CATERPILLAR®

SEBP5905
December 2010

RUTHZIL TRATOR COMERCIAL DE PEÇAS LTDA 11 97083-6812 ROLANDO

Parts Manual

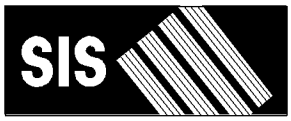

See "General Information" for New Parts Manual Features.

450E Backhoe Loader

RBA1-Up (Machine)
C4E1-Up (Engine)

Powered By C4.4 Engine

Product and Dealer Information

Note: For product identification plate locations, see the section “Product Identification Information” in the Operation and Maintenance Manual.

Delivery Date: _____

Product Information

Model: _____

Product Identification Number: _____

Engine Serial Number: _____

Transmission Serial Number: _____

Generator Serial Number: _____

Attachment Serial Numbers: _____

Attachment Information: _____

Customer Equipment Number: _____

Dealer Equipment Number: _____

Dealer Information

Name: _____ Branch: _____

Address: _____

_____

_____

	Dealer Contact	Phone Number	Hours
Sales:	_____	_____	_____
Parts:	_____	_____	_____
Service:	_____	_____	_____

MEMORANDA

TABLE OF CONTENTS

Name	Page
GENERAL INFORMATION	A4
REPAIR ALTERNATIVES	A7
SUPPLEMENTAL COOLANT ADDITIVES	A8
MAINTENANCE PARTS	A9
INDEX	A11
MACHINE ARRANGEMENT	1
BACKHOE AR-EXTENDABLE STICK	1
BACKHOE AR-STANDARD STICK	1
CHASSIS AR	2
COMMON AR	2
LOADER AR	2
ENGINE ARRANGEMENT	3
ENGINE AR	3
ENGINE AR-PRIMARY	4
BASIC ENGINE	5
CAMSHAFT GP	5
COVER GP-ENGINE	6
COVER GP-VALVE MECHANISM	7
CRANKSHAFT GP	9
CYLINDER BLOCK GP	11
CYLINDER HEAD AS	13
CYLINDER HEAD GP	15
DRIVE GP-FAN	16
FLYWHEEL GP	17
HOUSING GP-FLYWHEEL	18
HOUSING GP-FRONT	19
LIFTING GP-ENGINE	21
MOUNTING GP-ENGINE	22
MOUNTING GP-ENGINE & XMSN	23
PAN GP-OIL	24
PISTON & ROD GP	26
PLUG GP-CYLINDER HEAD	27
PLUG GP-ENGINE	28
PULLEY GP-CRANKSHAFT	29
ROCKER ARM GP	30
VALVE MECHANISM GP	31
LUBRICATION SYSTEM	33
BREATHER GP	33
FILLER GP-ENGINE OIL	35
GAUGE GP-OIL LEVEL & FILLER	36
PUMP GP-ENGINE OIL	37
VALVE GP-FLUID SAMPLING	38
COOLING SYSTEM	39
CONNECTION GP-WATER	39
COOLER & MTG GP-ENG & HYDR	40
COOLER AR-ENGINE & HYDRAULIC	42
COOLER GP-ENGINE & HYDRAULIC	43
COOLER GP-ENGINE OIL	44
FAN GP-SUCTION	46
LINES GP-TRANSMISSION COOLER	48
PUMP GP-WATER	50
AIR INLET AND EXHAUST SYSTEM	52
AIR CLEANER GP	52
ELBOW GP-AIR INLET	55
EXTENSION GP-EXHAUST	57
INDICATOR GP-AIR FILTER CHANGE	58
LINES GP-AIR	59
MUFFLER GP	60
TURBOCHARGER GP	61
FUEL SYSTEM	64
CONTROL GP-GOVERNOR	64
FILTER GP-PRIMARY FUEL	66
FILTER GP-WATER SEP & FUEL	67
INJECTOR GP-FUEL	68
LINES GP-FUEL	69
LINES GP-FUEL FILTER	71
PUMP GP-FUEL INJECTION	74
TANK & MTG GP-FUEL	79
TANK GP-FUEL	80
ELECTRICAL AND STARTING SYSTEM	82
ALTERNATOR GP-CHARGING	82
BATTERY GP	83
CONTROL GP-ENGINE ELECTRONIC	86
ELECTRONICS GP-COMMUNICATION	87
ELECTRONICS GP-MACHINE	87
GLOW PLUG GP	88
HEATER GP-JACKET WATER	89
INSTALLATION GP-COMMUNICATION	90
LAMP GP-FLOOD	94
LAMP GP-WARNING BEACON	97
LIGHTING GP-FLOOD & SIGNAL	98
LIGHTING GP-WARNING BEACON	101
PANEL GP-FUSE	102
RELAY GP	103
SENSOR GP-POSITION	107
STARTING MOTOR GP-ELECTRIC	108
SWITCH GP-ALL WHEEL DRIVE	109
SWITCH GP-DIFFERENTIAL LOCK	110
SWITCH GP-DISCONNECT	111
SWITCH GP-TOGGLE	112
WIRING GP-AIR CONDITIONER	113
WIRING GP-CONSOLE	116
WIRING GP-CONTROL	120
WIRING GP-ENGINE	123
WIRING GP-PLATFORM	130
WIRING GP-POWER RECEPTACLE	137
WIRING GP-REAR	138

TABLE OF CONTENTS

Name	Page
WIRING GP-RIDE CONTROL	140
WIRING GP-STABILIZER	142
WIRING GP-TRANSMISSION CONTROL	143
POWER TRAIN	145
AXLE GP-DRIVE & STEERING	145
AXLE GP-REAR	148
COOLER GP-TRANSMISSION OIL	150
DIFFERENTIAL & BEVEL GEAR GP	151
DIFFERENTIAL GP	156
DRIVE GP-FLEXIBLE COUPLING	158
FILLER GP-POWER TRAIN OIL	159
HOUSING & FLANGE GP-AXLE	161
KIT-DIFFERENTIAL	163
MOUNTING GP-AXLE	164
MOUNTING GP-TRANSMISSION	165
PLANETARY GP-FINAL DRIVE	166
POWER TRAIN AR	167
SHAFT GP-COUNTER	168
SHAFT GP-DRIVE	170
SHAFT GP-IDLER	172
SHAFT GP-INPUT	173
SHAFT GP-OUTPUT	175
TRANSMISSION AR-POWER SHIFT	179
TRANSMISSION GP-POWER SHIFT	179
VALVE & LINES GP-DIFF LOCK	182
VALVE & MTG GP-SOLENOID	184
VALVE GP-RELIEF	185
VALVE GP-TIRE	186
WHEEL & TIRE AR	187
WHEEL & TIRE GP	187
WHEEL GP-FINAL DRIVE & BRAKE	190
BRAKING SYSTEM	191
BRAKE GP-SERVICE	191
CONTROL GP-PARKING BRAKE	192
CONTROL GP-SERVICE BRAKE	194
LEVER GP-HAND CONTROL	198
STEERING SYSTEM	199
KNOB GP-STEERING	199
LINES GP-STEERING	200
PUMP GP-METERING	204
STEERING COLUMN GP	205
FRAME AND BODY	206
BOX GP-BATTERY	206
COUNTERWEIGHT GP	207
ENCLOSURE GP-ENGINE	208
EXTENSION GP-FENDER	210
FENDER GP-FRONT	211
FENDER GP-REAR	212
FLOORPLATE GP	214
FRAME GP-LOADER	216
FRAME GP-SWING	218
GUARD GP-DRIVE SHAFT	220
HOOD & GUARD GP	221
HOOD GP-ENGINE	223
HYDRAULIC SYSTEM	227
ACCUMULATOR GP-PILOT OIL	227
ACCUMULATOR GP-RIDE CONTROL	228
CONTROL AR-BACKHOE	229
CONTROL AR-RIDE	234
CYLINDER GP-BACKHOE BUCKET	235
CYLINDER GP-BOOM	237
CYLINDER GP-EXTENDABLE STICK	239
CYLINDER GP-LIFT	240
CYLINDER GP-STABILIZER	241
CYLINDER GP-STICK	244
CYLINDER GP-SWING	245
CYLINDER GP-TILT	247
DRIVE & MTG GP-PUMP	249
FASTENER GP-VALVE	250
FILTER GP-OIL	251
FITTING GP-HYDRAULIC	252
HYDRAULIC AR	253
KICKOUT & POSITIONER GP	254
LINES GP-AUXILIARY HYDRAULIC	258
LINES GP-BACKHOE AUXILIARY	264
LINES GP-BOOM	272
LINES GP-BUCKET	273
LINES GP-DRAIN	277
LINES GP-EXTENDABLE STICK	278
LINES GP-HYDRAULIC OIL COOLER	280
LINES GP-LIFT CYLINDER	282
LINES GP-MULTIPURPOSE BUCKET	284
LINES GP-PILOT	286
LINES GP-PUMP	297
LINES GP-RIDE CONTROL	303
LINES GP-STABILIZER	305
LINES GP-STICK	309
LINES GP-SWING	310
LINES GP-TILT CYLINDER	312
MANIFOLD & SOLENOID GP-CONTROL	314
MANIFOLD GP-CONTROL	317
MANIFOLD GP-RIDE CONTROL	321
MOUNTING GP-BANK VALVE	322
MOUNTING GP-LINES	324
MOUNTING GP-PUMP	325
PUMP GP-GEAR	326
PUMP GP-PISTON	328
ROTATING GP-PUMP	330
SHAFT GP-PUMP DRIVE	331
TANK & MTG GP-HYDRAULIC	332
VALVE & LINES GP-PILOT	334
VALVE AR-BANK 2	336
VALVE AR-BANK 3	336

TABLE OF CONTENTS

Name	Page
VALVE GP-BANK 2	338
VALVE GP-BANK 3	340
VALVE GP-BANK 7	342
VALVE GP-BANK 8	344
VALVE GP-CONTROL	346
VALVE GP-CUSHION CROSSOVER RLF	369
VALVE GP-MAKEUP	370
VALVE GP-PILOT	371
VALVE GP-PRESSURE REDUCING	373
VALVE GP-PUMP CONTROL	375
VALVE GP-RELIEF	376
VALVE GP-SOLENOID	378
IMPLEMENTS	379
ARM GP-LIFT	379
BOOM AS	381
BOOM GP	382
BRACE GP-LIFT CYLINDER	384
LINES GP-GREASE	385
LINKAGE GP-BACKHOE BUCKET	386
LINKAGE GP-LOADER BUCKET	388
LOCK GP-TRANSPORT	390
MOUNTING GP-STICK	393
PAD & GUARD GP-STABILIZER	394
PAD GP-STABILIZER	396
STABILIZER GP-BACKHOE	397
STICK AS	398
STICK GP-EXTENDABLE	399
STICK GP-HOE	401
WORK TOOLS	403
STOP GP-BUCKET	403
OPERATOR STATION	404
AIR CONDITIONER & MOUNTING GP	404
CAB AR-ENCLOSED ROPS	406
CAB GP	407
CANOPY AR-OPEN ROPS	410
CANOPY GP	411
COMPRESSOR & MTG GP-REFRIG	413
CONDENSER & MTG GP-REFRIGERANT	414
CONSOLE GP-OPERATOR	415
CONTROL GP-HANDLE	421
CONTROL GP-HYDRAULIC HAND	422
CONTROL GP-HYDRAULIC PEDAL	431
CONTROL GP-JOYSTICK	434
CONTROL GP-STEERING	436
DOOR GP-CAB	437
FLOOR MAT GP	441
HEATER & AIR CONDITIONER GP	442
LATCH GP-CAB DOOR & WINDOW	444
LATCH GP-CONSOLE	446
LINER GP-CAB	447
LINES GP-HEATER & AIR COND	449
MIRROR GP-REAR VIEW	451
MOTOR GP-WINDOW WIPER	452
MOUNTING GP-BACKHOE CONTROL	454
MOUNTING GP-CAB	457
PEDAL GP-GOVERNOR	458
ROOF GP-CAB	459
SEAT BELT GP	460
SEAT GP	462
SEAT GP-SUSPENSION	463
SUSPENSION GP-SEAT	466
TRIM GP-CAB	469
VISOR GP-CAB	471
WASHER GP-WINDOW	472
WINDOW GP-CAB	474
WINDOW GP-DOOR	480
WIPER GP-WINDOW	482
SERVICE EQUIPMENT AND SUPPLIES	484
FILM GP	484
LOCK GP-VANDALISM	485
PLATE & FILM GP	486
PROTECTION GP-VANDALISM	490
TRANSPORT GP-MACHINE	491
PART NUMBER INDEX	B1

GENERAL INFORMATION

1. MACHINE IDENTIFICATION

Caterpillar machines are identified by Product Identification Numbers (PIN). Some components included in a machine may be identified by Serial Numbers (S/N). Typical components that will be serialized include engines, transmissions, bulldozers, and rippers. The machine and engine are further identified by arrangement numbers and in some cases modification numbers. These numbers are shown on the product identification plate(s) and on the master plate in the operator's compartment.

Caterpillar dealers need all of these numbers to determine accurate parts identification.

SIS *New Feature*

Effective First Quarter 2001 the Caterpillar Product Identification Number (PIN) changed from 8 to 17 characters. In an effort to provide uniform equipment identification, Caterpillar and other construction equipment manufacturers are moving to comply with the latest version of the product identification numbering standard. Non-road machine PINs are defined by ISO 10261. The new PIN format will apply to all Caterpillar machines and generator sets. The PIN plates and frame marking will display the 17 character PIN. The new format will look like the following:

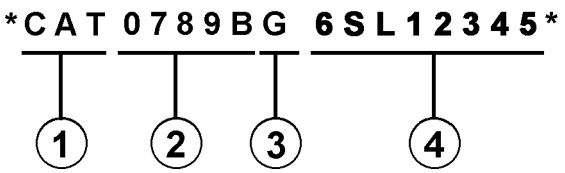

Where:

1. Caterpillar's World Manufacturing Code (characters 1-3)

2. Machine Descriptor (characters 4-8)

3. Check Character (character 9)

4. Machine Indicator Section (MIS) or Product Sequence Number (characters 10-17). These were previously referred to as the Serial Number.

Machines and generator sets produced before First Quarter 2001 will maintain their 8 character PIN format.

Components such as engines, transmissions, axles, etc. and work tools will continue to use an 8 character Serial Number (S/N).

2. ORDERING PARTS

⚠ WARNING

When replacement parts are required for this product Caterpillar recommends using Caterpillar replacement parts or parts with equivalent specifications including, but not limited to, physical dimensions, type, strength and material.

Failure to heed this warning can lead to premature failures, product damage, personal injury or death.

Quality Caterpillar replacement parts are available from Caterpillar dealers throughout the world. Their parts inventories are up to date and include all parts normally required to protect your investment in Caterpillar machines. Dealers may offer repair kits or remanufactured parts to allow selection of the most effective repair alternative for a particular situation. When ordering parts, your order should specify the quantity, part number, part name, and the serial number/product identification number of the machine for which the parts are needed.

3. PARTS MANUAL ORGANIZATION

Product information in this manual is presented as "information elements" that represent all of the components for the specific model. Engine Arrangement and Seat Group are examples of information elements. The information elements are organized alphabetically by part name and secondarily by part number within each major section of the manual.

4. TABLE OF CONTENTS

A table of contents (TOC) is found at the beginning of the manual. The TOC lists each section of the manual with a complete list of all information elements organized as they appear in the manual. Page numbers are provided for quick reference to detailed parts identification illustrations and serviceable consist lists.

5. MAINTENANCE PARTS INDEX

The Maintenance Parts Index, located near the beginning of the manual, references most frequently used maintenance part numbers, providing description, quantity, usage and page number. This information is organized alphabetically by part description.

6. INDEX

The index located near the front of the manual is an alphabetical listing of all information elements included in the manual. Page numbers are provided for quick reference to detailed parts identification illustrations and serviceable consist lists.

7. PART NUMBER INDEX

A numerical index listing all part numbers and the corresponding page number(s) appears at the back of the manual.

8. CAPTIONS

Captions located at the beginning of each information element identify the part number and part name along with additional descriptive information. PIN and S/N information found in each caption should be used to select correct information for a specific machine. Field replacement options, identification of optional attachment components, and where used ("part of") information is also provided.

The first line of a caption is shown in larger type font to indicate the beginning of an information element. Captions for additional pages that may be required to illustrate an information element will be shown in standard type font and will include the term *(contd.)* .

9. NON-SERVICED PARTS

In some instances it is necessary to display non-serviced parts that are a link to a lower level serviceable consist lists. These non-serviced part numbers are shown in *italic* type indicating that they are not available.

10. PARTS LIST REFERENCE NUMBERS

Numbers shown in the Ref No column correspond to numbers used in the associated graphic(s). An alphabetic suffix may be added to a reference number to identify lower level consist items. Numbers shown in the Graphic Ref column refer to the graphic number identifier displayed in the lower left corner of each illustration. The Graphic Ref number may be used in combination with the item Ref No to determine the correct part number. There may be intentional omission of a Ref No in a consist list as information is updated to reflect the latest serviceable part numbers.

11. INDENTED PART NAMES

When a part name is indented in a parts list, it is part of (included in) the group or assembly under which it is indented.

12. ILLUSTRATION REFERENCE LETTERS

When necessary, illustrations contain reference letters (A, B, C etc.) that are intended to track lines and harnesses from one point to another. They are also used to show where to reconnect illustrations that have been separated.

13. ABBREVIATIONS AND SYMBOLS

O.D. – Outside Diameter
I.D. – Inside Diameter
A – Not Part Of This Group
B – Use As Required
C – Change From Previous Type
D – Order By The Meter
E – Order By The Centimeter
F – Not Shown
G – Order By The Inch
I – Refer To Hydraulic Information System
M – Metric Part
R – Remfg Part May Be Available
Y – Separate Illustration
Z – Not Serviced Separately

SIS *New Feature*

14. DESCRIPTION OF TYPE CHANGES

Type - A type is defined as any configuration change that requires an additional Information Element for an Arrangement, Group, or Assembly. If serial number breaks for types are not available, a type # (Type 1, Type 2, etc.) will be displayed in the caption. These "type" changes are identified with a "C" note (change from previous type) in the Parts List. Only the "types" that apply to this Parts Manual will be included. Additional types may exist causing "C" notes to appear on an Information Element when no other types are shown.

15.<END>

This symbol indicates the end of an information element.

NOTE:

Continuing improvement and advancement of product design may cause changes to your machine which may not be included in this publication. Whenever a question arises regarding your Caterpillar product or this publication, please consult your Caterpillar dealer for the latest available information.

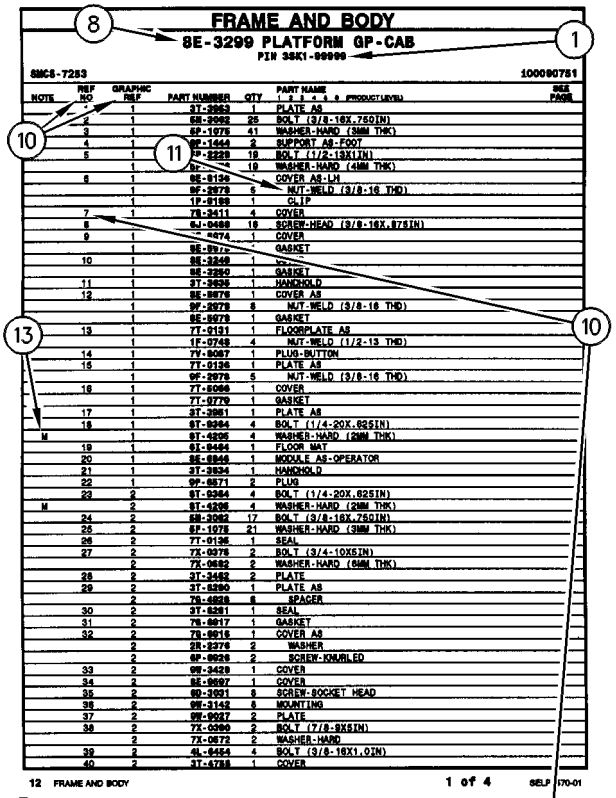

NOTE	REF NO	GRAPHIC REF	PART NUMBER	QTY	PART NAME (1 2 3 4 5 6 PRODUCT LEVEL)	SEE PAGE
	*	1	3T-3963	1	PLATE AS	
	2	1	5M-3982	25	BOLT (3/8-16X.750IN)	
	3	1	6P-1075	41	WASHER-HARD (3MM THK)	
	4	1	9F-1444	2	SUPPORT AS-FOOT	
	5	1	9P-2229	19	BOLT (1/2-13X1IN)	
		1	9P-[illegible]	19	WASHER-HARD (4MM THK)	
	6	1	8E-8136	*	COVER AS-LH	
		1	9F-2979	6	NUT-WELD (3/8-16 THD)	
		1	1P-8189	1	CLIP	
	7	1	7X-3411	4	COVER	
	8	1	6J-0468	18	SCREW-HEAD (3/8-16X.87SIN)	
	9	1	[illegible]074	1	COVER	
		1	8E-8976	*	GASKET	
	10	1	8E-3248	1	[illegible]	
		1	8E-2260	1	GASKET	
	11	1	3T-3636	1	HANDHOLD	
	12	1	8E-8976	1	COVER AS	
		1	9F-2979	8	NUT-WELD (3/8-16 THD)	
		1	8E-8978	1	GASKET	
	13	1	7T-9131	1	FLOORPLATE AS	
		1	1F-0748	4	NUT-WELD (1/2-13 THD)	
	14	1	7Y-8067	1	PLUG-BUTTON	
	15	1	7T-0136	1	PLATE AS	
		1	9F-2979	5	NUT-WELD (3/8-16 THD)	
	16	1	7T-8066	1	COVER	
		1	7T-9779	1	GASKET	
	17	1	3T-3961	1	PLATE AS	
	18	1	9T-0264	4	BOLT (1/4-20X.62SIN)	
M		1	9T-4295	4	WASHER-HARD (2MM THK)	
	19	1	9X-8464	1	FLOOR MAT	
	20	1	8E-8848	1	MODULE AS-OPERATOR	
	21	1	3T-3834	1	HANDHOLD	
	22	1	9F-8871	2	PLUG	
	23	2	9T-0264	4	BOLT (1/4-20X.62SIN)	
M		2	9T-4295	4	WASHER-HARD (2MM THK)	
	24	2	5M-3982	17	BOLT (3/8-16X.750IN)	
	25	2	6P-1075	21	WASHER-HARD (3MM THK)	
	26	2	7T-0136	1	SEAL	
	27	2	7X-0078	2	BOLT (3/4-10X5IN)	
		2	7X-0682	2	WASHER-HARD (6MM THK)	
	28	2	3T-3482	2	PLATE	
	29	2	3T-8290	1	PLATE AS	
		2	7S-4828	6	SPACER	
	30	2	3T-8281	1	SEAL	
	31	2	7S-8817	1	GASKET	
	32	2	7S-8816	1	COVER AS	
		2	5R-2276	2	WASHER	
		2	9F-8826	2	SCREW-KNURLED	
	33	2	9M-3429	1	COVER	
	34	2	8E-8697	1	COVER	
	35	2	9D-3931	8	SCREW-SOCKET HEAD	
	36	2	9M-3142	8	MOUNTING	
	37	2	9M-9017	2	PLATE	
	38	2	7X-0360	2	BOLT (7/8-9X5IN)	
		2	7X-0672	2	WASHER-HARD	
	39	2	4L-8454	4	BOLT (3/8-16X1.0IN)	
	40	2	3T-4788	1	COVER	

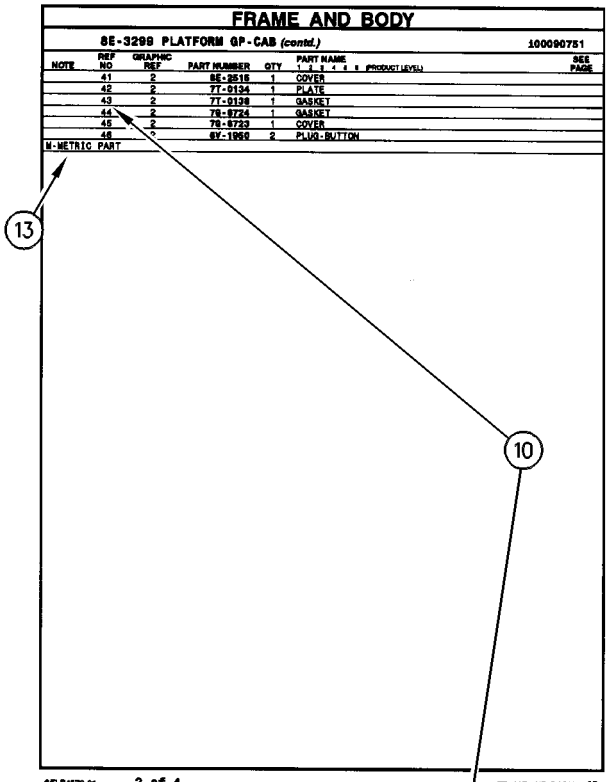

NOTE	REF NO	GRAPHIC REF	PART NUMBER	QTY	PART NAME (1 2 3 4 5 6 PRODUCT LEVEL)	SEE PAGE
	41	2	8E-2515	1	COVER	
	42	2	7T-0134	1	PLATE	
	43	2	7T-0138	1	GASKET	
	44	2	7S-8724	1	GASKET	
	45	2	7S-8723	1	COVER	
	46	*	8Y-1950	2	PLUG-BUTTON	

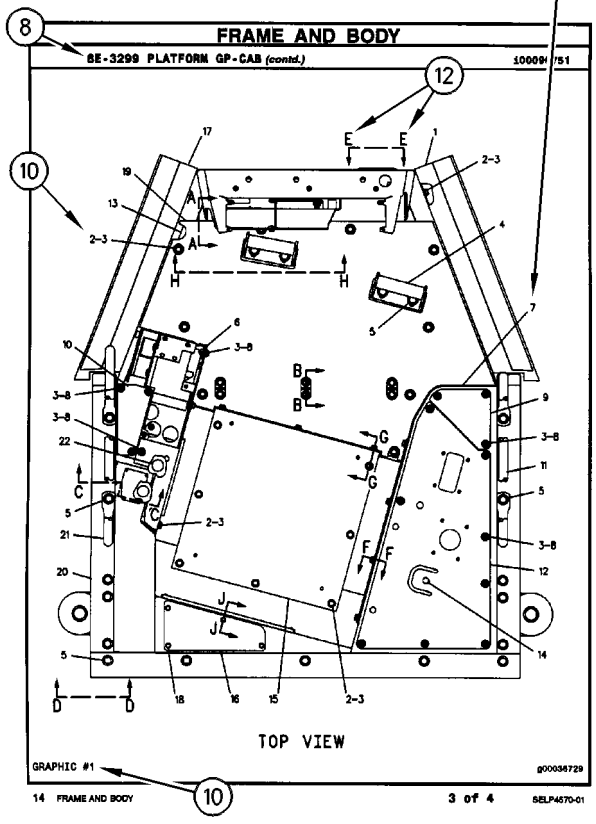

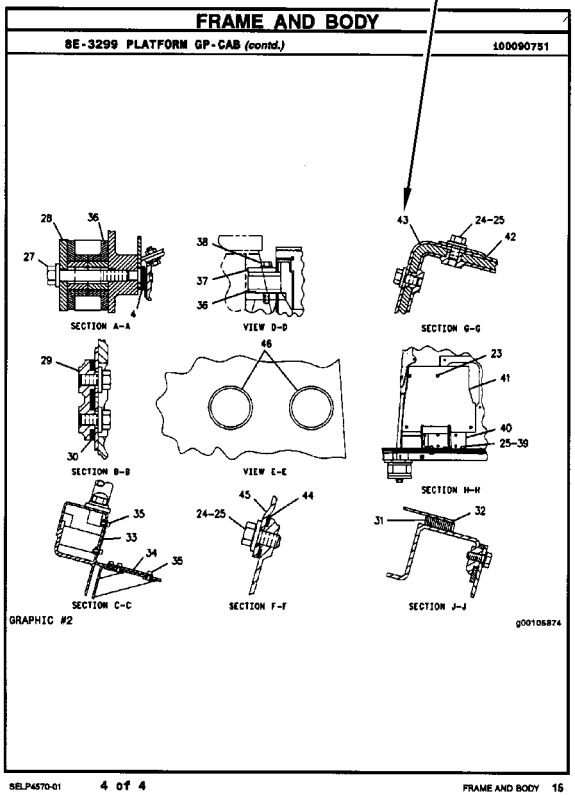

REPAIR ALTERNATIVES

REMANUFACTURED COMPONENTS

As an option when making repairs consider Caterpillar Remanufactured Components. Components that are available through the Caterpillar Remanufactured Program are identified three ways in the parts book:

- with the letter R in the note field of the parts list
- with an R* at the beginning of the first line of the caption
- with an *R at the end of the first line of the caption

Typical components included in the Remanufacturing Program include:

ALTERNATORS
CONNECTING RODS
CRANKSHAFTS - UNDERSIZE
CRANKSHAFTS - UPGRADE TO NEW
CYLINDER HEADS
ELECTRONIC CONTROL MODULES (ECM)
ELECTRONIC SENSORS
FUEL INJECTORS
FUEL NOZZLES
FUEL PUMPS
GOVERNORS
OIL PUMPS
PISTONS
SHORT BLOCKS
STARTERS
TURBOCHARGERS - COMPLETE
TURBOCHARGER CARTRIDGES
WATER PUMPS

Caterpillar Remanufactured engines for many engine arrangements are also available.

SUPPLEMENTAL COOLANT ADDITIVES

CUSTOMER BENEFITS:

Protects against cavitation, foam, erosion, corrosion, and scale buildup in cooling systems.

- Provides measured coolant conditioner.

DESCRIPTION:

Additives deplete from the coolant with normal operation. For this reason, Supplemental Coolant Additives (SCA) must be added to all heavy duty coolants at regular intervals. In addition, when not using a fully formulated, pre-charged antifreeze, like Caterpillar's DEAC, an initial charge of SCA must be added to the cooling system. The amount of SCA added to the system is dependent on the capacity of the system.

The SCA for initial fill is provided as a liquid. SCA's for maintenance intervals are available in liquid form and as a spin-on element. (No Spin-on available for 3600 Family of Engines)

NOTE:

The amount of SCA added at initial fill is not the same as the amount added at maintenance intervals.

The coolant additive elements can be used with any ethylene or propylene glycol type antifreeze which meets ASTM D4985 or ASTM D5345 Specifications.

NOTE:

For use with standard heavy duty coolant only, not for use with Extended Life Coolant.

PARTS NEEDED:

Cooling System Capacity		Liquid SCA at Initial Fill	Liquid SCA at Maintenance*	Spin-on SCA Maintenance Element*
Liters	Gallons			
22-30	(6-8)	3P-2044 (1)	6V-3542 (1)	111-2370 (1)
30-38	(8-10)	3P-2044 (1) 6V-3542 (1)	111-2372 (1)	111-2369 (1)
38-49	(10-13)	3P-2044 (1) 8T-1589 (1)	111-2372 (1)	111-2369 (1)
49-64	(13-17)	3P-2044 (2)	8T-1589 (1)	9N-3368 (1)
64-83	(17-22)	3P-2044 (2) 8T-1589 (1)	111-2372 (1) 6V-3542 (1)	111-2371 (1)
83-114	(22-30)	3P-2044 (3) 8T-1589 (1)	3P-2044 (1)	9N-3718 (1)
114-163	(30-43)	3P-2044 (5)	3P-2044 (1) 6V-3542 (1)	111-2371 (2)
163-242	(43-64)	3P-2044 (8)	3P-2044 (2)	9N-3718 (2)

** Normal maintenance period is 250 hrs. See your Operation and Maintenance Manual for complete coolant maintenance instructions.*

( ) Indicates quantity required.

MAINTENANCE PARTS

DESCRIPTION	PART NUMBER	QTY	WHERE USED	PAGE
AIR INLET AND EXHAUST SYSTEM				
FILTER ELEMENT-AIR (CLEANER)	278-8276	1	AIR CLEANER GP	54
FILTER ELEMENT-AIR (PRIMARY) (AIR CLEANER)	278-8275	1	AIR CLEANER GP	54
BASIC ENGINE				
GASKET-VALVE COVER (CYLINDER HEAD)	298-4546	1	COVER GP-VALVE MECHANISM	7
PLUG-DRAIN (ENGINE OIL)	7C-0351	2	PAN GP-OIL	24
COOLING SYSTEM				
BELT-SERPENTINE (FAN)	283-1171	1	FAN GP-SUCTION	46
	283-1172	1	FAN GP-SUCTION	47
CAP-PRESSURE (16-PSI)	211-6574	1	COOLER GP-ENGINE & HYDRAULIC	43
CAP-VENTED (COOLANT RECOVERY)	147-9611	1	COOLER & MTG GP-ENG & HYDR	40
GASKET-WATER REGULATOR (TEMPERATURE)	281-8744	1	CONNECTION GP-WATER	39
HOSE-RADIATOR (LOWER)	277-4696	1	COOLER & MTG GP-ENG & HYDR	40
HOSE-RADIATOR (UPPER)	272-9635	1	COOLER & MTG GP-ENG & HYDR	40
REGULATOR AS-WATER TEMPERATURE (CONNECTOR INCLUDED)	277-2974	1	CONNECTION GP-WATER	39
ELECTRICAL AND STARTING SYSTEM				
BATTERY (12-VOLT, MAINTENANCE FREE)	230-6368	2	BATTERY GP	83
BELT-DRIVE	9X-8139	1	LAMP GP-WARNING BEACON	97
CAP AS	180-9900	1	WIRING GP-PLATFORM	130
FLASHER AS (12-VOLT)	7T-4848	1	WIRING GP-PLATFORM	130
FUSE (10-AMPERE)	113-8490	11	PANEL GP-FUSE	102
	3K-8782	1	LAMP GP-WARNING BEACON	97
FUSE (15-AMPERE)	113-8491	13	PANEL GP-FUSE	102
FUSE (20-AMPERE)	113-8492	10	PANEL GP-FUSE	102
FUSE (30-AMPERE) (MAIN)	274-9872	1	RELAY GP	103
FUSE (40-AMPERE)	278-6377	1	RELAY GP	104
FUSE (50-AMPERE) (POWER, 1)	274-9877	1	RELAY GP	103
FUSE (60-AMPERE)	267-2701	2	RELAY GP	105
		1	RELAY GP	106
		1	WIRING GP-PLATFORM	132
GLOW PLUG (12-VOLT)	292-9880	4	GLOW PLUG GP	88
KEY (BATTERY DISCONNECT)	8H-5306	1	SWITCH GP-DISCONNECT	111
LAMP (12-VOLT, 21-WATT)	3C-4883	1	LIGHTING GP-FLOOD & SIGNAL	98
	9W-3326	1	LIGHTING GP-FLOOD & SIGNAL	98
LAMP (12-VOLT, 5-WATT)	084-4348	1	LIGHTING GP-FLOOD & SIGNAL	98
LAMP (12-VOLT, 55-WATT)	9W-0607	1	LAMP GP-FLOOD	94
		1	LAMP GP-FLOOD	95
		1	LAMP GP-FLOOD	96
	9X-8118	1	LAMP GP-WARNING BEACON	97
LAMP GP-WARNING BEACON (MAGNETIC MOUNT)	185-7016	1	LAMP GP-WARNING BEACON	97

MAINTENANCE PARTS

DESCRIPTION	PART NUMBER	QTY	WHERE USED	PAGE
FUEL SYSTEM				
CAP-FUEL	284-9039	1	TANK GP-FUEL	81
FILTER AS-WATER SEP & FUEL	308-7298	1	FILTER GP-WATER SEP & FUEL	67
FILTER-FUEL (ULTRA HIGH EFFICIENCY)	289-0600	1	FILTER GP-PRIMARY FUEL	66
STRAINER-FUEL (FILLER NECK SCREEN)	180-3730	1	TANK GP-FUEL	81
HYDRAULIC SYSTEM				
CAP-FILL (HYDRAULIC OIL)	237-3797	1	TANK & MTG GP-HYDRAULIC	332
FILTER ELEMENT AS-OIL (ULTRA HIGH EFFICIENCY) (HYDRAULIC)	207-5035	1	FILTER GP-OIL	251
FILTER ELEMENT-BREATHER (HYDRAULIC TANK)	9R-9925	1	TANK & MTG GP-HYDRAULIC	332
FILTER-OIL (FLOW REGULATOR)	227-1197	1	MANIFOLD GP-CONTROL	317
SCREEN (PILOT)	227-1189	1	MANIFOLD & SOLENOID GP-CONTROL	316
LUBRICATION SYSTEM				
CAP AS-FILLER (ENGINE OIL)	236-6651	1	GAUGE GP-OIL LEVEL & FILLER	36
FILTER AS-ENGINE OIL	7W-2326	1	GAUGE GP-OIL LEVEL & FILLER	36
OPERATOR STATION				
BLADE AS-WIPER (500-MM) (REAR)	5C-8811	1	WIPER GP-WINDOW	482
BLADE AS-WIPER (600-MM) (FRONT)	101-0745	1	WIPER GP-WINDOW	482
DRYER-REFRIGERANT (IN-LINE)	283-4237	1	LINES GP-HEATER & AIR COND	449
FILTER ELEMENT AS-AIR (CAB HEATER)	211-2661	1	AIR CONDITIONER & MOUNTING GP	404
FILTER ELEMENT-AIR (CAB HEATER)	211-2660	1	HEATER & AIR CONDITIONER GP	442
LAMP (12-VOLT)	210-8754	1	LINER GP-CAB	447
SEAT BELT (2-IN)	206-1749	1	SEAT BELT GP	460
SEAT BELT (3-IN)	206-1750	1	SEAT BELT GP	461
POWER TRAIN				
BREATHER (AXLE, FRONT)	253-5024	1	AXLE GP-DRIVE & STEERING	145
BREATHER (AXLE, REAR)	197-9155	1	AXLE GP-REAR	148
BREATHER (TRANSMISSION)	7T-3251	1	TRANSMISSION GP-POWER SHIFT	180
FILTER-OIL (STANDARD EFFICIENCY) (TRANSMISSION)	119-4740	1	TRANSMISSION AR-POWER SHIFT	179
PLUG AS-DRAIN (MAGNETIC) (AXLE)	152-6144	3	AXLE GP-DRIVE & STEERING	145
PLUG AS-DRAIN (MAGNETIC) (AXLE, FRONT)	152-6144	1	DIFFERENTIAL & BEVEL GEAR GP	151
PLUG AS-DRAIN (MAGNETIC) (AXLE, REAR)	152-6144	3	AXLE GP-REAR	148
PLUG AS-DRAIN (TRANSMISSION)	6Y-1896	1	TRANSMISSION GP-POWER SHIFT	180
PLUG-MAGNETIC (AXLE, REAR)	152-6145	2	AXLE GP-REAR	148
STRAINER-SUCTION (TRANSMISSION)	7T-2651	1	TRANSMISSION GP-POWER SHIFT	181

INDEX

Name	Page
A	
ACCUMULATOR GP-PILOT OIL–CHARGED	227
ACCUMULATOR GP-RIDE CONTROL–CHARGED	228
ACCUMULATOR-REFRIGERANT (AIR CONDITIONER)	449
AIR CLEANER GP–TURBO	52 54
AIR COMPRESSOR GP (SUSPENSION SEAT)	466
AIR CONDITIONER & MOUNTING GP	404
ALTERNATOR GP-CHARGING	82
ARM GP-LIFT	379
AXLE GP-DRIVE & STEERING	145
AXLE GP-REAR	148
B	
BACKHOE AR-EXTENDABLE STICK	1
BACKHOE AR-STANDARD STICK	1
BASE GP-VALVE COVER & INJ HARN	7
BATTERY (12-VOLT, MAINTENANCE FREE)	83
BATTERY GP–HEAVY-DUTY	83
BELT-DRIVE	97
BELT-SERPENTINE (FAN)	46 47
BLADE AS-WIPER (500-MM) (REAR)	482
BLADE AS-WIPER (600-MM) (FRONT)	482
BLOWER GP-CAB (HEATER)	442
BOOM AS	381
BOOM GP	382
BOX GP-BATTERY–WITH STORAGE	206
BRACE GP-LIFT CYLINDER	384
BRAKE GP-MECH CALIPER PARKING	153
BRAKE GP-SERVICE	191
BREATHER (AXLE, FRONT)	145
BREATHER (AXLE, REAR)	148
BREATHER (CRANKCASE)	7
BREATHER (TRANSMISSION)	180
BREATHER GP–ENGINE	33
C	
CAB AR-ENCLOSED ROPS–WITH AIR CONDITIONER	406
CAB GP–DELUXE	407
CAMSHAFT GP	5
CANOPY AR-OPEN ROPS–WITHOUT FRONT WINDOW	410
CANOPY GP	411
CAP AS	130
CAP AS-FILLER (ENGINE OIL)	36
CAP-FILL (HYDRAULIC OIL)	332
CAP-FUEL	81
CAP-PRESSURE (16-PSI)	43
CAP-VENTED (COOLANT RECOVERY)	40
CHASSIS AR	2
COMMON AR	2
COMPRESSOR & MTG GP-REFRIG	413
COMPRESSOR GP-REFRIGERANT	413
CONDENSER & MTG GP-REFRIGERANT	414
CONNECTION GP-WATER	39
CONSOLE GP-OPERATOR–FRONT	417
CONSOLE GP-OPERATOR–LH	415
CONSOLE GP-OPERATOR–RH	419
CONTROL AR-BACKHOE–MECHANICAL, 7-BANK	231 233
CONTROL AR-BACKHOE–MECHANICAL, 8-BANK	232 234
CONTROL AR-BACKHOE–PILOT, 7-BANK	229
CONTROL AR-BACKHOE–PILOT, 8-BANK	230
CONTROL AR-RIDE	234
CONTROL GP-ENGINE ELECTRONIC	86
CONTROL GP-GOVERNOR	64 65
CONTROL GP-HANDLE–LH	421
CONTROL GP-HYDRAULIC HAND	427 429
CONTROL GP-HYDRAULIC HAND–LOADER	422 424
CONTROL GP-HYDRAULIC PEDAL	431 433
CONTROL GP-JOYSTICK–LH	435
CONTROL GP-JOYSTICK–RH	434
CONTROL GP-PARKING BRAKE	192 193
CONTROL GP-SERVICE BRAKE	194
CONTROL GP-STEERING–TILT	436
CONTROL GP-TRANSMISSION (FORWARD, NEUTRAL, REVERSE)	143
CONTROL GP-UNPROGRAMMED	86
CONTROL GP-UNPROGRAMMED (MACHINE)	87
COOLER & MTG GP-ENG & HYDR	40
COOLER AR-ENGINE & HYDRAULIC	42
COOLER GP-ENGINE & HYDRAULIC	43
COOLER GP-ENGINE OIL	44 45
COOLER GP-HYDRAULIC OIL & FUEL	43
COOLER GP-TRANSMISSION OIL	150
CORE AS-CONDENSER	414
CORE AS-OIL COOLER (TRANSMISSION)	150
COUNTERWEIGHT GP	207
COVER GP (OUTLET)	338 340
COVER GP-ENGINE	6
COVER GP-VALVE MECHANISM	7

INDEX

Name	Page
CRANKSHAFT GP	9, 10
CUSHION GP-SEAT	465
CYLINDER BLOCK GP	11, 12
CYLINDER GP-BACKHOE BUCKET	235
CYLINDER GP-BOOM	237
CYLINDER GP-EXTENDABLE STICK	239
CYLINDER GP-LIFT	240
CYLINDER GP-STABILIZER–LH	241
CYLINDER GP-STABILIZER–RH	242
CYLINDER GP-STEERING	145
CYLINDER GP-STICK	244
CYLINDER GP-SWING	245
CYLINDER GP-TILT	247
CYLINDER HEAD AS	13
CYLINDER HEAD GP	15

D

DIFFERENTIAL & BEVEL GEAR GP	153
DIFFERENTIAL & BEVEL GEAR GP–FRONT	151
DIFFERENTIAL GP–AXLE, FRONT	156
DIFFERENTIAL GP–REAR	157
DOOR GP-CAB–LH	439
DOOR GP-CAB–RH	437
DRIVE & MTG GP-PUMP	249
DRIVE GP-FAN	16
DRIVE GP-FLEXIBLE COUPLING	158
DRYER-REFRIGERANT (IN-LINE)	449

E

ELBOW GP-AIR INLET	55
ELECTRONICS GP-COMMUNICATION–PRODUCT LINK 121SR	87
ELECTRONICS GP-COMMUNICATION–PRODUCT LINK 300	87
ELECTRONICS GP-MACHINE–NON-ACCUGRADE	87
ENCLOSURE GP-ENGINE–LH	209
ENCLOSURE GP-ENGINE–RH	208
ENGINE AR	3
ENGINE AR-PRIMARY	4
EXTENSION GP-EXHAUST	57
EXTENSION GP-FENDER	210

F

FAN GP-SUCTION–WITH AIR CONDITIONER	47
FAN GP-SUCTION–WITHOUT AIR CONDITIONER	46
FASTENER GP-VALVE	250
FENDER GP-FRONT	211
FENDER GP-REAR	212
FILLER GP-ENGINE OIL	35
FILLER GP-POWER TRAIN OIL–AUTOSHIFT	159
FILM GP	484
FILM-CERTIFICATION (OPS, READ OMM)	407, 411
FILM-CONTROL (BACKHOE, JOYSTICK)	229, 230
FILM-IDENTIFICATION (BOOM, LH)	484
FILM-IDENTIFICATION (BOOM, RH)	484
FILM-IDENTIFICATION (CAT)	225
FILM-IDENTIFICATION (CATERPILLAR)	410
FILM-IDENTIFICATION (CATERPILLAR, FRONT)	406
FILM-IDENTIFICATION (GROUP NO., SEQUENCE NO.)	442
FILM-IDENTIFICATION (TEMPERATURE CONTROL)	404
FILM-INFORMATION (CAT POWER, ACERT TECHNOLOGY)	489
FILM-INSTRUCTION	386
FILM-INSTRUCTION (4-FUNCTION)	427, 429
FILM-INSTRUCTION (AUXILIARY)	431, 433
FILM-INSTRUCTION (BUCKET CONTROL)	336, 337
FILM-INSTRUCTION (EXTENDABLE STICK PIN, READ OMM)	275
FILM-INSTRUCTION (EXTENDABLE STICK)	431
FILM-INSTRUCTION (OIL FLOW DIRECTION)	267
FILM-INSTRUCTION (STABILIZER, AUTO UP)	406, 410
FILM-INSTRUCTION (UNLOCK)	223
FILM-WARNING (ACCUM, HIGH PRESS, READ OMM)	228, 288, 292
FILM-WARNING (HIGH PRESSURE, READ OMM)	228
FILM-WARNING (HIGH PRESSURE, READ OMM, INTL) (ISO)	303
FILM-WARNING (HYD PRESS, READ OMM, INTL)	258, 261, 264, 267, 269
FILM-WARNING (HYD PRESS, READ OMM, U.S.)	258, 261, 264, 267, 269

INDEX

Name	Page
FILM-WARNING (NO WELD, NO DRILL, READ OMM)	411
FILM-WARNING (PRODUCT LINK 300, INTL)	90
FILM-WARNING (PRODUCT LINK 300, U.S.)	90
FILTER AS-ENGINE OIL	36
FILTER AS-WATER SEP & FUEL	67
FILTER ELEMENT AS-AIR (CAB HEATER)	404
FILTER ELEMENT AS-OIL (ULTRA HIGH EFFICIENCY) (HYDRAULIC)	251
FILTER ELEMENT-AIR (CAB HEATER)	442
FILTER ELEMENT-AIR (CLEANER)	54
FILTER ELEMENT-AIR (PRIMARY) (AIR CLEANER)	54
FILTER ELEMENT-BREATHER (HYDRAULIC TANK)	332
FILTER GP-OIL	251
FILTER GP-PRIMARY FUEL	66
FILTER GP-WATER SEP & FUEL	67
FILTER-FUEL (ULTRA HIGH EFFICIENCY)	66
FILTER-OIL (FLOW REGULATOR)	317
FILTER-OIL (STANDARD EFFICIENCY) (TRANSMISSION)	179
FINAL DRIVE & WHEEL	190
FITTING GP-HYDRAULIC–QUICK DISCONNECT	252
FLASHER AS (12-VOLT)	130
FLOOR MAT	441
FLOOR MAT GP	441
FLOORPLATE GP	214, 215
FLYWHEEL GP	17
FRAME GP-LOADER	216
FRAME GP-LOADER–LOADER	217
FRAME GP-SWING	218
FUSE (10-AMPERE)	97, 102
FUSE (15-AMPERE)	102
FUSE (20-AMPERE)	102
FUSE (30-AMPERE) (MAIN)	103
FUSE (40-AMPERE)	104
FUSE (50-AMPERE) (POWER, 1)	103
FUSE (60-AMPERE)	105, 106, 132

G

Name	Page
GASKET-VALVE COVER (CYLINDER HEAD)	7
GASKET-WATER REGULATOR (TEMPERATURE)	39
GAUGE AS-OIL LEVEL (DIPSTICK) (POWER TRAIN)	159
GAUGE GP-OIL LEVEL & FILLER	36
GAUGE GP-SIGHT (HYDRAULIC TANK)	332
GAUGE-OIL LEVEL (DIPSTICK) (ENGINE)	36
GEAR GP-BEVEL & PINION	153
GEAR GP-RING	161, 162
GLOW PLUG (12-VOLT)	88
GLOW PLUG GP	88
GUARD GP-DRIVE SHAFT	220

H

Name	Page
HANDLE GP-MODULAR (LH)	421, 435
HANDLE GP-MODULAR (RH)	434
HARNESS AS-AUXILIARY	120, 121, 122
HARNESS AS-CONSOLE	116, 118
HARNESS AS-CONTROL (PRODUCT LINK)	92
HARNESS AS-ENGINE	123, 128
HARNESS AS-HEATER & AIR COND	442
HARNESS AS-HEATER & AIR COND (COMPRESSOR)	113
HARNESS AS-HEATER & AIR COND (PLATFORM)	113
HARNESS AS-LIGHTING (ROOF)	98
HARNESS AS-PANEL (AUTOSHIFT, STAND SHIFT SWITCH)	143
HARNESS AS-PLATFORM	130
HARNESS AS-POWER (DISTRIBUTION)	132
HARNESS AS-RADIO (PRODUCT LINK)	90
HARNESS AS-REAR	138
HARNESS AS-RIDE CONTROL	140, 466
HARNESS AS-SENSOR	124
HARNESS AS-TRANSMISSION	143
HARNESS AS-WIRING	124
HARNESS AS-WIRING (AUTOSHIFT)	143
HARNESS AS-WIRING (DIFFERENTIAL LOCK)	110
HARNESS AS-WIRING (RESISTOR)	130
HEATER & AIR CONDITIONER GP	442
HEATER GP-JACKET WATER	89
HEATER GP-JACKET WATER–120-VOLT	89
HOOD & GUARD GP	221
HOOD GP-ENGINE	223, 225
HOSE-RADIATOR (LOWER)	40
HOSE-RADIATOR (UPPER)	40
HOUSING & FLANGE GP-AXLE–LH	162
HOUSING & FLANGE GP-AXLE–RH	161
HOUSING GP-FLYWHEEL	18
HOUSING GP-FRONT	19
HYDRAULIC AR	253

INDEX

Name	Page
I	
INDICATOR AS (LH TURN SIGNAL, PARKING BRAKE)	130
INDICATOR AS (RH TURN SIGNAL, HIGH BEAM)	130
INDICATOR AS (STARTING AID)	118
INDICATOR GP-AIR FILTER CHANGE	58
INDICATOR-AIR FILTER SERVICE	58
INJECTOR GP-FUEL	68
INSTALLATION GP-COMMUNICATION–PRODUCT LINK 121SR	90
INSTALLATION GP-COMMUNICATION–PRODUCT LINK 300	92
K	
KEY (BATTERY DISCONNECT)	111
KICKOUT & POSITIONER GP	254 256
KIT-DIFFERENTIAL–REAR AXLE	163
KIT-SENSOR (ENGINE SPEED)	75
KNOB GP-STEERING	199
L	
LAMP (12-VOLT)	447
LAMP (12-VOLT, 21-WATT)	98
LAMP (12-VOLT, 5-WATT)	98
LAMP (12-VOLT, 55-WATT)	94 95 96 97
LAMP GP-DOME (12-VOLT)	447
LAMP GP-FLOOD	94 95 96
LAMP GP-HEAD & SIGNAL (DIRECTIONAL)	98
LAMP GP-SIGNAL (STOP, TAIL, TURN)	98
LAMP GP-WARNING BEACON (MAGNETIC MOUNT)	97
LAMP GP-WARNING BEACON–AMBER, MAGNETIC MOUNT, ROTATING	97
LATCH GP-CAB DOOR & WINDOW	444 445
LATCH GP-CONSOLE	446
LEVER GP-GOVERNOR	65
LEVER GP-HAND CONTROL	198
LIFTING GP-ENGINE	21
LIGHTING GP-FLOOD & SIGNAL–NACD, OPTIONAL	98
LIGHTING GP-WARNING BEACON–AMBER, MAGNETIC MOUNT, ROTATING	101
LINER GP-CAB	447
LINES GP-AIR	59
LINES GP-AUXILIARY HYDRAULIC	258 261
LINES GP-BACKHOE AUXILIARY	264 267 269
LINES GP-BOOM	272
LINES GP-BUCKET	273 275
LINES GP-DRAIN	277
LINES GP-EXTENDABLE STICK	278
LINES GP-FUEL	69
LINES GP-FUEL FILTER	71
LINES GP-GREASE–BOOM, STICK CYLINDER BEARING	385
LINES GP-HEATER & AIR COND	449
LINES GP-HYDRAULIC OIL COOLER	280
LINES GP-LIFT CYLINDER	282
LINES GP-MULTIPURPOSE BUCKET	284
LINES GP-PILOT	288 292
LINES GP-PILOT–SIGNAL	286 295
LINES GP-PILOT–STABILIZER	291
LINES GP-PUMP	297 300
LINES GP-RIDE CONTROL	303
LINES GP-STABILIZER	305 307
LINES GP-STEERING	200 202
LINES GP-STICK	309
LINES GP-SWING	310
LINES GP-TILT CYLINDER	312
LINES GP-TRANSMISSION COOLER	48
LINKAGE GP-BACKHOE BUCKET	386
LINKAGE GP-LOADER BUCKET	388
LOADER AR	2
LOCK GP-TRANSPORT	391
LOCK GP-TRANSPORT–STABILIZER	390
LOCK GP-VANDALISM	485
M	
MANIFOLD & SOLENOID GP-CONTROL	314
MANIFOLD & SOLENOID GP-CONTROL–BOOM, STICK, PATTERN SWITCH	315
MANIFOLD & SOLENOID GP-CONTROL–INLET	316
MANIFOLD GP-CONTROL–INLET	318 319 320
MANIFOLD GP-CONTROL–OUTLET	317
MANIFOLD GP-HYDRAULIC	349 352 353

INDEX

Name	Page
MANIFOLD GP-RIDE CONTROL	321
MIRROR GP-REAR VIEW–INTERIOR	451
MODULE GP-DISPLAY	118
MOTOR GP-WINDOW WIPER	452
	453
MOTOR GP-WINDOW WIPER–FRONT	452
MOUNTING GP-AXLE	164
MOUNTING GP-BACKHOE CONTROL–PILOT	454
MOUNTING GP-BANK VALVE	322
	323
MOUNTING GP-CAB	457
MOUNTING GP-ENGINE	22
MOUNTING GP-ENGINE & XMSN	23
MOUNTING GP-LINES	324
MOUNTING GP-PUMP	325
MOUNTING GP-STICK	393
MOUNTING GP-TRANSMISSION	165
MOUNTING GP-WHEEL (FRONT)	188
MOUNTING GP-WHEEL (REAR)	189
MUFFLER GP	60

P

Name	Page
PAD & GUARD GP-STABILIZER	394
PAD GP-STABILIZER–STREET	396
PADLOCK GP	485
PAN GP-OIL	24
PANEL GP-FUSE–INCLUDES RELAY	102
PEDAL GP-GOVERNOR	458
PISTON & ROD GP	26
PLANETARY GP-FINAL DRIVE	190
PLANETARY GP-FINAL DRIVE–AXLE	166
PLATE & FILM GP	486
	487
PLUG AS-DRAIN (MAGNETIC) (AXLE)	145
PLUG AS-DRAIN (MAGNETIC) (AXLE, FRONT)	151
PLUG AS-DRAIN (MAGNETIC) (AXLE, REAR)	148
PLUG AS-DRAIN (TRANSMISSION)	180
PLUG GP-CONTROL VALVE	349
	351
	354
	357
PLUG GP-CYLINDER HEAD	27
PLUG GP-ENGINE	28
PLUG-DRAIN (ENGINE OIL)	24
PLUG-MAGNETIC (AXLE, REAR)	148
POWER TRAIN AR	167
PROTECTION GP-FUEL SYSTEM	66
	71
PROTECTION GP-FUEL SYSTEM (LINE, LOW PRESSURE)	75
PROTECTION GP-VANDALISM–ROTATING GUARD	490
PULLEY GP-CRANKSHAFT	29
PUMP GP-ENGINE OIL	37
PUMP GP-FUEL INJECTION	74
	75
PUMP GP-FUEL TRANSFER	74
PUMP GP-GEAR–SECONDARY	326
PUMP GP-METERING	204
PUMP GP-PISTON–PRIMARY	328
PUMP GP-TRANSMISSION (DIRECT DRIVE)	179
PUMP GP-WATER	50

R

Name	Page
RECOVERY GP-COOLANT	40
REGULATOR AS-WATER TEMPERATURE (CONNECTOR INCLUDED)	39
RELAY AS (12-VOLT) (ALL WHEEL DRIVE)	109
RELAY AS (12-VOLT) (BACKUP ALARM)	130
RELAY AS (12-VOLT) (FUSE BLOCK)	140
RELAY AS (12-VOLT) (HIGH SPEED)	113
RELAY AS (12-VOLT) (HORN)	130
RELAY AS (12-VOLT) (IMPLEMENT DISABLE)	130
RELAY AS (12-VOLT) (POSITION LAMP)	130
RELAY AS (12-VOLT) (START)	124
RELAY AS (12-VOLT) (TORQUE LIMITER)	132
RELAY AS-TIMER	142
RELAY GP	103
RELAY GP–POWER DISTRIBUTION	104
RELAY GP–POWER, 1	105
RELAY GP–POWER, 2	106
ROCKER ARM GP	30
ROOF GP-CAB	459
ROTATING GP-PUMP	330

S

Name	Page
SCREEN (PILOT)	316
SEAT BELT (2-IN)	460
SEAT BELT (3-IN)	461
SEAT BELT GP–RETRACTABLE, 2-IN	460
SEAT BELT GP–RETRACTABLE, 3-IN	461
SEAT GP–VINYL	462
SEAT GP-SUSPENSION–DELUXE, CLOTH	464
	465
	466
SEAT GP-SUSPENSION–VINYL	463
	466
SENDER AS-FUEL LEVEL	80
SENDER AS-TEMPERATURE (12-VOLT) (TRANSMISSION)	180
SENDER AS-TEMPERATURE (ENGINE COOLANT)	123
SENSOR GP-POSITION (ROTARY)	458
SENSOR GP-POSITION–ROTARY	107
SENSOR GP-SPEED (SECONDARY, TIMING)	74

INDEX

Name	Page
SENSOR GP-SPEED (TRANSMISSION)	179
SENSOR GP-TEMPERATURE (HYDRAULIC OIL)	123
SENSOR-PRESSURE (FUEL RAIL)	75
SENSOR-PRESSURE (WATER SEPARATOR)	67
SERVICE GP-COMMUNICATION (PRODUCT LINK 300)	87
SERVICE GP-MACHINE	87
SHAFT GP-COUNTER	168
SHAFT GP-DRIVE	170
SHAFT GP-DRIVE–REAR	171
SHAFT GP-IDLER	172
SHAFT GP-INPUT	173
SHAFT GP-OUTPUT–FRONT	177
SHAFT GP-OUTPUT–MAIN	175
SHAFT GP-PUMP DRIVE	331
SOFTWARE GP-COMMUNICATION (PRODUCT LINK 121SR)	87
SOFTWARE GP-COMMUNICATION (PRODUCT LINK 300)	87
SOFTWARE GP-MACHINE	87
SOLENOID (WASTEGATE)	61
SPRING AS-GAS	223
SPRING AS-GAS (LOCKABLE)	223
SPRING GP-GAS	205
SPRING GP-GAS (CAB DOOR)	437, 439
STABILIZER GP-BACKHOE	397
STARTING MOTOR GP-ELECTRIC–12-VOLT	108
STEERING COLUMN GP–TILT	205
STICK AS	398
STICK GP-EXTENDABLE	399
STICK GP-HOE	401
STOP GP-BUCKET	403
STRAINER-FUEL (FILLER NECK SCREEN)	81
STRAINER-SUCTION (TRANSMISSION)	181
SUN VISOR	471
SUSPENSION GP-SEAT	466
SWITCH AS (PARKING BRAKE)	192
SWITCH AS-FOOT (DIFFERENTIAL LOCK ON, OFF)	110
SWITCH AS-LIMIT (SERVICE BRAKE)	194
SWITCH AS-LIMIT (SUSPENSION SEAT)	466
SWITCH AS-MULTIFUNCTION (HD LIGHT, TURN SIG, WDO WIPER)	130
SWITCH AS-PRESSURE (HYDRAULIC OIL FILTER BYPASS)	123
SWITCH AS-PRESSURE (REFRIGERANT)	113
SWITCH AS-PRESSURE (RIDE CONTROL)	140
SWITCH AS-PRESSURE (SERVICE BRAKE)	194
SWITCH AS-PUSH BUTTON (PUSH BUTTON)	422, 424
SWITCH AS-ROCKER (AIR CONDITIONER, HEATER SELECT)	113
SWITCH AS-ROCKER (ALL WHEEL DRIVE)	109
SWITCH AS-ROCKER (AUTOSHIFT, STANDARD SHIFT)	143
SWITCH AS-ROCKER (AUXILIARY HYDRAULIC FLOW)	229, 230
SWITCH AS-ROCKER (BLOWER FAN SPEED)	113
SWITCH AS-ROCKER (FLOODLIGHT, FRONT)	98
SWITCH AS-ROCKER (FLOODLIGHT, REAR)	98
SWITCH AS-ROCKER (HAZARD WARNING LIGHTS)	130
SWITCH AS-ROCKER (HORN)	436
SWITCH AS-ROCKER (HYDRAULIC LOCKOUT)	229, 230
SWITCH AS-ROCKER (MODE SELECT)	229, 230
SWITCH AS-ROCKER (RIDE CONTROL)	140
SWITCH AS-ROCKER (TRANSMISSION NEUTRAL LOCK)	116
SWITCH AS-ROCKER (WARNING BEACON)	118
SWITCH AS-ROCKER (WIPER, WASHER, REAR)	482
SWITCH AS-ROLLER (POSITION SENSOR)	254, 256
SWITCH AS-START (KEY)	118
SWITCH GP-ALL WHEEL DRIVE–INCLUDES RELAY	109
SWITCH GP-DIFFERENTIAL LOCK–CENTER PIVOT MACHINE	110
SWITCH GP-DISCONNECT–BATTERY	111
SWITCH GP-PUSH BUTTON (NEUTRALIZER, DOWNSHIFT)	422, 424
SWITCH GP-TOGGLE	112
SWITCH-TEMPERATURE (AIR CONDITIONER)	442

T

Name	Page
TANK & MTG GP-FUEL–INCLUDES STEP	79
TANK & MTG GP-HYDRAULIC	332
TANK GP-FUEL	80, 81
TANK GP-HYDRAULIC	332
TANK GP-WINDOW WASHER	472
TRANSMISSION AR-POWER SHIFT–ALL WHEEL DRIVE, AUTOSHIFT	179
TRANSMISSION GP-POWER SHIFT	179
TRANSPORT GP-MACHINE	491
TRIM GP-CAB–OPEN ROPS	469
TURBOCHARGER GP	61

INDEX

Name	Page
V	
VALVE & LINES GP-DIFF LOCK	182
VALVE & LINES GP-PILOT–BACKHOE, JOYSTICK	334
VALVE & MTG GP-SOLENOID	184
VALVE AR-BANK 2	336
VALVE AR-BANK 3	336
	337
VALVE AS-RELIEF	75
	413
VALVE AS-RELIEF (FLUSHING)	317
VALVE GP-BANK 2–BUCKET CONTROL	338
	339
VALVE GP-BANK 3–BUCKET CONTROL	340
	341
VALVE GP-BANK 7–MECHANICAL	343
VALVE GP-BANK 7–PILOT	342
VALVE GP-BANK 8–MECHANICAL	345
VALVE GP-BANK 8–PILOT	344
VALVE GP-BRAKE (SERVICE)	194
VALVE GP-CHECK	318
	358
	364
	365
VALVE GP-CHECK (BOOM CONTROL VALVE)	351
VALVE GP-CHECK (STICK CONTROL VALVE)	354
	357
VALVE GP-COMPENSATING (STABILIZER)	367
VALVE GP-CONTROL	264
	269
	361
VALVE GP-CONTROL (AUXILIARY HYDRAULIC)	258
	261
VALVE GP-CONTROL–AUXILIARY	348
	356
	368
VALVE GP-CONTROL–BOOM	351
	362
VALVE GP-CONTROL–BUCKET	353
	364
VALVE GP-CONTROL–EXTENDABLE STICK	354
	366
VALVE GP-CONTROL–LIFT	346
	358
VALVE GP-CONTROL–STABILIZER	349
	367
VALVE GP-CONTROL–STICK	357
	365
VALVE GP-CONTROL–SWING	352
	363
VALVE GP-CONTROL–TILT	347
	359
	360
VALVE GP-CUSHION CROSSOVER RLF	369
VALVE GP-FLOW CONTROL (AUXILIARY, INLET)	317
VALVE GP-FLUID SAMPLING–ENGINE OIL	38
VALVE GP-MAKEUP	370
VALVE GP-MANUAL (OVERRIDE CONTROL)	362
VALVE GP-PILOT (CONTROL VALVE)	334
VALVE GP-PILOT–STABILIZER	371
VALVE GP-PRESSURE REDUCING	374
VALVE GP-PRESSURE REDUCING (INLET)	316
VALVE GP-PRESSURE REDUCING–SERVICE BRAKE	373
VALVE GP-PUMP CONTROL (PRESSURE, FLOW COMPENSATOR)	328
VALVE GP-PUMP CONTROL–POWER COMPENSATOR	375
VALVE GP-RELIEF	185
	358
	359
	360
	361
	364
	366
	368
	377
VALVE GP-RELIEF (160-BAR (2321-PSI)) (BOOM CYLINDER HEAD END)	362
VALVE GP-RELIEF (AUXILIARY CONTROL)	356
VALVE GP-RELIEF (AUXILIARY; 5TH, 6TH FUNCTIONS)	348
	352
VALVE GP-RELIEF (BOOM CONTROL)	351
VALVE GP-RELIEF (BOOM CYLINDER ROD END)	362
VALVE GP-RELIEF (BUCKET CONTROL)	353
VALVE GP-RELIEF (DIRECT OPERATED)	320
	363
VALVE GP-RELIEF (INLET MANIFOLD)	318
VALVE GP-RELIEF (LOAD SENSING SIGNAL)	317
VALVE GP-RELIEF (LOAD SENSOR)	319
VALVE GP-RELIEF (MAIN)	376
VALVE GP-RELIEF (STABILIZER CONTROL)	349
VALVE GP-RELIEF (STEERING CONTROL)	365
VALVE GP-RELIEF (STICK CONTROL VALVE)	354
VALVE GP-RELIEF (STICK)	357
VALVE GP-RELIEF (TILT CONTROL)	347
VALVE GP-RELIEF (TORQUE CONVERTER INLET)	179
VALVE GP-RELIEF–DIRECT OPERATED	376
VALVE GP-SHUTOFF (HYDRAULIC TANK DRAIN)	277
VALVE GP-SOLENOID	315
	378
VALVE GP-SOLENOID (12-VOLT)	179

INDEX

Name	Page
VALVE GP-SOLENOID (12-VOLT) (ACCUMULATOR)	321
VALVE GP-SOLENOID (12-VOLT) (DIFFERENTIAL LOCK)	184
VALVE GP-SOLENOID (12-VOLT) (PILOT)	314
VALVE GP-SOLENOID (12-VOLT) (RIDE CONTROL, SWITCH)	321
VALVE GP-SOLENOID (DIFFERENTIAL LOCK)	179
VALVE GP-SOLENOID (DUAL CONTROL)	179
VALVE GP-SOLENOID (INLET)	316
VALVE GP-SOLENOID (LOAD SENSING PRESSURE)	328
VALVE GP-SOLENOID (SINGLE FUNCTION)	179
VALVE GP-TIRE	186 187
VALVE MECHANISM GP	31
VISOR GP-CAB	471

W

WASHER GP-WINDOW	472
WHEEL & TIRE AR	187
WHEEL & TIRE GP–FRONT	188
WHEEL & TIRE GP–LH	187 188
WHEEL & TIRE GP–REAR	189
WHEEL & TIRE GP–RH	187 188
WHEEL GP-FINAL DRIVE & BRAKE	190
WINDOW GP-CAB–LH	476
WINDOW GP-CAB–REAR	474
WINDOW GP-CAB–RH	478
WINDOW GP-DOOR–LH	480
WINDOW GP-DOOR–RH	481
WIPER GP-WINDOW	482
WIRING GP-AIR CONDITIONER	113
WIRING GP-CONSOLE–FRONT	116
WIRING GP-CONSOLE–SIDE	118
WIRING GP-CONTROL–7TH FUNCTION	121
WIRING GP-CONTROL–8TH FUNCTION	122
WIRING GP-CONTROL–JOYSTICK, LH	120
WIRING GP-ENGINE	123 128
WIRING GP-PLATFORM	130
WIRING GP-POWER RECEPTACLE	137
WIRING GP-REAR–BACKUP ALARM	138
WIRING GP-RIDE CONTROL	140
WIRING GP-STABILIZER	142
WIRING GP-TRANSMISSION CONTROL–AUTOSHIFT, STANDARD SHIFT	143

MACHINE ARRANGEMENT

254-0180 BACKHOE AR-EXTENDABLE STICK

S/N: RBA1-UP

AN ATTACHMENT

SMCS-6504, 6533 **i04101634**

NOTE	PART NUMBER	QTY	PART NAME 1 2 3 4 5 6 (PRODUCT LEVEL)	SEE PAGE
Y	*269-8217*	1	BOOM GP	382
Y	**270-7287**	1	CYLINDER GP-BACKHOE BUCKET	235
Y	**270-7285**	1	CYLINDER GP-BOOM	237
Y	**270-7286**	1	CYLINDER GP-STICK	244
Y	*254-0174*	1	LINES GP-BOOM	272
Y	*254-0179*	1	LINES GP-BUCKET	275
Y	*285-1200*	1	LINES GP-GREASE (BOOM, STICK CYLINDER BEARING)	385
Y	*254-0173*	1	LINES GP-STICK	309
Y	*269-8218*	1	LINKAGE GP-BACKHOE BUCKET	386
Y	*280-1465*	1	MOUNTING GP-LINES	324
Y	*269-8219*	1	MOUNTING GP-STICK	393
Y	*269-8215*	1	STICK GP-EXTENDABLE	399
Y-SEPARATE ILLUSTRATION				

<END>

254-0175 BACKHOE AR-STANDARD STICK

S/N: RBA1-UP

AN ATTACHMENT

SMCS-6502, 6504 **i04101516**

NOTE	PART NUMBER	QTY	PART NAME 1 2 3 4 5 6 (PRODUCT LEVEL)	SEE PAGE
Y	*269-8217*	1	BOOM GP	382
Y	**270-7287**	1	CYLINDER GP-BACKHOE BUCKET	235
Y	**270-7285**	1	CYLINDER GP-BOOM	237
Y	**270-7286**	1	CYLINDER GP-STICK	244
Y	*254-0174*	1	LINES GP-BOOM	272
Y	*254-0172*	1	LINES GP-BUCKET	273
Y	*285-1200*	1	LINES GP-GREASE (BOOM, STICK CYLINDER BEARING)	385
Y	*254-0173*	1	LINES GP-STICK	309
Y	*269-8218*	1	LINKAGE GP-BACKHOE BUCKET	386
Y	*280-1465*	1	MOUNTING GP-LINES	324
Y	*269-8220*	1	STICK GP-HOE	401
Y-SEPARATE ILLUSTRATION				

<END>

MACHINE ARRANGEMENT

254-0110 CHASSIS AR

S/N: RBA1-UP

PART OF 368-0572 COMMON AR

SMCS-7000 **i04101309**

NOTE	PART NUMBER	QTY	PART NAME 1 2 3 4 5 6 (PRODUCT LEVEL)	SEE PAGE
Y	*263-0992*	1	BATTERY GP	83
Y	*253-0784*	1	BOX GP-BATTERY	206
Y	*254-0145*	1	COUNTERWEIGHT GP	207
Y	*254-0104*	1	FILM GP	484
Y	*265-6810*	1	FRAME GP-LOADER	216
Y	*269-8216*	1	FRAME GP-SWING	218
Y	*254-0107*	1	HOOD & GUARD GP	221
Y	*206-1641*	1	LOCK GP-TRANSPORT (STABILIZER)	390
Y	*254-0109*	1	LOCK GP-TRANSPORT	391
Y	*216-0909*	1	LOCK GP-VANDALISM	485
Y	*254-0135*	1	PAD & GUARD GP-STABILIZER	394
Y	*270-3220*	1	STABILIZER GP-BACKHOE	397
Y	*245-6098*	1	TANK & MTG GP-FUEL (INCLUDES STEP)	79
Y	*263-0960*	1	WIRING GP-REAR	138

Y-SEPARATE ILLUSTRATION

<END>

368-0572 COMMON AR

S/N: RBA1-UP

SMCS-7000 **i04073989**

NOTE	PART NUMBER	QTY	PART NAME 1 2 3 4 5 6 (PRODUCT LEVEL)	SEE PAGE
Y	*254-0110*	1	CHASSIS AR	2
Y	*254-0120*	1	ENGINE AR	3
Y	*254-0130*	1	POWER TRAIN AR	167
Y	*254-0140*	1	LOADER AR	2
Y	*254-0150*	1	COOLER AR-ENGINE & HYDRAULIC	42
Y	*254-0170*	1	HYDRAULIC AR	253
Y	*254-0196*	1	WHEEL & TIRE AR	187

Y-SEPARATE ILLUSTRATION

<END>

254-0140 LOADER AR

S/N: RBA1-UP

PART OF 368-0572 COMMON AR

SMCS-6100 **i04151410**

NOTE	PART NUMBER	QTY	PART NAME 1 2 3 4 5 6 (PRODUCT LEVEL)	SEE PAGE
Y	*9R-1335*	1	ARM GP-LIFT	379
Y	*9R-1336*	1	BRACE GP-LIFT CYLINDER	384
Y	**125-7895**	2	CYLINDER GP-LIFT	240
Y	**100-7844**	1	CYLINDER GP-TILT	247
Y	*254-0137*	1	LINES GP-TILT CYLINDER	312
Y	*254-0138*	1	LINES GP-LIFT CYLINDER	282
Y	*9R-1337*	1	LINKAGE GP-LOADER BUCKET	388

Y-SEPARATE ILLUSTRATION

<END>

ENGINE ARRANGEMENT

254-0120 ENGINE AR

S/N: RBA1-UP

PART OF 368-0572 COMMON AR

SMCS-1000 **i04102873**

NOTE	PART NUMBER	QTY	PART NAME 1 2 3 4 5 6 (PRODUCT LEVEL)	SEE PAGE
Y	*254-0116*	1	AIR CLEANER GP	52
Y	*306-7692*	1	BREATHER GP	33
Y	*209-3376*	1	CONTROL GP-GOVERNOR	64
YR	**254-0115**	1	ENGINE AR-PRIMARY	4
Y	*278-3492*	1	EXTENSION GP-EXHAUST	57
Y	*254-0118*	1	GAUGE GP-OIL LEVEL & FILLER	36
Y	*254-0119*	1	LINES GP-FUEL	69
Y	*294-7370*	1	MOUNTING GP-ENGINE & XMSN	23
Y	*254-0117*	1	MUFFLER GP	60
Y	*263-0958*	1	WIRING GP-ENGINE	123

R-REMFG PART MAY BE AVAILABLE
Y-SEPARATE ILLUSTRATION

ENGINE ARRANGEMENT

254-0115 ENGINE AR-PRIMARY*R

S/N: C4E1-UP
97 BRAKE KW (130 BHP) AT 2200 RPM
PART OF 254-0120 ENGINE AR

SMCS-1000 **i04158149**

NOTE	PART NUMBER	QTY	PART NAME 1 2 3 4 5 6 (PRODUCT LEVEL)	SEE PAGE
Y	*317-9776*	1	ALTERNATOR GP-CHARGING	82
Y	*368-1850*	1	CAMSHAFT GP	5
Y	*301-8243*	1	CONNECTION GP-WATER	39
Y	*304-6436*	1	CONTROL GP-ENGINE ELECTRONIC	86
Y	*298-5099*	1	COOLER GP-ENGINE OIL	44
Y	*298-5111*	1	COVER GP-ENGINE	6
Y	*322-9477*	1	COVER GP-VALVE MECHANISM	7
Y	*368-1846*	1	CRANKSHAFT GP	10
Y	*368-1845*	1	CYLINDER BLOCK GP	12
Y	*368-1848*	1	CYLINDER HEAD GP	15
Y	*303-5770*	1	DRIVE GP-FAN	16
Y	*303-5777*	1	ELBOW GP-AIR INLET	55
Y	*303-5773*	1	FILLER GP-ENGINE OIL	35
Y	*298-5123*	1	FILTER GP-PRIMARY FUEL	66
Y	*303-5768*	1	FLYWHEEL GP	17
Y	*298-5125*	1	GLOW PLUG GP	88
Y	*303-5767*	1	HOUSING GP-FLYWHEEL	18
Y	*357-0616*	1	HOUSING GP-FRONT	19
Y	*298-5127*	1	LIFTING GP-ENGINE	21
Y	*314-9819*	1	LINES GP-FUEL FILTER	71
Y	*303-5778*	1	MOUNTING GP-ENGINE	22
Y	*322-9476*	1	PAN GP-OIL	24
Y	*368-1847*	1	PISTON & ROD GP	26
Y	*298-5129*	1	PLUG GP-CYLINDER HEAD	27
Y	*298-5131*	1	PLUG GP-ENGINE	28
Y	*298-5101*	1	PULLEY GP-CRANKSHAFT	29
Y	*298-5112*	1	PUMP GP-ENGINE OIL	37
Y	*357-0587*	1	PUMP GP-FUEL INJECTION	75
Y	*298-5105*	1	PUMP GP-WATER	50
Y	*303-5769*	1	STARTING MOTOR GP-ELECTRIC	108
Y	*307-4410*	1	TURBOCHARGER GP	61
Y	*304-5617*	1	VALVE GP-FLUID SAMPLING	38
Y	*368-1849*	1	VALVE MECHANISM GP	31
Y	*298-5130*	1	WIRING GP-ENGINE	128
	359-0739	1	CYLINDER BLOCK GP-SHORT	
	305-8455	1	ELECTRONICS GP-ENGINE RATINGS	

Y-SEPARATE ILLUSTRATION

368-1850 CAMSHAFT GP

S/N: C4E1-UP

PART OF 254-0115 ENGINE AR-PRIMARY

SMCS-1210, 1211, 1212 **i04158173**

NOTE	REF NO	GRAPHIC REF	PART NUMBER	QTY	PART NAME 1 2 3 4 5 6 (PRODUCT LEVEL)	SEE PAGE
	1	1	**315-3384**	8	TAPPET	
	2	1	**278-5126**	8	PUSHROD	
	3	1	**306-2330**	1	CAMSHAFT AS	
	3A	1	**1B-8736**	1	KEY-WOODRUFF	

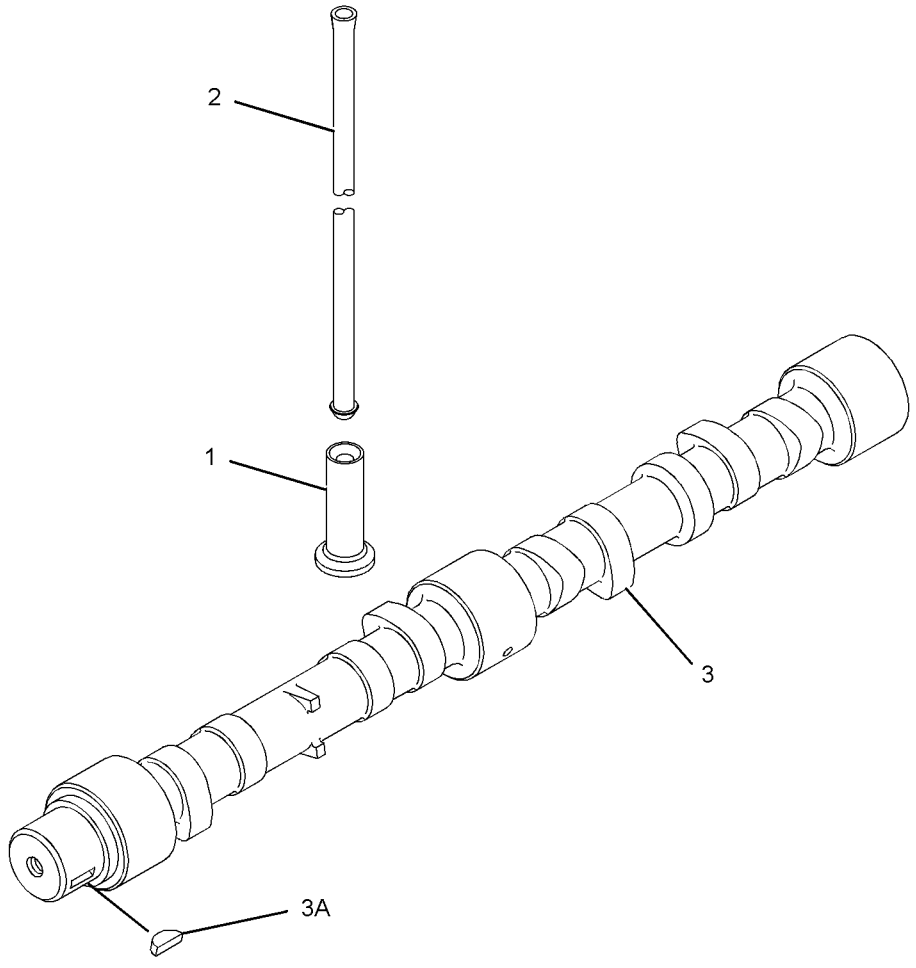

GRAPHIC #1 **<END>** g01304671

BASIC ENGINE

298-5111 COVER GP-ENGINE

S/N: C4E1-UP

PART OF 254-0115 ENGINE AR-PRIMARY

SMCS-1000 **i04158155**

NOTE	REF NO	GRAPHIC REF	PART NUMBER	QTY	PART NAME 1 2 3 4 5 6 (PRODUCT LEVEL)	SEE PAGE
	1	1	**6I-0646**	1	BOLT (M10X1.5X14-MM)	
M	2	1	**100-4830**	1	BOLT (M10X1.5X20-MM)	
	3	1	**111-8222**	5	BOLT (M8X16-MM)	
	4	1	**329-7854**	1	PLATE AS	
	4A	1	**329-7856**	1	SEAL-O-RING	
	5	1	**214-3203**	1	WASHER (SEALING)	

M-METRIC PART

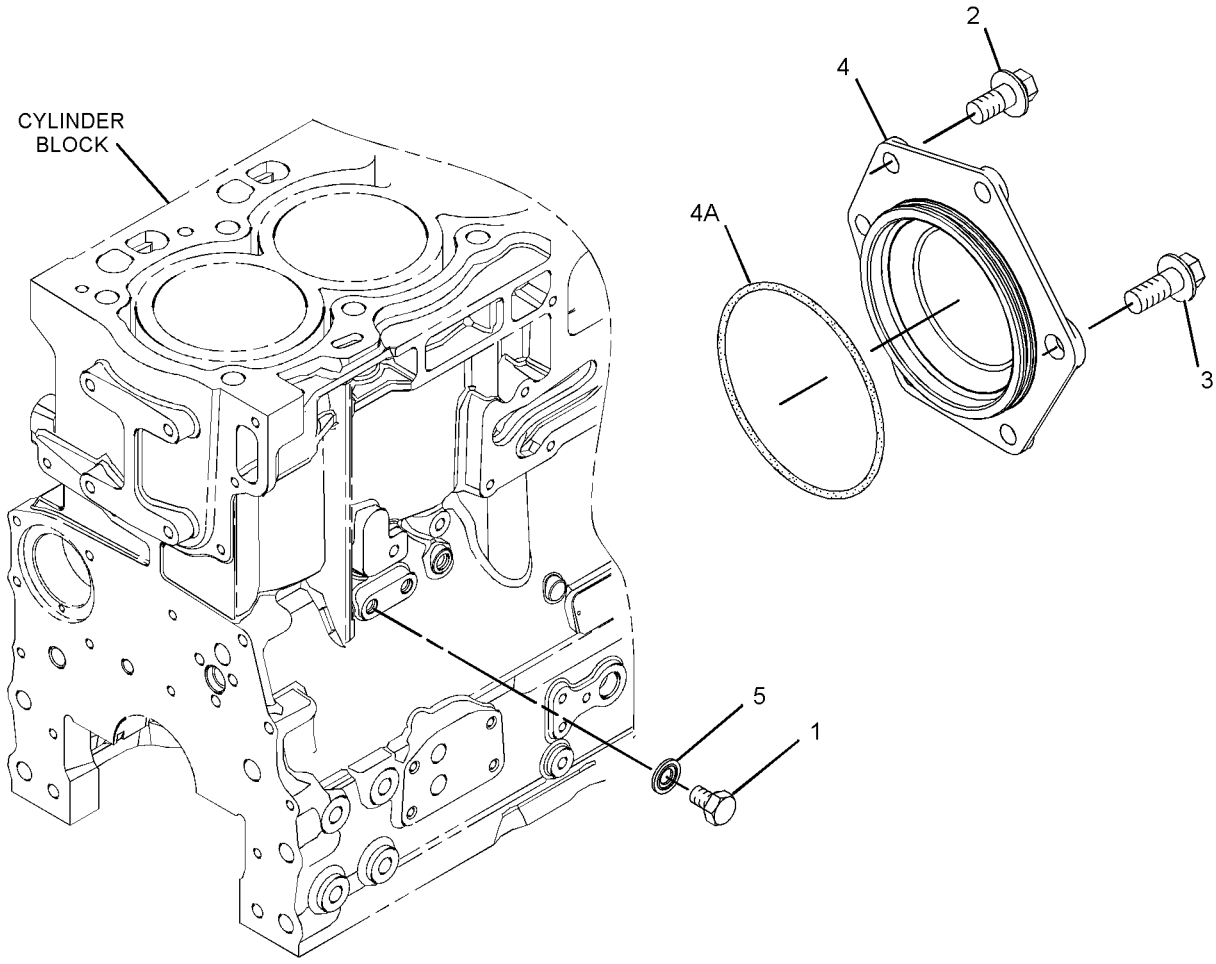

GRAPHIC #1 **<END>** g01304566

BASIC ENGINE

322-9477 COVER GP-VALVE MECHANISM

S/N: C4E1-UP

PART OF 254-0115 ENGINE AR-PRIMARY

SMCS-1107, 1120 **i03865191**

NOTE	REF NO	GRAPHIC REF	PART NUMBER	QTY	PART NAME 1 2 3 4 5 6 (PRODUCT LEVEL)	SEE PAGE
	1	1	**6I-0846**	3	BOLT (M6X1X14-MM)	
	2	1	**277-5031**	7	BOLT-SPECIAL (SHOULDER)	
	3	1	**277-5067**	4	SLEEVE	
	4	1	**298-4550**	4	BOLT-SPECIAL (SHOULDER)	
	5	1	**298-4551**	1	BASE GP-VALVE COVER & INJ HARN	
	5A	1	**277-5064**	2	SEAL-O-RING	
	5B	1	**277-5065**	2	CLIP	
	5C	1	**285-1973**	2	HARNESS AS-ENGINE (FUEL INJECTION)	
	5D	1	**298-4552**	1	GASKET (VALVE MECHANISM BASE)	
	6	1	**303-5781**	1	COVER AS-CYLINDER HEAD	
	6A	1	**295-1042**	4	SCREW-TAPPING	
	6B	1	**298-4546**	1	GASKET-VALVE COVER (CYLINDER HEAD)	
	6C	1	**298-4547**	1	BREATHER (CRANKCASE)	
	6D	1	**298-4548**	1	SEPARATOR-OIL	
	6E	1	**298-4549**	1	SEAL-O-RING	
	7	1	**320-2360**	1	HEAT SHIELD	
	8	1	**320-2361**	2	WASHER	
	9	1	**320-2362**	1	WASHER	

322-9477 **COVER GP-VALVE MECHANISM** *(contd.)* **i03865191**

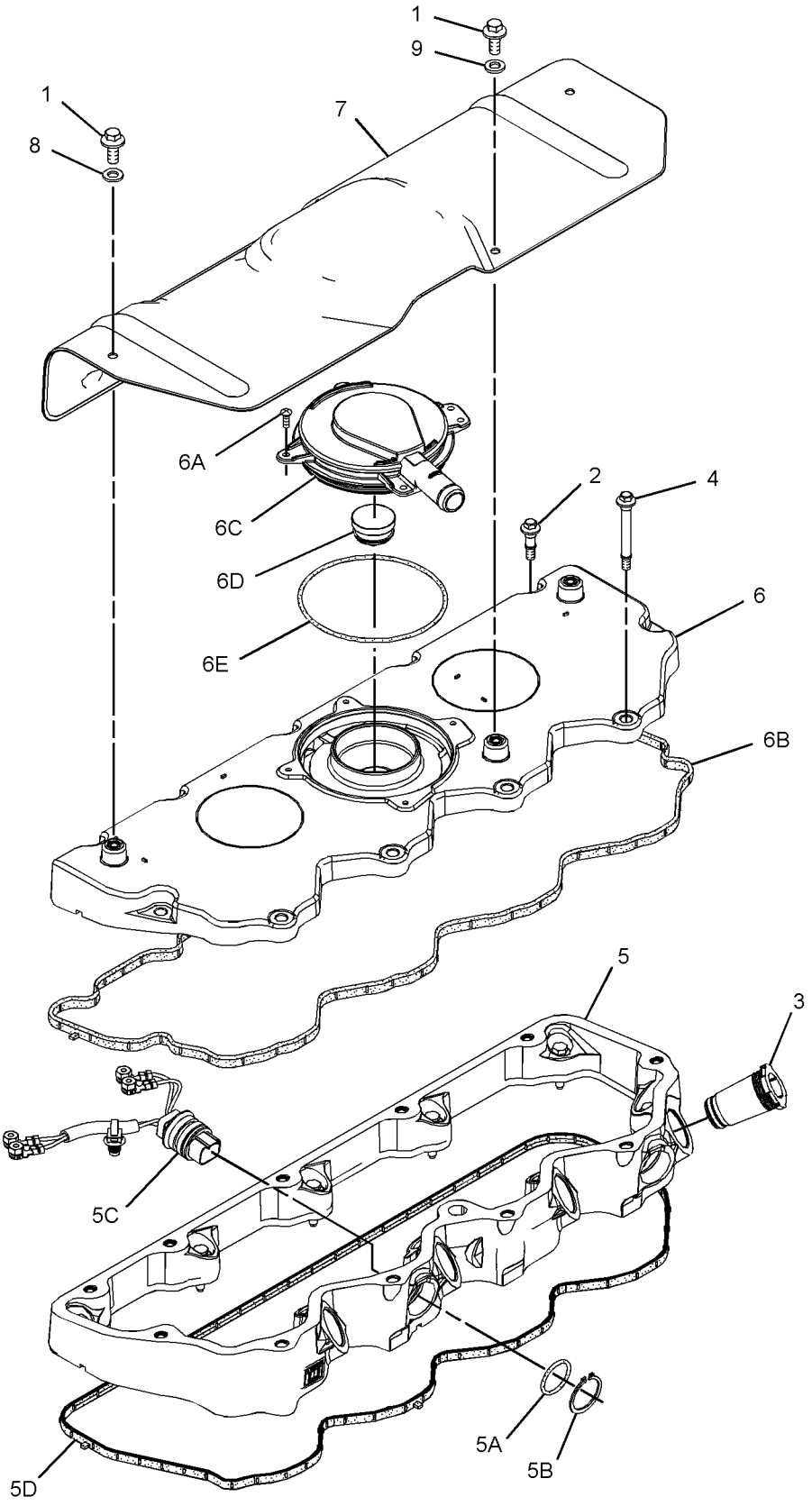

GRAPHIC #1 **<END>** g01442266

BASIC ENGINE

364-2829 CRANKSHAFT GP

S/N: C4E1-UP

PART OF 368-1846 CRANKSHAFT GP

SMCS-1202, 1203, 1204, 1230, 1231, 1232 **i04001632**

NOTE	REF NO	GRAPHIC REF	PART NUMBER	QTY	PART NAME 1 2 3 4 5 6 (PRODUCT LEVEL)	SEE PAGE
	1	1	**1B-8736**	1	KEY-WOODRUFF	
B	2	1	**032-9090**	2	WASHER-THRUST (STANDARD-UPPER)	
AB		1	**067-6873**		WASHER-THRUST (0.18-MM OS)	
B	3	1	**032-9091**	2	WASHER-THRUST (STANDARD-LOWER)	
AB		1	**067-6874**		WASHER-THRUST (0.18-MM OS)	
B	4	1	**353-2205**	1	KIT-ROD BEARING	
AB		1	**353-2206**		KIT-ROD BEARING (0.25-MM US)	
AB		1	**353-2207**		KIT-ROD BEARING (0.5-MM US)	
AB		1	**353-2208**		KIT-ROD BEARING (0.75-MM US)	
B	5	1	**353-7423**	1	KIT-BEARING	
AB		1	**233-3786**		KIT-CRANKSHAFT BEARING (0.030-IN US)	
AB		1	**353-7424**		KIT-BEARING (0.25-MM US)	
AB		1	**353-7425**		KIT-BEARING (0.50-MM US)	

A-NOT PART OF THIS GROUP
B-USE AS REQUIRED

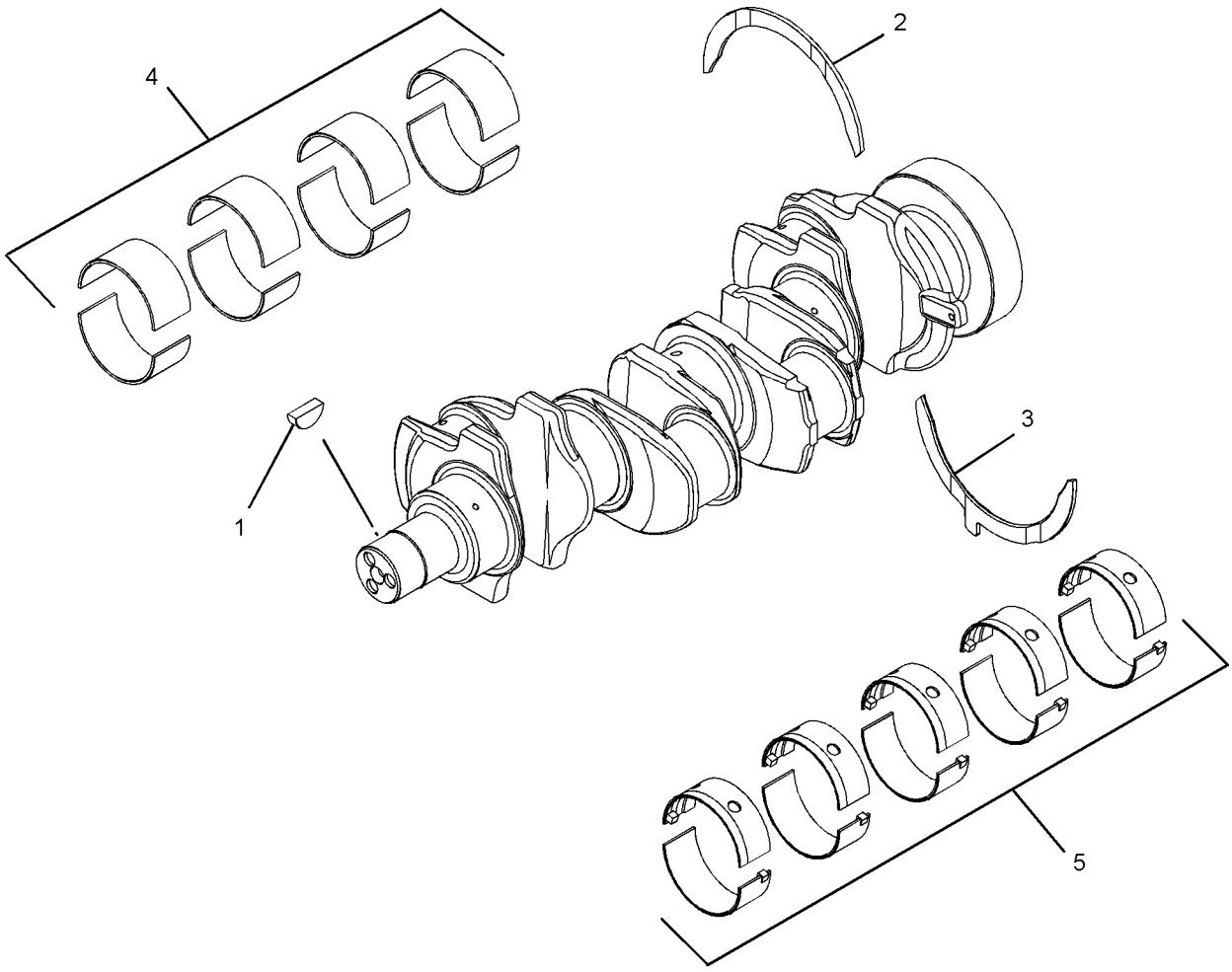

GRAPHIC #1 **<END>** g02178360

BASIC ENGINE

368-1846 CRANKSHAFT GP

S/N: C4E1-UP

PART OF 254-0115 ENGINE AR-PRIMARY

SMCS-1202, 1203, 1204, 1230, 1231, 1232 **i04158182**

NOTE	REF NO	GRAPHIC REF	PART NUMBER	QTY	PART NAME 1 2 3 4 5 6 (PRODUCT LEVEL)	SEE PAGE
Y	1	1	**364-2829**	1	CRANKSHAFT GP	9
	2	1	**276-7394**	3	BOLT	
	3	1	**341-4028**	1	RING-TIMING	

Y-SEPARATE ILLUSTRATION

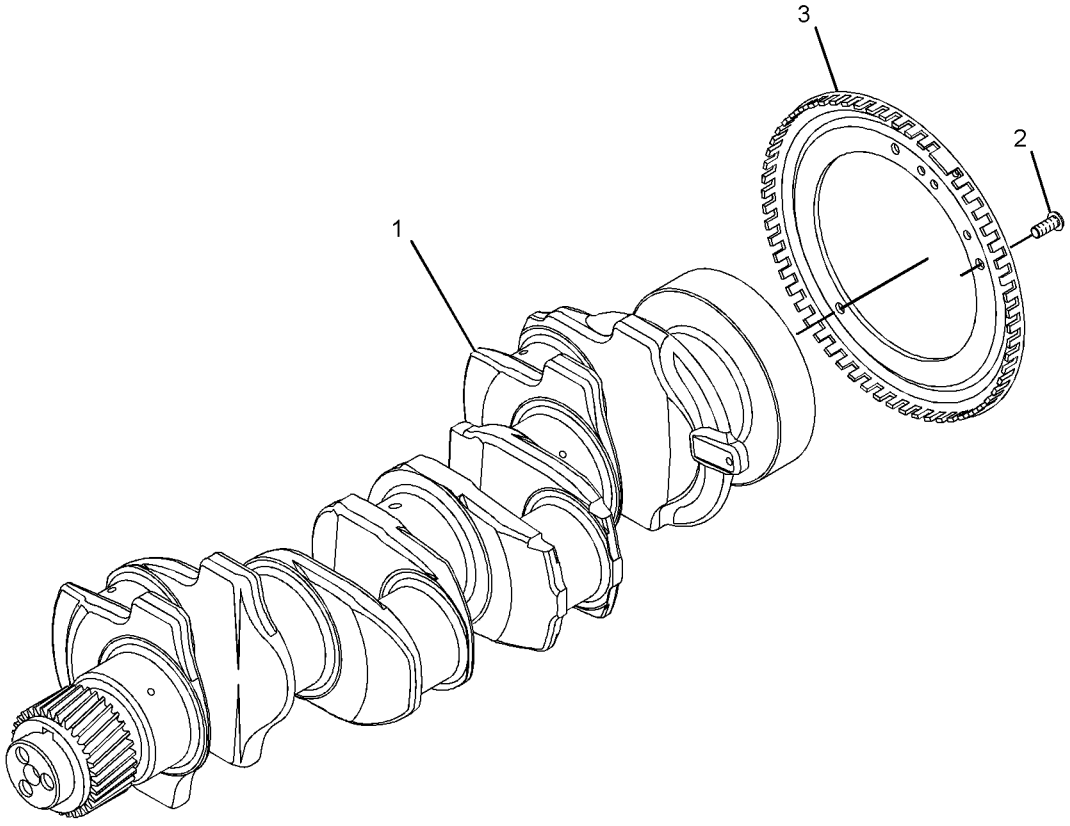

GRAPHIC #1 **<END>** g01546173

BASIC ENGINE

363-3907 CYLINDER BLOCK GP

S/N: C4E1-UP

PART OF 368-1845 CYLINDER BLOCK GP

SMCS-1201 **i04158346**

NOTE	PART NUMBER	QTY	PART NAME 1 2 3 4 5 6 (PRODUCT LEVEL)	SEE PAGE
M	**6I-0645**	4	BOLT (M8X1.25X25-MM)	
	6I-0646	1	BOLT (M10X1.5X14-MM)	
M	**100-4841**	4	BOLT (M6X1X10-MM)	
	363-3908	1	BOLT-SPECIAL	
	233-9408	1	GASKET	
	276-5605	4	JET AS-PISTON COOLING	
	252-6318	1	PLATE	
	035-8063	1	PLUG	
	295-6661	1	PLUG	
	214-3203	1	WASHER (SEALING)	
	346-0007	1	WASHER	

M-METRIC PART

<END>

BASIC ENGINE

368-1845 CYLINDER BLOCK GP

S/N: C4E1-UP

PART OF 254-0115 ENGINE AR-PRIMARY

SMCS-1201 **i04158185**

NOTE	REF NO	GRAPHIC REF	PART NUMBER	QTY	PART NAME 1 2 3 4 5 6 (PRODUCT LEVEL)	SEE PAGE
M	1	1	**209-9219**	10	BOLT (M8X1.25X16-MM)	
	2	1	**232-7449**	1	HOUSING AS	
Y	3	1	**363-3907**	1	CYLINDER BLOCK GP	11

M-METRIC PART
Y-SEPARATE ILLUSTRATION

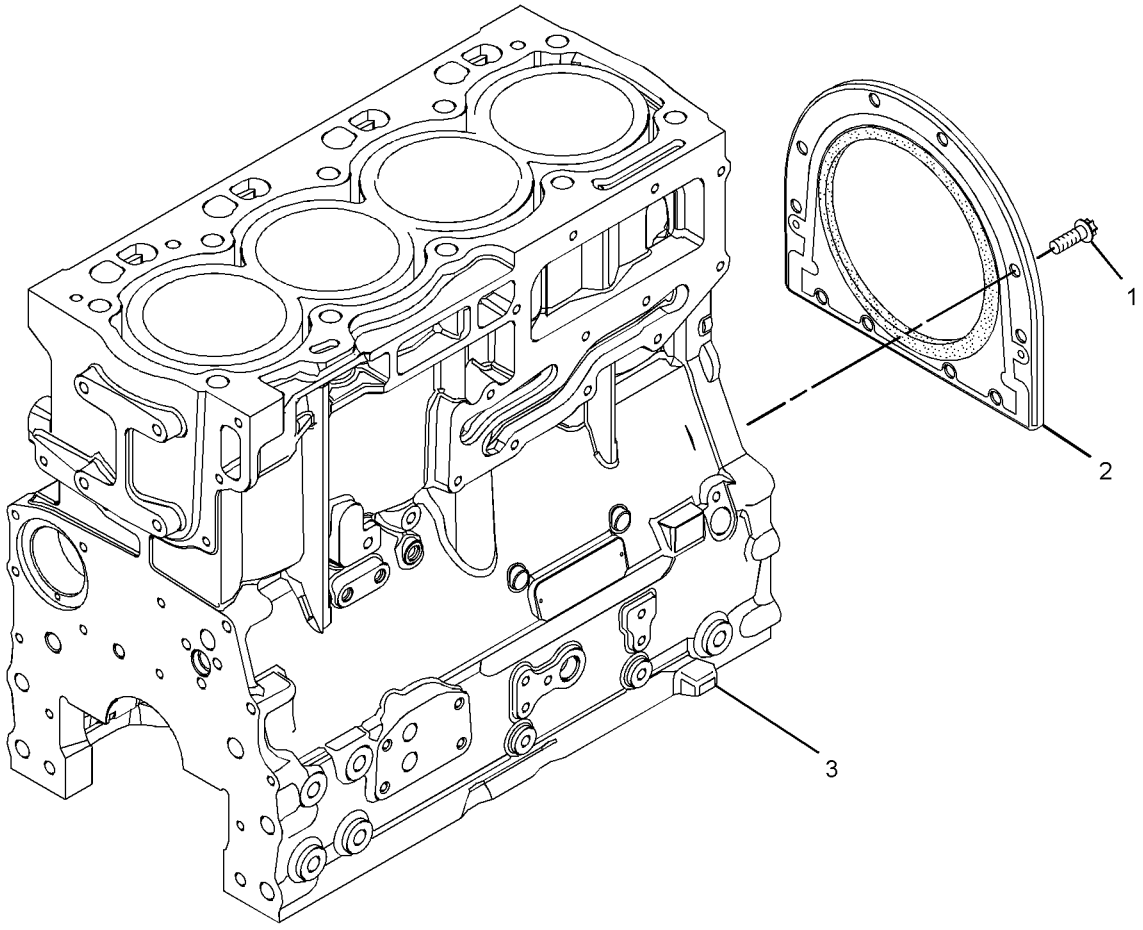

GRAPHIC #1 **<END>** g01586214

298-4526 CYLINDER HEAD AS

S/N: C4E1-UP

PART OF 368-1848 CYLINDER HEAD GP

SMCS-1100, 1101 **i03866194**

NOTE	REF NO	GRAPHIC REF	PART NUMBER	QTY	PART NAME 1 2 3 4 5 6 (PRODUCT LEVEL)	SEE PAGE
	1	1	**2B-0858**	2	PLUG-PIPE	
	2	1	**199-9751**	1	SEAL-O-RING	
	3	1	**232-1322**	1	PLUG	
	4	1	**276-8116**	4	PLUG-CORE	
	5	1	**276-8117**	9	PLUG-CORE	
	6	1	**309-6678**	8	VALVE-INLET	
	7	1	**276-8123**	32	RETAINER	
	8	1	**339-9637**	8	VALVE-EXHAUST	
	9	1	**299-5511**	16	SEAL-VALVE STEM	
	10	1	**276-8133**	16	CAP-VALVE	
	11	1	**295-6661**	1	PLUG	
	12	1	**298-4527**	1	PLUG-CORE	
	13	1	**298-4528**	1	PLUG-CORE	
	14	1	**298-4530**	16	SPRING-VALVE	

298-4526 CYLINDER HEAD AS *(contd.)* **i03866194**

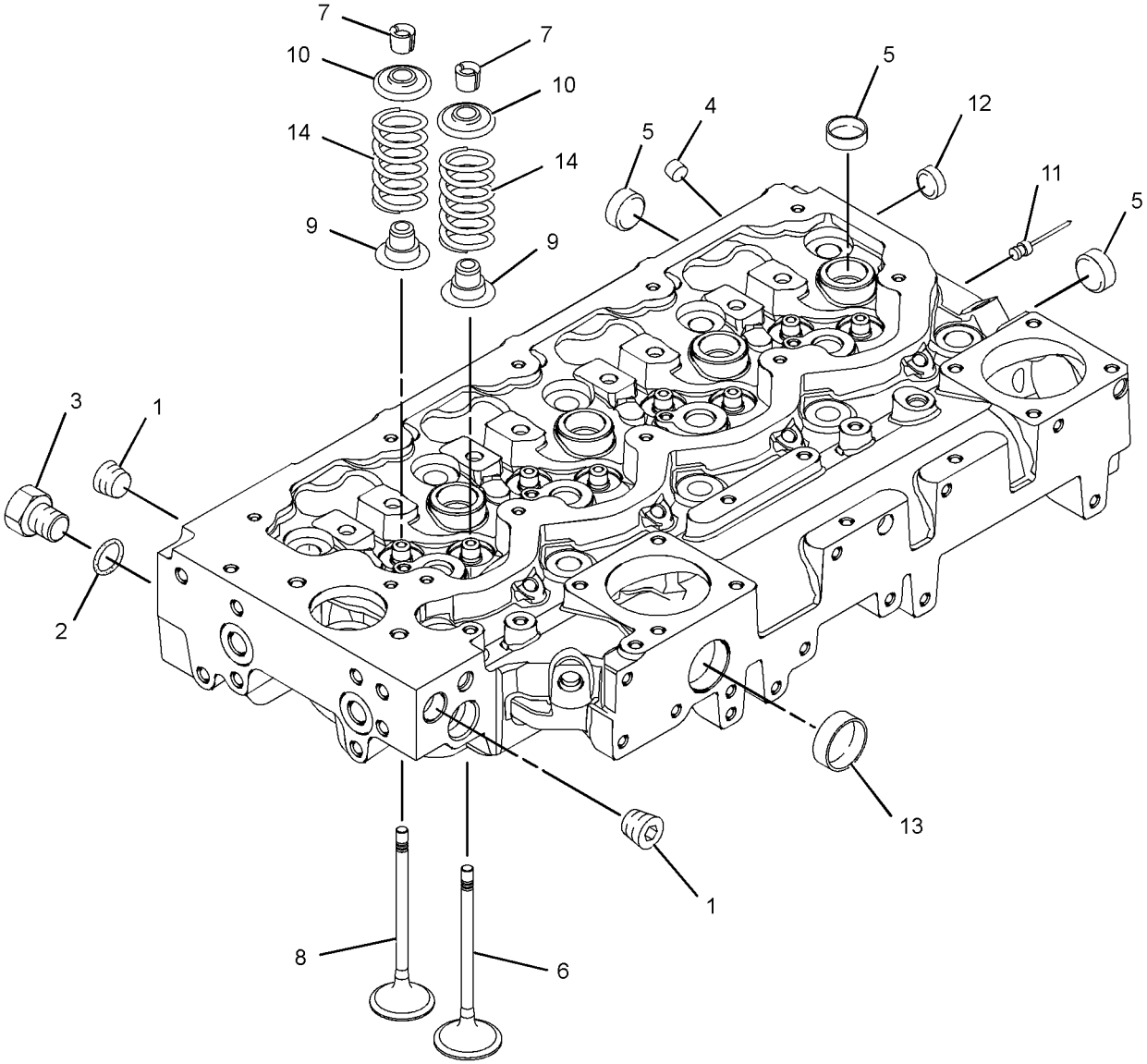

GRAPHIC #1 **<END>** g01305364

368-1848 CYLINDER HEAD GP

S/N: C4E1-UP

PART OF 254-0115 ENGINE AR-PRIMARY

SMCS-1100, 1101, 1103, 1104, 1105, 1106, 1108, 1109, 1115, 1117, 1121, 1124, 1125 **i04158187**

NOTE	REF NO	GRAPHIC REF	PART NUMBER	QTY	PART NAME 1 2 3 4 5 6 (PRODUCT LEVEL)	SEE PAGE
	1	1	**225-5501**	10	BOLT (M15X1.5X137-MM)	
Y	2	1	**298-4526**	1	CYLINDER HEAD AS	13
	3	1	**310-8520**	1	GASKET-CYLINDER HEAD	

Y-SEPARATE ILLUSTRATION

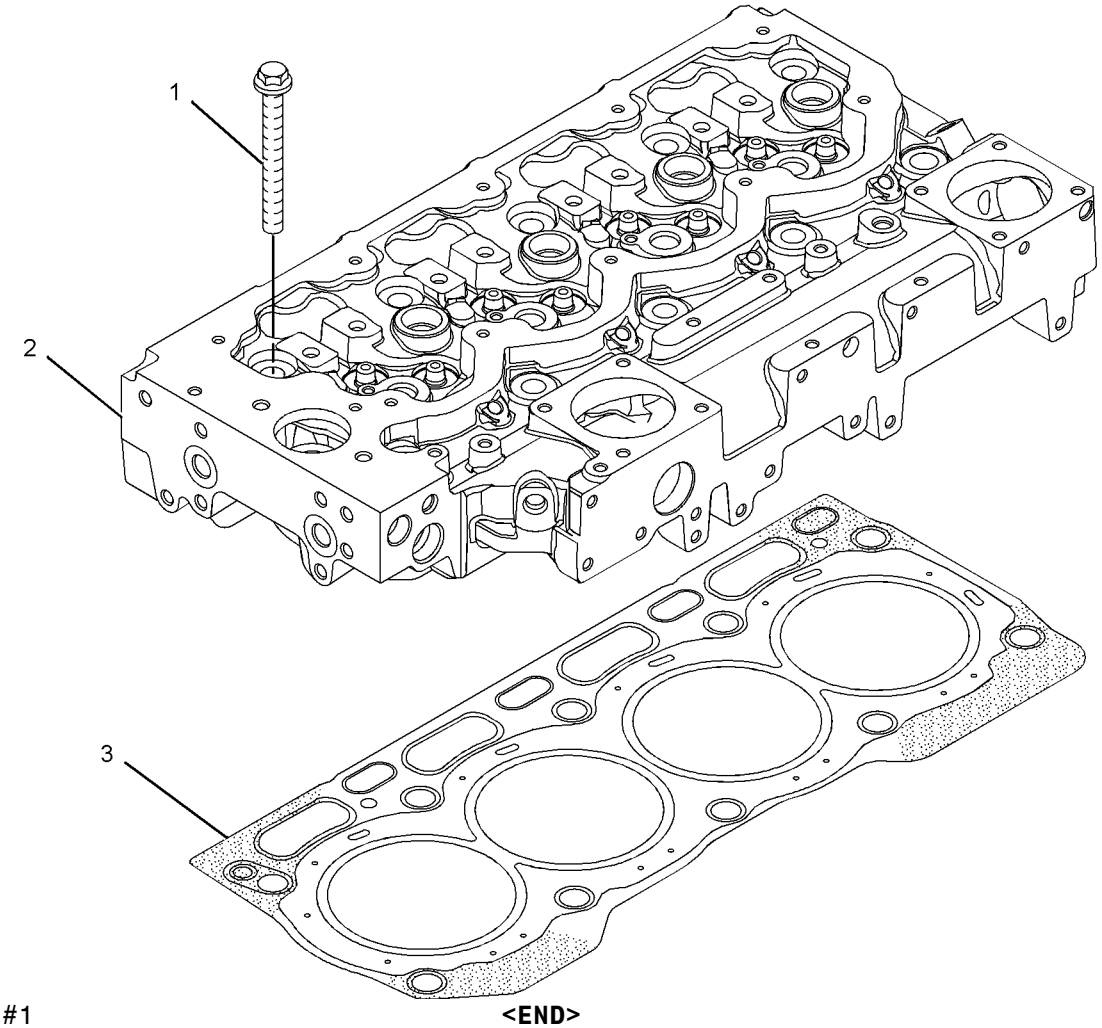

GRAPHIC #1 **<END>** g01307654

BASIC ENGINE

303-5770 DRIVE GP-FAN

S/N: C4E1-UP

PART OF 254-0115 ENGINE AR-PRIMARY

SMCS-1357, 1358, 1359, 1390 **i03128283**

NOTE	REF NO	GRAPHIC REF	PART NUMBER	QTY	PART NAME 1 2 3 4 5 6 (PRODUCT LEVEL)	SEE PAGE
	1	1	**326-1880**	1	HOUSING-FAN DRIVE	
	2	1	**251-2437**	1	PLATE	
	3	1	**111-0859**	8	BOLT (M10X1.5X35-MM)	

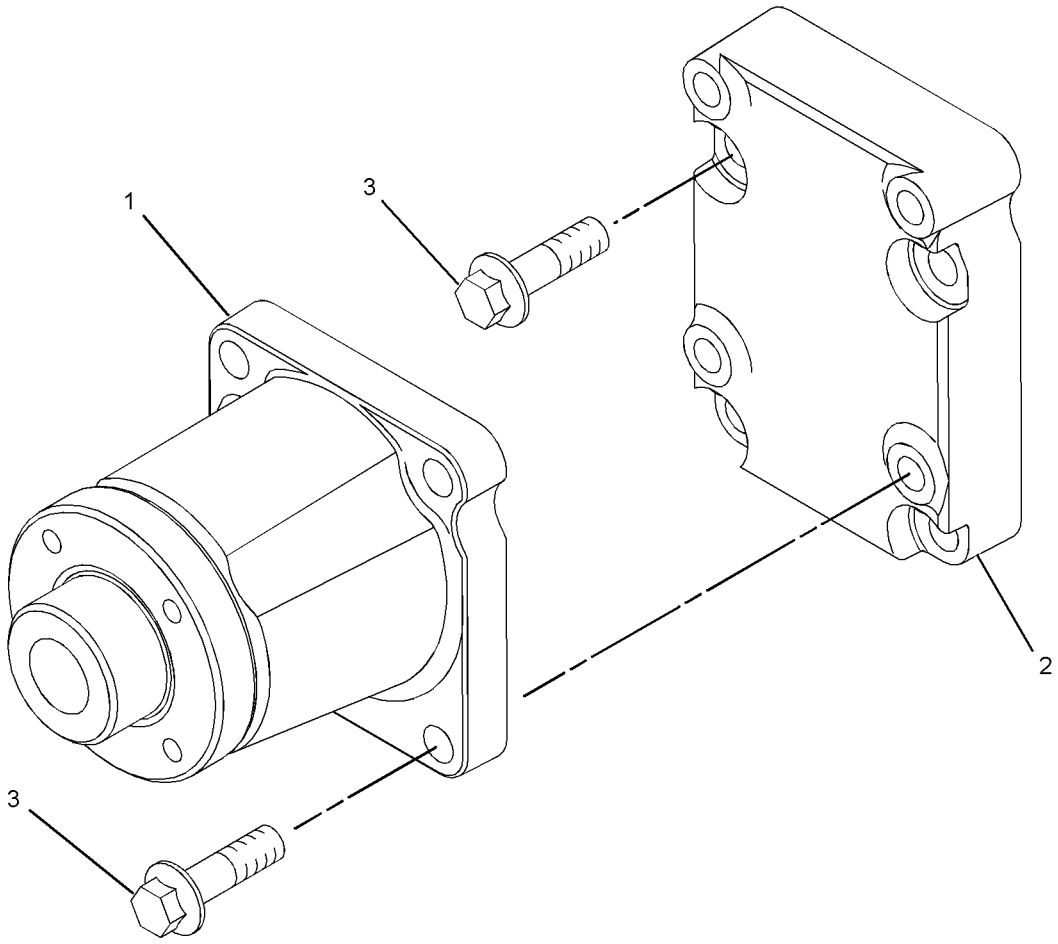

GRAPHIC #1 **<END>** g01340877

BASIC ENGINE

303-5768 FLYWHEEL GP

S/N: C4E1-UP

PART OF 254-0115 ENGINE AR-PRIMARY

SMCS-1156, 1158 **i03128301**

NOTE	REF NO	GRAPHIC REF	PART NUMBER	QTY	PART NAME 1 2 3 4 5 6 (PRODUCT LEVEL)	SEE PAGE
	1	1	**245-9828**	1	FLYWHEEL AS	
	1A	1	**033-7687**	1	RING-STARTING MOTOR (126-TEETH)	
	2	1	**0S-1603**	10	BOLT (1/2-20X1.5-IN)	
	3	1	**5P-8245**	10	WASHER-HARD (13.5X25.5X3-MM THK)	

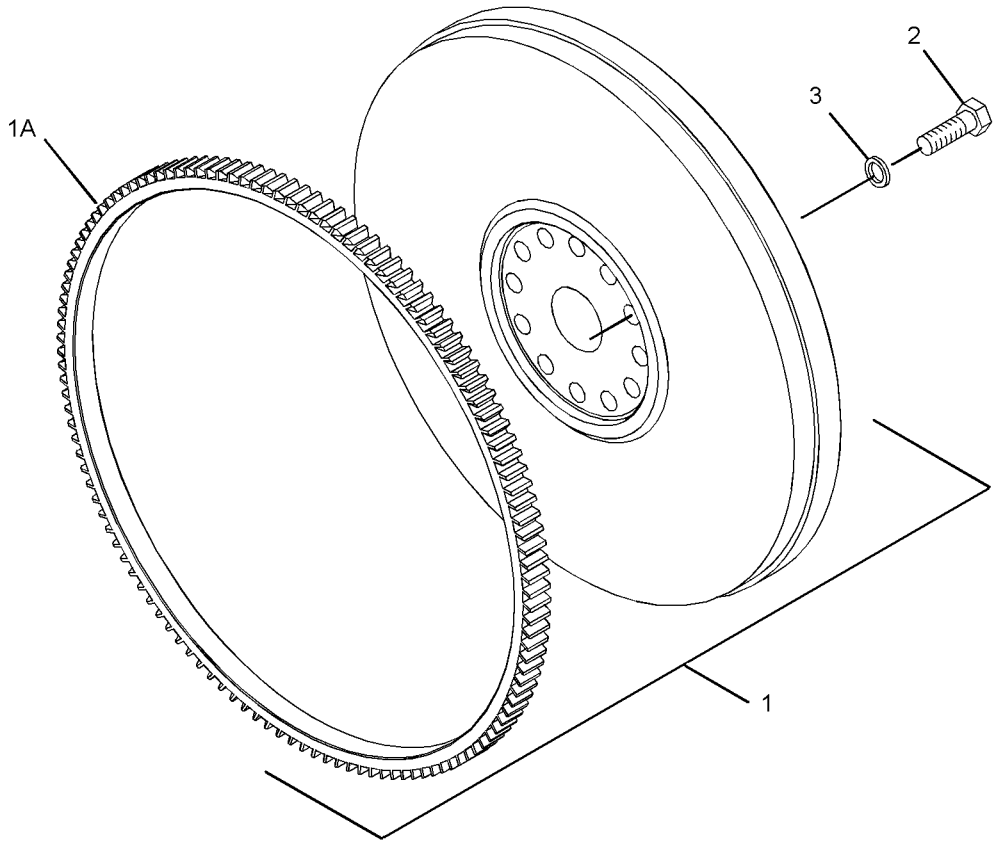

GRAPHIC #1 **<END>** g01372699

BASIC ENGINE

303-5767 HOUSING GP-FLYWHEEL

S/N: C4E1-UP

PART OF 254-0115 ENGINE AR-PRIMARY

SMCS-1157 **i03128293**

NOTE	REF NO	GRAPHIC REF	PART NUMBER	QTY	PART NAME 1 2 3 4 5 6 (PRODUCT LEVEL)	SEE PAGE
M	1	1	**6I-0423**	2	BOLT (M12X1.75X30-MM)	
	2	1	**6I-0847**	2	PLUG	
	3	1	**7W-1176**	1	PLATE-COVER	
	4	1	**7W-4642**	1	SHIELD-DUST	
	5	1	**287-8597**	2	DOWEL	
	6	1	**114-4363**	2	BOLT (M8X1.25X12-MM)	
	7	1	**4H-0408**	3	PLUG-PROTECTION	
M	8	1	**121-0883**	6	BOLT (M10X1.5X30-MM)	
	9	1	**220-8631**	1	HOUSING-FLYWHEEL	

M-METRIC PART

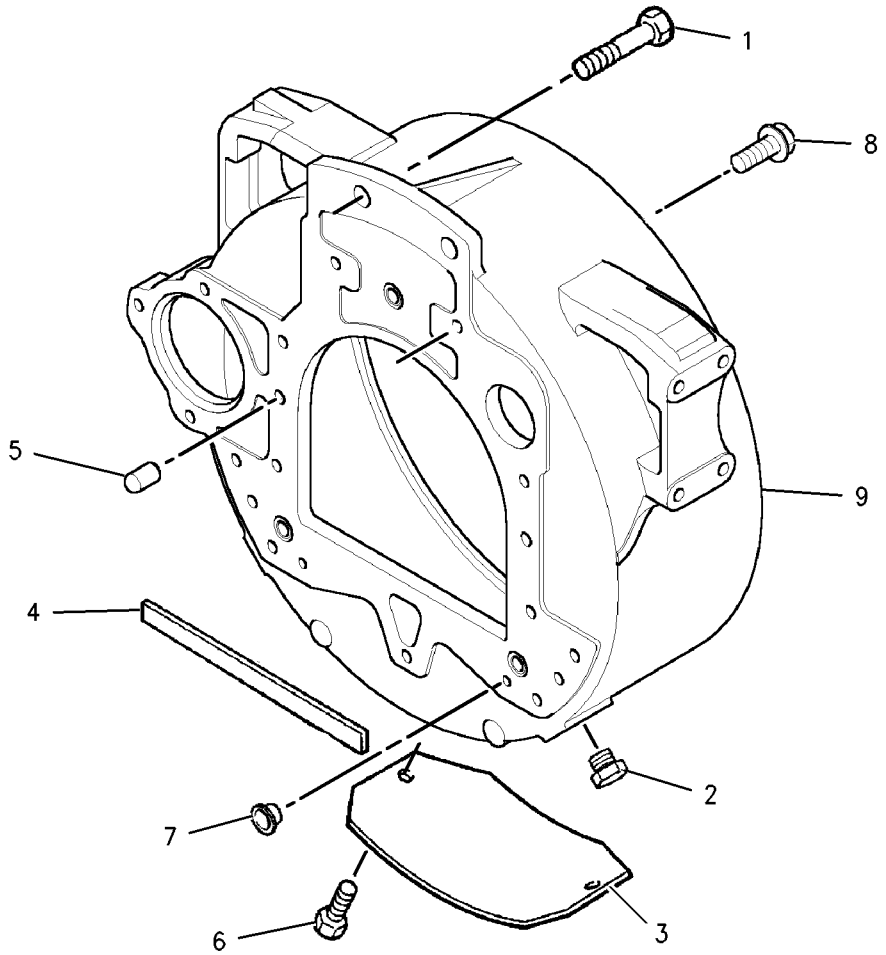

GRAPHIC #1 **<END>** g00902549

BASIC ENGINE

357-0616 HOUSING GP-FRONT

S/N: C4E1-UP

PART OF 254-0115 ENGINE AR-PRIMARY

SMCS-1151, 1162, 1166, 1206 **i04158365**

NOTE	REF NO	GRAPHIC REF	PART NUMBER	QTY	PART NAME 1 2 3 4 5 6 (PRODUCT LEVEL)	SEE PAGE
M	1	1	**6I-0217**	6	BOLT (M8X1.25X20-MM)	
M	2	1	**6I-0645**	4	BOLT (M8X1.25X25-MM)	
M	3	1	**6I-0650**	3	BOLT (M10X1.5X65-MM)	
	4	1	**7C-4616**	1	BOLT (M12X1.75X45-MM)	
	5	1	**067-6179**	1	DOWEL	
M	6	1	**100-3751**	1	BOLT (M8X1.25X65-MM)	
M	7	1	**101-3895**	2	BOLT (M8X1.25X35-MM)	
M	8	1	**124-3815**	10	BOLT (M8X1.25X16-MM)	
	9	1	**133-1011**	1	WASHER	
	10	1	**216-8634**	1	GEAR-CAMSHAFT (68-TEETH)	
	12	1	**226-8767**	1	COVER AS-FRONT	
	12A	1	**226-8766**	1	GASKET-COVER	
	13	1	**232-3666**	1	WASHER-THRUST	
	14	1	**251-4336**	1	GEAR AS-IDLER (73-TEETH)	
	15	1	**346-0408**	1	PLATE	
	16	1	**277-3012**	1	GASKET-COVER	
	17	1	**288-0422**	1	SEAL-OIL	
	18	1	**324-0444**	1	HUB-IDLER GEAR	
	19	1	**323-3515**	1	HOUSING-FRONT	

M-METRIC PART

357-0616 **HOUSING GP-FRONT** *(contd.)* **i04158365**

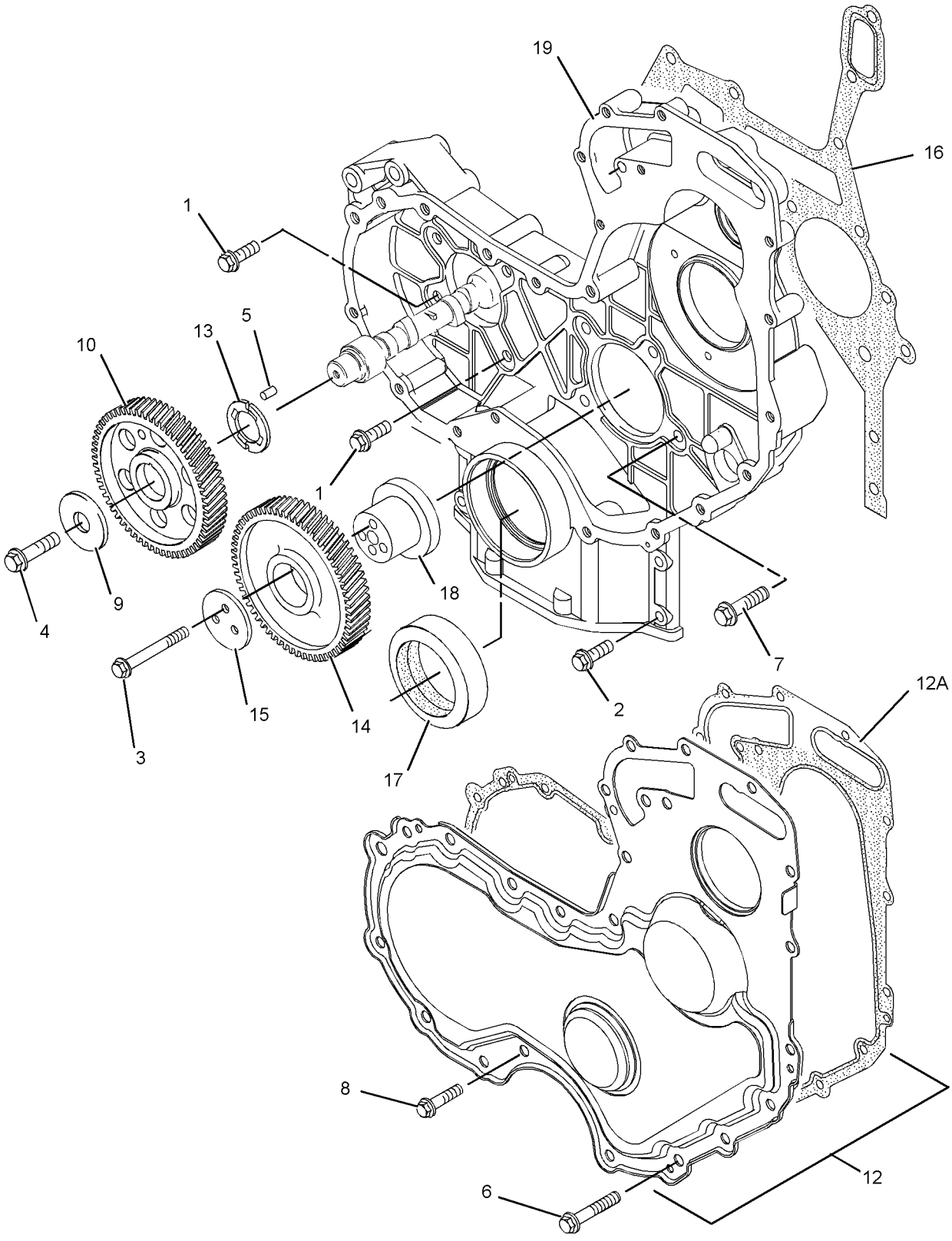

GRAPHIC #1 **<END>** g01233975

BASIC ENGINE

298-5127 LIFTING GP-ENGINE

S/N: C4E1-UP

PART OF 254-0115 ENGINE AR-PRIMARY

SMCS-1122 **i03865205**

NOTE	REF NO	GRAPHIC REF	PART NUMBER	QTY	PART NAME 1 2 3 4 5 6 (PRODUCT LEVEL)	SEE PAGE
	1	1	**279-9651**	1	PLATE-LIFTING	
M	2	1	**6I-0654**	4	BOLT (M10X1.5X25-MM)	
	3	1	**298-4604**	1	PLATE-LIFTING	

M-METRIC PART

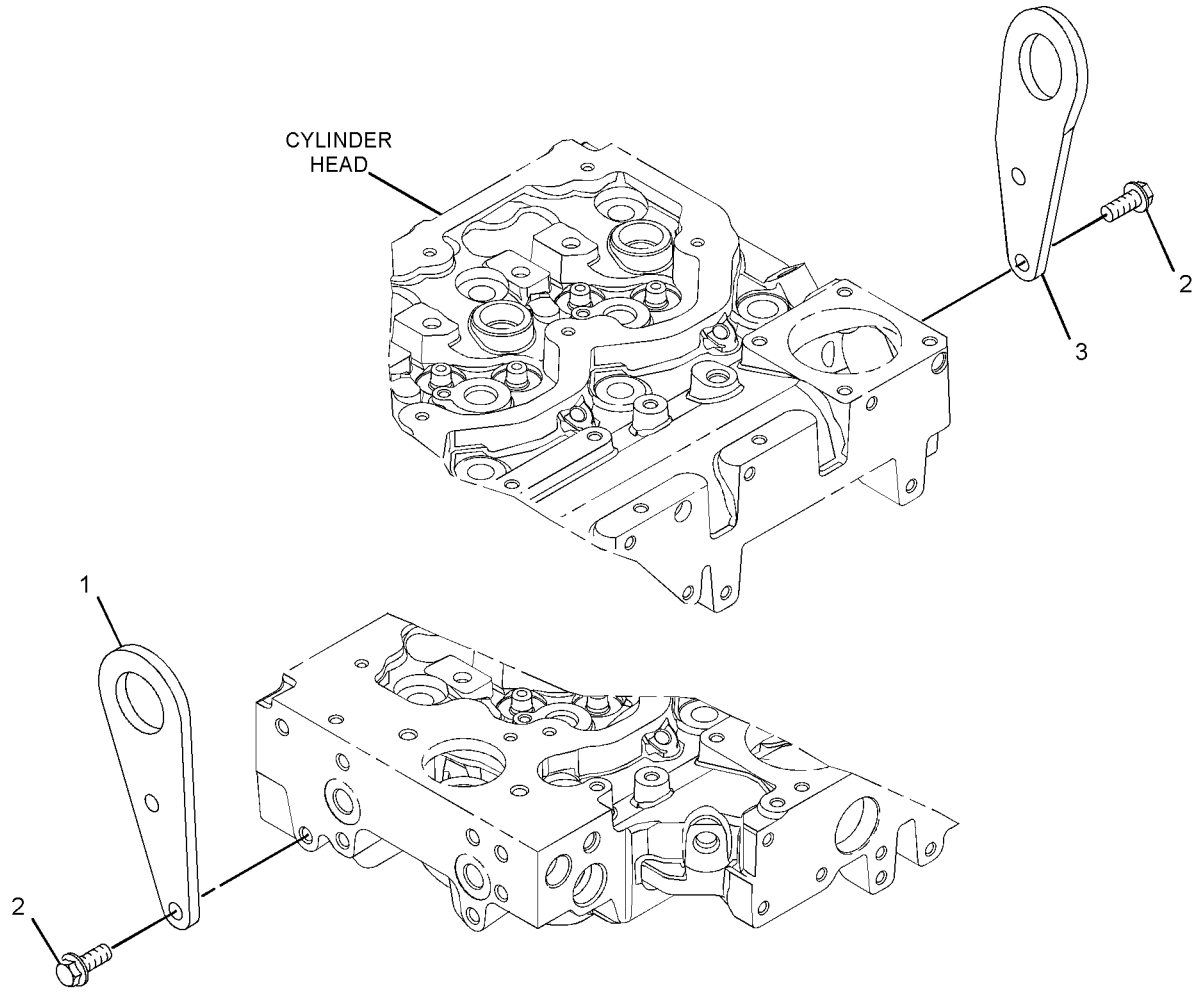

GRAPHIC #1 **<END>** g01305506

BASIC ENGINE

303-5778 MOUNTING GP-ENGINE

S/N: C4E1-UP

PART OF 254-0115 ENGINE AR-PRIMARY

SMCS-1152, 1153, 1154 **i03128292**

NOTE	REF NO	GRAPHIC REF	PART NUMBER	QTY	PART NAME 1 2 3 4 5 6 (PRODUCT LEVEL)	SEE PAGE
	1	1	**6H-3616**	3	PLUG-PROTECTION	
	2	1	**101-2987**	6	PLUG	
	3	1	**195-2132**	1	SUPPORT-FRONT	
	4	1	**195-2134**	1	SUPPORT-FRONT	
	5	1	**195-2136**	8	STUD	
	6	1	**195-2221**	8	NUT (M12X1.75-THD)	

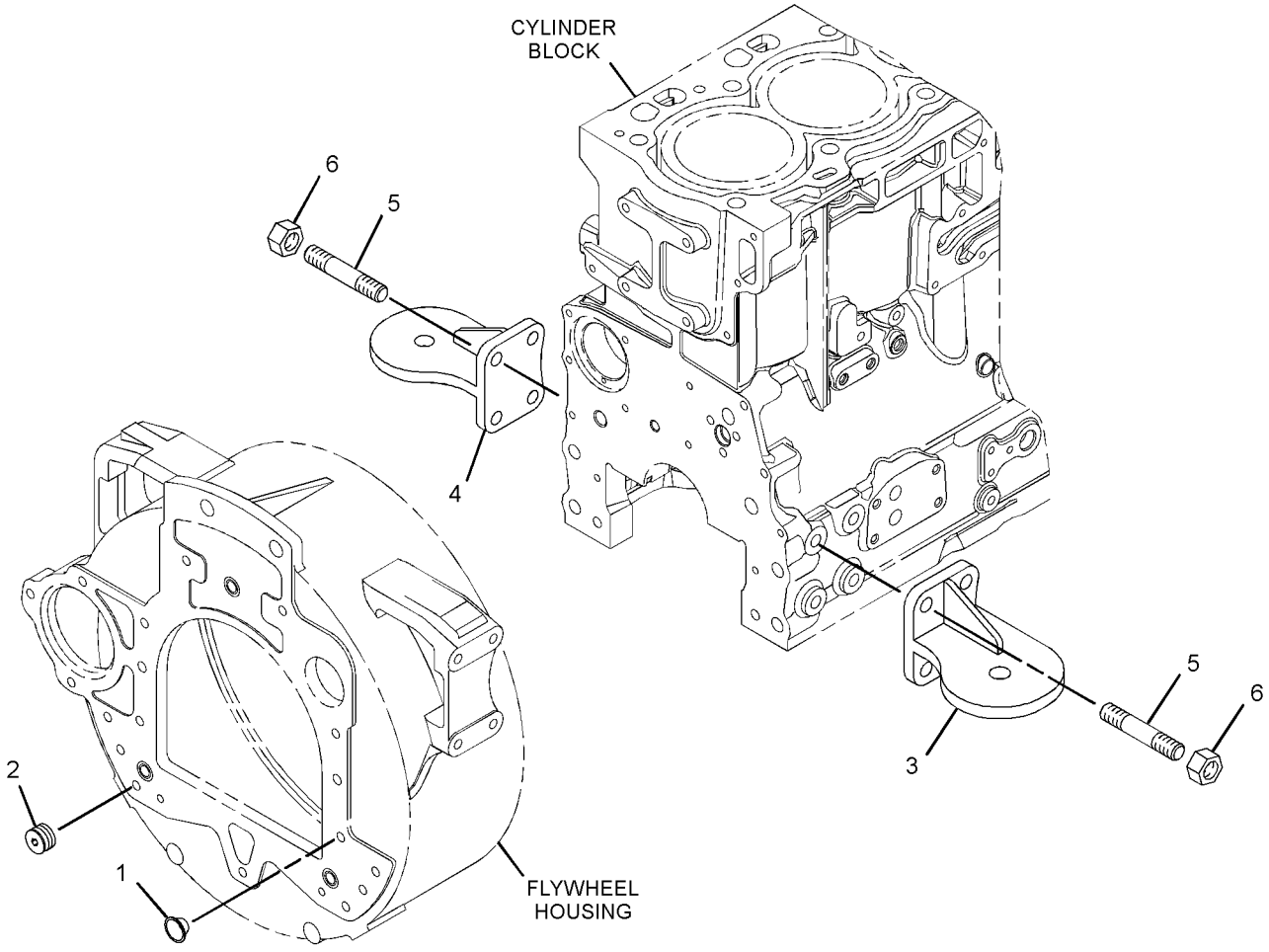

GRAPHIC #1 **<END>** g01378883

294-7370 MOUNTING GP-ENGINE & XMSN

S/N: RBA1-UP

PART OF 254-0120 ENGINE AR

SMCS-1152, 1153, 1154 **i04103251**

NOTE	REF NO	GRAPHIC REF	PART NUMBER	QTY	PART NAME 1 2 3 4 5 6 (PRODUCT LEVEL)	SEE PAGE
	1	1	**9W-9953**	4	SLEEVE	
	2	1	**273-7309**	4	MOUNTING GP-ENGINE & XMSN	
	3	1	**8T-4121**	12	WASHER-HARD (11X21X2.5-MM THK)	
	4	1	**8T-4122**	8	WASHER-HARD (17.0X32.0X3.5-MM THK)	
M	5	1	**8T-4132**	4	NUT (M16X2-THD)	
M	6	1	**8T-4174**	4	BOLT (M16X2X120-MM)	
M	7	1	**8T-4196**	12	BOLT (M10X1.5X35-MM)	
	8	1	**9W-9952**	4	WASHER (16.75X86X8-MM THK)	

M-METRIC PART

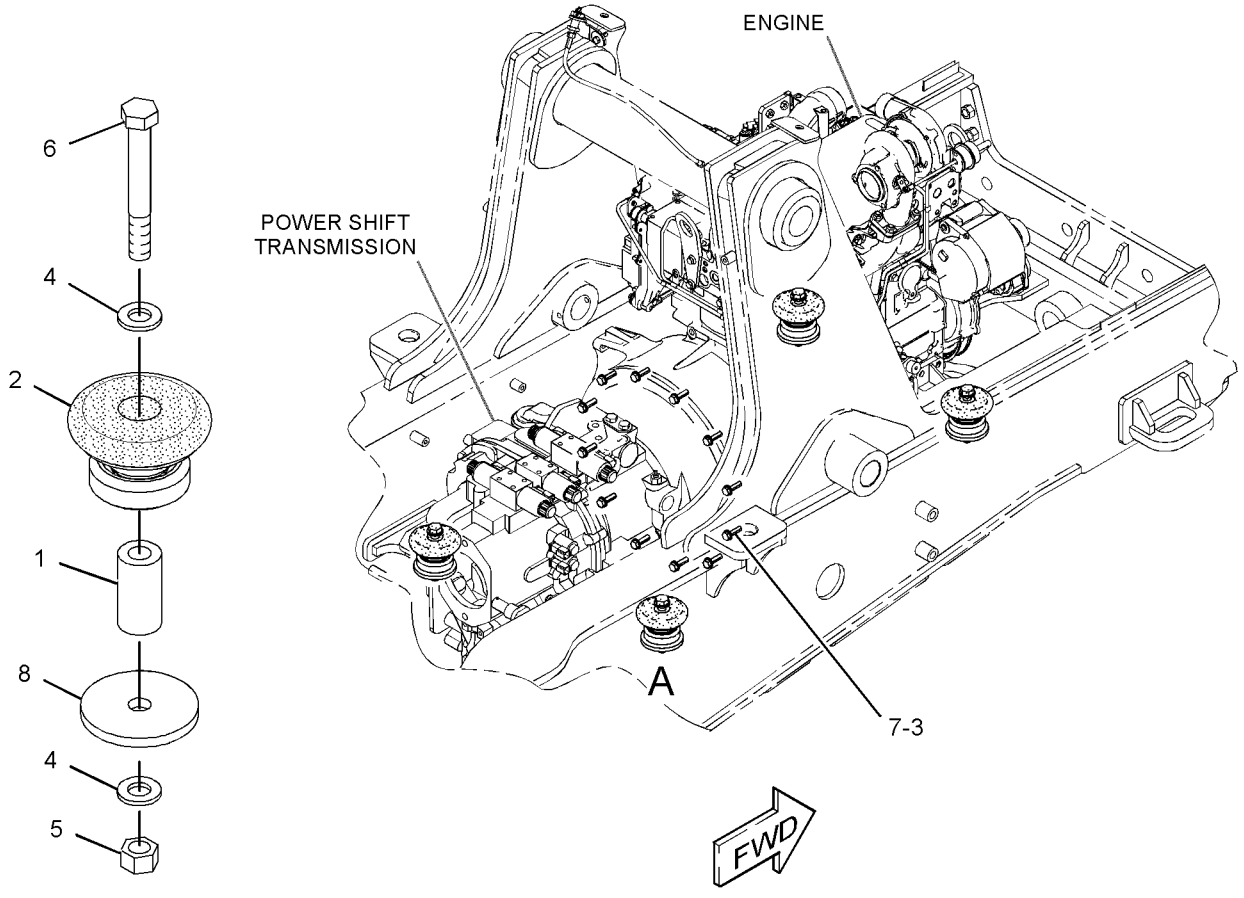

VIEW OF AREA A
(EXPLODED)

GRAPHIC #1 **<END>** g01433180

BASIC ENGINE

322-9476 PAN GP-OIL

S/N: C4E1-UP

PART OF 254-0115 ENGINE AR-PRIMARY

SMCS-1302 **i03728724**

NOTE	REF NO	GRAPHIC REF	PART NUMBER	QTY	PART NAME 1 2 3 4 5 6 (PRODUCT LEVEL)	SEE PAGE
M	1	1	**6I-0217**	14	BOLT (M8X1.25X20-MM)	
M	2	1	**6I-0260**	2	BOLT (M8X1.25X25-MM)	
	3	1	**6I-0289**	2	PLUG	
M	4	1	**6I-0363**	2	BOLT (M6X1X20-MM)	
	5	1	**6I-0572**	2	BOLT (M8X1.25X20-MM)	
	6	1	**7C-0351**	2	PLUG-DRAIN (ENGINE OIL)	
	7	1	**067-6213**	1	GASKET	
	8	1	**101-3771**	4	BOLT	
	9	1	**225-6005**	1	GASKET	
	10	1	**225-6041**	1	TUBE	
	11	1	**230-8094**	1	BRIDGE	
	12	1	**275-9883**	2	SEAL (DRAIN PLUG)	
	13	1	**304-8764**	1	PAN AS-OIL (ENGINE)	
	13A	1	**7C-1224**	2	INSERT	

M-METRIC PART

322-9476 **PAN GP-OIL** *(contd.)* **i03728724**

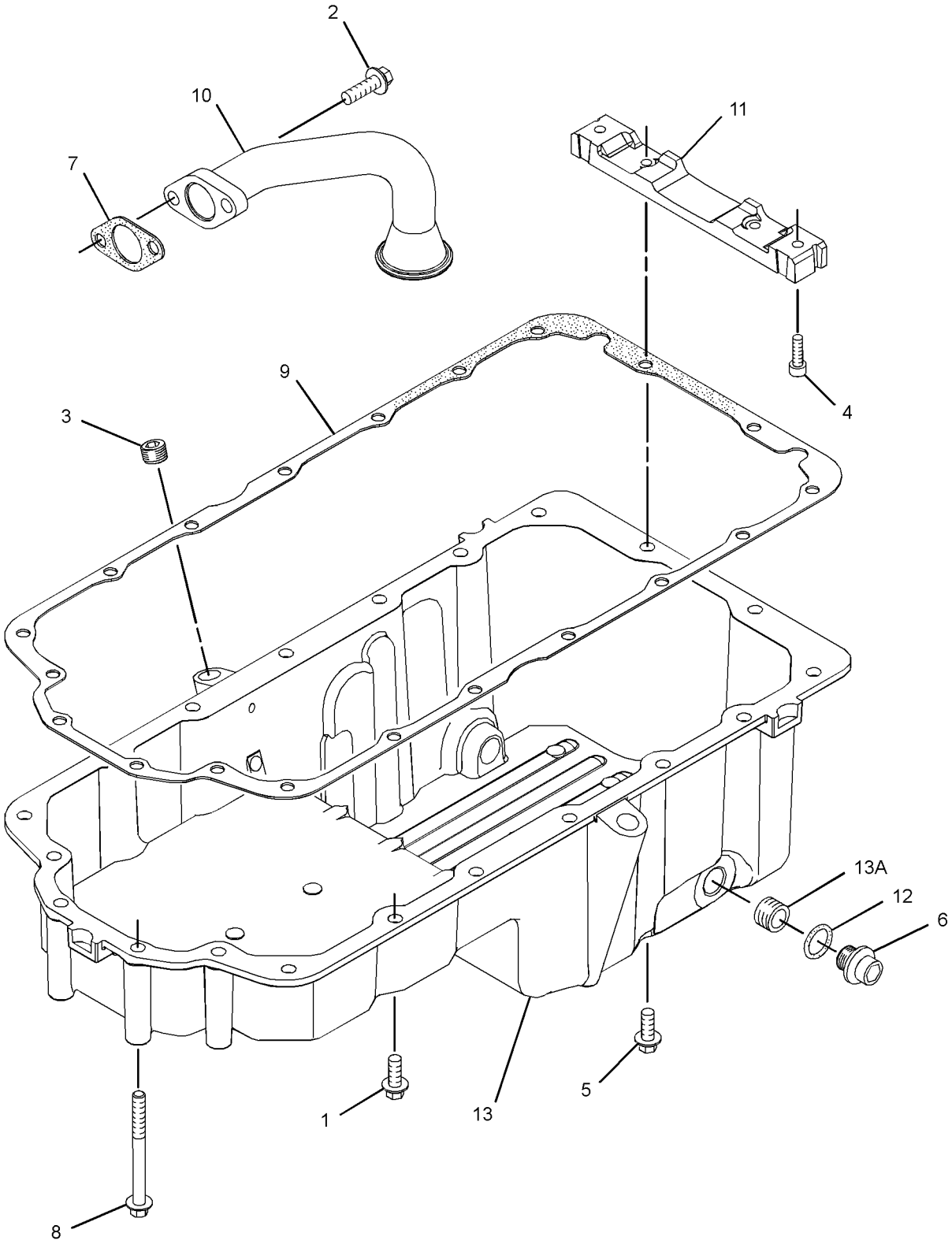

GRAPHIC #1 **<END>** g01442277

BASIC ENGINE

368-1847 PISTON & ROD GP

S/N: C4E1-UP

PART OF 254-0115 ENGINE AR-PRIMARY

SMCS-1213, 1214, 1215, 1218, 1219, 1225, 1239 **i04158186**

NOTE	REF NO	GRAPHIC REF	PART NUMBER	QTY	PART NAME 1 2 3 4 5 6 (PRODUCT LEVEL)	SEE PAGE
BJ	1	1	**225-5441**	4	ROD AS-CONNECTING	
					—OR—	
BJ		1	**225-5451**	4	ROD AS-CONNECTING	
					—OR—	
BJ		1	**225-5453**	4	ROD AS-CONNECTING	
					—OR—	
BJ		1	**225-5454**	4	ROD AS-CONNECTING	
					—OR—	
BJ		1	**225-5458**	4	ROD AS-CONNECTING	
					—OR—	
BJ		1	**225-5459**	4	ROD AS-CONNECTING	
					(EACH INCLUDES)	
	2	1	**225-5438**	1	BUSHING	
	3	1	**225-5439**	2	BOLT-SPECIAL (CONNECTING ROD)	
	4	1	**310-9905**	4	PISTON AS	
					(EACH INCLUDES)	
	4A	1	**124-3536**	2	RING-RETAINING	
	4B	1	**276-7476**	4	KIT-PISTON RING	

B-USE AS REQUIRED
J-ENSURE THAT CORRECT ROD LENGTH IS FITTED

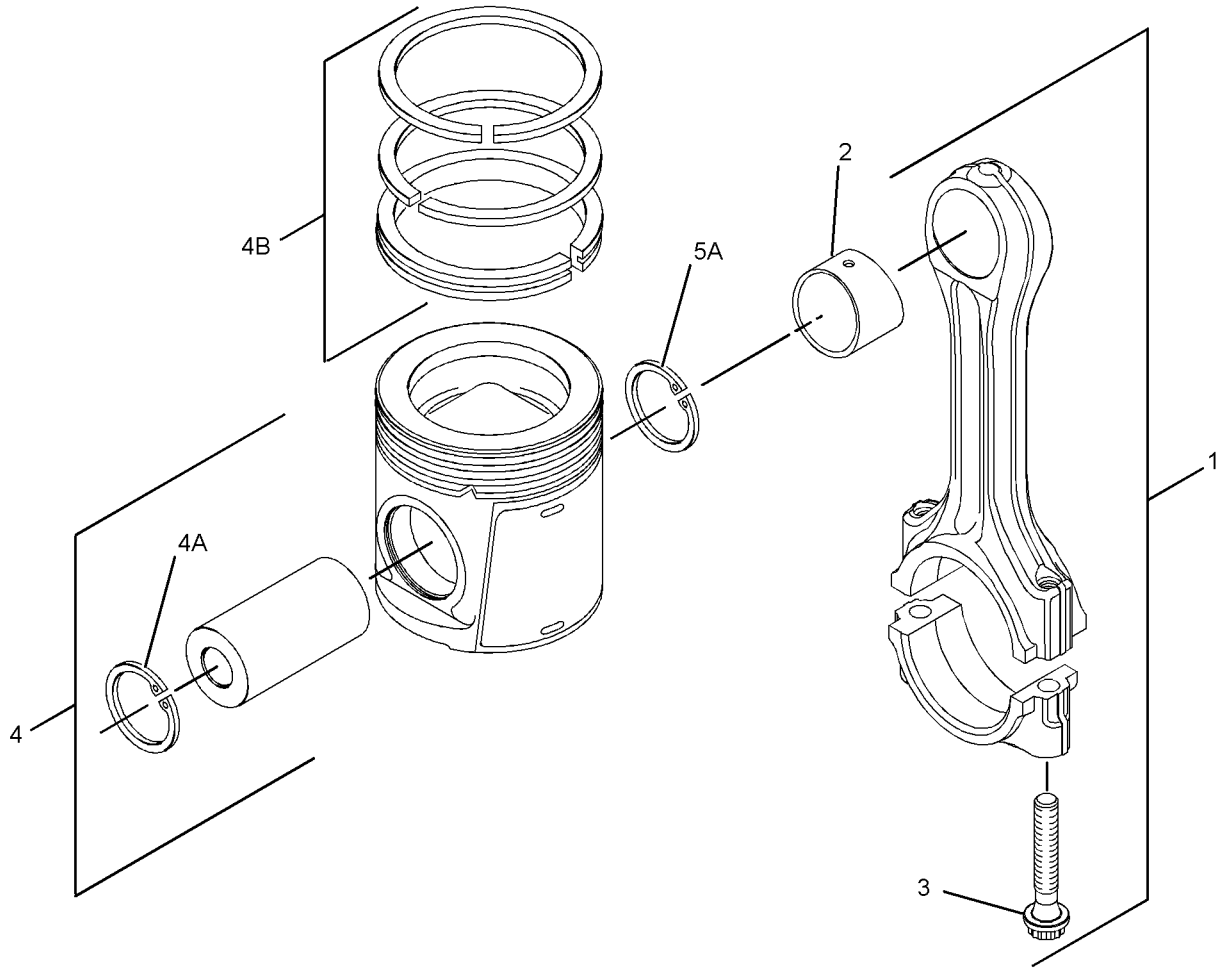

GRAPHIC #1 **<END>** g01420646

298-5129 PLUG GP-CYLINDER HEAD

S/N: C4E1-UP

PART OF 254-0115 ENGINE AR-PRIMARY

SMCS-1100 **i03128287**

NOTE	REF NO	GRAPHIC REF	PART NUMBER	QTY	PART NAME 1 2 3 4 5 6 (PRODUCT LEVEL)	SEE PAGE
	1	1	**232-1322**	1	PLUG	
	2	1	**199-9751**	1	SEAL-O-RING	

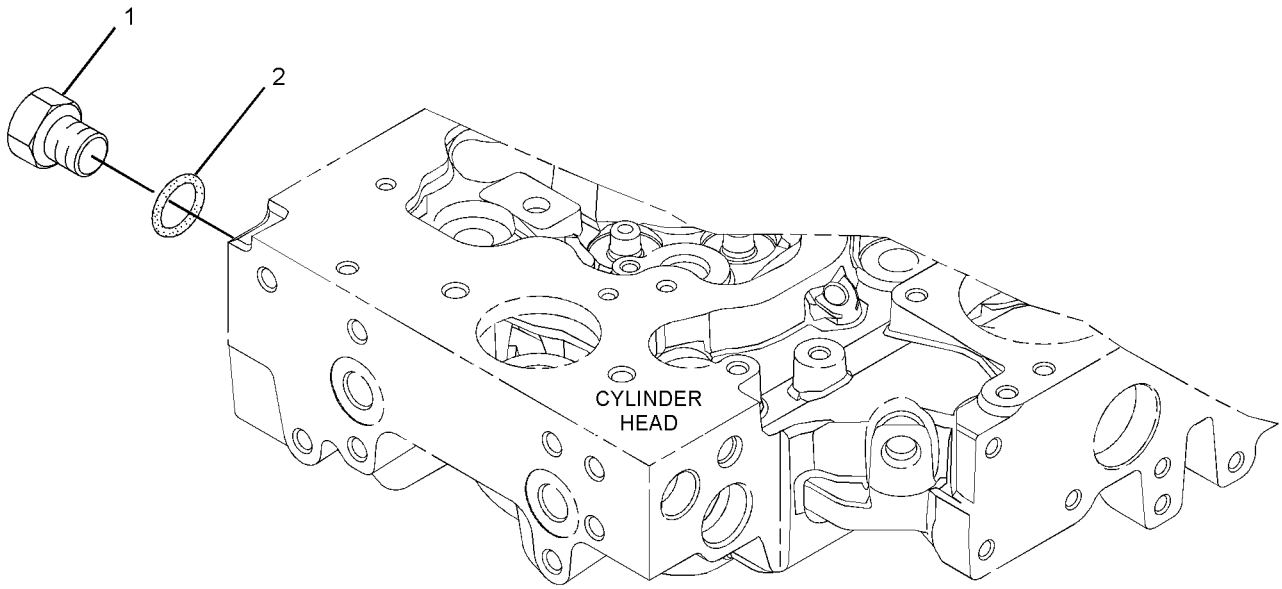

GRAPHIC #1 **<END>** g01305536

BASIC ENGINE

298-5131 PLUG GP-ENGINE

S/N: C4E1-UP

PART OF 254-0115 ENGINE AR-PRIMARY

SMCS-1000 **i03128286**

NOTE	REF NO	GRAPHIC REF	PART NUMBER	QTY	PART NAME 1 2 3 4 5 6 (PRODUCT LEVEL)	SEE PAGE
	1	1	**2B-0858**	3	PLUG-PIPE	

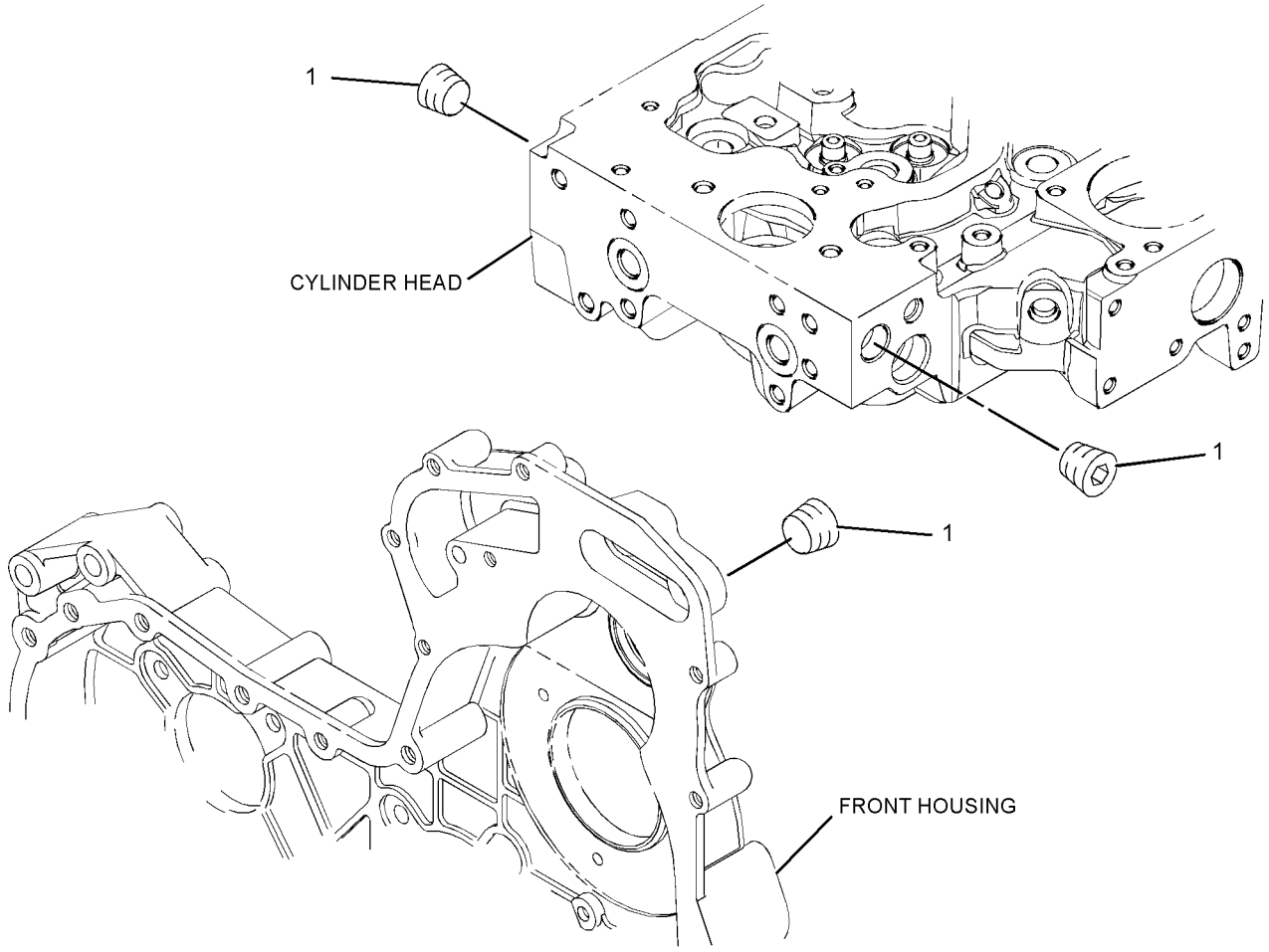

GRAPHIC #1 **<END>** g01305448

298-5101 PULLEY GP-CRANKSHAFT

S/N: C4E1-UP

PART OF 254-0115 ENGINE AR-PRIMARY

SMCS-1205 **i04158158**

NOTE	REF NO	GRAPHIC REF	PART NUMBER	QTY	PART NAME 1 2 3 4 5 6 (PRODUCT LEVEL)	SEE PAGE
	1	1	**274-1931**	1	PULLEY	
	2	1	**306-8857**	1	HUB	
M	3	1	**102-9941**	3	BOLT (M12X1.75X25-MM)	
	4	1	**6I-0501**	1	BLOCK	
	5	1	**7W-4634**	3	BOLT (7/16-20X1.5-IN)	

M-METRIC PART

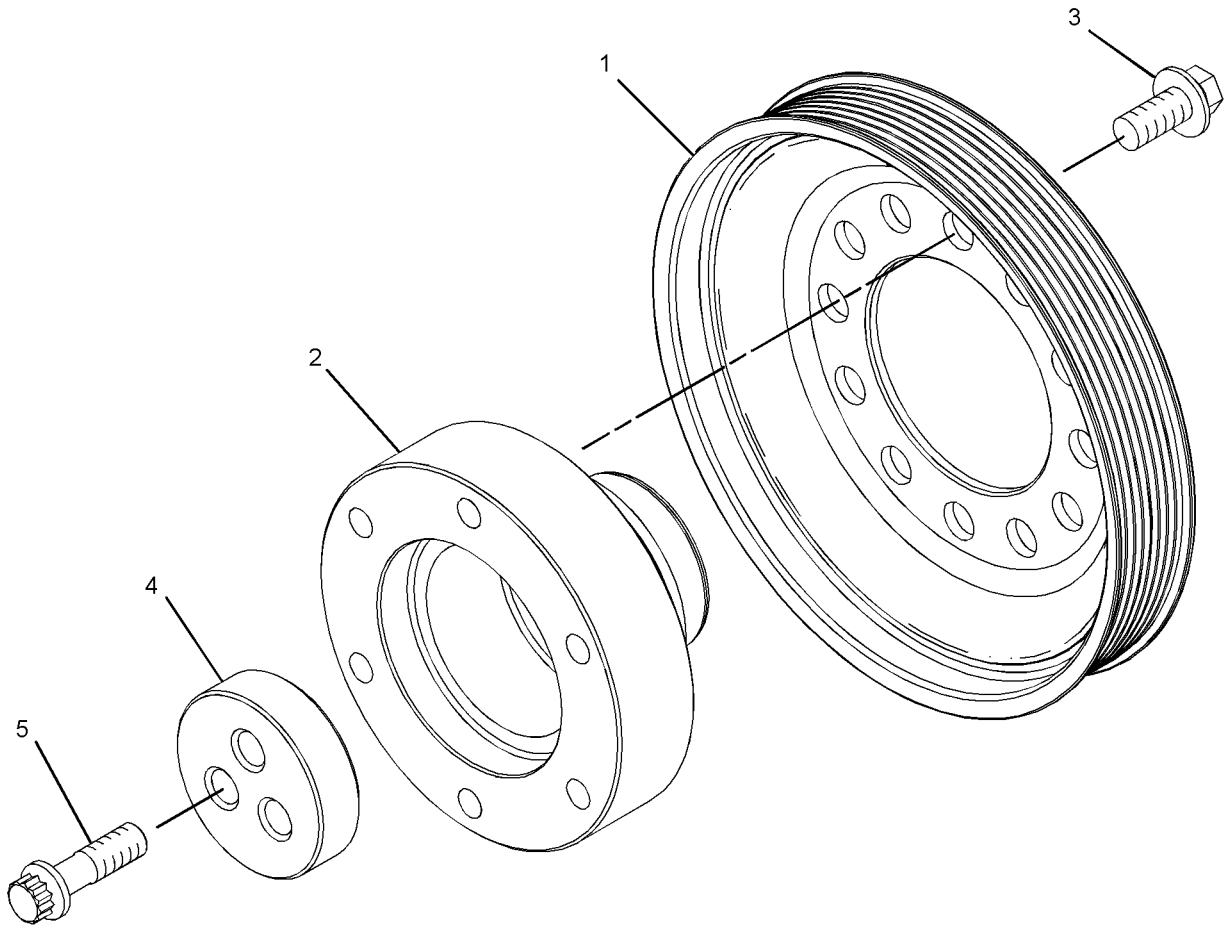

GRAPHIC #1 **<END>** g01304395

BASIC ENGINE

298-4533 ROCKER ARM GP

S/N: C4E1-UP

PART OF 368-1849 VALVE MECHANISM GP

SMCS-1102, 1123 **i03866203**

NOTE	REF NO	GRAPHIC REF	PART NUMBER	QTY	PART NAME 1 2 3 4 5 6 (PRODUCT LEVEL)	SEE PAGE
	1	1	**276-9200**	2	PLUG-SHAFT END	
	2	1	**276-9201**	1	CLIP	
	3	1	**276-9206**	3	SPRING-SHAFT	
	4	1	**276-9207**	1	SPRING-SHAFT	
	5	1	**278-5111**	4	ROCKER ARM AS	
	5A	1	**276-9230**	1	NUT	
	5B	1	**278-5113**	1	ADJUSTING SCREW (TORX)	
	6	1	**278-5112**	4	ROCKER ARM AS	
	6A	1	**276-9230**	1	NUT	
	6B	1	**278-5113**	1	ADJUSTING SCREW (TORX)	
	7	1	**280-1912**	4	BRACKET	
	8	1	**280-1913**	4	RETAINER	
	9	1	**280-1914**	8	BOLT (M8X1.25X55-MM)	

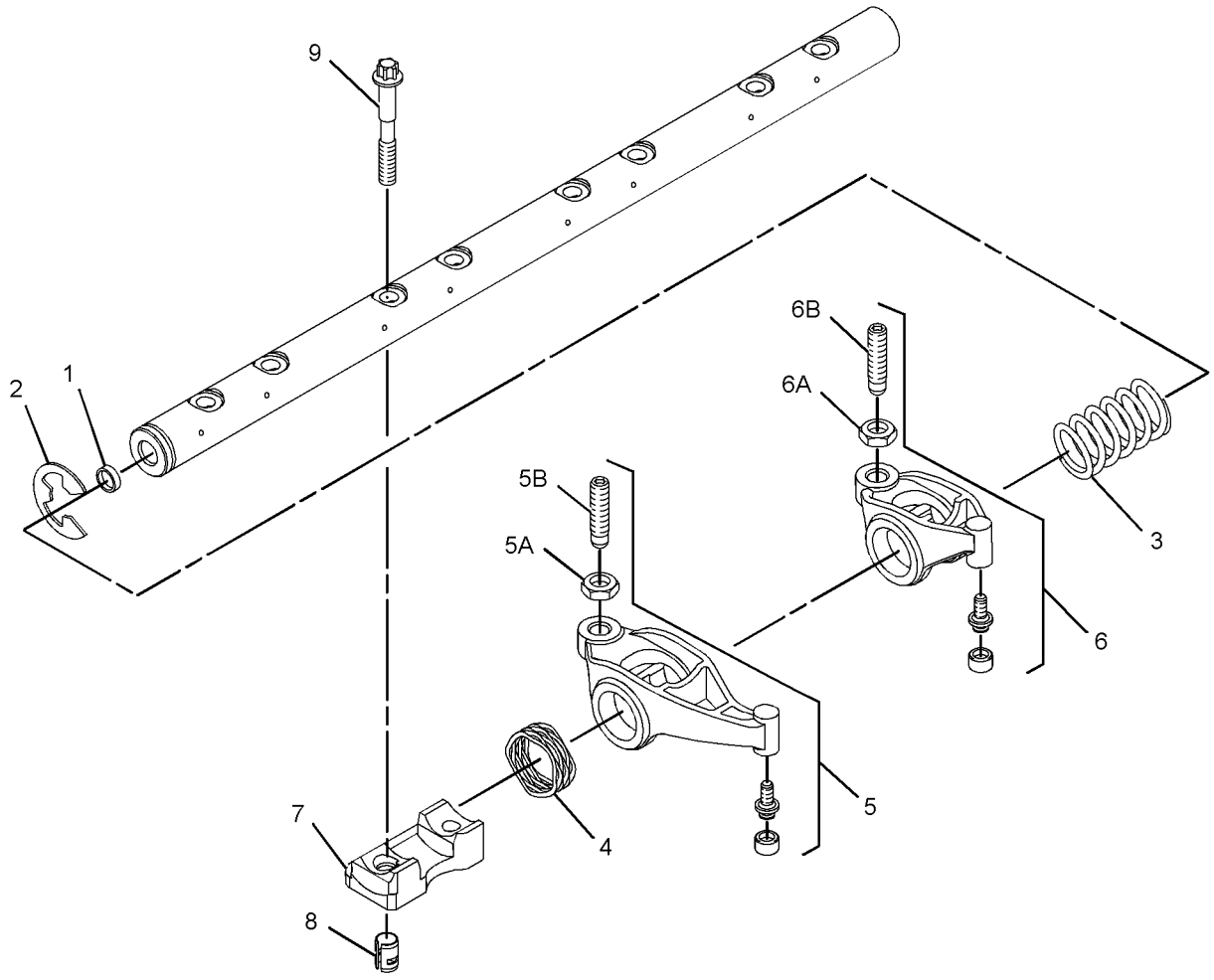

GRAPHIC #1 **<END>** g01532745

368-1849 VALVE MECHANISM GP

S/N: C4E1-UP

PART OF 254-0115 ENGINE AR-PRIMARY

SMCS-1102, 1112, 1121, 1123, 1208, 1209 **i04158189**

NOTE	REF NO	GRAPHIC REF	PART NUMBER	QTY	PART NAME 1 2 3 4 5 6 (PRODUCT LEVEL)	SEE PAGE
	1	1	**339-3397**	8	LINK	
Y	2	1	**298-4533**	1	ROCKER ARM GP	30

Y-SEPARATE ILLUSTRATION

368-1849 **VALVE MECHANISM GP** *(contd.)* **i04158189**

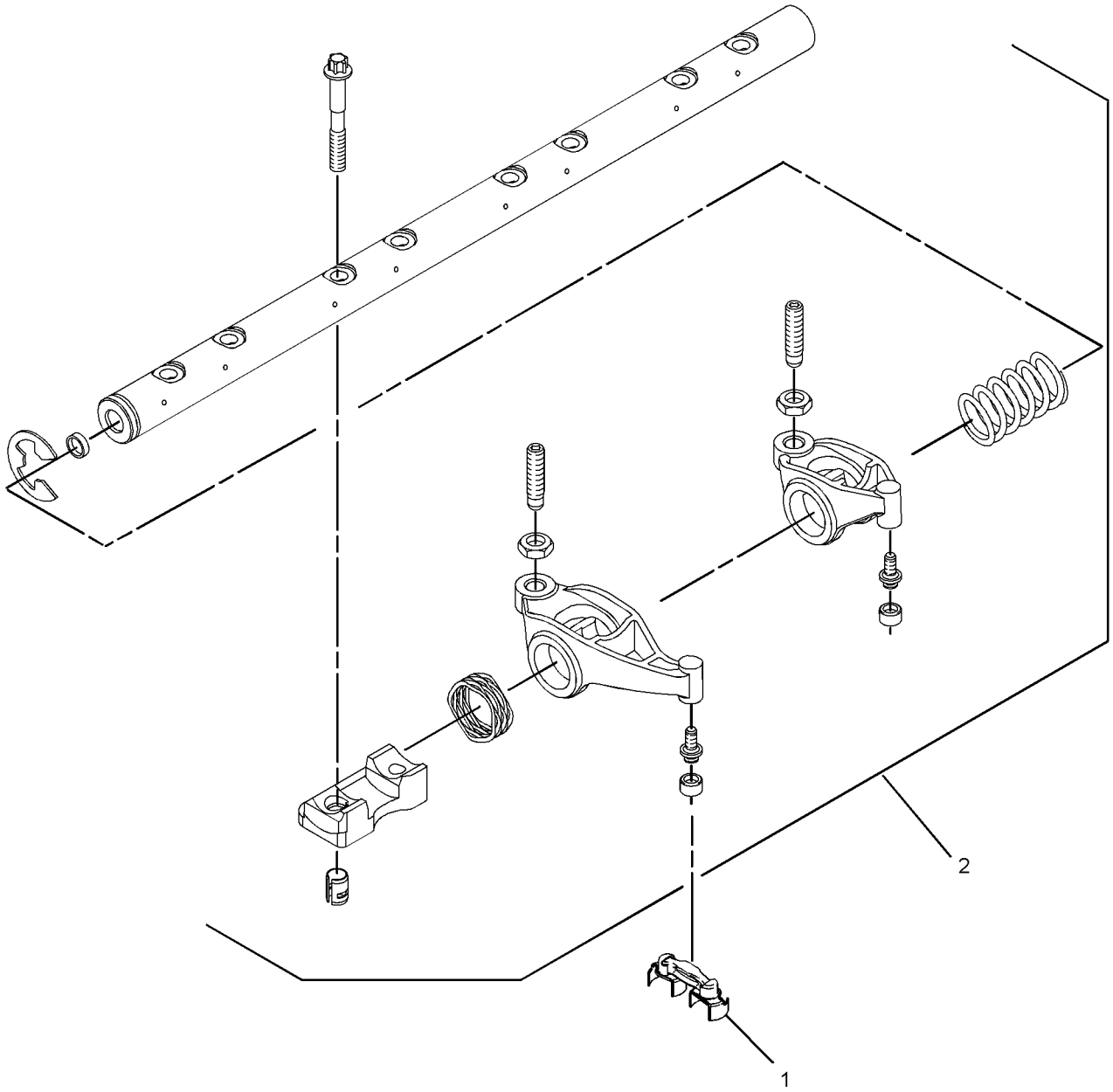

GRAPHIC #1 **<END>** g01932396

306-7692 BREATHER GP–ENGINE

S/N: RBA1-UP

PART OF 254-0120 ENGINE AR

SMCS-1317 **i04103290**

NOTE	REF NO	GRAPHIC REF	PART NUMBER	QTY	PART NAME 1 2 3 4 5 6 (PRODUCT LEVEL)	SEE PAGE
	1	1	**6I-1497**	1	SEAL	
	2	1	**6S-8620**	2	CLAMP-HOSE	
	3	1	**8T-9402**	3	CLAMP-HOSE	
	4	1	**138-7500**	1	SPACER (11X25X50-MM THK)	
	5	1	**165-4021**	1	CANISTER AS-BREATHER (CRANKCASE)	
		1	**185-6643**	1	SEAL (BREATHER)	
	6	1	**202-5909**	1	TUBE AS-OIL	
	7	1	**306-8864**	1	PLATE AS	
M		1	**6V-9632**	2	NUT-WELD (M6X1-THD)	
	8	1	**307-0765**	1	HOSE	
	9	1	**313-5658**	1	HOSE	
M	10	1	**111-4627**	2	SCREW-MACHINE (M6X1X30-MM)	
M	11	1	**129-3178**	2	LOCKNUT (M6X1-THD)	
	12	1	**6D-4246**	1	CLIP	
	13	1	**335-5426**	1	SPACER (10.5X20X24-MM THK)	
B	14	1	**8T-4121**	3	WASHER-HARD (11X21X2.5-MM THK)	
M	15	1	**8T-4138**	2	BOLT (M6X1X20-MM)	
M	16	1	**8T-4172**	1	BOLT (M10X1.5X80-MM)	
	17	1	**8T-4205**	6	WASHER-HARD (7.2X14.5X2-MM THK)	
	18	1	**5P-4116**	1	WASHER-HARD (8.8X20.5X2-MM THK)	
M	19	1	**8T-6912**	1	BOLT (M8X1.25X50-MM)	
	20	1	**8T-7529**	1	CLIP	
E	21	1	**5P-1505**		HOSE (79-CM)	

B-USE AS REQUIRED
E-ORDER BY THE CENTIMETER
M-METRIC PART

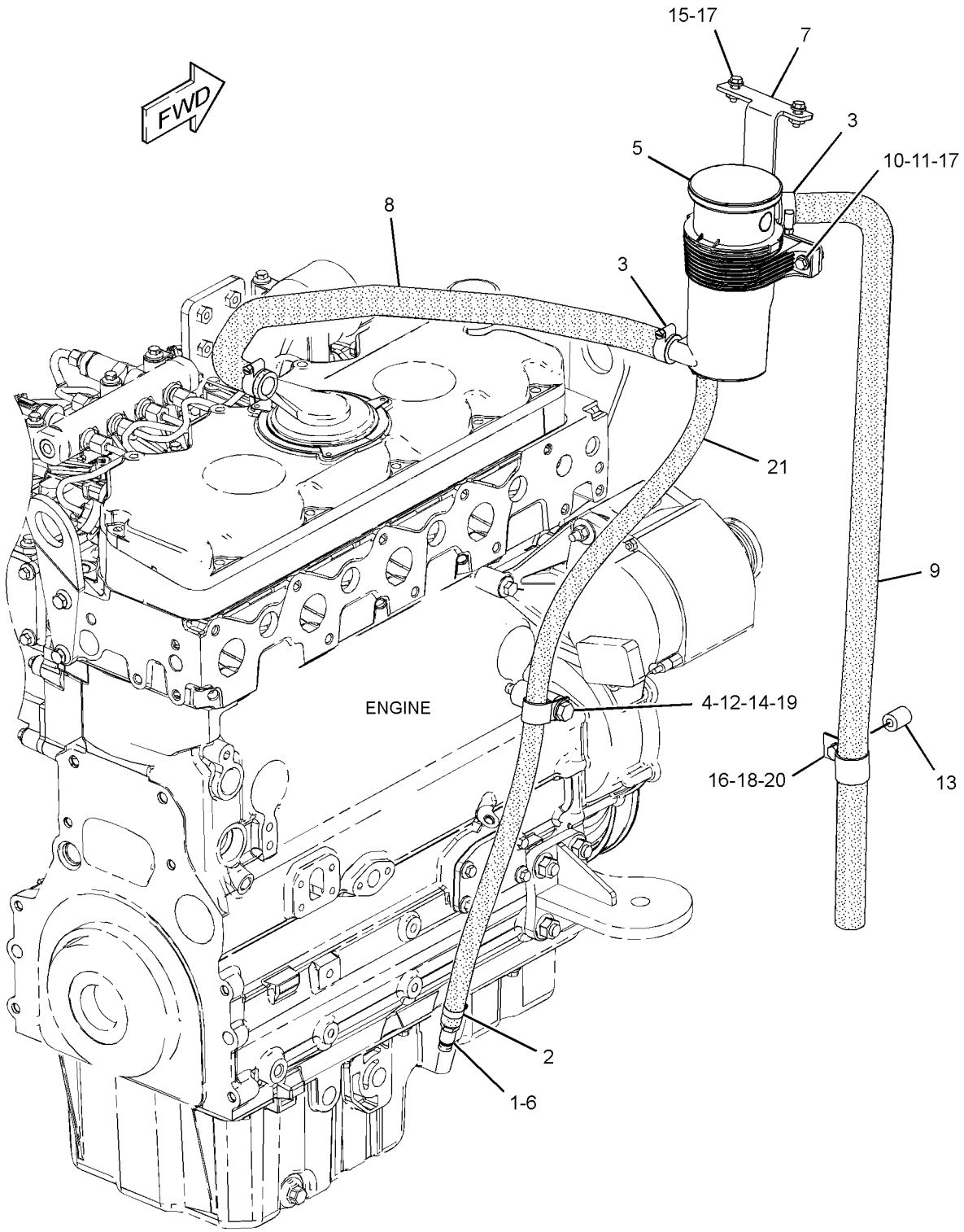

GRAPHIC #1 **<END>** g01415393

303-5773 FILLER GP-ENGINE OIL

S/N: C4E1-UP

PART OF 254-0115 ENGINE AR-PRIMARY

SMCS-1316 **i04158156**

NOTE	REF NO	GRAPHIC REF	PART NUMBER	QTY	PART NAME 1 2 3 4 5 6 (PRODUCT LEVEL)	SEE PAGE
M	1	1	**6I-0260**	2	BOLT (M8X1.25X25-MM)	
	2	1	**326-7861**	1	FILLER AS-OIL	
	2A	1	**306-2337**	1	SEAL-O-RING	

M-METRIC PART

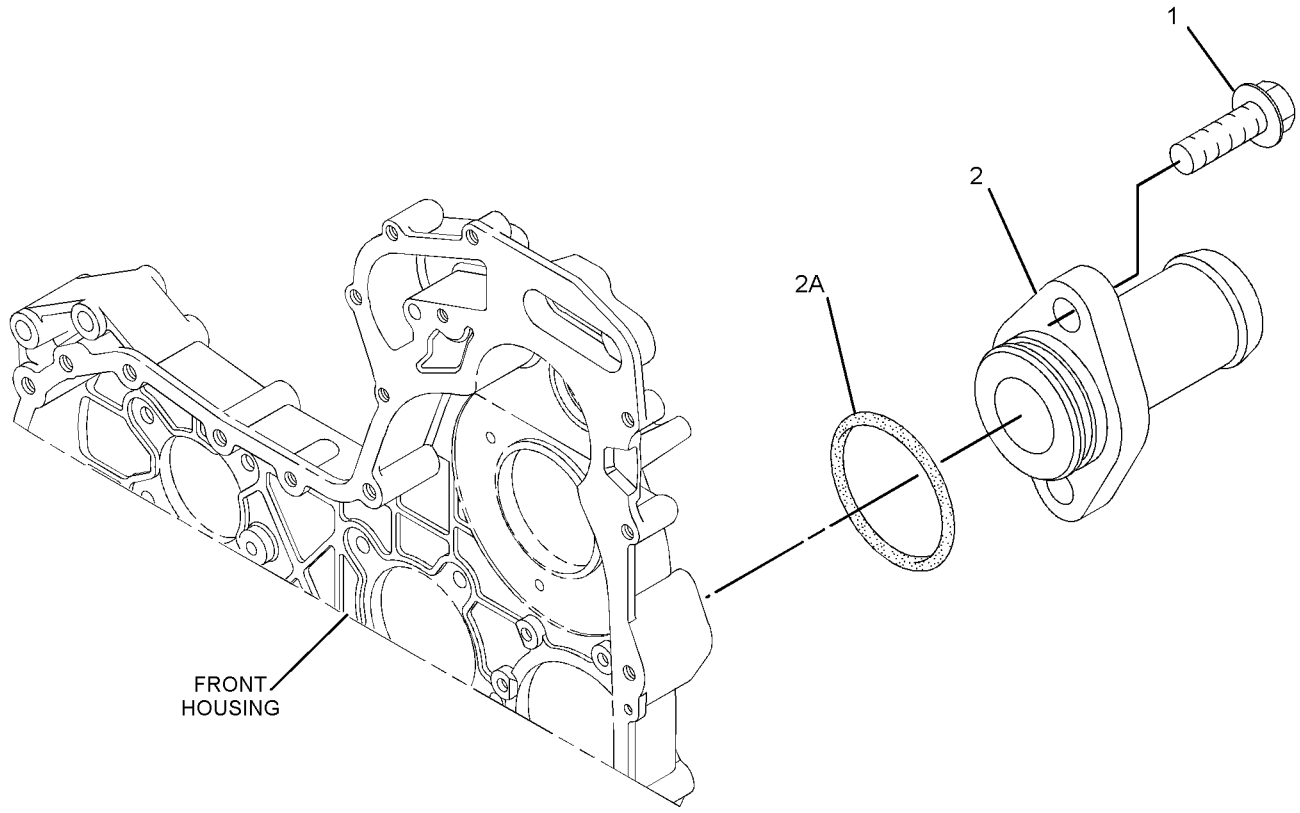

GRAPHIC #1 **<END>** g01674613

LUBRICATION SYSTEM

254-0118 GAUGE GP-OIL LEVEL & FILLER

S/N: RBA1-UP

PART OF 254-0120 ENGINE AR

SMCS-1316, 1326 **i04103049**

NOTE	REF NO	GRAPHIC REF	PART NUMBER	QTY	PART NAME 1 2 3 4 5 6 (PRODUCT LEVEL)	SEE PAGE
	1	1	**6I-1497**	1	SEAL	
	2	1	**7W-2326**	1	FILTER AS-ENGINE OIL	
	3	1	**9M-7958**	1	CLAMP-HOSE	
	4	1	**119-5708**	1	CLIP	
	5	1	**127-4471**	1	CLAMP-HOSE	
	6	1	**236-6651**	1	CAP AS-FILLER (ENGINE OIL)	
	7	1	**256-0143**	1	TUBE AS	
	8	1	**273-3262**	1	HOSE	
	9	1	**273-5097**	1	TUBE AS	
	10	1	**275-9902**	1	BRACKET AS	
	11	1	**341-8234**	1	GAUGE-OIL LEVEL (DIPSTICK) (ENGINE)	
	12	1	**033-8248**	1	CLIP	
	13	1	**7D-7233**	1	CLIP	
	14	1	**8T-4121**	3	WASHER-HARD (11X21X2.5-MM THK)	
M	15	1	**8T-4133**	1	NUT (M10X1.5-THD)	
M	16	1	**8T-4136**	3	BOLT (M10X1.5X25-MM)	
M	18	1	**8T-4189**	2	BOLT (M8X1.25X20-MM)	
	19	1	**8T-4224**	2	WASHER-HARD (8.8X16X2-MM THK)	

M-METRIC PART

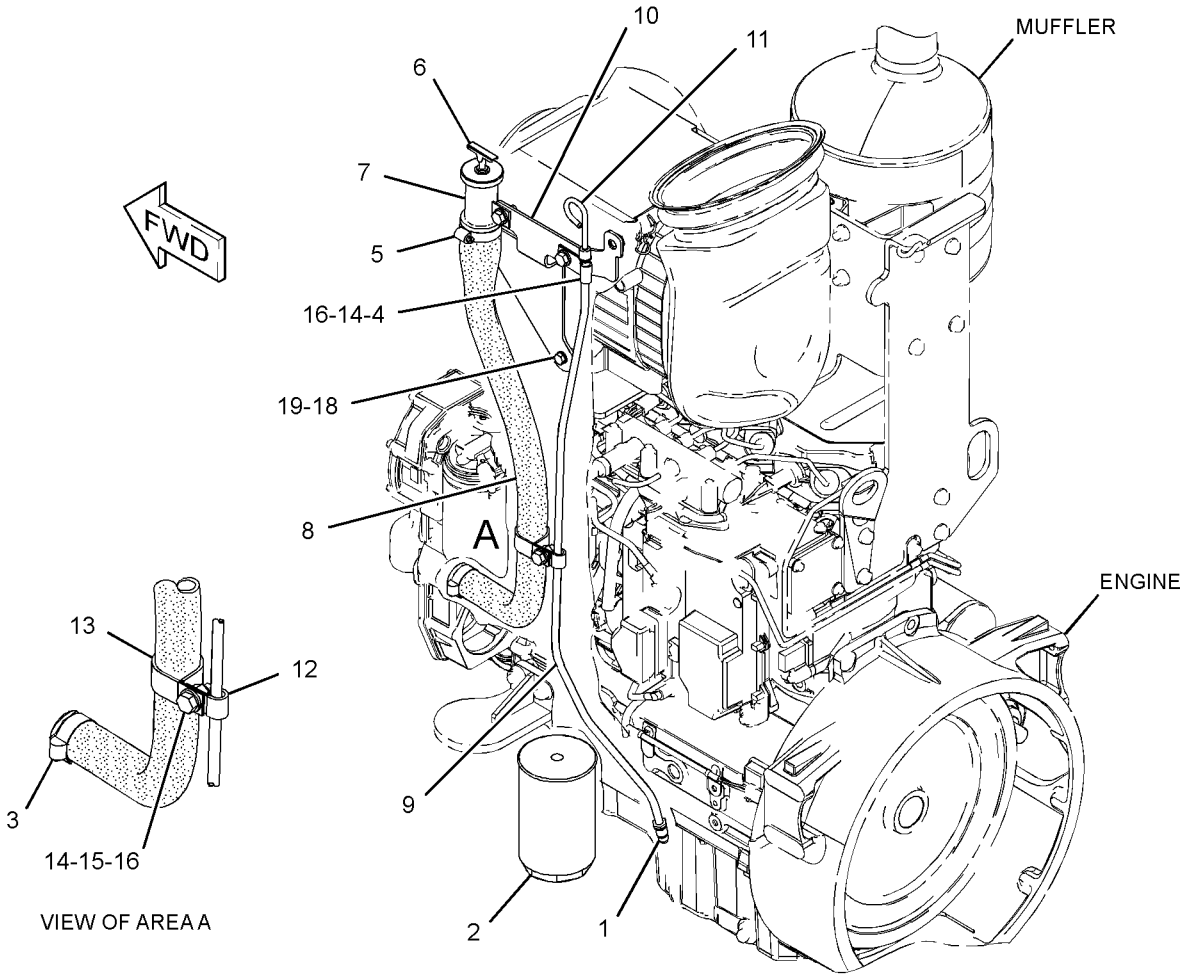

GRAPHIC #1 **<END>** g01592297

298-5112 PUMP GP-ENGINE OIL

S/N: C4E1-UP

PART OF 254-0115 ENGINE AR-PRIMARY

SMCS-1304, 1315 **i03128291**

NOTE	REF NO	GRAPHIC REF	PART NUMBER	QTY	PART NAME 1 2 3 4 5 6 (PRODUCT LEVEL)	SEE PAGE
	1	1	**225-8329**	1	PUMP AS-ENGINE OIL	
M	2	1	**100-4461**	5	BOLT (M10X1.50X50-MM)	

M-METRIC PART

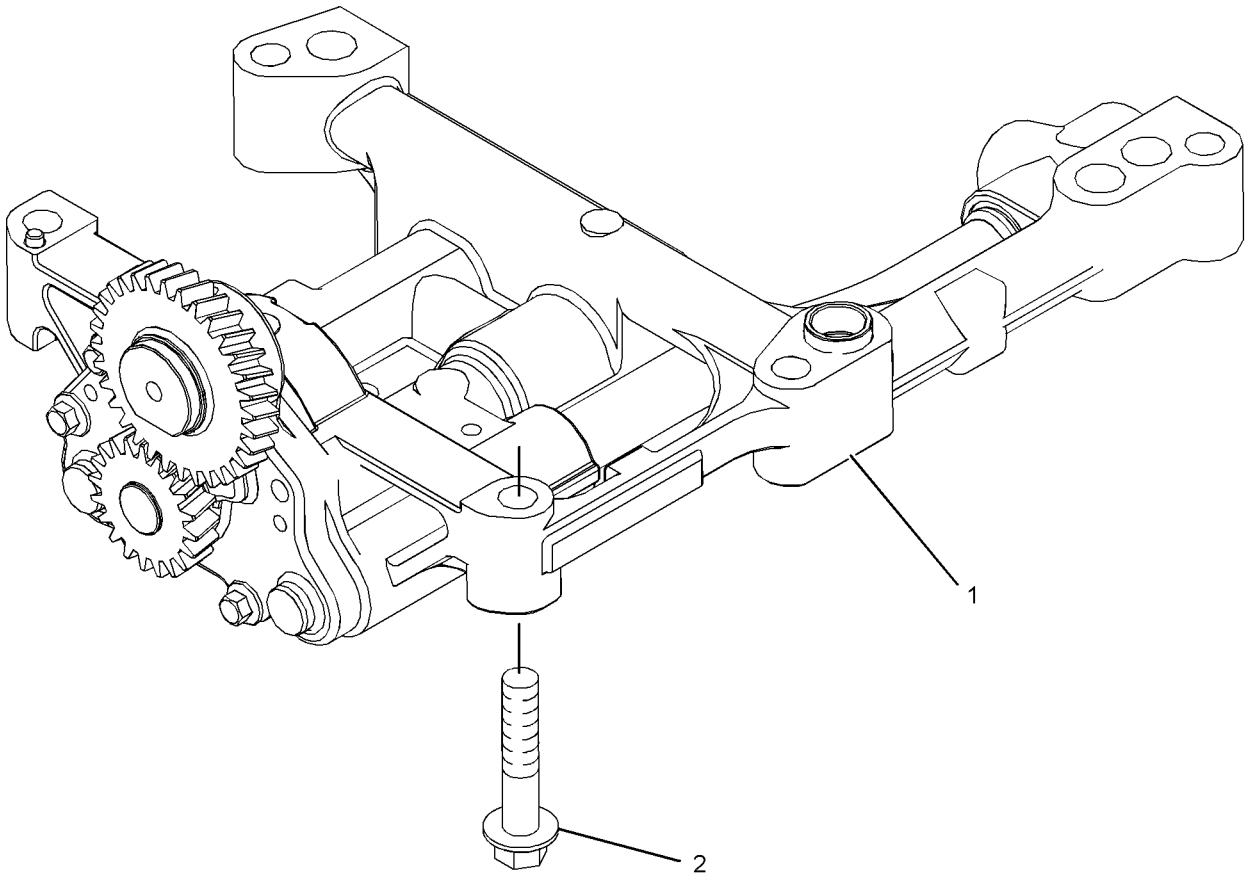

GRAPHIC #1 **<END>** g01304952

304-5617 VALVE GP-FLUID SAMPLING–ENGINE OIL

S/N: C4E1-UP

PART OF 254-0115 ENGINE AR-PRIMARY

SMCS-7542 **i04158159**

NOTE	REF NO	GRAPHIC REF	PART NUMBER	QTY	PART NAME 1 2 3 4 5 6 (PRODUCT LEVEL)	SEE PAGE
	1	1	**8C-3445**	1	CAP-DUST	
	2	1	**035-8063**	1	PLUG	
	3	1	**216-9633**	1	VALVE AS-FLUID SAMPLING	

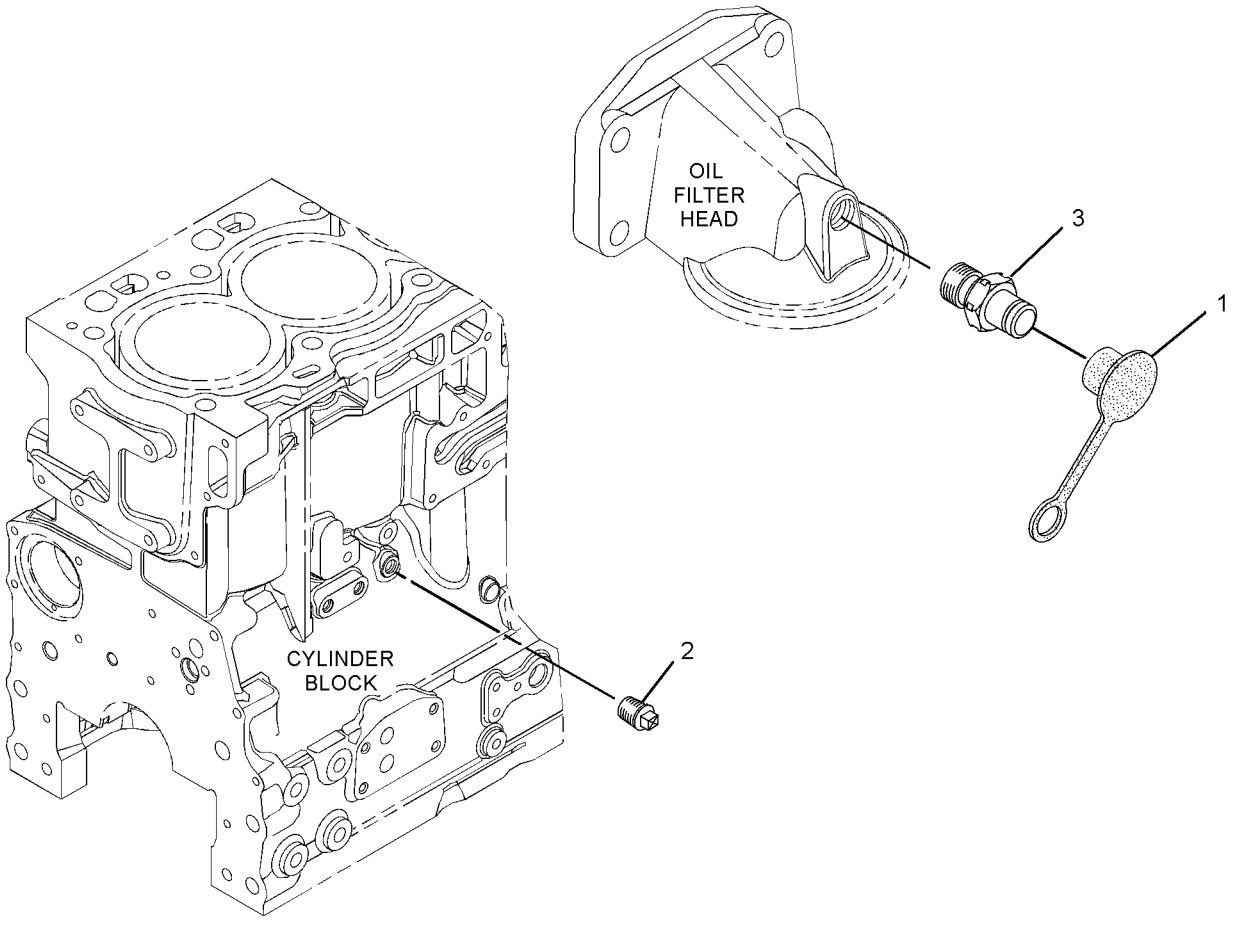

GRAPHIC #1 **<END>** g01438099

301-8243 CONNECTION GP-WATER

S/N: C4E1-UP

PART OF 254-0115 ENGINE AR-PRIMARY

SMCS-1380 **i03865183**

NOTE	REF NO	GRAPHIC REF	PART NUMBER	QTY	PART NAME 1 2 3 4 5 6 (PRODUCT LEVEL)	SEE PAGE
	1	1	**123-2899**	2	BOLT (M10X1.5X40-MM)	
	2	1	**277-2974**	1	REGULATOR AS-WATER TEMPERATURE (CONNECTOR INCLUDED)	
	3	1	**281-8744**	1	GASKET-WATER REGULATOR (TEMPERATURE)	

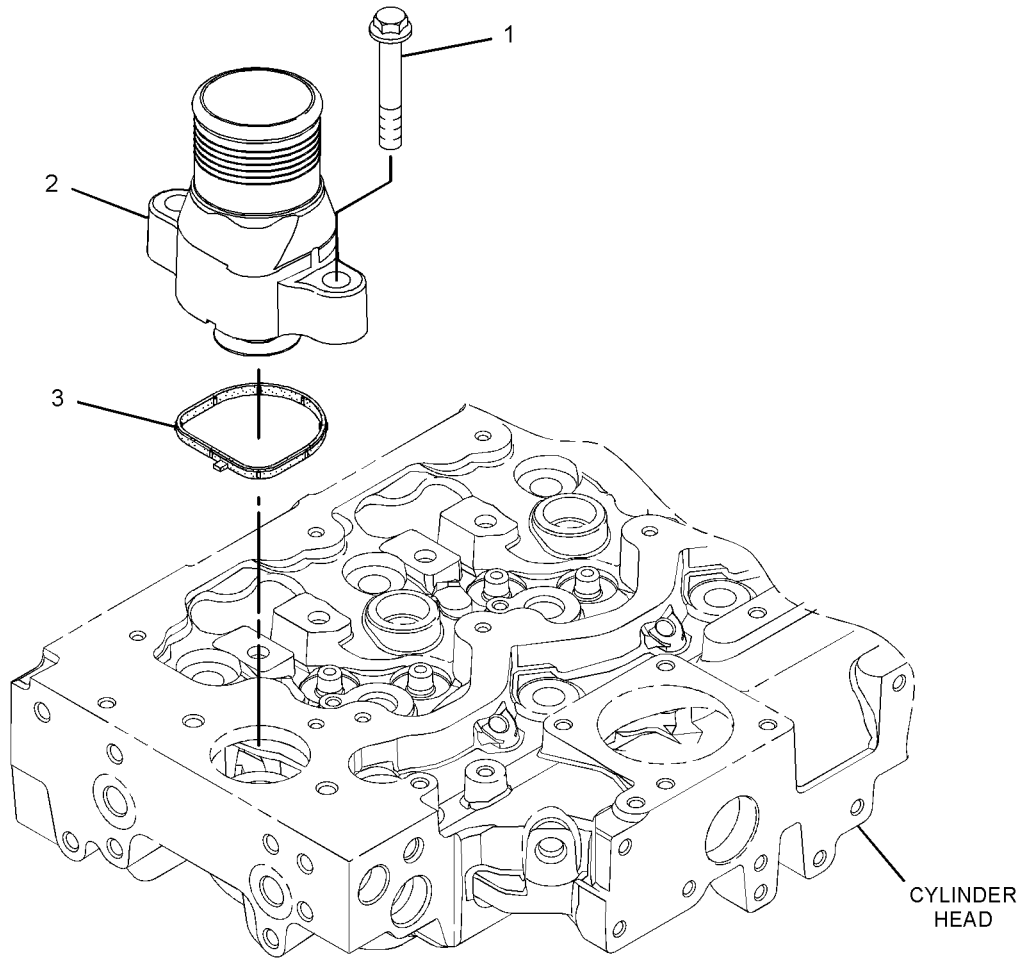

GRAPHIC #1 **<END>** g01371208

COOLING SYSTEM

266-0149 COOLER & MTG GP-ENG & HYDR

S/N: RBA1-UP

PART OF 254-0150 COOLER AR-ENGINE & HYDRAULIC

SMCS-1063, 1353, 1374, 1375 **i04110250**

NOTE	REF NO	GRAPHIC REF	PART NUMBER	QTY	PART NAME 1 2 3 4 5 6 (PRODUCT LEVEL)	SEE PAGE
	1	1	**5R-5927**	2	WASHER (14X65X6-MM THK)	
	2	1	**6N-6984**	2	MOUNT-RUBBER	
	3	1	**7K-1181**	4	STRAP-CABLE	
	4	1	**112-4159**	2	MOUNTING AS	
	5	1	**123-4065**	18	RIVET-POP	
	6	1	**214-7458**	2	CLAMP-HOSE	
	7	1	**265-7511**	2	CLAMP-WIRE	
	8	1	**272-9635**	1	HOSE-RADIATOR (UPPER)	
Y	9	1	**273-3137**	1	COOLER GP-ENGINE & HYDRAULIC	43
	10	1	**273-9638**	1	SHROUD AS	
	11	1	**274-2355**	2	PLATE	
	12	1	**275-2358**	1	SKIRT	
	13	1	**277-0639**	1	BRACKET	
	14	1	**277-4696**	1	HOSE-RADIATOR (LOWER)	
	15	1	**277-4697**	1	HOSE	
	16	1	**277-4813**	1	RECOVERY GP-COOLANT	
		1	**147-9611**	1	CAP-VENTED (COOLANT RECOVERY)	
	17	1	**277-8344**	1	SKIRT	
	18	1	**277-8438**	1	SKIRT	
Y	19	1	**291-3820**	1	COOLER GP-TRANSMISSION OIL	150
	20	1	**293-2916**	1	BRACKET AS	
	21	1	**296-5807**	3	CLAMP	
	22	1	**312-5570**	1	PLATE	
	23	1	**316-7992**	2	STUD	
	24	1	**144-3935**	2	CLIP	
M	25	1	**175-7141**	8	NUT-HEX FLANGE (M10X1.5-THD)	
	26	1	**198-4776**	2	WASHER-HARD (8.8X20X8-MM THK)	
	27	1	**4K-8864**	1	CLIP	
M	28	1	**5C-7261**	7	NUT (M8X1.25-THD)	
	29	1	**5P-4116**	4	WASHER-HARD (8.8X20.5X2-MM THK)	
	30	1	**7X-0515**	4	WASHER-HARD (17X35X5-MM THK)	
	31	1	**7X-0603**	4	WASHER-HARD (9.9X35X2.5-MM THK)	
	32	1	**8T-4121**	3	WASHER-HARD (11X21X2.5-MM THK)	
M	33	1	**8T-4133**	2	NUT (M10X1.5-THD)	
M	34	1	**8T-4136**	1	BOLT (M10X1.5X25-MM)	
M	35	1	**8T-4189**	5	BOLT (M8X1.25X20-MM)	
M	36	1	**8T-4197**	2	BOLT (M8X1.25X40-MM)	
M	37	1	**8T-4200**	1	BOLT (M8X1.25X16-MM)	
	38	1	**8T-4223**	2	WASHER-HARD (13.5X25.5X3-MM THK)	
	39	1	**8T-4224**	12	WASHER-HARD (8.8X16X2-MM THK)	
M	40	1	**8T-4244**	2	NUT (M12X1.75-THD)	
M	41	1	**8T-4779**	4	BOLT (M16X2X35-MM)	
M	42	1	**8T-4908**	5	BOLT (M8X1.25X25-MM)	
D	43	1	**5P-5991**		HOSE (0.8-M)	
E	44	1	**145-2350**		SEAL (41-CM EACH)	
G	45	1	**160-2252**		SLEEVE-ABRASION (26.5-IN)	
G	45A	1	**160-2252**		SLEEVE-ABRASION (7.5-IN)	
	46	1	**8T-6703**	1	CLAMP-HOSE	

D-ORDER BY THE METER
E-ORDER BY THE CENTIMETER
G-ORDER BY THE INCH
M-METRIC PART
Y-SEPARATE ILLUSTRATION

266-0149 **COOLER & MTG GP-ENG & HYDR** *(contd.)* **i04110250**

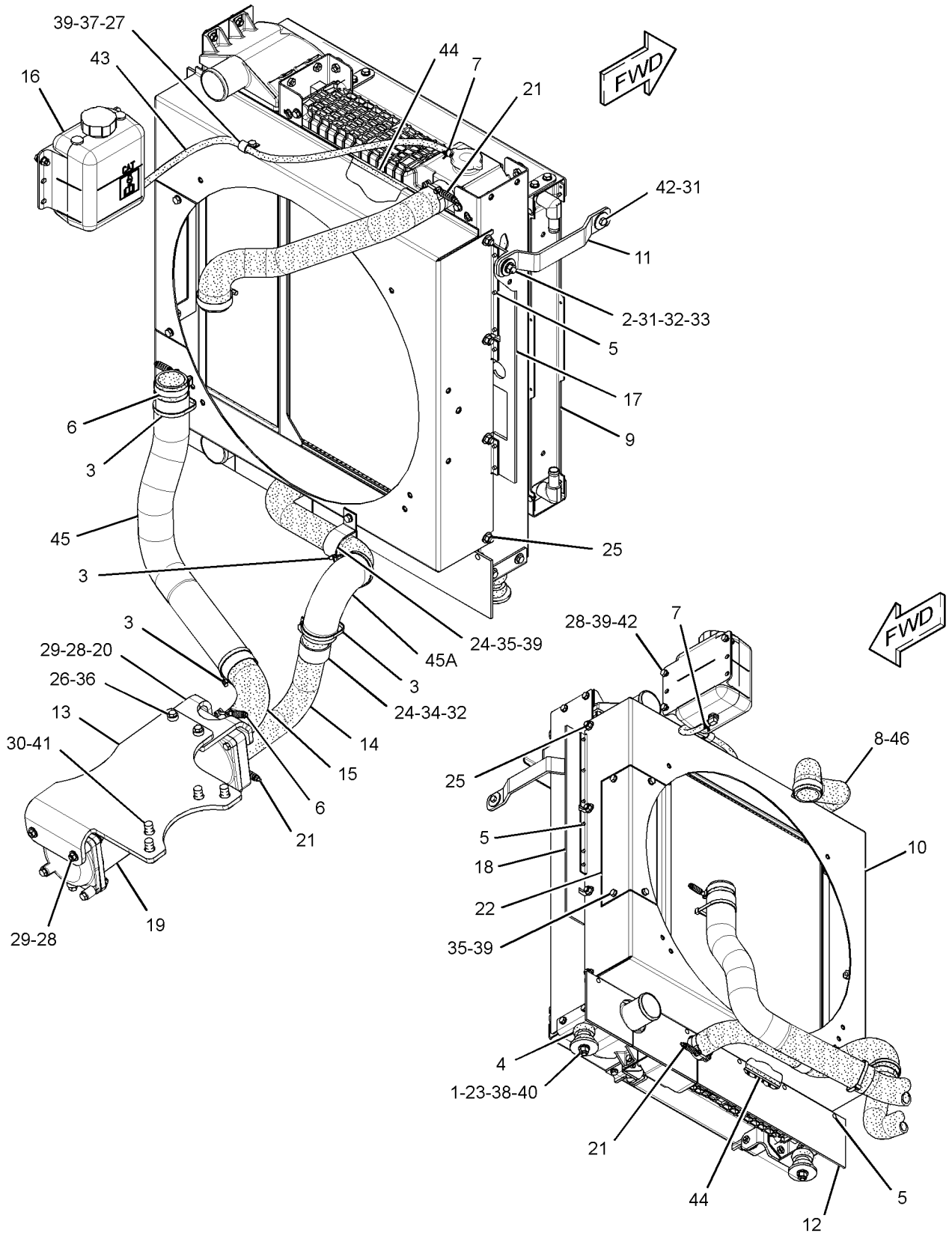

GRAPHIC #1 **<END>** g01722753

COOLING SYSTEM

254-0150 COOLER AR-ENGINE & HYDRAULIC

S/N: RBA1-UP

PART OF 368-0572 COMMON AR

SMCS-1063, 1353, 1374, 1375 **i04108454**

NOTE	PART NUMBER	QTY	PART NAME 1 2 3 4 5 6 (PRODUCT LEVEL)	SEE PAGE
Y	*266-0149*	1	COOLER & MTG GP-ENG & HYDR	40
Y	*254-0149*	1	LINES GP-AIR	59
Y	*254-0148*	1	LINES GP-HYDRAULIC OIL COOLER	280
Y	*254-0147*	1	LINES GP-TRANSMISSION COOLER	48

Y-SEPARATE ILLUSTRATION

<END>

COOLING SYSTEM

273-3137 COOLER GP-ENGINE & HYDRAULIC

S/N: RBA1-UP

PART OF 266-0149 COOLER & MTG GP-ENG & HYDR

SMCS-1063, 1353, 1374, 1375 **i04110270**

NOTE	REF NO	GRAPHIC REF	PART NUMBER	QTY	PART NAME 1 2 3 4 5 6 (PRODUCT LEVEL)	SEE PAGE
	1	1	**211-6574**	1	CAP-PRESSURE (16-PSI)	
	3	1	**278-3523**	1	RADIATOR GP	
	4	1	**278-3524**	1	AFTERCOOLER AS	
	5	1	**299-9009**	1	COOLER GP-HYDRAULIC OIL & FUEL	
		1	**123-4065**	24	RIVET-POP	
		1	**278-3505**	1	COOLER AS-HYDRAULIC OIL	
		1	**290-8071**	1	COOLER AS-FUEL	
	6	1	**260-6685**	2	WASHER (9X25X1.6-MM THK)	
	7	1	**5P-4116**	3	WASHER-HARD (8.8X20.5X2-MM THK)	
M	8	1	**8T-4189**	7	BOLT (M8X1.25X20-MM)	
	9	1	**8T-4224**	4	WASHER-HARD (8.8X16X2-MM THK)	
M	10	1	**8T-7547**	2	BOLT (M8X1.25X30-MM)	

M-METRIC PART

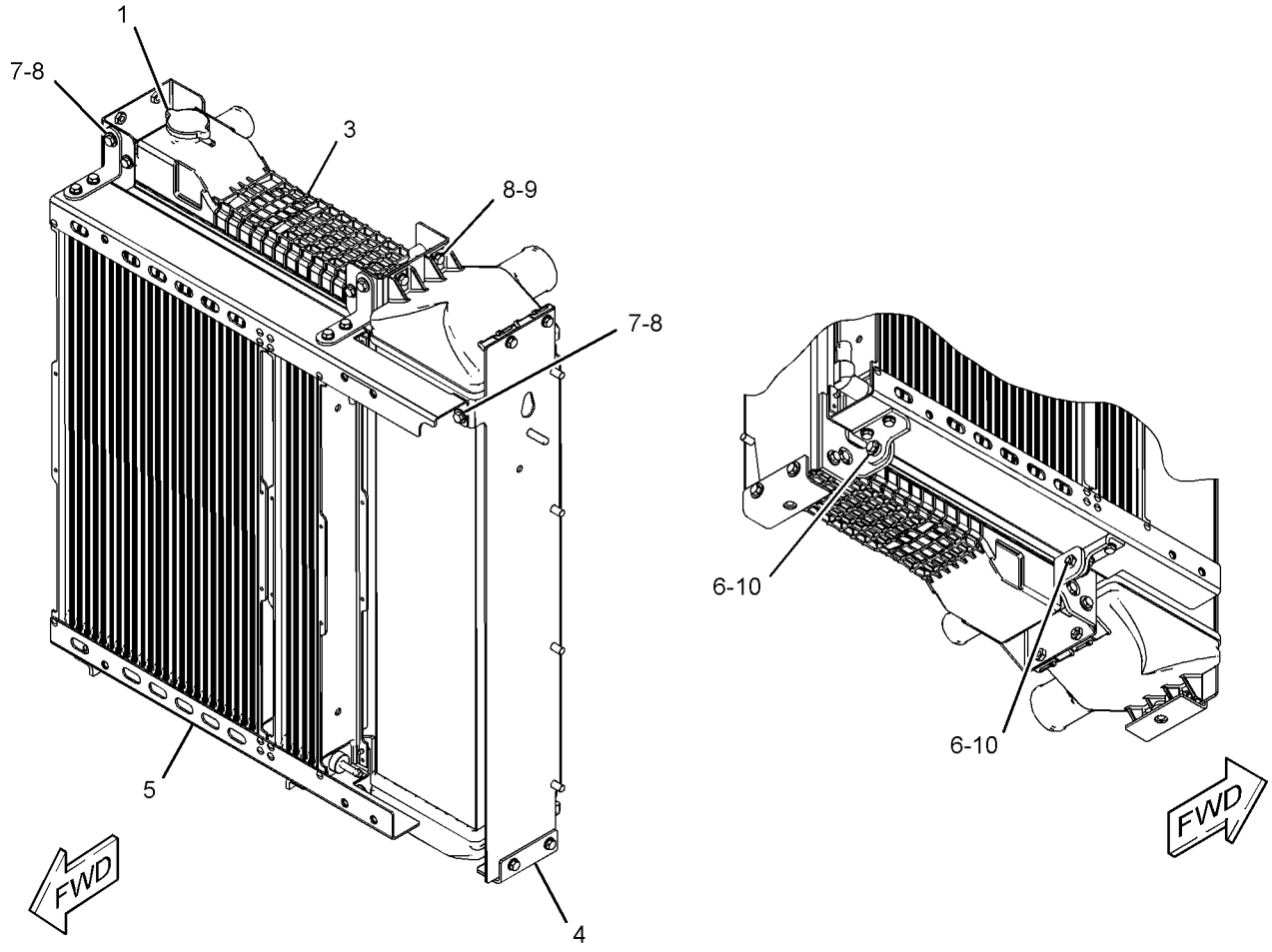

GRAPHIC #1 **<END>** g01413417

COOLING SYSTEM

298-5099 COOLER GP-ENGINE OIL

S/N: C4E1-UP

PART OF 254-0115 ENGINE AR-PRIMARY

SMCS-1378 **i04022179**

NOTE	REF NO	GRAPHIC REF	PART NUMBER	QTY	PART NAME 1 2 3 4 5 6 (PRODUCT LEVEL)	SEE PAGE
	1	1	**6I-0572**	4	BOLT (M8X1.25X20-MM)	
M	2	1	**6I-0645**	4	BOLT (M8X1.25X25-MM)	
	3	1	**225-7944**	2	GASKET	
	4	1	**232-3751**	1	PLATE	
	5	1	**249-0974**	1	HEAD AS-OIL FILTER	
CY	6	1	**353-7717**	1	COOLER GP-ENGINE OIL	45

C-CHANGE FROM PREVIOUS TYPE
M-METRIC PART
Y-SEPARATE ILLUSTRATION

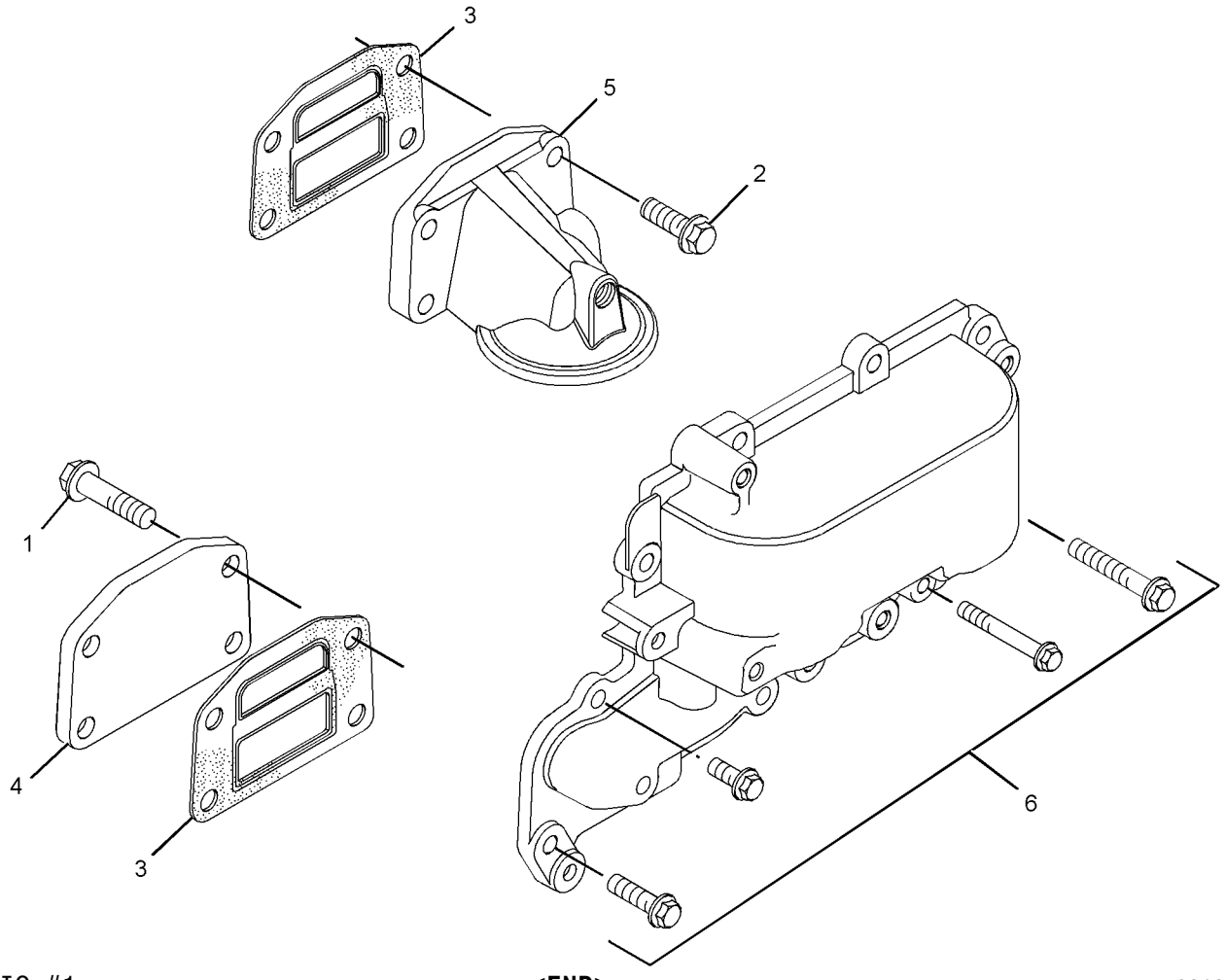

GRAPHIC #1 **<END>** g02124518

353-7717 COOLER GP-ENGINE OIL

S/N: C4E1-UP

PART OF 298-5099 COOLER GP-ENGINE OIL

SMCS-1378 **i04003848**

NOTE	REF NO	GRAPHIC REF	PART NUMBER	QTY	PART NAME 1 2 3 4 5 6 (PRODUCT LEVEL)	SEE PAGE
M	1	1	**6I-0217**	2	BOLT (M8X1.25X20-MM)	
M	2	1	**6I-0260**	7	BOLT (M8X1.25X25-MM)	
	3	1	**6I-1090**	1	BOLT (M8X1.25X40-MM)	
M	4	1	**100-3751**	2	BOLT (M8X1.25X65-MM)	
	5	1	**298-4558**	1	COOLER-OIL	
	6	1	**353-7715**	1	GASKET	
	7	1	**298-4560**	2	GASKET	

M-METRIC PART

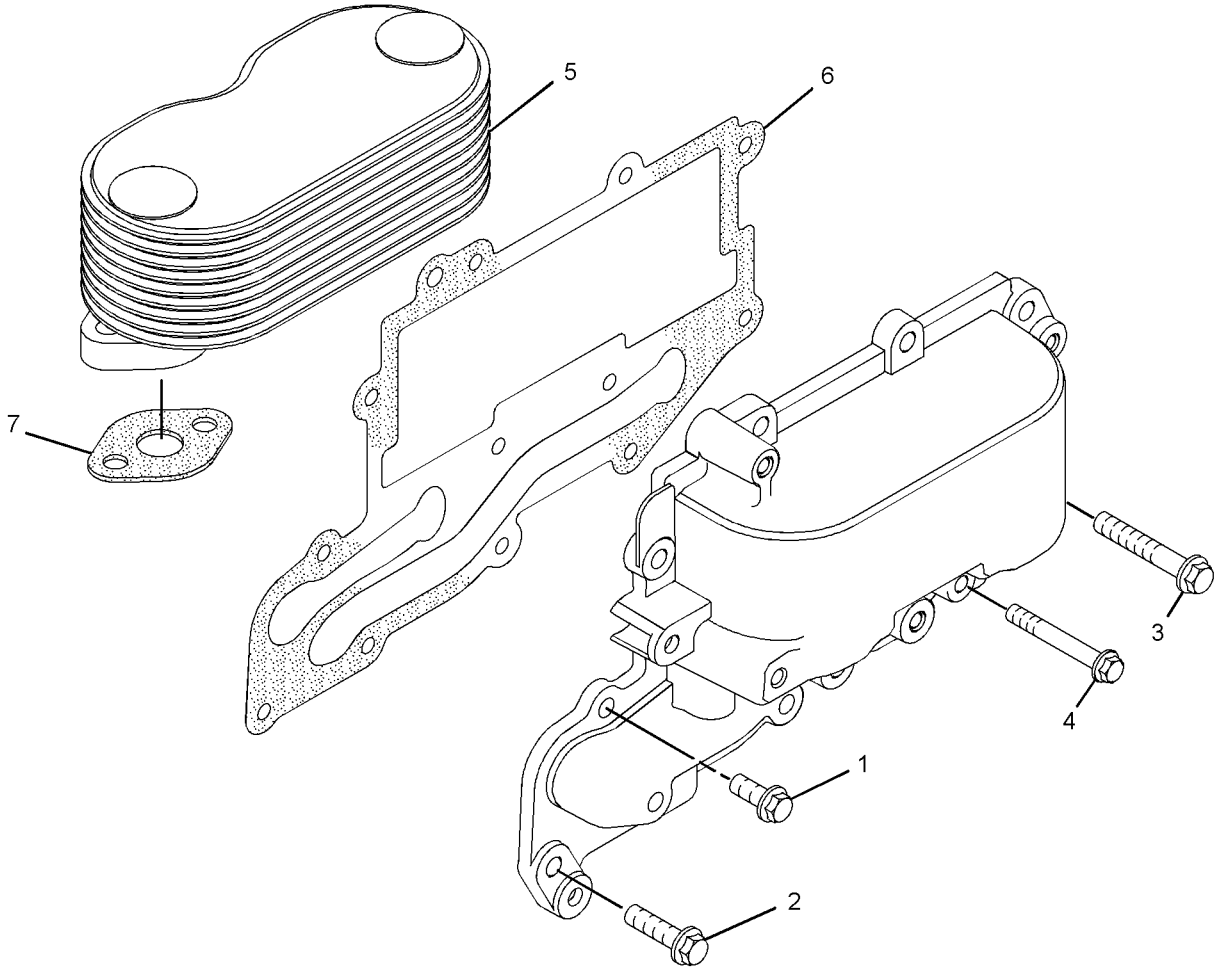

GRAPHIC #1 **<END>** g02196064

254-0112 FAN GP-SUCTION—WITHOUT AIR CONDITIONER

S/N: RBA1-UP
PART OF 254-0198 CANOPY AR-OPEN ROPS
AN ATTACHMENT

SMCS-1356, 1360 **i04116476**

NOTE	REF NO	GRAPHIC REF	PART NUMBER	QTY	PART NAME 1 2 3 4 5 6 (PRODUCT LEVEL)	SEE PAGE
	1	1	**207-2554**	1	SPACER-FAN	
	2	1	**349-3261**	1	PLATE-TENSIONER	
	3	1	**261-0406**	1	BELT TENSIONER	
	4	1	**261-4320**	1	PULLEY	
	5	1	**273-2994**	1	SPIDER AS-FAN	
	6	1	**275-3432**	1	GUARD AS-FAN	
	7	1	**283-1171**	1	BELT-SERPENTINE (FAN)	
	8	1	**5P-4116**	4	WASHER-HARD (8.8X20.5X2-MM THK)	
M	9	1	**7X-2539**	4	BOLT (M8X1.25X110-MM)	
	10	1	**8T-4121**	4	WASHER-HARD (11X21X2.5-MM THK)	
M	11	1	**8T-4196**	3	BOLT (M10X1.5X35-MM)	
	12	1	**8T-4224**	4	WASHER-HARD (8.8X16X2-MM THK)	
M	13	1	**8T-4908**	4	BOLT (M8X1.25X25-MM)	
M	14	1	**8T-4172**	1	BOLT (M10X1.5X80-MM)	

M-METRIC PART

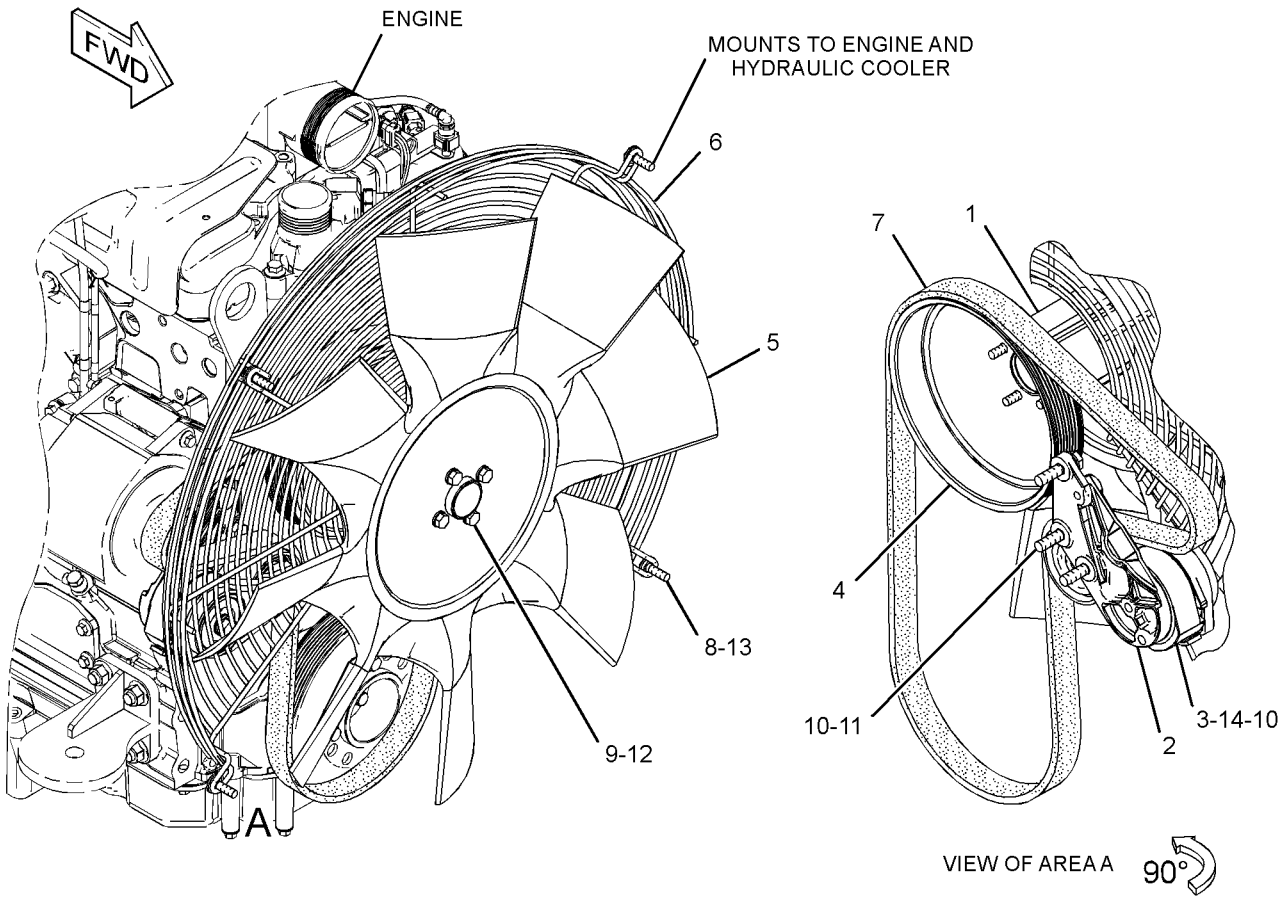

GRAPHIC #1 **<END>** g01409575

254-0113 FAN GP-SUCTION—WITH AIR CONDITIONER

S/N: RBA1-UP

PART OF 254-0200 CAB AR-ENCLOSED ROPS

AN ATTACHMENT

SMCS-1356, 1360 **i04115382**

NOTE	REF NO	GRAPHIC REF	PART NUMBER	QTY	PART NAME 1 2 3 4 5 6 (PRODUCT LEVEL)	SEE PAGE
	1	1	**207-2554**	1	SPACER-FAN	
	2	1	**261-0376**	1	BELT TENSIONER	
	3	1	**348-8149**	1	PLATE-MOUNTING	
	4	1	**261-0428**	1	PULLEY AS-IDLER	
	5	1	**261-4320**	1	PULLEY	
	6	1	**273-2994**	1	SPIDER AS-FAN	
	7	1	**275-3432**	1	GUARD AS-FAN	
	8	1	**283-1172**	1	BELT-SERPENTINE (FAN)	
	9	1	**5P-4116**	4	WASHER-HARD (8.8X20.5X2-MM THK)	
M	10	1	**7X-2539**	4	BOLT (M8X1.25X110-MM)	
	11	1	**8T-4121**	4	WASHER-HARD (11X21X2.5-MM THK)	
M	12	1	**8T-4196**	3	BOLT (M10X1.5X35-MM)	
	13	1	**8T-4224**	4	WASHER-HARD (8.8X16X2-MM THK)	
M	14	1	**8T-4908**	4	BOLT (M8X1.25X25-MM)	
M	15	1	**8T-4172**	1	BOLT (M10X1.5X80-MM)	

M-METRIC PART

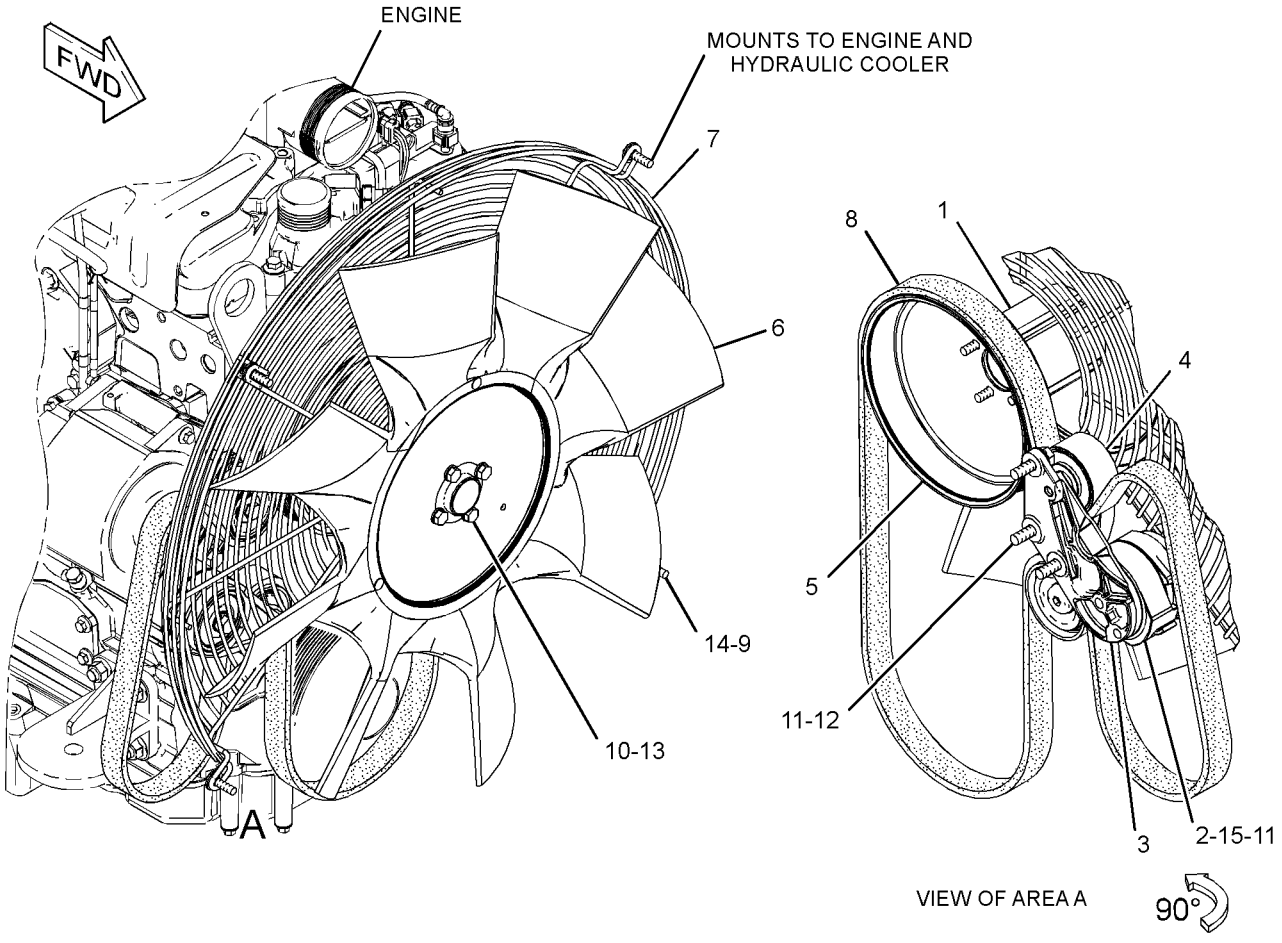

GRAPHIC #1 **<END>** g01524367

254-0147 LINES GP-TRANSMISSION COOLER

S/N: RBA1-UP

PART OF 254-0150 COOLER AR-ENGINE & HYDRAULIC

SMCS-1375 **i04110189**

NOTE	REF NO	GRAPHIC REF	PART NUMBER	QTY	PART NAME 1 2 3 4 5 6 (PRODUCT LEVEL)	SEE PAGE
	1	1	**4J-0520**	2	SEAL-O-RING	
	2	1	**7K-1181**	1	STRAP-CABLE	
I	3	1	**271-3188**	1	HOSE AS	
I	4	1	**271-3189**	1	HOSE AS	
	5	1	*148-8339*	1	CONNECTOR AS	
		1	**6V-8716**	1	CONNECTOR	
		1	**6V-9746**	1	SEAL-O-RING	
		1	**7M-8485**	1	SEAL-O-RING	
	6	1	*148-8360*	1	ELBOW AS	
		1	**6V-9182**	1	ELBOW	
		1	**6V-9746**	1	SEAL-O-RING	
		1	**7M-8485**	1	SEAL-O-RING	
	7	1	*148-8392*	1	ELBOW AS	
		1	**6V-9746**	1	SEAL-O-RING	
		1	**6V-9853**	1	ELBOW	
	8	1	**1P-4577**	4	FLANGE-HALF	
	9	1	**8T-4896**	8	WASHER-HARD (10.2X18.5X2.5-MM THK)	
	10	1	**8T-7529**	1	CLIP	
	11	1	*171-6723*	1	ELBOW AS	
			6V-9746	1	SEAL-O-RING	
			8T-8899	1	ELBOW	
	12	1	**9B-7237**	8	BOLT (3/8-16X1.25-IN)	

I-REFER TO HYDRAULIC INFORMATION SYSTEM

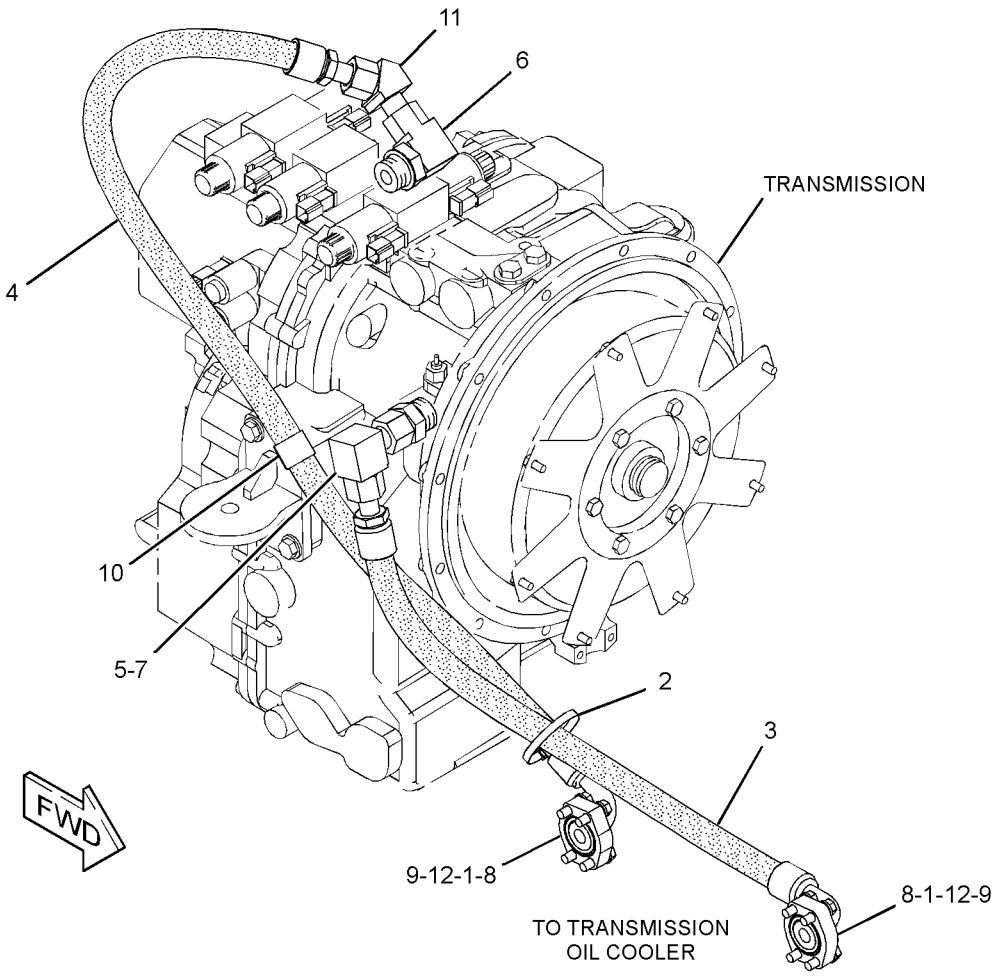

GRAPHIC #1 **<END>** g01412345

COOLING SYSTEM

298-5105 PUMP GP-WATER

S/N: C4E1-UP

PART OF 254-0115 ENGINE AR-PRIMARY

SMCS-1361 **i03998331**

NOTE	REF NO	GRAPHIC REF	PART NUMBER	QTY	PART NAME 1 2 3 4 5 6 (PRODUCT LEVEL)	SEE PAGE
C	1	1	**354-4754**	1	KIT-WATER PUMP	
	1A	1	**225-8019**	1	GASKET	
M	2	1	**6I-0254**	2	BOLT (M8X1.25X30-MM)	
	3	1	**113-8129**	2	BOLT (M8X1.25X75-MM)	
	4	1	**277-2925**	1	CONNECTION AS	
	4A	1	**225-7738**	1	SEAL-O-RING	
	4B	1	**277-2923**	1	GASKET	
M	5	1	**6I-0217**	2	BOLT (M8X1.25X20-MM)	
	6	1	**6I-0839**	5	BOLT (M8X1.25X70-MM)	

C-CHANGE FROM PREVIOUS TYPE
M-METRIC PART

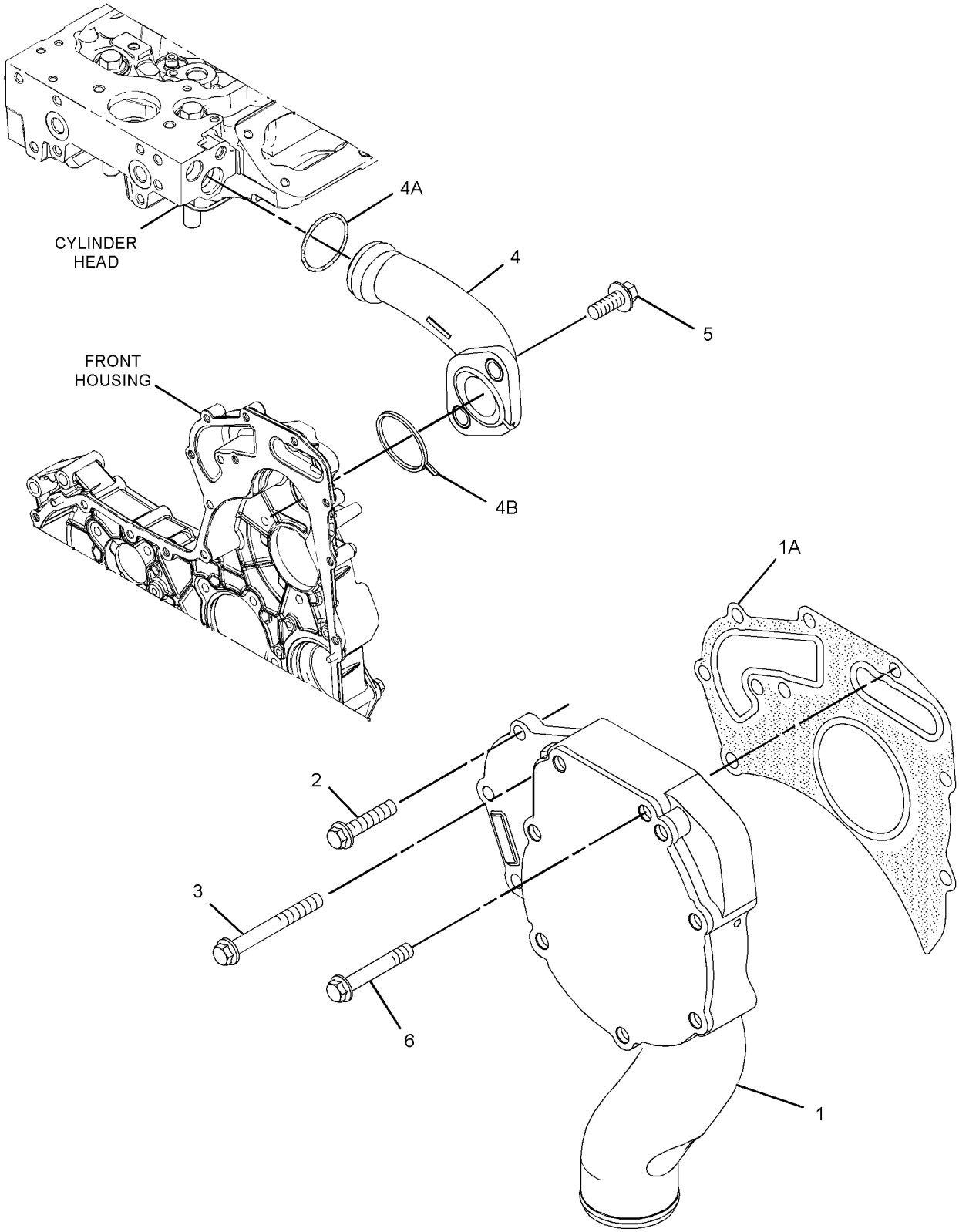

GRAPHIC #1 **<END>** g02177184

AIR INLET AND EXHAUST SYSTEM

254-0116 AIR CLEANER GP–TURBO

S/N: RBA1-UP

PART OF 254-0120 ENGINE AR

SMCS-1051, 1054 **i04102912**

NOTE	REF NO	GRAPHIC REF	PART NUMBER	QTY	PART NAME 1 2 3 4 5 6 (PRODUCT LEVEL)	SEE PAGE
	1	1	**096-1855**	1	CLAMP-HOSE	
	2	1	**159-0186**	1	CLAMP-HOSE	
	3	1	**127-4471**	2	CLAMP-HOSE	
	4	1	**273-4705**	1	DUCT-AIR	
	5	1	**317-4574**	1	HOSE	
Y	6	1	**273-4707**	1	AIR CLEANER GP	54
	7	1	**273-4708**	1	HOSE	
	8	1	**273-4709**	1	SEAL	
E	9	1	**7X-7898**		TRIM (75-CM)	
Y	10	1	*278-6399*	1	INDICATOR GP-AIR FILTER CHANGE	58
	11	1	**279-4602**	1	STUD	
M	12	1	**129-3178**	1	LOCKNUT (M6X1-THD)	
	13	1	**295-5550**	1	CLAMP-BAND (CONSTANT TENSION)	
	14	1	**7X-0586**	2	WASHER-HARD (7.2X32X2-MM THK)	
	15	1	**317-4575**	1	HOSE	
	16	1	**317-2727**	1	BRACKET AS	
M		1	**8T-3612**	4	NUT-WELD (M8X1.25-THD)	
	17	1	**260-0634**	1	TUBE	
	18	1	**247-9730**	1	VALVE AS-CHECK	
	19	1	**8T-4224**	6	WASHER-HARD (8.8X16X2-MM THK)	
M	20	1	**8T-4908**	6	BOLT (M8X1.25X25-MM)	
	21	1	**9M-2904**	1	CLAMP-HOSE	

E-ORDER BY THE CENTIMETER
M-METRIC PART
Y-SEPARATE ILLUSTRATION

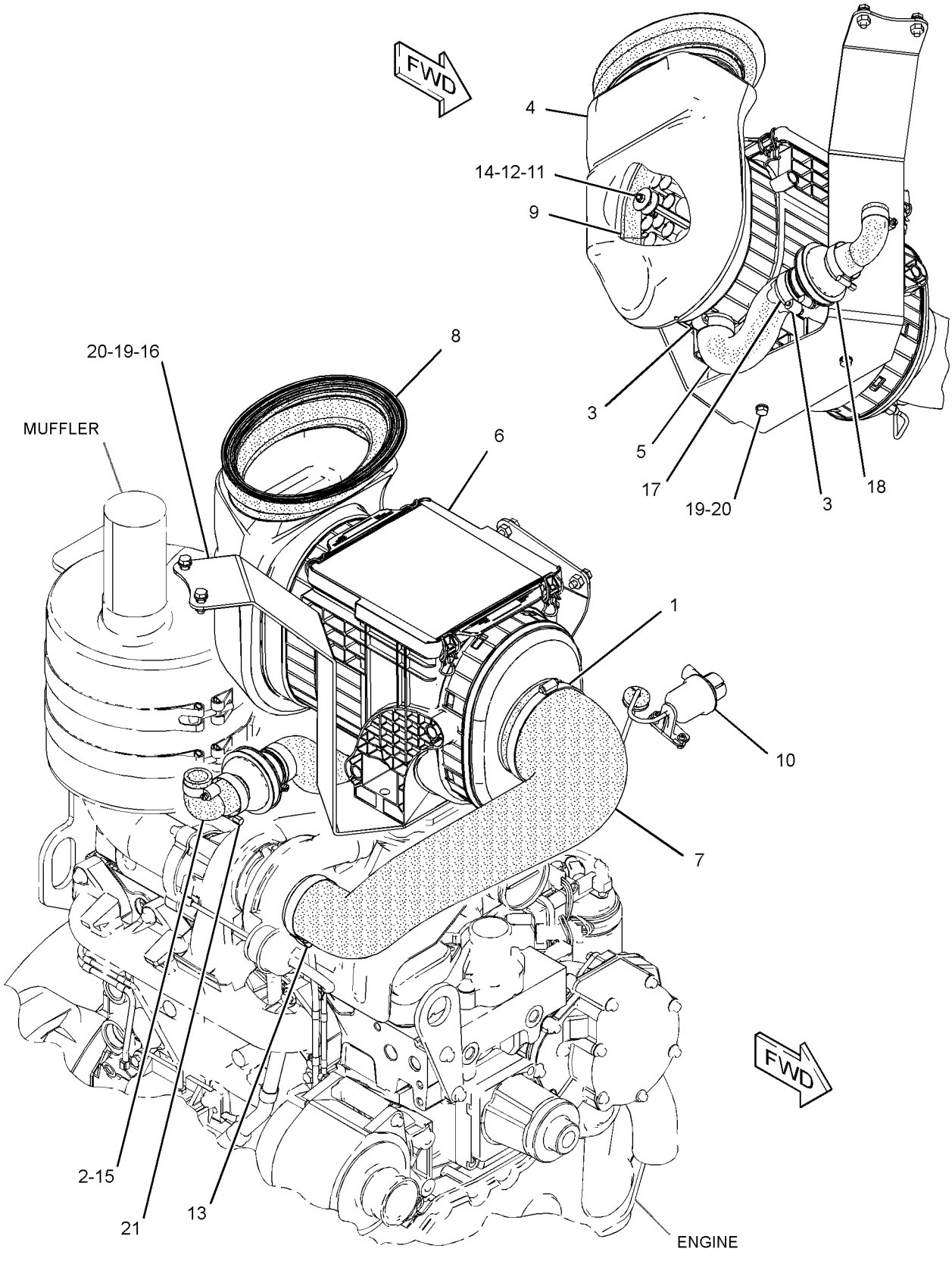

GRAPHIC #1 **<END>** g01445339

AIR INLET AND EXHAUST SYSTEM

273-4707 AIR CLEANER GP–TURBO

S/N: RBA1-UP

PART OF 254-0116 AIR CLEANER GP

SMCS-1051, 1054 **i03849766**

NOTE	REF NO	GRAPHIC REF	PART NUMBER	QTY	PART NAME 1 2 3 4 5 6 (PRODUCT LEVEL)	SEE PAGE
	1	1	**278-8275**	1	FILTER ELEMENT-AIR (PRIMARY) (AIR CLEANER)	
	2	1	**278-8276**	1	FILTER ELEMENT-AIR (CLEANER)	
	3	1	**278-8277**	1	COVER	
	4	1	**278-8278**	1	CANISTER AS	

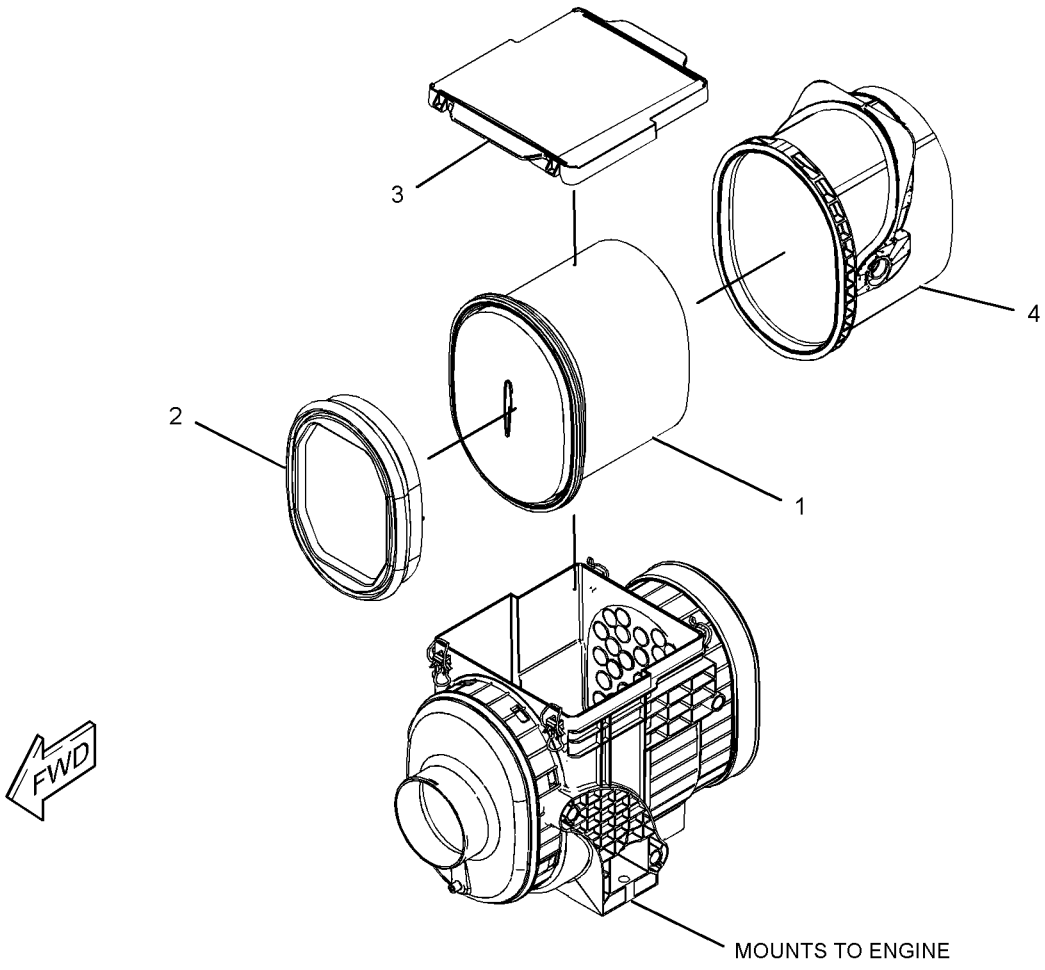

GRAPHIC #1 **<END>** g01413069

303-5777 ELBOW GP-AIR INLET

S/N: C4E1-UP

PART OF 254-0115 ENGINE AR-PRIMARY

SMCS-1058, 1087 **i03866147**

NOTE	REF NO	GRAPHIC REF	PART NUMBER	QTY	PART NAME 1 2 3 4 5 6 (PRODUCT LEVEL)	SEE PAGE
	1	1	**256-4447**	1	ELBOW AS-AIR INLET	
	1A	1	**238-8288**	1	GASKET-INLET	
	2	1	**114-2579**	2	GASKET	
	3	1	**111-8222**	4	BOLT (M8X16-MM)	
	4	1	**220-8311**	2	BOLT (M8X1.25X115-MM)	
M	5	1	**6I-0217**	2	BOLT (M8X1.25X20-MM)	
	6	1	**185-8627**	2	PLATE-WARNING-ROPS/FOPS (FINNISH)	
M	7	1	**124-3815**	4	BOLT (M8X1.25X16-MM)	

M-METRIC PART

303-5777 **ELBOW GP-AIR INLET** *(contd.)* **i03866147**

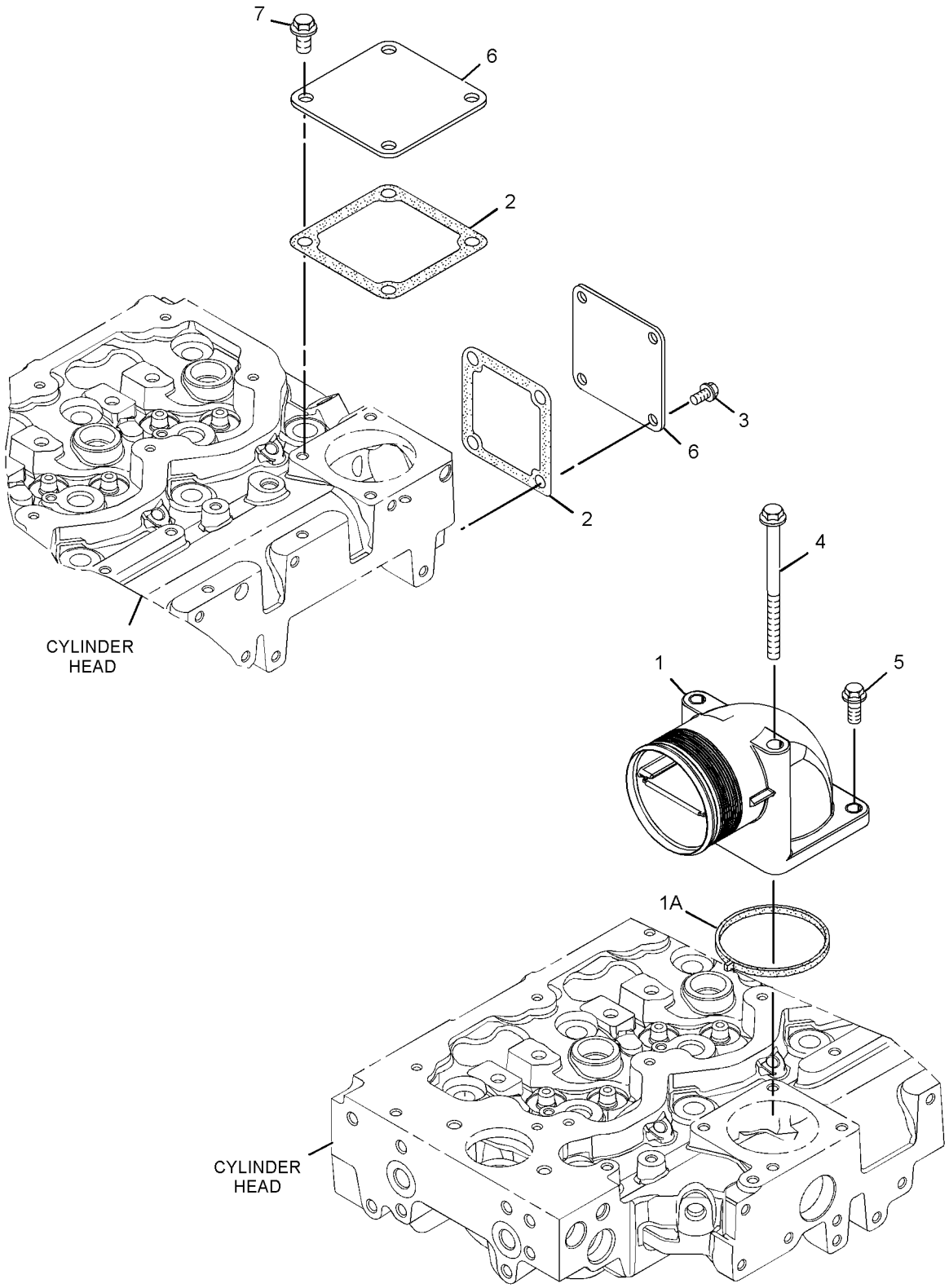

GRAPHIC #1 **<END>** g02091235

AIR INLET AND EXHAUST SYSTEM

278-3492 EXTENSION GP-EXHAUST

S/N: RBA1-UP

PART OF 254-0120 ENGINE AR

SMCS-1061 **i04103209**

NOTE	REF NO	GRAPHIC REF	PART NUMBER	QTY	PART NAME 1 2 3 4 5 6 (PRODUCT LEVEL)	SEE PAGE
	1	1	**141-1480**	1	CLAMP AS	
	2	1	**279-1971**	1	PIPE-EXTENSION	

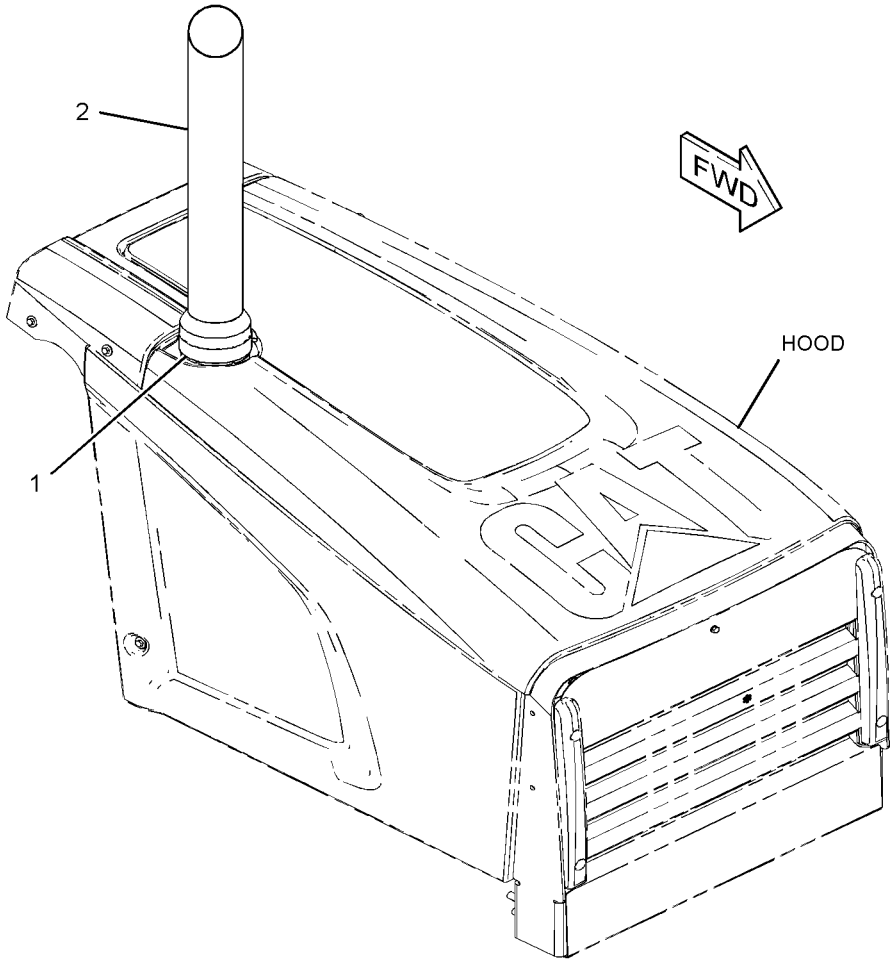

GRAPHIC #1 **<END>** g01414136

AIR INLET AND EXHAUST SYSTEM

278-6399 INDICATOR GP-AIR FILTER CHANGE

S/N: RBA1-UP

PART OF 254-0116 AIR CLEANER GP

SMCS-7452 **i04102990**

NOTE	REF NO	GRAPHIC REF	PART NUMBER	QTY	PART NAME 1 2 3 4 5 6 (PRODUCT LEVEL)	SEE PAGE
D	1	1	**6V-1363**		HOSE (0.4-M)	
	2	1	**255-4692**	1	CONNECTOR-FILTER	
	3	1	**260-1336**	1	INDICATOR GP-AIR FILTER CHANGE	
		1	**205-1627**	1	BRACKET	
		1	**260-3122**	1	INDICATOR-AIR FILTER SERVICE	
	4	1	**4B-4863**	4	WASHER (4.7X11X1.2-MM THK)	
M	5	1	**5C-8312**	2	NUT (M4X0.7-THD)	
M	6	1	**8T-9405**	2	BOLT-SOCKET HEAD (M4X0.7X16-MM)	
	7	1	**2D-2751**	1	GROMMET	

D-ORDER BY THE METER
M-METRIC PART

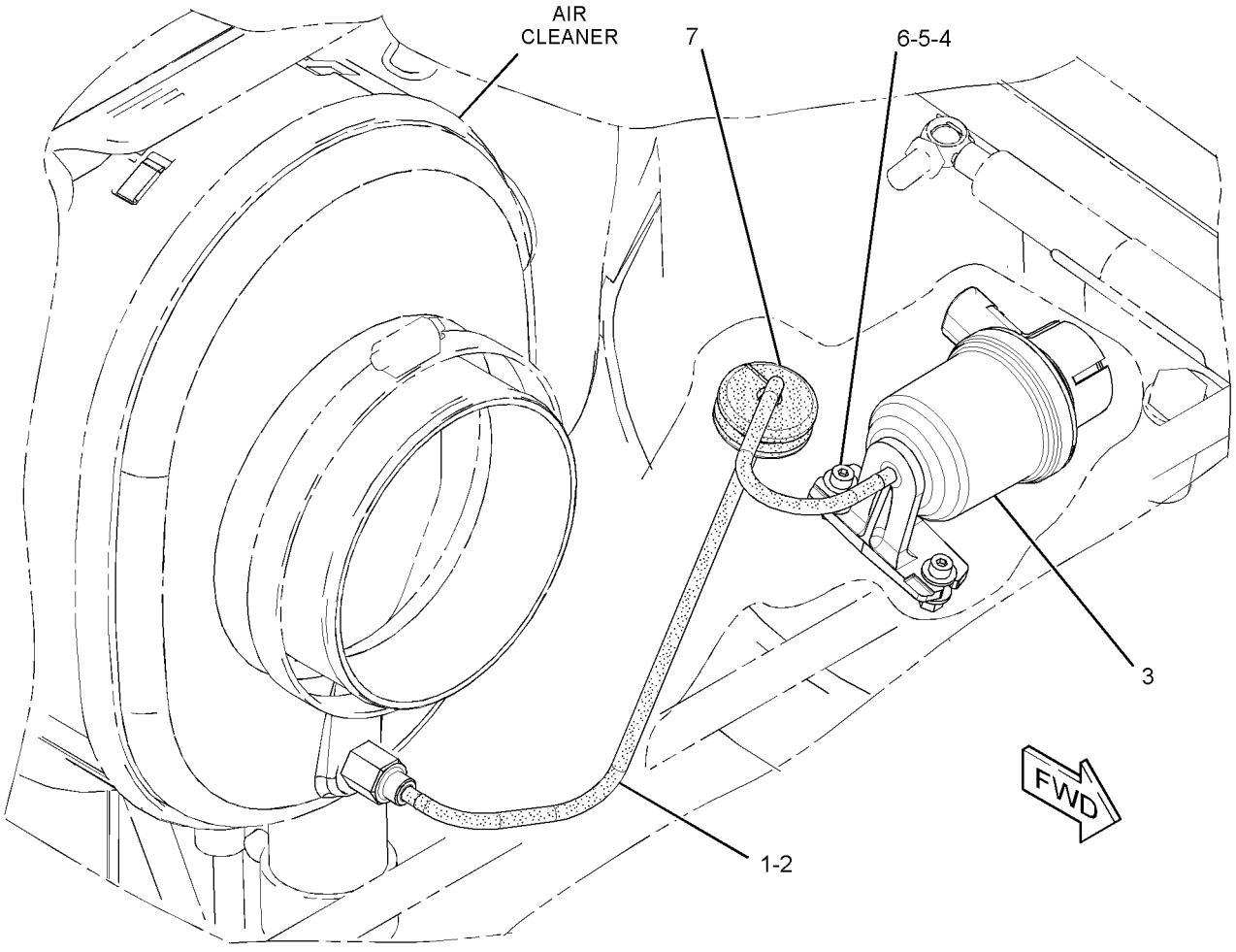

GRAPHIC #1 **<END>** g01434833

AIR INLET AND EXHAUST SYSTEM

254-0149 LINES GP-AIR

S/N: RBA1-UP

PART OF 254-0150 COOLER AR-ENGINE & HYDRAULIC

SMCS-1071 **i04110210**

NOTE	REF NO	GRAPHIC REF	PART NUMBER	QTY	PART NAME 1 2 3 4 5 6 (PRODUCT LEVEL)	SEE PAGE
	1	1	**4N-6749**	1	HOSE-ADAPTER (UPPER RADIATOR)	
	2	1	**209-4573**	1	CLAMP-V BAND	
	3	1	**255-2731**	1	CHART	
	4	1	**271-5357**	1	HOSE	
	5	1	**271-5358**	1	TUBE	
	6	1	**271-5359**	1	TUBE	
	7	1	**311-2768**	1	HOSE	
	8	1	**209-4581**	1	CLAMP	
	9	1	**215-4012**	1	CLAMP	
	10	1	**216-4983**	3	CLAMP	
	11	1	**212-6933**	2	CLAMP	

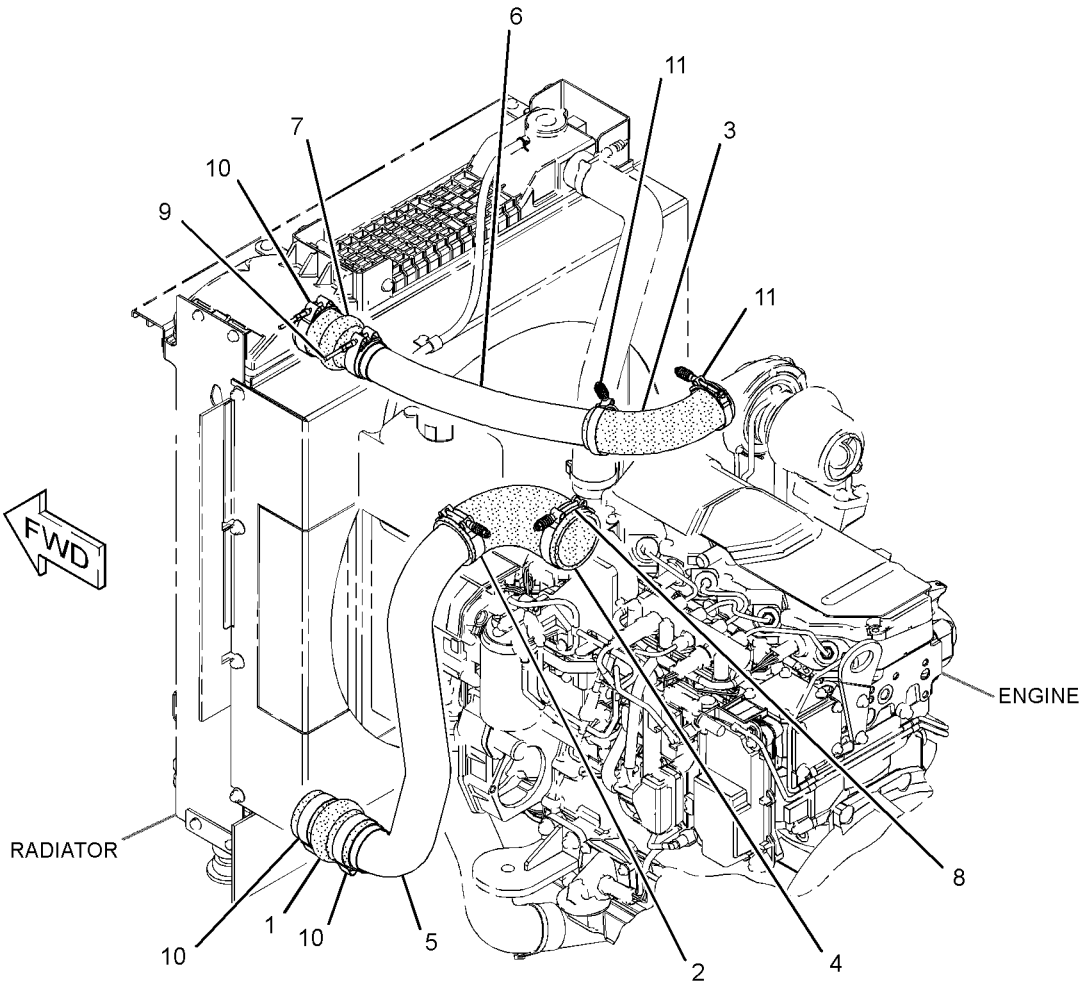

GRAPHIC #1 **<END>** g01433771

AIR INLET AND EXHAUST SYSTEM

254-0117 MUFFLER GP

S/N: RBA1-UP

PART OF 254-0120 ENGINE AR

SMCS-1062 **i04102994**

NOTE	REF NO	GRAPHIC REF	PART NUMBER	QTY	PART NAME 1 2 3 4 5 6 (PRODUCT LEVEL)	SEE PAGE
	1	1	**6I-0364**	3	STUD (M10X1.5X30-MM)	
	2	1	**6I-0563**	3	NUT (M10X1.5-THD)	
	3	1	**210-6829**	2	CLAMP AS	
	4	1	**273-2585**	1	PLATE AS	
	5	1	**273-2596**	1	MUFFLER AS	
	6	1	**317-2728**	1	BRACKET AS	
M	7	1	**7X-0818**	2	BOLT (M8X1.25X45-MM)	
	8	1	**7Y-1924**	2	SPACER (9X19X23-MM THK)	
	9	1	**8T-4121**	16	WASHER-HARD (11X21X2.5-MM THK)	
M	10	1	**8T-4133**	4	NUT (M10X1.5-THD)	
M	11	1	**8T-4136**	4	BOLT (M10X1.5X25-MM)	
M	12	1	**8T-4195**	8	BOLT (M10X1.5X30-MM)	
	13	1	**8T-4224**	2	WASHER-HARD (8.8X16X2-MM THK)	
B	14	1	**8T-4121**	4	WASHER-HARD (11X21X2.5-MM THK)	

B-USE AS REQUIRED
M-METRIC PART

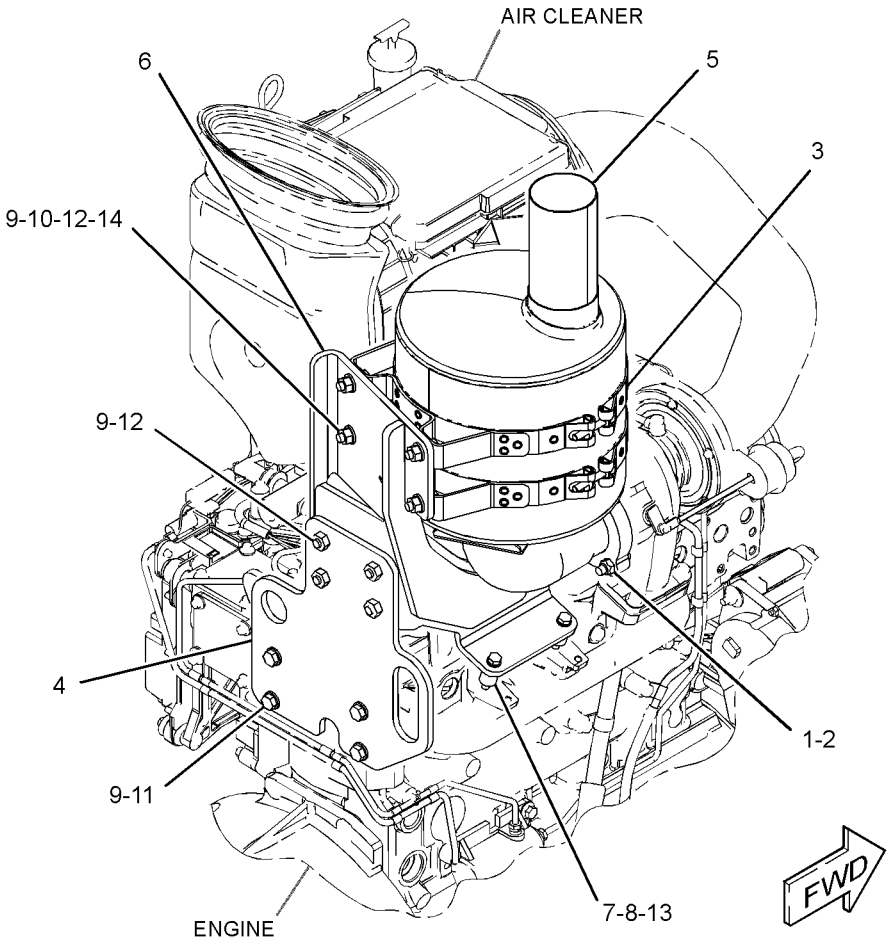

GRAPHIC #1 **<END>** g01710633

AIR INLET AND EXHAUST SYSTEM

307-4410 TURBOCHARGER GP

S/N: C4E1-UP

PART OF 254-0115 ENGINE AR-PRIMARY

SMCS-1052, 1053 **i03866141**

NOTE	REF NO	GRAPHIC REF	PART NUMBER	QTY	PART NAME 1 2 3 4 5 6 (PRODUCT LEVEL)	SEE PAGE
M	1	1	**6I-0217**	2	BOLT (M8X1.25X20-MM)	
M	2	1	**6I-0593**	1	BOLT (M10X1.5X30-MM)	
M	3	1	**6I-0654**	1	BOLT (M10X1.5X25-MM)	
	4	2	**6I-0817**	1	ADAPTER	
	5	2	**6I-4200**	2	BOLT (M10X1.5X16-MM)	
	6	2	**9Y-9381**	1	WASHER-HARD	
CM	7	2	**100-4830**	1	BOLT (M10X1.5X20-MM)	
	8	1	**106-8916**	2	BOLT (M6X16-MM)	
	9	1	**123-4038**	1	SPACER	
	10	1	**172-4325**	1	SPACER	
	11	1	**225-8533**	1	GASKET	
	12	1	**225-8534**	1	GASKET	
	13	1	**238-8292**	1	BOLT-FLANGE HEAD	
	14	1	**278-0361**	3	BOLT (M10X1.5X45-MM)	
	15	2	**294-7375**	1	SOLENOID (WASTEGATE)	
	16	1	**298-4570**	1	GASKET-EXHAUST MANIFOLD	
C	17	2	**303-2116**	6	CLIP	
	18	1	**316-0555**	1	TURBOCHARGER	
	19	1	**303-5786**	1	TUBE AS-TURBOCHARGER OIL (SUPPLY)	
	19A	1	**220-7163**	1	CLIP	
	19B	1	**225-8524**	2	BOLT-SPECIAL (BANJO)	
	19C	1	**225-8526**	4	WASHER (10.4X13.75X1.37-MM THK)	
	20	1	**303-5787**	1	TUBE AS-TURBOCHARGER OIL (DRAIN)	
	20A	1	**103-2135**	1	CLIP	
	21	1	**303-5788**	1	MANIFOLD-EXHAUST	
	22	2	**303-5793**	1	TUBE AS	
	22A	2	**4B-8774**	1	NUT-FLARED	
	22B	2	**032-8047**	1	FERRULE	
	22C	2	**278-0316**	2	CLIP	
	22D	2	**300-6520**	1	HOSE AS	
	22E	2	**107-2348**	2	CLIP	
	23	2	**304-3704**	1	TUBE AS	
	23A	2	**133-9469**	2	CLIP	
	23B	2	**035-8014**	1	NUT (7/16-IN)	
	23C	2	**032-8047**	1	FERRULE	
	23D	2	**4B-8774**	1	NUT-FLARED	
	24	1	**194-5390**	1	GASKET-MANIFOLD	
	25	1	**147-5553**	4	STUD	
	26	1	**6I-0563**	4	NUT (M10X1.5-THD)	
C	27	2	**127-8165**	1	SPACER	

C-CHANGE FROM PREVIOUS TYPE
M-METRIC PART

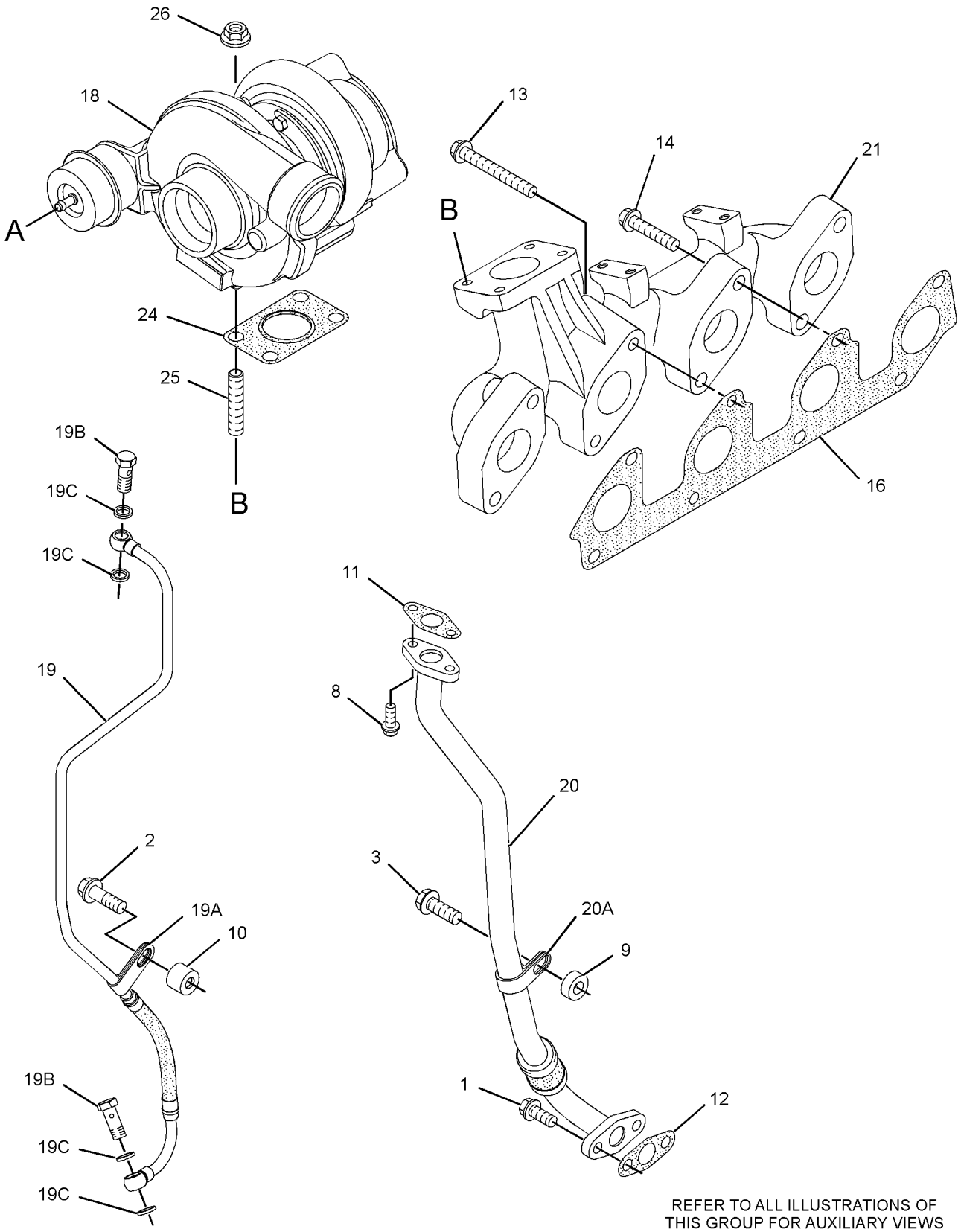

REFER TO ALL ILLUSTRATIONS OF
THIS GROUP FOR AUXILIARY VIEWS

GRAPHIC #1

g01632194

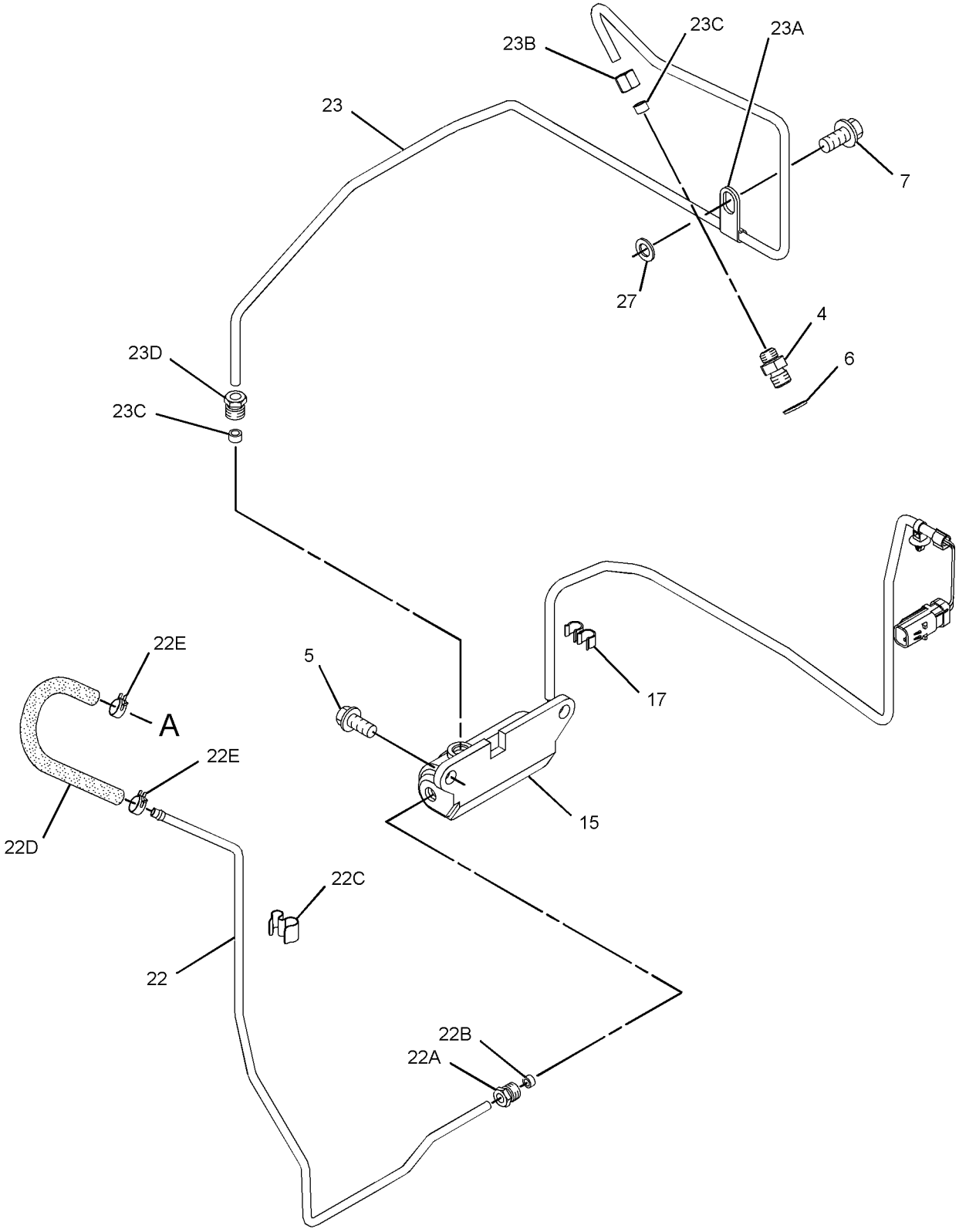

GRAPHIC #2 **<END>** g01632196

FUEL SYSTEM

209-3376 CONTROL GP-GOVERNOR

S/N: RBA1-UP

PART OF 254-0120 ENGINE AR

SMCS-1265 **i03893330**

NOTE	REF NO	GRAPHIC REF	PART NUMBER	QTY	PART NAME 1 2 3 4 5 6 (PRODUCT LEVEL)	SEE PAGE
Y	1	1	**288-8045**	1	CONTROL GP-GOVERNOR	65
	2	1	**3S-2093**	1	STRAP-CABLE	
M	3	1	**119-5025**	3	SCREW-FLAT HEAD (M6X1X25-MM)	
	4	1	**164-1395**	1	KNOB (GOVERNOR CONTROL)	
M	5	1	**8T-4138**	3	BOLT (M6X1X20-MM)	
	6	1	**8T-4205**	3	WASHER-HARD (7.2X14.5X2-MM THK)	
	7	1	**248-2707**	1	GROMMET	

M-METRIC PART
Y-SEPARATE ILLUSTRATION

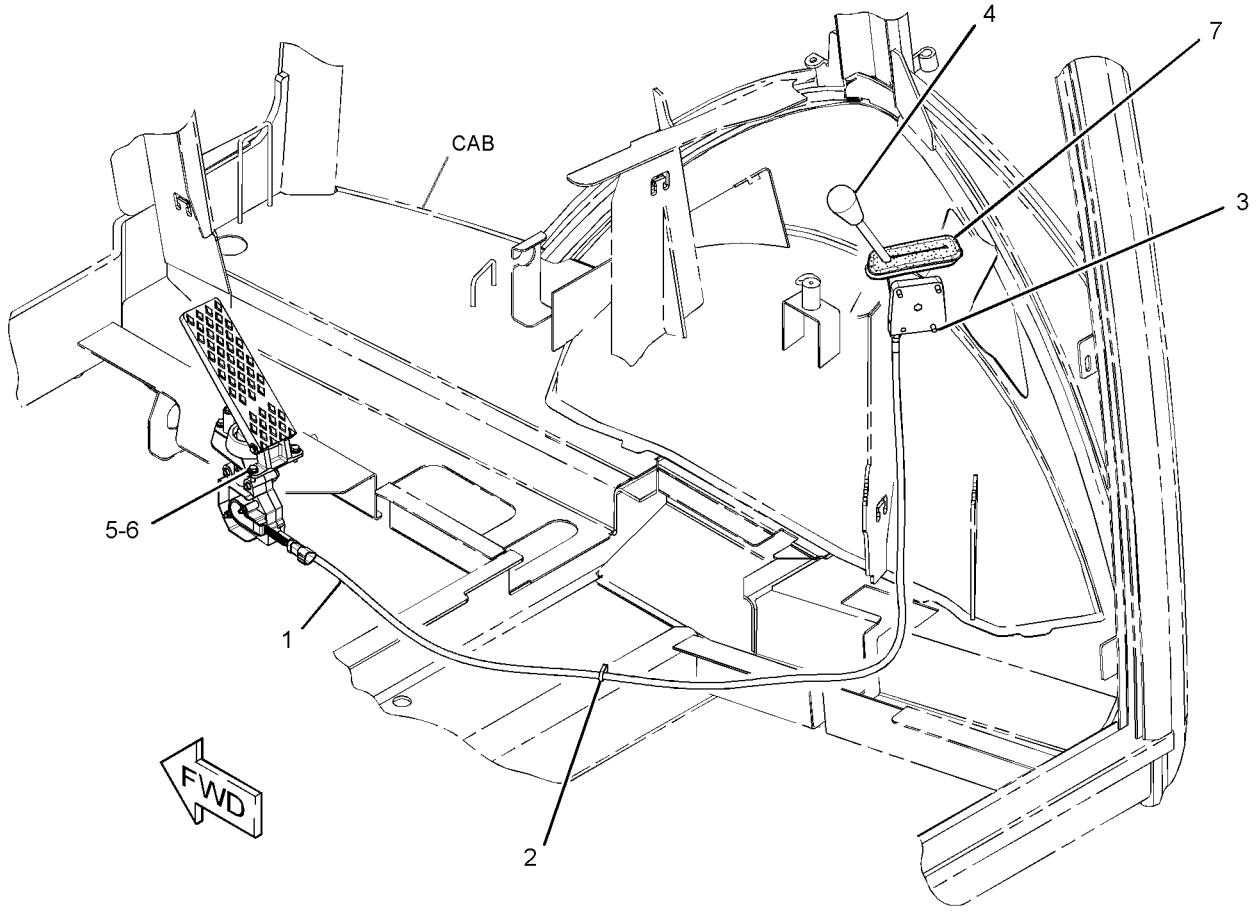

GRAPHIC #1 **<END>** g01624928

288-8045 CONTROL GP-GOVERNOR

S/N: RBA1-UP

PART OF 209-3376 CONTROL GP-GOVERNOR

SMCS-1265 **i03849760**

NOTE	REF NO	GRAPHIC REF	PART NUMBER	QTY	PART NAME 1 2 3 4 5 6 (PRODUCT LEVEL)	SEE PAGE
Y	1	1	**209-3377**	1	PEDAL GP-GOVERNOR	458
	2	1	**232-4690**	1	LEVER GP-GOVERNOR	

Y-SEPARATE ILLUSTRATION

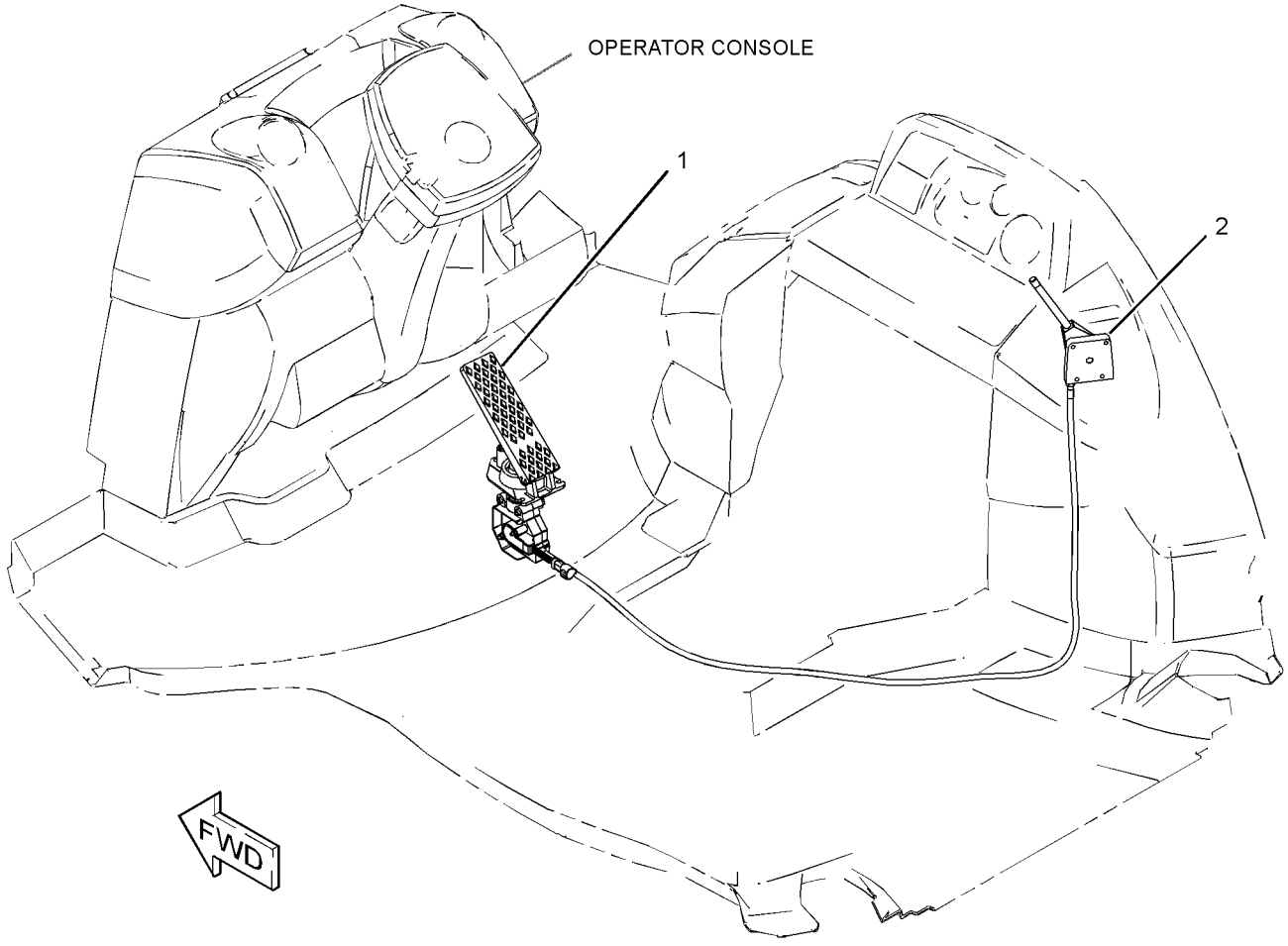

GRAPHIC #1 **<END>** g01635954

FUEL SYSTEM

298-5123 FILTER GP-PRIMARY FUEL

S/N: C4E1-UP

PART OF 254-0115 ENGINE AR-PRIMARY

SMCS-1260, 1261 **i03866138**

NOTE	REF NO	GRAPHIC REF	PART NUMBER	QTY	PART NAME 1 2 3 4 5 6 (PRODUCT LEVEL)	SEE PAGE
	1	1	**298-4603**	1	FILTER AS-FUEL (PRIMARY)	
	1A	1	**289-0600**	1	FILTER-FUEL (ULTRA HIGH EFFICIENCY)	
F			**278-4138**	1	PROTECTION GP-FUEL SYSTEM	

F-NOT SHOWN

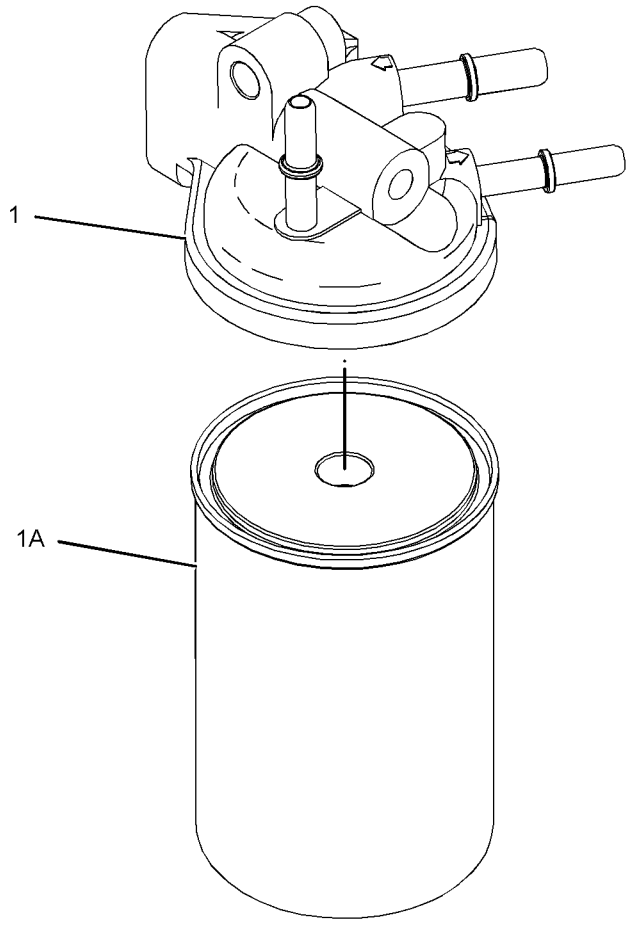

GRAPHIC #1 **<END>** g01304976

318-8064 FILTER GP-WATER SEP & FUEL

S/N: RBA1-UP

PART OF 254-0119 LINES GP-FUEL

SMCS-1261, 1263 **i03849764**

NOTE	REF NO	GRAPHIC REF	PART NUMBER	QTY	PART NAME 1 2 3 4 5 6 (PRODUCT LEVEL)	SEE PAGE
	1	1	*308-7576*	1	FILTER GP-WATER SEP & FUEL	
	1A	1	**308-7298**	1	FILTER AS-WATER SEP & FUEL	
		1	**220-8678**	1	SEAL-RING	
	1B	1	**310-5912**	1	BOWL AS	
	2	1	**313-1663**	1	SENSOR-PRESSURE (WATER SEPARATOR)	
	3	1	**333-9694**	1	BOOT-SEAL	
	4	1	**333-9693**	1	KIT-CONNECTION (FUEL, WATER SEPARATOR)	
					(INCLUDES CONNECTORS, PLUG & O-RINGS)	

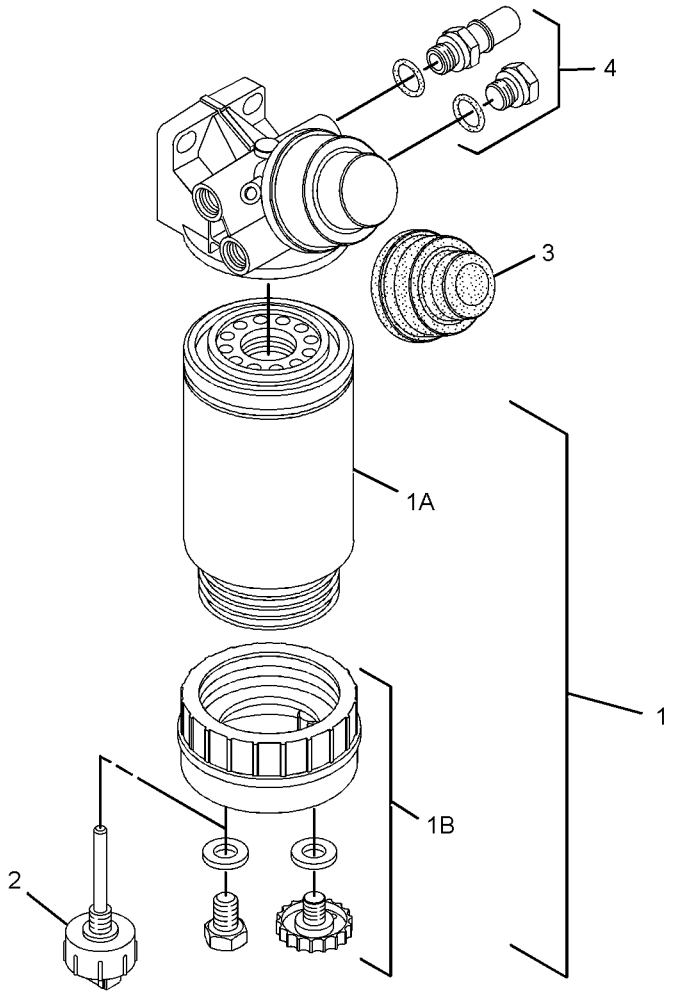

GRAPHIC #1 **<END>** g01622416

FUEL SYSTEM

320-0680 INJECTOR GP-FUEL*R

S/N: C4E1-UP

PART OF 357-0587 PUMP GP-FUEL INJECTION

SMCS-1251, 1254, 1290, 1713 **i03868249**

NOTE	REF NO	GRAPHIC REF	PART NUMBER	QTY	PART NAME 1 2 3 4 5 6 (PRODUCT LEVEL)	SEE PAGE
	1	1	**287-7637**	1	WASHER	
	2	1	**274-1639**	1	SEAL	

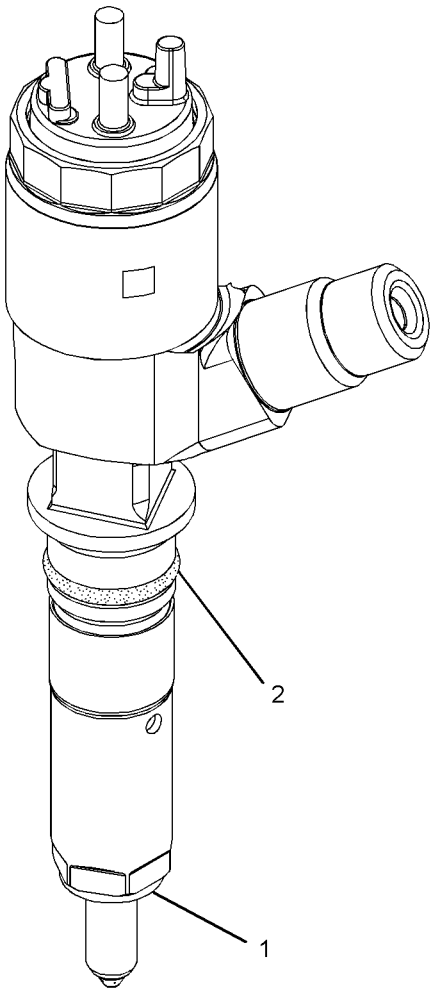

GRAPHIC #1 **<END>** g01321917

FUEL SYSTEM

254-0119 LINES GP-FUEL

S/N: RBA1-UP

PART OF 254-0120 ENGINE AR

SMCS-1274 **i04103069**

NOTE	REF NO	GRAPHIC REF	PART NUMBER	QTY	PART NAME 1 2 3 4 5 6 (PRODUCT LEVEL)	SEE PAGE
	1	1	**6S-8620**	12	CLAMP-HOSE	
	2	1	**175-7739**	2	CLAMP	
	3	1	**273-5684**	1	TUBE AS	
	4	1	**273-5685**	1	TUBE AS	
	5	1	**273-7180**	1	BRACKET AS	
	6	1	*274-3866*	1	CONNECTOR AS	
		1	**228-7100**	1	SEAL-O-RING	
		1	**321-8626**	1	CONNECTOR	
	7	1	*274-3867*	1	CONNECTOR AS	
		1	**228-7102**	1	SEAL-O-RING	
		1	**321-8627**	1	CONNECTOR	
	8	1	*274-3868*	1	ELBOW AS	
		1	**228-7102**	1	SEAL-O-RING	
		1	**321-8628**	1	ELBOW	
	9	1	**307-2032**	2	TUBE	
	10	1	**119-5708**	3	CLIP	
	11	1	**164-4225**	1	CLIP	
Y	12	1	**318-8064**	1	FILTER GP-WATER SEP & FUEL	67
M	13	1	**5C-7261**	2	NUT (M8X1.25-THD)	
	14	1	**5P-9297**	3	CLIP	
	15	1	**8M-2773**	2	CLIP	
	16	1	**8T-4121**	5	WASHER-HARD (11X21X2.5-MM THK)	
M	17	1	**8T-4136**	4	BOLT (M10X1.5X25-MM)	
M	18	1	**8T-4137**	1	BOLT (M10X1.5X20-MM)	
M	19	1	**8T-4192**	3	BOLT (M12X1.75X25-MM)	
	20	1	**8T-4223**	3	WASHER-HARD (13.5X25.5X3-MM THK)	
	21	1	**8T-4224**	4	WASHER-HARD (8.8X16X2-MM THK)	
M	22	1	**8T-7547**	2	BOLT (M8X1.25X30-MM)	
E	23	1	**5P-1442**		HOSE (24-CM)	
E	23A	1	**5P-1442**		HOSE (84-CM)	
E	23B	1	**5P-1442**		HOSE (40-CM)	
E	23C	1	**5P-1442**		HOSE (36-CM)	
E	23D	1	**5P-1442**		HOSE (59-CM)	
E	23E	1	**5P-1442**		HOSE (99-CM)	

E-ORDER BY THE CENTIMETER
M-METRIC PART
Y-SEPARATE ILLUSTRATION

254-0119 **LINES GP-FUEL** *(contd.)* **i04103069**

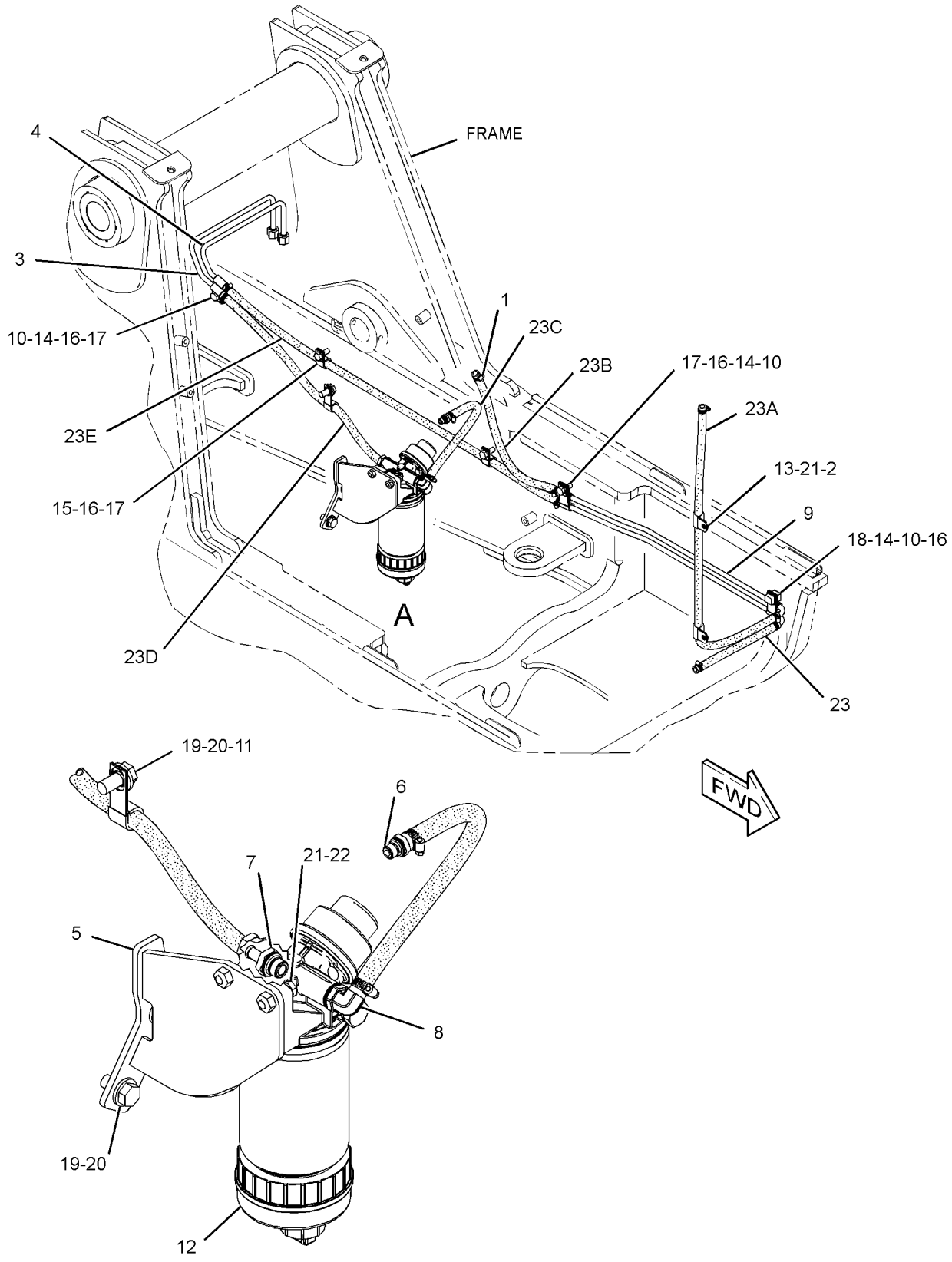

VIEW OF AREA A

GRAPHIC #1 **<END>** g02339439

314-9819 LINES GP-FUEL FILTER

S/N: C4E1-UP

PART OF 254-0115 ENGINE AR-PRIMARY

SMCS-1261, 1274 **i04022196**

NOTE	REF NO	GRAPHIC REF	PART NUMBER	QTY	PART NAME 1 2 3 4 5 6 (PRODUCT LEVEL)	SEE PAGE
M	1	2	**6I-0260**	1	BOLT (M8X1.25X25-MM)	
	2	2	**6I-4709**	1	BOLT (M8X1.25X100-MM)	
	3	2	**114-4363**	2	BOLT (M8X1.25X12-MM)	
	4	2	**215-9509**	1	FITTING (QUICK DISCONNECT, FEMALE)	
	5	2	**234-3063**	1	CLIP	
	6	2	**277-6165**	1	CONNECTION-FUEL	
	7	1	**298-4592**	1	TUBE AS	
	8	1	**298-4595**	1	TUBE AS	
	9	1	**298-4597**	1	TUBE AS	
	10	1	**308-7571**	1	TUBE AS	
	10A	1	**295-4670**	2	BOLT-SPECIAL (BANJO)	
	10B	1	**286-2890**	4	WASHER	
	12	2	**314-9820**	1	TUBE AS	
	13	2	**314-9821**	1	BRACKET AS	
	13A	2	**7C-1281**	1	BRACKET	
	13B	2	**101-3615**	1	BOLT (M8X1.25X10-MM)	
	13C	1,2	**232-1115**	3	CLIP-PIPE	
F			**278-4138**	5	PROTECTION GP-FUEL SYSTEM	

F-NOT SHOWN
M-METRIC PART

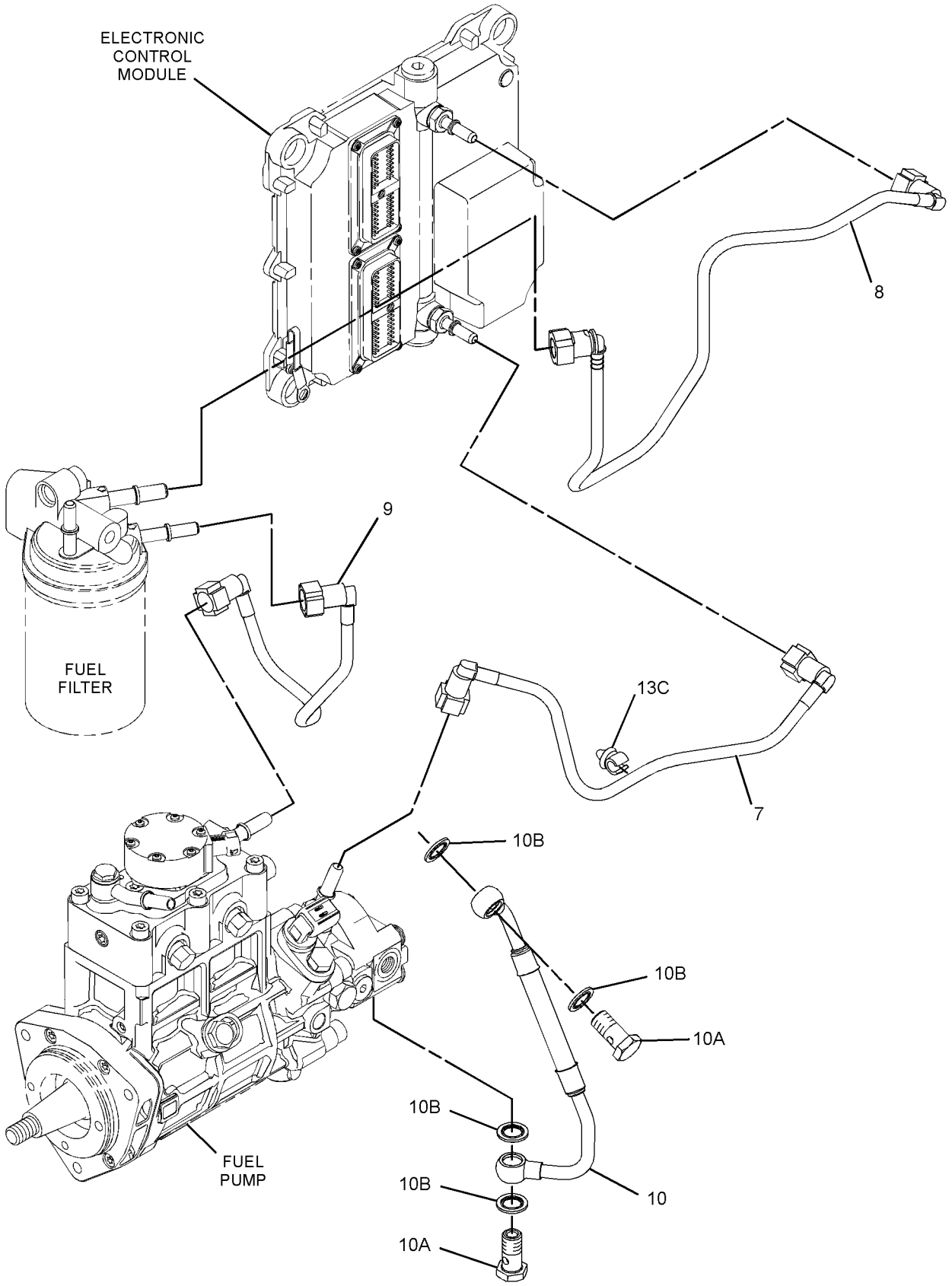

GRAPHIC #1 g01393456

314-9819 **LINES GP-FUEL FILTER** *(contd.)* **i04022196**

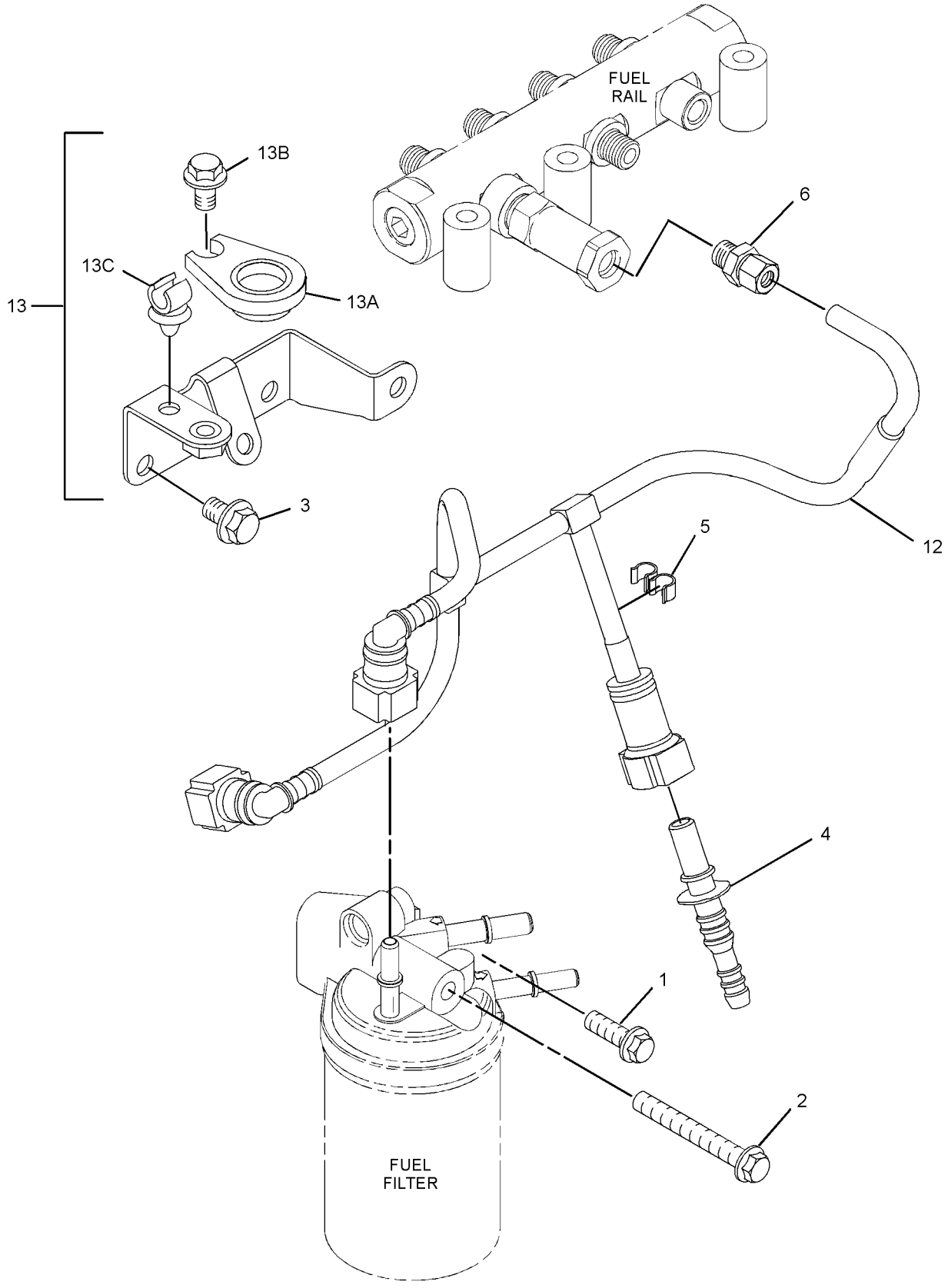

GRAPHIC #2 **<END>** g01923536

324-0532 PUMP GP-FUEL INJECTION*R

S/N: C4E1-UP

PART OF 357-0587 PUMP GP-FUEL INJECTION

SMCS-1251, 1290 **i03868250**

NOTE	REF NO	GRAPHIC REF	PART NUMBER	QTY	PART NAME 1 2 3 4 5 6 (PRODUCT LEVEL)	SEE PAGE
	1	1	**228-0172**	2	FITTING-FUEL	
	2	1	**228-7100**	3	SEAL-O-RING	
	3	1	**238-0120**	1	SENSOR GP-SPEED (SECONDARY, TIMING)	
	4	1	**247-6019**	2	SEAL	
	5	1	**248-1066**	1	FITTING-FUEL	
	6	1	**293-0249**	1	PUMP GP-FUEL TRANSFER	
	7	1	*295-0189*	1	CONNECTOR AS	
	7A	1	**8C-3076**	1	SEAL-O-RING	
	8	1	**295-4801**	1	NUT (M14X1.5-THD)	
	9	1	**296-3542**	1	LOCKWASHER	
	10	1	**117-1385**	1	SEAL-O-RING	
M	11	1	**5A-3604**	5	BOLT-SOCKET HEAD (M8X1.25X25-MM)	
	12	1	**334-2932**	1	SEAL-O-RING	
	13	1	**8L-2779**	4	SEAL-O-RING	
M	14	1	**8T-4200**	1	BOLT (M8X1.25X16-MM)	

M-METRIC PART

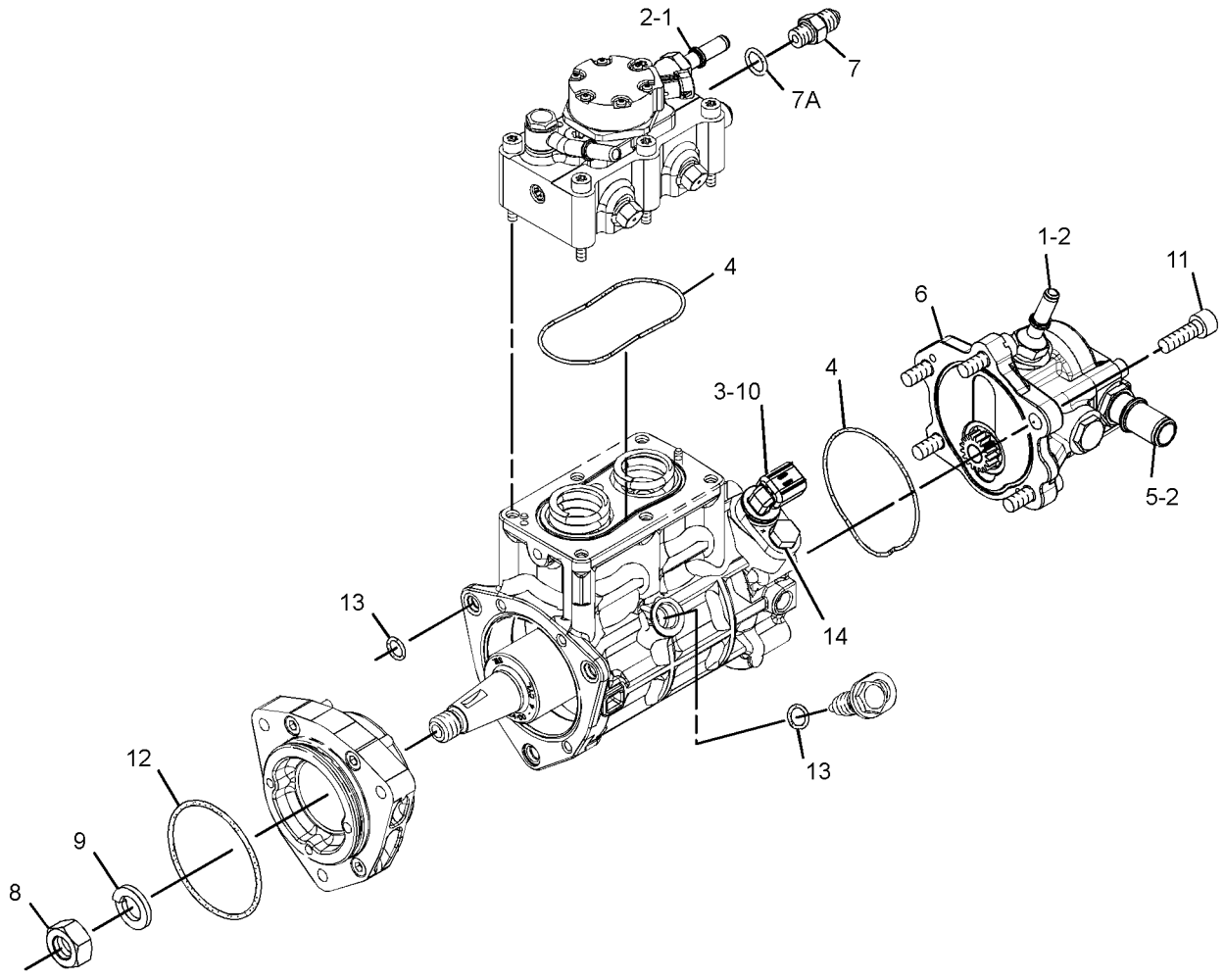

GRAPHIC #1 **<END>** g01620557

357-0587 PUMP GP-FUEL INJECTION

S/N: C4E1-UP

PART OF 254-0115 ENGINE AR-PRIMARY

SMCS-1251, 1290 **i04158176**

NOTE	REF NO	GRAPHIC REF	PART NUMBER	QTY	PART NAME 1 2 3 4 5 6 (PRODUCT LEVEL)	SEE PAGE
M	1	1	**6I-0260**	3	BOLT (M8X1.25X25-MM)	
	2	1	**6I-0455**	3	BOLT (M8X1.25X55-MM)	
	3	2	**6I-0572**	4	BOLT (M8X1.25X20-MM)	
	4	2	**7W-2632**	1	WASHER (8.5X16.8X1.6-MM THK)	
M	8	1	**100-4830**	1	BOLT (M10X1.5X20-MM)	
M	9	1	**101-3895**	4	BOLT (M8X1.25X35-MM)	
M	10	1,3	**124-3815**	4	BOLT (M8X1.25X16-MM)	
	11	2	**141-8584**	4	BOLT (M8X1.25X50-MM)	
	12	1	**160-0162**	2	WASHER	
	13	3	**199-9252**	1	SEAL-O-RING	
	14	2	**217-0099**	5	SPACER (8.2X25X2-MM THK)	
	15	1	**230-8989**	1	GEAR-FUEL PUMP (68-TEETH)	
	16	2	**268-6677**	1	BRACKET AS	
	16A	2	**260-3939**	1	SCREW-HEX HEAD	
	17	2	**268-6678**	1	BRACKET AS	
	17A	2	**260-3939**	1	SCREW-HEX HEAD	
	18	1	**278-5168**	4	CLAMP-INJECTOR	
	19	1	**278-5170**	4	BOLT	
	20	2	**278-5203**	4	SPACER	
	21	3	**278-5225**	1	KIT-SENSOR (OIL PRESSURE)	
	21A	3	**199-9267**	1	SEAL-O-RING	
	22	3	**278-5273**	1	KIT-SENSOR (AIR PRESSURE)	
	22A	3	**199-9252**	1	SEAL-O-RING	
	23	3	**278-5307**	1	KIT-SENSOR (COOLANT TEMPERATURE)	
	23A	3	**199-9267**	1	SEAL-O-RING	
YR	24	1	**324-0532**	1	PUMP GP-FUEL INJECTION	74
	25	1	**298-4535**	1	BRACKET-SUPPORT	
	26	1	**337-3573**	1	BRACKET	
	27	1	**298-4542**	1	TUBE AS	
	28	1	**298-4543**	1	BOLT	
	31	2	**300-6714**	8	MOUNT	
	32	3	**311-3858**	1	KIT-SENSOR (ENGINE SPEED)	
	32A	3	**274-1639**	1	SEAL	
	33	1	**311-6342**	1	SENSOR-PRESSURE (FUEL RAIL)	
	33A	1	**309-8006**	1	WASHER	
	34	1	**358-6632**	1	RAIL GP-FUEL	
	34A	1	**305-5291**	1	VALVE AS-RELIEF	
		1	**228-7102**	1	SEAL-O-RING	
	36	2	**317-3144**	1	BRACKET	
	37	1	**337-3574**	1	TUBE	
	38	1	**322-3745**	1	TUBE (CYL NO. 1)	
	39	1	**322-3746**	1	TUBE (CYL NO. 2)	
	40	1	**333-4732**	1	LINE-FUEL INJECTION (CYL NO. 3)	
	41	1	**333-4733**	1	LINE-FUEL INJECTION (CYL NO. 4)	
	42	1	**232-3149**	3	WASHER (8.35X16.85X1.55-MM THK)	
YR	43	1	**320-0680**	4	INJECTOR GP-FUEL	68
F			**278-4138**	1	PROTECTION GP-FUEL SYSTEM (LINE, LOW PRESSURE)	

F-NOT SHOWN
M-METRIC PART
R-REMFG PART MAY BE AVAILABLE
Y-SEPARATE ILLUSTRATION

357-0587 **PUMP GP-FUEL INJECTION** *(contd.)* **i04158176**

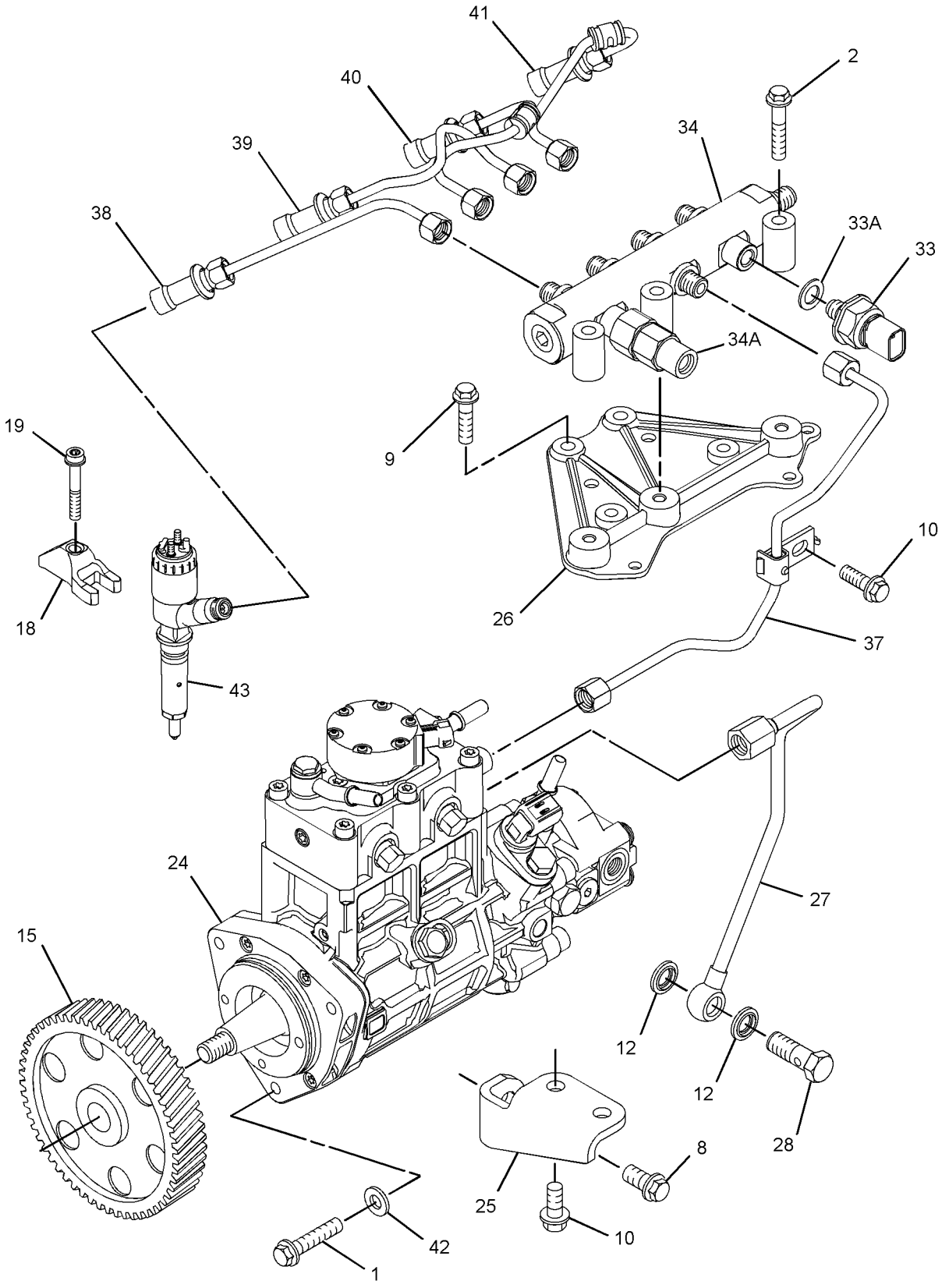

GRAPHIC #1 g01888536

357-0587 **PUMP GP-FUEL INJECTION** *(contd.)* **i04158176**

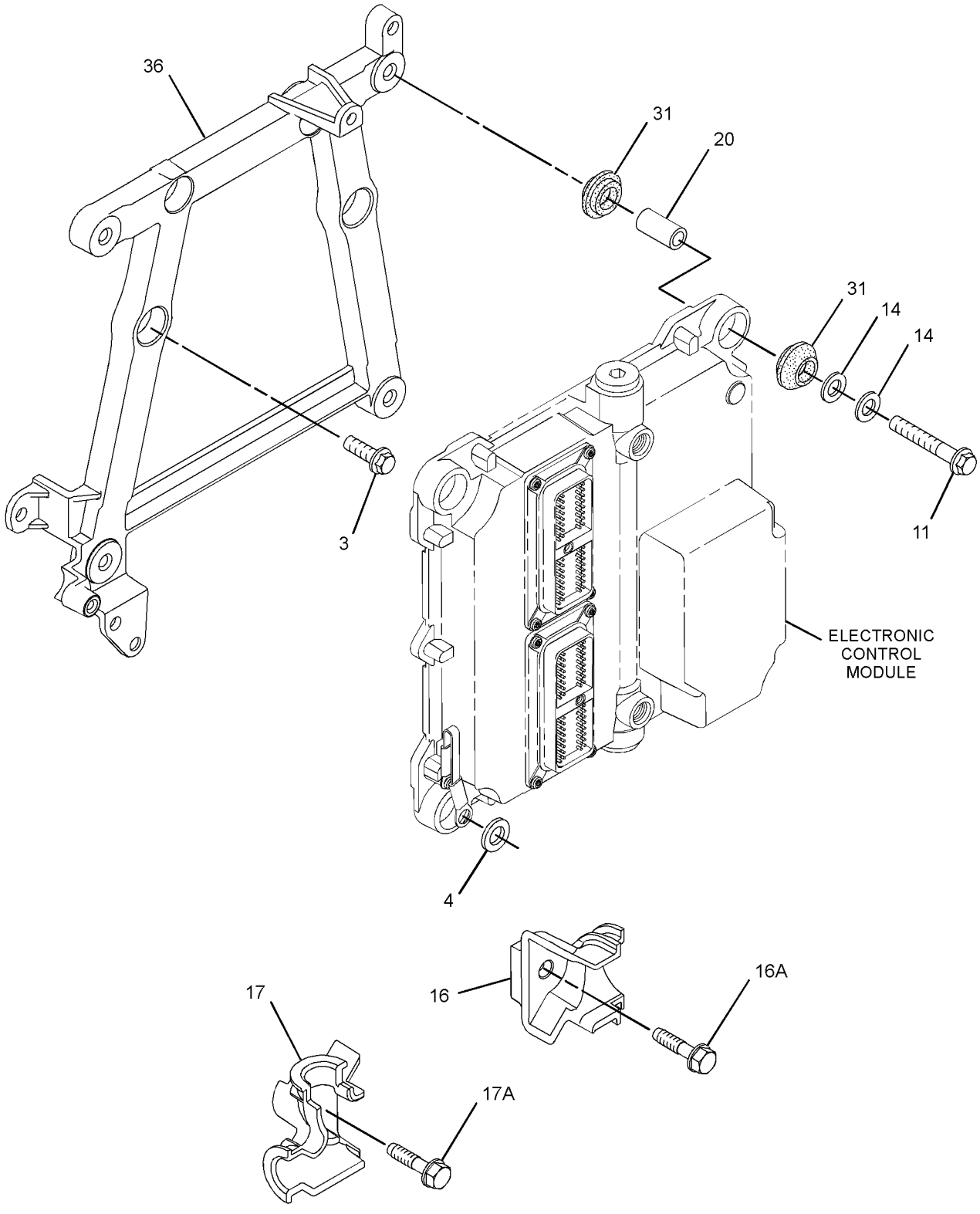

GRAPHIC #2 g01751378

357-0587 **PUMP GP-FUEL INJECTION** *(contd.)* **i04158176**

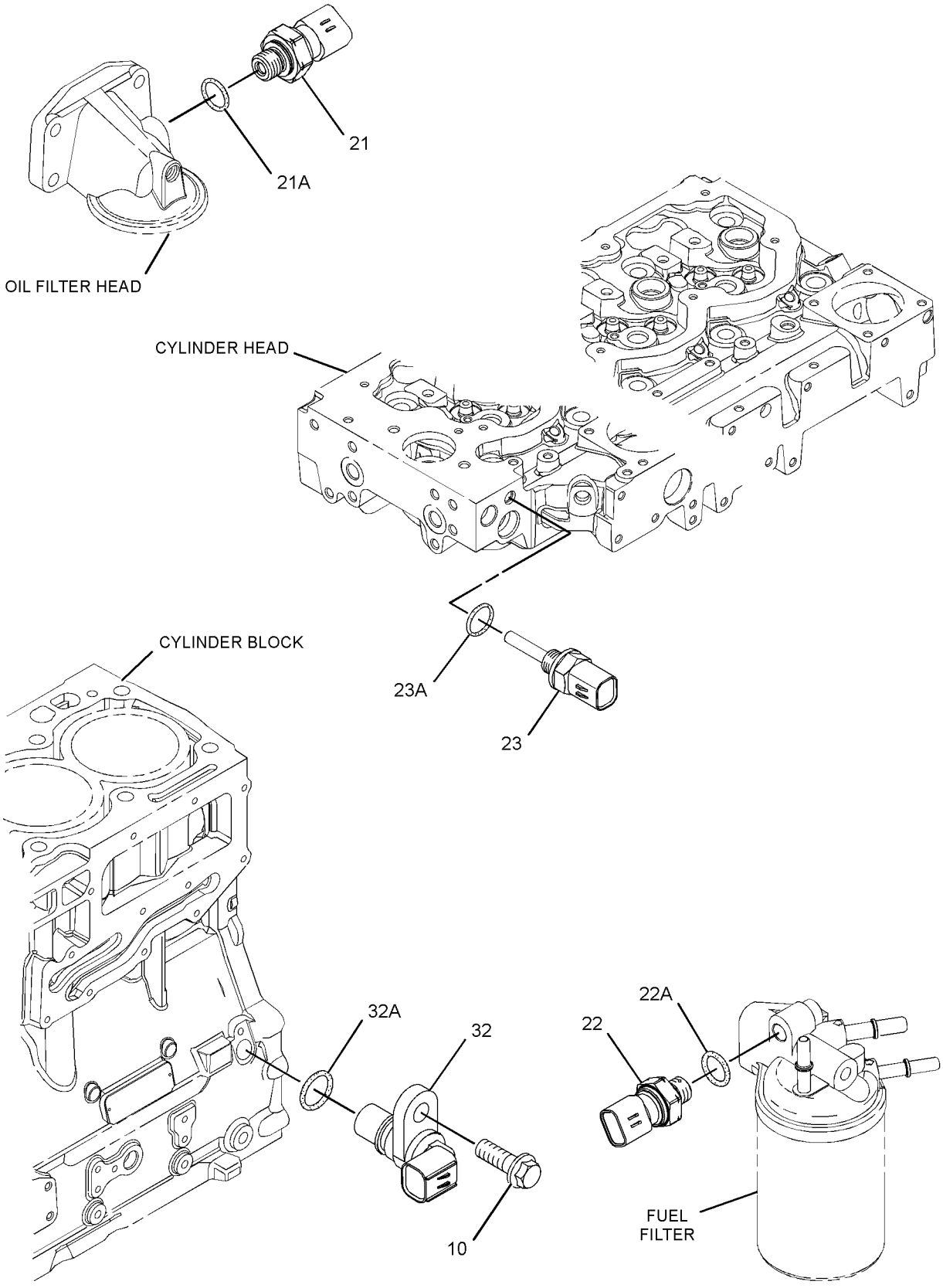

GRAPHIC #3 **<END>** g02352524

245-6098 TANK & MTG GP-FUEL—INCLUDES STEP

S/N: RBA1-UP

PART OF 254-0110 CHASSIS AR

SMCS-1273 **i02417390**

NOTE	REF NO	GRAPHIC REF	PART NUMBER	QTY	PART NAME 1 2 3 4 5 6 (PRODUCT LEVEL)	SEE PAGE
	1	1	**245-6101**	1	TREAD	
	2	1	**245-6103**	1	STEP AS	
Y	3	1	*245-6104*	1	TANK GP-FUEL	80
	4	1	**245-6108**	1	PLATE AS	
	5	1	**5P-4116**	7	WASHER-HARD (8.8X20.5X2-MM THK)	
M	6	1	**8T-4193**	4	BOLT (M16X2X50-MM)	
	7	1	**8T-4122**	4	WASHER-HARD (17X32X3.5-MM THK)	
M	8	1	**8T-4189**	7	BOLT (M8X1.25X20-MM)	
M	9	1	**8T-4200**	4	BOLT (M8X1.25X16-MM)	
	10	1	**8T-4224**	4	WASHER-HARD (8.8X16X2-MM THK)	

M-METRIC PART
Y-SEPARATE ILLUSTRATION

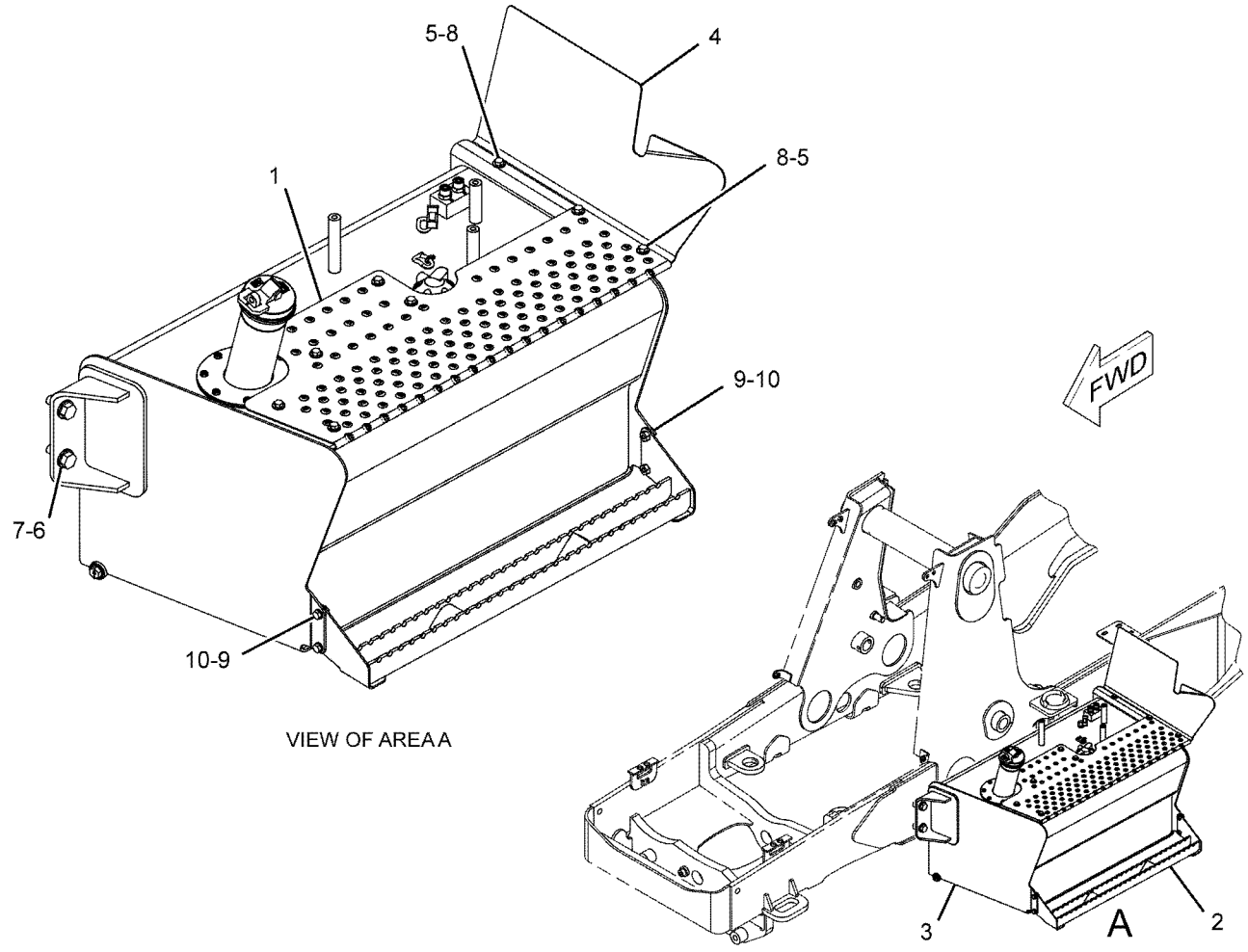

GRAPHIC #1 **<END>** g01077507

FUEL SYSTEM

245-6104 TANK GP-FUEL

S/N: RBA1-UP

PART OF 245-6098 TANK & MTG GP-FUEL

SMCS-1273 **i02963401**

NOTE	REF NO	GRAPHIC REF	PART NUMBER	QTY	PART NAME 1 2 3 4 5 6 (PRODUCT LEVEL)	SEE PAGE
	1	1	**8L-8413**	1	STRAP-CABLE	
	2	1	**9R-7240**	1	GASKET	
	3	1	**131-0232**	1	COVER	
	4	1	**251-3231**	1	SENDER AS-FUEL LEVEL	
		1	**186-3735**	2	PIN-CONNECTOR (16-GA TO 18-GA)	
		1	**102-8802**	1	KIT-RECEPTACLE (2-PIN)	
					(INCLUDES RECEPTACLE AS & WEDGE)	
Y	5	1	**245-6105**	1	TANK GP-FUEL	81
M	6	1	**184-0982**	5	SCREW-PAN HEAD (M6X1X16-MM)	

M-METRIC PART
Y-SEPARATE ILLUSTRATION

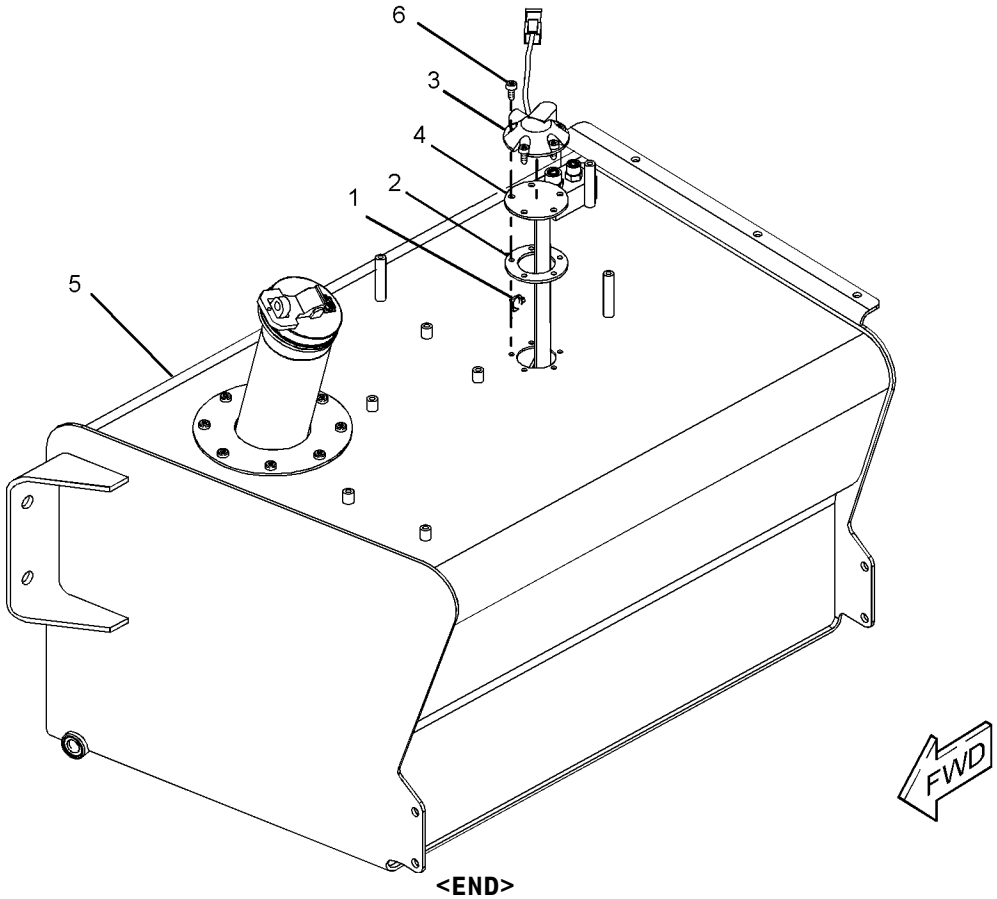

GRAPHIC #1 **<END>** g01089650

FUEL SYSTEM

245-6105 TANK GP-FUEL

S/N: RBA1-UP

PART OF 245-6104 TANK GP-FUEL

SMCS-1273 **i02963403**

NOTE	REF NO	GRAPHIC REF	PART NUMBER	QTY	PART NAME 1 2 3 4 5 6 (PRODUCT LEVEL)	SEE PAGE
	1	1	**284-9039**	1	CAP-FUEL	
	2	1	**201-1835**	1	TUBE AS	
	3	1	**272-0537**	1	PLUG AS	
		1	**3J-1907**	1	SEAL-O-RING	
	4	1	**245-6107**	1	TANK AS-FUEL	
	5	1	**106-8020**	1	GASKET	
M	6	1	**184-0982**	8	SCREW-PAN HEAD (M6X1X16-MM)	
	7	1	*148-8326*	2	CONNECTOR AS	
					(EACH INCLUDES)	
		1	**3J-7354**	1	SEAL-O-RING	
		1	**6V-8397**	1	SEAL-O-RING	
		1	**6V-9872**	1	CONNECTOR	
F			**180-3730**	1	STRAINER-FUEL (FILLER NECK SCREEN)	

F-NOT SHOWN
M-METRIC PART

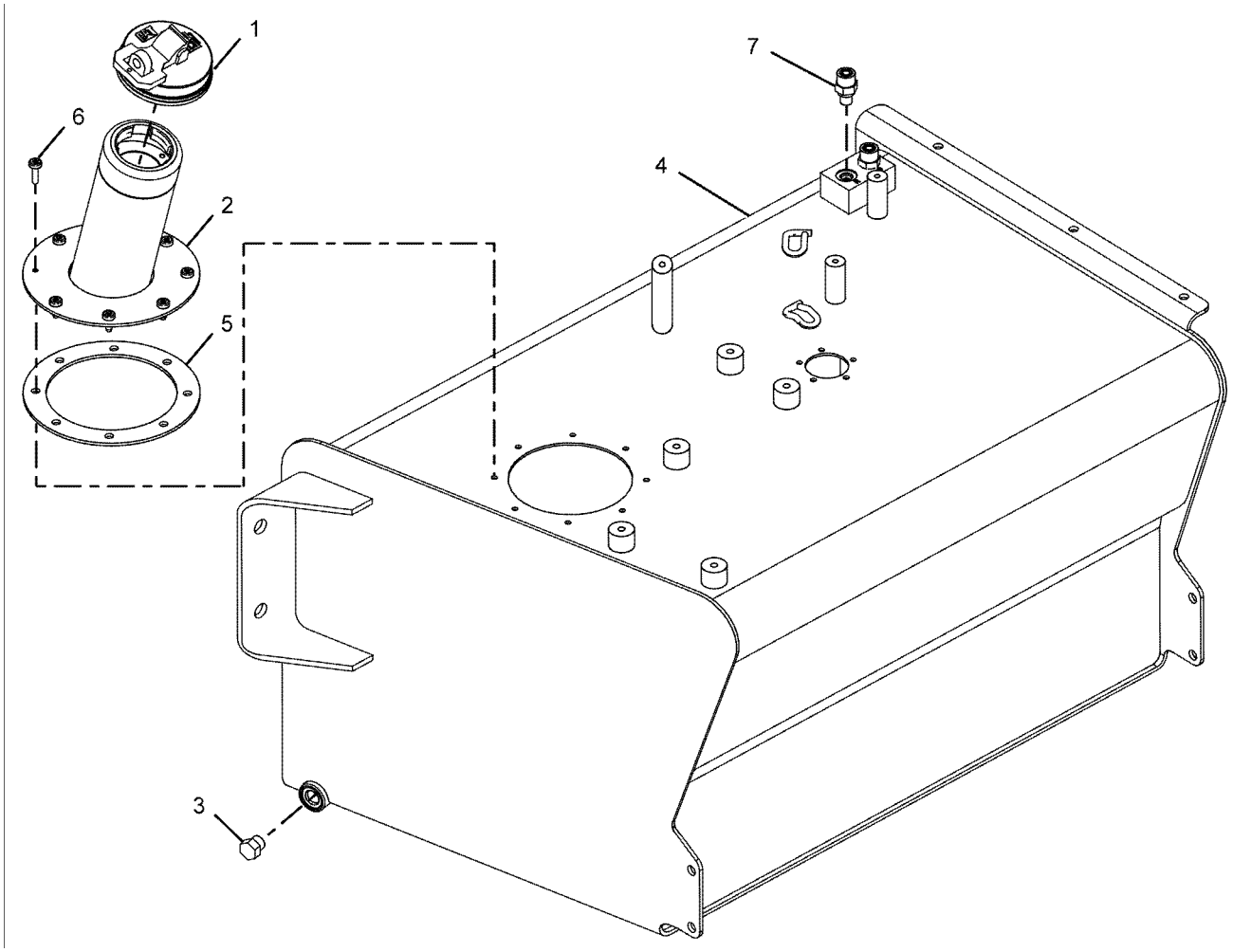

GRAPHIC #1 **<END>** g01086993

317-9776 ALTERNATOR GP-CHARGING

S/N: C4E1-UP
12 VOLT 120 AMPERE
PART OF 254-0115 ENGINE AR-PRIMARY

SMCS-1405, 1425 **i03899392**

NOTE	REF NO	GRAPHIC REF	PART NUMBER	QTY	PART NAME 1 2 3 4 5 6 (PRODUCT LEVEL)	SEE PAGE
M	1	1	**6I-0260**	1	BOLT (M8X1.25X25-MM)	
M	2	1	**6I-0650**	1	BOLT (M10X1.5X65-MM)	
	3	1	**359-9666**	1	BOLT-FLANGE HEAD	
	4	1	**113-6349**	1	NUT (M12X1.75X93-MM)	
M	5	1	**140-8783**	2	BOLT (M10X1.5X45-MM)	
	7	1	**346-9825**	1	ALTERNATOR GP-CHARGING	
	8	1	**284-3425**	1	PULLEY-ALTERNATOR	
	9	1	**305-7881**	1	BRACKET AS-ALTERNATOR	
	9A	1	**161-9820**	1	PIN	

M-METRIC PART

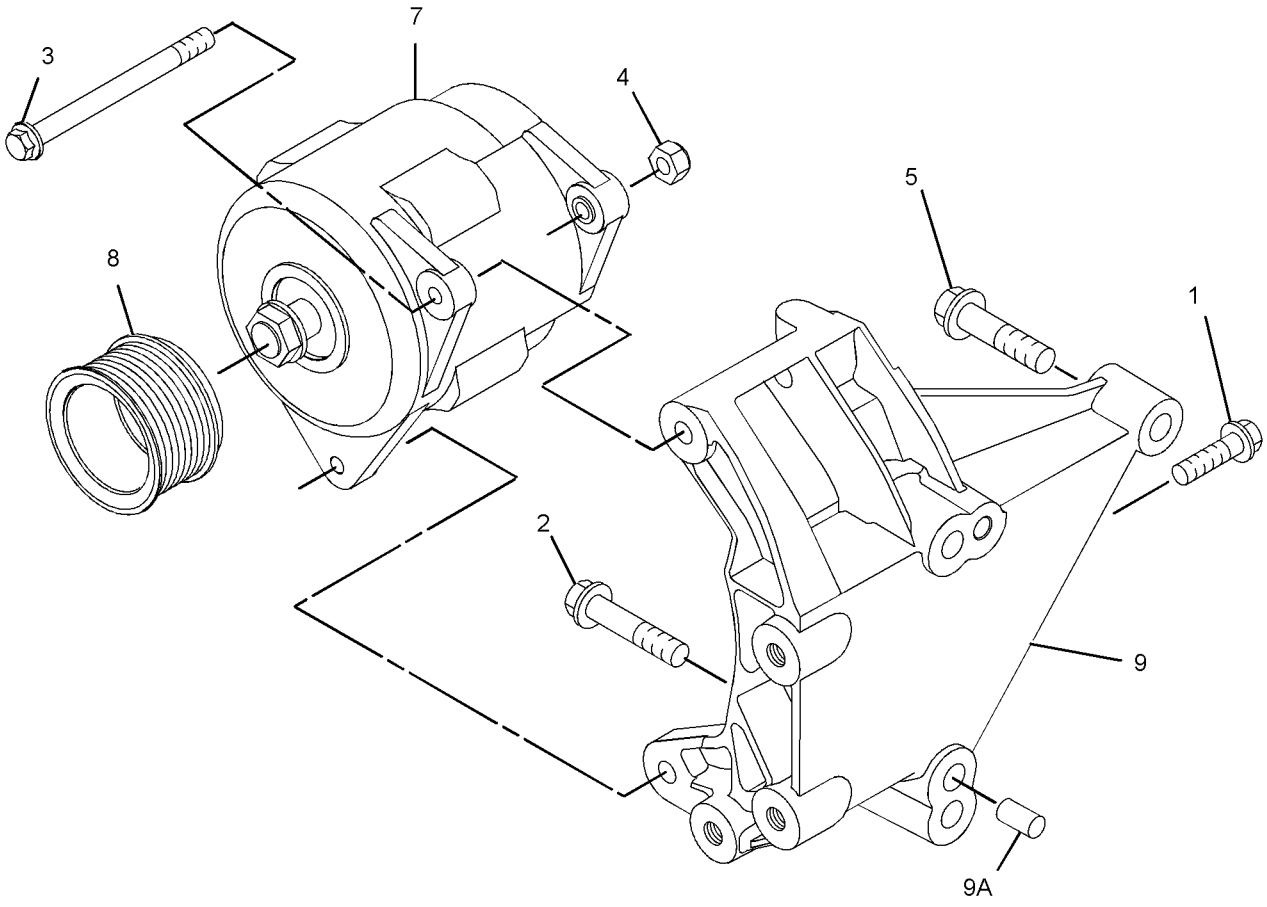

GRAPHIC #1 **<END>** g01953021

263-0992 BATTERY GP–HEAVY-DUTY

S/N: RBA1-UP

PART OF 254-0110 CHASSIS AR

SMCS-1401 **i04101211**

NOTE	REF NO	GRAPHIC REF	PART NUMBER	QTY	PART NAME 1 2 3 4 5 6 (PRODUCT LEVEL)	SEE PAGE
	1	2	**3E-8320**	1	PLATE-INSTRUCTION (BATTERY)	
M	2	2	**5C-2890**	2	NUT (M6X1-THD)	
M	3	2	**5C-9553**	2	BOLT (M6X1X16-MM)	
	4	2	**6T-0465**	1	COVER-TERMINAL (BLACK)	
C	5	1	**7K-1181**	8	STRAP-CABLE	
Y	6	2	**7N-0718**	1	SWITCH GP-DISCONNECT (BATTERY)	111
	7	1	**8T-8799**	1	BOOT (RED)	
	8	2	**038-9317**	2	TREAD-NONSKID	
	9	2	**206-2423**	2	SADDLE	
	10	1	**213-6089**	1	CABLE AS-POWER	
		1	**6T-5598**	1	TERMINAL-RING (1-GA TO 2-GA, 5/16-IN SCREW)	
E		1	**8C-3056**		CABLE (2-GA, RED) (230-CM)	
		1	**8T-8799**	1	BOOT (RED)	
E		1	**319-0755**		TUBE-CONVOLUTED (225-CM)	
E		1	**135-5009**		TUBE-HEAT SHRINK (32-MM DIA) (5-CM)	
	11	2	**213-6091**	1	CABLE AS-BATTERY (POSITIVE)	
		2	**3S-2093**	1	STRAP-CABLE	
E		2	**5P-0761**		CABLE (00-GA, RED) (36-CM)	
		2	**7T-9987**	1	COVER-TERMINAL (RED)	
		2	**8S-3020**	1	TERMINAL-CABLE (00-GA, 3/8-IN SCREW)	
E		2	**8Y-8081**		TUBE-CONVOLUTED (36-CM)	
	12	2	**213-6092**	1	CABLE AS-BATTERY (NEGATIVE)	
		2	**1S-7252**	1	TERMINAL-CABLE (00-GA, 3/8-IN SCREW)	
E		2	**5P-0747**		CABLE (00-GA, BLACK) (44-CM)	
		2	**7N-5274**	1	COVER-TERMINAL (BLACK)	
		2	**8L-8413**	1	STRAP-CABLE	
	13	2	**230-6368**	2	BATTERY (12-VOLT, MAINTENANCE FREE)	
	14	2	**240-4639**	2	BRACKET AS	
	15	1	**243-5027**	1	NUT AS (M6X1-THD)	
	16	2	**246-8053**	1	CABLE AS-BATTERY (POSITIVE)	
		2	**1S-7251**	1	TERMINAL-CABLE (00-GA, 1/2-IN SCREW)	
		2	**3S-2093**	2	STRAP-CABLE	
E		2	**5P-0761**		CABLE (00-GA, RED) (94-CM)	
		2	**8N-0869**	1	COVER-TERMINAL (RED)	
E		2	**8Y-8081**		TUBE-CONVOLUTED (94-CM)	
		2	**1M-6119**	1	BOLT (5/16-18X1.375-IN)	
		2	**1M-6120**	1	NUT (5/16-18-THD)	
		2	**6V-8801**	1	NUT (3/8-16-THD)	
	17	1	**274-8682**	1	CABLE AS-BATTERY (POSITIVE)	
		1	**7F-8031**	1	TERMINAL	
		1	**2L-8052**	1	TERMINAL-RING (6-GA, 3/8-IN SCREW)	
	18	1	**290-6746**	1	CABLE AS	
		1	**312-6455**	1	TERMINAL AS	
E		1	**125-7876**		TUBE-HEAT SHRINK (17.78-MM DIA) (5-CM)	
	19	2	**290-6791**	1	CABLE AS	
		2	**8S-3020**	1	TERMINAL-CABLE (00-GA, 3/8-IN SCREW)	
E		2	**159-8050**		CABLE (00-GA, BLACK) (44-CM)	
		2	**1M-6119**	1	BOLT (5/16-18X1.375-IN)	
		2	**1M-6120**	2	NUT (5/16-18-THD)	
	20	2	**290-6792**	1	CABLE AS	
		2	**1S-7251**	1	TERMINAL-CABLE (00-GA, 1/2-IN SCREW)	
		2	**8S-3020**	1	TERMINAL-CABLE (00-GA, 3/8-IN SCREW)	
E		2	**159-8050**		CABLE (00-GA, BLACK) (6-CM)	
	22	2	**156-6175**	2	CLIP	
	23	2	**277-1873**	2	CLIP	
	24	2	**3S-2093**	4	STRAP-CABLE	

263-0992 **BATTERY GP** *(contd.)* **i04101211**

NOTE	REF NO	GRAPHIC REF	PART NUMBER	QTY	PART NAME 1 2 3 4 5 6 (PRODUCT LEVEL)	SEE PAGE
	25	1	**4D-6466**	2	CLIP	
	26	1	**4P-7581**	2	CLIP	
C	27	1	**4P-8134**	2	CLIP	
	28	2	**7X-7729**	4	WASHER (11X25X3-MM THK)	
	29	1,2	**8T-4121**	8	WASHER-HARD (11X21X2.5-MM THK)	
M	30	2	**8T-4133**	2	NUT (M10X1.5-THD)	
CM	31	1,2	**8T-4137**	6	BOLT (M10X1.5X20-MM)	
M	32	2	**8T-4185**	2	BOLT (M10X1.5X50-MM)	
M	33	1	**8T-4191**	1	BOLT (M10X1.5X16-MM)	
	34	2	**8T-4205**	4	WASHER-HARD (7.2X14.5X2-MM THK)	
	35	2	**9G-4191**	1	GROMMET	
C	36	1	**5T-6374**	1	SPACER (10.5X20X40-MM THK)	
CM	37	1	**8T-6466**	1	BOLT (M10X1.5X60-MM)	
C	38	1	**8X-5489**	1	SLEEVE	
C	39	1	**8T-1887**	1	CLIP (SLOT)	
C	40	1	**8T-1888**	1	CLIP (TAB)	

C-CHANGE FROM PREVIOUS TYPE
E-ORDER BY THE CENTIMETER
M-METRIC PART
Y-SEPARATE ILLUSTRATION

REFER TO ALL ILLUSTRATIONS OF THIS GROUP FOR AUXILIARY VIEWS

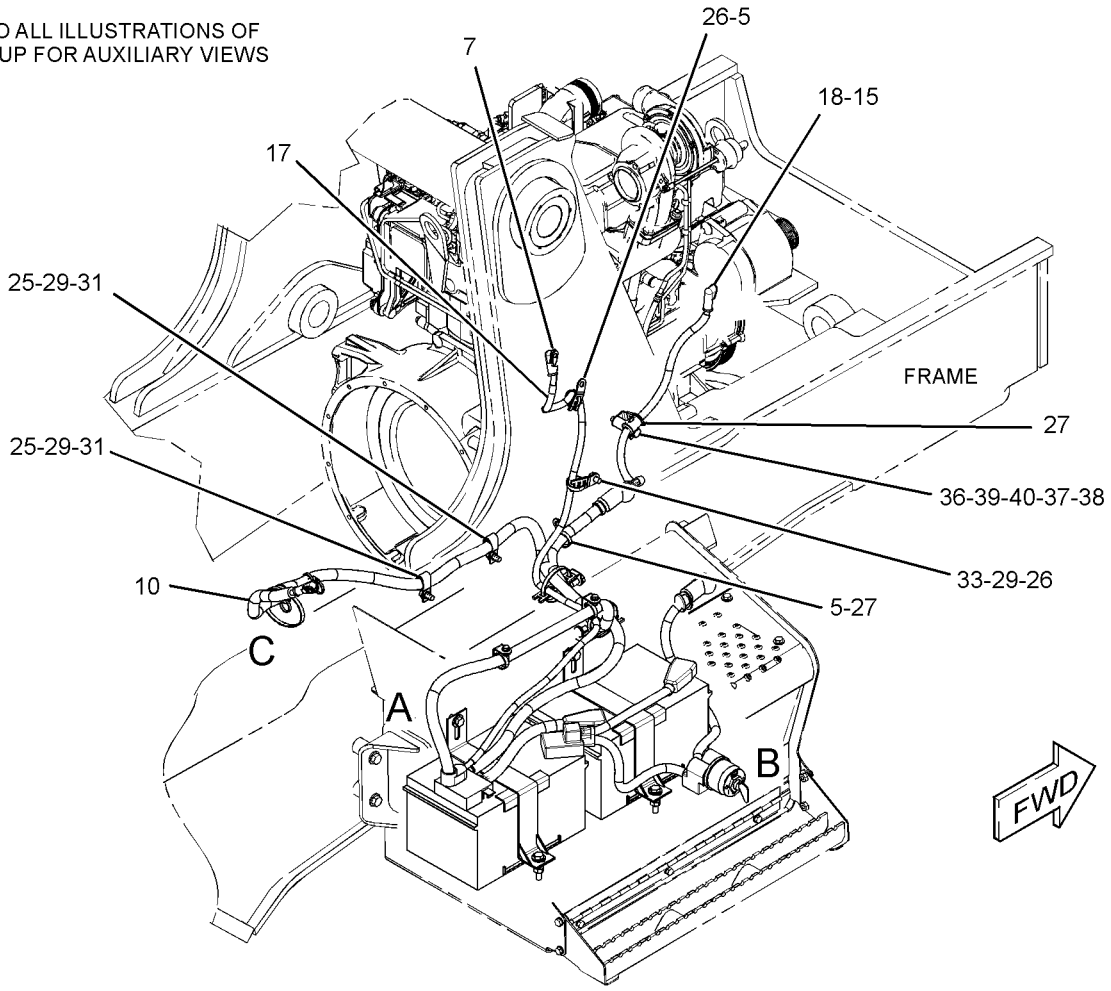

GRAPHIC #1 g01846017

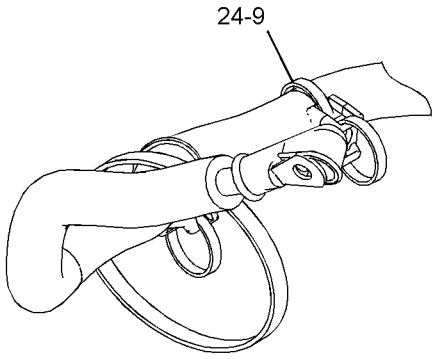

VIEW OF AREA C

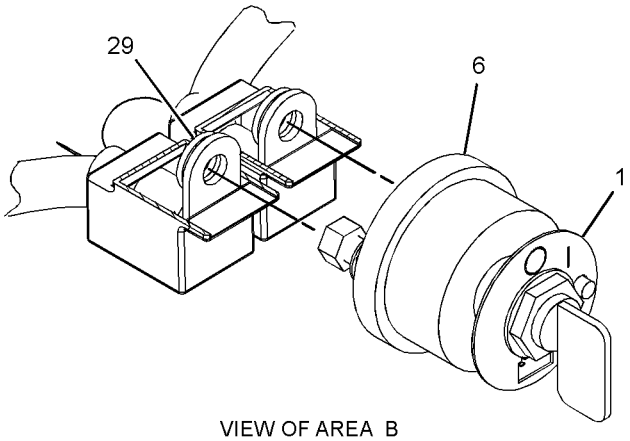

VIEW OF AREA B

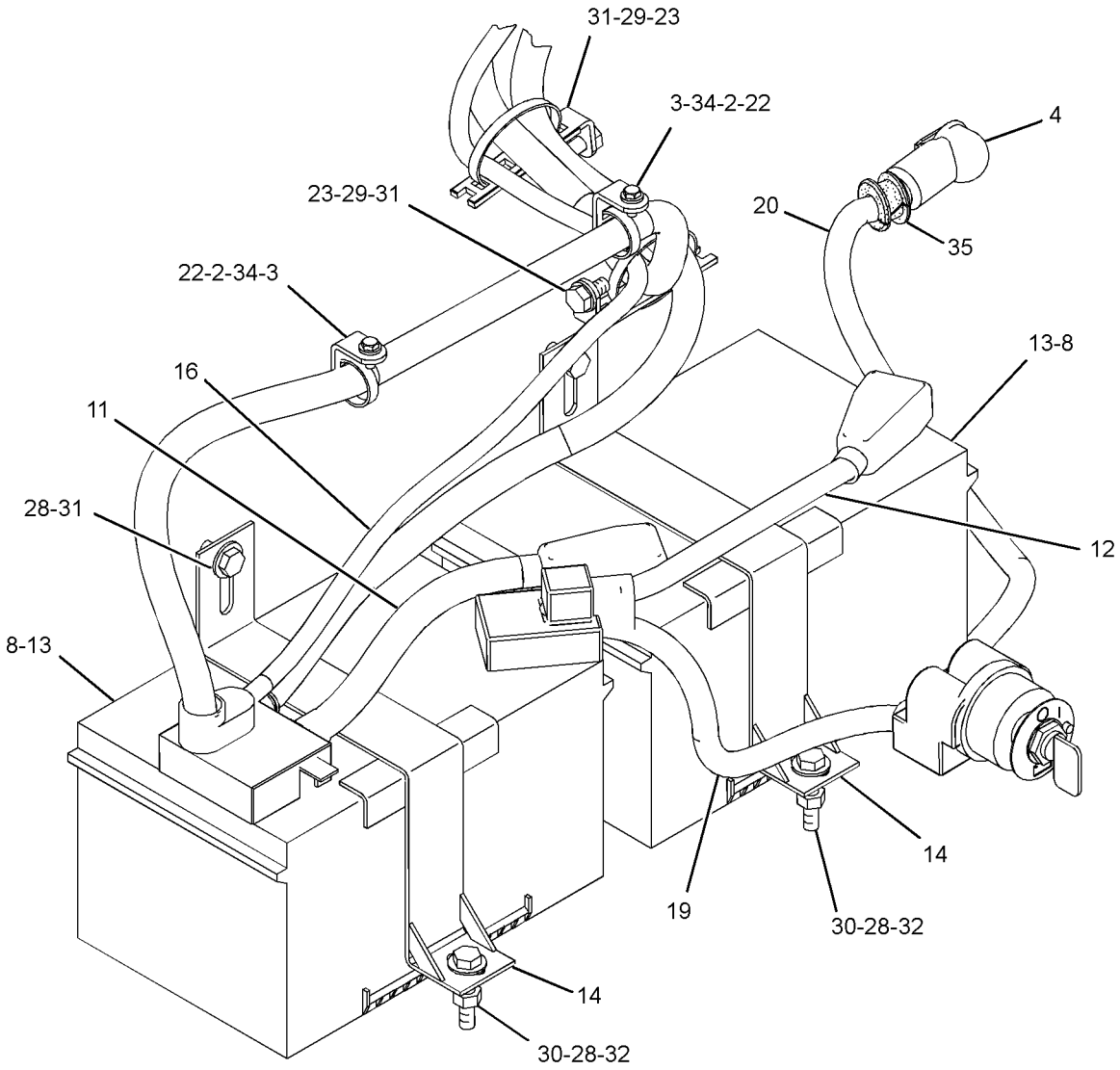

VIEW OF AREA A

GRAPHIC #2 **<END>** g01428586

ELECTRICAL AND STARTING SYSTEM

304-6436 CONTROL GP-ENGINE ELECTRONIC

S/N: C4E1-UP

PART OF 254-0115 ENGINE AR-PRIMARY

SMCS-1901 **i04022178**

NOTE	REF NO	GRAPHIC REF	PART NUMBER	QTY	PART NAME 1 2 3 4 5 6 (PRODUCT LEVEL)	SEE PAGE
R	1	1	**331-7539**	1	CONTROL GP-UNPROGRAMMED	
	2	1	**278-5201**	2	CONNECTION	
	3	1	**278-5202**	2	SEAL-O-RING	

R-REMFG PART MAY BE AVAILABLE

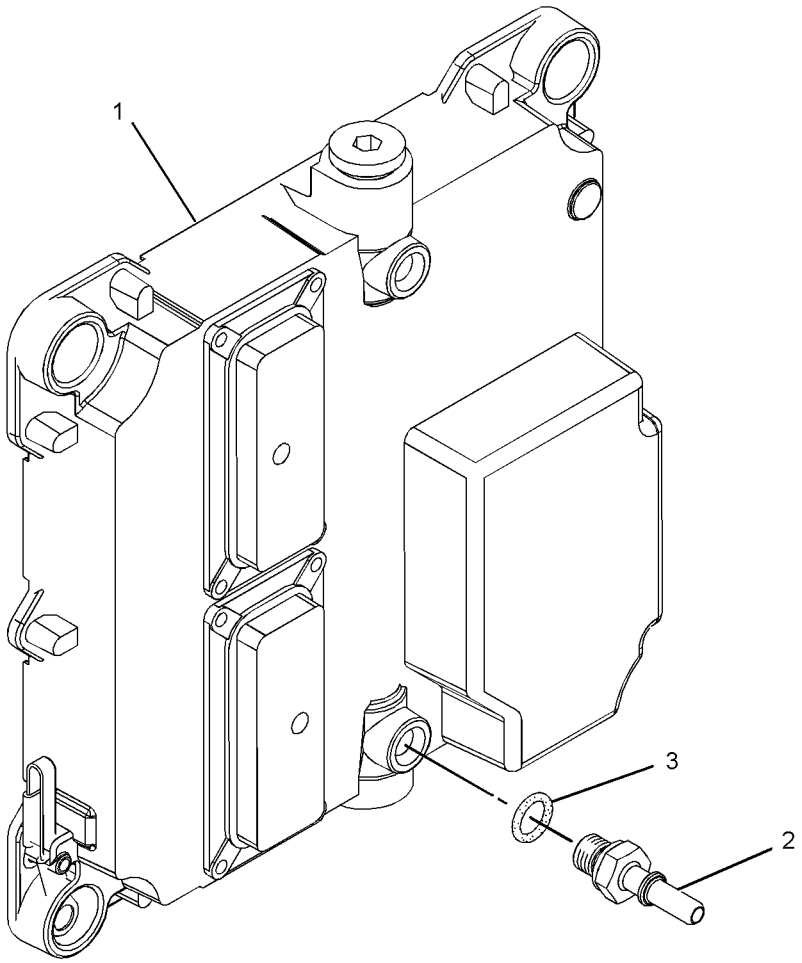

GRAPHIC #1 **<END>** g01340330

262-1421 ELECTRONICS GP-COMMUNICATION–
PRODUCT LINK 300
S/N: RBA1-UP
PART OF 225-7995 INSTALLATION GP-COMMUNICATION
AN ATTACHMENT

SMCS-7606, 7610, 7620 **i04034800**

NOTE	PART NUMBER	QTY	PART NAME 1 2 3 4 5 6 (PRODUCT LEVEL)	SEE PAGE
	355-5105	1	SOFTWARE GP-COMMUNICATION (PRODUCT LINK 300)	
			-OR-	
	355-9764	1	SERVICE GP-COMMUNICATION (PRODUCT LINK 300)	
			(OPTIONAL SERVICE REPLACEMENT)(INCLUDES CONTROL GP & SOFTWARE)	
	7X-6315	1	STRAP AS-GROUND	
	126-7574	1	SCREW-PAN HEAD (8-32X9.52-MM)	
	134-4126	1	WASHER (4.52X8.28X0.76-MM THK)	

<END>

336-3545 ELECTRONICS GP-COMMUNICATION–
PRODUCT LINK 121SR
S/N: RBA1-UP
PART OF 225-7994 INSTALLATION GP-COMMUNICATION
AN ATTACHMENT

SMCS-7606, 7610, 7620 **i03916171**

NOTE	PART NUMBER	QTY	PART NAME 1 2 3 4 5 6 (PRODUCT LEVEL)	SEE PAGE
	336-3566	1	SOFTWARE GP-COMMUNICATION (PRODUCT LINK 121SR)	

<END>

290-6776 ELECTRONICS GP-MACHINE–NON-ACCUGRADE
S/N: RBA1-UP
PART OF 254-0200 CAB AR-ENCLOSED ROPS, 254-0198 CANOPY AR-OPEN ROPS
AN ATTACHMENT

SMCS-7610, 7620 **i04141049**

NOTE	PART NUMBER	QTY	PART NAME 1 2 3 4 5 6 (PRODUCT LEVEL)	SEE PAGE
	367-9024	1	SOFTWARE GP-MACHINE	
			-OR-	
R	**304-5691**	1	CONTROL GP-UNPROGRAMMED (MACHINE)	
			-OR-	
	367-9026	1	SERVICE GP-MACHINE	
			(OPTIONAL SERVICE REPLACEMENT)(INCLUDES CONTROL GP & SOFTWARE)	

R-REMFG PART MAY BE AVAILABLE

<END>

298-5125 GLOW PLUG GP

S/N: C4E1-UP

PART OF 254-0115 ENGINE AR-PRIMARY

SMCS-1412 **i03865203**

NOTE	REF NO	GRAPHIC REF	PART NUMBER	QTY	PART NAME 1 2 3 4 5 6 (PRODUCT LEVEL)	SEE PAGE
	1	1	**292-9880**	4	GLOW PLUG (12-VOLT)	
	2	1	**298-5772**	1	BAR	

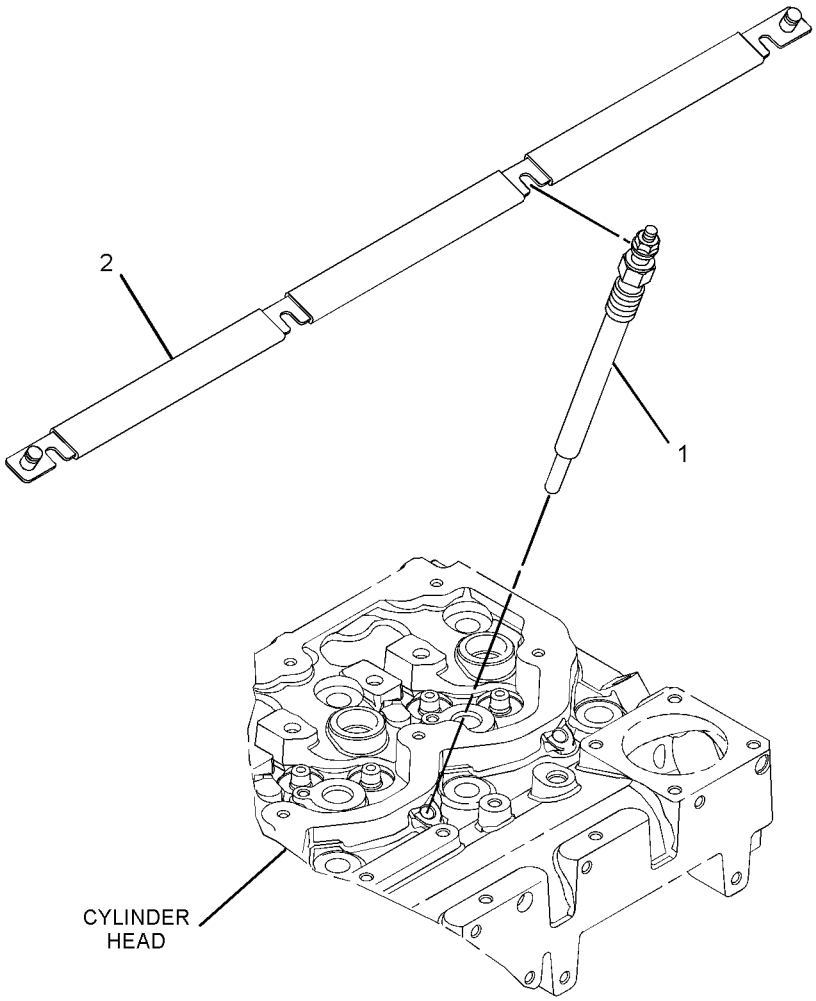

GRAPHIC #1 **<END>** g01305862

248-2214 HEATER GP-JACKET WATER–120-VOLT

S/N: RBA1-UP
AN ATTACHMENT

SMCS-1383 **i03845633**

NOTE	REF NO	GRAPHIC REF	PART NUMBER	QTY	PART NAME 1 2 3 4 5 6 (PRODUCT LEVEL)	SEE PAGE
	1	1	**3S-2093**	2	STRAP-CABLE	
	2	1	**130-0165**	1	RECEPTACLE AS	
	3	1	**165-8357**	1	BRACKET AS	
	4	1	*231-3054*	1	HEATER GP-JACKET WATER	
		1	**219-3273**	1	ELEMENT AS-JACKET WATER HEATER (120-VOLT, 1000-WATT)	
		1	**133-3413**	1	KIT-SEAL (WATER JACKET)	
					(INCLUDES SEAL, SPACER & RINGS)	
		1	**133-6517**	1	CAP AS-DUST	
		1	**231-3052**	1	CORD AS	
M	5	1	**8T-4189**	2	BOLT (M8X1.25X20-MM)	
	6	1	**8T-4224**	2	WASHER-HARD (8.8X16X2-MM THK)	

M-METRIC PART

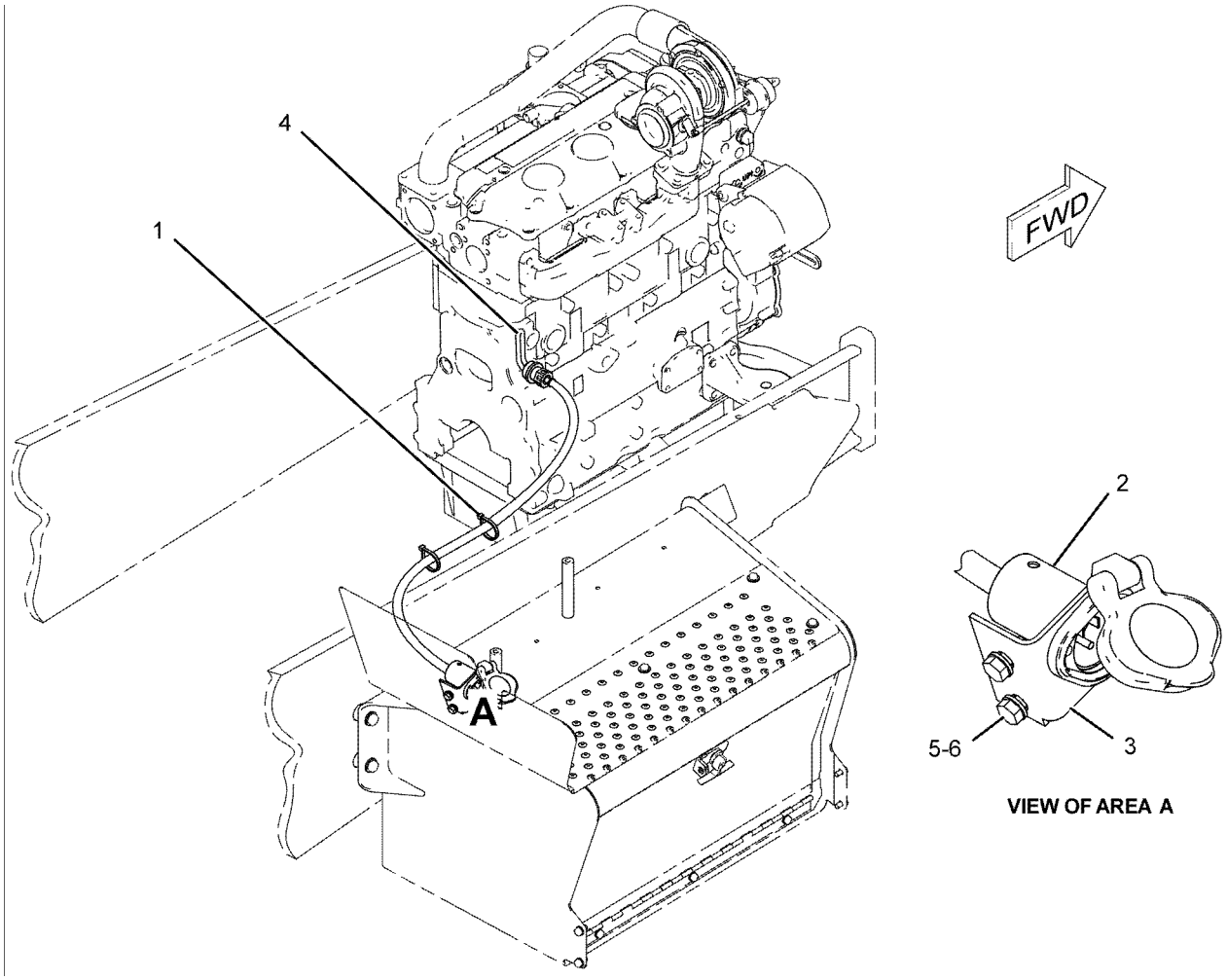

VIEW OF AREA A

GRAPHIC #1 **<END>** g01083542

225-7994 INSTALLATION GP-COMMUNICATION–

PRODUCT LINK 121SR

S/N: RBA1-UP

PART OF 225-7995 INSTALLATION GP-COMMUNICATION

AN ATTACHMENT

SMCS-7606 **i04024687**

NOTE	REF NO	GRAPHIC REF	PART NUMBER	QTY	PART NAME 1 2 3 4 5 6 (PRODUCT LEVEL)	SEE PAGE
	1	1	**7K-1181**	10	STRAP-CABLE	
	2	1	**249-9076**	4	CLIP	
	3	1	**256-6803**	1	HARNESS AS-RADIO (PRODUCT LINK)	
		1	**8T-8729**	9	PIN-CONNECTOR (16-GA TO 18-GA)	
		1	**8T-8737**	10	PLUG-SEAL	
		1	**8T-8730**	9	SOCKET-CONNECTOR (16-GA TO 18-GA)	
		1	**102-8801**	1	KIT-RECEPTACLE (12-PIN)	
		1	**102-8802**	1	KIT-RECEPTACLE (2-PIN)	
					(EACH RECEPTACLE KIT INCLUDES RECEPTACLE AS & WEDGE)	
		1	**155-2255**	1	KIT-CONNECTING PLUG (12-PIN)	
		1	**155-2270**	1	KIT-CONNECTING PLUG (2-PIN)	
					(EACH PLUG KIT INCLUDES PLUG AS, WEDGE & INTERFACE SEAL)	
	4	1	**260-7652**	1	FILM-WARNING (PRODUCT LINK 300, U.S.)	
					–OR–	
		1	**260-7653**	1	FILM-WARNING (PRODUCT LINK 300, INTL)	
Y	5	1	**336-3545**	1	ELECTRONICS GP-COMMUNICATION (PRODUCT LINK 121SR)	87
	6	1	**284-8531**	1	ANTENNA AS (MAGNETIC MOUNT, PRODUCT LINK)	
		1	**301-0589**	1	ANTENNA (FLEXIBLE)	
M	7	1	**129-3178**	4	LOCKNUT (M6X1-THD)	
	8	1	**156-6175**	2	CLIP	
	9	1	**170-9360**	1	GROMMET	
	10	1	**6P-6591**	1	GROMMET	
M	11	1	**6V-7357**	4	BOLT (M6X1X25-MM)	
	12	1	**8T-4205**	6	WASHER-HARD (7.2X14.5X2-MM THK)	

M-METRIC PART
Y-SEPARATE ILLUSTRATION

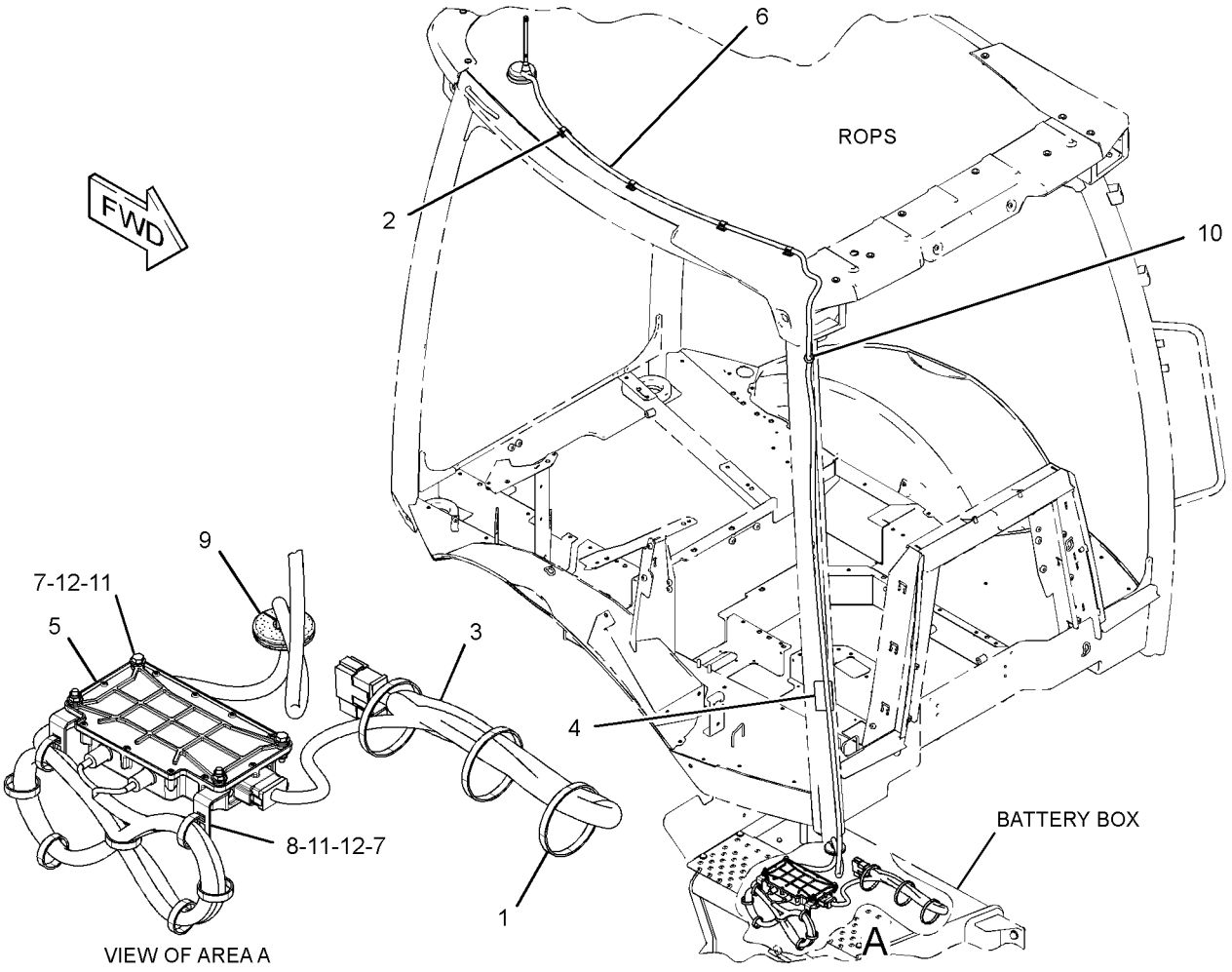

GRAPHIC #1 **<END>** g01457315

225-7995 INSTALLATION GP-COMMUNICATION–
PRODUCT LINK 300
S/N: RBA1-UP
AN ATTACHMENT

SMCS-7606 **i03848072**

NOTE	REF NO	GRAPHIC REF	PART NUMBER	QTY	PART NAME 1 2 3 4 5 6 (PRODUCT LEVEL)	SEE PAGE
	1	1	**8T-4205**	5	WASHER-HARD (7.2X14.5X2-MM THK)	
	2	1	**8C-5607**	8	MOUNT-ISOLATION	
	3	1	**8C-5608**	4	SPACER (6.5X9.5X25.4-MM THK)	
	4	1	**9X-6165**	8	WASHER (6.5X22X2.5-MM THK)	
Y	5	1	*225-7994*	1	INSTALLATION GP-COMMUNICATION (PRODUCT LINK 121SR)	90
	6	1	**256-6804**	1	HARNESS AS-CONTROL (PRODUCT LINK)	
		1	**126-1774**	1	COVER-CONNECTOR	
		1	**8T-8729**	11	PIN-CONNECTOR (16-GA TO 18-GA)	
		1	**155-2255**	1	KIT-CONNECTING PLUG (12-PIN)	
		1	**155-2270**	1	KIT-CONNECTING PLUG (2-PIN)	
					(EACH PLUG KIT INCLUDES PLUG AS, WEDGE & INTERFACE SEAL)	
		1	**160-7690**	1	PLUG AS-CONNECTOR (70-PIN)	
		1	**159-9322**	1	SEAL-O-RING	
		1	**8T-8737**	60	PLUG-SEAL	
		1	**102-8801**	1	KIT-RECEPTACLE (12-PIN)	
					(INCLUDES RECEPTACLE AS & WEDGE)	
		1	**8T-8730**	25	SOCKET-CONNECTOR (16-GA TO 18-GA)	
		1	**9X-6772**	2	STRAP-CABLE	
E		1	**125-7874**		TUBE-HEAT SHRINK (5.72-MM DIA) (20-CM)	
Y	7	1	*262-1421*	1	ELECTRONICS GP-COMMUNICATION (PRODUCT LINK 300)	87
M	8	1	**129-3178**	4	LOCKNUT (M6X1-THD)	
M	9	1	**9X-2480**	4	BOLT (M6X1X45-MM)	

E-ORDER BY THE CENTIMETER
M-METRIC PART
Y-SEPARATE ILLUSTRATION

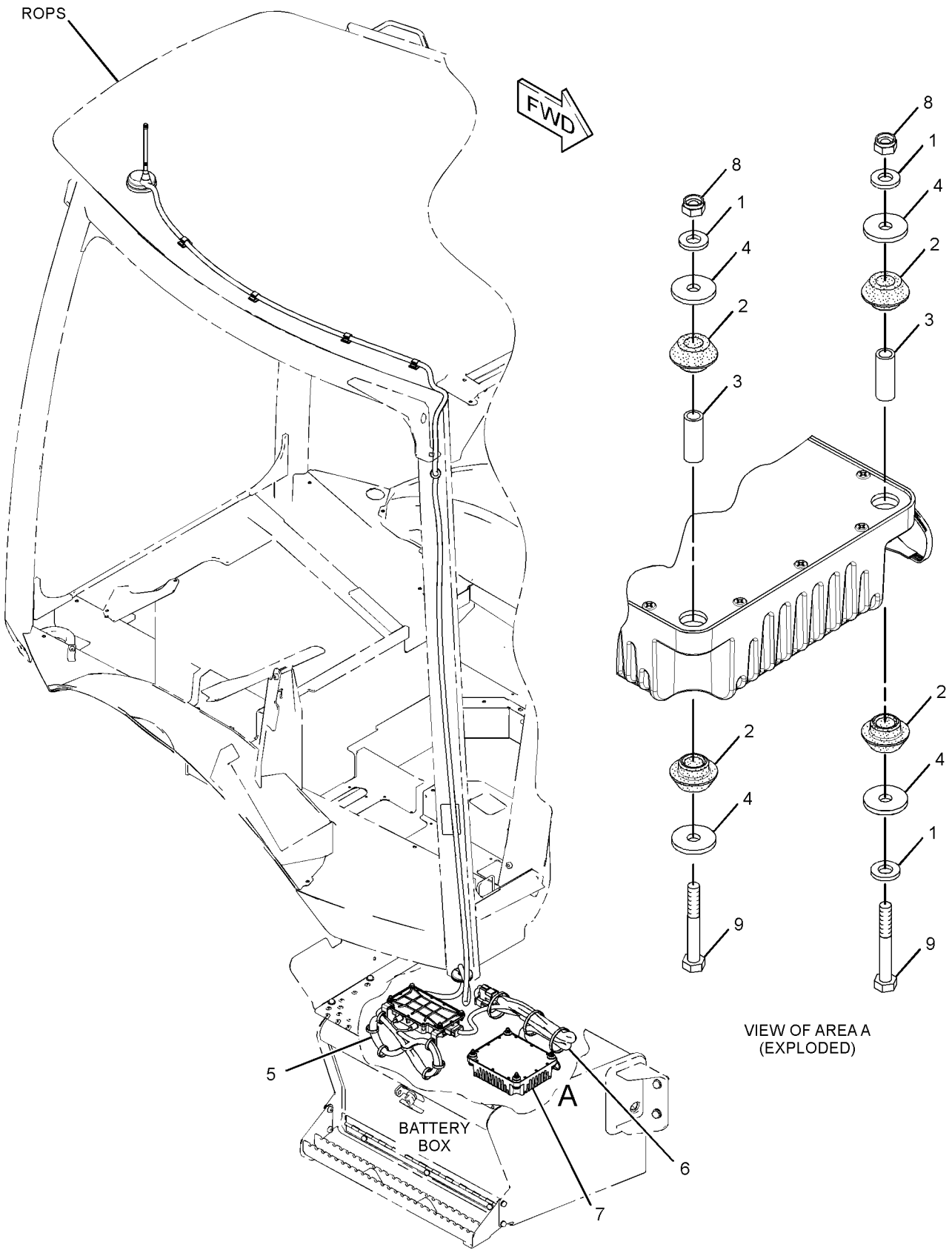

GRAPHIC #1 **<END>** g01421875

234-4328 LAMP GP-FLOOD

S/N: RBA1-UP
12-VOLT
PART OF 211-4277 LIGHTING GP-FLOOD & SIGNAL
AN ATTACHMENT

SMCS-1429, 1434 **i03091796**

NOTE	REF NO	GRAPHIC REF	PART NUMBER	QTY	PART NAME 1 2 3 4 5 6 (PRODUCT LEVEL)	SEE PAGE
	1	1	**9W-0607**	1	LAMP (12-VOLT, 55-WATT)	
M	2	1	**8T-0389**	1	LOCKNUT (M10X1.5-THD)	
	3	1	**9X-4244**	2	SCREW-SPECIAL (M4X1.79X25-MM)	
	4	1	**202-6614**	1	LENS AS (FLOOD)	
	5	1	**234-7730**	1	BODY AS	
	6	1	**164-7556**	1	BRACKET (LAMP RETAINING)	
	7	1	**234-7731**	1	BRACKET AS	
	8	1	**8T-4121**	1	WASHER-HARD (11X21X2.5-MM THK)	

M-METRIC PART

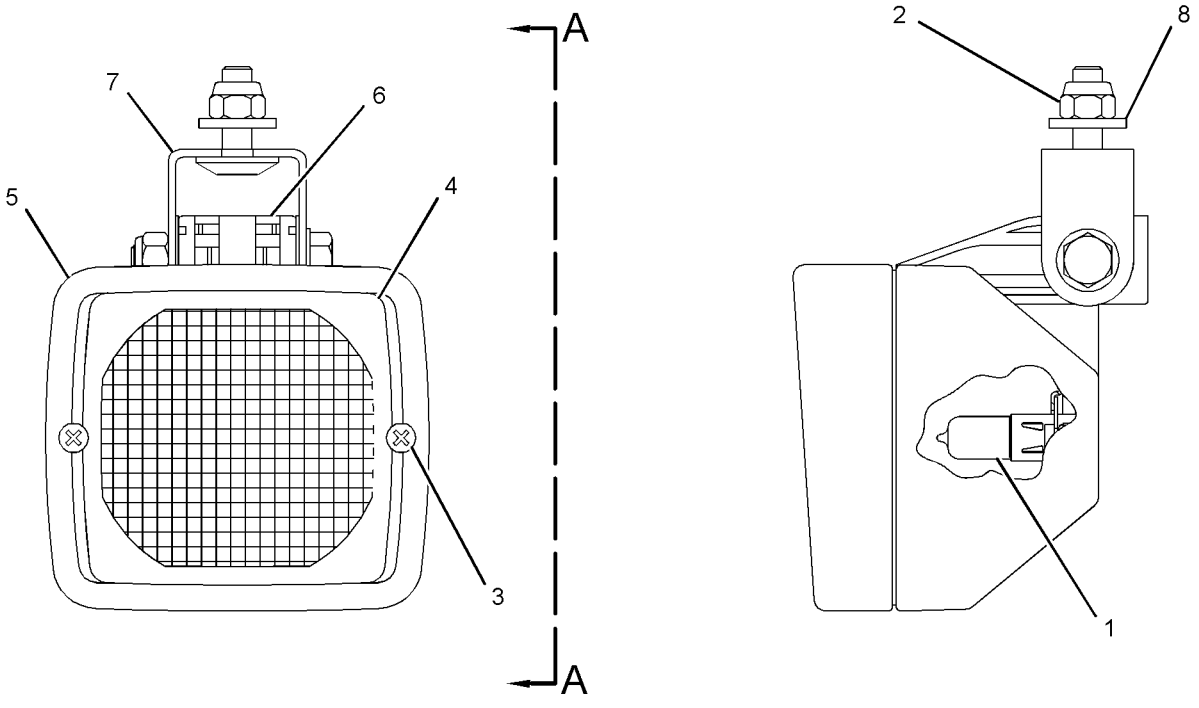

VIEW A-A

GRAPHIC #1 **<END>** g01283627

234-4329 LAMP GP-FLOOD

S/N: RBA1-UP
12-VOLT
PART OF 211-4277 LIGHTING GP-FLOOD & SIGNAL
AN ATTACHMENT

SMCS-1429, 1434 **i03325046**

NOTE	REF NO	GRAPHIC REF	PART NUMBER	QTY	PART NAME 1 2 3 4 5 6 (PRODUCT LEVEL)	SEE PAGE
	1	1	**9W-0607**	1	LAMP (12-VOLT, 55-WATT)	
M	2	1	**8T-0389**	1	LOCKNUT (M10X1.5-THD)	
	3	1	**9X-4244**	2	SCREW-SPECIAL (M4X1.79X25-MM)	
	4	1	**202-6611**	1	LENS AS (FLOODLIGHT)	
	5	1	**234-7730**	1	BODY AS	
	6	1	**164-7556**	1	BRACKET (LAMP RETAINING)	
	7	1	**234-7731**	1	BRACKET AS	
	8	1	**8T-4121**	1	WASHER-HARD (11X21X2.5-MM THK)	

M-METRIC PART

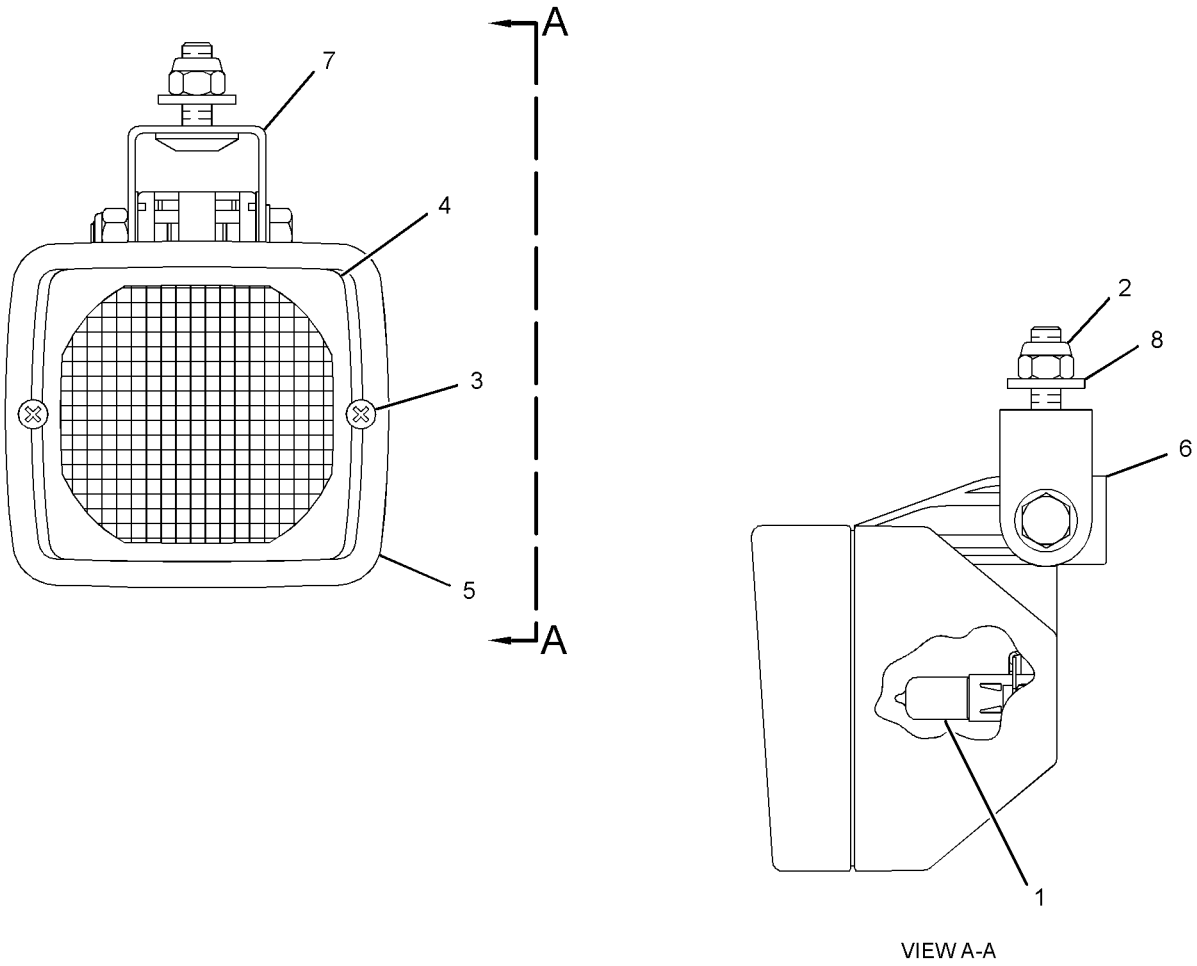

GRAPHIC #1 **<END>** g01431519

290-5760 LAMP GP-FLOOD

S/N: RBA1-UP
PART OF 211-4277 LIGHTING GP-FLOOD & SIGNAL
AN ATTACHMENT

SMCS-1429, 1434 **i02643648**

NOTE	REF NO	GRAPHIC REF	PART NUMBER	QTY	PART NAME 1 2 3 4 5 6 (PRODUCT LEVEL)	SEE PAGE
	1	1	**9W-0607**	1	LAMP (12-VOLT, 55-WATT)	
	2	1	**9X-4244**	2	SCREW-SPECIAL	
	3	1	**202-6611**	1	LENS AS	
	4	1	**234-7730**	1	BODY AS (FLOODLIGHT)	
	5	1	**164-7556**	1	BRACKET (LAMP RETAINING)	
M	6	1	**8T-0389**	1	LOCKNUT (M10X1.5-THD)	
	7	1	**234-7731**	1	BRACKET AS	
	8	1	**8T-4121**	1	WASHER-HARD (11X21X2.5-MM THK)	

M-METRIC PART

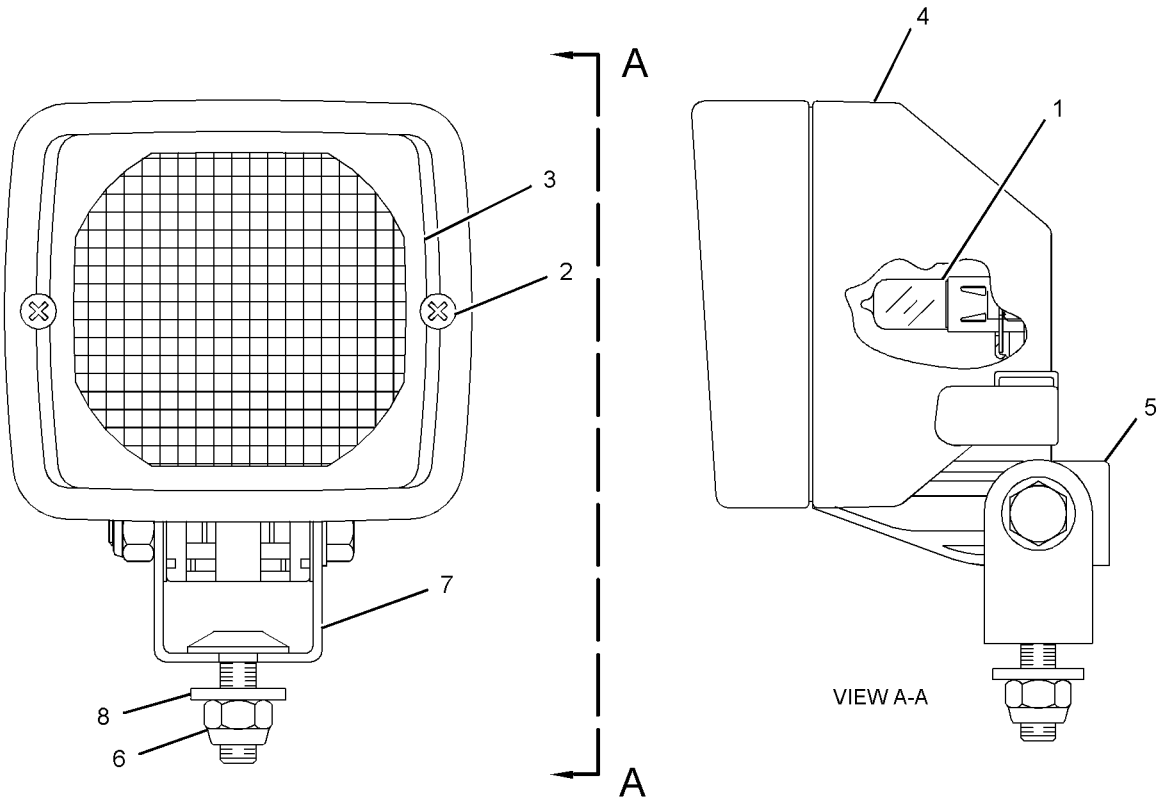

GRAPHIC #1 **<END>** g01349258

180-3664 LAMP GP-WARNING BEACON–
AMBER, MAGNETIC MOUNT, ROTATING
S/N: RBA1-UP
12-VOLT
PART OF 211-4292 LIGHTING GP-WARNING BEACON
AN ATTACHMENT

SMCS-1431 **i02600333**

NOTE	REF NO	GRAPHIC REF	PART NUMBER	QTY	PART NAME 1 2 3 4 5 6 (PRODUCT LEVEL)	SEE PAGE
	1	1	**185-7016**	1	LAMP GP-WARNING BEACON (MAGNETIC MOUNT)	
	2	1	**9X-8139**	1	BELT-DRIVE	
	3	1	**9X-8121**	1	LENS (AMBER, WARNING BEACON)	
	4	1	**9X-8118**	1	LAMP (12-VOLT, 55-WATT)	
	5	1	**179-5434**	1	PLUG AS	
	6	1	**3K-8782**	1	FUSE (10-AMPERE)	

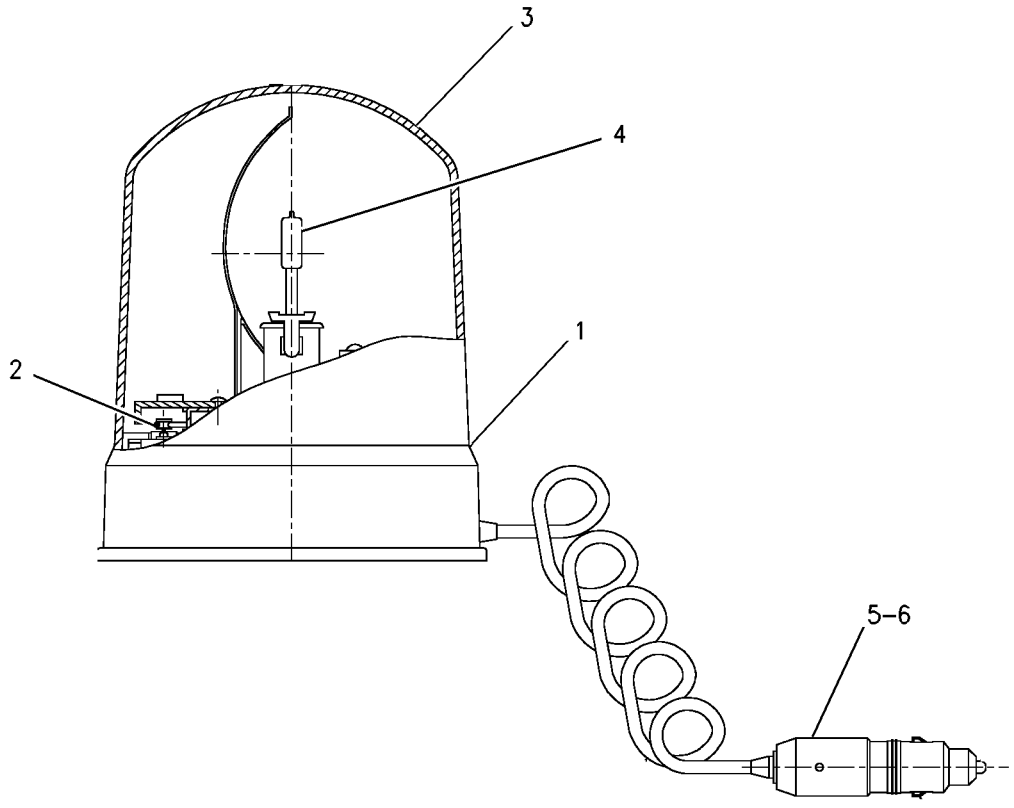

GRAPHIC #1 **<END>** g00781826

ELECTRICAL AND STARTING SYSTEM

211-4277 LIGHTING GP-FLOOD & SIGNAL—NACD, OPTIONAL

S/N: RBA1-UP

PART OF 254-0200 CAB AR-ENCLOSED ROPS, 254-0198 CANOPY AR-OPEN ROPS AN ATTACHMENT

SMCS-1429, 1430, 1432, 1434 **i03852120**

NOTE	REF NO	GRAPHIC REF	PART NUMBER	QTY	PART NAME 1 2 3 4 5 6 (PRODUCT LEVEL)	SEE PAGE
	1	1	**9R-1499**	2	REFLECTOR	
	2	1	**178-7539**	1	RECEPTACLE AS (POWER SUPPLY)	
	3	1	**290-6799**	1	HARNESS AS-LIGHTING (ROOF)	
		1	**274-3774**	4	CAP-CONNECTOR	
		1	**186-3735**	10	PIN-CONNECTOR (16-GA TO 18-GA)	
		1	**155-2270**	10	KIT-CONNECTING PLUG (2-PIN)	
		1	**155-2271**	2	KIT-CONNECTING PLUG (4-PIN)	
					(EACH PLUG AS INCLUDES PLUG AS, WEDGE & INTERFACE SEAL)	
		1	**8T-8737**	4	PLUG-SEAL	
		1	**102-8805**	1	KIT-RECEPTACLE (6-PIN)	
		1	**102-8806**	1	KIT-RECEPTACLE (8-PIN)	
					(EACH RECEPTACLE KIT INCLUDES RECEPTACLE AS & WEDGE)	
		1	**186-3736**	28	SOCKET-CONNECTOR (16-GA TO 18-GA)	
		1	**8L-8413**	15	STRAP-CABLE	
BD		1	**1P-0810**		TAPE-ELECTRICAL	
		1	**2L-8069**	2	TERMINAL-RING (2-GA TO 10-GA, 3/8-IN SCREW)	
		1	**5P-4571**	2	TERMINAL-BLADE (14-GA TO 16-GA)	
E		1	**119-3662**		TUBE-HEAT SHRINK (10.85-MM DIA) (13-CM)	
E		1	**125-7874**		TUBE-HEAT SHRINK (5.72-MM DIA) (35-CM)	
E		1	**125-7875**		TUBE-HEAT SHRINK (7.44-MM DIA) (20-CM)	
	4	1	**300-4995**	1	SWITCH AS-ROCKER (FLOODLIGHT, FRONT)	
	5	1	**300-4996**	1	SWITCH AS-ROCKER (FLOODLIGHT, REAR)	
					(EACH SWITCH AS ROCKER INCLUDES)	
		1	**111-7899**	1	GASKET	
Y	6	1	**234-4328**	4	LAMP GP-FLOOD (12-VOLT)	94
Y	7	1	**234-4329**	2	LAMP GP-FLOOD (12-VOLT)	95
	8	1	**282-7833**	1	GROMMET	
	9	1	**282-7835**	1	PLATE	
	10	1	**172-6489**	2	LAMP GP-HEAD & SIGNAL (DIRECTIONAL)	
					(EACH INCLUDES)	
		1	**102-8802**	1	KIT-RECEPTACLE (2-PIN)	
					(INCLUDES RECEPTACLE AS & WEDGE)	
		1	**3C-4883**	1	LAMP (12-VOLT, 21-WATT)	
		1	**176-0348**	1	LENS	
	11	1	**172-6490**	2	LAMP GP-SIGNAL (STOP, TAIL, TURN)	
					(EACH INCLUDES)	
		1	**102-8804**	1	KIT-RECEPTACLE (4-PIN)	
					(INCLUDES RECEPTACLE AS & WEDGE)	
		1	**9W-3326**	1	LAMP (12-VOLT, 21-WATT)	
		1	**084-4348**	1	LAMP (12-VOLT, 5-WATT)	
		1	**267-2809**	1	LENS	
		1	**186-3735**	4	PIN-CONNECTOR (16-GA TO 18-GA)	
	12	1	**3S-2093**	24	STRAP-CABLE	
	13	1	**8T-4121**	10	WASHER-HARD (11X21X2.5-MM THK)	
M	14	1	**8T-4133**	9	NUT (M10X1.5-THD)	
M	15	1	**8C-3798**	2	BOLT-LOCKING (M6X1X30-MM)	
	16	1	**9X-8256**	2	WASHER (6.6X12X2-MM THK)	
Y	17	1	**290-5760**	2	LAMP GP-FLOOD (12-VOLT) (REAR OUTER)	96
	18	1	**8F-3590**	1	LOCKWASHER	
E	19	1	**3E-6600**		SEAL (5-CM)	

B-USE AS REQUIRED
D-ORDER BY THE METER
E-ORDER BY THE CENTIMETER
M-METRIC PART
Y-SEPARATE ILLUSTRATION

211-4277 **LIGHTING GP-FLOOD & SIGNAL** *(contd.)* **i03852120**

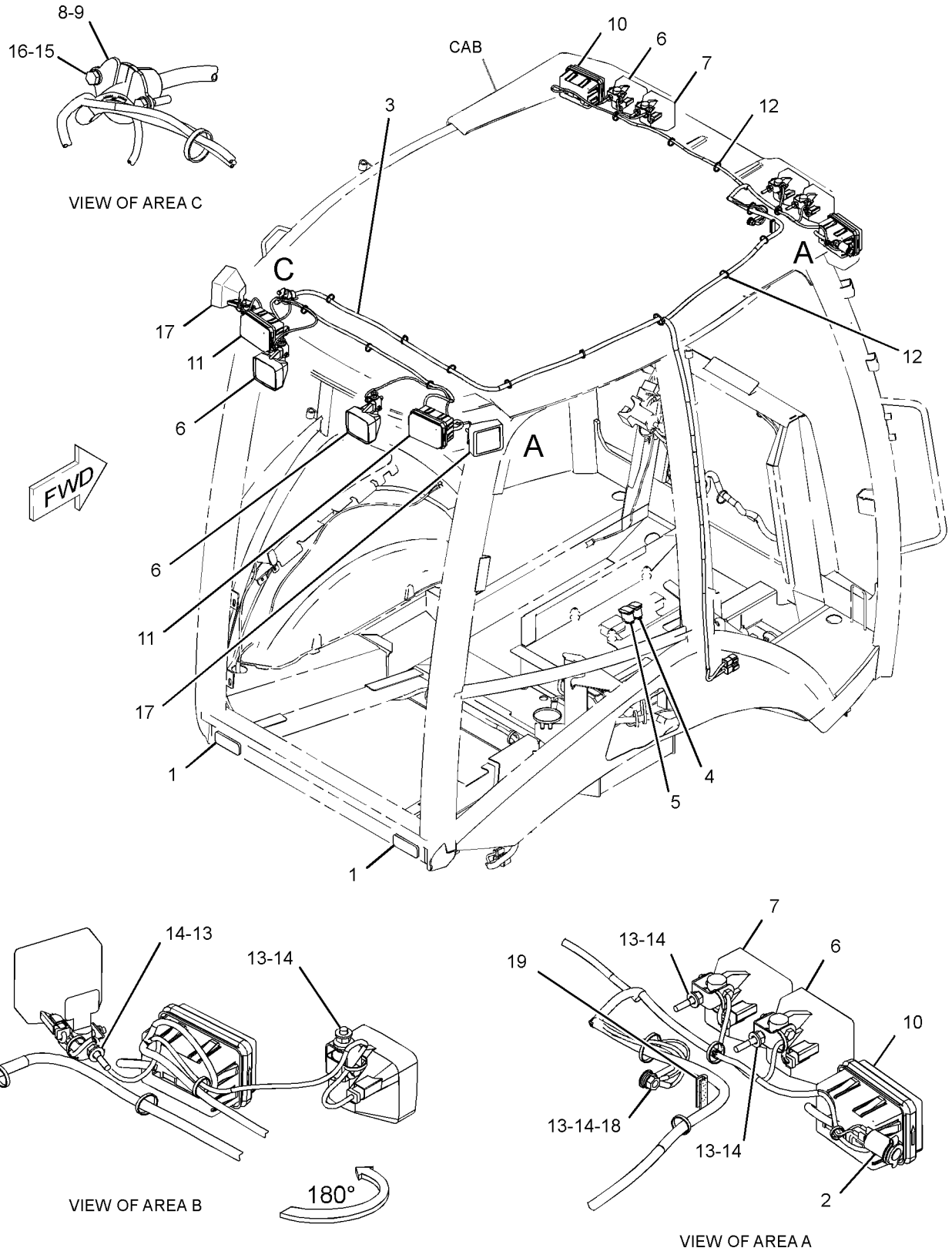

GRAPHIC #1 **<END>** g01405458

211-4292 LIGHTING GP-WARNING BEACON–
AMBER, MAGNETIC MOUNT, ROTATING
S/N: RBA1-UP
AN ATTACHMENT

SMCS-1431 **i03848712**

NOTE	REF NO	GRAPHIC REF	PART NUMBER	QTY	PART NAME 1 2 3 4 5 6 (PRODUCT LEVEL)	SEE PAGE
	1	1	**031-5644**	2	CLIP	
Y	2	1	**180-3664**	1	LAMP GP-WARNING BEACON (12-VOLT, AMBER)	97

Y-SEPARATE ILLUSTRATION

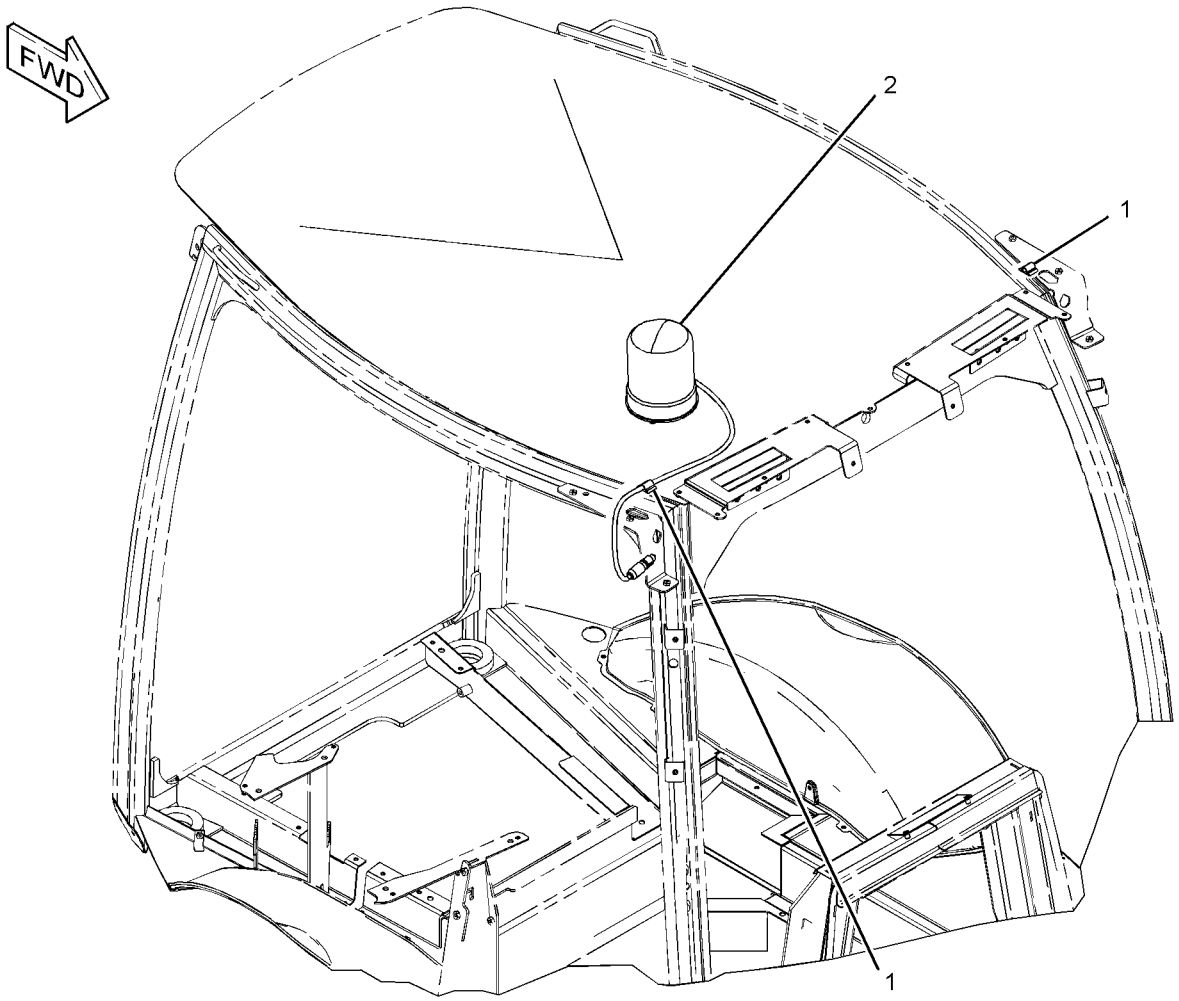

GRAPHIC #1 **<END>** g01233454

247-8199 PANEL GP-FUSE–INCLUDES RELAY

S/N: RBA1-UP
PART OF 263-0924 WIRING GP-PLATFORM
AN ATTACHMENT

SMCS-1417, 1422 **i03340693**

NOTE	REF NO	GRAPHIC REF	PART NUMBER	QTY	PART NAME 1 2 3 4 5 6 (PRODUCT LEVEL)	SEE PAGE
	1	1	**113-8490**	11	FUSE (10-AMPERE)	
	2	1	**113-8491**	13	FUSE (15-AMPERE)	
	3	1	**113-8492**	10	FUSE (20-AMPERE)	
	4	1	**265-8182**	1	COVER-FUSE BLOCK	
M	6	1	**5C-7261**	4	NUT (M8X1.25-THD)	
	7	1	**9F-5644**	4	LOCKWASHER	
	8	1	**7X-0608**	4	WASHER-HARD (10.2X16X2-MM THK)	

M-METRIC PART

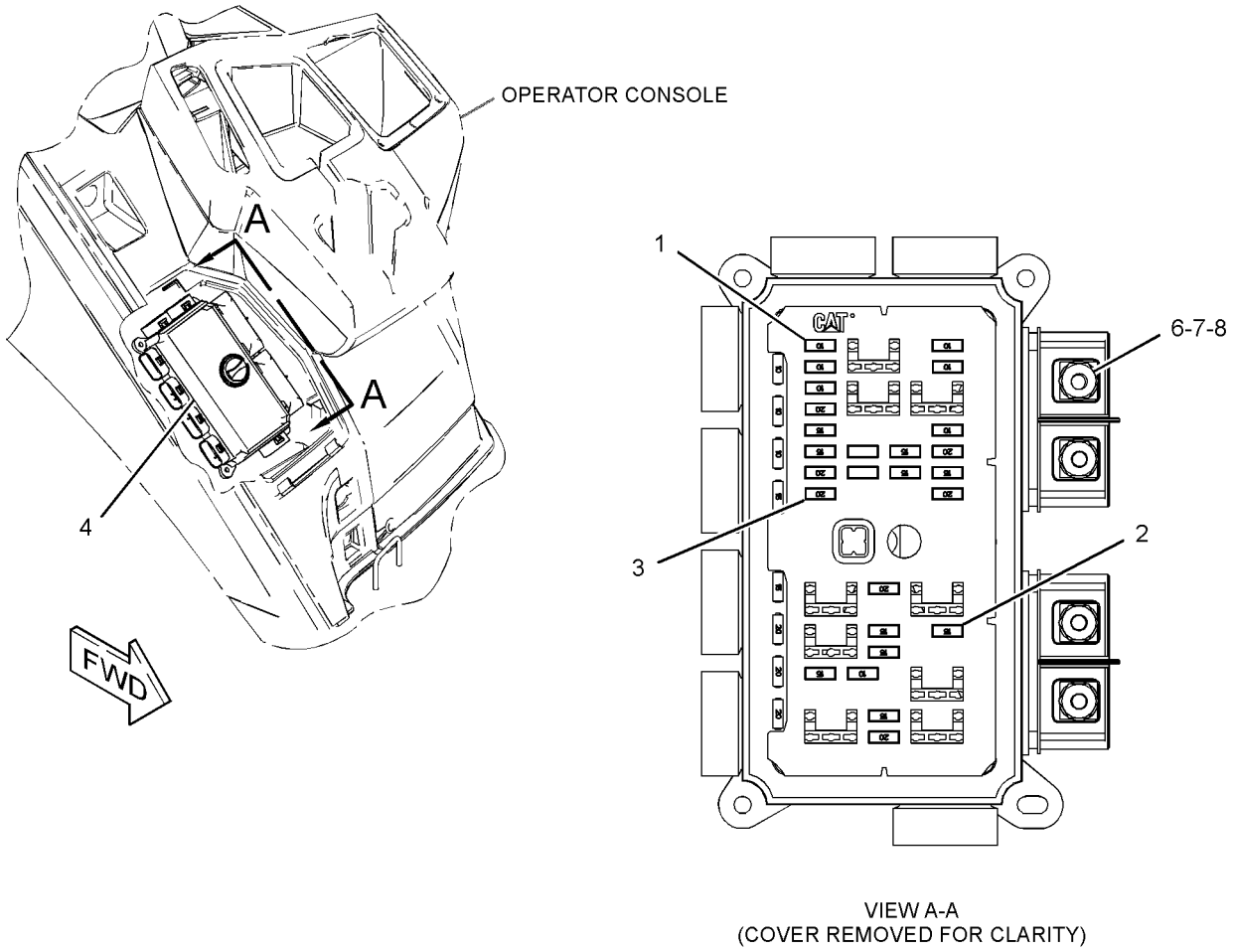

VIEW A-A
(COVER REMOVED FOR CLARITY)

GRAPHIC #1 **<END>** g01331615

275-0490 RELAY GP

S/N: RBA1-UP
12-VOLT
PART OF 263-0958 WIRING GP-ENGINE

SMCS-1422, 4493 **i03852131**

NOTE	REF NO	GRAPHIC REF	PART NUMBER	QTY	PART NAME 1 2 3 4 5 6 (PRODUCT LEVEL)	SEE PAGE
	1		**1H-3244**	2	LOCKWASHER	
M	2		**5C-2890**	2	NUT (M6X1-THD)	
M	3		**5C-7261**	1	NUT (M8X1.25-THD)	
	4		**8T-4205**	2	WASHER-HARD (7.2X14.5X2-MM THK)	
	5		**8T-4224**	1	WASHER-HARD (8.8X16X2-MM THK)	
	6		**267-5211**	1	SEAL	
	7		**267-5213**	1	COVER	
	8		**274-9872**	1	FUSE (30-AMPERE) (MAIN)	
	9		**274-9877**	1	FUSE (50-AMPERE) (POWER, 1)	

M-METRIC PART

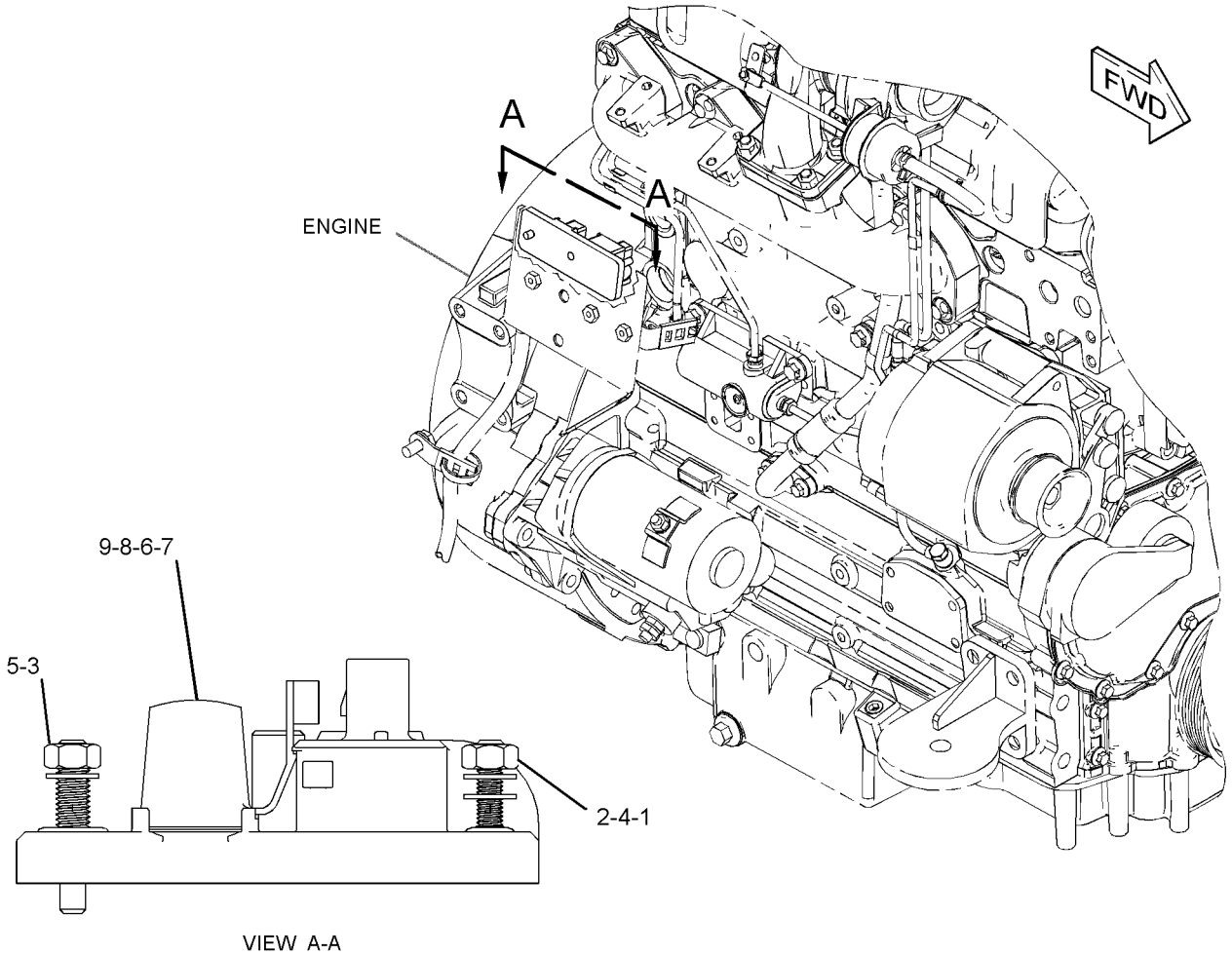

VIEW A-A

GRAPHIC #1 **<END>** g01341108

276-7287 RELAY GP—POWER DISTRIBUTION

S/N: RBA1-UP
12-VOLT
PART OF 287-2102 WIRING GP-AIR CONDITIONER
AN ATTACHMENT

SMCS-1422, 4493 **i03325084**

NOTE	REF NO	GRAPHIC REF	PART NUMBER	QTY	PART NAME 1 2 3 4 5 6 (PRODUCT LEVEL)	SEE PAGE
M	1	1	**5C-2890**	2	NUT (M6X1-THD)	
	2	1	**8T-4205**	2	WASHER-HARD (7.2X14.5X2-MM THK)	
	3	1	**1H-3244**	2	LOCKWASHER	
M	4	1	**5C-7261**	1	NUT (M8X1.25-THD)	
	5	1	**8T-4224**	1	WASHER-HARD (8.8X16X2-MM THK)	
	6	1	**267-5213**	1	COVER	
	7	1	**267-5211**	1	SEAL	
	8	1	**278-6377**	1	FUSE (40-AMPERE)	

M-METRIC PART

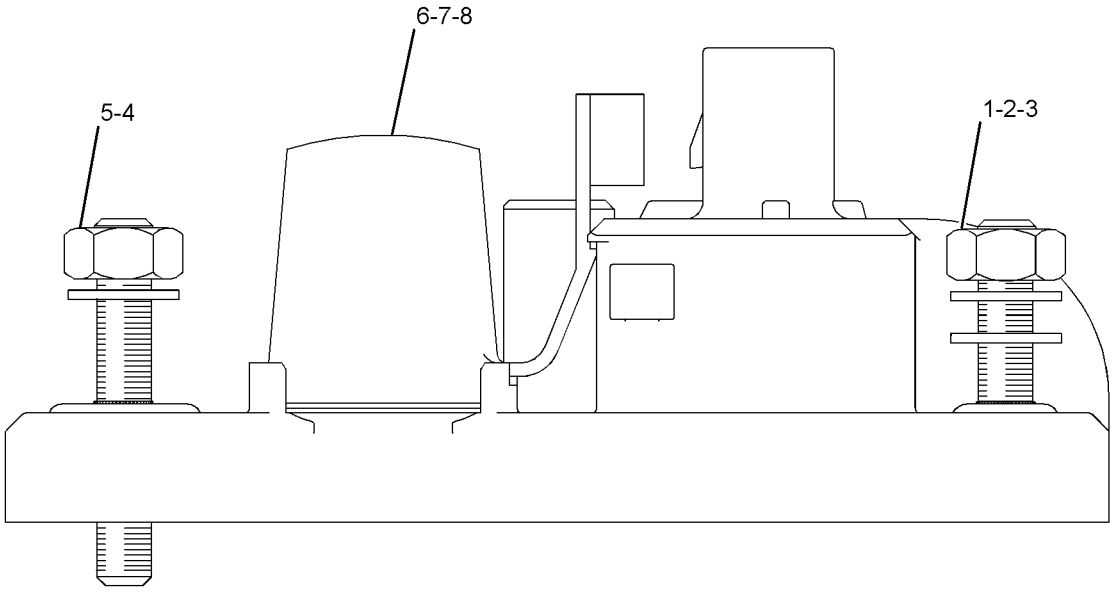

GRAPHIC #1 **<END>** g01290616

276-7290 RELAY GP–POWER, 1

S/N: RBA1-UP
12-VOLT
PART OF 263-0924 WIRING GP-PLATFORM
AN ATTACHMENT

SMCS-1422, 4493 **i03325122**

NOTE	REF NO	GRAPHIC REF	PART NUMBER	QTY	PART NAME 1 2 3 4 5 6 (PRODUCT LEVEL)	SEE PAGE
M	1	1	**5C-2890**	2	NUT (M6X1-THD)	
	2	1	**8T-4205**	2	WASHER-HARD (7.2X14.5X2-MM THK)	
	3	1	**1H-3244**	2	LOCKWASHER	
M	4	1	**5C-7261**	1	NUT (M8X1.25-THD)	
	5	1	**8T-4224**	1	WASHER-HARD (8.8X16X2-MM THK)	
	6	1	**267-5213**	1	COVER	
	7	1	**267-5211**	1	SEAL	
	8	1	**267-2701**	2	FUSE (60-AMPERE)	

M-METRIC PART

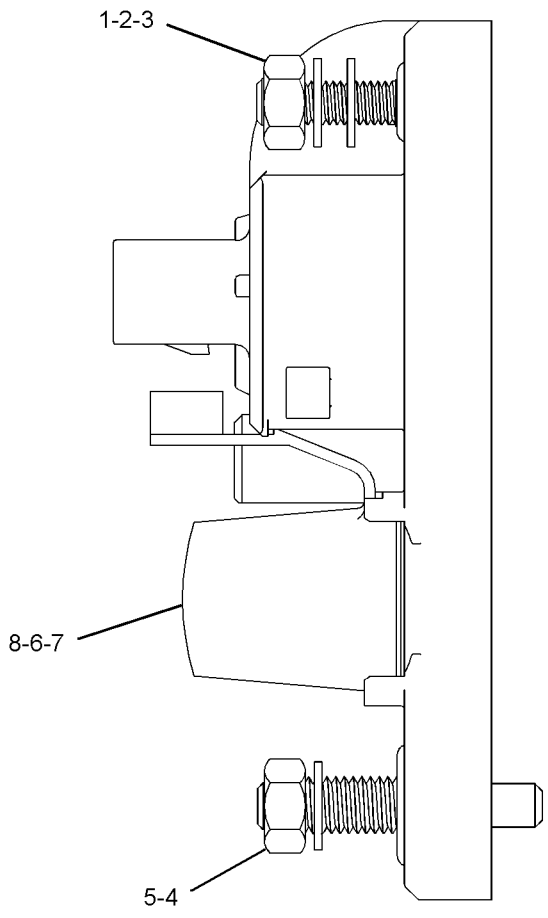

GRAPHIC #1 **<END>** g01278211

276-7291 RELAY GP–POWER, 2

S/N: RBA1-UP
12-VOLT
PART OF 263-0924 WIRING GP-PLATFORM
AN ATTACHMENT

SMCS-1422, 4493 **i03325141**

NOTE	REF NO	GRAPHIC REF	PART NUMBER	QTY	PART NAME 1 2 3 4 5 6 (PRODUCT LEVEL)	SEE PAGE
M	1	1	**5C-2890**	2	NUT (M6X1-THD)	
	2	1	**8T-4205**	2	WASHER-HARD (7.2X14.5X2-MM THK)	
	3	1	**1H-3244**	2	LOCKWASHER	
M	4	1	**5C-7261**	1	NUT (M8X1.25-THD)	
	5	1	**8T-4224**	1	WASHER-HARD (8.8X16X2-MM THK)	
	6	1	**267-5213**	1	COVER	
	7	1	**267-5211**	1	SEAL	
	8	1	**267-2701**	1	FUSE (60-AMPERE)	

M-METRIC PART

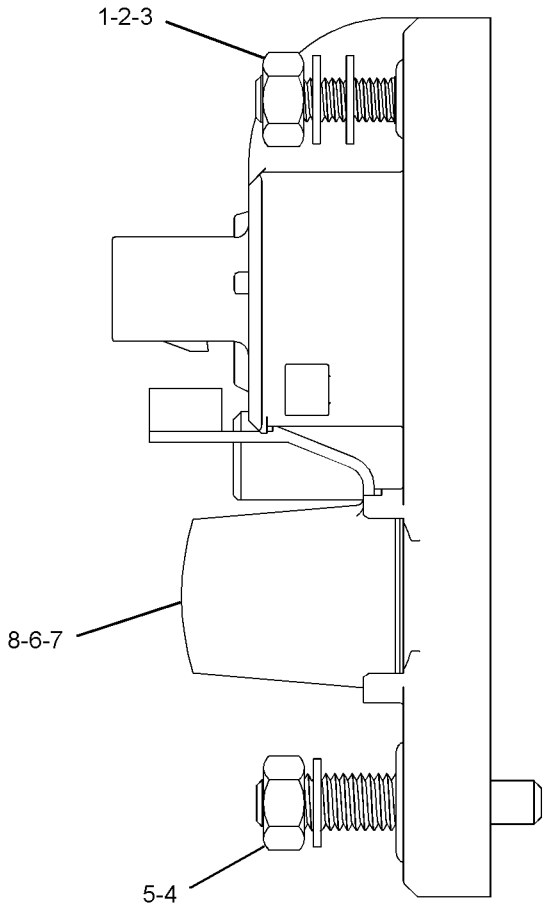

GRAPHIC #1 **<END>** g01278256

266-1467 SENSOR GP-POSITION–ROTARY

S/N: RBA1-UP

PART OF 209-3377 PEDAL GP-GOVERNOR

SMCS-5736 **i03849762**

NOTE	REF NO	GRAPHIC REF	PART NUMBER	QTY	PART NAME 1 2 3 4 5 6 (PRODUCT LEVEL)	SEE PAGE
	1	1	**9X-3401**	3	PIN-CONNECTOR (16-GA TO 18-GA)	
					–OR–	
		1	**126-1767**	3	PIN-CONNECTOR (14-GA TO 16-GA)	
	2	1	**102-8803**	1	KIT-RECEPTACLE (3-PIN)	
					(INCLUDES RECEPTACLE AS & WEDGE)	

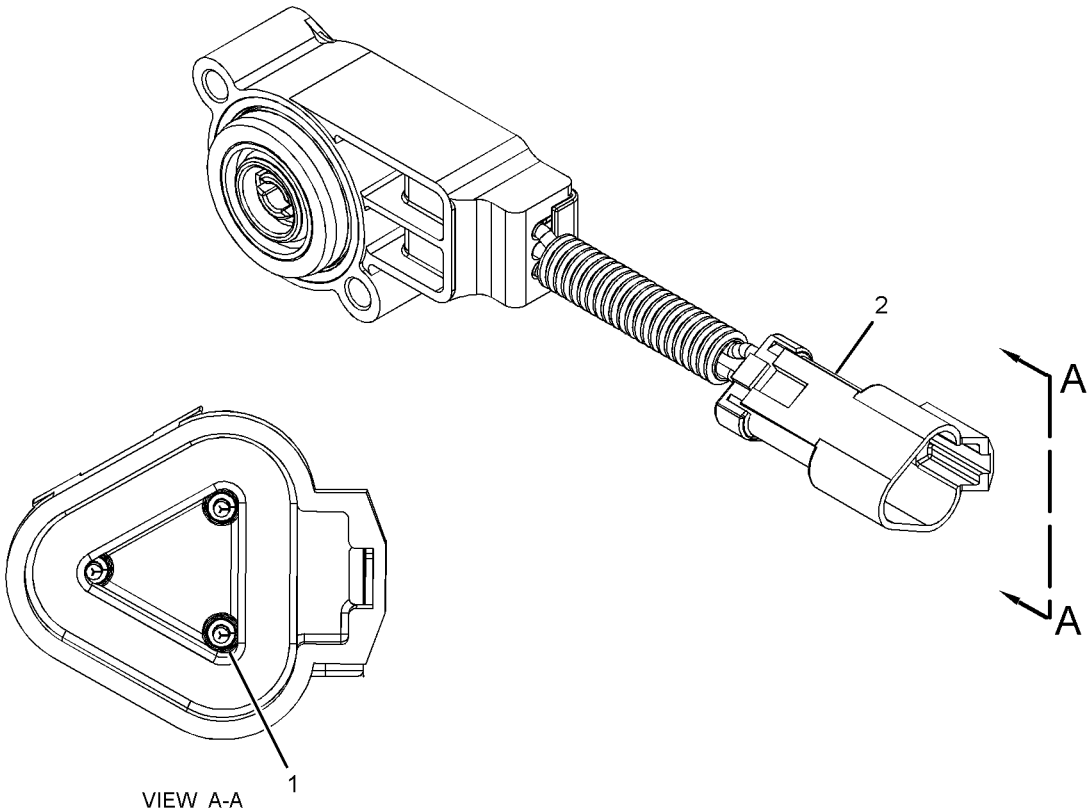

VIEW A-A

GRAPHIC #1 **<END>** g01740694

303-5769 STARTING MOTOR GP-ELECTRIC–12-VOLT

S/N: C4E1-UP

PART OF 254-0115 ENGINE AR-PRIMARY

SMCS-1453 **i03128303**

NOTE	REF NO	GRAPHIC REF	PART NUMBER	QTY	PART NAME 1 2 3 4 5 6 (PRODUCT LEVEL)	SEE PAGE
	1	1	**6I-0364**	3	STUD (M10X1.5X30-MM)	
	2	1	**6I-0594**	3	NUT (M10X1.5-THD)	
	3	1	**303-5795**	1	STARTING MOTOR-ELECTRIC	

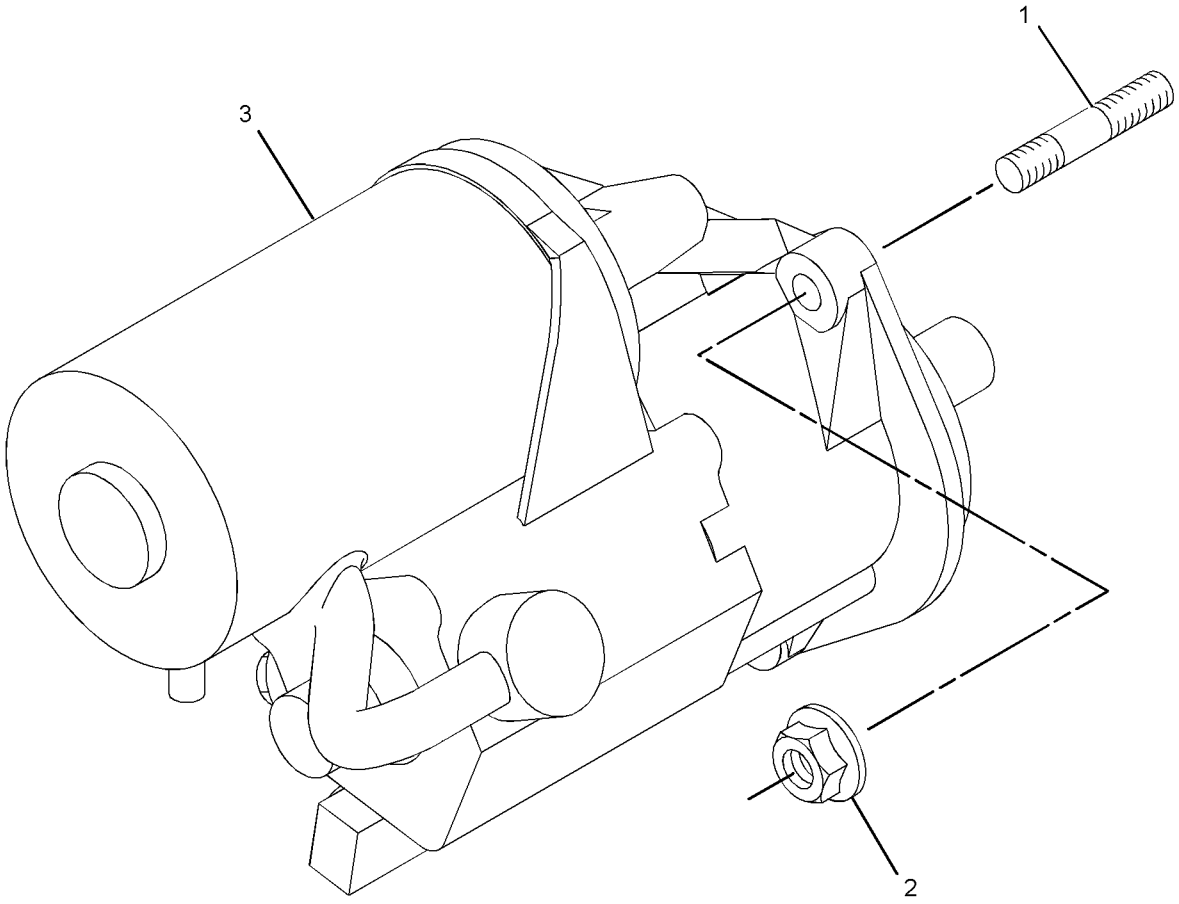

GRAPHIC #1 **<END>** g01376189

211-4267 SWITCH GP-ALL WHEEL DRIVE–INCLUDES RELAY

S/N: RBA1-UP

PART OF 254-0130 POWER TRAIN AR

SMCS-1435, 4493 **i03527865**

NOTE	REF NO	GRAPHIC REF	PART NUMBER	QTY	PART NAME 1 2 3 4 5 6 (PRODUCT LEVEL)	SEE PAGE
	1	1	**146-9439**	1	RELAY AS (12-VOLT) (ALL WHEEL DRIVE)	
	2	1	**214-4692**	1	SWITCH AS-ROCKER (ALL WHEEL DRIVE)	
		1	**111-7899**	1	GASKET	

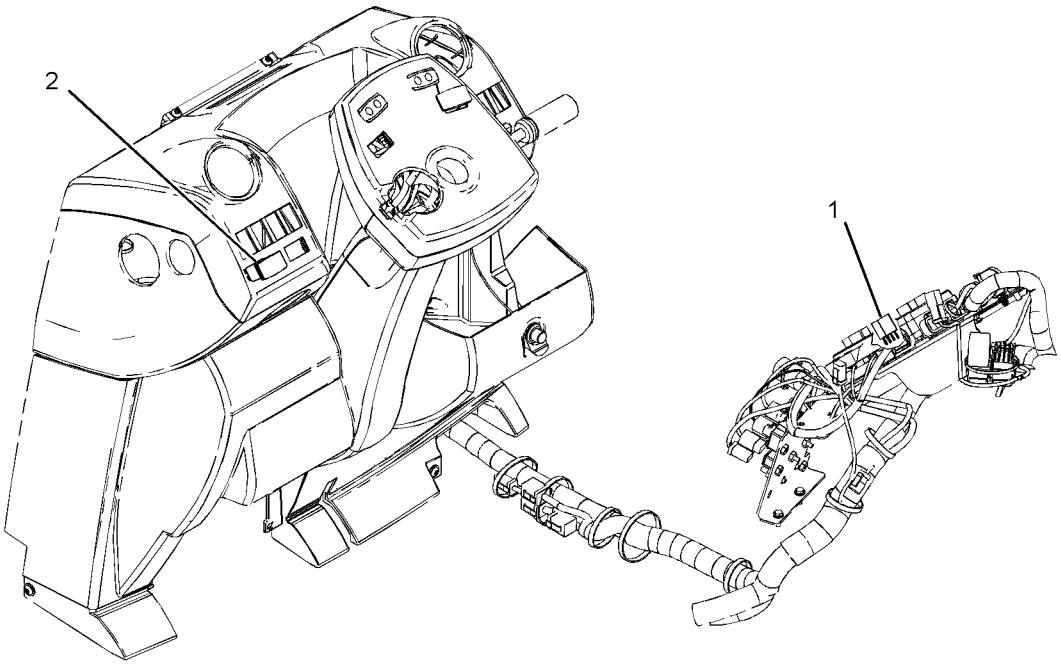

GRAPHIC #1 **<END>** g01211965

202-6010 SWITCH GP-DIFFERENTIAL LOCK–

CENTER PIVOT MACHINE

S/N: RBA1-UP

PART OF 254-0130 POWER TRAIN AR

SMCS-1435, 3264 **i03845429**

NOTE	REF NO	GRAPHIC REF	PART NUMBER	QTY	PART NAME 1 2 3 4 5 6 (PRODUCT LEVEL)	SEE PAGE
	1	1	**201-9459**	1	BOOT	
	2	1	**204-0775**	1	SWITCH AS-FOOT (DIFFERENTIAL LOCK ON, OFF)	
	3	1	**205-6298**	1	ACTUATOR	
	4	1	**213-6060**	1	HARNESS AS-WIRING (DIFFERENTIAL LOCK)	
		1	**9X-3401**	2	PIN-CONNECTOR (16-GA TO 18-GA)	
		1	**205-9362**	1	PLUG AS	
		1	**102-8802**	1	KIT-RECEPTACLE (2-PIN)	
					(INCLUDES RECEPTACLE AS & WEDGE)	
		1	**100-6674**	2	SEAL-CONNECTOR	
		1	**8L-8413**	2	STRAP-CABLE	

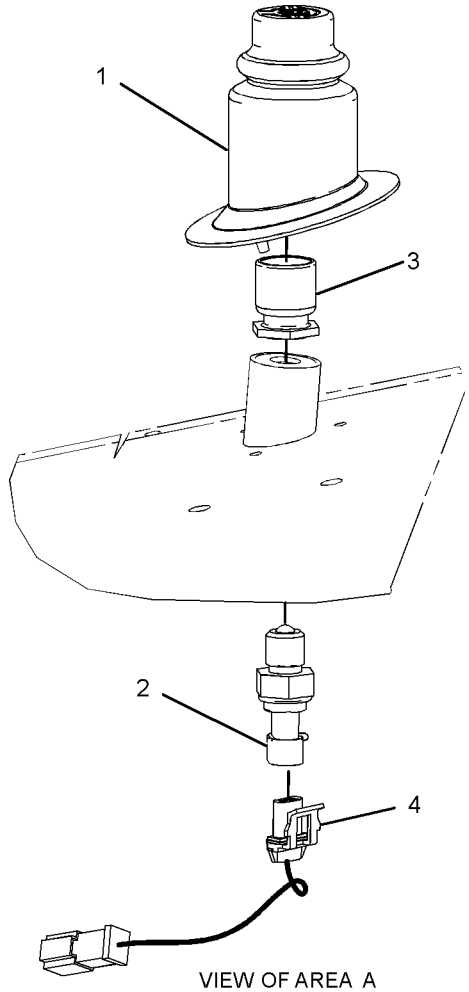

VIEW OF AREA A

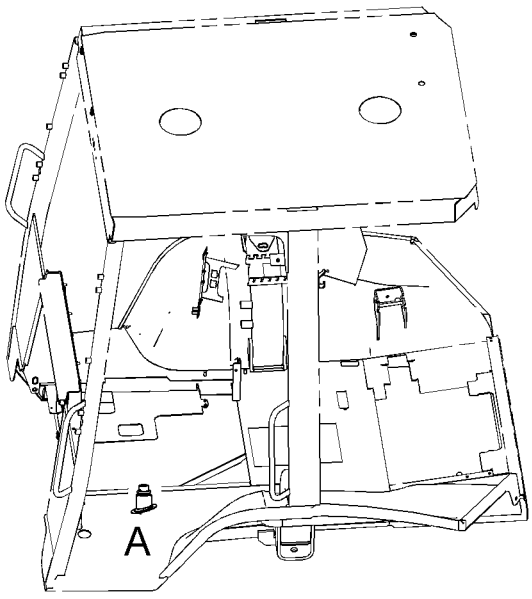

LEFT SIDE VIEW
(UPPER FRONT)

GRAPHIC #1 **<END>** g01230746

7N-0718 SWITCH GP-DISCONNECT–BATTERY

S/N: RBA1-UP

PART OF 263-0992 BATTERY GP

SMCS-1411 **i02544993**

NOTE	REF NO	GRAPHIC REF	PART NUMBER	QTY	PART NAME 1 2 3 4 5 6 (PRODUCT LEVEL)	SEE PAGE
	1	1	**8H-5306**	1	KEY (BATTERY DISCONNECT)	
	2	1	**8H-5303**	1	NUT (3/4-16-THD)	
	3	1	**2H-3922**	2	LOCKWASHER	
	4	1	**9F-5644**	2	LOCKWASHER	
	5	1	**6F-7045**	2	NUT-FULL (3/8-24-THD)	

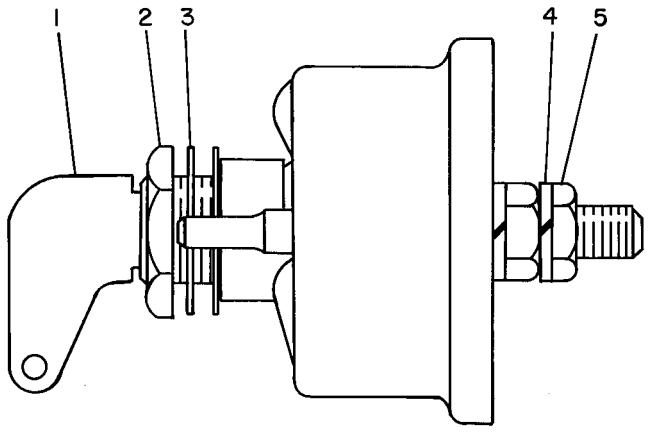

GRAPHIC #1 **<END>** g00084912

158-6634 SWITCH GP-TOGGLE

S/N: RBA1-UP

PART OF 263-0958 WIRING GP-ENGINE

SMCS-7332 **i04103087**

NOTE	REF NO	GRAPHIC REF	PART NUMBER	QTY	PART NAME 1 2 3 4 5 6 (PRODUCT LEVEL)	SEE PAGE
	1	1	**6T-3631**	2	NUT-HEX (15/32-32-THD)	
	2	1	**6T-3632**	1	LOCKWASHER	
	3	1	**6T-3633**	1	RING-LOCKING	
	4	1	**102-8804**	1	KIT-RECEPTACLE (4-PIN)	
					(INCLUDES RECEPTACLE AS & WEDGE)	
	5	1	**186-3735**	3	PIN-CONNECTOR (16-GA TO 18-GA)	
	6	1	**9G-3695**	1	PLUG-SEAL	

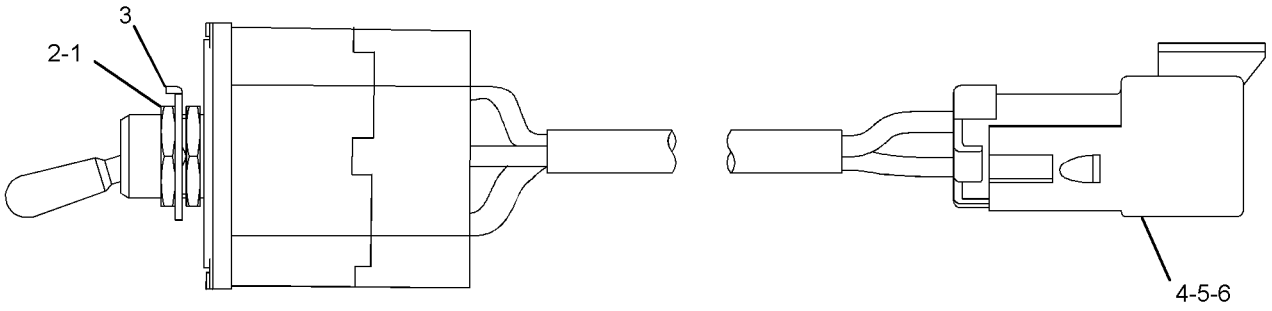

GRAPHIC #1 **<END>** g01618710

287-2102 WIRING GP-AIR CONDITIONER

S/N: RBA1-UP
PART OF 254-0200 CAB AR-ENCLOSED ROPS
AN ATTACHMENT

SMCS-1408, 7320 **i04115414**

NOTE	REF NO	GRAPHIC REF	PART NUMBER	QTY	PART NAME 1 2 3 4 5 6 (PRODUCT LEVEL)	SEE PAGE
	1	1	**8T-8799**	1	BOOT	
	2	1	**8Y-7833**	1	WIRE AS	
	3	1	**9X-7378**	1	SEAL-O-RING	
	4	1	**189-3158**	1	SUPPRESSOR-ARC	
	5	1	**213-6055**	1	HARNESS AS-HEATER & AIR COND (PLATFORM)	
		1	**228-5856**	2	CONNECTOR	
		1	**213-0139**	5	PIN	
		1	**9X-3401**	5	PIN-CONNECTOR (16-GA TO 18-GA)	
		1	**9X-1054**	1	PLUG AS-CONNECTOR (4-PIN)	
		1	**155-2270**	1	KIT-CONNECTING PLUG (2-PIN)	
		1	**177-9648**	1	KIT-CONNECTING PLUG (2-PIN)	
		1	**177-9656**	1	KIT-CONNECTING PLUG (4-PIN)	
					(EACH PLUG KIT INCLUDES PLUG AS, WEDGE & INTERFACE SEAL)	
		1	**8T-8737**	1	PLUG-SEAL	
		1	**102-8802**	1	KIT-RECEPTACLE (2-PIN)	
		1	**102-8803**	1	KIT-RECEPTACLE (3-PIN)	
					(EACH RECEPTACLE KIT INCLUDES RECEPTACLE AS & WEDGE)	
		1	**180-9340**	2	SOCKET-CONNECTOR (14-GA TO 18-GA)	
		1	**8L-8413**	29	STRAP-CABLE	
		1	**122-4401**	1	TERMINAL	
		1	**2L-8069**	1	TERMINAL-RING (2-GA TO 10-GA, 3/8-IN SCREW)	
		1	**2L-8067**	1	TERMINAL-RING (10-GA TO 12-GA, 1/4-IN SCREW)	
		1	**091-2436**	7	TERMINAL-BLADE (18-GA TO 22-GA)	
		1	**104-1995**	11	TERMINAL-BLADE (14-GA TO 18-GA)	
		1	**9X-1055**	2	TERMINAL-RECEPTACLE (12-GA)	
		1	**100-5041**	2	TERMINAL-RECEPTACLE (18-GA TO 20-GA)	
E		1	**119-3662**		TUBE-HEAT SHRINK (10.85-MM DIA) (20-CM)	
E		1	**125-7874**		TUBE-HEAT SHRINK (5.72-MM DIA) (10-CM)	
	6	1	**214-4695**	1	SWITCH AS-ROCKER (BLOWER FAN SPEED)	
	7	1	**214-4718**	1	SWITCH AS-ROCKER (AIR CONDITIONER, HEATER SELECT)	
					(EACH SWITCH AS INCLUDES)	
		1	**111-7899**	1	GASKET	
	8	1	**236-6923**	1	SWITCH AS-PRESSURE (REFRIGERANT)	
	9	1	**238-7492**	1	HARNESS AS-HEATER & AIR COND (COMPRESSOR)	
		1	**9X-3401**	2	PIN-CONNECTOR (16-GA TO 18-GA)	
		1	**155-2270**	2	KIT-CONNECTING PLUG (2-PIN)	
					(EACH INCLUDES PLUG AS, WEDGE & INTERFACE SEAL)	
		1	**102-8802**	1	KIT-RECEPTACLE (2-PIN)	
					(INCLUDES RECEPTACLE AS & WEDGE)	
		1	**100-6674**	2	SEAL-CONNECTOR	
		1	**180-9340**	4	SOCKET-CONNECTOR (14-GA TO 18-GA)	
		1	**124-5640**	2	TERMINAL-SOCKET	
		1	**3S-2093**	1	STRAP-CABLE	
E		1	**125-7874**		TUBE-HEAT SHRINK (5.72-MM DIA) (10-CM)	
	10	1	**275-0570**	1	BAR-BUS	
Y	11	1	**276-7287**	1	RELAY GP (12-VOLT) (POWER DISTRIBUTION)	104
	12	1	**115-1615**	1	RELAY AS (12-VOLT) (HIGH SPEED)	
M	13	1	**8T-9534**	1	BOLT (M6X1X50-MM)	
	14	1	**277-1873**	1	CLIP	
	15	1	**3S-2093**	15	STRAP-CABLE	
M	16	1	**5C-2890**	1	NUT (M6X1-THD)	

287-2102 **WIRING GP-AIR CONDITIONER** *(contd.)* **i04115414**

NOTE	REF NO	GRAPHIC REF	PART NUMBER	QTY	PART NAME 1 2 3 4 5 6 (PRODUCT LEVEL)	SEE PAGE
M	17	1	**5C-7261**	1	NUT (M8X1.25-THD)	
M	18	1	**8T-4171**	1	BOLT (M6X1X12-MM)	
	19	1	**8T-4205**	2	WASHER-HARD (7.2X14.5X2-MM THK)	
	20	1	**8T-4224**	1	WASHER-HARD (8.8X16X2-MM THK)	

E-ORDER BY THE CENTIMETER
M-METRIC PART
Y-SEPARATE ILLUSTRATION

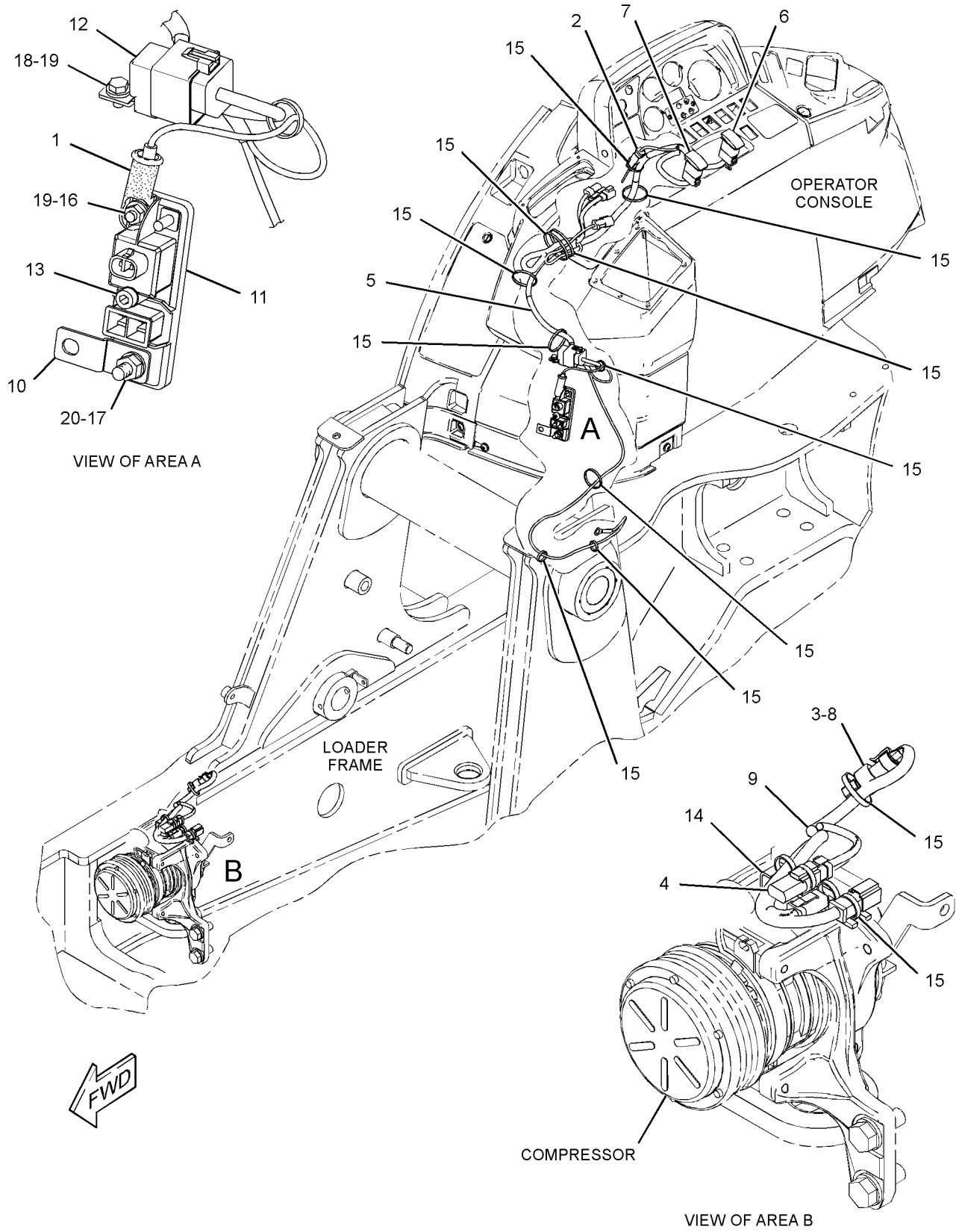

GRAPHIC #1 **<END>** g02156915

211-4245 WIRING GP-CONSOLE–FRONT

S/N: RBA1-UP

PART OF 254-0200 CAB AR-ENCLOSED ROPS, 254-0198 CANOPY AR-OPEN ROPS AN ATTACHMENT

SMCS-1408 **i02521285**

NOTE	REF NO	GRAPHIC REF	PART NUMBER	QTY	PART NAME 1 2 3 4 5 6 (PRODUCT LEVEL)	SEE PAGE
	1	1	**7K-1181**	3	STRAP-CABLE	
	2	1	**268-1964**	1	KIT-SERVICE METER	
					(INCLUDES METER & FILM)	
	3	1	**213-6040**	1	HARNESS AS-CONSOLE	
		1	**102-8802**	1	KIT-RECEPTACLE (2-PIN)	
					(INCLUDES RECEPTACLE AS & WEDGE)	
		1	*130-6791*	3	TERMINAL AS	
					(EACH INCLUDES)	
		1	**7N-7221**	1	TERMINAL-BLADE (18-GA TO 22-GA)	
		1	**6V-2689**		TUBE-HEAT SHRINK (6.35-MM DIA)	
		1	**155-2270**	1	KIT-CONNECTING PLUG (2-PIN)	
					(INCLUDES PLUG AS, INTERFACE SEAL & WEDGE)	
		1	**091-2436**	27	TERMINAL-BLADE (18-GA TO 22-GA)	
		1	**104-1995**	3	TERMINAL-BLADE (14-GA TO 18-GA)	
		1	**122-4401**	1	TERMINAL	
E		1	**125-7874**		TUBE-HEAT SHRINK (5.72-MM DIA) (25-CM)	
E		1	**125-7875**		TUBE-HEAT SHRINK (7.44-MM DIA) (5-CM)	
		1	**8L-8413**	26	STRAP-CABLE	
		1	**167-3693**	1	PLUG AS-CONNECTOR (31-PIN)	
	4	1	**214-4716**	1	SWITCH AS-ROCKER (TRANSMISSION NEUTRAL LOCK)	
B	5	1	**227-1057**	10	PLUG-HOLE	
	6	1	**3S-2093**	4	STRAP-CABLE	

B-USE AS REQUIRED
E-ORDER BY THE CENTIMETER

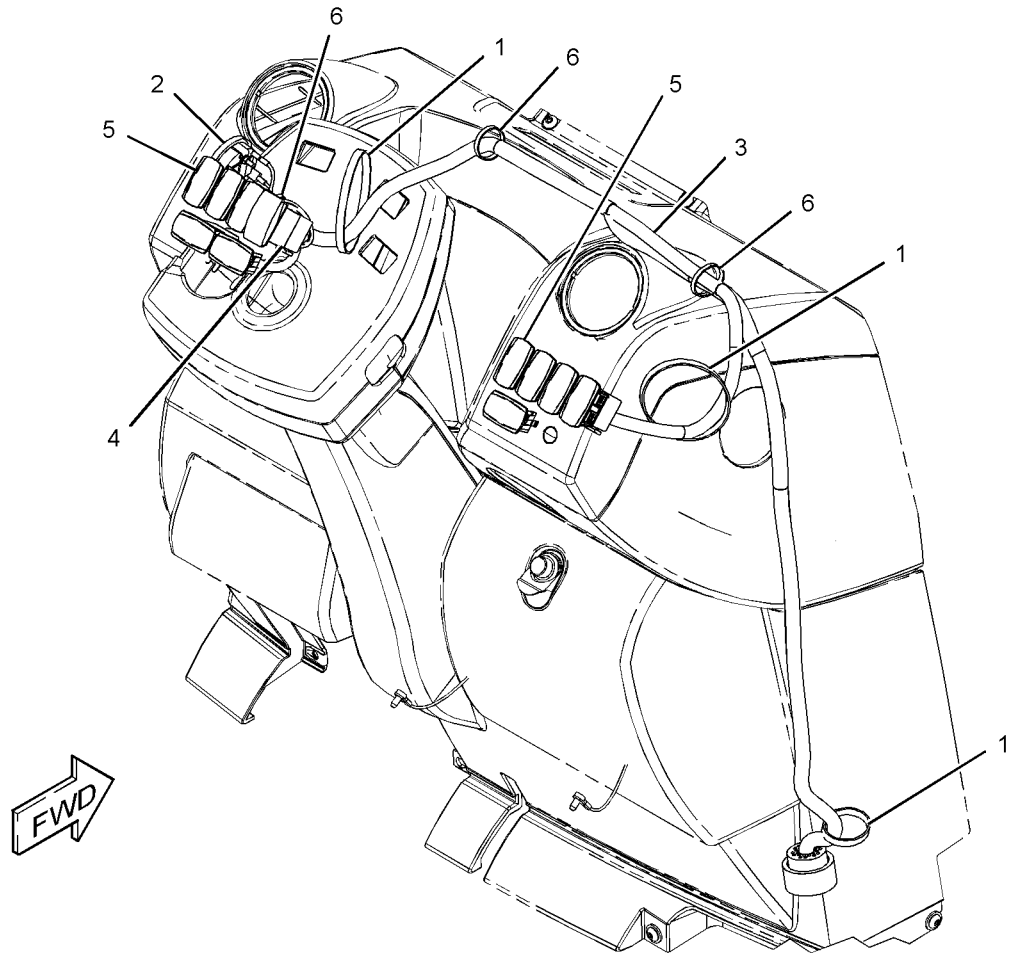

GRAPHIC #1 **<END>** g01190392

331-5602 WIRING GP-CONSOLE–SIDE

S/N: RBA1-UP

PART OF 254-0200 CAB AR-ENCLOSED ROPS, 254-0198 CANOPY AR-OPEN ROPS AN ATTACHMENT

SMCS-1408 **i04115481**

NOTE	REF NO	GRAPHIC REF	PART NUMBER	QTY	PART NAME 1 2 3 4 5 6 (PRODUCT LEVEL)	SEE PAGE
	1	1	**110-7887**	1	SWITCH AS-START (KEY)	
		1	**7T-6799**	1	NUT-MOUNTING (1-32-THD)	
		1	**102-8804**	1	KIT-RECEPTACLE (4-PIN)	
					(INCLUDES RECEPTACLE AS & WEDGE)	
		1	**8T-8729**	4	PIN-CONNECTOR (16-GA TO 18-GA)	
	2	1	**206-1345**	3	STRAP-CABLE	
	3	1	**214-4693**	1	SWITCH AS-ROCKER (WARNING BEACON)	
		1	**111-7899**	1	GASKET	
B	4	1	**227-1057**	3	PLUG-HOLE	
	5	1	**271-2351**	1	INDICATOR AS (STARTING AID)	
		1	**111-7899**	1	GASKET	
	6	1	**331-5592**	1	HARNESS AS-CONSOLE	
		1	**228-5856**	7	CONNECTOR	
		1	**8T-8729**	2	PIN-CONNECTOR (16-GA TO 18-GA)	
		1	**176-2947**	1	PLUG KIT-CONN (4-PIN)	
					(INCLUDES PLUG AS, WEDGE & INTERFACE SEAL)	
		1	**272-2838**	1	PLUG AS	
		1	**102-8802**	1	KIT-RECEPTACLE (2-PIN)	
					(INCLUDES RECEPTACLE AS & WEDGE)	
		1	**169-0705**	2	SEAL	
		1	**8T-8730**	38	SOCKET-CONNECTOR (16-GA TO 18-GA)	
		1	**180-9340**	13	SOCKET-CONNECTOR (14-GA TO 18-GA)	
		1	**122-4401**	1	TERMINAL	
		1	**7N-7221**	4	TERMINAL-BLADE (18-GA TO 22-GA)	
		1	**091-2436**	32	TERMINAL-BLADE (18-GA TO 22-GA)	
		1	**104-1995**	13	TERMINAL-BLADE (14-GA TO 18-GA)	
E		1	**119-3662**		TUBE-HEAT SHRINK (10.85-MM DIA) (7-CM)	
E		1	**125-7874**		TUBE-HEAT SHRINK (5.72-MM DIA) (30-CM)	
E		1	**125-7875**		TUBE-HEAT SHRINK (7.44-MM DIA) (5-CM)	
	7	1	**339-3075**	1	MODULE GP-DISPLAY	
	8	1	**343-4355**	1	HORN	
	9	1	**3S-2093**	7	STRAP-CABLE	

B-USE AS REQUIRED
E-ORDER BY THE CENTIMETER

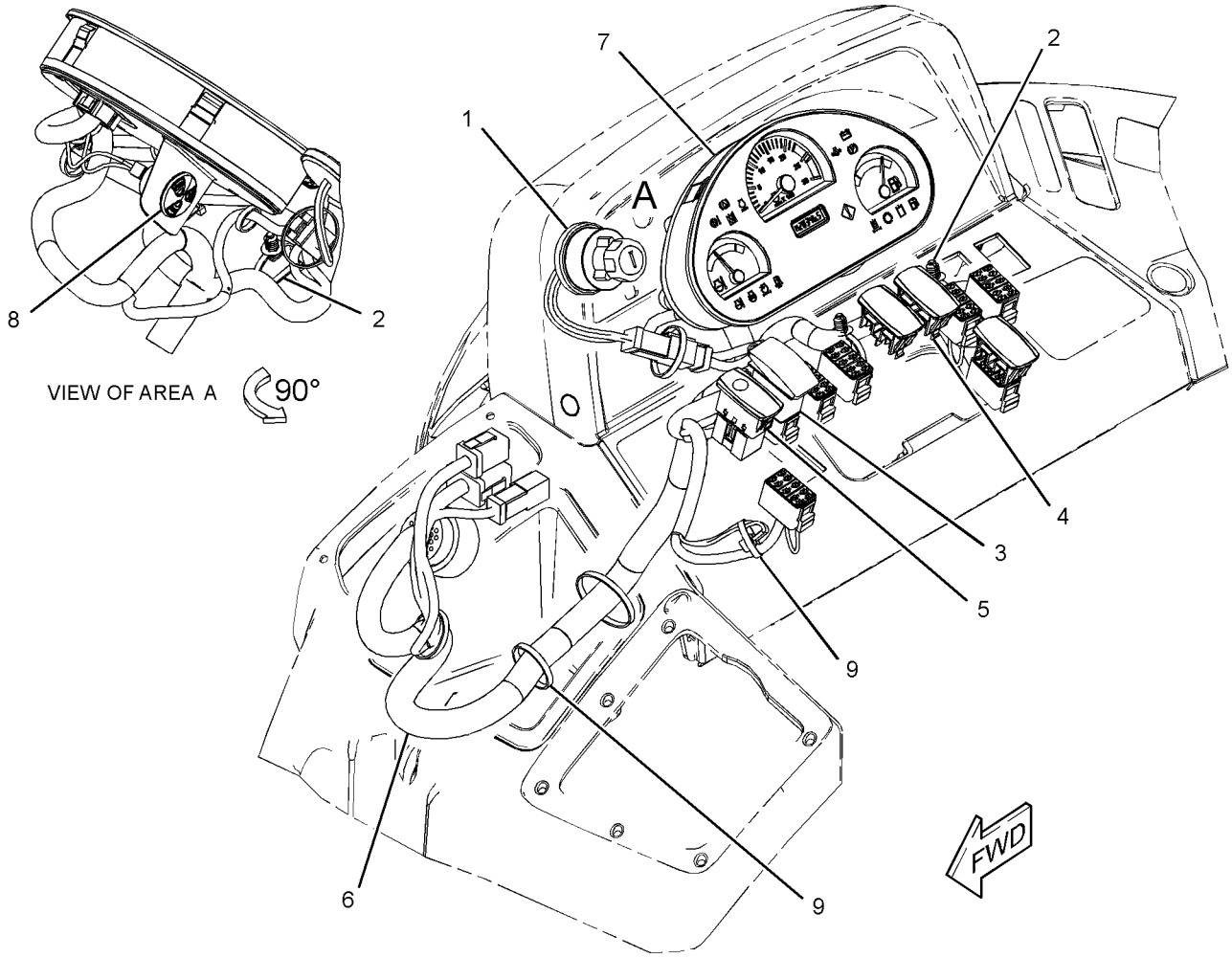

GRAPHIC #1 **<END>** g02319875

267-5635 WIRING GP-CONTROL–JOYSTICK, LH

S/N: RBA1-UP
PART OF 254-0153 CONTROL AR-BACKHOE
AN ATTACHMENT

SMCS-1408 **i03712372**

NOTE	REF NO	GRAPHIC REF	PART NUMBER	QTY	PART NAME 1 2 3 4 5 6 (PRODUCT LEVEL)	SEE PAGE
	1	1	**206-2423**	1	SADDLE	
	2	1	**225-7988**	1	HARNESS AS-AUXILIARY	
		1	**9X-3401**	2	PIN-CONNECTOR (16-GA TO 18-GA)	
		1	**8T-8737**	16	PLUG-SEAL	
		1	**180-9340**	2	SOCKET-CONNECTOR (14-GA TO 18-GA)	
		1	**155-2255**	1	KIT-CONNECTING PLUG (12-PIN)	
					(INCLUDES PLUG AS, WEDGE & INTERFACE SEAL)	
		1	**102-8806**	1	KIT-RECEPTACLE (8-PIN)	
					(INCLUDES RECEPTACLE AS & WEDGE)	
	3	1	**3S-2093**	5	STRAP-CABLE	

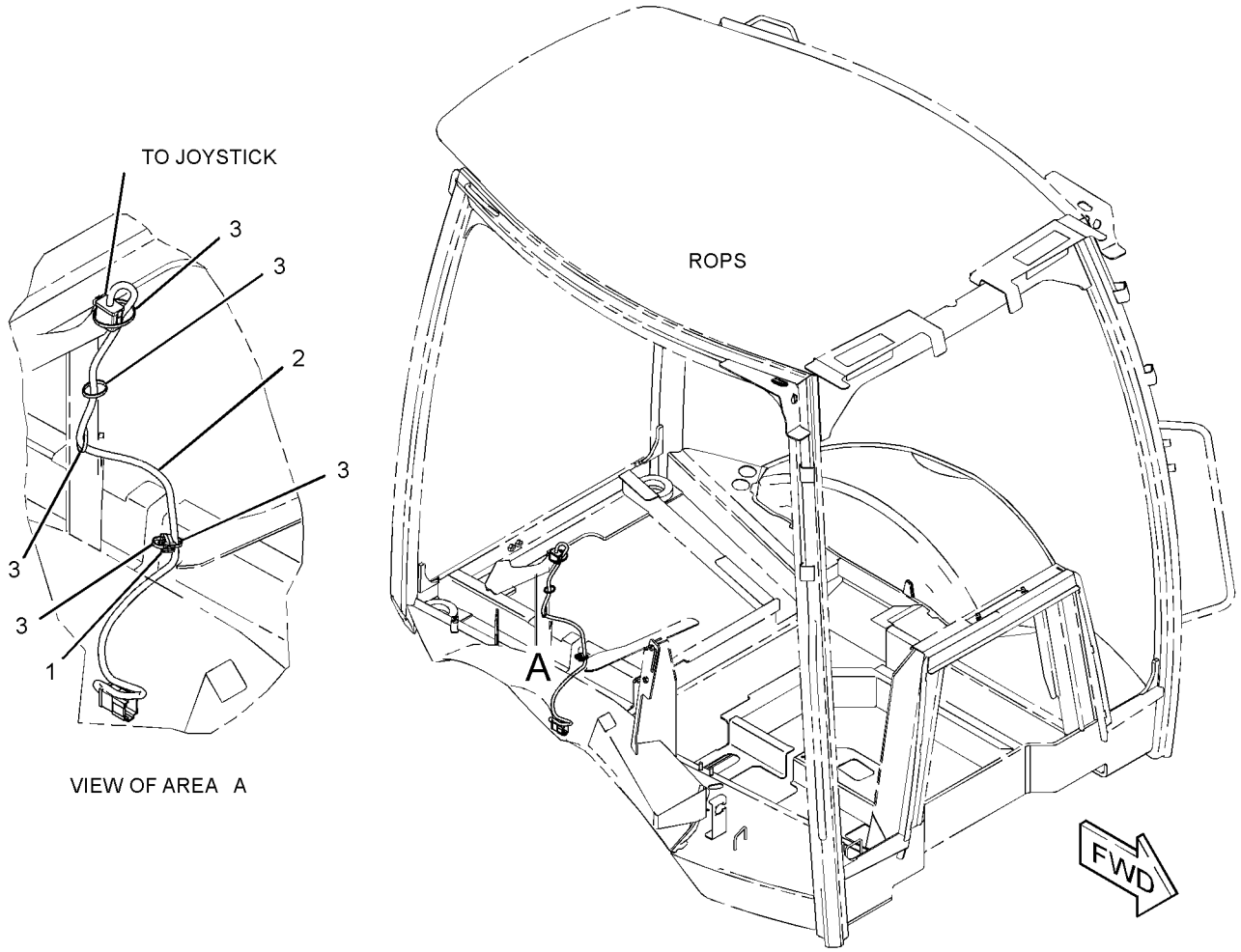

GRAPHIC #1 **<END>** g01367391

290-6767 WIRING GP-CONTROL–7TH FUNCTION

S/N: RBA1-UP

PART OF 254-0153, 254-0154 CONTROL AR-BACKHOE

AN ATTACHMENT

SMCS-1408 **i04112469**

NOTE	REF NO	GRAPHIC REF	PART NUMBER	QTY	PART NAME 1 2 3 4 5 6 (PRODUCT LEVEL)	SEE PAGE
	1	1	**6K-0806**	1	STRAP-CABLE	
	3	1	**206-2423**	4	SADDLE	
	4	1	**268-7756**	1	HARNESS AS-AUXILIARY	
		1	**9X-3401**	6	PIN-CONNECTOR (16-GA TO 18-GA)	
		1	**155-2255**	1	KIT-CONNECTING PLUG (12-PIN)	
		1	**155-2270**	2	KIT-CONNECTING PLUG (2-PIN)	
					(EACH PLUG KIT INCLUDES PLUG AS, WEDGE & INTERFACE SEAL)	
		1	**8T-8737**	9	PLUG-SEAL	
		1	**102-8805**	1	KIT-RECEPTACLE (6-PIN)	
					(INCLUDES RECEPTACLE AS & WEDGE)	
		1	**180-9340**	7	SOCKET-CONNECTOR (14-GA TO 18-GA)	
E		1	**125-7874**		TUBE-HEAT SHRINK (5.72-MM DIA) (5-CM)	
	5	1	**3S-2093**	10	STRAP-CABLE	

E-ORDER BY THE CENTIMETER

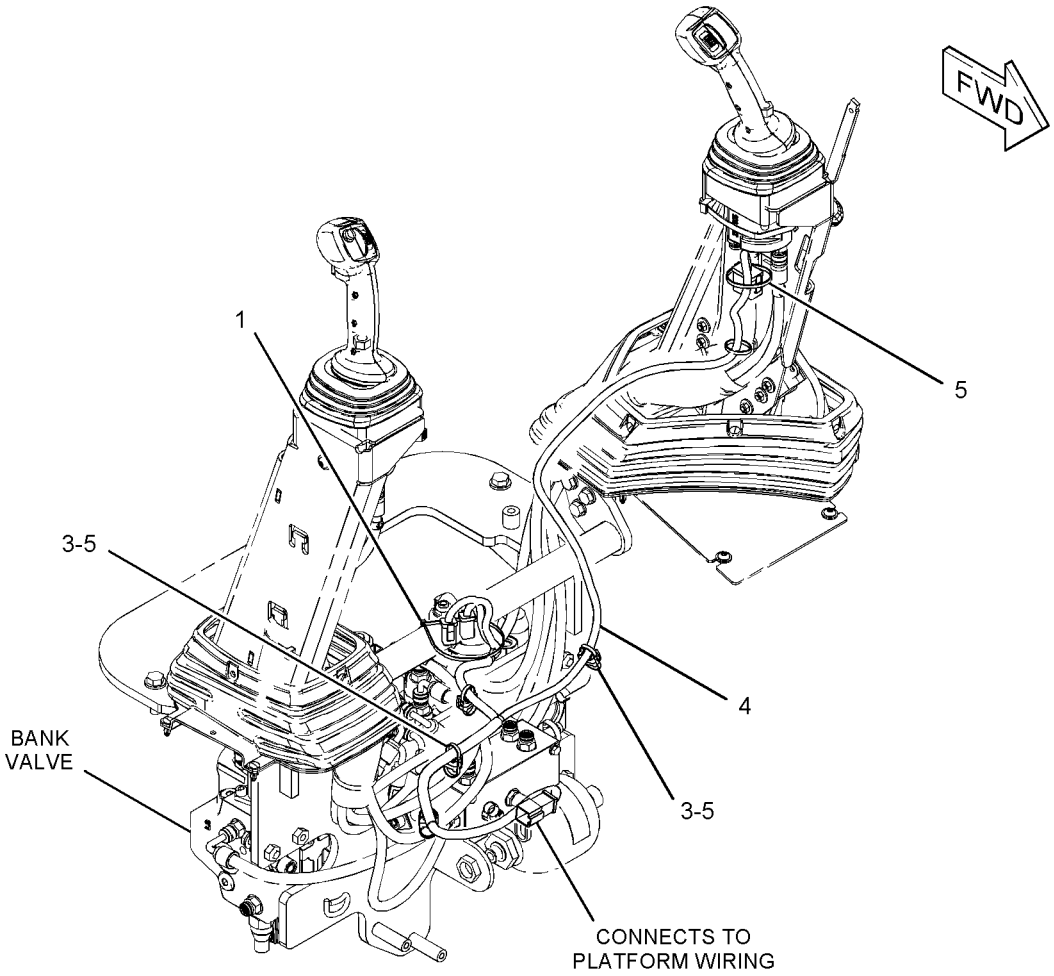

GRAPHIC #1 **<END>** g01790914

290-6768 WIRING GP-CONTROL–8TH FUNCTION

S/N: RBA1-UP
PART OF 254-0154 CONTROL AR-BACKHOE
AN ATTACHMENT

SMCS-1408 **i04112459**

NOTE	REF NO	GRAPHIC REF	PART NUMBER	QTY	PART NAME 1 2 3 4 5 6 (PRODUCT LEVEL)	SEE PAGE
	1	1	**6K-0806**	1	STRAP-CABLE	
	2	1	**3S-2093**	3	STRAP-CABLE	
	3	1	**268-7757**	1	HARNESS AS-AUXILIARY	
		1	**9X-3401**	8	PIN-CONNECTOR (16-GA TO 18-GA)	
		1	**155-2255**	1	KIT-CONNECTING PLUG (12-PIN)	
		1	**155-2270**	2	KIT-CONNECTING PLUG (2-PIN)	
					(EACH PLUG KIT INCLUDES PLUG AS, WEDGE & INTERFACE SEAL)	
		1	**8T-8737**	7	PLUG-SEAL	
		1	**102-8806**	1	KIT-RECEPTACLE (8-PIN)	
					(INCLUDES RECEPTACLE AS & WEDGE)	
		1	**180-9340**	9	SOCKET-CONNECTOR (14-GA TO 18-GA)	
E		1	**125-7874**		TUBE-HEAT SHRINK (5.72-MM DIA) (5-CM)	

E-ORDER BY THE CENTIMETER

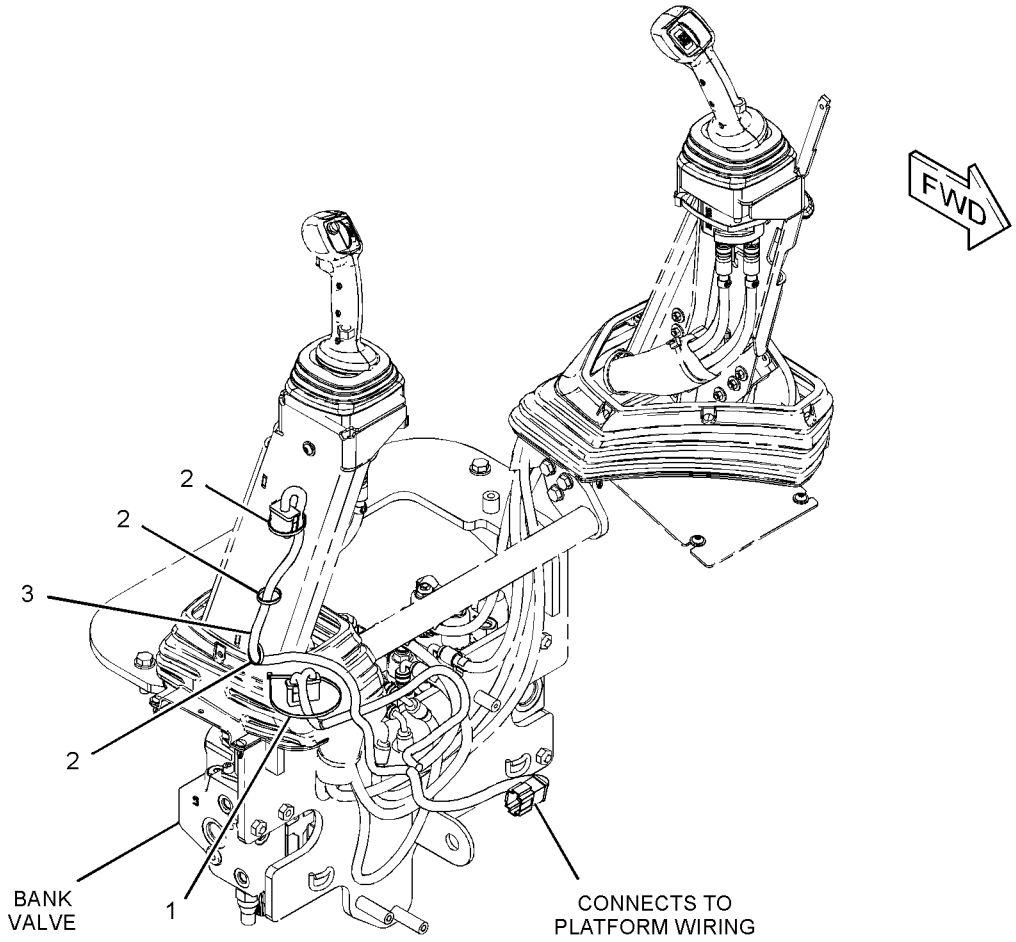

GRAPHIC #1 **<END>** g01790993

263-0958 WIRING GP-ENGINE

S/N: RBA1-UP

PART OF 254-0120 ENGINE AR

SMCS-1408 **i04103084**

NOTE	REF NO	GRAPHIC REF	PART NUMBER	QTY	PART NAME 1 2 3 4 5 6 (PRODUCT LEVEL)	SEE PAGE
	1	1	**3E-5169**	1	GUARD-SWITCH	
	2	1,2	**7K-1181**	20	STRAP-CABLE	
	3	1	**7Y-3883**	1	CABLE AS	
		1	**1S-7251**	2	TERMINAL-CABLE (00-GA, 1/2-IN SCREW)	
E		1	**5P-0747**		CABLE (00-GA, BLACK) (40-CM)	
	4	2	**8T-8799**	2	BOOT	
	5	2	**134-0404**	1	SWITCH AS-PRESSURE (HYDRAULIC OIL FILTER BYPASS)	
Y	6	1	**158-6634**	1	SWITCH GP-TOGGLE (GROUND LEVEL SHUTDOWN)	112
	7	1	**164-9425**	1	HORN AS (24-VOLT, LOW TONE)	
	8	1	**243-5027**	1	NUT AS (M6X1-THD)	
	9	2	**244-3106**	1	SENDER AS-TEMPERATURE (ENGINE COOLANT)	
		2	**102-8802**	1	KIT-RECEPTACLE (2-PIN)	
					(INCLUDES RECEPTACLE AS & WEDGE)	
		2	**186-3735**	2	PIN-CONNECTOR (16-GA TO 18-GA)	
	10	2	**250-1448**	1	CONNECTOR	
	11	2	**251-9570**	1	PLATE AS (RELAY)	
	12	2	**264-4297**	1	SENSOR GP-TEMPERATURE (HYDRAULIC OIL)	
		2	**137-6645**	1	PAD (CONNECTOR)	
	13	1	**264-4410**	1	HARNESS AS-ENGINE	
E		1	**292-2896**		CONDUIT (20-CM)	
		1	**123-7615**	2	CONNECTOR	
		1	**245-1045**	1	COVER	
		1	**245-1044**	2	LOCK-CONNECTOR	
		1	**186-3735**	1	PIN-CONNECTOR (16-GA TO 18-GA)	
		1	**9X-3401**	7	PIN-CONNECTOR (16-GA TO 18-GA)	
		1	**155-2270**	15	KIT-CONNECTING PLUG (2-PIN)	
		1	**155-2271**	1	KIT-CONNECTING PLUG (4-PIN)	
		1	**155-2260**	1	KIT-CONNECTING PLUG (3-PIN)	
					(EACH PLUG KIT INCLUDES PLUG AS, WEDGE & INTERFACE SEAL)	
		1	**9X-1054**	1	PLUG AS-CONNECTOR (4-PIN)	
		1	**230-4011**	1	PLUG AS-CONNECTOR (2-PIN)	
		1	**264-7029**	1	SEAL-CONNECTOR	
		1	**245-1042**	1	PLUG AS-CONNECTOR (64-PIN)	
M		1	**267-7207**	1	BOLT-SPECIAL	
		1	**267-7208**	1	RING-RETAINING	
		1	**274-4990**	1	SEAL	
		1	**167-3693**	1	PLUG AS-CONNECTOR (31-PIN)	
		1	**245-1048**	41	PLUG-CONNECTOR	
		1	**8T-8737**	9	PLUG-SEAL	
		1	**102-8804**	1	KIT-RECEPTACLE (4-PIN)	
		1	**102-8805**	1	KIT-RECEPTACLE (6-PIN)	
					(EACH RECEPTACLE KIT INCLUDES RECEPTACLE AS & WEDGE)	
		1	**238-9397**	1	RESISTOR AS	
		1	**102-8802**	1	KIT-RECEPTACLE (2-PIN)	
					(INCLUDES RECEPTACLE AS & WEDGE)	
		1	**8T-8729**	2	PIN-CONNECTOR (16-GA TO 18-GA)	
		1	**185-1861**	3	SEAL-WIRE	
		1	**100-6674**	2	SEAL-CONNECTOR	
		1	**9X-3402**	2	SOCKET-CONNECTOR (16-GA TO 18-GA)	
		1	**180-9340**	23	SOCKET-CONNECTOR (14-GA TO 18-GA)	
		1	**186-3736**	38	SOCKET-CONNECTOR (16-GA TO 18-GA)	
		1	**267-9572**	23	SOCKET-CONNECTION (18-GA)	
		1	**124-5640**	2	TERMINAL-SOCKET	

263-0958 **WIRING GP-ENGINE** *(contd.)* **i04103084**

NOTE	REF NO	GRAPHIC REF	PART NUMBER	QTY	PART NAME 1 2 3 4 5 6 (PRODUCT LEVEL)	SEE PAGE
		1	**3S-2093**	12	STRAP-CABLE	
		1	**189-3158**	3	SUPPRESSOR-ARC	
B		1	**1P-0810**		TAPE-ELECTRICAL	
B		1	**141-8061**		TAPE	
		1	**247-5009**	3	TERMINAL	
		1	**2L-8067**	3	TERMINAL-RING (10-GA TO 12-GA, 1/4-IN SCREW)	
		1	**5P-1478**	1	TERMINAL-FORK (10-GA TO 12-GA, NO. 10 SCREW)	
		1	**2L-8069**	1	TERMINAL-RING (2-GA TO 10-GA, 3/8-IN SCREW)	
		1	**2L-8071**	1	TERMINAL-RING (10-GA TO 12-GA, 1/2-IN SCREW)	
		1	**2L-8076**	1	TERMINAL-RING (14-GA TO 16-GA, NO. 10 SCREW)	
		1	**2L-8079**	1	TERMINAL-RING (14-GA TO 16-GA, 3/8-IN SCREW)	
		1	**7N-9017**	3	TERMINAL-RING (18-GA TO 22-GA, NO. 10 SCREW)	
		1	**6V-0491**	4	TERMINAL-BLADE (14-GA TO 18-GA)	
		1	**9X-1055**	2	TERMINAL-RECEPTACLE (12-GA)	
		1	**100-5041**	2	TERMINAL-RECEPTACLE (18-GA TO 20-GA)	
E		1	**119-3662**		TUBE-HEAT SHRINK (10.85-MM DIA) (7-CM)	
E		1	**125-7874**		TUBE-HEAT SHRINK (5.72-MM DIA) (30-CM)	
E		1	**125-7875**		TUBE-HEAT SHRINK (7.44-MM DIA) (15-CM)	
D		1	**6V-2722**		TUBE-HEAT SHRINK (0.1-M)	
	14	1	**272-0373**	1	HARNESS AS-SENSOR	
E		1	**6V-8523**		HOSE (123-CM)	
		1	**9X-3401**	2	PIN-CONNECTOR (16-GA TO 18-GA)	
		1	**8T-8737**	1	PLUG-SEAL	
		1	**102-8803**	1	KIT-RECEPTACLE (3-PIN)	
					(INCLUDES RECEPTACLE AS & WEDGE)	
		1	**8L-8413**	2	STRAP-CABLE	
		1	**5P-1476**	2	TERMINAL-FORK (14-GA TO 16-GA, NO. 10 SCREW)	
E		1	**8T-6885**		TUBE-HEAT SHRINK (19.05-MM DIA) (10-CM)	
	15	2	**274-3774**	1	CAP-CONNECTOR	
Y	16	2	**275-0490**	1	RELAY GP (12-VOLT) (STARTING AID HEATER)	103
	17	1	**290-6801**	1	HARNESS AS-WIRING	
		1	**186-3735**	2	PIN-CONNECTOR (16-GA TO 18-GA)	
		1	**155-2270**	1	KIT-CONNECTING PLUG (2-PIN)	
		1	**155-2260**	1	KIT-CONNECTING PLUG (3-PIN)	
					(EACH PLUG KIT INCLUDES PLUG AS, WEDGE & INTERFACE SEAL)	
		1	**8T-8737**	1	PLUG-SEAL	
		1	**102-8802**	1	KIT-RECEPTACLE (2-PIN)	
					(INCLUDES RECEPTACLE AS & WEDGE)	
		1	**186-3736**	4	SOCKET-CONNECTOR (16-GA TO 18-GA)	
	18	1	**315-7903**	1	PLATE	
	19	2	**115-1615**	1	RELAY AS (12-VOLT) (START)	
C	20	2	**132-5789**	3	CLIP	
	21	2	**3J-1907**	1	SEAL-O-RING	
	22	2	**3J-4818**	3	LOCKWASHER	
	23	2	**3K-0360**	1	SEAL-O-RING	
C	24	1,2	**3S-2093**	35	STRAP-CABLE	
	25	2	**4P-7428**	1	CLIP	
	26	2	**4P-7429**	1	CLIP	
C	27	1,2	**4P-7581**	5	CLIP	
C	28	1,2	**4P-8134**	3	CLIP	
M	29	2	**5C-2874**	2	NUT (M5X0.8-THD)	
M	30	2	**5C-2890**	2	NUT (M6X1-THD)	
M	31	2	**5C-7261**	1	NUT (M8X1.25-THD)	

263-0958 **WIRING GP-ENGINE** ***(contd.)*** **i04103084**

NOTE	REF NO	GRAPHIC REF	PART NUMBER	QTY	PART NAME 1 2 3 4 5 6 (PRODUCT LEVEL)	SEE PAGE
	32	1	**5P-4115**	1	WASHER-HARD (7.2X19X2-MM THK)	
M	33	2	**7X-2534**	1	BOLT (M6X1X50-MM)	
	34	2	**8C-3398**	2	LOCKWASHER	
	35	2	**8F-1434**	2	LOCKWASHER	
	36	2	**8T-0328**	2	WASHER-HARD (5.5X10X1-MM THK)	
	37	1,2	**8T-4121**	11	WASHER-HARD (11X21X2.5-MM THK)	
M	38	1,2	**8T-4136**	2	BOLT (M10X1.5X25-MM)	
M	39	1,2	**8T-4137**	6	BOLT (M10X1.5X20-MM)	
M	40	2	**8T-4139**	2	BOLT (M12X1.75X30-MM)	
	42	2	**8T-4205**	3	WASHER-HARD (7.2X14.5X2-MM THK)	
	43	2	**8T-4223**	3	WASHER-HARD (13.5X25.5X3-MM THK)	
	44	1,2	**8T-4224**	2	WASHER-HARD (8.8X16X2-MM THK)	
M	45	1	**8T-4908**	1	BOLT (M8X1.25X25-MM)	
M	46	1	**8T-4971**	1	BOLT (M6X1X30-MM)	
	47	1	**9R-1004**	1	CLIP (TAB)	
	48	1	**9R-1005**	1	CLIP (SLOT)	
C	49	2	**298-0663**	4	CLIP	
CM	50	2	**5C-9553**	1	BOLT (M6X1X16-MM)	

B-USE AS REQUIRED
C-CHANGE FROM PREVIOUS TYPE
D-ORDER BY THE METER
E-ORDER BY THE CENTIMETER
M-METRIC PART
Y-SEPARATE ILLUSTRATION

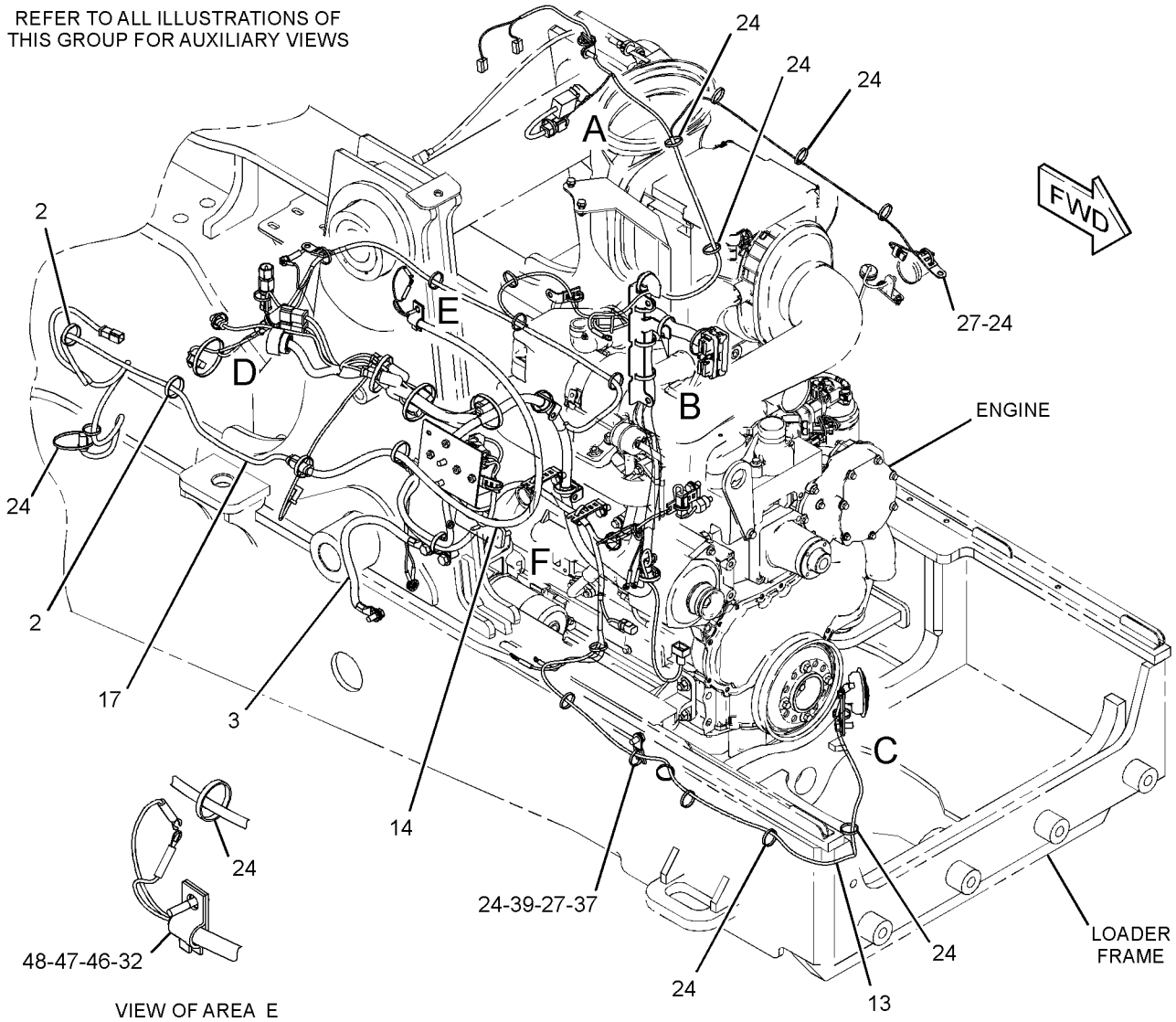

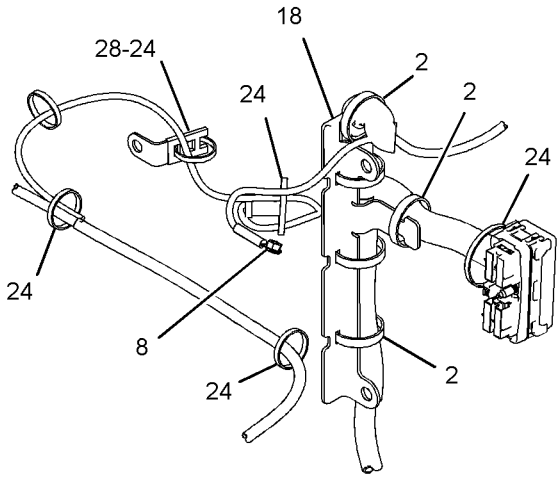

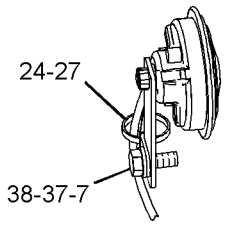

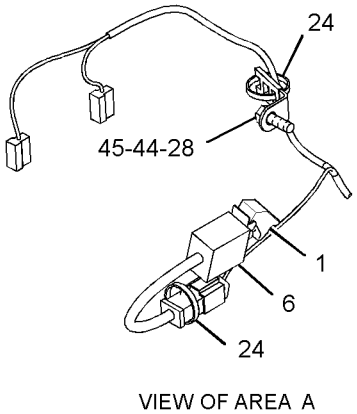

GRAPHIC #1 g01874633

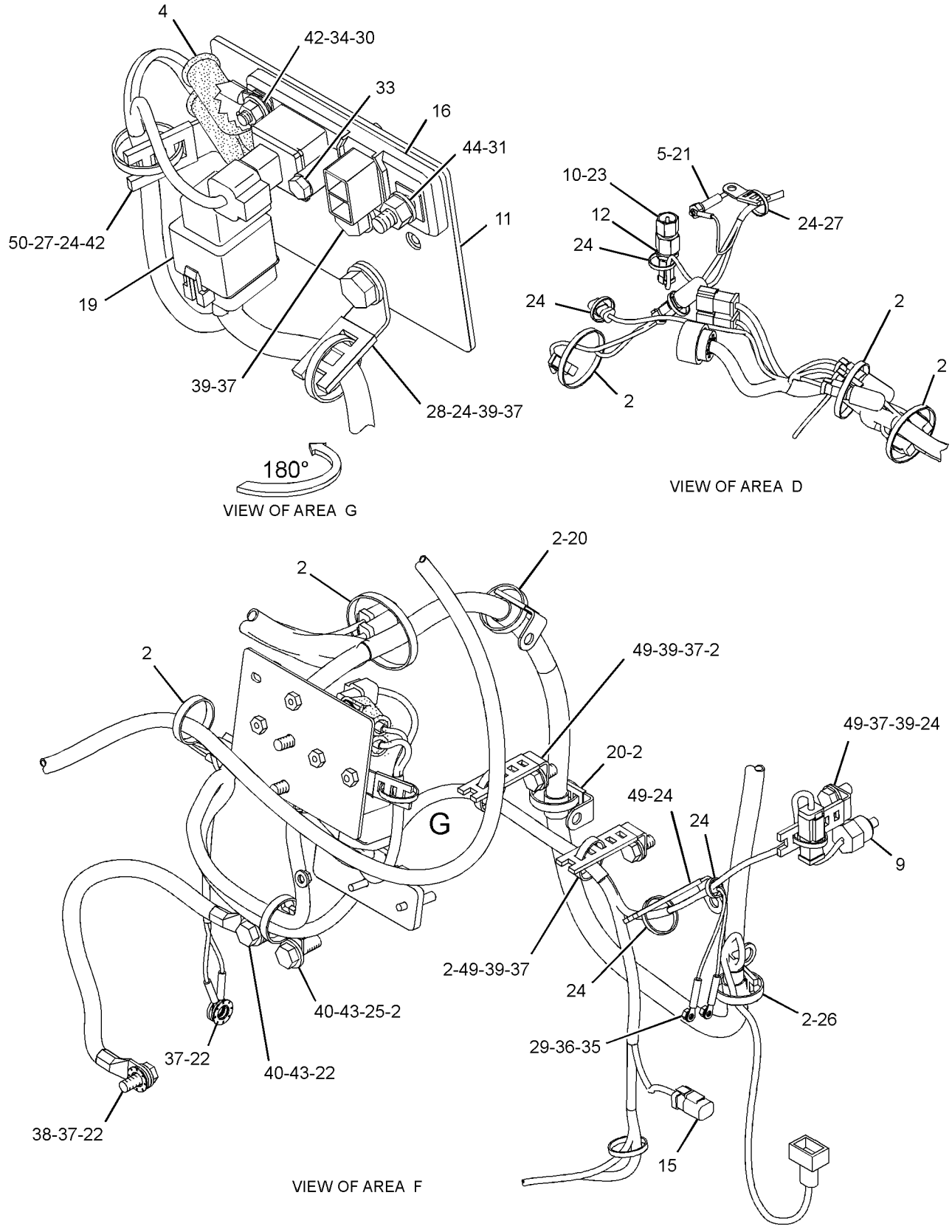

GRAPHIC #2 **<END>** g01874635

ELECTRICAL AND STARTING SYSTEM

298-5130 WIRING GP-ENGINE

S/N: C4E1-UP

PART OF 254-0115 ENGINE AR-PRIMARY

SMCS-1408 **i04022276**

NOTE	REF NO	GRAPHIC REF	PART NUMBER	QTY	PART NAME 1 2 3 4 5 6 (PRODUCT LEVEL)	SEE PAGE
M	1	1	**124-3815**	1	BOLT (M8X1.25X16-MM)	
	2	1	**217-9039**	3	STRAP-CABLE	
	3	1	**236-5539**	1	CLIP	
	4	1	**278-5209**	1	BRACKET	
	5	1	**278-5210**	1	BOLT	
	6	1	**346-1449**	1	BRACKET	
	7	1	**304-5163**	1	HARNESS AS-ENGINE	

M-METRIC PART

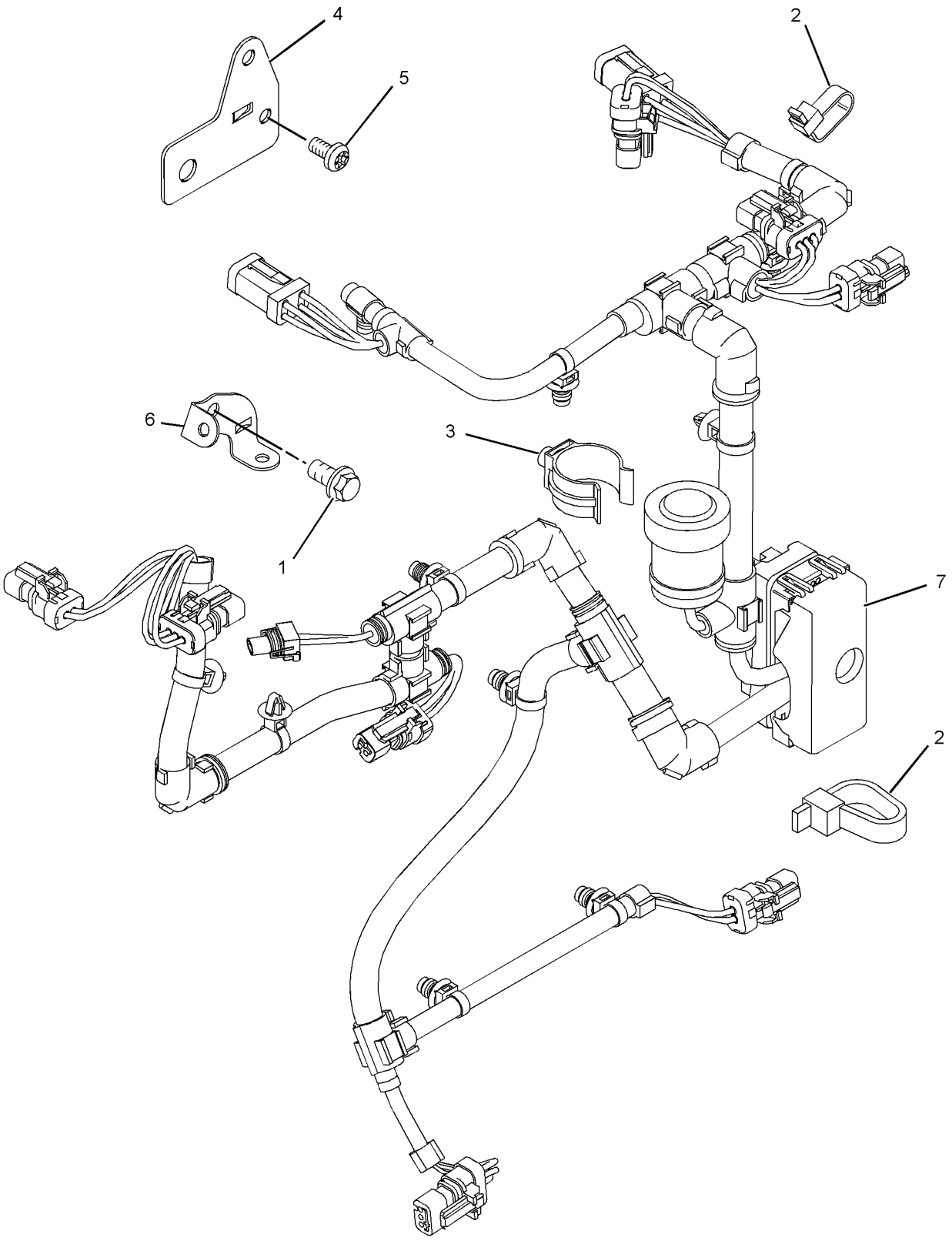

GRAPHIC #1 **<END>** g01922034

ELECTRICAL AND STARTING SYSTEM

263-0924 WIRING GP-PLATFORM

S/N: RBA1-UP

PART OF 254-0200 CAB AR-ENCLOSED ROPS, 254-0198 CANOPY AR-OPEN ROPS AN ATTACHMENT

SMCS-1408 **i04115449**

NOTE	REF NO	GRAPHIC REF	PART NUMBER	QTY	PART NAME 1 2 3 4 5 6 (PRODUCT LEVEL)	SEE PAGE
E	1	2	**103-2543**		SEAL (1-CM)	
	2	1	**1S-9593**	3	STRAP-CABLE	
	3	2	**4I-3038**	8	WASHER (3.3X8X0.5-MM THK)	
	4	1	**6I-1418**	4	SPACER (8.2X12.7X28.7-MM THK)	
	5	1,3	**7K-1181**	43	STRAP-CABLE	
	6	3	**7T-4848**	1	FLASHER AS (12-VOLT)	
	7	2	**180-9900**	1	CAP AS	
		2	**5P-7958**	1	SLEEVE-CABLE SPLICE	
		2	**8C-6354**	1	CAP-RECEPTACLE	
		2	**179-9392**	1	LANYARD	
	8	2	**8T-8799**	3	BOOT	
	9	1	**8T-9655**	8	MOUNT-ISOLATION	
	10	2	**100-5805**	1	CAP-RECEPTACLE	
	11	1,2	**189-3158**	3	SUPPRESSOR-ARC	
	12	2	**146-9439**	1	RELAY AS (12-VOLT) (HORN)	
	12A	2	**146-9439**	1	RELAY AS (12-VOLT) (BACKUP ALARM)	
	12B	2	**146-9439**	1	RELAY AS (12-VOLT) (POSITION LAMP)	
	12C	2	**146-9439**	1	RELAY AS (12-VOLT) (IMPLEMENT DISABLE)	
	13	3	**172-9200**	1	SUPPRESSOR-ARC	
	14	3	**178-7539**	1	RECEPTACLE AS (POWER SUPPLY)	
	15	2	**179-6401**	4	SCREW-PAN HEAD (6-32X0.5-IN)	
	16	2,3	**201-1024**	2	BRACKET	
	17	2	**206-1345**	3	STRAP-CABLE	
	18	2	**206-1718**	1	BRACKET AS	
	19	1	**212-0862**	3	CLAMP-CABLE	
	20	3	**214-4702**	1	SWITCH AS-ROCKER (HAZARD WARNING LIGHTS)	
		3	**111-7899**	1	GASKET	
	21	3	**214-4717**	1	INDICATOR AS (LH TURN SIGNAL, PARKING BRAKE)	
	22	3	**214-4723**	1	INDICATOR AS (RH TURN SIGNAL, HIGH BEAM)	
					(EACH INDICATOR AS INCLUDES)	
		3	**111-7899**	1	GASKET	
	23	1	**216-9069**	1	BRACKET AS	
M		1	**6V-9632**	1	NUT-WELD (M6X1-THD)	
	24	3	**225-7970**	1	BRACKET AS	
	25	2	**9F-5644**	4	LOCKWASHER	
	26	3	**227-1057**	1	PLUG-HOLE	
	27	3	**246-2671**	1	SWITCH AS-MULTIFUNCTION (HD LIGHT, TURN SIG, WDO WIPER)	
Y	28	2	**247-8199**	1	PANEL GP-FUSE (INCLUDES RELAY)	102
	29	3	**263-9498**	1	HARNESS AS-WIRING (RESISTOR)	
		3	**9X-3401**	2	PIN-CONNECTOR (16-GA TO 18-GA)	
		3	**180-9340**	2	SOCKET-CONNECTOR (14-GA TO 18-GA)	
		3	**102-8806**	1	KIT-RECEPTACLE (8-PIN)	
					(INCLUDES RECEPTACLE AS & WEDGE)	
		3	**8T-8737**	7	PLUG-SEAL	
		3	**134-2540**	1	RESISTOR AS-CONNECTION (3-PIN)	
		3	**155-2260**	1	KIT-CONNECTING PLUG (3-PIN)	
					(INCLUDES PLUG AS, WEDGE & INTERFACE SEAL)	
	30	1	**264-4362**	1	HARNESS AS-PLATFORM	
		1	**167-3692**	3	RECEPTACLE AS-CONNECTOR (31-PIN)	
		1	**196-2413**	6	TERMINAL AS	
		1	**180-9340**	87	SOCKET-CONNECTOR (14-GA TO 18-GA)	
		1	**310-0674**	3	LOCKWASHER	
		1	**186-3735**	61	PIN-CONNECTOR (16-GA TO 18-GA)	

263-0924 **WIRING GP-PLATFORM** *(contd.)* **i04115449**

NOTE	REF NO	GRAPHIC REF	PART NUMBER	QTY	PART NAME 1 2 3 4 5 6 (PRODUCT LEVEL)	SEE PAGE
		1	**9W-0852**	1	PIN-CONNECTOR (14-GA TO 16-GA)	
		1	**110-0203**	9	CONNECTOR AS	
		1	**111-6795**	2	HOUSING-RELAY	
		1	**111-6816**	2	LOCK	
		1	**230-4011**	3	PLUG AS-CONNECTOR (2-PIN)	
					(EACH PLUG AS INCLUDES)	
		1	**264-7029**	1	SEAL-CONNECTOR	
		1	**155-2265**	4	KIT-CONNECTING PLUG (8-PIN)	
		1	**155-2260**	3	KIT-CONNECTING PLUG (3-PIN)	
		1	**155-2270**	10	KIT-CONNECTING PLUG (2-PIN)	
		1	**155-2271**	4	KIT-CONNECTING PLUG (4-PIN)	
		1	**155-2274**	7	KIT-CONNECTING PLUG (6-PIN)	
		1	**196-2384**	1	KIT-CONNECTING PLUG (8-PIN)	
		1	**196-2385**	1	KIT-CONNECTING PLUG (8-PIN)	
		1	**196-2386**	1	KIT-CONNECTING PLUG (8-PIN)	
		1	**242-6114**	1	KIT-CONNECTING PLUG (8-PIN)	
		1	**242-6116**	1	KIT-CONNECTING PLUG (8-PIN)	
		1	**242-6118**	1	KIT-CONNECTING PLUG (8-PIN)	
		1	**242-6120**	1	KIT-CONNECTING PLUG (8-PIN)	
		1	**155-2255**	6	KIT-CONNECTING PLUG (12-PIN)	
					(EACH PLUG KIT INCLUDES PLUG AS, WEDGE & INTERFACE SEAL)	
		1	**147-1445**	1	PLUG AS-CONNECTOR (7O-PIN)	
		1	**147-1446**	1	PLUG AS-CONNECTOR (7O-PIN)	
					(EACH PLUG AS-CONNECTOR INCLUDES)	
		1	**159-9322**	1	SEAL-O-RING	
		1	**7R-2751**	16	PLUG-CONNECTOR	
		1	**8T-8737**	123	PLUG-SEAL	
		1	**102-8802**	1	KIT-RECEPTACLE (2-PIN)	
		1	**102-8804**	1	KIT-RECEPTACLE (4-PIN)	
		1	**102-8801**	1	KIT-RECEPTACLE (12-PIN)	
		1	**102-8805**	1	KIT-RECEPTACLE (6-PIN)	
					(EACH RECEPTACLE KIT INCLUDES RECEPTACLE AS & WEDGE)	
		1	**9X-4813**	1	RECEPTACLE AS-CONNECTOR (3-PIN)	
		1	**134-2540**	1	RESISTOR AS-CONNECTION (3-PIN)	
		1	**9W-1951**	1	RECEPTACLE-CONNECTOR (9-PIN)	
		1	**128-4123**	12	SEAL	
		1	**128-5016**	22	SEAL-CABLE	
		1	**7R-2750**	6	SEAL-CONNECTOR	
		1	**196-2412**	34	TERMINAL AS	
					(EACH INCLUDES)	
		1	**7R-2750**	1	SEAL-CONNECTOR	
		1	**9X-3402**	86	SOCKET-CONNECTOR (16-GA TO 18-GA)	
		1	**186-3736**	56	SOCKET-CONNECTOR (16-GA TO 18-GA)	
		1	**9W-0844**	5	SOCKET-CONNECTOR (14-GA TO 16-GA)	
		1	**3S-2093**	29	STRAP-CABLE	
B		1	**141-8061**		TAPE	
		1	**2L-8069**	2	TERMINAL-RING (2-GA TO 10-GA, 3/8-IN SCREW)	
		1	**2L-8077**	1	TERMINAL-RING (14-GA TO 16-GA, 1/4-IN SCREW)	
		1	**2L-8079**	3	TERMINAL-RING (14-GA TO 16-GA, 3/8-IN SCREW)	
		1	**5P-4571**	5	TERMINAL-BLADE (14-GA TO 16-GA)	
		1	**091-2436**	17	TERMINAL-BLADE (18-GA TO 22-GA)	
		1	**111-6792**	5	TERMINAL-RECEPTACLE (18-GA TO 20-GA)	
		1	**111-6793**	1	TERMINAL-RECEPTACLE	
E		1	**119-3662**		TUBE-HEAT SHRINK (10.85-MM DIA) (33-CM)	
E		1	**125-7874**		TUBE-HEAT SHRINK (5.72-MM DIA) (175-CM)	
E		1	**125-7875**		TUBE-HEAT SHRINK (7.44-MM DIA) (40-CM)	

263-0924 **WIRING GP-PLATFORM** ***(contd.)*** **i04115449**

NOTE	REF NO	GRAPHIC REF	PART NUMBER	QTY	PART NAME 1 2 3 4 5 6 (PRODUCT LEVEL)	SEE PAGE
	31	2	**267-2701**	1	FUSE (60-AMPERE)	
	32	2	**268-7759**	1	HARNESS AS-POWER (DISTRIBUTION)	
		2	**3S-2093**	1	STRAP-CABLE	
		2	**2L-8067**	1	TERMINAL-RING (10-GA TO 12-GA, 1/4-IN SCREW)	
		2	*128-4178*	3	TERMINAL AS	
					(EACH INCLUDES)	
		2	**2L-8068**	1	TERMINAL-RING (10-GA TO 12-GA, 5/16-IN SCREW)	
D		2	**5P-6006**		TUBE-HEAT SHRINK (9.52-MM DIA) (0.1-M)	
		2	*128-4168*	1	TERMINAL AS	
		2	**6H-3592**	1	TERMINAL-RING (6-GA TO 8-GA, 5/16-IN SCREW)	
E		2	**6V-9023**		TUBE-HEAT SHRINK (12.7-MM DIA) (4-CM)	
		2	*152-5532*	2	TERMINAL AS	
		2	**9X-9882**	1	TERMINAL-RING (6-GA TO 8-GA, 1/4-IN SCREW)	
D		2	**5P-6006**		TUBE-HEAT SHRINK (9.52-MM DIA) (0.1-M)	
	33	2	**274-3774**	1	CAP-CONNECTOR	
	34	1,3	**274-3775**	2	CAP-CONNECTOR	
	35	2	**274-3776**	1	CAP-SEAL	
	36	2,3	**274-3777**	2	CAP-CONNECTOR	
	37	1,2	**274-3778**	2	CAP-SEAL	
	38	1,2,3	**274-3779**	3	CAP-SEAL	
	39	2	**274-3780**	1	CAP-SEAL	
	40	1	**274-7409**	4	SCREW-TRUSS HEAD (M8X1.25X45-MM)	
	41	2	**275-0553**	1	BAR-BUS	
Y	42	2	**276-7290**	1	RELAY GP (12-VOLT) (POWER, 1)	105
Y	43	2	**276-7291**	1	RELAY GP (12-VOLT) (POWER, 2)	106
	44	3	**278-0461**	1	RELAY AS (12-VOLT) (TORQUE LIMITER)	
	46	1	**132-5789**	2	CLIP	
M	47	3	**138-8454**	2	SCREW-TRUSS HEAD (M4X0.7X10-MM)	
	48	3	**155-2271**	1	KIT-CONNECTING PLUG (4-PIN)	
					(INCLUDES PLUG AS & WEDGE)	
	49	3	**156-6175**	1	CLIP	
	50	1	**170-9360**	1	GROMMET	
M	51	2	**8T-9534**	2	BOLT (M6X1X50-MM)	
	52	1,2,3	**3S-2093**	18	STRAP-CABLE	
	53	3	**4B-4863**	2	WASHER (4.7X11X1.2-MM THK)	
	54	2	**4P-8134**	1	CLIP	
M	55	2,3	**5C-2890**	4	NUT (M6X1-THD)	
M	56	1,2	**5C-7261**	10	NUT (M8X1.25-THD)	
	57	1	**7X-0579**	8	WASHER-HARD (8.8X25.5X2-MM THK)	
	58	1	**7X-7729**	4	WASHER (11X25X3-MM THK)	
	59	2,3	**8C-3398**	4	LOCKWASHER	
	60	1,2	**8F-3590**	4	LOCKWASHER	
M	61	3	**8T-0352**	2	BOLT (M5X0.8X45-MM)	
	62	1,2	**8T-4121**	5	WASHER-HARD (11X21X2.5-MM THK)	
M	63	2	**8T-4133**	2	NUT (M10X1.5-THD)	
M	65	1	**8T-4137**	1	BOLT (M10X1.5X20-MM)	
M	66	2,3	**8T-4138**	7	BOLT (M6X1X20-MM)	
M	67	1,2,3	**8T-4200**	6	BOLT (M8X1.25X16-MM)	
	68	2,3	**8T-4205**	14	WASHER-HARD (7.2X14.5X2-MM THK)	
	69	1,2,3	**8T-4224**	12	WASHER-HARD (8.8X16X2-MM THK)	
	70	1	**132-1806**	1	STRAP AS-GROUND	
E	71	3	**3E-6600**		SEAL (3-CM EACH)	
E	71A	1	**3E-6600**		SEAL (9-CM)	
	72	3	**8T-8737**	4	PLUG-SEAL	
M	73	1	**8T-4195**	2	BOLT (M10X1.5X30-MM)	

263-0924 **WIRING GP-PLATFORM** *(contd.)* **i04115449**

B-USE AS REQUIRED
D-ORDER BY THE METER
E-ORDER BY THE CENTIMETER
M-METRIC PART
Y-SEPARATE ILLUSTRATION

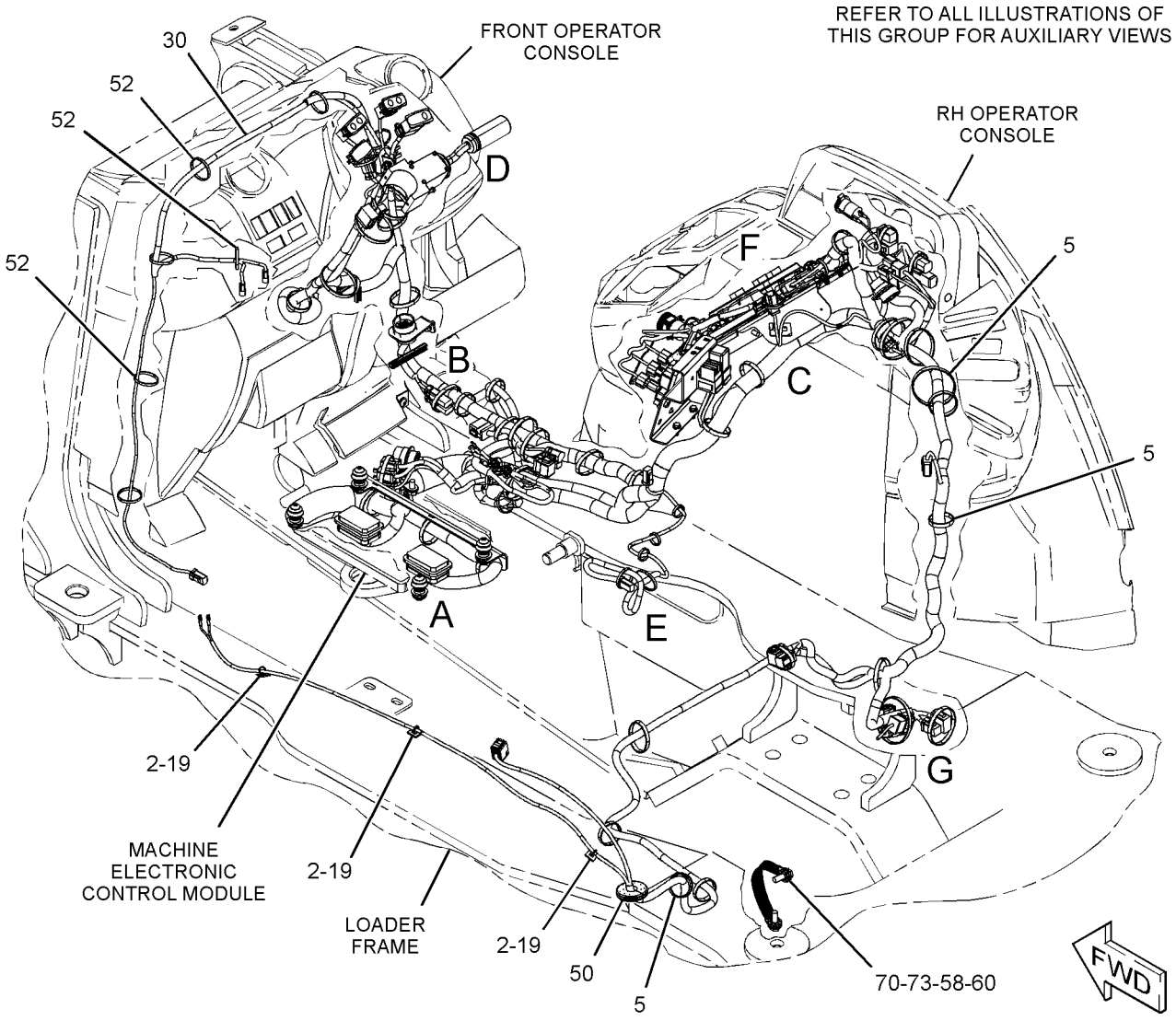

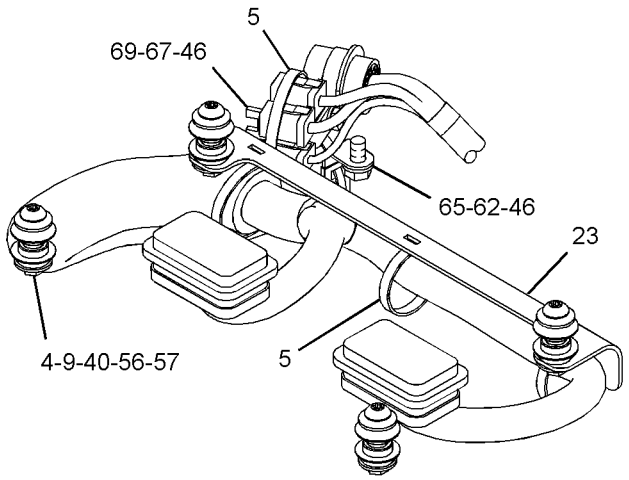

VIEW OF AREA A

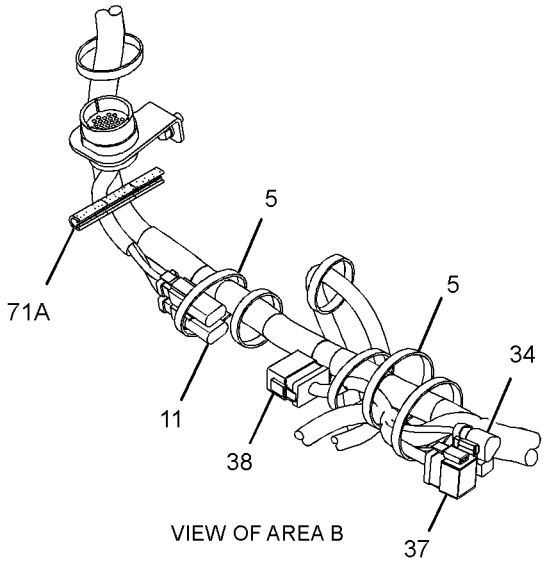

VIEW OF AREA B

GRAPHIC #1

g01524337

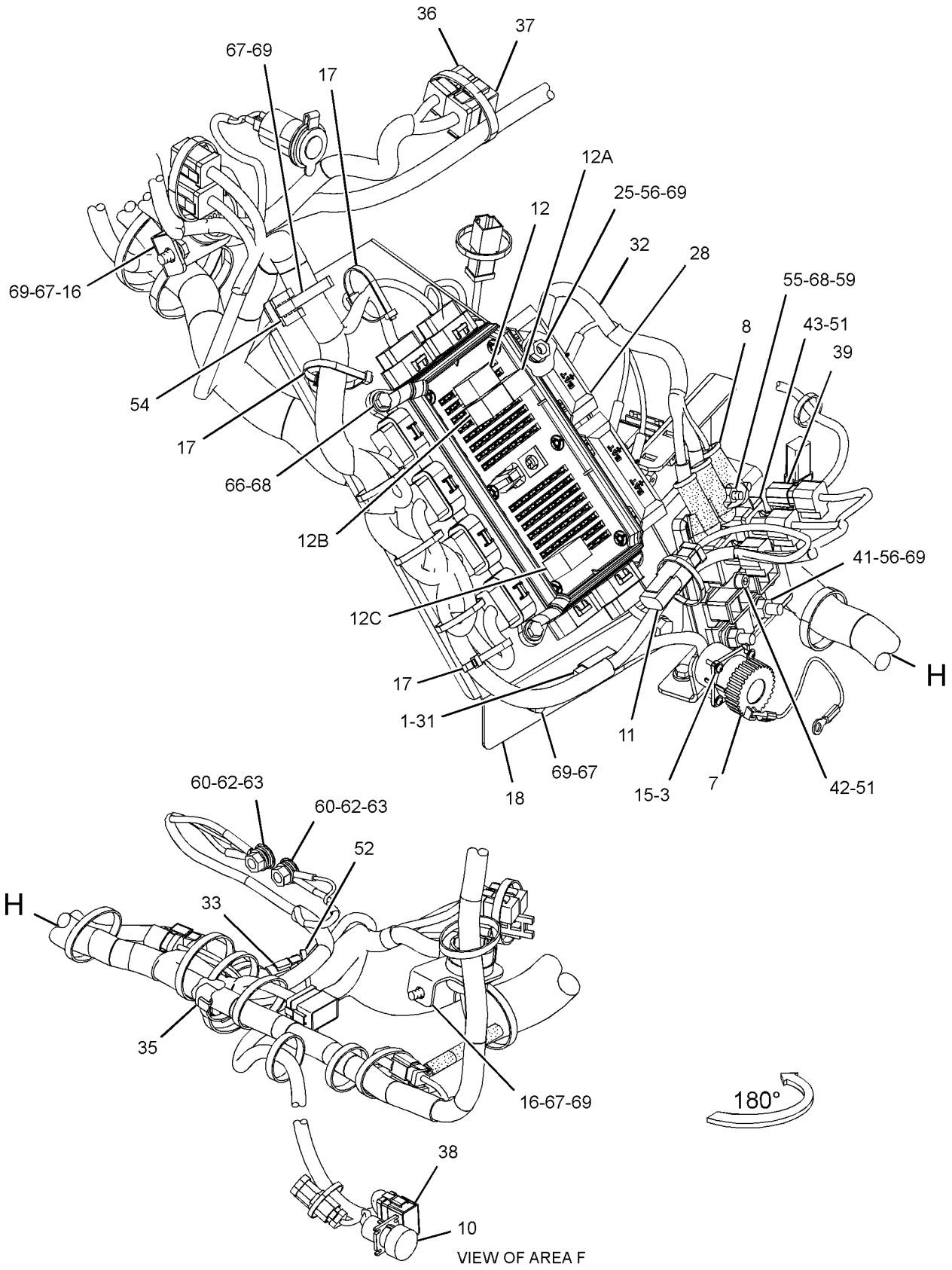

GRAPHIC #2

g02158845

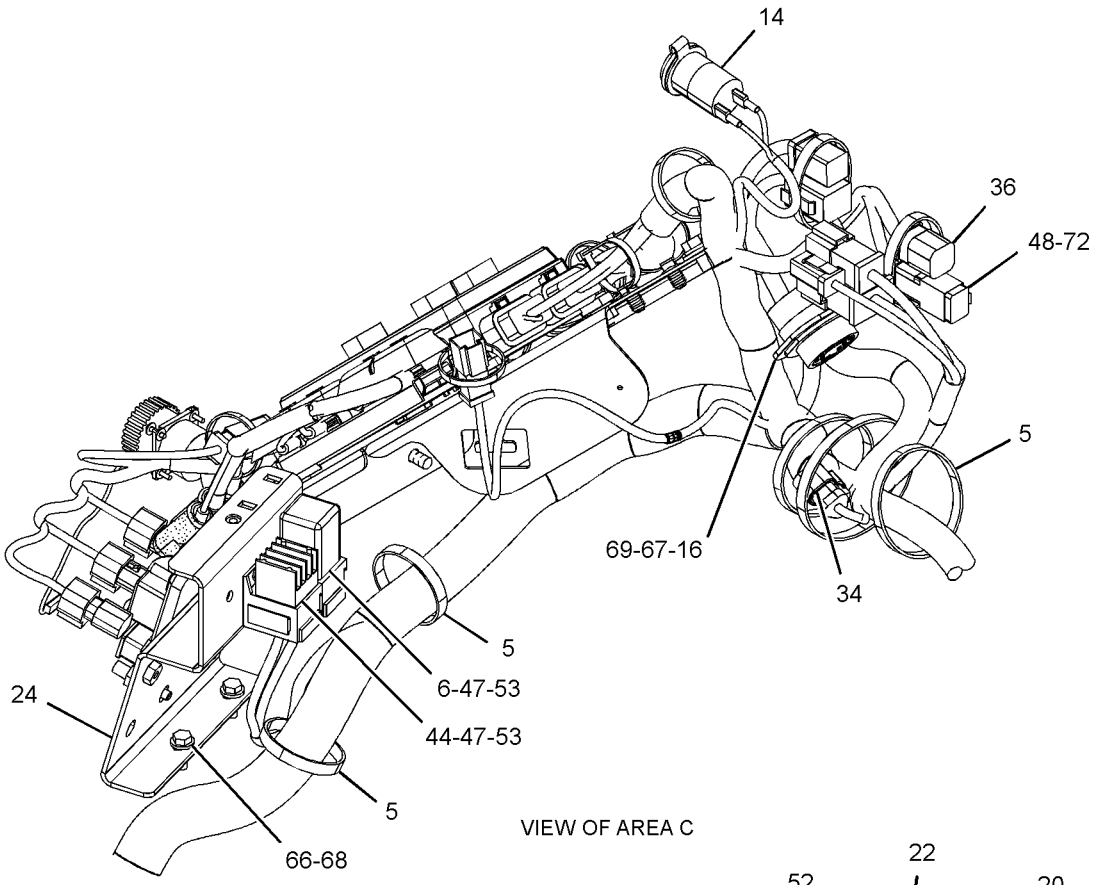

VIEW OF AREA C

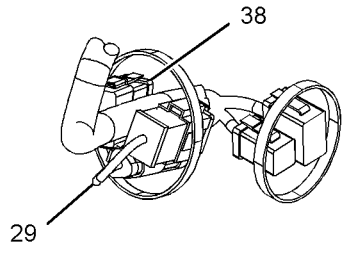

VIEW OF AREA G

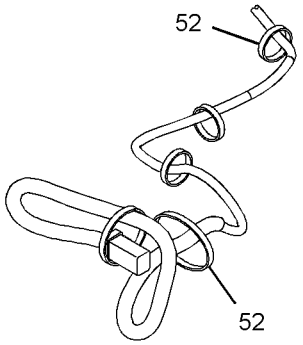

VIEW OF AREA E

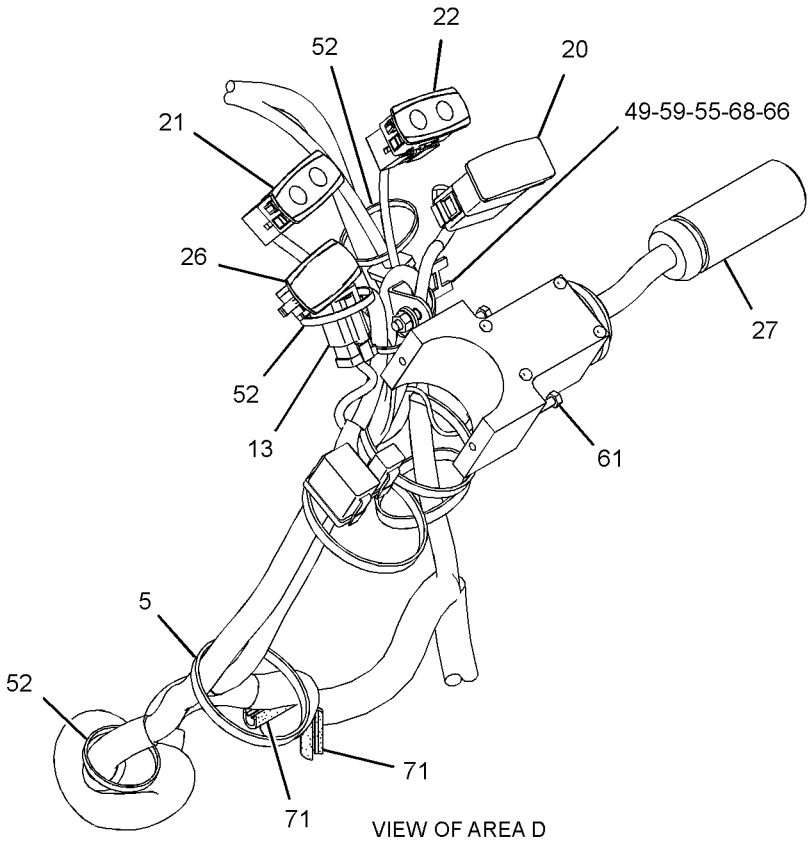

VIEW OF AREA D

GRAPHIC #3 **<END>** g01524338

211-4271 WIRING GP-POWER RECEPTACLE

S/N: RBA1-UP

PART OF 254-0200 CAB AR-ENCLOSED ROPS, 254-0198 CANOPY AR-OPEN ROPS AN ATTACHMENT

SMCS-1408, 7301 **i03029014**

NOTE	REF NO	GRAPHIC REF	PART NUMBER	QTY	PART NAME 1 2 3 4 5 6 (PRODUCT LEVEL)	SEE PAGE
	1	1	**178-7539**	1	RECEPTACLE AS (POWER SUPPLY)	

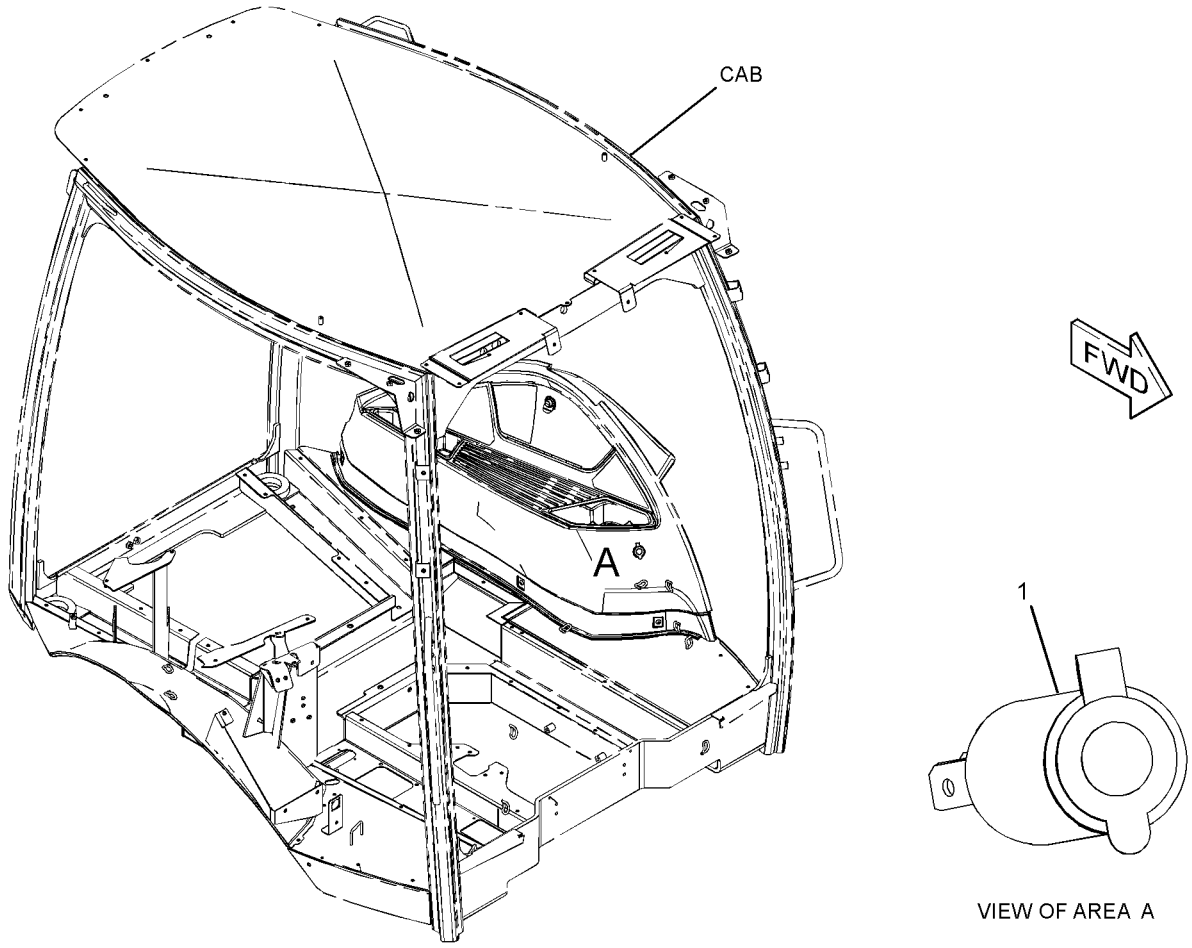

VIEW OF AREA A

GRAPHIC #1 **<END>** g01520595

263-0960 WIRING GP-REAR–BACKUP ALARM

S/N: RBA1-UP

PART OF 254-0110 CHASSIS AR

SMCS-1408 **i04101189**

NOTE	REF NO	GRAPHIC REF	PART NUMBER	QTY	PART NAME 1 2 3 4 5 6 (PRODUCT LEVEL)	SEE PAGE
M	1	1	**8T-4196**	2	BOLT (M10X1.5X35-MM)	
	2	1	**161-2539**	1	ALARM AS (BACKUP)	
		1	**4B-2043**	2	NUT (8-32-THD)	
M	3	1	**9X-2045**	2	SCREW-TRUSS HEAD (M6X1X20-MM)	
	4	1	**198-9365**	2	CLIP	
	5	1	**290-6820**	1	HARNESS AS-REAR	
		1	**274-3774**	3	CAP-CONNECTOR	
		1	**186-3735**	7	PIN-CONNECTOR (16-GA TO 18-GA)	
		1	**9X-3401**	2	PIN-CONNECTOR (16-GA TO 18-GA)	
					-OR-	
		1	**126-1767**	2	PIN-CONNECTOR (14-GA TO 16-GA)	
		1	**155-2270**	5	KIT-CONNECTING PLUG (2-PIN)	
		1	**155-2260**	1	KIT-CONNECTING PLUG (3-PIN)	
					(EACH PLUG KIT INCLUDES PLUG AS, WEDGE & INTERFACE SEAL)	
		1	**8T-8737**	10	PLUG-SEAL	
		1	**102-8801**	1	KIT-RECEPTACLE (12-PIN)	
		1	**102-8805**	1	KIT-RECEPTACLE (6-PIN)	
					(EACH RECEPTACLE KIT INLCUDES RECEPTACLE AS & WEDGE)	
		1	**180-9340**	2	SOCKET-CONNECTOR (14-GA TO 18-GA)	
		1	**186-3736**	10	SOCKET-CONNECTOR (16-GA TO 18-GA)	
		1	**8L-8413**	7	STRAP-CABLE	
		1	**189-3158**	2	SUPPRESSOR-ARC	
		1	**7N-9017**	2	TERMINAL-RING (18-GA TO 22-GA, NO. 10 SCREW)	
E		1	**125-7874**		TUBE-HEAT SHRINK (5.72-MM DIA) (20-CM)	
	6	1	**311-2154**	1	PLATE AS	
M		1	**6V-9632**	2	NUT-WELD (M6X1-THD)	
M		1	**8T-3490**	2	NUT-WELD (M10X1.5-THD)	
	7	1	**3S-2093**	8	STRAP-CABLE	
	8	1	**4P-7428**	1	CLIP	
	9	1	**4P-7581**	1	CLIP	
	10	1	**7X-7729**	2	WASHER (11X25X3-MM THK)	
	11	1	**8T-4121**	1	WASHER-HARD (11X21X2.5-MM THK)	
M	12	1	**8T-4137**	1	BOLT (M10X1.5X20-MM)	

E-ORDER BY THE CENTIMETER
M-METRIC PART

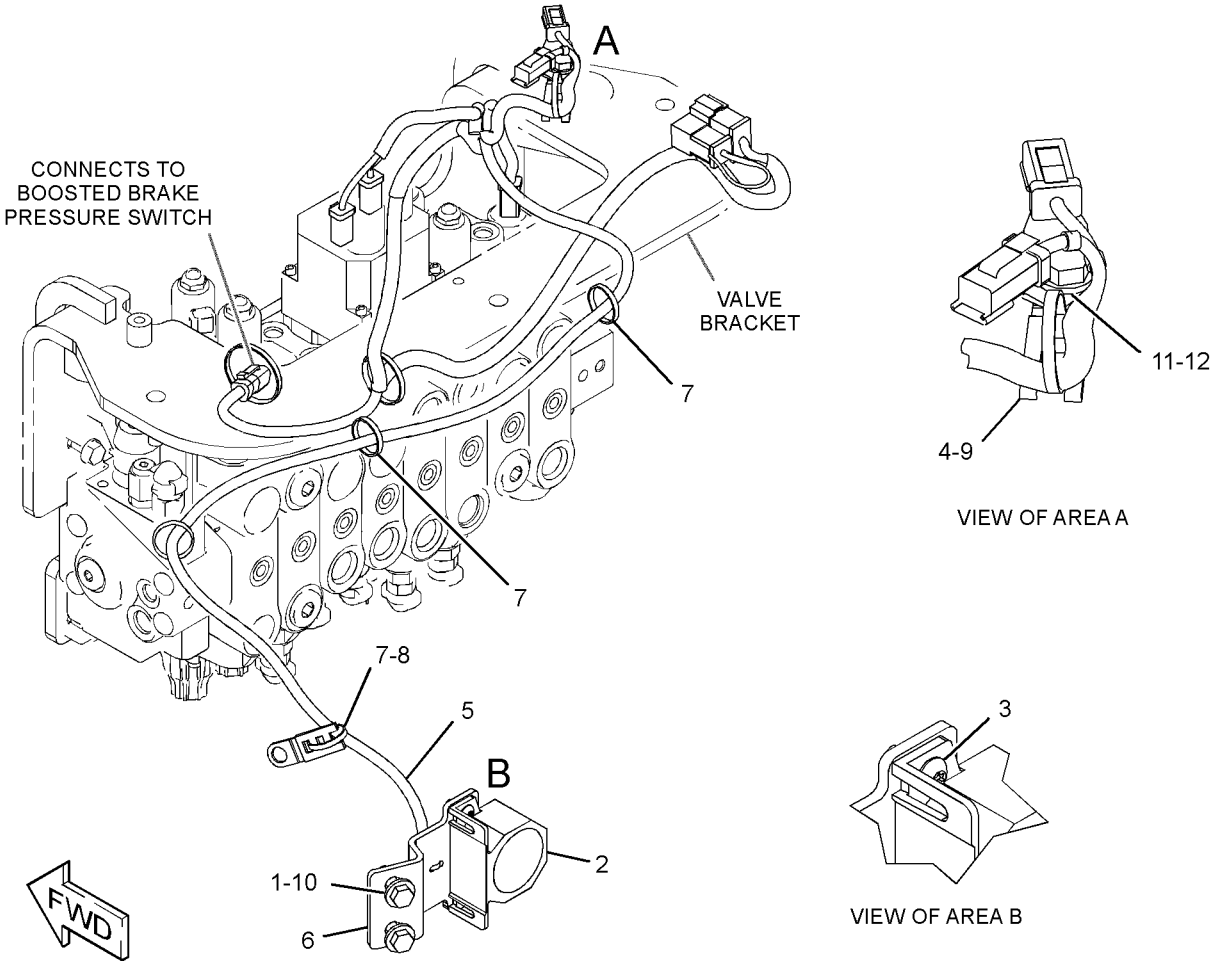

GRAPHIC #1 **<END>** g01937394

211-4259 WIRING GP-RIDE CONTROL

S/N: RBA1-UP

PART OF 254-0125 CONTROL AR-RIDE

SMCS-1408 **i03797071**

NOTE	REF NO	GRAPHIC REF	PART NUMBER	QTY	PART NAME 1 2 3 4 5 6 (PRODUCT LEVEL)	SEE PAGE
	1	1	**146-9439**	1	RELAY AS (12-VOLT) (FUSE BLOCK)	
	2	1	**246-8038**	1	HARNESS AS-RIDE CONTROL	
		1	**186-3735**	2	PIN-CONNECTOR (16-GA TO 18-GA)	
		1	**9X-3401**	1	PIN-CONNECTOR (16-GA TO 18-GA)	
		1	**8T-8737**	1	PLUG-SEAL	
		1	**186-3736**	8	SOCKET-CONNECTOR (16-GA TO 18-GA)	
E		1	**125-7874**		TUBE-HEAT SHRINK (5.72-MM DIA) (10-CM)	
		1	**8L-8413**	4	STRAP-CABLE	
E		1	**125-7874**		TUBE-HEAT SHRINK (5.72-MM DIA) (10-CM)	
		1	**102-8804**	1	KIT-RECEPTACLE (4-PIN)	
					(INCLUDES RECEPTACLE AS & WEDGE)	
		1	**155-2260**	1	KIT-CONNECTING PLUG (3-PIN)	
		1	**155-2270**	1	KIT-CONNECTING PLUG (2-PIN)	
					(EACH PLUG KIT INCLUDES PLUG AS, WEDGE & INTERFACE SEAL)	
	3	1	**214-4710**	1	SWITCH AS-ROCKER (RIDE CONTROL)	
		1	**111-7899**	1	GASKET	
	4	1	**3S-2093**	4	STRAP-CABLE	
	5	1	**3J-1907**	1	SEAL-O-RING	
	6	1	**4P-7581**	1	CLIP	
	7	1	**189-3158**	1	SUPPRESSOR-ARC	
	8	1	**304-5696**	1	SWITCH AS-PRESSURE (RIDE CONTROL)	
E		1	**9X-1813**		SLEEVE (23-CM)	
		1	**8T-8729**	3	PIN-CONNECTOR (16-GA TO 18-GA)	
		1	**102-8803**	1	KIT-RECEPTACLE (3-PIN)	
					(INCLUDES RECEPTACLE AS & WEDGE)	

E-ORDER BY THE CENTIMETER

211-4259 **WIRING GP-RIDE CONTROL** *(contd.)* **i03797071**

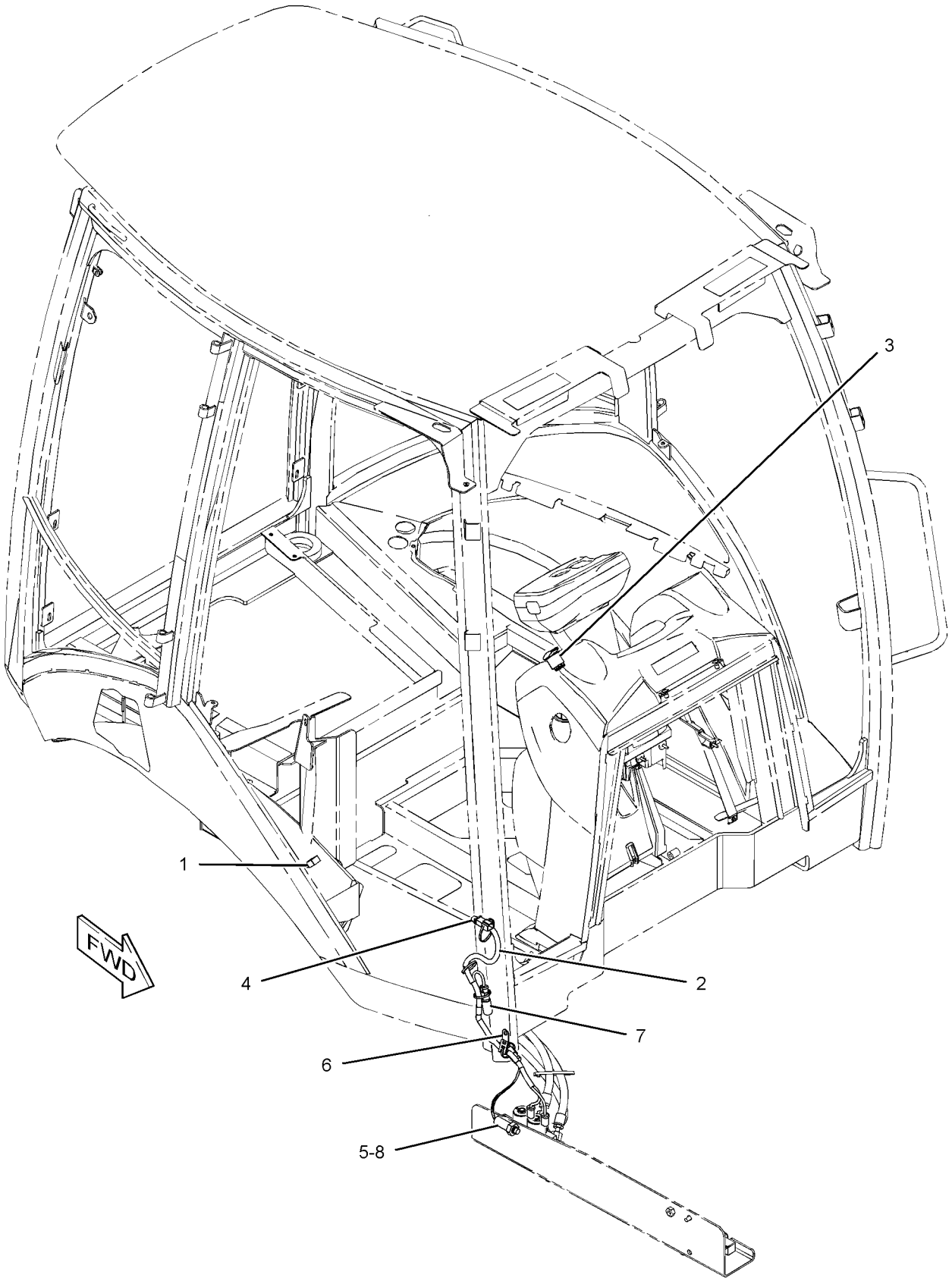

GRAPHIC #1 **<END>** g01208447

225-7996 WIRING GP-STABILIZER

S/N: RBA1-UP

PART OF 254-0200 CAB AR-ENCLOSED ROPS, 254-0198 CANOPY AR-OPEN ROPS AN ATTACHMENT

SMCS-1408, 5734 **i02501590**

NOTE	REF NO	GRAPHIC REF	PART NUMBER	QTY	PART NAME 1 2 3 4 5 6 (PRODUCT LEVEL)	SEE PAGE
	1	1	**8Y-7833**	1	WIRE AS	
	2	1	**173-7003**	1	RELAY AS-TIMER	

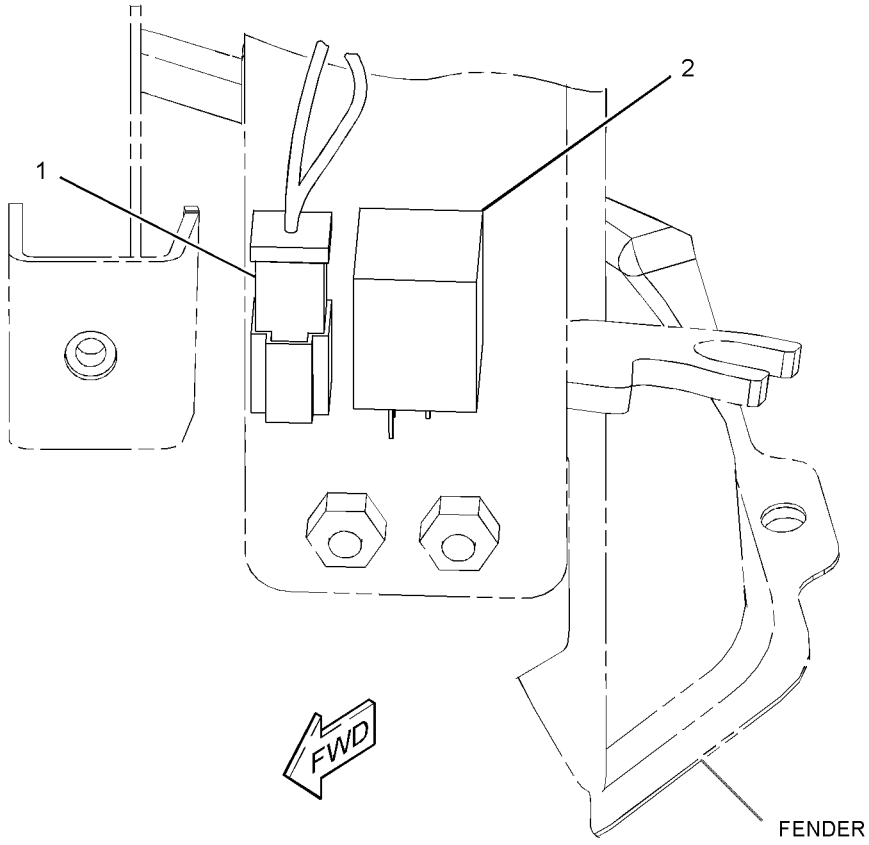

GRAPHIC #1 **<END>** g01231627

211-4254 WIRING GP-TRANSMISSION CONTROL–

AUTOSHIFT, STANDARD SHIFT

S/N: RBA1-UP

PART OF 254-0130 POWER TRAIN AR

SMCS-1408, 3168 **i04131049**

NOTE	REF NO	GRAPHIC REF	PART NUMBER	QTY	PART NAME 1 2 3 4 5 6 (PRODUCT LEVEL)	SEE PAGE
	1	1	**7K-1181**	9	STRAP-CABLE	
	2	1	**164-1368**	8	FASTENER-PANEL	
	3	1	**206-2423**	1	SADDLE	
	4	1	**213-6096**	1	HARNESS AS-PANEL (AUTOSHIFT, STAND SHIFT SWITCH)	
		1	**228-5856**	1	CONNECTOR	
		1	**9X-3401**	6	PIN-CONNECTOR (16-GA TO 18-GA)	
		1	**102-8805**	1	KIT-RECEPTACLE (6-PIN)	
					(INCLUDES RECEPTACLE AS & WEDGE)	
		1	**8L-8413**	5	STRAP-CABLE	
		1	**091-2436**	6	TERMINAL-BLADE (18-GA TO 22-GA)	
	5	1	**214-4691**	1	SWITCH AS-ROCKER (AUTOSHIFT, STANDARD SHIFT)	
		1	**111-7899**	1	GASKET	
	6	1	**225-7959**	1	HARNESS AS-WIRING (AUTOSHIFT)	
		1	**9X-3401**	7	PIN-CONNECTOR (16-GA TO 18-GA)	
		1	**155-2256**	1	KIT-CONNECTING PLUG (12-PIN)	
					(INCLUDES PLUG AS, WEDGE & INTERFACE SEAL)	
		1	**8T-8737**	12	PLUG-SEAL	
		1	**102-8802**	1	KIT-RECEPTACLE (2-PIN)	
		1	**102-8801**	1	KIT-RECEPTACLE (12-PIN)	
					(EACH RECEPTACLE KIT INCLUDES RECEPTACLE AS & WEDGE)	
		1	**180-9340**	7	SOCKET-CONNECTOR (14-GA TO 18-GA)	
		1	**8L-8413**	6	STRAP-CABLE	
E		1	**125-7874**		TUBE-HEAT SHRINK (5.72-MM DIA) (10-CM)	
	7	1	**232-1545**	1	PLATE AS	
	8	1	**246-8052**	1	HARNESS AS-TRANSMISSION	
		1	**9X-3401**	13	PIN-CONNECTOR (16-GA TO 18-GA)	
		1	**155-2270**	8	KIT-CONNECTING PLUG (2-PIN)	
					(INCLUDES PLUG AS, WEDGE & INTERFACE SEAL)	
		1	**8T-8737**	1	PLUG-SEAL	
		1	**102-8802**	4	KIT-RECEPTACLE (2-PIN)	
		1	**102-8805**	1	KIT-RECEPTACLE (6-PIN)	
					(EACH RECEPTACLE KIT INCLUDES RECEPTACLE AS & WEDGE)	
		1	**180-9340**	16	SOCKET-CONNECTOR (14-GA TO 18-GA)	
		1	**8L-8413**	1	STRAP-CABLE	
E		1	**125-7875**		TUBE-HEAT SHRINK (7.44-MM DIA) (5-CM)	
	9	1	**261-2208**	1	CONTROL GP-TRANSMISSION (FORWARD, NEUTRAL, REVERSE)	
	10	1	**274-9993**	1	PLATE	
M	11	1	**095-0756**	4	SCREW-MACHINE (M5X0.8X16-MM)	
	12	1	**3S-2093**	5	STRAP-CABLE	

E-ORDER BY THE CENTIMETER
M-METRIC PART

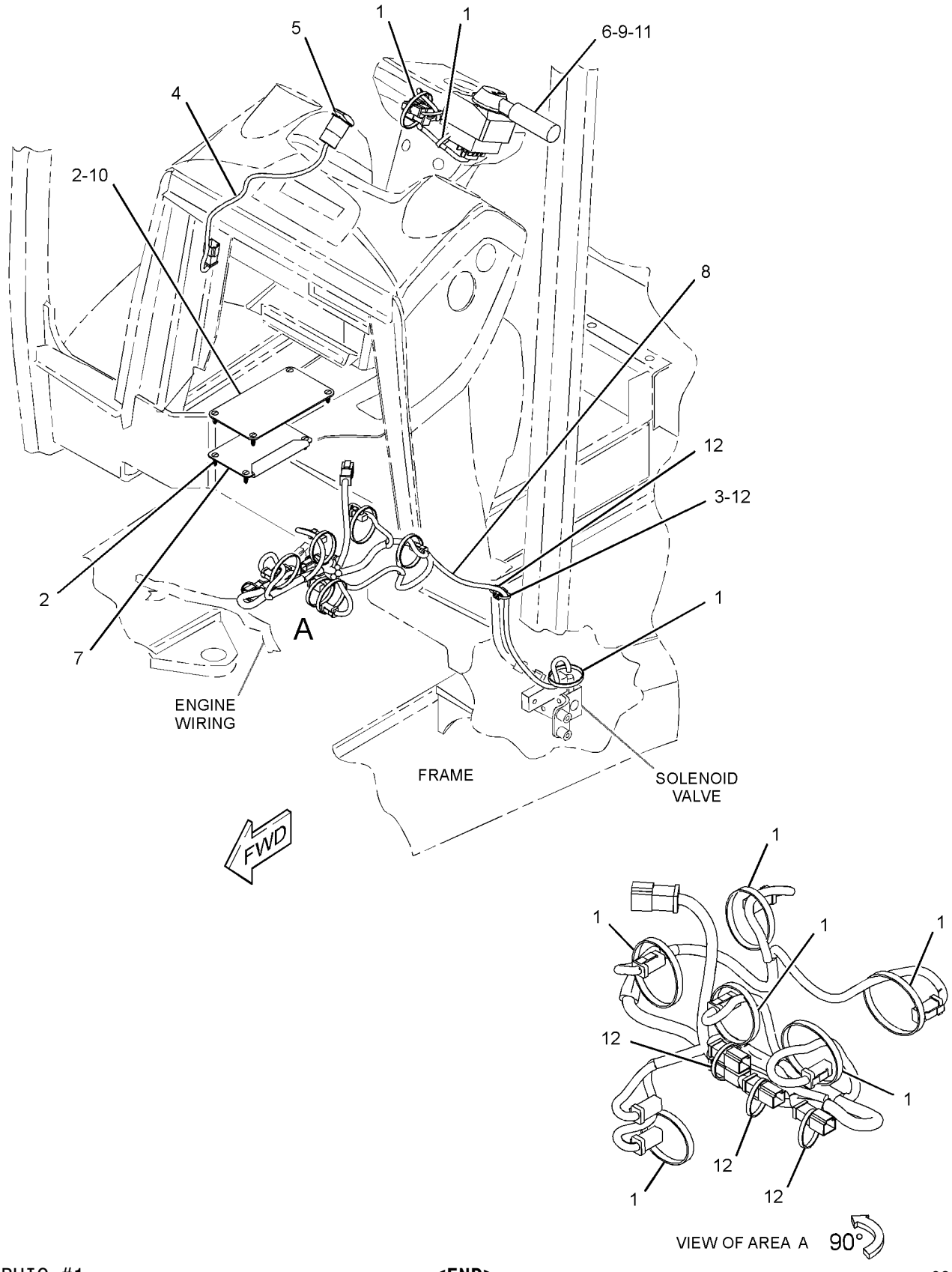

GRAPHIC #1 **<END>** g02334376

269-9259 AXLE GP-DRIVE & STEERING

S/N: RBA1-UP

PART OF 254-0130 POWER TRAIN AR

SMCS-3020, 3250, 3258, 3259, 3260, 3264, 3278, 4050, 4303, 4313

i04128909

NOTE	REF NO	GRAPHIC REF	PART NUMBER	QTY	PART NAME 1 2 3 4 5 6 (PRODUCT LEVEL)	SEE PAGE
	1	1	**154-5404**	2	BEARING	
M	2	1	**198-7835**	2	NUT-TIE ROD (M27X1.5-THD)	
	3	2	**290-4164**	6	BOLT (M20X1.5X80-MM)	
	4	1	**207-4262**	2	BOLT (STEERING STOP)	
	5	2	**209-7456**	2	BUSHING	
	6	2	**209-7464**	2	SEAL	
Y	7	2	**209-9882**	1	DIFFERENTIAL & BEVEL GEAR GP	151
	8	1	**209-9887**	1	BUSHING	
	9	2	**210-5937**	2	WASHER (46X66X3-MM THK)	
	10	2	**210-5942**	2	RING	
	11	2	**210-5947**	2	WASHER-THRUST (44.6X58X7-MM THK)	
	12	2	*216-7473*	4	PIN AS (UPPER)	
					(EACH INCLUDES)	
		2	**198-7823**	1	BEARING AS	
		2	**198-7825**	1	SEAL	
		2	**198-7838**	1	PIN	
	13	1	**219-8798**	2	SEAL-LIP TYPE	
	14	2	**231-0750**	2	SHAFT AS	
					(EACH INCLUDES)	
		2	**219-8791**	1	SHAFT	
		2	**219-8794**	2	KIT-SPIDER	
					(EACH INCLUDES SPIDER & RETAINING RINGS)	
		2	**238-5227**	1	SHAFT-AXLE	
		2	**238-5229**	1	YOKE	
J	15	2	**238-5285**	1	CYLINDER GP-STEERING	
		2	**280-7014**	2	CYLINDER HEAD	
		2	**280-7013**	1	KIT-SEAL	
					(INCLUDES RINGS, SEALS, WASHERS, & WIPERS)	
		2	**280-7015**	1	ROD	
	16	1	**253-5024**	1	BREATHER (AXLE, FRONT)	
Y	17	2	**288-7240**	1	HOUSING & FLANGE GP-AXLE (RH)	161
Y	18	2	**288-7242**	1	HOUSING & FLANGE GP-AXLE (LH)	162
	19	1	**288-7244**	2	TIE ROD AS	
					(EACH INCLUDES)	
		1	**217-2911**	1	NUT (M28X1.5-THD)	
	20	1	**288-7250**	1	HOUSING-AXLE	
	21	2	**152-6144**	3	PLUG AS-DRAIN (MAGNETIC) (AXLE)	
M	22	1	**8C-7505**	4	SCREW-FLAT HEAD (M8X1.25X20-MM)	
M	23	1	**098-5747**	2	NUT (M16X2-THD)	
M	24	1	**199-0683**	16	BOLT (M16X2X38-MM)	
	25	2	**1H-8278**	2	SEAL-O-RING	
	26	1	**208-0321**	11	BOLT-FLANGE HEAD (M12X1.75X33-MM)	
	27	2	**209-9875**	2	DOWEL	
Y	28	2	**210-5924**	2	PLANETARY GP-FINAL DRIVE	166
	29	1	**5P-2931**	1	SEAL-O-RING	
B	39	2	**198-7841**	4	SHIM (0.15-MM THK)	
B	40	2	**198-7842**	1	SHIM (0.2-MM THK)	
B	41	2	**198-7843**	1	SHIM (0.5-MM THK)	

B-USE AS REQUIRED
J-KIT MARKED J SERVICES PARTS MARKED J
M-METRIC PART
Y-SEPARATE ILLUSTRATION

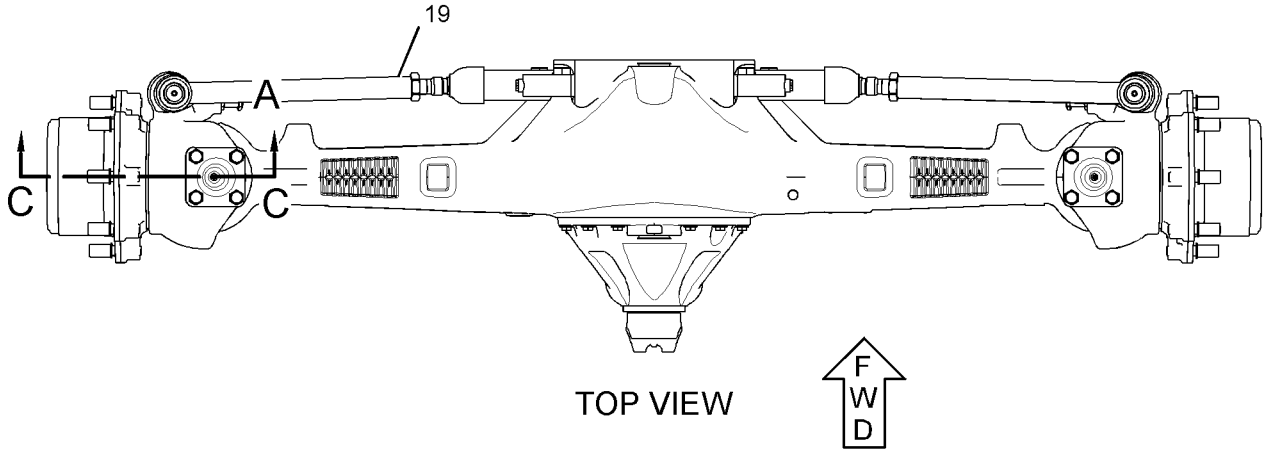

TOP VIEW

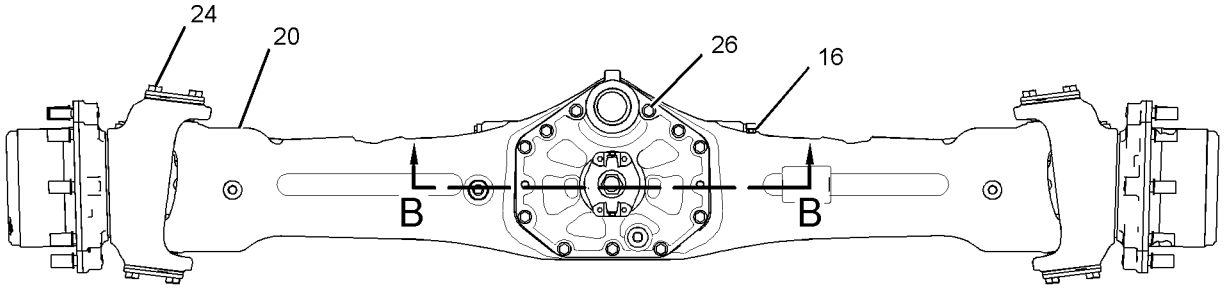

REAR VIEW

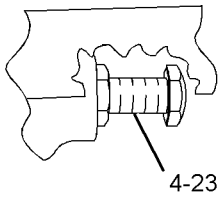

VIEW OF AREA A

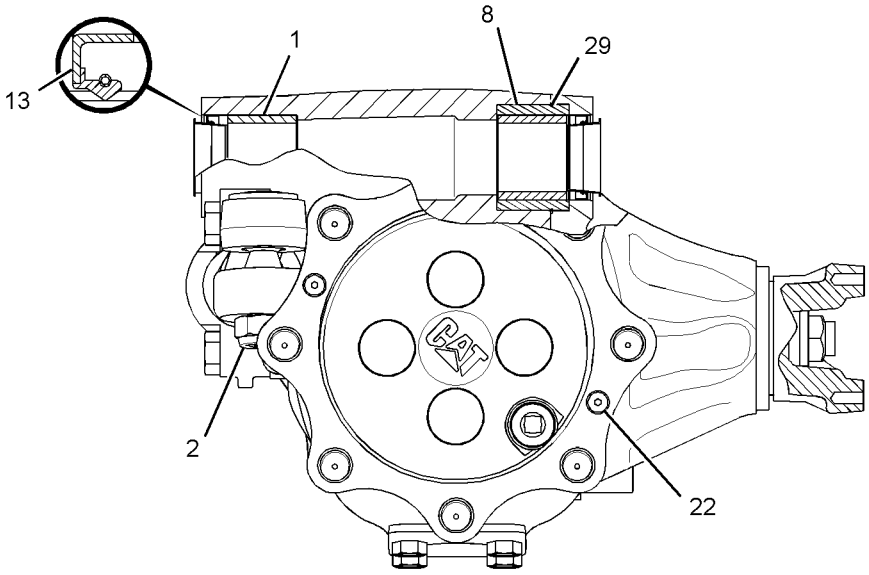

LEFT SIDE VIEW

REFER TO ALL ILLUSTRATIONS OF
THIS GROUP FOR AUXILIARY VIEWS

GRAPHIC #1

g01419503

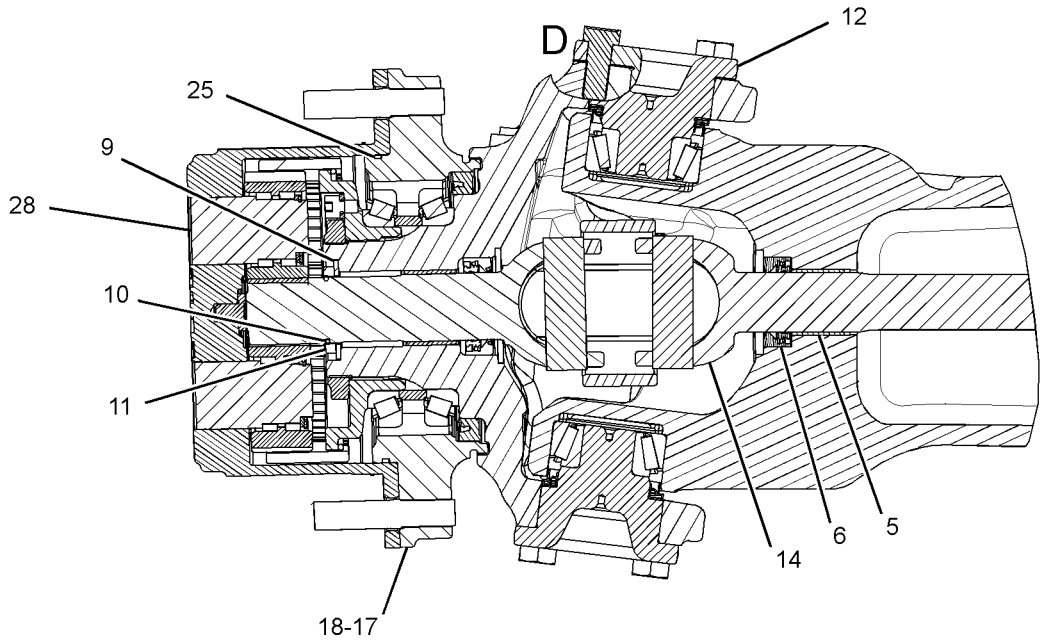

SECTION C-C

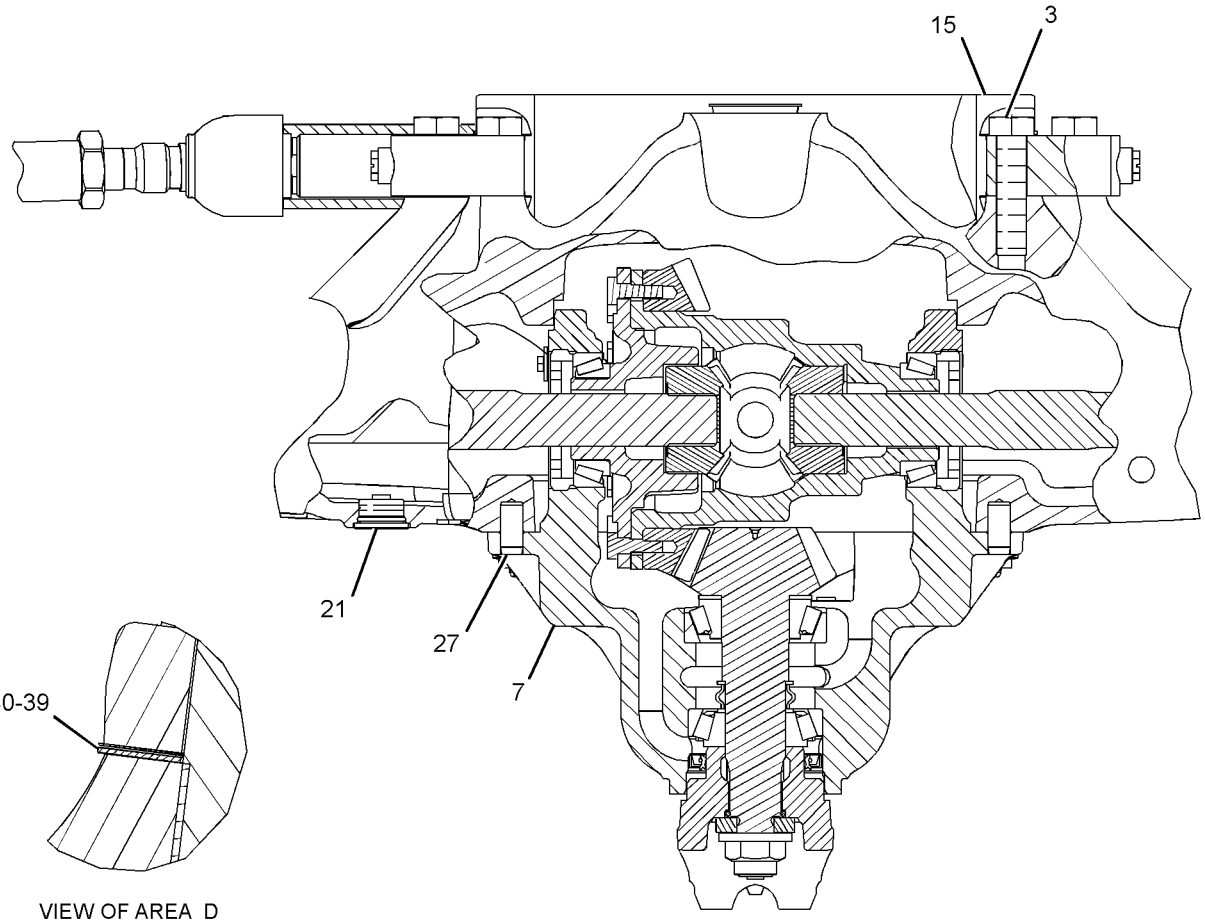

SECTION B-B

VIEW OF AREA D

GRAPHIC #2 **<END>** g01419504

269-9260 AXLE GP-REAR

S/N: RBA1-UP

PART OF 254-0130 POWER TRAIN AR

SMCS-3278, 3282 **i04105776**

NOTE	REF NO	GRAPHIC REF	PART NUMBER	QTY	PART NAME 1 2 3 4 5 6 (PRODUCT LEVEL)	SEE PAGE
M	1	1	**095-0687**	24	BOLT-SOCKET HEAD (M14X2X45-MM)	
	3	1	**197-9155**	1	BREATHER (AXLE, REAR)	
	4	1	**199-0670**	2	SCREW-PURGE	
	5	1	**209-9875**	2	DOWEL	
	6	1	**286-0870**	1	HOUSING-AXLE	
	7	1	**212-5713**	1	PLUG	
		1	**033-6041**	1	SEAL-O-RING	
Y	8	1	**288-7200**	1	DIFFERENTIAL & BEVEL GEAR GP	153
	9	1	**288-7232**	6	PIN-SPECIAL	
Y	10	1	**288-7300**	2	WHEEL GP-FINAL DRIVE & BRAKE	190
	11	1	**288-7301**	2	PLATE-BRAKE	
	12	1	**288-7302**	2	PLATE-BRAKE	
	13	1	**288-7303**	4	DISC AS-BRAKE	
	14	1	**288-7305**	2	SHAFT-AXLE	
	15	1	**152-6144**	3	PLUG AS-DRAIN (MAGNETIC) (AXLE, REAR)	
					(EACH INCLUDES)	
		1	**6V-6228**	1	SEAL-O-RING	
	16	1	**152-6145**	2	PLUG-MAGNETIC (AXLE, REAR)	
	17	1	**208-0321**	14	BOLT-FLANGE HEAD (M12X1.75X33-MM)	

M-METRIC PART
Y-SEPARATE ILLUSTRATION

269-9260 AXLE GP-REAR *(contd.)* **i04105776**

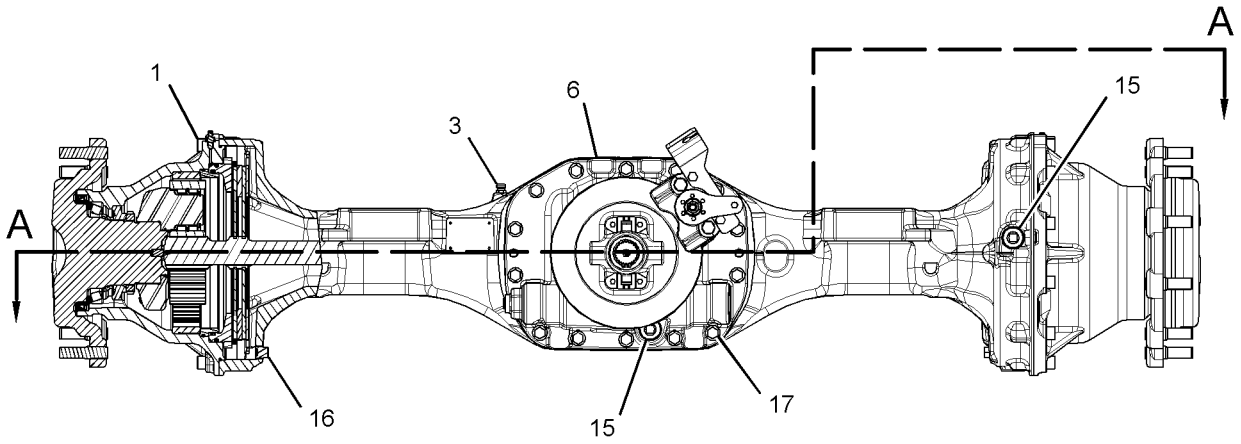

FRONT VIEW

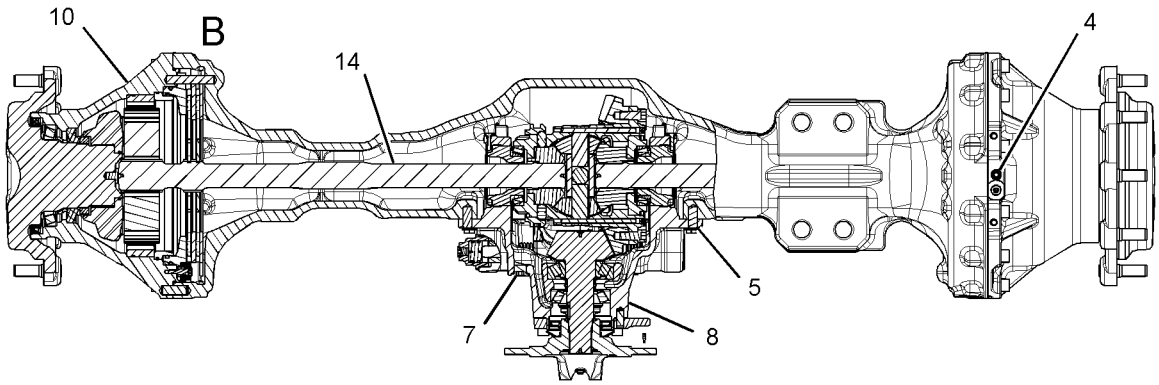

SECTION A-A

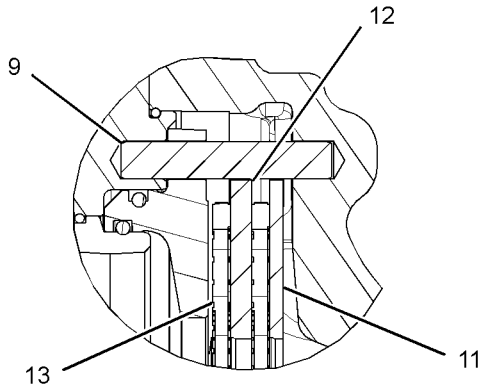

VIEW OF AREA B

GRAPHIC #1 **<END>** g01419311

291-3820 COOLER GP-TRANSMISSION OIL

S/N: RBA1-UP

PART OF 266-0149 COOLER & MTG GP-ENG & HYDR

SMCS-1375 **i04110271**

NOTE	REF NO	GRAPHIC REF	PART NUMBER	QTY	PART NAME 1 2 3 4 5 6 (PRODUCT LEVEL)	SEE PAGE
R	1	1	**4W-7188**	1	CORE AS-OIL COOLER (TRANSMISSION)	
	3	1	**273-3139**	1	PLATE AS	
	4	1	**297-1641**	1	BONNET	
	5	1	**129-2861**	2	GASKET	
M	6	1	**143-9392**	2	STUD (M8X1.25-THD)	
M	7	1	**5C-7261**	4	NUT (M8X1.25-THD)	
	8	1	**5P-4116**	4	WASHER-HARD (8.8X20.5X2-MM THK)	
	9	1	**6V-9027**	1	SEAL-O-RING	
M	10	1	**8T-4197**	2	BOLT (M8X1.25X40-MM)	
M	11	1	**8T-6869**	2	BOLT (M8X1.25X60-MM)	
	12	1	**9S-4182**	1	PLUG-O-RING	
M	13	1	**9X-6277**	2	BOLT (M8X1.25X60-MM)	

M-METRIC PART
R-REMFG PART MAY BE AVAILABLE

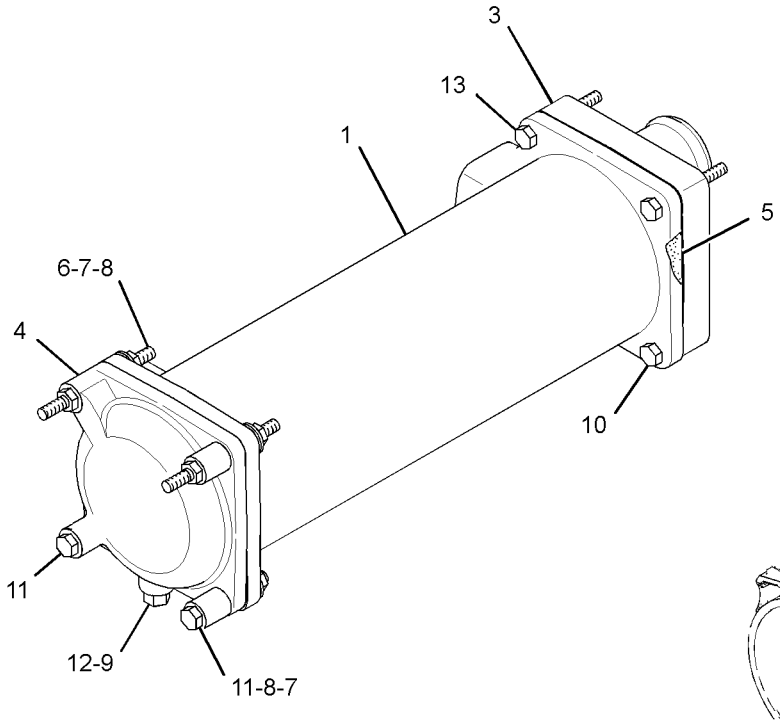

VIEW OF AREA A

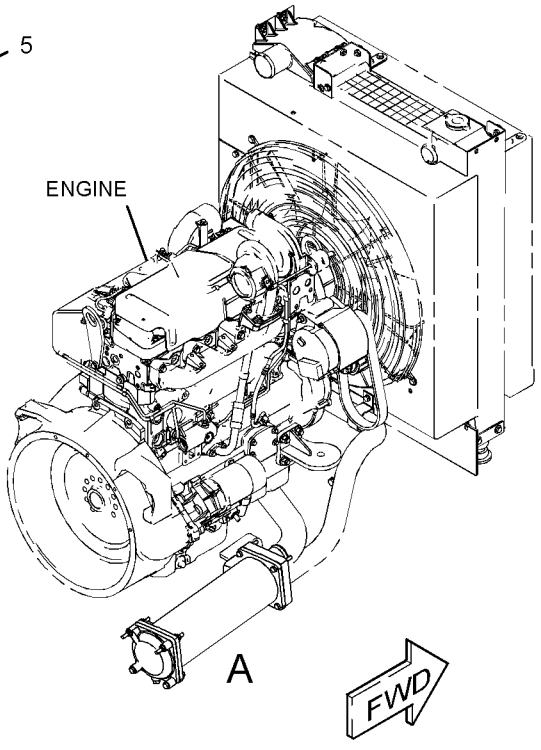

GRAPHIC #1 **<END>** g01412843

209-9882 DIFFERENTIAL & BEVEL GEAR GP–FRONT

S/N: RBA1-UP

PART OF 269-9259 AXLE GP-DRIVE & STEERING

SMCS-3256, 3258, 3281, 3283, 3284 **i03973173**

NOTE	REF NO	GRAPHIC REF	PART NUMBER	QTY	PART NAME 1 2 3 4 5 6 (PRODUCT LEVEL)	SEE PAGE
	1	1	**4J-0520**	1	SEAL-O-RING	
	2	1	**216-4457**	1	SEAL	
	3	1	**216-4458**	2	BEARING	
	4	1	**136-7808**	1	BEARING AS-TAPERED ROLLER	
	5	1	**216-4461**	1	BEARING	
	6	1	**209-7454**	2	NUT (M94X2-THD)	
	7	1	**152-6144**	1	PLUG AS-DRAIN (MAGNETIC) (AXLE, FRONT)	
		1	**6V-6228**	1	SEAL-O-RING	
	8	1	**209-7462**	2	WASHER (40X50X2-MM THK)	
	9	1	**209-7463**	1	SLEEVE	
M	10	1	**199-0695**	2	BOLT (M6X1X14-MM)	
M	11	1	**209-7472**	1	NUT (M24X1.5-THD)	
B	12	1	**209-7473**	1	SHIM (2.5-MM THK)	
B		1	**219-8751**	1	SHIM (2.6-MM THK)	
B		1	**219-8752**	1	SHIM (2.7-MM THK)	
B		1	**219-8753**	1	SHIM (2.8-MM THK)	
B		1	**219-8754**	1	SHIM (2.9-MM THK)	
B		1	**219-8755**	1	SHIM (3-MM THK)	
B		1	**219-8756**	1	SHIM (3.1-MM THK)	
B		1	**219-8757**	1	SHIM (3.2-MM THK)	
B		1	**219-8758**	1	SHIM (3.3-MM THK)	
B		1	**219-8759**	1	SHIM (3.4-MM THK)	
	13	1	**216-4465**	1	WASHER (24.5X52X10-MM THK)	
	14	1	**216-4464**	1	YOKE	
	15	1	**199-0858**	2	RETAINER	
	16	1	**216-4466**	1	KIT-BEVEL GEAR & PINION	
					(INCLUDES SPACER, NUT, WASHERS, O-RING SEAL & BEVEL GEAR AS)	
Y	17	1	**216-9498**	1	DIFFERENTIAL GP (AXLE, FRONT)	156
	18	1	**208-0322**	4	BOLT-FLANGE HEAD (M14X2X75-MM)	

B-USE AS REQUIRED
M-METRIC PART
Y-SEPARATE ILLUSTRATION

209-9882 DIFFERENTIAL & BEVEL GEAR GP *(contd.)* i03973173

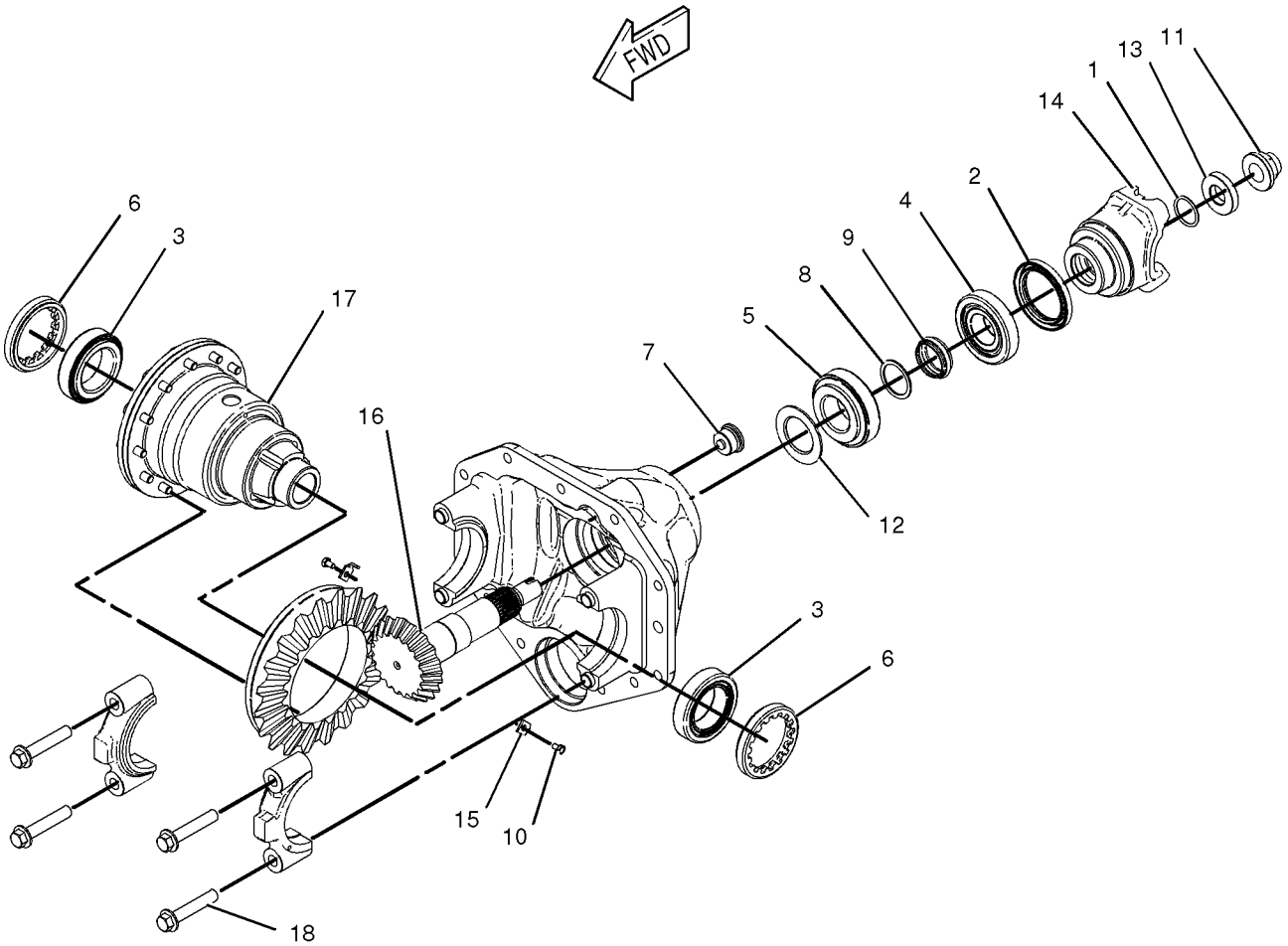

GRAPHIC #1 **<END>** g01028597

288-7200 DIFFERENTIAL & BEVEL GEAR GP

S/N: RBA1-UP

PART OF 269-9260 AXLE GP-REAR

SMCS-3256, 3258, 3281, 3283, 3284 **i04105777**

NOTE	REF NO	GRAPHIC REF	PART NUMBER	QTY	PART NAME 1 2 3 4 5 6 (PRODUCT LEVEL)	SEE PAGE
	1	1	**6V-5201**	1	RING-RETAINING	
M	2	1	**6V-8200**	8	BOLT-SOCKET HEAD (M12X1.75X35-MM)	
M	3	1	**6V-8490**	2	BOLT (M6X1X25-MM)	
M	4	1	**095-0685**	12	BOLT-SOCKET HEAD (M14X2X30-MM)	
	5	1	**199-0676**	2	SPRING	
	6	1	**199-0678**	2	WASHER (45.5X55X2-MM THK)	
	7	1	**199-0680**	1	SPACER (47X50X19.2-MM THK)	
	8	1	**199-0697**	1	SEAL	
	9	1	**199-0698**	1	SLINGER	
	10	1	**199-0706**	1	PISTON	
	11	1	**209-7457**	1	NUT	
	12	1	**211-1478**	1	PIN	
	13	1	**229-5055**	1	WASHER	
	14	1	**259-0127**	1	BRAKE GP-MECH CALIPER PARKING	
		1	**166-9413**	1	KIT-CAM (COUNTERCLOCKWISE)	
					(INCLUDES CAMS, BEARINGS, & RETAINER)	
		1	**259-0128**	1	KIT-BRAKE LINING	
					(INCLUDES LININGS, SPRING, INSRUCTION SHEET, GREASE, & CORRUGATED PAPER)	
		1	**259-0129**	1	KIT-BRAKE CALIPER	
					(INCLUDES SLEEVES, WASHERS, LININGS, O-RINGS, NUT, BOLT, BEARING, BOOT, SEAL, SPRING, GREASE, SPACER, & CARRIER)	
	15	1	**288-7201**	1	HOUSING-DIFFERENTIAL	
	16	1	**288-7202**	1	GEAR GP-BEVEL & PINION	
	17	1	**288-7205**	1	COVER	
Y	18	1	*288-7206*	1	DIFFERENTIAL GP (REAR)	157
	19	1	**288-7210**	2	NUT	
	20	1	**288-7211**	1	SHAFT	
	21	1	**174-4647**	1	BUSHING	
	22	1	**288-7213**	1	FORK	
	23	1	**288-7214**	1	COLLAR	
	24	1	**288-7215**	1	BUSHING	
	25	1	**288-7216**	1	COVER (DIFFERENTIAL LOCK)	
	26	1	**288-7217**	1	BRACKET	
	27	1	**288-7218**	1	DISC-BRAKE	
	28	1	**288-7233**	1	WASHER-SPECIAL	
	29	1	**302-5840**	1	BEARING AS	
	30	1	**095-1041**	1	BEARING AS	
	31	1	**199-0652**	2	CLIP-PIN	
	32	1	**3D-2898**	2	SEAL-O-RING	
	33	1	**4F-9029**	2	SEAL	
	34	1	**5P-8215**	1	SEAL-O-RING	
B	35	1	**199-0684**	1	SHIM (2.5-MM THK)	
	36	1	**326-4007**	1	KIT-BEVEL GEAR	
					(KIT INCLUDES NUT-BEARING,WASHERS,SPACER & GEAR AS-BEVEL)	
F			**199-0685**	1	SHIM (2.6-MM THK)	
F			**199-0686**	1	SHIM (2.7-MM THK)	
F			**199-0687**	1	SHIM (2.8-MM THK)	
F			**199-0688**	1	SHIM (2.9-MM THK)	
F			**199-0690**	1	SHIM (3.1-MM THK)	
F			**199-0691**	1	SHIM (3.2-MM THK)	
F			**199-0692**	1	SHIM (3.3-MM THK)	
F			**199-0693**	1	SHIM (3.4-MM THK)	

B-USE AS REQUIRED
F-NOT SHOWN
M-METRIC PART
Y-SEPARATE ILLUSTRATION

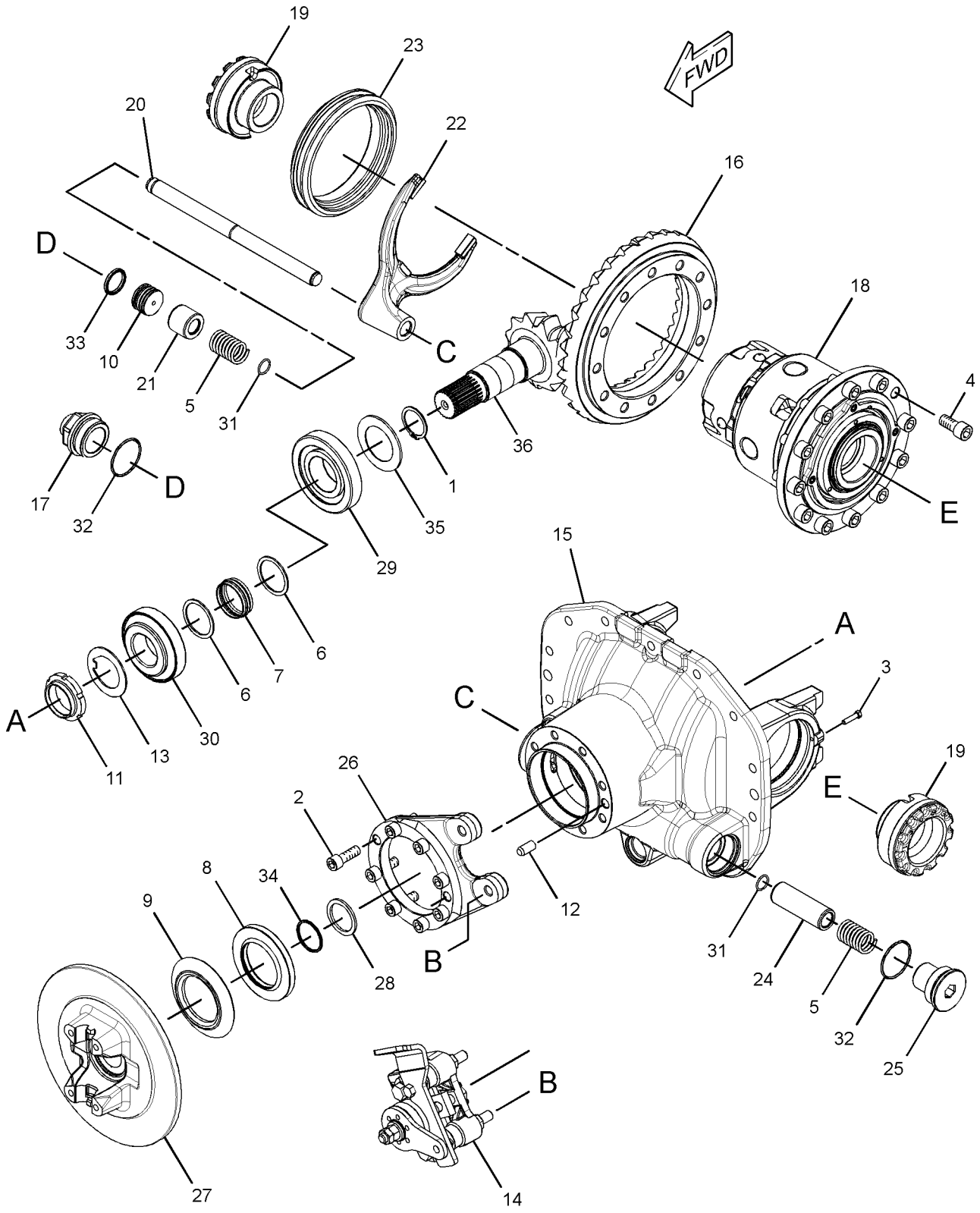

GRAPHIC #1 **<END>** g01777554

216-9498 DIFFERENTIAL GP–AXLE, FRONT

S/N: RBA1-UP

PART OF 209-9882 DIFFERENTIAL & BEVEL GEAR GP

SMCS-3258 **i03726325**

NOTE	REF NO	GRAPHIC REF	PART NUMBER	QTY	PART NAME 1 2 3 4 5 6 (PRODUCT LEVEL)	SEE PAGE
	1	1	**216-8687**	1	COVER (DIFFERENTIAL CASE)	
	2	1	**216-8689**	1	HOUSING-DIFFERENTIAL	
	3	1	**229-5093**	2	WASHER-THRUST (49X72X1.5-MM THK)	
M	4	1	**144-6734**	12	BOLT (M10X1.5X30-MM)	
					AVAILABLE REPAIR KIT(S):	
			216-8700		KIT-DIFFERENTIAL (KIT)	
					(INCLUDES PINS,WASHERS,DISC & GEARS)	

M-METRIC PART

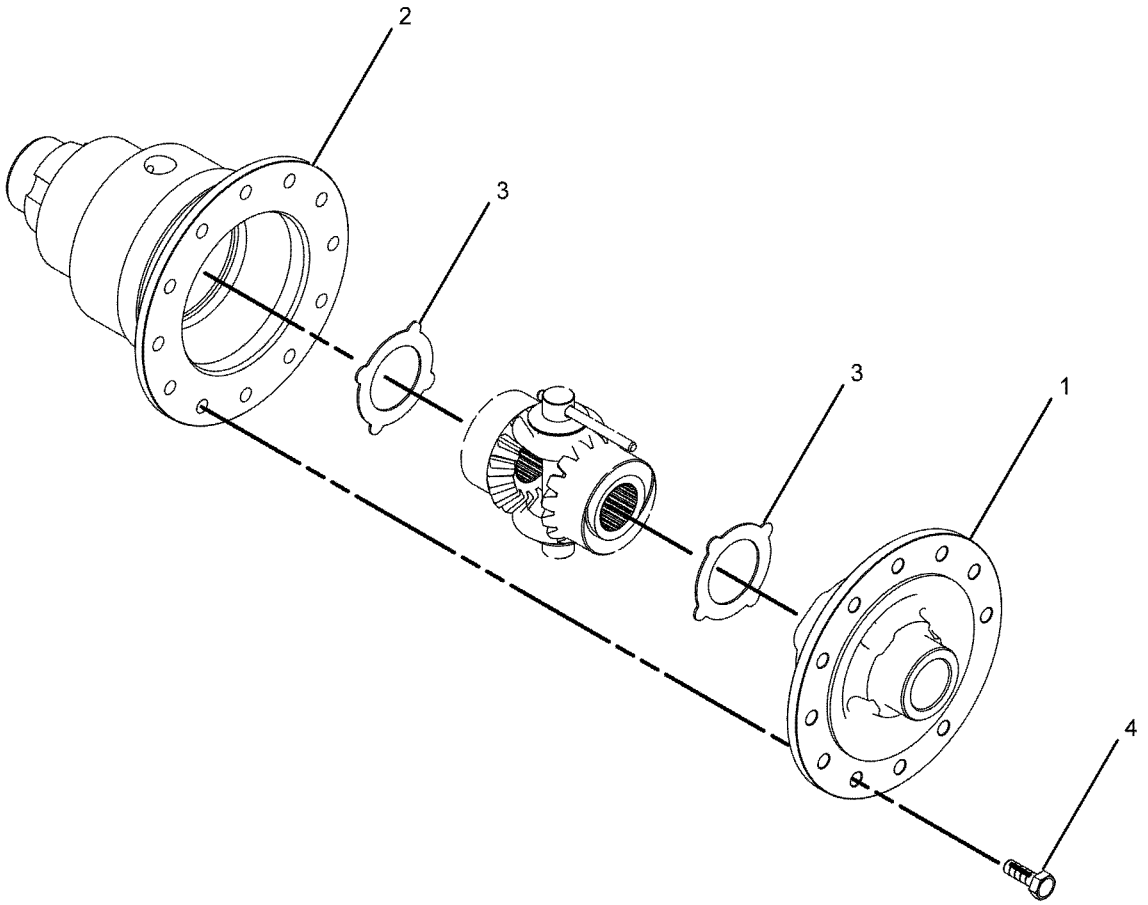

GRAPHIC #1 **<END>** g01008123

288-7206 DIFFERENTIAL GP–REAR

S/N: RBA1-UP

PART OF 288-7200 DIFFERENTIAL & BEVEL GEAR GP

SMCS-3258 **i04105778**

NOTE	REF NO	GRAPHIC REF	PART NUMBER	QTY	PART NAME 1 2 3 4 5 6 (PRODUCT LEVEL)	SEE PAGE
	1	1	**199-0656**	2	BEARING	
	2	1	**199-0808**	3	PIN	
	3	1	**231-0670**	1	SHAFT (DIFFERENTIAL)	
	4	1	**231-0671**	4	WASHER-THRUST	
	5	1	**231-0696**	2	SHAFT	
	6	1	**231-0697**	1	RETAINER	
	7	1	**286-0871**	1	HOUSING-DIFFERENTIAL	
	8	1	**288-7197**	1	WASHER-THRUST	
	9	1	**288-7198**	1	WASHER-THRUST	
	10	1	**288-7199**	4	PIN	
	11	1	**288-7207**	1	GEAR AS-DIFFERENTIAL	
	12	1	**288-7208**	1	CAGE-BEARING	
	13	1	**288-7209**	1	DOWEL	
	14	1	**299-8917**	1	RING-RETAINING	
	15	1	**199-0659**	4	SEAL-PIN	
	16	1	**207-4255**	3	PLUG	
Y	17	1	**305-3428**	1	KIT-DIFFERENTIAL	163

Y-SEPARATE ILLUSTRATION

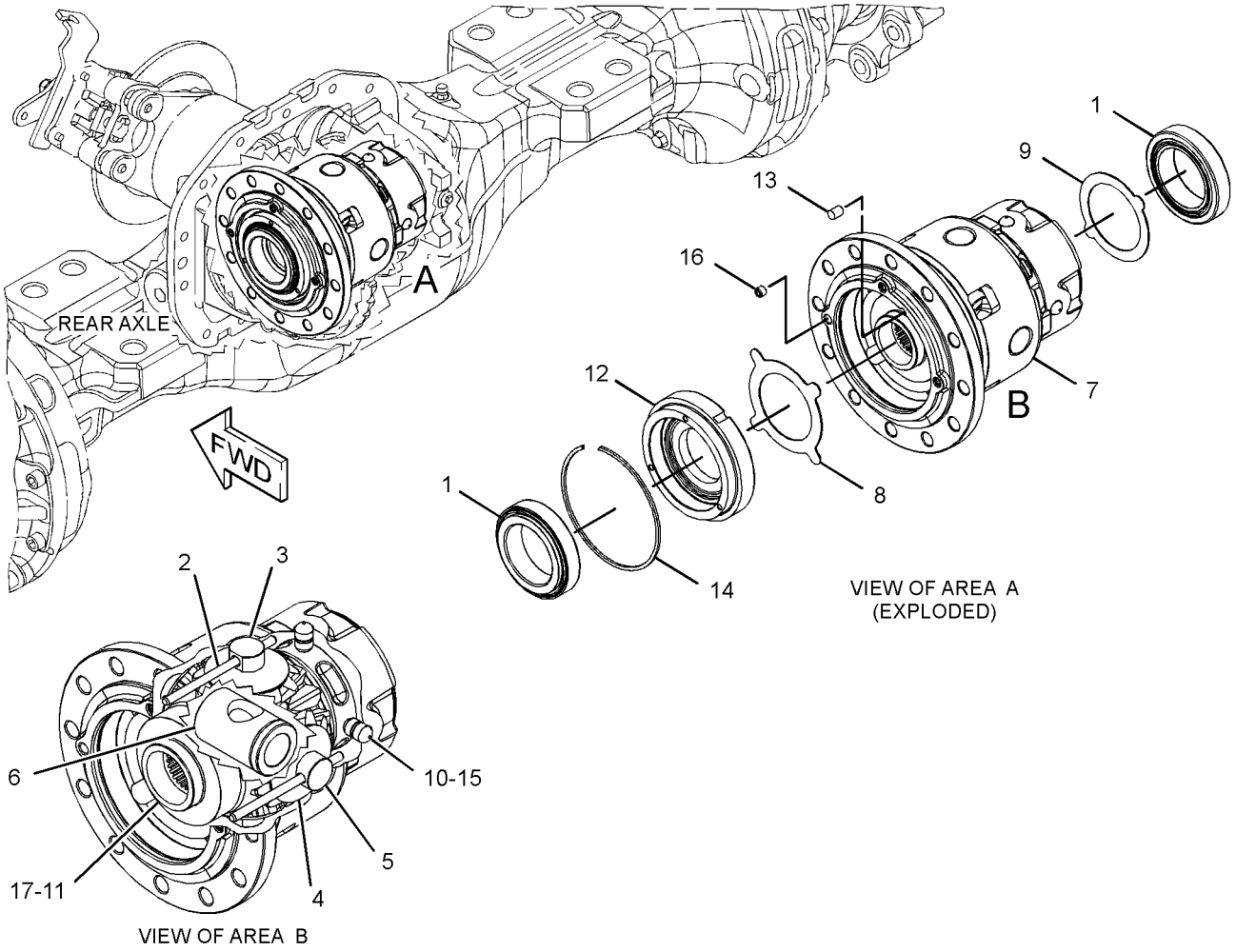

GRAPHIC #1 **<END>** g01927592

111-7907 DRIVE GP-FLEXIBLE COUPLING

S/N: RBA1-UP

PART OF 269-9263 TRANSMISSION AR-POWER SHIFT

SMCS-3252 **i02594396**

NOTE	REF NO	GRAPHIC REF	PART NUMBER	QTY	PART NAME 1 2 3 4 5 6 (PRODUCT LEVEL)	SEE PAGE
M	1	1	**8T-4200**	8	BOLT (M8X1.25X16-MM)	
M	2	1	**6V-8455**	6	BOLT (M10X1.5X16-MM)	
	3	1	**117-9713**	1	PLATE-CONVERTER REINFORCEMENT	
	4	1	**8T-4224**	8	WASHER-HARD (8.8X16X2-MM THK)	
	5	1	**111-7906**	1	PLATE-CONVERTER DRIVE	

M-METRIC PART

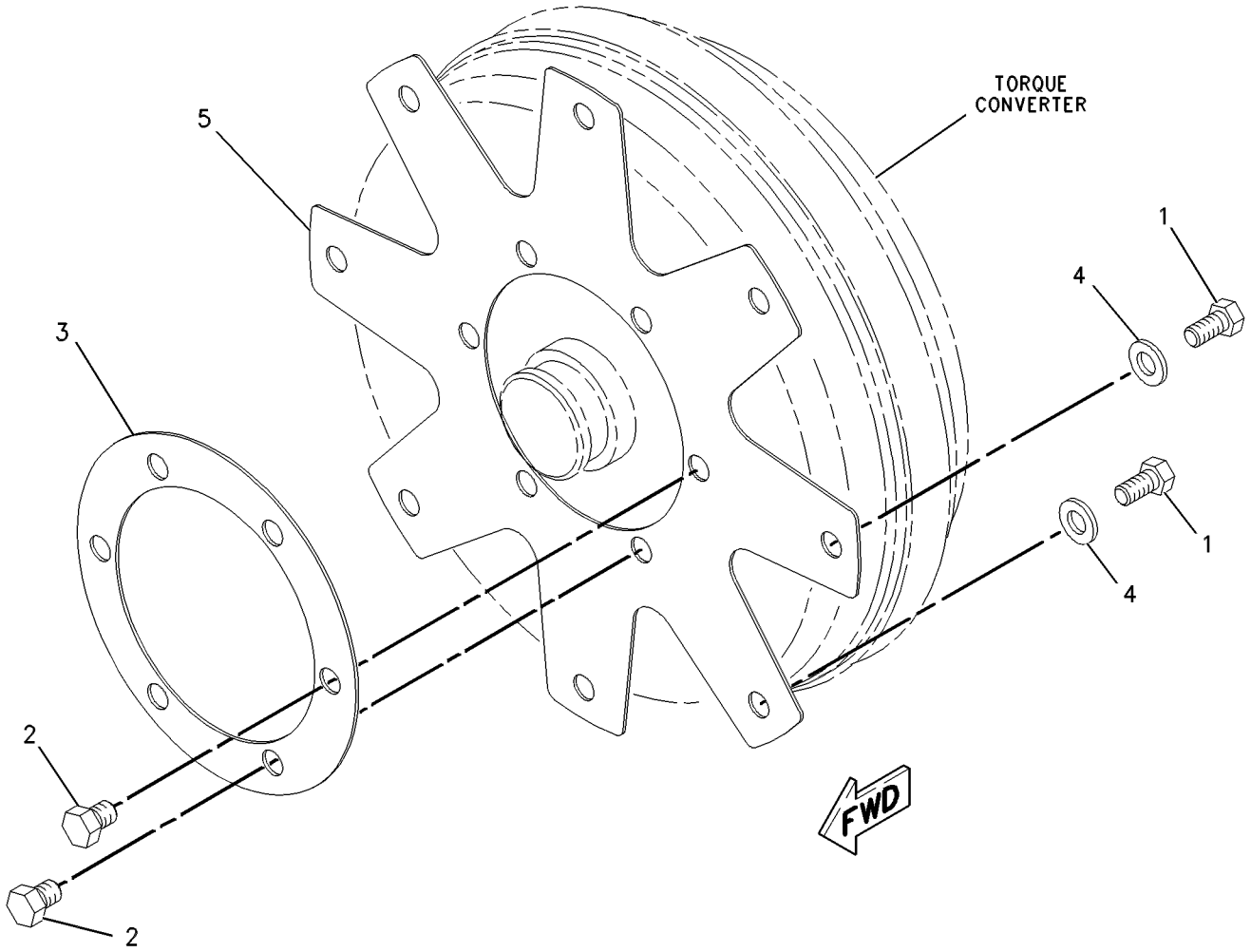

GRAPHIC #1 **<END>** g00547374

254-0129 FILLER GP-POWER TRAIN OIL–AUTOSHIFT

S/N: RBA1-UP

PART OF 254-0130 POWER TRAIN AR

SMCS-3005, 3081 **i04105369**

NOTE	REF NO	GRAPHIC REF	PART NUMBER	QTY	PART NAME 1 2 3 4 5 6 (PRODUCT LEVEL)	SEE PAGE
	1	1	**8T-4223**	3	WASHER-HARD (13.5X25.5X3-MM THK)	
M	2	1	**8T-4956**	2	BOLT (M12X1.75X35-MM)	
	3	1	**9R-4750**	1	BOSS (19.76X20X28-MM THK)	
	4	1	**136-1122**	1	BUSHING	
	5	1	*148-8368*	2	ELBOW AS	
					(EACH INCLUDES)	
		1	**6V-8627**	1	ELBOW	
		1	**3J-1907**	1	SEAL-O-RING	
		1	**4J-5477**	1	SEAL-O-RING	
	6	1	**271-3116**	1	TUBE AS	
	7	1	**272-0717**	1	GAUGE AS-OIL LEVEL (DIPSTICK) (POWER TRAIN)	
M	8	1	**8T-6466**	1	BOLT (M10X1.5X60-MM)	
	9	1	**4J-0522**	1	SEAL-O-RING	
	10	1	**8S-0023**	3	CLIP (SLOT)	
	11	1	**8S-0024**	3	CLIP (TAB)	
	12	1	**8T-4121**	3	WASHER-HARD (11X21X2.5-MM THK)	
M	13	1	**8T-4133**	1	NUT (M10X1.5-THD)	
M	14	1	**8T-4137**	1	BOLT (M10X1.5X20-MM)	
M	15	1	**8T-4139**	1	BOLT (M12X1.75X30-MM)	

M-METRIC PART

254-0129 **FILLER GP-POWER TRAIN OIL** *(contd.)* **i04105369**

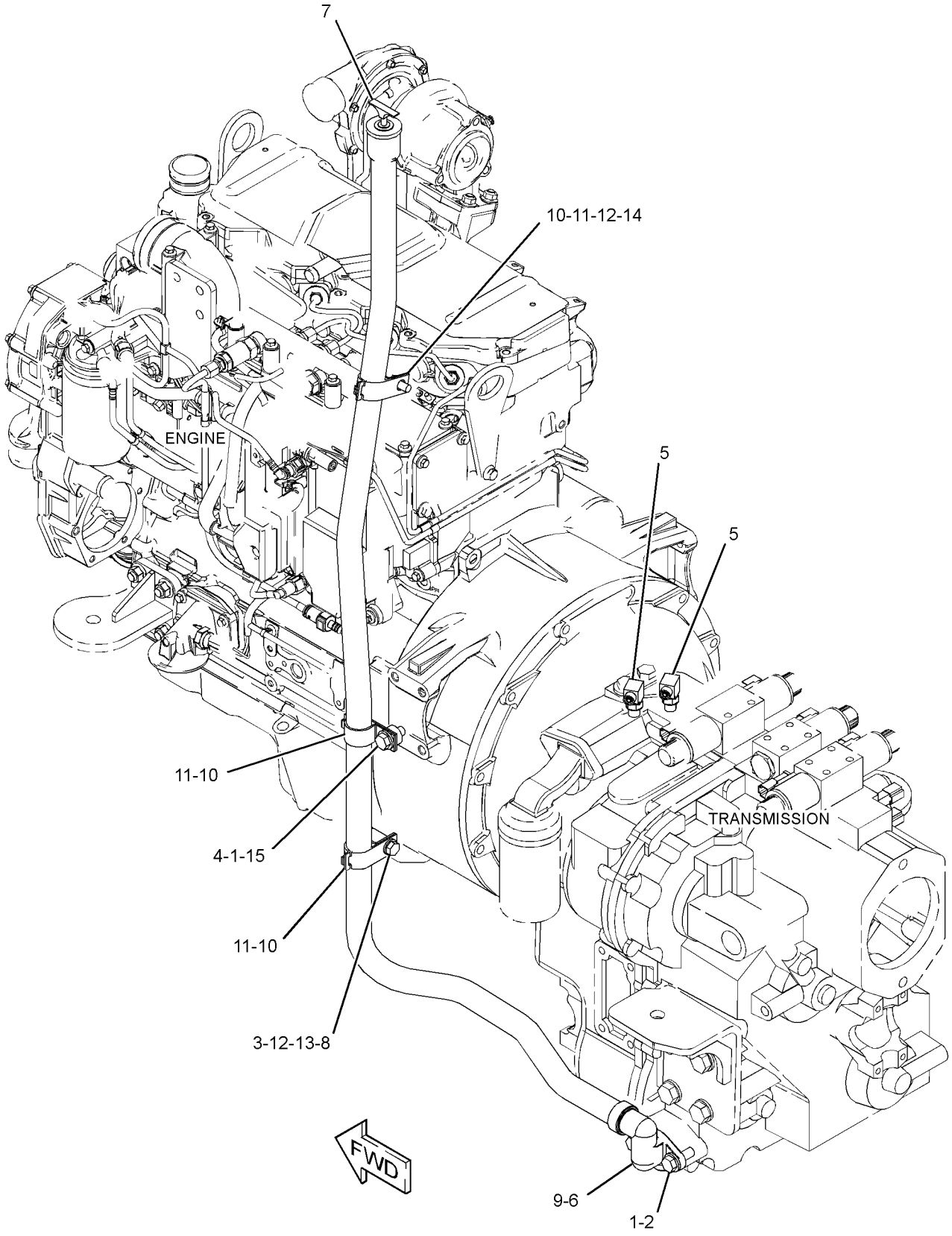

GRAPHIC #1 **<END>** g02324853

288-7240 HOUSING & FLANGE GP-AXLE—RH

S/N: RBA1-UP

PART OF 269-9259 AXLE GP-DRIVE & STEERING

SMCS-4057, 4234 **i04105749**

NOTE	REF NO	GRAPHIC REF	PART NUMBER	QTY	PART NAME 1 2 3 4 5 6 (PRODUCT LEVEL)	SEE PAGE
	1	1	**209-7460**	1	BUSHING	
	2	1	**209-7465**	1	SEAL	
	3	1	**217-2879**	1	GEAR GP-RING	
		1	**231-0745**	1	HUB-RING GEAR	
		1	**209-7459**	1	RETAINER	
		1	**209-7461**	1	GEAR-RING	
	4	1	**226-4365**	1	WASHER-TAB	
	5	1	**226-4366**	1	NUT-SPANNER	
	6	1	**226-4370**	3	BOLT-SELF-LOCKING	
	7	1	**229-5085**	1	SPACER (110X123X18.36-MM THK)	
J	8	1	*231-0703*	1	FLANGE AS	
		1	**210-5932**	2	BEARING-WHEEL	
		1	**226-4346**	8	STUD	
		1	**229-5092**	1	SEAL	
	9	1	**288-7241**	1	HOUSING AS-AXLE (RH)	
					AVAILABLE REPAIR KIT(S):	
J			**238-5256**	1	KIT-FLANGE	
					(INCLUDES WHEEL STUD & FLANGE)	

J-KIT MARKED J SERVICES PART MARKED J

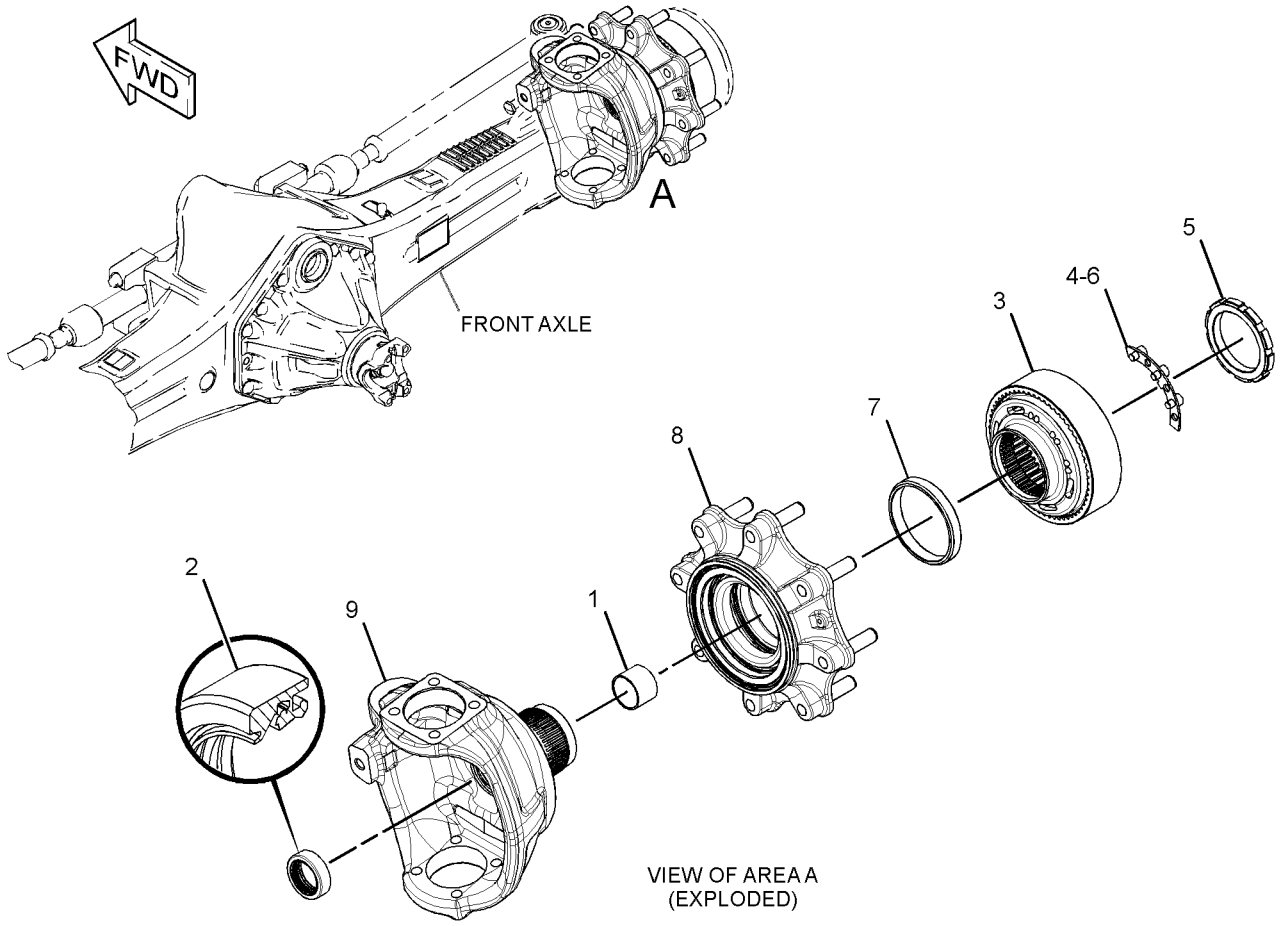

GRAPHIC #1 **<END>** g01414448

288-7242 HOUSING & FLANGE GP-AXLE—LH

S/N: RBA1-UP

PART OF 269-9259 AXLE GP-DRIVE & STEERING

SMCS-4057, 4234 **i04105770**

NOTE	REF NO	GRAPHIC REF	PART NUMBER	QTY	PART NAME 1 2 3 4 5 6 (PRODUCT LEVEL)	SEE PAGE
	1	1	**209-7460**	1	BUSHING	
	2	1	**209-7465**	1	SEAL	
	3	1	**217-2879**	1	GEAR GP-RING	
		1	**231-0745**	1	HUB-RING GEAR	
		1	**209-7459**	1	RETAINER	
		1	**209-7461**	1	GEAR-RING	
	4	1	**226-4365**	1	WASHER-TAB	
	5	1	**226-4366**	1	NUT-SPANNER	
	6	1	**226-4370**	3	BOLT-SELF-LOCKING	
	7	1	**229-5085**	1	SPACER (110X123X18.36-MM THK)	
J	8	1	*231-0703*	1	FLANGE AS	
		1	**210-5932**	2	BEARING-WHEEL	
		1	**226-4346**	8	STUD	
		1	**229-5092**	1	SEAL	
	9	1	**288-7243**	1	HOUSING AS-AXLE (LH)	
					AVAILABLE REPAIR KIT(S):	
J			**238-5256**	1	KIT-FLANGE	
					(INCLUDES WHEEL STUD & FLANGE)	

J-KIT MARKED J SERVICES PART MARKED J

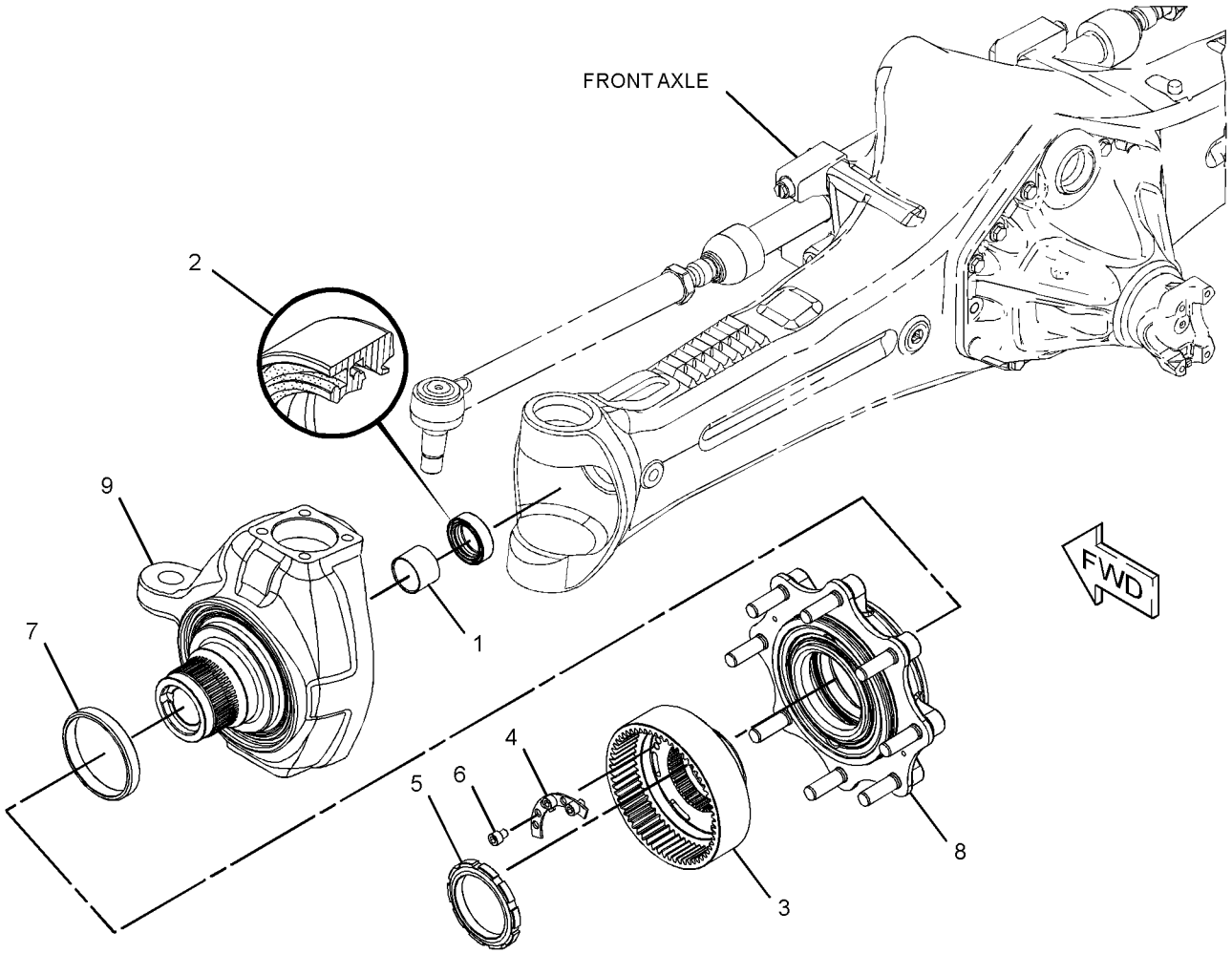

GRAPHIC #1 **<END>** g01414375

305-3428 KIT-DIFFERENTIAL–REAR AXLE

S/N: RBA1-UP

PART OF 288-7206 DIFFERENTIAL GP

SMCS-3258 **i04105779**

NOTE	REF NO	GRAPHIC REF	PART NUMBER	QTY	PART NAME 1 2 3 4 5 6 (PRODUCT LEVEL)	SEE PAGE
	1	1	**199-0808**	3	PIN	
	2	1	**231-0670**	1	SHAFT	
	3	1	**231-0671**	4	WASHER-THRUST	
	4	1	**231-0696**	2	SHAFT	
	5	1	**231-0697**	1	RETAINER	
	6	1	**288-7197**	1	WASHER-THRUST	
	7	1	**288-7198**	1	WASHER-THRUST	
	8	1	**288-7207**	1	GEAR AS-DIFFERENTIAL	
	9	1	**207-4255**	3	PLUG	

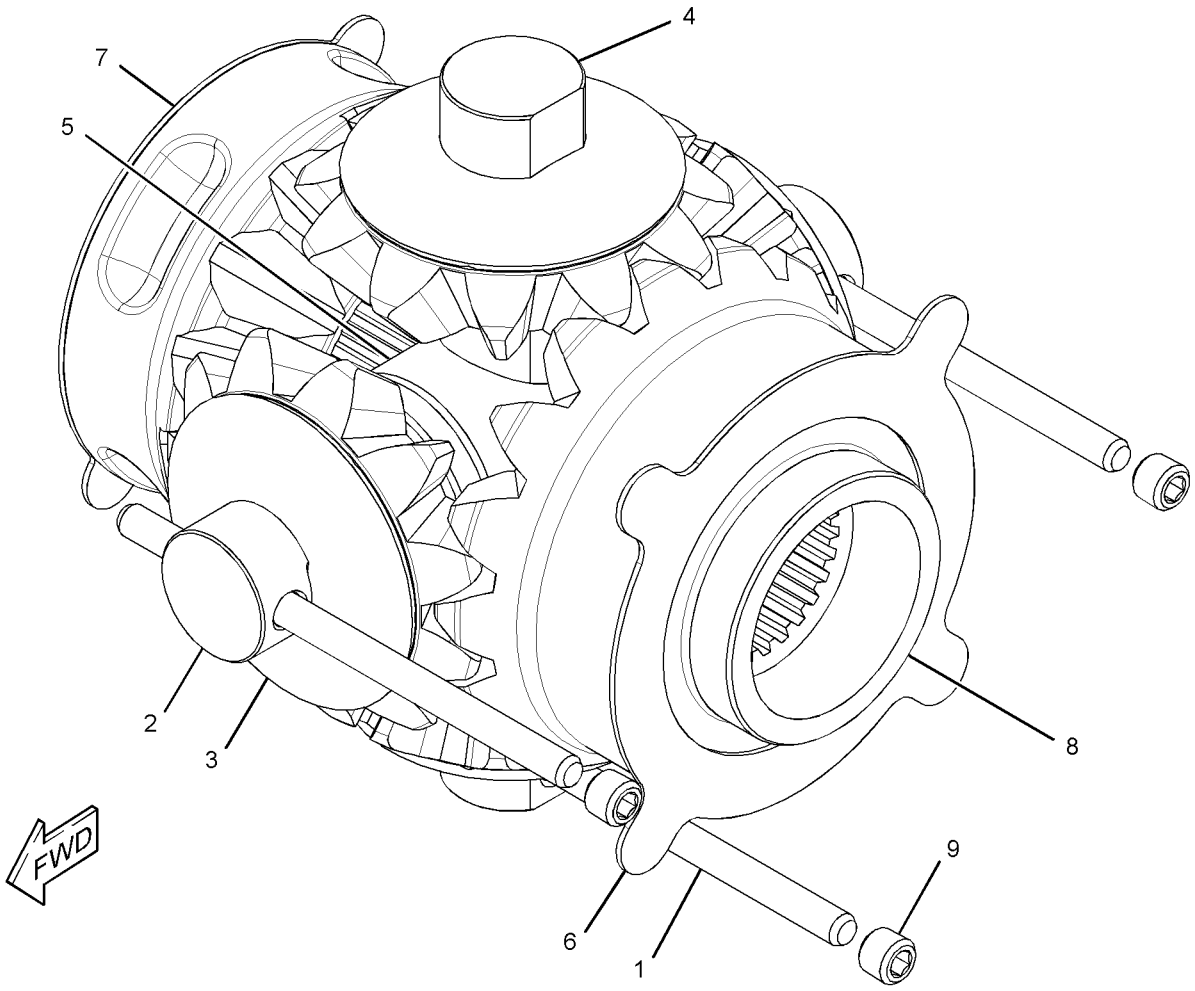

GRAPHIC #1 **<END>** g01788556

254-0127 MOUNTING GP-AXLE

S/N: RBA1-UP

PART OF 254-0130 POWER TRAIN AR

SMCS-3268 **i04105312**

NOTE	REF NO	GRAPHIC REF	PART NUMBER	QTY	PART NAME 1 2 3 4 5 6 (PRODUCT LEVEL)	SEE PAGE
B	1	1	**1K-7082**	1	WASHER (2.266X4X0.031-IN THK)	
B	2	1	**9R-9702**	2	WASHER (56X100X1.6-MM THK)	
	3	1	**271-4936**	1	PIN AS	
	4	1	**289-9808**	2	PLATE	
	5	1	**165-8996**	2	WASHER-THRUST (55.5X100.5X5-MM THK)	
	6	1	**7X-0618**	1	WASHER-HARD (13.5X40X5-MM THK)	
	7	1	**8T-4167**	8	WASHER-HARD (26X44X4-MM THK)	
M	8	1	**8T-4192**	1	BOLT (M12X1.75X25-MM)	
M	9	1	**8T-6380**	8	BOLT (M24X3X130-MM)	

B-USE AS REQUIRED
M-METRIC PART

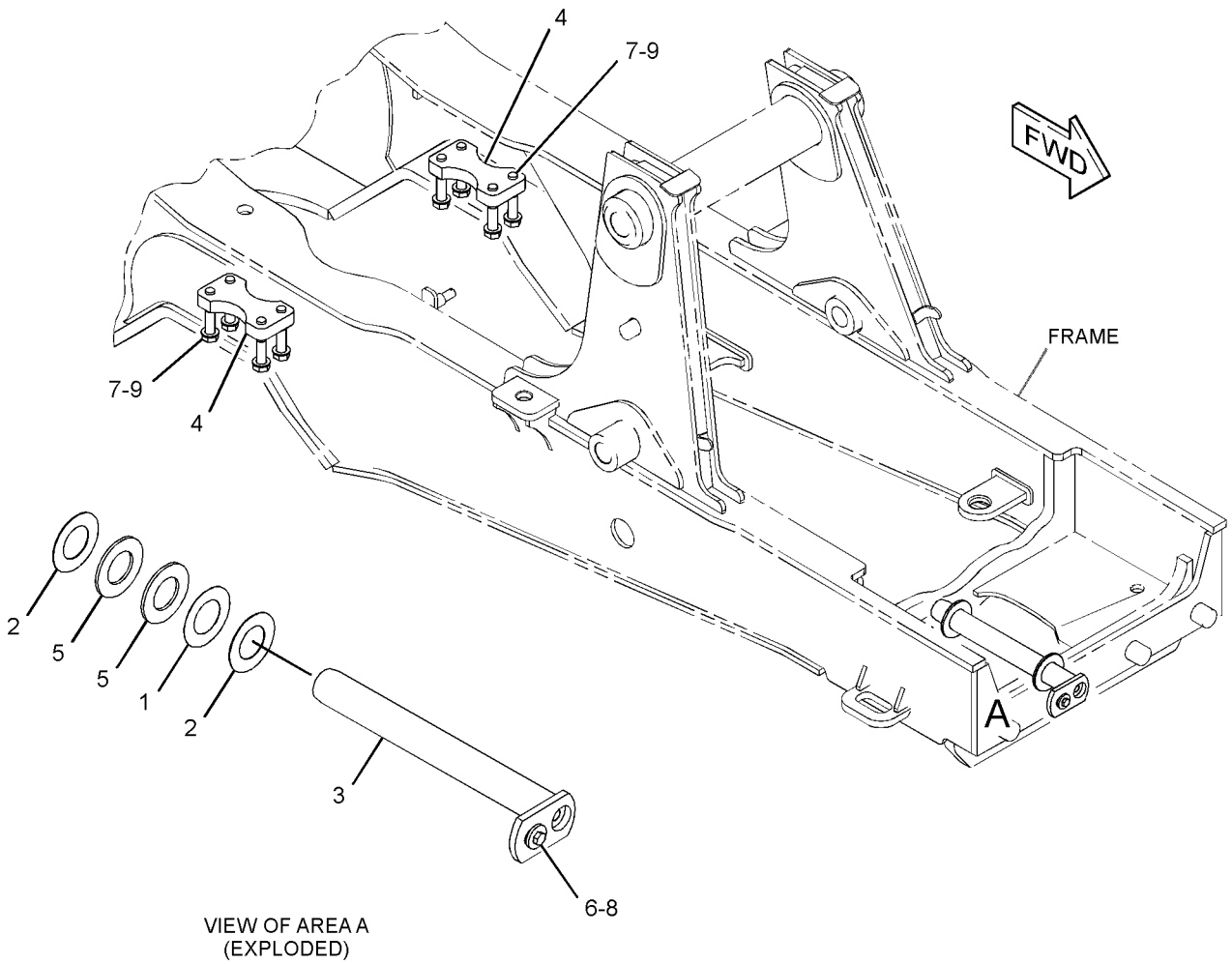

VIEW OF AREA A
(EXPLODED)

GRAPHIC #1 **<END>** g01411362

254-5703 MOUNTING GP-TRANSMISSION

S/N: RBA1-UP

PART OF 269-9263 TRANSMISSION AR-POWER SHIFT

SMCS-3082 **i02433177**

NOTE	REF NO	GRAPHIC REF	PART NUMBER	QTY	PART NAME 1 2 3 4 5 6 (PRODUCT LEVEL)	SEE PAGE
	1	1	**271-7308**	1	SUPPORT AS (LH)	
	2	1	**245-4827**	1	SUPPORT AS (RH)	
M	3	1	**7X-2553**	4	BOLT (M16X2X40-MM)	
	4	1	**8T-4223**	4	WASHER-HARD (13.5X25.5X3-MM THK)	
M	5	1	**8T-4956**	4	BOLT (M12X1.75X35-MM)	
	6	1	**9X-8257**	4	WASHER (17.5X30X3.5-MM THK)	

M-METRIC PART

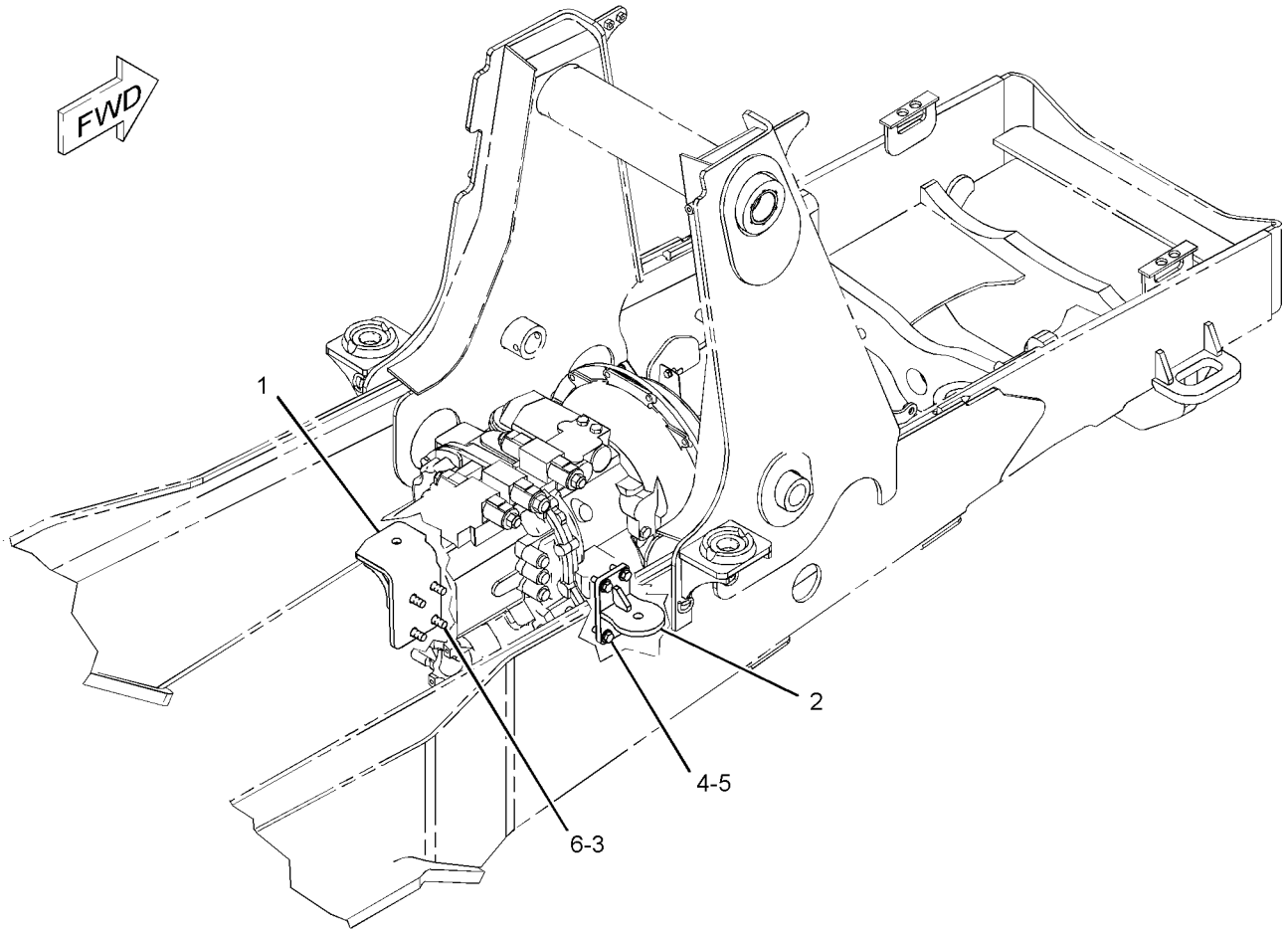

GRAPHIC #1 **<END>** g01216019

210-5924 PLANETARY GP-FINAL DRIVE–AXLE

S/N: RBA1-UP

PART OF 269-9259 AXLE GP-DRIVE & STEERING

SMCS-4050 **i03156043**

NOTE	REF NO	GRAPHIC REF	PART NUMBER	QTY	PART NAME 1 2 3 4 5 6 (PRODUCT LEVEL)	SEE PAGE
	1	1	**210-5931**	4	RETAINER	
	2	1	**209-4157**	4	GEAR (23-TEETH)	
	3	1	**095-0924**	4	RING-RETAINING	
					AVAILABLE REPAIR KIT(S):	
			209-7466	1	KIT-PLANETARY CARRIER	
					(INCLUDES THRUST PLUG, SUN GEAR SHAFT & PLANET CARRIER)	
			219-8783	23	KIT-ROLLER BEARING	
					(EACH INCLUDES 10 NEEDLES)	
					(SERVICED IN QUANITY OF 10, EACH GEAR REQUIRES 56 ROLLERS OR 6 KITS, EACH WHEEL END AS. REQUIRES 224 ROLLERS OR 23 KITS)	

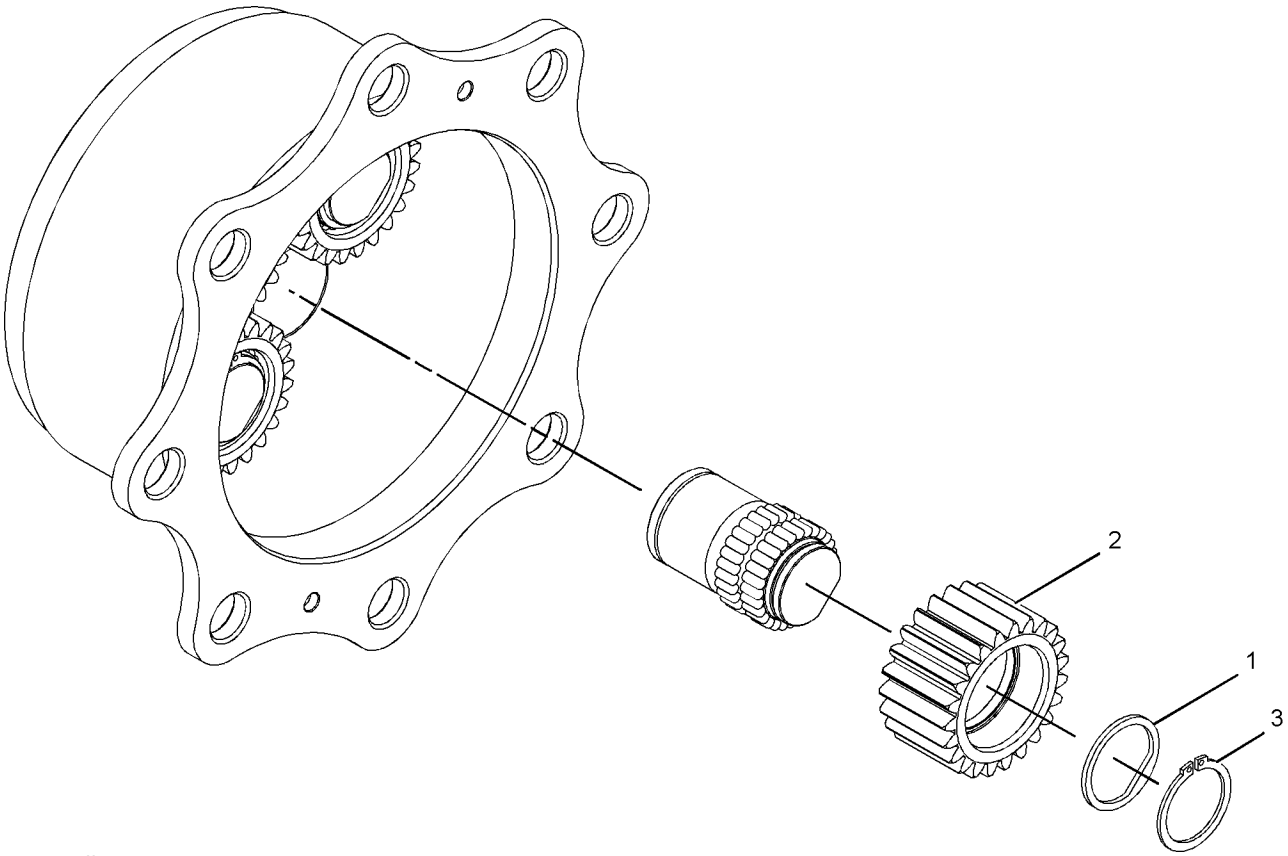

GRAPHIC #1 **<END>** g01132397

POWER TRAIN

254-0130 POWER TRAIN AR

S/N: RBA1-UP

PART OF 368-0572 COMMON AR

SMCS-3000, 4000 **i04151431**

NOTE	PART NUMBER	QTY	PART NAME 1 2 3 4 5 6 (PRODUCT LEVEL)	SEE PAGE
Y	**269-9259**	1	AXLE GP-DRIVE & STEERING (FRONT)	145
Y	**269-9260**	1	AXLE GP-REAR	148
Y	*206-1642*	1	CONTROL GP-PARKING BRAKE	192
Y	*254-0126*	1	CONTROL GP-SERVICE BRAKE	194
Y	*112-1826*	1	DRIVE & MTG GP-PUMP	249
Y	*254-0129*	1	FILLER GP-POWER TRAIN OIL	159
Y	*254-0111*	1	GUARD GP-DRIVE SHAFT	220
Y	*254-0127*	1	MOUNTING GP-AXLE	164
Y	*202-5732*	1	SHAFT GP-DRIVE (FRONT)	170
Y	*216-4475*	1	SHAFT GP-DRIVE (REAR)	171
Y	*211-4267*	1	SWITCH GP-ALL WHEEL DRIVE (INCLUDES RELAY)	109
Y	*202-6010*	1	SWITCH GP-DIFFERENTIAL LOCK (CENTER PIVOT MACHINE)	110
Y	*269-9263*	1	TRANSMISSION AR-POWER SHIFT	179
Y	*254-0121*	1	VALVE & LINES GP-DIFF LOCK	182
Y	*211-4254*	1	WIRING GP-TRANSMISSION CONTROL (AUTOSHIFT, STANDARD SHIFT)	143

Y-SEPARATE ILLUSTRATION

<END>

274-4580 SHAFT GP-COUNTER

S/N: RBA1-UP

PART OF 350-8601 TRANSMISSION GP-POWER SHIFT

SMCS-3053, 3063 **i04139511**

NOTE	REF NO	GRAPHIC REF	PART NUMBER	QTY	PART NAME 1 2 3 4 5 6 (PRODUCT LEVEL)	SEE PAGE
	1	1	**6T-9196**	1	SEAL	
	2	1	**6V-5100**	1	SEAL-O-RING	
	3	1	**6V-8757**	1	RING-RETAINING	
	4	1	**6Y-1192**	2	RING-SEAL	
	5	1	**6Y-7929**	8	DISC-FRICTION	
	6	1	**8E-5707**	1	PLATE-END	
	7	1	**122-1877**	1	WASHER-THRUST (40X65X4-MM THK)	
	8	1	**123-8907**	2	CONE-BEARING	
	9	1	**123-8908**	2	CUP-TAPERED ROLLER	
	10	1	**123-8912**	2	BEARING-ROLLER	
	11	1	**147-0203**	1	WASHER-THRUST (45.3X65X5-MM THK)	
	12	1	**147-0215**	1	GEAR (45/19-TEETH)	
	13	1	**147-0216**	1	GEAR (38-TEETH)	
	14	1	**147-0228**	1	PISTON-CLUTCH	
	15	1	**147-0238**	1	SPRING AS	
	16	1	**147-0258**	1	SPACER (46X50X16-MM THK)	
	17	1	**172-6050**	2	BEARING-SPECIAL	
	18	1	**173-0332**	1	SHAFT AS (COUNTERSHAFT)	
		1	**163-9091**	1	PLUG	
	19	1	**211-6752**	1	GEAR (46-TEETH)	
	20	1	**274-4553**	8	DISC-FRICTION	
	21	1	**274-8638**	1	RING-RETAINING	

274-4580 SHAFT GP-COUNTER *(contd.)* **i04139511**

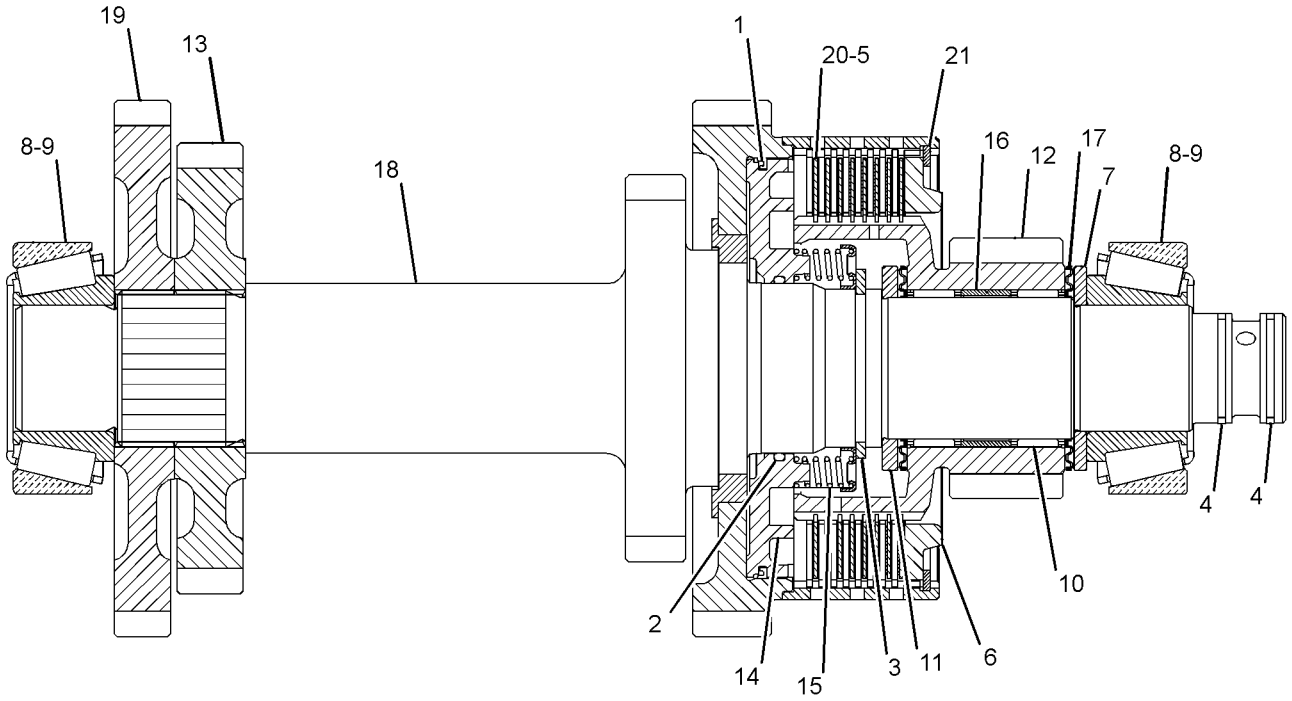

GRAPHIC #1 **<END>** g01216220

202-5732 SHAFT GP-DRIVE

S/N: RBA1-UP

PART OF 254-0130 POWER TRAIN AR

SMCS-3253 **i02000925**

NOTE	REF NO	GRAPHIC REF	PART NUMBER	QTY	PART NAME 1 2 3 4 5 6 (PRODUCT LEVEL)	SEE PAGE
	1	1	**5V-2545**	4	STRAP	
M	2	1	**107-6826**	8	BOLT (M24X19.1-MM)	
	3	1	**202-7875**	1	SHAFT AS-FRONT	
		1	**117-9887**	2	KIT-SPIDER & BEARING	

M-METRIC PART

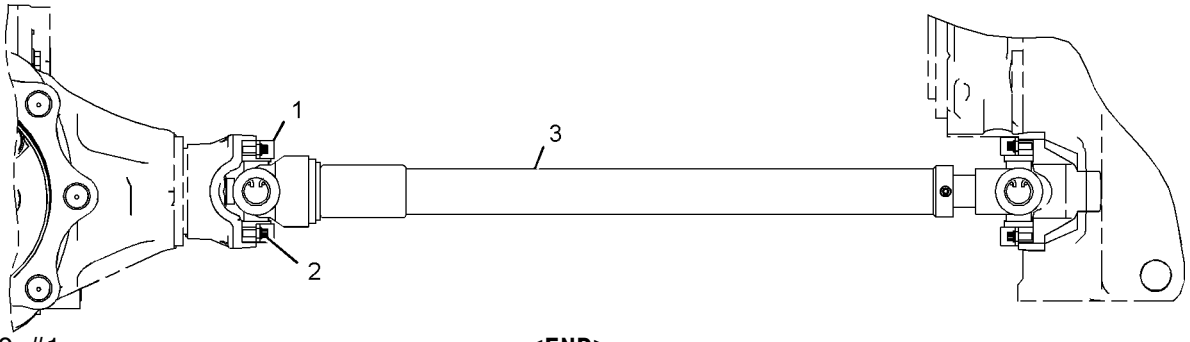

GRAPHIC #1 **<END>** g01036556

216-4475 SHAFT GP-DRIVE–REAR

S/N: RBA1-UP

PART OF 254-0130 POWER TRAIN AR

SMCS-3253 **i03498387**

NOTE	PART NUMBER	QTY	PART NAME 1 2 3 4 5 6 (PRODUCT LEVEL)	SEE PAGE
J	**304-3269**	1	SHAFT AS (REAR)	
M	**107-6826**	8	BOLT (M24X19.1-MM)	
	5V-2545	4	STRAP	
			AVAILABLE REPAIR KIT(S):	
J	**117-9887**	2	KIT-SPIDER & BEARING (DRIVE SHAFT)	
			(EACH INCLUDES SPIDER & RINGS)	

J-KITS MARKED J SERVICES PART MARKED J
M-METRIC PART

<END>

POWER TRAIN

288-7239 SHAFT GP-IDLER

S/N: RBA1-UP

PART OF 350-8601 TRANSMISSION GP-POWER SHIFT

SMCS-3063 **i04158469**

NOTE	REF NO	GRAPHIC REF	PART NUMBER	QTY	PART NAME 1 2 3 4 5 6 (PRODUCT LEVEL)	SEE PAGE
	1	1	**147-0256**	1	SHAFT AS-REVERSE	
		1	**9W-0717**	1	PLUG	
		1	**147-0270**	1	ORIFICE	
	2	1	**147-0202**	1	GEAR (45/24-TEETH)	
	3	1	**123-8905**	2	CONE-BEARING	
	4	1	**294-9810**	1	PISTON	
	5	1	**294-9812**	1	RETAINER-SPRING	
	6	1	**147-0238**	1	SPRING AS	
	7	1	**274-4553**	5	DISC-FRICTION	
	8	1	**313-5544**	5	DISC-FRICTION	
	9	1	**147-0259**	1	SPACER (51.1X54.9X18.7-MM THK)	
	10	1	**6V-8757**	1	RING-RETAINING	
	11	1	**121-2500**	1	WASHER-THRUST (50X70X4-MM THK)	
	12	1	**172-5317**	2	BEARING-SPECIAL	
	13	1	**121-0694**	1	WASHER-THRUST (40X70X4-MM THK)	
	14	1	**6Y-1192**	2	RING-SEAL	
	15	1	**8E-5707**	1	PLATE-END	
	16	1	**274-8638**	1	RING-RETAINING	
	17	1	**7T-6655**	2	BEARING	
	18	1	**123-8906**	2	CUP-TAPERED ROLLER	

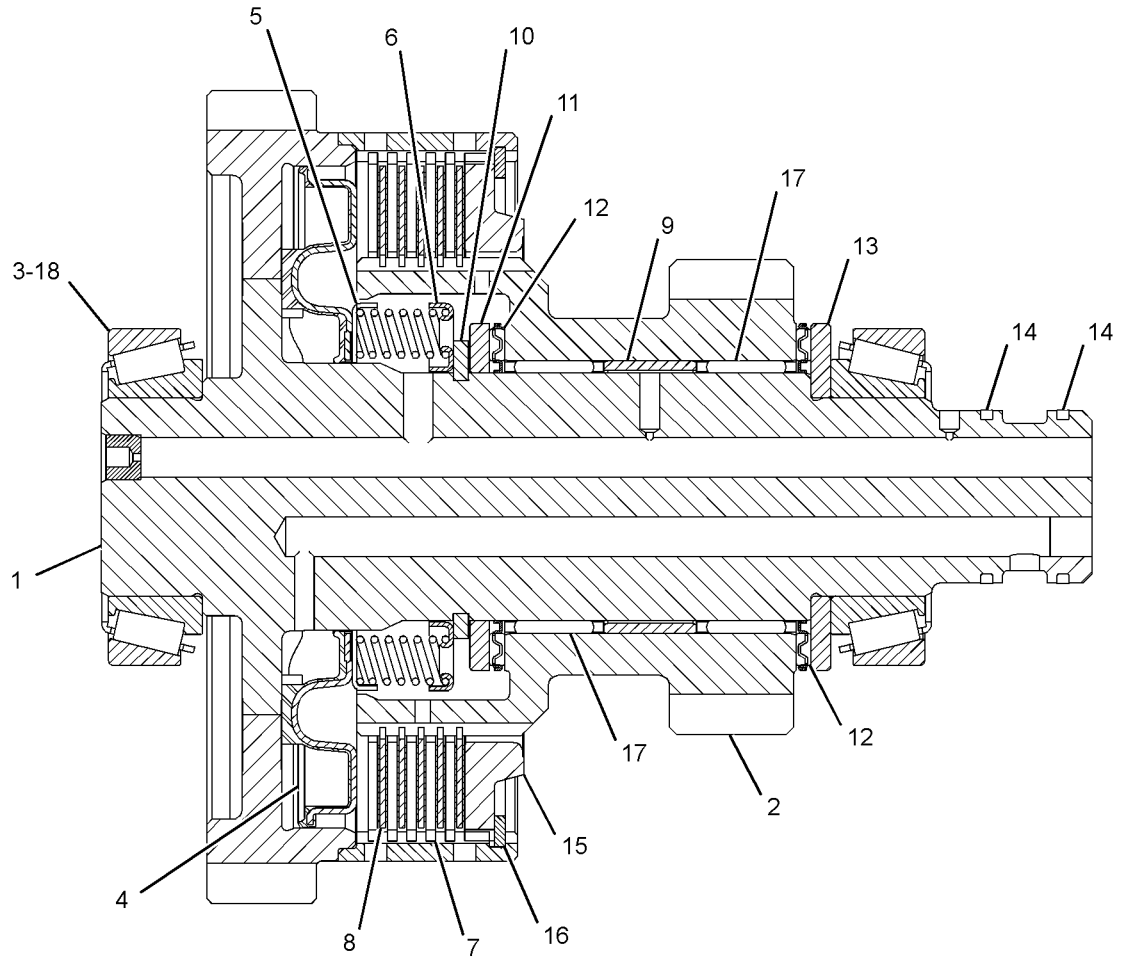

GRAPHIC #1 **<END>** g01499173

288-7249 SHAFT GP-INPUT

S/N: RBA1-UP

PART OF 350-8601 TRANSMISSION GP-POWER SHIFT

SMCS-3053, 3063 **i04158470**

NOTE	REF NO	GRAPHIC REF	PART NUMBER	QTY	PART NAME 1 2 3 4 5 6 (PRODUCT LEVEL)	SEE PAGE
	1	1	**294-9812**	2	RETAINER-SPRING	
	2	1	**6V-8757**	3	RING-RETAINING	
	3	1	**313-5544**	11	DISC-FRICTION	
	4	1	**7T-6655**	2	BEARING	
	5	1	**8E-5707**	2	PLATE-END	
	6	1	**9U-8886**	4	RING-SEAL	
	7	1	**121-0694**	1	WASHER-THRUST (40X70X4-MM THK)	
	8	1	**121-2500**	3	WASHER-THRUST (50X70X4-MM THK)	
	9	1	**122-1886**	1	RING-SEAL	
	10	1	**123-8905**	1	CONE-BEARING	
	11	1	**123-8906**	1	CUP-TAPERED ROLLER	
	12	1	**123-8909**	1	CONE-BEARING	
	13	1	**123-8910**	1	CUP-TAPERED ROLLER	
	14	1	**123-8913**	2	BEARING-ROLLER	
	15	1	**147-0202**	1	GEAR (45/24-TEETH)	
	16	1	**147-0224**	1	GEAR (45/32-TEETH)	
	17	1	**294-9810**	2	PISTON	
	18	1	**147-0238**	2	SPRING AS	
	19	1	**147-0257**	1	SHAFT AS-INPUT	
		1	**123-2920**	3	PLUG	
	20	1	**147-0259**	1	SPACER (51.1X54.9X18.7-MM THK)	
	21	1	**172-5317**	4	BEARING-SPECIAL	
	22	1	**274-4553**	11	DISC-FRICTION	
	23	1	**274-8638**	2	RING-RETAINING	

288-7249 SHAFT GP-INPUT *(contd.)* **i04158470**

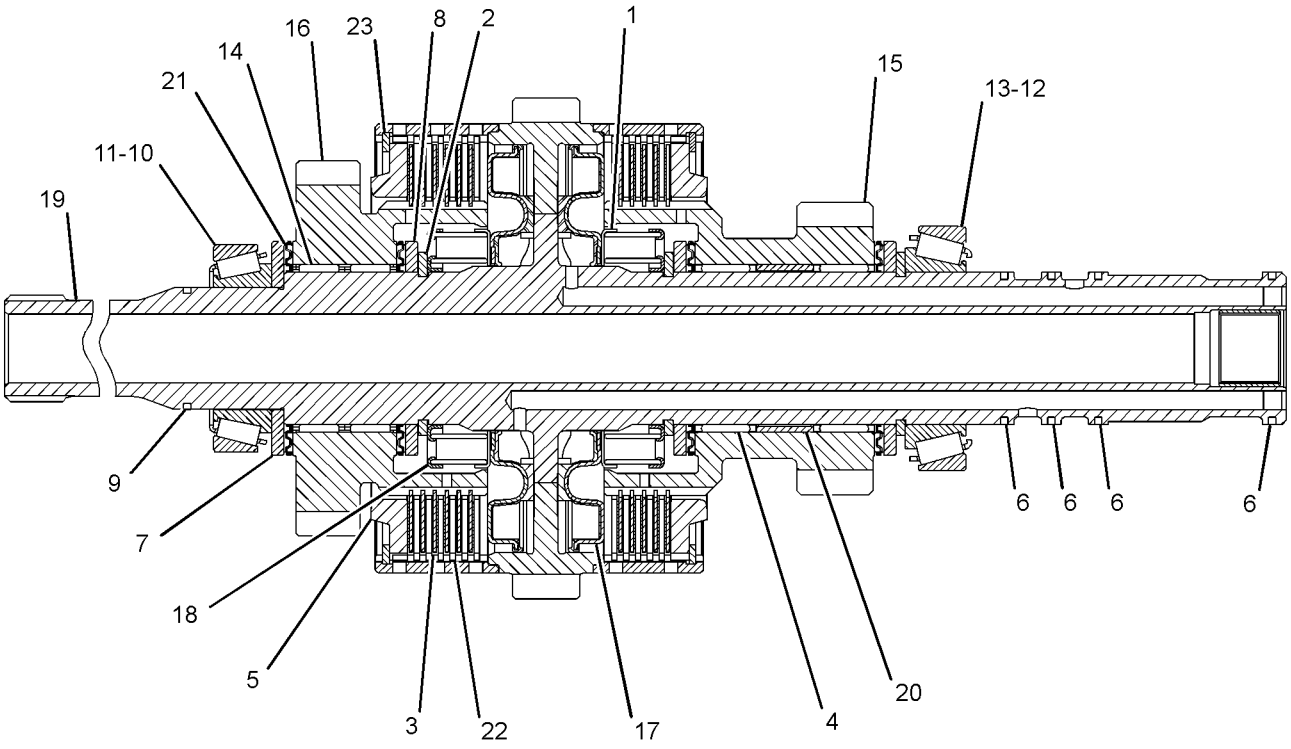

GRAPHIC #1 **<END>** g01513594

274-4582 SHAFT GP-OUTPUT—MAIN

S/N: RBA1-UP

PART OF 350-8601 TRANSMISSION GP-POWER SHIFT

SMCS-3053, 3063 **i03577182**

NOTE	REF NO	GRAPHIC REF	PART NUMBER	QTY	PART NAME 1 2 3 4 5 6 (PRODUCT LEVEL)	SEE PAGE
	1	1	**6T-9196**	2	SEAL	
	2	1	**6Y-1192**	3	RING-SEAL	
	3	1	**6Y-7929**	13	DISC-FRICTION	
	4	1	**8E-5707**	2	PLATE-END	
	5	1	**8T-1580**	1	CUP	
	6	1	**8T-1581**	1	CONE	
	7	1	**009-2062**	2	SEAL-O-RING	
	8	1	**095-0927**	1	RING-RETAINING	
	9	1	**095-0928**	1	RING-RETAINING (EXTERNAL)	
	10	1	**121-0885**	1	RETAINER	
	11	1	**122-1877**	1	WASHER-THRUST (40X65X4-MM THK)	
	12	1	**123-8907**	1	CONE-BEARING	
	13	1	**123-8908**	1	CUP-TAPERED ROLLER	
	14	1	**123-8912**	2	BEARING-ROLLER	
	15	1	**147-0203**	1	WASHER-THRUST (45.3X65X5-MM THK)	
	16	1	**147-0205**	2	WASHER (55X78X5-MM THK)	
	17	1	**147-0242**	1	GEAR (48-TEETH)	
	18	1	**147-0248**	1	SPACER (56.2X60X15.8-MM THK)	
	19	1	**147-0260**	1	RETAINER-SPRING	
	20	1	**147-0261**	1	SHAFT AS-OUTPUT (REAR)	
		1	**163-9091**	2	PLUG	
	21	1	**150-3757**	2	BEARING	
	22	1	**157-2088**	2	PISTON AS	
	23	1	**157-2090**	1	GEAR (38-TEETH)	
	24	1	**172-6050**	2	BEARING-SPECIAL	
	25	1	**172-6743**	2	BEARING-SPECIAL	
	26	1	**178-9566**	2	SPRING-PISTON	
	27	1	**211-6753**	1	GEAR (24-TEETH)	
	28	1	**274-4553**	13	DISC-FRICTION	
	29	1	**274-8638**	2	RING-RETAINING	

274-4582 SHAFT GP-OUTPUT *(contd.)* **i03577182**

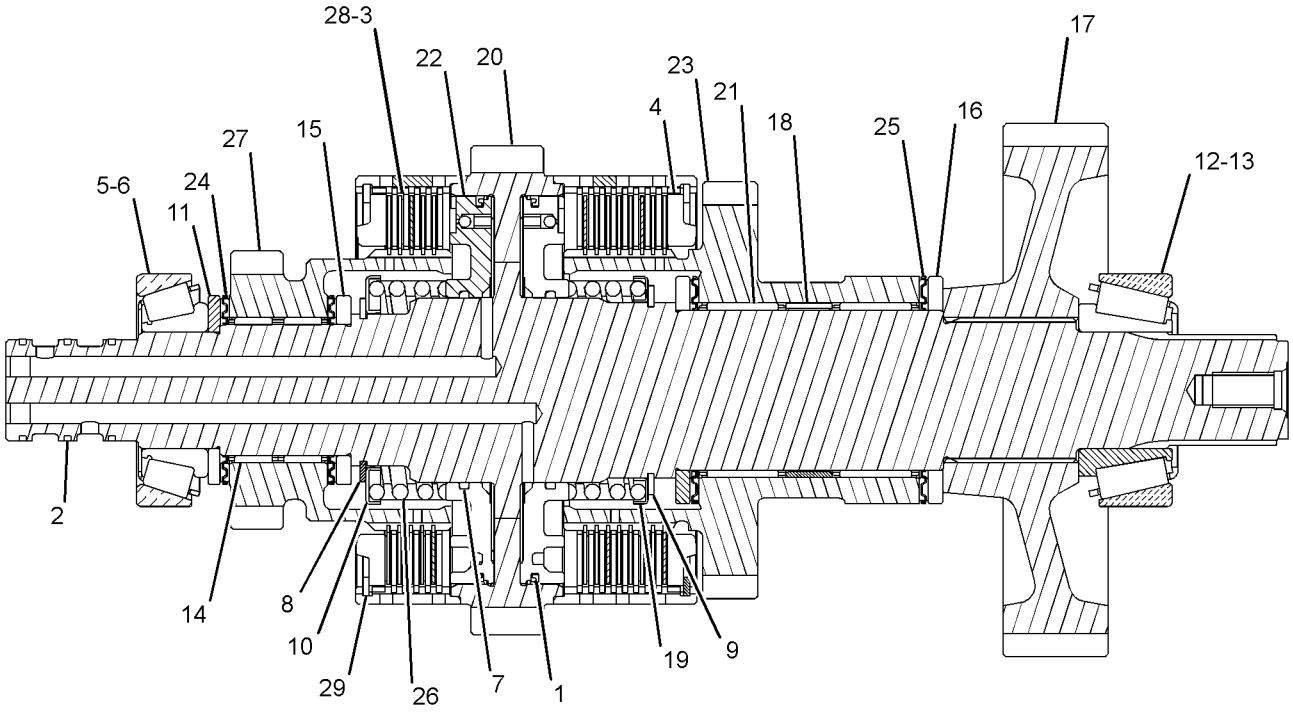

GRAPHIC #1 **<END>** g01216545

280-7007 SHAFT GP-OUTPUT–FRONT

S/N: RBA1-UP

PART OF 350-8601 TRANSMISSION GP-POWER SHIFT

SMCS-3053, 3063 **i02432353**

NOTE	REF NO	GRAPHIC REF	PART NUMBER	QTY	PART NAME 1 2 3 4 5 6 (PRODUCT LEVEL)	SEE PAGE
	1	1	**6T-9196**	1	SEAL	
	2	1	**6V-5100**	1	SEAL-O-RING	
	3	1	**6V-8757**	1	RING-RETAINING	
	4	1	**6Y-7957**	8	DISC-FRICTION	
	5	1	**8E-5707**	1	PLATE-END	
	6	1	**122-1877**	1	WASHER-THRUST (40X65X4-MM THK)	
	7	1	**122-1878**	1	RING-SEAL	
	8	1	**122-1884**	1	SPACER (45X49X8-MM THK)	
	9	1	**123-8905**	2	CONE-BEARING	
	10	1	**123-8906**	2	CUP-TAPERED ROLLER	
	11	1	**123-8912**	2	BEARING-ROLLER	
	12	1	**147-0203**	1	WASHER-THRUST (45.3X65X5-MM THK)	
	13	1	**147-0207**	1	SHAFT AS-OUTPUT (FRONT)	
	14	1	**147-0210**	1	GEAR (45/36-TEETH)	
	15	1	**147-0227**	1	PISTON-CLUTCH	
	16	1	**147-0238**	1	SPRING AS	
	17	1	**161-3249**	1	RING-RETAINING	
	18	1	**172-6050**	2	BEARING-SPECIAL	
	19	1	**274-4553**	8	DISC-FRICTION	

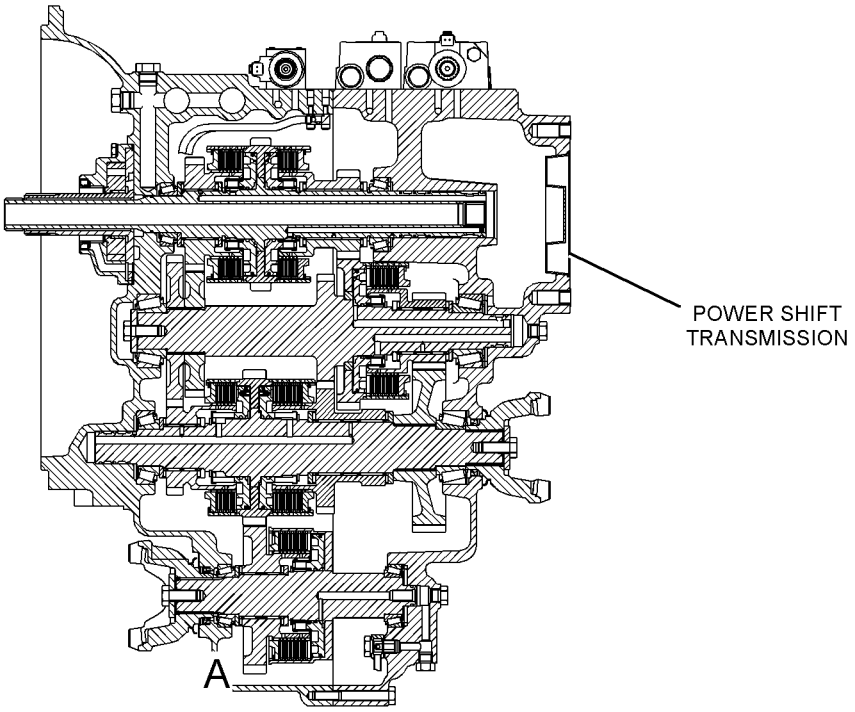

LEFT SIDE VIEW
(SECTIONED)

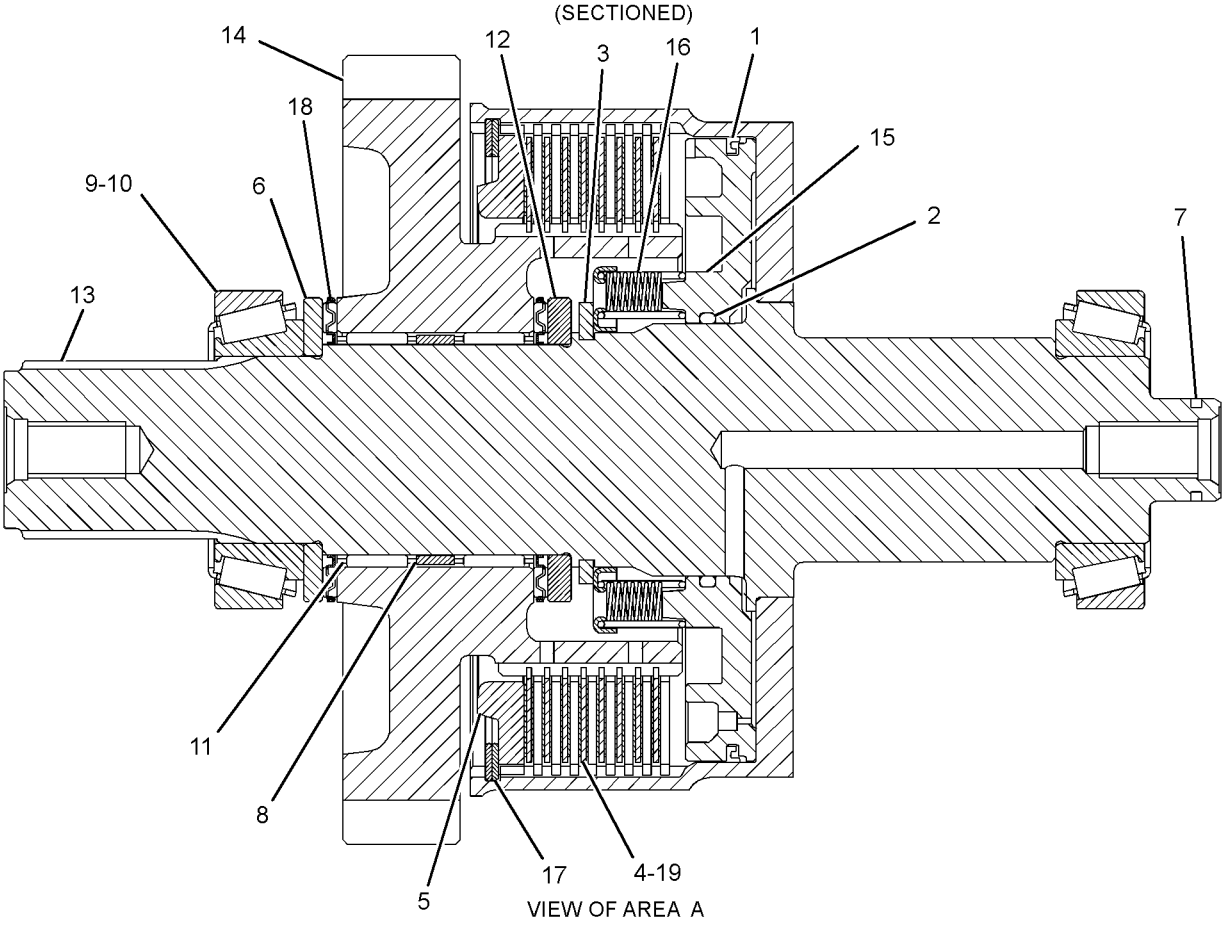

VIEW OF AREA A

GRAPHIC #1 **<END>** g01216346

269-9263 TRANSMISSION AR-POWER SHIFT–
ALL WHEEL DRIVE, AUTOSHIFT
S/N: RBA1-UP

PART OF 254-0130 POWER TRAIN AR

SMCS-3030 **i04156245**

NOTE	PART NUMBER	QTY	PART NAME 1 2 3 4 5 6 (PRODUCT LEVEL)	SEE PAGE
Y	*111-7907*	1	DRIVE GP-FLEXIBLE COUPLING	158
Y	*254-5703*	1	MOUNTING GP-TRANSMISSION	165
Y	*350-8601*	1	TRANSMISSION GP-POWER SHIFT	179
	268-1710	1	TORQUE CONVERTER AS	
	119-4740	1	FILTER-OIL (STANDARD EFFICIENCY) (TRANSMISSION)	
Y-SEPARATE ILLUSTRATION				

<END>

350-8601 TRANSMISSION GP-POWER SHIFT
S/N: RBA1-UP

PART OF 269-9263 TRANSMISSION AR-POWER SHIFT

SMCS-3030 **i04158465**

NOTE	PART NUMBER	QTY	PART NAME 1 2 3 4 5 6 (PRODUCT LEVEL)	SEE PAGE
Y	**274-4580**	1	SHAFT GP-COUNTER	168
Y	*288-7239*	1	SHAFT GP-IDLER	172
Y	**288-7249**	1	SHAFT GP-INPUT	173
Y	**274-4582**	1	SHAFT GP-OUTPUT (MAIN)	175
Y	**280-7007**	1	SHAFT GP-OUTPUT (FRONT)	177
Y	**147-0209**	1	VALVE GP-RELIEF (PRESSURE REGULATOR)	185
	121-7385	1	PUMP GP-TRANSMISSION (DIRECT DRIVE)	
	208-8240	1	SEAL-LIP TYPE	
	191-8304	1	SENSOR GP-SPEED (TRANSMISSION)	
	121-7396	1	VALVE GP-RELIEF (TORQUE CONVERTER INLET)	
	6V-4589	1	SEAL-O-RING	
	8L-2746	1	SEAL-O-RING	
	248-3290	2	VALVE GP-SOLENOID (DIFFERENTIAL LOCK)	
			(EACH INCLUDES)	
	238-4626	1	COIL AS	
	270-0526	1	VALVE GP-SOLENOID (DUAL CONTROL)	
	270-0527	1	VALVE GP-SOLENOID (SINGLE FUNCTION)	
			(EACH VALVE GP INCLUDES)	
	8L-2779	4	SEAL-O-RING	
	280-7009	2	COIL AS (12-VOLT)	
	280-7012	2	TUBE AS	
			(EACH INCLUDES)	
	6V-8399	1	SEAL-O-RING	
	274-4560	1	NUT-SELF LOCKING	
	278-0213	1	VALVE GP-SOLENOID (12-VOLT)	
	218-3597	1	PLUG-ORIFICE	
	8L-2779	4	SEAL-O-RING	
	280-7009	2	COIL AS (12-VOLT)	
	286-0867	2	TUBE AS	
			(EACH INCLUDES)	
	6V-8399	1	SEAL-O-RING	
	274-4560	1	NUT-SELF LOCKING	
	274-4554	1	CASE AS-FRONT	
	147-0268	4	PLUG	

350-8601 **TRANSMISSION GP-POWER SHIFT** *(contd.)* **i04158465**

NOTE	PART NUMBER	QTY	PART NAME 1 2 3 4 5 6 (PRODUCT LEVEL)	SEE PAGE
	163-9091	4	PLUG	
	274-4569	1	CASE AS-REAR	
	163-9091	11	PLUG	
	147-0211	1	ELBOW AS	
	3G-6927	1	ADAPTER	
	148-8407	15	PLUG AS	
			(EACH INCLUDES)	
	3J-1907	1	SEAL-O-RING	
	9S-4191	1	PLUG-O-RING	
	274-4556	3	PLUG AS	
			(EACH INCLUDES)	
	8L-2786	1	SEAL-O-RING	
	9S-4185	1	PLUG-O-RING	
	6Y-1896	1	PLUG AS-DRAIN (TRANSMISSION)	
	5P-6718	1	SEAL-O-RING	
	4W-9972	1	SENDER AS-TEMPERATURE (12-VOLT) (TRANSMISSION)	
	6V-8378	1	NUT (10-32-THD)	
	8F-1434	1	LOCKWASHER	
	8T-0328	1	WASHER-HARD (5.5X10X1-MM THK)	
	147-0201	1	TUBE AS	
	147-0226	1	TUBE AS	
	147-0218	1	TUBE AS-TRANSFER	
	147-0236	1	TUBE AS-TRANSFER	
	122-6787	2	YOKE AS	
			(EACH INCLUDES)	
	123-1377	1	GUARD	
M	**6V-5215**	3	BOLT (M8X1.25X16-MM)	
M	**6V-5842**	16	BOLT (M10X1.5X40-MM)	
M	**6V-8097**	2	BOLT (M12X1.75X30-MM)	
M	**8C-5748**	4	BOLT (M8X1.25X55-MM)	
M	**8T-0643**	1	BOLT (M10X1.5X80-MM)	
M	**9X-6615**	12	BOLT (M5X0.8X30-MM)	
	147-0234	6	BOLT (9/16-18X0.83-IN)	
	147-0266	2	BOLT (3/4-16X1.417-IN)	
M	**8C-8545**	2	BOLT-SOCKET HEAD (M5X0.8X20-MM)	
M	**8T-0271**	2	BOLT-SOCKET HEAD (M10X1.5X35-MM)	
	7T-3251	1	BREATHER (TRANSMISSION)	
	7T-3253	2	DOWEL	
	272-0751	1	NAMEPLATE	
	106-9861	1	PLATE-COVER	
	6T-9202	2	PLUG	
	205-9244	1	PLUG	
	147-0232	2	PLUG	
	9W-5460	1	RING	
	008-9682	4	RIVET-POP	
	7X-4741	1	SEAL	
	302-8432	2	SEAL-LIP TYPE	
	3J-1907	1	SEAL-O-RING	
	4J-0522	1	SEAL-O-RING	
	5P-8066	2	SEAL-O-RING	
	117-1385	1	SEAL-O-RING	
	120-9762	3	SEAL-O-RING	
	150-7732	2	SEAL-O-RING	
B	**6T-9163**	4	SHIM (0.599-MM THK)	
B	**6T-9164**	6	SHIM (0.178-MM THK)	
B	**6T-9165**	4	SHIM (0.076-MM THK)	
B	**6T-9166**	4	SHIM (0.051-MM THK)	
B	**104-3288**	4	SHIM (0.05-MM THK)	

350-8601 TRANSMISSION GP-POWER SHIFT *(contd.)* i04158465

NOTE	PART NUMBER	QTY	PART NAME 1 2 3 4 5 6 (PRODUCT LEVEL)	SEE PAGE
B	**121-2059**	4	SHIM (0.08-MM THK)	
B	**121-2060**	6	SHIM (0.18-MM THK)	
B	**121-2061**	4	SHIM (0.6-MM THK)	
B	**121-7399**	2	SHIM (0.05-MM THK)	
B	**121-7400**	2	SHIM (0.08-MM THK)	
B	**121-7401**	3	SHIM (0.18-MM THK)	
B	**121-7402**	2	SHIM (0.6-MM THK)	
	7T-2646	2	SPACER (66X79.5X2.02-MM THK)	
	121-7398	1	SPACER (70X79.5X2-MM THK)	
	122-1879	2	SPACER (58X67.5X2-MM THK)	
	122-1883	1	SPACER (38X45X5-MM THK)	
	7T-2651	1	STRAINER-SUCTION (TRANSMISSION)	
	7T-3195	2	WASHER (12.3X47X6.35-MM THK)	
	7W-3556	12	WASHER (14.27X20.57X1.5-MM THK)	
	9P-9150	4	WASHER (8.25X18X0.84-MM THK)	
	147-0262	4	WASHER (19.1X24.1X1.5-MM THK)	

B-USE AS REQUIRED
M-METRIC PART
Y-SEPARATE ILLUSTRATION

<END>

254-0121 VALVE & LINES GP-DIFF LOCK

S/N: RBA1-UP

PART OF 254-0130 POWER TRAIN AR

SMCS-3264, 5057, 5479 **i04105110**

NOTE	REF NO	GRAPHIC REF	PART NUMBER	QTY	PART NAME 1 2 3 4 5 6 (PRODUCT LEVEL)	SEE PAGE
	1	1	**7K-1181**	2	STRAP-CABLE	
	2	1	**151-4841**	2	BLOCK	
CY	3	1	**274-8048**	1	VALVE & MTG GP-SOLENOID (DIFFERENTIAL LOCK)	184
I	4	1	**256-0548**	2	HOSE AS	
I	5	1	**256-0549**	1	HOSE AS	
	6	1	*148-8325*	1	CONNECTOR AS	
		1	**6V-8641**	1	CONNECTOR	
		1	**3J-1907**	1	SEAL-O-RING	
		1	**4J-5477**	1	SEAL-O-RING	
	7	1	*148-8368*	3	ELBOW AS	
					(EACH INCLUDES)	
		1	**6V-8627**	1	ELBOW	
		1	**3J-1907**	1	SEAL-O-RING	
		1	**4J-5477**	1	SEAL-O-RING	
	8	1	*187-2120*	1	ELBOW AS	
		1	**8C-8408**	1	ELBOW	
		1	**4J-5477**	1	SEAL-O-RING	
	9	1	**8T-4121**	2	WASHER-HARD (11X21X2.5-MM THK)	
M	10	1	**8T-6466**	2	BOLT (M10X1.5X60-MM)	

C-CHANGE FROM PREVIOUS TYPE
I-REFER TO HYDRAULIC INFORMATION SYSTEM
M-METRIC PART
Y-SEPARATE ILLUSTRATION

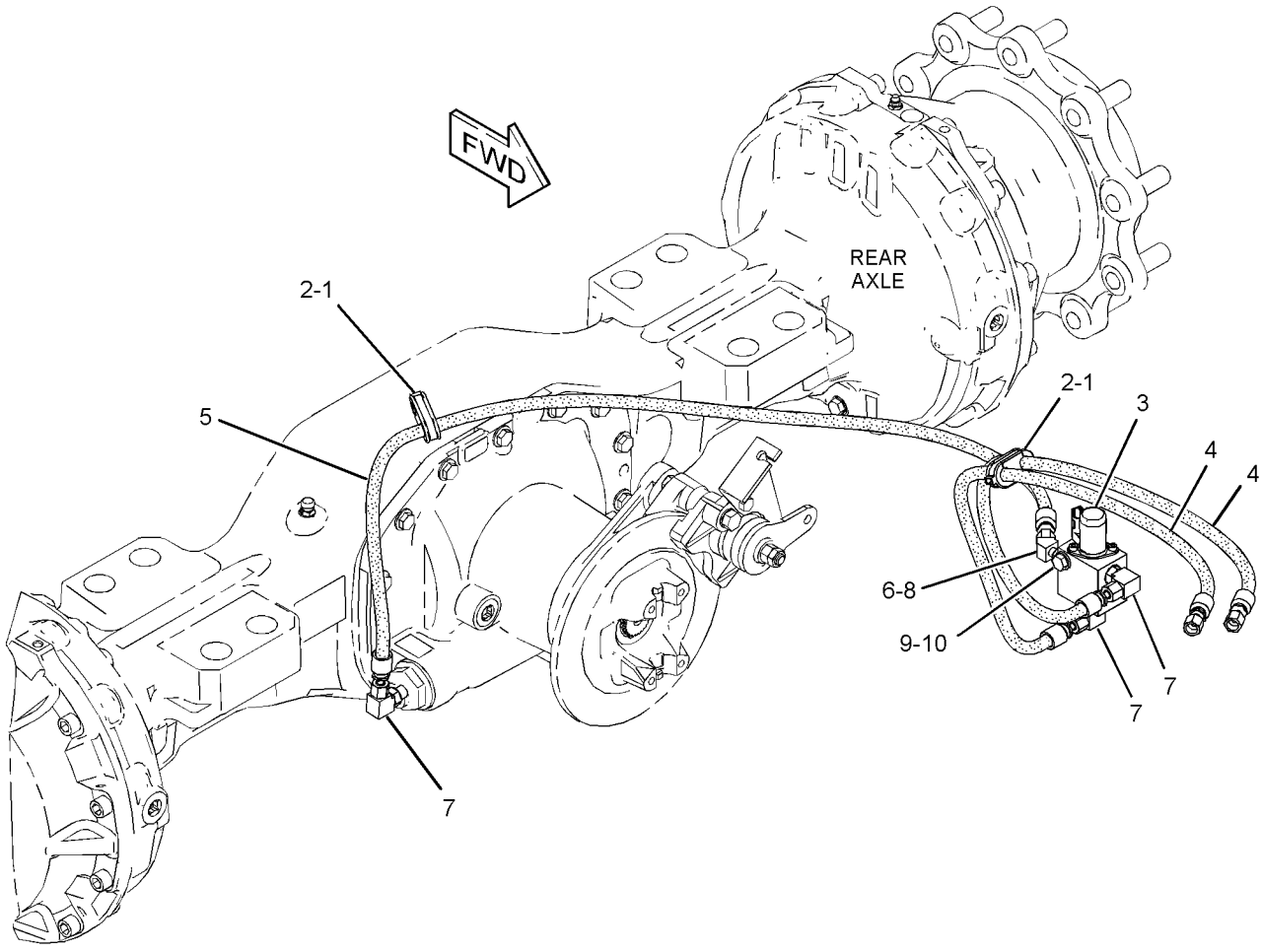

GRAPHIC #1 **<END>** g01411394

274-8048 VALVE & MTG GP-SOLENOID

S/N: RBA1-UP

PART OF 254-0121 VALVE & LINES GP-DIFF LOCK

SMCS-5479 **i04139542**

NOTE	REF NO	GRAPHIC REF	PART NUMBER	QTY	PART NAME 1 2 3 4 5 6 (PRODUCT LEVEL)	SEE PAGE
M	1	1	**096-5968**	2	BOLT-SOCKET HEAD (M5X0.8X8-MM)	
J	2	1	*274-8041*	1	VALVE GP-SOLENOID (12-VOLT) (DIFFERENTIAL LOCK)	
					AVAILABLE REPAIR KIT(S):	
J			**250-8330**	1	KIT-SEAL (VALVE)	
					(INCLUDES O-RINGS)	

J-KIT MARKED J SERVICES PART MARKED J
M-METRIC PART

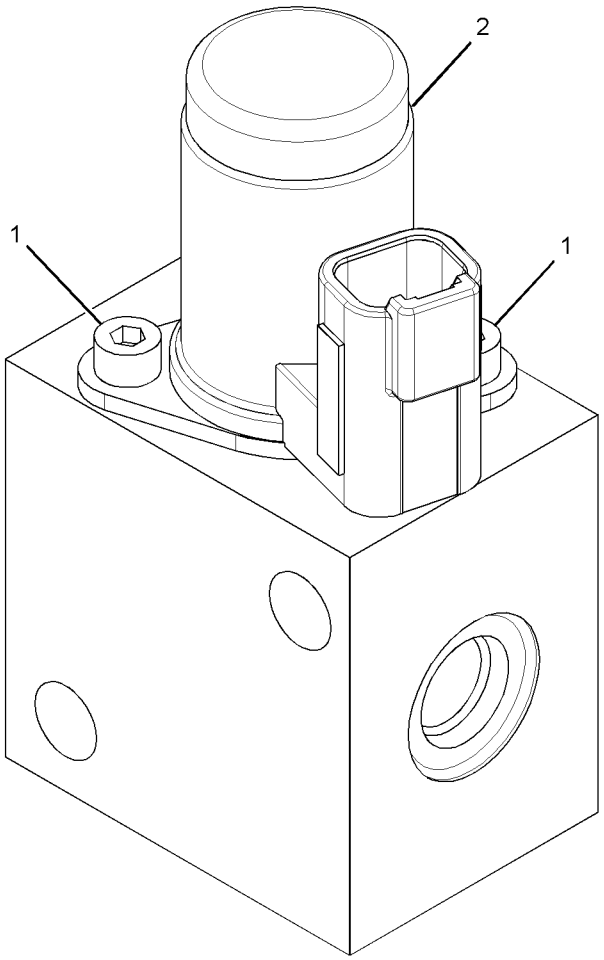

GRAPHIC #1 **<END>** g01346192

147-0209 VALVE GP-RELIEF

S/N: RBA1-UP

PART OF 350-8601 TRANSMISSION GP-POWER SHIFT

SMCS-3133, 3182, 3210, 3213 **i00724885**

NOTE	REF NO	GRAPHIC REF	PART NUMBER	QTY	PART NAME 1 2 3 4 5 6 (PRODUCT LEVEL)	SEE PAGE
	1	1	**7X-4744**	1	SEAL-O-RING	
	2	1	**6V-9178**	1	SEAL-O-RING	
	3	1	**106-9586**	1	SEAL-O-RING	

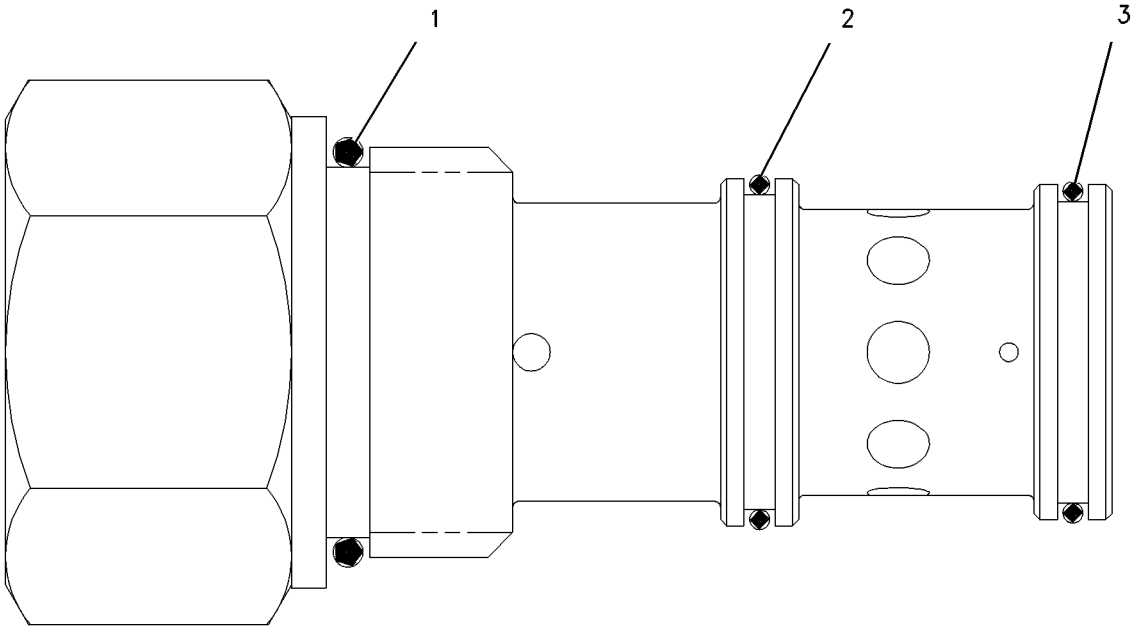

GRAPHIC #1 **<END>** g00304718

6D-0337 VALVE GP-TIRE

S/N: RBA1-UP

PART OF 201-1920 VALVE GP-TIRE

SMCS-4203 **i03644348**

NOTE	REF NO	GRAPHIC REF	PART NUMBER	QTY	PART NAME 1 2 3 4 5 6 (PRODUCT LEVEL)	SEE PAGE
	1	1	**6D-0443**	1	HOUSING AS-CORE	
	1A	1	**2D-2628**	1	CORE-VALVE	
	1B	1	**2D-2633**	1	CAP (VALVE STEM)	
	2	1	**8D-2707**	1	SPUD AS	
	2A	1	**2D-2629**	1	GROMMET	
	2B	1	**2D-2630**	1	WASHER	
	2C	1	**2D-2631**	1	NUT (0.482-26-THD)	

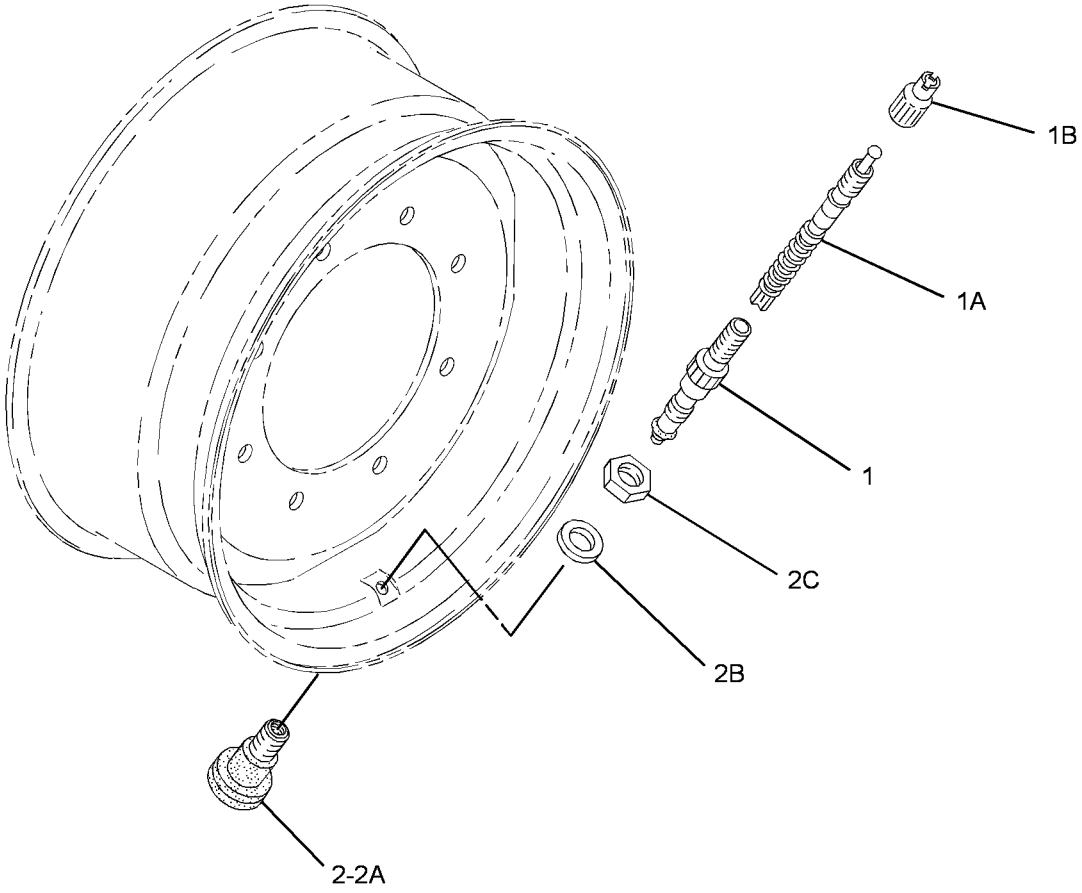

GRAPHIC #1 **<END>** g01955522

POWER TRAIN

201-1920 VALVE GP-TIRE

S/N: RBA1-UP

PART OF 272-5113, 272-5114, 272-5118, 272-5119 WHEEL & TIRE GP

SMCS-4203 **i03498408**

NOTE	PART NUMBER	QTY	PART NAME 1 2 3 4 5 6 (PRODUCT LEVEL)	SEE PAGE
Y	**6D-0337**	1	VALVE GP-TIRE	186

Y-SEPARATE ILLUSTRATION

<END>

254-0196 WHEEL & TIRE AR

S/N: RBA1-UP

PART OF 368-0572 COMMON AR

SMCS-4201, 4202, 4203, 4208, 4209 **i04105579**

NOTE	PART NUMBER	QTY	PART NAME 1 2 3 4 5 6 (PRODUCT LEVEL)	SEE PAGE
Y	*272-5115*	1	WHEEL & TIRE GP (FRONT)	188
Y	*272-5120*	1	WHEEL & TIRE GP (REAR)	189

Y-SEPARATE ILLUSTRATION

<END>

272-5113 WHEEL & TIRE GP—LH

S/N: RBA1-UP

PART OF 272-5115 WHEEL & TIRE GP

SMCS-4201, 4202, 4203, 4208, 4209 **i04129090**

NOTE	PART NUMBER	QTY	PART NAME 1 2 3 4 5 6 (PRODUCT LEVEL)	SEE PAGE
Y	*201-1920*	1	VALVE GP-TIRE	187
	272-5112	1	WHEEL AS (FRONT)	
	275-3984	1	TIRE (15-19.5)	

Y-SEPARATE ILLUSTRATION

<END>

272-5114 WHEEL & TIRE GP—RH

S/N: RBA1-UP

PART OF 272-5115 WHEEL & TIRE GP

SMCS-4201, 4202, 4203, 4208, 4209 **i04129091**

NOTE	PART NUMBER	QTY	PART NAME 1 2 3 4 5 6 (PRODUCT LEVEL)	SEE PAGE
Y	*201-1920*	1	VALVE GP-TIRE	187
	272-5112	1	WHEEL AS (FRONT)	
	275-3984	1	TIRE (15-19.5)	

Y-SEPARATE ILLUSTRATION

<END>

272-5115 WHEEL & TIRE GP—FRONT

S/N: RBA1-UP

PART OF 254-0196 WHEEL & TIRE AR

SMCS-4201, 4202, 4203, 4208, 4209 **i04129049**

NOTE	PART NUMBER	QTY	PART NAME 1 2 3 4 5 6 (PRODUCT LEVEL)	SEE PAGE
Y	*272-5113*	1	WHEEL & TIRE GP (LH)	187
Y	*272-5114*	1	WHEEL & TIRE GP (RH)	187
	201-1915	1	MOUNTING GP-WHEEL (FRONT)	
	8T-5439	16	WASHER-HARD (21.5X45X6-MM THK)	
M	**201-1919**	16	NUT (M20X1.5-THD)	

M-METRIC PART
Y-SEPARATE ILLUSTRATION

<END>

272-5118 WHEEL & TIRE GP—LH

S/N: RBA1-UP

PART OF 272-5120 WHEEL & TIRE GP

SMCS-4201, 4202, 4203, 4208, 4209 **i04142529**

NOTE	PART NUMBER	QTY	PART NAME 1 2 3 4 5 6 (PRODUCT LEVEL)	SEE PAGE
Y	*201-1920*	1	VALVE GP-TIRE	187
	272-5111	1	WHEEL AS (REAR)	
	318-8318	1	TIRE (21L-24)	

Y-SEPARATE ILLUSTRATION

<END>

272-5119 WHEEL & TIRE GP—RH

S/N: RBA1-UP

PART OF 272-5120 WHEEL & TIRE GP

SMCS-4201, 4202, 4203, 4208, 4209 **i04142530**

NOTE	PART NUMBER	QTY	PART NAME 1 2 3 4 5 6 (PRODUCT LEVEL)	SEE PAGE
Y	*201-1920*	1	VALVE GP-TIRE	187
	272-5111	1	WHEEL AS (REAR)	
	318-8318	1	TIRE (21L-24)	

Y-SEPARATE ILLUSTRATION

<END>

272-5120 WHEEL & TIRE GP–REAR

S/N: RBA1-UP

PART OF 254-0196 WHEEL & TIRE AR

SMCS-4201, 4202, 4203, 4208, 4209 **i04131749**

NOTE	PART NUMBER	QTY	PART NAME 1 2 3 4 5 6 (PRODUCT LEVEL)	SEE PAGE
Y	*272-5118*	1	WHEEL & TIRE GP (LH)	188
Y	*272-5119*	1	WHEEL & TIRE GP (RH)	188
	201-1916	1	MOUNTING GP-WHEEL (REAR)	
	8T-5439	20	WASHER-HARD (21.5X45X6-MM THK)	
M	**201-1919**	20	NUT (M20X1.5-THD)	

M-METRIC PART
Y-SEPARATE ILLUSTRATION

<END>

POWER TRAIN

288-7300 WHEEL GP-FINAL DRIVE & BRAKE

S/N: RBA1-UP

PART OF 269-9260 AXLE GP-REAR

SMCS-4008 **i04125730**

NOTE	REF NO	GRAPHIC REF	PART NUMBER	QTY	PART NAME 1 2 3 4 5 6 (PRODUCT LEVEL)	SEE PAGE
	1	1	**2S-0480**	1	CUP-TAPERED ROLLER	
	2	1	**4D-6695**	1	SEAL-O-RING	
	3	1	**178-8608**	1	CONE-TAPERED	
	4	1	**198-7811**	1	DOWEL	
	5	1	**199-0669**	1	PLUG (THRUST)	
	6	1	**253-5021**	1	SEAL	
	7	1	**288-7219**	1	HOUSING-AXLE	
	8	1	**288-7220**	1	SPACER	
	9	1	**288-7221**	1	FLANGE-WHEEL	
	10	1	**288-7222**	1	NUT	
	11	1	**288-7223**	1	GEAR-RING	
	12	1	**288-7224**	1	PLANETARY GP-FINAL DRIVE	
		1	**8T-4241**	3	RING-RETAINING	
	13	1	**288-7227**	1	RING-RETAINING	
Y	14	1	**288-7228**	1	BRAKE GP-SERVICE	191
	15	1	**288-7246**	10	STUD-WHEEL	
	16	1	**253-5020**	1	BEARING AS-TAPERED ROLLER	

Y-SEPARATE ILLUSTRATION

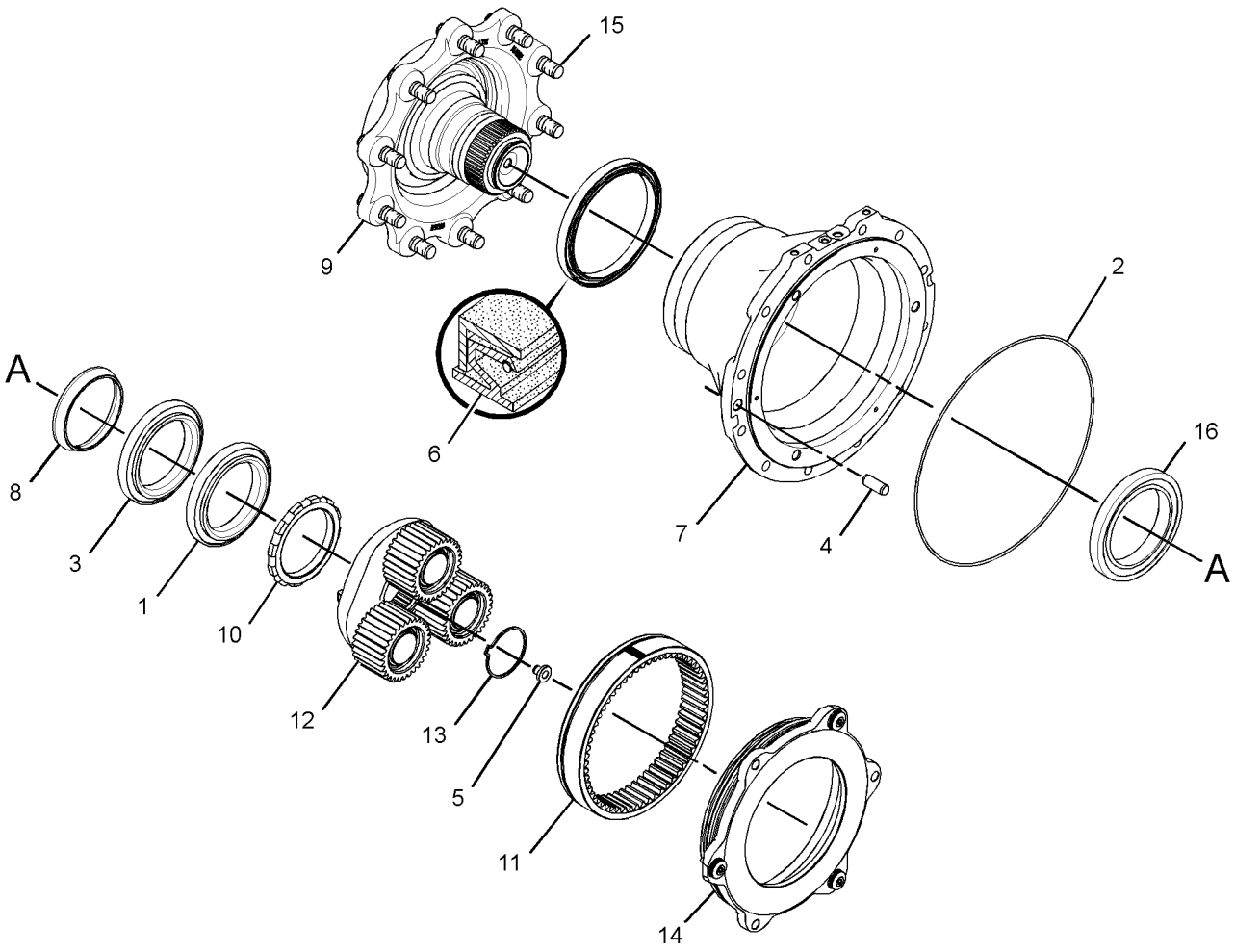

GRAPHIC #1 **<END>** g01414488

288-7228 BRAKE GP-SERVICE

S/N: RBA1-UP

PART OF 288-7300 WHEEL GP-FINAL DRIVE & BRAKE

SMCS-4251 **i04125732**

NOTE	REF NO	GRAPHIC REF	PART NUMBER	QTY	PART NAME 1 2 3 4 5 6 (PRODUCT LEVEL)	SEE PAGE
	1	1	**8J-8879**	1	SEAL-O-RING	
	2	1	**275-8521**	1	SEAL-O-RING	
	3	1	**288-7229**	1	PISTON-BRAKE	
	4	1	**288-7230**	1	CYLINDER-BRAKE	
	5	1	**288-7231**	3	ADJUSTER AS	
					(EACH INCLUDES)	
		1	**288-7234**	1	BUSHING	
		1	**288-7235**	1	BOLT-SPECIAL	
		1	**288-7236**	4	SPRING	
		1	**288-7237**	4	RING-RETAINING	
	6	1	**288-7238**	3	RING-RETAINER	
	7	1	**292-9201**	1	SEAL-O-RING	

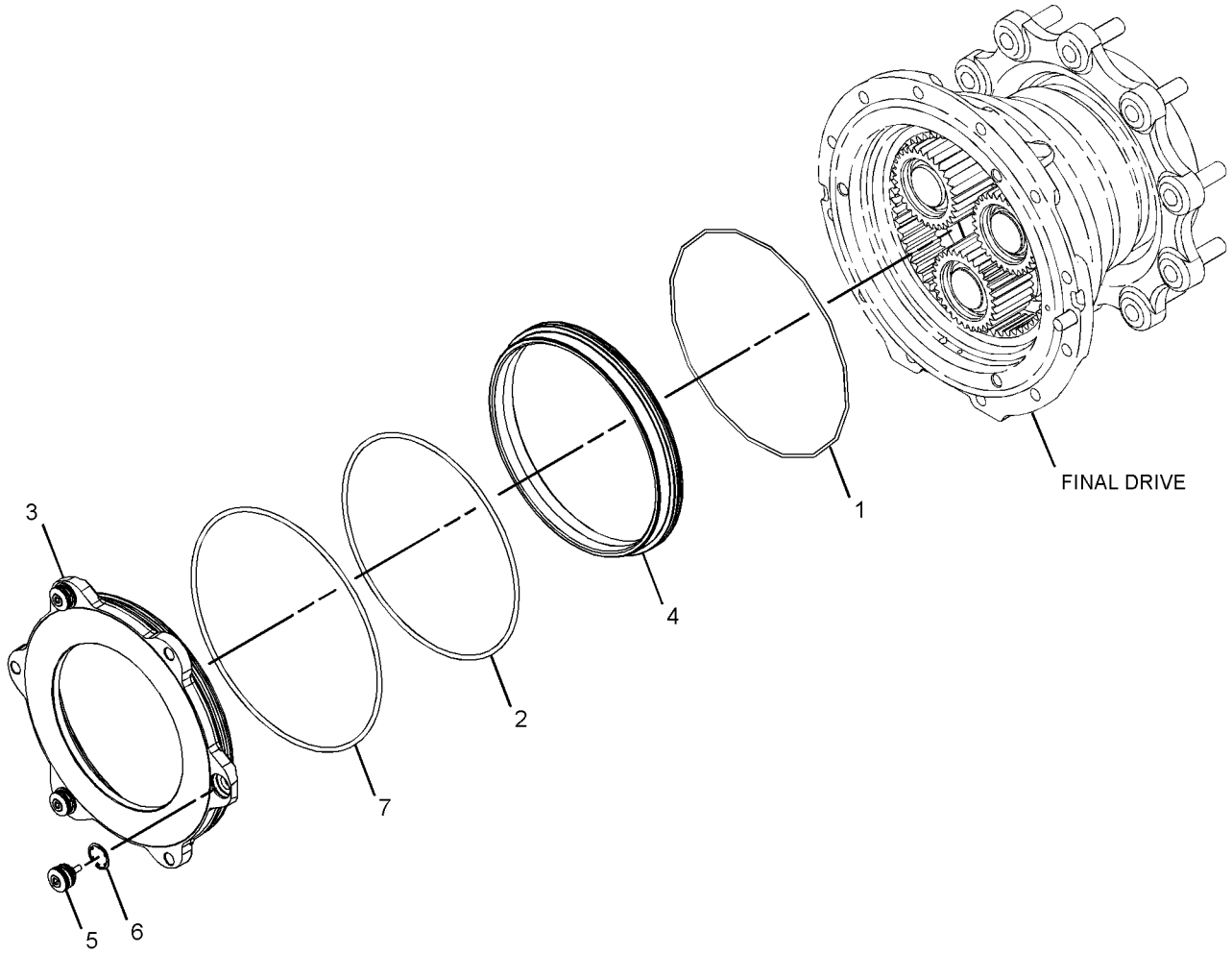

GRAPHIC #1 **<END>** g01418676

206-1642 CONTROL GP-PARKING BRAKE

S/N: RBA1-UP

PART OF 254-0130 POWER TRAIN AR

SMCS-4282, 4284 **i03920823**

NOTE	REF NO	GRAPHIC REF	PART NUMBER	QTY	PART NAME 1 2 3 4 5 6 (PRODUCT LEVEL)	SEE PAGE
	1	1	**7K-1181**	1	STRAP-CABLE	
	2	1	**9R-2806**	1	PIN	
	3	1	**9R-2807**	1	CLIP	
	4	1	**154-5416**	1	SWITCH AS (PARKING BRAKE)	
		1	**155-2270**	1	KIT-CONNECTING PLUG (2-PIN)	
					(INCLUDES PLUG AS, WEDGE & INTERFACE SEAL)	
Y	5	1	**261-5517**	1	CONTROL GP-PARKING BRAKE	193
	6	1	**261-9635**	1	BOOT (PARKING BRAKE)	
	7	1	**8T-4224**	2	WASHER-HARD (8.8X16X2-MM THK)	
M	8	1	**8T-6912**	2	BOLT (M8X1.25X50-MM)	
	9	1	**164-1368**	2	FASTENER-PANEL	

M-METRIC PART
Y-SEPARATE ILLUSTRATION

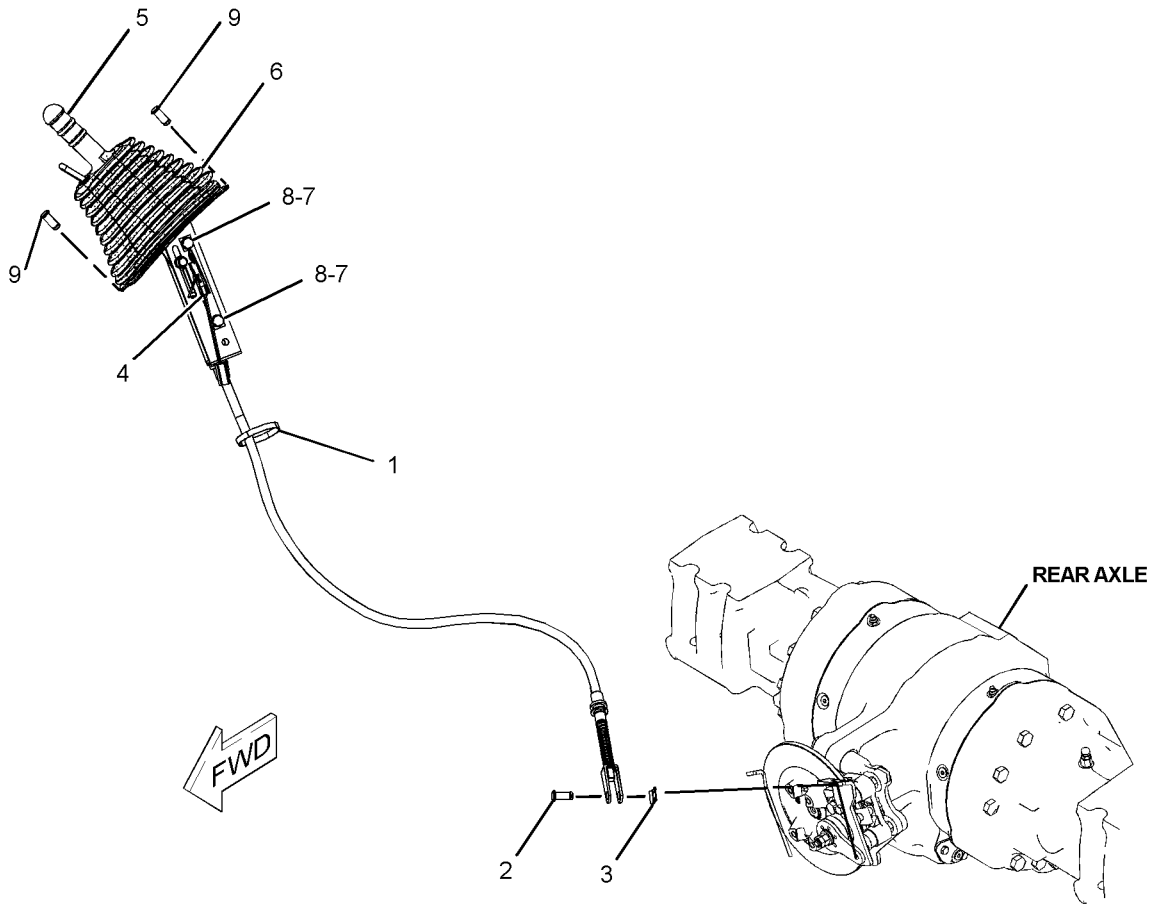

GRAPHIC #1 **<END>** g01228986

261-5517 CONTROL GP-PARKING BRAKE

S/N: RBA1-UP

PART OF 206-1642 CONTROL GP-PARKING BRAKE

SMCS-4282, 4284 **i03712421**

NOTE	REF NO	GRAPHIC REF	PART NUMBER	QTY	PART NAME 1 2 3 4 5 6 (PRODUCT LEVEL)	SEE PAGE
Y	1	1	**163-0753**	1	LEVER GP-HAND CONTROL (PARKING BRAKE)	198
	2	1	**261-5519**	1	CABLE AS	
		1	**6V-8759**	1	RING-RETAINING	

Y-SEPARATE ILLUSTRATION

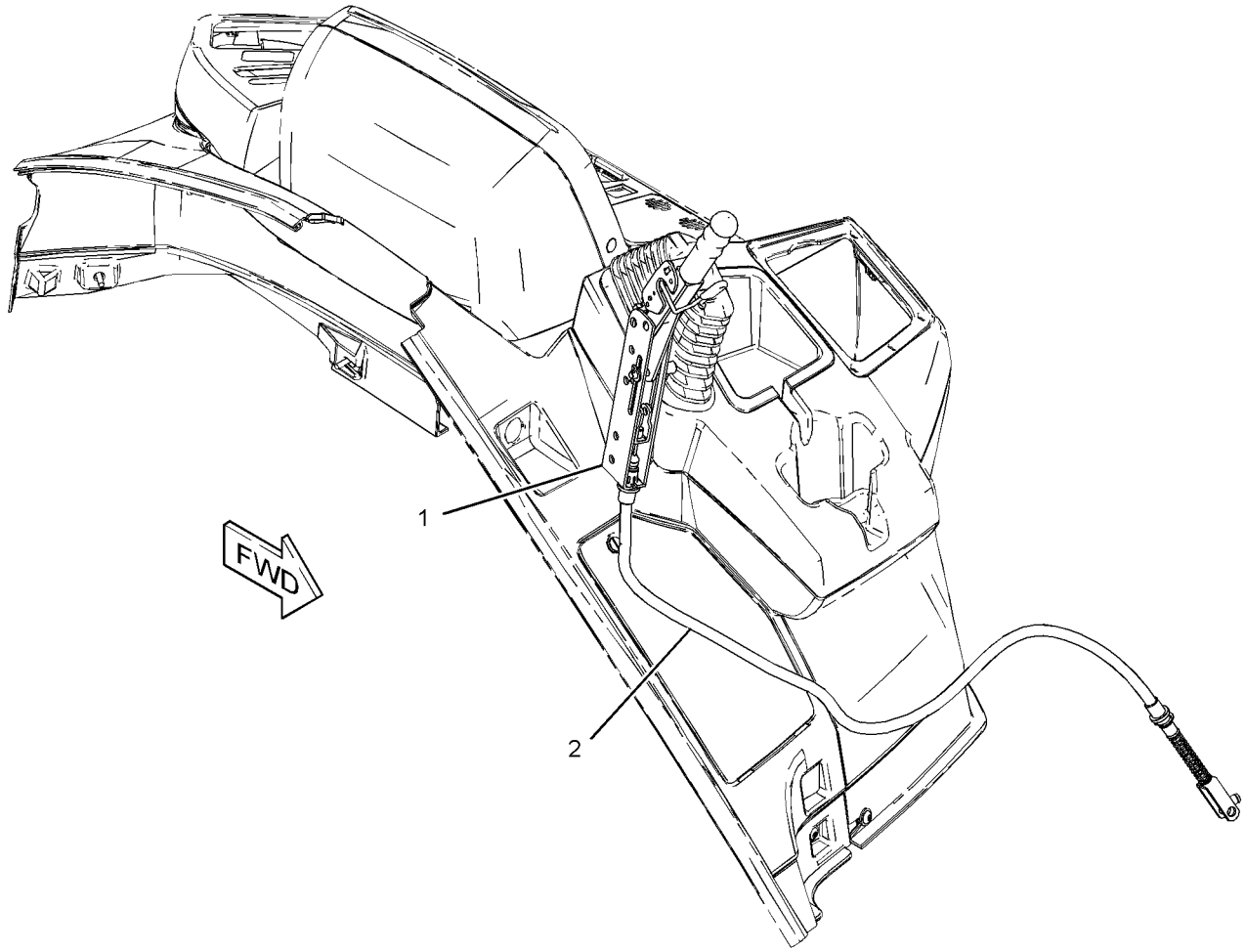

GRAPHIC #1 **<END>** g01210353

BRAKING SYSTEM

254-0126 CONTROL GP-SERVICE BRAKE

S/N: RBA1-UP

PART OF 254-0130 POWER TRAIN AR

SMCS-4269 **i04105129**

NOTE	REF NO	GRAPHIC REF	PART NUMBER	QTY	PART NAME 1 2 3 4 5 6 (PRODUCT LEVEL)	SEE PAGE
	1	1	**5I-4376**	1	FITTING	
	2	1	**5P-4961**	2	CLAMP-HOSE	
	3	1	**7K-1181**	1	STRAP-CABLE	
	4	2	**8T-0131**	1	ELBOW	
	5	2	**105-8034**	2	SWITCH AS-LIMIT (SERVICE BRAKE)	
	6	1	**151-4841**	1	BLOCK	
	7	2	**156-3600**	1	FITTING	
	8	2	**156-3631**	1	FITTING	
	9	1	*164-5567*	1	COUPLER AS-QUICK DISCONNECT (MALE)	
		1	**6V-3965**	1	FITTING (QUICK DISCONNECT)	
		1	**214-7568**	1	SEAL-O-RING	
	10	2	**165-6595**	1	PIN AS	
	11	2	*194-2903*	1	ELBOW AS	
		2	**8T-0119**	1	ELBOW	
		2	**3K-0360**	1	SEAL-O-RING	
	12	2	**202-5993**	1	PLATE	
	13	2	**206-1634**	1	PLATE AS	
M		2	**6V-4248**	2	BOLT (M10X1.5X25-MM)	
M		2	**6V-9632**	5	NUT-WELD (M6X1-THD)	
		2	**7T-1099**	4	LINK	
M		2	**8T-3612**	1	NUT-WELD (M8X1.25-THD)	
M		2	**8T-4908**	1	BOLT (M8X1.25X25-MM)	
	14	2	**206-1650**	1	GROMMET	
	15	2	**206-1752**	1	PLATE AS	
	16	2	**206-1766**	2	PIN	
	17	2	**206-1767**	1	SPRING (LH)	
	18	1	*217-8185*	1	ELBOW AS	
		1	**9X-3982**	1	ELBOW	
		1	**3K-0360**	1	SEAL-O-RING	
	19	1	**227-8917**	1	SWITCH AS-PRESSURE (SERVICE BRAKE)	
		1	**102-8803**	1	KIT-RECEPTACLE (3-PIN) (INCLUDES RECEPTACLE AS & WEDGE)	
		1	**186-3735**	3	PIN-CONNECTOR (16-GA TO 18-GA)	
E		1	**9X-1813**		SLEEVE (15-CM)	
I	20	2	**255-8280**	1	HOSE AS	
	21	2	**262-4081**	2	END-YOKE ROD	
I	22	1	**273-9433**	2	HOSE AS	
	23	2	**275-0652**	1	PEDAL AS (LH)	
	23A	2	**202-6029**	2	BUSHING	
	24	2	**275-0653**	1	PEDAL AS (RH)	
	24A	2	**202-6029**	2	BUSHING	
	25	1	**277-3149**	2	BRACKET AS	
	26	1	**277-3151**	2	BRACKET AS	
	27	2	**286-1930**	2	RING-RETAINING	
	28	2	**291-8379**	1	COVER-BRAKE	
	29	2	**298-3599**	1	PLATE AS	
	30	2	**300-5838**	1	VALVE GP-BRAKE (SERVICE)	
		2	**262-4084**	2	BOOT	
I	31	1	**301-2176**	1	HOSE AS	
I	32	1	**301-2177**	1	HOSE AS	
	33	1	*307-4849*	1	CONNECTOR AS	
		1	**168-9352**	1	CONNECTOR	
		1	**3K-0360**	1	SEAL-O-RING	
		1	**6V-8397**	1	SEAL-O-RING	
M	34	2	**142-0485**	2	NUT (M10X1.5-THD)	
	35	1	*148-8307*	1	ADAPTER AS	

254-0126 CONTROL GP-SERVICE BRAKE *(contd.)* i04105129

NOTE	REF NO	GRAPHIC REF	PART NUMBER	QTY	PART NAME 1 2 3 4 5 6 (PRODUCT LEVEL)	SEE PAGE
		1	**5P-8874**	1	ADAPTER	
		1	**3J-1907**	1	SEAL-O-RING	
	36	1,2	*148-8325*	4	CONNECTOR AS	
					(EACH INCLUDES)	
		1,2	**6V-8641**	1	CONNECTOR	
		1,2	**3J-1907**	1	SEAL-O-RING	
		1,2	**4J-5477**	1	SEAL-O-RING	
	37	1	*148-8354*	1	ELBOW AS	
		1	**6V-9002**	1	ELBOW	
		1	**3K-0360**	1	SEAL-O-RING	
		1	**6V-8398**	1	SEAL-O-RING	
	38	2	*148-8364*	2	ELBOW AS	
					(EACH INCLUDES)	
		2	**6V-8625**	1	ELBOW	
		2	**3K-0360**	1	SEAL-O-RING	
		2	**6V-8398**	1	SEAL-O-RING	
	39	1	*148-8383*	1	ELBOW AS	
		1	**8T-1683**	1	ELBOW	
		1	**3K-0360**	1	SEAL-O-RING	
		1	**6V-8397**	1	SEAL-O-RING	
	40	1	*150-3024*	1	ELBOW AS	
		1	**5P-4924**	1	ELBOW	
		1	**3J-1907**	1	SEAL-O-RING	
	41	2	**206-1768**	1	SPRING (RH)	
	42	1	*206-5123*	1	TEE AS	
		1	**206-5122**	1	TEE	
		1	**6V-8397**	1	SEAL-O-RING	
		1	**6V-8398**	1	SEAL-O-RING	
	43	2	**2K-5986**	1	PIN-SPRING	
Y	44	1	**300-0430**	1	VALVE GP-PRESSURE REDUCING (SERVICE BRAKE)	373
	46	1,2	**3K-0360**	3	SEAL-O-RING	
	47	1	**4D-6466**	1	CLIP	
M	48	2	**5C-2890**	1	NUT (M6X1-THD)	
M	49	2	**5C-7261**	6	NUT (M8X1.25-THD)	
	50	2	**5P-4116**	4	WASHER-HARD (8.8X20.5X2-MM THK)	
M	51	2	**6V-7357**	1	BOLT (M6X1X25-MM)	
	52	1	**7G-7053**	4	GROMMET	
	53	2	**7J-9108**	1	SEAL-O-RING	
	54	2	**7X-7729**	6	WASHER (11X25X3-MM THK)	
	55	1	**8T-4121**	9	WASHER-HARD (11X21X2.5-MM THK)	
M	56	2	**8T-4133**	2	NUT (M10X1.5-THD)	
M	57	1,2	**8T-4136**	5	BOLT (M10X1.5X25-MM)	
M	58	2	**8T-4138**	1	BOLT (M6X1X20-MM)	
M	59	1	**8T-4195**	4	BOLT (M10X1.5X30-MM)	
	60	2	**8T-4205**	1	WASHER-HARD (7.2X14.5X2-MM THK)	
	61	1,2	**8T-4224**	6	WASHER-HARD (8.8X16X2-MM THK)	
M	62	2	**8T-4908**	2	BOLT (M8X1.25X25-MM)	
M	63	1	**8T-6869**	2	BOLT (M8X1.25X60-MM)	
	64	1	**9D-3767**	2	PLUG-BUTTON	
	65	2	**9R-2807**	2	CLIP	
M	67	2	**9X-2045**	6	SCREW-TRUSS HEAD (M6X1X20-MM)	
M	68	1	**9X-2125**	4	BOLT-LOCKING (M10X1.5X25-MM)	
E	69	1	**5P-1442**		HOSE (41-CM)	
	70	2	**9X-2038**	4	WASHER (7X19X2-MM THK)	
	71	1	**6V-0852**	1	CAP-DUST	

E-ORDER BY THE CENTIMETER
I-REFER TO HYDRAULIC INFORMATION SYSTEM
M-METRIC PART
Y-SEPARATE ILLUSTRATION

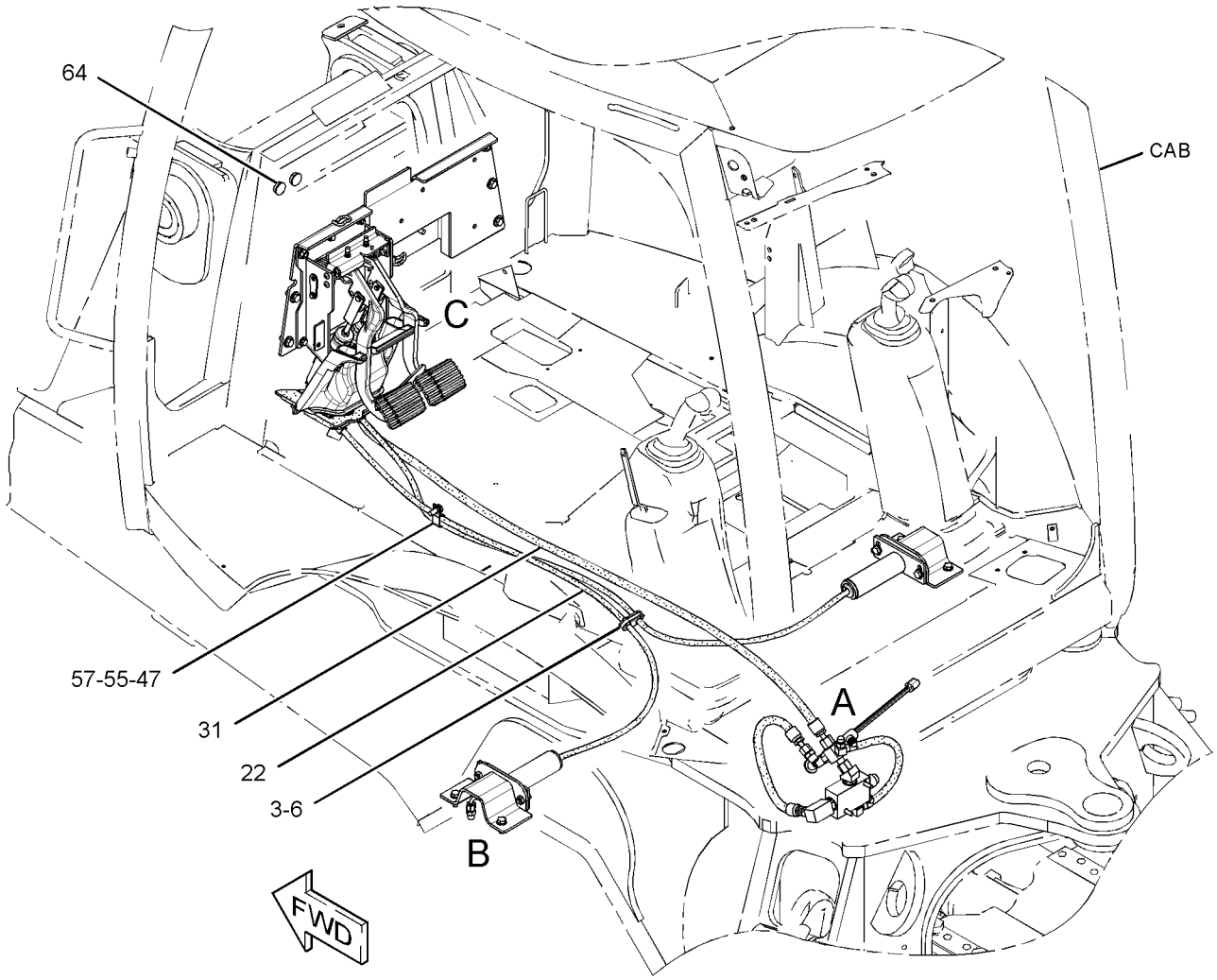

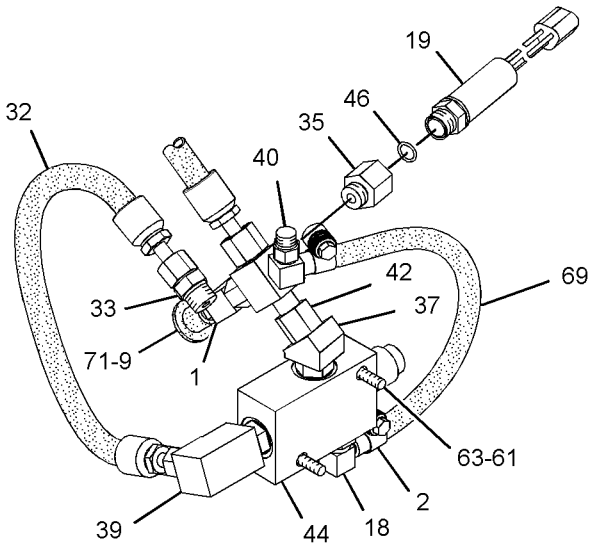

VIEW OF AREA A
(EXPLODED)

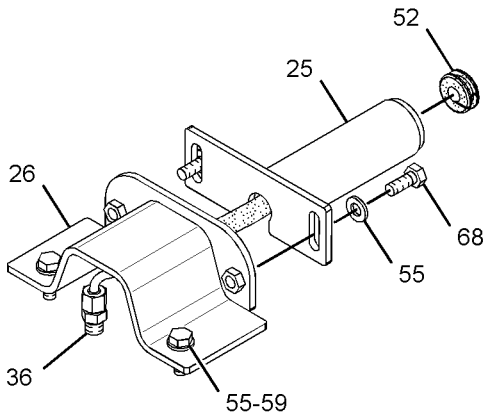

VIEW OF AREA B
(EXPLODED)

REFER TO ALL ILLUSTRATIONS OF
THIS GROUP FOR AUXILIARY VIEWS

GRAPHIC #1

g02145134

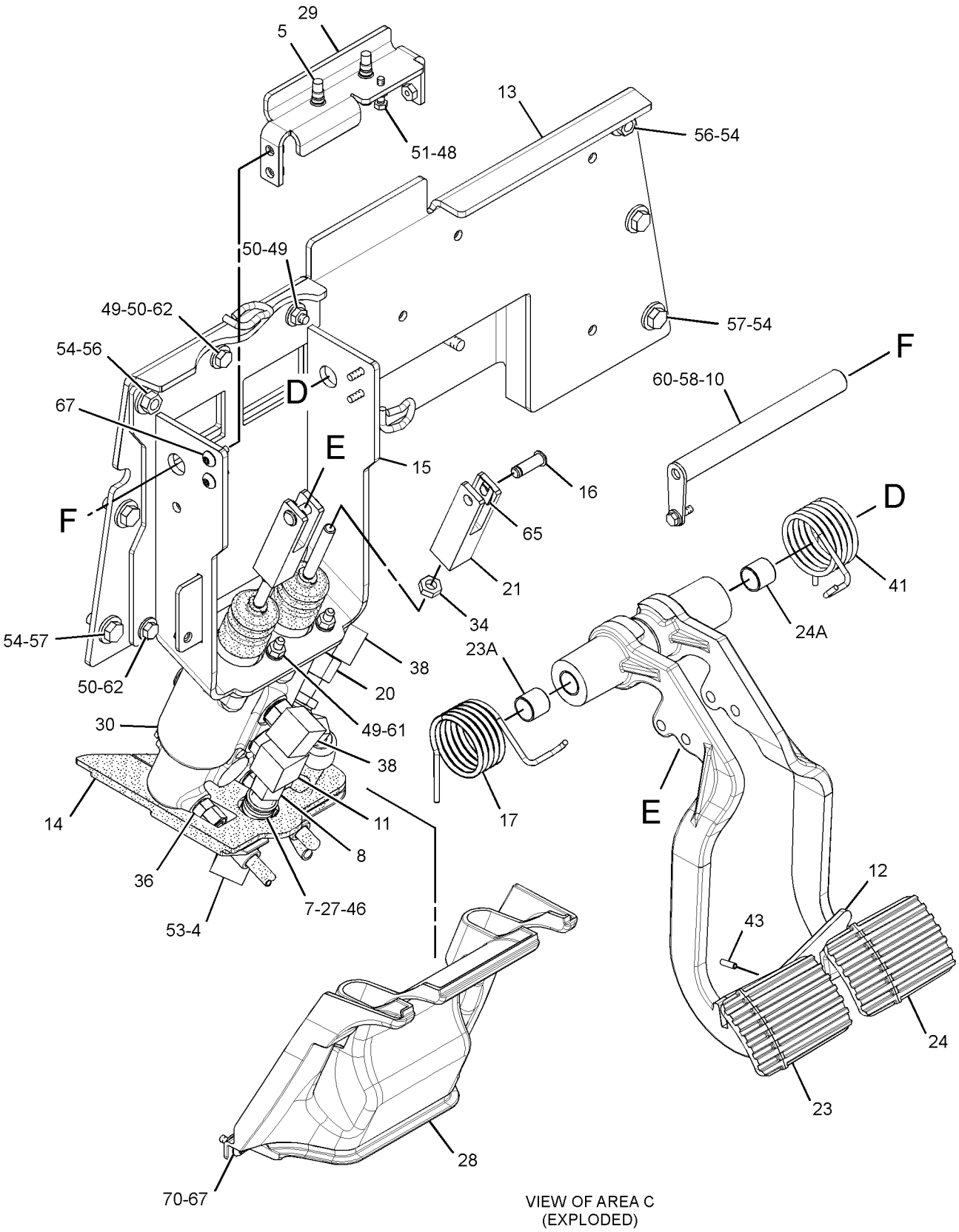

VIEW OF AREA C
(EXPLODED)

GRAPHIC #2 **<END>** g01455719

163-0753 LEVER GP-HAND CONTROL

S/N: RBA1-UP

PART OF 261-5517 CONTROL GP-PARKING BRAKE

SMCS-4284 **i02156244**

NOTE	REF NO	GRAPHIC REF	PART NUMBER	QTY	PART NAME 1 2 3 4 5 6 (PRODUCT LEVEL)	SEE PAGE
	1	1	**7R-8239**	2	SPACER	
	2	1	**039-9133**	1	PIN	
	3	1	**164-9598**	1	GRIP	
	4	1	**164-9599**	1	COVER	
	5	1	**3B-4610**	1	PIN-COTTER	
	6	1	**8T-4224**	2	WASHER-HARD (8.8X16X2-MM THK)	

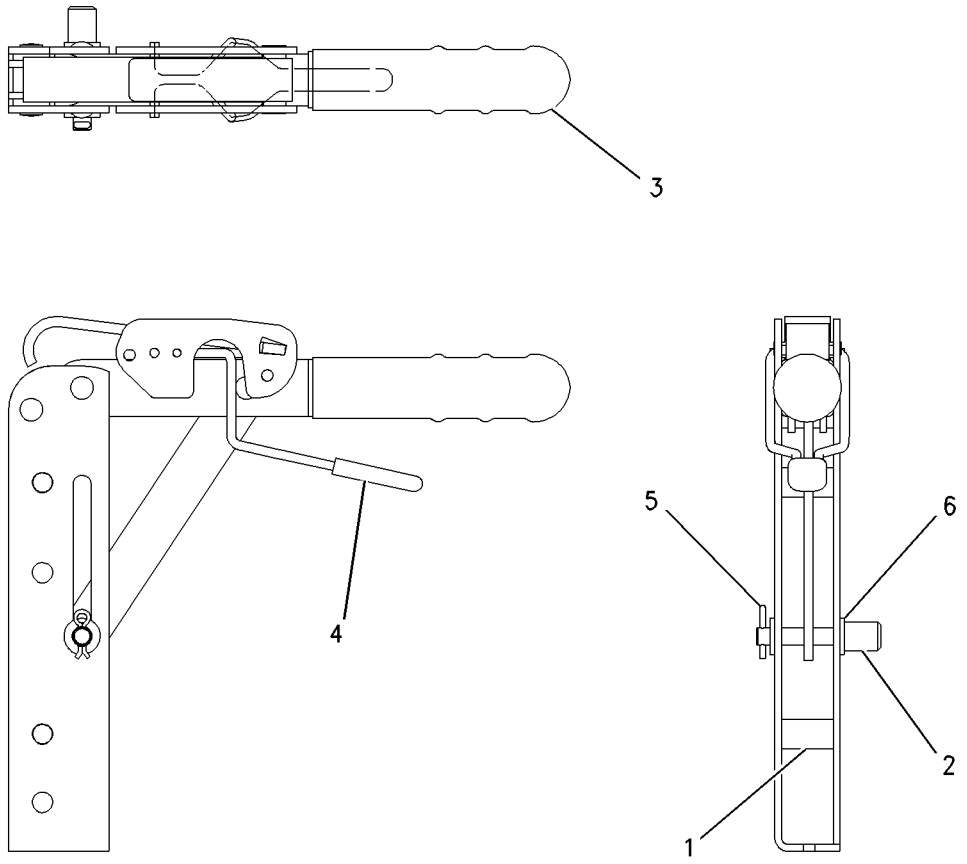

GRAPHIC #1 **<END>** g00729504

153-7369 KNOB GP-STEERING

S/N: RBA1-UP
PART OF 218-4453 CONTROL GP-STEERING
AN ATTACHMENT

SMCS-4309 **i01029926**

NOTE	REF NO	GRAPHIC REF	PART NUMBER	QTY	PART NAME 1 2 3 4 5 6 (PRODUCT LEVEL)	SEE PAGE
M	1	1	**8T-6869**	1	BOLT (M8X1.25X60-MM)	
	2	1	**8T-4224**	1	WASHER-HARD (8.8X16X2-MM THK)	
M	3	1	**5C-7261**	1	NUT (M8X1.25-THD)	

M-METRIC PART

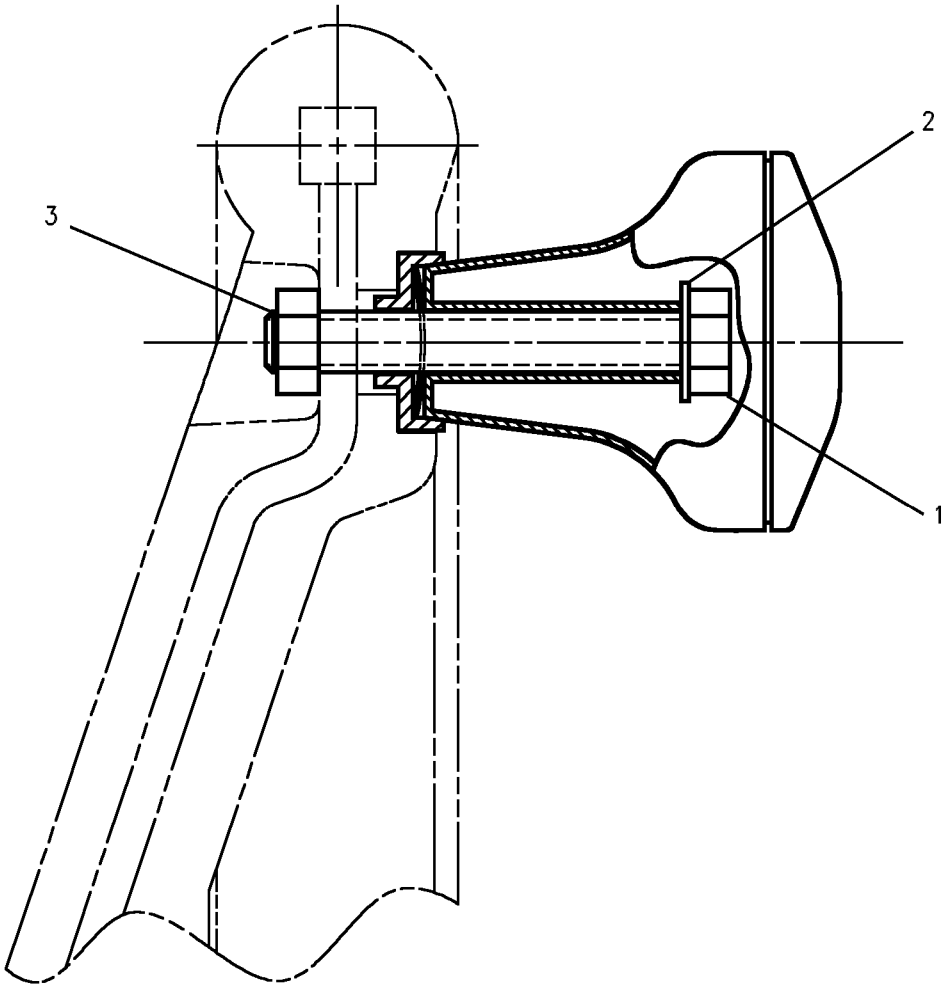

GRAPHIC #1 **<END>** g00534771

STEERING SYSTEM

289-3275 LINES GP-STEERING

S/N: RBA1-UP

PART OF 254-0188 VALVE AR-BANK 2, 254-0189 VALVE AR-BANK 3

AN ATTACHMENT

SMCS-4304 **i04125612**

NOTE	REF NO	GRAPHIC REF	PART NUMBER	QTY	PART NAME 1 2 3 4 5 6 (PRODUCT LEVEL)	SEE PAGE
	1	1	**5D-1026**	2	CLAMP-BAND	
E	2	1	**5P-1505**		HOSE (60-CM)	
	3	1	**7K-1181**	2	STRAP-CABLE	
	4	1	**9R-3884**	1	SPACER (13X20X45-MM THK)	
	5	1	**206-1652**	1	SEAL	
	6	1	**233-6592**	1	SPACER (13X20X24-MM THK)	
	8	1	**269-4964**	1	ELBOW-ADAPTER	
	9	1	**269-4966**	2	FITTING-ADAPTER	
I	10	1	**289-3284**	1	HOSE AS	
I	11	1	**289-3285**	1	HOSE AS	
M	12	1	**8T-5436**	1	BOLT (M10X1.5X130-MM)	
	13	1	**9M-8406**	1	CLIP	
	14	1	*148-8383*	2	ELBOW AS	
					(EACH INCLUDES)	
		1	**3K-0360**	1	SEAL-O-RING	
		1	**6V-8397**	1	SEAL-O-RING	
		1	**8T-1683**	1	ELBOW	
	15	1	*150-3026*	1	ELBOW AS	
		1	**3K-0360**	1	SEAL-O-RING	
		1	**6V-4292**	1	ELBOW	
	16	1	**269-4949**	1	ADAPTER	
	17	1	**269-4951**	2	ADAPTER	
	18	1	**5P-4295**	5	CLIP	
	19	1	**5P-7462**	1	CLIP (SLOT)	
	20	1	**5P-7463**	1	CLIP (TAB)	
	21	1	**6V-0683**	1	GROMMET	
	22	1	**8T-4121**	5	WASHER-HARD (11X21X2.5-MM THK)	
M	23	1	**8T-4185**	1	BOLT (M10X1.5X50-MM)	
M	24	1	**8T-4195**	2	BOLT (M10X1.5X30-MM)	
M	25	1	**8T-5005**	1	BOLT (M10X1.5X70-MM)	

E-ORDER BY THE CENTIMETER
I-REFER TO HYDRAULIC INFORMATION SYSTEM
M-METRIC PART

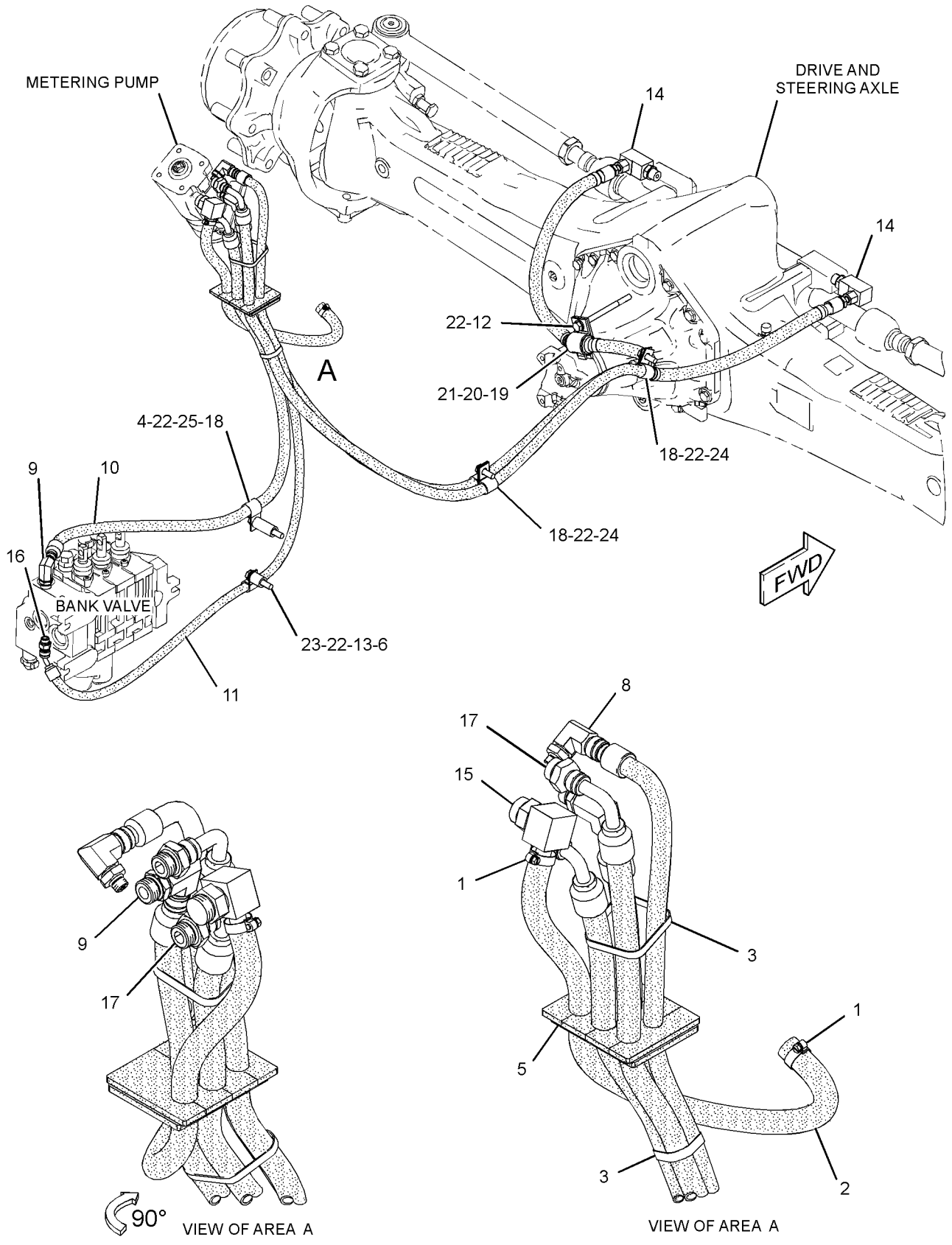

GRAPHIC #1 **<END>** g01417222

STEERING SYSTEM

345-3169 LINES GP-STEERING

S/N: RBA1-UP

PART OF 346-1232 VALVE AR-BANK 2, 346-1233 VALVE AR-BANK 3

AN ATTACHMENT

SMCS-4304 **i04130950**

NOTE	REF NO	GRAPHIC REF	PART NUMBER	QTY	PART NAME 1 2 3 4 5 6 (PRODUCT LEVEL)	SEE PAGE
	1	1	**5D-1026**	2	CLAMP-BAND	
E	2	1	**5P-1505**		HOSE (60-CM)	
I	3	1	**289-3286**	1	HOSE AS	
I	4	1	**289-3288**	1	HOSE AS	
I	5	1	**346-0323**	1	HOSE AS	
I	6	1	**308-5496**	1	HOSE AS	
	7	1	*148-8318*	1	CONNECTOR AS	
		1	**3K-0360**	1	SEAL-O-RING	
		1	**6V-8397**	1	SEAL-O-RING	
		1	**6V-8634**	1	CONNECTOR	
	8	1	*148-8368*	1	ELBOW AS	
		1	**3J-1907**	1	SEAL-O-RING	
		1	**4J-5477**	1	SEAL-O-RING	
		1	**6V-8627**	1	ELBOW	
	9	1	*148-8367*	2	ELBOW AS	
					(EACH INCLUDES)	
		1	**6V-8397**	1	SEAL-O-RING	
		1	**6V-9850**	1	ELBOW	
	10	1	*148-8369*	1	ELBOW AS	
		1	**3J-7354**	1	SEAL-O-RING	
		1	**4J-5477**	1	SEAL-O-RING	
		1	**6V-8628**	1	ELBOW	
	11	1	*148-8383*	2	ELBOW AS	
					(EACH INCLUDES)	
		1	**3K-0360**	1	SEAL-O-RING	
		1	**6V-8397**	1	SEAL-O-RING	
		1	**8T-1683**	1	ELBOW	
	12	1	*150-3026*	1	ELBOW AS	
		1	**3K-0360**	1	SEAL-O-RING	
		1	**6V-4292**	1	ELBOW	
	13	1	*164-5605*	1	CONNECTOR AS	
		1	**3K-0360**	1	SEAL-O-RING	
		1	**6V-8397**	1	SEAL-O-RING	
		1	**8T-0076**	1	CONNECTOR	
	14	1	**206-1652**	1	SEAL	
	15	1	**233-6592**	1	SPACER (13X20X24-MM THK)	
	16	1	**269-4951**	1	ADAPTER	
	17	1	**269-4966**	1	FITTING-ADAPTER	
	18	1	**5P-4295**	5	CLIP	
	19	1	**5P-7462**	1	CLIP (SLOT)	
	20	1	**5P-7463**	1	CLIP (TAB)	
	21	1	**6V-0683**	1	GROMMET	
	22	1	**7K-1181**	2	STRAP-CABLE	
	23	1	**8T-4121**	5	WASHER-HARD (11X21X2.5-MM THK)	
M	24	1	**8T-4185**	1	BOLT (M10X1.5X50-MM)	
M	25	1	**8T-4195**	2	BOLT (M10X1.5X30-MM)	
M	26	1	**8T-5005**	1	BOLT (M10X1.5X70-MM)	
M	27	1	**8T-5436**	1	BOLT (M10X1.5X130-MM)	
	28	1	**9M-8406**	1	CLIP	
	29	1	**9R-3884**	1	SPACER (13X20X45-MM THK)	

E-ORDER BY THE CENTIMETER
I-REFER TO HYDRAULIC INFORMATION SYSTEM
M-METRIC PART

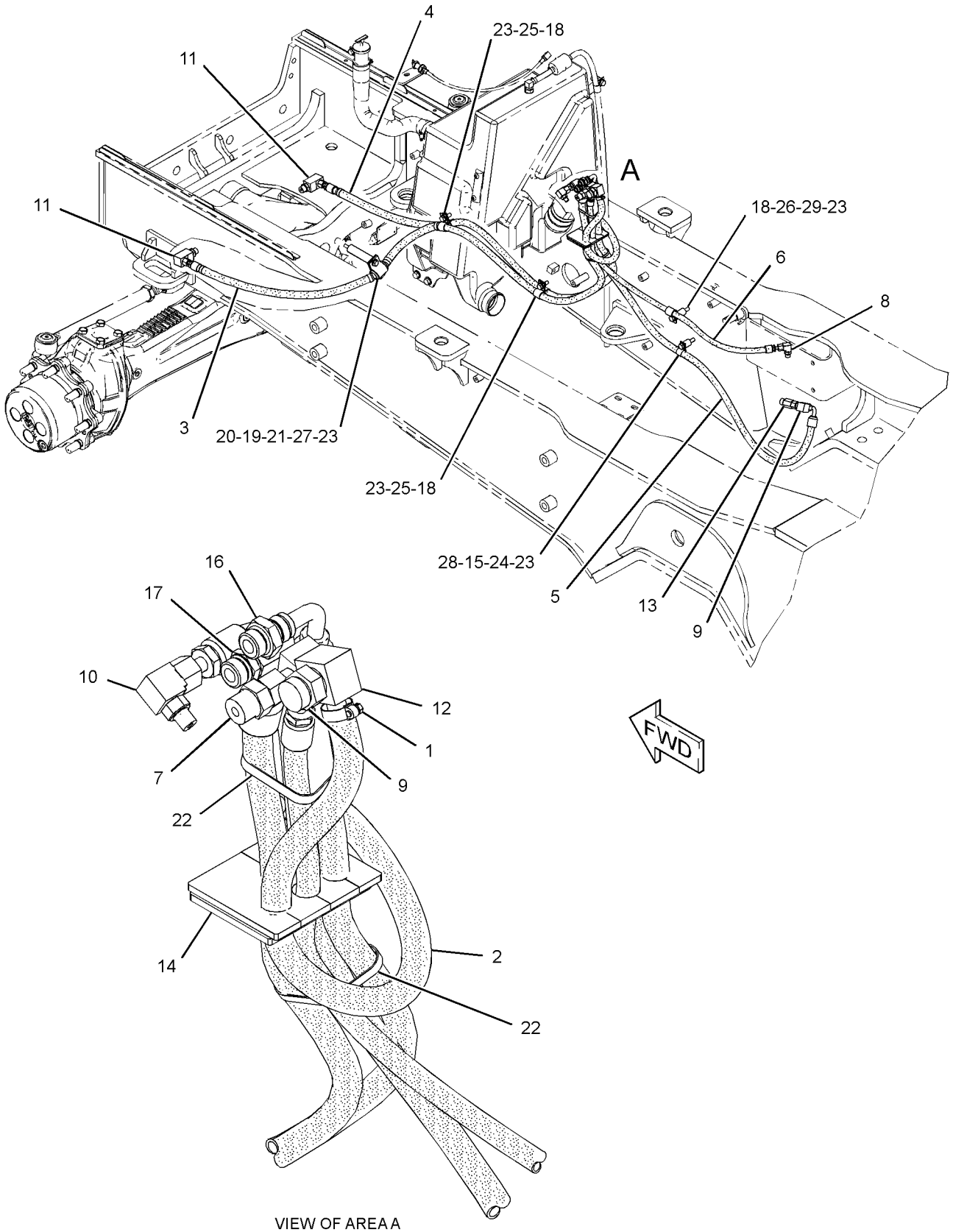

VIEW OF AREA A

GRAPHIC #1 **<END>** g02334157

STEERING SYSTEM

270-1590 PUMP GP-METERING

S/N: RBA1-UP

PART OF 254-0170 HYDRAULIC AR

SMCS-4312 **i04128989**

NOTE	REF NO	GRAPHIC REF	PART NUMBER	QTY	PART NAME 1 2 3 4 5 6 (PRODUCT LEVEL)	SEE PAGE
	1	1	**254-7536**	1	BEARING	
	2	1	**264-1335**	2	RACE-BEARING	
					AVAILABLE REPAIR KIT(S):	
			257-8471	1	KIT-SEAL (HMU)	
					(INCLUDES BACKUP RING & SEALS)	

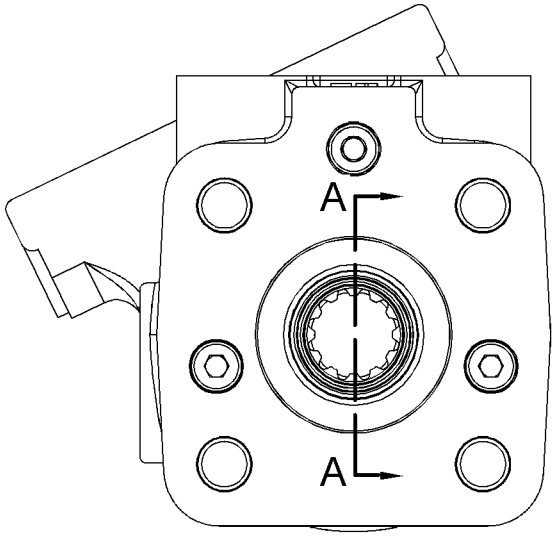

TOP VIEW

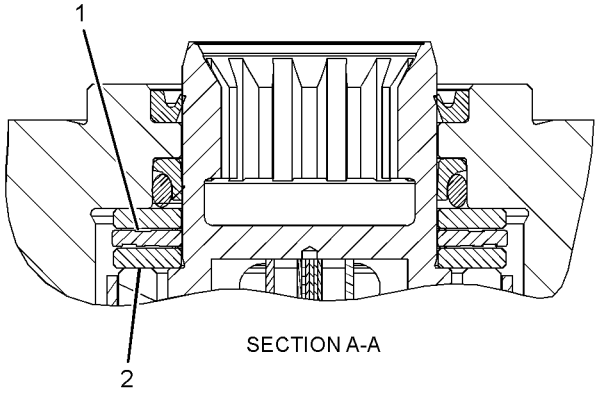

SECTION A-A

GRAPHIC #1 **<END>** g01413366

STEERING SYSTEM

218-4454 STEERING COLUMN GP–TILT

S/N: RBA1-UP

PART OF 218-4453 CONTROL GP-STEERING

AN ATTACHMENT

SMCS-4310, 4338 **i03574204**

NOTE	REF NO	GRAPHIC REF	PART NUMBER	QTY	PART NAME 1 2 3 4 5 6 (PRODUCT LEVEL)	SEE PAGE
	1	1	**338-1508**	1	SPRING GP-GAS	
		1	**146-6347**	2	RING-RETAINING	
	2	1	**254-9926**	1	KIT-TILT PEDAL	
					(INCLUDES SPRING, BOLT, NUT, RING-RETAINING & TILT-LEVER)	
	3	1	**254-9927**	1	KIT-PIVOT	
					(INCLUDES BUSHINGS, NUTS, PINS & WASHERS)	
M	4	1	**6V-8227**	1	NUT (M18X1.5-THD)	

M-METRIC PART

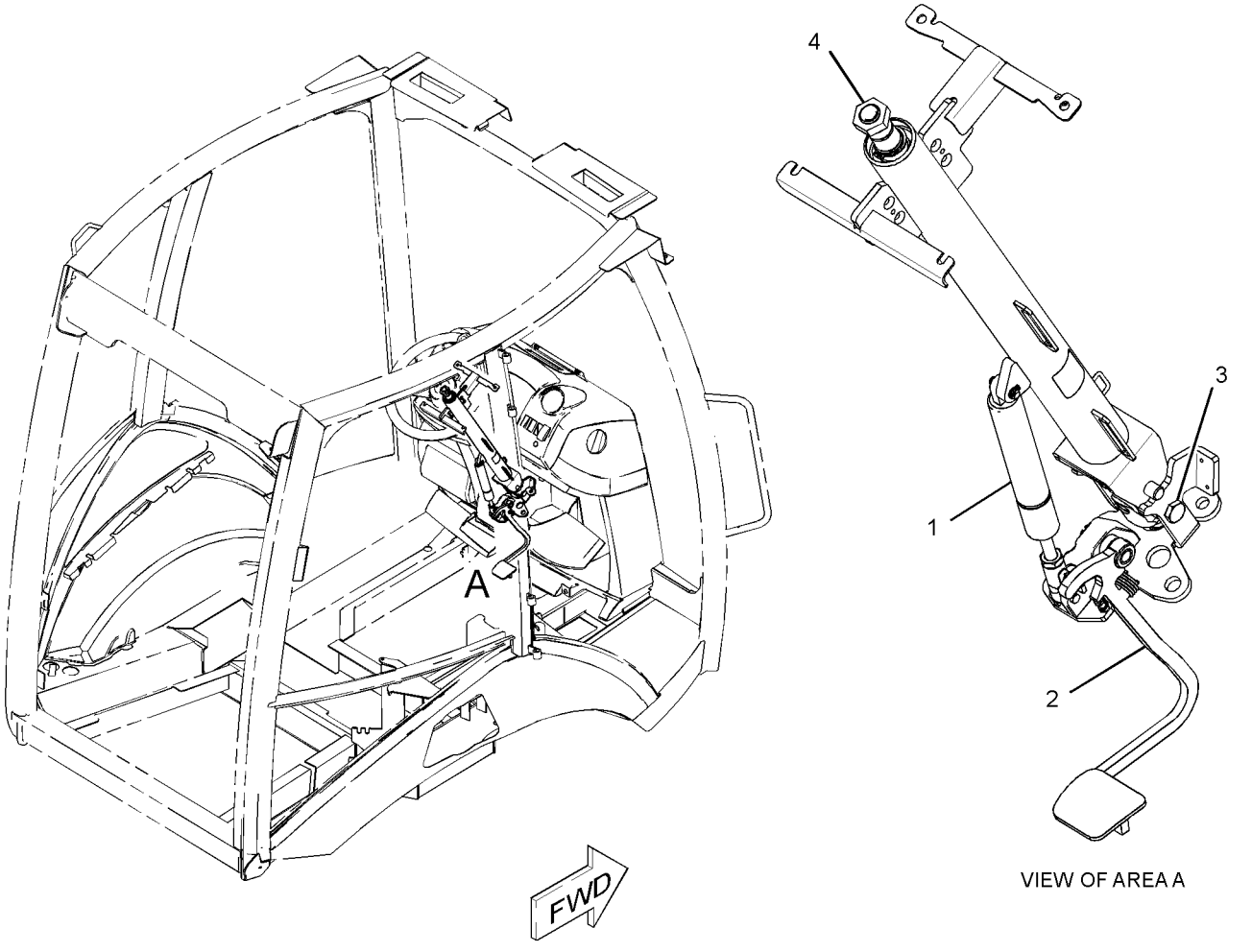

GRAPHIC #1 **<END>** g01910773

253-0784 BOX GP-BATTERY—WITH STORAGE

S/N: RBA1-UP

PART OF 254-0110 CHASSIS AR

SMCS-7257 **i03856957**

NOTE	REF NO	GRAPHIC REF	PART NUMBER	QTY	PART NAME 1 2 3 4 5 6 (PRODUCT LEVEL)	SEE PAGE
	1	1	**8C-8522**	1	PAWL-LATCH	
	2	1	**118-6854**	1	TREAD	
	3	1	**129-4741**	1	LATCH AS-T-BAR	
	4	1	**164-3876**	1	STEP AS	
M		1	**8T-3612**	4	NUT-WELD (M8X1.25-THD)	
	5	1	**245-6109**	1	PLATE AS	
M		1	**8T-3612**	3	NUT-WELD (M8X1.25-THD)	
	6	1	**295-8472**	1	BRACKET AS	
	7	1	**321-2559**	1	COVER AS-ACCESS	
	8	1	**349-3650**	1	BOX AS-BATTERY	
M	9	1	**5C-7261**	3	NUT (M8X1.25-THD)	
	10	1	**5P-4116**	16	WASHER-HARD (8.8X20.5X2-MM THK)	
M	11	1	**6V-7743**	2	LOCKNUT (M6X1-THD)	
M	12	1	**8T-4133**	2	NUT (M10X1.5-THD)	
M	13	1	**8T-4183**	4	BOLT (M12X1.75X40-MM)	
M	14	1	**8T-4189**	13	BOLT (M8X1.25X20-MM)	
	15	1	**8T-4205**	2	WASHER-HARD (7.2X14.5X2-MM THK)	
	16	1	**8T-4223**	5	WASHER-HARD (13.5X25.5X3-MM THK)	

M-METRIC PART

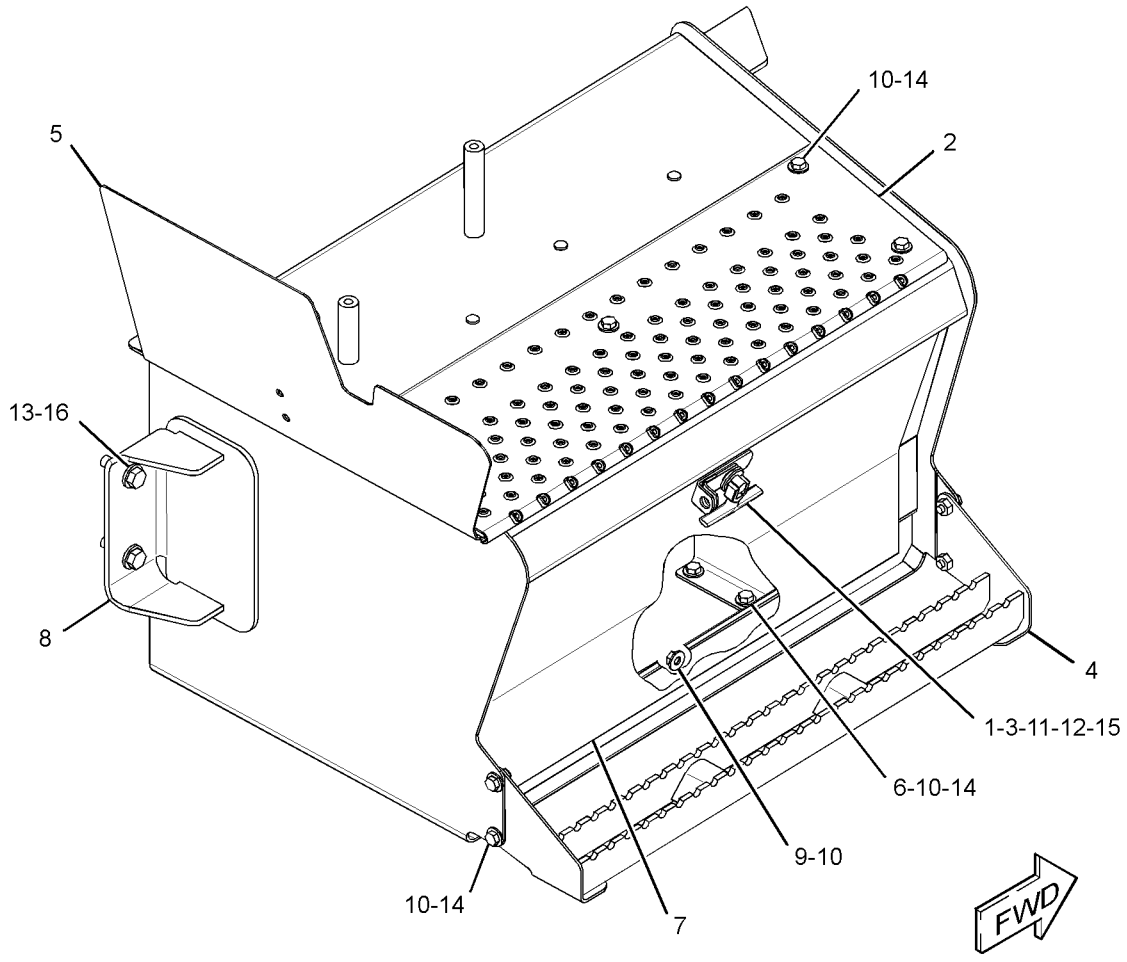

GRAPHIC #1 **<END>** g02116514

FRAME AND BODY

254-0145 COUNTERWEIGHT GP

S/N: RBA1-UP

PART OF 254-0110 CHASSIS AR

SMCS-7056 **i04101169**

NOTE	REF NO	GRAPHIC REF	PART NUMBER	QTY	PART NAME 1 2 3 4 5 6 (PRODUCT LEVEL)	SEE PAGE
	1	1	**068-6405**	4	WASHER (26X63.5X6-MM THK)	
	2	1	**270-2692**	1	COUNTERWEIGHT	
M	3	1	**8T-4779**	2	BOLT (M16X2X35-MM)	
M	4	1	**7X-2567**	4	BOLT (M24X3X160-MM)	
	5	1	**9X-8257**	2	WASHER (17.5X30.0X3.5-MM THK)	

M-METRIC PART

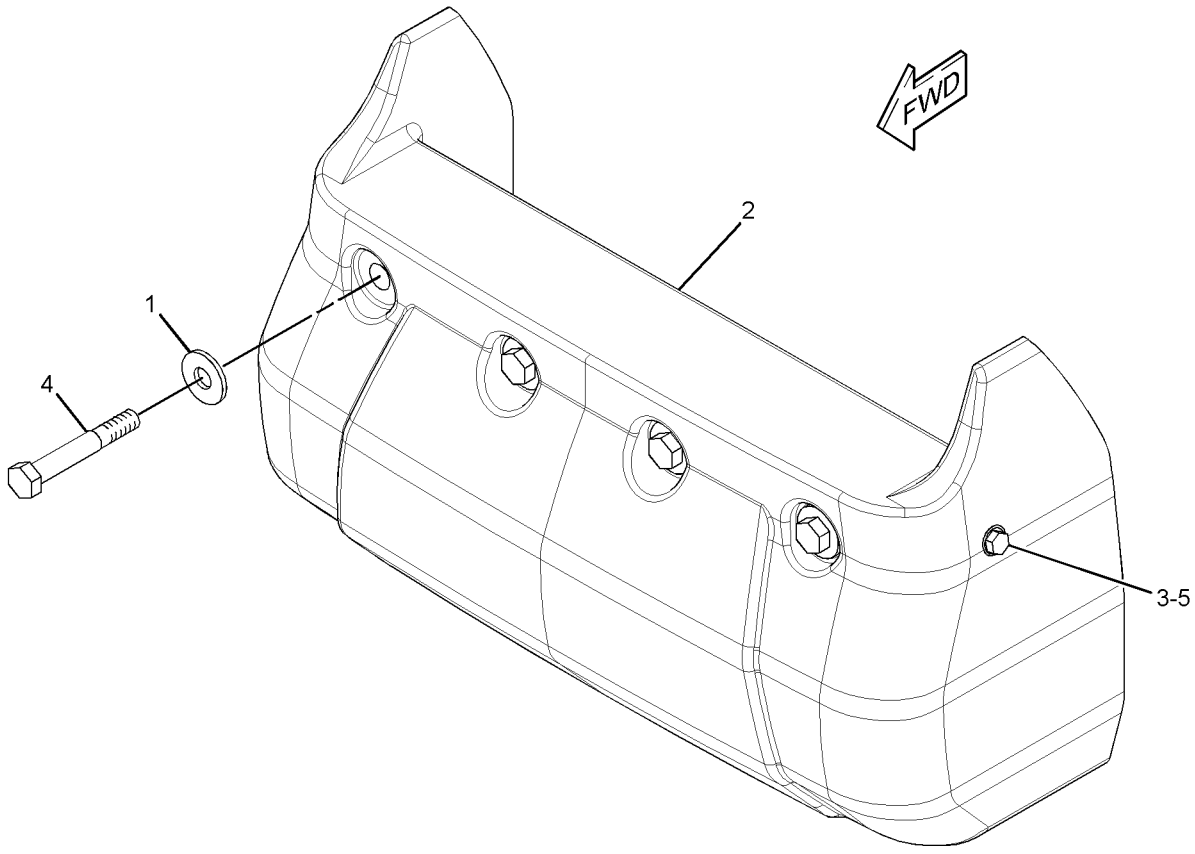

GRAPHIC #1 **<END>** g01352225

294-9538 ENCLOSURE GP-ENGINE–RH

S/N: RBA1-UP

PART OF 254-0107 HOOD & GUARD GP

SMCS-7263 **i04101109**

NOTE	REF NO	GRAPHIC REF	PART NUMBER	QTY	PART NAME 1 2 3 4 5 6 (PRODUCT LEVEL)	SEE PAGE
M	1	1	**095-0741**	7	SCREW-MACHINE (M6X1-THD)	
	2	1	**270-4195**	1	ENCLOSURE	
	3	1	**294-9540**	1	INSULATION	
	4	1	**312-2206**	7	SUPPORT	
	5	1	**319-6144**	7	WASHER	

M-METRIC PART

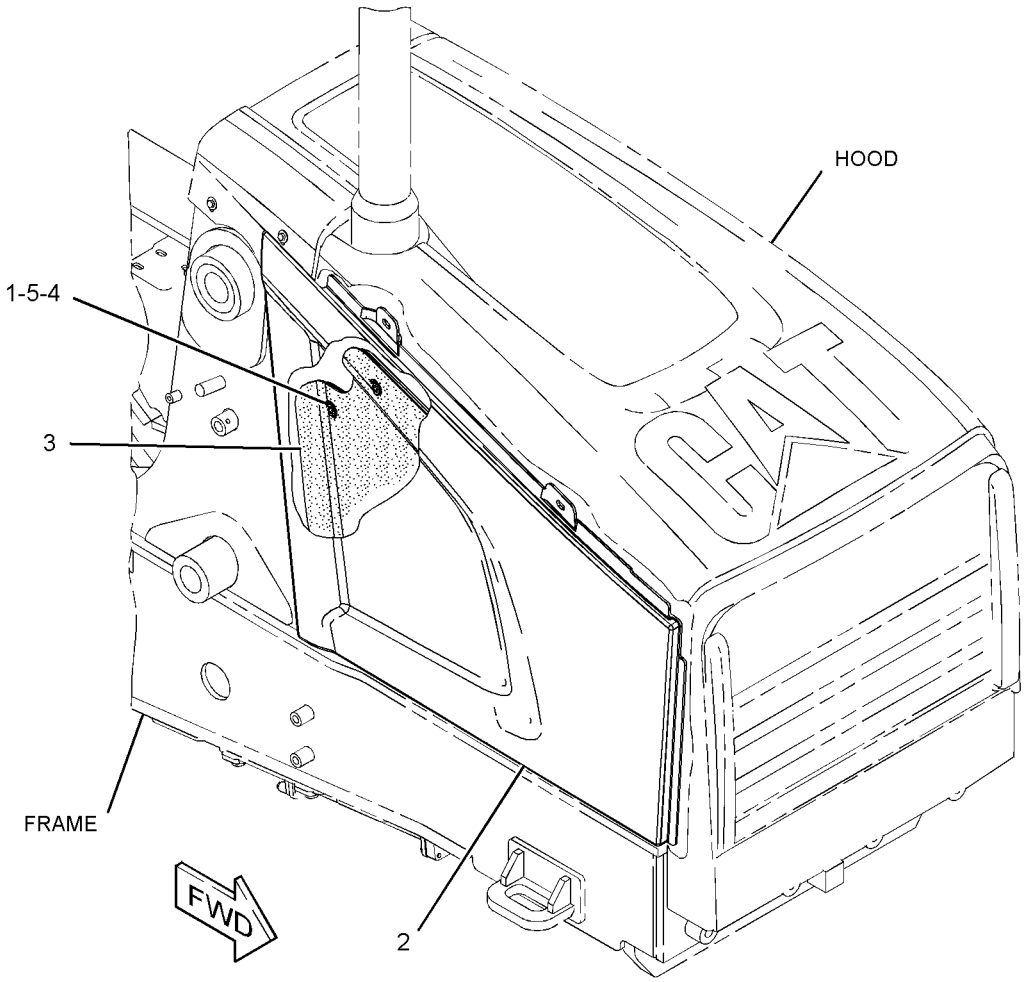

GRAPHIC #1 **<END>** g01433085

FRAME AND BODY

294-9539 ENCLOSURE GP-ENGINE–LH

S/N: RBA1-UP

PART OF 254-0107 HOOD & GUARD GP

SMCS-7263 **i04101110**

NOTE	REF NO	GRAPHIC REF	PART NUMBER	QTY	PART NAME 1 2 3 4 5 6 (PRODUCT LEVEL)	SEE PAGE
	1	1	**2W-8604**	7	WASHER (6.5X35X1.5-MM THK)	
M	2	1	**095-0741**	7	SCREW-MACHINE (M6X1-THD)	
	3	1	**270-4194**	1	ENCLOSURE (LH)	
	4	1	**294-9541**	1	INSULATION (LH)	
	5	1	**312-2206**	7	SUPPORT	

M-METRIC PART

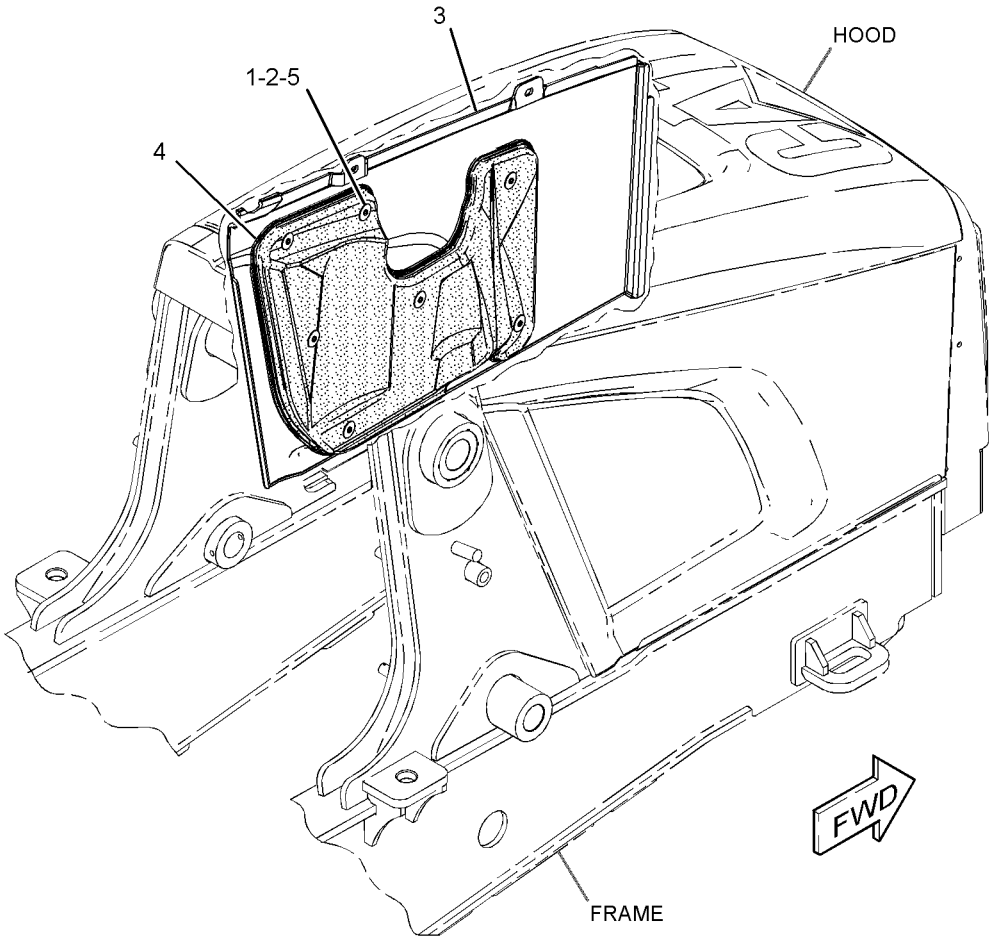

GRAPHIC #1 **<END>** g01411377

FRAME AND BODY

249-9328 EXTENSION GP-FENDER

S/N: RBA1-UP

PART OF 254-0200 CAB AR-ENCLOSED ROPS, 254-0198 CANOPY AR-OPEN ROPS AN ATTACHMENT

SMCS-7252 **i03849756**

NOTE	REF NO	GRAPHIC REF	PART NUMBER	QTY	PART NAME 1 2 3 4 5 6 (PRODUCT LEVEL)	SEE PAGE
	1	1	**249-9329**	1	EXTENSION-FENDER (LH)	
	2	1	**249-9330**	1	EXTENSION-FENDER (RH)	
	3	1	**251-4889**	8	WASHER-HARD (7.2X14.5X2-MM THK)	
	4	1	**251-4890**	4	SCREW-MACHINE (M6X1X25-MM)	
	5	1	**251-4891**	4	LOCKNUT (M6X1-THD)	

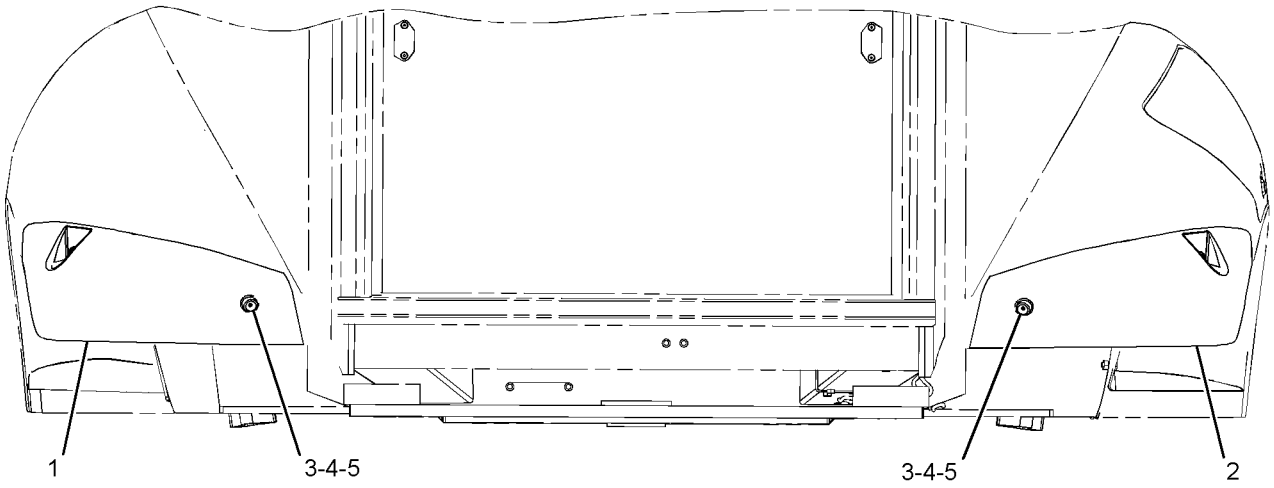

REAR VIEW

GRAPHIC #1 **<END>** g01231585

FRAME AND BODY

201-3954 FENDER GP-FRONT

S/N: RBA1-UP

AN ATTACHMENT

SMCS-7252 **i03498522**

NOTE	REF NO	GRAPHIC REF	PART NUMBER	QTY	PART NAME 1 2 3 4 5 6 (PRODUCT LEVEL)	SEE PAGE
	1	1	**162-4004**	2	FENDER	
M	2	1	**199-0783**	4	BOLT (M16X2X38-MM)	
	3	1	**222-1801**	1	BRACKET AS (LH)	
	4	1	**222-1802**	1	BRACKET AS (RH)	
M	5	1	**6V-7744**	4	LOCKNUT (M10X1.5-THD)	
	6	1	**8T-4121**	4	WASHER-HARD (11X21X2.5-MM THK)	
	7	1	**8T-4122**	12	WASHER-HARD (17X32X3.5-MM THK)	
M	8	1	**8T-4195**	4	BOLT (M10X1.5X30-MM)	
	9	1	**8T-4222**	4	WASHER-PLATED (11X32X2.5-MM THK)	
M	10	1	**8T-4778**	4	LOCKNUT (M16X2-THD)	

M-METRIC PART

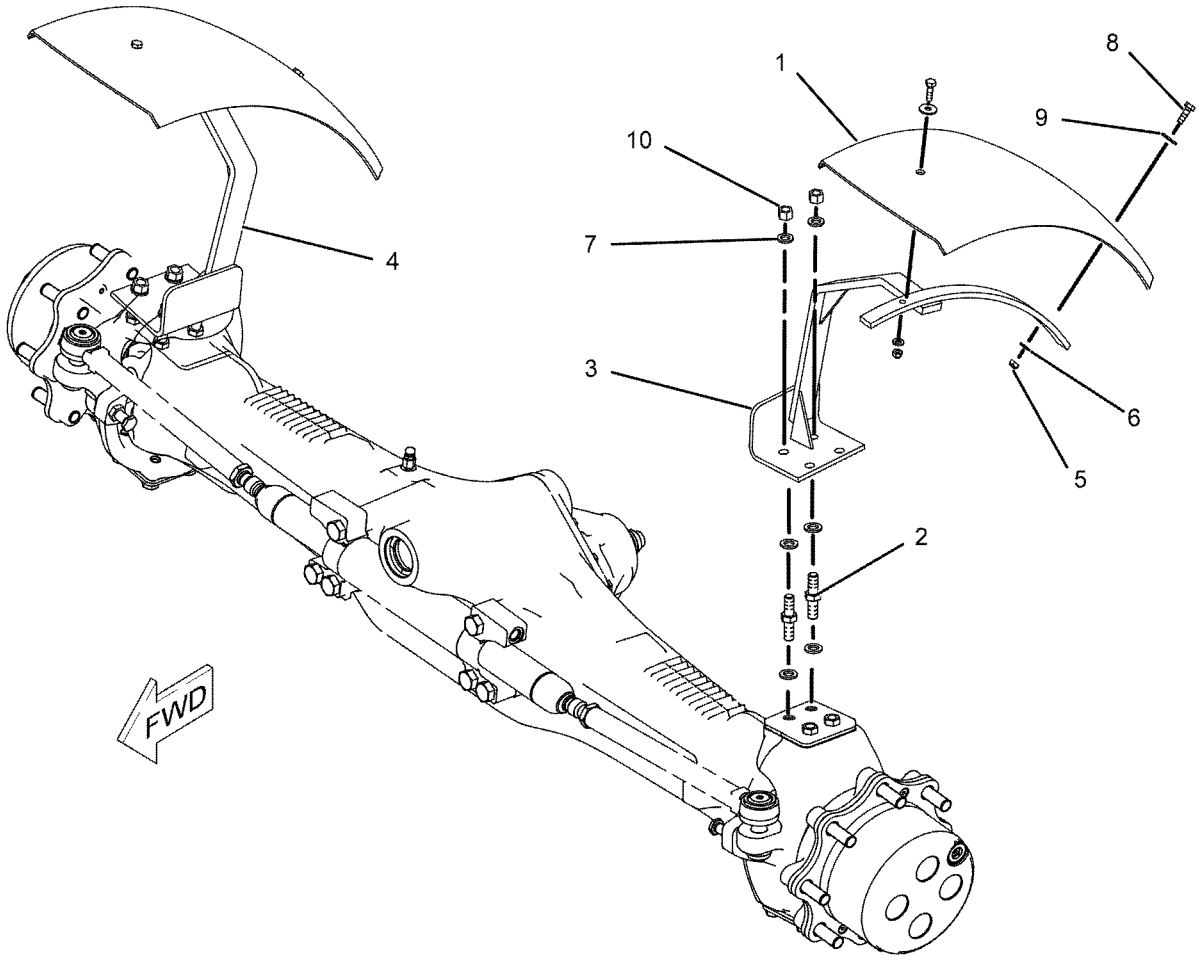

GRAPHIC #1 **<END>** g01027709

213-1891 FENDER GP-REAR

S/N: RBA1-UP

PART OF 254-0200 CAB AR-ENCLOSED ROPS, 254-0198 CANOPY AR-OPEN ROPS AN ATTACHMENT

SMCS-7252 **i03852124**

NOTE	REF NO	GRAPHIC REF	PART NUMBER	QTY	PART NAME 1 2 3 4 5 6 (PRODUCT LEVEL)	SEE PAGE
M	1	1	**8T-5093**	4	BOLT-LOCKING (M8X1.25X25-MM)	
E	2	1	**244-3113**		SEAL (210-CM EACH)	
	3	1	**116-5763**	1	CLIP-SPRING	
M	4	1	**193-9055**	4	SCREW-HEX FLANGE (M4X1.79X17-MM)	
	5	1	**211-3783**	1	FENDER-REAR (LH)	
	6	1	**213-1881**	1	FENDER-REAR (RH)	
	7	1	**213-1884**	1	CLIP	
	8	1	**213-1887**	1	COVER-FENDER	
	9	1	**213-1889**	1	PLATE	
	10	1	**225-0060**	1	GUARD	
J	11	1	**226-0291**	1	LOCK AS (PROTECTION)	
	12	1	**227-5556**	1	PLATE	
M	13	1	**7Y-9099**	1	SCREW-TRUSS HEAD (M8X1.25X25-MM)	
	14	1	**156-0283**	20	WASHER-HARD (8.4X35X2.5-MM THK)	
M	15	1	**5C-7261**	4	NUT (M8X1.25-THD)	
M	16	1	**8T-5091**	12	BOLT (M8X1.25X20-MM)	
L	17	1	**5P-0805**		SEAL (8-DM)	
E	18	1	**220-0738**		SEAL (118-CM)	

E-ORDER BY THE CENTIMETER
J-REQUIRES 5P8500 KEY
L-ORDER BY THE DECIMETER
M-METRIC PART

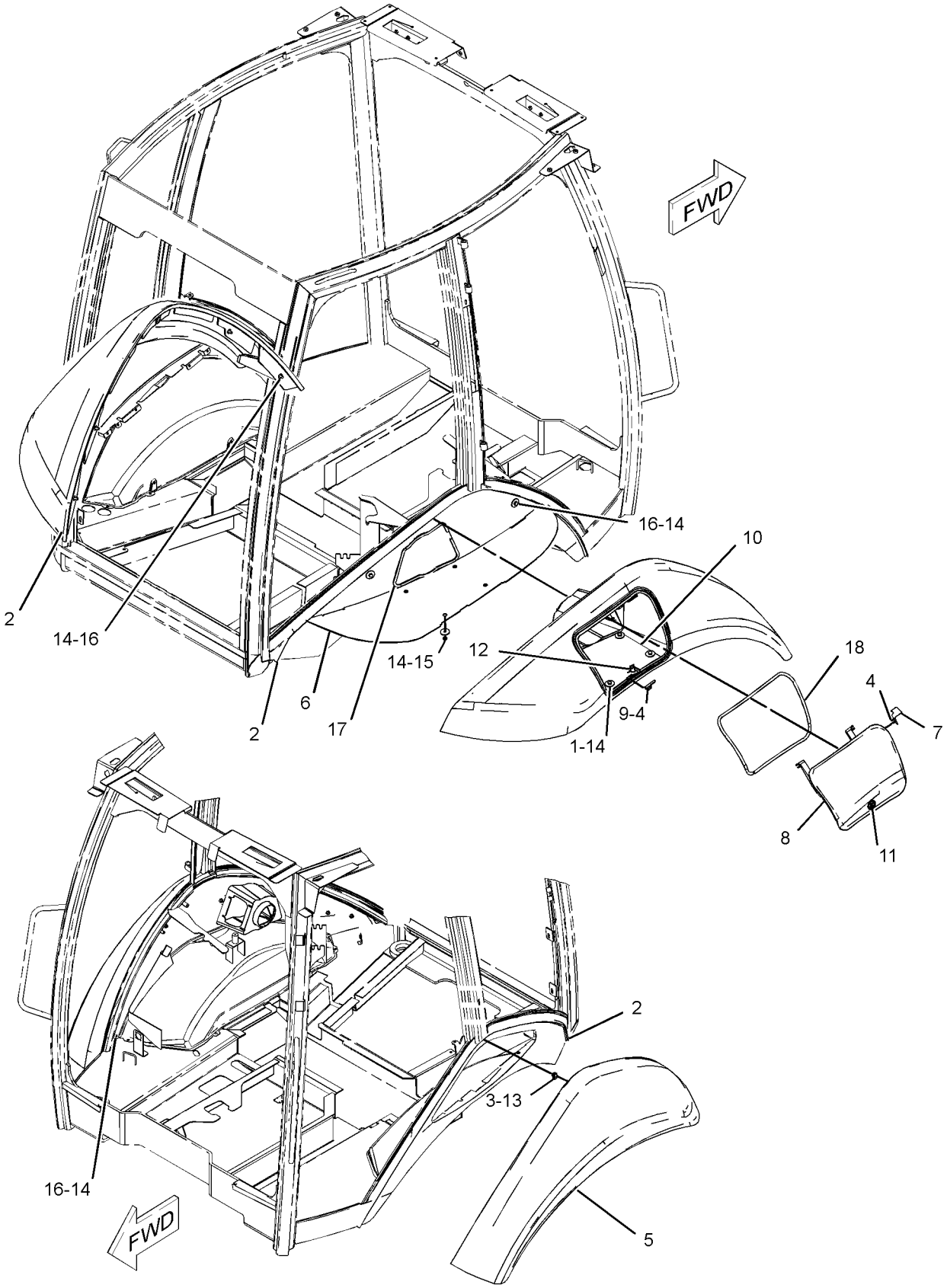

GRAPHIC #1 **<END>** g01275112

FRAME AND BODY

206-1831 FLOORPLATE GP

S/N: RBA1-UP
PART OF 254-0153, 254-0154 CONTROL AR-BACKHOE
AN ATTACHMENT

SMCS-7265 **i03857293**

NOTE	REF NO	GRAPHIC REF	PART NUMBER	QTY	PART NAME 1 2 3 4 5 6 (PRODUCT LEVEL)	SEE PAGE
	1	1	**289-9871**	1	PLATE AS	
	2	1	**269-3269**	1	PLATE AS	
M	3	1	**9X-2043**	42	SCREW-TRUSS HEAD (M6X1X14-MM)	
	4	1	**289-9874**	1	PLATE AS	
	5	1	**299-4777**	1	PLATE AS	
	6	1	**232-2865**	1	PLATE AS	
	7	1	**289-9873**	1	PLATE AS	
	8	1	**232-2869**	1	PLATE AS	
	9	1	**283-8563**	1	PLATE AS	
	10	1	**9X-2038**	38	WASHER (7X19X2-MM THK)	
	11	1	**232-2870**	1	PLATE AS	
	12	1	**223-4546**	1	PLATE AS	

M-METRIC PART

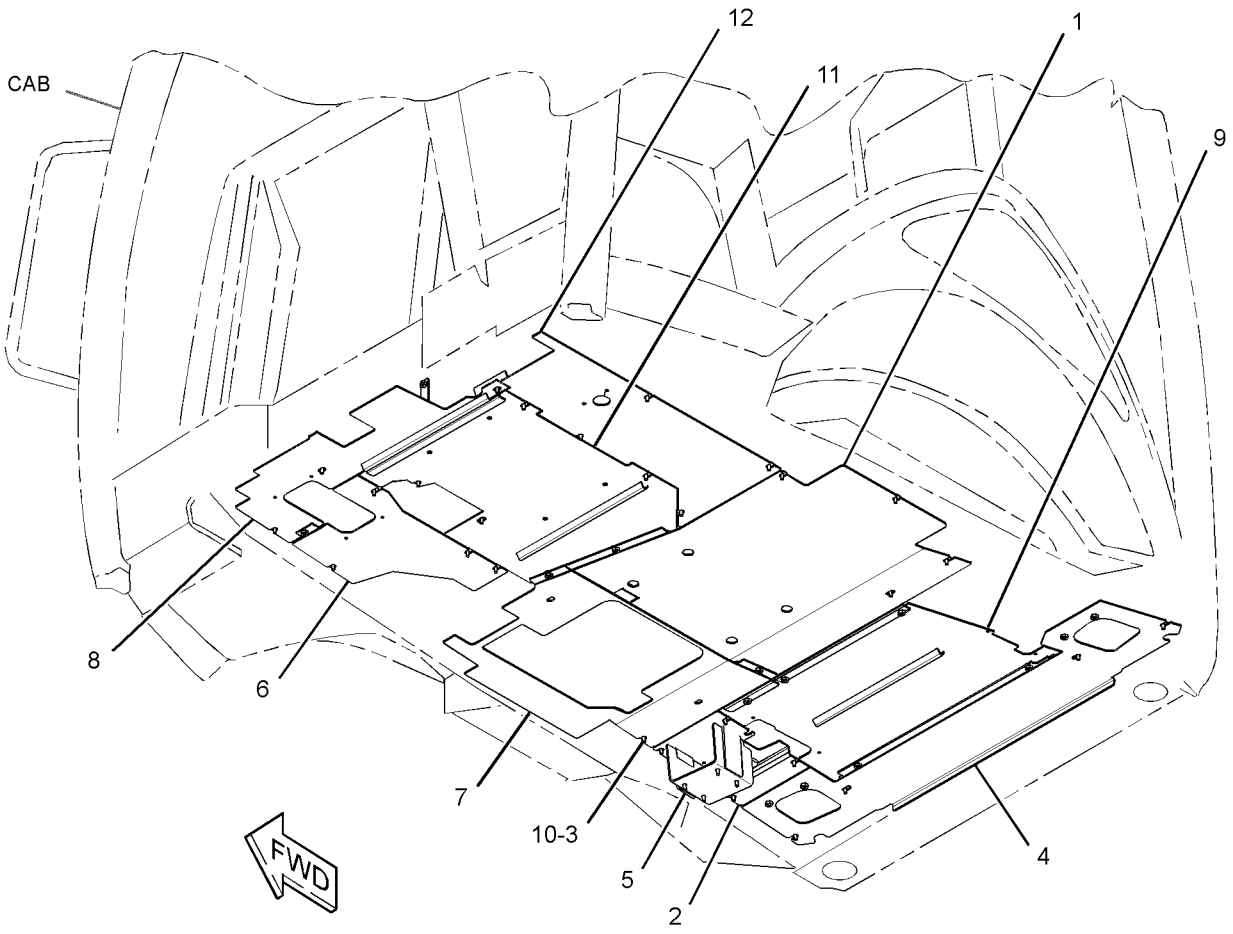

GRAPHIC #1 **<END>** g02110074

206-1840 FLOORPLATE GP

S/N: RBA1-UP

PART OF 254-0156, 254-0157, 254-0159, 254-0160 CONTROL AR-BACKHOE AN ATTACHMENT

SMCS-7265 **i04103210**

NOTE	REF NO	GRAPHIC REF	PART NUMBER	QTY	PART NAME 1 2 3 4 5 6 (PRODUCT LEVEL)	SEE PAGE
	1	1	**289-9871**	1	PLATE AS	
	2	1	**206-1835**	1	PLATE AS	
C	3	1	**223-4546**	1	PLATE AS	
	4	1	**289-9875**	1	PLATE AS	
	5	1	**289-9873**	1	PLATE AS	
	6	1	**223-8267**	1	PLATE AS	
	7	1	**232-2865**	1	PLATE AS	
	8	1	**232-2869**	1	PLATE AS	
	9	1	**232-2870**	1	PLATE AS	
	10	1	**9X-2038**	41	WASHER (7X19X2-MM THK)	
M	11	1	**9X-2043**	45	SCREW-TRUSS HEAD (M6X1X14-MM)	
	12	1	**299-4777**	1	PLATE AS	

C-CHANGE FROM PREVIOUS TYPE
M-METRIC PART

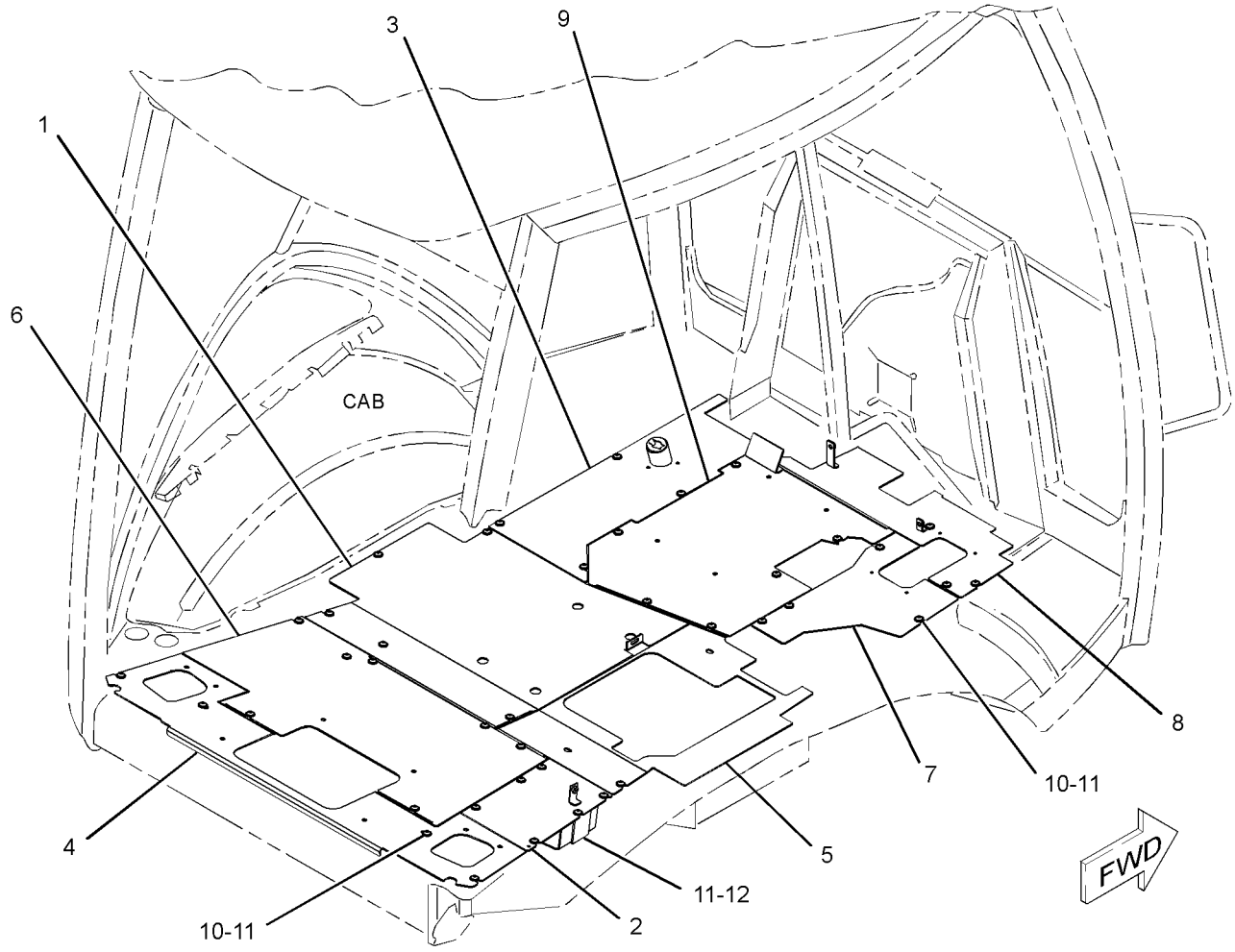

GRAPHIC #1 **<END>** g02311394

265-6810 FRAME GP-LOADER

S/N: RBA1-UP

PART OF 254-0110 CHASSIS AR

SMCS-7054 **i04101251**

NOTE	REF NO	GRAPHIC REF	PART NUMBER	QTY	PART NAME 1 2 3 4 5 6 (PRODUCT LEVEL)	SEE PAGE
	1	1	**3B-8486**	1	FITTING-GREASE	
	2	1	**5T-9771**	1	HOSE AS	
	3	1	**9R-0481**	2	WASHER (71X110X4-MM THK)	
	4	1	**082-2774**	1	CONNECTOR	
	5	1	**209-4777**	1	CAP & BEARING AS	
	5A	1	**9R-4110**	2	BUSHING	
Y	6	1	**265-6811**	1	FRAME GP-LOADER	217
M	7	1	**114-6099**	8	BOLT (M24X3X80-MM)	
	8	1	**3B-8488**	2	FITTING-GREASE	
	9	1	**3B-8489**	2	FITTING-GREASE	
	10	1	**3B-8822**	1	ELBOW	
M	11	1	**8T-4001**	8	NUT (M24X3-THD)	
	12	1	**8T-4167**	16	WASHER-HARD (26X44X4-MM THK)	

M-METRIC PART
Y-SEPARATE ILLUSTRATION

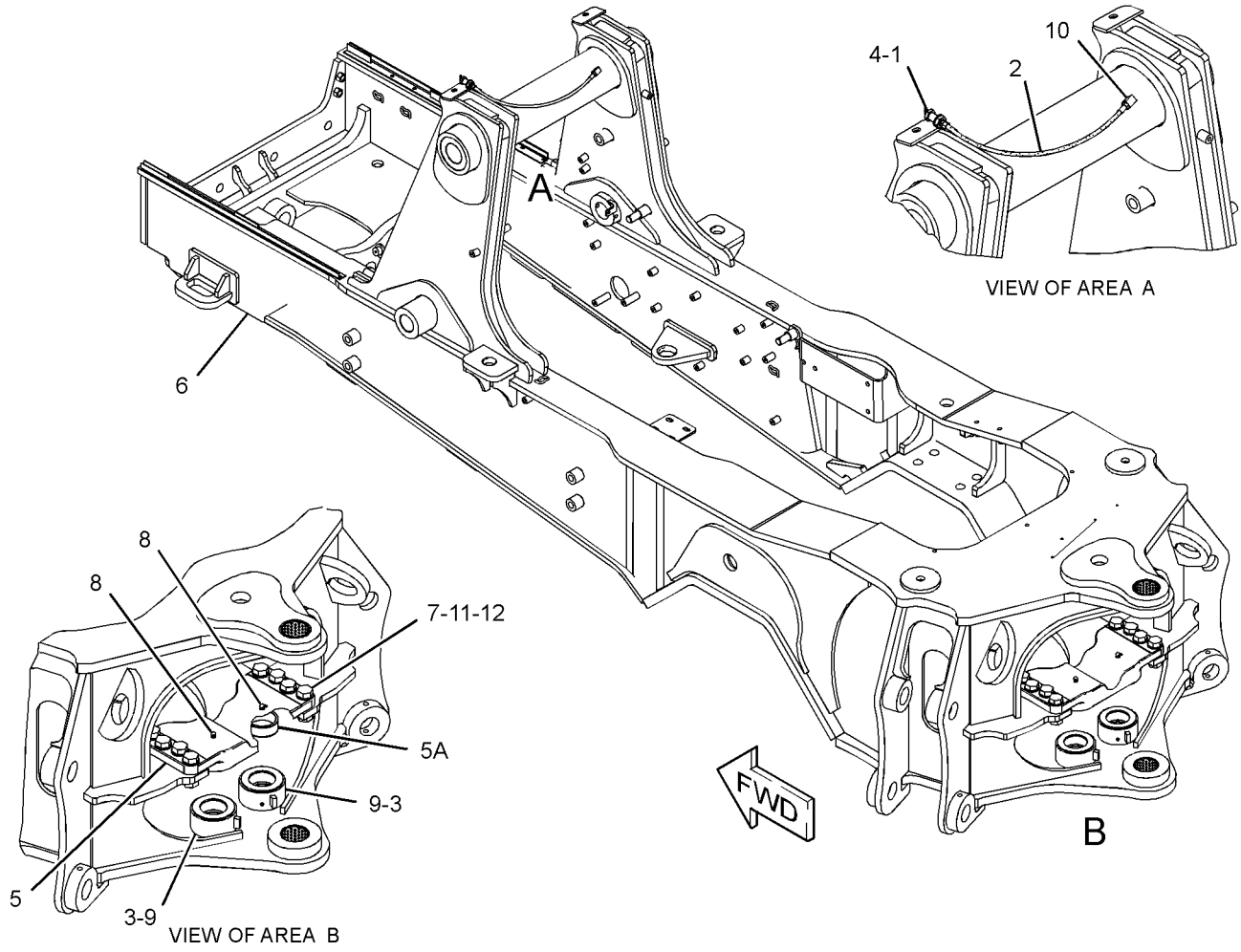

GRAPHIC #1 **<END>** g01412628

265-6811 FRAME GP-LOADER–LOADER

S/N: RBA1-UP

PART OF 265-6810 FRAME GP-LOADER

SMCS-7054 **i04101269**

NOTE	REF NO	GRAPHIC REF	PART NUMBER	QTY	PART NAME 1 2 3 4 5 6 (PRODUCT LEVEL)	SEE PAGE
	1	1	**092-1136**	1	BOSS (M10X1.5-THD)	
	2	1	**7T-1099**	24	LINK	
M	3	1	**8Y-4489**	9	BOSS (M10X1.5-THD)	
M	4	1	**9R-2613**	30	BOSS-WELD (M10X1.5X25-MM)	
	5	1	**292-4210**	2	BEARING	
	6	1	**9R-4110**	2	BUSHING	
	7	1	**296-9872**	4	BUSHING	

M-METRIC PART

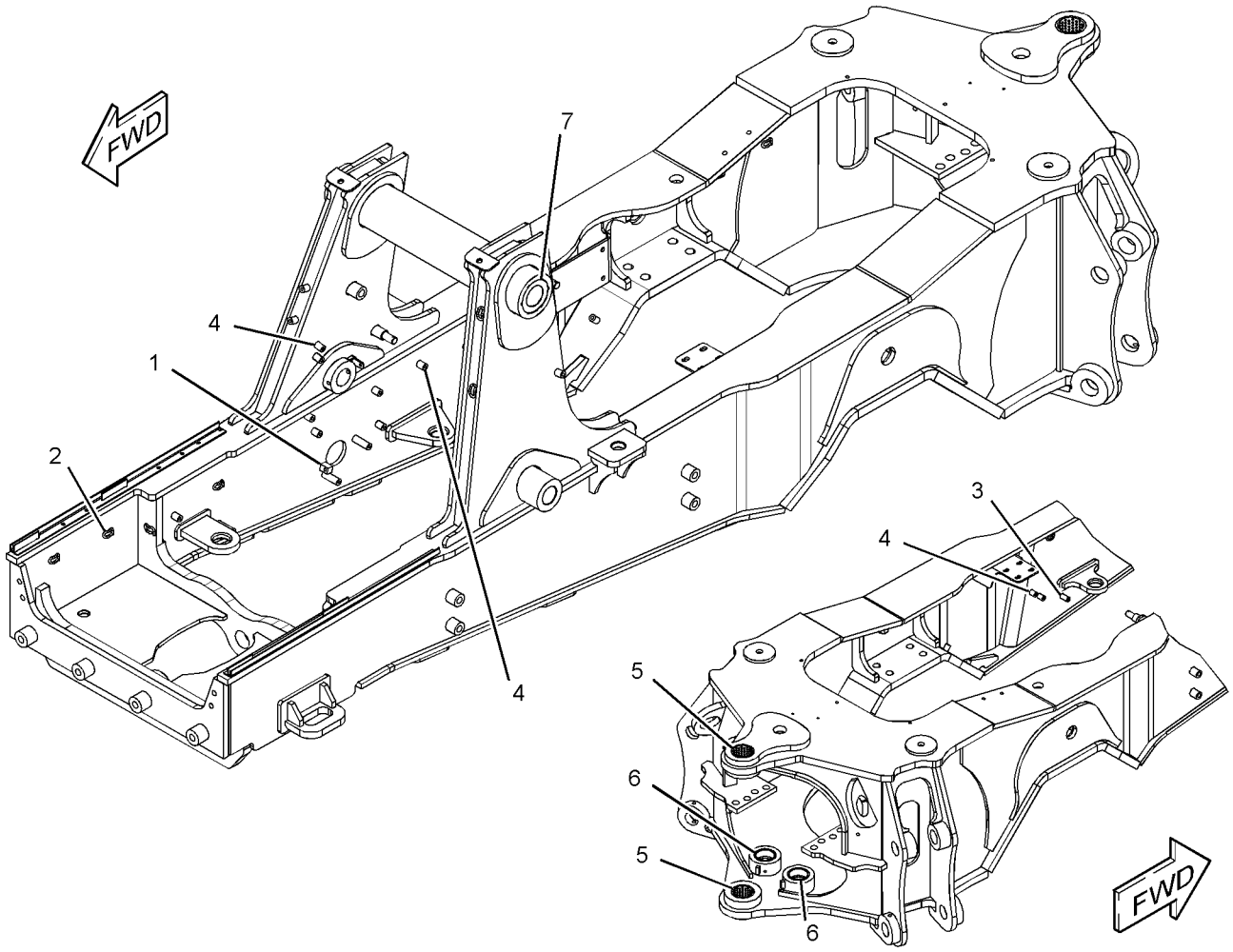

GRAPHIC #1 **<END>** g02183413

FRAME AND BODY

269-8216 FRAME GP-SWING

S/N: RBA1-UP

PART OF 254-0110 CHASSIS AR

SMCS-6506 **i04101289**

NOTE	REF NO	GRAPHIC REF	PART NUMBER	QTY	PART NAME 1 2 3 4 5 6 (PRODUCT LEVEL)	SEE PAGE
	1	1	**9R-7882**	1	SPACER (14X25X7-MM THK)	
	2	1	**9R-9492**	2	PIN	
	3	1	**132-8630**	1	ROD	
	4	1	**145-6023**	1	ROD	
	5	1	**270-7989**	1	PIN AS	
	6	1	**270-7990**	2	PIN	
	7	1	**271-3192**	1	PIN AS	
	8	1	**274-8378**	1	PIN	
	9	1	**280-7731**	1	FRAME AS-SWING	
	9A	1	**259-9796**	2	BUSHING	
	9B	1	**259-9797**	2	BUSHING	
	9C	1	**287-7539**	2	BUSHING	
	9D	1	**287-7541**	2	BUSHING	
	10	1	**280-7732**	1	WASHER (76.5X130X8-MM THK)	
	11	1	**3B-8488**	2	FITTING-GREASE	
	12	1	**3B-8489**	2	FITTING-GREASE	
M	13	1	**6V-7687**	6	LOCKNUT (M12X1.75-THD)	
M	14	1	**8T-4139**	2	BOLT (M12X1.75X30-MM)	
	15	1	**136-1122**	1	BUSHING	
	16	1	**8T-4821**	2	WASHER (13.5X40X3-MM THK)	
M	17	1	**8T-7930**	2	BOLT (M12X1.75X160-MM)	

M-METRIC PART

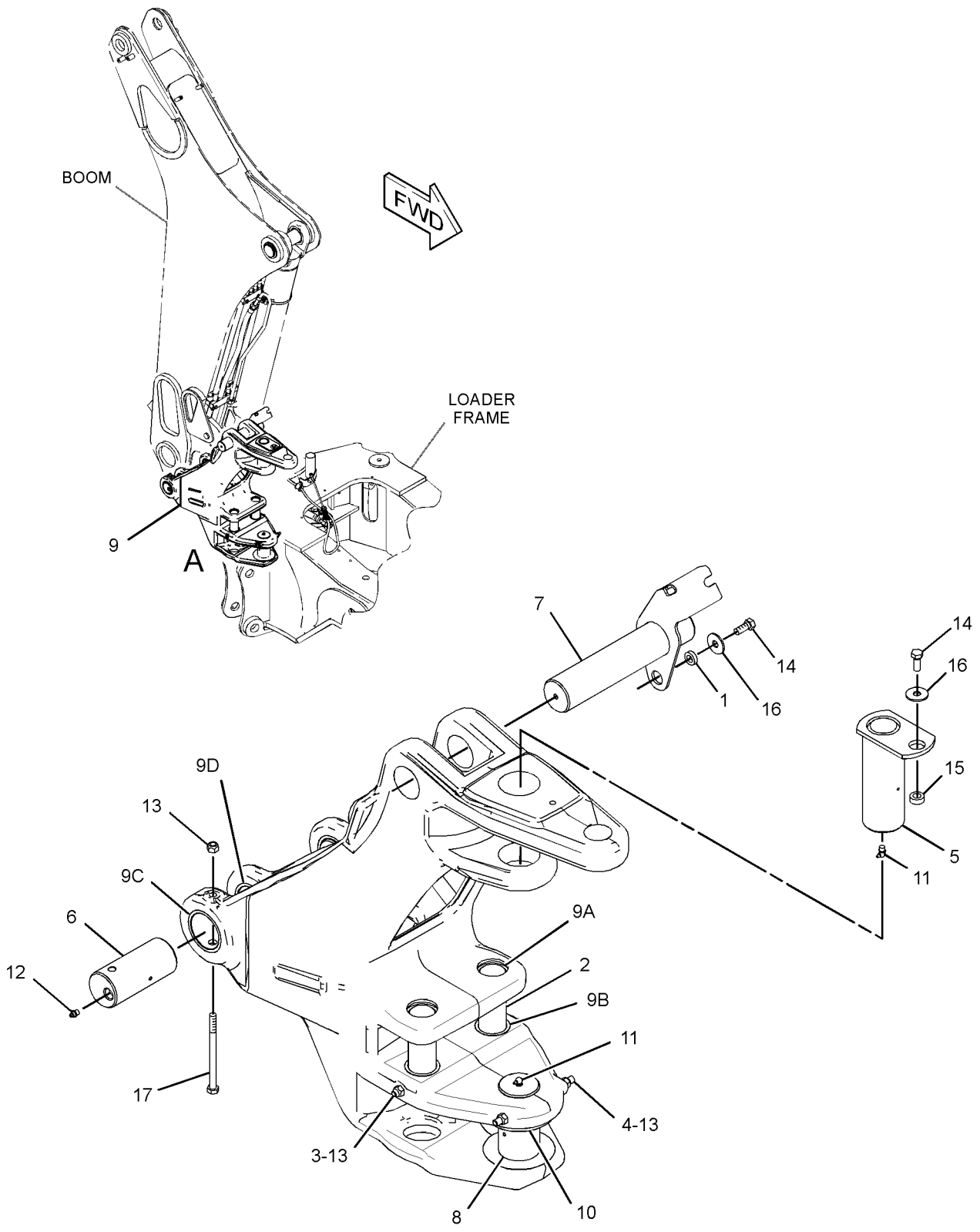

VIEW OF AREA A
(EXPLODED)

GRAPHIC #1 **<END>** g01442079

254-0111 GUARD GP-DRIVE SHAFT

S/N: RBA1-UP

PART OF 254-0130 POWER TRAIN AR

SMCS-7153 **i04105093**

NOTE	REF NO	GRAPHIC REF	PART NUMBER	QTY	PART NAME 1 2 3 4 5 6 (PRODUCT LEVEL)	SEE PAGE
	1	1	**276-8126**	1	GUARD AS	
M	2	1	**8T-7338**	4	BOLT (M16X2X45-MM)	
	3	1	**9X-8257**	4	WASHER (17.5X30X3.5-MM THK)	

M-METRIC PART

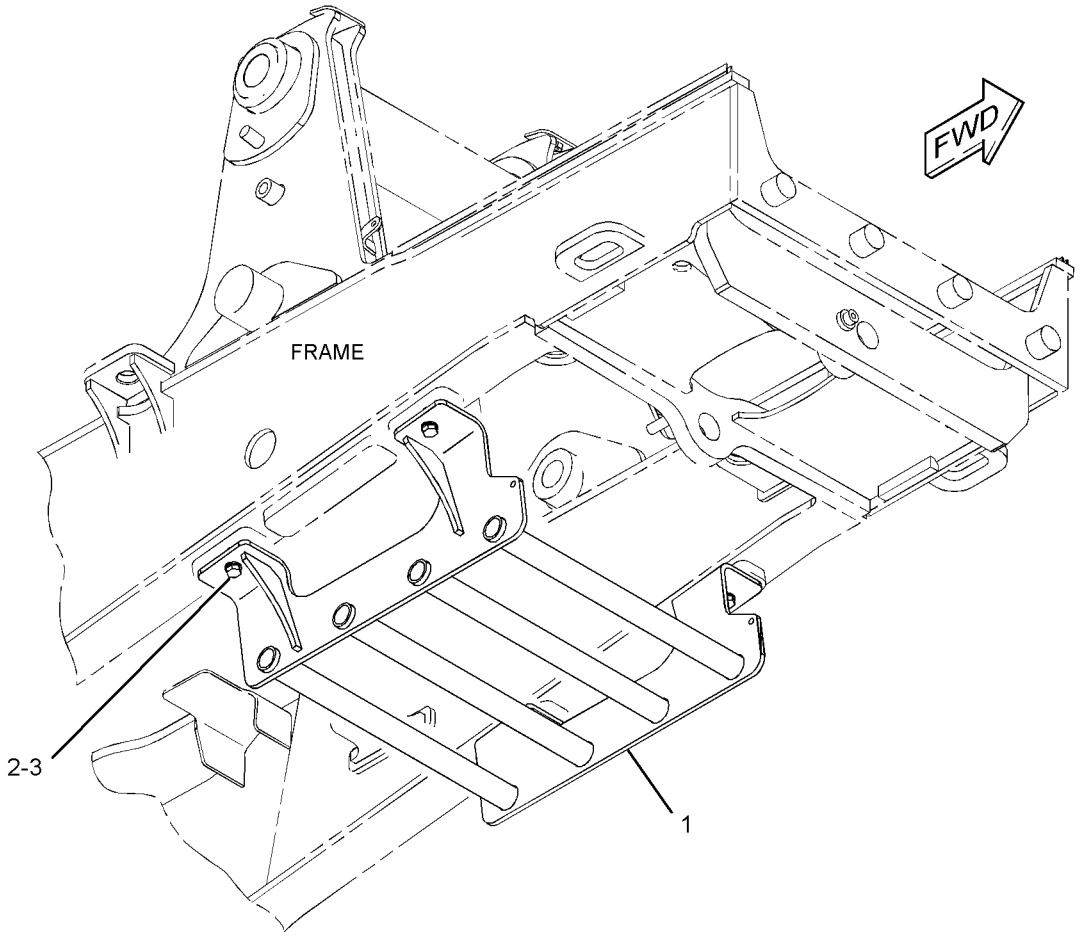

GRAPHIC #1 **<END>** g01411471

254-0107 HOOD & GUARD GP

S/N: RBA1-UP

PART OF 254-0110 CHASSIS AR

SMCS-7150, 7170, 7251, 7263 **i04101069**

NOTE	REF NO	GRAPHIC REF	PART NUMBER	QTY	PART NAME 1 2 3 4 5 6 (PRODUCT LEVEL)	SEE PAGE
E	1	1	**3E-6600**		SEAL (25-CM)	
D	2	1	**6V-1580**		SEAL (0.5-M)	
	3	1	**214-7915**	1	FILM-INSTRUCTION (ENGINE SHUTOFF)	
	4	1	**247-1080**	2	BUMPER AS	
Y	5	1	*270-1577*	1	HOOD GP-ENGINE	223
C	6	1	**270-1645**	1	COWLING	
	7	1	**270-2629**	1	GRILL	
	8	1	**270-2630**	1	GUARD AS	
	9	1	**270-9043**	1	BRACE	
Y	10	1	**294-9538**	1	ENCLOSURE GP-ENGINE (RH)	208
Y	11	1	**294-9539**	1	ENCLOSURE GP-ENGINE (LH)	209
M	12	1	**5C-7261**	1	NUT (M8X1.25-THD)	
	13	1	**7X-0579**	8	WASHER-HARD (8.8X25.5X2-MM THK)	
	14	1	**8T-4121**	4	WASHER-HARD (11X21X2.5-MM THK)	
M	15	1	**8T-4136**	2	BOLT (M10X1.5X25-MM)	
M	16	1	**8T-4139**	2	BOLT (M12X1.75X30-MM)	
M	17	1	**8T-4189**	8	BOLT (M8X1.25X20-MM)	
M	18	1	**8T-4779**	4	BOLT (M16X2X35-MM)	
M	19	1	**8T-4195**	2	BOLT (M10X1.5X30-MM)	
M	20	1	**8T-4197**	1	BOLT (M8X1.25X40-MM)	
	21	1	**8T-4223**	2	WASHER-HARD (13.5X25.5X3-MM THK)	
	22	1	**8T-4224**	7	WASHER-HARD (8.8X16X2-MM THK)	
M	23	1	**8T-7547**	5	BOLT (M8X1.25X30-MM)	
	24	1	**9X-8257**	4	WASHER (17.5X30X3.5-MM THK)	

C-CHANGE FROM PREVIOUS TYPE
D-ORDER BY THE METER
E-ORDER BY THE CENTIMETER
M-METRIC PART
Y-SEPARATE ILLUSTRATION

254-0107 **HOOD & GUARD GP** *(contd.)* **i04101069**

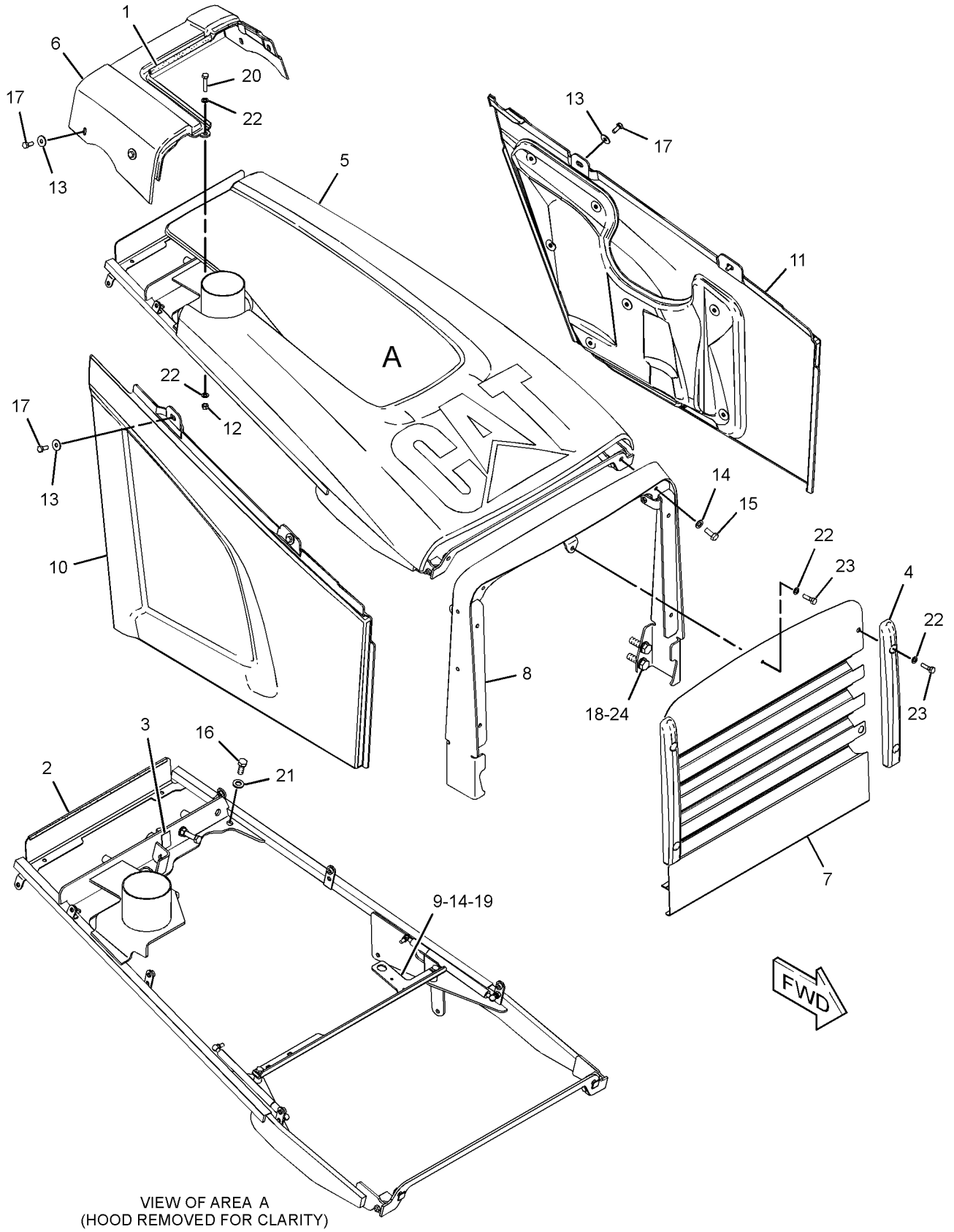

VIEW OF AREA A
(HOOD REMOVED FOR CLARITY)

GRAPHIC #1 **<END>** g01413532

270-1577 HOOD GP-ENGINE

S/N: RBA1-UP

PART OF 254-0107 HOOD & GUARD GP

SMCS-7251 **i04101090**

NOTE	REF NO	GRAPHIC REF	PART NUMBER	QTY	PART NAME 1 2 3 4 5 6 (PRODUCT LEVEL)	SEE PAGE
J	1	1	**250-5881**	1	SPRING AS-GAS	
J	2	1	**254-9301**	1	SPRING AS-GAS (LOCKABLE)	
Y	3	1	*270-1592*	1	HOOD GP-ENGINE	225
	4	1	**270-6999**	1	FRAME AS-HOOD	
	5	1	**288-1157**	1	FILM-INSTRUCTION (UNLOCK)	
	6	1	**3B-4506**	2	LOCKWASHER	
	7	1	**8T-4223**	2	WASHER-HARD (13.5X25.5X3-MM THK)	
	8	1	**8T-4224**	2	WASHER-HARD (8.8X16X2-MM THK)	
M	9	1	**8T-4244**	2	NUT (M12X1.75-THD)	
M	10	1	**8T-4648**	1	BOLT (M12X1.75X70-MM)	
M	11	1	**8T-6869**	2	BOLT (M8X1.25X60-MM)	
					AVAILABLE REPAIR KIT(S):	
J			**275-0001**	2	KIT-GAS SPRING	
					(EACH KIT INCLUDES STUDS & CLIPS)	

J-KITS MARKED J AVAILABLE FOR PART(S) MARKED J
M-METRIC PART
Y-SEPARATE ILLUSTRATION

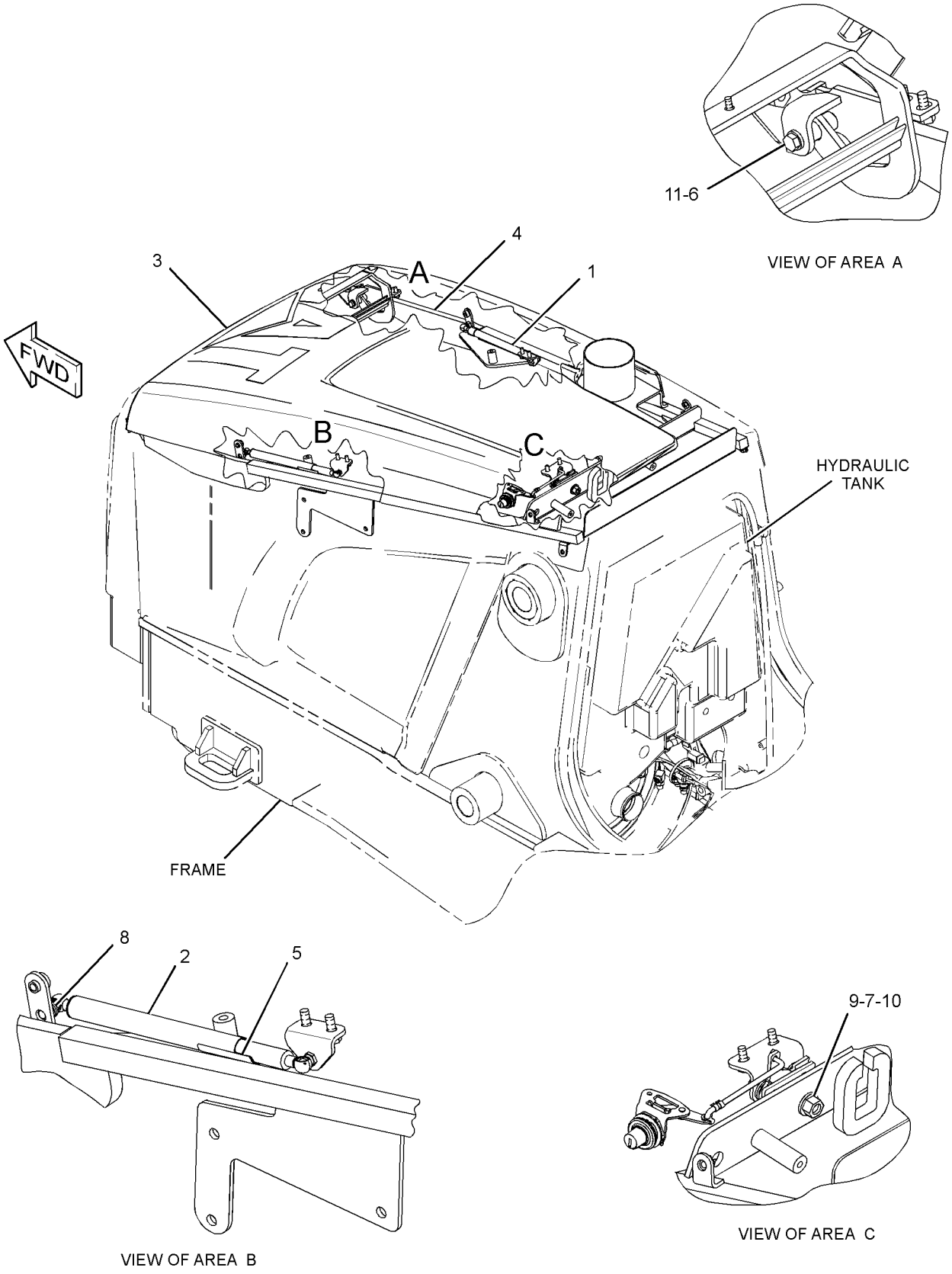

GRAPHIC #1 **<END>** g01413440

270-1592 HOOD GP-ENGINE

S/N: RBA1-UP

PART OF 270-1577 HOOD GP-ENGINE

SMCS-7251 **i04101092**

NOTE	REF NO	GRAPHIC REF	PART NUMBER	QTY	PART NAME 1 2 3 4 5 6 (PRODUCT LEVEL)	SEE PAGE
	1	1	**5E-8557**	1	CLIP (ROD END)	
E	2	1	**124-3243**		SEAL (72-CM)	
	3	1	**248-0395**	1	BRACKET AS	
	4	1	**250-1878**	1	FILM-IDENTIFICATION (CAT)	
	5	1	**250-6850**	2	BRACKET AS	
	6	1	**250-6858**	1	LATCH AS (HOOD)	
	7	1	**251-4374**	1	LOCK AS (HOOD)	
	8	1	**270-1595**	1	HOOD AS	
	9	1	**270-7273**	1	HINGE AS	
	10	1	**8T-4224**	12	WASHER-HARD (8.8X16X2-MM THK)	
	11	1	**307-4639**	1	ROD	
	12	1	**6V-5834**	4	SCREW-HEAD (10-14X0.75-IN)	
	13	1	**7X-0620**	4	WASHER-HARD (5.5X13X1.6-MM THK)	
M	14	1	**7X-2537**	2	BOLT (M8X1.25X35-MM)	
M	15	1	**8T-4189**	10	BOLT (M8X1.25X20-MM)	

E-ORDER BY THE CENTIMETER
M-METRIC PART

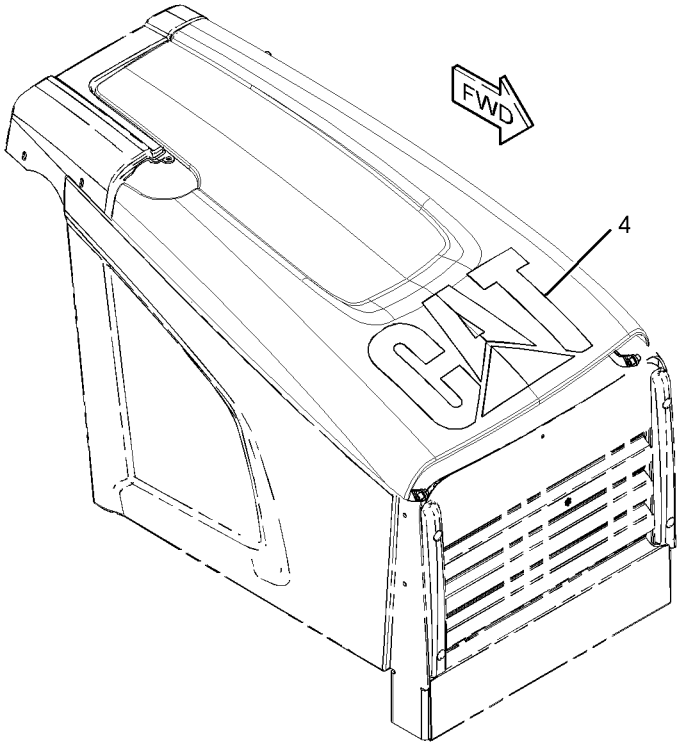

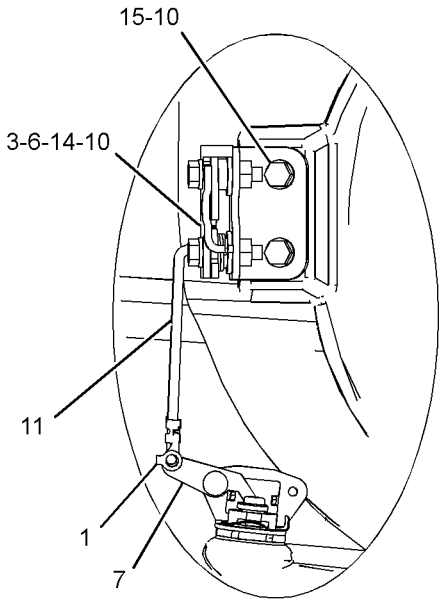

VIEW OF AREA A

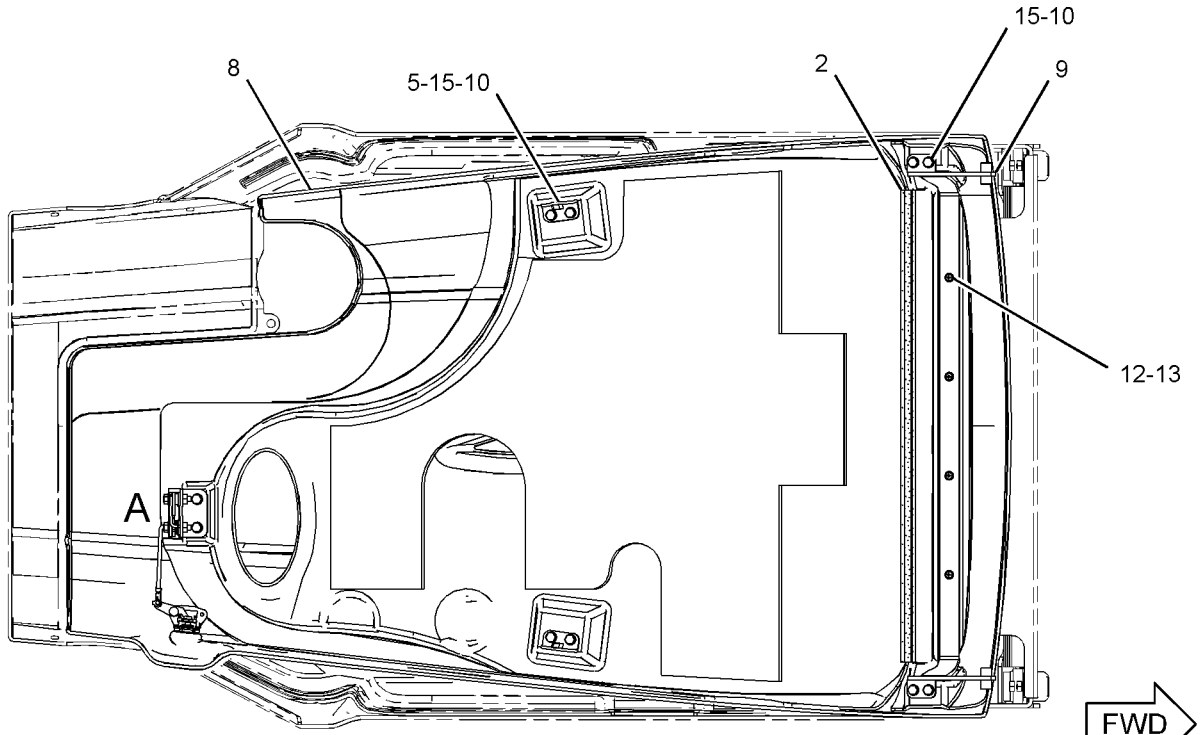

BOTTOM VIEW

GRAPHIC #1 **<END>** g01834878

226-0420 ACCUMULATOR GP-PILOT OIL–CHARGED

S/N: RBA1-UP

PART OF 289-3278, 345-3166 LINES GP-PILOT

AN ATTACHMENT

SMCS-5077 **i02174564**

NOTE	PART NUMBER	QTY	PART NAME 1 2 3 4 5 6 (PRODUCT LEVEL)	SEE PAGE
			(NO SERVICED PARTS)	

<END>

162-3960 ACCUMULATOR GP-RIDE CONTROL–CHARGED

S/N: RBA1-UP

PART OF 254-0122 LINES GP-RIDE CONTROL

SMCS-5077 **i03889069**

NOTE	REF NO	GRAPHIC REF	PART NUMBER	QTY	PART NAME 1 2 3 4 5 6 (PRODUCT LEVEL)	SEE PAGE
	1	1	**158-2306**	1	VALVE-GAS (ACCUMULATOR)	
	2	1	**241-0037**	1	FILM-WARNING (HIGH PRESSURE, READ OMM)	
	3	1	**170-0503**	1	FILM-WARNING (ACCUM, HIGH PRESS, READ OMM)	
					AVAILABLE REPAIR KIT(S):	
			160-0496	1	KIT-SEAL (ACCUMULATOR)	
					(INCLUDES SEALS)	



GRAPHIC #1 **<END>** g01220710

HYDRAULIC SYSTEM

254-0153 CONTROL AR-BACKHOE—PILOT, 7-BANK

S/N: RBA1-UP

AN ATTACHMENT

SMCS-5051, 5057, 5059, 5063, 5705, 7265 **i04110629**

NOTE	PART NUMBER	QTY	PART NAME 1 2 3 4 5 6 (PRODUCT LEVEL)	SEE PAGE
Y	**271-3097**	1	CONTROL GP-HANDLE (LH)	421
Y	**271-3096**	1	CONTROL GP-JOYSTICK (RH)	434
Y	*206-1831*	1	FLOORPLATE GP	214
Y	*289-3276*	1	LINES GP-PILOT (SIGNAL)	286
Y	*289-3278*	1	LINES GP-PILOT (LOADER)	288
Y	*289-3274*	1	LINES GP-PUMP	297
Y	*254-0164*	1	LINES GP-STABILIZER	305
Y	*269-3247*	1	MOUNTING GP-BACKHOE CONTROL (PILOT)	454
Y	*254-0185*	1	MOUNTING GP-BANK VALVE	322
Y	*278-7758*	1	VALVE & LINES GP-PILOT	334
Y	**271-0527**	1	VALVE GP-BANK 7	342
Y	*267-5635*	1	WIRING GP-CONTROL (JOYSTICK, LH)	120
Y	*290-6767*	1	WIRING GP-CONTROL (JOYSTICK, RH)	121
	214-4694	1	SWITCH AS-ROCKER (MODE SELECT)	
	214-4706	1	SWITCH AS-ROCKER (AUXILIARY HYDRAULIC FLOW)	
	300-4994	1	SWITCH AS-ROCKER (HYDRAULIC LOCKOUT)	
			(EACH SWITCH AS-ROCKER INCLUDES)	
	111-7899	1	GASKET	
	272-5421	1	FILM-CONTROL (BACKHOE, JOYSTICK)	
			(ON THE MACHINE LH CONSOLE & THE CUT OUT IS DESIGNED TO GO AROUND THE PATTERN CHANGER SWITCH)	

Y-SEPARATE ILLUSTRATION

<END>

HYDRAULIC SYSTEM

254-0154 CONTROL AR-BACKHOE—PILOT, 8-BANK

S/N: RBA1-UP

AN ATTACHMENT

SMCS-5051, 5057, 5059, 5063, 5705, 7265 **i04110649**

NOTE	PART NUMBER	QTY	PART NAME 1 2 3 4 5 6 (PRODUCT LEVEL)	SEE PAGE
Y	**271-3096**	1	CONTROL GP-JOYSTICK (RH)	434
Y	**271-3099**	1	CONTROL GP-JOYSTICK (LH)	435
Y	*206-1831*	1	FLOORPLATE GP	214
Y	*289-3276*	1	LINES GP-PILOT (SIGNAL)	286
Y	*289-3278*	1	LINES GP-PILOT (LOADER)	288
Y	*289-3274*	1	LINES GP-PUMP	297
Y	*254-0165*	1	LINES GP-STABILIZER	307
Y	*269-3247*	1	MOUNTING GP-BACKHOE CONTROL (PILOT)	454
Y	*254-0185*	1	MOUNTING GP-BANK VALVE	322
Y	*278-7758*	1	VALVE & LINES GP-PILOT	334
Y	**271-0528**	1	VALVE GP-BANK 8	344
Y	*290-6767*	1	WIRING GP-CONTROL (JOYSTICK, RH)	121
Y	*290-6768*	1	WIRING GP-CONTROL (JOYSTICK, LH)	122
	214-4694	1	SWITCH AS-ROCKER (MODE SELECT)	
	214-4706	1	SWITCH AS-ROCKER (AUXILIARY HYDRAULIC FLOW)	
	300-4994	1	SWITCH AS-ROCKER (HYDRAULIC LOCKOUT)	
			(EACH SWITCH AS-ROCKER INCLUDES)	
	111-7899	1	GASKET	
	272-5421	1	FILM-CONTROL (BACKHOE, JOYSTICK)	
			(ON THE MACHINE LH CONSOLE & THE CUT OUT IS DESIGNED TO GO AROUND THE PATTERN ARROUND SWITCH)	

Y-SEPARATE ILLUSTRATION

<END>

HYDRAULIC SYSTEM

254-0156 CONTROL AR-BACKHOE—MECHANICAL, 7-BANK

S/N: RBA1-UP

AN ATTACHMENT

SMCS-5051, 5057, 5059, 5063, 5705, 7265 **i04110669**

NOTE	PART NUMBER	QTY	PART NAME 1 2 3 4 5 6 (PRODUCT LEVEL)	SEE PAGE
Y	*254-0192*	1	CONTROL GP-HYDRAULIC HAND	427
Y	*274-4495*	1	CONTROL GP-HYDRAULIC PEDAL	431
Y	*206-1840*	1	FLOORPLATE GP	215
Y	*345-3166*	1	LINES GP-PILOT (LOADER)	292
Y	*345-3168*	1	LINES GP-PILOT (SIGNAL)	295
Y	*345-3167*	1	LINES GP-PUMP	300
Y	*254-0164*	1	LINES GP-STABILIZER	305
Y	*345-3165*	1	MOUNTING GP-BANK VALVE	323
Y	**342-6667**	1	VALVE GP-BANK 7 (MECHANICAL)	343
B	**6V-9832**	2	CAP AS	
B	*148-8327*	2	CONNECTOR AS	
			(EACH INCLUDES)	
	3D-2824	1	SEAL-O-RING	
	6V-8637	1	CONNECTOR	
	6V-9746	1	SEAL-O-RING	
	165-0312	1	WIRE AS	
	227-1057	3	PLUG-HOLE	

B-USE AS REQUIRED
Y-SEPARATE ILLUSTRATION

<END>

HYDRAULIC SYSTEM

254-0157 CONTROL AR-BACKHOE—MECHANICAL, 8-BANK

S/N: RBA1-UP

AN ATTACHMENT

SMCS-5051, 5057, 5059, 5063, 5705, 7265 **i04110689**

NOTE	PART NUMBER	QTY	PART NAME 1 2 3 4 5 6 (PRODUCT LEVEL)	SEE PAGE
Y	*254-0192*	1	CONTROL GP-HYDRAULIC HAND	427
Y	*274-4495*	1	CONTROL GP-HYDRAULIC PEDAL (EXTENDABLE STICK, AUXILIARY)	431
Y	*274-4496*	1	CONTROL GP-HYDRAULIC PEDAL (AUXILIARY)	433
Y	*206-1840*	1	FLOORPLATE GP	215
Y	*345-3166*	1	LINES GP-PILOT (LOADER)	292
Y	*345-3168*	1	LINES GP-PILOT (SIGNAL)	295
Y	*345-3167*	1	LINES GP-PUMP	300
Y	*254-0165*	1	LINES GP-STABILIZER	307
Y	*345-3165*	1	MOUNTING GP-BANK VALVE	323
Y	**342-6668**	1	VALVE GP-BANK 8 (MECHANICAL)	345
B	**6V-9832**	4	CAP AS	
B	*148-8327*	4	CONNECTOR AS	
			(EACH INCLUDES)	
	3D-2824	1	SEAL-O-RING	
	6V-8637	1	CONNECTOR	
	6V-9746	1	SEAL-O-RING	
	165-0312	1	WIRE AS	
	227-1057	3	PLUG-HOLE	

B-USE AS REQUIRED
Y-SEPARATE ILLUSTRATION

<END>

HYDRAULIC SYSTEM

254-0159 CONTROL AR-BACKHOE—MECHANICAL, 7-BANK

S/N: RBA1-UP

AN ATTACHMENT

SMCS-5051, 5057, 5059, 5063, 5705, 7265 **i04110692**

NOTE	PART NUMBER	QTY	PART NAME 1 2 3 4 5 6 (PRODUCT LEVEL)	SEE PAGE
Y	*254-0194*	1	CONTROL GP-HYDRAULIC HAND	429
Y	*274-4495*	1	CONTROL GP-HYDRAULIC PEDAL	431
Y	*206-1840*	1	FLOORPLATE GP	215
Y	*345-3166*	1	LINES GP-PILOT (LOADER)	292
Y	*345-3168*	1	LINES GP-PILOT (SIGNAL)	295
Y	*345-3167*	1	LINES GP-PUMP	300
Y	*254-0164*	1	LINES GP-STABILIZER	305
Y	*345-3165*	1	MOUNTING GP-BANK VALVE	323
Y	**342-6667**	1	VALVE GP-BANK 7 (MECHANICAL)	343
B	**6V-9832**	2	CAP AS	
B	*148-8327*	2	CONNECTOR AS	
			(EACH INCLUDES)	
	3D-2824	1	SEAL-O-RING	
	6V-8637	1	CONNECTOR	
	6V-9746	1	SEAL-O-RING	
	165-0312	1	WIRE AS	
	227-1057	3	PLUG-HOLE	

B-USE AS REQUIRED
Y-SEPARATE ILLUSTRATION

<END>

HYDRAULIC SYSTEM

254-0160 CONTROL AR-BACKHOE—MECHANICAL, 8-BANK

S/N: RBA1-UP

AN ATTACHMENT

SMCS-5051, 5057, 5059, 5063, 5705, 7265 **i04110698**

NOTE	PART NUMBER	QTY	PART NAME 1 2 3 4 5 6 (PRODUCT LEVEL)	SEE PAGE
Y	*254-0194*	1	CONTROL GP-HYDRAULIC HAND	429
Y	*274-4495*	1	CONTROL GP-HYDRAULIC PEDAL (EXTENDABLE STICK, AUXILIARY)	431
Y	*274-4496*	1	CONTROL GP-HYDRAULIC PEDAL (AUXILIARY)	433
Y	*206-1840*	1	FLOORPLATE GP	215
Y	*345-3166*	1	LINES GP-PILOT (LOADER)	292
Y	*345-3168*	1	LINES GP-PILOT (SIGNAL)	295
Y	*345-3167*	1	LINES GP-PUMP	300
Y	*254-0165*	1	LINES GP-STABILIZER	307
Y	*345-3165*	1	MOUNTING GP-BANK VALVE	323
Y	**342-6668**	1	VALVE GP-BANK 8 (MECHANICAL)	345
B	**6V-9832**	4	CAP AS	
B	*148-8327*	4	CONNECTOR AS	
			(EACH INCLUDES)	
	3D-2824	1	SEAL-O-RING	
	6V-8637	1	CONNECTOR	
	6V-9746	1	SEAL-O-RING	
	165-0312	1	WIRE AS	
	227-1057	3	PLUG-HOLE	

B-USE AS REQUIRED
Y-SEPARATE ILLUSTRATION

<END>

254-0125 CONTROL AR-RIDE

S/N: RBA1-UP

PART OF 254-0170 HYDRAULIC AR

SMCS-5004 **i04128930**

NOTE	PART NUMBER	QTY	PART NAME 1 2 3 4 5 6 (PRODUCT LEVEL)	SEE PAGE
Y	*254-0122*	1	LINES GP-RIDE CONTROL	303
Y	*211-4259*	1	WIRING GP-RIDE CONTROL (PILOT)	140

Y-SEPARATE ILLUSTRATION

<END>

HYDRAULIC SYSTEM

270-7287 CYLINDER GP-BACKHOE BUCKET

S/N: RBA1-UP

100-MM (3.9-IN) BORE X 934-MM (36.7-IN) STROKE

PART OF 254-0180 BACKHOE AR-EXTENDABLE STICK, 254-0175 BACKHOE AR-STANDARD STICK

AN ATTACHMENT

SMCS-5457 **i04141149**

NOTE	REF NO	GRAPHIC REF	PART NUMBER	QTY	PART NAME 1 2 3 4 5 6 (PRODUCT LEVEL)	SEE PAGE
	1	1	**317-6291**	1	PISTON	
	2	1	**266-9471**	1	HEAD	
	3	1	**279-5079**	1	CYLINDER AS-HYDRAULIC	
		1	*279-5080*		CAP & BEARING AS	
		1	**9R-6515**	2	BUSHING	
		1	**203-7807**	1	ELBOW	
		1	**6V-9746**	1	SEAL-O-RING	
	4	1	**318-0638**	1	ROD AS	
		1	**9R-4602**	2	BUSHING	
J	5	1	**140-7656**	1	RING-WEAR	
J	6	1	**165-9284**	1	SEAL-LIP TYPE	
J	7	1	**167-2184**	1	SEAL AS-BUFFER	
J	8	1	**167-2318**	1	SEAL-U-CUP	
J	9	1	**186-5147**	1	RING-WEAR	
J	10	1	**1H-8128**	1	SEAL-O-RING	
	11	1	**2J-3950**	1	LOCKNUT (1-1/2-12-THD)	
J	12	1	**4J-9219**	1	RING-BACKUP	
J	13	1	**3E-6735**	1	SEAL-O-RING	
J	14	1	**9X-7298**	1	SEAL AS	
					AVAILABLE REPAIR KIT(S):	
J			**326-0496**	1	KIT-SEAL	

J-KIT MARKED J SERVICES PARTS MARKED J

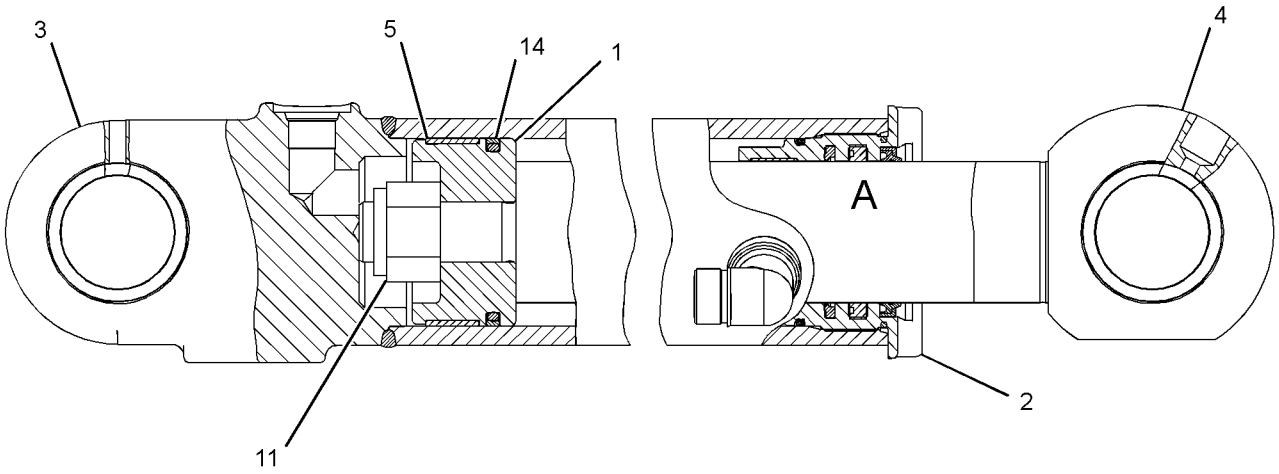

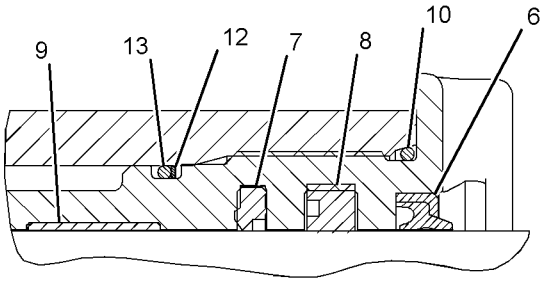

VIEW OF AREA A

GRAPHIC #1 **<END>** g01367015

270-7285 CYLINDER GP-BOOM

S/N: RBA1-UP
140-MM (5.5-IN) BORE X 1080-MM (42.5-IN) STROKE
PART OF 254-0180 BACKHOE AR-EXTENDABLE STICK, 254-0175 BACKHOE AR-STANDARD STICK
AN ATTACHMENT

SMCS-5456 **i04141129**

NOTE	REF NO	GRAPHIC REF	PART NUMBER	QTY	PART NAME 1 2 3 4 5 6 (PRODUCT LEVEL)	SEE PAGE
	1	1	**278-2324**	1	SEAL-WIPER	
	2	1	**264-0614**	1	HEAD	
	3	1	**272-1944**	1	PISTON	
	4	1	**278-1500**	1	ROD AS	
		1	**1H-7643**	1	RING-RETAINING	
		1	**9T-2141**	1	PLUNGER	
		1	**9T-2178**	1	SPRING	
		1	**213-6682**	2	BUSHING	
	5	1	**278-1496**	1	CYLINDER AS	
		1	**6V-9746**	1	SEAL-O-RING	
		1	*278-1497*	1	CAP AS	
		1	**311-8711**	2	BUSHING	
	6	1	**167-2235**	1	SEAL AS-BUFFER	
	7	1	**167-2299**	1	SEAL-U-CUP	
	8	1	**4J-4606**	1	RING-WEAR	
	9	1	**316-2517**	1	SEAL-O-RING	
	10	1	**3J-9545**	1	LOCKNUT (2-12-THD)	
	11	1	**2K-2961**	1	RING-BACKUP	
	12	1	**316-2516**	1	SEAL-O-RING	
	13	1	**9X-3598**	1	SEAL AS	
	14	1	**8C-9200**	1	RING-WEAR	

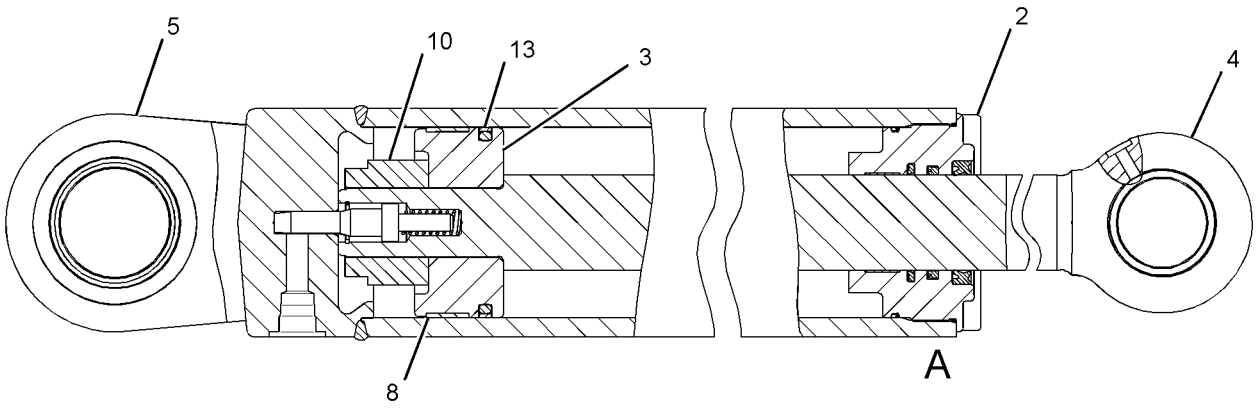

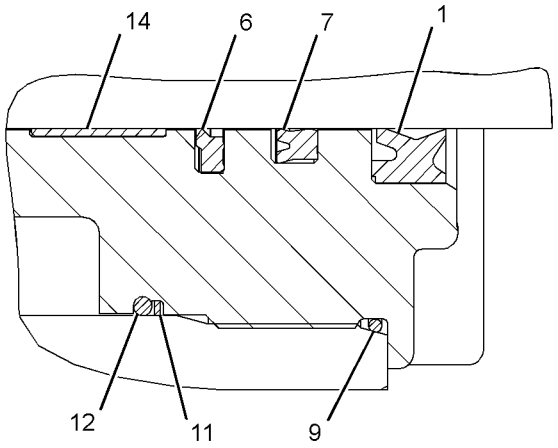

VIEW OF AREA A

GRAPHIC #1 **<END>** g01354600

270-7288 CYLINDER GP-EXTENDABLE STICK

S/N: RBA1-UP
75-MM (3-IN) BORE X 1272-MM (50-IN) STROKE
PART OF 269-8215 STICK GP-EXTENDABLE
AN ATTACHMENT

SMCS-5486 **i04145810**

NOTE	REF NO	GRAPHIC REF	PART NUMBER	QTY	PART NAME 1 2 3 4 5 6 (PRODUCT LEVEL)	SEE PAGE
	1	1	**266-5905**	1	HEAD	
	2	1	**266-9381**	1	PISTON	
	3	1	**278-5088**	1	CYLINDER AS	
		1	**6V-8398**	1	SEAL-O-RING	
	4	1	**278-5091**	1	ROD AS	
	5	1	**143-8916**	1	RING-WEAR	
	6	1	**143-8918**	1	RING-WEAR	
	7	1	**167-2242**	1	SEAL AS-BUFFER	
	8	1	**167-2297**	1	SEAL-U-CUP	
	9	1	**184-6970**	1	SEAL AS	
	10	1	**233-0617**	1	SEAL-WIPER	
	11	1	**5J-4561**	1	LOCKNUT (1-14-THD)	
	12	1	**6H-3977**	1	SEAL-O-RING	
	13	1	**6J-2420**	1	RING	
	14	1	**3E-6730**	1	SEAL-O-RING	

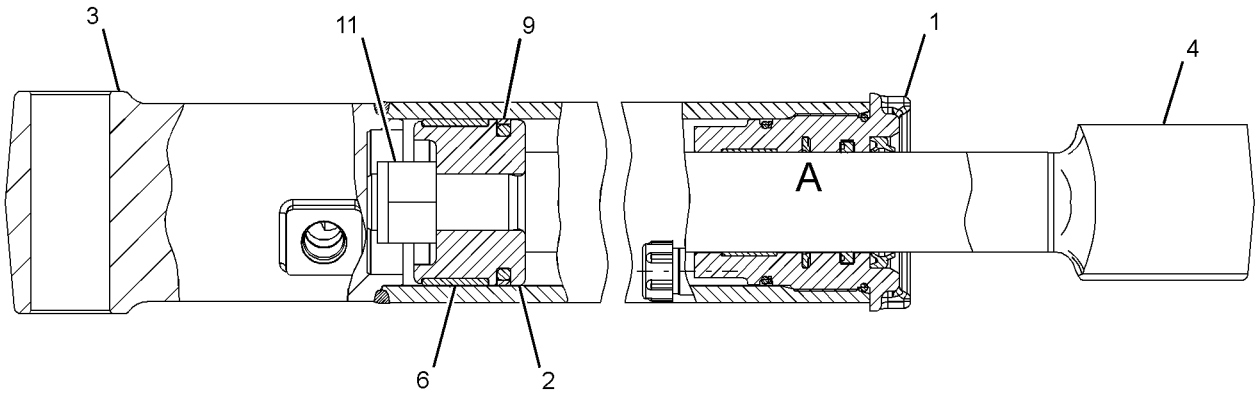

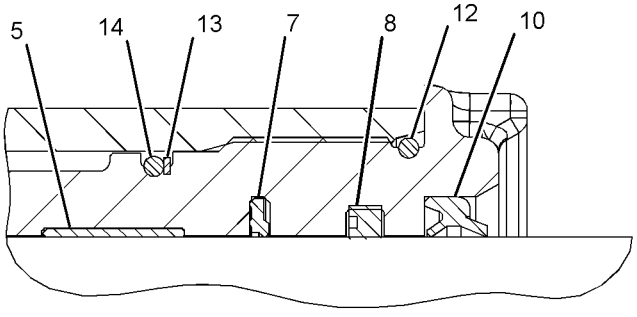

VIEW OF AREA A

GRAPHIC #1 **<END>** g01381593

HYDRAULIC SYSTEM

125-7895 CYLINDER GP-LIFT

S/N: RBA1-UP
95.25MM (3.75 IN) BORE X 718.5MM (29 IN) STROKE
PART OF 254-0140 LOADER AR

SMCS-5102 **i04108010**

NOTE	REF NO	GRAPHIC REF	PART NUMBER	QTY	PART NAME 1 2 3 4 5 6 (PRODUCT LEVEL)	SEE PAGE
	1	1	**125-7896**	1	CYLINDER AS	
	1A	1	**9R-6514**	1	BEARING-SLEEVE	
M	2	1	**173-9683**	1	BOLT (M30X3.5X90-MM)	
	3	1	**3S-7023**	1	WASHER (34X57X6-MM THK)	
	4	1	**8J-6245**	1	RING-WEAR	
	5	1	**5J-8011**	1	SEAL AS	
	6	1	**126-0239**	1	PISTON	
	7	1	**8H-7521**	1	SEAL-O-RING	
	8	1	**2Y-8973**	1	RING-BACKUP	
	9	1	**112-5737**	1	HEAD	
	10	1	**126-0240**	1	ROD AS	
	10A	1	**9R-6514**	1	BEARING-SLEEVE	
	11	1	**231-3538**	1	SEAL-WIPER	
	12	1	**167-2307**	1	SEAL-U-CUP	
	13	1	**167-2200**	1	SEAL AS	
	14	1	**8T-4958**	1	RING-WEAR	

M-METRIC PART

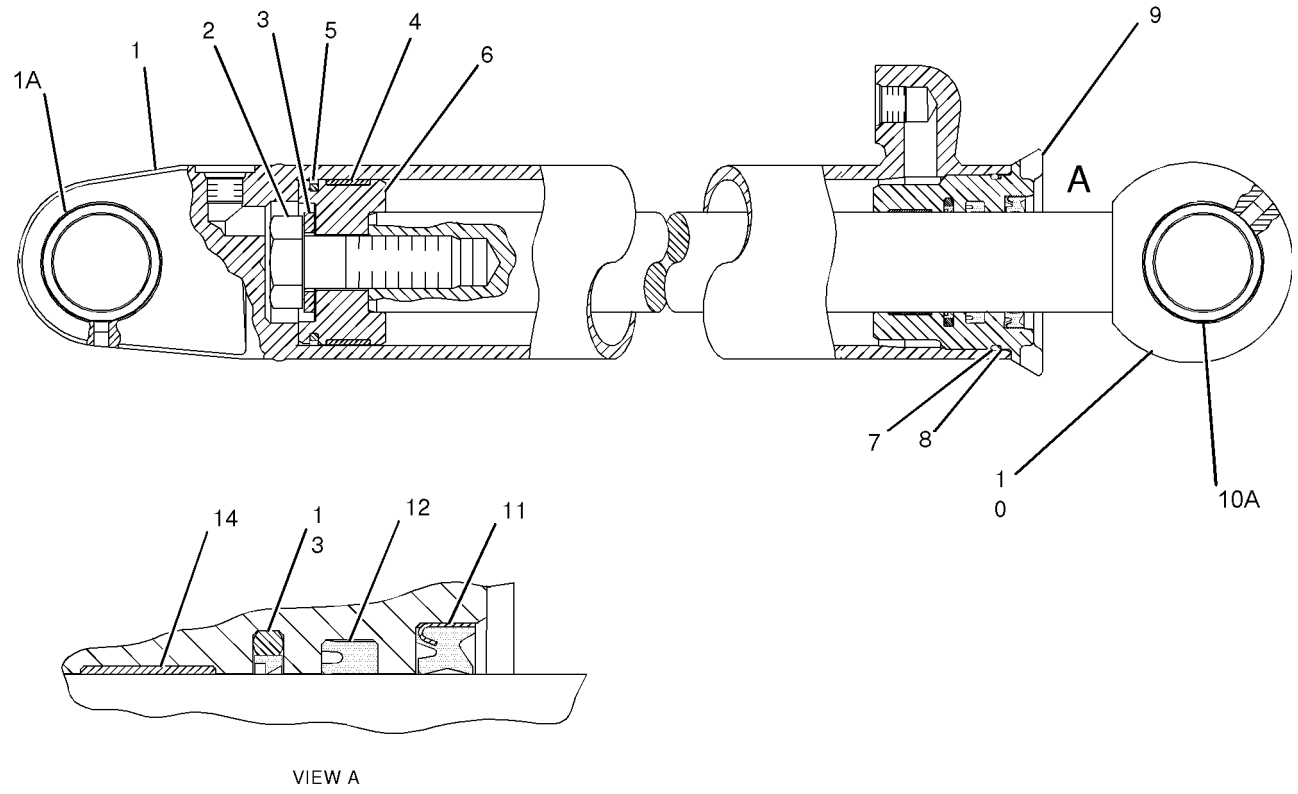

GRAPHIC #1 **<END>** g01047468

HYDRAULIC SYSTEM

270-7290 CYLINDER GP-STABILIZER–LH

S/N: RBA1-UP
115-MM (4.5-IN) BORE X 595-MM (23.4-IN) STROKE
PART OF 254-0170 HYDRAULIC AR

SMCS-5468 **i04128990**

NOTE	REF NO	GRAPHIC REF	PART NUMBER	QTY	PART NAME 1 2 3 4 5 6 (PRODUCT LEVEL)	SEE PAGE
	1	1	**352-3613**	1	PISTON	
	2	1	**266-9976**	1	HEAD	
	3	1	**279-6596**	1	CYLINDER AS	
		1	**9R-0139**	2	BEARING-SLEEVE	
		1	**6V-8398**	1	SEAL-O-RING	
	4	1	**279-6599**	1	ROD AS	
	4A	1	**311-8710**	2	BEARING-SLEEVE	
	5	1	**146-0742**	1	RING-WEAR	
	6	1	**146-0744**	1	RING-WEAR	
	7	1	**167-2204**	1	SEAL AS-BUFFER	
	8	1	**167-2314**	1	SEAL-U-CUP	
	9	1	**175-7902**	1	SEAL-O-RING	
	10	1	**1K-7095**	1	RING-BACKUP	
	11	1	**227-1148**	1	SEAL-WIPER	
	12	1	**146-0743**	1	SEAL-PISTON	
	13	1	**2H-3928**	1	SEAL-O-RING	
	14	1	**5J-5731**	1	LOCKNUT (1-3/4-12-THD)	

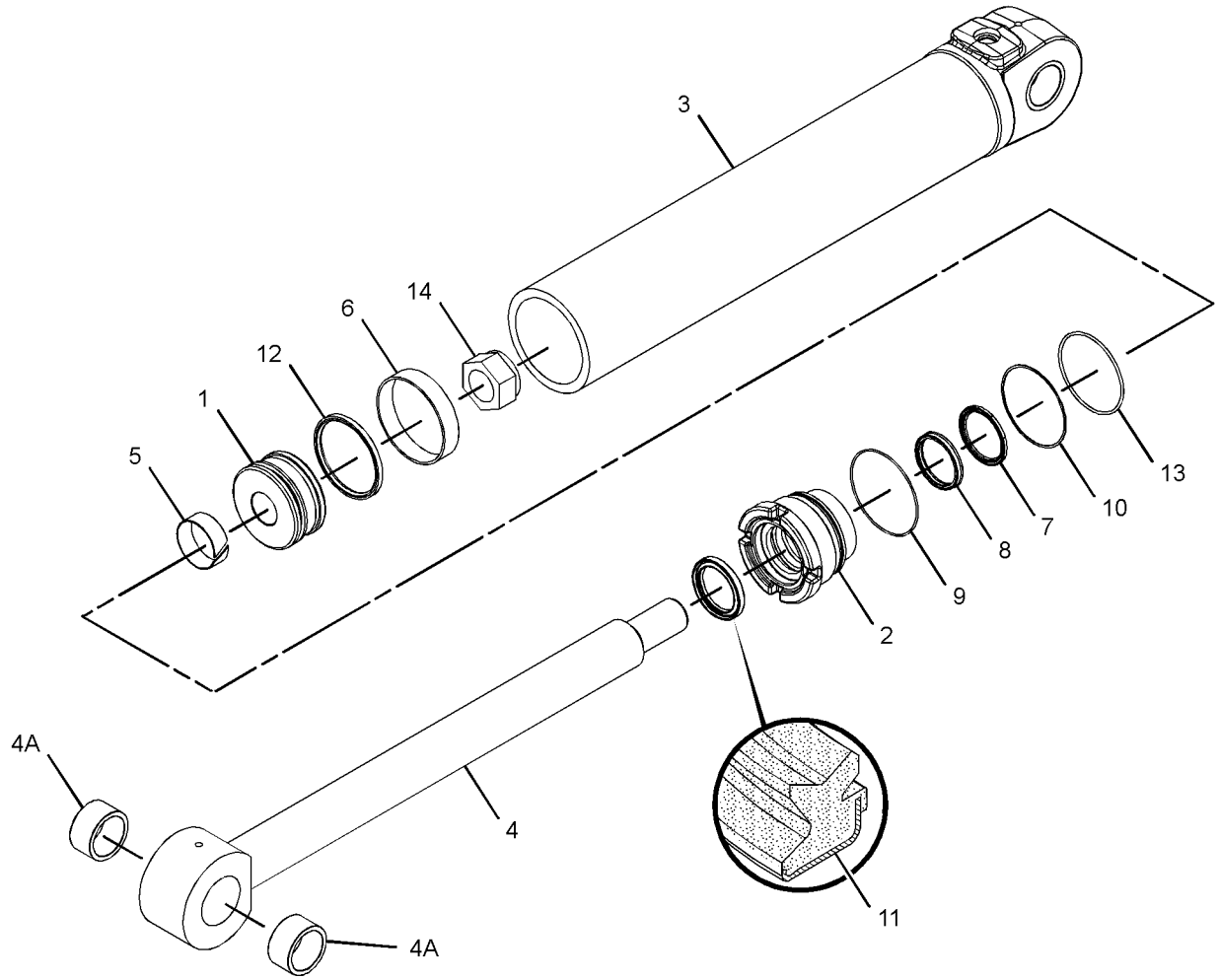

GRAPHIC #1 **<END>** g01419191

270-7291 CYLINDER GP-STABILIZER—RH

S/N: RBA1-UP
115-MM (4.5-IN) BORE X 595-MM (23.4-IN) STROKE
PART OF 254-0170 HYDRAULIC AR

SMCS-5468 **i04129009**

NOTE	REF NO	GRAPHIC REF	PART NUMBER	QTY	PART NAME 1 2 3 4 5 6 (PRODUCT LEVEL)	SEE PAGE
	1	1	**352-3613**	1	PISTON	
	2	1	**266-9976**	1	HEAD	
	3	1	**279-6599**	1	ROD AS	
	3A	1	**311-8710**	2	BUSHING	
	4	1	**279-6602**	1	CYLINDER AS	
	4A	1	**9R-0139**	2	BUSHING	
		1	**6V-8398**	1	SEAL-O-RING	
J	5	1	**146-0742**	1	RING-WEAR	
J	6	1	**146-0744**	1	RING-WEAR	
J	7	1	**167-2204**	1	SEAL AS-BUFFER	
J	8	1	**167-2314**	1	SEAL-U-CUP	
J	9	1	**175-7902**	1	SEAL-O-RING	
J	10	1	**1K-7095**	1	RING-BACKUP	
J	11	1	**227-1148**	1	SEAL-WIPER	
	12	1	**146-0743**	1	SEAL-PISTON	
J	13	1	**2H-3928**	1	SEAL-O-RING	
	14	1	**5J-5731**	1	LOCKNUT (1-3/4-12-THD)	
					AVAILABLE REPAIR KIT(S):	
J			**324-7165**	1	KIT-SEAL (STABILIZER)	
					(ALSO INCLUDES SEAL AS)	

J-KIT MARKED J SERVICES PARTS MARKED J

270-7291 CYLINDER GP-STABILIZER *(contd.)* **i04129009**

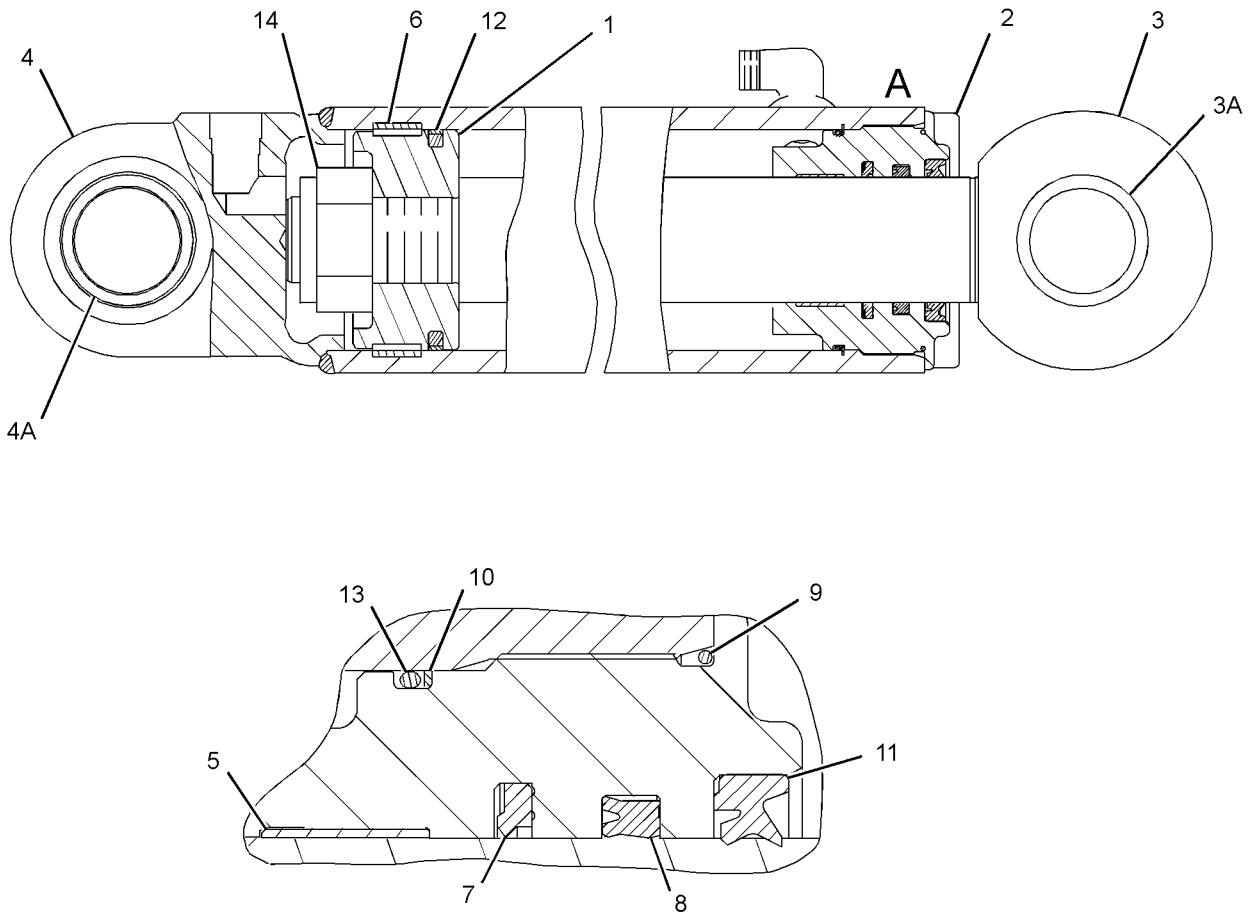

VIEW OF AREA A

GRAPHIC #1 **<END>** g02163652

HYDRAULIC SYSTEM

270-7286 CYLINDER GP-STICK

S/N: RBA1-UP
140-MM (5.5-IN) BORE X 705-MM (27.7-IN) STROKE
PART OF 254-0180 BACKHOE AR-EXTENDABLE STICK, 254-0175 BACKHOE AR-STANDARD STICK
AN ATTACHMENT

SMCS-5458 **i04141029**

NOTE	REF NO	GRAPHIC REF	PART NUMBER	QTY	PART NAME 1 2 3 4 5 6 (PRODUCT LEVEL)	SEE PAGE
	1	1	**277-7263**	1	CYLINDER AS-HYDRAULIC	
		1	**7J-9108**	1	SEAL-O-RING	
	2	1	**277-7267**	1	ROD AS	
		1	**278-0254**	2	BUSHING	
	3	1	**277-7269**	1	HEAD	
	4	1	**277-7270**	1	PISTON	
	5	1	**167-2243**	1	SEAL AS-BUFFER	
	6	1	**167-2343**	1	SEAL-U-CUP	
	7	1	**186-5148**	1	RING-WEAR	
	8	1	**233-0637**	1	SEAL-WIPER	
	9	1	**316-2517**	1	SEAL-O-RING	
	10	1	**316-2516**	1	SEAL-O-RING	
	11	1	**2K-2961**	1	RING-BACKUP	
	12	1	**4J-4606**	1	RING-WEAR	
	13	1	**5J-3488**	1	LOCKNUT (2-1/4-12-THD)	
	14	1	**9X-3598**	1	SEAL AS	

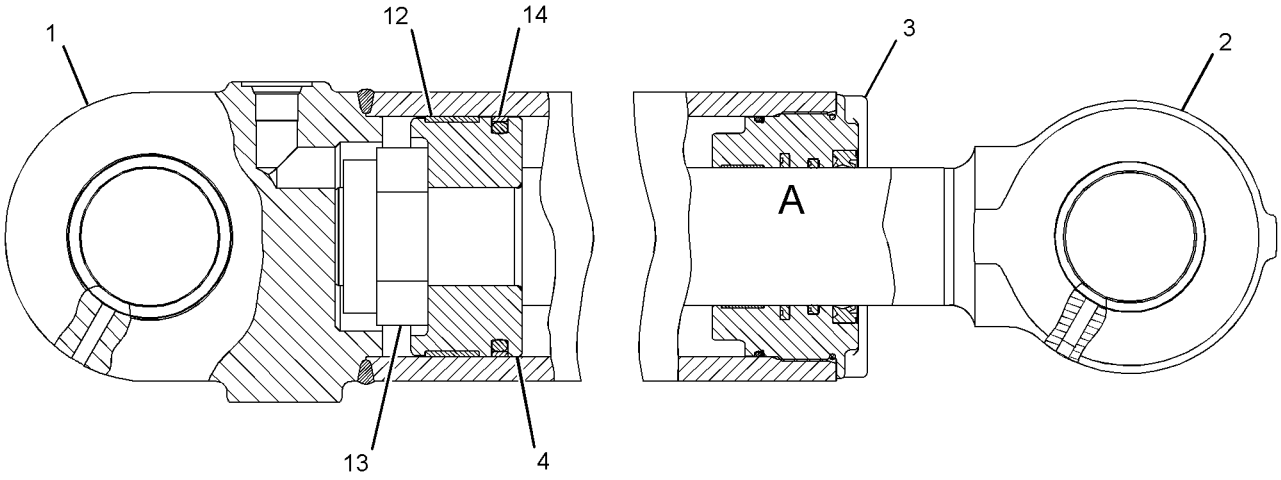

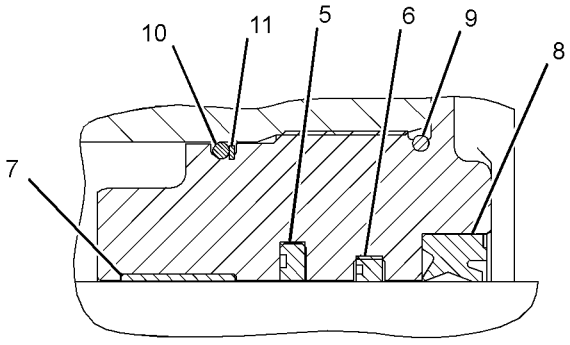

VIEW OF AREA A

GRAPHIC #1 **<END>** g01381599

HYDRAULIC SYSTEM

297-4896 CYLINDER GP-SWING

S/N: RBA1-UP

100-MM (3.94-IN) BORE X 289-MM (11.4-IN) STROKE

PART OF 254-0170 HYDRAULIC AR

SMCS-5105 **i04129013**

NOTE	REF NO	GRAPHIC REF	PART NUMBER	QTY	PART NAME 1 2 3 4 5 6 (PRODUCT LEVEL)	SEE PAGE
	1	1	**3B-8489**	1	FITTING-GREASE	
	2	1	**3N-5739**	1	SPRING	
	3	1	**102-3582**	1	WASHER (11X19.5X2.5-MM THK)	
	4	1	**233-0619**	1	SEAL-WIPER	
	5	1	**233-2589**	1	RING-WEAR	
	6	1	**233-2613**	1	BEARING	
	7	1	**269-0388**	1	HEAD	
	8	1	**269-0389**	1	PISTON	
	9	1	**287-2046**	1	PLUNGER	
	10	1	**297-4897**	1	CYLINDER AS-HYDRAULIC	
	10A	1	**9T-2883**	2	BEARING	
	11	1	**297-4900**	1	ROD AS	
	11A	1	**274-4274**	1	BUSHING	
	12	1	**140-7649**	1	SEAL-PISTON	
	13	1	**167-2183**	1	SEAL AS-BUFFER	
	14	1	**167-2303**	1	SEAL-U-CUP	
	15	1	**2K-6830**	1	RING-BACKUP	
	16	1	**2Y-5821**	1	RING	
	17	1	**3E-6735**	1	SEAL-O-RING	
	18	1	**9X-4611**	1	SEAL-O-RING	
M	19	1	**9X-6611**	1	SETSCREW-SOCKET (M10X1.5X16-MM)	

M-METRIC PART

297-4896 CYLINDER GP-SWING *(contd.)* **i04129013**

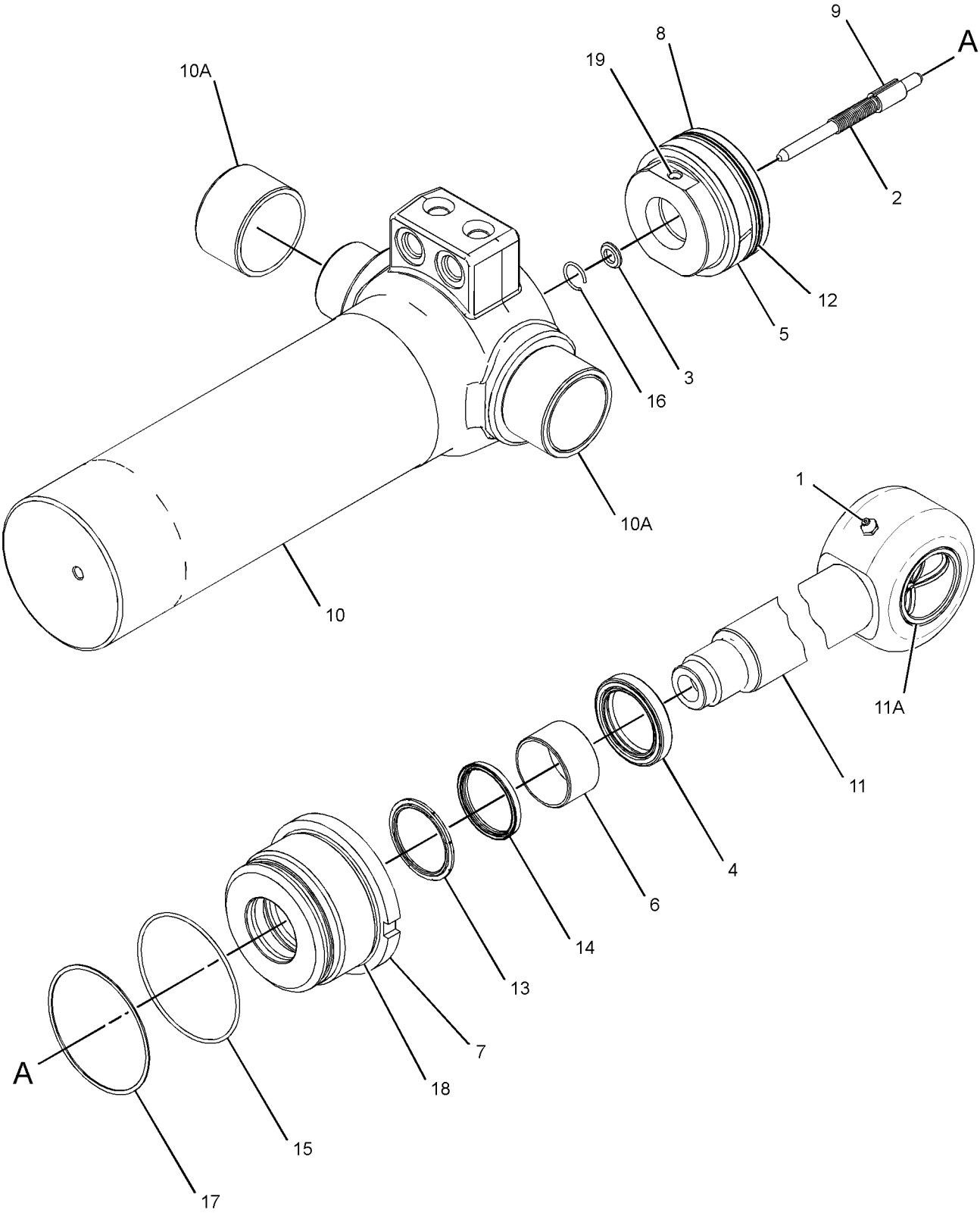

GRAPHIC #1 **<END>** g02215933

HYDRAULIC SYSTEM

100-7844 CYLINDER GP-TILT

S/N: RBA1-UP
101.6-MM (4-IN) BORE X 677-MM (26.6-IN) STROKE
PART OF 254-0140 LOADER AR

SMCS-5104 **i04159250**

NOTE	REF NO	GRAPHIC REF	PART NUMBER	QTY	PART NAME 1 2 3 4 5 6 (PRODUCT LEVEL)	SEE PAGE
M	1	1	**173-9683**	1	BOLT (M30X3.5X90-MM)	
	2	1	**3S-7023**	1	WASHER (34X57X6-MM THK)	
J	3	1	**6J-2797**	1	RING-WEAR	
J	4	1	**5J-5402**	1	SEAL AS	
	5	1	**9T-3133**	1	PISTON	
	6	1	**105-4822**	1	CYLINDER AS	
		1	**9T-3165**	2	BEARING	
J	7	1	**175-7900**	1	SEAL-O-RING	
J	8	1	**2K-6830**	1	RING-BACKUP	
	9	1	**6E-0775**	1	HEAD	
R	10	1	**100-7846**	1	ROD AS	
		1	**9R-0162**	1	BUSHING	
		1	**9R-3700**	1	BUSHING	
JL	11	1	**308-1845**	1	SEAL-WIPER	
JL	12	1	**289-2946**	1	SEAL-U-CUP	
JL	13	1	**289-2935**	1	SEAL AS	
JL	14	1	**4T-5613**	1	RING-WEAR	
					AVAILABLE REPAIR KIT(S):	
J			**233-9205**	1	KIT-SEAL (CYLINDER ONE)	
					(ALSO INCLUDES O-RING SEAL & BACKUP RING)	
L			**233-9207**	1	KIT-SEAL (CYLINDER TWO)	
					(ALSO INCLUDES SEAL AS, WEAR RING, HEAD SEAL & O-RING SEAL)	

J-KIT MARKED J SERVICES PARTS MARKED J
L-KIT MARKED L SERVICES PARTS MARKED L
M-METRIC PART
R-REMFG PART MAY BE AVAILABLE

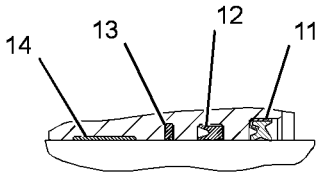

VIEW OF AREA A

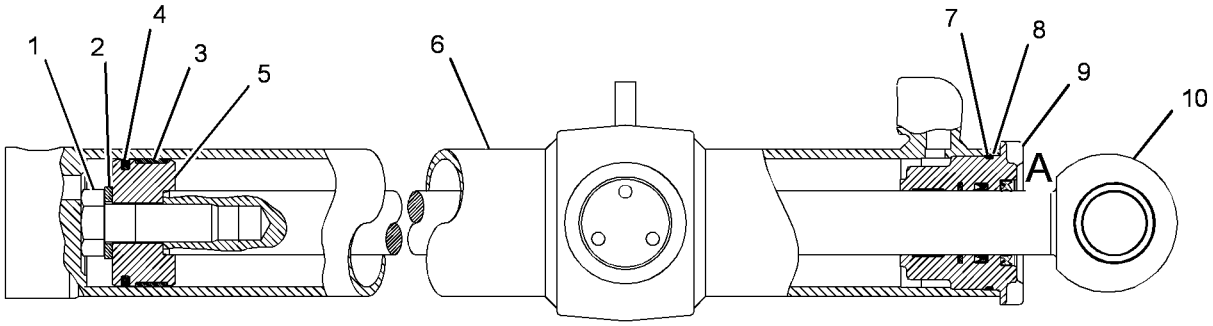

GRAPHIC #1 **<END>** g01843614

112-1826 DRIVE & MTG GP-PUMP

S/N: RBA1-UP

PART OF 254-0130 POWER TRAIN AR

SMCS-3108, 5070 **i03458260**

NOTE	REF NO	GRAPHIC REF	PART NUMBER	QTY	PART NAME 1 2 3 4 5 6 (PRODUCT LEVEL)	SEE PAGE
M	1	1	**8T-9405**	4	BOLT-SOCKET HEAD (M4X0.7X16-MM)	
	2	1	**9U-8886**	1	RING-SEAL	
	3	1	**115-1918**	1	PLATE	
	4	1	**117-3534**	1	ADAPTER	
	5	1	**274-4555**	1	HUB	
Y	6	1	**128-5596**	1	SHAFT GP-PUMP DRIVE	331
	7	1	**175-7904**	1	SEAL-O-RING	
	8	1	**8T-4122**	2	WASHER-HARD (17X32X3.5-MM THK)	
M	9	1	**8T-7338**	2	BOLT (M16X2X45-MM)	

M-METRIC PART
Y-SEPARATE ILLUSTRATION

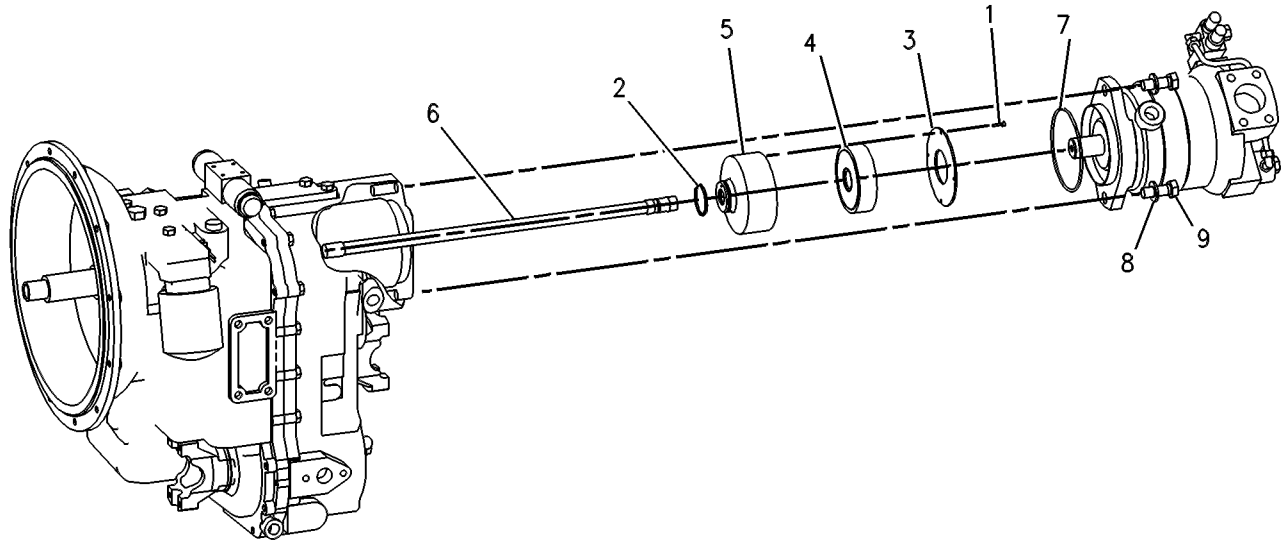

GRAPHIC #1 **<END>** g00131524

HYDRAULIC SYSTEM

245-8769 FASTENER GP-VALVE

S/N: RBA1-UP

PART OF 254-0188, 346-1232 VALVE AR-BANK 2, 254-0189, 346-1233 VALVE AR-BANK 3

AN ATTACHMENT

SMCS-5051 **i03799038**

NOTE	REF NO	GRAPHIC REF	PART NUMBER	QTY	PART NAME 1 2 3 4 5 6 (PRODUCT LEVEL)	SEE PAGE
	1	1	**8T-4121**	3	WASHER-HARD (11X21X2.5-MM THK)	
M	2	1	**8T-4186**	3	BOLT (M10X1.5X40-MM)	

M-METRIC PART

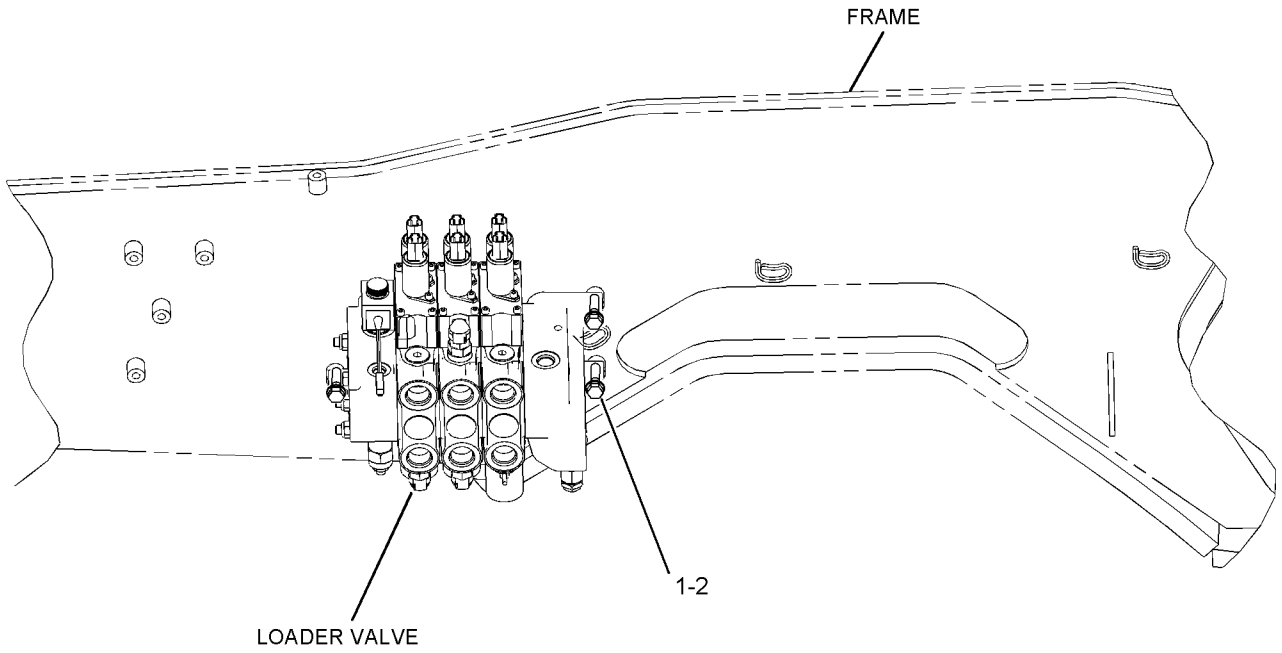

LEFT SIDE VIEW

GRAPHIC #1 **<END>** g01070282

307-9799 FILTER GP-OIL

S/N: RBA1-UP

PART OF 254-0170 HYDRAULIC AR

SMCS-5068 **i04129029**

NOTE	REF NO	GRAPHIC REF	PART NUMBER	QTY	PART NAME 1 2 3 4 5 6 (PRODUCT LEVEL)	SEE PAGE
	1	1	**207-5035**	1	FILTER ELEMENT AS-OIL (ULTRA HIGH EFFICIENCY) (HYDRAULIC)	
	2	1	*148-8406*	1	PLUG AS	
		1	**7M-8485**	1	SEAL-O-RING	
		1	**9S-9334**	1	PLUG-O-RING (STRAIGHT THREAD O-RING)	
	3	1	*164-6709*	1	PLUG AS (STORAGE)	
		1	**3J-1907**	1	SEAL-O-RING	
		1	**5F-9144**	1	SEAL-O-RING	
	4	1	**6V-9830**	2	CAP AS (RIDE CONTROL)	
	5	1	**8C-3446**	1	VALVE-FLUID SAMPLING (HYDRAULIC OIL)	
	6	1	**8C-3451**	1	CAP-DUST (HYDRAULIC OIL)	

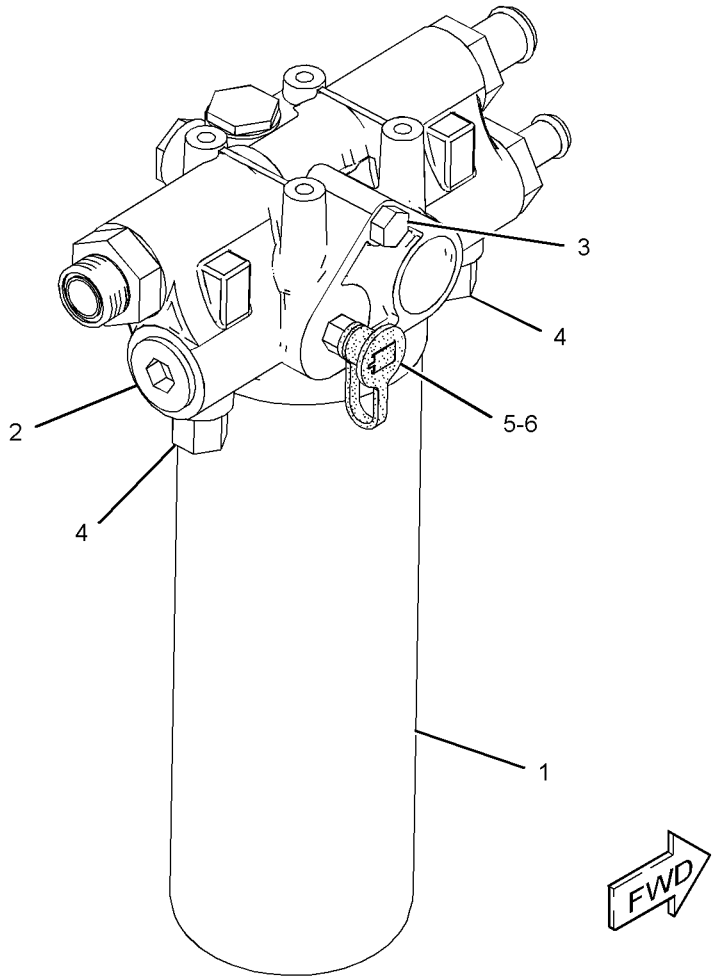

GRAPHIC #1 **<END>** g02176887

132-8769 FITTING GP-HYDRAULIC–QUICK DISCONNECT

S/N: RBA1-UP

AN ATTACHMENT

SMCS-5057 **i01499420**

NOTE	REF NO	GRAPHIC REF	PART NUMBER	QTY	PART NAME 1 2 3 4 5 6 (PRODUCT LEVEL)	SEE PAGE
	1	1	**106-0406**	1	FITTING (QUICK DISCONNECT, MALE)	
	2	1	**106-0401**	1	FITTING (QUICK DISCONNECT, FEMALE)	

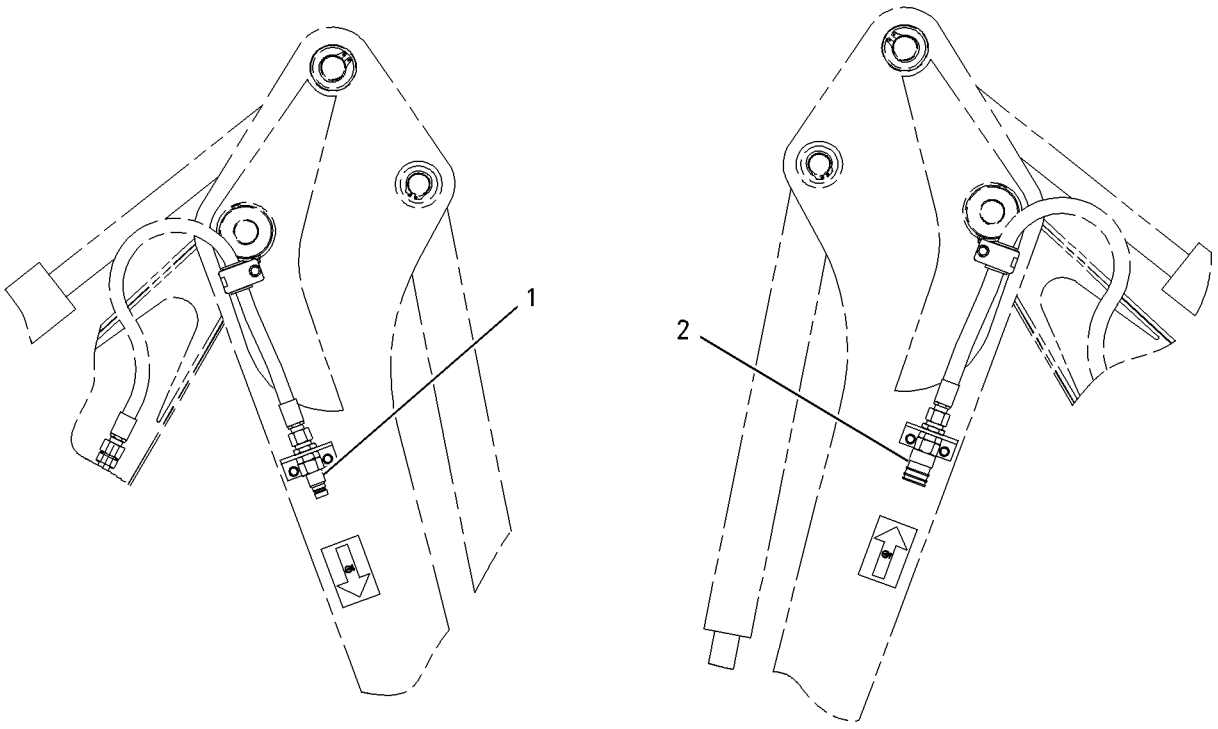

GRAPHIC #1 **<END>** g00778121

HYDRAULIC SYSTEM

254-0170 HYDRAULIC AR

S/N: RBA1-UP

PART OF 368-0572 COMMON AR

SMCS-5050 **i04151449**

NOTE	PART NUMBER	QTY	PART NAME 1 2 3 4 5 6 (PRODUCT LEVEL)	SEE PAGE
Y	*254-0125*	1	CONTROL AR-RIDE	234
Y	**270-7290**	1	CYLINDER GP-STABILIZER (LH)	241
Y	**270-7291**	1	CYLINDER GP-STABILIZER (RH)	242
Y	**297-4896**	2	CYLINDER GP-SWING	245
Y	**307-9799**	1	FILTER GP-OIL	251
Y	*216-5332*	1	LINES GP-DRAIN	277
Y	*289-3280*	1	LINES GP-PILOT	291
Y	*254-0151*	1	LINES GP-SWING	310
Y	*254-0163*	1	MOUNTING GP-PUMP	325
Y	**280-7873**	1	PUMP GP-GEAR	326
Y	**270-1590**	1	PUMP GP-METERING (HMU)	204
Y	**269-9336**	1	PUMP GP-PISTON	328
Y	*254-0169*	1	TANK & MTG GP-HYDRAULIC	332

Y-SEPARATE ILLUSTRATION

<END>

HYDRAULIC SYSTEM

254-0139 KICKOUT & POSITIONER GP

S/N: RBA1-UP

PART OF 254-0188 VALVE AR-BANK 2, 254-0189 VALVE AR-BANK 3

AN ATTACHMENT

SMCS-5109, 5112 **i04130849**

NOTE	REF NO	GRAPHIC REF	PART NUMBER	QTY	PART NAME 1 2 3 4 5 6 (PRODUCT LEVEL)	SEE PAGE
	1	1	**8T-0706**	1	RING-RETAINING	
	2	1	**9R-3255**	1	LEVER	
B	3	1	**9R-5429**	2	SPACER (67.5X120X3-MM THK)	
B	4	1	**9R-5432**	3	SPACER (67.5X120X2-MM THK)	
	5	1	**106-7301**	1	ROD AS	
	6	1	**129-6466**	1	SWITCH AS-ROLLER (POSITION SENSOR)	
		1	**2H-3922**	1	LOCKWASHER	
		1	**6V-8363**	2	SCREW (10-32X0.312-IN)	
		1	**6V-8370**	1	NUT-HEX (3/4-32-THD)	
		1	**8F-1434**	2	LOCKWASHER	
		1	**9X-0199**	1	BOOT-SWITCH	
	7	1	**279-6052**	1	LINK AS	
	8	1	**130-5891**	1	LEVER AS	
		1	**7Y-0336**	1	SPACER (24.5X44X24-MM THK)	
		1	**9R-2614**	1	BEARING	
		1	**9R-3135**	1	PIN	
	10	1	**141-6343**	1	SPRING	
	11	1	**268-5689**	1	FILM-IDENTIFICATION (BUCKET LEVEL)	
	12	1	**271-7464**	1	LEVER AS	
	13	1	**335-7098**	1	TUBE AS	
	14	1	**276-3069**	1	PLATE AS	
	15	1	**290-8139**	1	PLATE AS	
		1	**220-5974**	1	PLATE	
	16	1	**292-8127**	1	PLATE	
	17	1	**323-5174**	1	LEVER AS	
	17A	1	**9R-2614**	1	BEARING	
	18	1	**300-2692**	1	SPACER	
	19	1	**1B-8716**	1	KEY-WOODRUFF	
	20	1	**3B-8489**	2	FITTING-GREASE	
	21	1	**8C-6955**	1	END-YOKE ROD	
B	22	1	**8T-4123**	5	WASHER (22X35X3.5-MM THK)	
M	23	1	**8T-4133**	2	NUT (M10X1.5-THD)	
M	24	1	**8T-4138**	1	BOLT (M6X1X20-MM)	
M	25	1	**8T-4182**	1	BOLT (M10X1.5X45-MM)	
	26	1	**8T-4205**	1	WASHER-HARD (7.2X14.5X2-MM THK)	
	27	1	**8T-5063**	1	ROD END	
	28	1	**9R-2806**	2	PIN	
	29	1	**9R-2807**	5	CLIP	
	30	1	**9R-3067**	1	PIN	
	31	1	**9R-5301**	2	PIN-COTTER	

B-USE AS REQUIRED
M-METRIC PART

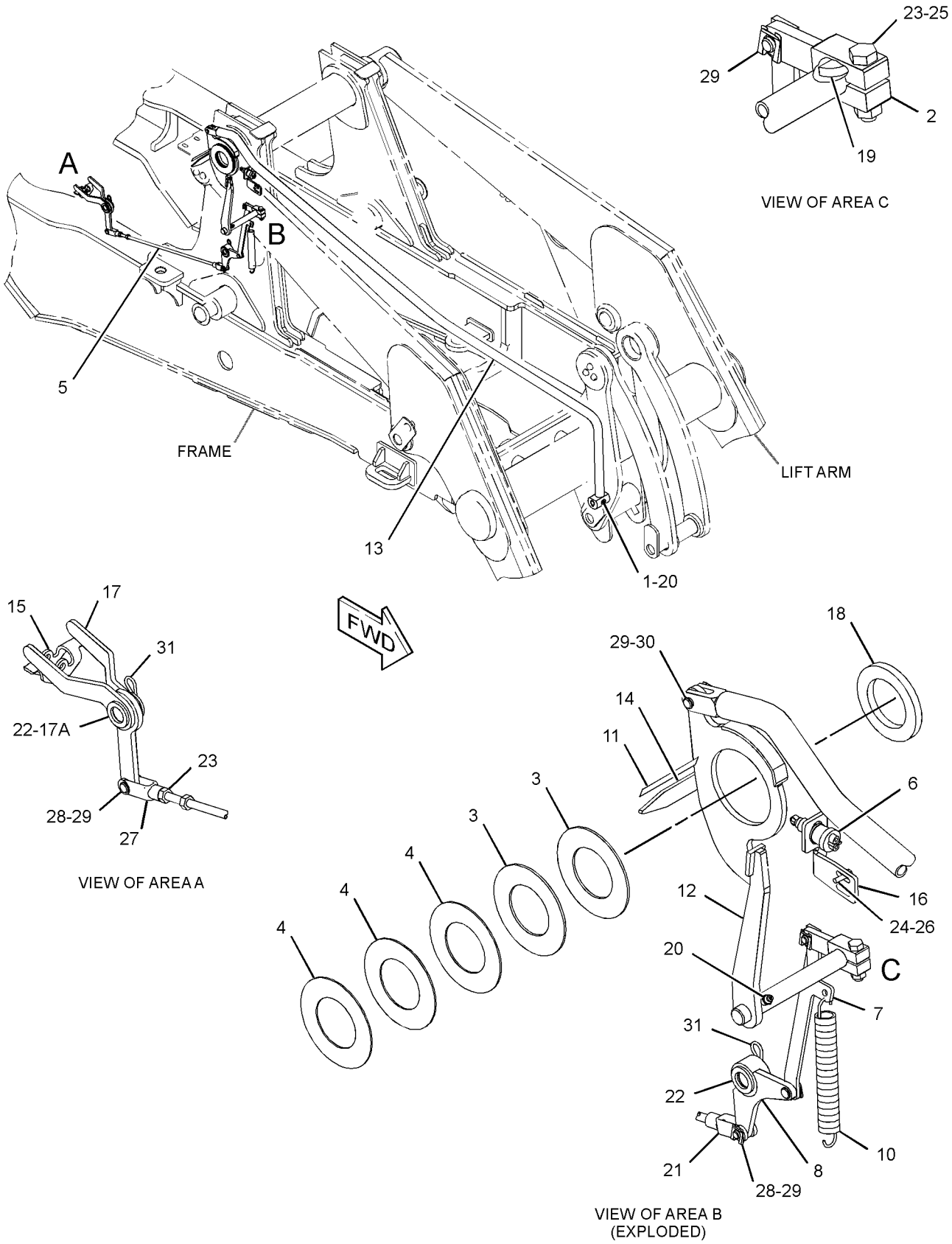

GRAPHIC #1 **<END>** g02334239

HYDRAULIC SYSTEM

346-0059 KICKOUT & POSITIONER GP

S/N: RBA1-UP

PART OF 346-1232 VALVE AR-BANK 2, 346-1233 VALVE AR-BANK 3

AN ATTACHMENT

SMCS-5109, 5112 **i04125820**

NOTE	REF NO	GRAPHIC REF	PART NUMBER	QTY	PART NAME 1 2 3 4 5 6 (PRODUCT LEVEL)	SEE PAGE
	1	1	**9R-3255**	1	LEVER	
B	2	1	**9R-5429**	2	SPACER (67.5X120X3-MM THK)	
B	3	1	**9R-5432**	3	SPACER (67.5X120X2-MM THK)	
	4	1	**106-7301**	1	ROD AS	
	5	1	**129-6466**	1	SWITCH AS-ROLLER (POSITION SENSOR)	
		1	**2H-3922**	1	LOCKWASHER	
		1	**6V-8363**	2	SCREW (10-32X0.312-IN)	
		1	**6V-8370**	1	NUT-HEX (3/4-32-THD)	
		1	**8F-1434**	2	LOCKWASHER	
		1	**9X-0199**	1	BOOT-SWITCH	
	6	1	**130-5891**	1	LEVER AS	
	6A	1	**9R-2614**	1	BEARING	
		1	**7Y-0336**	1	SPACER (24.5X44X24-MM THK)	
		1	**9R-3135**	1	PIN	
	7	1	**134-5930**	1	SPACER (19X41X12.7-MM THK)	
	8	1	**141-6343**	1	SPRING	
	9	1	**268-5689**	1	FILM-IDENTIFICATION (BUCKET LEVEL)	
	10	1	**271-7464**	1	LEVER AS	
	11	1	**275-9911**	1	TUBE AS	
	12	1	**276-3069**	1	PLATE AS	
	13	1	**279-6052**	1	LINK AS	
	14	1	**290-8139**	1	PLATE AS	
		1	**220-5974**	1	PLATE	
	15	1	**292-8127**	1	PLATE	
	16	1	**300-2692**	1	SPACER	
	17	1	**345-9662**	1	LEVER AS	
	17A	1	**9R-2614**	1	BEARING	
	18	1	**1B-8716**	1	KEY-WOODRUFF	
	19	1	**3B-8489**	2	FITTING-GREASE	
	20	1	**8C-6955**	1	END-YOKE ROD	
	21	1	**8T-0706**	1	RING-RETAINING	
B	22	1	**8T-4123**	5	WASHER (22X35X3.5-MM THK)	
M	23	1	**8T-4133**	2	NUT (M10X1.5-THD)	
M	24	1	**8T-4138**	1	BOLT (M6X1X20-MM)	
M	25	1	**8T-4182**	1	BOLT (M10X1.5X45-MM)	
	26	1	**8T-4205**	1	WASHER-HARD (7.2X14.5X2-MM THK)	
	27	1	**8T-5063**	1	ROD END	
	28	1	**9R-2806**	2	PIN	
	29	1	**9R-2807**	5	CLIP	
	30	1	**9R-3067**	1	PIN	
	31	1	**9R-5301**	2	PIN-COTTER	

B-USE AS REQUIRED
M-METRIC PART

346-0059 **KICKOUT & POSITIONER GP** *(contd.)* **i04125820**

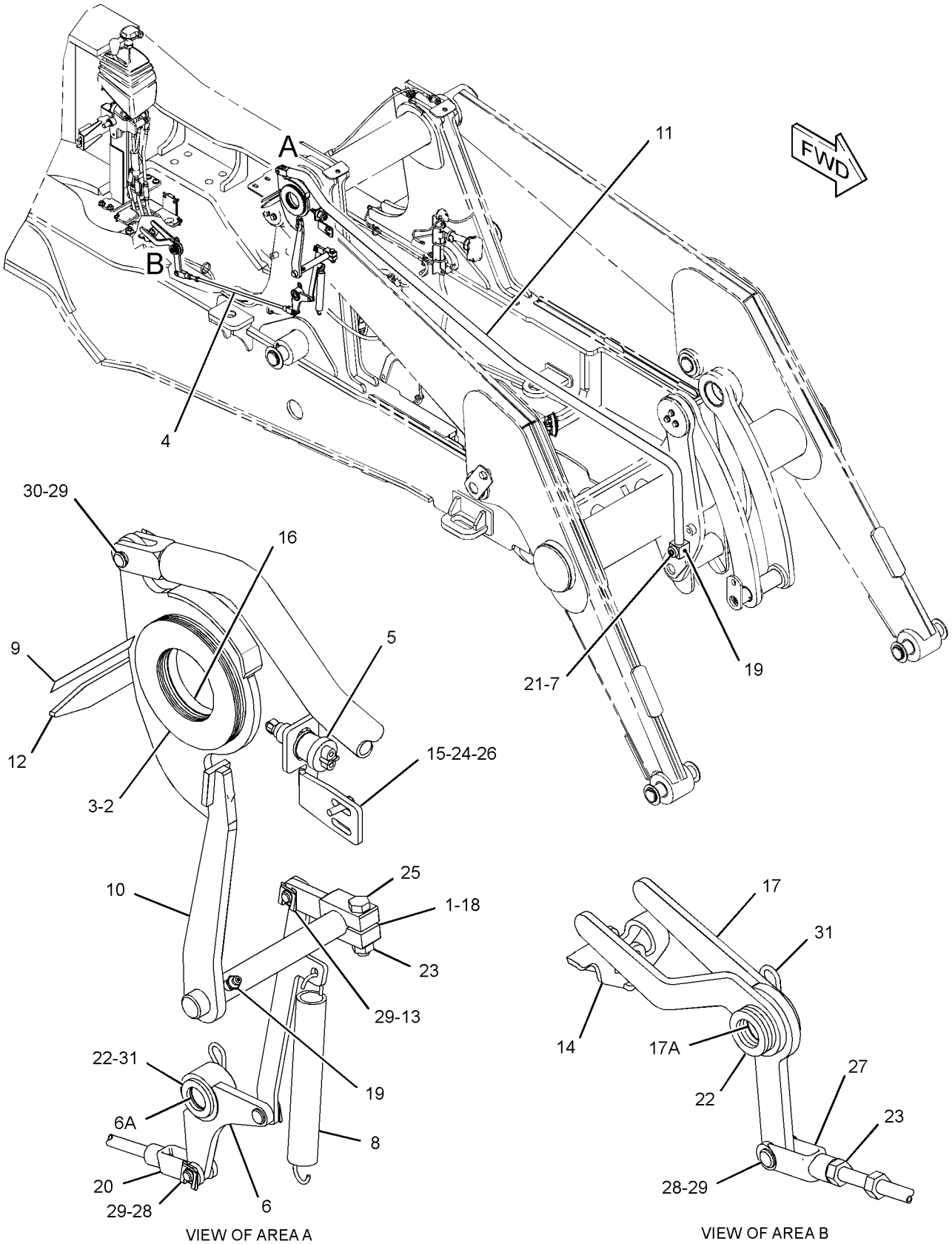

GRAPHIC #1 **<END>** g01958456

HYDRAULIC SYSTEM

345-3170 LINES GP-AUXILIARY HYDRAULIC

S/N: RBA1-UP
FOR USE WITH MECHANICAL BACKHOE VALVE
AN ATTACHMENT

SMCS-5057 **i04101699**

NOTE	REF NO	GRAPHIC REF	PART NUMBER	QTY	PART NAME 1 2 3 4 5 6 (PRODUCT LEVEL)	SEE PAGE
	1	1	**106-0401**	1	FITTING (QUICK DISCONNECT, FEMALE)	
	2	1	**106-0406**	1	FITTING (QUICK DISCONNECT, MALE)	
	3	1	**107-6708**	2	BRACKET	
	4	1	**241-8448**	2	FILM-WARNING (HYD PRESS, READ OMM, U.S.)	
					-OR-	
		1	**241-8450**	2	FILM-WARNING (HYD PRESS, READ OMM, INTL)	
M	5	1	**8T-4956**	2	BOLT (M12X1.75X35-MM)	
	6	1	**257-0480**	1	VALVE GP-CONTROL (AUXILIARY HYDRAULIC)	
I	7	1	**273-9177**	1	HOSE AS	
I	8	1	**273-9178**	1	HOSE AS	
	9	1	**273-9774**	2	PLATE AS	
					(EACH INCLUDES)	
M		1	**8T-3597**	1	NUT-WELD (M12X1.75-THD)	
I	10	1	**278-7780**	1	HOSE AS	
I	11	1	**278-7783**	1	HOSE AS	
	12	1	**292-2400**	1	BRACKET	
I	13	1	**322-7241**	1	HOSE AS	
	14	1	**346-1014**	1	TUBE AS	
	15	1	*148-8327*	2	CONNECTOR AS	
					(EACH INCLUDES)	
		1	**3D-2824**	1	SEAL-O-RING	
		1	**6V-8637**	1	CONNECTOR	
		1	**6V-9746**	1	SEAL-O-RING	
	16	1	*148-8335*	1	CONNECTOR AS	
		1	**5K-9090**	1	SEAL-O-RING	
		1	**6V-8635**	1	CONNECTOR	
		1	**7M-8485**	1	SEAL-O-RING	
	17	1	*148-8339*	1	CONNECTOR AS	
		1	**6V-8716**	1	CONNECTOR	
		1	**6V-9746**	1	SEAL-O-RING	
		1	**7M-8485**	1	SEAL-O-RING	
	18	1	*148-8357*	1	ELBOW AS	
		1	**5K-9090**	1	SEAL-O-RING	
		1	**6V-9008**	1	ELBOW	
		1	**7M-8485**	1	SEAL-O-RING	
	19	1	*148-8455*	1	UNION AS	
		1	**6V-8997**	1	UNION	
		1	**6V-9746**	2	SEAL-O-RING	
	20	1	*150-3052*	3	CONNECTOR AS	
					(EACH INCLUDES)	
		1	**5K-9090**	1	SEAL-O-RING	
		1	**7M-8485**	1	SEAL-O-RING	
		1	**107-6709**	1	CONNECTOR	
	21	1	*155-2026*	1	UNION AS	
		1	**5K-9090**	2	SEAL-O-RING	
		1	**6V-8998**	1	UNION	
	22	1	**233-6592**	2	SPACER (13X20X24-MM THK)	
	23	1	**2P-1293**	1	LOCKNUT (1-3/16-12-THD)	
	24	1	**4D-7388**	2	CLIP	
	25	1	**5P-7466**	2	CLIP (SLOT)	
	26	1	**5P-7467**	2	CLIP (TAB)	
	27	1	**5P-7468**	2	CLIP (SLOT)	
	28	1	**5P-7469**	2	CLIP (TAB)	
	29	1	**5P-8112**	2	GROMMET	
	30	1	**5P-8444**	2	GROMMET	

345-3170 **LINES GP-AUXILIARY HYDRAULIC** *(contd.)* **i04101699**

NOTE	REF NO	GRAPHIC REF	PART NUMBER	QTY	PART NAME 1 2 3 4 5 6 (PRODUCT LEVEL)	SEE PAGE
	31	1	**6V-9172**	4	NUT (1-7/16-12-THD)	
	32	1	**8T-4121**	12	WASHER-HARD (11X21X2.5-MM THK)	
M	33	1	**8T-4136**	10	BOLT (M10X1.5X25-MM)	
M	34	1	**8T-4185**	2	BOLT (M10X1.5X50-MM)	
	35	1	**8T-4223**	2	WASHER-HARD (13.5X25.5X3-MM THK)	

I-REFER TO HYDRAULIC INFORMATION SYSTEM
M-METRIC PART

345-3170 **LINES GP-AUXILIARY HYDRAULIC** *(contd.)* **i04101699**

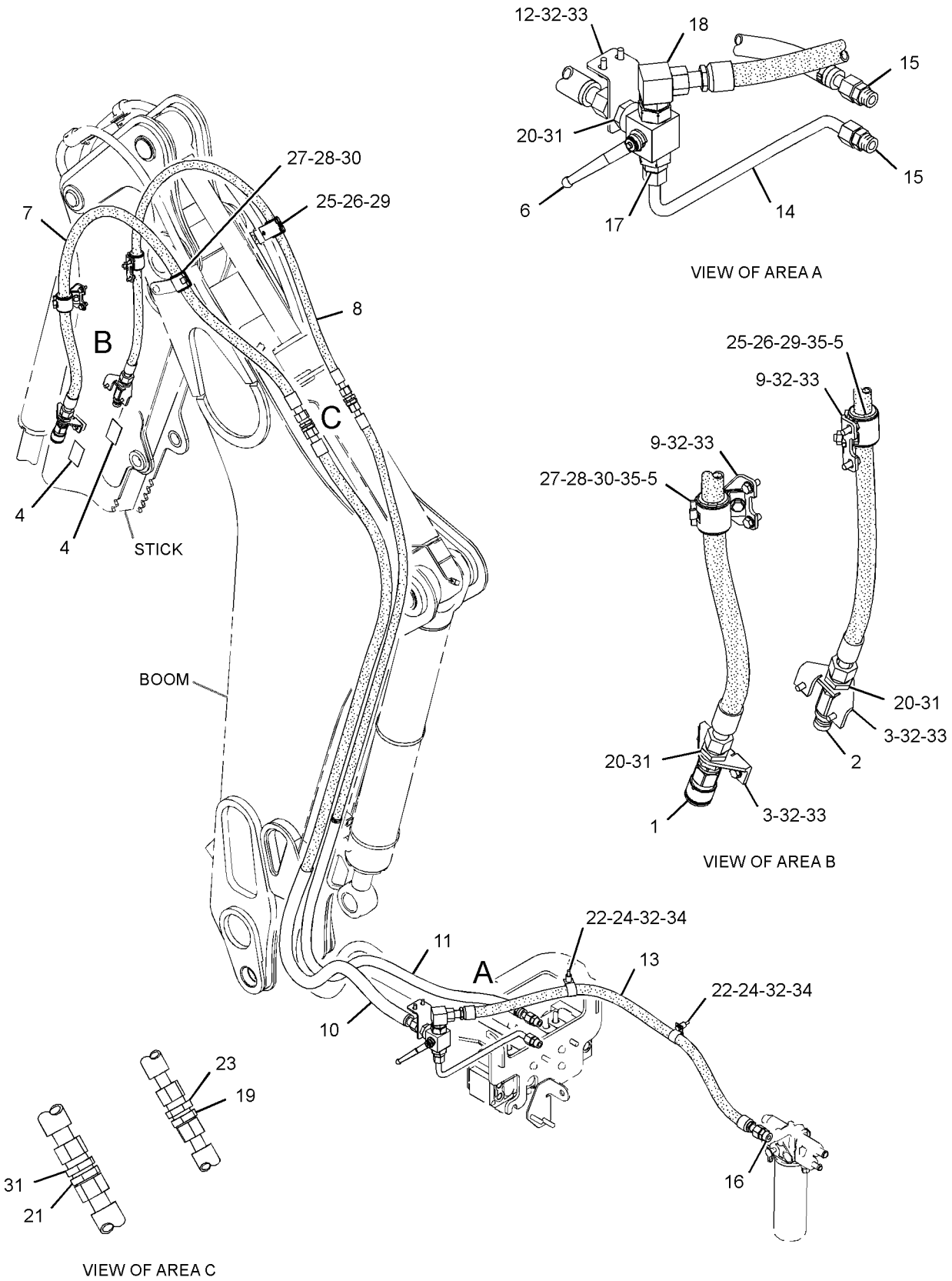

GRAPHIC #1 **<END>** g01951821

HYDRAULIC SYSTEM

345-3171 LINES GP-AUXILIARY HYDRAULIC

S/N: RBA1-UP

FOR USE WITH MECHANICAL BACKHOE VALVE

AN ATTACHMENT

SMCS-5057 **i04101709**

NOTE	REF NO	GRAPHIC REF	PART NUMBER	QTY	PART NAME 1 2 3 4 5 6 (PRODUCT LEVEL)	SEE PAGE
	1	1	**106-0401**	1	FITTING (QUICK DISCONNECT, FEMALE)	
	2	1	**106-0406**	1	FITTING (QUICK DISCONNECT, MALE)	
	3	1	**107-6708**	2	BRACKET	
	4	1	**241-8448**	2	FILM-WARNING (HYD PRESS, READ OMM, U.S.)	
					-OR-	
		1	**241-8450**	2	FILM-WARNING (HYD PRESS, READ OMM, INTL)	
M	5	1	**8T-4956**	2	BOLT (M12X1.75X35-MM)	
	6	1	**257-0480**	1	VALVE GP-CONTROL (AUXILIARY HYDRAULIC)	
I	7	1	**278-7778**	1	HOSE AS	
I	8	1	**278-7780**	1	HOSE AS	
I	9	1	**278-7781**	1	HOSE AS	
I	10	1	**278-7783**	1	HOSE AS	
	11	1	**292-2400**	1	BRACKET	
I	12	1	**322-7241**	1	HOSE AS	
	13	1	**346-1015**	1	TUBE AS	
	14	1	*148-8327*	2	CONNECTOR AS	
					(EACH INCLUDES)	
		1	**3D-2824**	1	SEAL-O-RING	
		1	**6V-8637**	1	CONNECTOR	
		1	**6V-9746**	1	SEAL-O-RING	
	15	1	*148-8335*	1	CONNECTOR AS	
		1	**5K-9090**	1	SEAL-O-RING	
		1	**6V-8635**	1	CONNECTOR	
		1	**7M-8485**	1	SEAL-O-RING	
	16	1	*148-8339*	1	CONNECTOR AS	
		1	**6V-8716**	1	CONNECTOR	
		1	**6V-9746**	1	SEAL-O-RING	
		1	**7M-8485**	1	SEAL-O-RING	
	17	1	*148-8357*	1	ELBOW AS	
		1	**5K-9090**	1	SEAL-O-RING	
		1	**6V-9008**	1	ELBOW	
		1	**7M-8485**	1	SEAL-O-RING	
	18	1	*148-8455*	1	UNION AS	
		1	**6V-8997**	1	UNION	
		1	**6V-9746**	2	SEAL-O-RING	
	19	1	*150-3052*	3	CONNECTOR AS	
					(EACH INCLUDES)	
		1	**5K-9090**	1	SEAL-O-RING	
		1	**7M-8485**	1	SEAL-O-RING	
		1	**107-6709**	1	CONNECTOR	
	20	1	*155-2026*	1	UNION AS	
		1	**5K-9090**	2	SEAL-O-RING	
		1	**6V-8998**	1	UNION	
	21	1	**233-6592**	2	SPACER (13X20X24-MM THK)	
	22	1	**2P-1293**	1	LOCKNUT (1-3/16-12-THD)	
	23	1	**327-7708**	1	CLIP (TAB)	
	24	1	**330-9416**	1	CLIP (TAB)	
	25	1	**4D-7388**	2	CLIP	
	26	1	**5P-7466**	2	CLIP (SLOT)	
	27	1	**5P-7467**	1	CLIP (TAB)	
	28	1	**5P-7468**	2	CLIP (SLOT)	
	29	1	**5P-7469**	1	CLIP (TAB)	
	30	1	**5P-8112**	2	GROMMET	
	31	1	**5P-8444**	2	GROMMET	
	32	1	**6V-9172**	4	NUT (1-7/16-12-THD)	

345-3171 **LINES GP-AUXILIARY HYDRAULIC** *(contd.)* **i04101709**

NOTE	REF NO	GRAPHIC REF	PART NUMBER	QTY	PART NAME 1 2 3 4 5 6 (PRODUCT LEVEL)	SEE PAGE
	33	1	**8T-4121**	8	WASHER-HARD (11X21X2.5-MM THK)	
M	34	1	**8T-4136**	6	BOLT (M10X1.5X25-MM)	
M	35	1	**8T-4185**	2	BOLT (M10X1.5X50-MM)	
	36	1	**8T-4223**	2	WASHER-HARD (13.5X25.5X3-MM THK)	

I-REFER TO HYDRAULIC INFORMATION SYSTEM
M-METRIC PART

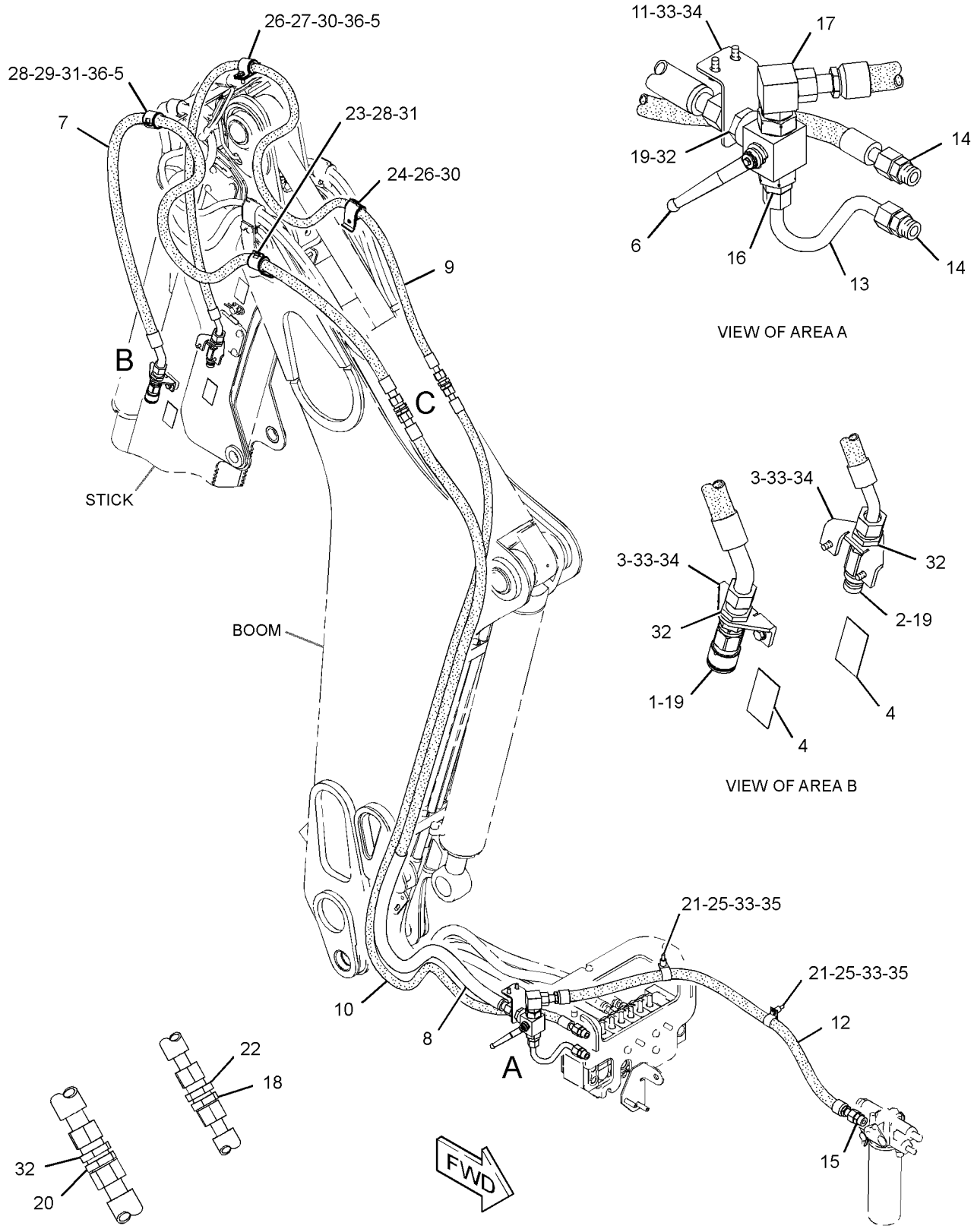

GRAPHIC #1 **<END>** g01951823

HYDRAULIC SYSTEM

274-3715 LINES GP-BACKHOE AUXILIARY

S/N: RBA1-UP
FOR USE WITH 254-0175—PAGE 1
AN ATTACHMENT

SMCS-5057 **i04130789**

NOTE	REF NO	GRAPHIC REF	PART NUMBER	QTY	PART NAME 1 2 3 4 5 6 (PRODUCT LEVEL)	SEE PAGE
	1	1	**106-0401**	1	FITTING (QUICK DISCONNECT, FEMALE)	
	2	1	**106-0406**	1	FITTING (QUICK DISCONNECT, MALE)	
	3	1	**107-6708**	2	BRACKET	
	4	1	**241-8448**	2	FILM-WARNING (HYD PRESS, READ OMM, U.S.)	
	5	1	**241-8450**	2	FILM-WARNING (HYD PRESS, READ OMM, INTL)	
	6	1	**257-0480**	1	VALVE GP-CONTROL	
I	7	1	**273-9177**	1	HOSE AS	
I	8	1	**273-9178**	1	HOSE AS	
	9	1	**278-7779**	1	TUBE AS	
I	10	1	**278-7780**	1	HOSE AS	
I	11	1	**278-7783**	1	HOSE AS	
	12	1	**4D-7388**	2	CLIP	
	13	1	**292-2400**	1	BRACKET	
	14	1	*148-8327*	2	CONNECTOR AS	
					(EACH INCLUDES)	
		1	**3D-2824**	1	SEAL-O-RING	
		1	**6V-8637**	1	CONNECTOR	
		1	**6V-9746**	1	SEAL-O-RING	
	15	1	*148-8339*	1	CONNECTOR AS	
		1	**6V-8716**	1	CONNECTOR	
		1	**6V-9746**	1	SEAL-O-RING	
		1	**7M-8485**	1	SEAL-O-RING	
I	16	1	**322-7241**	1	HOSE AS	
	18	1	*148-8455*	1	UNION AS (ORFS)	
		1	**6V-8997**	1	UNION	
		1	**6V-9746**	2	SEAL-O-RING	
	19	1	*150-3052*	3	CONNECTOR AS	
					(EACH INCLUDES)	
		1	**5K-9090**	1	SEAL-O-RING	
		1	**7M-8485**	1	SEAL-O-RING	
		1	**107-6709**	1	CONNECTOR	
	20	1	*155-2026*	1	UNION AS	
		1	**5K-9090**	2	SEAL-O-RING	
		1	**6V-8998**	1	UNION	
	21	1	**2P-1293**	1	LOCKNUT (1-3/16-12-THD)	
	22	1	**5P-7466**	2	CLIP (SLOT)	
	23	1	**5P-7467**	2	CLIP (TAB)	
	24	1	**5P-7468**	2	CLIP (SLOT)	
	25	1	**5P-7469**	2	CLIP (TAB)	
	26	1	**5P-8112**	2	GROMMET	
	27	1	**5P-8444**	2	GROMMET	
	28	1	**6V-9172**	4	NUT (1-7/16-12-THD)	
	29	1	**8T-4121**	12	WASHER-HARD (11X21X2.5-MM THK)	
M	30	1	**8T-4136**	10	BOLT (M10X1.5X25-MM)	
	31	1	*148-8335*	1	CONNECTOR AS	
		1	**5K-9090**	1	SEAL-O-RING	
		1	**6V-8635**	1	CONNECTOR	
		1	**7M-8485**	1	SEAL-O-RING	
	32	1	*148-8357*	1	ELBOW AS	
		1	**5K-9090**	1	SEAL-O-RING	
		1	**6V-9008**	1	ELBOW	
		1	**7M-8485**	1	SEAL-O-RING	
	33	1	**233-6592**	2	SPACER (13X20X24-MM THK)	
	34	1	**273-9774**	2	PLATE AS	
M	35	1	**8T-4185**	2	BOLT (M10X1.5X50-MM)	

274-3715 LINES GP-BACKHOE AUXILIARY *(contd.)* i04130789

NOTE	REF NO	GRAPHIC REF	PART NUMBER	QTY	PART NAME 1 2 3 4 5 6 (PRODUCT LEVEL)	SEE PAGE
	36	1	**8T-4223**	2	WASHER-HARD (13.5X25.5X3-MM THK)	
M	37	1	**8T-4956**	2	BOLT (M12X1.75X35-MM)	

I-REFER TO HYDRAULIC INFORMATION SYSTEM
M-METRIC PART

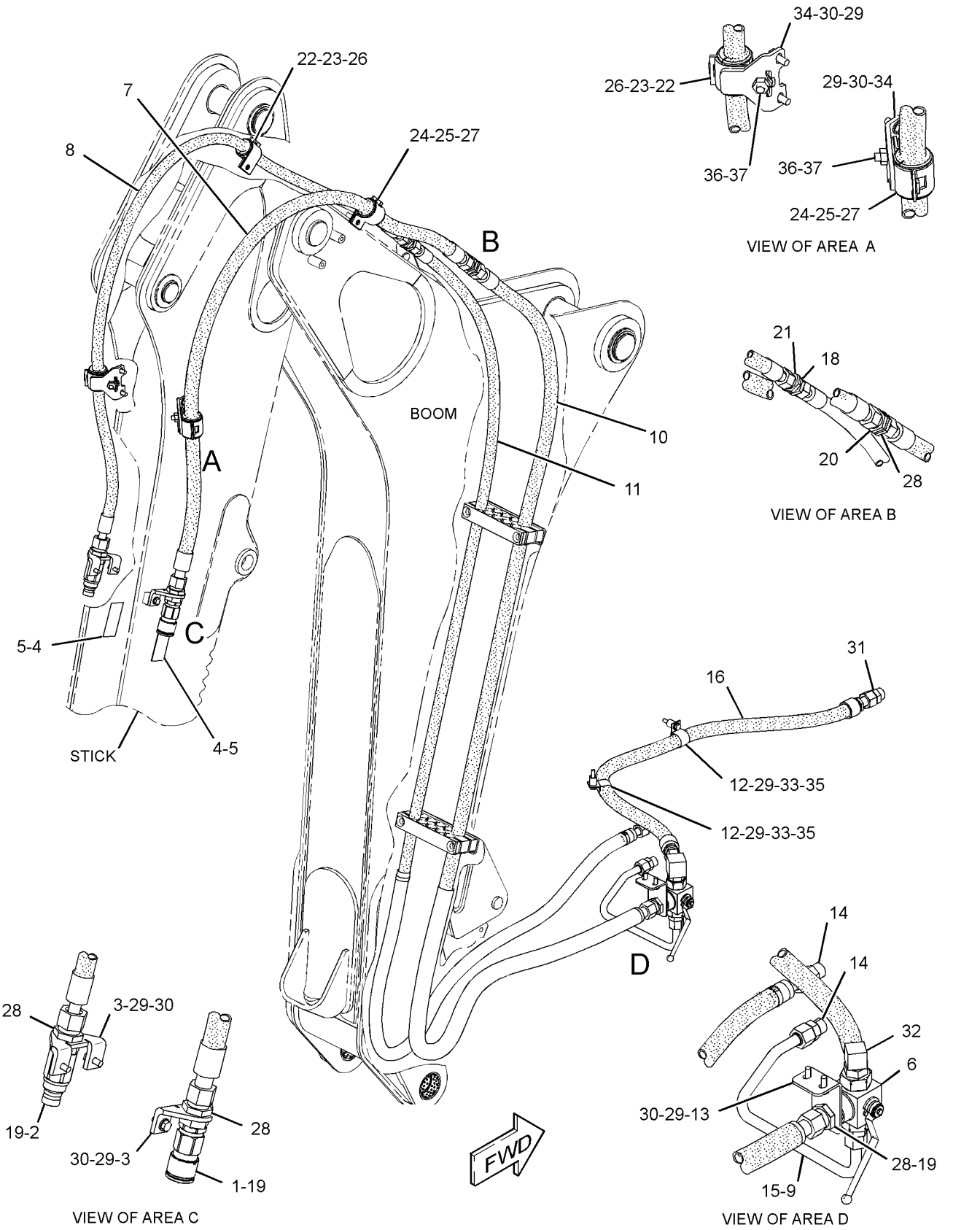

GRAPHIC #1 **<END>** g01437318

HYDRAULIC SYSTEM

274-3716 LINES GP-BACKHOE AUXILIARY

S/N: RBA1-UP
FOR USE WITH 254-0180—PAGE 1
AN ATTACHMENT

SMCS-5057 **i04101697**

NOTE	REF NO	GRAPHIC REF	PART NUMBER	QTY	PART NAME 1 2 3 4 5 6 (PRODUCT LEVEL)	SEE PAGE
	1	1	**233-6592**	2	SPACER (13.0X20.0X24.0-MM THK)	
	3	1	**106-0401**	1	FITTING (QUICK DISCONNECT, FEMALE)	
	4	1	**106-0406**	1	FITTING (QUICK DISCONNECT, MALE)	
	5	1	**107-6708**	2	BRACKET	
	6	1	*241-6226*	1	TEE AS	
		1	**6V-8398**	1	SEAL-O-RING	
		1	**6V-9746**	1	SEAL-O-RING	
		1	**7J-9108**	1	SEAL-O-RING	
		1	**241-6225**	1	TEE	
	7	1	**241-8448**	2	FILM-WARNING (HYD PRESS, READ OMM, U.S.)	
	8	1	**241-8450**	2	FILM-WARNING (HYD PRESS, READ OMM, INTL)	
I	9	1	**278-7778**	1	HOSE AS	
I	10	1	**278-7780**	1	HOSE AS	
I	11	1	**278-7781**	1	HOSE AS	
	12	1	**281-4726**	2	FILM-INSTRUCTION (OIL FLOW DIRECTION)	
	13	1	**292-2400**	1	BRACKET	
	15	1	*148-8352*	1	ELBOW AS	
		1	**5K-9090**	1	SEAL-O-RING	
		1	**6V-9854**	1	ELBOW	
	16	1	*150-3052*	2	CONNECTOR AS	
					(EACH INCLUDES)	
		1	**5K-9090**	1	SEAL-O-RING	
		1	**7M-8485**	1	SEAL-O-RING	
		1	**107-6709**	1	CONNECTOR	
	17	1	*155-2026*	1	UNION AS	
		1	**5K-9090**	2	SEAL-O-RING	
		1	**6V-8998**	1	UNION	
	18	1	**4D-7388**	2	CLIP (TAB)	
	19	1	*164-5577*	1	ELBOW AS	
		1	**5K-9090**	1	SEAL-O-RING	
		1	**6V-8984**	1	ELBOW	
	20	1	*260-9143*	1	ELBOW AS	
		1	**6V-9746**	1	SEAL-O-RING	
		1	**109-5825**	1	ELBOW	
	21	1	**5P-7466**	2	CLIP (SLOT)	
	22	1	**5P-7467**	2	CLIP (TAB)	
	23	1	**5P-7468**	2	CLIP (SLOT)	
	24	1	**5P-7469**	2	CLIP (TAB)	
	25	1	**5P-8112**	2	GROMMET	
	26	1	**5P-8444**	2	GROMMET	
	27	1	**6V-9170**	1	NUT-BULKHEAD (1-14-THD)	
	28	1	**6V-9172**	4	NUT (1-7/16-12-THD)	
	29	1	*148-8335*	1	CONNECTOR AS	
		1	**5K-9090**	1	SEAL-O-RING	
		1	**6V-8635**	1	CONNECTOR	
		1	**7M-8485**	1	SEAL-O-RING	
	30	1	**8T-4121**	8	WASHER-HARD (11X21X2.5-MM THK)	
M	31	1	**8T-4136**	6	BOLT (M10X1.5X25-MM)	
M	32	1	**8T-4185**	2	BOLT (M10X1.5X50-MM)	
	33	1	**8T-4223**	2	WASHER-HARD (13.5X25.5X3.0-MM THK)	
M	34	1	**8T-4956**	2	BOLT (M12X1.75X35-MM)	
I	35	1	**322-7241**	1	HOSE AS	

I-REFER TO HYDRAULIC INFORMATION SYSTEM
M-METRIC PART

274-3716 **LINES GP-BACKHOE AUXILIARY** *(contd.)* **i04101697**

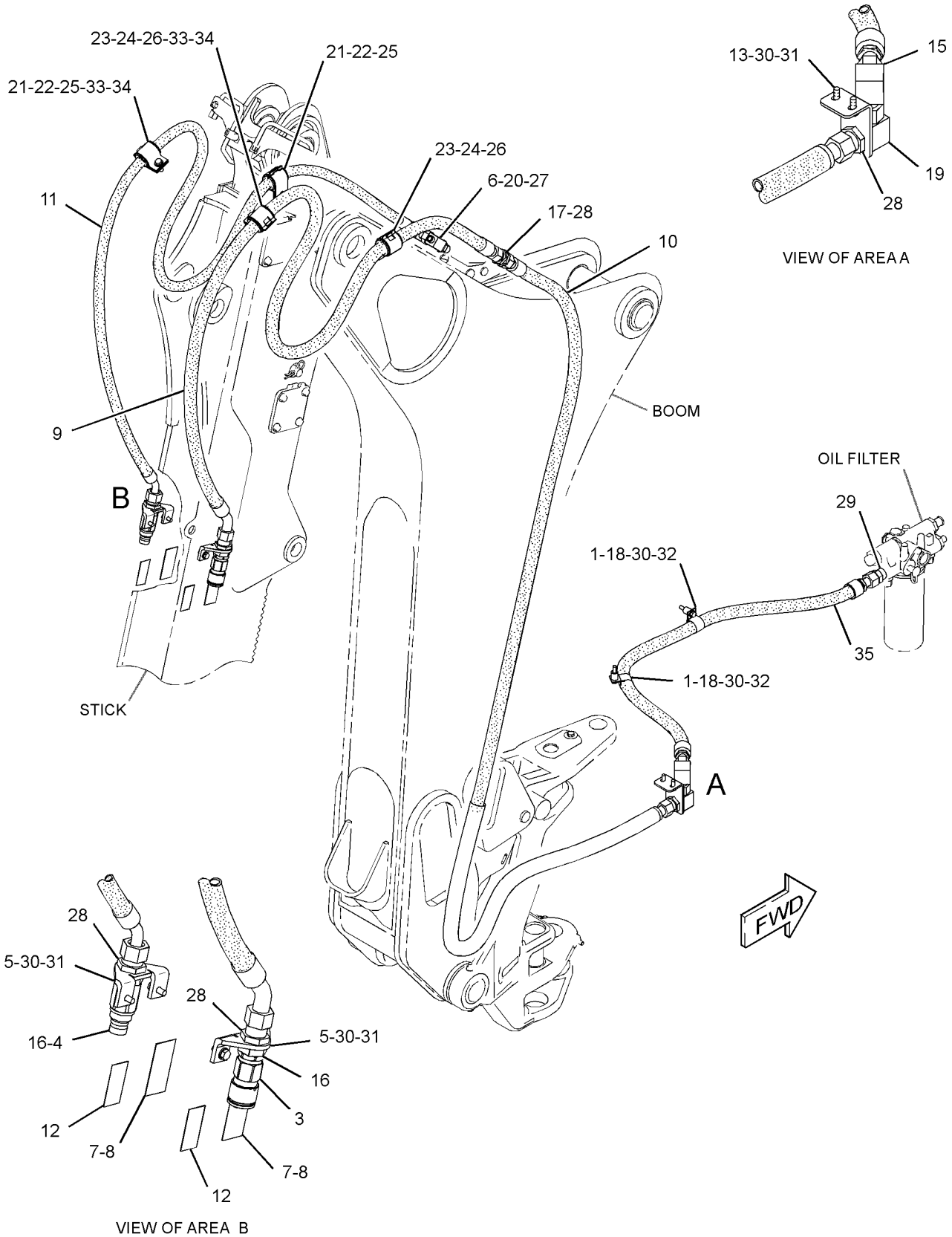

GRAPHIC #1 **<END>** g01437083

HYDRAULIC SYSTEM

274-3717 LINES GP-BACKHOE AUXILIARY

S/N: RBA1-UP
FOR USE WITH 254-0180—PAGE 1
AN ATTACHMENT

SMCS-5057 **i04101698**

NOTE	REF NO	GRAPHIC REF	PART NUMBER	QTY	PART NAME 1 2 3 4 5 6 (PRODUCT LEVEL)	SEE PAGE
	1	1	*148-8335*	1	CONNECTOR AS	
		1	**5K-9090**	1	SEAL-O-RING	
		1	**6V-8635**	1	CONNECTOR	
		1	**7M-8485**	1	SEAL-O-RING	
	3	1	*148-8357*	1	ELBOW AS	
		1	**5K-9090**	1	SEAL-O-RING	
		1	**6V-9008**	1	ELBOW	
		1	**7M-8485**	1	SEAL-O-RING	
	4	1	**106-0401**	1	FITTING (QUICK DISCONNECT, FEMALE)	
	5	1	**106-0406**	1	FITTING (QUICK DISCONNECT, MALE)	
	6	1	**107-6708**	2	BRACKET	
B	7	1	**241-8448**	2	FILM-WARNING (HYD PRESS, READ OMM, U.S.)	
B	8	1	**241-8450**	2	FILM-WARNING (HYD PRESS, READ OMM, INTL)	
	9	1	**257-0480**	1	VALVE GP-CONTROL	
	10	1	**278-7773**	1	TUBE AS	
I	11	1	**278-7778**	1	HOSE AS	
I	12	1	**278-7780**	1	HOSE AS	
I	13	1	**278-7781**	1	HOSE AS	
I	14	1	**278-7783**	1	HOSE AS	
	15	1	**292-2400**	1	BRACKET	
	16	1	*148-8327*	2	CONNECTOR AS	
					(EACH INCLUDES)	
		1	**3D-2824**	1	SEAL-O-RING	
		1	**6V-8637**	1	CONNECTOR	
		1	**6V-9746**	1	SEAL-O-RING	
	17	1	*148-8339*	1	CONNECTOR AS	
		1	**6V-8716**	1	CONNECTOR	
		1	**6V-9746**	1	SEAL-O-RING	
		1	**7M-8485**	1	SEAL-O-RING	
	18	1	*148-8455*	1	UNION AS	
		1	**6V-8997**	1	UNION	
		1	**6V-9746**	2	SEAL-O-RING	
	19	1	*150-3052*	3	CONNECTOR AS	
					(EACH INCLUDES)	
		1	**5K-9090**	1	SEAL-O-RING	
		1	**107-6709**	1	CONNECTOR	
		1	**7M-8485**		SEAL-O-RING	
	20	1	*155-2026*	1	UNION AS	
		1	**5K-9090**	2	SEAL-O-RING	
		1	**6V-8998**	1	UNION	
	21	1	**4D-7388**	2	CLIP	
	22	1	**2P-1293**	1	LOCKNUT (1-3/16-12-THD)	
	23	1	**5P-7466**	2	CLIP (SLOT)	
	24	1	**5P-7467**	1	CLIP (TAB)	
	25	1	**5P-7468**	2	CLIP (SLOT)	
	26	1	**5P-7469**	1	CLIP (TAB)	
	27	1	**5P-8112**	2	GROMMET	
	28	1	**5P-8444**	2	GROMMET	
	29	1	**6V-9172**	4	NUT (1-7/16-12-THD)	
	30	1	**233-6592**	2	SPACER (13X20X24-MM THK)	
	31	1	**8T-4121**	8	WASHER-HARD (11X21X2.5-MM THK)	
M	32	1	**8T-4136**	6	BOLT (M10X1.5X25-MM)	
M	33	1	**8T-4185**	2	BOLT (M10X1.5X50-MM)	
	34	1	**8T-4223**	2	WASHER-HARD (13.5X25.5X3-MM THK)	
M	35	1	**8T-4956**	2	BOLT (M12X1.75X35-MM)	

274-3717 LINES GP-BACKHOE AUXILIARY *(contd.)* i04101698

NOTE	REF NO	GRAPHIC REF	PART NUMBER	QTY	PART NAME 1 2 3 4 5 6 (PRODUCT LEVEL)	SEE PAGE
I	36	1	**322-7241**	1	HOSE AS	
	37	1	**327-7708**	1	CLIP (TAB)	
	38	1	**330-9416**	1	CLIP (TAB)	

B-USE AS REQUIRED
I-REFER TO HYDRAULIC INFORMATION SYSTEM
M-METRIC PART

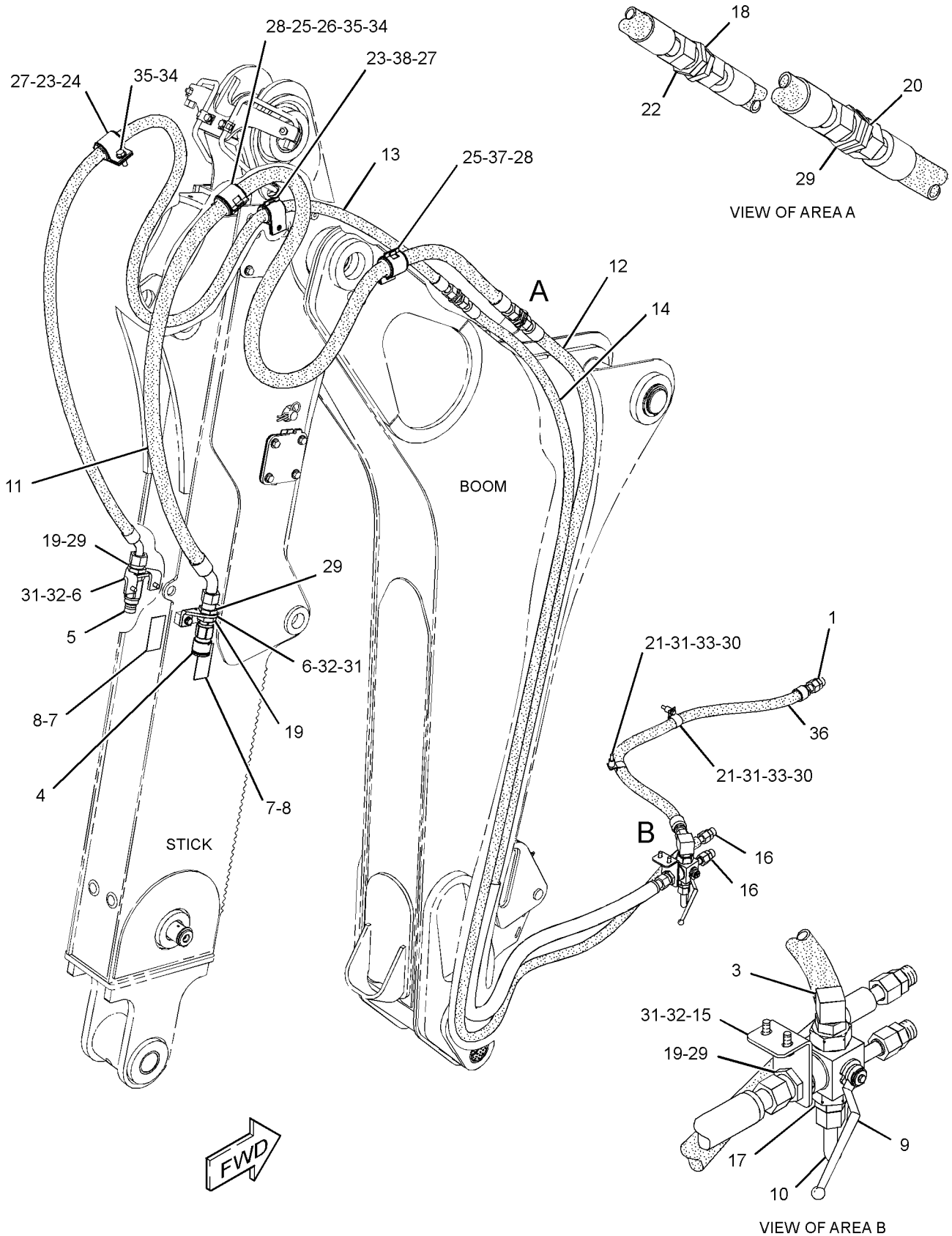

GRAPHIC #1 **<END>** g01934696

HYDRAULIC SYSTEM

254-0174 LINES GP-BOOM

S/N: RBA1-UP

PART OF 254-0180 BACKHOE AR-EXTENDABLE STICK, 254-0175 BACKHOE AR-STANDARD STICK

AN ATTACHMENT

SMCS-5057, 5456 **i04141109**

NOTE	REF NO	GRAPHIC REF	PART NUMBER	QTY	PART NAME 1 2 3 4 5 6 (PRODUCT LEVEL)	SEE PAGE
	1	1	**5P-3860**	1	CLAMP-HOSE	
	2	1	**9R-4619**	1	SUPPORT AS	
M		1	**6V-8224**	1	NUT-WELD (M10X1.5-THD)	
	3	1	**273-7300**	1	TUBE AS	
I	4	1	**273-7302**	1	HOSE AS	
I	5	1	**307-1654**	1	HOSE AS	
	6	1	*148-8327*	3	CONNECTOR AS	
					(EACH INCLUDES)	
		1	**3D-2824**	1	SEAL-O-RING	
		1	**6V-8637**	1	CONNECTOR	
		1	**6V-9746**	1	SEAL-O-RING	
	7	1	**6V-9746**	1	SEAL-O-RING	
	8	1	**8T-1887**	1	CLIP (SLOT)	
	9	1	**8T-1888**	1	CLIP (TAB)	
	10	1	**8T-4121**	1	WASHER-HARD (11X21X2.5-MM THK)	
M	11	1	**8T-4137**	1	BOLT (M10X1.5X20-MM)	

I-REFER TO HYDRAULIC INFORMATION SYSTEM
M-METRIC PART

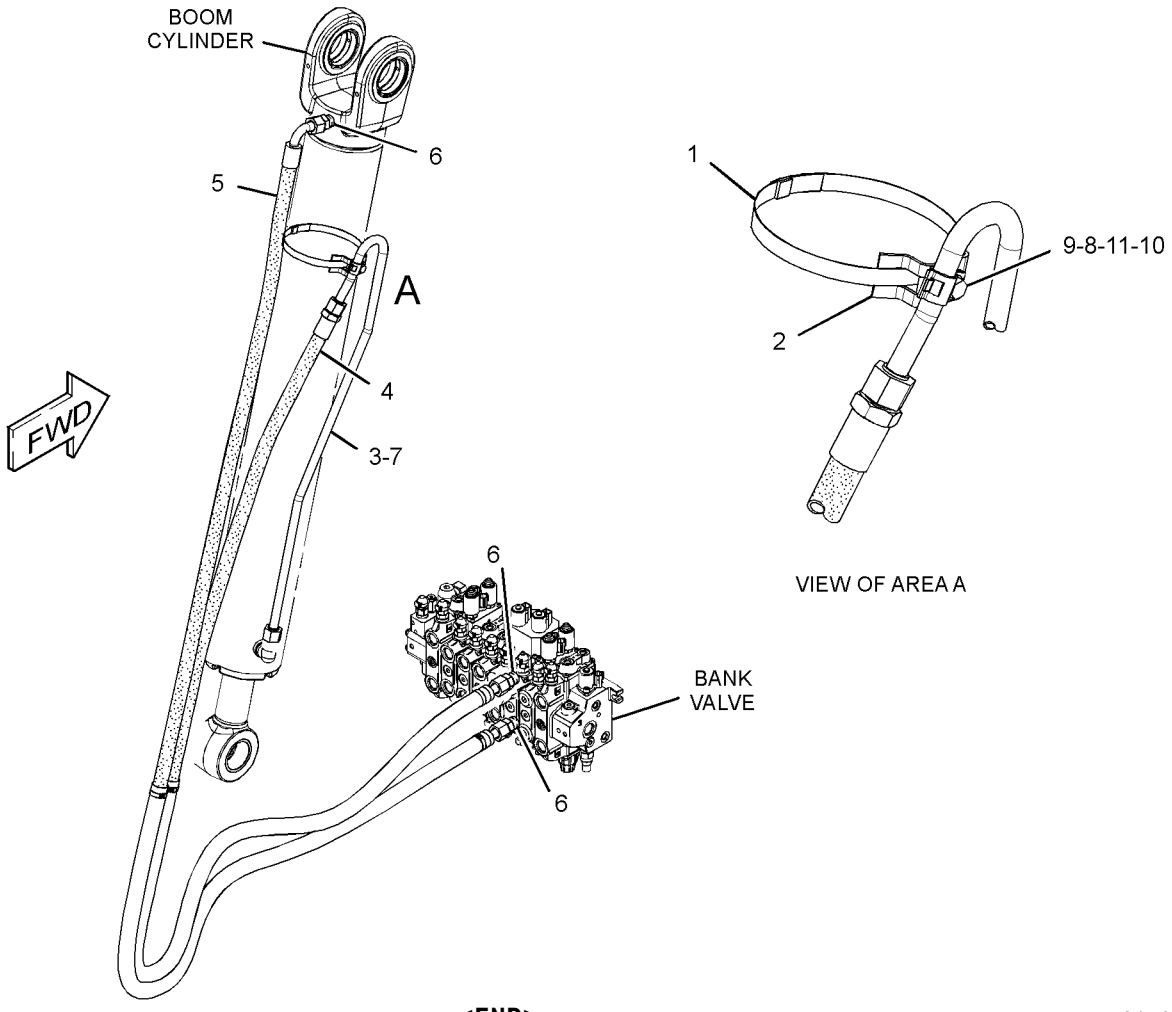

GRAPHIC #1 **<END>** g01409873

HYDRAULIC SYSTEM

254-0172 LINES GP-BUCKET

S/N: RBA1-UP

PART OF 254-0175 BACKHOE AR-STANDARD STICK

AN ATTACHMENT

SMCS-5057, 5457 **i04141009**

NOTE	REF NO	GRAPHIC REF	PART NUMBER	QTY	PART NAME 1 2 3 4 5 6 (PRODUCT LEVEL)	SEE PAGE
	1	1	**5P-0599**	1	CLAMP-BAND	
	2	1	**9R-9572**	1	BLOCK	
	3	1	**248-5547**	2	PLATE	
	4	1	**251-1541**	1	PLATE AS	
I	5	1	**278-7774**	1	HOSE AS	
I	6	1	**278-7775**	2	HOSE AS	
I	7	1	**278-7776**	1	HOSE AS	
	8	1	*148-8327*	2	CONNECTOR AS	
					(EACH INCLUDES)	
		1	**3D-2824**	1	SEAL-O-RING	
		1	**6V-8637**	1	CONNECTOR	
		1	**6V-9746**	1	SEAL-O-RING	
	9	1	*148-8347*	1	ELBOW AS	
		1	**3D-2824**	1	SEAL-O-RING	
		1	**6V-9007**	1	ELBOW	
		1	**6V-9746**	1	SEAL-O-RING	
	10	1	*148-8455*	2	UNION AS	
					(EACH INCLUDES)	
		1	**6V-8997**	1	UNION	
		1	**6V-9746**	2	SEAL-O-RING	
	11	1	**2P-1293**	2	LOCKNUT (1-3/16-12-THD)	
	12	1	**5P-7466**	4	CLIP (SLOT)	
	13	1	**5P-7467**	4	CLIP (TAB)	
	14	1	**5P-7854**	2	CLIP	
	15	1	**5P-8112**	4	GROMMET	
	16	1	**7X-7729**	4	WASHER (11X25X3-MM THK)	
	17	1	**8T-4121**	2	WASHER-HARD (11X21X2.5-MM THK)	
M	18	1	**8T-4139**	4	BOLT (M12X1.75X30-MM)	
M	19	1	**8T-4184**	2	BOLT (M12X1.75X45-MM)	
M	20	1	**8T-4195**	4	BOLT (M10X1.5X30-MM)	
M	21	1	**8T-4196**	2	BOLT (M10X1.5X35-MM)	
	22	1	**8T-4223**	8	WASHER-HARD (13.5X25.5X3-MM THK)	
M	23	1	**8T-4244**	2	NUT (M12X1.75-THD)	

I-REFER TO HYDRAULIC INFORMATION SYSTEM
M-METRIC PART

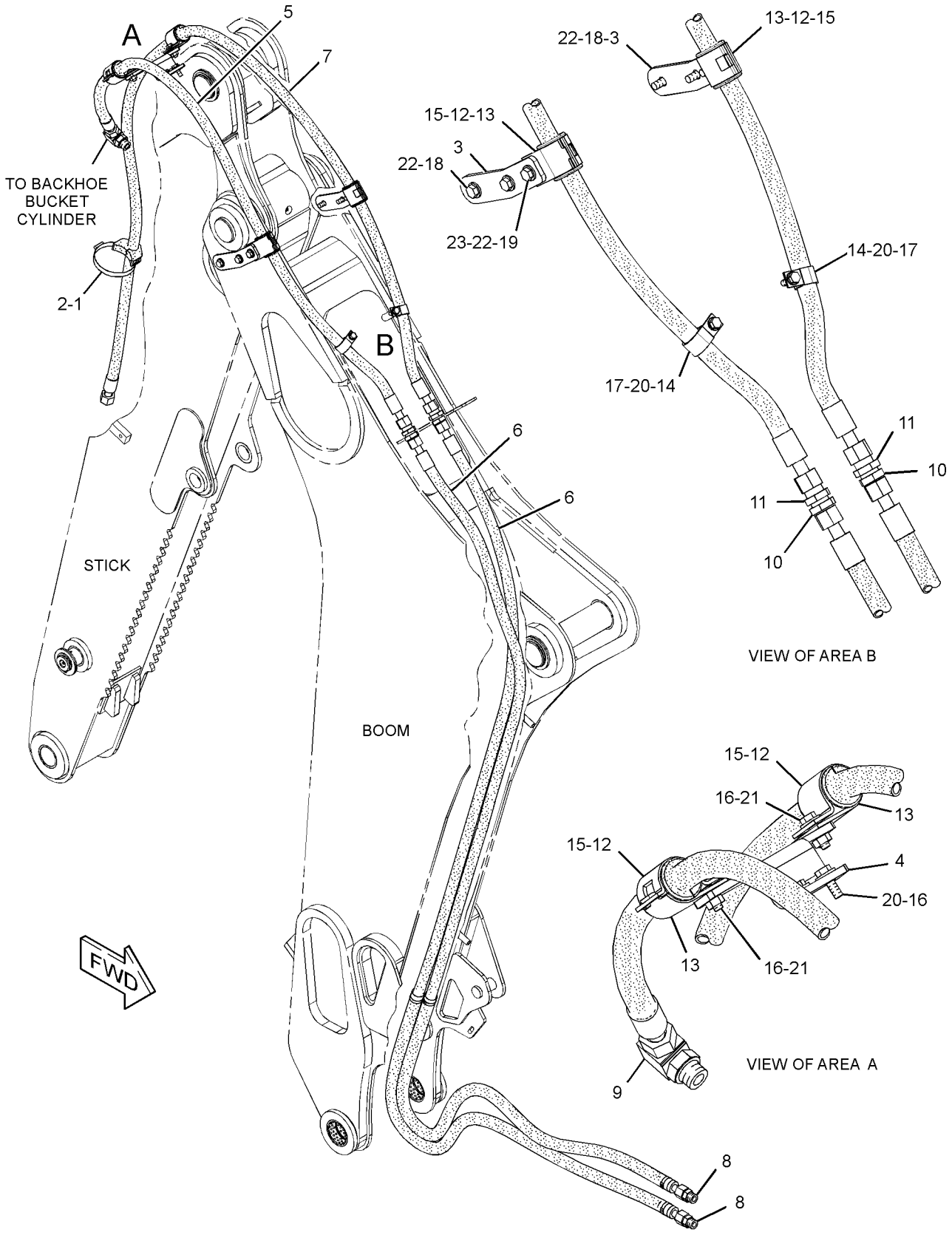

GRAPHIC #1 **<END>** g01407489

HYDRAULIC SYSTEM

254-0179 LINES GP-BUCKET

S/N: RBA1-UP

PART OF 254-0180 BACKHOE AR-EXTENDABLE STICK

AN ATTACHMENT

SMCS-5057, 5457 **i04141111**

NOTE	REF NO	GRAPHIC REF	PART NUMBER	QTY	PART NAME 1 2 3 4 5 6 (PRODUCT LEVEL)	SEE PAGE
	1	1	**5P-0599**	1	CLAMP-BAND	
	3	1	**259-1802**	2	FILM-INSTRUCTION (EXTENDABLE STICK PIN, READ OMM)	
	4	1	*268-1548*	2	CONNECTOR AS	
					(EACH INCLUDES)	
		1	**6V-8398**	1	SEAL-O-RING	
		1	**7J-9108**	1	SEAL-O-RING	
		1	**268-1547**	1	CONNECTOR	
I	5	1	**278-7775**	2	HOSE AS	
I	6	1	**278-7789**	2	HOSE AS	
I	7	1	**278-7791**	1	HOSE AS	
I	8	1	**278-7792**	1	HOSE AS	
I	9	1	**278-7793**	2	HOSE AS	
	11	1	**323-7311**	2	PLATE	
	12	1	**293-9478**	1	BRACKET AS	
	13	1	*148-8327*	2	CONNECTOR AS	
					(EACH INCLUDES)	
		1	**3D-2824**	1	SEAL-O-RING	
		1	**6V-8637**	1	CONNECTOR	
		1	**6V-9746**	1	SEAL-O-RING	
	14	1	*148-8341*	2	CONNECTOR AS	
					(EACH INCLUDES)	
		1	**3D-2824**	1	SEAL-O-RING	
		1	**6V-8713**	1	CONNECTOR	
		1	**7J-9108**	1	SEAL-O-RING	
	15	1	*148-8347*	1	ELBOW AS	
		1	**3D-2824**	1	SEAL-O-RING	
		1	**6V-9007**	1	ELBOW	
		1	**6V-9746**	1	SEAL-O-RING	
	16	1	*148-8455*	2	UNION AS	
					(EACH INCLUDES)	
		1	**6V-8997**	1	UNION	
		1	**6V-9746**	2	SEAL-O-RING	
	17	1	**2P-1293**	2	LOCKNUT (1-3/16-12-THD)	
	18	1	**3G-8054**	2	CLIP (TAB)	
	19	1	**3G-8057**	2	CLIP (SLOT)	
	20	1	**6V-8398**	2	SEAL-O-RING	
M	21	1	**8T-4184**	8	BOLT (M12X1.75X45-MM)	
	22	1	**5P-7466**	2	CLIP (SLOT)	
	23	1	**5P-7467**	2	CLIP (TAB)	
	24	1	**5P-8112**	2	GROMMET	
	25	1	**6V-1889**	2	CLIP	
	27	1	**6V-9170**	2	NUT-BULKHEAD (1-14-THD)	
	28	1	**6V-9990**	2	GROMMET	
	29	1	**7C-4354**	2	CLIP	
	30	1	**8T-4121**	2	WASHER-HARD (11X21X2.5-MM THK)	
M	31	1	**8T-4139**	3	BOLT (M12X1.75X30-MM)	
M	32	1	**8T-4195**	2	BOLT (M10X1.5X30-MM)	
	33	1	**8T-4223**	17	WASHER-HARD (13.5X25.5X3-MM THK)	
M	34	1	**8T-4244**	4	NUT (M12X1.75-THD)	
M	35	1	**8T-4956**	2	BOLT (M12X1.75X35-MM)	
	36	1	**9R-9572**	1	BLOCK	

I-REFER TO HYDRAULIC INFORMATION SYSTEM
M-METRIC PART

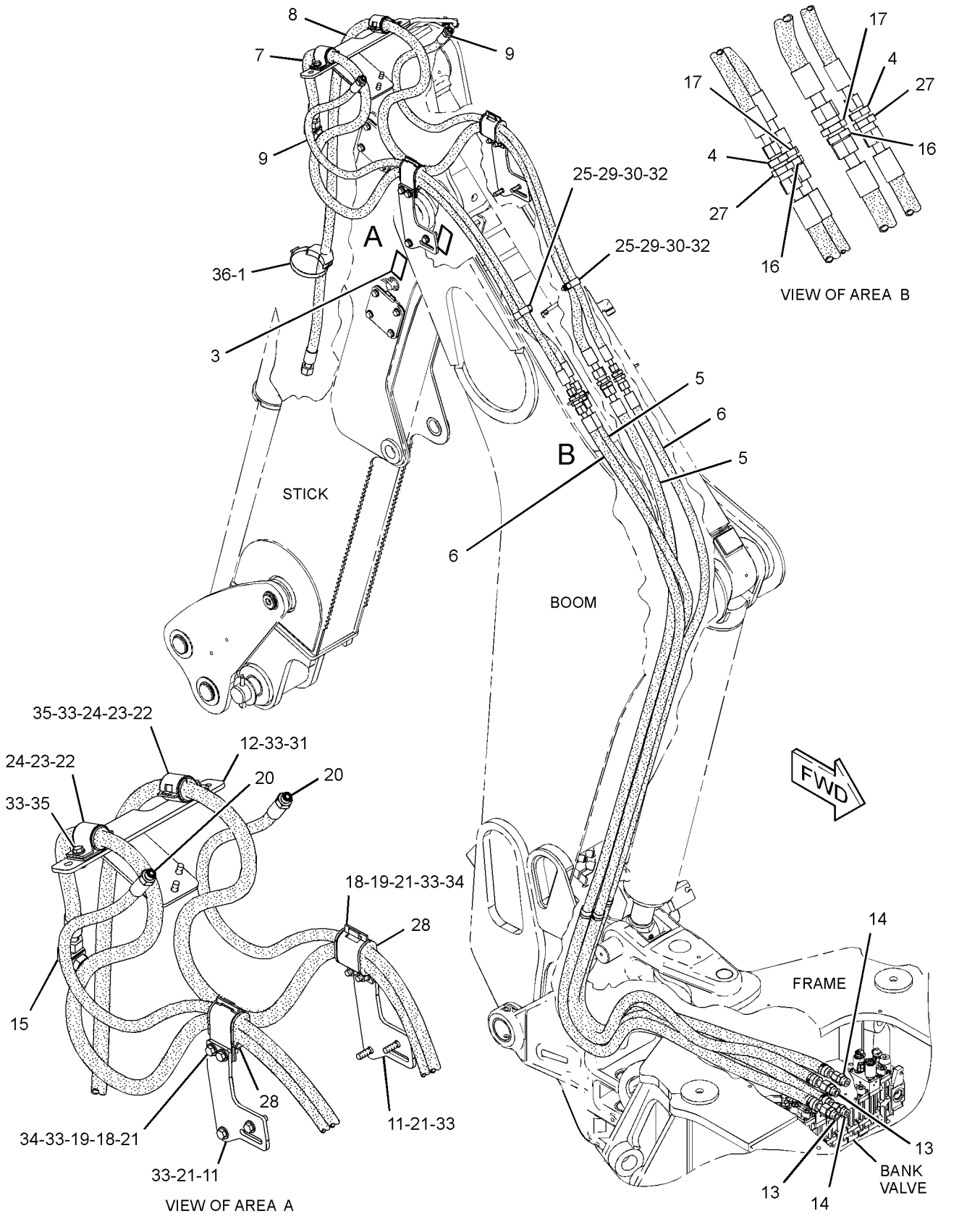

GRAPHIC #1 **<END>** g01901433

HYDRAULIC SYSTEM

216-5332 LINES GP-DRAIN

S/N: RBA1-UP

PART OF 254-0170 HYDRAULIC AR

SMCS-5057 **i03975149**

NOTE	REF NO	GRAPHIC REF	PART NUMBER	QTY	PART NAME 1 2 3 4 5 6 (PRODUCT LEVEL)	SEE PAGE
	1	1	**8T-0154**	1	CLAMP-HOSE	
	2	1	*165-2273*	1	VALVE GP-SHUTOFF (HYDRAULIC TANK DRAIN)	
		1	**3K-0360**	1	SEAL-O-RING	
		1	**6V-7238**	1	VALVE-SHUTOFF (HYDRAULIC TANK DRAIN)	
E	3	1	**5P-0743**		HOSE (35-CM)	

E-ORDER BY THE CENTIMETER

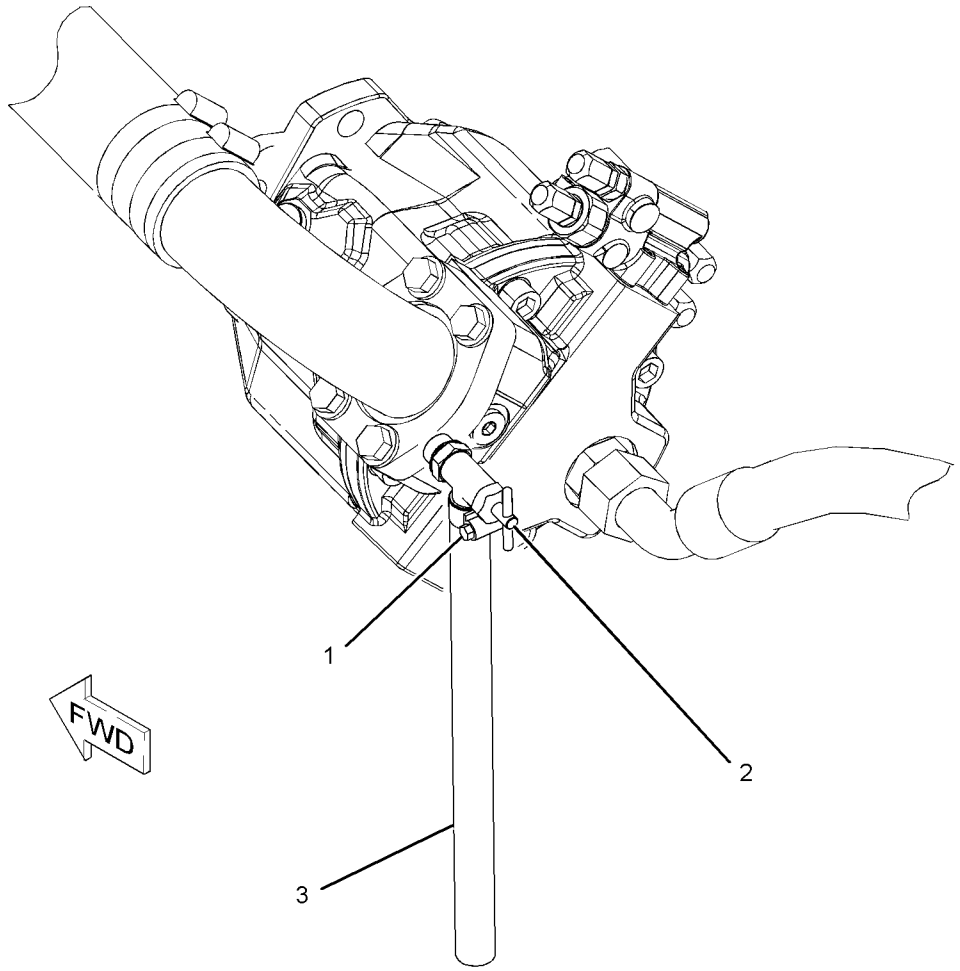

GRAPHIC #1 **<END>** g01087946

HYDRAULIC SYSTEM

254-0161 LINES GP-EXTENDABLE STICK

S/N: RBA1-UP

PART OF 269-8215 STICK GP-EXTENDABLE

AN ATTACHMENT

SMCS-5057 **i04145809**

NOTE	REF NO	GRAPHIC REF	PART NUMBER	QTY	PART NAME 1 2 3 4 5 6 (PRODUCT LEVEL)	SEE PAGE
	1	1	**7K-1181**	2	STRAP-CABLE	
	2	1	**8T-6726**	3	CLAMP-HOSE	
	3	1	**9R-5948**	3	BLOCK	
	4	1	**206-2423**	1	SADDLE	
	5	1	**293-7851**	1	PLATE AS	
I	6	1	**293-9360**	1	HOSE AS	
I	7	1	**293-9361**	1	HOSE AS	
	8	1	**293-9625**	1	TUBE AS	
	9	1	**293-9626**	1	TUBE AS	
	10	1	*148-8364*	1	ELBOW AS	
		1	**3K-0360**	1	SEAL-O-RING	
		1	**6V-8398**	1	SEAL-O-RING	
		1	**6V-8625**	1	ELBOW	
	11	1	**6V-8398**	2	SEAL-O-RING	
	12	1	**8T-1885**	4	CLIP (SLOT)	
	13	1	**8T-1886**	4	CLIP (TAB)	
	14	1	**8T-1889**	2	CLIP (SLOT)	
	15	1	**8T-1890**	2	CLIP (TAB)	
	16	1	**8T-4121**	6	WASHER-HARD (11X21X2.5-MM THK)	
M	17	1	**8T-4136**	2	BOLT (M10X1.5X25-MM)	
M	18	1	**8T-4195**	4	BOLT (M10X1.5X30-MM)	

I-REFER TO HYDRAULIC INFORMATION SYSTEM
M-METRIC PART

254-0161 **LINES GP-EXTENDABLE STICK** *(contd.)* **i04145809**

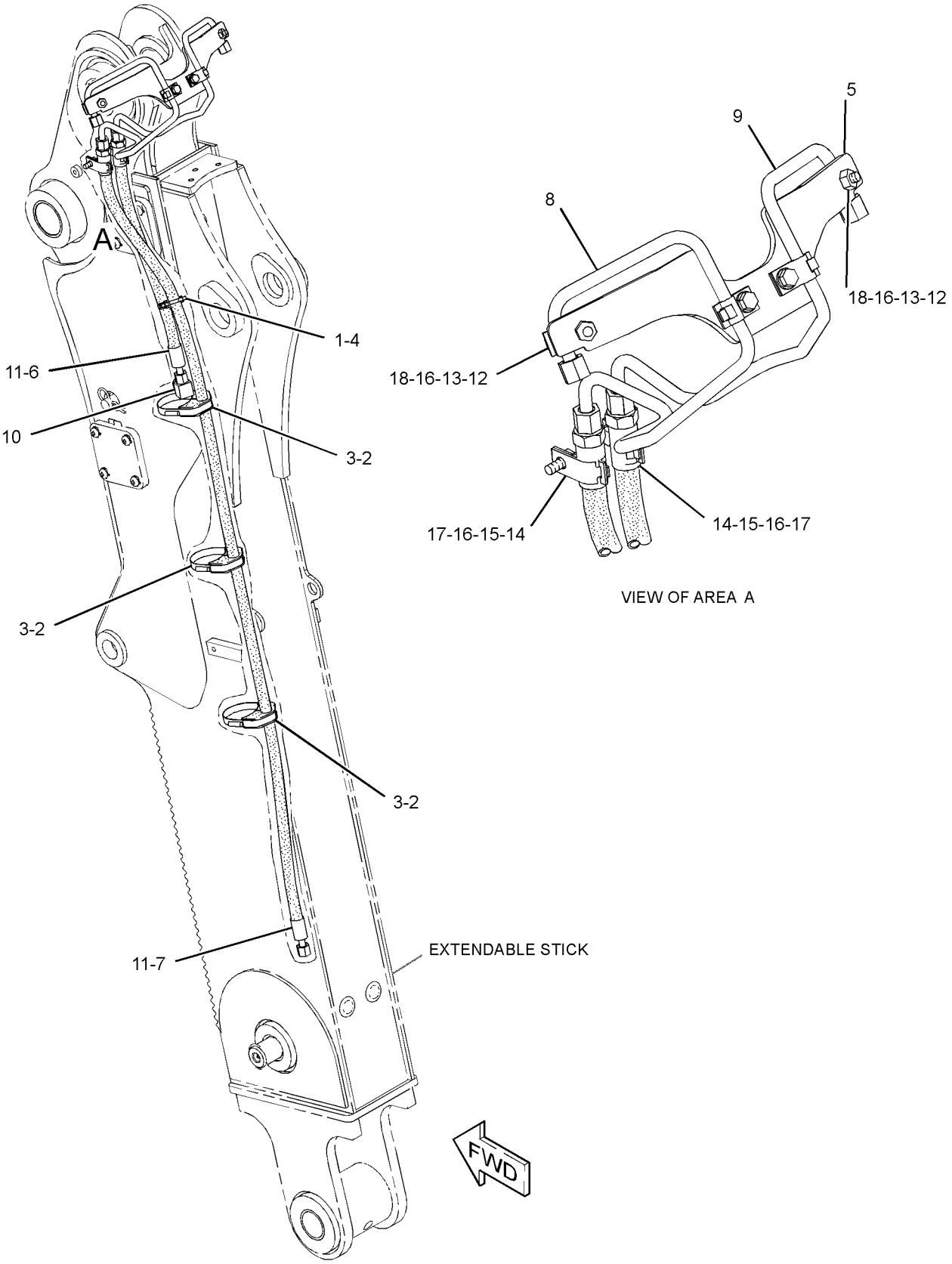

GRAPHIC #1 **<END>** g01434816

HYDRAULIC SYSTEM

254-0148 LINES GP-HYDRAULIC OIL COOLER

S/N: RBA1-UP

PART OF 254-0150 COOLER AR-ENGINE & HYDRAULIC

SMCS-1374, 5057 **i04110190**

NOTE	REF NO	GRAPHIC REF	PART NUMBER	QTY	PART NAME 1 2 3 4 5 6 (PRODUCT LEVEL)	SEE PAGE
	1	1	**3E-7445**	2	CLAMP-HOSE	
	2	1	**7K-1181**	2	STRAP-CABLE	
	3	1	**130-9984**	1	CLIP	
	4	1	**159-1503**	6	CLAMP-HOSE	
	5	1	**201-4756**	1	GROMMET	
I	6	1	**271-3201**	1	HOSE AS	
	7	1	**271-3205**	1	TUBE	
	8	1	**271-3206**	1	TUBE	
	9	1	**307-7518**	1	TEE	
	10	1	**310-7136**	1	HOSE	
	11	1	*148-8370*	1	ELBOW AS	
		1	**6V-8398**	1	SEAL-O-RING	
		1	**6V-9851**	1	ELBOW	
	12	1	**4D-7388**	1	CLIP	
E	13	1	**5P-1506**		HOSE (89-CM)	
	14	1	**5P-4116**	3	WASHER-HARD (8.8X20.5X2-MM THK)	
	15	1	**6D-4246**	2	CLIP	
	16	1	**7J-8581**	2	CLIP	
	17	1	**7X-7729**	2	WASHER (11X25X3-MM THK)	
	18	1	**7X-7958**	4	CLAMP-HOSE	
	19	1	**8T-1889**	1	CLIP (SLOT)	
	20	1	**8T-1890**	1	CLIP (TAB)	
	21	1	**8T-4121**	3	WASHER-HARD (11X21X2.5-MM THK)	
M	22	1	**8T-4136**	1	BOLT (M10X1.5X25-MM)	
M	23	1	**8T-4137**	2	BOLT (M10X1.5X20-MM)	
M	24	1	**8T-4189**	3	BOLT (M8X1.25X20-MM)	
	26	1	**8T-7529**	1	CLIP	
E	27	1	**262-8088**		HOSE (140-CM)	
E	27A	1	**262-8088**		HOSE (45-CM)	
E	27B	1	**262-8088**		HOSE (42-CM)	
E	27C		**262-8088**		HOSE (49-CM)	
	28	1	**3S-2093**	1	STRAP-CABLE	
G	29	1	**160-2246**		SLEEVE-ABRASION (15-IN)	

E-ORDER BY THE CENTIMETER
G-ORDER BY THE INCH
I-REFER TO HYDRAULIC INFORMATION SYSTEM
M-METRIC PART

254-0148 **LINES GP-HYDRAULIC OIL COOLER** *(contd.)* **i04110190**

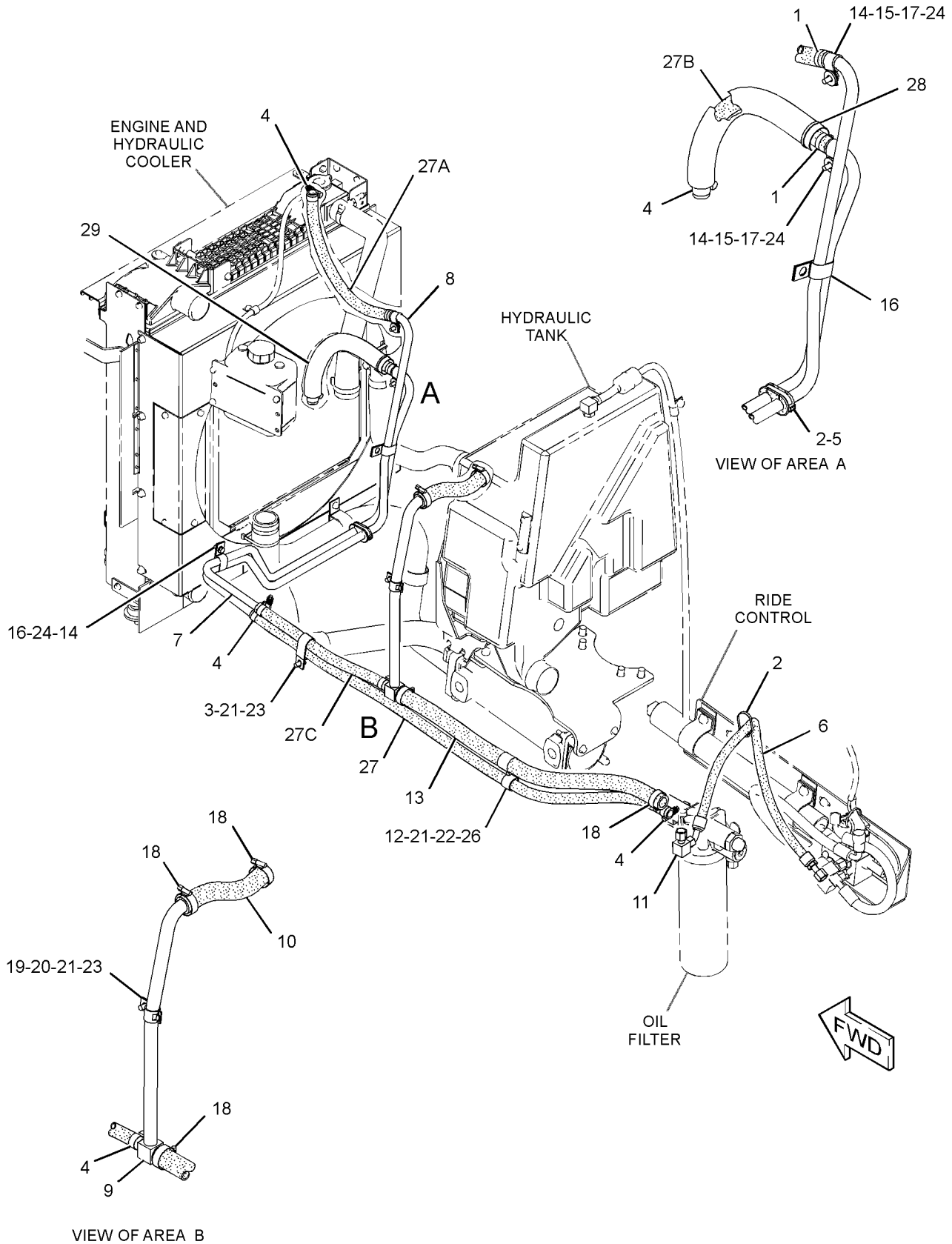

GRAPHIC #1 **<END>** g01438088

HYDRAULIC SYSTEM

254-0138 LINES GP-LIFT CYLINDER

S/N: RBA1-UP

PART OF 254-0140 LOADER AR

SMCS-5057, 5102 **i04108177**

NOTE	REF NO	GRAPHIC REF	PART NUMBER	QTY	PART NAME 1 2 3 4 5 6 (PRODUCT LEVEL)	SEE PAGE
	1	1	**7K-1181**	1	STRAP-CABLE	
	2	1	**8T-6726**	4	CLAMP-HOSE	
	3	1	**151-4841**	1	BLOCK	
	4	1	**158-3412**	8	CLIP (SLOT)	
	5	1	*222-4732*	1	TEE AS	
		1	**6V-8398**	1	SEAL-O-RING	
		1	**6V-9031**	1	TEE-UNION	
		1	**7J-9108**	2	SEAL-O-RING	
	6	1	**273-8652**	1	TUBE AS	
	7	1	**273-8653**	1	TUBE AS	
	8	1	**273-8654**	1	TUBE AS	
	9	1	**273-8655**	1	TUBE AS	
	10	1	**273-8656**	1	TUBE AS	
	11	1	**273-8675**	1	TUBE AS	
	12	1	**277-4439**	1	TUBE AS	
	13	1	**277-7566**	1	TUBE AS	
	14	1	**277-7567**	1	TUBE AS	
	15	1	*287-7307*	2	TEE AS	
					(EACH INCLUDES)	
		1	**3D-2824**	1	SEAL-O-RING	
		1	**7J-9108**	2	SEAL-O-RING	
		1	**287-7266**	1	TEE	
	16	1	**289-3802**	1	BRACKET	
I	17	1	**290-2713**	4	HOSE AS	
	18	1	**310-5782**	2	PLATE AS	
					(EACH INCLUDES)	
M		1	**8T-3490**	2	NUT-WELD (M10X1.5-THD)	
	19	1	*148-8315*	2	CONNECTOR AS	
					(EACH INCLUDES)	
		1	**2M-9780**	1	SEAL-O-RING	
		1	**6V-8642**	1	CONNECTOR	
		1	**7J-9108**	1	SEAL-O-RING	
	20	1	*148-8390*	2	ELBOW AS	
					(EACH INCLUDES)	
		1	**2M-9780**	1	SEAL-O-RING	
		1	**6V-8626**	1	ELBOW	
		1	**7J-9108**	1	SEAL-O-RING	
	21	1	*148-8446*	1	TEE AS-SWIVEL	
		1	**6V-9838**	1	TEE-SWIVEL	
		1	**7J-9108**	2	SEAL-O-RING	
	22	1	**6V-9830**	1	CAP AS	
	23	1	**6V-9831**	1	CAP AS	
	24	1	**7C-6921**	1	SPACER (11X20X22.8-MM THK)	
	25	1	**7J-9108**	8	SEAL-O-RING	
	26	1	**8T-4121**	8	WASHER-HARD (11X21X2.5-MM THK)	
M	27	1	**8T-4133**	1	NUT (M10X1.5-THD)	
M	28	1	**8T-4136**	4	BOLT (M10X1.5X25-MM)	
M	29	1	**8T-4137**	1	BOLT (M10X1.5X20-MM)	
M	30	1	**8T-4195**	1	BOLT (M10X1.5X30-MM)	
M	31	1	**8T-6466**	1	BOLT (M10X1.5X60-MM)	
	32	1	**9R-1004**	2	CLIP (TAB)	
	33	1	**9R-1005**	2	CLIP (SLOT)	
	34	1	**9R-7803**	4	CLIP (TAB)	

I-REFER TO HYDRAULIC INFORMATION SYSTEM
M-METRIC PART

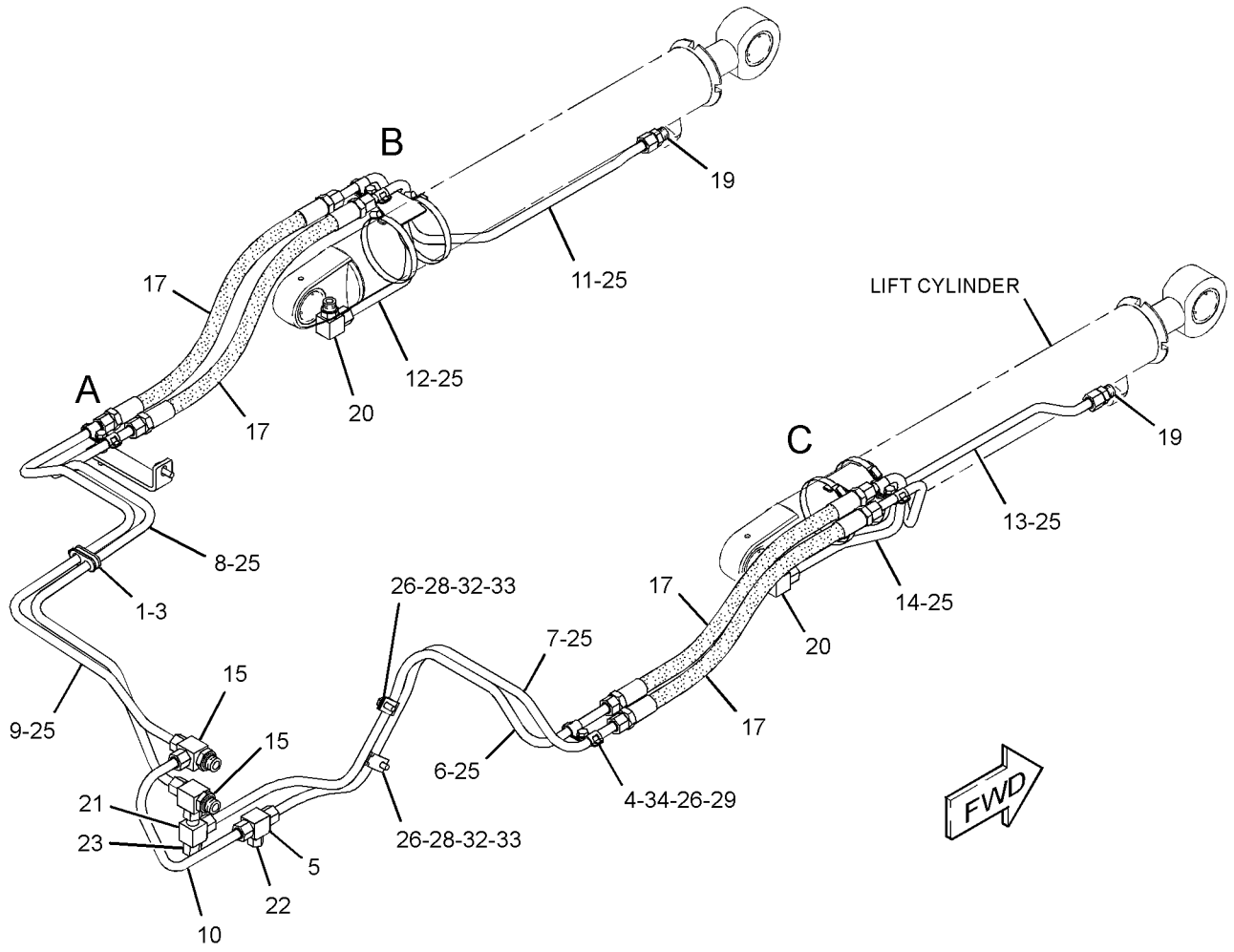

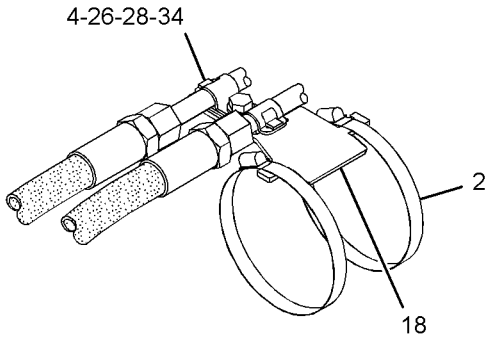

VIEW OF AREA B

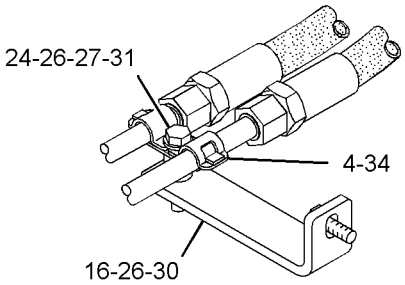

VIEW OF AREA A

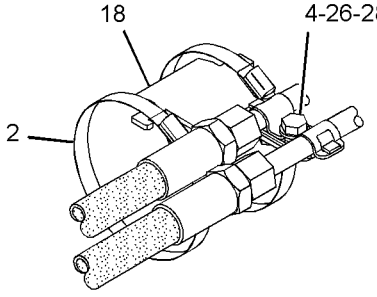

VIEW OF AREA C

GRAPHIC #1

<END>

g01413343

HYDRAULIC SYSTEM

254-0166 LINES GP-MULTIPURPOSE BUCKET

S/N: RBA1-UP
PART OF 254-0189, 346-1233 VALVE AR-BANK 3
AN ATTACHMENT

SMCS-5057 **i04125752**

NOTE	REF NO	GRAPHIC REF	PART NUMBER	QTY	PART NAME 1 2 3 4 5 6 (PRODUCT LEVEL)	SEE PAGE
	1	1	**158-3412**	6	CLIP (SLOT)	
	3	1	**254-7271**	1	PLATE AS	
	4	1	**273-8659**	1	TUBE AS	
	5	1	**273-8660**	1	TUBE AS	
	6	1	**289-3800**	1	TUBE AS	
	7	1	**289-3801**	1	TUBE AS	
	8	1	**289-3802**	1	BRACKET	
I	9	1	**290-2730**	2	HOSE AS	
	10	1	*148-8382*	2	ELBOW AS	
					(EACH INCLUDES)	
		1	**8T-0404**	1	ELBOW	
		1	**3D-2824**	1	SEAL-O-RING	
		1	**7J-9108**	1	SEAL-O-RING	
	11	1	**6V-8398**	2	SEAL-O-RING	
	12	1	**7J-9108**	4	SEAL-O-RING	
	13	1	**8T-4121**	9	WASHER-HARD (11X21X2.5-MM THK)	
M	14	1	**8T-4133**	1	NUT (M10X1.5-THD)	
M	15	1	**8T-4136**	6	BOLT (M10X1.5X25-MM)	
M	16	1	**8T-4137**	1	BOLT (M10X1.5X20-MM)	
M	17	1	**8T-4195**	1	BOLT (M10X1.5X30-MM)	
	18	1	**9R-1004**	4	CLIP (TAB)	
	19	1	**9R-1005**	4	CLIP (SLOT)	
	20	1	**9R-7803**	3	CLIP (TAB)	

I-REFER TO HYDRAULIC INFORMATION SYSTEM
M-METRIC PART

254-0166 **LINES GP-MULTIPURPOSE BUCKET** *(contd.)* **i04125752**

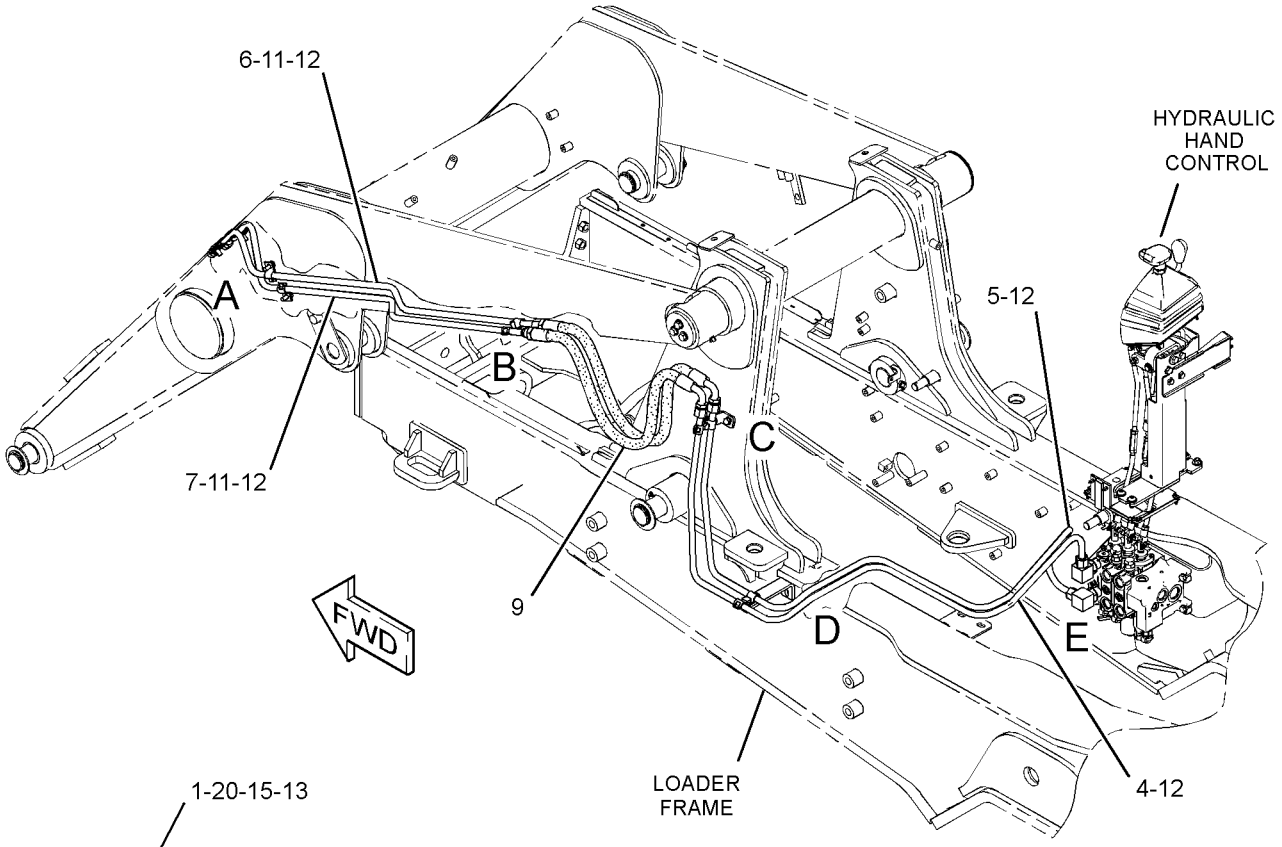

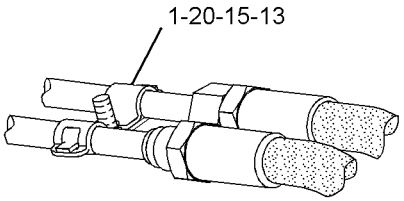

VIEW OF AREA B

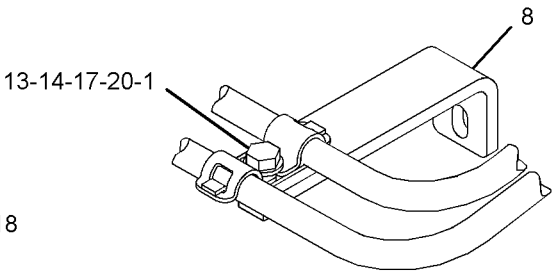

VIEW OF AREA D

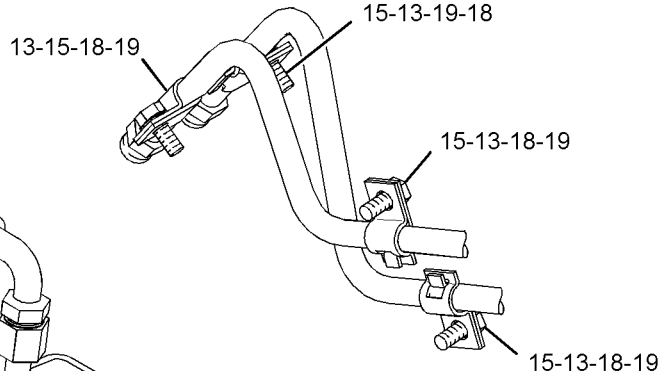

VIEW OF AREA A

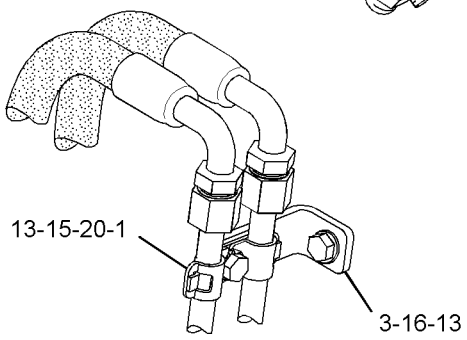

VIEW OF AREA C

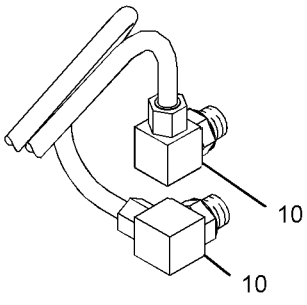

VIEW OF AREA E

GRAPHIC #1 **<END>** g01412065

HYDRAULIC SYSTEM

289-3276 LINES GP-PILOT–SIGNAL

S/N: RBA1-UP

PART OF 254-0153, 254-0154 CONTROL AR-BACKHOE AN ATTACHMENT

SMCS-5057, 5059 **i04110750**

NOTE	REF NO	GRAPHIC REF	PART NUMBER	QTY	PART NAME 1 2 3 4 5 6 (PRODUCT LEVEL)	SEE PAGE
	1	1	**5D-1026**	2	CLAMP-BAND	
E	2	1	**5P-1505**		HOSE (65-CM)	
	3	1	**7K-1181**	2	STRAP-CABLE	
I	4	1	**289-3290**	1	HOSE AS	
I	5	1	**289-3291**	1	HOSE AS	
	6	1	**6V-0852**	2	CAP-DUST	
	7	1	*148-8351*	1	ELBOW AS	
		1	**4J-5477**	1	SEAL-O-RING	
		1	**6V-9849**	1	ELBOW	
	8	1	*150-3027*	2	ELBOW AS	
					(EACH INCLUDES)	
		1	**2M-9780**	1	SEAL-O-RING	
		1	**6V-5653**	1	ELBOW	
	9	1	*150-3062*	1	TEE AS	
		1	**3J-7354**	1	SEAL-O-RING	
		1	**4J-5477**	1	SEAL-O-RING	
		1	**101-1787**	1	TEE AS	
	10	1	*150-3065*	1	ADAPTER AS	
		1	**3J-1907**	1	SEAL-O-RING	
		1	**6V-0484**	1	ADAPTER-O-RING	
	11	1	*164-5567*	2	COUPLER AS-QUICK DISCONNECT (MALE)	
					(EACH INCLUDES)	
		1	**6V-3965**	1	FITTING (QUICK DISCONNECT)	
		1	**214-7568**	1	SEAL-O-RING	
	12	1	*165-4931*	1	ELBOW AS	
		1	**3J-1907**	1	SEAL-O-RING	
		1	**6V-8077**	1	ELBOW	
	13	1	**269-4949**	3	ADAPTER	

E-ORDER BY THE CENTIMETER
I-REFER TO HYDRAULIC INFORMATION SYSTEM

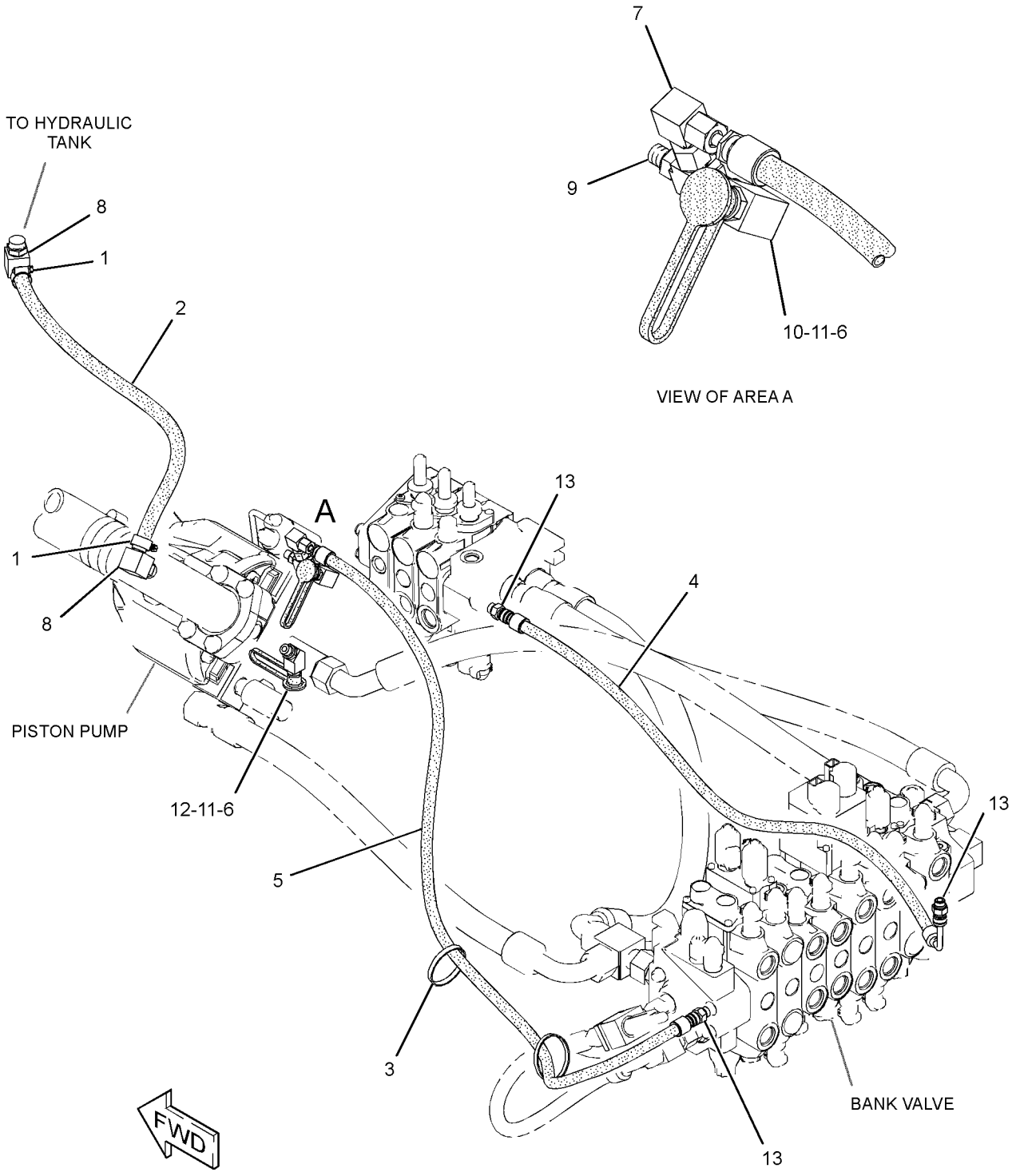

GRAPHIC #1 **<END>** g01412825

HYDRAULIC SYSTEM

289-3278 LINES GP-PILOT

S/N: RBA1-UP
PART OF 254-0153, 254-0154 CONTROL AR-BACKHOE
AN ATTACHMENT

SMCS-5057, 5059 **i04112468**

NOTE	REF NO	GRAPHIC REF	PART NUMBER	QTY	PART NAME 1 2 3 4 5 6 (PRODUCT LEVEL)	SEE PAGE
	1	1	**5D-1026**	2	CLAMP-BAND (RETAINER)	
E	2	1	**5P-1505**		HOSE (222-CM)	
	3	1	**6V-0852**	1	CAP-DUST	
	4	1	**133-5813**	6	BAND-MARKER (GRAY)	
	5	1	**143-3158**	1	CONNECTOR	
G	6	1	**160-2246**		SLEEVE-ABRASION (7.5-IN)	
	7	1	*174-6740*	1	TEE AS	
		1	**122-1113**	1	TEE-O-RING	
		1	**2M-9780**	1	SEAL-O-RING	
Y	8	1	*226-0420*	1	ACCUMULATOR GP-PILOT OIL (CHARGED)	227
	9	1	**268-0094**	1	MANIFOLD (RETURN)	
	10	1	*273-4211*	1	TEE AS	
		1	**273-4210**	1	TEE	
		1	**6V-8398**	1	SEAL-O-RING	
	11	1	**277-9708**	2	FILM-WARNING (ACCUM, HIGH PRESS, READ OMM)	
I	12	1	**278-7764**	1	HOSE AS	
I	13	1	**289-3296**	1	HOSE AS	
I	14	1	**289-3297**	1	HOSE AS	
I	15	1	**289-3298**	1	HOSE AS	
I	16	1	**289-3299**	1	HOSE AS	
I	17	1	**289-3300**	1	HOSE AS	
I	18	1	**289-3301**	1	HOSE AS	
I	19	1	**289-3302**	1	HOSE AS	
I	20	1	**289-3303**	1	HOSE AS	
	21	1	**7K-1181**	3	STRAP-CABLE	
	22	1	*148-8336*	1	CONNECTOR AS	
		1	**6V-8636**	1	CONNECTOR	
		1	**3J-1907**	1	SEAL-O-RING	
		1	**6V-8397**	1	SEAL-O-RING	
	23	1	*148-8407*	3	PLUG AS	
					(EACH INCLUDES)	
		1	**9S-4191**	1	PLUG-O-RING	
		1	**3J-1907**	1	SEAL-O-RING	
	24	1	*148-8433*	1	TEE AS	
		1	**6V-9836**	1	TEE-SWIVEL	
		1	**6V-8397**	2	SEAL-O-RING	
	25	1	*150-4043*	1	CONNECTOR AS	
		1	**6V-9873**	1	CONNECTOR	
		1	**3J-1907**	1	SEAL-O-RING	
		1	**6V-8398**	1	SEAL-O-RING	
	26	1	*164-5567*	1	COUPLER AS-QUICK DISCONNECT (MALE)	
		1	**6V-3965**	1	FITTING (QUICK DISCONNECT)	
		1	**3J-1907**	1	SEAL-O-RING	
	27	1	**269-4949**	13	ADAPTER (9/16-18)	
	28	1	**269-4965**	1	ADAPTER-ELBOW (9/16-18)	
	29	1	**2M-9780**	1	SEAL-O-RING	
	30	1	**4K-6177**	1	CLIP (SLOT)	
	31	1	**5P-4295**	1	CLIP (SLOT)	
	32	1	**6V-9169**	1	NUT (13/16-16-THD)	
	33	1	**8T-4121**	2	WASHER-HARD (11X21X2.5-MM THK)	
M	34	1	**8T-4186**	1	BOLT (M10X1.5X40-MM)	
	35	1	**8T-4205**	2	WASHER-HARD (7.2X14.5X2-MM THK)	
M	36	1	**8T-6974**	2	BOLT (M6X1X80-MM)	

E-ORDER BY THE CENTIMETER
G-ORDER BY THE INCH
I-REFER TO HYDRAULIC INFORMATION SYSTEM
M-METRIC PART
Y-SEPARATE ILLUSTRATION

289-3278 **LINES GP-PILOT** *(contd.)* **i04112468**

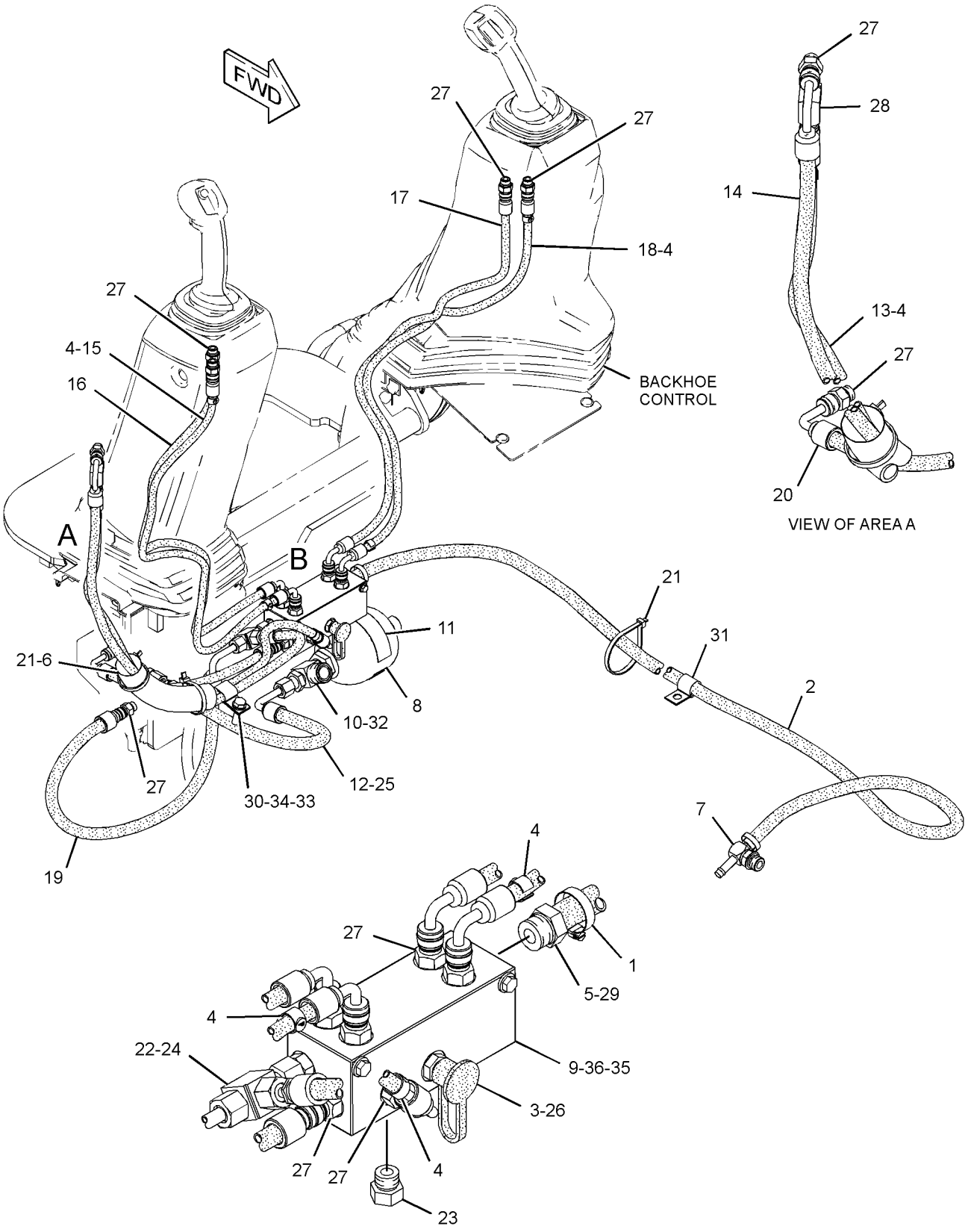

GRAPHIC #1 **<END>** g01442169

HYDRAULIC SYSTEM

289-3280 LINES GP-PILOT–STABILIZER

S/N: RBA1-UP

PART OF 254-0170 HYDRAULIC AR

SMCS-5057, 5059 **i04129011**

NOTE	REF NO	GRAPHIC REF	PART NUMBER	QTY	PART NAME 1 2 3 4 5 6 (PRODUCT LEVEL)	SEE PAGE
	1	1	**195-0260**	2	MARKER (BEIGE, L1)	
	2	1	**195-0261**	2	BAND-MARKER (BLACK, L2)	
	3	1	**195-0262**	2	BAND-MARKER (GREEN, R1)	
	4	1	**195-0263**	2	BAND-MARKER (PINK, R2)	
	5	1	**206-1851**	1	SEAL	
	6	1	**269-4949**	8	ADAPTER	
	7	1	**289-3311**	1	HOSE AS	
	8	1	**289-3312**	1	HOSE AS	
	9	1	**289-3313**	1	HOSE AS	
	10	1	**289-3314**	1	HOSE AS	
	11	1	**4K-6177**	2	CLIP	
	12	1	**8T-4121**	2	WASHER-HARD (11X21X2.5-MM THK)	
M	13	1	**8T-4186**	1	BOLT (M10X1.5X40-MM)	
D	14	1	**149-7372**		SLEEVE-ABRASION (.19-M EACH)	
	15	1	**7K-1181**	4	STRAP-CABLE	

D-ORDER BY THE METER
M-METRIC PART

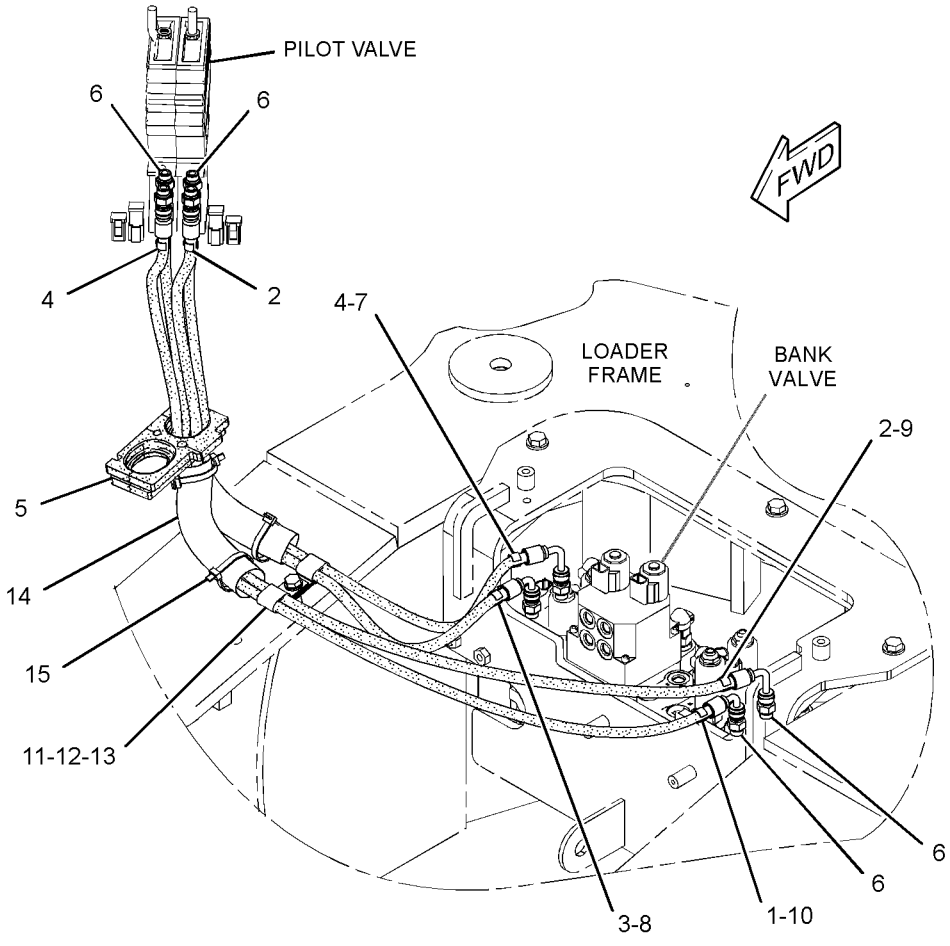

GRAPHIC #1 **<END>** g01442119

HYDRAULIC SYSTEM

345-3166 LINES GP-PILOT

S/N: RBA1-UP

PART OF 254-0156, 254-0157, 254-0159, 254-0160 CONTROL AR-BACKHOE AN ATTACHMENT

SMCS-5057, 5059 **i04112458**

NOTE	REF NO	GRAPHIC REF	PART NUMBER	QTY	PART NAME 1 2 3 4 5 6 (PRODUCT LEVEL)	SEE PAGE
	1	1	**5D-1026**	2	CLAMP-BAND	
I	2	1	**5G-8901**	1	HOSE AS	
	3	1	**6V-0852**	1	CAP-DUST	
	4	1	**7K-1181**	3	STRAP-CABLE	
	5	1	**123-4750**	1	VALVE-CHECK	
	6	1	**133-5813**	2	BAND-MARKER (GRAY)	
	7	1	**143-3158**	1	CONNECTOR	
	8	1	*174-6740*	1	TEE AS	
		1	**2M-9780**	1	SEAL-O-RING	
		1	**122-1113**	1	TEE-O-RING	
I	9	1	**194-9219**	1	HOSE AS	
Y	10	1	*226-0420*	1	ACCUMULATOR GP-PILOT OIL (CHARGED)	227
	11	1	**268-0094**	1	MANIFOLD (RETURN)	
	12	1	**269-4949**	2	ADAPTER	
	13	1	*273-4211*	1	TEE AS	
		1	**6V-8398**	1	SEAL-O-RING	
		1	**273-4210**	1	TEE	
	14	1	**277-9708**	2	FILM-WARNING (ACCUM, HIGH PRESS, READ OMM)	
I	15	1	**289-3296**	1	HOSE AS	
I	16	1	**289-3297**	1	HOSE AS	
I	17	1	**307-7521**	1	HOSE AS	
I	18	1	**346-0322**	1	HOSE AS	
	19	1	*148-8336*	2	CONNECTOR AS	
					(EACH INCLUDES)	
		1	**3J-1907**	1	SEAL-O-RING	
		1	**6V-8397**	1	SEAL-O-RING	
		1	**6V-8636**	1	CONNECTOR	
	20	1	*148-8367*	2	ELBOW AS	
					(EACH INCLUDES)	
		1	**6V-8397**	1	SEAL-O-RING	
		1	**6V-9850**	1	ELBOW	
	21	1	*148-8378*	2	ELBOW AS	
					(EACH INCLUDES)	
		1	**3J-1907**	1	SEAL-O-RING	
		1	**6V-8397**	1	SEAL-O-RING	
		1	**6V-8724**	1	ELBOW	
	22	1	*148-8407*	5	PLUG AS	
					(EACH INCLUDES)	
		1	**3J-1907**	1	SEAL-O-RING	
		1	**9S-4191**	1	PLUG-O-RING	
	23	1	*148-8433*	1	TEE AS	
		1	**6V-8397**	2	SEAL-O-RING	
		1	**6V-9836**	1	TEE-SWIVEL	
	24	1	*150-4044*	1	CONNECTOR AS	
		1	**3J-1907**	1	SEAL-O-RING	
		1	**6V-8397**	1	SEAL-O-RING	
		1	**8T-1779**	1	CONNECTOR	
	25	1	*164-5567*	1	COUPLER AS-QUICK DISCONNECT (MALE)	
		1	**6V-3965**	1	FITTING (QUICK DISCONNECT)	
		1	**214-7568**	1	SEAL-O-RING	
	26	1	*164-9869*	1	CONNECTOR AS	
		1	**3J-1907**	1	SEAL-O-RING	
		1	**6V-8397**	1	SEAL-O-RING	
		1	**9X-2297**	1	CONNECTOR	
	27	1	**269-4965**	1	ADAPTER-ELBOW	

345-3166 **LINES GP-PILOT** *(contd.)* **i04112458**

NOTE	REF NO	GRAPHIC REF	PART NUMBER	QTY	PART NAME 1 2 3 4 5 6 (PRODUCT LEVEL)	SEE PAGE
	28	1	**2M-9780**	1	SEAL-O-RING	
	29	1	**4K-6177**	1	CLIP	
	30	1	**5P-4295**	1	CLIP	
	31	1	**6V-9169**	1	NUT (13/16-16-THD)	
	32	1	**8T-4121**	2	WASHER-HARD (11X21X2.5-MM THK)	
M	33	1	**8T-4186**	1	BOLT (M10X1.5X40-MM)	
	34	1	**8T-4205**	2	WASHER-HARD (7.2X14.5X2-MM THK)	
M	35	1	**8T-6974**	2	BOLT (M6X1X80-MM)	
E	36	1	**5P-1505**		HOSE (222-CM)	
G	37	1	**160-2246**		SLEEVE-ABRASION (7.5-IN)	

E-ORDER BY THE CENTIMETER
G-ORDER BY THE INCH
I-REFER TO HYDRAULIC INFORMATION SYSTEM
M-METRIC PART
Y-SEPARATE ILLUSTRATION

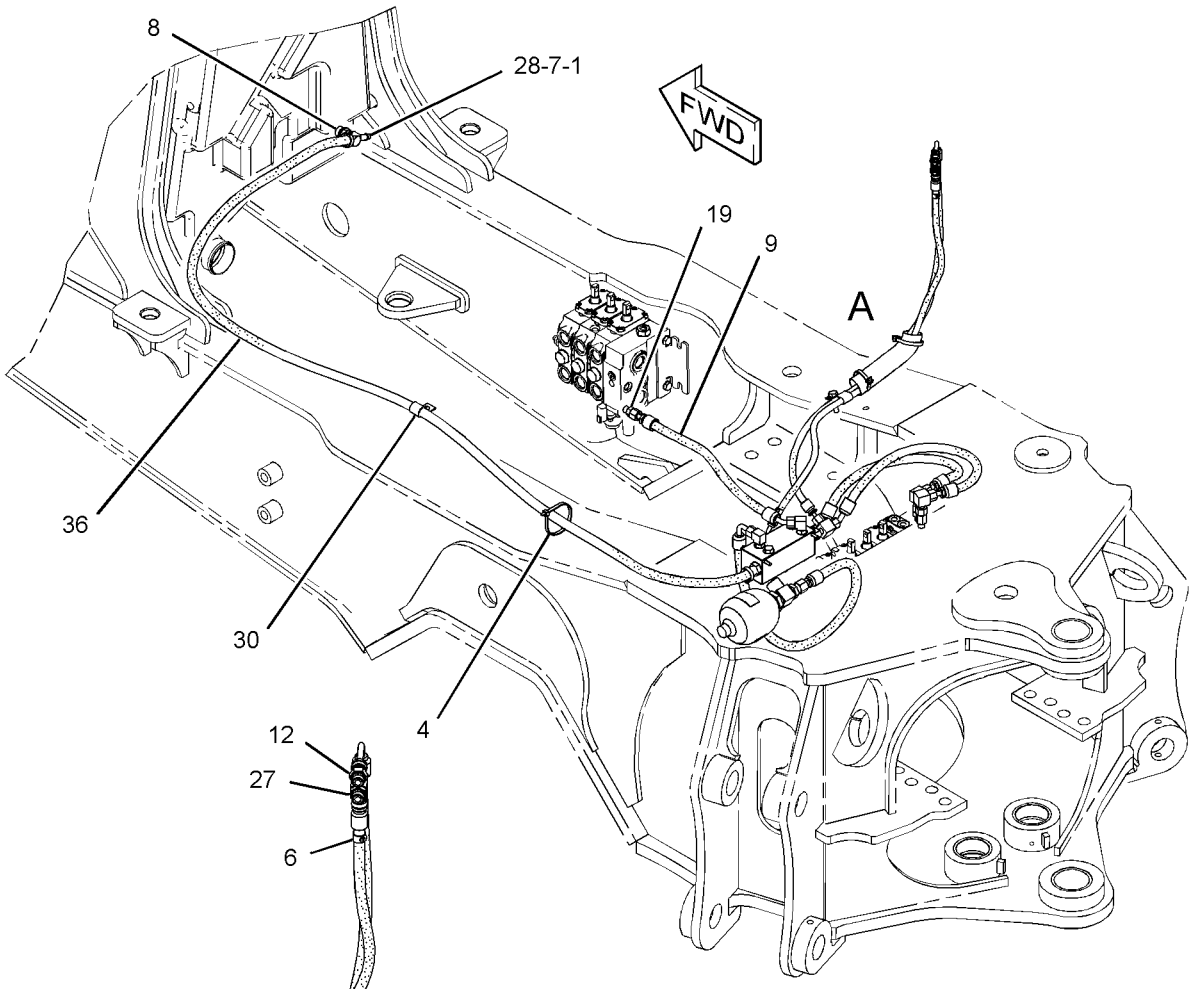

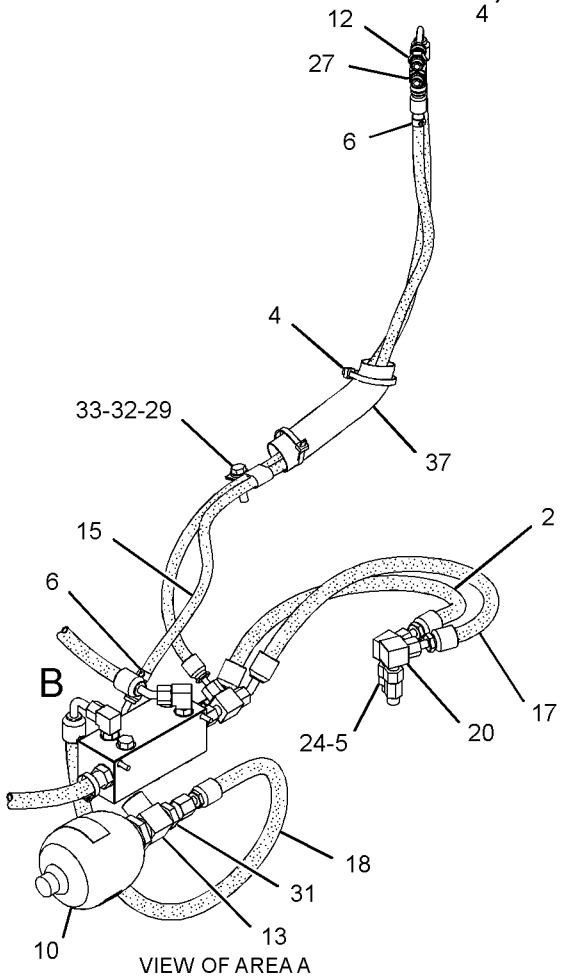

VIEW OF AREA A

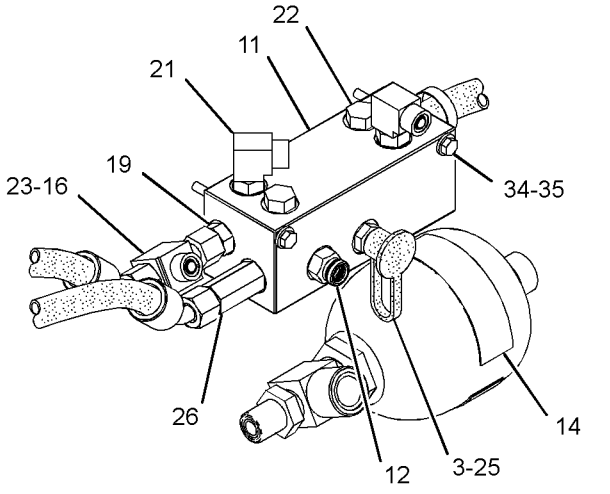

VIEW OF AREA B
(HOSES REMOVED FOR CLARITY)

180°

GRAPHIC #1 **<END>** g01958576

HYDRAULIC SYSTEM

345-3168 LINES GP-PILOT—SIGNAL

S/N: RBA1-UP

PART OF 254-0156, 254-0157, 254-0159, 254-0160 CONTROL AR-BACKHOE AN ATTACHMENT

SMCS-5057, 5059 **i04111975**

NOTE	REF NO	GRAPHIC REF	PART NUMBER	QTY	PART NAME 1 2 3 4 5 6 (PRODUCT LEVEL)	SEE PAGE
	1	1	**5D-1026**	2	CLAMP-BAND	
I	2	1	**303-0284**	1	HOSE AS	
I	3	1	**346-0310**	1	HOSE AS	
I	4	1	**346-0311**	1	HOSE AS	
	5	1	**6V-0852**	2	CAP-DUST	
	6	1	*148-8325*	2	CONNECTOR AS	
					(EACH INCLUDES)	
		1	**3J-1907**	1	SEAL-O-RING	
		1	**4J-5477**	1	SEAL-O-RING	
		1	**6V-8641**	1	CONNECTOR	
	7	1	*148-8351*	1	ELBOW AS	
		1	**4J-5477**	1	SEAL-O-RING	
		1	**6V-9849**	1	ELBOW	
	8	1	*148-8378*	1	ELBOW AS	
		1	**3J-1907**	1	SEAL-O-RING	
		1	**6V-8397**	1	SEAL-O-RING	
		1	**6V-8724**	1	ELBOW	
	9	1	*148-8435*	1	TEE AS	
		1	**3J-1907**	1	SEAL-O-RING	
		1	**6V-8397**	2	SEAL-O-RING	
		1	**6V-8781**	1	TEE-FACE SEAL	
	10	1	*150-3027*	2	ELBOW AS	
					(EACH INCLUDES)	
		1	**2M-9780**	1	SEAL-O-RING	
		1	**6V-5653**	1	ELBOW	
	11	1	*150-3062*	1	TEE AS	
		1	**3J-7354**	1	SEAL-O-RING	
		1	**4J-5477**	1	SEAL-O-RING	
		1	**101-1787**	1	TEE AS	
	12	1	*150-3065*	1	ADAPTER AS	
		1	**3J-1907**	1	SEAL-O-RING	
		1	**6V-0484**	1	ADAPTER-O-RING	
	13	1	*164-5567*	2	COUPLER AS-QUICK DISCONNECT (MALE)	
					(EACH INCLUDES)	
		1	**6V-3965**	1	FITTING (QUICK DISCONNECT)	
		1	**214-7568**	1	SEAL-O-RING	
	14	1	*165-4931*	1	ELBOW AS	
		1	**3J-1907**	1	SEAL-O-RING	
		1	**6V-8077**	1	ELBOW	
E	15	1	**5P-1505**		HOSE (65-CM)	

E-ORDER BY THE CENTIMETER
I-REFER TO HYDRAULIC INFORMATION SYSTEM

345-3168 **LINES GP-PILOT** *(contd.)* **i04111975**

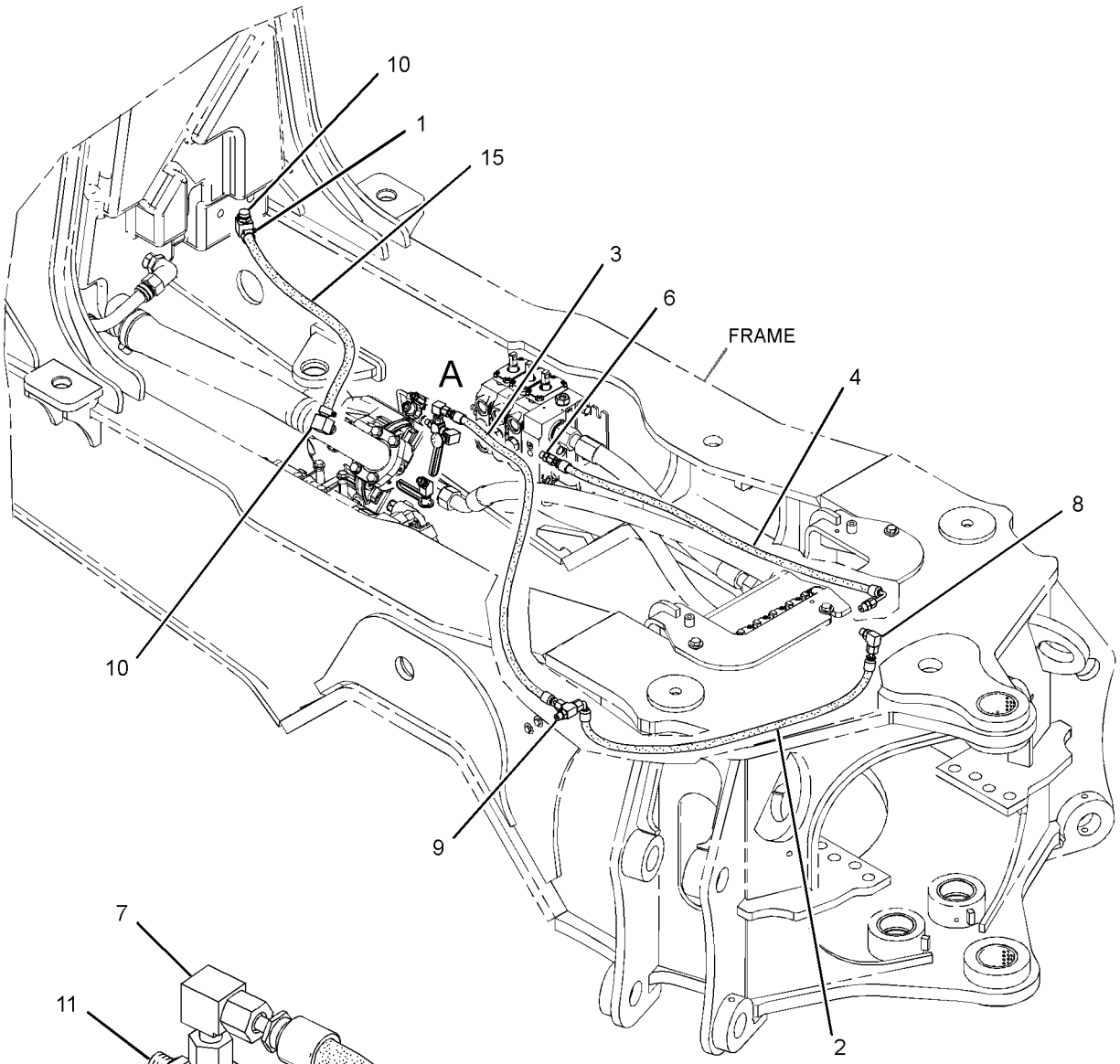

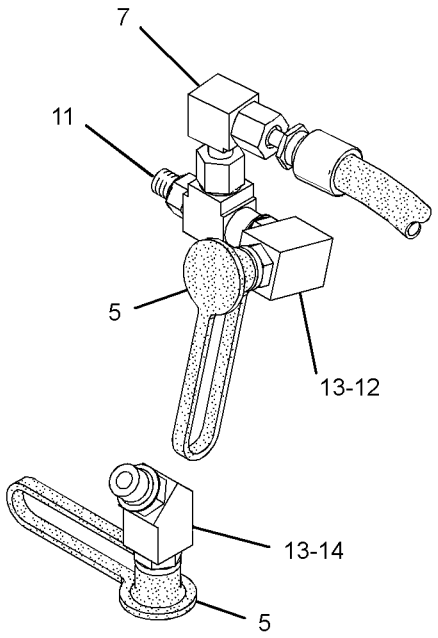

VIEW OF AREA A

GRAPHIC #1 **<END>** g01960193

HYDRAULIC SYSTEM

289-3274 LINES GP-PUMP

S/N: RBA1-UP

PART OF 254-0153, 254-0154 CONTROL AR-BACKHOE

AN ATTACHMENT

SMCS-5057 **i04112472**

NOTE	REF NO	GRAPHIC REF	PART NUMBER	QTY	PART NAME 1 2 3 4 5 6 (PRODUCT LEVEL)	SEE PAGE
	1	1	**7X-3164**	1	ADAPTER-SWIVEL	
I	2	1	**176-9294**	1	HOSE AS	
Y	3	1	**260-3022**	1	VALVE GP-RELIEF (MAIN)	376
	4	1	**260-9191**	1	ELBOW	
I	5	1	**273-6375**	1	HOSE AS	
I	6	1	**280-2815**	1	HOSE AS	
I	7	1	**289-3281**	1	HOSE AS	
I	8	1	**289-3282**	1	HOSE AS	
I	9	1	**289-3283**	1	HOSE AS	
I	10	1	**292-6831**	1	HOSE AS	
	11	1	**144-0367**	1	CLAMP-HOSE	
	12	1	*148-8335*	1	CONNECTOR AS	
		1	**5K-9090**	1	SEAL-O-RING	
		1	**6V-8635**	1	CONNECTOR	
		1	**7M-8485**	1	SEAL-O-RING	
	13	1	*148-8340*	3	CONNECTOR AS	
					(EACH INCLUDES)	
		1	**3K-0360**	1	SEAL-O-RING	
		1	**6V-8398**	1	SEAL-O-RING	
		1	**6V-8639**	1	CONNECTOR	
	14	1	*148-8358*	1	ELBOW AS	
		1	**2M-9780**	1	SEAL-O-RING	
		1	**6V-8398**	1	SEAL-O-RING	
		1	**6V-8624**	1	ELBOW	
	15	1	*148-8362*	1	ELBOW AS	
		1	**3D-2824**	1	SEAL-O-RING	
		1	**5K-9090**	1	SEAL-O-RING	
		1	**8T-6684**	1	ELBOW	
	16	1	*148-8429*	2	TEE AS	
					(EACH INCLUDES)	
		1	**5K-9090**	2	SEAL-O-RING	
		1	**6V-9840**	1	TEE-SWIVEL	
	17	1	*148-8444*	1	TEE AS-SWIVEL	
		1	**6V-8398**	2	SEAL-O-RING	
		1	**6V-9837**	1	TEE-SWIVEL	
	18	1	*155-2027*	1	CONNECTOR AS	
		1	**5K-9090**	1	SEAL-O-RING	
		1	**7M-8485**	1	SEAL-O-RING	
		1	**8T-8898**	1	CONNECTOR	
	19	1	**211-4348**	1	ELBOW AS	
	20	1	**235-8528**	1	HOSE	
	21	1	**269-4958**	2	ADAPTER	
	22	1	**269-4959**	2	ADAPTER	
	23	1	**1P-4584**	2	FLANGE-HALF	
	24	1	**3K-0360**	1	SEAL-O-RING	
	25	1	**5P-4868**	2	CLAMP-HOSE	
	26	1	**5P-7464**	3	CLIP (SLOT)	
	27	1	**5P-7465**	3	CLIP (TAB)	
	28	1	**6J-2680**	1	SEAL-O-RING	
	29	1	**6V-1249**	3	GROMMET	
	30	1	**7X-7729**	4	WASHER (11X25X3-MM THK)	
	31	1	**8T-4121**	3	WASHER-HARD (11X21X2.5-MM THK)	
M	32	1	**8T-4136**	5	BOLT (M10X1.5X25-MM)	
M	33	1	**8T-4184**	4	BOLT (M12X1.75X45-MM)	
M	34	1	**8T-4195**	2	BOLT (M10X1.5X30-MM)	

289-3274 **LINES GP-PUMP** *(contd.)* **i04112472**

NOTE	REF NO	GRAPHIC REF	PART NUMBER	QTY	PART NAME 1 2 3 4 5 6 (PRODUCT LEVEL)	SEE PAGE
	35	1	**8T-4223**	4	WASHER-HARD (13.5X25.5X3-MM THK)	
	36	1	**7M-8485**	1	SEAL-O-RING	

I-REFER TO HYDRAULIC INFORMATION SYSTEM
M-METRIC PART
Y-SEPARATE ILLUSTRATION

289-3274 **LINES GP-PUMP** *(contd.)* **i04112472**

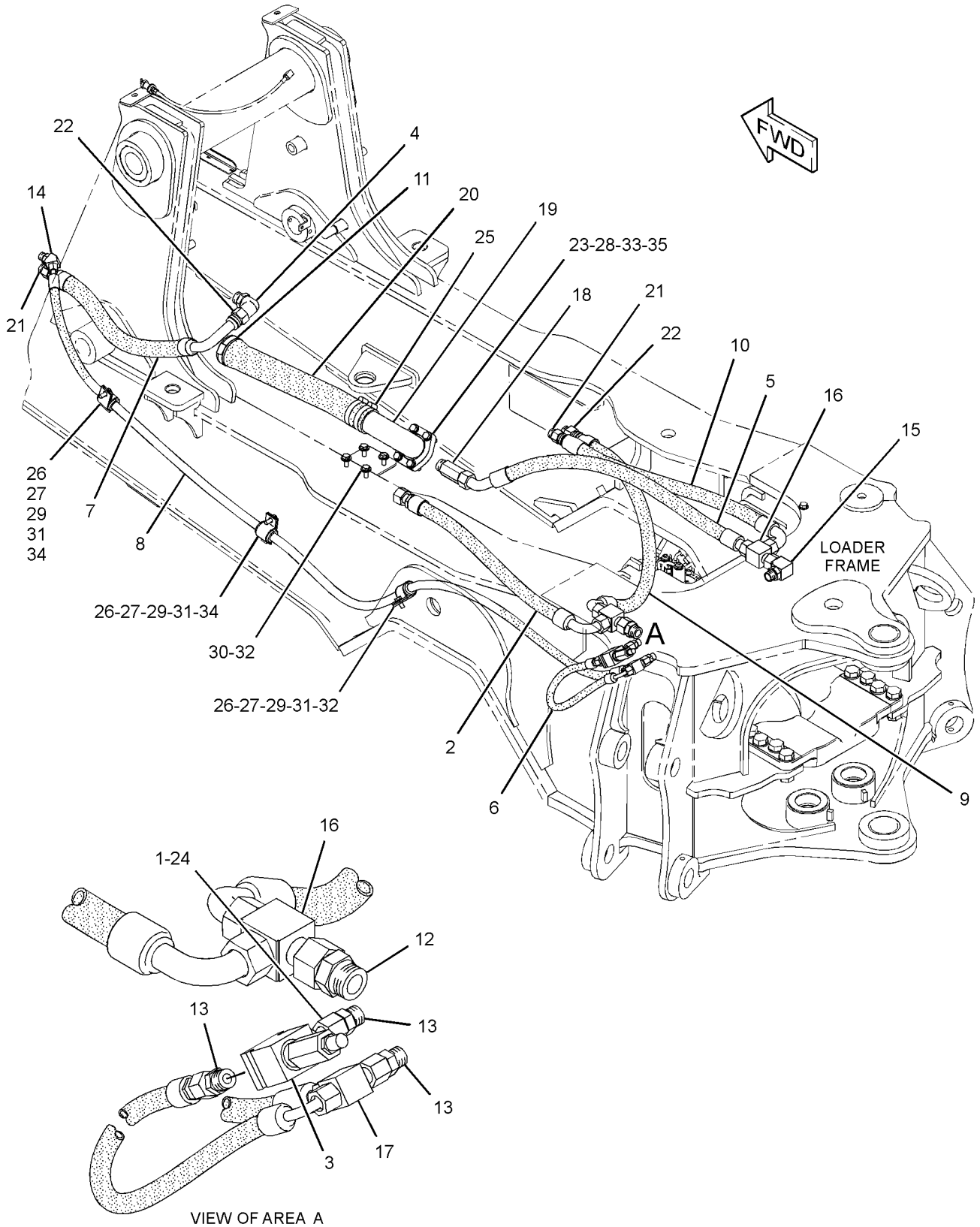

GRAPHIC #1 **<END>** g01415739

HYDRAULIC SYSTEM

345-3167 LINES GP-PUMP

S/N: RBA1-UP

PART OF 254-0156, 254-0157, 254-0159, 254-0160 CONTROL AR-BACKHOE AN ATTACHMENT

SMCS-5057 **i04112457**

NOTE	REF NO	GRAPHIC REF	PART NUMBER	QTY	PART NAME 1 2 3 4 5 6 (PRODUCT LEVEL)	SEE PAGE
I	1	1	**350-5196**	1	HOSE AS	
I	2	1	**103-1847**	1	HOSE AS	
I	3	1	**350-9172**	1	HOSE AS	
I	4	1	**136-3697**	1	HOSE AS	
	5	1	**143-0008**	2	SPACER (10X19.5X61-MM THK)	
	6	1	**144-0367**	1	CLAMP-HOSE	
	7	1	**235-8528**	1	HOSE	
	8	1	**260-9191**	1	ELBOW	
I	9	1	**273-6375**	1	HOSE AS	
I	10	1	**289-3281**	1	HOSE AS	
	11	1	*298-6825*	1	CONNECTOR AS	
		1	**3D-2824**	1	SEAL-O-RING	
		1	**5K-9090**	1	SEAL-O-RING	
		1	**298-6823**	1	CONNECTOR	
Y	12	1	**345-7712**	1	VALVE GP-RELIEF (MAIN)	377
I	13	1	**346-0309**	1	HOSE AS	
I	14	1	**346-2937**	1	HOSE AS	
	15	1	*148-8317*	2	CONNECTOR AS	
					(EACH INCLUDES)	
		1	**3D-2824**	1	SEAL-O-RING	
		1	**5K-9090**	1	SEAL-O-RING	
		1	**6V-8714**	1	CONNECTOR	
	17	1	*148-8335*	3	CONNECTOR AS	
					(EACH INCLUDES)	
		1	**5K-9090**	1	SEAL-O-RING	
		1	**6V-8635**	1	CONNECTOR	
		1	**7M-8485**	1	SEAL-O-RING	
	18	1	*148-8340*	1	CONNECTOR AS	
		1	**3K-0360**	1	SEAL-O-RING	
		1	**6V-8398**	1	SEAL-O-RING	
		1	**6V-8639**	1	CONNECTOR	
	19	1	*148-8358*	1	ELBOW AS	
		1	**2M-9780**	1	SEAL-O-RING	
		1	**6V-8398**	1	SEAL-O-RING	
		1	**6V-8624**	1	ELBOW	
	20	1	*148-8412*	2	REDUCER AS	
					(EACH INCLUDES)	
		1	**6V-8398**	1	SEAL-O-RING	
		1	**6V-8944**	1	REDUCER-O-RING	
	21	1	*148-8429*	2	TEE AS	
					(EACH INCLUDES)	
		1	**5K-9090**	2	SEAL-O-RING	
		1	**6V-9840**	1	TEE-SWIVEL	
	22	1	*148-8444*	1	TEE AS-SWIVEL	
		1	**6V-8398**	2	SEAL-O-RING	
		1	**6V-9837**	1	TEE-SWIVEL	
	23	1	*155-2027*	1	CONNECTOR AS	
		1	**5K-9090**	1	SEAL-O-RING	
		1	**7M-8485**	1	SEAL-O-RING	
		1	**8T-8898**	1	CONNECTOR	
	24	1	*164-8908*	1	CONNECTOR AS	
		1	**3K-0360**	1	SEAL-O-RING	
		1	**6V-8398**	1	SEAL-O-RING	
		1	**8T-0077**	1	CONNECTOR	
	25	1	**1P-4584**	2	FLANGE-HALF	

345-3167 **LINES GP-PUMP** ***(contd.)*** **i04112457**

NOTE	REF NO	GRAPHIC REF	PART NUMBER	QTY	PART NAME 1 2 3 4 5 6 (PRODUCT LEVEL)	SEE PAGE
	26	1	**211-4348**	1	ELBOW AS	
	27	1	**269-4958**	1	ADAPTER	
	28	1	**269-4959**	1	ADAPTER	
M	29	1	**5C-7261**	2	NUT (M8X1.25-THD)	
	30	1	**5P-4868**	2	CLAMP-HOSE	
	31	1	**5P-7464**	3	CLIP (SLOT)	
	32	1	**5P-7465**	3	CLIP (TAB)	
	33	1	**6V-1249**	3	GROMMET	
	34	1	**7M-8485**	1	SEAL-O-RING	
M	35	1	**7X-2541**	2	BOLT (M8X1.25X140-MM)	
	36	1	**7X-7729**	4	WASHER (11X25X3-MM THK)	
	37	1	**8T-4121**	3	WASHER-HARD (11X21X2.5-MM THK)	
M	38	1	**8T-4136**	5	BOLT (M10X1.5X25-MM)	
M	39	1	**8T-4184**	4	BOLT (M12X1.75X45-MM)	
M	40	1	**8T-4195**	2	BOLT (M10X1.5X30-MM)	
	41	1	**8T-4223**	4	WASHER-HARD (13.5X25.5X3-MM THK)	
	42	1	**8T-4224**	2	WASHER-HARD (8.8X16X2-MM THK)	
	43	1	**9X-6579**	2	NUT-ORIFICE (7/16-12-THD)	
	44	1	**5P-4116**	2	WASHER-HARD (8.8X20.5X2-MM THK)	
	45	1	**6J-2680**	1	SEAL-O-RING	

I-REFER TO HYDRAULIC INFORMATION SYSTEM
M-METRIC PART
Y-SEPARATE ILLUSTRATION

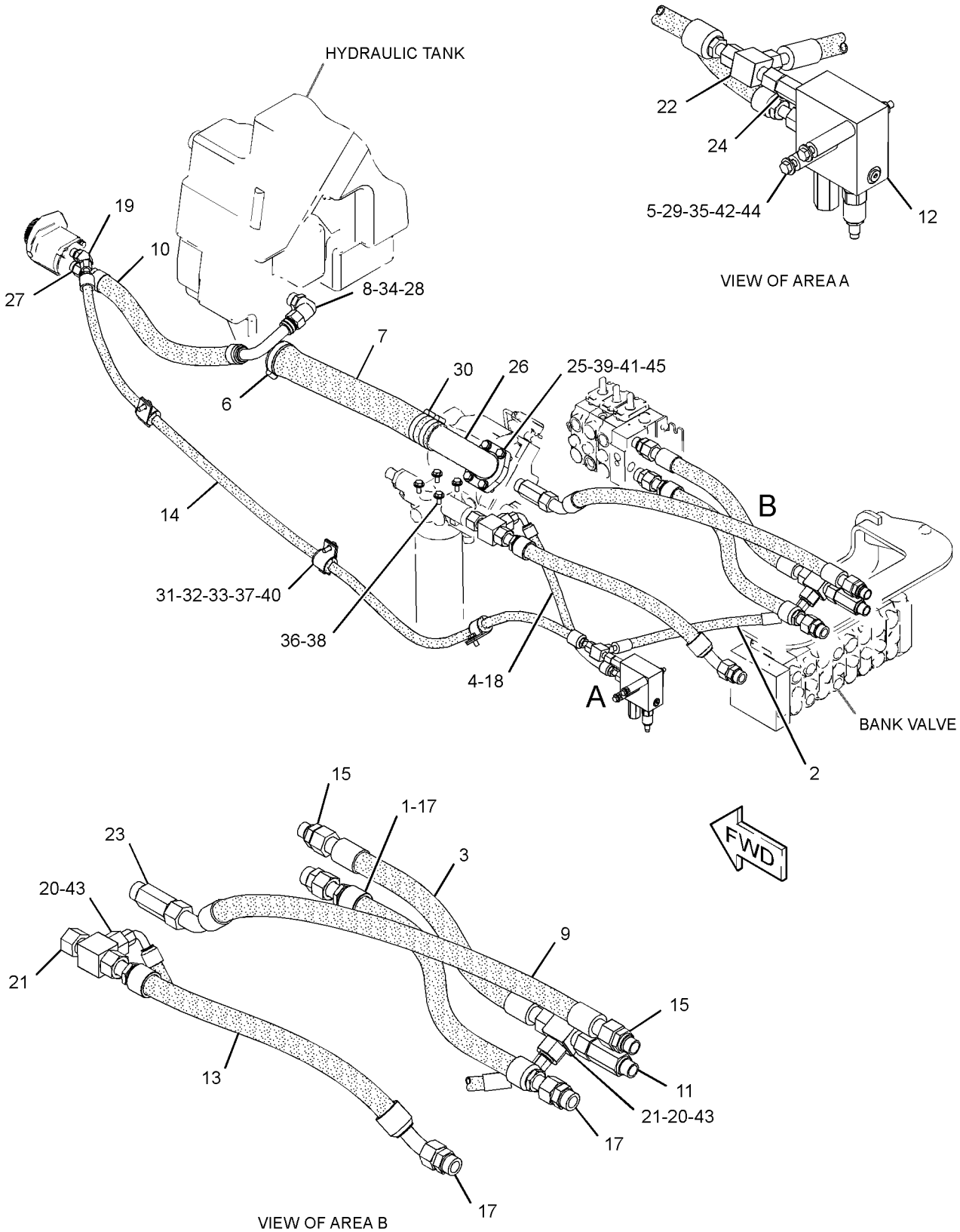

GRAPHIC #1 **<END>** g02188716

HYDRAULIC SYSTEM

254-0122 LINES GP-RIDE CONTROL

S/N: RBA1-UP

PART OF 254-0125 CONTROL AR-RIDE

SMCS-5057, 5077, 5264 **i04128931**

NOTE	REF NO	GRAPHIC REF	PART NUMBER	QTY	PART NAME 1 2 3 4 5 6 (PRODUCT LEVEL)	SEE PAGE
I	1	1	**152-7740**	1	HOSE AS	
Y	2	1	*162-3960*	1	ACCUMULATOR GP-RIDE CONTROL (CHARGED)	228
Y	3	1	**245-8780**	1	MANIFOLD GP-RIDE CONTROL	321
	4	1	**254-0124**	1	BRACKET AS	
	5	1	**276-2334**	1	FILM-WARNING (HIGH PRESSURE, READ OMM, INTL) (ISO)	
	6	1	**279-5016**	1	FILM-WARNING (HIGH PRESS CYLINDER, READ OMM) (U.S.)	
M	7	1	**096-5866**	2	BOLT (M8X1.25X75-MM)	
	8	1	**109-1633**	2	CLIP (SLOT)	
	9	1	**109-1634**	2	CLIP (TAB)	
	10	1	*148-8318*	1	CONNECTOR AS	
		1	**3K-0360**	1	SEAL-O-RING	
		1	**6V-8397**	1	SEAL-O-RING	
		1	**6V-8634**	1	CONNECTOR	
	11	1	*148-8340*	1	CONNECTOR AS	
		1	**3K-0360**	1	SEAL-O-RING	
		1	**6V-8398**	1	SEAL-O-RING	
		1	**6V-8639**	1	CONNECTOR	
	12	1	*148-8345*	1	CONNECTOR AS	
		1	**2M-9780**	1	SEAL-O-RING	
		1	**6V-8398**	1	SEAL-O-RING	
		1	**6V-8638**	1	CONNECTOR	
	13	1	*148-8370*	2	ELBOW AS	
					(EACH INCLUDES)	
		1	**6V-8398**	1	SEAL-O-RING	
		1	**6V-9851**	1	ELBOW	
	14	1	*148-8372*	1	ELBOW AS	
		1	**2M-9780**	1	SEAL-O-RING	
		1	**6V-8398**	1	SEAL-O-RING	
		1	**6V-8721**	1	ELBOW	
	15	1	*148-8416*	1	REDUCER AS	
		1	**6V-8398**	1	SEAL-O-RING	
		1	**6V-8939**	1	REDUCER-O-RING	
	16	1	*164-5549*	1	COUPLING AS	
		1	**3J-1907**	1	SEAL-O-RING	
		1	**4I-6287**	1	COUPLING	
	17	1	**6V-8555**	1	NUT-FACE SEAL (1-14-THD)	
	18	1	**8T-4121**	2	WASHER-HARD (11X21X2.5-MM THK)	
M	19	1	**8T-4136**	2	BOLT (M10X1.5X25-MM)	
M	20	1	**8T-4183**	2	BOLT (M12X1.75X40-MM)	
	21	1	**8T-4223**	4	WASHER-HARD (13.5X25.5X3-MM THK)	
	22	1	**8T-4224**	2	WASHER-HARD (8.8X16X2-MM THK)	
M	23	1	**8T-4244**	2	NUT (M12X1.75-THD)	
I	24	1	**210-1967**	1	HOSE AS	

I-REFER TO HYDRAULIC INFORMATION SYSTEM
M-METRIC PART
Y-SEPARATE ILLUSTRATION

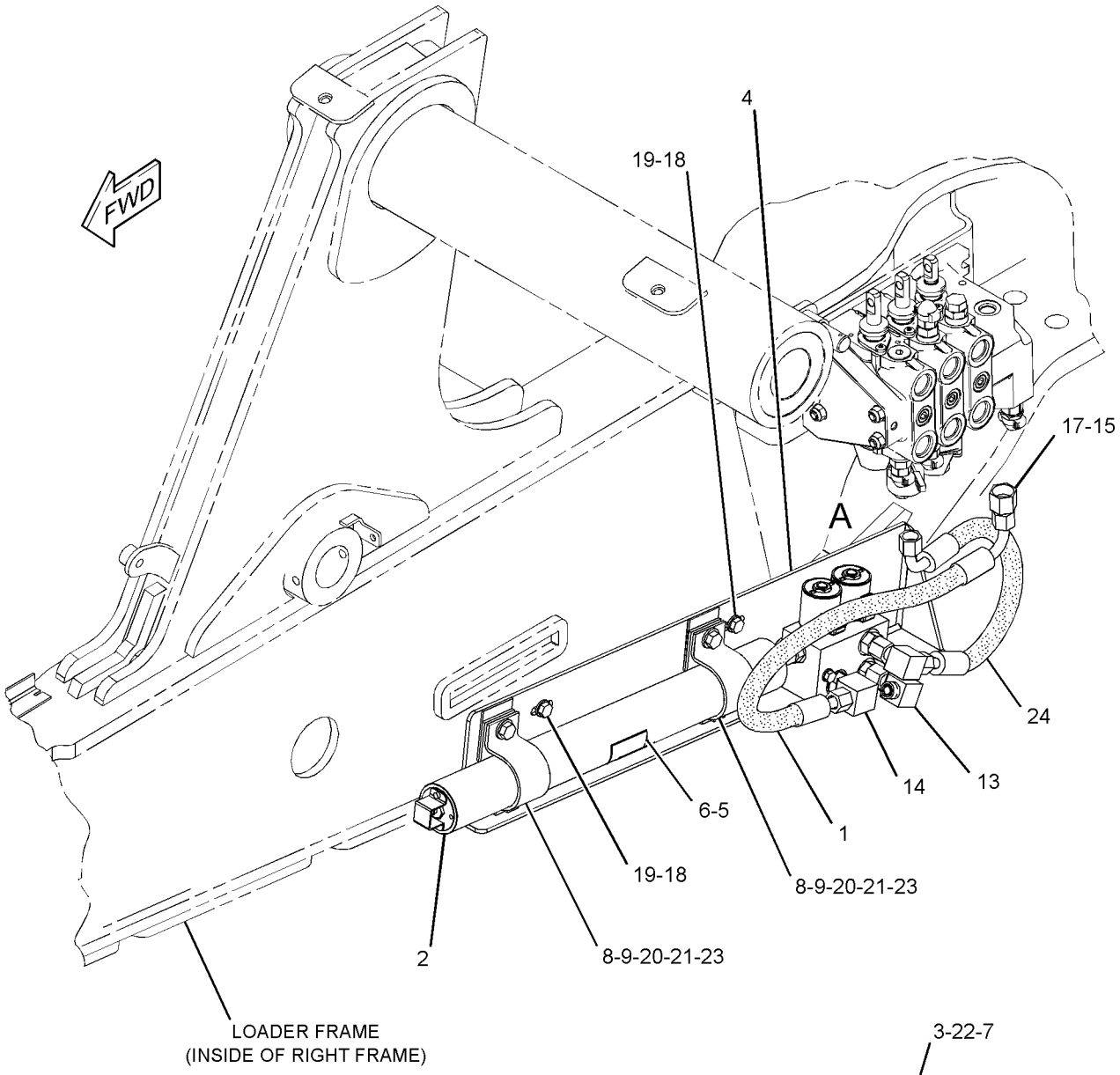

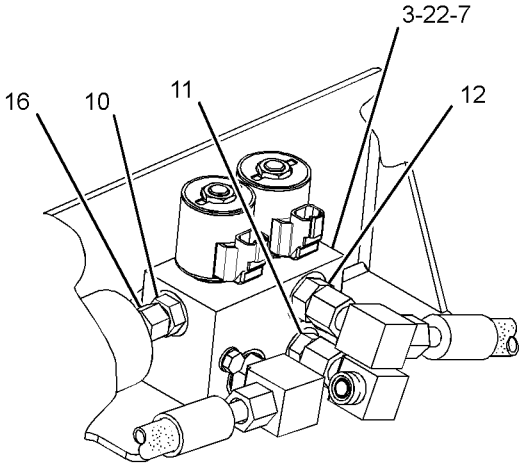

VIEW OF AREA A

GRAPHIC #1 **<END>** g01409898

HYDRAULIC SYSTEM

254-0164 LINES GP-STABILIZER

S/N: RBA1-UP

PART OF 254-0153, 254-0156, 254-0159 CONTROL AR-BACKHOE

AN ATTACHMENT

SMCS-5057, 5468 **i04112464**

NOTE	REF NO	GRAPHIC REF	PART NUMBER	QTY	PART NAME 1 2 3 4 5 6 (PRODUCT LEVEL)	SEE PAGE
	1	1	**5P-0599**	4	CLAMP-BAND	
I	2	1	**166-5994**	2	HOSE AS	
I	3	1	**254-2449**	2	HOSE AS	
	4	1	**277-7101**	2	PLATE AS	
	5	1	**280-7463**	2	PLATE AS	
	6	1	**280-8245**	1	TUBE AS	
	7	1	**311-4120**	1	TUBE AS	
	8	1	*148-8328*	4	CONNECTOR AS	
					(EACH INCLUDES)	
		1	**6V-8633**	1	CONNECTOR	
		1	**3D-2824**	1	SEAL-O-RING	
		1	**6V-8398**	1	SEAL-O-RING	
	9	1	*148-8372*	2	ELBOW AS	
					(EACH INCLUDES)	
		1	**6V-8721**	1	ELBOW	
		1	**2M-9780**	1	SEAL-O-RING	
		1	**6V-8398**	1	SEAL-O-RING	
	10	1	**5P-7462**	2	CLIP (SLOT)	
	11	1	**5P-7463**	2	CLIP (TAB)	
	12	1	**5P-7464**	2	CLIP (SLOT)	
	13	1	**5P-7465**	2	CLIP (TAB)	
	14	1	**6V-0683**	2	GROMMET	
	15	1	**6V-7359**	2	GROMMET	
	16	1	**6V-8397**	2	SEAL-O-RING	
	17	1	**8T-1885**	2	CLIP (SLOT)	
	18	1	**8T-1886**	2	CLIP (TAB)	
	19	1	**8T-4121**	6	WASHER-HARD (11X21X2.5-MM THK)	
M	20	1	**8T-4136**	2	BOLT (M10X1.5X25-MM)	
M	21	1	**8T-4196**	4	BOLT (M10X1.5X35-MM)	
	22	1	**8T-4223**	4	WASHER-HARD (13.5X25.5X3-MM THK)	
M	23	1	**8T-4956**	4	BOLT (M12X1.75X35-MM)	

I-REFER TO HYDRAULIC INFORMATION SYSTEM
M-METRIC PART

254-0164 **LINES GP-STABILIZER** *(contd.)* **i04112464**

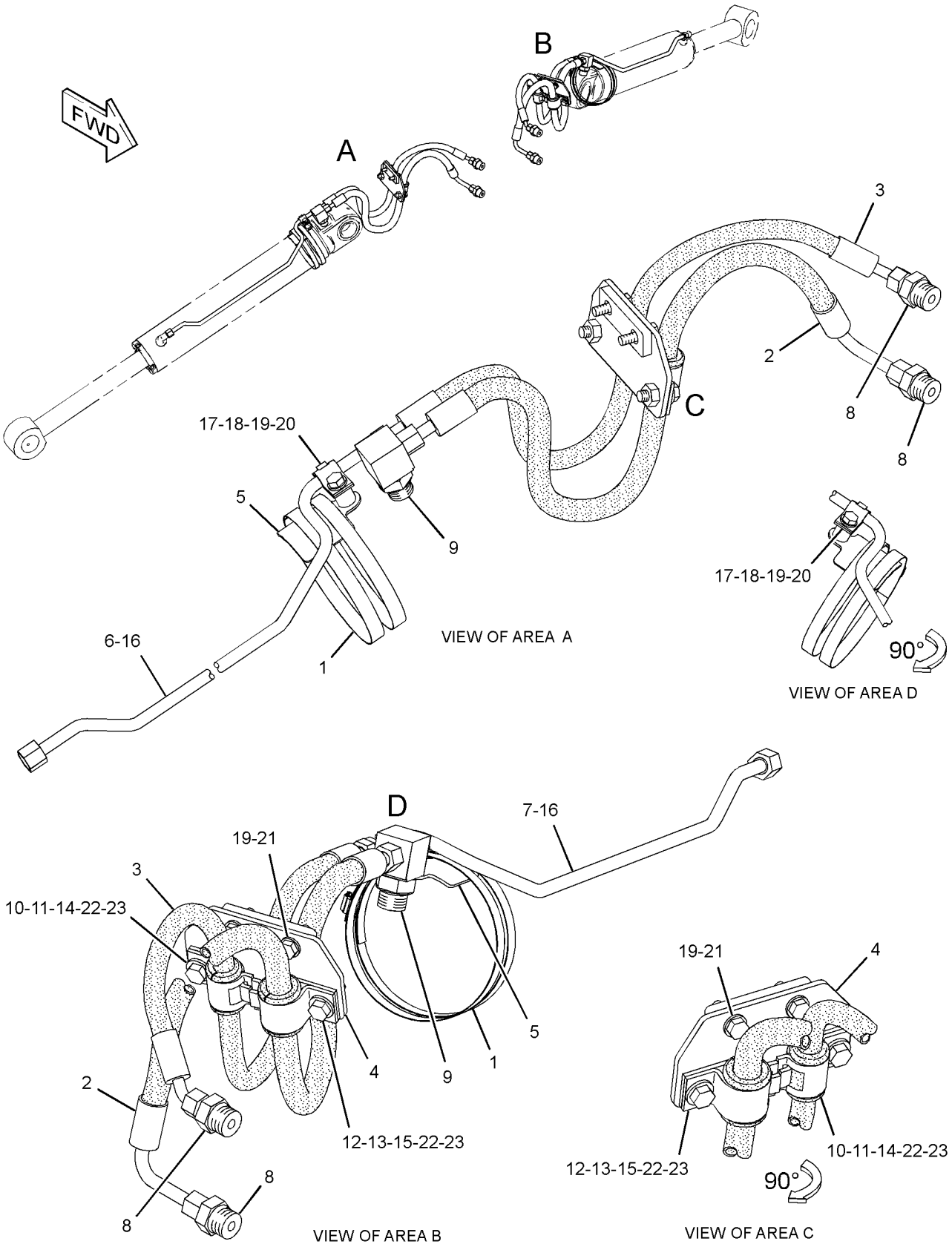

GRAPHIC #1 **<END>** g01413237

HYDRAULIC SYSTEM

254-0165 LINES GP-STABILIZER

S/N: RBA1-UP

PART OF 254-0154, 254-0157, 254-0160 CONTROL AR-BACKHOE

AN ATTACHMENT

SMCS-5057, 5468 **i04112477**

NOTE	REF NO	GRAPHIC REF	PART NUMBER	QTY	PART NAME 1 2 3 4 5 6 (PRODUCT LEVEL)	SEE PAGE
	1	1	**5P-0599**	4	CLAMP-BAND	
I	2	1	**166-5994**	2	HOSE AS	
I	3	1	**254-2449**	2	HOSE AS	
	4	1	**277-7101**	2	PLATE AS	
	5	1	**280-7463**	2	PLATE AS	
	6	1	**280-8245**	1	TUBE AS	
	7	1	**311-4120**	1	TUBE AS	
	8	1	*148-8328*	4	CONNECTOR AS	
					(EACH INCLUDES)	
		1	**6V-8633**	1	CONNECTOR	
		1	**3D-2824**	1	SEAL-O-RING	
		1	**6V-8398**	1	SEAL-O-RING	
	9	1	*148-8372*	2	ELBOW AS	
					(EACH INCLUDES)	
		1	**6V-8721**	1	ELBOW	
		1	**2M-9780**	1	SEAL-O-RING	
		1	**6V-8398**	1	SEAL-O-RING	
	10	1	**5P-7462**	2	CLIP (SLOT)	
	11	1	**5P-7463**	2	CLIP (TAB)	
	12	1	**5P-7464**	2	CLIP (SLOT)	
	13	1	**5P-7465**	2	CLIP (TAB)	
	14	1	**6V-0683**	2	GROMMET	
	15	1	**6V-7359**	2	GROMMET	
	16	1	**6V-8397**	2	SEAL-O-RING	
	17	1	**8T-1885**	2	CLIP (SLOT)	
	18	1	**8T-1886**	2	CLIP (TAB)	
	19	1	**8T-4121**	6	WASHER-HARD (11X21X2.5-MM THK)	
M	20	1	**8T-4136**	2	BOLT (M10X1.5X25-MM)	
M	21	1	**8T-4196**	4	BOLT (M10X1.5X35-MM)	
	22	1	**8T-4223**	4	WASHER-HARD (13.5X25.5X3-MM THK)	
M	23	1	**8T-4956**	4	BOLT (M12X1.75X35-MM)	

I-REFER TO HYDRAULIC INFORMATION SYSTEM
M-METRIC PART

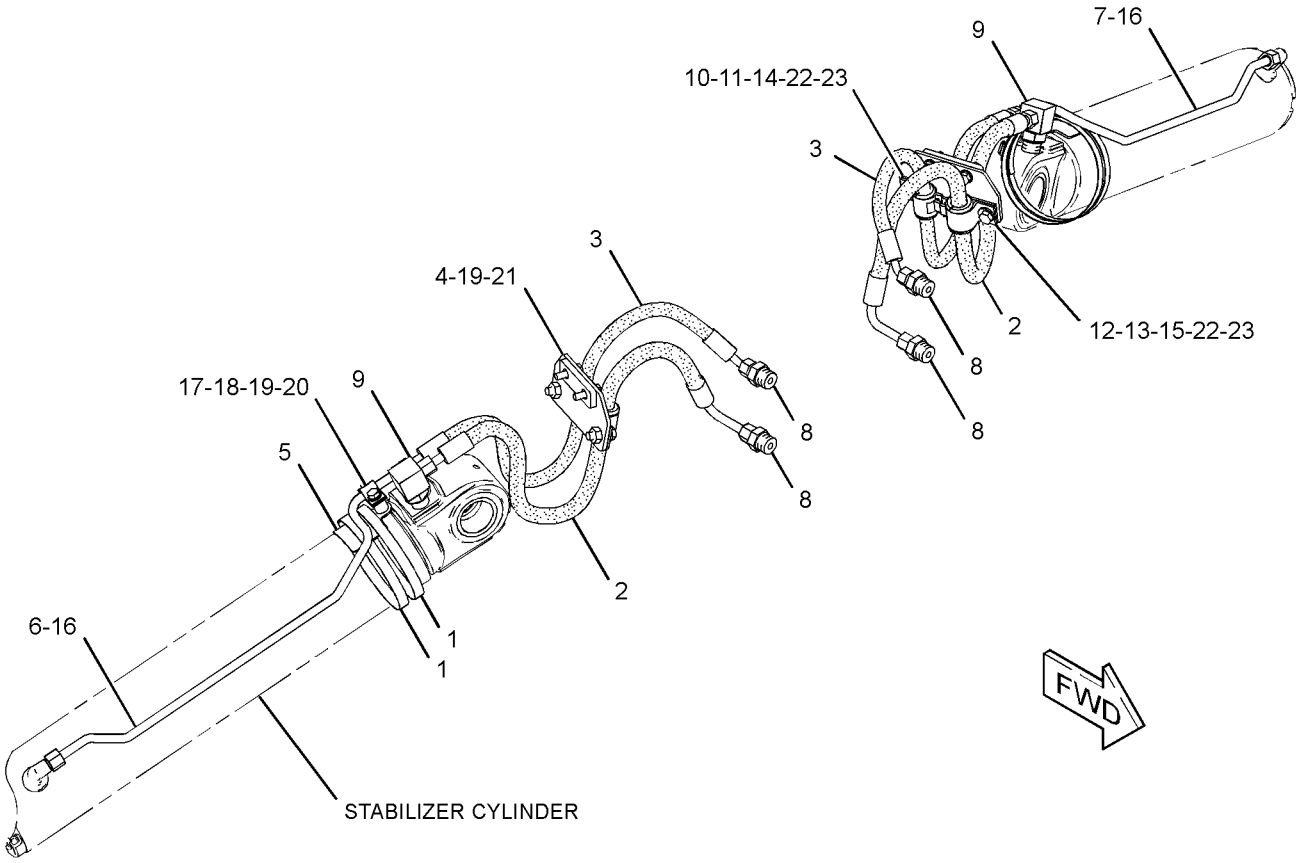

GRAPHIC #1 **<END>** g01413574

HYDRAULIC SYSTEM

254-0173 LINES GP-STICK

S/N: RBA1-UP

PART OF 254-0180 BACKHOE AR-EXTENDABLE STICK, 254-0175 BACKHOE AR-STANDARD STICK

AN ATTACHMENT

SMCS-5057 **i04141010**

NOTE	REF NO	GRAPHIC REF	PART NUMBER	QTY	PART NAME 1 2 3 4 5 6 (PRODUCT LEVEL)	SEE PAGE
	1	1	**5P-4869**	1	CLAMP-HOSE	
I	2	1	**273-7336**	1	HOSE AS	
I	3	1	**273-7338**	1	HOSE AS	
	4	1	**280-1641**	1	BLOCK	
	5	1	*148-8327*	2	CONNECTOR AS	
					(EACH INCLUDES)	
		1	**3D-2824**	1	SEAL-O-RING	
		1	**6V-8637**	1	CONNECTOR	
		1	**6V-9746**	1	SEAL-O-RING	
	6	1	*153-6237*	1	ELBOW AS	
		1	**3D-2824**	1	SEAL-O-RING	
		1	**6V-9004**	1	ELBOW	
		1	**6V-9746**	1	SEAL-O-RING	

I-REFER TO HYDRAULIC INFORMATION SYSTEM

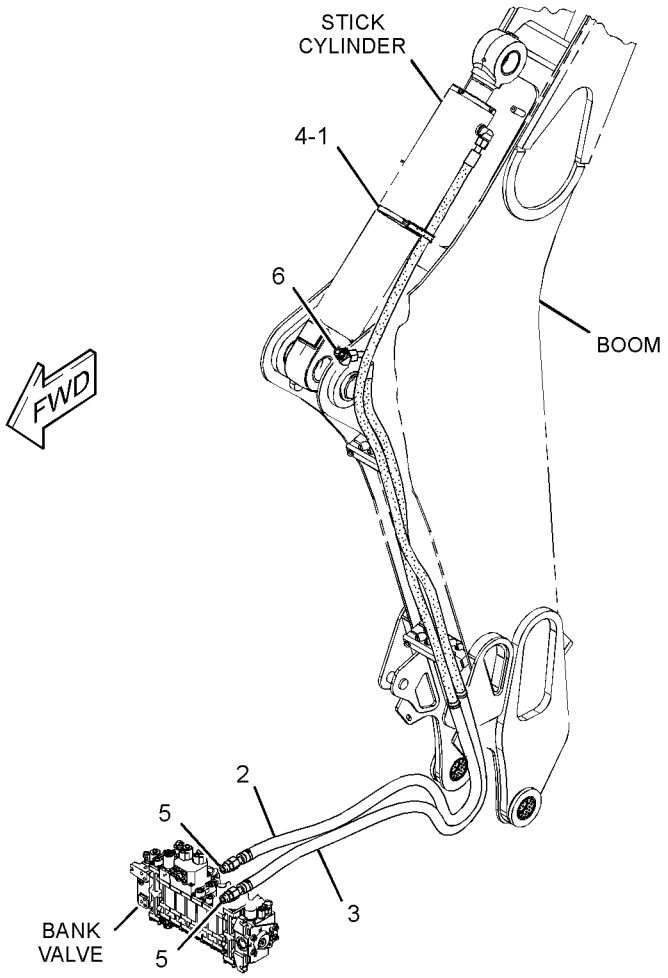

GRAPHIC #1 **<END>** g01409904

HYDRAULIC SYSTEM

254-0151 LINES GP-SWING

S/N: RBA1-UP

PART OF 254-0170 HYDRAULIC AR

SMCS-5057, 5105 **i04128932**

NOTE	REF NO	GRAPHIC REF	PART NUMBER	QTY	PART NAME 1 2 3 4 5 6 (PRODUCT LEVEL)	SEE PAGE
	1	1	**5P-0599**	2	CLAMP-BAND	
I	2	1	**8Y-8696**	2	HOSE AS	
	3	1	**9R-2053**	2	BLOCK	
	4	1	**226-5634**	2	CONNECTOR AS	
					(EACH INCLUDES)	
		1	**3J-1907**	1	SEAL-O-RING	
		1	**4J-5477**	1	SEAL-O-RING	
		1	**167-0566**	1	CARTRIDGE	
		1	**226-5633**	1	CONNECTOR	
I	5	1	**279-5735**	2	HOSE AS	
I	6	1	**279-5736**	1	HOSE AS	
I	7	1	**279-5737**	1	HOSE AS	
Y	8	1	*283-6331*	1	VALVE GP-CUSHION CROSSOVER RLF	369
	9	1	*148-8340*	4	CONNECTOR AS	
					(EACH INCLUDES)	
		1	**3K-0360**	1	SEAL-O-RING	
		1	**6V-8398**	1	SEAL-O-RING	
		1	**6V-8639**	1	CONNECTOR	
	10	1	*148-8351*	1	ELBOW AS	
		1	**4J-5477**	1	SEAL-O-RING	
		1	**6V-9849**	1	ELBOW	
	11	1	*148-8364*	2	ELBOW AS	
					(EACH INCLUDES)	
		1	**3K-0360**	1	SEAL-O-RING	
		1	**6V-8398**	1	SEAL-O-RING	
		1	**6V-8625**	1	ELBOW	
	12	1	*148-8428*	2	TEE AS	
					(EACH INCLUDES)	
		1	**3K-0360**	1	SEAL-O-RING	
		1	**6V-8398**	2	SEAL-O-RING	
		1	**6V-8782**	1	TEE	
	13	1	*155-7321*	2	ADAPTER AS	
					(EACH INCLUDES)	
		1	**3D-2824**	1	SEAL-O-RING	
		1	**6V-1722**	1	ADAPTER-O-RING	
	14	1	**8T-4224**	2	WASHER-HARD (8.8X16X2-MM THK)	
M	15	1	**8T-6869**	2	BOLT (M8X1.25X60-MM)	

I-REFER TO HYDRAULIC INFORMATION SYSTEM
M-METRIC PART
Y-SEPARATE ILLUSTRATION

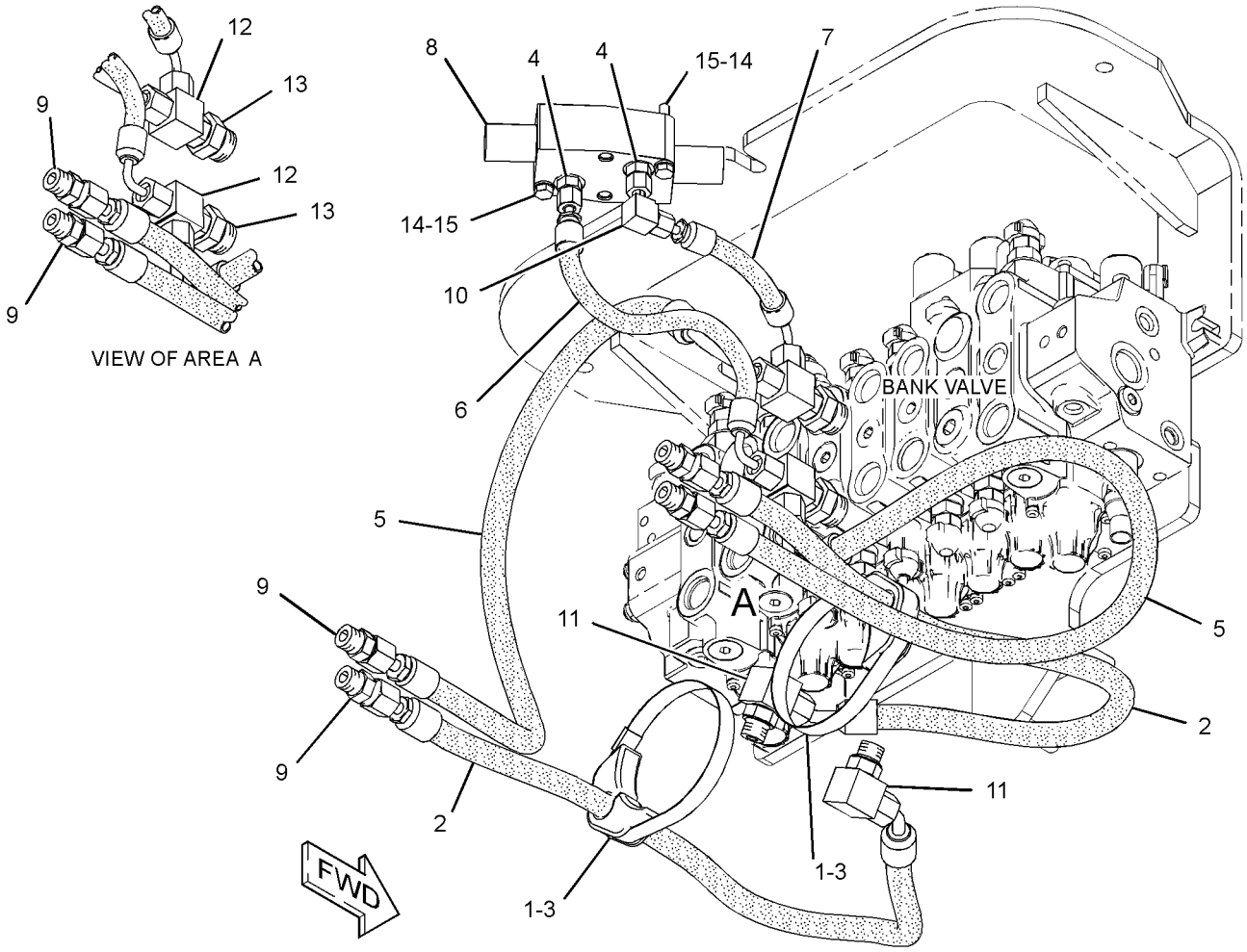

GRAPHIC #1 **<END>** g01413999

HYDRAULIC SYSTEM

254-0137 LINES GP-TILT CYLINDER

S/N: RBA1-UP

PART OF 254-0140 LOADER AR

SMCS-5057, 5104 **i04108029**

NOTE	REF NO	GRAPHIC REF	PART NUMBER	QTY	PART NAME 1 2 3 4 5 6 (PRODUCT LEVEL)	SEE PAGE
	1	1	**7K-1181**	1	STRAP-CABLE	
I	2	1	**9R-3677**	2	HOSE AS	
	3	1	**201-4756**	1	GROMMET	
	4	1	**232-3277**	1	BRACKET AS	
	5	1	**254-7271**	1	PLATE AS	
	6	1	**273-8657**	1	TUBE AS	
	7	1	**278-1427**	1	TUBE AS	
	8	1	**278-1428**	1	TUBE AS	
	9	1	**278-1429**	1	TUBE AS	
I	10	1	**290-2791**	2	HOSE AS	
	11	1	**290-4638**	1	TUBE AS	
	12	1	**339-2014**	1	TUBE AS	
	13	1	*148-8322*	1	CONNECTOR AS	
		1	**2M-9780**	1	SEAL-O-RING	
		1	**6V-8640**	1	CONNECTOR (SEAL)	
		1	**6V-9746**	1	SEAL-O-RING	
	14	1	*148-8388*	1	ELBOW AS	
		1	**2M-9780**	1	SEAL-O-RING	
		1	**6V-8629**	1	ELBOW (FACE SEAL)	
		1	**6V-9746**	1	SEAL-O-RING	
	15	1	*148-8392*	2	ELBOW AS	
					(EACH INCLUDES)	
		1	**6V-9746**	1	SEAL-O-RING	
		1	**6V-9853**	1	ELBOW (SWIVEL 90-DEG)	
	16	1	*164-5606*	2	CONNECTOR AS	
					(EACH INCLUDES)	
		1	**3D-2824**	1	SEAL-O-RING	
		1	**6V-9746**	1	SEAL-O-RING	
		1	**8T-0078**	1	CONNECTOR	
	17	1	**239-4232**	2	CLIP (SLOT)	
	18	1	**239-4235**	1	CLIP (TAB)	
	19	1	**6V-9746**	4	SEAL-O-RING	
	20	1	**7J-9108**	4	SEAL-O-RING	
	21	1	**8T-1887**	11	CLIP (SLOT)	
	22	1	**8T-1888**	11	CLIP (TAB)	
	23	1	**8T-1895**	2	CLIP (SLOT)	
	24	1	**8T-1896**	2	CLIP (TAB)	
	25	1	**8T-4121**	13	WASHER-HARD (11X21X2.5-MM THK)	
M	26	1	**8T-4136**	11	BOLT (M10X1.5X25-MM)	
M	27	1	**8T-4195**	1	BOLT (M10X1.5X30-MM)	
M	28	1	**8T-4196**	1	BOLT (M10X1.5X35-MM)	

I-REFER TO HYDRAULIC INFORMATION SYSTEM
M-METRIC PART

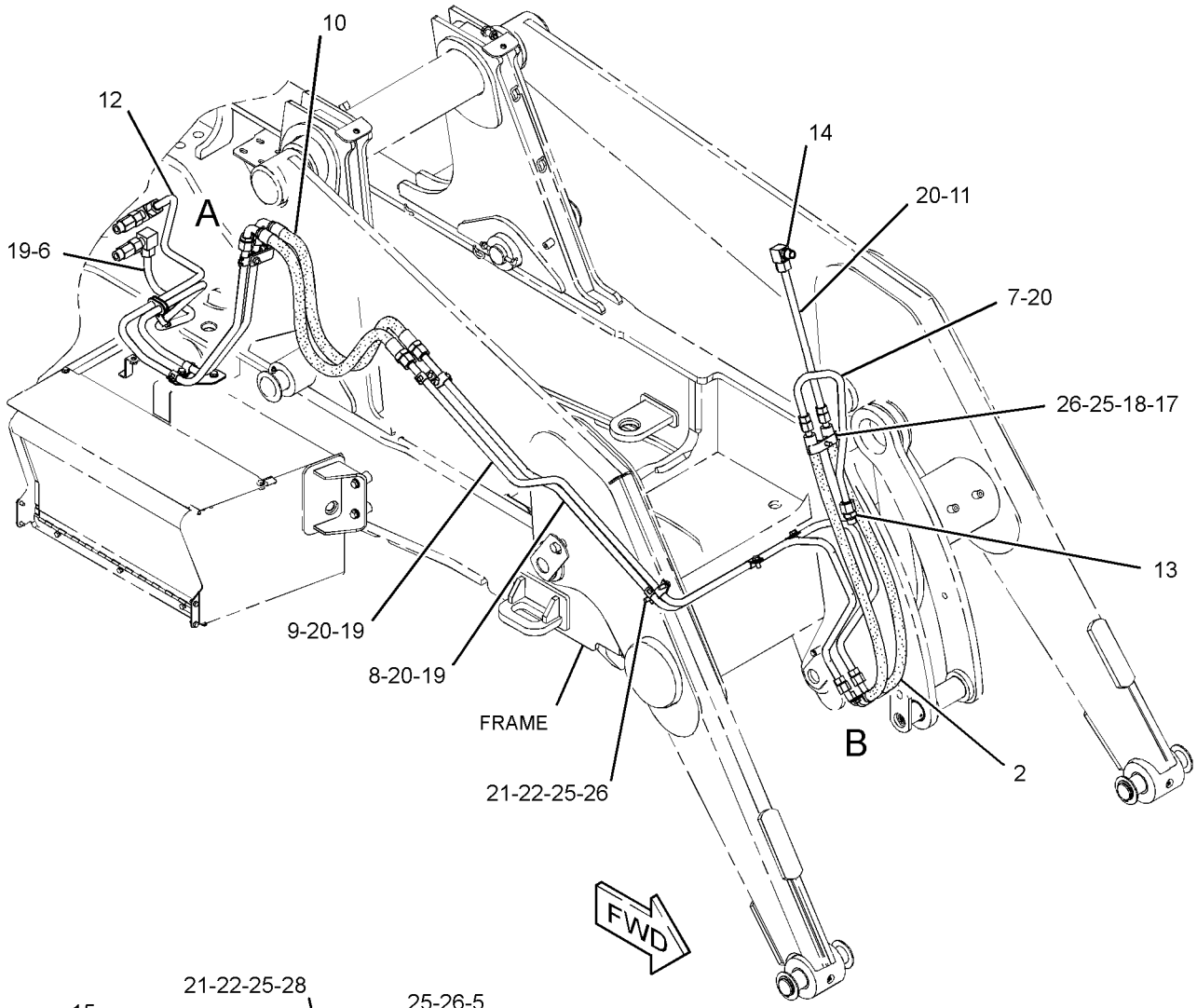

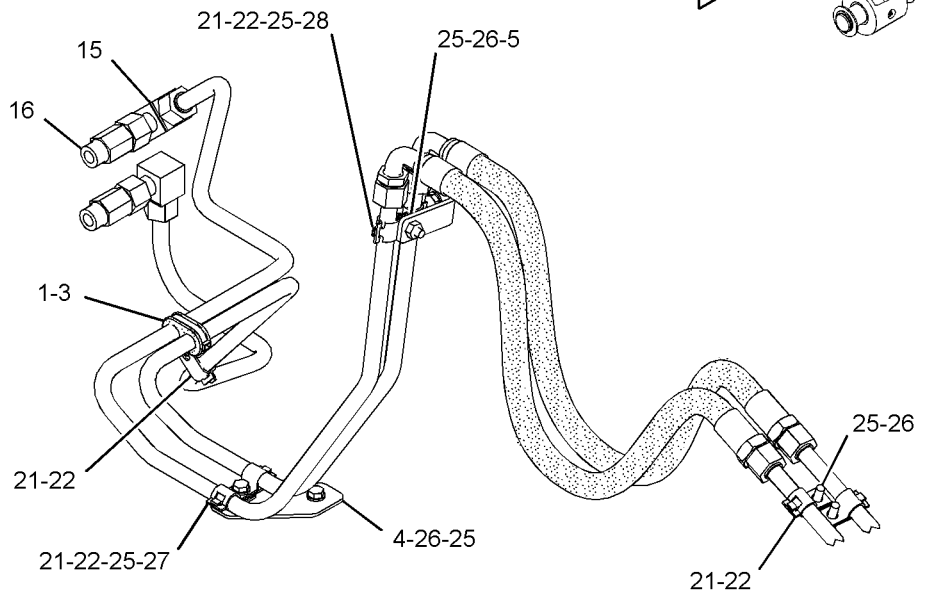

VIEW OF AREA A

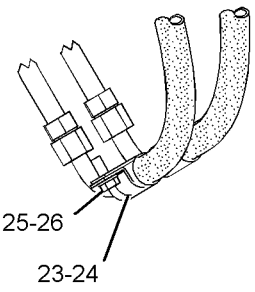

VIEW OF AREA B

GRAPHIC #1 **<END>** g02332173

HYDRAULIC SYSTEM

179-3543 MANIFOLD & SOLENOID GP-CONTROL

S/N: RBA1-UP
PART OF 271-0546, 271-0547 VALVE GP-CONTROL
AN ATTACHMENT

SMCS-5264, 5479 **i02474605**

NOTE	REF NO	GRAPHIC REF	PART NUMBER	QTY	PART NAME 1 2 3 4 5 6 (PRODUCT LEVEL)	SEE PAGE
Y	1	1	**185-4254**	2	VALVE GP-SOLENOID (12-VOLT) (PILOT)	378

Y-SEPARATE ILLUSTRATION

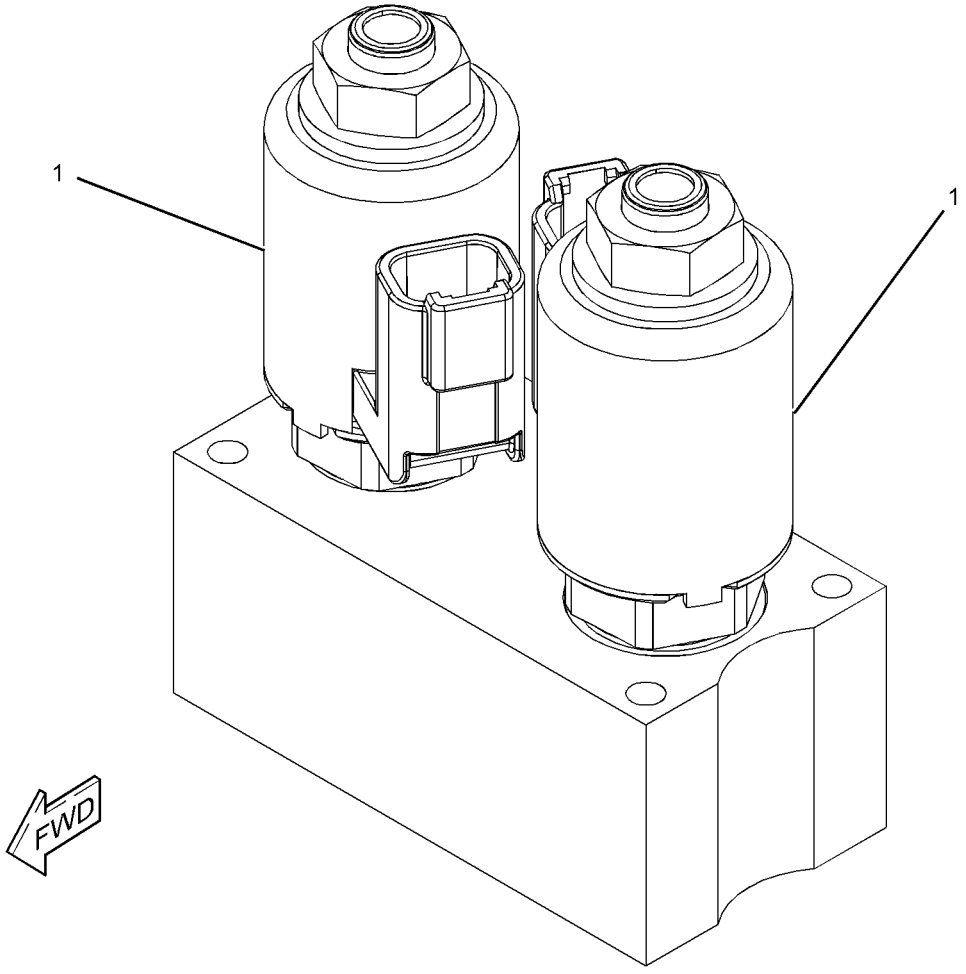

GRAPHIC #1 **<END>** g01220715

299-9072 MANIFOLD & SOLENOID GP-CONTROL–
BOOM, STICK, PATTERN SWITCH
S/N: RBA1-UP
PART OF 271-0527 VALVE GP-BANK 7, 271-0528 VALVE GP-BANK 8
AN ATTACHMENT

SMCS-5264, 5479 **i04124536**

NOTE	REF NO	GRAPHIC REF	PART NUMBER	QTY	PART NAME 1 2 3 4 5 6 (PRODUCT LEVEL)	SEE PAGE
J	1	1	**240-6866**	2	VALVE GP-SOLENOID	
					(EACH INCLUDES)	
		1	**250-6148**	1	COIL AS (24-VOLT)	
M	2	1	**095-0642**	4	BOLT-SOCKET HEAD (M5X0.8X50-MM)	
	3	1	**3D-2992**	2	SEAL	
	4	1	**6M-5062**	2	SEAL-O-RING	
	5	1	**2D-6392**	4	SEAL-O-RING	
					AVAILABLE REPAIR KIT(S):	
J			**106-3108**	1	KIT-SEAL	

J-KIT MARKED J SERVICES PART(S) MARKED J
M-METRIC PART

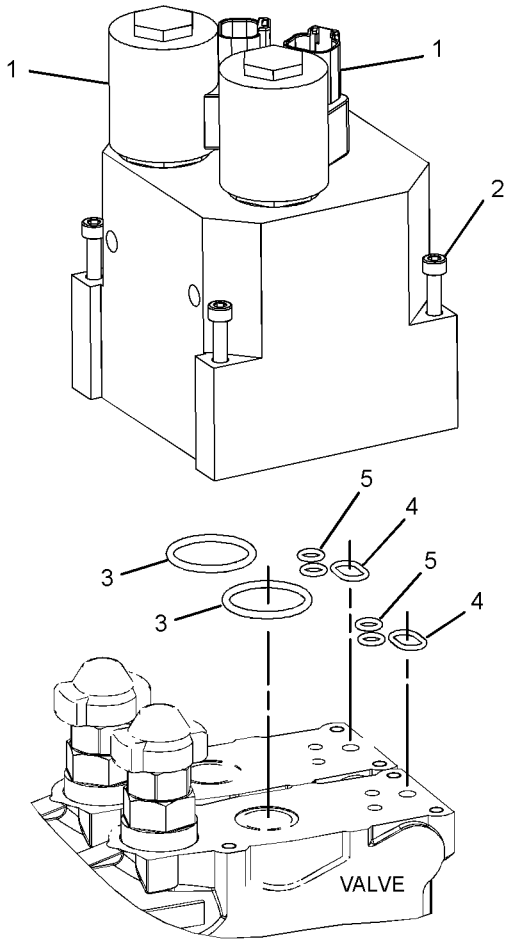

GRAPHIC #1 **<END>** g01412382

HYDRAULIC SYSTEM

341-4726 MANIFOLD & SOLENOID GP-CONTROL–INLET

S/N: RBA1-UP
PART OF 271-0527 VALVE GP-BANK 7, 271-0528 VALVE GP-BANK 8
AN ATTACHMENT

SMCS-5264, 5479 **i03887460**

NOTE	REF NO	GRAPHIC REF	PART NUMBER	QTY	PART NAME 1 2 3 4 5 6 (PRODUCT LEVEL)	SEE PAGE
	1	1	**257-0464**	1	VALVE GP-PRESSURE REDUCING (INLET)	
	1A	1	**257-0465**	1	CAP-PROTECTION	
		1	**236-5753**	1	KIT-SEAL	
					(INCLUDES SEAL-O-RINGS & BACKUP RINGS)	
	2	1	**341-4727**	1	KIT-SHUTTLE VALVE (INLET)	
	3	1	**227-1189**	1	SCREEN (PILOT)	
	4	1	**9S-8004**	2	PLUG-O-RING	
	5	1	**3J-1907**	2	SEAL-O-RING	
J	6	1	**200-6210**	1	VALVE GP-SOLENOID (INLET)	
		1	**212-0061**	1	FLANGE	
M	7	1	**6V-8202**	1	BOLT-SOCKET HEAD (M8X1.25X16-MM)	
					AVAILABLE REPAIR KIT(S):	
J			**200-2371**	1	KIT-SEAL (SOLENOID VALVE)	
					(INCLUDES SEAL-O-RINGS)	

J-KIT MARKED J SERVICES PARTS MARKED J
M-METRIC PART

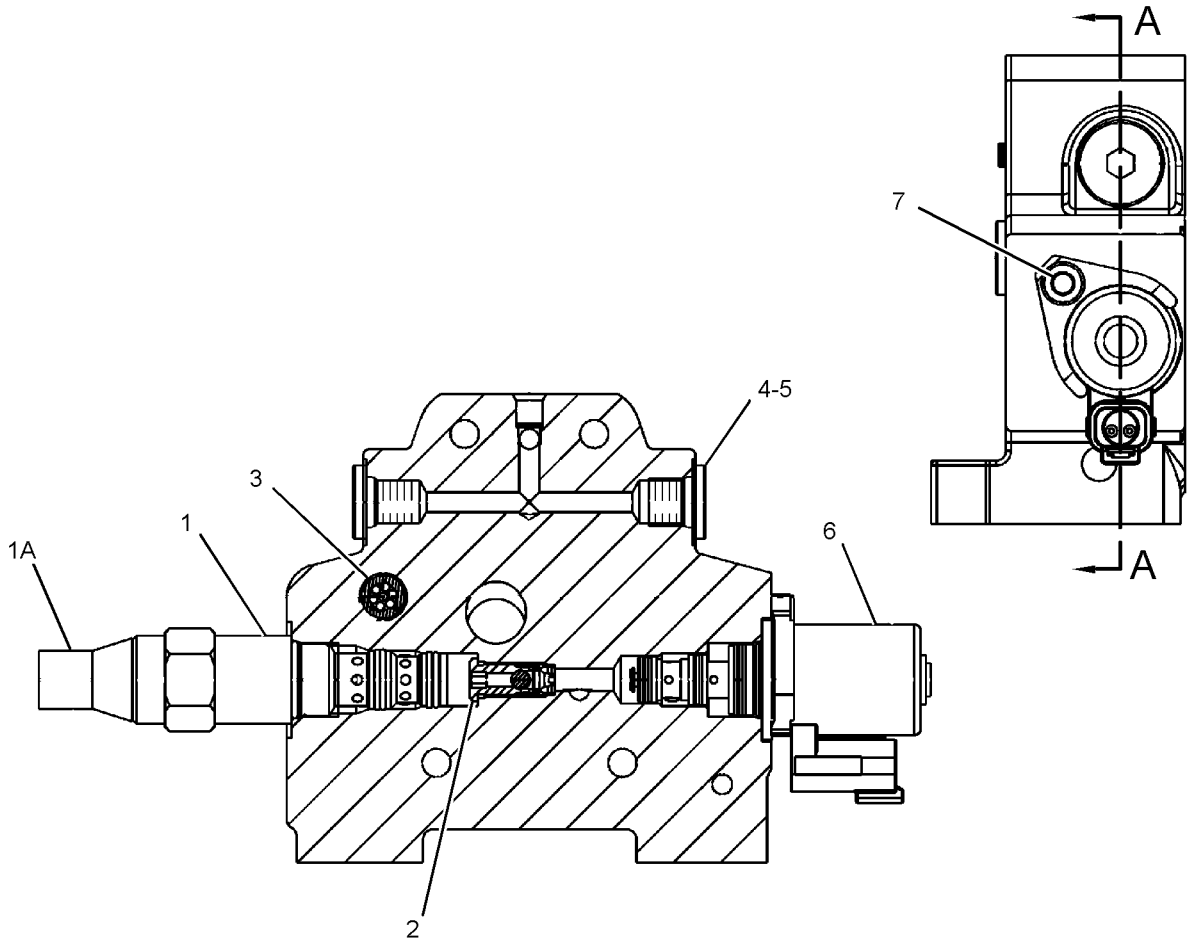

SECTION A-A

GRAPHIC #1 **<END>** g02106893

271-0539 MANIFOLD GP-CONTROL–OUTLET

S/N: RBA1-UP
PART OF 271-0527 VALVE GP-BANK 7, 271-0528 VALVE GP-BANK 8
AN ATTACHMENT

SMCS-5264 **i04124535**

NOTE	REF NO	GRAPHIC REF	PART NUMBER	QTY	PART NAME 1 2 3 4 5 6 (PRODUCT LEVEL)	SEE PAGE
	1	1	**330-3979**	1	VALVE GP-RELIEF (LOAD SENSING SIGNAL)	
	2	1	**227-1185**	1	VALVE GP-FLOW CONTROL (AUXILIARY, INLET)	
		1	**227-1198**	1	KIT-SEAL (FLOW CONTROL VALVE)	
					(INCLUDES SEAL-O-RINGS & RING-BACKUP)	
	3	1	**292-8989**	1	VALVE AS-RELIEF (FLUSHING)	
		1	**099-8232**	1	SEAL-O-RING	
	4	1	**9S-8004**	1	PLUG-O-RING	
	5	1	**3J-1907**	1	SEAL-O-RING	
	6	1	**227-1199**	1	KIT-SEAL	
					(INCLUDES SEAL-O-RINGS & RING-BACKUP)	
	7	1	**227-1197**	1	FILTER-OIL (FLOW REGULATOR)	
	8	1	**227-1198**	1	KIT-SEAL (FLOW CONTROL VALVE)	
					(INCLUDES SEAL-O-RINGS & RING-BACKUP)	
	9	1	**9S-8005**	1	PLUG-O-RING	
	10	1	**3K-0360**	1	SEAL-O-RING	
	11	1	**257-0468**	1	CAP-PROTECTION	

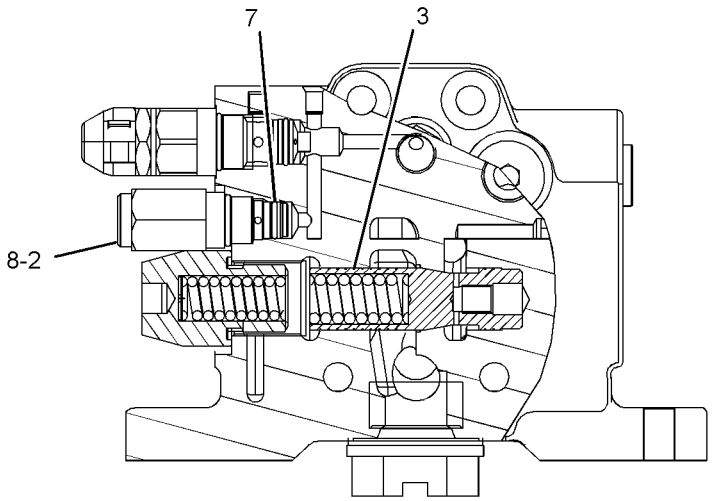

VIEW OF AREA A
(EXPLODED)

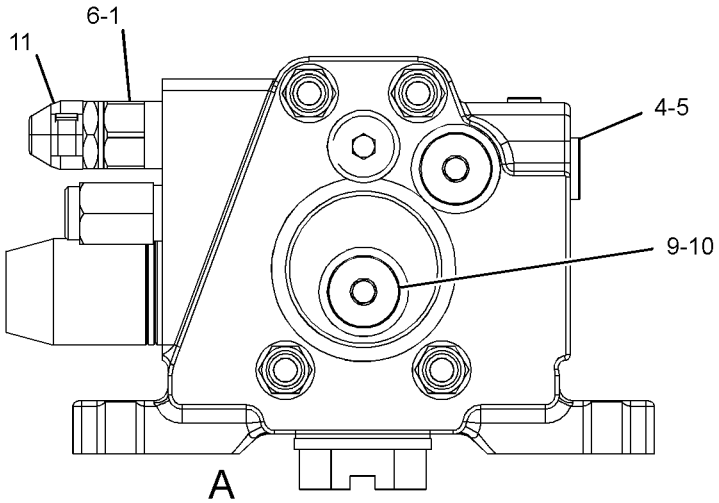

GRAPHIC #1 **<END>** g01418859

343-7137 MANIFOLD GP-CONTROL–INLET

S/N: RBA1-UP
PART OF 271-0512 VALVE GP-BANK 2, 271-0513 VALVE GP-BANK 3
AN ATTACHMENT

SMCS-5264 **i04125576**

NOTE	REF NO	GRAPHIC REF	PART NUMBER	QTY	PART NAME 1 2 3 4 5 6 (PRODUCT LEVEL)	SEE PAGE
	1	1	**299-9068**	1	KIT-VALVE (FLOW REGULATOR)	
					(INCLUDES SEAL-O-RING)	
	2	1	**341-4727**	1	KIT-SHUTTLE VALVE	
	3	1	**330-3979**	1	VALVE GP-RELIEF (INLET MANIFOLD)	
	4	1	**257-7721**	1	VALVE GP-CHECK	
		1	**8C-3076**	1	SEAL-O-RING	
	5	1	**227-1199**	1	KIT-SEAL	
					(INCLUDES SEAL-O-RINGS & BACKUP RING)	
	6	1	**257-0468**	1	CAP-PROTECTION	

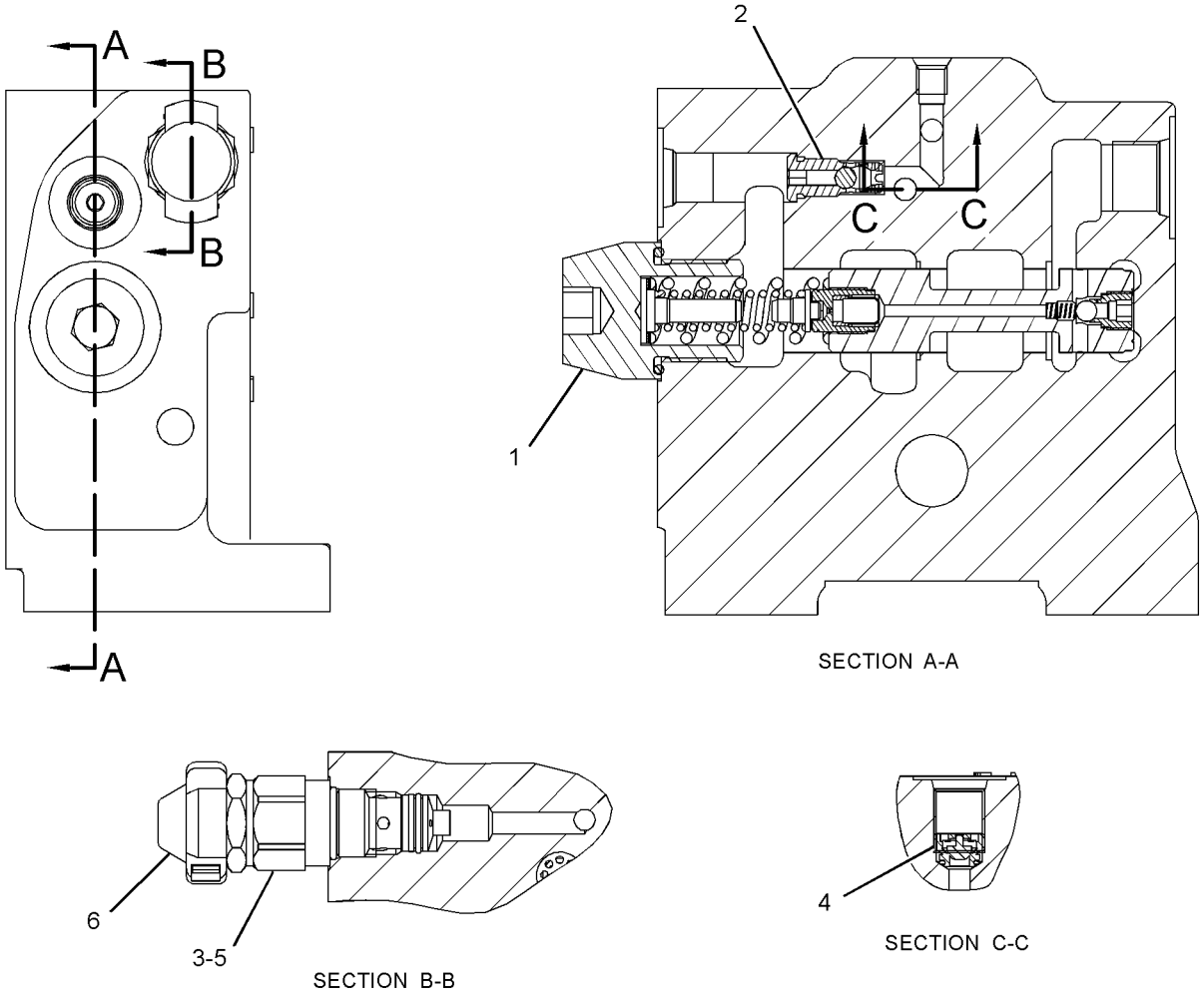

GRAPHIC #1 **<END>** g02124133

348-4573 MANIFOLD GP-CONTROL–INLET

S/N: RBA1-UP
PART OF 342-6662 VALVE GP-BANK 2, 342-6663 VALVE GP-BANK 3
AN ATTACHMENT

SMCS-5264 **i04125791**

NOTE	REF NO	GRAPHIC REF	PART NUMBER	QTY	PART NAME 1 2 3 4 5 6 (PRODUCT LEVEL)	SEE PAGE
	1	1	**348-4594**	1	VALVE GP-RELIEF (LOAD SENSOR)	
	1A	1	**192-7515**	1	SEAL-O-RING	
	2	1	**346-6759**	1	KIT-SPOOL	
					(INCLUDE SCREEN)	
	3	1	**9S-8001**	1	PLUG-O-RING	
	4	1	**4J-7533**	1	SEAL-O-RING	
	5	1	**6V-7970**	2	SEAL-O-RING	
	6	1	**7M-8485**	1	SEAL-O-RING	

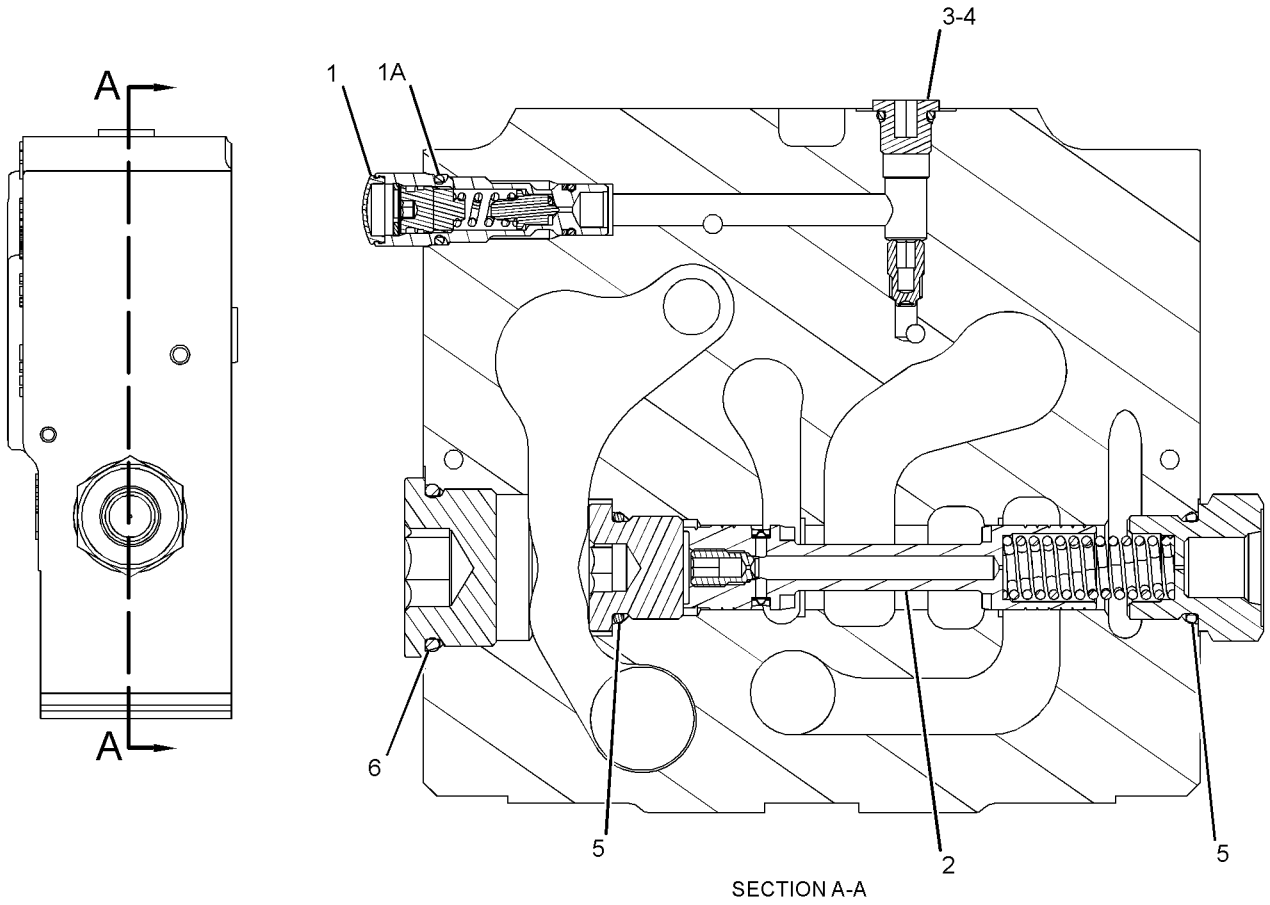

SECTION A-A

GRAPHIC #1 **<END>** g01959914

HYDRAULIC SYSTEM

348-4578 MANIFOLD GP-CONTROL–INLET

S/N: RBA1-UP
PART OF 342-6667 VALVE GP-BANK 7, 342-6668 VALVE GP-BANK 8
AN ATTACHMENT

SMCS-5264 **i04124170**

NOTE	REF NO	GRAPHIC REF	PART NUMBER	QTY	PART NAME 1 2 3 4 5 6 (PRODUCT LEVEL)	SEE PAGE
	1	1	**348-4590**	1	VALVE GP-RELIEF (DIRECT OPERATED)	
	1A	1	**192-7515**	1	SEAL-O-RING	
	2	1	**6V-5138**	1	SEAL-O-RING	

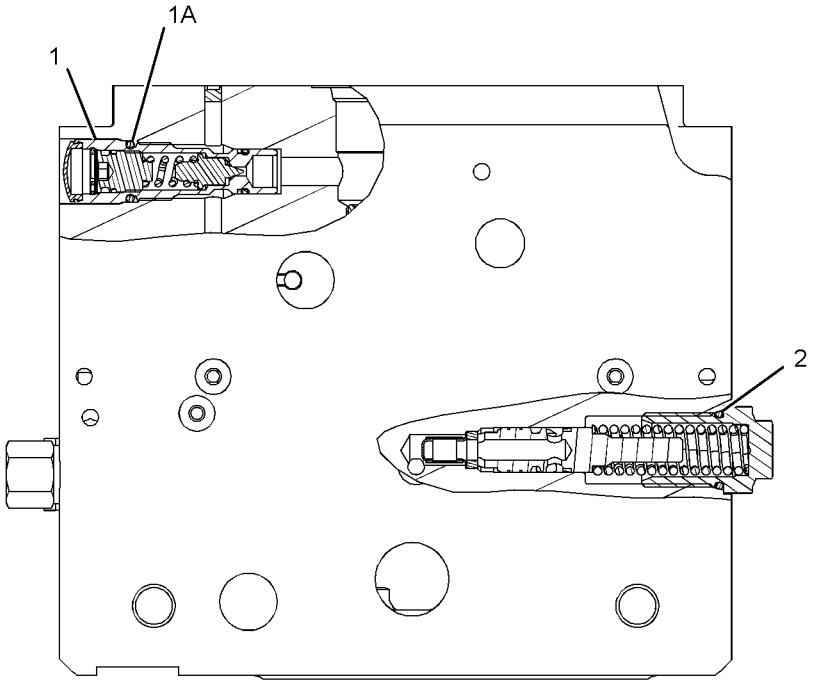

GRAPHIC #1 **<END>** g01958620

245-8780 MANIFOLD GP-RIDE CONTROL

S/N: RBA1-UP

PART OF 254-0122 LINES GP-RIDE CONTROL

SMCS-5264 **i04139608**

NOTE	REF NO	GRAPHIC REF	PART NUMBER	QTY	PART NAME 1 2 3 4 5 6 (PRODUCT LEVEL)	SEE PAGE
J	1	1	**249-3124**	1	VALVE GP-SOLENOID (12-VOLT) (RIDE CONTROL, SWITCH)	
L	2	1	**249-3125**	1	VALVE GP-SOLENOID (12-VOLT) (ACCUMULATOR)	
	3	1	**238-4628**	1	COIL AS (12-VOLT)	
					AVAILABLE REPAIR KIT(S):	
J			**141-0888**	1	KIT-SEAL (RIDE CONTROL, SWITCH)	
					(INCLUDES O-RING SEALS AND BACK-UP RING)	
L			**227-5509**	1	KIT-SEAL (ACCUMULATOR)	

J-KIT MARKED J SERVICES PART MARKED J
L-KIT MARKED L SERVICES PART MARKED L

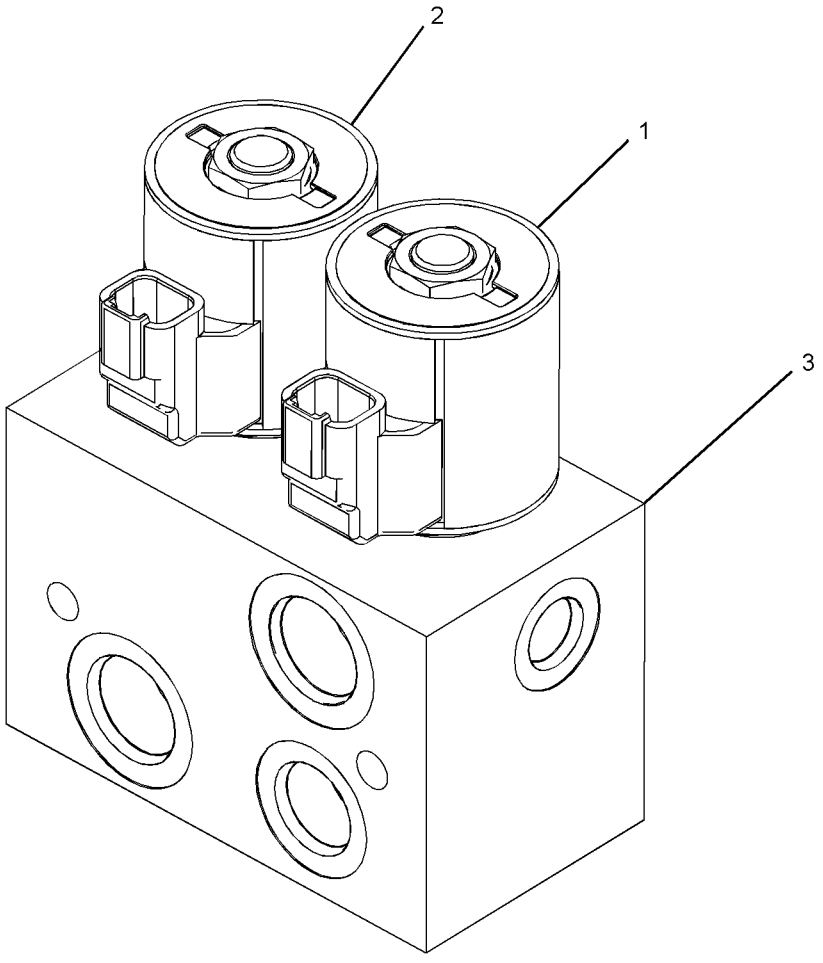

GRAPHIC #1 **<END>** g01646794

HYDRAULIC SYSTEM

254-0185 MOUNTING GP-BANK VALVE

S/N: RBA1-UP
PART OF 254-0153, 254-0154 CONTROL AR-BACKHOE
AN ATTACHMENT

SMCS-5051 **i04112463**

NOTE	REF NO	GRAPHIC REF	PART NUMBER	QTY	PART NAME 1 2 3 4 5 6 (PRODUCT LEVEL)	SEE PAGE
	1	1	**273-9161**	1	BRACKET AS	
	2	1	**8T-4121**	3	WASHER-HARD (11X21X2.5-MM THK)	
M	3	1	**8T-4182**	3	BOLT (M10X1.5X45-MM)	
M	4	1	**8T-4184**	3	BOLT (M12X1.75X45-MM)	
	5	1	**8T-4223**	3	WASHER-HARD (13.5X25.5X3-MM THK)	

M-METRIC PART

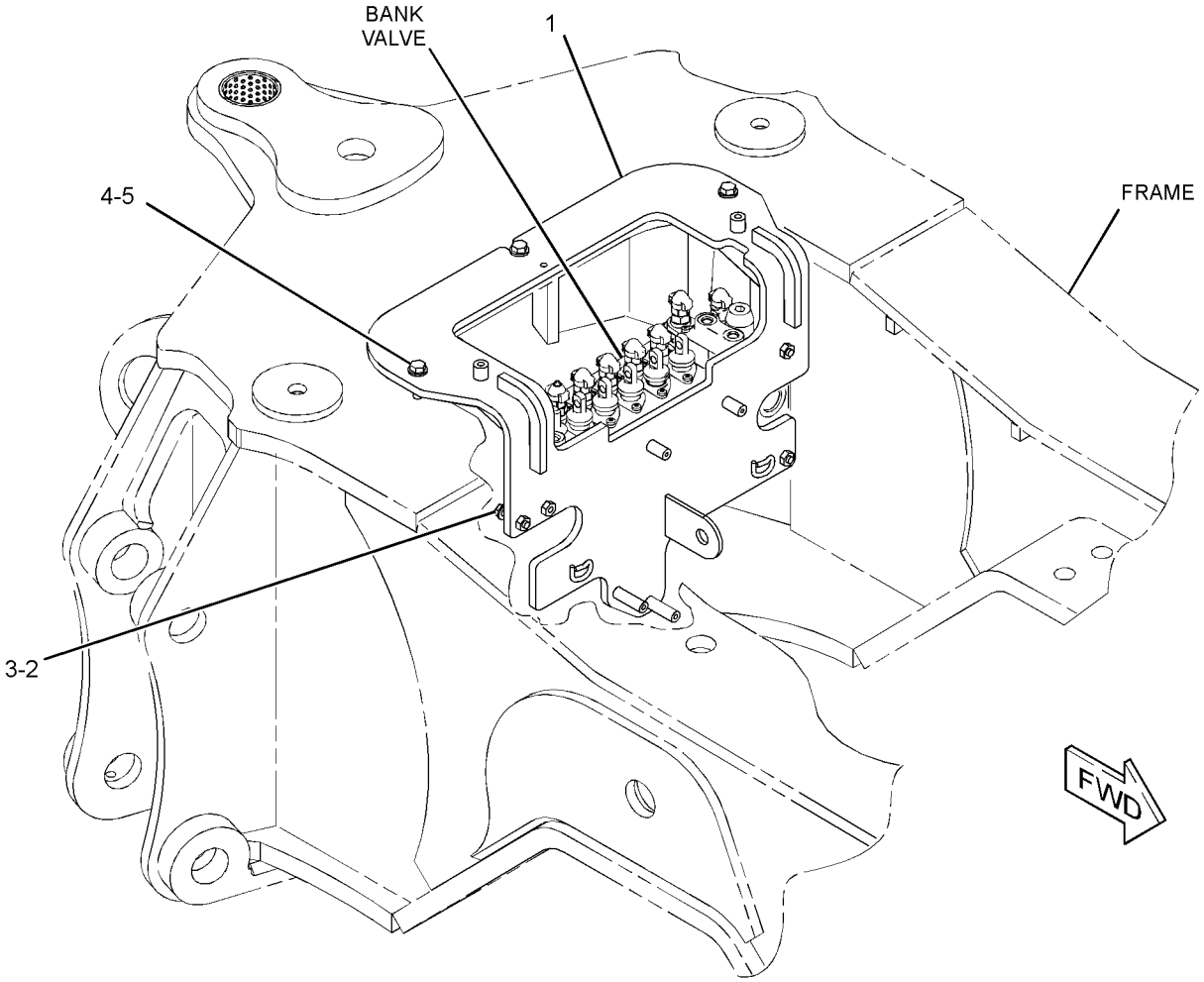

GRAPHIC #1 **<END>** g01413367

345-3165 MOUNTING GP-BANK VALVE

S/N: RBA1-UP

PART OF 254-0156, 254-0157, 254-0159, 254-0160 CONTROL AR-BACKHOE AN ATTACHMENT

SMCS-5051 **i04111974**

NOTE	REF NO	GRAPHIC REF	PART NUMBER	QTY	PART NAME 1 2 3 4 5 6 (PRODUCT LEVEL)	SEE PAGE
	1	1	**345-1647**	1	BRACKET AS	
	2	1	**5P-1076**	3	WASHER-HARD (13.5X30X4-MM THK)	
M	3	1	**8T-4139**	3	BOLT (M12X1.75X30-MM)	
M	4	1	**8T-4184**	3	BOLT (M12X1.75X45-MM)	
	5	1	**8T-7971**	3	WASHER-HARD (13.5X25.5X5-MM THK)	

M-METRIC PART

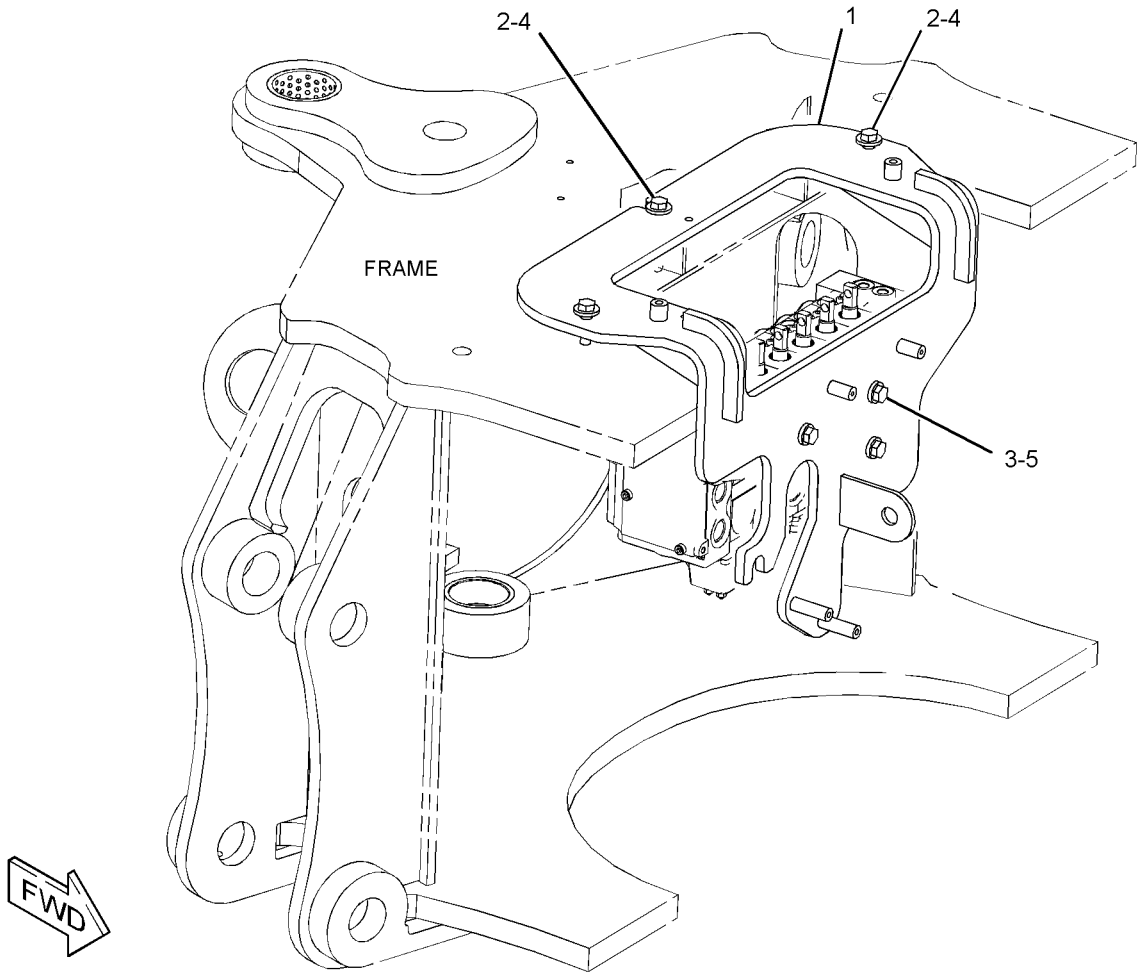

GRAPHIC #1 **<END>** g01958324

HYDRAULIC SYSTEM

280-1465 MOUNTING GP-LINES

S/N: RBA1-UP

PART OF 254-0180 BACKHOE AR-EXTENDABLE STICK, 254-0175 BACKHOE AR-STANDARD STICK

AN ATTACHMENT

SMCS-5057 **i04141030**

NOTE	REF NO	GRAPHIC REF	PART NUMBER	QTY	PART NAME 1 2 3 4 5 6 (PRODUCT LEVEL)	SEE PAGE
	1	1	**292-2403**	2	BLOCK	
	2	1	**292-2404**	2	BLOCK	
	3	1	**292-2405**	2	BLOCK	
	4	1	**292-2406**	2	PLATE	
	5	1	**8T-4121**	4	WASHER-HARD (11X21X2.5-MM THK)	
M	6	1	**8T-4136**	4	BOLT (M10X1.5X25-MM)	

M-METRIC PART

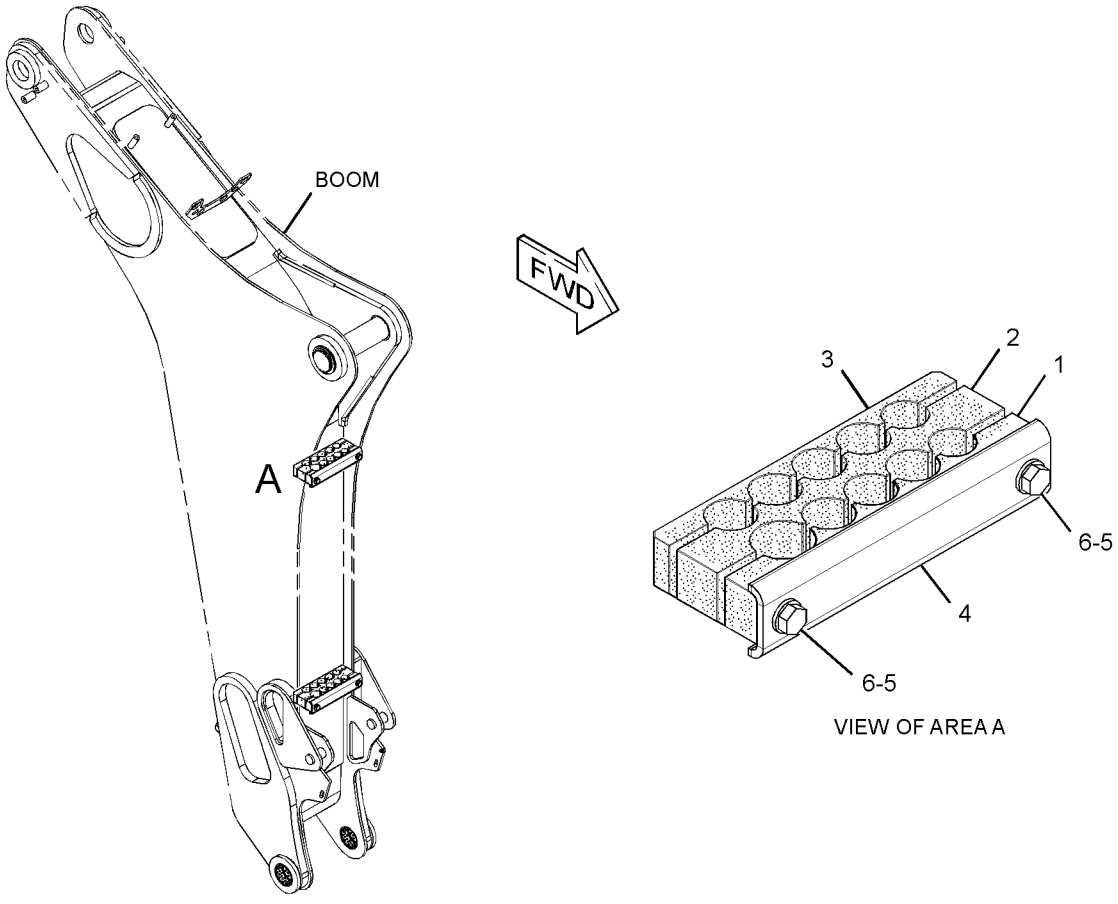

GRAPHIC #1 **<END>** g01356030

254-0163 MOUNTING GP-PUMP

S/N: RBA1-UP

PART OF 254-0170 HYDRAULIC AR

SMCS-5073 **i04128949**

NOTE	REF NO	GRAPHIC REF	PART NUMBER	QTY	PART NAME 1 2 3 4 5 6 (PRODUCT LEVEL)	SEE PAGE
	1	1	**9Y-9380**	1	GASKET	
M	2	1	**311-0501**	5	BOLT (M8X1.25X25-MM)	
	3	1	**8T-4224**	6	WASHER-HARD (8.8X16X2-MM THK)	
M	4	1	**8T-6869**	1	BOLT (M8X1.25X60-MM)	

M-METRIC PART

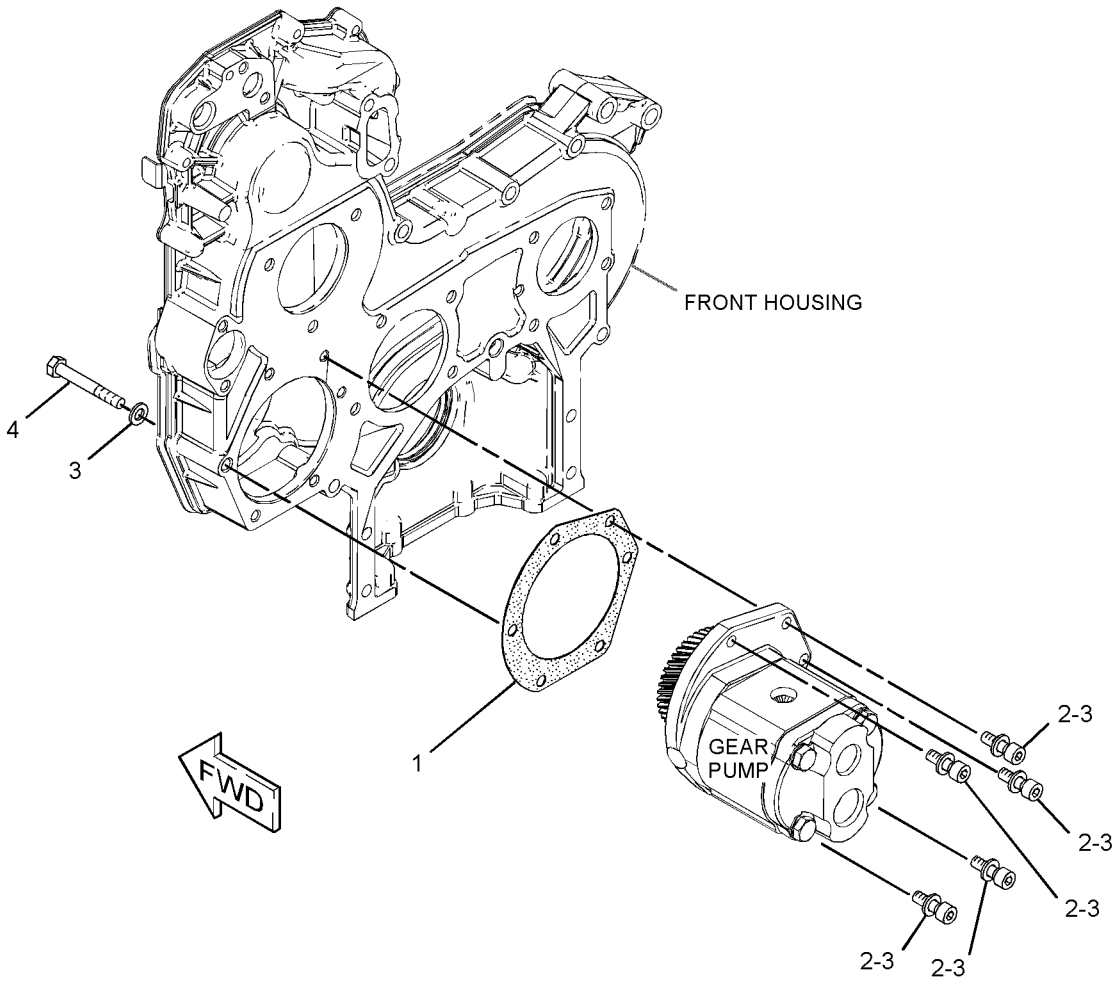

GRAPHIC #1 **<END>** g01415976

280-7873 PUMP GP-GEAR–SECONDARY

S/N: RBA1-UP

PART OF 254-0170 HYDRAULIC AR

SMCS-5073 **i04129010**

NOTE	REF NO	GRAPHIC REF	PART NUMBER	QTY	PART NAME 1 2 3 4 5 6 (PRODUCT LEVEL)	SEE PAGE
J	1	1	**204-4148**	1	SEAL-SHAFT	
J	2	1	**131-0715**	1	SEAL-SHAFT	
	3	1	**220-2657**	1	FLANGE	
	4	1	**099-3095**	4	DOWEL	
J	5	1	**4W-7356**	2	SEAL-O-RING	
	6	1	**6E-2943**	1	PLUG	
	7	1	**130-7758**	1	COVER-END	
	8	1	**205-4587**	1	GEAR (33-TEETH)	
	9	1	**5P-8244**	1	WASHER-HARD (12X22.5X2.5-MM THK)	
M	10	1	**160-8499**	1	NUT (M12X1.5-THD)	
M	11	1	**176-0798**	4	BOLT (M10X1.5X94-MM)	
					PARTS SHOWN IN GRAPHIC(S) WITHOUT A REFERENCE NUMBER ARE NOT SERVICED SEPARATELY	
					AVAILABLE REPAIR KIT(S):	
J			**201-5242**	1	KIT-SEAL (GEAR PUMP) (GEAR PUMP)	
					(INCLUDES SEALS & RINGS)	

J-KIT MARKED J SERVICES PARTS MARKED J
M-METRIC PART

280-7873 PUMP GP-GEAR *(contd.)* **i04129010**

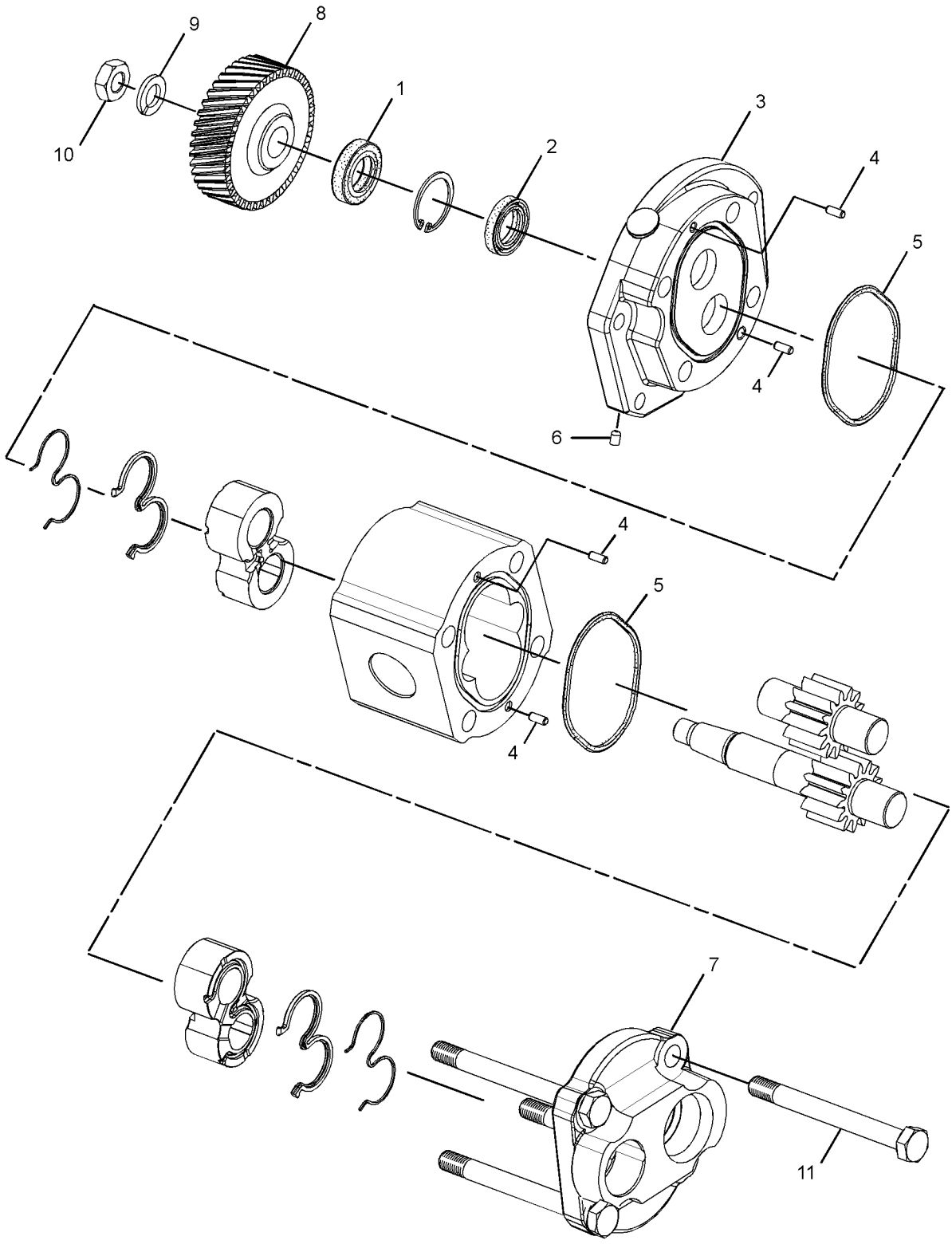

GRAPHIC #1 **<END>** g01341341

HYDRAULIC SYSTEM

269-9336 PUMP GP-PISTON—PRIMARY

S/N: RBA1-UP

PART OF 254-0170 HYDRAULIC AR

SMCS-5070 **i04128969**

NOTE	REF NO	GRAPHIC REF	PART NUMBER	QTY	PART NAME 1 2 3 4 5 6 (PRODUCT LEVEL)	SEE PAGE
	1	1	**280-7869**	1	VALVE GP-PUMP CONTROL (PRESSURE, FLOW COMPENSATOR)	
		1	**6E-6528**	2	SEAL	
M		1	**8T-8442**	4	BOLT-SOCKET HEAD (M6X1X30-MM)	
		1	**033-6043**	2	SEAL-O-RING	
		1	**280-7870**	1	GASKET	
Y	2	1	**6E-4006**	1	ROTATING GP-PUMP	330
	3	1	**6E-4004**	2	SEAL-SHAFT	
	4	1	**180-6213**	1	RING-RETAINING	
	5	1	**162-1604**	1	SHAFT-DRIVE	
	6	1	**3B-5790**	1	CUP-BEARING	
	7	1	**6V-2323**	1	CONE-BEARING	
	8	1	**1P-6872**	1	CUP-BEARING	
	9	1	**109-1779**	1	CONE-BEARING	
	10	1	**6E-4003**	2	BEARING	
	11	1	**262-0347**	1	KIT-PUMP	
					(INCLUDES PISTONS, GUIDES & SPRING)	
	12	1	**173-0639**	1	SWASHPLATE AS	
	13	1	**033-6028**	1	SEAL-O-RING	
	14	1	**153-4906**	1	SEAL-O-RING	
	15	1	**9S-8004**	1	PLUG-O-RING	
	16	1	**2M-9780**	1	SEAL-O-RING	
	17	1	**3E-6770**	1	SEAL-O-RING	
	18	1	**3E-6769**	4	SEAL-O-RING	
J	19	1	**263-5516**	1	VALVE GP-SOLENOID (LOAD SENSING PRESSURE)	
		1	**217-3875**	1	SEAL-O-RING	
		1	**247-7054**	1	COLLAR-LOCKING	
		1	**282-6944**	1	COIL AS	
	21	1	**280-7868**	1	TUBE AS	
		1	**033-5853**	2	SEAL-O-RING	
		1	**296-6720**	2	ADAPTER AS	
	22	1	**280-7872**	1	TUBE AS	
		1	**033-5853**	2	SEAL-O-RING	
		1	**296-6720**	2	ADAPTER AS	
	23	1	**173-0641**	1	PLUG-FILTER	
Y	24	1	**296-6723**	1	VALVE GP-PUMP CONTROL (POWER COMPENSATOR)	375
					AVAILABLE REPAIR KIT(S):	
J			**251-2429**	1	KIT-SEAL (SOLENOID VALVE)	
					(INCLUDES SEAL-O-RINGS)	

J-KIT MARKED J SREVICES PARTS MARKED J
M-METRIC PART
Y-SEPARATE ILLUSTRATION

269-9336 PUMP GP-PISTON *(contd.)* **i04128969**

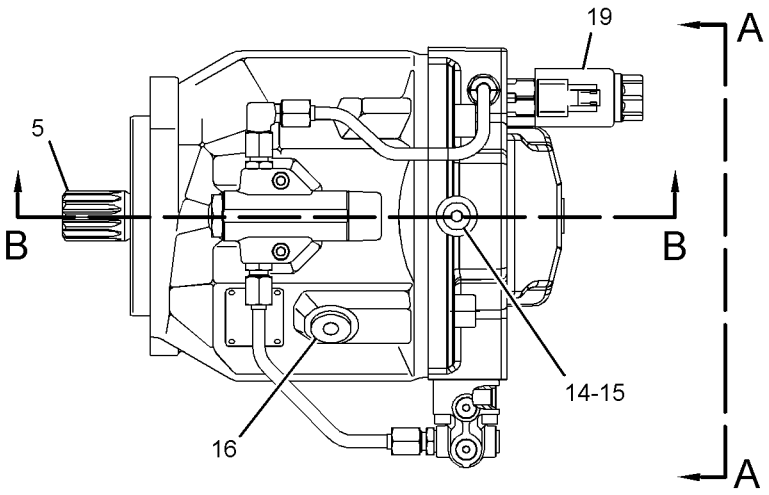

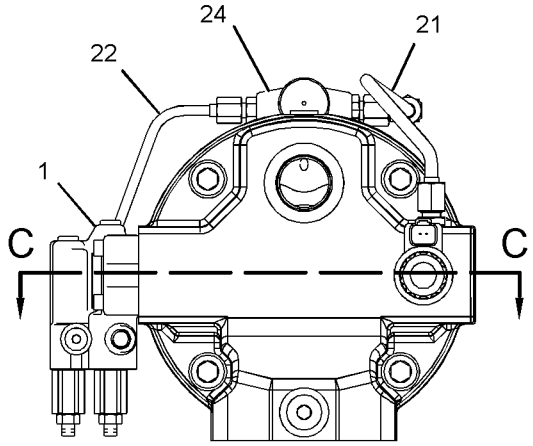

VIEW A-A

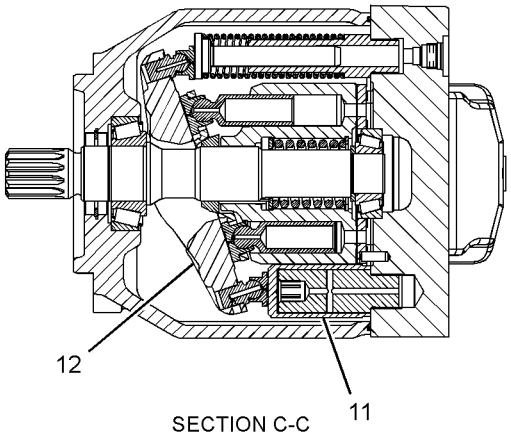

SECTION C-C

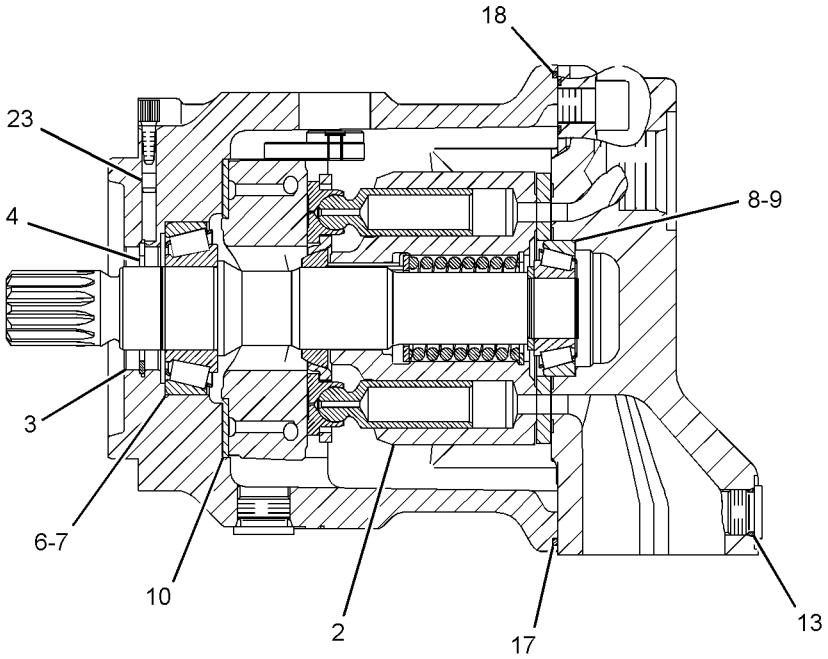

SECTION B-B

GRAPHIC #1 **<END>** g01514213

6E-4006 ROTATING GP-PUMP

S/N: RBA1-UP

PART OF 269-9336 PUMP GP-PISTON

SMCS-5070 **i02780608**

NOTE	REF NO	GRAPHIC REF	PART NUMBER	QTY	PART NAME 1 2 3 4 5 6 (PRODUCT LEVEL)	SEE PAGE
	1	1	**6E-6154**	1	PLATE-RETRACTION	
	2	1	**6E-6155**	1	BEARING	
	3	1	**6E-6157**	3	PIN	
	4	1	**6E-6151**	9	PISTON AS	
	5	1	**196-0226**	1	BARREL	
	6	1	**120-5724**	1	PLATE-VALVE	
	7	1	**7X-2908**	1	RING-RETAINING	
	8	1	**6E-4009**	1	SPRING	
	9	1	**6E-3341**	2	SEAT-SPRING	

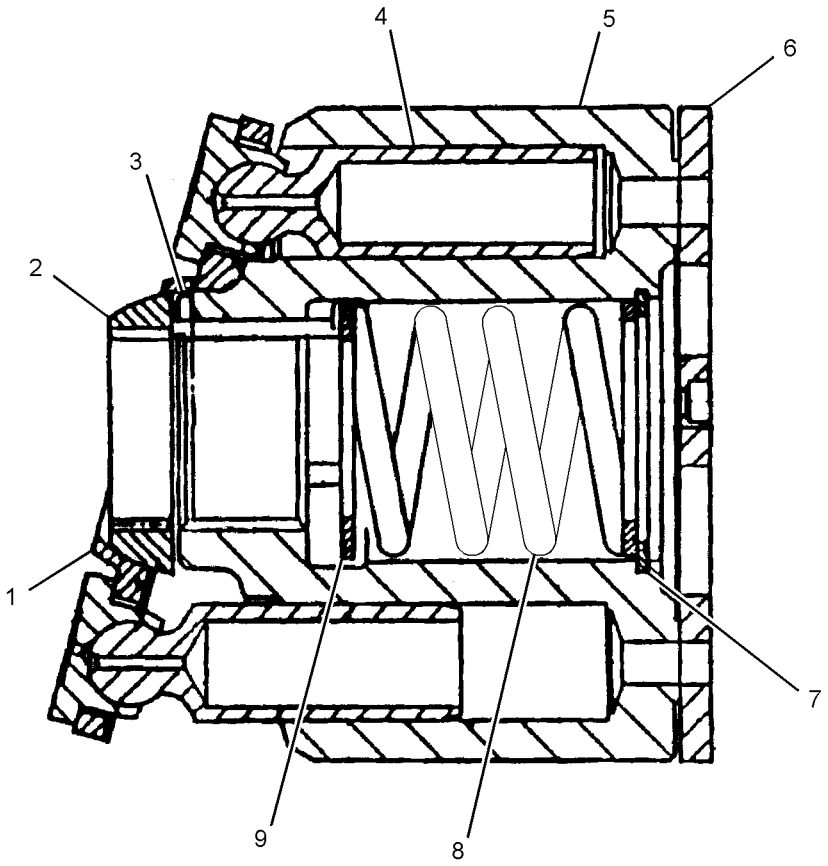

GRAPHIC #1 **<END>** g01389663

128-5596 SHAFT GP-PUMP DRIVE

S/N: RBA1-UP

PART OF 112-1826 DRIVE & MTG GP-PUMP

SMCS-3108 **i00535584**

NOTE	REF NO	GRAPHIC REF	PART NUMBER	QTY	PART NAME 1 2 3 4 5 6 (PRODUCT LEVEL)	SEE PAGE
	1	1	**130-8150**	1	RING-RETAINING	

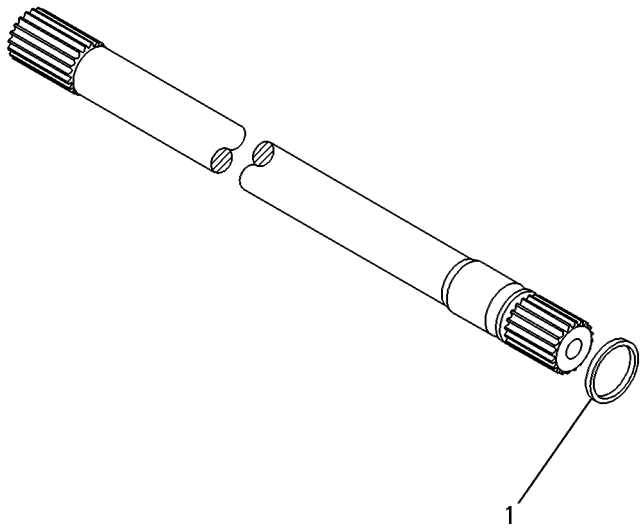

GRAPHIC #1 **<END>** g00131851

HYDRAULIC SYSTEM

254-0169 TANK & MTG GP-HYDRAULIC

S/N: RBA1-UP

PART OF 254-0170 HYDRAULIC AR

SMCS-5056 **i04128951**

NOTE	REF NO	GRAPHIC REF	PART NUMBER	QTY	PART NAME 1 2 3 4 5 6 (PRODUCT LEVEL)	SEE PAGE
	1	1	**1P-4278**	3	CLAMP-HOSE	
	2	1	**8T-0328**	6	WASHER-HARD (5.5X10X1-MM THK)	
E	3	1	**5P-1442**		HOSE (124-CM)	
E	3A	1	**5P-1442**		HOSE (9-CM)	
	4	1	**8T-4223**	4	WASHER-HARD (13.5X25.5X3-MM THK)	
	5	1	**9M-0164**	1	CLAMP-HOSE	
	6	1	**9R-9925**	1	FILTER ELEMENT-BREATHER (HYDRAULIC TANK)	
	7	1	**127-4471**	1	CLAMP-HOSE	
	8	1	**132-3056**	1	SEAL-O-RING	
	9	1	**222-4067**	6	BOLT-SOCKET HEAD (M5X0.8X14-MM)	
	10	1	**234-8815**	1	TUBE AS	
	11	1	**235-5843**	1	DIFFUSER AS	
	12	1	**237-3797**	1	CAP-FILL (HYDRAULIC OIL)	
	13	1	*272-0008*	1	TANK GP-HYDRAULIC	
		1	**267-8390**	1	GAUGE GP-SIGHT (HYDRAULIC TANK)	
		1	**236-5189**	2	SEAL-O-RING	
		1	**8F-3469**	2	SEAL-O-RING	
	14	1	**272-8123**	1	BRACKET AS	
	15	1	**274-5726**	1	HOSE	
	16	1	*217-8185*	1	ELBOW AS	
		1	**3K-0360**	1	SEAL-O-RING	
		1	**9X-3982**	1	ELBOW	
	17	1	**6D-3479**	1	CLIP	
	18	1	**8T-4121**	6	WASHER-HARD (11X21X2.5-MM THK)	
M	19	1	**8T-4137**	6	BOLT (M10X1.5X20-MM)	
M	20	1	**8T-4139**	4	BOLT (M12X1.75X30-MM)	

E-ORDER BY THE CENTIMETER
M-METRIC PART

254-0169 **TANK & MTG GP-HYDRAULIC** *(contd.)* **i04128951**

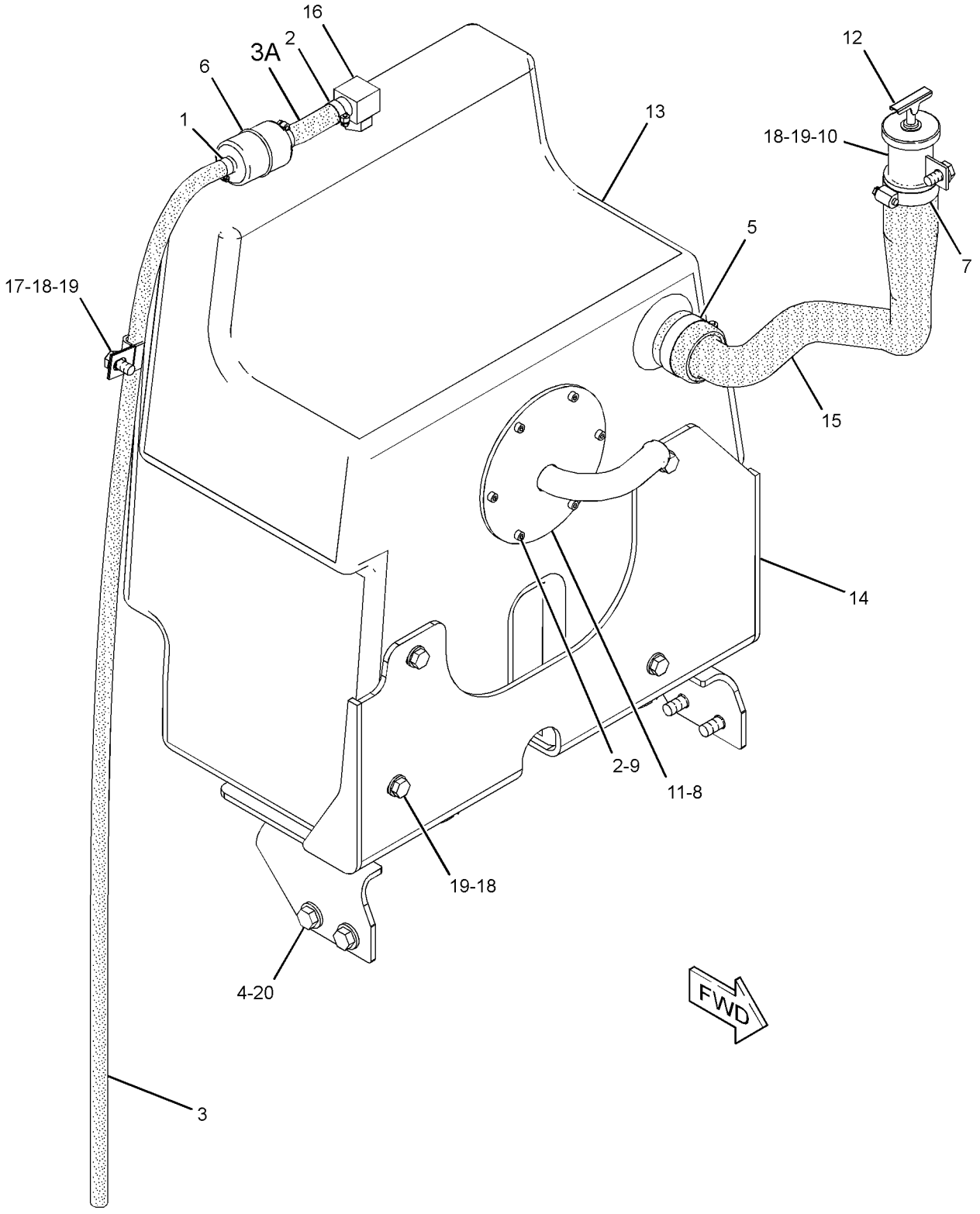

GRAPHIC #1 **<END>** g01791053

HYDRAULIC SYSTEM

278-7758 VALVE & LINES GP-PILOT—BACKHOE, JOYSTICK

S/N: RBA1-UP

PART OF 254-0153, 254-0154 CONTROL AR-BACKHOE

AN ATTACHMENT

SMCS-5057, 5059 **i04112475**

NOTE	REF NO	GRAPHIC REF	PART NUMBER	QTY	PART NAME 1 2 3 4 5 6 (PRODUCT LEVEL)	SEE PAGE
	1	1	**4I-9521**	2	BAND-MARKER (RED, L1)	
	2	1	**4I-9522**	2	BAND-MARKER (YELLOW, L2)	
	3	1	**4I-9523**	2	BAND-MARKER (BLUE, L3)	
	4	1	**4I-9524**	2	BAND-MARKER (BROWN, L4)	
	5	1	**4I-9525**	2	BAND-MARKER (ORANGE, R1)	
	6	1	**4I-9526**	2	BAND-MARKER (WHITE, R2)	
	7	1	**4I-9527**	2	BAND-MARKER (GREEN, R3)	
	8	1	**4I-9528**	2	BAND-MARKER (PURPLE, R4)	
	9	1	**7K-1181**	6	STRAP-CABLE	
	10	1	**267-2758**	2	VALVE GP-PILOT (CONTROL VALVE)	
I	11	1	**268-0103**	1	HOSE AS	
I	12	1	**268-0108**	1	HOSE AS	
I	13	1	**278-7770**	1	HOSE AS	
I	14	1	**292-0572**	1	HOSE AS	
I	15	1	**292-0573**	1	HOSE AS	
I	16	1	**292-0574**	1	HOSE AS	
I	17	1	**294-4625**	1	HOSE AS	
	18	1	*148-8325*	16	CONNECTOR AS	
					(EACH INCLUDES)	
		1	**6V-8641**	1	CONNECTOR	
		1	**3J-1907**	1	SEAL-O-RING	
		1	**4J-5477**	1	SEAL-O-RING	
I	19	1	**268-0109**	1	HOSE AS	
G	20	1	**160-2248**		SLEEVE-ABRASION (18.5-IN)	
G	20A	1	**160-2248**		SLEEVE-ABRASION (16.5-IN)	

G-ORDER BY THE INCH
I-REFER TO HYDRAULIC INFORMATION SYSTEM

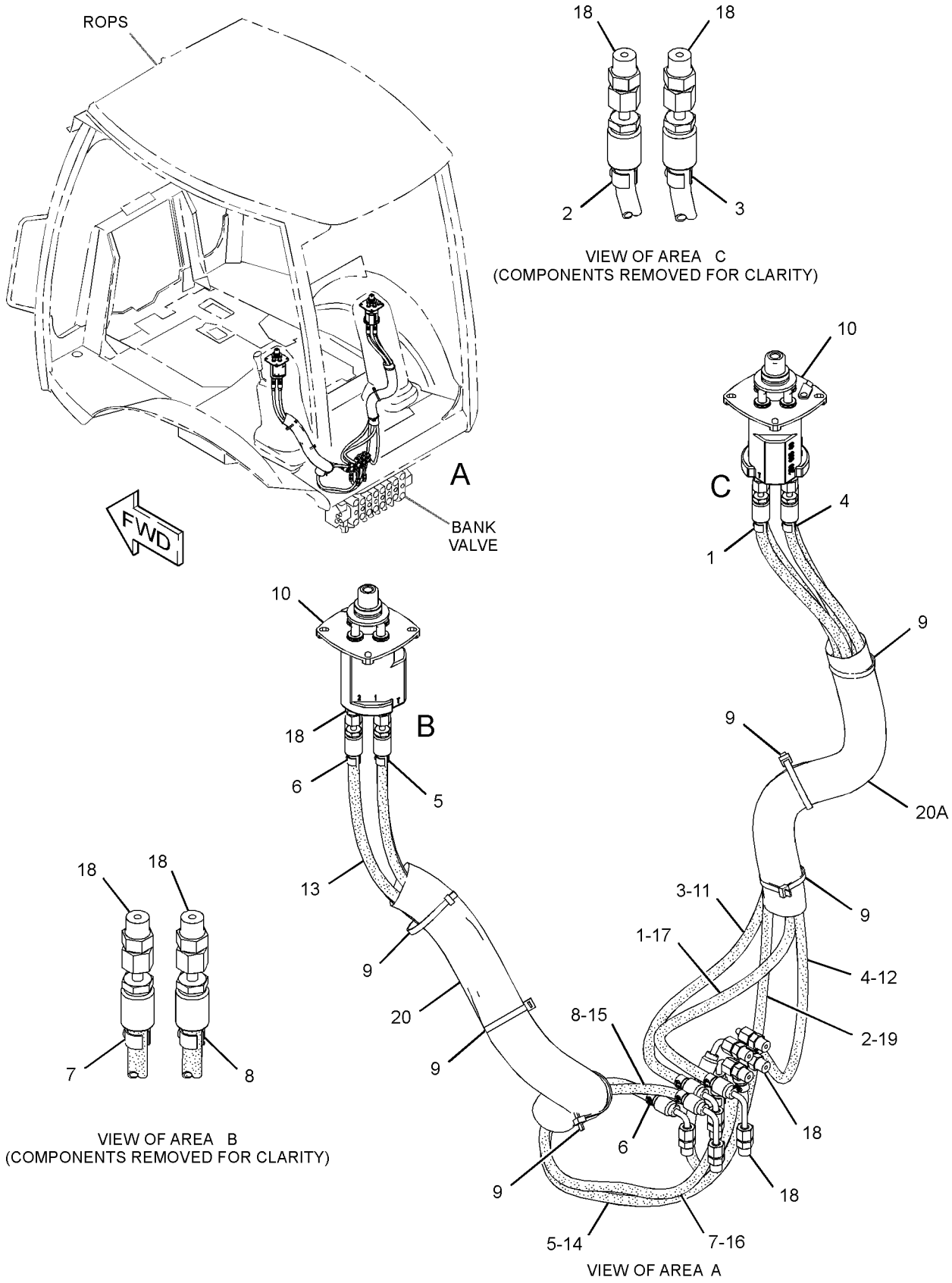

GRAPHIC #1 **<END>** g02350832

HYDRAULIC SYSTEM

254-0188 VALVE AR-BANK 2

S/N: RBA1-UP
CANNOT BE USED WITH MULTI-PURPOSE LOADER BUCKET
AN ATTACHMENT

SMCS-5051 **i04123989**

NOTE	PART NUMBER	QTY	PART NAME 1 2 3 4 5 6 (PRODUCT LEVEL)	SEE PAGE
Y	*206-1645*	1	CONTROL GP-HYDRAULIC HAND (LOADER)	422
Y	*245-8769*	1	FASTENER GP-VALVE (BANK)	250
Y	*254-0139*	1	KICKOUT & POSITIONER GP	254
Y	*289-3275*	1	LINES GP-STEERING	200
Y	**271-0512**	1	VALVE GP-BANK 2 (BUCKET CONTROL)	338
	251-5625	1	FILM-INSTRUCTION (BUCKET CONTROL)	
Y-SEPARATE ILLUSTRATION				

<END>

346-1232 VALVE AR-BANK 2

S/N: RBA1-UP
CANNOT BE USED WITH PILOT ACTUATED BACKHOE CONTROL ARRANGEMENT
AN ATTACHMENT

SMCS-5051 **i04125789**

NOTE	PART NUMBER	QTY	PART NAME 1 2 3 4 5 6 (PRODUCT LEVEL)	SEE PAGE
Y	*206-1645*	1	CONTROL GP-HYDRAULIC HAND (LOADER)	422
Y	*245-8769*	1	FASTENER GP-VALVE (BANK)	250
Y	*346-0059*	1	KICKOUT & POSITIONER GP	256
Y	*345-3169*	1	LINES GP-STEERING	202
Y	**342-6662**	1	VALVE GP-BANK 2 (BUCKET CONTROL)	339
	251-5625	1	FILM-INSTRUCTION (BUCKET CONTROL)	
Y-SEPARATE ILLUSTRATION				

<END>

254-0189 VALVE AR-BANK 3

S/N: RBA1-UP
AN ATTACHMENT

SMCS-5051 **i04125749**

NOTE	PART NUMBER	QTY	PART NAME 1 2 3 4 5 6 (PRODUCT LEVEL)	SEE PAGE
Y	*209-3364*	1	CONTROL GP-HYDRAULIC HAND (LOADER)	424
Y	*245-8769*	1	FASTENER GP-VALVE (BANK)	250
Y	*254-0139*	1	KICKOUT & POSITIONER GP	254
Y	*254-0166*	1	LINES GP-MULTIPURPOSE BUCKET	284
Y	*289-3275*	1	LINES GP-STEERING	200
Y	**271-0513**	1	VALVE GP-BANK 3 (BUCKET CONTROL)	340
	251-5626	1	FILM-INSTRUCTION (BUCKET CONTROL)	
Y-SEPARATE ILLUSTRATION				

<END>

HYDRAULIC SYSTEM

346-1233 VALVE AR-BANK 3

S/N: RBA1-UP

CANNOT BE USED WITH PILOT ACTUATED BACKHOE CONTROL ARRANGEMENT

AN ATTACHMENT

SMCS-5051 **i04145849**

NOTE	PART NUMBER	QTY	PART NAME 1 2 3 4 5 6 (PRODUCT LEVEL)	SEE PAGE
Y	*209-3364*	1	CONTROL GP-HYDRAULIC HAND (LOADER)	424
Y	*245-8769*	1	FASTENER GP-VALVE (BANK)	250
Y	*346-0059*	1	KICKOUT & POSITIONER GP	256
Y	*254-0166*	1	LINES GP-MULTIPURPOSE BUCKET	284
Y	*345-3169*	1	LINES GP-STEERING	202
Y	**342-6663**	1	VALVE GP-BANK 3 (BUCKET CONTROL)	341
	251-5626	1	FILM-INSTRUCTION (BUCKET CONTROL)	

Y-SEPARATE ILLUSTRATION

<END>

HYDRAULIC SYSTEM

271-0512 VALVE GP-BANK 2–BUCKET CONTROL

S/N: RBA1-UP
PART OF 254-0188 VALVE AR-BANK 2
AN ATTACHMENT

SMCS-5051 **i04124013**

NOTE	REF NO	GRAPHIC REF	PART NUMBER	QTY	PART NAME 1 2 3 4 5 6 (PRODUCT LEVEL)	SEE PAGE
CY	1	1	**343-7137**	1	MANIFOLD GP-CONTROL (INLET)	318
Y	2	1	**271-0521**	1	VALVE GP-CONTROL (LIFT)	346
Y	3	1	**271-0522**	1	VALVE GP-CONTROL (TILT)	347
	4	1	**269-1079**	1	COVER GP (OUTLET)	
		1	**3J-1907**	2	SEAL-O-RING	
		1	**9S-8004**	2	PLUG-O-RING	
	5	1	**227-1202**	1	KIT-FASTENER	
					(INCLUDES LOCKNUTS & TIE RODS)	
	6	1	**4J-5309**	12	SEAL-O-RING	
	7	1	**6V-5326**	3	SEAL-O-RING	
	8	1	**6V-8978**	3	SEAL-O-RING	

C-CHANGE FROM PREVIOUS TYPE
Y-SEPARATE ILLUSTRATION

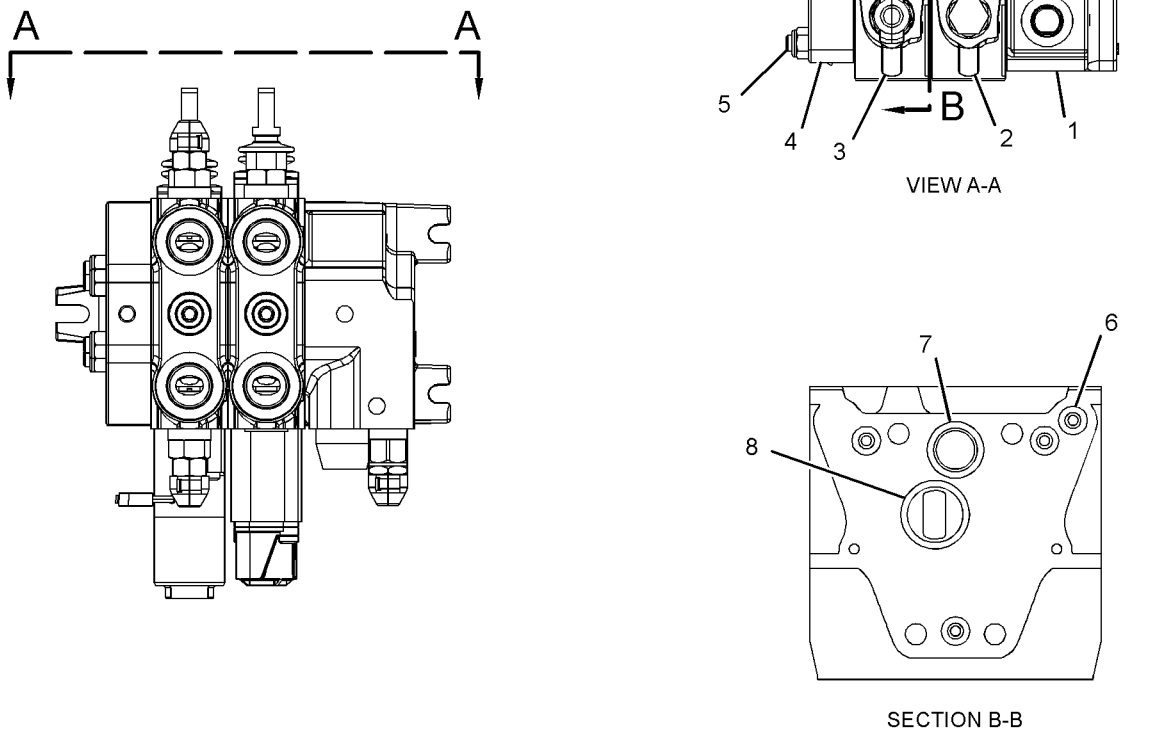

VIEW A-A

SECTION B-B

GRAPHIC #1 **<END>** g01411480

342-6662 VALVE GP-BANK 2–BUCKET CONTROL

S/N: RBA1-UP
PART OF 346-1232 VALVE AR-BANK 2
AN ATTACHMENT

SMCS-5051 **i04125790**

NOTE	REF NO	GRAPHIC REF	PART NUMBER	QTY	PART NAME 1 2 3 4 5 6 (PRODUCT LEVEL)	SEE PAGE
Y	1	1	**348-4573**	1	MANIFOLD GP-CONTROL (INLET)	319
Y	2	1	**348-4574**	1	VALVE GP-CONTROL (LIFT)	358
Y	3	1	**348-4575**	1	VALVE GP-CONTROL (TILT)	359
	4	1	**259-6747**	1	KIT-BRACKET (INLET MANIFOLD)	
					(INCLUDES BRACKET, BOLTS & WASHERS)	
	5	1	**259-6748**	1	KIT-BRACKET (VALVE)	
					(INCLUDES BRACKET, BOLTS & WASHERS)	
	6	1	**8T-4121**	2	WASHER-HARD (11X21X2.5-MM THK)	
M	7	1	**8T-4137**	2	BOLT (M10X1.5X20-MM)	
	8	1	**259-6749**	1	KIT-FASTENER	
					(INCLUDES RODS, WASHERS & NUTS)	
J	9	1	**192-7506**	10	SEAL-O-RING	
J	10	1	**192-7508**	4	SEAL-O-RING	
J	11	1	**133-4771**	4	SEAL-O-RING	
J	12	1	**349-6064**	2	KIT-SEAL (VALVES)	
					(ALSO INCLUDES ADDITIONAL SEALS)	

J-KIT MARKED J SERVICES PARTS MARKED J
M-METRIC PART
Y-SEPARATE ILLUSTRATION

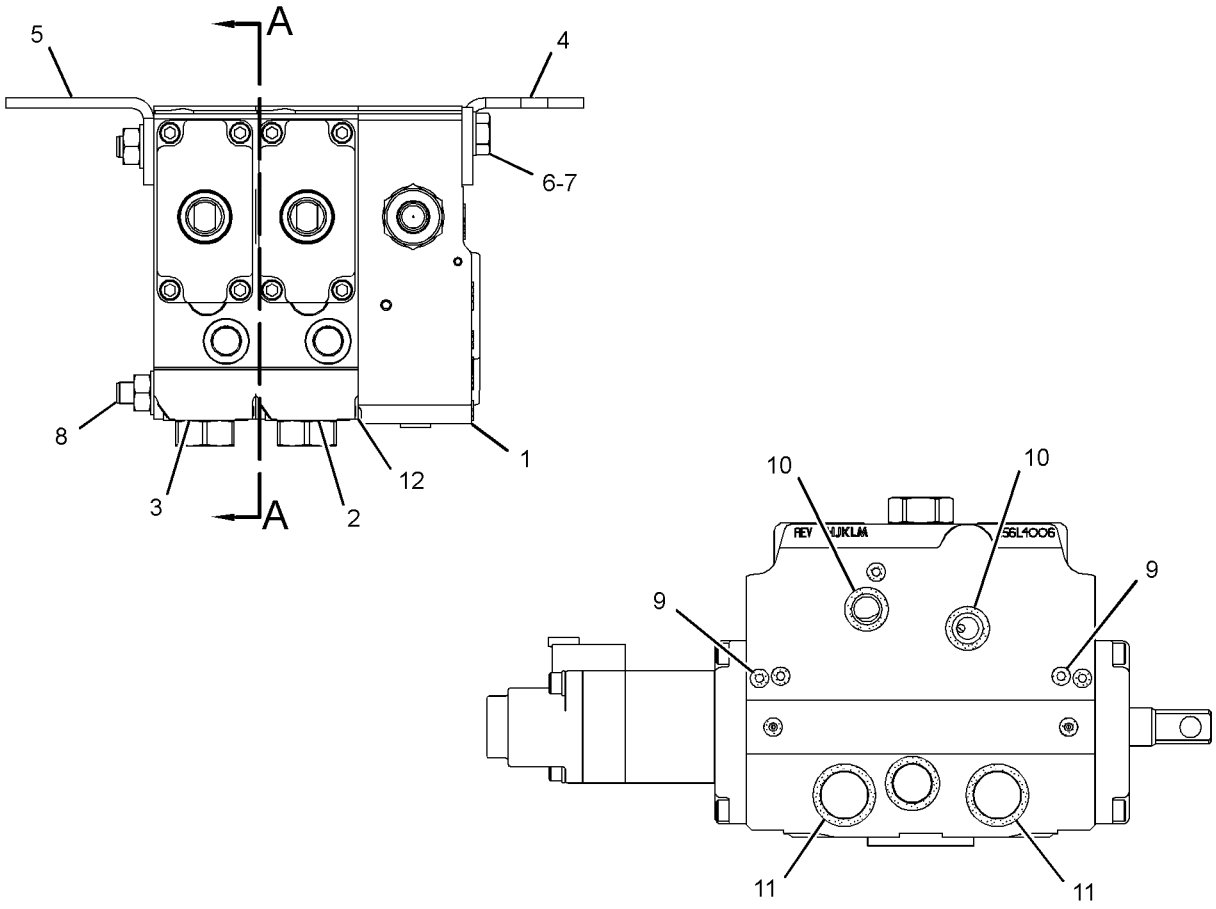

SECTION A-A

GRAPHIC #1 **<END>** g01958787

271-0513 VALVE GP-BANK 3—BUCKET CONTROL

S/N: RBA1-UP
PART OF 254-0189 VALVE AR-BANK 3
AN ATTACHMENT

SMCS-5051 **i04125754**

NOTE	REF NO	GRAPHIC REF	PART NUMBER	QTY	PART NAME 1 2 3 4 5 6 (PRODUCT LEVEL)	SEE PAGE
CY	1	1	**343-7137**	1	MANIFOLD GP-CONTROL (INLET)	318
Y	2	1	**271-0521**	1	VALVE GP-CONTROL (LIFT)	346
Y	3	1	**271-0522**	1	VALVE GP-CONTROL (TILT)	347
Y	4	1	**271-0523**	1	VALVE GP-CONTROL (AUXILIARY)	348
	5	1	**269-1079**	1	COVER GP (OUTLET)	
		1	**3J-1907**	2	SEAL-O-RING	
		1	**9S-8004**	2	PLUG-O-RING	
	6	1	**257-0453**	1	KIT-FASTENER	
					(INCLUDES LOCKNUTS & TIE RODS)	
	7	1	**4J-5309**	16	SEAL-O-RING	
	8	1	**6V-5326**	4	SEAL-O-RING	
	9	1	**6V-8978**	4	SEAL-O-RING	

C-CHANGE FROM PREVIOUS TYPE
Y-SEPARATE ILLUSTRATION

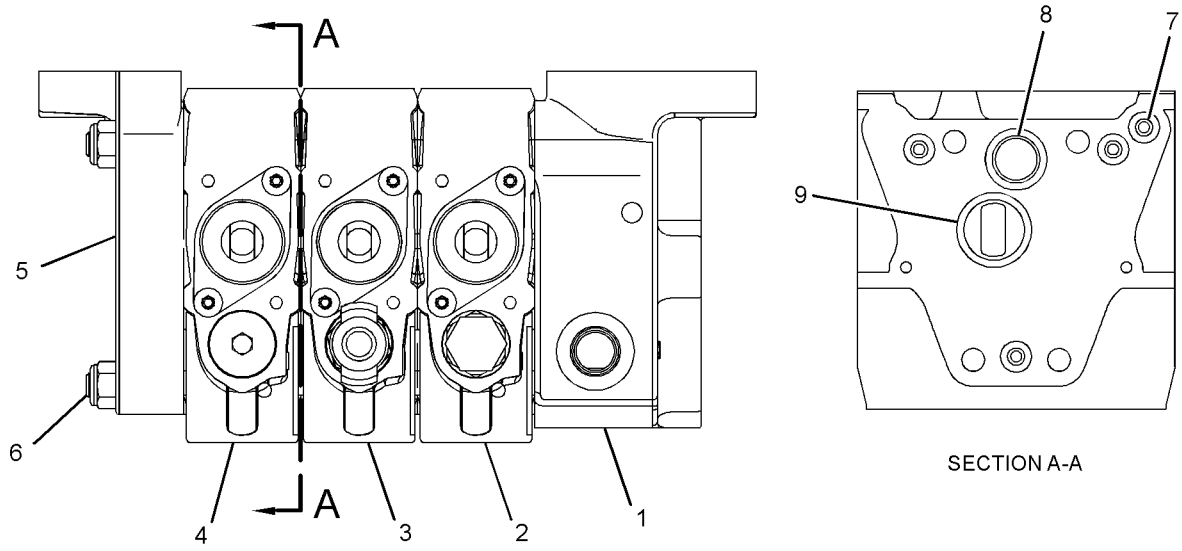

SECTION A-A

GRAPHIC #1 **<END>** g01411491

342-6663 VALVE GP-BANK 3—BUCKET CONTROL

S/N: RBA1-UP
PART OF 346-1233 VALVE AR-BANK 3
AN ATTACHMENT

SMCS-5051 **i04159165**

NOTE	REF NO	GRAPHIC REF	PART NUMBER	QTY	PART NAME 1 2 3 4 5 6 (PRODUCT LEVEL)	SEE PAGE
Y	1	1	**348-4573**	1	MANIFOLD GP-CONTROL (INLET)	319
Y	2	1	**348-4574**	1	VALVE GP-CONTROL (LIFT)	358
Y	3	1	**348-4576**	1	VALVE GP-CONTROL (TILT)	360
Y	4	1	**348-4577**	1	VALVE GP-CONTROL (AUXILIARY)	361
	5	1	**259-6747**	1	KIT-BRACKET (INLET MANIFOLD)	
					(INCLUDES BRACKET, BOLTS & WASHERS)	
	6	1	**259-6748**	1	KIT-BRACKET (VALVE)	
					(INCLUDES BRACKET, NUTS & WASHERS)	
	7	1	**8T-4121**	2	WASHER-HARD (11X21X2.5-MM THK)	
M	8	1	**8T-4137**	2	BOLT (M10X1.5X20-MM)	
	9	1	**259-6750**	1	KIT-FASTENER (3-BANK)	
					(INCLUDES RODS, WASHERS & NUTS)	
J	10	1	**192-7506**	13	SEAL-O-RING	
J	11	1	**192-7508**	6	SEAL-O-RING	
J	12	1	**133-4771**	6	SEAL-O-RING	
J	13	1	**349-6064**	3	KIT-SEAL (VALVES)	
					(INCLUDES SEALS)	

J-KIT MARKED J SERVICES PARTS MARKED J
M-METRIC PART
Y-SEPARATE ILLUSTRATION

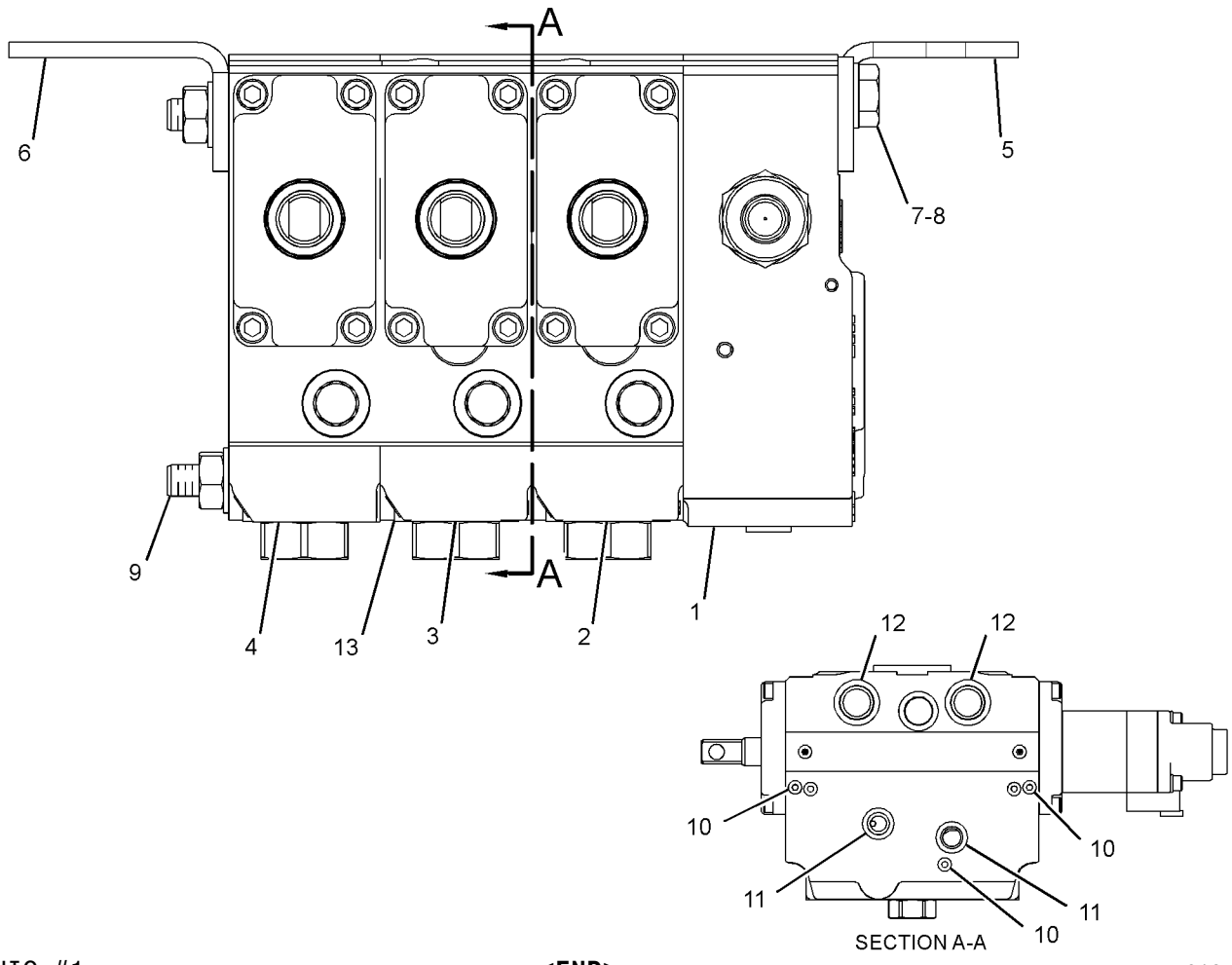

GRAPHIC #1 **<END>** g01958775

271-0527 VALVE GP-BANK 7–PILOT

S/N: RBA1-UP
PART OF 254-0153 CONTROL AR-BACKHOE
AN ATTACHMENT

SMCS-5051 **i04112331**

NOTE	REF NO	GRAPHIC REF	PART NUMBER	QTY	PART NAME 1 2 3 4 5 6 (PRODUCT LEVEL)	SEE PAGE
Y	1	1	**341-4726**	1	MANIFOLD & SOLENOID GP-CONTROL (INLET)	316
Y	2	1	**271-0541**	2	VALVE GP-CONTROL (STABILIZER)	349
Y	3	1	**271-0542**	1	VALVE GP-CONTROL (BOOM)	351
Y	4	1	**341-8185**	1	VALVE GP-CONTROL (STICK)	357
Y	5	1	**271-0544**	1	VALVE GP-CONTROL (SWING)	352
Y	6	1	**271-0545**	1	VALVE GP-CONTROL (BUCKET)	353
Y	7	1	**271-0546**	1	VALVE GP-CONTROL (EXTENDABLE STICK)	354
Y	8	1	**271-0539**	1	MANIFOLD GP-CONTROL (OUTLET)	317
Y	9	1	**299-9072**	1	MANIFOLD & SOLENOID GP-CONTROL (BOOM, STICK, PATTERN SWITCH)	315
	10	1	**257-0447**	1	KIT-FASTENER	
					(INCLUDES LOCKNUTS & TIE RODS)	
	11	1	**4J-5309**	32	SEAL-O-RING	
	12	1	**6V-5326**	8	SEAL-O-RING	
	13	1	**6V-8978**	8	SEAL-O-RING	

Y-SEPARATE ILLUSTRATION

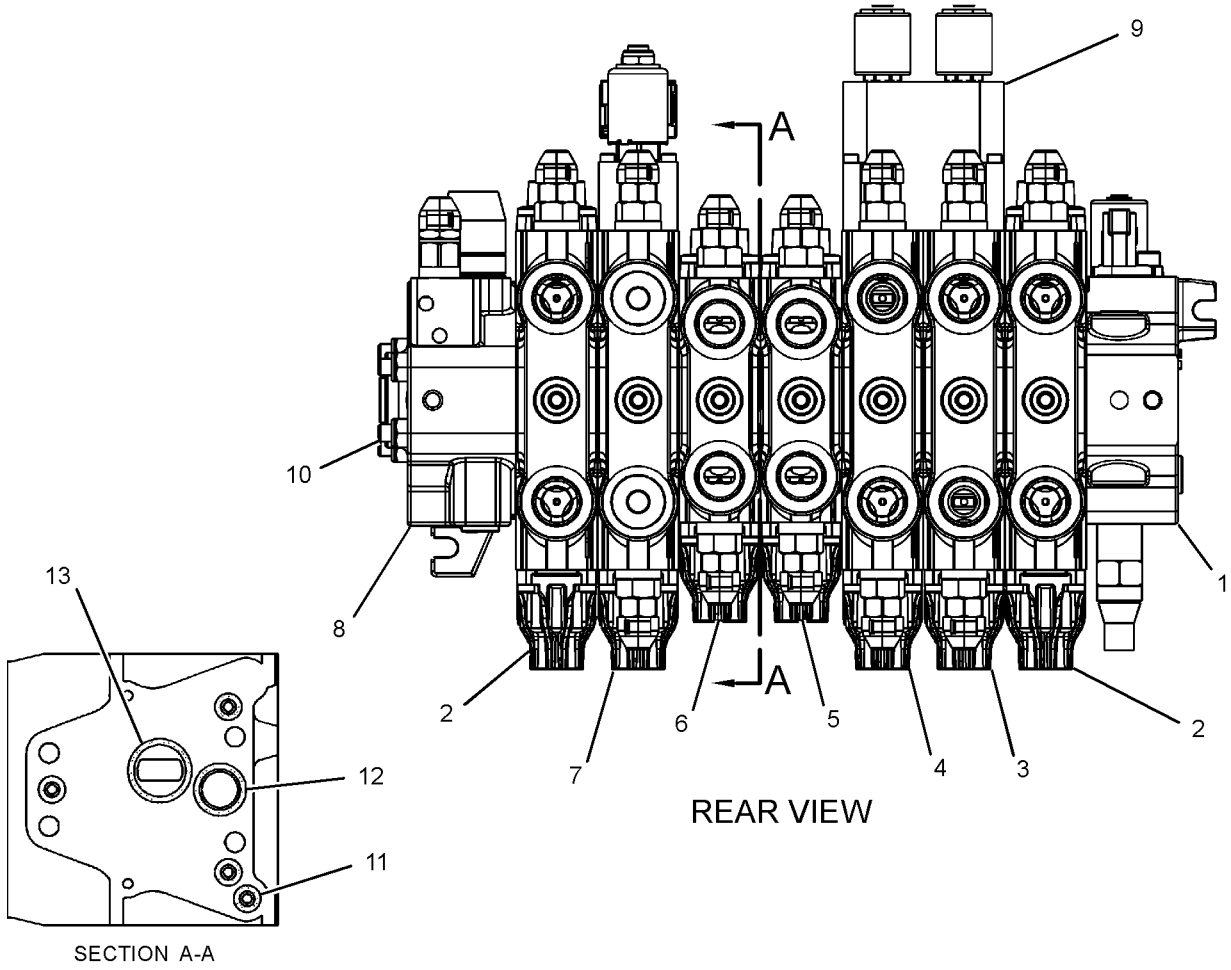

GRAPHIC #1 **<END>** g01412480

342-6667 VALVE GP-BANK 7—MECHANICAL

S/N: RBA1-UP
PART OF 254-0156, 254-0159 CONTROL AR-BACKHOE
AN ATTACHMENT

SMCS-5051 **i04112456**

NOTE	REF NO	GRAPHIC REF	PART NUMBER	QTY	PART NAME 1 2 3 4 5 6 (PRODUCT LEVEL)	SEE PAGE
Y	1	1	**348-4578**	1	MANIFOLD GP-CONTROL (INLET)	320
Y	2	1	**348-4584**	2	VALVE GP-CONTROL (STABILIZER)	367
Y	3	1	**348-4579**	1	VALVE GP-CONTROL (BOOM)	362
Y	4	1	**348-4582**	1	VALVE GP-CONTROL (STICK)	365
Y	5	1	**348-4580**	1	VALVE GP-CONTROL (SWING)	363
Y	6	1	**348-4581**	1	VALVE GP-CONTROL (BUCKET)	364
Y	7	1	**348-4583**	1	VALVE GP-CONTROL (EXTENDABLE STICK)	366
	8	1	**348-4585**	1	MANIFOLD-CONTROL (OUTLET)	
	9	1	**348-4587**	1	KIT-FASTENER (7-BANK)	
					(INCLUDES RODS, WASHERS & NUTS)	
J	10	1	**192-7506**	36	SEAL-O-RING	
J	11	1	**192-7508**	16	SEAL-O-RING	
J	12	1	**133-4771**	16	SEAL-O-RING	
J	13	1	**5W-1749**	7	SEAL-O-RING	
J	14	1	**349-6064**	8	KIT-SEAL (VALVES)	
					(INCLUDES SEALS)	

J-KIT MARKED J SERVICES PARTS MARKED J
Y-SEPARATE ILLUSTRATION

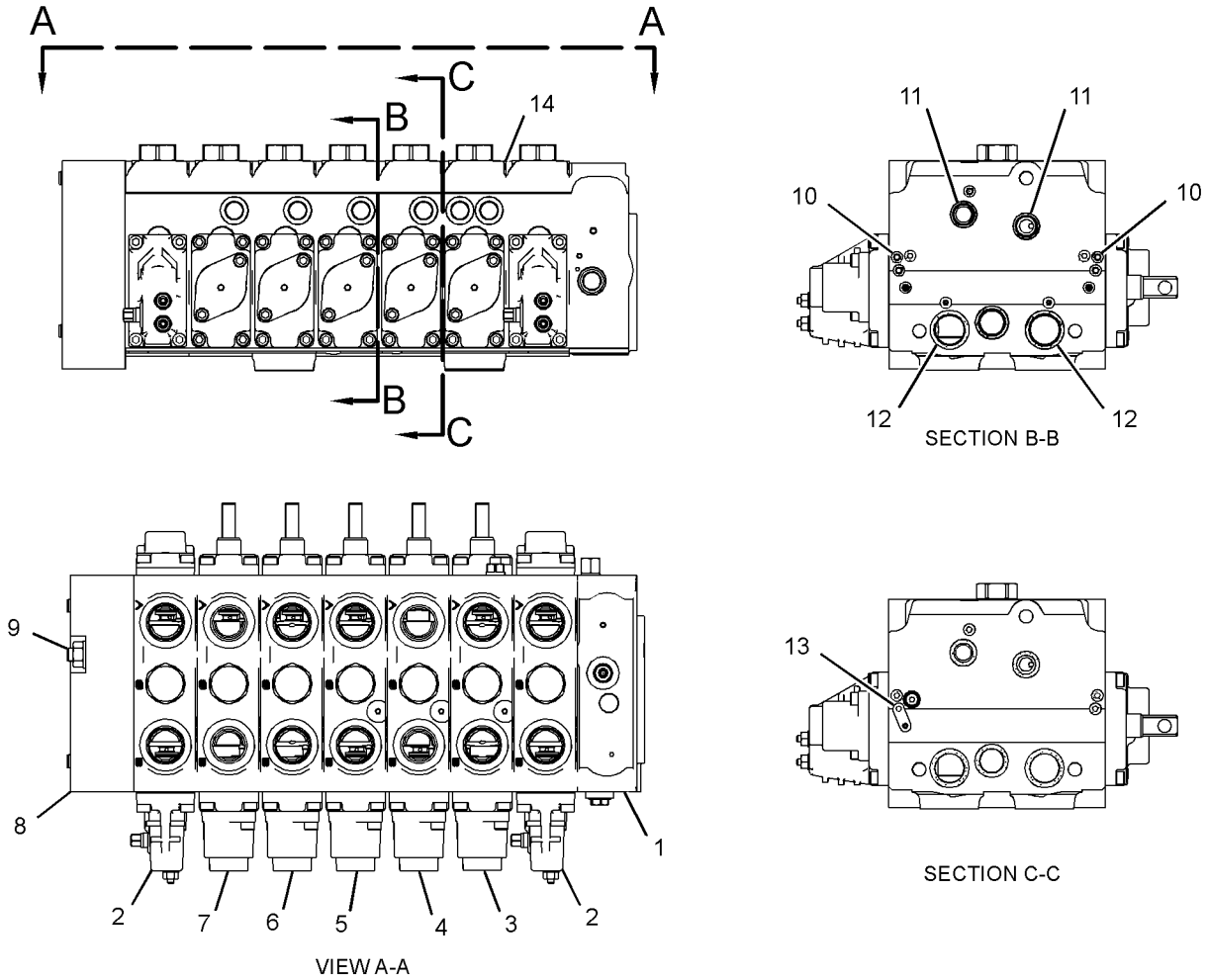

GRAPHIC #1 **<END>** g02150112

HYDRAULIC SYSTEM

271-0528 VALVE GP-BANK 8–PILOT

S/N: RBA1-UP
PART OF 254-0154 CONTROL AR-BACKHOE
AN ATTACHMENT

SMCS-5051 **i04112467**

NOTE	REF NO	GRAPHIC REF	PART NUMBER	QTY	PART NAME 1 2 3 4 5 6 (PRODUCT LEVEL)	SEE PAGE
Y	1	1	**341-4726**	1	MANIFOLD & SOLENOID GP-CONTROL (INLET)	316
Y	2	1	**271-0541**	2	VALVE GP-CONTROL (STABILIZER)	349
Y	3	1	**271-0547**	1	VALVE GP-CONTROL (AUXILIARY)	356
Y	4	1	**271-0542**	1	VALVE GP-CONTROL (BOOM)	351
Y	5	1	**341-8185**	1	VALVE GP-CONTROL (STICK)	357
Y	6	1	**271-0544**	1	VALVE GP-CONTROL (SWING)	352
Y	7	1	**271-0545**	1	VALVE GP-CONTROL (BUCKET)	353
Y	8	1	**271-0546**	1	VALVE GP-CONTROL (EXTENDABLE STICK)	354
Y	9	1	**271-0539**	1	MANIFOLD GP-CONTROL (OUTLET)	317
Y	10	1	**299-9072**	1	MANIFOLD & SOLENOID GP-CONTROL (BOOM, STICK, PATTERN SWITCH)	315
	11	1	**257-0448**	1	KIT-FASTENER	
					(INCLUDES TIE RODS & LOCKNUTS)	
	12	1	**4J-5309**	36	SEAL-O-RING	
	13	1	**6V-5326**	9	SEAL-O-RING	
	14	1	**6V-8978**	9	SEAL-O-RING	

Y-SEPARATE ILLUSTRATION

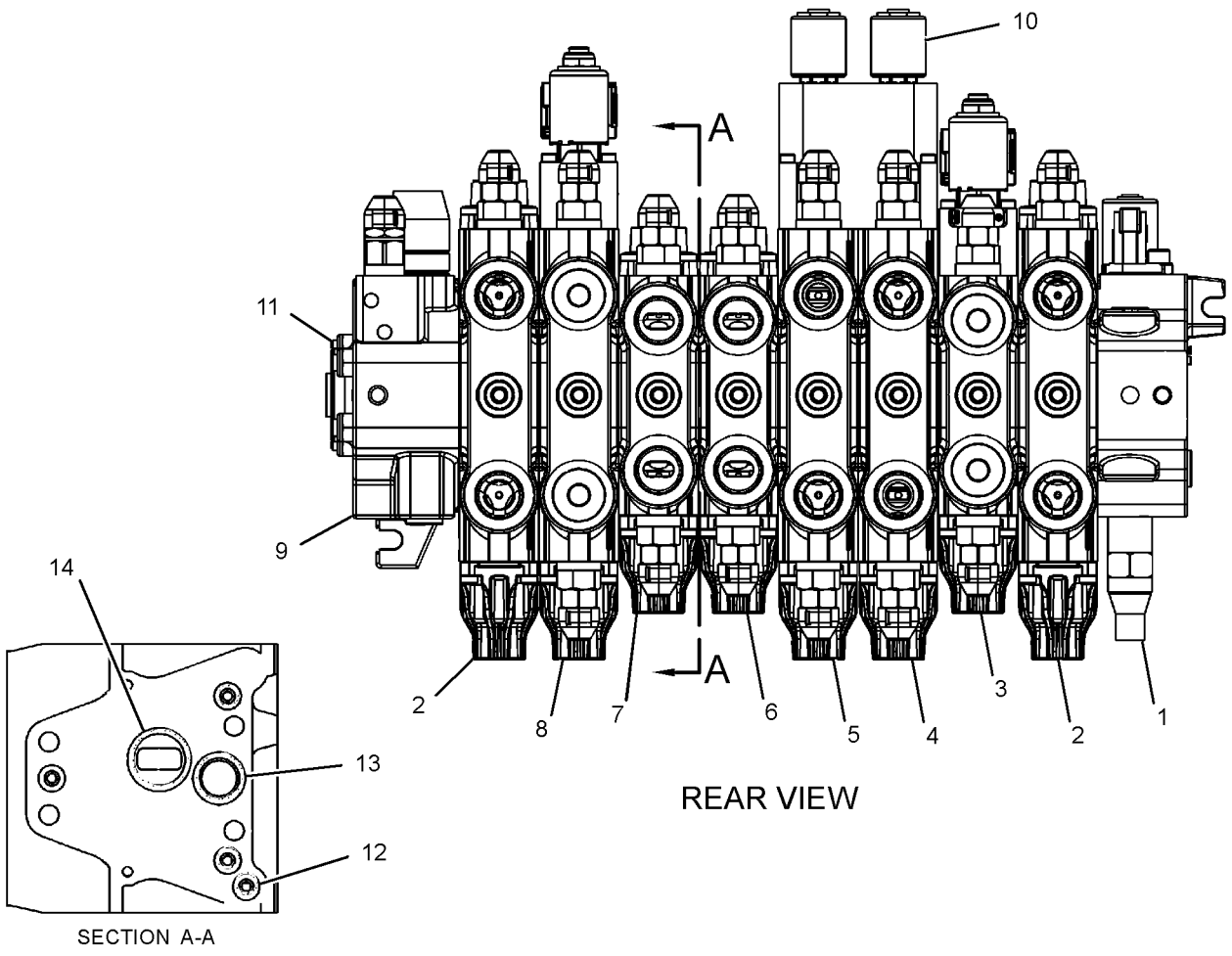

GRAPHIC #1 **<END>** g01418050

342-6668 VALVE GP-BANK 8—MECHANICAL

S/N: RBA1-UP
PART OF 254-0157, 254-0160 CONTROL AR-BACKHOE
AN ATTACHMENT

SMCS-5051 **i04112220**

NOTE	REF NO	GRAPHIC REF	PART NUMBER	QTY	PART NAME 1 2 3 4 5 6 (PRODUCT LEVEL)	SEE PAGE
Y	1	1	**348-4578**	1	MANIFOLD GP-CONTROL (INLET)	320
Y	2	1	**348-4584**	2	VALVE GP-CONTROL (STABILIZER)	367
Y	3	1	**348-9819**	1	VALVE GP-CONTROL (AUXILIARY)	368
Y	4	1	**348-4579**	1	VALVE GP-CONTROL (BOOM)	362
Y	5	1	**348-4582**	1	VALVE GP-CONTROL (STICK)	365
Y	6	1	**348-4580**	1	VALVE GP-CONTROL (SWING)	363
Y	7	1	**348-4581**	1	VALVE GP-CONTROL (BUCKET)	364
Y	8	1	**348-4583**	1	VALVE GP-CONTROL (EXTENDABLE STICK)	366
	9	1	**348-4585**	1	MANIFOLD-CONTROL (OUTLET)	
	10	1	**348-4588**	1	KIT-TIE ROD	
					(INCLUDES RODS, WASHERS & NUTS)	
J	11	1	**192-7506**	41	SEAL-O-RING	
J	12	1	**192-7508**	18	SEAL-O-RING	
J	13	1	**133-4771**	18	SEAL-O-RING	
J	14	1	**5W-1749**	7	SEAL-O-RING	
J	15	1	**349-6064**	9	KIT-SEAL (VALVES)	
					(INCLUDES SEALS)	

J-KIT MARKED J SERVICES MARKED J
Y-SEPARATE ILLUSTRATION

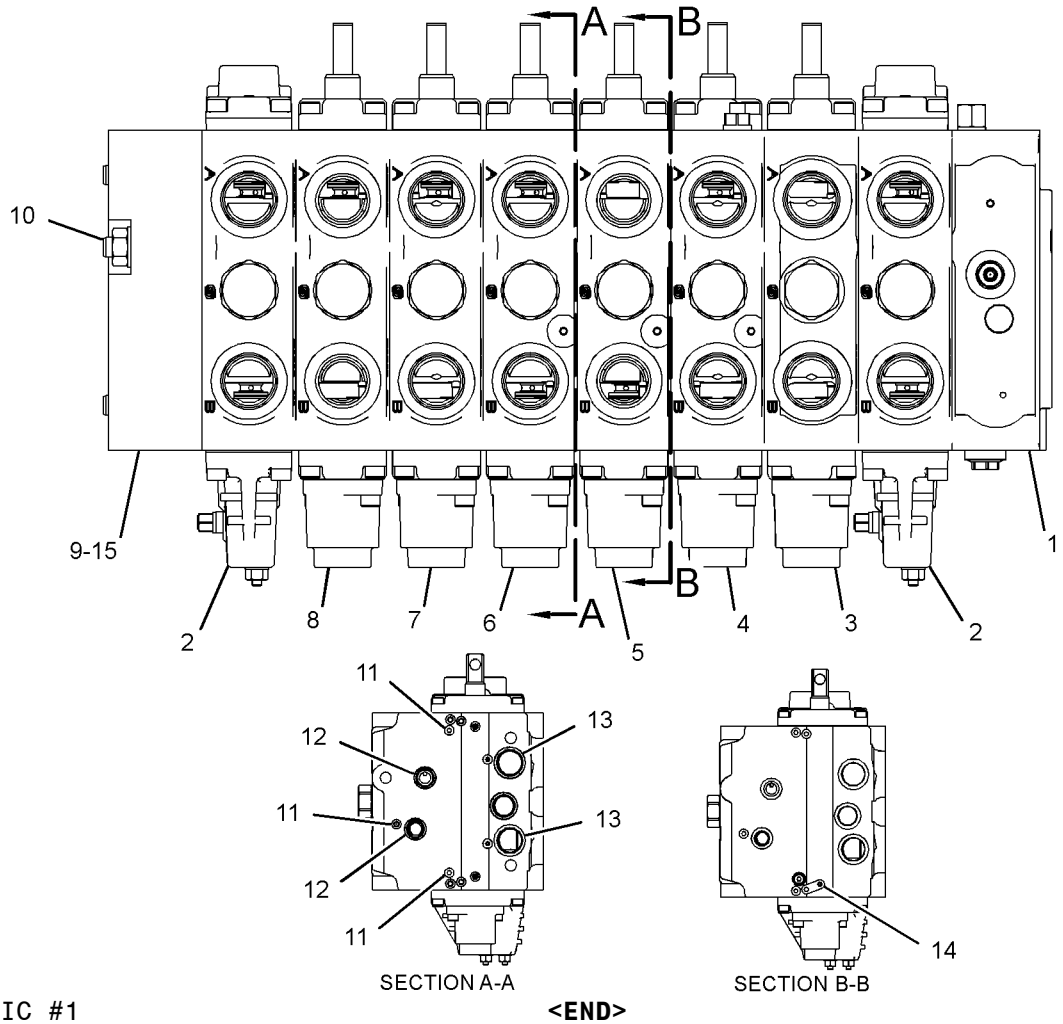

GRAPHIC #1 **<END>** g02150098

HYDRAULIC SYSTEM

271-0521 VALVE GP-CONTROL–LIFT

S/N: RBA1-UP

PART OF 271-0512 VALVE GP-BANK 2, 271-0513 VALVE GP-BANK 3

AN ATTACHMENT

SMCS-5051 **i04125552**

NOTE	REF NO	GRAPHIC REF	PART NUMBER	QTY	PART NAME 1 2 3 4 5 6 (PRODUCT LEVEL)	SEE PAGE
	1	1	**252-5068**	1	KIT-COVER	
					(INCLUDES SEAL-LIP, SPACERS, RETAINERS, SEAL-O-RING, HOUSING, SPRINGS, HOUSING-BALL, BALLS, RINGS, COVER & BOLTS)	
J	2	1	**252-5069**	1	KIT-ACTUATOR	
					(INCLUDES BOOT, RETAINER, BOLTS, SPACER, SEAL-LIP & TANG)	
	3	1	**227-1191**	1	PLUG AS	
		1	**8J-2413**	1	SEAL-O-RING	
		1	**095-1751**	1	SEAL-O-RING	
		1	**169-1616**	1	RING-BACKUP	
	4	1	**227-1186**	2	VALVE AS-CHECK	
	5	1	**6V-7970**	1	SEAL-O-RING	
Y	6	1	**257-7732**	1	VALVE GP-MAKEUP (IMPLEMENT PILOT OIL)	370
					AVAILABLE REPAIR KIT(S):	
J			**247-4981**	1	KIT-BOOT	
					(INCLUDES BOOT & RETAINER)	

J-KIT MARKED J SERVICES PARTS MARKED J
Y-SEPARATE ILLUSTRATION

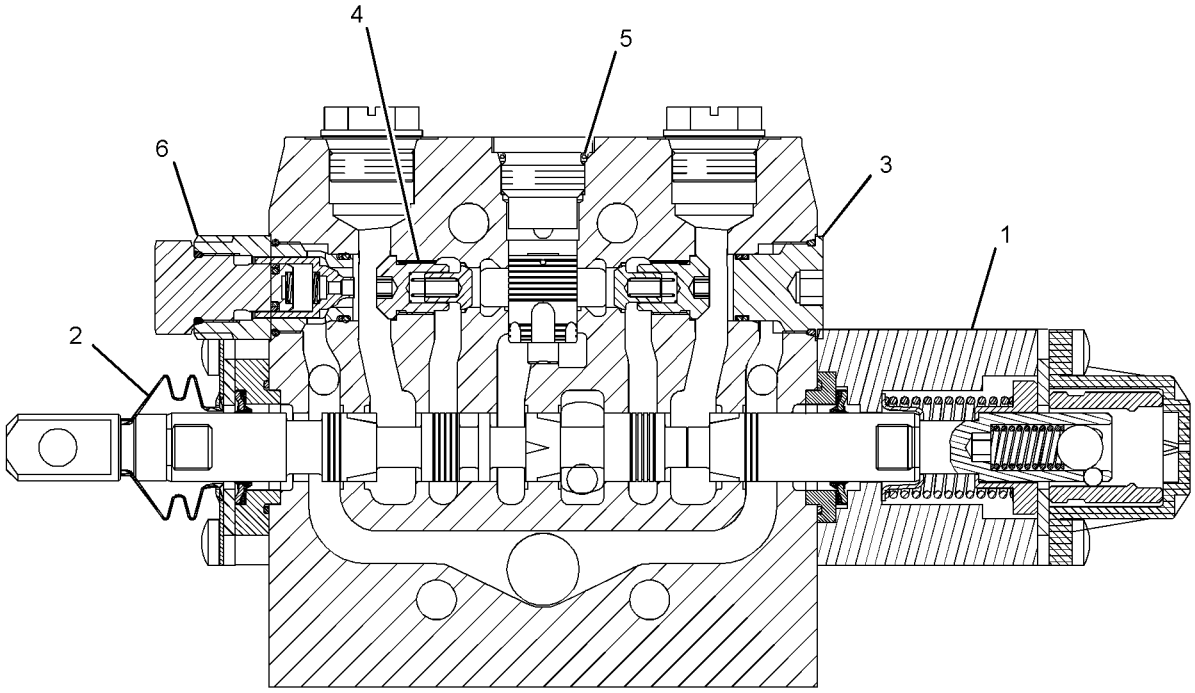

GRAPHIC #1 **<END>** g01412639

271-0522 VALVE GP-CONTROL–TILT

S/N: RBA1-UP

PART OF 271-0512 VALVE GP-BANK 2, 271-0513 VALVE GP-BANK 3

AN ATTACHMENT

SMCS-5051 **i04125569**

NOTE	REF NO	GRAPHIC REF	PART NUMBER	QTY	PART NAME 1 2 3 4 5 6 (PRODUCT LEVEL)	SEE PAGE
	1	1	**306-9205**	1	KIT-SOLENOID	
					(INCLUDES LIP SEAL, RETAINERS, SPRINGS, PLUNGER, COIL AS, ARMATURE, SNAP RING, COVER & SCREWS)	
	2	1	**257-7741**	1	KIT-ACTUATOR	
					(INCLUDES SPACER, LIP SEAL, TANG, BOLTS & BOOT KIT)	
	3	1	**348-9768**	2	VALVE GP-RELIEF (TILT CONTROL)	
					(EACH INCLUDES)	
		1	**8J-2413**	1	SEAL-O-RING	
		1	**095-1751**	1	SEAL-O-RING	
		1	**169-1616**	1	RING-BACKUP	
	4	1	**6V-7970**	1	SEAL-O-RING	
	5	1	**227-1186**	2	VALVE AS-CHECK	
	6	1	**257-0468**	2	CAP-PROTECTION	

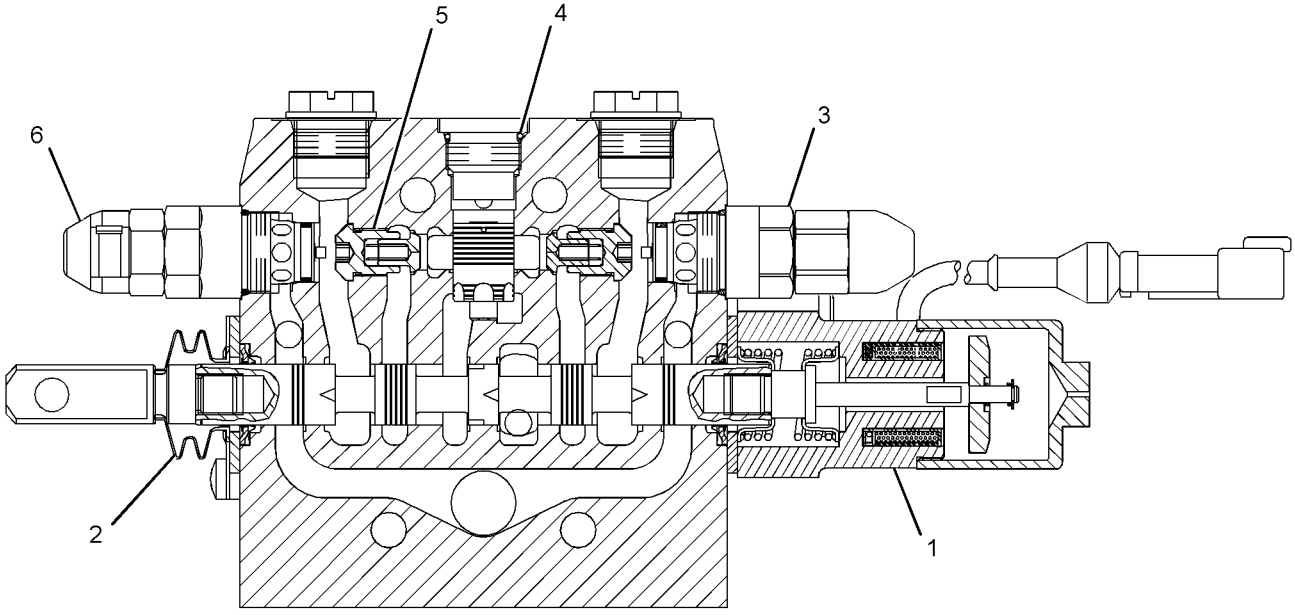

GRAPHIC #1 **<END>** g02122994

HYDRAULIC SYSTEM

271-0523 VALVE GP-CONTROL–AUXILIARY

S/N: RBA1-UP
PART OF 271-0513 VALVE GP-BANK 3
AN ATTACHMENT

SMCS-5051 **i04125756**

NOTE	REF NO	GRAPHIC REF	PART NUMBER	QTY	PART NAME 1 2 3 4 5 6 (PRODUCT LEVEL)	SEE PAGE
	1	1	**257-7739**	1	KIT-COVER	
					(INCLUDES LIP SEAL, SPACER, SPRING, RETAINERS, COVER & BOLTS)	
	2	1	**257-7741**	1	KIT-ACTUATOR	
					(INCLUDES SPACER, LIP SEAL, TANG, BOLTS & BOOT KIT)	
		1	**247-4981**	1	KIT-BOOT	
					(INCLUDES BOOT & RETAINER)	
	3	1	**348-9768**	1	VALVE GP-RELIEF (AUXILIARY; 5TH, 6TH FUNCTIONS)	
		1	**8J-2413**	1	SEAL-O-RING	
		1	**095-1751**	1	SEAL-O-RING	
		1	**169-1616**	1	RING-BACKUP	
	4	1	**227-1191**	1	PLUG AS	
		1	**8J-2413**	1	SEAL-O-RING	
		1	**095-1751**	1	SEAL-O-RING	
		1	**169-1616**	1	RING-BACKUP	
	5	1	**227-1186**	2	VALVE AS-CHECK	
	6	1	**6V-7970**	1	SEAL-O-RING	
	7	1	**257-0468**	1	CAP-PROTECTION	

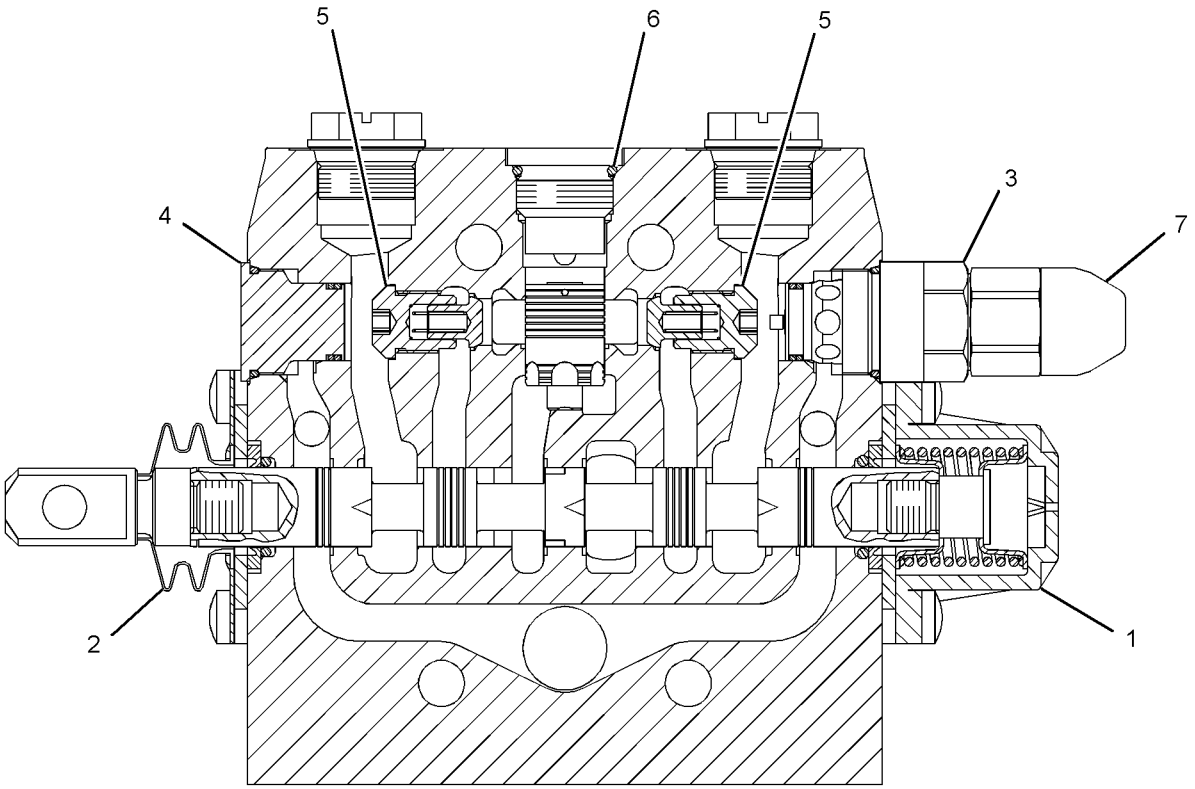

GRAPHIC #1 **<END>** g02122953

271-0541 VALVE GP-CONTROL–STABILIZER

S/N: RBA1-UP

PART OF 271-0527 VALVE GP-BANK 7, 271-0528 VALVE GP-BANK 8

AN ATTACHMENT

SMCS-5051 **i04124529**

NOTE	REF NO	GRAPHIC REF	PART NUMBER	QTY	PART NAME 1 2 3 4 5 6 (PRODUCT LEVEL)	SEE PAGE
	1	1	**257-7734**	1	KIT-COVER (CONTROL VALVE)	
					(INCLUDES BOLTS, SEAL-O-RING, COVER, PLUG, SPRING, & RETAINERS)	
	2	1	**227-1191**	1	PLUG AS	
		1	**8J-2413**	1	SEAL-O-RING	
		1	**095-1751**	1	SEAL-O-RING	
		1	**169-1616**	1	RING-BACKUP	
	3	1	**352-4225**	1	VALVE GP-RELIEF (STABILIZER CONTROL)	
		1	**8J-2413**	1	SEAL-O-RING	
		1	**095-1751**	1	SEAL-O-RING	
		1	**169-1616**	1	RING-BACKUP	
	4	1	**257-7730**	2	KIT-POPPET (CONTROL VALVE)	
					(EACH INCLUDES POPPET AS & PINS)	
	5	1	**257-7729**	2	PLUG GP-CONTROL VALVE	
					(EACH INCLUDES)	
		1	**122-9250**	1	SEAL-O-RING	
	6	1	**257-7731**	1	MANIFOLD GP-HYDRAULIC	
		1	**5D-6543**	1	SEAL-O-RING	
		1	**5F-9144**	3	SEAL-O-RING	
M		1	**8C-8580**	4	BOLT-SOCKET HEAD (M5X0.8X16-MM)	
	7	1	**6V-7970**	1	SEAL-O-RING	
	8	1	**257-0468**	1	CAP-PROTECTION	

M-METRIC PART

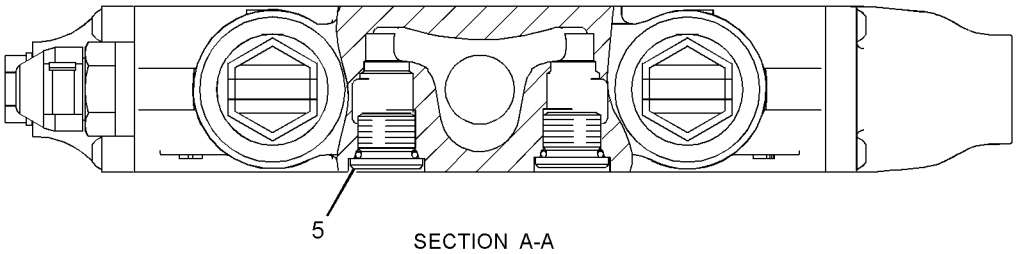

SECTION A-A

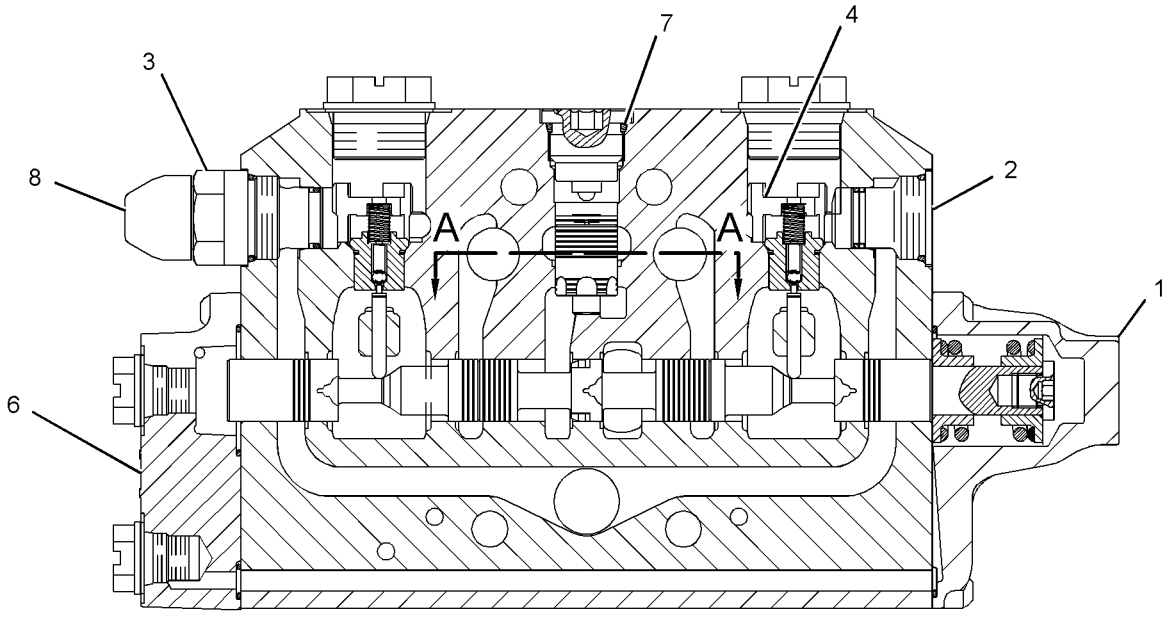

GRAPHIC #1 **<END>** g01412984

271-0542 VALVE GP-CONTROL–BOOM

S/N: RBA1-UP

PART OF 271-0527 VALVE GP-BANK 7, 271-0528 VALVE GP-BANK 8

AN ATTACHMENT

SMCS-5051 **i04124530**

NOTE	REF NO	GRAPHIC REF	PART NUMBER	QTY	PART NAME 1 2 3 4 5 6 (PRODUCT LEVEL)	SEE PAGE
	1	1	**257-7734**	1	KIT-COVER (CONTROL VALVE)	
					(INCLUDES BOLTS, SEAL-O-RING, COVER, PLUG, SPRING, & RETAINERS)	
	2	1	**348-9761**	1	VALVE GP-RELIEF (BOOM CONTROL)	
		1	**8J-2413**	1	SEAL-O-RING	
		1	**095-1751**	1	SEAL-O-RING	
		1	**169-1616**	1	RING-BACKUP	
	3	1	**257-7730**	1	KIT-POPPET (CONTROL VALVE)	
					(INCLUDES POPPET AS & PINS)	
	4	1	**348-9774**	1	VALVE GP-RELIEF (BOOM)	
		1	**8J-2413**	1	SEAL-O-RING	
		1	**095-1751**	1	SEAL-O-RING	
		1	**169-1616**	1	RING-BACKUP	
	5	1	**257-7733**	1	VALVE GP-CHECK (BOOM CONTROL VALVE)	
		1	**122-9250**	1	SEAL-O-RING	
	6	1	**257-7729**	1	PLUG GP-CONTROL VALVE	
		1	**122-9250**	1	SEAL-O-RING	
	7	1	**6V-7970**	1	SEAL-O-RING	
	8	1	**257-0468**	2	CAP-PROTECTION	

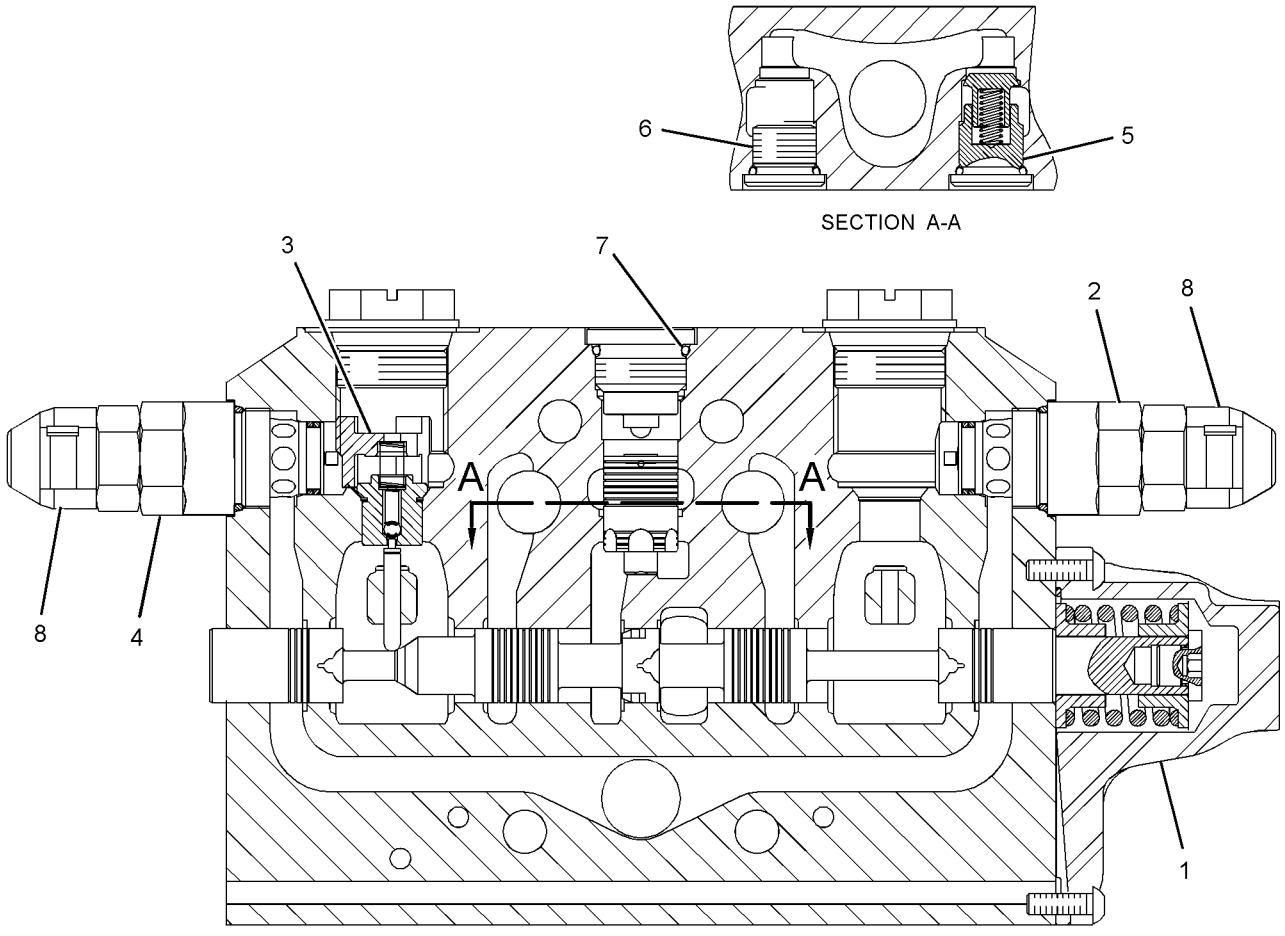

GRAPHIC #1 **<END>** g01413106

HYDRAULIC SYSTEM

271-0544 VALVE GP-CONTROL–SWING

S/N: RBA1-UP
PART OF 271-0527 VALVE GP-BANK 7, 271-0528 VALVE GP-BANK 8
AN ATTACHMENT

SMCS-5051 **i04124532**

NOTE	REF NO	GRAPHIC REF	PART NUMBER	QTY	PART NAME 1 2 3 4 5 6 (PRODUCT LEVEL)	SEE PAGE
	1	1	**257-5571**	1	KIT-COVER	
					(INCLUDES BOLTS, SEAL-O-RINGS, COVER, PLUG, SPRING, & RETAINERS)	
	2	1	**348-9768**	2	VALVE GP-RELIEF (AUXILIARY; 5TH, 6TH FUNCTIONS)	
					(EACH INCLUDES)	
		1	**8J-2413**	1	SEAL-O-RING	
		1	**095-1751**	1	SEAL-O-RING	
		1	**169-1616**	1	RING-BACKUP	
	3	1	**227-1186**	2	VALVE AS-CHECK	
	4	1	**257-7731**	1	MANIFOLD GP-HYDRAULIC	
		1	**5D-6543**	1	SEAL-O-RING	
		1	**5F-9144**	3	SEAL-O-RING	
M		1	**8C-8580**	4	BOLT-SOCKET HEAD (M5X0.8X16-MM)	
	5	1	**6V-7970**	1	SEAL-O-RING	
	6	1	**257-0468**	2	CAP-PROTECTION	

M-METRIC PART

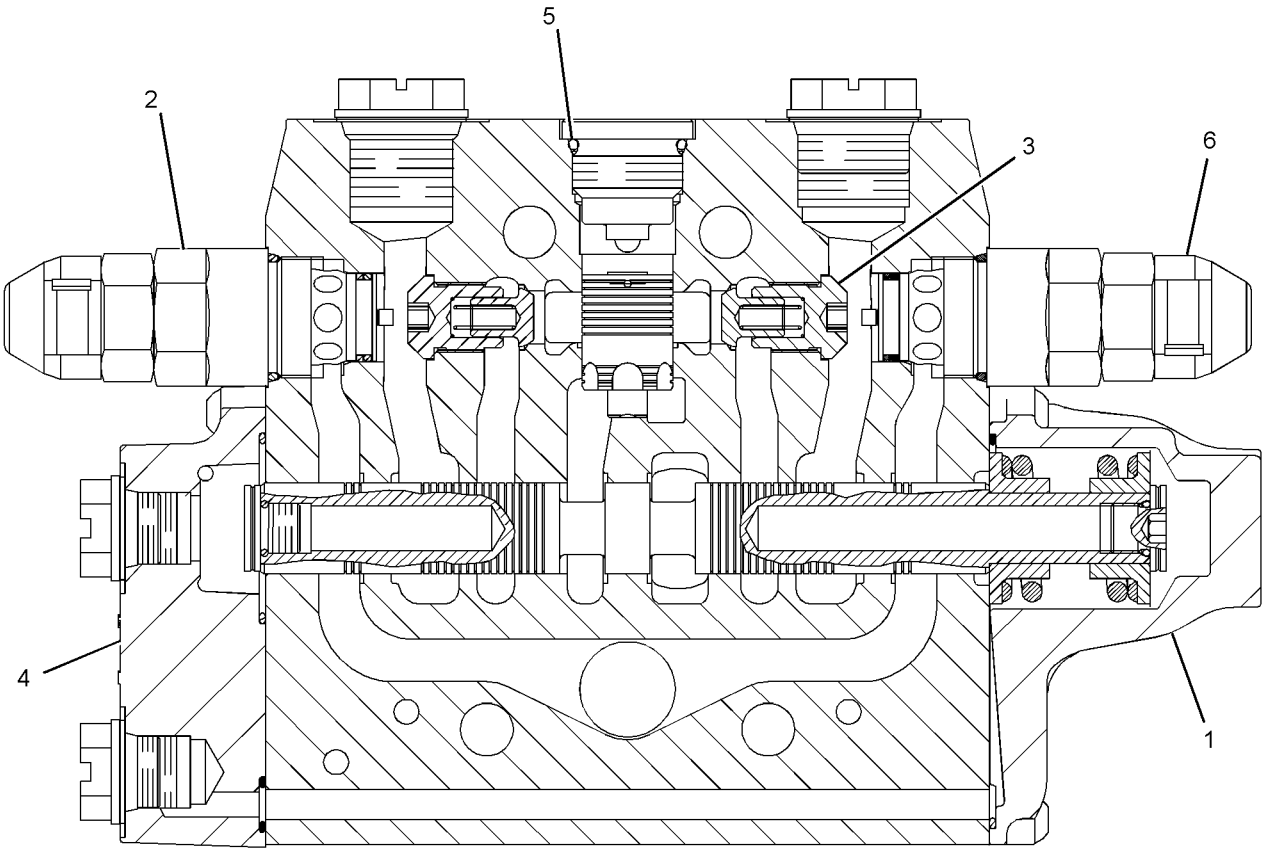

GRAPHIC #1 **<END>** g01412520

271-0545 VALVE GP-CONTROL–BUCKET

S/N: RBA1-UP

PART OF 271-0527 VALVE GP-BANK 7, 271-0528 VALVE GP-BANK 8

AN ATTACHMENT

SMCS-5051 **i04124533**

NOTE	REF NO	GRAPHIC REF	PART NUMBER	QTY	PART NAME 1 2 3 4 5 6 (PRODUCT LEVEL)	SEE PAGE
	1	1	**257-7734**	1	KIT-COVER (CONTROL VALVE)	
					(INCLUDES BOLTS, SEAL-O-RING, COVER, PLUG, SPRING, & RETAINERS)	
	2	1	**348-9771**	2	VALVE GP-RELIEF (BUCKET CONTROL)	
					(EACH INCLUDES)	
		1	**8J-2413**	1	SEAL-O-RING	
		1	**095-1751**	1	SEAL-O-RING	
		1	**169-1616**	1	RING-BACKUP	
	3	1	**227-1186**	2	VALVE AS-CHECK	
	4	1	**257-7731**	1	MANIFOLD GP-HYDRAULIC	
		1	**5D-6543**	1	SEAL-O-RING	
		1	**5F-9144**	3	SEAL-O-RING	
M		1	**8C-8580**	4	BOLT-SOCKET HEAD (M5X0.8X16-MM)	
	5	1	**6V-7970**	1	SEAL-O-RING	
	6	1	**257-0468**	2	CAP-PROTECTION	

M-METRIC PART

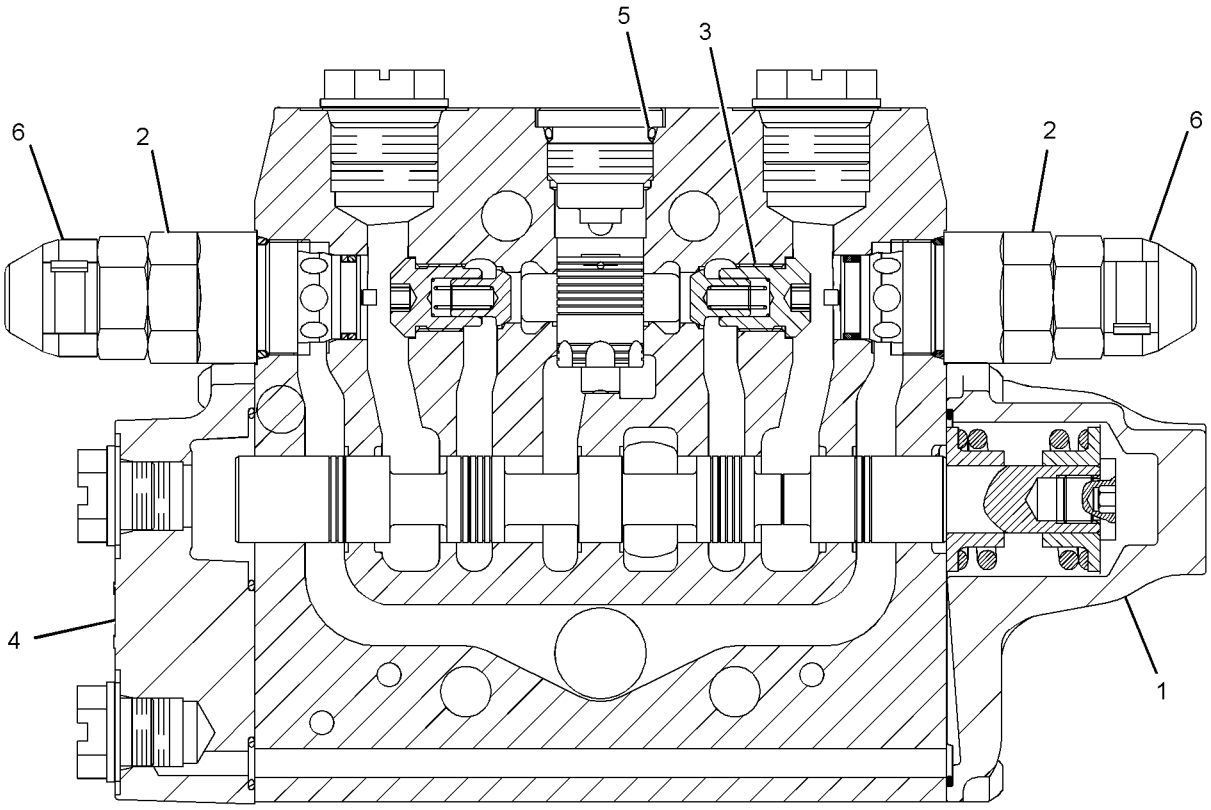

GRAPHIC #1 **<END>** g01412534

271-0546 VALVE GP-CONTROL—EXTENDABLE STICK

S/N: RBA1-UP

PART OF 271-0527 VALVE GP-BANK 7, 271-0528 VALVE GP-BANK 8 AN ATTACHMENT

SMCS-5051 **i04124534**

NOTE	REF NO	GRAPHIC REF	PART NUMBER	QTY	PART NAME 1 2 3 4 5 6 (PRODUCT LEVEL)	SEE PAGE
	1	1	**257-7734**	1	KIT-COVER (CONTROL VALVE)	
					(INCLUDES BOLTS, SEAL-O-RING, COVER, PLUG, SPRING & RETAINERS)	
	2	1	**6V-7970**	1	SEAL-O-RING	
	3	1	**257-7730**	1	KIT-POPPET (CONTROL VALVE)	
					(INCLUDES POPPET AS & PINS)	
	4	1	**348-9767**	2	VALVE GP-RELIEF (STICK CONTROL VALVE)	
					(EACH INCLUDES)	
		1	**8J-2413**	1	SEAL-O-RING	
		1	**095-1751**	1	SEAL-O-RING	
		1	**169-1616**	1	RING-BACKUP	
	5	1	**257-7733**	1	VALVE GP-CHECK (STICK CONTROL VALVE)	
		1	**122-9250**	1	SEAL-O-RING	
	6	1	**257-7729**	1	PLUG GP-CONTROL VALVE	
		1	**122-9250**	1	SEAL-O-RING	
Y	7	1	**179-3543**	1	MANIFOLD & SOLENOID GP-CONTROL	314
	8	1	**5F-9144**	3	SEAL-O-RING	
	9	1	**5D-6543**	1	SEAL-O-RING	
M	10	1	**095-0642**	4	BOLT-SOCKET HEAD (M5X0.8X50-MM)	
	11	1	**257-0468**	2	CAP-PROTECTION	

M-METRIC PART
Y-SEPARATE ILLUSTRATION

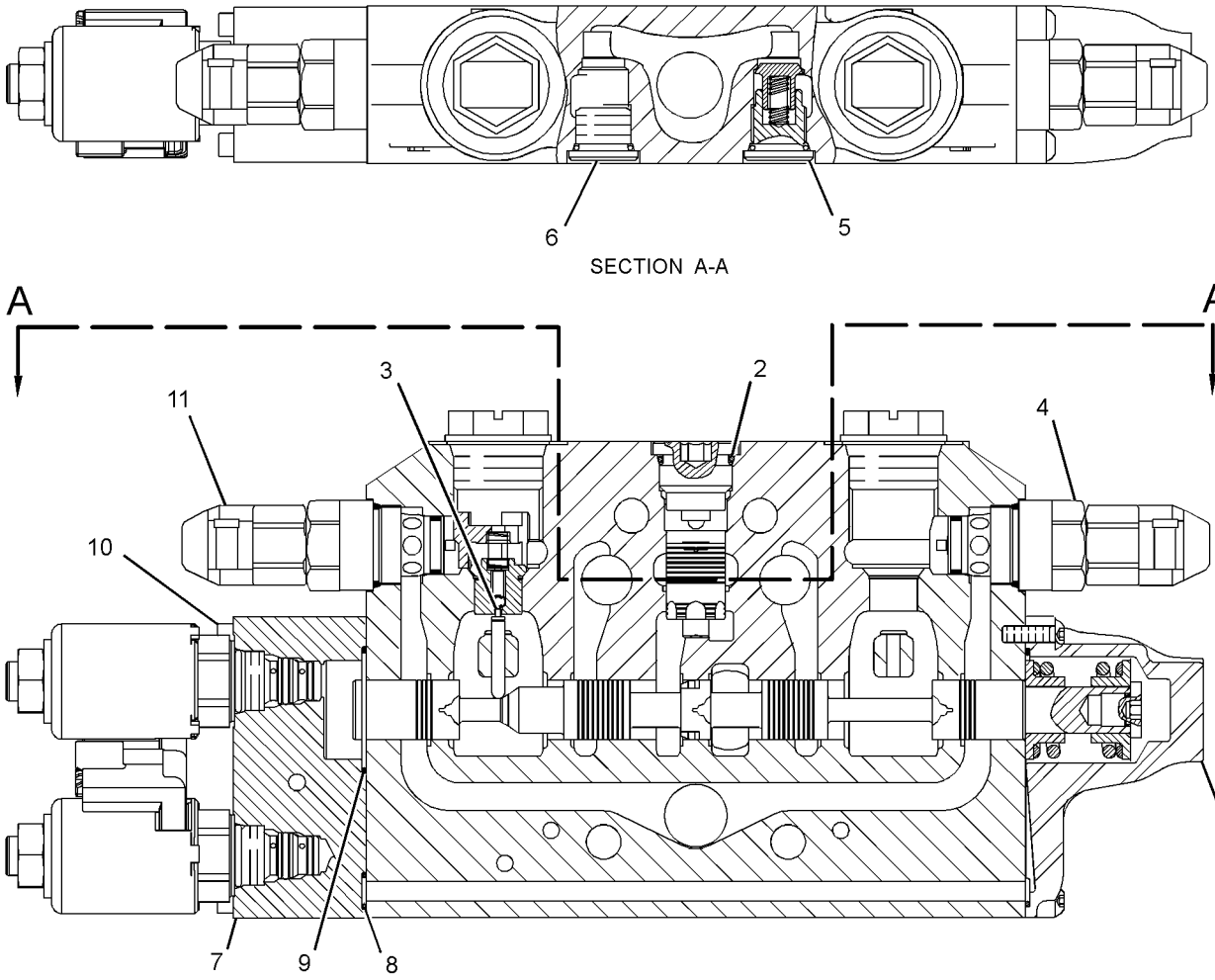

GRAPHIC #1 **<END>** g02123296

HYDRAULIC SYSTEM

271-0547 VALVE GP-CONTROL–AUXILIARY

S/N: RBA1-UP
PART OF 271-0528 VALVE GP-BANK 8
AN ATTACHMENT

SMCS-5051 **i04124538**

NOTE	REF NO	GRAPHIC REF	PART NUMBER	QTY	PART NAME 1 2 3 4 5 6 (PRODUCT LEVEL)	SEE PAGE
	1	1	**257-7734**	1	KIT-COVER (CONTROL VALVE)	
					(INCLUDES BOLTS, SEAL-O-RING, COVER, PLUG, SPRING & RETAINERS)	
	2	1	**348-9767**	2	VALVE GP-RELIEF (AUXILIARY CONTROL)	
					(EACH INCLUDES)	
		1	**8J-2413**	1	SEAL-O-RING	
		1	**095-1751**	1	SEAL-O-RING	
		1	**169-1616**	1	RING-BACKUP	
	3	1	**227-1186**	2	VALVE AS-CHECK	
Y	4	1	**179-3543**	1	MANIFOLD & SOLENOID GP-CONTROL	314
	5	1	**5F-9144**	3	SEAL-O-RING	
	6	1	**5D-6543**	1	SEAL-O-RING	
M	7	1	**095-0642**	4	BOLT-SOCKET HEAD (M5X0.8X50-MM)	
	8	1	**6V-7970**	1	SEAL-O-RING	
	9	1	**257-0468**	2	CAP-PROTECTION	

M-METRIC PART
Y-SEPARATE ILLUSTRATION

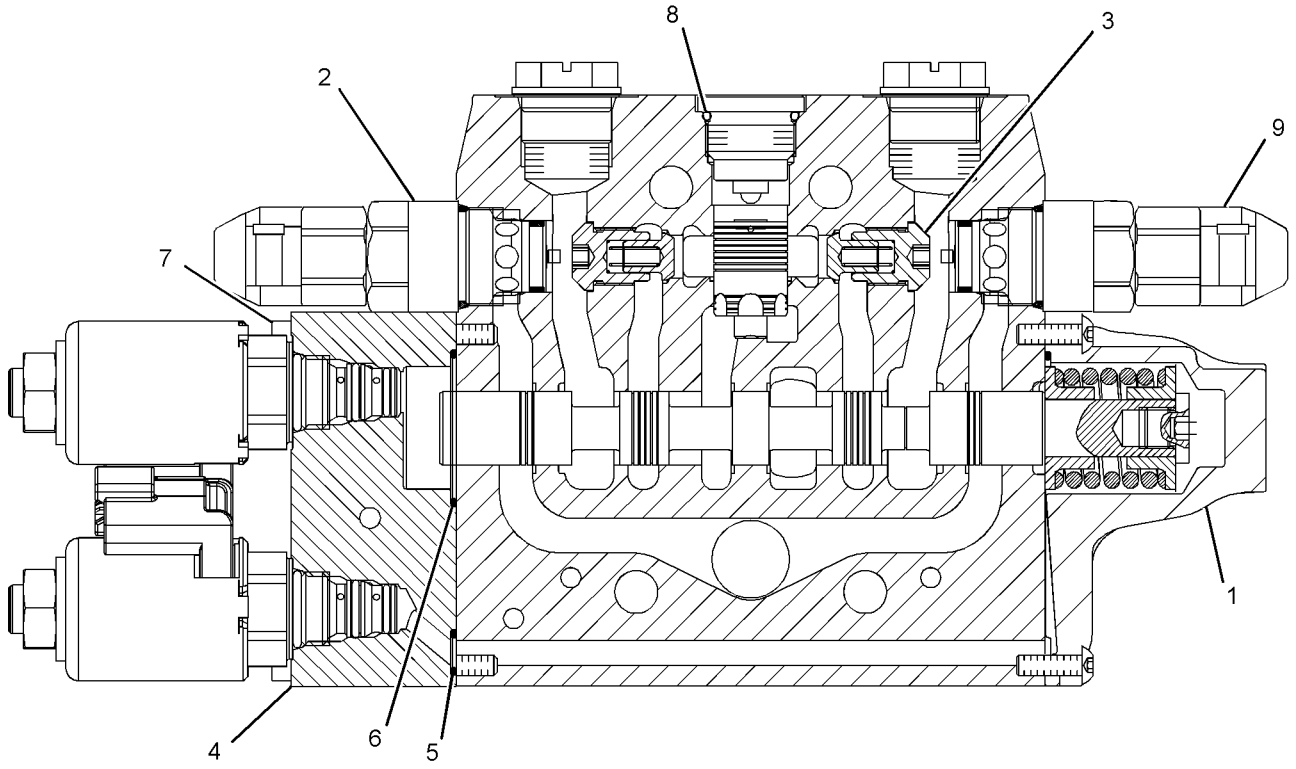

GRAPHIC #1 **<END>** g02123313

341-8185 VALVE GP-CONTROL–STICK

S/N: RBA1-UP

PART OF 271-0527 VALVE GP-BANK 7, 271-0528 VALVE GP-BANK 8

AN ATTACHMENT

SMCS-5051 **i04124531**

NOTE	REF NO	GRAPHIC REF	PART NUMBER	QTY	PART NAME 1 2 3 4 5 6 (PRODUCT LEVEL)	SEE PAGE
	1	1	**257-7734**	1	KIT-COVER (CONTROL VALVE)	
					(INCLUDES BOLTS, SEAL-O-RING, COVER, PLUG, SPRING & RETAINERS)	
	2	1	**348-9769**	2	VALVE GP-RELIEF (STICK)	
					(EACH INCLUDES)	
		1	**8J-2413**	1	SEAL-O-RING	
		1	**095-1751**	1	SEAL-O-RING	
		1	**169-1616**	1	RING-BACKUP	
	3	1	**257-7730**	1	KIT-POPPET (CONTROL VALVE)	
					(INCLUDES POPPET AS & PINS)	
	4	1	**257-7733**	1	VALVE GP-CHECK (STICK CONTROL VALVE)	
		1	**122-9250**	1	SEAL-O-RING	
	5	1	**257-7729**	1	PLUG GP-CONTROL VALVE	
		1	**122-9250**	1	SEAL-O-RING	
	6	1	**6V-7970**	1	SEAL-O-RING	
	7	1	**257-0468**	2	CAP-PROTECTION	

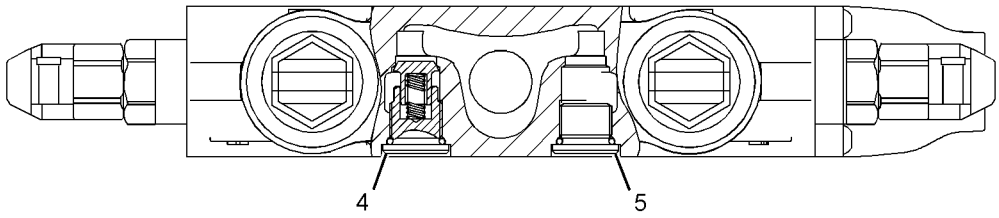

SECTION A-A

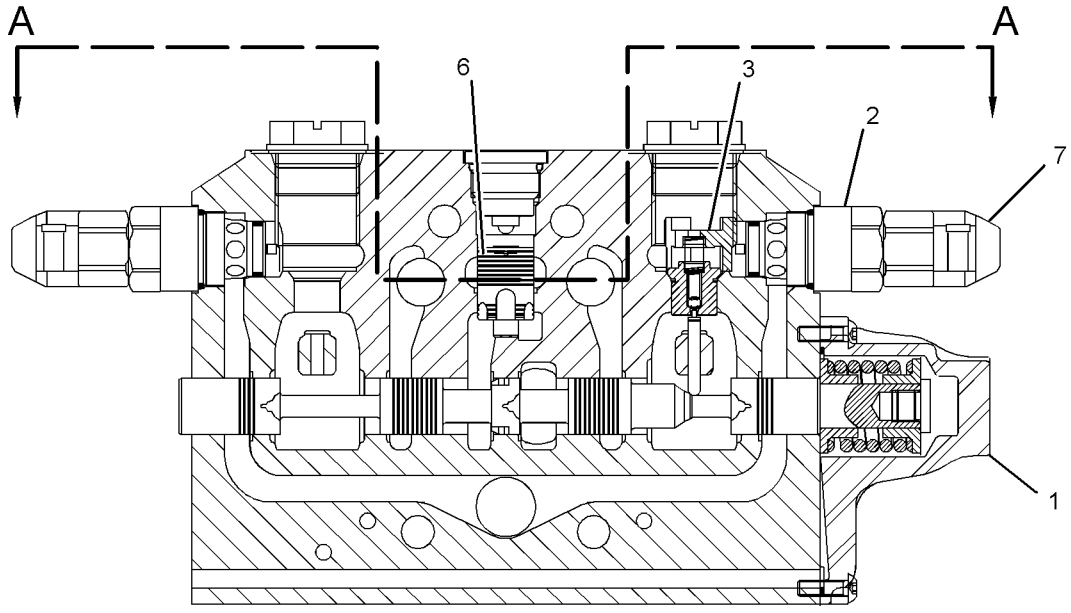

GRAPHIC #1 **<END>** g02123314

HYDRAULIC SYSTEM

348-4574 VALVE GP-CONTROL–LIFT

S/N: RBA1-UP

PART OF 342-6662 VALVE GP-BANK 2, 342-6663 VALVE GP-BANK 3

AN ATTACHMENT

SMCS-5051 **i04125810**

NOTE	REF NO	GRAPHIC REF	PART NUMBER	QTY	PART NAME 1 2 3 4 5 6 (PRODUCT LEVEL)	SEE PAGE
	1	1	**337-5099**	1	KIT-SEAL (TOP)	
					(INCLUDES HOUSING, SEALS, WIPER, SCREWS, INSERT & O-RING)	
	2	1	**337-5100**	1	KIT-SEAL (BOTTOM)	
					(INCLUDES HOUSING, SEALS, SCREWS & INSERT)	
	3	1	**338-5290**	1	KIT-DETENT (MECHANICAL)	
					(INCLUDES WASHERS, END CAP, SCREWS, SPACER, SEAT SPRING, RETAINER SPRING, SLEEVE & SPRING)	
	4	1	**192-7864**	2	PLUG	
	5	1	**192-7510**	2	SEAL-O-RING	
	6	1	**348-4589**	1	VALVE GP-RELIEF	
	7	1	**192-7863**	2	PLUG	
	8	1	**6V-5138**	2	SEAL-O-RING	
	9	1	**6V-7970**	1	SEAL-O-RING	
	10	1	**348-4593**	1	VALVE GP-CHECK	

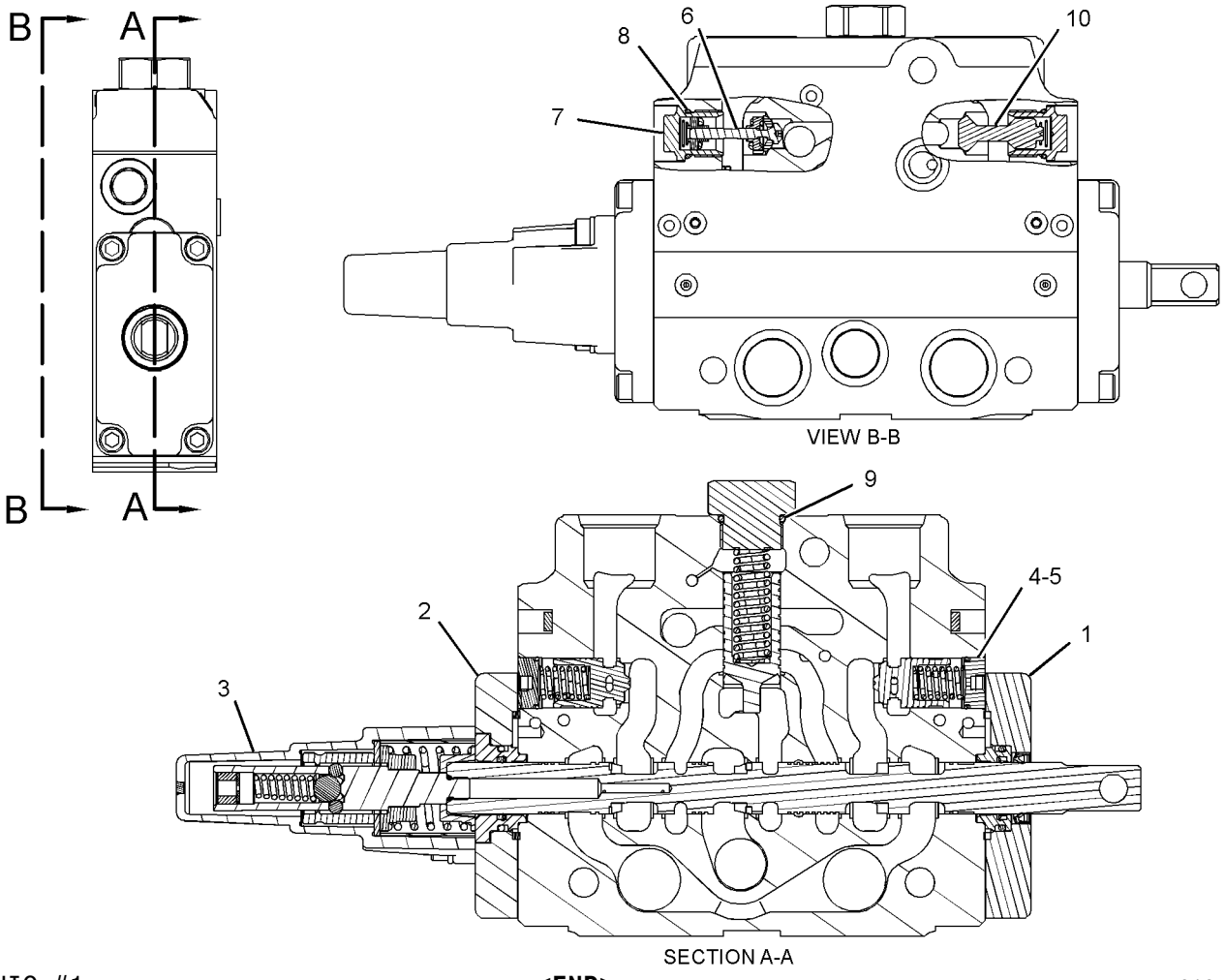

GRAPHIC #1 **<END>** g01958944

348-4575 VALVE GP-CONTROL–TILT

S/N: RBA1-UP
PART OF 342-6662 VALVE GP-BANK 2
AN ATTACHMENT

SMCS-5051 **i04125811**

NOTE	REF NO	GRAPHIC REF	PART NUMBER	QTY	PART NAME 1 2 3 4 5 6 (PRODUCT LEVEL)	SEE PAGE
	1	1	**260-3004**	2	VALVE GP-RELIEF	
	2	1	**192-7863**	2	PLUG	
	3	1	**6V-5138**	2	SEAL-O-RING	
	4	1	**338-5289**	1	KIT-DETENT (ELECTRICAL)	
					(INCLUDES SEAL-O-RING, CLIP, GASKETS, SCREWS, COIL, END CAP, STEM, MAGNET, RETAINERS, SPRINGS, LOCK WASHERS & HOUSING)	
	5	1	**337-5099**	1	KIT-SEAL (TOP)	
					(INCLUDES HOUSING, SEALS, WIPER, SCREWS, INSERT & O-RINGS)	
	6	1	**337-5100**	1	KIT-SEAL (BOTTOM)	
					(INCLUDES HOUSING, SEALS, SCREWS & INSERT)	
	7	1	**6V-7970**	1	SEAL-O-RING	
	8	1	**192-7864**	2	PLUG	
	9	1	**192-7510**	2	SEAL-O-RING	

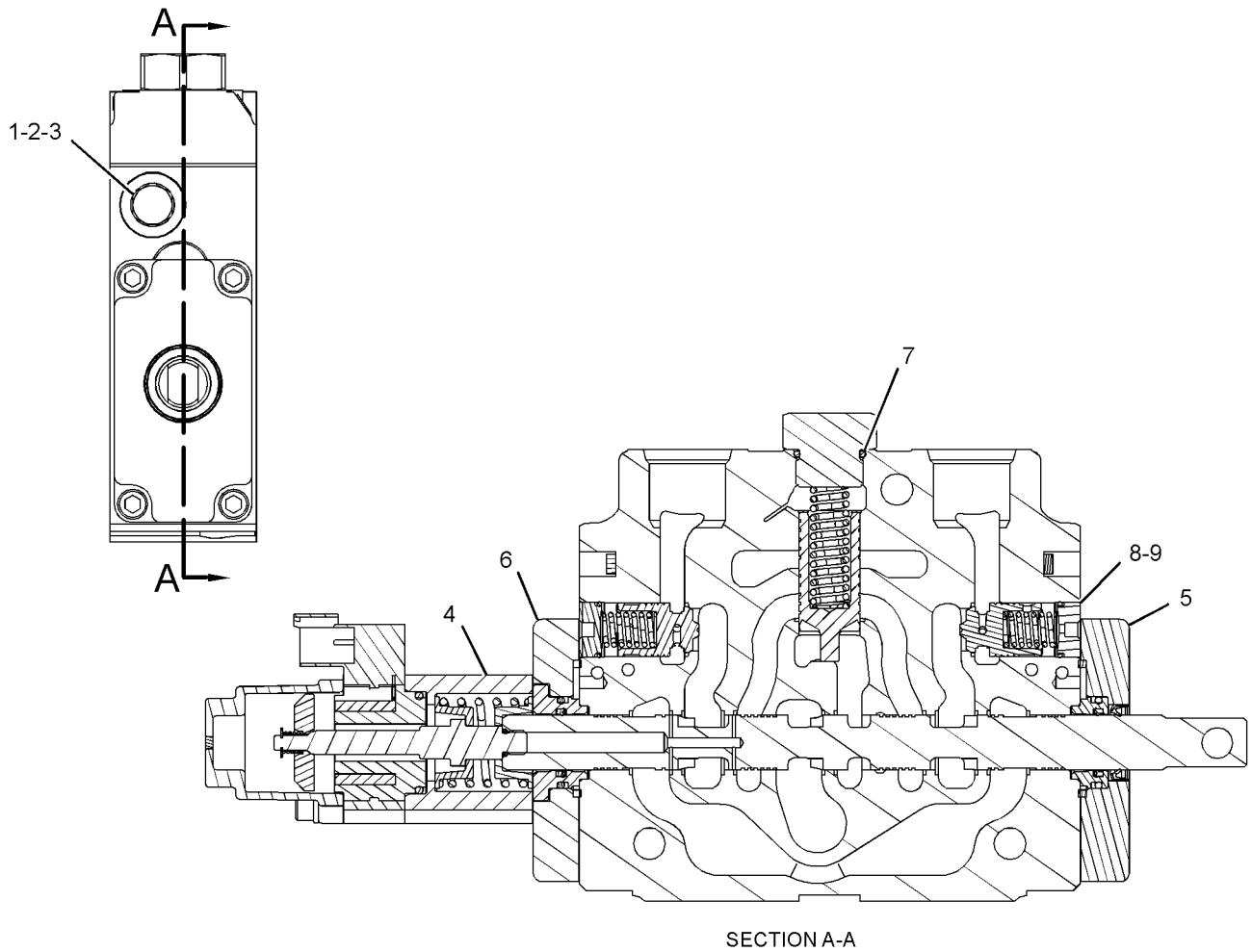

SECTION A-A

GRAPHIC #1 **<END>** g01958947

348-4576 VALVE GP-CONTROL–TILT

S/N: RBA1-UP
PART OF 342-6663 VALVE GP-BANK 3
AN ATTACHMENT

SMCS-5051 **i04129130**

NOTE	REF NO	GRAPHIC REF	PART NUMBER	QTY	PART NAME 1 2 3 4 5 6 (PRODUCT LEVEL)	SEE PAGE
	1	1	**260-3004**	2	VALVE GP-RELIEF	
	2	1	**192-7863**	2	PLUG	
	3	1	**6V-5138**	2	SEAL-O-RING	
	4	1	**338-5289**	1	KIT-DETENT (ELECTRICAL)	
					(INCLUDES SEAL-O-RING, CLIP, GASKETS, SCREWS, COIL, END CAP, STEM, MAGNET, RETAINERS, SPRINGS, LOCK WASHER & HOUSING)	
	5	1	**337-5099**	1	KIT-SEAL (TOP)	
					(INCLUDES HOUSING, SEALS, WIPER, SCREWS, INSERT & O-RING)	
	6	1	**337-5100**	1	KIT-SEAL (BOTTOM)	
					(INCLUDES HOUSING, SEALS, SCREWS & INSERT)	
	7	1	**6V-7970**	1	SEAL-O-RING	
	8	1	**192-7864**	2	PLUG	
	9	1	**192-7510**	2	SEAL-O-RING	

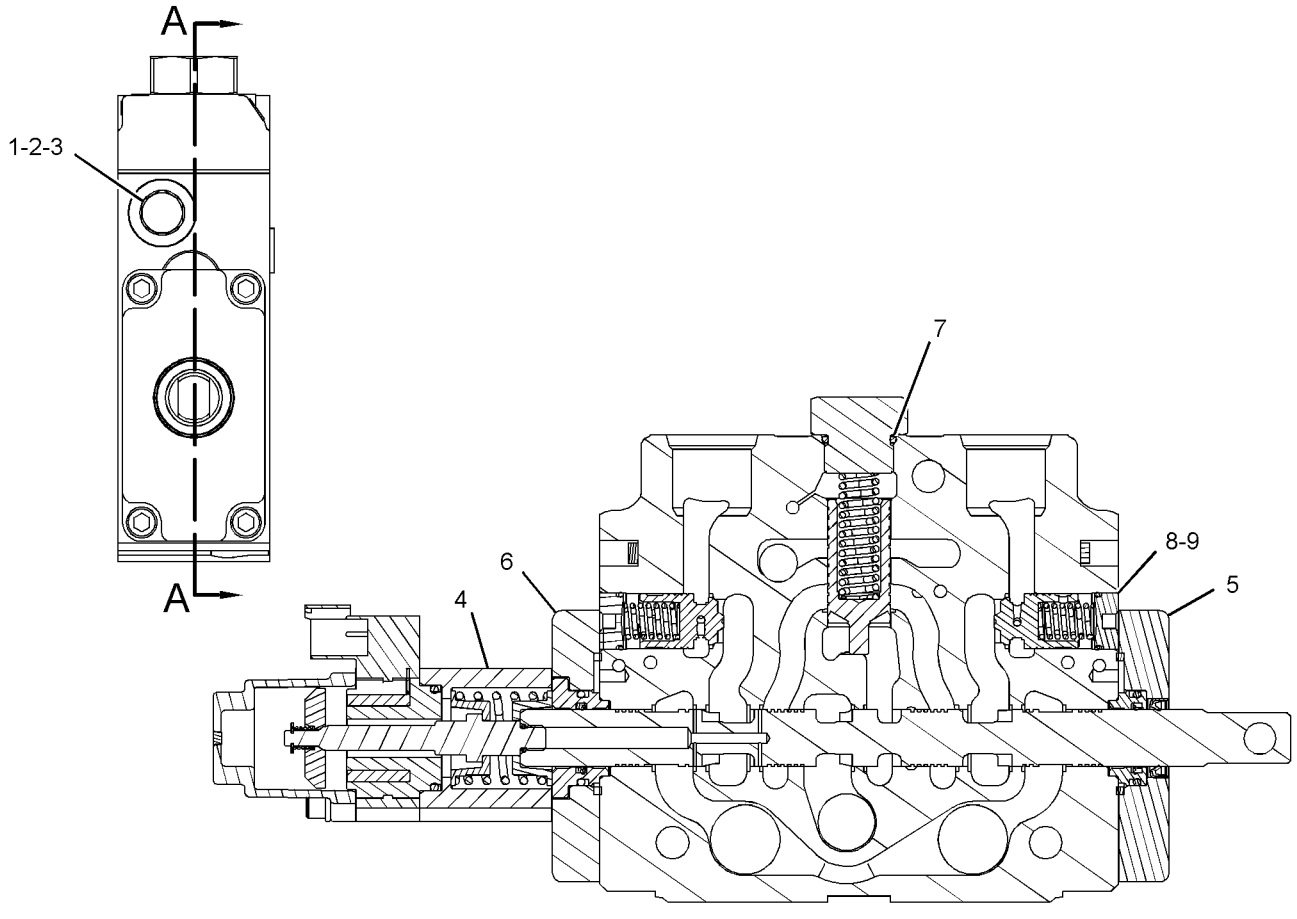

SECTION A-A

GRAPHIC #1 **<END>** g01958959

HYDRAULIC SYSTEM

348-4577 VALVE GP-CONTROL

S/N: RBA1-UP

PART OF 342-6663 VALVE GP-BANK 3

AN ATTACHMENT

SMCS-5051 **i04129131**

NOTE	REF NO	GRAPHIC REF	PART NUMBER	QTY	PART NAME 1 2 3 4 5 6 (PRODUCT LEVEL)	SEE PAGE
	1	1	**260-3005**	2	VALVE GP-RELIEF	
	2	1	**192-7863**	2	PLUG	
	3	1	**6V-5138**	2	SEAL-O-RING	
	4	1	**337-5099**	1	KIT-SEAL (TOP)	
					(INCLUDES HOUSING, SEALS, WIPER, SCREWS, INSERT & O-RING)	
	5	1	**337-5100**	1	KIT-SEAL (BOTTOM)	
					(INCLUDES HOUSING, SEALS, SCREWS & INSERT)	
	6	1	**338-5288**	1	KIT-COVER	
					(INCLUDES SCREWS, RETAINERS, SPRINGS, SPOOL & END CAP)	
	7	1	**6V-7970**	1	SEAL-O-RING	

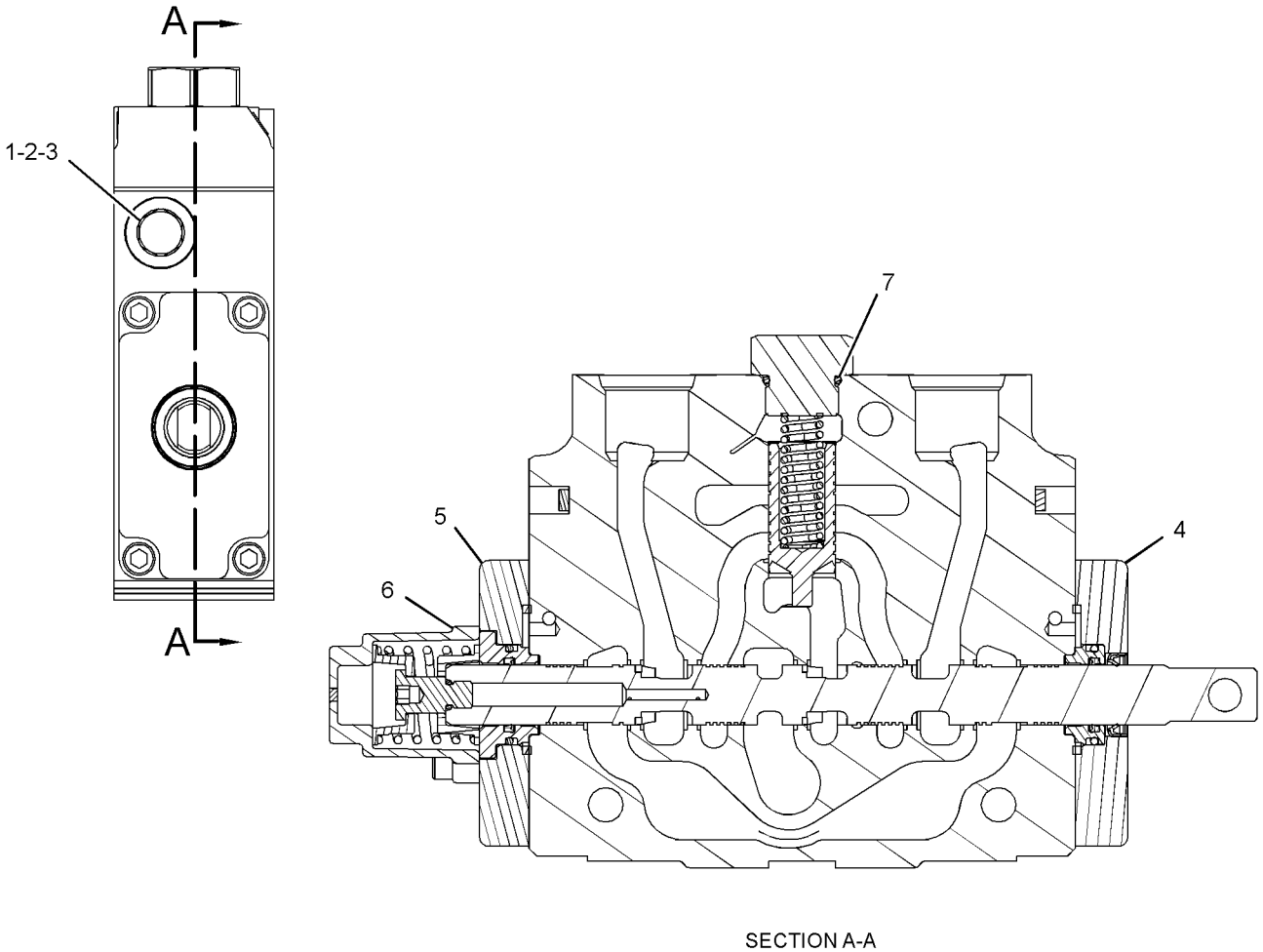

SECTION A-A

GRAPHIC #1 **<END>** g01958967

348-4579 VALVE GP-CONTROL–BOOM

S/N: RBA1-UP

PART OF 342-6667 VALVE GP-BANK 7, 342-6668 VALVE GP-BANK 8

AN ATTACHMENT

SMCS-5051 **i04124172**

NOTE	REF NO	GRAPHIC REF	PART NUMBER	QTY	PART NAME 1 2 3 4 5 6 (PRODUCT LEVEL)	SEE PAGE
	1	1	**348-4589**	1	VALVE GP-RELIEF (BOOM CYLINDER ROD END)	
	2	1	**348-4592**	1	VALVE GP-MANUAL (OVERRIDE CONTROL)	
	2A	1	**6V-5138**	1	SEAL-O-RING	
	3	1	**260-3003**	2	VALVE GP-RELIEF (160-BAR (2321-PSI)) (BOOM CYLINDER HEAD END)	
	4	1	**192-7863**	2	PLUG	
	5	1	**6V-5138**	2	SEAL-O-RING	
	6	1	**337-5099**	1	KIT-SEAL (TOP)	
					(INCLUDES HOUSING, SEALS, WIPER, SCREWS, INSERT & O-RING)	
	7	1	**337-5100**	1	KIT-SEAL (BOTTOM)	
					(INCLUDES HOUSING, SEALS, SCREWS & INSERT)	
	8	1	**338-5288**	1	KIT-COVER	
					(INCLUDES SCREWS, RETAINER, SPRINGS, SPOOL & END CAP)	
	9	1	**6V-7970**	1	SEAL-O-RING	
	10	1	**192-7864**	2	PLUG	
	11	1	**192-7510**	2	SEAL-O-RING	

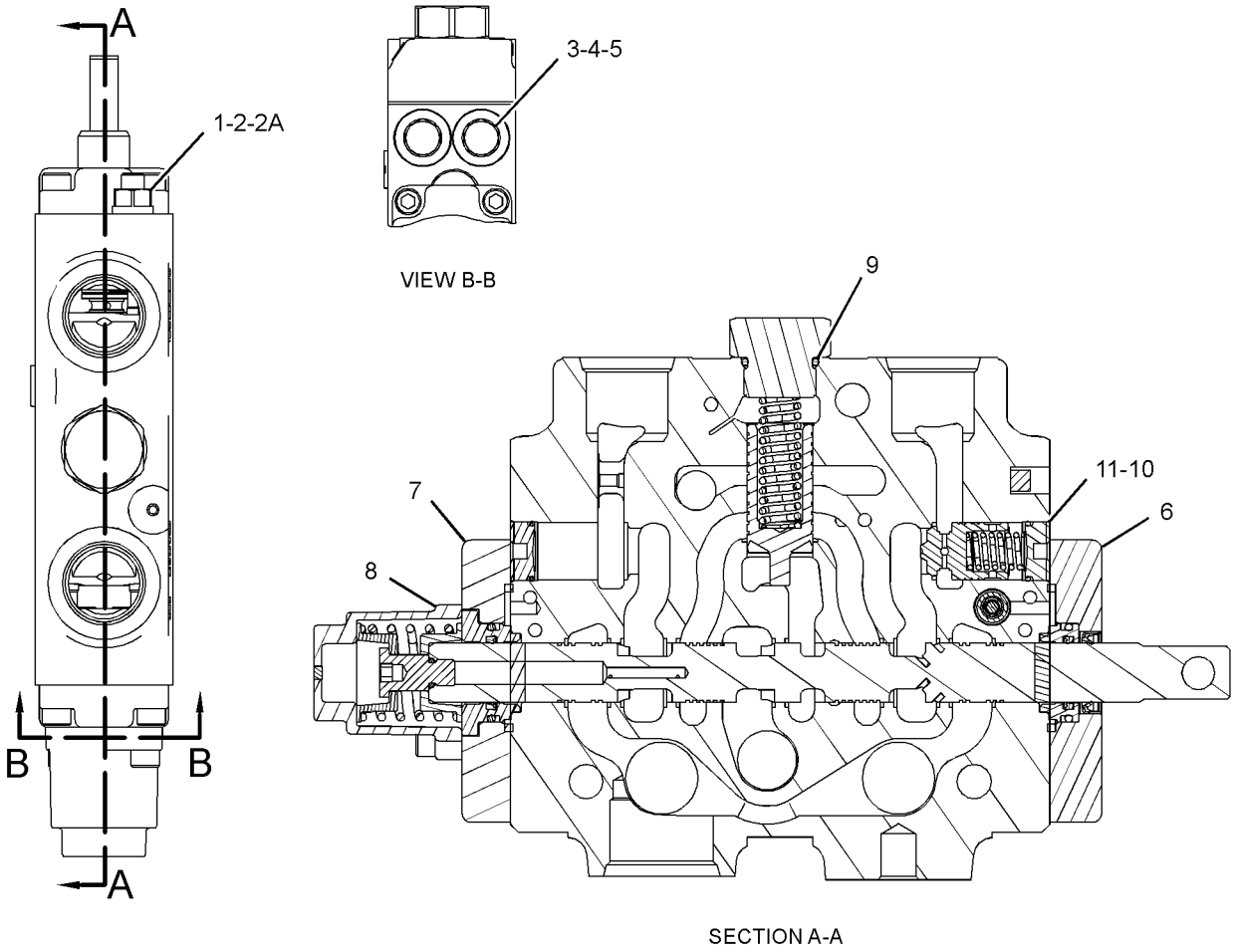

GRAPHIC #1 **<END>** g01959713

348-4580 VALVE GP-CONTROL–SWING

S/N: RBA1-UP

PART OF 342-6667 VALVE GP-BANK 7, 342-6668 VALVE GP-BANK 8

AN ATTACHMENT

SMCS-5051 **i04124174**

NOTE	REF NO	GRAPHIC REF	PART NUMBER	QTY	PART NAME 1 2 3 4 5 6 (PRODUCT LEVEL)	SEE PAGE
	1	1	**260-3002**	2	VALVE GP-RELIEF (DIRECT OPERATED)	
	2	1	**192-7863**	2	PLUG	
	3	1	**6V-5138**	2	SEAL-O-RING	
	4	1	**337-5099**	1	KIT-SEAL (TOP)	
					(INCLUDES HOUSING, SEALS, WIPER, SCREWS, INSERT & O-RING)	
	5	1	**337-5100**	1	KIT-SEAL (BOTTOM)	
					(INCLUDES HOUSING, SEALS, SCREWS & INSERT)	
	6	1	**338-5288**	1	KIT-COVER	
					(INCLUDES SCREWS, RETAINERS, SPRINGS, SPOOL & END CAP)	
	7	1	**6V-7970**	1	SEAL-O-RING	
	8	1	**192-7864**	2	PLUG	
	9	1	**192-7510**	2	SEAL-O-RING	

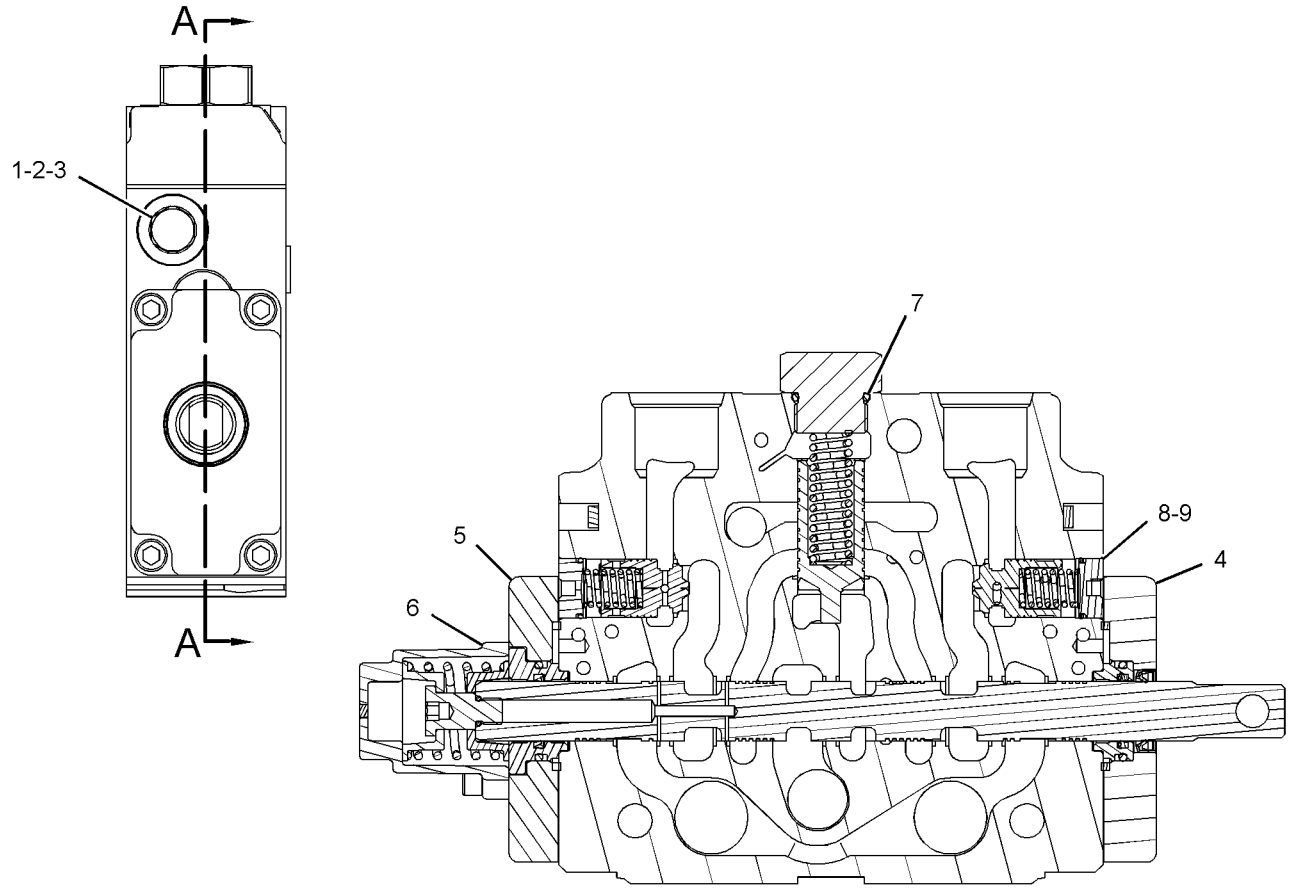

SECTION A-A

GRAPHIC #1 **<END>** g01958594

348-4581 VALVE GP-CONTROL–BUCKET

S/N: RBA1-UP

PART OF 342-6667 VALVE GP-BANK 7, 342-6668 VALVE GP-BANK 8 AN ATTACHMENT

SMCS-5051 **i04124175**

NOTE	REF NO	GRAPHIC REF	PART NUMBER	QTY	PART NAME 1 2 3 4 5 6 (PRODUCT LEVEL)	SEE PAGE
	1	1	**260-3006**	2	VALVE GP-RELIEF	
	2	1	**192-7863**	3	PLUG	
	3	1	**6V-5138**	3	SEAL-O-RING	
	4	1	**337-5099**	1	KIT-SEAL (TOP)	
					(INCLUDES HOUSING, SEALS, WIPER, SCREWS, INSERT & O-RING)	
	5	1	**337-5100**	1	KIT-SEAL (BOTTOM)	
					(INCLUDES HOUSING, SEALS, SCREWS & INSERT)	
	6	1	**338-5288**	1	KIT-COVER	
					(INCLUDES SCREWS, RETAINERS, SPRINGS, SPOOL & END CAP)	
	7	1	**6V-7970**	1	SEAL-O-RING	
	8	1	**192-7864**	2	PLUG	
	9	1	**192-7510**	2	SEAL-O-RING	
	10	1	**348-4593**	1	VALVE GP-CHECK	
		1	**6V-5138**	1	SEAL-O-RING	

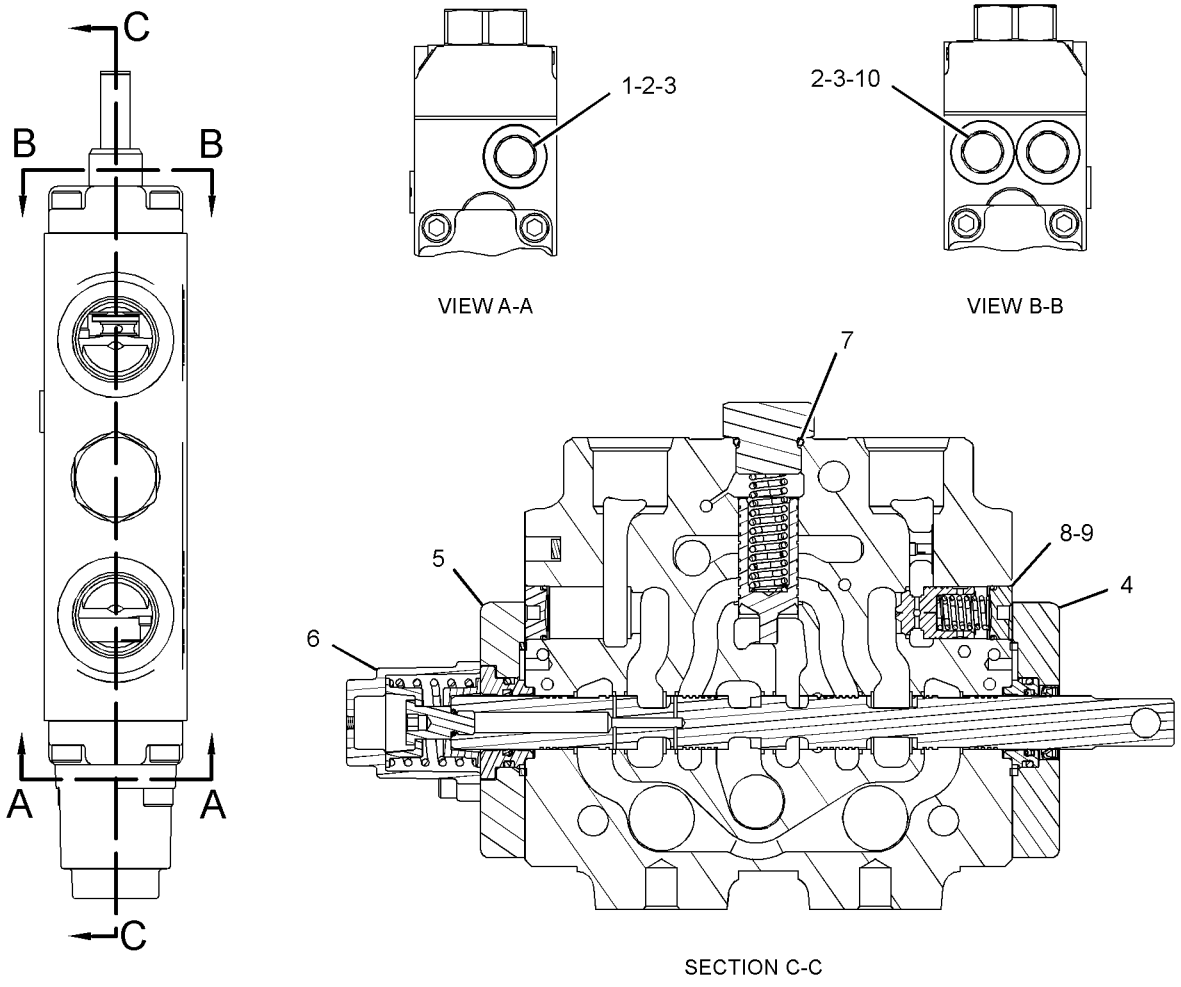

GRAPHIC #1 **<END>** g01958933

348-4582 VALVE GP-CONTROL–STICK

S/N: RBA1-UP

PART OF 342-6667 VALVE GP-BANK 7, 342-6668 VALVE GP-BANK 8

AN ATTACHMENT

SMCS-5051 **i04124173**

NOTE	REF NO	GRAPHIC REF	PART NUMBER	QTY	PART NAME 1 2 3 4 5 6 (PRODUCT LEVEL)	SEE PAGE
	1	1	**301-4484**	2	VALVE GP-RELIEF (STEERING CONTROL)	
	2	1	**192-7863**	3	PLUG	
	3	1	**6V-5138**	3	SEAL-O-RING	
	4	1	**337-5099**	1	KIT-SEAL (TOP)	
					(INCLUDES HOUSING, SEALS, WIPER, SCREWS, INSERT & O-RING)	
	5	1	**337-5100**	1	KIT-SEAL (BOTTOM)	
					(INCLUDES HOUSING, SEALS, SCREWS & INSERT)	
	6	1	**338-5288**	1	KIT-COVER	
					(INCLUDES SCREWS, RETAINERS, SPRINGS, SPOOL & END CAP)	
	7	1	**6V-7970**	1	SEAL-O-RING	
	8	1	**192-7864**	2	PLUG	
	9	1	**192-7510**	2	SEAL-O-RING	
	10	1	**348-4593**	1	VALVE GP-CHECK	
		1	**6V-5138**	1	SEAL-O-RING	

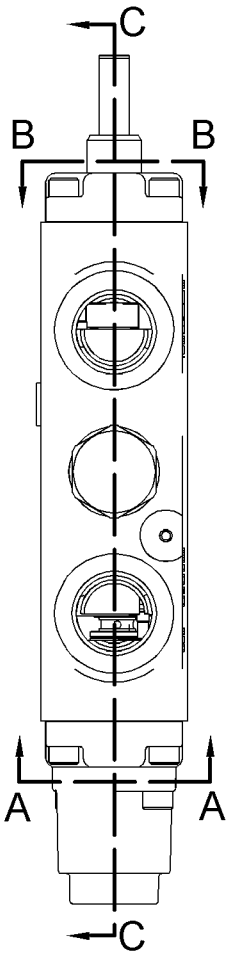

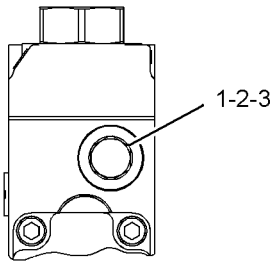

VIEW A-A

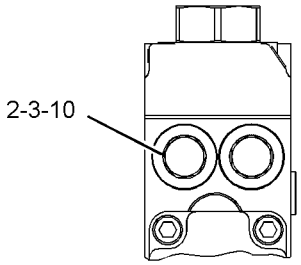

VIEW B-B

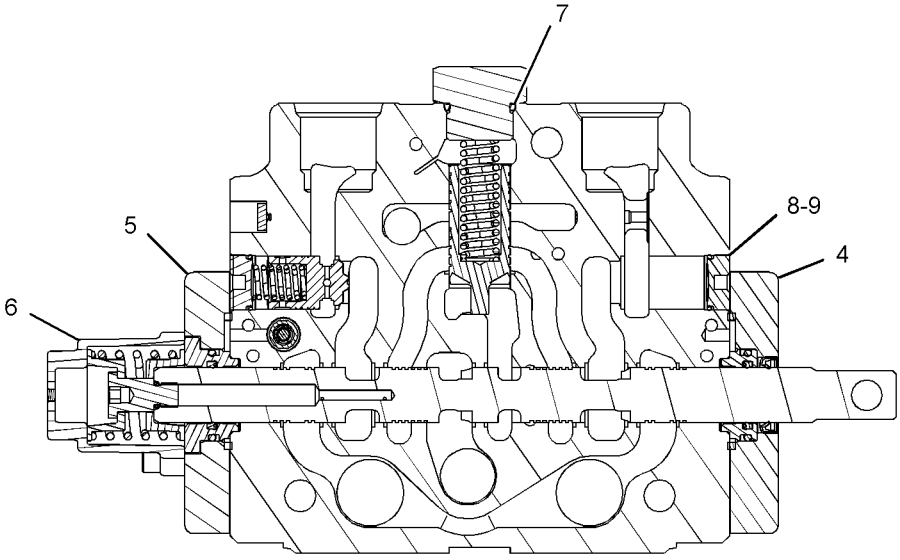

SECTION C-C

GRAPHIC #1 **<END>** g01958757

348-4583 VALVE GP-CONTROL–EXTENDABLE STICK

S/N: RBA1-UP

PART OF 342-6667 VALVE GP-BANK 7, 342-6668 VALVE GP-BANK 8 AN ATTACHMENT

SMCS-5051 **i04124176**

NOTE	REF NO	GRAPHIC REF	PART NUMBER	QTY	PART NAME 1 2 3 4 5 6 (PRODUCT LEVEL)	SEE PAGE
	1	1	**260-3002**	2	VALVE GP-RELIEF	
	2	1	**192-7863**	2	PLUG	
	3	1	**6V-5138**	2	SEAL-O-RING	
	4	1	**337-5099**	1	KIT-SEAL (TOP)	
					(INCLUDES HOUSING, SEALS, WIPER, SCREWS, INSERT & O-RING)	
	5	1	**337-5100**	1	KIT-SEAL (BOTTOM)	
					(INCLUDES HOUSING, SEALS, SCREWS & INSERT)	
	6	1	**338-5288**	1	KIT-COVER	
					(INCLUDES SCREWS, RETAINERS, SPRINGS, SPOOL & END CAP)	
	7	1	**6V-7970**	1	SEAL-O-RING	
	8	1	**192-7864**	2	PLUG	
	9	1	**192-7510**	2	SEAL-O-RING	

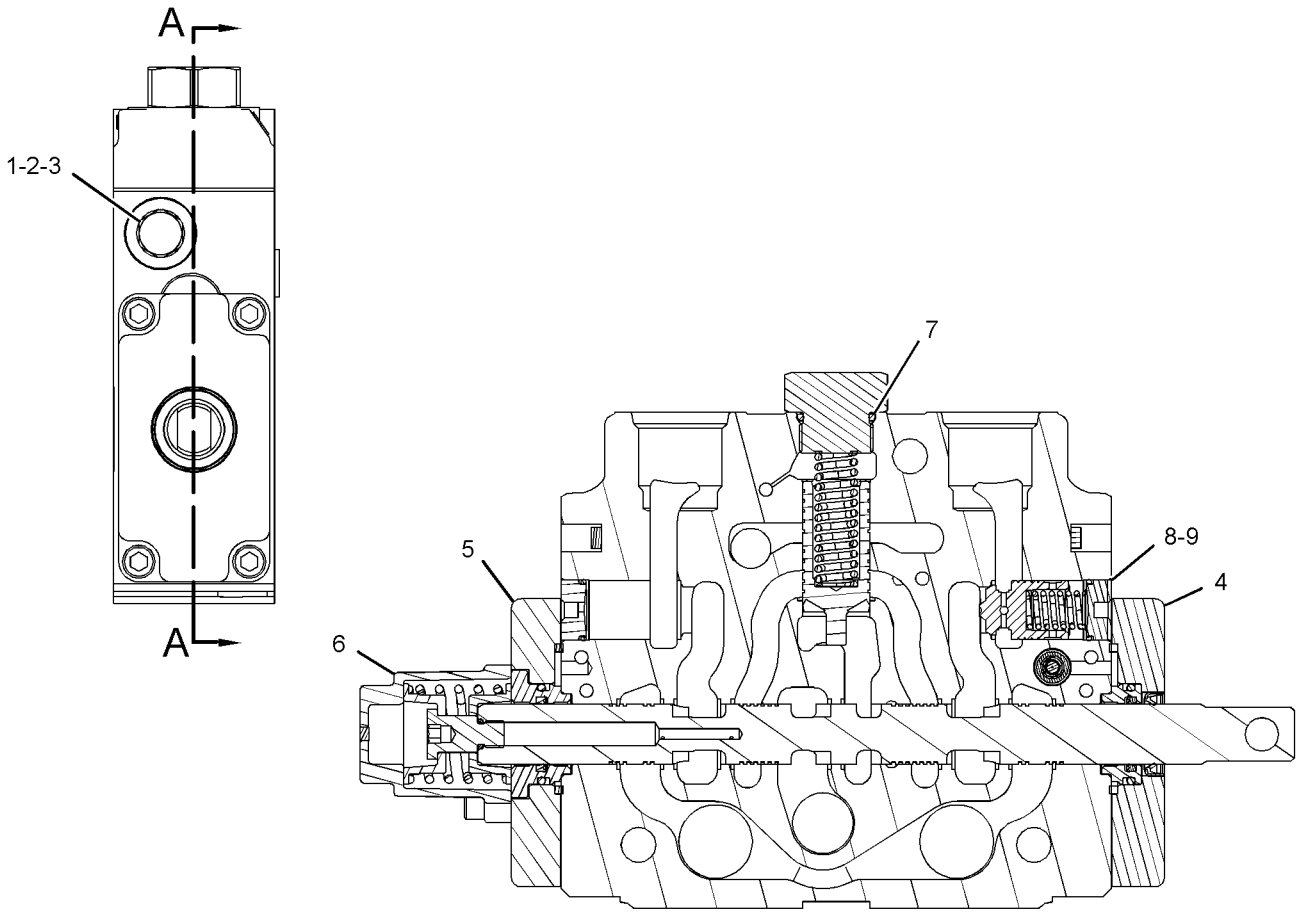

SECTION A-A

GRAPHIC #1 **<END>** g01958722

348-4584 VALVE GP-CONTROL–STABILIZER

S/N: RBA1-UP

PART OF 342-6667 VALVE GP-BANK 7, 342-6668 VALVE GP-BANK 8

AN ATTACHMENT

SMCS-5051 **i04124331**

NOTE	REF NO	GRAPHIC REF	PART NUMBER	QTY	PART NAME 1 2 3 4 5 6 (PRODUCT LEVEL)	SEE PAGE
	1	1	**192-0828**	1	VALVE GP-COMPENSATING (STABILIZER)	
		1	**192-4488**	1	RING	
		1	**192-7512**	1	SEAL-O-RING	
		1	**192-7515**	1	SEAL-O-RING	
	2	1	**192-2061**	1	COVER AS	
M		1	**149-4311**	4	BOLT-SOCKET HEAD (M6X1X16-MM)	
		1	**192-7505**	1	SEAL-O-RING	
		1	**192-7506**	4	SEAL-O-RING	
	3	1	**297-8500**	1	CAP-END	
	4	1	**6V-7970**	1	SEAL-O-RING	
	5	1	**192-7864**	2	PLUG	
	6	1	**192-7510**	2	SEAL-O-RING	

M-METRIC PART

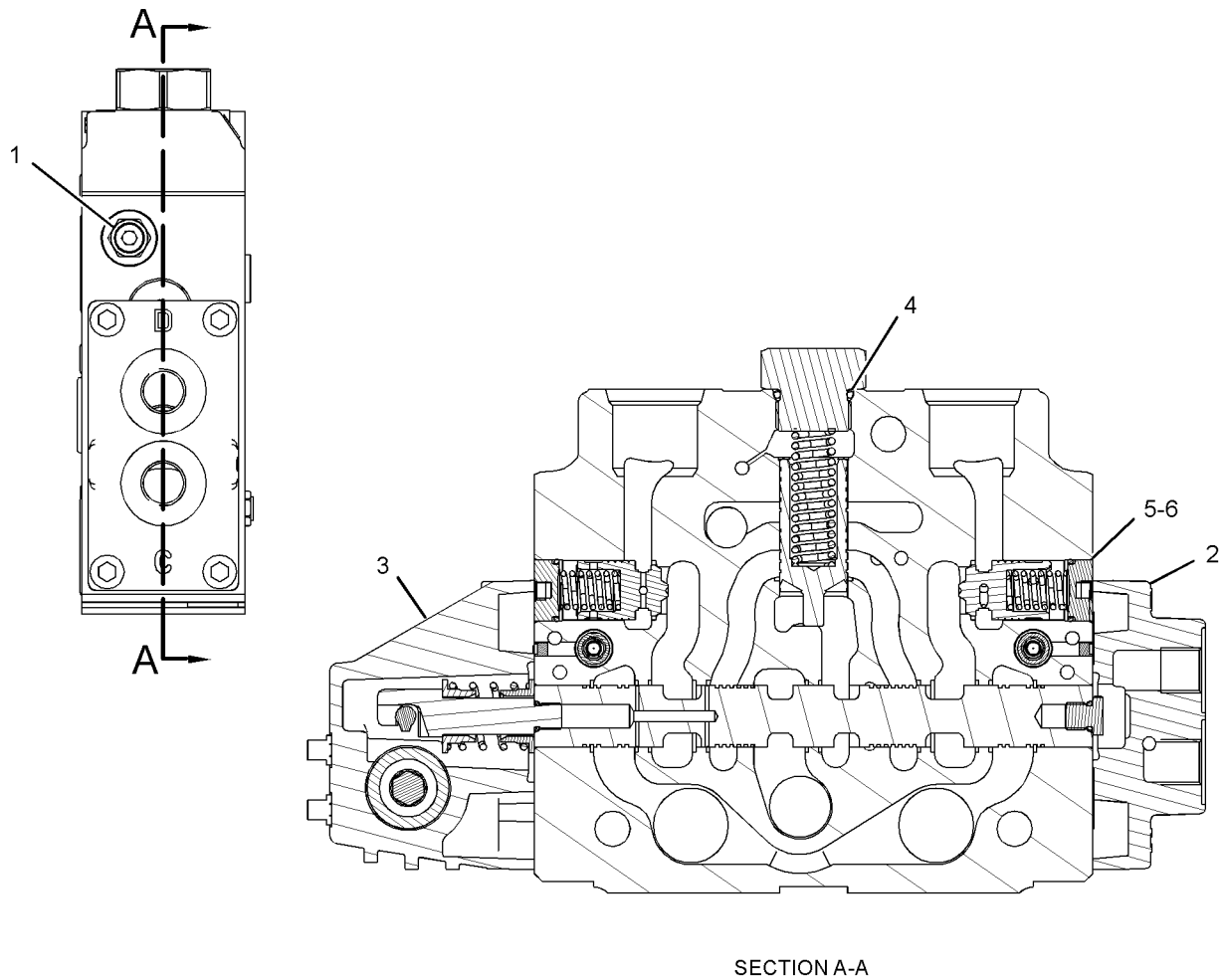

SECTION A-A

GRAPHIC #1 **<END>** g02150077

HYDRAULIC SYSTEM

348-9819 VALVE GP-CONTROL–AUXILIARY

S/N: RBA1-UP
PART OF 342-6668 VALVE GP-BANK 8
AN ATTACHMENT

SMCS-5051 **i04124178**

NOTE	REF NO	GRAPHIC REF	PART NUMBER	QTY	PART NAME 1 2 3 4 5 6 (PRODUCT LEVEL)	SEE PAGE
	1	1	**260-3002**	2	VALVE GP-RELIEF	
	2	1	**192-7863**	2	PLUG	
	3	1	**6V-5138**	2	SEAL-O-RING	
	4	1	**337-5099**	1	KIT-SEAL (TOP)	
					(INCLUDES HOUSING, SEALS, WIPER, SCREWS, INSERT & O-RING)	
	5	1	**337-5100**	1	KIT-SEAL (BOTTOM)	
					(INCLUDES HOUSING, SEALS, SCREWS & INSERT)	
	6	1	**338-5288**	1	KIT-COVER	
					(INCLUDES SCREWS, RETAINERS, SPRINGS, SPOOL & END CAP)	
	7	1	**6V-7970**	1	SEAL-O-RING	

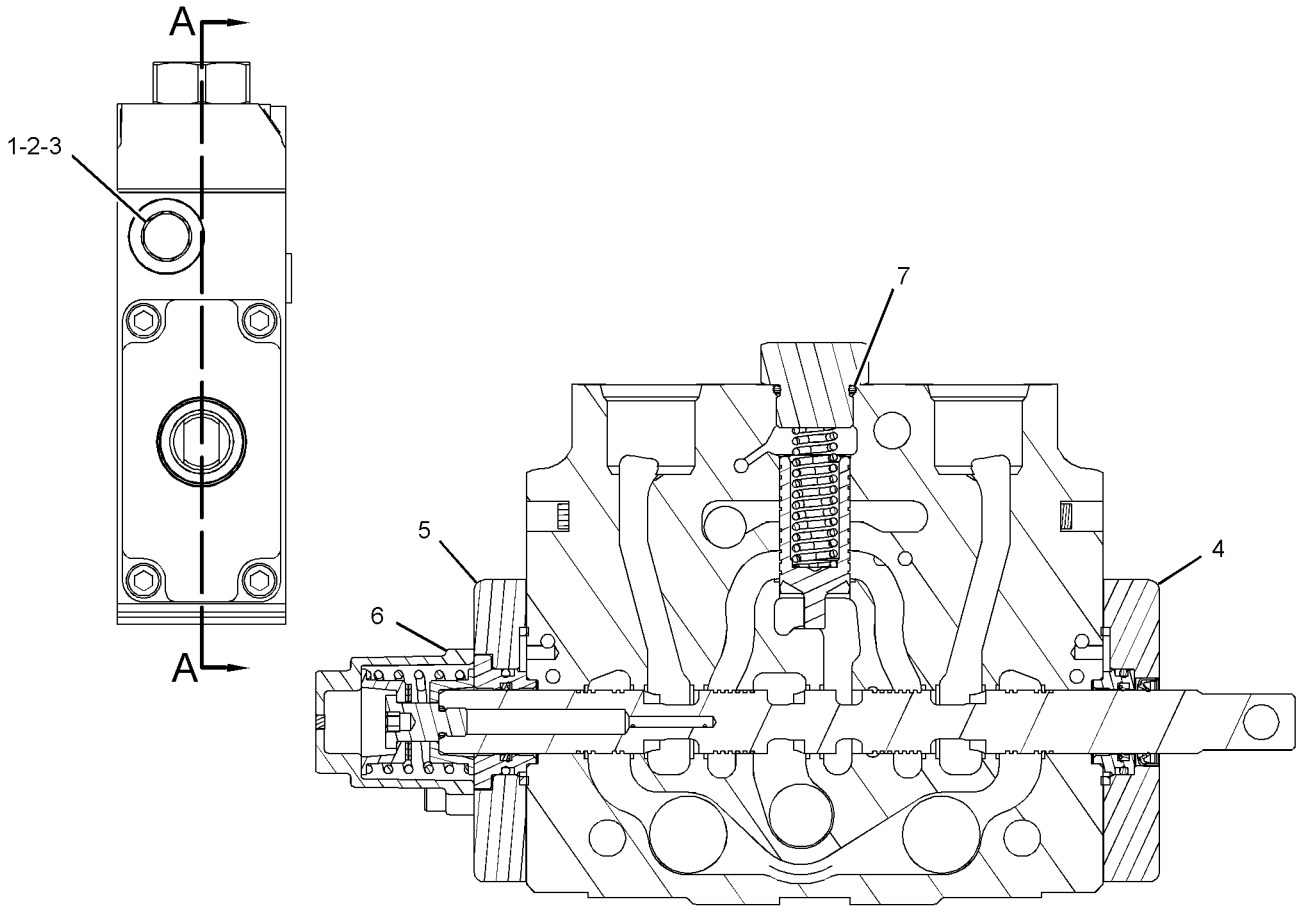

SECTION A-A

GRAPHIC #1 **<END>** g01958973

283-6331 VALVE GP-CUSHION CROSSOVER RLF

S/N: RBA1-UP

PART OF 254-0151 LINES GP-SWING

SMCS-5117 **i04128933**

NOTE	REF NO	GRAPHIC REF	PART NUMBER	QTY	PART NAME 1 2 3 4 5 6 (PRODUCT LEVEL)	SEE PAGE
	1	1	**7I-8084**	2	PLUG	
	2	1	**292-5618**	2	VALVE GP-CUSHION CROSSOVER RLF	
					(EACH INCLUDES)	
		1	**095-1586**	1	SEAL-O-RING	
		1	**095-1785**	2	RING-BACKUP	

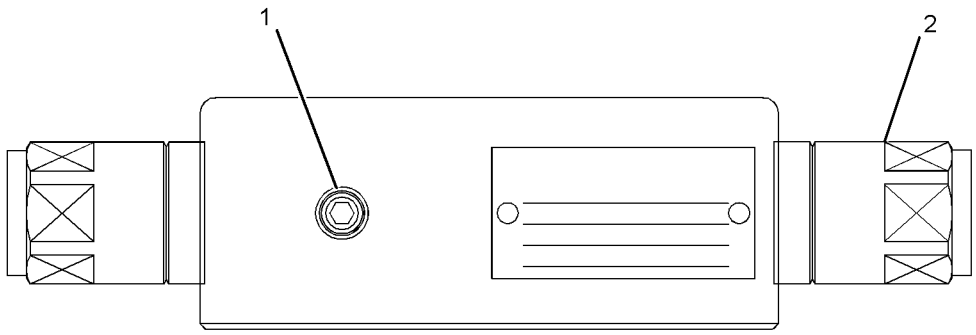

GRAPHIC #1 **<END>** g01433156

HYDRAULIC SYSTEM

257-7732 VALVE GP-MAKEUP

S/N: RBA1-UP
PART OF 271-0521 VALVE GP-CONTROL
AN ATTACHMENT

SMCS-5080, 5090 **i04125554**

NOTE	REF NO	GRAPHIC REF	PART NUMBER	QTY	PART NAME 1 2 3 4 5 6 (PRODUCT LEVEL)	SEE PAGE
	1	1	**169-1616**	1	RING-BACKUP	
	2	1	**095-1751**	1	SEAL-O-RING	
	3	1	**8J-2413**	1	SEAL-O-RING	

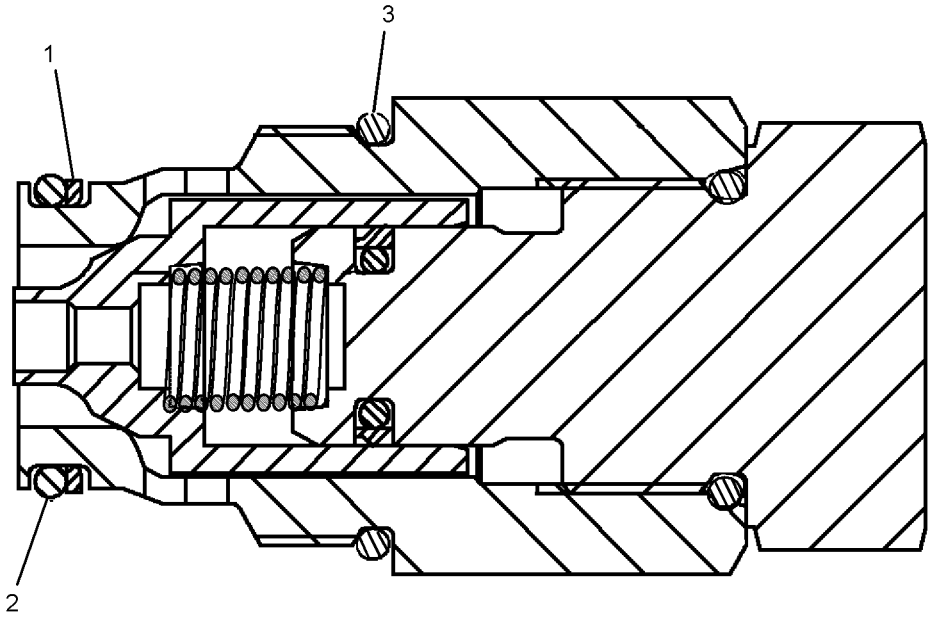

GRAPHIC #1 **<END>** g01296837

223-4715 VALVE GP-PILOT–STABILIZER

S/N: RBA1-UP

PART OF 254-0200 CAB AR-ENCLOSED ROPS, 254-0198 CANOPY AR-OPEN ROPS AN ATTACHMENT

SMCS-5059 **i02521230**

NOTE	REF NO	GRAPHIC REF	PART NUMBER	QTY	PART NAME 1 2 3 4 5 6 (PRODUCT LEVEL)	SEE PAGE
	1	1	**198-6498**	2	BOOT	
	2	1	**198-6522**	1	KIT-LEVER (PILOT VALVE)	
					(INCLUDES LEVER, CAM , COVER FOR MICROSWITCH, PIN, SCREWS, ARMATURE, SNAP RING & LOCKING PIN)	
	3	1	**198-6516**	2	KIT-SWITCH (PILOT VALVE)	
					(EACH INCLUDES MICROSWITCH, SUPPORT PLATE, SCREWS, WASHERS, CONNECTOR & SOCKETS)	
	4	1	**198-6505**	2	KIT-COIL (PILOT VALVE)	
					(EACH INCLUDES SOLENOID, BOLT & CONNECTOR KIT)	
	5	1	**198-6514**	2	KIT-SENSOR (PILOT VALVE)	
					(EACH INCLUDES SOCKET & SPRINGS)	
	6	1	**116-4481**	2	PLATE	
	7	1	**198-6506**	4	KIT-PLUNGER (PILOT VALVE)	
					(EACH INCLUDES PLUNGER GUIDE, FULL PLUNGER, SNAP RING & RELEASE SWITCH)	
	8	1	**198-6499**	1	KIT-LEVER (PILOT VALVE)	
					(INCLUDES LEVER, LOCKING PIN, CAM COVER FOR MICROSWITCH, PIN, SCREWS, ARMATURE & SNAP RING)	
	9	1	**158-4466**	2	KIT-SPRING (PILOT VALVE)	
					(EACH INCLUDES SPRINGS)	
	10	1	**198-6515**	1	KIT-SEAL (PILOT VALVE)	
					(INCLUDES O-RINGS)	
M	11	1	**7I-8935**	2	BOLT-SOCKET HEAD (M8X1.25X75-MM)	
M	12	1	**176-8541**	2	NUT (M8X6.5-MM)	

M-METRIC PART

223-4715 VALVE GP-PILOT *(contd.)* i02521230

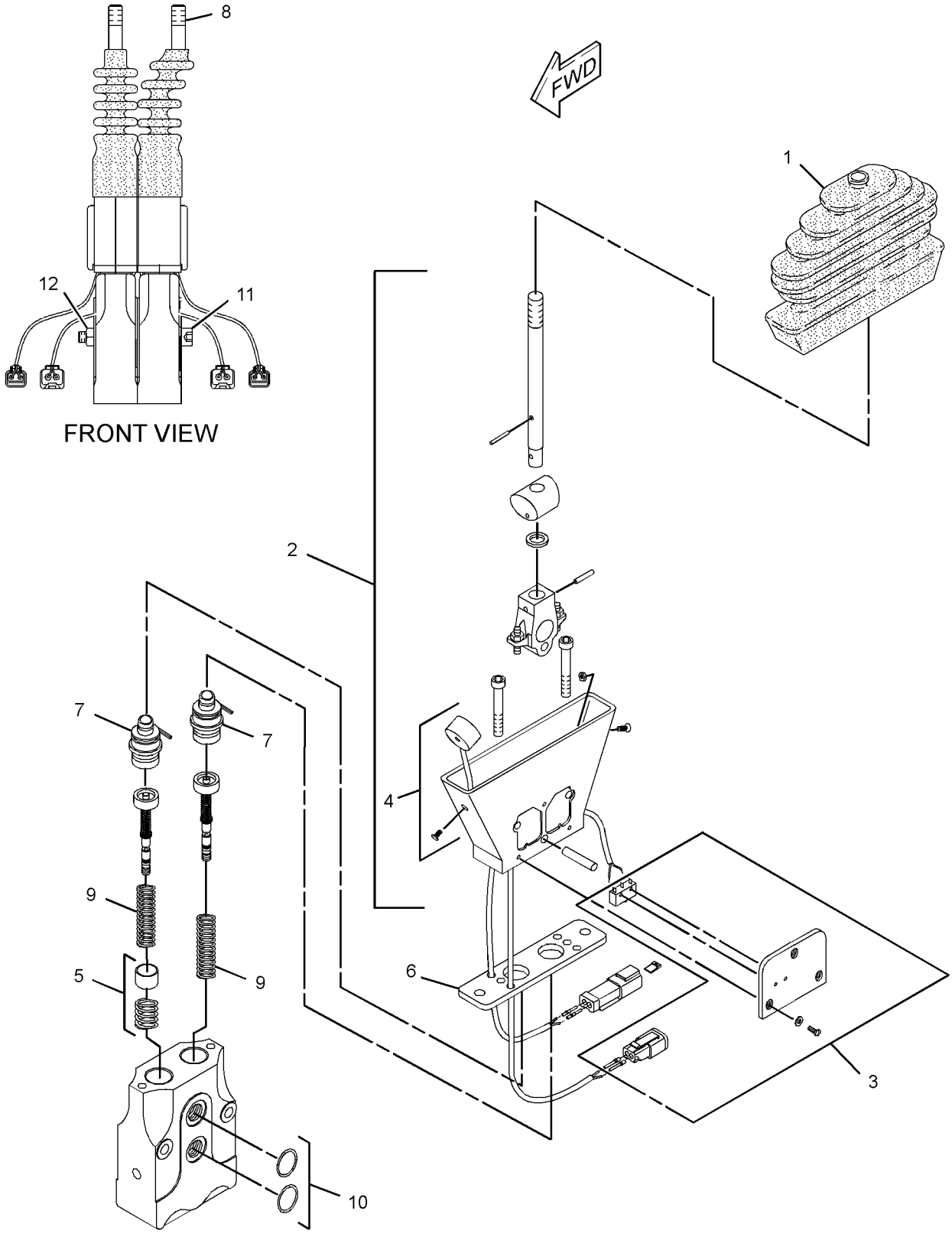

GRAPHIC #1 **<END>** g01268822

300-0430 VALVE GP-PRESSURE REDUCING–SERVICE BRAKE

S/N: RBA1-UP

PART OF 254-0126 CONTROL GP-SERVICE BRAKE

SMCS-5117 **i04105206**

NOTE	REF NO	GRAPHIC REF	PART NUMBER	QTY	PART NAME 1 2 3 4 5 6 (PRODUCT LEVEL)	SEE PAGE
Y	1	1	**301-0086**	1	VALVE GP-PRESSURE REDUCING	374

Y-SEPARATE ILLUSTRATION

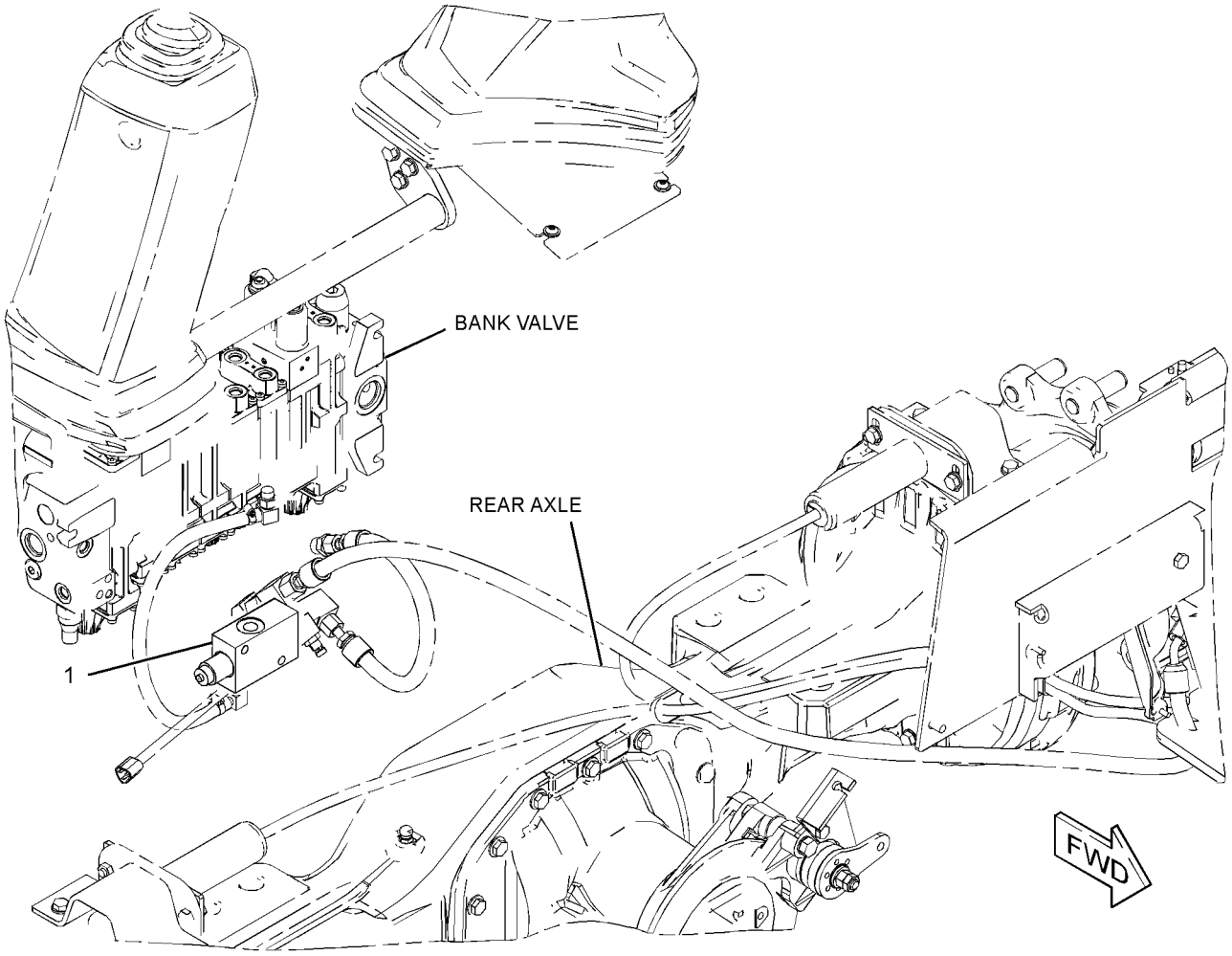

GRAPHIC #1 **<END>** g01411375

HYDRAULIC SYSTEM

301-0086 VALVE GP-PRESSURE REDUCING

S/N: RBA1-UP

PART OF 300-0430 VALVE GP-PRESSURE REDUCING

SMCS-5117 **i04105309**

NOTE	REF NO	GRAPHIC REF	PART NUMBER	QTY	PART NAME 1 2 3 4 5 6 (PRODUCT LEVEL)	SEE PAGE
	1	1	**2M-9780**	1	SEAL-O-RING	
	2	1	**6V-3505**	1	RING-BACKUP	
	3	1	**8C-3132**	1	SEAL-O-RING	
	4	1	**6E-0410**	1	SEAL-O-RING	
	5	1	**5P-2199**	1	RING-BACKUP	

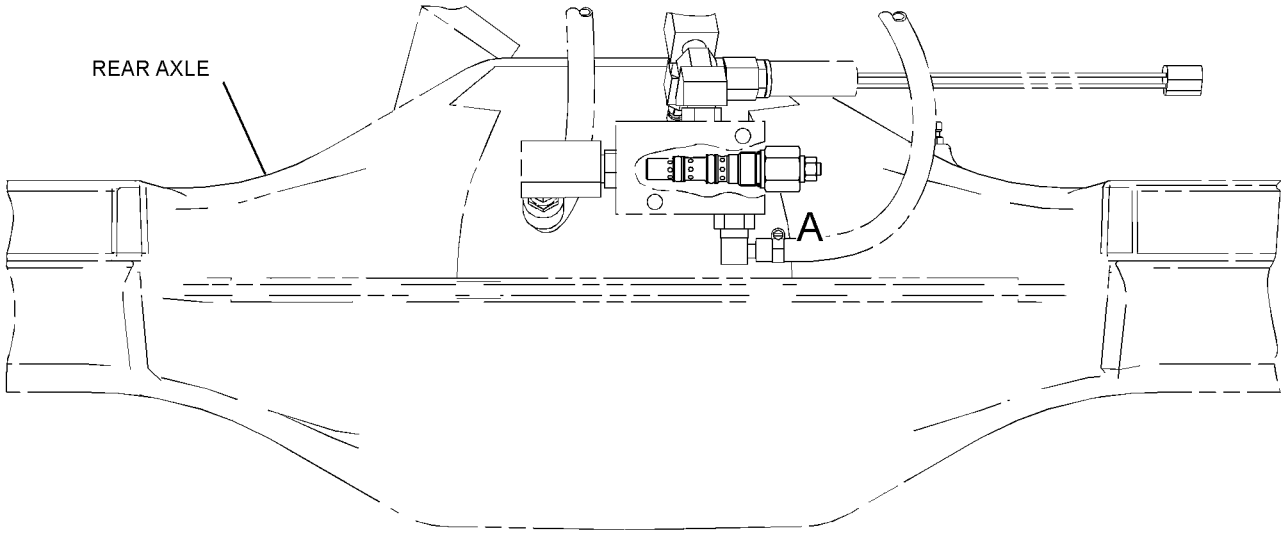

REAR VIEW

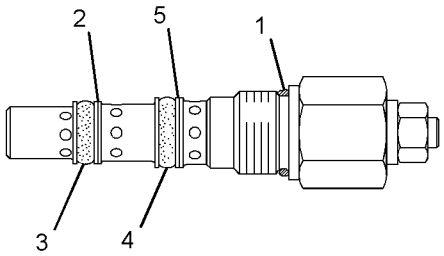

VIEW OF AREA A

GRAPHIC #1 **<END>** g01412656

296-6723 VALVE GP-PUMP CONTROL–POWER COMPENSATOR

S/N: RBA1-UP

PART OF 269-9336 PUMP GP-PISTON

SMCS-5086, 5455 **i04128971**

NOTE	REF NO	GRAPHIC REF	PART NUMBER	QTY	PART NAME 1 2 3 4 5 6 (PRODUCT LEVEL)	SEE PAGE
	1	1	**103-5520**	1	CARRIER-PIN	
	2	1	**214-0592**	1	GASKET	
M	3	1	**6V-5683**	1	BOLT (M6X1X16-MM)	
M	4	1	**3T-0849**	2	BOLT-SOCKET HEAD (M6X1X25-MM)	
	5	1	**3C-8388**	1	PIN-ROLL	
	6	1	**6V-8236**	1	PIN-SPRING	
	7	1	**105-1440**	1	CAP	
	8	1	**6V-4589**	1	SEAL-O-RING	
	9	1	**033-6044**	1	SEAL-O-RING	

M-METRIC PART

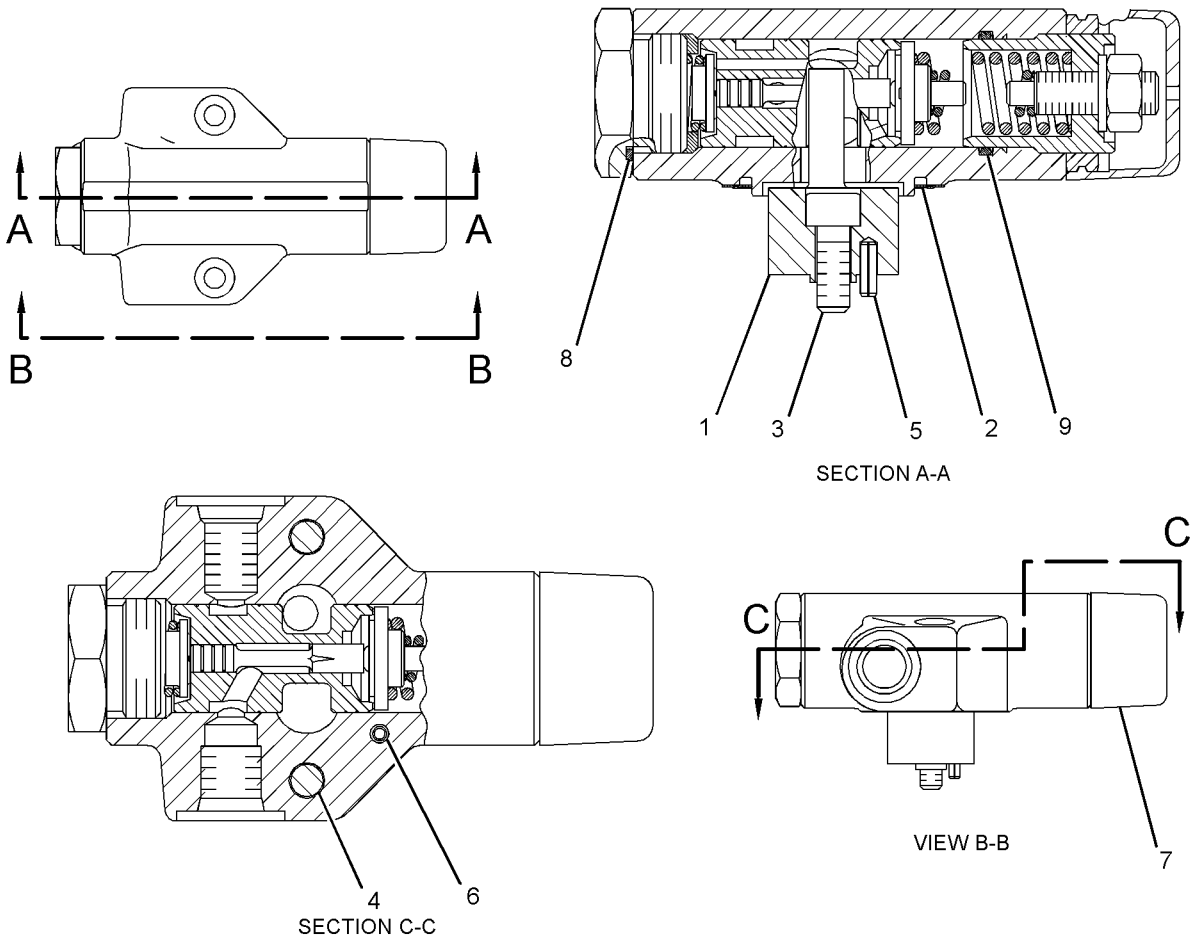

GRAPHIC #1 **<END>** g01529173

260-3022 VALVE GP-RELIEF–DIRECT OPERATED

S/N: RBA1-UP
PART OF 289-3274 LINES GP-PUMP
AN ATTACHMENT

SMCS-5069, 5117 **i04149769**

NOTE	REF NO	GRAPHIC REF	PART NUMBER	QTY	PART NAME 1 2 3 4 5 6 (PRODUCT LEVEL)	SEE PAGE
	1	1	**260-3023**	1	VALVE GP-RELIEF (MAIN)	
		1	**257-7707**	1	KIT-SEAL (RELIEF VALVE)	
					(INCLUDES O-RINGS & BACKUP RING)	
	2	1	**257-5616**	1	BLOCK AS-TEST MANIFOLD	

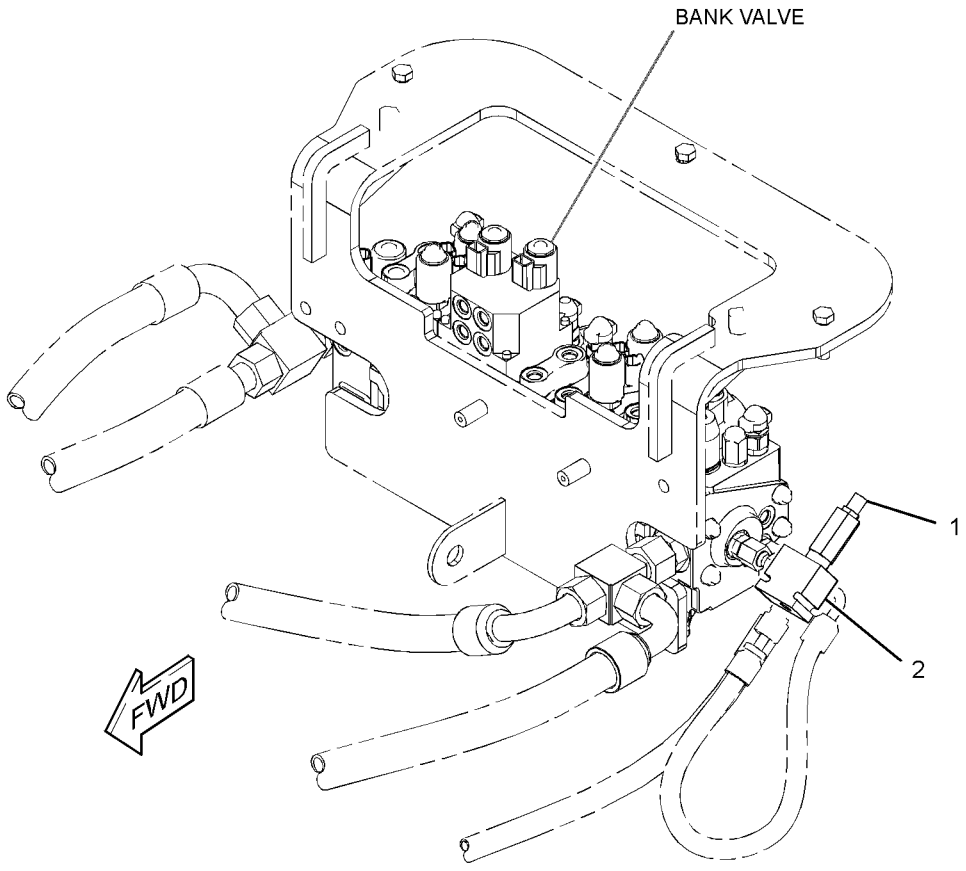

GRAPHIC #1 **<END>** g01414469

HYDRAULIC SYSTEM

345-7712 VALVE GP-RELIEF

S/N: RBA1-UP
PART OF 345-3167 LINES GP-PUMP
AN ATTACHMENT

SMCS-5069, 5117 **i04149770**

NOTE	REF NO	GRAPHIC REF	PART NUMBER	QTY	PART NAME 1 2 3 4 5 6 (PRODUCT LEVEL)	SEE PAGE
	1	1	**348-4091**	1	VALVE GP-RELIEF	
	2	1	**348-4101**	1	VALVE GP-RELIEF	

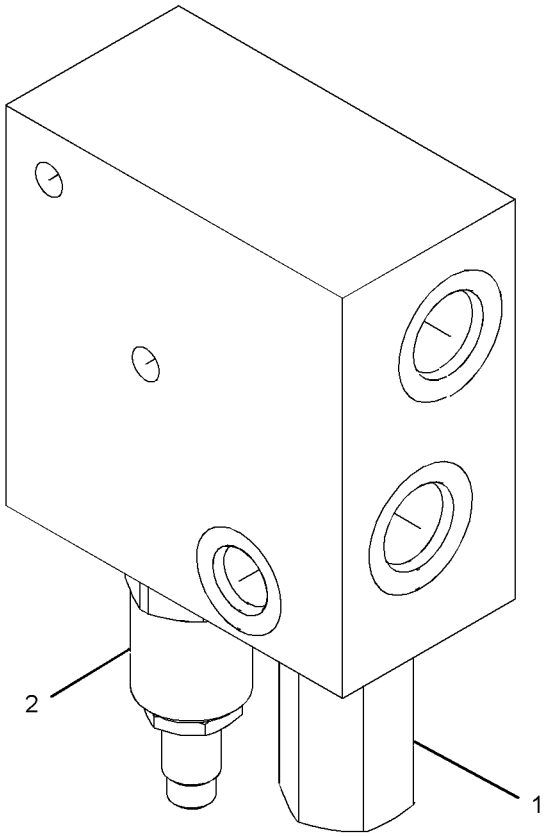

GRAPHIC #1 **<END>** g01957775

HYDRAULIC SYSTEM

185-4254 VALVE GP-SOLENOID

S/N: RBA1-UP
12-VOLT
PART OF 179-3543 MANIFOLD & SOLENOID GP-CONTROL
AN ATTACHMENT

SMCS-5132, 5479 **i03370641**

NOTE	REF NO	GRAPHIC REF	PART NUMBER	QTY	PART NAME 1 2 3 4 5 6 (PRODUCT LEVEL)	SEE PAGE
	1	1	**226-9629**	1	COIL AS-SOLENOID (12-VOLT)	
	2	1	**164-2108**	1	WASHER (13.03X25.4X2.38-MM THK)	
	3	1	**218-2373**	1	NUT (1/2-28-THD)	

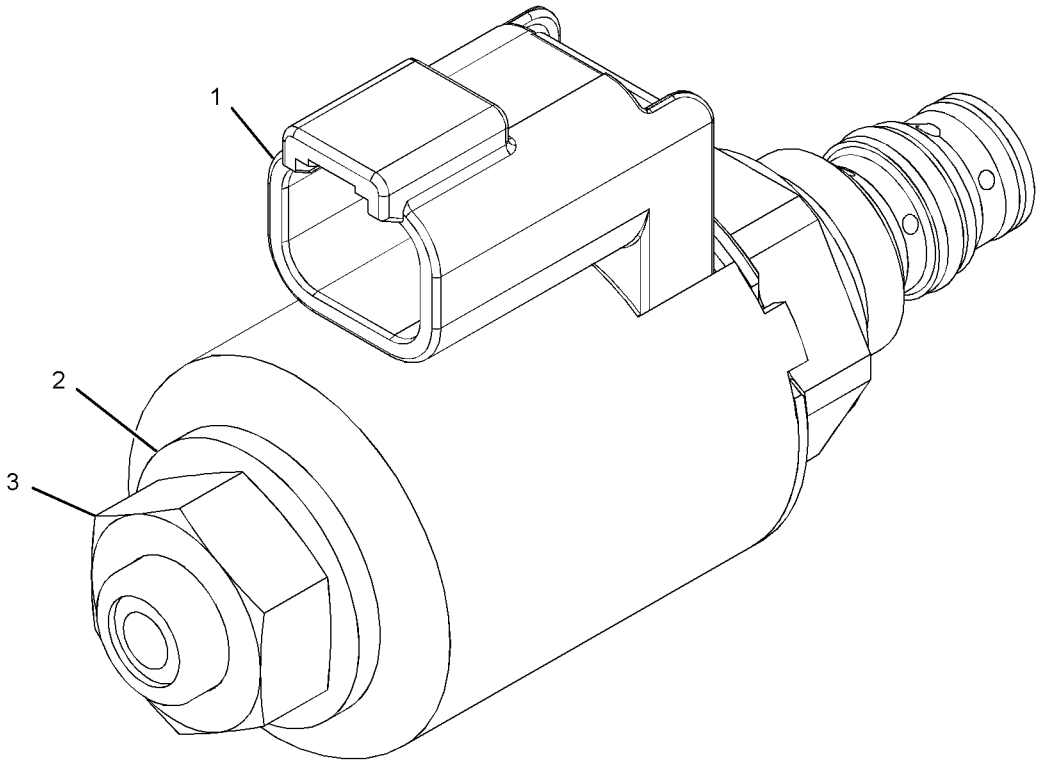

GRAPHIC #1 **<END>** g01716997

IMPLEMENTS

9R-1335 ARM GP-LIFT

S/N: RBA1-UP

PART OF 254-0140 LOADER AR

SMCS-6118, 6119 **i04130829**

NOTE	REF NO	GRAPHIC REF	PART NUMBER	QTY	PART NAME 1 2 3 4 5 6 (PRODUCT LEVEL)	SEE PAGE
	1	1	**9R-3649**	1	PIN	
	2	1	**9R-2790**	2	PLATE	
M	3	1	**8T-4910**	6	BOLT (M12X1.75X60-MM)	
	4	1	**8T-4223**	6	WASHER-HARD (13.5X25.5X3-MM THK)	
	5	1	**3B-8488**	2	FITTING-GREASE	
	6	1	**6V-8344**	4	RING-RETAINING	
B	7	1	**9R-1502**	5	WASHER (56X90X4-MM THK)	
	8	1	**3B-8489**	7	FITTING-GREASE	
M	9	1	**7X-2543**	2	BOLT (M10X1.5X120-MM)	
	10	1	**9R-3648**	2	PIN	
M	11	1	**8T-0389**	2	LOCKNUT (M10X1.5-THD)	
	12	1	**9R-3653**	1	PIN AS	
	13	1	**9R-3651**	1	PIN AS	
	14	1	**9R-1510**	4	WASHER (51X82X4-MM THK)	
	15	1	**6V-4364**	4	RING-RETAINING	
	16	1	**9R-2798**	2	PIN	
	17	1	**9R-3633**	1	ARM & BEARING AS-LIFT	
	17A	1	**9R-0413**	4	BUSHING	
	17B	1	**9R-3092**	4	BUSHING	
B	23	1	**176-0625**	3	WASHER (67.5X120X2-MM THK)	
B	24	1	**176-0626**	2	WASHER (67.5X120X3-MM THK)	

B-USE AS REQUIRED
M-METRIC PART

9R-1335 **ARM GP-LIFT** *(contd.)* **i04130829**

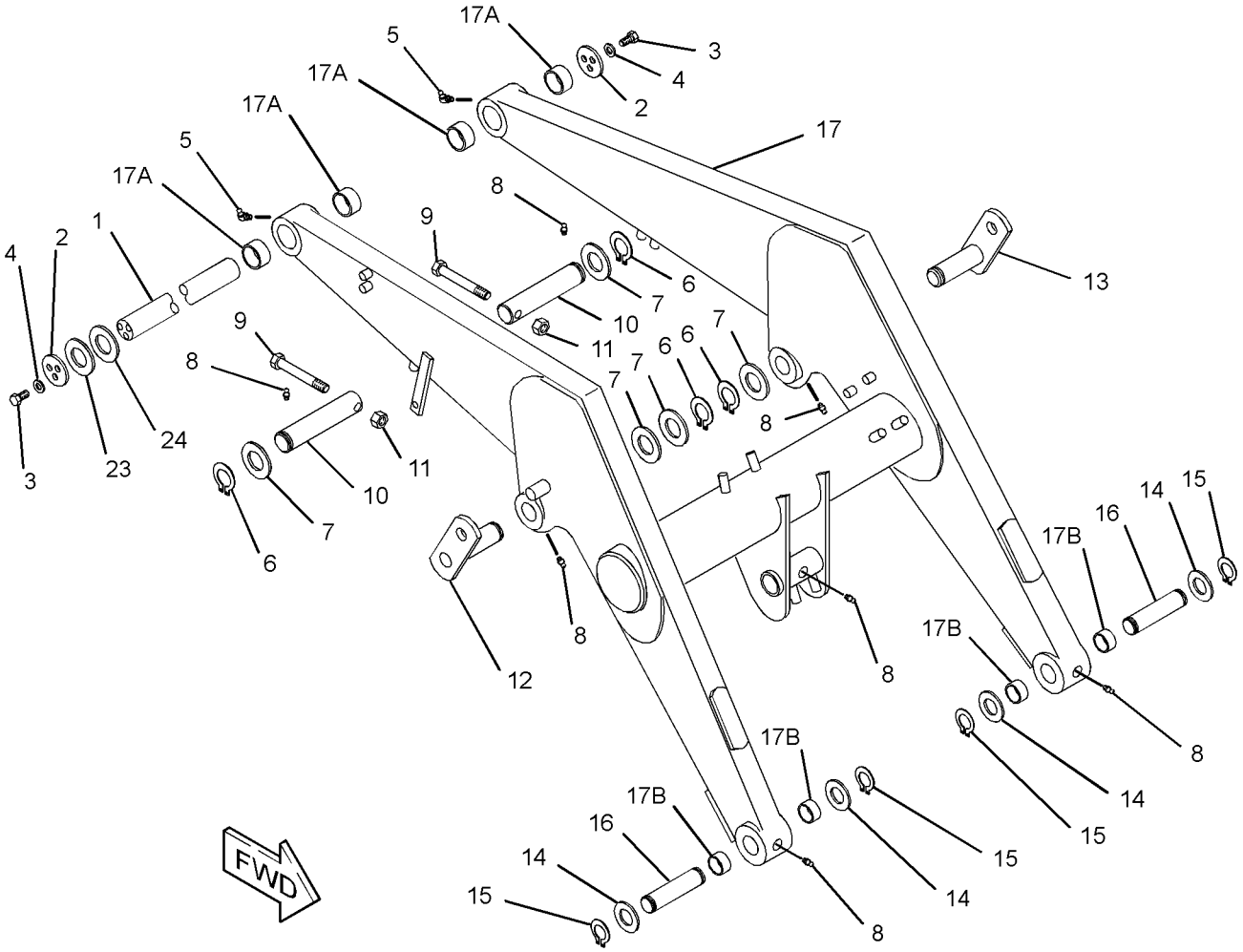

GRAPHIC #1 **<END>** g02346476

270-7818 BOOM AS

S/N: RBA1-UP
PART OF 269-8217 BOOM GP
AN ATTACHMENT

SMCS-6501 **i04145992**

NOTE	REF NO	GRAPHIC REF	PART NUMBER	QTY	PART NAME 1 2 3 4 5 6 (PRODUCT LEVEL)	SEE PAGE
	1	1	**278-0204**	2	BUSHING	
	2	1	**292-4209**	2	BEARING	
M	3	1	**8R-7783**	4	BOSS (M12X1.75X45-MM)	
	4	1	**9R-9282**	4	BOSS (M10X1.5-THD) (M10X80-MM)	

M-METRIC PART

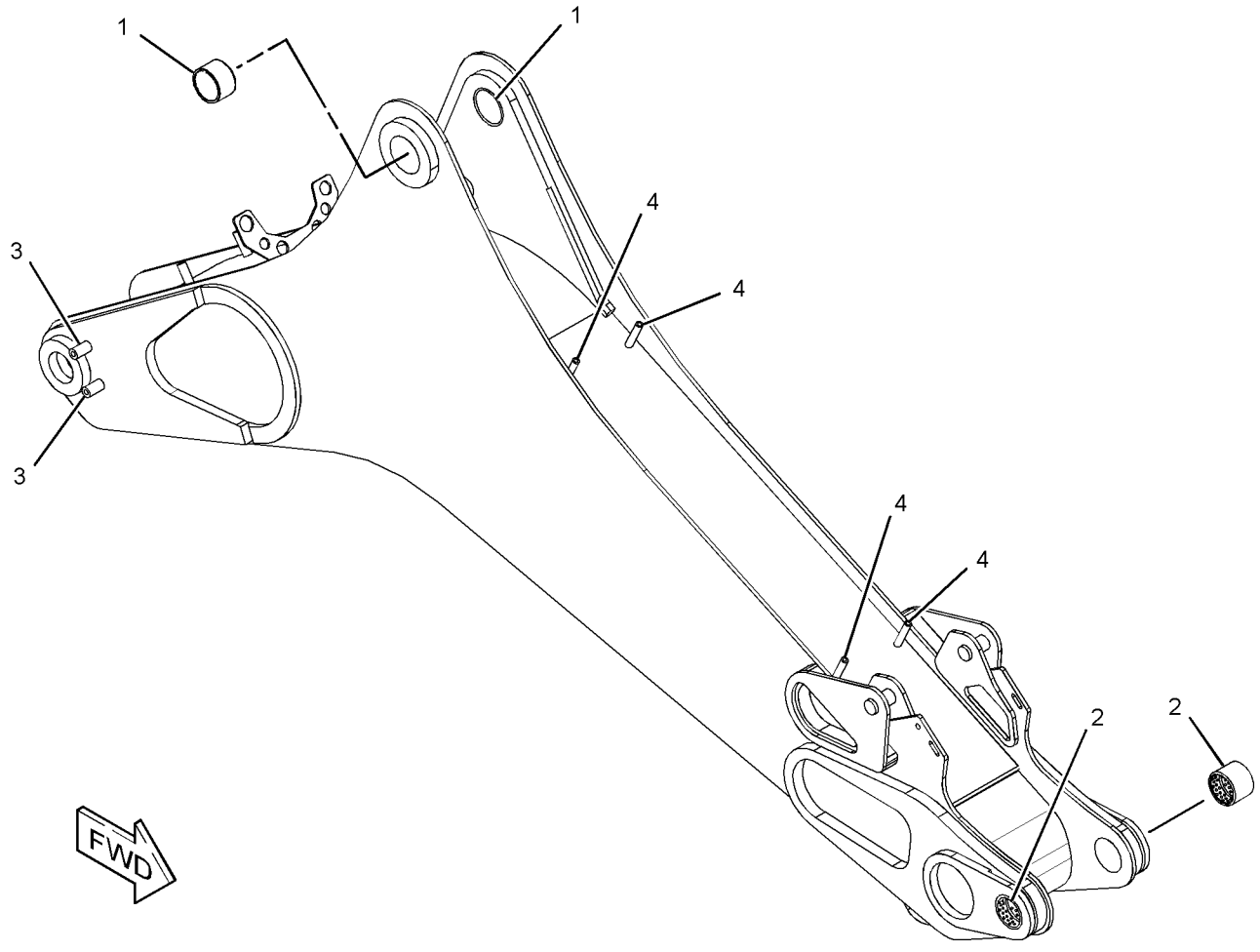

GRAPHIC #1 **<END>** g02352408

IMPLEMENTS

269-8217 BOOM GP

S/N: RBA1-UP

PART OF 254-0180 BACKHOE AR-EXTENDABLE STICK, 254-0175 BACKHOE AR-STANDARD STICK

AN ATTACHMENT

SMCS-6501 **i04141011**

NOTE	REF NO	GRAPHIC REF	PART NUMBER	QTY	PART NAME 1 2 3 4 5 6 (PRODUCT LEVEL)	SEE PAGE
Y	1	1	**270-7818**	1	BOOM AS	381
	2	1	**270-7819**	1	PIN	
B	3	1	**274-5339**	4	PLATE	
	4	1	**095-0931**	2	RING-RETAINING	
	5	1	**3B-8489**	1	FITTING-GREASE	

B-USE AS REQUIRED
Y-SEPARATE ILLUSTRATION

269-8217 **BOOM GP** *(contd.)* **i04141011**

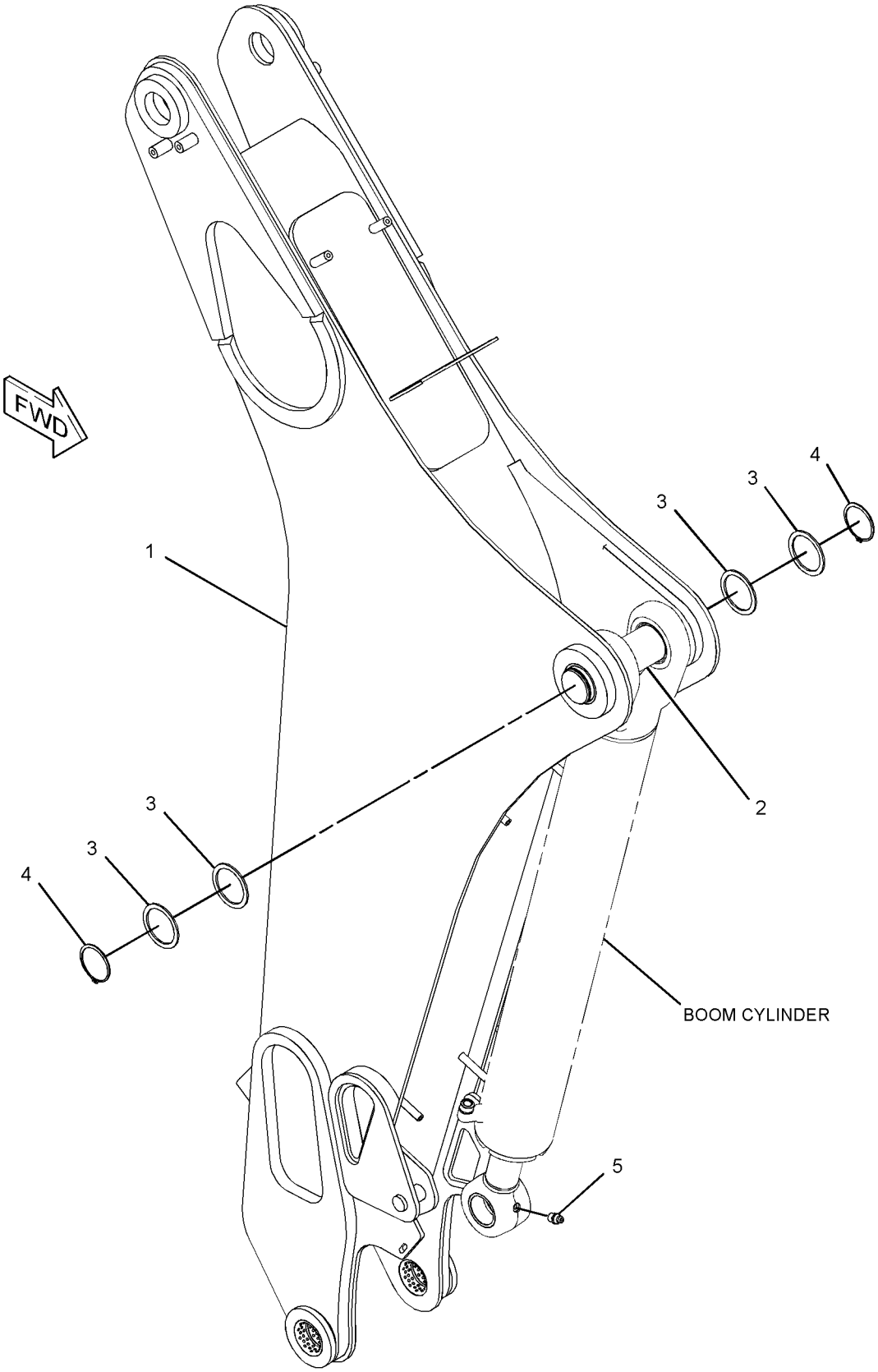

GRAPHIC #1 **<END>** g01356788

9R-1336 BRACE GP-LIFT CYLINDER

S/N: RBA1-UP

PART OF 254-0140 LOADER AR

SMCS-7507 **i04130830**

NOTE	REF NO	GRAPHIC REF	PART NUMBER	QTY	PART NAME 1 2 3 4 5 6 (PRODUCT LEVEL)	SEE PAGE
	1	1	**324-0720**	1	BRACE AS	
	2	1	**9R-2869**	1	PIN	
	3	1	**5P-0370**	1	LOCK PIN	

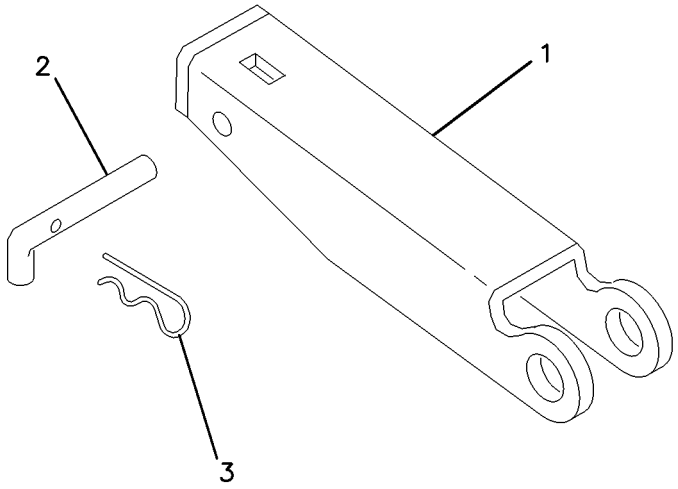

GRAPHIC #1 **<END>** g00130882

285-1200 LINES GP-GREASE–BOOM, STICK CYLINDER BEARING

S/N: RBA1-UP

PART OF 254-0180 BACKHOE AR-EXTENDABLE STICK, 254-0175 BACKHOE AR-STANDARD STICK

AN ATTACHMENT

SMCS-7510 **i04141110**

NOTE	REF NO	GRAPHIC REF	PART NUMBER	QTY	PART NAME 1 2 3 4 5 6 (PRODUCT LEVEL)	SEE PAGE
	1	1	**3B-8486**	3	FITTING-GREASE	
	2	1	**5P-3860**	3	CLAMP-HOSE	
	3	1	*148-8320*	3	CONNECTOR AS	
					(EACH INCLUDES)	
		1	**4J-5477**	1	SEAL-O-RING	
		1	**8C-6865**	1	CONNECTOR	
	4	1	**288-4118**	1	PLATE AS	
	5	1	**288-4464**	1	TUBE AS	
	6	1	**288-4465**	1	TUBE AS	
	7	1	**288-5411**	1	TUBE AS	
	8	1	**288-5412**	1	PLATE AS	
	9	1	*148-8389*	3	ELBOW AS	
					(EACH INCLUDES)	
		1	**4J-5477**	1	SEAL-O-RING	
		1	**7X-0492**	1	ELBOW	

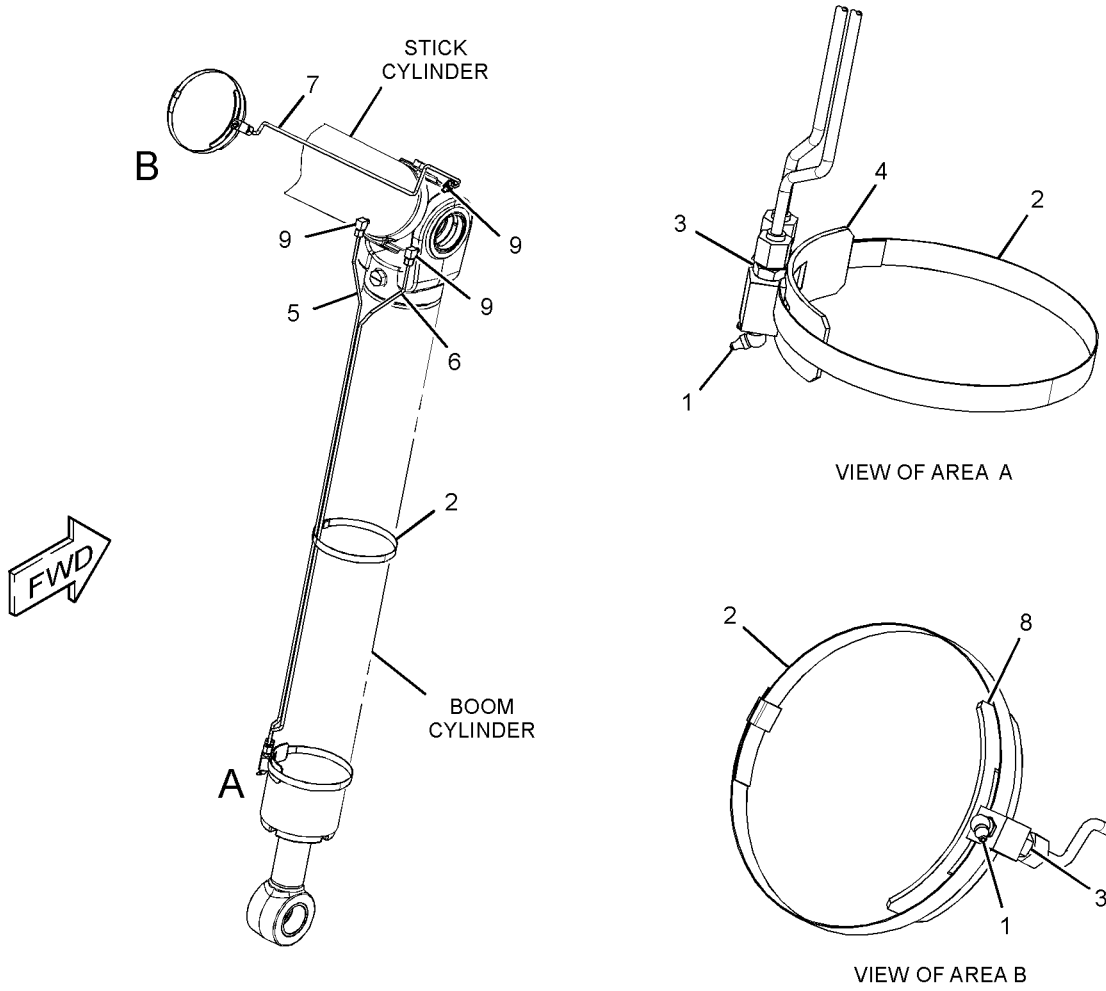

GRAPHIC #1 **<END>** g01356079

269-8218 LINKAGE GP-BACKHOE BUCKET

S/N: RBA1-UP

PART OF 254-0180 BACKHOE AR-EXTENDABLE STICK, 254-0175 BACKHOE AR-STANDARD STICK

AN ATTACHMENT

SMCS-6513 **i04141012**

NOTE	REF NO	GRAPHIC REF	PART NUMBER	QTY	PART NAME 1 2 3 4 5 6 (PRODUCT LEVEL)	SEE PAGE
B	1	1	**9R-4066**	16	WASHER (61X98X4-MM THK)	
	2	1	**270-7969**	2	PIN	
	3	1	**270-7971**	1	GUIDE AS (RH)	
		1	**9R-3092**	1	BUSHING	
		1	**272-1612**	2	BUSHING	
	4	1	**270-7972**	1	GUIDE AS (LH)	
		1	**9R-3092**	1	BUSHING	
		1	**272-1612**	2	BUSHING	
	5	1	**270-7973**	2	PIN	
	6	1	**270-7974**	1	LINK AS	
		1	**9R-4062**	4	BUSHING	
	7	1	**280-3577**	1	FILM-INSTRUCTION	
	8	1	**095-0928**	4	RING-RETAINING (EXTERNAL)	
	9	1	**3B-5326**	4	PIN-COTTER	
	10	1	**3B-8489**	3	FITTING-GREASE	

B-USE AS REQUIRED

269-8218 **LINKAGE GP-BACKHOE BUCKET** *(contd.)* **i04141012**

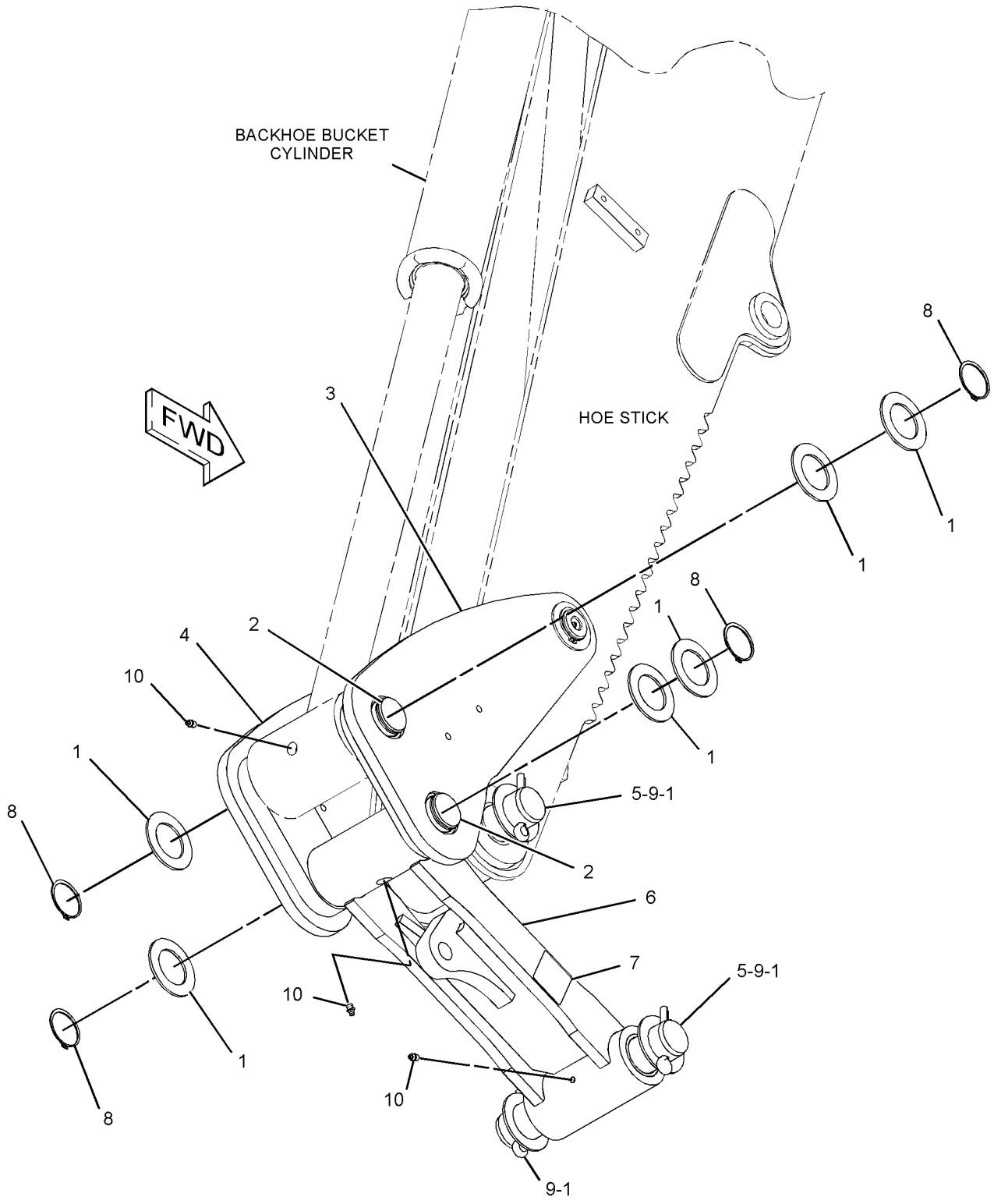

GRAPHIC #1 **<END>** g01356790

9R-1337 LINKAGE GP-LOADER BUCKET

S/N: RBA1-UP

PART OF 254-0140 LOADER AR

SMCS-6513 **i00529954**

NOTE	REF NO	GRAPHIC REF	PART NUMBER	QTY	PART NAME 1 2 3 4 5 6 (PRODUCT LEVEL)	SEE PAGE
	1	1	**9R-3745**	1	GUIDE AS (LH)	
	2	1	**9R-3747**	1	BUSHING	
	3	1	**6V-4364**	3	RING-RETAINING	
	4	1	**9R-3042**	2	PLATE	
	5	1	**9R-5775**	1	PIN AS	
	6	1	**9R-3759**	1	PIN AS	
	7	1	**9R-3754**	1	LINK AS (LH)	
	8	1	**9R-3756**	1	BUSHING	
	9	1	**9R-0204**	1	BUSHING	
	10	1	**9R-3758**	1	LINK AS (RH)	
	11	1	**9R-3756**	1	BUSHING	
	12	1	**9R-0204**	1	BUSHING	
	13	1	**8T-4223**	6	WASHER-HARD (13.5X25.5X3-MM THK)	
M	14	1	**8T-4139**	6	BOLT (M12X1.75X30-MM)	
	15	1	**9R-3491**	1	GUIDE AS (RH)	
	16	1	**9R-3747**	1	BUSHING	
	17	1	**6F-4161**	1	DOWEL	
	18	1	**9R-3753**	1	SPACER	
	19	1	**9R-1510**	3	WASHER (51X82X4-MM THK)	
	20	1	**9R-3749**	1	PIN AS	
	21	1	**3B-8489**	6	FITTING-GREASE	

M-METRIC PART

9R-1337 **LINKAGE GP-LOADER BUCKET** *(contd.)* **i00529954**

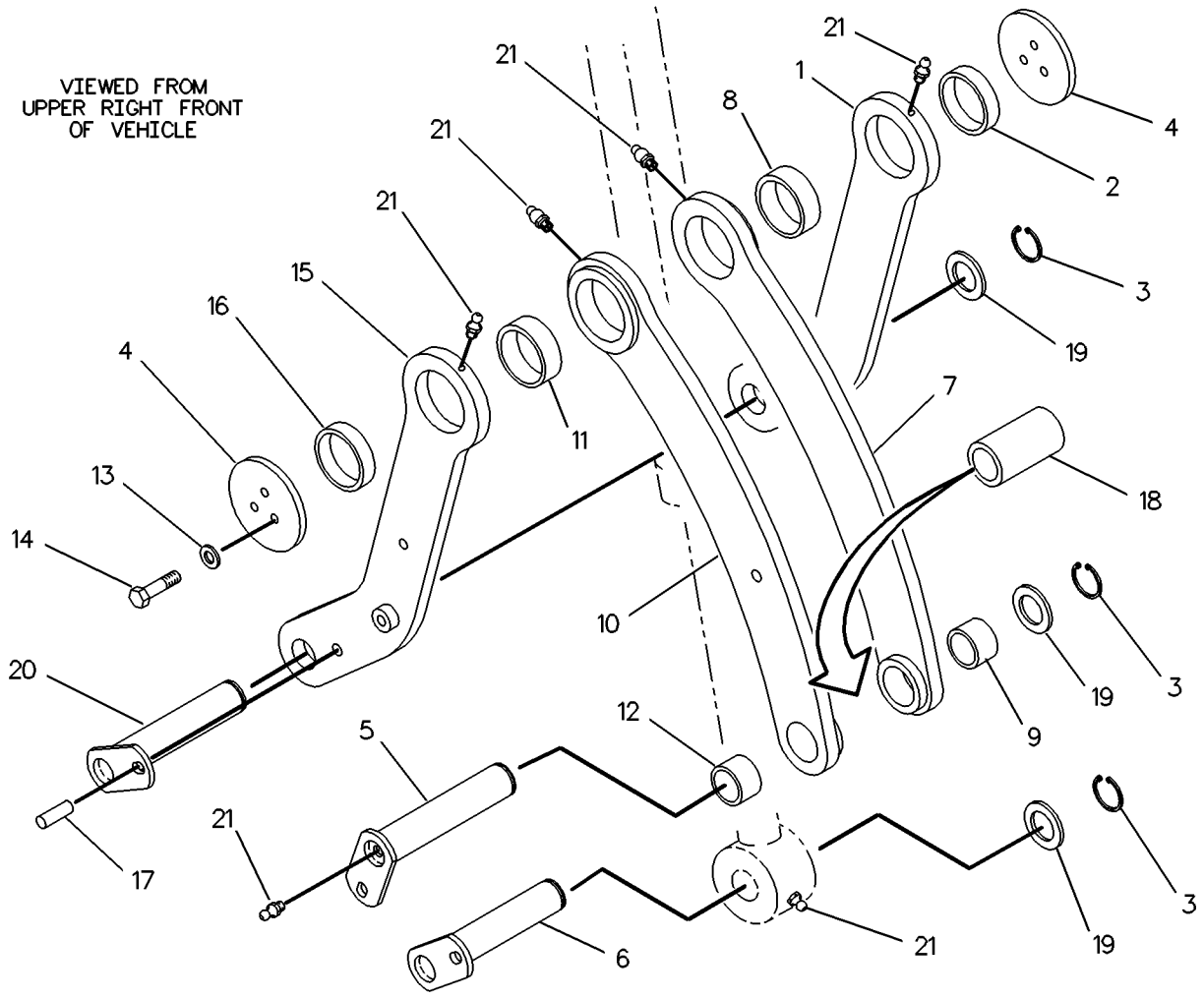

GRAPHIC #1 **<END>** g00207314

206-1641 LOCK GP-TRANSPORT–STABILIZER

S/N: RBA1-UP

PART OF 254-0110 CHASSIS AR

SMCS-7505 **i03577612**

NOTE	REF NO	GRAPHIC REF	PART NUMBER	QTY	PART NAME 1 2 3 4 5 6 (PRODUCT LEVEL)	SEE PAGE
	1	1	**9R-8165**	1	BEARING	
	2	1	**164-1398**	2	KNOB	
	3	1	**183-6084**	1	BEARING	
	4	1	**206-1871**	1	BRACKET AS	
M		1	**6V-9632**	3	NUT-WELD (M6X1-THD)	
M		1	**8T-3612**	9	NUT-WELD (M8X1.25-THD)	
	5	1	**206-1874**	1	LEVER AS	
	6	1	**229-5745**	1	SPACER (8X15.875X11.6-MM THK)	
	7	1	**248-2710**	1	GROMMET	
	8	1	**164-1395**	1	KNOB	
	9	1	**5P-4116**	6	WASHER-HARD (8.8X20.5X2-MM THK)	
B	10	1	**6E-5431**	1	SHIM (0.5-MM THK)	
M	11	1	**8T-4138**	1	BOLT (M6X1X20-MM)	
M	12	1	**8T-4189**	8	BOLT (M8X1.25X20-MM)	
	13	1	**8T-4224**	4	WASHER-HARD (8.8X16X2-MM THK)	
	14	1	**8T-6902**	1	CLIP	
M	15	1	**8T-7547**	1	BOLT (M8X1.25X30-MM)	
	16	1	**9X-8256**	1	WASHER (6.6X12X2-MM THK)	

B-USE AS REQUIRED
M-METRIC PART

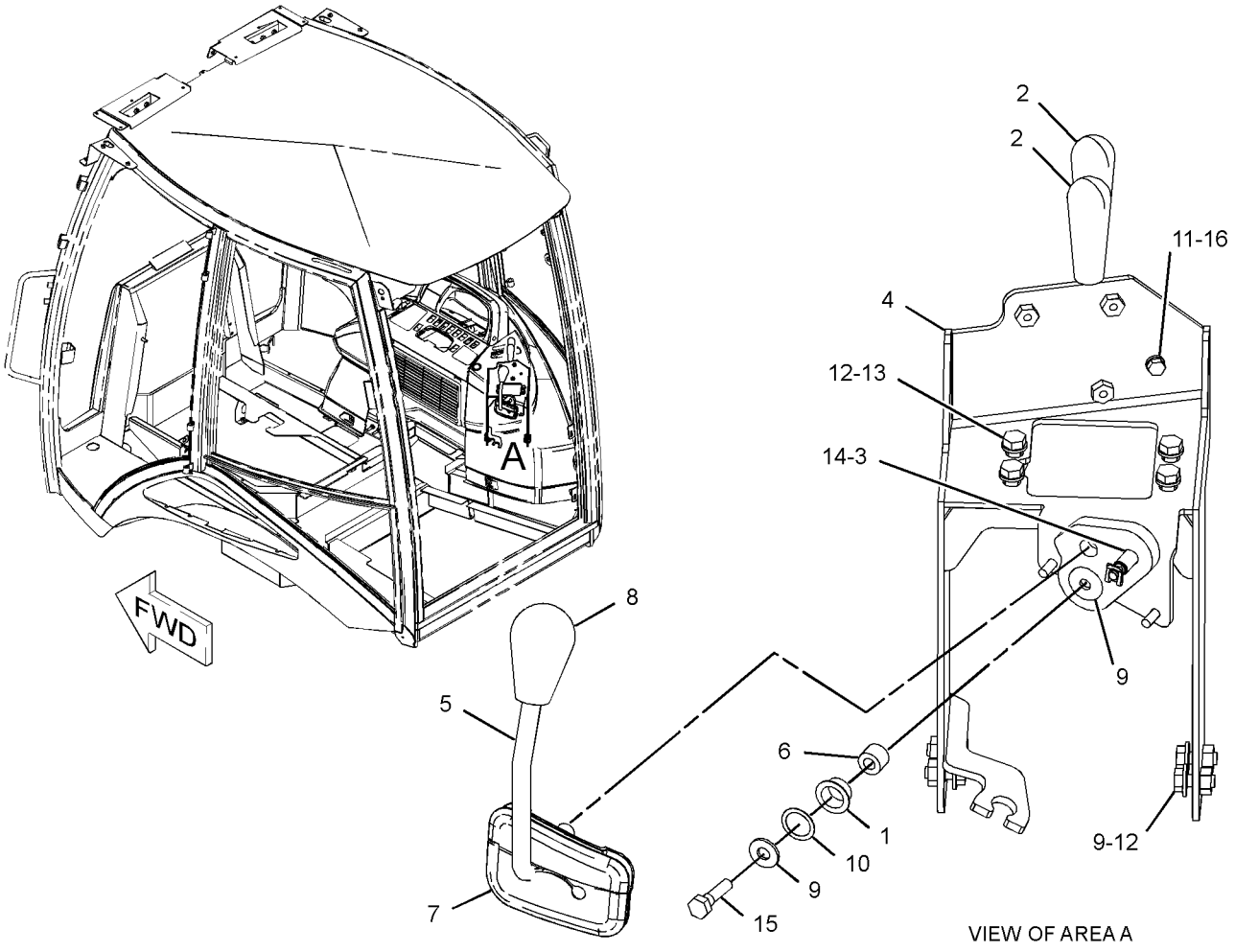

GRAPHIC #1 **<END>** g01207186

254-0109 LOCK GP-TRANSPORT

S/N: RBA1-UP

PART OF 254-0110 CHASSIS AR

SMCS-7505 **i04101130**

NOTE	REF NO	GRAPHIC REF	PART NUMBER	QTY	PART NAME 1 2 3 4 5 6 (PRODUCT LEVEL)	SEE PAGE
	1	1	**5P-7958**	1	SLEEVE-CABLE SPLICE	
	2	1	**9R-7239**	2	PLATE	
	3	1	**092-8211**	1	TUBE	
	4	1	**131-8776**	1	BRACKET AS	
	5	1	**134-0143**	1	CABLE	
	6	1	**147-9943**	1	WEDGE	
	7	1	**147-9945**	1	WEDGE	
	8	1	**214-7043**	1	SPACER (6.15X7.94X10-MM THK)	
B	9	1	**215-9690**	2	WASHER (66X100X4-MM THK)	
	10	1	**271-3179**	1	PIN AS	
	11	1	**271-3181**	1	PLATE AS	
	12	1	**271-3191**	1	BRACKET	
B	13	1	**271-3222**	3	SHIM (1-MM THK)	
	14	1	**271-3240**	1	PLATE AS	
	15	1	**311-0714**	1	CABLE AS	
		1	**6V-0826**	1	GROMMET	
		1	**279-9452**	1	CLIP	
		1	**2R-0364**	1	RING-RETAINING	
		1	**4D-9517**	1	CLIP	
	16	1	**133-6934**	1	SPACER (11X20X25-MM THK)	
	17	1	**3B-8489**	2	FITTING-GREASE	
M	18	1	**132-0111**	1	SCREW (M6X1X35-MM)	
	19	1	**7X-7729**	2	WASHER (11X25X3-MM THK)	
	20	1	**8T-4121**	10	WASHER-HARD (11X21X2.5-MM THK)	
M	21	1	**8T-4136**	3	BOLT (M10X1.5X25-MM)	
M	22	1	**8T-4137**	2	BOLT (M10X1.5X20-MM)	
M	23	1	**8T-4182**	1	BOLT (M10X1.5X45-MM)	
M	24	1	**8T-4186**	4	BOLT (M10X1.5X40-MM)	
M	25	1	**8T-4195**	2	BOLT (M10X1.5X30-MM)	

B-USE AS REQUIRED
M-METRIC PART

254-0109 **LOCK GP-TRANSPORT** *(contd.)* **i04101130**

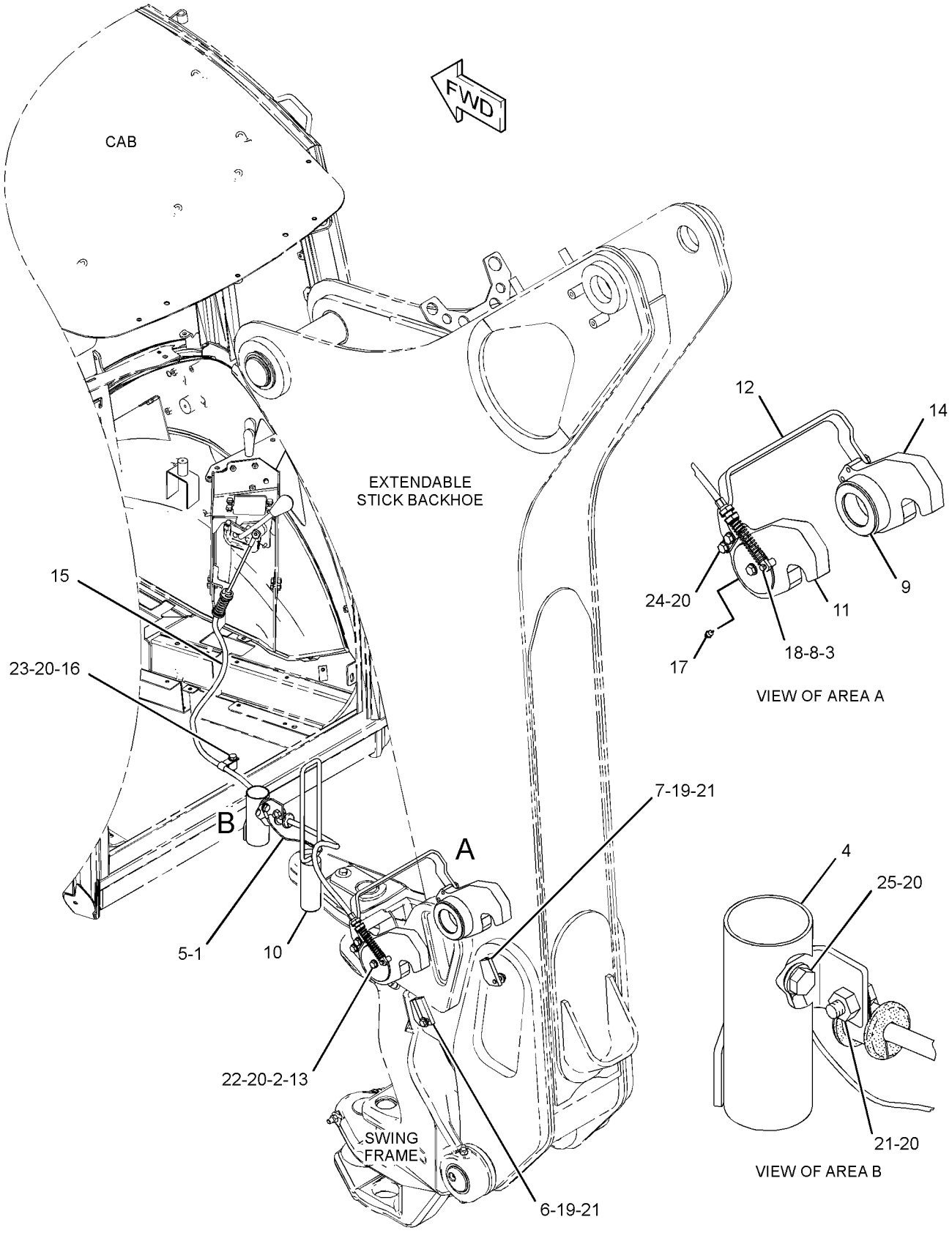

GRAPHIC #1 **<END>** g01415710

269-8219 MOUNTING GP-STICK

S/N: RBA1-UP
PART OF 254-0180 BACKHOE AR-EXTENDABLE STICK
AN ATTACHMENT

SMCS-6502 **i04141113**

NOTE	REF NO	GRAPHIC REF	PART NUMBER	QTY	PART NAME 1 2 3 4 5 6 (PRODUCT LEVEL)	SEE PAGE
	1	1	**9R-1510**	3	WASHER (51X82X4-MM THK)	
B	2	1	**9R-4066**	4	WASHER (61X98X4-MM THK)	
	3	1	**9R-8390**	6	SPACER (61X98X1-MM THK)	
B	4	1	**254-7211**	4	PLATE	
	5	1	**270-7862**	1	PIN AS	
	6	1	**270-7863**	1	PIN	
	7	1	**270-7864**	1	PIN	
B	8	1	**279-7145**	3	SPACER (76.6X135X1-MM THK)	
	9	1	**095-0928**	2	RING-RETAINING (EXTERNAL)	
	10	1	**095-0930**	2	RING-RETAINING (EXTERNAL)	
	11	1	**3B-8488**	1	FITTING-GREASE	
	12	1	**3B-8489**	1	FITTING-GREASE	

B-USE AS REQUIRED

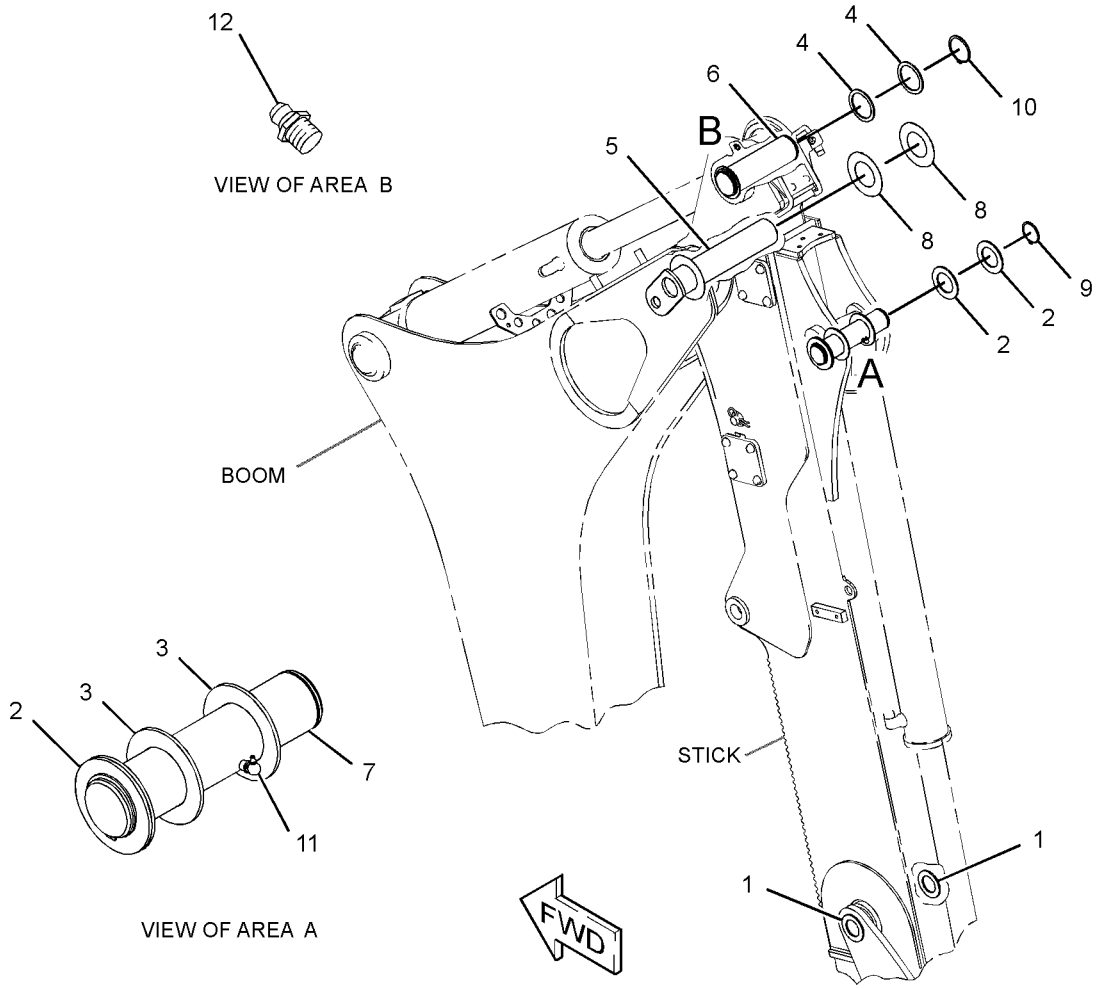

GRAPHIC #1 **<END>** g02160579

254-0135 PAD & GUARD GP-STABILIZER

S/N: RBA1-UP

PART OF 254-0110 CHASSIS AR

SMCS-7222 **i04101153**

NOTE	REF NO	GRAPHIC REF	PART NUMBER	QTY	PART NAME 1 2 3 4 5 6 (PRODUCT LEVEL)	SEE PAGE
	1	1	**9R-1502**	8	WASHER (56X90X4-MM THK)	
B	2	1	**9R-1510**	12	WASHER (51X82X4-MM THK)	
	3	1	**132-3947**	2	PIN	
	5	1	**188-3953**	2	PAD	
	6	1	**194-9487**	2	BUMPER AS	
B	7	1	**210-1707**	12	SHIM (1-MM THK)	
	8	1	**277-3160**	2	GUARD AS	
	9	1	**277-8766**	2	PIN	
	10	1	**278-8708**	2	PLATE AS	
Y	11	1	*322-7706*	2	PAD GP-STABILIZER	396
	12	1	**3B-5322**	4	PIN-COTTER	
	13	1	**5P-4116**	2	WASHER-HARD (8.8X20.5X2-MM THK)	
	14	1	**6V-8344**	4	RING-RETAINING	
M	15	1	**7X-2537**	2	BOLT (M8X1.25X35-MM)	
	16	1	**8T-4987**	2	CLAMP-HOSE	

B-USE AS REQUIRED
M-METRIC PART
Y-SEPARATE ILLUSTRATION

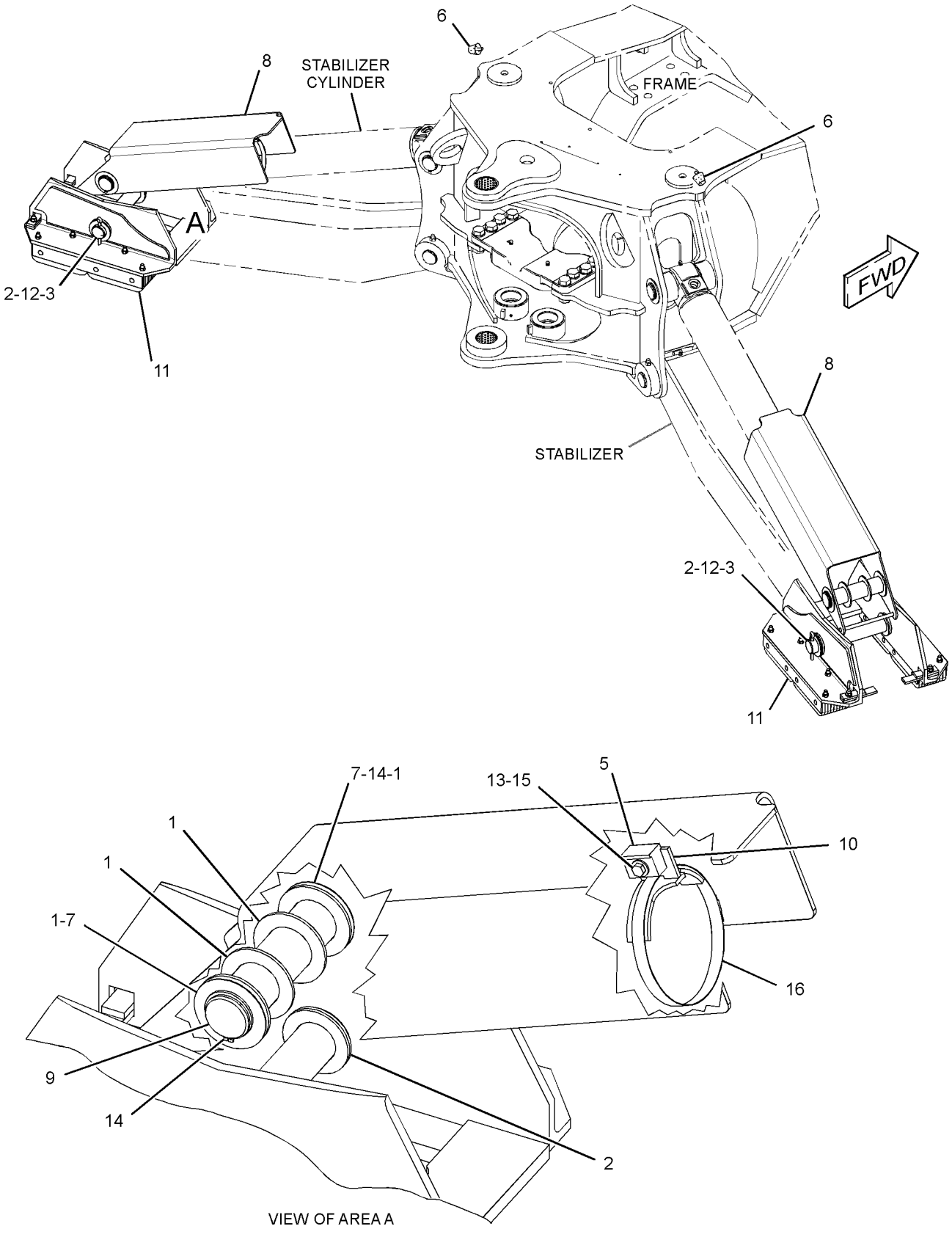

GRAPHIC #1 **<END>** g01881093

322-7706 PAD GP-STABILIZER—STREET

S/N: RBA1-UP

PART OF 254-0135 PAD & GUARD GP-STABILIZER

SMCS-7222 **i04107831**

NOTE	REF NO	GRAPHIC REF	PART NUMBER	QTY	PART NAME 1 2 3 4 5 6 (PRODUCT LEVEL)	SEE PAGE
	1	1	**9R-5555**	2	PAD AS-STABILIZER (STREET)	
	2	1	**130-1629**	1	PAD AS-STABILIZER	
	3	1	**146-1589**	2	LATCH	
	4	1	**146-1590**	2	LATCH	
	5	1	**6V-5729**	10	LOCKNUT (7/16-14-THD)	
	6	1	**7X-0310**	2	BOLT (7/16-14X2-IN)	
	7	1	**8T-5360**	4	WASHER (12X22.5X2.5-MM THK)	

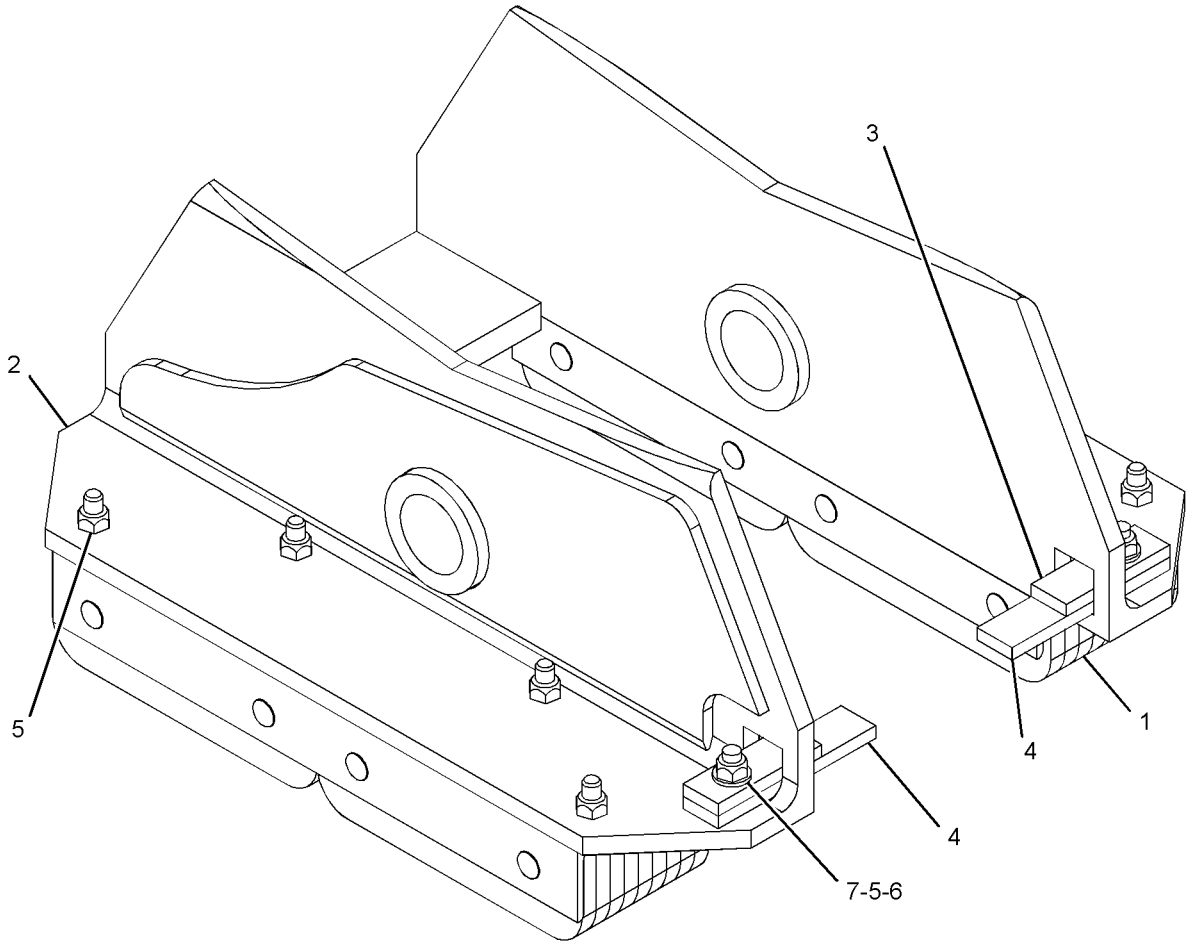

GRAPHIC #1 **<END>** g01860856

270-3220 STABILIZER GP-BACKHOE

S/N: RBA1-UP

PART OF 254-0110 CHASSIS AR

SMCS-7222 **i04101291**

NOTE	REF NO	GRAPHIC REF	PART NUMBER	QTY	PART NAME 1 2 3 4 5 6 (PRODUCT LEVEL)	SEE PAGE
B	1	1	**9R-1502**	4	WASHER (56X90X4-MM THK)	
	2	1	**270-3221**	2	PIN	
	3	1	**270-3222**	2	PIN	
	4	1	**270-3223**	2	STABILIZER AS	
					(EACH INCLUDES)	
	4A	1	**9R-5246**	2	BUSHING	
M	5	1	**8T-5412**	2	BOLT (M12X1.75X140-MM)	
	6	1	**3B-8488**	2	FITTING-GREASE	
	7	1	**3B-8489**	4	FITTING-GREASE	
M	8	1	**6V-7687**	2	LOCKNUT (M12X1.75-THD)	
	9	1	**6V-8344**	4	RING-RETAINING	

B-USE AS REQUIRED
M-METRIC PART

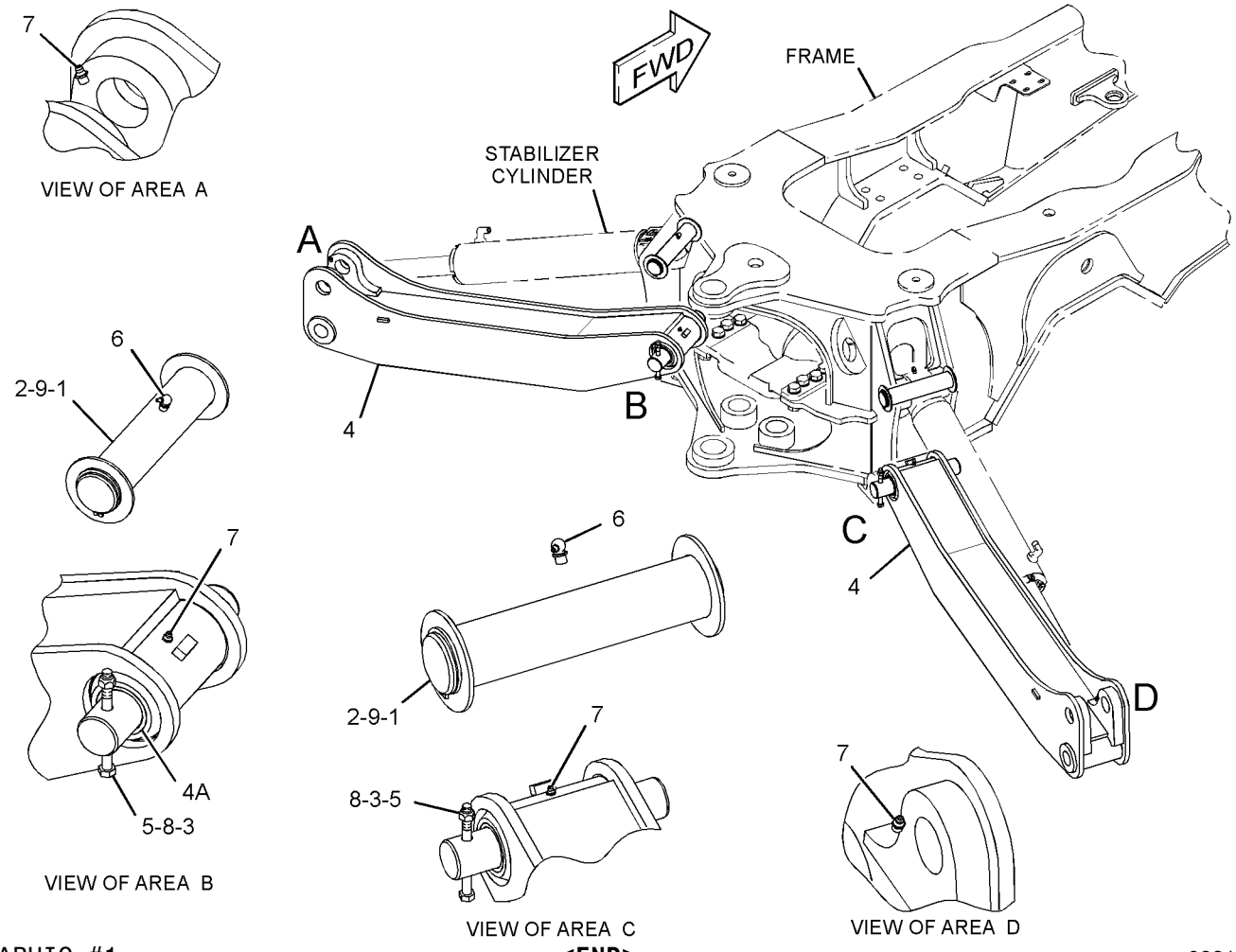

GRAPHIC #1

<END>

g02311173

IMPLEMENTS

270-7866 STICK AS

S/N: RBA1-UP
PART OF 269-8220 STICK GP-HOE
AN ATTACHMENT

SMCS-6502 **i04145811**

NOTE	REF NO	GRAPHIC REF	PART NUMBER	QTY	PART NAME 1 2 3 4 5 6 (PRODUCT LEVEL)	SEE PAGE
M	1	1	**9R-2613**	4	BOSS-WELD (M10X1.5X25-MM)	
	2	1	**272-1613**	4	BUSHING	
	3	1	**279-4177**	1	STOP AS	
	4	1	**107-6711**	2	BLOCK	
	5	1	**9R-0162**	2	BUSHING	
	6	1	**9R-4062**	2	BUSHING	

M-METRIC PART

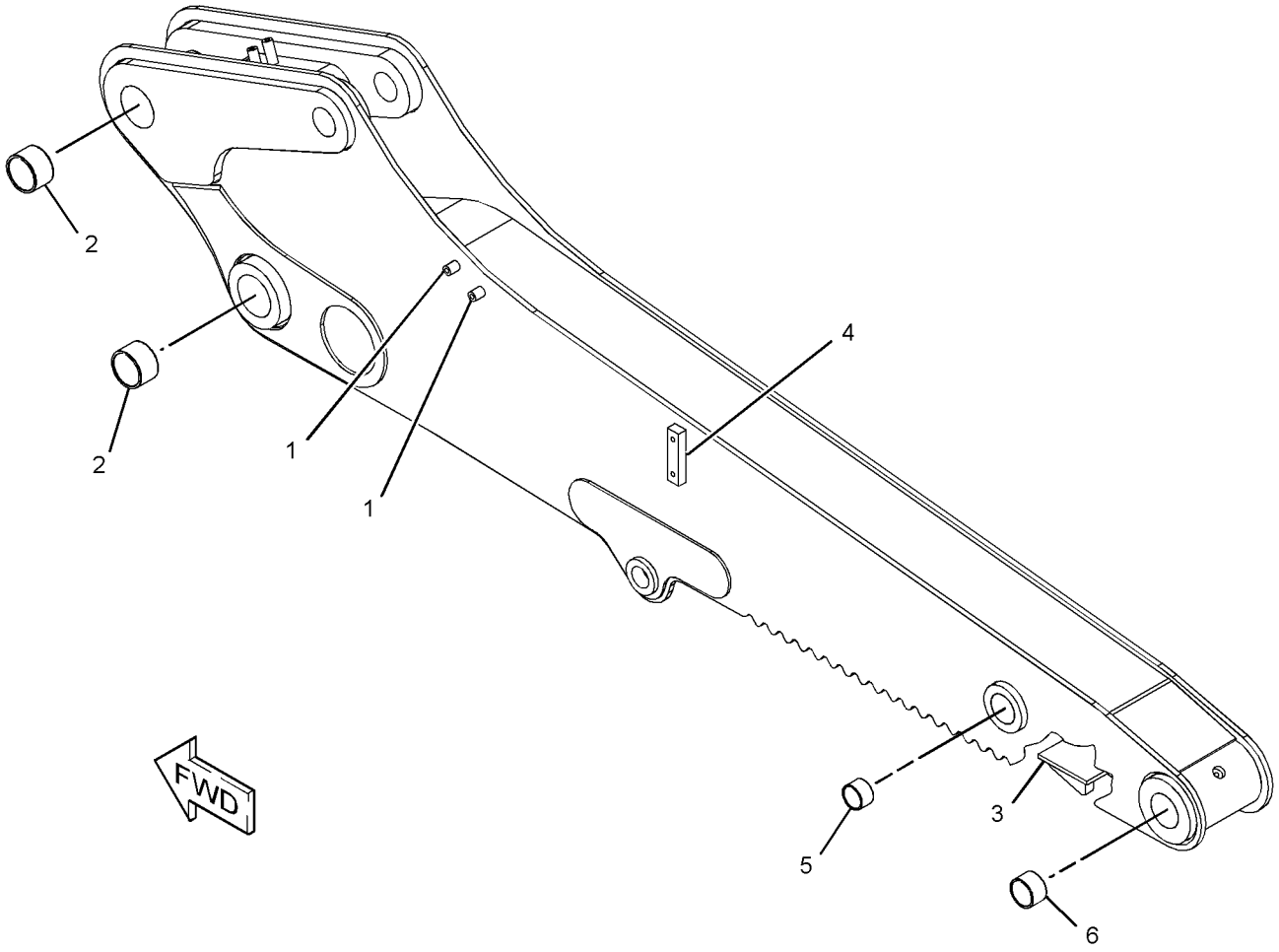

GRAPHIC #1 **<END>** g02352476

IMPLEMENTS

269-8215 STICK GP-EXTENDABLE

S/N: RBA1-UP

PART OF 254-0180 BACKHOE AR-EXTENDABLE STICK

AN ATTACHMENT

SMCS-6533 **i04141112**

NOTE	REF NO	GRAPHIC REF	PART NUMBER	QTY	PART NAME 1 2 3 4 5 6 (PRODUCT LEVEL)	SEE PAGE
	1	1	**3B-8489**	4	FITTING-GREASE	
	2	1	**9R-2959**	2	CLIP	
	3	1	**209-2435**	2	BLOCK	
	4	1	**214-6143**	1	PIN	
	5	1	**216-6295**	1	PLATE	
	6	1	**217-0055**	1	PIN	
	7	1	**217-1577**	2	PAD AS	
	8	1	**270-7865**	1	PIN	
	9	1	**222-5171**	2	SCREW AS (ADJUSTER)	
	10	1	**223-3926**	1	PLATE	
	11	1	**226-9764**	2	PAD AS	
	12	1	**311-8075**	4	PLATE	
B	13	1	**233-5166**	4	SHIM (1-MM THK)	
B	14	1	**233-5167**	12	SHIM (2-MM THK)	
	15	1	**233-5169**	4	PAD	
Y	16	1	*254-0161*	1	LINES GP-EXTENDABLE STICK	278
Y	17	1	**270-7288**	1	CYLINDER GP-EXTENDABLE STICK	239
	18	1	**272-6706**	1	STICK AS (INNER)	
	18A	1	**272-1613**	4	BUSHING	
	19	1	**272-6707**	1	STICK AS (OUTER)	
	19A	1	**286-7166**	2	BUSHING	
	19B	1	**9R-4062**	2	BUSHING	
B	20	1	**287-5667**	6	SHIM (1-MM THK)	
B	21	1	**293-9882**	4	SHIM (1-MM THK)	
B	22	1	**293-9884**	4	SHIM (0.25-MM THK)	
	23	1	**1L-3768**	2	RING-RETAINING	
	24	1	**7X-0603**	2	WASHER-HARD (9.9X35X2.5-MM THK)	
	25	1	**4F-8711**	2	BUTTON-PLUG	
	26	1	**5V-7190**	4	WASHER-HARD (10.5X45.2X6-MM THK)	
	27	1	**6V-4364**	2	RING-RETAINING	
B	28	1	**8T-4121**	12	WASHER-HARD (11X21X2.5-MM THK)	
M	29	1	**8T-4136**	2	BOLT (M10X1.5X25-MM)	
M	30	1	**8T-4139**	18	BOLT (M12X1.75X30-MM)	
M	31	1	**8T-4183**	2	BOLT (M12X1.75X40-MM)	
M	32	1	**8T-4194**	4	BOLT (M12X1.75X50-MM)	
M	33	1	**8T-4195**	2	BOLT (M10X1.5X30-MM)	
	34	1	**8T-4223**	26	WASHER-HARD (13.5X25.5X3-MM THK)	
M	35	1	**8T-4648**	2	BOLT (M12X1.75X70-MM)	

B-USE AS REQUIRED
M-METRIC PART
Y-SEPARATE ILLUSTRATION

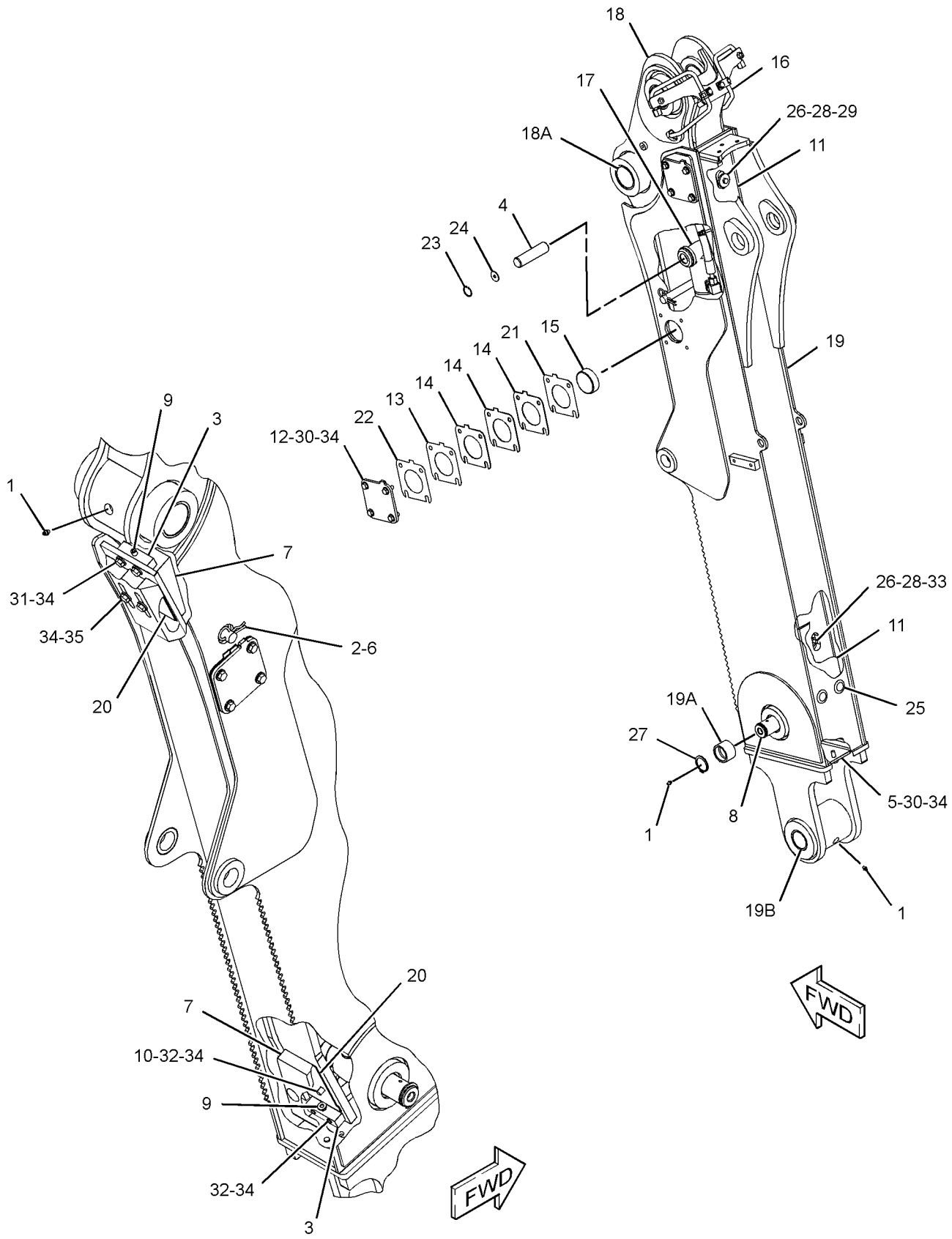

GRAPHIC #1 **<END>** g02122899

269-8220 STICK GP-HOE

S/N: RBA1-UP

PART OF 254-0175 BACKHOE AR-STANDARD STICK

AN ATTACHMENT

SMCS-6502 **i04141013**

NOTE	REF NO	GRAPHIC REF	PART NUMBER	QTY	PART NAME 1 2 3 4 5 6 (PRODUCT LEVEL)	SEE PAGE
B	1	1	**9R-1510**	4	WASHER (51X82X4-MM THK)	
B	2	1	**9R-4066**	4	WASHER (61X98X4-MM THK)	
	3	1	**095-0928**	2	RING-RETAINING (EXTERNAL)	
B	4	1	**254-7211**	4	PLATE	
	5	1	**270-7862**	1	PIN AS	
	6	1	**270-7863**	1	PIN	
	7	1	**270-7864**	1	PIN	
	8	1	**270-7865**	1	PIN	
Y	9	1	**270-7866**	1	STICK AS	398
B	10	1	**279-7145**	3	SPACER (76.6X135X1-MM THK)	
	11	1	**095-0930**	2	RING-RETAINING (EXTERNAL)	
	12	1	**3B-8488**	1	FITTING-GREASE	
	13	1	**3B-8489**	6	FITTING-GREASE	
	14	1	**6V-4364**	2	RING-RETAINING	

B-USE AS REQUIRED
Y-SEPARATE ILLUSTRATION

269-8220 **STICK GP-HOE** *(contd.)* **i04141013**

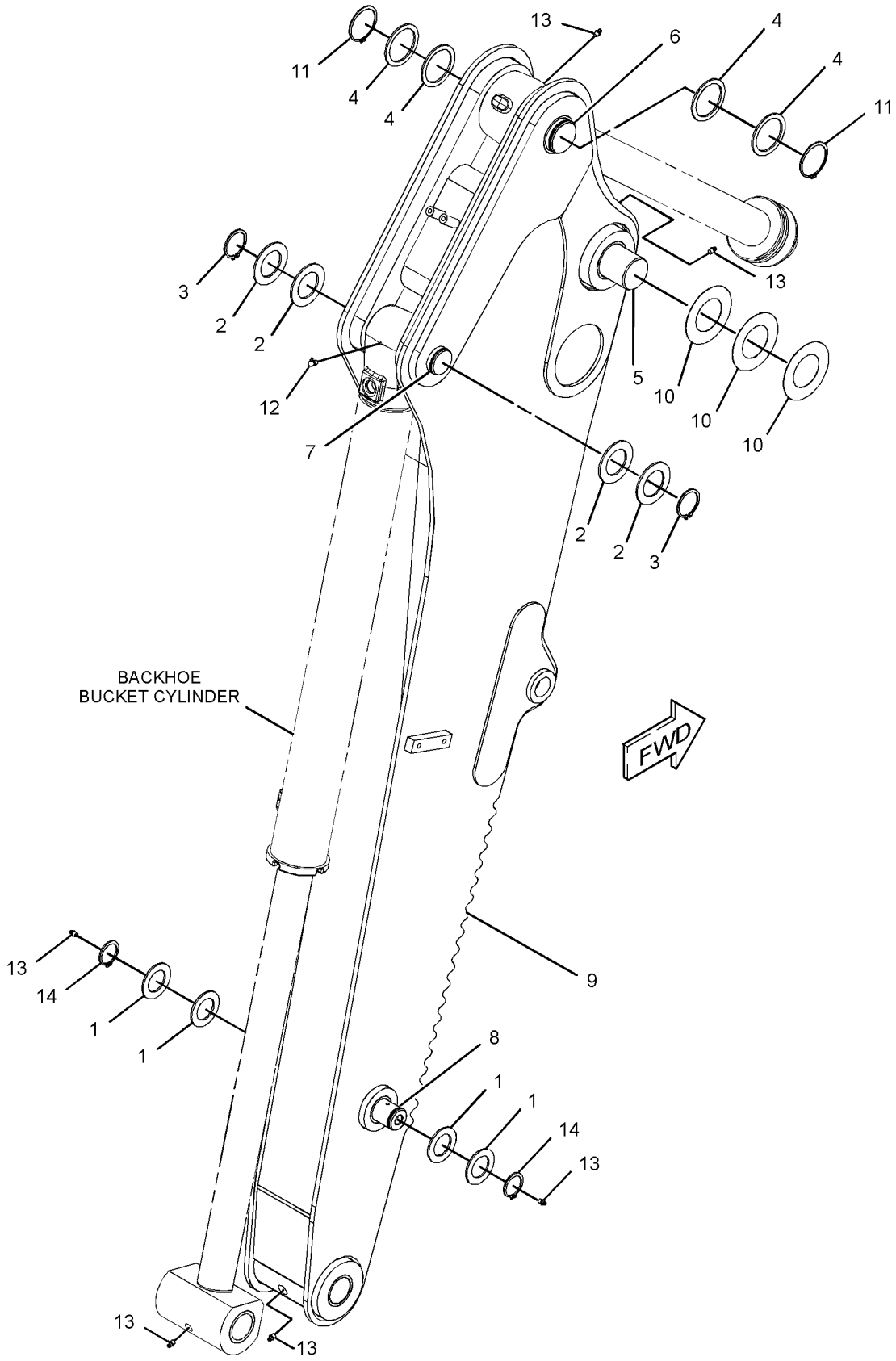

GRAPHIC #1 **<END>** g01356791

WORK TOOLS

303-4603 STOP GP-BUCKET

S/N: RBA1-UP

AN ATTACHMENT

SMCS-6001 **i04125769**

NOTE	REF NO	GRAPHIC REF	PART NUMBER	QTY	PART NAME 1 2 3 4 5 6 (PRODUCT LEVEL)	SEE PAGE
	1	1	**302-1480**	1	STOP AS (RH)	
	2	1	**302-1481**	1	STOP AS (LH)	
	3	1	**7X-7729**	8	WASHER (11X25X3-MM THK)	
M	4	1	**8T-0389**	4	LOCKNUT (M10X1.5-THD)	
M	5	1	**8T-4185**	4	BOLT (M10X1.5X50-MM)	

M-METRIC PART

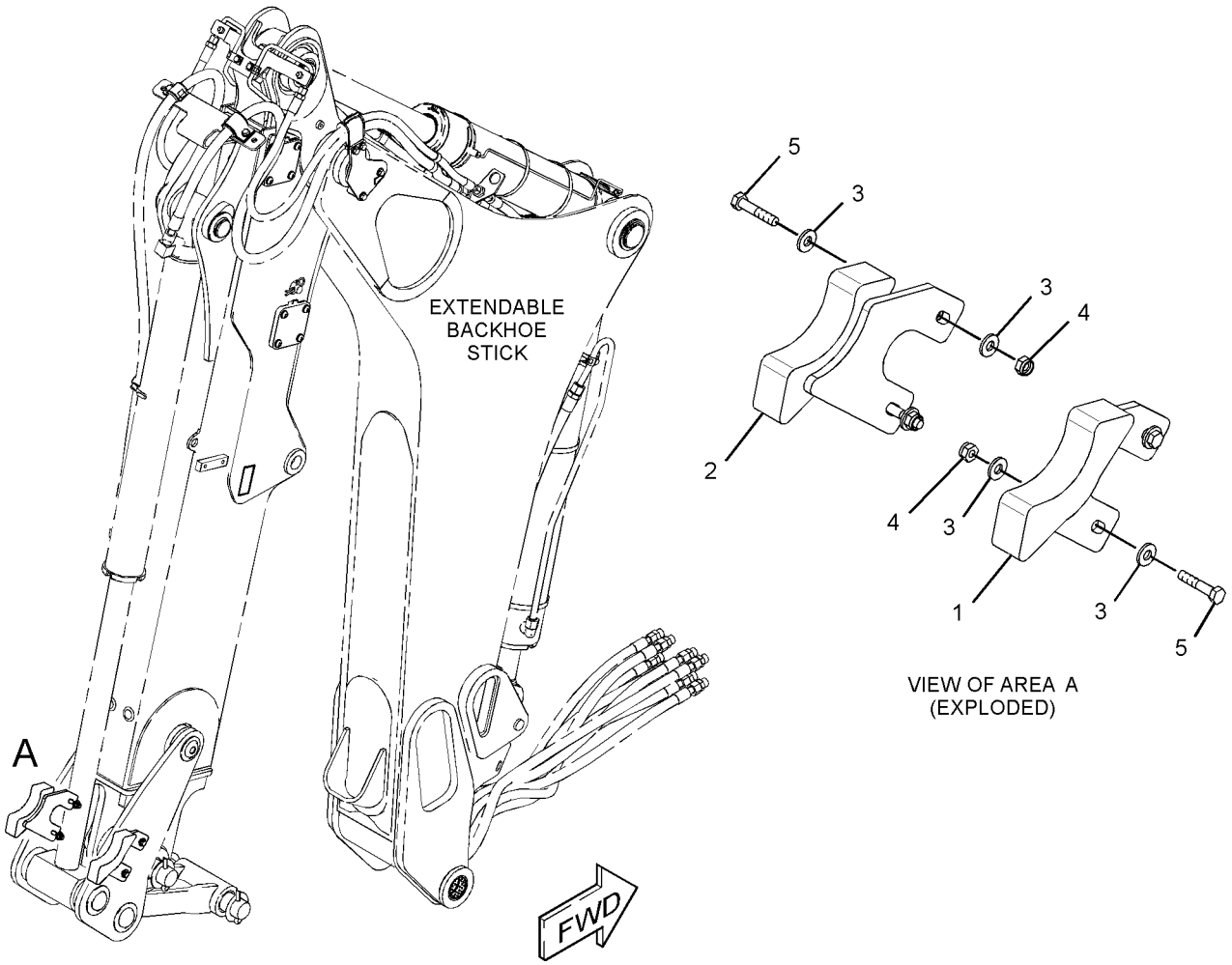

GRAPHIC #1

<END>

g01432779

OPERATOR STATION

206-1801 AIR CONDITIONER & MOUNTING GP

S/N: RBA1-UP
PART OF 254-0200 CAB AR-ENCLOSED ROPS
AN ATTACHMENT

SMCS-7320 **i03996332**

NOTE	REF NO	GRAPHIC REF	PART NUMBER	QTY	PART NAME 1 2 3 4 5 6 (PRODUCT LEVEL)	SEE PAGE
	1	1	**221-2420**	2	HOSE-AIR	
	2	1	**319-8524**	1	HOSE-AIR	
	3	1	**6L-4725**	2	CLAMP-HOSE	
	4	1	**8Y-5737**	1	CLAMP	
	5	1	**8Y-6967**	6	LOUVER AS-VENT	
	6	1	**9M-7959**	4	CLAMP-HOSE	
	7	1	**9N-2231**	1	GROMMET AS	
	8	1	**110-6109**	1	KNOB-CONTROL (A/C)	
	9	1	**130-4832**	2	SCREW (8-18X10-MM)	
	10	1	**206-1684**	1	COVER (CAB FILTER)	
	11	1	**164-1368**	4	FASTENER-PANEL	
	12	1	**164-8474**	2	LOUVER AS-VENT	
	13	1	**189-0881**	1	CONTROL AS	
		1	**129-1831**	1	CLAMP	
	14	1	**193-3356**	1	CABLE AS	
	15	1	**194-5622**	1	VALVE AS-WATER (AIR CONDITIONER)	
		1	**6V-6717**	1	SCREW-WASHER HEAD (8-32X9.52-MM)	
		1	**124-0312**	2	SCREW-PAN HEAD (8-16X0.32-IN)	
	16	1	**206-1648**	1	LOUVER	
	17	1	**206-1653**	4	GASKET	
	18	1	**206-1682**	1	PANEL-CONTROL	
	19	1	**206-1803**	2	GASKET	
	20	1	**206-1804**	1	GASKET	
	21	1	**206-1805**	1	GASKET	
E	22	1	**220-0738**		SEAL (87-CM)	
	23	1	**206-1807**	1	GASKET	
	24	1	**206-1808**	1	PLATE	
	25	1	**206-1809**	1	ROD AS	
	26	1	**206-1810**	1	DUCT-AIR	
	27	1	**206-1812**	1	DUCT-AIR	
	28	1	**206-1814**	1	DUCT-AIR	
	29	1	**206-1815**	1	DUCT-AIR	
	30	1	**206-1816**	1	DUCT-AIR	
	31	1	**206-1817**	2	DUCT-AIR	
	32	1	**206-1818**	1	DUCT AS-AIR	
	33	1	**206-1846**	1	INSULATION	
	34	1	**206-1847**	1	INSULATION	
Y	35	1	**358-7087**	1	HEATER & AIR CONDITIONER GP	442
	36	1	**211-2661**	1	FILTER ELEMENT AS-AIR (CAB HEATER)	
	37	1	**218-0666**	6	LOUVER AS	
D	38	1	**5P-6129**		TUBE (0.55-M EACH)	
	39	1	**255-0795**	1	FILM-IDENTIFICATION (TEMPERATURE CONTROL)	
	40	1	**5P-4116**	1	WASHER-HARD (8.8X20.5X2-MM THK)	
M	41	1	**111-4627**	3	SCREW-MACHINE (M6X1X30-MM)	
	42	1	**8Y-6352**	1	LOUVER AS	
	43	1	**7X-0579**	1	WASHER-HARD (8.8X25.5X2-MM THK)	
M	44	1	**8T-4200**	1	BOLT (M8X1.25X16-MM)	
	45	1	**9X-2038**	4	WASHER (7X19X2-MM THK)	
M	46	1	**9X-2045**	8	SCREW-TRUSS HEAD (M6X1X20-MM)	
	48	1	**4H-2558**	2	GROMMET	
	49	1	**8T-4205**	4	WASHER-HARD (7.2X14.5X2-MM THK)	

D-ORDER BY THE METER
E-ORDER BY THE CENTIMETER
M-METRIC PART
Y-SEPARATE ILLUSTRATION

206-1801 **AIR CONDITIONER & MOUNTING GP** *(contd.)* **i03996332**

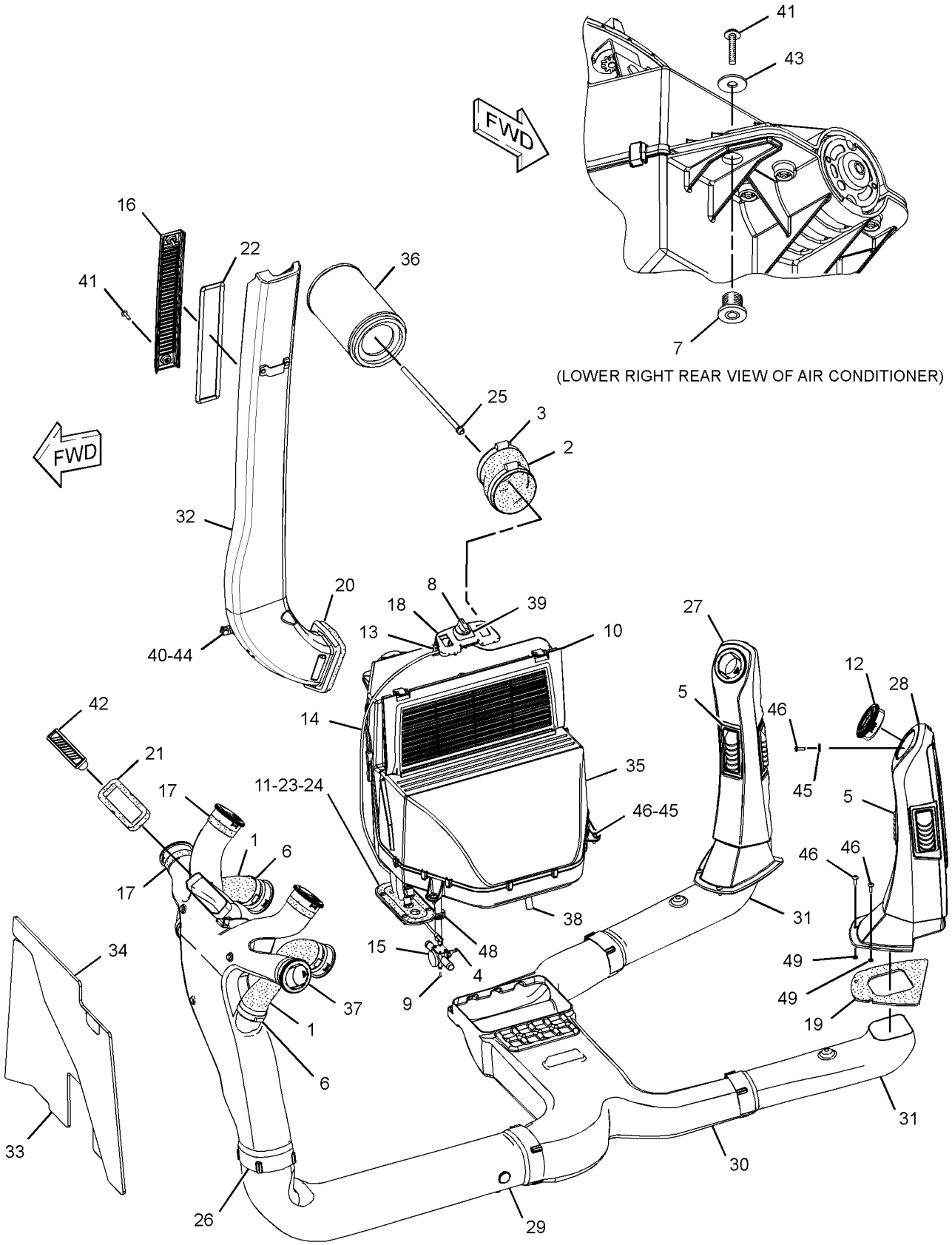

GRAPHIC #1 **<END>** g02174640

OPERATOR STATION

254-0200 CAB AR-ENCLOSED ROPS—WITH AIR CONDITIONER

S/N: RBA1-UP

AN ATTACHMENT

SMCS-7301, 7325 **i04110713**

NOTE	PART NUMBER	QTY	PART NAME 1 2 3 4 5 6 (PRODUCT LEVEL)	SEE PAGE
Y	*206-1801*	1	AIR CONDITIONER & MOUNTING GP	404
Y	**353-3011**	1	CAB GP	407
Y	*254-0177*	1	COMPRESSOR & MTG GP-REFRIG	413
Y	*301-9725*	1	CONDENSER & MTG GP-REFRIGERANT	414
Y	*368-9044*	1	CONSOLE GP-OPERATOR (RH)	419
Y	*206-1702*	1	CONSOLE GP-OPERATOR (LH)	415
Y	*206-1703*	1	CONSOLE GP-OPERATOR (FRONT)	417
Y	*218-4453*	1	CONTROL GP-STEERING (TILT)	436
Y	*290-6776*	1	ELECTRONICS GP-MACHINE (NON-ACCUGRADE)	87
Y	*249-9328*	1	EXTENSION GP-FENDER	210
Y	*254-0113*	1	FAN GP-SUCTION (WITH AIR CONDITIONER)	47
Y	*213-1891*	1	FENDER GP-REAR	212
Y	*206-1618*	1	FLOOR MAT GP	441
Y	*211-4277*	1	LIGHTING GP-FLOOD & SIGNAL (NACD, OPTIONAL)	98
Y	*317-5543*	1	LINER GP-CAB	447
Y	*254-0190*	1	LINES GP-HEATER & AIR COND	449
Y	*205-9560*	1	MOUNTING GP-CAB	457
Y	*205-9569*	1	ROOF GP-CAB	459
Y	*280-7366*	1	SEAT GP-SUSPENSION (DELUXE, CLOTH)	466
Y	**223-4715**	1	VALVE GP-PILOT (STABILIZER)	371
Y	*206-1857*	1	VISOR GP-CAB	471
Y	*206-1727*	1	WASHER GP-WINDOW	472
Y	*206-1725*	1	WIPER GP-WINDOW	482
Y	*287-2102*	1	WIRING GP-AIR CONDITIONER	113
Y	*211-4245*	1	WIRING GP-CONSOLE (FRONT)	116
Y	*331-5602*	1	WIRING GP-CONSOLE (SIDE)	118
Y	*263-0924*	1	WIRING GP-PLATFORM	130
Y	*211-4271*	1	WIRING GP-POWER RECEPTACLE	137
Y	*225-7996*	1	WIRING GP-STABILIZER	142
	250-7912	1	FILM-IDENTIFICATION (CATERPILLAR, FRONT)	
			(ON FRONT WINDSHIELD)	
	251-3306	1	FILM-INSTRUCTION (STABILIZER, AUTO UP)	
			(ON RH CONSOLE NEXT TO STABILIZER CONTROLS)	
	285-1207	1	MAT-PROTECTIVE (HEAVY-DUTY)	

Y-SEPARATE ILLUSTRATION

<END>

OPERATOR STATION

353-3011 CAB GP–DELUXE

S/N: RBA1-UP
PART OF 254-0200 CAB AR-ENCLOSED ROPS
AN ATTACHMENT

SMCS-7301 **i04115471**

NOTE	REF NO	GRAPHIC REF	PART NUMBER	QTY	PART NAME 1 2 3 4 5 6 (PRODUCT LEVEL)	SEE PAGE
	1	1	**129-3738**	2	GUARD-STRIKER	
	2	1	**129-5256**	12	BUSHING	
	3	1	**129-5257**	8	BUSHING	
	4	2	**159-4945**	2	KEEPER	
B	5	2	**177-4877**	4	SHIM (1-MM THK)	
	6	1	**193-5913**	4	PLUG	
	7	1	**193-5914**	4	PLUG	
	8	1	**205-9605**	1	GLASS (FRONT, LH)	
	9	1	**205-9606**	1	GLASS (FRONT, RH)	
	10	1	**205-9607**	1	GLASS (WINDSHIELD)	
	11	1	**205-9622**	1	GLASS (LOWER, LH)	
	12	1	**205-9631**	1	GLASS (LOWER, RH)	
	13	1	**206-1590**	4	PIN	
	14	1	**210-6475**	2	PLATE	
	15	1	**215-2913**	1	GROMMET	
	16	2	**219-0302**	1	FILM-WARNING (NO WELD, NO DRILL, READ OMM)	
Y	17	1	*229-0300*	1	WINDOW GP-CAB (REAR)	474
	18	1	**292-0667**	1	PLATE AS	
	19	2	**325-9310**	1	FILM-CERTIFICATION (OPS, READ OMM)	
Y	20	1	**327-7601**	1	WINDOW GP-CAB (LH)	476
Y	21	1	**327-7637**	1	WINDOW GP-CAB (RH)	478
Y	22	1	**329-1167**	1	DOOR GP-CAB (RH)	437
Y	23	1	**329-1168**	1	DOOR GP-CAB (LH)	439
	24	1	**338-3328**	2	BOLT-STRIKER	
	26	1	**360-3218**	1	PLATE	
M	27	2	**131-3987**	8	SCREW (M4X0.7X12-MM)	
	28	2	**159-4946**	2	KEEPER	
	29	1	**5P-4116**	11	WASHER-HARD (8.8X20.5X2-MM THK)	
	30	1	**7X-0618**	2	WASHER-HARD (13.5X40X5-MM THK)	
	31	1	**8S-7803**	8	RING-RETAINING	
M	32	1	**8T-4200**	11	BOLT (M8X1.25X16-MM)	
	33	1	**9R-5616**	2	PLUG	
M	34	1	**9X-2043**	4	SCREW-TRUSS HEAD (M6X1X14-MM)	
E	35	1	**322-8414**		SEAL-CAB (253.5-CM EACH)	
E	35A	1	**322-8414**		SEAL-CAB (340-CM EACH)	

B-USE AS REQUIRED
E-ORDER BY THE CENTIMETER
M-METRIC PART
Y-SEPARATE ILLUSTRATION

REFER TO ALL ILLUSTRATIONS OF
THIS GROUP FOR AUXILIARY VIEWS

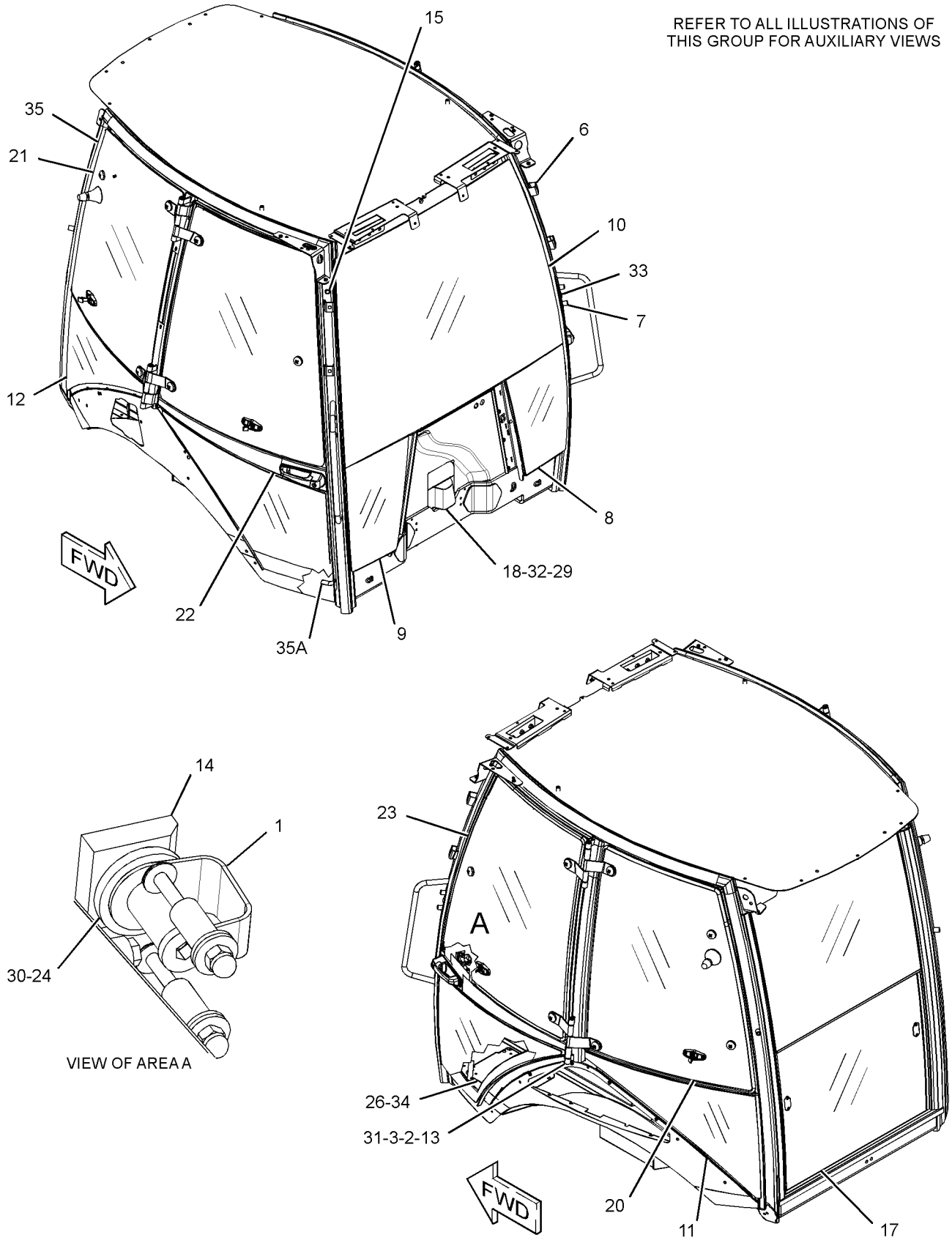

GRAPHIC #1

g02322233

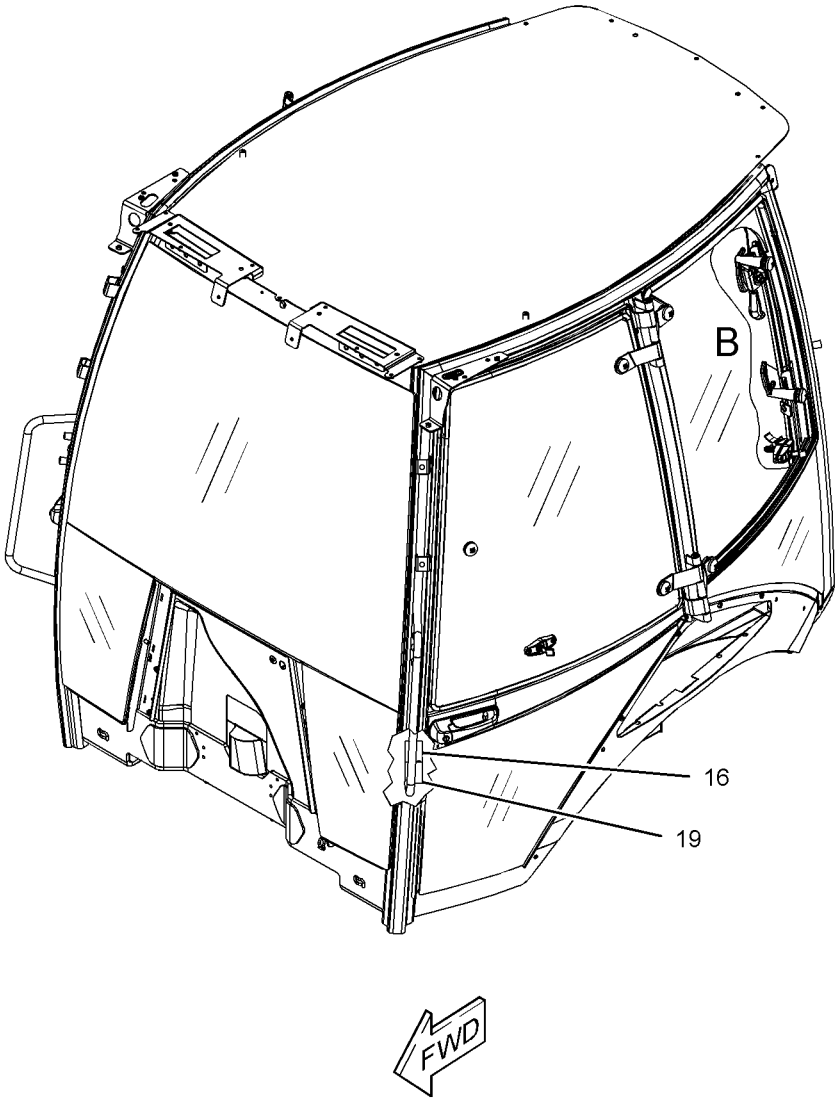

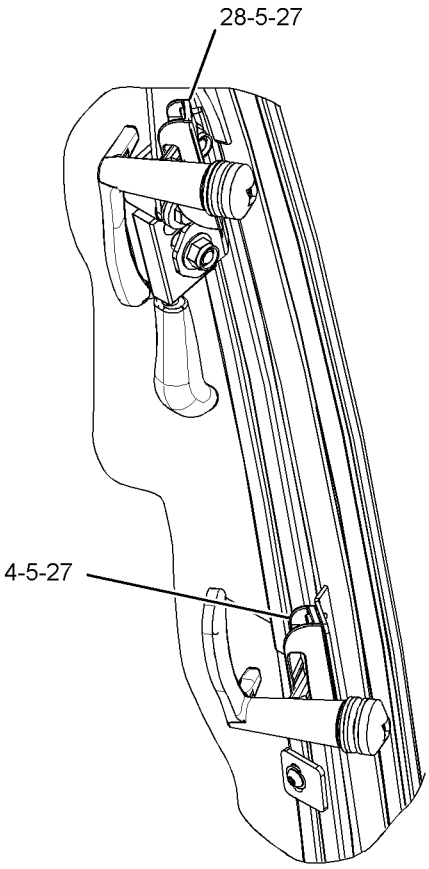

VIEW OF AREA B

GRAPHIC #2 **<END>** g02322213

OPERATOR STATION

254-0198 CANOPY AR-OPEN ROPS—WITHOUT FRONT WINDOW

S/N: RBA1-UP

AN ATTACHMENT

SMCS-7302, 7323 **i04110703**

NOTE	PART NUMBER	QTY	PART NAME 1 2 3 4 5 6 (PRODUCT LEVEL)	SEE PAGE
Y	**353-3010**	1	CANOPY GP	411
Y	*368-9044*	1	CONSOLE GP-OPERATOR (RH)	419
Y	*206-1702*	1	CONSOLE GP-OPERATOR (LH)	415
Y	*206-1703*	1	CONSOLE GP-OPERATOR (FRONT)	417
Y	*218-4453*	1	CONTROL GP-STEERING (TILT)	436
Y	*290-6776*	1	ELECTRONICS GP-MACHINE (NON-ACCUGRADE)	87
Y	*249-9328*	1	EXTENSION GP-FENDER	210
Y	*254-0112*	1	FAN GP-SUCTION (WITHOUT AIR CONDITIONER)	46
Y	*213-1891*	1	FENDER GP-REAR	212
Y	*206-1618*	1	FLOOR MAT GP	441
Y	*211-4277*	1	LIGHTING GP-FLOOD & SIGNAL (NACD, OPTIONAL)	98
Y	*259-6276*	1	MIRROR GP-REAR VIEW (INTERIOR)	451
Y	*205-9560*	1	MOUNTING GP-CAB	457
Y	*206-1701*	1	PROTECTION GP-VANDALISM (ROTATING GUARD)	490
Y	*205-9569*	1	ROOF GP-CAB	459
Y	*280-7364*	1	SEAT GP-SUSPENSION (VINYL)	466
Y	*206-1704*	1	TRIM GP-CAB (OPEN ROPS)	469
Y	**223-4715**	1	VALVE GP-PILOT (STABILIZER)	371
Y	*211-4245*	1	WIRING GP-CONSOLE (FRONT)	116
Y	*331-5602*	1	WIRING GP-CONSOLE (SIDE)	118
Y	*263-0924*	1	WIRING GP-PLATFORM	130
Y	*211-4271*	1	WIRING GP-POWER RECEPTACLE	137
Y	*225-7996*	1	WIRING GP-STABILIZER	142
	256-5299	1	FILM-IDENTIFICATION (CATERPILLAR)	
			(PLACED ON CENTER ROOF CAP BETWEEN SCREWS)	
	251-3306	1	FILM-INSTRUCTION (STABILIZER, AUTO UP)	
			(PLACED BETWEEN THE REAR THROTTLE LEVER & STAB LEVERS)	
	285-1207	1	MAT-PROTECTIVE (HEAVY-DUTY)	
	227-1057	1	PLUG-HOLE	
	273-1474	1	SEAL (CONSOLE, LH)	

Y-SEPARATE ILLUSTRATION

<END>

OPERATOR STATION

353-3010 CANOPY GP

S/N: RBA1-UP
PART OF 254-0198 CANOPY AR-OPEN ROPS
AN ATTACHMENT

SMCS-7302 **i04116480**

NOTE	REF NO	GRAPHIC REF	PART NUMBER	QTY	PART NAME 1 2 3 4 5 6 (PRODUCT LEVEL)	SEE PAGE
	1	1	**193-5913**	4	PLUG	
	2	1	**193-5914**	4	PLUG	
B	3	1	**205-9605**	1	GLASS (FRONT, LH)	
B	4	1	**205-9606**	1	GLASS (FRONT, RH)	
	5	1	**215-2913**	1	GROMMET	
	6	1	**219-0302**	1	FILM-WARNING (NO WELD, NO DRILL, READ OMM)	
	7	1	**292-0667**	1	PLATE AS	
	8	1	**325-9310**	1	FILM-CERTIFICATION (OPS, READ OMM)	
	9	1	*353-3013*	1	CANOPY AS-OPEN ROPS	
		1	**5D-9629**	2	ROD	
M		1	**6V-9632**	4	NUT-WELD (M6X1-THD)	
		1	**7T-1099**	2	LINK	
M		1	**8T-3612**	10	NUT-WELD (M8X1.25-THD)	
	10	1	**360-3218**	1	PLATE	
	11	1	**5P-4116**	11	WASHER-HARD (8.8X20.5X2-MM THK)	
M	12	1	**8T-4200**	11	BOLT (M8X1.25X16-MM)	
	13	1	**9R-5616**	2	PLUG	
M	14	1	**9X-2043**	4	SCREW-TRUSS HEAD (M6X1X14-MM)	
E	15	1	**9X-2092**		TRIM-EDGE (40-CM EACH)	

B-USE AS REQUIRED
E-ORDER BY THE CENTIMETER
M-METRIC PART

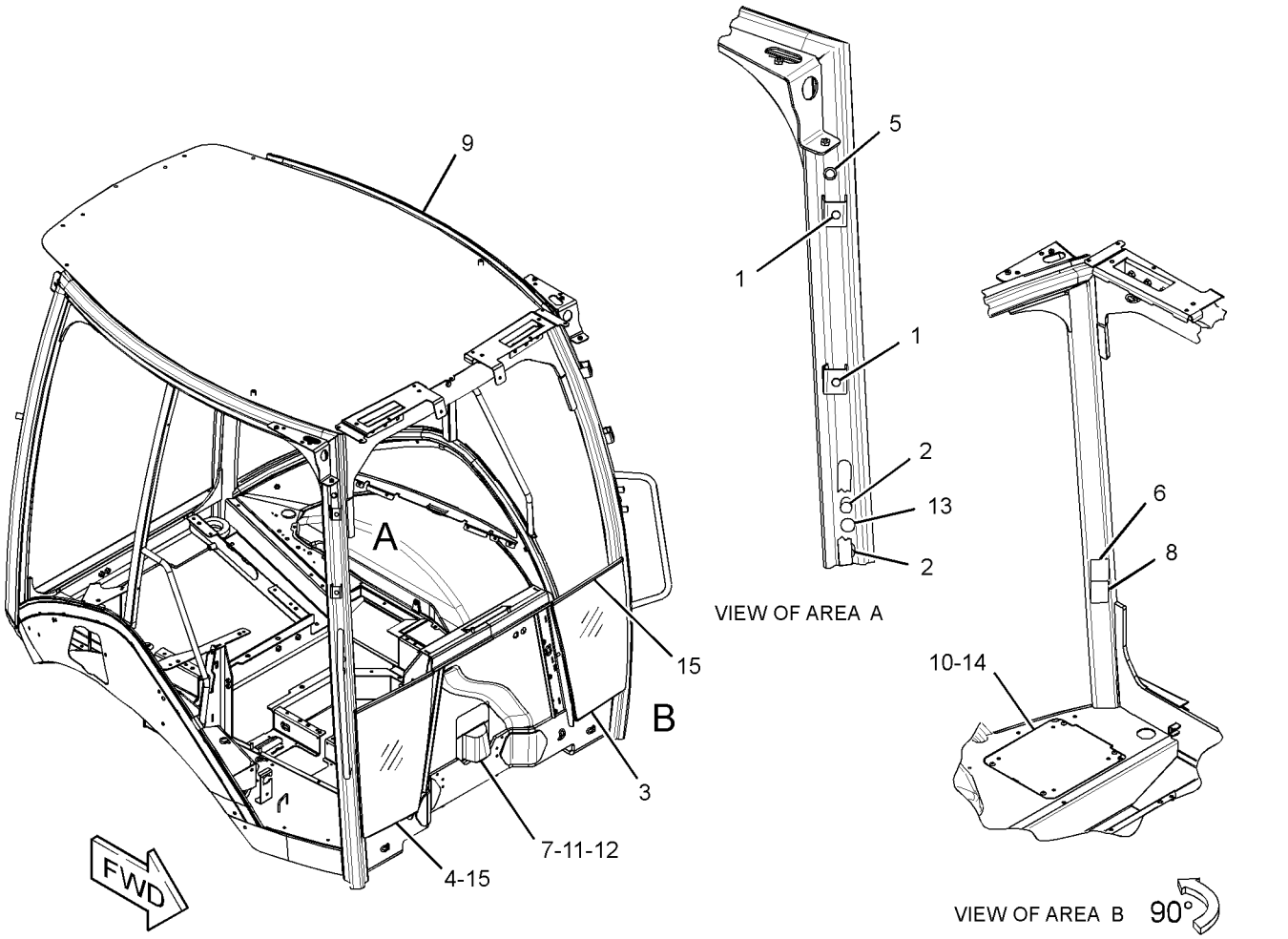

GRAPHIC #1 **<END>** g02352546

OPERATOR STATION

254-0177 COMPRESSOR & MTG GP-REFRIG

S/N: RBA1-UP

PART OF 254-0200 CAB AR-ENCLOSED ROPS

AN ATTACHMENT

SMCS-1802 **i04115376**

NOTE	REF NO	GRAPHIC REF	PART NUMBER	QTY	PART NAME 1 2 3 4 5 6 (PRODUCT LEVEL)	SEE PAGE
	1	1	**272-5767**	1	COMPRESSOR GP-REFRIGERANT	
		1	**102-8802**	1	KIT-RECEPTACLE (2-PIN)	
					(INCLUDES RECEPTACLE AS & WEDGE)	
		1	**229-4896**	2	SEAL-O-RING	
		1	**229-7356**	1	VALVE AS-RELIEF	
	2	1	**288-9734**	1	BRACKET	
	3	1	**290-7831**	1	BRACKET	
M	4	1	**7X-2538**	4	BOLT (M8X1.25X100-MM)	
M	5	1	**7X-2553**	2	BOLT (M16X2X40-MM)	
	6	1	**8T-4121**	1	WASHER-HARD (11X21X2.5-MM THK)	
M	7	1	**8T-4136**	1	BOLT (M10X1.5X25-MM)	
	8	1	**8T-4224**	4	WASHER-HARD (8.8X16X2-MM THK)	
	9	1	**9X-8257**	2	WASHER (17.5X30X3.5-MM THK)	

M-METRIC PART

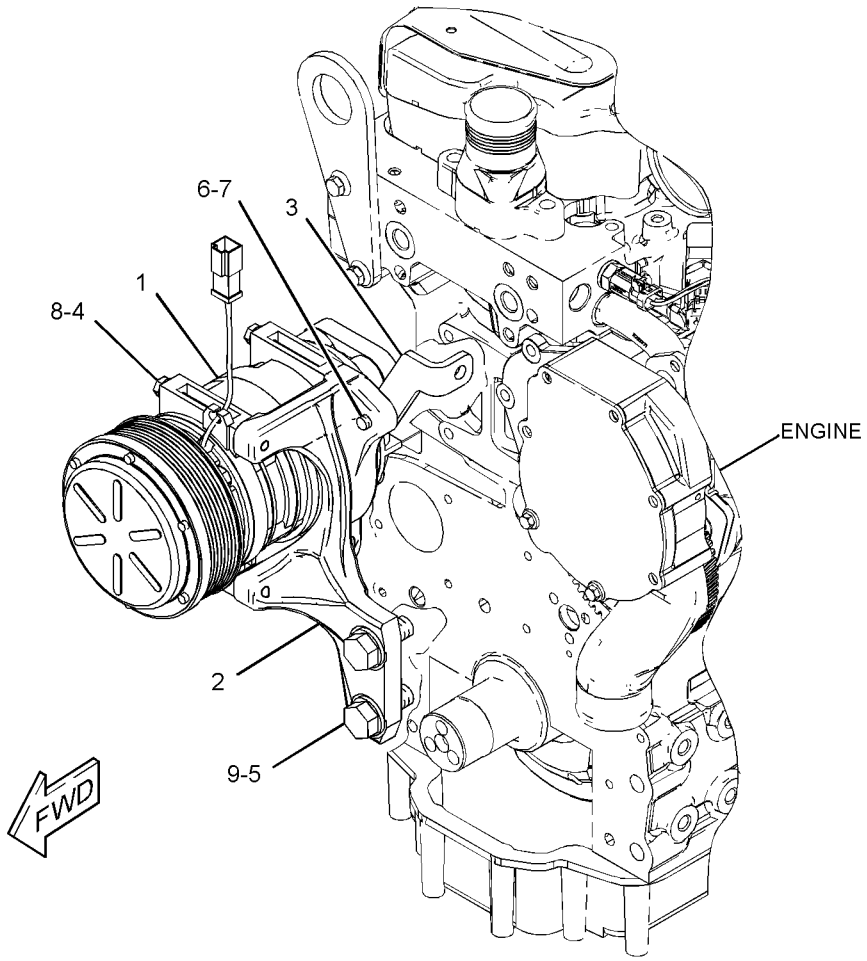

GRAPHIC #1 **<END>** g01409889

OPERATOR STATION

301-9725 CONDENSER & MTG GP-REFRIGERANT

S/N: RBA1-UP
PART OF 254-0200 CAB AR-ENCLOSED ROPS
AN ATTACHMENT

SMCS-1805 **i03852050**

NOTE	REF NO	GRAPHIC REF	PART NUMBER	QTY	PART NAME 1 2 3 4 5 6 (PRODUCT LEVEL)	SEE PAGE
	1	1	**353-8584**	1	CORE AS-CONDENSER	
		1	**317-8141**	4	MOUNT	
	2	1	**8C-9987**	4	WASHER (8.3X28X2.5-MM THK)	
M	3	1	**8T-4908**	4	BOLT (M8X1.25X25-MM)	

M-METRIC PART

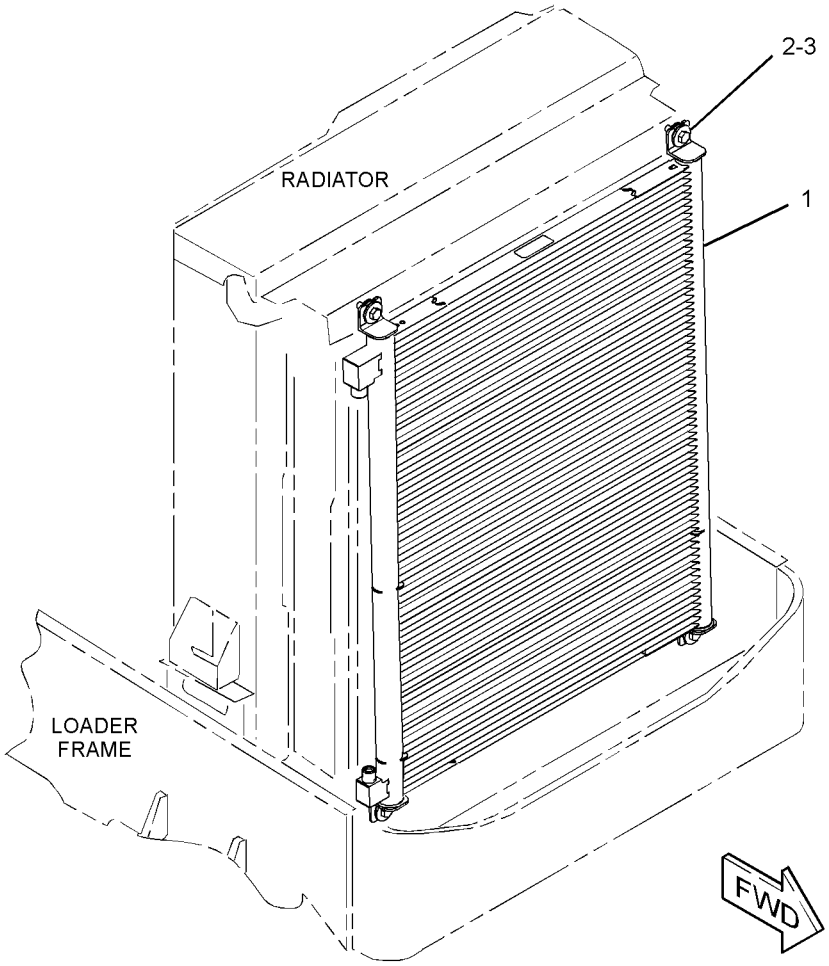

GRAPHIC #1 **<END>** g02099593

OPERATOR STATION

206-1702 CONSOLE GP-OPERATOR—LH

S/N: RBA1-UP

PART OF 254-0200 CAB AR-ENCLOSED ROPS, 254-0198 CANOPY AR-OPEN ROPS AN ATTACHMENT

SMCS-5258, 7451 **i03126124**

NOTE	REF NO	GRAPHIC REF	PART NUMBER	QTY	PART NAME 1 2 3 4 5 6 (PRODUCT LEVEL)	SEE PAGE
E	1	1	**3E-6600**		SEAL (34-CM)	
D	2	1	**5P-5927**		SEAL (1.7-M)	
	3	1	**206-1696**	1	CONSOLE AS (LH)	
	4	1	**206-1698**	1	DOOR-STORAGE	
	5	1	**206-1699**	1	CUP HOLDER	
	6	1	**206-1706**	1	BOX AS-STORAGE	
J	7	1	**206-1708**	1	LOCK AS	
	8	1	**206-1712**	1	HINGE-DOOR	
	9	1	**210-6491**	1	CUP HOLDER	
	10	1	**249-2482**	1	PLATE	
	11	1	**261-9636**	1	BRACKET-SUPPORT	
	12	1	**261-9637**	2	BRACKET AS	
	13	1	**261-9639**	3	SCREW-PAN HEAD (12X0.5-IN)	
E	14	1	**293-1980**		SEAL (71-CM)	
E	14A	1	**293-1980**		SEAL (77-CM)	
M	15	1	**5C-2890**	3	NUT (M6X1-THD)	
	16	1	**8T-4205**	3	WASHER-HARD (7.2X14.5X2-MM THK)	
	17	1	**9X-2038**	6	WASHER (7X19X2-MM THK)	
M	18	1	**9X-2044**	19	SCREW-TRUSS HEAD (M6X1X16-MM)	

D-ORDER BY THE METER
E-ORDER BY THE CENTIMETER
J-REQUIRES CORPORATE KEY
M-METRIC PART

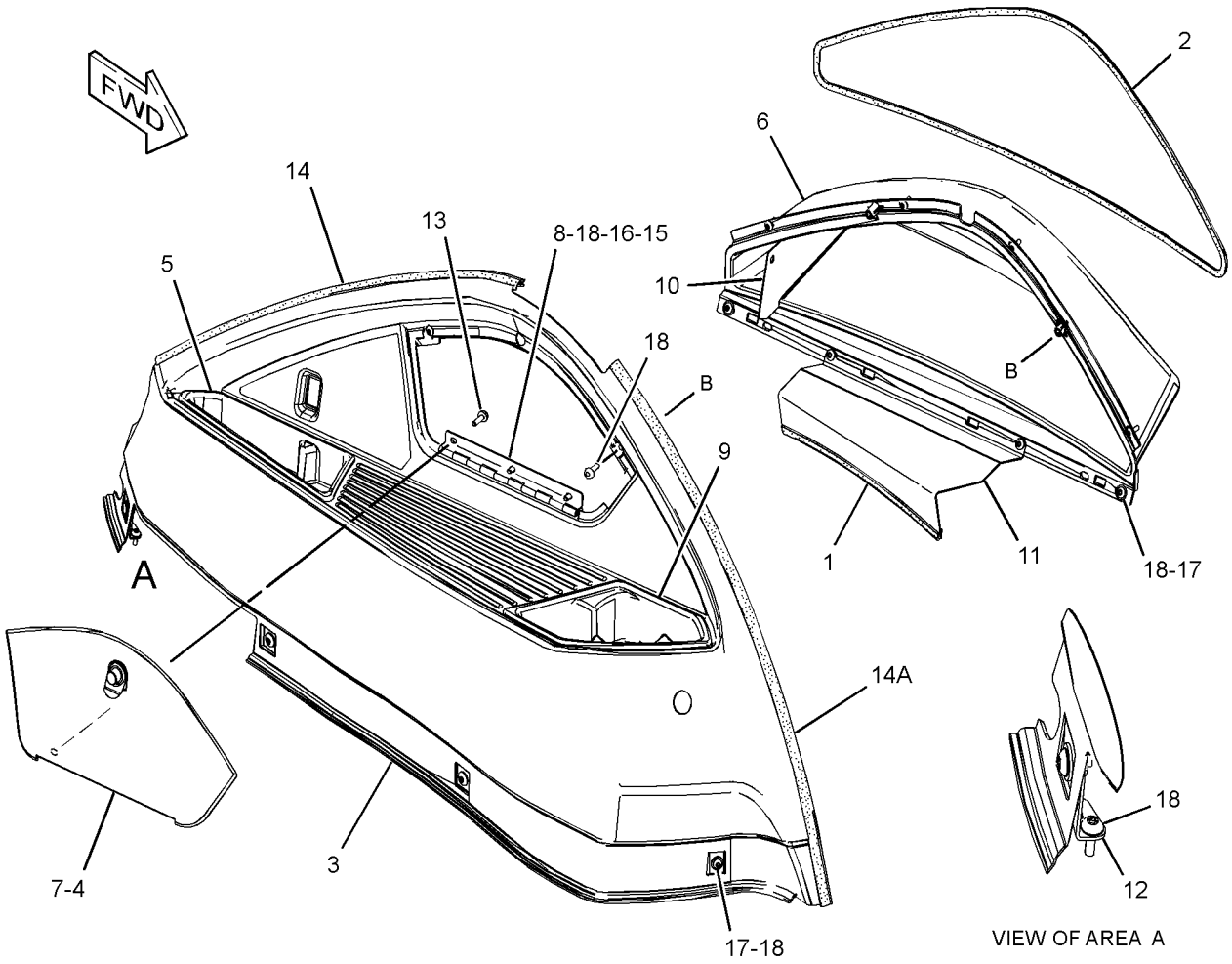

GRAPHIC #1 **<END>** g01520782

OPERATOR STATION

206-1703 CONSOLE GP-OPERATOR–FRONT

S/N: RBA1-UP

PART OF 254-0200 CAB AR-ENCLOSED ROPS, 254-0198 CANOPY AR-OPEN ROPS

AN ATTACHMENT

SMCS-5258, 7451 **i02959351**

NOTE	REF NO	GRAPHIC REF	PART NUMBER	QTY	PART NAME 1 2 3 4 5 6 (PRODUCT LEVEL)	SEE PAGE
B	1	1	**184-5293**	1	PLUG	
	2	1	**206-1658**	1	COVER AS-STEERING COLUMN (UPPER)	
		1	**206-1667**	2	CLIP	
	3	1	**206-1659**	1	DOOR-STORAGE	
	4	1	**206-1660**	1	COVER AS-STEERING COLUMN (FRONT)	
		1	**206-1667**	4	CLIP	
	5	1	**206-1661**	1	COVER AS-STEERING COLUMN (REAR)	
		1	**206-1667**	4	CLIP	
	6	1	**206-1662**	1	CONSOLE AS-FRONT (UPPER)	
		1	**206-1667**	8	CLIP	
	7	1	**206-1663**	1	CONSOLE-FRONT (MIDDLE)	
J	8	1	**206-1708**	1	LOCK AS	
	9	1	**261-9639**	10	SCREW-PAN HEAD (12X0.5-IN)	
E	10	1	**220-0738**		SEAL (22-CM)	
	11	1	**224-2147**	1	CONSOLE AS-FRONT (LOWER, LH)	
	12	1	**224-2149**	1	CONSOLE AS-FRONT (LOWER, RH)	
	13	1	**233-5260**	2	LANYARD	
M	14	1	**120-9027**	2	SCREW-PAN HEAD (M3X0.5X16-MM)	
	15	1	**206-1854**	1	HINGE	
M	16	1	**8T-2658**	2	LOCKNUT (M3X0.5-THD)	
M	17	1	**9X-2044**	2	SCREW-TRUSS HEAD (M6X1X16-MM)	
M	18	1	**9X-2045**	16	SCREW-TRUSS HEAD (M6X1X20-MM)	
	19	1	**258-2354**	1	BRACKET-LATCH	
	20	1	**9X-2038**	3	WASHER (7X19X2-MM THK)	
	21	1	**4I-3038**	2	WASHER (3.3X8X0.5-MM THK)	
D	22	1	**5P-7070**		INSULATION-STRIP (0.03-M EACH)	

B-USE AS REQUIRED
D-ORDER BY THE METER
E-ORDER BY THE CENTIMETER
J-REQUIRES CORPORATE KEY
M-METRIC PART

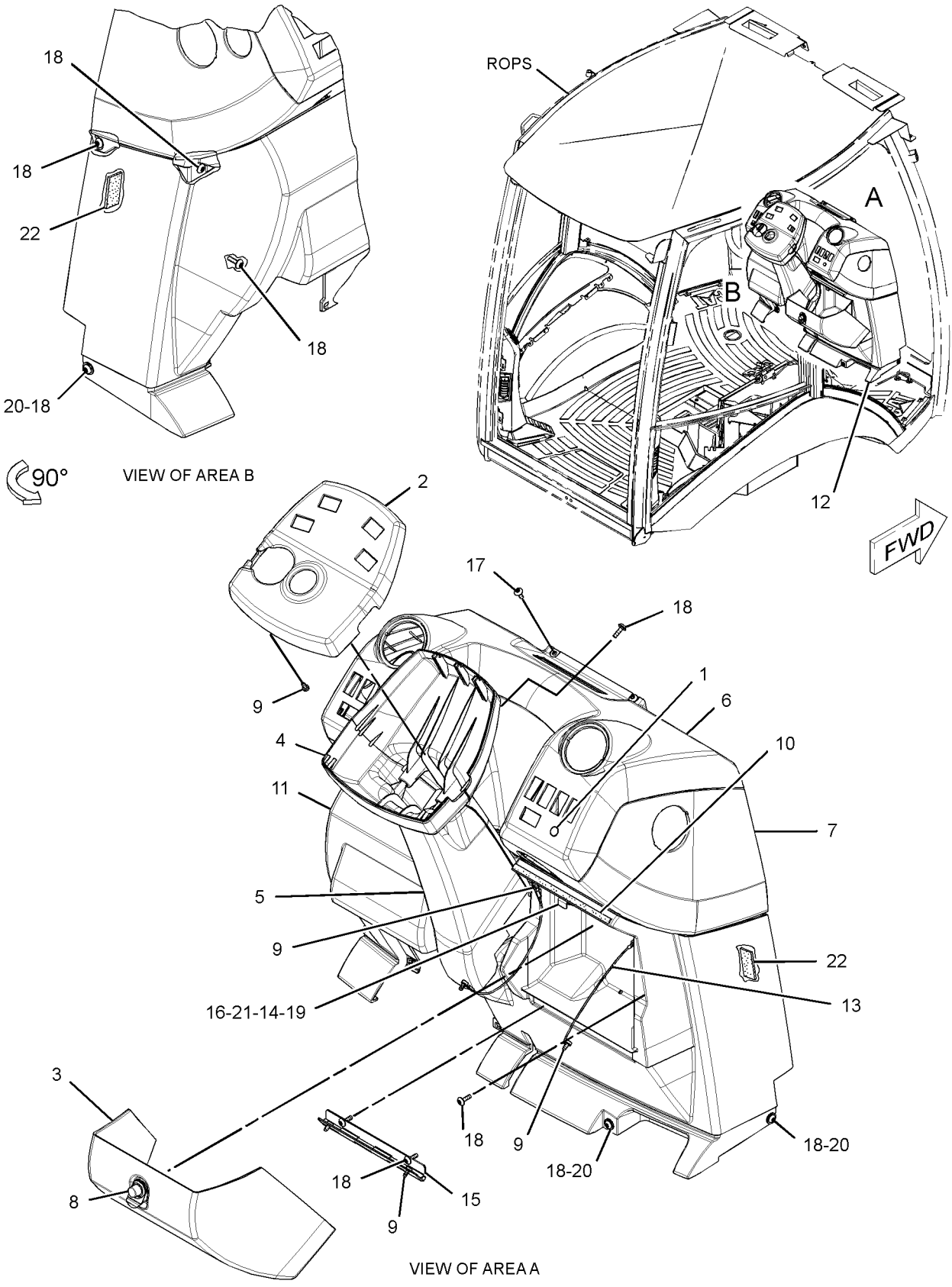

GRAPHIC #1 **<END>** g01522089

OPERATOR STATION

368-9044 CONSOLE GP-OPERATOR—RH

S/N: RBA1-UP

PART OF 254-0200 CAB AR-ENCLOSED ROPS, 254-0198 CANOPY AR-OPEN ROPS AN ATTACHMENT

SMCS-5258, 7451 **i04141069**

NOTE	REF NO	GRAPHIC REF	PART NUMBER	QTY	PART NAME 1 2 3 4 5 6 (PRODUCT LEVEL)	SEE PAGE
B	1	1	**2S-3163**	1	PLUG	
	2	1	**164-1178**	1	CLIP	
	3	1	**167-8251**	1	FASTENER	
	4	1	**206-1678**	1	HOUSING AS (UPPER)	
	5	1	**206-1681**	1	PANEL AS (LOWER)	
		1	**172-8591**	5	NUT-SPRING	
	6	1	**206-1687**	1	COVER-FUSE	
	7	1	**206-1690**	1	COVER (FENDER, REAR)	
	8	1	**206-1692**	1	COVER AS (CONTROLS, REAR)	
		1	**206-1667**	3	CLIP	
B	9	1	**248-2709**	2	PLUG	
	10	1	**261-9644**	1	COVER AS (CONTROLS, FRONT, LOWER)	
		1	**206-1667**	1	CLIP	
	11	1	**261-9645**	1	COVER AS (CONTROLS, FRONT, UPPER)	
		1	**206-1667**	4	CLIP	
	12	1	**269-9115**	1	COVER AS (FENDER, FRONT)	
		1	**172-8591**	1	NUT-SPRING	
E	13	1	**293-1980**		SEAL (73-CM)	
E	13A	1	**293-1980**		SEAL (77.5-CM)	
	14	1	**336-7533**	1	PANEL AS-GAUGE	
		1	**206-1667**	2	CLIP	
	15	1	**9X-2038**	5	WASHER (7X19X2-MM THK)	
M	16	1	**9X-2045**	16	SCREW-TRUSS HEAD (M6X1X20-MM)	

B-USE AS REQUIRED
E-ORDER BY THE CENTIMETER
M-METRIC PART

368-9044 **CONSOLE GP-OPERATOR** *(contd.)* **i04141069**

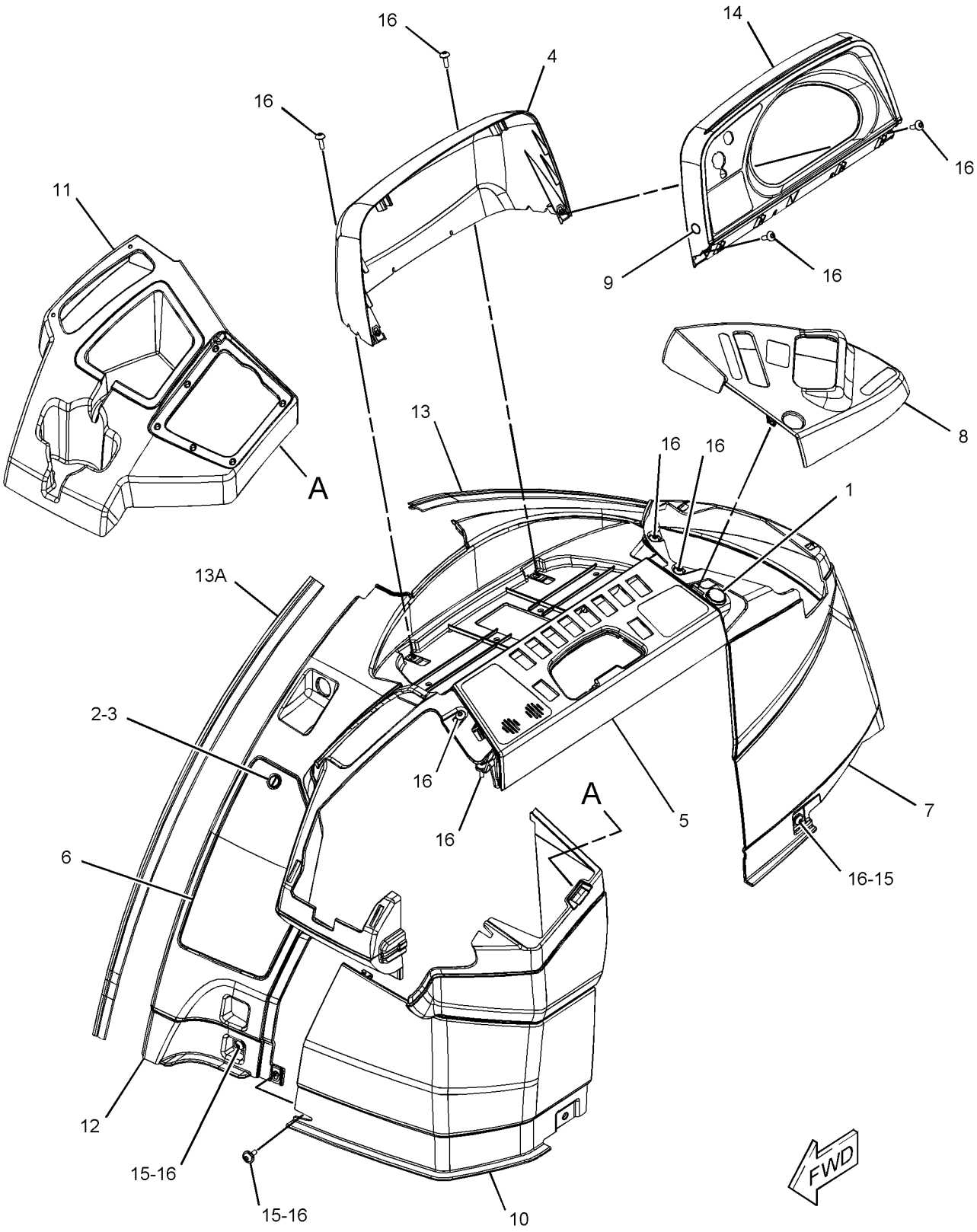

GRAPHIC #1 **<END>** g02346187

OPERATOR STATION

271-3097 CONTROL GP-HANDLE–LH

S/N: RBA1-UP
PART OF 254-0153 CONTROL AR-BACKHOE
AN ATTACHMENT

SMCS-5063, 5705 **i03321224**

NOTE	REF NO	GRAPHIC REF	PART NUMBER	QTY	PART NAME 1 2 3 4 5 6 (PRODUCT LEVEL)	SEE PAGE
	1	1	**271-3103**	1	HANDLE GP-MODULAR (LH)	
		1	**8T-8737**	10	PLUG-SEAL	
		1	**174-3091**	1	KIT-RECEPTACLE (12-PIN)	
					(INCLUDES RECEPTACLE AS & WEDGE)	
		1	**186-3735**	2	PIN-CONNECTOR (16-GA TO 18-GA)	
	2	1	**278-7469**	1	ADAPTER (LH)	
	3	1	**254-3437**	1	BOOT	

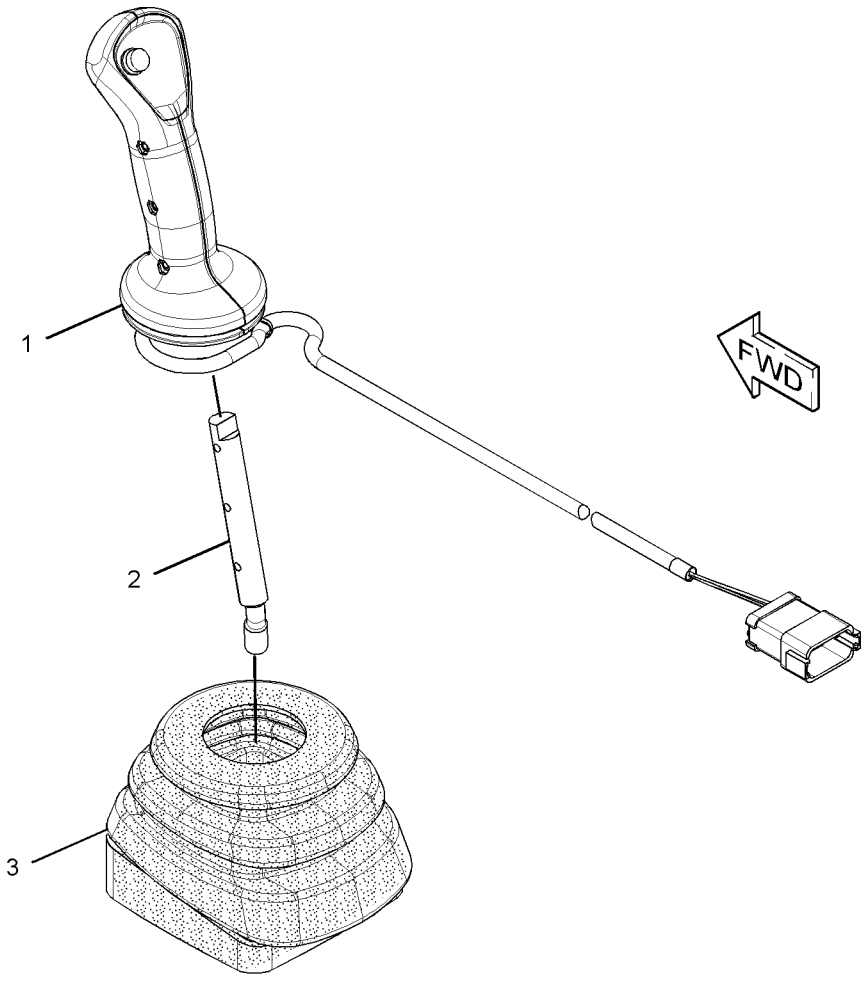

GRAPHIC #1 **<END>** g01473695

OPERATOR STATION

206-1645 CONTROL GP-HYDRAULIC HAND—LOADER

S/N: RBA1-UP

PART OF 254-0188, 346-1232 VALVE AR-BANK 2

AN ATTACHMENT

SMCS-5063 **i03500265**

NOTE	REF NO	GRAPHIC REF	PART NUMBER	QTY	PART NAME 1 2 3 4 5 6 (PRODUCT LEVEL)	SEE PAGE
B	1	1	**1K-0502**	7	WASHER (16.3X25.4X1.2-MM THK)	
	2	1	**2R-0364**	3	RING-RETAINING	
M	3	1	**8T-4137**	2	BOLT (M10X1.5X20-MM)	
	4	1	**5H-3193**	1	PIN-SPRING	
	5	1	**9R-1765**	1	COVER-TOP (TOP)	
	6	1	**9R-1766**	1	COVER-BOTTOM	
	7	1	**9R-1767**	1	BOOT	
	8	1	**9R-9868**	1	SWITCH GP-PUSH BUTTON (NEUTRALIZER, DOWNSHIFT)	
		1	**9W-0625**	1	SWITCH AS-PUSH BUTTON (PUSH BUTTON)	
		1	**9X-3401**	2	PIN-CONNECTOR (16-GA TO 18-GA)	
M	9	1	**9X-2065**	2	NUT (M10X1.5-THD, LH)	
	10	1	**107-5591**	1	NUT-JAM (3/4-16-THD)	
M	11	1	**134-0453**	2	TURNBUCKLE	
	12	1	**164-1368**	12	FASTENER-PANEL	
	13	1	**183-3135**	1	JOINT AS	
	14	1	**183-3137**	1	PIN	
	15	1	**206-1695**	1	BOOT	
	16	1	**209-3363**	1	ROD	
	17	1	**291-5108**	1	GASKET	
	18	1	**216-3358**	1	DAMPER AS (SPRING)	
		1	**095-9230**	1	PIN-SPRING	
		1	**183-3132**	1	CYLINDER	
	19	1	**216-3351**	1	ROD	
	20	1	**220-0269**	1	SHAFT	
	21	1	**230-2510**	1	LEVER AS	
	22	1	**269-8129**	1	BRACKET AS	
	23	1	**269-8817**	1	PLATE	
	24	1	**270-2795**	1	PLATE	
	25	1	**272-7104**	1	ROD	
	26	1	**275-8869**	1	BRACKET AS	
	27	1	**179-8235**	1	LOCK PIN	
	28	1	**102-8802**	1	KIT-RECEPTACLE (2-PIN)	
					(INCLUDES RECEPTACLE AS & WEDGE)	
M	29	1	**6V-7744**	4	LOCKNUT (M10X1.5-THD)	
	30	1	**7X-7729**	4	WASHER (11X25X3-MM THK)	
	31	1	**8C-4987**	1	PIN-CLEVIS	
	32	1	**8T-4121**	1	WASHER-HARD (11X21X2.5-MM THK)	
M	33	1,1	**8T-4133**	6	NUT (M10X1.5-THD)	
M	34	1	**8T-4136**	1	BOLT (M10X1.5X25-MM)	
M	35	1	**8T-4189**	4	BOLT (M8X1.25X20-MM)	
	36	1	**5P-4116**	4	WASHER-HARD (8.8X20.5X2-MM THK)	
	37	1	**8T-4773**	2	BALL JOINT	
	38	1	**8T-4815**	2	ROD END	
	39	1	**8T-9501**	2	SCREW (10-16X0.75-IN)	
	40	1	**9R-2807**	1	CLIP	
	41	1	**9R-3067**	1	PIN	
M	42	1	**9X-2040**	2	SCREW-TRUSS HEAD (M10X1.5X25-MM)	
E	43	1	**3E-6600**		SEAL (70-CM)	

B-USE AS REQUIRED
E-ORDER BY THE CENTIMETER
M-METRIC PART

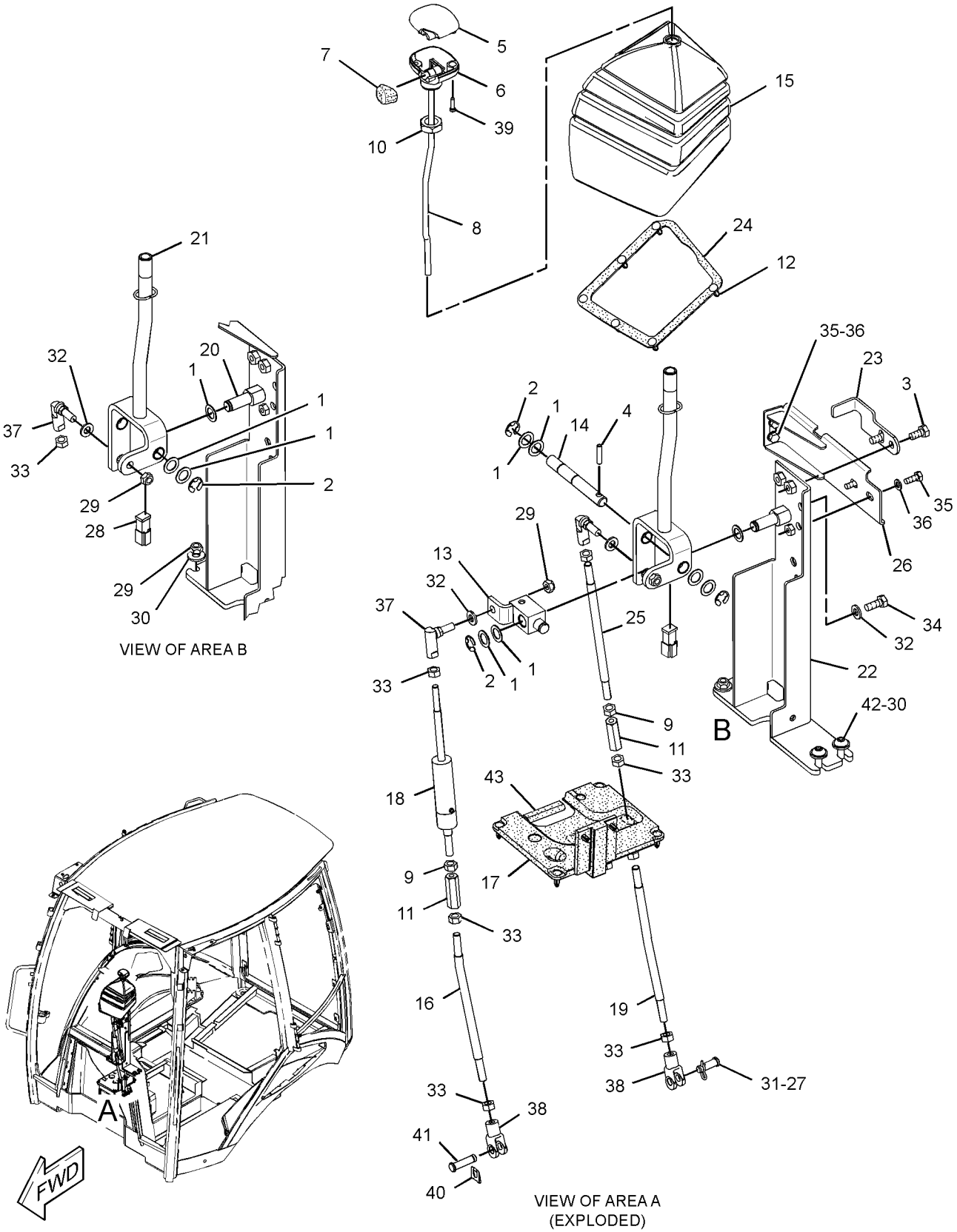

GRAPHIC #1

<END>

g01300494

OPERATOR STATION

209-3364 CONTROL GP-HYDRAULIC HAND—LOADER

S/N: RBA1-UP

PART OF 254-0189, 346-1233 VALVE AR-BANK 3

AN ATTACHMENT

SMCS-5063 **i03318831**

NOTE	REF NO	GRAPHIC REF	PART NUMBER	QTY	PART NAME 1 2 3 4 5 6 (PRODUCT LEVEL)	SEE PAGE
B	1	1	**1K-0502**	10	WASHER (16.3X25.4X1.2-MM THK)	
	2	1	**2R-0364**	4	RING-RETAINING	
M	3	1	**9X-2040**	2	SCREW-TRUSS HEAD (M10X1.5X25-MM)	
	4	1	**5H-3193**	1	PIN-SPRING	
	5	1	**9R-1765**	1	COVER-TOP (TOP)	
	6	1	**9R-1766**	1	COVER-BOTTOM	
	7	1	**9R-1767**	1	BOOT	
	8	1	**9R-9868**	1	SWITCH GP-PUSH BUTTON (NEUTRALIZER, DOWNSHIFT)	
BD		1	**6V-2689**		TUBE-HEAT SHRINK (6.35-MM DIA)	
		1	**9W-0625**	1	SWITCH AS-PUSH BUTTON (PUSH BUTTON)	
M	9	1	**9X-2065**	3	NUT (M10X1.5-THD, LH)	
	10	1	**107-5591**	1	NUT-JAM (3/4-16-THD)	
M	11	1	**134-0453**	3	TURNBUCKLE	
	12	1	**164-1368**	12	FASTENER-PANEL	
	13	1	**183-3135**	1	JOINT AS	
	14	1	**183-3137**	1	PIN	
	15	1	**206-1668**	1	BOOT	
	16	1	**209-3363**	1	ROD	
	17	1	**216-3350**	1	ROD	
	18	1	**216-3351**	1	ROD	
	19	1	**216-3358**	1	DAMPER AS (SPRING)	
		1	**095-9230**	1	PIN-SPRING	
		1	**183-3132**	1	CYLINDER	
	20	1	**291-5108**	1	GASKET	
	21	1	**220-0269**	1	SHAFT	
	22	1	**220-3251**	1	ROD	
	23	1	**230-2510**	1	LEVER AS	
	24	1	**230-3038**	1	LEVER AS	
	25	1	**269-8129**	1	BRACKET AS	
	26	1	**269-8817**	1	PLATE	
	27	1	**270-2795**	1	PLATE	
	28	1	**272-7104**	1	ROD	
	29	1	**275-8869**	1	BRACKET AS	
	30	1	**164-1395**	1	KNOB	
	31	1	**179-8235**	2	LOCK PIN	
	32	1	**102-8802**	1	KIT-RECEPTACLE (2-PIN)	
					(INCLUDES RECEPTACLE AS & WEDGE)	
M	33	1	**6V-7744**	4	LOCKNUT (M10X1.5-THD)	
	34	1	**7X-7729**	4	WASHER (11X25X3-MM THK)	
	35	1	**8C-4987**	2	PIN-CLEVIS	
	36	1	**8T-4121**	4	WASHER-HARD (11X21X2.5-MM THK)	
M	37	1	**8T-4133**	9	NUT (M10X1.5-THD)	
M	38	1	**8T-4136**	1	BOLT (M10X1.5X25-MM)	
M	39	1	**8T-4137**	2	BOLT (M10X1.5X20-MM)	
M	40	1	**8T-4189**	4	BOLT (M8X1.25X20-MM)	
	41	1	**5P-4116**	4	WASHER-HARD (8.8X20.5X2-MM THK)	
	42	1	**8T-4773**	3	BALL JOINT	
	43	1	**8T-4815**	3	ROD END	
	44	1	**8T-9501**	2	SCREW (10-16X0.75-IN)	
	45	1	**9R-2807**	1	CLIP	
	46	1	**9R-3067**	1	PIN	
E	47	1	**3E-6600**		SEAL (7-CM)	

B-USE AS REQUIRED
D-ORDER BY THE METER
E-ORDER BY THE CENTIMETER
M-METRIC PART

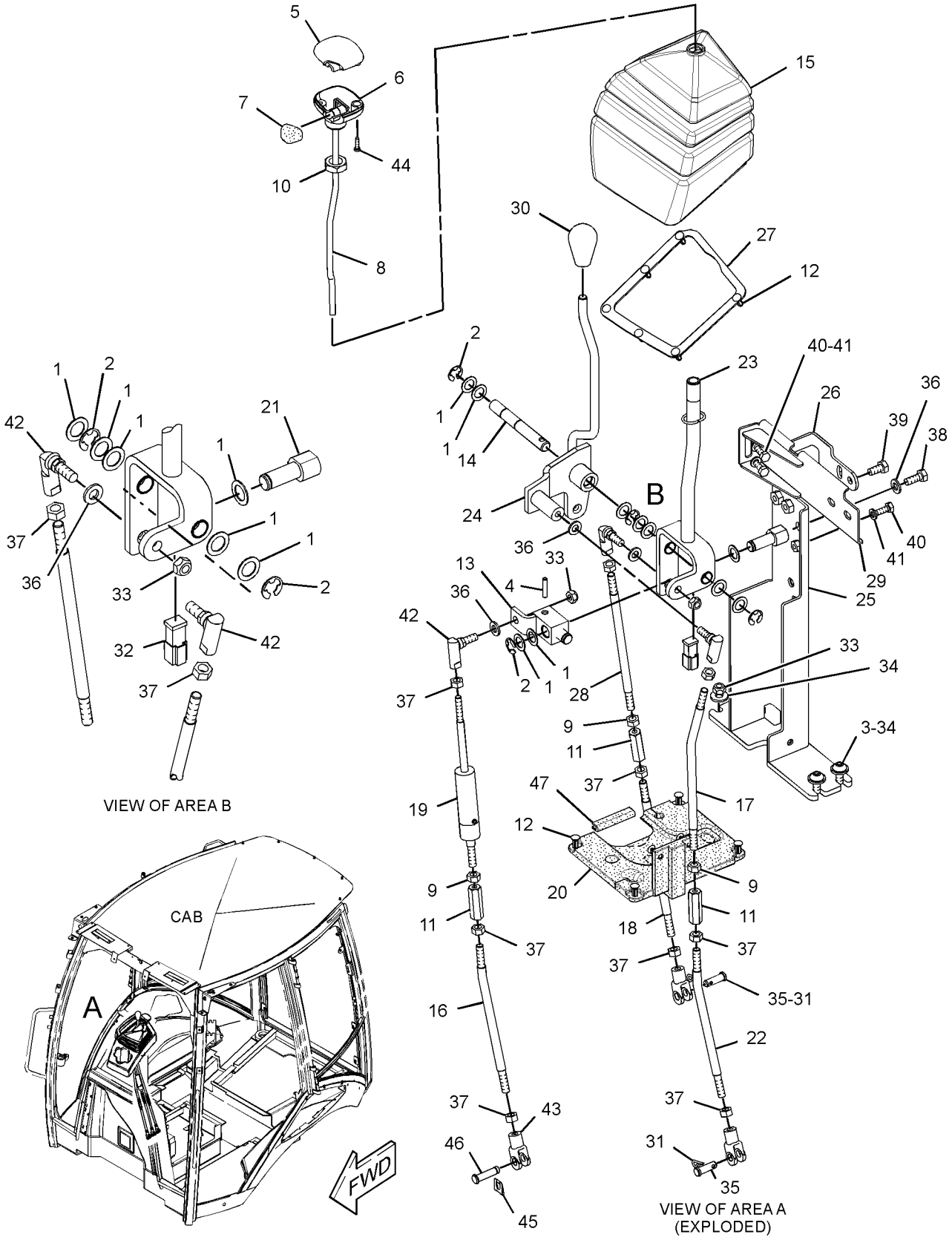

GRAPHIC #1 **<END>** g01314431

OPERATOR STATION

254-0192 CONTROL GP-HYDRAULIC HAND

S/N: RBA1-UP

PART OF 254-0156, 254-0157 CONTROL AR-BACKHOE

AN ATTACHMENT

SMCS-5063 **i04112460**

NOTE	REF NO	GRAPHIC REF	PART NUMBER	QTY	PART NAME 1 2 3 4 5 6 (PRODUCT LEVEL)	SEE PAGE
	1	1	**8T-4773**	4	BALL JOINT	
	2	1	**9R-9901**	6	FASTENER (CLIP)	
	3	1	**179-8235**	4	LOCK PIN	
	4	1	**206-1672**	1	CONSOLE	
	5	1	**206-1673**	1	CONSOLE AS	
		1	**172-8591**	2	NUT-SPRING	
	6	1	**209-3368**	1	GASKET	
	7	1	**218-2193**	2	PLATE	
	8	1	**273-9428**	1	LEVER AS	
	9	1	**273-9429**	1	LEVER AS	
	10	1	**273-9430**	1	LEVER AS	
	12	1	**273-9454**	1	LEVER AS	
	13	1	**294-9142**	1	TOWER AS	
	14	1	**311-6604**	4	ROD	
	15	1	**117-5672**	4	BOOT	
B	16	1	**136-7439**	4	SPACER (20X40X3-MM THK)	
B	17	1	**136-7440**	9	SHIM (1-MM THK)	
	18	1	**164-1519**	1	SHAFT-LEVER	
	19	1	**236-2746**	1	FILM-INSTRUCTION (4-FUNCTION)	
M	20	1	**6V-6317**	1	BOLT (M10X1.5X20-MM)	
M	21	1	**6V-7744**	4	LOCKNUT (M10X1.5-THD)	
	22	1	**8C-4987**	4	PIN-CLEVIS	
	23	1	**8T-3983**	4	KNOB	
	24	1	**8T-4121**	5	WASHER-HARD (11X21X2.5-MM THK)	
M	25	1	**8T-4133**	8	NUT (M10X1.5-THD)	
	26	1	**8T-4224**	2	WASHER-HARD (8.8X16X2-MM THK)	
	27	1	**8T-4815**	4	ROD END	
M	28	1	**8T-7547**	2	BOLT (M8X1.25X30-MM)	
	29	1	**9X-2038**	4	WASHER (7X19X2-MM THK)	
M	30	1	**9X-2045**	6	SCREW-TRUSS HEAD (M6X1X20-MM)	

B-USE AS REQUIRED
M-METRIC PART

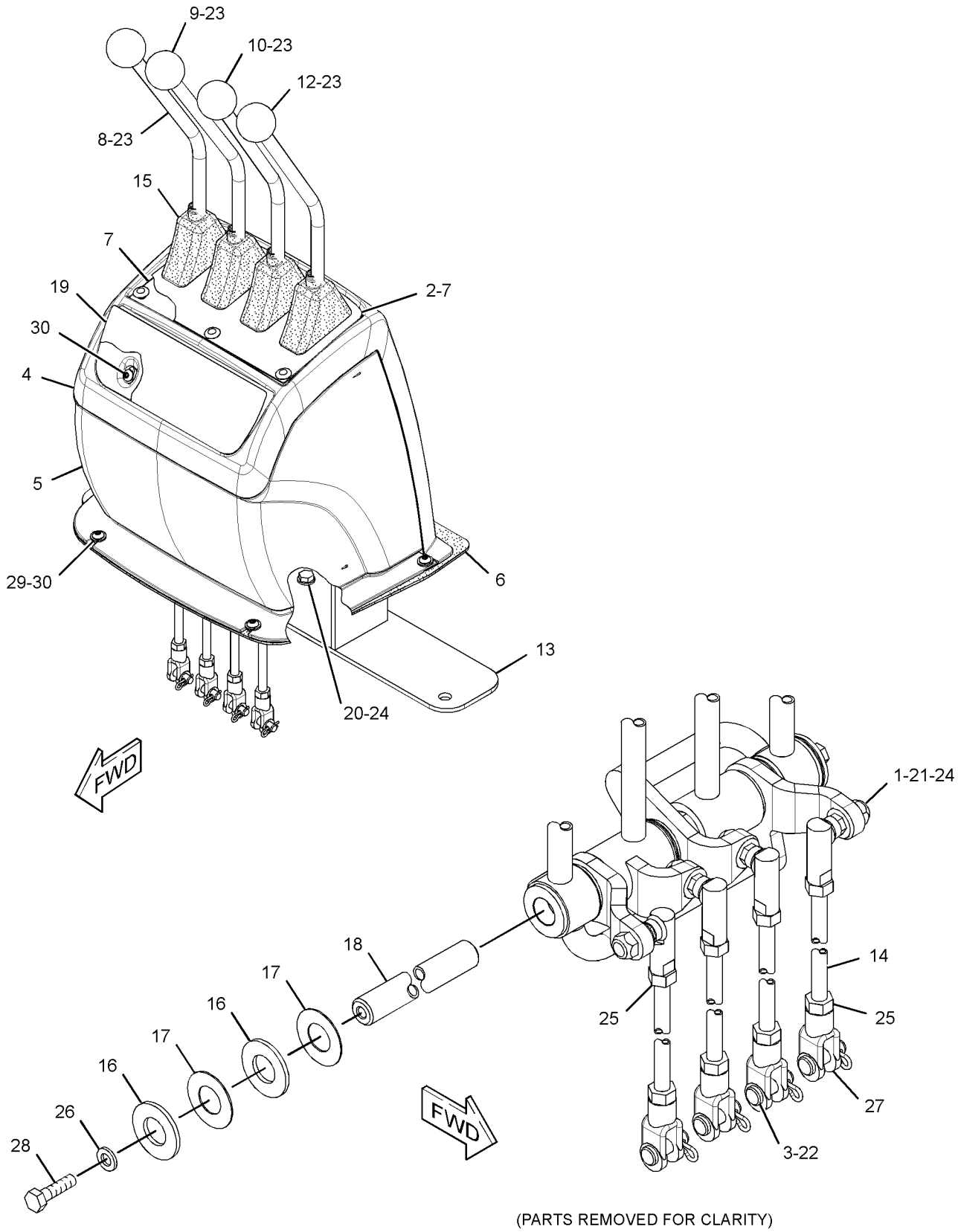

(PARTS REMOVED FOR CLARITY)

GRAPHIC #1 **<END>** g01950811

OPERATOR STATION

254-0194 CONTROL GP-HYDRAULIC HAND

S/N: RBA1-UP

PART OF 254-0159, 254-0160 CONTROL AR-BACKHOE

AN ATTACHMENT

SMCS-5063 **i04112462**

NOTE	REF NO	GRAPHIC REF	PART NUMBER	QTY	PART NAME 1 2 3 4 5 6 (PRODUCT LEVEL)	SEE PAGE
	1	1	**8T-4773**	4	BALL JOINT	
	2	1	**9R-9901**	6	FASTENER (CLIP)	
	3	1	**179-8235**	4	LOCK PIN	
	4	1	**206-1672**	1	CONSOLE	
	5	1	**206-1673**	1	CONSOLE AS	
		1	**172-8591**	2	NUT-SPRING	
	6	1	**209-3368**	1	GASKET	
	7	1	**218-2193**	2	PLATE	
	8	1	**277-3145**	1	LEVER AS	
	9	1	**277-3146**	1	LEVER AS	
	10	1	**277-3147**	1	LEVER AS	
	11	1	**277-3148**	1	LEVER AS	
	13	1	**294-9142**	1	TOWER AS	
	14	1	**311-5889**	4	ROD	
	15	1	**117-5672**	4	BOOT	
B	16	1	**136-7439**	13	SPACER (20X40X3-MM THK)	
B	17	1	**136-7440**	11	SHIM (1-MM THK)	
	18	1	**164-1519**	1	SHAFT-LEVER	
	19	1	**218-2192**	1	FILM-INSTRUCTION (4-FUNCTION)	
M	20	1	**6V-6317**	1	BOLT (M10X1.5X20-MM)	
M	21	1	**6V-7744**	4	LOCKNUT (M10X1.5-THD)	
	22	1	**8C-4987**	4	PIN-CLEVIS	
	23	1	**8T-4121**	5	WASHER-HARD (11X21X2.5-MM THK)	
M	24	1	**8T-4133**	12	NUT (M10X1.5-THD)	
	25	1	**8T-4224**	2	WASHER-HARD (8.8X16X2-MM THK)	
	26	1	**8T-4815**	4	ROD END	
M	27	1	**8T-7547**	2	BOLT (M8X1.25X30-MM)	
	28	1	**9R-4918**	4	KNOB	
	29	1	**9X-2038**	4	WASHER (7X19X2-MM THK)	
M	30	1	**9X-2045**	6	SCREW-TRUSS HEAD (M6X1X20-MM)	

B-USE AS REQUIRED
M-METRIC PART

254-0194 **CONTROL GP-HYDRAULIC HAND** *(contd.)* **i04112462**

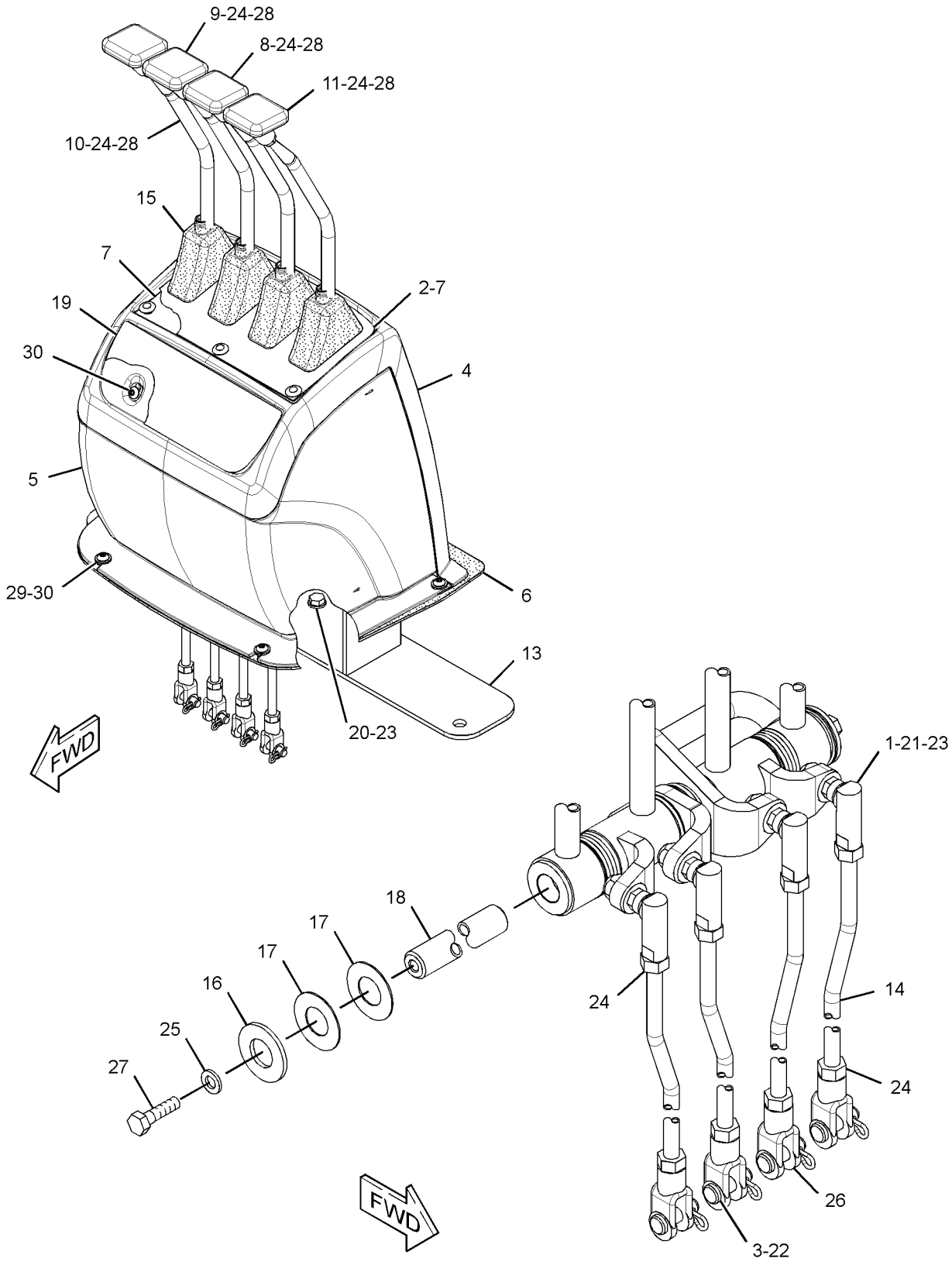

(PARTS REMOVED FOR CLARITY)

GRAPHIC #1 **<END>** g01950830

OPERATOR STATION

274-4495 CONTROL GP-HYDRAULIC PEDAL

S/N: RBA1-UP

PART OF 254-0156, 254-0157, 254-0159, 254-0160 CONTROL AR-BACKHOE AN ATTACHMENT

SMCS-5063 **i04112474**

NOTE	REF NO	GRAPHIC REF	PART NUMBER	QTY	PART NAME 1 2 3 4 5 6 (PRODUCT LEVEL)	SEE PAGE
	1	1	**8T-6431**	1	ROD END	
B	2	1	**133-8916**	1	FILM-INSTRUCTION (EXTENDABLE STICK)	
	3	1	**179-8235**	1	LOCK PIN	
B	4	1	**198-0098**	1	FILM-INSTRUCTION (AUXILIARY)	
	5	1	**232-1540**	1	SEAL	
	6	1	**306-8877**	1	ROD	
	7	1	**231-2876**	1	PEDAL AS (RH)	
	8	1	**231-2875**	1	SUPPORT AS (RH)	
	9	1	**164-1547**	1	SHAFT AS	
M	10	1	**6V-7744**	1	LOCKNUT (M10X1.5-THD)	
M	11	1	**6V-8335**	1	BOLT-SELF-LOCKING (M10X1.5X40-MM)	
	12	1	**8C-4987**	1	PIN-CLEVIS	
	13	1	**8M-3175**	1	WASHER-HARD (10.2X16X3-MM THK)	
	14	1	**8T-4121**	4	WASHER-HARD (11X21X2.5-MM THK)	
M	15	1	**8T-4133**	2	NUT (M10X1.5-THD)	
M	16	1	**8T-4186**	1	BOLT (M10X1.5X40-MM)	
M	17	1	**8T-4195**	2	BOLT (M10X1.5X30-MM)	
	18	1	**8T-4815**	1	ROD END	

B-USE AS REQUIRED
M-METRIC PART

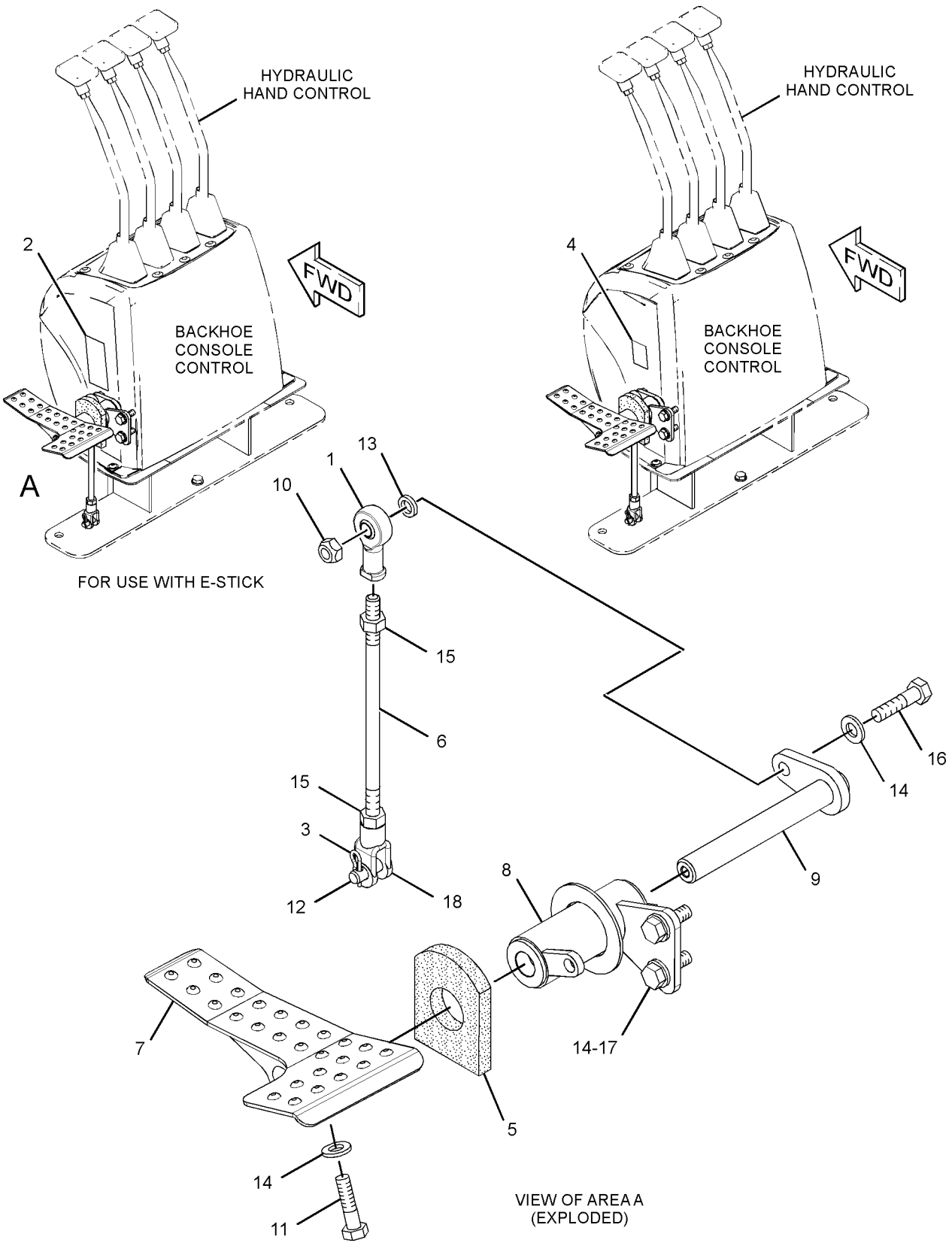

GRAPHIC #1 **<END>** g01618814

OPERATOR STATION

274-4496 CONTROL GP-HYDRAULIC PEDAL

S/N: RBA1-UP

PART OF 254-0157, 254-0160 CONTROL AR-BACKHOE

AN ATTACHMENT

SMCS-5063 **i04112275**

NOTE	REF NO	GRAPHIC REF	PART NUMBER	QTY	PART NAME 1 2 3 4 5 6 (PRODUCT LEVEL)	SEE PAGE
	1	1	**8T-6431**	1	ROD END	
	2	1	**198-0098**	1	FILM-INSTRUCTION (AUXILIARY)	
	3	1	**232-1540**	1	SEAL	
	4	1	**306-8877**	1	ROD	
	5	1	**232-1536**	1	SUPPORT AS	
	6	1	**164-1547**	1	SHAFT AS	
	7	1	**231-2877**	1	PEDAL AS (LH)	
	8	1	**179-8235**	1	LOCK PIN	
M	9	1	**6V-7744**	1	LOCKNUT (M10X1.5-THD)	
M	10	1	**6V-8335**	1	BOLT-SELF-LOCKING (M10X1.5X40-MM)	
	11	1	**8C-4987**	1	PIN-CLEVIS	
	12	1	**8M-3175**	1	WASHER-HARD (10.2X16X3-MM THK)	
	13	1	**8T-4121**	4	WASHER-HARD (11X21X2.5-MM THK)	
M	14	1	**8T-4133**	2	NUT (M10X1.5-THD)	
M	15	1	**8T-4186**	1	BOLT (M10X1.5X40-MM)	
M	16	1	**8T-4195**	2	BOLT (M10X1.5X30-MM)	
	17	1	**8T-4815**	1	ROD END	

M-METRIC PART

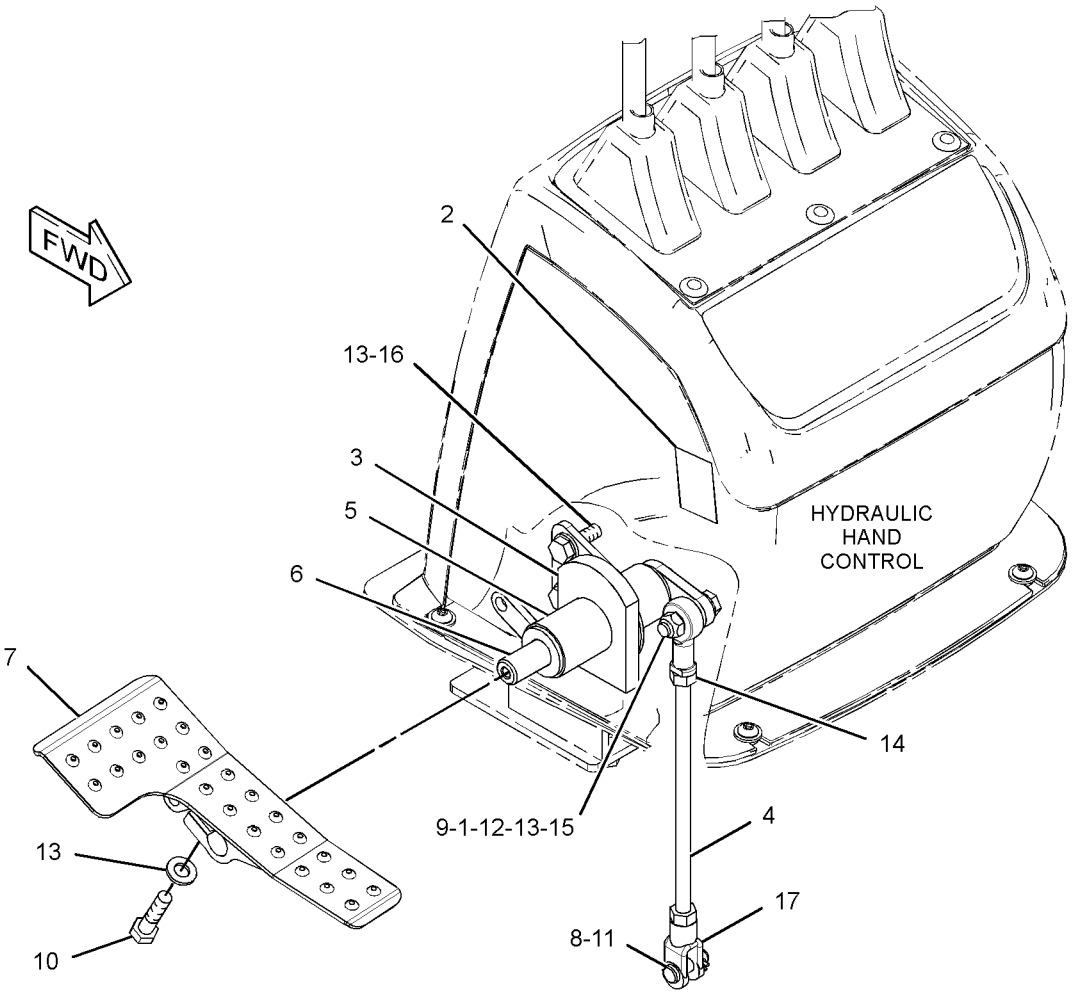

GRAPHIC #1 **<END>** g01508594

OPERATOR STATION

271-3096 CONTROL GP-JOYSTICK–RH

S/N: RBA1-UP
PART OF 254-0153, 254-0154 CONTROL AR-BACKHOE
AN ATTACHMENT

SMCS-5705 **i03321223**

NOTE	REF NO	GRAPHIC REF	PART NUMBER	QTY	PART NAME 1 2 3 4 5 6 (PRODUCT LEVEL)	SEE PAGE
	1	1	**271-3101**	1	HANDLE GP-MODULAR (RH)	
		1	**8T-8737**	8	PLUG-SEAL	
		1	**174-3091**	1	KIT-RECEPTACLE (12-PIN)	
					(INCLUDES RECEPTACLE AS & WEDGE)	
		1	**186-3735**	4	PIN-CONNECTOR (16-GA TO 18-GA)	
	2	1	**272-9701**	1	ADAPTER (RH)	
	3	1	**254-3437**	1	BOOT	

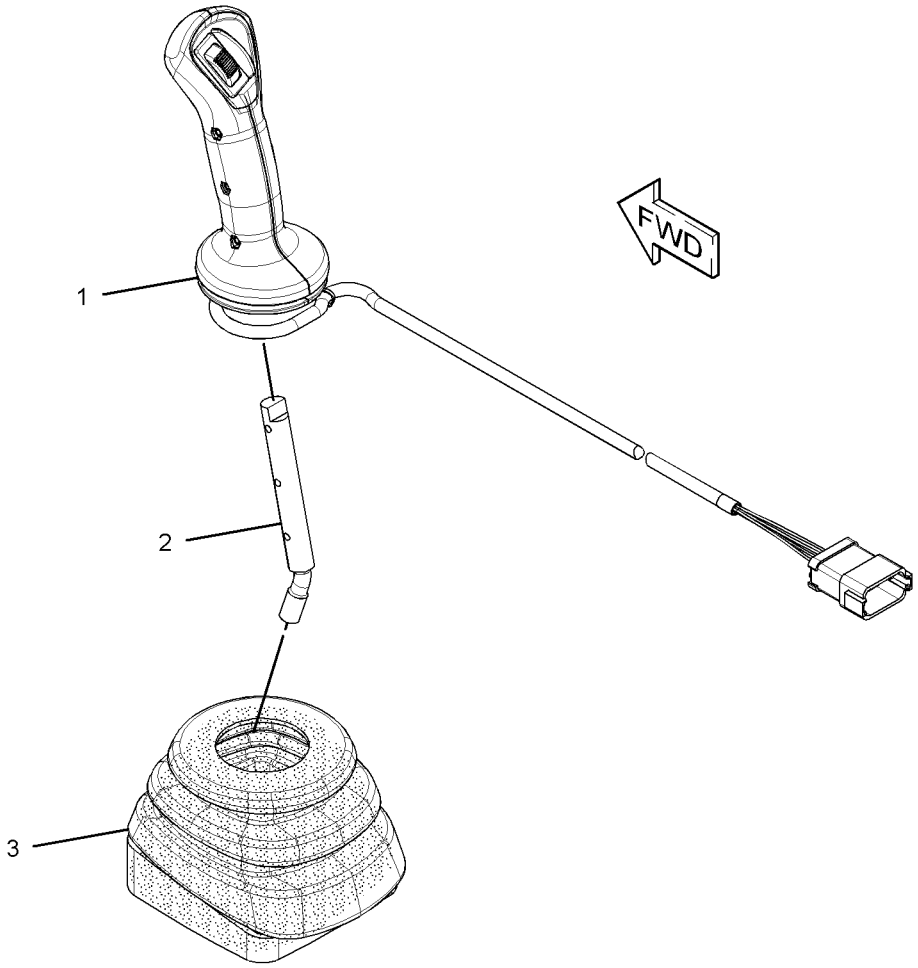

GRAPHIC #1 **<END>** g01478115

OPERATOR STATION

271-3099 CONTROL GP-JOYSTICK–LH

S/N: RBA1-UP

PART OF 254-0154 CONTROL AR-BACKHOE

AN ATTACHMENT

SMCS-5705 **i03799102**

NOTE	REF NO	GRAPHIC REF	PART NUMBER	QTY	PART NAME 1 2 3 4 5 6 (PRODUCT LEVEL)	SEE PAGE
	1	1	**271-3105**	1	HANDLE GP-MODULAR (LH)	
		1	**8T-8737**	6	PLUG-SEAL	
		1	**174-3091**	1	KIT-RECEPTACLE (12-PIN)	
					(INCLUDES RECEPTACLE AS & WEDGE)	
		1	**186-3735**	6	PIN-CONNECTOR (16-GA TO 18-GA)	
		1	**252-6934**	1	GROMMET	
	2	1	**278-7469**	1	ADAPTER (LH)	
	3	1	**254-3437**	1	BOOT	

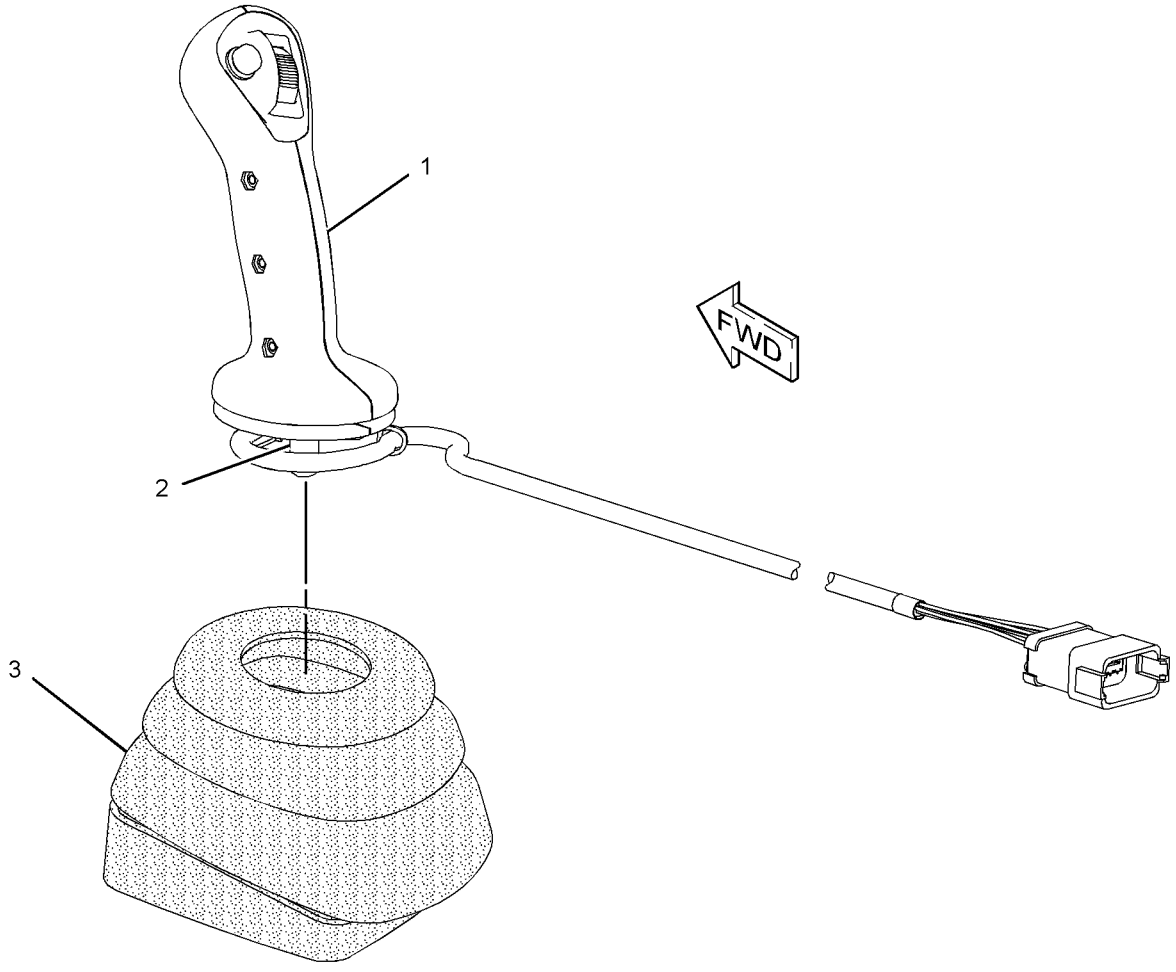

GRAPHIC #1 **<END>** g01433605

OPERATOR STATION

218-4453 CONTROL GP-STEERING–TILT

S/N: RBA1-UP

PART OF 254-0200 CAB AR-ENCLOSED ROPS, 254-0198 CANOPY AR-OPEN ROPS

AN ATTACHMENT

SMCS-4309, 4310, 4338 **i02392089**

NOTE	REF NO	GRAPHIC REF	PART NUMBER	QTY	PART NAME 1 2 3 4 5 6 (PRODUCT LEVEL)	SEE PAGE
	1	1	**153-7368**	1	PLUG	
Y	2	1	**153-7369**	1	KNOB GP-STEERING	199
	3	1	**206-1632**	1	PLATE AS	
	4	1	**214-4701**	1	SWITCH AS-ROCKER (HORN)	
		1	**111-7899**	1	GASKET	
Y	5	1	**218-4454**	1	STEERING COLUMN GP (TILT)	205
	6	1	**145-9291**	1	STEERING WHEEL AS	
	7	1	**7X-7729**	6	WASHER (11X25X3-MM THK)	
	8	1	**8R-2916**	1	COVER AS (CAT STEERING WHEEL)	
	9	1	**8T-4121**	4	WASHER-HARD (11X21X2.5-MM THK)	
M	10	1	**8T-4133**	2	NUT (M10X1.5-THD)	
M	11	1	**8T-4136**	4	BOLT (M10X1.5X25-MM)	
M	12	1	**8T-4195**	4	BOLT (M10X1.5X30-MM)	
M	13	1	**8T-8894**	1	BOLT-SOCKET HEAD (M10X1.5X20-MM)	

M-METRIC PART
Y-SEPARATE ILLUSTRATION

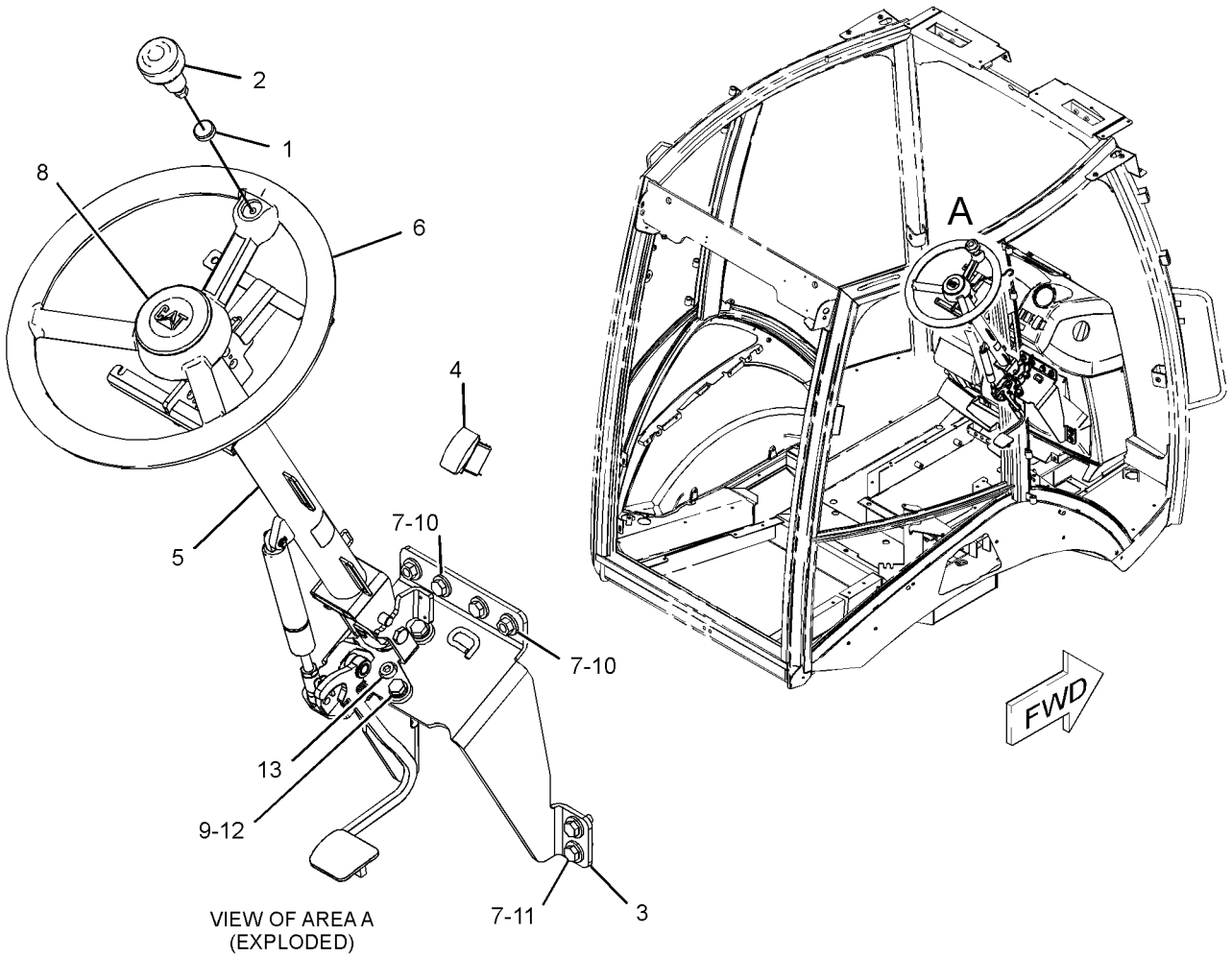

VIEW OF AREA A
(EXPLODED)

GRAPHIC #1 **<END>** g01197935

OPERATOR STATION

329-1167 DOOR GP-CAB–RH

S/N: RBA1-UP
PART OF 353-3011 CAB GP
AN ATTACHMENT

SMCS-7308 **i03628846**

NOTE	REF NO	GRAPHIC REF	PART NUMBER	QTY	PART NAME 1 2 3 4 5 6 (PRODUCT LEVEL)	SEE PAGE
	1	1	**132-2249**	2	SPACER (7.4X12.7X24-MM THK)	
J	2	1	**159-4269**	1	SPRING GP-GAS (CAB DOOR)	
	3	1	**159-4945**	1	KEEPER	
B	4	1	**177-4877**	1	SHIM (1-MM THK)	
	5	1	**205-9598**	1	GLASS (RH)	
	6	1	**248-2714**	2	NUT-ACORN	
N	7	1	**252-1862**	1	HANDLE AS (PULL)	
	8	1	**252-1863**	1	GASKET	
	9	1	**252-1865**	1	LATCH AS (RH)	
	10	1	**253-1817**	1	SPACER (6.5X14.5X12-MM THK)	
	11	1	**253-1857**	1	PLATE	
	12	1	**253-1858**	1	COVER (LATCH)	
	13	1	**254-1126**	1	PLATE	
	14	1	**254-1127**	1	PLATE	
	15	1	**258-3697**	2	WASHER-NYLON (7X20X2-MM THK)	
	16	1	**329-1169**	1	DOOR AS (RH)	
Y	17	1	*333-9902*	1	WINDOW GP-DOOR (RH)	481
	18	1	**223-2029**	1	SEAL AS (RH)	
M	19	1	**131-3987**	2	SCREW (M4X0.7X12-MM)	
	20	1	**197-5107**	2	SCREW-TRUSS HEAD (M6X1X60-MM)	
	21	1	**205-7048**	2	INSERT-THREADED (M6X1-THD)	
M	22	1	**5C-9553**	3	BOLT (M6X1X16-MM)	
M	23	1	**8T-6974**	1	BOLT (M6X1X80-MM)	
	24	1	**9X-2038**	4	WASHER (7X19X2-MM THK)	
M	25	1	**9X-2045**	4	SCREW-TRUSS HEAD (M6X1X20-MM)	
E	26	1	**322-8414**		SEAL-CAB (347-CM)	
					PARTS SHOWN IN GRAPHIC(S) WITHOUT A REFERENCE NUMBER ARE NOT SERVICED SEPARATELY	
					AVAILABLE REPAIR KIT(S):	
J			**161-9044**	1	KIT-FITTING	
					(INCLUDES FITTING AS & NUT)	

B-USE AS REQUIRED
E-ORDER BY THE CENTIMETER
J-KIT MARKED J SERVICES PART MARKED J
M-METRIC PART
N-REQUIRES CORPORATE KEY
Y-SEPARATE ILLUSTRATION

329-1167 DOOR GP-CAB *(contd.)* i03628846

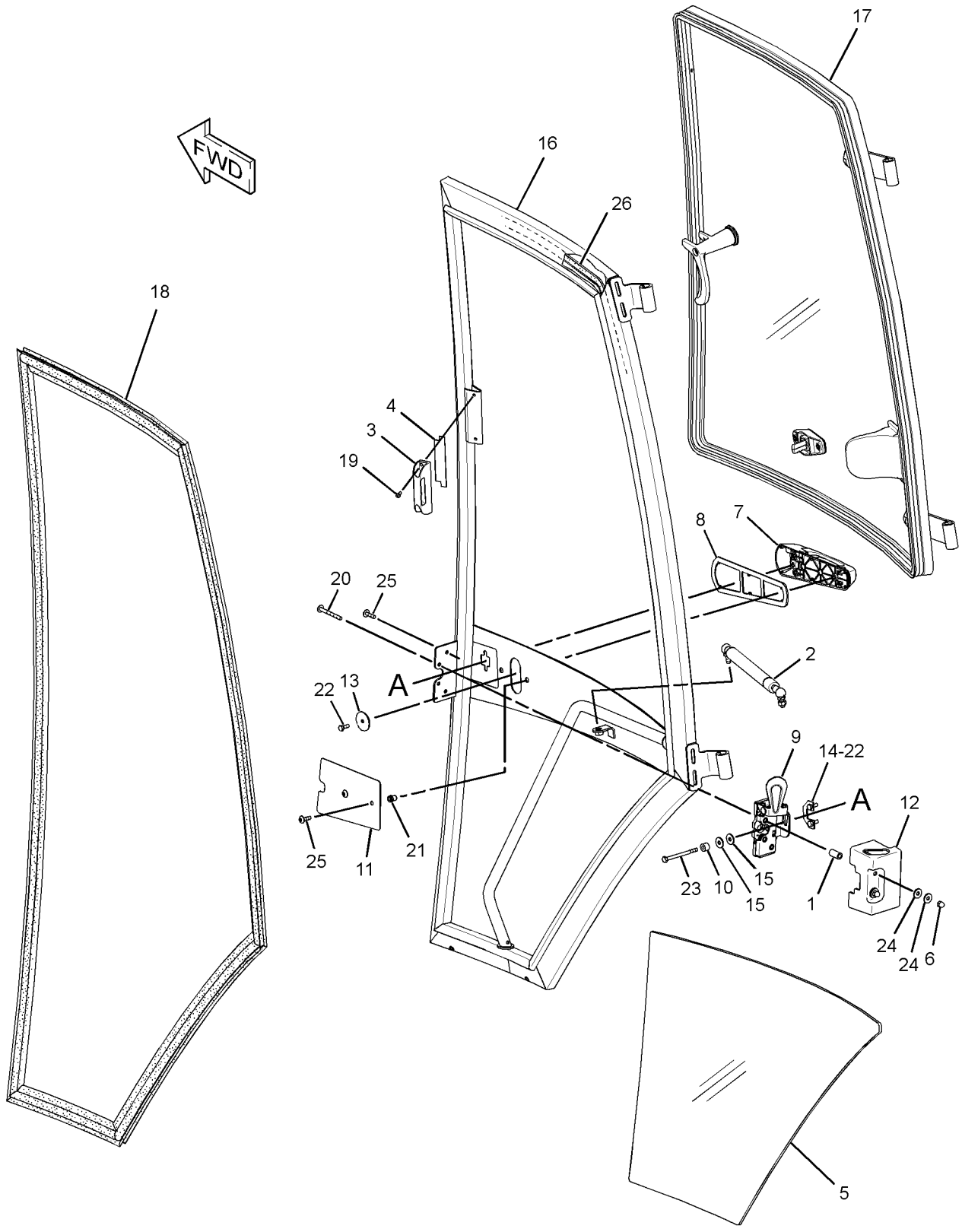

GRAPHIC #1 **<END>** g01819794

OPERATOR STATION

329-1168 DOOR GP-CAB–LH

S/N: RBA1-UP
PART OF 353-3011 CAB GP
AN ATTACHMENT

SMCS-7308 **i03628663**

NOTE	REF NO	GRAPHIC REF	PART NUMBER	QTY	PART NAME 1 2 3 4 5 6 (PRODUCT LEVEL)	SEE PAGE
	1	1	**132-2249**	2	SPACER (7.4X12.7X24-MM THK)	
J	2	1	**159-4269**	1	SPRING GP-GAS (CAB DOOR)	
B	3	1	**177-4877**	1	SHIM (1-MM THK)	
	4	1	**205-9588**	1	GLASS (LH)	
	5	1	**248-2714**	2	NUT-ACORN	
N	6	1	**252-1862**	1	HANDLE AS (PULL)	
	7	1	**252-1863**	1	GASKET	
	8	1	**252-1864**	1	LATCH AS (LH)	
	9	1	**253-1817**	1	SPACER (6.5X14.5X12-MM THK)	
	10	1	**253-1857**	1	PLATE	
	11	1	**253-1858**	1	COVER (LATCH)	
	12	1	**254-1126**	1	PLATE	
	13	1	**254-1127**	1	PLATE	
	14	1	**258-3697**	2	WASHER-NYLON (7X20X2-MM THK)	
	15	1	**329-1170**	1	DOOR AS (LH)	
Y	16	1	*333-9901*	1	WINDOW GP-DOOR (LH)	480
	17	1	**223-2028**	1	SEAL AS (LH)	
M	18	1	**131-3987**	2	SCREW (M4X0.7X12-MM)	
	19	1	**159-4946**	1	KEEPER	
	20	1	**197-5107**	2	SCREW-TRUSS HEAD (M6X1X60-MM)	
	21	1	**205-7048**	2	INSERT-THREADED (M6X1-THD)	
M	22	1	**5C-9553**	3	BOLT (M6X1X16-MM)	
M	23	1	**8T-6974**	1	BOLT (M6X1X80-MM)	
	24	1	**9X-2038**	4	WASHER (7X19X2-MM THK)	
M	25	1	**9X-2045**	4	SCREW-TRUSS HEAD (M6X1X20-MM)	
E	26	1	**322-8414**		SEAL-CAB (347-CM)	
					PARTS SHOWN IN GRAPHIC(S) WITHOUT A REFERENCE NUMBER ARE NOT SERVICED SEPARATELY	
					AVAILABLE REPAIR KIT(S):	
J			**161-9044**	1	KIT-FITTING	
					(INCLUDES NUT & FITTING AS)	

B-USE AS REQUIRED
E-ORDER BY THE CENTIMETER
J-KIT MARKED J SERVICES PART MARKED J
M-METRIC PART
N-REQUIRES CORPORATE KEY
Y-SEPARATE ILLUSTRATION

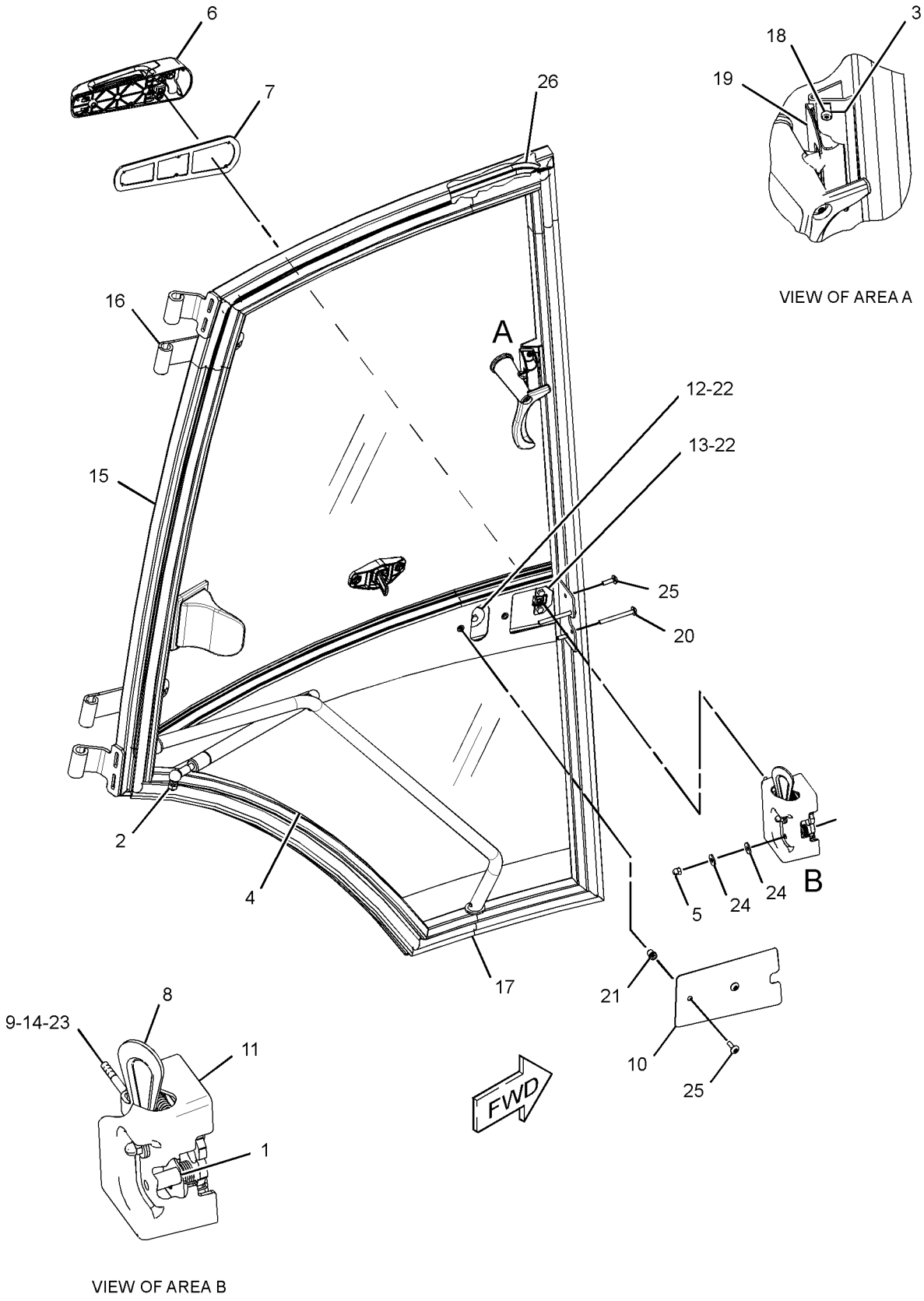

GRAPHIC #1 **<END>** g01811576

206-1618 FLOOR MAT GP

S/N: RBA1-UP

PART OF 254-0200 CAB AR-ENCLOSED ROPS, 254-0198 CANOPY AR-OPEN ROPS AN ATTACHMENT

SMCS-7265 **i02454744**

NOTE	REF NO	GRAPHIC REF	PART NUMBER	QTY	PART NAME 1 2 3 4 5 6 (PRODUCT LEVEL)	SEE PAGE
	1	1	**247-8179**	2	PLATE	
	2	1	**284-1602**	1	FLOOR MAT	
	3	1	**1H-3244**	4	LOCKWASHER	
M	4	1	**9X-2045**	4	SCREW-TRUSS HEAD (M6X1X20-MM)	

M-METRIC PART

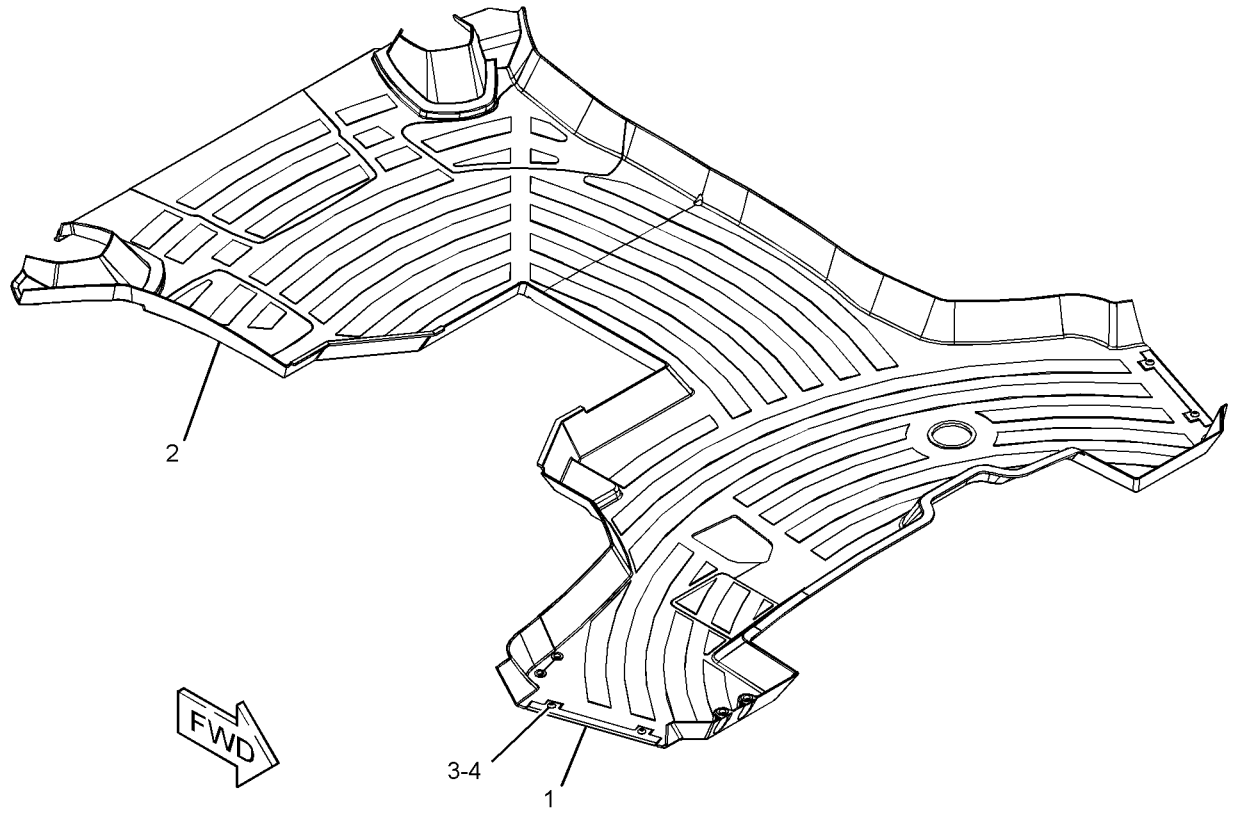

GRAPHIC #1 **<END>** g01228081

OPERATOR STATION

358-7087 HEATER & AIR CONDITIONER GP

S/N: RBA1-UP
PART OF 206-1801 AIR CONDITIONER & MOUNTING GP
AN ATTACHMENT

SMCS-7304, 7309, 7320, 7337 **i03996327**

NOTE	REF NO	GRAPHIC REF	PART NUMBER	QTY	PART NAME 1 2 3 4 5 6 (PRODUCT LEVEL)	SEE PAGE
	1	1	**8C-3756**	1	FILM-IDENTIFICATION (GROUP NO., SEQUENCE NO.)	
	2	1	**119-9631**	1	SWITCH-TEMPERATURE (AIR CONDITIONER)	
	3	1	**185-4015**	11	CLIP	
M	4	1	**187-7719**	3	SCREW-HEX FLANGE (M5X2.24X14-MM)	
	5	1	**204-9921**	1	RESISTOR AS	
	6	1	**210-7665**	1	HOUSING-TOP	
	7	1	**210-7666**	1	BAFFLE	
	8	1	**210-8401**	1	COIL AS-EVAPORATOR	
D		1	**5P-5688**	1	SEAL (1-M)	
		1	**219-6283**	1	LATCH	
	9	1	**211-2660**	1	FILTER ELEMENT-AIR (CAB HEATER)	
	10	1	**219-6281**	1	COVER AS	
		1	**6C-3680**	1	RIVET-POP	
		1	**219-6283**	1	LATCH	
	15	1	**219-6292**	1	HOUSING AS	
		1	**7H-3937**	4	LOCKWASHER (EXTERNAL TOOTH)	
M		1	**129-3178**	4	LOCKNUT (M6X1-THD)	
	16	1	**220-3762**	1	HARNESS AS-HEATER & AIR COND	
		1	**128-7716**	1	CONNECTOR	
		1	**7T-6739**	1	HOUSING-PLUG	
		1	**7T-0093**	3	PIN-CONNECTOR (12-GA TO 14-GA)	
		1	**155-2270**	1	KIT-CONNECTING PLUG (2-PIN)	
					(INCLUDES PLUG AS, WEDGE & INTERFACE SEAL)	
		1	**8T-8737**	1	PLUG-SEAL	
		1	**177-9653**	1	KIT-RECEPTACLE (4-PIN)	
					(INCLUDES RECEPTACLE AS & WEDGE)	
		1	**8T-8730**	2	SOCKET-CONNECTOR (16-GA TO 18-GA)	
		1	**192-2112**	5	SOCKET-TERMINAL	
	17	1	**253-9510**	1	GUARD	
	18	1	**304-8965**	1	BLOWER GP-CAB (HEATER)	
		1	**7T-0093**		PIN-CONNECTOR (12-GA TO 14-GA)	
		1	**177-9645**	1	KIT-RECEPTACLE (2-PIN)	
					(INCLUDES RECEPTACLE AS & WEDGE)	
	19	1	**2S-3745**	4	SCREW-TAPPING (10-16X0.5-IN)	
M	20	1	**6V-7357**	4	BOLT (M6X1X25-MM)	
	21	1	**8T-4205**	5	WASHER-HARD (7.2X14.5X2-MM THK)	
D	22	1	**5P-5655**		SEAL (0.5-M)	
DJ	23	1	**5P-5637**		SEAL (0.8-M)	
EJ	24	1	**8C-7524**		SEAL (35-CM)	
					AVAILABLE REPAIR KIT(S):	
J			**285-9109**	1	KIT-SEAL (HVAC)	
					(ALSO INCLUDES GASKETS & SEALS)	

D-ORDER BY THE METER
E-ORDER BY THE CENTIMETER
J-KIT MARKED J SERVICES PARTS MARKED J
M-METRIC PART

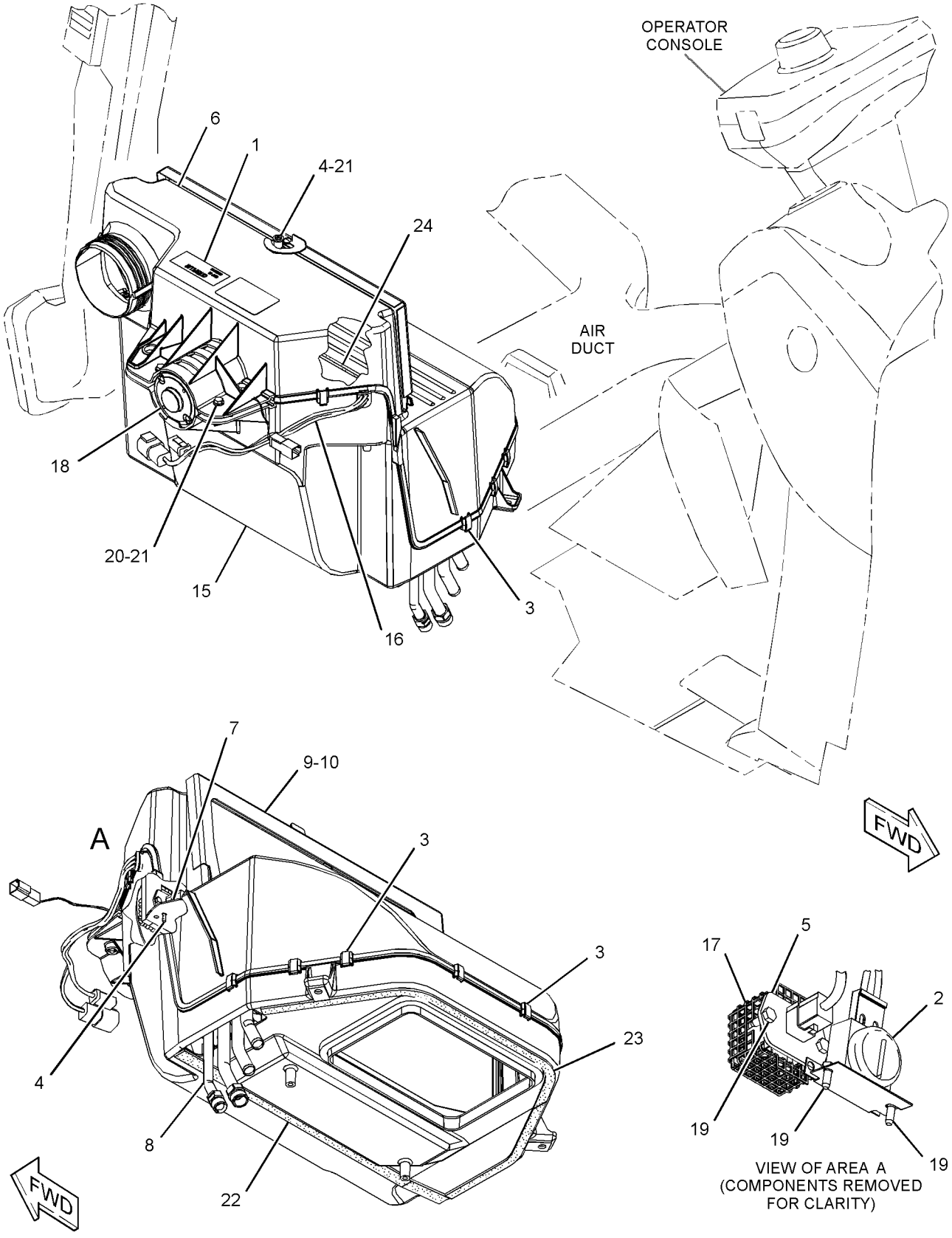

GRAPHIC #1 **<END>** g02178000

OPERATOR STATION

299-6985 LATCH GP-CAB DOOR & WINDOW

S/N: RBA1-UP

PART OF 327-7601, 327-7637 WINDOW GP-CAB, 333-9902 WINDOW GP-DOOR

AN ATTACHMENT

SMCS-7308, 7310 **i02693060**

NOTE	REF NO	GRAPHIC REF	PART NUMBER	QTY	PART NAME 1 2 3 4 5 6 (PRODUCT LEVEL)	SEE PAGE
M	1	1	**161-6984**	1	SCREW-TRUSS HEAD (M5X0.8X20-MM)	
	2	1	**161-6987**	1	WASHER-HARD (5.2X16X1.5-MM THK)	
	3	1	**161-9294**	1	SPRING-FLAT WIRE	
M	4	1	**162-6556**	1	LOCKNUT (M6X1-THD)	
M	5	1	**5C-2874**	1	NUT (M5X0.8-THD)	

M-METRIC PART

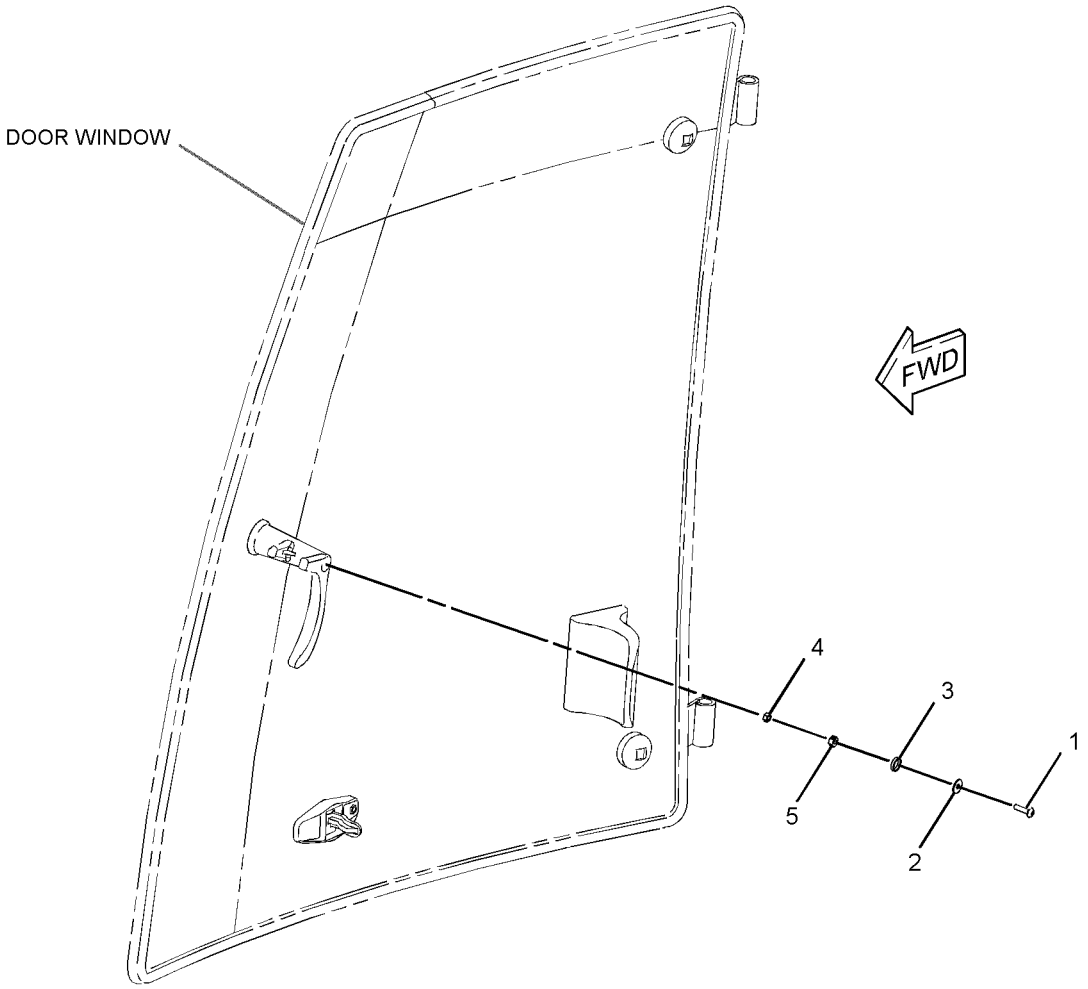

GRAPHIC #1 **<END>** g01353996

OPERATOR STATION

299-6986 LATCH GP-CAB DOOR & WINDOW

S/N: RBA1-UP

PART OF 327-7601, 327-7637 WINDOW GP-CAB, 333-9901 WINDOW GP-DOOR

AN ATTACHMENT

SMCS-7308, 7310 **i02693061**

NOTE	REF NO	GRAPHIC REF	PART NUMBER	QTY	PART NAME 1 2 3 4 5 6 (PRODUCT LEVEL)	SEE PAGE
M	1	1	**161-6984**	1	SCREW-TRUSS HEAD (M5X0.8X20-MM)	
	2	1	**161-6987**	1	WASHER-HARD (5.2X16X1.5-MM THK)	
	3	1	**161-9294**	1	SPRING-FLAT WIRE	
M	4	1	**162-6556**	1	LOCKNUT (M6X1-THD)	
M	5	1	**5C-2874**	1	NUT (M5X0.8-THD)	

M-METRIC PART

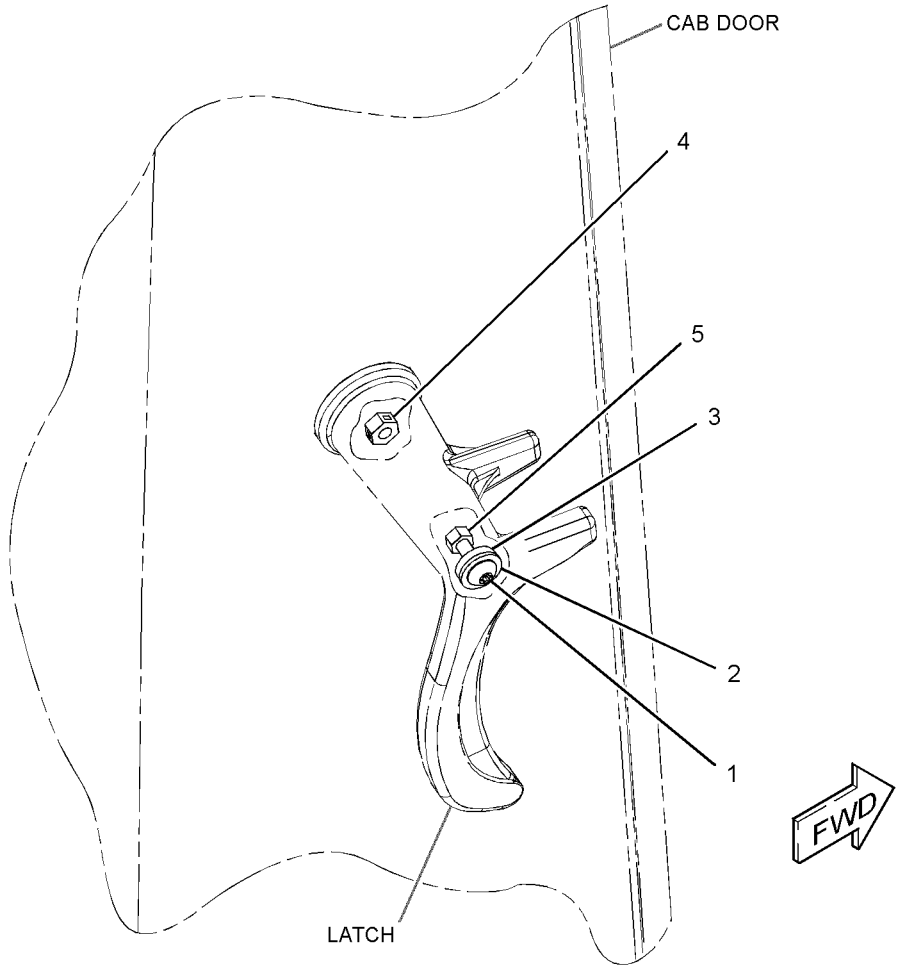

GRAPHIC #1 **<END>** g01354326

OPERATOR STATION

344-2432 LATCH GP-CONSOLE

S/N: RBA1-UP
PART OF 269-3247 MOUNTING GP-BACKHOE CONTROL
AN ATTACHMENT

SMCS-5258 **i04079173**

NOTE	REF NO	GRAPHIC REF	PART NUMBER	QTY	PART NAME 1 2 3 4 5 6 (PRODUCT LEVEL)	SEE PAGE
	1	1	**8T-4742**	2	END-YOKE ROD	
	2	1	**8T-4744**	2	PIN AS-SPRING	
	3	1	**110-5602**	1	KNOB	
	4	1	**183-6085**	2	BEARING	
	5	1	**316-3436**	1	LATCH AS	
	6	1	**316-3437**	1	LATCH AS	
	7	1	**319-9444**	2	PLATE	
	8	1	**344-2429**	2	ROD	
	9	1	**344-2430**	1	LEVER AS	
M	10	1	**099-3649**	1	BOLT (M8X1.25X40-MM)	
	11	1	**156-0283**	3	WASHER-HARD (8.4X35X2.5-MM THK)	
	12	1	**183-4912**	1	SLEEVE	
M	13	1	**5C-2890**	2	NUT (M6X1-THD)	

M-METRIC PART

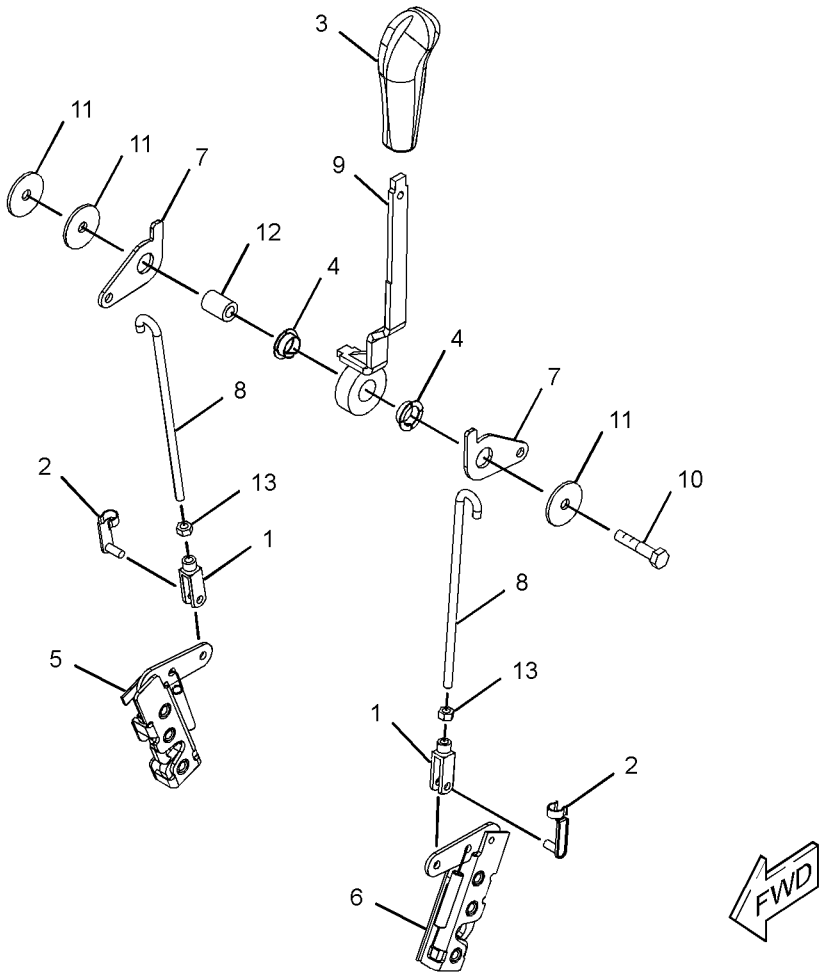

GRAPHIC #1 **<END>** g02309519

OPERATOR STATION

317-5543 LINER GP-CAB

S/N: RBA1-UP

PART OF 254-0200 CAB AR-ENCLOSED ROPS

AN ATTACHMENT

SMCS-7329 **i03737980**

NOTE	REF NO	GRAPHIC REF	PART NUMBER	QTY	PART NAME 1 2 3 4 5 6 (PRODUCT LEVEL)	SEE PAGE
	1	1	**325-9311**	3	FASTENER	
	2	1	**5G-2003**	2	SPACER (6.8X13X10-MM THK)	
	3	1	**8E-1118**	1	ANTENNA AS	
	4	1	**8R-6111**	1	CABLE AS-COAXIAL	
	5	1	**9U-8263**	1	COVER	
	6	1	**084-4277**	1	LAMP GP-DOME (12-VOLT)	
		1	**210-8754**	1	LAMP (12-VOLT)	
	7	1	**132-2249**	1	SPACER (7.4X12.7X24-MM THK)	
	8	1	**145-0981**	2	SPACER (8.5X12.7X18-MM)	
	9	1	**169-7291**	2	COVER-SPEAKER	
	10	1	**209-4716**	2	PLATE	
	11	1	**262-9567**	2	SPEAKER	
M	12	1	**8C-4982**	8	BOLT-SOCKET HEAD (M4X0.7X20-MM)	
	13	1	**9X-2038**	3	WASHER (7X19X2-MM THK)	
	14	1	**292-5773**	1	COVER	
	15	1	**317-5542**	1	LINER AS-CAB	
		1	**263-5781**	2	PLATE AS	
					(EACH INCLUDES)	
		1	**205-7047**	8	INSERT-THREADED (M4X0.7-THD)	
M	16	1	**113-0920**	8	BOLT-SOCKET HEAD (M4X0.7X35-MM)	
M	17	1	**121-9870**	5	SCREW-MACHINE (M6X1X40-MM)	

M-METRIC PART

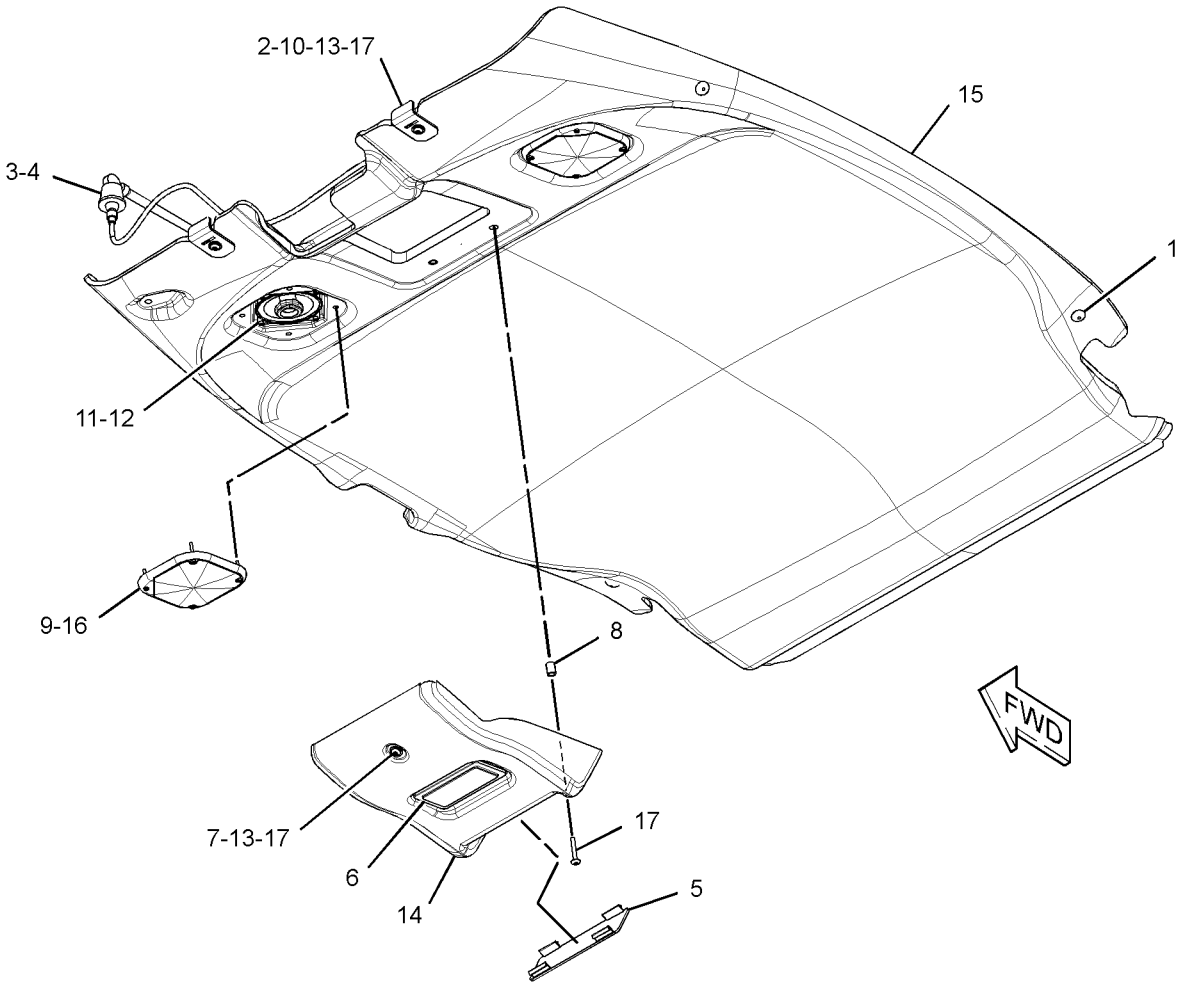

GRAPHIC #1 **<END>** g02020914

OPERATOR STATION

254-0190 LINES GP-HEATER & AIR COND

S/N: RBA1-UP

PART OF 254-0200 CAB AR-ENCLOSED ROPS

AN ATTACHMENT

SMCS-1380, 1808, 1812 **i04115402**

NOTE	REF NO	GRAPHIC REF	PART NUMBER	QTY	PART NAME 1 2 3 4 5 6 (PRODUCT LEVEL)	SEE PAGE
I	1	1	**214-3737**	1	HOSE AS	
	2	1	**3S-2093**	1	STRAP-CABLE	
	3	1	**5D-1026**	8	CLAMP-BAND	
E	4	1	**5P-0767**		HOSE (232-CM)	
E	4A	1	**5P-0767**		HOSE (177-CM)	
E	4B	1	**5P-0767**		HOSE (65-CM)	
E	4C	1	**5P-0767**		HOSE (22-CM)	
	5	1	**6P-8855**	1	TUBE	
	6	1	**7K-1181**	12	STRAP-CABLE	
	7	1	**9M-4814**	1	CONNECTOR-HOSE	
	8	1	**315-7790**	1	PLATE	
	9	1	**130-9984**	2	CLIP	
	10	1	**134-3856**	1	ELBOW	
G	11	1	**160-2244**		SLEEVE-ABRASION (24-IN)	
G	11A	1	**160-2244**		SLEEVE-ABRASION (18-IN)	
G	11B	1	**160-2244**		SLEEVE-ABRASION (33-IN)	
G	11C	1	**160-2244**		SLEEVE-ABRASION (48-IN)	
G	11D	1	**160-2244**		SLEEVE-ABRASION (39-IN)	
	12	1	**170-0235**	1	ACCUMULATOR-REFRIGERANT (AIR CONDITIONER)	
I	13	1	**214-3736**	1	HOSE AS	
I	15	1	**271-3186**	1	HOSE AS	
	16	1	**283-4237**	1	DRYER-REFRIGERANT (IN-LINE)	
		1	**3E-0068**	1	TUBE AS-REFRIGERANT ORIFICE	
	17	1	**289-6018**	2	U-BOLT	
	18	1	**289-6021**	1	PLATE	
I	19	1	**312-3123**	1	HOSE AS	
	20	1	**312-3124**	1	HOSE AS	
	21	1	**313-5196**	1	PLATE-INSTRUCTION (AIR CONDITIONER, READ OMM)	
	22	1	**109-1633**	1	CLIP (SLOT)	
	23	1	**109-1634**	1	CLIP (TAB)	
M	24	1	**208-9293**	2	BOLT-FLANGE HEAD (M10X1.5X30-MM)	
	25	1	**2K-4973**	4	LOCKNUT (3/8-16-THD)	
	26	1	**3E-4321**	4	CLIP	
	28	1	**6V-1889**	2	CLIP	
	29	1	**8T-4121**	8	WASHER-HARD (11X21X2.5-MM THK)	
M	30	1	**8T-4195**	1	BOLT (M10X1.5X30-MM)	
M	31	1	**8T-4137**	3	BOLT (M10X1.5X20-MM)	
M	32	1	**8T-4139**	1	BOLT (M12X1.75X30-MM)	
	33	1	**8T-4223**	1	WASHER-HARD (13.5X25.5X3-MM THK)	
	34	1	**9X-7380**	2	SEAL-O-RING	
	35	1	**9X-7381**	3	SEAL-O-RING	
	36	1	**9X-7382**	1	SEAL-O-RING	
	37	1	**9X-7383**	2	SEAL-O-RING	

E-ORDER BY THE CENTIMETER
G-ORDER BY THE INCH
I-REFER TO HYDRAULIC INFORMATION SYSTEM
M-METRIC PART

254-0190 **LINES GP-HEATER & AIR COND** *(contd.)* **i04115402**

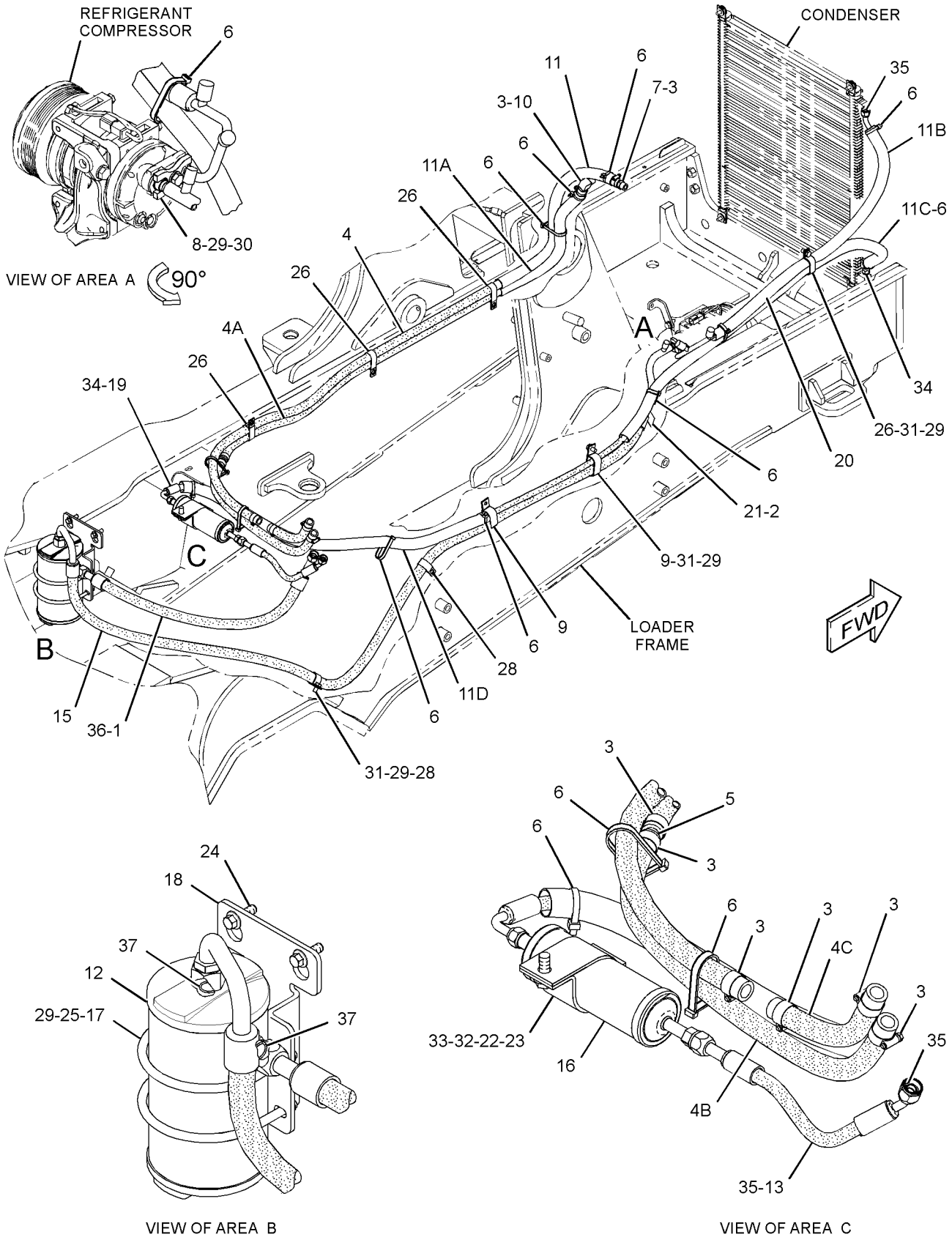

GRAPHIC #1 **<END>** g01841693

OPERATOR STATION

259-6276 MIRROR GP-REAR VIEW—INTERIOR

S/N: RBA1-UP
PART OF 254-0198 CANOPY AR-OPEN ROPS
AN ATTACHMENT

SMCS-7319 **i02403099**

NOTE	REF NO	GRAPHIC REF	PART NUMBER	QTY	PART NAME 1 2 3 4 5 6 (PRODUCT LEVEL)	SEE PAGE
M	1	1	**8C-4982**	2	BOLT-SOCKET HEAD (M4X0.7X20-MM)	
	2	1	**199-0929**	1	MIRROR AS	
	3	1	**096-6166**	2	WASHER-HARD (4.5X9X1-MM THK)	

M-METRIC PART

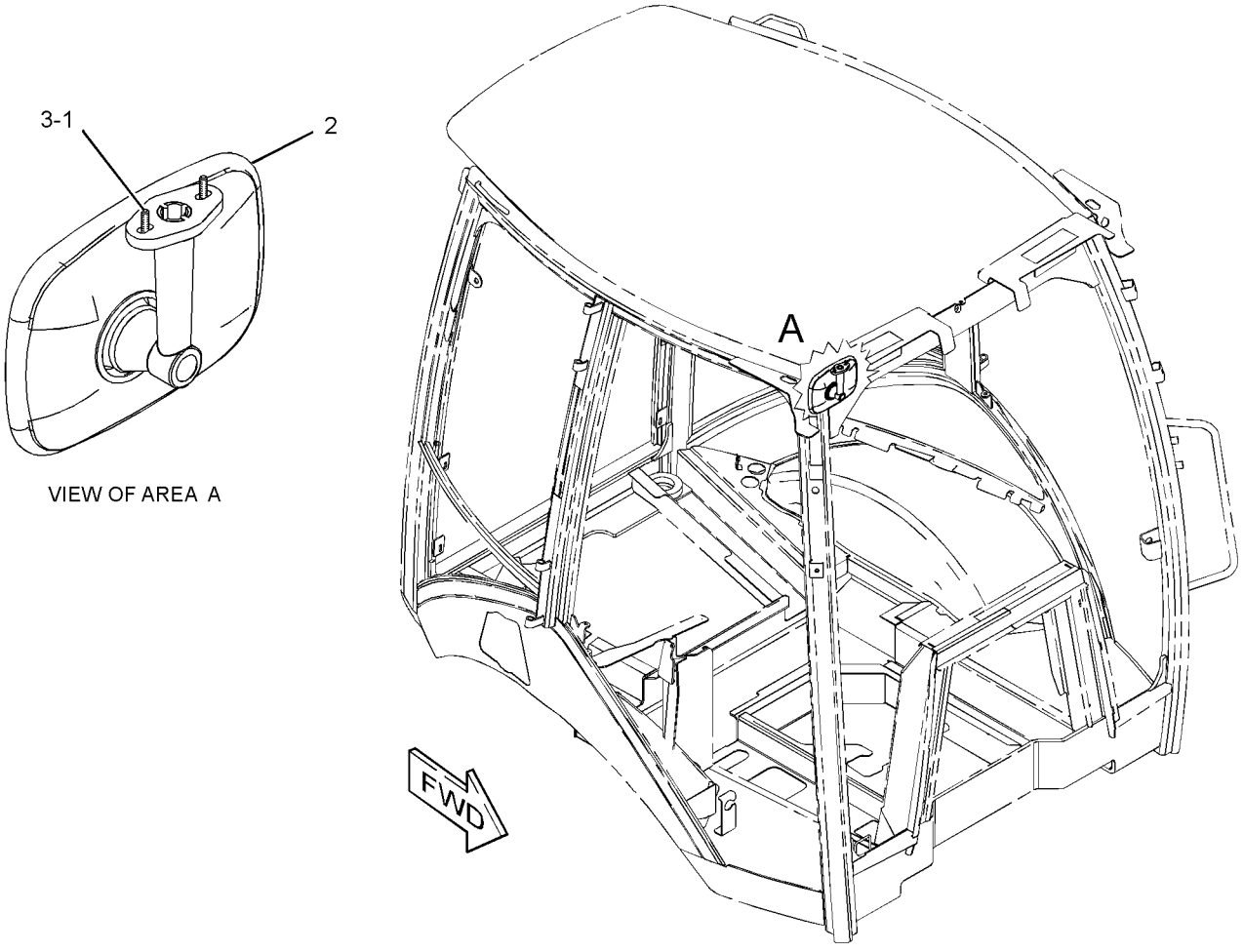

VIEW OF AREA A

GRAPHIC #1 **<END>** g01214241

OPERATOR STATION

186-2589 MOTOR GP-WINDOW WIPER—FRONT

S/N: RBA1-UP
PART OF 206-1725 WIPER GP-WINDOW
AN ATTACHMENT

SMCS-7305 **i02218671**

NOTE	REF NO	GRAPHIC REF	PART NUMBER	QTY	PART NAME 1 2 3 4 5 6 (PRODUCT LEVEL)	SEE PAGE
M	1	1	**5C-7261**	1	NUT (M8X1.25-THD)	
	2	1	**3F-9556**	1	LOCKWASHER	
	3	1	**152-7691**	1	MOTOR GP-WINDOW WIPER	
		1	**9G-3695**	1	PLUG-SEAL	
		1	**102-8805**	1	KIT-RECEPTACLE (6-PIN)	
					(INCLUDES RECEPTACLE AS & WEDGE)	
		1	**186-3735**	5	PIN-CONNECTOR (16-GA TO 18-GA)	
	4	1	**206-5823**	1	CAP	

M-METRIC PART

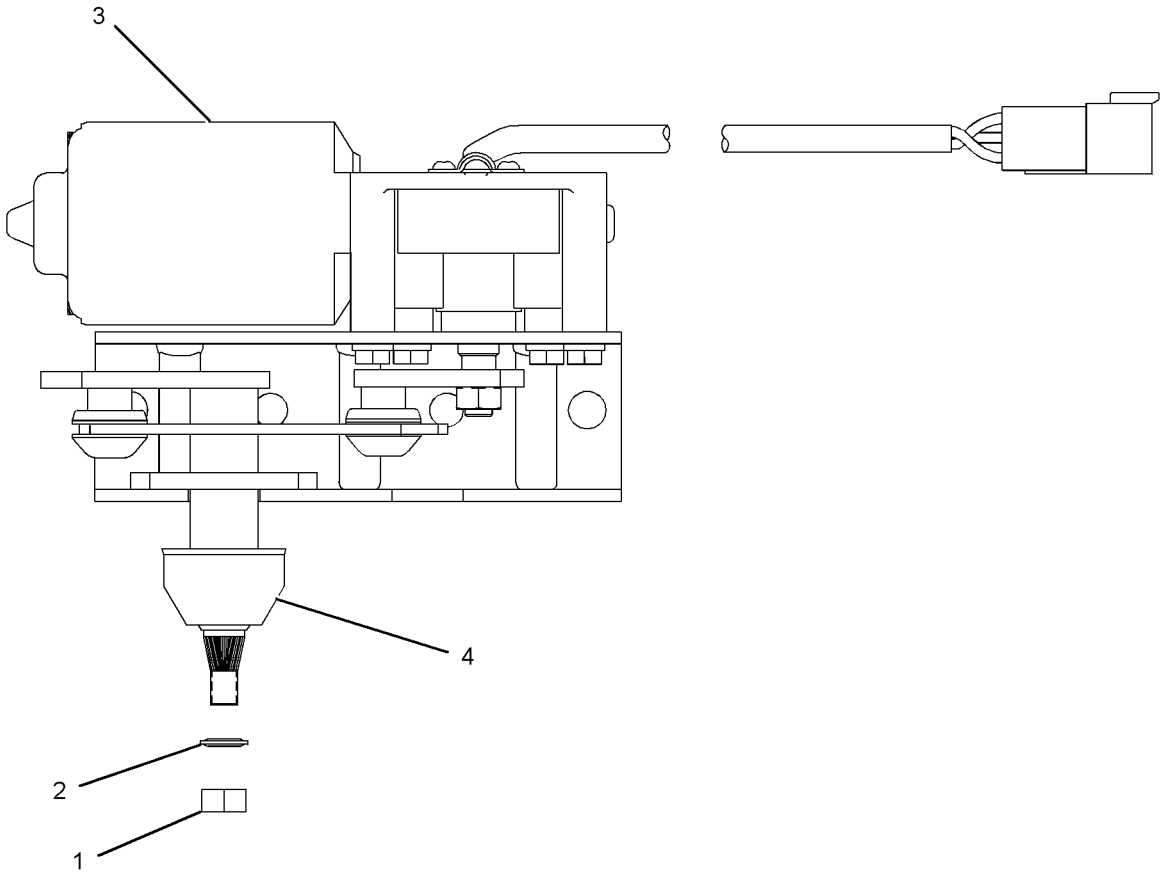

GRAPHIC #1 **<END>** g01120206

OPERATOR STATION

330-5010 MOTOR GP-WINDOW WIPER

S/N: RBA1-UP

PART OF 206-1725 WIPER GP-WINDOW

AN ATTACHMENT

SMCS-7305 **i03889151**

NOTE	REF NO	GRAPHIC REF	PART NUMBER	QTY	PART NAME 1 2 3 4 5 6 (PRODUCT LEVEL)	SEE PAGE
	1	1	**102-8804**	1	KIT-RECEPTACLE (4-PIN)	
					(INCLUDES RECEPTACLE AS & WEDGE)	
	2	1	**263-3823**	1	CAP-WIPER	
	3	1	**3F-9556**	1	LOCKWASHER	
M	4	1	**5C-7261**	1	NUT (M8X1.25-THD)	
	5	1	**186-3735**	4	PIN-CONNECTOR (16-GA TO 18-GA)	

M-METRIC PART

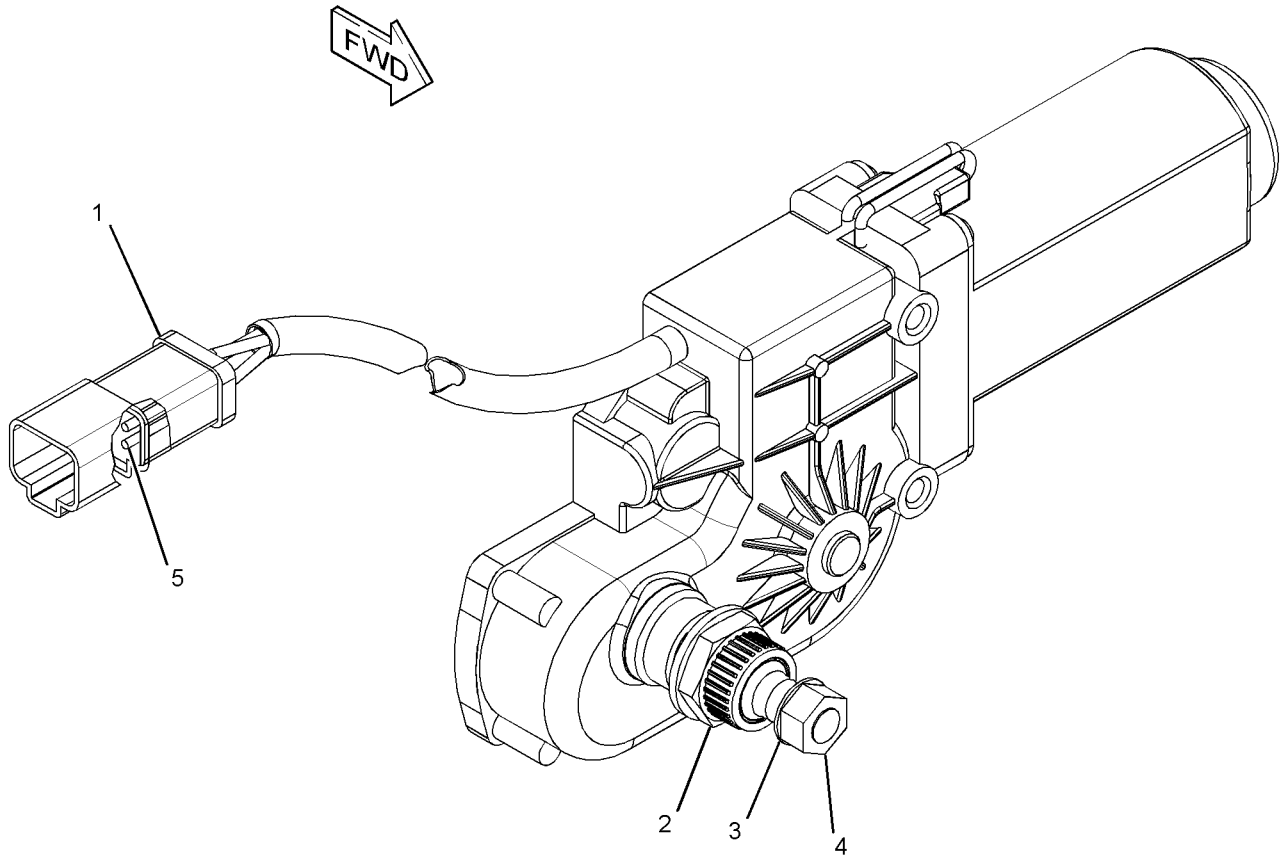

GRAPHIC #1 **<END>** g02133753

OPERATOR STATION

269-3247 MOUNTING GP-BACKHOE CONTROL—PILOT

S/N: RBA1-UP

PART OF 254-0153, 254-0154 CONTROL AR-BACKHOE

AN ATTACHMENT

SMCS-5063, 5258, 5705 **i04079151**

NOTE	REF NO	GRAPHIC REF	PART NUMBER	QTY	PART NAME 1 2 3 4 5 6 (PRODUCT LEVEL)	SEE PAGE
	1	1,2	**7K-1181**	2	STRAP-CABLE	
	2	1,2	**164-1368**	15	FASTENER-PANEL	
	3	1,2	**183-4934**	2	BEARING-SELF-ALIGNING	
B	4	1,2	**195-7602**	3	SHIM (1.6-MM THK)	
E	5	1	**261-9634**		SEAL-BULK (8.5-CM EACH)	
	6	2	**261-9642**	1	COVER-CONSOLE (LH)	
	7	2	**267-5225**	1	BOOT	
CY	8	1	*344-2432*	1	LATCH GP-CONSOLE	446
	9	2	**269-3254**	1	SUPPORT AS (LH)	
B	10	2	**269-3262**	4	SHIM (1-MM THK)	
	11	1,2	**270-2794**	2	INSULATION	
	12	2	**270-5161**	1	GASKET	
	13	2	**272-7079**	1	PLATE	
	14	1	**273-1473**	1	GROMMET	
	15	1	**273-1475**	1	COVER-CONSOLE (RH)	
	16	1	**273-1476**	1	BOOT	
	17	1	**273-1477**	1	PLATE	
	18	1	**273-1478**	1	BUMPER AS	
	19	1	**283-3467**	1	PLATE AS	
M		1	**6V-9632**	7	NUT-WELD (M6X1-THD)	
M		1	**8T-3490**	3	NUT-WELD (M10X1.5-THD)	
M		1	**8T-3612**	1	NUT-WELD (M8X1.25-THD)	
	20	2	**283-3477**	1	TUBE AS	
	21	1	**283-7981**	1	PLATE AS	
	22	1	**283-8053**	2	STRIKER	
	23	1	**039-8557**	2	WASHER (13X26X6-MM THK)	
M	24	1,2	**3T-0849**	8	BOLT-SOCKET HEAD (M6X1X25-MM)	
M	25	1	**7X-2533**	6	BOLT (M6X1X35-MM)	
	26	1,2	**8T-4121**	9	WASHER-HARD (11X21X2.5-MM THK)	
M	27	1	**8T-4134**	6	NUT (M6X1-THD)	
M	28	1,2	**8T-4138**	2	BOLT (M6X1X20-MM)	
M	29	2	**8T-4186**	5	BOLT (M10X1.5X40-MM)	
M	30	1	**8T-4189**	2	BOLT (M8X1.25X20-MM)	
M	31	1	**8T-4195**	4	BOLT (M10X1.5X30-MM)	
	32	1,2	**8T-4224**	4	WASHER-HARD (8.8X16X2-MM THK)	
M	33	1,2	**8T-4244**	2	NUT (M12X1.75-THD)	
M	34	1	**8T-4956**	2	BOLT (M12X1.75X35-MM)	
M	35	1	**8T-4971**	2	BOLT (M6X1X30-MM)	
M	36	2	**8T-7547**	2	BOLT (M8X1.25X30-MM)	
	37	1,2	**9X-2038**	14	WASHER (7X19X2-MM THK)	
M	38	1,2	**9X-2045**	8	SCREW-TRUSS HEAD (M6X1X20-MM)	
	39	1,2	**9X-8256**	26	WASHER (6.6X12X2-MM THK)	

B-USE AS REQUIRED
C-CHANGE FROM PREVIOUS TYPE
E-ORDER BY THE CENTIMETER
M-METRIC PART
Y-SEPARATE ILLUSTRATION

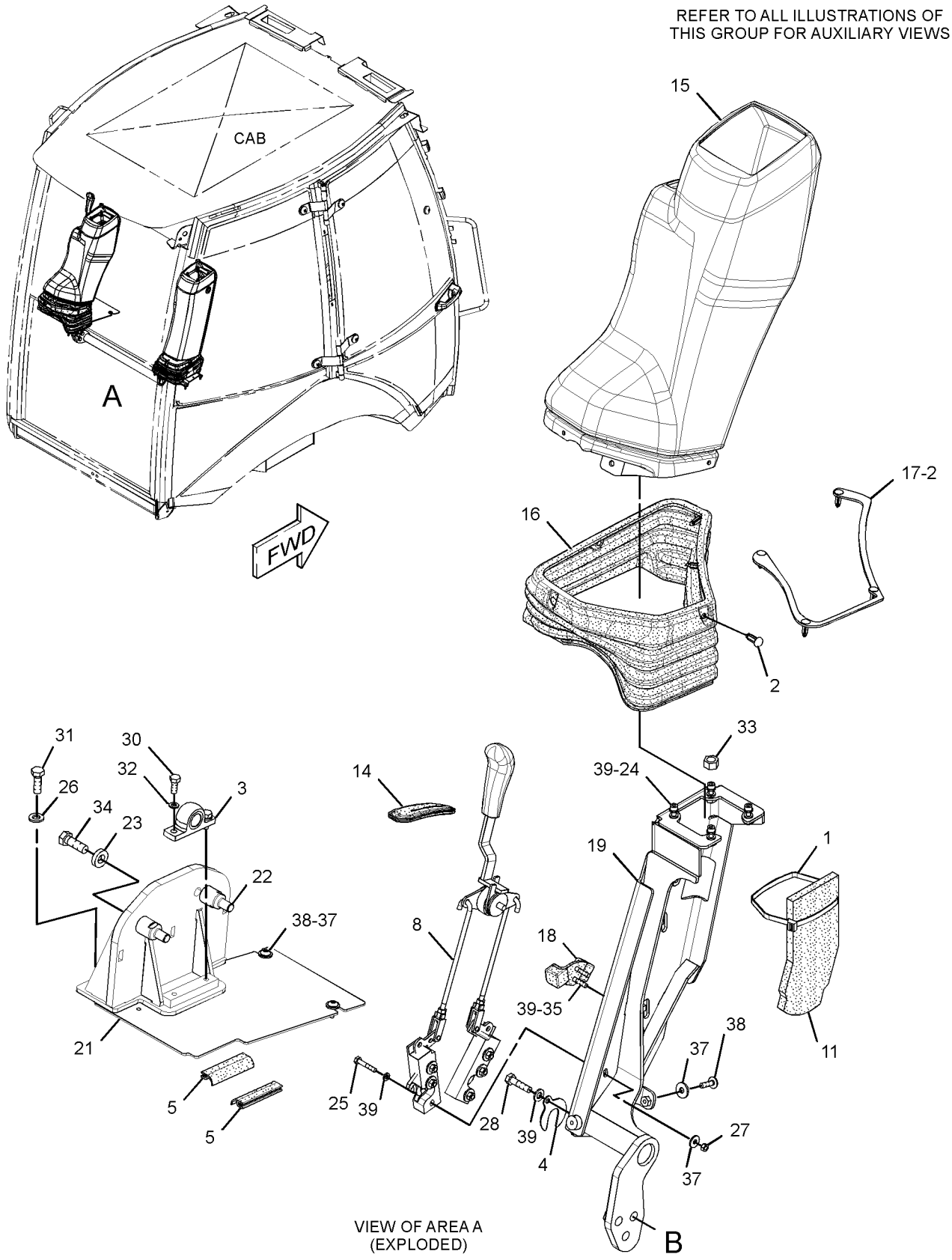

GRAPHIC #1

g01316012

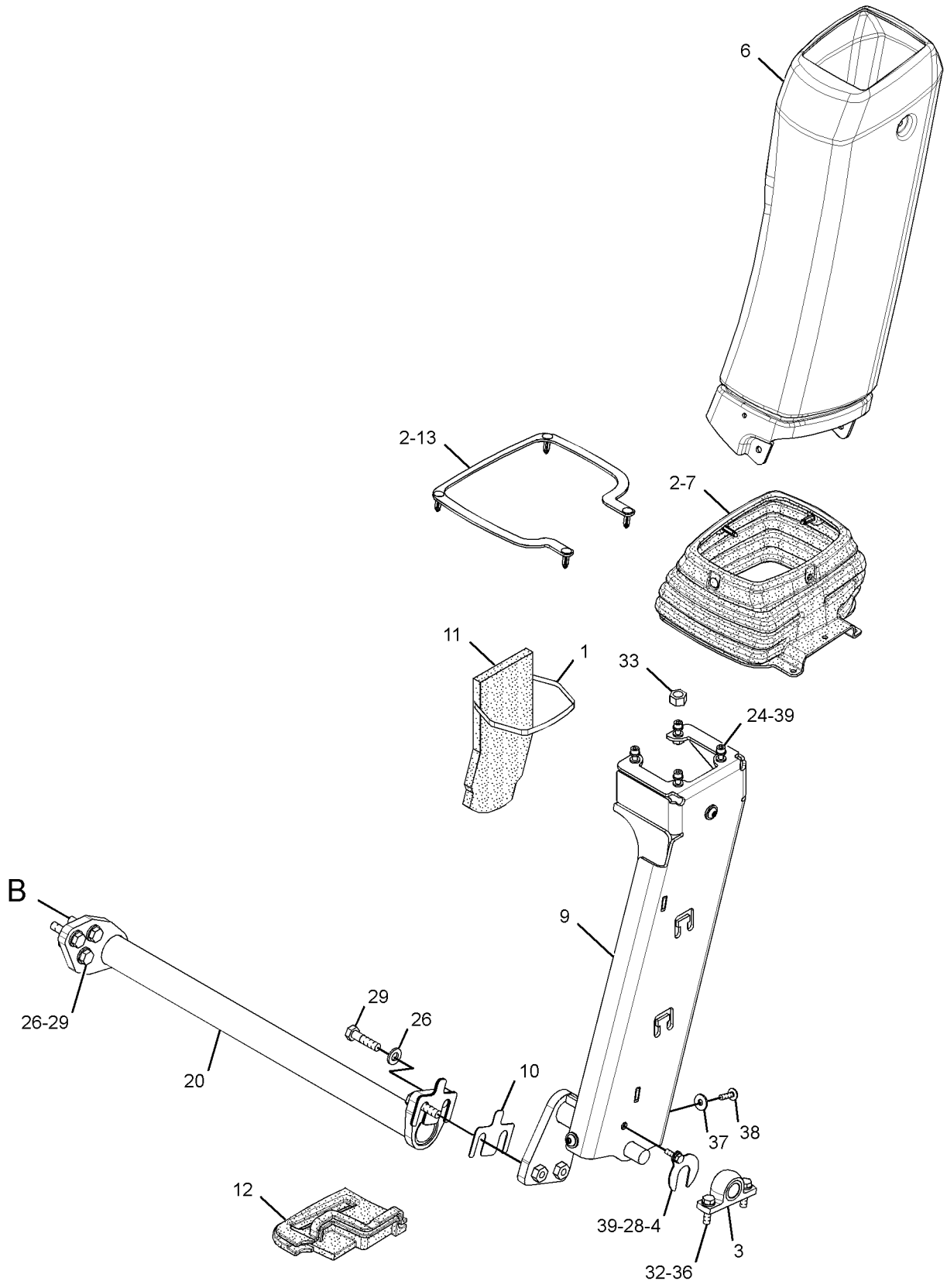

GRAPHIC #2 **<END>** g01316018

OPERATOR STATION

205-9560 MOUNTING GP-CAB

S/N: RBA1-UP

PART OF 254-0200 CAB AR-ENCLOSED ROPS, 254-0198 CANOPY AR-OPEN ROPS AN ATTACHMENT

SMCS-7301 **i03845646**

NOTE	REF NO	GRAPHIC REF	PART NUMBER	QTY	PART NAME 1 2 3 4 5 6 (PRODUCT LEVEL)	SEE PAGE
	1	1	**6Y-9930**	2	MOUNT AS	
	2	1	**118-2990**	2	MOUNT AS	
	3	1	**9W-6582**	2	SLEEVE	
M	4	1	**7X-2568**	2	BOLT (M20X2.5X180-MM)	
	5	1	**297-5849**	2	WASHER-HARD (17X75X10-MM THK)	
	6	1	**8T-4123**	4	WASHER (22X35X3.5-MM THK)	
M	7	1	**8T-4131**	2	NUT (M20X2.5-THD)	
M	8	1	**8T-4132**	2	NUT (M16X2-THD)	
M	9	1	**8T-4173**	2	BOLT (M16X2X110-MM)	
	10	1	**9W-6584**	2	WASHER (20.5X114X10-MM THK)	
	11	1	**9X-8257**	4	WASHER (17.5X30X3.5-MM THK)	
	12	1	**1L-6377**	2	BUTTON-PLUG	

M-METRIC PART

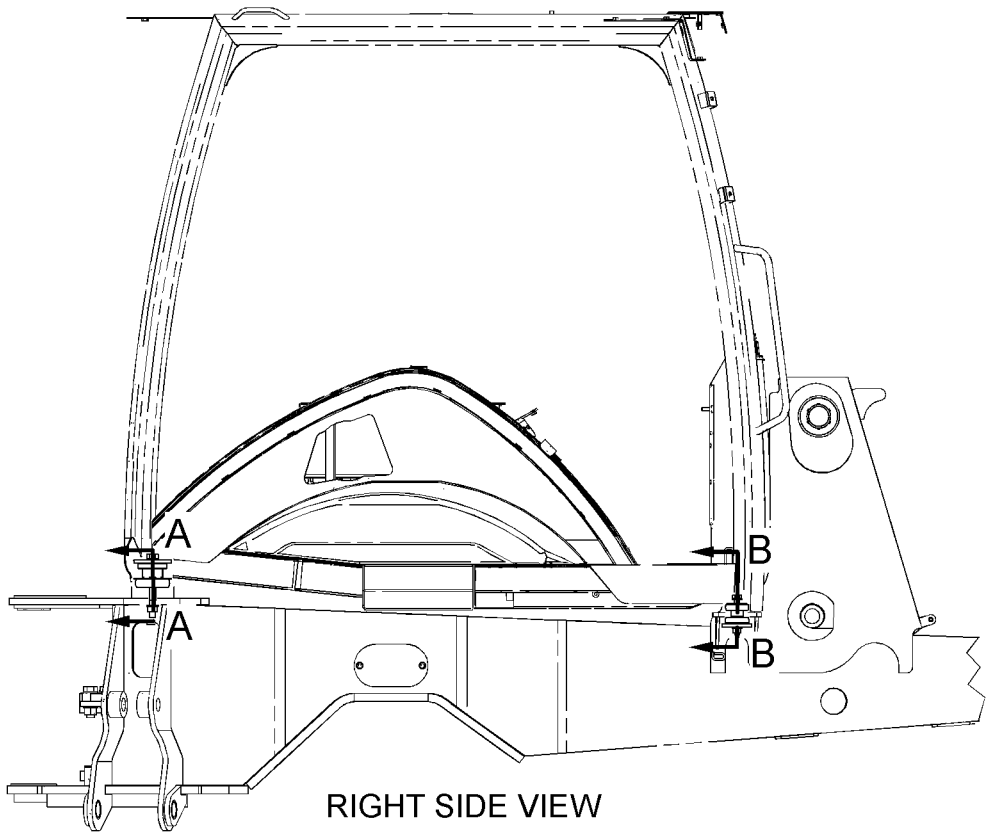

RIGHT SIDE VIEW

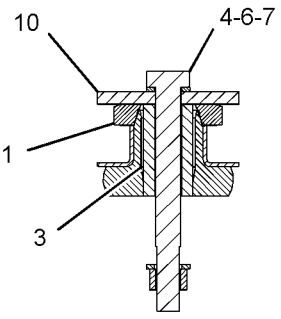

SECTION A-A

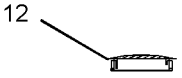

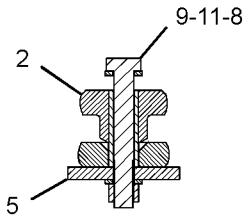

SECTION B-B

GRAPHIC #1 **<END>** g01189655

OPERATOR STATION

209-3377 PEDAL GP-GOVERNOR

S/N: RBA1-UP

PART OF 288-8045 CONTROL GP-GOVERNOR

SMCS-1265 **i03849761**

NOTE	REF NO	GRAPHIC REF	PART NUMBER	QTY	PART NAME 1 2 3 4 5 6 (PRODUCT LEVEL)	SEE PAGE
Y	1	1	**266-1467**	1	SENSOR GP-POSITION (ROTARY)	107
M	2	1	**096-3772**	4	SCREW-MACHINE (M4X0.7X16-MM)	
M	3	1	**6V-2313**	2	BOLT (M5X0.8X30-MM)	
	4	1	**8T-0328**	2	WASHER-HARD (5.5X10X1-MM THK)	
	5	1	**8T-6902**	2	CLIP	
					AVAILABLE REPAIR KIT(S):	
			243-0062	1	KIT-REPAIR (GOVERNOR PEDAL)	
					(INCLUDES SHAFT, CLIPS & BEARINGS)	

M-METRIC PART
Y-SEPARATE ILLUSTRATION

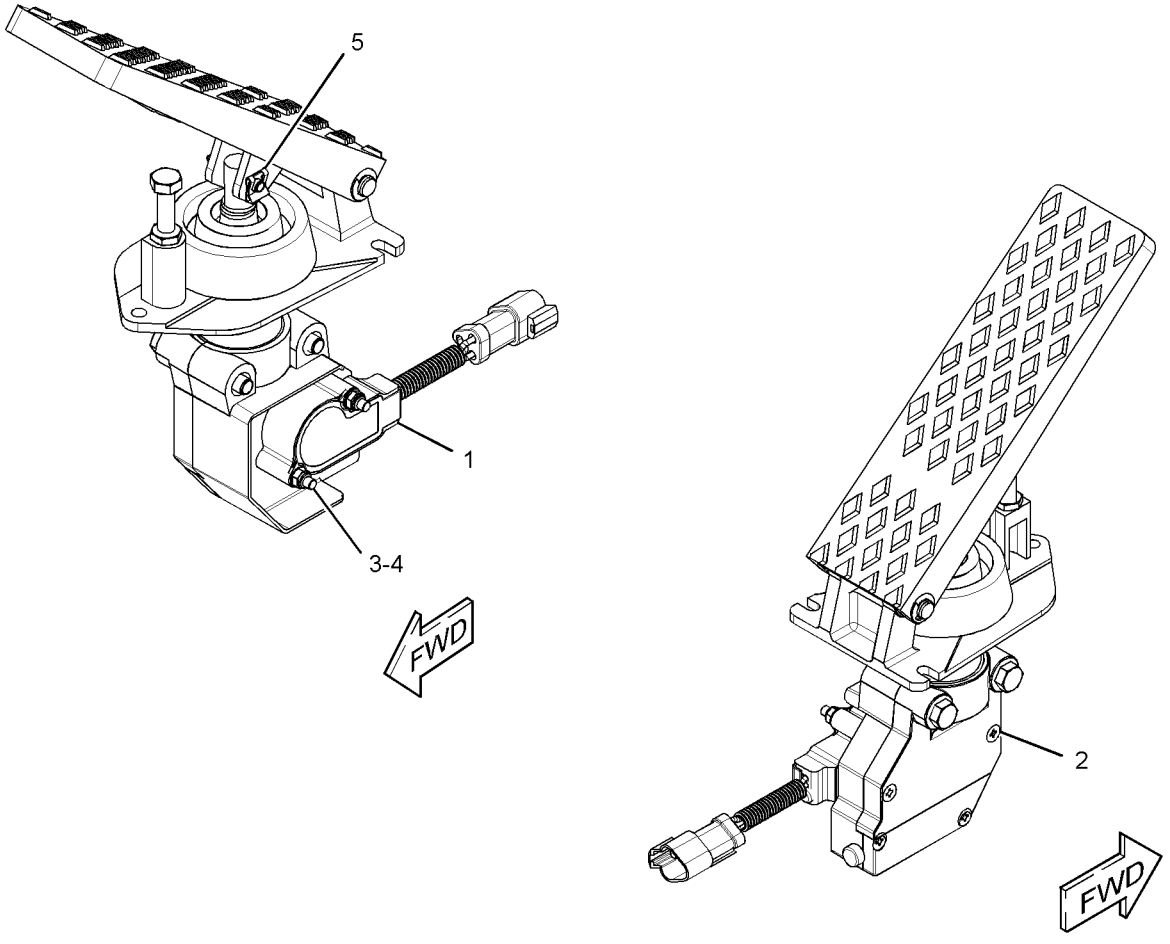

GRAPHIC #1 **<END>** g01648098

OPERATOR STATION

205-9569 ROOF GP-CAB

S/N: RBA1-UP
NACD
PART OF 254-0200 CAB AR-ENCLOSED ROPS, 254-0198 CANOPY AR-OPEN ROPS
AN ATTACHMENT

SMCS-7301 **i03852118**

NOTE	REF NO	GRAPHIC REF	PART NUMBER	QTY	PART NAME 1 2 3 4 5 6 (PRODUCT LEVEL)	SEE PAGE
	1	1	**205-9570**	1	COVER-ROOF (CENTER)	
	2	1	**205-9571**	1	COVER-ROOF (REAR)	
	3	1	**205-9576**	1	COVER-ROOF (LH)	
	4	1	**205-9577**	1	COVER-ROOF (RH)	
	5	1	**9X-6165**	16	WASHER (6.5X22X2.5-MM THK)	
M	6	1	**8T-4138**	16	BOLT (M6X1X20-MM)	
	7	1	**9X-2038**	7	WASHER (7X19X2-MM THK)	
M	8	1	**9X-2045**	9	SCREW-TRUSS HEAD (M6X1X20-MM)	

M-METRIC PART

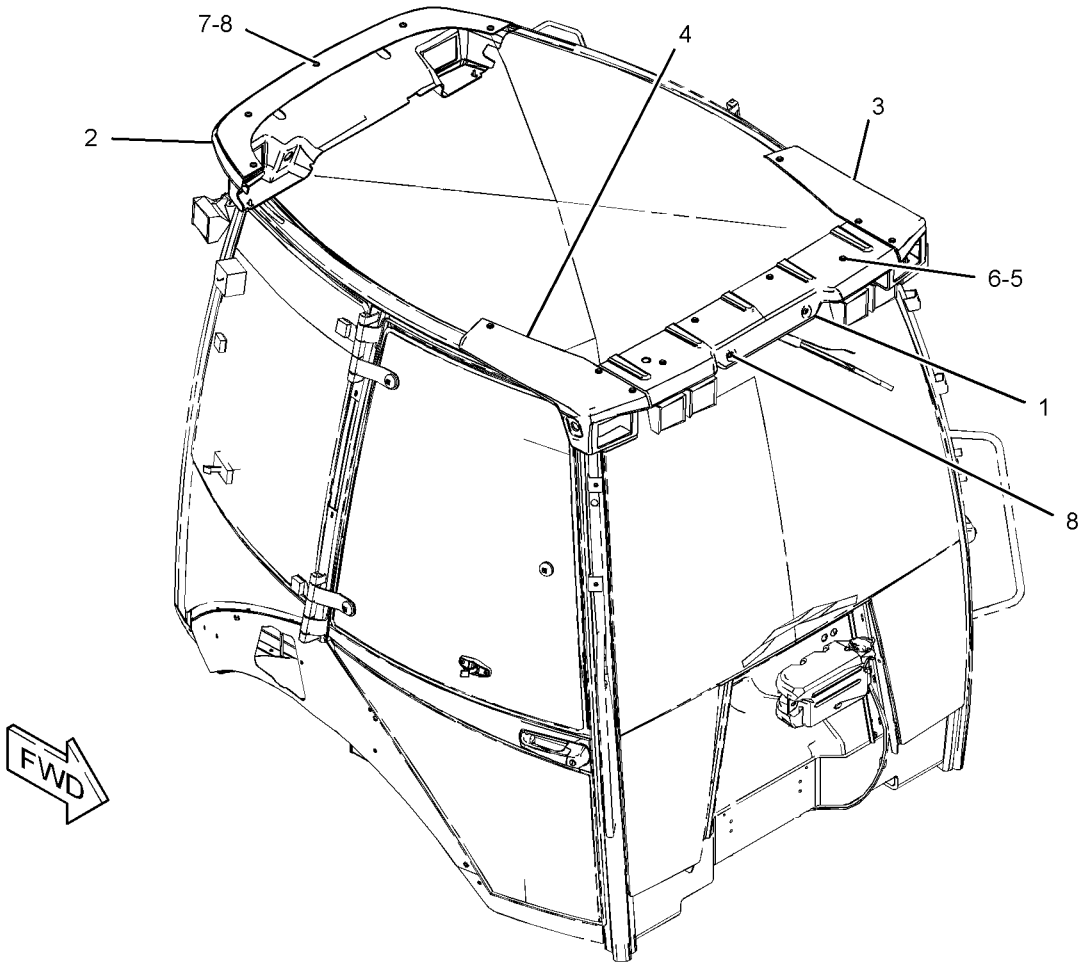

GRAPHIC #1 **<END>** g01233481

OPERATOR STATION

206-1747 SEAT BELT GP–RETRACTABLE, 2-IN

S/N: RBA1-UP

AN ATTACHMENT

SMCS-7327 **i02150894**

NOTE	REF NO	GRAPHIC REF	PART NUMBER	QTY	PART NAME 1 2 3 4 5 6 (PRODUCT LEVEL)	SEE PAGE
	1	1	**206-1749**	1	SEAT BELT (2-IN)	
	2	1	**8T-4223**	4	WASHER-HARD (13.5X25.5X3-MM THK)	
M	3	1	**8T-4956**	2	BOLT (M12X1.75X35-MM)	

M-METRIC PART

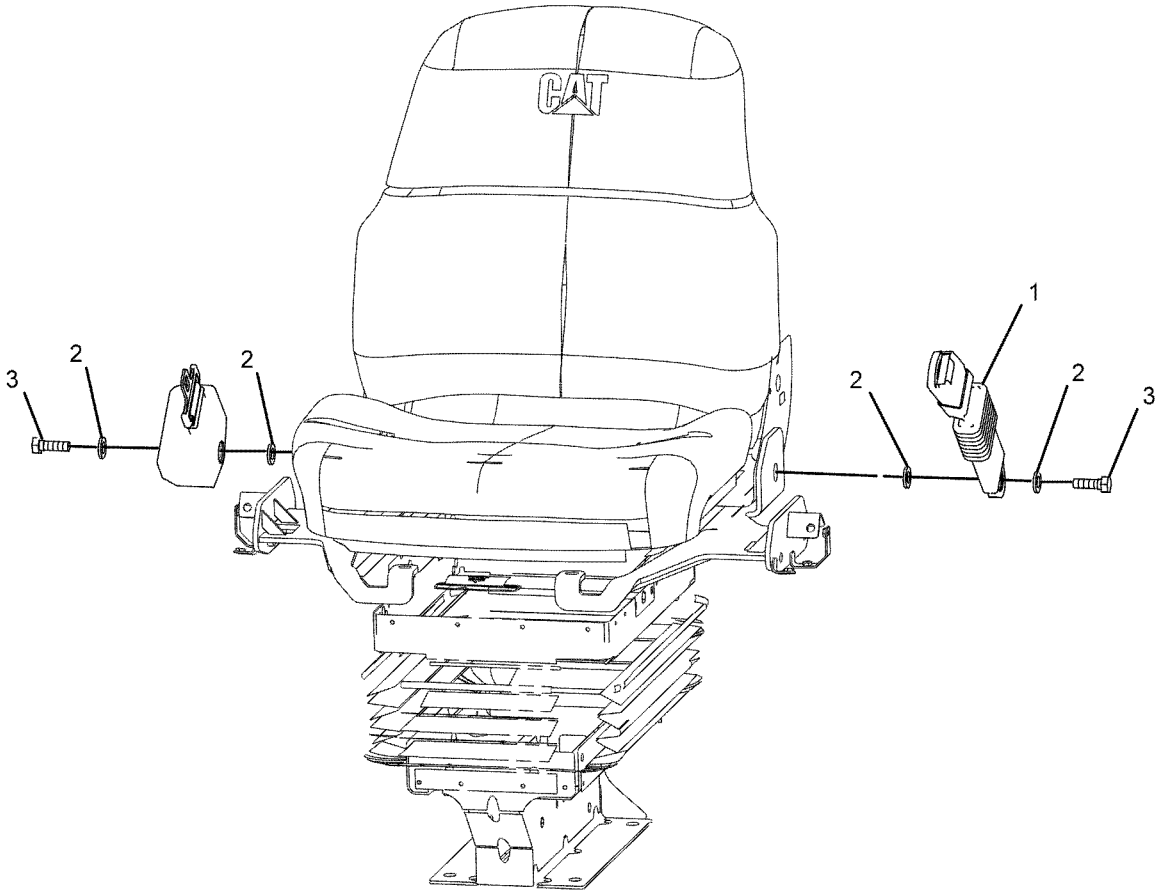

FRONT VIEW
(TOP LEFT)

GRAPHIC #1 **<END>** g01078751

206-1748 SEAT BELT GP–RETRACTABLE, 3-IN

S/N: RBA1-UP
FOR USE WITH IN CALIFORNIA, WASHINGTON, AND OREGON
AN ATTACHMENT

SMCS-7327 **i02209491**

NOTE	REF NO	GRAPHIC REF	PART NUMBER	QTY	PART NAME 1 2 3 4 5 6 (PRODUCT LEVEL)	SEE PAGE
	1	1	**206-1750**	1	SEAT BELT (3-IN)	
	2	1	**8T-4223**	4	WASHER-HARD (13.5X25.5X3-MM THK)	
M	3	1	**8T-4956**	2	BOLT (M12X1.75X35-MM)	

M-METRIC PART

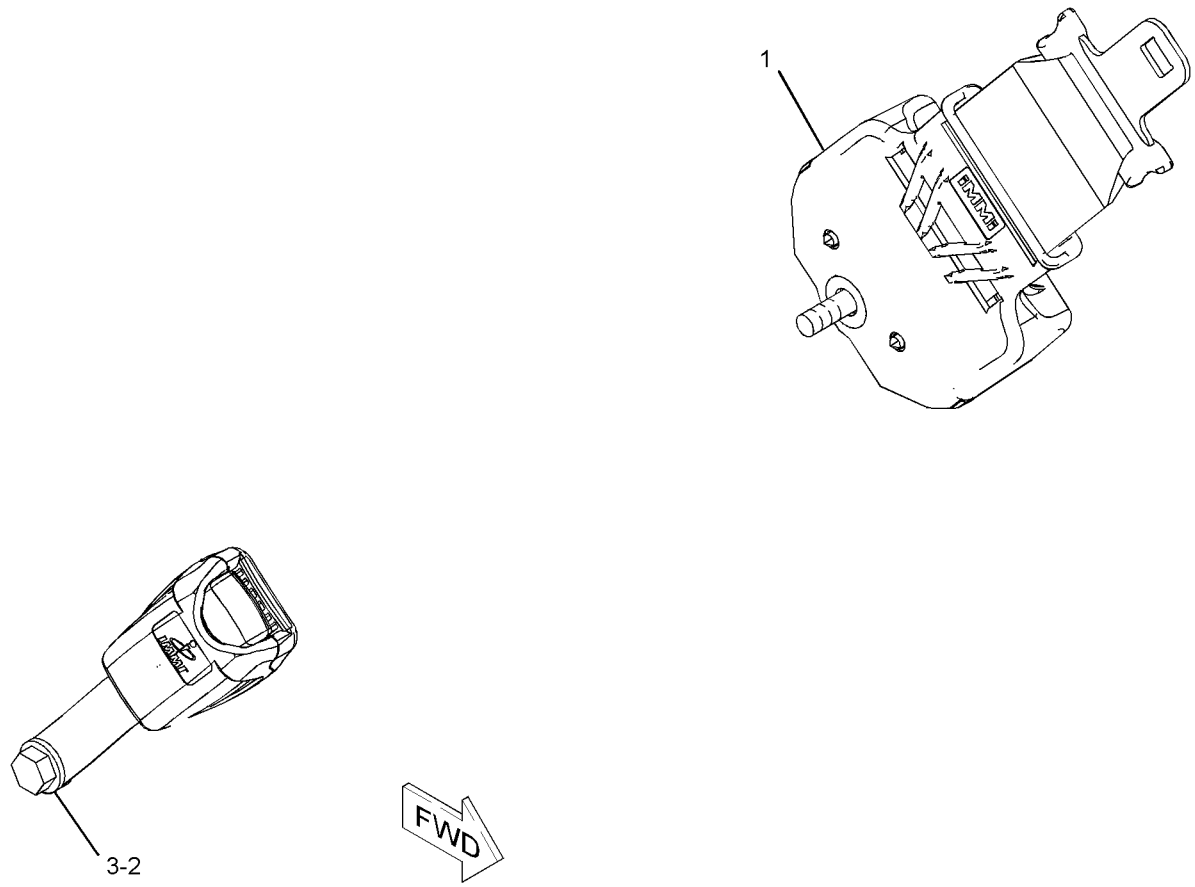

GRAPHIC #1 **<END>** g01117311

OPERATOR STATION

273-5905 SEAT GP–VINYL

S/N: RBA1-UP

PART OF 206-1791 SEAT GP-SUSPENSION

AN ATTACHMENT

SMCS-7312, 7321, 7324, 7336 **i03889150**

NOTE	PART NUMBER	QTY	PART NAME 1 2 3 4 5 6 (PRODUCT LEVEL)	SEE PAGE
	164-1258	1	BRACKET AS (RH)	
	164-1259	1	BRACKET AS (LH)	
	164-1266	1	CUSHION AS-BACK	
	260-0058	1	CUSHION AS-SEAT	
	164-1249	1	LEVER AS (RECLINER CONTROL)	
	164-1263	1	PAN AS	
	180-5797	1	PAN AS	
M	**8T-4189**	2	BOLT (M8X1.25X20-MM)	
	8T-8917	2	BOLT (1/2-13X1.25-IN)	
	164-1265	1	BOLT (3/8-16X1.1-IN)	
	260-0045	1	BOLT-SPECIAL	
M	**105-3481**	2	BOLT-SOCKET HEAD (M8X1.25X20-MM)	
	260-0027	1	KNOB-SLIDE	
	260-0028	1	LEVER-TILT (BOTTOM)	
M	**3T-0852**	8	LOCKNUT (M8X1.25-THD)	
M	**9X-6620**	1	LOCKNUT (M10X1.5-THD)	
M	**129-3180**	2	LOCKNUT (M12X1.75-THD)	
	260-0029	1	PAN	
	260-0040	1	PAN	
	180-5781	1	ROD	
	8T-9501	2	SCREW (10-16X0.75-IN)	
M	**8T-6412**	2	SCREW-MACHINE (M6X1X20-MM)	
	195-9223	2	SCREW-PAN HEAD	
	164-1256	2	SPACER (19X25.4X12.5-MM THK)	
	164-1251	1	SPRING	
	164-1252	1	SPRING	
	164-1273	1	SPRING-EXTENSION	
	161-9283	1	WASHER (19.8X31.8X1.6-MM THK)	
	5P-8245	2	WASHER-HARD (13.5X25.5X3-MM THK)	

M-METRIC PART

<END>

OPERATOR STATION

206-1791 SEAT GP-SUSPENSION—VINYL

S/N: RBA1-UP
PART OF 280-7364 SEAT GP-SUSPENSION
AN ATTACHMENT

SMCS-7324, 7336 **i03887952**

NOTE	REF NO	GRAPHIC REF	PART NUMBER	QTY	PART NAME 1 2 3 4 5 6 (PRODUCT LEVEL)	SEE PAGE
	1	1	**2K-4973**	4	LOCKNUT (3/8-16-THD)	
	2	1	**4L-6454**	4	BOLT (3/8-16X1-IN)	
	3	1	**195-7055**	4	WASHER-HARD (9.9X28.5X3.2-MM THK)	
Y	4	1	**273-5905**	1	SEAT GP (VINYL)	462
Y	5	1	**273-6372**	1	SUSPENSION GP-SEAT	466
	6	1	**164-1265**	4	BOLT (3/8-16X1.1-IN)	
	7	1	**4B-5271**	4	WASHER (25.5X11.2X2-MM THK)	
	8	1	**5T-7870**	4	KNOB (ARMREST ADJUSTMENT)	
	9	1	**164-1247**	1	BRACKET AS (RH)	
	10	1	**220-3790**	1	ARMREST AS (RH)	
M		1	**6A-9083**	1	SCREW-MACHINE (M6X1X15-MM)	
	11	1	**164-1261**	1	BRACKET AS (LH)	
	12	1	**220-3791**	1	ARMREST AS (LH)	
M		1	**6A-9083**	1	SCREW-MACHINE (M6X1X15-MM)	
	13	1	**1K-6872**	2	LOCKNUT (1/2-13-THD)	
	14	1	**0S-1595**	2	BOLT (1/2-13X1.25-IN)	
	15	1	**5P-8245**	2	WASHER-HARD (13.5X25.5X3-MM THK)	

M-METRIC PART
Y-SEPARATE ILLUSTRATION

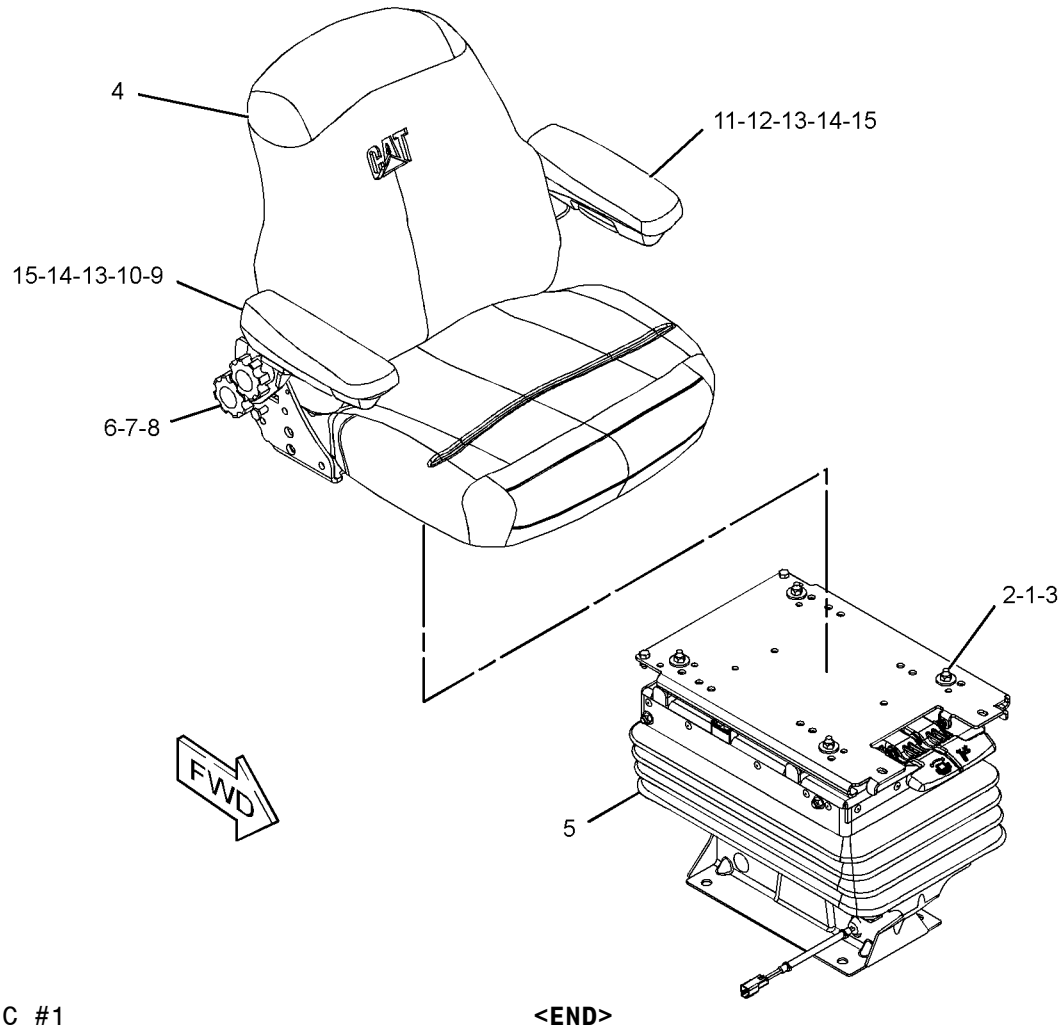

GRAPHIC #1 **<END>** g01298418

OPERATOR STATION

206-1796 SEAT GP-SUSPENSION—DELUXE, CLOTH

S/N: RBA1-UP
PART OF 280-7366 SEAT GP-SUSPENSION
AN ATTACHMENT

SMCS-7324, 7336 **i03889090**

NOTE	REF NO	GRAPHIC REF	PART NUMBER	QTY	PART NAME 1 2 3 4 5 6 (PRODUCT LEVEL)	SEE PAGE
	1	1	**2K-4973**	4	LOCKNUT (3/8-16-THD)	
	2	1	**4L-6454**	2	BOLT (3/8-16X1-IN)	
	3	1	**195-7055**	10	WASHER-HARD (9.9X28.5X3.2-MM THK)	
	4	1	**234-3017**	2	BOLT (3/8-16X0.875-IN)	
Y	5	1	**273-6037**	1	SEAT GP-SUSPENSION (DELUXE, CLOTH)	465
Y	6	1	**273-6372**	1	SUSPENSION GP-SEAT	466
	7	1	**164-1265**	4	BOLT (3/8-16X1.1-IN)	
	8	1	**4B-5271**	4	WASHER (25.5X11.2X2-MM THK)	
	9	1	**5T-7870**	4	KNOB (ARMREST ADJUSTMENT)	
	10	1	**164-1247**	1	BRACKET AS (RH)	
	11	1	**220-3790**	1	ARMREST AS (RH)	
M		1	**6A-9083**	1	SCREW-MACHINE (M6X1X15-MM)	
	12	1	**164-1261**	1	BRACKET AS (LH)	
	13	1	**220-3791**	1	ARMREST AS (LH)	
M		1	**6A-9083**	1	SCREW-MACHINE (M6X1X15-MM)	
	14	1	**1K-6872**	2	LOCKNUT (1/2-13-THD)	
	15	1	**0S-1595**	2	BOLT (1/2-13X1.25-IN)	
	16	1	**5P-8245**	2	WASHER-HARD (13.5X25.5X3-MM THK)	

M-METRIC PART
Y-SEPARATE ILLUSTRATION

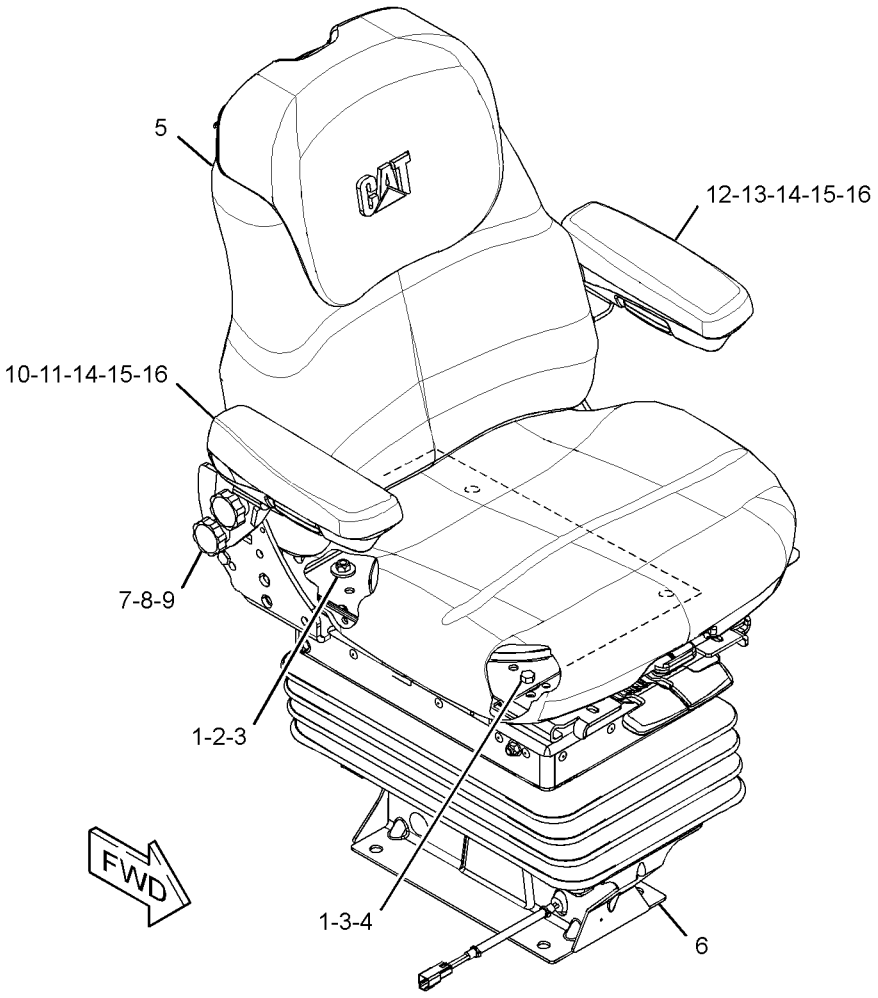

GRAPHIC #1 **<END>** g01309042

OPERATOR STATION

273-6037 SEAT GP-SUSPENSION—DELUXE, CLOTH

S/N: RBA1-UP

PART OF 206-1796 SEAT GP-SUSPENSION

AN ATTACHMENT

SMCS-7324, 7336 **i03887909**

NOTE	PART NUMBER	QTY	PART NAME 1 2 3 4 5 6 (PRODUCT LEVEL)	SEE PAGE
	260-0053	1	CUSHION GP-SEAT	
	164-1275	1	BACKREST AS	
M	**2W-9499**	2	BOLT (M6X1X40-MM)	
	8C-0572	2	WASHER (8.8X25.5X2-MM THK)	
	164-1259	1	BRACKET AS (LH)	
	164-1258	1	BRACKET AS (RH)	
	164-1244	1	CUSHION AS-BACK	
	180-5797	1	PAN AS	
	164-1263	1	PAN AS	
	260-0061	1	PAN AS	
	260-0062	1	PAN AS	
	180-5791	1	SUPPORT AS-SEAT (LUMBAR)	
	164-1249	1	LEVER AS (RECLINER CONTROL)	
M	**8T-4189**	2	BOLT (M8X1.25X20-MM)	
	164-1265	1	BOLT (3/8-16X1.1-IN)	
	8T-8917	2	BOLT (1/2-13X1.25-IN)	
	260-0045	1	BOLT-SPECIAL	
M	**105-3481**	2	BOLT-SOCKET HEAD (M8X1.25X20-MM)	
	260-0027	1	KNOB-SLIDE	
	260-0028	1	LEVER-TILT (BOTTOM)	
M	**3T-0852**	8	LOCKNUT (M8X1.25-THD)	
M	**129-3180**	2	LOCKNUT (M12X1.75-THD)	
M	**9X-6620**	1	LOCKNUT (M10X1.5-THD)	
	260-0029	1	PAN	
	260-0040	1	PAN	
	180-5781	1	ROD	
	8T-9501	2	SCREW (10-16X0.75-IN)	
M	**8T-6412**	2	SCREW-MACHINE (M6X1X20-MM)	
	195-9223	2	SCREW-PAN HEAD	
	164-1256	2	SPACER (19X25.4X12.5-MM THK)	
	164-1252	1	SPRING	
	164-1251	1	SPRING	
	164-1273	1	SPRING-EXTENSION	
	164-1276	1	TUBE	
	161-9283	1	WASHER (19.8X31.8X1.6-MM THK)	
	5P-8245	2	WASHER-HARD (13.5X25.5X3-MM THK)	

M-METRIC PART

<END>

OPERATOR STATION

280-7364 SEAT GP-SUSPENSION—VINYL

S/N: RBA1-UP
PART OF 254-0198 CANOPY AR-OPEN ROPS
AN ATTACHMENT

SMCS-7324, 7336 **i02415763**

NOTE	PART NUMBER	QTY	PART NAME 1 2 3 4 5 6 (PRODUCT LEVEL)	SEE PAGE
Y	**206-1791**	1	SEAT GP-SUSPENSION (VINYL)	463
	3S-2093	1	STRAP-CABLE	
M	**8T-4139**	4	BOLT (M12X1.75X30-MM)	
	8T-4223	4	WASHER-HARD (13.5X25.5X3-MM THK)	

M-METRIC PART
Y-SEPARATE ILLUSTRATION

<END>

280-7366 SEAT GP-SUSPENSION—DELUXE, CLOTH

S/N: RBA1-UP
PART OF 254-0200 CAB AR-ENCLOSED ROPS
AN ATTACHMENT

SMCS-7324, 7336 **i02410234**

NOTE	PART NUMBER	QTY	PART NAME 1 2 3 4 5 6 (PRODUCT LEVEL)	SEE PAGE
Y	**206-1796**	1	SEAT GP-SUSPENSION (DELUXE, CLOTH)	464
M	**8T-4139**	4	BOLT (M12X1.75X30-MM)	
	3S-2093	1	STRAP-CABLE	
	8T-4223	4	WASHER-HARD (13.5X25.5X3-MM THK)	

M-METRIC PART
Y-SEPARATE ILLUSTRATION

<END>

273-6372 SUSPENSION GP-SEAT

S/N: RBA1-UP
PART OF 206-1791, 206-1796 SEAT GP-SUSPENSION
AN ATTACHMENT

SMCS-7312, 7324 **i03911309**

NOTE	PART NUMBER	QTY	PART NAME 1 2 3 4 5 6 (PRODUCT LEVEL)	SEE PAGE
	260-0059	1	AIR COMPRESSOR GP (SUSPENSION SEAT)	
	164-1215	1	ABSORBER AS-SHOCK (SEAT)	
	164-1218	2	ARM AS-SUSPENSION (OUTER)	
	260-0060	1	ARM AS-SUSPENSION (INNER)	
	164-1219	1	BRACKET AS (FRONT)	
	164-1220	1	BRACKET AS (REAR)	
	260-0036	1	HARNESS AS-RIDE CONTROL	
	260-0057	1	LATCH AS-SLIDE	
	260-0052	1	PLATE AS-SLIDE	
	260-0051	1	PLATE AS-UPPER	
	102-8804	1	KIT-RECEPTACLE (4-PIN)	
			(INCLUDES RECEPTACLE AS & WEDGE)	
	260-0047	2	SHAFT AS	
	218-0235	2	SWITCH AS-LIMIT (SUSPENSION SEAT)	
			(EACH INCLUDES)	
	102-8803	1	KIT-RECEPTACLE (3-PIN)	
			(INCLUDES RECEPTACLE AS & WEDGE)	

273-6372 SUSPENSION GP-SEAT *(contd.)* i03911309

NOTE	PART NUMBER	QTY	PART NAME 1 2 3 4 5 6 (PRODUCT LEVEL)	SEE PAGE
	8T-8729	3	PIN-CONNECTOR (16-GA TO 18-GA)	
	4B-9784	8	BALL	
	260-0063	1	BASE-SEAT	
	164-1230	12	BEARING	
	260-0067	2	BEARING	
	260-0042	1	BEARING-FLANGED	
	161-9289	2	BLOCK-SLIDER	
	260-0043	1	BLOCK-STOP	
	0S-0509	1	BOLT (3/8-16X0.75-IN)	
	1H-3337	4	BOLT (1/4-20X0.875-IN)	
	4M-0061	2	BOLT (5/16-18X0.75-IN)	
	7X-0481	1	BOLT (1/2-13X8-IN)	
	260-0041	1	BOLT (3/4-10X1.42-IN)	
M	**197-6657**	1	BOLT-ROUND HEAD (M12X1.75X80-MM)	
	164-1240	1	BOOT	
	237-3943	1	BRACKET	
	164-1229	4	BUMPER	
	164-1237	1	BUSHING	
	111-5042	34	FASTENER	
	260-0046	1	HOUSING-UPPER	
	149-4745	2	KIT-SLIDER BLOCK (SUSPENSION SEAT)	
			(INCLUDES BOLT & BLOCKS)	
	260-0031	1	LEVER	
	260-0032	1	LEVER	
	1K-6872	1	LOCKNUT (1/2-13-THD)	
	2D-6235	4	LOCKNUT (1/4-20-THD)	
	2K-4973	8	LOCKNUT (3/8-16-THD)	
M	**6V-7687**	1	LOCKNUT (M12X1.75-THD)	
M	**096-4882**	2	LOCKNUT (M8X1.25-THD)	
	142-2928	4	LOCKNUT (4-40-THD)	
	3B-4505	2	LOCKWASHER	
	3J-4818	2	LOCKWASHER	
	6V-8185	2	NUT (1/4-20-THD)	
	2L-5893	1	PIN-SPRING	
	4H-8380	4	PIN-SPRING	
	164-1232	1	PLATE	
	260-0044	1	PLATE-LATCH	
	5V-1497	2	RETAINER	
	215-1242	1	RING	
	8S-7803	3	RING-RETAINING	
	130-8343	1	SCREW-BUTTON HEAD (3/8-16X0.625-IN)	
	6L-7155	2	SCREW-MACHINE (1/4-20X0.5-IN)	
	173-5787	2	SETSCREW (1/4-20-THD)	
	164-1226	2	SHAFT	
	260-0049	2	SHAFT-LOWER	
	161-9288	1	SHAFT-PIVOT	
	260-0030	1	SHAFT-PIVOT	
	164-1233	2	SPACER (13X25.4X20.5-MM THK)	
	164-1238	1	SPACER (12.8X22.2X3.1-MM THK)	
	164-1239	2	SPACER (13.5X19X61.9-MM THK)	
	163-1135	1	SPRING	
	260-0034	1	SPRING-RETURN	
	260-0035	1	SPRING-RETURN	
	260-0033	1	SPRING-TORSION	
	7X-0622	6	WASHER (13X24X2.5-MM THK)	
	9X-1481	2	WASHER (13X25.4X1.6-MM THK)	

273-6372 SUSPENSION GP-SEAT *(contd.)* **i03911309**

M-METRIC PART

<END>

OPERATOR STATION

206-1704 TRIM GP-CAB—OPEN ROPS

S/N: RBA1-UP

PART OF 254-0198 CANOPY AR-OPEN ROPS

AN ATTACHMENT

SMCS-7329, 7451 **i04010434**

NOTE	REF NO	GRAPHIC REF	PART NUMBER	QTY	PART NAME 1 2 3 4 5 6 (PRODUCT LEVEL)	SEE PAGE
E	1	1	**8C-7524**		SEAL (40-CM)	
	2	1	**9C-4457**	4	FASTENER	
	3	1	**141-1762**	1	SPACER (21.2X25.4X20-MM THK)	
	4	1	**206-1623**	1	INSERT (LH)	
	5	1	**206-1625**	1	INSERT (RH)	
	6	1	**206-1637**	1	CONSOLE-STORAGE	
	7	1	**206-1665**	2	PLUG	
	8	1	**206-1666**	1	PLUG	
	9	1	**206-1683**	1	INSERT	
	10	1	**206-1798**	1	COVER-POST	
	11	1	**206-1799**	4	PLUG	
	12	1	**213-1888**	1	COVER-FENDER	
	13	1	**261-9632**	1	COVER AS	
		1	**206-1684**	1	COVER (CAB FILTER)	
	14	1	**282-7833**	1	GROMMET	
	15	1	**282-7835**	1	PLATE	
M	16	1	**6V-7744**	1	LOCKNUT (M10X1.5-THD)	
	17	1	**8T-4222**	1	WASHER-PLATED (11X32X2.5-MM THK)	
M	18	1	**8T-4178**	1	BOLT (M10X1.5X90-MM)	
M	19	1	**8T-4181**	2	BOLT (M6X1X20-MM)	
	20	1	**9X-2038**	2	WASHER (7X19X2-MM THK)	
M	21	1	**9X-2044**	6	SCREW-TRUSS HEAD (M6X1X16-MM)	
	22	1	**9X-8256**	2	WASHER (6.6X12X2-MM THK)	

E-ORDER BY THE CENTIMETER
M-METRIC PART

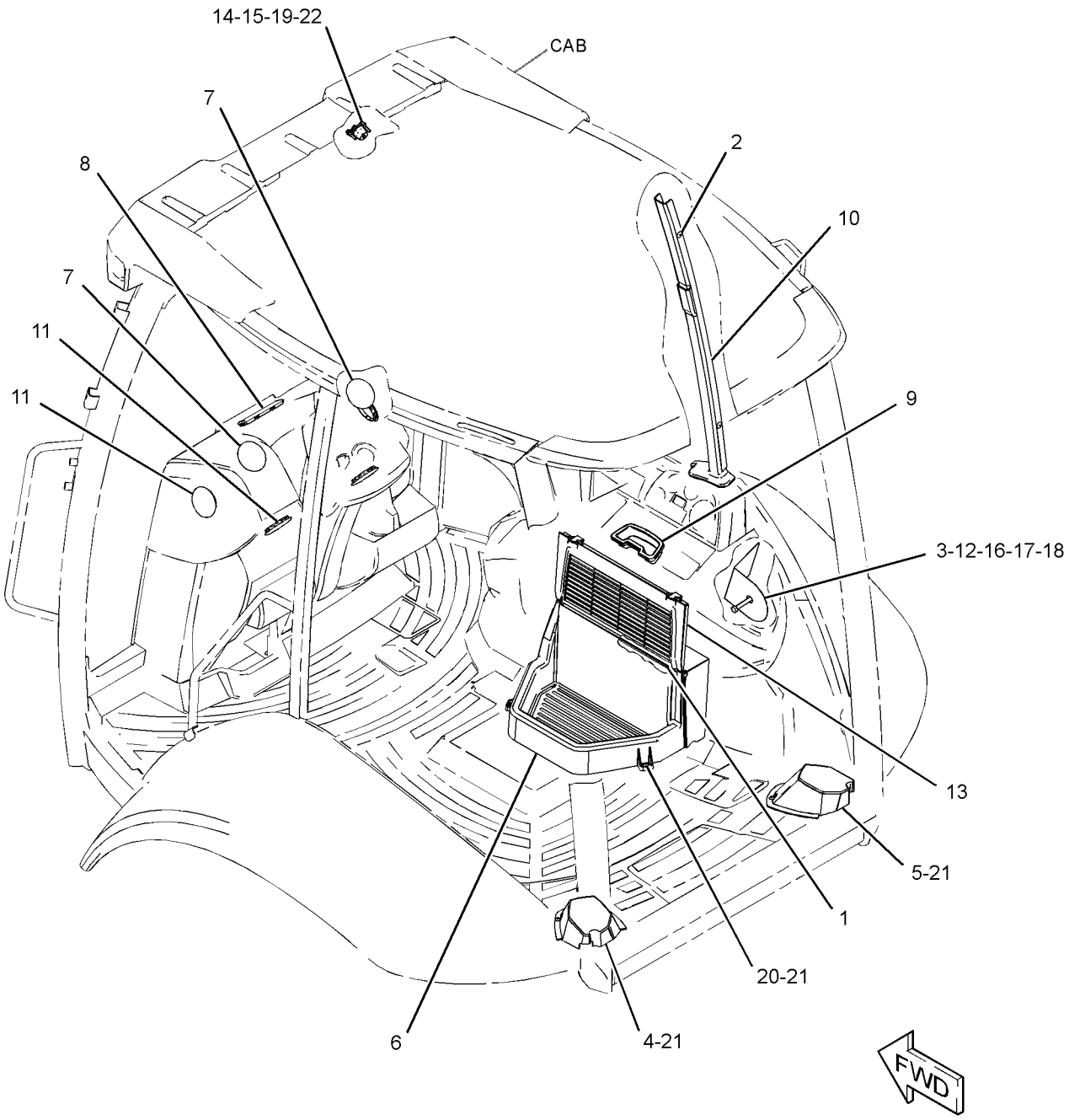

GRAPHIC #1 **<END>** g01870813

OPERATOR STATION

206-1857 VISOR GP-CAB

S/N: RBA1-UP
PART OF 254-0200 CAB AR-ENCLOSED ROPS
AN ATTACHMENT

SMCS-7301 **i02704721**

NOTE	REF NO	GRAPHIC REF	PART NUMBER	QTY	PART NAME 1 2 3 4 5 6 (PRODUCT LEVEL)	SEE PAGE
CE	1	1	**8C-3681**		HOSE (2.5-CM EACH)	
	2	1	**9R-3205**	1	VISOR AS	
C	3	1	**5P-9297**	2	CLIP	

C-CHANGE FROM PREVIOUS TYPE
E-ORDER BY THE CENTIMETER

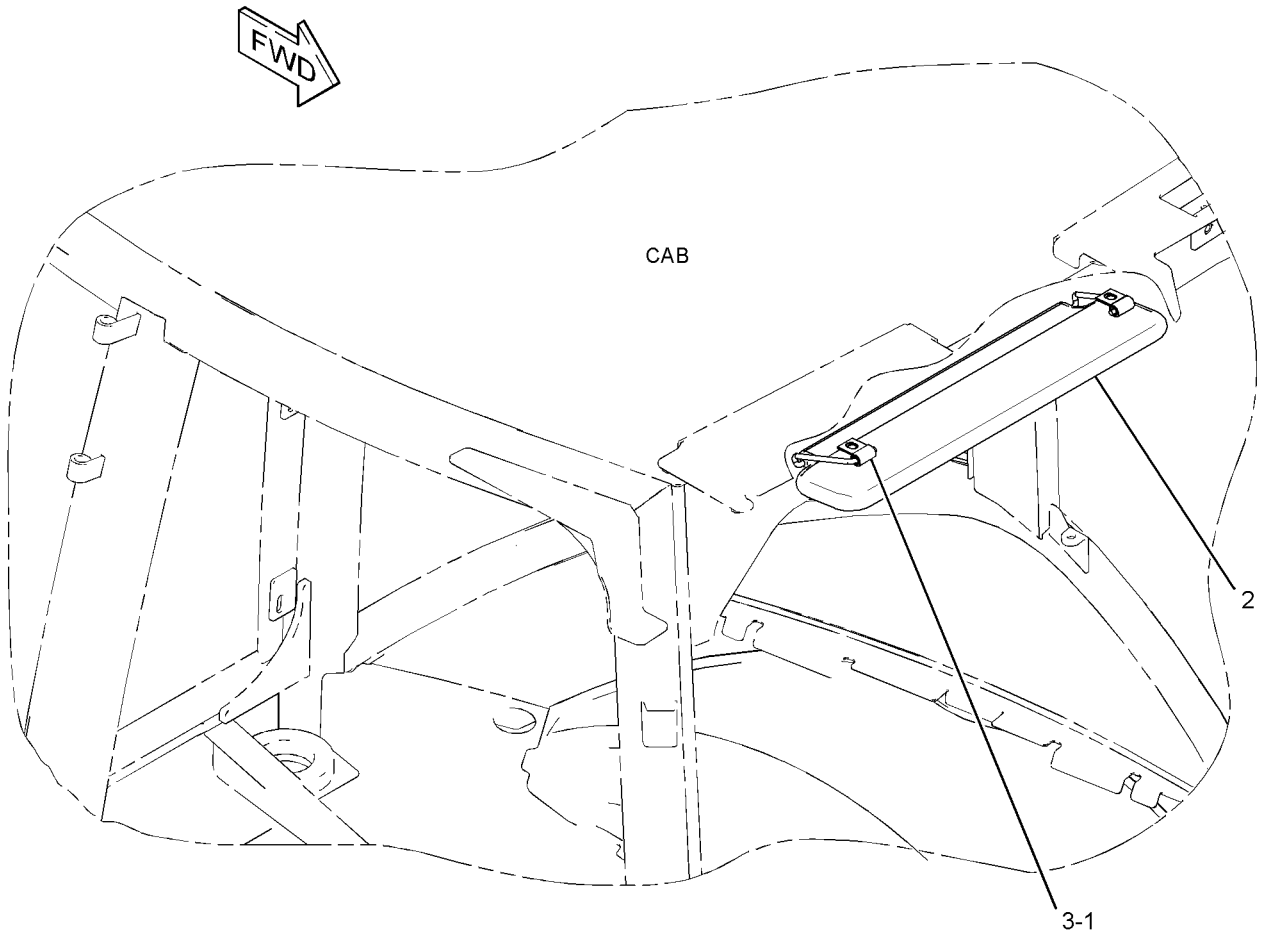

GRAPHIC #1 **<END>** g01384970

OPERATOR STATION

206-1727 WASHER GP-WINDOW

S/N: RBA1-UP
PART OF 254-0200 CAB AR-ENCLOSED ROPS
AN ATTACHMENT

SMCS-7306 **i02940309**

NOTE	REF NO	GRAPHIC REF	PART NUMBER	QTY	PART NAME 1 2 3 4 5 6 (PRODUCT LEVEL)	SEE PAGE
E	1	1	**144-0195**		HOSE (17-CM)	
E	1A	1	**144-0195**		HOSE (21-CM EACH)	
E	1B	1	**144-0195**		HOSE (81-CM)	
D	2	1	**6V-0505**		SEAL (0.5-M)	
	3	1	**3S-2093**	6	STRAP-CABLE	
	4	1	**8T-1118**	1	NOZZLE AS-WASHER	
	5	1	**9R-3469**	2	DIAPHRAGM	
	6	1	**9X-8372**	1	FILM-INSTRUCTION (WASHER FILL)	
	7	1	**121-6936**	1	CONNECTOR	
	8	1	**214-3763**	1	TANK GP-WINDOW WASHER	
		1	**254-5683**	1	CAP	
		1	**8E-8293**	2	GROMMET	
		1	**6T-1375**	2	PUMP AS-WASHER	
		1	**214-3742**	1	TANK-WASHER	
	9	1	**276-8791**	1	CLIP	
	10	1	**282-7833**	1	GROMMET	
	11	1	**282-7835**	1	PLATE	
	12	1	**283-3451**	2	CONNECTOR AS	
	13	1	**156-0283**	2	WASHER-HARD (8.4X35X2.5-MM THK)	
M	14	1	**8C-3798**	2	BOLT-LOCKING (M6X1X30-MM)	
M	15	1	**8T-5093**	1	BOLT-LOCKING (M8X1.25X25-MM)	
	16	1	**9X-8256**	2	WASHER (6.6X12X2-MM THK)	

D-ORDER BY THE METER
E-ORDER BY THE CENTIMETER
M-METRIC PART

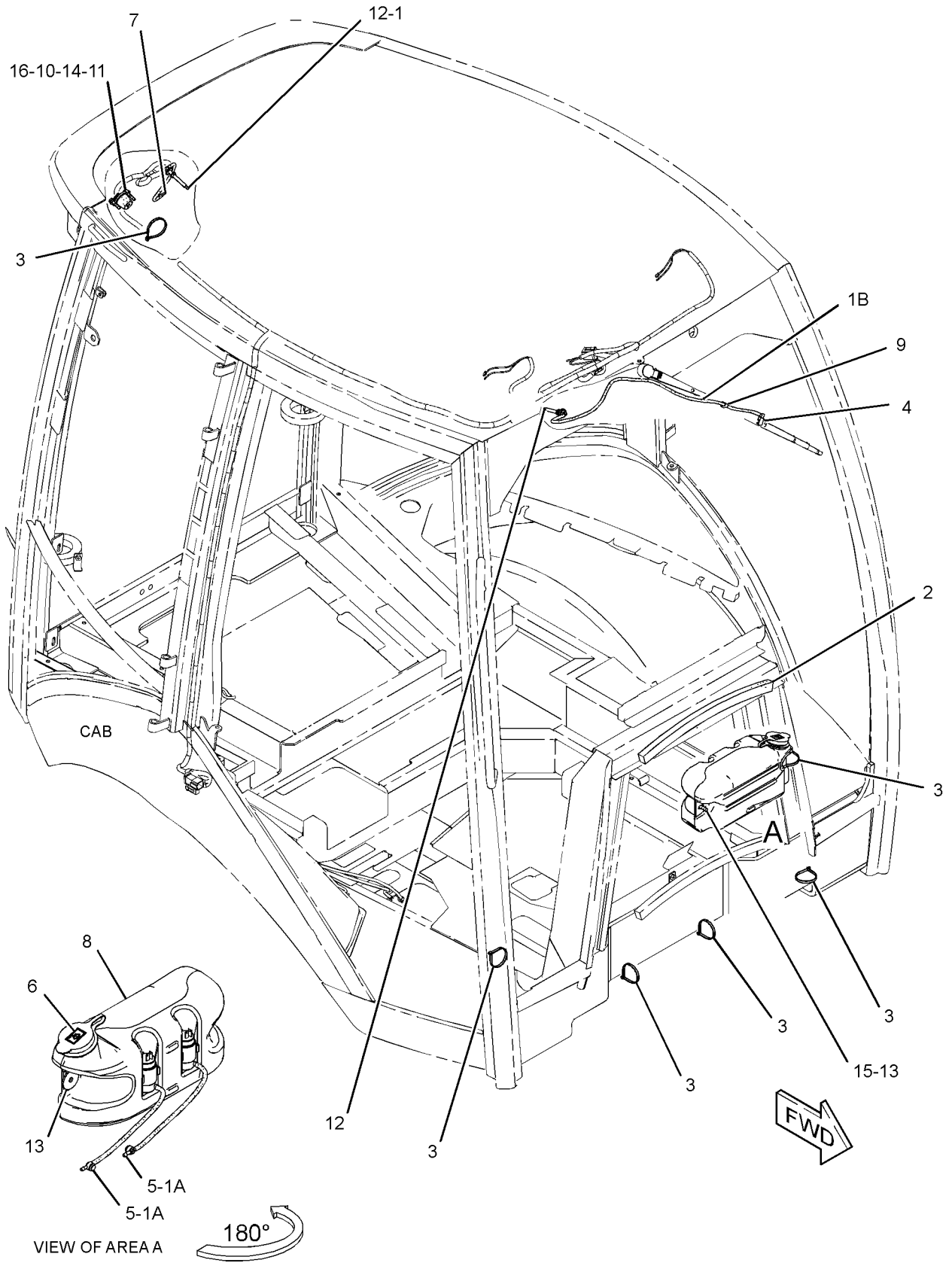

GRAPHIC #1

<END>

g01525173

OPERATOR STATION

229-0300 WINDOW GP-CAB—REAR

S/N: RBA1-UP
PART OF 353-3011 CAB GP
AN ATTACHMENT

SMCS-7310 **i03891190**

NOTE	REF NO	GRAPHIC REF	PART NUMBER	QTY	PART NAME 1 2 3 4 5 6 (PRODUCT LEVEL)	SEE PAGE
	1	1	**5P-4115**	6	WASHER-HARD (7.2X19X2-MM THK)	
M	2	1	**9X-2044**	4	SCREW-TRUSS HEAD (M6X1X16-MM)	
	3	1	**9X-2132**	4	RETAINER	
	4	1	**110-5602**	2	KNOB	
	5	1	**119-8349**	2	CAP	
	6	1	**308-1273**	1	SEAL	
M	7	1	**129-3180**	4	LOCKNUT (M12X1.75-THD)	
M	8	1	**179-7262**	4	SCREW-FLAT HEAD (M8X1.25X40-MM)	
	9	1	**146-7744**	1	KIT-LATCH (RH)	
	10	1	**146-7745**	1	KIT-LATCH (LH)	
	11	1	**164-1308**	2	ROLLER	
	12	1	**164-1328**	2	SPRING-GAS	
	13	1	**164-1342**	4	BOLT-SPECIAL	
	14	1	**164-1343**	4	WASHER-THRUST (13.6X30X5.1-MM THK)	
	15	1	**164-1344**	4	WASHER-THRUST (13.6X30X2.1-MM THK)	
	16	1	**164-1345**	4	BEARING	
	17	1	**164-1346**	4	STRIKER	
	18	1	**164-1351**	2	PIN	
	19	1	**164-1352**	1	LATCH AS (LH)	
	20	1	**164-1353**	1	LATCH AS (RH)	
	21	1	**167-8182**	2	BUMPER	
	22	1	**171-2870**	2	SPACER (7X10X5.4-MM THK)	
B	23	1	**201-9465**	4	SHIM (1-MM THK)	
	24	1	**359-3107**	1	PLATE AS (RH)	
	25	1	**359-3106**	1	PLATE AS (LH)	
	26	1	**229-0298**	1	LINKAGE AS	
	27	1	**290-1273**	1	FRAME AS	
	28	1	**229-0308**	1	GLASS	
	29	1	**229-0310**	1	WINDOW AS	
		1	**229-0309**	1	GLASS	
M	30	1	**5C-2890**	2	NUT (M6X1-THD)	
	31	1	**5P-4116**	4	WASHER-HARD (8.8X20.5X2-MM THK)	
M	32	1	**8T-4200**	4	BOLT (M8X1.25X16-MM)	
	33	1	**8T-4223**	2	WASHER-HARD (13.5X25.5X3-MM THK)	
D	34	1	**5P-5637**		SEAL (1-M)	
E	35	1	**9X-6383**		SEAL (88-CM)	
E	36	1	**164-1314**		SEAL-BULK (153-CM EACH)	
E	37	1	**164-1354**		CHANNEL-WINDOW (90-CM)	
E	37A	1	**164-1354**		CHANNEL-WINDOW (75-CM EACH)	
E	37B	1	**164-1354**		CHANNEL-WINDOW (74-CM EACH)	
	38	1	**150-8015**	2	GASKET	
	39	1	**8T-2970**	4	WASHER (13X28X1.6-MM THK)	

B-USE AS REQUIRED
D-ORDER BY THE METER
E-ORDER BY THE CENTIMETER
M-METRIC PART

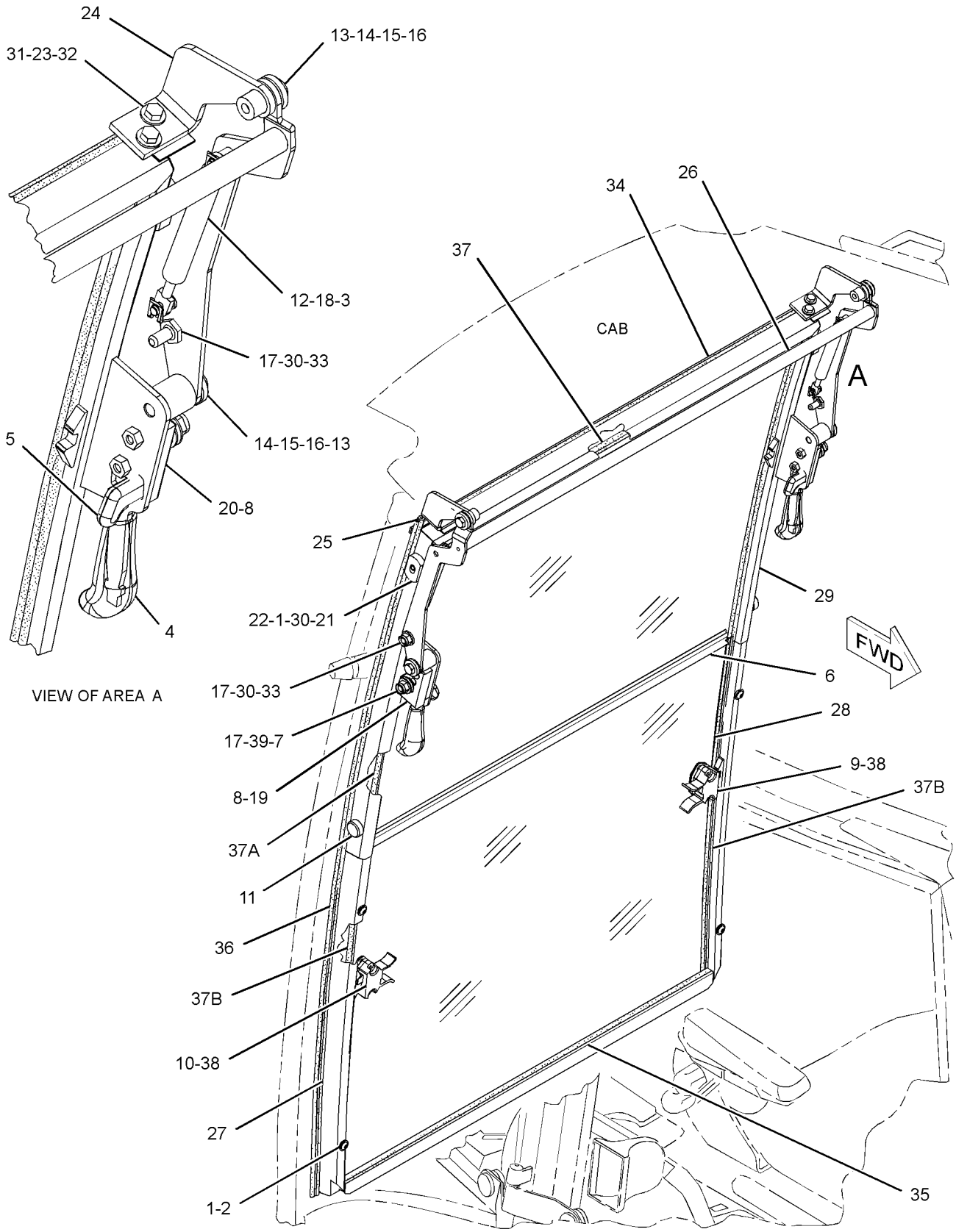

GRAPHIC #1

<END>

g02136116

OPERATOR STATION

327-7601 WINDOW GP-CAB—LH

S/N: RBA1-UP
PART OF 353-3011 CAB GP
AN ATTACHMENT

SMCS-7310 **i03712338**

NOTE	REF NO	GRAPHIC REF	PART NUMBER	QTY	PART NAME 1 2 3 4 5 6 (PRODUCT LEVEL)	SEE PAGE
	1	1	**8Y-7309**	1	RETAINER	
	2	1	**100-7608**	1	HANDLE (LH)	
	3	1	**129-8542**	6	RETAINER	
	4	1	**129-8545**	8	WASHER (13X40X3-MM THK)	
M	5	1	**136-4192**	4	BOLT (M6X1X35-MM)	
	6	1	**154-5423**	2	SPACER (6.6X12.7X17-MM THK)	
	7	1	**205-9623**	1	HINGE (LOWER, LH)	
	8	1	**205-9624**	1	HINGE (UPPER, LH)	
Y	9	1	**299-6985**	1	LATCH GP-CAB DOOR & WINDOW (LOWER)	444
Y	10	1	**299-6986**	1	LATCH GP-CAB DOOR & WINDOW (UPPER)	445
	11	1	**325-9300**	1	GLASS (REAR, LH)	
	12	1	**223-2030**	1	LATCH AS (HOLD OPEN)	
M		1	**6V-7743**	2	LOCKNUT (M6X1-THD)	
M		1	**9X-2045**	2	SCREW-TRUSS HEAD (M6X1X20-MM)	
		1	**143-2827**	1	SPRING	
M	13	1	**5C-7261**	1	NUT (M8X1.25-THD)	
M	14	1	**6V-7743**	2	LOCKNUT (M6X1-THD)	
	15	1	**7X-2393**	1	BUMPER-CONICAL	
E	16	1	**148-5353**		SEAL (342-CM)	

E-ORDER BY THE CENTIMETER
M-METRIC PART
Y-SEPARATE ILLUSTRATION

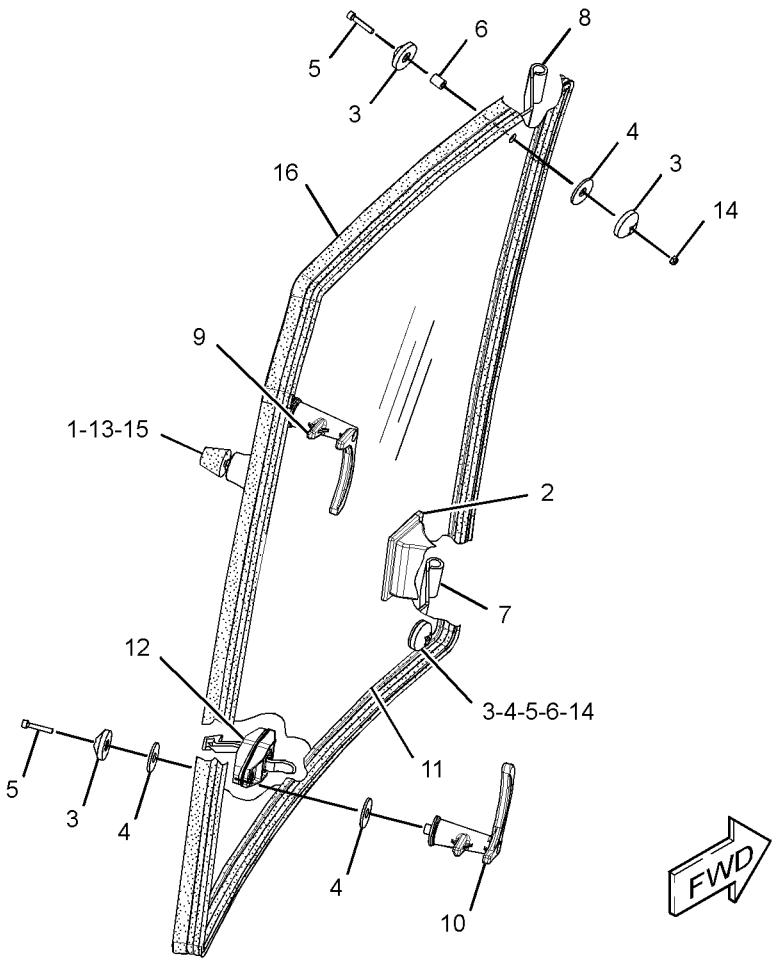

GRAPHIC #1 **<END>** g01971456

OPERATOR STATION

327-7637 WINDOW GP-CAB—RH

S/N: RBA1-UP
PART OF 353-3011 CAB GP
AN ATTACHMENT

SMCS-7310 **i03712339**

NOTE	REF NO	GRAPHIC REF	PART NUMBER	QTY	PART NAME 1 2 3 4 5 6 (PRODUCT LEVEL)	SEE PAGE
	1	1	**8Y-7309**	1	RETAINER	
	2	1	**100-7608**	1	HANDLE (RH)	
	3	1	**129-8542**	6	RETAINER	
	4	1	**129-8545**	8	WASHER (13X40X3-MM THK)	
M	5	1	**136-4192**	4	BOLT (M6X1X35-MM)	
	6	1	**154-5423**	2	SPACER (6.6X12.7X17-MM THK)	
	7	1	**205-9633**	1	HINGE (LOWER, RH)	
	8	1	**205-9634**	1	HINGE (UPPER, RH)	
Y	9	1	**299-6985**	1	LATCH GP-CAB DOOR & WINDOW (LOWER)	444
Y	10	1	**299-6986**	1	LATCH GP-CAB DOOR & WINDOW (UPPER)	445
	11	1	**325-9301**	1	GLASS (REAR, RH)	
	12	1	**223-2030**	1	LATCH AS (HOLD OPEN)	
M		1	**6V-7743**	2	LOCKNUT (M6X1-THD)	
M		1	**9X-2045**	2	SCREW-TRUSS HEAD (M6X1X20-MM)	
		1	**143-2827**	1	SPRING	
M	13	1	**5C-7261**	1	NUT (M8X1.25-THD)	
M	14	1	**6V-7743**	2	LOCKNUT (M6X1-THD)	
	15	1	**7X-2393**	1	BUMPER-CONICAL	
E	16	1	**148-5353**		SEAL (342-CM)	

E-ORDER BY THE CENTIMETER
M-METRIC PART
Y-SEPARATE ILLUSTRATION

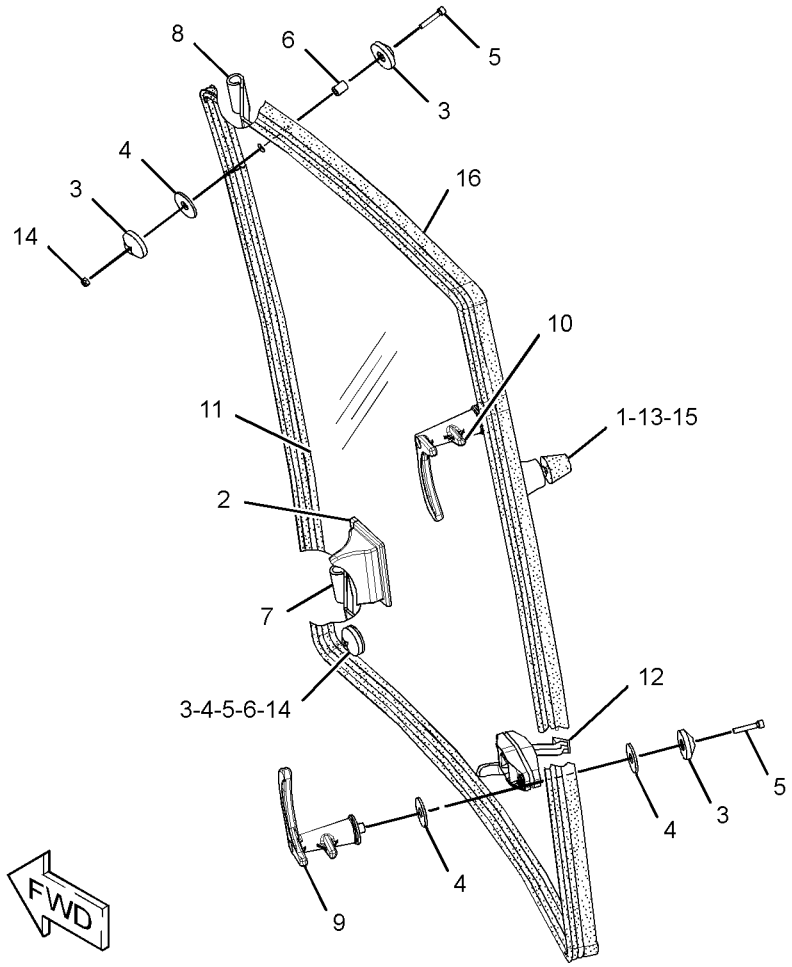

GRAPHIC #1 **<END>** g01971659

OPERATOR STATION

333-9901 WINDOW GP-DOOR–LH

S/N: RBA1-UP
PART OF 329-1168 DOOR GP-CAB
AN ATTACHMENT

SMCS-7308, 7310 **i03564760**

NOTE	REF NO	GRAPHIC REF	PART NUMBER	QTY	PART NAME 1 2 3 4 5 6 (PRODUCT LEVEL)	SEE PAGE
E	1	1	**148-5353**		SEAL (354-CM)	
	2	1	**100-7608**	1	HANDLE (LH)	
	3	1	**129-8542**	5	RETAINER	
	4	1	**129-8545**	6	WASHER (13X40X3-MM THK)	
M	5	1	**136-4192**	3	BOLT (M6X1X35-MM)	
	6	1	**154-5423**	2	SPACER (6.6X12.7X17-MM THK)	
	7	1	**205-9587**	1	GLASS (LH)	
	8	1	**205-9590**	1	HINGE (UPPER)	
	9	1	**205-9591**	1	HINGE (LOWER)	
Y	10	1	**299-6986**	1	LATCH GP-CAB DOOR & WINDOW (LH)	445
	11	1	**223-2030**	1	LATCH AS (HOLD OPEN) (LH)	
M		1	**6V-7743**	2	LOCKNUT (M6X1-THD)	
M		1	**9X-2045**	2	SCREW-TRUSS HEAD (M6X1X20-MM)	
		1	**143-2827**	1	SPRING	
M	12	1	**6V-7743**	2	LOCKNUT (M6X1-THD)	

E-ORDER BY THE CENTIMETER
M-METRIC PART
Y-SEPARATE ILLUSTRATION

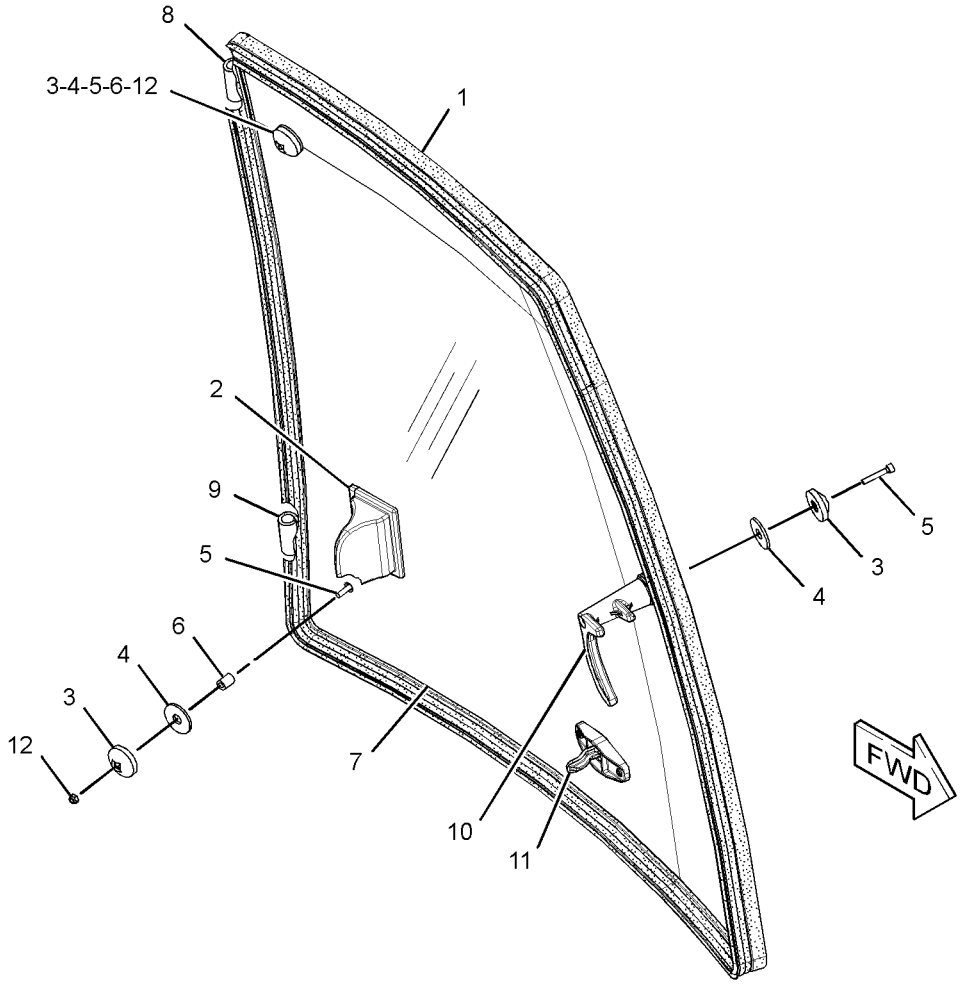

GRAPHIC #1 **<END>** g01890354

OPERATOR STATION

333-9902 WINDOW GP-DOOR–RH

S/N: RBA1-UP
PART OF 329-1167 DOOR GP-CAB
AN ATTACHMENT

SMCS-7308, 7310 **i03564761**

NOTE	REF NO	GRAPHIC REF	PART NUMBER	QTY	PART NAME 1 2 3 4 5 6 (PRODUCT LEVEL)	SEE PAGE
E	1	1	**148-5353**		SEAL (354-CM)	
	2	1	**100-7608**	1	HANDLE (RH)	
	3	1	**129-8542**	5	RETAINER	
	4	1	**129-8545**	6	WASHER (13X40X3-MM THK)	
M	5	1	**136-4192**	3	BOLT (M6X1X35-MM)	
	6	1	**154-5423**	2	SPACER (6.6X12.7X17-MM THK)	
	7	1	**205-9597**	1	GLASS (RH)	
	8	1	**205-9614**	1	HINGE (LOWER)	
	9	1	**205-9615**	1	HINGE (UPPER)	
Y	10	1	**299-6985**	1	LATCH GP-CAB DOOR & WINDOW (RH)	444
	11	1	**223-2030**	1	LATCH AS (HOLD OPEN) (RH)	
M		1	**6V-7743**	2	LOCKNUT (M6X1-THD)	
M		1	**9X-2045**	2	SCREW-TRUSS HEAD (M6X1X20-MM)	
		1	**143-2827**	1	SPRING	
M	12	1	**6V-7743**	2	LOCKNUT (M6X1-THD)	

E-ORDER BY THE CENTIMETER
M-METRIC PART
Y-SEPARATE ILLUSTRATION

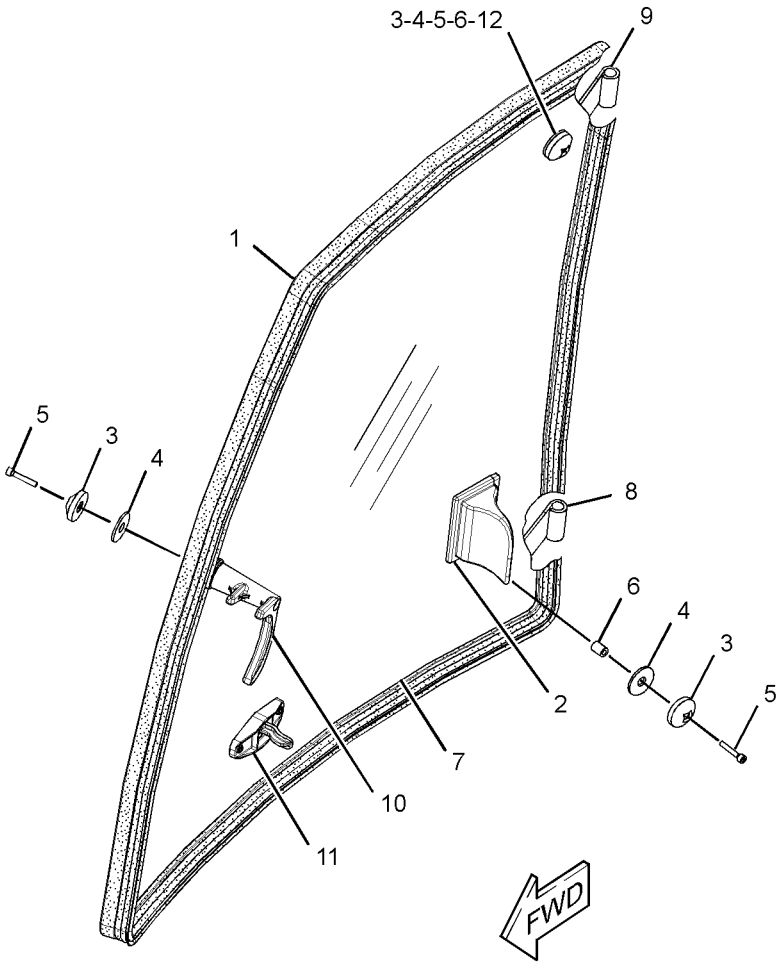

GRAPHIC #1 **<END>** g01890418

OPERATOR STATION

206-1725 WIPER GP-WINDOW

S/N: RBA1-UP
PART OF 254-0200 CAB AR-ENCLOSED ROPS
AN ATTACHMENT

SMCS-7305 **i03889149**

NOTE	REF NO	GRAPHIC REF	PART NUMBER	QTY	PART NAME 1 2 3 4 5 6 (PRODUCT LEVEL)	SEE PAGE
	1	1	**5C-8811**	1	BLADE AS-WIPER (500-MM) (REAR)	
	2	1	**101-0745**	1	BLADE AS-WIPER (600-MM) (FRONT)	
	3	1	**154-5410**	1	ARM-WINDOW WIPER (FRONT)	
	4	1	**160-2169**	2	SPACER (7X11X8.4-MM THK)	
Y	5	1	**186-2589**	1	MOTOR GP-WINDOW WIPER (FRONT)	452
	6	1	**214-4709**	1	SWITCH AS-ROCKER (WIPER, WASHER, REAR)	
		1	**111-7899**	1	GASKET	
Y	7	1	**330-5010**	1	MOTOR GP-WINDOW WIPER (REAR)	453
	8	1	**220-2001**	1	ARM AS-WIPER (REAR)	
E		1	**194-5171**		HOSE (35-CM)	
		1	**305-9190**	1	NOZZLE AS-WASHER	
	9	1	**223-8263**	1	PLATE	
	10	1	**229-0306**	1	PLATE	
M	11	1	**6V-7357**	1	BOLT (M6X1X25-MM)	
M	12	1	**8T-4138**	2	BOLT (M6X1X20-MM)	
M	13	1	**8T-4171**	4	BOLT (M6X1X12-MM)	
	14	1	**8T-4205**	9	WASHER-HARD (7.2X14.5X2-MM THK)	
M	15	1	**5C-2890**	1	NUT (M6X1-THD)	
M	16	1	**8T-4971**	1	BOLT (M6X1X30-MM)	

E-ORDER BY THE CENTIMETER
M-METRIC PART
Y-SEPARATE ILLUSTRATION

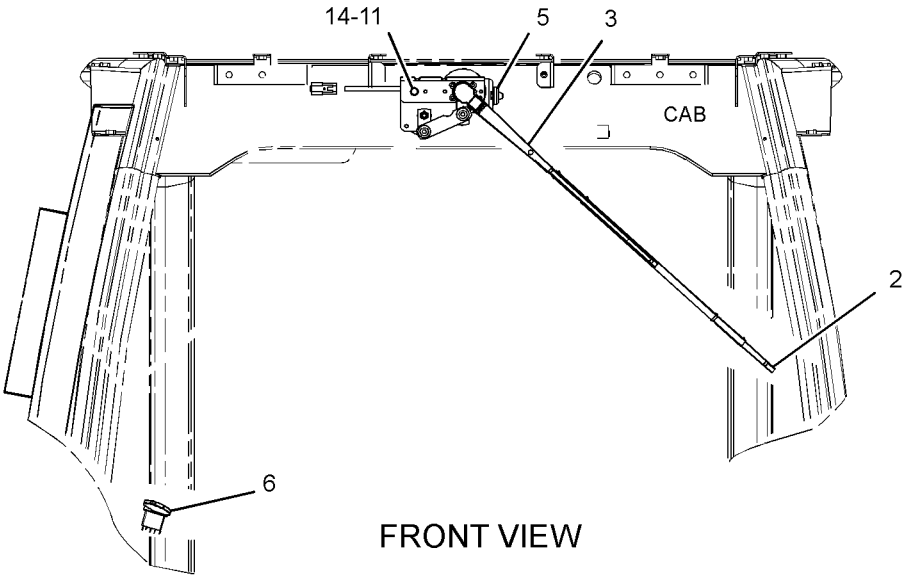

FRONT VIEW

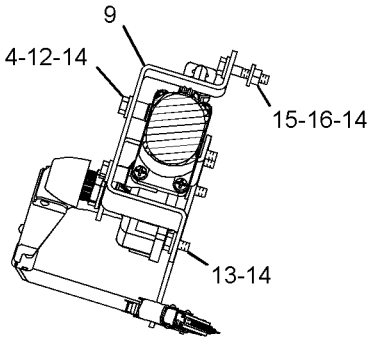

SECTION A-A

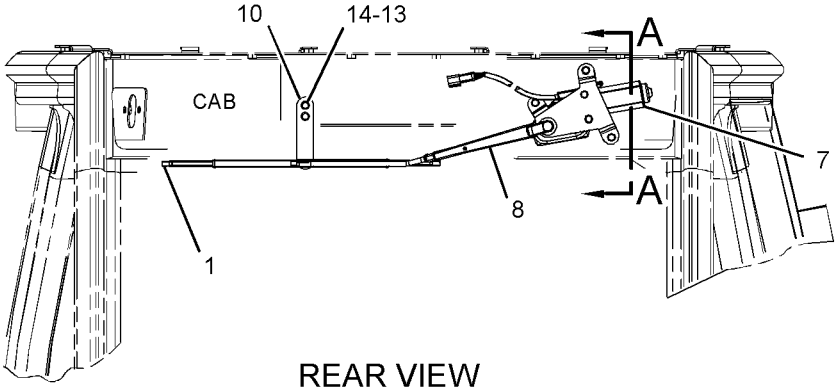

REAR VIEW

GRAPHIC #1

<END>

g02133833

SERVICE EQUIPMENT AND SUPPLIES

254-0104 FILM GP

S/N: RBA1-UP

PART OF 254-0110 CHASSIS AR

SMCS-7405, 7557 **i04101029**

NOTE	REF NO	GRAPHIC REF	PART NUMBER	QTY	PART NAME 1 2 3 4 5 6 (PRODUCT LEVEL)	SEE PAGE
	1	1	**292-2831**	1	FILM-IDENTIFICATION (450E, RH)	
	2	1	**292-2832**	1	FILM-IDENTIFICATION (450E, LH)	
	3	1	**292-2833**	1	FILM-IDENTIFICATION (BOOM, RH)	
	4	1	**292-2834**	1	FILM-IDENTIFICATION (BOOM, LH)	

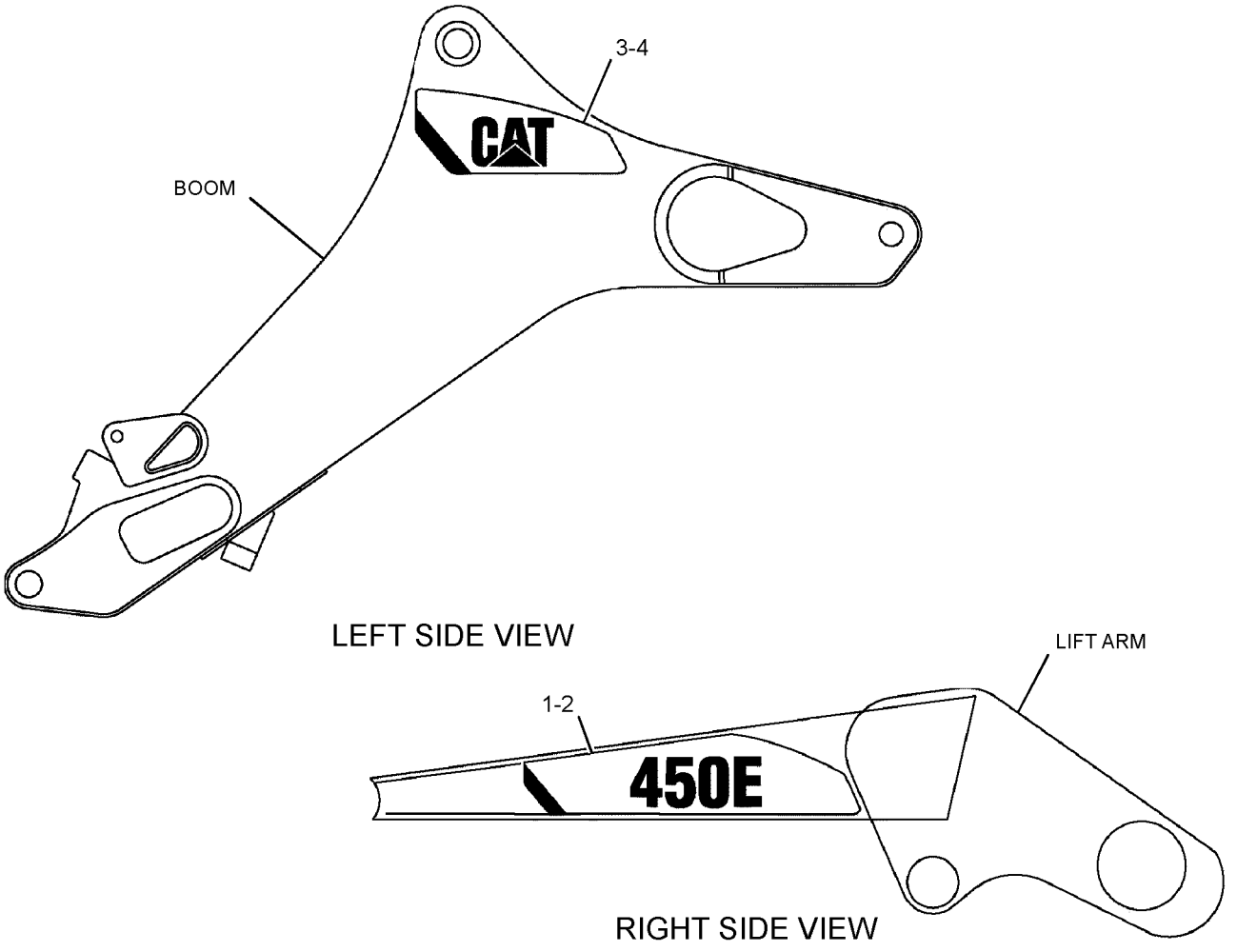

GRAPHIC #1 **<END>** g01419345

SERVICE EQUIPMENT AND SUPPLIES

216-0909 LOCK GP-VANDALISM

S/N: RBA1-UP

PART OF 254-0110 CHASSIS AR

SMCS-7315 **i02162054**

NOTE	REF NO	GRAPHIC REF	PART NUMBER	QTY	PART NAME 1 2 3 4 5 6 (PRODUCT LEVEL)	SEE PAGE
	1	1	**246-2641**	2	PADLOCK GP	
					(EACH INCLUDES)	
		1	**5P-8500**	1	KEY	
					(WITH PLASTIC OVERMOLD)	
					—OR—	
		1	**199-6309**	1	KEY (CORPORATE)	
					(OPTIONAL SERVICE REPLACEMENT)(PLAIN KEY WITHOUT PLASTIC OVERMOLD)	

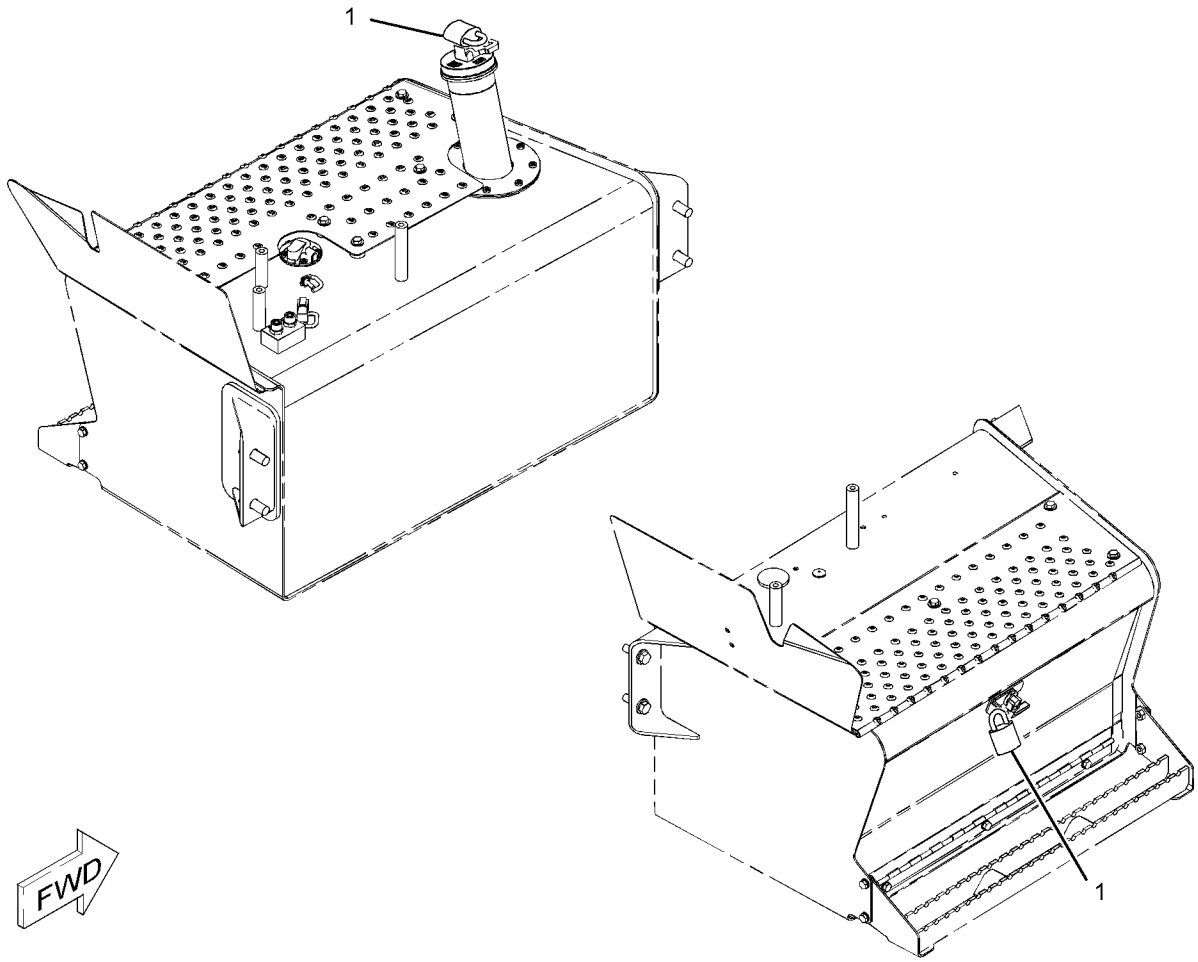

GRAPHIC #1 **<END>** g01096994

SERVICE EQUIPMENT AND SUPPLIES

254-0103 PLATE & FILM GP

S/N: RBA1-UP

AN ATTACHMENT

SMCS-7405 **i04111933**

NOTE	PART NUMBER	QTY	PART NAME 1 2 3 4 5 6 (PRODUCT LEVEL)	SEE PAGE
	239-6989	1	PLATE-SERIAL NUMBER (MACHINE)	
			(ON OUTSIDE OF LH PLATE OF FRAME NEAR REAR OF MACHINE)	
	225-4150	1	PLATE-SERVICE INFORMATION (MACHINE)	
			(ON OUTSIDE OF LH PLATE OF FRAME NEAR REAR OF MACHINE)	
	323-3308	30	CAP	
	323-3309	15	CAP	
	323-6645	10	CAP	
	250-7910	1	FILM-INSTRUCTION (BOOM LOCK)	
			(NEXT TO BOOM LOCK LEVER ON RH CONSOLE)	
	250-7911	1	FILM-INSTRUCTION (VARIABLE SPEED)	
			(ON RH CONSOLE NEXT TO GOVERNOR CONTROL HANDLE)	
	337-5351	1	FILM-INSTRUCTION (START SWITCH)	
			(ON RH CONSOLE AROUND KEY SWITCH)	
	258-9999	4	FILM-IDENTIFICATION (LIFT EYE LOCATION)	
			(2-ON RH & LH SIDE OF MACHINE TO FRONT SIDE OF FRONT AXLE BETWEEN CHASSIS & WHEEL AS)	
			(2-ON STAB PAD CENTERED UNDER LIFTING PROFILE, ORIENTED WITH ARROW POINTING UP)	
	289-3412	1	FILM-COVER (PROTECT)	
			(ON LEFT SIDE OF BATTERY BOX. ALIGN FILM WITH TOP LEFT CORNER OF BATTERY BOX)	
	233-0061	2	FILM-IDENTIFICATION (COOLANT)	
			(1-ON EXPANSION TANK NEXT TO CAP & 1-ON TOP OF RADIATOR NEXT TO CAP)	
	231-9361	1	FILM-IDENTIFICATION (FUSE, RELAY)	
			(UNDER RH CONSOLE COVER THAT COVERS POWER DISTRUBUTION BLOCK. ORIENT FILM SO IT CAN BE READ WHEN COVER IS OPEN)	
	254-0105	1	FILM-IDENTIFICATION (FUSE, RELAY)	
			(ON MACHINE RIGHT BEHIND SIDE PANEL CLOSE TO RELAY PLATE)	
	309-9657	1	FILM-IDENTIFICATION (FUSE PANEL)	
			(INSIDE RIGHT HAND CONSOLE ACCESS PANEL. ORIENT FILM SUCH THAT IT CAN BE READ WHILE STANDING ON GROUND WITH	
			ACCESS DOOR OPEN & VIEWING FILM)	
	159-8033	1	FILM-IDENTIFICATION (12-VOLT)	
			(INSIDE BATTERY BOX DOOR 280-MM FROM LEFT EDGE & BOTTOM EDGE OF FILM 140-MM FROM BOTTOM EDGE OF BATTERY DOOR)	
	252-2157	4	FILM-INFORMATION (TIE-DOWN)	
			(2-ON EACH SIDE OF MACHINE ON MAIN FRAME ABOVE FRONT AXLE, ABOVE TIE DOWN MOUNTING PLATE)	
			(2-ON EACH SIDE IN REAR OF MACHINE ON MAIN FRAME NEXT TO TIE DOWN PLATE)	
	253-0861	2	FILM-INFORMATION (CAT POWER, ACERT TECHNOLOGY)	
			(1-ON LEFT SIDE TOWER WITH RIGHT BOTTOM OF FILM PLACED 5-MM FROM TOP OF SERIAL PLATE & 80-MM FROM REAR OF TOWER)	
			(1-ON RIGHT SIDE TOWER WITH BOTTOM LEFT OF FILM 30-MM FROM REAR OF TOWER & BOTTOM EDGE OF FILM 60-MM	
			ABOVE SERIAL PIN STAMP)	

254-0103 **PLATE & FILM GP** ***(contd.)*** **i04111933**

NOTE	PART NUMBER	QTY	PART NAME 1 2 3 4 5 6 (PRODUCT LEVEL)	SEE PAGE
	124-2456	1	FILM-INSTRUCTION (NO STEP)	
			(INSIDE BATTERY BOX DOOR WITH BOTTOM EDGE OF DECAL 60-MM FROM BOTTOM EDGE OF DOOR & RIGHT SIDE OF DECAL 90-MM	
			FROM RIGHT EDGE OF DOOR)	
	219-0302	1	FILM-WARNING (NO WELD, NO DRILL, READ OMM)	
			(ON MACHINE LEFT A-POST 420-MM FROM FLOOR)	
	224-8945	1	FILM-WARNING (DO NOT USE ETHER, U.S)	
			(UNDER HOOD ON AIR-CLEANER BELOW SERVICE FILM SO IT CAN BE READ FROM MACHINE LEFT SIDE)	
	225-0313	1	FILM-WARNING (JUMP START, READ OMM, U.S.)	
			(INSIDE OF BATTERY BOX DOOR 260-MM FROM LEFT EDGE. ALIGN TOP OF FILM 100-MM FROM BOTTOM EDGE OF DOOR)	
	225-4256	1	FILM-WARNING (HOT FLUID UNDER PRESSURE, U.S.)	
			(ON HOOD FRAME PLATE TO LEFT OF EXPANSION BOTTLE SO THAT IT CAN BE READ FROM MACHINE LEFT)	
	226-1242	2	FILM-WARNING (CRUSH HAZARD, STAY BACK, U.S.)	
			(CENTER ON BOOM 800-MM UP FROM OUTER RADIUS OF BOOM LOWER FOOT PIN & 220-MM FROM BOTTOM EDGE OF BOOM)	
	239-9429	1	FILM-WARNING (ARM BRACE, READ OMM, U.S.)	
			(ON SAFETY BRACE 25-MM FROM LEFT END & 30-MM FROM BOTTOM EDGE OF BRACE. MUST BE PARALLEL WITH BRACE TOP SURFACE)	
	240-7094	2	FILM-WARNING (NO ENTRANCE, EXIT, READ OMM)	
			(ON REAR OF CAB STRUCTURE AT BOTTOM 50-MM FROM RED REFLECTOR TOWARD	
			CENTER OF MACHINE FOR BOTH FILMS, CENTERED FROM TOP TO BOTTOM)	
	255-0791	1	FILM-WARNING (READ OMM)	
			(ON RIGHT HAND CONSOLE UNDER KEYSWITCH IN AREA PROVIDED ON UPPER HALF & SEATBELT IS ON LOWER HALF)	
	255-0792	1	FILM-WARNING (SEAT BELT)	
			(ON RIGHT HAND CONSOLE UNDER KEYSWITCH IN AREA PROVIDED ON UPPER HALF & SEATBELT IS ON LOWER HALF)	
	295-9897	1	FILM-WARNING (HIGH PRESSURE)	
			(ON RADIATOR CAP SO THAT IT CAN BE READ FROM MACHINE RIGHT)	
			<END>	

284-8483 PLATE & FILM GP

S/N: RBA1-UP

AN ATTACHMENT

SMCS-7405 **i04130809**

NOTE	PART NUMBER	QTY	PART NAME 1 2 3 4 5 6 (PRODUCT LEVEL)	SEE PAGE
	239-6989	1	PLATE-SERIAL NUMBER (MACHINE)	
			(CENTERED ON UPPER RH SIDE FRAME RAIL)	
	225-4150	1	PLATE-SERVICE INFORMATION (MACHINE)	
			(CENTERED ON UPPER LH SIDE FRAME RAIL)	
B	**323-3308**	30	CAP	
B	**323-3309**	15	CAP	
B	**323-6645**	10	CAP	

284-8483 **PLATE & FILM GP** *(contd.)* **i04130809**

NOTE	PART NUMBER	QTY	PART NAME 1 2 3 4 5 6 (PRODUCT LEVEL)	SEE PAGE
	250-7910	1	FILM-INSTRUCTION (BOOM LOCK)	
			(NEXT TO BOOM LOCK LEVER ON RH CONSOLE)	
	233-0061	2	FILM-IDENTIFICATION (COOLANT)	
			(1-ON EXPANSION TANK NEXT TO CAP SO IT CAN BE READ FROM THE MACHINE LEFT SIDE)	
			(1-ON TOP OF RADIATOR NEXT TO CAP SO IT CAN BE READ FROM THE MACHINE RIGHT SIDE)	
	250-7911	1	FILM-INSTRUCTION (VARIABLE SPEED)	
			(ON RH CONSOLE NEXT TO GOVERNOR CONTROL HANDLE)	
	258-9999	4	FILM-IDENTIFICATION (LIFT EYE LOCATION)	
			(2-ON RH & LH SIDE OF THE MACHINE TO THE FRONT SIDE OF THE FRONT AXLE BETWEEN THE CHASSIS & WHEEL AS)	
			(2-ON STABILIZER PAD CENTERED UNDER THE LIFTING PROFILE, ORIENTED WITH THE ARROW POINTING UP WHEN THE STABILIZER IS IN	
			THE UPPER WARD POSITION)	
	289-3412	1	FILM-COVER (PROTECT)	
			(ON LEFT SIDE OF BATTERY BOX. ALIGN FILM WITH TOP LEFT CORNER OF BATTERY BOX)	
	231-9361	1	FILM-IDENTIFICATION (FUSE, RELAY)	
			(UNDER RH CONSOLE COVER THAT COVERS THE POWER DISTRUBUTION BLOCK. ORIENT FILM SO IT CAN BE READ WHEN THE COVER IS OPEN	
			& THE BLOCK IS EXPOSED)	
	254-0105	1	FILM-IDENTIFICATION (FUSE, RELAY)	
			(ON MACHINE RIGHT BEHIND THE SIDE PANEL CLOSE TO THE RELAY PLATE)	
	159-8033	1	FILM-IDENTIFICATION (12-VOLT)	
			(INSIDE BATTERY BOX DOOR 280-MM FROM THE LEFT EDGE & THE BOTTOM EDGE OF FILM 140-MM FROM BOTTOM EDGE OF BATTERY DOOR)	
	309-9657	1	FILM-IDENTIFICATION (FUSE PANEL)	
			(INSIDE RH CONSOLE ACCESS PANEL. ORIENT FILM SO IT CAN BE READ WHILE STANDING ON THE GROUND WITH THE ACCESS DOOR OPEN)	
	252-2157	4	FILM-INFORMATION (TIE-DOWN)	
			(2-ON EACH SIDE OF THE MACHINE ON THE MAIN FRAME ABOVE THE FRONT AXLE, ABOVE THE TIE DOWN MOUNTING PLATE)	
			(2-ON EACH SIDE IN THE REAR OF THE MACHINE ON THE MAIN FRAME NEXT TO THE TIE DOWN PLATE)	
	124-2456	1	FILM-INSTRUCTION (NO STEP)	
			(INSIDE BATTERY BOX DOOR WITH BOTTOM EDGE OF DECAL 60-MM FROM THE BOTTOM EDGE OF DOOR & RIGHT SIDE	
			OF DECAL 90-MM FROM THE RIGHT EDGE OF DOOR)	
	281-7403	1	FILM-IDENTIFICATION (LUBRICATION POINTS)	
			(UNDER HOOD ON THE AIR-CLEANER. ORIENT FILM SUCH THAT IT CAN BE READ FROM MACHINE LEFT SIDE)	
	219-0302	1	FILM-WARNING (NO WELD, NO DRILL, READ OMM)	
			(ON MACHINE LEFT A-POST 420-MM FROM THE FLOOR)	
	224-8946	1	FILM-WARNING (NO ETHER SPRAY/AIR INTK, INTL)	
			(UNDER HOOD ON THE AIR-CLEANER BELOW SERVICE FILM SO IT CAN BE READ FROM MACHINE LEFT SIDE)	
	225-0312	1	FILM-WARNING (JUMP START, READ OMM, INTL)	
			(INSIDE OF BATTERY BOX DOOR 260-MM FROM THE LEFT EDGE. ALIGN TOP OF FILM 100-MM FROM BOTTOM EDGE OF DOOR)	

284-8483 **PLATE & FILM GP** ***(contd.)*** **i04130809**

NOTE	PART NUMBER	QTY	PART NAME 1 2 3 4 5 6 (PRODUCT LEVEL)	SEE PAGE
	225-4257	1	FILM-WARNING (HOT FLUID UNDER PRESS, INTL)	
			(ON HOOD FRAME PLATE TO LEFT OF EXPANSION BOTTLE SO THAT IT CAN BE READ FROM MACHINE LEFT)	
	226-1240	2	FILM-WARNING (CRUSH HAZARD, STAY BACK, INTL)	
			(CENTER ON BOOM 800-MM UP FROM OUTER RADIUS OF BOOM LOWER FOOT PIN & 220-MM FROM BOTTOM EDGE OF BOOM)	
	239-9430	1	FILM-WARNING (ARM BRACE, READ OMM, INTL)	
			(ON SAFETY BRACE 125-MM FROM LEFT END & 30-MM FROM BOTTOM EDGE OF BRACE)	
	240-7095	2	FILM-WARNING (NO ENTRANCE, EXIT, READ OMM)	
			(ON THE REAR OF THE CAB STRUCTURE AT THE BOTTOM 50-MM FROM THE RED REFLECTOR TOWARD	
			THE CENTER OF THE MACHINE FOR BOTH FILMS, CENTERED FROM TOP TO BOTTOM)	
	255-0793	1	FILM-WARNING (READ OMM)	
			(ON RH CONSOLE UNDER KEYSWITCH IN AREA PROVIDED ON THE UPPER HALF)	
	255-0794	1	FILM-WARNING (SEAT BELT)	
			(ON RH CONSOLE UNDER KEYSWITCH IN AREA PROVIDED ON THE LOWER HALF)	
	295-9898	1	FILM-WARNING (HOT FLUID UND PRESS, READ OMM)	
			(ON RADIATOR CAP SO IT CAN BE READ FROM MACHINE RIGHT)	
	253-0861	2	FILM-INFORMATION (CAT POWER, ACERT TECHNOLOGY)	
			(1-ON LEFT SIDE TOWER WITH RIGHT BOTTOM OF FILM PLACED 5-MM FROM TOP OF SERIAL PLATE & 80-MM FROM REAR OF TOWER)	
			(1-ON RIGHT SIDE TOWER WITH BOTTOM LEFT OF FILM 30-MM FROM THE REAR OF TOWER & THE BOTTOM EDGE OF THE FILM 60-MM ABOVE	
			THE SERIAL PIN STAMP)	
	337-5351		FILM-INSTRUCTION (START SWITCH)	
			(ON RH CONSOLE AROUND KEYSWITCH)	
B-USE AS REQUIRED				

<END>

206-1701 PROTECTION GP-VANDALISM—ROTATING GUARD

S/N: RBA1-UP
PART OF 254-0198 CANOPY AR-OPEN ROPS
AN ATTACHMENT

SMCS-7315 **i03500322**

NOTE	REF NO	GRAPHIC REF	PART NUMBER	QTY	PART NAME 1 2 3 4 5 6 (PRODUCT LEVEL)	SEE PAGE
	1	1	**206-1852**	1	COVER-VANDALISM	
	2	1	**206-1853**	2	BUSHING	
	3	1	**206-1855**	1	PLATE	
	4	1	**206-1856**	1	BRACKET	
J	5	1	**226-0291**	1	LOCK AS	
M	6	1	**129-3178**	2	LOCKNUT (M6X1-THD)	
M	7	1	**174-8131**	1	SCREW-TRUSS HEAD (M4X0.7X12-MM)	
	8	1	**232-4636**	2	BOLT-CARRIAGE (M6X1-THD)	
	9	1	**8C-9660**	1	WASHER (4.6X7.9X0.8-MM THK)	
M	10	1	**8T-2659**	1	LOCKNUT (M4X0.7-THD)	
	11	1	**9X-2038**	2	WASHER (7X19X2-MM THK)	

J-REQUIRES 5P-8500 KEY
M-METRIC PART

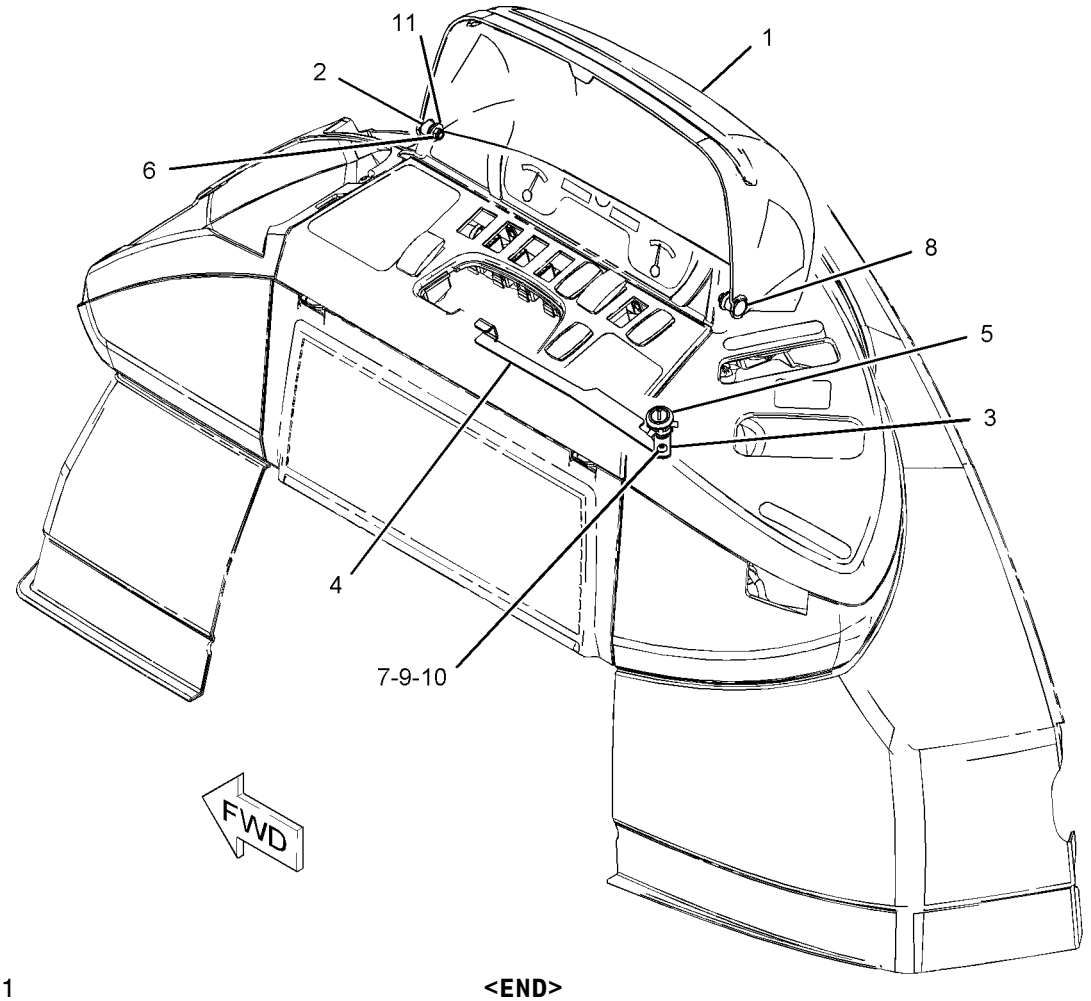

GRAPHIC #1 **<END>** g01083362

SERVICE EQUIPMENT AND SUPPLIES

112-9177 TRANSPORT GP-MACHINE

S/N: RBA1-UP

AN ATTACHMENT

SMCS-0355 **i04123830**

NOTE	REF NO	GRAPHIC REF	PART NUMBER	QTY	PART NAME 1 2 3 4 5 6 (PRODUCT LEVEL)	SEE PAGE
	1	1	**034-1432**	4	STRAP-CABLE	
	2	1	**113-7107**	1	TUBE	
	3	1	**9R-1510**	2	WASHER (51X82X4-MM THK)	
	4	1	**3B-5322**	2	PIN-COTTER	

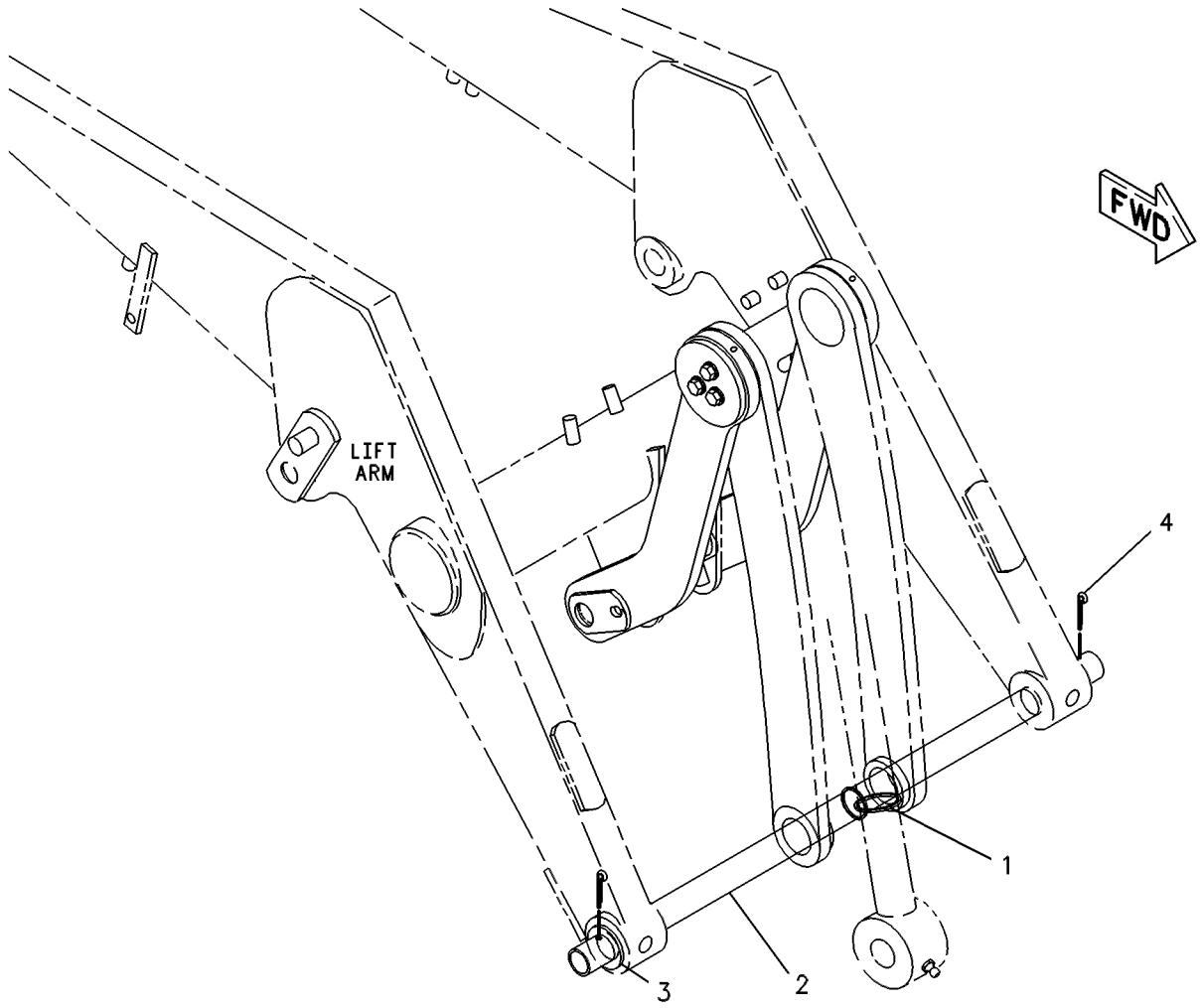

GRAPHIC #1 **<END>** g00132049

MEMORANDA

PART NUMBER INDEX

Part	Page
0	
0S-0509	467
0S-1595	463
	464
0S-1603	17
1	
1B-8716	254
	256
1B-8736	5
	9
1H-3244	103
	104
	105
	106
	441
1H-3337	467
1H-7643	237
1H-8128	235
1H-8278	145
1K-0502	422
	424
1K-6872	463
	464
	467
1K-7082	164
1K-7095	241
	242
1L-3768	399
1L-6377	457
1M-6119	83
1M-6120	83
1P-0810	98
	124
1P-4278	332
1P-4577	48
1P-4584	297
	300
1P-6872	328
1S-7251	83
	123
1S-7252	83
1S-9593	130
2	
2B-0858	13
	28
2D-2628	186
2D-2629	186
2D-2630	186
2D-2631	186
2D-2633	186
2D-2751	58
2D-6235	467
2D-6392	315
2H-3922	111
	254
	256
2H-3928	241
	242
2J-3950	235
2K-2961	237
	244
2K-4973	449
	463
	464
	467
2K-5986	195
2K-6830	245
	247
2L-5893	467
2L-8052	83
2L-8067	113
	124
	132
2L-8068	132
2L-8069	98
	113
	124
	131
2L-8071	124
2L-8076	124
2L-8077	131
2L-8079	124
	131
2M-9780	282
	286
	288
	292
	293
	295
	297
	300
	303
	305
	307
	312
	328
	374
2P-1293	258
	261
	264
	269
	273
	275
2R-0364	391
	422
	424
2S-0480	190
2S-3163	419
2S-3745	442
2W-8604	209
2W-9499	465
2Y-5821	245
2Y-8973	240
3	
3B-4505	467
3B-4506	223
3B-4610	198
3B-5322	394
	491
3B-5326	386
3B-5790	328
3B-8486	216
	385
3B-8488	216
	218
	379
	393
	397
	401
3B-8489	216
	218
	245
	254
	256
	379
	382
	386
	388
	391
	393
	397
	399
	401
3B-8822	216
3C-4883	98
3C-8388	375
3D-2824	231
	232
	233
	234
	258
	261
	264
	269
	272
	273
	275
	282
	284
	297
	300
	305
	307
	309
	310
	312
3D-2898	153
3D-2992	315
3E-0068	449
3E-4321	449
3E-5169	123
3E-6600	98
	132
	221
	415
	422
	424
3E-6730	239
3E-6735	235
	245
3E-6769	328
3E-6770	328
3E-7445	280
3E-8320	83
3F-9556	452
	453
3G-6927	180
3G-8054	275
3G-8057	275
3J-1907	81
	124
	140
	159
	180
	182
	195
	202
	251
	286
	288
	292
	295
	303
	310
	316
	317
	334
	338
	340
3J-4818	124
	467
3J-7354	81
	202
	286
	295
3J-9545	237
3K-0360	124
	194
	195
	200
	202
	277
	278
	297
	300
	303
	310
	317
	332
3K-8782	97
3N-5739	245
3S-2093	64
	83
	89
	98
	113
	116
	118
	120
	121
	122
	124
	131
	132
	138
	140
	143
	280
	449
	466
	472

► **PRIMARY REFERENCE**

PART NUMBER INDEX

Part	Page
3S-7023	240
	247
3T-0849	375
	454
3T-0852	462
	465
4	
4B-2043	138
4B-4863	58
	132
4B-5271	463
	464
4B-8774	61
4B-9784	467
4D-6466	84
	195
4D-6695	190
4D-7388	258
	261
	264
	267
	269
	280
4D-9517	391
4F-8711	399
4F-9029	153
4H-0408	18
4H-2558	404
4H-8380	467
4I-3038	130
	417
4I-6287	303
4I-9521	334
4I-9522	334
4I-9523	334
4I-9524	334
4I-9525	334
4I-9526	334
4I-9527	334
4I-9528	334
4J-0520	48
	151
4J-0522	159
	180
4J-4606	237
	244
4J-5309	338
	340
	342
	344
4J-5477	159
	182
	195
	202
	286
	295
	310
	334
	385
4J-7533	319
4J-9219	235
4K-6177	288
	291
	293
4K-8864	40
4L-6454	463
	464
4M-0061	467
4N-6749	59
4P-7428	124
	138
4P-7429	124
4P-7581	84
	124
	138
	140
4P-8134	84
	124
	132
4T-5613	247
4W-7188	150
4W-7356	326
4W-9972	180
5	
5A-3604	74
5C-2874	124
	444
	445
5C-2890	83
	103
	104
	105
	106
	113
	124
	132
	195
	415
	446
	474
	482
5C-7261	40
	69
	102
	103
	104
	105
	106
	114
	124
	132
	150
	195
	199
	206
	212
	221
	301
	452
	453
	476
	478
5C-8312	58
5C-8811	482
5C-9553	83
	125
	437
	439
5D-1026	200
	202
	286
	288
	292
	295
	449
5D-6543	349
	352
	353
	354
	356
5D-9629	411
5E-8557	225
5F-9144	251
	349
	352
	353
	354
	356
5G-2003	447
5G-8901	292
5H-3193	422
	424
5I-4376	194
5J-3488	244
5J-4561	239
5J-5402	247
5J-5731	241
	242
5J-8011	240
5K-9090	258
	261
	264
	267
	269
	297
	300
5P-0370	384
5P-0599	273
	275
	305
	307
	310
5P-0743	277
5P-0747	83
	123
5P-0761	83
5P-0767	449
5P-0805	212
5P-1076	323
5P-1442	69
	195
	332
5P-1476	124
5P-1478	124
5P-1505	33
	200
	202
	286
	288
	293
	295
5P-1506	280
5P-2199	374
5P-2931	145
5P-3860	272
	385
5P-4115	125
	474
5P-4116	33
	40
	43
	46
	47
	79
	150
	195
	206
	280
	301
	390
	394
	404
	407
	411
	422
	424
	474
5P-4295	200
	202
	288
	293
5P-4571	98
	131
5P-4868	297
	301
5P-4869	309
5P-4924	195
5P-4961	194
5P-5637	442
	474
5P-5655	442
5P-5688	442
5P-5927	415
5P-5991	40
5P-6006	132
5P-6129	404
5P-6718	180
5P-7070	417
5P-7462	200
	202
	305
	307
5P-7463	200
	202
	305
	307
5P-7464	297
	301
	305
	307
5P-7465	297
	301
	305
	307

PART NUMBER INDEX

Part	Page
5P-7466	258
	261
	264
	267
	269
	273
	275
5P-7467	258
	261
	264
	267
	269
	273
	275
5P-7468	258
	261
	264
	267
	269
5P-7469	258
	261
	264
	267
	269
5P-7854	273
5P-7958	130
	391
5P-8066	180
5P-8112	258
	261
	264
	267
	269
	273
	275
5P-8215	153
5P-8244	326
5P-8245	17
	462
	463
	464
	465
5P-8444	258
	261
	264
	267
	269
5P-8500	485
5P-8874	195
5P-9297	69
	471
5R-5927	40
5T-6374	84
5T-7870	463
	464
5T-9771	216
5V-1497	467
5V-2545	170
	171
5V-7190	399
5W-1749	343
	345

6

Part	Page
6A-9083	463
	464
6C-3680	442
6D-0337	►186
	187
6D-0443	186
6D-3479	332
6D-4246	33
	280
6E-0410	374
6E-0775	247
6E-2943	326
6E-3341	330
6E-4003	328
6E-4004	328
6E-4006	328
	►330
6E-4009	330
6E-5431	390
6E-6151	330
6E-6154	330
6E-6155	330
6E-6157	330
6E-6528	328
6F-4161	388
6F-7045	111
6H-3592	132
6H-3616	22
6H-3977	239
6I-0217	19
	24
	45
	50
	55
	61
6I-0254	50
6I-0260	24
	35
	45
	71
	75
	82
6I-0289	24
6I-0363	24
6I-0364	60
	108
6I-0423	18
6I-0455	75
6I-0501	29
6I-0563	60
	61
6I-0572	24
	44
	75
6I-0593	61
6I-0594	108
6I-0645	11
	19
	44
6I-0646	6
	11
6I-0650	19
	82

Part	Page
6I-0654	21
	61
6I-0817	61
6I-0839	50
6I-0846	7
6I-0847	18
6I-1090	45
6I-1418	130
6I-1497	33
	36
6I-4200	61
6I-4709	71
6J-2420	239
6J-2680	297
	301
6J-2797	247
6K-0806	121
	122
6L-4725	404
6L-7155	467
6M-5062	315
6N-6984	40
6P-6591	90
6P-8855	449
6S-8620	33
	69
6T-0465	83
6T-1375	472
6T-3631	112
6T-3632	112
6T-3633	112
6T-5598	83
6T-9163	180
6T-9164	180
6T-9165	180
6T-9166	180
6T-9196	168
	175
	177
6T-9202	180
6V-0484	286
	295
6V-0491	124
6V-0505	472
6V-0683	200
	202
	305
	307
6V-0826	391
6V-0852	195
	286
	288
	292
	295
6V-1249	297
	301
6V-1363	58
6V-1580	221
6V-1722	310
6V-1889	275
	449
6V-2313	458
6V-2323	328
6V-2689	116
	424

Part	Page
6V-2722	124
6V-3505	374
6V-3965	194
	286
	288
	292
	295
6V-4248	194
6V-4292	200
	202
6V-4364	379
	388
	399
	401
6V-4589	179
	375
6V-5100	168
	177
6V-5138	320
	358
	359
	360
	361
	362
	363
	364
	365
	366
	368
6V-5201	153
6V-5215	180
6V-5326	338
	340
	342
	344
6V-5653	286
	295
6V-5683	375
6V-5729	396
6V-5834	225
6V-5842	180
6V-6228	148
	151
6V-6317	427
	429
6V-6717	404
6V-7238	277
6V-7357	90
	195
	442
	482
6V-7359	305
	307
6V-7687	218
	397
	467
6V-7743	206
	476
	478
	480
	481
6V-7744	211
	422
	424
	427

► **PRIMARY REFERENCE**

PART NUMBER INDEX

Part	Page	Part	Page	Part	Page	Part	Page
	429		284		261		232
	431		288		264		233
	433		292		269		234
	469		297	6V-8721	303		235
6V-7970	319		300		305		237
	346		303		307		258
	347		305	6V-8724	292		261
	348		307		295		264
	349		310	6V-8757	168		267
	351	6V-8399	179		172		269
	352	6V-8455	158		173		272
	353	6V-8490	153		177		273
	354	6V-8523	124	6V-8759	193		275
	356	6V-8555	303	6V-8781	295		309
	357	6V-8624	297	6V-8782	310		312
	358		300	6V-8801	83	6V-9830	251
	359	6V-8625	195	6V-8939	303		282
	360		278	6V-8944	300	6V-9831	282
	361		310	6V-8978	338	6V-9832	231
	362	6V-8626	282		340		232
	363	6V-8627	159		342		233
	364		182		344		234
	365		202	6V-8984	267	6V-9836	288
	366	6V-8628	202	6V-8997	258		292
	367	6V-8629	312		261	6V-9837	297
	368	6V-8633	305		264		300
6V-8077	286		307		269	6V-9838	282
	295	6V-8634	202		273	6V-9840	297
6V-8097	180		303		275		300
6V-8185	467	6V-8635	258	6V-8998	258	6V-9849	286
6V-8200	153		261		261		295
6V-8202	316		264		264		310
6V-8224	272		267		267	6V-9850	202
6V-8227	205		269		269		292
6V-8236	375		297	6V-9002	195	6V-9851	280
6V-8335	431		300	6V-9004	309		303
	433	6V-8636	288	6V-9007	273	6V-9853	48
6V-8344	379		292		275		312
	394	6V-8637	231	6V-9008	258	6V-9854	267
	397		232		261	6V-9872	81
6V-8363	254		233		264	6V-9873	288
	256		234		269	6V-9990	275
6V-8370	254		258	6V-9023	132	6Y-1192	168
	256		261	6V-9027	150		172
6V-8378	180		264	6V-9031	282		175
6V-8397	81		269	6V-9169	288	6Y-1896	180
	194		272		293	6Y-7929	168
	195		273	6V-9170	267		175
	200		275		275	6Y-7957	177
	202		309	6V-9172	259	6Y-9930	457
	288	6V-8638	303		261		
	292	6V-8639	297		264		
	295		300		267	**7**	
	303		303		269		
	305		310	6V-9178	185	7C-0351	24
	307	6V-8640	312	6V-9182	48	7C-1224	24
6V-8398	195	6V-8641	182	6V-9632	33	7C-1281	71
	239		195		130	7C-4354	275
	241		295		138	7C-4616	19
	242		334		194	7C-6921	282
	267	6V-8642	282		390	7D-7233	36
	275	6V-8713	275		411	7F-8031	83
	278	6V-8714	300		454	7G-7053	195
	280	6V-8716	48	6V-9746	48	7H-3937	442
	282		258		231	7I-8084	369

PART NUMBER INDEX

Part	Page
7I-8935	371
7J-8581	280
7J-9108	195
	244
	267
	275
	282
	284
	312
7K-1181	40
	48
	83
	90
	116
	123
	130
	143
	182
	192
	194
	200
	202
	278
	280
	282
	286
	288
	291
	292
	312
	334
	449
	454
7M-8485	48
	251
	258
	261
	264
	267
	269
	297
	298
	300
	301
	319
7N-0718	83
	▶111
7N-5274	83
7N-7221	116
	118
7N-9017	124
	138
7R-2750	131
7R-2751	131
7R-8239	198
7T-0093	442
7T-1099	194
	217
	411
7T-2646	181
7T-2651	181
7T-3195	181
7T-3251	180
7T-3253	180
7T-4848	130
7T-6655	172
	173
7T-6739	442
7T-6799	118
7T-9987	83
7W-1176	18
7W-2326	36
7W-2632	75
7W-3556	181
7W-4634	29
7W-4642	18
7X-0310	396
7X-0481	467
7X-0492	385
7X-0515	40
7X-0579	132
	221
	404
7X-0586	52
7X-0603	40
	399
7X-0608	102
7X-0618	164
	407
7X-0620	225
7X-0622	467
7X-0818	60
7X-2393	476
	478
7X-2533	454
7X-2534	125
7X-2537	225
	394
7X-2538	413
7X-2539	46
	47
7X-2541	301
7X-2543	379
7X-2553	165
	413
7X-2567	207
7X-2568	457
7X-2908	330
7X-3164	297
7X-4741	180
7X-4744	185
7X-6315	87
7X-7729	84
	132
	138
	195
	273
	280
	297
	301
	391
	403
	422
	424
	436
7X-7898	52
7X-7958	280
7Y-0336	254
	256
7Y-1924	60
7Y-3883	123
7Y-9099	212
	8
8C-0572	465
8C-3056	83
8C-3076	74
	318
8C-3132	374
8C-3398	125
	132
8C-3445	38
8C-3446	251
8C-3451	251
8C-3681	471
8C-3756	442
8C-3798	98
	472
8C-4982	447
	451
8C-4987	422
	424
	427
	429
	431
	433
8C-5607	92
8C-5608	92
8C-5748	180
8C-6354	130
8C-6865	385
8C-6955	254
	256
8C-7505	145
8C-7524	442
	469
8C-8408	182
8C-8522	206
8C-8545	180
8C-8580	349
	352
	353
8C-9200	237
8C-9660	490
8C-9987	414
8D-2707	186
8E-1118	447
8E-5707	168
	172
	173
	175
	177
8E-8293	472
8F-1434	125
	180
	254
	256
8F-3469	332
8F-3590	98
	132
8H-5303	111
8H-5306	111
8H-7521	240
8J-2413	346
	347
	348
	349
	351
	352
	353
	354
	356
	357
	370
8J-6245	240
8J-8879	191
8L-2746	179
8L-2779	74
	179
8L-2786	180
8L-8413	80
	83
	98
	110
	113
	116
	124
	138
	140
	143
8M-2773	69
8M-3175	431
	433
8N-0869	83
8R-2916	436
8R-6111	447
8R-7783	381
8S-0023	159
8S-0024	159
8S-3020	83
8S-7803	407
	467
8T-0076	202
8T-0077	300
8T-0078	312
8T-0119	194
8T-0131	194
8T-0154	277
8T-0271	180
8T-0328	125
	180
	332
	458
8T-0352	132
8T-0389	94
	95
	96
	379
	403
8T-0404	284
8T-0643	180
8T-0706	254
	256
8T-1118	472
8T-1580	175
8T-1581	175
8T-1683	195
	200

▶ **PRIMARY REFERENCE**

PART NUMBER INDEX

Part	Page
	202
8T-1779	292
8T-1885	278
	305
	307
8T-1886	278
	305
	307
8T-1887	84
	272
	312
8T-1888	84
	272
	312
8T-1889	278
	280
8T-1890	278
	280
8T-1895	312
8T-1896	312
8T-2658	417
8T-2659	490
8T-2970	474
8T-3490	138
	282
	454
8T-3597	258
8T-3612	52
	194
	206
	390
	411
	454
8T-3983	427
8T-4001	216
8T-4121	23
	33
	36
	40
	46
	47
	60
	69
	84
	94
	95
	96
	98
	125
	132
	138
	159
	182
	195
	200
	202
	211
	221
	250
	259
	262
	264
	267
	269
	272
	273
	275
	278
	280
	282
	284
	288
	291
	293
	297
	301
	303
	305
	307
	312
	322
	324
	332
	339
	341
	391
	399
	413
	422
	424
	427
	429
	431
	433
	436
	449
	454
8T-4122	23
	79
	211
	249
8T-4123	254
	256
	457
8T-4131	457
8T-4132	23
	457
8T-4133	36
	40
	60
	84
	98
	132
	159
	195
	206
	254
	256
	282
	284
	422
	424
	427
	429
	431
	433
	436
8T-4134	454
8T-4136	36
	40
	60
	69
	125
	195
	221
	259
	262
	264
	267
	269
	278
	280
	282
	284
	297
	301
	303
	305
	307
	312
	324
	391
	399
	413
	422
	424
	436
8T-4137	69
	84
	125
	132
	138
	159
	272
	280
	282
	284
	332
	339
	341
	391
	422
	424
	449
8T-4138	33
	64
	132
	195
	254
	256
	390
	454
	459
	482
8T-4139	125
	159
	218
	221
	273
	275
	323
	332
	388
	399
	449
	466
8T-4167	164
	216
8T-4171	114
	482
8T-4172	33
	46
	47
8T-4173	457
8T-4174	23
8T-4178	469
8T-4181	469
8T-4182	254
	256
	322
	391
8T-4183	206
	303
	399
8T-4184	273
	275
	297
	301
	322
	323
8T-4185	84
	200
	202
	259
	262
	264
	267
	269
	403
8T-4186	250
	288
	291
	293
	391
	431
	433
	454
8T-4189	36
	40
	43
	79
	89
	206
	221
	225
	280
	390
	422
	424
	454
	462
	465
8T-4191	84
8T-4192	69
	164
8T-4193	79
8T-4194	399
8T-4195	60
	132
	195

► **PRIMARY REFERENCE**

PART NUMBER INDEX

Part	Page	Part	Page	Part	Page	Part	Page
	200		125		273	8T-6412	462
	202		159		275		465
	211		165		303	8T-6431	431
	221		206		454		433
	273		221	8T-4648	223	8T-6466	84
	275		223		399		159
	278		259	8T-4742	446		182
	282		262	8T-4744	446		282
	284		265	8T-4773	422	8T-6684	297
	297		267		424	8T-6703	40
	301		269		427	8T-6726	278
	312		273		429		282
	391		275	8T-4778	211	8T-6869	150
	399		298	8T-4779	40		195
	431		301		207		199
	433		303		221		223
	436		305	8T-4815	422		310
	449		307		424		325
	454		322		427	8T-6885	124
8T-4196	23		332		429	8T-6902	390
	46		379		431		458
	47		388		433	8T-6912	33
	138		399	8T-4821	218		192
	273		449	8T-4896	48	8T-6974	288
	305		460	8T-4908	40		293
	307		461		46		437
	312		466		47		439
8T-4197	40		474		52	8T-7338	220
	150	8T-4224	36		125		249
	221		40		194	8T-7529	33
8T-4200	40		43		195		48
	74		46		414		280
	79		47	8T-4910	379	8T-7547	43
	132		52	8T-4956	159		69
	158		60		165		221
	404		69		258		390
	407		79		261		427
	411		89		265		429
	474		103		267		454
8T-4205	33		104		269	8T-7930	218
	64		105		275	8T-7971	323
	84		106		305	8T-8442	328
	90		114		307	8T-8729	90
	92		125		454		92
	103		132		460		118
	104		158		461		123
	105		192	8T-4958	240		140
	106		195	8T-4971	125		467
	114		198		454	8T-8730	90
	125		199		482		92
	132		221	8T-4987	394		118
	195		223	8T-5005	200		442
	206		225		202	8T-8737	90
	254		301	8T-5063	254		92
	256		303		256		98
	288		310	8T-5091	212		113
	293		325	8T-5093	212		120
	404		390		472		121
	415		413	8T-5360	396		122
	442		427	8T-5412	397		123
	482		429	8T-5436	200		124
8T-4222	211		454		202		130
	469	8T-4241	190	8T-5439	188		131
8T-4223	40	8T-4244	40		189		132
	69		223	8T-6380	164		138

► **PRIMARY REFERENCE**

PART NUMBER INDEX

Part	Page
	140
	143
	421
	434
	435
	442
8T-8799	83
	113
	123
	130
8T-8894	436
8T-8898	297
	300
8T-8899	48
8T-8917	462
	465
8T-9402	33
8T-9405	58
	249
8T-9501	422
	424
	462
	465
8T-9534	113
	132
8T-9655	130
8X-5489	84
8Y-4489	217
8Y-5737	404
8Y-6352	404
8Y-6967	404
8Y-7309	476
	478
8Y-7833	113
	142
8Y-8081	83
8Y-8696	310
9	
9B-7237	48
9C-4457	469
9D-3767	195
9F-5644	102
	111
	130
9G-3695	112
	452
9G-4191	84
9M-0164	332
9M-2904	52
9M-4814	449
9M-7958	36
9M-7959	404
9M-8406	200
	202
9N-2231	404
9P-9150	181
9R-0139	241
	242
9R-0162	247
	398
9R-0204	388
9R-0413	379
9R-0481	216
9R-1004	125
	282
	284
9R-1005	125
	282
	284
9R-1335	2
	▶379
9R-1336	2
	▶384
9R-1337	2
	▶388
9R-1499	98
9R-1502	379
	394
	397
9R-1510	379
	388
	393
	394
	401
	491
9R-1765	422
	424
9R-1766	422
	424
9R-1767	422
	424
9R-2053	310
9R-2613	217
	398
9R-2614	254
	256
9R-2790	379
9R-2798	379
9R-2806	192
	254
	256
9R-2807	192
	195
	254
	256
	422
	424
9R-2869	384
9R-2959	399
9R-3042	388
9R-3067	254
	256
	422
	424
9R-3092	379
	386
9R-3135	254
	256
9R-3205	471
9R-3255	254
	256
9R-3469	472
9R-3491	388
9R-3633	379
9R-3648	379
9R-3649	379
9R-3651	379
9R-3653	379
9R-3677	312
9R-3700	247
9R-3745	388
9R-3747	388
9R-3749	388
9R-3753	388
9R-3754	388
9R-3756	388
9R-3758	388
9R-3759	388
9R-3884	200
	202
9R-4062	386
	398
	399
9R-4066	386
	393
	401
9R-4110	216
	217
9R-4602	235
9R-4619	272
9R-4750	159
9R-4918	429
9R-5246	397
9R-5301	254
	256
9R-5429	254
	256
9R-5432	254
	256
9R-5555	396
9R-5616	407
	411
9R-5775	388
9R-5948	278
9R-6514	240
9R-6515	235
9R-7239	391
9R-7240	80
9R-7803	282
	284
9R-7882	218
9R-8165	390
9R-8390	393
9R-9282	381
9R-9492	218
9R-9572	273
	275
9R-9702	164
9R-9868	422
	424
9R-9901	427
	429
9R-9925	332
9S-4182	150
9S-4185	180
9S-4191	180
	288
	292
9S-8001	319
9S-8004	316
	317
	328
	338
	340
9S-8005	317
9S-9334	251
9T-2141	237
9T-2178	237
9T-2883	245
9T-3133	247
9T-3165	247
9U-8263	447
9U-8886	173
	249
9W-0607	94
	95
	96
9W-0625	422
	424
9W-0717	172
9W-0844	131
9W-0852	131
9W-1951	131
9W-3326	98
9W-5460	180
9W-6582	457
9W-6584	457
9W-9952	23
9W-9953	23
9X-0199	254
	256
9X-1054	113
	123
9X-1055	113
	124
9X-1481	467
9X-1813	140
	194
9X-2038	195
	214
	215
	404
	415
	417
	419
	427
	429
	437
	439
	447
	454
	459
	469
	490
9X-2040	422
	424
9X-2043	214
	215
	407
	411
9X-2044	415
	417
	469
	474
9X-2045	138
	195
	404

▶ **PRIMARY REFERENCE**

PART NUMBER INDEX

Part	Page
	417
	419
	427
	429
	437
	439
	441
	454
	459
	476
	478
	480
	481
9X-2065	422
	424
9X-2092	411
9X-2125	195
9X-2132	474
9X-2297	292
9X-2480	92
9X-3401	107
	110
	113
	120
	121
	122
	123
	124
	130
	138
	140
	143
	422
9X-3402	123
	131
9X-3598	237
	244
9X-3982	194
	332
9X-4244	94
	95
	96
9X-4611	245
9X-4813	131
9X-6165	92
	459
9X-6277	150
9X-6383	474
9X-6579	301
9X-6611	245
9X-6615	180
9X-6620	462
	465
9X-6772	92
9X-7298	235
9X-7378	113
9X-7380	449
9X-7381	449
9X-7382	449
9X-7383	449
9X-8118	97
9X-8121	97
9X-8139	97
9X-8256	98
	390
9X-8257	165
	207
	220
	221
	413
	457
9X-8372	472
9X-9882	132
9Y-9380	325
9Y-9381	61

0

Part	Page
008-9682	180
009-2062	175
031-5644	101
032-8047	61
032-9090	9
032-9091	9
033-5853	328
033-6028	328
033-6041	148
033-6043	328
033-6044	375
033-7687	17
033-8248	36
034-1432	491
035-8014	61
035-8063	11
	38
038-9317	83
039-8557	454
039-9133	198
067-6179	19
067-6213	24
067-6873	9
067-6874	9
068-6405	207
082-2774	216
084-4277	447
084-4348	98
091-2436	113
	116
	118
	131
	143
092-1136	217
092-8211	391
095-0642	315
	354
	356
095-0685	153
095-0687	148
095-0741	208
	209
095-0756	143
095-0924	166
095-0927	175
095-0928	175
	386
	393
095-0930	393
	401
095-0931	382
095-1041	153
095-1586	369
095-1751	346
	347
	348
	349
	351
	352
	353
	354
	356
	357
	370
095-1785	369
095-9230	422
	424
096-1855	52
096-3772	458
096-4882	467
096-5866	303
096-5968	184
096-6166	451
098-5747	145
099-3095	326
099-3649	446
099-8232	317

1

Part	Page
100-3751	19
	45
100-4461	37
100-4830	6
	61
	75
100-4841	11
100-5041	113
	124
100-5805	130
100-6674	110
	113
	123
100-7608	476
	478
	480
	481
100-7844	2
	▶247
100-7846	247
101-0745	482
101-1787	286
	295
101-2987	22
101-3615	71
101-3771	24
101-3895	19
	75
102-3582	245
102-8801	90
	92
102-8802	80
	90
	98
	110
	113
	116
	118
	123
	124
	131
	143
	413
	422
	424
102-8803	107
	113
	124
	140
	194
	466
102-8804	98
	112
	118
	123
	131
	140
	453
	466
102-8805	98
	121
	123
	131
	138
	143
	452
102-8806	98
	120
	122
	130
102-9941	29
103-1847	300
103-2135	61
103-2543	130
103-5520	375
104-1995	113
	116
	118
104-3288	180
105-1440	375
105-3481	462
	465
105-4822	247
105-8034	194
106-0401	252
	258
	261
	264
	267
	269
106-0406	252
	258
	261

► **PRIMARY REFERENCE**

PART NUMBER INDEX

Part	Page
	264
	267
	269
106-3108	315
106-7301	254
	256
106-8020	81
106-8916	61
106-9586	185
106-9861	180
107-2348	61
107-5591	422
	424
107-6708	258
	261
	264
	267
	269
107-6709	258
	261
	264
	267
	269
107-6711	398
107-6826	170
	171
109-1633	303
	449
109-1634	303
	449
109-1779	328
109-5825	267
110-0203	131
110-5602	446
	474
110-6109	404
110-7887	118
111-0859	16
111-4627	33
	404
111-5042	467
111-6792	131
111-6793	131
111-6795	131
111-6816	131
111-7899	98
	109
	113
	118
	130
	140
	143
	229
	230
	436
	482
111-7906	158
111-7907	▶158
	179
111-8222	6
	55
112-1826	167
	▶249
112-4159	40
112-5737	240
112-9177	▶491
113-0920	447
113-6349	82
113-7107	491
113-8129	50
113-8490	102
113-8491	102
113-8492	102
114-2579	55
114-4363	18
	71
114-6099	216
115-1615	113
	124
115-1918	249
116-4481	371
116-5763	212
117-1385	74
	180
117-3534	249
117-5672	427
	429
117-9713	158
117-9887	170
	171
118-2990	457
118-6854	206
119-3662	98
	113
	118
	124
	131
119-4740	179
119-5025	64
119-5708	36
	69
119-8349	474
119-9631	442
120-5724	330
120-9027	417
120-9762	180
121-0694	172
	173
121-0883	18
121-0885	175
121-2059	181
121-2060	181
121-2061	181
121-2500	172
	173
121-6936	472
121-7385	179
121-7396	179
121-7398	181
121-7399	181
121-7400	181
121-7401	181
121-7402	181
121-9870	447
122-1113	288
	292
122-1877	168
	175
	177
122-1878	177
122-1879	181
122-1883	181
122-1884	177
122-1886	173
122-4401	113
	116
	118
122-6787	180
122-9250	349
	351
	354
	357
123-1377	180
123-2899	39
123-2920	173
123-4038	61
123-4065	40
	43
123-4750	292
123-7615	123
123-8905	172
	173
	177
123-8906	172
	173
	177
123-8907	168
	175
123-8908	168
	175
123-8909	173
123-8910	173
123-8912	168
	175
	177
123-8913	173
124-0312	404
124-2456	487
	488
124-3243	225
124-3536	26
124-3815	19
	55
	75
	128
124-5640	113
	123
125-7874	92
	98
	113
	116
	118
	121
	122
	124
	131
	138
	140
	143
125-7875	98
	116
	118
	124
	131
	143
125-7876	83
125-7895	2
	▶240
125-7896	240
126-0239	240
126-0240	240
126-1767	107
	138
126-1774	92
126-7574	87
127-4471	36
	52
	332
127-8165	61
128-4123	131
128-4168	132
128-4178	132
128-5016	131
128-5596	249
	▶331
128-7716	442
129-1831	404
129-2861	150
129-3178	33
	52
	90
	92
	442
	490
129-3180	462
	465
	474
129-3738	407
129-4741	206
129-5256	407
129-5257	407
129-6466	254
	256
129-8542	476
	478
	480
	481
129-8545	476
	478
	480
	481
130-0165	89
130-1629	396
130-4832	404
130-5891	254
	256
130-6791	116
130-7758	326
130-8150	331
130-8343	467
130-9984	280
	449
131-0232	80
131-0715	326
131-3987	407
	437
	439
131-8776	391
132-0111	391
132-1806	132

▶ **PRIMARY REFERENCE**

PART NUMBER INDEX

Part	Page	Part	Page	Part	Page	Part	Page
132-2249	437		292	147-0270	172		261
	439	143-8916	239	147-1445	131		264
	447	143-8918	239	147-1446	131		269
132-3056	332	143-9392	150	147-5553	61	148-8358	297
132-3947	394	144-0195	472	147-9611	40		300
132-5789	124	144-0367	297	147-9943	391	148-8360	48
	132		300	147-9945	391	148-8362	297
132-8630	218	144-3935	40	148-5353	476	148-8364	195
132-8769	▶252	144-6734	156		478		278
133-1011	19	145-0981	447		480		310
133-3413	89	145-2350	40		481	148-8367	202
133-4771	339	145-6023	218	148-8307	194		292
	341	145-9291	436	148-8315	282	148-8368	159
	343	146-0742	241	148-8317	300		182
	345		242	148-8318	202		202
133-5813	288	146-0743	241		303	148-8369	202
	292		242	148-8320	385	148-8370	280
133-6517	89	146-0744	241	148-8322	312		303
133-6934	391		242	148-8325	182	148-8372	303
133-8916	431	146-1589	396		195		305
133-9469	61	146-1590	396		295		307
134-0143	391	146-6347	205		334	148-8378	292
134-0404	123	146-7744	474	148-8326	81		295
134-0453	422	146-7745	474	148-8327	231	148-8382	284
	424	146-9439	109		232	148-8383	195
134-2540	130		130		233		200
	131		140		234		202
134-3856	449	147-0201	180		258	148-8388	312
134-4126	87	147-0202	172		261	148-8389	385
134-5930	256		173		264	148-8390	282
135-5009	83	147-0203	168		269	148-8392	48
136-1122	159		175		272		312
	218		177		273	148-8406	251
136-3697	300	147-0205	175		275	148-8407	180
136-4192	476	147-0207	177		309		288
	478	147-0209	179	148-8328	305		292
	480		▶185		307	148-8412	300
	481	147-0210	177	148-8335	258	148-8416	303
136-7439	427	147-0211	180		261	148-8428	310
	429	147-0215	168		264	148-8429	297
136-7440	427	147-0216	168		267		300
	429	147-0218	180		269	148-8433	288
136-7808	151	147-0224	173		297		292
137-6645	123	147-0226	180		300	148-8435	295
138-7500	33	147-0227	177	148-8336	288	148-8444	297
138-8454	132	147-0228	168		292		300
140-7649	245	147-0232	180	148-8339	48	148-8446	282
140-7656	235	147-0234	180		258	148-8455	258
140-8783	82	147-0236	180		261		261
141-0888	321	147-0238	168		264		264
141-1480	57		172		269		269
141-1762	469		173	148-8340	297		273
141-6343	254		177		300		275
	256	147-0242	175		303	149-4311	367
141-8061	124	147-0248	175		310	149-4745	467
	131	147-0256	172	148-8341	275	149-7372	291
141-8584	75	147-0257	173	148-8345	303	150-3024	195
142-0485	194	147-0258	168	148-8347	273	150-3026	200
142-2928	467	147-0259	172		275		202
143-0008	300		173	148-8351	286	150-3027	286
143-2827	476	147-0260	175		295		295
	478	147-0261	175		310	150-3052	258
	480	147-0262	181	148-8352	267		261
	481	147-0266	180	148-8354	195		264
143-3158	288	147-0268	179	148-8357	258		267

▶ **PRIMARY REFERENCE**

PART NUMBER INDEX

Part	Page	Part	Page	Part	Page	Part	Page
	269		143	162-3960	▶228	164-1368	143
150-3062	286		192		303		192
	295		442	162-4004	211		404
150-3065	286	155-2271	98	162-6556	444		422
	295		123		445		424
150-3757	175		131	163-0753	193		454
150-4043	288		132		▶198	164-1395	64
150-4044	292	155-2274	131	163-1135	467		390
150-7732	180	155-7321	310	163-9091	168		424
150-8015	474	156-0283	212		175	164-1398	390
151-4841	182		446		180	164-1519	427
	194		472	164-1178	419		429
	282	156-3600	194	164-1215	466	164-1547	431
152-5532	132	156-3631	194	164-1218	466		433
152-6144	145	156-6175	83	164-1219	466	164-2108	378
	148		90	164-1220	466	164-3876	206
	151		132	164-1226	467	164-4225	69
152-6145	148	157-2088	175	164-1229	467	164-5549	303
152-7691	452	157-2090	175	164-1230	467	164-5567	194
152-7740	303	158-2306	228	164-1232	467		286
153-4906	328	158-3412	282	164-1233	467		288
153-6237	309		284	164-1237	467		292
153-7368	436	158-4466	371	164-1238	467		295
153-7369	▶199	158-6634	▶112	164-1239	467	164-5577	267
	436		123	164-1240	467	164-5605	202
154-5404	145	159-0186	52	164-1244	465	164-5606	312
154-5410	482	159-1503	280	164-1247	463	164-6709	251
154-5416	192	159-4269	437		464	164-7556	94
154-5423	476		439	164-1249	462		95
	478	159-4945	407		465		96
	480		437	164-1251	462	164-8474	404
	481	159-4946	407		465	164-8908	300
155-2026	258		439	164-1252	462	164-9425	123
	261	159-8033	486		465	164-9598	198
	264		488	164-1256	462	164-9599	198
	267	159-8050	83		465	164-9869	292
	269	159-9322	92	164-1258	462	165-0312	231
155-2027	297		131		465		232
	300	160-0162	75	164-1259	462		233
155-2255	90	160-0496	228		465		234
	92	160-2169	482	164-1261	463	165-2273	277
	120	160-2244	449		464	165-4021	33
	121	160-2246	280	164-1263	462	165-4931	286
	122		288		465		295
	131		293	164-1265	462	165-6595	194
155-2256	143	160-2248	334		463	165-8357	89
155-2260	123	160-2252	40		464	165-8996	164
	124	160-7690	92		465	165-9284	235
	130	160-8499	326	164-1266	462	166-5994	305
	131	161-2539	138	164-1273	462		307
	138	161-3249	177		465	166-9413	153
	140	161-6984	444	164-1275	465	167-0566	310
155-2265	131		445	164-1276	465	167-2183	245
155-2270	90	161-6987	444	164-1308	474	167-2184	235
	92		445	164-1314	474	167-2200	240
	98	161-9044	437	164-1328	474	167-2204	241
	113		439	164-1342	474		242
	116	161-9283	462	164-1343	474	167-2235	237
	121		465	164-1344	474	167-2242	239
	122	161-9288	467	164-1345	474	167-2243	244
	123	161-9289	467	164-1346	474	167-2297	239
	124	161-9294	444	164-1351	474	167-2299	237
	131		445	164-1352	474	167-2303	245
	138	161-9820	82	164-1353	474	167-2307	240
	140	162-1604	328	164-1354	474	167-2314	241

▶ **PRIMARY REFERENCE**

PART NUMBER INDEX

Part	Page	Part	Page	Part	Page	Part	Page
	242	176-2947	118	185-6643	33		359
167-2318	235	176-8541	371	185-7016	97		360
167-2343	244	176-9294	297	185-8627	55		361
167-3692	130	177-4877	407	186-2589	▶452		362
167-3693	116		437		482		363
	123		439	186-3735	80		364
167-8182	474	177-9645	442		98		365
167-8251	419	177-9648	113		112		366
168-9352	194	177-9653	442		123		368
169-0705	118	177-9656	113		124	192-7864	358
169-1616	346	178-7539	98		130		359
	347		130		138		360
	348		137		140		362
	349	178-8608	190		194		363
	351	178-9566	175		421		364
	352	179-3543	▶314		434		365
	353		354		435		366
	354		356		452		367
	356	179-5434	97		453	193-3356	404
	357	179-6401	130	186-3736	98	193-5913	407
	370	179-7262	474		123		411
169-7291	447	179-8235	422		124	193-5914	407
170-0235	449		424		131		411
170-0503	228		427		138	193-9055	212
170-9360	90		429		140	194-2903	194
	132		431	186-5147	235	194-5171	482
171-2870	474		433	186-5148	244	194-5390	61
171-6723	48	179-9392	130	187-2120	182	194-5622	404
172-4325	61	180-3664	▶97	187-7719	442	194-9219	292
172-5317	172		101	188-3953	394	194-9487	394
	173	180-3730	81	189-0881	404	195-0260	291
172-6050	168	180-5781	462	189-3158	113	195-0261	291
	175		465		124	195-0262	291
	177	180-5791	465		130	195-0263	291
172-6489	98	180-5797	462		138	195-2132	22
172-6490	98		465		140	195-2134	22
172-6743	175	180-6213	328	191-8304	179	195-2136	22
172-8591	419	180-9340	113	192-0828	367	195-2221	22
	427		118	192-2061	367	195-7055	463
	429		120	192-2112	442		464
172-9200	130		121	192-4488	367	195-7602	454
173-0332	168		122	192-7505	367	195-9223	462
173-0639	328		123	192-7506	339		465
173-0641	328		130		341	196-0226	330
173-5787	467		138		343	196-2384	131
173-7003	142		143		345	196-2385	131
173-9683	240	180-9900	130		367	196-2386	131
	247	183-3132	422	192-7508	339	196-2412	131
174-3091	421		424		341	196-2413	130
	434	183-3135	422		343	197-5107	437
	435		424		345		439
174-4647	153	183-3137	422	192-7510	358	197-6657	467
174-6740	288		424		359	197-9155	148
	292	183-4912	446		360	198-0098	431
174-8131	490	183-4934	454		362		433
175-7141	40	183-6084	390		363	198-4776	40
175-7739	69	183-6085	446		364	198-6498	371
175-7900	247	184-0982	80		365	198-6499	371
175-7902	241		81		366	198-6505	371
	242	184-5293	417		367	198-6506	371
175-7904	249	184-6970	239	192-7512	367	198-6514	371
176-0348	98	185-1861	123	192-7515	319	198-6515	371
176-0625	379	185-4015	442		320	198-6516	371
176-0626	379	185-4254	314		367	198-6522	371
176-0798	326		▶378	192-7863	358	198-7811	190

▶ **PRIMARY REFERENCE**

PART NUMBER INDEX

Part	Page
198-7823	145
198-7825	145
198-7835	145
198-7838	145
198-7841	145
198-7842	145
198-7843	145
198-9365	138
199-0652	153
199-0656	157
199-0659	157
199-0669	190
199-0670	148
199-0676	153
199-0678	153
199-0680	153
199-0683	145
199-0684	153
199-0685	153
199-0686	153
199-0687	153
199-0688	153
199-0690	153
199-0691	153
199-0692	153
199-0693	153
199-0695	151
199-0697	153
199-0698	153
199-0706	153
199-0783	211
199-0808	157
	163
199-0858	151
199-0929	451
199-6309	485
199-9252	75
199-9267	75
199-9751	13
	27
2	
200-2371	316
200-6210	316
201-1024	130
201-1835	81
201-1915	188
201-1916	189
201-1919	188
	189
201-1920	▶187
	188
201-3954	▶211
201-4756	280
	312
201-5242	326
201-9459	110
201-9465	474
202-5732	167
	▶170
202-5909	33
202-5993	194
202-6010	▶110
	167
202-6029	194
202-6611	95
	96
202-6614	94
202-7875	170
203-7807	235
204-0775	110
204-4148	326
204-9921	442
205-1627	58
205-4587	326
205-6298	110
205-7047	447
205-7048	437
	439
205-9244	180
205-9362	110
205-9560	406
	410
	▶457
205-9569	406
	410
	▶459
205-9570	459
205-9571	459
205-9576	459
205-9577	459
205-9587	480
205-9588	439
205-9590	480
205-9591	480
205-9597	481
205-9598	437
205-9605	407
	411
205-9606	407
	411
205-9607	407
205-9614	481
205-9615	481
205-9622	407
205-9623	476
205-9624	476
205-9631	407
205-9633	478
205-9634	478
206-1345	118
	130
206-1590	407
206-1618	406
	410
	▶441
206-1623	469
206-1625	469
206-1632	436
206-1634	194
206-1637	469
206-1641	2
	▶390
206-1642	167
	▶192
206-1645	336
	▶422
206-1648	404
206-1650	194
206-1652	200
	202
206-1653	404
206-1658	417
206-1659	417
206-1660	417
206-1661	417
206-1662	417
206-1663	417
206-1665	469
206-1666	469
206-1667	417
	419
206-1668	424
206-1672	427
	429
206-1673	427
	429
206-1678	419
206-1681	419
206-1682	404
206-1683	469
206-1684	404
	469
206-1687	419
206-1690	419
206-1692	419
206-1695	422
206-1696	415
206-1698	415
206-1699	415
206-1701	410
	▶490
206-1702	406
	410
	▶415
206-1703	406
	410
	▶417
206-1704	410
	▶469
206-1706	415
206-1708	415
	417
206-1712	415
206-1718	130
206-1725	406
	▶482
206-1727	406
	▶472
206-1747	▶460
206-1748	▶461
206-1749	460
206-1750	461
206-1752	194
206-1766	194
206-1767	194
206-1768	195
206-1791	▶463
	466
206-1796	▶464
	466
206-1798	469
206-1799	469
206-1801	▶404
	406
206-1803	404
206-1804	404
206-1805	404
206-1807	404
206-1808	404
206-1809	404
206-1810	404
206-1812	404
206-1814	404
206-1815	404
206-1816	404
206-1817	404
206-1818	404
206-1831	▶214
	229
	230
206-1835	215
206-1840	▶215
	231
	232
	233
	234
206-1846	404
206-1847	404
206-1851	291
206-1852	490
206-1853	490
206-1854	417
206-1855	490
206-1856	490
206-1857	406
	▶471
206-1871	390
206-1874	390
206-2423	83
	120
	121
	143
	278
206-5122	195
206-5123	195
206-5823	452
207-2554	46
	47
207-4255	157
	163
207-4262	145
207-5035	251
208-0321	145
	148
208-0322	151
208-8240	179
208-9293	449
209-2435	399
209-3363	422
	424
209-3364	336
	337
	▶424
209-3368	427
	429
209-3376	3
	▶64

▶ **PRIMARY REFERENCE**

PART NUMBER INDEX

Part	Page
209-3377	65
	▶458
209-4157	166
209-4573	59
209-4581	59
209-4716	447
209-4777	216
209-7454	151
209-7456	145
209-7457	153
209-7459	161
	162
209-7460	161
	162
209-7461	161
	162
209-7462	151
209-7463	151
209-7464	145
209-7465	161
	162
209-7466	166
209-7472	151
209-7473	151
209-9219	12
209-9875	145
	148
209-9882	145
	▶151
209-9887	145
210-1707	394
210-1967	303
210-5924	145
	▶166
210-5931	166
210-5932	161
	162
210-5937	145
210-5942	145
210-5947	145
210-6475	407
210-6491	415
210-6829	60
210-7665	442
210-7666	442
210-8401	442
210-8754	447
211-1478	153
211-2660	442
211-2661	404
211-3783	212
211-4245	▶116
	406
	410
211-4254	▶143
	167
211-4259	▶140
	234
211-4267	▶109
	167
211-4271	▶137
	406
	410
211-4277	▶98
	406
	410
211-4292	▶101
211-4348	297
	301
211-6574	43
211-6752	168
211-6753	175
212-0061	316
212-0862	130
212-5713	148
212-6933	59
213-0139	113
213-1881	212
213-1884	212
213-1887	212
213-1888	469
213-1889	212
213-1891	▶212
	406
	410
213-6040	116
213-6055	113
213-6060	110
213-6089	83
213-6091	83
213-6092	83
213-6096	143
213-6682	237
214-0592	375
214-3203	6
	11
214-3736	449
214-3737	449
214-3742	472
214-3763	472
214-4691	143
214-4692	109
214-4693	118
214-4694	229
	230
214-4695	113
214-4701	436
214-4702	130
214-4706	229
	230
214-4709	482
214-4710	140
214-4716	116
214-4717	130
214-4718	113
214-4723	130
214-6143	399
214-7043	391
214-7458	40
214-7568	194
	286
	292
	295
214-7915	221
215-1242	467
215-2913	407
	411
215-4012	59
215-9509	71
215-9690	391
216-0909	2
	▶485
216-3350	424
216-3351	422
	424
216-3358	422
	424
216-4457	151
216-4458	151
216-4461	151
216-4464	151
216-4465	151
216-4466	151
216-4475	167
	▶171
216-4983	59
216-5332	253
	▶277
216-6295	399
216-7473	145
216-8634	19
216-8687	156
216-8689	156
216-8700	156
216-9069	130
216-9498	151
	▶156
216-9633	38
217-0055	399
217-0099	75
217-1577	399
217-2879	161
	162
217-2911	145
217-3875	328
217-8185	194
	332
217-9039	128
218-0235	466
218-0666	404
218-2192	429
218-2193	427
	429
218-2373	378
218-3597	179
218-4453	406
	410
	▶436
218-4454	▶205
	436
219-0302	407
	411
	487
	488
219-3273	89
219-6281	442
219-6283	442
219-6292	442
219-8751	151
219-8752	151
219-8753	151
219-8754	151
219-8755	151
219-8756	151
219-8757	151
219-8758	151
219-8759	151
219-8783	166
219-8791	145
219-8794	145
219-8798	145
220-0269	422
	424
220-0738	212
	404
	417
220-2001	482
220-2657	326
220-3251	424
220-3762	442
220-3790	463
	464
220-3791	463
	464
220-5974	254
	256
220-7163	61
220-8311	55
220-8631	18
220-8678	67
221-2420	404
222-1801	211
222-1802	211
222-4067	332
222-4732	282
222-5171	399
223-2028	439
223-2029	437
223-2030	476
	478
	480
	481
223-3926	399
223-4546	214
	215
223-4715	▶371
	406
	410
223-8263	482
223-8267	215
224-2147	417
224-2149	417
224-8945	487
224-8946	488
225-0060	212
225-0312	488
225-0313	487
225-4150	486
	487
225-4256	487
225-4257	489
225-5438	26
225-5439	26
225-5441	26
225-5451	26
225-5453	26
225-5454	26
225-5458	26
225-5459	26
225-5501	15

▶ **PRIMARY REFERENCE**

PART NUMBER INDEX

Part	Page
225-6005	24
225-6041	24
225-7738	50
225-7944	44
225-7959	143
225-7970	130
225-7988	120
225-7994	▶90
	92
225-7995	▶92
225-7996	▶142
	406
	410
225-8019	50
225-8329	37
225-8524	61
225-8526	61
225-8533	61
225-8534	61
226-0291	212
	490
226-0420	▶227
	288
	292
226-1240	489
226-1242	487
226-4346	161
	162
226-4365	161
	162
226-4366	161
	162
226-4370	161
	162
226-5633	310
226-5634	310
226-8766	19
226-8767	19
226-9629	378
226-9764	399
227-1057	116
	118
	130
	231
	232
	233
	234
	410
227-1148	241
	242
227-1185	317
227-1186	346
	347
	348
	352
	353
	356
227-1189	316
227-1191	346
	348
	349
227-1197	317
227-1198	317
227-1199	317
	318
227-1202	338
227-5509	321
227-5556	212
227-8917	194
228-0172	74
228-5856	113
	118
	143
228-7100	69
	74
228-7102	69
	75
229-0298	474
229-0300	407
	▶474
229-0306	482
229-0308	474
229-0309	474
229-0310	474
229-4896	413
229-5055	153
229-5085	161
	162
229-5092	161
	162
229-5093	156
229-5745	390
229-7356	413
230-2510	422
	424
230-3038	424
230-4011	123
	131
230-6368	83
230-8094	24
230-8989	75
231-0670	157
	163
231-0671	157
	163
231-0696	157
	163
231-0697	157
	163
231-0703	161
	162
231-0745	161
	162
231-0750	145
231-2875	431
231-2876	431
231-2877	433
231-3052	89
231-3054	89
231-3538	240
231-9361	486
	488
232-1115	71
232-1322	13
	27
232-1536	433
232-1540	431
	433
232-1545	143
232-2865	214
	215
232-2869	214
	215
232-2870	214
	215
232-3149	75
232-3277	312
232-3666	19
232-3751	44
232-4636	490
232-4690	65
232-7449	12
233-0061	486
	488
233-0617	239
233-0619	245
233-0637	244
233-2589	245
233-2613	245
233-3786	9
233-5166	399
233-5167	399
233-5169	399
233-5260	417
233-6592	200
	202
	258
	261
	264
	267
	269
233-9205	247
233-9207	247
233-9408	11
234-3017	464
234-3063	71
234-4328	▶94
	98
234-4329	▶95
	98
234-7730	94
	95
	96
234-7731	94
	95
	96
234-8815	332
235-5843	332
235-8528	297
	300
236-2746	427
236-5189	332
236-5539	128
236-5753	316
236-6651	36
236-6923	113
237-3797	332
237-3943	467
238-0120	74
238-4626	179
238-4628	321
238-5227	145
238-5229	145
238-5256	161
	162
238-5285	145
238-7492	113
238-8288	55
238-8292	61
238-9397	123
239-4232	312
239-4235	312
239-6989	486
	487
239-9429	487
239-9430	489
240-4639	83
240-6866	315
240-7094	487
240-7095	489
241-0037	228
241-6225	267
241-6226	267
241-8448	258
	261
	264
	267
	269
241-8450	258
	261
	264
	267
	269
242-6114	131
242-6116	131
242-6118	131
242-6120	131
243-0062	458
243-5027	83
	123
244-3106	123
244-3113	212
245-1042	123
245-1044	123
245-1045	123
245-1048	123
245-4827	165
245-6098	2
	▶79
245-6101	79
245-6103	79
245-6104	79
	▶80
245-6105	80
	▶81
245-6107	81
245-6108	79
245-6109	206
245-8769	▶250
	336
	337
245-8780	303
	▶321
245-9828	17
246-2641	485
246-2671	130
246-8038	140
246-8052	143
246-8053	83
247-1080	221

▶ **PRIMARY REFERENCE**

PART NUMBER INDEX

Part	Page	Part	Page	Part	Page	Part	Page
247-4981	346	252-5069	346		▶282		▶429
	348	252-6318	11	254-0139	▶254	254-0196	2
247-5009	124	252-6934	435		336		▶187
247-6019	74	253-0784	2	254-0140	2	254-0198	▶410
247-7054	328		▶206	254-0145	2	254-0200	▶406
247-8179	441	253-0861	486		▶207	254-1126	437
247-8199	▶102		489	254-0147	42		439
	130	253-1817	437		▶48	254-1127	437
247-9730	52		439	254-0148	42		439
248-0395	225	253-1857	437		▶280	254-2449	305
248-1066	74		439	254-0149	42		307
248-2214	▶89	253-1858	437		▶59	254-3437	421
248-2707	64		439	254-0150	2		434
248-2709	419	253-5020	190		▶42		435
248-2710	390	253-5021	190	254-0151	253	254-5683	472
248-2714	437	253-5024	145		▶310	254-5703	▶165
	439	253-9510	442	254-0153	▶229		179
248-3290	179	254-0103	▶486	254-0154	▶230	254-7211	393
248-5547	273	254-0104	2	254-0156	▶231		401
249-0974	44		▶484	254-0157	▶232	254-7271	284
249-2482	415	254-0105	486	254-0159	▶233		312
249-3124	321		488	254-0160	▶234	254-7536	204
249-3125	321	254-0107	2	254-0161	▶278	254-9301	223
249-9076	90		▶221		399	254-9926	205
249-9328	▶210	254-0109	2	254-0163	253	254-9927	205
	406		▶391		▶325	255-0791	487
	410	254-0110	▶2	254-0164	229	255-0792	487
249-9329	210	254-0111	167		231	255-0793	489
249-9330	210		▶220		233	255-0794	489
250-1448	123	254-0112	▶46		▶305	255-0795	404
250-1878	225		410	254-0165	230	255-2731	59
250-5881	223	254-0113	▶47		232	255-4692	58
250-6148	315		406		234	255-8280	194
250-6850	225	254-0115	3		▶307	256-0143	36
250-6858	225		▶4	254-0166	▶284	256-0548	182
250-7910	486	254-0116	3		336	256-0549	182
	488		▶52		337	256-4447	55
250-7911	486	254-0117	3	254-0169	253	256-5299	410
	488		▶60		▶332	256-6803	90
250-7912	406	254-0118	3	254-0170	2	256-6804	92
250-8330	184		▶36		▶253	257-0447	342
251-1541	273	254-0119	3	254-0172	1	257-0448	344
251-2429	328		▶69		▶273	257-0453	340
251-2437	16	254-0120	2	254-0173	1	257-0464	316
251-3231	80		▶3		▶309	257-0465	316
251-3306	406	254-0121	167	254-0174	1	257-0468	317
	410		▶182		▶272		318
251-4336	19	254-0122	234	254-0175	▶1		347
251-4374	225		▶303	254-0177	406		348
251-4889	210	254-0124	303		▶413		349
251-4890	210	254-0125	▶234	254-0179	1		351
251-4891	210		253		▶275		352
251-5625	336	254-0126	167	254-0180	▶1		353
251-5626	336		▶194	254-0185	229		354
	337	254-0127	▶164		230		356
251-9570	123		167		▶322		357
252-1862	437	254-0129	▶159	254-0188	▶336	257-0480	258
	439		167	254-0189	▶336		261
252-1863	437	254-0130	2	254-0190	406		264
	439		▶167		▶449		269
252-1864	439	254-0135	2	254-0192	231	257-5571	352
252-1865	437		▶394		232	257-5616	376
252-2157	486	254-0137	2		▶427	257-7707	376
	488		▶312	254-0194	233	257-7721	318
252-5068	346	254-0138	2		234	257-7729	349

▶ **PRIMARY REFERENCE**

PART NUMBER INDEX

Part	Page	Part	Page	Part	Page	Part	Page
	351	260-0046	467		▶123	268-7757	122
	354	260-0047	466	263-0960	2	268-7759	132
	357	260-0049	467		▶138	269-0388	245
257-7730	349	260-0051	466	263-0992	2	269-0389	245
	351	260-0052	466		▶83	269-1079	338
	354	260-0053	465	263-3823	453		340
	357	260-0057	466	263-5516	328	269-3247	229
257-7731	349	260-0058	462	263-5781	447		230
	352	260-0059	466	263-9498	130		▶454
	353	260-0060	466	264-0614	237	269-3254	454
257-7732	346	260-0061	465	264-1335	204	269-3262	454
	▶370	260-0062	465	264-4297	123	269-3269	214
257-7733	351	260-0063	467	264-4362	130	269-4949	200
	354	260-0067	467	264-4410	123		286
	357	260-0634	52	264-7029	123		288
257-7734	349	260-1336	58		131		291
	351	260-3002	363	265-6810	2		292
	353		366		▶216	269-4951	200
	354		368	265-6811	216		202
	356	260-3003	362		▶217	269-4958	297
	357	260-3004	359	265-7511	40		301
257-7739	348		360	265-8182	102	269-4959	297
257-7741	347	260-3005	361	266-0149	▶40		301
	348	260-3006	364		42	269-4964	200
257-8471	204	260-3022	297	266-1467	▶107	269-4965	288
258-2354	417		▶376		458		292
258-3697	437	260-3023	376	266-5905	239	269-4966	200
	439	260-3122	58	266-9381	239		202
258-9999	486	260-3939	75	266-9471	235	269-8129	422
	488	260-6685	43	266-9976	241		424
259-0127	153	260-7652	90		242	269-8215	1
259-0128	153	260-7653	90	267-2701	105		▶399
259-0129	153	260-9143	267		106	269-8216	2
259-1802	275	260-9191	297		132		▶218
259-6276	410		300	267-2758	334	269-8217	1
	▶451	261-0376	47	267-2809	98		▶382
259-6747	339	261-0406	46	267-5211	103	269-8218	1
	341	261-0428	47		104		▶386
259-6748	339	261-2208	143		105	269-8219	1
	341	261-4320	46		106		▶393
259-6749	339		47	267-5213	103	269-8220	1
259-6750	341	261-5517	192		104		▶401
259-9796	218		▶193		105	269-8817	422
259-9797	218	261-5519	193		106		424
260-0027	462	261-9632	469	267-5225	454	269-9115	419
	465	261-9634	454	267-5635	▶120	269-9259	▶145
260-0028	462	261-9635	192		229		167
	465	261-9636	415	267-7207	123	269-9260	▶148
260-0029	462	261-9637	415	267-7208	123		167
	465	261-9639	415	267-8390	332	269-9263	167
260-0030	467		417	267-9572	123		▶179
260-0031	467	261-9642	454	268-0094	288	269-9336	253
260-0032	467	261-9644	419		292		▶328
260-0033	467	261-9645	419	268-0103	334	270-0526	179
260-0034	467	262-0347	328	268-0108	334	270-0527	179
260-0035	467	262-1421	▶87	268-0109	334	270-1577	221
260-0036	466		92	268-1547	275		▶223
260-0040	462	262-4081	194	268-1548	275	270-1590	▶204
	465	262-4084	194	268-1710	179		253
260-0041	467	262-8088	280	268-1964	116	270-1592	223
260-0042	467	262-9567	447	268-5689	254		▶225
260-0043	467	263-0924	▶130		256	270-1595	225
260-0044	467		406	268-6677	75	270-1645	221
260-0045	462		410	268-6678	75	270-2629	221
	465	263-0958	3	268-7756	121	270-2630	221

▶ PRIMARY REFERENCE

PART NUMBER INDEX

Part	Page	Part	Page	Part	Page	Part	Page
270-2692	207		344	272-5115	187	273-8657	312
270-2794	454	271-0541	342		▶188	273-8659	284
270-2795	422		344	272-5118	▶188	273-8660	284
	424		▶349		189	273-8675	282
270-3220	2	271-0542	342	272-5119	▶188	273-9161	322
	▶397		344		189	273-9177	258
270-3221	397		▶351	272-5120	187		264
270-3222	397	271-0544	342		▶189	273-9178	258
270-3223	397		344	272-5421	229		264
270-4194	209		▶352		230	273-9428	427
270-4195	208	271-0545	342	272-5767	413	273-9429	427
270-5161	454		344	272-6706	399	273-9430	427
270-6999	223		▶353	272-6707	399	273-9433	194
270-7273	225	271-0546	342	272-7079	454	273-9454	427
270-7285	1		344	272-7104	422	273-9638	40
	▶237		▶354		424	273-9774	258
270-7286	1	271-0547	344	272-8123	332		264
	▶244		▶356	272-9635	40	274-1639	68
270-7287	1	271-2351	118	272-9701	434		75
	▶235	271-3096	229	273-1473	454	274-1931	29
270-7288	▶239		230	273-1474	410	274-2355	40
	399		▶434	273-1475	454	274-3715	▶264
270-7290	▶241	271-3097	229	273-1476	454	274-3716	▶267
	253		▶421	273-1477	454	274-3717	▶269
270-7291	▶242	271-3099	230	273-1478	454	274-3774	98
	253		▶435	273-2585	60		124
270-7818	▶381	271-3101	434	273-2596	60		132
	382	271-3103	421	273-2994	46		138
270-7819	382	271-3105	435		47	274-3775	132
270-7862	393	271-3116	159	273-3137	40	274-3776	132
	401	271-3179	391		▶43	274-3777	132
270-7863	393	271-3181	391	273-3139	150	274-3778	132
	401	271-3186	449	273-3262	36	274-3779	132
270-7864	393	271-3188	48	273-4210	288	274-3780	132
	401	271-3189	48		292	274-3866	69
270-7865	399	271-3191	391	273-4211	288	274-3867	69
	401	271-3192	218		292	274-3868	69
270-7866	▶398	271-3201	280	273-4705	52	274-4274	245
	401	271-3205	280	273-4707	52	274-4495	231
270-7969	386	271-3206	280		▶54		232
270-7971	386	271-3222	391	273-4708	52		233
270-7972	386	271-3240	391	273-4709	52		234
270-7973	386	271-4936	164	273-5097	36		▶431
270-7974	386	271-5357	59	273-5684	69	274-4496	232
270-7989	218	271-5358	59	273-5685	69		234
270-7990	218	271-5359	59	273-5905	▶462		▶433
270-9043	221	271-7308	165		463	274-4553	168
271-0512	336	271-7464	254	273-6037	464		172
	▶338		256		▶465		173
271-0513	336	272-0008	332	273-6372	463		175
	▶340	272-0373	124		464		177
271-0521	338	272-0537	81		▶466	274-4554	179
	340	272-0717	159	273-6375	297	274-4555	249
	▶346	272-0751	180		300	274-4556	180
271-0522	338	272-1612	386	273-7180	69	274-4560	179
	340	272-1613	398	273-7300	272	274-4569	180
	▶347		399	273-7302	272	274-4580	▶168
271-0523	340	272-1944	237	273-7309	23		179
	▶348	272-2838	118	273-7336	309	274-4582	▶175
271-0527	229	272-5111	188	273-7338	309		179
	▶342	272-5112	187	273-8652	282	274-4990	123
271-0528	230	272-5113	▶187	273-8653	282	274-5339	382
	▶344		188	273-8654	282	274-5726	332
271-0539	▶317	272-5114	▶187	273-8655	282	274-7409	132
	342		188	273-8656	282	274-8041	184

▶ **PRIMARY REFERENCE**

PART NUMBER INDEX

Part	Page
274-8048	182
	▶184
274-8378	218
274-8638	168
	172
	173
	175
274-8682	83
274-9872	103
274-9877	103
274-9993	143
275-0001	223
275-0490	▶103
	124
275-0553	132
275-0570	113
275-0652	194
275-0653	194
275-2358	40
275-3432	46
	47
275-3984	187
275-8521	191
275-8869	422
	424
275-9883	24
275-9902	36
275-9911	256
276-2334	303
276-3069	254
	256
276-5605	11
276-7287	▶104
	113
276-7290	▶105
	132
276-7291	▶106
	132
276-7394	10
276-7476	26
276-8116	13
276-8117	13
276-8123	13
276-8126	220
276-8133	13
276-8791	472
276-9200	30
276-9201	30
276-9206	30
276-9207	30
276-9230	30
277-0639	40
277-1873	83
	113
277-2923	50
277-2925	50
277-2974	39
277-3012	19
277-3145	429
277-3146	429
277-3147	429
277-3148	429
277-3149	194
277-3151	194
277-3160	394
277-4439	282
277-4696	40
277-4697	40
277-4813	40
277-5031	7
277-5064	7
277-5065	7
277-5067	7
277-6165	71
277-7101	305
	307
277-7263	244
277-7267	244
277-7269	244
277-7270	244
277-7566	282
277-7567	282
277-8344	40
277-8438	40
277-8766	394
277-9708	288
	292
278-0204	381
278-0213	179
278-0254	244
278-0316	61
278-0361	61
278-0461	132
278-1427	312
278-1428	312
278-1429	312
278-1496	237
278-1497	237
278-1500	237
278-2324	237
278-3492	3
	▶57
278-3505	43
278-3523	43
278-3524	43
278-4138	66
	71
	75
278-5088	239
278-5091	239
278-5111	30
278-5112	30
278-5113	30
278-5126	5
278-5168	75
278-5170	75
278-5201	86
278-5202	86
278-5203	75
278-5209	128
278-5210	128
278-5225	75
278-5273	75
278-5307	75
278-6377	104
278-6399	52
	▶58
278-7469	421
	435
278-7758	229
	230
	▶334
278-7764	288
278-7770	334
278-7773	269
278-7774	273
278-7775	273
	275
278-7776	273
278-7778	261
	267
	269
278-7779	264
278-7780	258
	261
	264
	267
	269
278-7781	261
	267
	269
278-7783	258
	261
	264
	269
278-7789	275
278-7791	275
278-7792	275
278-7793	275
278-8275	54
278-8276	54
278-8277	54
278-8278	54
278-8708	394
279-1971	57
279-4177	398
279-4602	52
279-5016	303
279-5079	235
279-5080	235
279-5735	310
279-5736	310
279-5737	310
279-6052	254
	256
279-6596	241
279-6599	241
	242
279-6602	242
279-7145	393
	401
279-9452	391
279-9651	21
280-1465	1
	▶324
280-1641	309
280-1912	30
280-1913	30
280-1914	30
280-2815	297
280-3577	386
280-7007	▶177
	179
280-7009	179
280-7012	179
280-7013	145
280-7014	145
280-7015	145
280-7364	410
	▶466
280-7366	406
	▶466
280-7463	305
	307
280-7731	218
280-7732	218
280-7868	328
280-7869	328
280-7870	328
280-7872	328
280-7873	253
	▶326
280-8245	305
	307
281-4726	267
281-7403	488
281-8744	39
282-6944	328
282-7833	98
	469
	472
282-7835	98
	469
	472
283-1171	46
283-1172	47
283-3451	472
283-3467	454
283-3477	454
283-4237	449
283-6331	310
	▶369
283-7981	454
283-8053	454
283-8563	214
284-1602	441
284-3425	82
284-8483	▶487
284-8531	90
284-9039	81
285-1200	1
	▶385
285-1207	406
	410
285-1973	7
285-9109	442
286-0867	179
286-0870	148
286-0871	157
286-1930	194
286-2890	71
286-7166	399
287-2046	245
287-2102	▶113
	406
287-5667	399
287-7266	282
287-7307	282
287-7539	218
287-7541	218

▶ **PRIMARY REFERENCE**

PART NUMBER INDEX

Part	Page	Part	Page	Part	Page	Part	Page
287-7637	68	288-7300	148	290-2713	282	293-9361	278
287-8597	18		▶190	290-2730	284	293-9478	275
288-0422	19	288-7301	148	290-2791	312	293-9625	278
288-1157	223	288-7302	148	290-4164	145	293-9626	278
288-4118	385	288-7303	148	290-4638	312	293-9882	399
288-4464	385	288-7305	148	290-5760	▶96	293-9884	399
288-4465	385	288-8045	64		98	294-4625	334
288-5411	385		▶65	290-6746	83	294-7370	3
288-5412	385	288-9734	413	290-6767	▶121		▶23
288-7197	157	289-0600	66		229	294-7375	61
	163	289-2935	247		230	294-9142	427
288-7198	157	289-2946	247	290-6768	▶122		429
	163	289-3274	229		230	294-9538	▶208
288-7199	157		230	290-6776	▶87		221
288-7200	148		▶297		406	294-9539	▶209
	▶153	289-3275	▶200		410		221
288-7201	153		336	290-6791	83	294-9540	208
288-7202	153	289-3276	229	290-6792	83	294-9541	209
288-7205	153		230	290-6799	98	294-9810	172
288-7206	153		▶286	290-6801	124		173
	▶157	289-3278	229	290-6820	138	294-9812	172
288-7207	157		230	290-7831	413		173
	163		▶288	290-8071	43	295-0189	74
288-7208	157	289-3280	253	290-8139	254	295-1042	7
288-7209	157		▶291		256	295-4670	71
288-7210	153	289-3281	297	291-3820	40	295-4801	74
288-7211	153		300		▶150	295-5550	52
288-7213	153	289-3282	297	291-5108	422	295-6661	11
288-7214	153	289-3283	297		424		13
288-7215	153	289-3284	200	291-8379	194	295-8472	206
288-7216	153	289-3285	200	292-0572	334	295-9897	487
288-7217	153	289-3286	202	292-0573	334	295-9898	489
288-7218	153	289-3288	202	292-0574	334	296-3542	74
288-7219	190	289-3290	286	292-0667	407	296-5807	40
288-7220	190	289-3291	286		411	296-6720	328
288-7221	190	289-3296	288	292-2400	258	296-6723	328
288-7222	190		292		261		▶375
288-7223	190	289-3297	288		264	296-9872	217
288-7224	190		292		267	297-1641	150
288-7227	190	289-3298	288		269	297-4896	▶245
288-7228	190	289-3299	288	292-2403	324		253
	▶191	289-3300	288	292-2404	324	297-4897	245
288-7229	191	289-3301	288	292-2405	324	297-4900	245
288-7230	191	289-3302	288	292-2406	324	297-5849	457
288-7231	191	289-3303	288	292-2831	484	297-8500	367
288-7232	148	289-3311	291	292-2832	484	298-0663	125
288-7233	153	289-3312	291	292-2833	484	298-3599	194
288-7234	191	289-3313	291	292-2834	484	298-4526	▶13
288-7235	191	289-3314	291	292-2896	123		15
288-7236	191	289-3412	486	292-4209	381	298-4527	13
288-7237	191		488	292-4210	217	298-4528	13
288-7238	191	289-3800	284	292-5618	369	298-4530	13
288-7239	▶172	289-3801	284	292-5773	447	298-4533	▶30
	179	289-3802	282	292-6831	297		31
288-7240	145		284	292-8127	254	298-4535	75
	▶161	289-6018	449		256	298-4542	75
288-7241	161	289-6021	449	292-8989	317	298-4543	75
288-7242	145	289-9808	164	292-9201	191	298-4546	7
	▶162	289-9871	214	292-9880	88	298-4547	7
288-7243	162		215	293-0249	74	298-4548	7
288-7244	145	289-9873	214	293-1980	415	298-4549	7
288-7246	190		215		419	298-4550	7
288-7249	▶173	289-9874	214	293-2916	40	298-4551	7
	179	289-9875	215	293-7851	278	298-4552	7
288-7250	145	290-1273	474	293-9360	278	298-4558	45

▶ **PRIMARY REFERENCE**

PART NUMBER INDEX

Part	Page
298-4560	45
298-4570	61
298-4592	71
298-4595	71
298-4597	71
298-4603	66
298-4604	21
298-5099	4
	▶44
298-5101	4
	▶29
298-5105	4
	▶50
298-5111	4
	▶6
298-5112	4
	▶37
298-5123	4
	▶66
298-5125	4
	▶88
298-5127	4
	▶21
298-5129	4
	▶27
298-5130	4
	▶128
298-5131	4
	▶28
298-5772	88
298-6823	300
298-6825	300
299-4777	214
	215
299-5511	13
299-6985	▶444
	476
	478
	481
299-6986	▶445
	476
	478
	480
299-8917	157
299-9009	43
299-9068	318
299-9072	▶315
	342
	344

3

Part	Page
300-0430	195
	▶373
300-2692	254
	256
300-4994	229
	230
300-4995	98
300-4996	98
300-5838	194
300-6520	61
300-6714	75
301-0086	373
	▶374
301-0589	90
301-2176	194
301-2177	194
301-4484	365
301-8243	4
	▶39
301-9725	406
	▶414
302-1480	403
302-1481	403
302-5840	153
302-8432	180
303-0284	295
303-2116	61
303-4603	▶403
303-5767	4
	▶18
303-5768	4
	▶17
303-5769	4
	▶108
303-5770	4
	▶16
303-5773	4
	▶35
303-5777	4
	▶55
303-5778	4
	▶22
303-5781	7
303-5786	61
303-5787	61
303-5788	61
303-5793	61
303-5795	108
304-3269	171
304-3704	61
304-5163	128
304-5617	4
	▶38
304-5691	87
304-5696	140
304-6436	4
	▶86
304-8764	24
304-8965	442
305-3428	157
	▶163
305-5291	75
305-7881	82
305-8455	4
305-9190	482
306-2330	5
306-2337	35
306-7692	3
	▶33
306-8857	29
306-8864	33
306-8877	431
	433
306-9205	347
307-0765	33
307-1654	272
307-2032	69
307-4410	4
	▶61
307-4639	225
307-4849	194
307-7518	280
307-7521	292
307-9799	▶251
	253
308-1273	474
308-1845	247
308-5496	202
308-7298	67
308-7571	71
308-7576	67
309-6678	13
309-8006	75
309-9657	486
	488
310-0674	130
310-5782	282
310-5912	67
310-7136	280
310-8520	15
310-9905	26
311-0501	325
311-0714	391
311-2154	138
311-2768	59
311-3858	75
311-4120	305
	307
311-5889	429
311-6342	75
311-6604	427
311-8075	399
311-8710	241
	242
311-8711	237
312-2206	208
	209
312-3123	449
312-3124	449
312-5570	40
312-6455	83
313-1663	67
313-5196	449
313-5544	172
	173
313-5658	33
314-9819	4
	▶71
314-9820	71
314-9821	71
315-3384	5
315-7790	449
315-7903	124
316-0555	61
316-2516	237
	244
316-2517	237
	244
316-3436	446
316-3437	446
316-7992	40
317-2727	52
317-2728	60
317-3144	75
317-4574	52
317-4575	52
317-5542	447
317-5543	406
	▶447
317-6291	235
317-8141	414
317-9776	4
	▶82
318-0638	235
318-8064	▶67
	69
318-8318	188
319-0755	83
319-6144	208
319-8524	404
319-9444	446
320-0680	▶68
	75
320-2360	7
320-2361	7
320-2362	7
321-2559	206
321-8626	69
321-8627	69
321-8628	69
322-3745	75
322-3746	75
322-7241	258
	261
	264
	267
	270
322-7706	394
	▶396
322-8414	407
	437
	439
322-9476	4
	▶24
322-9477	4
	▶7
323-3308	486
	487
323-3309	486
	487
323-3515	19
323-5174	254
323-6645	486
	487
323-7311	275
324-0444	19
324-0532	▶74
	75
324-0720	384
324-7165	242
325-9300	476
325-9301	478
325-9310	407
	411
325-9311	447
326-0496	235
326-1880	16

▶ **PRIMARY REFERENCE**

PART NUMBER INDEX

Part	Page	Part	Page	Part	Page	Part	Page
326-4007	153		489		▶295	348-4588	345
326-7861	35	338-1508	205	345-3169	▶202	348-4589	358
327-7601	407	338-3328	407		336		362
	▶476	338-5288	361		337	348-4590	320
327-7637	407		362	345-3170	▶258	348-4592	362
	▶478		363	345-3171	▶261	348-4593	358
327-7708	261		364	345-7712	300		364
	270		365		▶377		365
329-1167	407		366	345-9662	256	348-4594	319
	▶437		368	346-0007	11	348-8149	47
329-1168	407	338-5289	359	346-0059	▶256	348-9761	351
	▶439		360		336	348-9767	354
329-1169	437	338-5290	358		337		356
329-1170	439	339-2014	312	346-0309	300	348-9768	347
329-7854	6	339-3075	118	346-0310	295		348
329-7856	6	339-3397	31	346-0311	295		352
330-3979	317	339-9637	13	346-0322	292	348-9769	357
	318	341-4028	10	346-0323	202	348-9771	353
330-5010	▶453	341-4726	▶316	346-0408	19	348-9774	351
	482		342	346-1014	258	348-9819	345
330-9416	261		344	346-1015	261		▶368
	270	341-4727	316	346-1232	▶336	349-3261	46
331-5592	118		318	346-1233	▶337	349-3650	206
331-5602	▶118	341-8185	342	346-1449	128	349-6064	339
	406		344	346-2937	300		341
	410		▶357	346-6759	319		343
331-7539	86	341-8234	36	346-9825	82		345
333-4732	75	342-6662	336	348-4091	377	350-5196	300
333-4733	75		▶339	348-4101	377	350-8601	179
333-9693	67	342-6663	337	348-4573	▶319	350-9172	300
333-9694	67		▶341		339	352-3613	241
333-9901	439	342-6667	231		341		242
	▶480		233	348-4574	339	352-4225	349
333-9902	437		▶343		341	353-2205	9
	▶481	342-6668	232		▶358	353-2206	9
334-2932	74		234	348-4575	339	353-2207	9
335-5426	33		▶345		▶359	353-2208	9
335-7098	254	343-4355	118	348-4576	341	353-3010	410
336-3545	▶87	343-7137	▶318		▶360		▶411
	90		338	348-4577	341	353-3011	406
336-3566	87		340		▶361		▶407
336-7533	419	344-2429	446	348-4578	▶320	353-3013	411
337-3573	75	344-2430	446		343	353-7423	9
337-3574	75	344-2432	▶446		345	353-7424	9
337-5099	358		454	348-4579	343	353-7425	9
	359	345-1647	323		345	353-7715	45
	360	345-3165	231		▶362	353-7717	44
	361		232	348-4580	343		▶45
	362		233		345	353-8584	414
	363		234		▶363	354-4754	50
	364		▶323	348-4581	343	355-5105	87
	365	345-3166	231		345	355-9764	87
	366		232		▶364	357-0587	4
	368		233	348-4582	343		▶75
337-5100	358		234		345	357-0616	4
	359		▶292		▶365		▶19
	360	345-3167	231	348-4583	343	358-6632	75
	361		232		345	358-7087	404
	362		233		▶366		▶442
	363		234	348-4584	343	359-0739	4
	364		▶300		345	359-3106	474
	365	345-3168	231		▶367	359-3107	474
	366		232	348-4585	343	359-9666	82
	368		233		345	360-3218	407
337-5351	486		234	348-4587	343		411

▶ **PRIMARY REFERENCE**

PART NUMBER INDEX

Part	Page	Part	Page	Part	Page	Part	Page
363-3907	▶11						
	12						
363-3908	11						
364-2829	▶9						
	10						
367-9024	87						
367-9026	87						
368-0572	▶2						
368-1845	4						
	▶12						
368-1846	4						
	▶10						
368-1847	4						
	▶26						
368-1848	4						
	▶15						
368-1849	4						
	▶31						
368-1850	4						
	▶5						
368-9044	406						
	410						
	▶419						



© 2010 CATERPILLAR
ALL RIGHTS
RESERVED

CAT, CATERPILLAR, THEIR RESPECTIVE LOGOS, “CATERPILLAR YELLOW” AND THE POWER EDGE TRADE DRESS, AS WELL AS CORPORATE AND PRODUCT IDENTITY USED HEREIN, ARE TRADEMARKS OF CATERPILLAR AND MAY NOT BE USED WITHOUT PERMISSION.

PRINTED IN
U.S.A.