MARÇO 2007

450J/550J/650J CRAWLER

RUTHZIL TRATOR COMERCIAL DE PEÇAS LTDA 11 97083-6812 ROLANDO CITRANGULO

JOHN DEERE

PARTS CATALOG

450J/550J/650J CRAWLER

PC9387 (Mar-07) English

Worldwide Construction and Forestry Division
Worldwide Edition
Litho in U.S.A. (Revised)
COPYRIGHT © 2007
DEERE & COMPANY
Moline, Illinois
All rights reserved

T199713A -UN-05MAY04



RIGHT SIDE VIEW OF 650J CRAWLER
(MANUFACTURED 2004-)

TO THE CUSTOMER

THE PART NUMBERS IN THIS PARTS CATALOG WERE CORRECT AT THE TIME THIS CATALOG WAS PUBLISHED. IT IS OUR POLICY TO CONSTANTLY IMPROVE OUR MACHINES AND, THEREFORE, PART NUMBERS MAY CHANGE. WHEN ORDERING PARTS, VERIFY PART NUMBERS THROUGH YOUR DEALER.

(SPECIFICATIONS AND DESIGN SUBJECT TO CHANGE WITHOUT NOTICE.)

SERIAL NUMBER LOCATION

EACH 450J,550J OR 650J CRAWLER MAY HAVE SEVEN SERIAL NUMBERS. ONE FOR THE PRODUCT IDENTIFICATION NUMBER, ONE FOR THE ENGINE, ONE FOR THE L.H. TRACK DRIVE MOTOR,ONE FOR THE R.H. TRACK DRIVE MOTOR, ONE FOR THE HYDROSTATIC FRONT PUMP, ONE FOR THE HYDROSTATIC REAR PUMP AND ONE FOR THE MICRO COMPUTER.
THE PRODUCT IDENTIFICATION NUMBER IS LOCATED ON THE LEFT-HAND SIDE OF THE CRAWLER FRAME BELOW THE OPERATORS STATION
THE ENGINE SERIAL NUMBER PLATE IS LOCATED ON THE RIGHT-HAND SIDE OF THE CYLINDER BLOCK.
THE TRACK DRIVE MOTOR SERIAL NUMBER PLATE IS LOCATED ON THE END CAP OF THE DRIVE MOTOR.

THE FRONT HYDROSTATIC PUMP SERIAL NUMBER PLATE IS LOCATED ON THE PUMP HOUSING.

THE REAR HYDROSTATIC PUMP SERIAL NUMBER PLATE IS LOCATED ON THE PUMP HOUSING.

THE MICRO-COMPUTER SERIAL NUMBER PLATE IS LOCATED ON THE BOTTOM OF THE COMPUTER.
LEFT SIDE AND RIGHT SIDE, FRONT AND REAR OF THE CRAWLER ARE VIEWED BY FACING IN THE DIRECTION OF THE CRAWLER FORWARD TRAVEL.

PRODUCT IDENTIFICATION NUMBER
(450J)

TP62040 -UN-14SEP99

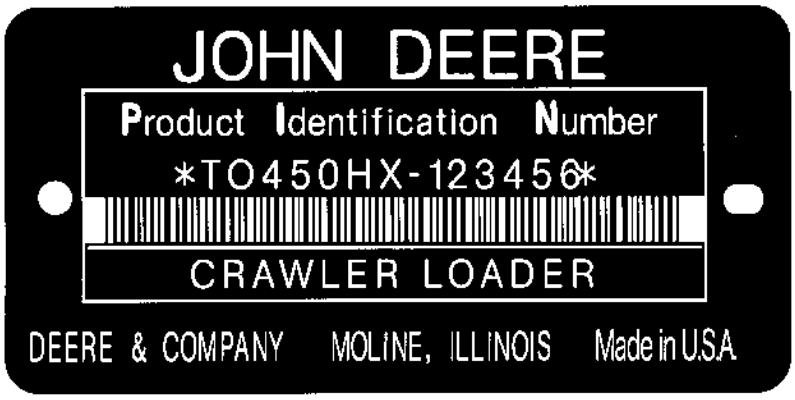

TP62040

1. DESIGNATES CRAWLER MANUFACTURER	TO - JOHN DEERE DUBUQUE WORKS
2. DESIGNATES CRAWLER MODEL	450JX
3. DESIGNATES CRAWLER SERIAL NUMBER	123456 (EXAMPLE)
4. DESIGNATES UNIT TYPE	CRAWLER

ENGINE SERIAL NUMBER PLATE
(450J,550J AND 650J CRAWLER)

T134833 -UN-23OCT00



T134833

FIRST LINE	DEFINES
PE - JOHN DEERE TORREON	DESIGNATES ENGINE MANUFACTURER.
4	DESIGNATES NUMBER OF CYLINDERS.
4.5	DESIGNATES LITER DISPLACEMENT.
H - TURBOCHARGED DIESEL WITH INTERCOOLER	DESIGNATES TY
T - TURBOCHARGED	
T - (JOHN DEERE DUBUQUE WORKS)	DESIGNATES VEHICLE APPLICATION
123456	DESIGNATES ENGINE SERIAL NUMBER.

SECOND LINE	APPLICATION
PE4045TT090	450JX/550JX
PE4045HT050	650JX (STD)
PE4045HT051	650JX (FIREPLOW)

SERIAL NUMBER LISTING INFORMATION

SERIAL NUMBER INFORMATION IS LISTED TO SHOW ON WHICH MACHINES EACH PART CAN BE USED; FOR EXAMPLE:

- THE PART CAN BE USED ON ALL MACHINES.

000000- THE PART CAN BE USED ON ALL MACHINES BEGINNING WITH THE SERIAL NUMBER LISTED.

-000000 THE PART CAN BE USED ON ALL MACHINES UP TO AND INCLUDING THE SERIAL NUMBER LISTED.

000000-000000 THE PART CAN BE USED ON ALL MACHINES BETWEEN AND INCLUDING THE SERIAL NUMBERS LISTED.

WHEN XXXXXX'S ARE LISTED IN PLACE OF A SERIAL NUMBER, A SERIAL NUMBER CHANGE WAS MADE BUT THE EXACT SERIAL NUMBER WAS NOT AVAILABLE WHEN THE CATALOG WAS PRODUCED.

DIRECTION ARROW

ARROWS ARE USED WITH ILLUSTRATIONS TO INDICATE THE FRONT OF THE UNIT. "RIGHT-HAND" AND "LEFT-HAND" SIDES ARE DETERMINED BY FACING IN THE DIRECTION OF MACHINE FORWARD TRAVEL.

BOX-ENCLOSED ILLUSTRATIONS

A KEY NUMBER, SHOWN IN THE PARTS LIST, IS ASSIGNED TO A BOX ENCLOSING ALL PARTS SOLD AS A SERVICE ASSEMBLY.

COMPLETE GOODS LISTINGS

COMPLETE GOODS ARE LISTED IN BOLD FACE TYPE. ORDER SEPARATELY. DO NOT INCLUDE ON REPLACEMENT PARTS ORDER.

SI UNITS OF MEASURE

METRIC DIMENSIONS ARE GIVEN, WHERE APPLICABLE, THROUGHOUT THIS PARTS CATALOG.

CHANGE INDICATOR LINE

CHANGES AFFECTING THE ORDERING OF PARTS ARE IDENTIFIED BY VERTICAL LINES MARKED IN THE LEFT-HAND MARGIN OF REVISED PARTS LISTING IMAGES. A LINE IS ALSO AT THE LEFT-HAND EDGE OF THE SAME PART NUMBER IN THE NUMERICAL INDEX TO SHOW THE LOCATION OF REVISED INFORMATION.

REMARKS AND ABBREVIATIONS

THE FOLLOWING REMARKS AND ABBREVIATIONS MAY APPEAR THROUGHOUT THE PARTS CATALOG. REFER TO THE FOLLOWING CHART FOR TRANSLATIONS TO LANGUAGES OTHER THAN ENGLISH.

REMARKS AND ABBREVIATIONS

TX1007193 -UN-04MAY06

PHRASE	ENGLISH	FRANCAIS	DEUTSCH	ITALIANO	ESPANOL	SVENSKA
ALSO ORDER, ORD W/	Also order	Commander aussi	Ebenso bestellen	Ordinare anche	Pedir también	Beställ även
AMP	Ampere	Ampère	Ampere	Ampere	Amperio	Ampere
APPL, APPL ONLY	This application only	Uniquement pour cette utilisation	Nur für diese Anwendung	Solo per questa applicazione	Solo para este propósito	Endast för denna användning
AR	As required	Selon le besoin	Nach Bedarf	Secondo necessità	Según necesidad	Vid behov
ASSY	Complete assembly	Ensemble complet	Kompl.-Zusammenbau	Gruppo completo	Montaje completo	Komplett montering
CA, CONVENIENCE ASSY	Convenience assembly	Ensemble convenance	Komfort-Zusammenbau	Montaggio pratico	Montaje de conveniencia	Lämplig montering
CCW	Counter-clockwise	Sens anti-horaire	Gegen Uhrzeigersinn	Senso antiorario	A la izquierda	Moturs
COMPLETE	Complete	Complet	Vollständig	Completo	Completo	Fullständig
COMPLETE GOODS	Complete goods	Compléter marchandises	Vollst. Waren	Merci complete	Mercancías completas	Kompletta varor
CTL CUT TO LENGTH	Cut to length	Couper à la longueur	Auf Länge zurechtschneiden	Tagliare alla lunghezza	Corte a la longitud	Skära till längd
CW	Clockwise	Sens horaire	Im Uhrzeigersinn	In senso orario	A la derecha	Medurs
FOR	For	Pour	Für	Per	Para	För
FRONT	Front	Avant	Vorn	Anteriore	Frente	Fram
GAS	Gasoline	Essence	Benzin	Benzina	Gasolina	Bensin
HP	Horsepower	Puissance en cv	Leistung	Potenza	Potencia	Hästkraft
HFWD	Hydraulic Front-wheel Drive	Traction Avant Hydraulique	Hydraulischer Vorderradantrieb	Trazione Anteriore Idraulica	Traccion Delantera Hidraulica	Hydraulisk Framhjulsdrift
HS, HEAD MARKED	High strength, head marked	Haute résistance, tête marquée	Hochfest, vorn gekennzeichnet	Contrassegnato in testa, ad alta resistenza	Alta fuerza, marca en cabeza	Hög styrka, huvudmärkt
ID	Inside diameter	Diamétre intérieur	Innendurch-messer	Diametro interno	Diá. interior	Innerdiameter
INCH	Inch	Pouce	In.	Pollice	Pulg.	Tum
INCL KEYS	Includes keys...	Comprend les positions...	Einschließlich Schlüssel...	Include le chiavette...	Incluye posiciones...	Inklusive nycklar...
INCL, INCLUDES	Includes...	Comprend...	Enthält...	Include...	Incluye...	Inkluderar...
INCLUDES PARTS/ ITEMS MARKED	Includes parts/items marked...	Comprend les pièces/articles marqués...	Enthält gekennzeichnete Teile/Pos. ...	Include i pezzi e gli elementi contrassegnati...	Incluye piezas marcadas...	Inkluderar markerade delar/artiklar...
INNER	Inner	Intérieur	Innerer	Interno	Interno	Inre, invändig
KIT	Kit	Kit	Kit	Kit	Juego	Sats
L	Number of links	Nombre de maillons	Anzahl der Glieder	Numero di maglie	Nº de eslabones	Antal länkar
LGTH	Length	Longueur	Länge	Lunghezza	Longitud	Längd
LGP	Low Ground Pressure	Faible Pression Au Sol	Niederer Bodendruck	Bassa Pressione Sul Suelo	Baja Presion Sobre El Suelo	Laagt Marktryck
LH	Left-hand	Gauche	Links	Sinistra	Izquierda	Vänster
LT	Long Track	Chenille Longue	Mit Langem Laufwerk	Cingolo Lungo	Cadena Largo	Laangt Larvband
LOW, LOWER	Lower	Inférieur	Unterer	Inferiore	Inferior	Nedre
MAKE FROM, MF	Make from	Faireavec	Herstellen von	Fabbricare da	Hacer de	Tillverka av
MARKED	Marked	Marqué	Markiert	Contrassegnato	Marcado	Märkt

TX1007193

REMARKS AND ABBREVIATIONS

TX1007195 -UN-04MAY06

PHRASE	ENGLISH	FRANCAIS	DEUTSCH	ITALIANO	ESPANOL	SVENSKA
MATCHED SET	Matched set	Ensemble assorti	Passender Satz	Set abbinato	Sistema emparejado	Anpassad sats
MFWD	Mechanical Front-Wheel Drive	Pont Avant	Allradantrieb	Ruota Motrice Meccanica Anteriore	Traccion Delantera Mecanica	Mekanisk Framhjulsdrift
NA, NOT USED THIS APPL	Not used this application	Ne sert pas pour cette application	In dieser Anwendung nicht benutzt	Non usato in questa applicazione	No se usa en esta aplicación	Ej använd i detta sammanhang
NLA	No longer available	Epuisé	Nicht mehr lieferbar	Non più disponibile	Descontinuado	Ej längre tillgänglig
NSEP	Not supplied separately	Non livré séparément	Nicht einzeln lieferbar	Non fornito separatamente	No se suministra por separado	Kan ej erhållas separat
OD	Outside diameter	Diamètre extérieur	Außendurch-messer	Diametro esterno	Diá. exterior	Ytterdiameter
OPTIONAL	Optional	En option	Wahlweise	Opzionale	Opcional	Valfri
OR	Or	Ou	Oder	Oppure	O	Eller
ORD, ORDER	Order	Commander	Bestellen	Ordinare	Pídase	Order
OS	Oversize	Sur-dimension	Übergröße	Maggiorato	Sobretamaño	Överdimension
OUTER	Outer	Externe	Äußerer	Esterno	Externo	Yttre, utvändig
PKG, PACKG	Package, Packet of	Emballage, paquet de	Verpackung, verpackt mit	In confezione da	Paquete de	I sats; paket
PTO	Power Take Off	Prise De Force	Zapfwelle	Presa Di Forza	Toma De Fuerza	Kraftuttag
RATIO	Ratio	Rapport	Übersetzungs-verhältnis	Rapporto	Índice	Förhållande
REAR	Rear	Arrière	Hinten	Posteriore	Trasero	Bak; bakre
REMAN	Remanufactured	Echange Standard	Generalveberholt	Refatto	Refabricador por	Renoverad
REPL	Replaces	Remplace	Ersetzt	Sostituisce	Sustituye	Ersätter
RH	Right-hand	Droit	Rechts	Destra	Derecha	Höger
SN	Serial number	Numéro de série	Seriennummer	Numero di serie	Nº de serie	Serienummer
STD	Standard	Standard	Standard	Standard	Normal	Standard
SUB	Replaced by	Remplacé par	Ersetzt durch	Sostituito da	Sustituido por	Ersatt med
SUB COMPONENTS	Substitute components (of the kit or assy)	Substituer les composants (du kit ou de l'ensemble)	Komponenten ersetzen (des Kits oder der Baugruppe)	Sostituire i componenti (del kito del gruppo)	Sustituir los componentes	Ersätta komponenterna (i satsen eller monteringen)
SUB FOR	Subsitutes for	Remplace	Ersatz für	Sostituisce	Sustitución para	Ersätter
TEETH, Z	Number of gear teeth	Nombre de dents d'engrenages	Zahl der Zahnradzähne	Numero di denti dell'ingranaggio	Nº de dientes de engranaje	Antal redskapständer
TK	Thickness	Épaisseur	Stärke	Spessore	Espesor	Tjocklek
UP, UPPER	Upper	Supérieur	Oberer	Superiore	Superior	Övre
US	Undersize	Sous-dimension	Untergröße	Minorato	Subtamaño	Underdimension
USE WITH	Use with	À utiliser avec	Verwenden mit	Usare con	Usar con	Använd med
USE UNTIL EXHAUSTED	Use until exhausted	Utilisation jusqu'à épuisé	Verwenden, bis erschöpft	Usare fino all'esaurimento	Usar hasta agotar	Använda till uttömd
W/	With	Avec	Mit	Con	Con	Med; inklusive
W/O	Without	Sans	Ohne	Senza	Sin	Utan; exklusive
WHOLE GOODS	Whole goods	Marchandises entières	Vollständige Waren	Merci intere	Mercancías enteras	Hela varor
XLT	Extra Long Track	Chenille Extra Longue	Mit Extra Langem Laufwerk	Cingolo Extra Lungo	Cadena Extra Larga	Extra Laangt Larvband
VEC	Vehicle Electronic Controller	Controleur Elektronisches Du Vehicule	Elektronisches Steuergeraet Des Fahrzeugs	Unità Di Comando Elettronica Del Veicolo	Unidad de Control Electronico del Vehiculo	Elektronisk Fordonsstyrenhet
VLC	Vehicle Load Center	Coffret De Repartition Du Vehicule	Verteilerstation Des Fahrzeugs	Centro Di Carico Del Veicolo	Centro De Cargas Del Vehiculo	Fordonets Elcentral

TX1007195

ALPHABETICAL INDEX

PAGE

A

A/C COMPRESSOR HARDWARE KIT....1832-10
A/C COMPRESSOR SHAFT SEAL KIT....1832-9
A/C KIT, COMPRESSOR HARDWARE....1832-10
ACCESS COVER OIL....1741-2
ACCESS COVER, INJECTION PUMP GEAR....0402-4
ACCESS COVER, REAR....1741-2
ACCESS PLATE, CAB FRONT....1810-8
ACCESSORY, POWER....2006-2
ACTUATOR KIT, SEAT SUSPENSION (DELUXE)....1821-20
ADAPTER PLATE, MONITOR WITH 650J INTEGRADED GRADE CONTROL....1676-3A
ADAPTER, ENGINE OIL COOLER....0419-2
ADAPTER, HYDROSTATIC FILTER....0355-2
ADAPTER,ENGINE OIL FILLER....0402-3
ADJUSTABLE PITCH, C-FRAME....3243-2
ADJUSTER, TRACK....0133-4
ADJUSTER, TRACK CHAIN TENSION....0133-4
ADJUSTING STRAP, ALTERNATOR....0423-2
AIR CLEANER CLEAN OUT VALVE (550J AND 650J)....0521-6
AIR CLEANER CLEAN OUT VALVE(450J)....0521-2
AIR CLEANER COVER (550J AND 650J)....0521-6
AIR CLEANER COVER(450J)....0521-2
AIR CLEANER FILTER ELEMENT WITH(450J) TURBOCHARGER....0521-2
AIR CLEANER FILTER W/ TURBOCHARGER (550J AND 650J)....0521-6
AIR CLEANER RAINCAP WITH CLAMP (550J AND 650J)(SERIAL NO. 893113-)....0521-6
AIR CLEANER RAINCAP WITH CLAMP(450J)....0521-2
AIR CLEANER STACK(450J)....0521-2
AIR CLEANER STACK(550J AND 650J)....0521-6
AIR CLEANER VACUUM SWITCH SENSOR (450J)....0521-2
AIR CLEANER VACUUM SWITCH SENSOR (550J AND 650J)....0521-6
AIR CLEANER WITH TURBOCHARGER (550J AND 650J)....0521-6
AIR CLEANER WITH TURBOCHARGER(450J)....0521-2
AIR CONDITIONER AND HEATER BLOWER SWITCH....1832-2
AIR CONDITIONER AND HEATER BLOWER SWITCH (UPPER)....1831-8
AIR CONDITIONER AND HEATER TEMPERATURE SWITCH....1832-2
AIR CONDITIONER AND HEATER TEMPERATURE SWITCH (UPPER)....1831-8
AIR CONDITIONER FIELD KIT....1832-2
AIR CONDITIONER ON/OFF SWITCH....1832-2
AIR CONDITIONER REAR COVER PLATE (S/N'S -XXXXXX)....1810-4
AIR CONDITIONER REAR COVER PLATE (S/N'S -XXXXXX)....1810-6
AIR CONDITIONER REAR COVER PLATE (S/N'S XXXXXX-)....1810-7A
AIR CONDITIONER REAR COVER PLATE (S/N'S XXXXXX-)....1810-7C
AIR CONDITIONER REAR COVER PLATE (S/N'S XXXXXX-)....1810-7E
AIR CONDITIONER REAR COVER PLATE (S/N'S XXXXXX-)....1810-7G
AIR CONDITIONER SIDE COVER PLATE (S/N'S -XXXXXX)....1810-4
AIR CONDITIONER SIDE COVER PLATE (S/N'S -XXXXXX)....1810-6

PAGE

AIR CONDITIONER SIDE COVER PLATE (S/N'S XXXXXX-)....1810-7A
AIR CONDITIONER SIDE COVER PLATE (S/N'S XXXXXX-)....1810-7C
AIR CONDITIONER SIDE COVER PLATE (S/N'S XXXXXX-)....1810-7E
AIR CONDITIONER SIDE COVER PLATE (S/N'S XXXXXX-)....1810-7G
AIR CONDITIONING CHARGE FITTING....1832-4
AIR CONDITIONING COMPRESSOR....1832-6
AIR CONDITIONING COMPRESSOR....1832-8
AIR CONDITIONING COMPRESSOR BELTS....1832-6
AIR CONDITIONING COMPRESSOR BRACKETS....1832-6
AIR CONDITIONING COMPRESSOR MANIFOLD....1832-8
AIR CONDITIONING COMPRESSOR PULLEY....1832-6
AIR CONDITIONING CONDENSER FAN....1832-2
AIR CONDITIONING CONDENSER WIRING HARNESS....1832-2
AIR CONDITIONING CORE CONDENSER....1832-2
AIR CONDITIONING FIELD KIT(HIGH AND LOW PRESSURE REFRIGERANT HOSES)....1832-4
AIR CONDITIONING HOUSING FIELD KIT....1832-2
AIR CONDITIONING LOW AND HIGH PRESSURE SWITCH....1832-2
AIR CONDITIONING PLUMBING GUARD (S/N'S -XXXXXX)....1810-4
AIR CONDITIONING PLUMBING GUARD (S/N'S XXXXXX-)....1810-7A
AIR CONDITIONING PLUMBING GUARD (S/N'S XXXXXX-)....1810-7E
AIR CONDITIONING PLUMBING GUARD (S/N'S -XXXXXX)....1810-6
AIR CONDITIONING PLUMBING GUARD (S/N'S XXXXXX-)....1810-7C
AIR CONDITIONING PLUMBING GUARD (S/N'S XXXXXX-)....1810-7G
AIR CONDITIONING PLUMBING(HIGH AND LOW PRESSURE REFRIGERANT HOSES)....1832-4
AIR CONDITIONING RECEIVER DRYER....1832-2
AIR CONDITIONING REFRIGERANT LINE....1832-2
AIR CONDTIONER AND HEATER BLOWER SWITCH (S/N'S -XXXXXX)....1810-6
AIR CONDTIONER AND HEATER BLOWER SWITCH (S/N'S XXXXXX-)....1810-7C
AIR CONDTIONER AND HEATER BLOWER SWITCH (S/N'S XXXXXX-)....1810-7G
AIR CONTROL VALVE (AIR SUSPENSION)....1821-28
AIR COVER, RECIRCULATION (S/N'S -XXXXXX)....1810-4
AIR COVER, RECIRCULATION (S/N'S -XXXXXX)....1810-6
AIR COVER, RECIRCULATION (S/N'S XXXXXX-)....1810-7A
AIR COVER, RECIRCULATION (S/N'S XXXXXX-)....1810-7C
AIR COVER, RECIRCULATION (S/N'S XXXXXX-)....1810-7E
AIR COVER, RECIRCULATION (S/N'S XXXXXX-)....1810-7G
AIR FILTER, FRESH AIR (UPPER)....1831-8
AIR INTAKE HOSE(450J)....0521-2
AIR INTAKE HOSE(550J AND 650J)....0521-6
AIR INTAKE SYSTEM....0414-2
AIR INTAKE TEMPERATURE SENSOR....0414-2
AIR LINES (AIR SUSPENSION)....1821-28
AIR SUSPENSION SEAT TOP PLATE....1821-26

ALPHABETICAL INDEX - CONTINUED

PAGE

AIRDUCT WORK FOAM 1810-7A
AIRDUCT WORK FOAM 1810-7E
AIRDUCT WORK FOAM (S/N'S -XXXXXX) 1810-4
ALARM BACKUP 2004-4
ALARM, REAR WORK LAMP BRACKET AND BACKUP 1673-4
ALARM, 12 VOLT WITH SHUTTER 1676-8
ALARM, 12 VOLT WITH SHUTTER WITH 650J INTEGRADED GRADE CONTROL 1676-3A
ALTERNATOR ADJUSTING STRAP 0423-2
ALTERNATOR FAN 1672-2
ALTERNATOR HARNESS WITH 650J INTEGRADED GRADE CONTROL 1674-28
ALTERNATOR MOUNTING BRACKETS 0423-2
ALTERNATOR PULLEY 1672-2
ALTERNATOR PULLEY, LOCKING COLLAR 1672-2
ALTERNATOR 12 VOLT 65 AMP 1672-2
ANGLE CYLINDER BARREL (450J) (SN -102817) 3265-10
ANGLE CYLINDER BARREL (450J) (SN XXXXXX-) 3265-13A
ANGLE CYLINDER BARREL (450J) (SN 102818-XXXXXX) 3265-12
ANGLE CYLINDER BARREL (550J AND 650J) 3265-14
ANGLE CYLINDER HEAD END PIN 3243-2
ANGLE CYLINDER HYDRAULIC HOSES 3263-6
ANGLE CYLINDER ROD (450J) (SN -102817) 3265-10
ANGLE CYLINDER ROD (450J) (SN XXXXXX-) 3265-13A
ANGLE CYLINDER ROD (450J) (SN 102818-XXXXXX) 3265-12
ANGLE CYLINDER ROD (550J AND 650J) 3265-14
ANGLE CYLINDER ROD END PIN 3201-4
ANGLE CYLINDER UNITIZED PISTON (450J) (SN -102817) 3265-10
ANGLE CYLINDER UNITIZED PISTON (450J) (SN XXXXXX-) 3265-13A
ANGLE CYLINDER UNITIZED PISTON (450J) (SN 102818-XXXXXX) 3265-12
ANGLE CYLINDER UNITIZED PISTON (550J AND 650J) 3265-14
ANGLE HOSE HEAD END 3263-8
ANGLE HOSE ROD END 3263-8
ANGLE HYDRAULIC CYLINDER 3265-4
ANGLE SECTION RELIEF VALVE (7500 PSI) (NOT ILLUSTRATED) 3262-2
ANGLE VALVE SECTION, IGC CONTROL VALVE (650J) 3262-16
ANTENNA, RADIO 2001-2
ANTENNA, RADIO (S/N'S -XXXXXX) 1810-4
ANTENNA, RADIO (S/N'S XXXXXX-) 1810-7A
ANTENNA, RADIO (S/N'S XXXXXX-) 1810-7E
ARM, FRONT WINDOW WIPER 1814-6
ARM, SIDE WINDOW WIPER 1814-10
ARMREST (AIR SUSPENSION) 1821-24
ARMREST (DELUXE) 1821-14
ARMREST PLATE (AIR SUSPENSION) 1821-24
ARMREST PLATE (DELUXE) 1821-14
ARMREST, STANDARD SEAT 1821-4
ARMS, ROCKER 0402-2
AUX VALVE SECTION, IGC CONTROL VALVE (650J) 3262-18
AUXILIARY FUNCTION CONTROL 3262-6
AUXILIARY FUNCTION CONTROL 3262-7A

PAGE

AUXILIARY FUNCTION CONTROL (FIFTH FUNCTION 3262-8
AUXILIARY FUNCTION LEVER 3262-6
AUXILIARY FUNCTION LEVER 3262-7A
AUXILIARY FUNCTION LEVER (FIFTH FUNCTION) 3262-8
AUXILIARY HYDRAULIC OIL COOLER AND HOSES IGC 650J 2164-8
AUXILIARY HYDRAULIC OIL COOLER FIELD KIT 2164-6
AUXILIARY JOYSTICK - FIELD KIT INTEGRATED GRADE CONTROL 3262-22
AUXILIARY VALVE BELLCRANK 3215-2
AUXILIARY VALVE CIRCUIT(PRESSURE)RELIEF VALVE(1900, 3000 AND 3450 PSI) 3262-6
AUXILIARY VALVE CIRCUIT(PRESSURE)RELIEF VALVE(1900, 3000 AND 3450 PSI) 3262-7A
AUXILIARY VALVE CIRCUIT(PRESSURE)RELIEF VALVE(5TH FUNCTION)(1900,3000&3450PSI) 3262-8
AUXILIARY VALVE WITH LINKAGE (FIFTH FUNCTION) 3262-8
AUXILIARY VALVE WITH LINKAGE (FOURTH FUNCTION) 3262-6
AUXILIARY VALVE WITH LINKAGE (FOURTH FUNCTION) 3262-7A
AUXILLIARY VALVE 3262-2

B

BACK FENDER 1927-2
BACK PAD CLIPS, SEAT, X-MAS TREE 1821-30
BACK, SEAT PAD 1821-2
BACKING PLATE, CAB ONLY UNDER SEAT 1831-2
BACKUP ALARM 2004-4
BACKUP ALARM AND REAR WORK LAMP BRACKET 1673-4
BACKUP ALARM PLATE 2004-4
BALANCER SHAFT, ENGINE 0415-2
BALL, C-FRAME PIVOT 3243-2
BARREL, ANGLE CYLINDER (450J) (SN -102817) 3265-10
BARREL, ANGLE CYLINDER (450J) (SN XXXXXX-) 3265-13A
BARREL, ANGLE CYLINDER (450J) (SN 102818-XXXXXX) 3265-12
BARREL, ANGLE CYLINDER (550J AND 650J) 3265-14
BARREL, HYDRAULIC CYLINDER 3265-4
BARREL, TILT CYLINDER 3265-6
BARREL, TILT CYLINDER 3265-8
BASE WITH HEATER, ROPS AND CAB SEAT UNDER SEAT 1831-2
BASE, CAB SEAT 1811-4
BATTERY CABLE, NEGATIVE AND POSITIVE, HEAVY DUTY 1671-4
BATTERY CABLES NEGATIVE AND POSITIVE 1671-2
BATTERY COVER, HEAVY DUTY 1671-4
BATTERY GROUND STRAP 1671-2
BATTERY GROUND STRAP 1671-4
BATTERY HEAVY DUTY 1671-4
BATTERY HOLDOWN 1671-2
BATTERY HOLDOWN PLATE, HEAVY DUTY 1671-4
BATTERY RUBBER BOOT 1671-2
BATTERY STANDARD 1671-2
BATTERY TERMINAL COVER 1671-2
BEARING CAPS, ENGINE MAIN AND THRUST 0404-2
BEARING PLATE, HYDROSTATIC MOTOR CYLINDER BLOCK 0355-24
BEARING ROLLER KIT (AIR SUSPENSION SEAT) 1821-26

ALPHABETICAL INDEX - CONTINUED

PAGE

BEARING, CRANKSHAFT 0401-2
BEARING, HYDROSTATIC PUMP....0355-14
BEARING, HYDROSTATIC PUMP SHAFT ROLLER 0355-12
BEARINGS,C0NNECTING ROD 0403-2
BELLCRANK, AUXILIARY VALVE 3215-2
BELT IDLER TENSIONER....0429-2
BELT WITHOUT AIR CONDITIONING, DRIVE 0512-2
BELT, BLOWER FAN POLY RIB (WITHOUT AIR CONDITIONING)....0512-2
BELT, DRIVE....0429-1
BELT, TWO INCH SEAT....1821-2
BELTS, AIR CONDITIONING COMPRESSOR....1832-6
BIT, BLADE END 3201-2
BIT, BLADE END 3201-4
BLADE , FRONT WINDOW WIPER 1814-6
BLADE ANGLE HYDRAULIC CYLINDER (550J AND 650J)....3265-14
BLADE ANGLE HYDRAULIC CYLINDER HOSES....3263-6
BLADE ANGLE HYDRAULIC CYLINDER(450J) (SN -102817)....3265-10
BLADE ANGLE HYDRAULIC CYLINDER(450J) (SN XXXXXX-) 3265-13A
BLADE ANGLE HYDRAULIC CYLINDER(450J) (SN 102818-XXXXXX) 3265-12
BLADE BOLTS....3201-2
BLADE BOLTS....3201-4
BLADE CUTTING EDGE 3201-2
BLADE CUTTING EDGE 3201-4
BLADE END BIT 3201-2
BLADE END BIT 3201-4
BLADE HYDRAULIC PLUMBING....3263-8
BLADE LIFT CYLINDER HYDRAULIC HOSES 3263-2
BLADE LIFT HYDRAULIC CYLINDER 3265-8
BLADE PINS....3201-2
BLADE PINS....3201-4
BLADE SIDE WINDOW WIPER 1814-10
BLADE TILT CYLINDER 3265-6
BLADE TILT CYLINDER HYDRAULIC HOSES....3263-4
BLADE TORQUE AND SHIM DECAL (ENGLISH, FRENCH, SPANISH)....3201-2
BLADE 105 INCH (FIELD)....3201-2
BLADE 115 INCH (FIELD)....3201-2
BLADE 115 INCH (FIELD)....3201-4
BLADE 121 INCH (FIELD)....3201-2
BLADE 124 INCH (FIELD)....3201-2
BLADE 124 INCH (FIELD)....3201-4
BLADE 128 INCH (FIELD)....3201-2
BLADE 90 INCH (FIELD)....3201-2
BLADE 90 INCH (FIELD)....3201-4
BLADE 97 INCH (FIELD)....3201-2
BLADE 97 INCH (FIELD)....3201-4
BLADE, HYDRAULIC SIX WAY LABEL (S/N'S -XXXXXX) 1810-4
BLADE, HYDRAULIC SIX WAY LABEL (S/N'S XXXXXX-) 1810-7A
BLADE, HYDRAULIC SIX WAY LABEL (S/N'S XXXXXX-) 1810-7E
BLADE, REAR WIPER 1814-8
BLOCK, ENGINE CYLINDER....0404-2
BLOWER FAN....0512-2
BLOWER FAN HEATER (UPPER)....1831-8
BLOWER FAN POLY RIB BELT....0512-2
BLOWER FAN SPACER 0512-2
BLOWER MOTOR BULKHEAD ROPS AND CAB UNDER SEAT HEATER 1831-2
BLOWER SWITCH, AIR CONDITIONER AND HEATER 1832-2

PAGE

BLOWER SWITCH, HEATER AND AIR CONDITIONER (UPPER).... 1831-8
BLOWER WITH MOTOR ROPS AND CAB UNDER SEAT HEATER 1831-2
BOLTS, BLADE 3201-2
BOLTS, BLADE 3201-4
BOOT CLIP KIT (AIR SUSPENSION SEAT).... 1821-26
BOOT KIT (AIR SUSPENSION SEAT).... 1821-26
BOOT KIT (DELUXE).... 1821-18
BOOT, BATTERY BOOT.... 1671-2
BOOT, HYDRAULIC LINKAGE 3215-2
BOOT, SINGLE LEVER CONTROL 0315-6
BOOT, SINGLE LEVER CONTROL (CONTINUED).... 0315-8
BORE SEAL KIT (450J) (SN -102817).... 3265-10
BORE SEAL KIT (450J) (SN XXXXXX-).... 3265-13A
BORE SEAL KIT (450J) (SN 102818-XXXXXX).... 3265-12
BORE SEAL KIT (550J AND 650J).... 3265-14
BOWL,PRIMARY FUEL FILTER 0563-2
BOX AND CUP TRAY, LUNCH.... 1810-12
BOX, TOOL 1810-12
BRACKET WITH INTEGRATED GRADE CONTROL FUSEBOX 650J.... 1674-30
BRACKET, FINAL FUEL FILTER FUEL LINES.... 0420-2
BRACKET, HYDRAULIC FILTER 2164-4
BRACKET, HYDROSTATIC MOTOR CONTROL SHIFT.... 0355-20
BRACKET, HYDROSTATIC REAR PUMP LIFTING.... 0355-10
BRACKET, LIGHT 1673-6
BRACKET, LIGHT CAB HI-INTENSITY 1673-8
BRACKET, LOW AND HIGH PRESSURE AIR CONDITIONING REFRIGERANT HOSE 1832-4
BRACKET, PARK LOCK SUPPORT 1115-2
BRACKET, POWER TRAIN/ENGINE CRADLE 0540-2
BRACKET, SEAT TILTING 1811-2
BRACKET, SEAT TILTING 1811-4
BRACKET, SINGLE LEVER CONTROL 0315-6
BRACKET, SINGLE LEVER CONTROL (CONTINUED).... 0315-8
BRACKET, TENSIONER.... 0429-2
BRACKET, TRACK ROLLER 0133-2
BRACKETS WITH IDLER 0133-6
BRACKETS, AIR CONDITIONING COMPRESSOR 1832-6
BRACKETS, ALTERNATOR MOUNTING 0423-2
BRAKE VALVE 1062-2
BRAKE VALVE KIT 1062-2
BRAKE VALVE SWITCH.... 1062-2
BRAKE/DECELERATOR PEDAL.... 0515-4
BRAKE/DECELERATOR SENSOR, ROTARY 0515-4
BRAKE/DECELERATOR SHAFT.... 0515-4
BRAKE/DECELERATOR SUPPORT 0515-4
BRAKE, FINAL DRIVES 0201-2
BRAKE, FINAL DRIVES 0201-3A
BRAKE, FINAL DRIVES (CONTINUED).... 0201-4
BRAKE, FINAL DRIVES (CONTINUED)....0201-5A
BREAKER LIGHTCIRCUIT CAB HI-INTENSITY.... 1673-8
BREAKER 20 AMP (ROPS HARNESS), CIRCUIT.... 1674-8
BREAKER 20 AMP, CIRCUIT (CAB HARNESS).... 1674-6
BREAKER, LIGHT CIRCUIT.... 1673-6
BULB, CAB DOME LAMP....1810-7A
BULB, CAB DOME LAMP....1810-7E
BULB, CAB DOME LAMP AND 1810-4
BULB, LIGHT 1673-6

ALPHABETICAL INDEX - CONTINUED

PAGE

BULB, LIGHT CAB HI-INTENSITY 1673-8
BULB, WORK LIGHT 1673-4
BULKHEAD PLATE....3263-4
BULKHEAD, BLOWER MOTOR ROPS AND CAB UNDER SEAT HEATER 1831-2
BUMPER KIT (AIR SUSPENSION) 1821-28
BUMPER, DOOR....1813-4
BUSHING AND EXTENDED WEAR TRACK BUSHING 0132-12
BUSHING EXTENDED WEAR, TRACK 0132-6
BUSHING EXTENDED WEAR, TRACK 0132-8
BUSHING, CAMSHAFT....0402-1
BUSHING, ENGINE BALANCER SHAFT....0404-2
BUSHING, TRACK....0132-6
BUSHING, TRACK....0132-8
BUSHINGS C-FRAME....3243-2
BY PASS VALVE, HYDROSTATIC OIL COOLER 0363-14
BY-PASS VALVE, ENGINE OIL....0404-2

C

C FRAME STEP 3243-4
C-FLANGE ADAPTER....0355-2
C-FRAME BUSHINGS....3243-2
C-FRAME HOSE GUARD....1921-4
C-FRAME LUBRICATION HOSES 3243-2
C-FRAME PINS 3243-2
C-FRAME STANDARD AND HEAVY DUTY REINFORCEMENT KIT 3243-2
C-FRAME, HEAVY DUTY....3243-2
C-FRAME, STANDARD 3243-2
C-FRAME, XLT 3243-2
CAB....1811-4
CAB ACCESSORIES KIT 1810-12
CAB AND ROPS FLOOR PLATE....1810-8
CAB AND ROPS SEAT BASE WITH HEATER UNDER SEAT....1831-2
CAB AND ROPS UNDER SEAT HEATER....1831-2
CAB COMPONENTS (S/N'S -XXXXXX) 1810-4
CAB COMPONENTS (S/N'S XXXXXX-) 1810-7A
CAB COMPONENTS (S/N'S XXXXXX-) 1810-7E
CAB COMPONENTS (CONTINUED) (S/N XXXXXX-) 1810-7C
CAB COMPONENTS (CONTINUED) (S/N XXXXXX-) 1810-7G
CAB COMPONENTS (CONTINUED) (S/N'S -XXXXXX) 1810-6
CAB DOME LAMP AND BULB (S/N'S -XXXXXX) 1810-4
CAB DOME LAMP AND BULB (S/N'S XXXXXX-) 1810-7A
CAB DOME LAMP AND BULB (S/N'S XXXXXX-) 1810-7E
CAB DOOR....1813-2
CAB DOOR FRAME AND GLASS....1813-2
CAB DOOR HINGE KIT....1811-4
CAB DOOR HOLD OPEN....1813-4
CAB DOOR HOLD OPEN HANDLE GRIP 1813-4
CAB DOOR HOLD OPEN LATCH 1813-4
CAB DOOR LATCH 1813-2
CAB DOOR LATCH COVER....1813-2
CAB DOORS AND LATCHES....1813-2
CAB FOOTREST 1810-8
CAB FRAME STRUCTURE CONVENIENCE ASSEMBLY....1811-4

PAGE

CAB FRESH AIR FILTER (UPPER).... 1831-8
CAB FRONT ACCESS PLATE.... 1810-8
CAB FUSEBLOCK LABEL.... 1674-6
CAB FUSEBLOCK LABEL (S/N'S -XXXXXX) 1810-6
CAB FUSEBLOCK LABEL (S/N'S XXXXXX-) 1810-7C
CAB FUSEBLOCK LABEL (S/N'S XXXXXX-) 1810-7G
CAB FUSES, CIRCUIT BREAKER AND ELECTRICAL RELAYS.... 1674-22
CAB HARNESS 1674-6
CAB HARNESS DIODE CONNECTOR 1674-6
CAB HARNESS DOOR CLIPS/CLAMPS 1674-6
CAB HARNESS, INTERGRATED GRADE CONTROL.... 1674-6
CAB HEADLINER, FRONT (WITH LOUVERS) (S/N'S -XXXXXX) 1810-4
CAB HEADLINER, FRONT (WITH LOUVERS) (S/N'S XXXXXX-) 1810-7A
CAB HEADLINER, FRONT (WITH LOUVERS) (S/N'S XXXXXX-) 1810-7E
CAB HEATER (UPPER).... 1831-8
CAB HEATER HOSE 1831-6
CAB HEATER PLUMBING.... 1831-6
CAB HEATER THERMAL (UPPER).... 1831-8
CAB HEATER THERMOSTAT (UPPER).... 1831-8
CAB HI-INTENSITY LIGHTS 1673-8
CAB HIGH-INTENSITY WORK LIGHT LABEL.... 1673-8
CAB LIGHT IN HEADLINER, INTERIOR (S/N'S -XXXXXX) 1810-4
CAB LIGHT IN HEADLINER, INTERIOR (S/N'S XXXXXX-) 1810-7A
CAB LIGHT IN HEADLINER, INTERIOR (S/N'S XXXXXX-) 1810-7E
CAB NOISE REDUCTION FOAM/ISOLATOR 1807-2
CAB ONLY BACKING PLATE UNDER SEAT.... 1831-2
CAB PARTS (S/N'S -XXXXXX) 1810-4
CAB PARTS (S/N'S XXXXX-).... 1810-7A
CAB PARTS (S/N'S XXXXX-).... 1810-7E
CAB PLATE.... 1810-8
CAB ROPS OR ROPS MOUNTS AND ISOLATORS 1811-6
CAB SEAT BASE 1811-4
CAB STRUCTURE WELDMENT CONVENIENCE ASSEMBLY.... 1811-4
CAB WINDOW 1814-2
CAB, RECTANGULAR LOUVER (S/N'S -XXXXXX) 1810-4
CAB, RECTANGULAR LOUVER (S/N'S XXXXXX-) 1810-7A
CAB, RECTANGULAR LOUVER (S/N'S XXXXXX-) 1810-7E
CABLE, MASTER DISCONNECT SWITCH 1674-2
CABLE, NEGATIVE BATTERY, HEAVY DUTY 1671-4
CABLE, POSITIVE BATTERY, HEAVY DUTY.... 1671-4
CABLES, NEGATIVE AND POSITIVE BATTERY 1671-2
CAM KIT, SEAT SUSPENSION (DELUXE).... 1821-20
CAMSHAFT 0402-1
CAN TERMINATION RESISTOR.... 1674-6
CAN TERMINATION RESISTOR.... 1674-8
CAN TERMINATION RESISTOR.... 1674-10
CAN TERMINATION RESISTOR W/650J W/ INTEGRADED GRADE CONTROL 1674-28
CAP WIPER WASHER RESERVOIR.... 1814-4
CAP WIPER WASHERTANK 1814-4

ALPHABETICAL INDEX - CONTINUED

PAGE

CAP, AIR CLEANER WITH CLAMP (550J AND 650J) 0521-6
CAP, AIR CLEANER WITH CLAMP(450J) 0521-2
CAP, ENGINE MAIN AND THRUST BEARING 0404-2
CAP, ENGINE OIL FILLER(450J) 0521-2
CAP, ENGINE OIL FILLER(550J AND 650J) 0521-6
CAP, FUEL TANK FILLER 0564-2
CAP, HYDROSTATIC MOTOR END 0355-20
CAP, RADIATOR (450J AND 550J) 0511-6
CAP, RADIATOR(650J) 0511-10
CAP,END 0355-2
CAP,ENGINE OIL FILL 0402-3
CARRIER ROLLER COVER 0133-16
CARRIER ROLLER SUPPORT 0133-16
CARRIER ROLLER WITH SHAFT 0133-16
CENTER CHAIN GUIDES 650J 0131-12
CENTER GUARD 1741-2
CHAIN BUSHING AND EXTENDED WEAR TRACK CHAIN BUSHING 0132-12
CHAIN DRIVE SPROCKET, TRACK 0132-16
CHAIN EXTENDED WEAR, LUBED CHAIN 40 LINK WITH 16 INCH SHOES TRACK 0132-12
CHAIN EXTENDED WEAR, LUBED CHAIN 40 LINK WITH 24 INCH SHOES TRACK 0132-12
CHAIN EXTENDED WEAR, TRACK LUBED 40 LINK WITHOUT SHOES 0132-6
CHAIN EXTENDED WEAR, TRACK LUBED 40 LINK WITHOUT SHOES 0132-8
CHAIN GUIDE SLIDE, FRONT (WELDED ON COMPONENT) 0131-2
CHAIN GUIDES 0131-6
CHAIN GUIDES 650J 0131-12
CHAIN WITH EXTENDED WEAR BUSHING, MASTER TRACK LINK WITH LUBED 0132-6
CHAIN WITH EXTENDED WEAR BUSHING, MASTER TRACK LINK WITH LUBED 0132-8
CHAIN, MASTER TRACK LINK WITH LUBED 0132-6
CHAIN, MASTER TRACK LINK WITH LUBED 0132-8
CHAIN, TRACK LUBED 40 LINK WITH 16 INCH SHOES 0132-6
CHAIN, TRACK LUBED 40 LINK WITH 16 INCH SHOES 0132-8
CHAIN, TRACK LUBED 40 LINK WITH 16 INCH SHOES 0132-10
CHAIN, TRACK LUBED 40 LINK WITH 16 INCH SHOES 0132-12
CHAIN, TRACK LUBED 40 LINK WITHOUT SHOES 0132-6
CHAIN, TRACK LUBED 40 LINK WITHOUT SHOES 0132-8
CHAIN, TRACK LUBED 40 LINK WITHOUT SHOES 0132-10
CHAIN, TRACK LUBED 40 LINK WITHOUT SHOES 0132-12
CHAIN, TRACK SEALED 37 LINK WITH 16 INCH SHOES 0132-4
CHAIN, TRACK SEALED 37 LINK WITHOUT SHOES 0132-4
CHAIN, TRACK SEALED 40 LINK WITH 18 INCH SHOES (450J,550J) 0132-2
CHAIN, TRACK SEALED 40 LINK WITHOUT SHOES (450J,550J) 0132-2
CHARGE FITTING, AIR CONDITIONING 1832-4
CHART, PERIODIC SERVICE 1322-2
CHART, PERIODIC SERVICE LABEL 1911-2

PAGE

CHRISTMAS TREE CLIP (S/N'S -XXXXXX) 1810-4
CHRISTMAS TREE CLIP (S/N'S XXXXXX-) 1810-7A
CHRISTMAS TREE CLIP (S/N'S XXXXXX-) 1810-7E
CHROME MUFFLER EXHAUST STACK 1911-2
CIGAR LIGHTER 2006-2
CIGAR LIGHTER FUSE 2006-2
CIRCUIT BREAKER AND ELECTRICAL RELAYS, FUSES/CAB 1674-22
CIRCUIT BREAKER AND ELECTRICAL RELAYS, FUSES/ROPS 1674-24
CIRCUIT BREAKER LIGHT 1673-6
CIRCUIT BREAKER LIGHT CAB HI-INTENSITY 1673-8
CIRCUIT BREAKER 20 AMP 1674-16
CIRCUIT BREAKER 20 AMP (CAB HARNESS) 1674-6
CIRCUIT BREAKER 20 AMP (ROPS HARNESS) 1674-8
CIRCUIT(PRESSURE)RELIEF VALVE, AUXILIARY VALVE(1900, 3000 AND 3450 PSI) 3262-6
CIRCUIT(PRESSURE)RELIEF VALVE, AUXILIARY VALVE(1900, 3000 AND 3450 PSI) 3262-7A
CIRCUIT(PRESSURE)RELIEF VALVE, AUXILIARY VALVE(5TH FUNCTION)(1900,3000&3450PSI) 3262-8
CLIP, CHRISTMAS TREE (S/N'S -XXXXXX) 1810-4
CLIP, CHRISTMAS TREE (S/N'S XXXXXX-) 1810-7A
CLIP, CHRISTMAS TREE (S/N'S XXXXXX-) 1810-7E
CLIPS/CLAMPS, CAB HARNESS DOOR 1674-6
CLIPS, X-MAS TREE, SEAT BACK 1821-30
CLOTH HEADREST (AIR SUSPENSION) 1821-22
CLOTH SEAT (AIR SUSPENSION) 1821-22
CLOTH SEAT (DELUXE) 1821-12
CLOTH SEAT BACK (AIR SUSPENSION) 1821-22
CLOTH SEAT PAD (AIR SUSPENSION) 1821-22
CLUTCH, STARTING MOTOR 0422-2
CLYINDER TILT HYDRAULIC 3265-4
COIL, HYDROSTATIC MOTOR CONTROL ELECTRICAL 0355-20
COLD START/WARM UP LABEL (S/N'S -XXXXXX) 1810-4
COLD START/WARM UP LABEL (S/N'S XXXXXX-) 1810-7A
COLD START/WARM UP LABEL (S/N'S XXXXXX-) 1810-7E
COLD WEATHER/ETHER STARTING AID 0505-2
COLD WEATHER/FLUID/ETHER START AID SWITCH 1676-8
COMPONENTS, CAB (S/N'S -XXXXXX) 1810-4
COMPONENTS, CAB (S/N'S XXXXXX-) 1810-7A
COMPONENTS, CAB (S/N'S XXXXXX-) 1810-7E
COMPONENTS, ROPS 1810-2
COMPONENTS, STANDARD SEAT SUSPENSION 1821-6
COMPRESSOR, AIR CONDITIONING 1832-6
COMPRESSOR, AIR CONDITIONING 1832-8
COMPRESSOR, 12 VOLT (AIR SUSPENSION SEAT) 1821-26
CONDENSER FAN AIR CONDITIONING 1832-2
CONDENSER, AIR CONDITIONING CORE 1832-2
CONNECTING ROD 0403-2
CONNECTING ROD BEARINGS 0403-2
CONNECTOR, TORQUE TORSIONAL COUPLING 0325-2

ALPHABETICAL INDEX - CONTINUED

PAGE

CONTROL HANDLE, T-BAR....3215-2
CONTROL LEVER (AUXILIARY JOYSTICK) FIELD KIT....3262-22
CONTROL LEVER (JOYSTICK) INTEGRATED GRADE & PILOT ENABLE SWITCH....3262-20
CONTROL LEVER, PARK LOCK....1115-2
CONTROL LINKAGE, HYDRAULIC....3215-2
CONTROL PANEL, ELECTRONIC SWITCH OVERHEAD (S/N'S -XXXXXX)....1810-4
CONTROL PANEL, ELECTRONIC SWITCH OVERHEAD (S/N'S XXXXXX-)....1810-7A
CONTROL PANEL, ELECTRONIC SWITCH OVERHEAD (S/N'S XXXXXX-)....1810-7E
CONTROL SHAFT WITH ARM, HYDRAULIC....3215-2
CONTROL U-JOINT (HOUSING),HYDRAULIC....3215-2
CONTROL UNIT ENGINE....0575-2
CONTROL VALVE SECTION, ANGLE IGC (650J)....3262-16
CONTROL VALVE SECTION, AUX IGC (650J)....3262-18
CONTROL VALVE SECTION, LIFT IGC (650J)....3262-12
CONTROL VALVE SECTION, TILT IGC (650J)....3262-14
CONTROL VALVE TO BLADE LIFT CYLINDER HYDRAULIC HOSES....3263-2
CONTROL VALVE TO HYDRAULIC FILTER HOSE....2163-6
CONTROL VALVE TO HYDRAULIC PUMP PRESSURE HOSE....2163-4
CONTROL VALVE, HYDRAULIC....3262-2
CONTROL VALVE, HYDRAULIC....3262-10
CONTROL WITH SPEED IN GRIP, SINGLE LEVER....0315-6
CONTROL, AUXILIARY FUNCTION....3262-6
CONTROL, AUXILIARY FUNCTION....3262-7A
CONTROL, AUXILIARY FUNCTION (FIFTH FUNCTION)....3262-8
CONTROL, SEAT SLIDE (ALL SEATS)....1821-8
CONTROL, SEAT TILT (ALL SEATS)....1821-8
CONTROL, SINGLE LEVER (CONTINUED)....0315-8
CONTROLLER, ELECTROHYDRUALIC....1674-6
CONVENIENCE ASSEMBLY, ROPS....1811-2
COOLANT HEATER, ENGINE....0505-4
COOLANT HEATER, FUEL FIRED....0505-8
COOLANT HEATER, FUEL FIRED (HYDRONIC 5 SERIES HEATER)....0505-10
COOLER BY PASS VALVE, HYDROSTATIC OIL....0363-14
COOLER FIELD KIT, AUXILIARY HYDRAULIC OIL....2164-6
COOLER, ENGINE OIL....0419-2
COOLER, HYDRAULIC OIL IGC 650J....2164-8
COOLER, HYDROSTATIC OIL(450J AND 550J)....0511-6
COOLER, HYDROSTATIC OIL(650J)....0511-10
COOLING SYSTEM SAND SHIELD....0511-12
CORDURA SLEEVE....3263-4
CORDURA SLEEVE....3263-8
CORE CONDENSER, AIR CONDITIONING....1832-2
CORE, EVAPORATOR (UPPER)....1831-8
CORE, HEATER (UPPER)....1831-8
CORE, ROPS AND CAB UNDER SEAT HEATER....1831-2
CORNER COVERS, PLATFORM....1810-14
COUNTERWEIGHT, FRONT....1749-2
COUNTERWEIGHT, REAR....1749-4
COUPLER, FLYWHEEL....0325-2
COUPLER, LOVEJOY....0325-2
COUPLING, HYDROSTATIC FRONT AND REAR COUPLING....0355-4
COUPLING, STANDARD HYDRAULIC PUMP....2161-2
COVER BATTERY TERMINAL....1671-2
COVER BATTERY, HEAVY DUTY....1671-4

PAGE

COVER PLATE - CAB, FUSE (S/N'S -XXXXXX)....1810-4
COVER PLATE - CAB, FUSE (S/N'S XXXXXX-)....1810-7A
COVER PLATE - CAB, FUSE (S/N'S XXXXXX-)....1810-7E
COVER PLATE WITH TUBE, HYDRAULIC RESERVOIR....2164-2
COVER PLATE, FUSE....1810-2
COVER PLATE, HYDROSTATIC RESERVOIR ACCESS....0364-4
COVER, ACCESS, INJECTION PUMP GEAR....0402-4
COVER, AIR CLEANER (550J AND 650J)....0521-6
COVER, AIR CLEANER(450J)....0521-2
COVER, CAB DOOR LATCH....1813-2
COVER, CARRIER ROLLER....0133-16
COVER, FLY WHEEL....0540-2
COVER, HEATER TOP (UPPER)....1831-8
COVER, HORN SWITCH (CONTINUED)....0315-8
COVER, HYDROSTATIC PUMP SIDE....0355-2
COVER, HYDROSTATIC RESERVOIR....0364-4
COVER, MICROPROCESSOR....0375-2
COVER, OIL ACCESS....1741-2
COVER, PTO SHAFT....2161-6
COVER, REAR ACCESS....1741-2
COVER, REAR WIPER MOTOR....1814-8
COVER, RECIRCULATION AIR (S/N'S -XXXXXX)....1810-4
COVER, RECIRCULATION AIR (S/N'S -XXXXXX)....1810-6
COVER, RECIRCULATION AIR (S/N'S XXXXXX-)....1810-7A
COVER, RECIRCULATION AIR (S/N'S XXXXXX-)....1810-7C
COVER, RECIRCULATION AIR (S/N'S XXXXXX-)....1810-7E
COVER, RECIRCULATION AIR (S/N'S XXXXXX-)....1810-7G
COVER, ROCKER ARM....0402-3
COVER, START AID SWITCH....0505-6
COVER, THERMOSTAT....0418-2
COVER, TIMING GEAR....0402-4
COVER, VANDAL WITH ROPS....1810-2
COVER,ENGINE OIL FILLER OPENING....0407-3
COVERS, PLATFORM CORNER....1810-14
COVERS, TRACK FRAME....0133-8
CRADLE/POWER TRAIN MOUNTING, ENGINE....0540-2
CRANKSHAFT AND BEARINGS....0401-2
CRANKSHAFT ENGINE SPEED SENSOR....0402-4
CRANKSHAFT PULLEY....0429-1
CRANKSHAFT PULLEY AND DRIVE BELT....0429-1
CRANKSHAFT REAR OIL SEAL....0433-3
CRANKSHAFT TIMING WHEEL....0401-2
CUP TRAY AND LUNCH BOX....1810-12
CUPPED, END BIT....3201-4
CUTTING EDGE, BLADE....3201-2
CUTTING EDGE, BLADE....3201-4
CYLINDER BARREL HYDRAULIC....3265-4
CYLINDER BLOCK BEARING PLATE, HYDROSTATIC MOTOR....0355-24
CYLINDER BLOCK, ENGINE....0404-2
CYLINDER BLOCK, HYDROSTATIC MOTOR....0355-24
CYLINDER BLOCK, PISTON, SWASHPLATE AND PARTS, HYDROSTATIC MOTOR, HOUSING....0355-24
CYLINDER GUARD....3265-4

ALPHABETICAL INDEX - CONTINUED

PAGE

CYLINDER HEAD....0409-2
CYLINDER HEAD GASKET....0409-2
CYLINDER LINER....0403-2
CYLINDER LINER KIT....0403-2
CYLINDER, ANGLE HYDRAULIC....3265-4
CYLINDER, BLADE ANGLE (450J) (SN -102817)....3265-10
CYLINDER, BLADE ANGLE (450J) (SN XXXXXX-)....3265-13A
CYLINDER, BLADE ANGLE (450J) (SN 102818-XXXXXX)....3265-12
CYLINDER, BLADE TILT....3265-6
CYLINDER, HYDROSTATIC SERVO CAN....0355-2
CYLINDER, LIFT....3265-8
CYLINDER, LIFT HYDRAULIC....3265-4
CYLINDER, STARTING AID FLUID COLD WEATHER/ETHER....0505-2
CYLINDER,BLADE ANGLE (550J AND 650J)....3265-14

D

DASH AND MONITOR....1676-8
DASH AND MONITOR WITH 650J INTEGRATED GRADE CONTROL....1676-3A
DASH PANEL, LOWER....1810-2
DASH PANEL, LOWER (S/N'S -XXXXXX)....1810-6
DASH PANEL, LOWER (S/N'S XXXXXX-)....1810-7C
DASH PANEL, LOWER (S/N'S XXXXXX-)....1810-7G
DECAL, BLADE TORQUE AND SHIM (ENGLISH, FRENCH, SPANISH)....3201-2
DECAL, HEATER AND FAN CONTROL....1322-2
DECAL, HEATER AND FAN CONTROL (S/N'S -XXXXXX)....1810-4
DECAL, HEATER AND FAN CONTROL (S/N'S -XXXXXX)....1810-6
DECAL, HEATER AND FAN CONTROL (S/N'S XXXXXX-)....1810-7A
DECAL, HEATER AND FAN CONTROL (S/N'S XXXXXX-)....1810-7C
DECAL, HEATER AND FAN CONTROL (S/N'S XXXXXX-)....1810-7E
DECAL, HEATER AND FAN CONTROL (S/N'S XXXXXX-)....1810-7G
DECALS (FRENCH AND SPANISH)....1322-4
DECALS AND LABELS (ENGLISH)....1322-2
DECELERATOR/BRAKE PEDAL....0515-4
DECELERATOR/BRAKE SENSOR, ROTARY....0515-4
DECELERATOR/BRAKE SHAFT....0515-4
DECELERATOR/BRAKE SUPPORT....0515-4
DECORATIVE GREY CIRCLE LABEL....1810-2
DEERE LABEL (ON BACK OF FUEL TANK)....1322-2
DEERE LABEL (ON BACK OF FUEL TANK) (S/N'S -XXXXXX)....1810-4
DEERE LABEL (ON BACK OF FUEL TANK) (S/N'S XXXXXX-)....1810-7A
DEERE LABEL (ON BACK OF FUEL TANK) (S/N'S XXXXXX-)....1810-7E
DEFLECTOR GRID, SAND SHIELD....0511-12
DEFLECTOR LIGHT....1673-6
DEFLECTOR LIGHT CAB HI-INTENSITY....1673-8
DEFROST LOUVERS (S/N'S -XXXXXX)....1810-4

PAGE

DEFROST LOUVERS (S/N'S -XXXXXX)....1810-6
DEFROST LOUVERS (S/N'S XXXXXX-)....1810-7A
DEFROST LOUVERS (S/N'S XXXXXX-)....1810-7C
DEFROST LOUVERS (S/N'S XXXXXX-)....1810-7E
DEFROST LOUVERS (S/N'S XXXXXX-)....1810-7G
DESIGNATION LABEL, HYDRAULIC AND HYDROSTATIC OIL TANK 10W30....1322-2
DIAGNOSTIC PLUMBING, HYDROSTATIC/ TRANSMISSION....0363-4
DIODE CONNECTOR, CAB HARNESS....1674-6
DIODE CONNECTOR, ROPS HARNESS....1674-8
DIPSTICK, ENGINE OIL....0407-1
DISCONNECT LABEL....1322-2
DISCONNECT SWITCH CABLE, MASTER....1674-2
DISCONNECT SWITCH MASTER....1674-2
DOME LAMP AND BULB, CAB (S/N'S -XXXXXX)....1810-4
DOME LAMP AND BULB, CAB (S/N'S XXXXXX-)....1810-7A
DOME LAMP AND BULB, CAB (S/N'S XXXXXX-)....1810-7E
DOME LIGHT (S/N'S -XXXXXX)....1810-6
DOME LIGHT (S/N'S XXXXXX-)....1810-7C
DOME LIGHT (S/N'S XXXXXX-)....1810-7G
DOOR BUMPER....1813-4
DOOR CLIPS/CLAMPS, CAB HARNESS....1674-6
DOOR FRAME AND GLASS, CAB....1813-2
DOOR HOLD OPEN, CAB....1813-4
DOOR LATCH COVER, CAB....1813-2
DOOR LATCH LEVER....1813-2
DOOR LATCH, CAB....1813-2
DOOR OUTER HANDLE....1813-2
DOOR WINDOW WIPERS....1814-10
DOOR, CAB....1813-2
DOOR, HOLD OPEN LATCH CAB....1813-4
DOOR, HOOD SERVICE....1911-2
DOOR, HYDRAULIC RESERVOIR....2164-2
DOOR, HYDROSTATIC RESERVOIR....0364-4
DOORS, CAB AND LATCHES....1813-2
DOUBLE-FLANGE TRACK ROLLER....0133-2
DRAIN COCK RADIATOR(450J AND 550J)....0511-6
DRAIN COCK RADIATOR(650J)....0511-10
DRAIN HOSE, ENVIR0NMENTAL ENGINE....2163-10
DRAIN HOSE, HYDROSTATIC MOTOR....0363-14
DRAIN PAN FOAM, UPPER HEATER....1831-8
DRAIN PLUG GUARDING, FINAL DRIVE....0201-6
DRAIN VALVE CAB HEATER PLUMBING....1831-6
DRAIN VALVE, FUEL TANK....0564-2
DRAIN VALVE, HYDRAULIC, HYDROSTATIC AND ENGINE....2163-10
DRAWBAR....1511-4
DRAWBAR PIN (EXTENDED RIGID)....1511-2
DRAWBAR PIN 4000S WINCH....1511-6
DRAWBAR 4000S WINCH....1511-6
DRAWBAR, STANDARD (EXTENDED RIGID)....1511-2
DRIVE BELT....0429-1
DRIVE BELT WITHOUT AIR CONDITIONING)....0512-2
DRIVE GEAR SERVICE KIT, FINAL (SERIAL NO. -108451)....0201-8

ALPHABETICAL INDEX - CONTINUED

PAGE

DRIVE SHAFT, UNIVERSAL FINAL 0201-2
DRIVE SHAFT, UNIVERSAL FINAL 0201-3A
DRIVE SHAFT, UNIVERSAL FINAL (CONTINUED)....0201-4
DRIVE SHAFT, UNIVERSAL FINAL (CONTINUED).... 0201-5A
DRIVE THRU-HYDRAULIC PUMP WITH SHAFT 2161-6
DRIVE, FAN 0429-2
DRIVES, FINAL....0201-2
DRIVES, FINAL.... 0201-3A
DRIVES, FINAL (CONTINUED)....0201-4
DRIVES, FINAL (CONTINUED).... 0201-5A
DUCTWORK FOAM, AIR.... 1810-7A
DUCTWORK FOAM, AIR.... 1810-7E
DUCTWORK FOAM, AIR (S/N'S -XXXXXX) 1810-4

E

EDGE GUARD MOULDING....3263-4
EDGE, BLADE CUTTING 3201-2
EDGE, BLADE CUTTING 3201-4
ELBOW, ENGINE VENTILATING 0408-2
ELECTRICAL COIL, HYDROSTATIC MOTOR CONTROL....0355-20
ELECTRICAL RESISTOR, CAB HEATER (UPPER)....1831-8
ELECTROHYDRAULIC CONTROL VALVE ANGLE SECTION (650J) 3262-16
ELECTROHYDRAULIC CONTROL VALVE AUX SECTION (650J) 3262-18
ELECTROHYDRAULIC CONTROL VALVE LIFT SECTION (650J) 3262-12
ELECTROHYDRAULIC CONTROL VALVE TILT SECTION (650J) 3262-14
ELECTROHYDRUALIC CONTROLLER 1674-6
ELECTRONIC SWITCH OVERHEAD CONTROL PANEL (S/N'S -XXXXXX) 1810-4
ELECTRONIC SWITCH OVERHEAD CONTROL PANEL (S/N'S XXXXXX-) 1810-7A
ELECTRONIC SWITCH OVERHEAD CONTROL PANEL (S/N'S XXXXXX-) 1810-7E
ELEMENT, AIR CLEANER FILTER WITH TURBOCHARGER (450J)....0521-2
ELEMENT, AIR CLEANER W/ TURBOCHARGER (550J AND 650J)....0521-6
ELEMENT, TRANSMISSION FILTER 0364-2
ELEMENT,FINAL FUEL FILTER 0420-4
ELEMENT,PRIMARY FUEL FILTER 0563-4
END BIT KIT 3201-4
END BIT, BLADE 3201-2
END BIT, BLADE 3201-4
END BIT, CUPPED 3201-4
END CAP 0355-2
END CAP ASSEMBLY, HYDROSTATIC....0355-10
END PLATE, HYDROSTATIC MOTOR CONTROL....0355-20
ENGINE BALANCER SHAFT 0415-2
ENGINE CONTROL UNIT 0575-2
ENGINE COOLANT HEATER....0505-4
ENGINE COOLANT HEATER POWER CORD....0505-4
ENGINE COOLANT HEATING ELEMENT 0505-4
ENGINE CRADLE/POWER TRAIN MOUNTING....0540-2
ENGINE FLYWHEEL 0433-2
ENGINE FRONT PLATE 0404-1
ENGINE HARNESS RELAY (START RELAY 12 VOLT) 1674-10

PAGE

ENGINE HARNESS RELAY WITH 650J INTEGRADED GRADE START RELAY 12 VOLT) 1674-28
ENGINE MAJOR OVERHAUL GASKET SET.... 0452-2
ENGINE OIL COOLER 0419-2
ENGINE OIL DIPSTICK 0407-1
ENGINE OIL DIPSTICK TUBE 0407-1
ENGINE OIL FILL CAP 0402-3
ENGINE OIL FILLER ADAPTER.... 0402-3
ENGINE OIL FILLER CAP(450J).... 0521-2
ENGINE OIL FILLER CAP(550J AND 650J) 0521-6
ENGINE OIL FILLER OPENING COVER 0407-3
ENGINE OIL FILLER TUBE (550J AND 650J).... 0521-6
ENGINE OIL FILLER TUBE(450J).... 0521-2
ENGINE OIL FILTER.... 0407-6
ENGINE OIL FILTER HEADER.... 0407-6
ENGINE OIL PAN (CAST IRON R121621) 0407-4
ENGINE OIL PAN (STEEL METAL PAN) (ENGINE SN XXXXXX-) 0407-8
ENGINE OIL PAN DRAIN VALVE.... 2163-10
ENGINE OIL PAN GASKET (STEEL METAL PAN) (ENGINE SN XXXXXX-) 0407-8
ENGINE OIL PRESSURE SENDER WITH MONITOR AND GAUGE 1674-16
ENGINE OIL PRESSURE SENDER WITH MONITOR ONLY 1674-14
ENGINE OIL PRESSURE SENSOR.... 1674-26
ENGINE OIL PUMP 0407-2
ENGINE OIL PUMP GEAR 0407-2
ENGINE OIL PUMP HOUSING 0407-2
ENGINE OIL PUMP INTAKE.... 0407-2
ENGINE OVERHAUL KIT 0450-2
ENGINE OVERHAUL KIT 0452-2
ENGINE PISTON 0403-2
ENGINE SHORT BLOCK.... 0404-4
ENGINE SIDE SHIELDS RIGHT AND LEFT 1912-2
ENGINE SIDE SHIELDS RIGHT AND LEFT (IGC) 1912-4
ENGINE SPEED LABEL (S/N'S -XXXXXX) 1810-4
ENGINE SPEED LABEL (S/N'S XXXXX-).... 1810-7A
ENGINE SPEED LABEL (S/N'S XXXXX-).... 1810-7E
ENGINE SPEED LABEL, SYSTEM WARM UP (IN FRONT OF ENGINE SPEED CONTROL POD).... 1810-4
ENGINE SPEED LABEL, SYSTEM WARM UP (IN FRONT OF ENGINE SPEED CONTROL POD).... 1810-7A
ENGINE SPEED LABEL, SYSTEM WARM UP (IN FRONT OF ENGINE SPEED CONTROL POD).... 1810-7E
ENGINE SPEED POTENTIOMETER SWITCH 1676-8
ENGINE SPEED POTENTIOMETER SWITCH WITH 650J INTEGRADED GRADE CONTROL.... 1676-3A
ENGINE SPEED SENSOR 0402-4
ENGINE SPEED-REVERSE LABEL.... 1810-7A
ENGINE SPEED-REVERSE LABEL.... 1810-7E
ENGINE SPEED-REVERSE LABEL (S/N'S -XXXXXX) 1810-4
ENGINE VENTILATING SYSTEM 0408-2
ENGINE WATER TEMPERATURE SENDER WITH MONITOR AND GAUGE 1674-16
ENGINE WATER TEMPERATURE SENDER WITH MONITOR ONLY 1674-14
ENGINE WIRING HARNESS.... 1674-10
ENGINE WIRING HARNESS W/ 650J W/ INTEGRADED GRADE CONTROL 1674-28

ALPHABETICAL INDEX - CONTINUED

PAGE

ENGINE WIRING HARNESS WITH 650J INTEGRADED GRADE CONTROL 1674-28
ENGINE, ENVIRONMENTAL DRAIN HOSE 2163-10
ENVIRONMENTAL DRAIN VALVE 2163-10
ENVIRONMENTAL ENGINE DRAIN HOSE 2163-10
ETHER/COLD WEATHER STARTING AID....0505-2
ETHER/COLD WEATHER/FLUID START AID SWITCH 1676-8
EVAPORATOR CORE (UPPER)....1831-8
EXHAUST MANIFOLD....0410-2
EXHAUST MANIFOLD GASKET 0410-2
EXHAUST MUFFLER 0531-2
EXHAUST STACK, CHROME MUFFLER....1911-2
EXHAUST STACK, MUFFLER....1911-2
EXHAUST VALVE 0409-2

F

FAN AIR CONDITIONING CONDENSER....1832-2
FAN BELT....0512-2
FAN CONTROL AND HEATER DECAL (S/N'S -XXXXXX) 1810-4
FAN CONTROL AND HEATER DECAL (S/N'S -XXXXXX) 1810-6
FAN CONTROL AND HEATER DECAL (S/N'S XXXXXX-) 1810-7A
FAN CONTROL AND HEATER DECAL (S/N'S XXXXXX-) 1810-7C
FAN CONTROL AND HEATER DECAL (S/N'S XXXXXX-) 1810-7E
FAN CONTROL AND HEATER DECAL (S/N'S XXXXXX-) 1810-7G
FAN DRIVE 0429-2
FAN DRIVE HOUSING 0429-2
FAN DRIVE HUB....0429-2
FAN DRIVE PULLEY 0429-2
FAN POLY RIB BELT, BLOWER (WITHOUT AIR CONDITIONING)....0512-2
FAN PULLEY BLOWER....0512-2
FAN SHROUD, RADIATOR(450J AND 550J) 0511-6
FAN SHROUD, RADIATOR(650J)....0511-10
FAN SPACER, BLOWER 0512-2
FAN, ALTERNATOR....1672-2
FAN, BLOWER....0512-2
FAN, HEATER BLOWER (UPPER)....1831-8
FAN, SHIELD RADIATOR(450J AND 550J)....0511-6
FAN, SHIELD RADIATOR(650J)....0511-10
FEEDBACK LINK, SWASHPLATE....0355-14
FENDER, BACK....1927-2
FENDER, REAR 1927-2
FIELD KIT, AIR CONDITIONER 1832-2
FIELD KIT, INTEGRATED GRADE CONTROL AUXILIARY JOYSTICK AND VALVE....3262-22
FILLER PLUG, HYDRAULIC RESERVOIR....2164-2
FILTER BRACKET, HYDRAULIC....2164-4
FILTER COVER PLATE (S/N'S -XXXXXX) 1810-4
FILTER COVER PLATE (S/N'S -XXXXXX) 1810-6
FILTER COVER PLATE (S/N'S XXXXXX-) 1810-7C
FILTER COVER PLATE (S/N'S XXXXXX-) 1810-7G
FILTER COVER PLATE (S/N'S XXXXXX-) 1810-7A

PAGE

FILTER COVER PLATE (S/N'S XXXXXX-) 1810-7E
FILTER ELEMENT, AIR CLEANER WITH TURBOCHARGER (450J)....0521-2
FILTER HEAD, HYDRAULIC....2164-4
FILTER HOSE, HYDRAULIC (CONTROL VALVE TO HYDRAULIC FILTER) 2163-6
FILTER HOSES, HYDROSTATIC....0363-16
FILTER, AIR CLEANER WITH TURBOCHARGER (550J AND 650J)....0521-6
FILTER, CAB FRESH AIR (UPPER)....1831-8
FILTER, HYDRAULIC....2164-4
FILTER, HYDROSTATIC OR TRANSMISSION....0364-2
FILTER, PRIMARY FUEL....0563-2
FILTER, PRIMARY FUEL....0563-4
FILTER, TRAMSMISSION 0364-2
FILTER, TRANSMISSION ELEMENT....0364-2
FILTER, TRANSMISSION HEAD....0364-2
FILTER, WATER PUMP 0417-3
FILTRATION MANIFOLD HYDROSTATIC PUMP 0355-4
FINAL DRIVE BRAKE PISTON....0201-2
FINAL DRIVE BRAKE PISTON....0201-3A
FINAL DRIVE BRAKE PISTON (CONTINUED)....0201-4
FINAL DRIVE BRAKE PISTON (CONTINUED)....0201-5A
FINAL DRIVE DRAIN PLUG GUARDS....0201-6
FINAL DRIVE GEAR SERVICE KIT (SER. NO. -108451) 0201-8
FINAL DRIVE INNER HOUSING 0201-2
FINAL DRIVE INNER HOUSING 0201-3A
FINAL DRIVE INNER HOUSING (CONTINUED)....0201-4
FINAL DRIVE INNER HOUSING (CONTINUED)....0201-5A
FINAL DRIVE INPUT GEAR 0201-2
FINAL DRIVE INPUT GEAR....0201-3A
FINAL DRIVE INPUT GEAR (CONTINUED)....0201-4
FINAL DRIVE INPUT GEAR (CONTINUED)....0201-5A
FINAL DRIVE OUTER HOUSING....0201-2
FINAL DRIVE OUTER HOUSING....0201-3A
FINAL DRIVE OUTER HOUSING (CONTINUED)....0201-4
FINAL DRIVE OUTER HOUSING (CONTINUED)....0201-5A
FINAL DRIVES....0201-2
FINAL DRIVES....0201-3A
FINAL DRIVES (CONTINUED)....0201-4
FINAL DRIVES (CONTINUED)....0201-5A
FINAL DRIVES BRAKE 0201-2
FINAL DRIVES BRAKE 0201-3A
FINAL DRIVES BRAKE (CONTINUED)....0201-4
FINAL DRIVES BRAKE (CONTINUED)....0201-5A
FINAL FUEL FILTER....0420-4
FINAL FUEL FILTER ELEMENT....0420-4
FINAL FUEL FILTER FUEL LINES 0420-2
FINAL FUEL FILTER HEATER....0420-4
FINAL FUEL FILTER SERVICE KIT....0420-4
FITTING, AIR CONDITIONING CHARGE 1832-4
FITTINGS (AIR SUSPENSION)....1821-28
FLANGE,PULLEY....0429-1
FLANGED AXLE SHAFT SEAL....0201-2

ALPHABETICAL INDEX - CONTINUED

PAGE

FLANGED AXLE SHAFT SEAL 0201-3A
FLANGED AXLE SHAFT SEAL (CONTINUED) 0201-4
FLANGED AXLE SHAFT SEAL (CONTINUED) 0201-5A
FLOOR MAT 1810-10
FLOOR PLATE SEAL 1810-8
FLUID/COLD WEATHER/ETHER START AID SWITCH 1676-8
FLY WHEEL COVER 0540-2
FLYWHEEL COUPLER 0325-2
FLYWHEEL HOUSING 0433-3
FLYWHEEL RING GEAR 0433-2
FLYWHEEL, ENGINE 0433-2
FOAM/ISOLATOR, CAB NOISE REDUCTION 1807-2
FOAM, AIR DUCTWORK 1810-7A
FOAM, AIR DUCTWORK 1810-7E
FOAM, AIR DUCTWORK (S/N'S -XXXXXX) 1810-4
FOAM, UPPER HEATER DRAIN PAN 1831-8
FOOTREST, CAB 1810-8
FORWARD GUARD 1741-2
FORWARD, NEUTRAL AND REVERSE LABEL 1322-2
FORWARD, NEUTRUAL, REVERSE LABLE 0315-6
FORWARD, NEUTRUAL, REVERSE LABLE (CONTINUED) 0315-8
FRAME STEP 3243-4
FRAME, MAIN CONVENIENCE ASSEMBLY 1741-2
FRAME, CAB DOOR AND GLASS 1813-2
FRAME, HEAVY DUTY 3243-2
FRAME, STANDARD 3243-2
FRAME, TRACK 0131-2
FRAME, XLT 3243-2
FRENCH AND SPANISH LABELS AND DECALS 1322-4
FRENCH OR SPANISH LABEL AND DECAL KIT 1322-4
FRESH AIR FILTER, CAB (UPPER) 1831-8
FRONT ACCESS PLATE, CAB 1810-8
FRONT AXIAL PISTON HYDROSTATIC PUMP 0355-2
FRONT CHAIN GUIDE SLIDE (WELDED ON COMPONENT) 0131-2
FRONT COUNTERWIGHT 1749-2
FRONT HYDROSTATIC PUMP 0355-2
FRONT PLATE, ENGINE 0404-1
FRONT ROPS HEADLINER 1810-2
FRONT TRACK CHAIN IDLER AND BRACKETS 0133-6
FRONT WINDOW GLASS 1814-2
FRONT WORK LAMP PLATE 1673-4
FUEL FILTER, PRIMARY 0563-2
FUEL FILTER,FINAL 0420-4
FUEL FIRED COOLANT HEATER KIT 0505-8
FUEL FIRED COOLANT HEATER KIT (HYDRONIC 5 SERIES HEATER) 0505-10
FUEL INJECTION LINES 0413-2
FUEL INJECTION PUMP 0413-2
FUEL INJECTION PUMP, REMANUFACTURED 0413-2
FUEL INJECTION SEAL 0413-1
FUEL LINES 0563-2
FUEL LINES,FINAL FUEL FILTER 0420-2
FUEL RETURN LINE 0413-2
FUEL SHUT OFF VALVE 0563-2
FUEL TANK 0564-2
FUEL TANK DRAIN VALVE 0564-2
FUEL TANK FILLER CUP 0564-2
FUEL TANK, FUEL SENDER 0564-2
FUEL TRANSFER PUMP 0421-1
FUSE COVER PLATE 1810-2

PAGE

FUSE COVER PLATE - CAB (S/N'S -XXXXXX) 1810-4
FUSE COVER PLATE - CAB (S/N'S XXXXXX-) 1810-7A
FUSE COVER PLATE - CAB (S/N'S XXXXXX-) 1810-7E
FUSE, CIGAR LIGHTER 2006-2
FUSEBLOCK LABEL, CAB 1674-6
FUSEBLOCK LABEL, CAB (S/N'S -XXXXXX) 1810-6
FUSEBLOCK LABEL, CAB (S/N'S XXXXXX-) 1810-7C
FUSEBLOCK LABEL, CAB (S/N'S XXXXXX-) 1810-7G
FUSEBLOCK LABEL, ROPS 1674-8
FUSEBOX BRACKET WITH INTEGRATED GRADE CONTROL 650J 1674-30
FUSES VEHICLE HARNESS W/650J W/ INTEGRADED GRADE CONTROL 1674-30
FUSES, CIRCUIT BREAKER AND ELECTRICAL RELAYS/CAB 1674-22
FUSES, CIRCUIT BREAKER AND ELECTRICAL RELAYS/ROPS 1674-24

G

GASKET KIT, HYDRAULIC PUMP 2161-2
GASKET SET,ENGINE MAJOR OVERHAUL 0452-2
GASKET, CYLINDER HEAD 0409-2
GASKET, ENGINE OIL PAN (STEEL METAL PAN) (ENGINE SN XXXXXX-) 0407-8
GASKET, HYDROSTATIC END CAP 0355-10
GASKET, TIMING GEAR COVER 0402-4
GASKET, TURBOCHARGER 0416-2
GASKET,EXHAUST MANIFOLD 0410-2
GASKET,OIL PAN (W/CAST IRON R121621) 0407-4
GASKET,ROCKER ARM COVER 0402-3
GEAR, CAMSHAFT 0402-1
GEAR, CRANKSHAFT 0401-2
GEAR, ENGINE OIL PUMP 0407-2
GLASS, CAB DOOR FRAME 1813-2
GLASS, FRONT WINDOW 1814-2
GLASS, REAR WINDOW 1814-2
GRADE CONTROL CAB HARNESS 1674-6
GRADE CONTROL LEVER (AUXILIARY JOYSTICK) FIELD KIT 3262-22
GRADE CONTROL LEVER (JOYSTICK) INTEGRATED/PILOT ENABLE SWITCH 3262-20
GRID, SAND SHIELD DEFLECTOR 0511-12
GRILLE HOSE GUARD 1921-2
GRILLE HOUSING, STANDARD 1921-2
GRILLE WIRING HARNESS 1674-10
GRILLE WIRING HARNESS W/INTEGRADED GRADE CONTROL 650J 1674-28
GRILLE, HEAVY DUTY 1921-4
GRILLE, STANDARD 1921-2
GRIP CONTROLLER HANDLE SINGLE LEVER CONTROL 0315-6
GRIP CONTROLLER HANDLE SINGLE LEVER CONTROL (CONTINUED) 0315-8
GROUND SPEED LABEL 0315-6
GROUND SPEED LABEL (CONTINUED) 0315-8
GROUND STRAP BATTERY 1671-4
GROUND STRAP, BATTERY 1671-2

ALPHABETICAL INDEX - CONTINUED

PAGE

GROUND STRAP, MICROPROCESSOR TRANSMISSION CONTROL 0375-2
GROUND STRAP, STARTER (CAB HARNESS) 1674-6
GROUND STRAP, STARTER (ROPS HARNESS)....1674-8
GUARD REAR 1741-2
GUARD, AIR CONDITIONING PLUMBING (S/N'S -XXXXXX) 1810-4
GUARD, AIR CONDITIONING PLUMBING (S/N'S -XXXXXX) 1810-6
GUARD, AIR CONDITIONING PLUMBING (S/N'S XXXXXX-) 1810-7A
GUARD, AIR CONDITIONING PLUMBING (S/N'S XXXXXX-) 1810-7C
GUARD, AIR CONDITIONING PLUMBING (S/N'S XXXXXX-) 1810-7E
GUARD, AIR CONDITIONING PLUMBING (S/N'S XXXXXX-) 1810-7G
GUARD, C-FRAME HOSE....1921-4
GUARD, CENTER....1741-2
GUARD, CYLINDER 3265-4
GUARD, FORWARD 1741-2
GUARD, HEAVY DUTY HOSE....1921-4
GUARD, LIGHT HARNESS 1673-6
GUARD, TRACK DRIVE SPROCKET....0132-14
GUARD, WIRING HARNESS....1673-8
GUARDING, FINAL DRIVE DRAIN PLUG....0201-6
GUARDS, ROCK....0131-10
GUARDS, ROCK 450J LONG TRACK AND LOW GROUND PRESSURE....0131-10
GUIDE SLIDE, FRONT CHAIN (WELDED ON COMPONENT)....0131-2
GUIDE, IDLER 0133-6
GUIDES, CHAIN 0131-6
GUIDES, CHAIN 650J 0131-12

H

HANDLE GRIP, CAB DOOR HOLD OPEN....1813-4
HANDLE, DOOR OUTER 1813-2
HANDLE, T-BAR CONTROL....3215-2
HARDWARE KIT, A/C COMPRESSOR 1832-10
HARNESS (AIR SUSPENSION) COMPRESSOR SEAT WIRING(SN.-XXXXXX)....1821-26
HARNESS (AIR SUSPENSION), SEAT POWER (SN.-XXXXXX) 1821-26
HARNESS AIR CONDITIONING CONDENSER WIRING....1832-2
HARNESS GUARD, LIGHT 1673-6
HARNESS GUARD, WIRING....1673-8
HARNESS, ALTERNATOR WITH 650J INTEGRADED GRADE CONTROL....1674-28
HARNESS, CAB 1674-6
HARNESS, CAB HEATER WIRING (UPPER)....1831-8
HARNESS, CAB WORK LIGHT....1673-8
HARNESS, ENGINE WIRING....1674-10
HARNESS, ENGINE WIRING WITH 650J INTEGRADED GRADE CONTROL 1674-28
HARNESS, GRILLE WIRING....1674-10
HARNESS, GRILLE WIRING W/INTEGRADED GRADE CONTROL 650J 1674-28
HARNESS, HORN WIRING....1674-20
HARNESS, INTERGRATED GRADE CONTROL....1674-6
HARNESS, POWER PLUG 2006-2
HARNESS, RADIO WIRING....2001-2
HARNESS, REAR WIPER MOTOR WIRING 1814-8

PAGE

HARNESS, ROPS.... 1674-8
HARNESS, ROPS WORK LIGHT.... 1673-6
HARNESS, STARTER TERMINAL JUMPER WITH 650J INTEGRADED GRADE CONTROL.... 1674-28
HARNESS, TRANSMISSION.... 1674-4
HARNESS, UNDER SEAT ROPS AND CAB HEATER WIRING 1831-2
HARNESS, VEHICLE WIRING WITH 650J INTEGRADED GRADE CONTROL.... 1674-30
HARNESS, WITH SWITCH AND COVER SINGLE LEVER CONTROL WITH SPEEDIN GRIP 0315-6
HARNESS, WORK LIGHT WIRING.... 1673-4
HCU 1674-6
HEAD END PIN, ANGLE CYLINDER 3243-2
HEAD END PIN, LIFT CYLINDER.... 3265-4
HEAD END PIN, TILT CYLINDER 3201-4
HEAD, CYLINDER 0409-2
HEAD, HYDRAULIC FILTER.... 2164-4
HEAD, TRANSMISSION FILTER 0364-2
HEADER,ENGINE OIL FILTER.... 0407-6
HEADER,PRIMARY FUEL FILTER.... 0563-4
HEADLINER, CAB FRONT (WITH LOUVERS) (S/N'S -XXXXXX) 1810-4
HEADLINER, CAB FRONT (WITH LOUVERS) (S/N'S XXXXXX-) 1810-7A
HEADLINER, CAB FRONT (WITH LOUVERS) (S/N'S XXXXXX-) 1810-7E
HEADLINER, INTERIOR CAB LIGHT (S/N'S -XXXXXX) 1810-4
HEADLINER, INTERIOR CAB LIGHT (S/N'S XXXXXX-) 1810-7A
HEADLINER, INTERIOR CAB LIGHT (S/N'S XXXXXX-) 1810-7E
HEADLINER, REAR (WITH LOUVERS) (S/N'S -XXXXXX) 1810-6
HEADLINER, REAR (WITH LOUVERS) (S/N'S XXXXXX-) 1810-7C
HEADLINER, REAR (WITH LOUVERS) (S/N'S XXXXXX-) 1810-7G
HEADLINER, REAR ROPS.... 1810-2
HEADLINER, ROPS 1810-2
HEADREST(DELUXE).... 1821-12
HEATER AND AIR CONDITIONER BLOWER SWITCH..... 1832-2
HEATER AND AIR CONDITIONER BLOWER SWITCH (S/N'S -XXXXXX) 1810-6
HEATER AND AIR CONDITIONER BLOWER SWITCH (S/N'S XXXXXX-) 1810-7C
HEATER AND AIR CONDITIONER BLOWER SWITCH (S/N'S XXXXXX-) 1810-7G
HEATER AND AIR CONDITIONER BLOWER SWITCH (UPPER).... 1831-8
HEATER AND AIR CONDITIONER TEMPERATURE SWITCH 1832-2
HEATER AND AIR CONDITIONER TEMPERATURE SWITCH (UPPER).... 1831-8
HEATER AND AIR CONDITIONER TEMPERATURE SWITCH (S/N'S XXXXXX-) 1810-7C
HEATER AND AIR CONDITIONER TEMPERATURE SWITCH (S/N'S XXXXXX-) 1810-7G
HEATER AND AIR CONDITIONER TEMPERATURE SWITCH(S/N'S -XXXXXX) 1810-6
HEATER AND FAN CONTROL DECAL.... 1322-2
HEATER AND FAN CONTROL DECAL (S/N'S -XXXXXX) 1810-4
HEATER AND FAN CONTROL DECAL (S/N'S -XXXXXX) 1810-6

ALPHABETICAL INDEX - CONTINUED

PAGE

HEATER AND FAN CONTROL DECAL (S/N'S XXXXXX-) 1810-7A
HEATER AND FAN CONTROL DECAL (S/N'S XXXXXX-) 1810-7C
HEATER AND FAN CONTROL DECAL (S/N'S XXXXXX-) 1810-7E
HEATER AND FAN CONTROL DECAL (S/N'S XXXXXX-) 1810-7G
HEATER CORE (UPPER) 1831-8
HEATER CORE ROPS AND CAB UNDER SEAT 1831-2
HEATER DRAIN PAN FOAM, UPPER 1831-8
HEATER HOSE, CAB 1831-6
HEATER ON/OFF SWITCH (UPPER) 1831-8
HEATER PLUMBING, CAB 1831-6
HEATER PLUMBING, ROPS SEAT BASE 1831-4
HEATER SWITCH ROPS AND CAB UNDER SEAT HEATER 1831-2
HEATER TOP COVER (UPPER) 1831-8
HEATER TRAY FOR ROPS AND CAB UNDER SEAT 1831-2
HEATER, BLOWER FAN (UPPER) 1831-8
HEATER, CAB (UPPER) 1831-8
HEATER, ENGINE COOLANT 0505-4
HEATER, FUEL FIRED COOLANT 0505-8
HEATER, FUEL FIRED COOLANT (HYDRONIC 5 SERIES HEATER) 0505-10
HEATER, ROPS AND CAB SEAT BASE WITH UNDER SEAT 1831-2
HEATER, ROPS AND CAB UNDER SEAT 1831-2
HEATER, THERMAL EXPANSION VALVE, CAB (UPPER) 1831-8
HEATER, UPPPER 1831-8
HEATER,FINAL FUEL FILTER 0420-4
HEATING ELEMENT, ENGINE COOLANT 0505-4
HEAVY DUTY C-FRAME 3243-2
HEAVY DUTY GRILLE 1921-4
HEAVY DUTY HOSE GUARD 1921-4
HI-INTENSITY LIGHTS, ROPS 1673-6
HIGH AND LOW PRESSURE AIR CONDITIONING REFRIGERANT HOSE BRACKET 1832-4
HIGH AND LOW PRESSURE AIR CONDITIONING REFRIGERANT HOSES 1832-4
HIGH AND LOW PRESSURE AIR CONDITIONING SWITCH 1832-2
HIGH PRESSURE HOSES-LONG TRACK AND LOW LOW GROUND PRESSURE 0363-10
HIGH-INTENSITY LIGHTS, CAB 1673-8
HINGE, CAB DOOR 1811-4
HINGE, HYDROSTATIC RESERVOIR DOOR 0364-4
HITCH PIN (DRAWBAR) 1511-4
HITCH PIN, QUICK LOCK (DRAWBAR) 1511-4
HITCH RETRIEVAL PLATE (DRAWBAR) 1511-4
HOLD OPEN LATCH, CAB DOOR 1813-4
HOLD OPEN, CAB DOOR 1813-4
HOLDER, OPERATOR MANUAL 1821-4
HOLDER, OPERATOR MANUAL (AIR SUSPENSION) 1821-24
HOLDER, OPERATOR MANUAL (DELUXE) 1821-14
HOLDOWN, BATTERY 1671-2
HOOD 1911-2
HOOD SEAL 1927-2
HOOD SERVICE DOOR 1911-2
HOOD SUPPORT 1911-4
HOOK, TOW 1512-2
HORN 2004-2
HORN COVER SWITCH (CONTINUED) 0315-8
HORN SWITCH 1674-20

PAGE

HORN SWITCH COVER (CONTINUED) 0315-8
HORN WIRING HARNESS 1674-20
HOSE BRACKET, HIGH AND LOW PRESSURE AIR CONDITIONING REFRIGERANT 1832-4
HOSE GUARD C-FRAME 1921-4
HOSE GUARD, GRILLE 1921-2
HOSE GUARD, HEAVY DUTY 1921-4
HOSE HEAD END, ANGLE 3263-8
HOSE ROD AND HEAD END, TILT 3263-8
HOSE ROD END, ANGLE 3263-8
HOSE THRU DRIVE PUMP, SUCTION 2163-8
HOSE, AIR INTAKE(450J) 0521-2
HOSE, AIR INTAKE(550J AND 650J) 0521-6
HOSE, CAB HEATER 1831-6
HOSE, ENVIRONMENTAL ENGINE DRAIN 2163-10
HOSE, FRONT WINDSHIELD WASHER 1814-6
HOSE, HYDRASTATIC SUCTION 0363-12
HOSE, HYDRAULIC FILTER (CONTROL VALVE TO HYDRAULIC FILTER) 2163-6
HOSE, HYDRAULIC SUCTION 2163-2
HOSE, WINDSHIELD WASHER SIDE 1814-10
HOSES-LONG TRACK AND LOW GROUND PRESSURE, HIGH PRESSURE 0363-10
HOSES, A/C REFRIGERANT(HIGH AND LOW PRESSURE) 1832-4
HOSES, ANGLE HYDRAULIC 3263-6
HOSES, BLADE LIFT CYLINDER 3263-2
HOSES, C-FRAME LUBRICATION 3243-2
HOSES, HYDRAULIC PRESSURE 2163-4
HOSES, HYDROSTATIC FILTER 0363-16
HOSES, PARKING BRAKE 0363-2
HOSES, RIPPER 3263-10
HOSES, TILT PLUMBING HYDRAULIC 3263-4
HOUSING FIELD KIT, AIR CONDITONING 1832-2
HOUSING WORK LIGHT 1673-6
HOUSING, ANGLE VALVE SECTION, (650J) 3262-16
HOUSING, AUX VALVE SECTION, (650J) 3262-18
HOUSING, FAN DRIVE 0429-2
HOUSING, FLYWHEEL 0433-3
HOUSING, GRILLE 1921-2
HOUSING, HYDROSTATIC CHARGE 0355-10
HOUSING, INNER FINAL DRIVE 0201-2
HOUSING, INNER FINAL DRIVE 0201-3A
HOUSING, INNER FINAL DRIVE (CONTINUED) 0201-4
HOUSING, INNER FINAL DRIVE (CONTINUED) 0201-5A
HOUSING, LIFT VALVE SECTION, (650J) 3262-12
HOUSING, OUTER FINAL DRIVE 0201-2
HOUSING, OUTER FINAL DRIVE 0201-3A
HOUSING, OUTER FINAL DRIVE (CONTINUED) 0201-4
HOUSING, OUTER FINAL DRIVE (CONTINUED) 0201-5A
HOUSING, TILT VALVE SECTION, (650J) 3262-14
HOUSING, WORK LAMP 1673-4
HOUSING, WORK LIGHT CAB HI-INTENSITY 1673-8
HOUSING,ENGINE OIL PUMP 0407-2
HUB, FAN DRIVE 0429-2
HYDRAULIC AND HYDROSTATIC OIL TANK 10W30 OIL DESIGNATION LABEL 1322-2
HYDRAULIC BLADE LIFT HOSES 3263-2
HYDRAULIC CONTROL LINKAGE 3215-2
HYDRAULIC CONTROL SHAFT WITH ARM 3215-2
HYDRAULIC CONTROL U-JOINT (HOUSING) 3215-2
HYDRAULIC CONTROL VALVE 3262-2

ALPHABETICAL INDEX - CONTINUED

PAGE

HYDRAULIC CONTROL VALVE....3262-10
HYDRAULIC CYLINDER ANGLE....3265-4
HYDRAULIC CYLINDER LIFT....3265-4
HYDRAULIC CYLINDER, BLADE TILT....3265-6
HYDRAULIC CYLINDER, TILT....3265-4
HYDRAULIC FILTER....2164-4
HYDRAULIC FILTER BRACKET....2164-4
HYDRAULIC FILTER HEAD....2164-4
HYDRAULIC FILTER HOSE (CONTROL VALVE TO HYDRAULIC FILTER)....2163-6
HYDRAULIC FLUID SIGHT LABEL....1322-2
HYDRAULIC HOSES RIPPER....3263-10
HYDRAULIC HOSES, ANGLE....3263-6
HYDRAULIC HOSES, TILT PLUMBING....3263-4
HYDRAULIC LINKAGE BOOT....3215-2
HYDRAULIC OIL COOLER FIELD KIT, AUXILIARY....2164-6
HYDRAULIC OIL COOLER, IGC 650J....2164-8
HYDRAULIC OIL TEMPERATURE SENSOR....1674-26
HYDRAULIC PLUMBING, BLADE....3263-8
HYDRAULIC PRESSURE HOSES....2163-4
HYDRAULIC PUMP COUPLING....2161-2
HYDRAULIC PUMP GASKET KIT....2161-2
HYDRAULIC PUMP REPAIR KIT....2161-6
HYDRAULIC PUMP TO CONTROL VALVE PRESSURE HOSE....2163-4
HYDRAULIC PUMP, DRIVE THRU WITH SHAFT....2161-6
HYDRAULIC PUMP, STANDARD....2161-2
HYDRAULIC RESERVOIR....2164-2
HYDRAULIC RESERVOIR COVER PLATE WITH TUBE....2164-2
HYDRAULIC RESERVOIR DOOR....2164-2
HYDRAULIC RESERVOIR DOOR LATCH....2164-2
HYDRAULIC RESERVOIR FILLER PLUG....2164-2
HYDRAULIC RESERVOIR SIGHT TUBE....2164-2
HYDRAULIC RESERVOIR TO HYDRAULIC PUMP SUCTION HOSE....2163-2
HYDRAULIC SITE LABEL....2164-2
HYDRAULIC SIX WAY BLADE LABEL....1322-2
HYDRAULIC SIX WAY BLADE LABEL (S/N'S -XXXXXX)....1810-4
HYDRAULIC SIX WAY BLADE LABEL (S/N'S XXXXXX-)....1810-7A
HYDRAULIC SIX WAY BLADE LABEL (S/N'S XXXXXX-)....1810-7E
HYDRAULIC SUCTION HOSE....2163-2
HYDRAULIC SUCTION HOSE(HYDRAULIC RESERVOIR TO HYDRAULIC PUMP)....2163-2
HYDRAULIC SUCTION HOSE, DRIVE THRU PUMP (RESERVOIR TO HYDRAULIC PUMP)....2163-8
HYDRAULIC TANK DRAIN VALVE....2163-10
HYDRAULIC 6-WAY BLADE LABEL....1810-2
HYDROSTATIC AND HYDRAULIC OIL TANK 10W30 OIL DESIGNATION LABEL....1322-2
HYDROSTATIC CAGE LOCATOR LINK....0355-14
HYDROSTATIC CHARGE HOUSING....0355-10
HYDROSTATIC CHARGE RELIEF VALVE....0355-2
HYDROSTATIC CHARGE RELIEF VALVE PLUG....0355-6
HYDROSTATIC CYLINDER BLOCK ASSEMBLY WITH SPEED RING....0355-14
HYDROSTATIC CYLINDER BLOCK KIT WITH SPEED RING....0355-14
HYDROSTATIC ELECTRONIC DISPLACEMENT CONTROL VALVE....0355-2
HYDROSTATIC END CAP ASSEMBLY....0355-10
HYDROSTATIC END CAP GASKET....0355-10
HYDROSTATIC FILTER ADAPTER....0355-2

PAGE

HYDROSTATIC FILTER HOSES....0363-16
HYDROSTATIC FILTER SCREEN....0355-6
HYDROSTATIC FILTRATION MANIFOLD KIT....0355-4
HYDROSTATIC FRONT AND REAR PUMP, COUPLING....0355-4
HYDROSTATIC FRONT PUMP....0355-2
HYDROSTATIC FRONT PUMP SHAFT....0355-12
HYDROSTATIC MOTOR CONTROL ELECTRICAL COIL....0355-20
HYDROSTATIC MOTOR CONTROL END PLATE....0355-20
HYDROSTATIC MOTOR CONTROL PRESSURE RELIEF VALVE....0355-20
HYDROSTATIC MOTOR CONTROL SERVO PISTON....0355-20
HYDROSTATIC MOTOR CONTROL SHIFT BRACKET....0355-20
HYDROSTATIC MOTOR CYLINDER BLOCK....0355-24
HYDROSTATIC MOTOR CYLINDER BLOCK BEARING PLATE....0355-24
HYDROSTATIC MOTOR DRAIN HOSE....0363-14
HYDROSTATIC MOTOR END CAP....0355-20
HYDROSTATIC MOTOR END CAP SHUTTLE SPOOL....0355-20
HYDROSTATIC MOTOR FLANGE SEAL....0355-24
HYDROSTATIC MOTOR FLANGE SEAL KIT....0355-24
HYDROSTATIC MOTOR SHAFT PISTON RING KIT....0355-24
HYDROSTATIC MOTOR SHAFT WITH SPEED RING....0355-24
HYDROSTATIC MOTOR SPEED SENSOR....0355-24
HYDROSTATIC MOTOR SPRING AND SPRING SEAT ASSEMBLY....0355-20
HYDROSTATIC MOTOR SYNC SHAFT KIT....0355-24
HYDROSTATIC MOTOR VALVE (SWASHPLATE)....0355-24
HYDROSTATIC MOTOR, HOUSING, CYLINDER BLOCK, PISTON SWASHPLATE AND PARTS....0355-24
HYDROSTATIC MOTOR, HYDROSTATIC MOTOR CONTROL AND COMPONENT PARTS....0355-20
HYDROSTATIC MULTI FUNCTION VALVE....0355-2
HYDROSTATIC MULTI FUNCTION VALVE....0355-6
HYDROSTATIC OIL COOLER BY PASS VALVE....0363-14
HYDROSTATIC OIL COOLER(450J AND 550J)....0511-6
HYDROSTATIC OIL COOLER(650J)....0511-10
HYDROSTATIC OIL OR TRANSMISSION OIL TEMPERATURE SWITCH....0363-14
HYDROSTATIC OR TRANSMISSION FILTER....0364-2
HYDROSTATIC PUMP BEARING....0355-14
HYDROSTATIC PUMP CHARGING SYSTEM....0355-4
HYDROSTATIC PUMP COMPRESSION SPRING....0355-12
HYDROSTATIC PUMP DISPLACEMENT CONTROL VALVE....0355-16
HYDROSTATIC PUMP FILTRATION MANIFOLD....0355-4
HYDROSTATIC PUMP FRONT SHAFT....0355-2
HYDROSTATIC PUMP LEVELOR....0355-12
HYDROSTATIC PUMP PRESSURE CONTROL PILOT VALVE....0355-16
HYDROSTATIC PUMP RETAINING PLATE TANDEM PUMPS....0355-6
HYDROSTATIC PUMP SHAFT ROLLER BEARING....0355-12
HYDROSTATIC PUMP SIDE COVER....0355-2
HYDROSTATIC REAR PUMP....0355-2
HYDROSTATIC REAR PUMP LIFTING BRACKET....0355-10
HYDROSTATIC REAR PUMP SHAFT....0355-2
HYDROSTATIC REAR PUMP SHAFT....0355-12
HYDROSTATIC RESERVOIR....0364-4
HYDROSTATIC RESERVOIR ACCESS COVER PLATE....0364-4
HYDROSTATIC RESERVOIR COVER....0364-4
HYDROSTATIC RESERVOIR DOOR HINGE....0364-4
HYDROSTATIC RESERVOIR DOOR LATCH....0364-4
HYDROSTATIC RESERVOIR SIGHT GUAGE LABEL....0364-4

ALPHABETICAL INDEX - CONTINUED

PAGE

HYDROSTATIC RESERVOIR, WELDING INSTRUCTION LABEL....0364-4
HYDROSTATIC RSERVOIR DOOR....0364-4
HYDROSTATIC SERVO ARM....0355-14
HYDROSTATIC SERVO CAN CYLINDER....0355-2
HYDROSTATIC SERVO PISTON KIT....0355-12
HYDROSTATIC SHAFT SEAL ASSEMBLY....0355-6
HYDROSTATIC SIDE COVER INSERT....0355-12
HYDROSTATIC SLIPPER GUIDE....0355-14
HYDROSTATIC SPEED RING....0355-14
HYDROSTATIC SPEED SENSOR....0355-2
HYDROSTATIC SPEED SENSOR....0355-6
HYDROSTATIC SUCTION HOSE....0363-12
HYDROSTATIC SWASHPLATE GUIDE....0355-14
HYDROSTATIC TANK DRAIN VALVE....2163-10
HYDROSTATIC VARIABLE SWASHPLATE....0355-14
HYDROSTATIC WELDED PISTON ASSEMBLY....0355-14
HYDROSTATIC/TRANSMISSION DIAGNOSTIC PLUMBING....0363-4
HYDROSTATIC/TRANSMISSION TESTING LABEL....0363-4

I

IDENTIFICATION PLUG FOR SINGLE LEVER CONTROL....1674-20
IDENTIFICATION PLUG FOR SINGLE LEVER CONTROL WITH SPEED IN GRIP....1674-20
IDLER GUIDE....0133-6
IDLER WITH BRACKETS....0133-6
IDLER, FRONT TRACK CHAIN....0133-6
IDLER, SHAFT....0133-6
IGC ANGLE VALVE SECTION (650J)....3262-16
IGC AUX VALVE SECTION (650J)....3262-18
IGC LIFT VALVE SECTION (650J)....3262-12
IGC TILT VALVE SECTION (650J)....3262-14
IMPELLER, WATER PUMP....0417-3
INJECTION NOZZLE....0413-1
INJECTION PUMP, FUEL....0413-2
INLET VALVE....3262-2
INLET VALVE....3262-10
INLET, WATER PUMP....0417-2
INPUT GEAR, FINAL DRIVE....0201-2
INPUT GEAR, FINAL DRIVE....0201-3A
INPUT GEAR, FINAL DRIVE (CONTINUED)....0201-4
INPUT GEAR, FINAL DRIVE (CONTINUED)....0201-5A
INTAKE SYSTEM,AIR....0414-2
INTAKE VALVE....0409-2
INTAKE, ENGINE OIL PUMP....0407-2
INTEGRADED CONTROL VALVE ANGLE SECTION (650J)....3262-16
INTEGRADED CONTROL VALVE AUX SECTION (650J)....3262-18
INTEGRADED CONTROL VALVE LIFT SECTION (650J)....3262-12
INTEGRADED CONTROL VALVE TILT SECTION (650J)....3262-14
INTEGRADED GRADE CONTROL CAB HARNESS....1674-6
INTEGRATED GRADE CONTROL HYDRAULIC OIL COOLER....2164-8
INTEGRATED GRADE CONTROL HYDRAULIC OIL C OOLER HOSES....2164-8
INTEGRATED GRADE CONTROL LEVER (AUXILIARY JOYSTICK) FIELD KIT....3262-22

PAGE

INTEGRATED GRADE CONTROL LEVER (JOYSTICK)& PILOT ENABLE SWITCH....3262-20
INTERIOR CAB LIGHT IN HEADLINER (S/N'S -XXXXXX)....1810-4
INTERIOR CAB LIGHT IN HEADLINER (S/N'S XXXXXX-)....1810-7A
INTERIOR CAB LIGHT IN HEADLINER (S/N'S XXXXXX-)....1810-7E
ISOLATOR RADIATOR MOUNTS(450J AND 550J)....0511-6
ISOLATOR RADIATOR MOUNTS(650J)....0511-10
ISOLATOR, CAB NOISE REDUCTION FOAM....1807-2
ISOLATOR, POWER TRAIN/ENGINE CRADLE RUBBER....0540-2
ISOLATORS AND MOUNTS, CAB ROPS OR ROPS....1811-6

J

JACK SCREW....1811-4
JET, ENGINE PISTON COOLING....0404-2
JOYSTICK - INTEGRATED GRADE CONTROL LEVER & PILOT ENABLE SWITCH....3262-20
JOYSTICK AUXILIARY FIELD KIT, INTEGRATED GRADE CONTROL....3262-22

K

KEY....1676-8
KEY START LABEL....1810-2
KEY START LABEL (S/N'S XXXXXX-)....1810-7A
KEY START LABEL (S/N'S XXXXXX-)....1810-7E
KEY START LABEL (S/N'S -XXXXXX)....1810-4
KEY SWITCH....1676-8
KEY SWITCH WITH 650J INTEGRADED GRADE CONTROL....1676-3A
KEY WITH 650J INTEGRADED GRADE CONTROL....1676-3A
KIT(HIGH AND LOW PRESSURE REFRIGERANT HOSES, AIR CONDITIONING FIELD....1832-4
KIT, AIR CONDITIONER FIELD....1832-2
KIT, BRAKE VALVE....1062-2
KIT, C-FRAME STANDARD AND HEAVY DUTY REINFORCEMENT....3243-2
KIT, CAB ACCESSORIES....1810-12
KIT, CYLINDER BLOCK WITH SPEED RING....0355-14
KIT, CYLINDER LINER....0403-2
KIT, ENGINE OVERHAUL....0452-2
KIT, FRENCH OR SPANISH LABEL AND DECAL....1322-4
KIT, FUEL FIRED COOLANT HEATER....0505-8
KIT, FUEL FIRED COOLANT HEATER (HYDRONIC 5 SERIES HEATER)....0505-10
KIT, HYDRAULIC PUMP REPAIR....2161-6
KIT, HYDROSTATIC FILTRATION MANIFOLD....0355-4
KIT, HYDROSTATIC MOTOR SYNC SHAFT....0355-24
KIT, HYDROSTATIC SERVO PISTON....0355-12
KIT, LEAD WIRE....1674-18
KIT, LOCTITE SERVICE....1330-2
KIT, LUMBAR....1821-30
KIT, O-RING....1369-6
KIT, PIN AND BUSHING (450J,550J)....0132-2
KIT, PIN AND BUSHING(450J AND 650J)....0132-4
KIT, ROTARY SENSOR....0315-6
KIT, ROTARY SENSOR (CONTINUED)....0315-8
KIT, SEAT RECLINER....1821-32

ALPHABETICAL INDEX - CONTINUED

PAGE

KIT, SINGLE LEVER TO SINGLE LEVER WITH SPEED IN GRIP (SER. NO. -910010)....0315-8
KIT, SLIDE LATCH (ALL SEATS)....1821-10
KIT, START REPLACEMENT RESISTOR....1674-6
KIT, STARTER MOTOR....0422-2
KIT, STARTING MOTOR SOLENOID....0422-2
KIT, WATER PUMP REPAIR....0417-3
KIT, 12V POWER SUPPLY....2006-2
KIT,FINAL FUEL FILTER SERVICE....0420-4
KIT,PRIMARY FUEL FILTER SERVICE....0563-4
KIT,WATER PUMP INSERT REPAIR....0402-4
KNEE PAD....1810-12
KNOB, LUMBAR....1821-30
KNOB, PARK LOCK LEVER....1115-2
KNOB, RECLINER....1821-32
KNOB, RERVERSE RATIO....1676-8
KNOB, RERVERSE RATIO WITH 650J INTEGRADED GRADE CONTROL....1676-3A

L

LABEL (FRENCH AND SPANISH)....1322-4
LABEL CAB HIGH INTENSITY WORK LIGHT....1673-8
LABEL ROPS....1810-2
LABEL, BYPASS START, STARTER MOTOR....0422-2
LABEL, CAB FUSEBLOCK....1674-6
LABEL, CAB FUSEBLOCK (S/N'S -XXXXXX)....1810-6
LABEL, CAB FUSEBLOCK (S/N'S XXXXXX-)....1810-7C
LABEL, CAB FUSEBLOCK (S/N'S XXXXXX-)....1810-7G
LABEL, COLD START/WARM UP (S/N'S -XXXXXX)....1810-4
LABEL, COLD START/WARM UP (S/N'S XXXXXX-)....1810-7A
LABEL, COLD START/WARM UP (S/N'S XXXXXX-)....1810-7E
LABEL, DECORATIVE GREY CIRCLE....1810-2
LABEL, DEERE (ON BACK OF FUEL TANK)....1322-2
LABEL, DEERE (ON BACK OF FUEL TANK) (S/N'S -XXXXXX)....1810-4
LABEL, DEERE (ON BACK OF FUEL TANK) (S/N'S XXXXXX-)....1810-7A
LABEL, DEERE (ON BACK OF FUEL TANK) (S/N'S XXXXXX-)....1810-7E
LABEL, DISCONNECT....1322-2
LABEL, ENGINE SPEED....1810-2
LABEL, ENGINE SPEED (S/N'S -XXXXXX)....1810-4
LABEL, ENGINE SPEED (S/N'S XXXXXX-)....1810-7A
LABEL, ENGINE SPEED (S/N'S XXXXXX-)....1810-7E
LABEL, ENGINE SPEED-REVERSE....1810-7A
LABEL, ENGINE SPEED-REVERSE....1810-7E
LABEL, ENGINE SPEED-REVERSE (S/N'S -XXXXXX)....1810-4
LABEL, FORWARD, NEUTRAL AND REVERSE....1322-2
LABEL, FORWARD, NEUTRAL, REVERSE....0315-6
LABEL, FORWARD, NEUTRAL, REVERSE (CONTINUED)....0315-8
LABEL, GROUND SPEED....0315-6
LABEL, GROUND SPEED (CONTINUED)....0315-8
LABEL, HYDRAULIC FLUID SIGHT....1322-2

PAGE

LABEL, HYDRAULIC SITE....2164-2
LABEL, HYDRAULIC SIX WAY BLADE....1322-2
LABEL, HYDRAULIC SIX WAY BLADE (S/N'S -XXXXXX)....1810-4
LABEL, HYDRAULIC SIX WAY BLADE (S/N'S XXXXX-)....1810-7A
LABEL, HYDRAULIC SIX WAY BLADE (S/N'S XXXXX-)....1810-7E
LABEL, HYDRAULIC 6-WAY BLADE LABEL....1810-2
LABEL, HYDROSTATIC AND HYDRAULIC OIL TANK 10W30 OIL DESIGNATION....1322-2
LABEL, HYDROSTATIC RESERVOIR SIGHT GUAGE....0364-4
LABEL, HYDROSTATIC RESERVOIR, WELDING INSTRUCTION....0364-4
LABEL, KEY START....1810-2
LABEL, KEY START (S/N'S XXXXXX-)....1810-7A
LABEL, KEY START (S/N'S XXXXXX-)....1810-7E
LABEL, KEY START (S/N'S -XXXXXX)....1810-4
LABEL, LEAPING DEERE....1322-2
LABEL, LEAPING DEERE....1810-2
LABEL, LEAPING DEERE (S/N'S -XXXXXX)....1810-4
LABEL, LEAPING DEERE (S/N'S XXXXXX-)....1810-7A
LABEL, LEAPING DEERE (S/N'S XXXXXX-)....1810-7E
LABEL, LEEPING DEERE (S/N'S -XXXXXX)....1810-6
LABEL, LEEPING DEERE (S/N'S XXXXXX-)....1810-7C
LABEL, LEEPING DEERE (S/N'S XXXXXX-)....1810-7G
LABEL, LONG TRACK....1322-2
LABEL, LOW GROUND PRESSURE....1322-2
LABEL, MASTER DISCONNECT SWITCH....1674-2
LABEL, PARK LOCK....1322-2
LABEL, PARK LOCK LEFT (S/N'S -XXXXXX)....1810-4
LABEL, PARK LOCK LEFT (S/N'S XXXXXX-)....1810-7A
LABEL, PARK LOCK LEFT (S/N'S XXXXXX-)....1810-7E
LABEL, PERIODIC SERVICE CHART....1911-2
LABEL, REVERSE RATIO-ENGINE SPEED....1810-2
LABEL, REVERSE SPEED (S/N'S -XXXXXX)....1810-4
LABEL, REVERSE SPEED (S/N'S XXXXXX-)....1810-7A
LABEL, REVERSE SPEED (S/N'S XXXXXX-)....1810-7E
LABEL, RIGHT REAR STRIPE....1810-2
LABEL, ROPS (S/N'S -XXXXXX)....1810-6
LABEL, ROPS (S/N'S XXXXXX-)....1810-7C
LABEL, ROPS (S/N'S XXXXXX-)....1810-7G
LABEL, ROPS (ON ROPS POST)....1322-2
LABEL, ROPS (ON ROPS POST) (S/N'S -XXXXXX)....1810-4
LABEL, ROPS (ON ROPS POST) (S/N'S XXXXXX-)....1810-7A
LABEL, ROPS (ON ROPS POST) (S/N'S XXXXXX-)....1810-7E
LABEL, ROPS FUSEBLOCK....1674-8

ALPHABETICAL INDEX - CONTINUED

PAGE

LABEL, SAFETY START PROCEDURE....1810-2
LABEL, SAFETY START PROCEDURE.... 1810-7A
LABEL, SAFETY START PROCEDURE.... 1810-7E
LABEL, SAFETY START PROCEDURE (S/N'S -XXXXXX) 1810-4
LABEL, SEAT BASE TILT PROCEDURE (S/N'S -XXXXXX) 1810-4
LABEL, SEAT BASE TILT PROCEDURE (S/N'S XXXXXX-) 1810-7A
LABEL, SEAT BASE TILT PROCEDURE (S/N'S XXXXXX-) 1810-7E
LABEL, SEAT BELT WARNING 1322-2
LABEL, SEAT BELT WARNING 1810-2
LABEL, SYSTEM WARM UP ENGINE SPEED (IN FRONT OF ENGINE SPEED CONTROL POD)....1810-4
LABEL, SYSTEM WARM UP ENGINE SPEED (IN FRONT OF ENGINE SPEED CONTROL POD).... 1810-7A
LABEL, SYSTEM WARM UP ENGINE SPEED (IN FRONT OF ENGINE SPEED CONTROL POD).... 1810-7E
LABEL, TIE DOWN 1322-2
LABEL, TRACK SAG 1322-2
LABEL, TRANSMISSION FLUID SIGHT 1322-2
LABEL, TRANSMISSION/HYDROSTATIC TESTING 0363-4
LABEL, WARNING SEAT BELT (S/N'S -XXXXXX) 1810-4
LABEL, WARNING SEAT BELT (S/N'S XXXXXX-) 1810-7A
LABEL, WARNING SEAT BELT (S/N'S XXXXXX-) 1810-7E
LABEL, XLT....1322-2
LABEL, 450J 1322-2
LABEL, 550J 1322-2
LABEL, 650J 1322-2
LABELS AND DECALS (ENGLISH) 1322-2
LAMP AND BULB, CAB DOME (S/N'S -XXXXXX) 1810-4
LAMP AND BULB, CAB DOME (S/N'S XXXXXX-) 1810-7A
LAMP AND BULB, CAB DOME (S/N'S XXXXXX-) 1810-7E
LAMP BRACKET, BACKUP ALARM AND REAR WORK....1673-4
LAMP HOUSING, WORK 1673-4
LATCH CAB DOOR HOLD OPEN 1813-4
LATCH LEVER, DOOR 1813-2
LATCH, CAB DOOR 1813-2
LATCH, HYDRAULIC RESERVOIR DOOR 2164-2
LATCH, HYDROSTATIC RESERVOIR DOOR 0364-4
LATCHES, CAB DOOR....1813-2
LEAD WIRE KIT....1674-18
LEAPING DEERE LABEL....1322-2
LEAPING DEERE LABEL....1810-2
LEEPING DEERE LABEL (S/N'S -XXXXXX) 1810-4
LEEPING DEERE LABEL (S/N'S -XXXXXX) 1810-6
LEEPING DEERE LABEL (S/N'S XXXXXX-) 1810-7A
LEEPING DEERE LABEL (S/N'S XXXXXX-) 1810-7C
LEEPING DEERE LABEL (S/N'S XXXXXX-) 1810-7E
LEEPING DEERE LABEL (S/N'S XXXXXX-) 1810-7G
LEFT RAIL ASSEMBLY POWER TRAIN/ENGINE CRADLE MOUNTING 0540-2
LEFT SIDE WINDOW 1814-2
LEVELOR, HYSROSTATIC PUMP 0355-12

PAGE

LEVER (AUXILIARY JOYSTICK) FIELD KIT 3262-22
LEVER (JOYSTICK) INTEGRATED GRADE CONTROL & PILOT ENABLE SWITCH 3262-20
LEVER ASSEMBLY, SPEED 0315-6
LEVER ASSEMBLY, SPEED (CONTINUED) 0315-8
LEVER CONTROL WITH SPEED IN GRIP, SINGLE.... 0315-6
LEVER CONTROL, SINGLE (CONTINUED) 0315-8
LEVER, AUXILIARY FUNCTION 3262-6
LEVER, AUXILIARY FUNCTION 3262-7A
LEVER, AUXILIARY FUNCTION (FIFTH FUNCTION) 3262-8
LEVER, DOOR LATCH 1813-2
LEVER, PARK LOCK CONTROL.... 1115-2
LIFT CYLINDER.... 3265-8
LIFT CYLINDER BARREL 3265-8
LIFT CYLINDER HEAD END PIN 3265-4
LIFT CYLINDER ROD.... 3265-8
LIFT CYLINDER ROD END PIN 3243-2
LIFT CYLINDER UNITIZED PISTON.... 3265-8
LIFT HYDRAULIC, CYLINDER 3265-4
LIFT STRAPS, ENGINE (ENG. MODEL NO. PE4045HT050).... 0404-6
LIFT VALVE SECTION, IGC CONTROL VALVE (650J) 3262-12
LIFTING BRACKET, HYDROSTATIC REAR PUMP.... 0355-10
LIGHT BRACKET.... 1673-6
LIGHT BRACKET CAB HI-INTENSITY.... 1673-8
LIGHT BULB 1673-6
LIGHT BULB CAB HI-INTENSITY 1673-8
LIGHT BULB, WORK 1673-4
LIGHT CIRCUIT BREAKER.... 1673-6
LIGHT CIRCUIT BREAKER CAB HI-INTENSITY 1673-8
LIGHT DEFLECTOR CAB HI-INTENSITY 1673-8
LIGHT HARNESS GUARD 1673-6
LIGHT HARNESS, CAB WORK.... 1673-8
LIGHT HARNESS, ROPS WORK 1673-6
LIGHT ON-OFF SWITCH WITH 650J INTEGRADED GRADE CONTROL 1676-3A
LIGHT ON-OFF SWITCH, WORK.... 1676-8
LIGHT WIRING HARNESS, WORK.... 1673-4
LIGHT, DEFLECTOR 1673-6
LIGHT, DOME (S/N'S -XXXXXX) 1810-6
LIGHT, DOME (S/N'S XXXXXX-) 1810-7C
LIGHT, DOME (S/N'S XXXXXX-) 1810-7G
LIGHT, HOUSING WORK 1673-6
LIGHTER, CIGAR 2006-2
LIGHTS, CAB HI-INTENSITY 1673-8
LIGHTS, ROPS HI-INTENSITY.... 1673-6
LINE, FUEL RETURN 0413-2
LINER, CYLINDER 0403-2
LINES, FUEL.... 0563-2
LINES, FUEL INJECTION.... 0413-2
LINES, TURBOCHARGER OIL.... 0416-4
LINK WITH LUBED CHAIN WITH EXTENDED WEAR BUSHING, MASTER TRACK 0132-6
LINK WITH LUBED CHAIN WITH EXTENDED WEAR BUSHING, MASTER TRACK 0132-8
LINK WITH LUBED CHAIN, MASTER TRACK.... 0132-6
LINK WITH LUBED CHAIN, MASTER TRACK.... 0132-8
LINK, HYDROSTATIC CAGE LOCATOR 0355-14
LINK, TRACK LUBED 0132-6
LINK, TRACK LUBED 0132-8

ALPHABETICAL INDEX - CONTINUED

PAGE

LINK, TRACK LUBED 0132-10
LINK, TRACK LUBED 0132-12
LINK, TRACK SEALED 0132-4
LINK, TRACK SEALED (450J,550J) 0132-2
LINKAGE BOOT, HYDRAULIC 3215-2
LINKAGE, AUXILIARY VALVE (FOURTH FUNCTION) 3262-6
LINKAGE, AUXILIARY VALVE (FOURTH FUNCTION) 3262-7A
LINKAGE, AUXILIARY VALVE WITH (FIFTH FUNCTION) 3262-8
LINKAGE, HYDRAULIC CONTROL 3215-2
LOCK, PARK 1115-2
LOCTITE SERVICE KIT 1330-2
LOGO PLATE 1921-2
LONG TRACK AND LOW GROUND PRESSURE; 450J 0131-6
LONG TRACK LABEL 1322-2
LOUVER, RECTANGULAR CAB (S/N'S -XXXXXX) 1810-4
LOUVER, RECTANGULAR CAB (S/N'S XXXXXX-) 1810-7A
LOUVER, RECTANGULAR CAB (S/N'S XXXXXX-) 1810-7E
LOUVERS, RECTANGULER (S/N'S -XXXXXX) 1810-4
LOUVERS, RECTANGULER (S/N'S XXXXXX-) 1810-7A
LOUVERS, RECTANGULER (S/N'S XXXXXX-) 1810-7E
LOUVERS, DEFROST (S/N'S -XXXXXX) 1810-4
LOUVERS, DEFROST (S/N'S -XXXXXX) 1810-6
LOUVERS, DEFROST (S/N'S XXXXXX-) 1810-7A
LOUVERS, DEFROST (S/N'S XXXXXX-) 1810-7C
LOUVERS, DEFROST (S/N'S XXXXXX-) 1810-7E
LOUVERS, DEFROST (S/N'S XXXXXX-) 1810-7G
LOUVERS, RECTANGULAR (S/N'S -XXXXXX) 1810-6
LOUVERS, RECTANGULAR (S/N'S XXXXXX-) 1810-7C
LOUVERS, RECTANGULAR (S/N'S XXXXXX-) 1810-7G
LOVEJOY COUPLER 0325-2
LOW AND HIGH PRESSURE AIR CONDITIONING REFRIGERANT HOSE BRACKET 1832-4
LOW AND HIGH PRESSURE AIR CONDITIONING REFRIGERANT HOSES 1832-4
LOW AND HIGH PRESSURE SWITCH AIR CONDITIONING 1832-2
LOW GROUND PRESSURE LABEL 1322-2
LOWER DASH PANEL 1810-2
LOWER DASH PANEL PLATE 1810-2
LUBED CHAIN WITH EXTENDED WEAR BUSHING, MASTER TRACK LINK 0132-6
LUBED CHAIN WITH EXTENDED WEAR BUSHING, MASTER TRACK LINK 0132-8
LUBED CHAIN, MASTER TRACK LINK WITH 0132-6
LUBED CHAIN, MASTER TRACK LINK WITH 0132-8
LUBRICATION HOSES, C-FRAME 3243-2
LUMBAR KIT 1821-30
LUMBAR KNOB 1821-30
LUNCH BOX AND CUP TRAY 1810-12

M

MAIN AND THRUST BEARING CAPS, ENGINE 0404-2
MAIN BEARING, CRANKSHAFT 0401-2
MAIN FRAME CONVENIENCE ASSEMBLY 1741-2
MANIFOLD, AIR CONDITIONING COMPRESSOR 1832-8
MANIFOLD, HYDROSTATIC PUMP FILTRATION 0355-4
MANIFOLD,EXHAUST 0410-2
MANUAL HOLDER, OPERATOR 1821-4
MARKER, REFLECTIVE RED 1810-2
MASTER DISCONNECT SWITCH 1674-2
MASTER DISCONNECT SWITCH CABLE 1674-2
MASTER DISCONNECT SWITCH LABEL 1674-2
MASTER TRACK LINK WITH LUBED CHAIN 0132-6
MASTER TRACK LINK WITH LUBED CHAIN 0132-8
MASTER TRACK LINK WITH LUBED CHAIN WITH EXTENDED WEAR BUSHING) 0132-6
MASTER TRACK LINK WITH LUBED CHAIN WITH EXTENDED WEAR BUSHING) 0132-8
MAT, FLOOR 1810-10
MECHANICAL ACTUATOR, ANGLE VALVE SECTION (650J) IGC 3262-16
MECHANICAL ACTUATOR, AUX VALVE SECTION, (650J) IGC 3262-18
MECHANICAL ACTUATOR, LIFT VALVE SECTION, (650J) IGC 3262-12
MECHANICAL ACTUATOR, TILT VALVE SECTION, (650J) IGC 3262-14
MECHANICAL SEAT SUSPENSION (DELUXE) 1821-16
MECHANICAL SEAT SUSPENSION (DELUXE) 1821-12
MECHANICAL SEAT SUSPENSION (DELUXE) 1821-20
MECHANICAL SEAT SUSPENSION, STANDARD 1821-6
METAL FACE SEAL 0133-6
METERING ORIFACE NOZZLE START AID COLD WEATHER/ETHER 0505-2
MICROPROCESSOR COVER 0375-2
MICROPROCESSOR TRANSMISSION CONTROL 0375-2
MICROPROCESSOR TRANSMISSION CONTROL GROUND STRAP 0375-2
MIRROR, REAR VIEW 1810-2
MIRROR, REAR VIEW 1810-12
MIRROR, REAR VIEW (S/N'S -XXXXXX) 1810-4
MIRROR, REAR VIEW (S/N'S XXXXXX-) 1810-7A
MIRROR, REAR VIEW (S/N'S XXXXXX-) 1810-7E
MODULE, ANGLE VALVE SECTION, (650J) IGC 3262-16
MODULE, AUX VALVE SECTION, (650J) IGC 3262-18
MODULE, LIFT VALVE SECTION, (650J) IGC 3262-12
MODULE, TILT VALVE SECTION, (650J) IGC 3262-14
MOLDING, EDGE GUARD 3263-4
MONITOR ADAPTER PLATE WITH 650J INTEGRADED GRADE CONTROL 1676-3A
MONITOR ALARM, 12 VOLT WITH SHUTTER 1676-8
MONITOR ALARM, 12 VOLT WITH SHUTTER WITH 650J INTGRATED GRADE CONTROL 1676-3A
MONITOR AND DASH 1676-8
MONITOR AND DASH WITH 650J INTEGRATED GRADE CONTROL 1676-3A
MOTOR AND COMPONENT PARTS, HYDROSTATIC MOTOR CONTROL 0355-20
MOTOR CONTROL END PLATE, HYDROSTATIC 0355-20
MOTOR CONTROL SHIFT BRACKET, HYDROSTATIC 0355-20
MOTOR CYLINDER BLOCK BEARING PLATE, HYDROSTATIC 0355-24
MOTOR CYLINDER BLOCK, HYDROSTATIC 0355-24

ALPHABETICAL INDEX - CONTINUED

PAGE

MOTOR SHAFT PISTON RING KIT, HYDROSTATIC 0355-24
MOTOR SHAFT WITH SPEED RING, HYDROSTATIC 0355-24
MOTOR SPEED SENSOR, HYDROSTATIC 0355-24
MOTOR SYNC SHAFT KIT, HYDROSTATIC 0355-24
MOTOR VALVE (SWASHPLATE), HYDROSTATIC 0355-24
MOTOR, FRONT WINDOW WIPER 1814-6
MOTOR, HOUSING, CYLINDER BLOCK, PISTON, SWASHPLATE AND PARTS, HYDROSTATIC 0355-24
MOTOR, REAR WIPER 1814-8
MOTOR, SIDE WINDOW WIPER 1814-10
MOTOR, STARTING 0422-2
MOUNTING, POWER TRAIN/ENGINE CRADLE 0540-2
MOUNTS AND ISOLATORS, CAB ROPS OR ROPS 1811-6
MOUNTS, RADIATOR ISOLATOR(450J AND 550J) 0511-6
MOUNTS, RADIATOR ISOLATOR(650J) 0511-10
MUFFLER CHROME EXHAUST STACK 1911-2
MUFFLER EXHAUST STACK 1911-2
MUFFLER, EXHAUST 0531-2

N

NEGATIVE BATTERY CABLE, HEAVY DUTY 1671-4
NEUTRAL START SWITCH 0315-6
NEUTRAL START SWITCH (CONTINUED) 0315-8
NOISE REDUCTION FOAM/ISOLATOR, CAB 1807-2
NON-HEATER SEAT BASE SPACER ROPS 1811-2
NOZZLE, INJECTION 0413-1
NOZZLE, METERING ORIFACE START AID COLD WEATHER/ETHER 0505-2
NOZZLE, STARTING AID COLD WEATHER/ETHER 0505-2

O

O-RING KIT 1369-6
OIL ACCESS COVER 1741-2
OIL BY-PASS VALVE, ENGINE 0404-2
OIL COOLER FIELD KIT, AUXILIARY HYDRAULIC 2164-6
OIL COOLER HOSES, IGC 650J 2164-8
OIL COOLER, ENGINE 0419-2
OIL COOLER, HYDROSTATIC(450J AND 550J) 0511-6
OIL COOLER, HYDROSTATIC(650J) 0511-10
OIL DESIGNATION LABEL, HYDRAULIC AND HYDROSTATIC OIL TANK 10W30 1322-2
OIL DESIGNATION LABEL, HYDROSTATIC AND HYDRAULIC OIL TANK 10W30 1322-2
OIL FILL TUBE SUPPORT(450J) 0521-2
OIL FILL TUBE SUPPORT(550J AND 650J) 0521-6
OIL FILLER TUBE 0402-3
OIL FILTER,ENGINE 0407-6
OIL LINES, TURBOCHARGER 0416-4
OIL PAN GASKET (W/CAST IRON R121621) 0407-4
OIL PAN PLUG (STEEL METAL PAN) (ENGINE SN XXXXXX-) 0407-8
OIL PAN, ENGINE (STEEL METAL PAN) (ENGINE SN XXXXXX-) 0407-8
OIL PAN,ENGINE (CAST IRON R121621) 0407-4
OIL PRESSURE REGULATING VALVE, ENGINE 0404-2
OIL PRESSURE SENDER WITH MONITOR AND GAUGE, ENGINE 1674-16

PAGE

OIL PRESSURE SENDER WITH MONITOR ONLY, ENGINE 1674-14
OIL PRESSURE SENSOR , ENGINE 1674-26
OIL PRESSURE SENSOR, TRANSMISSION 1062-2
OIL TANK 10W30 OIL DESIGNATION LABEL, HYDRAULIC AND HYDROSTATIC 1322-2
OIL TEMPERATURE SENSOR, HYDRAULIC 1674-26
ON/OFF SWITCH, HEATER (UPPER) 1831-8
ON/OFF SWITCH,AIR CONDITIONER 1832-2
OPERATOR MANUAL HOLDER 1821-4
OPERATOR MANUAL HOLDER (AIR SUSPENSION) 1821-24
OPERATOR MANUAL HOLDER (DELUXE) 1821-14
ORIFACE NOZZLE, METERING START AID COLD WEATHER/ETHER 0505-2
ORIFICE, ENGINE PISTON COOLING 0404-2
OUTER HOUSING FINAL DRIVE 0201-2
OUTER HOUSING FINAL DRIVE 0201-3A
OUTER HOUSING FINAL DRIVE (CONTINUED) 0201-4
OUTER HOUSING FINAL DRIVE (CONTINUED) 0201-5A
OUTER HOUSING,FINAL DRIVE 0201-2
OUTER HOUSING,FINAL DRIVE 0201-3A
OUTER HOUSING,FINAL DRIVE (CONTINUED) 0201-4
OUTER HOUSING,FINAL DRIVE (CONTINUED) 0201-5A
OUTLET VALVE 3262-2
OUTLET VALVE 3262-10
OUTLET, POWER PLUG 2006-4
OVERHAUL KIT, ENGINE 0450-2

P

PAD, KNEE 1810-12
PAD, SEAT BACK 1821-2
PAN, ENGINE OIL (STEEL METAL PAN) (ENGINE SN XXXXXX-) 0407-8
PAN,ENGINE OIL (CAST IRON R121621) 0407-4
PANEL, ELECTRONIC SWITCH OVERHEAD CONTROL (S/N'S -XXXXXX) 1810-4
PANEL, ELECTRONIC SWITCH OVERHEAD CONTROL (S/N'S XXXXXX-) 1810-7A
PANEL, ELECTRONIC SWITCH OVERHEAD CONTROL (S/N'S XXXXXX-) 1810-7E
PANEL, LOWER DASH 1810-2
PANEL, LOWER DASH (S/N'S -XXXXXX) 1810-6
PANEL, LOWER DASH (S/N'S XXXXXX-) 1810-7C
PANEL, LOWER DASH (S/N'S XXXXXX-) 1810-7G
PARK BRAKE LOCK SWITCH 1115-2
PARK BRAKE SPRING RETAINER 0201-2
PARK BRAKE SPRING RETAINER 0201-3A
PARK BRAKE SPRING RETAINER (CONTINUED) 0201-4
PARK BRAKE SPRING RETAINER (CONTINUED) 0201-5A
PARK LOCK 1115-2
PARK LOCK CONTROL LEVER 1115-2
PARK LOCK LABEL 1322-2
PARK LOCK LEFT LABEL 1810-2

ALPHABETICAL INDEX - CONTINUED

PAGE

PARK LOCK LEFT LABEL (S/N'S -XXXXXX) 1810-4
PARK LOCK LEFT LABEL (S/N'S XXXXXX-) 1810-7A
PARK LOCK LEFT LABEL (S/N'S XXXXXX-) 1810-7E
PARK LOCK LEVER KNOB....1115-2
PARK LOCK SUPPORT BRACKET....1115-2
PARKING BRAKE HOSES 0363-2
PEDAL, DECELERATOR/BRAKE....0515-4
PERIODIC SERVICE CHART....1322-2
PERIODIC SERVICE CHART LABEL....1911-2
PILOT ENABLE SWITCH & INTEGRATED GRADE CONTROL LEVER (JOYSTICK) 3262-20
PIN AND BUSHING KIT (450J,550J)....0132-2
PIN AND BUSHING KIT(450J AND 650J) 0132-4
PIN, ANGLE CYLINDER HEAD END 3243-2
PIN, DRAWBAR (EXTENDED RIGID)....1511-2
PIN, DRAWBAR 4000S WINCH 1511-6
PIN, HEAD END TILT CYLINDER 3201-4
PIN, HITCH (DRAWBAR) 1511-4
PIN, LIFT CYLINDER HEAD END....3265-4
PIN, LIFT CYLINDER ROD END....3243-2
PIN, PITCH JACK, C-FRAME SIDE 3243-2
PIN, QUICK LOCK....1511-2
PIN, QUICK LOCK HITCH (DRAWBAR) 1511-4
PIN, ROD END ANGLE CYLINDER....3201-4
PIN, TILT CYLINDER HEAD END 3201-4
PIN, TILT CYLINDER ROD END 3243-2
PINS, ANGLE CYLINDER ROD END....3201-4
PINS, BLADE....3201-2
PINS, BLADE....3201-4
PINS, C-FRAME 3243-2
PISTON ASSEMBLY, HYDROSTATIC WELDED 0355-14
PISTON RINGS 0403-2
PISTON, ANGLE CYLINDER UNITIZED (450J) (SN -102817)....3265-10
PISTON, ANGLE CYLINDER UNITIZED (450J) (SN XXXXXX-) 3265-13A
PISTON, ANGLE CYLINDER UNITIZED (450J) (SN 102818-XXXXXX) 3265-12
PISTON, ANGLE CYLINDER UNITIZED (550J AND 650J)....3265-14
PISTON, ENGINE....0403-2
PISTON, FINAL DRIVE BRAKE PISTON 0201-2
PISTON, FINAL DRIVE BRAKE PISTON 0201-3A
PISTON, FINAL DRIVE BRAKE PISTON (CONTINUED)....0201-4
PISTON, FINAL DRIVE BRAKE PISTON (CONTINUED).... 0201-5A
PISTON, HYDROSTATIC MOTOR CONTROL SERVO 0355-20
PISTON, LIFT CYLINDER UNITIZED....3265-8
PISTON, SWASHPLATE AND PARTS,HYDROSTATIC MOTOR, HOUSING, CYLINDER BLOCK 0355-24
PISTON, TILT CYLINDER UNITIZED 3265-6
PISTON, TRACK ADJUSTER....0133-4
PITCH ADJUSTABLE, C-FRAME 3243-2
PITCH JACK PIN, C-FRAME SIDE 3243-2
PIVOT BALL C-FRAME 3243-2
PLATE - CAB, FUSE COVER (S/N'S -XXXXXX) 1810-4
PLATE - CAB, FUSE COVER (S/N'S XXXXXX-) 1810-7A
PLATE - CAB, FUSE COVER (S/N'S XXXXXX-) 1810-7E
PLATE WITH TUBE, HYDRAULIC RESERVOIR COVER....2164-2

PAGE

PLATE, AIR CONDITIONER REAR COVER (S/N'S -XXXXXX) 1810-4
PLATE, AIR CONDITIONER REAR COVER (S/N'S -XXXXXX) 1810-6
PLATE, AIR CONDITIONER REAR COVER (S/N'S XXXXXX-) 1810-7A
PLATE, AIR CONDITIONER REAR COVER (S/N'S XXXXXX-) 1810-7C
PLATE, AIR CONDITIONER REAR COVER (S/N'S XXXXXX-) 1810-7E
PLATE, AIR CONDITIONER REAR COVER (S/N'S XXXXXX-) 1810-7G
PLATE, AIR CONDITIONER SIDE COVER (S/N'S -XXXXXX) 1810-4
PLATE, AIR CONDITIONER SIDE COVER (S/N'S -XXXXXX) 1810-6
PLATE, AIR CONDITIONER SIDE COVER (S/N'S XXXXXX-) 1810-7A
PLATE, AIR CONDITIONER SIDE COVER (S/N'S XXXXXX-) 1810-7C
PLATE, AIR CONDITIONER SIDE COVER (S/N'S XXXXXX-) 1810-7E
PLATE, AIR CONDITIONER SIDE COVER (S/N'S XXXXXX-) 1810-7G
PLATE, ARMREST (AIR SUSPENSION).... 1821-24
PLATE, ARMREST (DELUXE).... 1821-14
PLATE, BACKUP ALARM 1673-4
PLATE, BACKUP ALARM 2004-4
PLATE, BATTERY HOLDOWN, HEAVY DUTY.... 1671-4
PLATE, BULKHEAD.... 3263-4
PLATE, CAB.... 1810-8
PLATE, CAB FRONT ACCESS.... 1810-8
PLATE, CAB ONLY BACKING UNDER SEAT.... 1831-2
PLATE, FILTER COVER (S/N'S -XXXXXX) 1810-4
PLATE, FILTER COVER (S/N'S -XXXXXX) 1810-6
PLATE, FILTER COVER (S/N'S XXXXXX-) 1810-7C
PLATE, FILTER COVER (S/N'S XXXXXX-) 1810-7G
PLATE, FILTER COVER (S/N'S XXXXXX-) 1810-7A
PLATE, FILTER COVER (S/N'S XXXXXX-) 1810-7E
PLATE, FRONT WORK LAMP 1673-4
PLATE, FUSE COVER.... 1810-2
PLATE, HITCH RETRIEVAL (DRAWBAR).... 1511-4
PLATE, HYDROSTATIC MOTOR CONTROL END 0355-20
PLATE, HYDROSTATIC MOTOR CYLINDER BLOCK BEARING 0355-24
PLATE, HYDROSTATIC PUMP RETAINING.... 0355-6
PLATE, LOGO.... 1921-2
PLATE, LOWER DASH PANEL.... 1810-2
PLATE, MONITOR ADAPTER WITH 650J INTEGRADED GRADE CONTROL.... 1676-3A
PLATE, RADIO BLANKING (S/N'S -XXXXXX) 1810-4
PLATE, RADIO BLANKING (S/N'S XXXXXX-) 1810-7A
PLATE, RADIO BLANKING (S/N'S XXXXXX-) 1810-7E
PLATE, RADIO BLANKING (S/N'S -XXXXXX) 1810-4
PLATE, SINGLE LEVER CONTROL MOUNTING 0315-6
PLATE, SINGLE LEVER CONTROL MOUNTING (CONTINUED).... 0315-8

ALPHABETICAL INDEX - CONTINUED

PAGE

PLATE, SWITCH FACE....1810-2
PLATE, TOP, AIR SUSPENSION SEAT....1821-26
PLATFORM CORNER COVERS....1810-14
PLUG FOR AIR CONDITIONING ON/OFF SWITCH HOLE WHEN THERE IS NO AIR CONDITIONING....1832-2
PLUG FOR SINGLE LEVER CONTROL WITH SPEED IN GRIP, IDENTIFICATION....1674-20
PLUG FOR SINGLE LEVER CONTROL, IDENTIFICATION....1674-20
PLUG GUARDING, FINAL DRIVE DRAIN....0201-6
PLUG WINDOW....1814-2
PLUG, HYDRAULIC RESERVOIR FILLER....2164-2
PLUG, HYDROSTATIC CHARGE RELIEF VALVE....0355-6
PLUG, OIL PAN (STEEL METAL PAN) (ENGINE SN XXXXXX-)....0407-8
PLUG, POWER....2006-4
PLUG, REAR WINDOW....1814-2
PLUMBING HYDRAULIC HOSES, TILT....3263-4
PLUMBING(HIGH AND LOW PRESSURE REFRIGERANT HOSES) AIR CONDITIONING....1832-4
PLUMBING, BLADE HYDRAULIC....3263-8
PLUMBING, CAB HEATER....1831-6
PLUMBING, HYDROSTATIC/TRANSMISSION DIAGNOSTIC....0363-4
PLUMBING, ROPS SEAT BASE HEATER....1831-4
PLUMBING, TRANSMISSION....0363-14
POSITIVE BATTERY CABLE, HEAVY DUTY....1671-4
POTENTIOMETER ENGINE SPEED SWITCH....1676-8
POTENTIOMETER ENGINE SPEED SWITCH WITH 650J INTEGRADED GRADE CONTROL....1676-3A
POWER ACCESSORY....2006-2
POWER CORD, ENGINE COOLANT HEATER....0505-4
POWER PLUG....2006-4
POWER PLUG HARNESS....2006-2
POWER PLUG OUTLET....2006-4
POWER TRAIN/ENGINE CRADLE BRACKET....0540-2
POWER TRAIN/ENGINE CRADLE LEFT RAIL ASSEMBLY....0540-2
POWER TRAIN/ENGINE CRADLE MOUNTING....0540-2
POWER TRAIN/ENGINE CRADLE RIGHT RAIL ASSEMBLY....0540-2
POWER TRAIN/ENGINE CRADLE RUBBER ISOLATOR....0540-2
PRESSURE HOSES-LONG TRACK AND LOW GROUND, HIGH....0363-10
PRESSURE HOSES, HYDRAULIC (PUMP TO CONTROL VALVE)....2163-4
PRESSURE REGULATING VALVE, ENGINE OIL....0404-2
PRESSURE SENDER WITH MONITOR AND GAUGE, ENGINE OIL....1674-16
PRESSURE SENDER WITH MONITOR ONLY, ENGINE OIL....1674-14
PRESSURE SENSOR, ENGINE OIL....1674-26
PRESSURE(CIRCUIT)RELIEF VALVE, AUXILIARY VALVE(1900, 3000 AND 3450 PSI)....3262-8
PRESSURE(CIRCUIT)RELIEF VALVE, AUXILIARY VALVE(1900,3000 AND 3450 PSI)....3262-6
PRESSURE(CIRCUIT)RELIEF VALVE, AUXILIARY VALVE(1900,3000 AND 3450 PSI)....3262-7A
PRIMARY FUEL FILTER BOWL....0563-2
PRIMARY FUEL FILTER ELEMENT....0563-4
PRIMARY FUEL FILTER HEADER....0563-4
PRIMARY FUEL FILTER SERVICE KIT....0563-4
PTO SHAFT COVER....2161-6
PULLEY ALTERNATOR....1672-2
PULLEY, AIR CONDITIONING COMPRESSOR....1832-6

PAGE

PULLEY, BLOWER FAN....0512-2
PULLEY, FAN DRIVE....0429-2
PULLEY, TENSIONER....0429-2
PULLEY, WATER PUMP....0417-2
PULLEY,CRANKSHAFT....0429-1
PULLEY,FLANGE....0429-1
PUMP CHARGING SYSTEM, HYDROSTATIC....0355-4
PUMP REPAIR KIT, HYDRAULIC....2161-6
PUMP TO RESERVOIR HYDRAULIC SUCTION HOSE (DRIVE THRU PUMP)....2163-8
PUMP, DRIVE THRU-HYDRAULIC WITH SHAFT....2161-6
PUMP, ENGINE OIL....0407-2
PUMP, FRONT AXIAL PISTON HYDROSTATIC....0355-2
PUMP, FUEL INJECTION....0413-2
PUMP, FUEL TRANSFER....0421-1
PUMP, HYDROSTATIC FRONT....0355-2
PUMP, HYDROSTATIC REAR....0355-2
PUMP, REAR AXIAL PISTON HYDROSTATIC....0355-2
PUMP, STANDARD HYDRAULIC....2161-2
PUMP, WINDSHIELD WIPER WASHER TANK....1814-4
PUSH ROD, FUEL TRANSFER PUMP....0421-1
PUSH RODS....0402-2

Q

QUICK LOCK PIN....1511-2

R

RADIATOR (450J AND 550J)....0511-6
RADIATOR (650J)....0511-10
RADIATOR CAP (450J AND 550J)....0511-6
RADIATOR CAP(650J)....0511-10
RADIATOR DRAIN COCK(450J AND 550J)....0511-6
RADIATOR DRAIN COCK(650J)....0511-10
RADIATOR DRAIN VALVE(450J AND 550J)....0511-6
RADIATOR DRAIN VALVE(650J)....0511-10
RADIATOR FAN SHIELD(450J AND 550J)....0511-6
RADIATOR FAN SHIELD(650J)....0511-10
RADIATOR FAN SHROUD(450J AND 550J)....0511-6
RADIATOR FAN SHROUD(650J)....0511-10
RADIATOR ISOLATOR MOUNTS(450J AND 550J)....0511-6
RADIATOR ISOLATOR MOUNTS(650J)....0511-10
RADIATOR RECOVERY TANK(450J AND 550J)....0511-6
RADIATOR RECOVERY TANK(650J)....0511-10
RADIO....2001-2
RADIO ANTENNA....2001-2
RADIO ANTENNA (S/N'S -XXXXXX)....1810-4
RADIO ANTENNA (S/N'S XXXXXX-)....1810-7A
RADIO ANTENNA (S/N'S XXXXXX-)....1810-7E
RADIO BLANKING PLATE (S/N'S -XXXXX)....1810-4
RADIO BLANKING PLATE (S/N'S XXXXXX-)....1810-7A
RADIO BLANKING PLATE (S/N'S XXXXXX-)....1810-7E
RADIO BLANKING PLATE (S/N'S -XXXXXX)....1810-4
RADIO SPEAKERS....2001-2
RADIO WIRING HARNESS....2001-2
RATIO KNOB, REVERSE....1676-8

ALPHABETICAL INDEX - CONTINUED

PAGE

RATIO SWITCH, REVERSE 1676-8
REAR ACCESS COVER....1741-2
REAR AXIAL PISTON HYDROSTATIC PUMP 0355-2
REAR COUNTERWEIGHT 1749-4
REAR FENDER 1927-2
REAR GUARD ASSEMBLY 1741-2
REAR HEADLINER (WITH LOUVERS) (S/N'S -XXXXXX) 1810-6
REAR HEADLINER (WITH LOUVERS) (S/N'S XXXXXX-) 1810-7C
REAR HEADLINER (WITH LOUVERS) (S/N'S XXXXXX-) 1810-7G
REAR HYDROSTATIC PUMP....0355-2
REAR ROPS HEADLINER 1810-2
REAR VIEW MIRROR 1810-2
REAR VIEW MIRROR 1810-12
REAR VIEW MIRROR (S/N'S -XXXXXX) 1810-4
REAR VIEW MIRROR (S/N'S XXXXXX-) 1810-7A
REAR VIEW MIRROR (S/N'S XXXXXX-) 1810-7E
REAR WINDOW GLASS 1814-2
REAR WINDOW PLUG....1814-2
REAR WINDOW WIPER....1814-8
REAR WIPER BLADE 1814-8
REAR WIPER FLOW CONTROL VALVE....1814-8
REAR WIPER MOTOR 1814-8
REAR WIPER MOTOR COVER....1814-8
REAR WIPER MOTOR WIRING HARNESS 1814-8
RECEIVER DRYER AIR CONDITIONING....1832-2
RECIRCULATION AIR COVER (S/N'S -XXXXXX) 1810-4
RECIRCULATION AIR COVER (S/N'S -XXXXXX) 1810-6
RECIRCULATION AIR COVER (S/N'S XXXXXX-) 1810-7A
RECIRCULATION AIR COVER (S/N'S XXXXXX-) 1810-7C
RECIRCULATION AIR COVER (S/N'S XXXXXX-) 1810-7E
RECIRCULATION AIR COVER (S/N'S XXXXXX-) 1810-7G
RECTANGULAR LOUVERS (S/N'S -XXXXXX) 1810-4
RECTANGULAR LOUVERS (S/N'S -XXXXXX) 1810-6
RECTANGULAR LOUVERS (S/N'S XXXXXX-) 1810-7A
RECTANGULAR LOUVERS (S/N'S XXXXXX-) 1810-7C
RECTANGULAR LOUVERS (S/N'S XXXXXX-) 1810-7E
RECTANGULAR LOUVERS (S/N'S XXXXXX-) 1810-7G
RED REFLECTOR MARKER (S/N'S -XXXXXX) 1810-4
RED REFLECTOR MARKER (S/N'S XXXXXX-) 1810-7A
RED REFLECTOR MARKER (S/N'S XXXXXX-) 1810-7E
REFLECTIVE RED MARKER....1810-2
REFLECTOR MARKER, RED (S/N'S -XXXXXX) 1810-4
REFLECTOR MARKER, RED (S/N'S XXXXXX-) 1810-7A

PAGE

REFLECTOR MARKER, RED (S/N'S XXXXXX-) 1810-7E
REFRIGERANT HOSE BRACKET, HIGH AND LOW PRESSURE AIR CONDITIONING 1832-4
REFRIGERANT HOSES, AIR CONDITIONING (HIGH AND LOW PRESSURE)....1832-4
REFRIGERANT LINE, AIR CONDITIONING....1832-2
REINFORCEMENT KIT, C-FRAME STANDARD AND HEAVY DUTY 3243-2
RELAY, ENGINE WIRING HARNESS (STARTER 12 VOLT) 1674-10
RELAY, ENGINE WIRING HARNESS W/650J (STARTER 12 VOLT)INTEGRADED GRADE....1674-28
RELAY, STARTER (12 VOLT) (ENGINE WIRING HARNESS)....1674-10
RELAY, STARTER (12 VOLT)W/650J (ENGINE WIRING HARNESS)....1674-28
RELAY, VEHICLE WIRING HARNESS W/650J WITH INTEGRADED GRADE CONTROL 1674-30
RELAY, 12 VOLT W/DIODE (ROPS HARNESS)....1674-8
RELAYS, CIRCUIT BREAKER AND FUSES, ELECTRICAL/CAB 1674-22
RELAYS, CIRCUIT BREAKER AND FUSES, ELECTRICAL/ROPS 1674-24
RELIEF VALVE, ANGLE SECTION (7500 PSI) (NOT ILLUSTRATED)....3262-2
RELIEF VALVE, AUXILIARY VALVE CIRCUIT (PRESSURE)(1900, 3000 AND 3450 PSI)....3262-8
RELIEF VALVE, AUXILIARY VALVE CIRCUIT PRESSURE)(1900,3000 AND 3450 PSI)....3262-6
RELIEF VALVE, AUXILIARY VALVE CIRCUIT PRESSURE)(1900,3000 AND 3450 PSI)....3262-7A
RELIEF VALVE, HYDROSTATIC MOTOR CONTROL PRESSURE....0355-20
REMANUFACTURED FUEL INJECTION PUMP....0413-2
REPAIR KIT, HYDRAULIC PUMP 2161-6
REPLACEMENT KIT, START RESISTOR....1674-8
RESERVOIR FILLER PLUG, HYDRAULIC....2164-2
RESERVOIR TO PUMP HYDRAULIC SUCTION HOSE (DRIVE THRU PUMP)....2163-8
RESERVOIR WINDSHIELD WIPER WASHER 1814-4
RESERVOIR WIPER WASHER CAP....1814-4
RESERVOIR, HYDRAULIC....2164-2
RESERVOIR, HYDROSTATIC 0364-4
RESISTOR CAB HEATER, ELECTRICAL (UPPER)....1831-8
RESISTOR KIT, START REPLACEMENT....1674-6
RESISTOR REPLACEMENT KIT, START....1674-8
RESISTOR, CAN TEMINATION....1674-8
RESISTOR, CAN TERMINATION 1674-6
RESISTOR, CAN TERMINATION 1674-10
RESISTOR, CAN TERMINATION W/650J W/ INTEGRADED GRADE CONTROL 1674-28
RETAINER, PARK BRAKE SPRING 0201-2
RETAINER, PARK BRAKE SPRING 0201-3A
RETAINER, PARK BRAKE SPRING (CONTINUED)....0201-4
RETAINER, PARK BRAKE SPRING (CONTINUED)....0201-5A
REVERSE RATIO KNOB 1676-8
REVERSE RATIO KNOB WITH 650J INTEGRADED GRADE CONTROL 1676-3A
REVERSE RATIO SWITCH 1676-8
REVERSE RATIO SWITCH (SER. NO. -910010) 0315-8
REVERSE RATIO SWITCH FOR SINGLE LEVER CONTROL WITH SPEED IN GRIP 0315-6

ALPHABETICAL INDEX - CONTINUED

PAGE

REVERSE RATIO SWITCH WITH 650J INTEGRADED GRADE CONTROL 1676-3A
REVERSE RATIO-ENGINE SPEED LABEL 1810-2
REVERSE RATIO-ENGINE SPEED LABEL (S/N'S -XXXXXX) 1810-4
REVERSE RATIO-ENGINE SPEED LABEL (S/N'S XXXXXX-) 1810-7A
REVERSE RATIO-ENGINE SPEED LABEL (S/N'S XXXXXX-) 1810-7E
REVERSE SPEED LABEL (S/N'S -XXXXXX) 1810-4
REVERSE SPEED LABEL (S/N'S XXXXXX-) 1810-7A
REVERSE SPEED LABEL (S/N'S XXXXXX-) 1810-7E
RIGHT RAIL ASSEMBLY POWER TRAIN/ENGINE CRADLE MOUNTING 0540-2
RIGHT SIDE WINDOW 1814-2
RING GEAR, FLYWHEEL 0433-2
RING KIT, HYDROSTATIC MOTOR PISTON 0355-24
RING, HYDROSTATIC MOTOR SHAFT WITH SPEED 0355-24
RING, HYDROSTATIC SPEED 0355-14
RINGS, PISTON 0403-2
RIPPER COMPONENTS-ALL OTHER RIPPER COMPO NENTS ARE ORDERED FROM WELDCO BEALES 1741-2
RIPPER COMPONENTS-ALL OTHER RIPPER COMPO NENTS ARE ORDERED FROM WELDCO BEALES 3263-10
RIPPER HOSES 3263-10
RIPPER SHIMS FOR CONVERTING H RIPPERS TO J CRAWLERS AND EARLY J CRAWLERS 1741-2
ROCK GUARDS 0131-10
ROCK GUARDS 450J LONG TRACK AND LOW GROUND PRESSURE 0131-10
ROCKER ARM COVER 0402-3
ROCKER ARM COVER GASKET 0402-3
ROCKER ARM SHAFT 0402-2
ROCKER ARMS 0402-2
ROD ANGLE CYLINDER (450J) (SN -102817) 3265-10
ROD ANGLE CYLINDER (450J) (SN XXXXXX-) 3265-13A
ROD ANGLE CYLINDER (450J) (SN 102818-XXXXXX) 3265-12
ROD ANGLE CYLINDER (550J AND 650J) 3265-14
ROD END PIN, LIFT CYLINDER 3243-2
ROD END PIN, TILT CYLINDER 3243-2
ROD END PINS, ANGLE CYLINDERS 3201-4
ROD SEAL KIT (450J) (SN -102817) 3265-10
ROD SEAL KIT (450J) (SN XXXXXX-) 3265-13A
ROD SEAL KIT (450J) (SN 102818-XXXXXX) 3265-12
ROD SEAL KIT (550J AND 650J) 3265-14
ROD, CONNECTING 0403-2
ROD, LIFT CYLINDER 3265-8
ROD, TILT CYLINDER 3265-6
RODS, PUSH 0402-2
RODS, VALVE TIE 3262-2
RODS, VALVE TIE 3262-10
ROLLER (SINGLE- & DOUBLE-FLANGE), TRACK 0133-2
ROLLER KIT (DELUXE) 1821-18
ROLLER SUPPORT, CARRIER 0133-16
ROLLER WITH SHAFT, CARRIER 0133-16
ROPS AND CAB UNDER SEAT HEATER 1831-2
ROPS AND CAB SEAT BASE WITH HEATER UNDER SEAT 1831-2

PAGE

ROPS COMPONENTS 1810-2
ROPS CONVENIENCE ASSEMBLY 1811-2
ROPS FUSEBLOCK LABEL 1674-8
ROPS FUSES, CIRCUIT BREAKER AND ELECTRICAL RELAYS 1674-24
ROPS HARNESS 1674-8
ROPS HARNESS DIODE CONNECTOR 1674-8
ROPS HEADLINER 1810-2
ROPS HEADLINER FRONT 1810-2
ROPS HI-INTENSITY LIGHTS 1673-6
ROPS LABEL 1810-2
ROPS LABEL (ON ROPS POST) 1322-2
ROPS LABEL (ON ROPS POST) (S/N'S -XXXXXX) 1810-4
ROPS LABEL (ON ROPS POST) (S/N'S XXXXXX-) 1810-7A
ROPS LABEL (ON ROPS POST) (S/N'S XXXXXX-) 1810-7E
ROPS MOUNTS AND ISOLATORS OR CAB ROPS 1811-6
ROPS PARTS 1810-2
ROPS REAR HEADLINER 1810-2
ROPS SEAT BASE HEATER PLUMBING 1831-4
ROPS WORK LIGHT HARNESS 1673-6
ROPS WORK LIGHT HARNESS CAB HI-INTENSITY 1673-8
ROPS, LABEL (S/N'S -XXXXXX) 1810-6
ROPS, LABEL (S/N'S XXXXXX-) 1810-7C
ROPS, LABEL (S/N'S XXXXXX-) 1810-7G
ROPS, SEAT BASE NON-HEATER 1811-2
ROTARY DECELERATOR/BRAKE SENSOR 0515-4
ROTARY SENSOR KIT 0315-6
ROTARY SENSOR KIT (CONTINUED) 0315-8
RUBBER BOOT BATTERY 1671-2

S

SAFETY START PROCEDURE LABEL 1810-2
SAFETY START PROCEDURE LABEL 1810-7A
SAFETY START PROCEDURE LABEL 1810-7E
SAFETY START PROCEDURE LABEL (S/N'S -XXXXXX) 1810-4
SAND SHIELD 0511-12
SAND SHIELD DEFLECTOR GRID 0511-12
SCREW, JACK 1811-4
SEAL ASSEMBLY HYDROSTATIC SHAFT 0355-6
SEAL KIT, A/C COMPRESSOR SHAFT 1832-9
SEAL KIT, BORE (450J) (SN -102817) 3265-10
SEAL KIT, BORE (450J) (SN XXXXXX-) 3265-13A
SEAL KIT, BORE (450J) (SN 102818-XXXXXX) 3265-12
SEAL KIT, BORE (550J AND 650J) 3265-14
SEAL KIT, HYDROSTATIC MOTOR FLANGE 0355-24
SEAL KIT, ROD (450J) (SN -102817) 3265-10
SEAL KIT, ROD (450J) (SN XXXXXX-) 3265-13A
SEAL KIT, ROD (450J) (SN 102818-XXXXXX) 3265-12
SEAL KIT, ROD (550J AND 650J) 3265-14
SEAL, FLANGED AXLE SHAFT SEAL 0201-2
SEAL, FLANGED AXLE SHAFT SEAL 0201-3A

ALPHABETICAL INDEX - CONTINUED

PAGE

SEAL, FLANGED AXLE SHAFT SEAL (CONTINUED)....0201-4
SEAL, FLANGED AXLE SHAFT SEAL (CONTINUED).... 0201-5A
SEAL, FLOOR PLATE 1810-8
SEAL, FUEL INJECTION....0413-1
SEAL, HOOD 1927-2
SEAL, HYDROSTATIC MOTOR FLANGE 0355-24
SEAL, METAL FACE 0133-6
SEAL,CRANKSHAFT REAR OIL....0433-3
SEALED TRACK....0132-4
SEALED TRACK CHAIN (450J,550J)....0132-2
SEALED TRACK CHAIN DRIVE SPROCKET....0132-16
SEAT (DELUXE) 1821-12
SEAT (DELUXE) 1821-14
SEAT ARMREST, STANDARD....1821-4
SEAT BACK 1821-30
SEAT BACK PAD CLIPS, X-MAS TREE 1821-30
SEAT BACK(DELUXE)....1821-12
SEAT BASE NON-HEATER, ROPS 1811-2
SEAT BASE PLATE (MOUNTING BRACKET/RISER)....1821-4
SEAT BASE SPACER ROPS NON-HEATER....1811-2
SEAT BASE TILT PROCEDURE LABEL (S/N'S -XXXXXX) 1810-4
SEAT BASE TILT PROCEDURE LABEL (S/N'S XXXXXX-) 1810-7A
SEAT BASE TILT PROCEDURE LABEL (S/N'S XXXXXX-) 1810-7E
SEAT BASE WITH HEATER ROPS AND CAB UNDER SEAT....1831-2
SEAT BASE, CAB 1811-4
SEAT BELT TILT PROCEDURE LABEL 1810-2
SEAT BELT WARNING LABEL 1322-2
SEAT BELT WARNING LABEL 1810-2
SEAT BELT WARNING LABEL (S/N'S -XXXXXX) 1810-4
SEAT BELT WARNING LABEL (S/N'S XXXXXX-) 1810-7A
SEAT BELT WARNING LABEL (S/N'S XXXXXX-) 1810-7E
SEAT BELT 3 INCH (AIR SUSPENSION)....1821-22
SEAT BELT 3 INCH (DELUXE)....1821-12
SEAT BELT, TWO INCH....1821-2
SEAT CLIPS, BACK PAD, X-MAS TREE 1821-30
SEAT HEATER, ROPS AND CAB UNDER....1831-2
SEAT HEIGHT ADJUSTMENT KIT (DELUXE)....1821-20
SEAT PAD 1821-2
SEAT PAD (DELUXE) 1821-12
SEAT PAD BACK 1821-2
SEAT POWER HARNESS (AIR SUSPENSION) (SN.-XXXXXX) 1821-26
SEAT RECLINER KIT 1821-32
SEAT RECLINER KNOB....1821-32
SEAT SLIDE AND TILT CONTROL (ALL SEATS) 1821-8
SEAT SLIDE CONTROL (ALL SEATS)....1821-8
SEAT SUSPENSION (AIR SUSPENSION) (COMPLETE ASSEMBLY NUMBER ONLY) 1821-22
SEAT SUSPENSION (AIR SUSPENSION) (COMPRESSOR WIRING HARNESS) 1821-26
SEAT SUSPENSION (AIR SUSPENSION) COMPONENT PARTS....1821-26
SEAT SUSPENSION ACTUATOR KIT (DELUXE) 1821-20
SEAT SUSPENSION BOOT KIT (DELUXE)....1821-18
SEAT SUSPENSION CAM KIT (DELUXE)....1821-20
SEAT SUSPENSION COMPONENTS (AIR SUSPENSION)....1821-28

PAGE

SEAT SUSPENSION COMPONENTS AND SHOCK ABSORBER KIT 1821-28
SEAT SUSPENSION ROLLER KIT (DELUXE)..... 1821-18
SEAT SUSPENSION SHAFT KIT (DELUXE) 1821-18
SEAT SUSPENSION SHOCK KIT (DELUXE) 1821-18
SEAT SUSPENSION SPRING KIT (DELUXE) 1821-20
SEAT SUSPENSION STANDARD 1821-6
SEAT SUSPENSION TETHER KIT (DELUXE)..... 1821-18
SEAT SUSPENSION, MECHANICAL (DELUXE) 1821-12
SEAT SUSPENSION, MECHANICAL (DELUXE) 1821-16
SEAT SUSPENSION, STANDARD 1821-2
SEAT TILT CONTROL (ALL SEATS)..... 1821-8
SEAT TILTING BRACKET 1811-2
SEAT TILTING BRACKET 1811-4
SEAT, STANDARD 1821-2
SELF CLEANING/SWAMP SHOE 24 INCH 0132-10
SENDER WITH MONITOR AND GAUGE, ENGINE OIL PRESSURE..... 1674-16
SENDER WITH MONITOR ONLY, ENGINE OIL PRESSURE..... 1674-14
SENDER WITH MONITOR ONLY, ENGINE WATER TEMPERATURE..... 1674-14
SENDER, FUEL TANK FUEL..... 0564-2
SENSOR KIT, ROTARY..... 0315-6
SENSOR KIT, ROTARY (CONTINUED)..... 0315-8
SENSOR, AIR CLEANER VACUUM SWITCH (450J) 0521-2
SENSOR, AIR CLEANER VACUUM SWITH (550J AND 650J)..... 0521-6
SENSOR, CRANKSHAFT SPEED 0402-4
SENSOR, ENGINE OIL PRESSURE..... 1674-26
SENSOR, HYDRAULIC OIL TEMPERATURE..... 1674-26
SENSOR, HYDROSTATIC MOTOR SPEED..... 0355-24
SENSOR, HYDROSTATIC SPEED 0355-2
SENSOR, HYDROSTATIC SPEED 0355-6
SENSOR, ROTARY DECELERATOR/BRAKE 0515-4
SENSOR, TEMPERATURE, THERMOSTAT 0418-2
SENSOR, TRANSMISSION OIL PRESSURE 1062-2
SENSOR,AIR INTAKE TEMPERATURE..... 0414-2
SERVICE CHART, PERIODIC LABEL 1911-2
SERVICE DOOR, HOOD 1911-2
SERVO PISTON KIT, HYDROSTATIC..... 0355-12
SHAFT COVER, PTO..... 2161-6
SHAFT KIT (AIR SUSPENSION SEAT)..... 1821-26
SHAFT KIT, HYDROSTATIC MOTOR SYNC 0355-24
SHAFT PISTON RING KIT, HYDROSTATIC MOTOR 0355-24
SHAFT WITH ARM, HYDRAULIC CONTROL 3215-2
SHAFT WITH SPEED RING, HYDROSTATIC MOTOR 0355-24
SHAFT, CARRIER ROLLER 0133-16
SHAFT, DECELERATOR/BRAKE 0515-4
SHAFT, ENGINE BALANCER..... 0415-2
SHAFT, HYDROSTATIC FRONT PUMP 0355-12
SHAFT, HYDROSTATIC PUMP FRONT 0355-2
SHAFT, HYDROSTATIC REAR PUMP..... 0355-2
SHAFT, HYDROSTATIC REAR PUMP..... 0355-12
SHAFT, IDLER 0133-6
SHAFT, ROCKER ARM..... 0402-2
SHIELD DEFLECTOR GRID, SAND..... 0511-12
SHIELD, RADIATOR FAN(450J AND 550J)..... 0511-6
SHIELD, RADIATOR FAN(650J) 0511-10
SHIELD,SAND 0511-12
SHIELDS RIGHT AND LEFT, ENGINE SIDE 1912-2
SHIELDS RIGHT AND LEFT, ENGINE SIDE (IGC)..... 1912-4

ALPHABETICAL INDEX - CONTINUED

PAGE

SHIM AND TORQUE DECAL, BLADE (ENGLISH, FRENCH, SPANISH) 3201-2
SHIMS FOR CONVERTING H RIPPERS TO J CRAWLERS AND EARLY J CRAWLERS, RIPPER 1741-2
SHOCK ABSORBER KIT(AIR SUSPENSION) AND COMPONENTS, SEAT 1821-28
SHOCK KIT (DELUXE) 1821-18
SHOE 14 INCH, SINGLE BAR 0132-4
SHOE 16 INCH (450J,550J) 0132-2
SHOE 16 INCH, SINGLE BAR 0132-4
SHOE 18 INCH (450J,550J) 0132-2
SHOE 18 INCH, SINGLE BAR 0132-4
SHOE 24 INCH SELF CLEANING/SWAMP 0132-10
SHOE 24 INCH SWAMP 0132-6
SHOE 24 INCH SWAMP 0132-8
SHOE 24 INCH SWAMP 0132-12
SHOE 24 INCH, GROUSER 0132-6
SHOE 24 INCH, GROUSER 0132-8
SHOE 24 INCH, GROUSER 0132-10
SHOE 24 INCH, GROUSER 0132-12
SHOE, SINGLE BAR 0132-10
SHORT BLOCK,ENGINE 0404-4
SHROUD, RADIATOR FAN(450J AND 550J) 0511-6
SHROUD, RADIATOR FAN(650J) 0511-10
SHUT OFF VAVLE, FUEL 0563-2
SIDE COVER INSERT, HYDROSTATIC 0355-12
SIDE SHIELDS, RIGHT AND LEFT ENGINE 1912-2
SIDE SHIELDS, RIGHT AND LEFT ENGINE (IGC) 1912-4
SIDE WINDOW WIPER ARM 1814-10
SIDE WINDOW WIPERS 1814-10
SIGHT TUBE, HYDRAULIC RESERVOIR 2164-2
SINGLE BAR SHOE 0132-10
SINGLE BAR SHOE, 14 INCH 0132-4
SINGLE BAR SHOE, 16 INCH 0132-4
SINGLE BAR SHOE, 18 INCH 0132-4
SINGLE BAR SHOE, 450J, 16 INCH LONG TRACK 0132-6
SINGLE BAR SHOE, 450J, 16 INCH LONG TRACK 0132-8
SINGLE LEVER CONTROL (CONTINUED) 0315-8
SINGLE LEVER CONTROL BOOT 0315-6
SINGLE LEVER CONTROL BOOT (CONTINUED) 0315-8
SINGLE LEVER CONTROL BRACKET 0315-6
SINGLE LEVER CONTROL BRACKET (CONTINUED) 0315-8
SINGLE LEVER CONTROL GRIP CONTROLLER HANDLE 0315-6
SINGLE LEVER CONTROL GRIP CONTROLLER HANDLE (CONTINUED) 0315-8
SINGLE LEVER CONTROL IDENTIFICATION PLUG 1674-20
SINGLE LEVER CONTROL MOUNTING PLATE 0315-6
SINGLE LEVER CONTROL MOUNTING PLATE (CONTINUED) 0315-8
SINGLE LEVER CONTROL WITH SPEED IN GRIP 0315-6
SINGLE LEVER CONTROL WITH SPEED IN GRIP IDENTIFICATION PLUG 1674-20
SINGLE LEVER CONTROL WITH SPEED IN GRIP REVERSE RATIO SWITCH 0315-6
SINGLE LEVER CONTROL WITH SPEED IN GRIP WIRING HARNESS WITH SWITCH AND COVER 0315-6
SINGLE LEVER TO SINGLE LEVER WITH SPEED IN GRIP (SER. NO. -910010) 0315-8

PAGE

SINGLE LEVER WITH SPEED IN GRIP CONVERSION (SER. NO. -910010) 0315-8
SINGLE-FLANGE TRACK ROLLER 0133-2
SITE LABEL, HYDRAULIC 2164-2
SIX WAY BLADE HYDRAULIC LABEL (S/N'S -XXXXXX) 1810-4
SIX WAY BLADE HYDRAULIC LABEL (S/N'S XXXXXX-) 1810-7A
SIX WAY BLADE HYDRAULIC LABEL (S/N'S XXXXXX-) 1810-7E
SLEEVE, CORDURA 3263-4
SLEEVE, CORDURA 3263-8
SLIDE LATCH (ALL SEATS) 1821-8
SLIDE LATCH KIT (ALL SEATS) 1821-10
SLIDE, FRONT CHAIN GUIDE (WELDED ON COMPONENT) 0131-2
SLIDER PLATE ASSEMBLY (ALL SEATS) 1821-10
SLIPPER GUIDE, HYDROSTATIC 0355-14
SOLENOID KIT, STARTING MOTOR 0422-2
SOLENOID, STARTING AID COLD WEATHER/ETHER 0505-2
SOLENOID, STARTING MOTOR 0422-2
SPACER, BLOWER FAN 0512-2
SPACER, NON-HEATER SEAT BASE ROPS 1811-2
SPANISH AND FRENCH LABELS AND DECALS 1322-4
SPANISH OR FRENCH LABEL AND DECAL KIT 1322-4
SPEAKERS, RADIO 2001-2
SPEED IN GRIP CONVERSION (SER. NO. -910010) 0315-8
SPEED LABEL, GROUND 0315-6
SPEED LABEL, GROUND (CONTINUED) 0315-8
SPEED LABEL, SYSTEM WARM UP ENGINE (IN FRONT OF ENGINE SPEED CONTROL POD) 1810-4
SPEED LABEL, SYSTEM WARM UP ENGINE (IN FRONT OF ENGINE SPEED CONTROL POD) 1810-7A
SPEED LABEL, SYSTEM WARM UP ENGINE (IN FRONT OF ENGINE SPEED CONTROL POD) 1810-7E
SPEED LEVER ASSEMBLY 0315-6
SPEED LEVER ASSEMBLY (CONTINUED) 0315-8
SPEED RING, HYDROSTATIC 0355-14
SPEED RING, HYDROSTATIC MOTOR SHAFT WITH 0355-24
SPEED SENSOR, HYDROSTATIC MOTOR 0355-24
SPEED SWITCH POTENTIOMETER, ENGINE 1676-8
SPEED SWITCH POTENTIOMETER, ENGINE WITH 650J INTEGRADED GRADE CONTROL 1676-3A
SPOOL, ANGLE VALVE SECTION, IGC (650J) 3262-16
SPOOL, AUX VALVE SECTION, IGC (650J) 3262-18
SPOOL, HYDROSTATIC MOTOR END CAP SHUTTLE 0355-20
SPOOL, LIFT VALVE SECTION, IGC (650J) 3262-12
SPOOL, TILT VALVE SECTION, IGC (650J) 3262-14
SPRING AND SPRING SEAT ASSEMBLY, HYDROSTATIC MOTOR 0355-20
SPRING KIT, SEAT SUSPENSION (DELUXE) 1821-20
SPRING, HYDROSTATIC COMPRESSION 0355-12
SPRING, SWASHPLATE 0355-14
SPRING, TRACK ADJUSTER COMPRESSION 0133-4
SPROCKET GUARD, TRACK DRIVE 0132-14
SPROCKET, TRACK CHAIN DRIVE 0132-16
SPROCKET, TRACK DRIVE 0132-16
STACK, CHROME MUFFLER EXHAUST 1911-2
STACK, MUFFLER EXHAUST 1911-2
STANDARD C-FRAME 3243-2
STANDARD DRAWBAR (EXTENDED RIGID) 1511-2
STANDARD GRILLE 1921-2
STANDARD HYDRAULIC PUMP 2161-2

ALPHABETICAL INDEX - CONTINUED

PAGE

STANDARD SEAT....1821-2
STANDARD SEAT ARMREST....1821-4
STANDARD SEAT SUSPENSION....1821-2
STANDARD SEAT SUSPENSION....1821-6
STANDARD SEAT SUSPENSION COMPONENTS....1821-6
START AID SWITCH....0505-6
START AID SWITCH COVER....0505-6
START AID SWITCH(ETHER/COLD WEATHER/ FLUID)....1676-8
START RESISTOR REPLACEMENT KIT....1674-6
START RESISTOR REPLACEMENT KIT....1674-8
START SWITCH NEUTRAL....0315-6
START SWITCH NEUTRAL (CONTINUED)....0315-8
STARTER GROUND STRAP (CAB HARNESS)....1674-6
STARTER MOTOR KIT....0422-2
STARTER MOTOR SWITCH....0422-2
STARTER RELAY (12 VOLT) (ENGINE WIRING HARNESS)....1674-10
STARTER RELAY (12 VOLT)W/650J (ENGINE WIRING HARNESS)....1674-28
STARTER TERMINAL JUMPER HARNESS WITH 650J INTEGRADED GRADE CONTROL....1674-28
STARTING AID COLD WEATHER/ETHER....0505-2
STARTING AID FLUID CYLINDER COLD WEATHER/ETHER....0505-2
STARTING AID METERING ORIFACE ELBOW COLD WEATHER/ETHER....0505-2
STARTING AID NOZZLE COLD WEATHER/ETHER....0505-2
STARTING AID SOLENOID COLD WEATHER/ETHER....0505-2
STARTING MOTOR....0422-2
STARTING MOTOR CLUTCH....0422-2
STEP, C FRAME....3243-4
STORAGE COMPARTMENT W/ 650J W/ INTEGRADED GRADE CONTROL....1674-30
STRAP, BATTERY GROUND....1671-2
STRAP, BATTERY GROUND....1671-4
STRAP, ENGINE LIFT (ENG. MODEL NO. PE4045HT050)....0404-6
STRAP, STARTER GROUND (CAB HARNESS)....1674-6
STRAP, STARTER GROUND (ROPS HARNESS)....1674-8
STRIP, WEAR....0131-2
SUCTION HOSE, HYDRAULIC....2163-2
SUCTION HOSE, HYDROSTATIC....0363-12
SUCTION HOSE, THRU DRIVE PUMP....2163-8
SUPPORT OIL FILL INTAKE(450J)....0521-2
SUPPORT OIL FILL INTAKE(550J AND 650J)....0521-6
SUPPORT, CARRIER ROLLER....0133-16
SUPPORT, DECELERATOR/BRAKE....0515-4
SUPPORT, HOOD....1911-4
SUSPENSION (AIR SUSPENSION) COMPONENTS, SEAT....1821-28
SUSPENSION BOOT CLIP KIT (DELUXE)....1821-18
SUSPENSION, SEAT (AIR SUSPENSION) (COMPLETE ASSEMBLY NUMBER ONLY)....1821-22
SUSPENSION, SEAT (AIR SUSPENSION) COMPONENT PARTS....1821-26
SUSPENSION, STANDARD SEAT....1821-2
SUSPENSION,SEAT (AIR SUSPENSION) COMPRESSOR WIRING HARNESS(SN.-XXXXXX)....1821-26
SWAMP SHOE 24 INCH....0132-6
SWAMP SHOE 24 INCH....0132-8
SWAMP SHOE 24 INCH....0132-12
SWAMP SHOE 24 INCH, SELF CLEANING/....0132-10
SWASHPLATE (VALVE) HYDROSTATIC MOTOR....0355-24

PAGE

SWASHPLATE AND COMPONENT PARTS, HYDROSTATIC MOTOR,HOUSING,....0355-24
SWASHPLATE ASSEMBLY....0355-14
SWASHPLATE FEEDBACK LINK....0355-14
SWASHPLATE GUIDE, HYDROSTATIC....0355-14
SWASHPLATE SPRING....0355-14
SWASHPLATE, HYDROSTATIC VARIABLE....0355-14
SWITCH CABLE, MASTER DISCONNECT....1674-2
SWITCH COVER, START AID....0505-6
SWITCH FACE PLATE....1810-2
SWITCH FOR SINGLE LEVER CONTROL WITH SPEED IN GRIP, REVERSE RATIO....0315-6
SWITCH LABEL, MASTER DISCONNECT....1674-2
SWITCH OVERHEAD CONTROL PANEL, ELECTRONIC (S/N'S -XXXXXX)....1810-4
SWITCH OVERHEAD CONTROL PANEL, ELECTRONIC (S/N'S XXXXXX-)....1810-7A
SWITCH OVERHEAD CONTROL PANEL, ELECTRONIC (S/N'S XXXXXX-)....1810-7E
SWITCH POTENTIOMETER ENGINE SPEED....1676-8
SWITCH POTENTIOMETER, ENGINE SPEED WITH 650J INTEGRADED GRADE CONTROL....1676-3A
SWITCH, AIR CONDIONER AND HEATER BLOWER....1832-2
SWITCH, AIR CONDITIONER AND HEATER BLOWER (UPPER)....1831-8
SWITCH, AIR CONDITIONER AND HEATER TEMPERATURE....1832-2
SWITCH, AIR CONDITIONER AND HEATER TEMPERATURE (UPPER)....1831-8
SWITCH, AIR CONDITIONER ON/OFF....1832-2
SWITCH, AIR CONDITIONING LOW AND HIGH PRESSURE....1832-2
SWITCH, BRAKE VALVE....1062-2
SWITCH, FRONT WINDOW WIPER & WASHER....1814-6
SWITCH, HEATER AND AIR CONDITIONER TEMPERATURE (S/N'S XXXXXX-)....1810-7C
SWITCH, HEATER AND AIR CONDITIONER TEMPERATURE (S/N'S XXXXXX-)....1810-7G
SWITCH, HEATER AND AIR CONDITIONER TEMPERATURE(S/N'S -XXXXXX)....1810-6
SWITCH, HEATER ON/OFF (UPPER)....1831-8
SWITCH, HEATER ROPS AND CAB UNDER SEAT HEATER....1831-2
SWITCH, HORN....1674-20
SWITCH, HORN COVER (CONTINUED)....0315-8
SWITCH, HYDROSTATIC OIL OR TRANSMISSION OIL TEMPERATURE....0363-14
SWITCH, KEY....1676-8
SWITCH, KEY WITH 650J INTEGRADED GRADE CONTROL....1676-3A
SWITCH, MASTER DISCONNECT....1674-2
SWITCH, NEUTRAL START....0315-6
SWITCH, NEUTRAL START (CONTINUED)....0315-8
SWITCH, PARK BRAKE LOCK....1115-2
SWITCH, PILOT ENABLE & INTEGRATED GRADE CONTROL LEVER (JOYSTICK)....3262-20
SWITCH, REVERSE RATIO....1676-8
SWITCH, REVERSE RATIO (SER. NO. -910010)....0315-8
SWITCH, REVERSE RATIO WITH 650J INTEGRADED GRADE CONTROL....1676-3A
SWITCH, SIDE WINDOW WIPER....1814-10
SWITCH, START AID....0505-6

ALPHABETICAL INDEX - CONTINUED

PAGE

SWITCH, START AID(ETHER/COLD WEATHER/ FLUID)....1676-8
SWITCH, TOGGLE CAB HIGH INTENSITY....1673-8
SWITCH, WORK LIGHT ON-OFF 1676-8
SWITCH, WORK LIGHT ON-OFF WITH 650J INTEGRATED GRADE CONTROL 1676-3A
SWITCH,STARTER MOTOR 0422-2
SYNC SHAFT KIT, HYDROSTATIC MOTOR 0355-24
SYSTEM WARM UP ENGINE SPEED LABEL (IN FRONT OF ENGINE SPEED CONTROL POD)....1810-4
SYSTEM WARM UP ENGINE SPEED LABEL (IN FRONT OF ENGINE SPEED CONTROL POD).... 1810-7A
SYSTEM WARM UP ENGINE SPEED LABEL (IN FRONT OF ENGINE SPEED CONTROL POD).... 1810-7E

T

T-BAR CONTROL HANDLE....3215-2
TANDEM PUMPS 0355-6
TANK RADIATOR RECOVERY(450J AND 550J) 0511-6
TANK RADIATOR RECOVERY(650J)....0511-10
TANK 10W30 OIL DESIGNATION LABEL, HYDRAULIC AND HYDROSTATIC OIL....1322-2
TANK, FUEL....0564-2
TANK, WINDSHIELD WIPER WASHER....1814-4
TEMPERATURE SENDER WITH MONITOR ONLY, ENGINE WATER 1674-14
TEMPERATURE SENSOR, HYDRAULIC OIL....1674-26
TEMPERATURE SENSOR, THERMOSTAT 0418-2
TEMPERATURE SWITCH, AIR CONDITIONER AND HEATER (UPPER)....1831-8
TEMPERATURE SWITCH, AIR CONDITIONER AND HEATER 1832-2
TEMPERATURE SWITCH, HEATER AND AIR CONDITIONER (S/N'S -XXXXXX) 1810-6
TEMPERATURE SWITCH, HEATER AND AIR CONDITIONER (S/N'S XXXXXX-) 1810-7C
TEMPERATURE SWITCH, HEATER AND AIR CONDITIONER (S/N'S XXXXXX-) 1810-7G
TEMPERATURE SWITCH, HYDROSTATIC OIL OR TRANSMISSION OIL 0363-14
TENSIONER, BELT IDLER....0429-2
TENSIONER, TRACK CHAIN....0133-4
TERMINATION RESISTOR, CAN....1674-6
TERMINATION RESISTOR, CAN....1674-8
TERMINATION RESISTOR, CAN....1674-10
TERMINATION RESISTOR, CAN W/650J W/ INTEGRADED GRADE CONTROL....1674-28
TETHER BELT KIT (AIR SUSPENSION SEAT)....1821-26
TETHER KIT (DELUXE) 1821-18
THERMOSTAT 0418-2
THERMOSTAT CAB HEATER (UPPER)....1831-8
THERMOSTAT COVER....0418-2
THERMOSTAT COVER TUBE....0418-2
THRUST BEARING, CRANKSHAFT 0401-2
TIE DOWN LABEL....1322-2
TIE RODS, VALVE 3262-2
TIE RODS, VALVE 3262-10
TILT CYLINDER HEAD END PIN 3201-4
TILT CYLINDER ROD....3265-6
TILT CYLINDER ROD END PIN 3243-2
TILT CYLINDER UNITIZED PISTON 3265-6
TILT CYLINDER, BARREL 3265-6
TILT HOSE ROD AND HEAD, END 3263-8
TILT HYDRAULIC CYLINDER 3265-4

PAGE

TILT PLUMBING HYDRAULIC HOSES 3263-4
TILT VALVE SECTION, IGC CONTROL VALVE (650J) 3262-14
TILTING BRACKET, SEAT 1811-2
TILTING BRACKET, SEAT 1811-4
TIMING GEAR COVER....0402-4
TIMING GEAR COVER GASKET 0402-4
TIMING WHEEL, CRANKSHAFT 0401-2
TOGGLE SWITCH CAB HIGHT INTENSITY.... 1673-8
TOOL BOX 1810-12
TOP PLATE, AIR SUSPENSION SEAT 1821-26
TORQUE AND SHIM DECAL, BLADE (ENGLISH, FRENCH, SPANISH) 3201-2
TORQUE TORSIONAL COUPLING CONNECTOR.... 0325-2
TOW HOOK 1512-2
TRACK ADJUSTER 0133-4
TRACK ADJUSTER PISTON.... 0133-4
TRACK ADJUSTER RELIEF OR CHECK VALVE.... 0133-4
TRACK ADJUSTER SPRING COMPRESSION 0133-4
TRACK ADJUSTER YOKE 0133-4
TRACK BUSHING.... 0132-6
TRACK BUSHING.... 0132-8
TRACK BUSHING AND EXTENDED WEAR TRACK BUSHING 0132-12
TRACK BUSHING EXTENDED WEAR 0132-6
TRACK BUSHING EXTENDED WEAR 0132-8
TRACK CHAIN DRIVE SPROCKET 0132-16
TRACK CHAIN TENSION ADJUSTER.... 0133-4
TRACK DRIVE SPROCKET GUARD.... 0132-14
TRACK FRAME.... 0131-2
TRACK FRAME COVERS.... 0133-8
TRACK LINK LUBED 0132-6
TRACK LINK LUBED 0132-8
TRACK LINK LUBED 0132-10
TRACK LINK LUBED 0132-12
TRACK LINK SEALED 0132-4
TRACK LINK SEALED (450J,550J) 0132-2
TRACK LINK WITH LUBED CHAIN WITH EXTENDED WEAR BUSHING, MASTER.... 0132-6
TRACK LINK WITH LUBED CHAIN WITH EXTENDED WEAR BUSHING, MASTER.... 0132-8
TRACK LINK WITH LUBED CHAIN, MASTER.... 0132-6
TRACK LINK WITH LUBED CHAIN, MASTER.... 0132-8
TRACK LUBED CHAIN 40 LINK WITH 16 INCH SHOES.... 0132-6
TRACK LUBED CHAIN 40 LINK WITH 16 INCH SHOES.... 0132-8
TRACK LUBED CHAIN 40 LINK WITH 16 INCH SHOES.... 0132-10
TRACK LUBED CHAIN 40 LINK WITH 16 INCH SHOES.... 0132-12
TRACK LUBED CHAIN 40 LINK WITH 16 INCH SHOES EXTENDED WEAR.... 0132-12
TRACK LUBED CHAIN 40 LINK WITH 24 INCH SHOES EXTENDED WEAR.... 0132-12
TRACK LUBED CHAIN 40 LINK WITHOUT SHOES.... 0132-6
TRACK LUBED CHAIN 40 LINK WITHOUT SHOES.... 0132-8
TRACK LUBED CHAIN 40 LINK WITHOUT SHOES.... 0132-10
TRACK LUBED CHAIN 40 LINK WITHOUT SHOES.... 0132-12
TRACK LUBED CHAIN 40 LINK WITHOUT SHOES EXTENDED WEAR 0132-6
TRACK LUBED CHAIN 40 LINK WITHOUT SHOES EXTENDED WEAR 0132-8
TRACK ROLLERS, SINGLE- & DOUBLE-FLANGE 0133-2
TRACK SAG LABEL 1322-2
TRACK SEALED CHAIN 37 LINK WITH 16 INCH SHOES.... 0132-4

ALPHABETICAL INDEX - CONTINUED

PAGE

TRACK SEALED CHAIN 37 LINK WITHOUT SHOES 0132-4
TRACK SEALED CHAIN 40 LINK WITH 18 INCH SHOES (450J,550J).....0132-2
TRACK SEALED CHAIN 40 LINK WITHOUT SHOES (450J,550J) 0132-2
TRACK, LONG (450J).....0131-6
TRANSFER PUMP, FUEL.....0421-1
TRANSMISSION CONTROL, MICROPROCESSOR 0375-2
TRANSMISSION FILTER.....0364-2
TRANSMISSION FILTER ELEMENT.....0364-2
TRANSMISSION FILTER HEAD.....0364-2
TRANSMISSION FLUID SIGHT LABEL 1322-2
TRANSMISSION HARNESS 1674-4
TRANSMISSION OIL OR HYDROSTATIC OIL TEMPERATURE SWITCH 0363-14
TRANSMISSION OIL PRESSURE SENSOR.....1062-2
TRANSMISSION PLUMBING.....0363-14
TRANSMISSION/HYDROSTATIC DIAGNOSTIC PLUMBING.....0363-4
TRANSMISSION/HYDROSTATIC TESTING LABEL.....0363-4
TRAY, LUNCH BOX AND CUP 1810-12
TRAY, ROPS AND CAB UNDER SEAT 1831-2
TUBE, ENGINE OIL FILLER (550J AND 650J).....0521-6
TUBE, ENGINE OIL FILLER(450J) 0521-2
TUBE, ENGINE VENTILATING 0408-2
TUBE, HYDRAULIC RESERVOIR SIGHT.....2164-2
TUBE,ENGINE OIL DIPSTICK 0407-1
TUBE,THERMOSTAT COVER.....0418-2
TURBOCHARGER 0416-2
TURBOCHARGER GASKET.....0416-2
TURBOCHARGER OIL LINES 0416-4
TWO INCH SEAT BELT 1821-2

U

U-JOINT (HOUSING), HYDRAULIC CONTROL.....3215-2
UNIVERSAL FINAL DRIVE SHAFT.....0201-2
UNIVERSAL FINAL DRIVE SHAFT..... 0201-3A
UNIVERSAL FINAL DRIVE SHAFT (CONTINUED).....0201-4
UNIVERSAL FINAL DRIVE SHAFT (CONTINUED)..... 0201-5A
UPPER HEATER 1831-8
UPPER HEATER DRAIN PAN FOAM 1831-8

V

VALVE (SWASHPLATE), HYDROSTATIC MOTOR.....0355-24
VALVE BELLCRANK, AUXILIARY 3215-2
VALVE CAB HEATER PLUMBING, DRAIN.....1831-6
VALVE SECTION, ANGLE FOR INTEGRATED CONTROL (650J).....3262-16
VALVE SECTION, AUX FOR INTEGRATED CONTROL (650J).....3262-18
VALVE SECTION, LIFT FOR INTEGRATED CONTROL (650J).....3262-12
VALVE SECTION, TILT FOR INTEGRATED CONTROL (650J).....3262-14
VALVE SWITCH, BRAKE.....1062-2
VALVE TIE RODS 3262-2
VALVE TIE RODS 3262-10
VALVE, AIR CLEANER CLEAN OUT (550J AND 650J).....0521-6
VALVE, AIR CLEANER CLEAN OUT(450J) 0521-2

PAGE

VALVE, AIR CONTROL (AIR SUSPENSION)..... 1821-28
VALVE, ANGLE SECTION RELIEF (7500 PSI) (NOT ILLUSTRATED)..... 3262-2
VALVE, AUXILIARY CIRCUIT(PRESSURE)RELIEF (FIFTH FUNCTION)(1900,3000&3450 PSI)..... 3262-8
VALVE, AUXILIARY CIRCUIT(PRESSURE)RELIEF (1900, 3000 AND 3450 PSI)..... 3262-6
VALVE, AUXILIARY CIRCUIT(PRESSURE)RELIEF (1900, 3000 AND 3450 PSI).....3262-7A
VALVE, AUXILIARY WITH LINKAGE (FIFTH FUNCTION) 3262-8
VALVE, AUXILIARY WITH LINKAGE (FOURTH FUNCTION)..... 3262-6
VALVE, AUXILIARY WITH LINKAGE (FOURTH FUNCTION).....3262-7A
VALVE, AUXILLIARY 3262-2
VALVE, BRAKE 1062-2
VALVE, CAB HEATER PLUMBING WATER..... 1831-6
VALVE, CAB HEATER THERMAL EXPANSION (UPPER)..... 1831-8
VALVE, ENGINE COOLANT DRAIN..... 0404-2
VALVE, ENGINE OIL BY-PASS 0404-2
VALVE, ENGINE OIL PRESSURE REGULATING..... 0404-2
VALVE, EXHAUST 0409-2
VALVE, FUEL SHUT OFF 0563-2
VALVE, FUEL TANK DRAIN..... 0564-2
VALVE, HYDRAULIC CONTROL 3262-2
VALVE, HYDRAULIC CONTROL 3262-10
VALVE, HYDRAULIC, HYDROSTATIC AND ENGINE DRAIN 2163-10
VALVE, HYDROSTATIC CHARGE RELIEF 0355-2
VALVE, HYDROSTATIC ELECTRONIC DISPLACEMENT CONTROL 0355-2
VALVE, HYDROSTATIC MOTOR CONTROL PRESSURE RELIEF 0355-20
VALVE, HYDROSTATIC MULTI FUNCTION 0355-2
VALVE, HYDROSTATIC MULTI FUNCTION 0355-6
VALVE, HYDROSTATIC OIL COOLER BY PASS 0363-14
VALVE, HYDROSTATIC PUMP DISPLACEMENT CONTROL..... 0355-16
VALVE, HYDROSTATIC PUMP PRESSURE CONTROL PILOT 0355-16
VALVE, INLET 3262-2
VALVE, INLET 3262-10
VALVE, INTAKE..... 0409-2
VALVE, OUTLET 3262-2
VALVE, OUTLET 3262-10
VALVE, RADIATOR DRAIN(450J AND 550J)..... 0511-6
VALVE, RADIATOR DRAIN(650J) 0511-10
VALVE, REAR WIPER FLOW CONTROL..... 1814-8
VALVE, TRACK ADJUSTER RELIEF OR CHECK..... 0133-4
VANDAL COVER WITH ROPS 1810-2
VEHICLE HARNESS RELAY WITH 650J INTEGRADED GRADE START RELAY 12 VOLT) 1674-30
VEHICLE WIRING HARNESS WITH 650J INTEGRADED GRADE CONTROL..... 1674-30
VENTILATING SYSTEM, ENGINE 0408-2
VINYL HEADREST (AIR SUSPENSION) 1821-22
VINYL SEAT (AIR SUSPENSION)..... 1821-22
VINYL SEAT (DELUXE) 1821-12
VINYL SEAT BACK (AIR SUSPENSION) 1821-22
VINYL SEAT PAD (AIR SUSPENSION)..... 1821-22

ALPHABETICAL INDEX - CONTINUED

PAGE

W

WARM UP/COLD START LABEL (S/N'S -XXXXXX) 1810-4
WARM UP/COLD START LABEL (S/N'S XXXXXX-) 1810-7A
WARM UP/COLD START LABEL (S/N'S XXXXXX-) 1810-7E
WARMUP ENGINE SPEED LABEL, SYSTEM (IN FRONT OF ENGINE SPEED CONTROL POD)....1810-4
WARMUP ENGINE SPEED LABEL, SYSTEM (IN FRONT OF ENGINE SPEED CONTROL POD).... 1810-7A
WARMUP ENGINE SPEED LABEL, SYSTEM (IN FRONT OF ENGINE SPEED CONTROL POD).... 1810-7E
WARNING LABEL SEAT BELT (S/N'S -XXXXXX) 1810-4
WARNING LABEL SEAT BELT (S/N'S XXXXXX-) 1810-7A
WARNING LABEL SEAT BELT (S/N'S XXXXXX-) 1810-7E
WASHER & WIPER SWITCH WINDOW, FRONT 1814-6
WASHER AND WIPER SWITCH SIDE WINDOW....1814-10
WASHER TANK, WINDSHIELD WIPER....1814-4
WATER PUMP 0417-3
WATER PUMP FILTER 0417-3
WATER PUMP IMPELLER 0417-3
WATER PUMP INLET....0417-2
WATER PUMP INSERT REPAIR KIT....0402-4
WATER PUMP PULLEY 0417-2
WATER PUMP REPAIR KIT....0417-3
WATER TEMPERATURE SENDER WITH MONITOR AND GAUGE, ENGINE OIL 1674-16
WATER TEMPERATURE SENDER WITH MONITOR ONLY, ENGINE....1674-14
WATER VALVE, CAB HEATER PLUMBING 1831-6
WEAR STRIP....0131-2
WEIGHT ADJUSTMENT KNOB(DELUXE) 1821-16
WHEEL, CRANKSHAFT TIMING 0401-2
WINDOW GLASS FRONT 1814-2
WINDOW GLASS, REAR 1814-2
WINDOW PLUG....1814-2
WINDOW WIPER & WASHER SWITCH, FRONT 1814-6
WINDOW WIPER AND WASHER SWITCH SIDE....1814-10
WINDOW WIPER ARM SIDE 1814-10
WINDOW WIPER ARM, FRONT 1814-6
WINDOW WIPER BLADE SIDE 1814-10
WINDOW WIPER BLADE, FRONT 1814-6
WINDOW WIPER MOTOR 1814-6
WINDOW WIPER MOTOR SIDE 1814-10
WINDOW WIPERS SIDE....1814-10
WINDOW WIPERS. DOOR 1814-10
WINDOW WIPERS, FRONT....1814-6
WINDOW, CAB 1814-2
WINDOW, LEFT SIDE 1814-2
WINDOW, PLUG REAR....1814-2
WINDOW, REAR WIPER....1814-8
WINDOW, RIGHT SIDE....1814-2
WINDSHIELD WASHER HOSE SIDE 1814-10
WINDSHIELD WASHER HOSE, FRONT 1814-6
WINDSHIELD WIPER WASHER RESERVOIR 1814-4
WINDSHIELD WIPER WASHER TANK....1814-4
WINDSHIELD WIPER WASHER TANK PUMP 1814-4
WIPER & WASHER SWITCH WINDOW, FRONT 1814-6
WIPER AND WASHER SWITCH SIDE WINDOW....1814-10
WIPER BLADE SIDE WINDOW 1814-10
WIPER BLADE, FRONT WINDOW 1814-6
WIPER BLADE, REAR 1814-8

PAGE

WIPER MOTOR SIDE WINDOW 1814-10
WIPER MOTOR WINDOW, FRONT.... 1814-6
WIPER WASHER TANK CAP 1814-4
WIPER WASHER TANK, WINDSHIELD 1814-4
WIPER, REAR WINDOW.... 1814-8
WIPERS SIDE WINDOW.... 1814-10
WIPERS, DOOR WINDOW.... 1814-10
WIPERS, FRONT WINDOW 1814-6
WIRING HARNESS (AIR SUSPENSION) COMPRESSOR SEAT(SN.-XXXXXX).... 1821-26
WIRING HARNESS CAB HEATER (UPPER).... 1831-8
WIRING HARNESS GUARD.... 1673-8
WIRING HARNESS UNDER SEAT ROPS AND CAB HEATER 1831-2
WIRING HARNESS WITH SWITCH AND COVER SINGLE LEVER CONTROL WITH SPEEDIN GRIP 0315-6
WIRING HARNESS, ENGINE.... 1674-10
WIRING HARNESS, ENGINE W/INTEGRADED GRADE CONTROL 650J 1674-28
WIRING HARNESS, HORN.... 1674-20
WIRING HARNESS, RADIO 2001-2
WIRING HARNESS, VEHICLE W/INTEGRADED GRADE CONTROL 650J 1674-30
WORK LAMP HOUSING.... 1673-4
WORK LIGHT BULB 1673-4
WORK LIGHT HARNESS, CAB.... 1673-8
WORK LIGHT HARNESS, ROPS 1673-6
WORK LIGHT HOUSING, CAB HI-INTENSITY.... 1673-8
WORK LIGHT ON-OFF SWITCH.... 1676-8
WORK LIGHT ON-OFF SWITCH WITH 650J INTEGRATED GRADE CONTROL 1676-3A
WORK LIGHT WIRING HARNESS.... 1673-4
WORK LIGHT, HOUSING 1673-6

X

X-MAS TREE CLIPS, SEAT BACK PAD 1821-30
XLT C-FRAME.... 3243-2
XLT LABEL.... 1322-2

Y

YOKE, TRACK ADJUSTER 0133-4

MEMORANDA
MEMORANDA
MEMORANDA

MEMORANDA
MEMORANDA
MEMORANDA

TRACK FRAME
PROTECTION DE PIGNON D'ENTRAINEMENT DE CHENILLE
BASTIDOR DE CADENA

T198470 -UN-16MAR04

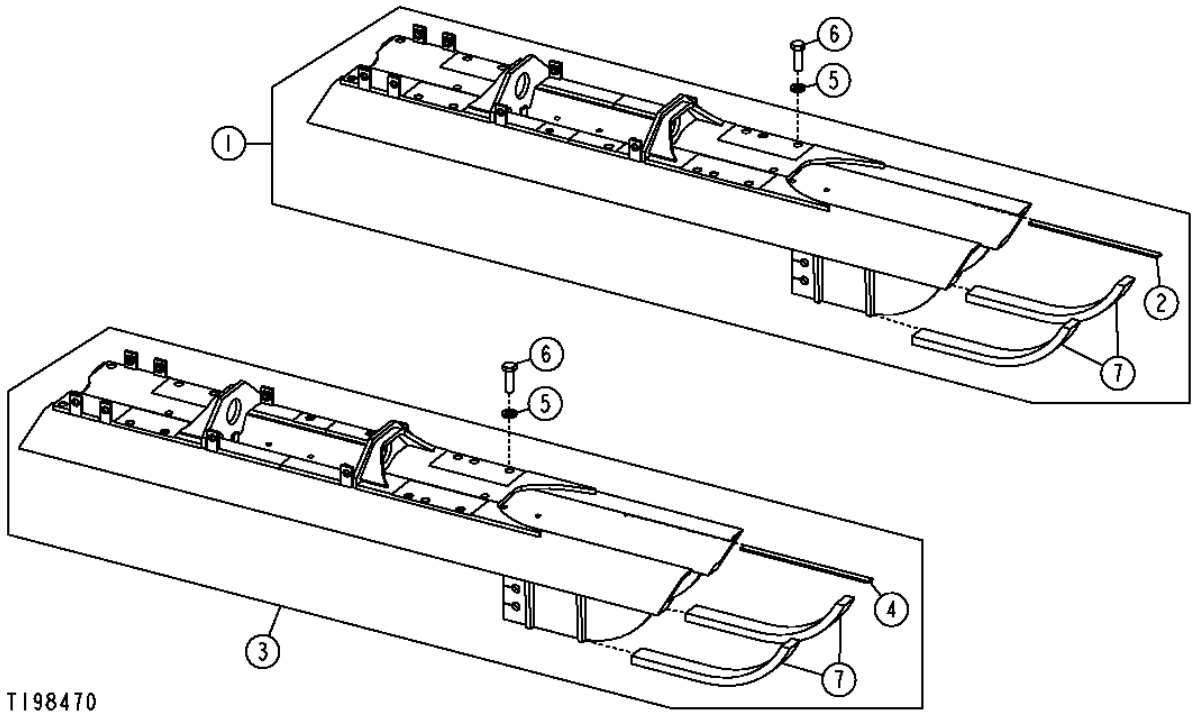

TRACK FRAME
BATI DE CHENILLE
BASTIDOR DE CADENA

KEY	PART NO.	PART NAME	QTY.	SERIAL NO.	450J	550J	650J	REMARKS
1	AT209175	FRAME	1		X	X		(LH) (CONVENIENCE ASSY) (450J LONG TRACK AND LGP)
	AT210880	FRAME	1				X	(CONVENIENCE ASSY) (LH)
	AT225897	FRAME	1				X	(CONVENIENCE ASSY) (LH) (XLT/LOW GROUND PRESSURE)
2	T105530	REINFORCEMENT	2		X	X	X	(WEAR)
3	AT210576	FRAME	1		X	X		(CONVENIENCE ASSY) (RH) (450J LONG TRACK AND LGP)
	AT211481	FRAME	1				X	(CONVENIENCE ASSY) (RH)
	AT225708	FRAME	1				X	(CONVENIENCE ASSY) (RH) (XLT/LGP)
4	T105530	REINFORCEMENT	2		X	X	X	(WEAR)
5	T83426	WASHER	20		X	X	X	
6	19M8224	CAP SCREW	20		X	X	X	M20 X 60
7	T204192	GUIDE	4		X	X	X	(WELDED ON PART) (FRONT CHAIN GUIDE SLIDE)

CHAIN GUIDES
GUIDES DE CHAINE
GUIAS DE CADENA

T198427 -UN-07APR04

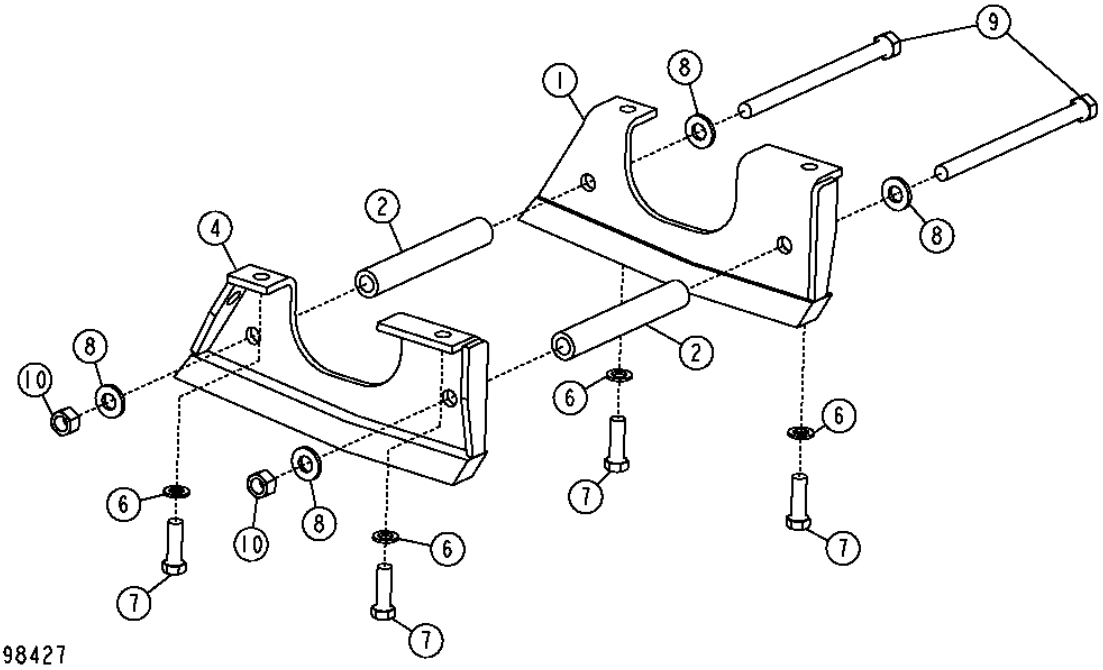

CHAIN GUIDES
GUIDES DE CHAINE
GUIAS DE CADENA

KEY	PART NO.	PART NAME	QTY.	SERIAL NO.	450J	550J	650J	REMARKS
1	AT209238	GUIDE	1		X	X		(REAR CHAIN) (450J LONG TRACK AND LGP)
	AT211092	GUIDE	1				X	(REAR CHAIN)
2	T121001	SPACER	2		X	X		(450J LONG TRACK AND LGP)
	T121002	SPACER	2				X	
4	AT209640	GUIDE	1		X	X		(REAR CHAIN) (450J LONG TRACK AND LPG)
	AT211093	GUIDE	1				X	(REAR CHAIN)
6	R76126	WASHER	4		X	X	X	
7	19H3652	CAP SCREW	4		X	X	X	9/16" X 1-3/4"
8	24M7241	WASHER	4		X	X	X	17 X 34 X 4 MM
9	19H3623	CAP SCREW	2		X	X		5/8" X 9"
	19H3583	CAP SCREW	2				X	5/8" X 10"
10	14H1039	NUT	2		X	X	X	5/8"

ROCK GUARD
PARE-ROCHES
PROTECTOR CONTRA ROCAS

T198426 -UN-16MAR04

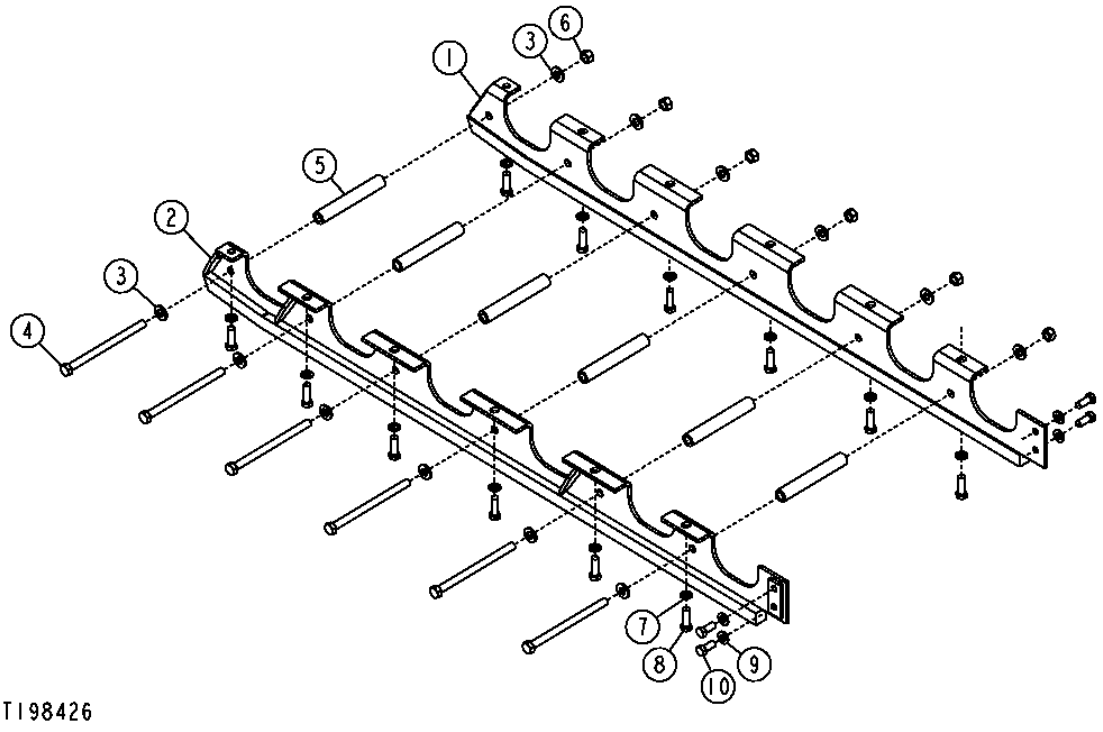

ROCK GUARD
PARE-ROCHES
PROTECTOR CONTRA ROCAS

KEY	PART NO.	PART NAME	QTY.	SERIAL NO.	450J	550J	650J	REMARKS
1	AT306100	GUARD	1		X	X		(LH)
	AT305887	GUARD	1				X	(LH)
	AT305942	GUARD	1				X	(LH) XLT (LGP)
2	AT306101	GUARD	1		X	X		(RH)
	AT305888	GUARD	1				X	(RH)
	AT305943	GUARD	1				X	(RH) XLT (LGP)
3	24M7241	WASHER	12		X	X	X	17 X 34 X 4 MM
	24M7241	WASHER	14				X	17 X 34 X 4 MM, (650J XLT) LGP
4	19H3623	CAP SCREW	6		X	X		5/8" X 9"
	19H3583	CAP SCREW	6				X	5/8" X 10"
	19H3583	CAP SCREW	7				X	5/8" X 10", (650J XLT) LGP
5	T121001	SPACER	6		X	X		
	T179706	SPACER	6				X	
	T179706	SPACER	7				X	(650J XLT) LGP
6	14H1039	NUT	6		X	X	X	5/8"
	14H1039	NUT	7				X	5/8", (650J XLT) LGP
7	R76126	WASHER	12		X	X	X	
	R76126	WASHER	14				X	(650J XLT) LGP
8	19H3652	CAP SCREW	12		X	X		9/16" X 1-3/4"
	19H3653	CAP SCREW	12				X	9/16" X 2"
	19H3653	CAP SCREW	14				X	9/16" X 2", (650J XLT) LGP
9	24H1355	WASHER	4		X	X	X	37/64" X 1-1/8" X 0.120"
10	19H2354	CAP SCREW	4		X	X	X	9/16" X 1-1/4"

CENTER GUIDE (650J)
GUIDE CENTRAL (650J)
GUIA DE CENTRO (650J)

T199049 -UN-08APR04

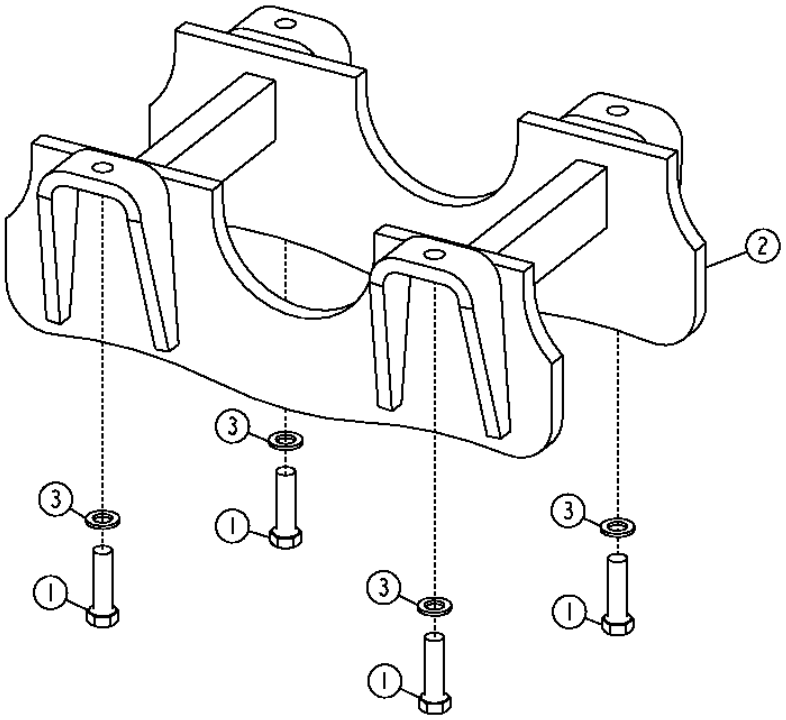

CENTER GUIDE (650J)
GUIDE CENTRAL (650J)
GUIA DE CENTRO (650J)

KEY	PART NO.	PART NAME	QTY.	SERIAL NO.	450J	550J	650J	REMARKS
1	19H3653	CAP SCREW	4			X		9/16" X 2"
2	AT302971	GUIDE	1			X		
3	R76126	WASHER	4			X		

SEALED TRACK (450J, 550J)
CHENILLE SCELLEE (450J, 550J)
ORUGA SELLADA (450J, 550J)

T198490 -UN-16MAR04

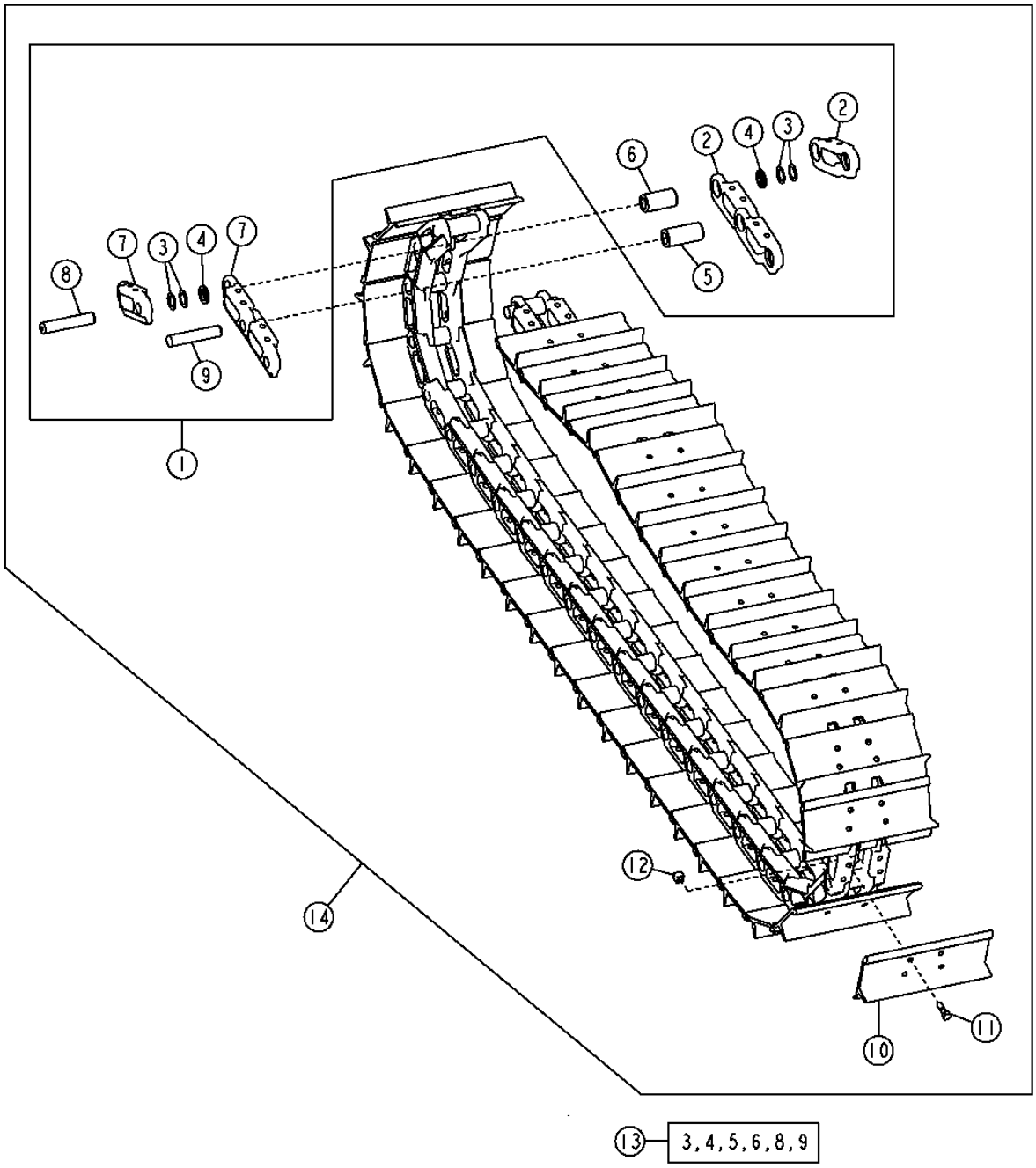

T198490

SEALED TRACK (450J, 550J)
CHENILLE SCELLEE (450J, 550J)
ORUGA SELLADA (450J, 550J)

KEY	PART NO.	PART NAME	QTY.	SERIAL NO.	450J	550J	650J	REMARKS
1	AT143168	TRACK CHAIN W/O SHOES	2		X	X		(CHAIN 40 LINK, SEALED WITHOUT SHOES)
2	T126959	NON-STRUTTED LINK-LH	40		X	X		
3	T105117	SPRING WASHER	160		X	X		(CONICAL)
4	T105131	WASHER	2		X	X		(MASTER)
5	T105116	BUSHING	39		X	X		
6	T74177	MASTER TRACK BUSHING	1		X	X		
7	T126958	NON-STRUTTED LINK-RH	40		X	X		
8	T74185	MASTER TRACK PIN	1		X	X		
9	T74178	TRACK PIN	39		X	X		
10	T127061	SINGLE BAR SHOE	40		X	X		
	T127059	SINGLE BAR SHOE	40		X	X		(16 INCH (400 MM) SINGLE GROUSER)
11	T126931	TRACK BOLT	160		X	X		(SHOE)
12	T126932	NUT	160		X	X		(TRACK SHOE)
13	AT104530	PIN & BUSHING KIT	1		X	X		(ALSO ORDER (16) T105117, (4) T74178 AND (4) T105116) (INCLUDES (35) T105116, (144) T105117, T105131, T74177, (35) T74178 AND T74185)
14	AT143179	TRACK ASSEMBLY WITH SHOES	1		X	X		(CHAIN 40 LINK, SEALED WITH 18 INCH SHOES)

SEALED TRACK (450J, 650J)
CHENILLE SCELLEEE (450J, 650J)
ORUGA SELLADA (450J, 650J)

TP52057 -UN-06JAN99

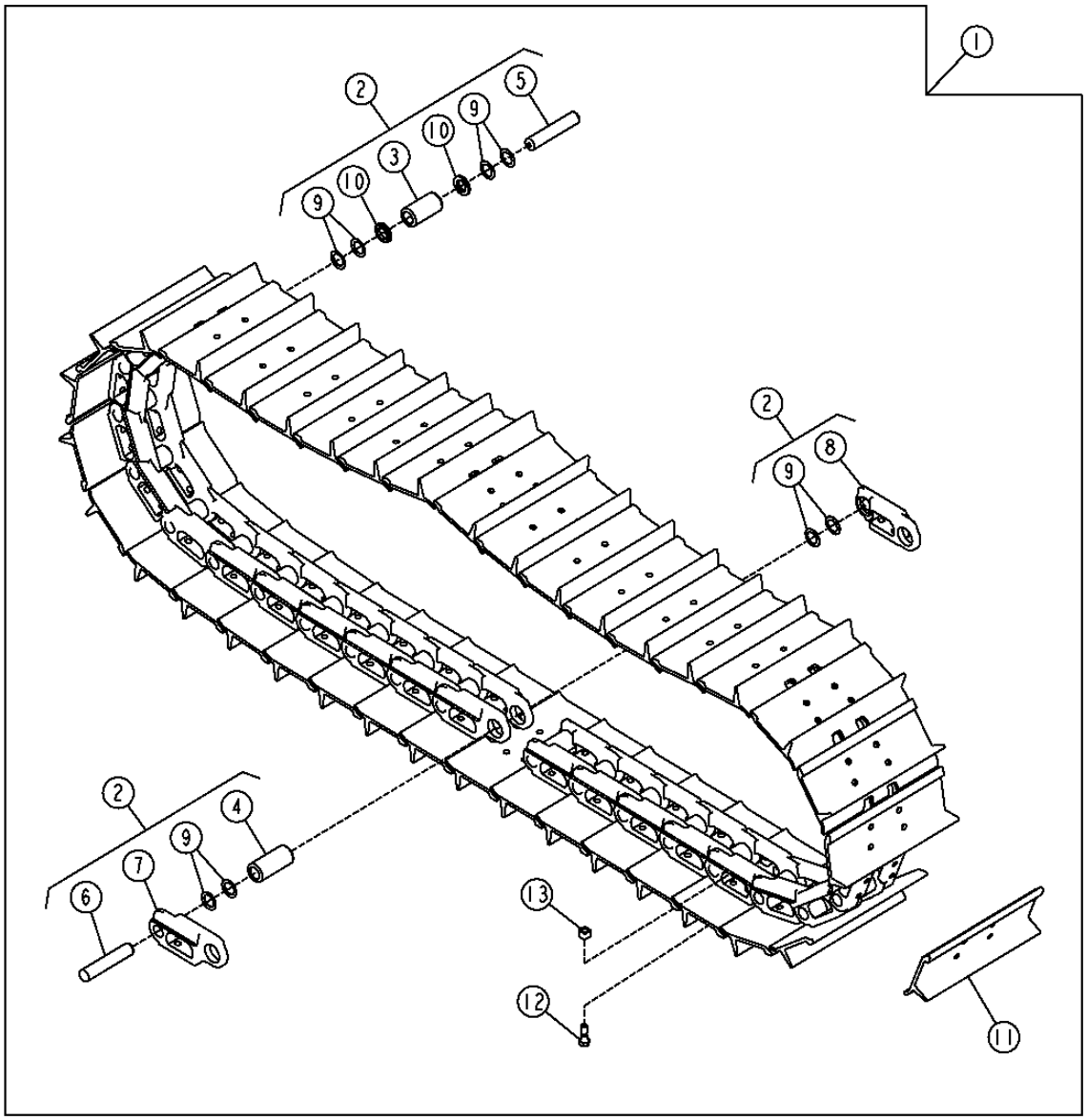

TP52057

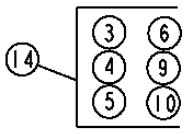

SEALED TRACK (450J, 650J)
CHENILLE SCELLEE (450J, 650J)
ORUGA SELLADA (450J, 650J)

KEY	PART NO.	PART NAME	QTY.	SERIAL NO.	450J	550J	650J	REMARKS
1	AT135625	TRACK ASSEMBLY WITH SHOES	2		X			(CHAIN 37 LINK WITH 16 INCH SHOES) (SINGLE GROUSER CLOSED CENTER SHOES)
	AT222658	TRACK ASSEMBLY WITH SHOES	2				X	(CHAIN 38 LINK, SEALED WITH 18 INCH SHOES)
2	AT135620	TRACK CHAIN W/O SHOES	1		X			(CHAIN 37 LINK, SEALED WITHOUT SHOES) (BUSHING 51 MM (2.00 INCH) O.D.)
	AT104102	TRACK CHAIN W/O SHOES	1				X	(38 LINK)
3	T74177	MASTER TRACK BUSHING	1		X			
	T104549	MASTER TRACK BUSHING	1				X	
4	T105116	BUSHING	36		X			
	T104550	BUSHING	37				X	
5	T74185	MASTER TRACK PIN	1		X			
	T104561	MASTER TRACK PIN	1				X	
6	T74178	TRACK PIN	36		X			
	T104546	TRACK PIN	37				X	(TRACK)
7	T126958	NON-STRUTTED LINK-RH	37		X			(RH)
	T201139	TRACK LINK	38				X	(RH)
8	T126959	NON-STRUTTED LINK-LH	37		X			(LH)
	T201140	TRACK LINK	38				X	(LH)
9	T105117	SPRING WASHER	148		X			
	T104547	SPRING WASHER	152				X	(CONICAL)
10	T105131	WASHER	2		X			(MASTER)
	T104558	WASHER	2				X	
11	T127059	SINGLE BAR SHOE	37		X			(16 INCH (400MM))
	T147607	SINGLE BAR SHOE	37		X			(14 INCH (350MM)) (SINGLE GROUSER CLOSED CENTER) (MUST BE ORDERED SEPARATELY, DOES NOT COME IN COMPLETE TRACK CHAIN)
	T178816	SINGLE BAR SHOE	38				X	(SUB FOR T120740) (18 INCH (450 MM) SINGLE GROUSER)
12	T126931	TRACK BOLT	148		X			(TORQUE)
	T121478	BOLT	152				X	(TRACK)
13	T126932	NUT	148		X			(TORQUE 305 NM (225 LB-FT))
	T45097	NUT	152				X	(TRACK)
14	AT104530	PIN & BUSHING KIT	1		X			(INCLUDES (35) T105116, (144) T105117, (2) T105131, T74177, (35) T74178 AND T74185) (ALSO ORDER (4) T105117, T74178 AND T105116)
	AT120440	PIN & BUSHING KIT	1				X	(INCLUDES (35) T104546, (144) T104547, T104549, (2) T104558, (35) T104550 AND T104561)

LUBRICATED TRACK
CHENILLE LUBRIFIEE
CADENA LUBRICADA

T200327 -UN-24MAY04

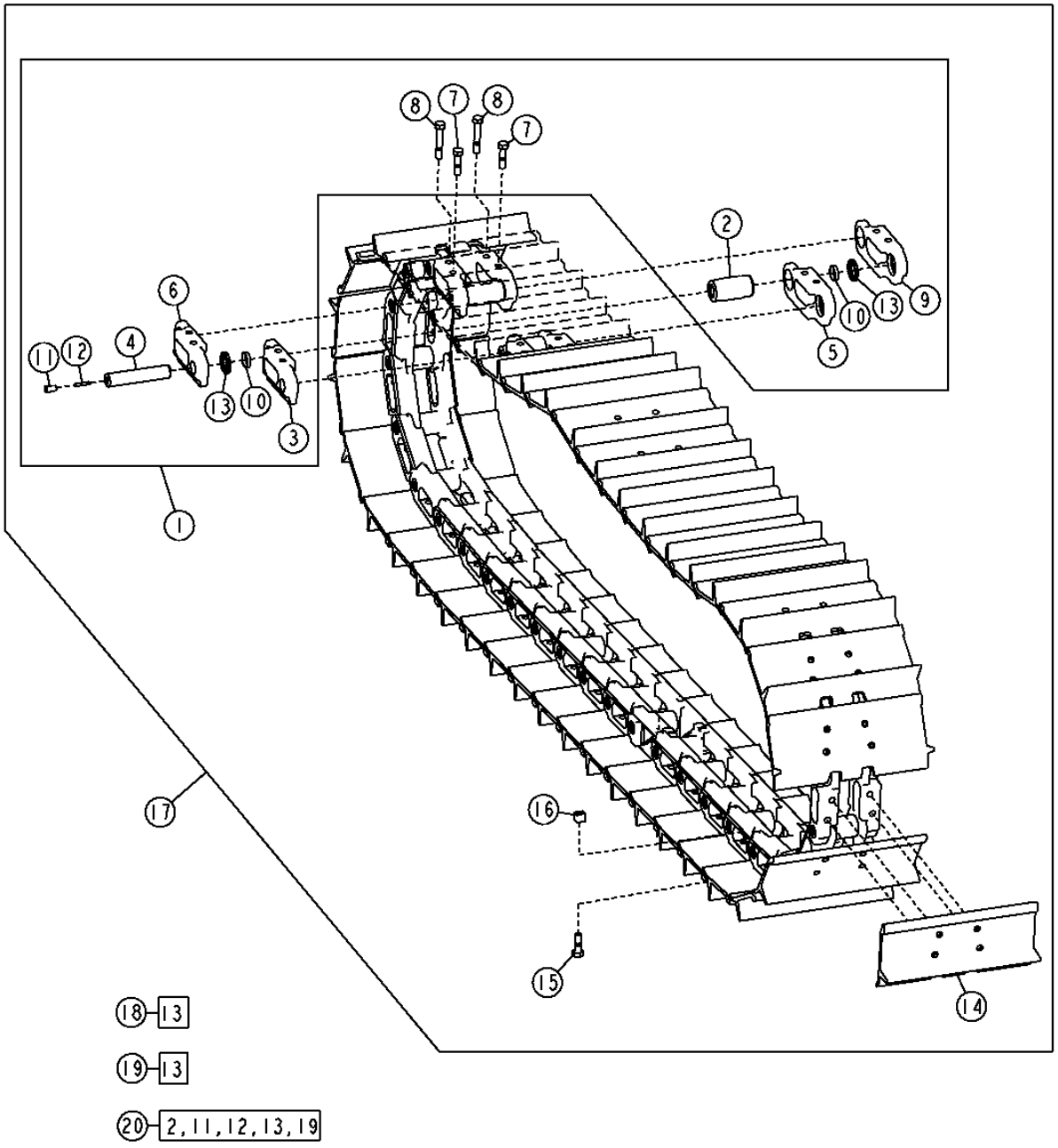

T200327

THIS PARTS LISTING IS CONTINUED

LUBRICATED TRACK
CHENILLE LUBRIFIEE
CADENA LUBRICADA

KEY	PART NO.	PART NAME	QTY.	SERIAL NO.	450J	550J	650J	REMARKS
1	AT167324	TRACK CHAIN W/O SHOES	1		X	X		(40L) (BUSHING O.D. 53.8 MM (2.12 INCH)) (WITHOUT SHOES)
	AT173392	TRACK CHAIN W/O SHOES	1				X	(CHAIN 38 LINK, LUBRICATED WITHOUT SHOES) (WHEN USED FOR SELF CLEANING SWAMP SHOES, ALSO ORDER (2) T177859 MASTER TRACK BOLTS PER SIDE)
	AT225852	TRACK CHAIN W/O SHOES	1				X	(XLT) (40 LINK WITHOUT SHOES)
	AT305209	TRACK CHAIN W/O SHOES	1		X	X		(40 LINK, WITHOUT SHOE, EXTENDED WEAR)
	AT305173	TRACK CHAIN W/O SHOES	1				X	(38 LINK, LUBRICATED WITHOUT SHOES, EXTENDED WEAR)
	AT305200	TRACK CHAIN W/O SHOES	1				X	(40 LINK, LUBRICATED WITHOUT SHOES, EXTENDED WEAR)
2	T135646	BUSHING	40		X	X		(53.8 MM (2.12 INCH) O.D.)
	T145546	BUSHING	38				X	(TRACK)
	T145546	BUSHING	40				X	(XLT)
	T203866	TRACK BUSHING	40		X	X		(A)
	T203864	TRACK BUSHING	38				X	(A)
	T203864	TRACK BUSHING	40				X	(A)
	T203866	TRACK BUSHING	37		X	X		(A)
3	T126958	NON-STRUTTED LINK-RH	39		X	X		
	T201139	TRACK LINK	37				X	(RH)
	T201139	TRACK LINK	39				X	(XLT)
4	T112247	TRACK PIN	40		X	X		
	T104545	TRACK PIN	38				X	
	T104545	TRACK PIN	40				X	(XLT)
5	T126959	NON-STRUTTED LINK-LH	39		X	X		
	T201140	TRACK LINK	37				X	(LH)
	T201140	TRACK LINK	39				X	(XLT)
6	AT167327	MASTER TRACK LINK-SPLIT-RH	1		X	X		(SAW TOOTH)
	AT173085	MASTER TRACK LINK-SPLIT-RH	1				X	
	AT310708	MASTER TRACK LINK-SPLIT-RH	1		X	X		(WITH EXTENDED WEAR CHAIN) (WITH HARDENED BUSHINGS)
	AT310710	MASTER TRACK LINK-SPLIT-RH	1				X	(WITH EXTENDED WEAR CHAIN) (WITH HARDENED BUSHINGS)
7	T151271	MASTER TRACK BOLT	2		X	X		(SHORT)
	T152285	MASTER TRACK BOLT	2		X			(SHORT) WITH SELF CLEANING SHOES
	T160248	MASTER TRACK BOLT	2				X	15.875 X 88.900 MM, (USED WITH 38 LINK CHAIN WITHOUT SHOES)

(A) EXTENDED WEAR BUSHING WITH EXTENDED WEAR TRACK
(A) BAGUE LONGUE DUREE AVEC RAINURE LONGUE DUREE
(A) BUJE DE DESGASTE EXTENDIDO CON PISTA DE DESGASTE EXTENDIDO

THIS PARTS LISTING IS CONTINUED

LUBRICATED TRACK (CONTINUED)
CHENILLE LUBRIFIEE (SUITE)
CADENA LUBRICADA (CONINUACION)

T200327 -UN-24MAY04

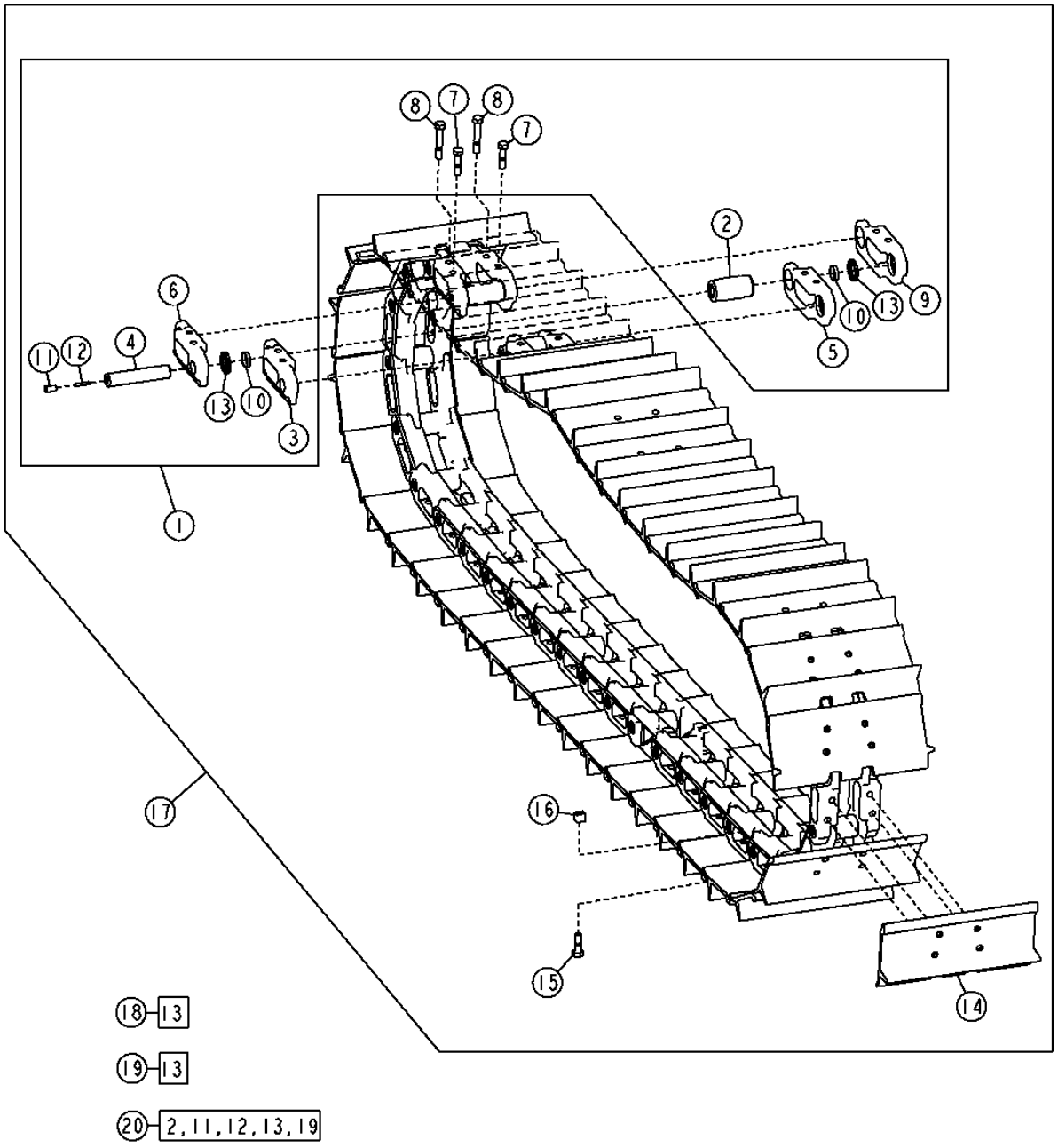

LUBRICATED TRACK (CONTINUED)
CHENILLE LUBRIFIÉE (SUITE)
CADENA LUBRICADA (CONTINUACION)

KEY	PART NO.	PART NAME	QTY.	SERIAL NO.	450J	550J	650J	REMARKS
8	T151272	MASTER TRACK BOLT	2		X	X		(LONG)
	T152286	MASTER TRACK BOLT	2		X			(LONG) (WITH SELF CLEANING SHOES)
	T160248	MASTER TRACK BOLT	4				X	15.875 X 88.900 MM
	T177859	BOLT	2				X	(USED WITH 38 LINK CHAIN) (WITH SELF CLEANING SHOES)
9	AT167329	MASTER TRACK LINK-SPLIT-LH	1		X	X		(SAW TOOTH)
	AT173084	MASTER TRACK LINK-SPLIT-LH	1				X	
	AT310709	MASTER TRACK LINK-SPLIT-LH	1		X	X		(WITH EXTENDED WEAR CHAIN) (WITH HARDENED BUSHINGS)
	AT310711	MASTER TRACK LINK-SPLIT-LH	1				X	(WITH EXTENDED WEAR CHAIN) (WITH HARDENED BUSHINGS)
10	T112252	WASHER	80		X	X		(THRUST)
	T104548	BUSHING	76				X	(THRUST)
	T104548	BUSHING	80				X	(XLT)
11	T149248	PLUG	40		X	X		(PLASTIC)
	T149248	PLUG	38				X	(PLASTIC)
12	T149247	PLUG	38				X	(STOPPER)
	T149247	PLUG	40				X	(XLT)
	T151270	PLUG	40		X	X		(STOPPER)
13	AT113118	SEAL	40		X	X		(PKG = 2)
	AT113380	SEAL	39				X	(PKG = 2)
	AT113380	SEAL	40				X	(XLT)
14	T127059	SINGLE BAR SHOE	40		X			(450J LONG TRACK) (400 MM (16 INCH) SINGLE GROUSER CLOSED CENTER)

THIS PARTS LISTING IS CONTINUED

LUBRICATED TRACK (CONTINUED)
CHENILLE LUBRIFIEE (SUITE)
CADENA LUBRICADA (CONTINUACION)

T200327 -UN-24MAY04

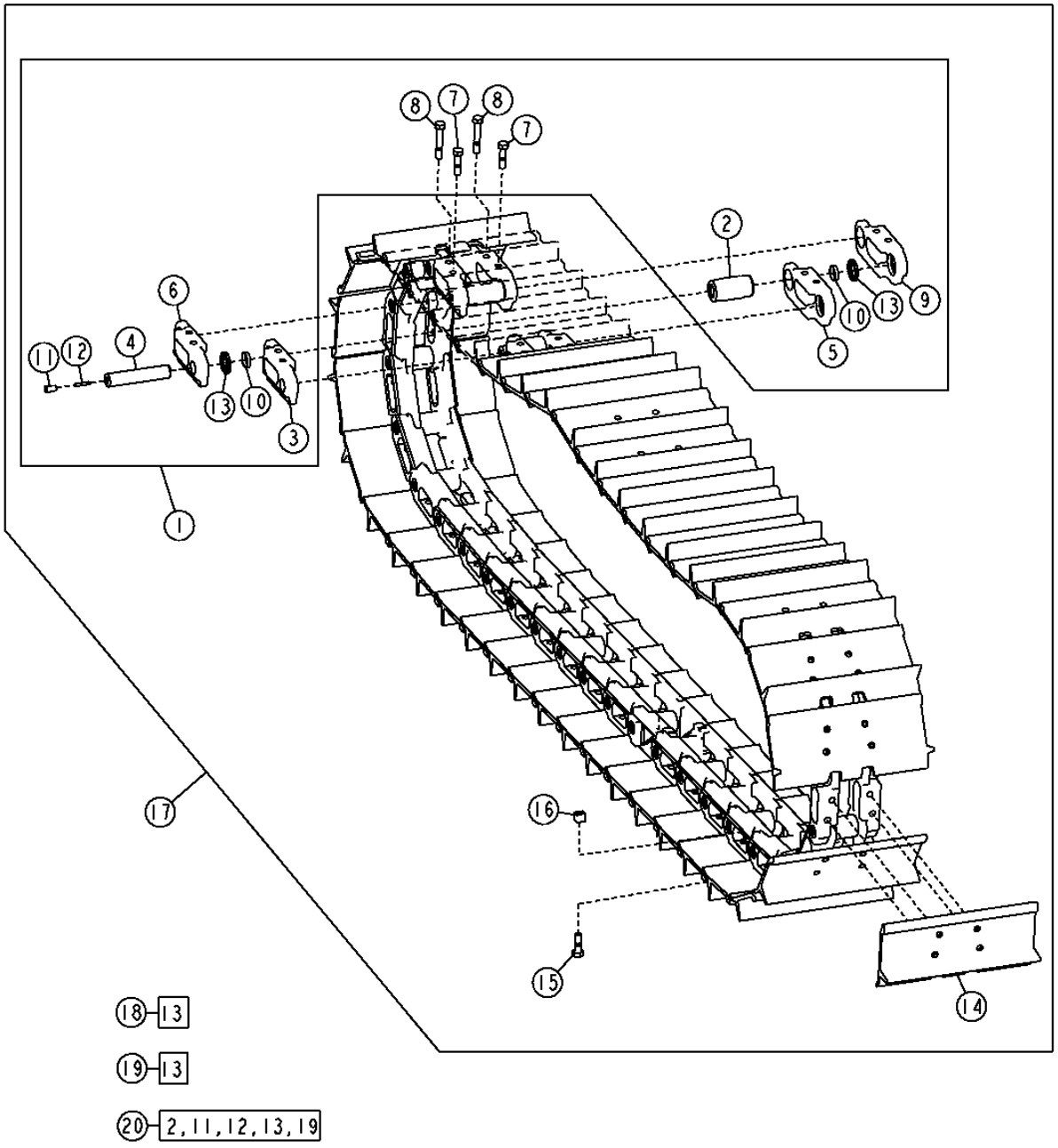

T200327

LUBRICATED TRACK (CONTINUED)
CHENILLE LUBRIFIÉE (SUITE)
CADENA LUBRICADA (CONTINUACION)

KEY	PART NO.	PART NAME	QTY.	SERIAL NO.	450J	550J	650J	REMARKS
14	T178818	SINGLE BAR SHOE	37				X	(500 MM (20 INCH) SINGLE GROUSER)
	T178819	SINGLE BAR SHOE	1				X	(500 MM (20 INCH) MASTER)
	T178816	SINGLE BAR SHOE	37				X	(450 MM (18 INCH) SINGLE GROUSER)
	T178817	SINGLE BAR SHOE	1				X	(450 MM (18 INCH) MASTER)
	T178821	SINGLE BAR SHOE	1				X	(600 MM (24 INCH) MASTER)
	T178733	SINGLE BAR SHOE	1				X	(700 MM (28 INCH) MASTER)
	T178818	SINGLE BAR SHOE	39				X	(XLT)
	T127063	SINGLE BAR SHOE	40		X			(600 MM (24 INCH) SINGLE GROUSER)
	T178820	SINGLE BAR SHOE	38				X	(600 MM (24 INCH) SINGLE GROUSER CLOSED CENTER)
	T178732	SINGLE BAR SHOE	38				X	(700 MM (28 INCH) SINGLE GROUSER)
	T176612	SELF CLEANING SHOE	38				X	(700 MM (28 INCH) SELF CLEANING SHOE)
	T178816	SINGLE BAR SHOE	39				X	(XLT) (450 MM (18 INCH) SINGLE GROUSER)
	T140585	SELF CLEANING SHOE	40		X	X		(600 MM (24 INCH) SELF CLEANING SHOES)
	T127061	SINGLE BAR SHOE	40			X		(450 MM (18 INCH) SINGLE GROUSER)
	DP29960	SINGLE BAR SHOE	40		X	X		(500 MM (20 INCH))
	T225283	DOUBLE BAR SHOE	AR				X	(20 INCH)
	T225284	DOUBLE BAR SHOE	1				X	(2O INCH MASTER SHOE)
	T226478	SINGLE BAR SHOE	39				X	(20 INCH NO-HOLE SHOES)
	T226479	SINGLE BAR SHOE	1				X	(MASTER 20 INCH-NO HOLE SHOES)

THIS PARTS LISTING IS CONTINUED

LUBRICATED TRACK (CONTINUED)
CHENILLE LUBRIFIEE (SUITE)
CADENA LUBRICADA (CONTINUACION)

T200327 -UN-24MAY04

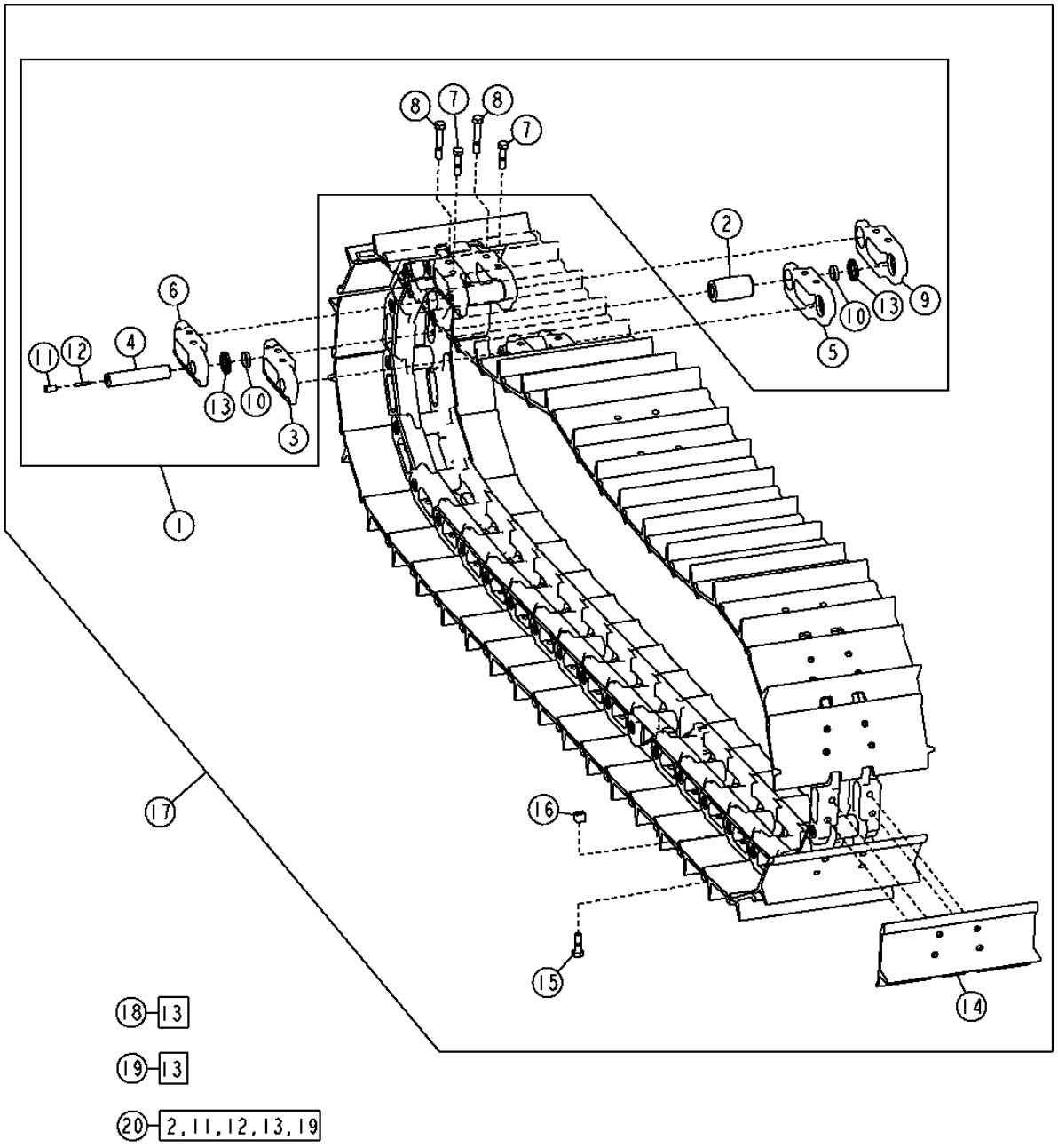

T200327

LUBRICATED TRACK (CONTINUED)
CHENILLE LUBRIFIÉE (SUITE)
CADENA LUBRICADA (CONTINUACION)

KEY	PART NO.	PART NAME	QTY.	SERIAL NO.	450J	550J	650J	REMARKS
15	T126931	TRACK BOLT	156		X	X		(SHOE) (TORQUE 306 NM (225 LB-FT))
	T142435	TRACK BOLT	156		X			(WITH SELF CLEANING SHOE) (TORQUE 306 NM (225 LB-FT))
	T121478	BOLT	148				X	(TRACK)
	T177867	BOLT	74				X	(USED WITH 700 MM (28 INCH) SELF CLEANING SHOE)
	T121478	BOLT	156				X	(XLT)
16	T126932	NUT	156		X	X		(TRACK SHOE)
	T45097	NUT	148				X	(TRACK)
	T45097	NUT	156				X	(XLT)
17	AT167392	TRACK ASSEMBLY WITH SHOES	1			X		(40 LINK CHAIN, LUBRICATED WITH 450 MM (18 INCH) SINGLE BAR CLOSED CENTER SHOES)
	AT222660	TRACK ASSEMBLY WITH SHOES	1				X	(LUBRICATED WITH 450 MM (18 INCH) SHOES)
	AT303064	TRACK ASSEMBLY WITH SHOES	1				X	(CHAIN 40 LINKED, LUBRICATED WITH 700 MM (28 INCH) SHOES) (LGP)
	AT222662	TRACK ASSEMBLY WITH SHOES	1				X	(LUBRICATED CHAIN W/ 500 MM (20 INCH) SHOES)
	AT303033	TRACK ASSEMBLY WITH SHOES	1				X	(40 LINK LUBRICATED CHAIN WITH 600 MM (24 INCH) SHOES) (LGP)
	AT225894	TRACK ASSEMBLY WITH SHOES	1				X	(XLT) (40 LINK CHAIN WITH 500 MM (20 INCH) SHOES)
	AT225851	TRACK ASSEMBLY WITH SHOES	1				X	(650JXLT) (WITH SHOES) (40 LINK LUBRICATED WITH 450 MM (18 INCH) SHOES)
	AT305208	TRACK ASSEMBLY WITH SHOES	1		X			(40 LINK LUBRICATED WITH 400 MM (16 INCH) SHOES, EXTENDED WEAR)
	AT305211	TRACK ASSEMBLY WITH SHOES	1		X	X		(40 LINK LUBRICATED WITH 600 MM (24 INCH) SHOES, EXTENDED WEAR)
	AT305210	TRACK ASSEMBLY WITH SHOES	1			X		(40 LINK LUBRICATED WITH 450 MM (18 INCH) SHOES, EXTENDED WEAR)
	AT305174	TRACK ASSEMBLY WITH SHOES	1				X	(38 LINK LUBRICATED WITH 450 MM (18 INCH) SHOES, EXTENDED WEAR)
	AT305178	TRACK ASSEMBLY WITH SHOES	1				X	(38 LINK LUBRICATED WITH 500 MM (20 INCH) SHOES, EXTENDED WEAR)
	AT305202	TRACK ASSEMBLY WITH SHOES	1				X	(40 LINK LUBRICATED WITH 500 MM (20 INCH) SHOES, EXTENDED WEAR)
	AT305199	TRACK ASSEMBLY WITH SHOES	1				X	(40 LINK LUBRICATED WITH 450 MM (18 INCH) SHOES, EXTENDED WEAR)
	AT305307	TRACK ASSEMBLY WITH SHOES	1				X	(40 LINK LUBRICATED WITH 600 MM (24 INCH) SHOES, EXTENDED WEAR)
	AT305309	TRACK ASSEMBLY WITH SHOES	1				X	(X) (40 LINK LUBRICATED WITH 700 MM (28 INCH) SHOES, EXTENDED WEAR)
18	AT124014	SEAL KIT	1		X	X		(CONTAINS (36) SEALS) (ALSO ORDER (4) AT113118, PKG = 2)
19	AT124015	SEAL KIT	1				X	(CONTAINS (36) AT113380 SEALS) (PKG = 2) (ALSO ORDER (2) AT113380 SEALS)
20	AT168267	BUSHING KIT	1				X	(ALSO ORDER (2) AT113380, (2) T145546, (2) T149248 AND T149247) (650J) (FOR CHAIN WITH BUSHING O.D. 56.8 MM (2.25 INCH)) (CONTAINS (36) SEALS, (36) BUSHINGS AND (36) PLUGS)

TRACK DRIVE SPROCKET GUARD
PROTECTION DE PIGNON D'ENTRAINEMENT DE CHENILLE
PROTECTOR DE RUEDA DENTADA IMPULSORA DE ORUGA

T216554 -UN-25OCT05

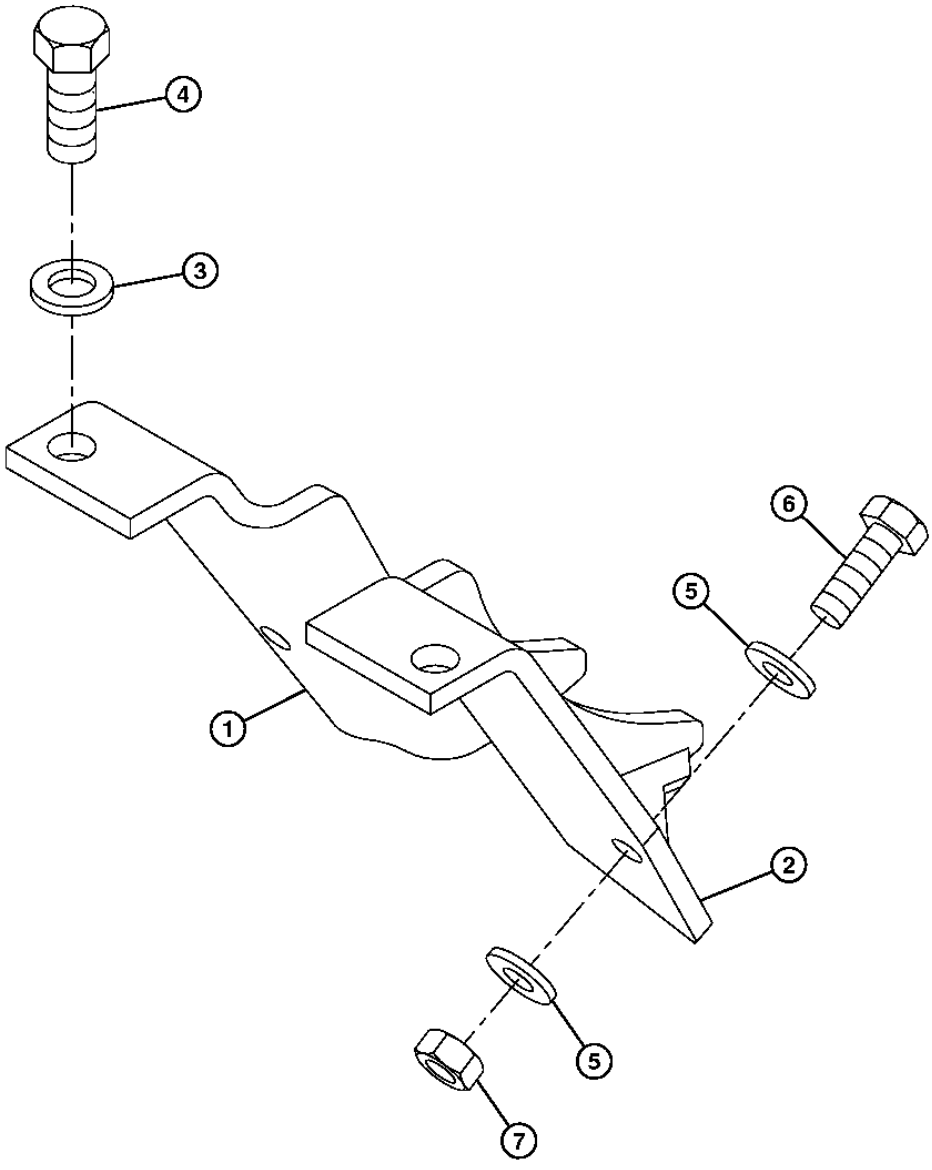

T216554

TRACK DRIVE SPROCKET GUARD
PROTECTION DE PIGNON D'ENTRAINEMENT DE CHENILLE
PROTECTOR DE RUEDA DENTADA IMPULSORA DE ORUGA

KEY	PART NO.	PART NAME	QTY.	SERIAL NO.	450 J	550 J	650 J	REMARKS
1	AT222740	GUARD	1		X	X		(RH)
	AT222752	GUARD	1				X	(RH)
2	AT222741	GUARD	1		X	X		(LH)
	AT222753	GUARD	1				X	(LH)
3	T83426	WASHER	2		X	X	X	
4	19M8002	CAP SCREW	2		X	X	X	M20 X 55, (TORQUE 624 NM (460 LB-FT))
5	R76126	WASHER	4		X	X	X	
6	19H3652	CAP SCREW	2		X	X	X	9/16" X 1-3/4", (TORQUE 203 NM (150 LB-FT))
7	T120710	NUT	2		X	X	X	

TRACK CHAIN DRIVE SPROCKET
PIGNON D'ENTRAINEMENT DE CHAINE DE CHENILLE
RUEDA DENTADA IMPULSORA DE CADENA DE ORUGA

TP52059 -UN-06JAN99

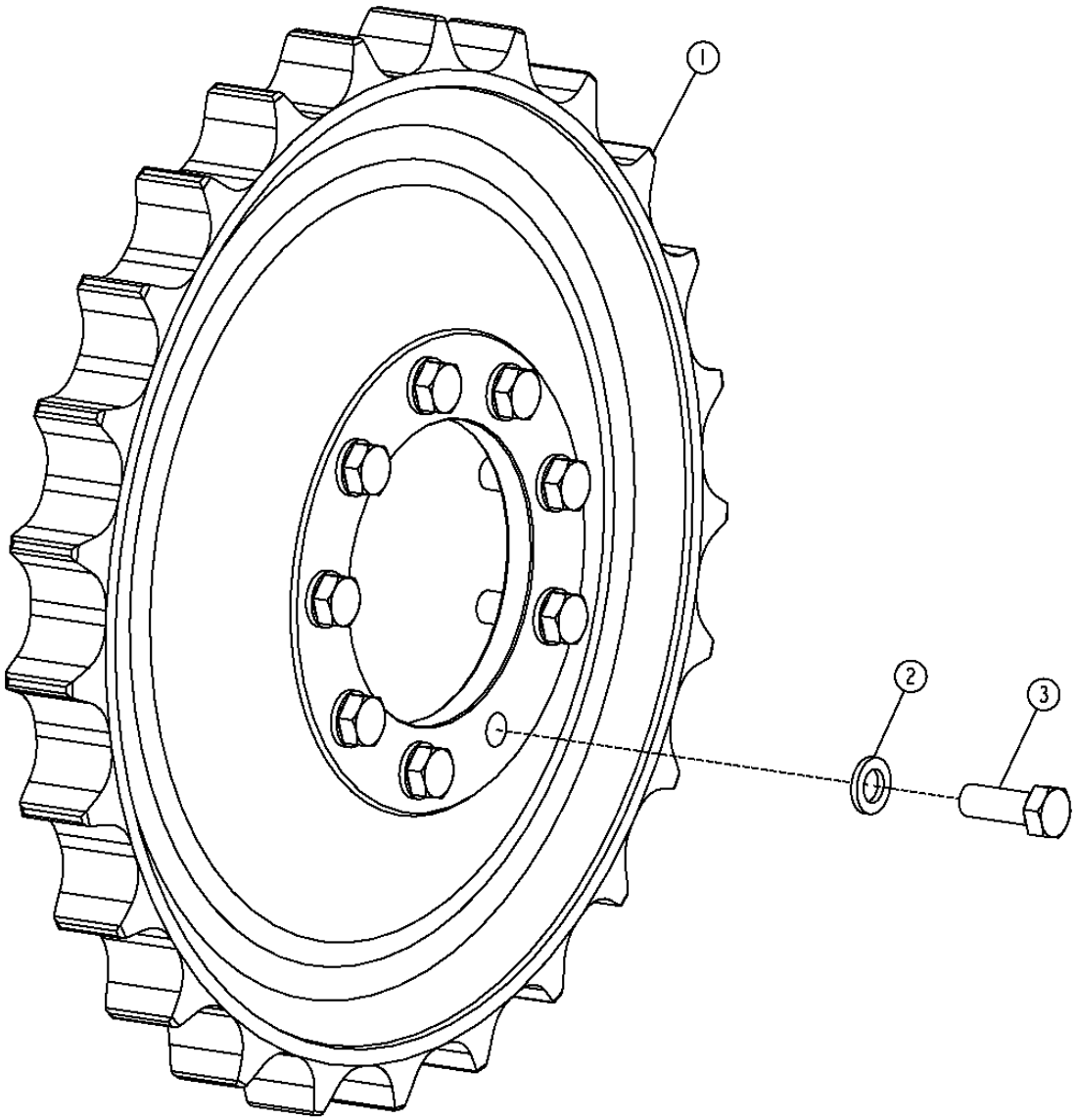

TP52059

TRACK CHAIN DRIVE SPROCKET
PIGNON D'ENTRAINEMENT DE CHAINE DE CHENILLE
RUEDA DENTADA IMPULSORA DE CADENA DE ORUGA

KEY	PART NO.	PART NAME	QTY.	SERIAL NO.	450J	550J	650J	REMARKS
1	T178482	DRIVE SPROCKET	1		X	X		(LUBRICATED DRIVE SPROCKET)
	T178481	CHAIN SPROCKET	1		X	X		(SEALED DRIVE SPROCKET)
	T178484	CHAIN SPROCKET	1				X	(LUBRICATED DRIVE SPROCKET)
	T178483	CHAIN SPROCKET	1				X	(SEALED DRIVE SPROCKET)
2	R78019	WASHER	9		X	X		
	R78019	WASHER	12				X	
3	19H2857	CAP SCREW	9		X	X		3/4" X 2"
	19H2411	CAP SCREW	12				X	3/4" X 2-1/2"

TRACK ROLLER
GALET DE CHENILLE
RODILLO INFERIOR DE ORUGA

TP52061 -UN-06JAN99

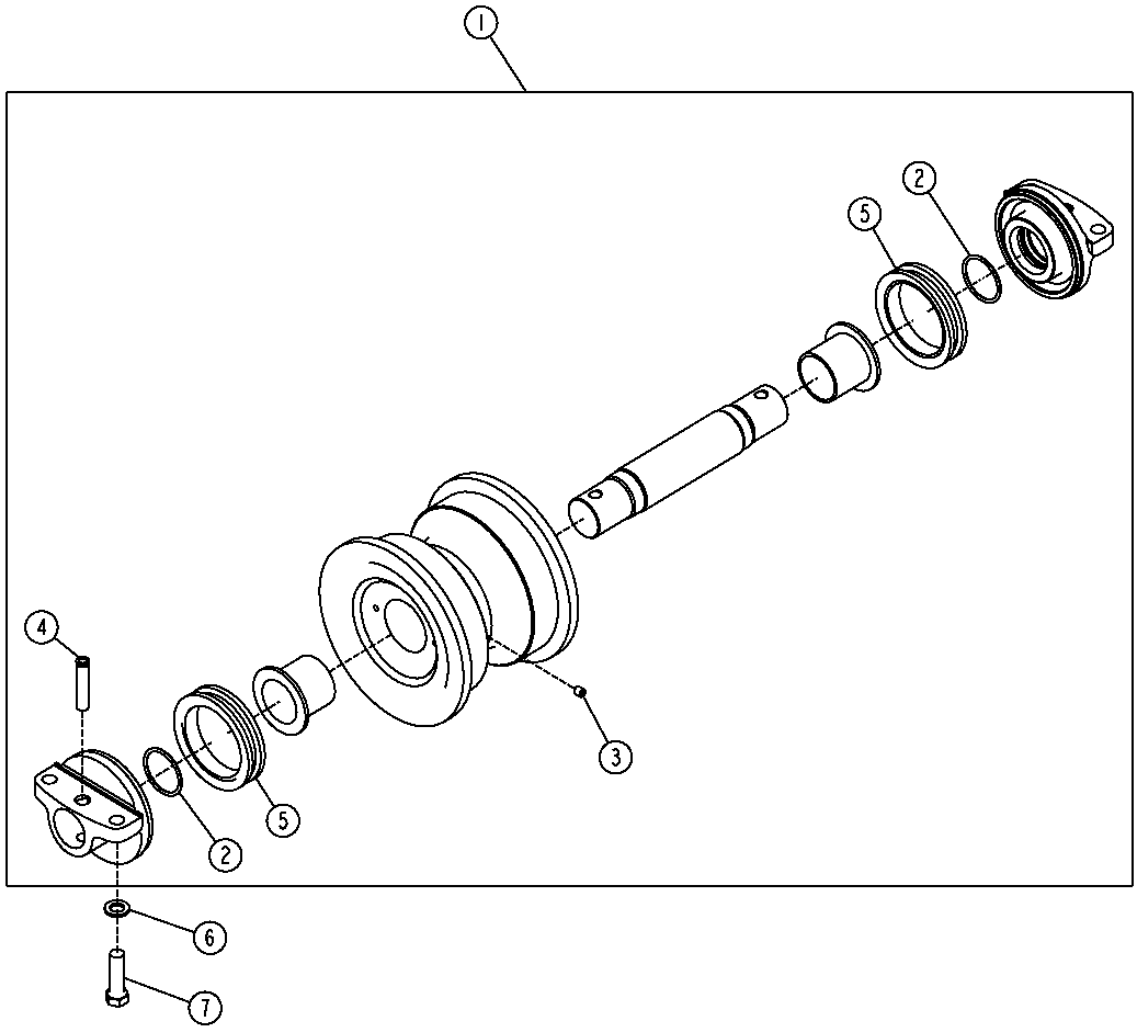

TP52061

TRACK ROLLER
GALET DE CHENILLE
RODILLO INFERIOR DE ORUGA

KEY	PART NO.	PART NAME	QTY.	SERIAL NO.	450 J	550 J	650 J	REMARKS
1	AT307884	ROLLER	12		X	X		(SINGLE FLANGE)
	AT185741	ROLLER	4				X	(SINGLE FLANGE)
	AT185742	ROLLER	3				X	(DOUBLE FLANGE) (2ND, 3RD, AND 5TH ARE DOUBLE FLANGED)
	AT307885	ROLLER	AR		X	X		(DOUBLE FLANGE WITH BRACKETS) (FOR ADDED TRACK GUIDING) (AVAILABLE ON REQUEST) (SECOND, THIRD AND FIFTH ARE DOUBLE FLANGED)
	AT185741	ROLLER	3				X	
2	T166021	O-RING	2		X	X	X	37.694 X 3.531 MM (1.484" X 0.139")
3	T125615	PIPE PLUG	1		X	X	X	
4	T166020	PIN	2		X	X	X	SOLID
5	AT185743	SEAL	2		X	X	X	
6	R76126	WASHER	24		X	X	X	
	R76126	WASHER	28				X	
7	19H3653	CAP SCREW	24		X	X	X	9/16" X 2"
	19H3653	CAP SCREW	28				X	9/16" X 2"

TRACK CHAIN TENSION ADJUSTER
DISPOSITIF DE REGLAGE DE TENSION DE CHAINE DE CHENILLE
AJUSTADOR DE TENSION DE CADENA DE ORUGA

TP52062 -UN-06JAN99

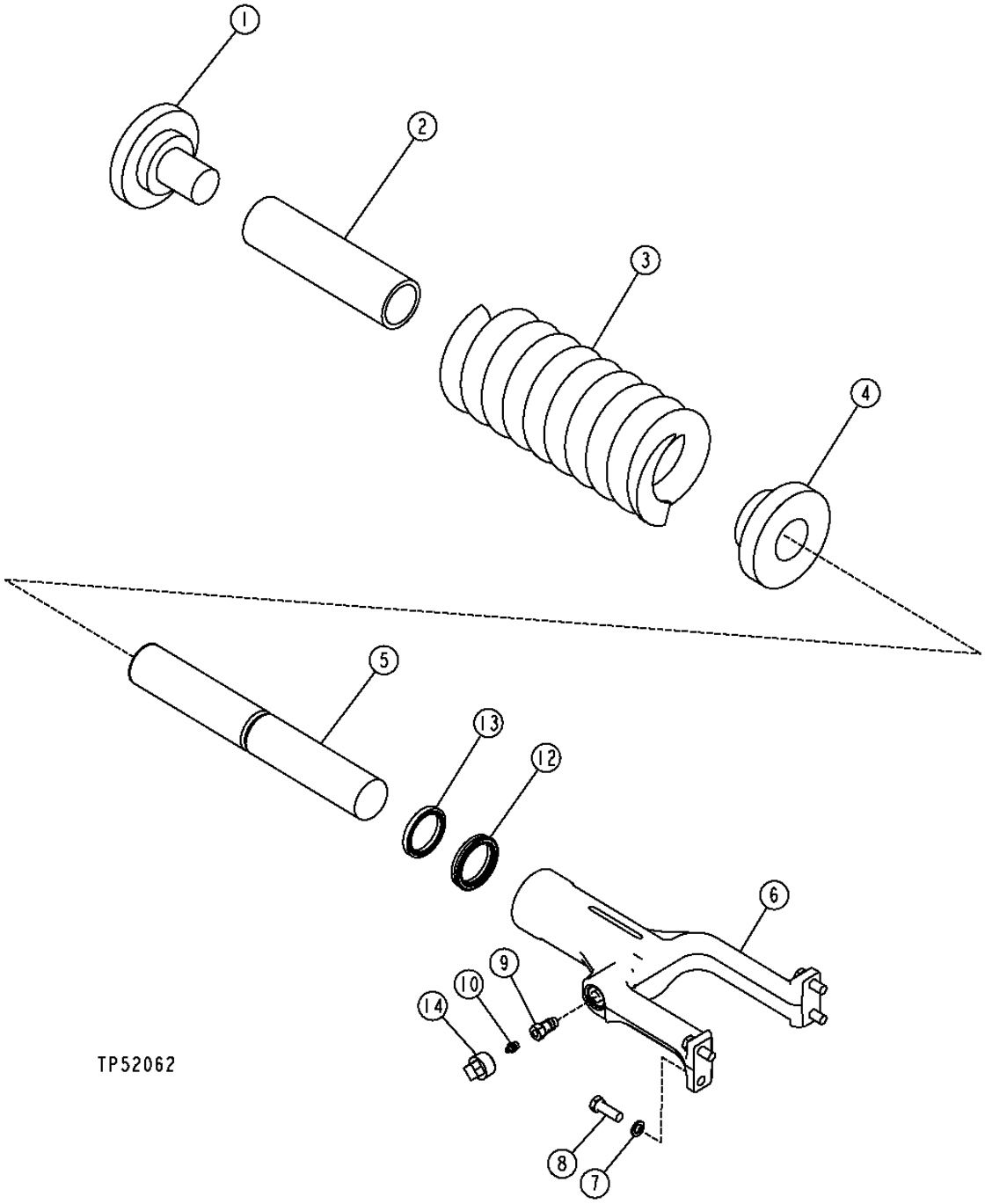

TRACK CHAIN TENSION ADJUSTER
DISPOSITIF DE REGLAGE DE TENSION DE CHAINE DE CHENILLE
AJUSTADOR DE TENSION DE CADENA DE ORUGA

KEY	PART NO.	PART NAME	QTY.	SERIAL NO.	455 000 JJJ	REMARKS
1	T32049	CAP	2		X X X	(SPRING)
2	T105500	PIPE	2		X X X	
3	T106882	COMPRESSION SPRING	2		X X	(TRACK ADJUSTER)
	T105605	COMPRESSION SPRING	2		X	(TRACK ADJUSTER)
4	T106909	CAP	2		X X X	(FRONT END)
5	AT210058	PISTON	2		X X	(450J LONG TRACK / LGP)
	AT211001	PISTON	2		X	(TRACK ADJUSTER)
	AT225225	PISTON	2		X	(650JXLT/LOW GROUND PRESSURE)
6	T169180	YOKE	2		X X X	(TRACK ADJUSTER)
7	T20168	WASHER	8		X X X	
8	19H3025	CAP SCREW	8		X X X	1/2" X 1-1/2", (TORQUE 163 NM (120 LB-FT))
9	AT158628	CHECK VALVE	2		X X X	(TORQUE 54 NM (40 LB-FT)) (CHECK VALVE) (CHROME WITHOUT PART NUMBER MARKED)
	AT181966	PRESSURE RELIEF VALVE	2		X X X	(BRASS WITH PART NUMBER MARKED)
10	JD7759	LUBRICATION FITTING	2		X X X	
	JD7797	LUBRICATION FITTING	2		X X X	(USE WITH AT181966)
12	AT124099	SEAL	2		X X X	
13	AT124100	SEAL	2		X X X	(SCRAPER)
14	T175023	PIPE PLUG	2		X X X	(INSTALL ONLY AFTER YOKE TO IDLER HARDWARE IS TORQUED)

FRONT TRACK CHAIN IDLER AND BRACKETS
TENDEUR ET SUPPORTS DE CHAINE DE CHENILLE AVANT
RUEDA GUIA Y ESCUADRAS DELANTERAS DE CADENA

TP67616 -UN-08NOV99

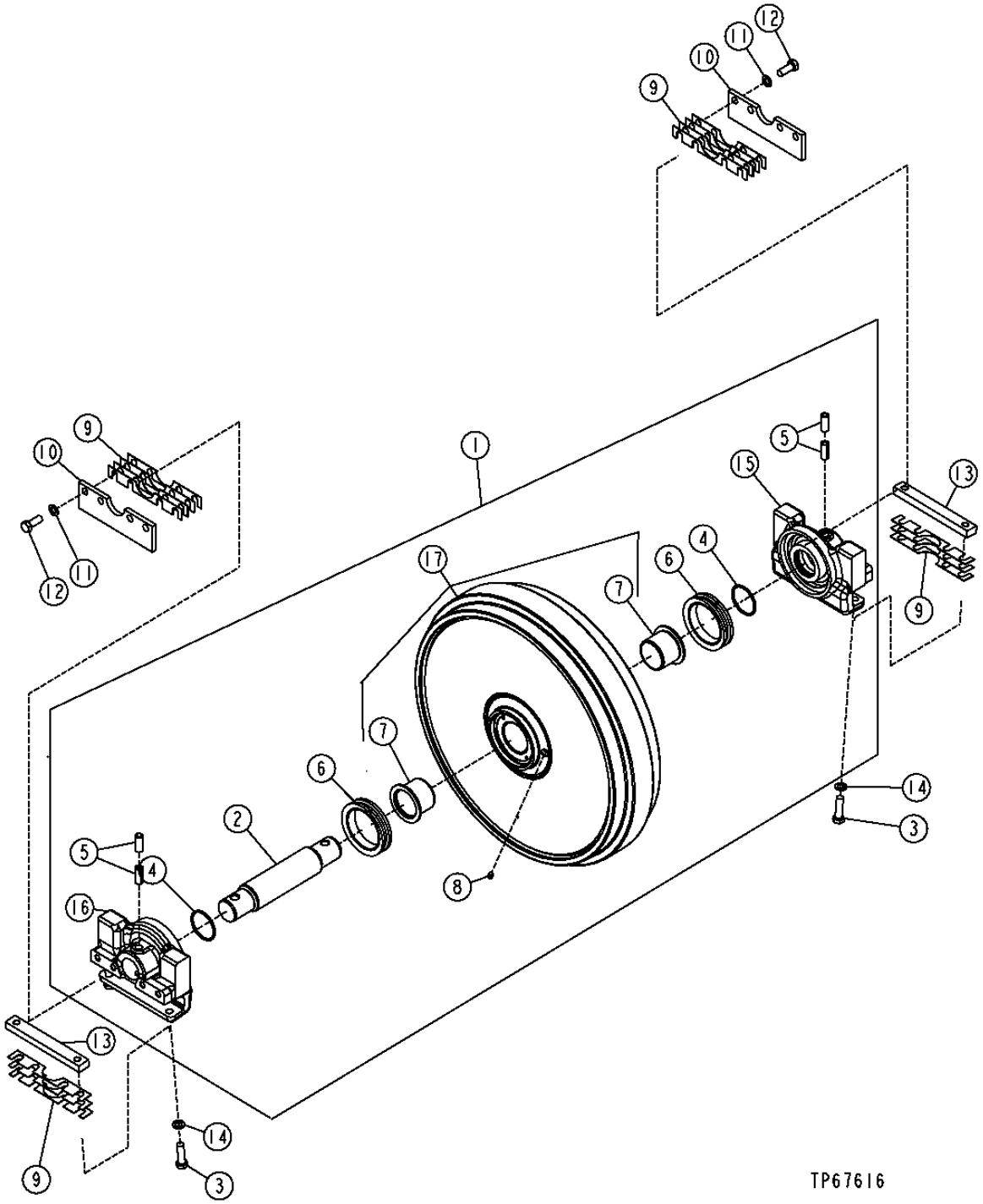

THIS PARTS LISTING IS CONTINUED

FRONT TRACK CHAIN IDLER AND BRACKETS
TENDEUR ET SUPPORTS DE CHAINE DE CHENILLE AVANT
RUEDA GUIA Y ESCUADRAS DELANTERAS DE CADENA

KEY	PART NO.	PART NAME	QTY.	SERIAL NO.	450 J	550 J	650 J	REMARKS
1	AT307886	TRACK IDLER	1		X	X		(WITH BRACKETS)
	AT307887	TRACK IDLER	1				X	(WITH BRACKETS)
2	T173503	UNIVERSAL DRIVESHAFT	1		X	X		(IDLER)
	T174382	SHAFT	1				X	(IDLER)
3	19H2473	CAP SCREW	4		X	X		1/2" X 1-3/4", (TORQUE 163 NM (120 LB-FT))
	19H2510	CAP SCREW	4				X	1/2" X 1-5/8"
4	T173765	O-RING	2		X	X		
	B3690	O-RING	2				X	
5	T173501	SPRING PIN	4		X	X		
	T174381	SPRING PIN	4				X	(ROLL)
6	AT185743	SEAL	2		X	X	X	(METAL FACE)
7	T173502	BUSHING	2		X	X	X	
8	T125615	PIPE PLUG	1		X	X	X	
9	T173517	SHIM	14		X	X		(IDLER)
	T173517	SHIM	16				X	(IDLER)
10	T172899	GUIDE	2		X	X	X	(IDLER)
11	T20168	WASHER	8		X	X	X	
12	19H2898	CAP SCREW	8		X	X	X	1/2" X 1-1/4", (SUB FOR 19H3299) (TORQUE 163 NM (120 LB-FT))
13	T20696	STRAP	2		X	X	X	(WEAR STRIP)
14	T20168	WASHER	4		X	X	X	
15	T174411	BRACKET	1		X	X		(LH)
	T174384	BRACKET	1				X	(LH)
16	T174412	BRACKET	1		X	X		(RH)
	T174385	BRACKET	1				X	(RH)
17	AT211304	IDLER	1				X	(WITH BUSHINGS)
	AT210564	IDLER	1		X	X		(WITH BUSHINGS)

TRACK FRAME COVERS
PROTECTIONS DE BATI DE CHENILLE
CUBIERTAS DE BASTIDOR DE CADENA

TP52064 -UN-06JAN99

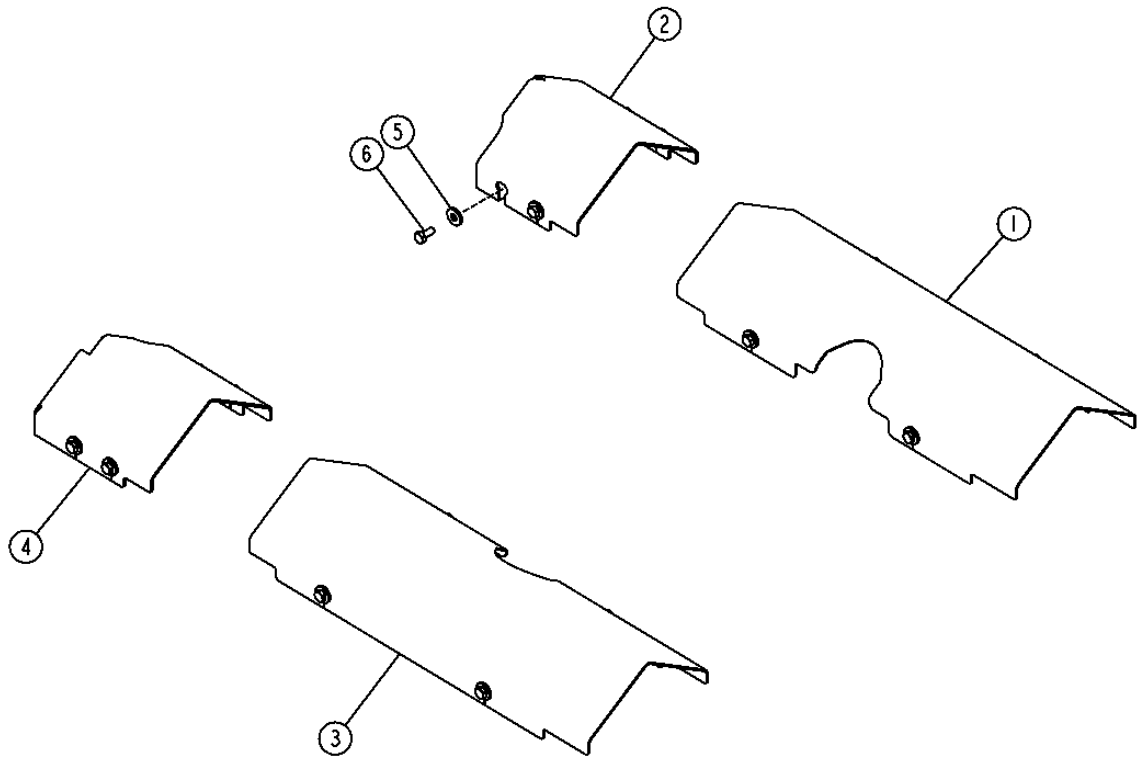

TP52064

TRACK FRAME COVERS
PROTECTIONS DE BATI DE CHENILLE
CUBIERTAS DE BASTIDOR DE CADENA

KEY	PART NO.	PART NAME	QTY.	SERIAL NO.	450 JJ	550 JJ	650 JJ	REMARKS
1	T172588	COVER	1		X	X		(450JLT AND LGP) (LEFT FRONT)
	T173978	COVER	1				X	(LEFT FRONT)
2	AT209843	COVER	1		X	X		(450JLT AND LGP) (LEFT REAR)
	AT210987	COVER	1				X	(LEFT REAR)
3	T172591	COVER	1		X	X		(450JLT AND LGP) (RIGHT FRONT)
	T173979	COVER	1				X	(RIGHT FRONT)
4	AT209844	COVER	1		X	X		(450JLT AND LGP) (RIGHT REAR)
	AT210988	COVER	1				X	(RIGHT REAR)
5	T29342	WASHER	16		X	X	X	
6	19H2898	CAP SCREW	16		X	X	X	1/2" X 1-1/4", (TORQUE 140 NM (103 LB-FT))

CARRIER ROLLER
GALET DE PORTE-SATELLITES
RODILLO SUPERIOR

T198346 -UN-24MAY04

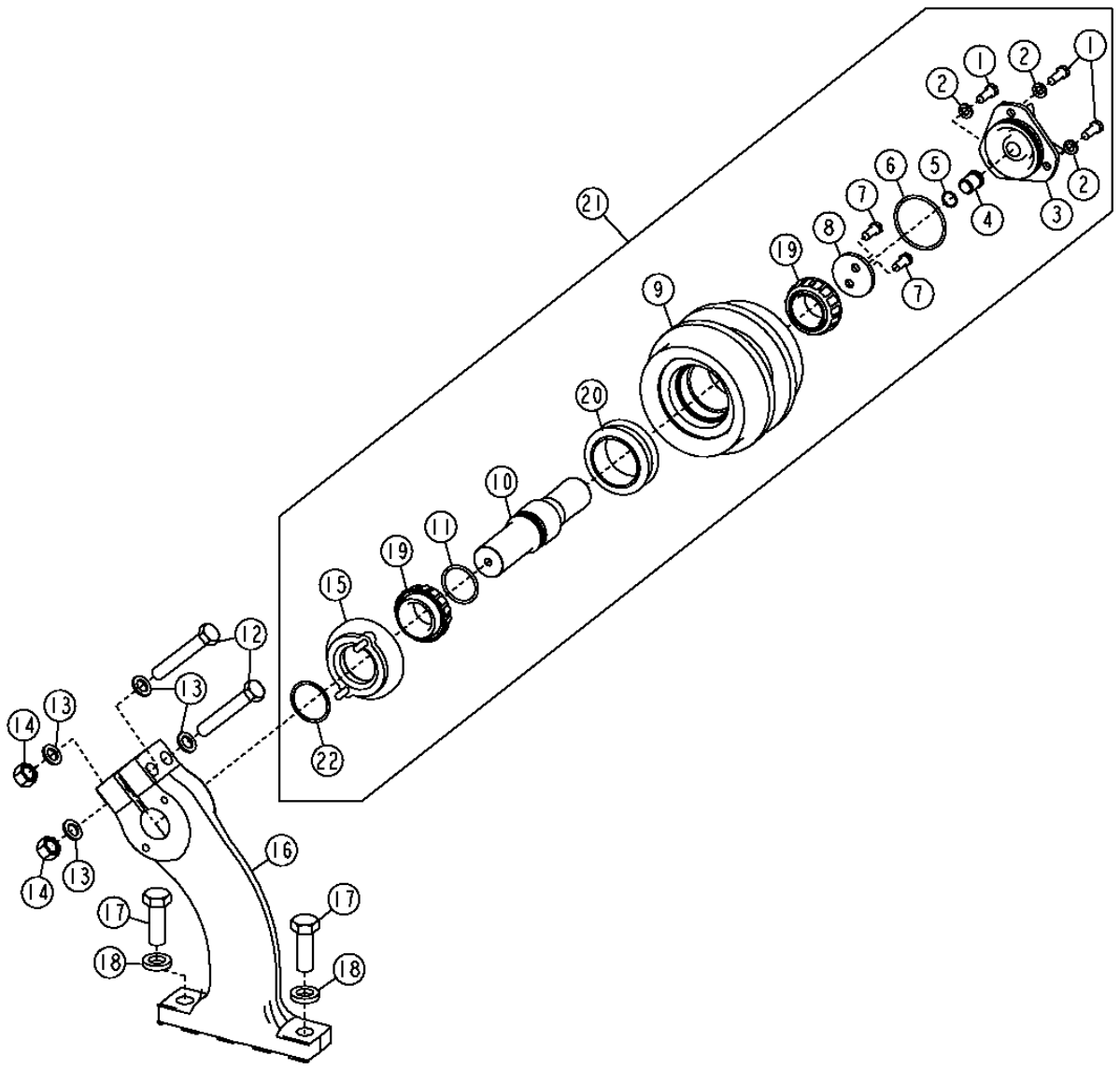

THIS PARTS LISTING IS CONTINUED

CARRIER ROLLER
GALET DE PORTE-SATELLITES
RODILLO SUPERIOR

KEY	PART NO.	PART NAME	QTY.	SERIAL NO.	450 J	550 J	650 J	REMARKS
1	19H2676	CAP SCREW	3		X	X	X	3/8" X 1"
2	T176441	LOCK WASHER	3		X	X	X	
3	T176321	COVER	1		X	X	X	
4	T47861	PIPE PLUG	1		X	X	X	
5	P50883	RING	1		X	X	X	
6	T176318	O-RING	1		X	X		
	T207557	O-RING	1				X	
7	T176515	CAP SCREW	2		X	X	X	
8	T176301	THRUST WASHER	1		X	X	X	
9	T181072	ROLLER	1		X	X		
	T205514	ROLLER CARRIAGE	1				X	
10	T175978	UNIVERSAL DRIVESHAFT	1		X	X	X	
11	R31378	O-RING	1		X	X	X	
12	19M8020	CAP SCREW	2		X	X	X	M16 X 100
13	R73290	WASHER	4		X	X	X	
14	14M7276	NUT	2		X	X	X	M16
15	T176302	BUSHING	1		X	X	X	
16	T175706	SUPPORT	1		X	X	X	
17	19M8002	CAP SCREW	2		X	X	X	M20 X 55
18	T83426	WASHER	2		X	X	X	
19	AT222521	TAPERED ROLLER BEARING	2		X	X	X	
20	AT222524	SEAL	1		X	X	X	
21	AT220677	ROLLER CARRIAGE	1		X	X		
	AT307134	ROLLER CARRIAGE	1				X	
22	T149363	SNAP RING	1		X	X	X	

FINAL DRIVE COMPONENTS
COMPOSANTS DE REDUCTION FINALE
COMPONENTES DE MANDOS FINALES

T198568 -UN-31MAR04

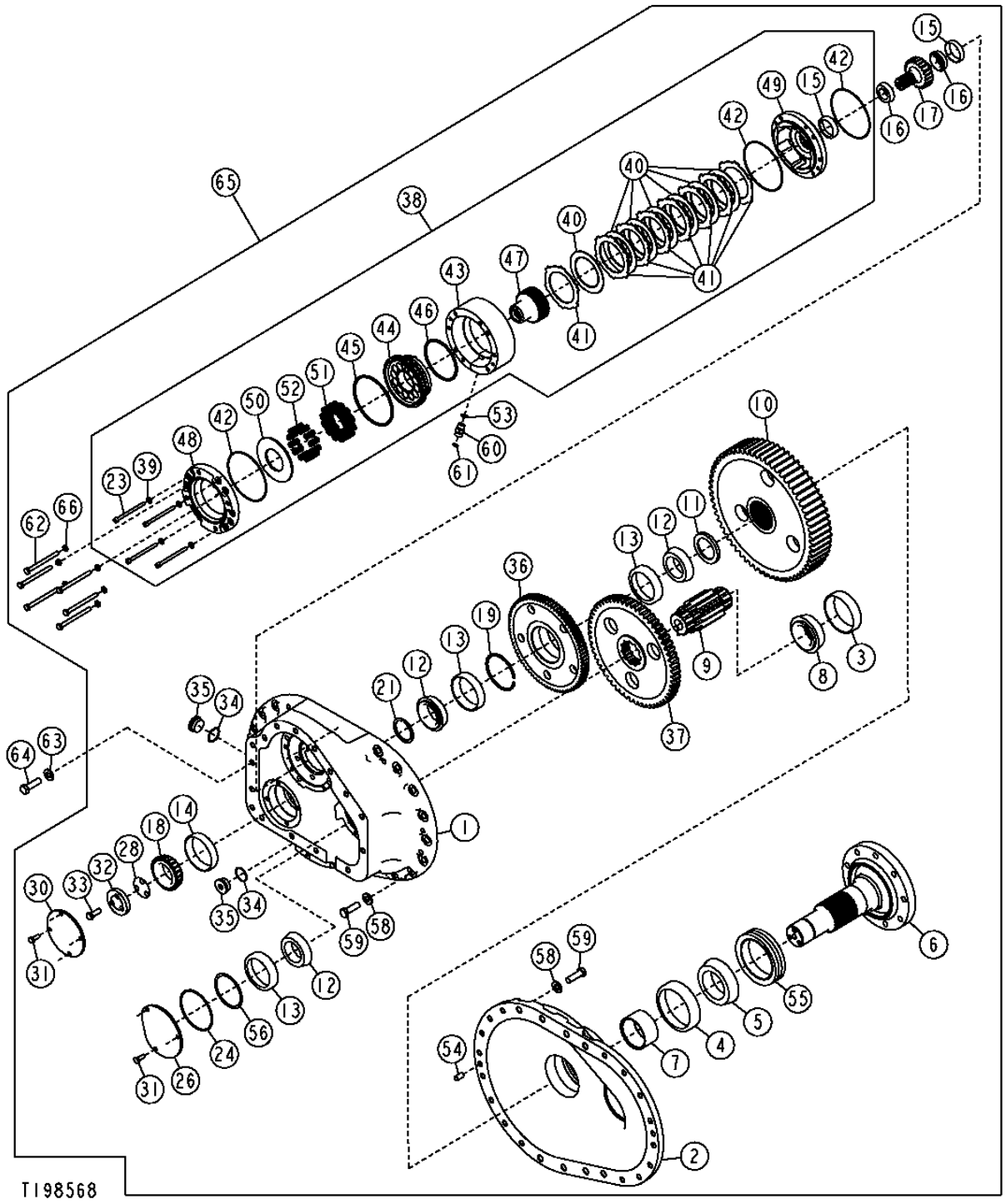

DRIVE AXLE HOUSING AND SUPPORT (INCL. FINAL DRIVES) 0201

FINAL DRIVE COMPONENTS
COMPOSANTS DE REDUCTION FINALE
COMPONENTES DE MANDOS FINALES

KEY	PART NO.	PART NAME	QTY.	SERIAL NO.	450J	550J	650J	REMARKS
1	T204591	HOUSING	1		X			(LEFT INNNER)
	T204590	HOUSING	1		X			(RIGHT INNER)
	T204592	HOUSING	1			X	X	(LEFT INNER)
	T204593	HOUSING	1			X	X	(RIGHT INNER)
2	T170205	HOUSING	1		X	X	X	(OUTER)
3	JD9021	BEARING CUP	1		X	X	X	(SECOND PINION OUTER)
4	JD10025	BEARING CUP	1		X	X	X	(FINAL DRIVE AXLE)
5	JD10023	BEARING CONE	1		X	X	X	(FINAL DRIVE AXLE)
6	T169014	SPINDLE	1		X	X		(FLANGED AXLE)
	T173628	SPINDLE	1				X	(FLANGED AXLE)
7	T169182	SPACER	1		X	X	X	(OUTER AXLE)
8	JD10122	BEARING CONE	1		X	X	X	(FINAL DRIVE IDLER)
9	T169138	SPUR GEAR	1		X	X	X	(SECOND IDLER PINION) (Z = 11)
10	T169137	SPUR GEAR	1		X	X	X	(Z = 63)
11	T169183	SPACER	1		X	X	X	(MIDDLE AXLE)
12	JD7378	BEARING CONE	3		X	X	X	(IDLER CLUSTER GEAR)
13	JD8296	BEARING CUP	3		X	X	X	(FINAL DRIVE IDLER)
14	JD7446	BEARING CUP	1		X	X	X	(AXLE INNER)
15	T214596	BEARING CUP	2		X	X	X	(SUB FOR JD8230, THIS APPLICATION) (INPUT GEAR)
16	AT320692	BEARING CONE	2		X	X	X	(SUB FOR JD8194, THIS APPLICATION) (INPUT GEAR)

THIS PARTS LISTING IS CONTINUED

FINAL DRIVE COMPONENTS (CONTINUED)
COMPOSANTS DE REDUCTION FINALE (SUITE)
COMPONENTES DE MANDOS FINALES (CONTINUACION)

T198568 -UN-31MAR04

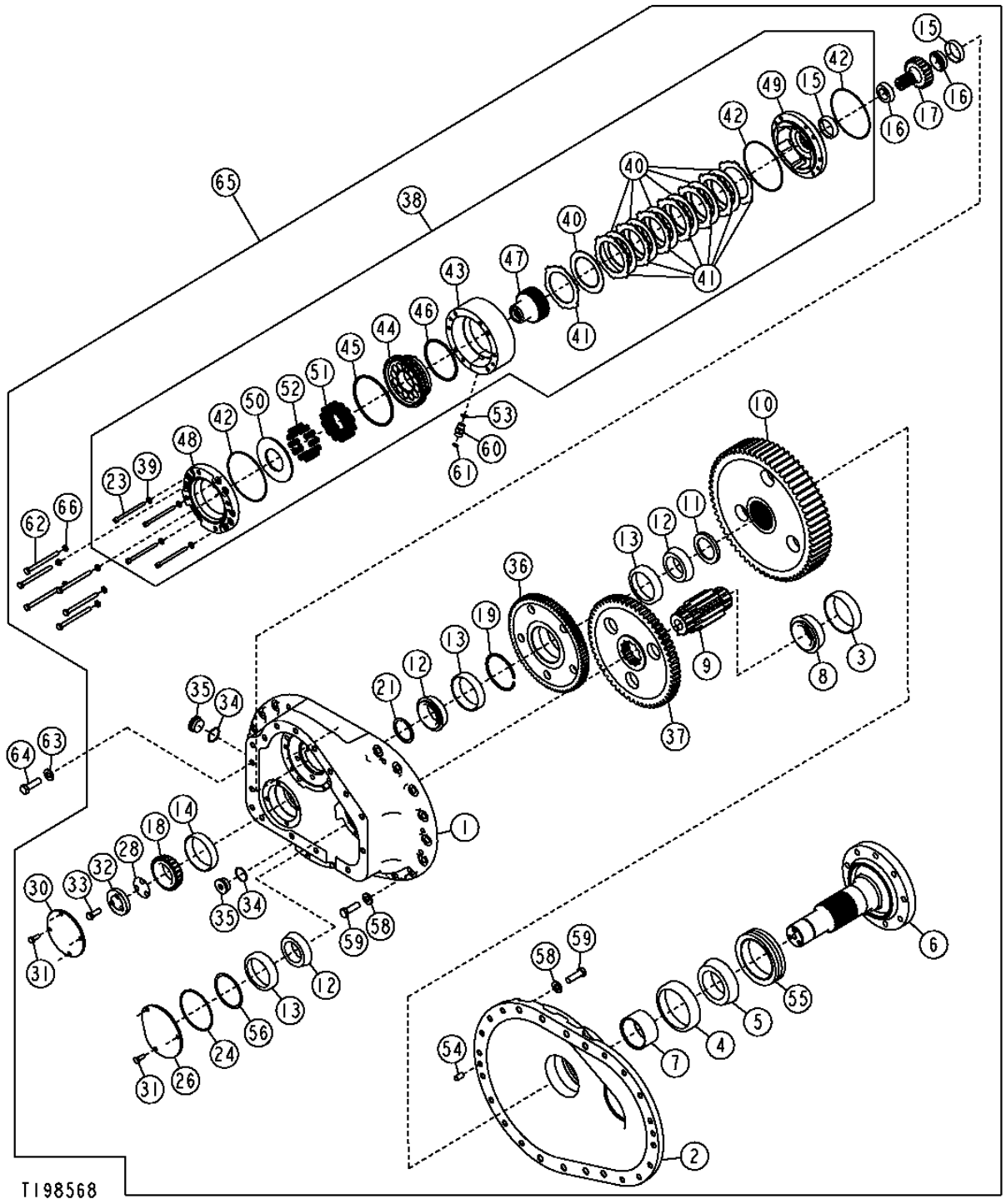

THIS PARTS LISTING IS CONTINUED

FINAL DRIVE COMPONENTS (CONTINUED)
COMPOSANTS DE REDUCTION FINALE (SUITE)
COMPONENTES DE MANDOS FINALES (CONTINUACION)

KEY	PART NO.	PART NAME	QTY.	SERIAL NO.	455 455 000 JJJ	REMARKS
17	T214597	GEAR	1	-108451	X X	(A) (B) (SUB FOR T169132) (FINAL DRIVE INPUT) (Z = 22)
	T214598	SPUR GEAR	1	-108451	X	(A) (B) (SUB FOR T169133) (FINAL DRIVE INPUT GEAR) (Z = 21)
	T213661	GEAR	1	108452-	X X	(FINAL DRIVE INPUT GEAR) (Z = 14)
	T213662	SPUR GEAR	1	108452-	X	(FINAL DRIVE INPUT GEAR) (Z = 13)
18	JD8130	BEARING CONE	1		X X X	(AXLE INNER)
19	R64247	SNAP RING	1		X X X	(IDLER CLUSTER GEAR)
21	T174365	SNAP RING	AR		X X X	(.105INCH) (2.67MM)
	T174364	SNAP RING	AR		X X X	(.115INCH) (2.92MM)
	T27862	SNAP RING	AR		X X X	(.125 INCH) (3.175MM)
23	19M8433	SCREW	4		X X X	M8 X 110, (MOTOR MOUNT)
24	T59483	RING	1		X X X	(SECOND IDLER COVER)
26	T157534	PLATE	1		X X X	(SECOND PINION INNER COVER)
28	T83331	SHIM	AR		X X X	(.0050INCH) (.127MM)
	T83332	SHIM	AR		X X X	(.0070INCH) (.178MM)
	T83333	SHIM	AR		X X X	(.0100INCH) (.254MM)
30	T157533	COVER	1		X X X	(AXLE INNER)
31	19M7402	CAP SCREW	7		X X X	M10 X 25
32	T172550	SPACER	1		X X X	(AXLE RETAINER)
33	19H3579	CAP SCREW	3		X X X	1/2" X 1-3/8"
34	U15973	O-RING	2		X X X	(FILL AND DRAIN PLUG)

(A) IF MACHINE HAS HAD PIP 05XTX6550 (DTAC SOLUTION 68189) DONE, ORDER LATER SERIAL NUMBER GEARS
(A) SI MACHINE A RECU PIP 05XTX6550 (SOLUTION DTAC 68189), COMMANDER ENGRENAGES DERNIER SN
(A) SI MAQUINA TENIA PIP 05XTX6550 (SOLUC DTAC 68189) HECHO, PIDA ENGRANAJES SN MAS RECIENTES

(B) IF PIP HAS NOT BEEN DONE, THEN ORDER PARTS PER SERIAL NUMBER BREAK
(B) SI PIP NON EFFECTUE, COMMANDER ALORS PIECES SELON COUPURE NUMERO SERIE.
(B) SI PIP NO SE HA HECHO, ENTONCES PIDA PARTES DE ACUERDO CON NUMERO DE SERIE.

THIS PARTS LISTING IS CONTINUED

FINAL DRIVE COMPONENTS (CONTINUED)
COMPOSANTS DE REDUCTION FINALE (SUITE)
COMPONENTES DE MANDOS FINALES (CONTINUACION)

T198568 -UN-31MAR04

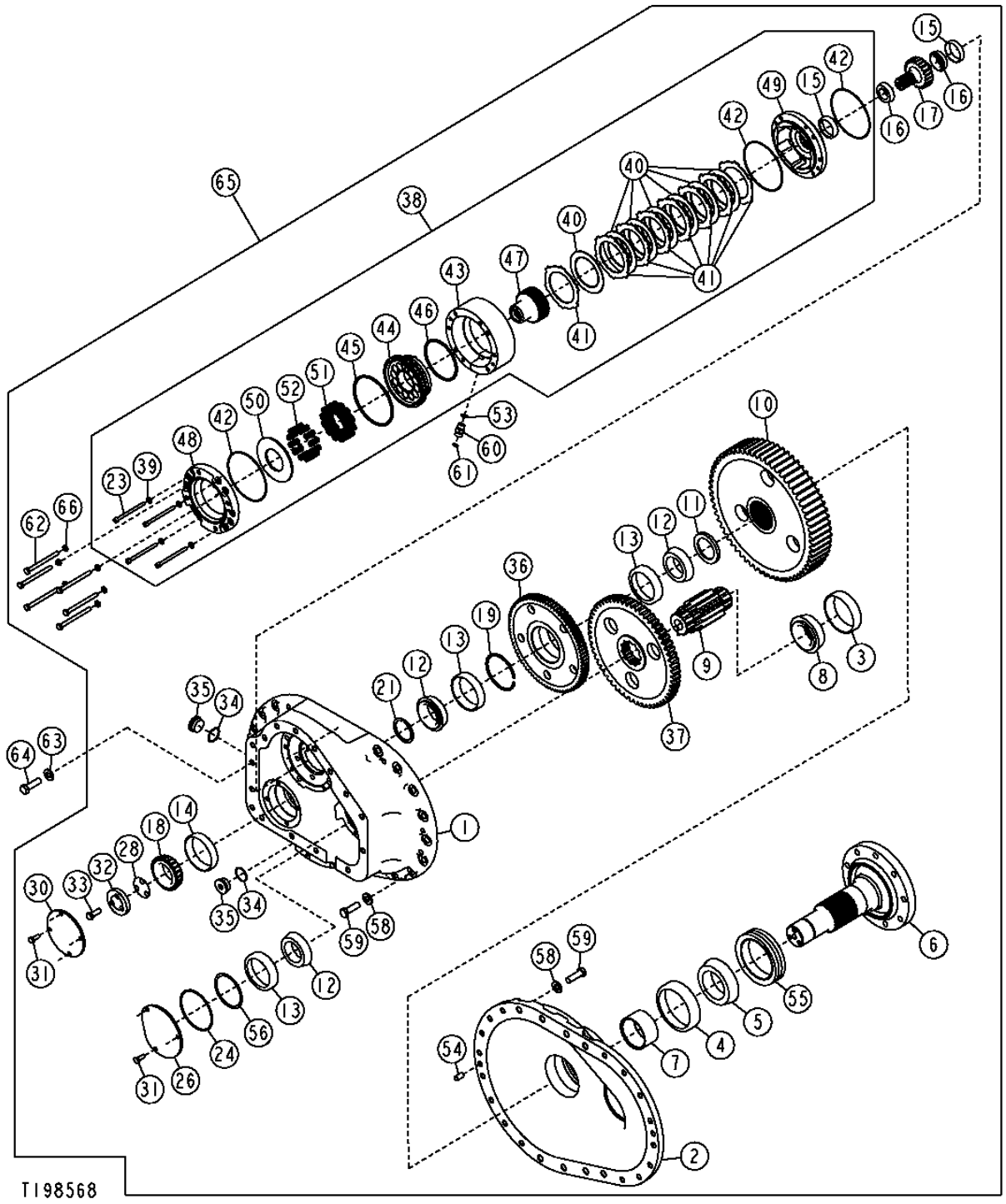

THIS PARTS LISTING IS CONTINUED

FINAL DRIVE COMPONENTS (CONTINUED)
COMPOSANTS DE REDUCTION FINALE (SUITE)
COMPONENTES DE MANDOS FINALES (CONTINUACION)

KEY	PART NO.	PART NAME	QTY.	SERIAL NO.	450J	550J	650J	REMARKS
35	T77170	FITTING PLUG	2		X	X	X	(FILL AND DRAIN PLUG)
36	T172541	SPUR GEAR	1	-108451	X	X	X	(A) (B) (FIRST IDLER CLUSTER) (Z = 81 AND Z = 25)
	T213663	SPUR GEAR	1	108452-	X	X	X	(FIRST IDLER CLUSTER) (Z = 51 AND Z = 25)
37	T172543	SPUR GEAR	1	-108451	X	X		(A) (B) (SECOND IDLER RING) (Z = 57)
	T172542	SPUR GEAR	1				X	(Z = 58)
	T172542	SPUR GEAR	1	108452-	X	X		(SECOND IDLER RING) (Z = 58)
38	AT305995	BRAKE	1		X	X	X	(PARK)(IMPORTANT-REFER TO DTAC SOLUTION 73284 FOR DETAILS REGARDING PRODUCT IMPROVEMENT PROGRAM)
39	24M7238	WASHER	4		X	X	X	8.700 X 17 X 2 MM
40	AT329360	CLUTCH DISK	7		X	X	X	(SUB FOR AT306444) (IMPORTANT-REFER TO DTAC SOLUTION 73284 FOR DETAILS REGARDING PRODUCT IMPROVEMENT PROGRAM)
41	T201825	CLUTCH PLATE	8		X	X	X	(IMPORTANT-REFER TO DTAC SOLUTION 73284 FOR DETAILS REGARDING PRODUCT IMPROVEMENT PROGRAM)
42	R82238	O-RING	3		X	X	X	
43	T204333	HOUSING	1		X	X	X	
44	T204335	PISTON	1		X	X	X	(FINAL DRIVE BRAKE)
45	H88900	O-RING	1		X	X	X	
46	R63308	O-RING	1		X	X	X	
47	T204339	SHAFT	1		X	X	X	
48	T204334	PLATE	1		X	X	X	
49	T204340	PLATE	1		X	X	X	(BRAKE MOUNT)
50	T204338	PLATE	1		X	X	X	(SPRING BACKING)
51	T204336	COMPRESSION SPRING	12		X	X	X	(OUTER)
52	T204337	COMPRESSION SPRING	12		X	X	X	(INNER)
53	R26375	O-RING	1		X	X	X	
54	M3689T	DOWEL PIN	2		X	X	X	(FINAL DRIVE HOUSING)
55	AT72157	SEAL	1		X	X	X	(FLANGED AXLE SHAFT)

(A) IF MACHINE HAS HAD PIP 05XTX6550 (DTAC SOLUTION 68189) DONE, ORDER LATER SERIAL NUMBER GEARS
(A) SI MACHINE A RECU PIP 05XTX6550 (SOLUTION DTAC 68189), COMMANDER ENGRENAGES DERNIER SN
(A) SI MAQUINA TENIA PIP 05XTX6550 (SOLUC DTAC 68189) HECHO, PIDA ENGRANAJES SN MAS RECIENTES

(B) IF PIP HAS NOT BEEN DONE, THEN ORDER PARTS PER SERIAL NUMBER BREAK
(B) SI PIP NON EFFECTUE, COMMANDER ALORS PIECES SELON COUPURE NUMERO SERIE.
(B) SI PIP NO SE HA HECHO, ENTONCES PIDA PARTES DE ACUERDO CON NUMERO DE SERIE.

FINAL DRIVE COMPONENTS (CONTINUED)
COMPOSANTS DE REDUCTION FINALE (SUITE)
COMPONENTES DE MANDOS FINALES (CONTINUACION)

T198568 -UN-31MAR04

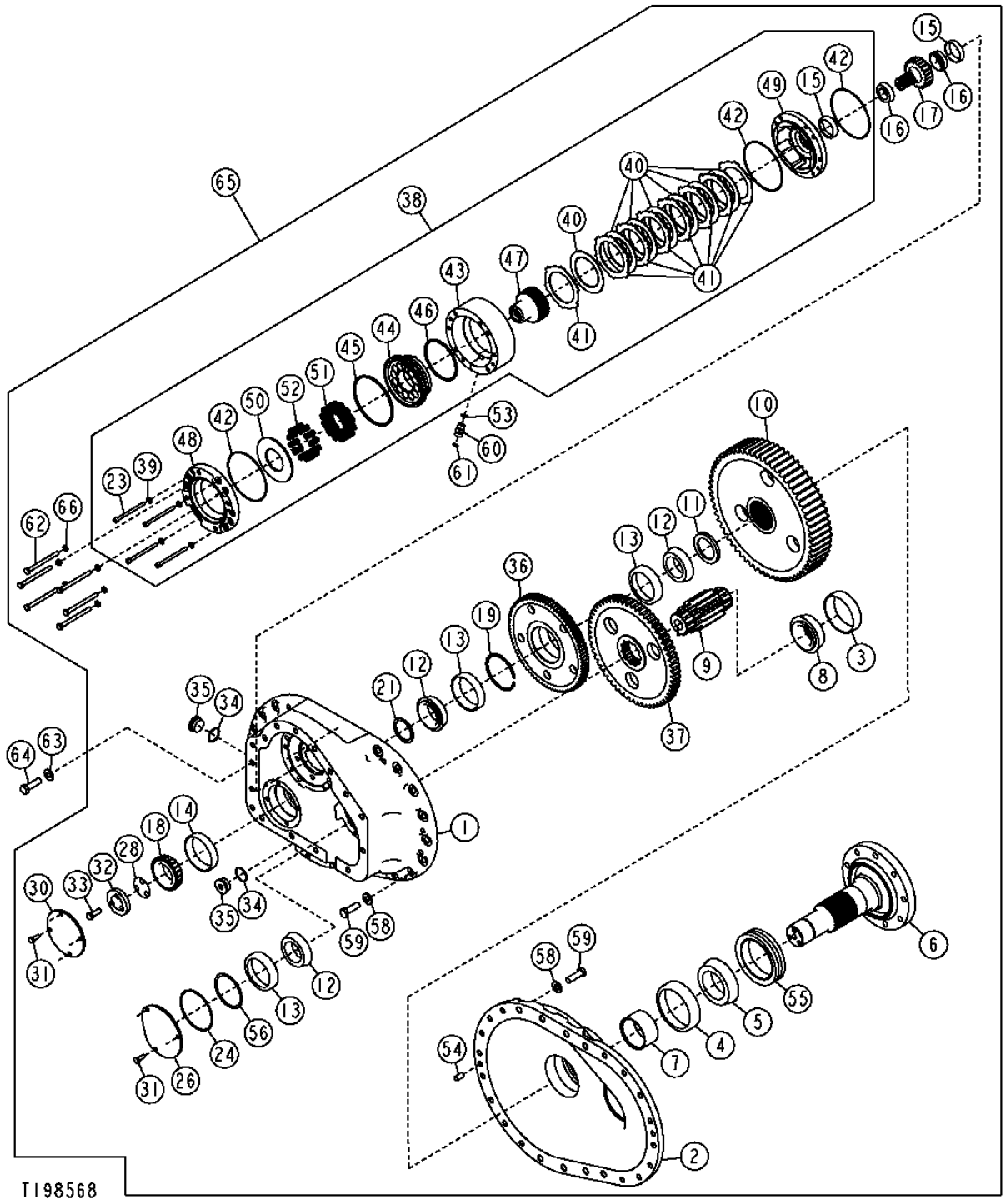

THIS PARTS LISTING IS CONTINUED

FINAL DRIVE COMPONENTS (CONTINUED)
COMPOSANTS DE REDUCTION FINALE (SUITE)
COMPONENTES DE MANDOS FINALES (CONTINUACION)

KEY	PART NO.	PART NAME	QTY.	SERIAL NO.	450J	550J	650J	REMARKS
56	R57312	SHIM	AR		X	X	X	(FINAL DRIVE AXLE) (.0100INCH) (.254MM)
	R57313	WASHER	AR		X	X	X	(.0480INCH) (1.219MM)
	R57311	SHIM	AR		X	X	X	(.0050INCH) (.127MM)
58	24M7241	WASHER	24		X	X	X	17 X 34 X 4 MM
59	19M7409	CAP SCREW	24		X	X	X	M16 X 50
60	38H1161	ADAPTER FITTING	1		X	X	X	
61	T77857	O-RING	1		X	X	X	
62	19M8166	CAP SCREW	6		X			M10 X 110
	19M8343	CAP SCREW	6			X	X	M10 X 120
63	24M7241	WASHER	16		X	X	X	17 X 34 X 4 MM
64	19M8295	CAP SCREW	16		X	X	X	M16 X 55
65	AT306199	DRIVE	1	-108451	X			(A) (B) (LH) (CONVENIENCE ASSY)
	AT306200	DRIVE	1	-108451	X			(A) (B) (RH) (CONVENIENCE ASSY)
	AT306207	DRIVE	1	-108451		X		(A) (B) (LH) (CONVENIENCE ASSY)
	AT306208	DRIVE	1	-108451		X		(A) (B) (RH) (CONVENIENCE ASSY)
	AT306203	DRIVE	1	-108451			X	(A) (B) (LH) (CONVENIENCE ASSY)
	AT306204	DRIVE	1	-108451			X	(A) (B) (RH) (CONVENIENCE ASSY)
	AT320545	DRIVE	1	108452-	X			(LH) (CONVENIENCE ASSY)
	AT320546	DRIVE	1	108452-	X			(RH) (CONVENIENCE ASSY)
	AT320547	DRIVE	1	108452-			X	(LH) (CONVENIENCE ASSY)
	AT320548	DRIVE	1	108452-			X	(RH) (CONVENIENCE ASSY)
	AT320549	DRIVE	1	108452-		X		(LH) (CONVENIENCE ASSY)
	AT320550	DRIVE	1	108452-		X		(RH) (CONVENIENCE ASSY)
66	R63845	WASHER	6		X	X	X	

(A) IF MACHINE HAS HAD PIP 05XTX6550 (DTAC SOLUTION 68189) DONE, ORDER LATER SN FINAL DRIVE)
(A) SI PIP 05XTX6550 (DTAC 68189) INSTALLE, COMMANDER UNE REDUCTION FINALE RECENTE
(A) SI PIP 05XTX6550 (DTAC 68189) HA SIDO INSTALADO, PEDIR MANDO FINAL MAS RECIENTE

(B) IF PIP HAS NOT BEEN DONE, THEN ORDER PARTS PER SERIAL NUMBER BREAK
(B) SI PIP NON EFFECTUE, COMMANDER ALORS PIECES SELON COUPURE NUMERO SERIE.
(B) SI PIP NO SE HA HECHO, ENTONCES PIDA PARTES DE ACUERDO CON NUMERO DE SERIE.

FINAL DRIVE DRAIN PLUG GUARDS
PROTECTIONS BOUCHON VIDANGE REDUCTION FINALE
PROTECTORES DE TAPONES VACIADO MANDOS FINALES

TP67713 -UN-30MAR00

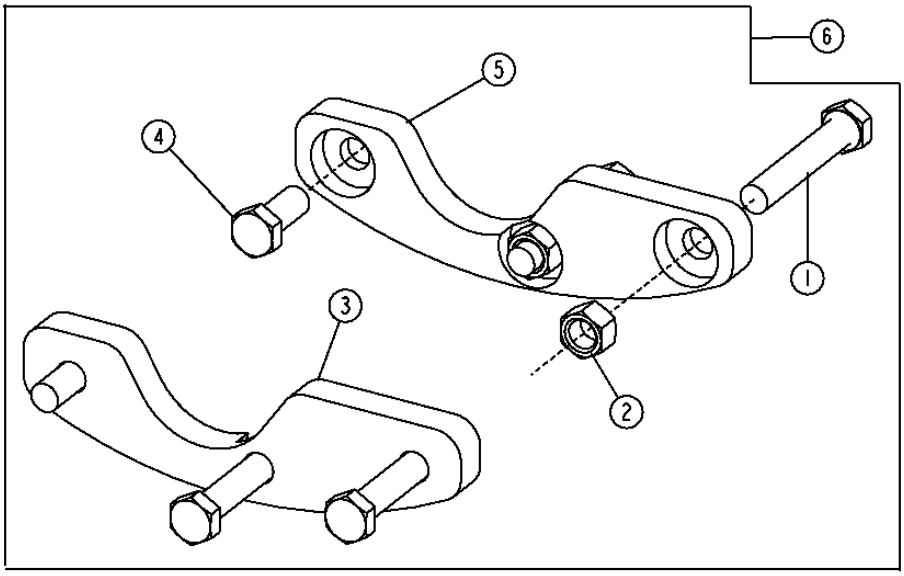

TP67713

DRIVE AXLE HOUSING AND SUPPORT (INCL. FINAL DRIVES) 0201

FINAL DRIVE DRAIN PLUG GUARDS
PROTECTIONS BOUCHON VIDANGE REDUCTION FINALE
PROTECTORES DE TAPONES VACIADO MANDOS FINALES

KEY	PART NO.	PART NAME	QTY.	SERIAL NO.	450 J	550 J	650 J	REMARKS
1	19M8349	CAP SCREW	4		X	X	X	M16 X 90
2	14M7276	NUT	4		X	X	X	M16
3	.....	SKID PLATE	1		X	X	X	(SUB AT223021)
4	19M8035	CAP SCREW	2		X	X	X	M16 X 35
5	.....	SKID PLATE	1		X	X	X	(SUB AT223021)
6	AT223021	SKID PLATE	1		X	X	X	

DRIVE AXLE HOUSING AND SUPPORT (INCL. FINAL DRIVES) 0201

FINAL DRIVE GEAR SERVICE KIT (SN -108451)
KIT D'ENTRETIEN D'ENGRENAGE DE REDUCTION FINALE (SN -108451)
JUEGO DE SERVICIO DE ENGRANAJES MANDOS FINALES (SN -108451)

T210088 -UN-14APR05

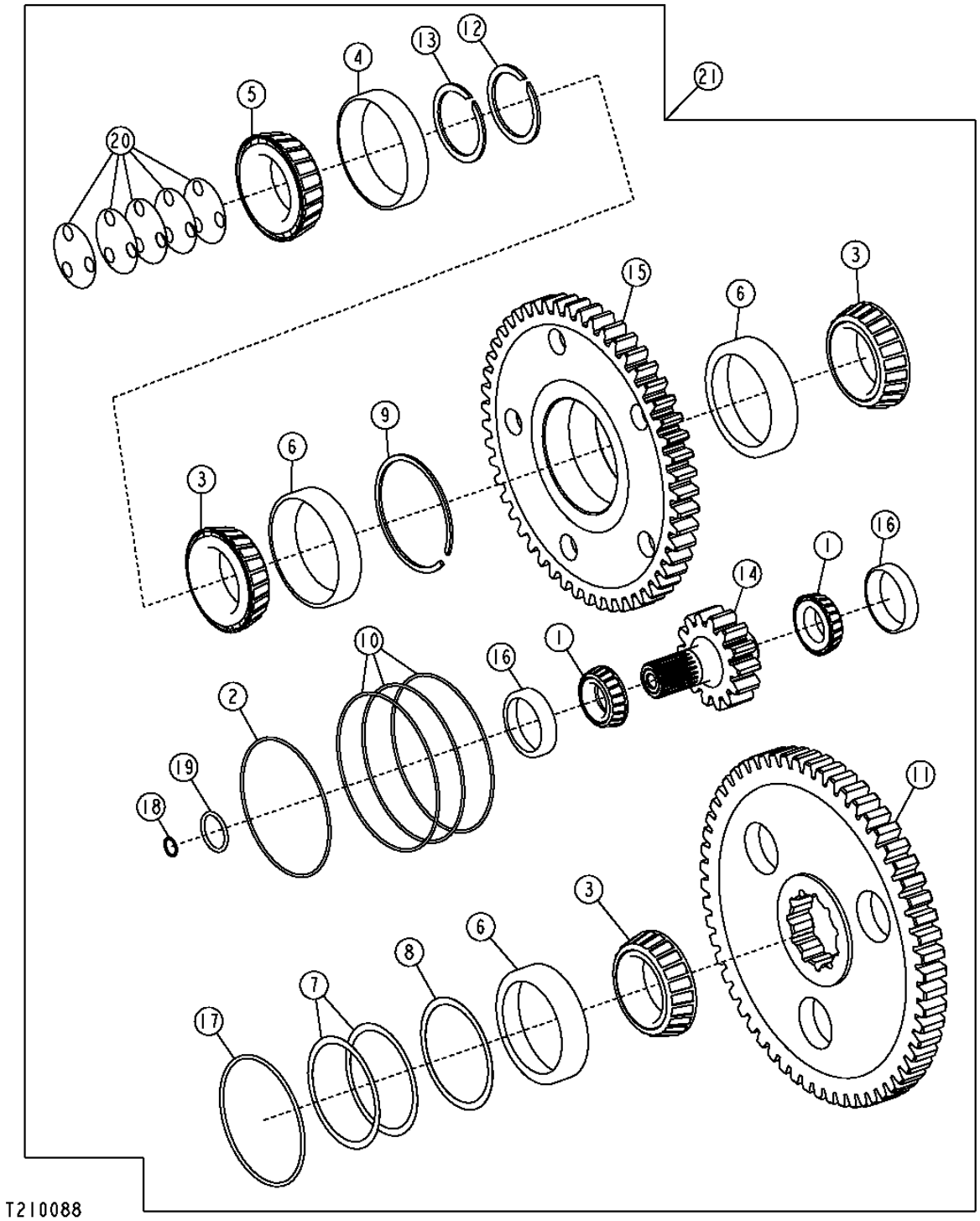

THIS PARTS LISTING IS CONTINUED

DRIVE AXLE HOUSING AND SUPPORT (INCL. FINAL DRIVES) 0201

FINAL DRIVE GEAR SERVICE KIT (SN -108451)
KIT D'ENTRETIEN D'ENGRENAGE DE REDUCTION FINALE (SN -108451)
JUEGO DE PREOTECTORES DE MANDOS FINALES (SN -108451)

KEY	PART NO.	PART NAME	QTY.	SERIAL NO.	450 J	455 J	460 J	REMARKS
1	AT320692	BEARING CONE	4		X	X	X	
2	E80224	O-RING	2		X	X	X	
3	JD9378	BEARING	6		X	X	X	
4	JD7446	BEARING CUP	2		X	X	X	
5	JD8130	BEARING CONE	2		X	X	X	
6	JD8296	BEARING CUP	6		X	X	X	
7	R57311	SHIM	4		X	X		
8	R57312	SHIM	2		X	X		
9	R64247	SNAP RING	2		X	X	X	
10	R82238	O-RING	6		X	X	X	
11	T172542	SPUR GEAR	1		X	X		(Z = 58)
12	T174364	SNAP RING	2		X	X	X	
13	T174365	SNAP RING	2		X	X	X	
14	T213661	GEAR	2		X	X		(Z = 14)
	T213662	SPUR GEAR	2				X	(Z = 13)
15	T213663	SPUR GEAR	2		X	X	X	(Z = 51 AND Z = 25)
16	T214596	BEARING CUP	4		X	X	X	
17	T59483	RING	2		X	X	X	
18	T77932	O-RING	2		X	X	X	
19	T78313	O-RING	8		X	X	X	
20	T83331	SHIM	4		X	X	X	
	T83332	SHIM	4		X	X	X	
	T83333	SHIM	4		X	X	X	
21	AT321524	FIELD INSTALLATION KIT	1		X	X		
	AT321525	FIELD INSTALLATION KIT	1				X	

THIS PARTS LISTING IS CONTINUED

SINGLE LEVER CONTROL WITH SPEED IN GRIP
COMMANDE A 1 SEUL LEVIER AVEC POIGNEE VITESSE
PALANCA UNICA CON VELOCIDAD EN EMPUNADURA

T207704 -UN-04FEB05

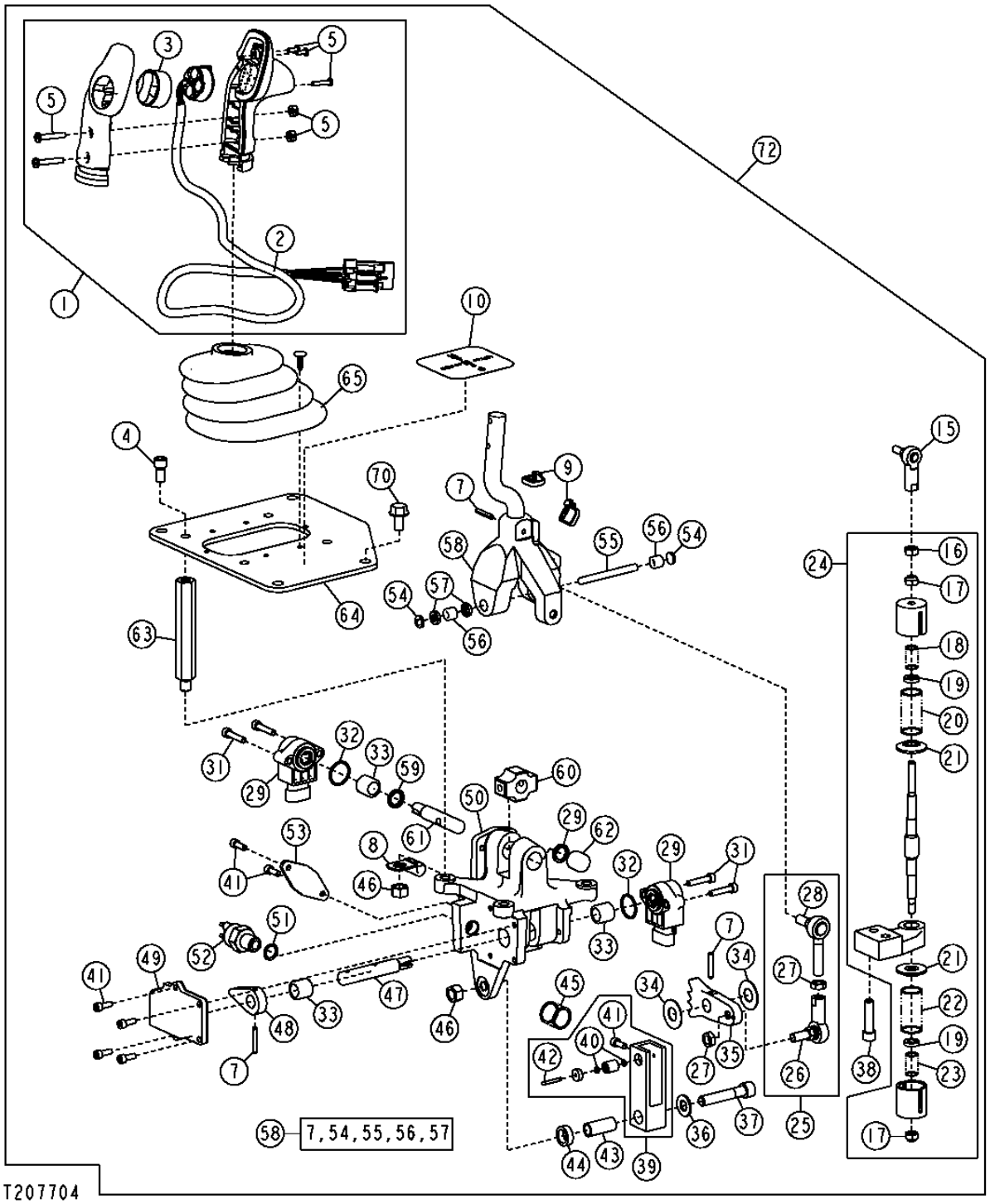

THIS PARTS LISTING IS CONTINUED

SINGLE LEVER CONTROL WITH SPEED IN GRIP
COMMANDE A 1 SEUL LEVIER AVEC POIGNEE VITESSE
PALANCA UNICA CON VELOCIDAD EN EMPUNADURA

KEY	PART NO.	PART NAME	QTY.	SERIAL NO.	455000 JJJ	REMARKS
1	AT219793	GRIP	1		X X X	
2	AT222609	WIRING HARNESS	1		X X X	(WITH SWITCH AND COVER)
3	.....	COVER	1		X X X	(SUB T178768) (SUB FOR AT222804) (SWITCH BOOT)
4	T176136	BOLT	4		X X X	
5	AT222608	KIT	1		X X X	(GRIP FASTENER HARDWARE KIT)
7	34H266	SPRING PIN	4		X X X	5/32" X 1"
8	AT222606	CLAMP	1		X X X	
9	R44302	TIE BAND	AR		X X X	
10	T204071	LABEL	1		X X X	(FORWARD, NEUTRAL AND REVERSE)
15	AT169374	BALL JOINT	1		X X X	(BEARING)
16	14H860	NUT	1		X X X	1/4"
17	T30637	NUT	2		X X X	(LOCK)
18	T176172	SPRING	1		X X X	
19	T176169	SPACER	2		X X X	
20	T176173	SPRING	1		X X X	
21	T176168	WASHER	2		X X X	(STEPPED)
22	T176170	SPRING	1		X X X	
23	T176171	SPRING	1		X X X	
24	AT220709	SPRING ASSEMBLY	1		X X X	(PACK)
25	AT220706	LINKAGE	1		X X X	(ROD END ASSEMBLY)
26	AT48548	BALL JOINT	1		X X X	
27	14H882	NUT	2		X X X	5/16"
28	AT46597	BALL JOINT	1		X X X	
29	AT220879	POTENTIOMETER	2		X X X	(ROTARY SENSOR)
31	T176137	SCREW	4		X X X	
32	U15980	O-RING	2		X X X	
33	AT220702	BEARING	3		X X X	(NEEDLE)
34	T176149	WASHER	2		X X X	(DETENT SPACER)
35	T176150	PLATE	1		X X X	(DETENT)
36	T177605	WASHER	1		X X X	
37	T177604	SCREW	1		X X X	

THIS PARTS LISTING IS CONTINUED

SINGLE LEVER CONTROL WITH SPEED IN GRIP (CONTINUED)
COMMANDE A 1 SEUL LEVIER AVEC POIGNEE VITESSE (SUITE)
PALANCA UNICA CON VELOCIDAD EN EMPUNADURA (CONTINUACION)

T207704 -UN-04FEB05

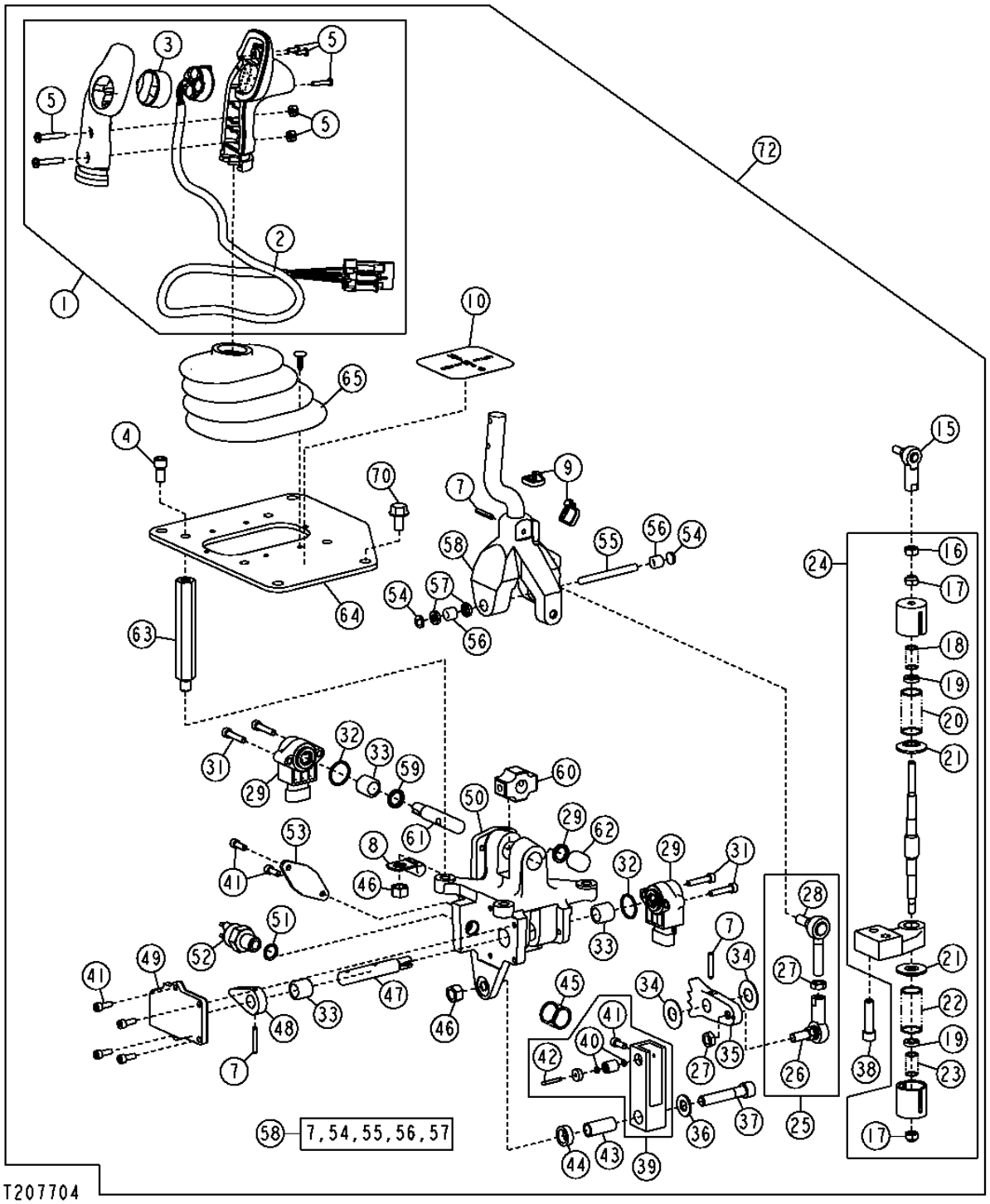

SINGLE LEVER CONTROL WITH SPEED IN GRIP (CONTINUED)
COMMANDE A 1 SEUL LEVIER AVEC POIGNEE VITESSE (SUITE)
PALANCA UNICA CON VELOCIDAD EN EMPUNADURA (CONTINUACION)

KEY	PART NO.	PART NAME	QTY.	SERIAL NO.	450 J	550 J	650 J	REMARKS
38	T176157	SCREW	2		X	X	X	
39	AT220708	LEVER	1		X	X	X	(DETENT ASSEMBLY)
40	T26257	O-RING	2		X	X	X	
41	T176152	SCREW	7		X	X	X	
42	R39090	NEEDLE ROLLER	1		X	X	X	(BEARING)
43	T177602	SPACER	1		X	X	X	
44	T177603	SPACER	1		X	X	X	
45	T176154	SPRING	1		X	X	X	
46	14H1076	NUT	2		X	X	X	3/8"
47	T176147	CAM	1		X	X	X	(SHAFT DETENT)
48	T176148	CAM	1		X	X	X	(NEUTRAL SWITCH)
49	AT220707	COVER	1		X	X	X	(CAM ASSEMBLY)
50	AT221854	HOUSING	1		X	X	X	(SLC BODY)
51	R26448	O-RING	1		X	X	X	
52	AT86950	SWITCH	1		X	X	X	(NEUTRAL START)
53	T176155	PLATE	1		X	X	X	(SPRING)
54	T176146	PLUG	2		X	X	X	(SEAL)
55	T176145	UNIVERSAL DRIVESHAFT	1		X	X	X	
56	AT220711	BEARING	2		X	X	X	(NEEDLE)
57	AT220710	SEAL	2		X	X	X	(LIP)
58	AT222803	BRACKET	1		X	X	X	
59	AT220704	SEAL	2		X	X	X	(LIP)
60	T176143	SPACER	1		X	X	X	(BLOCK BEARING)
61	T176144	UNIVERSAL DRIVESHAFT	1		X	X	X	
62	AT220703	BEARING	1		X	X	X	(NEEDLE)
63	T176158	POST	3		X	X	X	(MOUNTING)
	T178767	POST	1		X	X	X	
64	.....	PLATE	1		X	X	X	(MOUNTING) (AT307105 NLA)
65	AT220855	BOOT	1		X	X	X	(ASSY)
70	19M7865	SCREW	4		X	X	X	M8 X 16
72	AT304326	STEERING CONTROLLER	1		X	X	X	(CONVENIENCE ASSY)

FLYWHEEL COUPLER/TORQUE CONNECTOR
ACCOUPLEMENT DE VOLANT-MOTEUR / CONNECTEUR DE SERRAGE
ACOPLADOR DE VOLANTE / CONECTOR DE PAR MOTOR

T208848 -UN-25FEB05

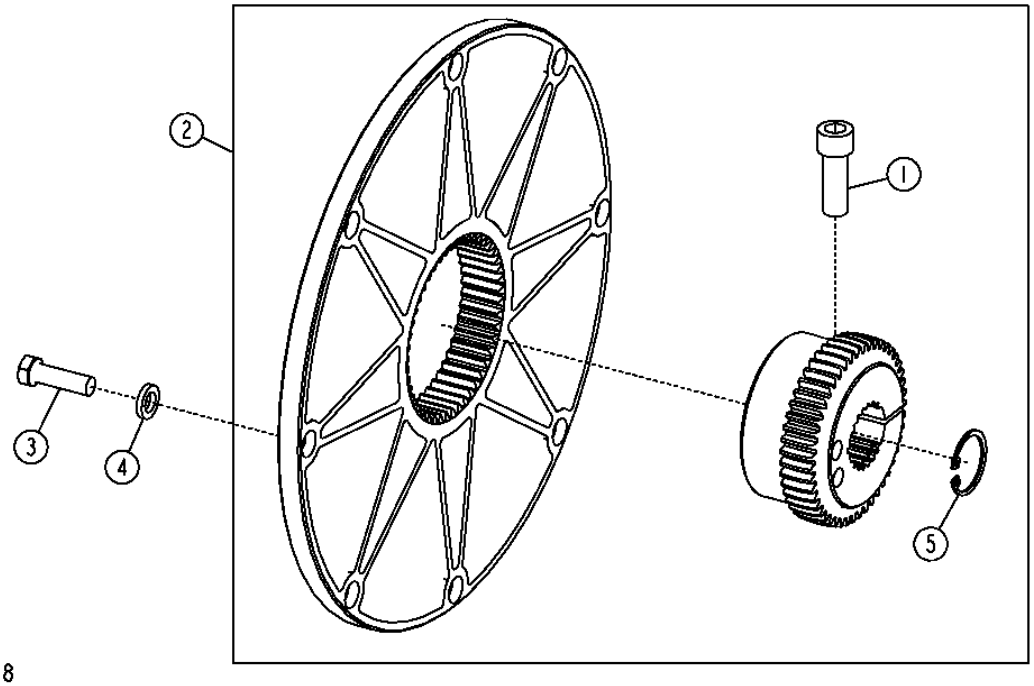

T208848

FLYWHEEL COUPLER/TORQUE CONNECTOR
ACCOUPLEMENT DE VOLANT-MOTEUR / CONNECTEUR DE SERRAGE
ACOPLADOR DE VOLANTE / CONECTOR DE PAR MOTOR

KEY	PART NO.	PART NAME	QTY.	SERIAL NO.	450 J	550 J	650 J	REMARKS
1	19M8448	SCREW	1		X	X	X	M12 X 35
2	AT303532	TORSIONAL DAMPER	1		X	X	X	
3	19H3239	CAP SCREW	8		X	X	X	3/8" X 1-1/4"
4	R63845	WASHER	8		X	X	X	
5	40M1856	SNAP RING	1		X	X	X	

TANDEM PUMPS
POMPE EN TANDEM
BOMBA EN TANDEM

T200283 -UN-24MAY04

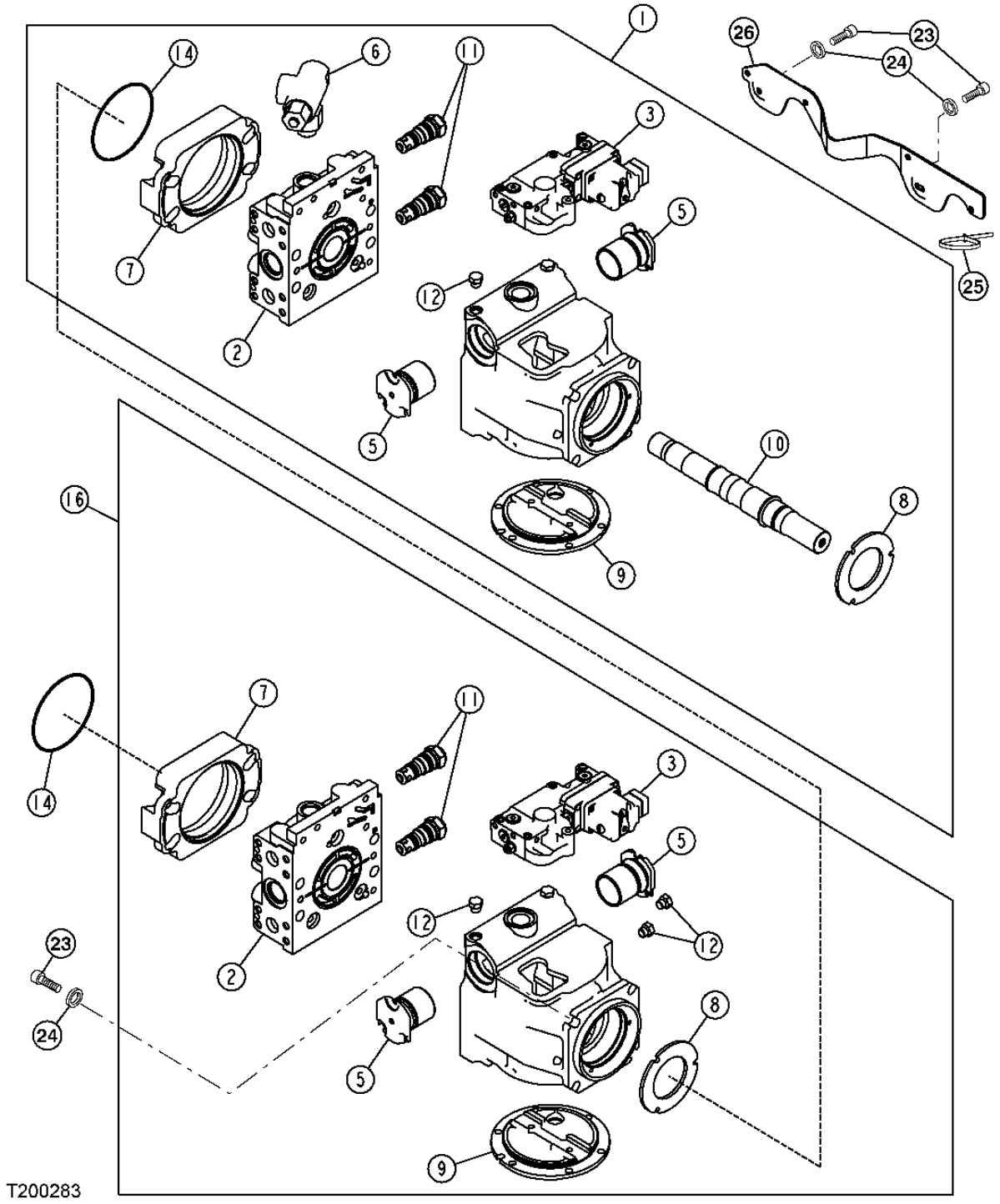

TANDEM PUMPS
POMPE EN TANDEM
BOMBA EN TANDEM

KEY	PART NO.	PART NAME	QTY.	SERIAL NO.	450J	550J	650J	REMARKS
1	AT304665	PUMP	1	-120536	X	X	X	(REMAN) (FRONT HYDROSTATIC PUMP)
	AT330447	PUMP	1	120537-	X	X	X	(REMAN) (FRONT HYDROSTATIC PUMP)
2	AT226441	CAP	1		X	X	X	(BOTTOM PORT)
3	AT304672	HYD ACTUATED CONTROL VALVE	1		X	X	X	(ELECTRONIC DISPLACEMENT CONTROL)
5	RE151096	CYLINDER	2		X	X	X	(SERVO CAN)
6	AT223218	PRESSURE RELIEF VALVE	1		X	X	X	(HYDROSTATIC NEUTRAL CHARGE)
7	T226424	FLANGE	2		X	X	X	(SUB FOR T180379) (T155694 WASHER NO LONGER NEEDED)
8	T175376	RETAINER	1		X	X	X	(SEAL PLATE)
9	R151067	COVER	1	-120536	X	X	X	(HYDROSTATIC PUMP SIDE)
	T222125	COVER	1	120537-	X	X	X	
10	T175318	SHAFT	1		X	X	X	(HYDROSTATIC PUMP FRONT) (344 MM (13.54 INCH) LONG)
11	AT307494	HYD ACTUATED CONTROL VALVE	2		X			(HYDROSTATIC MULTI-FUNCTION RELIEF)
	AT220776	HYD ACTUATED CONTROL VALVE	2			X		(HYDROSTATIC MULTI-FUNCTION RELIEF)
	AT307496	FLOW CONTROL HYD. VALVE	2				X	(HYDROSTATIC MULTI-FUNCTION RELIEF)
12	AT334796	FITTING PLUG	AR		X	X	X	(SUB FOR R27218, THIS APPLICATION)
14	R99702	O-RING	2		X	X	X	
16	AT304666	PUMP	1	-120536	X	X	X	(REMAN) (REAR PUMP)
	AT330448	PUMP	1	120537-	X	X	X	
21	T176238	WASHER	2		X	X	X	
22	T176237	SCREW	2		X	X	X	
23	T176240	SCREW	4		X	X	X	
24	T176241	WASHER	4		X	X	X	
25	R44302	TIE BAND	AR		X	X	X	
26	T175296	BRACKET	1		X	X	X	(STRAIN RELIEF)

HYDROSTATIC PUMP CHARGING SYSTEM AND FILTRATION MANIFOLD
SYSTEME DE CHARGE DE POMPE HYDROSTATIQUE ET COLLECTEUR DE FILTRATION
SISTEMA DE CARGA DE BOMBA HIDROSTATICA Y COLECTOR DE FILTRACION

T200298 -UN-24MAY04

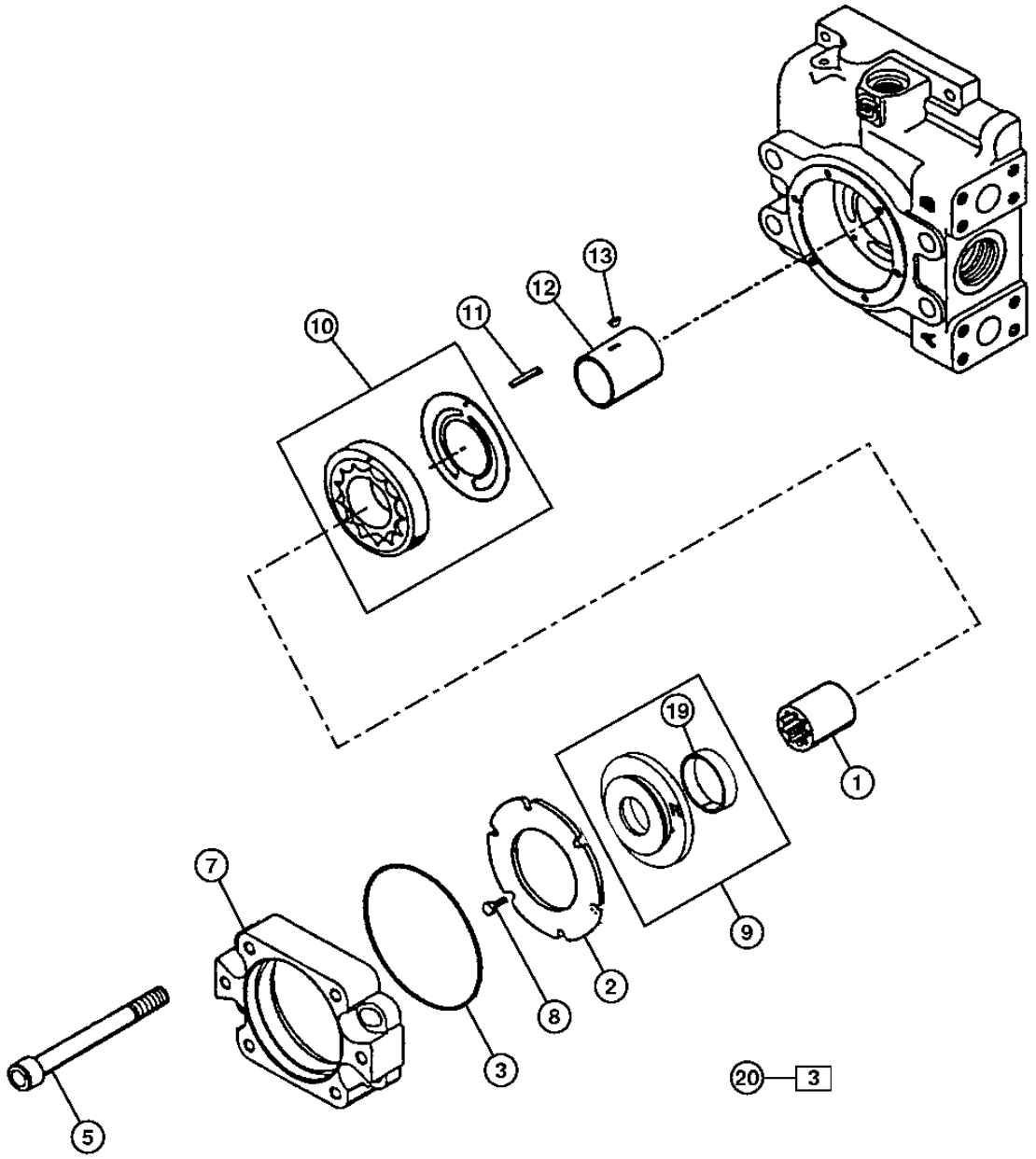

T200298

HYDROSTATIC PUMP CHARGING SYSTEM AND FILTRATION MANIFOLD
SYSTEME DE CHARGE DE POMPE HYDROSTATIQUE ET COLLECTEUR DE FILTRATION
SISTEMA DE CARGA DE BOMBA HIDROSTATICA Y COLECTOR DE FILTRACION

KEY	PART NO.	PART NAME	QTY.	SERIAL NO.	450 J	550 J	650 J	REMARKS
1	T174118	COUPLING	1		X	X	X	(FRONT PUMP)
	T167226	COUPLING	1		X	X	X	(REAR PUMP)
2	AT214844	PLATE	1		X	X	X	(RETAINING)
3	N203952	O-RING	1		X	X	X	
5	T210527	SCREW	4		X	X	X	(SUB FOR T156000)
7	T226424	FLANGE	1		X	X	X	(SUB FOR T180379) (T155694 WASHER NO LONGER NEEDED)
8	T155680	SCREW	6		X	X	X	
9	AN220423	COVER	1		X	X	X	(CHARGE PUMP COVER ASSEMBLY)
10	AN203914	OIL PUMP	1		X	X	X	(CHARGE PUMP)
11	R151080	PIN	1		X	X	X	
12	T155678	DRIVE SHAFT	1		X	X	X	(CHARGE PUMP)
13	T155677	KEY	1		X	X	X	
19	N203486	BUSHING	1		X	X	X	

TANDEM PUMPS
POMPES TANDEMS
BOMBAS EN TANDEM

T200303 -UN-25MAY04

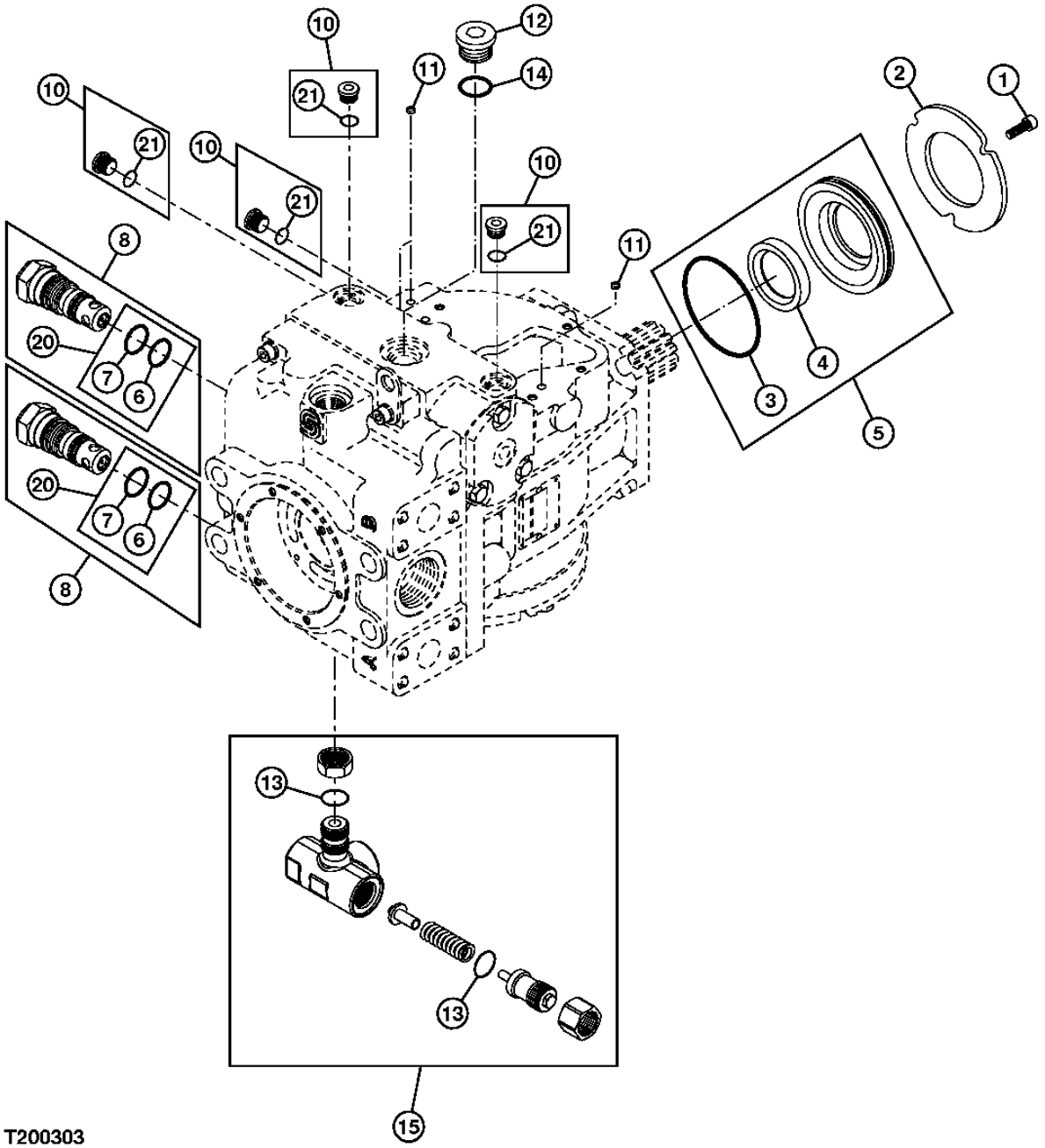

T200303

TANDEM PUMPS
POMPES TANDEMS
BOMBAS EN TANDEM

KEY	PART NO.	PART NAME	QTY.	SERIAL NO.	450J	550J	650J	REMARKS
1	19M8627	SCREW	3		X	X	X	M6 X 20, (CAP)
2	T175376	RETAINER	1		X	X	X	(RETAINING PLATE)
3	R151088	O-RING	1		X	X	X	
4	R150997	SEAL	1	-120536	X	X	X	
	T223612	SEAL	1	120537-	X	X	X	
5	AT330297	SEAL KIT	1	-120536	X	X	X	(SUB FOR AT220774) (SHAFT SEAL ASSEMBLY)
	AT330297	SEAL KIT	1	120537-	X	X	X	
6	N203491	O-RING	2		X	X	X	
7	P42061	O-RING	2		X	X	X	
8	AT307494	HYD ACTUATED CONTROL VALVE	2		X			(MULTI FUNCTION)
	AT220776	HYD ACTUATED CONTROL VALVE	2			X		
	AT307496	FLOW CONTROL HYD. VALVE	2				X	
10	AT334796	FITTING PLUG	4		X	X	X	(SUB FOR AT184868, THIS APPLICATION)
11	AH123403	SCREEN	3		X	X	X	(FILTER)
12	T64769	DRAIN PLUG	1		X	X	X	
13	T59014	O-RING	2		X	X	X	
14	R27390	NUT	1		X	X	X	(SUB FOR T177596)
15	AT223218	PRESSURE RELIEF VALVE	1		X	X	X	(SUB FOR AT220773) (CHARGE) (FRONT PUMP ONLY)
20	AN220311	SEAL KIT	1		X	X	X	(OVERHAUL) (PARTS INCLUDED ON OTHER PAGES)
21	M74600	O-RING	4		X	X	X	

HYDROSTATIC CHARGE HOUSING
CARTER D'ALIMENTATION HYDROSTATIQUE
CAJA DE CARGA HIDROSTATICA

TP52071 -UN-05JAN99

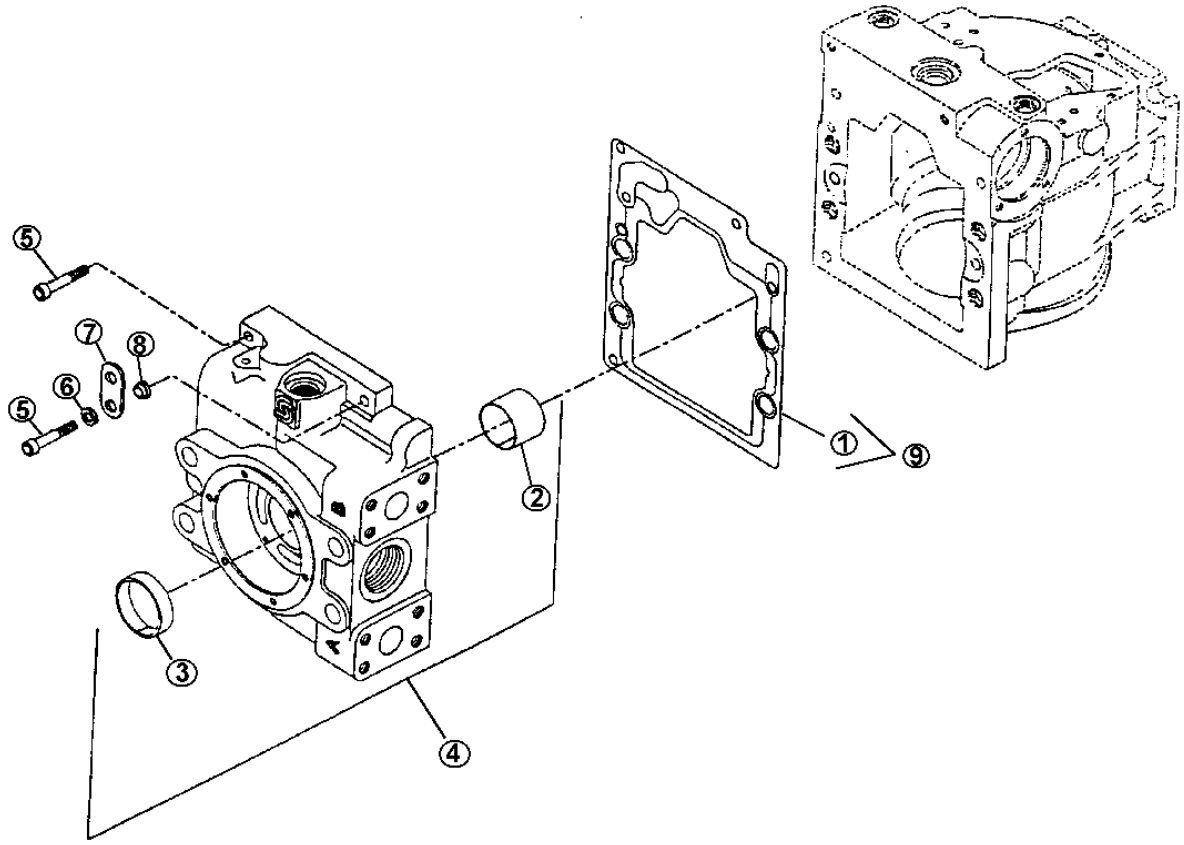

TP52071

HYDROSTATIC CHARGE HOUSING
CARTER D'ALIMENTATION HYDROSTATIQUE
CAJA DE CARGA HIDROSTATICA

KEY	PART NO.	PART NAME	QTY.	SERIAL NO.	450J	550J	650J	REMARKS
1	R151078	GASKET	1		X	X	X	(END CAP)
2	R150986	BEARING	1		X	X	X	(JOURNAL)
3	N203486	BUSHING	1		X	X	X	
4	AT226441	CAP	1		X	X	X	
5	19M8123	SCREW	2		X	X	X	M8 X 45
6	24H1136	WASHER	1		X	X	X	11/32" X 11/16" X 0.065"
7	AT214861	LUG	1		X	X	X	(LIFTING BRACKET) (REAR PUMP ONLY)
8	AT214860	SPACER	1		X	X	X	
9	AN220311	SEAL KIT	1		X	X	X	(OVERHAUL) (PARTS INCLUDED ON OTHER PAGES)

HYDROSTATIC PUMP ASSEMBLY
POMPE HYDROSTATIQUE
CONJUNTO DE BOMBA HIDROSTATICA ASSY

TP52072 -UN-07JAN99

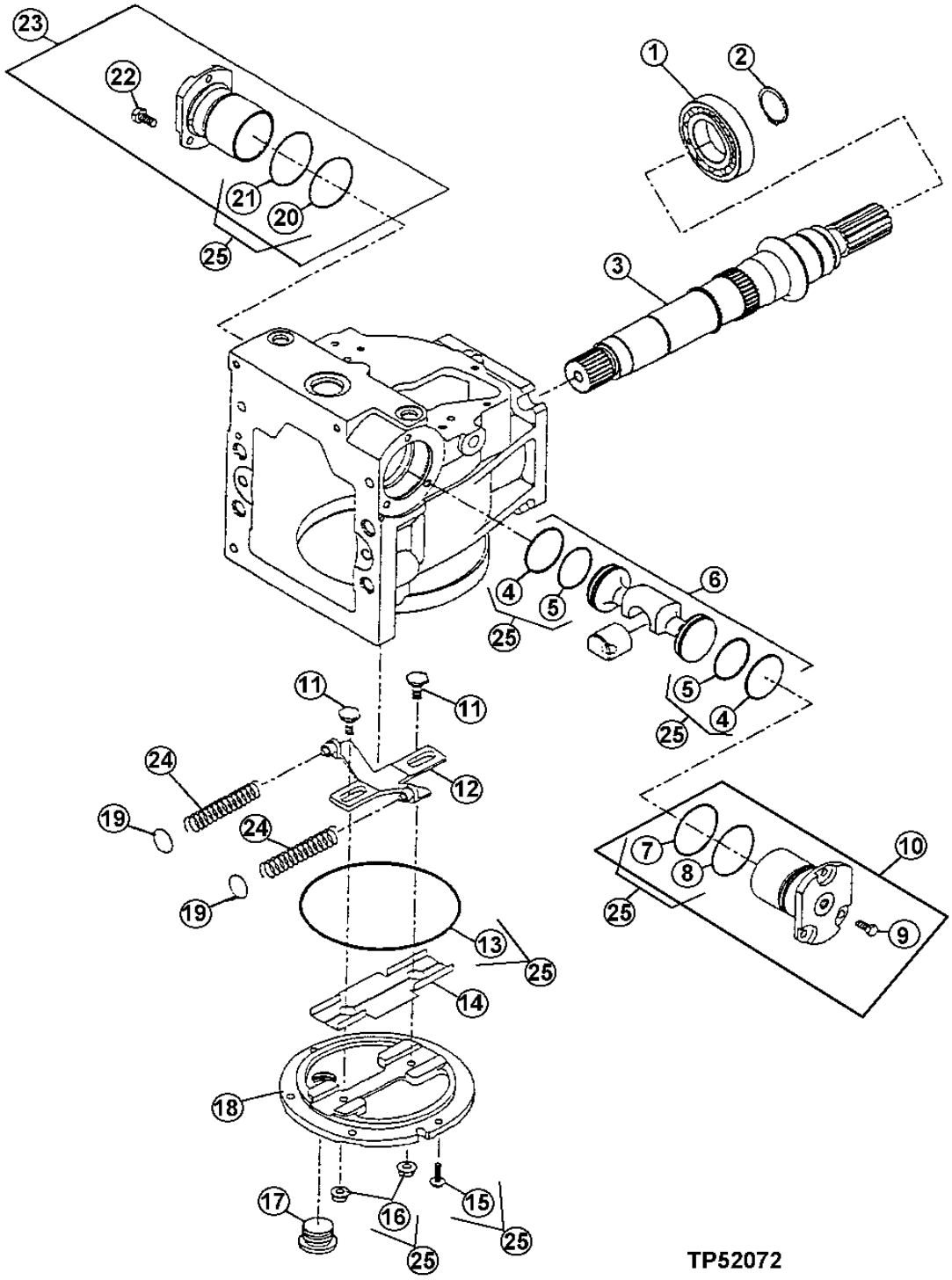

HYDROSTATIC PUMP ASSEMBLY
POMPE HYDROSTATIQUE
CONJUNTO DE BOMBA HIDROSTATICA ASSY

KEY	PART NO.	PART NAME	QTY.	SERIAL NO.	450 J	550 J	650 J	REMARKS
1	T177597	BEARING	1		X	X	X	
2	T15509	SNAP RING	1		X	X	X	
3	T173133	SHAFT	1		X	X	X	(REAR)
	T175318	SHAFT	1		X	X	X	(FRONT) (344 MM (13.54 INCHES))
4	R151103	PISTON RING	2		X	X	X	
5	T176262	O-RING	2		X	X	X	
6	RE151101	PISTON REPLACEMENT KIT	1		X	X	X	(SERVO PISTON)
7	R151097	O-RING	1		X	X	X	
8	T35580	O-RING	1		X	X	X	
9	19M7932	CAP SCREW	3		X	X	X	M8 X 16
10	RE151096	CYLINDER	1		X	X	X	(SERVO KIT)
11	T177595	POST	2		X	X	X	(GUIDE)
12	AT220771	BRACKET	1		X	X	X	(LEVELER)
13	E80224	O-RING	1		X	X	X	
14	RE151074	INSERT	1		X	X	X	(SIDE COVER)
15	T155641	SCREW	6		X	X	X	
16	T155640	NUT	2		X	X	X	
17	T64769	DRAIN PLUG	1		X	X	X	
18	R151067	COVER	1	-120536	X	X	X	(SIDE)
	T222125	COVER	1	120537-	X	X	X	
19	R151069	SHIM	2		X	X	X	
20	R151097	O-RING	1		X	X	X	
21	T35580	O-RING	1		X	X	X	
22	19M7932	CAP SCREW	3		X	X	X	M8 X 16
23	RE151096	CYLINDER	1		X	X	X	(SERVO KIT)
24	R151072	SPRING	2		X	X	X	(COMPRESSION)
25	AN220311	SEAL KIT	1		X	X	X	(OVERHAUL)

HYDROSTATIC PUMP, SWASHPLATE, AND CYLINDER BLOCK ASSEMBLY
POMPE HYDROSTATIQUE, PLATEAU OSCILLANT, ET BLOC-CYLINDRES
CONJUNTO DE BOMBA HIDROSTATICA, PLACA OSCILANTE, Y CONJUNTO DE BLOQUE DE CILINDRO

TP52073 -UN-12JAN99

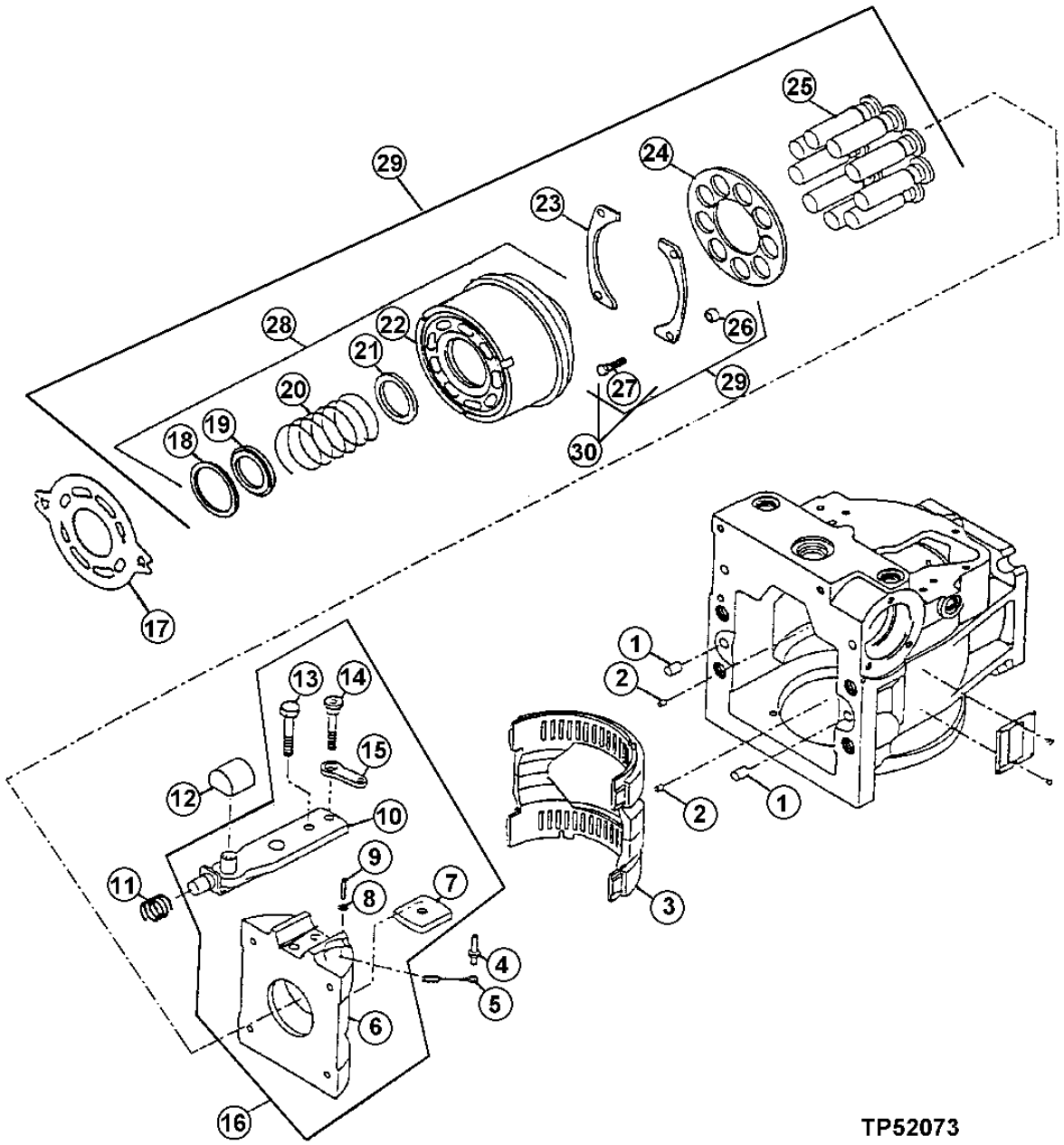

HYDROSTATIC PUMP, SWASHPLATE, AND CYLINDER BLOCK ASSEMBLY
POMPE HYDROSTATIQUE, PLATEAU OSCILLANT, ET BLOC-CYLINDRES
CONJUNTO DE BOMBA HIDROSTATICA, PLACA OSCILANTE, Y CONJUNTO DE BLOQUE DE CILINDRO

KEY	PART NO.	PART NAME	QTY.	SERIAL NO.	450J	550J	650J	REMARKS
1	R726R	DOWEL PIN	2		X	X	X	
2	T155936	PIN	2		X	X	X	
3	R151062	BEARING	1		X	X	X	
4	RE159656	PIN	1		X	X	X	
5	R151065	LINK	1		X	X	X	(CAGE LOCATOR)
6	T176242	SWASH PLATE	1	-120536	X	X	X	(VARIABLE)
	T223607	SWASH PLATE	1	120537-	X	X	X	
7	AT214873	GUIDE	1		X	X	X	(SWASHPLATE)
8	T24199	WASHER	1		X	X	X	
9	AT214874	PIN FASTENER	1		X	X	X	(SPIRAL)
10	AT220770	ACTUATOR	1		X	X	X	(SERVO ARM)
11	R151066	SPRING	1		X	X	X	
12	R151075	CLAMP	1		X	X	X	(SLIDE BLOCK)
13	T176243	SCREW	1	-120536	X	X	X	
	T222123	CAP SCREW	1	120537-	X	X	X	
14	T176244	SCREW	1		X	X	X	
15	T176245	LINK	1		X	X	X	(FEEDBACK)
16	RE151064	YOKE	1	-120536	X	X	X	(SWASHPLATE ASSEMBLY)
	AT330299	SWASH PLATE	1	120537-	X	X	X	
17	R151063	PLATE	1		X	X	X	
18	T176259	RING	1		X	X	X	(RETAINING)
19	T176258	PLATE	1		X	X	X	(SPRING RETAINER)
20	T176256	SPRING	1		X	X	X	
21	T176257	SPRING WASHER	1		X	X	X	(SEAT)
22	T176260	RING	1		X	X	X	(SPEED)
23	R151099	BEARING	2		X	X	X	(SLIPPER GUIDE)
24	N220940	GUIDE	1		X	X	X	(SLIPPER)
25	AN220419	PISTON	9		X	X	X	(WELDED ASSEMBLY)
26	T177594	SPACER	4		X	X	X	
27	T176261	SCREW	4		X	X	X	
28	AT221619	CYLINDER	1		X	X	X	(BLOCK ASSEMBLY WITH SPEED RING)
29	AT224344	CYLINDER BLOCK	1		X	X	X	
30	AN220311	SEAL KIT	1		X	X	X	(OVERHAUL) (PARTS INCLUDED ON OTHER PAGES)

HYDROSTATIC PUMP DISPLACEMENT CONTROL VALVE
SOUPAPE DE CONTROLE DE VARIATION DE CYLINDREE DE POMPE HYDROSTATIQUE
VALVULA DE CONTROL DE CAUDAL DE BOMBA HIDROSTATICA

T206189 -UN-18DEC04

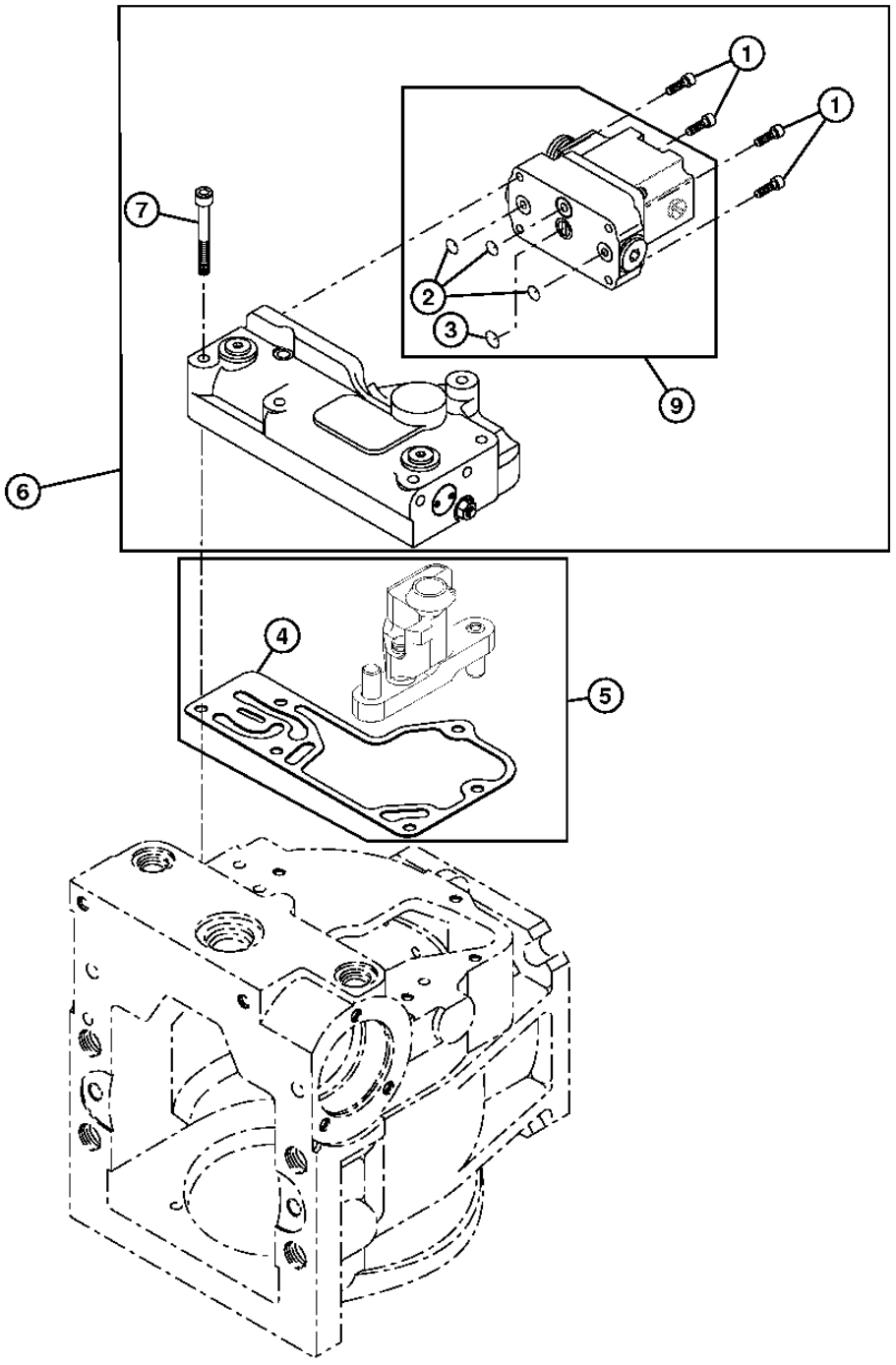

T206189

HYDROSTATIC PUMP DISPLACEMENT CONTROL VALVE
SOUPAPE DE CONTROLE DE VARIATION DE CYLINDREE DE POMPE HYDROSTATIQUE
VALVULA DE CONTROL DE CAUDAL DE BOMBA HIDROSTATICA

KEY	PART NO.	PART NAME	QTY.	SERIAL NO.	450J	550J	650J	REMARKS
1	19M7600	SCREW	4		X	X	X	M5 X 12
2	T164365	O-RING	3		X	X	X	
3	T200765	O-RING	1		X	X	X	
4	R151090	GASKET	1		X	X	X	(CONTROL)
5	AT310345	LINKAGE	1		X	X	X	
6	AT304672	HYD ACTUATED CONTROL VALVE	1		X	X	X	(ELECTRONIC DISPLACEMENT)
7	19M8541	SCREW	6		X	X	X	M6 X 50
9	AT304671	HYD ACTUATED CONTROL VALVE	1		X	X	X	(PRESSURE PILOT)

HYDROSTATIC MOTOR, CONTROL, AND SHIFT SOLENOID VALVE
MOTEUR HYDROSTATIQUE, COMMANDE, ET ELECTROVANNE DE DIRECTION
MOTOR HIDROSATICA, CONTROL, Y VALVULA DE SOLENOIDE DE CAMBIO

T201417 -UN-30JUN04

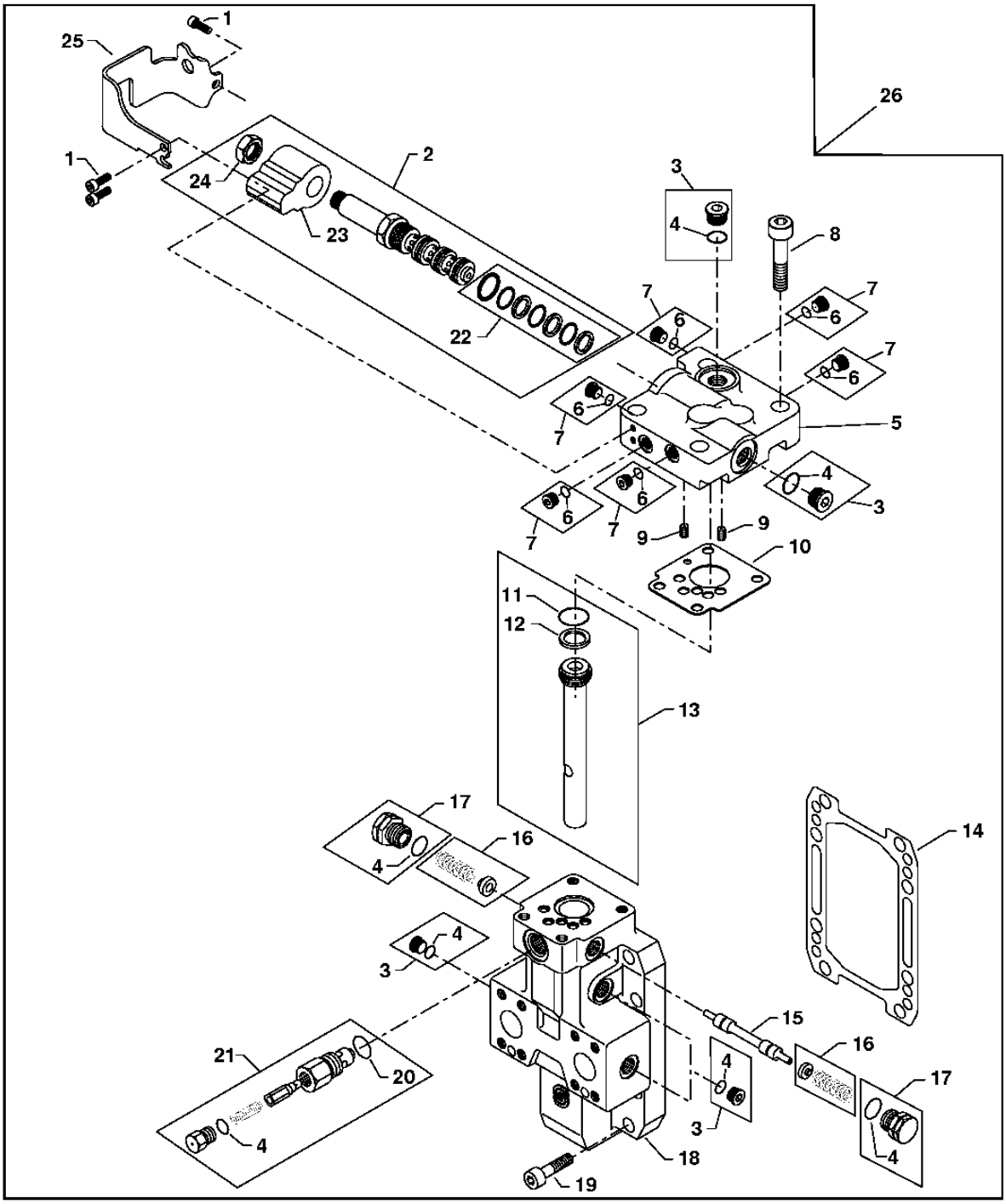

T201417

HYDROSTATIC MOTOR, CONTROL, AND SHIFT SOLENOID VALVE
MOTEUR HYDROSTATIQUE, COMMANDE, ET ELECTROVANNE DE DIRECTION
MOTOR HIDROSATICA, CONTROL, Y VALVULA DE SOLENOIDE DE CAMBIO

KEY	PART NO.	PART NAME	QTY.	SERIAL NO.	450J	550J	650J	REMARKS
1	T188306	BOLT	4		X	X	X	
2	AT301765	SOLENOID VALVE	1		X	X	X	(SHIFT)
3	AT334796	FITTING PLUG	5		X	X	X	(SUB FOR AT184868, THIS APPLICATION)
4	T158240	O-RING	7		X	X	X	
5	T204277	HOUSING	1		X	X	X	(END PLATE)
6	T165535	O-RING	6		X	X	X	
7	AT184869	PLUG	6		X	X	X	
8	19M8273	SCREW	4		X	X	X	M12 X 45
9	T204293	ORIFICE	2		X	X	X	
10	T204291	GASKET	1		X	X	X	
11	T155969	O-RING	1		X	X	X	
12	T165500	SEAL	1		X	X	X	
13	AT305949	PISTON	1		X	X	X	(SERVO)
14	T204282	GASKET	1		X	X	X	
15	T176405	SPOOL	1		X	X	X	(SHUTTLE)
16	AT196462	PLATE	2		X	X	X	(SPRING SEAT)
17	AT180814	PLUG	2		X	X	X	
18	T204281	HOUSING	1		X	X	X	(END CAP)
19	19M8904	SCREW	8		X	X	X	M10 X 45
20	R26906	O-RING	1		X	X	X	
21	AT224194	PRESSURE RELIEF VALVE	1		X	X	X	(HYDROSTATIC)
22	AT301766	SEAL KIT	1		X	X	X	
23	AT301767	SOLENOID VALVE COIL	1		X	X	X	
24	T181306	NUT	1		X	X	X	
25	T204263	BRACKET	1		X	X	X	(MOTORSHIFT)
26	AT305969	MOTOR	1		X	X	X	(A)

(A) REST OF HYDROSTATIC MOTOR, HOUSING, CYLINDER BLOCK, PISTON AND SWASHPLATE ON ANOTHER PAGE.
(A)RESTE DU MOTEUR HYDROSTATIQUE, BATI, BLOC-CYLINDRES, PISTON ET PLATEAU OSCILLANT SUR AUTRE PAGE
(A) REST DE MOTOR HIDROSTATICO, CAJA, BLOQUE DE CILINDROS, EMBOLO Y PLACA OOCILANTE EN OTRA PAGINA

THIS PARTS LISTING IS CONTINUED

HYDROSTATIC MOTOR, HOUSING, CYLINDER BLOCK, PISTON, AND SWASHPLATE
MOTEUR HYDROSTATIQUE, CARTER, BLOC-CYLINDRES, PISTON ET PLATEAU OSCILLANT
MOTOR HIDROSATICA, CARCASA, BLOQUE DE CILINDROS, PISTON Y PLACA OSCILANTE

T210150 -UN-13APR05

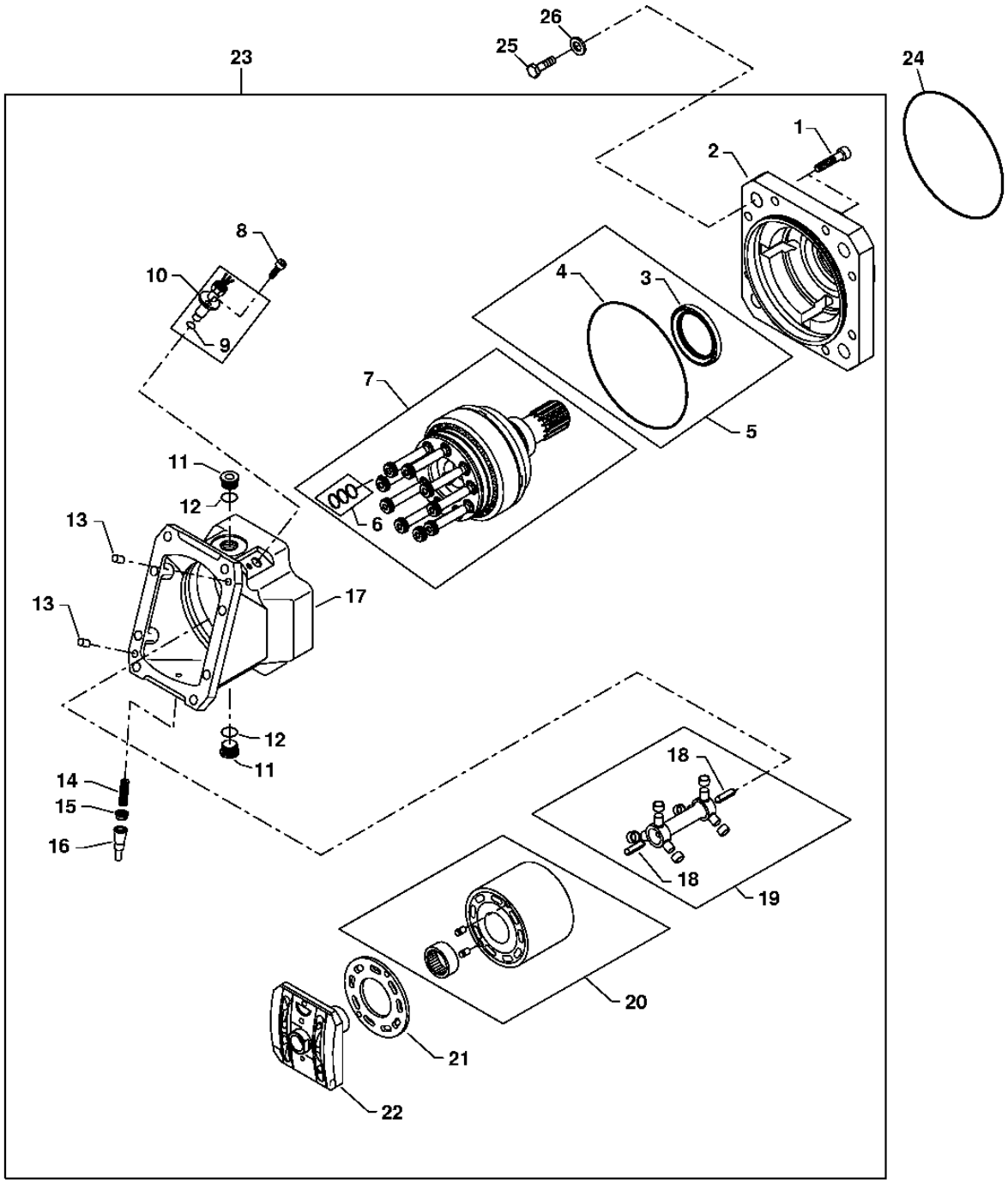

T210150

HYDROSTATIC MOTOR, HOUSING, CYLINDER BLOCK, PISTON, AND SWASHPLATE
MOTEUR HYDROSTATIQUE, CARTER, BLOC-CYLINDRES, PISTON ET PLATEAU OSCILLANT
MOTOR HIDROSATICA, CARCASA, BLOQUE DE CILINDROS, PISTON Y PLACA OSCILANTE

KEY	PART NO.	PART NAME	QTY.	SERIAL NO.	450J	550J	650J	REMARKS
1	19M8349	CAP SCREW	8		X	X	X	M16 X 90
2	.....	FLANGE	1		X	X	X	(SUB AT305969)
3	AT173174	SEAL	1		X	X	X	(MOTOR FLANGE)
4	T204292	O-RING	1		X	X	X	
5	AT305960	SEAL KIT	1		X	X	X	(MOTOR FLANGE)
6	AT305951	PISTON RING KIT	1		X	X	X	
7	AT305913	SHAFT	4		X	X	X	(WITH SPEED RING)
8	T188306	BOLT	1		X	X	X	
9	T158240	O-RING	1		X	X	X	
10	AT301762	SENSOR	1		X	X	X	(SPEED)
11	T64769	DRAIN PLUG	1		X	X	X	
12	T59014	O-RING	1		X	X	X	
13	R762R	SPLINED COUPLING	2		X	X	X	
14	T204294	SET SCREW	1		X	X	X	
15	T155723	NUT	1		X	X	X	
16	T204283	CAP	1		X	X	X	
17	.....	HOUSING	1		X	X	X	(SUB AT305969)
18	T178741	PIN	2		X	X	X	
19	AT305950	KIT	1		X	X	X	(SYNC SHAFT)
20	AT305948	CYLINDER BLOCK	1		X	X	X	
21	T204290	PLATE	1		X	X	X	(BEARING)
22	AT305947	VALVE	1		X	X	X	(SWASHPLATE)
23	AT305969	MOTOR	1		X	X	X	(REMAN)
24	E80224	O-RING	1		X	X	X	
25	24M7240	WASHER	4		X	X	X	13 X 25 X 3 MM
26	19M7493	CAP SCREW	4		X	X	X	M12 X 40

PARKING BRAKE HYDRAULIC HOSES
FLEXIBLES HYDRAULIQUES DE FREIN DE STATIONNEMENT
MANGUERAS HIDRAULICAS DE FRENO DE ESTACIONAMIENTO

T198611 -UN-01APR04

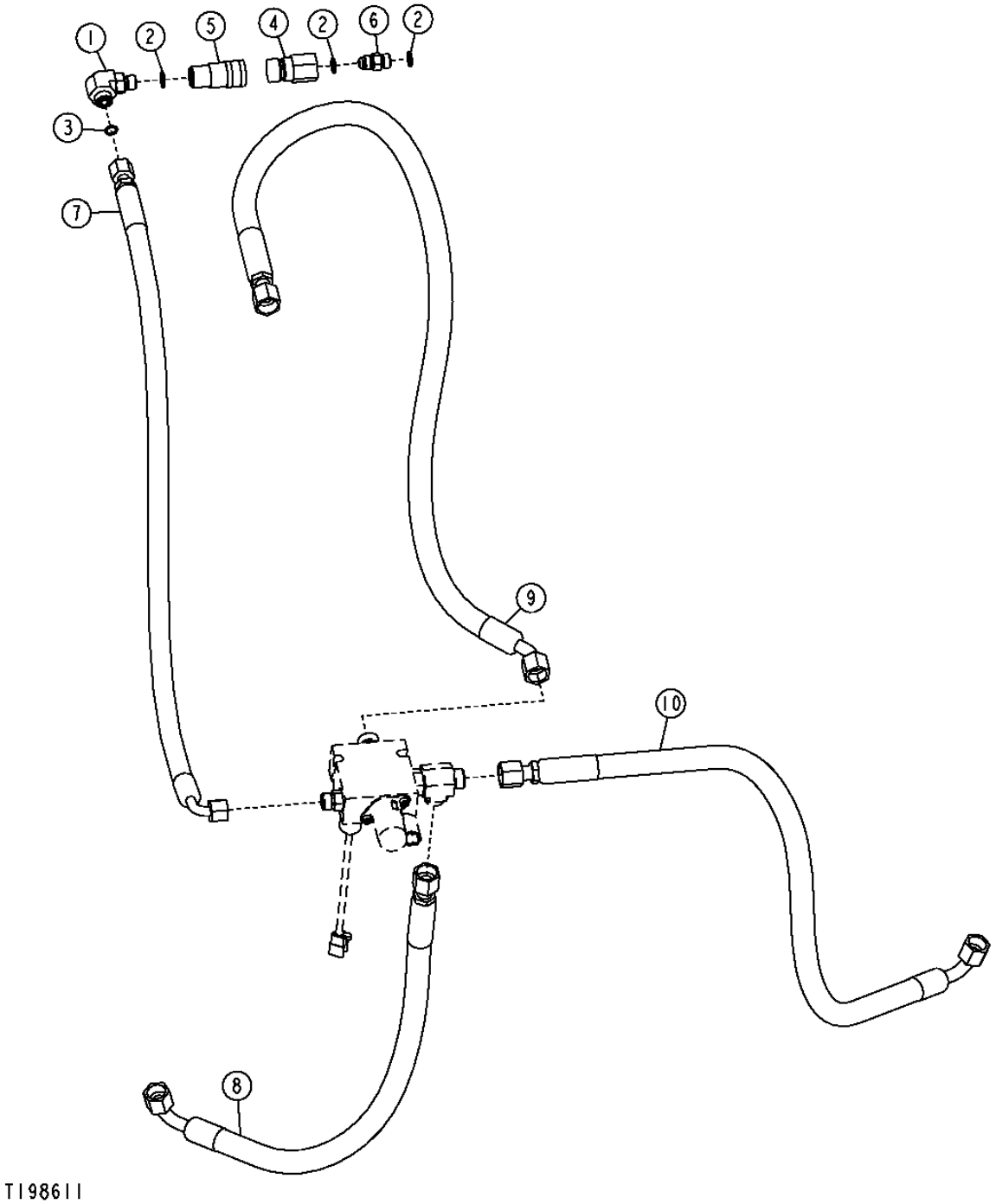

PARKING BRAKE HYDRAULIC HOSES
FLEXIBLES HYDRAULIQUES DE FREIN DE STATIONNEMENT
MANGUERAS HIDRAULICAS DE FRENO DE ESTACIONAMIENTO

KEY	PART NO.	PART NAME	QTY.	SERIAL NO.	450J	550J	650J	REMARKS
1	38H1004	ELBOW FITTING	1		X	X	X	
2	R26448	O-RING	3		X	X	X	
3	T77613	O-RING	1		X	X	X	
4	AM102420	HYDR.QUICK COUPLER PLUG	1		X	X	X	
5	AM102487	HYD. QUICK-CONNECT COUPLER	1		X	X	X	
6	R27212	FITTING	1		X	X	X	
7	AT306141	HYDRAULIC HOSE - FABRICATE	1		X	X	X	(BRAKE CHARGE SUPPLY)
8	AT306153	HYDRAULIC HOSE - FABRICATE	1		X	X	X	(TO LEFT BRAKE)
9	AT306157	HYDRAULIC HOSE - FABRICATE	1		X	X	X	(BRAKE VALVE TANK LINE)
10	AT308485	HYDRAULIC HOSE - FABRICATE	1		X	X	X	
	AT308483	HYDRAULIC HOSE - FABRICATE	1		X	X	X	(LGP)

TRANSMISSION / HYDROSTATIC DIAGNOSTIC PLUMBING
TUYAUTERIE DE DIAGNOSTIC DE TRANSMISSION / HYDROSTATIQUE
TUBERIA DE DIAGNOSTICO DE LA TRANSMISION / SISTEMA HIDROSTATICO

T212709 -UN-15JUL05

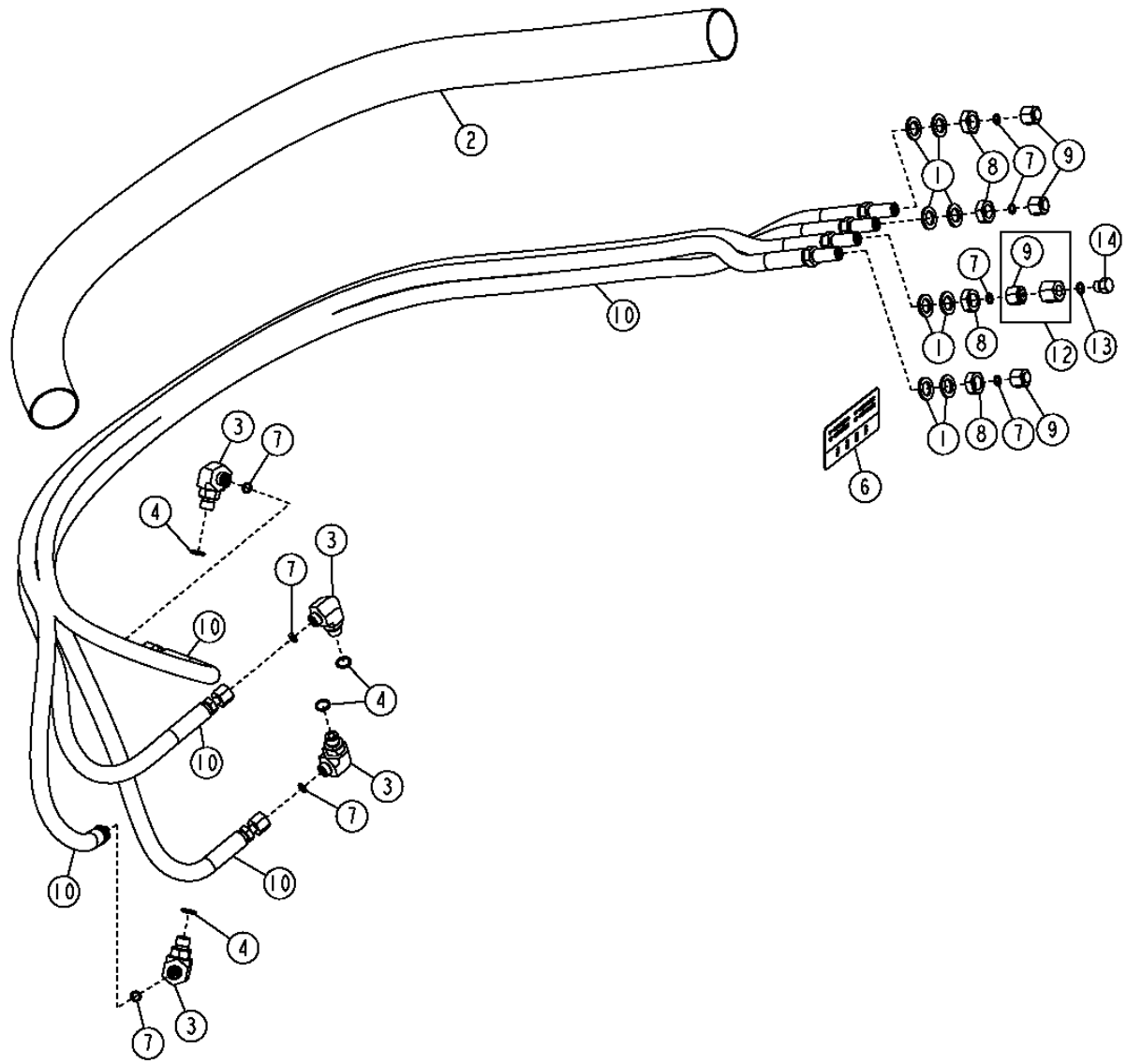

T212709

THIS PARTS LISTING IS CONTINUED

TRANSMISSION / HYDROSTATIC DIAGNOSTIC PLUMBING
TUYAUTERIE DE DIAGNOSTIC DE TRANSMISSION / HYDROSTATIQUE
TUBERIA DE DIAGNOSTICO DE LA TRANSMISION / SISTEMA HIDROSTATICO

KEY	PART NO.	PART NAME	QTY.	SERIAL NO.	450 J	550 J	650 J	REMARKS
1	24M7145	WASHER	8		X	X	X	15 X 24 X 2.500 MM
2	.....	CONDUIT	AR		X	X	X	(CUT TO LENGTH, 1423 MM (56 INCH)) (PARKER PS-B-33)
3	38H1009	ELBOW FITTING	4		X	X	X	
4	R26448	O-RING	4		X	X	X	
6	T204422	LABEL	1		X	X	X	(REMOTE TRANSMISSION TEST BANK)
7	T77814	O-RING	7		X	X	X	
8	14H832	NUT	4		X	X	X	9/16"
9	38H1414	FITTING	4		X	X	X	(BULKHEAD)
10	AT321257	HYDRAULIC HOSE - FABRICATE	1		X	X	X	
12	AT225112	ADAPTER FITTING	1		X	X	X	
13	R28782	O-RING	1		X	X	X	
14	U44115	FITTING PLUG	1		X	X	X	
15	.....	HOSE KIT	1		X	X	X	(ORDER COMPONENT PARTS) (AT322752 NLA)

HIGH PRESSURE HOSES
FLEXIBLES HAUTE PRESSION
MANGUERAS DE PRESION ALTA

T198640 -UN-31MAR04

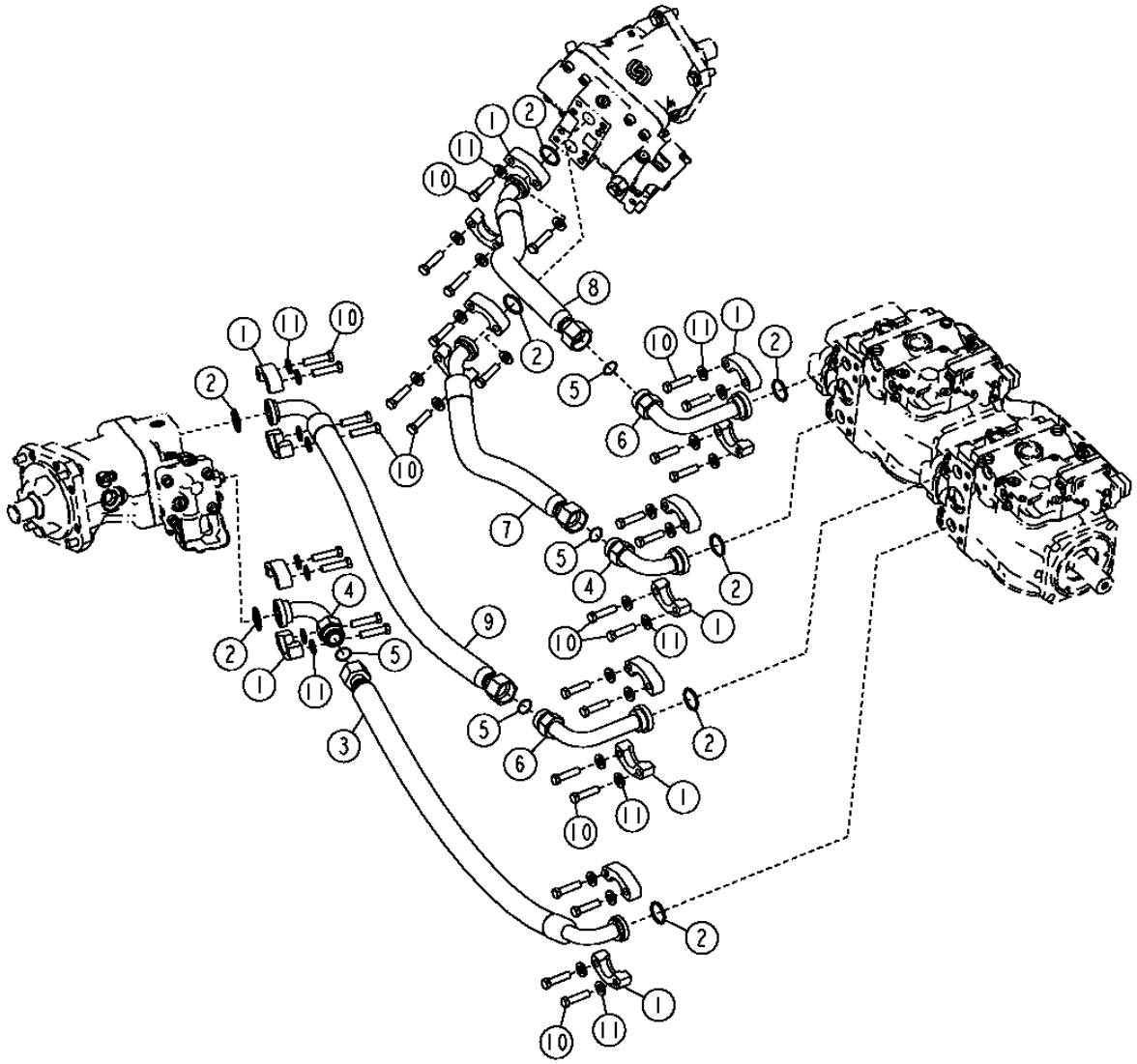

T198640

HIGH PRESSURE HOSES
FLEXIBLES HAUTE PRESSION
MANGUERAS DE PRESION ALTA

KEY	PART NO.	PART NAME	QTY.	SERIAL NO.	450J	550J	650J	REMARKS
1	H122182	FLANGE FITTING	16		X	X	X	
2	T78313	O-RING	8		X	X	X	
3	AT303106	HYDRAULIC HOSE	1		X	X	X	
4	T149315	ADAPTER FITTING	2		X	X	X	(4-BOLT FLANGE TO ORFS)
	T143372	ADAPTER FITTING	1		X			(450J LGP)
5	T76938	O-RING	4		X	X	X	
6	T174191	ADAPTER FITTING	2		X	X	X	(4-BOLT FLANGE TO ORFS)
7	AT303107	HYDRAULIC HOSE	1			X	X	(550J LONG TRACK 650J LONG TRACK)
	AT325798	HYDRAULIC HOSE	1		X	X	X	(SUB FOR AT304093) (LGP)
	AT334524	HYDRAULIC HOSE	1		X			(450J LONG TRACK)
8	AT309076	HYDRAULIC HOSE	1		X			(450J LONG TRACK)
	AT304092	HYDRAULIC HOSE	1		X	X	X	(LGP)
	AT303107	HYDRAULIC HOSE	1			X	X	(550J LONG TRACK AND 650J LONG TRACK)
9	AT303113	HYDRAULIC HOSE	1		X	X	X	
	AT303113	HYDRAULIC HOSE	1		X	X	X	(LGP)
10	19H2563	CAP SCREW	32		X	X	X	7/16" X 1-3/4"
11	24M7240	WASHER	32		X	X	X	13 X 25 X 3 MM

HYDROSTATIC SUCTION HOSE
FLEXIBLE D'ASPIRATION HYDROSTATIQUE
MANGUERA DE ASPIRACION HIDROSTATICA

TX1004849 -UN-16MAR06

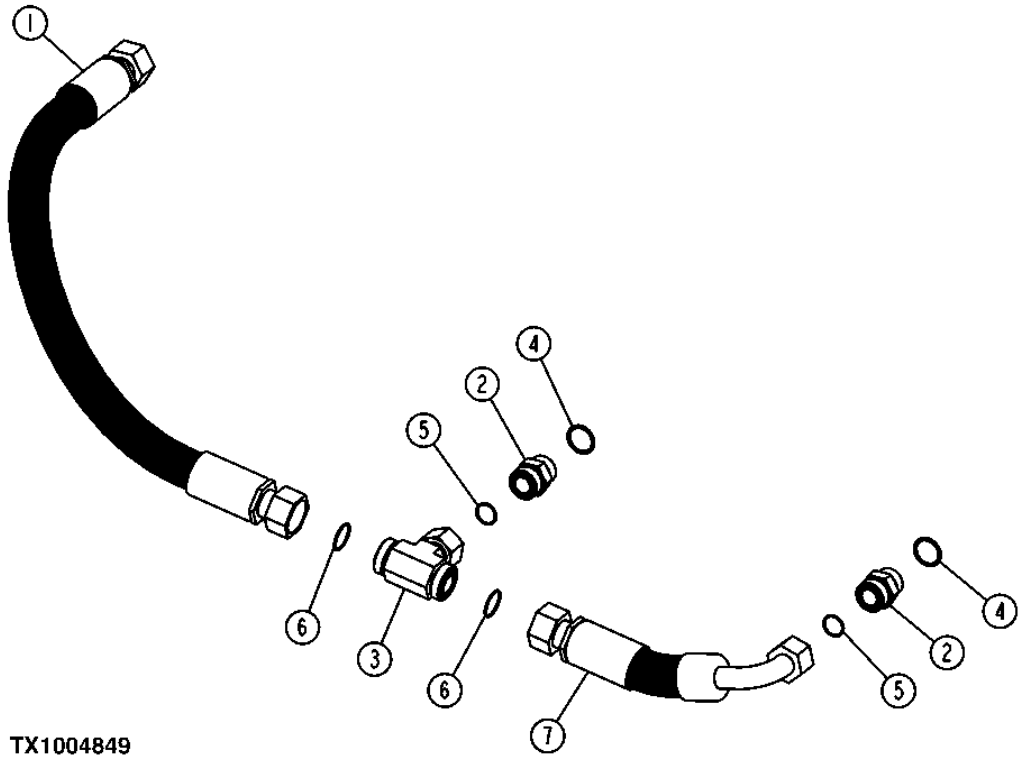

HYDROSTATIC SUCTION HOSE
FLEXIBLE D'ASPIRATION HYDROSTATIQUE
MANGUERA DE ASPIRACION HIDROSTATICA

KEY	PART NO.	PART NAME	QTY.	SERIAL NO.	450 J	550 J	650 J	REMARKS
1	AT220789	HYDRAULIC HOSE - FABRICATE	1		X	X	X	
2	38H1164	ADAPTER FITTING	2		X	X	X	
3	AT209303	TEE FITTING	1		X	X	X	
4	R29936	O-RING	2		X	X	X	
5	T76938	O-RING	2		X	X	X	
6	T78612	O-RING	2		X	X	X	
7	AT208682	HYDRAULIC HOSE - FABRICATE	1		X	X	X	

TRANSMISSION PLUMBING
TUYAUTERIE DE TRANSMISSION
TUBERIA DE LA TRANSMISION

T198990 -UN-20APR04

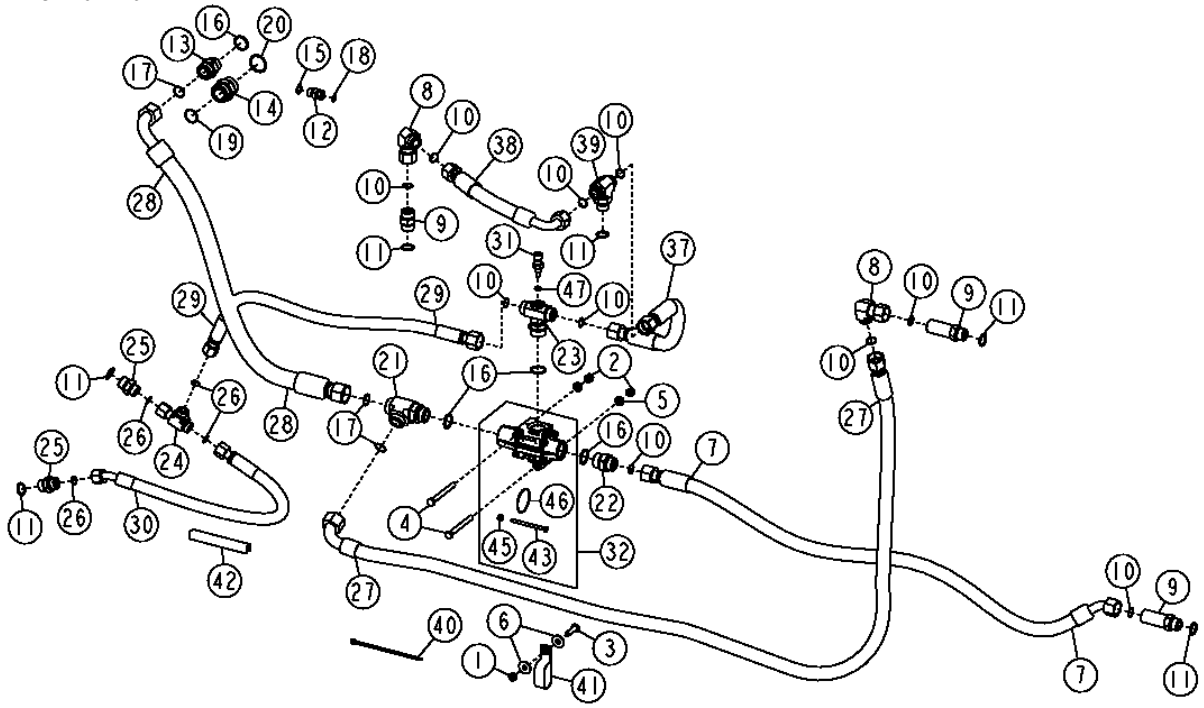

THIS PARTS LISTING IS CONTINUED

TRANSMISSION PLUMBING
TUYAUTERIE DE TRANSMISSION
TUBERIA DE LA TRANSMISION

KEY	PART NO.	PART NAME	QTY.	SERIAL NO.	450J	550J	650J	REMARKS
1	14M7274	NUT	1		X	X	X	M10
2	14M7517	LOCK NUT	2		X	X	X	M10
3	19M7550	CAP SCREW	1		X	X	X	M10 X 35
4	19M8093	CAP SCREW	2		X	X	X	M10 X 100
5	24M7239	WASHER	4		X	X	X	10.700 X 21 X 2.500 MM
6	24M7296	WASHER	2		X	X	X	10.500 X 30 X 2.500 MM
7	AT207408	HYDRAULIC HOSE - FABRICATE	1		X	X		
	AT306443	HYDRAULIC HOSE - FABRICATE	1				X	
8	38H1097	ELBOW FITTING	2		X	X	X	
9	38H1215	ADAPTER FITTING	3		X	X		
	38H1163	ADAPTER FITTING	3				X	
10	T77858	O-RING	13		X	X	X	18.771 X 1.778 MM
11	U12547	O-RING	8		X	X	X	23.470 X 2.946 MM
12	38H1161	ADAPTER FITTING	1		X	X	X	
13	38H1164	ADAPTER FITTING	1		X	X	X	
14	38H1165	ADAPTER FITTING	1		X	X	X	
15	R26375	O-RING	1		X	X	X	16.358 X 2.210 MM
16	R29936	O-RING	3		X	X	X	29.743 X 2.946 MM
17	T76938	O-RING	3		X	X	X	23.520 X 1.778 MM
18	T77857	O-RING	1		X	X	X	12.421 X 1.778 MM
19	T78612	O-RING	1		X	X	X	29.870 X 1.778 MM
20	U13639	O-RING	1		X	X	X	37.465 X 2.997 MM
21	38H1027	TEE FITTING	1		X	X	X	
22	38H1194	ADAPTER FITTING	1		X	X	X	
23	AT223739	FITTING	1		X	X	X	
24	38H1032	TEE FITTING	1		X	X	X	
25	38H1329	ADAPTER FITTING	2		X	X	X	
26	T77932	O-RING	4		X	X	X	15.596 X 1.778 MM
27	AT208966	HYDRAULIC HOSE - FABRICATE	1		X	X		
	AT301288	HYDRAULIC HOSE - FABRICATE	1				X	
28	AT211239	HYDRAULIC HOSE - FABRICATE	1		X	X	X	
29	AT211253	HYDRAULIC HOSE - FABRICATE	1		X	X	X	
30	AT211255	HYDRAULIC HOSE - FABRICATE	1		X	X	X	(LONG TRACK)
	AT308484	HYDRAULIC HOSE - FABRICATE	1		X	X	X	(LGP)
31	RE48419	SENSOR	1		X	X	X	
32	AT223937	FLOW CONTROL HYD. VALVE	1		X	X	X	(INCLUDES AT220846) (CONTAINS SPRING NOT SERVICED SEPARATELY)
	AT220846	KIT	1		X	X	X	(THERMAL BYPASS KIT, COMPONENT OF AT223937 BYPASS VALVE) (DOES NOT INCLUDE SPRING)
37	AT225122	HYDRAULIC HOSE - FABRICATE	1		X	X	X	
38	AT225123	HYDRAULIC HOSE - FABRICATE	1		X	X	X	
39	38H1019	TEE FITTING	1		X	X	X	
40	R44302	TIE BAND	1		X	X	X	
41	T149597	CLAMP	1		X	X	X	
42	.....	ISOLATOR	1		X	X	X	(SUB T176644, CUT TO 153 MM (6 INCHES))
43	19H2336	CAP SCREW	4		X	X	X	1/4" X 3-1/2"
45	M40333	LOCK NUT	4		X	X	X	
46	T102419	O-RING	2		X	X	X	53.696 X 1.778 MM
47	51M7041	O-RING	1		X	X	X	11.300 X 2.200 MM

HYDROSTATIC FILTER HOSES
FLEXIBLES DE FILTRE HYDROSTATIQUE
MANGUERAS DE FILTRO HIDROSTATICO

T164984 -UN-04FEB03

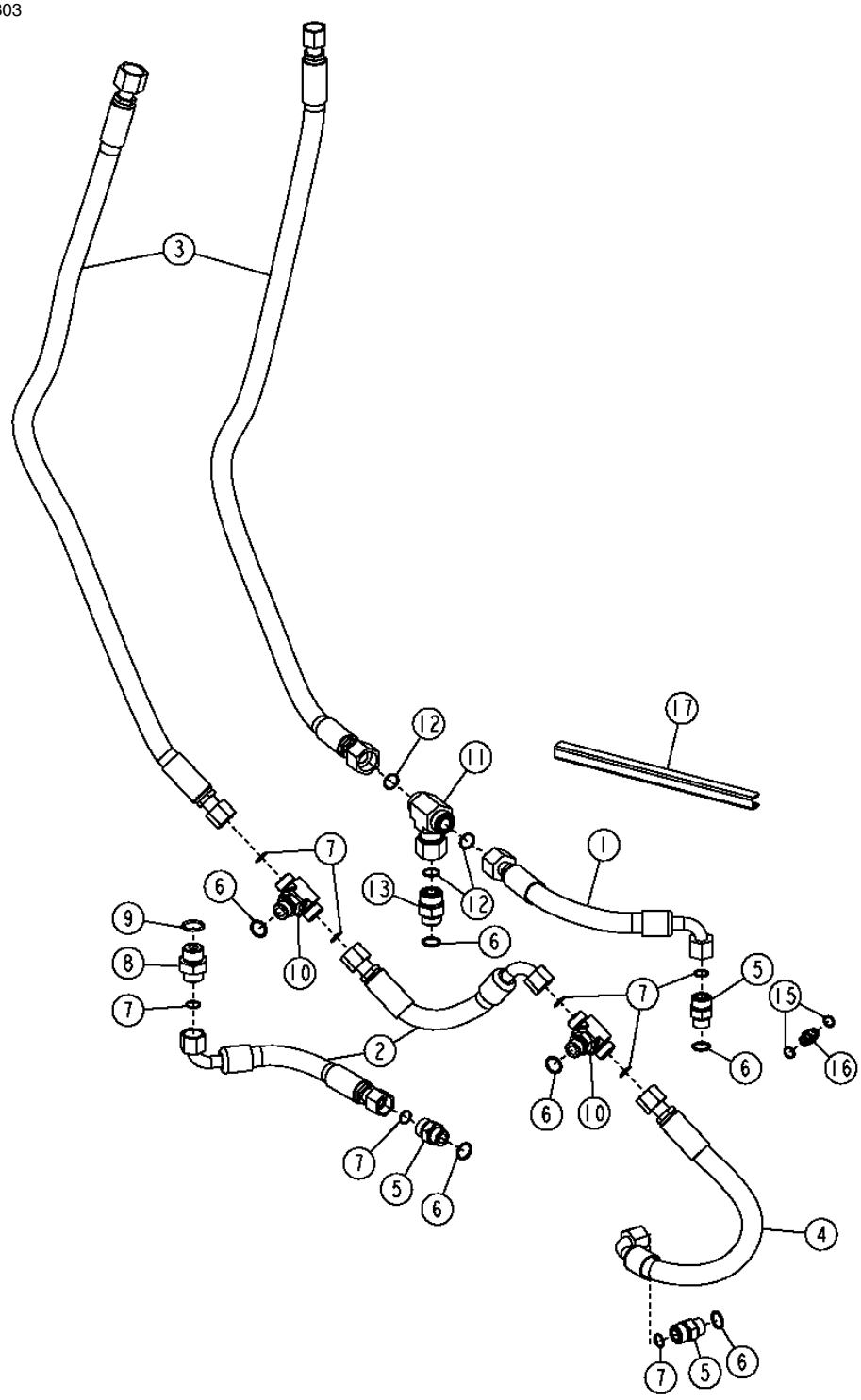

HYDROSTATIC FILTER HOSES
FLEXIBLES DE FILTRE HYDROSTATIQUE
MANGUERAS DE FILTRO HIDROSTATICO

KEY	PART NO.	PART NAME	QTY.	SERIAL NO.	450J	550J	650J	REMARKS
1	AT207364	HYDRAULIC HOSE - FABRICATE	1		X	X	X	
2	AT209299	HYDRAULIC HOSE - FABRICATE	2		X	X	X	
3	AT225124	HYDRAULIC HOSE - FABRICATE	2		X	X	X	
4	AT225125	HYDRAULIC HOSE - FABRICATE	1		X	X	X	
5	38H1162	ADAPTER FITTING	3		X	X	X	
6	R26906	O-RING	6		X	X	X	
7	T77932	O-RING	8		X	X	X	
8	38H1329	ADAPTER FITTING	1		X	X	X	
9	U12547	O-RING	1		X	X	X	
10	38H1018	TEE FITTING	2		X	X	X	
11	38H1041	TEE FITTING	1		X	X	X	
12	T77858	O-RING	3		X	X	X	
13	38H1193	ADAPTER FITTING	1		X	X	X	
15	R26448	O-RING	2		X	X	X	
16	R27212	FITTING	1		X	X	X	
17	.....	ISOLATOR	1			X	X	(MAKE FROM T176644) (CUT TO 610 MM (2 FT))

TRANSMISSION FILTER, COOLER AND AUXILIARY RESERVOIR 0364

HYDROSTATIC FILTER
FILTRE HYDROSTATIQUE
FILTRO HIDROSTATICO

TX1004853 -UN-17MAR06

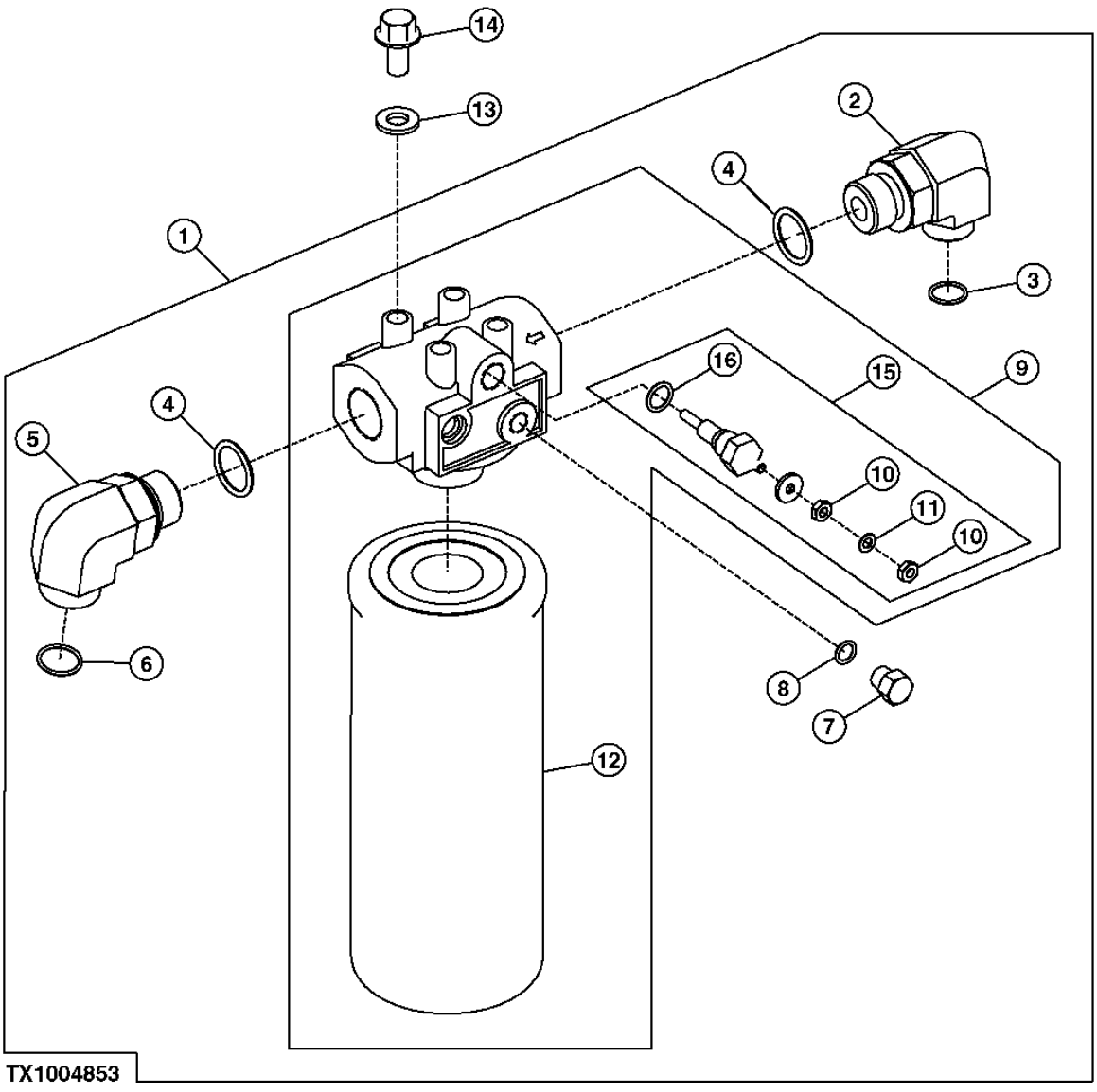

TRANSMISSION FILTER, COOLER AND AUXILIARY RESERVOIR 0364

HYDROSTATIC FILTER
FILTRE HYDROSTATIQUE
FILTRO HIDROSTATICO

KEY	PART NO.	PART NAME	QTY.	SERIAL NO.	450J	550J	650J	REMARKS
1	.....	FILTER	1		X	X	X	
2	38H1404	ELBOW FITTING	1		X	X	X	
3	T77932	O-RING	1		X	X	X	
4	U12547	O-RING	2		X	X	X	
5	38H1007	ELBOW FITTING	1		X	X	X	
6	T77858	O-RING	1		X	X	X	
7	U44115	FITTING PLUG	1		X	X	X	
8	R28782	O-RING	1		X	X	X	
9	AT219956	FILTER HEAD	1		X	X	X	
10	14H778	NUT	2		X	X	X	0.190"
11	12M7060	WASHER	1		X	X	X	5.300 MM
12	T175002	HYDRAULIC FILTER	1		X	X	X	(ELEMENT)
13	24M7239	WASHER	4		X	X	X	10.700 X 21 X 2.500 MM
14	19M7784	SCREW	4		X	X	X	M10 X 20
15	AH128450	PUSH SWITCH	1		X	X	X	(RESTRICTION INDICATOR)
16	R26448	O-RING	1		X	X	X	

TRANSMISSION FILTER, COOLER AND AUXILIARY RESERVOIR 0364

HYDROSTATIC RESERVOIR
RESERVOIR HYDROSTATIQUE
DEPOSITO HIDROSTATICO

T199301 -UN-19APR04

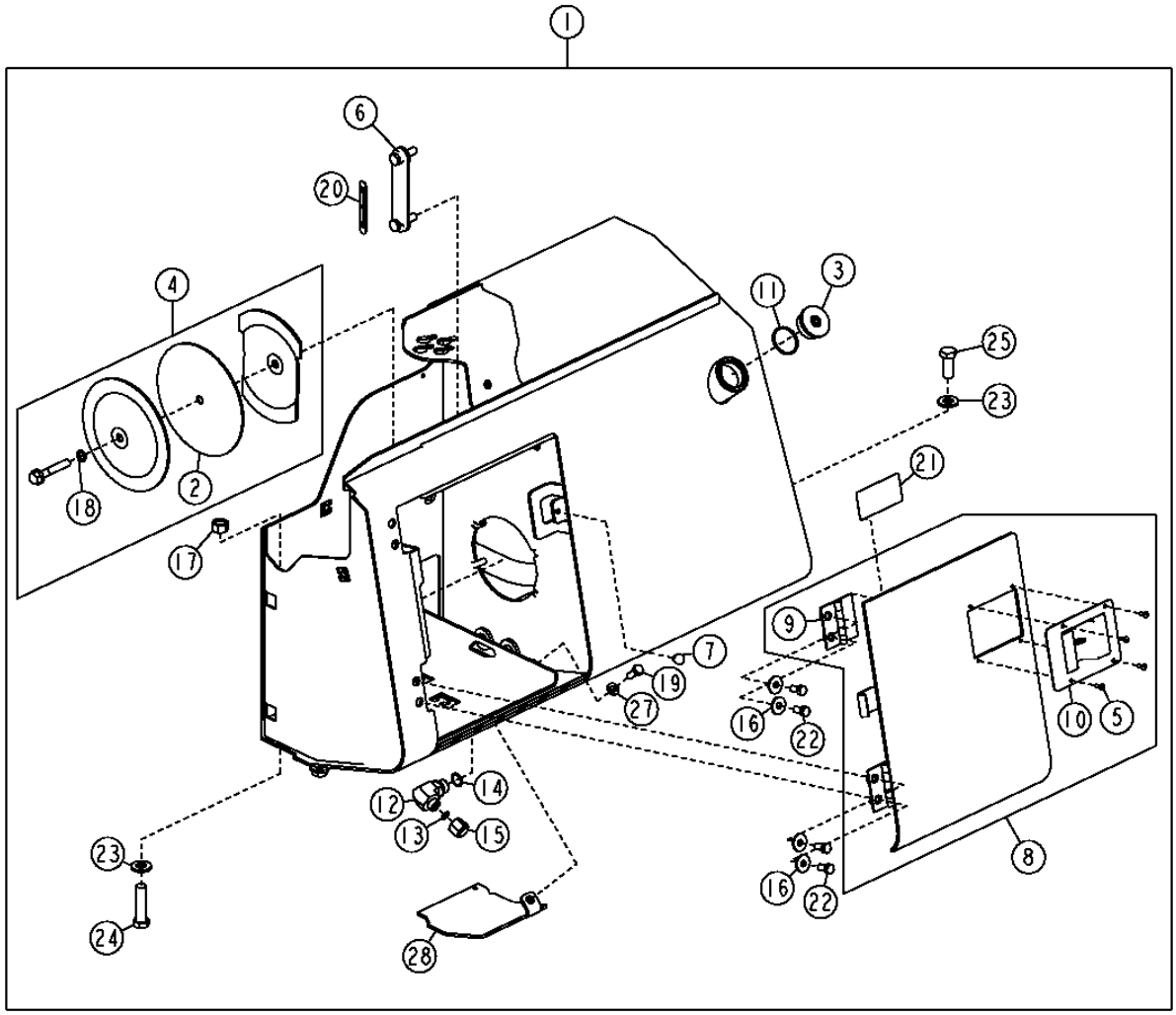

T199301

TRANSMISSION FILTER, COOLER AND AUXILIARY RESERVOIR 0364

HYDROSTATIC RESERVOIR
RESERVOIR HYDROSTATIQUE
DEPOSITO HIDROSTATICO

KEY	PART NO.	PART NAME	QTY.	SERIAL NO.	450 J	550 J	650 J	REMARKS
1	AT228752	HYDROSTATIC RESERVOIR	1		X	X	X	
2	AT307292	GASKET KIT	1		X	X	X	
3	T170935	DRAIN PLUG	1		X	X	X	(O-RING)
4	AT307278	COVER	1		X	X	X	(NOT AS SHOWN) (CIRCULAR) (INCLUDES GASKET AND HARDWARE, AT307292)
5	M68628	RIVET	4		X	X	X	(ELBOW)
6	AT227279	LEVEL GAUGE	1		X	X	X	(SIGHT GAUGE) (NOT AS SHOWN)
7	T175361	GROMMET	1		X	X	X	
8	AT209227	DOOR	1		X	X	X	
9	AT209110	HINGE	2		X	X	X	
10	AT221696	LATCH	1		X	X	X	
11	R26773	O-RING	1		X	X	X	
12	38H1012	ELBOW FITTING	1		X	X	X	(WITHOUT DRAIN VALVE)
13	T77857	O-RING	1		X	X	X	(WITHOUT DRAIN VALVE)
14	R26906	O-RING	1		X	X	X	
15	38H1416	FITTING	1		X	X	X	(WITHOUT DRAIN VALVE)
16	24M7296	WASHER	14		X	X	X	10.500 X 30 X 2.500 MM
17	14M7276	NUT	2		X	X	X	M16
18	AT307292	GASKET KIT	1		X	X	X	
19	19M7402	CAP SCREW	2		X	X	X	M10 X 25
20	T197300	LABEL	1		X	X	X	(HYDROSTATIC LABEL)
21	T158583	LABEL	1		X	X	X	(WELDING INSTRUCTION)
22	19M7938	CAP SCREW	4		X	X	X	M10 X 20
23	24M7241	WASHER	4		X	X	X	17 X 34 X 4 MM
24	19M7417	CAP SCREW	2		X	X	X	M16 X 65
25	19M7488	CAP SCREW	2		X	X	X	M16 X 40
27	24M7239	WASHER	1		X	X	X	10.700 X 21 X 2.500 MM
28	AT223113	DOOR	1		X	X	X	(ACCESS COVER PLATE)

MICROPROCESSOR TRANSMISSION CONTROL
COMMANDE DE TRANSMISSION DE MICROPROCESSEUR
CONTROL POR MICROPROCESADOR DE LA TRANSMISION

T198701 -UN-07APR04

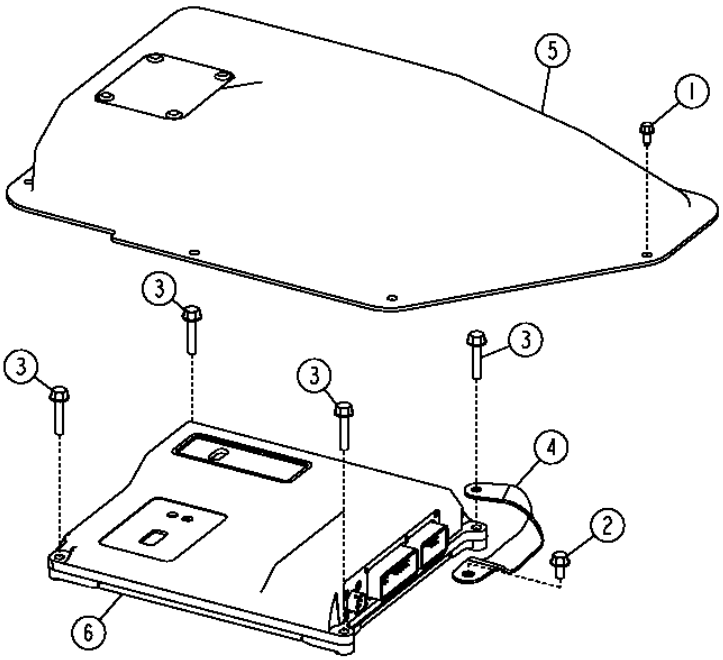

T198701

MICROPROCESSOR TRANSMISSION CONTROL
COMMANDE DE TRANSMISSION DE MICROPROCESSEUR
CONTROL POR MICROPROCESADOR DE LA TRANSMISION

KEY	*PART NO.*	*PART NAME*	*QTY.*	*SERIAL NO.*	450J	550J	650J	*REMARKS*
1	37M7059	SCREW	6		X	X	X	
2	19M7774	SCREW	1		X	X	X	M6 X 12
3	19M7796	SCREW	4		X	X	X	M6 X 30
4	AT209965	GROUND CABLE	1		X	X	X	(STRAP)
5	AT224151	COVER	1		X	X	X	
6	AT322362	TRANSMISSION CONTROLLER	1		X	X	X	(SUB FOR AT304821)

CRANKSHAFT AND MAIN BEARINGS
VILEBREQUIN ET PALIER
CIGUENAL Y COJINETE DE BANCADA

RGP10579 -UN-02JUL04

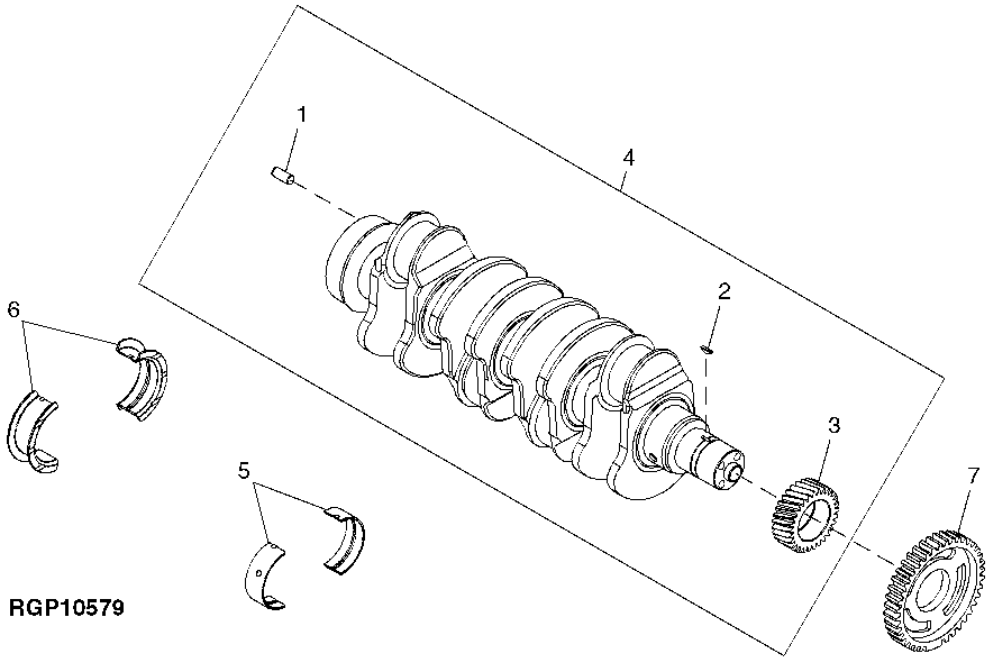

KEY	PART NO.	PART NAME	QTY.	ENGINE SERIAL NO.	456 555 000 JJJ	REMARKS
1	R48685	DOWEL PIN	1		X X X	
2	R505609	SHAFT KEY	1		X X X	
3	R120631	GEAR	1		X X X	Z = 30
4	RE504638	CRANKSHAFT	1		X X X	(MARKED R113596)
5	RE65165	BEARING KIT	4		X X X	(CONSISTS OF R123561 AND R123562) STD
	RE65911	BEARING	AR		X X X	(CONSISTS OF R130576 AND R130577) 0.254 MM (.010 INCH) US
6	RE65168	BEARING KIT	1		X X X	(CONSISTS OF R123563 AND R123564) STD
	RE65912	THRUST BEARING	1		X X X	(CONSISTS OF R130574 AND R130575) 0.254 MM (.010 INCH) US
7	R501489	WHEEL SPEED SENSOR	1		X X X	CRANKSHAFT TIMING

CAMSHAFT
ARBRE A CAMES
ARBOL DE LEVAS

RGP10592 -UN-02JUL04

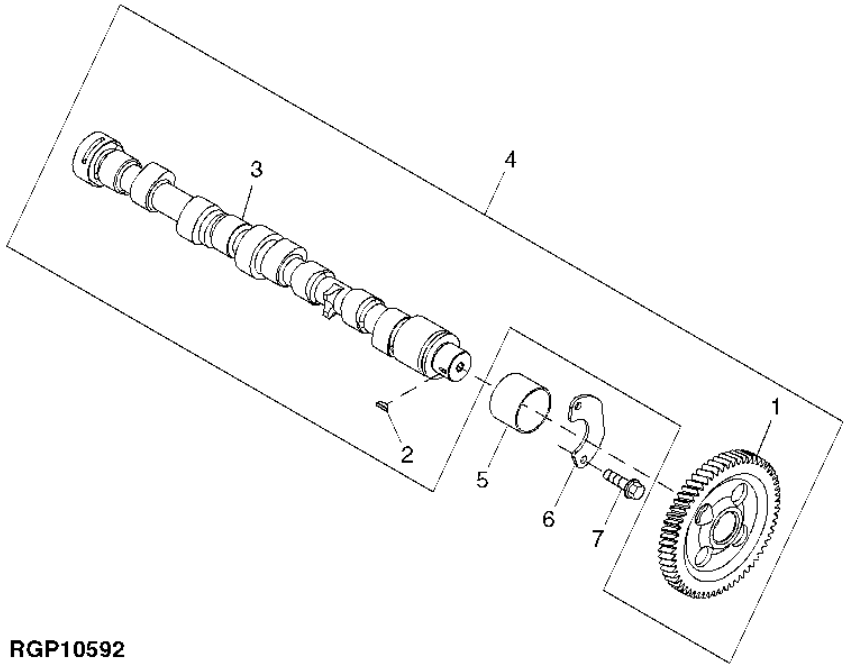

RGP10592

KEY	PART NO.	PART NAME	QTY.	ENGINE SERIAL NO.	450J	550J	650J	REMARKS
1	.....	HELICAL GEAR	1		X	X	X	(ORDER RE507595) (MARKED R133812) Z=60
2	R133303	SHAFT KEY	1		X	X	X	
3	.....	CAMSHAFT	1		X	X	X	(ORDER RE507595) (MARKED R504534)
4	RE507595	CAMSHAFT	1		X	X	X	
5	R119874	BUSHING	1		X	X	X	(ALSO ORDER TY6333)
6	R132518	PLATE	1		X	X	X	
7	19M7867	SCREW	2		X	X	X	M8 X 25

ROCKER ARM, SHAFT AND PUSH RODS
CULBUTEUR, ARBRE DES CULBUTEURS ET TIGES DE CULBUTEURS
BALANCIN, EJE Y VARILLAS DE EMPUJE

TP49263 -UN-20JUN95

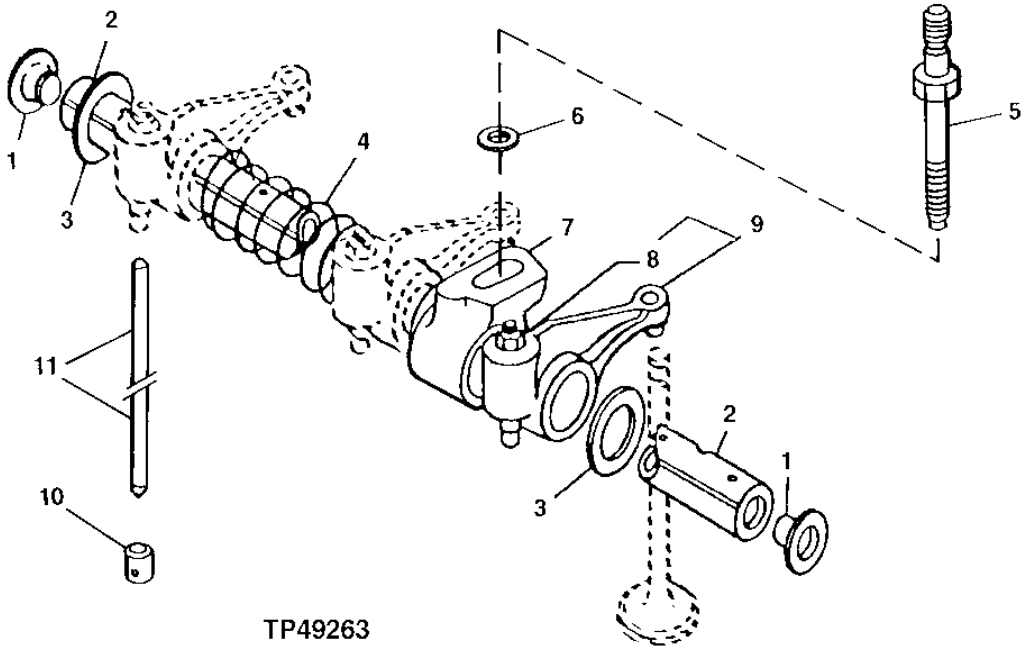

TP49263

KEY	PART NO.	PART NAME	QTY.	ENGINE SERIAL NO.	456 555 000 JJJ	REMARKS
1	R54565	PLUG	2		X X X	
2	R123513	ROCKER ARM SHAFT	1		X X X	
3	T20316	WASHER	2		X X X	
4	T20314	SPRING	3		X X X	
5	R123271	STUD	4		X X X	
6	24M7346	WASHER	4		X X X	11 X 20 X 2 MM
7	R123161	SUPPORT	4		X X X	
8	14M7148	NUT	1		X X X	M10
9	RE508317	ROCKER ARM	8		X X X	
10	R123565	CAM FOLLOWER	8		X X X	
11	R107731	PUSH ROD	8		X X X	

ROCKER ARM COVER
COUVERCLE DE CULBUTEURS
TAPA DE BALANCINES

TP68246 -UN-14MAR00

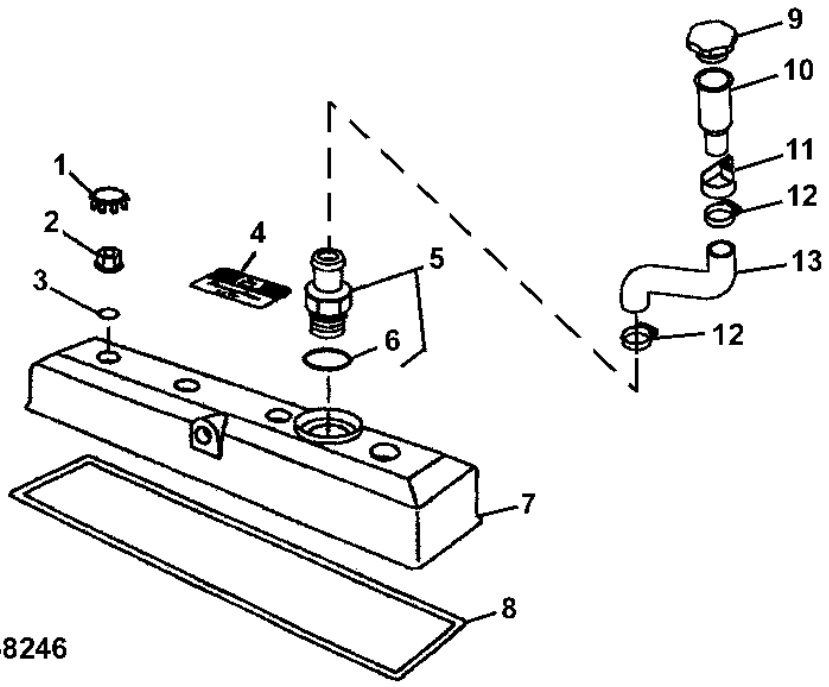

KEY	PART NO.	PART NAME	QTY.	ENGINE SERIAL NO.	455 JJJ 000	REMARKS
1	H23125	PLUG	4		X X X	
2	R123574	NUT	4		X X X	
3	R123575	O-RING	4		X X X	
4	R116324	MEDALLION	1		X X X	
5	RE70041	ADAPTER FITTING	1		X X X	REMOTE ENGINE OIL FILLER
6	R502902	PACKING	1		X X X	(SUB FOR R500001)
7	RE70401	VALVE COVER	1		X X X	
8	R123542	GASKET	1		X X X	
9	RE500250	FILLER CAP	1		X X X	
10	R120864	TUBE	1		X X X	
11	N198631	CLAMP	1		X X X	
12	AR65293	CLAMP	2		X X X	
13	T173721	HOSE	1		X	
	T174677	HOSE	1		X X	

TIMING GEAR COVER
CARTER DE DISTRIBUTION
CUBIERTA DE ENGRANAJES DE DISTRIBUCION

T161901 -UN-19NOV02

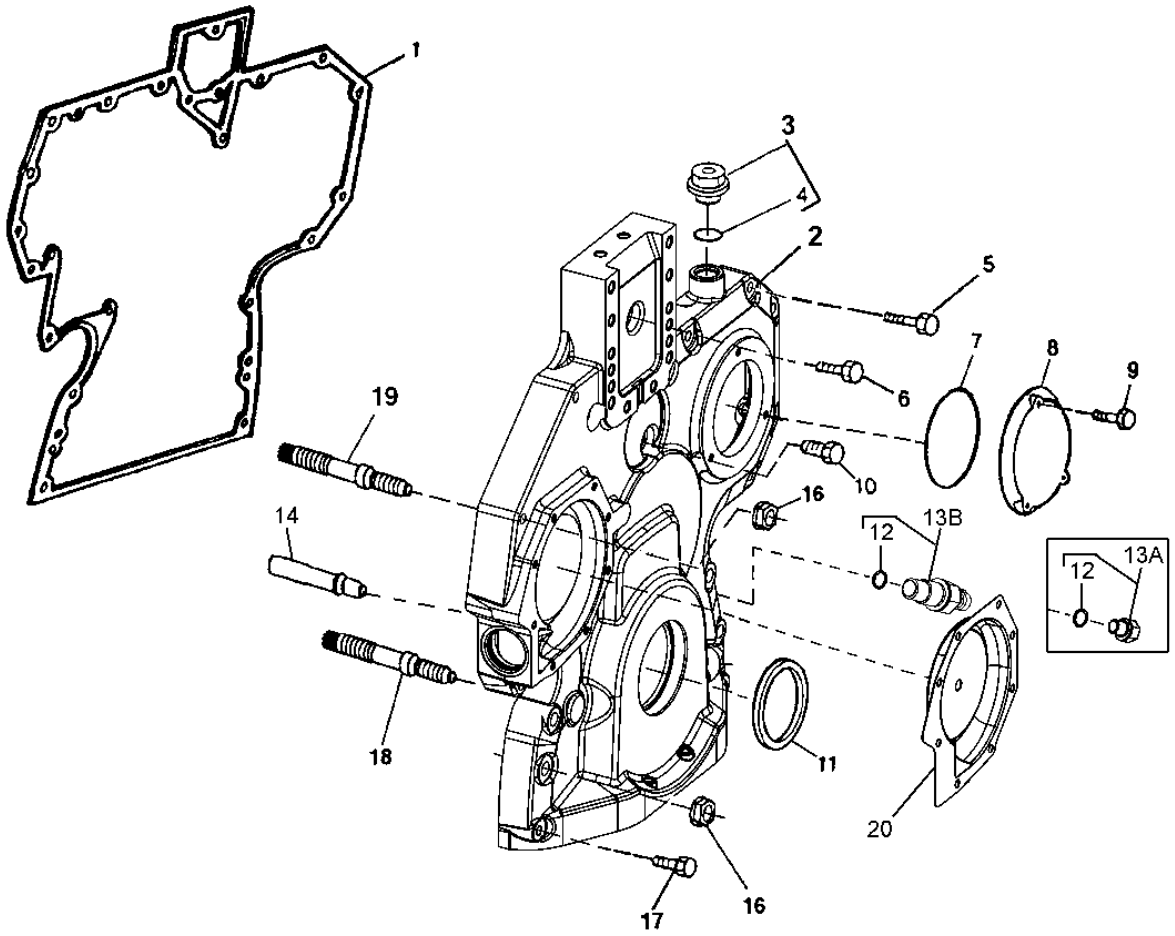

15- 11,12,13,14,20

T161901

TIMING GEAR COVER
CARTER DE DISTRIBUTION
CUBIERTA DE ENGRANAJES DE DISTRIBUCION

KEY	PART NO.	PART NAME	QTY.	ENGINE SERIAL NO.	450J	550J	650J	REMARKS
1	R136516	GASKET	1	-XXXXXX	X	X	X	(USE WITH R504725)
	R520132	GASKET	1	XXXXXX-	X	X	X	(USE WITH R520130)
2	R504725	COVER	1	-XXXXXX	X	X	X	(SUB RE515978, R520130 AND R520132)
	R520130	COVER	1	XXXXXX-	X	X	X	(USE WITH R520132)
3	RE517370	FITTING	1		X	X	X	(WITHOUT TACHOMETER SENSOR)
4	51M7044	O-RING	1		X	X	X	17.300 X 2.200 MM
5	19M8317	SCREW	6		X	X	X	M8 X 40
	19M7867	SCREW	1		X	X	X	M8 X 25
	RE67239	SCREW	1		X	X	X	
6	19M8291	SCREW	1		X	X	X	M8 X 35
7	R121424	O-RING	1		X	X	X	
8	R121411	COVER	1		X	X	X	
9	19M7775	SCREW	3		X	X	X	M6 X 16
10	19M7801	SCREW	1		X	X	X	M8 X 60
11	RE505515	SEAL	1		X	X	X	(A) (SUB FOR RE516340 OR RE59810)
12	51M7044	O-RING	1		X	X	X	(A) 17.300 X 2.200 MM
13A	RE517370	FITTING	1		X	X	X	
13B	RE519144	SENSOR	1		X	X	X	(A) (CRANKSHAFT POSITION)
14	RE505501	BLEED VALVE	1		X	X	X	(A)
15	RE515978	KIT	1		X	X	X	(INCL PARTS MARKED (A))
16	14M7296	FLANGE NUT	6		X	X	X	M10
17	19M7979	SCREW	2		X	X	X	M8 X 55
18	R123584	STUD	4		X	X	X	
19	R134518	STUD	2		X	X	X	
20	RE508566	KIT	1		X	X	X	(A) WATER PUMP INSERT REPAIR

PISTONS AND LINER KITS, CONNECTING RODS AND BEARINGS
PISTON ET CHEMISE JEU DE PIECES, BIELLE ET ROULEMENT
PSITON Y CAMISA DE CILINDRO JUEGO, BIELA Y COJINETE

TP49283 -UN-17JUL95

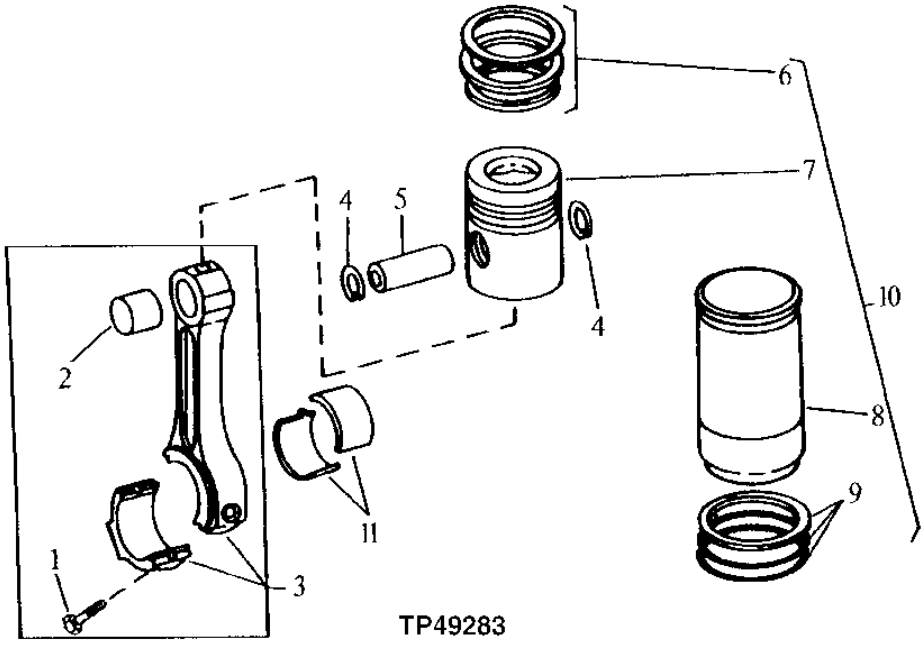

TP49283

KEY	PART NO.	PART NAME	QTY.	ENGINE SERIAL NO.	455 000 JJJ	REMARKS
1	R501124	SCREW	8		X X X	
2	R123960	BUSHING	4		X X X	
3	RE500002	CONNECTING ROD	4		X X X	(MARKED RE500000)
	SE501096	CONNECTING ROD	4		X X X	(REMANUFACTURED FOR RE500002) (CALL 1-800-537-3626)
4	M41029	SNAP RING	8		X X X	
5	R123178	PISTON PIN	4		X X X	
6	RE507852	PISTON RING KIT	4		X X X	
7	.....	PISTON	4		X X X	FURNISHED IN ASSEMBLY
8	.....	CYLINDER LINER	4		X X X	FURNISHED IN ASSEMBLY
9	AR65507	O-RING KIT	4		X X X	(INCLUDES R26121, R48767 AND R55453) CYLINDER LINER
	R26121	O-RING	4		X X X	(TOP GROOVE IN CYLINDER BLOCK)
	R48767	PACKING	4		X X X	(UPPER CYLINDER LINER)
	R55453	O-RING	4		X X X	(LOWER GROOVE)
10	RE507920	PISTON-LINER KIT	4		X X X	(ALSO ORDER (8) M41029)
11	RE65908	BEARING	4		X X X	STD
	RE65909	BEARING	4		X X X	0.254 MM (0.010 INCH) US

ENGINE FRONT PLATE
PLAQUE AVANT DU MOTEUR
PLACA DELANTERA DEL MOTOR

TP80036 -UN-08DEC98

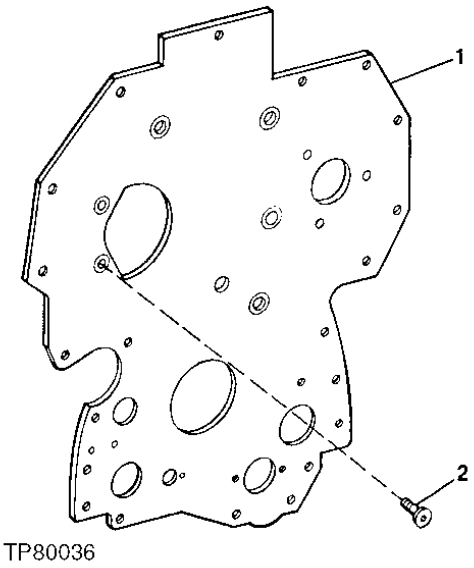

TP80036

KEY	PART NO.	PART NAME	QTY.	ENGINE SERIAL NO.	456 555 000 JJJ	REMARKS
1	R134527	PLATE	1		X X X	
2	R136475	SCREW	6		X X X	

CYLINDER BLOCK
BLOC-CYLINDRES
BLOQUE DE CILINDROS

RGP11880 -UN-03MAY06

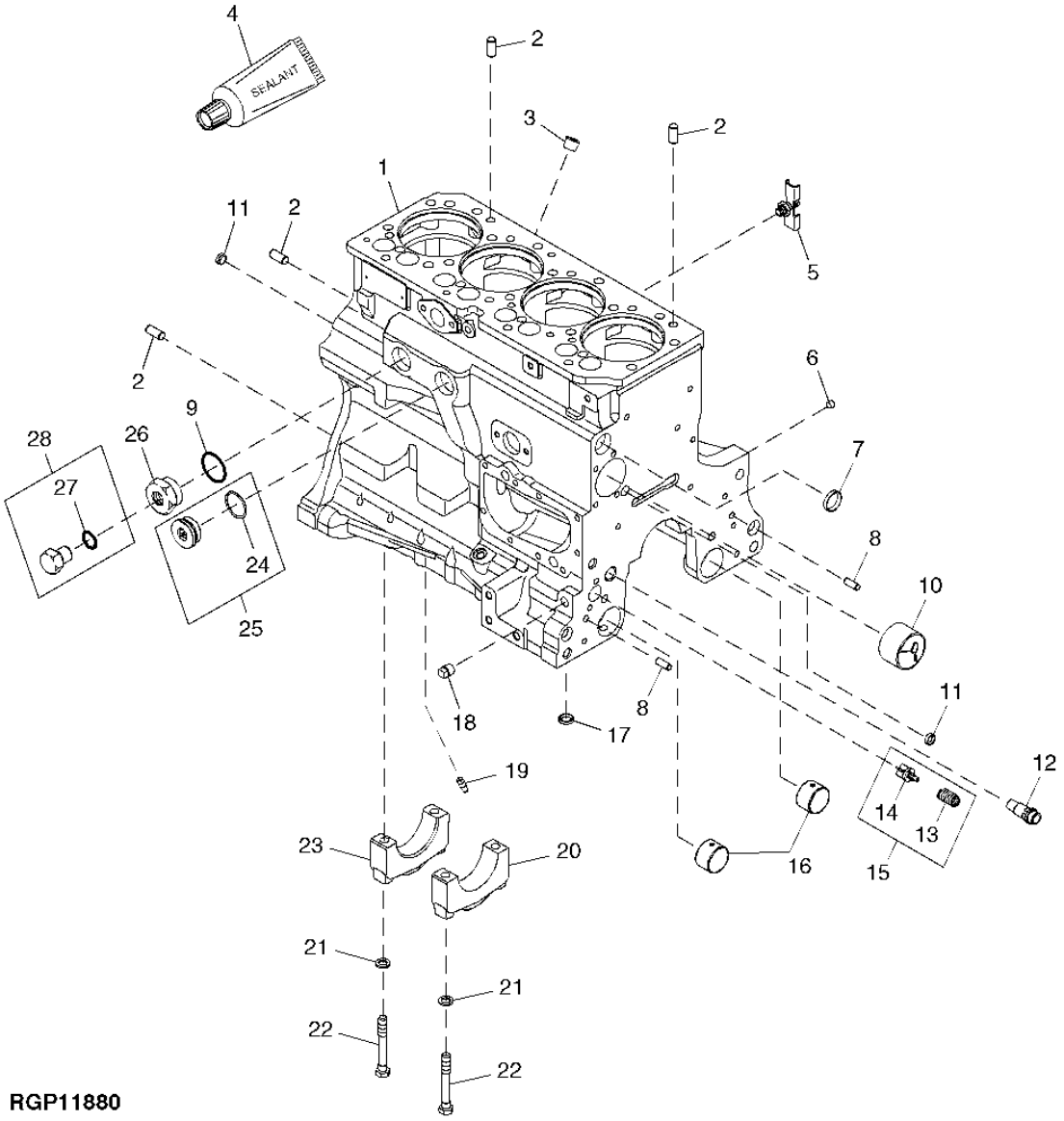

RGP11880

CYLINDER BLOCK
BLOC-CYLINDRES
BLOQUE DE CILINDROS

KEY	PART NO.	PART NAME	QTY.	ENGINE SERIAL NO.	450J	550J	650J	REMARKS
1	.....	CYLINDER BLOCK	1		X	X	X	
2	R48685	DOWEL PIN	4		X	X	X	
3	RE57836	PIPE PLUG	1		X	X	X	1/2"-14NPT, WITH PRE-APPLIED SEALANT
4	PM38655	SEALANT	AR		X	X	X	GASKET MAKER 515® (NON-CALIFORNIA ONLY)
5	AT13740	DRAIN VALVE	AR		X	X	X	1/4"-18NPT
6	R104592	PIPE PLUG	5		X	X	X	1/8"-27NPT
7	R116466	PLUG	1		X	X	X	OD 32MM
8	R26650	DOWEL PIN	2		X	X	X	3/8" X 1"
9	U13639	O-RING	1		X	X	X	1.475" X 0.118"
10	R119874	BUSHING	1		X	X	X	CAMSHAFT, (ALSO ORDER TY6333)
11	T18891	PLUG	2		X	X	X	OD 16MM
12	RE505501	BLEED VALVE	1		X	X	X	OIL PRESSURE REGULATING
13	R111137	SPRING	1		X	X	X	
14	R121043	VALVE	1		X	X	X	
15	RE63674	VALVE	1		X	X	X	OIL BY-PASS
16	R115299	BUSHING	6		X	X	X	BALANCER SHAFT
17	R75892	O-RING	1		X	X	X	0.586" X 0.160"
18	15H623	PIPE PLUG	1		X	X	X	3/8"-18NPT
19	R131182	ORIFICE	4		X	X	X	PISTON COOLING JET
20	R114241	BEARING CAP	4		X	X	X	MAIN
21	T20168	WASHER	10		X	X	X	
22	T23474	CAP SCREW	10		X	X	X	
23	R132186	BEARING CAP	1		X	X	X	THRUST
24	U13639	O-RING	1		X	X	X	1.475" X 0.118"
25	RE508185	FITTING	1		X	X	X	1-5/8"-12UN
26	R123616	PLUG	1		X	X	X	1-5/8"-12UN X M18X1.5
27	51M7043	O-RING	1		X	X	X	15.300 X 2.200 MM
28	RE46685	FITTING PLUG	1		X	X	X	M18 X 1.5

ENGINE SHORT BLOCK
BLOC MOTEUR COURT
BLOQUE CORTO DEL MOTOR

TX1004716 -UN-14MAR06

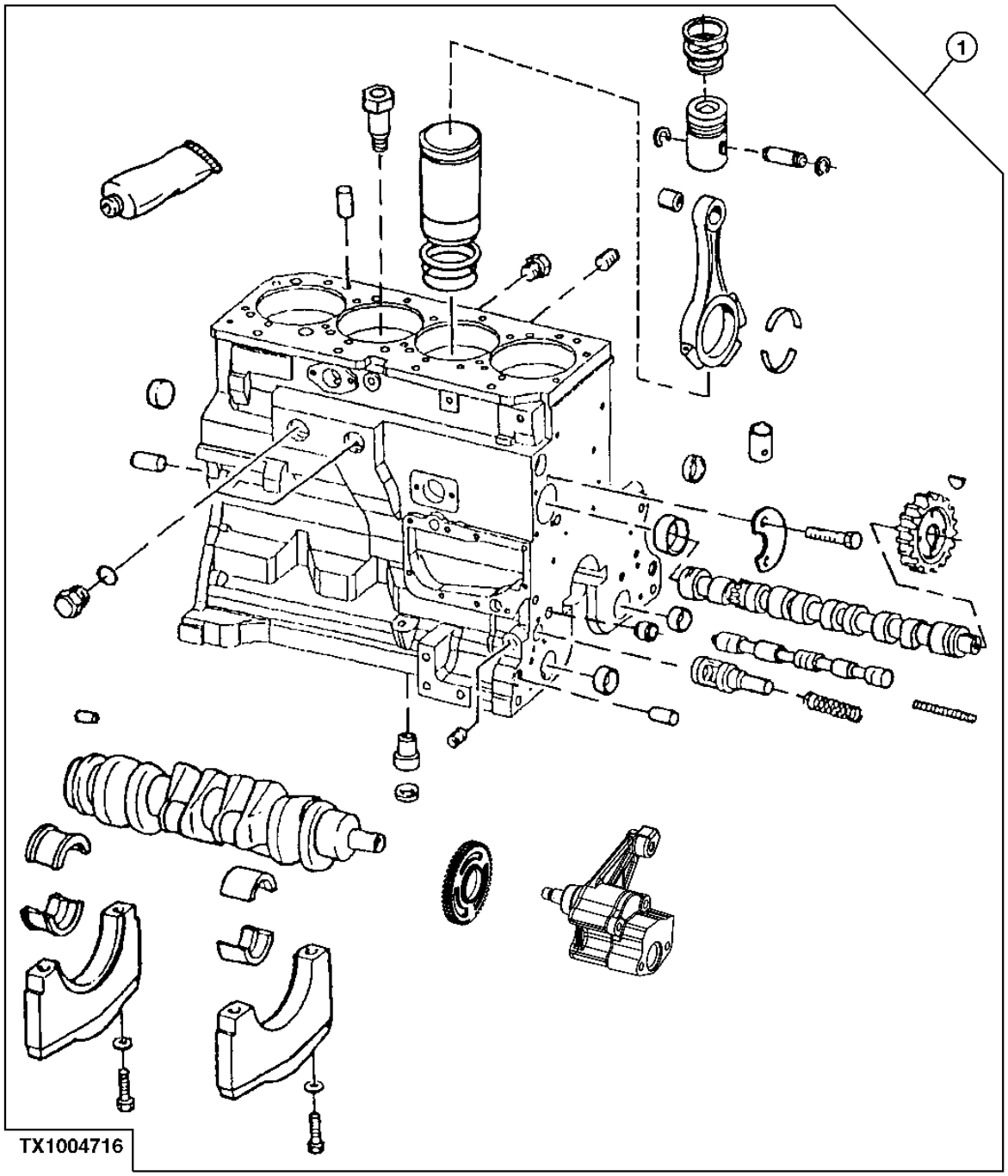

THIS PARTS LISTING IS CONTINUED

ENGINE SHORT BLOCK
BLOC MOTEUR COURT
BLOQUE CORTO DEL MOTOR

KEY	PART NO.	PART NAME	QTY.	ENGINE SERIAL NO.	4 5 6 5 5 5 0 0 0 J J J	REMARKS
1	RE520023	SHORT BLOCK ASSEMBLY	1		X X X	

LIFT STRAPS
ECLISSES D'APAREIL DE LEVAGE
TIRAS DE ELEVADOR

RGP7560 -UN-26JUN01

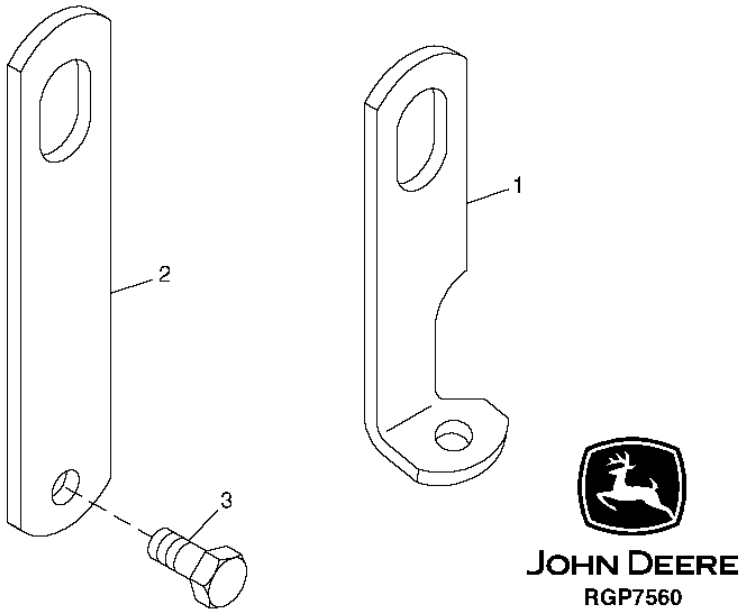

KEY	PART NO.	PART NAME	QTY.	ENGINE SERIAL NO.	4 5 6 5 5 5 0 0 0 J J J	REMARKS
1	.....	STRAP	1		X X X	R502175 NOT FOR SERVICE (FRONT)
2	R502329	STRAP	1		X X X	(REAR)
3	19M7788	SCREW	2		X X X	M12 X 25

OIL DIPSTICK AND TUBE
JAUGE ET TUBE D'HUILE
VARILLA DE MEDICION Y TUBO

TX1004797 -UN-15MAR06

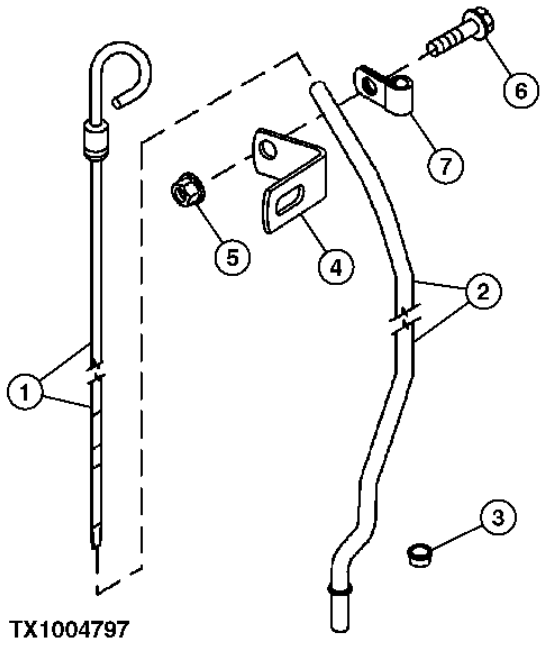

KEY	PART NO.	PART NAME	QTY.	ENGINE SERIAL NO.	4 5 6 5 5 5 0 0 0 J J J	REMARKS
1	RE500661	DIPSTICK	1		X X X	(SUB RE528026)
2	R502464	DIPSTICK TUBE	1		X X X	
3	R502725	PLUG	1		X X X	
4	R502287	BRACKET	1		X X X	
5	14M7298	FLANGE NUT	1		X X X	M8
6	19M7867	SCREW	1		X X X	M8 X 25
7	T28862	CLAMP	1		X X X	

OIL PUMP
POMPE A HUILE
BOMBA DE ACEITE

TX1004798 -UN-22MAR06

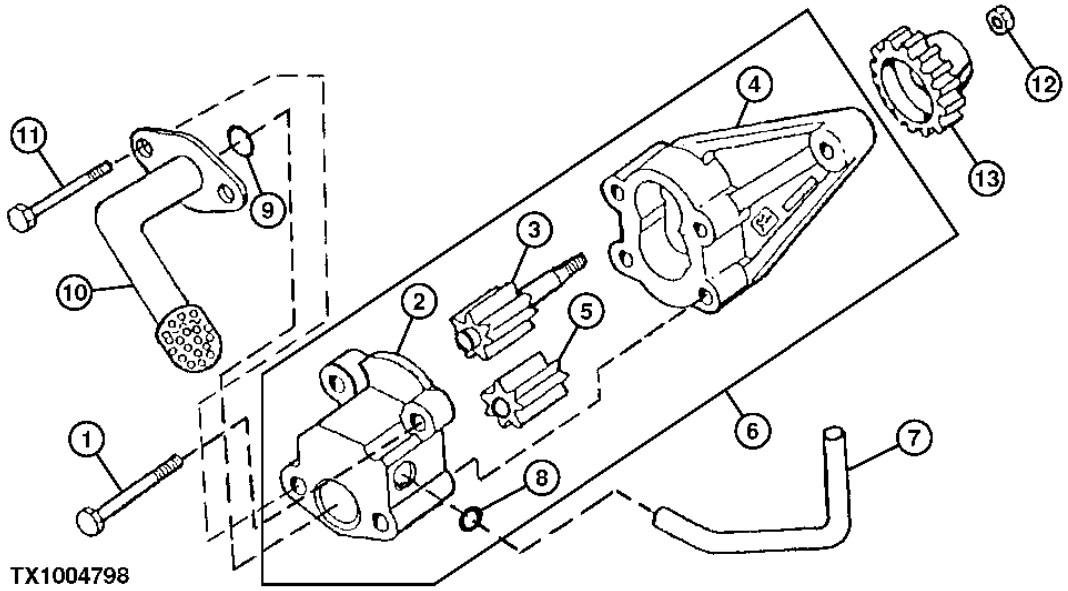

KEY	PART NO.	PART NAME	QTY.	ENGINE SERIAL NO.	456 555 000 JJJ	REMARKS
1	19M8987	SCREW	2		X X X	M8 X 65
2	.....	COVER	1		X X X	
3	.....	GEAR	1		X X X	
4	.....	HOUSING	1		X X X	
5	.....	GEAR	1		X X X	
6	RE504914	OIL PUMP	1		X X X	(MARKED R502867)
7	R121376	TUBE	1		X X X	
8	R97185	O-RING	1		X X X	
9	R61871	O-RING	1		X X X	
10	RE57619	OIL PUMP INTAKE	1		X X X	
11	19M8986	SCREW	2		X X X	M8 X 100
12	14M7066	NUT	1		X X X	M12
13	R120638	GEAR	1		X X X	(Z = 30)

ENGINE OIL FILLER OPENING COVER
COUVERCLE DE L'ORIFICE DE REMPLISSAGE D'HUILE MOTEUR
TAPA DE LA BOCA DE LLENADO DE ACEITE DEL MOTOR

TX1004800 -UN-15MAR06

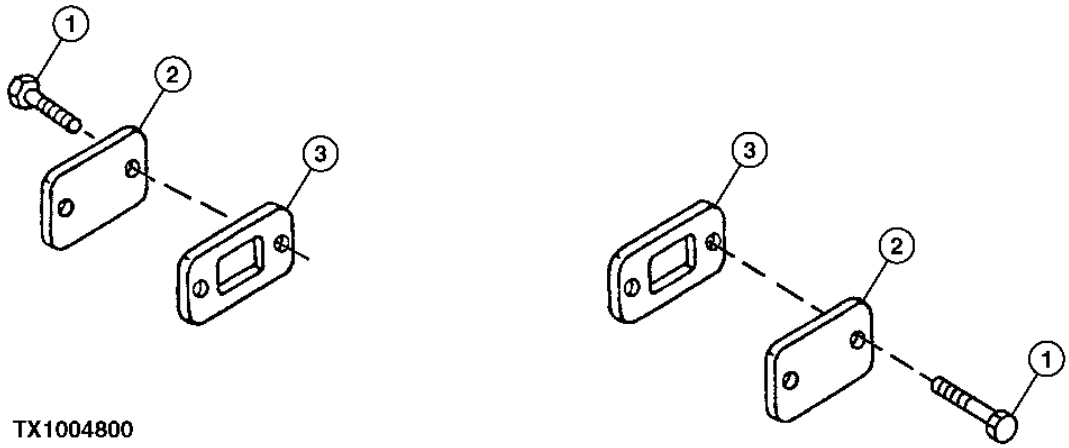

TX1004800

KEY	PART NO.	PART NAME	QTY.	ENGINE SERIAL NO.	456 555 000 JJJ	REMARKS
1	RE67238	SCREW	4		X X X	(WITH PRE-APPLIED SEALANT)
2	R116296	COVER	2		X X X	
3	R136495	GASKET	2		X X X	

ENGINE OIL PAN
CARTER D'HUILE DE MOTEUR
CARTER DEL MOTEUR

TP80038 -UN-15DEC98

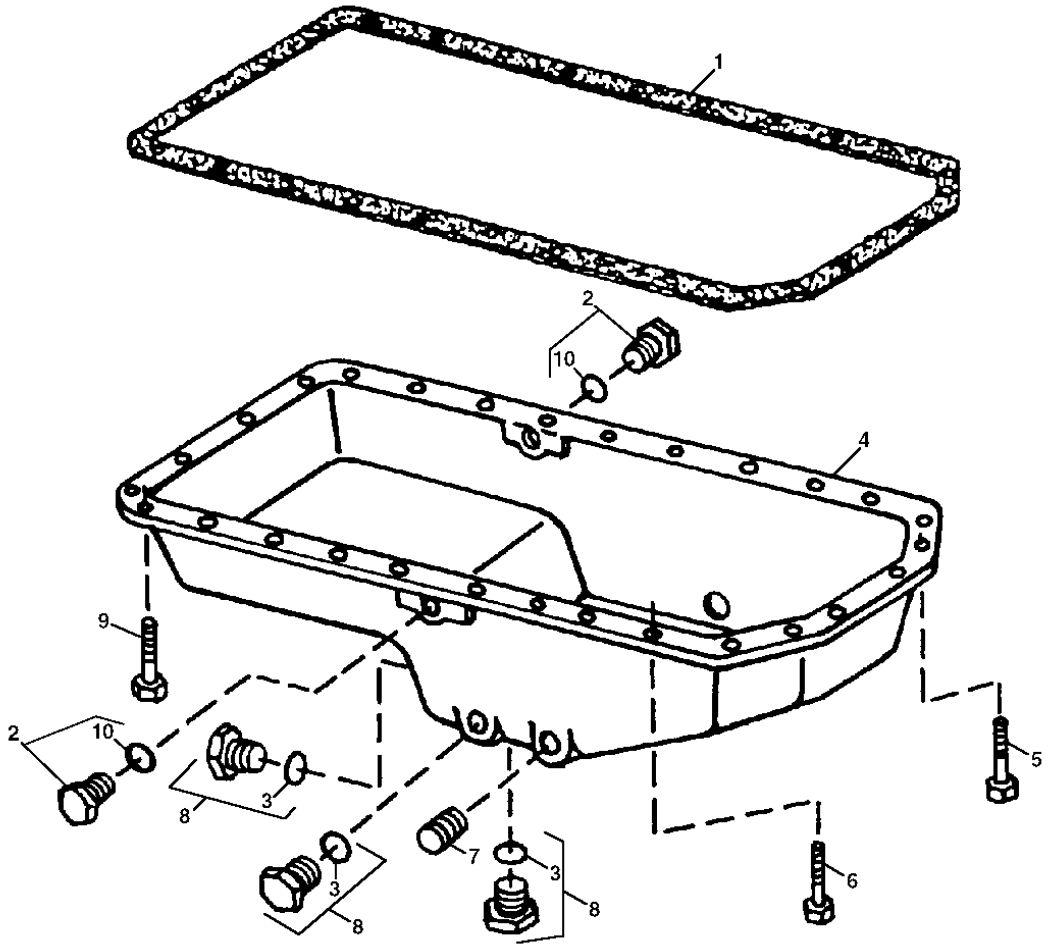

TP80038

ENGINE OIL PAN
CARTER D'HUILE DE MOTEUR
CARTER DEL MOTEUR

KEY	PART NO.	PART NAME	QTY.	ENGINE SERIAL NO.	455 000 JJJ	REMARKS
1	R521493	GASKET	1		X X X	
2	RE46687	DRAIN PLUG	2		X X X	
3	51M7043	O-RING	3		X X X	15.300 X 2.200 MM
4	R121621	OIL PAN	1		X X X	
5	19M7868	SCREW	6		X X X	M8 X 30, (BOTTOM, REAR AND RIGHT SIDE DRAINS)
6	19M7867	SCREW	18		X X X	M8 X 25
7	15H690	PIPE PLUG	1		X X X	
8	RE46685	FITTING PLUG	3		X X X	
9	19M7799	SCREW	4		X X X	M8 X 45
10	51M7045	O-RING	2		X X X	

OIL FILTER
FILTRE A HUILE
FILTRO DE ACEITE

T161772 -UN-19NOV02

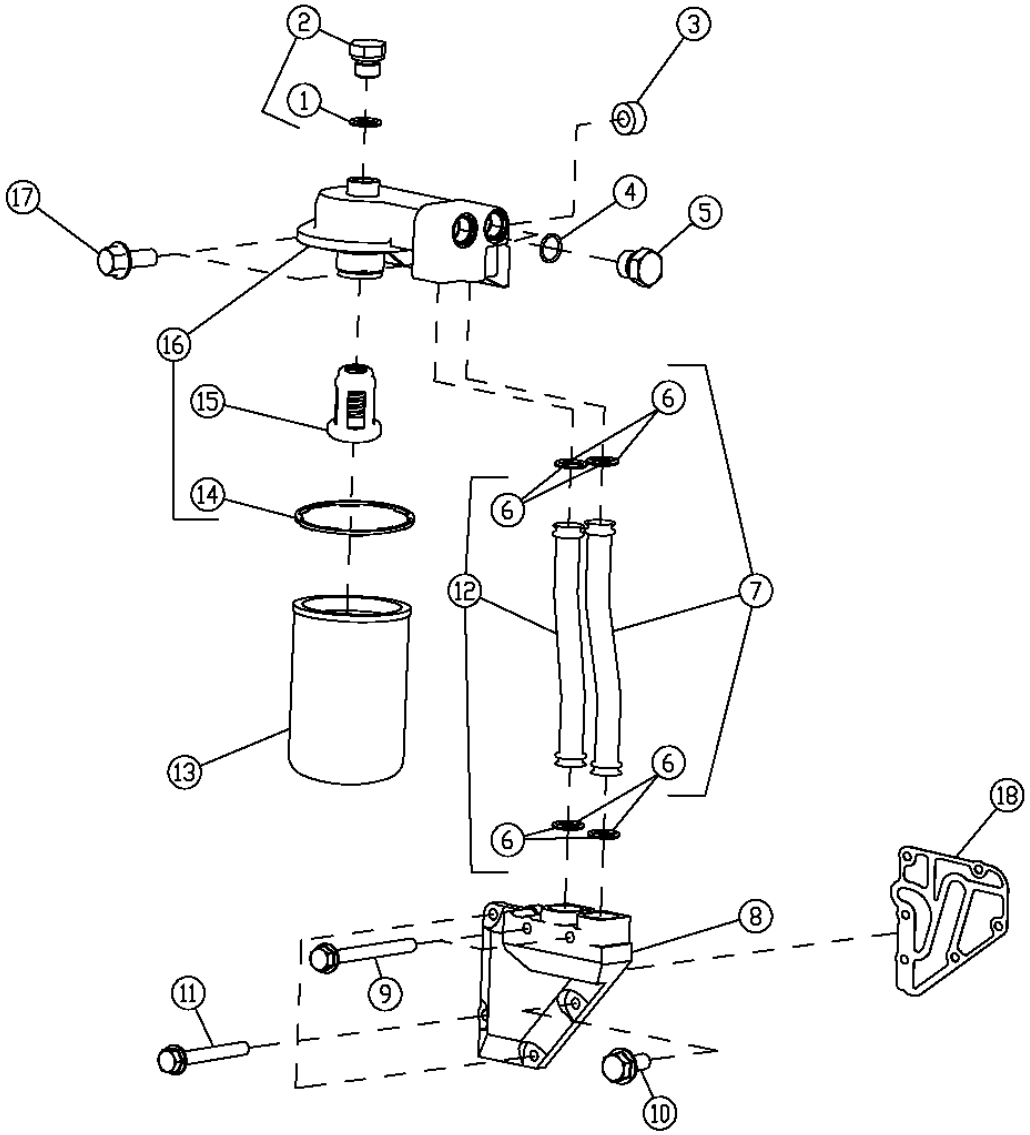

T161772

OIL FILTER
FILTRE A HUILE
FILTRO DE ACEITE

KEY	PART NO.	PART NAME	QTY.	ENGINE SERIAL NO.	450J	550J	650J	REMARKS
1	51M7042	O-RING	1		X	X	X	
2	RE52242	DRAIN PLUG	1		X	X	X	
3	R114358	SPACER	1		X	X	X	
4	51M7045	O-RING	2		X	X	X	
5	R116115	FITTING	2		X	X	X	
6	R517488	O-RING	2		X	X	X	
	R518507	O-RING	2					
7	RE519743	TUBE	1		X	X	X	
8	R501436	ADAPTER FITTING	1		X	X	X	
9	19M7913	SCREW	2		X	X	X	M8 X 90
10	RE67238	SCREW	1		X	X	X	
11	19M7802	SCREW	3		X	X	X	M8 X 65
12	RE519742	TUBE	1		X	X	X	
13	RE504836	OIL FILTER	1		X	X	X	(ALSO ORDER R502513)
14	R502513	SEAL	1		X	X	X	
15	RE504543	VALVE	1		X	X	X	
16	RE504563	FILTER HEAD	1		X	X	X	(MARKED R502504)
17	19M7835	SCREW	2		X	X	X	M10 X 35
18	R502864	GASKET	1		X	X	X	
19	19M8618	SCREW	1		X	X	X	M6 X 12
20	R518145	HALF CLAMP	1		X	X	X	
21	R518146	HALF CLAMP	1		X	X	X	

STEEL OIL PAN (ENGINE SERIAL NO. XXXXXX-)

RGP11507 -UN-01FEB06

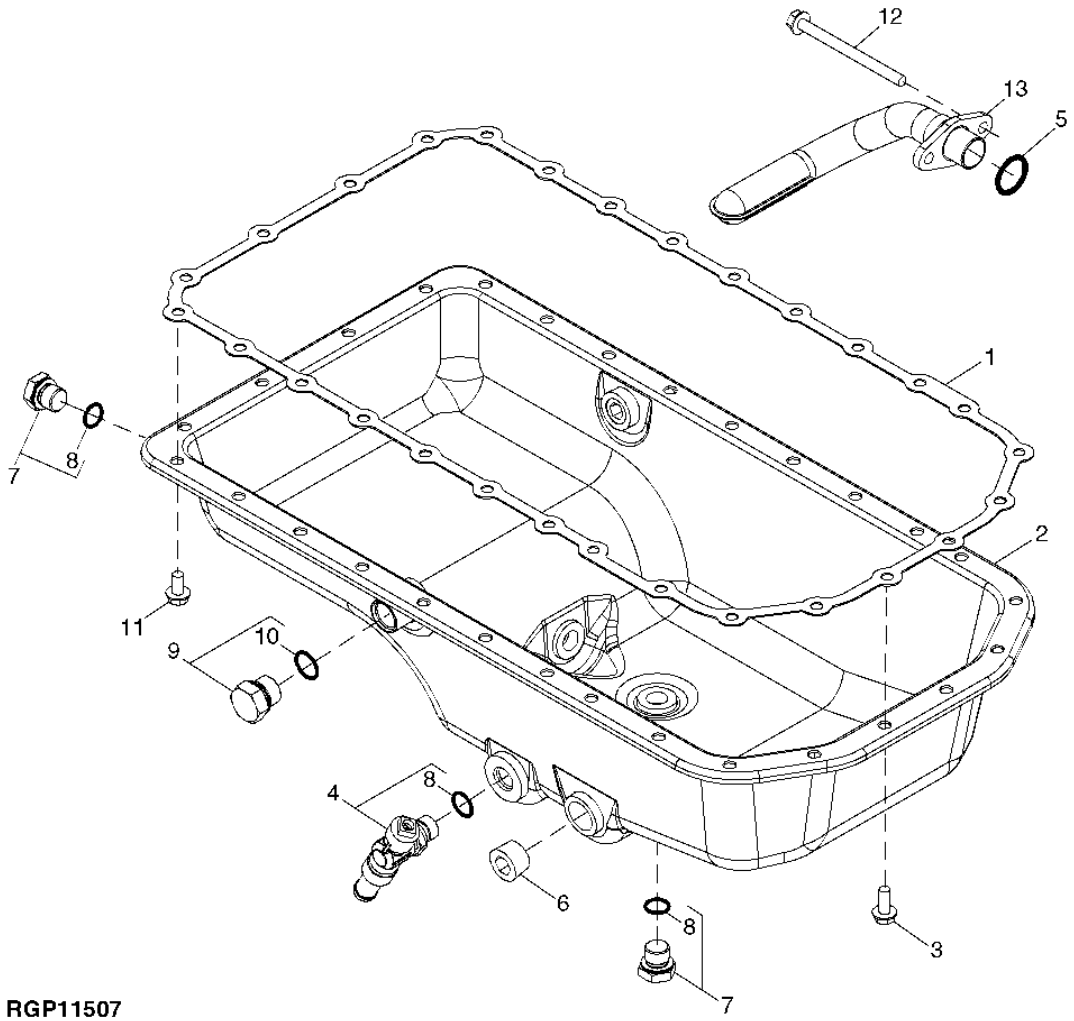

RGP11507

STEEL OIL PAN (ENGINE SERIAL NO. XXXXXX-)

KEY	PART NO.	PART NAME	QTY.	ENGINE SERIAL NO.	456 555 000 JJJ	REMARKS
1	R521493	GASKET	1		X X X	
2	RE520147	OIL PAN	1		X X X	(MARKED R518101)
3	19M8062	SCREW	6		X X X	M8 X 20
4	RE507952	DRAIN VALVE	NA			
	RE46685	FITTING PLUG	1		X X X	
5	R61871	O-RING	1		X X X	
6	15H690	PIPE PLUG	1		X X X	3/4"
7	RE46685	FITTING PLUG	2		X X X	M18
8	51M7043	O-RING	3		X X X	15.300 X 2.200 MM
9	RE46687	DRAIN PLUG	2		X X X	M22
10	51M7045	O-RING	2		X X X	19.300 X 2.200 MM
11	19M8163	BOLT	22		X X X	M8 X 16
12	19M8986	SCREW	2		X X X	M8 X 100
13	RE57619	OIL PUMP INTAKE	1		X X X	

VENTILATING HOSE
FLEXIBLE DE VENTILATION
MANGUERA DE VENTILACION

T152236 -UN-05MAR02

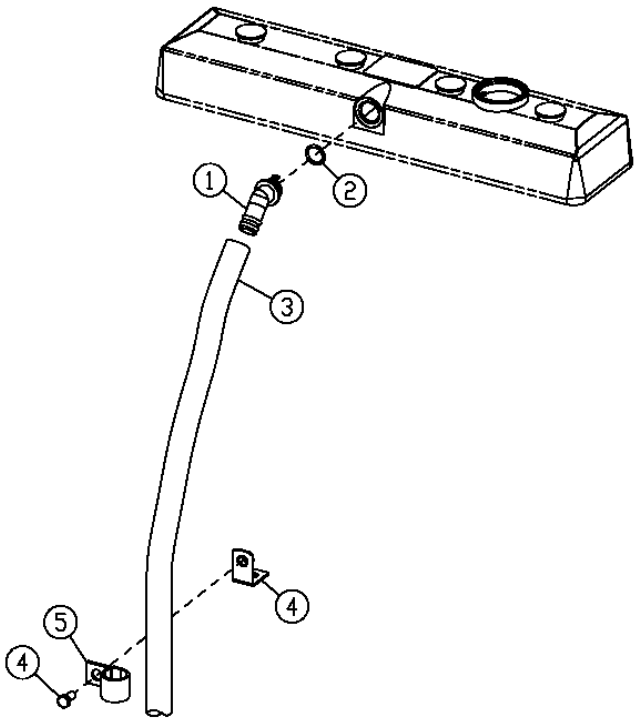

T152236

VENTILATING HOSE
FLEXIBLE DE VENTILATION
MANGUERA DE VENTILACION

KEY	PART NO.	PART NAME	QTY.	ENGINE SERIAL NO.	456 555 000 JJJ	REMARKS
1	R120467	ELBOW FITTING	1		X X X	
2	R72328	O-RING	1		X X X	
3	H36031	HOSE	1		X X X	
4	RE504036	BRACKET	1		X X X	
5	R72659	CLAMP	1		X X X	
6	19M7783	SCREW	1		X X X	M10 X 16

CYLINDER HEAD, HEAD GASKET AND VALVES
CULASSE, JOINT DE CULASSE ET SOUPAPES
CULATA, EMPAQUETADURA DE CULATA Y VALVULAS

TP80018 -UN-22OCT98

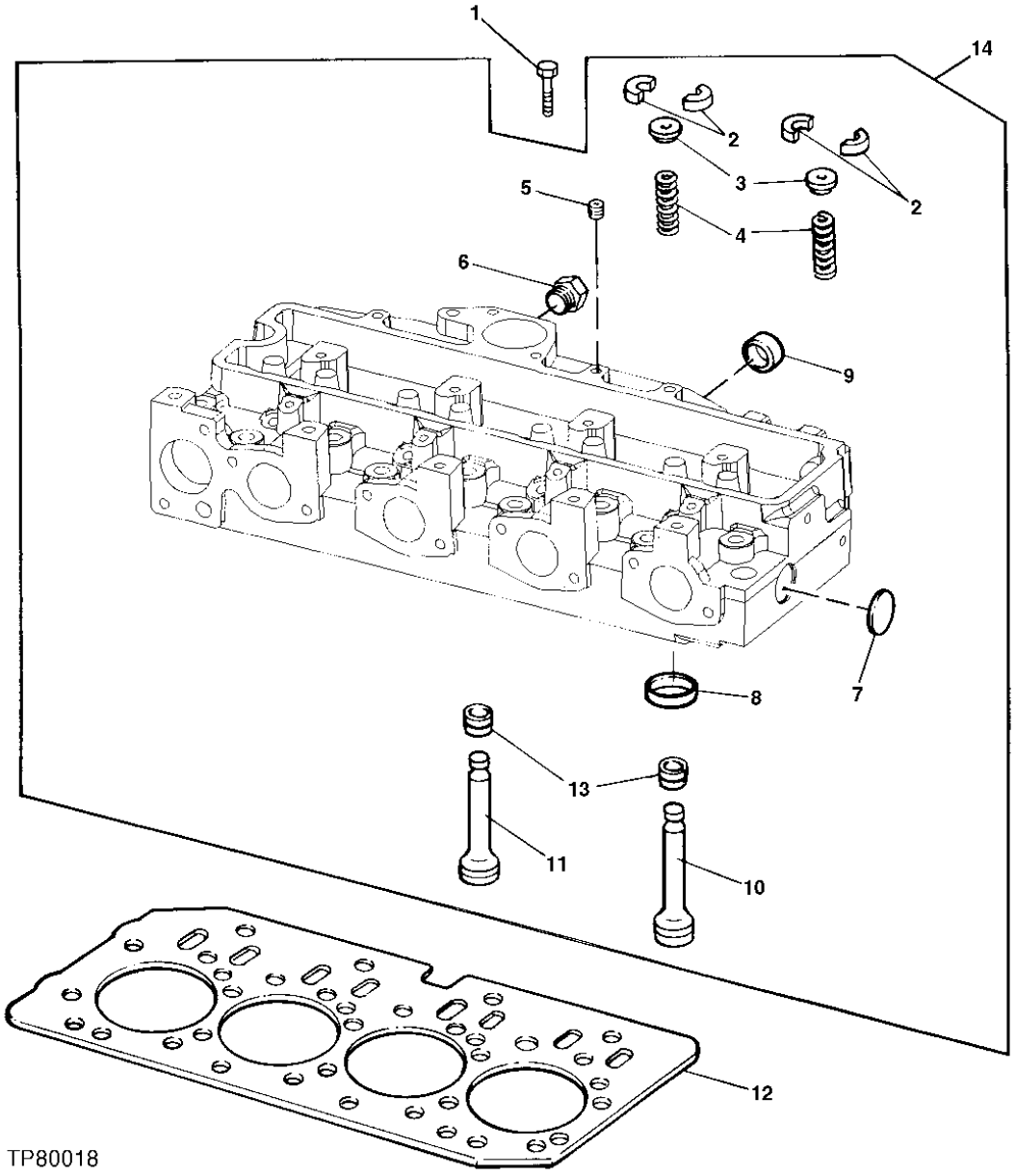

TP80018

CYLINDER HEAD, VALVES AND EXHAUST VALVE BRAKE 0409

CYLINDER HEAD, HEAD GASKET AND VALVES
CULASSE, JOINT DE CULASSE ET SOUPAPES
CULATA, EMPAQUETADURA DE CULATA Y VALVULAS

KEY	PART NO.	PART NAME	QTY.	ENGINE SERIAL NO.	450J	550J	650J	REMARKS
1	R85363	CAP SCREW	18		X	X	X	
2	R91889	RETAINER	16		X	X	X	
3	RE60005	ROTATOR	8		X	X	X	
4	R26125	SPRING	8		X	X	X	
5	R104592	PIPE PLUG	1		X	X	X	
6	T58477	FITTING	1		X	X	X	
	R26906	O-RING	1		X	X	X	
7	CD16284	PLUG	1		X	X	X	
8	R98063	VALVE SEAT INSERT	4		X	X	X	(STD) INTAKE
	R98335	VALVE SEAT INSERT	4		X	X	X	(OS) INTAKE
	R85687	VALVE SEAT INSERT	4		X	X	X	(STD) EXHAUST
	R93910	VALVE SEAT INSERT	4		X	X	X	(OS) EXHAUST
	R106831	VALVE SEAT INSERT	4		X	X	X	(EXHAUST) OD 43.1MM (1.70 INCH)
	R106829	VALVE SEAT INSERT	4		X	X	X	(INTAKE) OD 47.22MM (1.86 INCH)
9	R43409	PLUG	2		X	X	X	
10	R90692	EXHAUST VALVE	4		X	X	X	STD
11	R98062	INTAKE VALVE	4		X	X	X	STD
12	R116515	ENGINE CYLINDER HEAD GASKET	1		X	X	X	
13	RE31617	SEAL	8		X	X	X	
14	RE57234	CYLINDER HEAD	1		X	X	X	(MARKED R121402)

EXHAUST MANIFOLD
COLLECTEUR D'ECHAPPEMENT
COLECTOR DE ESCAPE

TP49344 -UN-22NOV95

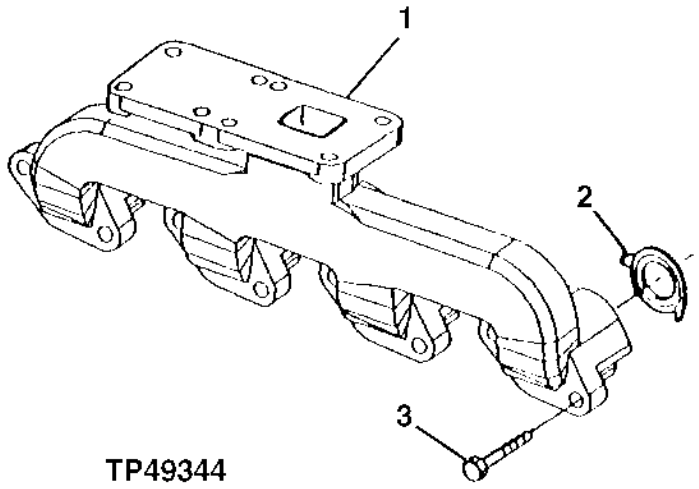

KEY	PART NO.	PART NAME	QTY.	ENGINE SERIAL NO.	450 550 650 J J J	REMARKS
1	R132261	EXHAUST MANIFOLD	1		X X X	
2	R90658	GASKET	4		X X X	
3	19M7810	SCREW	8		X X X	M10 X 80

FUEL INJECTION NOZZLE
INJECTEURS DINJECTION DE CARBURANT
TOBERAS DE INYECCION DE COMBUSTIBLE

RGP10096 -UN-28AUG03

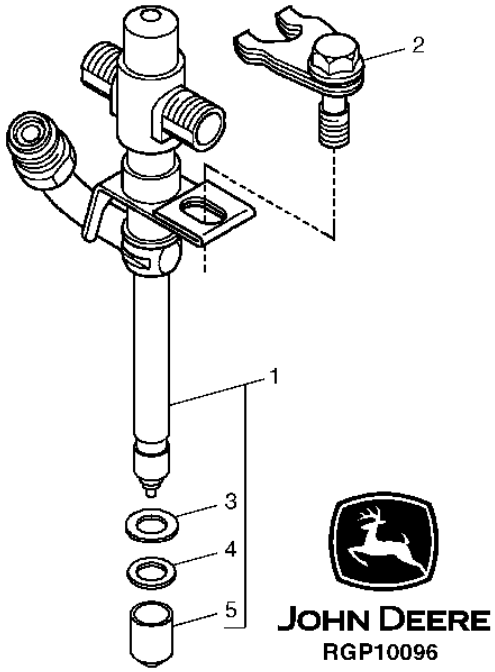

KEY	PART NO.	PART NAME	QTY.	ENGINE SERIAL NO.	456 555 000 JJJ	REMARKS
1	RE507766	INJECTION NOZZLE	6		X X X	
	SE500831	INJECTION NOZZLE	1		X X X	(REMANUFACTURED FOR RE507766) (PKG OF 6)
	SE501103	NOZZLE	AR		X X X	(REMANUFACTURED FOR RE507766) (PKG OF 1)
	RE531116	KIT	1		X X X	
2	RE508716	CLAMP	6		X X X	
3	R92352	PACKING	1		X X X	
4	R500390	WASHER	1		X X X	
5	T24472	CAP	1		X X X	

FUEL INJECTION SYSTEM
CIRCUIT D'INJECTION DE CARBURANT
SISTEMA DE INYECCION DE COMBUSTIBLE

TX1004787 -UN-15MAR06

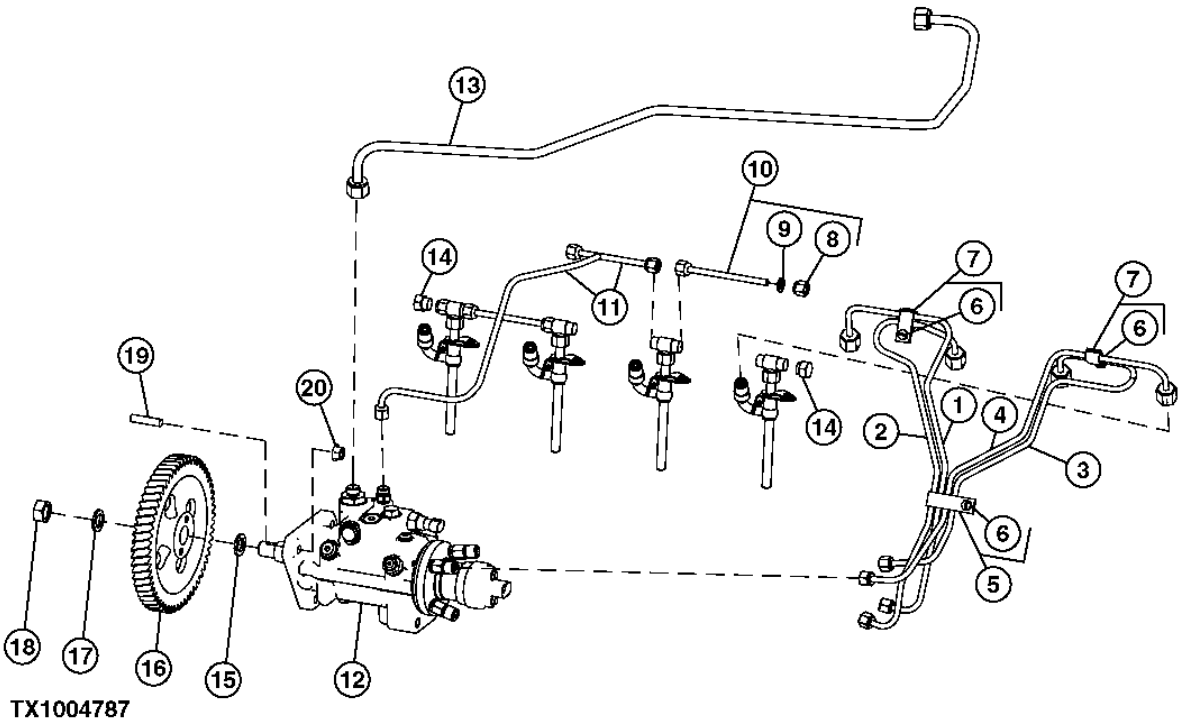

TX1004787

FUEL INJECTION SYSTEM
CIRCUIT D'INJECTION DE CARBURANT
SISTEMA DE INYECCION DE COMBUSTIBLE

KEY	PART NO.	PART NAME	QTY.	ENGINE SERIAL NO.	450J	550J	650J	REMARKS
1	RE507646	FUEL LINE	1		X	X	X	NO.1
2	RE507647	FUEL LINE	1		X	X	X	NO.2
3	RE507648	FUEL LINE	1		X	X	X	NO.3
4	RE507649	FUEL LINE	1		X	X	X	NO.4
5	RE19799	CLAMP	1		X	X	X	
6	19M7923	CAP SCREW	3		X	X	X	M6 X 12
7	RE19797	CLAMP	1		X	X	X	
8	R123593	TUBE NUT	4		X	X	X	
9	R51936	SEALING WASHER	4		X	X	X	
10	RE68748	TUBE	2		X	X	X	
11	RE507598	FUEL LINE	1		X	X	X	
12	RE518087	FUEL INJECTION PUMP	1		X	X		STANADYNE DE10
	SE501235	FUEL INJECTION PUMP	1		X	X		(REMANUFACTURED FOR RE518087) (CALL 1-800-537-3626)
	RE518086	FUEL INJECTION PUMP	1				X	STANADYNE DE10
	SE501234	FUEL INJECTION PUMP	1				X	(REMANUFACTURED FOR RE518086) (CALL 1-800-537-3626)
13	RE507597	FUEL LINE	1		X	X	X	
14	AR85519	PLUG	2		X	X	X	
15	R502076	O-RING	1		X	X	X	
16	R505472	GEAR	1		X	X	X	
17	R132874	WASHER	1		X	X	X	
18	R91360	NUT	1		X	X	X	
19	R116386	STUD	3		X	X	X	
20	14M7298	FLANGE NUT	3		X	X	X	M8

AIR INTAKE SYSTEM
SYSTEME DADMISSION DAIR
SISTEMA DE ADMISION DE AIRE

TX1004730 -UN-14MAR06

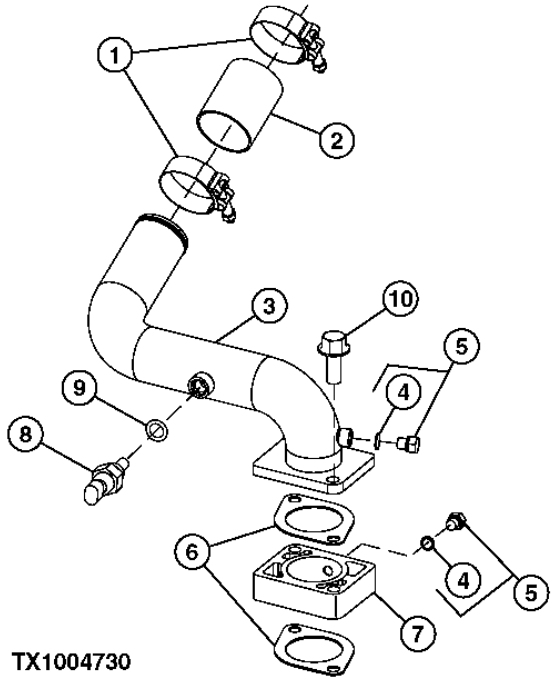

TX1004730

KEY	PART NO.	PART NAME	QTY.	ENGINE SERIAL NO.	455 000 JJJ	REMARKS
1	R110531	CLAMP	2		X X	
2	R500596	HOSE	1		X X	
3	RE506949	STRUCTURAL TUBING	1		X X	
	RE508762	INTAKE MANIFOLD	1		X	
4	51M7039	O-RING	2		X X X	8.100 X 1.600 MM
5	RE60071	FITTING	2		X X X	
6	R81275	GASKET	2		X X X	
7	R501472	SPACER	1		X X X	(ALSO ORDER (2) R81275) (AIR INLET)
8	RE61812	SENSOR	1		X X X	(TEMPERATURE)
9	51M7041	O-RING	1		X X X	11.300 X 2.200 MM
10	19M8292	SCREW	2		X X X	M10 X 50

MEMORANDA
MEMORANDA
MEMORANDA

BALANCER SHAFT
ARBRE DE COMPENSATION
EJE EQUILIBRADOR

T149536 -UN-03JAN02

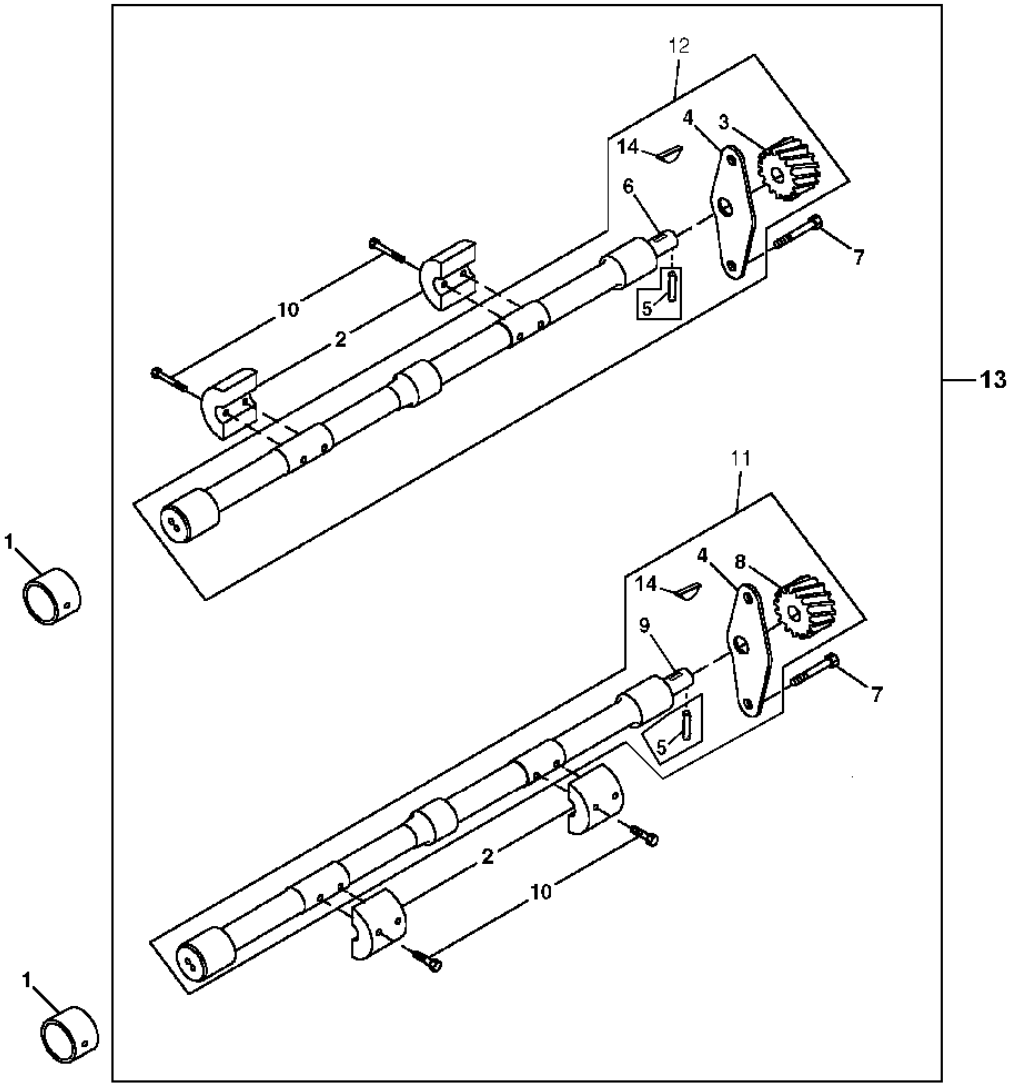

T149536

BALANCER SHAFT
ARBRE DE COMPENSATION
EJE EQUILIBRADOR

KEY	PART NO.	PART NAME	QTY.	SERIAL NO.	450J	550J	650J	REMARKS
1	R115299	BUSHING	6		X	X	X	
2	R500265	WEIGHT	4		X	X	X	
3	.....	GEAR	1		X	X	X	L.H. (Z = 15)
4	.....	PLATE	2		X	X	X	
5	34M7089	DOWEL PIN	2		X	X	X	4 X 12 MM
6	.....	PLATFORM	1		X	X	X	L.H.
7	19M8998	SCREW	4		X	X	X	M8 X 12
8	.....	GEAR	1		X	X	X	R.H. (Z = 15)
9	.....	PLATFORM	1		X	X	X	R.H.
10	19M8882	SCREW	8		X	X	X	M8 X 40
11	RE500448	BALANCER SHAFT	1		X	X	X	(MARKED R500668) R.H.
12	RE500449	BALANCER SHAFT	1		X	X	X	(MARKED R500266) L.H.
13	RE504741	BALANCER SHAFT	1		X	X	X	
14	R133303	SHAFT KEY	2		X	X	X	

TURBOCHARGER
TURBOCOMPRESSEUR
TURBOCARGADOR

RGP10091 -UN-28AUG03

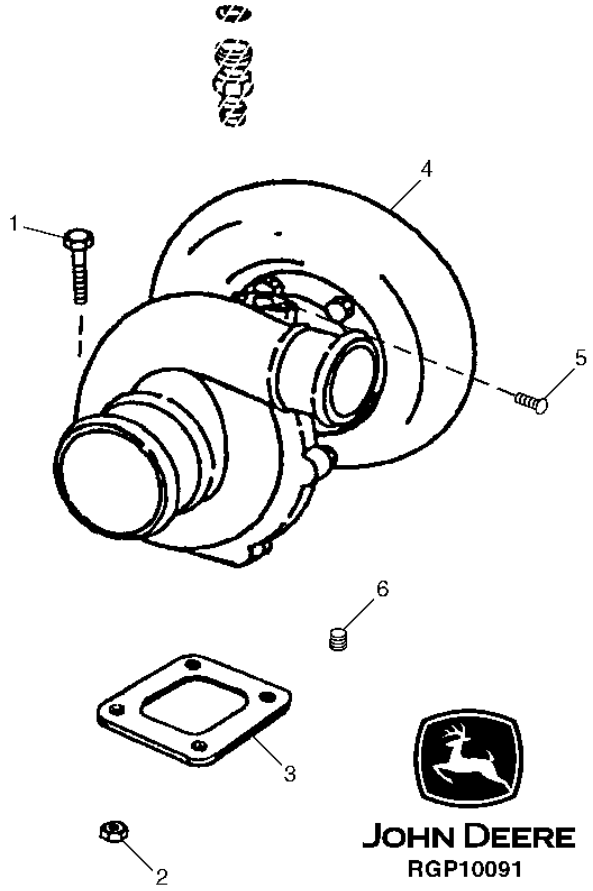

TURBOCHARGER
TURBOCOMPRESSEUR
TURBOCARGADOR

KEY	PART NO.	PART NAME	QTY.	ENGINE SERIAL NO.	450J	550J	650J	REMARKS
1	19M8162	SCREW	4		X	X	X	M10 X 40
2	14M7296	FLANGE NUT	4		X	X	X	M10
3	R92097	GASKET	1		X	X	X	
4	RE509572	TURBOCHARGER	1		X	X		(MARKED RE508968)
	SE501155	TURBOCHARGER	1		X	X		(MARKED RE526871)
	SE501155	TURBOCHARGER	1				X	(MARKED RE526873) (1-888-697-3626)
	RE520461	TURBOCHARGER	1				X	(MARKED RE520459)
	RE515977	TURBOCHARGER	1				X	(MARKED RE520459) (REMANUFACTURED)
5	37H26	SCREW	2				X	0.116" X 1/4"
6	RE57836	PIPE PLUG	1				X	

TURBOCHARGER OIL LINES
CONDUITES D'HUILE DE TURBOCOMPRESSEUR
LINEAS DE ACEITE DEL TURBOALIMENTADOR

TX1005707 -UN-03APR06

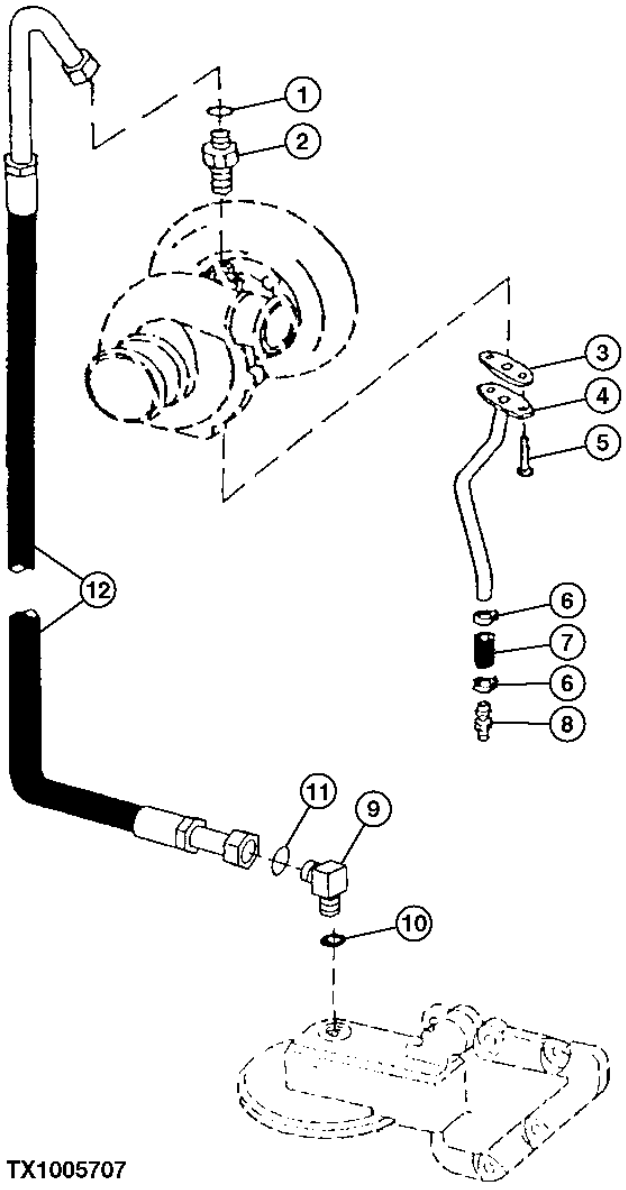

TX1005707

TURBOCHARGER OIL LINES
CONDUITES D'HUILE DE TURBOCOMPRESSEUR
LINEAS DE ACEITE DEL TURBOALIMENTADOR

KEY	PART NO.	PART NAME	QTY.	ENGINE SERIAL NO.	450 J	550 J	650 J	REMARKS
1	R63548	O-RING	1		X	X	X	
2	M87733	ADAPTER FITTING	1		X	X	X	
3	R503891	GASKET	1		X	X		
	R123570	GASKET	1				X	
4	RE509555	OIL LINE	1		X	X		
	RE59547	OIL LINE	1				X	
5	19M7866	SCREW	2		X	X	X	M8 X 20
6	RE65978	CLAMP	1		X	X	X	
7	.....	HOSE	1		X	X	X	(MAKE FROM R120013) (CUT TO LENGTH)
8	RE54885	HOSE FITTING	1		X	X	X	
9	38H5035	ELBOW FITTING	1		X	X	X	
10	51M7042	O-RING	1		X	X	X	13.300 X 2.200 MM
11	T77613	O-RING	1		X	X	X	
12	RE503208	OIL LINE	1		X	X	X	

WATER PUMP INLET AND PULLEY
ENTREE DE POMPE A EAU ET POULIE
ENTRADA DE BOMBA DE AGUA Y POLEA

TP80015 -UN-19OCT98

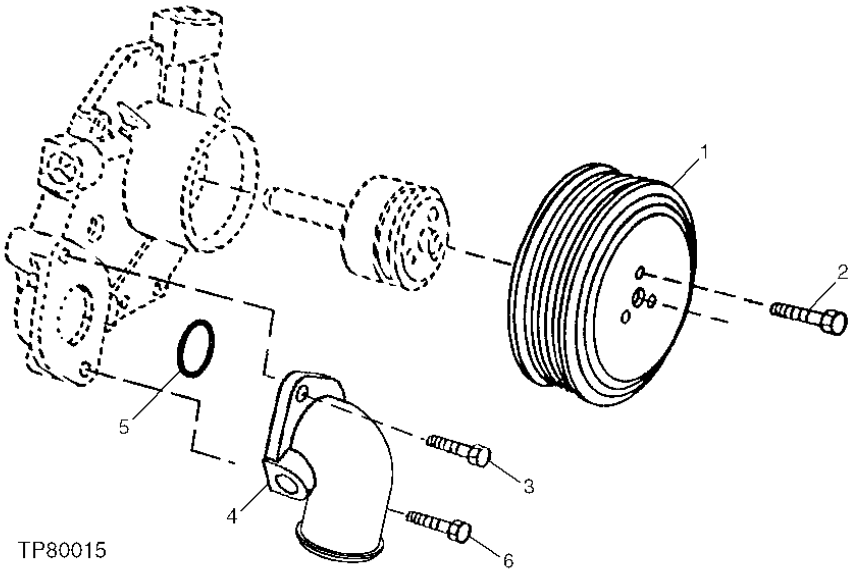

KEY	PART NO.	PART NAME	QTY.	ENGINE SERIAL NO.	455 000 JJJ	REMARKS
1	R121038	PULLEY	1		X X X	
2	19M7774	SCREW	3		X X X	M6 X 12
3	19M7867	SCREW	1		X X X	M8 X 25
4	R121635	ELBOW FITTING	1		X X X	
5	R89944	O-RING	1		X X X	
6	19M7802	SCREW	1		X X X	M8 X 65

WATER PUMP
POMPE A EAU
BOMBA DE AGUA

T149718 -UN-07JAN02

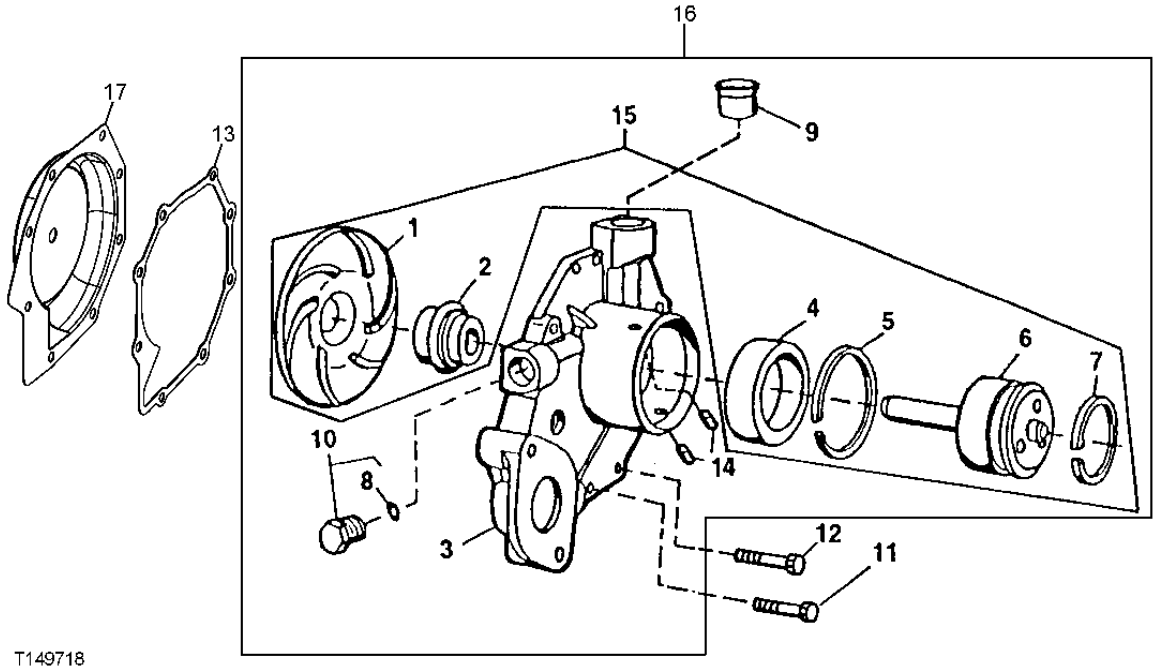

KEY	PART NO.	PART NAME	QTY.	ENGINE SERIAL NO.	4 5 6 5 5 5 0 0 0 J J J	REMARKS
1	.....	IMPELLER	1		X X X	(MARKED R121036)
2	.....	SEAL	1		X X X	(MARKED R503509)
3	.....	HOUSING	1		X X X	
4	.....	BALL BEARING	1		X X X	
5	.....	RING	1		X X X	
6	.....	SHAFT	1		X X X	
7	A364R	SNAP RING	1		X X X	
8	51M7043	O-RING	1		X X X	15.300 X 2.200 MM
9	R123226	GASKET	1		X X X	
10	RE46685	FITTING PLUG	1		X X X	
11	19M7863	SCREW	5		X X X	M6 X 25
12	19M7796	SCREW	3		X X X	M6 X 30
13	R123417	GASKET	1		X X X	
14	R100369	FILTER	2		X X X	
15	RE71240	KIT	1		X X X	
16	RE505981	WATER PUMP	1		X X X	(MARKED R503509)
17	RE508566	KIT	1		X X X	(WATER PUMP INSERT REPAIR)

THERMOSTAT AND COVER
THERMOSTAT ET COUVERCLE
TERMOSTATO Y TAPADERA

RGP9956 -UN-28AUG03

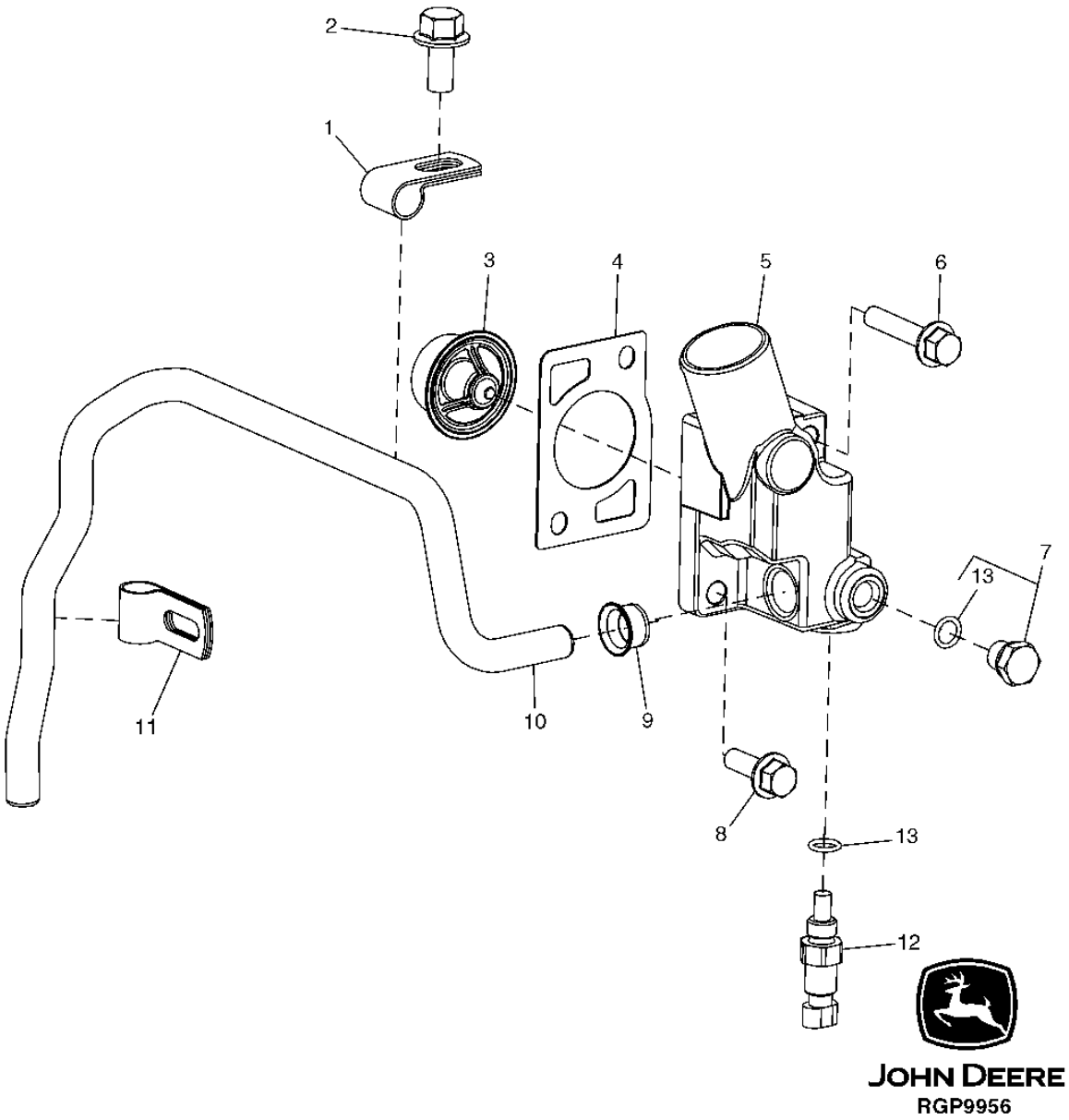

THERMOSTAT AND COVER
THERMOSTAT ET COUVERCLE
TERMOSTATO Y TAPADERA

KEY	PART NO.	PART NAME	QTY.	ENGINE SERIAL NO.	456 550 JJJ	REMARKS
1	R123323	CLAMP	1		X X X	
2	19M7788	SCREW	1		X X X	M12 X 25
3	RE522076	THERMOSTAT	1		X X X	82° C (180° F)
4	R502814	GASKET	1		X X X	
5	R131016	COVER	1		X X X	
6	19M8292	SCREW	1		X X X	M10 X 50
7	RE46684	FITTING PLUG	1		X X X	
8	19M7786	SCREW	1		X X X	M10 X 30
9	R123226	GASKET	1		X X X	
10	R501144	TUBE	1		X X X	
11	R123324	CLAMP	1		X X X	
12	RE46684	FITTING PLUG	1		X X X	(FOR SHIPPING PURPOSES)
	RE52722	COOLANT TEMPERATURE SENSOR	1		X X X	
13	51M7041	O-RING	2		X X X	11.300 X 2.200 MM

ENGINE OIL COOLER AND ADAPTER
REFROIDISSEUR D'HUILE MOTEUR ET ADAPTATEUR
ENFRIADOR DE ACEITE DEL MOTOR Y ADAPTADOR

RGP8862 -UN-15JUL02

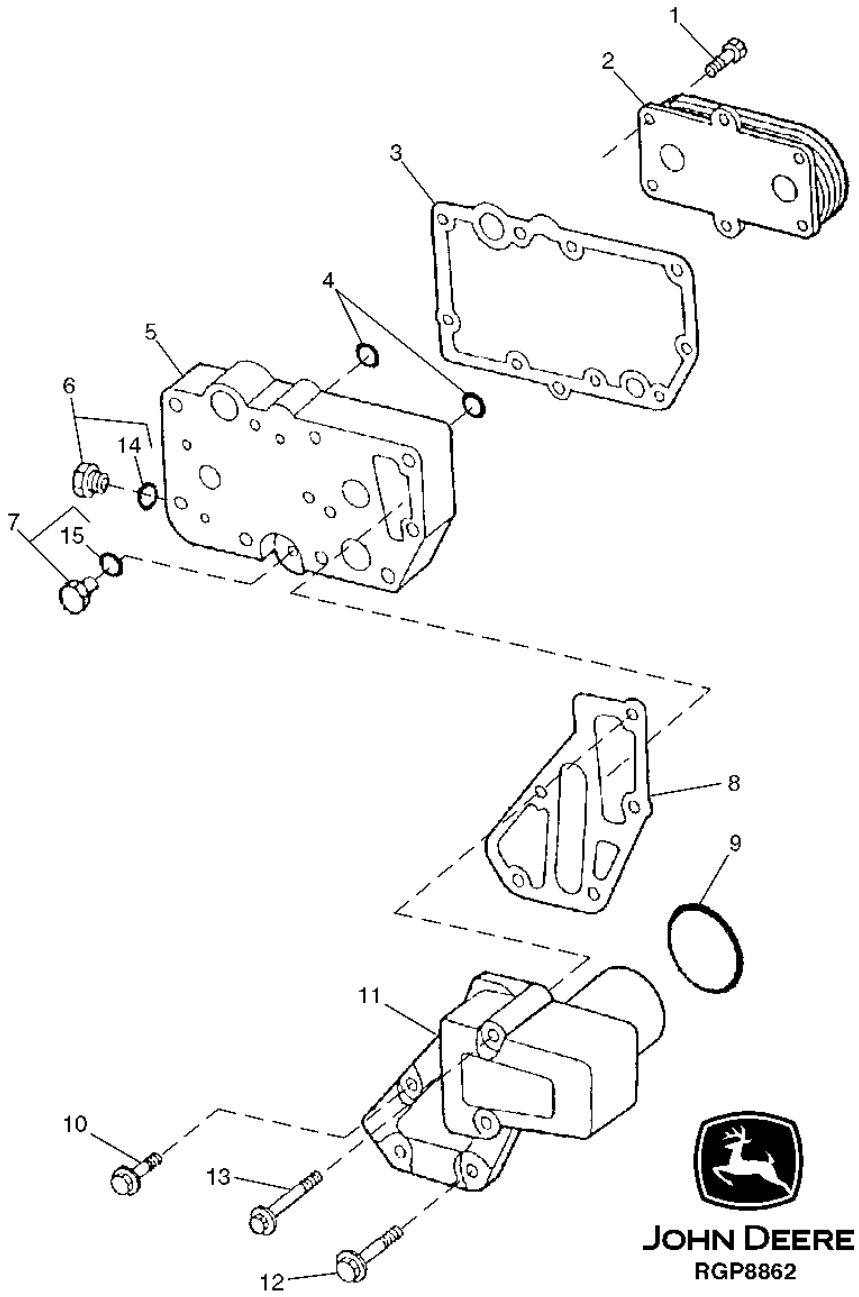

ENGINE OIL COOLER AND ADAPTER
REFROIDISSEUR D'HUILE MOTEUR ET ADAPTATEUR
ENFRIADOR DE ACEITE DEL MOTOR Y ADAPTADOR

KEY	PART NO.	PART NAME	QTY.	ENGINE SERIAL NO.	455 000 JJJ	REMARKS
1	RE67231	SCREW	6		X X X	M6 X 16, (WITH PRE-APPLIED SEALANT)
2	RE59296	OIL COOLER	1		X X X	(5 PLATE)
3	R123501	GASKET	1		X X X	
4	T122075	O-RING	2		X X X	
5	R123471	HOUSING	1		X X X	
6	RE46685	FITTING PLUG	1		X X X	
7	RE46686	FITTING PLUG	1		X X X	
8	R501428	GASKET	1		X X X	
9	R504734	O-RING	1		X X X	
10	19M7802	SCREW	2		X X X	M8 X 65
11	R502811	ADAPTER FITTING	1		X X X	
12	19M7970	SCREW	2		X X X	M8 X 100
13	RE67238	SCREW	1		X X X	M8 X 20, (WITH PRE-APPLIED SEALANT)
14	51M7043	O-RING	1		X X X	
15	51M7040	O-RING	1		X X X	
..	RE522820	OIL COOLER	1		X X X	COMPLETE SERVICE UNIT

FUEL FILTER LINES
CONDUITE DE FILTRE A COMBUSTIBLE
TUBERIA DEL FILTRO DE COMBUSTIBLE

TX1004736 -UN-22MAR06

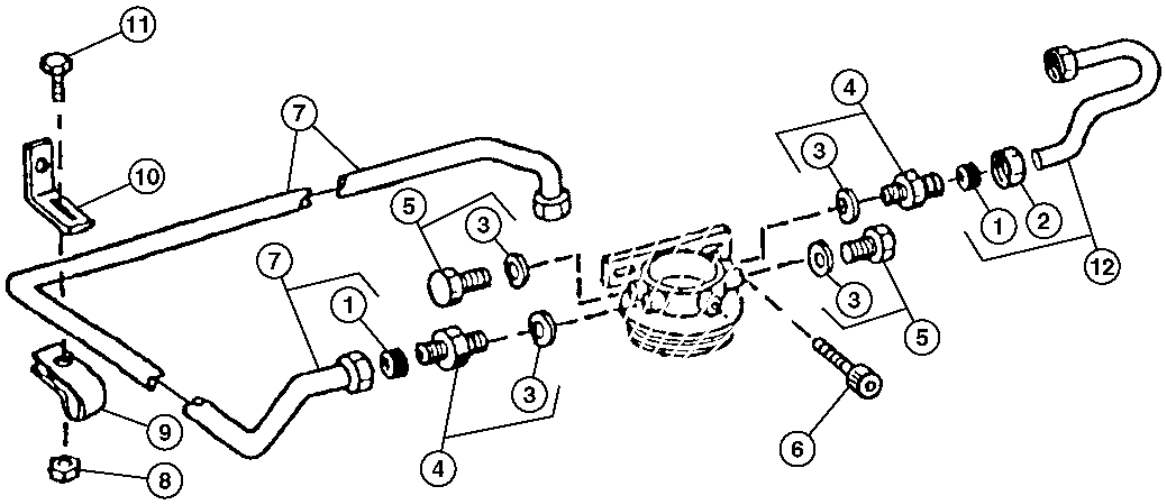

TX1004736

FUEL FILTER LINES
CONDUITE DE FILTRE A COMBUSTIBLE
TUBERIA DEL FILTRO DE COMBUSTIBLE

KEY	PART NO.	PART NAME	QTY.	ENGINE SERIAL NO.	450J	550J	650J	REMARKS
1	R74012	SEALING WASHER	4		X	X	X	
2	R123594	TUBE NUT	2		X	X	X	
3	51M7040	O-RING	1		X	X	X	9.300 X 2.200 MM
4	RE60029	ADAPTER FITTING	2		X	X	X	
5	RE46686	FITTING PLUG	2		X	X	X	
6	19M7784	SCREW	2		X	X	X	M10 X 20
7	RE507597	FUEL LINE	1		X	X	X	
8	14M7298	FLANGE NUT	1		X	X	X	M8
9	T14050	CLAMP	1		X	X	X	
10	R116116	BRACKET	1		X	X	X	
11	19M7865	SCREW	1		X	X	X	M8 X 16
12	RE60037	FUEL LINE	1		X	X	X	

FUEL FILTER KITS
KITS DE FILTRE A CARBURANT
JUEGOS DE FILTRO DE COMBUSTIBLE

T152601 -UN-13MAR02

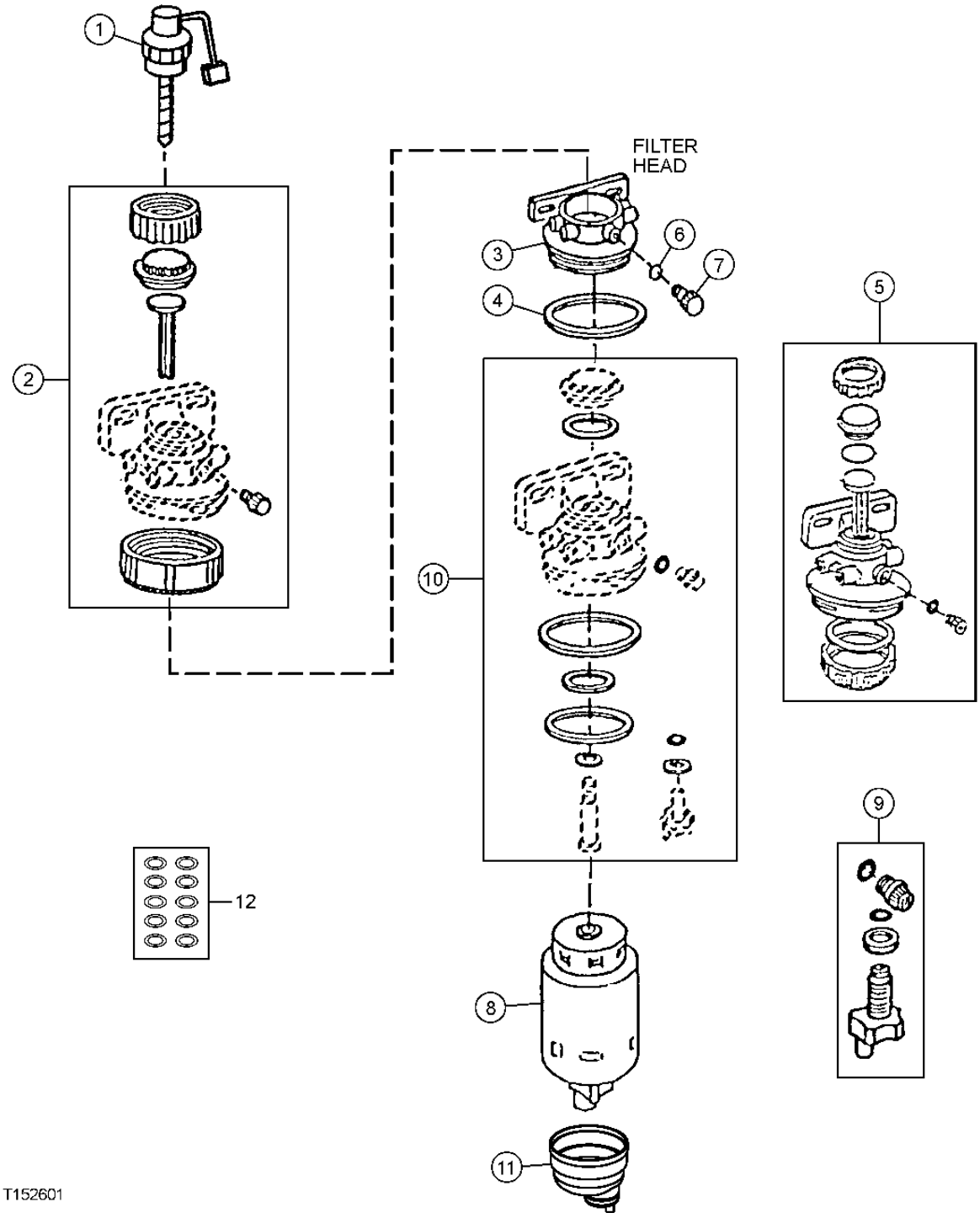

FUEL FILTER KITS
KITS DE FILTRE A CARBURANT
JUEGOS DE FILTRO DE COMBUSTIBLE

KEY	PART NO.	PART NAME	QTY.	ENGINE SERIAL NO.	450 J	550 J	650 J	REMARKS
1	RE51648	KIT	1		X	X	X	HEATER (12-VOLT)
2	RE51649	SEAL KIT	1		X	X	X	
3	.....	FILTER HEAD	1		X	X	X	(ORDER RE509794)
4	R113565	O-RING	1		X	X	X	
5	RE509794	KIT	1		X	X	X	
6	R113562	O-RING	1		X	X	X	
7	R113563	DRAIN PLUG	1		X	X	X	(ALSO ORDER R113562)
8	RE509031	FILTER ELEMENT	1		X	X	X	
9	RE60854	DRAIN VALVE	1		X	X	X	DRAIN VALVE
10	RE516553	SEAL KIT	1		X	X	X	(SUB FOR RE50752)
11	RE51650	SEDIMENT BOWL	1		X	X	X	
12	RE516513	KIT	1		X	X	X	(CONTAINS 10 PIECES)

MEMORANDA
MEMORANDA
MEMORANDA

FUEL TRANSFER PUMP
POMPE DE TRANSFERT DE CARBURANT
BOMBA DE TRANSFERENCIA DE COMBUSTIBLE

RGP8271 -UN-05NOV01

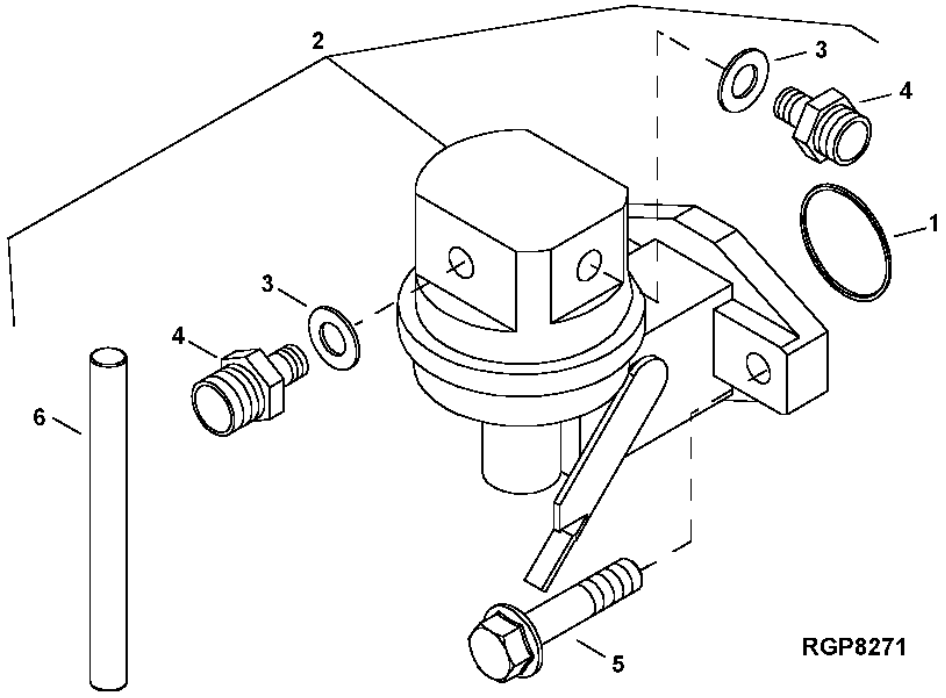

KEY	PART NO.	PART NAME	QTY.	ENGINE SERIAL NO.	450J	550J	650J	REMARKS
1	R123273	O-RING	1		X	X	X	
2	RE66153	FUEL PUMP	1		X	X	X	
3	R500271	O-RING	2		X	X	X	
4	R500270	FITTING	2		X	X	X	
5	RE504233	CAP SCREW	2		X	X	X	
6	R133405	PIN	1		X	X	X	

STARTER MOTOR
DEMARREUR
ARRANCADOR

T147951 -UN-08NOV01

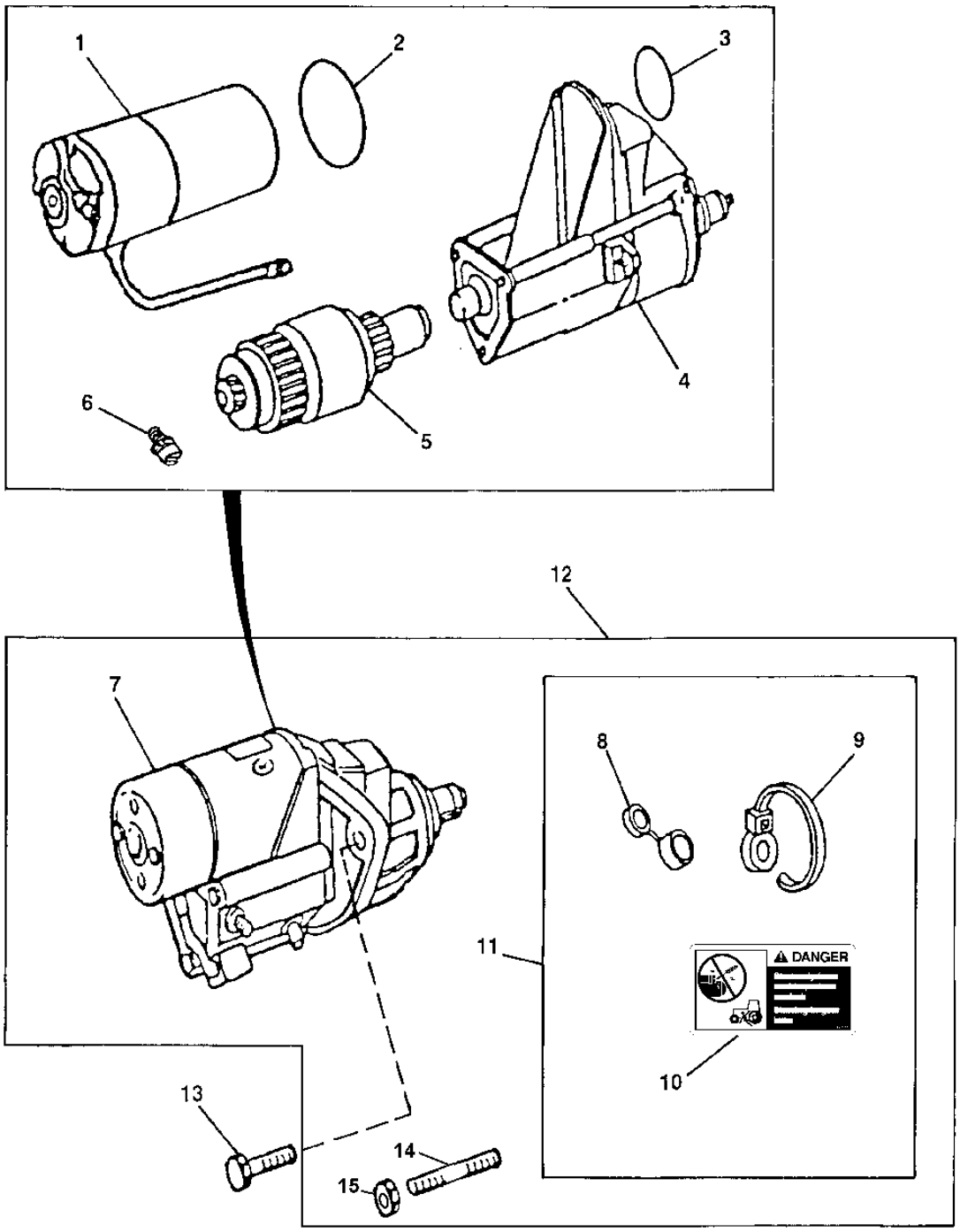

T147951

STARTER MOTOR
DEMARREUR
ARRANCADOR

KEY	PART NO.	PART NAME	QTY.	ENGINE SERIAL NO.	450J	550J	650J	REMARKS
1	.....	MOTOR	1		X	X	X	
2	R135509	SEAL	1		X	X	X	
3	R135510	O-RING	1		X	X	X	
4	RE70486	SWITCH	1		X	X	X	
5	RE70487	CLUTCH	1		X	X	X	
6	RE71256	SCREW WITH WASHER	1		X	X	X	M5 X .8
7	.....	STARTER MOTOR	1		X	X	X	(12-VOLT L.H. NIPPONDENSO)
8	.....	COVER	1		X	X	X	
9	R96703	TIE BAND	1		X	X	X	
10	T146102	LABEL	1		X	X	X	(BYPASS START)
11	RE70756	KIT	1		X	X	X	(SOLENOID)
12	RE501298	STARTER MOTOR KIT	1		X	X	X	SOLENOID
13	19M7786	SCREW	3		X	X	X	M10 X 30
14	R503419	STUD	1		X	X	X	(LOWER, RH)
15	14M7299	FLANGE NUT	1		X	X	X	M12, (LOWER, RH)

ALTERNATOR MOUNTING BRACKETS
SUPPORTS DE MONTAGE DU ALTERNATEUR
SOPORTES DE MONTAJE DEL ALTERNADOR

T162077 -UN-25NOV02

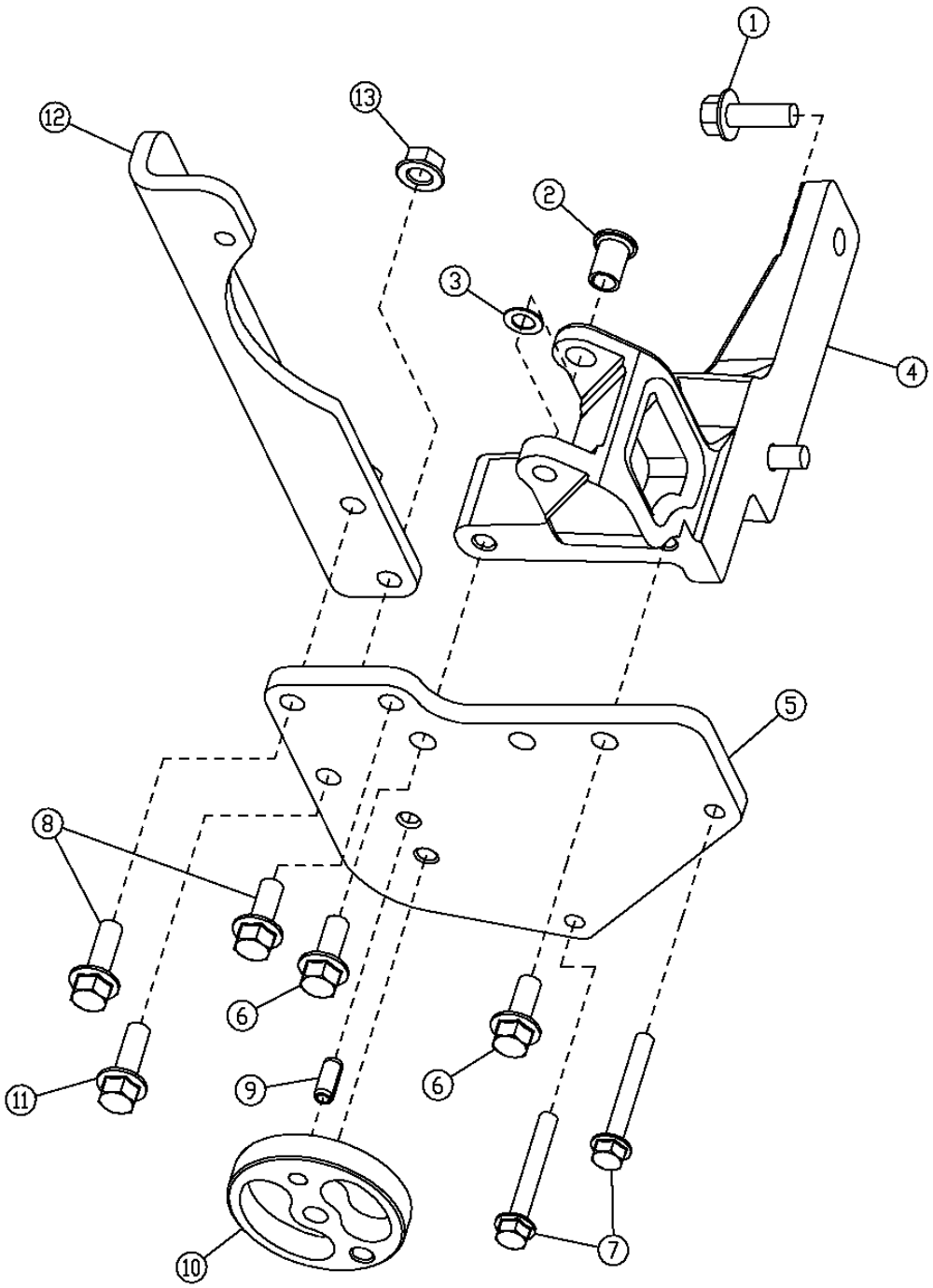

T162077

ALTERNATOR MOUNTING BRACKETS
SUPPORTS DE MONTAGE DU ALTERNATEUR
SOPORTES DE MONTAJE DEL ALTERNADOR

KEY	PART NO.	PART NAME	QTY.	ENGINE SERIAL NO.	450J	550J	650J	REMARKS
1	19M7786	SCREW	2		X	X	X	M10 X 30
2	R100377	BUSHING	1		X	X	X	
3	R64525	THRUST WASHER	1		X	X	X	
4	R132166	BRACKET	1		X	X	X	
5	R133978	SUPPORT	1		X	X	X	
6	19M7785	SCREW	2		X	X	X	M10 X 25
7	19M7801	SCREW	2		X	X	X	M8 X 60
8	19M7786	SCREW	2		X	X	X	M10 X 30
9	34M7061	SPRING PIN	1		X	X	X	8 X 20 MM
10	R516623	SPACER	1		X	X	X	
11	19M7786	SCREW	4		X	X	X	M10 X 30
12	R500531	STRAP	1		X	X	X	
13	14M7296	FLANGE NUT	2		X	X	X	M10

MEMORANDA
MEMORANDA
MEMORANDA

CRANKSHAFT PULLEY
POULIE DE VILEBREQUIN
POLEA DEL CIGUENAL

RGP11302 -UN-29JUN05

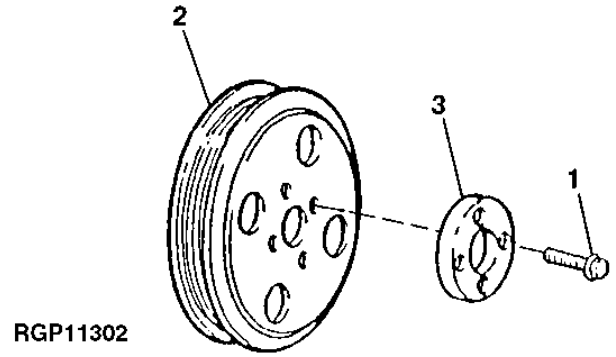

RGP11302

KEY	PART NO.	PART NAME	QTY.	ENGINE SERIAL NO.	450 550 650 J J J	REMARKS
1	R121897	BOLT	4		X X X	
2	R133295	PULLEY	1		X X X	
3	R500649	FLANGE	1		X X X	

FAN DRIVE PULLEYS AND TENSIONERS
POULIE D ENTRAINEMENT DE VENTILATEUR ET TENDEURS
POLEA DE MANDO DEL VENTILADOR Y TENSORES

TP80052 -UN-09DEC98

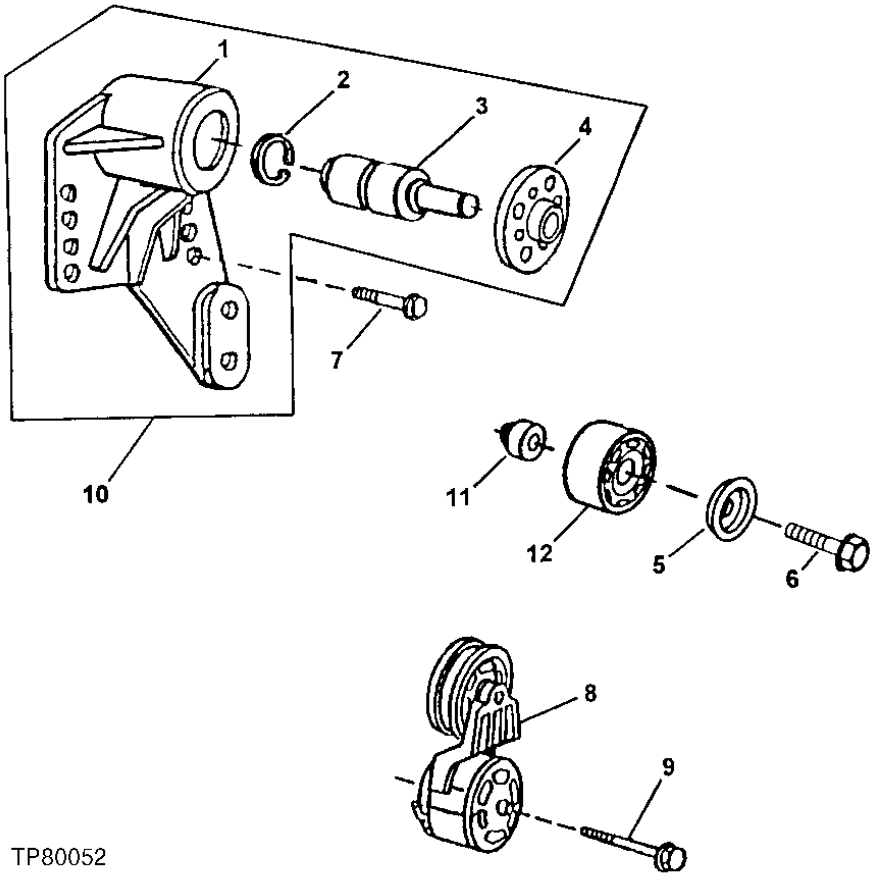

TP80052

FAN DRIVE PULLEYS AND TENSIONERS
POULIE D ENTRAINEMENT DE VENTILATEUR ET TENDEURS
POLEA DE MANDO DEL VENTILADOR Y TENSORES

KEY	PART NO.	PART NAME	QTY.	ENGINE SERIAL NO.	455 000 JJJ	REMARKS
1	.....	HOUSING	1		X X X	
2	H80753	SNAP RING	1		X X X	
3	.....	BALL BEARING	1		X X X	(SUB RE500539)
4	.....	HUB	1		X X X	(MARKED R123284)
5	R500352	COVER	1		X X X	
6	19M7808	SCREW	1		X X X	M10 X 65
7	19M7835	SCREW	4		X X X	M10 X 35
8	RE518097	TIGHTENER	1		X X X	(SUB FOR RE70535)
9	19M7811	SCREW	1		X X X	M10 X 90
10	RE500539	HUB	1		X X X	
11	R500320	SPACER	1		X X X	(WITH AIR CONDITIONING)
12	RE505264	PULLEY	1		X X X	(SUB FOR RE68722) (WITH AIR CONDITIONING)

FLYWHEEL
VOLANT-MOTEUR
VOLANTE

TP80049 -UN-09DEC98

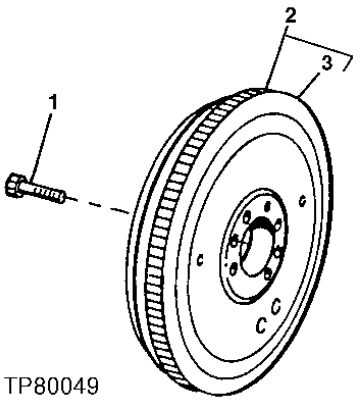

KEY	PART NO.	PART NAME	QTY.	ENGINE SERIAL NO.	456 555 000 JJJ	REMARKS
1	R135918	BOLT	4		XXX	
2	RE508966	FLYWHEEL	1		XXX	(MARKED R28811)
3	R28811	RING GEAR	1		XXX	(Z = 129)

FLYWHEEL HOUSING AND CRANKSHAFT REAR OIL SEAL
CARTER DE VOLANT-MOTEUR ET JOINT PARE-HUILE ARRIERE DE VILEBREQUIN
CAJA DEL VOLANTE Y SELLO TRASERO DE ACEITE DEL CIGUENAL

T157577 -UN-31JUL02

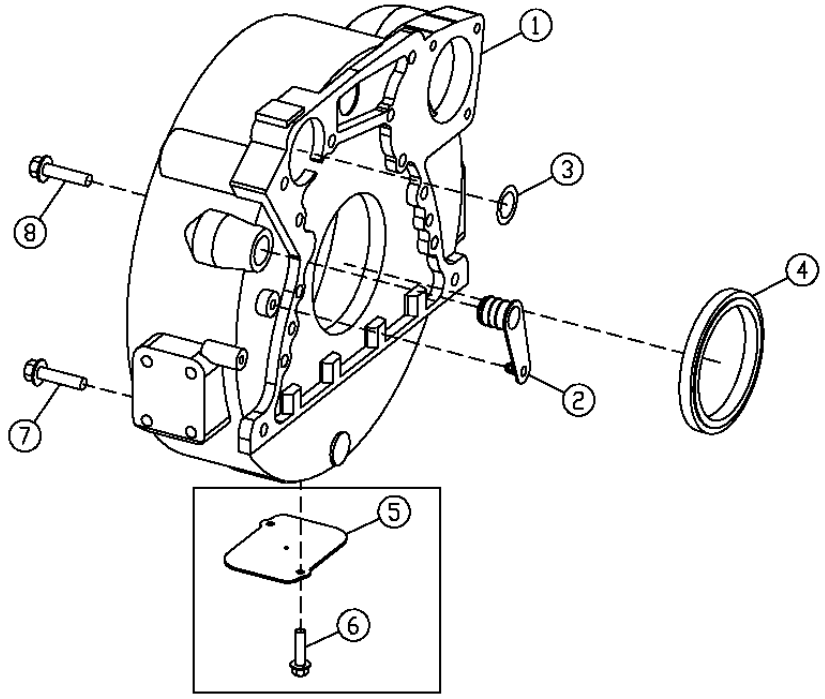

T157577

KEY	PART NO.	PART NAME	QTY.	ENGINE SERIAL NO.	456 555 000 JJJ	REMARKS
1	R503452	HOUSING	1		X X X	
2	R131769	PLUG	1		X X X	
3	R61467	O-RING	1		X X X	
4	RE44574	SEAL	1		X X X	
5	R121039	PLATE	1		X X X	
6	19M7923	CAP SCREW	2		X X X	M6 X 12
7	19M8306	SCREW	4		X X X	M12 X 50
8	R135918	BOLT	8		X X X	

OVERHAUL KIT
JEU DE REMISE EN ETAT
JUEGO DE RECONSTRUCCION

TP28491 -UN-01JAN94

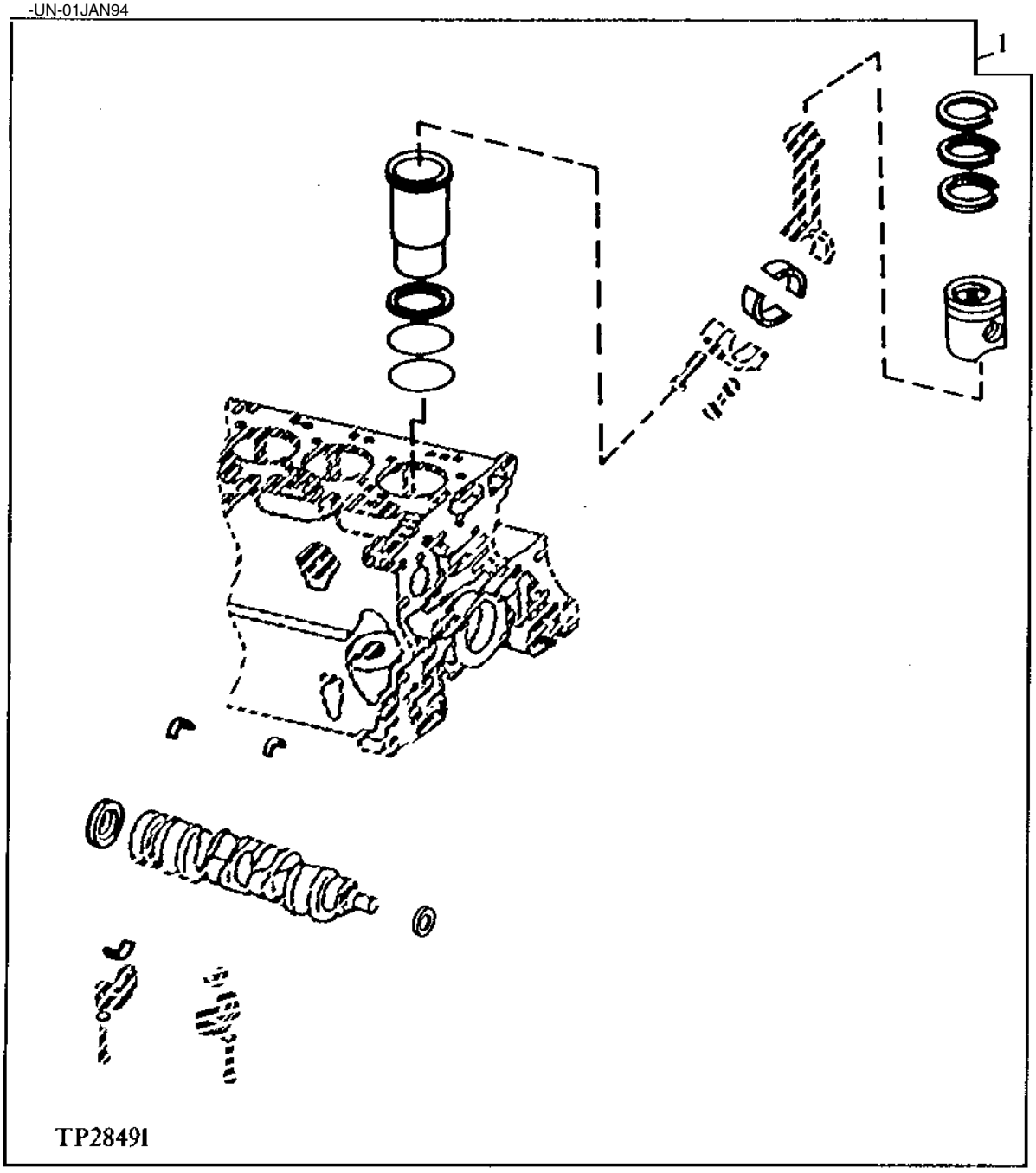

OVERHAUL KIT
JEU DE REMISE EN ETAT
JEUGO DE RECONSTRUCCION

KEY	PART NO.	PART NAME	QTY.	ENGINE SERIAL NO.	450 J	550 J	650 J	REMARKS
1	RE527299	ENGINE OVERHAUL KIT	1		X	X	X	(MARKED RE515372) PISTON

OVERHAUL GASKET SET
KIT DE JOINTS DE REMISE A NEUF
JUEGO DE EMPAQUETADURAS PARA REACONDICIONAMIENTO

T150767 -UN-31JAN02

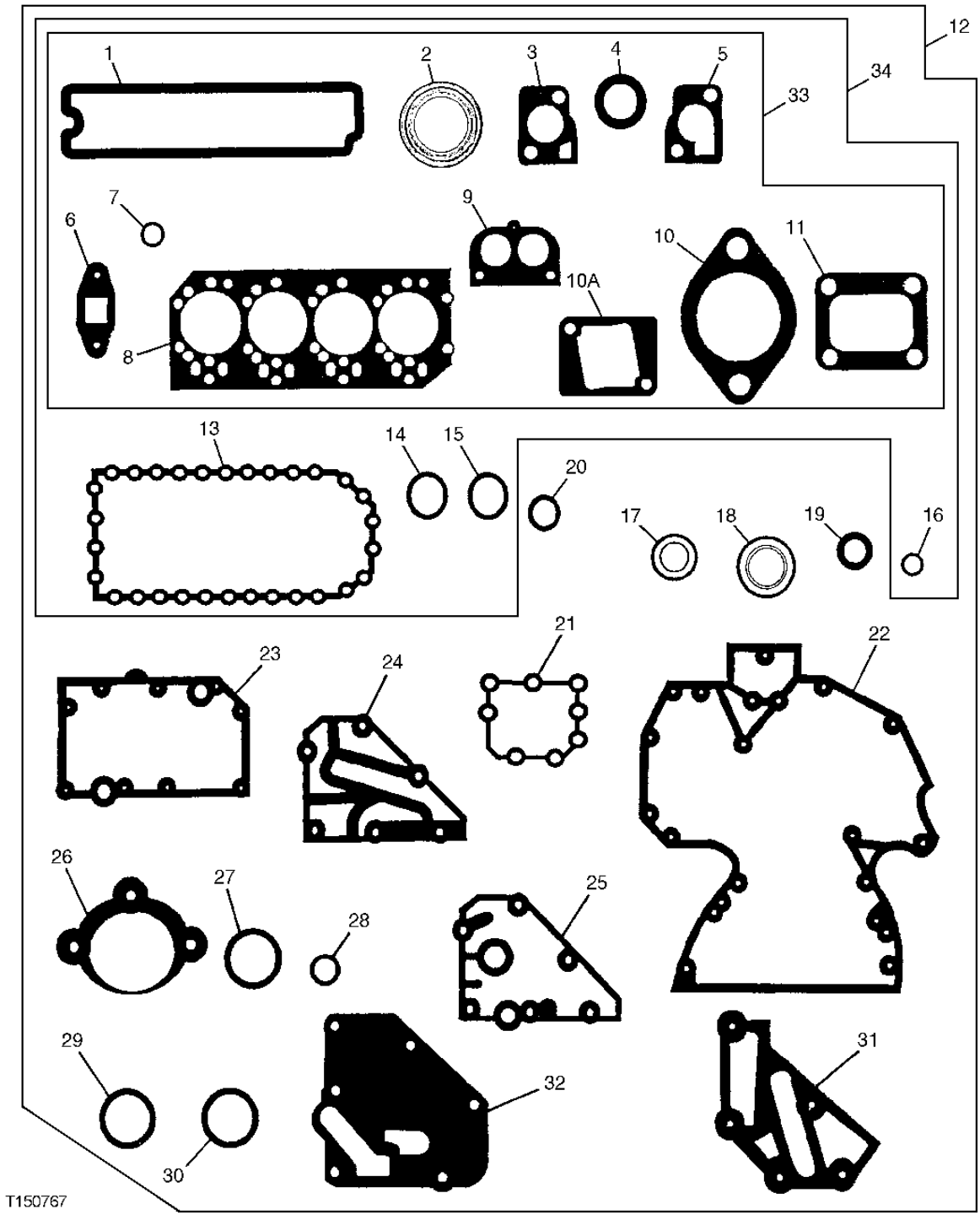

OVERHAUL GASKET SET
KIT DE JOINTS DE REMISE A NEUF
JUEGO DE EMPAQUETADURAS PARA REACONDICIONAMIENTO

KEY	PART NO.	PART NAME	QTY.	ENGINE SERIAL NO.	4550 5550 6000 J J J	REMARKS
1	R123542	GASKET	1		X X X	ROCKER ARM COVER
2	R90658	GASKET	4		X X X	EXHAUST MANIFOLD
3	R502814	GASKET	1		X X X	(SUB FOR R135896) THERMOSTAT COVER
4	R123226	GASKET	2		X X X	WATER BY-PASS TUBE
5	R123345	GASKET	1		X X X	THERMOSTAT HOUSING
6	R123570	GASKET	1		X X X	TURBOCHARGER OIL OUTLET TUBE
7	R123575	O-RING	4		X X X	ROCKER ARM COVER STUD
8	R116515	ENGINE CYLINDER HEAD GASKET	1		X X X	
9	R54638	GASKET	1		X X X	THERMOSTAT COVER
10	R81275	GASKET	1		X X X	AIR INLET
10A	R133893	GASKET	1		X X X	AIR INLET
11	R92097	GASKET	1		X X X	TURBOCHARGER TO EXHAUST MANIFOLD
12	RE527042	GASKET KIT	1		X X X	(MAJOR OVERHAUL)(4 CYL)
13	R521493	GASKET	1		X X X	ENGINE OIL PAN
14	R75892	O-RING	1		X X X	OIL PUMP TUBE CONNECTOR
15	R97185	O-RING	1		X X X	OIL PUMP OUTLET TUBE TO COVER
16	R61871	O-RING	1		X X X	OIL PUMP INTAKE TUBE
17	A4827R	WASHER	1		X X X	OIL PRESSURE REGULATOR PLUG
18	RE44574	SEAL	1		X X X	REAR OIL SEAL
19	RE59810	SEAL KIT	1		X X X	FRONT OIL SEAL
20	R123273	O-RING	1		X X X	FUEL TRANSFER PUMP
21	R123417	GASKET	1		X X X	WATER PUMP
22	R136516	GASKET	1		X X X	TIMING GEAR COVER (WITHOUT AUXILIARY DRIVE)
23	R123501	GASKET	1		X X X	OIL COOLER HOUSING
24	R123504	GASKET	1		X X X	REMOTE OIL FILTER ADAPTER
25	R123525	GASKET	1		X X X	OIL FILTER HEADER
26	R53108	GASKET	1		X X X	STARTER MOTOR
27	R72328	O-RING	4		X X X	OIL FILTER TUBES
28	R89944	O-RING	1		X X X	WATER PUMP INLET
29	R61105	O-RING	2		X X X	CONNECTOR TUBE TO TIMING GEAR COVER
30	T122075	O-RING	2		X X X	OIL COOLER TO HOUSING
31	R501428	GASKET	1		X X X	COOLANT PASSAGE ADAPTER
32	R500374	GASKET	1		X X X	OIL FILTER HEADER
33	RE66082	GASKET KIT	1		X X X	CYLINDER HEAD REMOVAL
34	RE66084	GASKET KIT	1		X X X	IN CHASSIS OVERHAUL

STARTING AID
AIDE AU DEMARRAGE
AUXILIAR DE ARRANQUE

T199306 -UN-16APR04

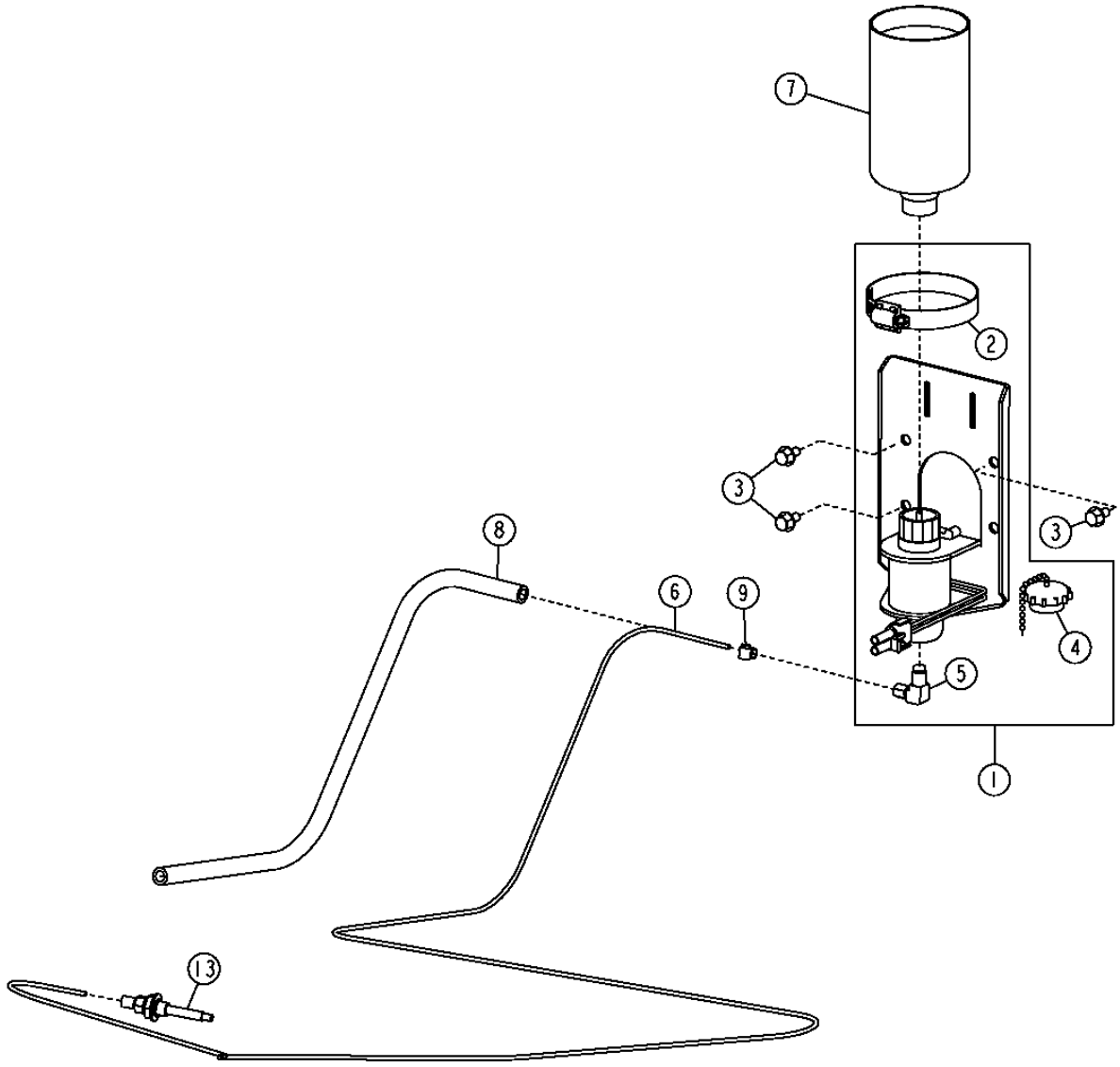

T199306

STARTING AID
AIDE AU DEMARRAGE
AUXILIAR DE ARRANQUE

KEY	PART NO.	PART NAME	QTY.	SERIAL NO.	450 J	550 J	650 J	REMARKS
1	AT173385	STARTING AID SOLENOID	1		X	X	X	
2	AR21999	HOSE CLAMP	1		X	X	X	
3	19M7775	SCREW	3		X	X	X	M6 X 16
4	AT171539	CAP (HAT)	1		X	X	X	
5	AT181582	ELBOW FITTING	1		X	X	X	(METERING ORIFACE)
6	.....	HOSE	1		X	X	X	(MAKE FROM T78593) (CUT TO LENGTH, 3353 MM (11 FT))
7	AT171162	STARTING FLUID	1		X	X	X	(CYLINDER)
8	.....	TUBE	1		X	X	X	(MAKE FROM T119816) (CUT TO LENGTH, 610 MM (2 FT))
9	TY22462	CLAMP	1		X	X	X	(SUB FOR AR48236)
13	AT183222	NOZZLE	1		X	X	X	

ENGINE COOLANT HEATER
CHAUFFE-BLOC MOTEUR
CALEFACTOR DE REFRIGERANTE DE MOTOR

TX1004782 -UN-15MAR06

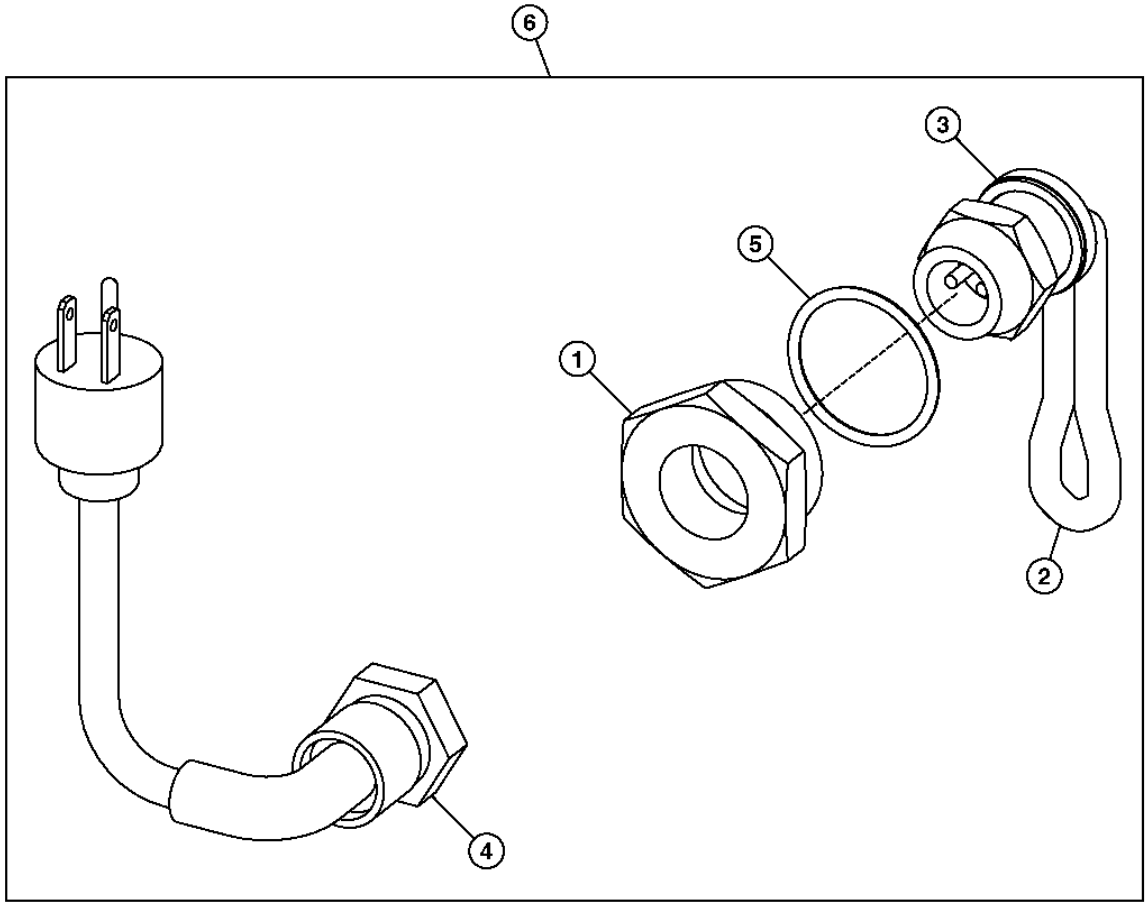

TX1004782

THIS PARTS LISTING IS CONTINUED

ENGINE COOLANT HEATER
CHAUFFE-BLOC MOTEUR
CALEFACTOR DE REFRIGERANTE DE MOTOR

KEY	PART NO.	PART NAME	QTY.	SERIAL NO.	450 J	550 J	650 J	REMARKS
1	R54123	ADAPTER FITTING	1		X	X	X	
2	RE524676	HEATING ELEMENT	1		X	X	X	(SUB FOR RE504122)
3	R206883	WASHER	1		X	X	X	
4	AT73296	POWER CORD	1		X	X	X	
5	U13639	O-RING	1		X	X	X	
6	**AT211191**	**GATHERING NUMBER**	**1**		**X**	**X**	**X**	**(WHOLEGOODS)**

START AID SWITCH
INTERRUPTEUR DU DISPOSITIF D'AIDE AU DEMARRAGE
BOTON DE AUXILIAR DE ARRANQUE

TX1004783 -UN-15MAR06

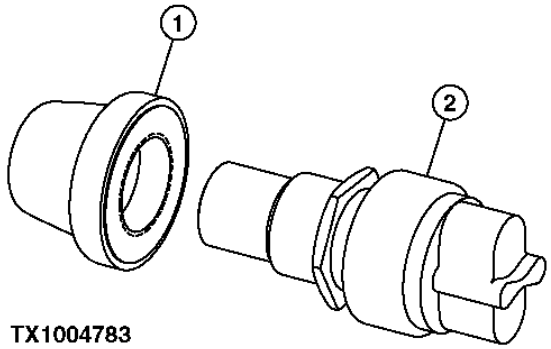

TX1004783

THIS PARTS LISTING IS CONTINUED

START AID SWITCH
INTERRUPTEUR DU DISPOSITIF D'AIDE AU DEMARRAGE
BOTON DE AUXILIAR DE ARRANQUE

KEY	PART NO.	PART NAME	QTY.	SERIAL NO.	450J	550J	650J	REMARKS
1	T55585	CAP	1		X	X	X	(COVER SWITCH FLUID START AID)
2	AT25258	SWITCH	1		X	X	X	(STARTER)
3	99M7065	FUSE	1		X	X	X	15 AMP, (NOT ILLUSTRATED)

FUEL FIRED COOLANT HEATER
CHAUFFE-BLOC THERMIQUE
CALEFACTOR DE REFRIGERANTE ENCENDIDO POR COMBUSTIBLE

T199323 -UN-20APR04

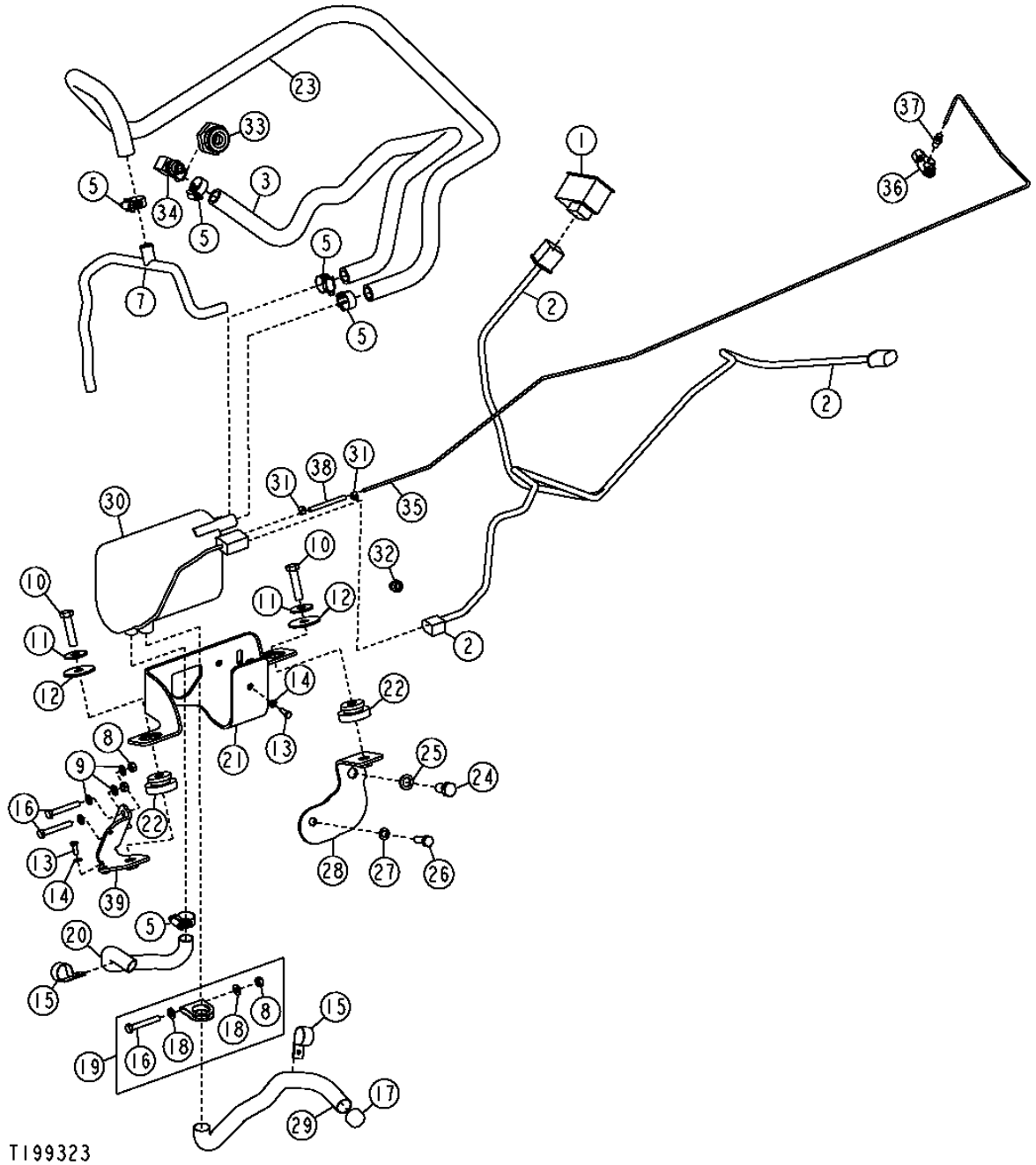

FUEL FIRED COOLANT HEATER
CHAUFFE-BLOC THERMIQUE
CALEFACTOR DE REFRIGERANTE ENCENDIDO POR COMBUSTIBLE

KEY	PART NO.	PART NAME	QTY.	SERIAL NO.	450J	550J	650J	REMARKS
1	AT221990	TIMER	1		X	X	X	
2	AT221991	WIRING HARNESS	1		X	X	X	(INCLUDES 99M7069)
	99M7069	FUSE	1		X	X	X	
3	T177522	BULK HOSE	1		X	X	X	
5	AR21837	CLAMP	5		X	X	X	
6	T178390	CONDUIT	1		X	X	X	(NOT ILLUSTRATED)
7	AT225605	LINE	1		X	X	X	
8	14M7273	NUT	3		X	X	X	M8
9	24M7036	WASHER	4		X	X	X	9 X 16 X 1.600 MM
10	19M7361	CAP SCREW	2		X	X	X	M12 X 50
11	24M7180	WASHER	2		X	X	X	13 X 37 X 3 MM
12	T62323	WASHER	2		X	X	X	
13	19M7560	CAP SCREW	3		X	X	X	M6 X 16
14	24M7054	WASHER	3		X	X	X	6.400 X 12 X 1.600 MM
15	T179306	CLAMP	2		X	X	X	
16	19M7981	CAP SCREW	3		X	X	X	M8 X 55
17	T177575	EXHAUST CAP	1		X	X	X	(SCREEN GUARD ON EXHAUST HOSE)
18	24M7238	WASHER	2		X	X	X	8.700 X 17 X 2 MM
19	AT221605	CLAMP	1		X	X	X	
20	T177524	BULK HOSE	1		X	X	X	
21	T178214	BRACKET	1		X	X	X	
22	T41770	ISOLATOR	2		X	X	X	
23	T182368	BULK HOSE	1		X	X	X	
24	19M7646	CAP SCREW	1		X	X	X	M14 X 25
25	24M7427	WASHER	1		X	X	X	15 X 24 X 2.500 MM
26	19M7168	CAP SCREW	1		X	X	X	M10 X 30
27	24M7096	WASHER	1		X	X	X	10.500 X 18 X 1.600 MM
28	AT222213	BRACKET	1		X	X	X	
29	T177525	BULK HOSE	1		X	X	X	
30	AT221166	COOLANT HEATER	1		X	X	X	
31	AT224094	CLAMP	2		X	X	X	
32	15H219	ELBOW FITTING	1		X	X	X	
33	R123616	PLUG	1		X	X	X	
34	AT221440	FITTING	1		X	X	X	
35	T177520	BULK HOSE	1		X	X	X	
36	AT221560	TEE FITTING	1		X	X	X	
37	T177579	FITTING	1		X	X	X	
38	T177580	HOSE	1		X	X	X	
39	AT222214	BRACKET	1		X	X	X	
40	**AT226572**	**KIT**	**1**		**X**	**X**	**X**	**(SPECIAL EQUIPMENT FIELD) (WHOLEGOODS) (NOT ILLUSTRATED)**

FUEL FIRED COOLANT HEATER (HYDRONIC 5 SERIES HEATER)
CHAUFFE-BLOC THERMIQUE (PIECES DE RECHANGE POUR POMPE HYDRAULIQUE 5)
CALEFACTOR DE REFRIGERANE ENCENDIDO POR COMBUSTIBLE (CALEFACTOR HYDRONIC SERIE 5)

T210887 -UN-16MAY05

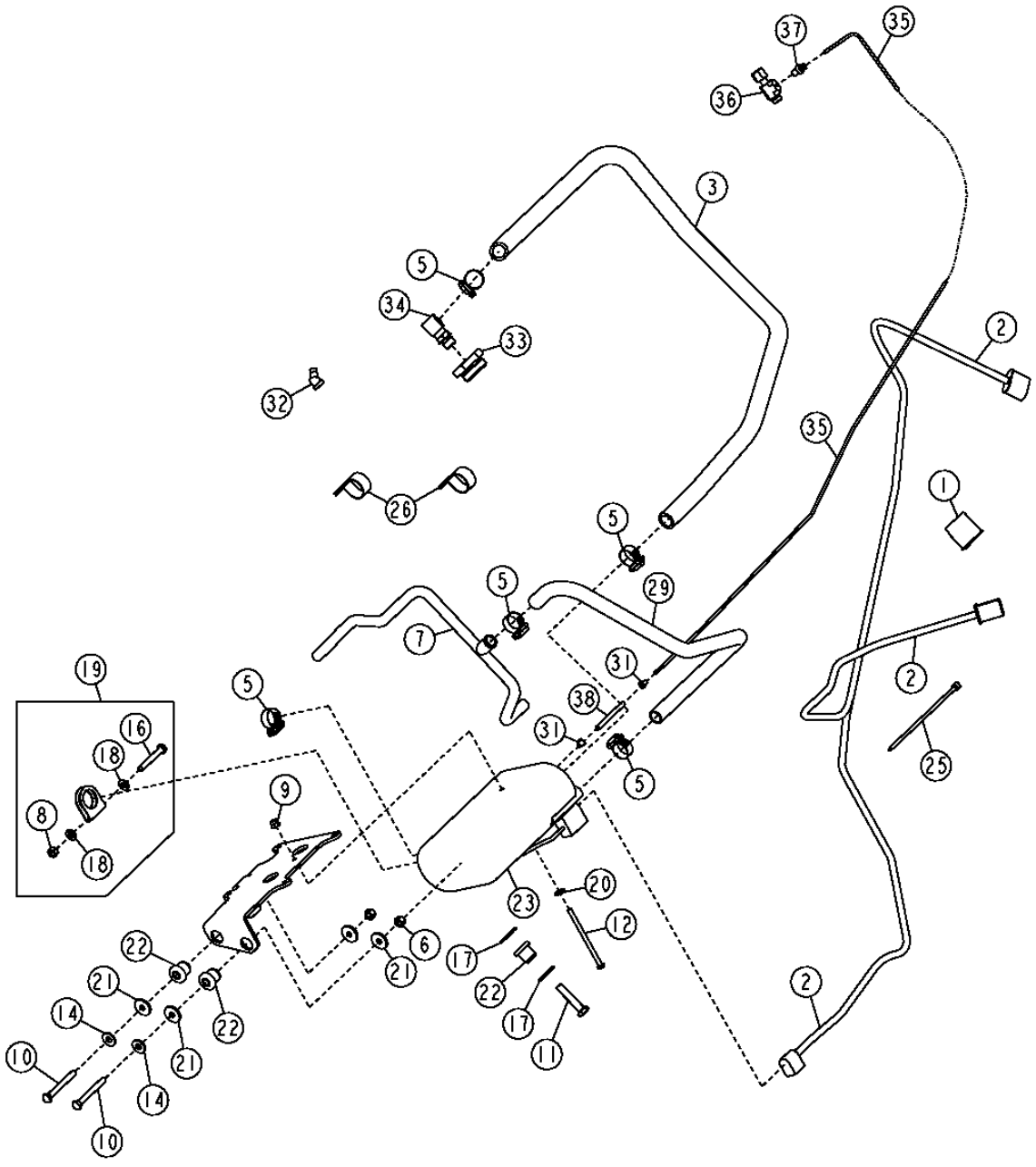

THIS PARTS LISTING IS CONTINUED

FUEL FIRED COOLANT HEATER (HYDRONIC 5 SERIES HEATER)
CHAUFFE-BLOC THERMIQUE (PIECES DE RECHANGE POUR POMPE HYDRAULIQUE 5)
CALEFACTOR DE REFRIGERANE ENCENDIDO POR COMBUSTIBLE (CALEFACTOR HYDRONIC SERIE 5)

KEY	PART NO.	PART NAME	QTY.	SERIAL NO.	450J	550J	650J	REMARKS
1	AT221990	DIGITAL DISPLAY	1		X	X	X	
2	AT221991	WIRING HARNESS	1		X	X	X	(INCLUDES 99M7069)
	99M7069	FUSE	1		X	X	X	
3	T177522	BULK HOSE	1		X	X	X	
5	AR21837	CLAMP	5		X	X	X	
6	14M7327	LOCK NUT	2		X	X	X	M8
7	AT225605	LINE	1		X	X	X	
8	14M7273	NUT	3		X	X	X	M8
9	14M7397	LOCK NUT	1		X	X	X	M6
10	19M3138	CAP SCREW	2		X	X	X	M8 X 70
11	19M8357	CAP SCREW	1		X	X	X	M10 X 50
12	19M9090	CAP SCREW	1		X	X	X	M6 X 100
13	19M9295	CAP SCREW	1		X	X	X	M6 X 20
14	24H1122	WASHER	2		X	X	X	3/8" X 7/8" X 0.083"
15	T179306	CLAMP	2		X	X	X	
16	19M7981	CAP SCREW	3		X	X	X	M8 X 55
17	24M7178	WASHER	2		X	X	X	10.500 X 30 X 2.500 MM
18	24M7238	WASHER	2		X	X	X	8.700 X 17 X 2 MM (0.343" X 0.669" X 0.079")
19	AT221605	CLAMP	1		X	X	X	
20	24H1287	WASHER	1		X	X	X	9/32" X 5/8" X 0.065"
21	24M7024	WASHER	4		X	X	X	9 X 28 X 3 MM
22	AT116162	ISOLATOR	3		X	X	X	
23	AT311171	COOLANT HEATER	1		X	X	X	
24	AT316599	WIRING HARNESS	1		X	X	X	
25	R44302	TIE BAND	AR		X	X	X	
26	T162675	CLAMP	2		X	X	X	
27	T206126	EXHAUST PIPE	1		X	X	X	
28	T206127	BULK HOSE	1		X	X	X	
29	T210130	BULK HOSE	1		X	X	X	
31	AT224094	CLAMP	2		X	X	X	
32	15H219	ELBOW FITTING	1		X	X	X	
33	R123616	PLUG	1		X	X	X	
34	AT221440	FITTING	1		X	X	X	
35	T177520	BULK HOSE	1		X	X	X	
36	AT221560	TEE FITTING	1		X	X	X	
37	T177579	FITTING	1		X	X	X	
38	T177580	HOSE	1		X	X	X	
40	**AT311172**	**GATHERING NUMBER**	**1**		**X**	**X**	**X**	**(SPECIAL EQUIPMENT FIELD) (WHOLEGOODS) (NOT ILLUSTRATED)**

COOLING SYSTEM (450J, 550J)
CIRCUIT DE REFROIDISSEMENT (450J, 550J)
SISTEMA DE ENFRIAMIENTO (450J, 550J)

T194365 -UN-19SEP03

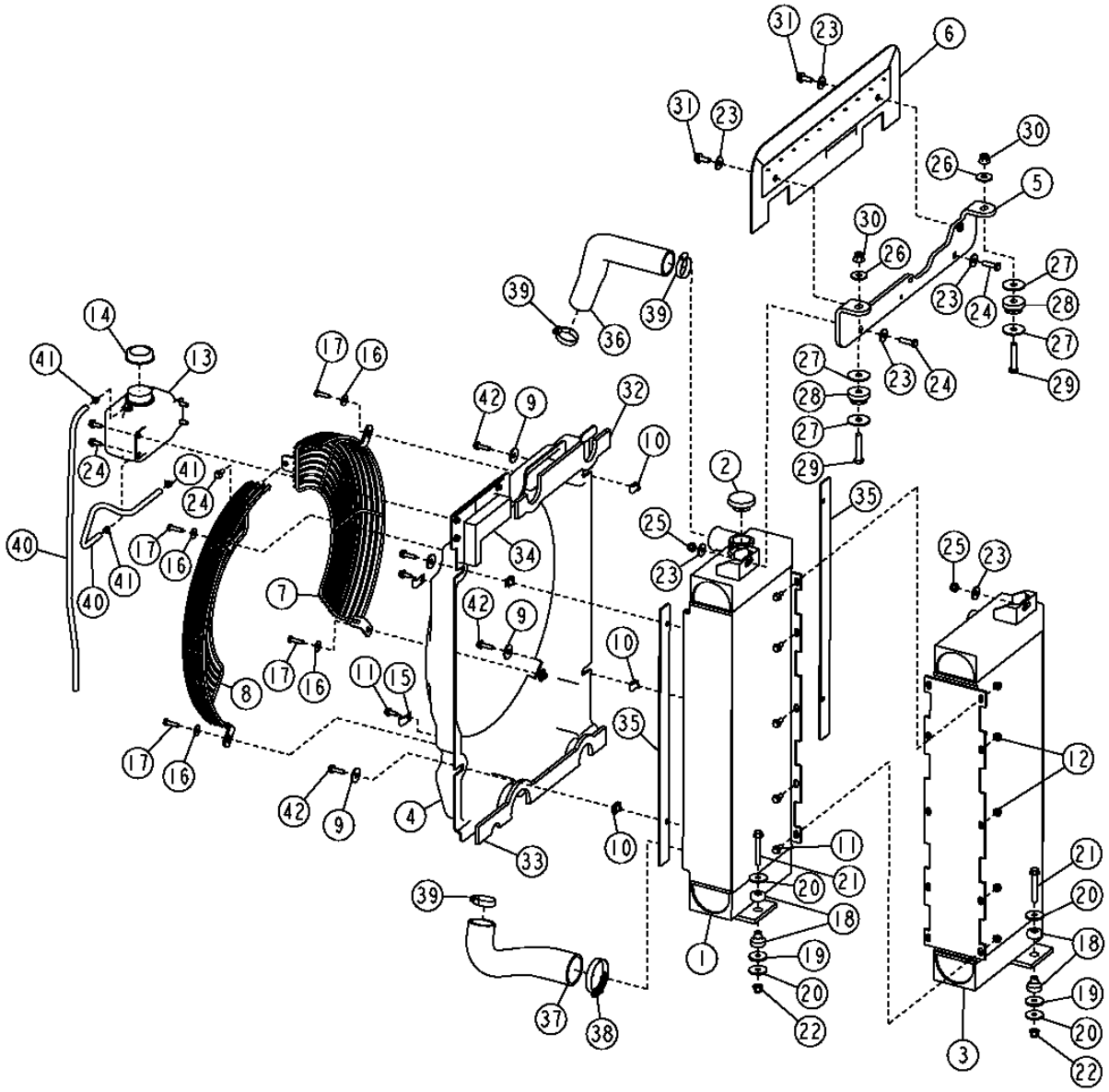

T194365

THIS PARTS LISTING IS CONTINUED

COOLING SYSTEM (450J, 550J)
CIRCUIT DE REFROIDISSEMENT (450J, 550J)
SISTEMA DE ENFRIAMIENTO (450J, 550J)

KEY	PART NO.	PART NAME	QTY.	SERIAL NO.	450J	550J	REMARKS
1	AT304728	RADIATOR	1		X	X	(INCLUDES AT173610)
2	AT173610	FILLER CAP	1		X	X	
3	AT304727	OIL COOLER	1		X	X	
4	AT303834	SHROUD	1		X	X	
5	AT304491	ANGLE	1		X	X	
6	AT304493	ISOLATOR	1			X	
7	AT312981	GUARD	1		X	X	(ALSO ORDER AT312982)
8	AT312982	GUARD	1		X	X	(ALSO ORDER AT312981)
9	24M7101	WASHER	4		X	X	11 X 34 X 3 MM
10	M84971	NUT	4		X	X	M8
11	19M7866	SCREW	17		X	X	M8 X 20
12	14M7298	FLANGE NUT	10		X	X	M8
13	AN205068	TANK	1		X	X	(INCLUDES AT186925)
14	AT186925	FILLER CAP	1		X	X	
15	T19935	CLAMP	2		X	X	
16	24M7207	WASHER	4		X	X	8.400 X 24 X 2 MM
17	19M7513	CAP SCREW	4		X	X	M8 X 30
18	AT208549	ISOLATOR	2		X	X	
19	M49812	WASHER	2		X	X	
20	24H1718	WASHER	4		X	X	13/32" X 1-5/8" X 0.134"
21	19M9128	SCREW	2		X	X	M10 X 75
22	14M7400	LOCK NUT	2		X	X	M10
23	24M7296	WASHER	6		X	X	10.500 X 30 X 2.500 MM
24	19M7550	CAP SCREW	7			X	M10 X 35
25	14M7517	LOCK NUT	2		X	X	M10
26	24M7180	WASHER	2		X	X	13 X 37 X 3 MM
27	T62323	WASHER	4		X	X	
28	T41770	ISOLATOR	2		X	X	
29	19M8348	CAP SCREW	2		X	X	M12 X 65
30	14M7401	LOCK NUT	2		X	X	M12
31	19M7785	SCREW	2		X	X	M10 X 25
32	T202749	DEFLECTOR	1		X	X	
33	T202750	DEFLECTOR	1		X	X	
34	T202751	DEFLECTOR	1		X	X	
35	T201177	STRIP	2		X	X	(USE (2) T202932 INSTEAD OF T201177 WITH SAND SCREEN)
36	T202711	RADIATOR HOSE	1		X	X	
37	T200827	RADIATOR HOSE	1		X	X	
38	AR21999	HOSE CLAMP	1		X	X	
39	TY22470	CLAMP	3		X	X	(SUB FOR AR65294)
40	TY22566	BULK HOSE	2		X	X	(CUT TO LENGTH)
41	R56101	CLIP	3		X	X	
42	19M7867	SCREW	4		X	X	M8 X 25

COOLING SYSTEM (650J)
CIRCUIT DE REFROIDISSEMENT (650J)
SISTEMA DE ENFRIAMIENTO (650J)

T197543 -UN-26MAY04

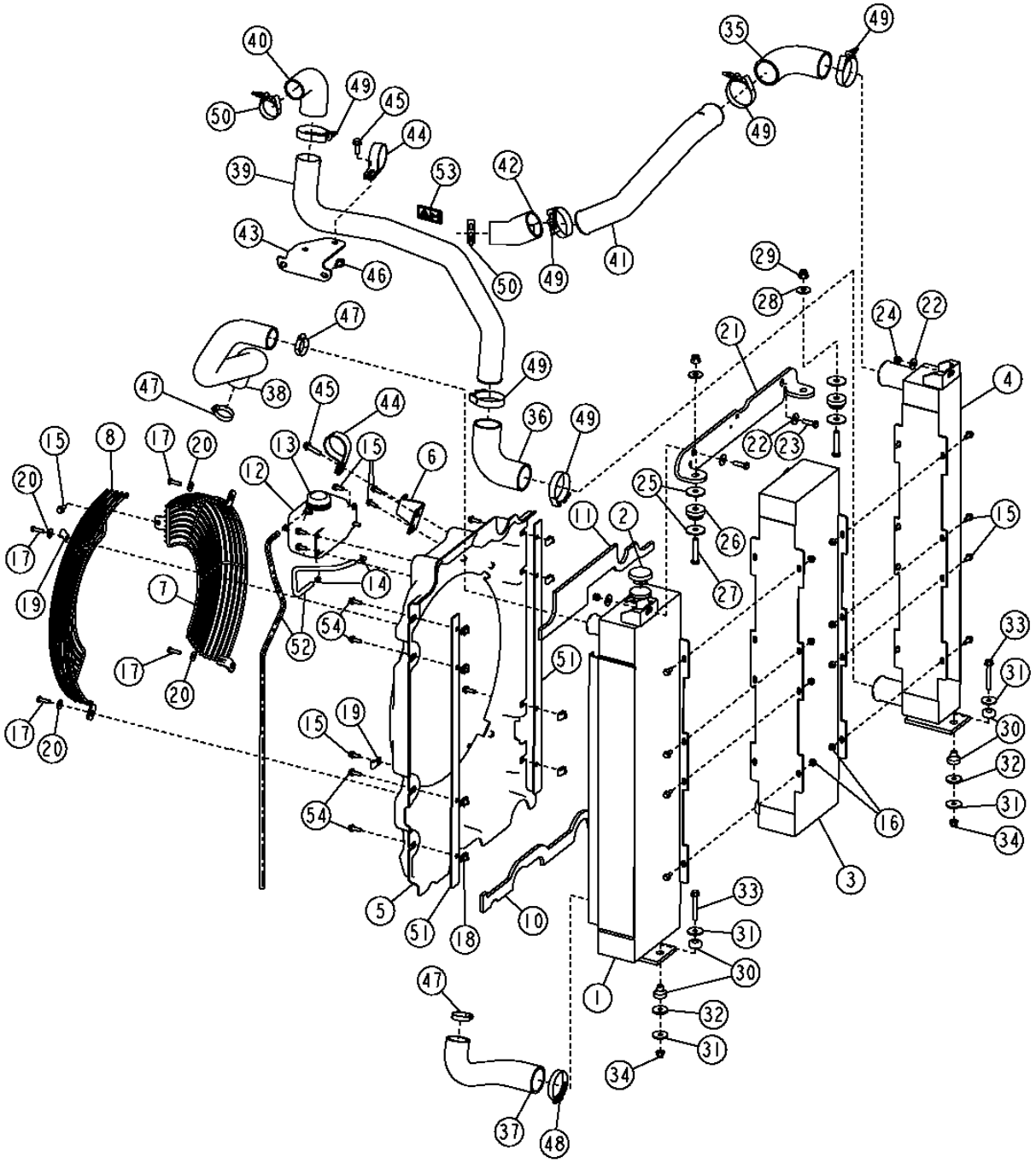

THIS PARTS LISTING IS CONTINUED

COOLING SYSTEM (650J)
CIRCUIT DE REFROIDISSEMENT (650J)
SISTEMA DE ENFRIAMIENTO (650J)

KEY	PART NO.	PART NAME	QTY.	SERIAL NO.	REMARKS
1	AT301068	RADIATOR	1		(INCLUDES AT173610)
2	AT173610	FILLER CAP	1		
3	AT301069	OIL COOLER	1		
4	AT301070	AIR COOLER	1		
5	AT301071	SHROUD	1		
6	T200830	BRACKET	1		(REQUIRES 14M7296 AND 19M7804) (FOR HIGH AND LOW PRESSURE AIR CONDITIONING REFRIGERANT HOSES)
	14M7296	FLANGE NUT	1		M10, (USE WITH T200830)
	19M7804	SCREW	1		M10 X 40, (USE WITH T200830)
7	AT312981	GUARD	1		(SUB FOR AT309319)
8	AT312982	GUARD	1		(SUB FOR AT309320)
9	24M7101	WASHER	8		11 X 34 X 3 MM
10	T200829	DEFLECTOR	1		
11	T200828	DEFLECTOR	1		
12	AN205068	TANK	1		(INCLUDES AT186925)
13	AT186925	FILLER CAP	1		
14	R56101	CLIP	3		
15	19M7866	SCREW	24		M8 X 20
16	14M7298	FLANGE NUT	16		M8
17	19M7513	CAP SCREW	4		M8 X 30
18	M84971	NUT	8		M8
19	T19935	CLAMP	2		
20	24M7207	WASHER	4		8.400 X 24 X 2 MM
21	T200825	BRACKET	1		
22	24M7296	WASHER	4		10.500 X 30 X 2.500 MM
23	19M7550	CAP SCREW	2		M10 X 35
24	14M7517	LOCK NUT	2		M10
25	T62323	WASHER	4		
26	T41770	ISOLATOR	2		
27	19M8348	CAP SCREW	2		M12 X 65
28	24M7180	WASHER	2		13 X 37 X 3 MM
29	14M7401	LOCK NUT	2		M12
30	AT208549	ISOLATOR	2		
31	24H1718	WASHER	4		13/32" X 1-5/8" X 0.134"
32	M49812	WASHER	2		
33	19M9128	SCREW	2		M10 X 75
34	14M7400	LOCK NUT	2		M10
35	T196726	HOSE	1	-106025	
36	P61341	RADIATOR HOSE	1		
37	T200827	RADIATOR HOSE	1		
38	T200826	RADIATOR HOSE	1		
39	T200824	TUBE	1		
40	T200426	HOSE	1		
41	.....	TUBE	1	-106025	(SUB T206898)
	T206898	RADIATOR HOSE	1	106026-	
42	T160123	HOSE	1		
43	AT228770	BRACKET	1		
44	F1451R	CLAMP	2	-106025	
	F1451R	CLAMP	1	106026-	
45	19M7786	SCREW	2		M10 X 30, (USE WITH F1451R)
46	19M7784	SCREW	2		M10 X 20
47	TY22470	CLAMP	3		(SUB FOR AR65294)
48	AR21999	HOSE CLAMP	1		
49	AT198270	CLAMP	6	-106025	
	AT198270	CLAMP	4	106026-	
50	AT105289	CLAMP	2		
51	T201021	STRIP	2		
52	TY22566	BULK HOSE	1		(CUT TO LENGTH)
53	GX21121	LABEL	1		(HOT SURFACE)
54	19M7867	SCREW	8		M8 X 25

COOLING SYSTEM SAND SHIELD
PARE-SABLE DU CIRCUIT DE REFROIDISSEMENT
SISTEMA DE ENFRIAMIENTO Y ESCUDO

T199331 -UN-26APR04

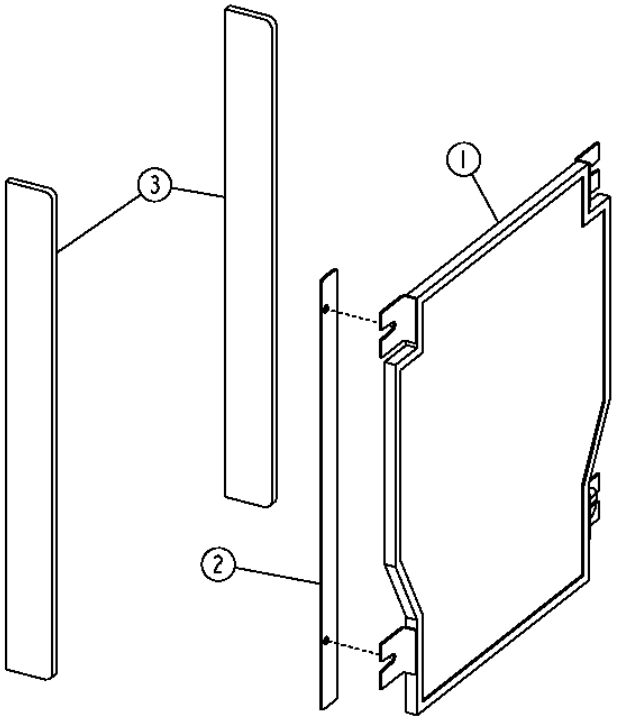

T199331

COOLING SYSTEM SAND SHIELD
PARE-SABLE DU CIRCUIT DE REFROIDISSEMENT
SISTEMA DE ENFRIAMIENTO Y ESCUDO

KEY	PART NO.	PART NAME	QTY.	SERIAL NO.	450 J	550 J	650 J	REMARKS
1	AT306300	SHIELD	1		X	X		(INCLUDES T202716 (SCREEN) AND T202717 (BRACKETS))
	AT300543	SHIELD	1				X	
2	T201177	STRIP	4		X	X		
	T201021	STRIP	4				X	
3	T202932	DEFLECTOR	2		X	X		
	T200329	DEFLECTOR	2				X	

BLOWER FAN
VENTILATEUR DE SOUFFLANTE
VENTILADOR SOPLADOR

T199353 -UN-22APR04

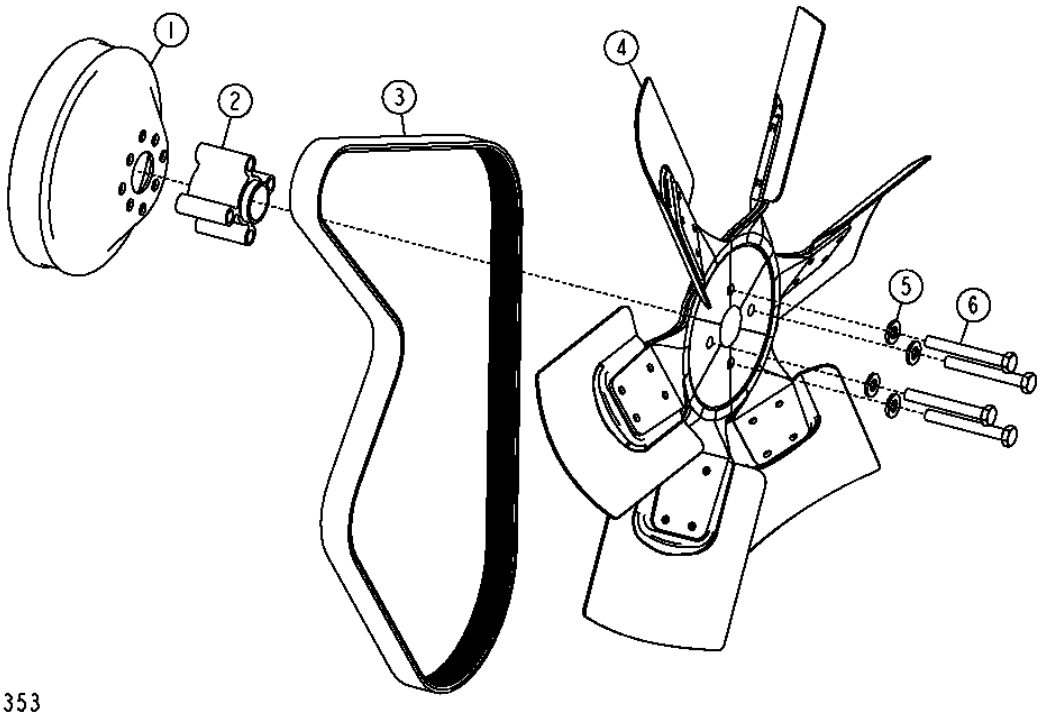

T199353

BLOWER FAN
VENTILATEUR DE SOUFFLANTE
VENTILADOR SOPLADOR

KEY	PART NO.	PART NAME	QTY.	SERIAL NO.	450J	550J	650J	REMARKS
1	R128662	PULLEY	1		X	X		
	R128661	PULLEY	1				X	(SPACER)
	R128660	PULLEY	1				X	(WITH INTEGRATED GRADE CONTROL)
2	T113232	SPACER	1		X	X	X	(SPACER)
3	R500377	V-BELT	1		X	X		DRIVE (POLY RIB) (WITHOUT AIR CONDITIONING)
	R500378	V-BELT	1		X	X		DRIVE (WITH AIR CONDITIONING)
	T184594	V-BELT	1				X	(WITHOUT AIR CONDITIONING)
	R500379	V-BELT	1				X	(POLY RIB) (WITH AIR CONDITIONING)
	R500382	V-BELT	1				X	(T04045TT091 OR PE4045TT091) (FIRE PLOW ENGINE) (WITH CAB)
	R135195	V-BELT	1				X	(T04045TT091 OR PE4045TT091) (FIRE PLOW ENGINE) (WITHOUT CAB)
4	AT221459	BLOWER FAN	1		X	X	X	
5	24M7239	WASHER	4		X	X	X	10.700 X 21 X 2.500 MM
6	19M8081	CAP SCREW	4		X	X	X	M10 X 80, (TORQUE 54 LB/FT 73 NM)

DECELERATOR/BRAKE PEDAL
DECELERATEUR / PEDALE DE FREIN
PEDAL DESACELERADOR / FRENOS

T215416 -UN-05OCT05

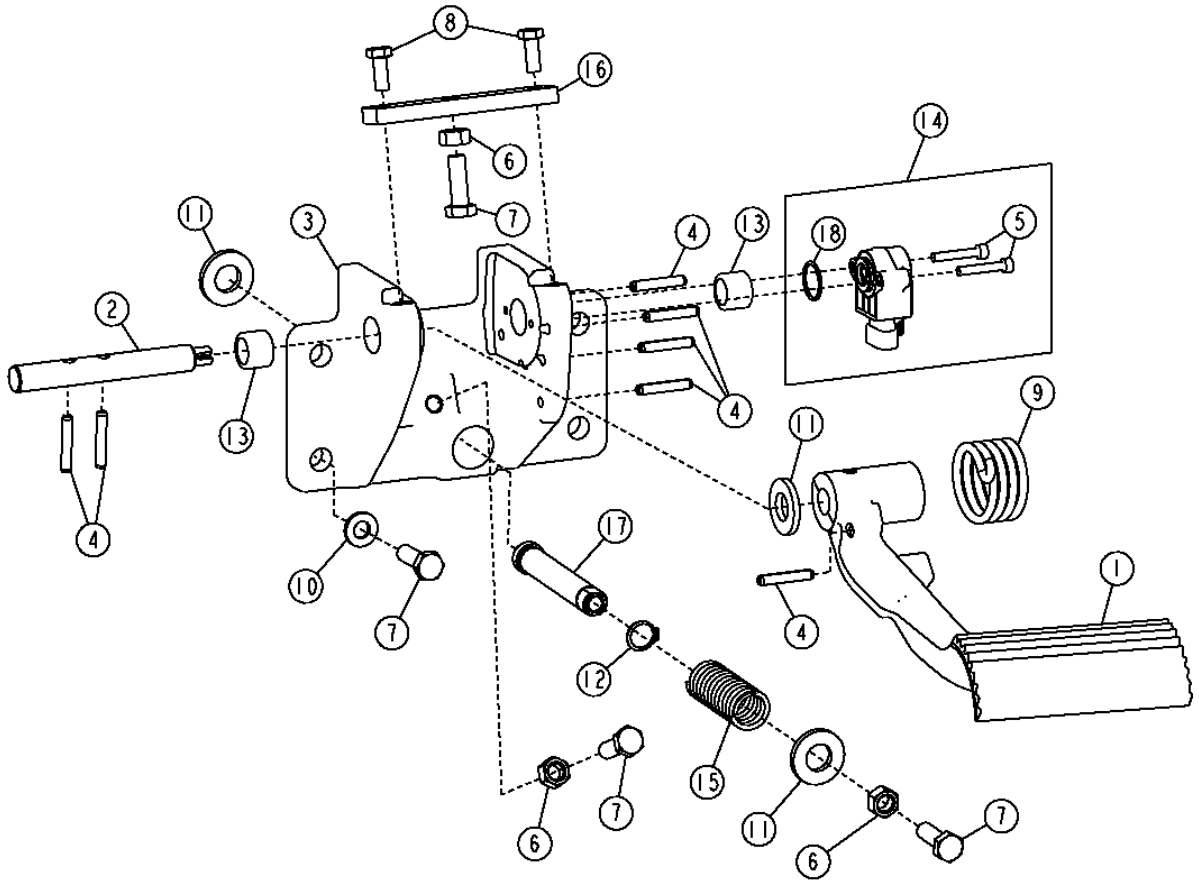

T215416

DECELERATOR/BRAKE PEDAL
DECELERATEUR / PEDALE DE FREIN
PEDAL DESACELERADOR / FRENOS

KEY	PART NO.	PART NAME	QTY.	SERIAL NO.	450J	550J	650J	REMARKS
1	T168219	PEDAL	1		X	X	X	
2	T201520	SHAFT	1		X	X	X	
3	T182632	SUPPORT	1		X	X	X	
4	34M7216	SPRING PIN	7		X	X	X	6 X 35 MM
5	19M8576	SCREW	2		X	X	X	M5 X 30
6	14M7274	NUT	3		X	X	X	M10
7	19M7662	CAP SCREW	7		X	X	X	M10 X 30
8	19M7881	SCREW	2		X	X	X	M8 X 20
9	T210217	EXTENSION SPRING	1		X	X	X	(SUB FOR T177425)
10	24M7239	WASHER	4		X	X	X	10.700 X 21 X 2.500 MM
11	24M7241	WASHER	3		X	X	X	17 X 34 X 4 MM
12	40M7068	SNAP RING	1		X	X	X	
13	AT162350	NEEDLE BEARING	2		X	X	X	(ROLLER)
14	AT224606	KIT	1		X	X	X	(SENSOR)
15	T140608	SPRING	1		X	X	X	
16	T181668	PLATE	1		X	X	X	
17	T182625	PIN FASTENER	1		X	X	X	
18	U15980	O-RING	1		X	X	X	

AIR CLEANER (450J)
FILTRE A AIR (450J)
FILTRO DE AIRE (450J)

T199359 -UN-26MAY04

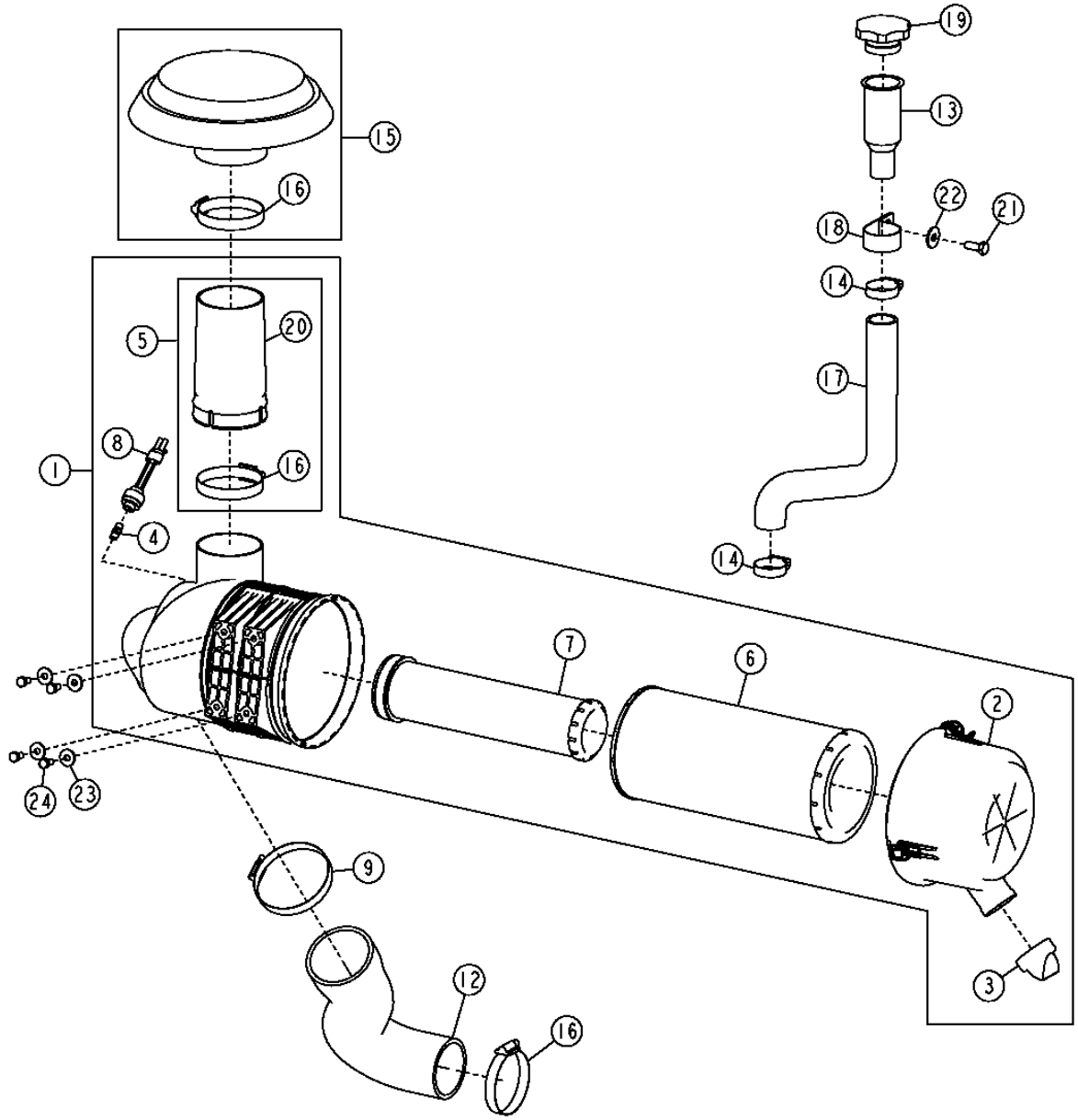

T199359

AIR CLEANER (450J)
FILTRE A AIR (450J)
FILTRO DE AIRE (450J)

KEY	PART NO.	PART NAME	QTY.	SERIAL NO.	450J	REMARKS
1	AT226963	AIR CLEANER	1		X	
2	AT171855	COVER	1		X	
3	R48568	VALVE	1		X	(CLEAN OUT)
4	AR44361	FITTING	1		X	
5	AT177542	TUBE	1		X	(STACK AND CLAMP ASSEMBLY)
6	AT171853	AIR FILTER	1		X	(PRIMARY)
7	AT171854	AIR FILTER	1		X	(SECONDARY)
8	AT178542	AIR RESTRICTION SENSOR	1		X	(VACUUM SWITCH)
9	TY22489	HOSE CLAMP	1		X	(SUB FOR AR85329)
12	T205602	HOSE	1		X	
13	R120864	TUBE	1		X	(ENGINE OIL FILLER)
14	AR65293	CLAMP	2		X	
15	AT171169	CAP	1		X	(AIR CLEANER RAINCAP WITH CLAMP)
16	AH104837	HOSE CLAMP	3		X	
17	T174677	HOSE	1		X	
18	N198631	CLAMP	1		X	(OIL FILL TUBE SUPPORT)
19	RE500250	FILLER CAP	1		X	(ENGINE OIL FILLER)
20	.....	STRUCTURAL TUBING	1		X	(SUB AT177542)
21	19M7402	CAP SCREW	1		X	M10 X 25
22	24M7296	WASHER	1		X	10.500 X 30 X 2.500 MM
23	24M7207	WASHER	4		X	8.400 X 24 X 2 MM
24	19M7932	CAP SCREW	4		X	M8 X 16

AIR CLEANER (550J AND 650J)
FILTRE A AIR (550J, 650J)
FILTRO DE AIRE (550J, 650J)

T209065 -UN-04MAR05

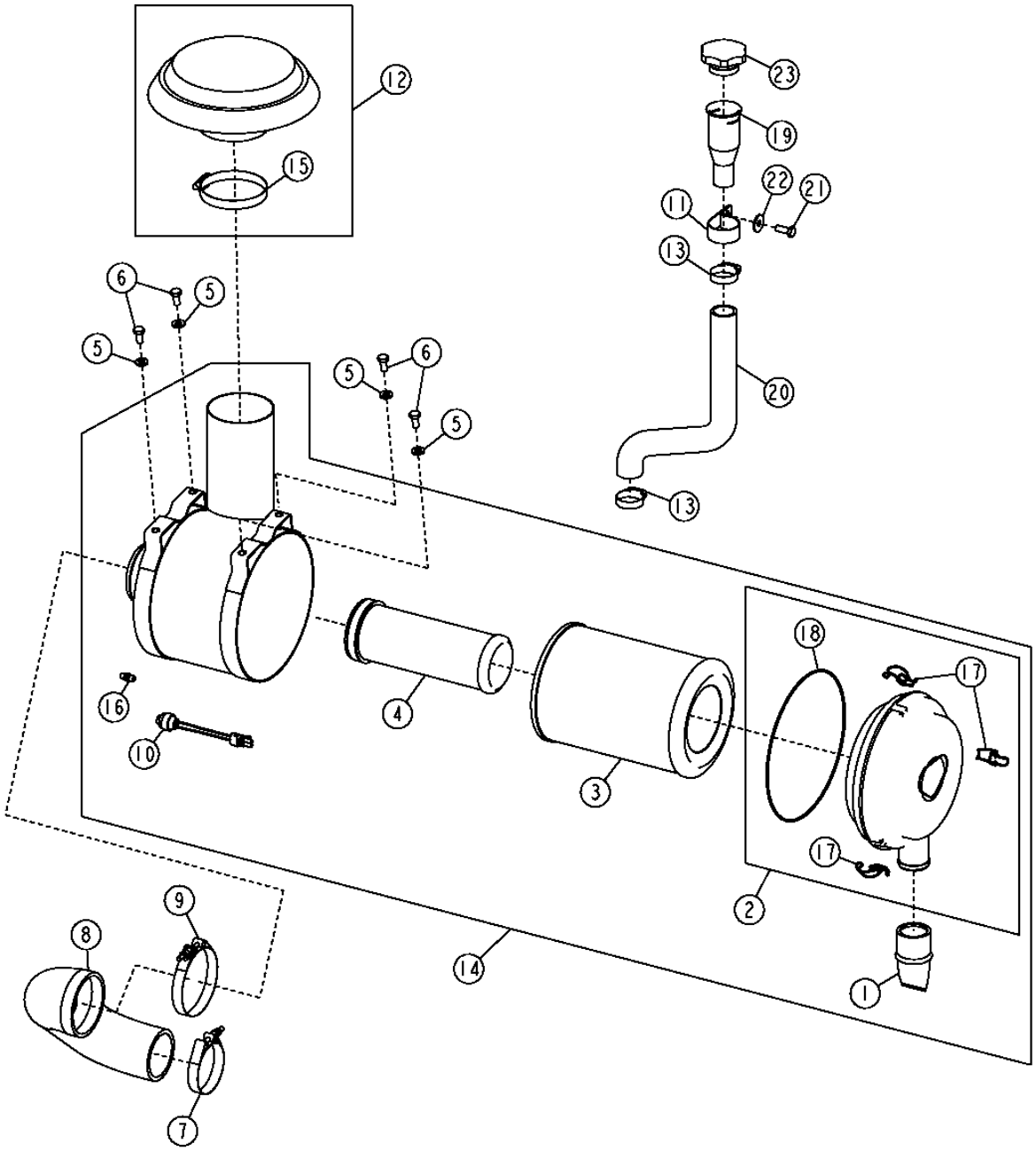

T209065

AIR CLEANER (550J AND 650J)
FILTRE A AIR (550J, 650J)
FILTRO DE AIRE (550J, 650J)

KEY	PART NO.	PART NAME	QTY.	SERIAL NO.	550J	650J	REMARKS
1	T158495	VALVE	1		X	X	(CLEAN OUT)
2	AT175357	COVER	1		X	X	
3	AT175344	AIR FILTER	1		X	X	(PRIMARY)
4	AT175345	AIR FILTER	1		X	X	(SECONDARY)
5	24M7239	WASHER	4		X	X	10.700 X 21 X 2.500 MM
6	19M7938	CAP SCREW	4		X	X	M10 X 20
7	AT50923	HOSE CLAMP	1		X	X	
8	T180055	HOSE	1		X	X	
9	AT56657	HOSE CLAMP	1		X	X	
10	AT178542	AIR RESTRICTION SENSOR	1		X	X	(VACUUM SWITCH)
11	N198631	CLAMP	1		X	X	
12	AT175358	CAP	1		X	X	
13	AR65293	CLAMP	2		X	X	(NOT SERVICED)
14	AT223481	AIR CLEANER	1		X	X	
15	AR85329	CLAMP	1		X	X	
16	AR44361	FITTING	1		X	X	(VACUUM SWITCH SENSOR SPECIAL CONNECTOR)
17	AT209926	LATCH	3		X	X	
18	T163113	O-RING	1		X	X	
19	R120864	TUBE	1		X	X	
20	T174677	HOSE	1		X	X	
21	19M7402	CAP SCREW	1		X	X	M10 X 25
22	24M7296	WASHER	1		X	X	10.500 X 30 X 2.500 MM
23	RE500250	FILLER CAP	1		X	X	

MUFFLER
SILENCIEUX
SILENCIADOR

TP52083 -UN-08JAN99

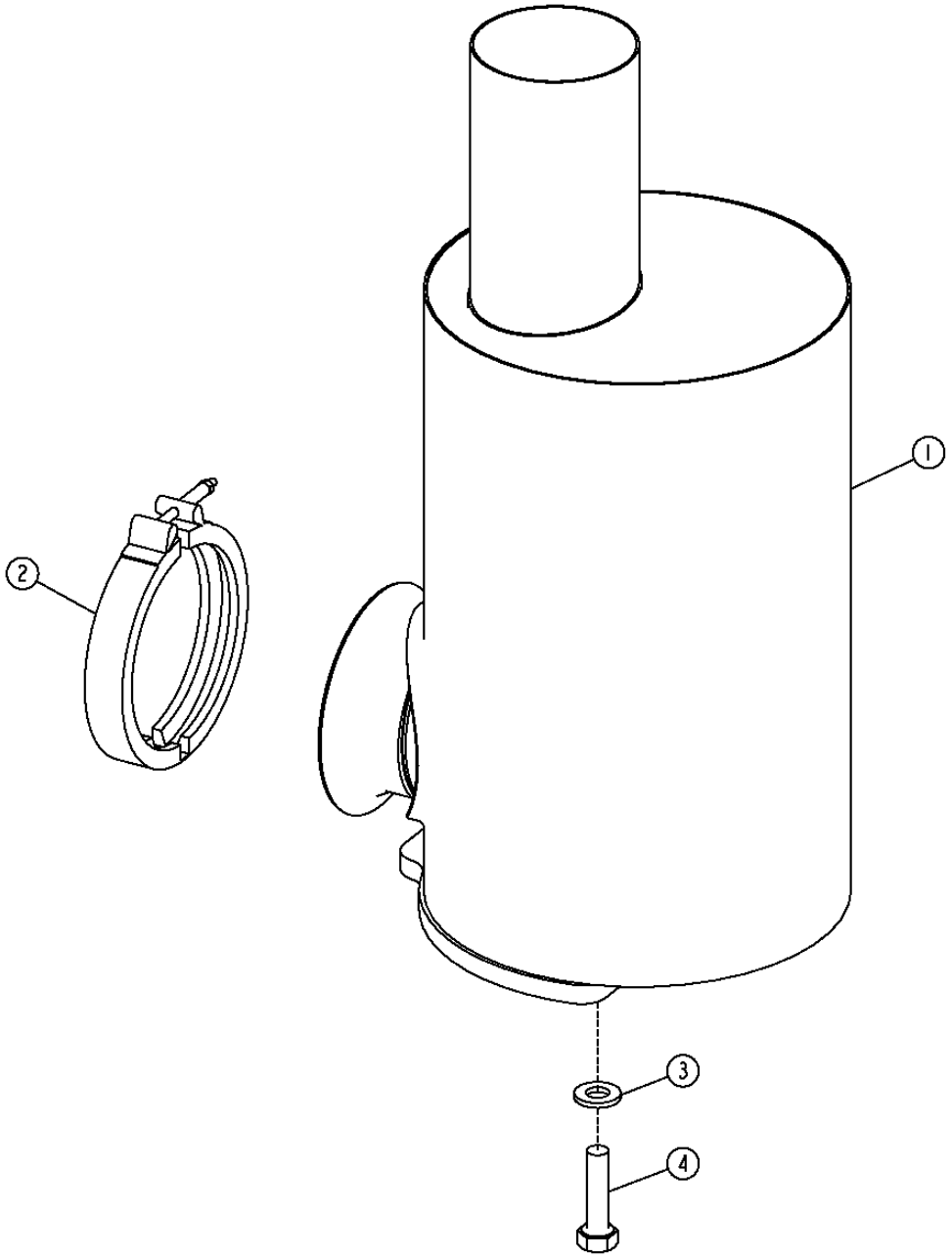

TP52083

MUFFLER
SILENCIEUX
SILENCIADOR

KEY	PART NO.	PART NAME	QTY.	SERIAL NO.	450J	550J	650J	REMARKS
1	AT220299	MUFFLER	1		X	X	X	
	AT304484	MUFFLER	1				X	(LGP)
2	RE40048	CLAMP	1		X	X	X	
3	24M7239	WASHER	3		X	X	X	10.700 X 21 X 2.500 MM
4	19M8637	CAP SCREW	3		X	X	X	M10 X 40

POWER TRAIN/ENGINE CRADLE MOUNTING
TRANSMISSION / MONTAGE BERCEAU MOTEUR
TREN TRANSMISOR DE POTENCIA / MONTAJE DEL SOPORTE DEL MOTOR

T136998 -UN-16JAN01

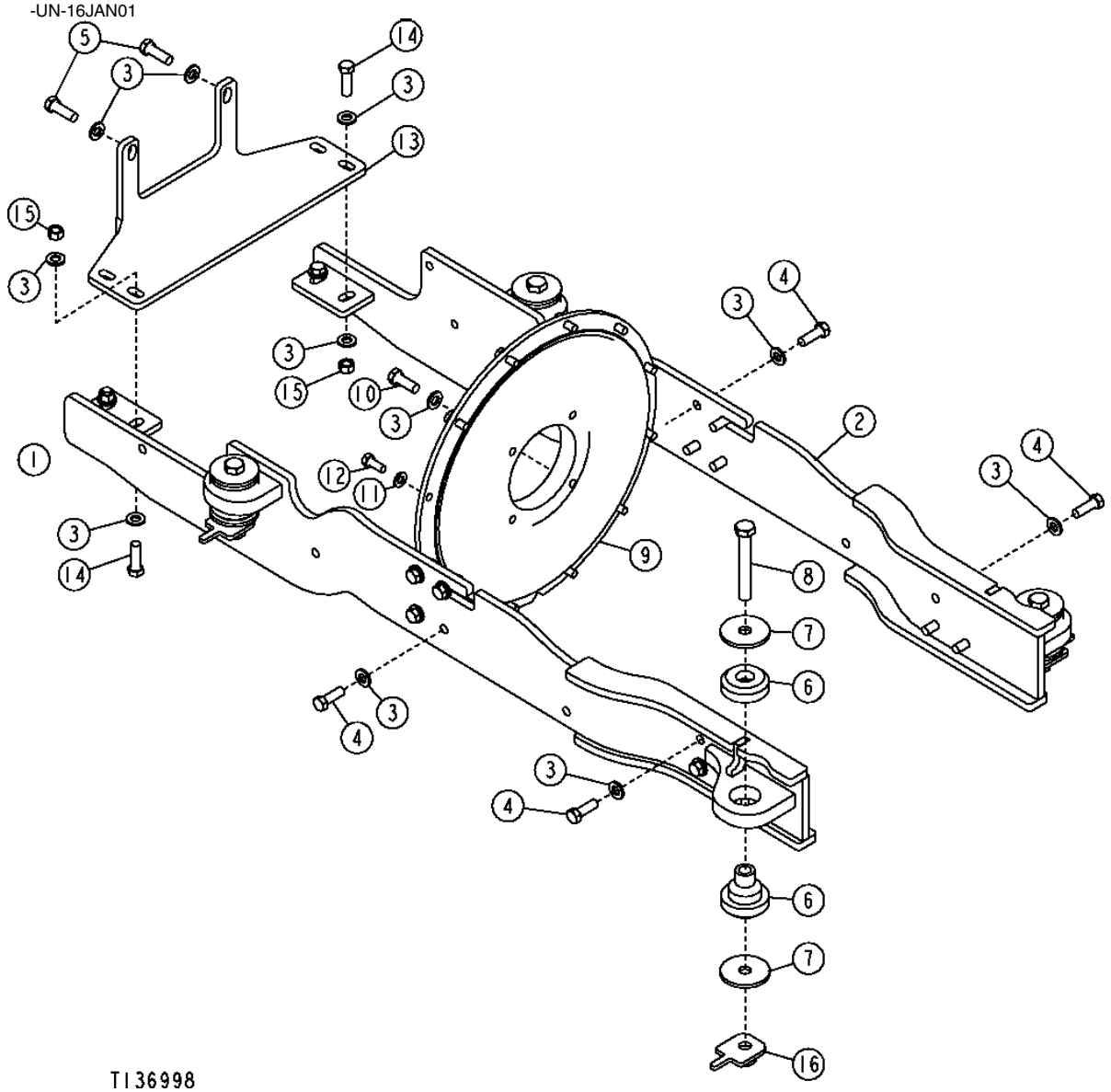

POWER TRAIN/ENGINE CRADLE MOUNTING
TRANSMISSION / MONTAGE BERCEAU MOTEUR
TREN TRANSMISOR DE POTENCIA / MONTAJE DEL SOPORTE DEL MOTOR

KEY	PART NO.	PART NAME	QTY.	SERIAL NO.	450 J	550 J	650 J	REMARKS
1	AT226559	MOUNTING PARTS	1		X	X	X	(RH RAIL ASSEMBLY)
2	AT226558	MOUNTING PARTS	1		X	X	X	(LH RAIL ASSEMBLY)
3	24M7240	WASHER	28		X	X	X	13 X 25 X 3 MM
4	19M7403	CAP SCREW	14		X	X	X	M12 X 35
5	19H2993	CAP SCREW	2		X	X	X	1/2" X 1-1/2"
6	AT221779	ISOLATOR	4		X	X	X	(RUBBER)
7	T179952	WASHER	8		X	X	X	
8	19M7884	CAP SCREW	4		X	X	X	M16 X 110
9	T196319	COVER	1		X	X	X	(FLYWHEEL)
10	19H3579	CAP SCREW	4		X	X	X	1/2" X 1-3/8"
11	24M7239	WASHER	12		X	X	X	10.700 X 21 X 2.500 MM
12	19M7402	CAP SCREW	12		X	X	X	M10 X 25
13	T170611	BRACKET	1		X	X	X	
14	19M7493	CAP SCREW	4		X	X	X	M12 X 40
15	14M7275	NUT	4		X	X	X	M12
16	AT221789	WELD NUT	4		X	X	X	

FUEL FILTER AND LINES
FILTRE A CARBURANT ET CONDUITE
FILTRO DE COMBUSTIBLE Y TUBERIA

T211358 -UN-21JUN05

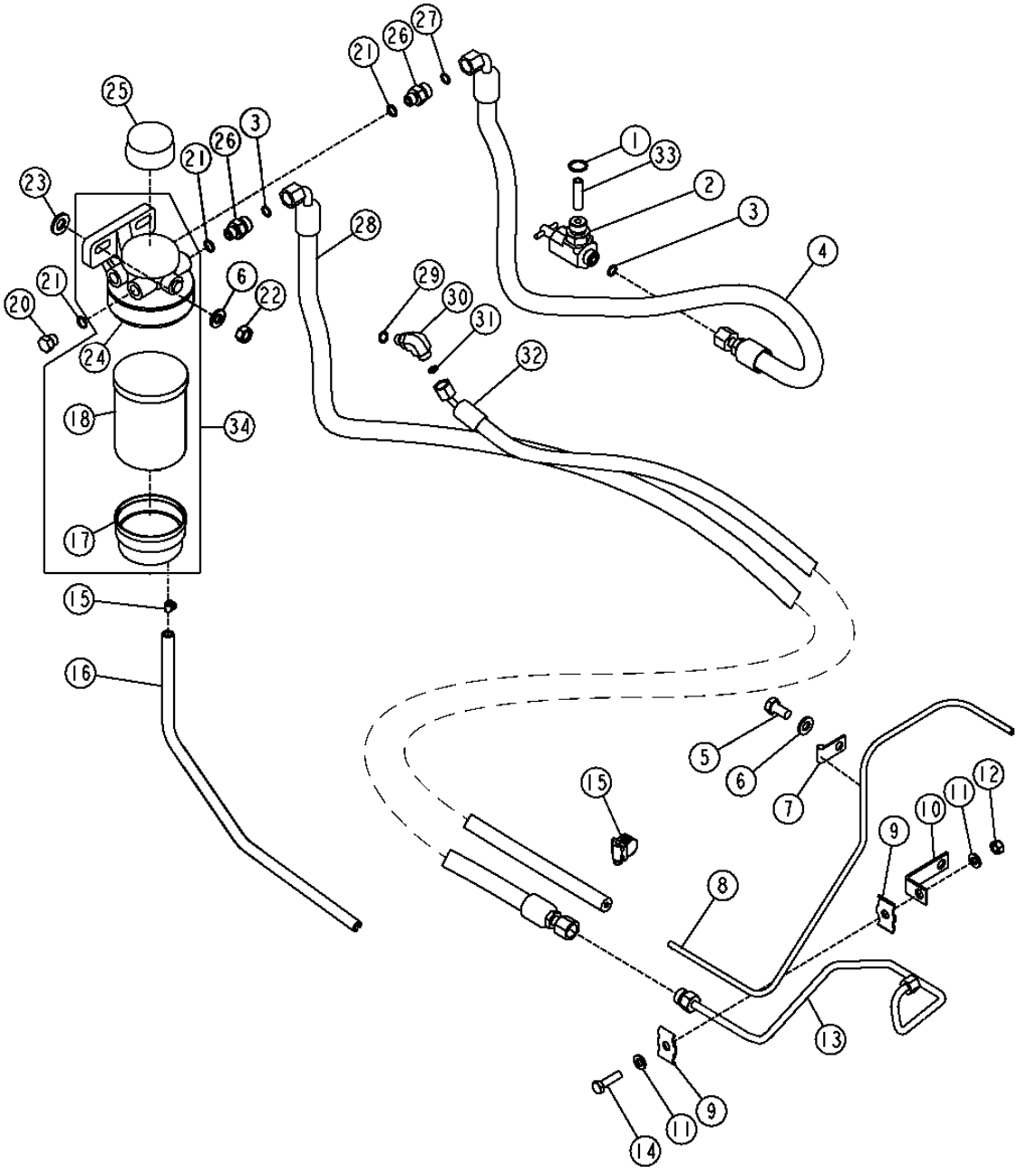

T211358

THIS PARTS LISTING IS CONTINUED

FUEL FILTER AND LINES
FILTRE A CARBURANT ET CONDUITE
FILTRO DE COMBUSTIBLE Y TUBERIA

KEY	PART NO.	PART NAME	QTY.	SERIAL NO.	456 555 000 JJJ	REMARKS
1	R26375	O-RING	1		X X X	
2	AM118213	HAND OPERATED VALVE	1		X X X	(ALSO ORDER AH106982)
3	T77613	O-RING	1		X X X	9.246 X 1.778 MM
4	AT210157	HYDRAULIC HOSE - FABRICATE	1		X X X	(FUEL SUPPLY TANK TO FILTER)
5	19M7938	CAP SCREW	1		X X X	M10 X 20
6	24M7239	WASHER	3		X X X	10.700 X 21 X 2.500 MM
7	T29969	CLAMP	1		X X X	
8	T203194	FUEL LINE	1		X X X	
9	R42009	CLAMP	2		X X X	
10	T151959	ANGLE	1		X X X	
11	24M7238	WASHER	2		X X X	8.700 X 17 X 2 MM
12	14M7273	NUT	1		X X X	M8
13	AT228841	FUEL LINE	1		X X X	
14	19M7513	CAP SCREW	1		X X X	M8 X 30
15	TY22462	CLAMP	1		X X X	(SUB FOR AR48236) (HOSE AT FUEL FILTER)
	TY22464	CLAMP	1		X X X	(HOSE AT FUEL LEAK-OFF LINE)
16	.....	HOSE	1		X X X	(MAKE FROM T119816) (CUT TO LENGTH 610MM (2 FT) AND 762 MM (2.5 FT))
17	RE51650	SEDIMENT BOWL	1		X X X	
18	RE517181	FUEL FILTER	1	-114080	X X X	PRIMARY
	RE516477	FILTER ELEMENT	1		X X X	TIER II ENGINE (ANTI-FUEL GELLING) (USE IN COLD CLIMATE)
	RE509036	FUEL FILTER	1	114081-	X X X	
20	RE46686	FITTING PLUG	2		X X X	
21	R26286	O-RING	4		X X X	
22	14M7274	NUT	2		X X X	M10
23	24M7085	WASHER	2		X X X	15 X 28 X 2.500 MM
24	RE508847	FILTER	1		X X X	TIER II ENGINE
25	RE515404	KIT	1	-114080	X X X	
26	38H5008	ADAPTER FITTING	2		X X X	
27	T77613	O-RING	2		X X X	
28	AT210158	HYDRAULIC HOSE - FABRICATE	1		X X X	(FUEL SUPPLY FILTER TO ENGINE)
29	R28782	O-RING	1		X X X	
30	38H1003	ELBOW FITTING	1		X X X	(90 DEGREE) (FACE SEAL)
31	T77814	O-RING	1		X X X	
32	AT210156	HOSE	1		X X X	(RETURN)
33	AH106982	SCREEN	1		X X X	(STAND PIPE)
34	.....	FUEL FILTER	1	114081-	X X X	(NSEP) (ORDER INDIVIDUAL COMPONENTS)

PRIMARY FUEL FILTER, HEADER AND SERVICE KITS
FILTRE A CARBURANT PRIMAIRE, TETE ET KITS D'ENTRETIEN
FILTRO DE COMBUSTIBLE PRIMARIO, COLECTOR Y JUEGOS DE SERVICIO

T211359 -UN-21JUN05

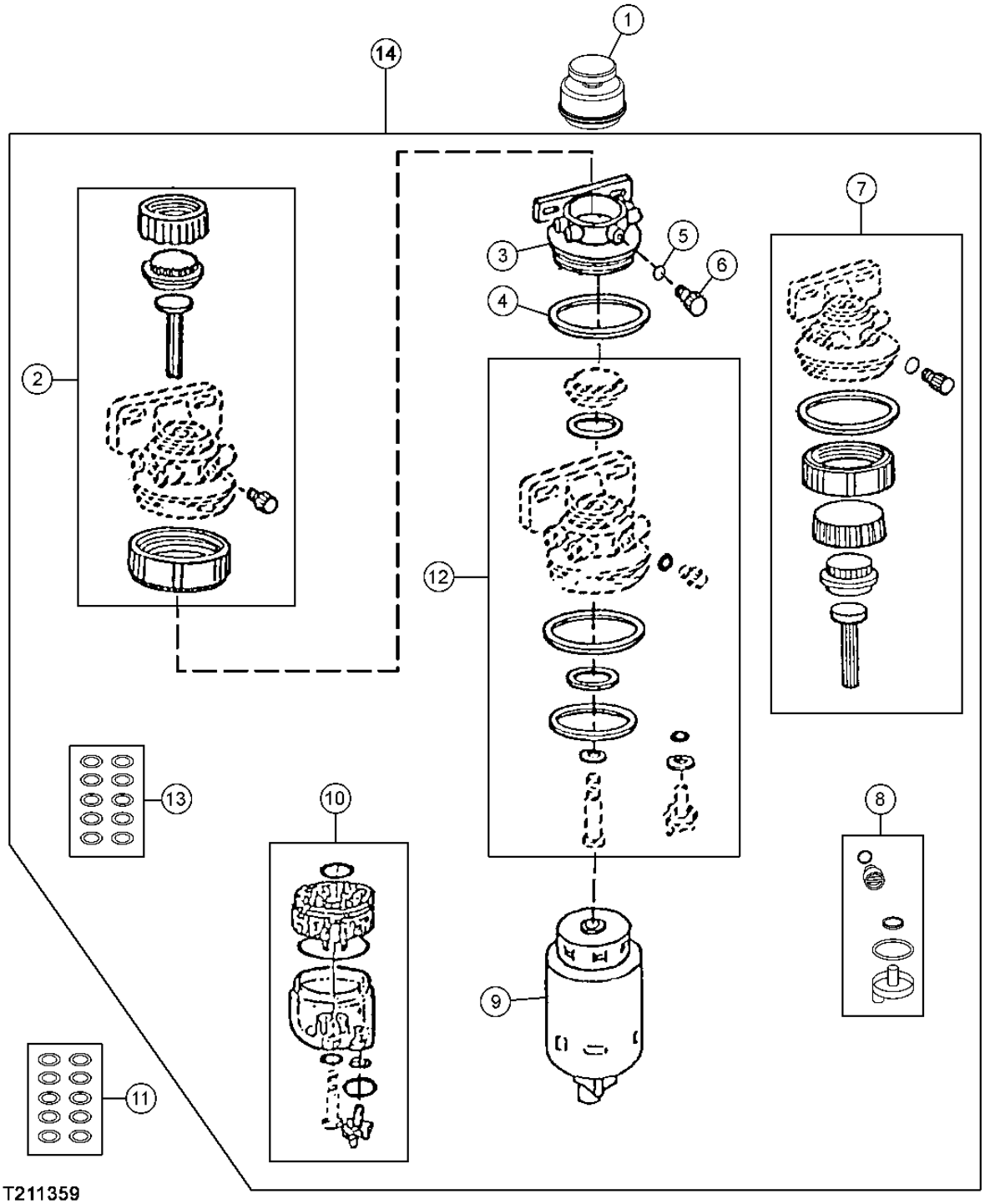

PRIMARY FUEL FILTER, HEADER AND SERVICE KITS
FILTRE A CARBURANT PRIMAIRE, TETE ET KITS D'ENTRETIEN
FILTRO DE COMBUSTIBLE PRIMARIO, COLECTOR Y JUEGOS DE SERVICIO

KEY	PART NO.	PART NAME	QTY.	SERIAL NO.	450J	550J	650J	REMARKS
1	RE515404	KIT	1	-114080	X	X	X	(HAND PRIMER ASSEMBLY)
2	RE51649	SEAL KIT	1		X	X	X	(MECHANICAL COMPONENTS FOR FUEL GUARD FILTER)
3	RE508847	FILTER	1		X	X	X	
4	R113565	O-RING	1		X	X	X	
5	R113562	O-RING	1		X	X	X	
6	R113563	DRAIN PLUG	1		X	X	X	
7	RE508847	FILTER	1		X	X	X	
8	RE60854	DRAIN VALVE	1		X	X	X	(VALVE)
9	RE517181	FUEL FILTER	1	-114080	X	X	X	(ELEMENT)(WITH DRAIN)
	RE516477	FILTER ELEMENT	1		X	X	X	(ANTI-FUEL GELLING) (USE IN COLD CLIMATE)
	RE509036	FUEL FILTER	1	114081-	X	X	X	
10	RE51650	SEDIMENT BOWL	1		X	X	X	
11	RE516513	KIT	1		X	X	X	(HAND PRIMER VALVE VALVE PLATE O-RING)
12	RE516553	SEAL KIT	1		X	X	X	(CONTAINS 10 PIECES)
13	RE516512	O-RING KIT	1		X	X	X	(FUEL FILTER HEADER CAP O-RING)
14	.....	FUEL FILTER	1	114081-	X	X	X	(NSEP) (ORDER INDIVIDUAL COMPONENTS)

FUEL TANK
RESERVOIR DE CARBURANT
TANQUE DE COMBUSTIBLE

TP52118 -UN-18DEC98

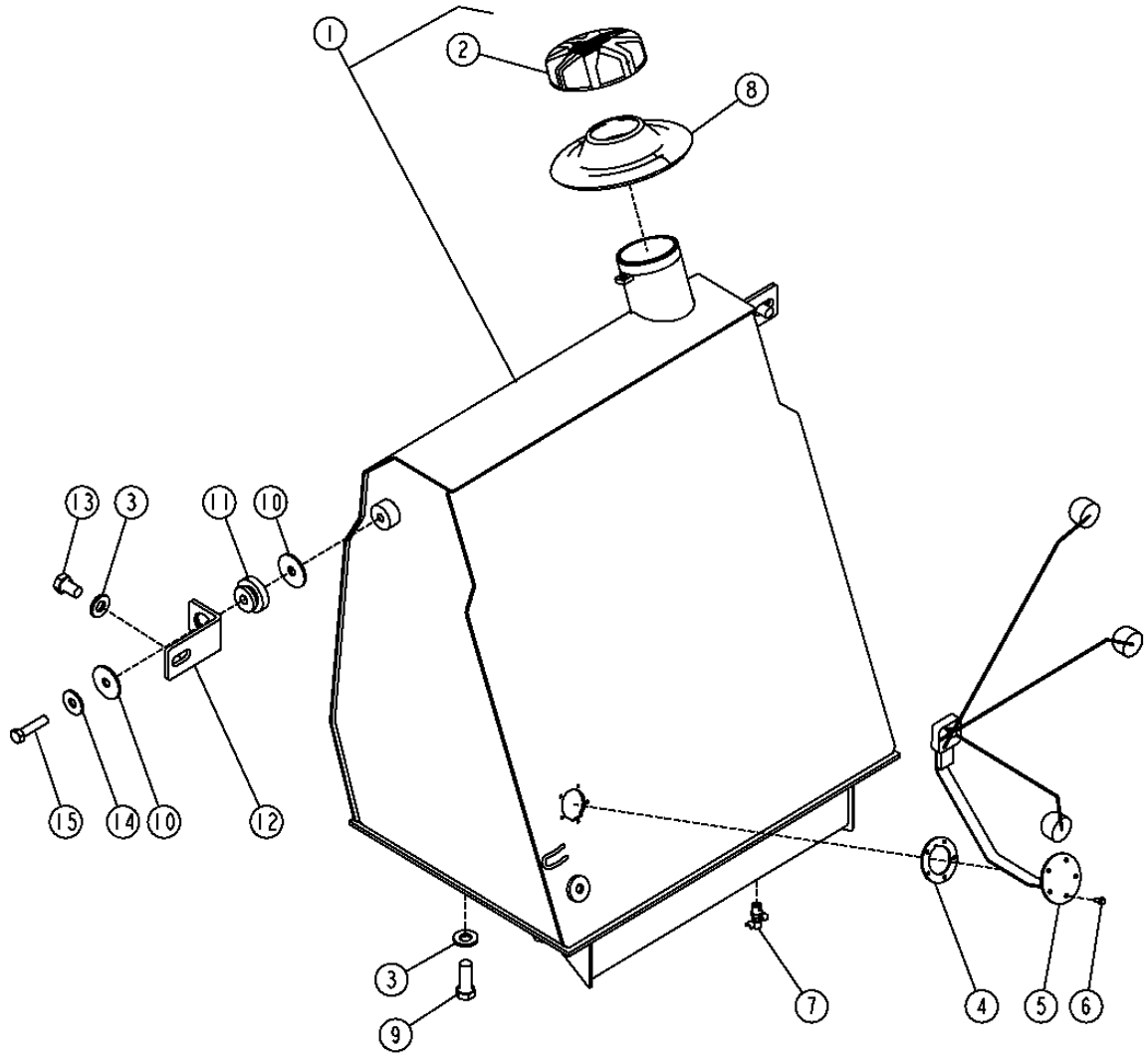

TP52118

THIS PARTS LISTING IS CONTINUED

FUEL TANK
RESERVOIR DE CARBURANT
TANQUE DE COMBUSTIBLE

KEY	PART NO.	PART NAME	QTY.	SERIAL NO.	450 550 650 J J J	REMARKS
1	AT224977	FUEL TANK	1		X X X	
2	AT156445	FILLER CAP	1		X X X	(INCLUDES T103461 AND T24652)
	T103461	SEALING WASHER	1		X X X	
	T24652	BALL	1		X X X	
3	24M7241	WASHER	6		X X X	17 X 34 X 4 MM
4	T214230	GASKET	1		X X X	(SUB FOR T155195, THIS APPLICATION)
5	AT227234	FUEL SENDER	1		X X X	
6	19M8078	CAP SCREW	5		X X X	M4 X 16
7	AT13740	DRAIN VALVE	1		X X X	
8	T178363	BOOT	1		X X X	
9	19M7489	CAP SCREW	4		X X X	M16 X 45
10	T62323	WASHER	4		X X X	
11	T41770	ISOLATOR	2		X X X	
12	T170973	BRACKET	2		X X X	
13	19M7394	CAP SCREW	2		X X X	M16 X 25
14	24M7180	WASHER	2		X X X	13 X 37 X 3 MM
15	19M7361	CAP SCREW	2		X X X	M12 X 50

ENGINE CONTROL UNIT
UNITE D'COMMANDE DU MOTEUR
UNIDAD DE CONTROLE DEL MOTOR

T199134 -UN-26MAY04

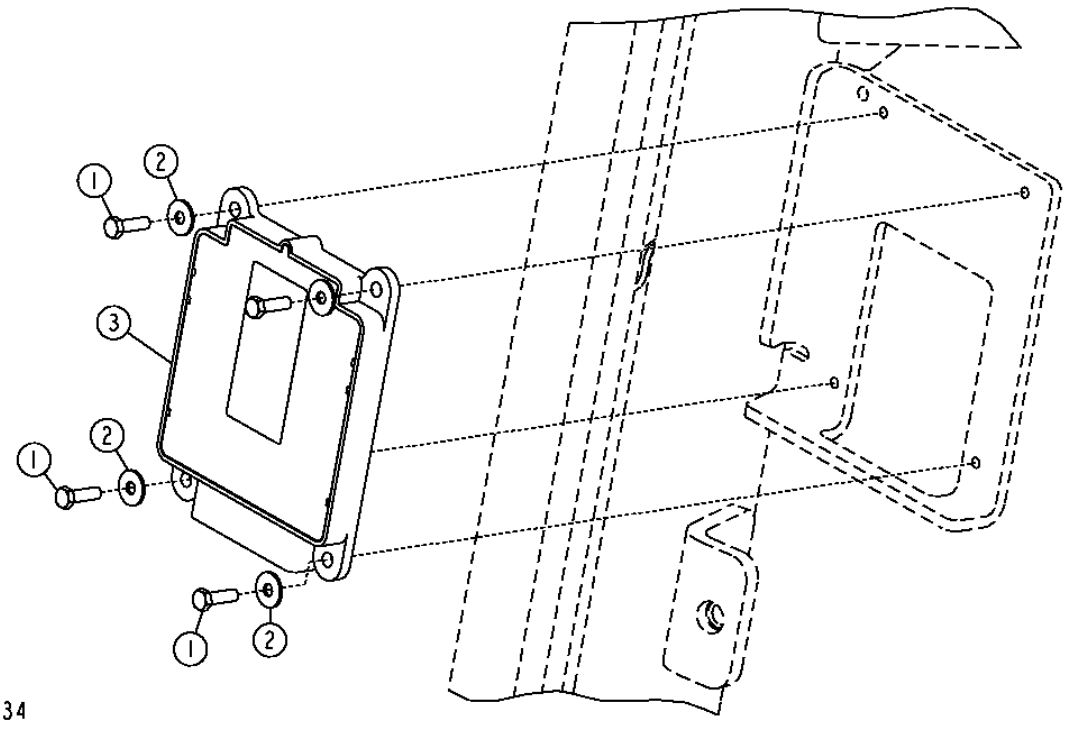

THIS PARTS LISTING IS CONTINUED

ENGINE CONTROL UNIT
UNITE D'COMMANDE DU MOTEUR
UNIDAD DE CONTROLE DEL MOTOR

KEY	PART NO.	PART NAME	QTY.	SERIAL NO.	450J	550J	650J	REMARKS
1	19M7372	CAP SCREW	4		X	X	X	M5 X 16
2	24M7138	WASHER	4		X	X	X	5.300 X 15 X 1.200 MM
3	RE532627	ENGINE CONTROLLER	1		X	X	X	(SUB FOR RE522527)
	RE53267	HEAT SHIELD	1				X	(WITH INTEGRATED GRADE CONTROL)

BRAKE VALVE
MAITRE-CYLINDRE
VALVULA DE MANDO DEL FRENO

T212969 -UN-18AUG05

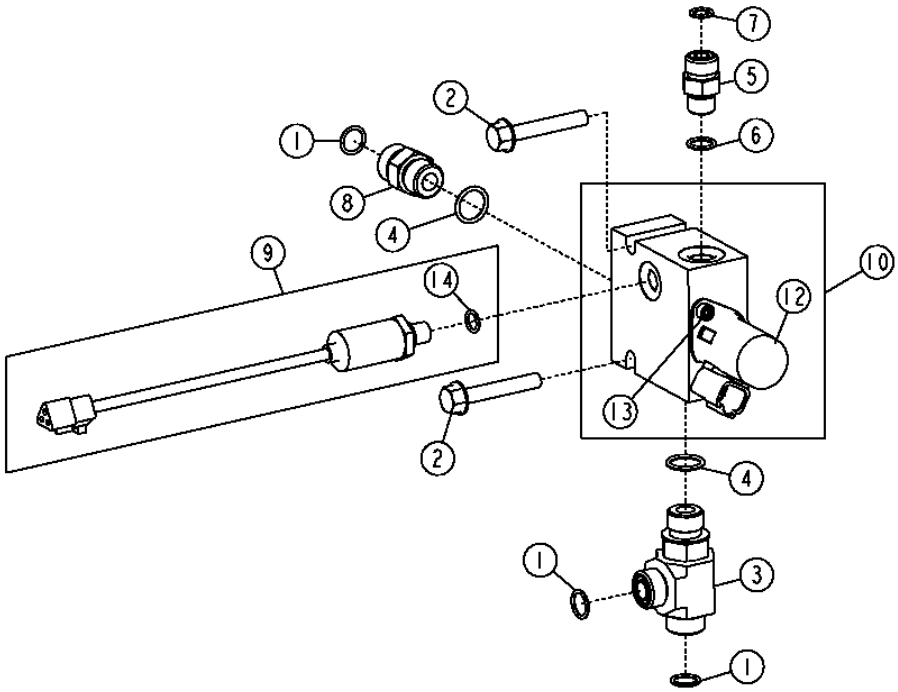

T212969

BRAKE VALVE
MAITRE-CYLINDRE
VALVULA DE MANDO DEL FRENO

KEY	PART NO.	PART NAME	QTY.	SERIAL NO.	450J	550J	650J	REMARKS
1	T77857	O-RING	3		X	X	X	
2	19M8319	SCREW	2		X	X	X	M8 X 50
3	38H1024	TEE FITTING	1		X	X	X	
4	R26375	O-RING	2		X	X	X	
5	38H1160	ADAPTER FITTING	1		X	X	X	
6	R26448	O-RING	1		X	X	X	
7	T77613	O-RING	1		X	X	X	
8	38H1161	ADAPTER FITTING	1		X	X	X	
9	AT228298	TRANS OIL PRESSURE SENSOR	1		X	X	X	
10	AT305772	VALVE	1		X	X	X	
11	AT224873	SEAL KIT	1		X	X	X	(NOT ILLUSTRATED) (FOR USE IN REPAIRING AT305772)
12	KV25678	SOLENOID VALVE	1		X	X	X	
13	T204128	SCREW	2		X	X	X	
14	R28782	O-RING	1		X	X	X	

PARK LOCK
VERROU DE STATIONNEMENT
TRABA DE ESTACIONAMIENTO

T198731 -UN-10MAY04

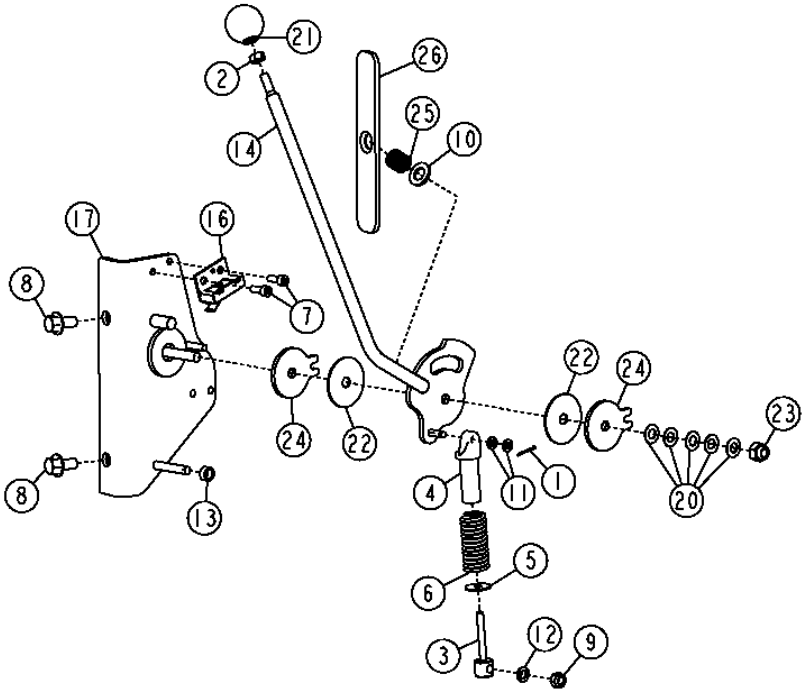

T198731

PARK LOCK
VERROU DE STATIONNEMENT
TRABA DE ESTACIONAMIENTO

KEY	PART NO.	PART NAME	QTY.	SERIAL NO.	450J	550J	650J	REMARKS
1	11M7093	COTTER PIN	1		X	X	X	
2	14H785	NUT	1		X	X	X	
3	T119915	PIN FASTENER	1		X	X	X	(WITH HEAD)
4	T119916	PIN FASTENER	1		X	X	X	(PIN-GUIDE WITH CYLINDER FOR SPRING)
5	24H1288	WASHER	1		X	X	X	9/32" X 1" X 1/16"
6	R57438	SPRING	1		X	X	X	
7	19M9560	SCREW	2		X	X	X	M6 X 10
8	19M7784	SCREW	2		X	X	X	M10 X 20
9	14M7166	LOCK NUT	1		X	X	X	M8
10	24M7085	WASHER	1		X	X	X	15 X 28 X 2.500 MM
11	24M7054	WASHER	2		X	X	X	6.400 X 12 X 1.600 MM
12	24M7095	WASHER	1		X	X	X	8.400 X 15 X 1.600 MM
13	28H1511	WASHER	1		X	X	X	0.364" X 0.540" X 1/4"
14	AT320978	CONTROL LEVER	1		X	X	X	(SUB FOR AT300736)
16	AT306056	SWITCH	1		X	X	X	(CPI)
17	AT307772	BRACKET	1		X	X	X	(LEVER)
20	M48238	SPRING WASHER	5		X	X	X	9.703 X 19.050 X 0.813 MM
21	M84247	KNOB	1		X	X	X	
22	R105812	WASHER	2		X	X	X	
23	T11234	LOCK NUT	1		X	X	X	
24	T153420	PLATE	2		X	X	X	(HAND SPEED)
25	R44313	COMPRESSION SPRING	1		X	X	X	(SUB FOR T174881)
26	T204487	PLATE	1		X	X	X	(PLASTIC SLIDER)

DECALS AND LABELS (ENGLISH)
AUTOCOLLANTS (ANGLAIS)
CALCOMANIAS (INGLES)

T210836 -UN-10MAY05

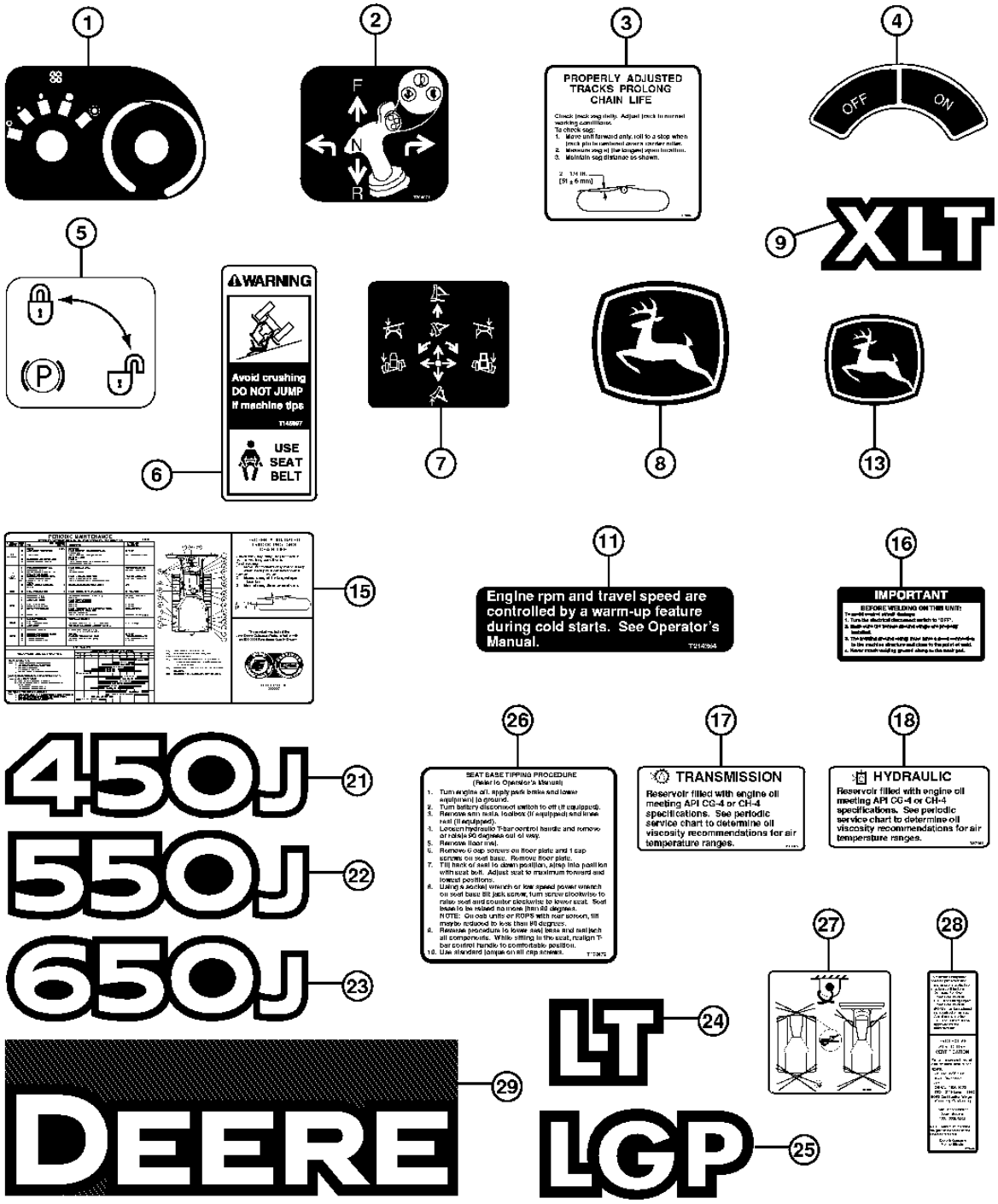

T210836

DECALS AND LABELS (ENGLISH)
AUTOCOLLANTS (ANGLAIS)
CALCOMANIAS (INGLES)

KEY	PART NO.	PART NAME	QTY.	SERIAL NO.	REMARKS
1	T180755	LABEL	1		(HEATER AND FAN CONTROL)
2	T204071	LABEL	1		(FORWARD, NEUTRAL AND REVERSE)
3	T146182	LABEL	1		(TRACK SAG) (ONE PIECE DESIGN REPLACES 2 PIECE DESIGN)
4	T42199	LABEL	1		(DISCONNECT)
5	T151711	LABEL	1		(PARK LOCK LEFT)
6	T146097	LABEL	1		(SEAT BELT WARNING)
7	T177890	LABEL	1		(HYDRAULIC SIX WAY BLADE)
8	JD5756	LABEL	2		(LEAPING DEER)
9	T182161	LABEL	2		(XLT)
11	T214364	LABEL	1		(COLD START/WARM UP)
13	JD5764	LABEL	1		(DEER LEAPING UP BETWEEN HEADLIGHTS)
15	T210576	LABEL	1		(PERIODIC SERVICE CHART)
16	T158583	LABEL	1		(WELDING)
17	T207189	LABEL	1		(TRANSMISSION FLUID SIGHT)
18	T207191	LABEL	1		(HYDRAULIC FLUID SIGHT)
21	T208996	LABEL	2		(450J)
22	T208997	LABEL	2		(550J)
23	T208998	LABEL	2		(650J)
24	T211338	LABEL	2		(LONG TRACK)
25	T211337	LABEL	2		(LGP)
26	T178472	LABEL	1		(SEAT BASE TILT PROCEDURE)
27	T210843	LABEL	1		(TIE DOWN)
28	T209418	LABEL	1		(ROPS) (ON ROPS POST)
29	T204683	LABEL	1		(DEERE) (ON BACK OF FUEL TANK)

DECALS AND LABELS (FRENCH AND SPANISH)
AUTOCOLLANTS (FRANCAIS ET ESPAGNOL)
CALCOMANIAS (FRANCES Y ESPANOL)

T208803 -UN-01MAR05

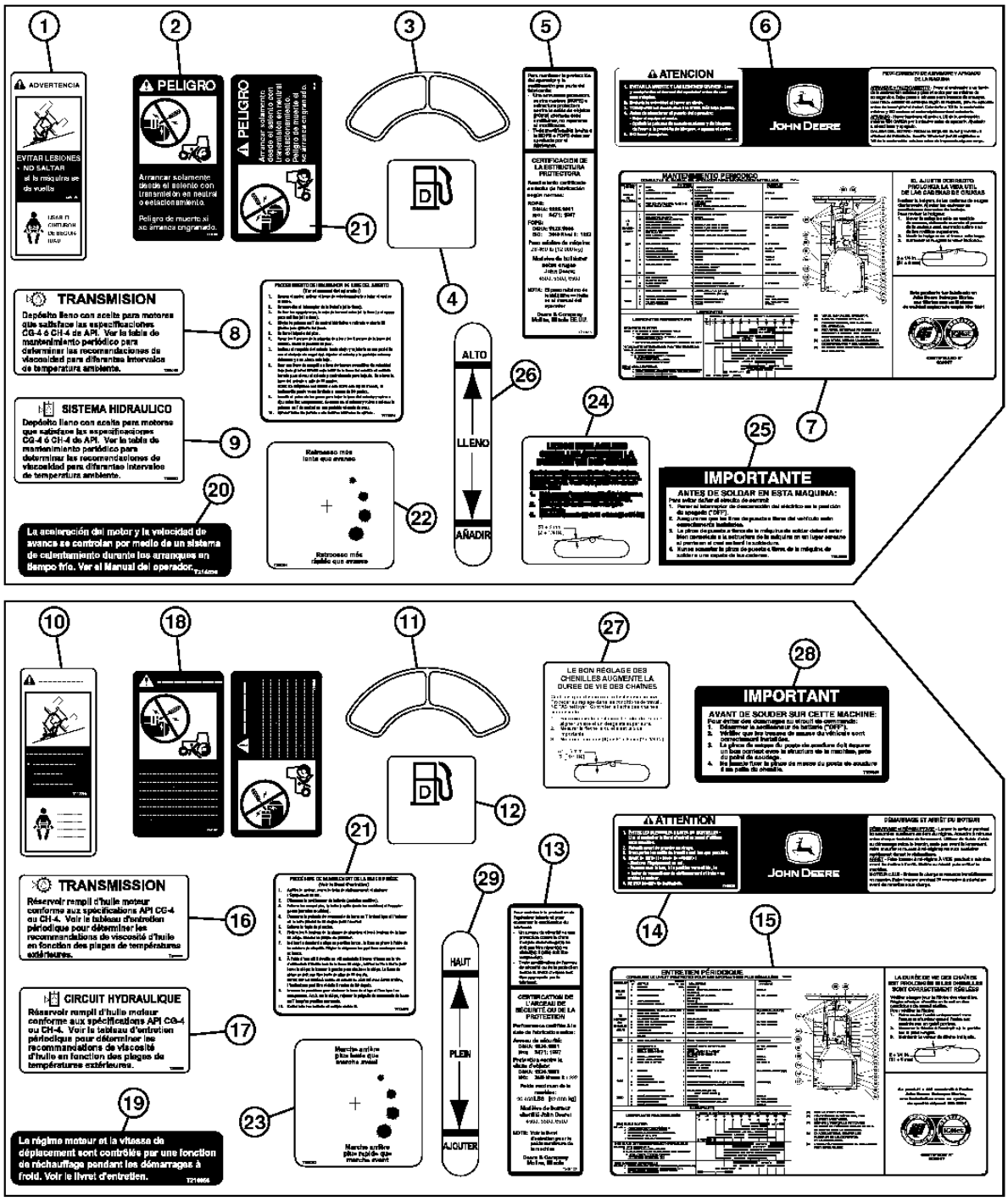

T208803

DECALS AND LABELS (FRENCH AND SPANISH)
AUTOCOLLANTS (FRANCAIS ET ESPAGNOL)
CALCOMANIAS (FRANCES Y ESPANOL)

KEY	PART NO.	PART NAME	QTY.	SERIAL NO.	455 500 JJJ	REMARKS
1	T146098	SAFETY SIGN	1		X X X	(SPANISH) (WARNING) (SEAT BELT)
2	T146106	SAFETY SIGN	1		X X X	(SPANISH) WARNING (STARTER BYPASS)
3	T63225	LABEL	1		X X X	(SPANISH) (DISCONNECT)
4	T127575	LABEL	1		X X X	(SPANISH) (DIESEL ONLY)
5	T209419	LABEL	1		X X X	(SPANISH) (ROPS)
6	T213866	LABEL	1		X X X	(SUB FOR T182037, THIS APPLICATION) (SPANISH) (SAFETY START)
7	T210577	LABEL	1		X X X	(SPANISH) (PERIODIC SERVICE CHART)
8	T208005	LABEL	1		X X X	(SPANISH) (TRANSMISSION OIL LEVEL)
9	T208007	LABEL	1		X X X	(SPANISH) (HYDRAULIC OIL LEVEL)
10	T146099	SAFETY SIGN	1		X X X	(FRENCH) (WARNING) (SEAT BELT)
11	T63224	LABEL	1		X X X	(FRENCH) (DISCONNECT)
12	T114681	LABEL	1		X X X	(FRENCH) (DIESEL ONLY)
13	T209420	LABEL	1		X X X	(FRENCH) (ROPS)
14	T213867	LABEL	1		X X X	(SUB FOR T182038, THIS APPLICATION) (FRENCH) (SAFETY START)
15	T210578	LABEL	1		X X X	(FRENCH) (PERIODIC SERVICE CHART)
16	T208006	LABEL	1		X X X	(FRENCH) (TRANSMISSION OIL LEVEL)
17	T208008	LABEL	1		X X X	(FRENCH) (HYDRAULIC OIL LEVEL)
18	T146104	SAFETY SIGN	1		X X X	(FRENCH) WARNING (STARTER BYPASS)
19	T214658	LABEL	1		X X X	(FRENCH) (COLD START/WARM UP)
20	T214659	LABEL	1		X X X	(SPANISH) (COLD START/WARM UP)
21	T178473	LABEL	1		X X X	(FRENCH) (SEAT BASE TILT PROCEDURE)
	T178474	LABEL	1		X X X	(SPANISH) (SEAT BASE TILT PROCEDURE)
22	T205291	LABEL	1		X X X	(SPANISH) (REVERSE SPEED)
23	T205292	LABEL	1		X X X	(FRENCH) (REVERSE SPEED)
24	T146184	LABEL	1		X X X	(SPANISH) (TRACK SAG)
25	T158589	LABEL	1		X X X	(SPANISH) (WELDING)
26	T197324	LABEL	2		X X X	(SPANISH) (HYDRAULIC RESEVOIR SIGHT GAUGE)
27	T146183	LABEL	1		X X X	(FRENCH) (TRACK SAG)
28	T158588	LABEL	1		X X X	(FRENCH) (WELDING)
29	T197323	LABEL	2		X X X	(FRENCH) (HYDRAULIC RESEVOIR SIGHT GAUGE)

LOCTITE SERVICE KIT (PARTS LISTED BELOW ARE NOT ILLUSTRATED)
KIT D'ENTRETIEN LOCTITE™ (PIECES INDIQUEES CI-DESSOUS NON ILLUSTREES)
JUEGO DE SERVICIO LOCTITE™ (LAS PIEZAS INDICADAS ABAJO NO SE ILUSTRAN)

KEY	PART NO.	PART NAME	QTY.	SERIAL NO.	450 J	550 J	650 J	REMARKS
..	TY16285	PRIMER	1		X	X	X	
..	T43512	SEALANT	1		X	X	X	
..	T43513	SEALANT	1		X	X	X	
..	PM38655	SEALANT	1		X	X	X	(SUB FOR T43514) PLASTIC
..	PM37485	ADHESIVE	1		X	X	X	(SUB FOR TY15969)

MEMORANDA
MEMORANDA
MEMORANDA

O-RING KIT
JEU DE PIECES DE JOINT TORIQUE
JUEGO DE ANILLO TORICO

TP1406 -UN-09NOV99

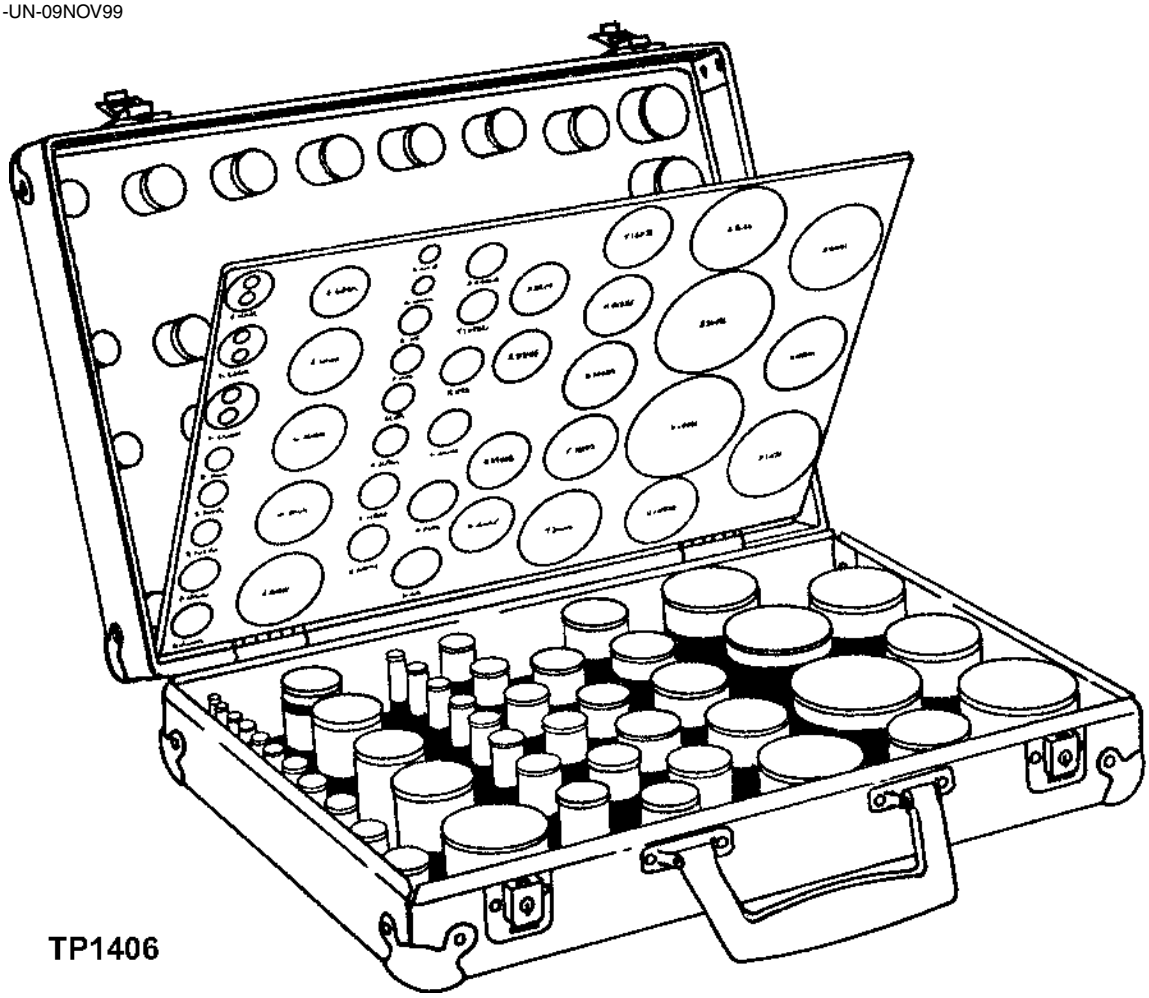

TP1406

O-RING KIT
JEU DE PIECES DE JOINT TORIQUE
JUEGO DE ANILLO TORICO

KEY	PART NO.	PART NAME	QTY.	SERIAL NO.	REMARKS
..	A3606R	O-RING	5		
..	A3917R	O-RING	5		
..	A4365R	O-RING	5		
..	A4730R	O-RING	5		
..	B2762R	O-RING	5		
..	B3690R	O-RING	5		
..	F1056R	O-RING	5		
..	F1870R	O-RING	5		
..	U12547	O-RING	5		
..	F3353R	O-RING	5		
..	H35244	RING	5		
..	T78313	O-RING	5		
..	M4237T	O-RING	5		
..	N131838	O-RING	5		
..	P46051	O-RING	5		
..	P48403	O-RING	5		
..	P50631	O-RING	5		
..	R375R	O-RING	5		
..	R394R	O-RING	5		
..	R459R	O-RING	5		
..	R460R	O-RING	5		
..	R495R	O-RING	5		
..	R10093	O-RING	5		
..	R26286	O-RING	5		
..	R26287	O-RING	5		
..	R26375	O-RING	5		
..	R26448	O-RING	5		
..	R26773	O-RING	5		
..	R26863	O-RING	5		
..	R26906	O-RING	5		
..	R27166	O-RING	5		
..	R27928	O-RING	5		
..	R28776	O-RING	5		
..	R28782	O-RING	5		
..	R29463	O-RING	5		
..	R29936	O-RING	5		
..	R30903	O-RING	5		
..	R33259	O-RING	5		
..	R56461	O-RING	5		
..	R48638	O-RING	5		
..	R71732	O-RING	5		
..	R53543	O-RING	5		
..	R56463	O-RING	5		
..	R56751	O-RING	5		
..	R60332	O-RING	5		
..	R80632	O-RING	5		
..	T12275	O-RING	5		
..	T13119	O-RING	5		
..	T16752	O-RING	5		
..	T19687	O-RING	5		
..	R112857	O-RING	5		
..	T25335	O-RING	5		
..	T34248	O-RING	5		
..	U10289	O-RING	5		
..	U10746	O-RING	5		
..	U10776	O-RING	5		
..	U11326	O-RING	5		
..	U11343	O-RING	5		
..	U12037	O-RING	5		
..	U12198	O-RING	5		
..	U12331	O-RING	5		
..	U12547	O-RING	5		
..	U13639	O-RING	5		
..	U15415	O-RING	5		
..	U15973	O-RING	5		
..	U17409	O-RING	5		
..	U42111	O-RING	5		
..	AT130208	O-RING KIT	1		(INCLUDES CARRYING CASE)

STANDARD DRAWBAR (EXTENDED RIGID)
BARRE D'ATTELAGE STANDARD (RIGIDE ETENDU)
BARRA DE TIRO ESTANDAR (EXTENDIDO RIGIDO)

TP52086 -UN-18DEC98

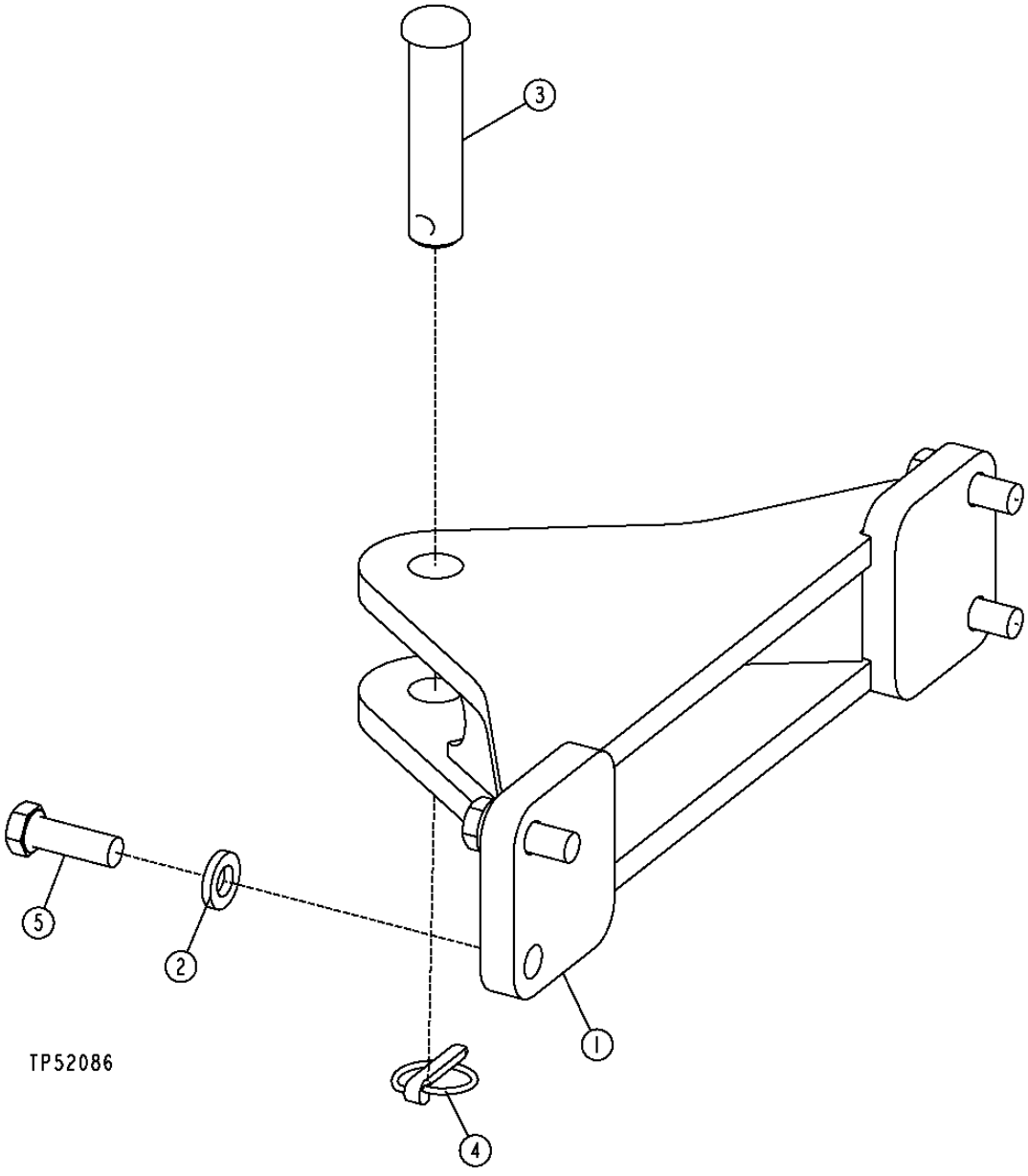

STANDARD DRAWBAR (EXTENDED RIGID)
BARRE D'ATTELAGE STANDARD (RIGIDE ETENDU)
BARRA DE TIRO ESTANDAR (EXTENDIDO RIGIDO)

KEY	PART NO.	PART NAME	QTY.	SERIAL NO.	450 J	550 J	650 J	REMARKS
1	AT208561	PLATE	1		X	X	X	
2	N231749	WASHER	4		X	X	X	
3	T23914	PIN	1		X	X	X	
4	AR62150	QUICK LOCK PIN	1		X	X	X	
5	19M8224	CAP SCREW	4		X	X	X	M20 X 60
	19M8503	CAP SCREW	4		X	X	X	M20 X 160, (WITH COUNTERWEIGHT)

HITCH RETRIEVAL
RECUPERATION ATTELAGE
RECUPERACION DE ENGANCHE

TP52087 -UN-18DEC98

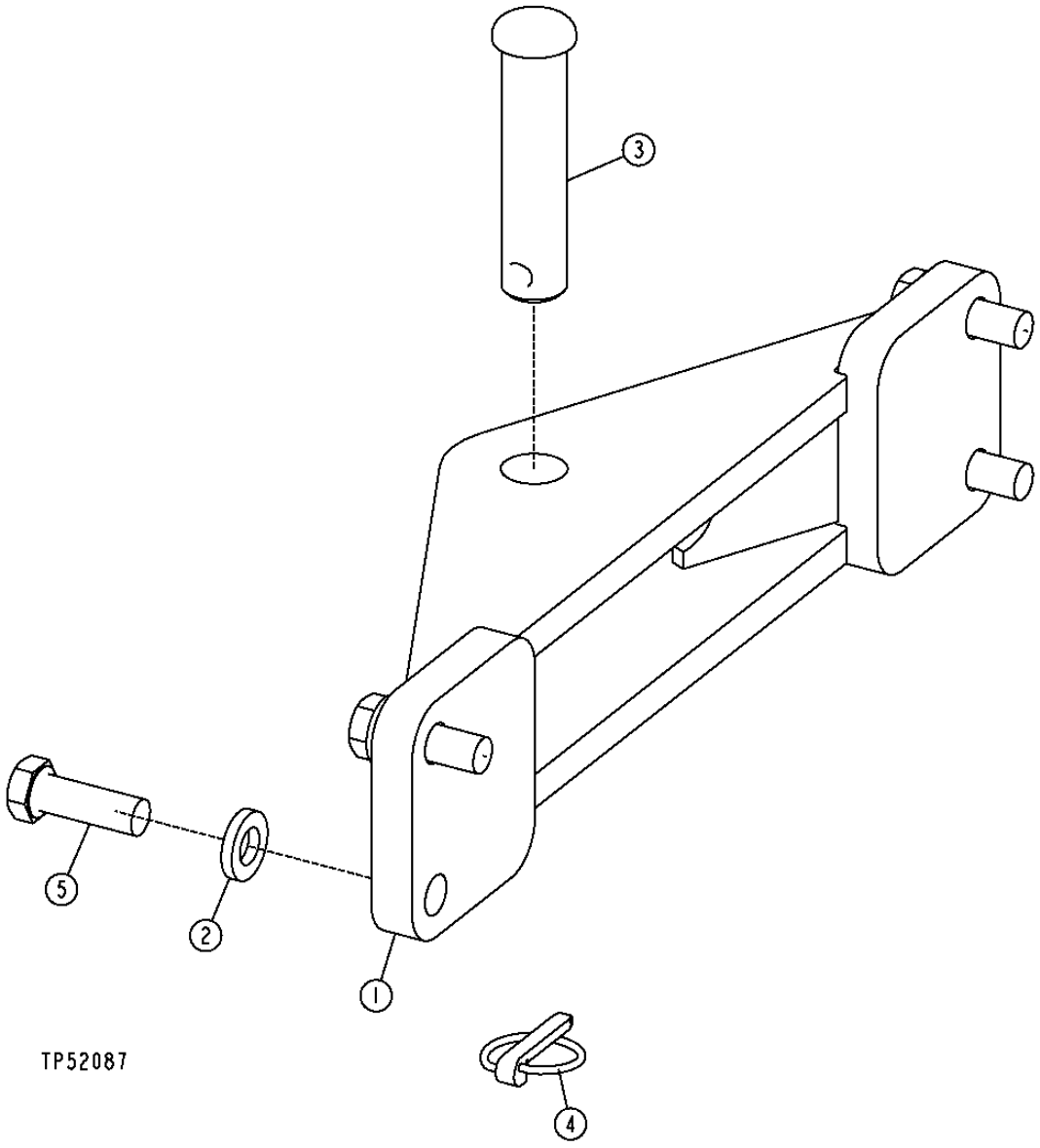

HITCH RETRIEVAL
RECUPERATION ATTELAGE
RECUPERACION DE ENGANCHE

KEY	PART NO.	PART NAME	QTY.	SERIAL NO.	450 550 650 J J J	REMARKS
1	AT208554	PLATE	1		X X X	(DRAWBAR)
2	N231749	WASHER	4		X X X	
3	T23914	PIN	1		X X X	(HITCH)
4	AR62150	QUICK LOCK PIN	1		X X X	
5	19M8224	CAP SCREW	4		X X X	M20 X 60, (FOR 650J WITHOUT COUNTERWEIGHT)
	19M8503	CAP SCREW	4		X X X	M20 X 160, (FOR 650J WITH COUNTERWEIGHT)

DRAWBAR WITH 4000S WINCH
BARRE DATTELAGE AVEC TREUIL CRUCIFORME 4000S
BARRA DE TIRO CON MALACATE 4000S

TP67550 -UN-18MAY99

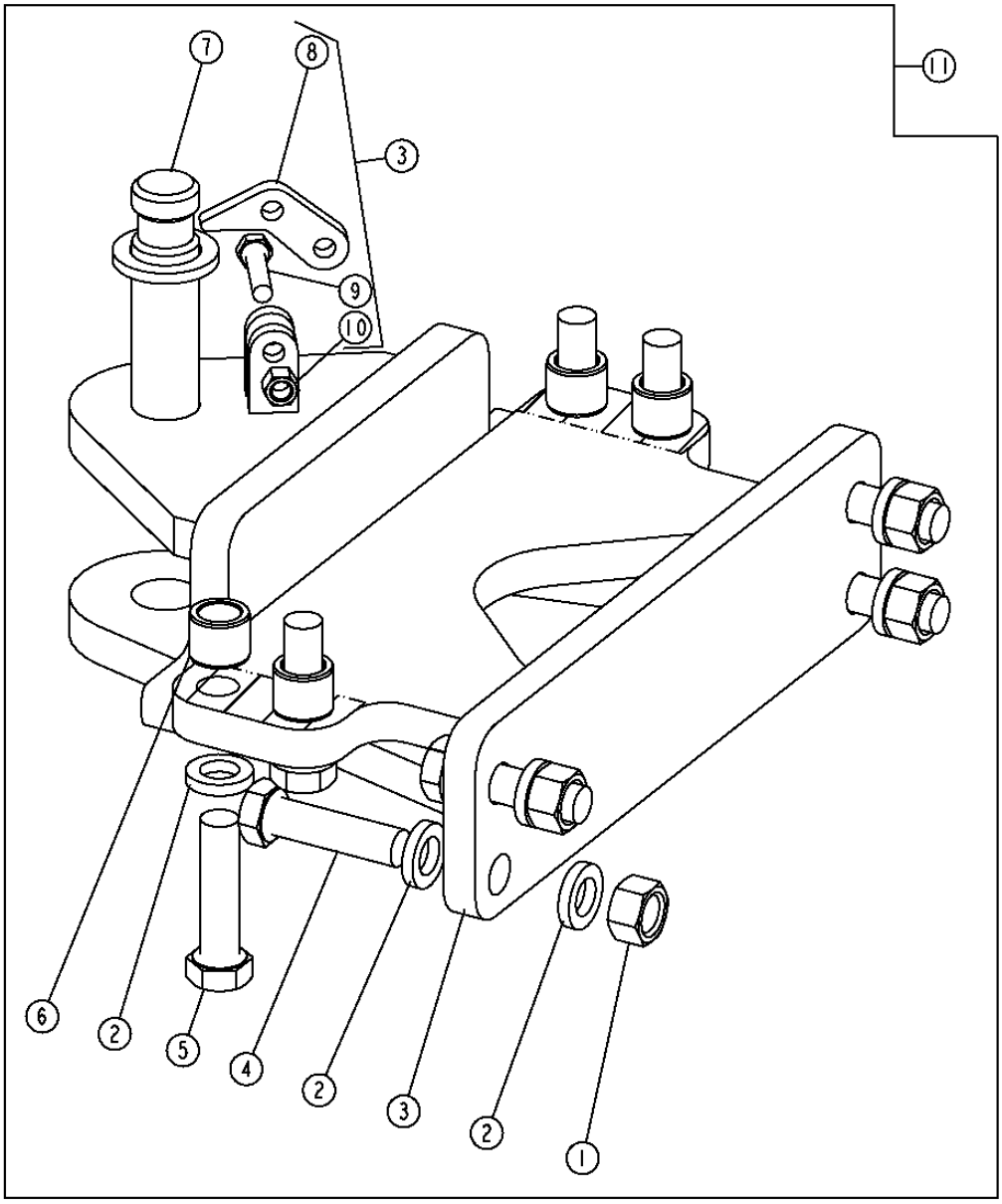

TP67550

DRAWBAR WITH 4000S WINCH
BARRE DATTELAGE AVEC TREUIL CRUCIFORME 4000S
BARRA DE TIRO CON MALACATE 4000S

KEY	PART NO.	PART NAME	QTY.	SERIAL NO.	450J	550J	650J	REMARKS
1	14M7277	NUT	4		X	X	X	M20
2	T83426	WASHER	12		X	X	X	
3	AT222828	DRAWBAR	1		X	X	X	(WITH FAIRLEAD)
	AT222220	DRAWBAR	1		X	X	X	(WITHOUT FAIRLEAD)
4	19M8410	SCREW	4		X	X	X	M20 X 75
5	19M7892	CAP SCREW	4		X	X	X	M20 X 80
6	T158619	BUSHING	4		X	X	X	
7	AT222155	QUICK LOCK PIN	1		X	X	X	
8	T152122	RETAINER	1		X	X	X	
9	19M7572	CAP SCREW	1		X	X	X	M10 X 45
10	14M7517	LOCK NUT	1		X	X	X	M10
11	**AT222827**	**GATHERING NUMBER**	**1**		**X**	**X**	**X**	**(WHOLEGOODS) (WITH FAIRLEAD)**
	AT207587	**GATHERING NUMBER**	**1**		**X**	**X**	**X**	**(WHOLEGOODS) (WITHOUT FAIRLEAD)**

TOW HOOK
CROCHET DE REMORQUAGE
GANCHO DE REMOLCADO

TP52088 -UN-18DEC98

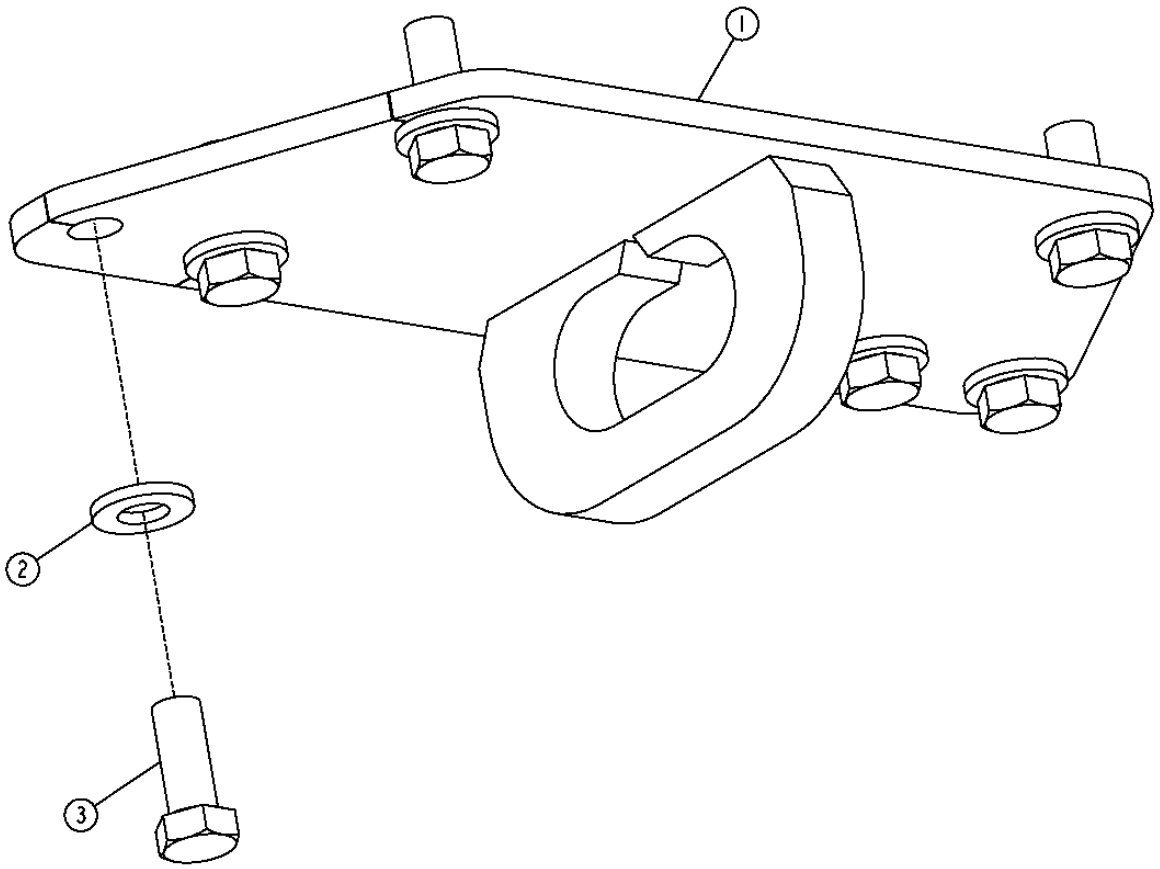

TP52088

TOW HOOK
CROCHET DE REMORQUAGE
GANCHO DE REMOLCADO

KEY	PART NO.	PART NAME	QTY.	SERIAL NO.	450J	550J	650J	REMARKS
1	AT174226	HOOK	1		X	X	X	
	T177033	PLATE	1				X	(USE WITH FRONT COUNTERWEIGHT) (TOW EYE)
2	24M7242	WASHER	6		X	X	X	21.400 X 42 X 5 MM
	24M7242	WASHER	2				X	21.400 X 42 X 5 MM
3	19M7597	CAP SCREW	6		X	X	X	M20 X 50
	19M7597	CAP SCREW	2				X	M20 X 50

STANDARD BATTERY
BATTERIE STANDARD
BATERIA ESTANDAR

T198737 -UN-07APR04

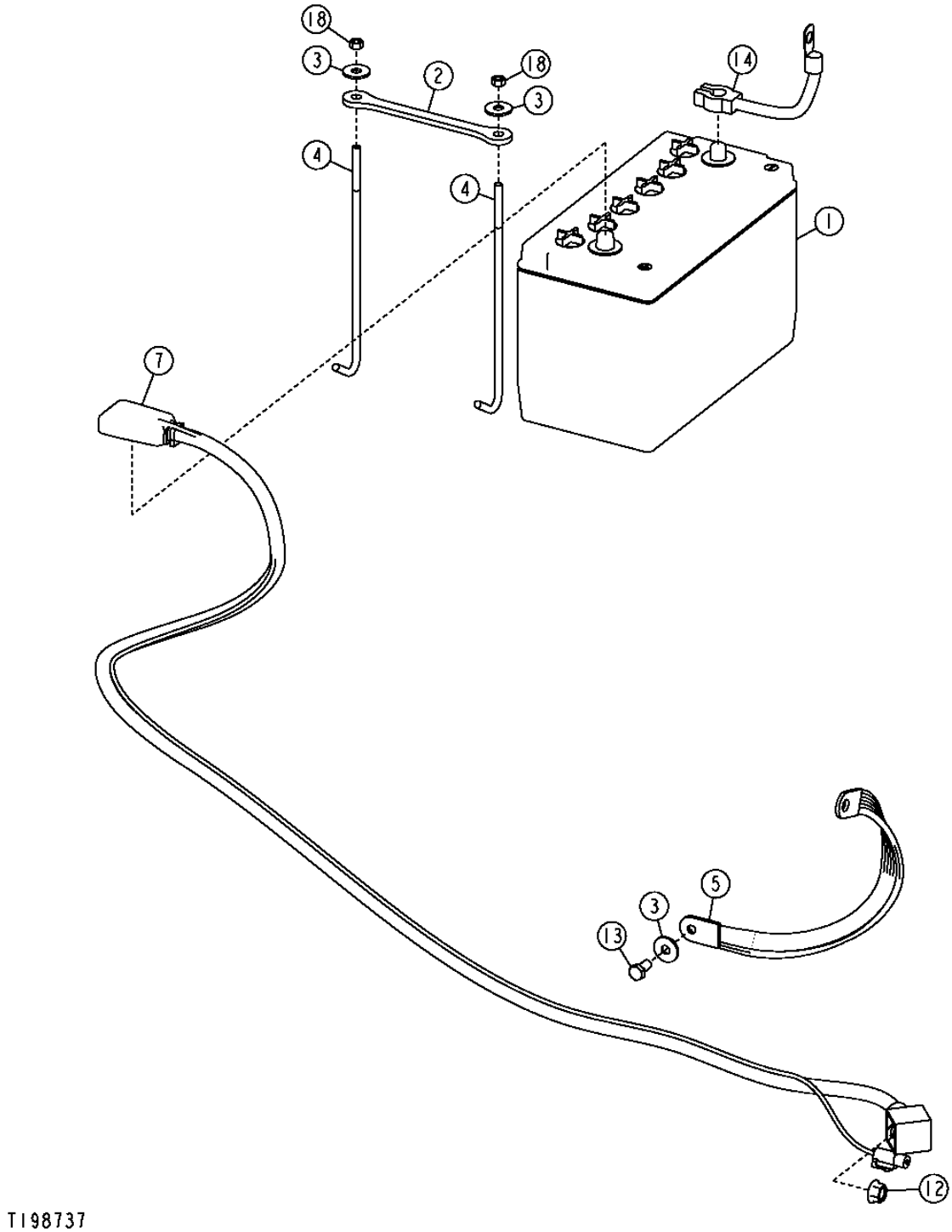

STANDARD BATTERY
BATTERIE STANDARD
BATERIA ESTANDAR

KEY	PART NO.	PART NAME	QTY.	SERIAL NO.	450 J	550 J	650 J	REMARKS
1	TY6128	DRY CHARGED BATTERY	1		X	X	X	
2	T173733	PLATE	1		X	X	X	(HOLD DOWN)
3	24M7296	WASHER	3		X	X	X	10.500 X 30 X 2.500 MM
4	T141123	BOLT	2		X	X	X	
5	AT47069	GROUND CABLE	1		X	X	X	
7	AT310214	BATTERY CABLE	1		X	X	X	
12	14M7299	FLANGE NUT	1		X	X	X	M12
13	19M7938	CAP SCREW	1		X	X	X	M10 X 20
14	AT210925	CABLE	1		X	X	X	(NEGATIVE)
18	14M7273	NUT	2		X	X	X	M8

HEAVY DUTY BATTERY
BATTERIE USAGE INTENSIF
BATERIA SERVICIO SEVERO

T198739 -UN-07APR04

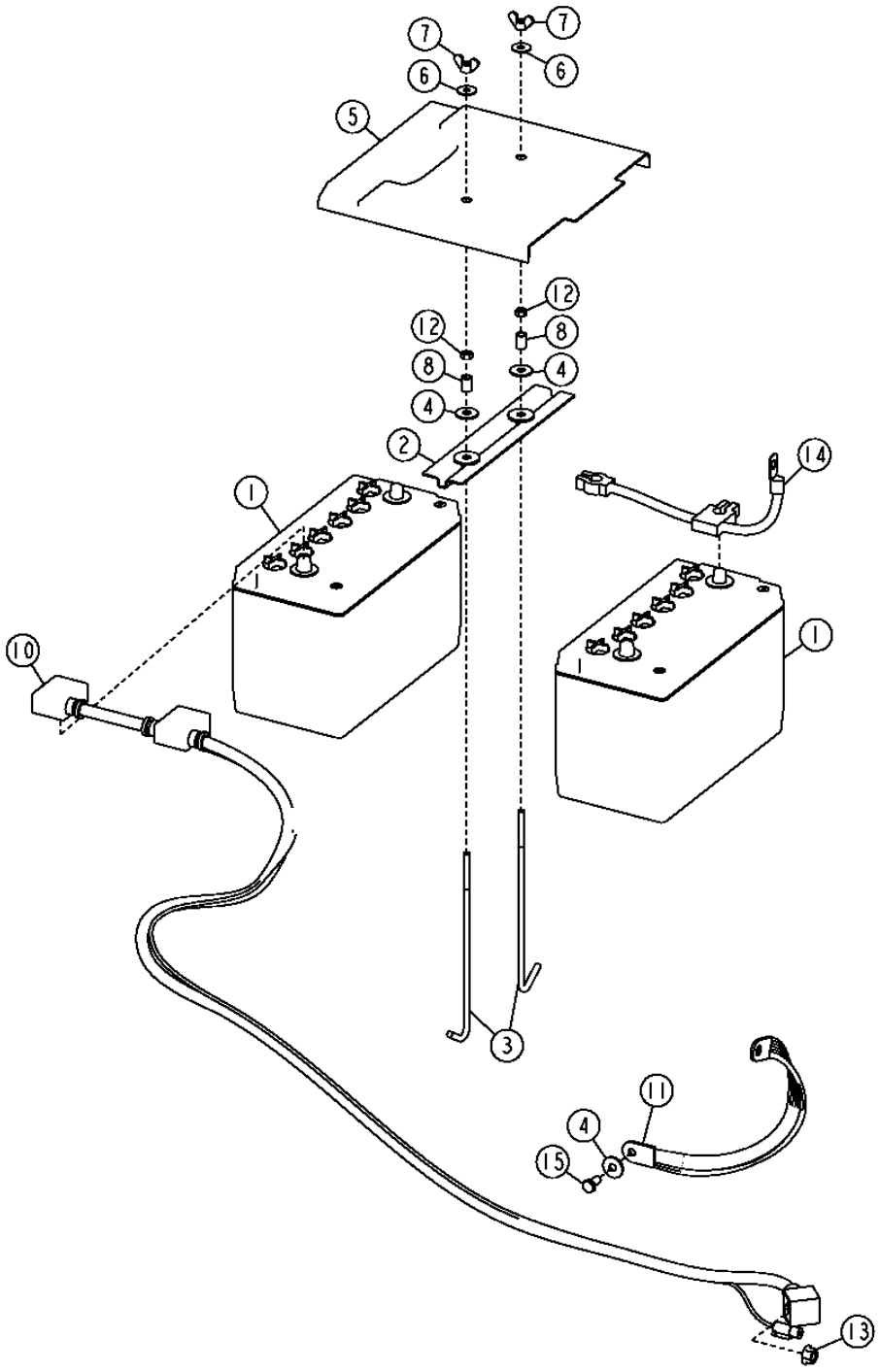

T198739

HEAVY DUTY BATTERY
BATTERIE USAGE INTENSIF
BATERIA SERVICIO SEVERO

KEY	PART NO.	PART NAME	QTY.	SERIAL NO.	450J	550J	650J	REMARKS
1	TY6128	DRY CHARGED BATTERY	2		X	X	X	(ALSO ORDER (2) TY15733)
	TY15733	FELT	2		X	X	X	(TERMINAL PROTECTOR)
2	AT210517	PLATE	1		X	X	X	(HOLD DOWN)
3	T141123	BOLT	2		X	X	X	
4	24M7296	WASHER	3		X	X	X	10.500 X 30 X 2.500 MM
5	T173580	COVER	1		X	X	X	
6	24M7207	WASHER	2		X	X	X	8.400 X 24 X 2 MM
7	14M7020	WING NUT	2		X	X	X	M8
8	T161816	SPACER	2		X	X	X	
10	AT310215	BATTERY CABLE	1		X	X	X	
11	AT47069	GROUND CABLE	1		X	X	X	
12	14M7273	NUT	2		X	X	X	M8
13	14M7299	FLANGE NUT	1		X	X	X	M12
14	AT210935	BATTERY CABLE	1		X	X	X	(NEGATIVE)
15	19M7938	CAP SCREW	1		X	X	X	

ALTERNATOR
ALTERNATEUR
ALTERNADOR

T200173 -UN-19MAY04

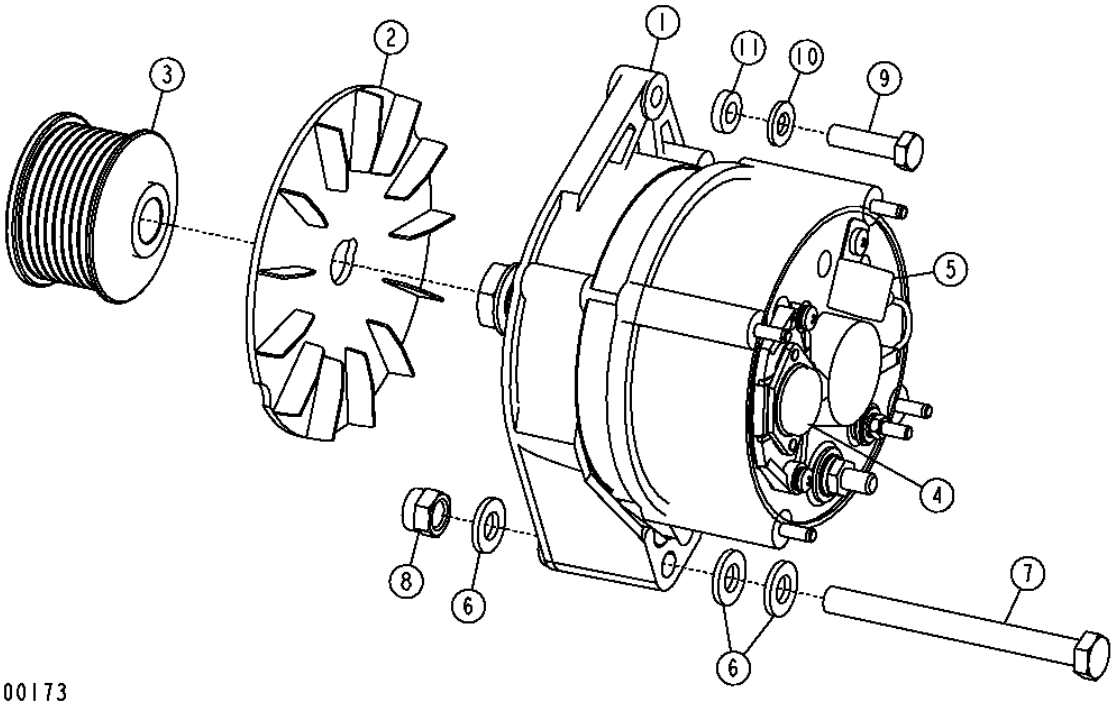

T200173

ALTERNATOR, REGULATOR AND CHARGING SYSTEM WIRING 1672

ALTERNATOR
ALTERNATEUR
ALTERNADOR

KEY	PART NO.	PART NAME	QTY.	SERIAL NO.	450J	550J	650J	REMARKS
1	TY24485	ALTERNATOR	1		X	X	X	(REMAN) (12 VOLT) (95 AMP)
	SE501342	ALTERNATOR	1		X	X	X	(REMANUFACTURED FOR TY24485)
	TY6799	ALTERNATOR	1		X	X	X	(REMAN) (12 VOLT) (65 AMP)
	SE501387	ALTERNATOR	1		X	X	X	(REMANUFACTURED FOR TY6799)
2	T158584	FAN	1		X	X	X	
3	R501486	PULLEY	1		X	X	X	
4	H144094	VOLTAGE REGULATOR	1		X	X	X	
5	H144095	CAPACITOR	1		X	X	X	
6	24M7239	WASHER	3		X	X	X	10.700 X 21 X 2.500 MM
7	19M8166	CAP SCREW	1		X	X	X	M10 X 110
8	14M7517	LOCK NUT	1		X	X	X	M10
9	19M7513	CAP SCREW	1		X	X	X	M8 X 30
10	24M7238	WASHER	1		X	X	X	8.700 X 17 X 2 MM
11	R48808	WASHER	1		X	X	X	

GRILLE MOUNTED WORK LIGHTS
PROJECTEURS DE TRAVAIL MONTES SUR LA CALANDRE
LUCES DE TRABAJO MONTADAS EN PARRILLA

T199450 -UN-23APR04

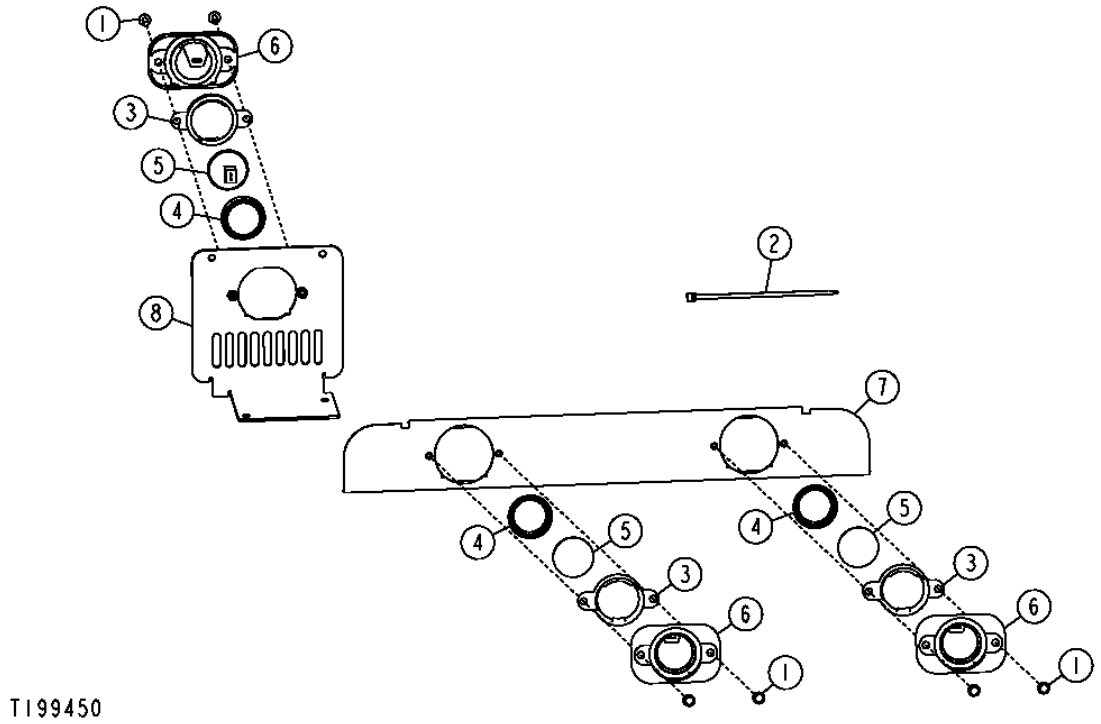

T199450

GRILLE MOUNTED WORK LIGHTS
PROJECTEURS DE TRAVAIL MONTES SUR LA CALANDRE
LUCES DE TRABAJO MONTADAS EN PARRILLA

KEY	PART NO.	PART NAME	QTY.	SERIAL NO.	450J	550J	650J	REMARKS
1	19M7775	SCREW	6		X	X	X	M6 X 16
2	R44302	TIE BAND	5		X	X	X	
3	T177833	RING	3		X	X	X	(RETAINING)
4	T208406	GROMMET	3		X	X	X	(DEFLECTOR)
5	AT220508	BULB	3		X	X	X	
6	T202551	HOUSING	3		X	X	X	
7	AT224805	BRACKET	1		X	X	X	(FRONT WORK LAMP)
8	AT221980	BRACKET	1		X	X	X	(REAR WORK LAMP/BACKUP ALARM)
9	AT222676	WIRING HARNESS	1		X	X	X	(NOT ILLUSTRATED)

ROPS HI-INTENSITY LIGHTS
ECLAIRAGE HAUTE INTENSITE DE L'ARCEAU DE SECURITE
LUCES DE ALTA INTENSIDAD DE ROPS

T199442 -UN-10MAY04

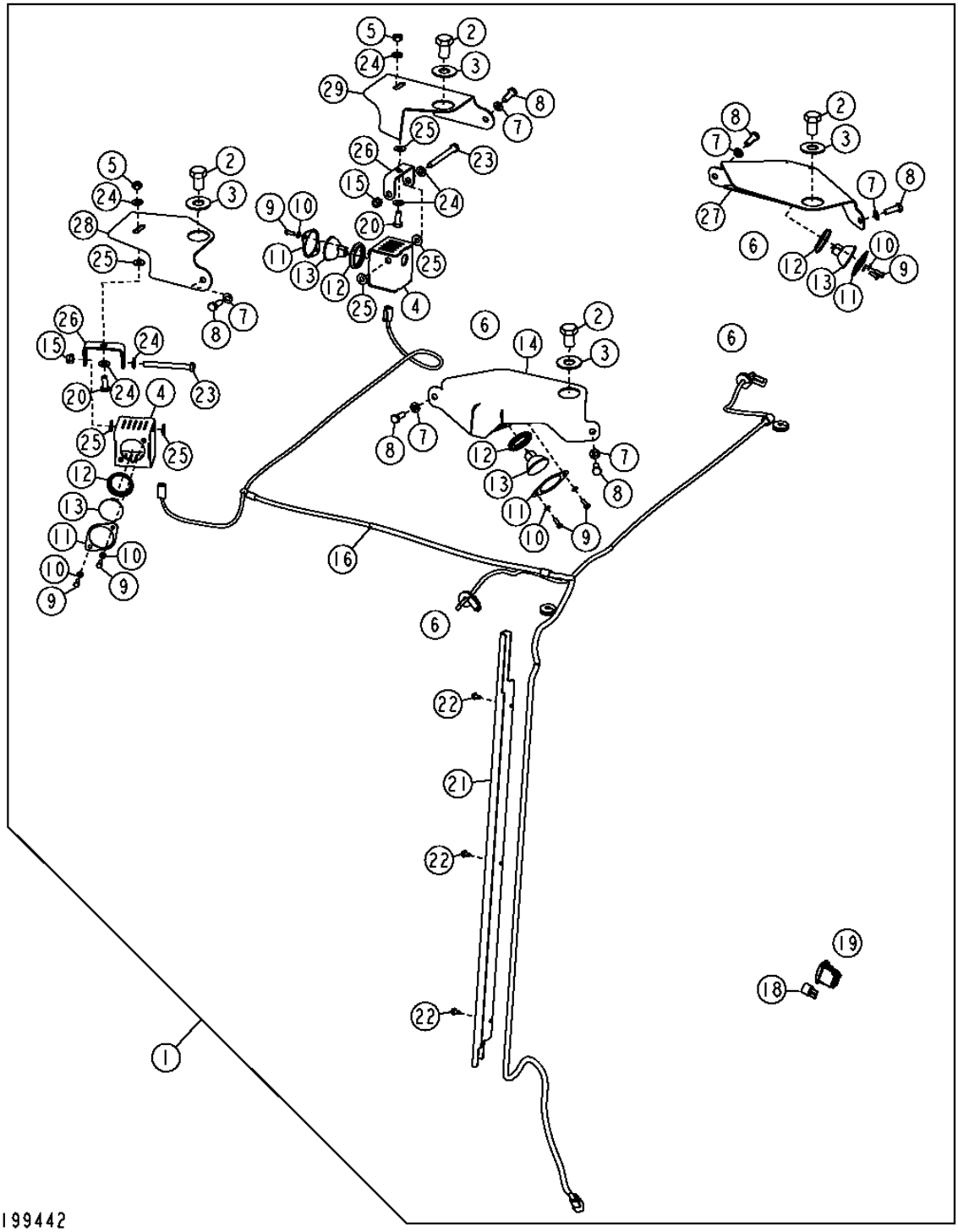

ROPS HI-INTENSITY LIGHTS
ECLAIRAGE HAUTE INTENSITE DE L'ARCEAU DE SECURITE
LUCES DE ALTA INTENSIDAD DE ROPS

KEY	PART NO.	PART NAME	QTY.	SERIAL NO.	450 J	550 J	650 J	REMARKS
1	AT307941	KIT	1		X	X	X	(WHOLEGOODS) (OPTIONAL)
2	19M8543	CAP SCREW	4		X	X	X	M20 X 30
3	24H1411	WASHER	4		X	X	X	7/8" X 2" X 0.120"
4	AT221351	HOUSING	2		X	X	X	(WORK LIGHT)
5	14M7274	NUT	2		X	X	X	M10
6	R41440	GROMMET	6		X	X	X	
7	24M7028	WASHER	6		X	X	X	10.500 X 20 X 2 MM
8	19M7662	CAP SCREW	6		X	X	X	M10 X 30
9	19M8425	CAP SCREW	8		X	X	X	M6 X 16
10	24M7054	WASHER	8		X	X	X	6.400 X 12 X 1.600 MM
11	T175866	PLATE	4		X	X	X	
12	T208406	GROMMET	4		X	X	X	
13	AT220508	BULB	4		X	X	X	(12V-65W-38 DEG. LIGHT BEAM)
14	AT219952	PLATE	1		X	X	X	(LIGHT BRACKET) (RH)
15	14M7517	LOCK NUT	2		X	X	X	M10
16	AT310970	WIRING HARNESS	1		X	X	X	(WORK LIGHTS)
17	AT222676	WIRING HARNESS	4		X	X	X	(NOT ILLUSTRATED)
18	T102780	CIRCUIT BREAKER	1		X	X	X	(25 AMP)
19	AT303862	TOGGLE/ROCKER SWITCH	1		X	X	X	(WORK LIGHT)
20	19M7402	CAP SCREW	2		X	X	X	M10 X 25
21	T178024	PLATE	1		X	X	X	(LIGHT HARNESS GUARD)
22	37H116	SCREW	3		X	X	X	(USE WITH T178024)
23	19M8093	CAP SCREW	2		X	X	X	M10 X 100
24	24M7239	WASHER	6		X	X	X	10.700 X 21 X 2.500 MM
25	H110232	WASHER	6		X	X	X	
26	T177261	BRACKET	2		X	X	X	
27	AT219953	PLATE	1		X	X	X	(LIGHT BRACKET) (LH)
28	T208582	PLATE	1		X	X	X	
29	T208583	PLATE	1		X	X	X	

CAB HI-INTENSITY LIGHTS
ECLAIRAGE HAUTE INTENSITE DE LA CABINE
LUCES DE ALTA INTENSIDAD DE CABINA

T199445 -UN-23APR04

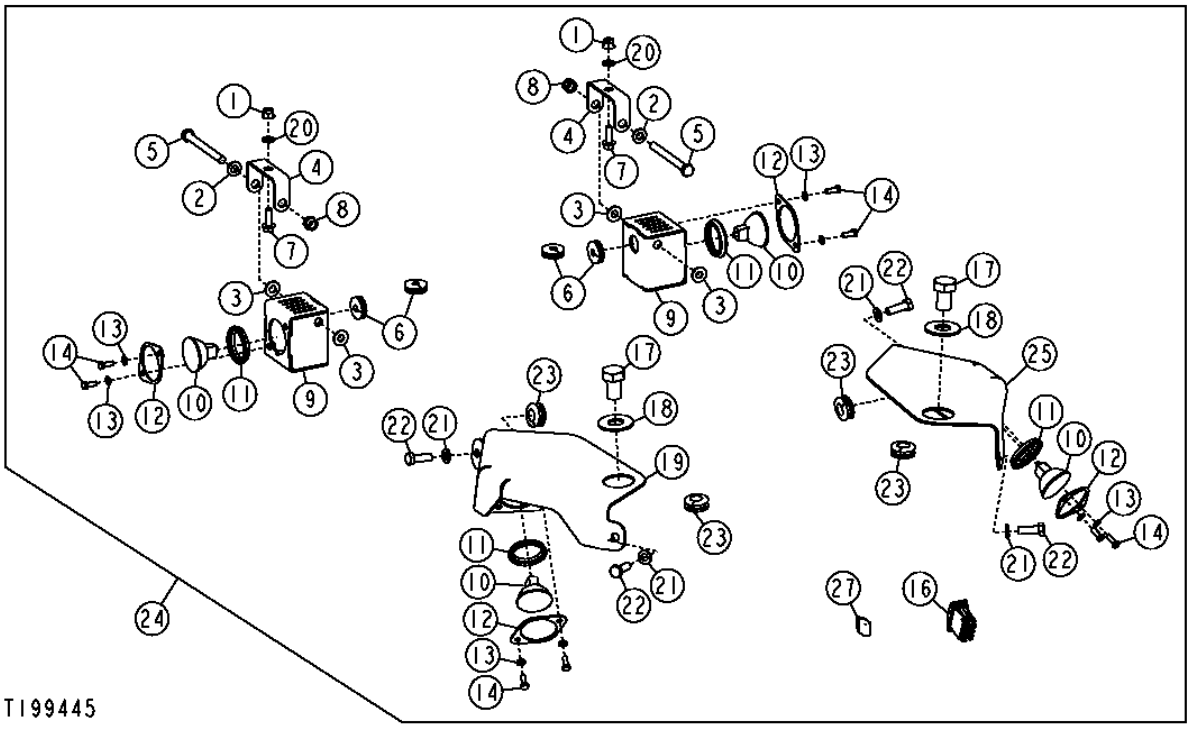

CAB HI-INTENSITY LIGHTS
ECLAIRAGE HAUTE INTENSITE DE LA CABINE
LUCES DE ALTA INTENSIDAD DE CABINA

KEY	PART NO.	PART NAME	QTY.	SERIAL NO.	450 J	550 J	650 J	REMARKS
1	14M7396	LOCK NUT	2		X	X	X	M8
2	24M7239	WASHER	2		X	X	X	10.700 X 21 X 2.500 MM
3	H110232	WASHER	4		X	X	X	
4	T177261	BRACKET	2		X	X	X	
5	19M8093	CAP SCREW	2		X	X	X	M10 X 100
6	R41440	GROMMET	4		X	X	X	
7	19M7867	SCREW	2		X	X	X	M8 X 25
8	14M7517	LOCK NUT	2		X	X	X	M10
9	AT221351	HOUSING	2		X	X	X	(WORK LIGHT)
10	AT220508	BULB	4		X	X	X	
11	T208406	GROMMET	4		X	X	X	
12	T175866	PLATE	4		X	X	X	
13	24M7054	WASHER	8		X	X	X	6.400 X 12 X 1.600 MM
14	19M8425	CAP SCREW	8		X	X	X	M6 X 16
16	AT306955	TOGGLE/ROCKER SWITCH	1		X	X	X	
17	19M8543	CAP SCREW	2		X	X	X	M20 X 30
18	24H1411	WASHER	2		X	X	X	7/8" X 2" X 0.120"
19	AT219952	PLATE	1		X	X	X	(LIGHT BRACKET) (RH)
20	24M7238	WASHER	2		X	X	X	8.700 X 17 X 2 MM
21	24M7028	WASHER	4		X	X	X	10.500 X 20 X 2 MM
22	19M7662	CAP SCREW	4		X	X	X	M10 X 30
23	R41440	GROMMET	4		X	X	X	
24	**AT307940**	**LAMP**	**1**		**X**	**X**	**X**	**(WHOLEGOODS) (OPTIONAL)**
25	AT219953	PLATE	1		X	X	X	(LIGHT BRACKET) (LH)
26	AT222676	WIRING HARNESS	4		X	X	X	(NOT ILLUSTRATED)
27	T102780	CIRCUIT BREAKER	1		X	X	X	

MASTER BATTERY DISCONNECT
SECTIONNEUR DE BATTERIE PRINCIPAL
DESCONEXION MAESTRA DE BATERIAS

TX1004695 -UN-13MAR06

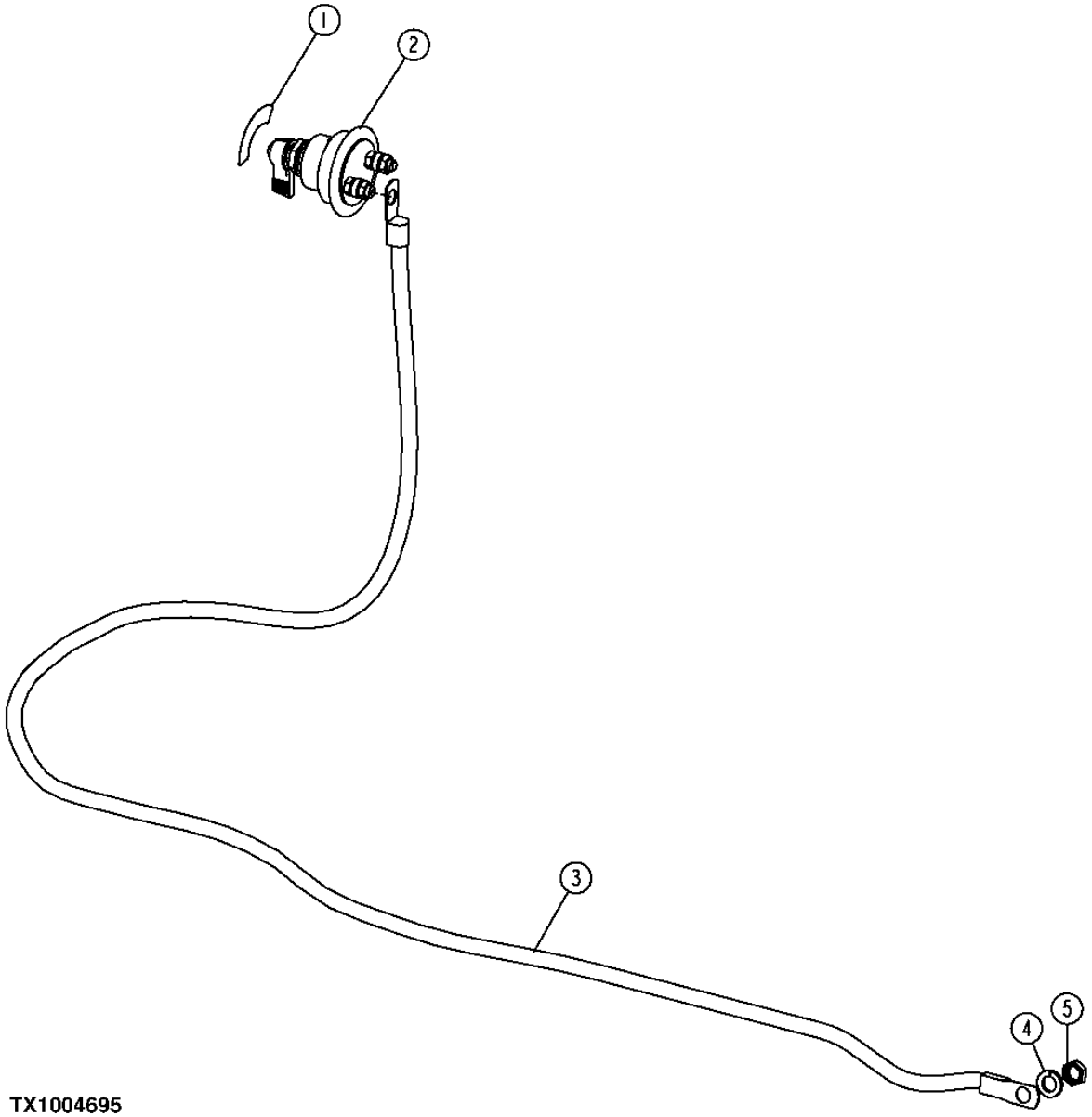

TX1004695

MASTER BATTERY DISCONNECT
SECTIONNEUR DE BATTERIE PRINCIPAL
DESCONEXION MAESTRA DE BATERIAS

KEY	PART NO.	PART NAME	QTY.	SERIAL NO.	450J	550J	650J	REMARKS
1	T42199	LABEL	1		X	X	X	(DISCONNECT)
2	AT41188	SWITCH	1		X	X	X	
3	AT210922	GROUND CABLE	1		X	X	X	
4	12H301	LOCK WASHER	1		X	X	X	1/2"
5	14M7415	NUT	1		X	X	X	M12

TRANSMISSION HARNESS
FAISCEAU DE TRANSMISSION
ARNES DE LA TRANSMISION

T198840 -UN-07APR04

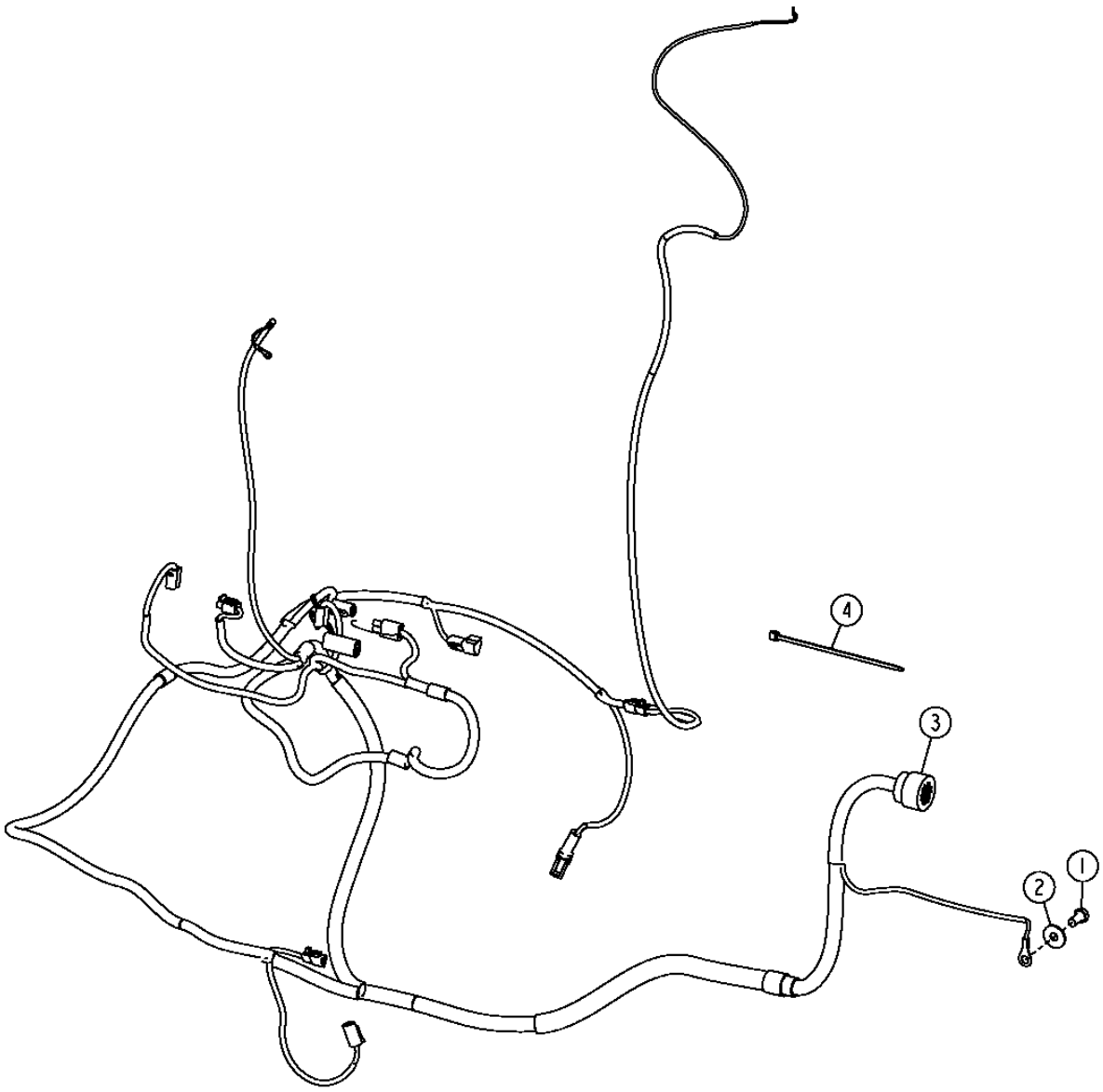

T198840

THIS PARTS LISTING IS CONTINUED

TRANSMISSION HARNESS
FAISCEAU DE TRANSMISSION
ARNES DE LA TRANSMISION

KEY	PART NO.	PART NAME	QTY.	SERIAL NO.	450J	550J	650J	REMARKS
1	19M7938	CAP SCREW	1		X	X	X	M10 X 20
2	24M7296	WASHER	1		X	X	X	10.500 X 30 X 2.500 MM
3	AT304799	WIRING HARNESS	1		X	X	X	
4	R44302	TIE BAND	AR		X	X	X	

CAB WIRING HARNESS
FAISCEAU DE CABINE
ARNES DE CABINA

T201439 -UN-07JUL04

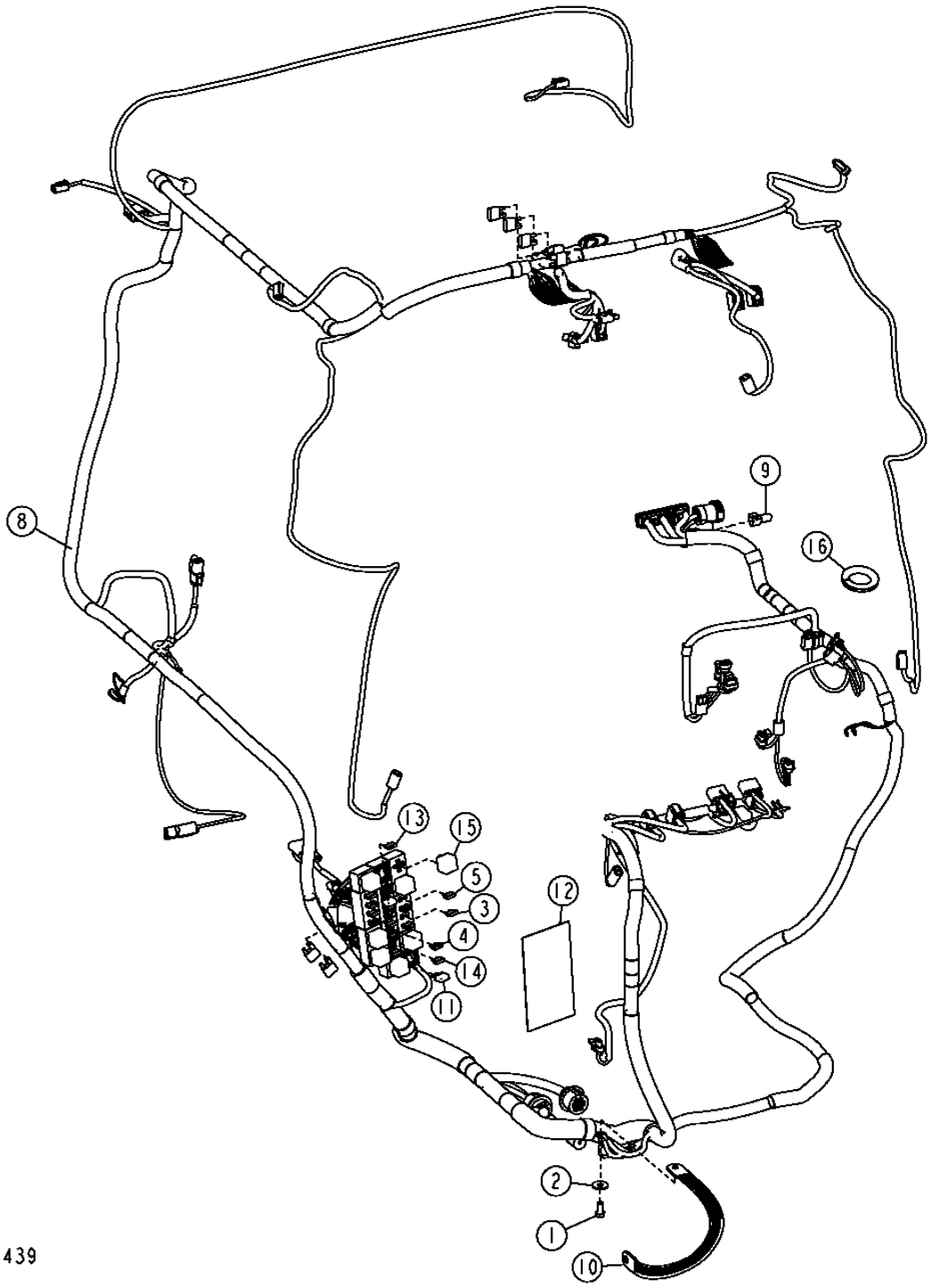

CAB WIRING HARNESS
FAISCEAU DE CABINE
ARNES DE CABINA

KEY	PART NO.	PART NAME	QTY.	SERIAL NO.	450 J	550 J	650 J	REMARKS
1	19M7938	CAP SCREW	1		X	X	X	M10 X 20
2	24M7296	WASHER	1		X	X	X	10.500 X 30 X 2.500 MM
3	57M7121	FUSE	9		X	X	X	10 AMP
4	99M7064	FUSE	1		X	X	X	7-1/2 AMP
5	99M7065	FUSE	8		X	X	X	15 AMP
6	AR94101	DIODE	2		X	X	X	(CONNECTOR) (1 AMP) (NOT ILLUSTRATED)
7	AT103399	DIODE	2		X	X	X	(CONNECTOR) (5 AMP) (NOT ILLUSTRATED)
8	AT304806	WIRING HARNESS	1		X	X	X	
	AT309676	RESISTOR	1		X	X	X	(REPLACEMENT START RESISTOR KIT)
	AT341470	CAB WIRING HARNESS	1				X	(WITH INTEGRATED GRADE CONTROL) (NOT ILLUSTRATED)
	AT320767	ELECTROHYDRAULIC CONTROLLER	1				X	(WITH INTEGRATED GRADE CONTROL) (NOT ILLUSTRATED)
	19M7797	SCREW	2				X	M6 X 40, (FOR EH CONTROLLER)
9	57M8131	ELEC. CONNECTOR TERMINAL	1		X	X	X	(CAN TERMINATION RESISTOR)
10	AT47069	GROUND CABLE	1		X	X	X	
11	T103834	CIRCUIT BREAKER	1		X	X	X	(20 AMP)
12	T217187	LABEL	1		X	X	X	(SUB FOR T205336) (FUSE BLOCK)
13	57M7120	FUSE	1		X	X	X	(20 AMP)
14	57M7125	FUSE	1		X	X	X	(5 AMP)
15	AT168878	RELAY	1		X	X	X	(12 VOLT) (WITH DIODE)
16	T46876	GROMMET	2		X	X	X	(SUB FOR T58056, THIS APPLICATION)
	E53830	CLAMP	2		X	X	X	(CLIP ON DOORS)

ROPS WIRING HARNESS
FAISCEAU DARCEAU DE SECURITE
ARNES DE ROPS

T198850 -UN-25MAY04

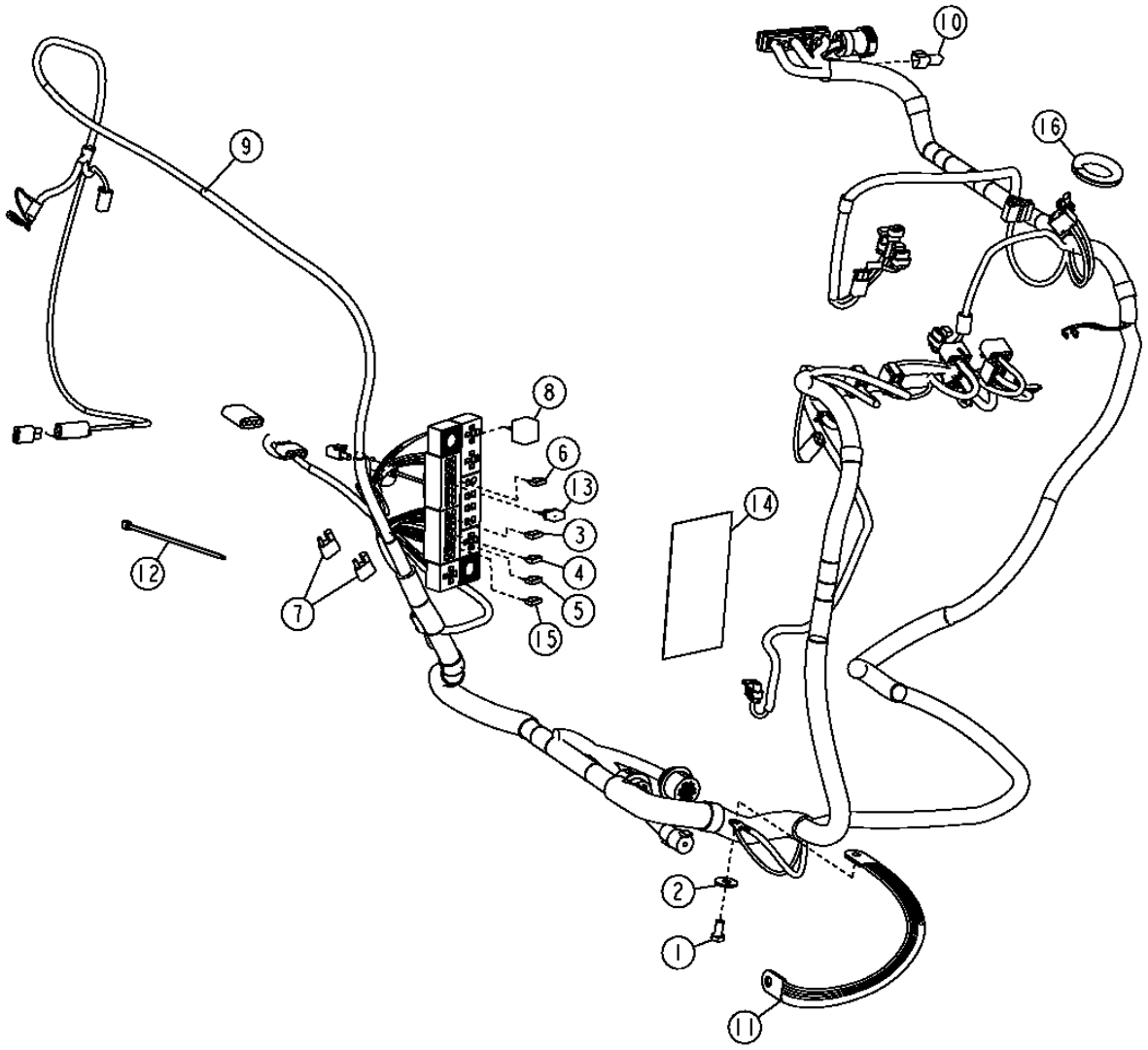

T198850

ROPS WIRING HARNESS
FAISCEAU D ARCEAU DE SECURITE
ARNES DE ROPS

KEY	PART NO.	PART NAME	QTY.	SERIAL NO.	450J	550J	650J	REMARKS
1	19M7938	CAP SCREW	1		X	X	X	M10 X 20
2	24M7296	WASHER	1		X	X	X	10.500 X 30 X 2.500 MM
3	57M7121	FUSE	8		X	X	X	10 AMP
4	99M7064	FUSE	1		X	X	X	7-1/2 AMP
5	99M7065	FUSE	3		X	X	X	15 AMP
6	57M7120	FUSE	1		X	X	X	20 AMP
7	AT103399	DIODE	2		X	X	X	(CONNECTOR)
8	AT168878	RELAY	4		X	X	X	(12 VOLT) (WITH DIODE)
9	AT304804	WIRING HARNESS	1		X	X	X	(ROPS)
	AT309676	RESISTOR	1		X	X	X	(REPLACEMENT START RESISTOR KIT)
10	57M8131	ELEC. CONNECTOR TERMINAL	1		X	X	X	(CAN TERMINATION RESISTOR)
11	AT47069	GROUND CABLE	1		X	X	X	(STARTER)
12	R44302	TIE BAND	AR		X	X	X	
13	T103834	CIRCUIT BREAKER	1		X	X	X	(20 AMP)
14	T217187	LABEL	1		X	X	X	(SUB FOR T205335) (FUSE BLOCK)
15	57M7125	FUSE	1		X	X	X	5 AMP
16	.....	ISOLATOR	AR		X	X	X	(MAKE FROM T58056)

ENGINE WIRING HARNESS
FAISCEAU DE FILS DE MOTEUR
ARNES DE ALAMBRADO DEL MOTOR

T205432 -UN-18DEC04

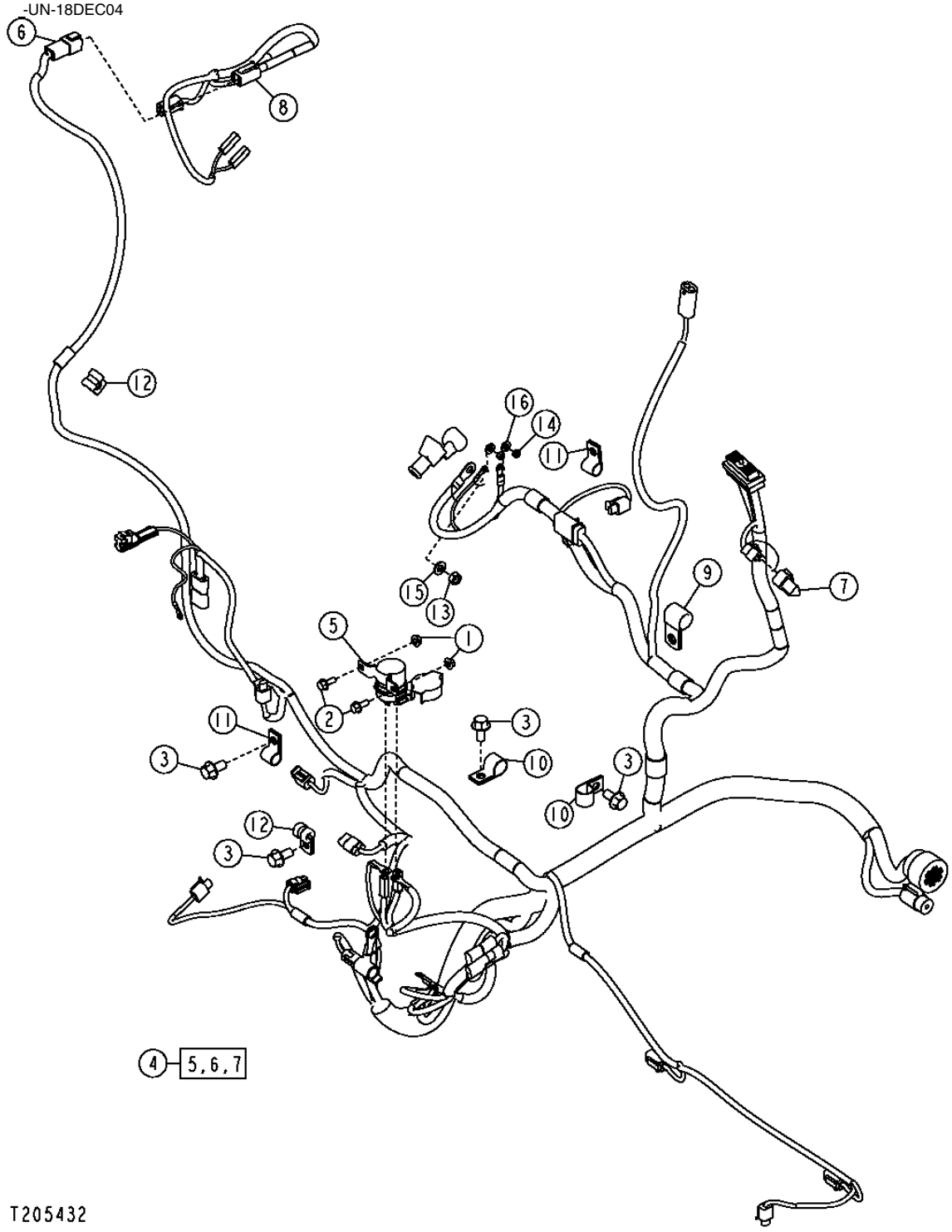

ENGINE WIRING HARNESS
FAISCEAU DE FILS DE MOTEUR
ARNES DE ALAMBRADO DEL MOTOR

KEY	PART NO.	PART NAME	QTY.	SERIAL NO.	450J	550J	650J	REMARKS
1	14M7303	FLANGE NUT	2		X	X	X	M6
2	19M7775	SCREW	2		X	X	X	M6 X 16
3	19M7784	SCREW	4		X	X	X	M10 X 20
4	AT305679	WIRING HARNESS	1		X	X	X	
5	AT141011	RELAY	4		X	X	X	(STARTER) (12 VOLT)
6	AT305680	WIRING HARNESS	1		X	X	X	(ENGINE)
7	57M8131	ELEC. CONNECTOR TERMINAL	1		X	X	X	(CAN TERMINATION RESISTOR)
8	AT310476	WIRING HARNESS	1		X	X	X	(GRILLE)
9	T28949	CLAMP	1		X	X	X	
10	T74416	CLAMP	2		X	X	X	(HOSE)
11	T75197	CLAMP	2		X	X	X	(HOSE)
12	T78974	CLAMP	2		X	X	X	
13	14M7273	NUT	1		X	X	X	M8
14	14M7297	NUT	2		X	X	X	M5
15	24M7238	WASHER	1		X	X	X	8.700 X 17 X 2 MM
16	24M7293	WASHER	2		X	X	X	6.500 X 13 X 1.600 MM

MONITOR ONLY SWITCHES
INTERRUPTEURS DE MONITEUR UNIQUEMENT
INTERRUPTORES DE MONITOR SOLAMENTE

TX1005893 -UN-10APR06

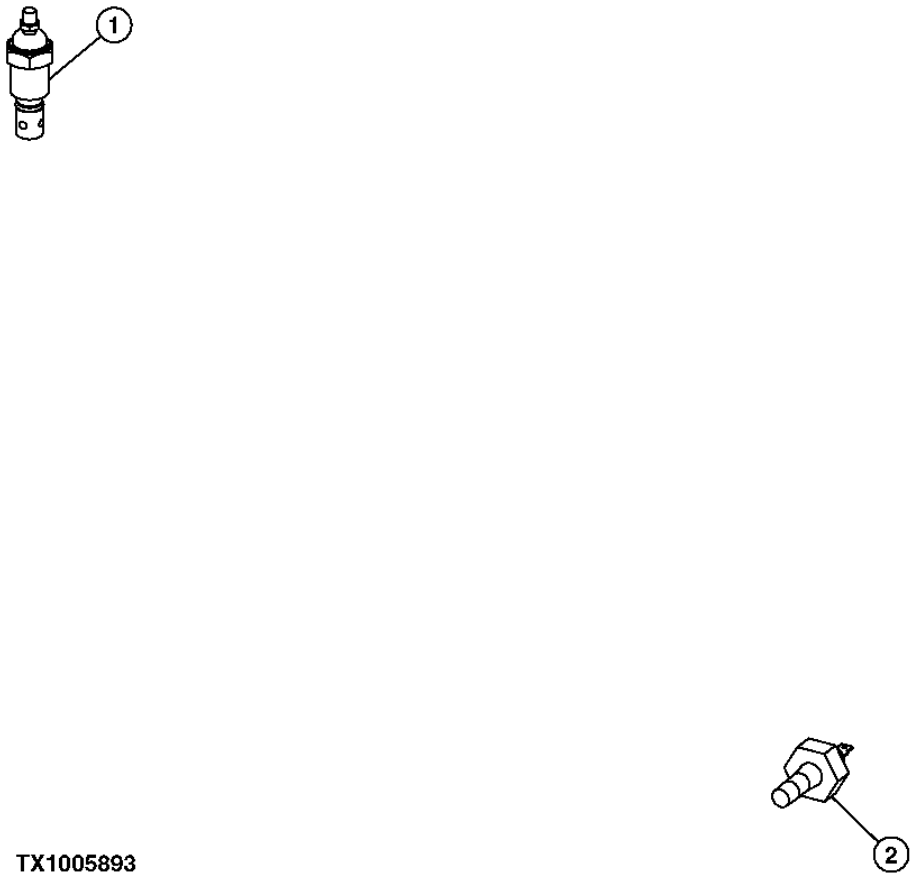

TX1005893

MONITOR ONLY SWITCHES
INTERRUPTEURS DE MONITEUR UNIQUEMENT
INTERRUPTORES DE MONITOR SOLAMENTE

KEY	PART NO.	PART NAME	QTY.	SERIAL NO.	450J	550J	650J	REMARKS
1	AT164352	SWITCH	1		X	X	X	(ENGINE TEMPERATURE)
2	AT85174	SWITCH	1		X	X	X	(ENGINE PRESSURE)

MONITOR AND GAUGE SENDER/SWITCHES
MONITEUR ET TRANSMETTEURS DE JAUGE/INTERRUPTEURS
INTERRUPTORES/EMISORES DE INDICADORES Y MONITOR

TX1005894 -UN-10APR06

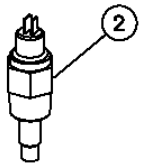

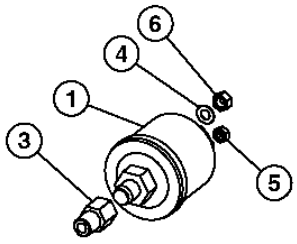

TX1005894

THIS PARTS LISTING IS CONTINUED

MONITOR AND GAUGE SENDER/SWITCHES
MONITEUR ET TRANSMETTEURS DE JAUGE/INTERRUPTEURS
INTERRUPTORES/EMISORES DE INDICADORES Y MONITOR

KEY	PART NO.	PART NAME	QTY.	SERIAL NO.	450J	550J	650J	REMARKS
1	AT210825	SENDER	1		X	X	X	(ENGINE OIL PRESSURE)
2	AT210827	SENDER	1		X	X	X	(ENGINE WATER TEMPERATURE)
3	P40098	ADAPTER FITTING	1		X	X	X	
4	12M7060	WASHER	1		X	X	X	5.300 MM
5	14M7100	NUT	1		X	X	X	M4
6	14M7297	NUT	1		X	X	X	M5

WIRE LEAD KIT
MOYEU DE ROUE
CUBO DE RUEDA

TP5496 -UN-01JAN94

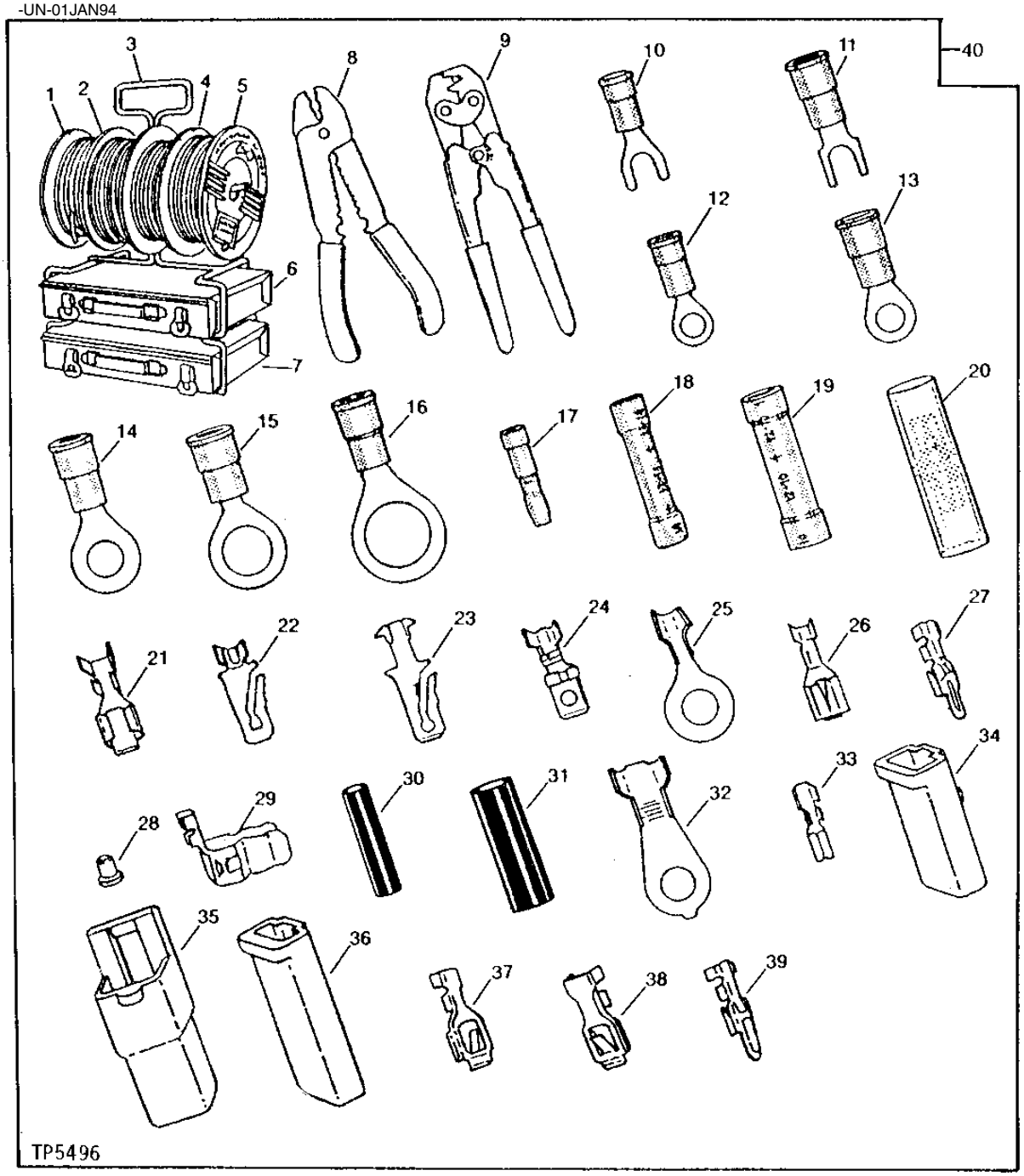

WIRE LEAD KIT
MOYEU DE ROUE
CUBO DE RUEDA

KEY	PART NO.	PART NAME	QTY.	TRACTOR SERIAL NO.	REMARKS
1	R66319	WIRING LEAD	1		(CABLE) (PRIMARY) (14 GA., 30,480 MM (100 FT.)) (1 SPOOL)
2	R65593	WIRING LEAD	1		(CABLE) (PRIMARY) (16 GA., 30,480 MM (100 FT.)) (1 SPOOL)
3	R65608	RACK	1		
4	R66321	WIRING LEAD	1		(CABLE) (PRIMARY) (10 GA., 15,240 MM (50 FT.)) (1 SPOOL)
5	R66320	WIRING LEAD	1		(CABLE) (PRIMARY) (12 GA., 30,480 MM (100 FT.)) (1 SPOOL)
6	R65609	CONTAINER	1		32 COMPARTMENT
7	R65610	CONTAINER	1		11 COMPARTMENT
8	R32011	TOOL	1		WIRE STRIPPING
9	R65594	TOOL	1		WIRE CRIMPING
10	R32016	ELEC. CONNECTOR TERMINAL	1		(PRIMARY) 14-16 GA., NO. 10 SPADE
11	R32017	ELEC. CONNECTOR TERMINAL	1		(PRIMARY) 10-12 GA., NO. 10 SPADE
12	R32018	ELEC. CONNECTOR TERMINAL	1		(PRIMARY) 14-16 GA., NO. 10 EYELET
13	R32019	ELEC. CONNECTOR TERMINAL	1		(PRIMARY) 10-12 GA., NO. 10 EYELET
14	R32021	ELEC. CONNECTOR TERMINAL	1		(PRIMARY) 10-12 GA., 1/4 INCH EYELET
15	R32022	ELEC. CONNECTOR TERMINAL	1		(PRIMARY) 10-12 GA., 3/8 INCH EYELET
16	R32023	ELEC. CONNECTOR TERMINAL	1		(PRIMARY) 10-12 GA., 1/2 INCH EYELET
17	R32026	ELEC. CONNECTOR TERMINAL	1		MALE, BULLET
18	R32027	ELEC. CONNECTOR TERMINAL	1		SPLICE, 14-16 GA.
19	R32028	ELEC. CONNECTOR TERMINAL	1		SPLICE, 10-12 GA.
20	R32029	ELEC. CONNECTOR TERMINAL	1		2-WIRE BULLET CONNECTOR
21	R65595	ELEC. CONNECTOR TERMINAL	1		FEMALE, 10 GA.
22	R65596	ELEC. CONNECTOR TERMINAL	1		MALE, 10 GA. OR TWO 14 GA. CABLES
23	T34067	ELEC. CONNECTOR TERMINAL	1		(SUB FOR R65597) MALE, 14-16 GA.
24	R65598	ELEC. CONNECTOR TERMINAL	1		MALE, SHORT, 14-16 GA.
25	R65599	ELEC. CONNECTOR TERMINAL	1		14-16 GA., 1/4 INCH EYELET
26	R65600	ELEC. CONNECTOR TERMINAL	1		FEMALE, 14-16 GA.
27	R65601	ELEC. CONNECTOR TERMINAL	1		TWIN-LOCK, TWO 16 GA. CABLES
28	R65602	ELEC. CONNECTOR TERMINAL	1		BULB SOCKET, 16-18 GA.
29	R65603	ELEC. CONNECTOR ACCESSORY	1		FUSE
30	R65604	ELEC. CONNECTOR ACCESSORY	1		14-18 GA.
31	R65605	ELEC. CONNECTOR ACCESSORY	1		8-12 GA.
32	R65606	ELEC. CONNECTOR TERMINAL	1		6-8 GA., 1/4 INCH EYELET
33	R65607	ELEC. CONNECTOR TERMINAL	1		18-20 GA.
34	T28583	ELEC. CONNECTOR HOUSING	1		ONE CONTACT LOCK-TYPE, MALE
35	T28585	ELECTRICAL CONNECTOR ASSY	1		ONE CONTACT LOCK-TYPE, FEMALE
36	U46370	ELECTRICAL CONNECTOR ASSY	1		ONE CONTACT SINGLE BODY, MALE
37	U46662	ELEC. CONNECTOR TERMINAL	1		MALE
38	U46663	ELEC. CONNECTOR TERMINAL	1		MALE
39	U46664	ELEC. CONNECTOR TERMINAL	1		MALE
40	TY26194	KIT	1		(SUB FOR PM797NA) TERMINAL AND WIRING

TRACTOR IDENTIFICATION PLUGS AND HORN WIRING HARNESS
BOUCHONS D'IDENTIFICATION DU TRACTEUR ET FAISCEAU DE FILS DE KLAXON
ENCHUFES DE INDENTIFICACION DE TRACTOR Y ANRES DE ALAMBRADO DE BOCINA

TX1005895 -UN-10APR06

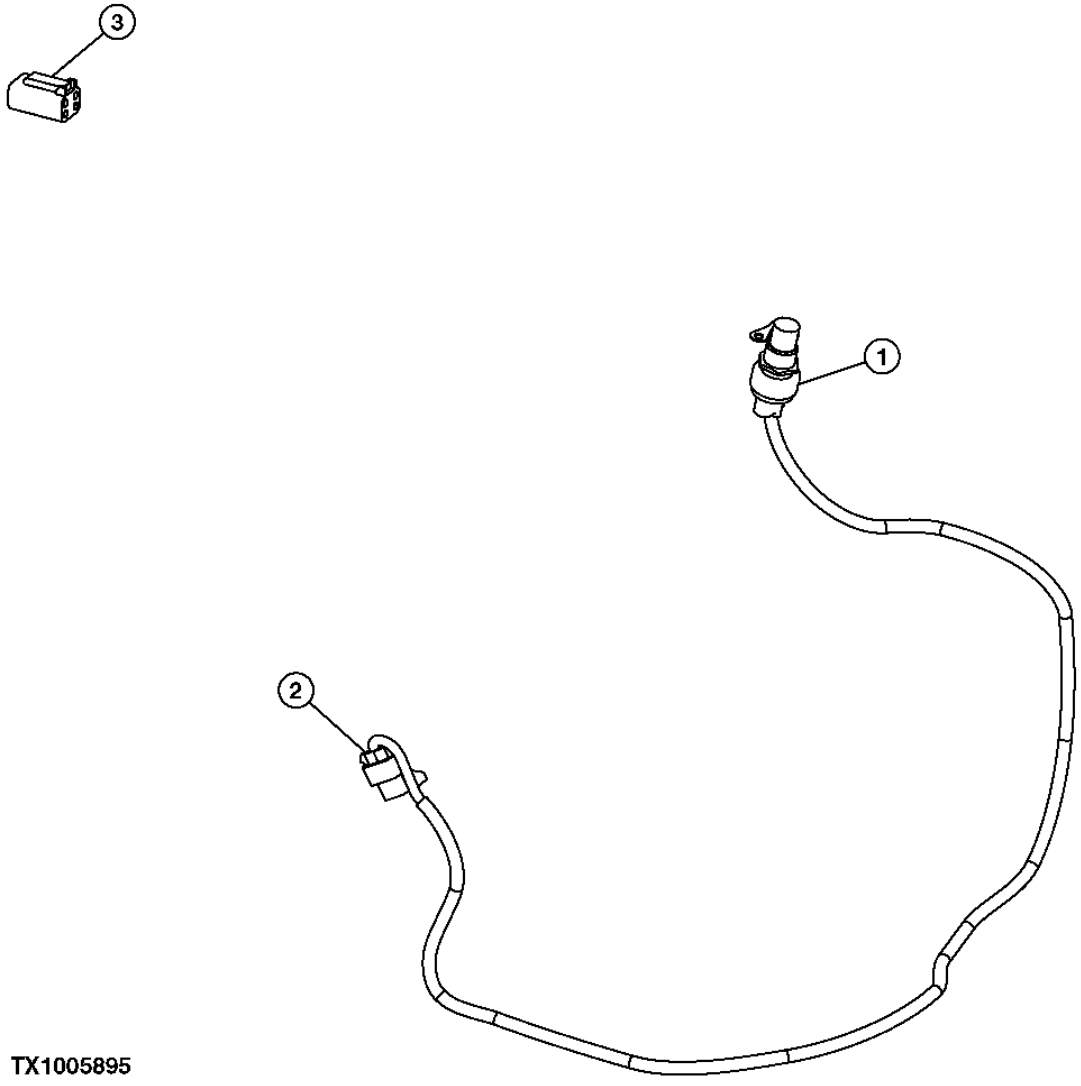

TX1005895

TRACTOR IDENTIFICATION PLUGS AND HORN WIRING HARNESS
BOUCHONS D'IDENTIFICATION DU TRACTEUR ET FAISCEAU DE FILS DE KLAXON
ENCHUFES DE IDENTIFICACION DE TRACTOR Y ARNES DE ALAMBRADO DE BOCINA

KEY	PART NO.	PART NAME	QTY.	SERIAL NO.	450J	550J	650J	REMARKS
1	AT25258	SWITCH	1		X	X	X	(HORN)
2	AT223149	WIRING HARNESS	1		X	X	X	(HORN)
3	AT222901	ELEC. CONNECTOR TERMINAL	1		X	X	X	(IDENTIFICATION PLUG FOR SINGLE LEVER CONTROL)
	AT222902	ELEC. CONNECTOR TERMINAL	1		X	X	X	(IDENTIFICATION PLUG FOR SINGLE LEVER CONTROL) (WITH SPEED IN GRIP)

CAB FUSES, CIRCUIT BREAKER AND RELAYS
FUSIBLES, COUPE-CIRCUIT ET RELAIS DE CABINE
FUSIBLES, DISYUNTORES Y RELES DE CABINA

TP67709 -UN-17MAR00

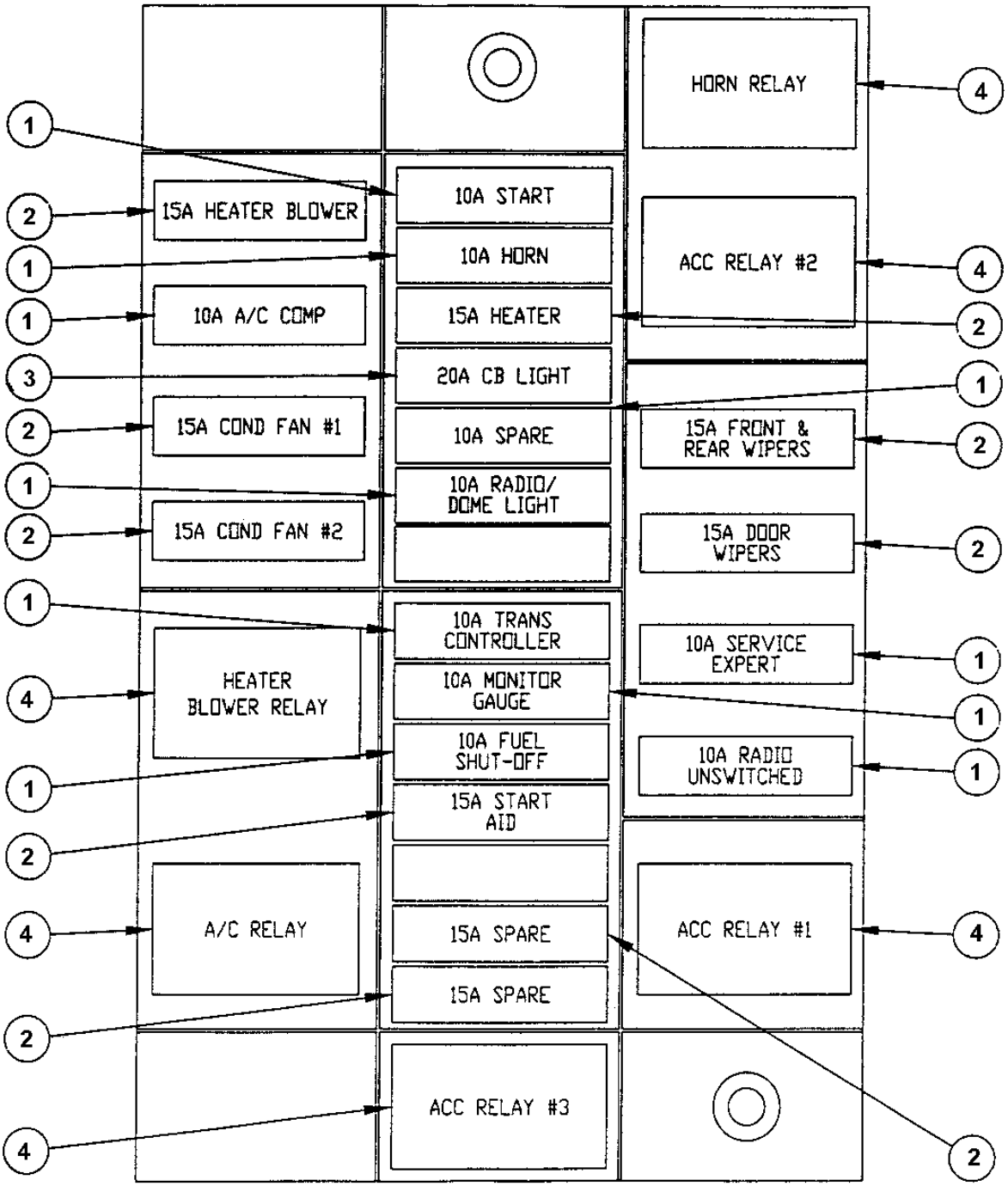

TP67709

CAB FUSES, CIRCUIT BREAKER AND RELAYS
FUSIBLES, COUPE-CIRCUIT ET RELAIS DE CABINE
FUSIBLES, DISYUNTORES Y RELES DE CABINA

KEY	PART NO.	PART NAME	QTY.	SERIAL NO.	450 J	550 J	650 J	REMARKS
1	57M7121	FUSE	10		X	X	X	(10 AMP)
2	99M7065	FUSE	9		X	X	X	(15 AMP)
3	T103834	CIRCUIT BREAKER	1		X	X	X	(20AMP)
4	AT168878	RELAY	6		X	X	X	

ROPS FUSES, CIRCUIT BREAKER AND RELAYS
FUSIBLES, COUPE-CIRCUIT ET RELAIS D'ARCEAU DE SECURITE
FUSIBLES DE ROPS, DISYUNTOR Y RELES

TP67710 -UN-17MAR00

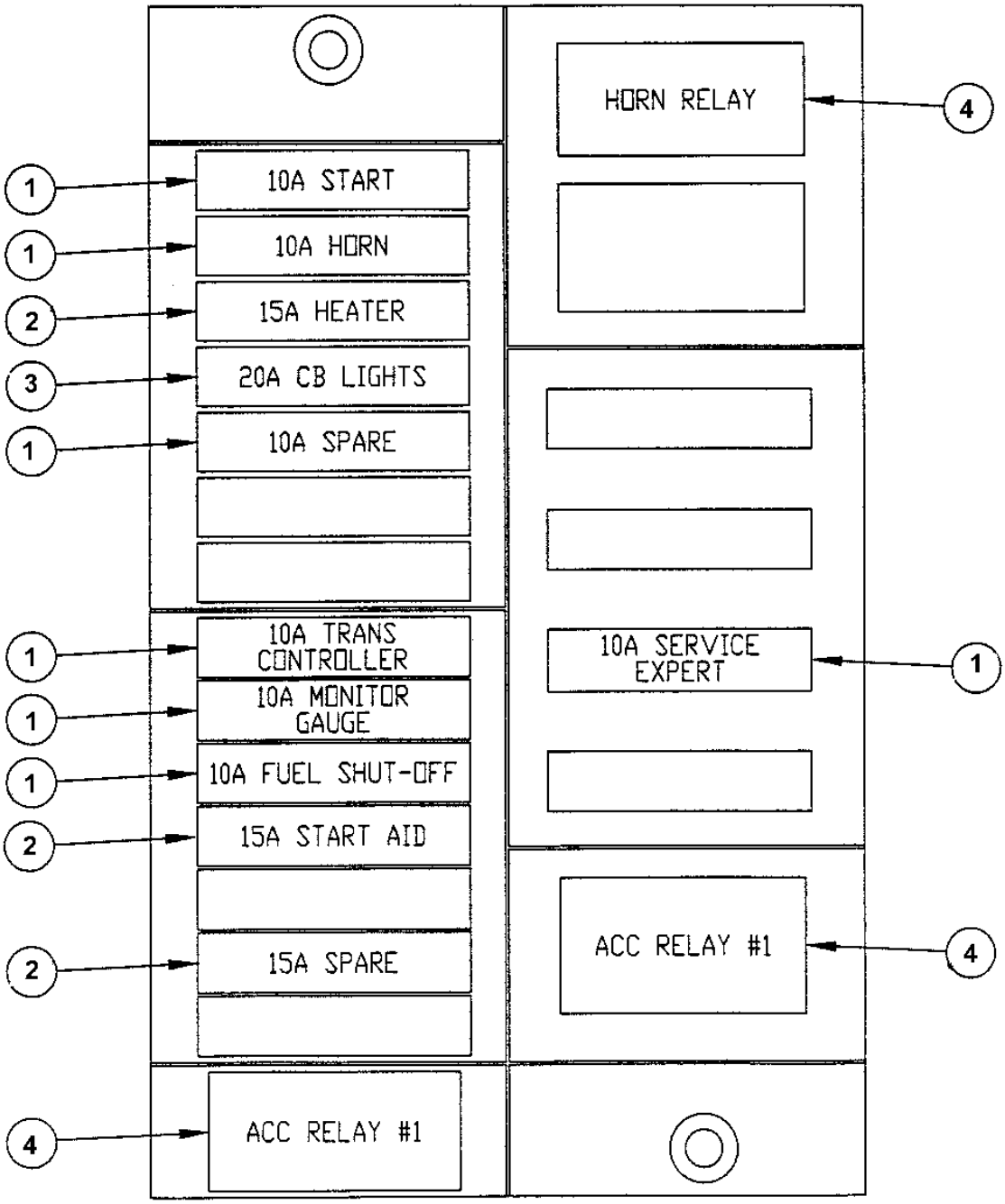

TP67710

ROPS FUSES, CIRCUIT BREAKER AND RELAYS
FUSIBLES, COUPE-CIRCUIT ET RELAIS D'ARCEAU DE SECURITE
FUSIBLES DE ROPS, DISYUNTOR Y RELES

KEY	PART NO.	PART NAME	QTY.	SERIAL NO.	450J	550J	650J	REMARKS
1	57M7121	FUSE	7		X	X	X	(10 AMP)
2	99M7065	FUSE	3		X	X	X	(15 AMP)
3	T103834	CIRCUIT BREAKER	1		X	X	X	(20AMP)
4	AT168878	RELAY	3		X	X	X	

ENGINE OIL PRESSURE AND HYDRAULIC OIL TEMPERATURE SENSOR
CAPTEUR DE PRESSION DE L'HUILE MOTEUR ET DE TEMPERATURE DE L'HUILE HYDRAULIQUE
SENSORES DE PRESION DE ACEITE DEL MOTOR Y TEMPERATURA DE ACEITE HIDRAULICO

T199494 -UN-04MAY04

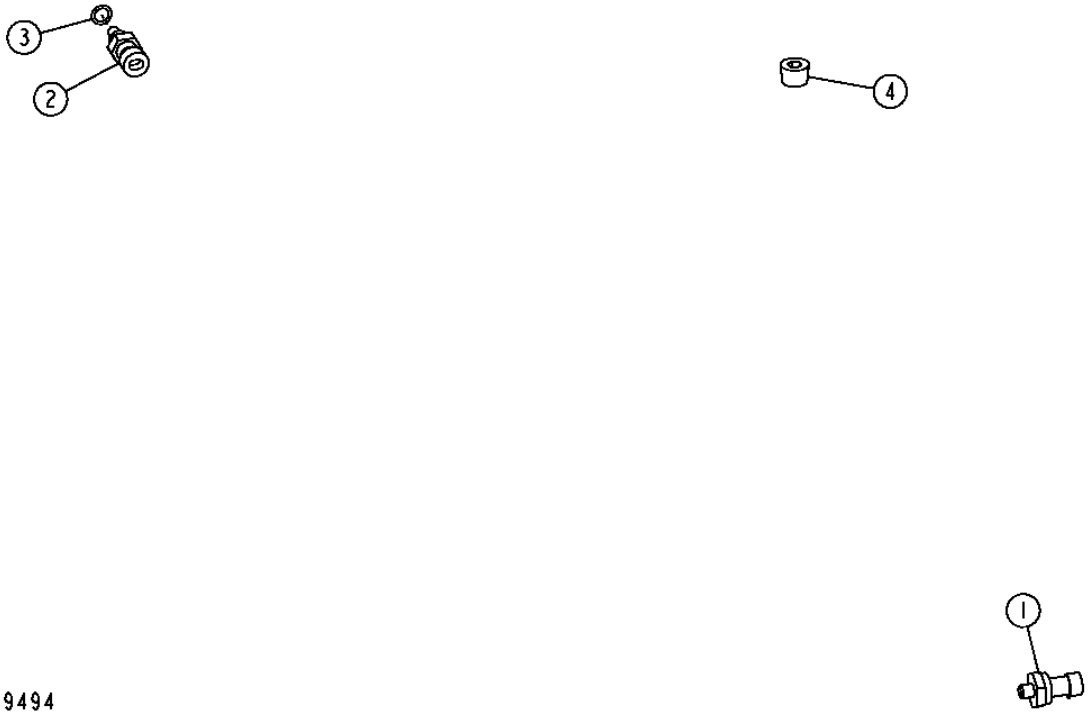

ENGINE OIL PRESSURE AND HYDRAULIC OIL TEMPERATURE SENSOR
CAPTEUR DE PRESSION DE L'HUILE MOTEUR ET DE TEMPERATURE DE L'HUILE HYDRAULIQUE
SENSORES DE PRESION DE ACEITE DEL MOTOR Y TEMPERATURA DE ACEITE HIDRAULICO

KEY	*PART NO.*	*PART NAME*	*QTY.*	*SERIAL NO.*	450J	550J	650J	*REMARKS*
1	RE167207	PRESSURE SENSOR	1		X	X	X	(ENGINE OIL PRESSURE)
2	RE48419	SENSOR	1		X	X	X	(HYDRAULIC OIL TEMPERATURE)
3	51M7041	O-RING	1		X	X	X	
4	RE57836	PIPE PLUG	1		X	X	X	1/2", (SUB FOR 15H624)

ENGINE WIRING HARNESS, 650J WITH INTEGRATED GRADE CONTROL
FAISCEAU DE FILS DE MOTEUR
ARNES DE ALAMBRADO DEL MOTOR

TX1017842 -UN-23JAN07

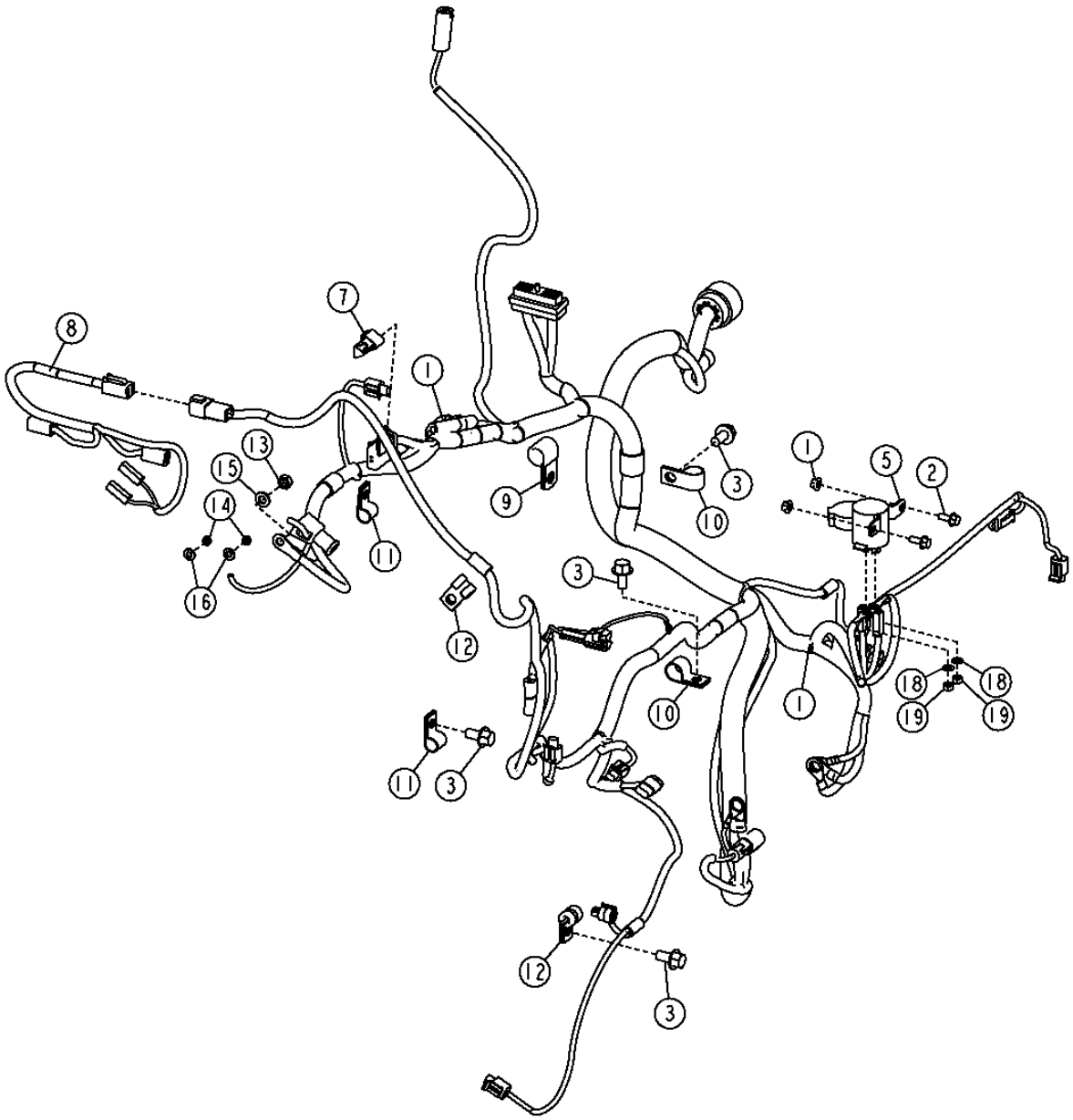

ENGINE WIRING HARNESS, 650J WITH INTEGRADED GRADE CONTROL
FAISCEAU DE FILS DE MOTEUR
ARNES DE ALAMBRADO DEL MOTOR

KEY	PART NO.	PART NAME	QTY.	SERIAL NO.	650J	REMARKS
1	14M7303	FLANGE NUT	2		X	M6
2	19M7775	SCREW	2		X	M6 X 16
3	19M7784	SCREW	4		X	M10 X 20
4	AT330633	WIRING HARNESS	1		X	
5	AT141011	RELAY	1		X	(STARTER) (12 VOLT)
6	AT316756	WIRING HARNESS	1		X	(NOT ILLUSTRADED)(ALTERNATOR HARNESS)
7	57M8131	ELEC. CONNECTOR TERMINAL	1		X	(CAN TERMINATION RESISTOR)
8	AT310476	WIRING HARNESS	1		X	(GRILLE)
9	T28949	CLAMP	1		X	
10	T74416	CLAMP	2		X	(HOSE)
11	T75197	CLAMP	2		X	(HOSE)
12	T78974	CLAMP	2		X	
13	14M7273	NUT	1		X	M8
14	14M7297	NUT	2		X	M5
15	24M7238	WASHER	1		X	8.700 X 17 X 2 MM
16	24M7293	WASHER	2		X	6.500 X 13 X 1.600 MM
17	AT322385	WIRING HARNESS	1		X	(NOT ILLUSTRATED)(STARTER TERMINAL JUMPER)
18	12H297	LOCK WASHER	2		X	1/4"
19	14M7272	NUT	2		X	M6

VEHICLE WIRING HARNESS, 650J WITH INTEGRATED GRADE CONTROL
FAISCEAU DE FILS DE MOTEUR
ARNES DE ALAMBRADO DEL MOTOR

TX1017844 -UN-23JAN07

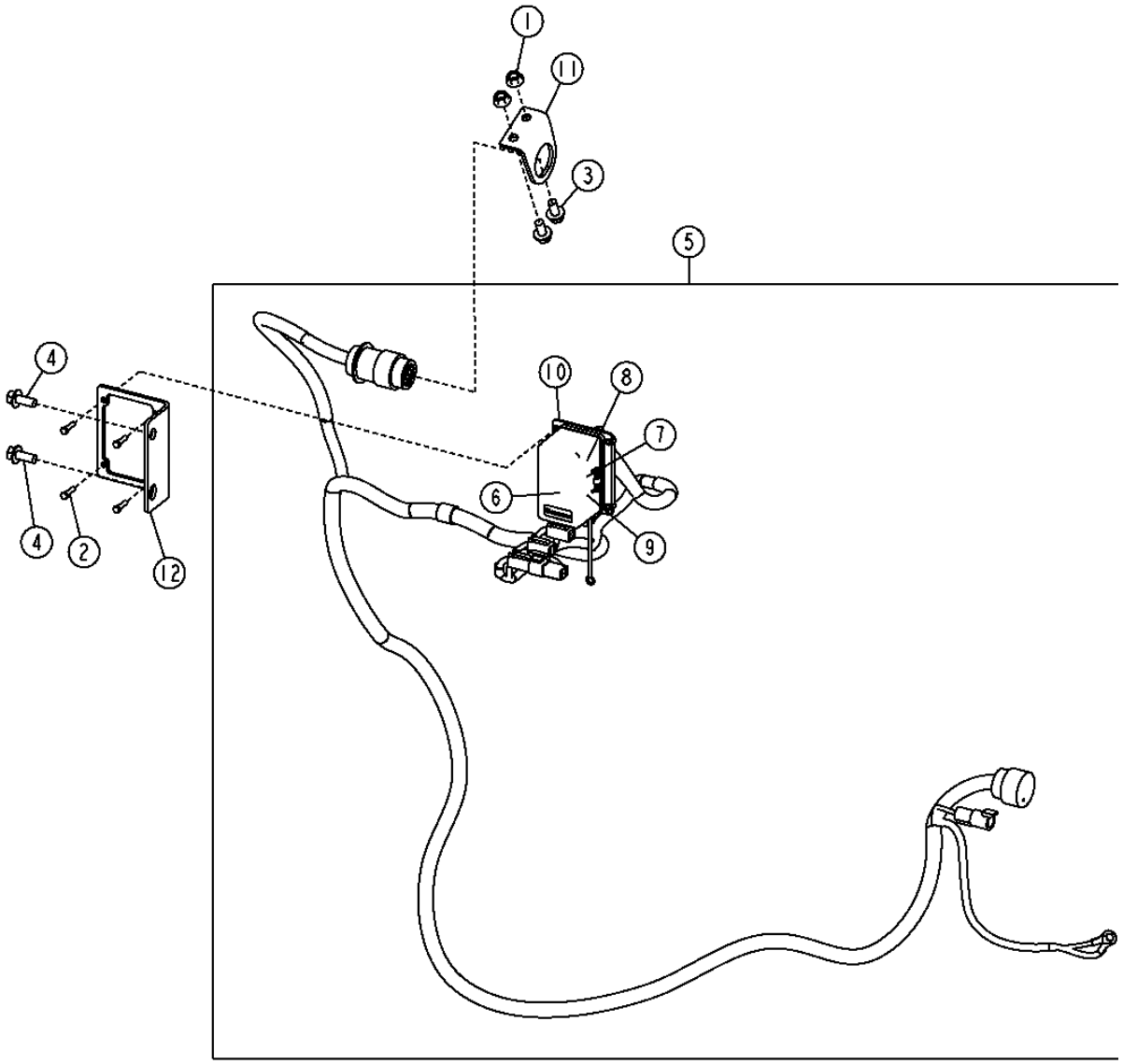

TX1017844

VEHICLE WIRING HARNESS, 650J WITH INTEGRADED GRADE CONTROL
FAISCEAU DE FILS DE MOTEUR
ARNES DE ALAMBRADO DEL MOTOR

KEY	PART NO.	PART NAME	QTY.	SERIAL NO.	650J	REMARKS
1	14M7296	FLANGE NUT	2		X	M10
2	19M7373	CAP SCREW	2		X	M5 X 20
3	19M7784	SCREW	2		X	M10 X 20
4	19M7785	SCREW	2		X	M10 X 25
5	AT330627	WIRING HARNESS	1		X	
6	57M7688	FUSE	1		X	
7	57M7689	FUSE	4		X	
8	57M7690	FUSE	1		X	
9	AT308380	RELAY	2		X	
10	AT323326	FUSE BOX	1		X	
11	T206431	ANGLE	1		X	
12	T229966	BRACKET	1		X	

DASH AND MONITOR WITH 650J INTEGRATED GRADE CONTROL

TX1014038 -UN-28OCT06

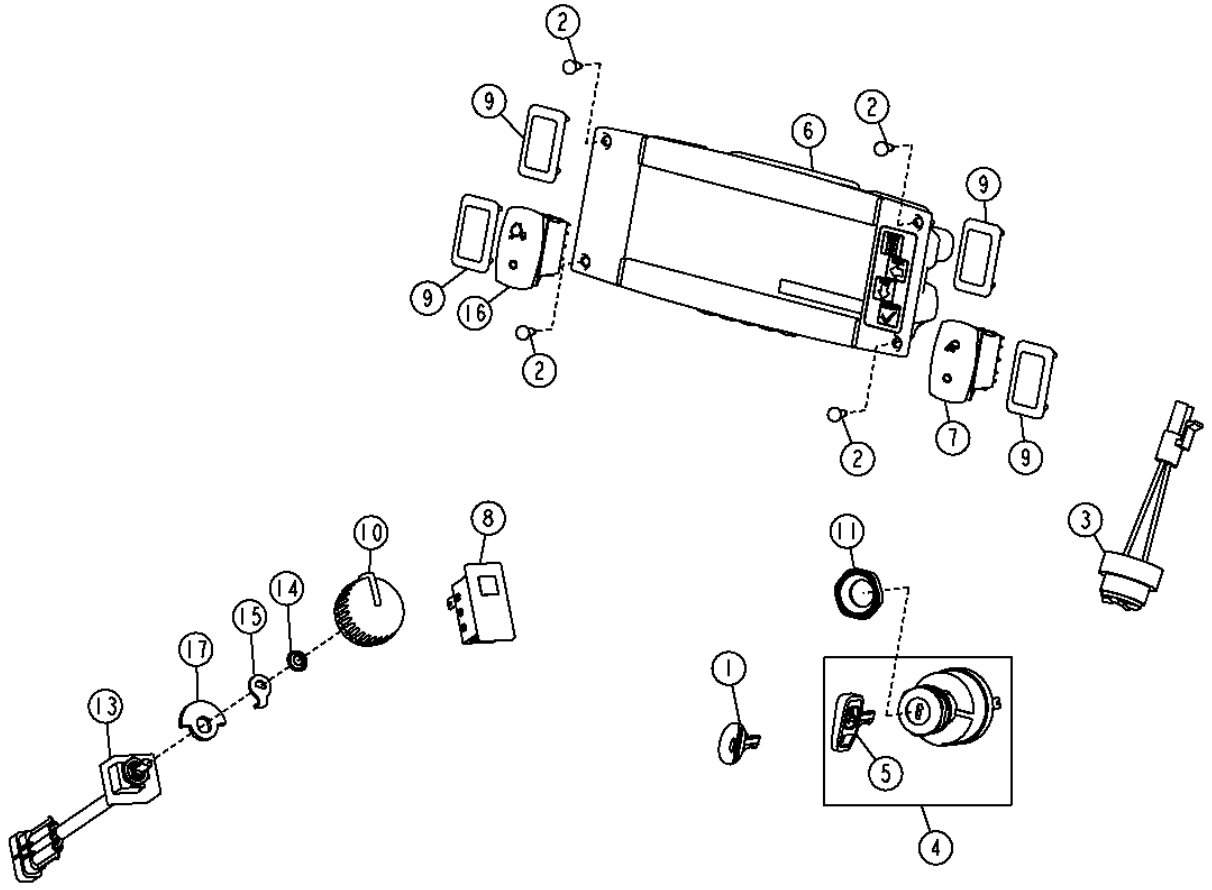

TX1014038

DASH AND MONITOR WITH 650J INTEGRATED GRADE CONTROL

KEY	*PART NO.*	*PART NAME*	*QTY.*	*SERIAL NO.*	*REMARKS*
1	AT336305	KEY	2		
2	37H95	SCREW	4		
3	AT160480	ALARM SYSTEM	1		(SUB FOR AT160480, THIS APPLICATION) (ALARM 12 VOLT WITH SHUTTER)
4	AT195301	SWITCH	1		(KEY SWITCH)
5	AT195302	KEY	1		(SWITCH)
6	AT329674	VEHICLE MONITOR	1		(24 VOLT MONITOR)
	T224826	PLATE	1		(MONITOR ADAPTER PLATE)
7	AT306955	TOGGLE/ROCKER SWITCH	1		(WORK LIGHT SWITCH) (ON-OFF)
8	AT324000	INDICATOR	1		(24V) (AMBER)
9	M115279	PLUG	3		
10	R111632	KNOB	2		
11	R44342	NUT	1		1", (SPECIAL HARDWARE)
13	RE154222	SWITCH	1		(ENGINE SPEED)
14	R78035	PUSH NUT	1		1/4", (SPRING)
15	T226427	WASHER	1		(TAB) (SUB FOR T209995)
16	AT303867	TOGGLE/ROCKER SWITCH	1		(DECOUPLE/DECEL SWITCH)
17	T226430	STOP	1		(SUB FOR T209917)

DASH AND MONITOR
TABLEAU DE BORD ET MONITEUR
TABLERO DE INSTRUMENTOS Y MONITOR

T216826 -UN-31OCT05

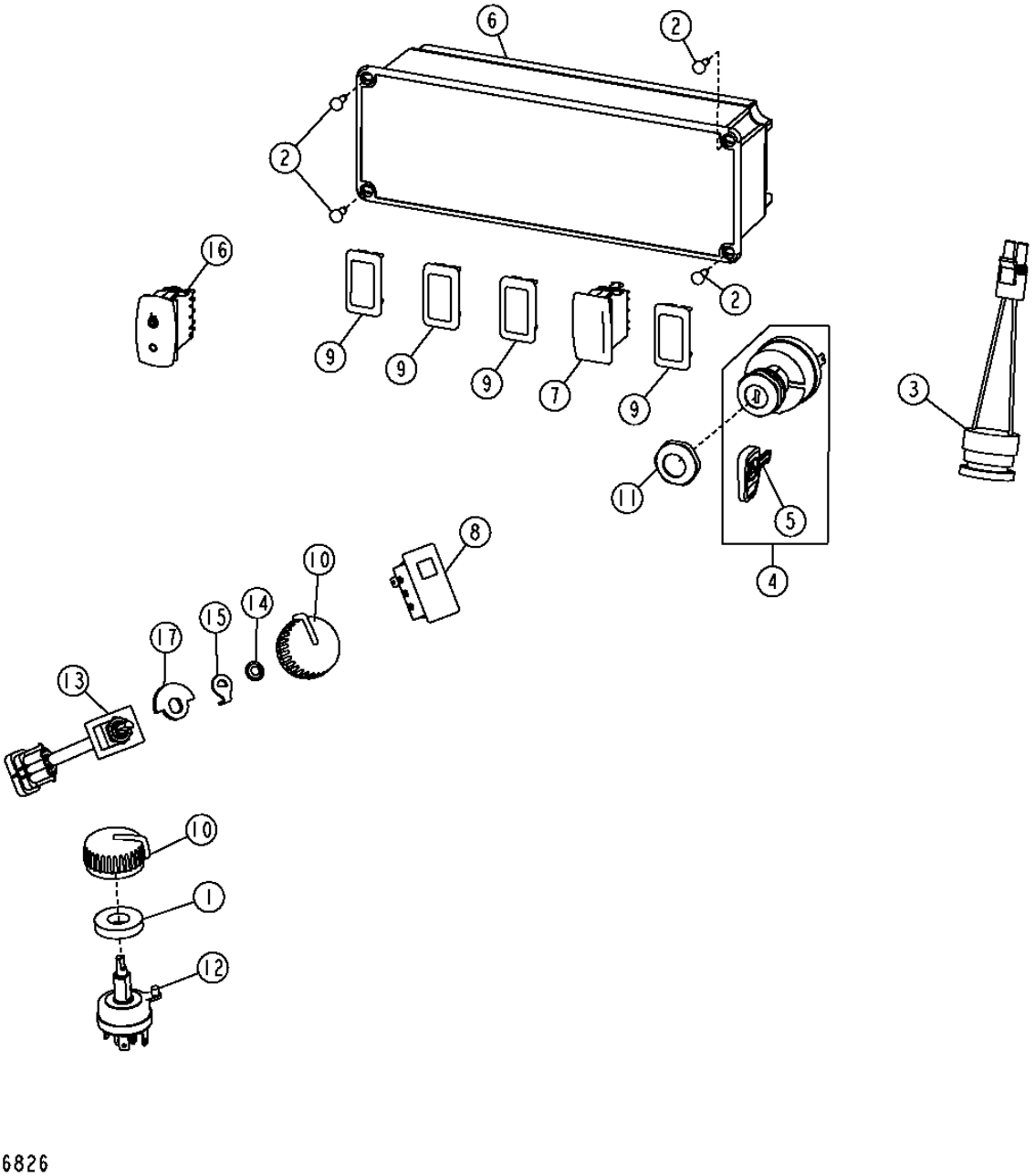

DASH AND MONITOR
TABLEAU DE BORD ET MONITEUR
TABLERO DE INSTRUMENTOS Y MONITOR

KEY	PART NO.	PART NAME	QTY.	SERIAL NO.	450J	550J	650J	REMARKS
1	24H1272	WASHER	1		X	X	X	9/16" X 1-1/4" X 1/4"
2	37H95	SCREW	4		X	X	X	
3	AT178526	AUDIBLE WARNING ALARM	1		X	X	X	(SUB FOR AT160480, THIS APPLICATION) (12 VOLT)(WITH SHUTTER)
4	AT195301	SWITCH	1		X	X	X	(KEY)
5	AT195302	KEY	1		X	X	X	
6	AT306512	VEHICLE MONITOR	1		X	X	X	(12 VOLT)
7	AT306955	TOGGLE/ROCKER SWITCH	1		X	X	X	(ON-OFF)
8	AT312516	TAIL LAMP	1		X	X	X	(AMBER)
9	M115279	PLUG	4		X	X	X	
10	R111632	KNOB	2		X	X	X	
11	R44342	NUT	1		X	X	X	
12	RE154222	SWITCH	1		X	X	X	(REVERSE RATIO)
13	AT312606	POTENTIOMETER	1		X	X	X	
14	R78035	PUSH NUT	1		X	X	X	
15	T226427	WASHER	1		X	X	X	(SUB FOR T209995)
16	AT309946	TOGGLE/ROCKER SWITCH	1		X	X	X	(START AID)(ETHER)
17	T226430	STOP	1		X	X	X	(SUB FOR T209917)

MAIN FRAME
CHASSIS PRINCIPAL
BASTIDOR PRINCIPAL

T209866 -UN-11APR05

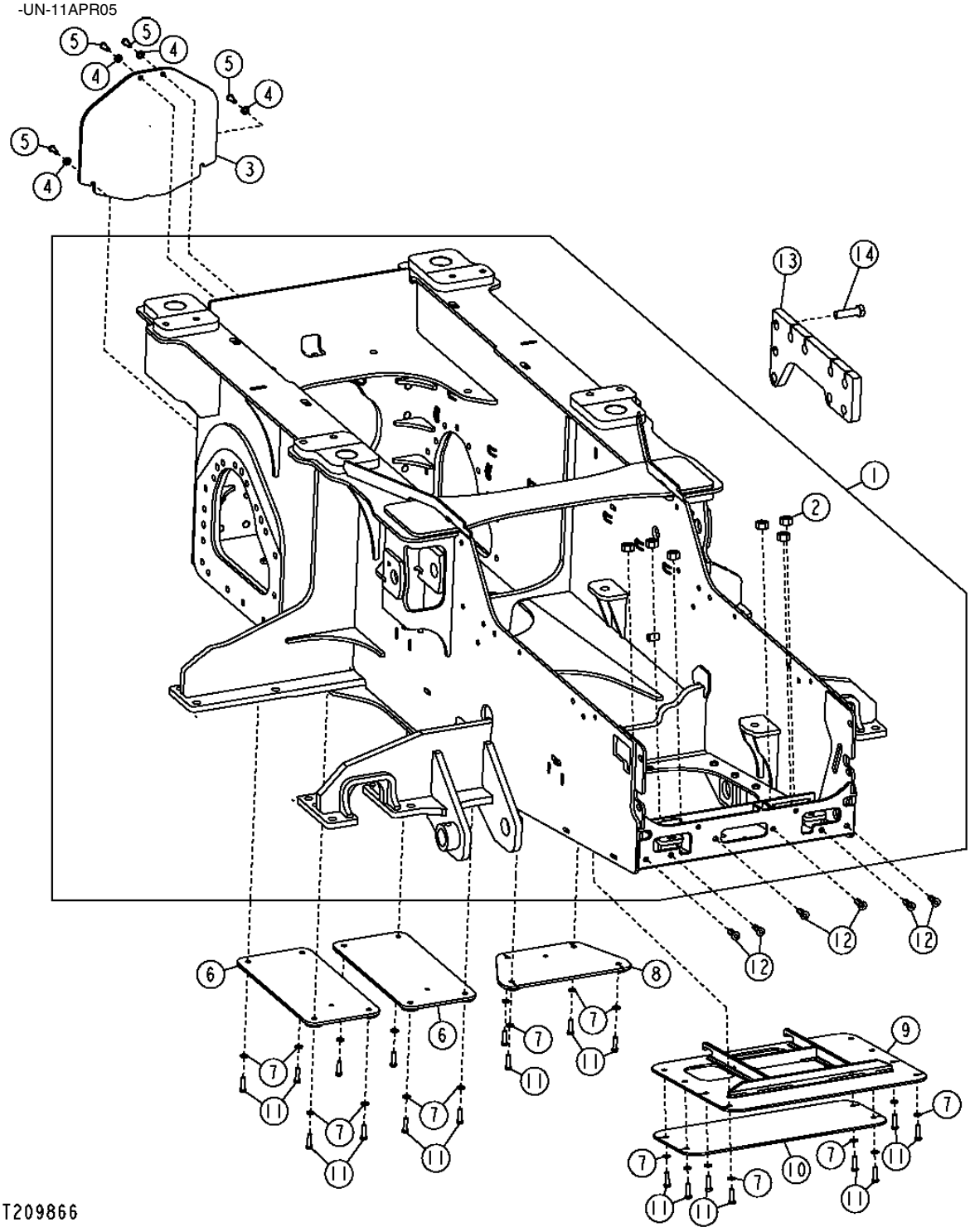

THIS PARTS LISTING IS CONTINUED

MAIN FRAME
CHASSIS PRINCIPAL
BASTIDOR PRINCIPAL

KEY	PART NO.	PART NAME	QTY.	SERIAL NO.	450J	550J	650J	REMARKS
1	AT305605	MAIN FRAME	1		X			(CONVENIENCE ASSY) (LONG TRACK)
	AT305676	**MAIN FRAME**	**1**		**X**			**(CONVENIENCE ASSY) (LGP)**
	AT305721	**MAIN FRAME**	**1**			**X**		**(CONVENIENCE ASSY) (LGP)**
	AT305728	**MAIN FRAME**	**1**				**X**	**(CONVENIENCE ASSY) (LGP)**
	AT305723	**MAIN FRAME**	**1**				**X**	**(CONVENIENCE ASSY) (650JXLT)**
	AT305718	**MAIN FRAME**	**1**			**X**	**X**	**(LONG TRACK)**
2	14M7277	NUT	6		X	X	X	M20
3	T175014	PLATE	1		X	X	X	(REAR ACCESS COVER)
4	24M7239	WASHER	4		X	X	X	10.700 X 21 X 2.500 MM
5	19M7402	CAP SCREW	4		X	X	X	M10 X 25
6	AT209414	GUARD	2		X	X	X	(REAR)
7	24M7028	WASHER	20		X	X	X	10.500 X 20 X 2 MM
8	AT209415	GUARD	1		X	X	X	(CENTER)
9	AT208566	GUARD	1		X	X	X	(FORWARD)
10	T175248	PLATE	1		X	X	X	(OIL ACCESS COVER)
11	19M7550	CAP SCREW	20		X	X	X	M10 X 35
12	T148410	NUT	6		X	X	X	
13	T213123	PLATE	2		X	X		(RIPPER SHIMS FOR CONVERTING H RIPPERS TO J CRAWLERS AND EARLY J CRAWLERS) (ORDER OTHER RIPPER COMPONENTS FROM WELDCO BEALES)
	T213123	PLATE	4				X	(RIPPER SHIMS FOR CONVERTING H RIPPERS TO J CRAWLERS AND EARLY J CRAWLERS) (ORDER OTHER RIPPER COMPONENTS FROM WELDCO BEALES)
14	19M8639	CAP SCREW	18		X	X		M20 X 70
	19M7963	CAP SCREW	18				X	M20 X 100

FRONT COUNTERWEIGHT
CONTREPOIDS AVANT
CONTRAPESO DELANTERO

T201560 -UN-13JUL04

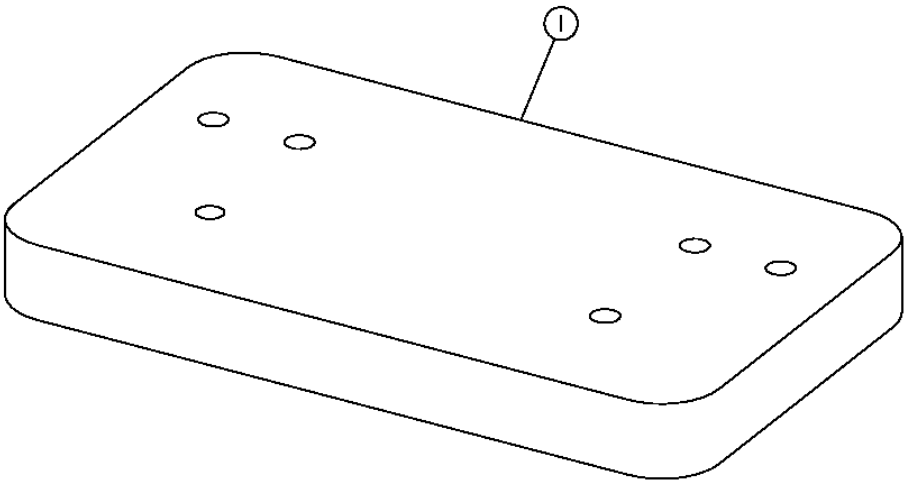

T201560

FRONT COUNTERWEIGHT
CONTREPOIDS AVANT
CONTRAPESO DELANTERO

KEY	PART NO.	PART NAME	QTY.	SERIAL NO.	450 550 650 J J J	REMARKS
1	AT309492	COUNTERWEIGHT	1		X X X	(FIELD KIT) (WHOLEGOODS)
2	24M7242	WASHER	6		X X X	21.400 X 42 X 5 MM, (NOT ILLUSTRATED)
3	19M8147	CAP SCREW	6		X X X	M20 X 90, (NOT ILLUSTRATED) (USE WITH ONE COUNTERWEIGHT)
	19M8026	CAP SCREW	6		X X X	(NOT ILLUSTRATED) (USE WITH TWO COUNTERWEIGHTS)
	19M8415	CAP SCREW	6		X X X	M20 X 260, (NOT ILLUSTRATED) (USE WITH THREE COUNTERWEIGHTS)

REAR COUNTERWEIGHT
CONTREPOIDS ARRIERE
CONTRAPESO TRASERO

TP52098 -UN-18DEC98

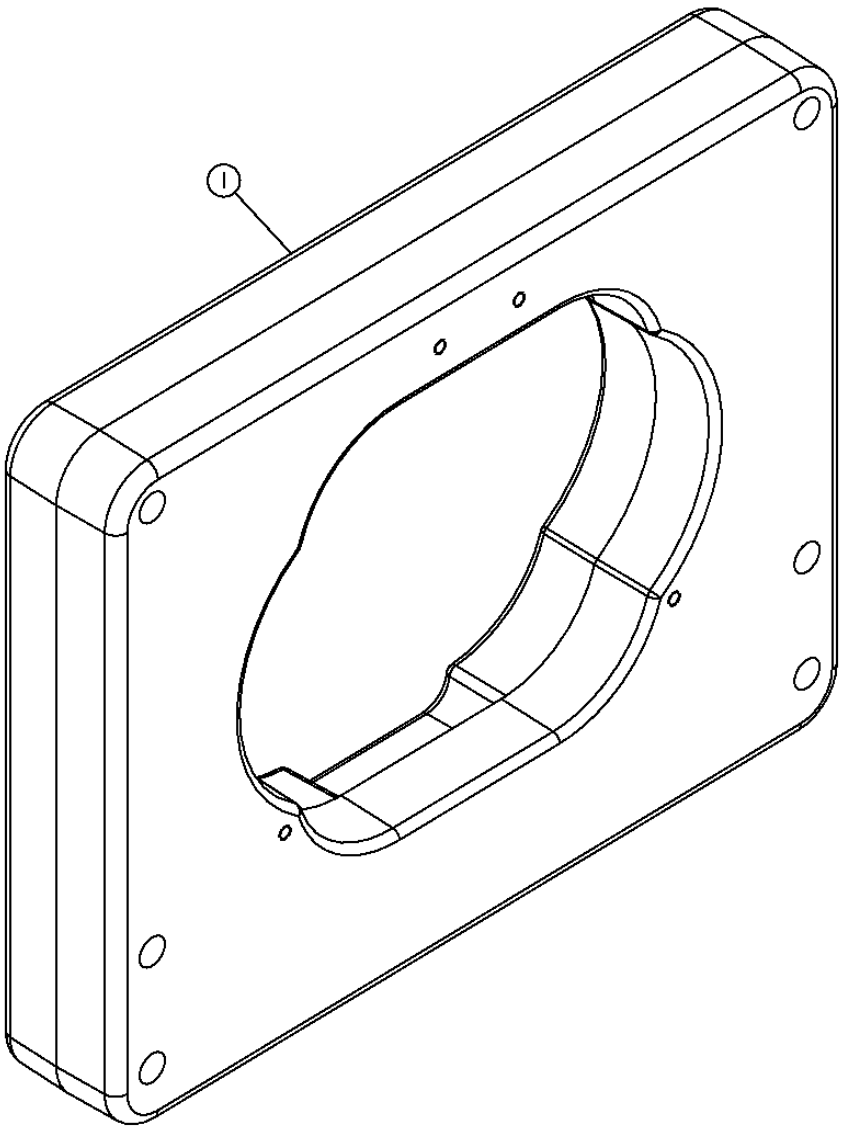

TP52098

REAR COUNTERWEIGHT
CONTREPOIDS ARRIERE
CONTRAPESO TRASERO

KEY	PART NO.	PART NAME	QTY.	SERIAL NO.	450J	550J	650J	REMARKS
1	T174346	PLATE	1		X	X	X	
2	24M7090	WASHER	6		X	X	X	22 X 37 X 3 MM, (NOT ILLUSTRATED)
3	19M7907	SCREW	6		X	X	X	M20 X 140, (NOT ILLUSTRATED)

CAB NOISE REDUCTION FOAM
MOUSSE DINSONORISATION DE CABINE
ESPUMA REDUCTORA DE RUIDO DE CABINA

T214141 -UN-08SEP05

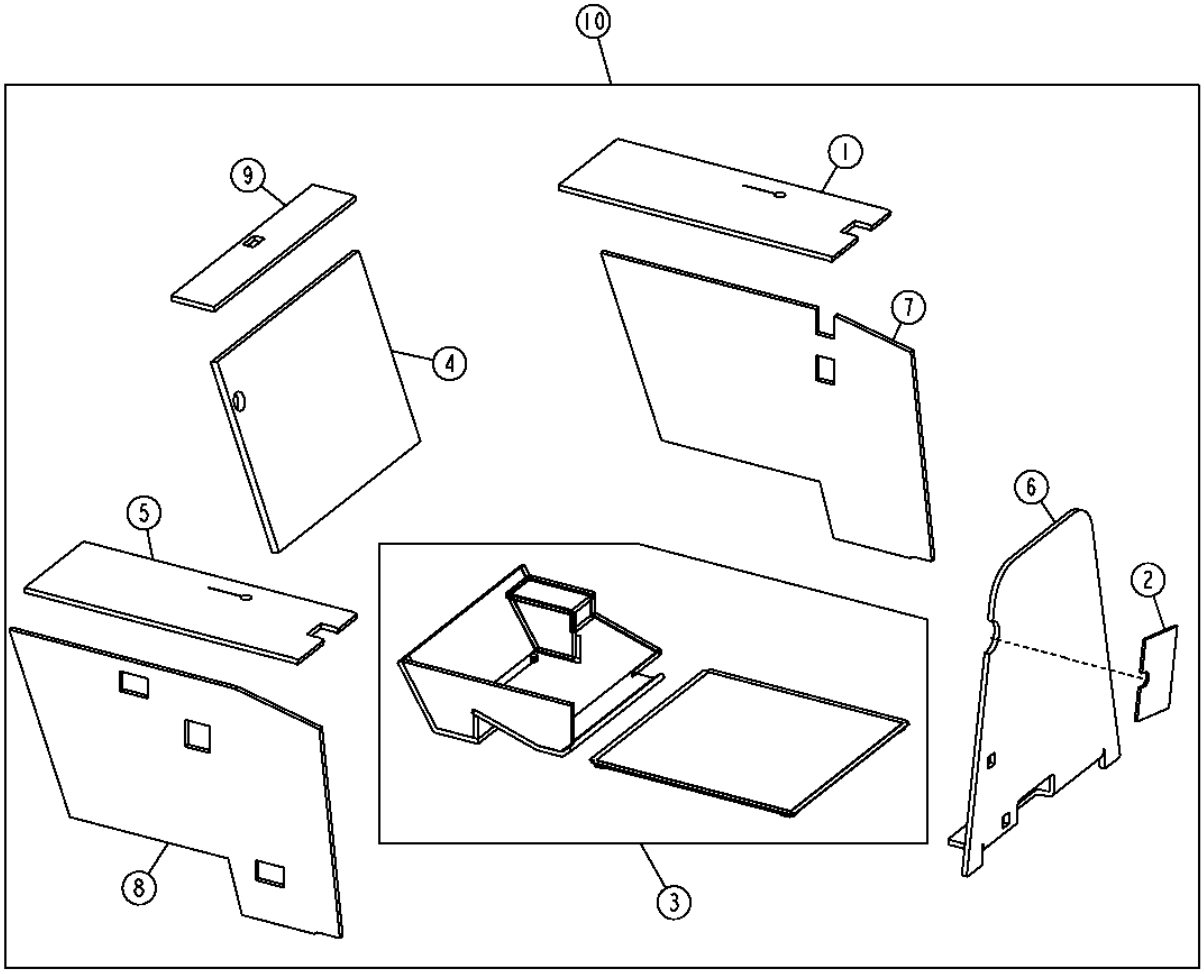

T214141

CAB NOISE REDUCTION FOAM
MOUSSE DINSONORISATION DE CABINE
ESPUMA REDUCTORA DE RUIDO DE CABINA

KEY	*PART NO.*	*PART NAME*	*QTY.*	*SERIAL NO.*	*REMARKS*
1	T213934	ISOLATOR	1		(FOAM) (ALSO REQUIRES AT317949)
2	T210591	PAD	1		(FOAM) (ALSO REQUIRES AT317949)
3	AT316482	ISOLATOR	1		(FOAM) (UNDER SEAT HEATER ASSEMBLY) (ALSO REQUIRES AT317949)
4	T179923	ISOLATOR	1		(FOAM) (ALSO REQUIRES AT317949)
5	T213931	ISOLATOR	2		(FOAM) (ALSO REQUIRES AT317949)
6	T213889	ISOLATOR	1	-127710	(FOAM) (ALSO REQUIRES AT317949)
	T224587	ISOLATOR	1	127711-	
7	T213898	ISOLATOR	1		(FOAM) (ALSO REQUIRES AT317949)
8	T213899	ISOLATOR	1		(FOAM) (ALSO REQUIRES AT317949)
9	T213900	ISOLATOR	1		(FOAM) (ALSO REQUIRES AT317949)
10	**AT318780**	**FIELD INSTALLATION KIT**	**1**		**(ALSO REQUIRES AT317949 SPRAY ADHESIVE)**

ROPS COMPONENTS
COMPOSANTS D'ARCEAU DE SECURITE
COMPONENTES DE ROPS

T208799 -UN-25FEB05

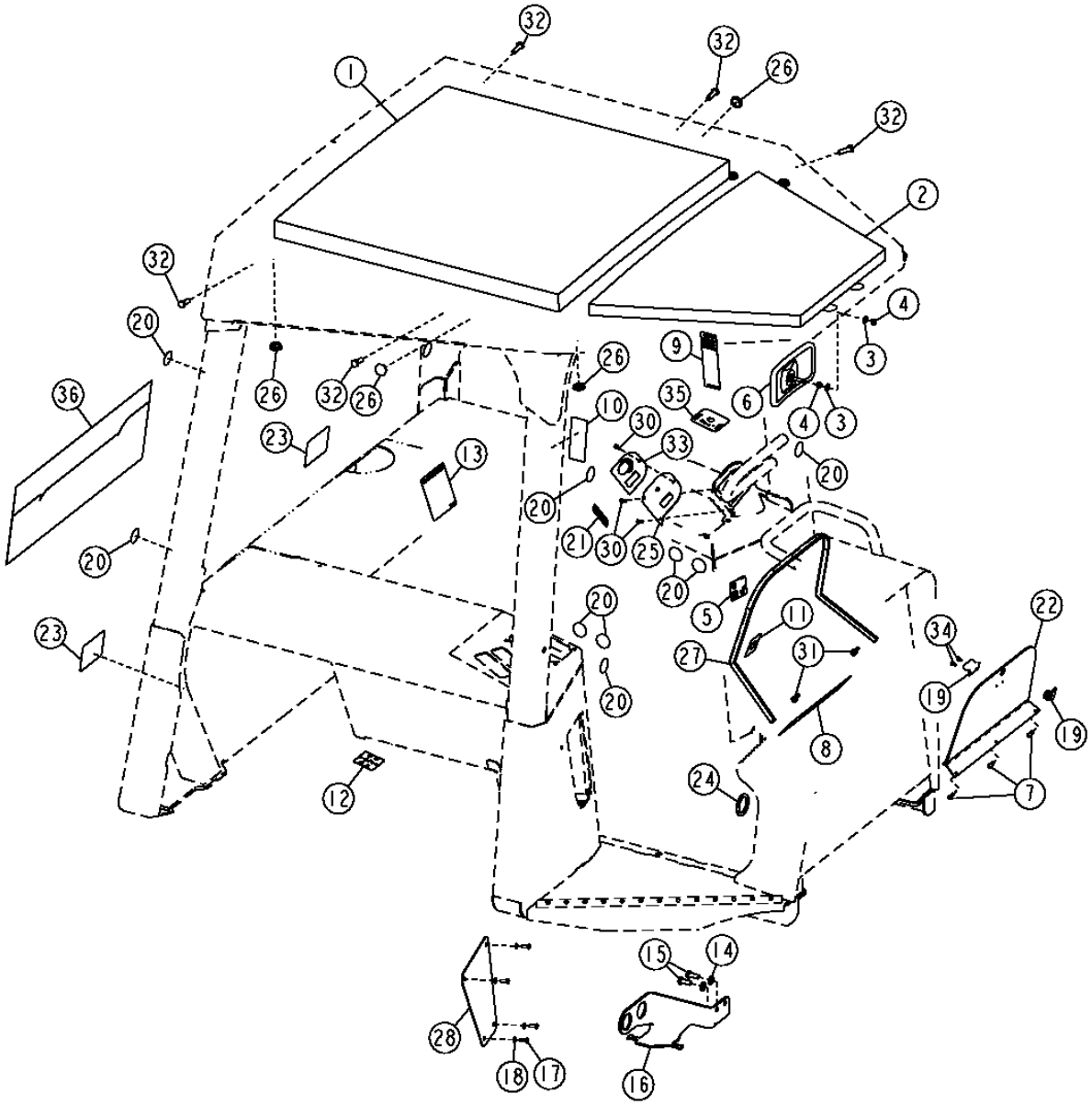

ROPS COMPONENTS
COMPOSANTS D'ARCEAU DE SECURITE
COMPONENTES DE ROPS

KEY	PART NO.	PART NAME	QTY.	SERIAL NO.	4 5 6 5 5 5 0 0 0 J J J	REMARKS
1	T176903	HEADLINER	1		X X X	(REAR)
2	T176904	HEADLINER	1		X X X	(FRONT)
3	24M7238	WASHER	2		X X X	8.700 X 17 X 2 MM
4	14H785	NUT	2		X X X	5/16"
5	T151711	LABEL	1		X X X	(PARK LOCK LEFT)
6	AT186760	REAR VIEW MIRROR	1		X X X	
7	19M6614	CAP SCREW	3		X X X	M6 X 12
8	T213861	LABEL	1		X X X	(SUB FOR T182033, THIS APPLICATION) (SAFETY START AND CAUTION)
9	T209418	LABEL	1		X X X	(ROPS)
10	T146097	LABEL	1		X X X	(WARNING) (SEAT BELT)
11	T157172	LABEL	1		X X X	(KEY START)
12	T177890	LABEL	1		X X X	(HYDRAULIC 6-WAY BLADE)
13	T178472	LABEL	1		X X X	(SEAT BASE TILT PROCEDURE)
14	24M7239	WASHER	2		X X X	10.700 X 21 X 2.500 MM
15	19M7402	CAP SCREW	2		X X X	M10 X 25
16	T174600	BRACKET	1		X X X	(BULKHEAD)
17	19M8425	CAP SCREW	4		X X X	M6 X 16
18	24M7293	WASHER	4		X X X	6.500 X 13 X 1.600 MM
19	AT141724	LOCK	1		X X X	(VANDAL COVER CAM CYLINDER LOCK)
20	T186793	LABEL	14		X X X	(GREY CIRCLE)
21	T214364	LABEL	1		X X X	(COLD START/WARM UP)
22	AT304200	COVER	1		X X X	(VANDAL)
23	JD5902	REFLECTOR	2		X X X	(RED REFLECTOR MARKER)
24	R50406	O-RING	1		X X X	42.164 X 6.985 MM
25	T201606	PLATE	1		X X X	(SWITCH FACE)
26	T152230	PLUG	8		X X X	
27	T204691	ISOLATOR	1		X X X	
28	T205289	PANEL	1		X X X	(LOWER DASH)
29	T205726	LATCH	2		X X X	(VANDAL) (NOT ILLUSTRATED)
30	21M7265	SCREW	3		X X X	M5 X 12, (SUB FOR TCU14336, THIS APPLICATION)
31	U43021	BUMPER	2		X X X	
32	19M7662	CAP SCREW	6		X X X	M10 X 30
33	T209860	LABEL	1		X X X	(SYSTEM WARMUP-ENGINE SPEED)
34	R54477	RIVET	2		X X X	
35	AT306587	LABEL	1		X X X	(REVERSE SPEED)
36	T204683	LABEL	1		X X X	(DEERE)

CAB COMPONENTS (SN -XXXXXX)
COMPOSANTS DE CABINE (SN -XXXXXX)
COMPONENTES DE CABINA (SN -XXXXXX)

T210837 -UN-09MAY05

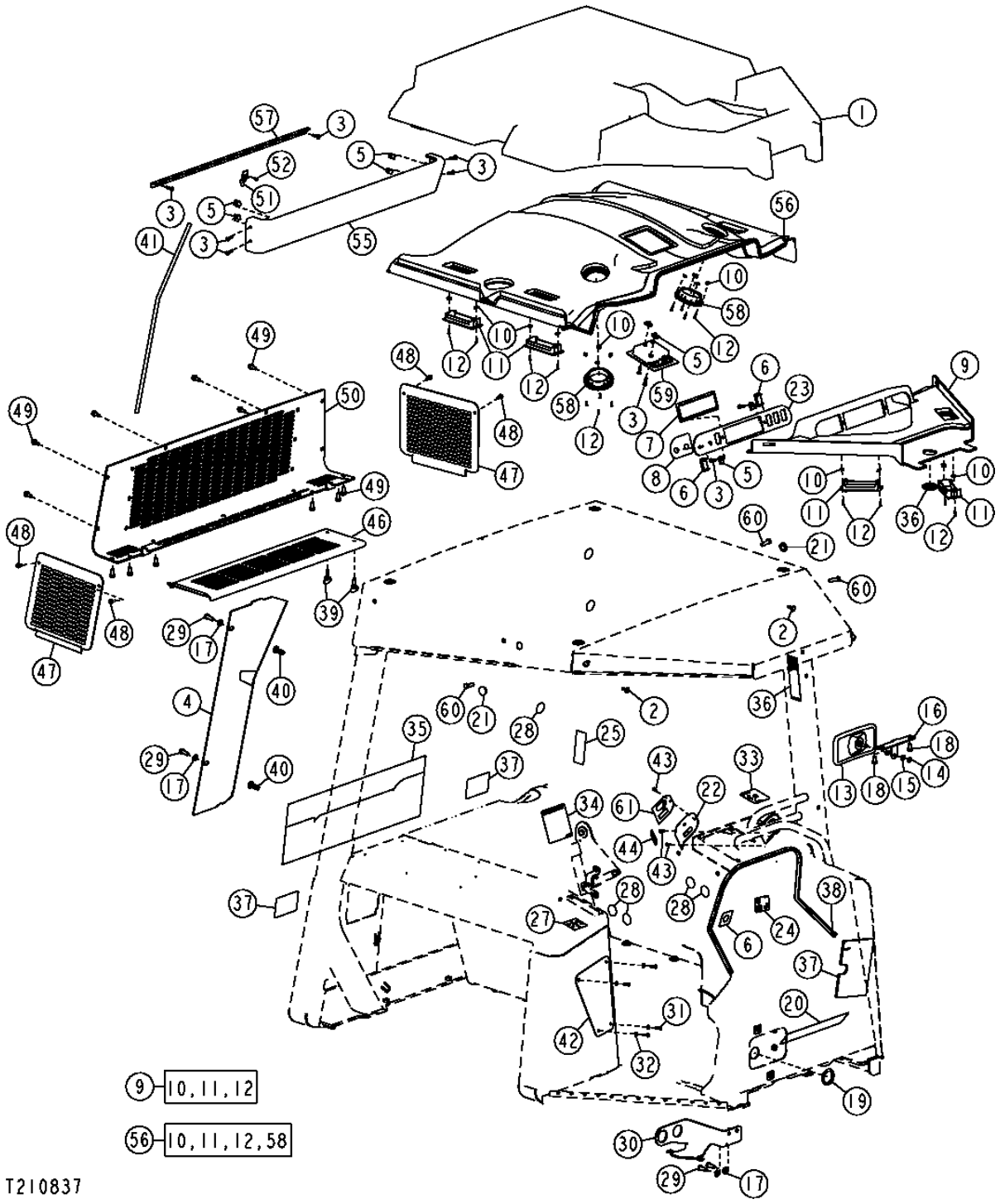

CAB COMPONENTS (SN -XXXXXX)
COMPOSANTS DE CABINE (SN -XXXXXX)
COMPONENTES DE CABINA (SN -XXXXXX)

KEY	PART NO.	PART NAME	QTY.	SERIAL NO.	456 550 JJJ	REMARKS
1	T174490	ISOLATOR	1		X X X	(FOAM DUCTWORK)
2	T177169	CLIP	2		X X X	(CHRISTMAS TREE)
3	T134895	SELF-LOCKING SCREW	10		X X X	
4	AT306611	COVER	1		X X X	(ELECTRONIC SWITCH OVERHEAD CONTROL PANEL)
5	M84972	NUT	8		X X X	
6	M115279	PLUG	3		X X X	
7	T175963	PLATE	1		X X X	(RADIO BLANKING)
8	T180755	LABEL	1		X X X	(HEATER AND FAN CONTROL)
9	AT324136	HEADLINER	1		X X X	(SUB FOR AT221051 AND AT313496) (FRONT WITH LOUVERS) (INCLUDES PARTS MARKED (A))
10	T159946	NUT	20		X X X	(A) (B) (SPECIAL)
11	AT177227	LOUVER	6		X X X	(A) (B) (RECTANGULAR)
12	T159945	SCREW	20		X X X	(A) (B)
13	AT186760	REAR VIEW MIRROR	1		X X X	
14	14H785	NUT	2		X X X	5/16"
15	24M7238	WASHER	2		X X X	8.700 X 17 X 2 MM
16	T177568	BRACKET	1		X X X	
17	24M7239	WASHER	6		X X X	10.700 X 21 X 2.500 MM
18	19M8324	CAP SCREW	2		X X X	M10 X 16
19	R50406	O-RING	1		X X X	
20	T213861	LABEL	1		X X X	(SUB FOR T182033, THIS APPLICATION) (SAFETY START AND CAUTION)
21	T152230	PLUG	2		X X X	
22	T201606	PLATE	1		X X X	(SWITCH)
23	T203512	COVER	1		X X X	(RADIO)
24	T151711	LABEL	1		X X X	(PARK LOCK LEFT)
25	T146097	LABEL	1		X X X	(WARNING) (SEAT BELT)
26	T157172	LABEL	1		X X X	(KEY START)
27	T177890	LABEL	1		X X X	(HYDRAULIC 6-WAY BLADE)
28	T186793	LABEL	4		X X X	(GRAY CIRCLE)
29	19M7402	CAP SCREW	4		X X X	M10 X 25
30	T174600	BRACKET	1		X X X	(BULKHEAD)
31	19M8425	CAP SCREW	5		X X X	M6 X 16
32	24M7293	WASHER	4		X X X	6.500 X 13 X 1.600 MM
33	AT306587	LABEL	1		X X X	(REVERSE SPEED)
34	T178472	LABEL	1		X X X	(SEAT BASE TILT PROCEDURE)
35	TT206940	LAMP	1		X X X	(INCLUDES TT207136) (INTERIOR LIGHT) (24 VOLT/10WATT)
	TT207136	BULB	1		X X X	(COMPONENT OF TT206940)
36	AT313962	LOUVER	1		X X X	(ROUND)
37	T210591	PAD	1		X X X	(FOAM INSULATION)

THIS PARTS LISTING IS CONTINUED

CAB COMPONENTS (SN -XXXXXX) (CONTINUED)
COMPOSANTS DE CABINE (SN -XXXXXX) (SUITE)
COMPONENTES DE CABINA (SN -XXXXXX) (CONTINUACION)

T208800 -UN-25FEB05

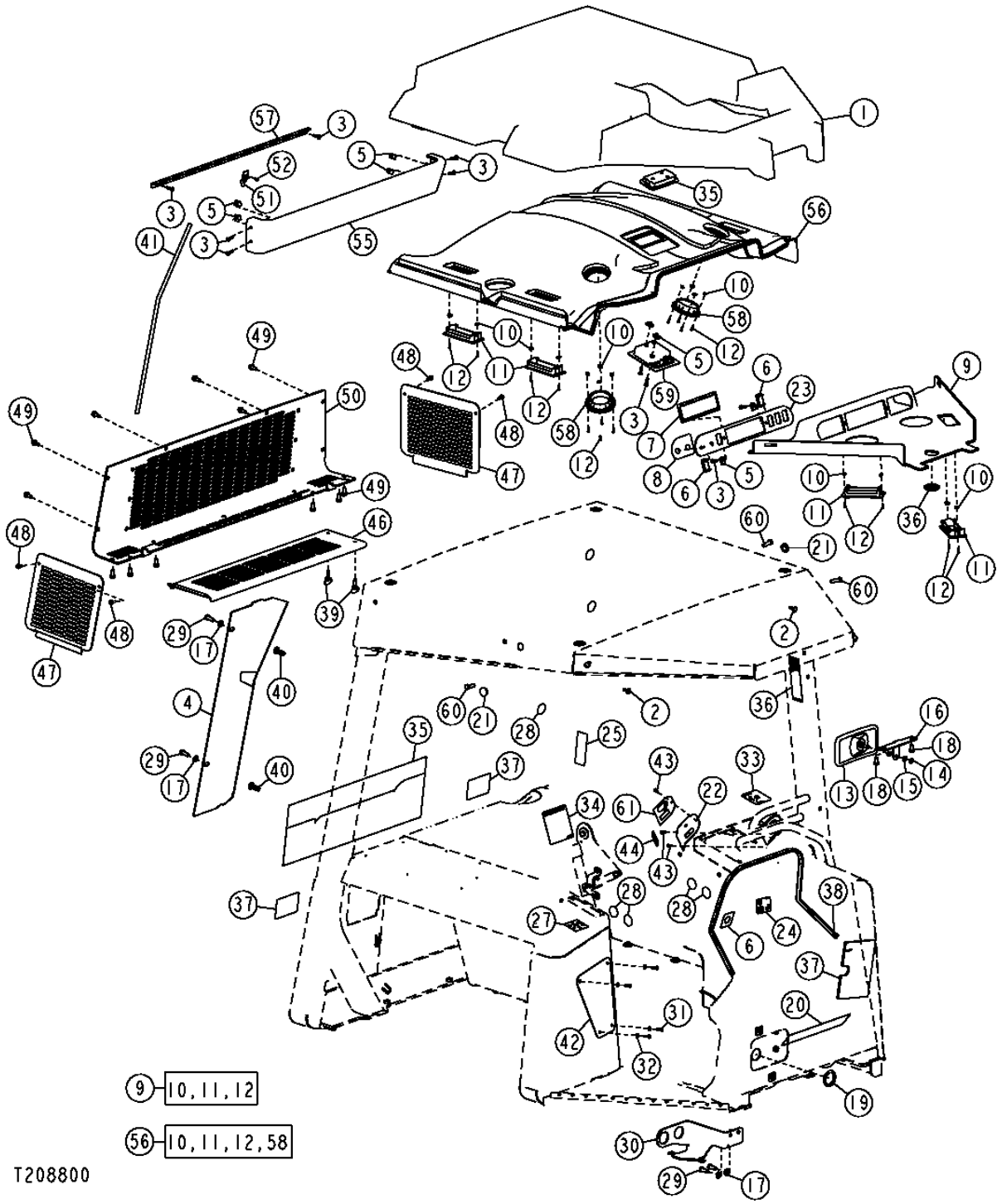

THIS PARTS LISTING IS CONTINUED

CAB COMPONENTS (SN -XXXXXX) (CONTINUED)
COMPOSANTS DE CABINE (SN -XXXXXX) (SUITE)
COMPONENTES DE CABINA (SN -XXXXXX) (CONTINUACION)

KEY	PART NO.	PART NAME	QTY.	SERIAL NO.	450 J	550 J	650 J	REMARKS
38	T204691	ISOLATOR	1		X	X	X	
39	T176296	WING SCREW	2		X	X	X	
40	T148409	NUT	2		X	X	X	
41	T176818	SEAL	1		X	X	X	
42	T176517	PLATE	1		X	X	X	(LOWER DASH PANEL) (FUSE COVER PLATE)
43	21M7265	SCREW	3		X	X	X	(SUB FOR TCU14336, THIS APPLICATION)
44	T214364	LABEL	1		X	X	X	(COLD START/WARM UP)
46	T178665	COVER	1	-XXXXXX	X	X	X	(FILTER COVER)
	T216631	COVER	1	XXXXXX-	X	X	X	
47	T176268	PLATE	1		X	X	X	(AIR CONDITIONER SIDE COVER) (RH)
	T176269	PLATE	1		X	X	X	(AIR CONDITIONER SIDE COVER) (LH)
48	19M7775	SCREW	4		X	X	X	M6 X 16
49	19M7866	SCREW	12		X	X	X	M8 X 20
50	T176270	PLATE	1		X	X	X	(AIR CONDITIONER REAR COVER)
51	AT221228	CLIP	1		X	X	X	
52	R54477	RIVET	1		X	X	X	
53	AT208495	ANTENNA	1		X	X	X	(NOT INCLUDED WITH MISCELLANEOUS CAB PARTS) (MUST BE SERVICED BY ITSELF OR WITH RADIO)
54	T176820	GROMMET	1		X	X	X	(NOT INCLUDED WITH MISCELLANEOUS CAB PARTS) (MUST BE SERVICED BY ITSELF OR WITH RADIO)
55	AT324134	COVER	1		X	X	X	(SUB FOR AT221055) (AIR RECIRCULATION)
56	AT324135	HEADLINER	1		X	X	X	(SUB FOR AT221049 AND AT313494) (REAR WITH LOUVERS) (INCLUDES PARTS MARKED (B))
57	T176888	PLATE	1		X	X	X	
58	AT151036	LOUVER	2		X	X	X	(B) (DEFROST)
59	AT185500	LAMP	1		X	X	X	(DOME)
60	19M7662	CAP SCREW	4		X	X	X	M10 X 30
61	T209860	LABEL	1		X	X	X	(IN FRONT OF ENGINE SPEED CONTROL POD) (SYSTEM WARM UP-ENGINE SPEED)
63	T204683	LABEL	1		X	X	X	(DEERE) (BACK OF FUEL TANK)
64	T209418	LABEL	1		X	X	X	(ROPS) (ON ROPS POST)
65	JD5902	REFLECTOR	2		X	X	X	(RED REFLECTOR MARKER)

CAB COMPONENTS (SN XXXXXX-)
COMPOSANTS DE CABINE (SN XXXXXX-)
COMPONENTES DE CABINA (SN XXXXXX-)

T214464 -UN-15SEP05

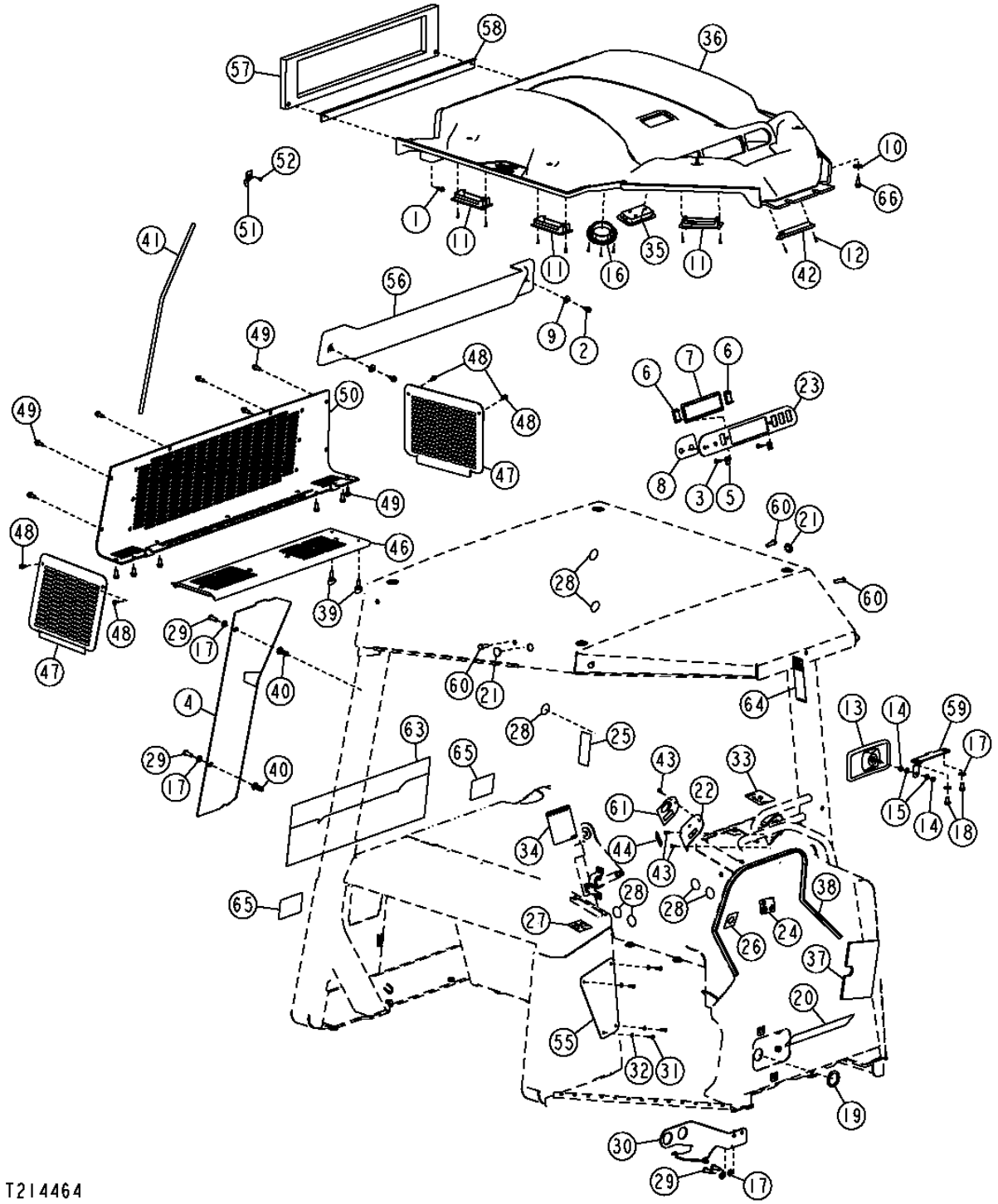

THIS PARTS LISTING IS CONTINUED

CAB COMPONENTS (SN XXXXXX-)
COMPOSANTS DE CABINE (SN XXXXXX-)
COMPONENTES DE CABINA (SN XXXXXX-)

KEY	PART NO.	PART NAME	QTY.	SERIAL NO.	456 555 000 JJJ	REMARKS
1	19M7863	SCREW	2		X X X	M6 X 25
2	19M7865	SCREW	2		X X X	M8 X 16
3	T134895	SELF-LOCKING SCREW	10		X X X	
4	AT306611	COVER	1		X X X	(ELECTRONIC SWITCH OVERHEAD CONTROL PANEL)
5	M84972	NUT	2		X X X	
6	M115279	PLUG	3		X X X	
7	T175963	PLATE	1		X X X	(RADIO BLANKING)
8	T180755	LABEL	1		X X X	(HEATER AND FAN CONTROL)
9	24M7207	WASHER	2		X X X	8.400 X 24 X 2 MM
10	24M7296	WASHER	6		X X X	10.500 X 30 X 2.500 MM
11	AT227669	LOUVER	6		X X X	
12	37M7333	SCREW	22		X X X	
13	AT186760	REAR VIEW MIRROR	1		X X X	
14	14H785	NUT	2		X X X	5/16"
15	24M7238	WASHER	2		X X X	8.700 X 17 X 2 MM
16	AT227669	LOUVER	2		X X X	
17	24M7239	WASHER	6		X X X	10.700 X 21 X 2.500 MM
18	19M8324	CAP SCREW	2		X X X	M10 X 16
19	R50406	O-RING	1		X X X	
20	T213861	LABEL	1		X X X	(SAFETY START AND CAUTION)
21	T152230	PLUG	2		X X X	
22	T201606	PLATE	1		X X X	(SWITCH)
23	T203512	COVER	1		X X X	(RADIO)
24	T151711	LABEL	1		X X X	(PARK LOCK LEFT)
25	T146097	LABEL	1		X X X	(WARNING) (SEAT BELT)
26	T157172	LABEL	1		X X X	(KEY START)
27	T177890	LABEL	1		X X X	(HYDRAULIC 6-WAY BLADE)
28	T186793	LABEL	4		X X X	(GRAY CIRCLE)
29	19M7402	CAP SCREW	4		X X X	M10 X 25
30	T174600	BRACKET	1		X X X	(BULKHEAD)
31	19M8425	CAP SCREW	4		X X X	M6 X 16
32	24M7293	WASHER	4		X X X	6.500 X 13 X 1.600 MM
33	AT306587	LABEL	1		X X X	(REVERSE SPEED)
34	T178472	LABEL	1		X X X	(SEAT BASE TILT PROCEDURE)
35	TT206940	LAMP	1		X X X	(INCLUDES TT207136) (INTERIOR LIGHT) (24VOLT/10WATT)
	TT207136	BULB	1		X X X	(COMPONENT OF TT206940)
36	AT322708	HEADLINER	1		X X X	
37	T210591	PAD	1		X X X	(FOAM INSULATION)

THIS PARTS LISTING IS CONTINUED

CAB COMPONENTS (SN XXXXXX-) (CONTINUED)
COMPOSANTS DE CABINE (SN XXXXXX-) (SUITE)
COMPONENTES DE CABINA (SN XXXXXX-) (CONTINUACION)

T214464 -UN-15SEP05

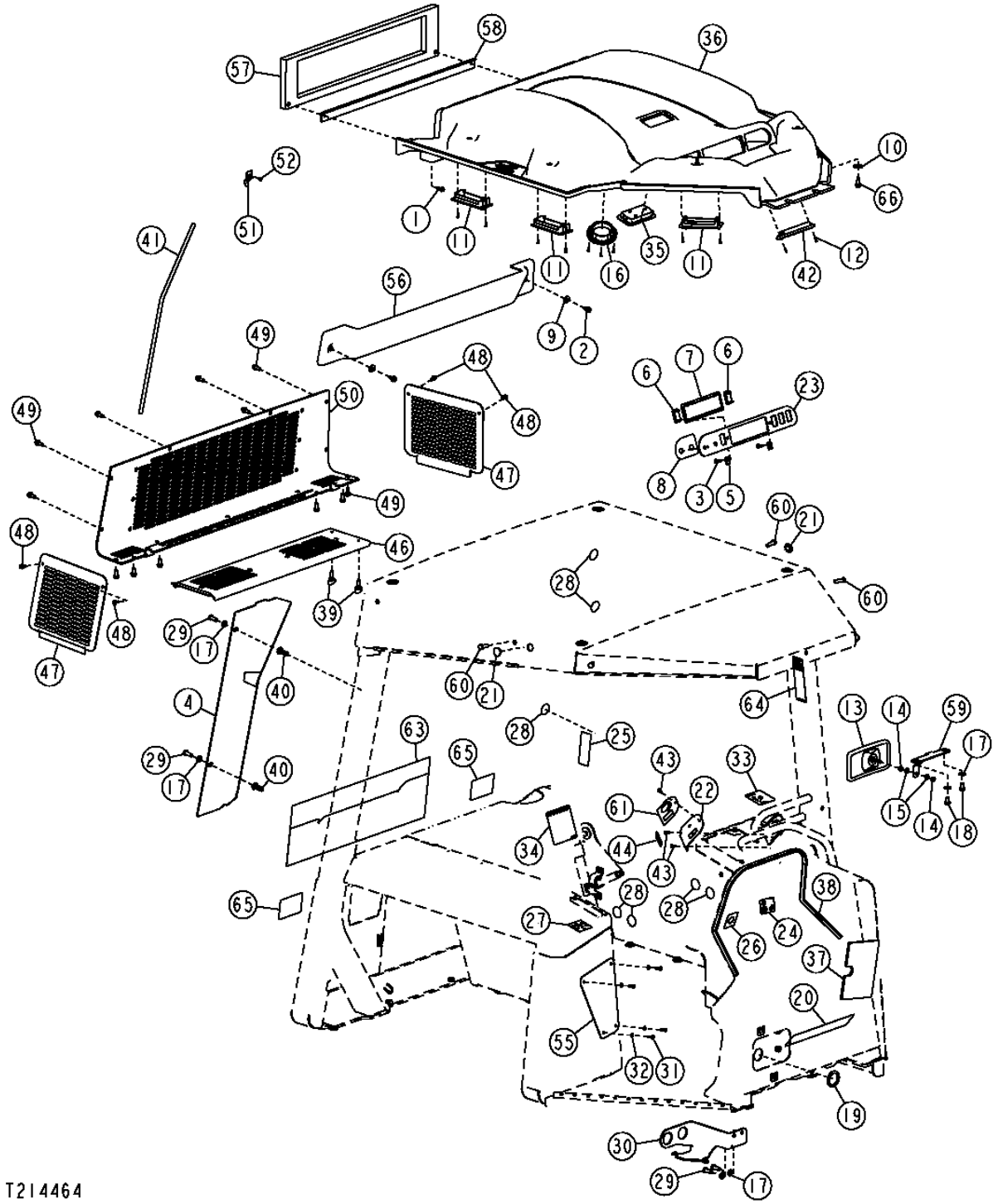

THIS PARTS LISTING IS CONTINUED

CAB COMPONENTS (SN XXXXXX-) (CONTINUED)
COMPOSANTS DE CABINE (SN XXXXXX-) (SUITE)
COMPONENTES DE CABINA (SN XXXXXX-) (CONTINUACION)

KEY	PART NO.	PART NAME	QTY.	SERIAL NO.	450J	550J	650J	REMARKS
38	T204691	ISOLATOR	1		X	X	X	
39	T176296	WING SCREW	2		X	X	X	
40	T148409	NUT	2		X	X	X	
41	T176818	SEAL	1		X	X	X	
42	AZ43305	NOZZLE	1		X	X	X	
43	21M7265	SCREW	3		X	X	X	
44	T214364	LABEL	1		X	X	X	(COLD START/WARM UP)
46	T216631	COVER	1		X	X	X	
47	T176268	PLATE	1		X	X	X	(AIR CONDITIONER SIDE COVER) (RH)
	T176269	PLATE	1		X	X	X	(AIR CONDITIONER SIDE COVER) (LH)
48	19M7775	SCREW	4		X	X	X	M6 X 16
49	19M7866	SCREW	18		X	X	X	M8 X 20
50	T176270	PLATE	1		X	X	X	(AIR CONDITIONER REAR COVER)
51	AT221228	CLIP	1		X	X	X	
52	R54477	RIVET	1		X	X	X	
53	AT208495	ANTENNA	1		X	X	X	(NOT INCLUDED WITH MISCELLANEOUS CAB PARTS) (MUST BE SERVICED BY ITSELF OR WITH RADIO)
54	T176820	GROMMET	1		X	X	X	(NOT INCLUDED WITH MISCELLANEOUS CAB PARTS) (MUST BE SERVICED BY ITSELF OR WITH RADIO)
55	T205289	PANEL	1		X	X	X	(SUB FOR AT221055) (LOWER DASH) (FUSE BLOCK LABEL MUST ALSO BE ORDERED)
56	T217327	COVER	1		X	X	X	(RECIRCULATING)
57	T218063	ISOLATOR	1		X	X	X	(FOAM)
58	T218435	PLATE	1		X	X	X	
59	T218457	BRACKET	1		X	X	X	(MIRROR)
60	19M7662	CAP SCREW	4		X	X	X	M10 X 30
61	T209860	LABEL	1		X	X	X	(IN FRONT OF ENGINE SPEED CONTROL POD) (SYSTEM WARM UP-ENGINE SPEED)
63	T204683	LABEL	1		X	X	X	(DEERE) (BACK OF FUEL TANK)
64	T209418	LABEL	1		X	X	X	(ROPS) (ON ROPS POST)
65	JD5902	REFLECTOR	2		X	X	X	(RED REFLECTOR MARKER)

CAB COMPONENTS (SN XXXXXX-)
COMPOSANTS DE CABINE (SN XXXXXX-)
COMPONENTES DE CABINA (SN XXXXXX-)

TX1017910 -UN-26JAN07

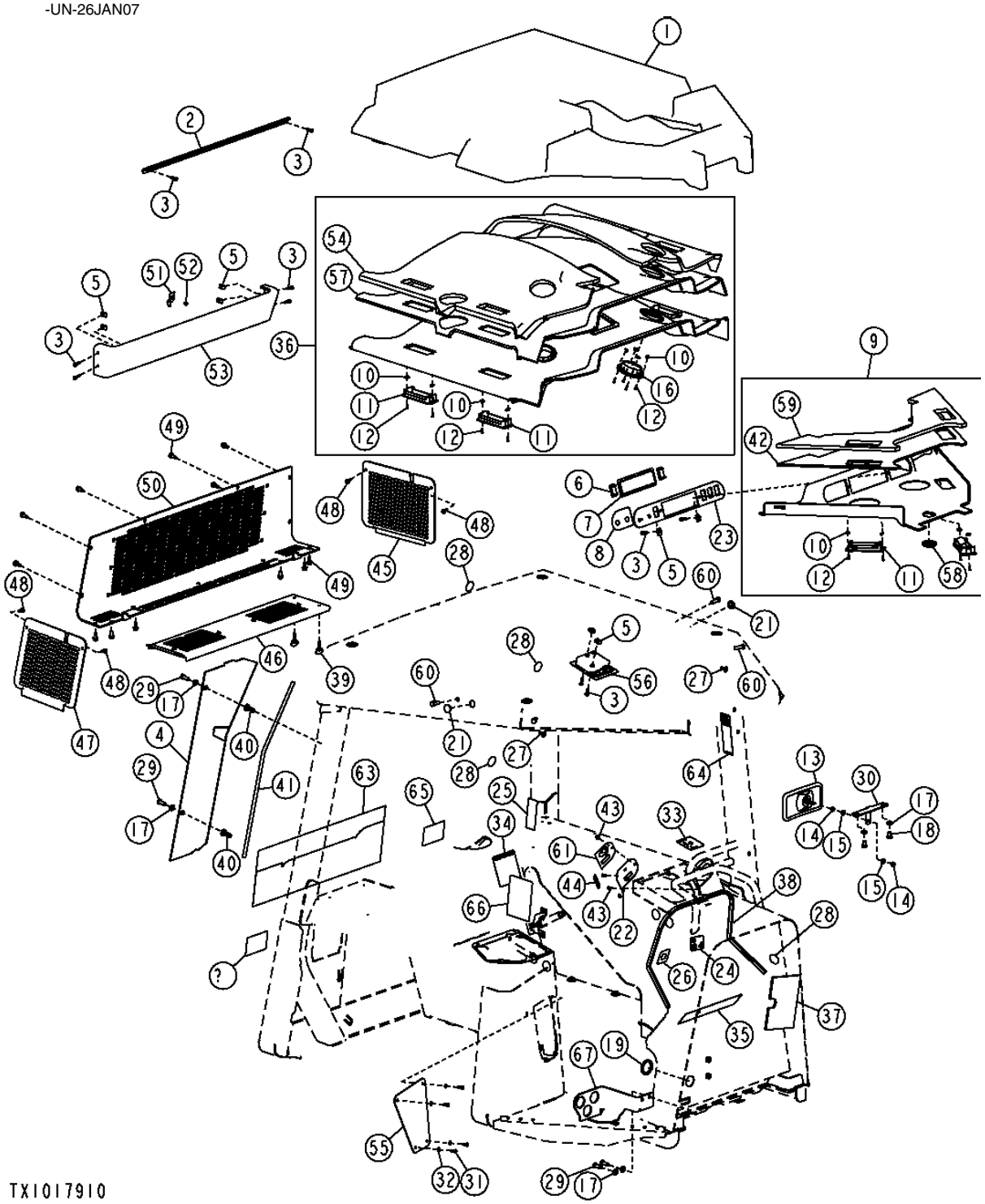

THIS PARTS LISTING IS CONTINUED

CAB COMPONENTS (SN XXXXXX-)
COMPOSANTS DE CABINE (SN XXXXXX-)
COMPONENTES DE CABINA (SN XXXXXX-)

KEY	PART NO.	PART NAME	QTY.	SERIAL NO.	450 J	550 J	650 J	REMARKS
1	T174490	ISOLATOR	1		X	X	X	
2	T176888	PLATE	2		X	X	X	
3	T134895	SELF-LOCKING SCREW	10		X	X	X	
4	AT306611	COVER	1		X	X	X	(ELECTRONIC SWITCH OVERHEAD CONTROL PANEL)
5	M84972	NUT	2		X	X	X	
6	M115279	PLUG	3		X	X	X	
7	T175963	PLATE	1		X	X	X	(RADIO BLANKING)
8	T180755	LABEL	1		X	X	X	(HEATER AND FAN CONTROL)
9	AT324136	HEADLINER	1		X	X	X	
10	T159946	NUT	20		X	X	X	
11	AT177227	LOUVER	6		X	X	X	
12	T159945	SCREW	20		X	X	X	
13	AT186760	REAR VIEW MIRROR	1		X	X	X	
14	14H785	NUT	2		X	X	X	5/16"
15	24M7238	WASHER	2		X	X	X	8.700 X 17 X 2 MM
16	AT151036	LOUVER	2		X	X	X	
17	24M7239	WASHER	6		X	X	X	10.700 X 21 X 2.500 MM
18	19M8324	CAP SCREW	2		X	X	X	M10 X 16
19	R50406	O-RING	1		X	X	X	
20	T213861	LABEL	1		X	X	X	(SAFETY START AND CAUTION)
21	T152230	PLUG	2		X	X	X	
22	T201606	PLATE	1		X	X	X	(SWITCH)
23	T203512	COVER	1		X	X	X	(RADIO)
24	T151711	LABEL	1		X	X	X	(PARK LOCK LEFT)
25	T146097	LABEL	1		X	X	X	(WARNING) (SEAT BELT)
26	T157172	LABEL	1		X	X	X	(KEY START)
27	T177169	CLIP	2		X	X	X	
28	T186793	LABEL	4		X	X	X	(GRAY CIRCLE)
29	19M7402	CAP SCREW	4		X	X	X	M10 X 25
30	T177568	BRACKET	1		X	X	X	
31	19M8425	CAP SCREW	4		X	X	X	M6 X 16
32	24M7293	WASHER	4		X	X	X	6.500 X 13 X 1.600 MM
33	AT306587	LABEL	1		X	X	X	(REVERSE SPEED)
34	T178472	LABEL	1		X	X	X	(SEAT BASE TILT PROCEDURE)
35	T213861	LABEL	1		X	X	X	(CAUTION AND START)
36	AT324135	HEADLINER	1		X	X	X	
37	T210591	PAD	1		X	X	X	(FOAM INSULATION)

THIS PARTS LISTING IS CONTINUED

CAB COMPONENTS (SN XXXXXX-) (CONTINUED)
COMPOSANTS DE CABINE (SN XXXXXX-) (SUITE)
COMPONENTES DE CABINA (SN XXXXXX-) (CONTINUACION)

TX1017910 -UN-26JAN07

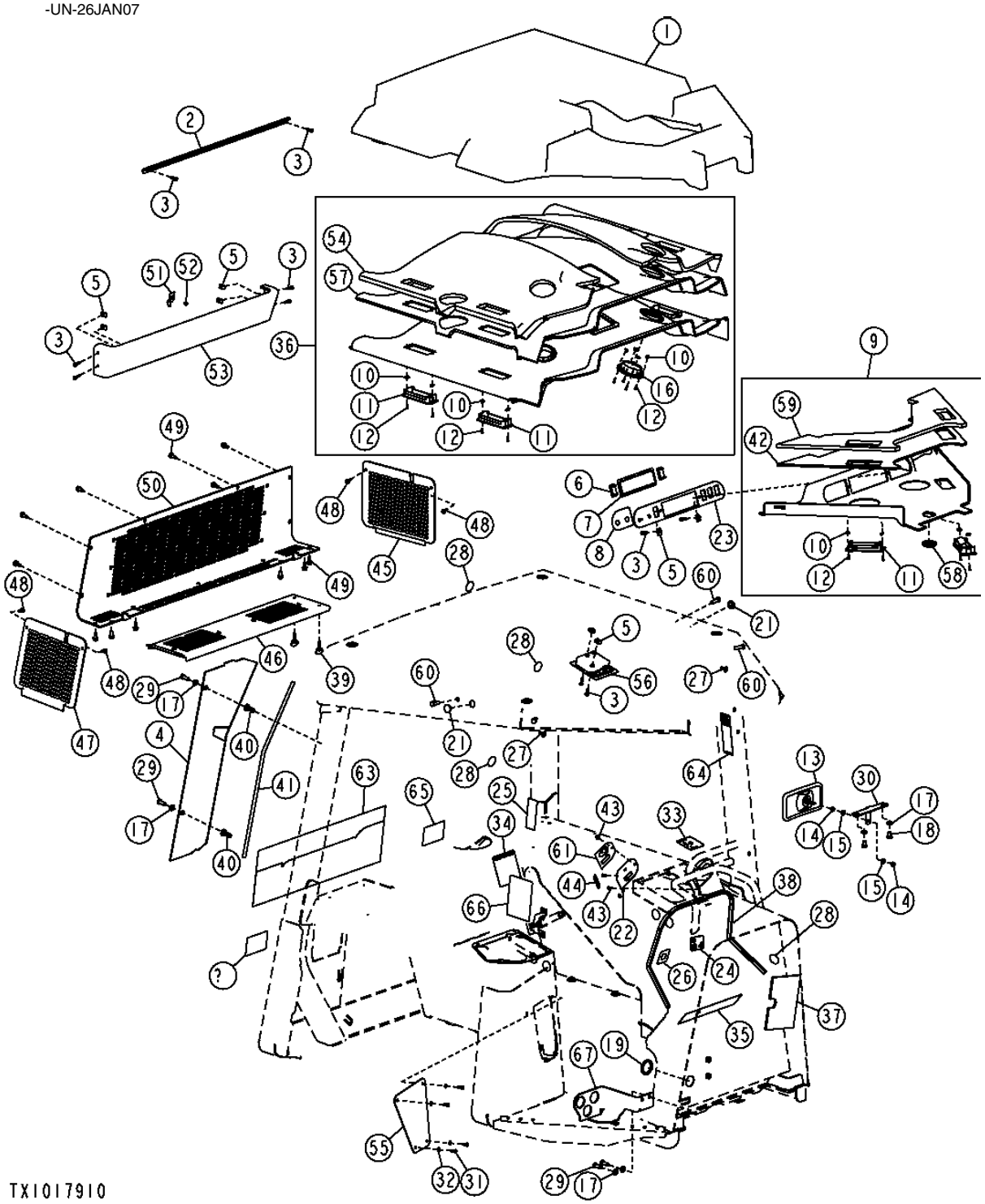

THIS PARTS LISTING IS CONTINUED

CAB COMPONENTS (SN XXXXXX-) (CONTINUED)
COMPOSANTS DE CABINE (SN XXXXXX-) (SUITE)
COMPONENTES DE CABINA (SN XXXXXX-) (CONTINUACION)

KEY	PART NO.	PART NAME	QTY.	SERIAL NO.	456 550 JJJ	REMARKS
38	T204691	ISOLATOR	1		X X X	
39	T176296	WING SCREW	2		X X X	
40	T148409	NUT	2		X X X	
41	T176818	SEAL	1		X X X	
42	T208921	ISOLATOR	1		X X X	(FRONT)
43	21M7265	SCREW	3		X X X	
44	T214364	LABEL	1		X X X	(COLD START/WARM UP)
46	T216631	COVER	1		X X X	
47	T176268	PLATE	1		X X X	(AIR CONDITIONER SIDE COVER) (RH)
	T176269	PLATE	1		X X X	(AIR CONDITIONER SIDE COVER) (LH)
48	19M7775	SCREW	4		X X X	M6 X 16
49	19M7866	SCREW	18		X X X	M8 X 20
50	T176270	PLATE	1		X X X	(AIR CONDITIONER REAR COVER)
51	AT221228	CLIP	1		X X X	
52	R54477	RIVET	1		X X X	
53	AT324134	COVER	1		X X X	
54	T208918	ISOLATOR	1		X X X	(REAR)
55	T205289	PANEL	1		X X X	(SUB FOR AT221055) (LOWER DASH) (FUSE BLOCK LABEL MUST ALSO BE ORDERED)
56	AT185500	LAMP	1		X X X	(DOME)
57	T208937	ISOLATOR	1		X X X	(REAR)
58	AT313962	LOUVER	1		X X X	
59	T208919	ISOLATOR	1		X X X	(FRONT)
60	19M7662	CAP SCREW	4		X X X	M10 X 30
61	T209860	LABEL	1		X X X	(IN FRONT OF ENGINE SPEED CONTROL POD) (SYSTEM WARM UP-ENGINE SPEED)
63	T204683	LABEL	1		X X X	(DEERE) (BACK OF FUEL TANK)
64	T209418	LABEL	1		X X X	(ROPS) (ON ROPS POST)
65	JD5902	REFLECTOR	2		X X X	(RED REFLECTOR MARKER)
66	T224137	LABEL	1		X X X	(BLADE JOYSTICK)
67	T224538	BRACKET	1		X X X	(BULKHEAD)

CAB AND ROPS FLOOR PLATES
PLAQUES DE PLANCHER DE CABINE ET DARCEAU DE SECURITE
PLANCHAS DEL PISO ROPS Y CABINA

T135508 -UN-14NOV00

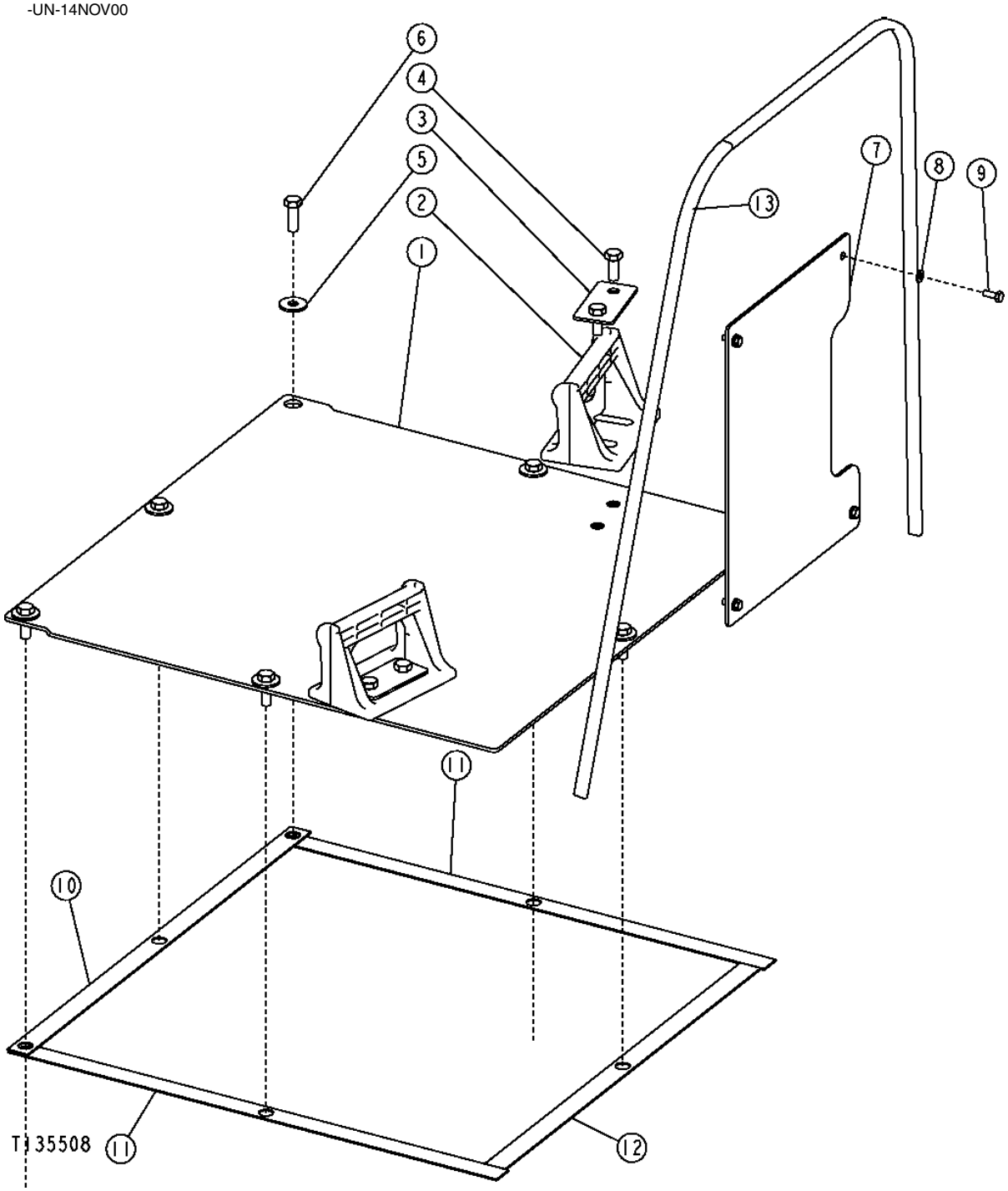

CAB AND ROPS FLOOR PLATES
PLAQUES DE PLANCHER DE CABINE ET DARCEAU DE SECURITE
PLANCHAS DEL PISO ROPS Y CABINA

KEY	PART NO.	PART NAME	QTY.	SERIAL NO.	450 J	550 J	650 J	REMARKS
1	AT210886	PLATE	1		X	X	X	
2	T174841	FOOTREST	2		X	X	X	
3	T175244	PLATE	2		X	X	X	(FOOTREST)
4	19M7402	CAP SCREW	4		X	X	X	M10 X 25
5	24M7296	WASHER	6		X	X	X	10.500 X 30 X 2.500 MM
6	19M7662	CAP SCREW	6		X	X	X	M10 X 30
7	T180942	PLATE	1		X	X	X	(FRONT ACCESS ON FIREWALL)
8	24M7293	WASHER	4		X	X	X	6.500 X 13 X 1.600 MM
9	19M7775	SCREW	4		X	X	X	M6 X 16
10	T176522	ISOLATOR	1		X	X	X	
11	T176523	ISOLATOR	2		X	X	X	
12	T176524	ISOLATOR	1		X	X	X	
13	T179732	ISOLATOR	1		X	X	X	

FLOOR MAT
TAPIS D'PLANCHER
FELPUDO DEL PISO

TX1004791 -UN-16MAR06

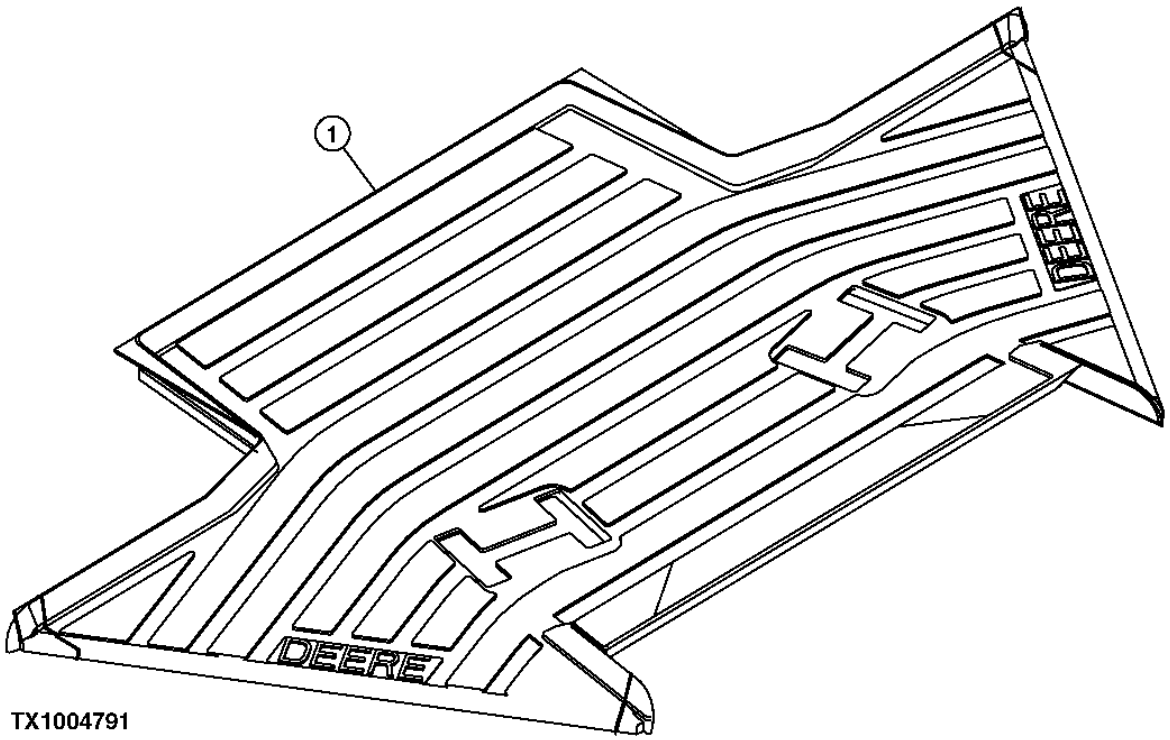

TX1004791

FLOOR MAT
TAPIS D'PLANCHER
FELPUDO DEL PISO

KEY	PART NO.	PART NAME	QTY.	SERIAL NO.	450 550 650 J J J	REMARKS
1	T172763	MAT	1		X X X	

OPERATOR STATION ACCESSORIES
ACCESSOIRES DU POSTE DE CONDUITE
ACCESORIOS DEL PUESTO DEL OPERADOR

TP67512 -UN-18MAY99

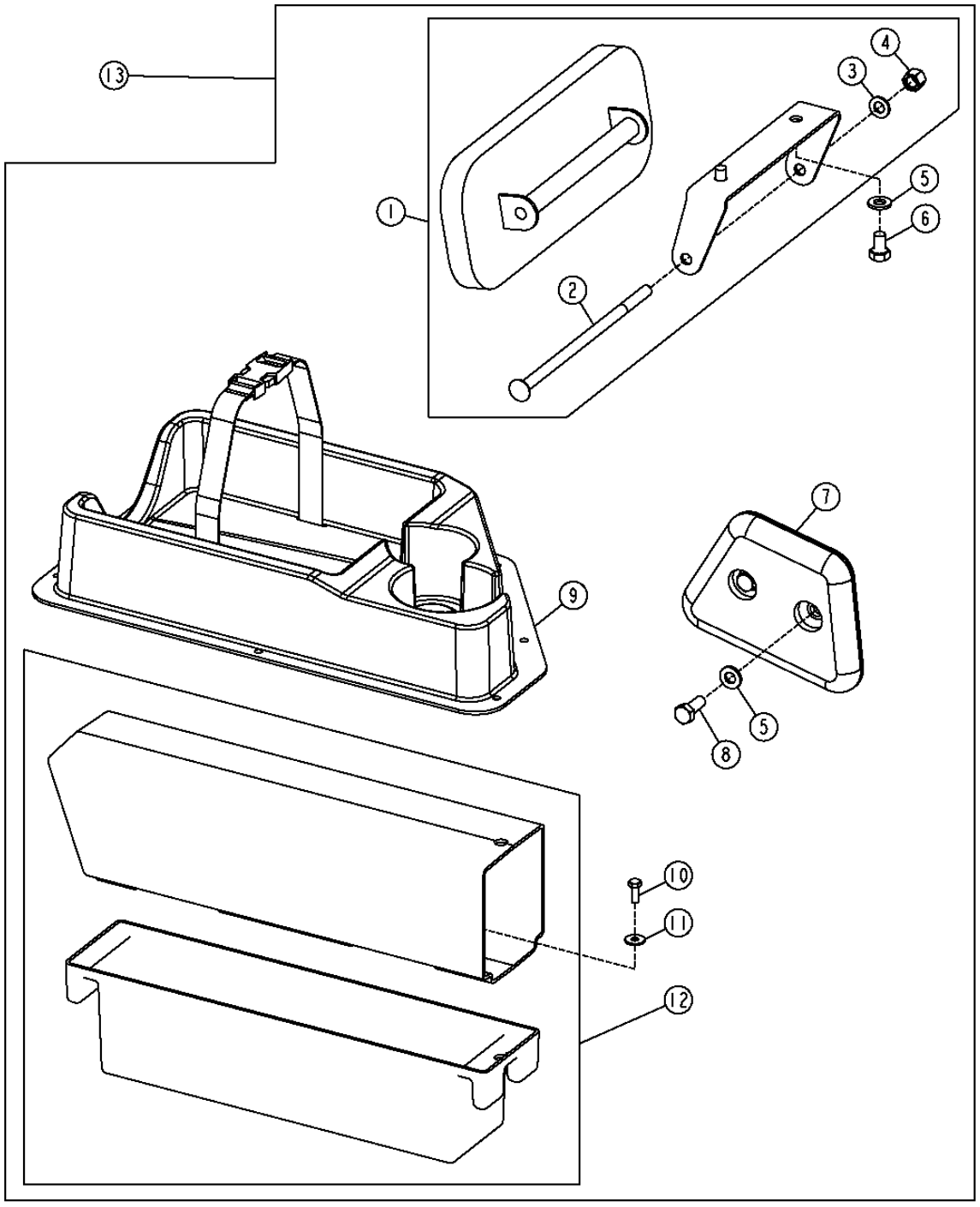

OPERATOR STATION ACCESSORIES
ACCESSOIRES DU POSTE DE CONDUITE
ACCESORIOS DE PUESTO DEL OPERADOR

KEY	PART NO.	PART NAME	QTY.	SERIAL NO.	455 000 JJJ	REMARKS
1	AT326272	REAR VIEW MIRROR	1	-XXXXXX	X X X	(ALSO ORDER (2) 19M7402 AND (2) 24M7239)
	AT326272	REAR VIEW MIRROR	1	XXXXXX-	X X X	
2	19H3392	CAP SCREW	1		X X X	9.525 X 228.600 MM, (CARRIAGE)
3	24M7028	WASHER	1		X X X	10.500 X 20 X 2 MM
4	T11234	LOCK NUT	1		X X X	9.525 MM
5	24M7239	WASHER	6		X X X	10.700 X 21 X 2.500 MM
6	19M8324	CAP SCREW	2		X X X	M10 X 16
7	AT220105	PAD	2		X X X	(ALSO ORDER (2) 19M7402 AND (2) 24M7239) (KNEE)
8	19M7402	CAP SCREW	4		X X X	M10 X 25
9	AT221283	HOLDER	1		X X X	(LUNCHBOX TRAY AND CUP) (USE (7) 37M7059 TO FASTEN)
	37M7059	SCREW	7		X X X	M5 X 12, (USE WITH AT221283)
10	19M8425	CAP SCREW	1		X X X	M6 X 16
11	24M7139	WASHER	1		X X X	6.400 X 18 X 1.600 MM
12	AT208436	TOOLBOX	1		X X X	(ALSO ORDER 24M7139 AND 19M8425)
13	**AT221574**	**KIT**	**1**		**X X X**	**(WHOLEGOODS) (CAB ACCESSORIES KIT)**

PLATFORM CORNER COVERS
PROTECTIONS DES COINS DE PLATE-FORME
CUBIERTAS DE ESQUINA DE PLATAFORMA

TP67579 -UN-01SEP99

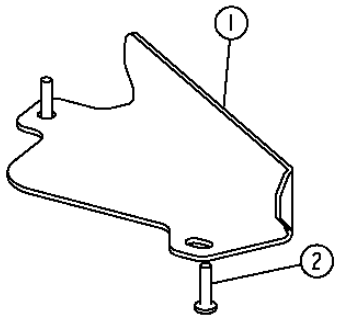

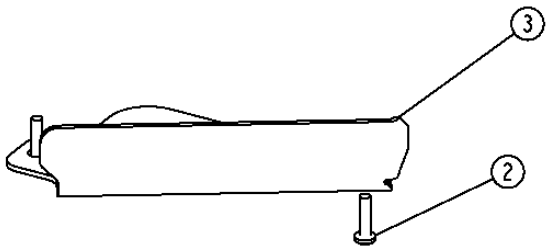

TP67579

THIS PARTS LISTING IS CONTINUED

PLATFORM CORNER COVERS
PROTECTIONS DES COINS DE PLATE-FORME
CUBIERTAS DE ESQUINA DE PLATAFORMA

KEY	PART NO.	PART NAME	QTY.	SERIAL NO.	450J	550J	650J	REMARKS
1	T176732	PLATE	1		X	X		
2	T134895	SELF-LOCKING SCREW	4		X	X		M6 X 25
3	T176731	PLATE	1		X	X		

ROPS STRUCTURE
STRUCTURE DARCEAU DE SECURITE
ESTRUTURA ROPS

T199125 -UN-27MAY04

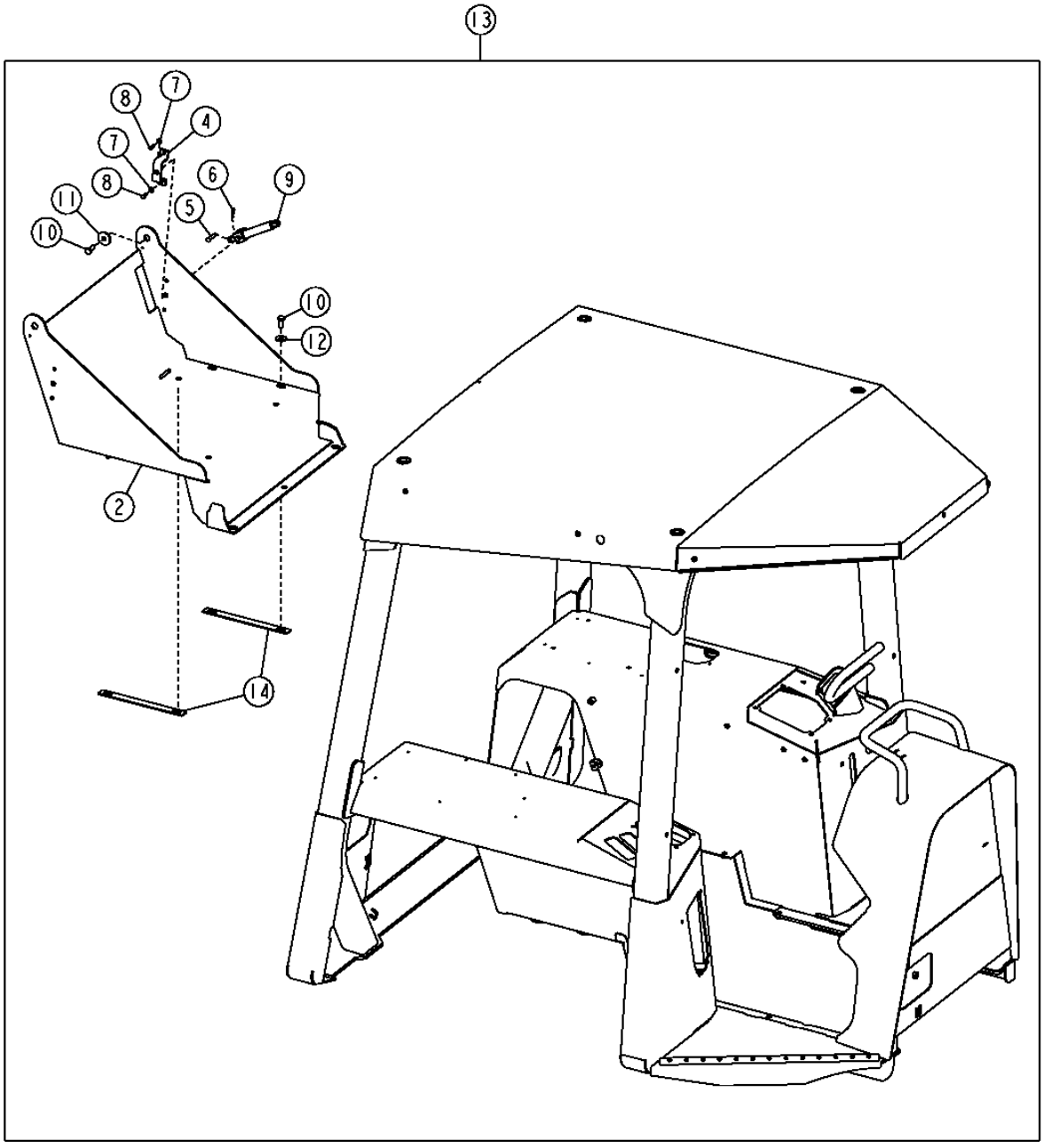

T199125

ROPS STRUCTURE
STRUCTURE DARCEAU DE SECURITE
ESTRUCTURA ROPS

KEY	PART NO.	PART NAME	QTY.	SERIAL NO.	450J	550J	650J	REMARKS
2	AT220265	BASE	1		X	X	X	(NON-HEATER SEAT)
	AT207486	BASE	1		X	X	X	(SEATBASE WITH HEATER)
4	T171778	BRACKET	1		X	X	X	(SEAT TILTING)
5	N31296	PIN FASTENER	1		X	X	X	(FLAT HEAD)
6	R46528	SPRING LOCKING PIN	1		X	X	X	(CLIP)
7	24M7293	WASHER	2		X	X	X	6.500 X 13 X 1.600 MM
8	19M8425	CAP SCREW	2		X	X	X	M6 X 16
9	AT209308	JACK	1		X	X	X	(SEAT JACK)
10	19M7402	CAP SCREW	6		X	X	X	M10 X 25
11	T171737	WASHER	2		X	X	X	(SPACER) (TILTING PIVOT)
12	24M7178	WASHER	4		X	X	X	10.500 X 30 X 2.500 MM
13	AT311877	CANOPY	1		X	X	X	
14	T178425	STRIP	2		X	X	X	(WITHOUT ROPS HEATER)

CAB
CABINE
CABINA

T199126 -UN-26MAY04

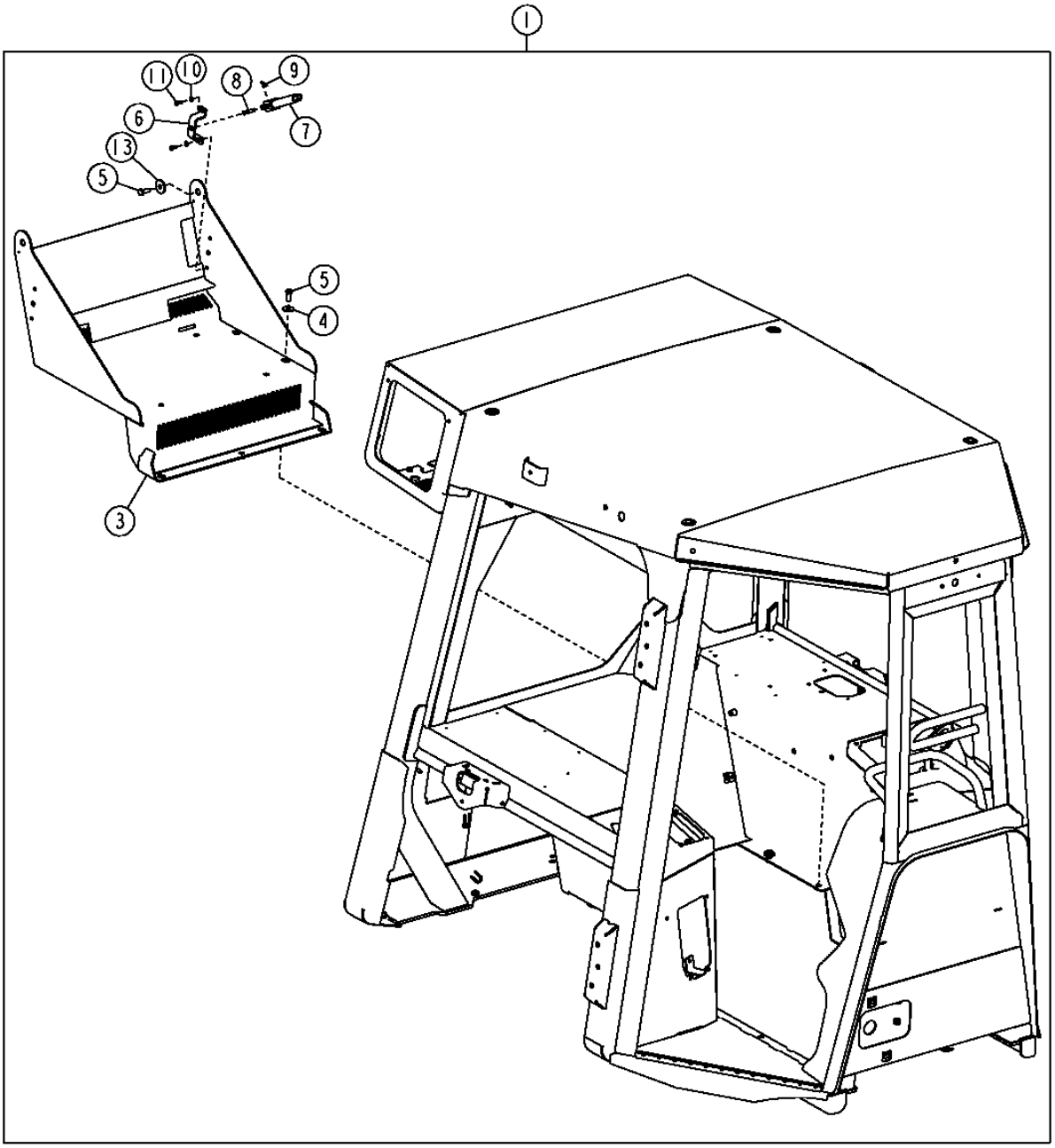

T199126

CAB
CABINE
CABINA

KEY	PART NO.	PART NAME	QTY.	SERIAL NO.	450J	550J	650J	REMARKS
1	AT311876	CAB	1		X	X	X	
	AT341825	GATHERING NUMBER	1				X	(WITH INTEGRATED GRADE CONTROL)
3	AT207486	BASE	1		X	X	X	(SEAT) (WITH HEATER)
4	24M7178	WASHER	4		X	X	X	10.500 X 30 X 2.500 MM
5	19M7402	CAP SCREW	6		X	X	X	M10 X 25
6	T171778	BRACKET	1		X	X	X	(SEAT TILTING)
7	AT209308	JACK	1		X	X	X	(JACK)
8	N31296	PIN FASTENER	1		X	X	X	(FLAT HEAD)
9	R46528	SPRING LOCKING PIN	1		X	X	X	(CLIP)
10	24M7293	WASHER	6		X	X	X	6.500 X 13 X 1.600 MM
11	19M8425	CAP SCREW	6		X	X	X	M6 X 16
13	T171737	WASHER	2		X	X	X	(SPACER) (TILTING PIVOT)

CAB ROPS OR ROPS MOUNTS AND ISOLATORS
ARCEAU DE SECURITE OU MONTAGES DARCEAU DE SECURITE DE LA CABINE ET ISOLATEURS
ROPS DE CABINA O MONTAJES ROPS Y AMORTIGUADORES

TP52102 -UN-09JAN99

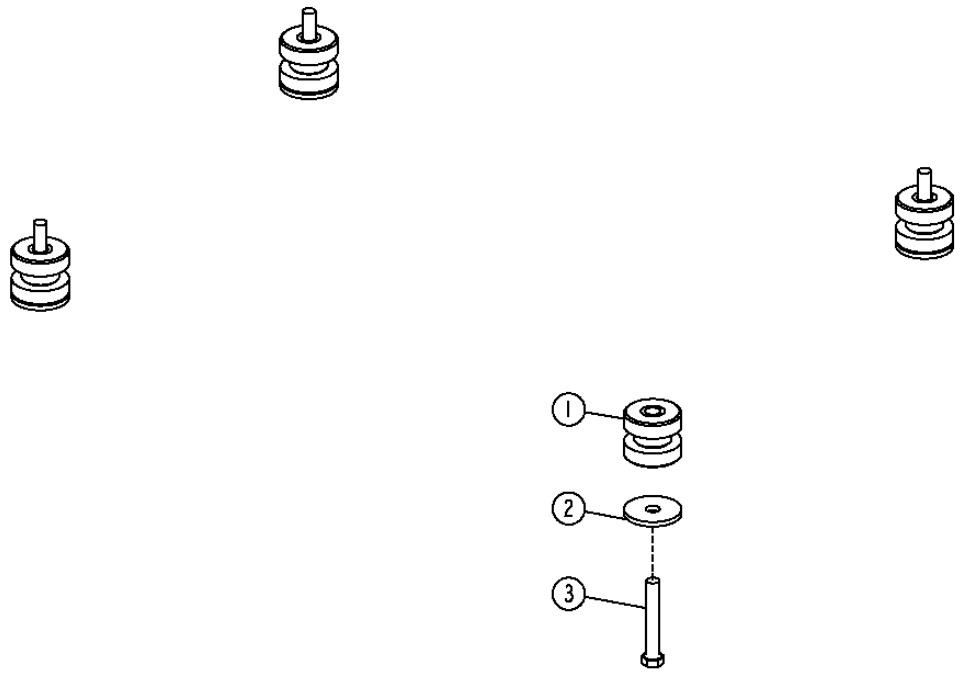

TP52102

CAB ROPS OR ROPS MOUNTS AND ISOLATORS
ARCEAU DE SECURITE OU MONTAGES DARCEAU DE SECURITE DE LA CABINE ET ISOLATEURS
ROPS DE CABINA O MONTAJES ROPS Y AMORTIGUADORES

KEY	PART NO.	PART NAME	QTY.	SERIAL NO.	450 J	550 J	650 J	REMARKS
1	AT220104	ISOLATOR	4		X	X	X	
2	T101807	WASHER	4		X	X	X	
3	19M7969	CAP SCREW	4		X	X	X	M20 X 110

CAB DOORS AND LATCHES
PORTIERES DE CABINE ET LOQUETS
PESTILLOS Y PUERTAS DE CABINA

TX1012442 -UN-05OCT06

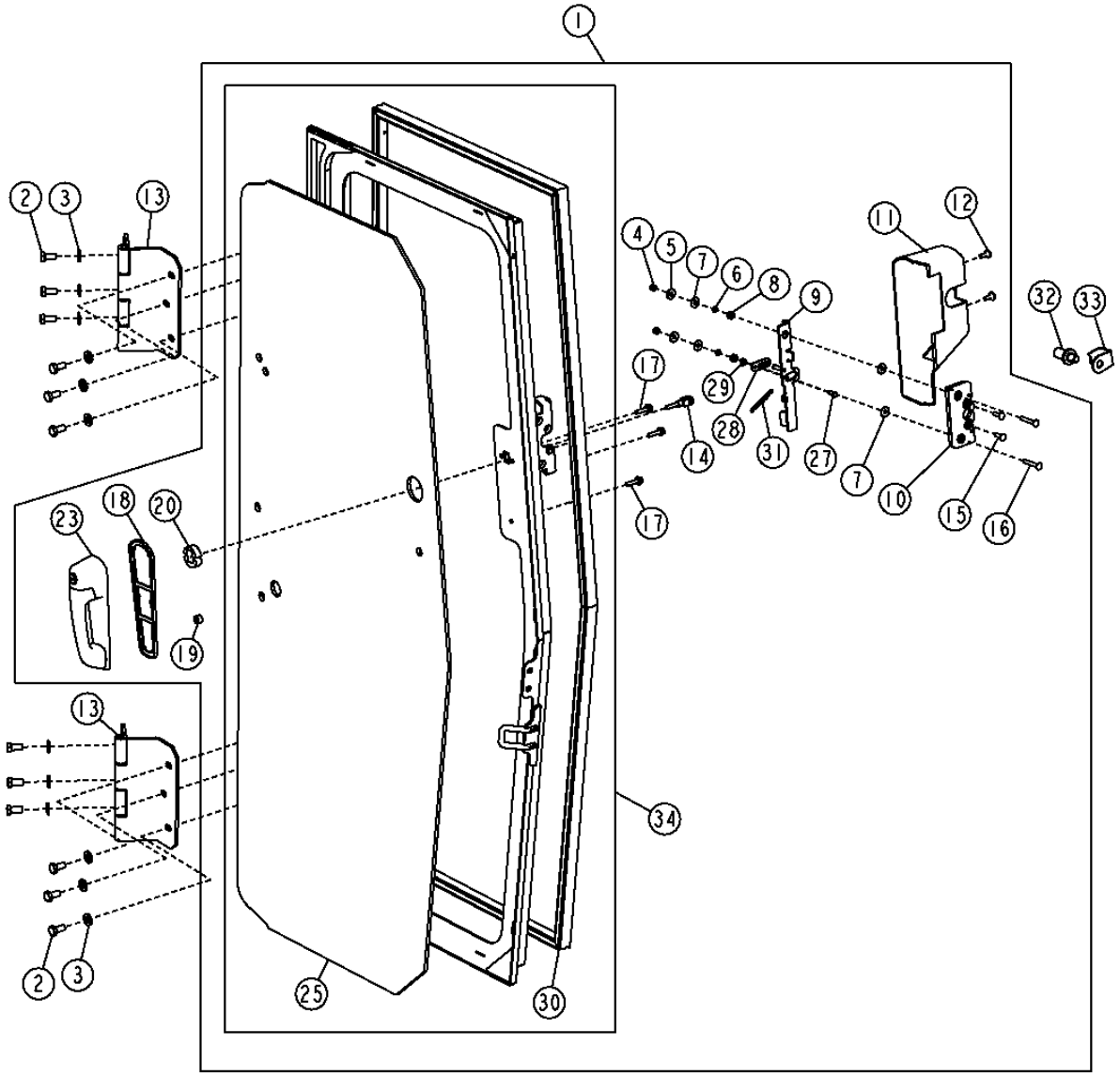

TX1012442

CAB DOORS AND LATCHES
PORTIERES DE CABINE ET LOQUETS
PESTILLOS Y PUERTAS DE CABINA

KEY	PART NO.	PART NAME	QTY.	SERIAL NO.	450J	550J	650J	REMARKS
1	AT306744	DOOR	1		X	X	X	(RH)
	AT306798	DOOR	1		X	X	X	(LH)
2	19M7938	CAP SCREW	12		X	X	X	M10 X 20
3	24M7239	WASHER	12		X	X	X	10.700 X 21 X 2.500 MM
4	14M7165	LOCK NUT	2		X	X	X	M6
5	24M7139	WASHER	2		X	X	X	6.400 X 18 X 1.600 MM
6	T175674	WASHER	2		X	X	X	(SPRING)
7	T210413	WASHER	4		X	X	X	(NYLON)
8	T160017	SPACER	2		X	X	X	(LATCH)
9	AT312708	LEVER	1		X	X	X	(RIGHT DOOR LATCH)
	AT312707	LEVER	1		X	X	X	(LEFT DOOR LATCH)
10	AT306182	LATCH	1		X	X	X	
11	T204577	COVER	1		X	X	X	(RIGHT DOOR LATCH)
	T204576	COVER	1		X	X	X	(LEFT DOOR LATCH)
12	TCU14336	SCREW	2		X	X	X	
13	AT329813	HINGE	4		X	X	X	(SUB FOR AT305005)
14	T210101	YOKE	1		X	X	X	(CLEVIS ADJUSTMENT)
15	21M7326	SCREW	2		X	X	X	M6 X 20
16	21M7289	SCREW	2		X	X	X	M6 X 40
17	19M7863	SCREW	3		X	X	X	M6 X 25
18	T204599	GASKET	1		X	X	X	
19	T205901	WASHER	1		X	X	X	(PULL HANDLE) (ROUND-SPACER)
20	T205902	SPACER	1		X	X	X	(PULL HANDLE)
23	AT306181	HANDLE	1		X	X	X	(OUTER DOOR)
25	T205160	WINDOWPANE	1		X	X	X	(RH)
	T205205	WINDOWPANE	1		X	X	X	(LH)
27	T210102	PIN FASTENER	1		X	X	X	
28	T210105	LINK	1		X	X	X	
29	T210103	RING	1		X	X	X	
30	AT307746	ISOLATOR	1		X	X	X	(RH)
	AT307745	ISOLATOR	1		X	X	X	(LH)
31	T210106	SPRING	1		X	X	X	(DOOR LATCH)
32	AT307096	STRIKER	2		X	X	X	
33	T205499	GUARD	2		X	X	X	(STRIKER PIN)
34	AT306743	DOOR	1		X	X	X	(R.H.)
	AT306799	DOOR	1		X	X	X	(L.H.)

CAB DOOR HOLD OPEN
MAINTIEN DE LA PORTIERE DE CABINE
FIJACION DE PUERTA DE CABINA EN POSICION ABIERTA

TX1005872 -UN-06APR06

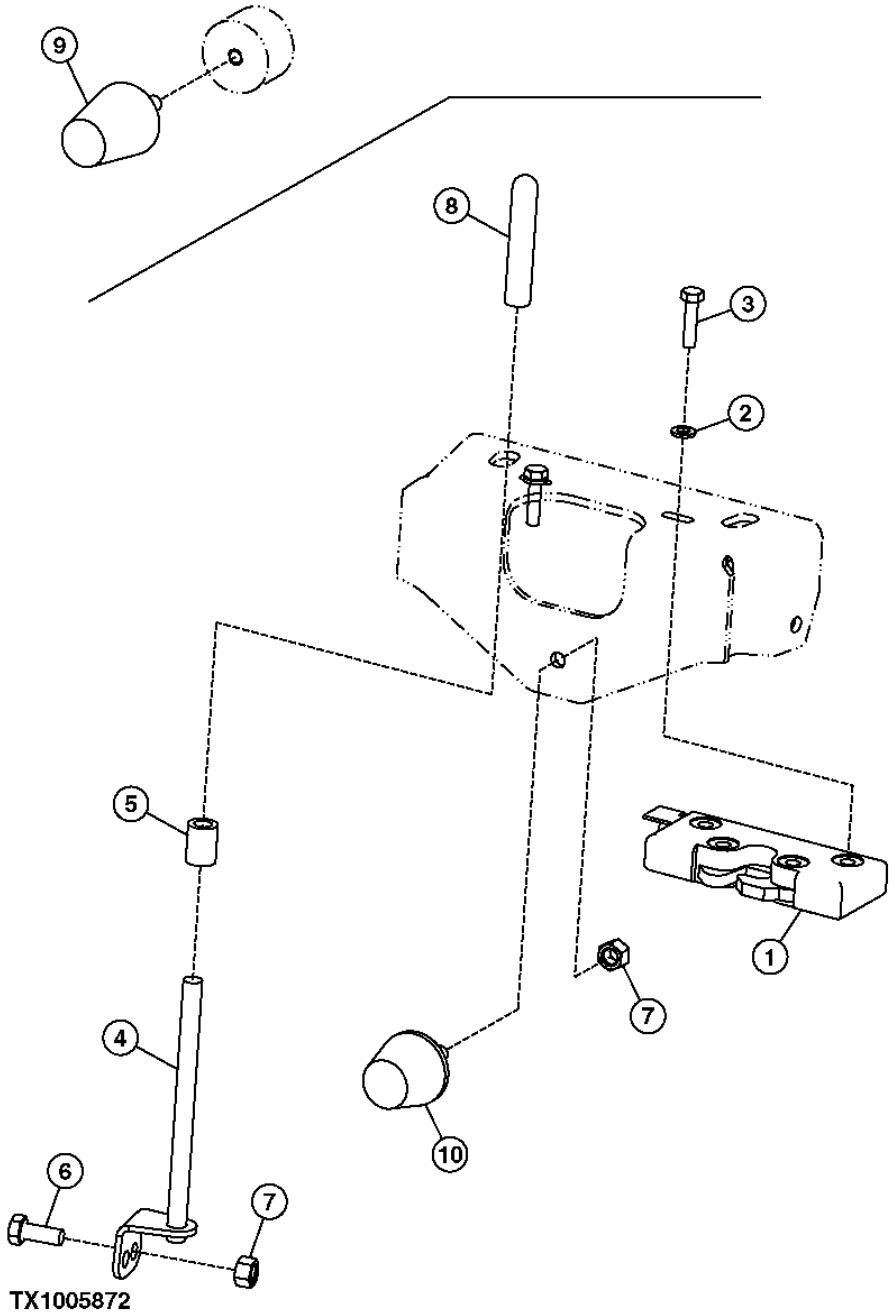

TX1005872

CAB DOOR HOLD OPEN
MAINTIEN DE LA PORTIERE DE CABINE
FIJACION DE PUERTA DE CABINA EN POSICION ABIERTA

KEY	PART NO.	PART NAME	QTY.	SERIAL NO.	450J	550J	650J	REMARKS
1	AT222258	LATCH	2		X	X	X	
2	24H1821	WASHER	4		X	X	X	9/32" X 47/64" X 1/16"
3	19M7933	CAP SCREW	4		X	X	X	M6 X 25
4	AT220873	LEVER	2		X	X	X	
5	T176454	SLEEVE	2		X	X	X	
6	19M7881	SCREW	2		X	X	X	M8 X 20
7	14M7166	LOCK NUT	2		X	X	X	M8, (WITH LEVER)
	14H611	NUT	2		X	X	X	5/16", (WITH BUMPER)
8	N157204	GRIP	2		X	X	X	
9	T176473	BUMPER	2		X	X	X	(DOOR)
10	T58920	BUMPER	2		X	X	X	(DOOR)

CAB WINDOWS
GLACES DE CABINE
VENTANAS DE LA CABINA

TX1007220 -UN-05MAY06

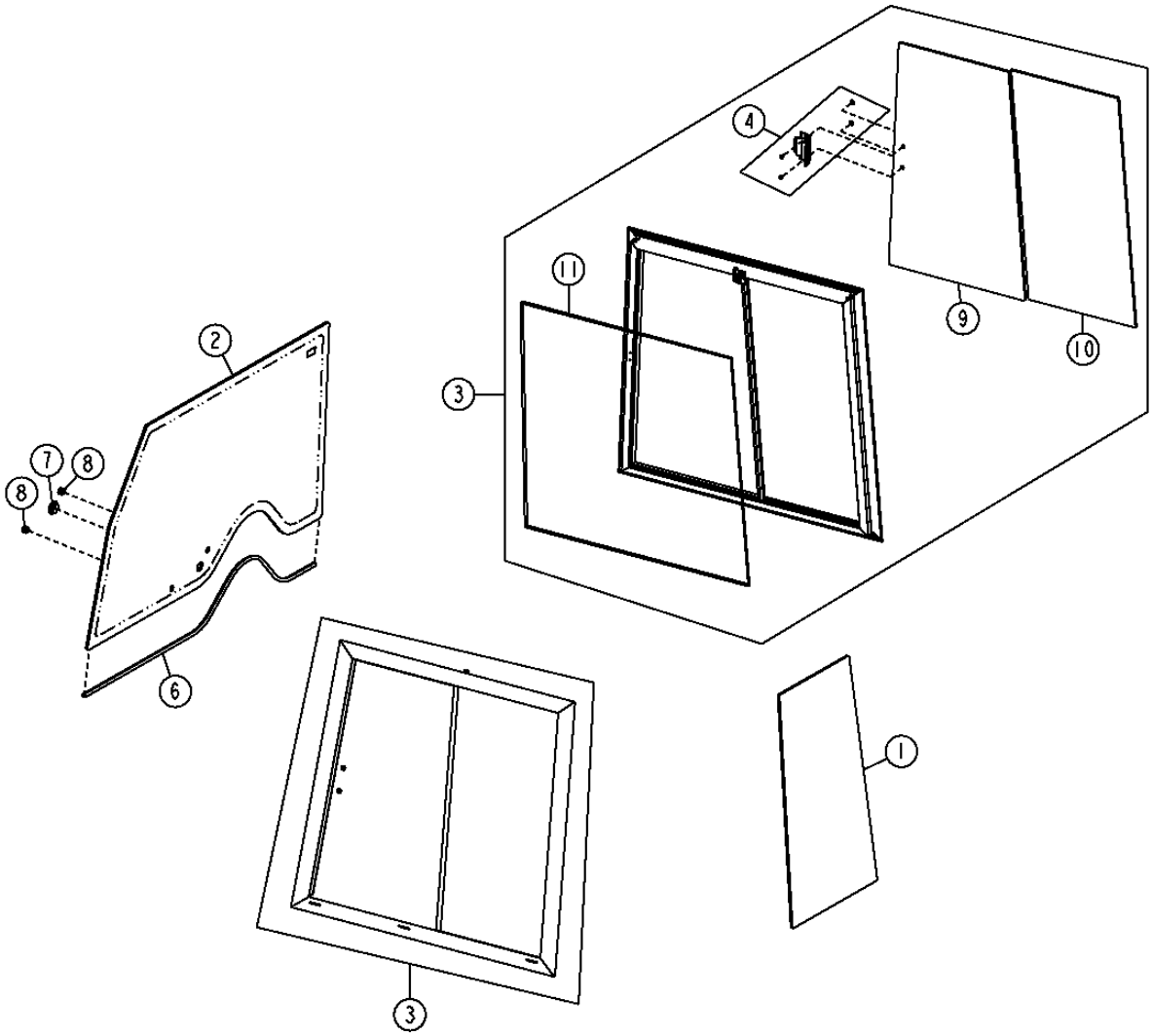

TX1007220

CAB WINDOWS
GLACES DE CABINE
VENTANAS DE LA CABINA

KEY	PART NO.	PART NAME	QTY.	SERIAL NO.	450J	550J	650J	REMARKS
1	T175748	WINDSHIELD	1		X	X	X	(FRONT)
2	T175747	WINDOWPANE	1		X	X	X	(REAR)
3	AT335804	WINDOW	1		X	X	X	(SUB FOR AT220421 AND AT318268) (RH)
	AT335803	WINDOW	1		X	X	X	(SUB FOR AT220422 AND AT318267) (LH)
4	AT223821	LATCH	1		X	X	X	(SUB FOR AT221437) (REPLACEMENT LOCK)
6	T176819	SEAL	1		X	X	X	
7	T176959	PLUG	1		X	X	X	(REAR WINDOW)
8	T176958	PLUG	2		X	X	X	(WINDOW)
9	T177365	WINDSHIELD	1	-131553	X	X	X	(SLIDING SIDE)
10	T177364	WINDSHIELD	1	-131553	X	X	X	(STATIONARY SIDE)
11	AT333072	KIT	1		X	X	X	

WIPER WASHER TANK
RESERVOIR DE LAVE-GLACE/ESSUIE-GLACE
TANQUE DE LAVAPARABRISAS

TP52107 -UN-09JAN99

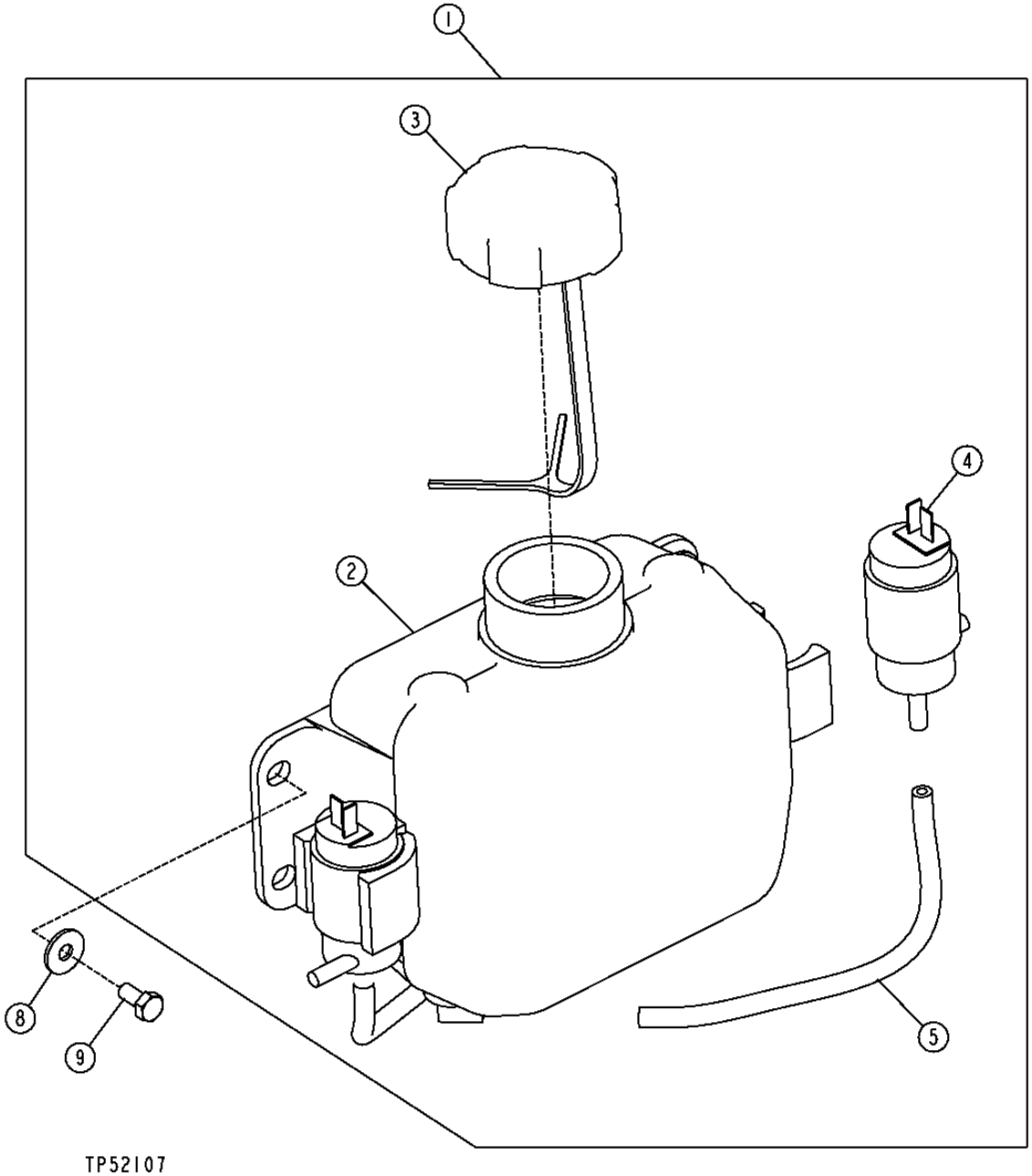

WIPER WASHER TANK
RESERVOIR DE LAVE-GLACE/ESSUIE-GLACE
TANQUE DE LAVAPARABRISAS

KEY	PART NO.	PART NAME	QTY.	SERIAL NO.	450 550 650 J J J	REMARKS
1	AT220548	RESERVOIR	1		X X X	
2	.....	RESERVOIR	1		X X X	(SUB AT220548)
3	AT173193	CAP	1		X X X	
4	AT174348	PUMP	2		X X X	
5	.....	HOSE	2		X X X	(MAKE FROM R120653) (0.7 FT, CUT TO LENGTH)
6	R44302	TIE BAND	2		X X X	
8	24M7139	WASHER	3		X X X	6.400 X 18 X 1.600 MM
9	19M7923	CAP SCREW	3		X X X	M6 X 12

WINDSHIELD WIPERS
ESSUIE-GLACE
LIMPIADOR DE PARABRISAS

T199497 -UN-04MAY04

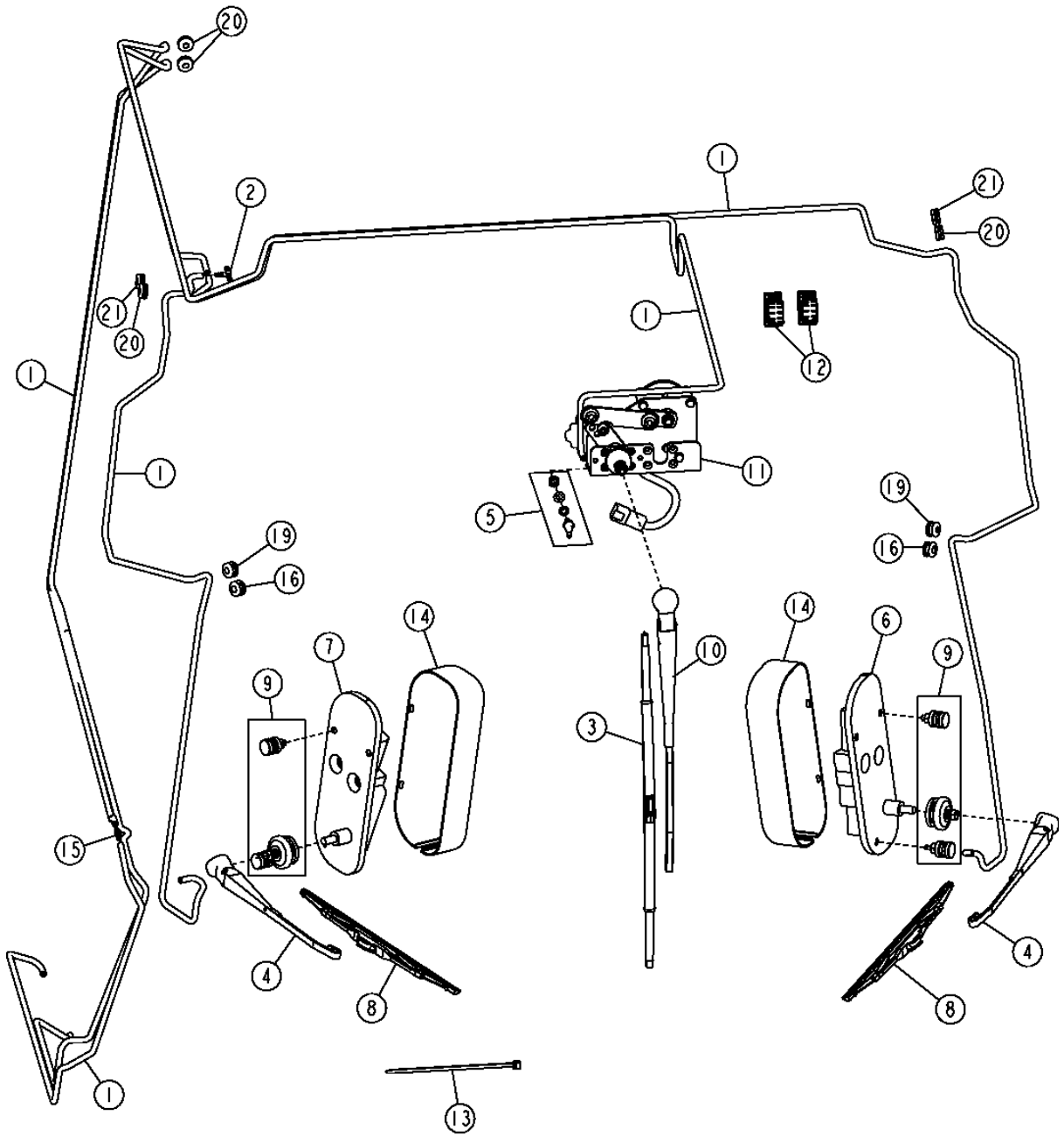

THIS PARTS LISTING IS CONTINUED

WINDSHIELD WIPERS
ESSUIE-GLACE
LIMPIADOR DE PARABRISAS

KEY	PART NO.	PART NAME	QTY.	SERIAL NO.	450J	550J	650J	REMARKS
1	.....	HOSE	1		X	X	X	(MAKE FROM R120653) (CUT TO LENGTH)
2	T135764	TEE FITTING	1		X	X	X	
3	AL153660	WIPER BLADE	1		X	X	X	
4	AT177131	WIPER ARM	2		X	X	X	
5	AT188681	KIT	1		X	X	X	(CONNECTOR FITTING) (BULKHEAD)
6	AT220332	WIPER MOTOR	1		X	X	X	(LH)
7	AT220333	WIPER MOTOR	1		X	X	X	(RH)
8	AT221045	WIPER BLADE	2		X	X	X	
9	AT221596	PACKAGE OF PARTS	2		X	X	X	
10	AT304634	WIPER ARM	1		X	X	X	
11	AT306766	WIPER MOTOR	1		X	X	X	
12	AT306954	TOGGLE/ROCKER SWITCH	2		X	X	X	
13	R44302	TIE BAND	29		X	X	X	
14	T159875	COVER	2		X	X	X	
15	T176777	FLOW CONTROL HYD. VALVE	1		X	X	X	
16	T176876	GROMMET	2		X	X	X	
19	T176877	GROMMET	2		X	X	X	
20	T176879	GROMMET	4		X	X	X	
21	T176878	GROMMET	2		X	X	X	

OPTIONAL REAR WIPER
ESSUIE-GLACE ARRIERE EN OPTION
LIMPIACRISTAL TRASERO OPCIONAL

T200404 -UN-26MAY04

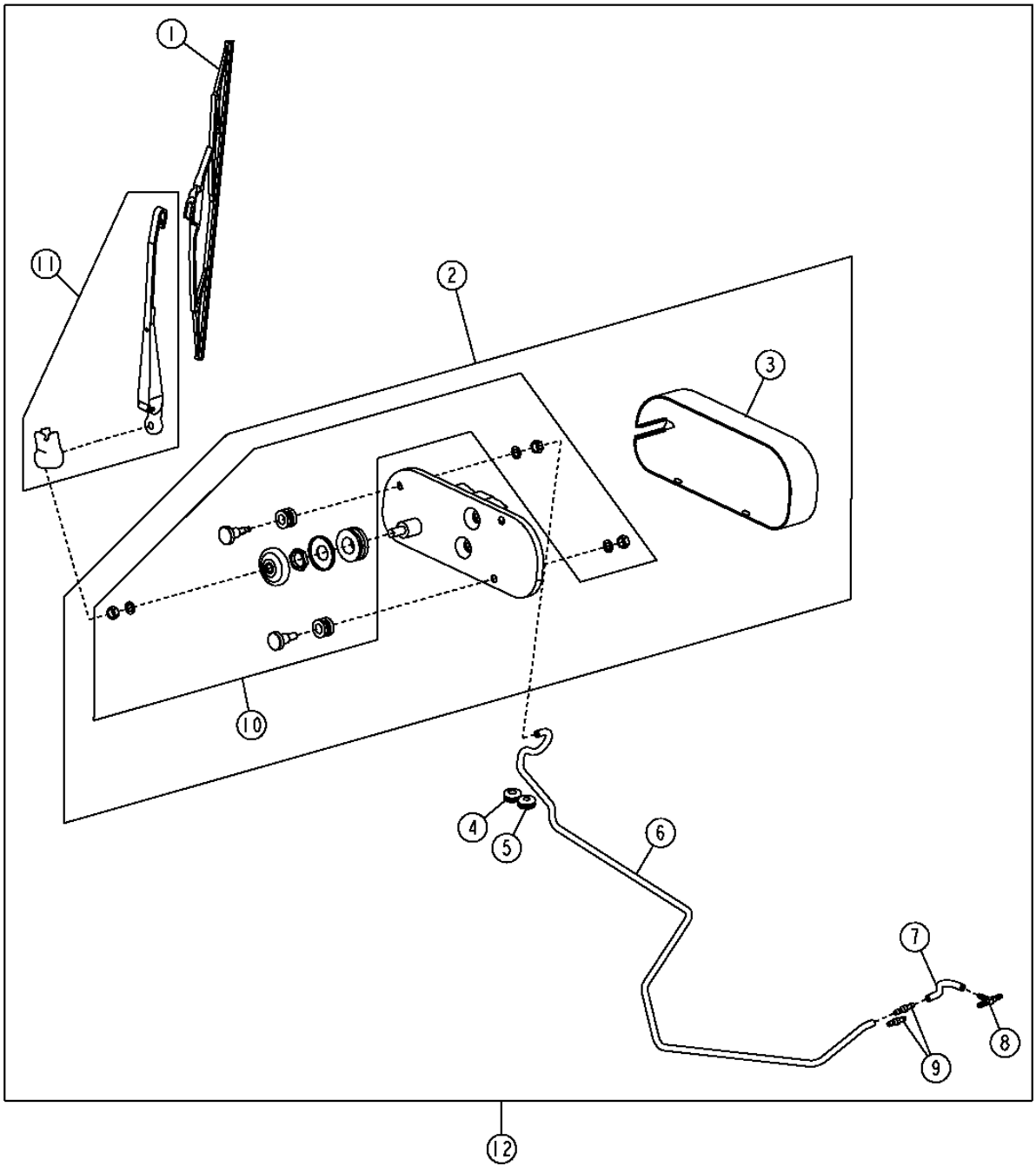

T200404

OPTIONAL REAR WIPER
ESSUIE-GLACE ARRIERE EN OPTION
LIMPIACRISTAL TRASERO OPCIONAL

KEY	PART NO.	PART NAME	QTY.	SERIAL NO.	450J	550J	650J	REMARKS
1	AT177132	WIPER BLADE	1		X	X	X	
2	AT220448	WIPER MOTOR	1		X	X	X	
	AT221578	WIPER MOTOR WIRING HARNESS	1		X	X	X	(COMPONENT OF AT221078)
	R44302	TIE BAND	AR		X	X	X	(COMPONENT OF AT221078)
3	T159875	COVER	1		X	X	X	
4	T176878	GROMMET	1		X	X	X	
5	T176879	GROMMET	1		X	X	X	
6	.....	HOSE	1		X	X	X	(MAKE FROM R54445) (3.5 FT CUT TO LENGTH)
7	.....	HOSE	1		X	X	X	(MAKE FROM R54445) (0.3FT CUT TO LENGTH)
8	T135764	TEE FITTING	1		X	X	X	
9	T176777	FLOW CONTROL HYD. VALVE	2		X	X	X	
10	AT221596	PACKAGE OF PARTS	1		X	X	X	(SPECIAL ATTACHING HARDWARE)
11	AT177131	WIPER ARM	1		X	X	X	
12	**AT221078**	**KIT**	**1**		**X**	**X**	**X**	**(INCLUDES AT221578 AND R44302) (WHOLEGOODS)**

DOOR WINDOW WIPERS
ESSUIE-GLACES DE PORTIERE
LIMPIACRISTALES DE LA PUERTA

TX1004792 -UN-16MAR06

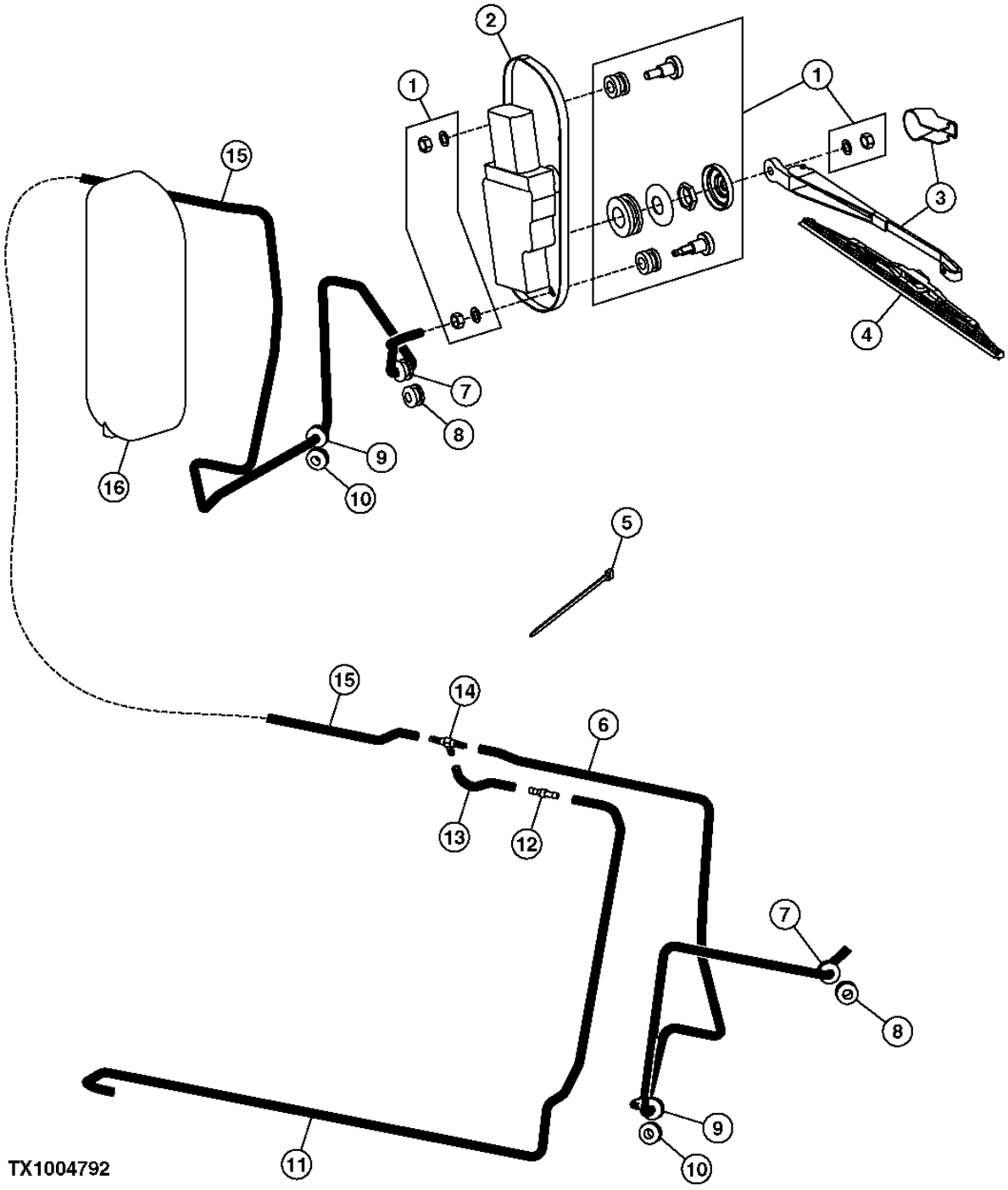

DOOR WINDOW WIPERS
ESSUIE-GLACES DE PORTIERE
LIMPIACRISTALES DE LA PUERTA

KEY	PART NO.	PART NAME	QTY.	SERIAL NO.	455 000 JJJ	REMARKS
1	AT221596	PACKAGE OF PARTS	1		X X X	(SPECIAL ATTACHING HARDWARE)
2	AT220332	WIPER MOTOR	1		X X X	(ASSY) (LH)
	AT220333	WIPER MOTOR	1		X X X	(ASSY) (RH)
3	AT177131	WIPER ARM	2		X X X	
4	AT221045	WIPER BLADE	2		X X X	
5	R44302	TIE BAND	AR		X X X	
6	.....	HOSE	1		X X X	(MAKE FROM R54445) (4.5FT, CUT TO LENGTH)
7	T176877	GROMMET	2		X X X	
8	T176876	GROMMET	2		X X X	
9	T176879	GROMMET	2		X X X	
10	T176878	GROMMET	2		X X X	
11	.....	HOSE	1		X X X	(MAKE FROM R54445) (33 FT, CUT TO LENGTH)
12	T176777	FLOW CONTROL HYD. VALVE	1		X X X	(ASSY)
13	.....	HOSE	1		X X X	(MAKE FROM R54445) (0.3FT CUT TO LENGTH)
14	T135764	TEE FITTING	1		X X X	
15	.....	HOSE	2		X X X	(MAKE FROM R54445) (16FT CUT TO LENGTH)
16	T159875	COVER	2		X X X	

SEAT (STANDARD)
SIEGE (STANDARD)
ASIENTO (ESTANDAR)

TX1000697A -UN-30NOV05



THIS PARTS LISTING IS CONTINUED

SEAT (STANDARD)
SIEGE (STANDARD)
ASIENTO (ESTANDAR)

KEY	PART NO.	PART NAME	QTY.	SERIAL NO.	450 550 650 J J J	REMARKS
1	AT209259	SEAT SUSPENSION	1		X X X	(DOES NOT INCLUDE SEAT BELT, SEAT BELT SOLD SEPARATELY)
2	AT221015	SEAT	1		X X X	(BOTTOM PAD)
3	AT221016	PAD	1		X X X	(INCLUDES (4) T171686) (BACK PAD)
	T171686	CLIP	4		X X X	(COMPONENT OF AT221016)
4	AT220292	SEAT BELT	1		X X X	(MUST BE ORDERED SEPARATELY)
5	AT211579	SEAT SUSPENSION	1		X X X	(COMPONENTS ON SEAT SUSPENSION PAGES) (SEAT BASE PLATE/MOUNTING BRACKET/RISER AT210791, MUST BE ORDERED SEPARATLY)

SEAT ARMREST AND OPERATOR MANUAL HOLDER (STANDARD)
ACCOUDOIR DE SIEGE ET COFFRET DU LIVRET D'ENTRETIEN (STANDARD)
APOYABRAZOS DEL ASIENTO Y BOLSILLO PARA MANUAL DEL OPERADOR (NORMAL)

T188997 -UN-02APR03

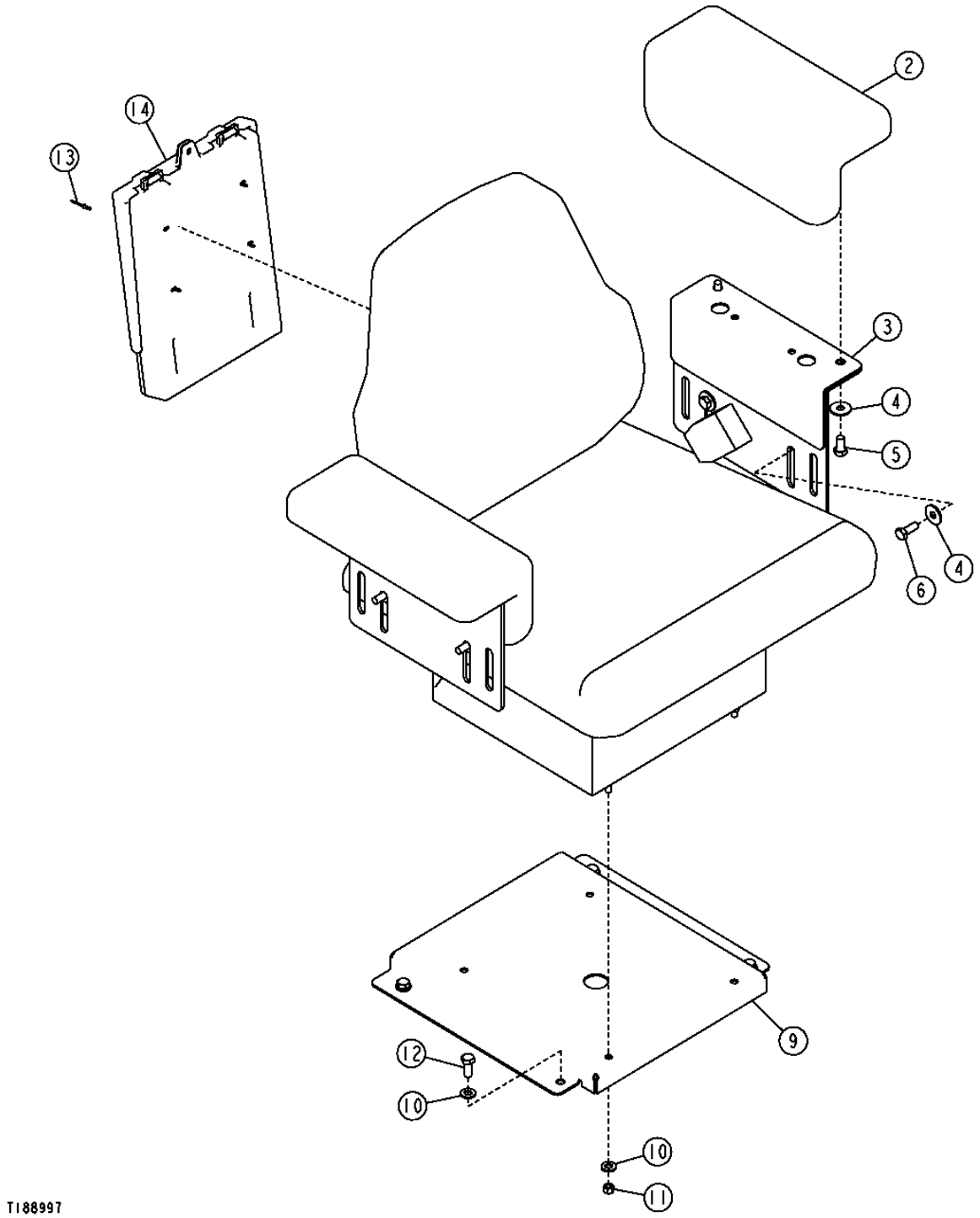

THIS PARTS LISTING IS CONTINUED

SEAT ARMREST AND OPERATOR MANUAL HOLDER (STANDARD)
ACCOUDOIR DE SIEGE ET COFFRET DU LIVRET D'ENTRETIEN (STANDARD)
APOYABRAZOS DEL ASIENTO Y BOLSILLO PARA MANUAL DEL OPERADOR (NORMAL)

KEY	PART NO.	PART NAME	QTY.	SERIAL NO.	450 J	550 J	650 J	REMARKS
2	AT223247	ARMREST	2		X	X	X	
3	T179167	PLATE	2		X	X	X	
4	24M7296	WASHER	8		X	X	X	10.500 X 30 X 2.500 MM
5	19M7938	CAP SCREW	4		X	X	X	M10 X 20
6	19M7402	CAP SCREW	4		X	X	X	M10 X 25
9	AT210791	BRACKET	1		X	X	X	(SEAT BASE PLATE/MOUNTING BRACKET/RISER)
10	24M7239	WASHER	8		X	X	X	10.700 X 21 X 2.500 MM
11	T16464	LOCK NUT	4		X	X	X	
12	19M7402	CAP SCREW	4		X	X	X	M10 X 25
13	R77914	RIVET	4		X	X	X	
14	AT195894	HOLDER	1		X	X	X	

MECHANICAL SEAT SUSPENSION (STANDARD)
SUSPENSION MECANIQUE DE SIEGE (STANDARD)
SUSPENSION MECANICA DEL ASIENTO (NORMAL)

T189045B -UN-01APR03

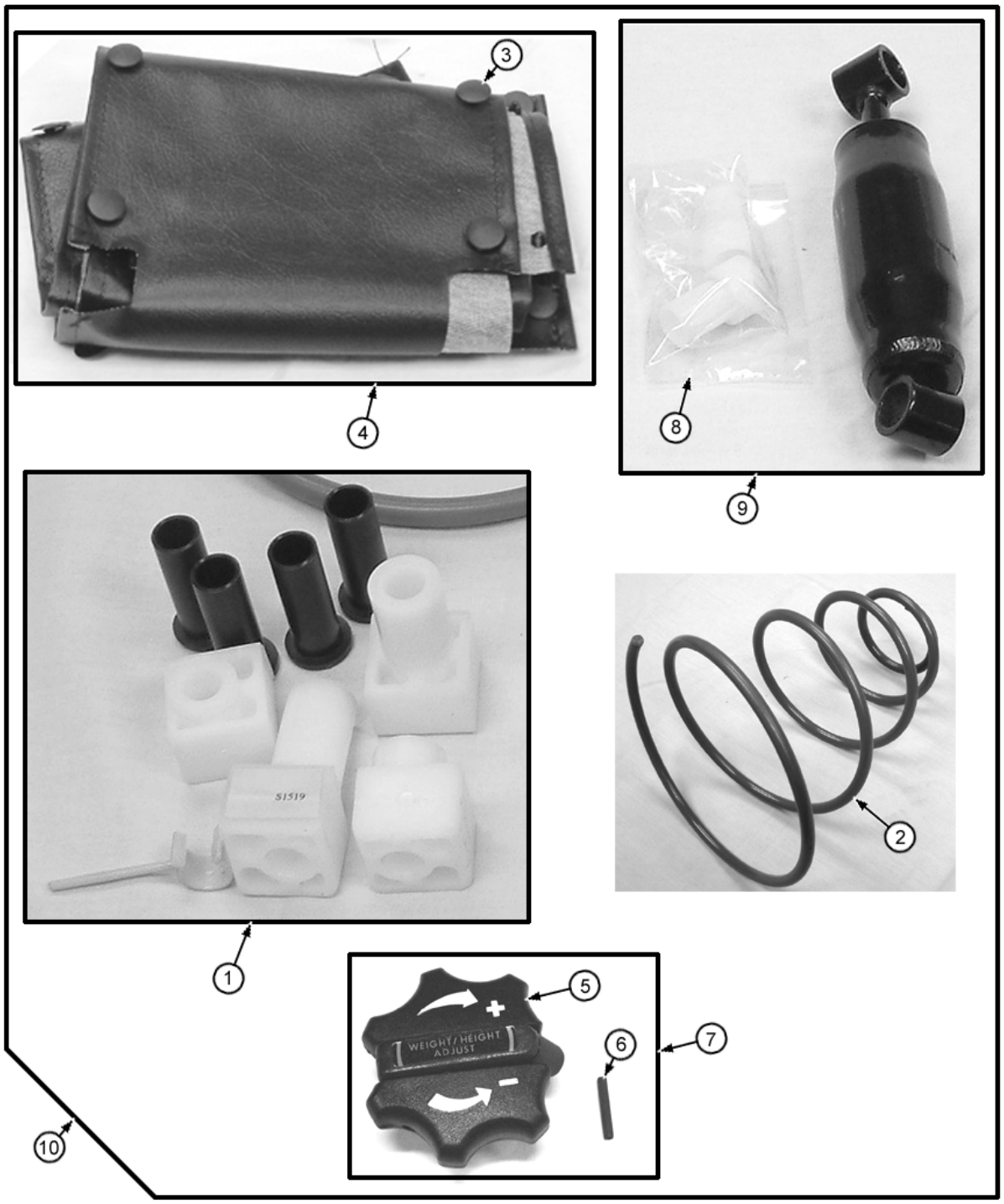

MECHANICAL SEAT SUSPENSION (STANDARD)
SUSPENSION MECANIQUE DE SIEGE (STANDARD)
SUSPENSION MECANICA DEL ASIENTO (NORMAL)

KEY	PART NO.	PART NAME	QTY.	SERIAL NO.	450 J	550 J	650 J	REMARKS
1	AT106397	BEARING KIT	1		X	X	X	
2	AT125801	SPRING	1		X	X	X	(INCLUDES T55210)
	T55210	SPRING	1		X	X	X	(COMPONENT OF AT125801)
3	T63798	PLUG	25		X	X	X	
4	AT125803	BOOT	1		X	X	X	
5	AT125829	KNOB	1		X	X	X	
6	34H266	SPRING PIN	1		X	X	X	
7	AT125805	KIT	1		X	X	X	(INCLUDES 25H729) (ADJUSTING KNOB)
	25H729	GROOVE PIN	1		X	X	X	(COMPONENT OF AT125805)
8	T55222	BUSHING	2		X	X	X	
9	AT175436	KIT	1		X	X	X	(SHOCK)
10	AT211579	SEAT SUSPENSION	1		X	X	X	

SEAT SLIDE AND TILT CONTROL (ALL SEATS)
GLISSIERE DE SIEGE ET COMMANDE D'INCLINAISON (TOUS SIEGES)
CORREDERA Y CONTROL DE INCLINACION DEL ASIENTO (TODOS LOS ASIENTOS)

T189047B -UN-01APR03

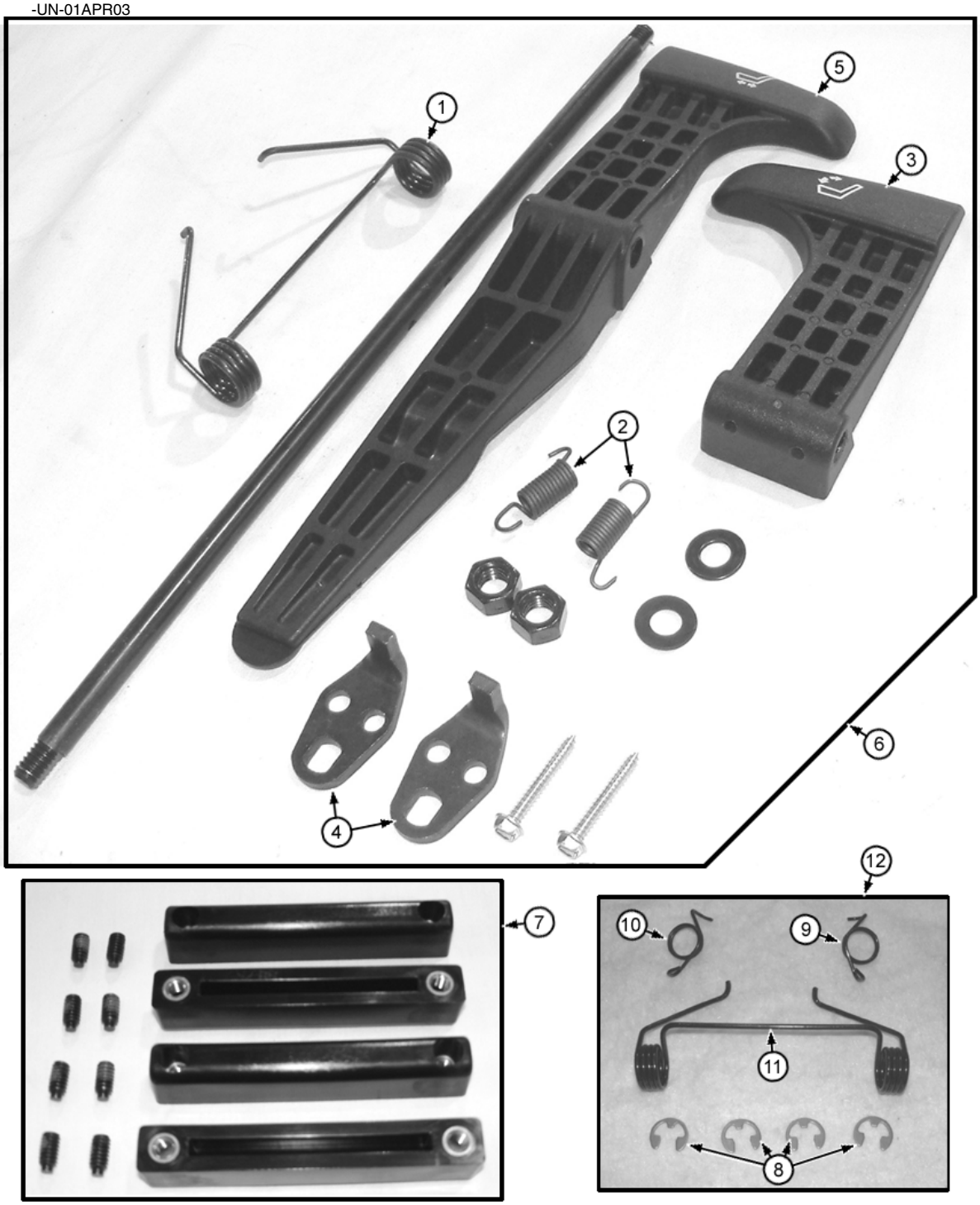

SEAT SLIDE AND TILT CONTROL (ALL SEATS)
GLISSIERE DE SIEGE ET COMMANDE D'INCLINAISON (TOUS SIEGES)
CORREDERA Y CONTROL DE INCLINACION DEL ASIENTO (TODOS LOS ASIENTOS)

KEY	PART NO.	PART NAME	QTY.	SERIAL NO.	450J	550J	650J	REMARKS
1	T163336	TORSION SPRING	1		X	X	X	
2	T55207	SPRING	2		X	X	X	
3	T163339	CONTROL	1		X	X	X	
4	T163344	ANGLE	2		X	X	X	
5	.....	CONTROL	1		X	X	X	(SUB AT182479)
6	AT182479	CONTROL	1		X	X	X	(KIT)
7	AT209020	KIT	1		X	X	X	(SLIDE PUCK)
8	R72655	SNAP RING	4		X	X	X	
9	T163334	SPRING	1		X	X	X	(RH)
10	T163335	SPRING	1		X	X	X	(LH)
11	T163336	TORSION SPRING	1		X	X	X	
12	AT209021	KIT	1		X	X	X	(SLIDE SPRING)

SLIDER PLATE ASSEMBLY (ALL SEATS)
PLAQUE COULISSANTE (TOUS SIEGES)
CONJUNTO DE PLACA DE CORREDERA (TODOS LOS ASIENTOS)

T189049B -UN-01APR03

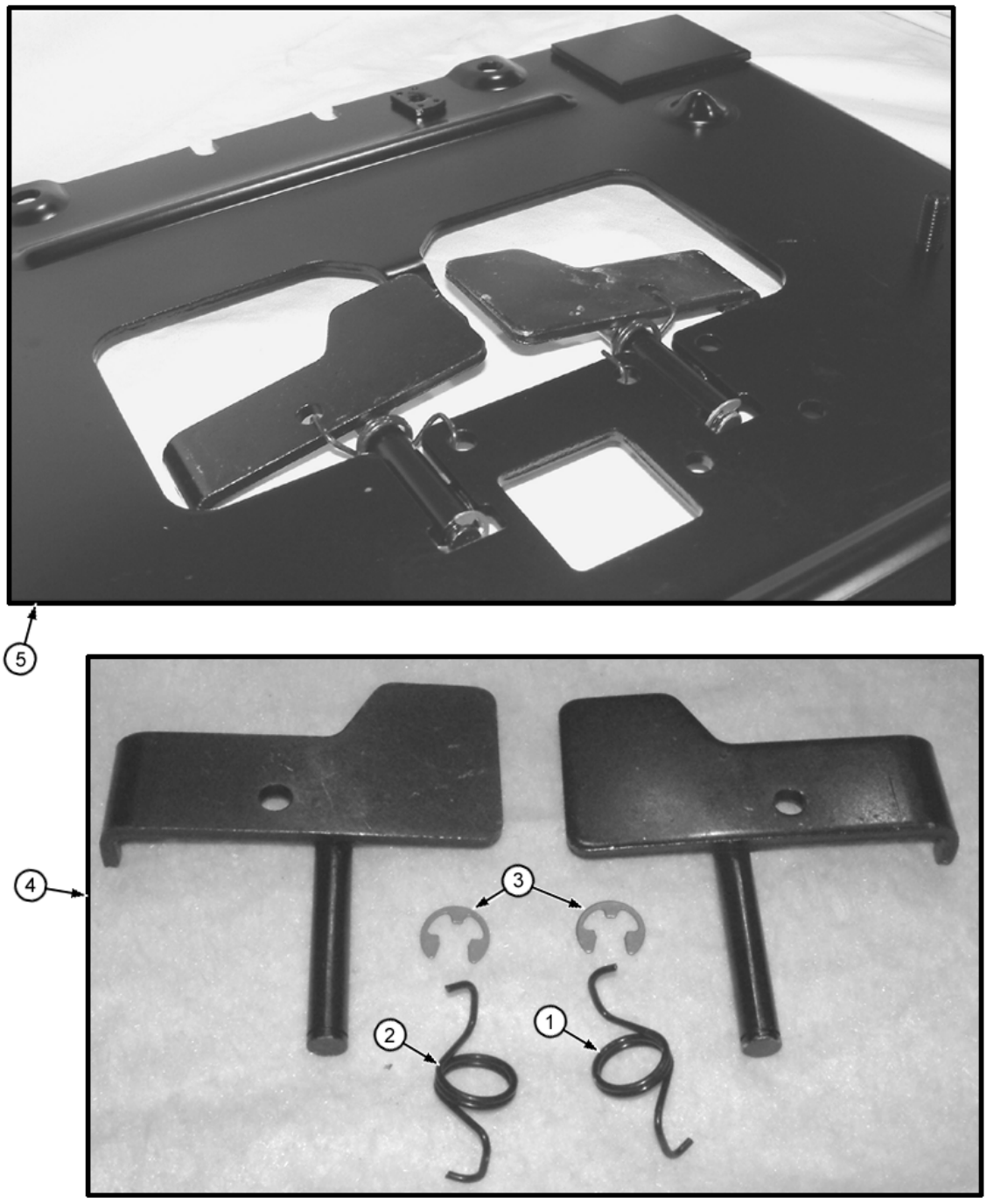

THIS PARTS LISTING IS CONTINUED

SLIDER PLATE ASSEMBLY (ALL SEATS)
PLAQUE COULISSANTE (TOUS SIEGES)
CONJUNTO DE PLACA DE CORREDERA (TODOS LOS ASIENTOS)

KEY	PART NO.	PART NAME	QTY.	SERIAL NO.	450 J	550 J	650 J	REMARKS
1	T163334	SPRING	1		X	X	X	
2	T163335	SPRING	1		X	X	X	
3	R72655	SNAP RING	2		X	X	X	
4	AT226470	KIT	1		X	X	X	
5	AT226471	KIT	1		X	X	X	(INCLUDES AT226470)

SEAT (DELUXE)
SIEGE (DELUXE)
ASIENTO (DELUXE)

TX1000764A -UN-01DEC05



SEAT (DELUXE)
SIEGE (DELUXE)
ASIENTO (DELUXE)

KEY	PART NO.	PART NAME	QTY.	SERIAL NO.	456 550 JJJ	REMARKS
1	AT226693	SEAT SUSPENSION	1		X X X	(DELUXE VINYL WITH MECHANICAL SUSPENSION) (DOES NOT INCLUDE SEAT BELT-SEAT BELT SOLD SEPARATELY)
	AT226694	SEAT SUSPENSION	1		X X X	(DELUXE CLOTH WITH MECHANICAL SUSPENSION) (DOES NOT INCLUDE SEAT BELT-SEAT BELT SOLD SEPARATELY)
2	AT221015	SEAT	1		X X X	(DELUXE VINYL SEAT BOTTOM PAD)
	AT308795	CUSHION	1		X X X	(DELUXE CLOTH SEAT BOTTOM PAD)
3	AT221016	PAD	1		X X X	(INCLUDES (4) T171686) (DELUXE VINYL SEAT BACK PAD)
	AT308796	CUSHION	1		X X X	(INCLUDES (4) T171686) (DELUXE CLOTH SEAT BACK PAD)
	T171686	CLIP	4		X X X	(COMPONENT OF AT221016 AND AT308796)
4	AT228292	SEAT BELT	1		X X X	(3 INCH) (MUST BE SOLD SEPARATELY)
5	AT226685	SEAT SUSPENSION	1		X X X	(DELUXE MECHANICAL SUSPENSION) (COMPONENTS ON MECHANICAL SUSPENSION PAGE)
6	AT221017	CUSHION	1		X X X	(HEADREST) (DELUXE VINYL)
	AT308797	CUSHION	1		X X X	(HEADREST) (DELUXE CLOTH)

SEAT ARMREST AND OPERATOR MANUAL HOLDER (DELUXE)
ACCOUDOIR DE SIEGE ET COFFRET DU LIVRET D'ENTRETIEN (DELUXE)
APOYABRAZOS DEL ASIENTO Y BOLSILLO PARA MANUAL DEL OPERADOR (DELUXE)

T189043 -UN-01APR03

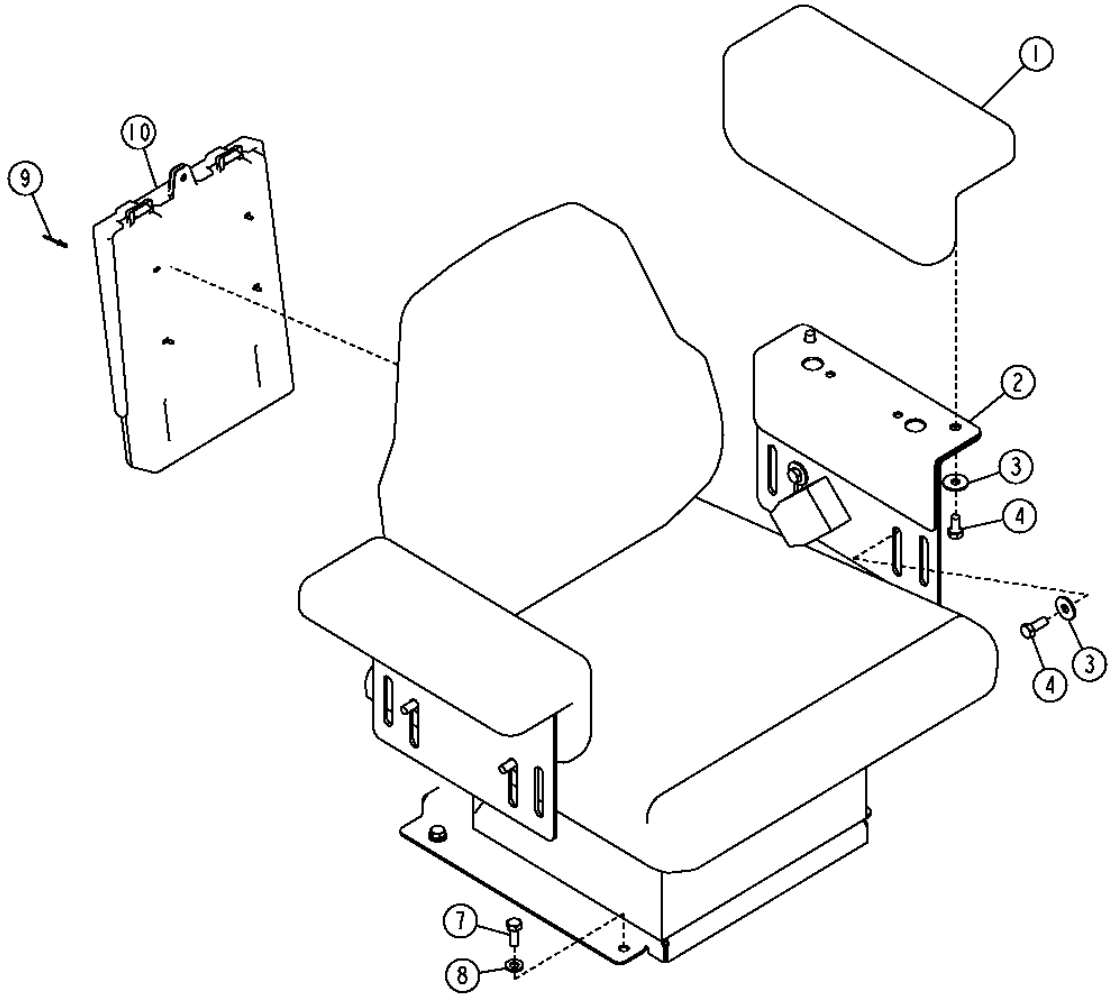

T189043

SEAT ARMREST AND OPERATOR MANUAL HOLDER (DELUXE)
ACCOUDOIR DE SIEGE ET COFFRET DU LIVRET D'ENTRETIEN (DELUXE)
APOYABRAZOS DEL ASIENTO Y BOLSILLO PARA MANUAL DEL OPERADOR (DELUXE)

KEY	PART NO.	PART NAME	QTY.	SERIAL NO.	450J	550J	650J	REMARKS
1	AT223247	ARMREST	2		X	X	X	
2	T179167	PLATE	2		X	X	X	(ARMREST)
3	24M7296	WASHER	8		X	X	X	10.500 X 30 X 2.500 MM
4	19M7938	CAP SCREW	8		X	X	X	M10 X 20
7	19M7402	CAP SCREW	4		X	X	X	M10 X 25
8	24M7239	WASHER	4		X	X	X	10.700 X 21 X 2.500 MM
9	R77914	RIVET	4		X	X	X	(WITH VINYL SEAT OPERATOR MANUAL HOLDER)
	R77914	RIVET	6		X	X	X	(WITH CLOTH SEAT OPERATOR MANUAL HOLDER)
10	R77915	HOLDER	1		X	X	X	(CLOTH SEAT OPERATOR MANUAL HOLDER)
	AT195894	HOLDER	1		X	X	X	(VINYL SEAT OPERATOR MANUAL HOLDER)

MECHANICAL SEAT SUSPENSION (DELUXE)
SUSPENSION MECANIQUE DE SIEGE (DELUXE)
SUSPENSION MECANICA DEL ASIENTO (DELUXE)

T189062B -UN-01APR03

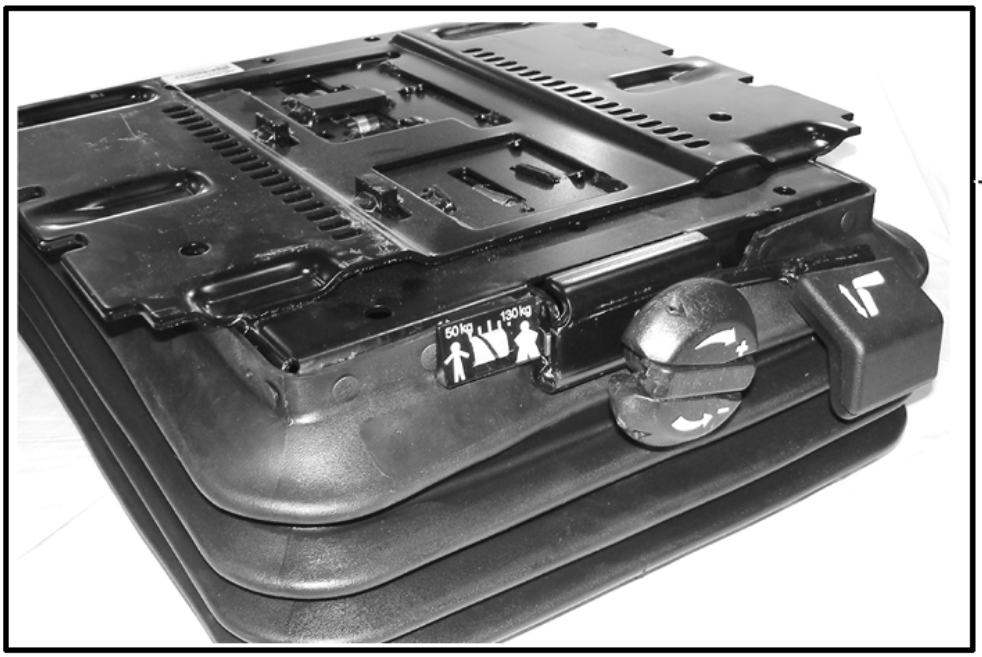

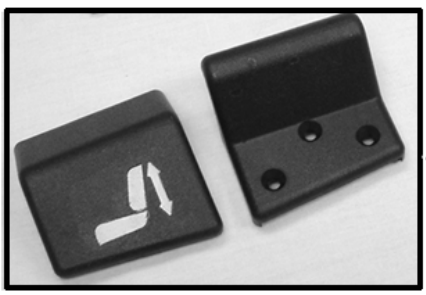

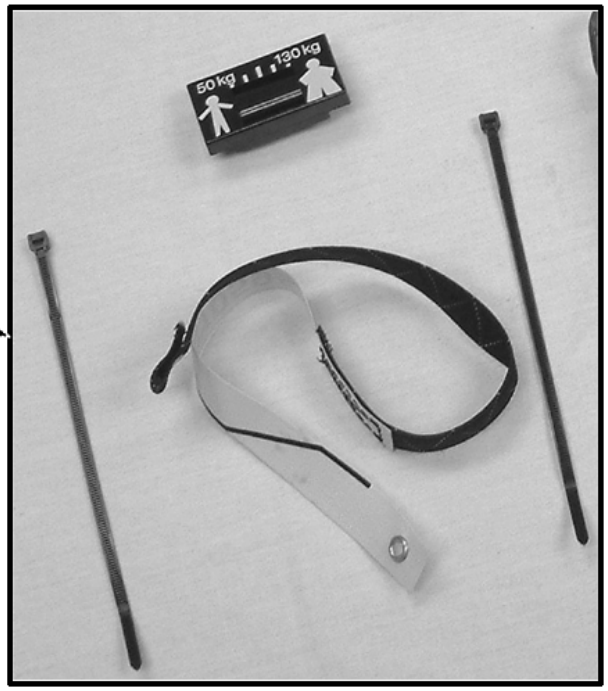

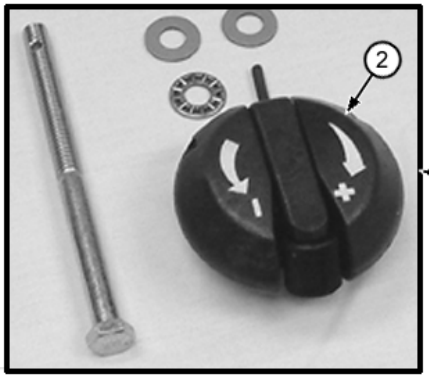

MECHANICAL SEAT SUSPENSION (DELUXE)
SUSPENSION MECANIQUE DE SIEGE (DELUXE)
SUSPENSION MECANICA DEL ASIENTO (DELUXE)

KEY	PART NO.	PART NAME	QTY.	SERIAL NO.	450J	550J	650J	REMARKS
1	AT226685	SEAT SUSPENSION	1		X	X	X	
2	AT182589	KNOB	1		X	X	X	
3	AT173316	KNOB	1		X	X	X	(KIT)
4	AT173323	SEAT KNOB KIT	1		X	X	X	
5	AT173325	WEIGHT	1		X	X	X	

MECHANICAL SEAT SUSPENSION KITS (DELUXE)
KITS DE SUSPENSION MECANIQUE DE SIEGE (DELUXE)
JUEGOS DE SUSPENSION MECANICA DEL ASIENTO (DELUXE)

T189060B -UN-01APR03

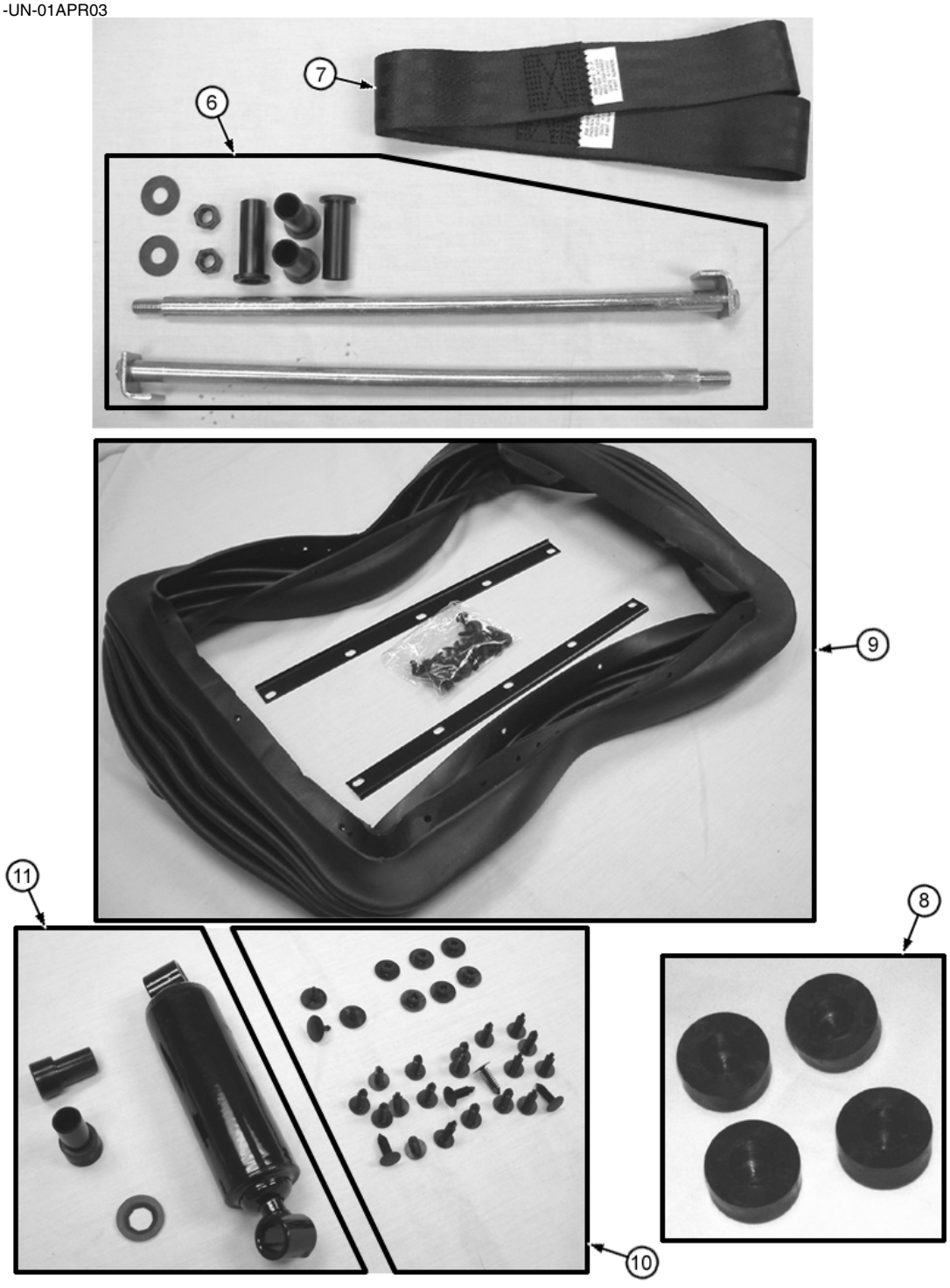

THIS PARTS LISTING IS CONTINUED

MECHANICAL SEAT SUSPENSION KITS (DELUXE)
KITS DE SUSPENSION MECANIQUE DE SIEGE (DELUXE)
JUEGOS DE SUSPENSION MECANICA DEL ASIENTO (DELUXE)

KEY	PART NO.	PART NAME	QTY.	SERIAL NO.	450 J	550 J	650 J	REMARKS
6	AT173313	SHAFT	1		X	X	X	(KIT)
7	AT173315	KIT	1		X	X	X	(TETHER)
8	AT173314	SEAT BEARING ROLLER KIT	1		X	X	X	
9	AT173317	BOOT	1		X	X	X	(INCLUDES AT173321) (KIT)
10	AT173321	SEAT SUSPENSION BOOT KIT	1		X	X	X	(CLIP KIT)
11	AT173322	MOUNTING PARTS	1		X	X	X	

MECHANICAL SEAT SUSPENSION SPRING KITS (DELUXE)
KITS DE RESSORTS DE SUSPENSION MECANIQUE DE SIEGE (DELUXE)
JUEGOS DE RESORTES DE SUSPENSION MECANICA DEL ASIENTO (DELUXE)

T189063B -UN-01APR03

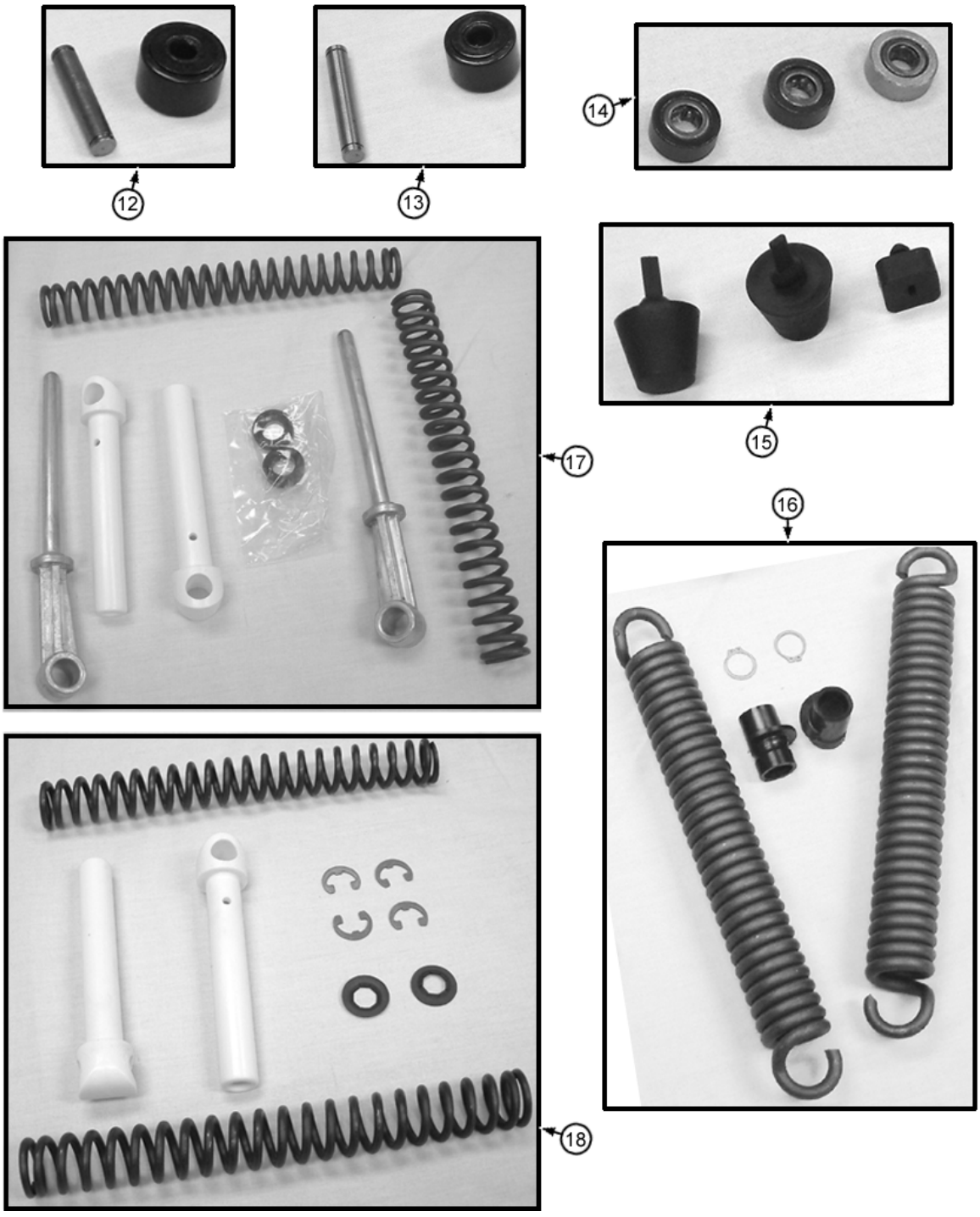

MECHANICAL SEAT SUSPENSION SPRING KITS (DELUXE)
KITS DE RESSORTS DE SUSPENSION MECANIQUE DE SIEGE (DELUXE)
JUEGOS DE RESORTES DE SUSPENSION MECANICA DEL ASIENTO (DELUXE)

KEY	PART NO.	PART NAME	QTY.	SERIAL NO.	450J	550J	650J	REMARKS
12	AT173328	CAM	1		X	X	X	
13	AT173326	CAM	1		X	X	X	
14	AT173327	ACTUATOR	1		X	X	X	
15	AT210549	BUMPER	1		X	X	X	
16	AT173319	SPRING	1		X	X	X	
17	AT173318	SPRING	1		X	X	X	(INCLUDES AT173320) (HEIGHT ADJUSTMENT SPRING KIT)
18	AT173320	MOUNTING PARTS	1		X	X	X	(HEIGHT ADJUSTMENT KIT)

SEAT (AIR SUSPENSION)
SIEGE (SUSPENSION PNEUMATIQUE)
ASIENTO (SUSPENSION NEUMATICA)

TX1000849A -UN-01DEC05



SEAT (AIR SUSPENSION)
SIEGE (SUSPENSION PNEUMATIQUE)
ASIENTO (SUSPENSION NEUMATICA)

KEY	PART NO.	PART NAME	QTY.	SERIAL NO.	450 550 650 J J J	REMARKS
1	AT226695	SEAT SUSPENSION	1		X X X	(AIR RIDE VINYL SEAT) (DOES NOT INCLUDE SEAT BELT - SEAT BELT SOLD SEPARATELY)
	AT226696	SEAT SUSPENSION	1		X X X	(AIR RIDE CLOTH SEAT) (DOES NOT INCLUDE SEAT BELT - SEAT BELT SOLD SEPARATELY)
2	AT221015	SEAT	1		X X X	(VINYL SEAT PAD)
	AT308795	CUSHION	1		X X X	(CLOTH SEAT PAD)
3	AT221016	PAD	1		X X X	(VINYL SEAT BACK)
	AT308796	CUSHION	1		X X X	(CLOTH SEAT BACK)
4	AT228292	SEAT BELT	1		X X X	(3 INCH) (MUST BE ORDERED SEPARATELY)
5	AT226818	SEAT SUSPENSION	1		X X X	(INCLUDES AT208486 AND AT208485) (AIR RIDE SUSPENSION) (12 VOLT) (COMPONENTS ON AIR RIDE SUSPENSION PAGE) (COMPONENTS ON SEAT SUSPENSION SHOCK KIT PAGE) (AIR BLADDER SPRING)
	AT208485	ARM	1		X X X	(AIR SUSPENSION ARM WELDMENT) (COMPONENT OF AT226818)
6	AT221017	CUSHION	1		X X X	(VINYL HEADREST)
	AT308797	CUSHION	1		X X X	(CLOTH HEADREST)

SEAT ARMREST AND OPERATOR MANUAL HOLDER (AIR SUSPENSION)
ACCOUDOIR DE SIEGE ET COFFRET DU LIVRET D'ENTRETIEN (SUSPENSION PNEUMATIQUE)
APOYABRAZOS DEL ASIENTO Y BOLSILLO PARA MANUAL DEL OPERADOR (SUSPENSION NEUMATICA)

T189043 -UN-01APR03

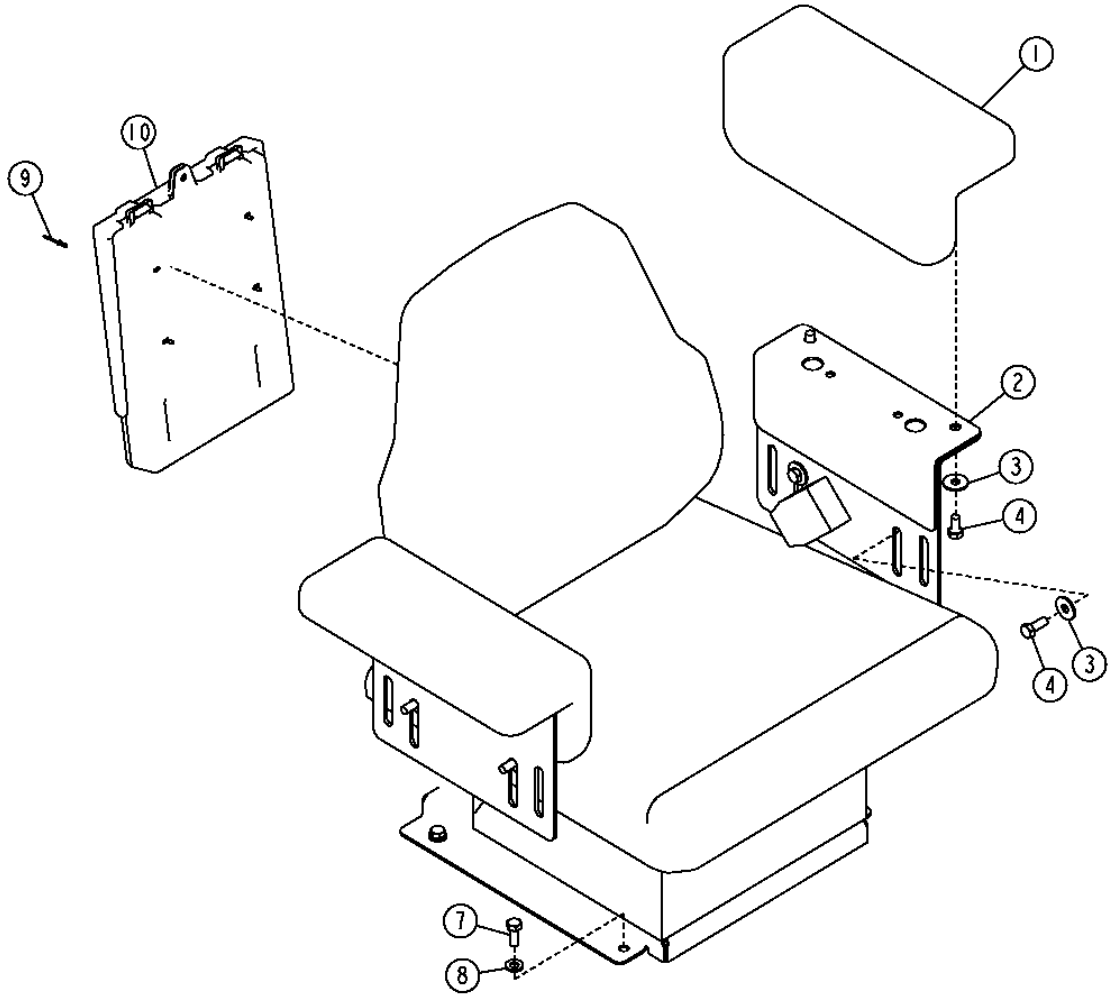

T189043

SEAT ARMREST AND OPERATOR MANUAL HOLDER (AIR SUSPENSION)
ACCOUDOIR DE SIEGE ET COFFRET DU LIVRET D'ENTRETIEN (SUSPENSION PNEUMATIQUE)
APOYABRAZOS DEL ASIENTO Y BOLSILLO PARA MANUAL DEL OPERADOR (SUSPENSION NEUMATICA)

KEY	PART NO.	PART NAME	QTY.	SERIAL NO.	450 J	550 J	650 J	REMARKS
1	AT223247	ARMREST	2		X	X	X	
2	T179167	PLATE	2		X	X	X	(ARMREST)
3	24M7296	WASHER	8		X	X	X	10.500 X 30 X 2.500 MM
4	19M7938	CAP SCREW	8		X	X	X	M10 X 20
7	19M7402	CAP SCREW	4		X	X	X	M10 X 25
8	24M7239	WASHER	4		X	X	X	10.700 X 21 X 2.500 MM
9	R77914	RIVET	4		X	X	X	(WITH VINYL SEAT OPERATOR MANUAL HOLDER)
	R77914	RIVET	6		X	X	X	(WITH CLOTH SEAT OPERATOR MANUAL HOLDER)
10	AT195894	HOLDER	1		X	X	X	(VINYL SEAT OPERATOR MANUAL HOLDER)
	R77915	HOLDER	1		X	X	X	(CLOTH SEAT OPERATOR MANUAL HOLDER)

SEAT SUSPENSION (AIR SUSPENSION) (COMPONENT PARTS)
SUSPENSION DE SIEGE (SUSPENSION PNEUMATIQUE) (PIECES COMPOSANTES)
SUSPENSION DEL ASIENTO (SUSPENSION NEUMATICA) (COMPONENTES)

T200900A -UN-16JUN04

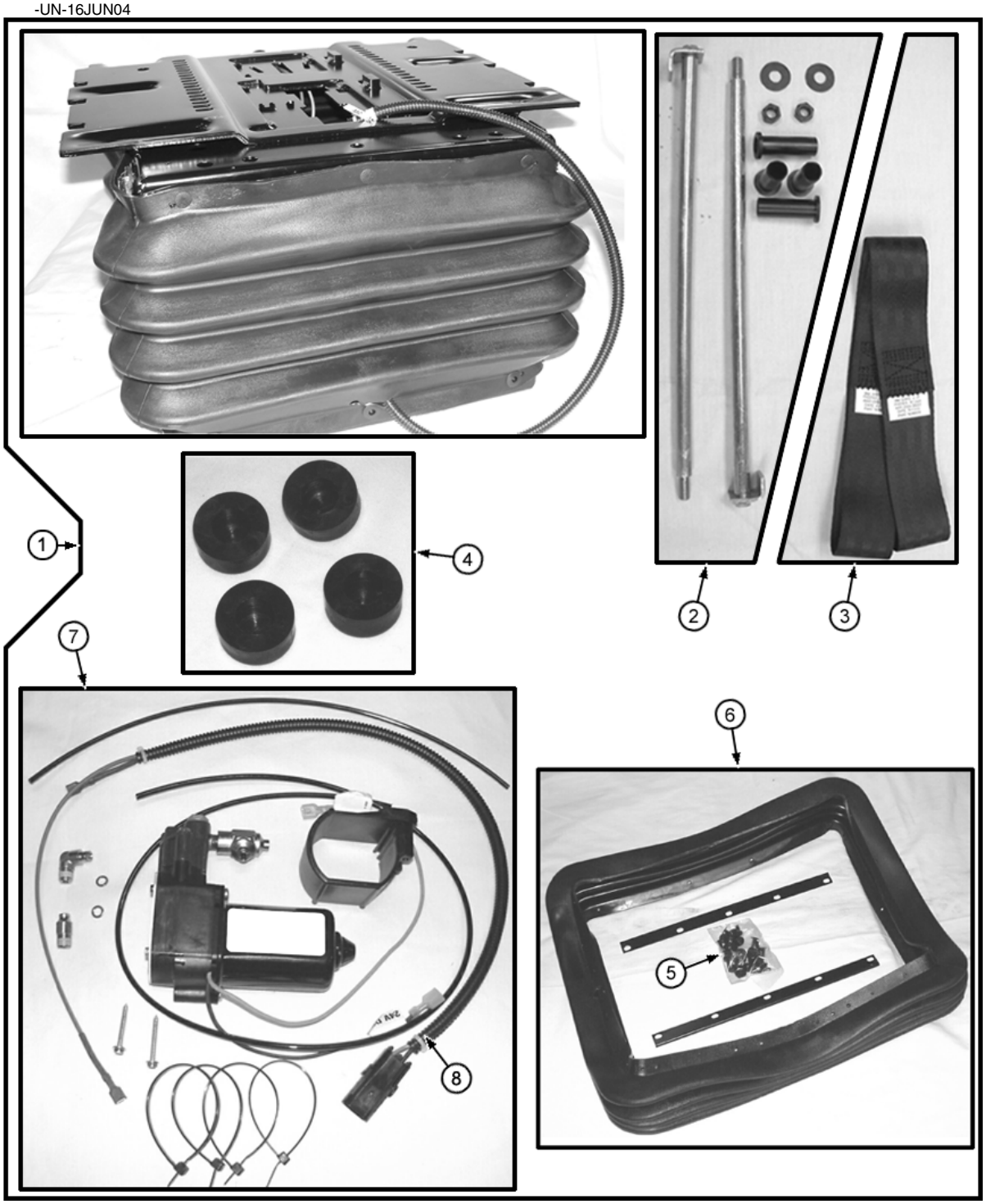

SEAT SUSPENSION (AIR SUSPENSION) (COMPONENT PARTS)
SUSPENSION DE SIEGE (SUSPENSION PNEUMATIQUE) (PIECES COMPOSANTES)
SUSPENSION DEL ASIENTO (SUSPENSION NEUMATICA) (COMPONENTES)

KEY	PART NO.	PART NAME	QTY.	SERIAL NO.	4 5 6 5 5 5 0 0 0 J J J	REMARKS
1	AT226818	SEAT SUSPENSION	1		X X X	(INCLUDES AT226818, T55224 AND AT208485) (AIR RIDE SUSPENSION 12 VOLT) (INCLUDES ALL PARTS ON THIS PAGE) (REST OF COMPONENTS FOUND ON ANOTHER AIR SUSPENSION PAGE)
	AT208484	HOUSING	1		X X X	(TOP PLATE ONLY)
	AT208485	ARM	1		X X X	(AIR SUSPENSION ARM WELDMENT) (COMPONENT OF AT226818)
	T55224	BUMPER	1		X X X	(COMPONENT OF AT226818)
2	AT173313	SHAFT	1		X X X	(KIT)
3	AT173315	KIT	1		X X X	(TETHER BELT)
4	AT173314	SEAT BEARING ROLLER KIT	1		X X X	
5	AT173321	SEAT SUSPENSION BOOT KIT	1		X X X	(BOOT CLIP KIT)
6	AT208491	KIT	1		X X X	(INCLUDES AT173321) (BOOT SERVICE)
7	AT198869	COMPRESSOR	1		X X X	(12 VOLT)
8	AT208488	WIRING HARNESS	1		X X X	(ALSO ORDER 19H2038)
	57M7120	FUSE	1		X X X	20 AMP
9	AT224393	WIRING HARNESS	1	-XXXXXX	X X X	(NOT ILLUSTRATED) (SEAT POWER) (FROM SEAT SUSPENSION HARNESS TO FUSE BOX) (NOT INCLUDED IN SEAT SUSPENSION ASSEMBLY)

SEAT SUSPENSION COMPONENT PARTS & SHOCK ABSORBER KIT (AIR SUSPENSION)
PIECES COMPOSANTES DE SUSPENSION DE SIEGE ET KIT D AMORTISSEUR (SUSPENSION PNEUMATIQUE)
JUEGO DE PARTES DEL COMPONENTE DE SUSPENSION DEL ASIENTO Y DE AMORTIGUADORES(SUSPENSION NEUMATICA)

T215935A -UN-11OCT05

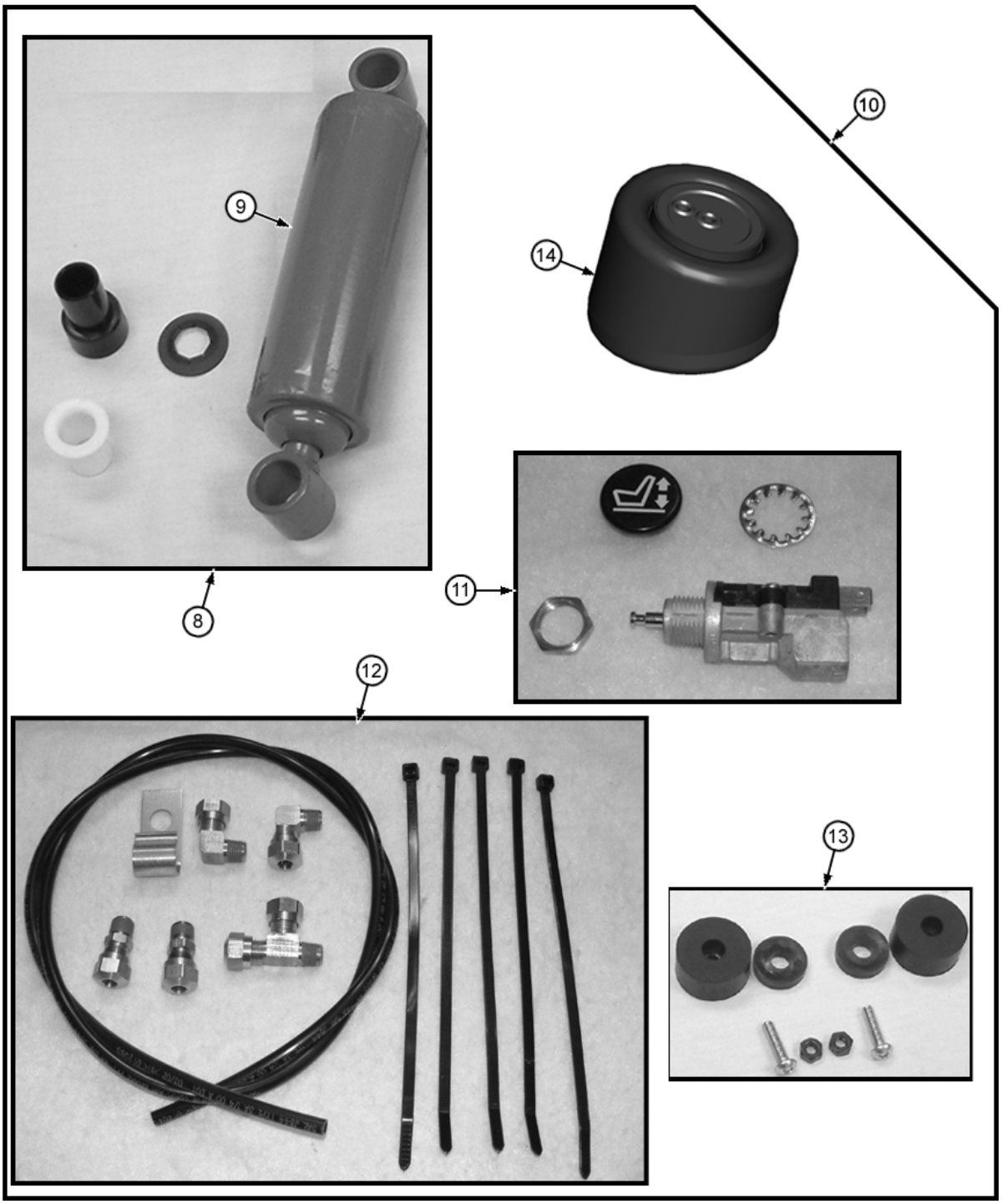

THIS PARTS LISTING IS CONTINUED

SEAT SUSPENSION COMPONENT PARTS & SHOCK ABSORBER KIT (AIR SUSPENSION)
PIECES COMPOSANTES DE SUSPENSION DE SIEGE ET KIT D'AMORTISSEUR (SUSPENSION PNEUMATIQUE)
JUEGO DE PARTES DEL COMPONENTE DE SUSPENSION DEL ASIENTO Y DE AMORTIGUADORES(SUSPENSION NEUMATICA)

KEY	PART NO.	PART NAME	QTY.	SERIAL NO.	450 J	550 J	650 J	REMARKS
8	AT208487	KIT	1		X	X	X	
9	T163394	SHOCK ABSORBER	1		X	X	X	
10	AT226818	SEAT SUSPENSION	1		X	X	X	(REST OF COMPONENTS SHOWN ON ANOTHER AIR SUSPENSION PAGE)
11	AT208490	SELECTIVE CONTROL VALVE	1		X	X	X	
12	AT208493	FITTING KIT	1		X	X	X	(AIRLINE FITTINGS)
13	AT209469	KIT	1		X	X	X	(BUMPER KIT)
14	AT208486	ABSORBER	1		X	X	X	(AIR SPRING) (COMPONENT OF AT226818) (AIR BLADDER SPRING)

LUMBAR KIT (DELUXE AND AIR SUSPENSION SEAT)
KIT DE SUPPORT LOMBAIRE (DELUXE ET SIEGE A SUSPENSION PNEUMATIQUE)
JUEGO DE SOPORTE LUMBAR (DELUXE Y ASIENTO CON SUSPENSION NEUMATICA)

T189058B -UN-04APR03

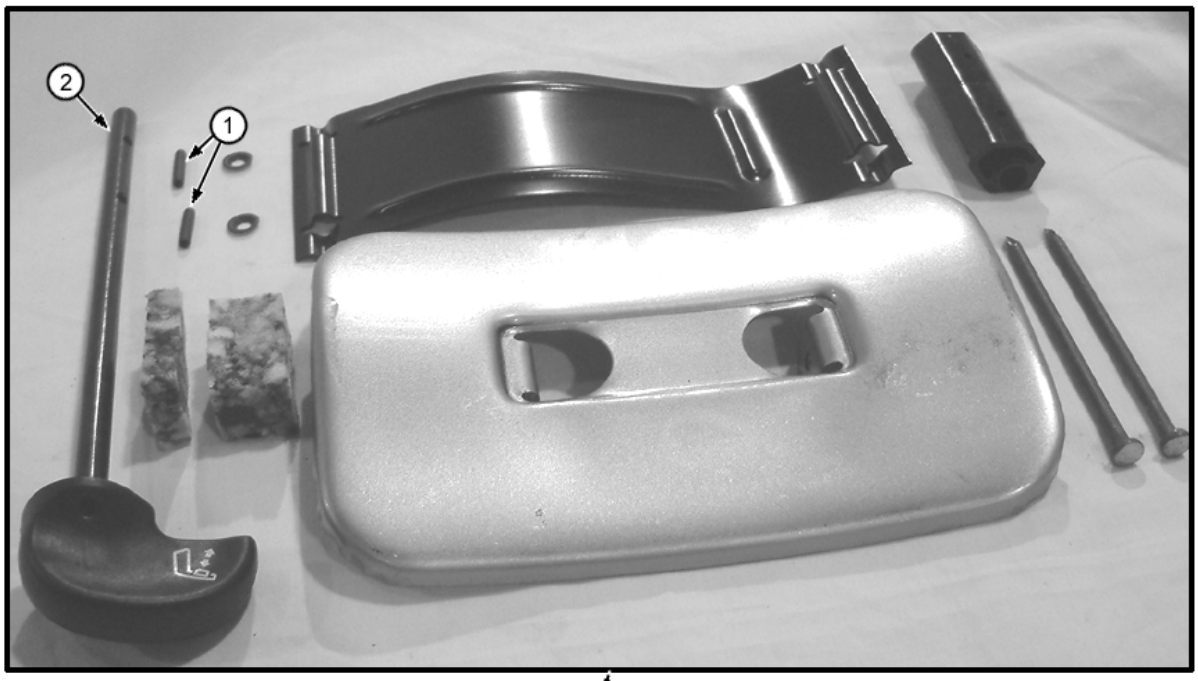

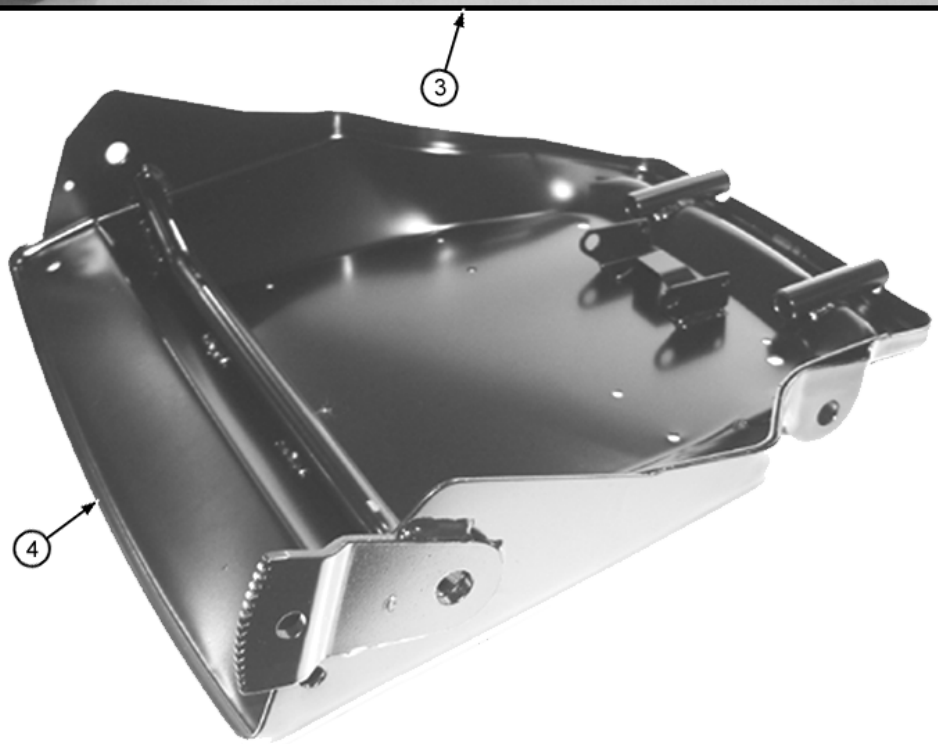

THIS PARTS LISTING IS CONTINUED

LUMBAR KIT (DELUXE AND AIR SUSPENSION SEAT)
KIT DE SUPPORT LOMBAIRE (DELUXE ET SIEGE A SUSPENSION PNEUMATIQUE)
JUEGO DE SOPORTE LUMBAR (DELUXE Y ASIENTO CON SUSPENSION NEUMATICA)

KEY	PART NO.	PART NAME	QTY.	SERIAL NO.	450 J	550 J	650 J	REMARKS
1	34H387	SPRING PIN	2		X	X	X	
2	AT209024	KIT	1		X	X	X	(INCLUDES 34H262) (LUMBAR KNOB)
	34H262	SPRING PIN	1		X	X	X	5/32" X 3/4", (COMPONENT OF AT209024)
3	AT209026	KIT	1		X	X	X	(INCLUDES 34H387 AND AT209024)
4	AT280583	PAN	1		X	X	X	

RECLINER KIT (DELUXE AND AIR SUSPENSION SEAT)
KIT D'INCLINAISON (DELUXE ET SIEGE A SUSPENSION PNEUMATIQUE)
JUEGO DE ASIENTO RECLINABLE (DELUXE Y ASIENTO CON SUSPENSION NEUMATICA)

TX1019528 -UN-

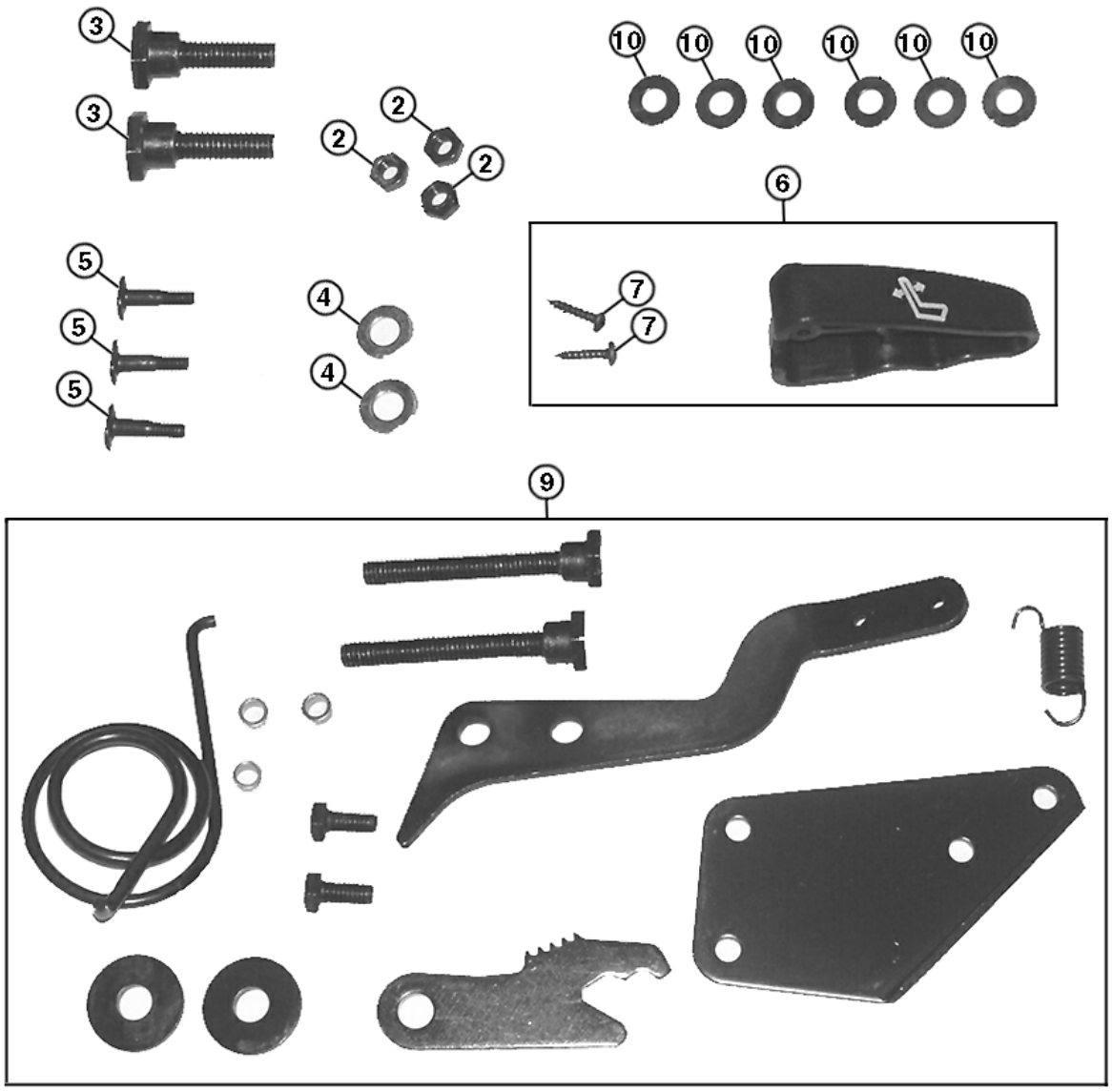

TX1019528

RECLINER KIT (DELUXE AND AIR SUSPENSION SEAT)
KIT D'INCLINAISON (DELUXE ET SIEGE A SUSPENSION PNEUMATIQUE)
JUEGO DE ASIENTO RECLINABLE (DELUXE Y ASIENTO CON SUSPENSION NEUMATICA)

KEY	PART NO.	PART NAME	QTY.	SERIAL NO.	450J	550J	650J	REMARKS
2	M453T	LOCK NUT	3		X	X	X	
3	19H1813	CAP SCREW	2		X	X	X	7.925 X 15.875 MM
4	24H1136	WASHER	2		X	X	X	8.738 X 17.475 X 1.651 MM
5	19H1914	CAP SCREW	3		X	X	X	6.350 X 25.400 MM
6	AT209025	KIT	1		X	X	X	(INCLUDES 37H121) (RECLINER KNOB KIT)
7	37H121	SCREW	2		X	X	X	
9	AT209225	KIT	1		X	X	X	(RECLINER) (DOES NOT INCLUDE 19H1813, 24H1136, 19H1914, 24H1287 - ORDER SEPARATELY)
10	24H1287	WASHER	6		X	X	X	7.137 X 15.875 X 1.651 MM

ROPS AND CAB HEATER (UNDER SEAT)
ARCEAU DE SECURITE ET CHAUFFAGE DE CABINE (SOUS LE SIEGE)
ROPS Y CALEFACTOR DE CABINA (DEBAJO DEL ASIENTO)

T143109 -UN-15JUN01

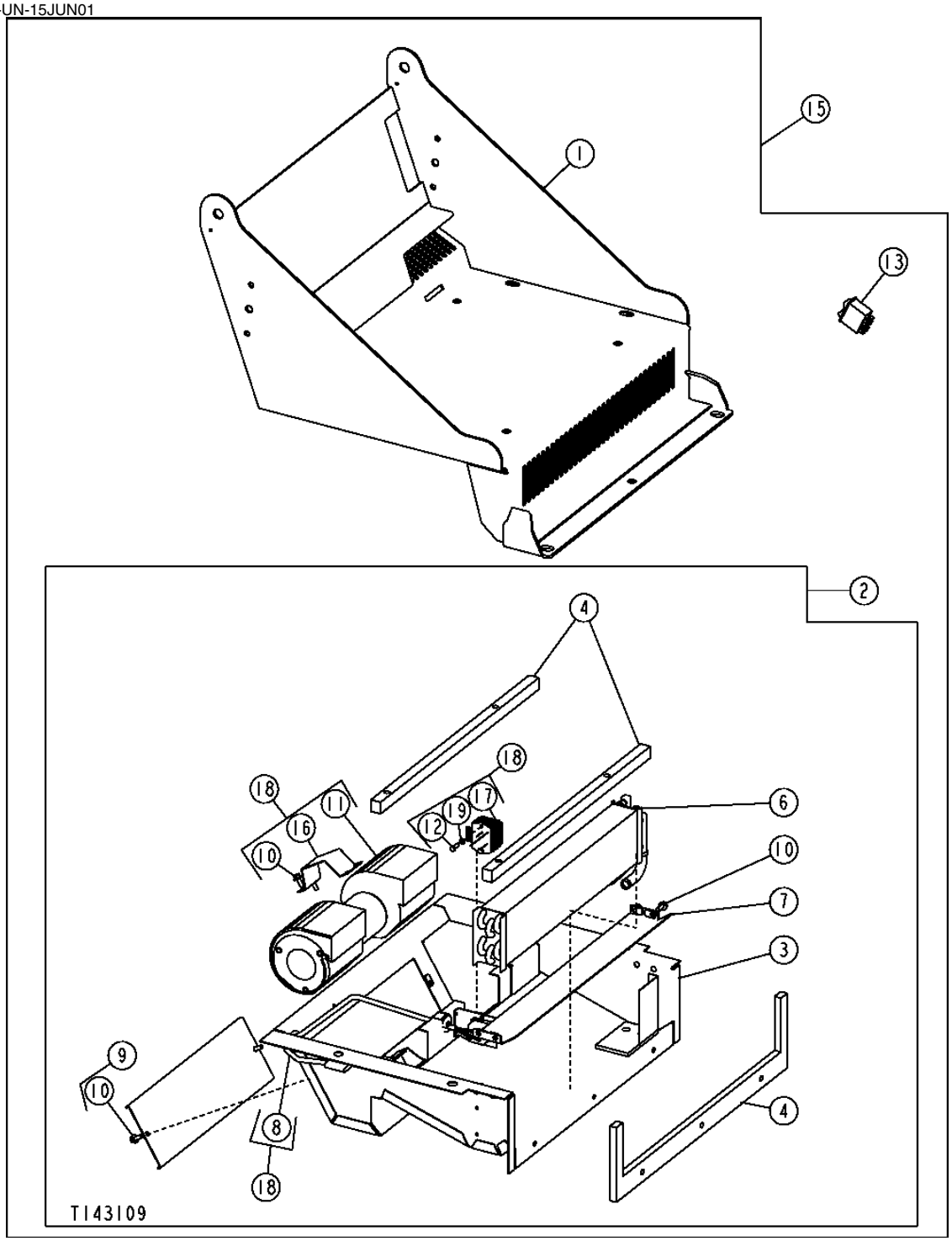

ROPS AND CAB HEATER (UNDER SEAT)
ARCEAU DE SECURITE ET CHAUFFAGE DE CABINE (SOUS LE SIEGE)
ROPS Y CALEFACTOR DE CABINA (DEBAJO DEL ASIENTO)

KEY	PART NO.	PART NAME	QTY.	SERIAL NO.	456 555 000 JJJ	REMARKS
1	AT207486	BASE	1		X X X	(ROPS SEAT)
2	AT224601	HEATER	1		X X X	(UNDER SEAT)
3	AT224602	TRAY	1		X X X	(HEATER)
4	AT221245	GASKET KIT	1		X X X	
6	AT211192	CORE	1		X X X	(HEATER)
7	AT221246	SUPPORT	1		X X X	
8	AT224604	WIRING HARNESS	1		X X X	(SEAT BASE ROPS HEATER)
9	AT221249	PLATE	1		X X X	(CAB ONLY)
10	19M7775	SCREW	10		X X X	M6 X 16
11	AT224603	BLOWER	1		X X X	(WITH MOTOR)
12	19M7372	CAP SCREW	2		X X X	M5 X 16
13	AT306956	TOGGLE/ROCKER SWITCH	1		X X X	(HEATER)
14	.....	PLUG	1		X X X	(SUB T207060) (T163309 NLA) (USED WHEN ROPS SEAT BASE HEATER IS NOT) (NOT ILLUSTRATED)
15	**AT306964**	**GATHERING NUMBER**	**1**		**X X X**	**ROPS HEATER FIELD KIT (WHOLE GOODS) (PARTS ARE ALSO INCLUDED ON ROPS HEATER PLUMBING PAGE)**
16	T181217	BRACKET	1		X X X	
17	AT182200	RESISTOR	1		X X X	(FOUR SPEED RESISTOR)
18	AT224758	HEATER	1		X X X	(BLOWER UPGRADE)
19	24M7087	WASHER	2		X X X	5.500 X 10 X 1 MM

ROPS HEATER PLUMBING
TUYAUTERIE DE CHAUFFAGE D'ARCEAU DE SECURITE
TUBERIA DE CALEFACTOR DE ROPS

TX1004879 -UN-16MAR06

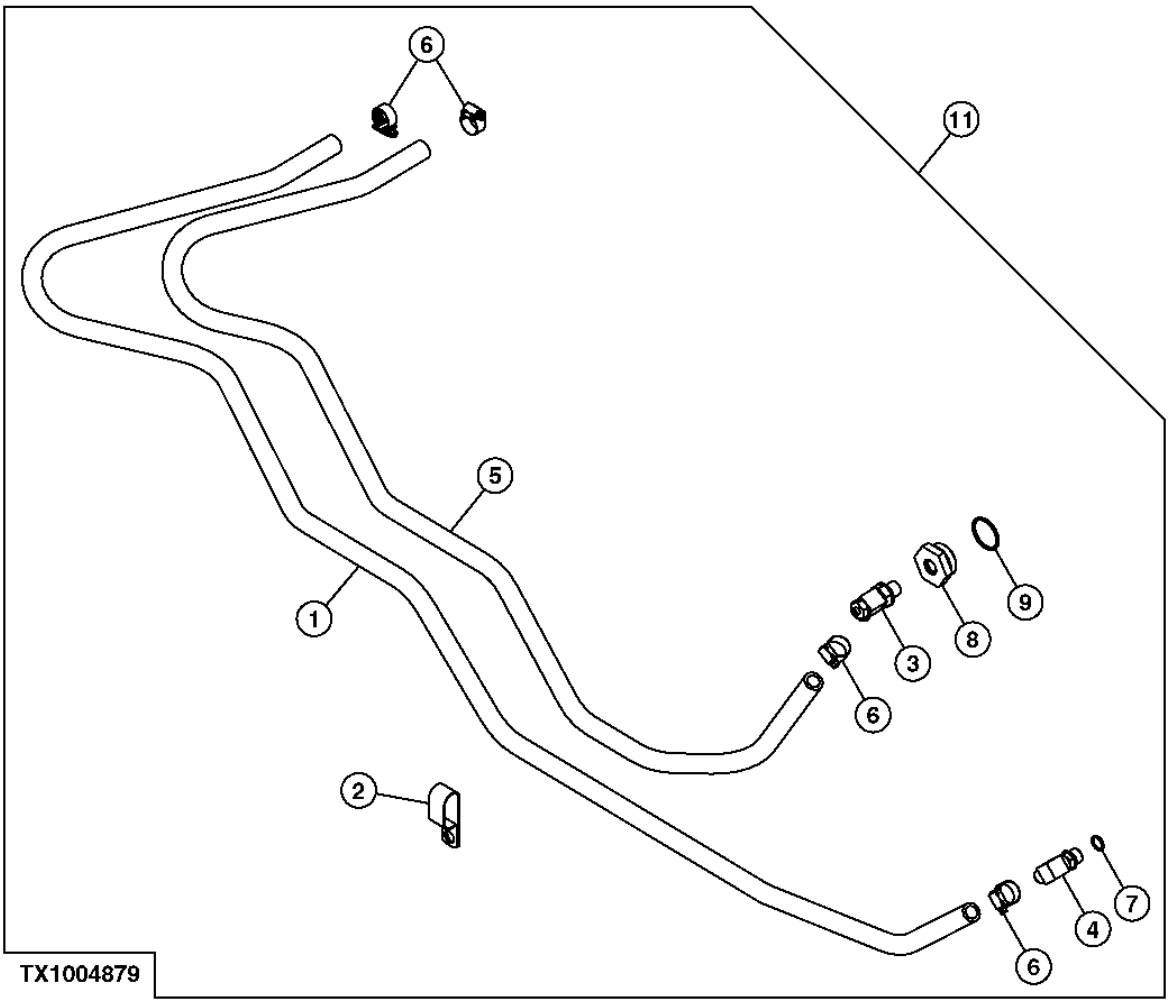

ROPS HEATER PLUMBING
TUYAUTERIE DE CHAUFFAGE D'ARCEAU DE SECURITE
TUBERIA DE CALEFACTOR DE ROPS

KEY	PART NO.	PART NAME	QTY.	SERIAL NO.	450J	550J	650J	REMARKS
1	.....	HOSE	1		X	X	X	(MAKE FROM T60811) (CUT TO LENGTH, 2270 MM (90 INCH)) (HEATER HOSE)
2	T149597	CLAMP	1		X	X	X	
3	RE59579	DRAIN VALVE	1		X	X	X	
4	AT174697	ELBOW FITTING	1		X	X	X	
5	.....	HOSE	1		X	X	X	(MAKE FROM T60811) (CUT TO LENGTH, 1754 MM (70 INCH)) (HEATER HOSE)
6	AR21837	CLAMP	4		X	X	X	
7	51M7043	O-RING	1		X	X	X	15.300 X 2.200 MM
8	R123616	PLUG	1		X	X	X	
9	U13639	O-RING	1		X	X	X	
10	R44302	TIE BAND	8		X	X	X	
11	**AT306964**	**GATHERING NUMBER**	**1**		**X**	**X**	**X**	**(ROPS HEATER FIELD KIT) (WHOLE GOODS) (PARTS ARE ALSO INCLUDED ON ROPS HEATER PAGE)**

CAB HEATER PLUMBING
TUYAUTERIE DE CHAUFFAGE DE CABINE
TUBERIA DE CALEFACTOR DE CABINA

TX1004878 -UN-16MAR06

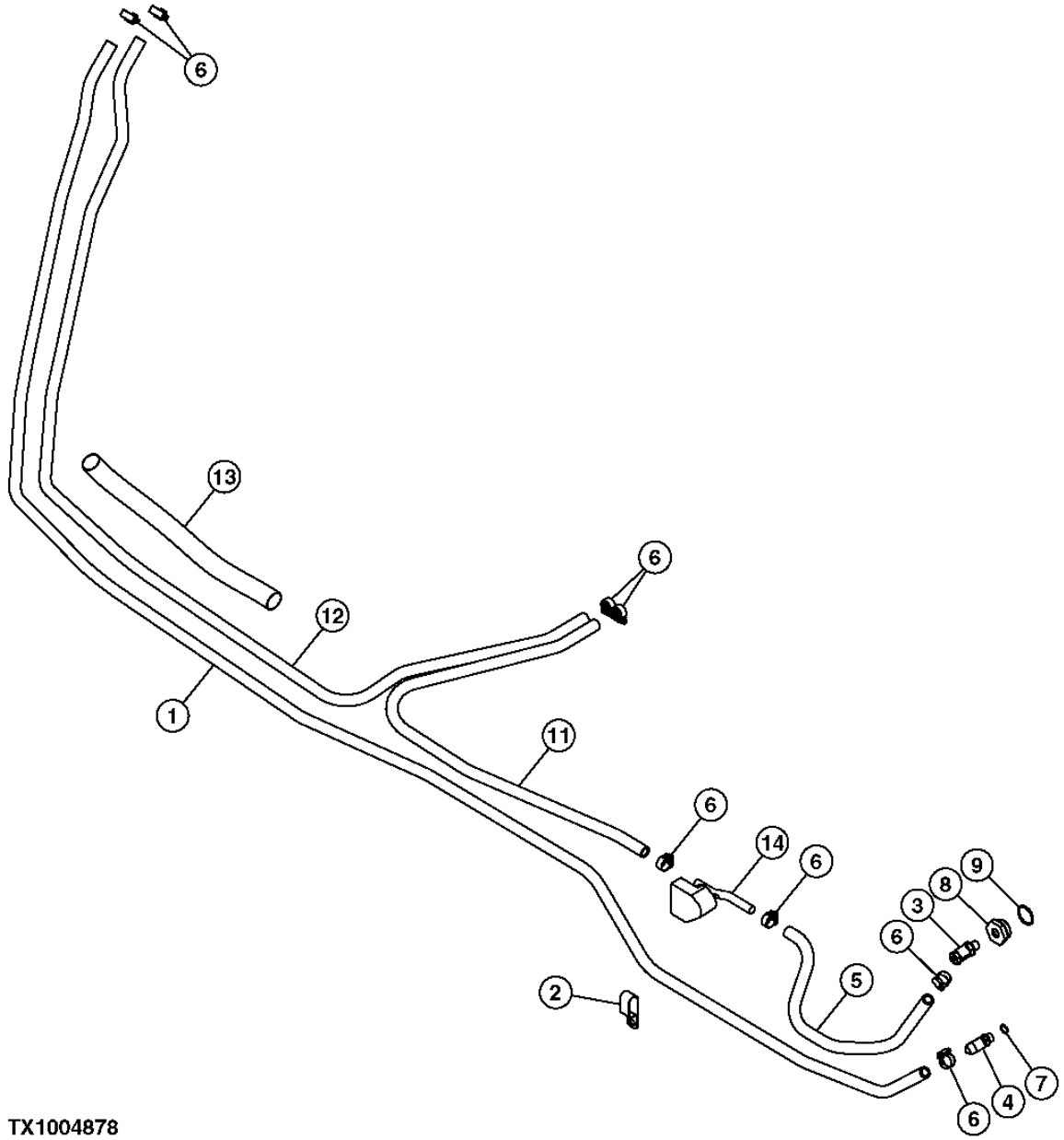

TX1004878

CAB HEATER PLUMBING
TUYAUTERIE DE CHAUFFAGE DE CABINE
TUBERIA DE CALEFACTOR DE CABINA

KEY	PART NO.	PART NAME	QTY.	SERIAL NO.	456 555 000 JJJ	REMARKS
1	.....	BULK HOSE	1		X X X	(MAKE FROM T60811) (CUT TO LENGTH, 4030 MM (159 INCH))
2	T149597	CLAMP	1		X X X	
3	RE59579	DRAIN VALVE	1		X X X	(DRAIN)
4	AT174697	ELBOW FITTING	1		X X X	
5	.....	BULK HOSE	1		X X X	(MAKE FROM T60811) (CUT TO LENGTH, 657 MM (26 INCH))
6	AR21837	CLAMP	8		X X X	
7	51M7043	O-RING	1		X X X	15.300 X 2.200 MM
8	R123616	PLUG	1		X X X	
9	U13639	O-RING	1		X X X	
10	R44302	TIE BAND	5		X X X	
	H77698	TIE BAND	2		X X X	
11	.....	BULK HOSE	1		X X X	(MAKE FROM T60811) (CUT TO LENGTH, 1175 MM (46 INCH))
12	.....	BULK HOSE	1		X X X	(MAKE FROM T60811) (CUT TO LENGTH, 2730 MM (108 INCH))
13	.....	HOSE GUARD	1		X X X	(CORDURA) (CUT TO LENGTH, 1448MM PARKER PS-B-17)
14	AT220542	FLOW CONTROL HYD. VALVE	1		X X X	(WATER)

CAB HEATER (UPPER)
CHAUFFAGE DE CABINE (SUPERIEUR)
CALEFACTOR DE CABINA (SUPERIOR)

TX1000206 -UN-14NOV05

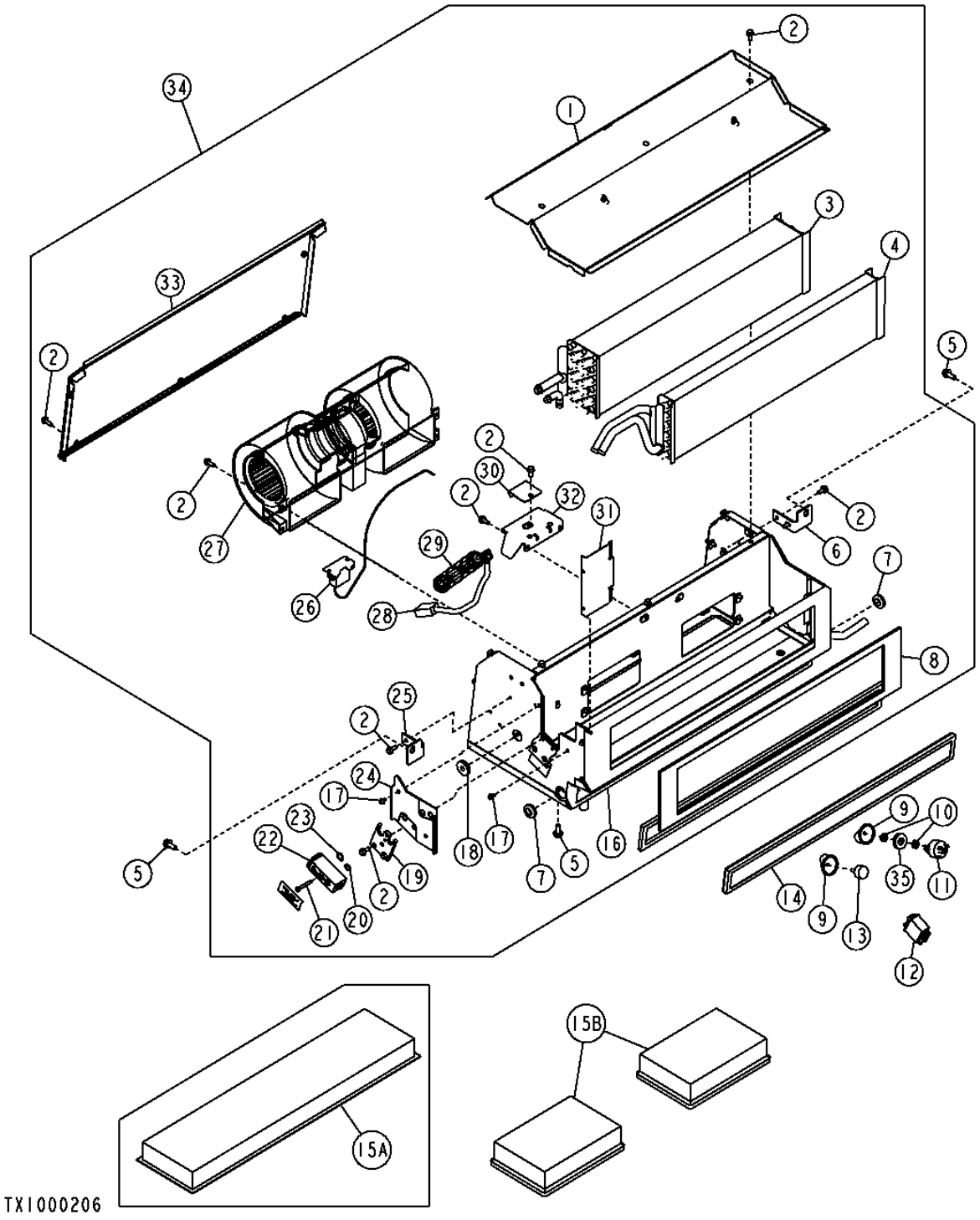

CAB HEATER (UPPER)
CHAUFFAGE DE CABINE (SUPERIEUR)
CALEFACTOR DE CABINA (SUPERIOR)

KEY	PART NO.	PART NAME	QTY.	SERIAL NO.	450J	550J	650J	REMARKS
1	AT221267	COVER	1		X	X	X	(TOP)
2	19M7775	SCREW	34		X	X	X	M6 X 16
3	AT207848	CORE	1		X	X	X	(EVAPORATOR)
4	AT207849	CORE	1		X	X	X	(HEATER)
5	19M7866	SCREW	10		X	X	X	M8 X 20
6	T177172	BRACKET	1		X	X	X	(TIE DOWN)
7	P41858	GROMMET	2		X	X	X	
8	AT221263	GASKET KIT	1		X	X	X	
9	AT220817	KNOB	2		X	X	X	(SWITCH)
10	E46066	NUT	2		X	X	X	(JAM)
11	RE43497	SWITCH	1		X	X	X	(IN OVERHEAD CONTROL PANEL)
12	AT306956	TOGGLE/ROCKER SWITCH	1		X	X	X	(ON/OFF) (IN DASH)
13	AT219733	TEMPERATURE SWITCH	1		X	X	X	(IN OVERHEAD CONTROL PANEL)
14	AT315957	FILTER ELEMENT	1		X	X	X	(SUB FOR AT221265) (RECIRCULATION) (INSIDE, ABOVE REAR WINDOW)
15A	AT315958	AIR FILTER	1	-118110	X	X	X	(SUB FOR AT222256) (FRESH AIR FILTER) (CONTACT GR MANUFACTURING IF YOU HAVE AN ENVIRONMENTAL CAB)
15B	AT191102	AIR FILTER	2	118111-	X	X	X	(FRESH AIR FILTER) (CONTACT GR MANUFACTURING IF YOU HAVE AN ENVIRONMENTAL CAB)
16	AT224719	HOUSING	1	-118110	X	X	X	
	AT224721	GASKET KIT	1		X	X	X	(NOT ILLUSTRATED) (UPPER HEATER DRAIN PAN FOAM)
	AT326633	HOUSING	1	118111-	X	X	X	
17	19M8870	SCREW	4		X	X	X	M5 X 8
18	R26936	GROMMET	1		X	X	X	
19	T158127	PLATE	1		X	X	X	(MOUNT)
20	R113050	O-RING	1		X	X	X	
21	19M8669	SCREW	2		X	X	X	M5 X 35
22	RE57575	VALVE	1		X	X	X	(THERMAL EXPANSION)
23	R33259	O-RING	1		X	X	X	
24	AT221317	PLATE	1		X	X	X	(CUTOUT)
25	T177171	BRACKET	1		X	X	X	(RIGHT TIE DOWN)
26	RE198074	TEMPERATURE SWITCH	1		X	X	X	(SWITCH FREEZE CONTROL)
27	AT221261	BLOWER FAN	1		X	X	X	(HEATER)
28	AT223253	WIRING HARNESS	1		X	X	X	
29	AT221271	RESISTOR	1		X	X	X	
30	T177168	PLATE	1		X	X	X	(RETAINER MOTOR SPORT)
31	AT221266	RETAINER	1		X	X	X	(HEATER MOTOR)
32	AT221279	BRACKET	1		X	X	X	
33	AT221268	COVER	1		X	X	X	(AIR CONDITIONER BACK)
34	AT224762	HEATER	1	-118110	X	X	X	(UPPER)
	AT326630	HEATER	1	118111-	X	X	X	
35	24H1272	WASHER	1		X	X	X	

AIR CONDITIONING
CLIMATISATION
ACONDIC. DE AIRE

TX1011903 -UN-11SEP06

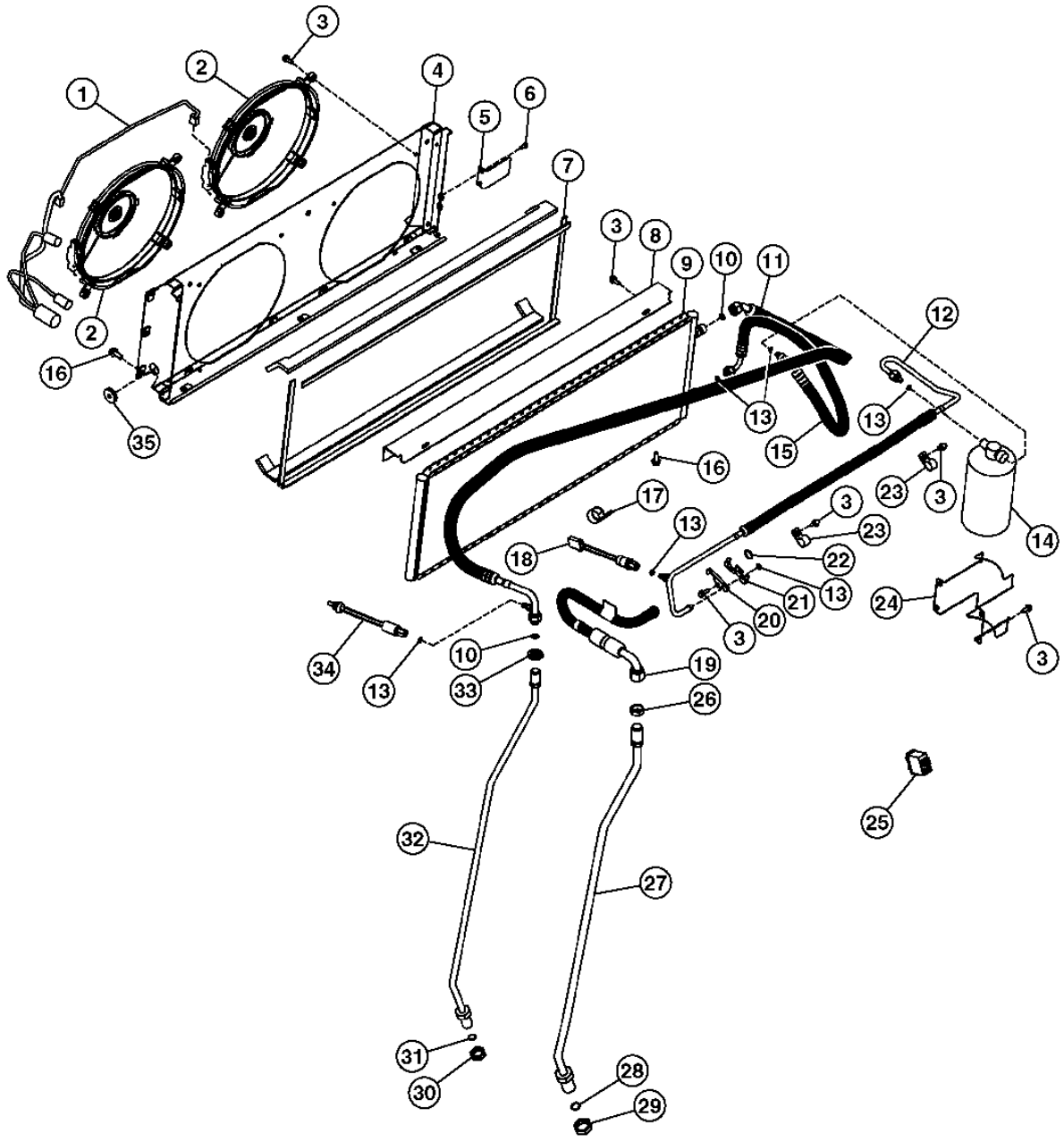

TX1011903

AIR CONDITIONING
CLIMATISATION
ACONDIC. DE AIRE

KEY	PART NO.	PART NAME	QTY.	SERIAL NO.	450 J	550 J	650 J	REMARKS
1	AT221314	AIR PLENUM	1		X	X	X	(WIRING HARNESS CONDENSER)
2	AT221282	SUCTION FAN	2		X	X	X	(CONDENSER) (INCLUDES RESISTOR)
3	19M7775	SCREW	18		X	X	X	M6 X 16
4	AT221298	AIR PLENUM	1		X	X	X	(CONDENSER FANS)
5	.....	BRACKET	1		X	X	X	
6	19M7775	SCREW	1		X	X	X	M6 X 16
7	AT221312	INSULATOR	1		X	X	X	(CONDENSER FOAM KIT)
8	AT221308	BRACKET	1		X	X	X	(CONDENSER RETAINER)
9	AT207545	CORE	1		X	X	X	(CONDENSER)
10	R113050	O-RING	2		X	X	X	
11	AT221318	REFRIGERANT HOSE	1		X	X	X	(BULKHEAD TO CONDENSER)
12	AT221321	REFRIGERANT HOSE	1		X	X	X	(HOSE DRIER)
13	R10093	O-RING	6		X	X	X	
14	AT162848	RECEIVER-DRYER	1		X	X	X	
15	AT221320	REFRIGERANT HOSE	1		X	X	X	(CONDENSER TO DRIER)
16	19M7866	SCREW	9		X	X	X	M8 X 20
17	T27550	CLIP	1		X	X	X	
18	RE155938	PRESSURE SWITCH	1		X	X	X	
19	AT221319	REFRIGERANT HOSE	1		X	X	X	
20	T177227	PLATE	1		X	X	X	
21	T177226	PLATE	1		X	X	X	
22	T143169	O-RING	1		X	X	X	
23	AH78237	CLAMP	2		X	X	X	
24	T177228	BRACKET	1		X	X	X	(RECEIVER / DRIER)
25	AT306943	TOGGLE/ROCKER SWITCH	1		X	X	X	(ON/OFF)
	.....	PLUG	1		X	X	X	(SUB T207060) (T163309 NLA) (FOR SWITCH HOLE WHEN NO AIR CONDITIONING)
26	R26627	NUT	1		X	X	X	
27	AT211404	LINE	1		X	X	X	(INCLUDES 38H1221) (REFRIGERANT)
28	T77932	O-RING	1		X	X	X	
29	T80306	NUT	1		X	X	X	
30	T78716	NUT	1		X	X	X	
31	T77857	O-RING	1		X	X	X	
32	AT211403	LINE	1		X	X	X	(INCLUDES 38H1220) (REFRIGERANT)
33	H148375	LOCK NUT	1		X	X	X	
34	RE60888	PRESSURE SWITCH	1		X	X	X	
35	R26936	GROMMET	1		X	X	X	
39	**AT227785**	**FIELD INSTALLATION KIT**	**1**		**X**	**X**	**X**	**(HOUSING NOT ILLUSTRATED) (WHOLEGOODS) (CONTAINS HOUSING AND INSTALLATION INSTRUCTIONS)**
40	RE43497	SWITCH	1		X	X	X	(ILLUSTRATED ON CAB HEATER PAGE) (ELECTRICAL SWITCH IN OVERHEAD CONSOLE PANEL)
41	AT219733	TEMPERATURE SWITCH	1		X	X	X	(ILLUSTRATED ON CAB HEATER PAGE) (ELECTRICAL SWITCH IN OVERHEAD CONSOLE PANEL)

AIR CONDITIONING PLUMBING
TUYAUTERIE DE CLIMATISATION
TUBERIA DEL ACONDICIONADOR DE AIRE

T199547 -UN-26MAY04

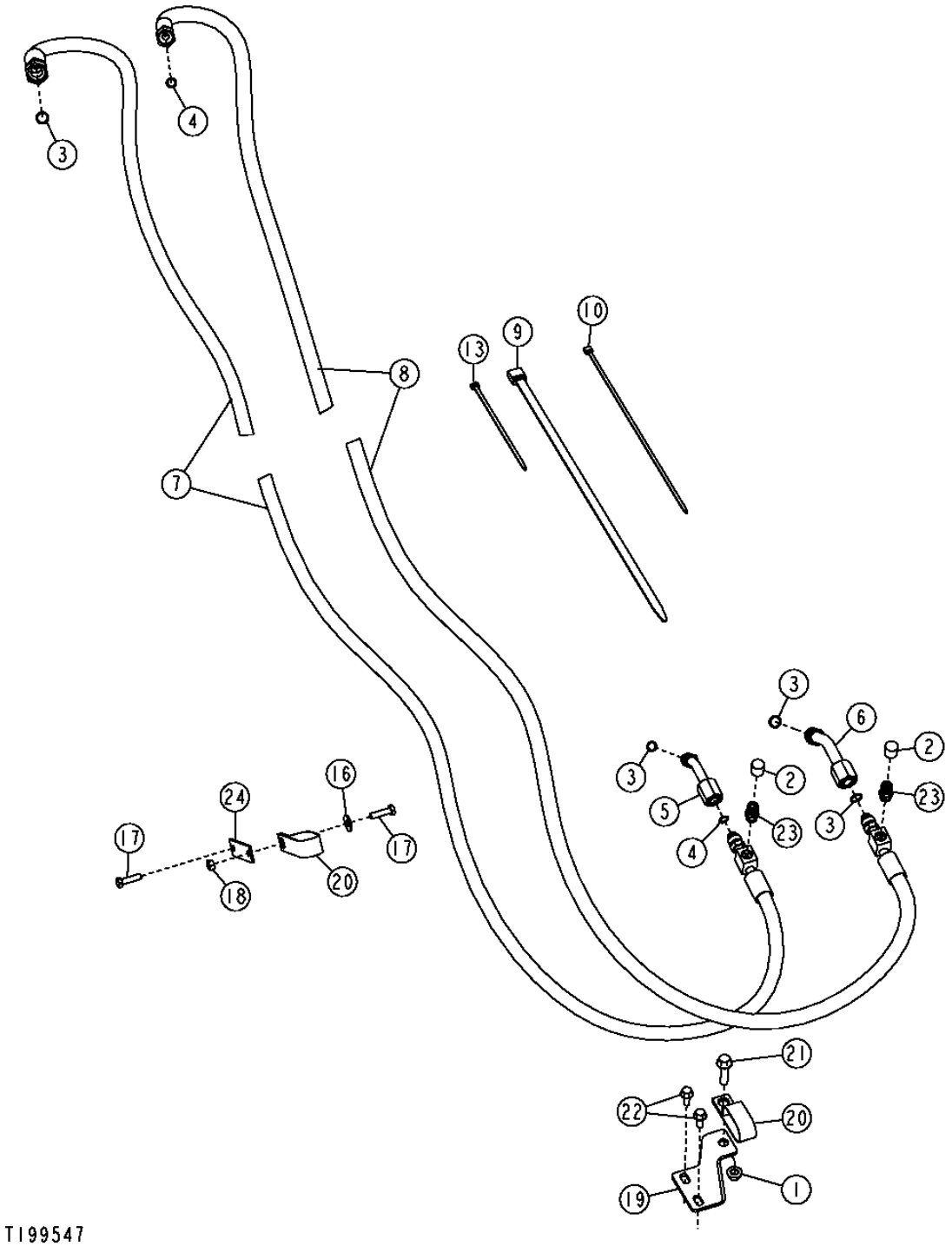

AIR CONDITIONING SYSTEM, COMPRESSOR AND DRIVE 1832

AIR CONDITIONING PLUMBING
TUYAUTERIE DE CLIMATISATION
TUBERIA DEL ACONDICIONADOR DE AIRE

KEY	PART NO.	PART NAME	QTY.	SERIAL NO.	455 500 JJJ	REMARKS
1	14M7296	FLANGE NUT	1		X X	M10, (CHARGE) (HIGH PRESSURE FITTING)
2	T148917	CAP	2		X X X	(HIGH PRESSURE)
	T148946	CAP	1		X X X	(LOW PRESSURE)
3	R33259	O-RING	4		X X X	
4	R113050	O-RING	2		X X X	
5	AT171107	STRUCTURAL TUBING	1		X X X	(REFRIGERANT)
6	AT207639	LINE	1		X X X	(REFRIGERANT)
7	AT223872	REFRIGERANT HOSE	1		X X X	(LOW PRESSURE) (INCLUDES BRAZED ON CHARGE FITTING)
8	AT223873	REFRIGERANT HOSE	1		X X X	(HIGH PRESSURE) (INCLUDES BRAZED ON CHARGE FITTING)
9	N189220	TIE BAND	1		X X X	
10	H77698	TIE BAND	6		X X X	
13	R44302	TIE BAND	1		X X X	
16	24M7207	WASHER	1		X X X	8.400 X 24 X 2 MM
17	19M7513	CAP SCREW	2		X X X	M8 X 30
18	14M7273	NUT	1		X X X	M8
19	T200830	BRACKET	1		X X	(REQUIRES 14M7296 AND 19M7804)
20	T149597	CLAMP	2		X X X	
21	19M7804	SCREW	1		X X X	M10 X 40
22	19M7866	SCREW	2		X X	M8 X 20
	19M7866	SCREW	1		X	M8 X 20
23	.....	FITTING	1		X X X	(CHARGE) (HIGH PRESSURE FITTING) (NEVER SERVICED ON THESE UNITS - BRAZED ON HOSE FITTING)
	.....	FITTING	1		X X X	(LOW PRESSURE FITTING) (NEVER SERVICED ON THESE UNITS - BRAZED ON HOSE FITTING)
24	T132233	STRAP	1		X X	

AIR CONDITIONING COMPRESSOR
COMPRESSEUR DE CLIMATISATION
COMPRESOR DEL ACONDICIONADOR DE AIRE

T199541 -UN-04MAY04

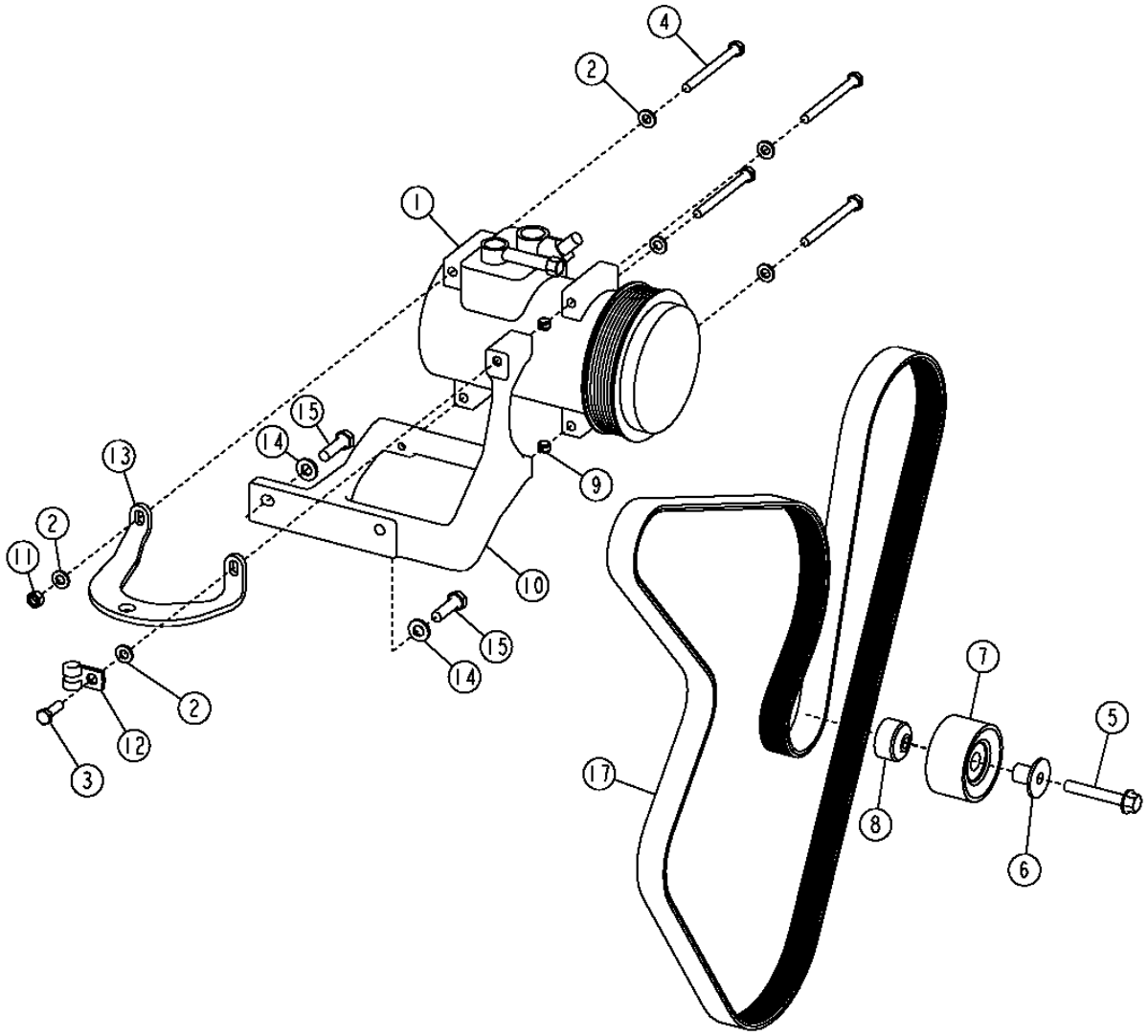

T199541

AIR CONDITIONING SYSTEM, COMPRESSOR AND DRIVE 1832

AIR CONDITIONING COMPRESSOR
COMPRESSEUR DE CLIMATISATION
COMPRESOR DEL ACONDICIONADOR DE AIRE

KEY	PART NO.	PART NAME	QTY.	SERIAL NO.	450 J	550 J	650 J	REMARKS
1	RE46609	COMPRESSOR	1		X	X	X	
2	24M7238	WASHER	6		X	X	X	8.700 X 17 X 2 MM
3	19M7407	CAP SCREW	1		X	X	X	M8 X 25
4	19M8539	CAP SCREW	4		X	X	X	M8 X 90
5	19M7808	SCREW	1		X	X	X	M10 X 65
6	R502079	SLEEVE	1		X	X	X	
7	RE505264	PULLEY	1		X	X	X	
8	R500320	SPACER	1		X	X	X	(IDLER PULLEY)
9	34M7189	SPRING PIN	2		X	X	X	11 X 8 MM
10	R504192	BRACKET	1		X	X	X	
11	14M7273	NUT	1		X	X	X	M8
12	T78974	CLAMP	1		X	X	X	(USE WITH SUPPORT)
13	R504191	BRACKET	1		X	X	X	(SUB FOR T188560)
14	24M7239	WASHER	2		X	X	X	10.700 X 21 X 2.500 MM
15	19M7550	CAP SCREW	2		X	X	X	M10 X 35
17	R500378	V-BELT	1		X	X		(POLY RIB)
	R500379	V-BELT	1				X	

AIR CONDITIONING SYSTEM, COMPRESSOR AND DRIVE 1832

AIR CONDITIONING COMPRESSOR MANIFOLD AND DUST COVER
COLLECTEUR DU COMPRESSEUR DE CLIMATISATION ET CACHE-POUSSIERE
COLECTOR DEL COMPRESOR Y TAPA CONTRA POLVO DEL ACONDICIONADOR DE AIRE

TP54000 -UN-13DEC96

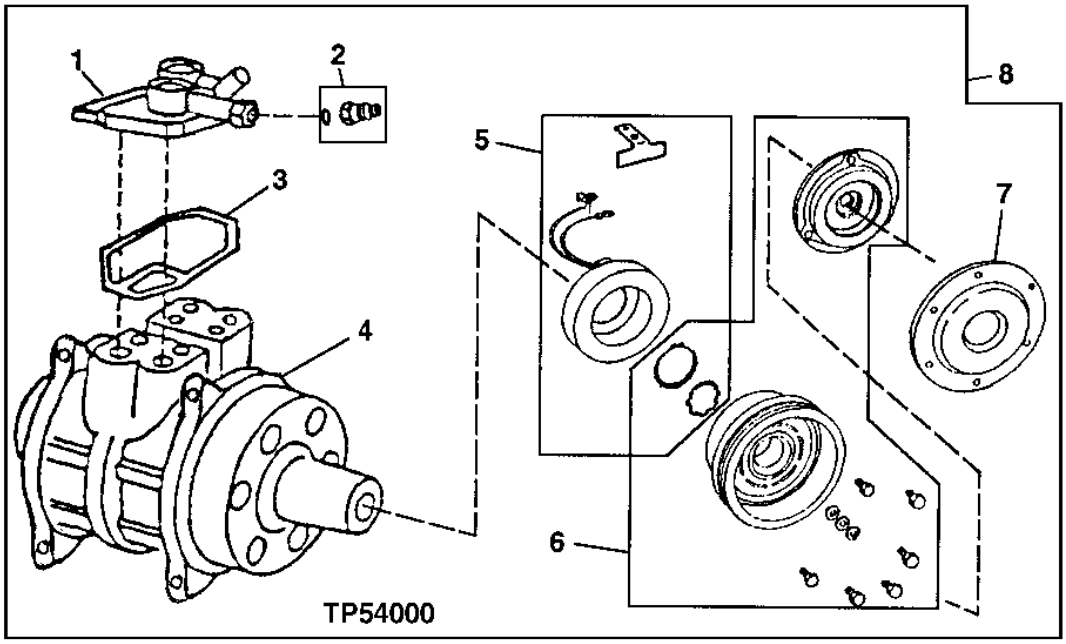

KEY	PART NO.	PART NAME	QTY.	SERIAL NO.	REMARKS
1	RE51052	MANIFOLD	1		(INCLUDES RE52506 AND R115742)
2	RE52506	FLOW CONTROL HYD. VALVE	1		
3	R115742	SEAL	1		
4	RE52454	COMPRESSOR	1		
5	RE52510	STATOR	1		
6	RE52508	KIT	1		COMPRESSOR CLUTCH AND PULLEY (INCLUDES CLUTCH HUB SCREW, CLUTCH HUB, SNAP RING (STATOR), SNAP RING (ROTOR), (6) R77390 FRONT COVER SCREWS, (2) .5 MM SHIMS, (2) .3 MM (2) .1 MM SHIMS AND PULLEY WITH BEARING)
7	R115743	COVER	1		
8	TY6764	COMPRESSOR	1		

AIR CONDITIONER COMPRESSOR SHAFT SEAL KIT
KIT DETANCHEITE DARBRE DE COMPRESSEUR DE CLIMATISATION
JUEGO DE SELLOS DE EJE DE COMPRESOR DE A/A

TP34246 -UN-01JAN94

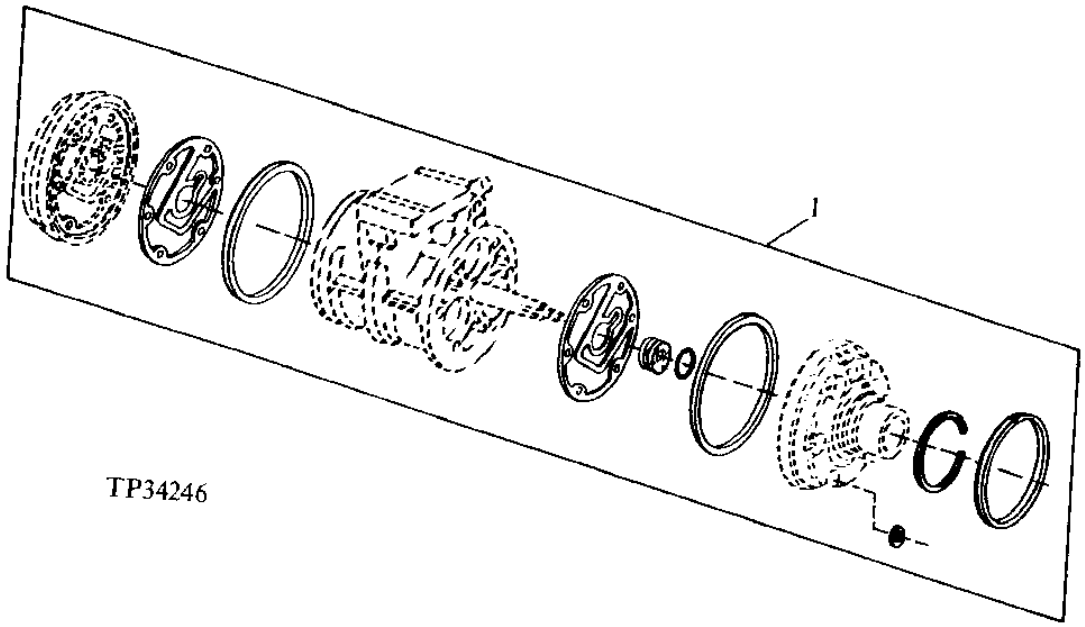

KEY	PART NO.	PART NAME	QTY.	SERIAL NO.	REMARKS
1	RE52509	SEAL KIT	1		(SHAFT SEAL)

COMPRESSOR HARDWARE KIT
KIT DE BOULONNERIE DE COMPRESSEUR
JUEGO DE TORNILLERIA DEL COMPRESOR

TP53974 -UN-12OCT96

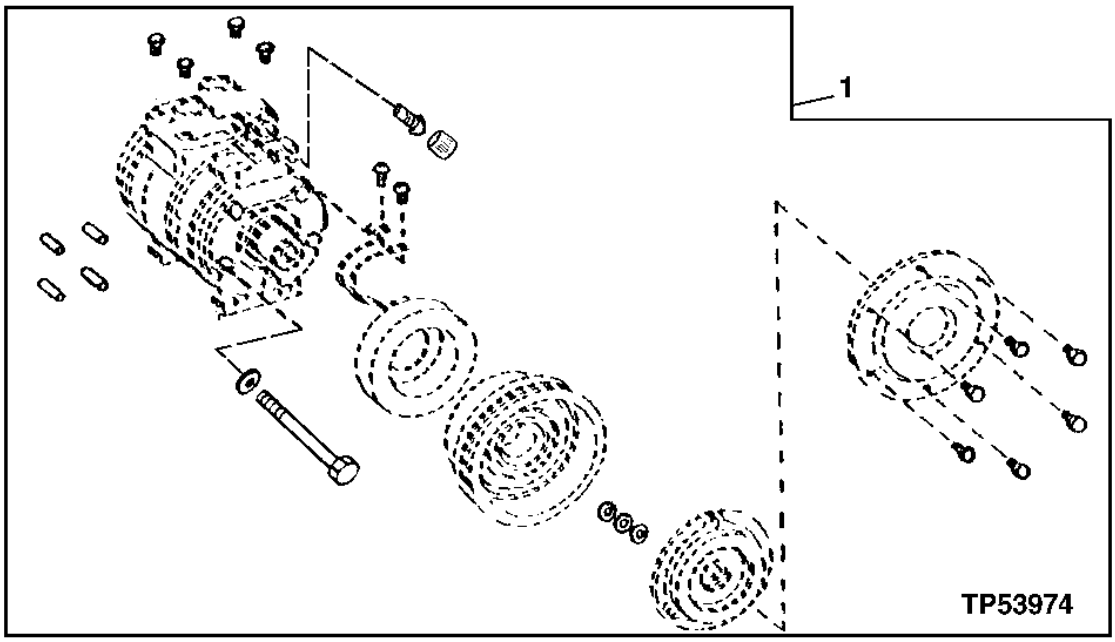

KEY	PART NO.	PART NAME	QTY.	SERIAL NO.	REMARKS
1	RE52507	KIT	1		

MEMORANDA
MEMORANDA
MEMORANDA

HOOD
CAPOT
CAPO

T199561 -UN-03MAY04

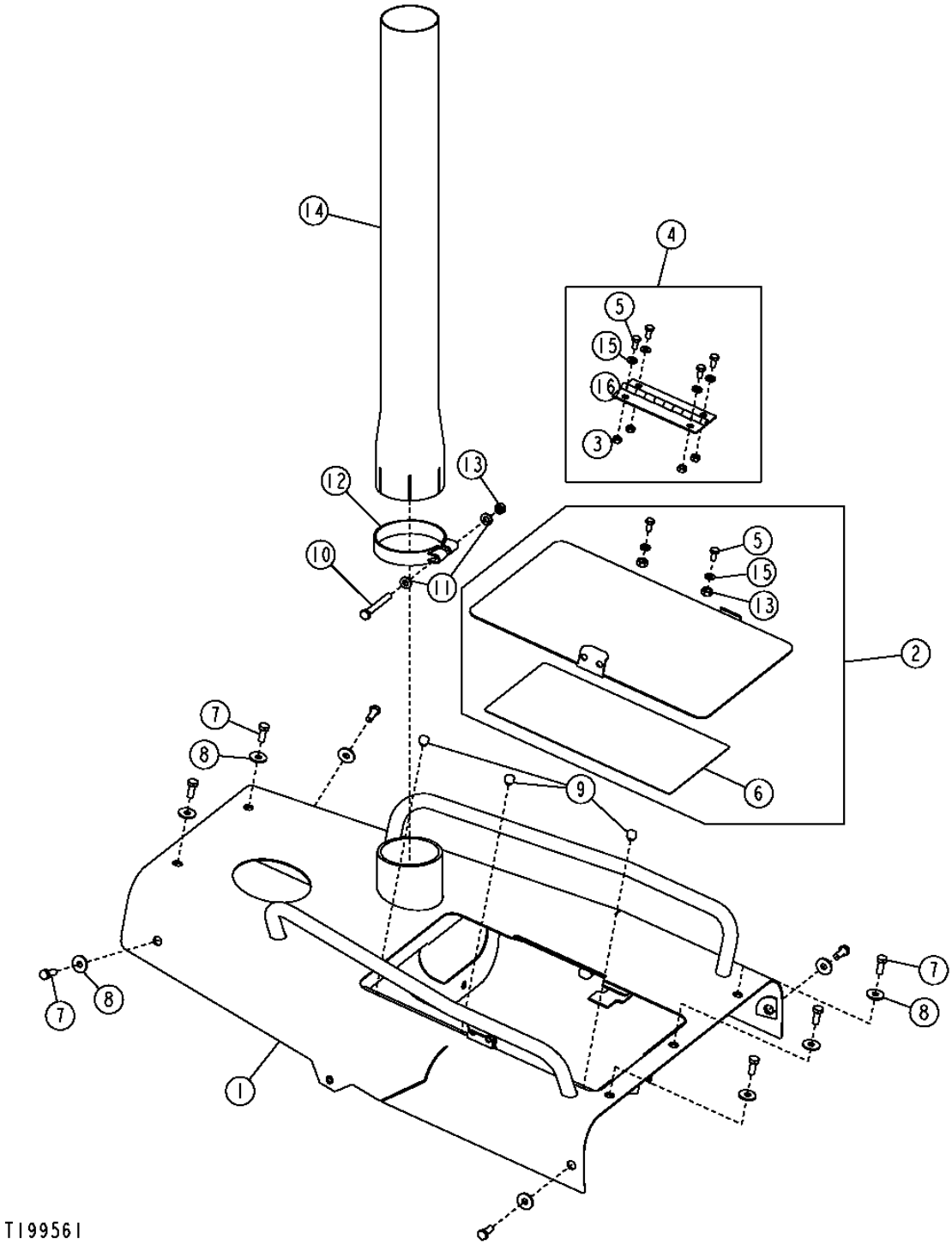

HOOD
CAPOT
CAPO

KEY	PART NO.	PART NAME	QTY.	SERIAL NO.	456 555 000 JJJ	REMARKS
1	AT305204	HOOD	1		X	
	AT305206	HOOD	1		XX	
2	AT303697	DOOR	1		XXX	
3	14M7273	NUT	4		XXX	M8
4	AT210600	HINGE	1		XXX	
5	19M7932	CAP SCREW	6		XXX	M8 X 16
6	T210576	LABEL	1		XXX	(SUB FOR T197138, THIS APPLICATION) (PERIODIC SERVICE CHART)
7	19M7402	CAP SCREW	9		XXX	M10 X 25
8	24M7296	WASHER	9		XXX	10.500 X 30 X 2.500 MM
9	M68997	BUMPER	3		XXX	
10	19M8081	CAP SCREW	1		XXX	M10 X 80
11	24M7239	WASHER	2		XXX	10.700 X 21 X 2.500 MM
12	T210998	CLAMP	1		XXX	(SUB FOR T121190, THIS APPLICATION)
13	14M7274	NUT	3		XXX	M10
14	T228551	EXHAUST PIPE	1		XXX	(SUB FOR T176675) (BLACK) (EXHAUST STACK)
	T228552	EXHAUST PIPE	1		XXX	(SUB FOR T176961) (CHROME) (EXHAUST STACK)
	T178070	MUFFLER EXTENSION	1		XXX	(BLACK) (CURVED STACK)
	T178071	MUFFLER EXTENSION	1		XXX	(CHROME) (CURVED STACK)
15	24M7238	WASHER	6		XXX	8.700 X 17 X 2 MM
16	AT162114	HINGE	1		XXX	

HOOD SUPPORT
ETAI DE CAPOT
SOPORTE DEL CAPO

T199007 -UN-07APR04

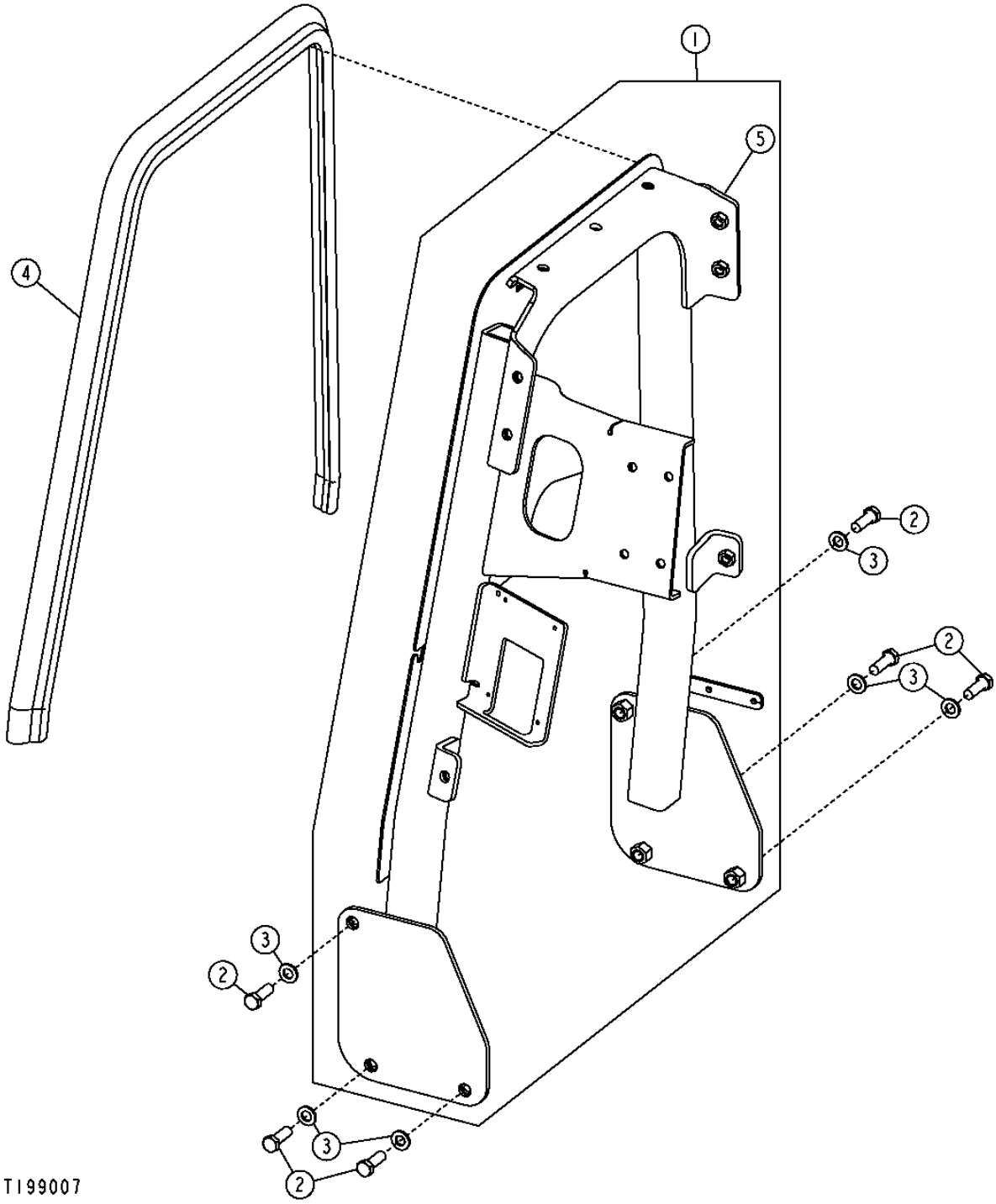

THIS PARTS LISTING IS CONTINUED

HOOD SUPPORT
ETAI DE CAPOT
SOPORTE DEL CAPO

KEY	PART NO.	PART NAME	QTY.	SERIAL NO.	450J	550J	650J	REMARKS
1	AT307298	SUPPORT	1		X			
	AT224985	SUPPORT	1			X	X	
	AT328869	SUPPORT	1				X	(WITH INTEGRATED GRADE CONTROL)
2	19M7403	CAP SCREW	6		X	X	X	M12 X 35, (TORQUE 73 NM (54 FT-LB))
3	24M7047	WASHER	6		X	X	X	13 X 24 X 2.500 MM
4	T180726	SEAL	1		X	X	X	
5	T180035	BRACKET	1		X	X	X	(UPPER MOUNTING)

SIDE SHIELD
PANNEAU LATERAL
ESCUDO LATERAL

TP52115 -UN-14JAN99

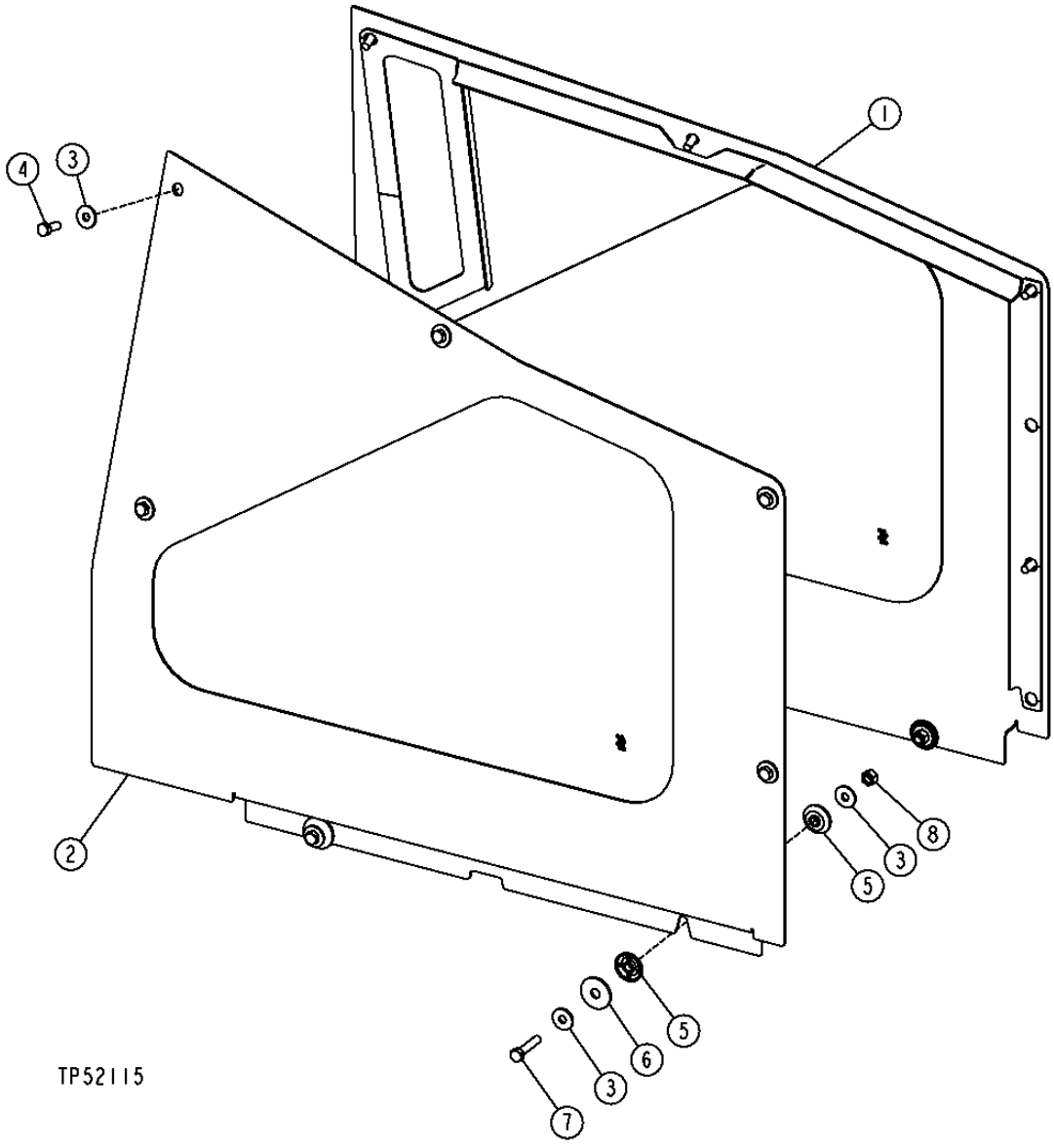

SIDE SHIELD
PANNEAU LATERAL
ESCUDO LATERAL

KEY	PART NO.	PART NAME	QTY.	SERIAL NO.	450J	550J	650J	REMARKS
1	M68997	BUMPER	1		X	X	X	(COMPONENT OF AT222968)
	AT222968	SHIELD	1		X	X	X	(INCLUDES M68997) (LEFT ENGINE SIDE)
	AT330321	SHIELD	1				X	(WITH INTEGRATED GRADE CONTROL)
2	M68997	BUMPER	1		X	X	X	(COMPONENT OF AT222970)
	AT222970	SHIELD	1		X	X	X	(INCLUDES M68997) (RIGHT ENGINE SIDE)
3	24M7296	WASHER	18		X	X	X	10.500 X 30 X 2.500 MM
4	19M7402	CAP SCREW	10		X	X	X	M10 X 25
5	T148643	GUIDE	8		X	X	X	
6	24H1346	WASHER	4		X	X	X	17/32" X 1-3/4" X 0.120", (NA)
7	19M7658	CAP SCREW	4		X	X	X	M10 X 50
8	14M7167	LOCK NUT	4		X	X	X	M10

SIDE SHIELD (IGC)
PANNEAU LATERAL (IGC)
ESCUDO LATERAL (IGC)

TX1017975 -UN-26JAN07

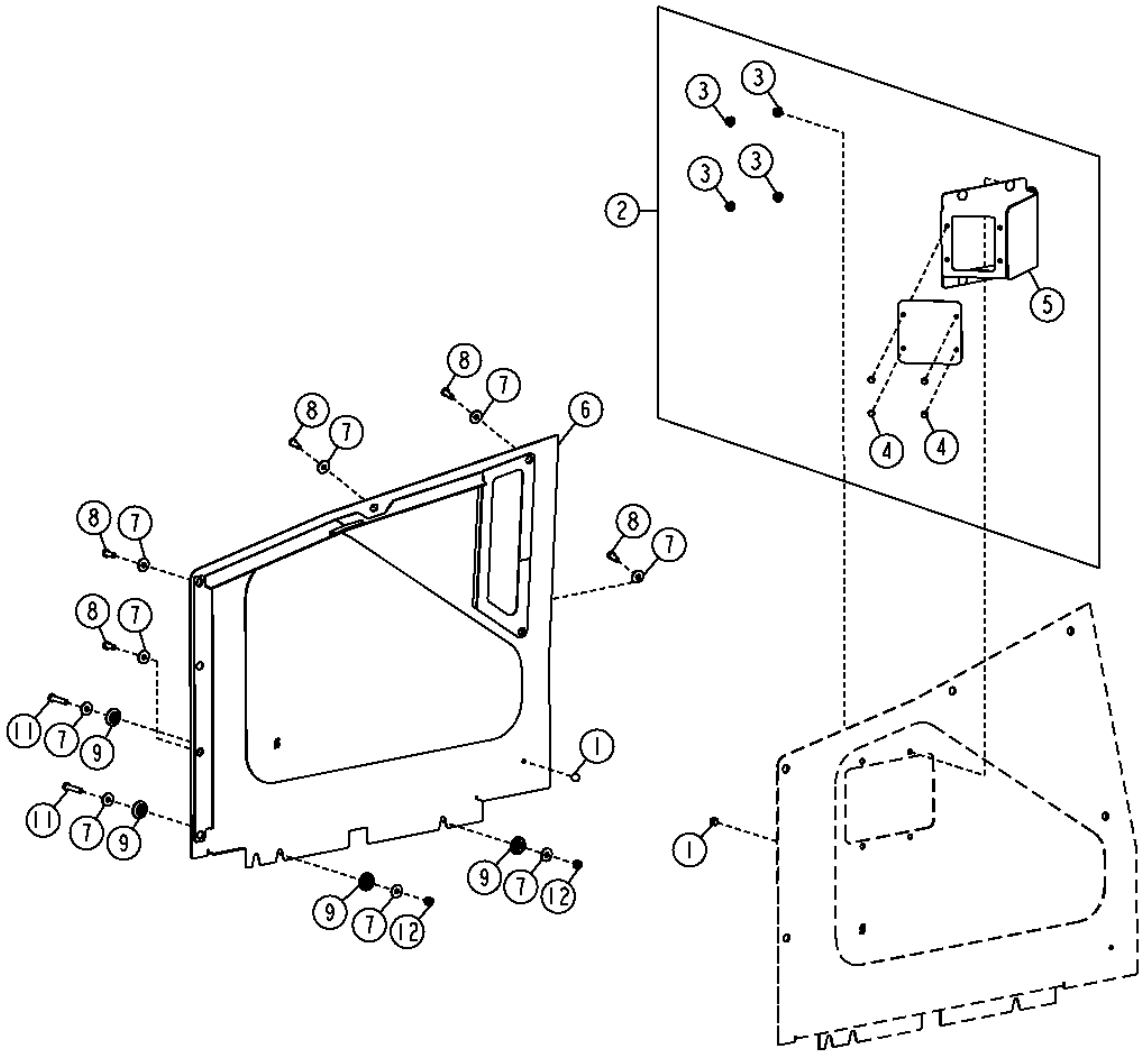

THIS PARTS LISTING IS CONTINUED

SIDE SHIELD (IGC)
PANNEAU LATERAL
ESCUDO LATERAL

KEY	PART NO.	PART NAME	QTY.	SERIAL NO.	450J	550J	650J	REMARKS
1	M68997	BUMPER	2					
2	AT331141	ELEC. CONNECTOR HOUSING	1					
3	14M7296	FLANGE NUT	4					M10
4	19M7775	SCREW	4					M6 X 16
5	AT332279	ELEC. CONNECTOR HOUSING	1					
6	AT222970	SHIELD	1					
7	24M7396	WASHER	9					21 X 34 X 3 MM
8	19M7402	CAP SCREW	5					M10 X 25
9	T148643	GUIDE	8					
11	19M7658	CAP SCREW	2					M10 X 50
12	14M7167	LOCK NUT	2					M10

GRILLE AND GRILLE HOUSING
CALANDRE ET LOGEMENT DE CALANDRE
PARRILLA Y CAJA DE LA PARRILLA

TP67705 -UN-13MAR00

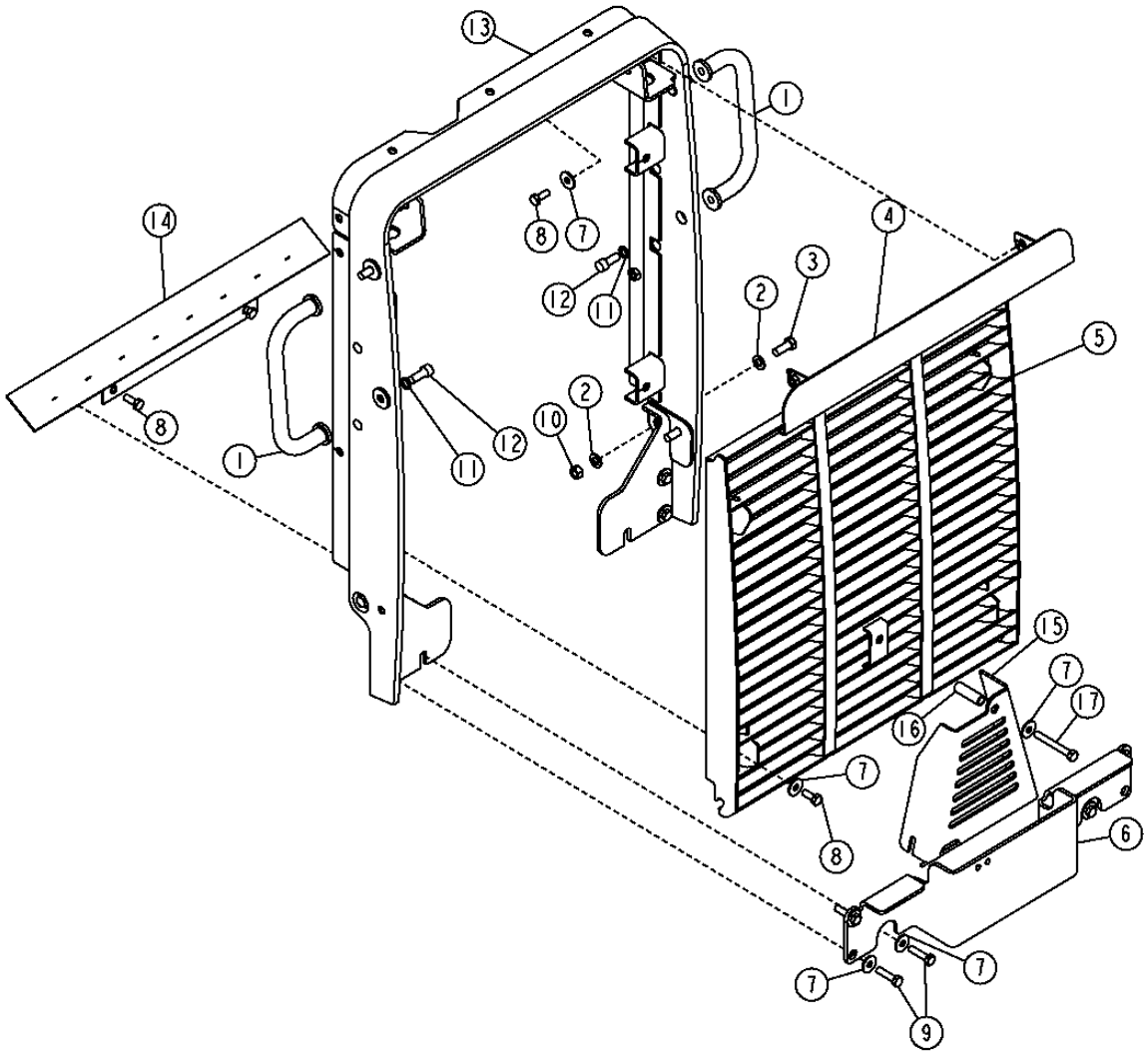

TP67705

GRILLE AND GRILLE HOUSING
CALANDRE ET LOGEMENT DE CALANDRE
PARRILLA Y CAJA DE LA PARRILLA

KEY	PART NO.	PART NAME	QTY.	SERIAL NO.	450 550 650 J J J	REMARKS
1	AT221353	HANDLE	2		X X X	(BOLT ON)
2	24H1272	WASHER	8		X X X	9/16" X 1-1/4" X 1/4"
3	19M7496	CAP SCREW	2		X X X	M12 X 45
4	AT209416	PLATE	1		X X X	(REMOVED FOR LIGHTS) (GREY LOGO)
5	AT312847	GRILLE	1		X X X	(SUB FOR AT228736)
6	T179724	HOSE GUARD	1		X X X	
7	24M7296	WASHER	13		X X X	10.500 X 30 X 2.500 MM
8	19M7402	CAP SCREW	8		X X X	M10 X 25
9	19M8600	CAP SCREW	4		X X X	M10 X 50
	19M7662	CAP SCREW	2		X X X	M10 X 30
10	14M7401	LOCK NUT	4		X X X	M12
11	24M7044	WASHER	4		X X X	13 X 20 X 2 MM
12	19M8169	SCREW	4		X X X	M12 X 30
13	AT210479	GRILLE	1		X X X	(FRAME) (GREY HOUSING)
14	AT308613	SHIELD	1		X X X	(DIRT FLAP)
15	T178661	HOSE GUARD	1		X X X	
16	28H3472	SPACER	1		X X X	
17	19M8183	CAP SCREW	1		X X X	M10 X 90

HEAVY DUTY GRILLE
CALANDRE RENFORCEE
PARRILLA PARA SERVICIO SEVERO

T199566 -UN-27MAY04

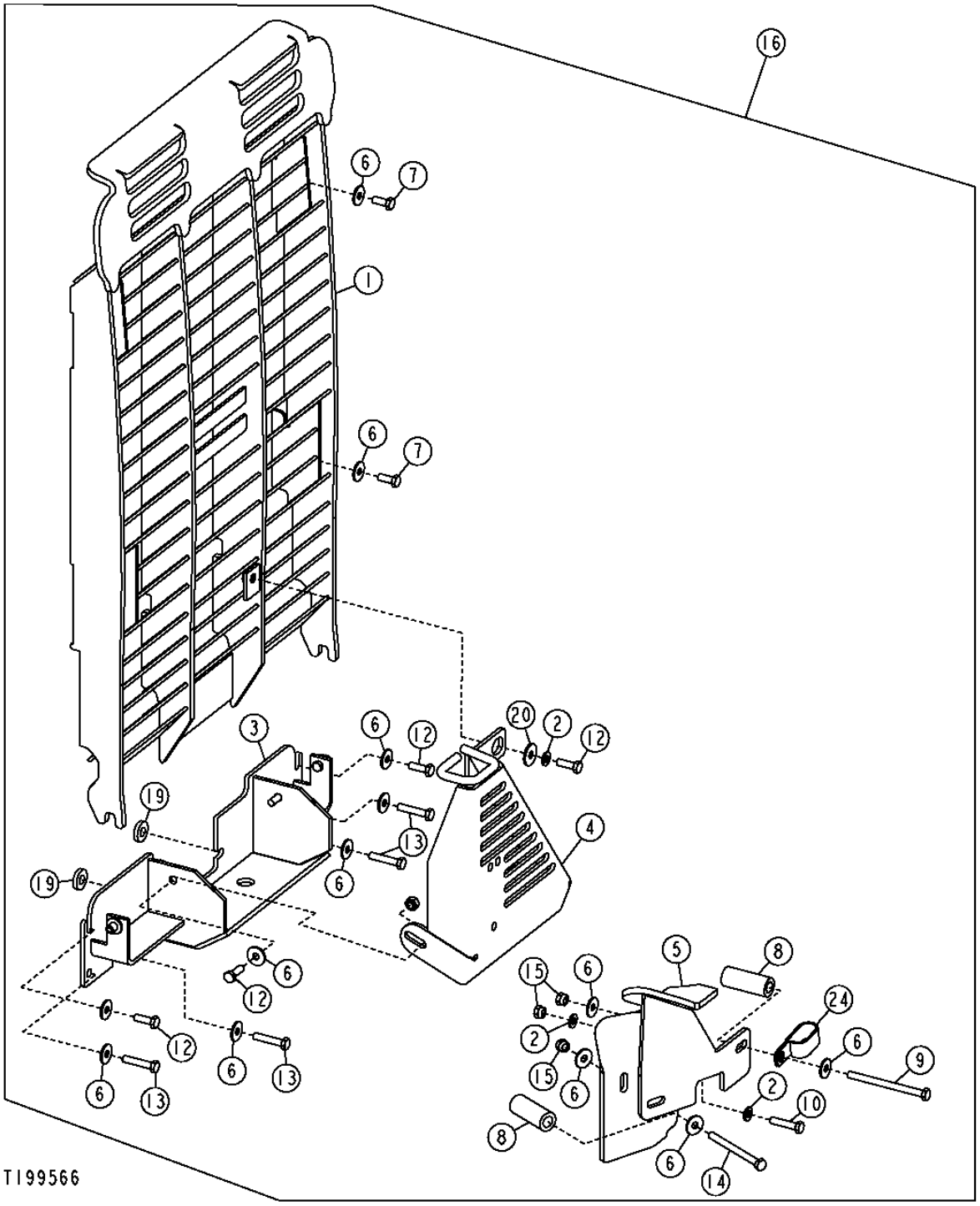

HEAVY DUTY GRILLE
CALANDRE RENFORCEE
PARRILLA PARA SERVICIO SEVERO

KEY	PART NO.	PART NAME	QTY.	SERIAL NO.	450 J	550 J	650 J	REMARKS
1	AT228737	GRILLE	1		X	X	X	
2	24M7239	WASHER	3		X	X	X	10.700 X 21 X 2.500 MM
3	AT222397	HOSE GUARD	1		X	X	X	
4	AT221503	HOSE GUARD	1		X	X	X	(TOP)
5	AT222472	HOSE GUARD	1		X	X	X	
6	24M7296	WASHER	16		X	X	X	10.500 X 30 X 2.500 MM
7	19M7402	CAP SCREW	4		X	X	X	M10 X 25
8	T151427	BUSHING	2		X	X	X	
9	19M7638	CAP SCREW	1		X	X	X	M10 X 130
10	19M7572	CAP SCREW	1		X	X	X	M10 X 45
12	19M7662	CAP SCREW	5		X	X	X	M10 X 30
13	19M8600	CAP SCREW	4		X	X	X	M10 X 50
14	19M8166	CAP SCREW	1		X	X	X	M10 X 110
15	14M7517	LOCK NUT	3		X	X	X	M10
16	**AT222512**	**KIT**	**1**		**X**	**X**	**X**	**(WHOLEGOODS)**
19	24H1272	WASHER	2		X	X	X	9/16" X 1-1/4" X 1/4"
20	24M7101	WASHER	1		X	X	X	11 X 34 X 3 MM
24	T126299	CLAMP	1		X	X	X	

BACK FENDER AND HOOD SEAL
AILE ARRIERE ET JOINT DE CAPOT
GUARDABARROS TRASERO Y SELLO DEL CAPO

TP52153 -UN-14JAN99

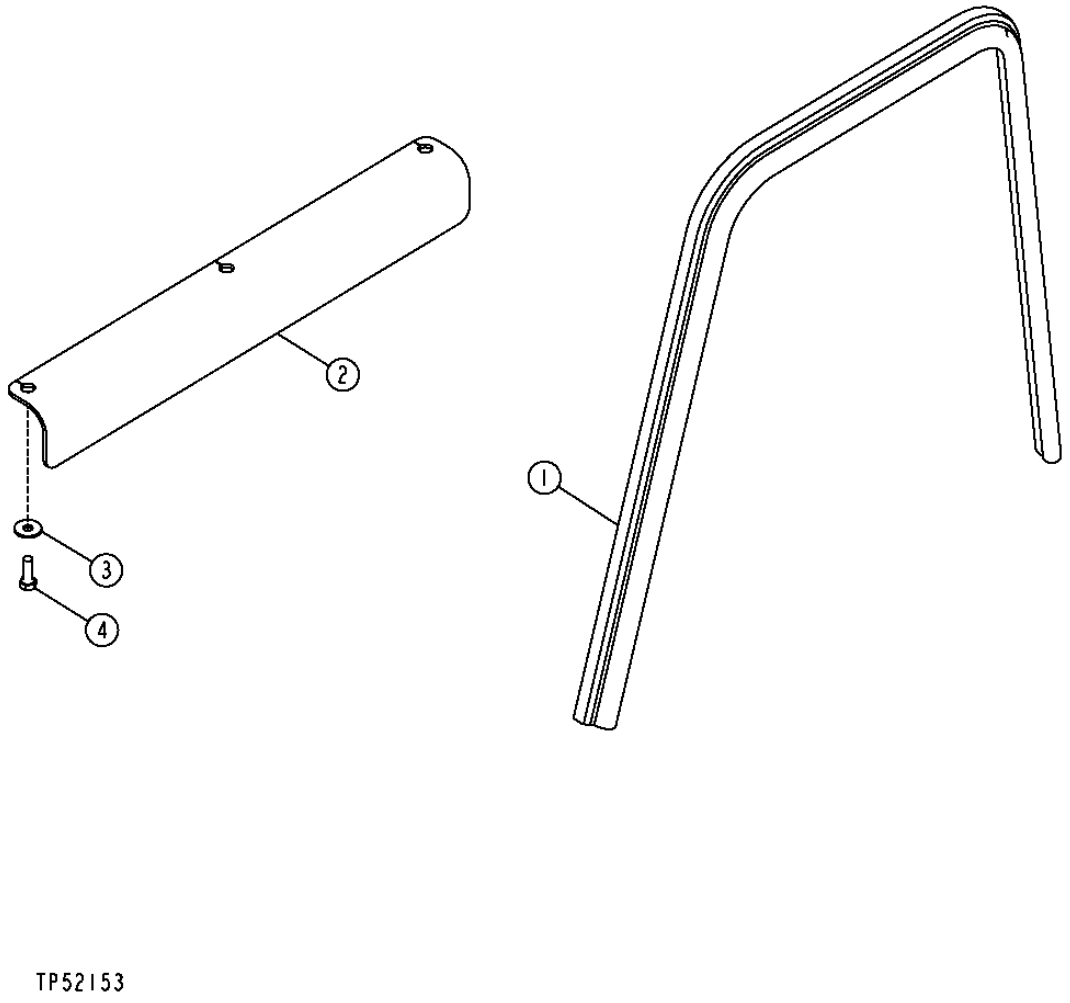

TP52153

THIS PARTS LISTING IS CONTINUED

BACK FENDER AND HOOD SEAL
AILE ARRIERE ET JOINT DE CAPOT
GUARDABARROS TRASERO Y SELLO DEL CAPO

KEY	PART NO.	PART NAME	QTY.	SERIAL NO.	450J	550J	650J	REMARKS
1	T175484	SEAL	1		X	X	X	
2	T173405	PLATE	1		X			(REAR FENDER)
3	24M7296	WASHER	3		X			10.500 X 30 X 2.500 MM
4	19M7662	CAP SCREW	3		X			M10 X 30

RADIO
RADIO
RADIO

TP67704 -UN-06MAR00

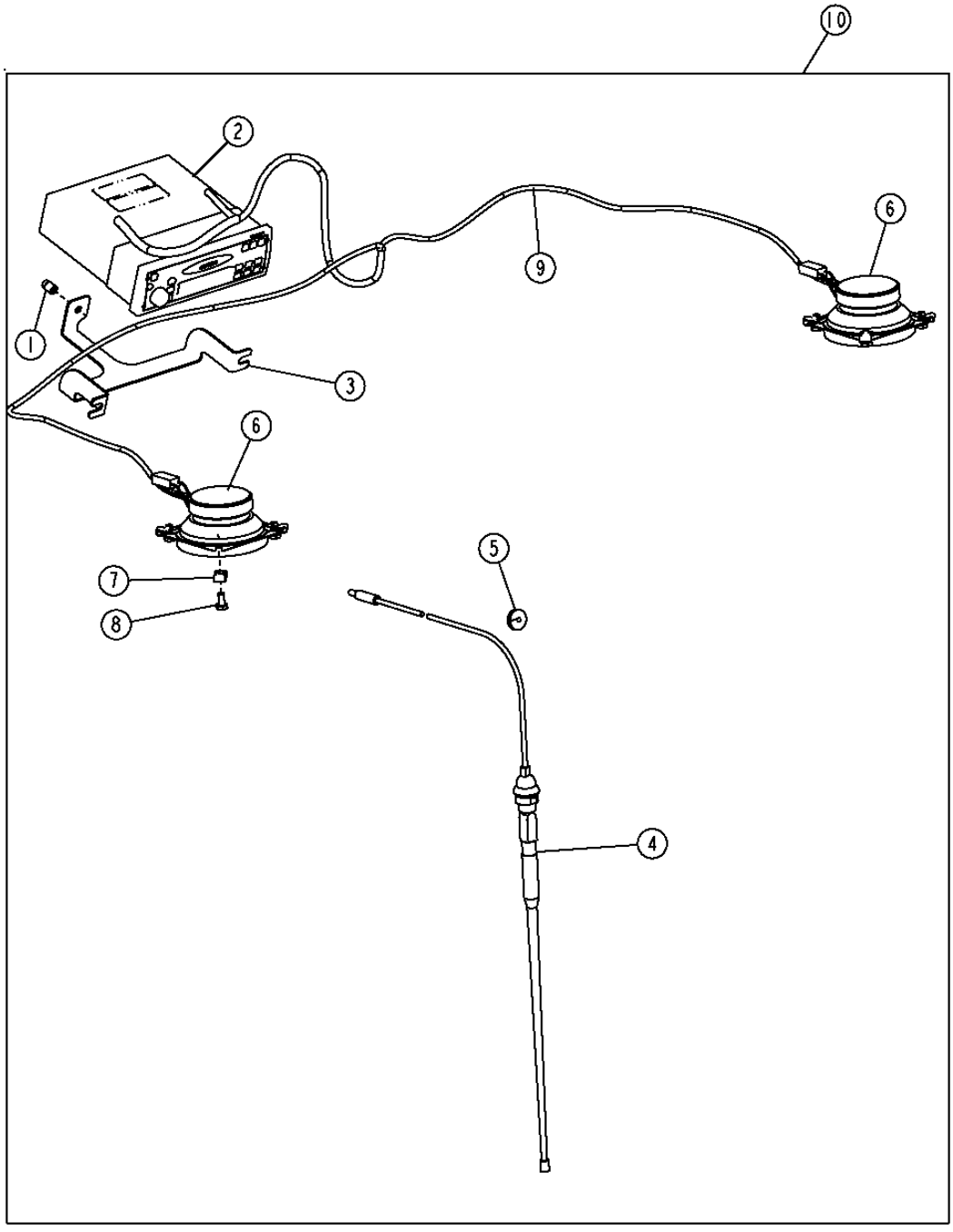

TP67704

RADIO
RADIO
RADIO

KEY	PART NO.	PART NAME	QTY.	SERIAL NO.	450J	550J	650J	REMARKS
1	T142434	BUSHING	1		X	X	X	(PIN)
2	RE190139	RADIO	1		X	X	X	
3	T179761	BRACKET	1		X	X	X	
4	AT208495	ANTENNA	1		X	X	X	(WITH CABLE)
5	T176820	GROMMET	1		X	X	X	
6	AT222831	SPEAKER	2		X	X	X	
7	BP13712	NUT	6		X	X	X	
8	19H1227	CAP SCREW	6		X	X	X	1/4" X 1/2"
9	AT222705	RADIO SPEAKER WRG HARNESS	1		X	X	X	
10	**AT207496**	**RADIO**	**1**		**X**	**X**	**X**	**(WHOLEGOODS)**

WARNING DEVICES INCLUDING HORN AND REVERSE ALARM 2004

HORN
KLAXON
BOCINA

T209320 -UN-11MAR05

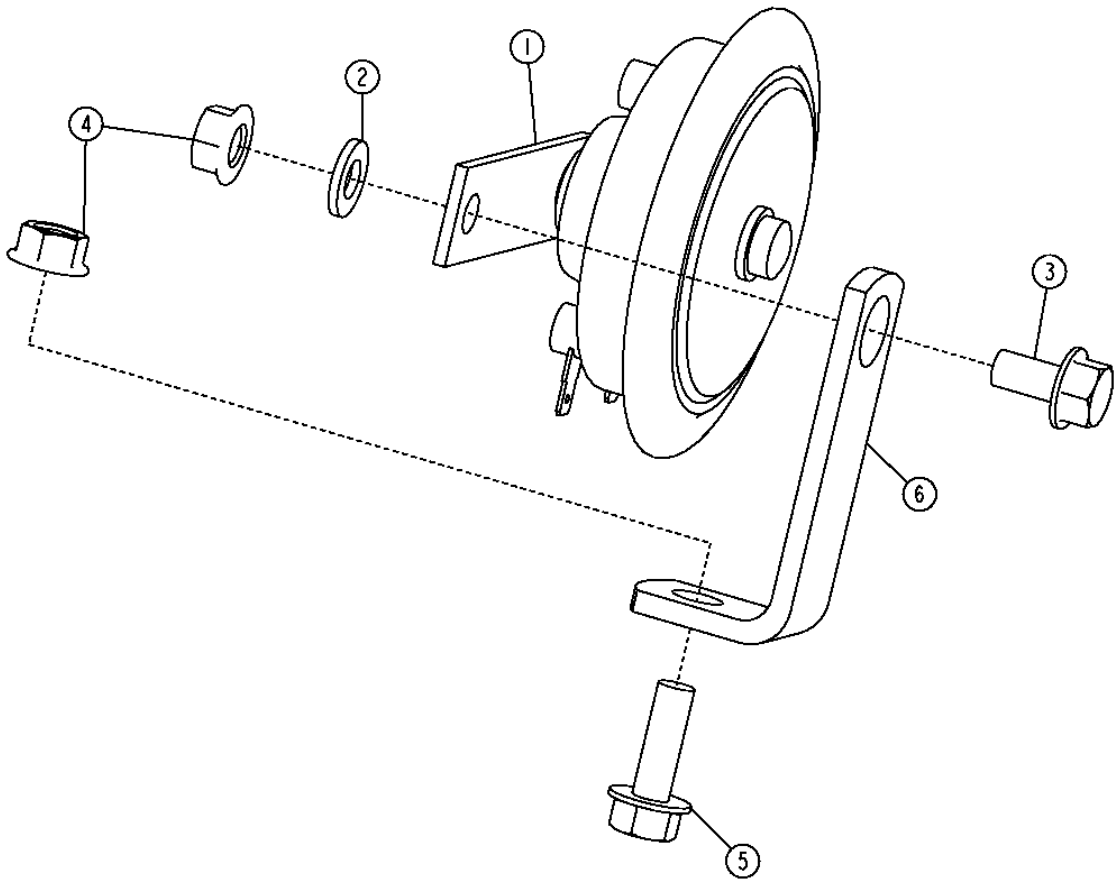

T209320

THIS PARTS LISTING IS CONTINUED

WARNING DEVICES INCLUDING HORN AND REVERSE ALARM 2004

HORN
KLAXON
BOCINA

KEY	PART NO.	PART NAME	QTY.	SERIAL NO.	450J	550J	650J	REMARKS
1	AT226281	HORN	1		X	X	X	
2	24M7207	WASHER	1		X	X	X	8.400 X 24 X 2 MM
3	19M7866	SCREW	1		X	X	X	M8 X 20
4	14M7298	FLANGE NUT	2		X	X	X	M8
5	19M7867	SCREW	1		X	X	X	M8 X 25
6	T76697	ANGLE	1		X	X	X	

WARNING DEVICES INCLUDING HORN AND REVERSE ALARM 2004

BACK-UP ALARM
AVERTISSEUR SONORE DE MARCHE ARRIERE
BOCINA DE RETROCESO

TP67577 -UN-01SEP99

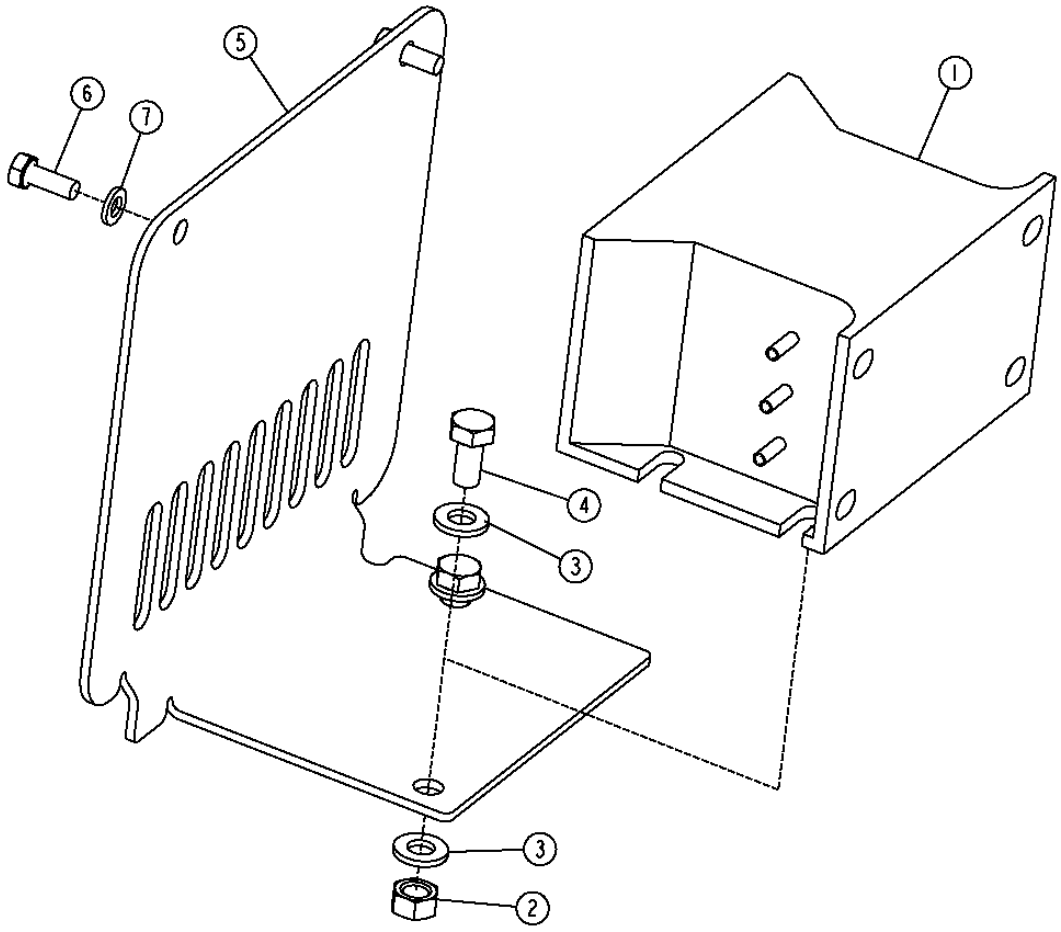

TP67577

WARNING DEVICES INCLUDING HORN AND REVERSE ALARM 2004

BACK-UP ALARM
AVERTISSEUR SONORE DE MARCHE ARRIERE
BOCINA DE RETROCESO

KEY	PART NO.	PART NAME	QTY.	SERIAL NO.	450J	550J	650J	REMARKS
1	AT120461	TRAVEL WARNING ALARM	1		X	X	X	
2	14M7273	NUT	2		X	X	X	M8
3	24M7238	WASHER	4		X	X	X	8.700 X 17 X 2 MM
4	19M7865	SCREW	2		X	X	X	M8 X 16
5	T175194	PLATE	1		X	X	X	
6	19M8425	CAP SCREW	2		X	X	X	M6 X 16
7	24M7054	WASHER	2		X	X	X	6.400 X 12 X 1.600 MM

CIGAR LIGHTER AND/OR POWER ACCESSORY
ALLUME-CIGARE ET/OU ALIMENTATION DACCESSOIRE
ENCENDEDOR DE CIGARROS Y/O TOMACORRIENTE AUX.

T199571 -UN-03MAY04

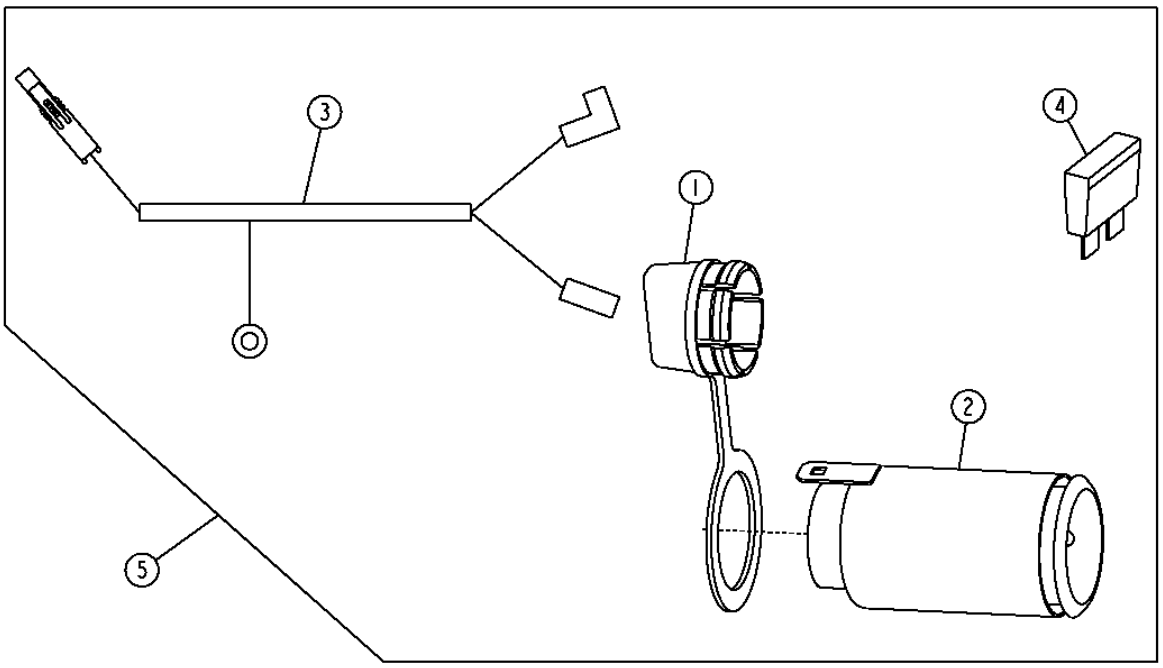

CIGAR LIGHTER AND/OR POWER ACCESSORY
ALLUME-CIGARE ET/OU ALIMENTATION DACCESSOIRE
ENCENDEDOR DE CIGARROS Y/O TOMACORRIENTE AUX.

KEY	PART NO.	PART NAME	QTY.	SERIAL NO.	450J	550J	650J	REMARKS
1	R131671	PLUG	1		X	X	X	
2	AT78633	HOUSING	1		X	X	X	
3	AT179882	WIRING HARNESS	1		X	X	X	(POWER PLUG)
4	57M7120	FUSE	1		X	X	X	20 AMP
5	**AT221140**	**KIT**	**1**		**X**	**X**	**X**	**(WHOLEGOODS) (12V POWER SUPPLY)**

POWER PLUG
FICHE ALIMENTATION
ENCHUFE ALIMENTACION

T199575 -UN-04MAY04

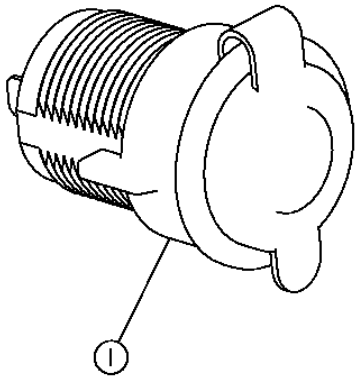

T199575

POWER PLUG
FICHE ALIMENTATION
ENCHUFE ALIMENTACION

KEY	PART NO.	PART NAME	QTY.	SERIAL NO.	450J	550J	650J	REMARKS
1	GY20126	SOCKET OUTLET	1		X	X	X	

HYDRAULIC PUMP (STANDARD)
POMPE HYDRAULIQUE (STANDARD)
BOMBA HIDRAULICA (NORMAL)

T200165 -UN-19MAY04

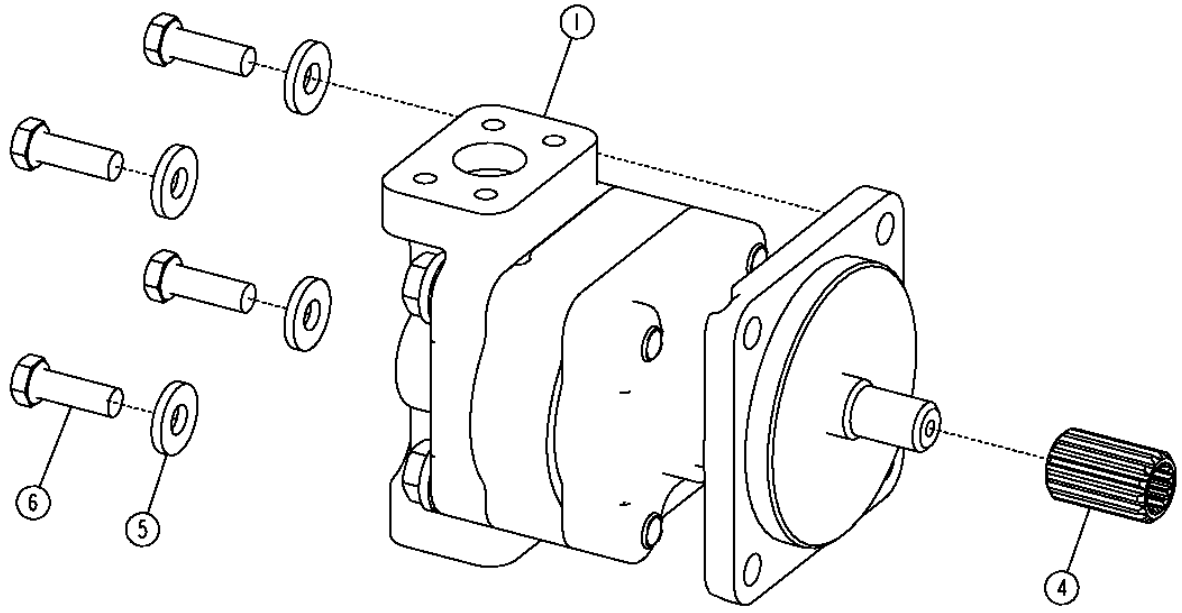

T200165

HYDRAULIC PUMP (STANDARD)
POMPE HYDRAULIQUE (STANDARD)
BOMBA HIDRAULICA (NORMAL)

KEY	*PART NO.*	*PART NAME*	*QTY.*	*SERIAL NO.*	*REMARKS*
1	AT224355	HYDRAULIC PUMP	1		(ALSO ORDER R99702) (SUB FOR AT209862)
2	AT224352	GASKET KIT	1		(NOT ILLUSTRATED)
4	T174515	COUPLING	1		(SPLINE ADAPTER)
5	T29342	WASHER	4		
6	19H2993	CAP SCREW	4		1/2" X 1-1/2"

HYDRAULIC PUMP (WITH DRIVE THROUGH SHAFT)
POMPE HYDRAULIQUE (AVEC ARBRE DE COMMANDE TRAVERSANT)
BOMBA HIDRAULICA (CON EJE IMPULSOR)

T200166 -UN-20MAY04

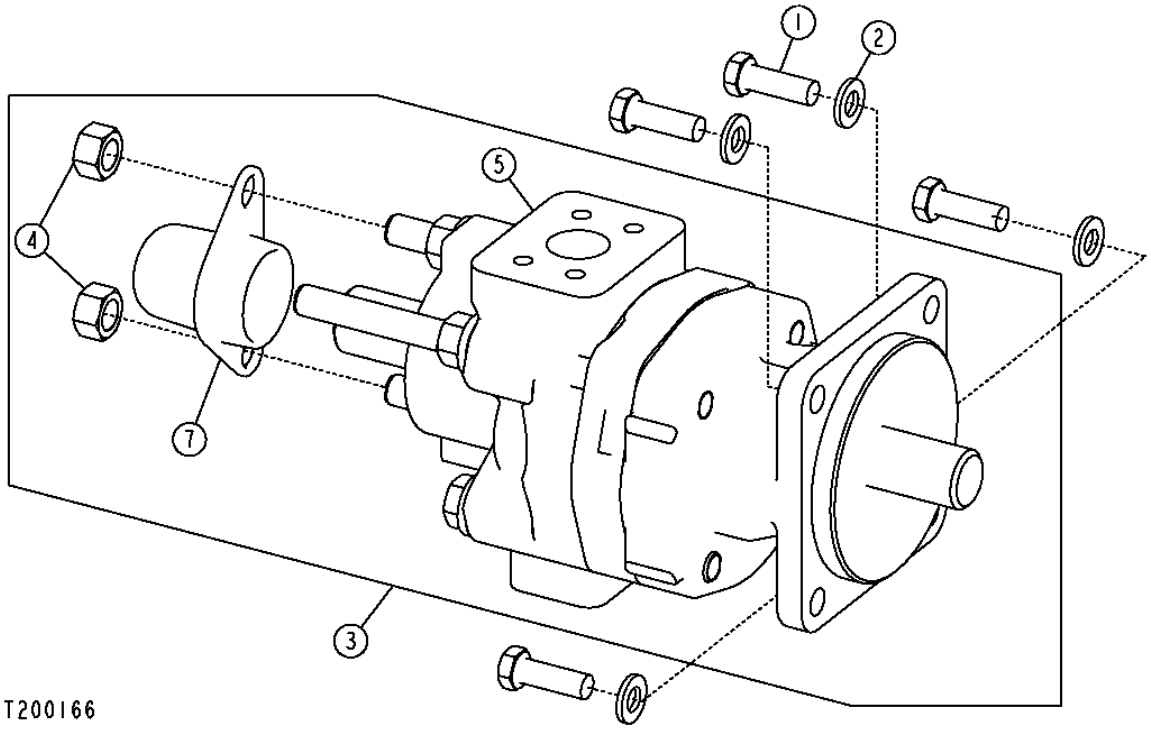

THIS PARTS LISTING IS CONTINUED

HYDRAULIC PUMP (WITH DRIVE THROUGH SHAFT)
POMPE HYDRAULIQUE (AVEC ARBRE DE COMMANDE TRAVERSANT)
BOMBA HIDRAULICA (CON EJE IMPULSOR)

KEY	PART NO.	PART NAME	QTY.	SERIAL NO.	450 J	550 J	650 J	REMARKS
1	19H2993	CAP SCREW	4		X	X	X	1/2" X 1-1/2"
2	24M7240	WASHER	4		X	X	X	13 X 25 X 3 MM
3	AT224353	HYDRAULIC PUMP	1		X	X	X	(WITH DRIVE THRU SHAFT)
4	14H1039	NUT	2		X	X	X	5/8"
5	AT210038	HYDRAULIC PUMP	1		X	X	X	(ALSO ORDER R99702)
6	AT224351	GASKET KIT	1		X	X	X	(NOT ILLUSTRATED)(HYDRAULIC PUMP REPAIR KIT)
7	T180651	COVER	1		X	X	X	(PTO SHAFT)

HYDRAULIC SUCTION HOSE (RESERVOIR TO PUMP)
FLEXIBLE D'ASPIRATION HYDRAULIQUE (ENTRE RESERVOIR ET POMPE)
MANGUERA DE ASPIRACION HIDRAULICA (DEPOSITO A BOMBA)

TX1005874 -UN-06APR06

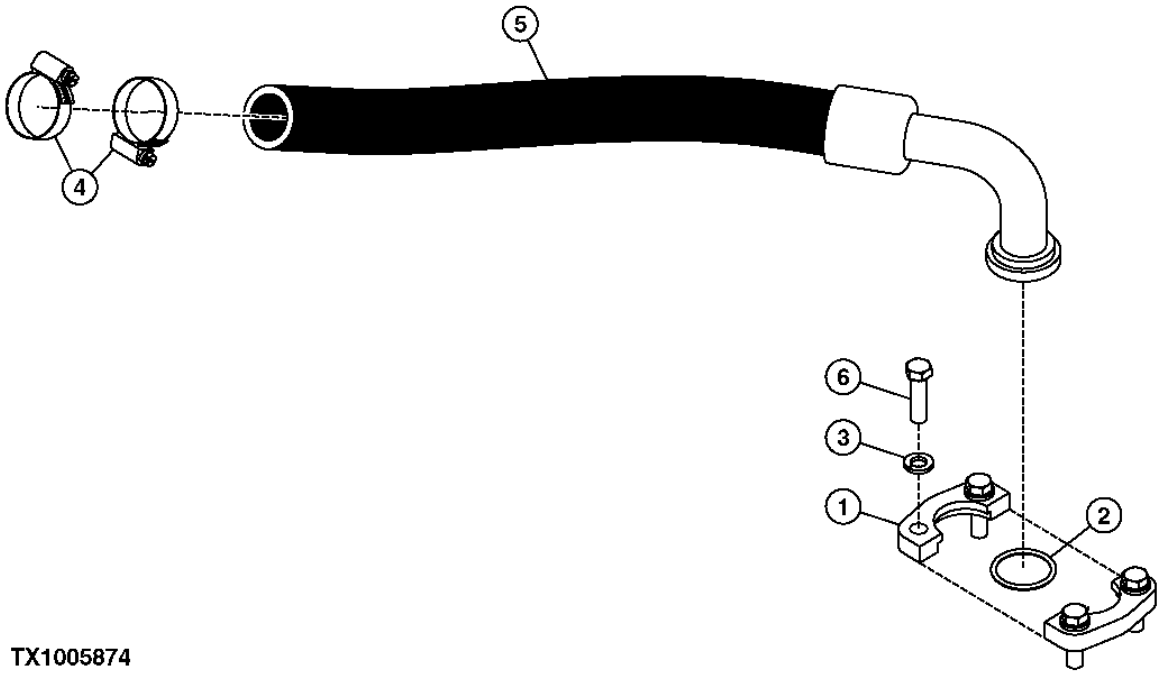

TX1005874

HYDRAULIC SUCTION HOSE (RESERVOIR TO PUMP)
FLEXIBLE D'ASPIRATION HYDRAULIQUE (ENTRE RESERVOIR ET POMPE)
MANGUERA DE ASPIRACION HIDRAULICA (DEPOSITO A BOMBA)

KEY	PART NO.	PART NAME	QTY.	SERIAL NO.	450 J	550 J	650 J	REMARKS
1	R29867	FLANGE FITTING	2		X	X	X	
2	T78393	O-RING	1		X	X	X	
3	12H293	LOCK WASHER	4		X	X	X	
4	AR44217	CLAMP	2		X	X	X	(HOSE)
5	AT220256	HYDRAULIC HOSE - FABRICATE	1		X	X	X	
6	19H3205	CAP SCREW	4		X	X	X	7/16" X 1-1/2"

HYDRAULIC PRESSURE HOSE (PUMP TO CONTROL VALVE)
FLEXIBLE DE PRESSION HYDRAULIQUE (POMPE A DISTRIBUTEUR)
MANGUERA DE PRESION HIDRAULICA (BOMBA A VALVULA DE CONTROL)

TX1005875 -UN-06APR06

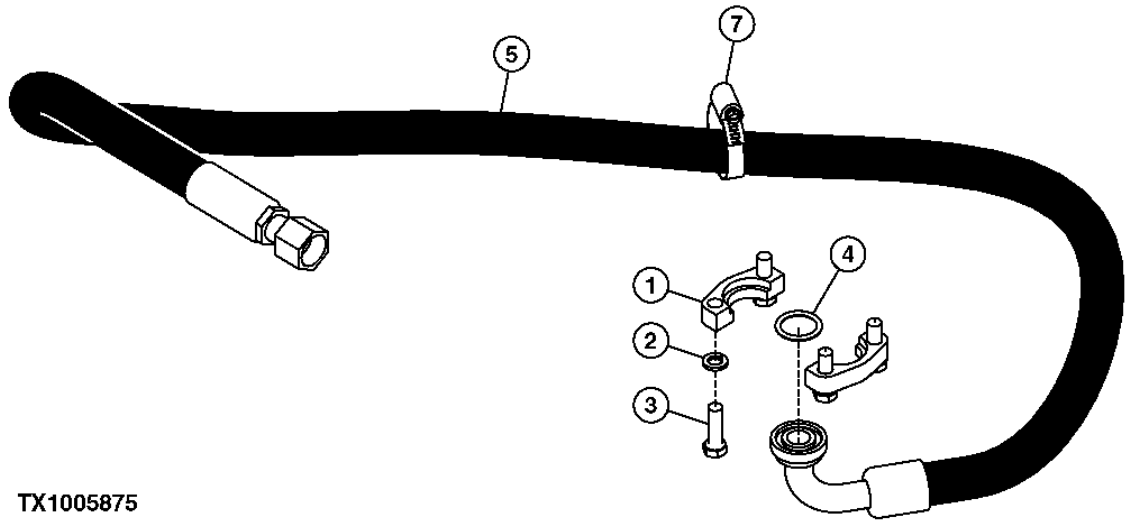

TX1005875

HYDRAULIC PRESSURE HOSE (PUMP TO CONTROL VALVE)
FLEXIBLE DE PRESSION HYDRAULIQUE (POMPE A DISTRIBUTEUR)
MANGUERA DE PRESION HIDRAULICA (BOMBA A VALVULA DE CONTROL)

KEY	PART NO.	PART NAME	QTY.	SERIAL NO.	450 J	550 J	650 J	REMARKS
1	R29424	FLANGE FITTING	2		X	X	X	
2	12H304	LOCK WASHER	4		X	X	X	3/8"
3	19H3239	CAP SCREW	4		X	X	X	3/8" X 1-1/4"
4	T59014	O-RING	1		X	X	X	
5	AT208169	HYDRAULIC HOSE - FABRICATE	1		X	X	X	
6	N189220	TIE BAND	2		X	X	X	
7	AT145651	CLAMP	1		X	X	X	

HYDRAULIC FILTER HOSE
FLEXIBLE DE FILTRE HYDRAULIQUE
MANGUERA DE FILTRO HIDRAULICO

TX1005876 -UN-06APR06

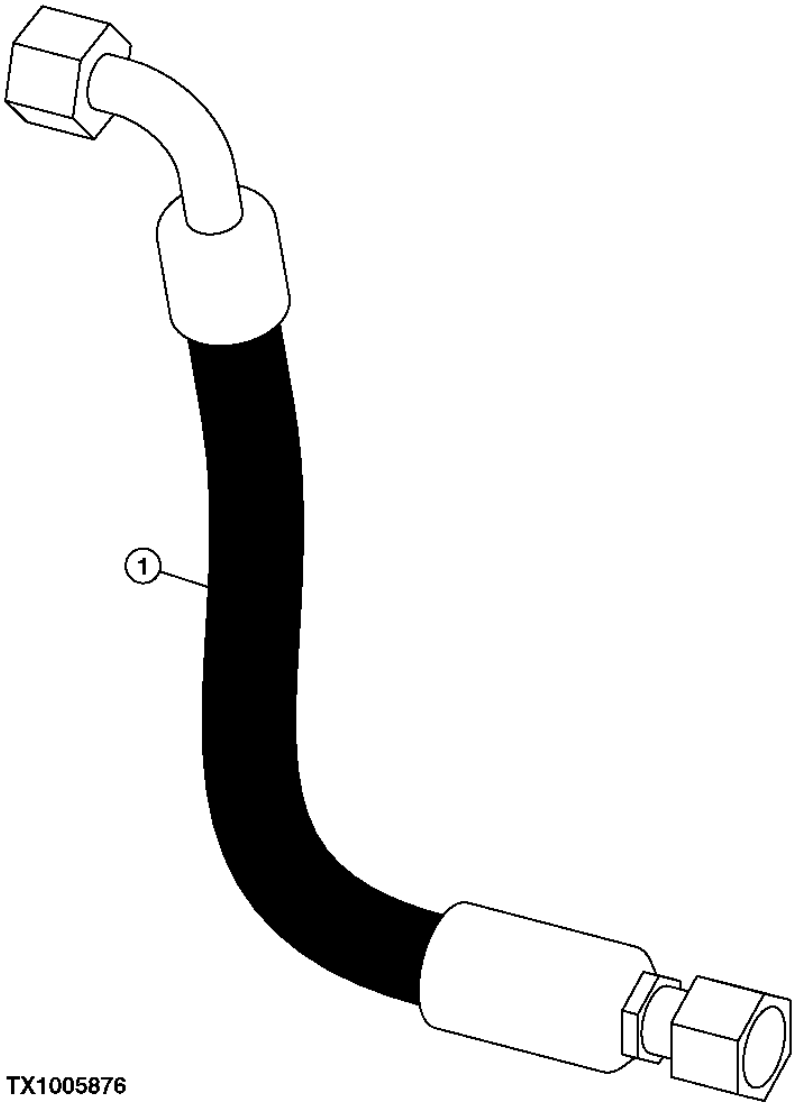

TX1005876

THIS PARTS LISTING IS CONTINUED

HYDRAULIC FILTER HOSE
FLEXIBLE DE FILTRE HYDRAULIQUE
MANGUERA DE FILTRO HIDRAULICO

KEY	PART NO.	PART NAME	QTY.	SERIAL NO.	450 J	550 J	650 J	REMARKS
1	AT208170	HYDRAULIC HOSE - FABRICATE	1		X	X	X	

HYDRAULIC SUCTION HOSE (THRU DRIVE WITH SHAFT) (RESERVIOR TO PUMP)
FLEXIBLE D'ASPIRATION HYDRAULIQUE (ENTRAÎNEMENT TRAVERSANT AVEC ARBRE) (ENTRE RESERVOIR ET POMPE)
MANGUERA DE ASPIRACION HIDRAULICA (MANDO CON EJE) (DEPOSITO A BOMBA)

TX1005877 -UN-06APR06

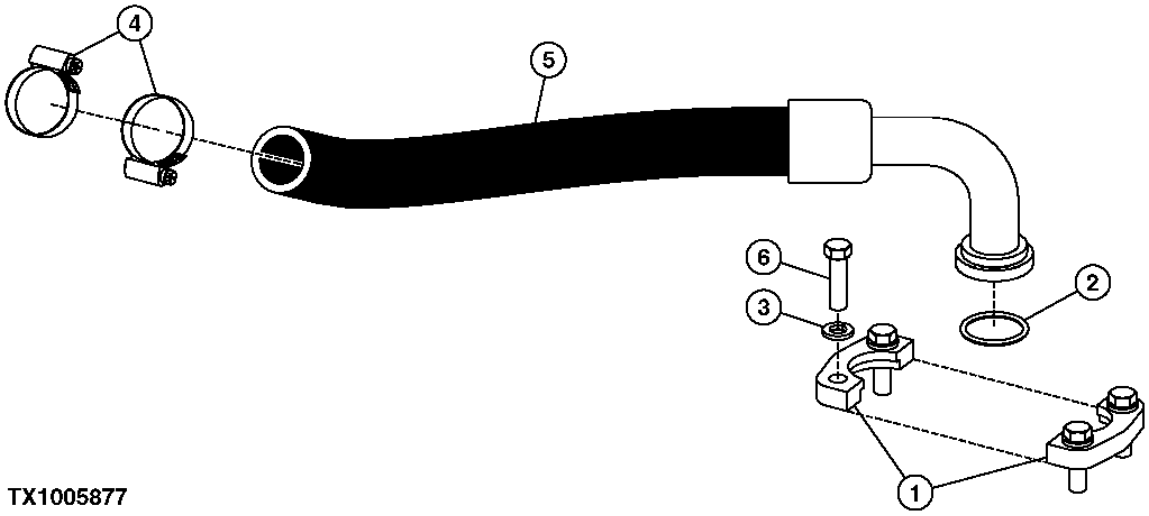

TX1005877

HYDRAULIC SUCTION HOSE (THRU DRIVE WITH SHAFT) (RESERVIOR TO PUMP)
FLEXIBLE D'ASPIRATION HYDRAULIQUE (ENTRAÌNEMENT TRAVERSANT AVEC ARBRE) (ENTRE RESERVOIR ET POMPE)
MANGUERA DE ASPIRACION HIDRAULICA (MANDO CON EJE) (DEPOSITO A BOMBA)

KEY	PART NO.	PART NAME	QTY.	SERIAL NO.	455 000 JJJ	REMARKS
1	R29867	FLANGE FITTING	2		X X X	
2	T78393	O-RING	1		X X X	
3	12H293	LOCK WASHER	4		X X X	7/16"
4	AR44217	CLAMP	2		X X X	
5	AT220255	HYDRAULIC HOSE - FABRICATE	1		X	
	AT220256	HYDRAULIC HOSE - FABRICATE	1		X X	
6	19H3205	CAP SCREW	4		X X X	7/16" X 1-1/2"

ENVIRONMENTAL DRAIN
VIDANGE ECOLOGIQUE
VACIADO AMBIENTAL

T199577 -UN-04MAY04

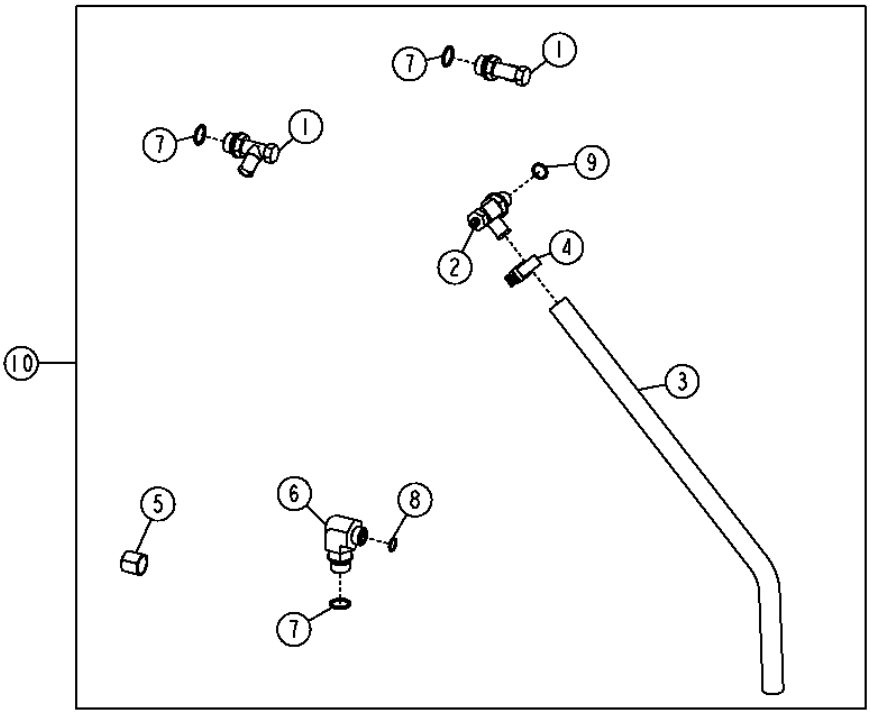

T199577

ENVIRONMENTAL DRAIN
VIDANGE ECOLOGIQUE
VACIADO AMBIENTAL

KEY	PART NO.	PART NAME	QTY.	SERIAL NO.	450 J	550 J	650 J	REMARKS
1	AT152180	DRAIN VALVE	2		X	X	X	(HYDRAULIC AND TRANSMISSION RESERVOIR)
2	RE59579	DRAIN VALVE	1		X	X	X	(ENGINE OIL)
3	.....	HOSE	1		X	X	X	(MAKE FROM T60811) (CUT TO LENGTH 5 FEET)
4	AR21837	CLAMP	1		X	X	X	
5	38H1416	FITTING	1		X	X	X	
6	38H1012	ELBOW FITTING	1		X	X	X	
7	R26906	O-RING	3		X	X	X	
8	T77857	O-RING	1		X	X	X	
9	51M7043	O-RING	1		X	X	X	
10	.....	GATHERING NUMBER	1		X	X	X	(AT220282 NLA)

HYDRAULIC RESERVOIR
RESERVOIR HYDRAULIQUE
DEPOSITO HIDRAULICO

T199579 -UN-04MAY04

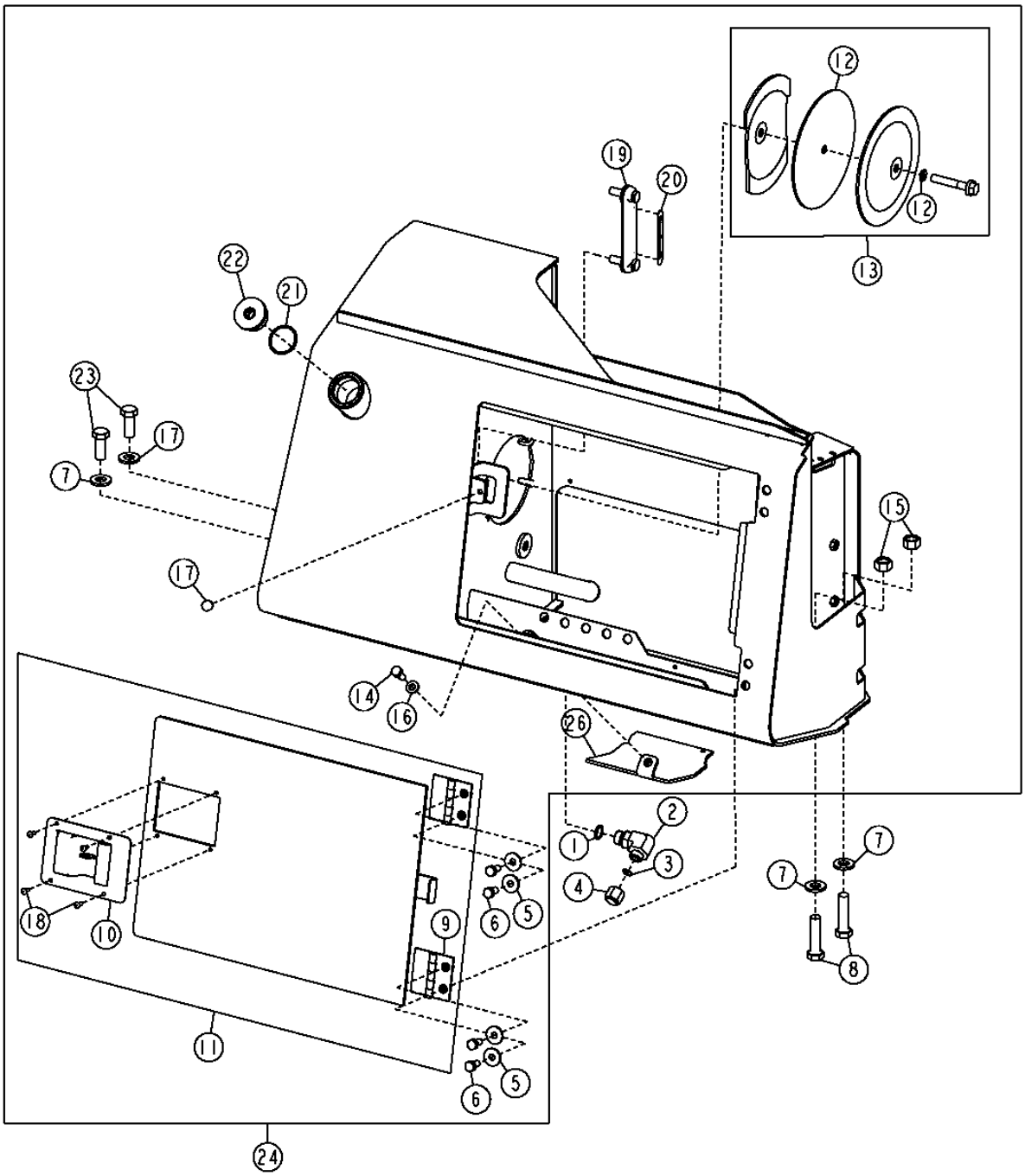

HYDRAULIC RESERVOIR
RESERVOIR HYDRAULIQUE
DEPOSITO HIDRAULICO

KEY	PART NO.	PART NAME	QTY.	SERIAL NO.	450J	550J	650J	REMARKS
1	R26906	O-RING	1		X	X	X	
2	38H1012	ELBOW FITTING	1		X	X	X	(WITHOUT DRAIN VALVE)
3	T77857	O-RING	1		X	X	X	(WITHOUT DRAIN VALVE)
4	38H1416	FITTING	1		X	X	X	(WITHOUT DRAIN VALVE)
5	24M7296	WASHER	4		X	X	X	10.500 X 30 X 2.500 MM
6	19M7938	CAP SCREW	4		X	X	X	M10 X 20
7	24M7241	WASHER	4		X	X	X	17 X 34 X 4 MM
8	19M7417	CAP SCREW	2		X	X	X	M16 X 65
9	AT209110	HINGE	2		X	X	X	
10	AT221696	LATCH	1		X	X	X	(LOCK)
11	AT209228	DOOR	1		X	X	X	
12	AT307292	GASKET KIT	1		X	X	X	(CLEANOUT COVER)
13	AT307278	COVER	1		X	X	X	
14	19M7402	CAP SCREW	1		X	X	X	M10 X 25
15	14M7276	NUT	2		X	X	X	M16
16	24M7239	WASHER	1		X	X	X	10.700 X 21 X 2.500 MM, (ACCESS COVER)
17	T175361	GROMMET	1		X	X	X	(BUMPER)
18	M68628	RIVET	4		X	X	X	
19	AT227279	LEVEL GAUGE	1		X	X	X	(SIGHT GAUGE)
20	T197300	LABEL	1		X	X	X	(HYDRAULIC SIGHT)
21	R26773	O-RING	1		X	X	X	
22	T170935	DRAIN PLUG	1		X	X	X	(FILLER)
23	19M7488	CAP SCREW	2		X	X	X	M16 X 40
24	AT228750	HYDRAULIC RESERVOIR	1		X	X	X	
26	AT223113	DOOR	1		X	X	X	(ACCESS COVER PLATE)

HYDRAULIC OIL FILTER
FILTRE A HUILE HYDRAULIQUE
FILTRO DE ACEITE HIDRAULICO

TP52119 -UN-11JAN99

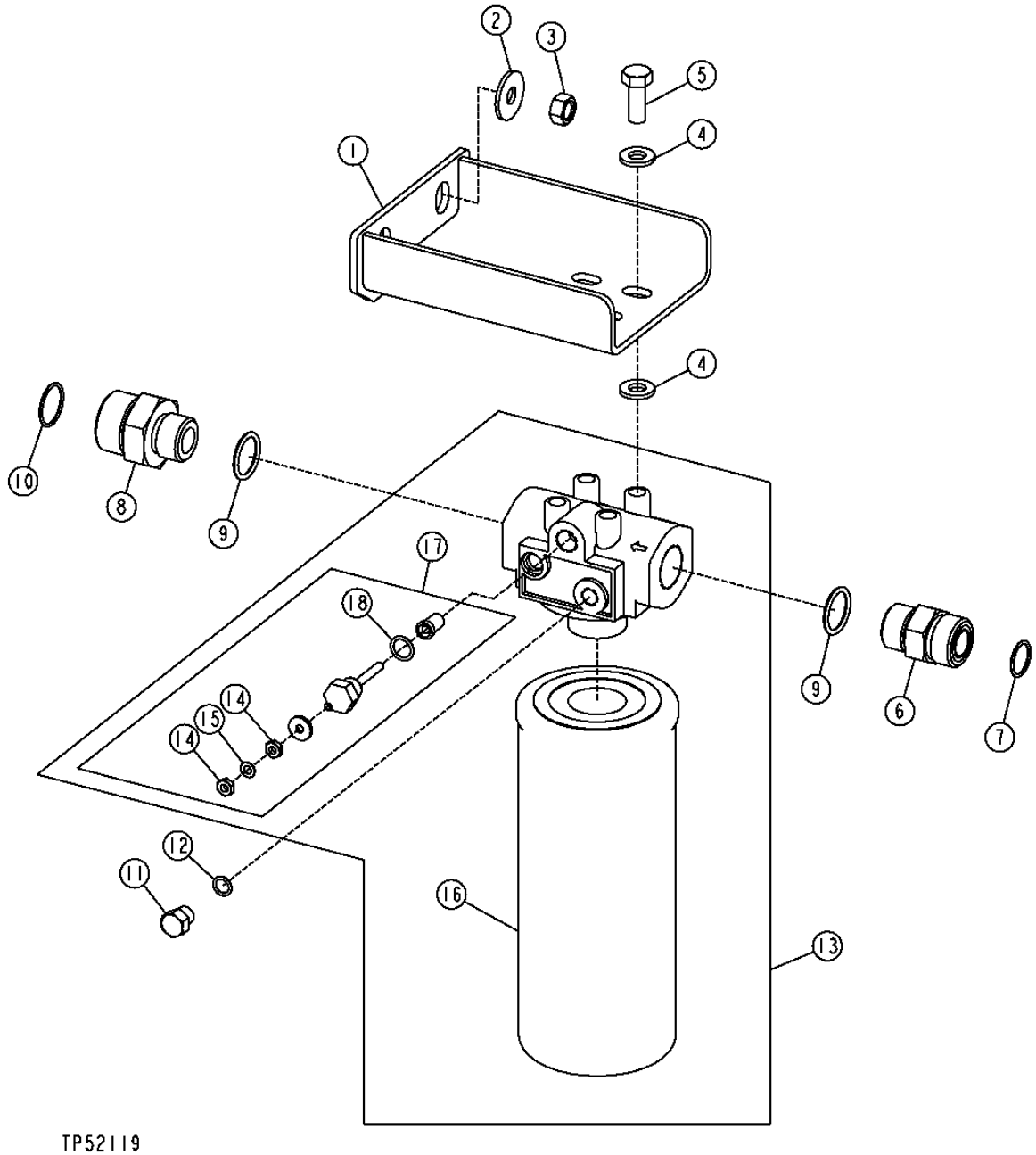

THIS PARTS LISTING IS CONTINUED

HYDRAULIC OIL FILTER
FILTRE A HUILE HYDRAULIQUE
FILTRO DE ACEITE HIDRAULICO

KEY	PART NO.	PART NAME	QTY.	SERIAL NO.	450J	550J	650J	REMARKS
1	AT219962	BRACKET	1		X	X	X	
2	24M7296	WASHER	2		X	X	X	10.500 X 30 X 2.500 MM
3	14M7274	NUT	2		X	X	X	M10, (TORQUE 23 LB-FT)
4	24M7239	WASHER	8		X	X	X	10.700 X 21 X 2.500 MM
5	19M7402	CAP SCREW	4		X	X	X	M10 X 25, (TORQUE 37 LB-FT)
6	38H1163	ADAPTER FITTING	1		X	X	X	
7	T77858	O-RING	1		X	X	X	
8	38H1179	ADAPTER FITTING	1		X	X	X	
9	U12547	O-RING	2		X	X	X	
10	T76938	O-RING	1		X	X	X	
11	U44115	FITTING PLUG	1		X	X	X	
12	R28782	O-RING	1		X	X	X	
13	AT219956	FILTER HEAD	1		X	X	X	
14	14H778	NUT	2		X	X	X	
15	12M7060	WASHER	1		X	X	X	5.300 MM
16	T175002	HYDRAULIC FILTER	1		X	X	X	
17	AH128450	PUSH SWITCH	1		X	X	X	(RESTRICTION INDICATOR)
18	R26448	O-RING	1		X	X	X	

AUXILIARY HYDRAULIC OIL COOLER FIELD KIT
FILTRE A HUILE HYDRAULIQUE
FILTRO DE ACEITE HIDRAULICO

TX1007740 -UN-16MAY06

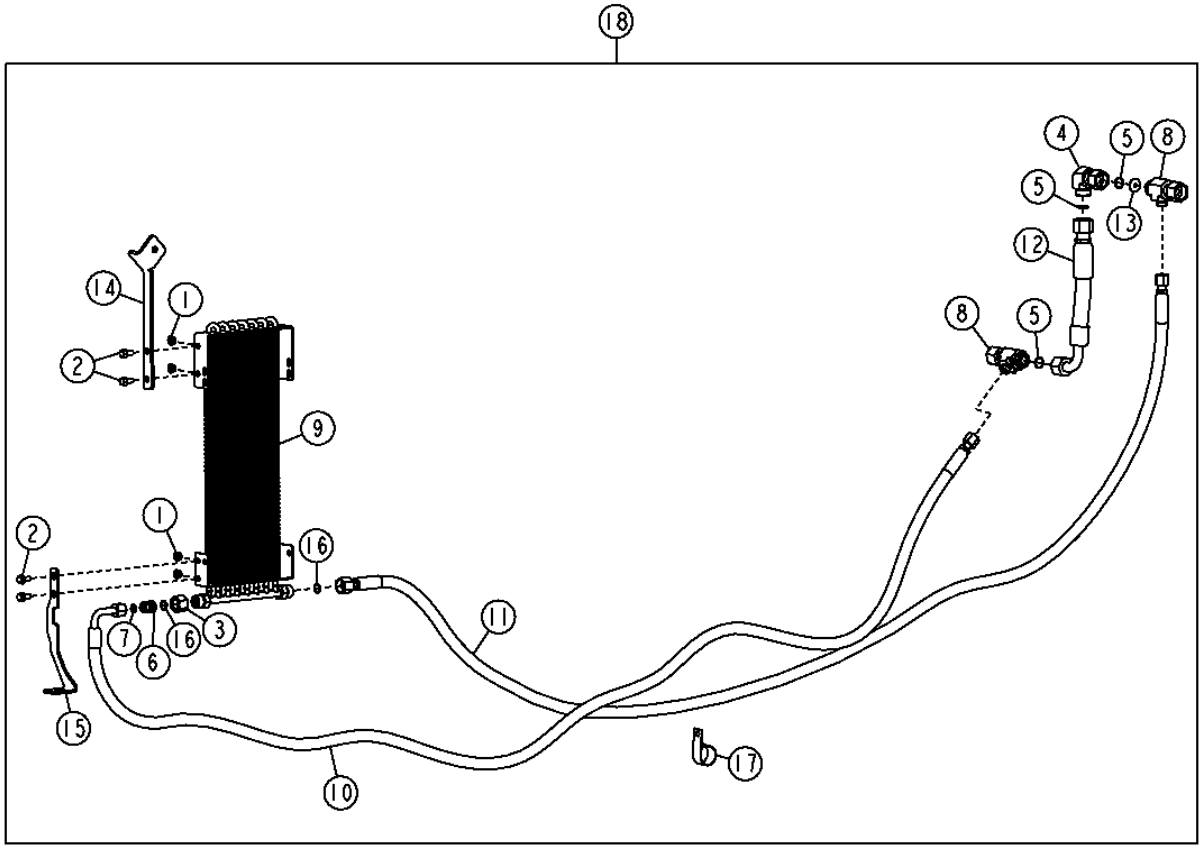

TX1007740

HYDRAULIC RESERVOIR, FILTER AND COOLER 2164

AUXILIARY HYDRAULIC OIL COOLER FIELD KIT
FILTRE A HUILE HYDRAULIQUE
FILTRO DE ACEITE HIDRAULICO

KEY	PART NO.	PART NAME	QTY.	SERIAL NO.	450J	550J	650J	REMARKS
1	14M7298	FLANGE NUT	4		X	X		M8
2	19M7866	SCREW	4		X	X		M8 X 20
3	38H1355	TUBE NUT	AR		X	X	X	(NOT USED ON NEWER DESIGN)
4	38H1097	ELBOW FITTING	8		X	X	X	
5	T77858	O-RING	3		X	X	X	
6	38H1471	REDUCER	AR		X	X	X	(NOT USED ON NEWER DESIGN)
7	T77857	O-RING	3		X	X	X	
8	38H1532	TEE FITTING	2		X	X	X	
9	AT329148	OIL COOLER	1		X	X	X	
10	AT331796	HYDRAULIC HOSE - FABRICATE	1		X	X	X	
11	AT331801	HYDRAULIC HOSE - FABRICATE	1		X	X	X	
12	AT333519	HYDRAULIC HOSE - FABRICATE	1		X	X	X	
13	T220178	ORIFICE	1		X	X	X	
14	T225729	BRACKET	1		X	X		
15	T225812	BRACKET	1		X	X		
16	T77857	O-RING	2		X	X	X	
17	AH117301	CLAMP	1		X	X	X	
18	**AT334372**	**FIELD INSTALLATION KIT**	**1**		**X**	**X**	**X**	**(FIELD)**
	.....	FIELD INSTALLATION KIT	1				X	(SUB AT334372) (SUB FOR AT333489) (FIELD)

INTEGRATED GRADE CONTROL HYDRAULIC OIL COOLER AND HOSES 650J
FILTRE A HUILE HYDRAULIQUE
FILTRO DE ACEITE HIDRAULICO

TX1017995 -UN-26JAN07

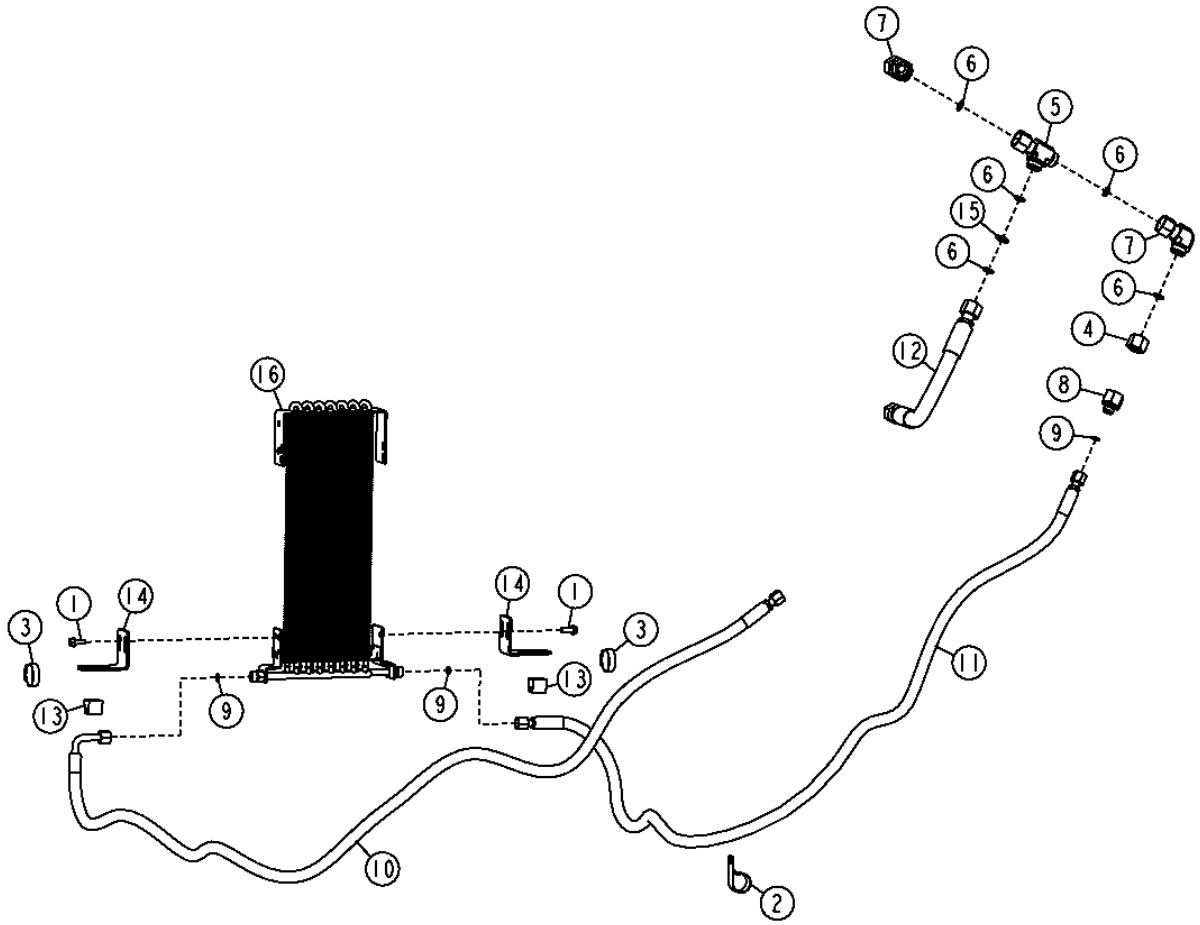

THIS PARTS LISTING IS CONTINUED

INTEGRATED GRADE CONTROL HYDRAULIC OIL COOLER AND HOSES 650J

KEY	PART NO.	PART NAME	QTY.	SERIAL NO.	450J	550J	650J	REMARKS
1	19M7867	SCREW	2				X	M8 X 25
2	AH117301	CLAMP	1				X	
3	AR44217	CLAMP	2				X	
4	38H1356	TUBE NUT	1				X	
5	38H1033	TEE FITTING	1				X	
6	T77858	O-RING	4				X	18.771 X 1.778 MM
7	38H1474	REDUCER	1				X	
9	T77857	O-RING	3				X	12.421 X 1.778 MM
10	AT331796	HYDRAULIC HOSE - FABRICATE	1				X	13/16" X 2 941 MM X 13/16"
11	AT331801	HYDRAULIC HOSE - FABRICATE	1				X	13/16" X 3 054 MM X 13/16"
12	AT331986	HYDRAULIC HOSE - FABRICATE	1					
13	KV13179	GUIDE	2					
14	T228640	BRACKET	2					
15	T230374	ORIFICE	1					
16	AT338499	OIL COOLER	1					

BLADE
LAME
HOJA

T210157 -UN-12APR05

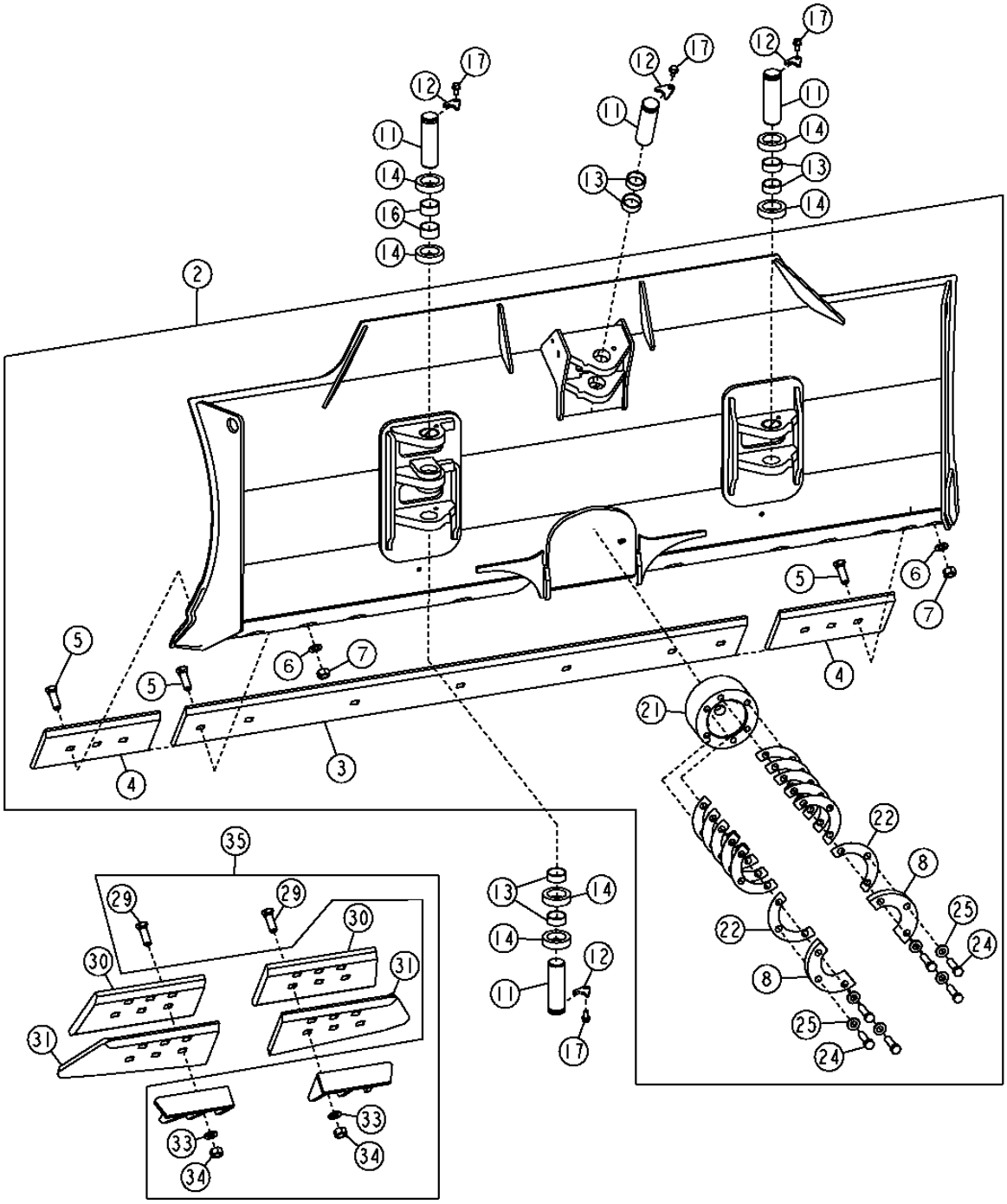

T210157

BLADE
LAME
HOJA

KEY	PART NO.	PART NAME	QTY.	SERIAL NO.	450J	550J	650J	REMARKS
2	AT305022	BLADE	1		X			(97 INCH) (CONVENIENCE ASSY)
	AT305014	BLADE	1		X			(90 INCH) (CONVENIENCE ASSY)
	AT305027	BLADE	1		X			(124 INCH) (CONVENIENCE ASSY)
	AT305024	BLADE	1		X	X	X	(115 INCH) (CONVENIENCE ASSY)
	AT305032	BLADE	1			X		(105 INCH) (CONVENIENCE ASSY)
	AT305036	BLADE	1				X	(105 INCH) (CONVENIENCE ASSY)
	AT303200	BLADE	1				X	(128 INCH) (CONVENIENCE ASSY)
	AT303488	BLADE	1			X		(128 INCH) (CONVENIENCE ASSY)
	AT305034	BLADE	1			X	X	(121 INCH) (CONVENIENCE ASSY)
	T216870	LABEL	1		X	X	X	(ENGLISH) (TORQUE AND SHIM DETAIL)
	T217919	LABEL	1		X	X	X	(SPANISH) (TORQUE AND SHIM DETAIL)
	T217916	LABEL	1		X	X	X	(FRENCH) (TORQUE AND SHIM DETAIL)
3	T120979	CUTTING EDGE	1		X			(USE WITH 97 INCH BLADE)
	T140560	CUTTING EDGE	1		X	X	X	(USE WITH 115 INCH BLADE)
	T172943	PLATE	1		X			(CUTTING EDGE) (USE WITH 124 INCH BLADE)
	T127297	CUTTING EDGE	1		X			(USE WITH 90 INCH BLADE)
	T120980	CUTTING EDGE	1			X	X	(USE WITH 105 INCH BLADE)
	T155646	CUTTING EDGE	1			X	X	(USE WITH 128 INCH BLADE)
	T120981	CUTTING EDGE	1			X	X	(USE WITH 121 INCH BLADE)
4	T162841	END BIT	2		X	X	X	
5	T70286	BOLT	13		X	X	X	(USE WITH 90, 97 OR 105 INCH BLADE)
	T70286	BOLT	15		X	X	X	(USE WITH 115, 121, 124 OR 128 INCH BLADE)
6	T10510	WASHER	13		X	X	X	
	T10510	WASHER	15		X	X	X	
7	14H1058	NUT	13		X			3/4"
	14H1058	NUT	15		X	X	X	3/4"
8	T197054	RETAINER	2		X	X	X	

THIS PARTS LISTING IS CONTINUED

BLADE (CONTINUED)
LAME (SUITE)
HOJA (CONTINUACION)

T210157 -UN-12APR05

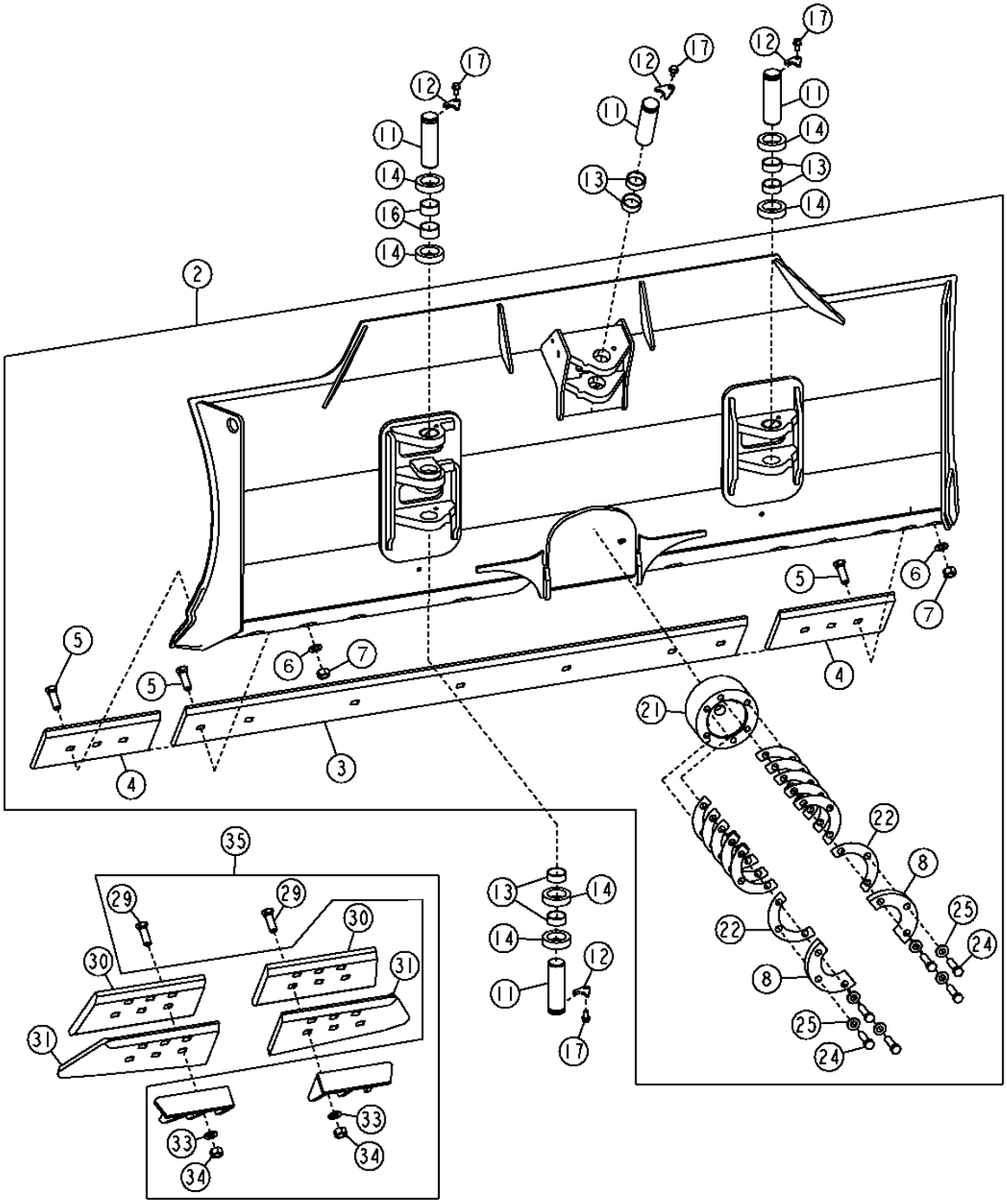

T210157

BLADE (CONTINUED)
LAME (SUITE)
HOJA (CONTINUACION)

KEY	PART NO.	PART NAME	QTY.	SERIAL NO.	450J 550J 650J	REMARKS
11	T170879	PIN	4		X X X	
12	T170880	PLATE	4		X X X	
13	T170884	BUSHING	6		X X X	
14	T178620	BUSHING	6		X X X	
16	T174256	BUSHING	2		X X X	
17	19M7784	SCREW	4		X X X	M10 X 20
21	T181021	SOCKET	1		X X X	
22	T180582	SHIM	14		X X X	
24	19M7759	CAP SCREW	6		X X X	M16 X 60
25	24M7241	WASHER	6		X X X	17 X 34 X 4 MM
26	JD7759	LUBRICATION FITTING	1		X X X	(USED WITH SOCKET) (NOT ILLUSTRATED)
29	T70286	BOLT	12		X X X	
30	T182280	END BIT	1		X X X	(RH STRAIGHT 6 BOLT END BIT)
	T182281	END BIT	1		X X X	(LH STRAIGHT 6 BOLT END BOLT)
31	T182304	END BIT	1		X X X	(RH) (6 BOLT) (CUPPED END BIT) (HEAVY DUTY)
	T182253	END BIT	1		X X X	(LH) (6 BOLT) (CUPPED END BIT) (HEAVY DUTY)
33	T10510	WASHER	12		X X X	
34	14H1058	NUT	12		X X X	
35	**AT225884**	**FIELD INSTALLATION KIT**	**1**		**X X X**	**(ENDBIT KIT) (WHOLEGOODS)**

HYDRAULIC CONTROLS
COMMANDES HYDRAULIQUES
CONTROLES HIDRAULICOS

TX1005878 -UN-06APR06

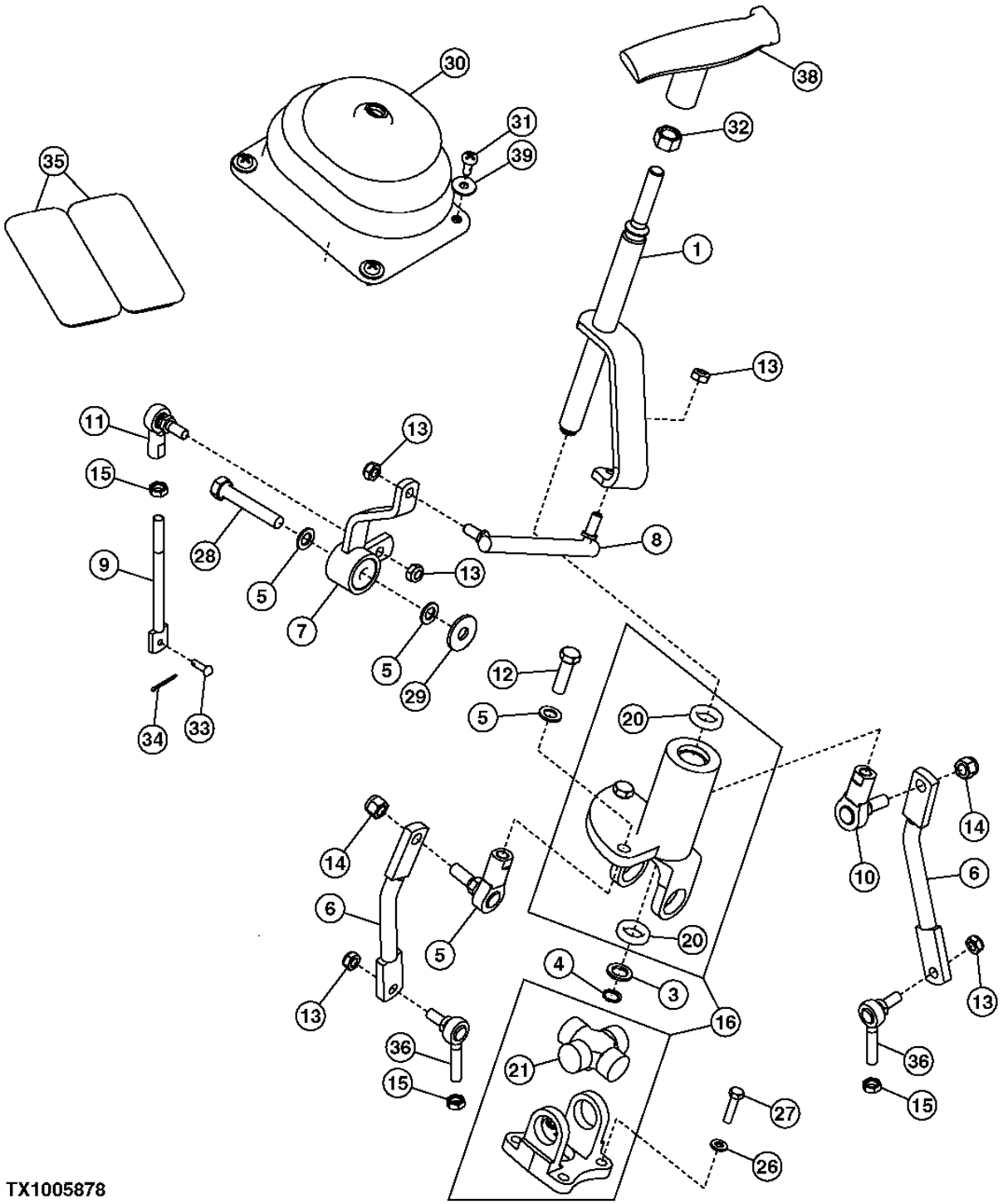

TX1005878

HYDRAULIC CONTROLS
COMMANDES HYDRAULIQUES
CONTROLES HIDRAULICOS

KEY	PART NO.	PART NAME	QTY.	SERIAL NO.	450J	550J	650J	REMARKS
1	AT220759	SHAFT	1		X	X	X	
3	24M7044	WASHER	1		X	X	X	13 X 20 X 2 MM
4	M43940	SNAP RING	1		X	X	X	
5	24M7096	WASHER	4		X	X	X	10.500 X 18 X 1.600 MM
6	T172829	LINK	2		X	X	X	(BENT)
7	AT210430	BELLCRANK	1		X	X	X	(AUXILIARY VALVE)
8	AT221783	TIE ROD ASSEMBLY	1		X	X	X	
9	T180727	EYEBOLT	1		X	X	X	
10	AT112928	BALL JOINT	2		X	X	X	(3/8 INCH, STUD)
11	AT48548	BALL JOINT	1		X	X	X	(5/16 INCH, STUD)
12	19H2309	CAP SCREW	2		X	X	X	3/8" X 1-1/4"
13	R11151	LOCK NUT	5		X	X	X	(ELASTIC INSERT)
14	M68954	LOCK NUT	2		X	X	X	9.525 MM, (ELASTIC INSERT)
15	14H882	NUT	3		X	X	X	5/16"
16	AT220322	CONTROL	1		X	X	X	(U-JOINT) (HOUSING)
20	AT210265	WASHER	2		X	X	X	
21	AT211316	CONTROL	1		X	X	X	(U-JOINT KIT)
26	24M7293	WASHER	4		X	X	X	6.500 X 13 X 1.600 MM
27	19M7863	SCREW	4		X	X	X	M6 X 25
28	19M8499	CAP SCREW	1		X	X	X	M10 X 60
29	24M7296	WASHER	1		X	X	X	10.500 X 30 X 2.500 MM
30	AT223375	BOOT	1		X	X	X	
31	T133674	SELF-LOCKING SCREW	4		X	X	X	
32	14M7275	NUT	1		X	X	X	M12
33	T174528	PIN FASTENER	1		X	X	X	
34	11M7078	COTTER PIN	1		X	X	X	2 X 20 MM
35	T178362	GROMMET	2		X	X	X	
36	AT46597	BALL JOINT	2		X	X	X	
38	AT223278	HANDLE	1		X	X	X	(T-BAR CONTROL)
39	24H1821	WASHER	4		X	X	X	9/32" X 47/64" X 1/16"

C-FRAME
C-CHASSIS
C-BASTIDOR

T209814 -UN-01APR05

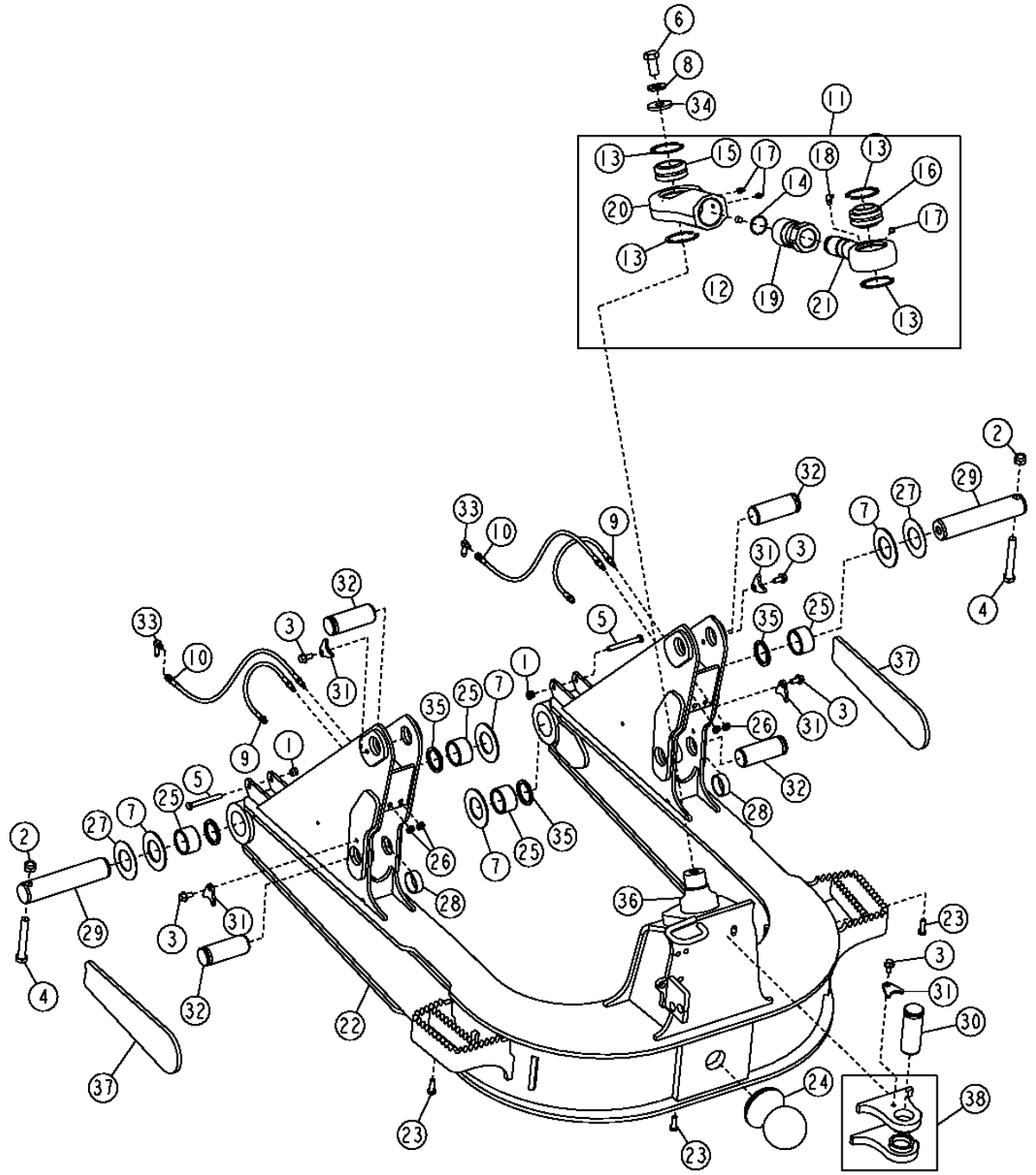

T209814

C-FRAME
C-CHASSIS
C-BASTIDOR

KEY	PART NO.	PART NAME	QTY.	SERIAL NO.	450J	550J	650J	REMARKS
1	14M7168	LOCK NUT	2		X	X	X	M12
2	14M7328	LOCK NUT	2		X	X	X	M16
3	19M7784	SCREW	5		X	X	X	M10 X 20
4	19M7884	CAP SCREW	2		X	X	X	M16 X 110
5	19M7943	CAP SCREW	2		X	X	X	M12 X 90
6	19M7946	CAP SCREW	1		X	X	X	M20 X 40
7	24H988	WASHER	4		X	X	X	52.375 X 95.250 X 3.048 MM
8	24M7242	WASHER	1		X	X	X	21.400 X 42 X 5 MM
9	AT173254	HYDRAULIC HOSE	2		X	X	X	
10	AT209423	HYDRAULIC HOSE	2		X	X		
	AT226033	HOSE	2				X	(XLT)
11	AT300480	LINK	1		X	X	X	(WHOLEGOODS) ADJUSTABLE PITCH
12	15H685	PIPE PLUG	1		X	X	X	
13	40M5099	SNAP RING	4		X	X	X	
14	40M7294	SNAP RING	1		X	X	X	
15	AT128773	SELF-ALIGNING BUSHING	1		X	X	X	
16	AT157173	SELF-ALIGNING BUSHING	1		X	X	X	
17	JD7759	LUBRICATION FITTING	3		X	X	X	
18	JD7781	LUBRICATION FITTING	1		X	X	X	
19	T200273	SLEEVE	1		X	X	X	
20	T200274	LINK END	1		X	X	X	
21	T202263	LINK END	1		X	X	X	
22	**AT319108**	**FRAME**	**1**		**X**	**X**	**X**	**(SUB FOR AT302874) (MAIN C-FRAME) (HEAVY DUTY) (CONVENIENCE ASSY)**
	AT319109	**FRAME**	**1**		**X**			**(SUB FOR AT304946) (STD) (CONVENIENCE ASSY)**
	AT319110	**FRAME**	**1**			**X**		**(SUB FOR AT305091) (XLT) (CONVENIENCE ASSY)**
	AT226475	**FIELD INSTALLATION KIT**	**1**		**X**	**X**	**X**	**(C-FRAME REINFORCEMENT) (CONVENIENCE ASSY)**
23	19M7662	CAP SCREW	3		X	X	X	M10 X 30
24	T196072	BALL	1		X	X	X	
25	T122720	BUSHING	4		X	X	X	
26	E12379	NUT	4		X	X	X	
27	M467M	WASHER	2		X	X	X	
28	T105052	BUSHING	4		X	X	X	
29	T122628	PIN FASTENER	2		X	X	X	
30	T170891	PIN	1		X	X	X	(SUB FOR T170879, THIS APPLICATION)
31	T170880	PLATE	5		X	X	X	
32	T170891	PIN	4		X	X	X	
33	T174185	ELBOW FITTING	2		X	X	X	
34	T29049	WASHER	1		X	X	X	
35	T68818	SEAL	4		X	X	X	
36	T176698	PIN FASTENER	1		X	X	X	
37	T213489	REINFORCEMENT	2		X	X	X	
38	**AT311768**	**ASSEMBLY LINE PARTS**	**1**		**X**	**X**	**X**	**(WHOLEGOODS)**

RH AND LH STEP FOR C-FRAME
MARCHE DROITE ET GAUCHE POUR CHASSIS EN C
PELDANO DER E IZQ PARA BASTIDOR EN C

T198049 -UN-24FEB04

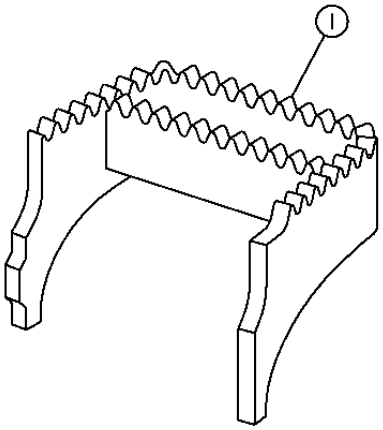

T198049

KEY	PART NO.	PART NAME	QTY.	ENGINE SERIAL NO.	450J	550J	650J	REMARKS
1	AT310522	FIELD INSTALLATION KIT	2		X	X	X	

MEMORANDA
MEMORANDA
MEMORANDA

HYDRAULIC CONTROL VALVE
DISTRIBUTEUR HYDRAULIQUE
VALVULA DE CONTROL HIDRAULICO

TP67751 -UN-16AUG00

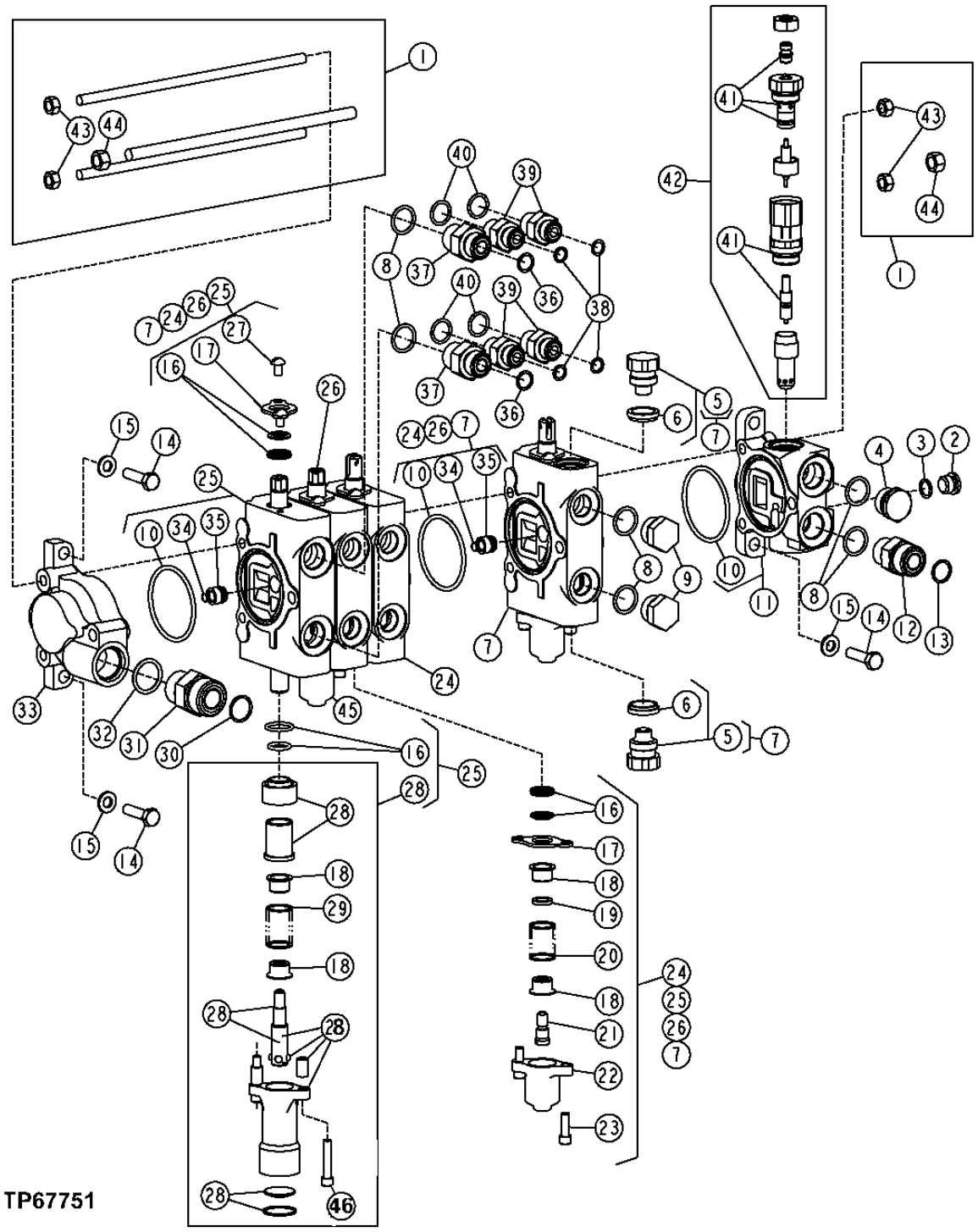

HYDRAULIC CONTROL VALVE
DISTRIBUTEUR HYDRAULIQUE
VALVULA DE CONTROL HIDRAULICO

KEY	PART NO.	PART NAME	QTY.	SERIAL NO.	450J	550J	650J	REMARKS
1	AT211314	TIE ROD ASSEMBLY	1		X	X	X	(FOURTH SECTION)
	AT220404	KIT	1		X	X	X	(THREE FUNCTION)
2	R111493	FITTING PLUG	1		X	X	X	
3	R26448	O-RING	1		X	X	X	
4	T76502	FITTING	1		X	X	X	
5	AT78527	FITTING PLUG	2		X	X	X	(SHUT-OFF)
6	T183756	SEAL	2		X	X	X	
7	AT222119	VALVE STACK	1		X	X	X	(AUXILIARY) (WITHOUT FLOAT)
	AT222097	VALVE STACK	1		X	X	X	(AUXILIARY) (WITH FLOAT)
8	R26906	O-RING	6		X	X	X	
9	R27474	DRAIN PLUG	2		X	X	X	
10	L111836	O-RING	4		X	X	X	
11	AT221403	VALVE STACK	1		X	X	X	(INLET HOUSING)
12	38H1162	ADAPTER FITTING	1		X	X	X	
13	T77932	O-RING	1		X	X	X	
14	19M7513	CAP SCREW	4		X	X	X	M8 X 30
15	24M7238	WASHER	4		X	X	X	8.700 X 17 X 2 MM
16	AT220400	SEAL KIT	1		X	X	X	(SPOOL)
17	T76504	PLATE	7		X	X	X	(SEAL)
18	T76505	ROUND RETAINER	10		X	X	X	(SPRING SEAT)
19	T176727	SPACER	1		X	X	X	(ANGLE SPOOL POSITIONER)
20	T175732	SPRING	4		X	X	X	
21	T76507	CAP SCREW	3		X	X	X	(SPOOL END SCREW)
22	T76508	CAP	3		X	X	X	(SPRING)
23	19H2924	SCREW	6		X	X	X	1/4" X 3/4"
24	AT225537	SPOOL VALVE	1		X	X	X	(ALSO ORDER (2) AT224820) (ANGLE SPOOL SECTION)
25	AT336563	VALVE STACK	1		X	X	X	(SUB FOR AT222116) (LIFT-SPOOL SECTION)
26	AT222117	VALVE STACK	1		X	X	X	(TILT-SPOOL SECTION)
27	21H1352	SCREW	4		X	X	X	1/4" X 3/8"
28	AT220398	KIT	1		X	X	X	(FLOAT SPOOL POSITIONER)
29	T176448	SPRING	1		X	X	X	
30	T77858	O-RING	1		X	X	X	
31	38H1163	ADAPTER FITTING	1		X	X	X	
32	U12547	O-RING	1		X	X	X	
33	T175731	FLOW CONTROL HYD. VALVE	1		X	X	X	(OUTLET HOUSING)
34	T76509	SPRING	2		X	X	X	
35	T76503	POPPET	2		X	X	X	(CHECK VALVE)
36	T77857	O-RING	2		X	X	X	
37	38H1174	ADAPTER FITTING	2		X	X	X	
38	T77613	O-RING	4		X	X	X	
39	38H1171	ADAPTER FITTING	4		X	X	X	
40	R26375	O-RING	4		X	X	X	
41	AT314538	SEAL KIT	1		X	X	X	(SUB FOR AT220399)
42	AT321340	FLOW CONTROL HYD. VALVE	1		X	X	X	(SUB FOR AT221396, THIS APPLICATION) (RELIEF)(3000 PSI)
43	14H1042	NUT	4		X	X	X	5/16"
44	14H1080	NUT	2		X	X	X	3/8"
45	T176728	SPACER	1		X	X	X	(TILT SPOOL POSITIONER)
46	19H2992	SCREW	2		X	X	X	1/4" X 1-1/4"
47	AT224820	PRESSURE RELIEF VALVE	2		X	X	X	(7500 PSI RELIEF VALVES) (INSTALL IN ANGLE SECTION VALVE STACK) (NOT ILLUSTRATED)
48	**AT336565**	**VALVE**	**1**		**X**	**X**	**X**	**(INCLUDES (2) AT224820, AT211314, AT221403, AT321340, AT336563, AT222117, AT222119, AT225537, (2) AT78527, R26448 AND R26906) (SUB FOR AT225536) (CONVENIENCE ASSY) (FOUR-SPOOL COMPLETE CONTROL VALVE)**
49	**AT336564**	**VALVE**	**1**		**X**	**X**	**X**	**(INCLUDES (2) AT224820, AT321340, AT211314, AT221403, AT336563, AT222117 AND AT225537) (SUB FOR AT225198) (CONVENIENCE ASSEMBLY) (THREE SPOOL COMPLETE CONTROL VALVE)**

AUXILIARY VALVE (FOURTH FUNCTION)
SOUPAPE AUXILIAIRE (QUATRIEME FONCTION)
VALVULA AUXILIAR (CUARTA FUNCION)

T200426 -UN-27MAY04

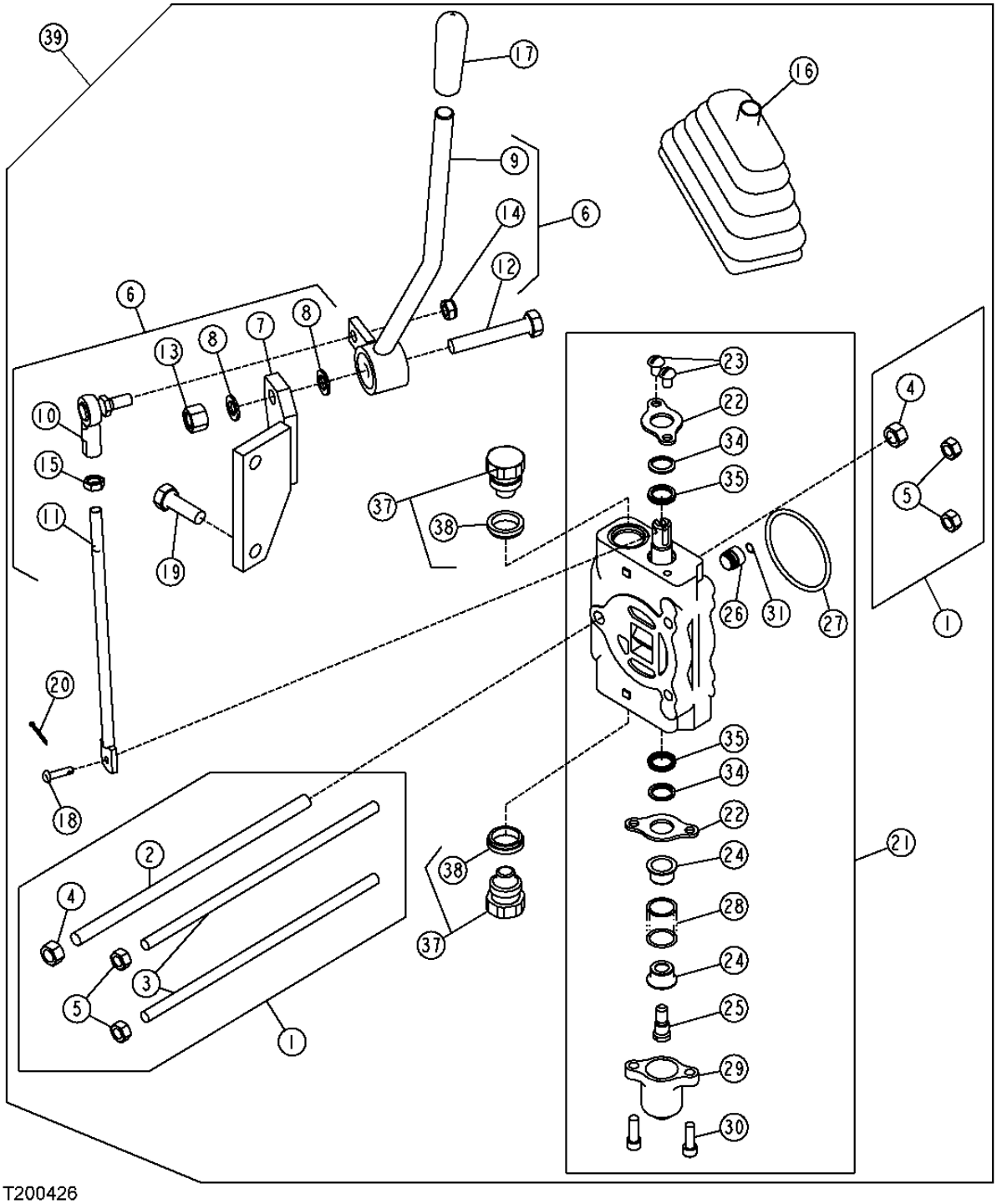

T200426

AUXILIARY VALVE (FOURTH FUNCTION)
SOUPAPE AUXILIAIRE (QUATRIEME FONCTION)
VALVULA AUXILIAR (CUARTA FUNCION)

KEY	PART NO.	PART NAME	QTY.	SERIAL NO.	456 550 000 JJJ	REMARKS
1	AT211314	TIE ROD ASSEMBLY	1		X X X	(FOURTH SECTION)
2	.....	STUD	1		X X X	(SUB AT211314)
3	.....	STUD	2		X X X	(SUB AT211314)
4	L111424	NUT	2		X X X	
5	L111423	NUT	4		X X X	
6	AT211021	CONTROL	1		X X X	(AUXILIARY FOURTH FUNCTION)
7	.....	BRACKET	1		X X X	(SUB AT211021) (AUXILIARY LINKAGE LEVER)
8	24M7096	WASHER	2		X X X	10.500 X 18 X 1.600 MM
9	.....	LEVER	1		X X X	(SUB AT211021) (AUXILIARY FUNCTION)
10	AT48548	BALL JOINT	1		X X X	(STUD)
11	.....	ROD	1		X X X	(SUB AT211021) (AUXILIARY LINKAGE)
12	19M8499	CAP SCREW	1		X X X	
13	14M7517	LOCK NUT	1		X X X	
14	R11151	LOCK NUT	1		X X X	(ELASTIC INSERT)
15	14H882	NUT	1		X X X	5/16"
16	AT140287	BOOT	1		X X X	
17	T71570	GRIP	1		X X X	(BLACK PVC)
18	T174528	PIN FASTENER	1		X X X	(DRILLED)
19	19M7662	CAP SCREW	2		X X X	M10 X 30
20	11M7078	COTTER PIN	1		X X X	2 X 20 MM
21	AT222119	VALVE STACK	1		X X X	(AUXILIARY) (WITHOUT FLOAT)
	AT222097	VALVE STACK	1		X X X	(AUXILIARY) (WITH FLOAT) (NOT INCLUDED IN AT207568)
22	T76504	PLATE	2		X X X	
23	21H1352	SCREW	2		X X X	
24	T76505	ROUND RETAINER	2		X X X	

THIS PARTS LISTING IS CONTINUED

AUXILIARY VALVE (FOURTH FUNCTION) (CONTINUED)
SOUPAPE AUXILIAIRE (QUATRIEME FONCTION) (SUITE)
VALVULA AUXILIAR (CUARTA FUNCION) (CONTINUACION)

T200426 -UN-27MAY04

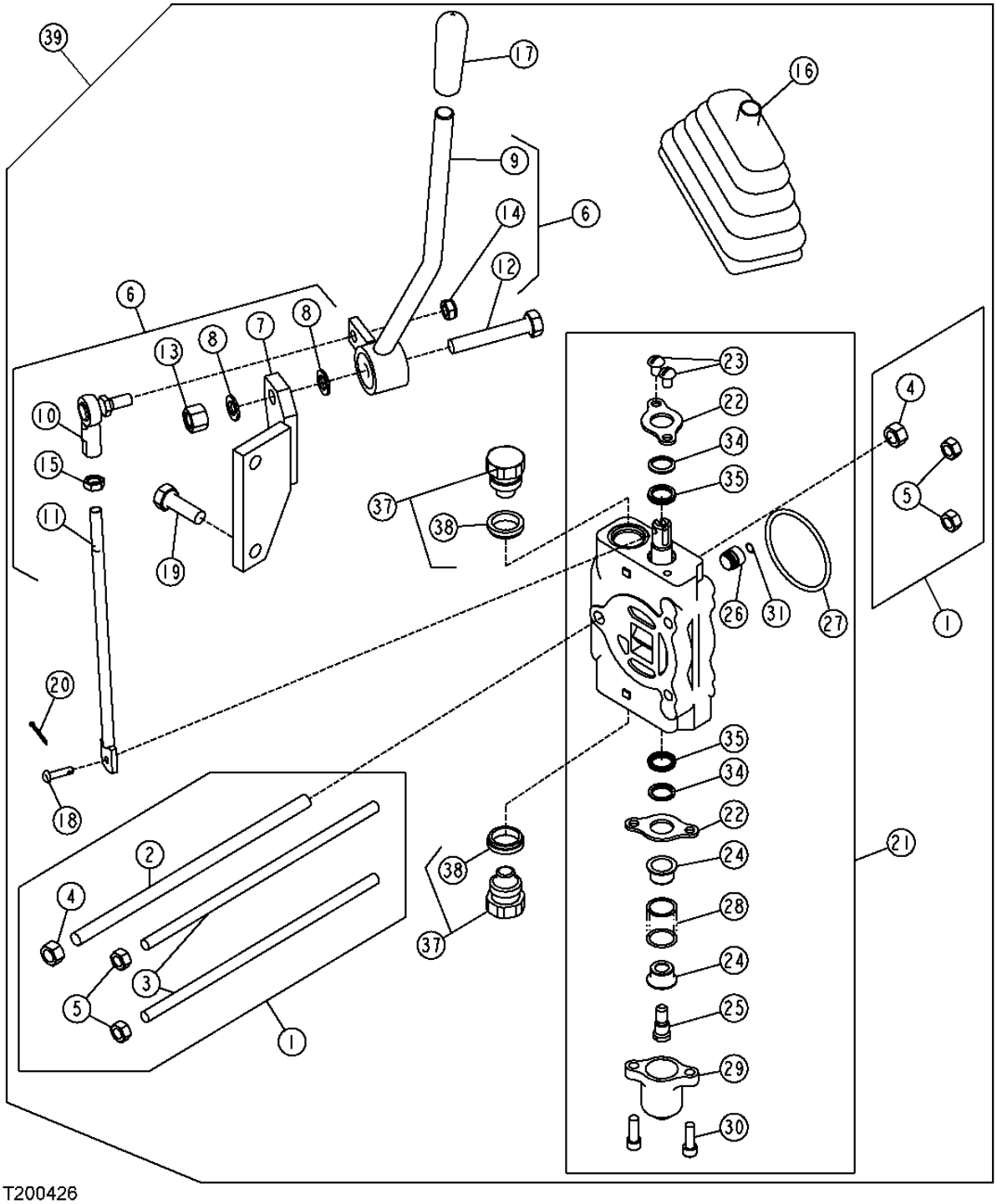

T200426

AUXILIARY VALVE (FOURTH FUNCTION) (CONTINUED)
SOUPAPE AUXILIAIRE (QUATRIEME FONCTION) (SUITE)
VALVULA AUXILIAR (CUARTA FUNCION) (CONTINUACION)

KEY	PART NO.	PART NAME	QTY.	SERIAL NO.	450J	550J	650J	REMARKS
25	T76507	CAP SCREW	1		X	X	X	
26	T76503	POPPET	1		X	X	X	
27	L111836	O-RING	1		X	X	X	
28	T175732	SPRING	1		X	X	X	
29	T76508	CAP	1		X	X	X	
30	19H2924	SCREW	2		X	X	X	
31	T76509	SPRING	1		X	X	X	
32	AT220400	SEAL KIT	1		X	X	X	(SPOOL) (NOT ILLUSTRATED)
33	.....	O-RING	1		X	X	X	(SUB AT220400) (NOT ILLUSTRATED)
34	.....	SEAL	2		X	X	X	(SUB AT220400) (WIPER)
35	.....	SEAL	2		X	X	X	(SUB AT220400) (SPOOL)
36	.....	O-RING	1		X	X	X	(SUB AT220400) (NOT ILLUSTRATED)
37	AT78527	FITTING PLUG	2		X	X	X	
	AT221397	PRESSURE RELIEF VALVE	AR		X	X	X	(CIRCUIT RELIEFS) (MUST BE ORDERED SEPARATELY) (3450 PSI, 5 GPM)
	AT321340	FLOW CONTROL HYD. VALVE	AR		X	X	X	(SUB FOR AT221396, THIS APPLICATION) (CIRCUIT RELIEFS) (MUST BE ORDERED SEPARATELY) (3000 PSI, 16 GPM)
	AT224381	PRESSURE RELIEF VALVE	AR		X	X	X	(CIRCUIT RELIEFS) (MUST BE ORDERED SEPARATELY) (1900 PSI, 5 GPM)
38	T183756	SEAL	2		X	X	X	
39	AT207568	SPOOL VALVE	1		X	X	X	(EQUIPMENT FIELD) (AUXILIARY) (LEVER AND LINKAGE KIT WITHOUT FLOAT)

AUXILIARY VALVE WITH LINKAGE (FIFTH FUNCTION)
DISTRIBUTEUR AUXILIAIRE AVEC TRINGLERIE (FONCTION 5)
VALVULA AUXILIAR CN VARILLAJE (5 FUNCION)

TP67549 -UN-18MAY99

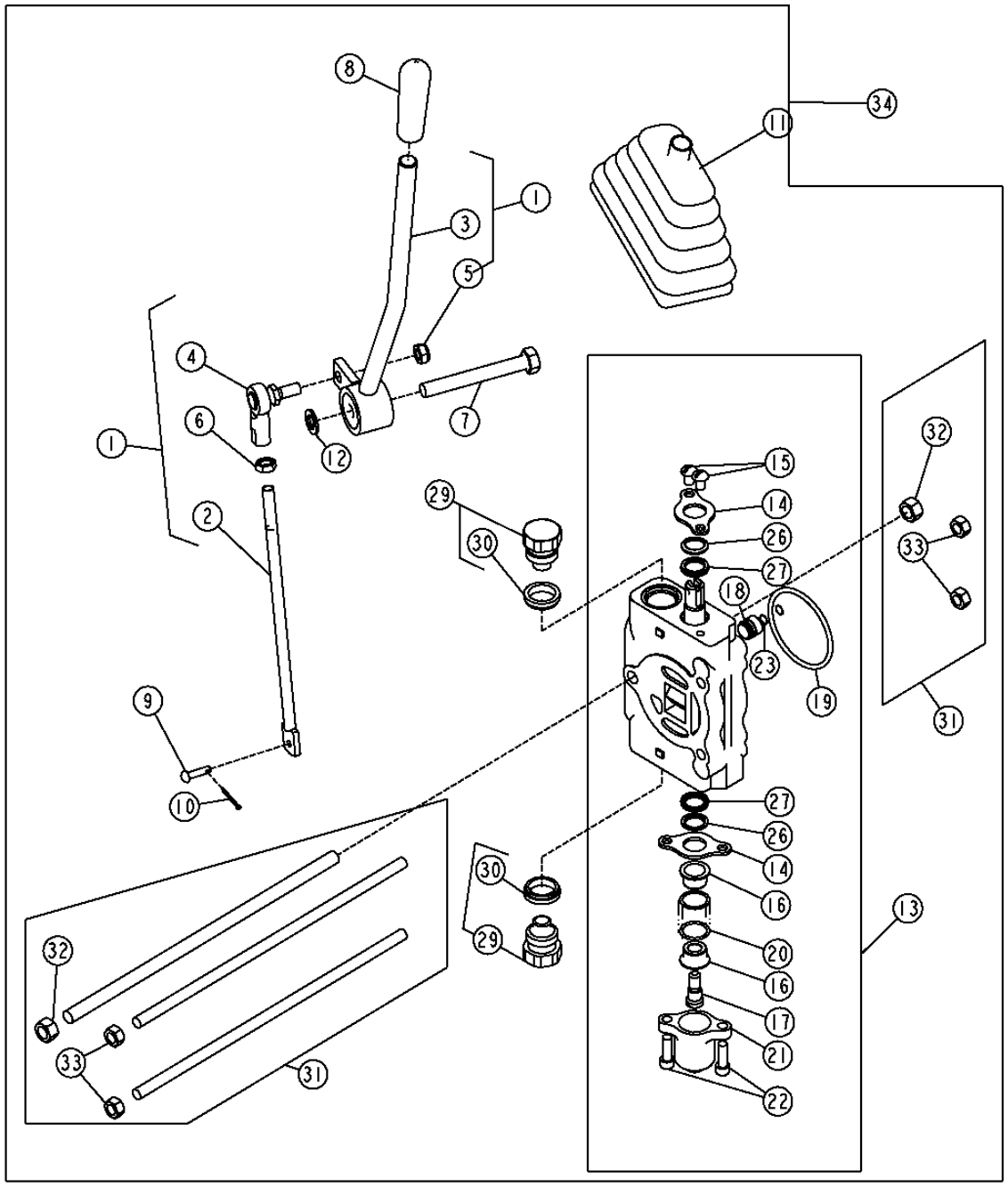

THIS PARTS LISTING IS CONTINUED

AUXILIARY VALVE WITH LINKAGE (FIFTH FUNCTION)
DISTRIBUTEUR AUXILIAIRE AVEC TRINGLERIE (FONCTION 5)
VALVULA AUXILIAR CN VARILLAJE (5 FUNCION)

KEY	PART NO.	PART NAME	QTY.	SERIAL NO.	450J	550J	650J	REMARKS
1	AT211121	CONTROL	1		X	X	X	
2	.....	SHIFTER ROD	1		X	X	X	(SUB AT211121) (CONTROL)
3	.....	LEVER	1		X	X	X	(SUB AT211121) (CONTROL)
4	AT48548	BALL JOINT	1		X	X	X	
5	R11151	LOCK NUT	1		X	X	X	
6	14H882	NUT	1		X	X	X	5/16"
7	19M8081	CAP SCREW	1		X	X	X	M10 X 80
8	T71570	GRIP	1		X	X	X	
9	T174528	PIN FASTENER	1		X	X	X	
10	11M7078	COTTER PIN	1		X	X	X	2 X 20 MM
11	AT140287	BOOT	1		X	X	X	
12	24M7096	WASHER	1		X	X	X	10.500 X 18 X 1.600 MM
13	AT222119	VALVE STACK	1		X	X	X	WITHOUT FLOAT
	AT222097	VALVE STACK	1		X	X	X	WITH FLOAT
14	T76504	PLATE	2		X	X	X	
15	21H1352	SCREW	2		X	X	X	1/4" X 3/8"
16	T76505	ROUND RETAINER	2		X	X	X	
17	T76507	CAP SCREW	1		X	X	X	
18	T76503	POPPET	1		X	X	X	
19	L111836	O-RING	1		X	X	X	
20	T175732	SPRING	1		X	X	X	
21	T76508	CAP	1		X	X	X	
22	19H2924	SCREW	2		X	X	X	1/4" X 3/4"
23	T76509	SPRING	1		X	X	X	
24	AT220400	SEAL KIT	1		X	X	X	(SPOOL) (NOT ILLUSTRATED)
25	.....	O-RING	1		X	X	X	(SUB AT220400) (NOT ILLUSTRATED)
26	.....	SEAL	2		X	X	X	(SUB AT220400) (WIPER)
27	.....	SEAL	2		X	X	X	(SUB AT220400) (SPOOL)
28	.....	O-RING	1		X	X	X	(SUB AT220400) (NOT ILLUSTRATED)
29	AT78527	FITTING PLUG	2		X	X	X	
	AT221397	PRESSURE RELIEF VALVE	AR		X	X	X	(CIRCUIT RELIEFS) (MUST BE ORDERED SEPARATELY) (3450 PSI, 5 GPM)
	AT321340	FLOW CONTROL HYD. VALVE	AR		X	X	X	(SUB FOR AT221396, THIS APPLICATION) (CIRCUIT RELIEFS) (MUST BE ORDERED SEPARATELY) (3000 PSI, 16 GPM)
	AT224381	PRESSURE RELIEF VALVE	AR		X	X	X	(CIRCUIT RELIEFS) (MUST BE ORDERED SEPARATELY) (1900 PSI, 5 GPM)
30	T183756	SEAL	1		X	X	X	
31	AT219742	TIE ROD ASSEMBLY	1		X	X	X	
32	L111424	NUT	2		X	X	X	
33	L111423	NUT	4		X	X	X	
34	AT219741	GATHERING NUMBER	1		X	X	X	(EQUIPMENT FIELD) (AUXILIARY CONTROL) (WITH LINKAGE) (WITHOUT FLOAT)

INTEGRATED CONTROL VAVLVE, INLET/OUTLET AND TIE RODS (650J)
DISTRIBUTEUR HYDRAULIQUE
VALVULA DE CONTROL HIDRAULICO

TX1018052 -UN-26JAN07

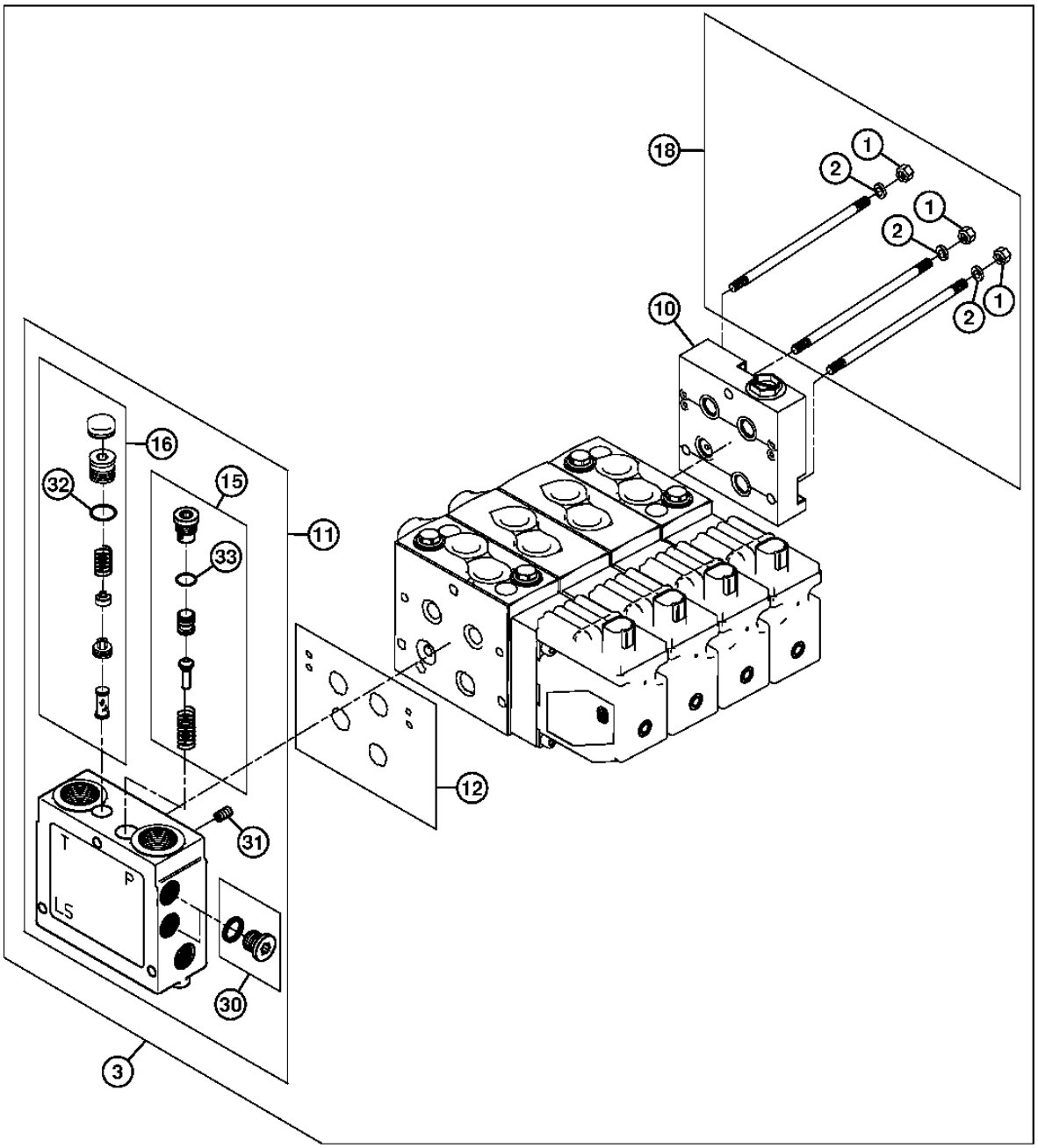

TX1018052

INTEGRATED CONTROL VAVLVE, INLET/OUTLET AND TIE RODS (650J)
DISTRIBUTEUR HYDRAULIQUE
VALVULA DE CONTROL HIDRAULICO

KEY	PART NO.	PART NAME	QTY.	SERIAL NO.	455J	550J	650J	REMARKS
1	14M7273	NUT	6			X		M8
2	24M7420	WASHER	6			X		8.250 X 16 X 1.600 MM
3	AT329356	CONTROL VALVE	1			X		(3 SPOOL)
	AT333759	CONTROL VALVE	1			X		(4 SPOOL)
10	AT340835	VALVE	1			X		
11	AT340837	VALVE	1			X		
12	AT340839	SEAL KIT	AR			X		
15	AT341136	HYDRAULIC PRESSURE VALVE	1			X		
16	AT341137	PRESSURE RELIEF VALVE	1			X		
18	AT341140	BOLT AND NUT	1			X		(3 SPOOL)
	AT341283	BOLT AND NUT	1			X		(4 SPOOL)
30	RE72618	FITTING PLUG	2			X		
31	T230349	ORIFICE	1			X		
32	T74550	O-RING	AR			X		9 X 2 MM
33	T74553	O-RING	AR			X		11 X 2 MM

LIFT VALVE SECTION, INTEGRATED GRADE CONTROL (650J)
DISTRIBUTEUR HYDRAULIQUE
VALVULA DE CONTROL HIDRAULICO

TX1018051 -UN-26JAN07

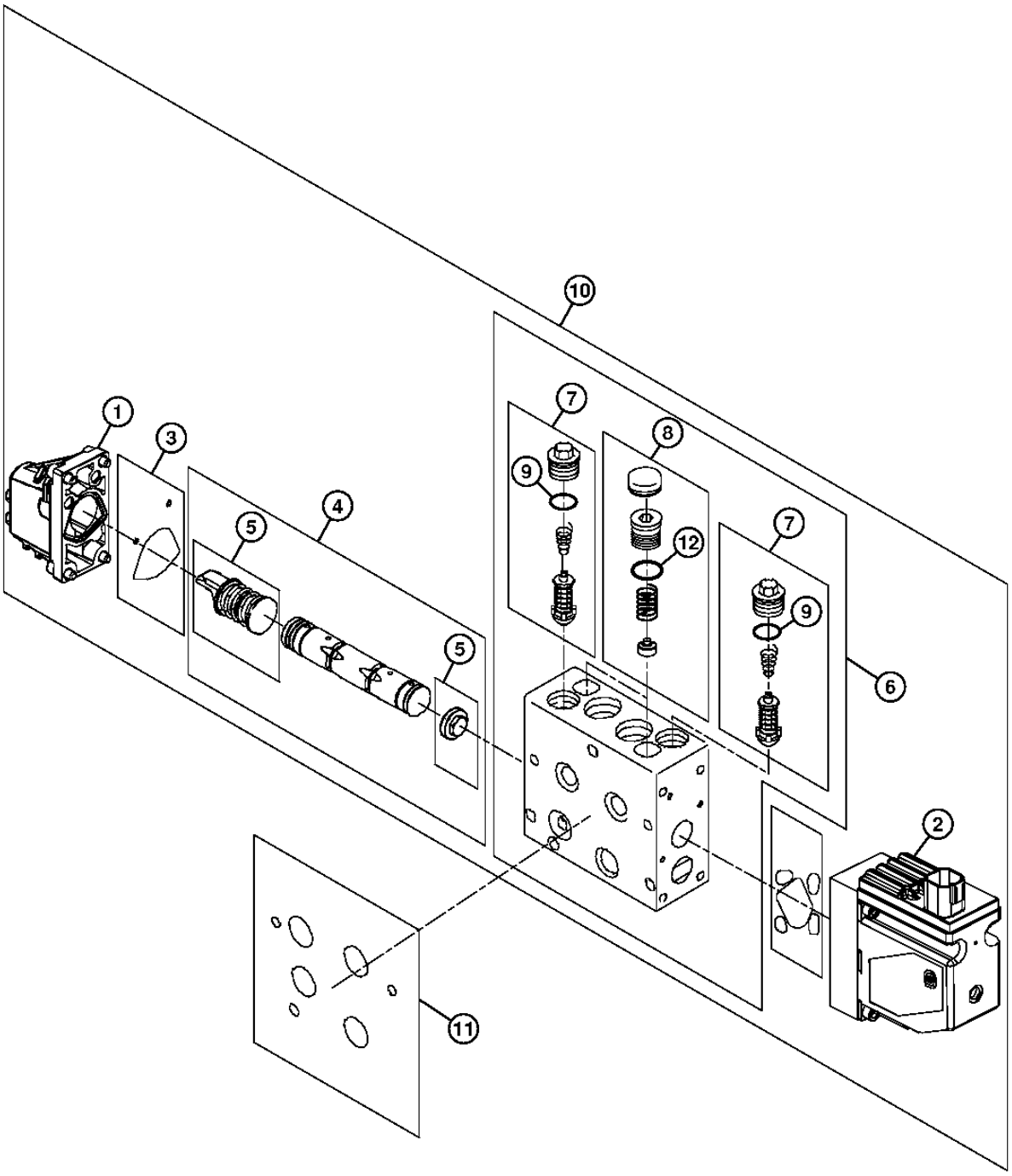

TX1018051

LIFT VALVE SECTION, INTEGRATED GRADE CONTROL (650J)
DISTRIBUTEUR HYDRAULIQUE
VALVULA DE CONTROL HIDRAULICO

KEY	PART NO.	PART NAME	QTY.	SERIAL NO.	450J	550J	650J	REMARKS
1	AT335927	ACTUATOR	1			X		
2	AT329088	ELEC-HYD PROPORTIONAL VALVE	1			X		
3	AT324966	SEAL KIT	1			X		
4	AT341146	VALVE SPOOL	1			X		
5	AT341143	SPRING ASSEMBLY	1			X		
6	AT342187	HOUSING	1			X		
7	AT329127	CHECK VALVE	2			X		
8	AT341137	PRESSURE RELIEF VALVE	2			X		
9	Z29304	O-RING	2			X		15.600 X 1.780 MM
10	AT341290	VALVE	1			X		
11	AT340839	SEAL KIT	1			X		
12	T74550	O-RING	2			X		9 X 2 MM

TILT VALVE SECTION, INTEGRATED GRADE CONTROL (650J)
DISTRIBUTEUR HYDRAULIQUE
VALVULA DE CONTROL HIDRAULICO

TX1018050 -UN-26JAN07

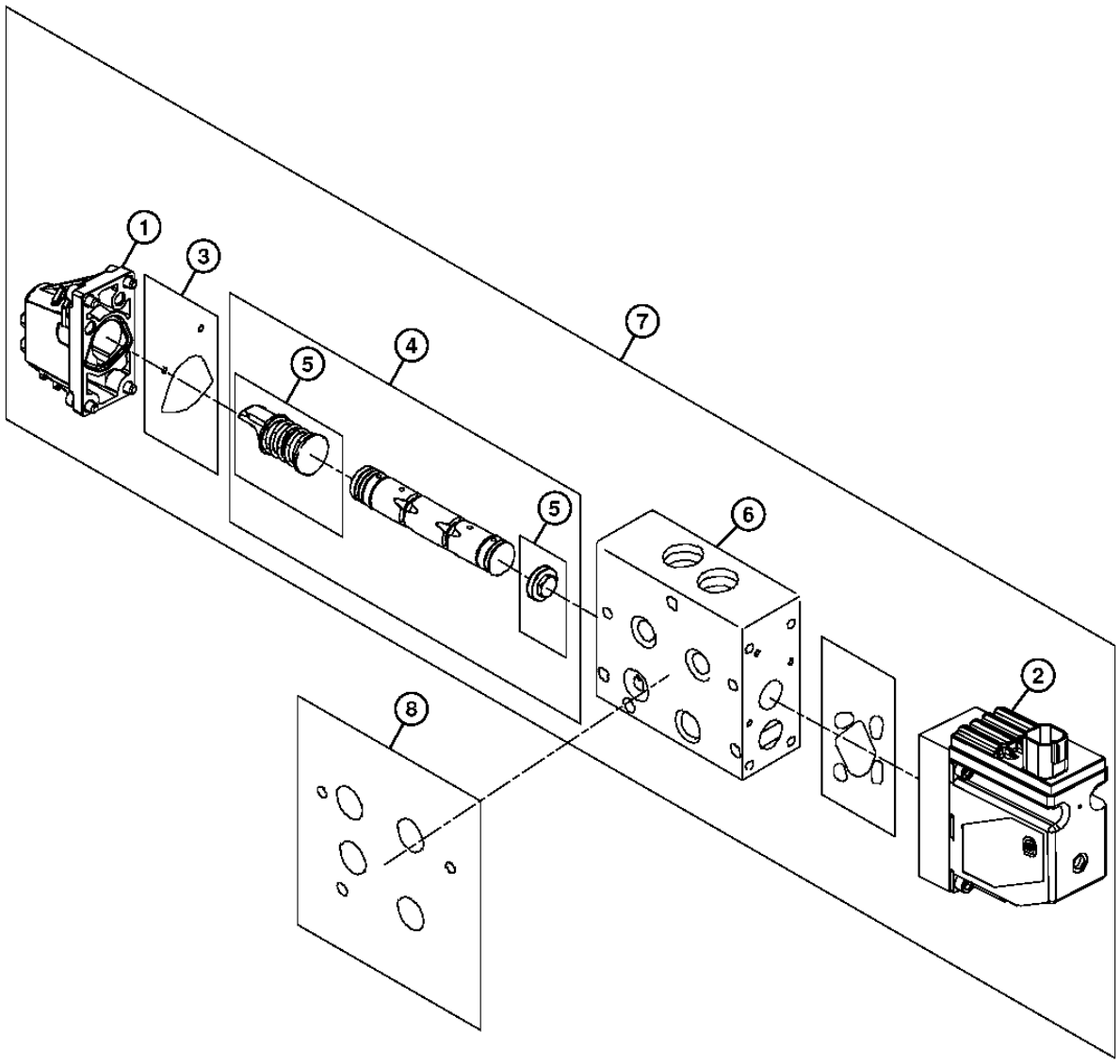

TX1018050

TILT VALVE SECTION, INTEGRATED GRADE CONTROL (650J)
DISTRIBUTEUR HYDRAULIQUE
VALVULA DE CONTROL HIDRAULICO

KEY	PART NO.	PART NAME	QTY.	SERIAL NO.	450J	550J	650J	REMARKS
1	AT335927	ACTUATOR	1				X	
2	AT329087	ELEC-HYD PROPORTIONAL VALVE	1				X	
3	AT324966	SEAL KIT	1				X	
4	AT341145	VALVE SPOOL	1				X	
5	AT341142	SPRING ASSEMBLY	1				X	
6	AT341281	HOUSING	1				X	
7	AT340841	VALVE	2				X	
8	AT340839	SEAL KIT	2				X	

ANGLE VALVE SECTION, INTEGRATED GRADE CONTROL (650J)
DISTRIBUTEUR HYDRAULIQUE
VALVULA DE CONTROL HIDRAULICO

TX1018047 -UN-26JAN07

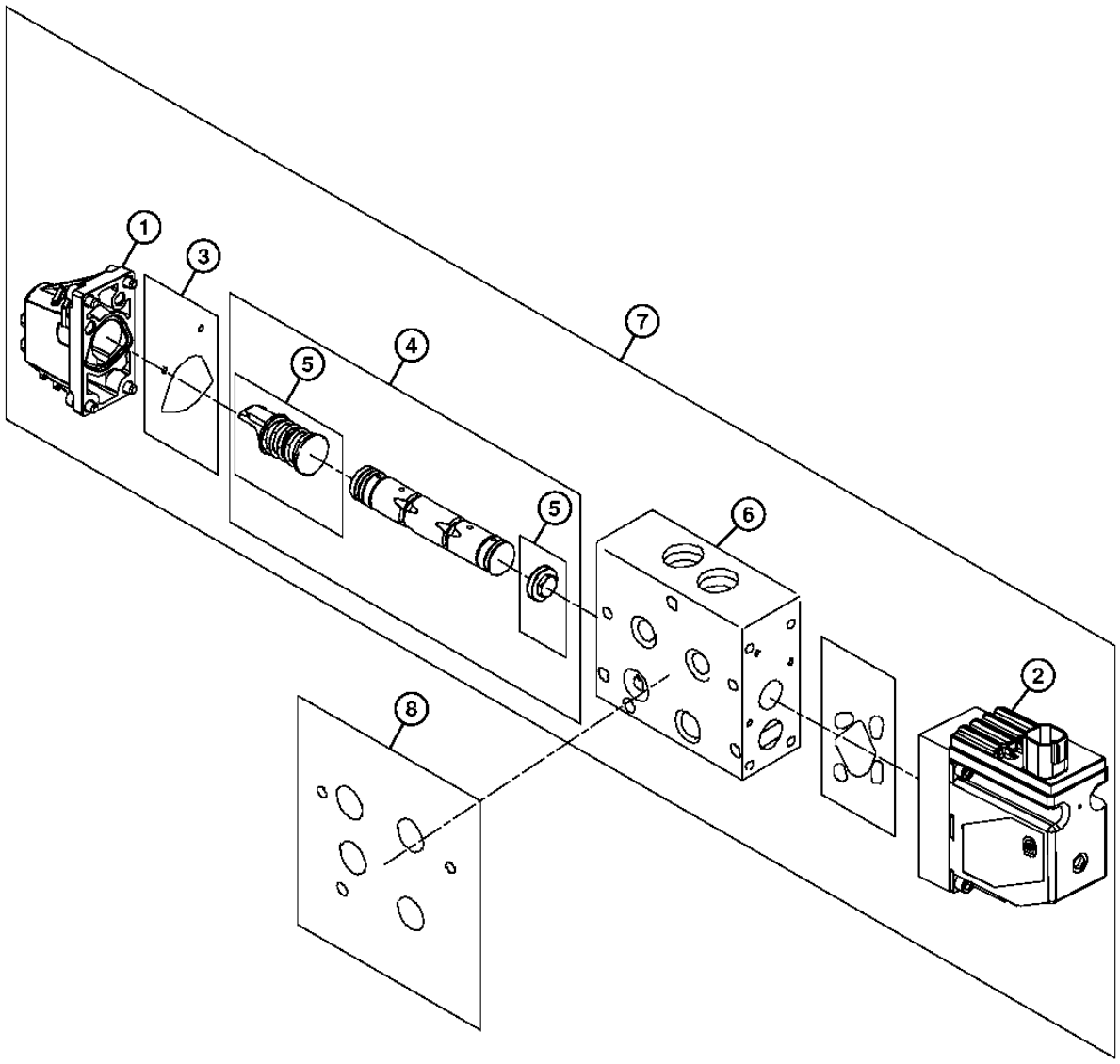

TX1018047

ANGLE VALVE SECTION, INTEGRATED GRADE CONTROL (650J)
DISTRIBUTEUR HYDRAULIQUE
VALVULA DE CONTROL HIDRAULICO

KEY	PART NO.	PART NAME	QTY.	SERIAL NO.	450J	550J	650J	REMARKS
1	AT335927	ACTUATOR	1				X	
2	AT329087	ELEC-HYD PROPORTIONAL VALVE	1				X	
3	AT324966	SEAL KIT	1				X	
4	AT341144	VALVE SPOOL	1				X	
5	AT341142	SPRING ASSEMBLY	1				X	
6	AT341281	HOUSING	1				X	
7	AT340840	VALVE	2				X	
8	AT340839	SEAL KIT	2				X	

AUX VALVE SECTION, INTEGRATED GRADE CONTROL (650J)
DISTRIBUTEUR HYDRAULIQUE
VALVULA DE CONTROL HIDRAULICO

TX1018012 -UN-26JAN07

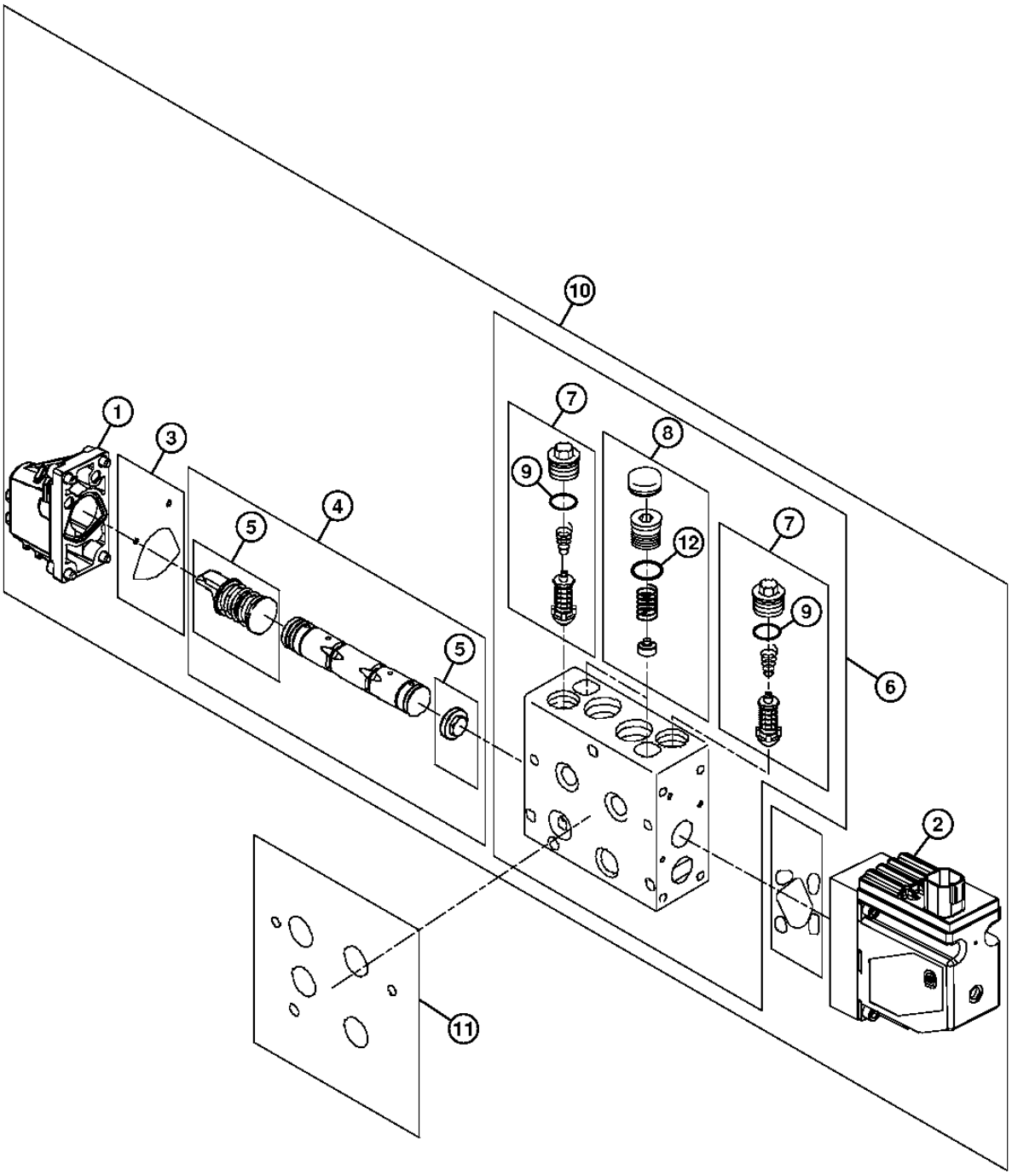

TX1018012

AUX VALVE SECTION, INTEGRATED GRADE CONTROL (650J)
DISTRIBUTEUR HYDRAULIQUE
VALVULA DE CONTROL HIDRAULICO

KEY	PART NO.	PART NAME	QTY.	SERIAL NO.	450J	550J	650J	REMARKS
1	AT335927	ACTUATOR	1			X		
2	AT329087	ELEC-HYD PROPORTIONAL VALVE	1			X		
3	AT324966	SEAL KIT	1			X		
4	AT341144	VALVE SPOOL	1			X		
5	AT341142	SPRING ASSEMBLY	1			X		
6	AT342234	HOUSING	1			X		
7	AT342233	PRESSURE RELIEF VALVE	2			X		
8	AT341137	PRESSURE RELIEF VALVE	2			X		
9	Z29304	O-RING	2			X		15.600 X 1.780 MM
10	AT340828	VALVE	1			X		
11	AT340839	SEAL KIT	1			X		
12	T74550	O-RING	2			X		9 X 2 MM

INTEGRATED GRADE CONTROL LEVER (JOYSTICK)
HYDRAULIQUES DE DISTRIBUTEUR PILOTE AUXILIAIRE (QUATRIEME FONCTION)
HIDRAULICOS DEL VALVULA DE CONTROL PILOTO AUXILIAR (CUARTA FUNCION)

TX1017983 -UN-27JAN07

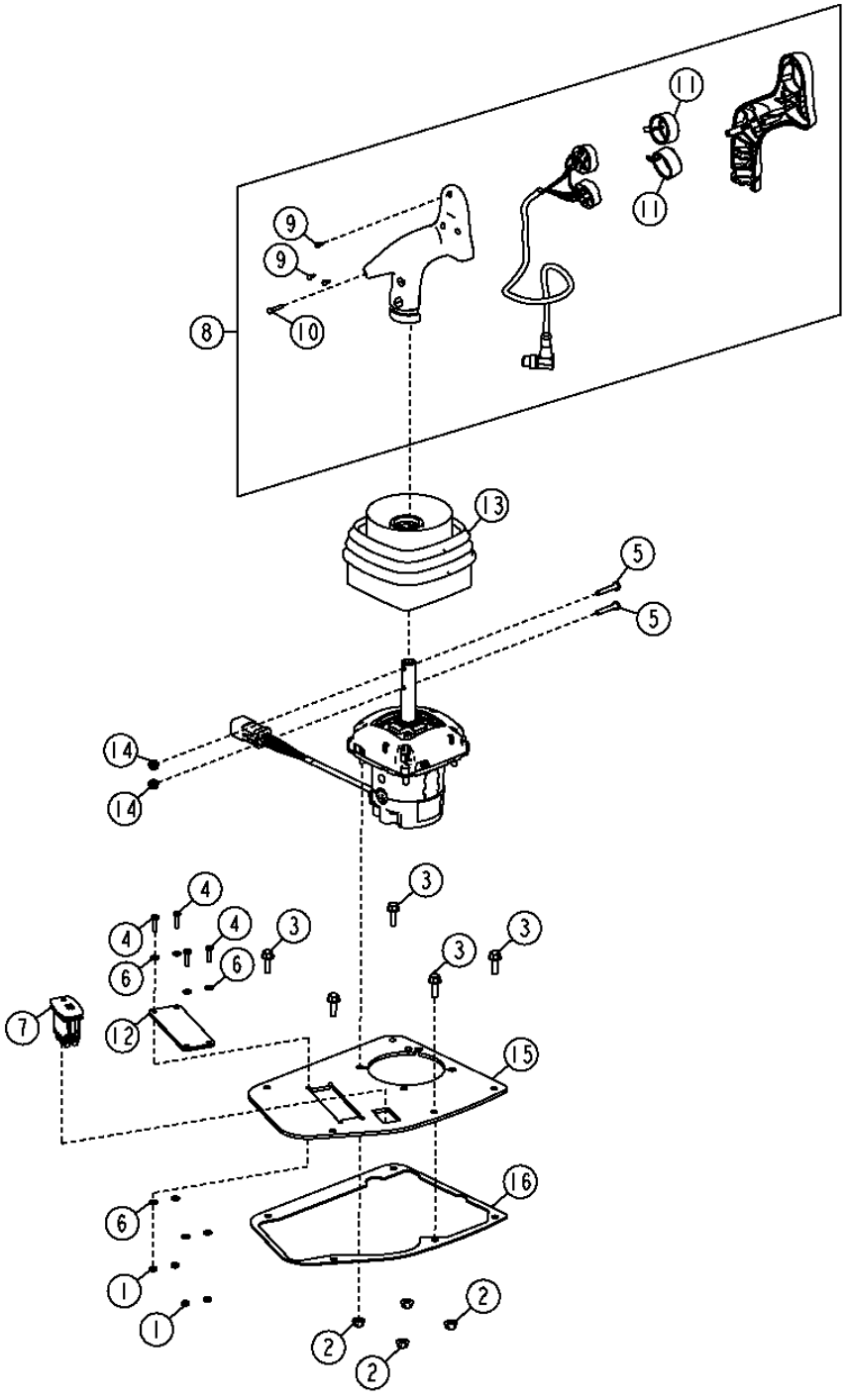

INTEGRATED GRADE CONTROL LEVER(JOYSTICK)
HYDRAULIQUES DE DISTRIBUTEUR PILOTE AUXILIAIRE (QUATRIÈME FONCTION)
HIDRAULICOS DEL VALVULA DE CONTROL PILOTO AUXILIAR (CUARTA FUNCION)

KEY	PART NO.	PART NAME	QTY.	SERIAL NO.	450J	550J	650J	REMARKS
1	14M7100	NUT	4			X		M4
2	14M7303	FLANGE NUT	4			X		M6
3	19M7862	SCREW	5			X		M6 X 20
4	19M8078	CAP SCREW	4			X		M4 X 16
5	21H1486	SCREW	2			X		0.190" X 1-1/8"
6	24M7117	WASHER	8			X		4.300 X 9 X 0.800 MM
7	AT309947	TOGGLE/ROCKER SWITCH	1			X		
8	AT323420	HANDLE	1			X		
9	37M7353	SCREW	3			X		
10	37M7356	SCREW	1			X		
11	T178768	BOOT	2			X		
12	AT333686	PLATE	1			X		
13	T230623	BOOT	1			X		
14	LVA12162	NUT	2			X		4.826 MM
15	T23857	PISTON	1			X		

INTEGRATED GRADE CONTROL LEVER (AUXILIARY JOYSTICK) FIELD KIT
HYDRAULIQUES DE DISTRIBUTEUR PILOTE AUXILIAIRE (QUATRIEME FONCTION)
HIDRAULICOS DEL VALVULA DE CONTROL PILOTO AUXILIAR (CUARTA FUNCION)

TX1018009 -UN-27JAN07

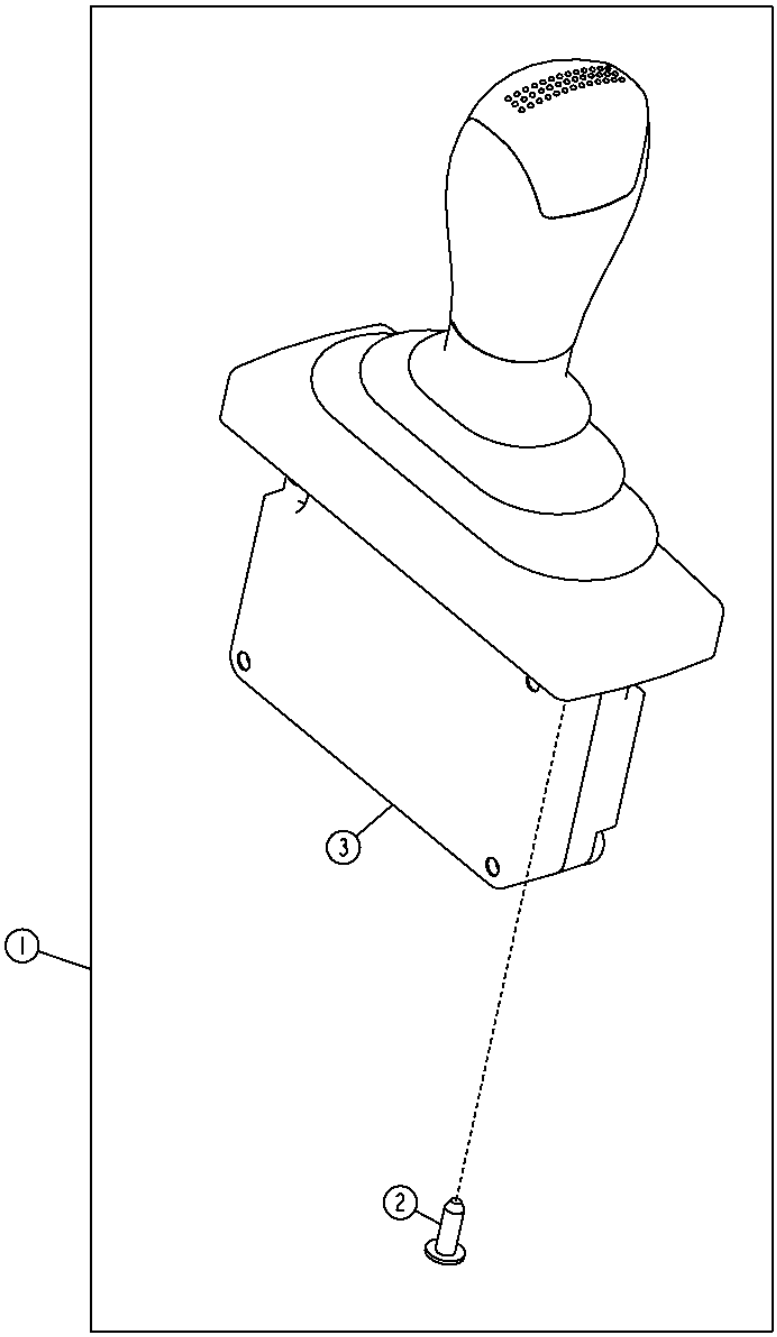

TX1018009

INTEGRATED GRADE CONTROL LEVER (AUXILIARY JOYSTICK) FIELD KIT
HYDRAULIQUES DE DISTRIBUTEUR PILOTE AUXILIAIRE (QUATRIEME FONCTION)
HIDRAULICOS DEL VALVULA DE CONTROL PILOTO AUXILIAR (CUARTA FUNCION)

KEY	PART NO.	PART NAME	QTY.	SERIAL NO.	450J	550J	650J	REMARKS
1	AT342202	GATHERING NUMBER	1			X		INCLUDES AUXILIARY VALVE AND TIE RODS ILLUSTRATED ON SEPERATE PAGE
2	37M7181	SCREW	4			X		
3	AT339580	MULTI-FUNCTIONAL CONTROLLER	1			X		

BLADE LIFT CYLINDER HYDRAULIC HOSES
FLEXIBLES HYDRAULIQUES DE VERIN DE RELEVAGE DE LAME
MANGUERAS HIDRAULICAS DE CILINDRO ELEVADOR DE HOJA

TX1005879 -UN-06APR06

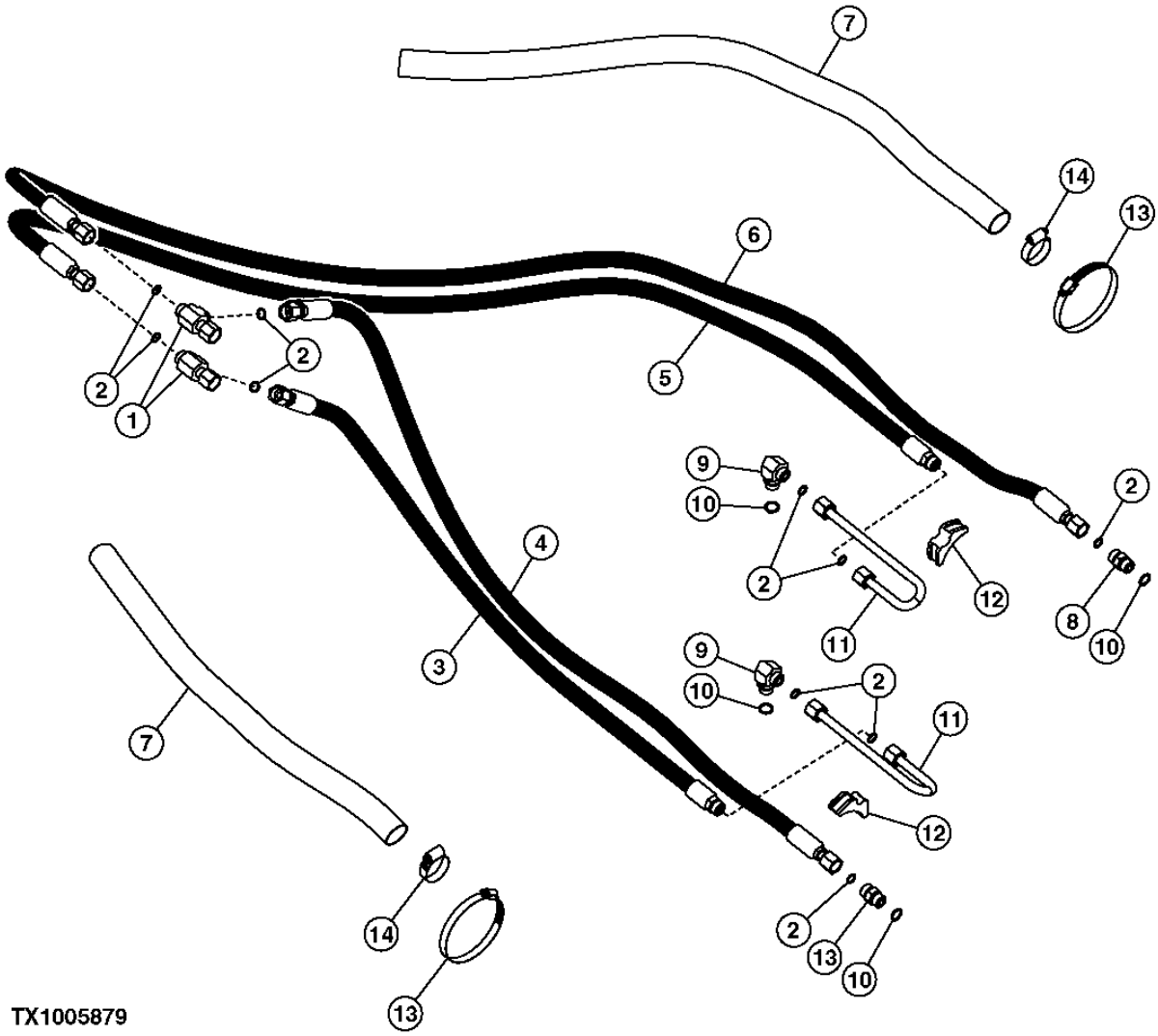

BLADE LIFT CYLINDER HYDRAULIC HOSES
FLEXIBLES HYDRAULIQUES DE VERIN DE RELEVAGE DE LAME
MANGUERAS HIDRAULICAS DE CILINDRO ELEVADOR DE HOJA

KEY	PART NO.	PART NAME	QTY.	SERIAL NO.	450J	550J	650J	REMARKS
1	38H1031	TEE FITTING	2		X	X	X	
2	T77857	O-RING	10		X	X	X	
3	AT219904	HYDRAULIC HOSE - FABRICATE	1		X	X	X	
4	AT219905	HYDRAULIC HOSE - FABRICATE	1		X	X	X	
5	AT219906	HYDRAULIC HOSE - FABRICATE	1		X	X	X	
6	AT219907	HYDRAULIC HOSE - FABRICATE	1		X	X	X	
7	.....	HOSE GUARD	2		X	X	X	(CORDURA) (CUT TO LENGTH, 950MM PARKER PS-B-33 OR PS-B-37)
8	38H1161	ADAPTER FITTING	2		X	X	X	(STRAIGHT)
9	38H1005	ELBOW FITTING	2		X	X	X	
10	R26375	O-RING	4		X	X	X	
11	AT208515	TUBE	2		X	X	X	(HYDRAULIC OIL TUBE)
12	T181801	CLAMP	2		X	X	X	(TUBE SUPPORT)
13	AR21842	CLAMP	2		X	X	X	
14	AR44217	CLAMP	2		X	X	X	

BLADE TILT CYLINDER HYDRAULIC HOSES
FLEXIBLES HYDRAULIQUES DE VERIN D'INCLINAISON DE LAME
MANGUERAS HIDRAULICAS DE CILINDRO DE INCLINACION DE HOJA

TX1005880 -UN-05APR06

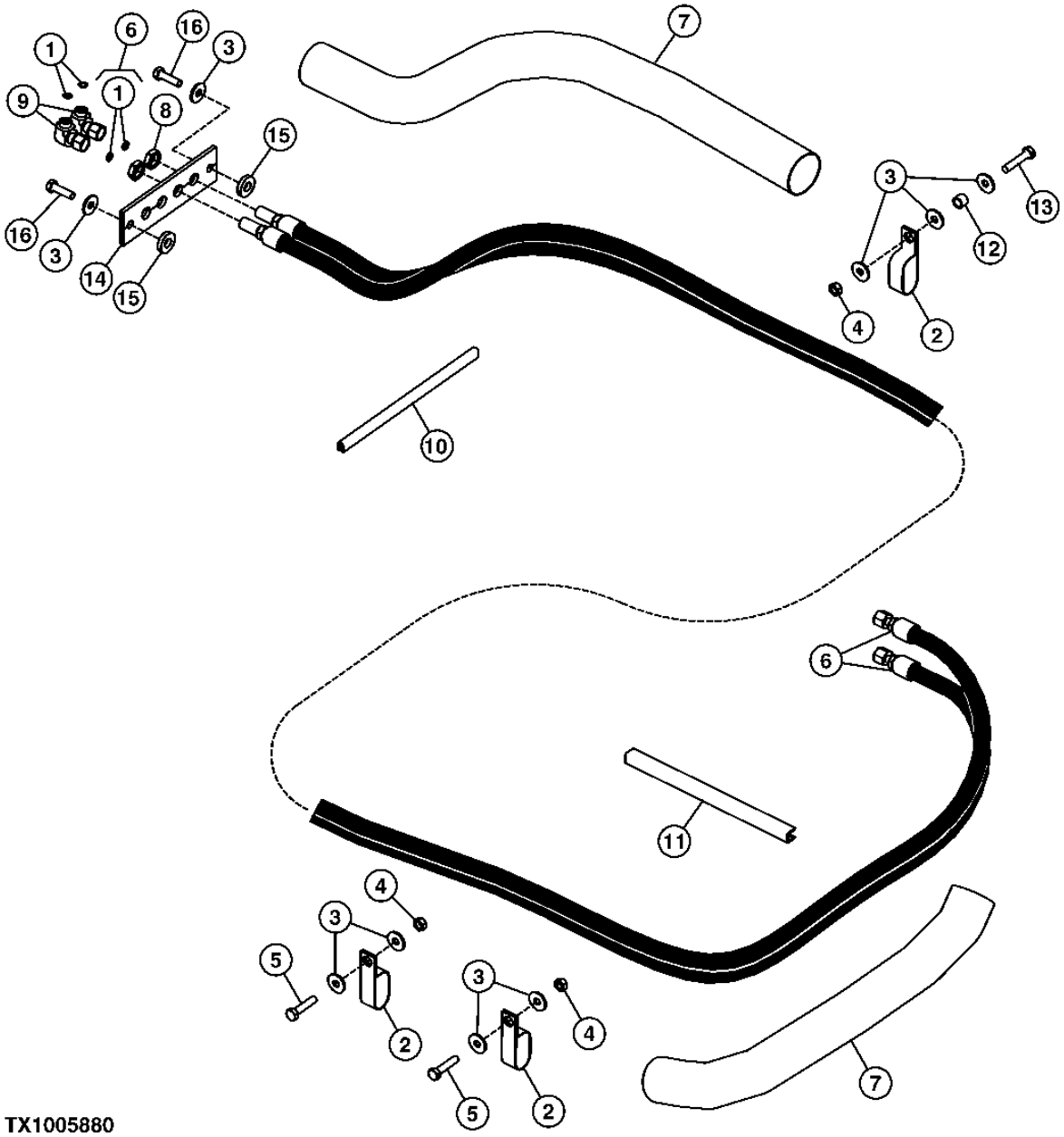

TX1005880

BLADE TILT CYLINDER HYDRAULIC HOSES
FLEXIBLES HYDRAULIQUES DE VERIN D'INCLINAISON DE LAME
MANGUERAS HIDRAULICAS DE CILINDRO DE INCLINACION DE HOJA

KEY	PART NO.	PART NAME	QTY.	SERIAL NO.	455000 JJJ	REMARKS
1	T77613	O-RING	4		X X X	
2	T149597	CLAMP	3		X X X	
3	24M7296	WASHER	9		X X X	10.500 X 30 X 2.500 MM
4	14M7274	NUT	3		X X X	M10
5	19M7572	CAP SCREW	2		X X X	M10 X 45
6	AT211564	HYDRAULIC HOSE - FABRICATE	2		X X X	
7	.....	HOSE GUARD	2		X X X	(CORDURA) (CUT TO LENGTH, 914MM PARKER PS-B-37 OR PS-B-39)
8	T81029	NUT	2		X X X	
9	38H1094	ELBOW FITTING	2		X X X	
10	.....	MOLDING	1		X X X	(MAKE FROM T61861) (CUT TO LENGTH, 1 FT) (EDGE GUARDS)
11	.....	MOLDING	1		X X X	(MAKE FROM T176644) (CUT TO LENGTH, 2 FT) (EDGE GUARDS)
12	28H3394	BUSHING	1		X X X	0.493" X 0.675" X 1/2", (PIPE)
13	19M7658	CAP SCREW	1		X X X	M10 X 50
14	T174980	PLATE	1		X X X	(BULKHEAD)
15	24H1272	WASHER	2		X X X	9/16" X 1-1/4" X 1/4"
16	19M8600	CAP SCREW	2		X X X	M10 X 50

BLADE ANGLE HYDRAULIC CYLINDER HOSES
FLEXIBLES DE VERIN HYDRAULIQUE D'ORIENTATION DE LAME
MANGUERAS DE CILINDRO HIDRAULICO DE ANGULACION DE HOJA

TX1005881 -UN-05APR06

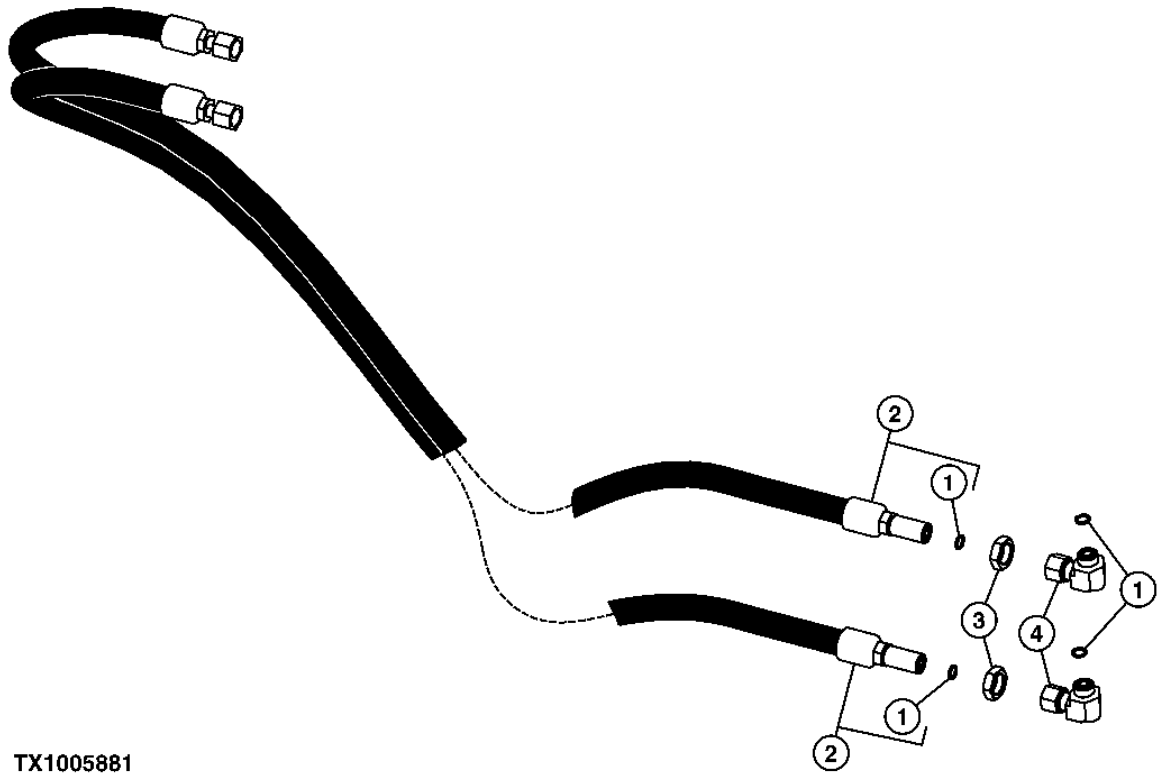

TX1005881

BLADE ANGLE HYDRAULIC CYLINDER HOSES
FLEXIBLES DE VERIN HYDRAULIQUE D'ORIENTATION DE LAME
MANGUERAS DE CILINDRO HIDRAULICO DE ANGULACION DE HOJA

KEY	PART NO.	PART NAME	QTY.	SERIAL NO.	450J	550J	650J	REMARKS
1	T77613	O-RING	4		X	X	X	
2	AT211564	HYDRAULIC HOSE - FABRICATE	2		X	X	X	
3	T81029	NUT	2		X	X	X	
4	38H1094	ELBOW FITTING	2		X	X	X	

BLADE PLUMBING
TUYAUTERIE DE LAME
TUBERIA DE HOJA

T199645 -UN-27MAY04

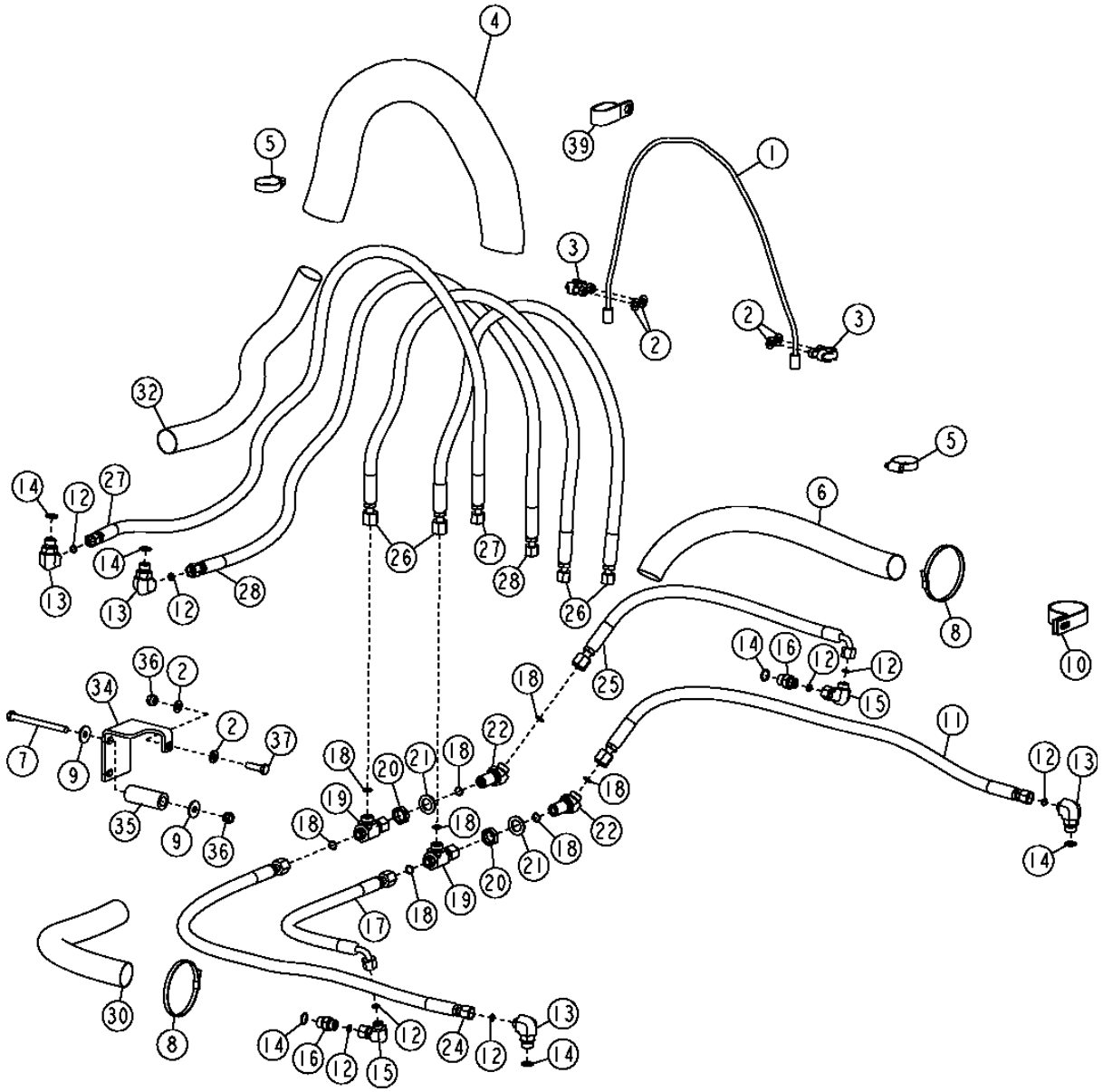

T199645

THIS PARTS LISTING IS CONTINUED

BLADE PLUMBING
TUYAUTERIE DE LAME
TUBERIA DE HOJA

KEY	PART NO.	PART NAME	QTY.	SERIAL NO.	450 J	550 J	650 J	REMARKS
1	AT219986	CABLE	1		X	X	X	
	AT221229	CABLE	1				X	(650JXLT)
2	24M7239	WASHER	6		X	X	X	10.700 X 21 X 2.500 MM
3	AT62123	CLAMP	2		X	X	X	
4	.....	HOSE GUARD	1		X	X	X	(CORDURA) (BLADE TO GRILLE) (CUT TO LENGTH, PARKER PS-B-37)
5	AR65293	CLAMP	2		X	X	X	
6	.....	HOSE GUARD	1		X	X	X	(CORDURA) (RIGHT ANGLE CYLINDER TO BLOCK) (CUT TO LENGTH, 650MM PARKER PS-B-33)
7	19M8343	CAP SCREW	1		X	X	X	M10 X 120
8	R76477	TIE BAND	2		X	X	X	
9	24M7296	WASHER	2		X	X	X	10.500 X 30 X 2.500 MM
10	T118385	CLAMP	1		X	X	X	
11	AT210061	HYDRAULIC HOSE - FABRICATE	1		X	X	X	(RIGHT ANGLE HOSE - ROD END)
12	T77613	O-RING	8		X	X	X	
13	38H1010	ELBOW FITTING	4		X	X	X	
14	R26375	O-RING	6		X	X	X	
15	38H1094	ELBOW FITTING	2		X	X	X	
16	38H1171	ADAPTER FITTING	2		X	X	X	
17	AT210062	HYDRAULIC HOSE - FABRICATE	1		X	X	X	(LEFT ANGLE HOSE - ROD END)
18	T77857	O-RING	8		X	X	X	
19	38H1031	TEE FITTING	2		X	X	X	
20	T78716	NUT	2		X	X	X	
21	24M7396	WASHER	2		X	X	X	21 X 34 X 3 MM
22	38H1321	ELBOW FITTING	2		X	X	X	
24	AT210063	HYDRAULIC HOSE - FABRICATE	1		X	X	X	(LEFT ANGLE HOSE - HEAD END)
25	AT210060	HYDRAULIC HOSE - FABRICATE	1		X	X	X	(RIGHT ANGLE HOSE - ROD END)
26	AT219901	HYDRAULIC HOSE - FABRICATE	2		X	X	X	(ANGLE HOSE GRILLE TO MANIFOLD)
	AT225948	HYDRAULIC HOSE - FABRICATE	2				X	(650JXLT)
27	AT219902	HYDRAULIC HOSE - FABRICATE	1		X	X	X	(TILT HOSE - ROD END)
	AT225945	HYDRAULIC HOSE - FABRICATE	1				X	(650JXLT)
28	AT219903	HYDRAULIC HOSE - FABRICATE	1		X	X	X	(TILT HOSE - HEAD END)
	AT228557	HYDRAULIC HOSE - FABRICATE	1				X	(650JXLT)
30	.....	HOSE GUARD	1		X	X	X	(CORDURA) (CUT TO LENGTH, 950MM PARKER PS-B-33 OR PS-B-37)
32	XPS-B-45	HOSE SLEEVE - FABRICATE	1		X	X	X	(CORDURA) (SUB FOR T173356)
34	T178314	GUARD	1		X	X	X	(ANGLE HOSE GUARD)
35	T151427	BUSHING	1		X	X	X	
36	14M7517	LOCK NUT	2		X	X	X	
37	19M7550	CAP SCREW	1		X	X	X	M10 X 35
39	T126299	CLAMP	1		X	X	X	

RIPPER HOSES
FLEXIBLES DE DEFONCEUSE
MANGUERAS DE DESGARRADORA

TX1005883 -UN-05APR06

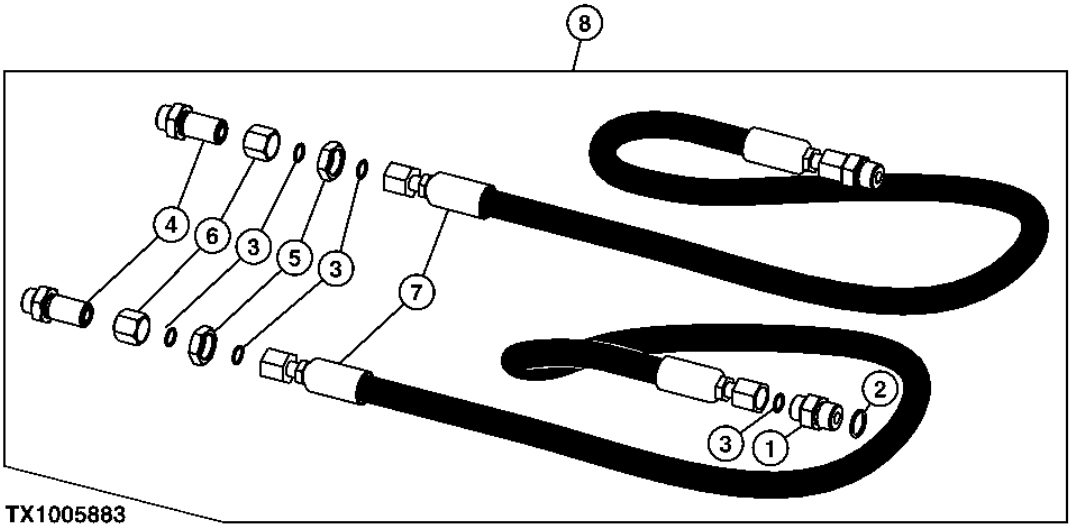

RIPPER HOSES
FLEXIBLES DE DEFONCEUSE
MANGUERAS DE DESGARRADORA

KEY	PART NO.	PART NAME	QTY.	SERIAL NO.	450J	550J	650J	REMARKS
1	38H1174	ADAPTER FITTING	2		X	X	X	
2	R26906	O-RING	2		X	X	X	
3	T77857	O-RING	6		X	X	X	
4	38H1275	ADAPTER FITTING	2		X	X	X	
5	T78716	NUT	2		X	X	X	
6	38H1416	FITTING	2		X	X	X	
7	AT210594	HYDRAULIC HOSE - FABRICATE	2		X	X	X	
8	**AT207570**	**FIELD INSTALLATION KIT**	**1**		**X**	**X**	**X**	**(ORDER OTHER RIPPER COMPONENTS FROM WELDCO BEALES)**

HYDRAULIC CYLINDERS
VERINS HYDRAULIQUES
CILINDROS HIDRAULICOS

T200144 -UN-19MAY04

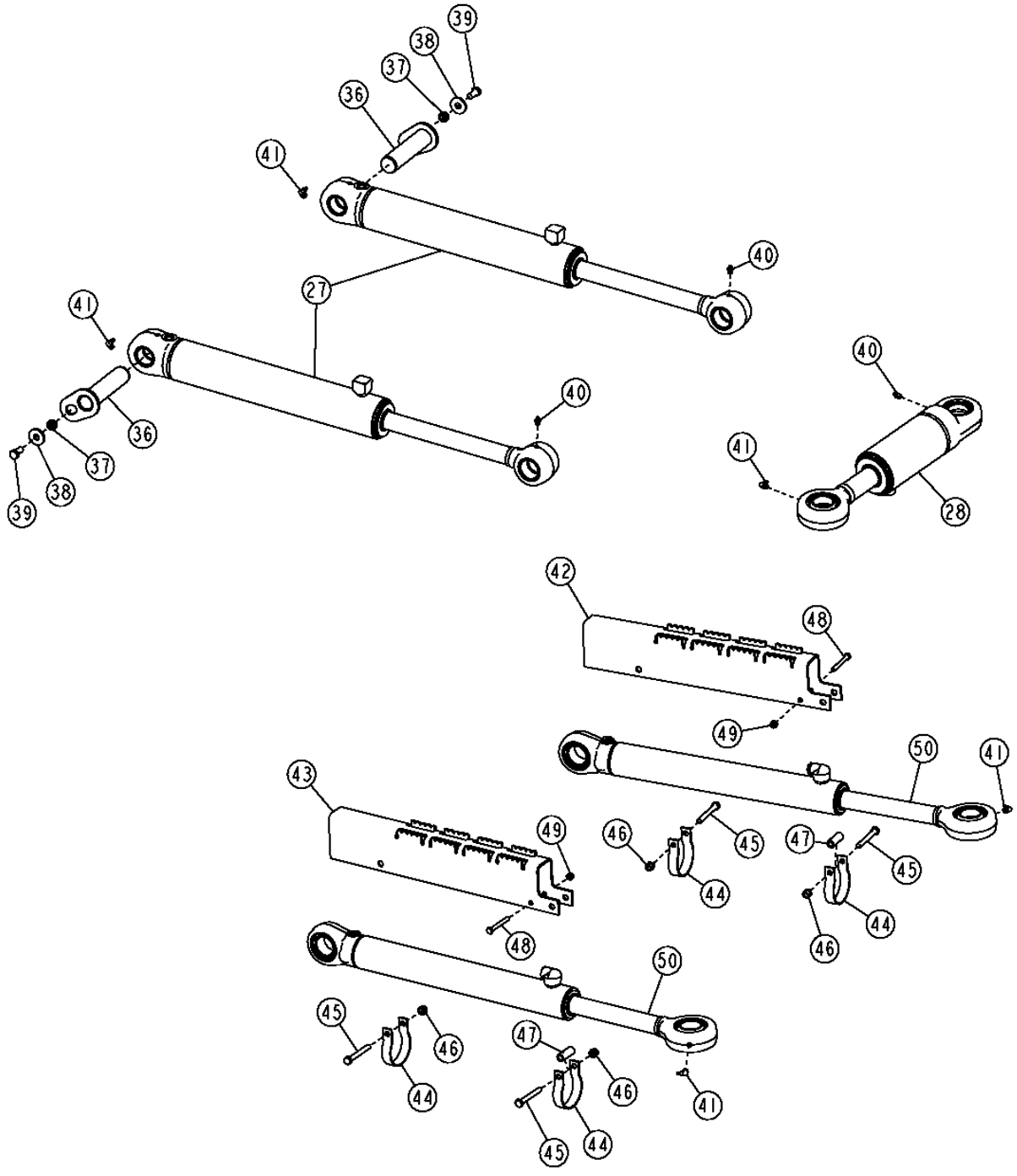

THIS PARTS LISTING IS CONTINUED

HYDRAULIC CYLINDERS
VERINS HYDRAULIQUES
CILINDROS HIDRAULICOS

KEY	PART NO.	PART NAME	QTY.	SERIAL NO.	455J	555J	600J	REMARKS
27	AH211370	HYDRAULIC CYLINDER	2		X	X	X	(LIFT)
28	AH211381	HYDRAULIC CYLINDER	1		X	X		(TILT)(ALSO SEE HYDRAULIC TILT CYLINDER PAGE FOR COMPLETE PART LISTING)
	AH210979	HYDRAULIC CYLINDER	1				X	(TILT) (ALSO SEE HYDRAULIC TILT CYLINDER PAGE FOR COMPLETE PART LISTING)
36	AT211297	PIN	2		X	X	X	(LIFT CYLINDER HEAD END)
37	28H3418	WASHER	2		X	X	X	0.546" X 0.840" X 5/16"
38	24H1351	WASHER	2		X	X	X	9/16" X 1-1/2" X 0.164"
39	19M7872	CAP SCREW	2		X	X	X	M12 X 25
40	T162396	LUBRICATION FITTING	3		X	X	X	
41	JD7799	LUBRICATION FITTING	5		X			
	JD7847	LUBRICATION FITTING	5			X	X	(45 DEGREE)
42	T208166	COVER	1		X	X	X	(SUB FOR AT220033) (RIGHT CYLINDER GUARD)
43	T208166	COVER	1		X	X	X	(SUB FOR AT220032) (LEFT CYLINDER GUARD)
44	T182013	CLAMP	4		X			
	T182014	CLAMP	4			X	X	
45	19M8197	CAP SCREW	4		X	X	X	M10 X 85
46	14M7517	LOCK NUT	4		X	X	X	M10
47	T101975	BUSHING	2		X	X	X	
48	19M7663	CAP SCREW	2		X	X	X	M8 X 70
49	14M7426	LOCK NUT	2		X	X	X	M8
50	.....	HYDRAULIC CYLINDER	2	-102817	X			(SUB AH216716) (SUB FOR AH219523) (AH165237 NLA) (ANGLE) (ALSO SEE HYDRAULIC ANGLE CYLINDER PAGE FOR COMPLETE PART LISTING)
	.....	HYDRAULIC CYLINDER	2	102818-	X			(SUB AH216716) (SUB FOR AH165237 AND AH219523) (ANGLE) (ALSO SEE HYDRAULIC ANGLE CYLINDER PAGE FOR COMPLETE PART LISTING)
	AH211851	HYDRAULIC CYLINDER	2			X	X	(ANGLE) (ALSO SEE HYDRAULIC ANGLE CYLINDER PAGE FOR COMPLETE PART LISTING)

BLADE TILT HYDRAULIC CYLINDER
VERIN HYDRAULIQUE D'INCLINAISON DE LAME
CLINDRO HIDRAULICO DE INCLINACION DE HOJA

T200110 -UN-18MAY04

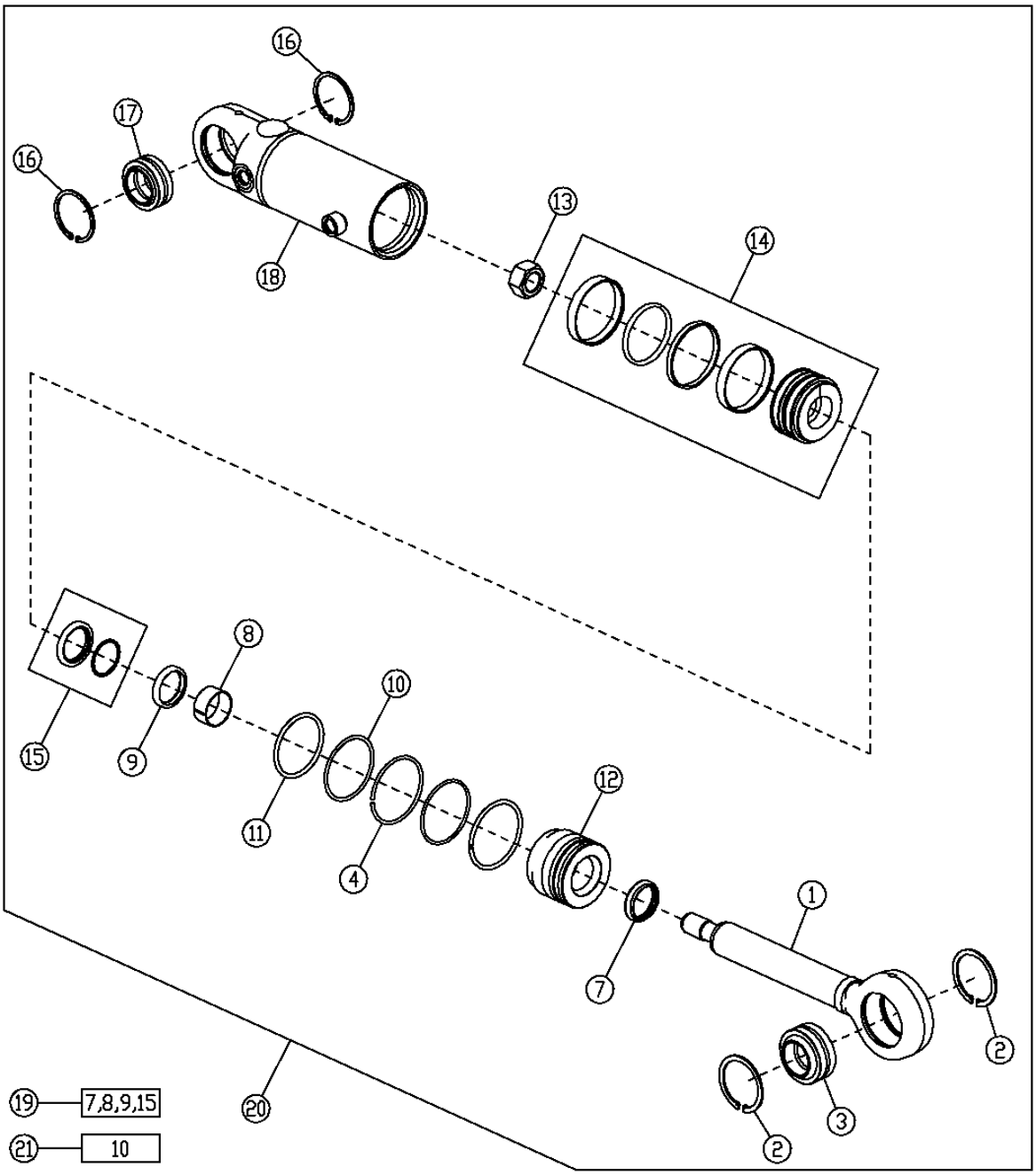

T200110

BLADE TILT HYDRAULIC CYLINDER
VERIN HYDRAULIQUE D'INCLINAISON DE LAME
CILINDRO HIDRAULICO DE INCLINACION DE HOJA

KEY	PART NO.	PART NAME	QTY.	SERIAL NO.	450J	550J	650J	REMARKS
1	AH159495	ROD	1		X	X		(WITH END)
	AH158621	ROD	1				X	(WITH END)
2	40M5099	SNAP RING	2		X	X	X	(INTERNAL)
3	AT157173	SELF-ALIGNING BUSHING	1		X	X	X	
4	H180103	SNAP RING	1		X	X		
	H180094	SNAP RING	1				X	
7	AH146556	SEAL	1		X	X		(ROD WIPER)
	AH146557	SEAL	1				X	(ROD WIPER)
8	H157898	WEAR RING	1		X	X		(ROD BEARING)
	H208987	WEAR RING	1				X	(ROD BEARING)
9	H152202	SEAL	1		X	X		(ROD U-CUP)
	H152203	SEAL	1				X	(ROD U-CUP)
10	R79101	BACK-UP RING	1		X	X		
	R81862	BACK-UP RING	1				X	
11	F1430R	O-RING	1		X	X		
	F950R	O-RING	1				X	
12	H208999	HYDR. CYLINDER ROD GUIDE	1		X	X		
	H208995	HYDR. CYLINDER ROD GUIDE	1				X	
13	H170538	NUT	1		X	X		M27, (LOCK)
	H170539	NUT	1				X	M30
14	AH136453	PISTON	1		X	X		(UNITIZED) (IF PISTON WEAR RINGS ARE CONTAMINATED OR BROKEN COMPLETE PISTON MUST BE ORDERED)
	AH205062	PISTON	1				X	(SUB FOR AH159034) (UNITIZED) (IF PISTON WEAR RINGS ARE CONTAMINATED OR BROKEN COMPLETE PISTON MUST BE CHANGED)
15	AH146560	SEAL	1		X	X		
	AH146561	SEAL	1				X	
16	40M7090	SNAP RING	2		X	X	X	(INTERNAL)
17	.....	SELF-ALIGNING BUSHING	1		X	X	X	(SUB FOR AH155619)
18	AH211057	HYDRAULIC CYLINDER BARREL	1		X	X		(WITH CAP)
	AH210978	HYDRAULIC CYLINDER BARREL	1				X	(WITH CAP)
19	AH149813	HYDRAULIC CYLINDER KIT	1		X	X		(ROD SEAL KIT)
	AH210484	HYDRAULIC CYLINDER KIT	1				X	(ROD SEAL KIT)
20	AH211381	HYDRAULIC CYLINDER	1		X	X		(TILT) (ALSO SEE HYDRAULIC CYLINDER PAGE)
	AH210979	HYDRAULIC CYLINDER	1				X	(TILT) (ALSO SEE HYDRAULIC CYLINDER PAGE)
21	AH212097	HYDRAULIC CYLINDER KIT	1		X	X		(BORE SEAL KIT)
	AH212102	HYDRAULIC CYLINDER KIT	1				X	(BORE SEAL KIT)

BLADE LIFT HYDRAULIC CYLINDER
VERIN HYDRAULIQUE DE RELEVAGE DE LAME
CILINDRO HIDRAULICO ELEVADOR DE HOJA

T200125 -UN-18MAY04

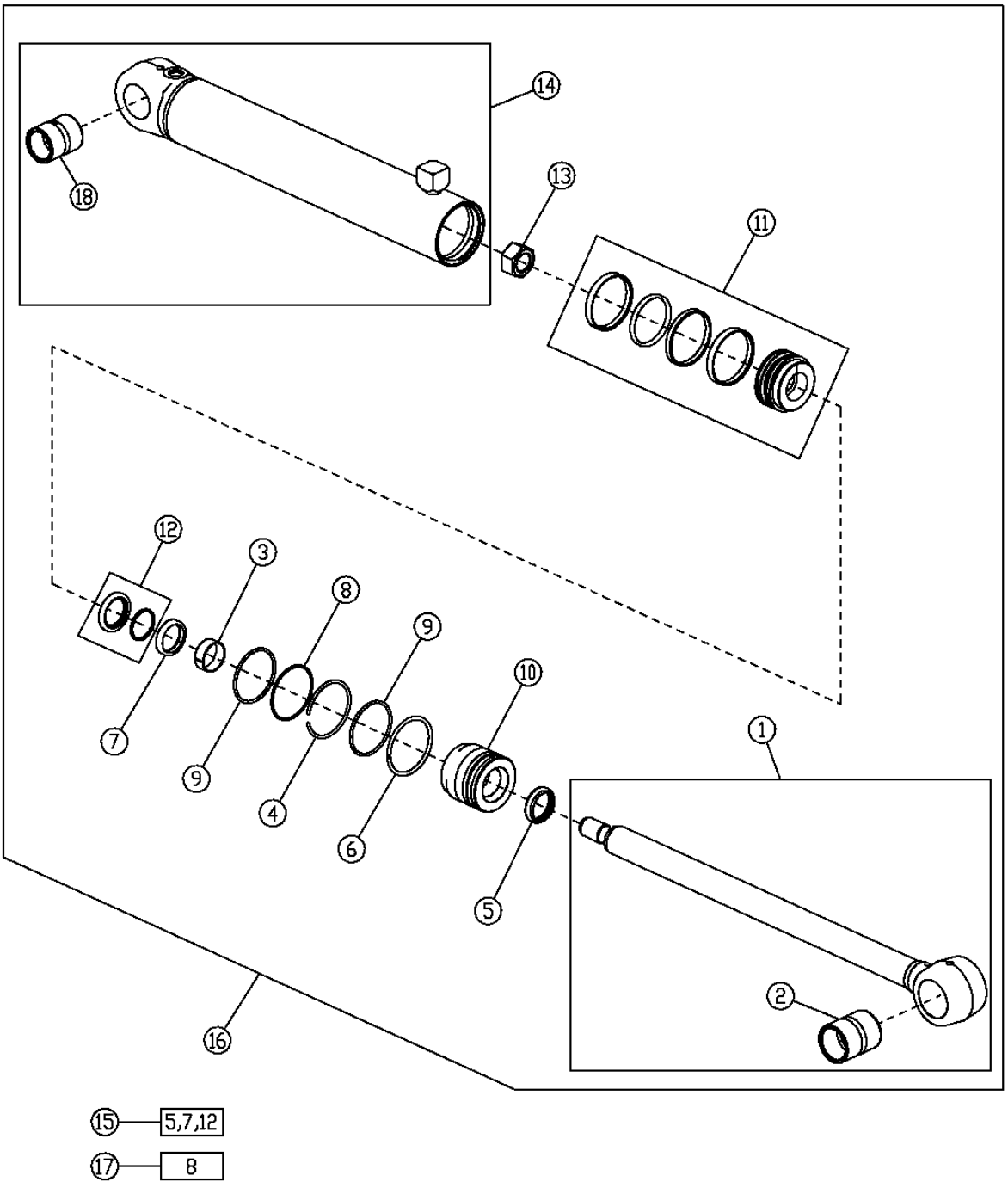

BLADE LIFT HYDRAULIC CYLINDER
VERIN HYDRAULIQUE DE RELEVAGE DE LAME
CILINDRO HIDRAULICO ELEVADOR DE HOJA

KEY	PART NO.	PART NAME	QTY.	SERIAL NO.	450 JJJ	550 JJJ	650 JJJ	REMARKS
1	AH158615	ROD	1		X	X	X	(INCLUDES R84376) (WITH END AND BUSHING)
2	R84376	BUSHING	1		X	X	X	
3	H157897	WEAR RING	1		X	X	X	(SUB FOR H157947)
4	H170216	SNAP RING	1		X	X	X	
5	AH150453	SEAL	1		X	X	X	(CANNED WIPER)
6	H180787	SNAP RING	1		X	X	X	
7	H155655	SEAL	1		X	X	X	(ROD U-CUP)
8	R81864	BACK-UP RING	1		X	X	X	
9	T12582	O-RING	2		X	X	X	
10	H210845	HYDR. CYLINDER ROD GUIDE	1		X	X	X	
11	RE34085	PISTON	1		X	X	X	(UNITIZED) (IF PISTON WEAR RINGS ARE CONTAMINATED OR BROKEN, COMPLETE PISTON MUST BE CHANGED)
12	AH148608	SEAL	1		X	X	X	(BUFFER)
13	H170538	NUT	1		X	X	X	(LOCK)
14	AH211371	HYDRAULIC CYLINDER BARREL	1		X	X	X	(INCLUDES R89683) (WITH CAP AND BUSHING)
15	AH149194	HYDRAULIC CYLINDER KIT	1		X	X	X	(ROD SEAL)
16	AH211370	HYDRAULIC CYLINDER	2		X	X	X	(LIFT) (ALSO SEE HYDRAULIC CYLINDER PAGE)
	T186166	ORIFICE	1		X	X	X	(NOT ILLUSTRATED) (OPTIONAL ANTI-CAVITATION ORIFICE FOR ROD END LIFT CYLINDER)
17	AH212092	HYDRAULIC CYLINDER KIT	1		X	X	X	(SEAL) (80 BORE)
18	R89683	BUSHING	1		X	X	X	

BLADE ANGLE HYDRAULIC CYLINDER (450J) (SN -102817)
VERIN HYDRAULIQUE D'ORIENTATION DE LAME (450J) (SN -102817)
CILINDRO HIDRAULICO DE ANGULACION DE HOJA (450J) (SN -102817)

T200132 -UN-19MAY04

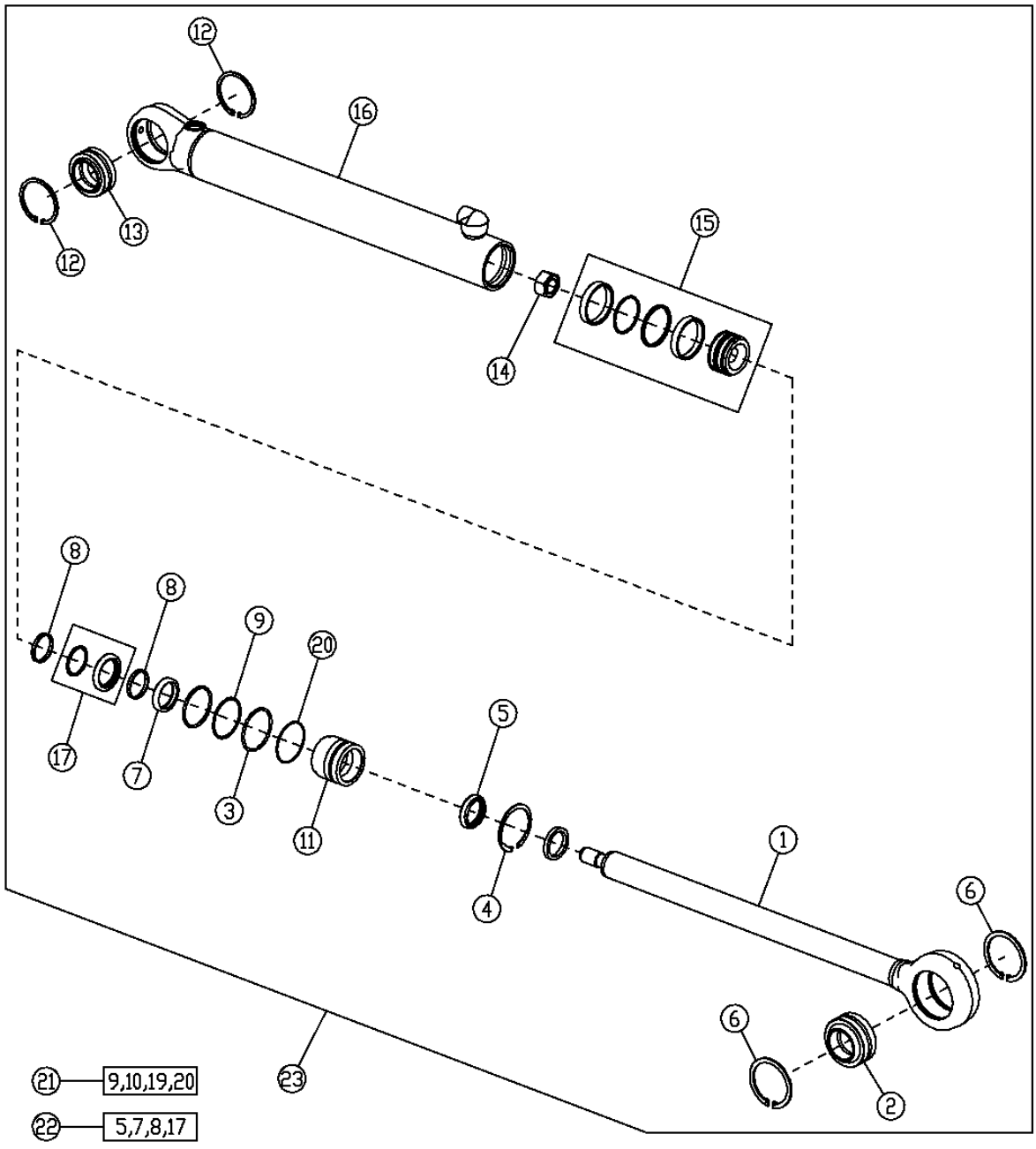

T200132

THIS PARTS LISTING IS CONTINUED

BLADE ANGLE HYDRAULIC CYLINDER (450J) (SN -102817)
VERIN HYDRAULIQUE D'ORIENTATION DE LAME (450J) (SN -102817)
CILINDRO HIDRAULICO DE ANGULACION DE HOJA (450J) (SN -102817)

KEY	PART NO.	PART NAME	QTY.	SERIAL NO.	450J	550J	650J	REMARKS
1	AH152114	HYDRAULIC CYLINDER ROD	1		X			
2	AT157173	SELF-ALIGNING BUSHING	1		X			
3	H164982	SNAP RING	1		X			
4	H165169	SNAP RING	1		X			(INVERTED EXTERNAL)
5	AH150453	SEAL	1		X			(CANNED WIPER)
6	40M5099	SNAP RING	2		X			(INTERNAL)
7	H155655	SEAL	1		X			(ROD U-CUP)
8	H159608	WEAR RING	2		X			
9	U13461	BACK-UP RING	1		X			
10	R93633	O-RING	1		X			
11	H171333	HYDR. CYLINDER ROD GUIDE	1		X			
12	40M7090	SNAP RING	2		X			(INTERNAL)
13	.....	SELF-ALIGNING BUSHING	1		X			(SUB FOR AH155619)
14	H170536	NUT	1		X			M22, (LOCK)
15	AH137177	PISTON	1		X			(UNITIZED) (IF PISTON WEAR RINGS ARE CONTAMINATED OR BROKEN, COMPLETE PISTON MUST BE CHANGED)
16	AH152113	HYDRAULIC CYLINDER BARREL	2		X			
17	AH148608	SEAL	1		X			(BUFFER)
18	RE27205	SEAL	1		X			(PISTON) (NOT ILLUSTRATED)
19	R91727	RING	1		X			(FILLER)
20	N260556	O-RING	1		X			(ORIGINAL DUST SEAL)
21	AH212088	HYDRAULIC CYLINDER KIT	1		X			(INCLUDES U13461, R93633 AND N260556) (BORE SEAL KIT)
22	AH153497	HYDRAULIC CYLINDER KIT	1		X			(INCLUDES AH150453, H155655, H159608 AND AH148608) (ROD SEAL KIT)
23	.....	HYDRAULIC CYLINDER	2		X			(SUB AH216716) (SUB FOR AH219523) (AH165237 NLA)

BLADE ANGLE HYDRAULIC CYLINDER (450J) (SN 102818-XXXXXX)
VERIN HYDRAULIQUE D'ORIENTATION DE LAME (450J) (SN 102818-XXXXXX)
CILINDRO HIDRAULICO DE ANGULACION DE HOJA (450J) (SN 102818-XXXXXX)

T208417 -UN-03MAR05

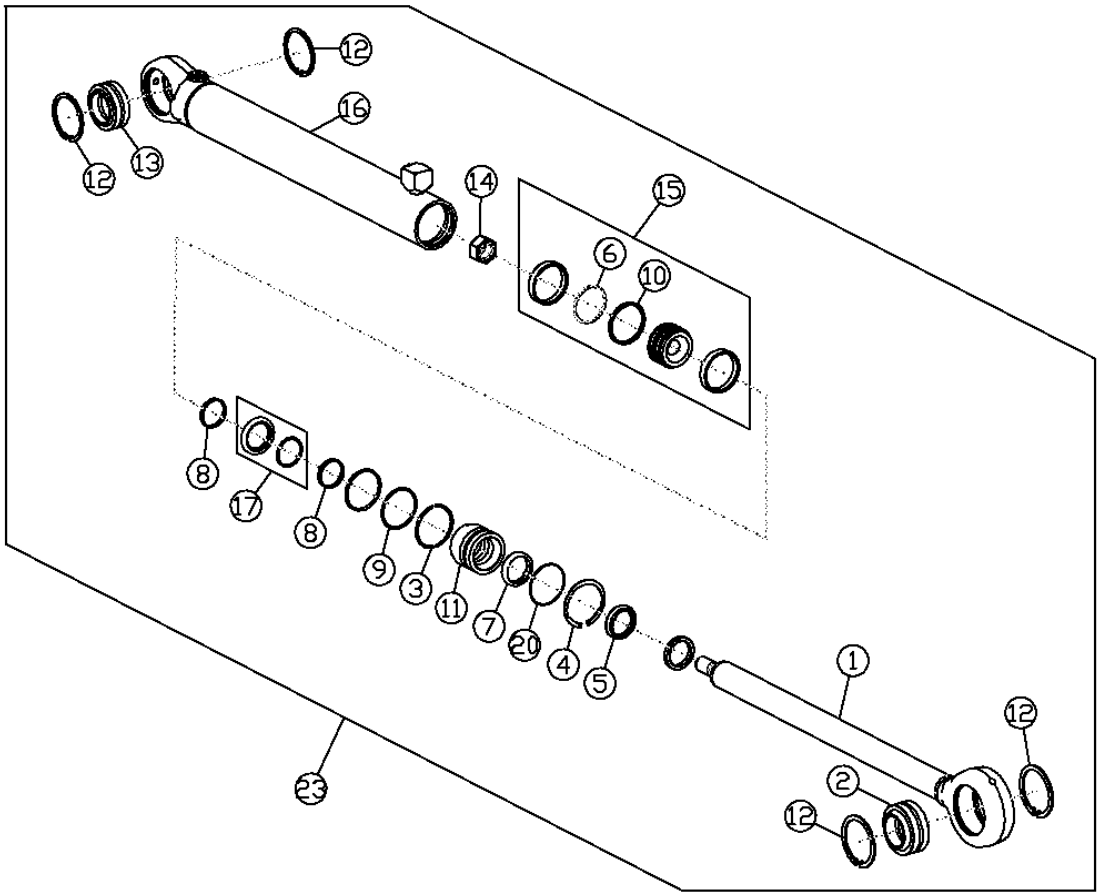

21 — 9,20
22 — 5,7,8,17

T208417

BLADE ANGLE HYDRAULIC CYLINDER (450J) (SN 102818-XXXXXX)
VERIN HYDRAULIQUE D'ORIENTATION DE LAME (450J) (SN 102818-XXXXXX)
CILINDRO HIDRAULICO DE ANGULACION DE HOJA (450J) (SN 102818-XXXXXX)

KEY	PART NO.	PART NAME	QTY.	SERIAL NO.	450J	550J	650J	REMARKS
1	AH152114	HYDRAULIC CYLINDER ROD	1		X			
2	AT157173	SELF-ALIGNING BUSHING	1		X			
3	H164982	SNAP RING	1		X			
4	H165169	SNAP RING	1		X			(INVERTED EXTERNAL)
5	AH150453	SEAL	1		X			(CANNED WIPER)
6	U40708	O-RING	1		X			2.050" X 0.103"
7	H155655	SEAL	1		X			(ROD U-CUP)
8	H159608	WEAR RING	2		X			
9	U13461	BACK-UP RING	1		X			
10	R90237	RING	1		X			
11	H171333	HYDR. CYLINDER ROD GUIDE	1		X			
12	40M7090	SNAP RING	2		X			(INTERNAL)
13	AH155619	SELF-ALIGNING BUSHING	1		X			
14	H170536	NUT	1		X			M22, (LOCK)
15	AH137177	PISTON	1		X			(UNITIZED) (IF PISTON WEAR RINGS ARE CONTAMINATED OR BROKEN, COMPLETE PISTON MUST BE CHANGED)
16	AH216801	HYDRAULIC CYLINDER BARREL	2		X			
17	AH148608	SEAL	1		X			(BUFFER)
20	N260556	O-RING	1		X			(DUST SEAL)
21	AH212088	HYDRAULIC CYLINDER KIT	1		X			(INCLUDES U13461 AND N260556) (BORE SEAL KIT)
22	AH153497	HYDRAULIC CYLINDER KIT	1		X			(INCLUDES AH150453, H155655, H159608 AND AH148608) (ROD SEAL KIT)
23	.....	HYDRAULIC CYLINDER	2		X			(SUB AH216716) (SUB FOR AH219523) (BLADE ANGLE)

BLADE ANGLE HYDRAULIC CYLINDER (450J) (SN XXXXXX-)
VERIN HYDRAULIQUE D'ORIENTATION DE LAME (450J) (SN XXXXXX-)
CILINDRO HIDRAULICO DE ANGULACION DE HOJA (450J) (SN XXXXXX-)

T208417 -UN-03MAR05

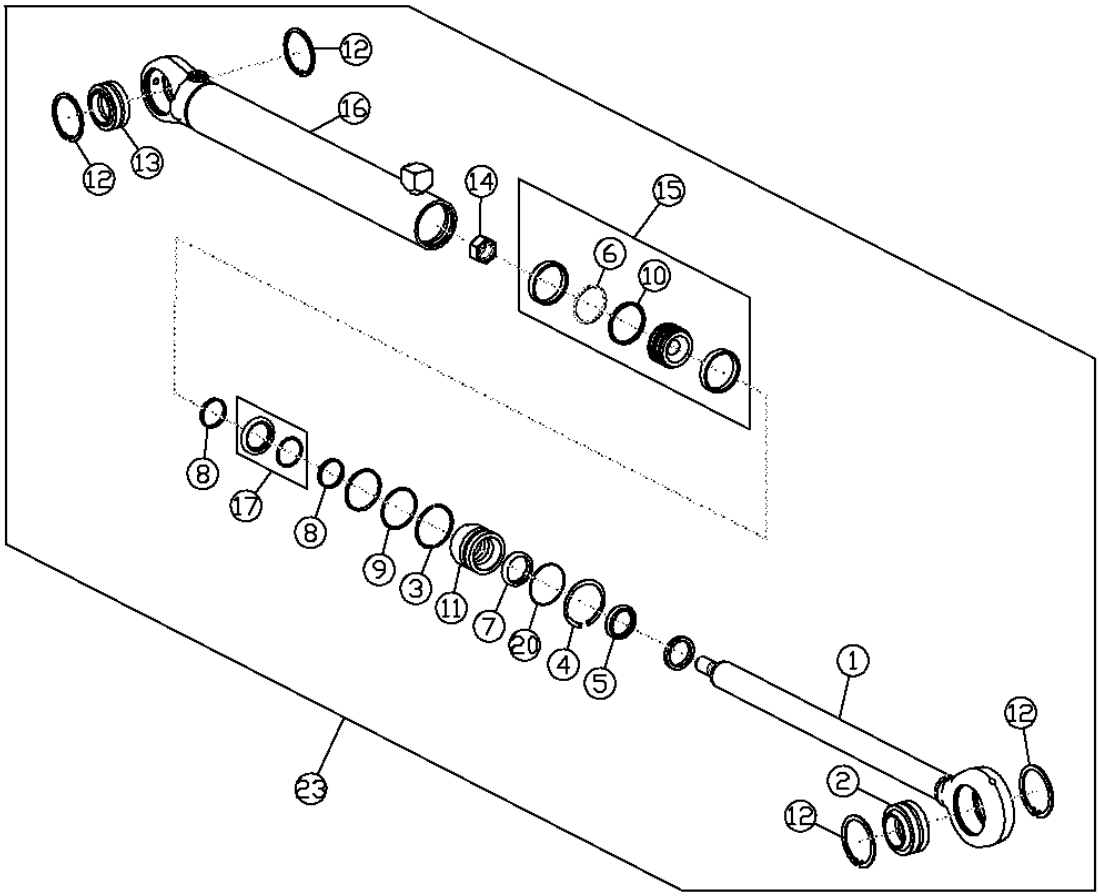

21 — 9,20
22 — 5,7,8,17

T208417

BLADE ANGLE HYDRAULIC CYLINDER (450J) (SN XXXXXX-)
VERIN HYDRAULIQUE D'ORIENTATION DE LAME (450J) (SN XXXXXX-)
CILINDRO HIDRAULICO DE ANGULACION DE HOJA (450J) (SN XXXXXX-)

KEY	PART NO.	PART NAME	QTY.	SERIAL NO.	450J	550J	650J	REMARKS
1	AH152114	HYDRAULIC CYLINDER ROD	1		X			
2	AT157173	SELF-ALIGNING BUSHING	1		X			
3	H164982	SNAP RING	1		X			
4	H211156	SNAP RING	1		X			(INVERTED EXTERNAL)
5	AH150453	SEAL	1		X			(CANNED WIPER)
6	U40708	O-RING	1		X			2.050" X 0.103"
7	H155655	SEAL	1		X			(ROD U-CUP)
8	H157897	WEAR RING	1		X			(15.9MM (0.6215 INCH))
9	U13461	BACK-UP RING	1		X			
10	R90237	RING	1		X			
11	H211093	HYDR. CYLINDER ROD GUIDE	1		X			
12	40M7090	SNAP RING	2		X			(INTERNAL)
13	AH155619	SELF-ALIGNING BUSHING	1		X			
14	H170536	NUT	1		X			M22, (LOCK)
15	AH137177	PISTON	1		X			(UNITIZED) (IF PISTON WEAR RINGS ARE CONTAMINATED OR BROKEN, COMPLETE PISTON MUST BE CHANGED)
16	AH219525	HYDRAULIC CYLINDER BARREL	1		X			
17	AH148608	SEAL	1		X			(BUFFER)
20	N260556	O-RING	1		X			(DUST SEAL)
21	AH212088	HYDRAULIC CYLINDER KIT	1		X			(INCLUDES U13461 AND N260556) (BORE SEAL KIT)
22	AH153497	HYDRAULIC CYLINDER KIT	1		X			(INCLUDES AH150453, H155655, H159608 AND AH148608) (ROD SEAL KIT)
23	AH216716	HYDRAULIC CYLINDER	2		X			(SUB FOR AH219523) (BLADE ANGLE)

BLADE ANGLE HYDRAULIC CYLINDER (550J AND 650J)
VERIN HYDRAULIQUE D'ORIENTATION DE LAME (550J ET 650J)
CILINDRO HIDRAULICO DE ANGULACION DE HOJA (550J Y 650J)

T200133 -UN-19MAY04

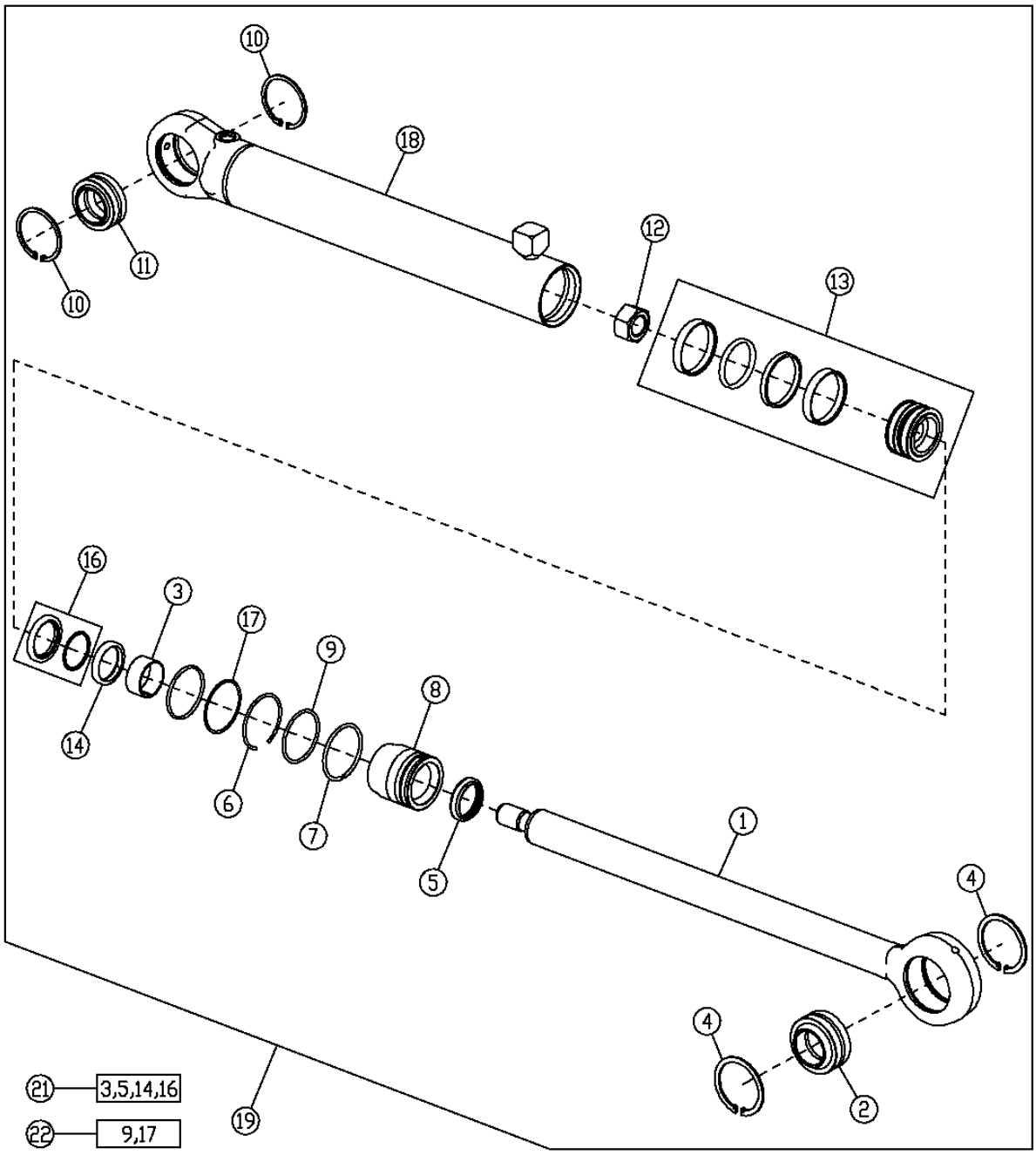

T200133

BLADE ANGLE HYDRAULIC CYLINDER (550J AND 650J)
VERIN HYDRAULIQUE D'ORIENTATION DE LAME (550J ET 650J)
CILINDRO HIDRAULICO DE ANGULACION DE HOJA (550J Y 650J)

KEY	PART NO.	PART NAME	QTY.	SERIAL NO.	455J	550J	650J	REMARKS
1	AH165684	ROD	1		X	X		
2	AT157173	SELF-ALIGNING BUSHING	1		X	X		
3	H157898	WEAR RING	1		X	X		
4	40M5099	SNAP RING	2		X	X		(INTERNAL)
5	AH146556	SEAL	1		X	X		
6	H178765	SNAP RING	1		X	X		
7	H179657	SNAP RING	1		X	X		
8	H210941	HYDR. CYLINDER ROD GUIDE	1		X	X		(SEAL)
9	U12198	O-RING	1		X	X		
10	40M7090	SNAP RING	2		X	X		(INTERNAL)
11	.....	SELF-ALIGNING BUSHING	1		X	X		(SUB FOR AH155619)
12	H170538	NUT	1		X	X		M27
13	AH165962	PISTON	1		X	X		(UNITIZED) (IF PISTON WEAR RINGS ARE OR CONTAMINATED OR BROKEN COMPLETE PISTON MUST CHANGED)
14	H152202	SEAL	1		X	X		(ROD U-CUP)
16	AH146560	SEAL	1		X	X		(BUFFER)
17	R81195	BACK-UP RING	1		X	X		
18	AH211365	HYDRAULIC CYLINDER BARREL	1		X	X		
19	AH211851	HYDRAULIC CYLINDER	1		X	X		(ANGLE)
21	AH149813	HYDRAULIC CYLINDER KIT	1		X	X		(ROD SEAL KIT)
22	AH212090	HYDRAULIC CYLINDER KIT	1		X	X		(BORE SEAL KIT)

MEMORANDA
MEMORANDA
MEMORANDA

NUMERICAL INDEX

PART NO.	KEY	PAGE
AH104837	16	0521-3
AH106982	2	0563-3
AH106982	33	0563-3
AH117301	17	2164-7
AH117301	2	2164-9
AH123403	11	0355-7
AH128450	15	0364-3
AH128450	17	2164-5
AH136453	14	3265-7
AH137177	15	3265-11
AH137177	15	3265-13
AH137177	15	3265-13B
AH146556	7	3265-7
AH146556	5	3265-15
AH146557	7	3265-7
AH146560	15	3265-7
AH146560	16	3265-15
AH146561	15	3265-7
AH148608	12	3265-9
AH148608	17	3265-11
AH148608	22	3265-11
AH148608	17	3265-13
AH148608	22	3265-13
AH148608	17	3265-13B
AH148608	22	3265-13B
AH149194	15	3265-9
AH149813	19	3265-7
AH149813	21	3265-15
AH150453	5	3265-9
AH150453	5	3265-11
AH150453	22	3265-11
AH150453	5	3265-13
AH150453	22	3265-13
AH150453	5	3265-13B
AH150453	22	3265-13B
AH152113	16	3265-11
AH152114	1	3265-11
AH152114	1	3265-13
AH152114	1	3265-13B
AH153497	22	3265-11
AH153497	22	3265-13
AH153497	22	3265-13B
AH155619	17	3265-7
AH155619	13	3265-11
AH155619	13	3265-13
AH155619	13	3265-13B
AH155619	11	3265-15
AH158615	1	3265-9
AH158621	1	3265-7
AH159034	14	3265-7
AH159495	1	3265-7
AH165237	50	3265-5
AH165237	23	3265-11
AH165684	1	3265-15
AH165962	13	3265-15
AH205062	14	3265-7
AH210484	19	3265-7
AH210978	18	3265-7
AH210979	28	3265-5
AH210979	20	3265-7
AH211057	18	3265-7
AH211365	18	3265-15
AH211370	27	3265-5
AH211370	16	3265-9
AH211371	14	3265-9
AH211381	28	3265-5
AH211381	20	3265-7
AH211851	50	3265-5
AH211851	19	3265-15
AH212088	21	3265-11
AH212088	21	3265-13
AH212088	21	3265-13B
AH212090	22	3265-15
AH212092	17	3265-9
AH212097	21	3265-7
AH212102	21	3265-7
AH216716	50	3265-5
AH216716	23	3265-11
AH216716	23	3265-13
AH216716	23	3265-13B
AH216801	16	3265-13
AH219523	50	3265-5
AH219523	23	3265-11
AH219523	23	3265-13
AH219523	23	3265-13B
AH219525	16	3265-13B
AH78237	23	1832-3
AL153660	3	1814-7
AM102420	4	0363-3
AM102487	5	0363-3
AM118213	2	0563-3
AN203914	10	0355-5
AN205068	13	0511-7
AN205068	12	0511-11
AN220311	20	0355-7
AN220311	9	0355-11
AN220311	25	0355-13
AN220311	30	0355-15
AN220419	25	0355-15
AN220423	9	0355-5
AR21837	5	0505-9
AR21837	5	0505-11
AR21837	6	1831-5
AR21837	6	1831-7
AR21837	4	2163-11
AR21842	13	3263-3
AR21999	2	0505-3
AR21999	38	0511-7
AR21999	48	0511-11
AR44217	4	2163-3
AR44217	4	2163-9
AR44217	3	2164-9
AR44217	14	3263-3
AR44361	4	0521-3
AR44361	16	0521-7
AR48236	9	0505-3
AR48236	15	0563-3
AR62150	4	1511-3
AR62150	4	1511-5
AR65293	12	0402-3
AR65293	14	0521-3
AR65293	13	0521-7
AR65293	5	3263-9
AR65294	39	0511-7
AR65294	47	0511-11
AR65507	9	0403-2
AR85329	9	0521-3
AR85329	15	0521-7
AR85519	14	0413-3
AR94101	6	1674-7
AT103399	7	1674-7
AT103399	7	1674-9
AT104102	2	0132-5
AT104530	13	0132-3
AT104530	14	0132-5
AT105289	50	0511-11
AT106397	1	1821-7
AT112928	10	3215-3
AT113118	13	0132-9
AT113118	18	0132-13
AT113380	13	0132-9
AT113380	19	0132-13
AT113380	20	0132-13
AT116162	22	0505-11
AT120440	14	0132-5
AT120461	1	2004-5
AT124014	18	0132-13
AT124015	19	0132-13
AT124099	12	0133-5
AT124100	13	0133-5
AT125801	2	1821-7
AT125803	4	1821-7
AT125805	7	1821-7
AT125829	5	1821-7
AT128773	15	3243-3
AT130208	..	1369-7
AT135620	2	0132-5
AT135625	1	0132-5
AT13740	5	0404-3
AT13740	7	0564-3
AT140287	16	3262-7
AT140287	11	3262-9
AT141011	5	1674-11
AT141011	5	1674-29
AT141724	19	1810-3
AT143168	1	0132-3
AT143179	14	0132-3
AT145651	7	2163-5
AT151036	58	1810-7
AT151036	16	1810-7F
AT152180	1	2163-11
AT156445	2	0564-3
AT157173	16	3243-3
AT157173	3	3265-7
AT157173	2	3265-11
AT157173	2	3265-13
AT157173	2	3265-13B
AT157173	2	3265-15
AT158628	9	0133-5
AT160480	3	1676-3B
AT160480	3	1676-9
AT162114	16	1911-3
AT162350	13	0515-5
AT162848	14	1832-3
AT164352	1	1674-15
AT167324	1	0132-7
AT167327	6	0132-7
AT167329	9	0132-9
AT167392	17	0132-13
AT168267	20	0132-13
AT168878	15	1674-7
AT168878	8	1674-9
AT168878	4	1674-23
AT168878	4	1674-25
AT169374	15	0315-7
AT171107	5	1832-5
AT171162	7	0505-3
AT171169	15	0521-3
AT171539	4	0505-3
AT171853	6	0521-3
AT171854	7	0521-3

NUMERICAL INDEX - CONTINUED

PART NO.	KEY	PAGE
AT171855	2	0521-3
AT173084	9	0132-9
AT173085	6	0132-7
AT173174	3	0355-25
AT173193	3	1814-5
AT173254	9	3243-3
AT173313	6	1821-19
AT173313	2	1821-27
AT173314	8	1821-19
AT173314	4	1821-27
AT173315	7	1821-19
AT173315	3	1821-27
AT173316	3	1821-17
AT173317	9	1821-19
AT173318	17	1821-21
AT173319	16	1821-21
AT173320	17	1821-21
AT173320	18	1821-21
AT173321	9	1821-19
AT173321	10	1821-19
AT173321	5	1821-27
AT173321	6	1821-27
AT173322	11	1821-19
AT173323	4	1821-17
AT173325	5	1821-17
AT173326	13	1821-21
AT173327	14	1821-21
AT173328	12	1821-21
AT173385	1	0505-3
AT173392	1	0132-7
AT173610	1	0511-7
AT173610	2	0511-7
AT173610	1	0511-11
AT173610	2	0511-11
AT174226	1	1512-3
AT174348	4	1814-5
AT174697	4	1831-5
AT174697	4	1831-7
AT175344	3	0521-7
AT175345	4	0521-7
AT175357	2	0521-7
AT175358	12	0521-7
AT175436	9	1821-7
AT177131	4	1814-7
AT177131	11	1814-9
AT177131	3	1814-11
AT177132	1	1814-9
AT177227	11	1810-5
AT177227	11	1810-7F
AT177542	5	0521-3
AT177542	20	0521-3
AT178526	3	1676-9
AT178542	8	0521-3
AT178542	10	0521-7
AT179882	3	2006-3
AT180814	17	0355-21
AT181582	5	0505-3
AT181966	9	0133-5
AT181966	10	0133-5
AT182200	17	1831-3
AT182479	5	1821-9
AT182479	6	1821-9
AT182589	2	1821-17
AT183222	13	0505-3
AT184868	10	0355-7
AT184868	3	0355-21
AT184869	7	0355-21
AT185500	59	1810-7
AT185500	56	1810-7H
AT185741	1	0133-3
AT185742	1	0133-3
AT185743	5	0133-3
AT185743	6	0133-7
AT186760	6	1810-3
AT186760	13	1810-5
AT186760	13	1810-7B
AT186760	13	1810-7F
AT186925	13	0511-7
AT186925	14	0511-7
AT186925	12	0511-11
AT186925	13	0511-11
AT188681	5	1814-7
AT191102	15B	1831-9
AT195301	4	1676-3B
AT195301	4	1676-9
AT195302	5	1676-3B
AT195302	5	1676-9
AT195894	14	1821-5
AT195894	10	1821-15
AT195894	10	1821-25
AT196462	16	0355-21
AT198270	49	0511-11
AT198869	7	1821-27
AT207364	1	0363-17
AT207408	7	0363-15
AT207486	2	1811-3
AT207486	3	1811-5
AT207486	1	1831-3
AT207496	10	2001-3
AT207545	9	1832-3
AT207568	21	3262-7
AT207568	39	3262-7B
AT207570	8	3263-11
AT207587	11	1511-7
AT207639	6	1832-5
AT207848	3	1831-9
AT207849	4	1831-9
AT208169	5	2163-5
AT208170	1	2163-7
AT208436	12	1810-13
AT208484	1	1821-27
AT208485	5	1821-23
AT208485	1	1821-27
AT208486	5	1821-23
AT208486	14	1821-29
AT208487	8	1821-29
AT208488	8	1821-27
AT208490	11	1821-29
AT208491	6	1821-27
AT208493	12	1821-29
AT208495	53	1810-7
AT208495	53	1810-7D
AT208495	4	2001-3
AT208515	11	3263-3
AT208549	18	0511-7
AT208549	30	0511-11
AT208554	1	1511-5
AT208561	1	1511-3
AT208566	9	1741-3
AT208682	7	0363-13
AT208966	27	0363-15
AT209020	7	1821-9
AT209021	12	1821-9
AT209024	2	1821-31
AT209024	3	1821-31
AT209025	6	1821-33
AT209026	3	1821-31
AT209110	9	0364-5
AT209110	9	2164-3
AT209175	1	0131-3
AT209225	9	1821-33
AT209227	8	0364-5
AT209228	11	2164-3
AT209238	1	0131-7
AT209259	1	1821-3
AT209299	2	0363-17
AT209303	3	0363-13
AT209308	9	1811-3
AT209308	7	1811-5
AT209414	6	1741-3
AT209415	8	1741-3
AT209416	4	1921-3
AT209423	10	3243-3
AT209469	13	1821-29
AT209640	4	0131-7
AT209843	2	0133-9
AT209844	4	0133-9
AT209862	1	2161-3
AT209926	17	0521-7
AT209965	4	0375-3
AT210038	5	2161-7
AT210058	5	0133-5
AT210060	25	3263-9
AT210061	11	3263-9
AT210062	17	3263-9
AT210063	24	3263-9
AT210156	32	0563-3
AT210157	4	0563-3
AT210158	28	0563-3
AT210265	20	3215-3
AT210430	7	3215-3
AT210479	13	1921-3
AT210517	2	1671-5
AT210549	15	1821-21
AT210564	17	0133-7
AT210576	3	0131-3
AT210594	7	3263-11
AT210600	4	1911-3
AT210791	5	1821-3
AT210791	9	1821-5
AT210825	1	1674-17
AT210827	2	1674-17
AT210880	1	0131-3
AT210886	1	1810-9
AT210922	3	1674-3
AT210925	14	1671-3
AT210935	14	1671-5
AT210987	2	0133-9
AT210988	4	0133-9
AT211001	5	0133-5
AT211021	6	3262-7
AT211021	7	3262-7
AT211021	9	3262-7
AT211021	11	3262-7
AT211092	1	0131-7
AT211093	4	0131-7
AT211121	1	3262-9
AT211121	2	3262-9
AT211121	3	3262-9
AT211191	6	0505-5
AT211192	6	1831-3

NUMERICAL INDEX - CONTINUED

PART NO.	KEY	PAGE
AT211239	28	0363-15
AT211253	29	0363-15
AT211255	30	0363-15
AT211297	36	3265-5
AT211304	17	0133-7
AT211314	1	3262-3
AT211314	48	3262-3
AT211314	49	3262-3
AT211314	1	3262-7
AT211314	2	3262-7
AT211314	3	3262-7
AT211316	21	3215-3
AT211403	32	1832-3
AT211404	27	1832-3
AT211481	3	0131-3
AT211564	6	3263-5
AT211564	2	3263-7
AT211579	5	1821-3
AT211579	10	1821-7
AT214844	2	0355-5
AT214860	8	0355-11
AT214861	7	0355-11
AT214873	7	0355-15
AT214874	9	0355-15
AT219733	13	1831-9
AT219733	41	1832-3
AT219741	34	3262-9
AT219742	31	3262-9
AT219793	1	0315-7
AT219901	26	3263-9
AT219902	27	3263-9
AT219903	28	3263-9
AT219904	3	3263-3
AT219905	4	3263-3
AT219906	5	3263-3
AT219907	6	3263-3
AT219952	14	1673-7
AT219952	19	1673-9
AT219953	27	1673-7
AT219953	25	1673-9
AT219956	9	0364-3
AT219956	13	2164-5
AT219962	1	2164-5
AT219986	1	3263-9
AT220032	43	3265-5
AT220033	42	3265-5
AT220104	1	1811-7
AT220105	7	1810-13
AT220255	5	2163-9
AT220256	5	2163-3
AT220256	5	2163-9
AT220265	2	1811-3
AT220282	10	2163-11
AT220292	4	1821-3
AT220299	1	0531-3
AT220322	16	3215-3
AT220332	6	1814-7
AT220332	2	1814-11
AT220333	7	1814-7
AT220333	2	1814-11
AT220398	28	3262-3
AT220399	41	3262-3
AT220400	16	3262-3
AT220400	32	3262-7B
AT220400	33	3262-7B
AT220400	34	3262-7B
AT220400	35	3262-7B
AT220400	36	3262-7B
AT220400	24	3262-9
AT220400	25	3262-9
AT220400	26	3262-9
AT220400	27	3262-9
AT220400	28	3262-9
AT220404	1	3262-3
AT220421	3	1814-3
AT220422	3	1814-3
AT220448	2	1814-9
AT220508	5	1673-5
AT220508	13	1673-7
AT220508	10	1673-9
AT220542	14	1831-7
AT220548	1	1814-5
AT220548	2	1814-5
AT220677	21	0133-17
AT220702	33	0315-7
AT220703	62	0315-9
AT220704	59	0315-9
AT220706	25	0315-7
AT220707	49	0315-9
AT220708	39	0315-9
AT220709	24	0315-7
AT220710	57	0315-9
AT220711	56	0315-9
AT220759	1	3215-3
AT220770	10	0355-15
AT220771	12	0355-13
AT220773	15	0355-7
AT220774	5	0355-7
AT220776	11	0355-3
AT220776	8	0355-7
AT220789	1	0363-13
AT220817	9	1831-9
AT220846	32	0363-15
AT220855	65	0315-9
AT220873	4	1813-5
AT220879	29	0315-7
AT221015	2	1821-3
AT221015	2	1821-13
AT221015	2	1821-23
AT221016	3	1821-3
AT221016	3	1821-13
AT221016	3	1821-23
AT221017	6	1821-13
AT221017	6	1821-23
AT221045	8	1814-7
AT221045	4	1814-11
AT221049	56	1810-7
AT221051	9	1810-5
AT221055	55	1810-7
AT221055	55	1810-7D
AT221055	55	1810-7H
AT221078	2	1814-9
AT221078	12	1814-9
AT221140	5	2006-3
AT221166	30	0505-9
AT221228	51	1810-7
AT221228	51	1810-7D
AT221228	51	1810-7H
AT221229	1	3263-9
AT221245	4	1831-3
AT221246	7	1831-3
AT221249	9	1831-3
AT221261	27	1831-9
AT221263	8	1831-9
AT221265	14	1831-9
AT221266	31	1831-9
AT221267	1	1831-9
AT221268	33	1831-9
AT221271	29	1831-9
AT221279	32	1831-9
AT221282	2	1832-3
AT221283	9	1810-13
AT221298	4	1832-3
AT221308	8	1832-3
AT221312	7	1832-3
AT221314	1	1832-3
AT221317	24	1831-9
AT221318	11	1832-3
AT221319	19	1832-3
AT221320	15	1832-3
AT221321	12	1832-3
AT221351	4	1673-7
AT221351	9	1673-9
AT221353	1	1921-3
AT221396	42	3262-3
AT221396	37	3262-7B
AT221396	29	3262-9
AT221397	37	3262-7B
AT221397	29	3262-9
AT221403	11	3262-3
AT221403	48	3262-3
AT221403	49	3262-3
AT221437	4	1814-3
AT221440	34	0505-9
AT221440	34	0505-11
AT221459	4	0512-3
AT221503	4	1921-5
AT221560	36	0505-9
AT221560	36	0505-11
AT221574	13	1810-13
AT221578	2	1814-9
AT221578	12	1814-9
AT221596	9	1814-7
AT221596	10	1814-9
AT221596	1	1814-11
AT221605	19	0505-9
AT221605	19	0505-11
AT221619	28	0355-15
AT221696	10	0364-5
AT221696	10	2164-3
AT221779	6	0540-3
AT221783	8	3215-3
AT221789	16	0540-3
AT221854	50	0315-9
AT221980	8	1673-5
AT221990	1	0505-9
AT221990	1	0505-11
AT221991	2	0505-9
AT221991	2	0505-11
AT222097	7	3262-3
AT222097	21	3262-7
AT222097	13	3262-9
AT222116	25	3262-3
AT222117	26	3262-3
AT222117	48	3262-3
AT222117	49	3262-3
AT222119	7	3262-3
AT222119	48	3262-3
AT222119	21	3262-7
AT222119	13	3262-9
AT222155	7	1511-7

NUMERICAL INDEX - CONTINUED

PART NO.	KEY	PAGE
AT222213	28	0505-9
AT222214	39	0505-9
AT222220	3	1511-7
AT222256	15A	1831-9
AT222258	1	1813-5
AT222397	3	1921-5
AT222472	5	1921-5
AT222512	16	1921-5
AT222521	19	0133-17
AT222524	20	0133-17
AT222606	8	0315-7
AT222608	5	0315-7
AT222609	2	0315-7
AT222658	1	0132-5
AT222660	17	0132-13
AT222662	17	0132-13
AT222676	9	1673-5
AT222676	17	1673-7
AT222676	26	1673-9
AT222705	9	2001-3
AT222740	1	0132-15
AT222741	2	0132-15
AT222752	1	0132-15
AT222753	2	0132-15
AT222803	58	0315-9
AT222804	3	0315-7
AT222827	11	1511-7
AT222828	3	1511-7
AT222831	6	2001-3
AT222901	3	1674-21
AT222902	3	1674-21
AT222968	1	1912-3
AT222970	2	1912-3
AT222970	6	1912-5
AT223021	3	0201-7
AT223021	5	0201-7
AT223021	6	0201-7
AT223113	28	0364-5
AT223113	26	2164-3
AT223149	2	1674-21
AT223218	6	0355-3
AT223218	15	0355-7
AT223247	2	1821-5
AT223247	1	1821-15
AT223247	1	1821-25
AT223253	28	1831-9
AT223278	38	3215-3
AT223375	30	3215-3
AT223481	14	0521-7
AT223739	23	0363-15
AT223821	4	1814-3
AT223872	7	1832-5
AT223873	8	1832-5
AT223937	32	0363-15
AT224094	31	0505-9
AT224094	31	0505-11
AT224151	5	0375-3
AT224194	21	0355-21
AT224344	29	0355-15
AT224351	6	2161-7
AT224352	2	2161-3
AT224353	3	2161-7
AT224355	1	2161-3
AT224381	37	3262-7B
AT224381	29	3262-9
AT224393	9	1821-27
AT224601	2	1831-3
AT224602	3	1831-3
AT224603	11	1831-3
AT224604	8	1831-3
AT224606	14	0515-5
AT224719	16	1831-9
AT224721	16	1831-9
AT224758	18	1831-3
AT224762	34	1831-9
AT224805	7	1673-5
AT224820	24	3262-3
AT224820	47	3262-3
AT224820	48	3262-3
AT224820	49	3262-3
AT224873	11	1062-3
AT224977	1	0564-3
AT224985	1	1911-5
AT225112	12	0363-5
AT225122	37	0363-15
AT225123	38	0363-15
AT225124	3	0363-17
AT225125	4	0363-17
AT225198	49	3262-3
AT225225	5	0133-5
AT225536	48	3262-3
AT225537	24	3262-3
AT225537	48	3262-3
AT225537	49	3262-3
AT225605	7	0505-9
AT225605	7	0505-11
AT225708	3	0131-3
AT225851	17	0132-13
AT225852	1	0132-7
AT225884	35	3201-5
AT225894	17	0132-13
AT225897	1	0131-3
AT225945	27	3263-9
AT225948	26	3263-9
AT226033	10	3243-3
AT226281	1	2004-3
AT226441	2	0355-3
AT226441	4	0355-11
AT226470	4	1821-11
AT226470	5	1821-11
AT226471	5	1821-11
AT226475	22	3243-3
AT226558	2	0540-3
AT226559	1	0540-3
AT226572	40	0505-9
AT226685	5	1821-13
AT226685	1	1821-17
AT226693	1	1821-13
AT226694	1	1821-13
AT226695	1	1821-23
AT226696	1	1821-23
AT226818	5	1821-23
AT226818	1	1821-27
AT226818	10	1821-29
AT226818	14	1821-29
AT226963	1	0521-3
AT227234	5	0564-3
AT227279	6	0364-5
AT227279	19	2164-3
AT227669	11	1810-7B
AT227669	16	1810-7B
AT227785	39	1832-3
AT228292	4	1821-13
AT228292	4	1821-23
AT228298	9	1062-3
AT228557	28	3263-9
AT228736	5	1921-3
AT228737	1	1921-5
AT228750	24	2164-3
AT228752	1	0364-5
AT228770	43	0511-11
AT228841	13	0563-3
AT25258	2	0505-7
AT25258	1	1674-21
AT280583	4	1821-31
AT300480	11	3243-3
AT300543	1	0511-13
AT300736	14	1115-3
AT301068	1	0511-11
AT301069	3	0511-11
AT301070	4	0511-11
AT301071	5	0511-11
AT301288	27	0363-15
AT301762	10	0355-25
AT301765	2	0355-21
AT301766	22	0355-21
AT301767	23	0355-21
AT302874	22	3243-3
AT302971	2	0131-13
AT303033	17	0132-13
AT303064	17	0132-13
AT303106	3	0363-11
AT303107	7	0363-11
AT303107	8	0363-11
AT303113	9	0363-11
AT303200	2	3201-3
AT303488	2	3201-3
AT303532	2	0325-3
AT303697	2	1911-3
AT303834	4	0511-7
AT303862	19	1673-7
AT303867	16	1676-3B
AT304092	8	0363-11
AT304093	7	0363-11
AT304200	22	1810-3
AT304326	72	0315-9
AT304484	1	0531-3
AT304491	5	0511-7
AT304493	6	0511-7
AT304634	10	1814-7
AT304665	1	0355-3
AT304666	16	0355-3
AT304671	9	0355-17
AT304672	3	0355-3
AT304672	6	0355-17
AT304727	3	0511-7
AT304728	1	0511-7
AT304799	3	1674-5
AT304804	9	1674-9
AT304806	8	1674-7
AT304821	6	0375-3
AT304946	22	3243-3
AT305005	13	1813-3
AT305014	2	3201-3
AT305022	2	3201-3
AT305024	2	3201-3
AT305027	2	3201-3
AT305032	2	3201-3
AT305034	2	3201-3
AT305036	2	3201-3
AT305091	22	3243-3

NUMERICAL INDEX - CONTINUED

PART NO.	KEY	PAGE
AT305173	1	0132-7
AT305174	17	0132-13
AT305178	17	0132-13
AT305199	17	0132-13
AT305200	1	0132-7
AT305202	17	0132-13
AT305204	1	1911-3
AT305206	1	1911-3
AT305208	17	0132-13
AT305209	1	0132-7
AT305210	17	0132-13
AT305211	17	0132-13
AT305307	17	0132-13
AT305309	17	0132-13
AT305605	1	1741-3
AT305676	1	1741-3
AT305679	4	1674-11
AT305680	6	1674-11
AT305718	1	1741-3
AT305721	1	1741-3
AT305723	1	1741-3
AT305728	1	1741-3
AT305772	10	1062-3
AT305772	11	1062-3
AT305887	1	0131-11
AT305888	2	0131-11
AT305913	7	0355-25
AT305942	1	0131-11
AT305943	2	0131-11
AT305947	22	0355-25
AT305948	20	0355-25
AT305949	13	0355-21
AT305950	19	0355-25
AT305951	6	0355-25
AT305960	5	0355-25
AT305969	26	0355-21
AT305969	2	0355-25
AT305969	17	0355-25
AT305969	23	0355-25
AT305995	38	0201-5
AT306056	16	1115-3
AT306100	1	0131-11
AT306101	2	0131-11
AT306141	7	0363-3
AT306153	8	0363-3
AT306157	9	0363-3
AT306181	23	1813-3
AT306182	10	1813-3
AT306199	65	0201-5B
AT306200	65	0201-5B
AT306203	65	0201-5B
AT306204	65	0201-5B
AT306207	65	0201-5B
AT306208	65	0201-5B
AT306300	1	0511-13
AT306443	7	0363-15
AT306444	40	0201-5
AT306512	6	1676-9
AT306587	35	1810-3
AT306587	33	1810-5
AT306587	33	1810-7B
AT306587	33	1810-7F
AT306611	4	1810-5
AT306611	4	1810-7B
AT306611	4	1810-7F
AT306743	34	1813-3
AT306744	1	1813-3
AT306766	11	1814-7
AT306798	1	1813-3
AT306799	34	1813-3
AT306943	25	1832-3
AT306954	12	1814-7
AT306955	16	1673-9
AT306955	7	1676-3B
AT306955	7	1676-9
AT306956	13	1831-3
AT306956	12	1831-9
AT306964	15	1831-3
AT306964	11	1831-5
AT307096	32	1813-3
AT307105	64	0315-9
AT307134	21	0133-17
AT307278	4	0364-5
AT307278	13	2164-3
AT307292	2	0364-5
AT307292	4	0364-5
AT307292	18	0364-5
AT307292	12	2164-3
AT307298	1	1911-5
AT307494	11	0355-3
AT307494	8	0355-7
AT307496	11	0355-3
AT307496	8	0355-7
AT307745	30	1813-3
AT307746	30	1813-3
AT307772	17	1115-3
AT307884	1	0133-3
AT307885	1	0133-3
AT307886	1	0133-7
AT307887	1	0133-7
AT307940	24	1673-9
AT307941	1	1673-7
AT308380	9	1674-31
AT308483	10	0363-3
AT308484	30	0363-15
AT308485	10	0363-3
AT308613	14	1921-3
AT308795	2	1821-13
AT308795	2	1821-23
AT308796	3	1821-13
AT308796	3	1821-23
AT308797	6	1821-13
AT308797	6	1821-23
AT309076	8	0363-11
AT309319	7	0511-11
AT309320	8	0511-11
AT309492	1	1749-3
AT309676	8	1674-7
AT309676	9	1674-9
AT309946	16	1676-9
AT309947	7	3262-21
AT310214	7	1671-3
AT310215	10	1671-5
AT310345	5	0355-17
AT310476	8	1674-11
AT310476	8	1674-29
AT310522	1	3243-4
AT310708	6	0132-7
AT310709	9	0132-9
AT310710	6	0132-7
AT310711	9	0132-9
AT310970	16	1673-7
AT311171	23	0505-11
AT311172	40	0505-11
AT311768	38	3243-3
AT311876	1	1811-5
AT311877	13	1811-3
AT312516	8	1676-9
AT312606	13	1676-9
AT312707	9	1813-3
AT312708	9	1813-3
AT312847	5	1921-3
AT312981	7	0511-7
AT312981	8	0511-7
AT312981	7	0511-11
AT312982	7	0511-7
AT312982	8	0511-7
AT312982	8	0511-11
AT313494	56	1810-7
AT313496	9	1810-5
AT313962	36	1810-5
AT313962	58	1810-7H
AT314538	41	3262-3
AT315957	14	1831-9
AT315958	15A	1831-9
AT316482	3	1807-3
AT316599	24	0505-11
AT316756	6	1674-29
AT317949	1	1807-3
AT317949	2	1807-3
AT317949	3	1807-3
AT317949	4	1807-3
AT317949	5	1807-3
AT317949	6	1807-3
AT317949	7	1807-3
AT317949	8	1807-3
AT317949	9	1807-3
AT317949	10	1807-3
AT318267	3	1814-3
AT318268	3	1814-3
AT318780	10	1807-3
AT319108	22	3243-3
AT319109	22	3243-3
AT319110	22	3243-3
AT320545	65	0201-5B
AT320546	65	0201-5B
AT320547	65	0201-5B
AT320548	65	0201-5B
AT320549	65	0201-5B
AT320550	65	0201-5B
AT320692	16	0201-3
AT320692	1	0201-9
AT320767	8	1674-7
AT320978	14	1115-3
AT321257	10	0363-5
AT321340	42	3262-3
AT321340	48	3262-3
AT321340	49	3262-3
AT321340	37	3262-7B
AT321340	29	3262-9
AT321524	21	0201-9
AT321525	21	0201-9
AT322362	6	0375-3
AT322385	17	1674-29
AT322708	36	1810-7B
AT322752	15	0363-5
AT323326	10	1674-31
AT323420	8	3262-21
AT324000	8	1676-3B
AT324134	55	1810-7
AT324134	53	1810-7H

NUMERICAL INDEX - CONTINUED

PART NO.	KEY	PAGE
AT324135	56	1810-7
AT324135	36	1810-7F
AT324136	9	1810-5
AT324136	9	1810-7F
AT324966	3	3262-13
AT324966	3	3262-15
AT324966	3	3262-17
AT324966	3	3262-19
AT325798	7	0363-11
AT326272	1	1810-13
AT326630	34	1831-9
AT326633	16	1831-9
AT328869	1	1911-5
AT329087	2	3262-15
AT329087	2	3262-17
AT329087	2	3262-19
AT329088	2	3262-13
AT329127	7	3262-13
AT329148	9	2164-7
AT329356	3	3262-11
AT329360	40	0201-5
AT329674	6	1676-3B
AT329813	13	1813-3
AT330297	5	0355-7
AT330299	16	0355-15
AT330321	1	1912-3
AT330447	1	0355-3
AT330448	16	0355-3
AT330627	5	1674-31
AT330633	4	1674-29
AT331141	2	1912-5
AT331796	10	2164-7
AT331796	10	2164-9
AT331801	11	2164-7
AT331801	11	2164-9
AT331986	12	2164-9
AT332279	5	1912-5
AT333072	11	1814-3
AT333489	18	2164-7
AT333519	12	2164-7
AT333686	12	3262-21
AT333759	3	3262-11
AT334372	18	2164-7
AT334524	7	0363-11
AT334796	12	0355-3
AT334796	10	0355-7
AT334796	3	0355-21
AT335803	3	1814-3
AT335804	3	1814-3
AT335927	1	3262-13
AT335927	1	3262-15
AT335927	1	3262-17
AT335927	1	3262-19
AT336305	1	1676-3B
AT336563	25	3262-3
AT336563	48	3262-3
AT336563	49	3262-3
AT336564	49	3262-3
AT336565	48	3262-3
AT338499	16	2164-9
AT339580	3	3262-23
AT340828	10	3262-19
AT340835	10	3262-11
AT340837	11	3262-11
AT340839	12	3262-11
AT340839	11	3262-13
AT340839	8	3262-15
AT340839	8	3262-17
AT340839	11	3262-19
AT340840	7	3262-17
AT340841	7	3262-15
AT341136	15	3262-11
AT341137	16	3262-11
AT341137	8	3262-13
AT341137	8	3262-19
AT341140	18	3262-11
AT341142	5	3262-15
AT341142	5	3262-17
AT341142	5	3262-19
AT341143	5	3262-13
AT341144	4	3262-17
AT341144	4	3262-19
AT341145	4	3262-15
AT341146	4	3262-13
AT341281	6	3262-15
AT341281	6	3262-17
AT341283	18	3262-11
AT341290	10	3262-13
AT341470	8	1674-7
AT341825	1	1811-5
AT342187	6	3262-13
AT342202	1	3262-23
AT342233	7	3262-19
AT342234	6	3262-19
AT41188	2	1674-3
AT46597	28	0315-7
AT46597	36	3215-3
AT47069	5	1671-3
AT47069	11	1671-5
AT47069	10	1674-7
AT47069	11	1674-9
AT48548	26	0315-7
AT48548	11	3215-3
AT48548	10	3262-7
AT48548	4	3262-9
AT50923	7	0521-7
AT56657	9	0521-7
AT62123	3	3263-9
AT72157	55	0201-5
AT73296	4	0505-5
AT78527	5	3262-3
AT78527	48	3262-3
AT78527	37	3262-7B
AT78527	29	3262-9
AT78633	2	2006-3
AT85174	2	1674-15
AT86950	52	0315-9
AZ43305	42	1810-7D
A3606R	..	1369-7
A364R	7	0417-3
A3917R	..	1369-7
A4365R	..	1369-7
A4730R	..	1369-7
A4827R	17	0452-3
BP13712	7	2001-3
B2762R	..	1369-7
B3690	4	0133-7
B3690R	..	1369-7
CD16284	7	0409-3
DP29960	14	0132-11
E12379	26	3243-3
E46066	10	1831-9
E53830	16	1674-7
E80224	2	0201-9
E80224	13	0355-13
E80224	24	0355-25
F1056R	..	1369-7
F1430R	11	3265-7
F1451R	44	0511-11
F1451R	45	0511-11
F1870R	..	1369-7
F3353R	..	1369-7
F950R	11	3265-7
GX21121	53	0511-11
GY20126	1	2006-5
H110232	25	1673-7
H110232	3	1673-9
H122182	1	0363-11
H144094	4	1672-3
H144095	5	1672-3
H148375	33	1832-3
H152202	9	3265-7
H152202	14	3265-15
H152203	9	3265-7
H155655	7	3265-9
H155655	7	3265-11
H155655	22	3265-11
H155655	7	3265-13
H155655	22	3265-13
H155655	7	3265-13B
H155655	22	3265-13B
H157897	3	3265-9
H157897	8	3265-13B
H157898	8	3265-7
H157898	3	3265-15
H157947	3	3265-9
H159608	8	3265-11
H159608	22	3265-11
H159608	8	3265-13
H159608	22	3265-13
H159608	22	3265-13B
H164982	3	3265-11
H164982	3	3265-13
H164982	3	3265-13B
H165169	4	3265-11
H165169	4	3265-13
H170216	4	3265-9
H170536	14	3265-11
H170536	14	3265-13
H170536	14	3265-13B
H170538	13	3265-7
H170538	13	3265-9
H170538	12	3265-15
H170539	13	3265-7
H171333	11	3265-11
H171333	11	3265-13
H178765	6	3265-15
H179657	7	3265-15
H180094	4	3265-7
H180103	4	3265-7
H180787	6	3265-9
H208987	8	3265-7
H208995	12	3265-7
H208999	12	3265-7
H210845	10	3265-9
H210941	8	3265-15
H211093	11	3265-13B
H211156	4	3265-13B
H23125	1	0402-3
H35244	..	1369-7
H36031	3	0408-3

NUMERICAL INDEX - CONTINUED

PART NO.	KEY	PAGE
H77698	10	1831-7
H77698	10	1832-5
H80753	2	0429-3
H88900	45	0201-5
JD10023	5	0201-3
JD10025	4	0201-3
JD10122	8	0201-3
JD5756	8	1322-3
JD5764	13	1322-3
JD5902	23	1810-3
JD5902	65	1810-7
JD5902	65	1810-7D
JD5902	65	1810-7H
JD7378	12	0201-3
JD7446	14	0201-3
JD7446	4	0201-9
JD7759	10	0133-5
JD7759	26	3201-5
JD7759	17	3243-3
JD7781	18	3243-3
JD7797	10	0133-5
JD7799	41	3265-5
JD7847	41	3265-5
JD8130	18	0201-3B
JD8130	5	0201-9
JD8194	16	0201-3
JD8230	15	0201-3
JD8296	13	0201-3
JD8296	6	0201-9
JD9021	3	0201-3
JD9378	3	0201-9
KV13179	13	2164-9
KV25678	12	1062-3
LVA12162	14	3262-21
L111423	5	3262-7
L111423	33	3262-9
L111424	4	3262-7
L111424	32	3262-9
L111836	10	3262-3
L111836	27	3262-7B
L111836	19	3262-9
M115279	9	1676-3B
M115279	9	1676-9
M115279	6	1810-5
M115279	6	1810-7B
M115279	6	1810-7F
M3689T	54	0201-5
M40333	45	0363-15
M41029	4	0403-2
M41029	10	0403-2
M4237T	..	1369-7
M43940	4	3215-3
M453T	2	1821-33
M467M	27	3243-3
M48238	20	1115-3
M49812	19	0511-7
M49812	32	0511-11
M68628	5	0364-5
M68628	18	2164-3
M68954	14	3215-3
M68997	9	1911-3
M68997	1	1912-3
M68997	2	1912-3
M68997	1	1912-5
M74600	21	0355-7
M84247	21	1115-3
M84971	10	0511-7
M84971	18	0511-11
M84972	5	1810-5
M84972	5	1810-7B
M84972	5	1810-7F
M87733	2	0416-5
N131838	..	1369-7
N157204	8	1813-5
N189220	9	1832-5
N189220	6	2163-5
N198631	11	0402-3
N198631	18	0521-3
N198631	11	0521-7
N203486	19	0355-5
N203486	3	0355-11
N203491	6	0355-7
N203952	3	0355-5
N220940	24	0355-15
N231749	2	1511-3
N231749	2	1511-5
N260556	20	3265-11
N260556	21	3265-11
N260556	20	3265-13
N260556	21	3265-13
N260556	20	3265-13B
N260556	21	3265-13B
N31296	5	1811-3
N31296	8	1811-5
PM37485	..	1330-2
PM38655	4	0404-3
PM38655	..	1330-2
PM797NA	40	1674-19
P40098	3	1674-17
P41858	7	1831-9
P42061	7	0355-7
P46051	..	1369-7
P48403	..	1369-7
P50631	..	1369-7
P50883	5	0133-17
P61341	36	0511-11
RE151064	16	0355-15
RE151074	14	0355-13
RE151096	5	0355-3
RE151096	10	0355-13
RE151096	23	0355-13
RE151101	6	0355-13
RE154222	13	1676-3B
RE154222	12	1676-9
RE155938	18	1832-3
RE159656	4	0355-15
RE167207	1	1674-27
RE190139	2	2001-3
RE19797	7	0413-3
RE19799	5	0413-3
RE198074	26	1831-9
RE27205	18	3265-11
RE31617	13	0409-3
RE34085	11	3265-9
RE40048	2	0531-3
RE43497	11	1831-9
RE43497	40	1832-3
RE44574	4	0433-3
RE44574	18	0452-3
RE46609	1	1832-7
RE46684	7	0418-3
RE46684	12	0418-3
RE46685	28	0404-3
RE46685	8	0407-5
RE46685	4	0407-9
RE46685	7	0407-9
RE46685	10	0417-3
RE46685	6	0419-3
RE46686	7	0419-3
RE46686	5	0420-3
RE46686	20	0563-3
RE46687	2	0407-5
RE46687	9	0407-9
RE48419	31	0363-15
RE48419	2	1674-27
RE500000	3	0403-2
RE500002	3	0403-2
RE500250	9	0402-3
RE500250	19	0521-3
RE500250	23	0521-7
RE500448	11	0415-3
RE500449	12	0415-3
RE500539	3	0429-3
RE500539	10	0429-3
RE500661	1	0407-1
RE501298	12	0422-3
RE503208	12	0416-5
RE504036	4	0408-3
RE504122	2	0505-5
RE504233	5	0421-1
RE504543	15	0407-7
RE504563	16	0407-7
RE504638	4	0401-2
RE504741	13	0415-3
RE504836	13	0407-7
RE504914	6	0407-2
RE505264	12	0429-3
RE505264	7	1832-7
RE505501	14	0402-5
RE505501	12	0404-3
RE505515	11	0402-5
RE505981	16	0417-3
RE506949	3	0414-2
RE50752	10	0420-5
RE507595	1	0402-1
RE507595	3	0402-1
RE507595	4	0402-1
RE507597	13	0413-3
RE507597	7	0420-3
RE507598	11	0413-3
RE507646	1	0413-3
RE507647	2	0413-3
RE507648	3	0413-3
RE507649	4	0413-3
RE507766	1	0413-1
RE507852	6	0403-2
RE507920	10	0403-2
RE507952	4	0407-9
RE508185	25	0404-3
RE508317	9	0402-2
RE508566	20	0402-5
RE508566	17	0417-3
RE508716	2	0413-1
RE508762	3	0414-2
RE508847	24	0563-3
RE508847	3	0563-5
RE508847	7	0563-5
RE508966	2	0433-2
RE508968	4	0416-3
RE509031	8	0420-5
RE509036	18	0563-3

NUMERICAL INDEX - CONTINUED

PART NO.	KEY	PAGE
RE509036	9	0563-5
RE509555	4	0416-5
RE509572	4	0416-3
RE509794	3	0420-5
RE509794	5	0420-5
RE51052	1	1832-8
RE515372	1	0450-3
RE515404	25	0563-3
RE515404	1	0563-5
RE515977	4	0416-3
RE515978	2	0402-5
RE515978	15	0402-5
RE516340	11	0402-5
RE516477	18	0563-3
RE516477	9	0563-5
RE51648	1	0420-5
RE51649	2	0420-5
RE51649	2	0563-5
RE51650	11	0420-5
RE51650	17	0563-3
RE51650	10	0563-5
RE516512	13	0563-5
RE516513	12	0420-5
RE516513	11	0563-5
RE516553	10	0420-5
RE516553	12	0563-5
RE517181	18	0563-3
RE517181	9	0563-5
RE517370	3	0402-5
RE517370	13A	0402-5
RE518086	12	0413-3
RE518087	12	0413-3
RE518097	8	0429-3
RE519144	13B	0402-5
RE519742	12	0407-7
RE519743	7	0407-7
RE520023	1	0404-5
RE520147	2	0407-9
RE520459	4	0416-3
RE520461	4	0416-3
RE522076	3	0418-3
RE52242	2	0407-7
RE522527	3	0575-3
RE522820	..	0419-3
RE52454	4	1832-8
RE524676	2	0505-5
RE52506	1	1832-8
RE52506	2	1832-8
RE52507	1	1832-10
RE52508	6	1832-8
RE52509	1	1832-9
RE52510	5	1832-8
RE526871	4	0416-3
RE526873	4	0416-3
RE527042	12	0452-3
RE52722	12	0418-3
RE527299	1	0450-3
RE528026	1	0407-1
RE531116	1	0413-1
RE532627	3	0575-3
RE53267	3	0575-3
RE54885	8	0416-5
RE57234	14	0409-3
RE57575	22	1831-9
RE57619	10	0407-2
RE57619	13	0407-9
RE57836	3	0404-3
RE57836	6	0416-3
RE57836	4	1674-27
RE59296	2	0419-3
RE59547	4	0416-5
RE59579	3	1831-5
RE59579	3	1831-7
RE59579	2	2163-11
RE59810	11	0402-5
RE59810	19	0452-3
RE60005	3	0409-3
RE60029	4	0420-3
RE60037	12	0420-3
RE60071	5	0414-2
RE60854	9	0420-5
RE60854	8	0563-5
RE60888	34	1832-3
RE61812	8	0414-2
RE63674	15	0404-3
RE65165	5	0401-2
RE65168	6	0401-2
RE65908	11	0403-2
RE65909	11	0403-2
RE65911	5	0401-2
RE65912	6	0401-2
RE65978	6	0416-5
RE66082	33	0452-3
RE66084	34	0452-3
RE66153	2	0421-1
RE67231	1	0419-3
RE67238	1	0407-3
RE67238	10	0407-7
RE67238	13	0419-3
RE67239	5	0402-5
RE68722	12	0429-3
RE68748	10	0413-3
RE70041	5	0402-3
RE70401	7	0402-3
RE70486	4	0422-3
RE70487	5	0422-3
RE70535	8	0429-3
RE70756	11	0422-3
RE71240	15	0417-3
RE71256	6	0422-3
RE72618	30	3262-11
R100369	14	0417-3
R100377	2	0423-3
R10093	..	1369-7
R10093	13	1832-3
R104592	6	0404-3
R104592	5	0409-3
R105812	22	1115-3
R106829	8	0409-3
R106831	8	0409-3
R107731	11	0402-2
R110531	1	0414-2
R111137	13	0404-3
R111493	2	3262-3
R11151	13	3215-3
R11151	14	3262-7
R11151	5	3262-9
R111632	10	1676-3B
R111632	10	1676-9
R112857	..	1369-7
R113050	20	1831-9
R113050	10	1832-3
R113050	4	1832-5
R113562	6	0420-5
R113562	7	0420-5
R113562	5	0563-5
R113563	7	0420-5
R113563	6	0563-5
R113565	4	0420-5
R113565	4	0563-5
R113596	4	0401-2
R114241	20	0404-3
R114358	3	0407-7
R115299	16	0404-3
R115299	1	0415-3
R115742	1	1832-8
R115742	3	1832-8
R115743	7	1832-8
R116115	5	0407-7
R116116	10	0420-3
R116296	2	0407-3
R116324	4	0402-3
R116386	19	0413-3
R116466	7	0404-3
R116515	12	0409-3
R116515	8	0452-3
R119874	5	0402-1
R119874	10	0404-3
R120467	1	0408-3
R120631	3	0401-2
R120638	13	0407-2
R120653	5	1814-5
R120653	1	1814-7
R120864	10	0402-3
R120864	13	0521-3
R120864	19	0521-7
R121036	1	0417-3
R121038	1	0417-2
R121039	5	0433-3
R121043	14	0404-3
R121376	7	0407-2
R121402	14	0409-3
R121411	8	0402-5
R121424	7	0402-5
R121621	4	0407-5
R121635	4	0417-2
R121897	1	0429-1
R123161	7	0402-2
R123178	5	0403-2
R123226	9	0417-3
R123226	9	0418-3
R123226	4	0452-3
R123271	5	0402-2
R123273	1	0421-1
R123273	20	0452-3
R123284	4	0429-3
R123323	1	0418-3
R123324	11	0418-3
R123345	5	0452-3
R123417	13	0417-3
R123417	21	0452-3
R123471	5	0419-3
R123501	3	0419-3
R123501	23	0452-3
R123504	24	0452-3
R123513	2	0402-2
R123525	25	0452-3
R123542	8	0402-3
R123542	1	0452-3
R123561	5	0401-2
R123562	5	0401-2

NUMERICAL INDEX - CONTINUED

PART NO.	KEY	PAGE
R123563	6	0401-2
R123564	6	0401-2
R123565	10	0402-2
R123570	3	0416-5
R123570	6	0452-3
R123574	2	0402-3
R123575	3	0402-3
R123575	7	0452-3
R123584	18	0402-5
R123593	8	0413-3
R123594	2	0420-3
R123616	26	0404-3
R123616	33	0505-9
R123616	33	0505-11
R123616	8	1831-5
R123616	8	1831-7
R123960	2	0403-2
R128660	1	0512-3
R128661	1	0512-3
R128662	1	0512-3
R130574	6	0401-2
R130575	6	0401-2
R130576	5	0401-2
R130577	5	0401-2
R131016	5	0418-3
R131182	19	0404-3
R131671	1	2006-3
R131769	2	0433-3
R132166	4	0423-3
R132186	23	0404-3
R132261	1	0410-2
R132518	6	0402-1
R132874	17	0413-3
R133295	2	0429-1
R133303	2	0402-1
R133303	14	0415-3
R133405	6	0421-1
R133812	1	0402-1
R133893	10A	0452-3
R133978	5	0423-3
R134518	19	0402-5
R134527	1	0404-1
R135195	3	0512-3
R135509	2	0422-3
R135510	3	0422-3
R135896	3	0452-3
R135918	1	0433-2
R135918	8	0433-3
R136475	2	0404-1
R136495	3	0407-3
R136516	1	0402-5
R136516	22	0452-3
R150986	2	0355-11
R150997	4	0355-7
R151062	3	0355-15
R151063	17	0355-15
R151065	5	0355-15
R151066	11	0355-15
R151067	9	0355-3
R151067	18	0355-13
R151069	19	0355-13
R151072	24	0355-13
R151075	12	0355-15
R151078	1	0355-11
R151080	11	0355-5
R151088	3	0355-7
R151090	4	0355-17
R151097	7	0355-13
R151097	20	0355-13
R151099	23	0355-15
R151103	4	0355-13
R206883	3	0505-5
R26121	9	0403-2
R26125	4	0409-3
R26286	21	0563-3
R26286	..	1369-7
R26287	..	1369-7
R26375	53	0201-5
R26375	15	0363-15
R26375	1	0563-3
R26375	4	1062-3
R26375	..	1369-7
R26375	40	3262-3
R26375	10	3263-3
R26375	14	3263-9
R26448	51	0315-9
R26448	2	0363-3
R26448	4	0363-5
R26448	15	0363-17
R26448	16	0364-3
R26448	6	1062-3
R26448	..	1369-7
R26448	18	2164-5
R26448	3	3262-3
R26448	48	3262-3
R26627	26	1832-3
R26650	8	0404-3
R26773	11	0364-5
R26773	..	1369-7
R26773	21	2164-3
R26863	..	1369-7
R26906	20	0355-21
R26906	6	0363-17
R26906	14	0364-5
R26906	6	0409-3
R26906	..	1369-7
R26906	7	2163-11
R26906	1	2164-3
R26906	8	3262-3
R26906	48	3262-3
R26906	2	3263-11
R26936	18	1831-9
R26936	35	1832-3
R27166	..	1369-7
R27212	6	0363-3
R27212	16	0363-17
R27218	12	0355-3
R27390	14	0355-7
R27474	9	3262-3
R27928	..	1369-7
R28776	..	1369-7
R28782	13	0363-5
R28782	8	0364-3
R28782	29	0563-3
R28782	14	1062-3
R28782	..	1369-7
R28782	12	2164-5
R28811	2	0433-2
R28811	3	0433-2
R29424	1	2163-5
R29463	..	1369-7
R29867	1	2163-3
R29867	1	2163-9
R29936	4	0363-13
R29936	16	0363-15
R29936	..	1369-7
R30903	..	1369-7
R31378	11	0133-17
R32011	8	1674-19
R32016	10	1674-19
R32017	11	1674-19
R32018	12	1674-19
R32019	13	1674-19
R32021	14	1674-19
R32022	15	1674-19
R32023	16	1674-19
R32026	17	1674-19
R32027	18	1674-19
R32028	19	1674-19
R32029	20	1674-19
R33259	..	1369-7
R33259	23	1831-9
R33259	3	1832-5
R375R	..	1369-7
R39090	42	0315-9
R394R	..	1369-7
R41440	6	1673-7
R41440	6	1673-9
R41440	23	1673-9
R42009	9	0563-3
R43409	9	0409-3
R44302	9	0315-7
R44302	25	0355-3
R44302	40	0363-15
R44302	25	0505-11
R44302	2	1673-5
R44302	4	1674-5
R44302	12	1674-9
R44302	6	1814-5
R44302	13	1814-7
R44302	2	1814-9
R44302	12	1814-9
R44302	5	1814-11
R44302	10	1831-5
R44302	10	1831-7
R44302	13	1832-5
R44313	25	1115-3
R44342	11	1676-3B
R44342	11	1676-9
R459R	..	1369-7
R460R	..	1369-7
R46528	6	1811-3
R46528	9	1811-5
R48568	3	0521-3
R48638	..	1369-7
R48685	1	0401-2
R48685	2	0404-3
R48767	9	0403-2
R48808	11	1672-3
R495R	..	1369-7
R500001	6	0402-3
R500265	2	0415-3
R500266	12	0415-3
R500270	4	0421-1
R500271	3	0421-1
R500320	11	0429-3
R500320	8	1832-7
R500352	5	0429-3
R500374	32	0452-3
R500377	3	0512-3
R500378	3	0512-3

NUMERICAL INDEX - CONTINUED

PART NO.	KEY	PAGE
R500378	17	1832-7
R500379	3	0512-3
R500379	17	1832-7
R500382	3	0512-3
R500390	4	0413-1
R500531	12	0423-3
R500596	2	0414-2
R500649	3	0429-1
R500668	11	0415-3
R501124	1	0403-2
R501144	10	0418-3
R501428	8	0419-3
R501428	31	0452-3
R501436	8	0407-7
R501472	7	0414-2
R501486	3	1672-3
R501489	7	0401-2
R502076	15	0413-3
R502079	6	1832-7
R502175	1	0404-6
R502287	4	0407-1
R502329	2	0404-6
R502464	2	0407-1
R502504	16	0407-7
R502513	13	0407-7
R502513	14	0407-7
R502725	3	0407-1
R502811	11	0419-3
R502814	4	0418-3
R502814	3	0452-3
R502864	18	0407-7
R502867	6	0407-2
R502902	6	0402-3
R503419	14	0422-3
R503452	1	0433-3
R503509	2	0417-3
R503509	16	0417-3
R503891	3	0416-5
R50406	24	1810-3
R50406	19	1810-5
R50406	19	1810-7B
R50406	19	1810-7F
R504191	13	1832-7
R504192	10	1832-7
R504534	3	0402-1
R504725	1	0402-5
R504725	2	0402-5
R504734	9	0419-3
R505472	16	0413-3
R505609	2	0401-2
R516623	10	0423-3
R517488	6	0407-7
R518101	2	0407-9
R518145	20	0407-7
R518146	21	0407-7
R518507	6	0407-7
R51936	9	0413-3
R520130	1	0402-5
R520130	2	0402-5
R520132	1	0402-5
R520132	2	0402-5
R521493	1	0407-5
R521493	1	0407-9
R521493	13	0452-3
R53108	26	0452-3
R53543	..	1369-7
R54123	1	0505-5
R54445	6	1814-9
R54445	7	1814-9
R54445	6	1814-11
R54445	11	1814-11
R54445	13	1814-11
R54445	15	1814-11
R54477	34	1810-3
R54477	52	1810-7
R54477	52	1810-7D
R54477	52	1810-7H
R54565	1	0402-2
R54638	9	0452-3
R55453	9	0403-2
R56101	41	0511-7
R56101	14	0511-11
R56461	..	1369-7
R56463	..	1369-7
R56751	..	1369-7
R57311	56	0201-5B
R57311	7	0201-9
R57312	56	0201-5B
R57312	8	0201-9
R57313	56	0201-5B
R57438	6	1115-3
R60332	..	1369-7
R61105	29	0452-3
R61467	3	0433-3
R61871	9	0407-2
R61871	5	0407-9
R61871	16	0452-3
R63308	46	0201-5
R63548	1	0416-5
R63845	66	0201-5B
R63845	4	0325-3
R64247	19	0201-3B
R64247	9	0201-9
R64525	3	0423-3
R65593	2	1674-19
R65594	9	1674-19
R65595	21	1674-19
R65596	22	1674-19
R65597	23	1674-19
R65598	24	1674-19
R65599	25	1674-19
R65600	26	1674-19
R65601	27	1674-19
R65602	28	1674-19
R65603	29	1674-19
R65604	30	1674-19
R65605	31	1674-19
R65606	32	1674-19
R65607	33	1674-19
R65608	3	1674-19
R65609	6	1674-19
R65610	7	1674-19
R66319	1	1674-19
R66320	5	1674-19
R66321	4	1674-19
R71732	..	1369-7
R72328	2	0408-3
R72328	27	0452-3
R726R	1	0355-15
R72655	8	1821-9
R72655	3	1821-11
R72659	5	0408-3
R73290	13	0133-17
R74012	1	0420-3
R75892	17	0404-3
R75892	14	0452-3
R76126	6	0131-7
R76126	7	0131-11
R76126	3	0131-13
R76126	5	0132-15
R76126	6	0133-3
R762R	13	0355-25
R76477	8	3263-9
R77390	6	1832-8
R77914	13	1821-5
R77914	9	1821-15
R77914	9	1821-25
R77915	10	1821-15
R77915	10	1821-25
R78019	2	0132-17
R78035	14	1676-3B
R78035	14	1676-9
R79101	10	3265-7
R80632	..	1369-7
R81195	17	3265-15
R81275	6	0414-2
R81275	7	0414-2
R81275	10	0452-3
R81862	10	3265-7
R81864	8	3265-9
R82238	42	0201-5
R82238	10	0201-9
R84376	1	3265-9
R84376	2	3265-9
R85363	1	0409-3
R85687	8	0409-3
R89683	14	3265-9
R89683	18	3265-9
R89944	5	0417-2
R89944	28	0452-3
R90237	10	3265-13
R90237	10	3265-13B
R90658	2	0410-2
R90658	2	0452-3
R90692	10	0409-3
R91360	18	0413-3
R91727	19	3265-11
R91889	2	0409-3
R92097	3	0416-3
R92097	11	0452-3
R92352	3	0413-1
R93633	10	3265-11
R93633	21	3265-11
R93910	8	0409-3
R96703	9	0422-3
R97185	8	0407-2
R97185	15	0452-3
R98062	11	0409-3
R98063	8	0409-3
R98335	8	0409-3
R99702	14	0355-3
R99702	1	2161-3
R99702	5	2161-7
SE500831	1	0413-1
SE501096	3	0403-2
SE501103	1	0413-1
SE501155	4	0416-3
SE501234	12	0413-3
SE501235	12	0413-3
SE501342	1	1672-3
SE501387	1	1672-3

NUMERICAL INDEX - CONTINUED

PART NO.	KEY	PAGE
TCU14336	30	1810-3
TCU14336	43	1810-7
TCU14336	12	1813-3
TT206940	35	1810-5
TT206940	35	1810-7B
TT207136	35	1810-5
TT207136	35	1810-7B
TY15733	1	1671-5
TY15969	..	1330-2
TY16285	..	1330-2
TY22462	9	0505-3
TY22462	15	0563-3
TY22464	15	0563-3
TY22470	39	0511-7
TY22470	47	0511-11
TY22489	9	0521-3
TY22566	40	0511-7
TY22566	52	0511-11
TY24485	1	1672-3
TY26194	40	1674-19
TY6128	1	1671-3
TY6128	1	1671-5
TY6333	5	0402-1
TY6333	10	0404-3
TY6764	8	1832-8
TY6799	1	1672-3
T101807	2	1811-7
T101975	47	3265-5
T102419	46	0363-15
T102780	18	1673-7
T102780	27	1673-9
T103461	2	0564-3
T103834	11	1674-7
T103834	13	1674-9
T103834	3	1674-23
T103834	3	1674-25
T104545	4	0132-7
T104546	6	0132-5
T104546	14	0132-5
T104547	9	0132-5
T104547	14	0132-5
T104548	10	0132-9
T104549	3	0132-5
T104549	14	0132-5
T104550	4	0132-5
T104550	14	0132-5
T104558	10	0132-5
T104558	14	0132-5
T104561	5	0132-5
T104561	14	0132-5
T105052	28	3243-3
T10510	6	3201-3
T10510	33	3201-5
T105116	5	0132-3
T105116	13	0132-3
T105116	4	0132-5
T105116	14	0132-5
T105117	3	0132-3
T105117	13	0132-3
T105117	9	0132-5
T105117	14	0132-5
T105131	4	0132-3
T105131	13	0132-3
T105131	10	0132-5
T105131	14	0132-5
T105500	2	0133-5
T105530	2	0131-3
T105530	4	0131-3
T105605	3	0133-5
T106882	3	0133-5
T106909	4	0133-5
T112247	4	0132-7
T112252	10	0132-9
T11234	23	1115-3
T11234	4	1810-13
T113232	2	0512-3
T114681	12	1322-5
T118385	10	3263-9
T119816	8	0505-3
T119816	16	0563-3
T119915	3	1115-3
T119916	4	1115-3
T120710	7	0132-15
T120740	11	0132-5
T120979	3	3201-3
T120980	3	3201-3
T120981	3	3201-3
T121001	2	0131-7
T121001	5	0131-11
T121002	2	0131-7
T121190	12	1911-3
T121478	12	0132-5
T121478	15	0132-13
T122075	4	0419-3
T122075	30	0452-3
T122628	29	3243-3
T122720	25	3243-3
T12275	..	1369-7
T125615	3	0133-3
T125615	8	0133-7
T12582	9	3265-9
T126299	24	1921-5
T126299	39	3263-9
T126931	11	0132-3
T126931	12	0132-5
T126931	15	0132-13
T126932	12	0132-3
T126932	13	0132-5
T126932	16	0132-13
T126958	7	0132-3
T126958	7	0132-5
T126958	3	0132-7
T126959	2	0132-3
T126959	8	0132-5
T126959	5	0132-7
T127059	10	0132-3
T127059	11	0132-5
T127059	14	0132-9
T127061	10	0132-3
T127061	14	0132-11
T127063	14	0132-11
T127297	3	3201-3
T127575	4	1322-5
T13119	..	1369-7
T132233	24	1832-5
T133674	31	3215-3
T134895	3	1810-5
T134895	3	1810-7B
T134895	3	1810-7F
T134895	2	1810-15
T135646	2	0132-7
T135764	2	1814-7
T135764	8	1814-9
T135764	14	1814-11
T14050	9	0420-3
T140560	3	3201-3
T140585	14	0132-11
T140608	15	0515-5
T141123	4	1671-3
T141123	3	1671-5
T142434	1	2001-3
T142435	15	0132-13
T143169	22	1832-3
T143372	4	0363-11
T145546	2	0132-7
T145546	20	0132-13
T146097	6	1322-3
T146097	10	1810-3
T146097	25	1810-5
T146097	25	1810-7B
T146097	25	1810-7F
T146098	1	1322-5
T146099	10	1322-5
T146102	10	0422-3
T146104	18	1322-5
T146106	2	1322-5
T146182	3	1322-3
T146183	27	1322-5
T146184	24	1322-5
T147607	11	0132-5
T148409	40	1810-7
T148409	40	1810-7D
T148409	40	1810-7H
T148410	12	1741-3
T148643	5	1912-3
T148643	9	1912-5
T148917	2	1832-5
T148946	2	1832-5
T149247	12	0132-9
T149247	20	0132-13
T149248	11	0132-9
T149248	20	0132-13
T149315	4	0363-11
T149363	22	0133-17
T149597	41	0363-15
T149597	2	1831-5
T149597	2	1831-7
T149597	20	1832-5
T149597	2	3263-5
T151270	12	0132-9
T151271	7	0132-7
T151272	8	0132-9
T151427	8	1921-5
T151427	35	3263-9
T151711	5	1322-3
T151711	5	1810-3
T151711	24	1810-5
T151711	24	1810-7B
T151711	24	1810-7F
T151959	10	0563-3
T152122	8	1511-7
T152230	26	1810-3
T152230	21	1810-5
T152230	21	1810-7B
T152230	21	1810-7F
T152285	7	0132-7
T152286	8	0132-9
T153420	24	1115-3
T15509	2	0355-13
T155195	4	0564-3
T155640	16	0355-13

NUMERICAL INDEX - CONTINUED

PART NO.	KEY	PAGE
T155641	15	0355-13
T155646	3	3201-3
T155677	13	0355-5
T155678	12	0355-5
T155680	8	0355-5
T155694	7	0355-3
T155694	7	0355-5
T155723	15	0355-25
T155936	2	0355-15
T155969	11	0355-21
T156000	5	0355-5
T157172	11	1810-3
T157172	26	1810-5
T157172	26	1810-7B
T157172	26	1810-7F
T157533	30	0201-3B
T157534	26	0201-3B
T158127	19	1831-9
T158240	4	0355-21
T158240	9	0355-25
T158495	1	0521-7
T158583	21	0364-5
T158583	16	1322-3
T158584	2	1672-3
T158588	28	1322-5
T158589	25	1322-5
T158619	6	1511-7
T159875	14	1814-7
T159875	3	1814-9
T159875	16	1814-11
T159945	12	1810-5
T159945	12	1810-7F
T159946	10	1810-5
T159946	10	1810-7F
T160017	8	1813-3
T160123	42	0511-11
T160248	7	0132-7
T160248	8	0132-9
T161816	8	1671-5
T162396	40	3265-5
T162675	26	0505-11
T162841	4	3201-3
T163113	18	0521-7
T163309	14	1831-3
T163309	25	1832-3
T163334	9	1821-9
T163334	1	1821-11
T163335	10	1821-9
T163335	2	1821-11
T163336	1	1821-9
T163336	11	1821-9
T163339	3	1821-9
T163344	4	1821-9
T163394	9	1821-29
T164365	2	0355-17
T16464	11	1821-5
T165500	12	0355-21
T165535	6	0355-21
T166020	4	0133-3
T166021	2	0133-3
T167226	1	0355-5
T16752	..	1369-7
T168219	1	0515-5
T169014	6	0201-3
T169132	17	0201-3B
T169133	17	0201-3B
T169137	10	0201-3
T169138	9	0201-3
T169180	6	0133-5
T169182	7	0201-3
T169183	11	0201-3
T170205	2	0201-3
T170611	13	0540-3
T170879	11	3201-5
T170879	30	3243-3
T170880	12	3201-5
T170880	31	3243-3
T170884	13	3201-5
T170891	30	3243-3
T170891	32	3243-3
T170935	3	0364-5
T170935	22	2164-3
T170973	12	0564-3
T171686	3	1821-3
T171686	3	1821-13
T171737	11	1811-3
T171737	13	1811-5
T171778	4	1811-3
T171778	6	1811-5
T172541	36	0201-5
T172542	37	0201-5
T172542	11	0201-9
T172543	37	0201-5
T172550	32	0201-3B
T172588	1	0133-9
T172591	3	0133-9
T172763	1	1810-11
T172829	6	3215-3
T172899	10	0133-7
T172943	3	3201-3
T173133	3	0355-13
T173356	32	3263-9
T173405	2	1927-3
T173501	5	0133-7
T173502	7	0133-7
T173503	2	0133-7
T173517	9	0133-7
T173580	5	1671-5
T173628	6	0201-3
T173721	13	0402-3
T173733	2	1671-3
T173765	4	0133-7
T173978	1	0133-9
T173979	3	0133-9
T174118	1	0355-5
T174185	33	3243-3
T174191	6	0363-11
T174256	16	3201-5
T174346	1	1749-5
T174364	21	0201-3B
T174364	12	0201-9
T174365	21	0201-3B
T174365	13	0201-9
T174381	5	0133-7
T174382	2	0133-7
T174384	15	0133-7
T174385	16	0133-7
T174411	15	0133-7
T174412	16	0133-7
T174490	1	1810-5
T174490	1	1810-7F
T174515	4	2161-3
T174528	33	3215-3
T174528	18	3262-7
T174528	9	3262-9
T174600	16	1810-3
T174600	30	1810-5
T174600	30	1810-7B
T174677	13	0402-3
T174677	17	0521-3
T174677	20	0521-7
T174841	2	1810-9
T174881	25	1115-3
T174980	14	3263-5
T175002	12	0364-3
T175002	16	2164-5
T175014	3	1741-3
T175023	14	0133-5
T175194	5	2004-5
T175244	3	1810-9
T175248	10	1741-3
T175296	26	0355-3
T175318	10	0355-3
T175318	3	0355-13
T175361	7	0364-5
T175361	17	2164-3
T175376	8	0355-3
T175376	2	0355-7
T175484	1	1927-3
T175674	6	1813-3
T175706	16	0133-17
T175731	33	3262-3
T175732	20	3262-3
T175732	28	3262-7B
T175732	20	3262-9
T175747	2	1814-3
T175748	1	1814-3
T175866	11	1673-7
T175866	12	1673-9
T175963	7	1810-5
T175963	7	1810-7B
T175963	7	1810-7F
T175978	10	0133-17
T176136	4	0315-7
T176137	31	0315-7
T176143	60	0315-9
T176144	61	0315-9
T176145	55	0315-9
T176146	54	0315-9
T176147	47	0315-9
T176148	48	0315-9
T176149	34	0315-7
T176150	35	0315-7
T176152	41	0315-9
T176154	45	0315-9
T176155	53	0315-9
T176157	38	0315-9
T176158	63	0315-9
T176168	21	0315-7
T176169	19	0315-7
T176170	22	0315-7
T176171	23	0315-7
T176172	18	0315-7
T176173	20	0315-7
T176237	22	0355-3
T176238	21	0355-3
T176240	23	0355-3
T176241	24	0355-3
T176242	6	0355-15
T176243	13	0355-15
T176244	14	0355-15

NUMERICAL INDEX - CONTINUED

PART NO.	KEY	PAGE
T176245	15	0355-15
T176256	20	0355-15
T176257	21	0355-15
T176258	19	0355-15
T176259	18	0355-15
T176260	22	0355-15
T176261	27	0355-15
T176262	5	0355-13
T176268	47	1810-7
T176268	47	1810-7D
T176268	47	1810-7H
T176269	47	1810-7
T176269	47	1810-7D
T176269	47	1810-7H
T176270	50	1810-7
T176270	50	1810-7D
T176270	50	1810-7H
T176296	39	1810-7
T176296	39	1810-7D
T176296	39	1810-7H
T176301	8	0133-17
T176302	15	0133-17
T176318	6	0133-17
T176321	3	0133-17
T176405	15	0355-21
T176441	2	0133-17
T176448	29	3262-3
T176454	5	1813-5
T176473	9	1813-5
T176515	7	0133-17
T176517	42	1810-7
T176522	10	1810-9
T176523	11	1810-9
T176524	12	1810-9
T176612	14	0132-11
T176644	42	0363-15
T176644	17	0363-17
T176644	11	3263-5
T176675	14	1911-3
T176698	36	3243-3
T176727	19	3262-3
T176728	45	3262-3
T176731	3	1810-15
T176732	1	1810-15
T176777	15	1814-7
T176777	9	1814-9
T176777	12	1814-11
T176818	41	1810-7
T176818	41	1810-7D
T176818	41	1810-7H
T176819	6	1814-3
T176820	54	1810-7
T176820	54	1810-7D
T176820	5	2001-3
T176876	16	1814-7
T176876	8	1814-11
T176877	19	1814-7
T176877	7	1814-11
T176878	21	1814-7
T176878	4	1814-9
T176878	10	1814-11
T176879	20	1814-7
T176879	5	1814-9
T176879	9	1814-11
T176888	57	1810-7
T176888	2	1810-7F
T176903	1	1810-3
T176904	2	1810-3
T176958	8	1814-3
T176959	7	1814-3
T176961	14	1911-3
T177033	1	1512-3
T177168	30	1831-9
T177169	2	1810-5
T177169	27	1810-7F
T177171	25	1831-9
T177172	6	1831-9
T177226	21	1832-3
T177227	20	1832-3
T177228	24	1832-3
T177261	26	1673-7
T177261	4	1673-9
T177364	10	1814-3
T177365	9	1814-3
T177425	9	0515-5
T177520	35	0505-9
T177520	35	0505-11
T177522	3	0505-9
T177522	3	0505-11
T177524	20	0505-9
T177525	29	0505-9
T177568	16	1810-5
T177568	30	1810-7F
T177575	17	0505-9
T177579	37	0505-9
T177579	37	0505-11
T177580	38	0505-9
T177580	38	0505-11
T177594	26	0355-15
T177595	11	0355-13
T177596	14	0355-7
T177597	1	0355-13
T177602	43	0315-9
T177603	44	0315-9
T177604	37	0315-7
T177605	36	0315-7
T177833	3	1673-5
T177859	1	0132-7
T177859	8	0132-9
T177867	15	0132-13
T177890	7	1322-3
T177890	12	1810-3
T177890	27	1810-5
T177890	27	1810-7B
T178024	21	1673-7
T178024	22	1673-7
T178070	14	1911-3
T178071	14	1911-3
T178214	21	0505-9
T178314	34	3263-9
T178362	35	3215-3
T178363	8	0564-3
T178390	6	0505-9
T178425	14	1811-3
T178472	26	1322-3
T178472	13	1810-3
T178472	34	1810-5
T178472	34	1810-7B
T178472	34	1810-7F
T178473	21	1322-5
T178474	21	1322-5
T178481	1	0132-17
T178482	1	0132-17
T178483	1	0132-17
T178484	1	0132-17
T178620	14	3201-5
T178661	15	1921-3
T178665	46	1810-7
T178732	14	0132-11
T178733	14	0132-11
T178741	18	0355-25
T178767	63	0315-9
T178768	3	0315-7
T178768	11	3262-21
T178816	11	0132-5
T178816	14	0132-11
T178817	14	0132-11
T178818	14	0132-11
T178819	14	0132-11
T178820	14	0132-11
T178821	14	0132-11
T179167	3	1821-5
T179167	2	1821-15
T179167	2	1821-25
T179306	15	0505-9
T179306	15	0505-11
T179706	5	0131-11
T179724	6	1921-3
T179732	13	1810-9
T179761	3	2001-3
T179923	4	1807-3
T179952	7	0540-3
T180035	5	1911-5
T180055	8	0521-7
T180379	7	0355-3
T180379	7	0355-5
T180582	22	3201-5
T180651	7	2161-7
T180726	4	1911-5
T180727	9	3215-3
T180755	1	1322-3
T180755	8	1810-5
T180755	8	1810-7B
T180755	8	1810-7F
T180942	7	1810-9
T181021	21	3201-5
T181072	9	0133-17
T181217	16	1831-3
T181306	24	0355-21
T181668	16	0515-5
T181801	12	3263-3
T182013	44	3265-5
T182014	44	3265-5
T182033	8	1810-3
T182033	20	1810-5
T182037	6	1322-5
T182038	14	1322-5
T182161	9	1322-3
T182253	31	3201-5
T182280	30	3201-5
T182281	30	3201-5
T182304	31	3201-5
T182368	23	0505-9
T182625	17	0515-5
T182632	3	0515-5
T183756	6	3262-3
T183756	38	3262-7B
T183756	30	3262-9
T184594	3	0512-3
T186166	16	3265-9
T186793	20	1810-3

NUMERICAL INDEX - CONTINUED

PART NO.	KEY	PAGE
T186793	28	1810-5
T186793	28	1810-7B
T186793	28	1810-7F
T188306	1	0355-21
T188306	8	0355-25
T188560	13	1832-7
T18891	11	0404-3
T196072	24	3243-3
T196319	9	0540-3
T196726	35	0511-11
T19687	..	1369-7
T197054	8	3201-3
T197138	6	1911-3
T197300	20	0364-5
T197300	20	2164-3
T197323	29	1322-5
T197324	26	1322-5
T19935	15	0511-7
T19935	19	0511-11
T200273	19	3243-3
T200274	20	3243-3
T200329	3	0511-13
T200426	40	0511-11
T200765	3	0355-17
T200824	39	0511-11
T200825	21	0511-11
T200826	38	0511-11
T200827	37	0511-7
T200827	37	0511-11
T200828	11	0511-11
T200829	10	0511-11
T200830	6	0511-11
T200830	19	1832-5
T201021	51	0511-11
T201021	2	0511-13
T201139	7	0132-5
T201139	3	0132-7
T201140	8	0132-5
T201140	5	0132-7
T201177	35	0511-7
T201177	2	0511-13
T201520	2	0515-5
T201606	25	1810-3
T201606	22	1810-5
T201606	22	1810-7B
T201606	22	1810-7F
T20168	7	0133-5
T20168	11	0133-7
T20168	14	0133-7
T20168	21	0404-3
T201825	41	0201-5
T202263	21	3243-3
T202551	6	1673-5
T202711	36	0511-7
T202716	1	0511-13
T202717	1	0511-13
T202749	32	0511-7
T202750	33	0511-7
T202751	34	0511-7
T202932	35	0511-7
T202932	3	0511-13
T20314	4	0402-2
T20316	3	0402-2
T203194	8	0563-3
T203512	23	1810-5
T203512	23	1810-7B
T203512	23	1810-7F
T203864	2	0132-7
T203866	2	0132-7
T204071	10	0315-7
T204071	2	1322-3
T204128	13	1062-3
T204192	7	0131-3
T204263	25	0355-21
T204277	5	0355-21
T204281	18	0355-21
T204282	14	0355-21
T204283	16	0355-25
T204290	21	0355-25
T204291	10	0355-21
T204292	4	0355-25
T204293	9	0355-21
T204294	14	0355-25
T204333	43	0201-5
T204334	48	0201-5
T204335	44	0201-5
T204336	51	0201-5
T204337	52	0201-5
T204338	50	0201-5
T204339	47	0201-5
T204340	49	0201-5
T204422	6	0363-5
T204487	26	1115-3
T204576	11	1813-3
T204577	11	1813-3
T204590	1	0201-3
T204591	1	0201-3
T204592	1	0201-3
T204593	1	0201-3
T204599	18	1813-3
T204683	29	1322-3
T204683	36	1810-3
T204683	63	1810-7
T204683	63	1810-7D
T204683	63	1810-7H
T204691	27	1810-3
T204691	38	1810-7
T204691	38	1810-7D
T204691	38	1810-7H
T205160	25	1813-3
T205205	25	1813-3
T205289	28	1810-3
T205289	55	1810-7D
T205289	55	1810-7H
T205291	22	1322-5
T205292	23	1322-5
T205335	14	1674-9
T205336	12	1674-7
T205499	33	1813-3
T205514	9	0133-17
T205602	12	0521-3
T205726	29	1810-3
T205901	19	1813-3
T205902	20	1813-3
T206126	27	0505-11
T206127	28	0505-11
T206431	11	1674-31
T206898	41	0511-11
T20696	13	0133-7
T207060	14	1831-3
T207060	25	1832-3
T207189	17	1322-3
T207191	18	1322-3
T207557	6	0133-17
T208005	8	1322-5
T208006	16	1322-5
T208007	9	1322-5
T208008	17	1322-5
T208166	42	3265-5
T208166	43	3265-5
T208406	4	1673-5
T208406	12	1673-7
T208406	11	1673-9
T208582	28	1673-7
T208583	29	1673-7
T208918	54	1810-7H
T208919	59	1810-7H
T208921	42	1810-7H
T208937	57	1810-7H
T208996	21	1322-3
T208997	22	1322-3
T208998	23	1322-3
T209418	28	1322-3
T209418	9	1810-3
T209418	64	1810-7
T209418	64	1810-7D
T209418	64	1810-7H
T209419	5	1322-5
T209420	13	1322-5
T209860	33	1810-3
T209860	61	1810-7
T209860	61	1810-7D
T209860	61	1810-7H
T209917	17	1676-3B
T209917	17	1676-9
T209995	15	1676-3B
T209995	15	1676-9
T210101	14	1813-3
T210102	27	1813-3
T210103	29	1813-3
T210105	28	1813-3
T210106	31	1813-3
T210130	29	0505-11
T210217	9	0515-5
T210413	7	1813-3
T210527	5	0355-5
T210576	15	1322-3
T210576	6	1911-3
T210577	7	1322-5
T210578	15	1322-5
T210591	2	1807-3
T210591	37	1810-5
T210591	37	1810-7B
T210591	37	1810-7F
T210843	27	1322-3
T210998	12	1911-3
T211337	25	1322-3
T211338	24	1322-3
T213123	13	1741-3
T213489	37	3243-3
T213661	17	0201-3B
T213661	14	0201-9
T213662	17	0201-3B
T213662	14	0201-9
T213663	36	0201-5
T213663	15	0201-9
T213861	8	1810-3
T213861	20	1810-5
T213861	20	1810-7B
T213861	20	1810-7F
T213861	35	1810-7F

NUMERICAL INDEX - CONTINUED

PART NO.	KEY	PAGE
T213866	6	1322-5
T213867	14	1322-5
T213889	6	1807-3
T213898	7	1807-3
T213899	8	1807-3
T213900	9	1807-3
T213931	5	1807-3
T213934	1	1807-3
T214230	4	0564-3
T214364	11	1322-3
T214364	21	1810-3
T214364	44	1810-7
T214364	44	1810-7D
T214364	44	1810-7H
T214596	15	0201-3
T214596	16	0201-9
T214597	17	0201-3B
T214598	17	0201-3B
T214658	19	1322-5
T214659	20	1322-5
T216631	46	1810-7
T216631	46	1810-7D
T216631	46	1810-7H
T216870	2	3201-3
T217187	12	1674-7
T217187	14	1674-9
T217327	56	1810-7D
T217916	2	3201-3
T217919	2	3201-3
T218063	57	1810-7D
T218435	58	1810-7D
T218457	59	1810-7D
T220178	13	2164-7
T222123	13	0355-15
T222125	9	0355-3
T222125	18	0355-13
T223607	6	0355-15
T223612	4	0355-7
T224137	66	1810-7H
T224538	67	1810-7H
T224587	6	1807-3
T224826	6	1676-3B
T225283	14	0132-11
T225284	14	0132-11
T225729	14	2164-7
T225812	15	2164-7
T226424	7	0355-3
T226424	7	0355-5
T226427	15	1676-3B
T226427	15	1676-9
T226430	17	1676-3B
T226430	17	1676-9
T226478	14	0132-11
T226479	14	0132-11
T228551	14	1911-3
T228552	14	1911-3
T228640	14	2164-9
T229966	12	1674-31
T230349	31	3262-11
T230374	15	2164-9
T230623	13	3262-21
T23474	22	0404-3
T23857	15	3262-21
T23914	3	1511-3
T23914	3	1511-5
T24199	8	0355-15
T24472	5	0413-1
T24652	2	0564-3
T25335	..	1369-7
T26257	40	0315-9
T27550	17	1832-3
T27862	21	0201-3B
T28583	34	1674-19
T28585	35	1674-19
T28862	7	0407-1
T28949	9	1674-11
T28949	9	1674-29
T29049	34	3243-3
T29342	5	0133-9
T29342	5	2161-3
T29969	7	0563-3
T30637	17	0315-7
T32049	1	0133-5
T34067	23	1674-19
T34248	..	1369-7
T35580	8	0355-13
T35580	21	0355-13
T41770	22	0505-9
T41770	28	0511-7
T41770	26	0511-11
T41770	11	0564-3
T42199	4	1322-3
T42199	1	1674-3
T43512	..	1330-2
T43513	..	1330-2
T43514	..	1330-2
T45097	13	0132-5
T45097	16	0132-13
T46876	16	1674-7
T47861	4	0133-17
T55207	2	1821-9
T55210	2	1821-7
T55222	8	1821-7
T55224	1	1821-27
T55585	1	0505-7
T58056	16	1674-7
T58056	16	1674-9
T58477	6	0409-3
T58920	10	1813-5
T59014	13	0355-7
T59014	12	0355-25
T59014	4	2163-5
T59483	24	0201-3B
T59483	17	0201-9
T60811	1	1831-5
T60811	5	1831-5
T60811	1	1831-7
T60811	5	1831-7
T60811	11	1831-7
T60811	12	1831-7
T60811	3	2163-11
T61861	10	3263-5
T62323	12	0505-9
T62323	27	0511-7
T62323	25	0511-11
T62323	10	0564-3
T63224	11	1322-5
T63225	3	1322-5
T63798	3	1821-7
T64769	12	0355-7
T64769	17	0355-13
T64769	11	0355-25
T68818	35	3243-3
T70286	5	3201-3
T70286	29	3201-5
T71570	17	3262-7
T71570	8	3262-9
T74177	6	0132-3
T74177	13	0132-3
T74177	3	0132-5
T74177	14	0132-5
T74178	9	0132-3
T74178	13	0132-3
T74178	6	0132-5
T74178	14	0132-5
T74185	8	0132-3
T74185	13	0132-3
T74185	5	0132-5
T74185	14	0132-5
T74416	10	1674-11
T74416	10	1674-29
T74550	32	3262-11
T74550	12	3262-13
T74550	12	3262-19
T74553	33	3262-11
T75197	11	1674-11
T75197	11	1674-29
T76502	4	3262-3
T76503	35	3262-3
T76503	26	3262-7B
T76503	18	3262-9
T76504	17	3262-3
T76504	22	3262-7
T76504	14	3262-9
T76505	18	3262-3
T76505	24	3262-7
T76505	16	3262-9
T76507	21	3262-3
T76507	25	3262-7B
T76507	17	3262-9
T76508	22	3262-3
T76508	29	3262-7B
T76508	21	3262-9
T76509	34	3262-3
T76509	31	3262-7B
T76509	23	3262-9
T76697	6	2004-3
T76938	5	0363-11
T76938	5	0363-13
T76938	17	0363-15
T76938	10	2164-5
T77170	35	0201-5
T77613	3	0363-3
T77613	11	0416-5
T77613	3	0563-3
T77613	27	0563-3
T77613	7	1062-3
T77613	38	3262-3
T77613	1	3263-5
T77613	1	3263-7
T77613	12	3263-9
T77814	7	0363-5
T77814	31	0563-3
T77857	61	0201-5B
T77857	18	0363-15
T77857	13	0364-5
T77857	1	1062-3
T77857	31	1832-3
T77857	8	2163-11
T77857	3	2164-3
T77857	7	2164-7

NUMERICAL INDEX - CONTINUED

PART NO.	KEY	PAGE
T77857	16	2164-7
T77857	9	2164-9
T77857	36	3262-3
T77857	2	3263-3
T77857	18	3263-9
T77857	3	3263-11
T77858	10	0363-15
T77858	12	0363-17
T77858	6	0364-3
T77858	7	2164-5
T77858	5	2164-7
T77858	6	2164-9
T77858	30	3262-3
T77932	18	0201-9
T77932	26	0363-15
T77932	7	0363-17
T77932	3	0364-3
T77932	28	1832-3
T77932	13	3262-3
T78313	19	0201-9
T78313	2	0363-11
T78313	..	1369-7
T78393	2	2163-3
T78393	2	2163-9
T78593	6	0505-3
T78612	6	0363-13
T78612	19	0363-15
T78716	30	1832-3
T78716	20	3263-9
T78716	5	3263-11
T78974	12	1674-11
T78974	12	1674-29
T78974	12	1832-7
T80306	29	1832-3
T81029	8	3263-5
T81029	3	3263-7
T83331	28	0201-3B
T83331	20	0201-9
T83332	28	0201-3B
T83332	20	0201-9
T83333	28	0201-3B
T83333	20	0201-9
T83426	5	0131-3
T83426	3	0132-15
T83426	18	0133-17
T83426	2	1511-7
U10289	..	1369-7
U10746	..	1369-7
U10776	..	1369-7
U11326	..	1369-7
U11343	..	1369-7
U12037	..	1369-7
U12198	..	1369-7
U12198	9	3265-15
U12331	..	1369-7
U12547	11	0363-15
U12547	9	0363-17
U12547	4	0364-3
U12547	..	1369-7
U12547	9	2164-5
U12547	32	3262-3
U13461	9	3265-11
U13461	21	3265-11
U13461	9	3265-13
U13461	21	3265-13
U13461	9	3265-13B
U13461	21	3265-13B
U13639	20	0363-15
U13639	9	0404-3
U13639	24	0404-3
U13639	5	0505-5
U13639	..	1369-7
U13639	9	1831-5
U13639	9	1831-7
U15415	..	1369-7
U15973	34	0201-3B
U15973	..	1369-7
U15980	32	0315-7
U15980	18	0515-5
U17409	..	1369-7
U40708	6	3265-13
U40708	6	3265-13B
U42111	..	1369-7
U43021	31	1810-3
U44115	14	0363-5
U44115	7	0364-3
U44115	11	2164-5
U46370	36	1674-19
U46662	37	1674-19
U46663	38	1674-19
U46664	39	1674-19
XPS-B-45	32	3263-9
Z29304	9	3262-13
Z29304	9	3262-19

PART NO.	KEY	PAGE