AGOSTO 1978

CLARK EQUIPMENT

35C 45C 55C

MICHIGAN

RUTHZIL TRATOR COMERCIAL DE PEÇAS LTDA 11 97083-6812 ROLANDO CITRANGULO



PARTS MANUAL

35C/45C/55C

MICHIGAN

TRACTOR SHOVEL

No. 3150

CLARK

PARTS MANUAL

No. 3150
35C/45C/55C
MICHIGAN
TRACTOR SHOVEL

For Machine Serial Numbers

35 DETROIT – 472A

35 PERKINS – 458A

45 DETROIT – 473A

45 PERKINS – 459A

55 CUMMINS – 481A

55 CUMMINS – 481B

55 DETROIT – 480A

55 DETROIT – 480B

Record Your Machine
Serial Number Here

_____

CLARK



MODEL 35C TRACTOR SHOVEL TS-15225



MODEL 45C TRACTOR SHOVEL TS-15226



MODEL 55C TRACTOR SHOVEL TS-15681

CLARK

CLARK WARRANTY

CLARK warrants each new Construction Machinery Group product, including attachments and accessories thereto, sold by it to be merchantable and free from defects in material and workmanship.

CLARK will cause any part of a CLARK product covered by this warranty (except as excluded below) which proves to be defective in material or workmanship during six (6) months immediately following the delivery of said product to the person who first puts it into use, to be replaced without charge with a new or repaired part (whichever CLARK elects). CLARK also will cause the labor to remove any such defective part and to install the new or repaired part to be provided without charge to the owner of said CLARK product. The parts and labor to meet this warranty will be furnished by a CLARK distributor designated by CLARK.

CLARK also warrants each replacement part for the products covered by this warranty sold by it to be merchantable and free from defects in material and workmanship. CLARK will cause any such replacement part which proves to be defective during the first six (6) months following its installation in a CLARK product to be replaced, without charge, with a new or repaired part (whichever CLARK elects).

CLARK'S warranty *does not cover*: (i) the replacement of parts found to have been damaged by abuse, accident or a failure to maintain or use the CLARK product or part according to the instructions applicable to it, (ii) the labor to remove and reinstall a defective replacement part after the expiration of the warranty period applicable to the product in which such part is located, (iii) overtime labor premiums, (iv) transportation of the CLARK product to the distributor's service facility or transportation of the distributor's service men to the product's location, (v) the engine or the tires of any CLARK product, nor does it cover the carrier on any truck mounted hydraulic cranes. The warranty of the respective manufacturers of these components shall apply to said items unless said manufacturers make no warranty with respect to said items, in which event CLARK'S warranty shall apply.

The Buyer accepts this warranty and the limitations of liability and disclaimers set forth herein as part of the purchase of the CLARK product or part to which this warranty applies.

THIS WARRANTY IS EXCLUSIVE AND IS IN LIEU OF ALL OTHER WARRANTIES EXPRESSED OR IMPLIED AND THERE IS NO IMPLIED WARRANTY OF MERCHANTABILITY OR FITNESS FOR A PARTICULAR PURPOSE.

Remedies available to any person claiming under this warranty are exclusive and expressly limited to obtaining the parts and the labor, where applicable, in accordance with terms of this warranty.

CLARK'S liability for losses, damages or expenses of any kind arising from its design, manufacture or sale of the products or parts covered by this warranty, whether based on contract, tort or otherwise, including liability arising from a breach of this warranty, is limited, unless otherwise prohibited by law, to an amount not exceeding the cost of performing the obligations contained in this warranty according to its terms, and in no event shall CLARK'S liability exceed the value of the CLARK product giving rise to such liability.

CLARK disclaims all liability for loss, damage or expense attributable to a loss of use of the CLARK product, a loss or damage to property other than the CLARK product, a loss of profits or other commercial loss, or any special or consequential damages (except liability for consequential damages which by law may not be disclaimed).

The term CLARK means Clark Equipment Company or one of its subsidiaries, whichever last sold the product to which this warranty applies.

The term Construction Machinery Group products refers to machines of the following types: Tractor shovels (loaders), wheel dozers, scrapers, log skidders, log loaders, motor graders, hydraulic cranes, cable cranes, excavators, and power shovels. (Not included are: lift trucks, straddle carriers, skid steer loaders, agricultural products or other products sold by CLARK'S Material Handling Group or the General Products Group)

Revised August 1978-1

IMPROVEMENTS

It is CLARK'S policy to constantly strive to improve its products. The right therefore is reserved to make changes in design and improvements whenever it is believed the efficiency of the product will be improved thereby, but without incurring any obligation to incorporate such improvements in any product which has been shipped or is in service.

PM 3150
Printed in U.S.A.

CLARK

HOW TO USE THIS PARTS MANUAL

The pages in this Parts Manual are arranged in alphabetical order by Parts Group. Axle (A), Brakes (B), Frame (F), and Transmission (T). Each page within a group is numbered separately with the alphabetical letter as a prefix: A1, B1, F1, T1, etc. Revisions to a page are indicated by a hyphen (-) and appear as A1-2, A1-3, etc.

All standard equipment is included in alphabetical groups A thru Y. Optional equipment, accessories and attachments will be found in group Z.

There is a separate Alphabetical Index for use as a guide in locating page numbers.

Abbreviations and symbols used are explained on a separate page.

Attention is called to SERIAL NUMBER (S/N) information on the illustrations and by use of an asterisk (*) as a suffix on the page titles. Applicable SERIAL NUMBERS will appear as a FOOTNOTE.

ILLUSTRATIONS shown are only typical examples of the appearance of parts arrangements. Illustrations are provided to loca and identify parts only and should not be used as a guide for assembly.

WHEN ORDERING PARTS always give the distributor the Model and Serial Number of the machine.

Order by Part Number, Description and Quantity. Furnish complete SHIPPING INSTRUCTIONS to avoid delay in delivery. Chec your order as soon as parts are received.

Clark Equipment Company encourages the use of "Original Equipment Replacement Parts" and the experienced "Service Know-How" available through our distributors.

ABBREVIATIONS

adjusting ..... adj	**engine** ..... eng	**pressure** ..... press
assembly ..... assy	**emergency** ..... emgcy	**protective structure** ..... prot structr
bearing ..... brg	**hydraulic** ..... hyd	**radiator** ..... rad
brake ..... brk	**includes** ..... inc	**receptacle** ..... recept
carrier ..... crr	**inlet** ..... in	**retainer** ..... ret
cluster ..... clsr	**instrument** ..... inst	**right hand** ..... R.H.
connecting ..... connctg	**left hand** ..... L.H.	**ring** ..... rg
converter ..... conv	**mounting** ..... mtg	**section** ..... sectn
cylinder ..... cyl	**outlet** ..... out	**steering** ..... strg
differential ..... diff	**planetary** ..... planet	**temperature** ..... temp
	power ..... pwr	**windshield** ..... wndsh

SYMBOLS

†NOT ILLUSTRATED
§NOT SOLD SEPARATELY
‡AS REQUIRED
→thru
&→and after

PM 3150
Printed in U.S.A.

CLARK

Description	Description	Benennung	Descrição	Descripción
Adapter kit	adapt trousse	Adaptersatz	adapt jogo	adapt juego
Adapter starter	démarr adapt	Zwischenstuckanlass	arranque adapt	arranque adapt
Adjuster assembly	ass d'ajusteur	Einstelleinheit	conj ajustador	disp de ajuste
Air cond kit	climatiseur jeu	Klimaanlagesatz	condicionador ar jgo	acondic air jgo
Air dryer	secheur air	Lufttrockner	secador ar	secador de aire
Air duct assy LH	conduit d'air ens CG	Luftrohr vollst L	conduto de ar cjo LE	conducto aire cjo LI
Air duct assy RH	conduit d'air ens CD	Luftrohr vollst R	conduto de ar cjo LD	conducto aire cjo LD
Alternator	alternateur	Alternator	alternador	alternador
Angle	angle	Winkel	ângulo	angulo
Arm	bras	Arm	braço	brazo
Armature	induit	Anker	induzido	inducido
Arm rest LH	accoudoir CG	Armstutze L	descanso braço LE	apoyo brazo LI
Arm rest RH	accoudoir CD	Armstütze R	descanso braço LD	apoyo brazo LD
Axle assy	essieu ensemble	Achse vollst	eixo conjunto	eje conjunto
Back rest	dossier siege	Rücklehne	encosto	respaldar
Back-up alarm	alarme recul	Rückfahralarm	alarme de re	alarma de retroceso
Back-up ring	anneau de renfort	Stützring	anel do retrocesso	anillo de respaldo
Baffle	deflecteur	Deflektor	defletor	deflector
Ball	bille	Kugel	esfera	bola
Ball joint	rotule	Kugelgelenk	articulação esf	articulación esf
Bar	barre	Stange	barra	barra
Barrier	barriere	Schranke	barreira	barrera
Basket	panier	Korb	cesta	cesto
Battery	batterie	Batterie	bateria	bateria
Bearing	palier	Lager	mancal	cojinete
Bearing assy	palier ens	Lager vollst	mancal conj	cojinete conj
Bellcrank	levier coude	Kniehebel	balancinho	balancin
Bellcrank assy	levier coude ens	Kniehebel vollst	balancinho conj	balancin conj
Belt	courroie	Riemen	correia	correa
Belt alternator	courr alternateur	Treibrmn Alternat	correia alternador	correa alternador
Belt assembly	courroie ens	Riemen vollst	correia conj	correa conj
Belt fan	courr ventil	Treibrmn Vent	crr vent	corr vent
Bleeder	robinet de purge	Ablasshahn	torneira de purga	robinete de purga
Body	carrosserie	Karosserie	carroçria	carroceria
Body assy	ens carrosserie	Karosserie vollst	conj carroçaria	conj carroceria
Bolt	boulon	Bolzen	parafuso	bulón
Bolt assy	boulon ens	Bolzen vollst	parafuso conj	bulón conj
Bolt lockwasher	boulon rond frein	Bolzen Sichrschb	parfuso arr press	bulón aran seg
Boom assy	fleche ens	Hubarm vollst	braço conj	aguilón conj
Boss	moyeu	Nabe	cubo	cubo
Bottom tank	reservoir inferieur	Unterer Tank	reservatório inferior	depósito inferior
Bracket	support	Winkel	grampo	grampa
Bracket assy	ens support	Winkel vollst	conj suporte	conj soporte
Bracket LH	support CG	Winkel L	grampo LE	grampa LI
Bracket RH	support CD	Winkel R	grampo LD	grampa LD
Brake assy LH	frein ens CG	Bremse vollst L	freio conj LE	freno conj LI
Brake assy RH	frein ens CD	Bremse vollst R	freio conj LD	freno conj LD
Brake head	etrier frein	Bremsknopf	cabeça freio	cabeza freno
Brake head assy	étrier frein ens	Bremskopf vollst	cabeça freio conj	cabeza freno conj
Breather	reniflard	Entlüfter	respiradouro	respiradero
Bucket	godet	Schaufel	caçamba	cucharón
Bulb	ampoule	Birne	bulbo	lamparilla
Bumper	butoir	Stossfänger	batente	tope
Bushing	chemise	Buchse	bucha	buje
Cab assembly	cabine ens	Kabine vollst	cabina conj	cabina conj
Cab body	carosserie cabine	Führerst Kaross	carroc da cabina	cuerpo de la cabina
Cable	câble	Kabel	cabo	cable
Cable tie	lien cables	Kabelband	liame cabos	atadura cables
Cage assy	boitier roul ens	Rollenlager vollst	aloj rolam conj	caja rodamiento conj
Cam	came	Nocke	came	leva

Description	Description	Benennung	Descrição	Descripción
Canopy	dais	Schutzdach	dossel	dosel
Canopy assy	dais ens	Schutzdach-Baugr	dossel conj	dosel conj
Cap	chapeau	Kappe	tampa	tapa
Carrier	porteur	Träger	suporte	soporte
Carrier assy	porteur ens	Träger vollst	conj suporte	conj soporte
Case	boitier	Gehäuse	carcaça	carcasa
Case assy	ens boitier	Gehäuse vollst	carcaça conj	carcasa conj
Case kit	trousse boitier	Gehäusesatz	carcaça jgo	carcasa jgo
Channel	canal	Kanal	canelura	canal
Check	clapet	Rückschlagventil	gatilho	clapeta
Circuit breaker	disjoncteur	Stromunterbrecher	disjuntor	cortacircuitos
Clamp	pince	Schelle	braçadeira	abrazadera
Clamp half	demi serrage	Klammerhälfte	meio grampo	media grampa
Clevis	etrier	Schäkel	garfo	horquilla
Clevis pin	goupille chape	Schäkelstift	pino garfo	pasador horquilla
Clip	attache	Schelle	braçadeira	abrazadera
Clutch	embrayage	Kupplung	embreagem	embrague
Clutch assy	embrayage ens	Kupplung vollst	embreagem conj	embrague conj
Coil assy	bobine ens	Spule vollst	bobina conj	bobina conj
Compressor	compresseur	Kompressor	compressor	compresor
Condenser core	noyau condenseur	Kondensatorinnenteil	núcleo condensador	núcleo condensador
Cone	cône	Kegel	cone	cono
Cone inner	cône inter	Innenkegel	cone interior	cono interior
Cone outer	cône exter	Aussenkegel	cone exterior	cono exterior
Cone roller bearing	cône roulement	Kegel Rollenlager	cone rolamento	cono rodamiento
Connector	raccord	Verbindungsstück	ligador	conector
Control valve assy	ens soupape commande	Regelventil vollst	conj válv controle	conj válv control
Core assy	noyau ens	Innenteil-Baugruppe	nucleo conj	núcleo conj
Corner plate LH	plaque cornier CG	Eckplatt L	placa canto LE	placa punta LI
Corner plate RH	plaque cornier CD	Eckplatt R	placa canto LD	placa punta LD
Cotter pin	goupille fendue	Splint	contrapino	chaveta dos patas
Counterweight	contrepoids	Gegengewicht	contrapeso	contrapeso
Counterweight kit	contrepoids jeu	Gegengewichtssatz	contrapeso jogo	contrapeso juego
Coupling	accouplement	Kupplung	acoplamento	acople
Cover	couvercle	Deckel	tampa	tapa
Cup	cuvette	Schale	capa	cubeta
Cup outer	cuvette exter	Aussenschale	capa exterior	cubeta exterior
Cup roller bearing	cuvette roulement	Aussenring Kegellgr	capa rolamento	cubeta rodamiento
Cushion	coussin	Kissen	almofada	cojin
Cutting edge kit	lame coupe ens	Schneidkantesatz	fio corte conj	cuchilla corte conj
Cylinder assy boom	ens vérin flèche	Zylind vollst Hubarm	cil braço conj	cil aguilón conj
Cylinder assy bucket	ens vérin godet	Zyl vollst Schaufel	cil caçamba conj	cil cucharón conj
Cylinder assy LH	ens vérin CG	Zylinder vollst V	cilindro conj LE	cilindro conj LI
Cylinder assy RH	ens vérin CD	Zylinder vollst V	cilindro conj LD	cilindro conj LD
Cylinder assy strg	ens vérin direction	Zylinder vollst Lenk	cil direcão conj	cil dirección conj
Cylinder LH	vérin CG	Zylinder L	cilindro LE	cilindro LI
Decal	décalcamanie	Abziehbild	decalcomania	calcomania
De-clutch valve	clapet débrayage	Entkupplungsventil	válvula desebreagem	válvula desembrague
Detent assy	ens pièce crantée	Arretierung voll	conj detentor	conj detén
Diff carrier assy	ens chassis-port dif	Träger Difflagr voll	conj suporte dif	conj soporte dif
Differential case	boîtier différentiel	Differentialgehäuse	diferencial carcaça	diferencial carcasa
Dipstick	jauge	Messtab	vareta verif	varilla nivel
Disc	disque	Scheibe	disco	disco
Disc inner	disque intérieur	Scheibe innen	disco interior	disco interno
Dome light 12V	lampe plafond 12V	Deckenleuchte 12V	luz teto 12V	luz techo 12V
Door assy LH	porte ens CG	Tür vollst L	porta conj LE	puerta conj LI
Dowel	goujon	Stift	espiga	espiga
Drain cock	robinet vidange	Abflusshahn	torneira purga	grifo purga
Drive arm	levier entrnmnt	Antriebshebel	alavanca acionadora	palanca impulsora
Drum shaft assy	ens arbre à tambour	Trommelwellenaggreg	conj eixo tambor	conj eje de bomba

Description	Description	Benennung	Descrição	Descripción
Elbow	coude	Winkelrohr	cotovêlo	codo
Element air cleaner primary	elmnt fltr air prin	Einsatzluftfilt Prim	elmnt fltr ar prin	elmnt fltr aire prin
Element air cleaner secondary	elmnt fltr air second	Einsatzluftfilt Zweit	elmnt fltr ar secund	elmnt fltr aire secund
Element fuel	élément carburant	Einstz Kraftstf	elmto combustivel	elmto combustible
Element fuel primary	élmnt primaire carb	Einstz Erst-Kraftstf	elmto combstvel prim	elmto combstle prim
Element fuel secondary	elmnt secon carb	Einstz Zweit-Kraftstf	elmto combstle secun	elmto combstle secun
Element full flow	élém huile-ess	Triebstfvrbrauch Einstz	elem óleo fluxo total	elem pino aceit
Element oil resvr	elém rsvr huile	Behälteröleinsatz	elem rsvtrio óleo	elem depósito aceite
Element transmission & conv	élmnt transm & conv	Einstz Getr-Drehwdlr	elmto transm & conv	elmto transm & conv
Evaporator	évaporateur	Verdampfer	evaporador	evaporador
Face plate	plaque desurface	Frontplatte	chapa da sup	placa de frente
Fan	ventilateur	Ventilator	ventilador	ventilador
Fan alternator	souffleuse d'altern	Alter-Ventilator	vent alternador	vent alternador
Fan guard	prot ventilateur	Ventilatorschutz	proteção ventilador	guarda de ventilador
Fender LH	garde-boue CG	Kotflügel L	para-lama LE	guardafangos LI
Fender RH	garde-boue CD	Kotflügel R	para-lama LD	guardafangos LD
Fender kit front	garde-boue jeu AV	Kotflügelsatz V	para-lama jôgo DI	guardafango juego DE
Fender kit rear	garde-boue jeu AR	Kotflügelsatz H	para-lama jôgo TR	guardafango juego TR
Filler cap	bouchon de remplis	Fülldeckel	tampa de abastesc	tapa de llenado
Fill neck	goulot remplissage	Einfüllstutzen	tubo enchimento	tubo llenado
Filter head	culasse filtre	Filterkopf	cabeça filtro	cabeza filtro
Fitting	ajustage	Verbindung	ajuste	accesorio
Flange	bride	Flansch	flange	brida
Flat	méplat	Fläche	bloco plano	planchuela
Floormat	tapis	Bodenmatte	capacho assoalho	colchoneta del piso
Foam	ecume/mousse	Schaum	espuma	espumadora
Frame front	chassis avant	Vorderahmen	chassi dianteiro	bastidor delantero
Frame rear	châssis arriere	Hinterrahmen	chassi traseiro	bastidor trasero
Fuse	fusible	Sicherung	fusivel	fusible
Fuse holder	porte fusible	Sicherungshälter	porta-fuzivel	portafusible
Gauge	jauge	Instrument	calibrador	medidor
Gauge conv temp	jauge convertisseur	Tempmssr Drehmwndlr	termtro conversor	termtro convertidor
Gauge engine temp	jauge temp mot	Tempmssr Motor	termtro motor	termtro motor
Gauge oil press	juage pression huile	Messer Öldruck	ind pressão óleo	manóm presión aceite
Gauge voltmeter	jauge voltmètre	Voltmetermesser	manóm voltímetro	manóm voltímetro
Gear	engrenage	Zahnrad	engrenagem	engranaje
Gear kit	engrenage jeu	Zahnradsatz	engrenagem jôgo	engranaje juego
Gear set	engrenage jeu	Zahnrad Satz	engrenagem jôgo	engranje juego
Gear shaft	axe pignon	Zahnradwelle	eixo engrenagem	eje engranaje
Glass	verre	Glas	vidro	vidrio
Glass rear	verre arrière	Glas Hintere	vidro traseiro	vidrio trasero
Grease fitting	graisseur	Nippel Schmier	graxeira	grasera
Grille	grille	Grill	grade	careta
Grommet	oeillet	Augenring	ilhó	arandela pasacable
Guard	protecteur	Schutz	proteção	protector
Handle	manette	Handgriff	punho	manija
Handle assy	ass de la poignée	Handgriffeinheit	cj da maçaneta	conj perilla
Handrail kit	main courante jeu	Geländersatz	corrimão jôgo	passamano juego
Harness	harnais	Kabelbaum	chicote	mazo
Head light	phare	Scheinwerfer	farol	faro
Hinge	charnière	Scharnier	charneira	bisagra
Hold down	installer	Nach unten Halten	restritor	restringir
Holder fuse	porte fuse	Sicherungshalter	porta fuzivel	porta fusible
Hood	capot	Haube	capô	capó
Horn	avertisseur	Hupe	buzina	bocina
Horn button	bouton d'avertis	Hupenknopf	botão da buzina	botón de la bocina
Horn button kit	trousse intrr avert	Hornknopfsatz	jogo botão buzina	juego botón bocina
Hose	tuyau flexible	Schlauch	mangueira	manguera
Hose suction	tuyau flexible aspir	Ansaugschlauch	mangueira aspiração	manguera aspiración
Hourmeter	compteur d'heures	Stundenzähler	horímetro	cuenta-horas

Description	Description	Benennung	Descrição	Descripción
Housing	boitier	Gehäuse	carcaça	carcasa
Hub	moyeu	Nabe	cubo	cubo
Hub assy	moyeu ens	Nabe vollst	cubo conj	cubo conj
Ignition switch	interrupteur allumage	Zündschalter	interruptor ignição	interruptor encendido
Impeller	impulseur	Pumprad	impulsor	impulsor
Inner ring	anneau interieur	Innenring	anel interior	anillo interior
Instrument panel	tableau de bord	Armaturenbrett	painel instrumentos	tablero instrumentos
Insulation	isolation	Isolierung	isolamento	aislación
Insulation R	isolation AR	Isolierung H	isolamento TR	aislación TR
Insulation roof F	isolation toit AV	Dachisolierung V	isolação teth DI	aislación techo DE
Kit boom kickout	regl hauteur lev jeu	Hubhöhenbegrenz-Satz	regul autom elev jgo	regul autom elev jgo
Kit windsld washer	lave-glace jeu	Scheibenwaschan satz	lav pára-brisa jgo	lava parabrisa jgo
Knob	bouton	Knopf	manipula	botón
Ladder	échelle	Leiter	escada	escala
Latch	loquet	Verschluss	trinco	cerrojo
Latch LH	verrou gauche	Klinke links	fecho esq	pestillo izq
Latch RH	verrou droit	Klinke rechts	fecho dir	pestillo der
Lens	lentille	Linse	lente	lente
Lever	levier	Hebel	alavanca	palanca
Light	lampe	Licht	lâmpada	lampara
Lining brake	garniture frein	Belag Brems	lona freio	cinta freno
Link	articulation	Gelenk	articulação	articulación
Linkage assy	tringlerie ens	Gestänge vollst	articulação conj	articulación conj
Lock	serrure	Schloss	fechadura	cerradura
Locknut	contre-ecrou	Gegenmutter	contra porca	contratuerca
Lockplate	plaque d'arrêt	Schlossblech	chapa retentora	chapa seguridad
Lockring	anneau blocage	Klemmring	anel trava	anillo seguridad
Lockwasher	rondelle frein	Sicherungsscheibe	arruela de pressão	arandela seguridad
Main cutting edge	bord coupant prin	Hauptschneidkante	fio de corte princ	borde corte princ
Member	membrure	Bauglied	membro	miembro
Mirror	miroir	Spiegel	espelho	espejo
Modulation valve assy	soup module ens	Ventil modulier vollst	válv modulação cjo	válv modulación cjo
Motor	moteur	Motor	motor	motor
Moulding	moulure	Abdichtung	moldura	moldura
Mount	support	Befestigung	apoio	montura
Mount engine	support moteur	Befestigung Motor	apoio do motro	montura del motor
Mount transm	sup boîte vit	Getriebegehäuse	suporte transm	soporte transm
Mud flap kit	trappe boue jeu	Schlammklappesatz	lama chapeleta jgo	barro chapaleta jgo
Muffler	silencieux	Auspufftopf	silenciador	silenciador
Nameplate	plaque du constructr	Namensschild	placa do nome	placa de nombre
Nipple	raccord	Nippel	niple	niple
Non skid	antiderapant	Nichttrutsch	não-decapar	sin deslizar
No-spin	anti-patinage	No-Spin	anti-patinante	antipatinaje
Nozzle	gicleur	Düse	bocal	boquilla
Nut	écrou	Mutter	porca	tuerca
Nut assy	ecrou ens	Mutter vollst	porca conj	tuerca conj
Oil cooler	refroidis huile	Ölkühler	esfriador óleo	enfriador aceite
Oil seal	jnt etancheite huile	Öldichtung	vedação de óleo	sello de aceite
Omit	omettre	Auslassen	omitir	omitir
O-ring	joint torique	O Ring	anel-O	anillo-O
O-Ring kit	ensemble de bague O	Dichtungsringsatz	motor hidráulico	motor hidráulico
Outer ring	anneau exterieur	Aüssenring	anel externo	anillo exterior
Packing	garniture	Dichtung	gaxeta	empaquetadura
Pedal	pédale	Pedal	pedal	pedal
Pedal assy	ass de la pedale	Pedaleinheit	conj do pedal	disp de pedal
Pin	goupille	Stift	pino	pasador
Pin cotter	goupille fendue	Splint	contrapino	chaveta dos patas
Pinion	pignon	Ritzel	pinhão	piñon
Pinion kit	pignons jeu	Ritzelsatz	pinhão jôgo	piñon juego
Pipe	tuyau	Rohr	cano	caño

5 Language Dictionary
Dictionnaire de langues
Sprachenwörterbuch
Dicionario de línguas
Diccionario de idiomas

CLARK

Description	Description	Benennung	Descrição	Descripción
Piston	piston	Kolben	pistão	piston
Planet carrier	porte planetaire	Planetenträger	veic do planet	portador planet
Plate	plaque	Platte	placa	placa
Plate front	plaque AV	Platte V	placa DI	placa DE
Plate LH	plaque CG	Platte L	placa LE	placa LI
Plate RH	plaque CD	Platte R	placa LD	placa LD
Plug	bouchon	Stopfen	bujão	tapón
Plunger	plongeur	Druckstange	embolo	émbolo buzo
Poppet	clapet	Ventilkegel	gatilho	clapeta
Pressure sender	pression du relais	Druckgeber	pressão da transm	presión trans
Pressurizer assy	pressuriseur ens	Druckanlage vollst	pressurizador cjo	pressurizador cjo
Propeller shaft	arbre entraînement	Antriebswelle	eixo propulsor	árbol propulsor
Propeller shaft assy	ens arbre propulsion	Kardanwelle vollst	conj eixo propulsor	conj eje impulsor
Protector	protecteur	Schützerinrichtung	protetor	protector
Pulley	poulie	Riemenscheibe	polia	polea
Pump	pompe	Pumpe	bomba	bomba
Pump assy	pompe ensemble	Pumpe vollst	bomba conjunto	bomba conjunto
Pushrod	tige de poussee	Stössel	tirante de empuxe	barra de empuje
Race	course	Laufring	canaleta	vía
Radiator	radiateur	Kühler	radiador	radiador
Radiator assy	radiateur ens	Kühler vollst	radiador conj	radiador conj
Receptacle	receptacle	Behälter	receptaculo	receptáculo
Relay	relais	Relais	relé	relé
Relief valve	soupape décharge	Uberdr Ventil	válvula descarga	válvula alivio
Retainer	arrêtoir	Halterung	retentor	retén
Retainer plate	plaque de maintien	Halteplatte	chapa rententora	placa del retén
Ring	anneau	Ring	anel	anillo
Ring gear	couronne dentée	Zahnkranz	corôa	corona
Ring snap	bague arrêt	Sprengring	anel pressão	arandela retén
Rivet	rivet	Niet	rebite	remache
Rod	tige	Stange	varão	varilla
Rod assy	tige ens	Stange vollst	varão conj	varilla conj
Roller	galet	Rolle	rolete	rodillo
Screen	crible	Sieb	tela	tamiz
Screw	vis	Schraube	parafuso	tornillo
Seal	joint étancheité	Dichtung	vedador	sello
Sealed beam	barra jointe	Trägerdichtung	farol de milha	viga sellada
Sealed unit	bloc optique herm	Abgedichtete Schnwrf	farol vedado	óptica sellada
Seal kit	joint étan trse	Dichtungssatz	vedador jôgo	sello juego
Seal strip	jnt étan bande	Dichtungbande	vedador faixa	sellador tira
Seat	siège	Sitz	assento	asiento
Seat assembly	siège ens	Sitz vollst	assento conj	asiento conj
Service indicator	indicateur entretien	Wartungsanzeiger	indicador serviço	indicador servicio
Shaft	arbre	Welle	árvore	árbol
Shaft & hub assy	arbre & moyeu ens	Welle & Nabe vollst	eixo & cubo cjo	eje & cubo cjo
Shank	tige	Schaft	haste	cabo
Shim	cale	Beilage	calço	planchita
Shroud assy	enveloppe ens	Umleidung vollst	proteção conj	envolvente conj
Side column	colonne latér	Seitensäulen	coluna lateral	columna lateral
Side cutting edge	lame coupe latéral	Seitenschneidkante	fio corte lateral	cuchill corte lateral
Side cutting edge LH	lame coup latér CG	Seitenschneidkant L	fio corte lateral LE	cuchil corte later LI
Side cutting edge RH	lame coup latér CD	Seitenschneidkant R	fio corte lateral LD	cuchil corte later LD
Side panel	panneau latéral	Seitenblech	painel lateral	panel lateral
Side plate LH	plaque latérale CG	Seitenblech L	placa lateral LE	chapa lateral LI
Side plate RH	plaque latérale CD	Seitenblech R	placa lateral LD	chapa lateral LD

Description	Description	Benennung	Descrição	Descripción
Sight glass	viseur	Anzeigeglas	visor	mirilla
Sleeve	manchon	Muffe	luva	manguito
Slug	lingot	Pfropfen	libra-massa	lingote
Snap ring	circlips	Sperring	anel de trava	anillo de retención
Solenoid	solénoide	Schaltmagnet	solenóide	solenoide
Solenoid switch	solénoide interrupteur	Schaltmagnetschalter	solenoide interruptor	solenoide interruptor
Spacer	entretoise	Distanzteil	espaçador	espaciador
Spacer kit	entretoises jeu	Distanzteil Satz	espaçador jôgo	espaciador jgo
Spider	croisillon	Kreuzgelenk	cruzeta	cruceta
Spider U-joint	croisillion jnt univ	Kreuz Kardangelenk	cruzeta acopl univ	cruceta acople univ
Spindle	fusee	Spindel	haste	eje
Spool	tiroir	Spule	carretel	carrete
Spring	ressort	Feder	mola	resorte
Spring clip	bride de ressort	Haltefeder	prendedor de mola	pinza de resorte
Spring inner	bride intérieur	Innenfeder	mola interior	resorte interior
Spring outer	ressort exterieur	Aussenfeder	mola exterior	resorte exterior
Starter	demarreur	Anlasser	arranque	arranque
Starter motor	demarreur	Anlassermotor	motor arranque	motor arranque
Stator support	support stator	Stator Abstutzung	suporte estator	soporte estator
Steering wheel	volant direction	Steuerrad	volante direção	volante dirección
Stem	tige	Schaft	haste	vástago
Stop	butoir	Anschlag	batente	tope
Strainer	tamis	Sieb	coador	tamiz
Strainer assy	tamis ens	Sieb vollst	coador conj	tamiz conj
Strap	bande	Band	faixa	banda
Stud	goujon	Stift	prisioneiro	espárrago
Support	support	Abstützung	suporte	soporte
Support F	support avant	Stütze vordere	suporte dianteiro	soporte delantero
Support R	support AR	Abstützung H	suporte TR	soporte TR
Switch	interrupteur	Schalter	interruptor	interruptor
Switch back-up alarm	interrupt alarme recul	Rückfahralarmschalter	interruptor alarme de re	interruptor alarma de retroceso
Switch cold start	interr demarreur froid	Kaltstartanlage schalter	interr arrancador frio	interr arrancador frio
Switch eng temp	inter temper moteur	Motortemp Schalter	interrup temp motor	inter temp motor
Switch limit	intrptr fin course	Schaltbegrenzung	interruptor limite	interruptor limite
Switch neutral start	contact dép pt mort	Schalt Leerif Start	intrptr arr pto mto	intrptr arr pto mto
Switch overheat	interr surchauf	Uberhitzenschalter	interr superaquec	interr recalenta
Switch press	intrptr pression	Druckschalter	interruptor pressão	interruptor presión
Switch trans temp	inter temp transm	Getriebetemp Schalter	interrupt temp transm	inter temp transm
Swivel joint	joint émerillon	Drehzapfen	junta articulada	unión articulada
Tab	patte	Dorn	aba	apéndice
Tag	étiquette	Etikett	etiqueta	etiqueta
Tail light	feux AR	Rücklicht	lanterna TR	luz TR
Tail light LH	feux AR CG	Rücklicht L	lanterna TR LE	luz TR LI
Tail pipe	tuyau d'échappement	Auspuffrohr	cano escape	caño escape
Tank	réservoir	Tank	tanque	tanque
Tank group	réservoir groupe	Tankgrupe	tanque grupo	tanque grupo
Tape	ruban	Band	fita	cinta
Tapped block	bloc taraudé	Gewinde Block	peça con rosca	pieza roscada
Tee	raccord T	T-Verbindungsstück	te	te
Terminal	borne	Anschluss	terminal	terminal
Thrust plate	plaque de butée	Druckplatte	chapa de empuxo	placa de empuje
Tip	pointe	Spitze	ponta	punta
Tire	pneumatique	Reifen	pneumático	neumático
Tooth assy	dent ens	Zahn vollst	dente conj	diente conj
Top tank	réservoir supérieur	Tank oben	tanque superior	tanque superior
Transmission	transmission	Getriebe	transmissão	transmisión
Tube	tube	Rohr	tubo	tubo
Tube assy	assemblage de tube	Rohreinheit	conjunto de tubos	conjunto del tubo
Tube LH	tube CG	Rohr L	tubo LE	tubo LI
Tube RH	tube CD	Rohr R	tubo LD	tubo LD
Turbine	turbine	Turbine	turbina	turbina

PM 3168
Printed in U.S.A.

CLARK

Description	Description	Benennung	Descrição	Descripción
Turn signal kit	trousse clignotants	Blinklicht Bausatz	jogo sinaliz curvas	juego luz direcc
Turn signal lamp	lampe clignotants	Blinklichtlamp	sinal curvas lamp	luz dirección lamp
Turn sig switch assy	ens int clignotants	Blinklichtschltr voll	cj int sinaliz crvas	conj int luz direcc
U-bolt	boulon U	U-Bolzen	cavilha U	bulón U
Valve	soupape	Ventil	válvula	válvula
Valve assembly	soupape ens	Ventil vollst	válvula conj	válvula conj
Valve brake	soupape frein	Ventil Bremse	válvula freio	válvula freno
Valve control	soupape commande	Regelventil	válvula controle	válvula control
Valve cover	soupape couvercle	Ventildeckel	válvula tampa	válvula tapa
Valve steering	soupape direction	Lenkventil	válvula direção	válvula dirección
Vibration mount	mont de vibration	Schwingmetall	mont de vibração	mont vibracion
Warning light	voyant d'alarme	Warnlicht	luz de aviso	luz de alarmo
Washer	rondelle	Scheibe	arruela	arandela
Wear plate	plaque d usure	Verschleissblech	placa desgaste	chapa desgaste
Wear ring	bague d'usure	Gleitring	anel desgaste	anillo desgaste
Wheel	roue	Rad	roda	rueda
Window assy	ens fenêtres	Fensteraggreg	conjunto janela	conjunto de ventana
Wiper	racleur	Wischer	limpador	limpiador
Wire	fil	Draht	fio	cable
Wiring harness	harnais installation	Kabelbaum	chicote instalação	mazo cables
Wndshld wiper arm	bras essuie-glace	Scheibenwischerarm	braço limp para-br	brazo limpiaparabr
Wndshld wpr blade	balai essui-glace	Scheibenwischerblatt	páleta limp para-br	escob limpia para-br
Wndshld wpr motor kit	ens mot d ess gl	Scheibenw Mot Satz	cj mot limp par	equipo mot limpiapara
Yoke	chape	Joch	garfo	horqueta

ALPHABETICAL INDEX

A

Air Conditioner Kit Z3
Alternator E10
Axle Assembly, Front — 35C-45C A3
Axle Assembly, Front — 55C A5
Axle Assembly, Rear — 35C-45C A7
Axle Assembly, Rear With Brakes — 35C-45C A9
Axle Assembly, Rear With Brakes — 55C A11
Axle Differential & Carrier Assembly, Front — 35C-45C A13
Axle Differential & Carrier Assembly, Front — 55C A15
Axle Differential & Carrier Assembly, Front — No-Spin — 35C-45C A17
Axle Differential & Carrier Assembly, Rear — 35C-45C A19
Axle Differential & Carrier Assembly, Rear — 55C A21
Axle Differential & Carrier Assembly, Rear — No-Spin — 35C-45C A23
Axle Differential & Carrier Assembly, Rear — No-Spin — 55C A25
Axle No-Spin Unit A27
Axle Planet Carrier Assembly, Front & Rear Drive A26

B

Battery & Battery Mount — 35C-45C B2
Battery & Battery Mount — 55C B3
Battery Disconnect Kit Z24
Bolt-On Cutting Edge Z5
Boom Assembly, High Lift — 45C Z6
Boom, Bellcrank, Pushrod & Bucket Leveler B5
Boom Kickout Kit Z7
Boom Support Kit Z28
Brake Controls B7
Brake Controls, Parking B8
Brake Head Assembly B9
Brake Head Assembly, Parking & Emergency B11
Brake Lines, Front B13
Brake Lines, Rear (Optional) B15
Bucket Assembly B17
Bucket Assembly, Multi-Task — 35C Z9
Bucket Assembly, Multi-Task — 45C Z11
Bucket Cylinder Assembly, High Lift — 45C Z15
Bucket Teeth (Optional) Z14

C

Cab Assembly, ROPS Z17
Clips — Wiring, Pipe & Hose C2
Clutch Assembly T4
Cockpit Assembly C5
Cold Start Kit — Cummins Z18
Cold Start Kit — G.M. Z19
Converter Assembly T11
Counterweight — 45C C6
Counterweight — 55C C7
Counterweight Kit — 35C-45C Z20
Counterweight Kit — 55C Z21
Counterweights, High Lift — 45C Z22
Cylinder Assembly, Boom — 35C C9
Cylinder Assembly, Boom — 45C C11
Cylinder Assembly, Boom — 55C C13
Cylinder Assembly, Bucket — 35C C15
Cylinder Assembly, Bucket — 45C C17
Cylinder Assembly, Bucket — 55C C19
Cylinder Assembly, Steering — 35C-45C C21
Cylinder Assembly, Steering — 55C C23

D

Defroster Fan Assembly Z23

E

Electrical Instrument Panel — 35C-45C E3
Electrical Instrument Panel — 55C E5
Electrical System E7
Electrical System Color Code E9
Engine Accessories — Cummins — 55C E10
Engine Accessories — G.M. — 35C-45C E11
Engine Accessories — G.M. — 55C E12
Engine Accessories — Perkins E13
Engine Air Cleaner & Connections — Cummins — 55C E14
Engine Air Cleaner & Connections — G.M. — 35C E15
Engine Air Cleaner & Connections — G.M. — 45C E16
Engine Air Cleaner & Connections — G.M. — 55C E17
Engine Air Cleaner & Connections — Perkins E19
Engine Controls — Cummins — 55C E23
Engine Controls — G.M. — 55C E21

ALPHABETICAL INDEX (CONT.)

Engine Controls — Perkins — 35C E25
Engine Controls — Perkins — 45C E27
Engine Exhaust System — Cummins — 55C E28
Engine Exhaust System — G.M. — 35C-45C E29
Engine Exhaust System — G.M. — 55C E30
Engine Exhaust System — Perkins E31
Engine Oil By-Pass Filter E33
Engine Oil Cooler — Perkins — 35C E34
Engine Oil Cooler — Perkins — 45C E35
Engine & Transmission Mounting — Cummins ... E37
Engine & Transmission Mounting — G.M. E39
Engine & Transmission Mounting — Perkins E41

F

Fan E8
Fenders & Mud Flap Z24
Fork Attachment Z23
Frame Front & Rear — 35C-45C F2
Frame Front & Rear — 55C F3
Fuel Gauge Kit Z26
Fuel Tank & Lines — Cummins F4
Fuel Tank & Lines — G.M. F5
Fuel Tank & Lines — Perkins F7

H

Hand Rail Kit Z27
Heater Piping — Cummins — 55C Z33
Heater Piping — G.M. Z30
Heater Piping — Perkins — 35C Z31
Heater Piping — Perkins — 45C Z32
Heater & Pressurizer Kit Z29
Hydraulic Oil Reservoir — 35C-45C H1
Hydraulic Oil Reservoir — 55C H3
Hydraulic System, Main H5
Hydraulic System, Steering — 35C-45C H7
Hydraulic System, Steering — 55C H9
Hydraulic System, Transmission & Converter — 35C-45C H11
Hydraulic System, Transmission & Converter — 55C H13

I

Instrument Panel E3

L

Lifting Lugs Kit Z34
Lubrication System L1

M

Mirror Kit Z35

N

Nameplates & Decals N3

O

Oil Filters E10

P

Piping Installation & Parts (Three Spool) Z36
Planet Carrier Assembly A26
Propeller Shaft Assembly, Mid-Mount Bearing to Front Axle — 35C-45C .....
Propeller Shaft Assembly, Mid-Mount Bearing to Front Axle — 55C P2
Propeller Shaft Assembly, Transmission / Mid-Mount Bearing P3
Propeller Shaft Assembly, Transmission / Rear Axle — 35C-45C P4
Propeller Shaft Assembly, Transmission / Rear Axle — 55C ..... P
Pump Assembly — 35C ..... P
Pump Assembly — 45C P9
Pump Assembly — 55C P11

R

Radiator Assembly — G & O R3
Radiator Assembly — Stewart Warner R5
Radiator & Connections — Cummins R7
Radiator & Connections — G.M. — 35C-45C R9
Radiator & Connections — G.M. — 55C R11
Radiator & Connections — Perkins — 35C R13
Radiator & Connections — Perkins — 45C R15

PM 3150
Printed in U.S.A.

ALPHABETICAL INDEX (CONT.)

ROPS Z17
Rotating Beacon & Cab Lights Z37

S

Seat Assembly S1
Sheet Metal Group — 35C-45C S3
Sheet Metal Group — 55C S5
Spark Arrestor Kit Z38
Steering Controls S7

T

Transmission & Converter Assembly T3
Transmission Clutch Group, Forward T4
Transmission Clutch Group, Low T5
Transmission Clutch Group, Reverse & Second ... T6
Transmission Clutch Group, Third T7
Transmission Control Valve T9
Transmission Converter Assembly T11
Transmission Controls — 35C-45C T25
Transmission Controls — 55C T27
Transmission — Gear & Shaft Group T15
Transmission Modulation Valve T23
Turn Lights Z39

V

Valve Assembly, Brake — 35C-45C V2
Valve Assembly, Brake — 55C V3
Valve Assembly, Flow Divider V12
Valve Assembly (Three Spool) Z41
Valve Assembly (Two Spool) V5
Valve Controls V7
Valve Controls (Three Spool) Z43
Valve, Main, Electric Detent Assembly, Boom V9
Valve, Main, Electric Detent Assembly, Bucket ... V11
Vandal Cover Kit Z44

W

Wheel & Tire Assembly W1
Windshield Washer Kit Z45
Windshield Wiper, Front Z46
Windshield Wiper, Rear Z47

TABLE DES MATIERES

A

Accessoire de fourche Z23
Accessoires du moteur — Cummins — 55C E10
Accessoires du moteur — G.M. — 35C-45C E11
Accessoires du moteur — G.M. — 55C E12
Accessoires du moteur — Perkins E13
Alternateur E10
Attaches — câblage, tuyau & durités C2

B

Batterie & fixation de la batterie — 35C-45C B2
Batterie & fixation de la batterie — 55C B3

C

Canalisation d'air du frein arrière (optionel) B15
Canalisation d'air du frein avant B13
Châssis avant & arrière — 35C-45C F2
Châssis avant & arrière — 55C F3
Chauffage & pressuriseur, jeu Z29
Circuit du chauffage — Cummins — 55C Z33
Circuit du chauffage — G.M. Z30
Circuit du chauffage — Perkins — 35C Z31
Circuit du chauffage — Perkins — 45C Z32
Circuit, installation & pièces (trois tiroirs) Z36
Climatiseur, jeu Z3
Clignotants Z39
Codes des couleurs du câblage eléctrique E9
Commandes de direction S7
Commandes de la transmission — 35C-45C T25
Commandes de la transmission — 55C T27
Commandes de soupape V7
Commandes de soupape (trois tiroirs) Z43
Commandes du frein B7
Commandes du frein de stationnement B8
Commandes du moteur — Cummins — 55C E23
Commandes du moteur — G.M. — 55C E21
Commandes du moteur — Perkins — 35C E25
Commandes du moteur — Perkins — 45C E27
Contrepoids — 45C C6
Contrepoids — 55C C7
Contrepoids, haute élévation — 45C Z22
Contrepoids, jeu — 35C-45C Z20
Contrepoids, jeu — 55C Z21
Convertisseur de la transmission, ensemble T11
Convertisseur, ensemble T11
Couvercle protecteur contre vandalisme, jeu Z44

D

Déconnection de la batterie, jeu Z24
Dents du godet (optionel) Z14

E

Embrayage, ensemble T4
Ensemble d'arbre d'entraînement, palier central à essieu avant — 35C-45C ..... P
Ensemble d'arbre d'entraînement, palier central à essieu avant — 55C P2
Ensemble d'arbre d'entraînement, transmission / palier central P3
Ensemble d'arbre d'entraînement, transmission / essieu arrière — 35C-45C P4
Ensemble d'arbre d'entraînement, transmission / essieu arrière — 55C P5
Ensemble de cabine avec structure de sécurité ROPS Z17
Ensemble de différentiel & porteur d'essieu arrière — 35C-45C A1
Ensemble de différentiel & porteur d'essieu arrière — 55C A21
Ensemble de différentiel & porteur d'essieu arrière, anti-patinage — 35C-45C A23
Ensemble de différentiel & porteur d'essieu arrière, anti-patinage — 55C A25
Ensemble de différentiel & porteur d'essieu avant — 35C-45C A13
Ensemble de différentiel & porteur d'essieu avant — 55C A15
Ensemble de différentiel & porteur d'essieu avant, anti-patinage — 55C A17
Ensemble de la flèche, haute élévation — 45C Z6
Ensemble de soupape du frein — 35C-45C V2
Ensemble de soupape du frein — 55C V3
Ensemble de soupape (deux tiroirs) V5
Ensemble de soupape répartiteur de débit V12
Ensemble de soupape (trois tiroirs) Z41
Ensemble d'étrier du frein de stationnement & d'urgence B11
Ensemble de vérin du godet, haute élévation — 45C Z15
Ergots de levage, jeu Z34
Essieu arrière avec freins, ensemble — 35C-45C A9
Essieu arrière avec freins, ensemble — 55C A11
Essieu arrière, ensemble — 35C-45C ..... A

PM 3150
Printed in U.S.A.

TABLE DES MATIERES CONT.)

Essieu avant, ensemble — 35C-45C A3
Essieu avant, ensemble — 55C A5
Essieu, ensemble anti-patinage A27
Essuie-glace, arrière Z47
Essuie-glace, avant Z46
Etrier du frein, ensemble B11

F

Feux clignotants balise & de la cabine Z37
Filtre à air du moteur & raccords — Cummins — 55C E14
Filtre à air du moteur & raccords — G.M. — 35C E15
Filtre à air du moteur & raccords — G.M. — 45C E16
Filtre à air du moteur & raccords — G.M. — 55C E17
Filtre à air du moteur & raccords — Perkins E19
Filtre à huile de dérivation du moteur E33
Filtres à huile E10
Flèche, levier de renvoi, poussoir & niveleur du godet B5

G

Godet, ensemble B17
Godet, ensemble — tâche multiple — 35C Z9
Godet, ensemble — tâche multiple — 45C Z11
Groupe d'embrayage de la transmission, lente T5
Groupe d'embrayage de la transmission, marche arrière & deuxième T6
Groupe d'embrayage de la transmission, marche avant T4
Groupe d'embrayage de la transmission, troisième T7
Groupe de tôles — 35C-45C S3
Groupe de tôles — 55C S5

J

Jauge de carburant, jeu Z26

L

Lame de coupe boulonné Z5
Lave-glace, jeu Z45

M

Main-courant, jeu Z27
Mirroir, jeu Z35
Montages du moteur & transmission — Cummins E37
Montages du moteur & transmission — G.M. E39
Montages du moteur & transmission — Perkins ..E41

P

Pare-chocs & trappe de boue Z24
Pare-etincelles, jeu Z38
Planetaire d'essieu d'entraînement avant & arrière, ensemble porteur A26
Plaques de constructeur & décalcomanies N3
Pompe, ensemble — 35C P7
Pompe, ensemble — 45C P9
Pompe, ensemble — 55C P11
Poste d'operateur, ensemble C5

R

Radiateur, ensemble — G & O R3
Radiateur, ensemble — Stewart Warner R5
Radiateur & connections — Cummins R7
Radiateur & connections — G.M. — 35C-45C R9
Radiateur & connections — G.M. — 55C R11
Radiateur & connections — Perkins — 35C R13
Radiateur & connections — Perkins — 45C R15
Refroidisseur d'huile du moteur — Perkins — 35C E34
Refroidisseur d'huile du moteur — Perkins — 45C E35
Réglage automatique de hauteur de levage, jeu ...Z7
Réservoir de carburant & canalisation — Cummins F4
Réservoir de carburant & canalisation — G.M. F5
Réservoir de carburant & canalisation — Perkins ..F7
Réservoir d'huile du système hydraulique — 35C-45C H1
Réservoir d'huile du système hydraulique — 55C .H3
Roues & pneumatiques, ensemble W1

S

Siège, ensemble S1
Soupape de commande de la transmission T9
Soupape modulé de la transmission T23

TABLE DES MATIERES CONT.)

Soupape principal, ensemble du réglage électrique du hauteur, flèche V9
Soupape principal, ensemble du réglage électrique du hauteur, godet V11
Support de la flèche, jeu Z28
Support de planétaire, ensemble A26
Système d'échappement du moteur — Cummins — 55C E28
Système d'échappement du moteur — G.M. — 35C-45C E29
Système d'échappement du moteur — G.M. — 55C E30
Système d'échappement du moteur — Perkins E31
Système de lubrification L1
Système électrique E7
Système hydraulique de direction — 35C-45C H7
Système hydraulique de direction — 55C H9
Système hydraulique principal H5
Système hydraulique, transmission & convertisseur — 35C-45C H11
Système hydraulique, transmission & convertisseur — 55C H13

T

Tableau de bord E3
Tableau de bord du système hydraulique — 35C-45C E3
Tableau de bord du système hydraulique — 55C .E5
Toit de protection & sécurité ROPS R11
Transmission & convertisseur, ensemble T3
Transmission — groupe d'arbres & engrenages .. T15
Trousse de démarrage à froid — Cummins Z18
Trousse de démarrage à froid — G.M. Z19

V

Ventilateur E8
Ventilateur de dégivrage, ensemble Z23
Vérin de direction, ensemble — 35C-45C C21
Vérin de direction, ensemble — 55C C23
Vérin de la flèche, ensemble — 35C C
Vérin de la flèche, ensemble — 45C C11
Vérin de la flèche, ensemble — 55C C13
Vérin du godet, ensemble — 35C C15
Vérin du godet, ensemble — 45C C17
Vérin du godet, ensemble — 55C C19

PM 3150
Printed in U.S.A.

INHALTSVERZEICHNIS

A

Abdeckungsgruppe — 35C-45C S3
Abdeckungsgruppe — 55C S5
Achse, No-Spin Anlage A27
Achsendifferential & Träger-Baugruppe, hinten — 35C-45C A19
Achsendifferential & Träger-Baugruppe, hinten — 55C A21
Achsendifferential & Träger-Baugruppe, hinten — No-Spin — 35C-45C A23
Achsendifferential & Träger-Baugruppe, hinten — No-Spin — 55C A25
Achsendifferential & Träger-Baugruppe, vorne — 35C-45C A13
Achsendifferential & Träger-Baugruppe, vorne — 55C A15
Achsendifferential & Träger-Baugruppe, vorne — No-Spin — 55C A17
Achsenplanetenträger-Baugruppe, Vorderrad- & Hinterradantrieb A26
Alternator E10
Aushebebehaltersatz Z34
Auslegerträgersatz Z28
Auslegerzylinder-Baugruppe — 35C C9
Auslegerzylinder-Baugruppe — 45C C11
Auslegerzylinder-Baugruppe — 55C C13

B

Batterie & Batteriehalterung — 35C-45C B2
Batterie & Batteriehalterung — 55C B3
Batterienausrückungssatz Z24
Bremshebel B7
Bremskopf-Baugruppe B9
Bremsleitungen, hintere (Option) B15
Bremsleitungen, vordere B13
Bremsventil-Baugruppe — 35C-45C V2
Bremsventil-Baugruppe — 55C V3

D

Deckel wider Vandalismus-Bausatz Z44
Drehendes Such- & Kabinelichter Z37

E

Elektrishe Anlage — 35C-45C E3
Elektrishe Anlage — 55C E5
Elektrischesystem E7
Elektrischesystemfarbschlüssel E9
Entfroster-Ventilatoreinheit Z23

F

Fahrerstand-Baugruppe C5
Fahrgestell, vordere & hintere — 35C-45C F2
Fahrgestell, vordere & hintere — 55C F3
Funkenfängersatz Z38

G

Gabelzusatz Z23
Gegengewicht — 45C C6
Gegengewicht — 55C C7
Gegengewicht, Hochausleger — 45C Z22
Gegengewichtsatz — 35C-45C Z20
Gegengewichtsatz — 55C Z21
Geländersatz Z27
Gelenkwellen-Baugruppe, Getriebe / Hinterachse — 35C-45C P4
Gelenkwellen-Baugruppe, Getriebe / Hinterachse — 55C P5
Gelenkwellen-Baugruppe, Getriebe / Mittellager P3
Gelenkwellen-Baugruppe, Mittellager zum Vorderachse — 35C-45C P1
Gelenkwellen-Baugruppe, Mittellager zum Vorderachse — 55C P2
Getriebe & Umformer-Baugruppe T3
Getriebekupplungsgruppe, dritte T7
Getriebekupplungsgruppe, Langsam T5
Getriebekupplungsgruppe, rückwärts & zweiter T6
Getriebekupplungsgruppe, vorwärts T4
Getriebemodulierenventil T23
Getrieberegelventil T9
Getriebeschalthebel — 35C-45C T25
Getriebeschalthebel — 55C T27
Getriebeumformer-Baugruppe T11
Getriebezahnräder- & Wellengruppe T15

H

Haupthydrauliksystem H5
Hauptventil, elektrische Hubhöhenbegrenzer-Baugruppe V9

INHALTSVERZEICHNIS (FORTS.)

Hauptventil, elektrische Schaufelbegrenzer-Baugruppe V11
Heizungs- & Druckanlagesatz Z29
Heizungsrohre — Cummins — 55C Z33
Heizungsrohre — G.M. Z30
Heizungsrohre — Perkins — 35C Z31
Heizungsrohre — Perkins — 45C Z32
Hinterachsen-Baugruppe — 35C-45C A7
Hinterachsen-Baugruppe mit Bremse — 35C-45C . A9
Hinterachsen-Baugruppe mit Bremse — 55C A11
Hubarm-Baugruppe, Hochausleger — 45C Z6
Hubarm, Kniehebel, Stösselstange & Schaufel-Nivelleirvorrichtung B5
Hubhöhenbegrenzersatz Z7
Hydraulikölbehälter — 35C-45C H1
Hydraulikölbehälter — 55C H3
Hydrauliksystem, Getriebe & Umformer — 35C-45C H11
Hydrauliksystem, Getriebe & Umformer — 55C .. H13
Hydrauliksystem, Lenkung — 35C-45C H7
Hydrauliksystem, Lenkung — 55C H9

K

Kabine-Baugruppe mit Überrollschutz ROPS Z17
Kaltstartsatz — Cummins Z18
Kaltstartsatz — G.M. Z19
Klimaanlagesatz Z3
Kotflügel & Schlamklappe Z24
Kraftstoffmessersatz Z26
Kraftstofftank & Leitungen — Cummins F4
Kraftstofftank & Leitungen — G.M F5
Kraftstofftank & Leitungen — Perkins F7
Kühler & Anschlüsse — Cummins R7
Kühler & Anschlüsse — GM — 35C-45C R9
Kühler & Anschlüsse — G.M. — 55C R11
Kühler & Anschlüsse — Perkins — 35C-45C R13
Kühler & Anschlüsse — Perkins — 55C R15
Kühler-Baugruppe — G & O R3
Kühler-Baugruppe — Stewart Warner R5
Kupplungs-Baugruppe T4

L

Lenkvorrichtung S7
Lenkzylinder-Baugruppe — 35C-45C C21
Lenkzylinder-Baugruppe — 55C C23
Luftfilter des Motors & Anschlüsse — Cummins — 55C E14
Luftfilter des Motors & Anschlüsse — G.M. — 35C E15
Luftfilter des Motors & Anschlüsse — G.M. — 45C E16
Luftfilter des Motors & Anschlüsse — G.M. — 55C E17
Luftfilter des Motors & Anschlüsse — Perkins ... E19

M

Motor- & Getriebebefestigung — Cummins E37
Motor- & Getriebebefestigung — G.M. E39
Motor- & Getriebebefestigung — Perkins E41
Motorauspuffanlage — Cummins — 55C E28
Motorauspuffanlage — G.M. — 35C-45C E29
Motorauspuffanlage — G.M. — 55C E30
Motorauspuffanlage — Perkins E31
Motorölkühler — Perkins — 35C E34
Motorölkühler — Perkins — 45C E35
Motoröl-Umgehungsfilter E33
Motorregulierung — Cummins — 55C E23
Motorregulierung — G.M. — 55C E21
Motorregulierung — Perkins — 35C E25
Motorregulierung — Perkins — 45C E27
Motorzubehör — Cummins — 55C E10
Motorzubehör — G.M. — 35C-45C E11
Motorzubehör — G.M. — 55C E12
Motorzubehör — Perkins E13

N

Namensschilder & Abziehbilder N3

O

Ölfilter E10

P

Planetenträger-Baugruppe A26
Pumpe-Baugruppe — 35C P7
Pumpe-Baugruppe — 45C P9
Pumpe-Baugruppe — 55C P11

PM 3150
Printed in U.S.A.

INHALTSVERZEICHNIS (FORTS.)

R

Räder- & Reifen-Baugruppe W1
Richtungslicht Z39
Rohrleitungen, Einbau & Teile (drei-Spulen) Z36

S

Schaufel-Baugruppe B17
Schaufel-Baugruppe, Mehraufgabe — 35C Z9
Schaufel-Baugruppe, Mehraufgabe — 45C Z11
Schaufelzähne (Option) Z14
Schaufelzylinder-Baugruppe — 35C C15
Schaufelzylinder-Baugruppe — 45C C17
Schaufelzylinder-Baugruppe — 55C C19
Schaufelzylinder-Baugruppe, Hochausleger — 45C Z15
Scheibenwaschanlagesatz Z45
Scheibenwischer, hintere Z47
Scheibenwischer, vordere Z46
Schellen — Drähte, Rohre & Schlauche C2
Schmiersystem L1
Sitz-Baugruppe S1
Spiegelsatz Z35
Stand- & Notbremskopf-Baugruppe B11
Standbremshebel B8

T

Tafel für elektrische Instrumente E3

U

Uberrollschutz ROPS Z17
Umformer-Baugruppe T11

V

Ventilator E8
Ventil-Baugruppe (drei-Spulen) Z41
Ventil-Baugruppe, Trennfluss V12
Ventil-Baugruppe (zwei-Spulen) V5
Ventilregler V7
Ventilregler (drei-Spulen) Z43
Verriegelte Schneidekante Z5
Vorderachsen-Baugruppe — 35C-45C A3
Vorderachsen-Baugruppe — 55C A5

INDICE ALFABETICO

A

Acessório de garfo Z23
Acessórios do motor — Cummins — 55C E10
Acessórios do motor — G.M. — 35C-45C E11
Acessórios do motor — G.M. — 55C E12
Acessórios do motor — Perkins E10
Alternador E10
Aquecedor & pressurizador, jôgo Z29
Assento, conjunto S1

B

Bateria & montagem da bateria — 35C-45C B2
Bateria & montagem da bateria — 55C B3
Bomba, conjunto — 35C P7
Bomba, conjunto — 45C P9
Bomba, conjunto — 55C P11
Braçadeiras — cabo elétrico, tubo & mangueira ..C2
Braço, balancinho, varão de empuxo & nivelador da caçamba B5

C

Cabeça do freio, conjunto B9
Cabeça do freio de estacionamento & de emergência, conjunto B11
Caçamba, conjunto B17
Chassi dianteiro & traseiro — 35C-45C F2
Chassi dianteiro & traseiro — 55C F3
Cilindro da caçamba, conjunto — 35C C15
Cilindro da caçamba, conjunto — 45C C17
Cilindro da caçamba, conjunto — 55C C19
Cilindro da direção, conjunto — 35C-45C C21
Cilindro da direção, conjunto — 55C C23
Cilindro do braço, conjunto — 35C C9
Cilindro do braço, conjunto — 45C C11
Cilindro do braço, conjunto — 55C C13
Código de côres de sistema elétrico E9
Condicionador de ar, jôgo Z3
Conjunto da cabina com estrutura de proteção ROPS Z17
Conjunto da caçamba, multitrabalho — 35C Z9
Conjunto da caçamba, multitrabalho — 45C Z11
Conjunto de cilindro da caçamba, elevação alta — 45C Z15
Conjunto de diferencial & suporte de eixo dianteiro — 35C-45C A13
Conjunto de diferencial & suporte de eixo dianteiro — 55C A15
Conjunto de diferencial & suporte de eixo dianteiro — anti-patinante — 55C A17
Conjunto de diferencial & suporte de eixo traseiro — 35C-45C A19
Conjunto de diferencial & suporte de eixo traseiro — 55C A21
Conjunto de diferencial & suporte de eixo traseiro — anti-patinante — 35C-45C A23
Conjunto de diferencial & suporte de eixo traseiro — anti-patinante — 55C A25
Conjunto do braço, elevação alta — 45C ..... Z
Conjunto do eixo propulsor, mancal central a eixo dianteiro — 35C-45C P1
Conjunto do eixo propulsor, mancal central a eixo dianteiro — 55C P2
Conjunto do eixo propulsor, transmissão / eixo traseiro — 35C-45C P4
Conjunto do eixo propulsor, transmissão / eixo traseiro — 55C P5
Conjunto do eixo propulsor, transmissão / mancal central P3
Contrapeso — 45C C6
Contrapeso — 55C C
Contrapeso, jôgo — 35C-45C ..... Z
Contrapeso, jôgo — 55C Z21
Contrapesos, elevação alta — 45C Z22
Controles da direção S7
Controles da transmissão — 35C-45C T25
Controles da transmissão — 55C T27
Controles da válvula V7
Controles da válvula (três carréteis) Z43
Controles do freio B7
Controles do freio de estacionamento ..... B
Controles do motor — Cummins — 55C E23
Controles do motor — G.M. — 55C E21
Controles do motor — Perkins — 35C E25
Controles do motor — Perkins — 55C E27
Conversor, conjunto T11
Conversor da transmissão, conjunto T11
Corrimão, jôgo Z27

D

Dentes da caçamba (opcional) Z14
Desconectador da bateria, jôgo Z24
Dispositivo de arranque em frio, jôgo — Cummins Z18
Dispositivo de arranque em frio, jôgo — G.M. ...Z

PM 3150
Printed in U.S.A.

INDICE ALFABETICO (CONT.)

E

Eixo, conjunto anti-patinante A27
Eixo dianteiro, conjunto — 35C-45C A3
Eixo dianteiro, conjunto — 55C A5
Eixo traseiro, conjunto — 35C-45C A7
Eixo traseiro com freios, conjunto — 35C-45C A9
Eixo traseiro com freios, conjunto — 55C A11
Embreagem, conjunto T4
Encanamento de aquecedor — Cummins — 55C Z33
Encanamento de aquecedor — G.M. Z30
Encanamento de aquecedor — Perkins — 35C .. Z31
Encanamento de aquecedor — Perkins — 45C .. Z32
Encanamento, instalação & peças (três carretéis) Z36
Esfriador de óleo do motor — Perkins — 35C ... E34
Esfriador de óleo do motor — Perkins — 45C ... E35
Espelho, jôgo Z35
Estrutura protetora contra tombamentos ROPS .Z17

F

Filtro em derivação & tubulações de óleo do motor E33
Filtros de óleo E10
Fio corte aparafusado Z5

G

Grupo da chapa — 35C-45C S3
Grupo da chapa — 55C S5
Grupo de embreagem da transmissão, baixa T5
Grupo de embreagem da transmissão, marcha à ré & segunda T6
Grupo de embreagem da transmissão, marcha avante T4
Grupo de embreagem da transmissão, terceira ... T7

L

Lavador pára-brisa, jôgo Z45
Limpa pára-brisa, dianteiro Z46
Limpa pára-brisa, traseiro Z47
Luzes de farol rotador & da cabina Z37
Luzes de voltar Z39

M

Manômetro de combustível, jôgo Z26

O

Orelhas de elevação, jôgo Z34

P

Painel de instrumentos E3
Painel de instrumentos elétricos — 35C-45C E3
Painel de instrumentos elétricos — 55C E5
Para-faiscas, jôgo Z38
Pára-lamas & lama chapeleta Z24
Placas da fabrica & decalcomanias N3
Planetários dos eixos de propulsão dianteiro & traseiro, conjunto de suporte A26
Posto de operador, conjunto C5
Purificador de ar do motor & conexões — Cummins — 55C E14
Purificador de ar do motor & conexões G.M. — 35C E15
Purificador de ar do motor & conexões G.M. — 45C E16
Purificador de ar do motor & conexões G.M. — 55C E17
Purificador de ar do motor & conexões Perkins E19

R

Radiador, conjunto — G & O R3
Radiador, conjunto — Stewart Warner R5
Radiador & conexões — Cummins R7
Radiador & conexões — G.M. — 35C-45C R9
Radiador & conexões — G.M. — 55C R11
Radiador & conexões — Perkins — 35C R13
Radiador & conexões — Perkins — 45C R15
Regulador automático da elevação do braço, jôgo Z7
Reservatório de óleo hidráulico — 35C-45C H1
Reservatório de óleo hidráulico — 55C H3
Rodas & pneus, conjunto W1

S

Sistema de escape do motor — Cummins — 55C E28
Sistema de escape do motor — G.M. — 35C-45C E29
Sistema de escape do motor — G.M. — 55C E30
Sistema de escape do motor — Perkins E31
Sistema de lubrificação L1
Sistema elétrico E7

INDICE ALFABETICO (CONT.)

Sistema hidráulico da direção — 35C-45C H7
Sistema hidráulico da direção — 55C H9
Sistema hidráulico principal H5
Sistema hidráulico, transmissão & conversor — 35C-45C H11
Sistema hidráulico, transmissão & conversor — 55C H13
Suporte da planetária, conjunto A26
Suporte de braço, conjunto Z28
Suportes do motor & da transmissão — Cummins E37
Suportes do motor & da transmissão — G.M. ...E39
Suportes do motor & da transmissão — Perkins E41

T

Tampa protetora contra vandalismo, conjunto Z44
Tanque de combustível & tubulações — Cummins F4
Tanque de combustível & tubulações — G.M. F5
Tanque de combustível & tubulações — Perkins ..F7
Transmissão & conversor, conjunto T3
Transmissão, grupo de eixos & engrenagens T15
Tubos dos freios dianteiros B13
Tubos dos freios traseiros (opcional) B15

V

Válvula, conjunto (dois carretéis) V5
Válvula, conjunto (três carretéis) Z41
Válvula de controle da transmissão T9
Válvula divisora de fluxo, conjunto V12
Válvula do freio, conjunto — 35C-45C V2
Válvula do freio, conjunto — 55C V3
Válvula modular da transmissão T23
Válvula principal, conjunto de regulador elétrico de elevação, braço V9
Válvula principal, conjunto de regulador elétrico de elevação, caçamba V11
Ventilador E8
Ventilador degelador, conjunto Z23

PM 3150
Printed in U.S.A.

INDICE ALFABETICO

A

Abrazaderas — cablaje eléctrico, tubo & manguera C2
Accesorio de horquillas Z23
Accesorios del motor — Cummins — 55C E10
Accesorios del motor — G.M. — 35C-45C E11
Accesorios del motor — G.M. — 55C E12
Accesorios del motor — Perkins E13
Acondicionador de aire, juego Z3
Aguilón, balancín, varilla de empuje & nivelador del cucharón B5
Alternador E10
Apagachispas, juego Z38
Asiento, conjunto S1

B

Bastidor delantero & trasero — 35C-45C F2
Bastidor delantero & trasero — 55C F3
Batería & montaje de la batería — 35C-45C B2
Batería & montaje de la batería — 55C B3
Bomba, conjunto — 35C P7
Bomba, conjunto — 45C P9
Bomba, conjunto — 55C P11

C

Cabeza del freno, conjunto B9
Cabeza del freno de estacionamiento & de emergencia, conjunto B11
Calefactor & pressurizador, juego Z29
Cilindro de dirección, conjunto — 35C-45C C21
Cilindro de dirección, conjunto — 55C C23
Cilindro del aguilón, conjunto — 35C C9
Cilindro del aguilón, conjunto — 45C C11
Cilindro del aguilón, conjunto — 55C C13
Cilindro del cucharón, conjunto — 35C C15
Cilindro del cucharón, conjunto — 45C C17
Cilindro del cucharón, conjunto — 55C C19
Circuito del calefactor — Cummins — 55C Z33
Circuito del calefactor — G.M. Z30
Circuito del calefactor — Perkins — 35C Z31
Circuito del calefactor — Perkins — 45C Z32
Circuito, instalación & piezas (tres carretes) Z36
Código de colores de sistema eléctrico E9
Conjunto de arbol propulsor, cojinete central a eje delantero — 35C-45C P1
Conjunto de arbol propulsor, cojinete central a eje delantero — 55C P2
Conjunto de arbol propulsor, transmisión / cojinete central P3
Conjunto de arbol propulsor, transmisión / eje trasero — 35C-45C P4
Conjunto de arbol propulsor, transmisión / eje trasero — 55C P5
Conjunto de la cabina con estructura contra vuelcos ROPS Z17
Conjunto de cilindro del cucharón, levantamiento alta — 45C Z15
Conjunto de diferencial & soporte del eje delantero — 35C-45C A13
Conjunto de diferencial & soporte del eje delantero — 55C A15
Conjunto de diferencial & soporte del eje delantero — anti-patinaje — 55C A17
Conjunto de diferencial & soporte del eje trasero — 35C-45C A19
Conjunto de diferencial & soporte del eje trasero — 55C A21
Conjunto de diferencial & soporte del eje trasero — anti-patinaje — 35C-45C A23
Conjunto de diferencial & soporte del eje trasero — anti-patinaje — 55C A25
Conjunto del aguilón, levantamiento alto — 45C Z6
Conjunto del cucharón, multitrabajo — 35C Z9
Conjunto del cucharón, multitrabajo — 45C Z11
Contrapeso — 45C C6
Contrapeso — 55C C7
Contrapeso, juego — 35C-45C Z20
Contrapeso, juego — 55C Z21
Contrapesos, levantamiento alta — 45C Z22
Controles de dirección S7
Controles de la transmisión — 35C-45C T25
Controles de la transmisión — 55C T27
Controles del freno B7
Controles del freno de estacionamiento B8
Controles del motor — Cummins — 55C E23
Controles del motor — G.M. — 55C E21
Controles del motor — Perkins — 35C E25
Controles del motor — Perkins — 45C E27
Controles de válvula V7
Controles de válvula (tres carretes) Z43
Convertidor, conjunto T11
Convertidor de la transmisión, conjunto T11
Cucharón, conjunto B17
Cuchilla corte boulonado Z5

INDICE ALFABETICO

D

Depósito de aceite hidráulico — 35C-45C H1
Depósito de aceite hidráulico — 55C H3
Depósito & líneas de combustible — Cummins F4
Depósito & líneas de combustible — G.M. F5
Depósito & líneas de combustible — Perkins F7
Depurador de aire del motor & conexiones — Cummins — 55C E14
Depurador de aire del motor & conexiones — G.M. — 35C E15
Depurador de aire del motor & conexiones — G.M. — 45C E16
Depurador de aire del motor & conexiones — G.M. — 55C E17
Depurador de aire del motor & conexiones — Perkins E19
Desconectador del eje, juego Z24
Dientes del cucharón (opcional) Z14
Dispositivo de arranque en frío, juego — Cummins Z18
Dispositivo de arranque en frío, juego — G.M. Z19

E

Eje, conjunto anti-patinaje A27
Eje delantero, conjunto — 35C-45C A3
Eje delantero, conjunto — 55C A5
Eje trasero, conjunto — 35C-45C A7
Eje trasero con frenos, conjunto — 35C-45C A9
Eje trasero con frenos, conjunto — 55C A11
Embrague, conjunto T4
Enfriador de aceite del motor — Perkins — 35C .E34
Enfriador de aceite del motor — Perkins — 45C .E35
Espejo, juego Z35
Estructura protectora contra vuelcos ROPS Z17

F

Filtro de aceite en derivación del motor E33
Filtros de aceite E10

G

Guardabarros & barro chapeleta Z24
Grupo de chapa — 35C-45C S3
Grupo de chapa — 55C S5
Grupo de embrague de la transmisión, baja T5
Grupo de embrague de la transmisión, marcha adelante T4
Grupo de embrague de la transmisión, marcha retroceso & segunda T6
Grupo de embrague de la transmisión, tercera T7

L

Lava parabrisas, juego Z4
Limpiaparabrisas, delantero Z46
Limpiaparabrisas, trasero Z47
Líneas de frenos delanteros B13
Líneas de frenos traseros (opcional) B15
Luces de faro giratorio & de la cabina Z37
Luces de virajes Z39

M

Manómetro de combustible, juego Z26

O

Orejas de levante, juego Z34

P

Pasamano, juego Z27
Placas del fabricante & calcomanías N3
Planetarios de eje de tracción delantero & trasero, conjunto de soporte A26
Puesto de operador, conjunto C5

R

Radiador, conjunto — G & O R3
Radiador, conjunto — Stewart Warner R5
Radiador & conexiones — Cummins R7
Radiador & conexiones — G.M. — 35C-45C R9
Radiador & conexiones — G.M. — 55C R11
Radiador & conexiones — Perkins — 35C R1

PM 3150
Printed in U.S.A.

INDICE ALFABETICO

Radiador & conexiones — Perkins — 45C R15
Regulador automatico de elevación del aguilón, juego Z7
Ruedas & neumaticos, conjunto W1

S

Sistema eléctrico E7
Sistema de escape del motor — Cummins — 55C E28
Sistema de escape del motor — G.M. — 35C-45C E29
Sistema de escape del motor — G.M. — 55C ...E30
Sistema de escape del motor — Perkins E31
Sistema de lubricación L1
Sistema hidráulico de dirección — 35C-45C H7
Sistema hidráulico de dirección — 55C H9
Sistema hidráulico principal H5
Sistema hidráulico, transmisión & convertidor — 35C-45C H11
Sistema hidráulico, transmisión & convertidor — 55C H13
Soporte del aguilón, juego Z28
Soporte de planetaria, conjunto A26
Soportes de montaje del motor & transmisión — Cummins E37
Soportes de montaje del motor & transmisión — G.M. E39
Soportes de montaje del motor & transmisión — Perkins E41

T

Tablero de instrumentos E3
Tablero de instrumentos eléctricos — 35C-45C ...E3
Tablero de instrumentos eléctricos — 55C E5
Tapa protectora contra vandalismo, conjunto Z44
Transmisión & convertidor, conjunto T3
Transmisión — grupo de ejes & engranajes T15

V

Válvula bifurcadora de flujo, conjunto V12
Válvula, conjunto (dos carretes) V5
Válvula, conjunto (tres carretes) Z41
Válvula de control de la transmisión T9
Válvula del freno, conjunto — 35C-45C V2
Válvula del freno, conjunto — 55C V3
Válvula modular de la transmisión T23
Válvula principal, conjunto de regulador electrico de elevación, brazo V9
Válvula principal, conjunto de regulador electrico de elevación, cucharón V11
Ventilador E8
Ventilador descongelador, conjunto Z23

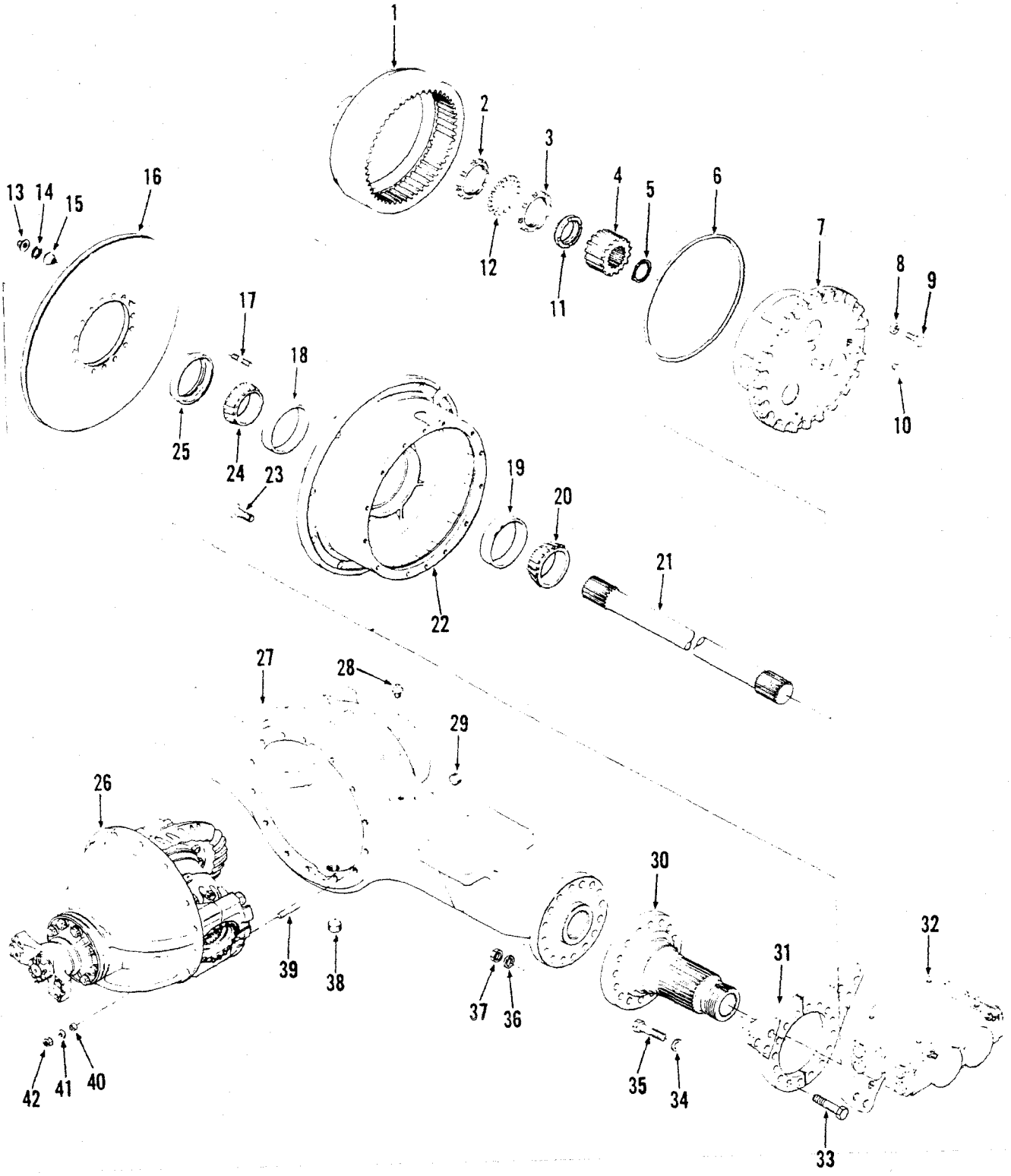

TS-15200

PM 3150
Printed in U.S.A.

Axle Assembly, Front — 35C — 45C *

CLARK

No.	Part No.	Qty.	Description
A	[2,4,6]195592	1	Axle assy
B	[5,7]188206	1	Axle assy
1	123904	2	Hub
2	121013	2	Nut
3	121013	2	Nut
4	126463	2	Gear
5	224026	2	Ring
6	107348	2	Ring
7	[1]———	2	Planet carrier
8	106762	24	Washer
9	126415	24	Bolt
10	24K7	2	Plug
11	128830	2	Ring
12	121014	2	Locknut
13	124543	32	Nut
14	104412	32	Washer
15	119141	8	Dowel
16	128724	2	Disc
17	128213	32	Stud
18	672004	2	Cup
19	668553	2	Cup
20	675261	2	Cone
21	127206	2	Shaft
22	[3]129784	2	Hub assy
23	121808	24	Stud
23A	†103522	24	Nut
24	672005	2	Cone
25	128117	2	Seal
26	[1]———	1	Diff carrier assy
27	129788	1	Housing
27A	2106427	1	Housing
28	121214	1	Breather
29	16F12	1	Plug
30	129787	2	Spindle
31	129793	2	Plate
31A	†129796	2	Plate
32	[1]———	2	Brake head assy
33	18C1252	32	Bolt
34	111656	12	Washer
35	17C1244	12	Bolt
36	111656	32	Washer
37	64D12	32	Nut
38	119469	1	Plug
39	119270	14	Stud
39A	126416	14	Stud
40	103216	3	Dowel
40A	112287	3	Dowel
41	112278	14	Washer
41A	106762	14	Washer
42	64D7	14	Nut
42A	60D8	14	Nut

[1]See Index
[2]Inc. 1→27, 28→39, 40, 41, 42 (D17620)
[3]Inc. 18, 19
[4]For complete replacement use 188206 Axle Assy
[5]Inc. 1→26, 27A, 28→38, 39A, 40A, 41A, 42A (D17620)
[6]458A101CB→120CB, 459A101CB→999CB, 472A101CB→337CB, 473A101CB→411CB
[7]458A121CB→999CB, 472A338CB→999CB, 473A412CB→999CB

CLARK

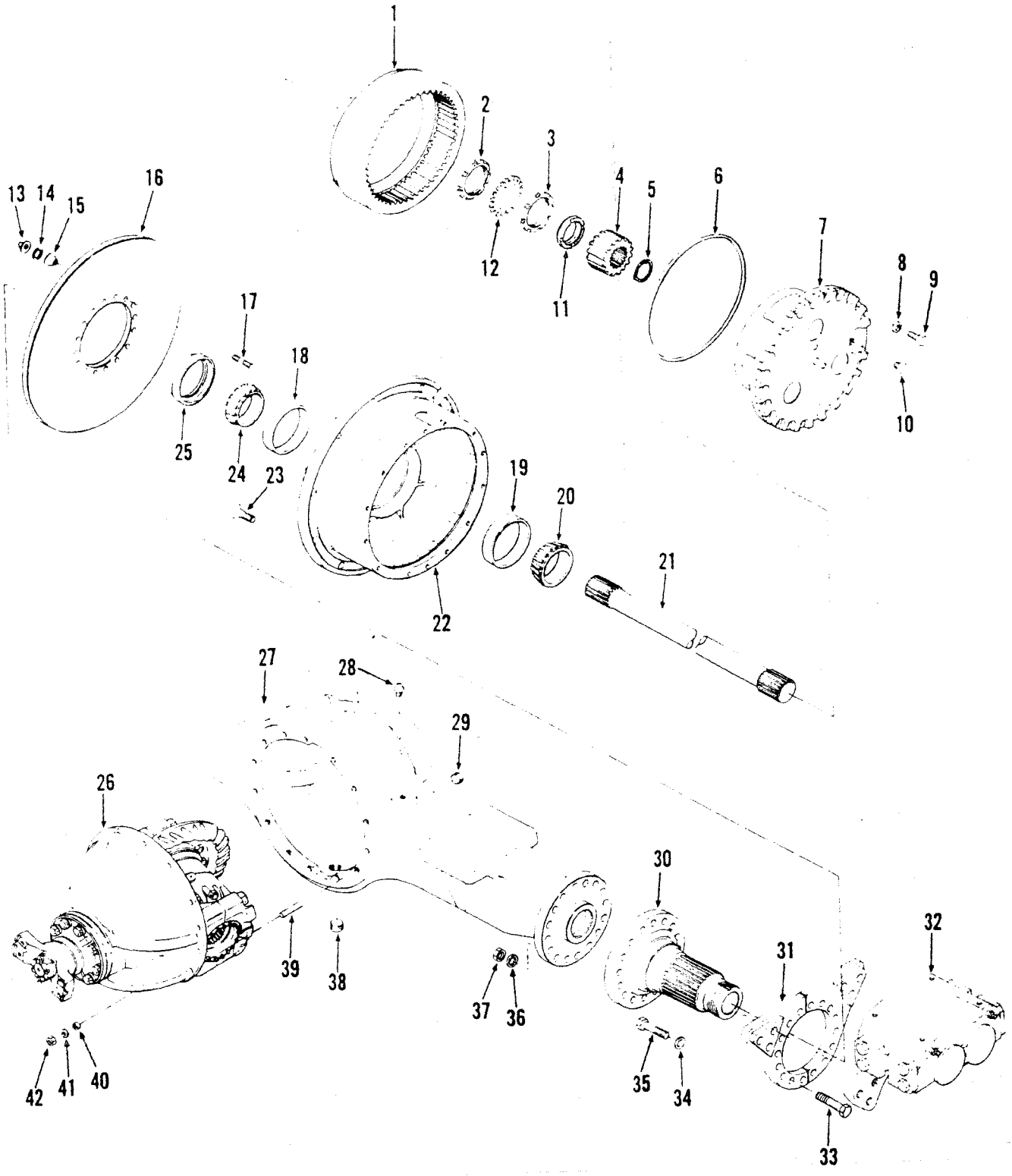

TS-15200

PM 3150
Printed in U.S.A.

Axle Assembly, Front – 55C

CLARK

No.	Part No.	Qty.	Description
A	[2 5]188207	1	Axle assy
B	[5 7]195946	1	Axle assy
C	[3 5]188208	1	Axle assy
D	[5 8]195947	1	Axle assy
1	123904	2	Hub
2	121013	2	Nut
3	121013	2	Nut
4	126463	2	Gear
5	224026	2	Ring
6	107348	2	Ring
7	[1]———	2	Planet carrier
8	106762	24	Washer
9	126415	24	Bolt
10	24K7	2	Plug
11	128830	2	Ring
12	121014	2	Locknut
13	[5]124543	32	Nut
13A	[6]86D10	32	Nut
14	104412	32	Washer
15	119141	8	Dowel
16	128724	2	Disc
17	128213	32	Stud
18	672004	2	Cup
19	668553	2	Cup
20	675261	2	Cone
21	126243	2	Shaft
22	[4 5]129784	2	Hub assy
22A	[4 6]2106356	2	Hub assy
23	[5]121808	24	Stud
23A	[5]2106352	24	Stud
23B	†103522	24	Nut
24	672005	2	Cone
25	128117	2	Seal
26	[1]———	1	Diff carrier assy
27	2106209	1	Housing
28	121214	1	Breather
29	16F12	1	Plug
30	129787	2	Spindle
31	[5]129793	2	Plate
31A	†[5]129796	2	Plate
31B	[5]2107369	2	Plate
32	[1]———	2	Brake head assy
33	[5]18C1252	32	Bolt
33A	[6]18C1252	16	Bolt
33B	[6]18C1240	16	Bolt
34	111656	12	Washer
35	17C1244	12	Bolt
36	111656	32	Washer
37	64D12	32	Nut
38	119469	1	Plug
39	126416	14	Stud
40	112287	3	Dowel
41	106762	14	Washer
42	64D8	14	Nut

[1]See Index
[2]Inc. 1 → 13. 14 → 22. 23. 24 → 42 Std Diff (D17620)
[3]Inc. 1 → 13. 14 → 22. 23. 24 → 42 No-Spin Diff (D17620)
[4]Inc. 18. 19
[5]480A. 480B101CB → 180CB. 481A. 481B101CB → 157CB
[6]480B181CB & →. 481B158CB & →
[7]Inc. 1 → 12. 13A → 21. 22A. 23A → 42 Std Diff (D17620)
[8]Inc. 1 → 12. 13A → 21. 22A. 23A → 42 No-Spin Diff (D17620)

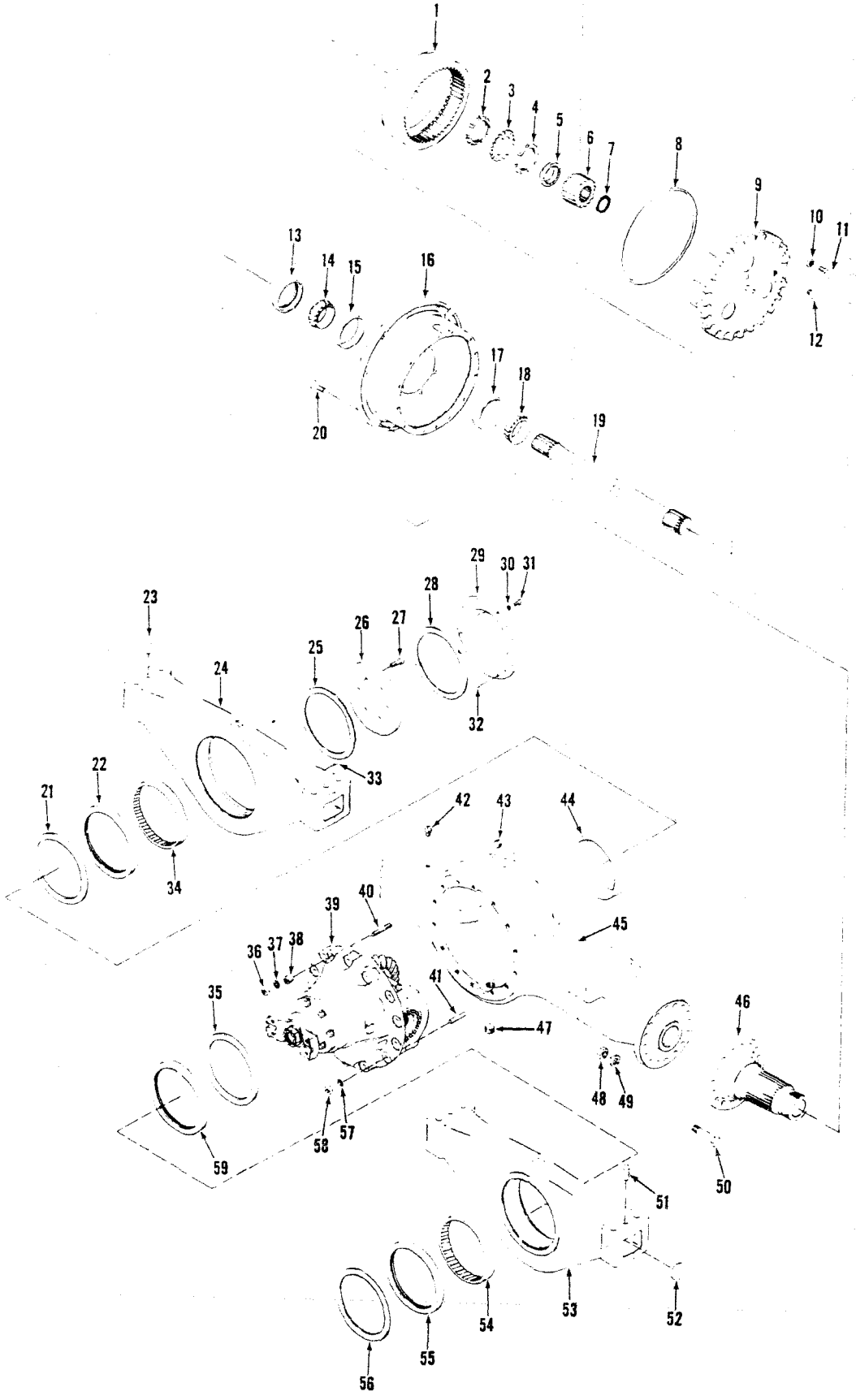
1
2
3
4
5
6
7
8
9
10
11
12
13
14
15
16
17
18
19
20
21
22
23
24
25
26
27
28
29
30
31
32
33
34
35
36
37
38
39
40
41
42
43
44
45
46
47
48
49
50
51
52
53
54
55
56
57
58
59

TS-14930

Axle Assembly — Rear — 35C — 45C

CLARK

No.	Part No.	Qty.	Description
A	[2,7]195652	1	Axle assy
B	[3,8]195655	1	Axle assy
1	123904	2	Hub
2	121013	2	Nut
3	121014	2	Lock
4	121013	2	Nut
5	128830	2	Washer
6	126463	2	Gear
7	224026	2	Ring
8	107348	2	Ring
9	[1]———	2	Planet carrier
10	106762	24	Washer
11	126415	24	Bolt
12	24K7	2	Plug
12A	†91F7	2	O-ring
13	128117	2	Seal
14	672005	2	Cone inner
15	672004	2	Cup inner
16	[4]129784	2	Hub assy
17	668553	2	Cup outer
18	675261	2	Cone outer
19	127206	2	Shaft
20	121808	24	Stud
20A	†103522	24	Nut
21	128746	1	Protector
22	128943	1	Seal
23	128750	2	Dowel
24	[5]113939	1	Support R
25	2106012	1	Washer
26	2106015	1	Plate
27	17C920	6	Bolt
28	2106012	1	Washer

No.	Part No.	Qty.	Description
29	128749	1	Retainer
30	4E7	8	Lockwasher
31	17C722	8	Bolt
32	———	—	Omit
33	17J2808	4	Pin
34	2106009	1	Bushing
35	128746	1	Protector
36	64D8	10	Nut
37	106762	10	Washer
38	112287	3	Dowel
39	[1]———	1	Diff carrier assy
40	129776	10	Stud
41	129777	4	Stud
42	121214	1	Breather
43	16F12	1	Plug
44	2106014	1	Sleeve
45	[6]129791	1	Housing
46	129787	2	Spindle
47	119469	1	Plug
48	64D12	32	Nut
49	111656	32	Washer
50	18C1240	32	Bolt
51	128750	2	Dowel
52	12F300	4	Plug
53	[7]113936	1	Support F
54	2106010	1	Bushing
55	128943	1	Seal
56	128746	1	Protector
57	106762	4	Washer
58	64D8	4	Nut
59	128943	1	Seal

[1]See Index
[2]Inc. 1→59 std diff (D 17620)
[3]Inc. 1→59 no-spin diff (D 17620)
[4]Inc. 15, 17
[5]Inc. 34
[6]Inc. 44
[7]For complete replacement use 188209 Axle Assy.
[8]For complete replacement use 188210 Axle Assy.

CLARK

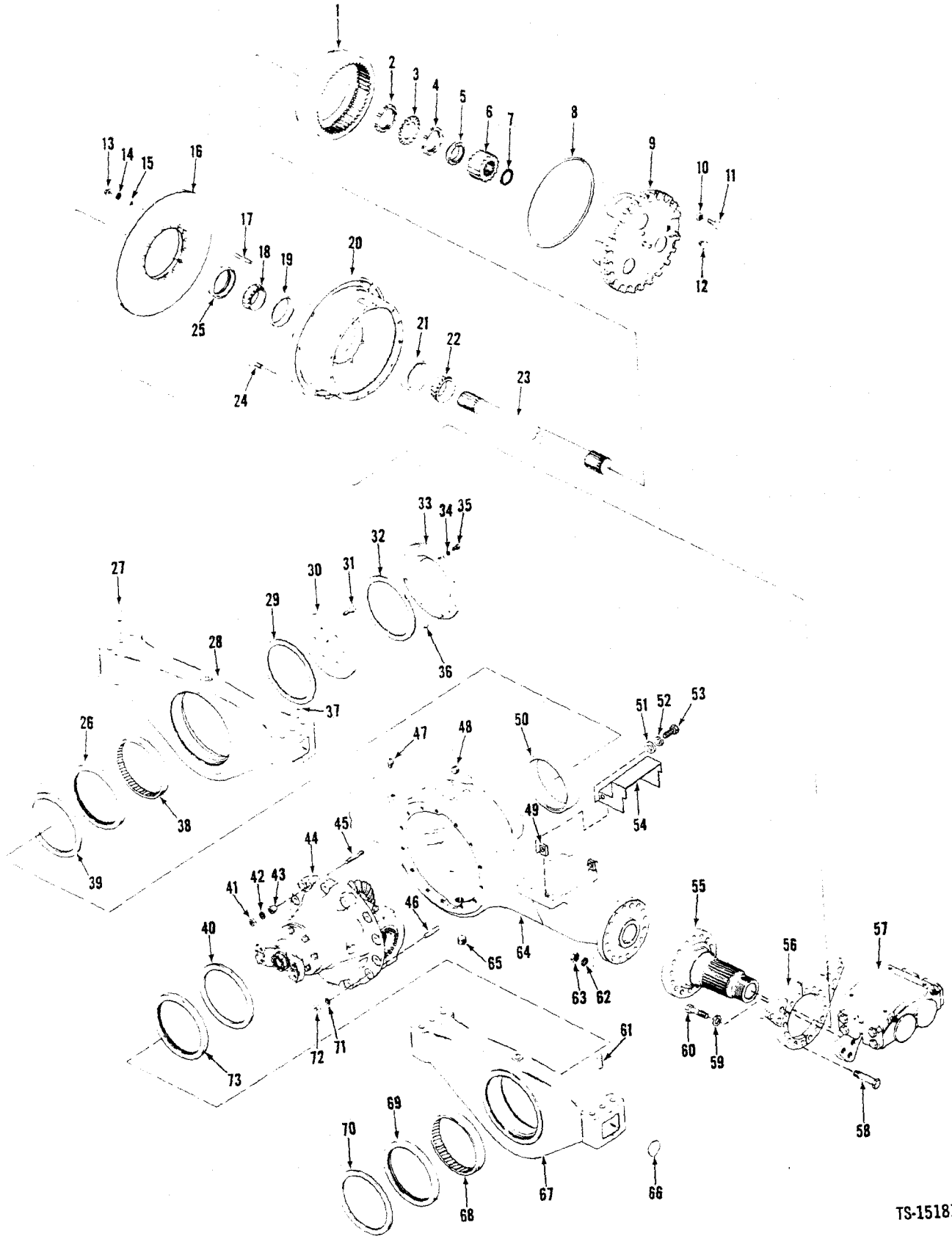

TS-15181

PM 3150
Printed in U.S.A.

(1A23)

Axle Assembly, Rear – With Brakes – 35C – 45C

CLARK

No.	Part No.	Qty.	Description
A	[2,8]195653	1	Axle assy
B	[3,9]195654	1	Axle assy
1	123904	2	Hub
2	121013	2	Nut
3	121014	2	Lock
4	121013	2	Nut
5	128830	2	Washer
6	126463	2	Gear
7	224026	2	Ring
8	107348	2	Ring
9	[1]———	2	Planet carrier
10	106762	24	Washer
11	126415	24	Bolt
12	24K7	2	Plug
12A	†91F7	2	O-ring
13	124543	32	Nut
14	104412	32	Washer
15	119141	4	Dowel
16	128724	2	Disc
17	128213	32	Stud
18	672005	2	Cone inner
19	672004	2	Cup inner
20	[4]129784	2	Hub assy
21	668553	2	Cup outer
22	675261	2	Cone outer
23	127206	2	Shaft
24	121808	24	Stud
24A	†103522	24	Nut
25	128117	2	Seal
26	128943	1	Seal
27	128750	2	Dowel
28	[5]113939	1	Support
29	128748	1	Washer
30	2106015	1	Plate
31	17C920	6	Bolt
32	2106012	1	Washer
33	128749	1	Retainer
34	4E7	8	Lockwasher
35	17C722	8	Bolt
36	———	–	Omit
37	———	–	Omit
38	2106009	1	Bushing
39	128746	1	Protector
40	128746	1	Protector
41	64D8	10	Nut
42	106762	10	Washer
43	112287	3	Dowel
44	[1]———	1	Diff carrier assy
45	129776	10	Stud
46	129777	4	Stud
47	121214	1	Breather
48	16F12	1	Plug
49	667266	4	Tapped block
50	2106014	2	Sleeve
51	25E14	4	Washer
52	4E4	4	Lockwasher
53	17C412	4	Bolt
54	2522364	2	Cover
55	129787	2	Spindle
56	129793	2	Plate RH
56A	†129796	2	Plate LH
57	[1]———	2	Brake head
58	18C1252	32	Bolt
59	111656	12	Washer
60	17C1244	12	Bolt
61	128750	2	Dowel
62	111656	32	Washer
63	64D12	32	Nut
64	[6]129791	1	Housing
65	119469	1	Plug
66	12F300	4	Plug
67	[7]113936	1	Support
68	2106010	1	Bushing
69	128943	1	Seal
70	128746	1	Protector
71	106762	4	Washer
72	64D8	4	Nut
73	128943	1	Seal

[1]See Index
[2]Inc. 1→72 std diff (D 17620)
[3]Inc. 1→72 no-spin diff (D 17620)
[4]Inc. 19, 21
[5]Inc. 38
[6]Inc. 50
[7]Inc. 68
[8]For complete replacement use 195683 Axle Assy.
[9]For complete replacement use 195684 Axle Assy.

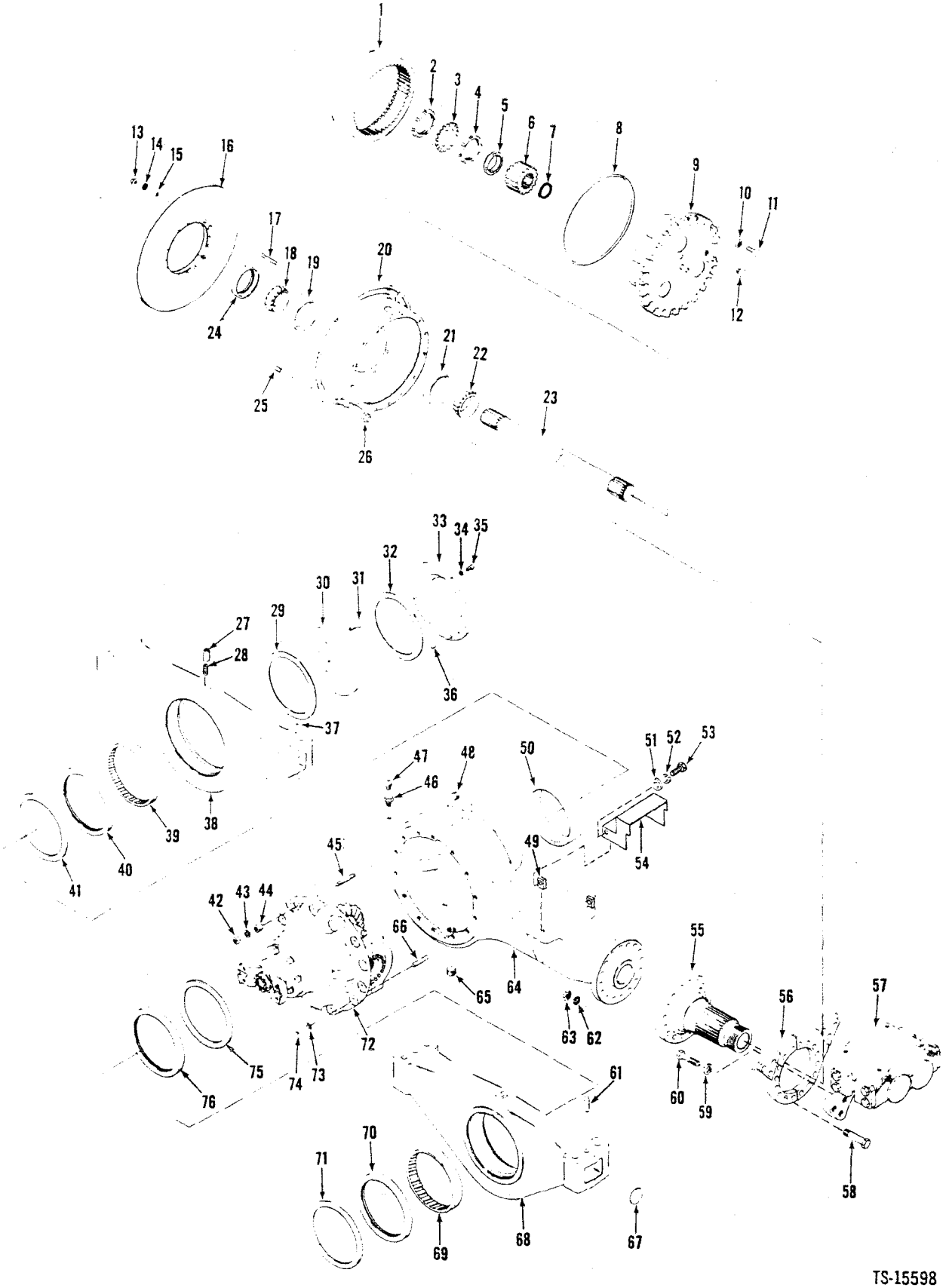
1
2
3
4
5
6
7
8
9
10
11
12
13
14
15
16
17
18
19
20
21
22
23
24
25
26
27
28
29
30
31
32
33
34
35
36
37
38
39
40
41
42
43
44
45
46
47
48
49
50
51
52
53
54
55
56
57
58
59
60
61
62
63
64
65
66
67
68
69
70
71
72
73
74
75
76

TS-15598

Axle Assembly, Rear — With Brakes — 55C

CLARK

No.	Part No.	Qty.	Description
A	[2]188152	1	Axle assy
B	[12]195948	1	Axle assy
C	[3]188153	1	Axle assy
1	123904	2	Hub
2	121013	2	Nut
3	121014	2	Lock
4	121013	2	Nut
5	128830	2	Washer
6	126463	2	Gear
7	224026	2	Ring
8	107348	2	Ring
9	[1]———	2	Planet carrier
10	106762	24	Washer
11	126415	24	Bolt
12	24K7	2	Plug
12A	†91F7	2	O-ring
13	[10]124543	32	Nut
13A	[11]86D10	32	Nut
14	104412	32	Washer
15	119141	4	Dowel
16	128724	2	Disc
17	128213	32	Stud
18	672005	2	Cone inner
19	672004	2	Cup inner
20	[4,10]129784	2	Hub assy
20A	[4,11]2106356	2	Hub assy
21	668553	2	Cup outer
22	675261	2	Cone outer
23	127206	2	Shaft
24	128117	2	Seal
25	[10]121808	24	Stud
25A	[11]2106352	24	Stud
26	103522	24	Nut
27	75F1	2	Coupling
28	5K118	2	Nipple
29	2106012	1	Washer
30	2106015	1	Plate
31	17C920	6	Bolt
32	2106012	1	Washer
33	128749	1	Retainer
34	4E7	8	Washer
35	17C722	8	Bolt
36	———	—	Omit
37	———	—	Omit

No.	Part No.	Qty.	Description
38	[5]113939	1	Support
39	2106009	1	Bushing
40	128943	1	Seal
41	128746	1	Protector
42	64D8	10	Nut
43	106762	10	Washer
44	112287	3	Dowel
45	129776	10	Stud
46	19F2	1	Bushing
47	106656	1	Breather
48	16F12	1	Plug
49	667266	4	Tapped block
50	2106014	2	Sleeve
51	2525069	4	Washer
52	———	—	Omit
53	17C412	4	Bolt
54	2522364	2	Cover
55	129787	2	Spindle
56	[5]129793	2	Plate
56A	†[7,10]129796	2	Plate
56B	[11]2107369	2	Plate
57	[1]———	2	Brake head
58	[10]18C1252	32	Bolt
58A	[11]18C1252	16	Bolt
58B	[11]18C1240	16	Bolt
59	111656	12	Washer
60	17C1244	12	Bolt
61	128750	4	Dowel
62	111656	32	Washer
63	64D12	32	Nut
64	[8]2105902	1	Housing
65	119469	1	Plug
66	129777	4	Stud
67	12F300	4	Plug
68	[9]113956	1	Support
69	2106010	1	Bushing
70	128943	1	Seal
71	128746	1	Protector
72	[1]———	—	Diff carrier assy
73	106762	4	Washer
74	64D8	4	Nut
75	128746	1	Protector
76	128943	1	Seal

[1]See Index
[2]Inc. 1 → 13, 14 → 20, 21 → 25, 26 → 56A, 57, 58, 59 → 76 Std Diff (D17620)
[3]Inc. 1 → 13, 14 → 20, 21 → 25, 26 → 56A, 57, 58, 59 → 76 No-Spin (D17620)
[4]Inc. 19, 21
[5]Inc. 39
[6]RH Front LH Rear
[7]LH Front RH Rear
[8]Inc. 50
[9]Inc. 69
[10]480A, 480B101CB → 180CB, 481A, 481B101CB → 157CB
[11]480B181CB & →, 481B158CB & →
[12]Inc. 1 → 12A, 13A → 19, 20A → 24, 25A → 55, 56B, 57, 58A → 76 S & D Diff (D17620)

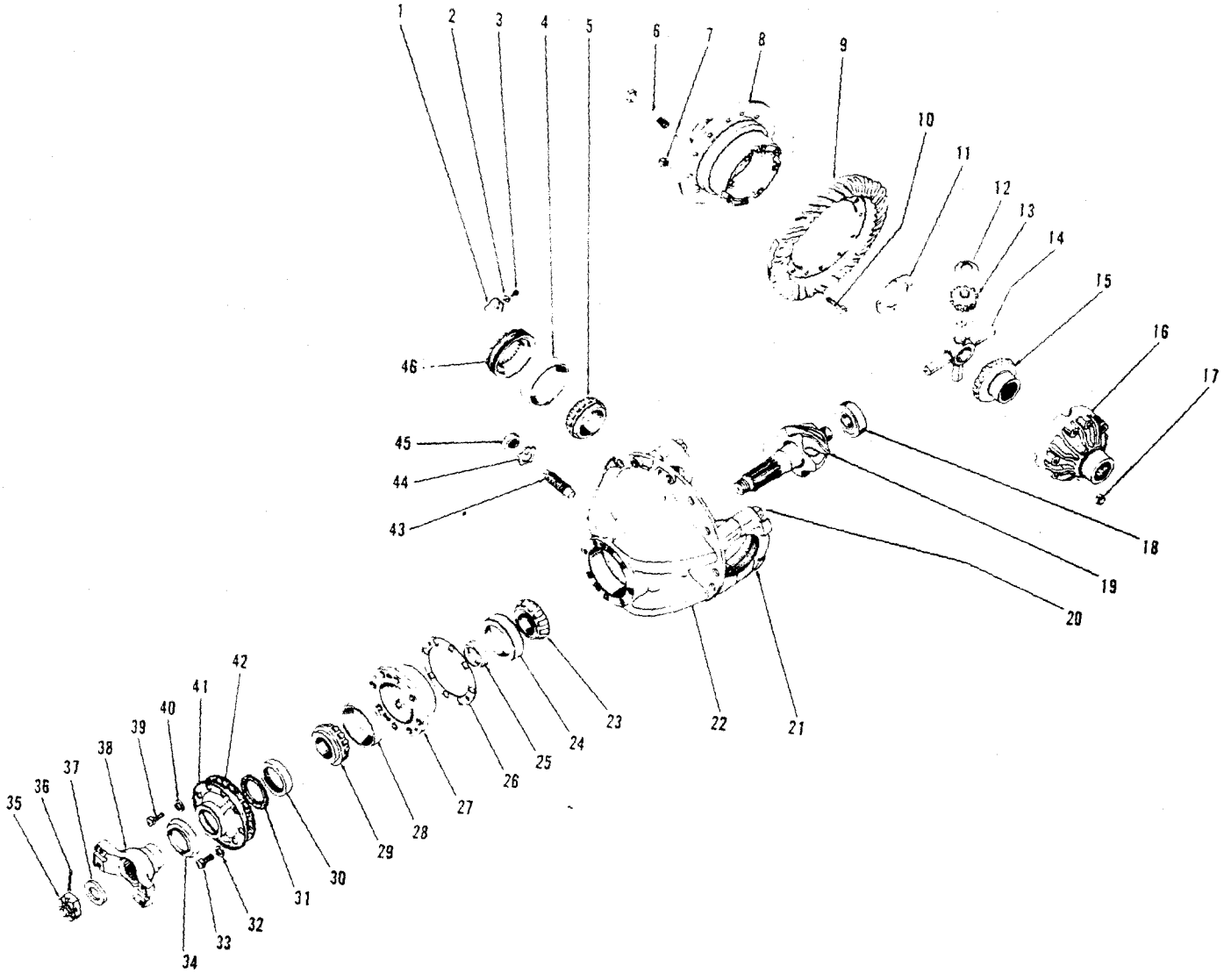
1
2
3
4
5
6
7
8
9
10
11
12
13
14
15
16
17
18
19
20
21
22
23
24
25
26
27
28
29
30
31
32
33
34
35
36
37
38
39
40
41
42
43
44
45
46

Axle Differential & Carrier Assembly, Front – 35C – 45C

CLARK

No.	Part No.	Qty.	Description
A	[2]129242	1	Differential assy
1	126468	2	Lock
2	4E6	2	Lockwasher
3	1C614	2	Bolt
4	675249	2	Cup
5	675248	2	Cone
6	17C856	12	Bolt
7	8608	12	Nut
8	[3]———	1	Differential case
9	[4]———	1	Ring gear
10	100176	12	Bolt
11	100173	2	Washer
12	100172	4	Washer
13	815744	1	Gear kit
14	100171	1	Spider
15	126135	1	Gear
16	[3]———	1	Differential case
17	106762	12	Washer
18	675536	1	Bearing
19	§[4]———	1	Pinion
20	123830	4	Bolt
20A	†26E12	4	Washer
21	§[5]———	2	Cap
22	[6]112279	1	Carrier assy
23	667277	1	Cone
24	667278	1	Cup
25	815040	1	Spacer kit
26	‡112354	–	Shim 0.10 mm .004 in
26A	‡125576	–	Shim 0.18 mm .007 in
26B	‡125577	–	Shim 0.25 mm .010 in
27	124041	1	Cage assy
28	675257	1	Cup
29	710288	1	Cone
30	111720	1	Seal
31	———	–	Omit
32	4E9	5	Lockwasher
33	17C932	5	Bolt
34	———	–	Omit
35	100950	1	Nut
36	1F428	1	Pin cotter
37	119298	1	Washer
38	106081	1	Flange
39	17C828	1	Bolt
40	4E8	1	Lockwasher
41	112352	1	Retainer
42	———	–	Omit
43	123800	1	Screw
44	———	–	Omit
45	8D14	1	Nut
46	122765	2	Nut
47	[7]126132	1	Body assy
48	[8]129232	1	Gear set
49	[9]129894	1	Differential assy

[2]Inc. 1→30, 32, 33, 35→41, 43, 45, 46
[3]See 49
[4]See 48
[5]See 22
[6]Inc. 20, 20A, 21
[7]Inc. 6, 8, 11→17
[8]Inc. 9, 19
[9]Inc. 6, 8, 16, 17

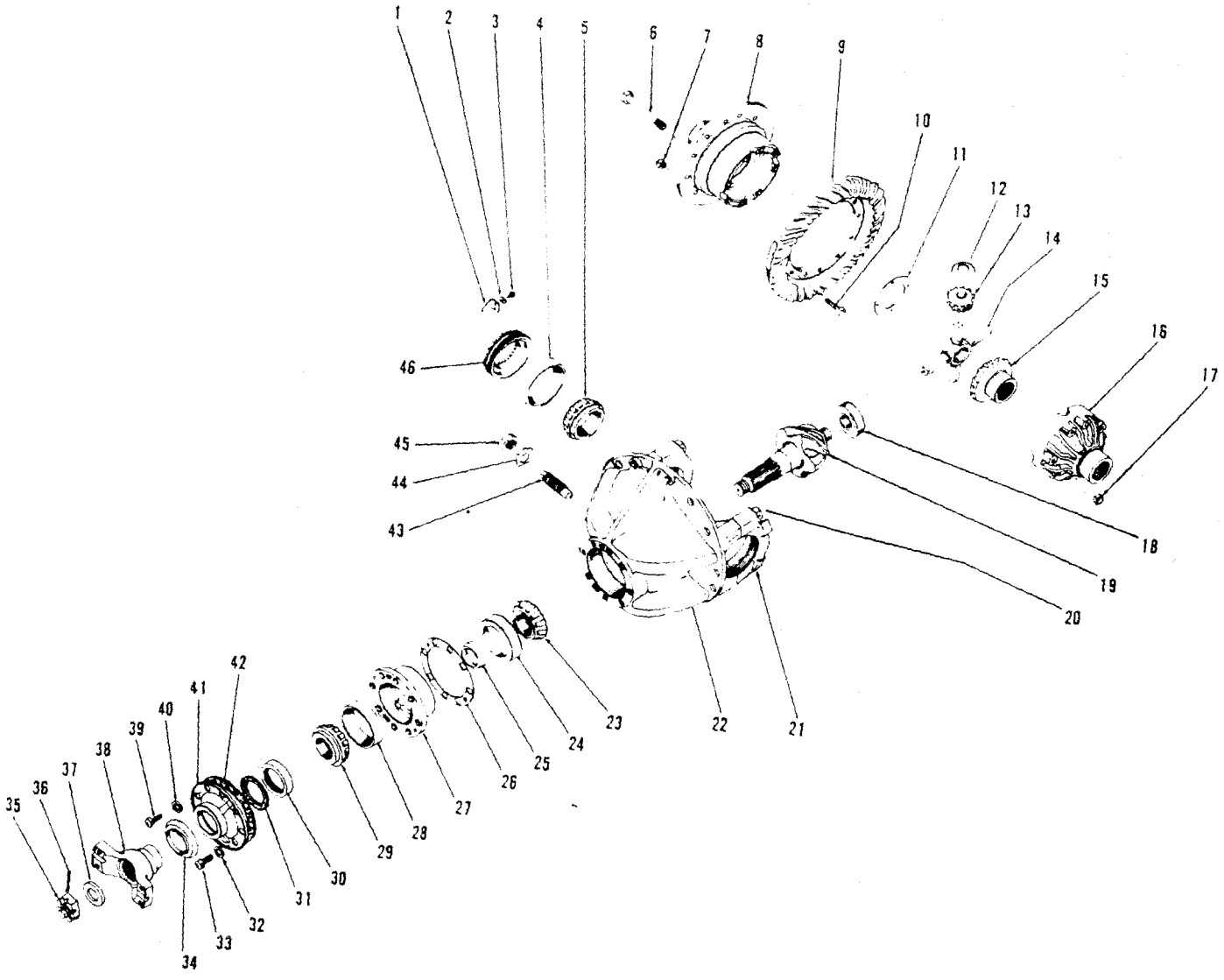
1
2
3
4
5
6
7
8
9
10
11
12
13
14
15
16
17
18
19
20
21
22
23
24
25
26
27
28
29
30
31
32
33
34
35
36
37
38
39
40
41
42
43
44
45
46

Axle Differential & Carrier Assembly, Front — 55C

CLARK

No.	Part No.	Qty.	Description
A	[2]2106722	1	Differential assy
1	126468	2	Lock
2	4E6	2	Lockwasher
3	1C614	2	Bolt
4	675249	2	Cup
5	675248	2	Cone
6	17C856	12	Bolt
7	86D8	12	Nut
8	[3]———	1	Differential case
9	[4]———	1	Ring gear
10	100176	12	Bolt
11	100173	2	Washer
12	100172	4	Washer
13	815744	4	Gear kit
14	100171	1	Spider
15	126135	2	Gear
16	[3]———	1	Differential case
17	106762	12	Washer
18	675536	1	Bearing
19	§[4]———	1	Pinion
20	123830	4	Bolt
20A	[2]6E12	4	Washer
21	§[5]———	2	Cap
22	[6]2106207	1	Carrier assy
23	667277	1	Cone
24	667278	1	Cup
25	815040	1	Spacer kit
26	‡112354	—	Shim 0.10 mm .004 in
26A	‡125576	—	Shim 0.18 mm .007 in
26B	‡125577	—	Shim 0.25 mm .010 in
27	124041	1	Cage assy
28	675257	1	Cup
29	710288	1	Cone
30	111720	1	Seal
31	———	—	Omit
32	4E9	5	Lockwasher
33	17C932	5	Bolt
34	———	—	Omit
35	100950	1	Nut
36	1F428	1	Pin cotter
37	119298	1	Washer
38	106081	1	Flange
39	17C828	1	Bolt
40	4E8	1	Lockwasher
41	112352	1	Retainer
42	———	—	Omit
43	123800	1	Screw
44	———	—	Omit
45	8D14	1	Nut
46	122765	2	Nut
47	[7]126132	1	Body assy
48	[8]122574	1	Gear set
49	[9]126894	1	Differential assy

[2]Inc. 1→30, 32, 33, 35→41, 43, 45, 46
[3]See 49
[4]See 48
[5]See 22
[6]Inc. 20, 20A, 21
[7]Inc. 6, 8, 11→17
[8]Inc. 9, 19
[9]Inc. 6, 8, 16, 17

CLARK

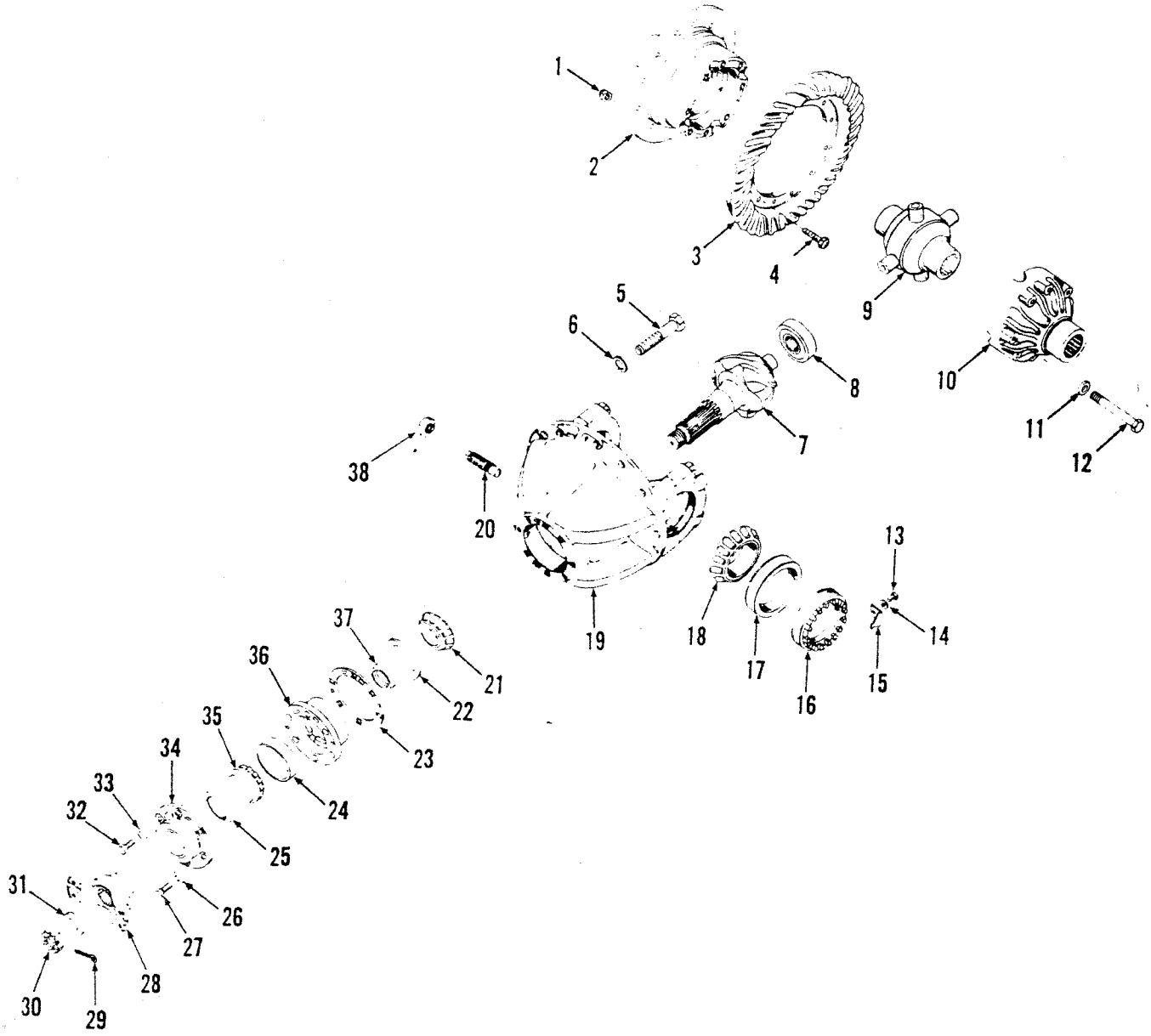

TS-15670

Axle Differential & Carrier Assy — Front (No-Spin) — 55C

CLARK

No.	Part No.	Qty.	Description
A	[1]2106724	1	Differential assy
1	86D8	12	Nut
2	[2]———	1	Case
3	[3]———	1	Gear
4	100176	12	Bolt
5	123830	4	Bolt
6	26E12	4	Washer
7	[3]———	1	Pinion
8	675536	1	Bearing
9	126136	1	No-spin
10	[3]———	1	Case
11	106762	12	Washer
12	17C856	12	Bolt
13	1C614	2	Bolt
14	4E6	2	Washer
15	126468	2	Lock
16	122765	2	Nut
17	675249	2	Cup roller bearing
18	675248	2	Cone roller bearing
19	[1]2106207	1	Carrier assy
20	123800	1	Screw
21	667277	1	Cone roller bearing
22	667278	1	Cup roller bearing
23	‡112354	—	Shim 0.10 mm .004 in
23A	‡125576	—	Shim 0.18 mm .007 in
23B	‡125577	—	Shim 0.25 mm .010 in
24	675257	1	Cup roller bearing
25	111720	1	Seal
26	4E9	5	Washer
27	17C932	5	Bolt
28	106081	1	Flange
29	1F428	1	Cotter pin
30	100950	1	Nut
31	119298	1	Washer
32	17C828	1	Bolt
33	4E8	1	Washer
34	112352	1	Retainer
35	710288	1	Cone roller bearing
36	124041	1	Cage assy
37	815040	1	Spacer kit
38	8D14	1	Nut
39	†[5]126133	1	Body assy
40	†[6]126894	1	Case kit
41	†[7]122574	1	Gear kit

[1]Inc. 1→39
[2]See 38
[3]See 40
[4]Inc. 5, 6, 20
[5]Inc. 2, 9→12
[6]Inc. 2, 10, 11, 12
[7]Inc. 3, 7

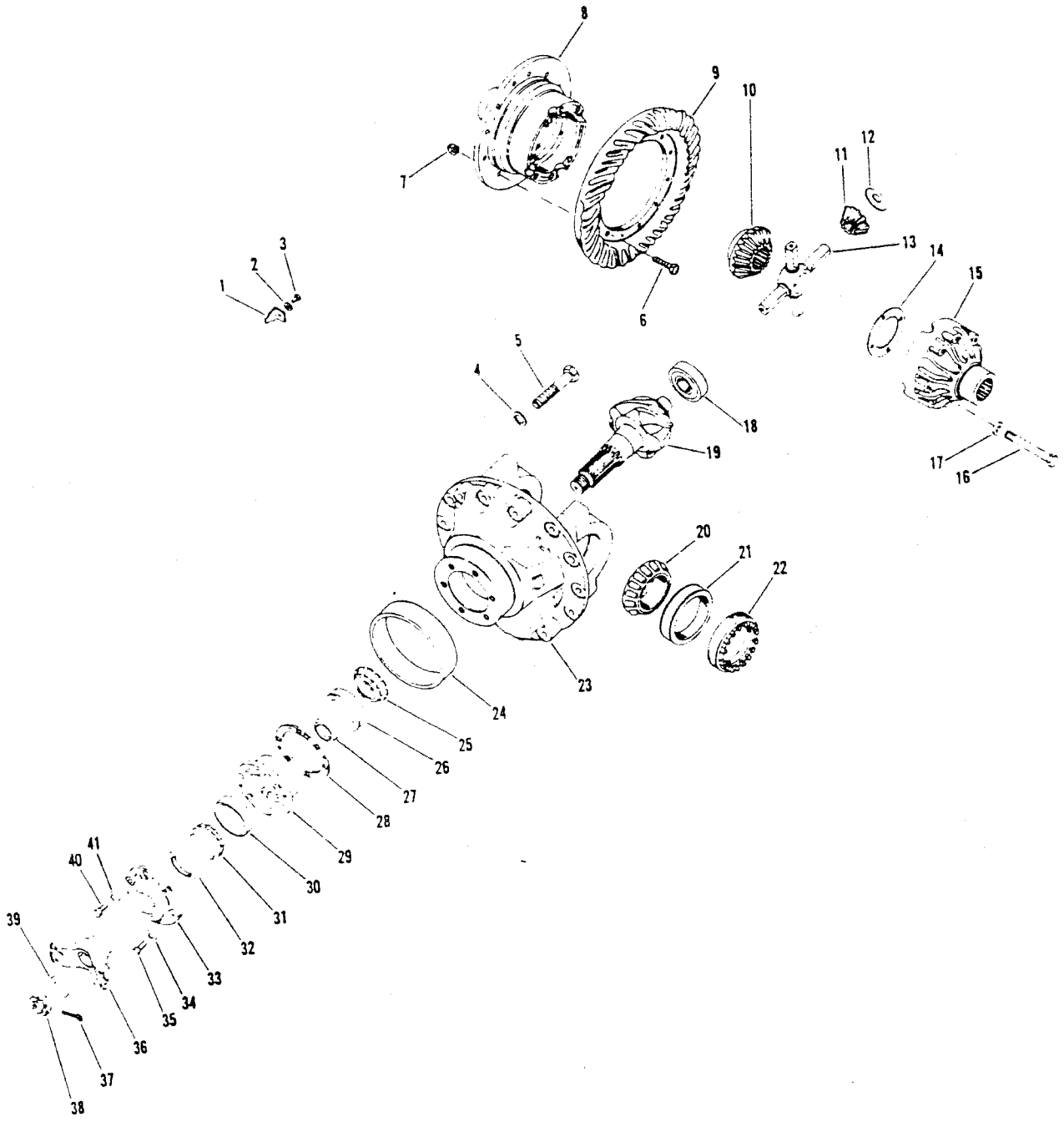
1
2
3
4
5
6
7
8
9
10
11
12
13
14
15
16
17
18
19
20
21
22
23
24
25
26
27
28
29
30
31
32
33
34
35
36
37
38
39
40
41

TS-15201

Axle Differential & Carrier Assembly, Rear – 35C & 45C

CLARK

No.	Part No.	Qty.	Description
A	[2]129778	1	Differential assy
1	126468	2	Lock
2	4E6	2	Washer
3	1C614	2	Bolt
4	26E12	4	Washer
5	123830	4	Bolt
6	100176	12	Bolt
7	86D8	12	Nut
8	[3]———	1	Case
9	[4]———	1	Gear
10	126135	2	Gear
11	815744	1	Pinion kit
12	100172	4	Washer
13	100171	1	Spider
14	100173	2	Washer
15	[3]———	1	Case
16	17C856	12	Bolt
17	106762	12	Washer
18	675536	1	Bearing
19	[4]———	1	Pinion
20	675248	2	Cone roller bearing
21	675249	2	Cup roller bearing
22	122765	2	Nut
23	[5]129779	1	Carrier assy
24	2106013	1	Sleeve
25	667277	1	Cone roller bearing
26	667278	1	Cup roller bearing
27	815040	1	Spacer kit
28	‡112354	–	Shim 0.10 mm .004 in
28A	‡125576	–	Shim 0.18 mm .007 in
28B	‡125577	–	Shim 0.25 mm .010 in
29	124041	1	Cage assy
30	675257	1	Cup roller bearing
31	710288	1	Cone roller bearing
32	111720	1	Oil seal
33	112352	1	Retainer
34	4E9	5	Washer
35	17C928	5	Bolt
36	106081	1	Flange
37	1F428	1	Cotter pin
38	100950	1	Nut
39	119298	1	Washer
40	17C828	1	Bolt
41	4E8	1	Washer
42	†[6]126132	1	Body assy
43	†[7]126894	–	Case kit
44	†[8]129235	–	Gear kit

[2]Inc. 1➔41
[3]See 42
[4]See 44
[5]Inc. 4, 5, 24
[6]Inc. 8, 10➔17
[7]Inc. 8, 15, 16, 17
[8]Inc. 9, 19

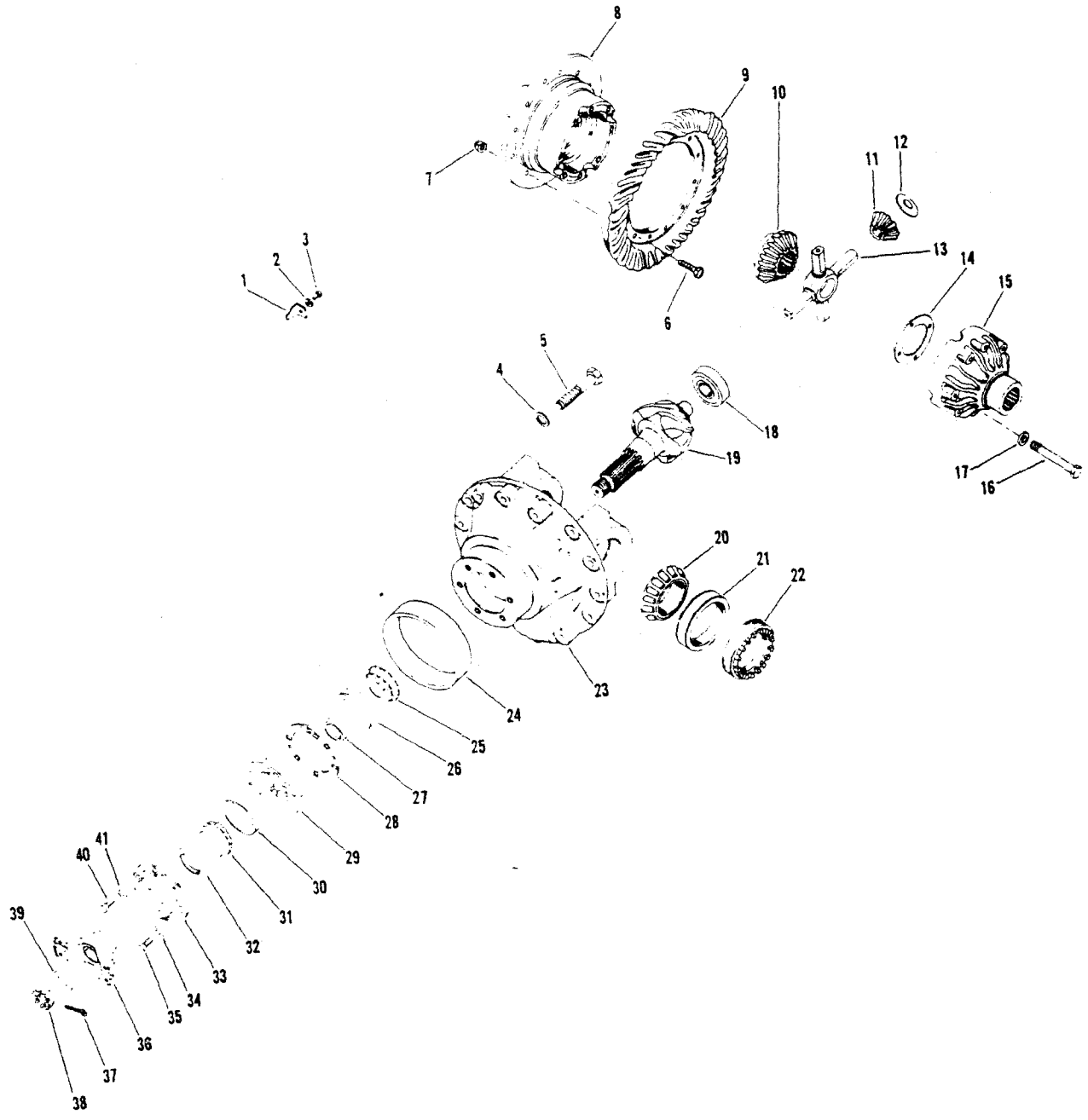
1
2
3
4
5
6
7
8
9
10
11
12
13
14
15
16
17
18
19
20
21
22
23
24
25
26
27
28
29
30
31
32
33
34
35
36
37
38
39
40
41

TS-15201

Axle Differential & Carrier Assembly, Rear – 55C

CLARK

No.	Part No.	Qty.	Description
A	[2]2106726	1	Differential assy
1	126468	2	Lock
2	4E6	2	Washer
3	1C614	2	Bolt
4	26E12	4	Washer
5	123830	4	Bolt
6	100176	12	Bolt
7	86D8	12	Nut
8	[3]———	1	Case
9	[4]———	1	Gear
10	126135	2	Gear
11	815744	1	Pinion kit
12	100172	4	Washer
13	100171	1	Spider
14	100173	2	Washer
15	[3]———	1	Case
16	17C856	12	Bolt
17	106762	12	Washer
18	675536	1	Bearing
19	[4]———	1	Pinion
20	675248	2	Cone roller bearing
21	675249	2	Cup roller bearing
22	122765	2	Nut
23	[5]129779	1	Carrier assy
23A	†128731	2	Cap
24	2106013	1	Sleeve
25	667277	1	Cone roller bearing
26	667278	1	Cup roller bearing
27	815040	1	Spacer kit
28	‡112354	–	Shim 0.10 mm .004 in
28A	‡125576	–	Shim 0.18 mm .007 in
28B	‡125577	–	Shim 0.25 mm .010 in
29	124041	1	Cage assy
30	675257	1	Cup roller bearing
31	710288	1	Cone roller bearing
32	111720	1	Oil seal
33	112352	1	Retainer
34	4E9	5	Washer
35	17C928	5	Bolt
36	106081	1	Flange
37	1F428	1	Cotter pin
38	100950	1	Nut
39	119298	1	Washer
40	17C828	1	Bolt
41	4E8	1	Washer
42	†[6]126132	1	Body assy
43	†[7]126894	–	Case kit
44	†[8]122565	–	Gear kit

[2]Inc. 1→41
[3]See 42
[4]See 44
[5]Inc. 4, 5, 24
[6]Inc. 8, 10→17
[7]Inc. 8, 15, 16, 17
[8]Inc. 9, 19

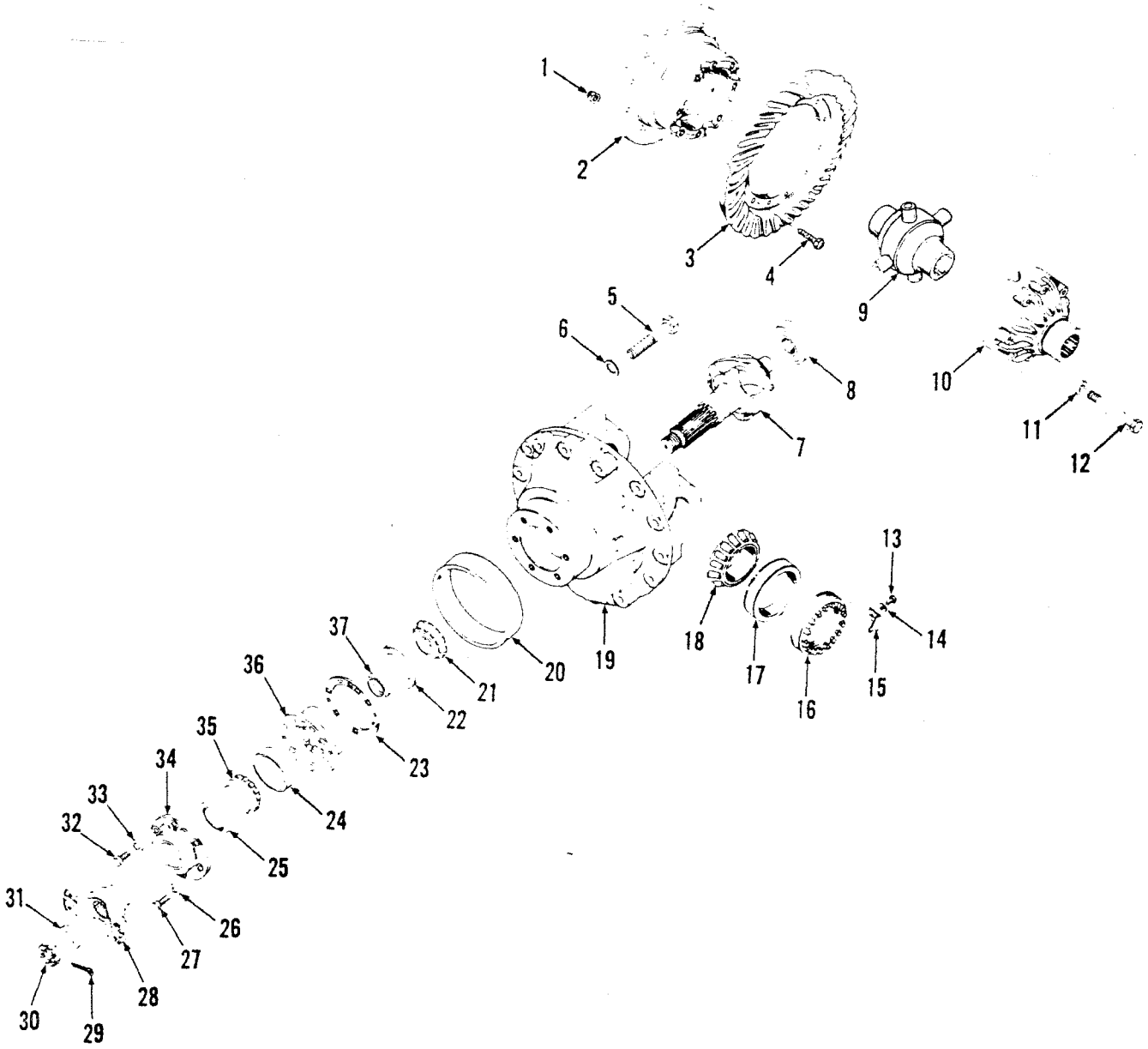
1
2
3
4
5
6
7
8
9
10
11
12
13
14
15
16
17
18
19
20
21
22
23
24
25
26
27
28
29
30
31
32
33
34
35
36
37

TS-15203

Axle Differential & Carrier Assy — Rear (No-Spin) — 35C — 45C

CLARK

No.	Part No.	Qty.	Description
A	129782	1	Differential assy
1	86D8	12	Nut
2	[2]———	1	Case
3	[3]———	1	Gear
4	100176	12	Bolt
5	123830	4	Bolt
6	26E12	4	Washer
7	[3]———	1	Pinion
8	675536	1	Bearing
9	126136	1	No-spin
10	[3]———	1	Case
11	106762	12	Washer
12	17C856	12	Bolt
13	1C614	2	Bolt
14	4E6	2	Washer
15	126468	2	Lock
16	122765	2	Nut
17	675249	2	Cup roller bearing
18	675248	2	Cone roller bearing
19	[4]129779	1	Carrier assy
20	2106013	1	Sleeve
21	667277	1	Cone roller bearing
22	667278	1	Cup roller bearing
23	±112354	—	Shim 0.10 mm .004 in
23A	±125576	—	Shim 0.18 mm .007 in
23B	±125577	—	Shim 0.25 mm .010 in
24	675257	1	Cup roller bearing
25	111720	1	Seal
26	4E9	5	Washer
27	17C932	5	Bolt
28	106081	1	Flange
29	1F428	1	Cotter pin
30	100950	1	Nut
31	119298	1	Washer
32	17C828	1	Bolt
33	4E8	1	Washer
34	112352	1	Retainer
35	710288	1	Cone roller bearing
36	124041	1	Cage assy
37	815040	1	Spacer kit
38	†[5]126133	1	Body assy
39	†[6]126894	1	Case kit
40	†[7]129235	1	Gear kit

[2]See 38
[3]See 40
[4]Inc. 5, 6, 20
[5]Inc. 2, 9 ⟶ 12
[6]Inc. 2, 10, 11, 12
[7]Inc. 3, 7

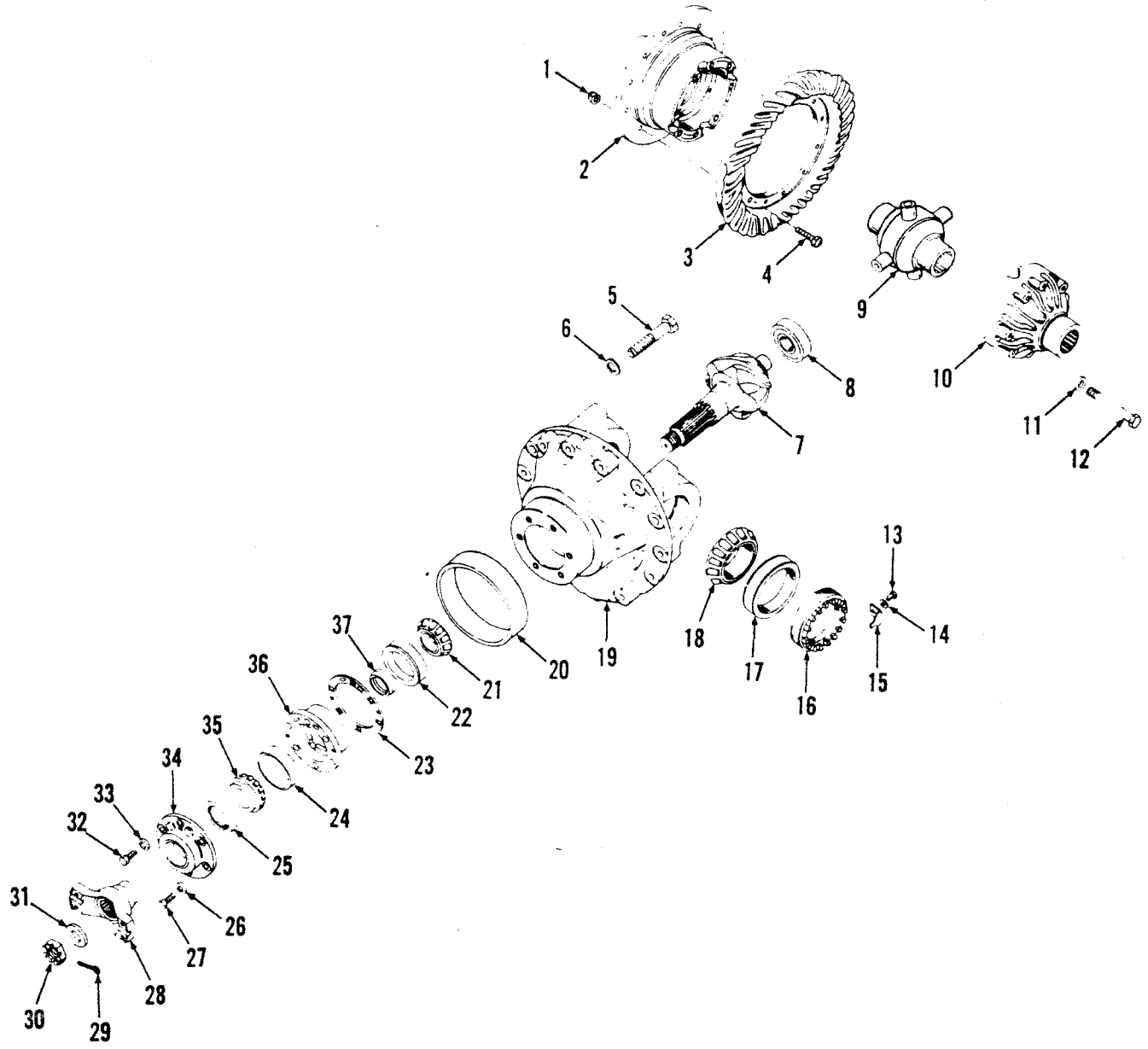
1
2
3
4
5
6
7
8
9
10
11
12
13
14
15
16
17
18
19
20
21
22
23
24
25
26
27
28
29
30
31
32
33
34
35
36
37

TS-15203

Axle Differential & Carrier Assy — Rear (No-Spin) — 55C

CLARK

No.	Part No.	Qty.	Description
A	[1]2106728	1	Differential assy
1	86D8	12	Nut
2	[2]———	1	Case
3	[3]———	1	Gear
4	100176	12	Bolt
5	123830	4	Bolt
6	26E12	4	Washer
7	[3]———	1	Pinion
8	675536	1	Bearing
9	126136	1	No-spin
10	[3]———	1	Case
11	106762	12	Washer
12	17C856	12	Bolt
13	1C614	2	Bolt
14	4E6	2	Washer
15	126468	2	Lock
16	122765	2	Nut
17	675249	2	Cup roller bearing
18	675248	2	Cone roller bearing
19	[4]129779	1	Carrier assy
19A	†128731	2	Cap
20	2106013	1	Sleeve
21	667277	1	Cone roller bearing
22	667278	1	Cup roller bearing
23	‡112354	—	Shim 0.10 mm .004 in
23A	‡125576	—	Shim 0.18 mm .007 in
23B	‡125577	—	Shim 0.25 mm .010 in
24	675257	1	Cup roller bearing
25	111720	1	Seal
26	4E9	5	Washer
27	17C932	5	Bolt
28	106081	1	Flange
29	1F428	1	Cotter pin
30	100950	1	Nut
31	119298	1	Washer
32	17C828	1	Bolt
33	4E8	1	Washer
34	112352	1	Retainer
35	710288	1	Cone roller bearing
36	124041	1	Cage assy
37	815040	1	Spacer kit
38	†[5]126133	1	Body assy
39	†[6]126894	1	Case kit
40	†[7]122565	1	Gear kit

[1]Inc. 1→37
[2]See 38
[3]See 40
[4]Inc. 5, 6, 20
[5]Inc. 2, 9→12
[6]Inc. 2, 10, 11, 12
[7]Inc. 3, 7

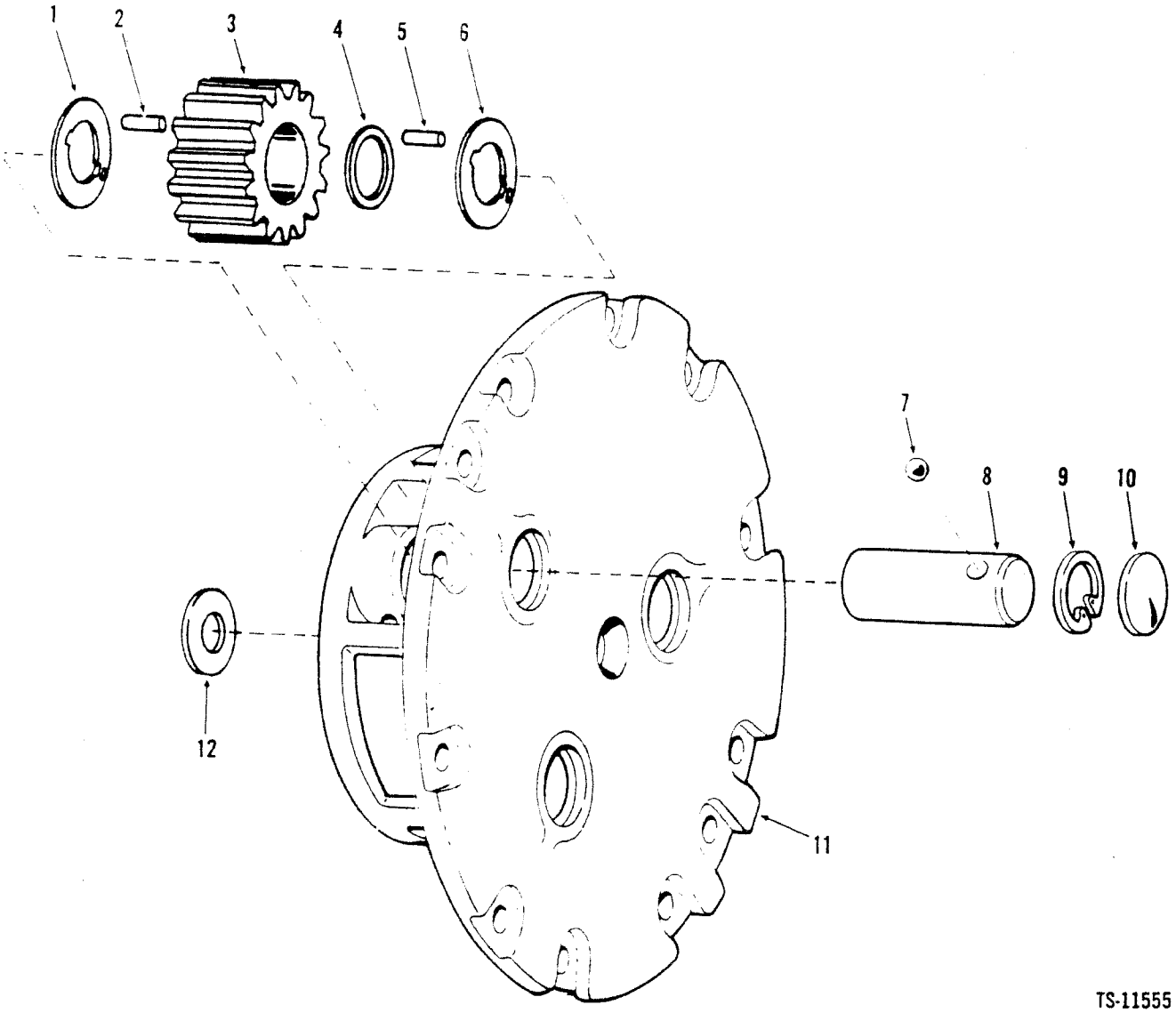

TS-11555

No.	Part No.	Qty.	Description
A	[2][3]127398	4	Carrier assy
1	124574	3	Washer
2	124576	87	Roller
3	124573	3	Gear
4	124577	3	Spacer
5	124576	87	Roller
6	124574	3	Washer
7	10J12	3	Ball
8	124575	3	Gear shaft
9	672907	3	Ring snap
10	12F200	3	Plug
11	127399	1	Carrier
12	121166	1	Washer

[2]Inc. 1→12
[3]4 used. Quantities listed are for 1.

CLARK

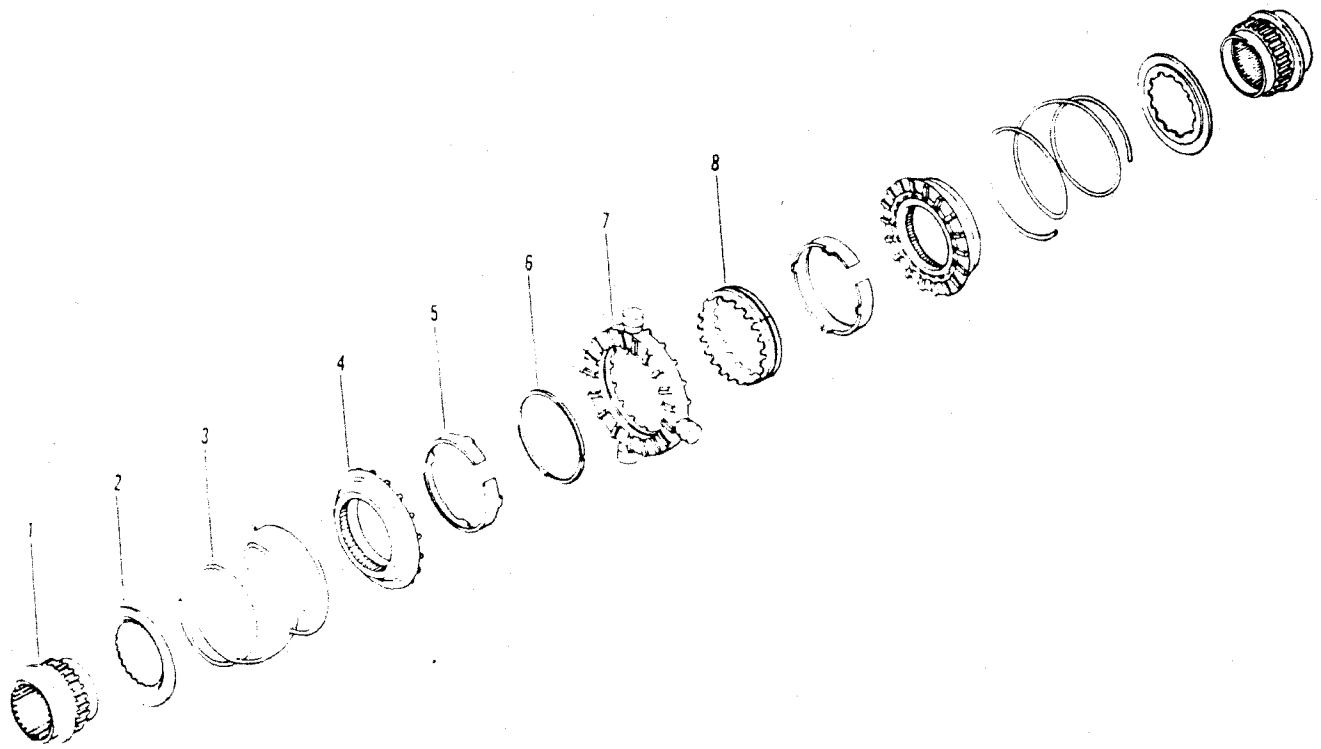

TS-14378

No.	Part No.	Qty.	Description
A	126136	1	No-spin assy
1	840964	2	Gear
2	840874	2	Retainer
3	840873	2	Spring
4	[3]840597	2	Clutch
5	§———	2	Ring
6	§———	1	Snap ring
7	[3]840598	1	Spider assy
8	§———	1	Cam

[2]Inc. 5
[3]Inc. 6, 8

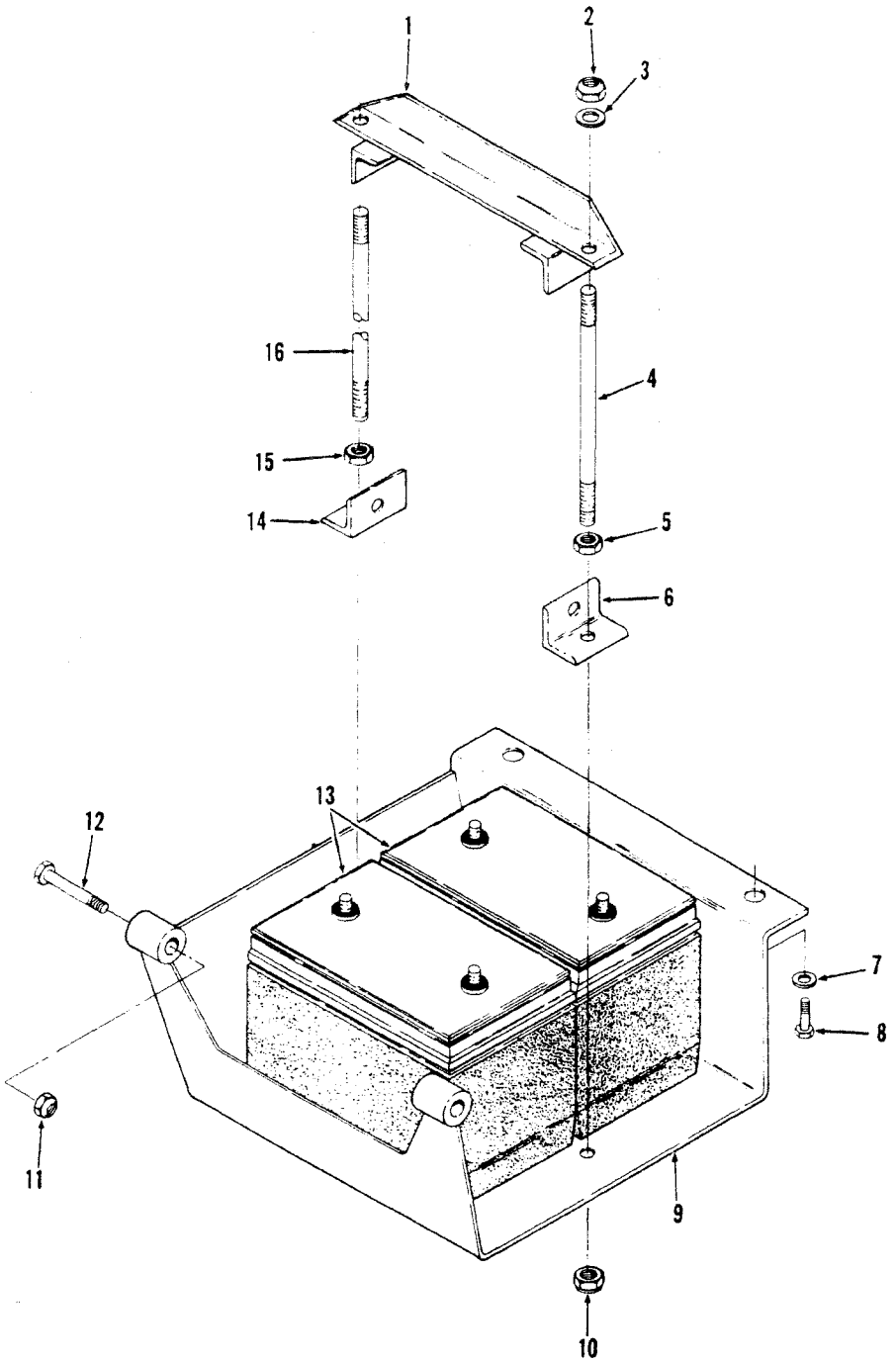

TS-20083

No.	Part No.	Qty.	Description
1	2512541	1	Hold down
2	60D4	2	Nut
3	25E13	2	Washer
4	1308261	1	Stud
5	8D4	1	Nut
6	2518708	1	Angle
7	27E8	2	Washer
8	33C820	2	Bolt
9	2518016	1	Support
10	60D4	2	Nut
11	60D8	2	Nut
12	18C864	2	Bolt
13	2511022	2	Battery
14	2518708	1	Angle
15	8D4	1	Nut
16	1308261	1	Stud

Battery & Battery Mount – 55C

CLARK

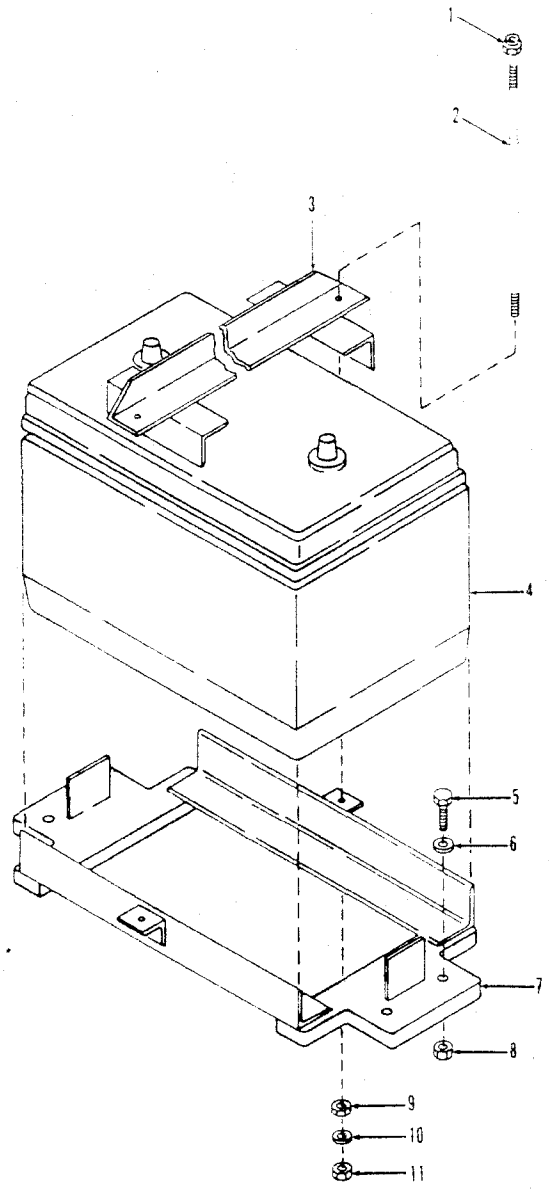

TS-15691

No.	Part No.	Qty.	Description
1	60D4	2	Nut
2	2524255	2	Rod
3	[2]2519116	2	Hold down
3A	[3 4]2529737	2	Hold down
4	[3 2]2511022	2	Battery
4A	[4]5294896	2	Battery
5	[2]17C624	4	Bolt
5A	[3 4]17C628	4	Bolt
6	27E6	8	Washer
7	[2]2519115	1	Box assy
7A	[3 4]2529739	1	Box assy
8	59D6	4	Nut
9	8D4	2	Jam nut
10	2525069	2	Washer
11	60D4	2	Nut

[2]480A 481A
[3]480B
[4]481B

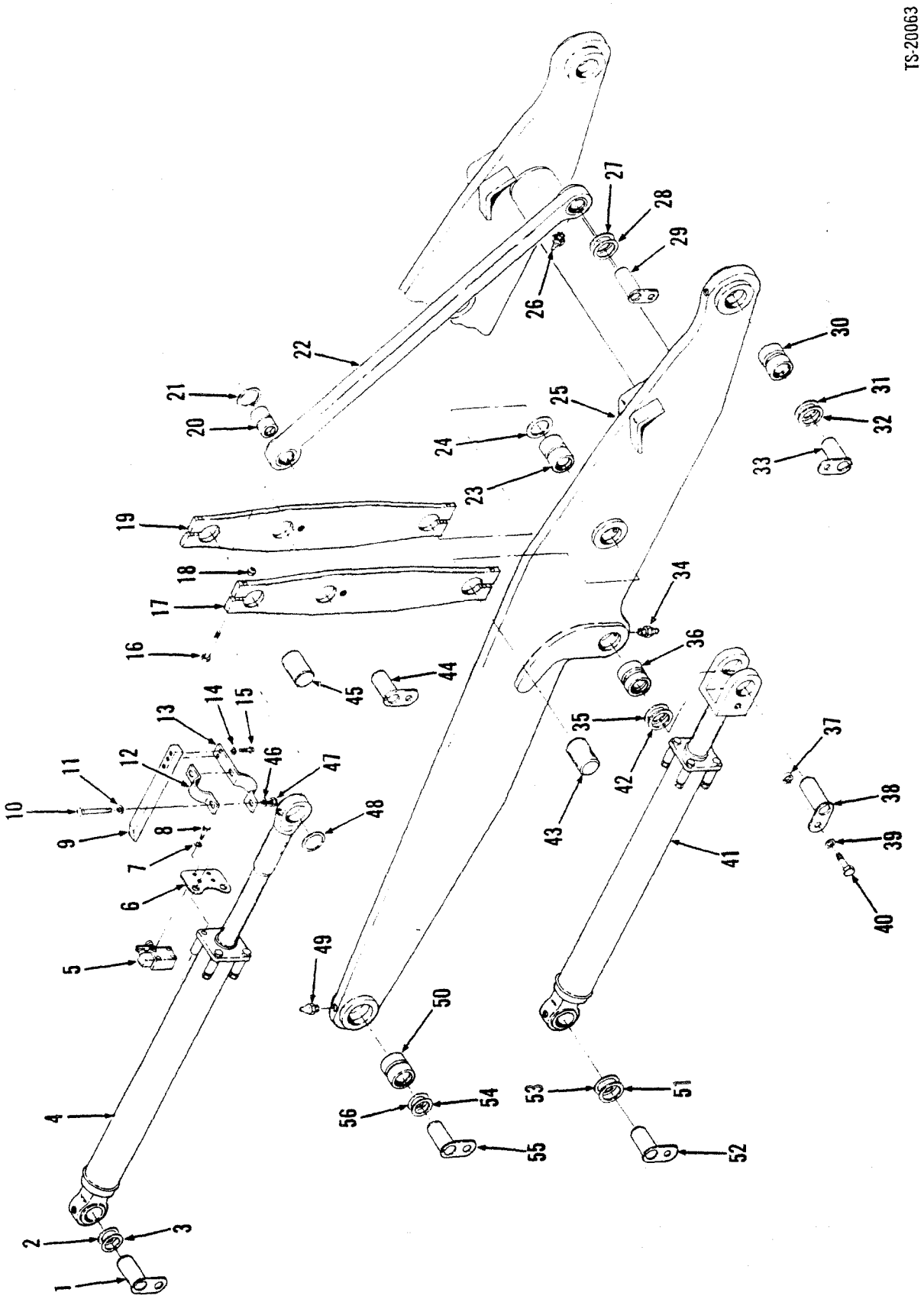
TS-20063
1
2
3
4
5
6
7
8
9
10
11
12
13
14
15
16
17
18
19
20
21
22
23
24
25
26
27
28
29
30
31
32
33
34
35
36
37
38
39
40
41
42
43
44
45
46
47
48
49
50
51
52
53
54
55
56

Boom, Bellcrank, Pushrod & Bucket Leveler

CLARK

No.	Part No.	Qty.	Description
1	2512051	2	Pin
2	2511956	4	Seal
3	‡2512169	–	Shim .065
3A	‡2512168	–	Shim .120
4	[1]———	2	Cylinder assy bucket
5	[4]1767898	1	Switch limit 35C-45C
5A	308031	1	Switch limit 55C
5B	†990556	1	Arm
6	2515623	1	Bracket
7	2525069	4	Lockwasher
8	17C412	4	Bolt
9	2515625	1	Cam 35C-45C
9A	2526994	1	Cam 55C
10	[8]17C624	2	Bolt
10A	[9]17C628	2	Bolt
11	27E6	2	Washer
12	2515626	1	Clamp
13	2515624	1	Clamp
14	[8]4E4	2	Washer
14A	[9]2525069	2	Lockwasher
15	17C416	2	Bolt
16	18C1080	8	Bolt
17	2523015	2	Bellcrank 35C-45C
17A	2518321	2	Bellcrank 55C
18	60D10	8	Nut
19	2523015	2	Bellcrank 35C-45C
19A	2518321	2	Bellcrank 55C
20	2512013	4	Bushing
21	2511956	4	Seal
22	[2]2523013	2	Pushrod – 35C-55C
22A	[2]2523017	2	Pushrod – 45C
23	2512013	2	Bushing
24	2511956	4	Seal
25	[3]2521005	1	Boom assy – 35C
25A	[7-3-5]2521000	1	Boom assy – 45C
25B	[3-6]2525728	1	Boom assy – 45C
25C	[3]2518316	1	Boom assy – 55C
25D	†2516803	2	Stop block
26	10H25	4	Grease fitting
27	2511956	4	Seal
28	‡2512169	–	Shim .065
28A	‡2512168	–	Shim .120
29	2512159	2	Pin
30	2512014	2	Bushing
31	2512012	4	Seal
32	‡2515710	–	Shim 1,6 mm .065 in
32A	‡2515723	–	Shim 3,0 mm .120 in
33	2514887	2	Pin
34	10H25	4	Grease fitting
35	2512012	4	Seal
36	2512014	2	Bushing
37	2512037	14	Spacer
38	2514887	2	Pin
39	27E8	14	Washer
40	18C824	14	Bolt
41	[1]———	2	Cylinder assy boom
42	‡2515710	–	Shim 1,6 mm .065 in
42A	‡2515723	–	Shim 3,0 mm .120 in
43	513372	2	Pin
44	2512159	2	Pin
45	513372	2	Pin
46	27E6	2	Washer
47	5906	2	Nut
48	2511956	4	Seal
49	10H25	4	Grease fitting
50	2512014	2	Bushing
51	‡2515710	–	Shim 1,6 mm .065 in
51A	‡2515723	–	Shim 3,0 mm .120 in
52	2512052	2	Pin
53	2512012	4	Seal
54	‡2515710	–	Shim 1,6 mm .065 in
54A	‡2515723	–	Shim 3,0 mm .120 in
55	2512052	2	Pin
56	2512012	4	Seal

[1]See Index
[2]Inc. 20, 21
[3]Inc. 23, 25C, 30, 36, 50
[4]Ref. SG-723
[5]G.M. 473A101→298CB, Perkins 459A101→140CB
[6]G.M. 473A299CB & →, Perkins 459A141CB & →
[7]For replacement use 2525728 Boom Assy
[8]458A101CB→999CB, 459A101CB→155CB, 472A101CB→327CB, 473A101CB→403CB
[9]459A156CB→999CB, 472A328CB→999CB, 473A404CB→999CB, 480A101CB & →, 481A101CB & →

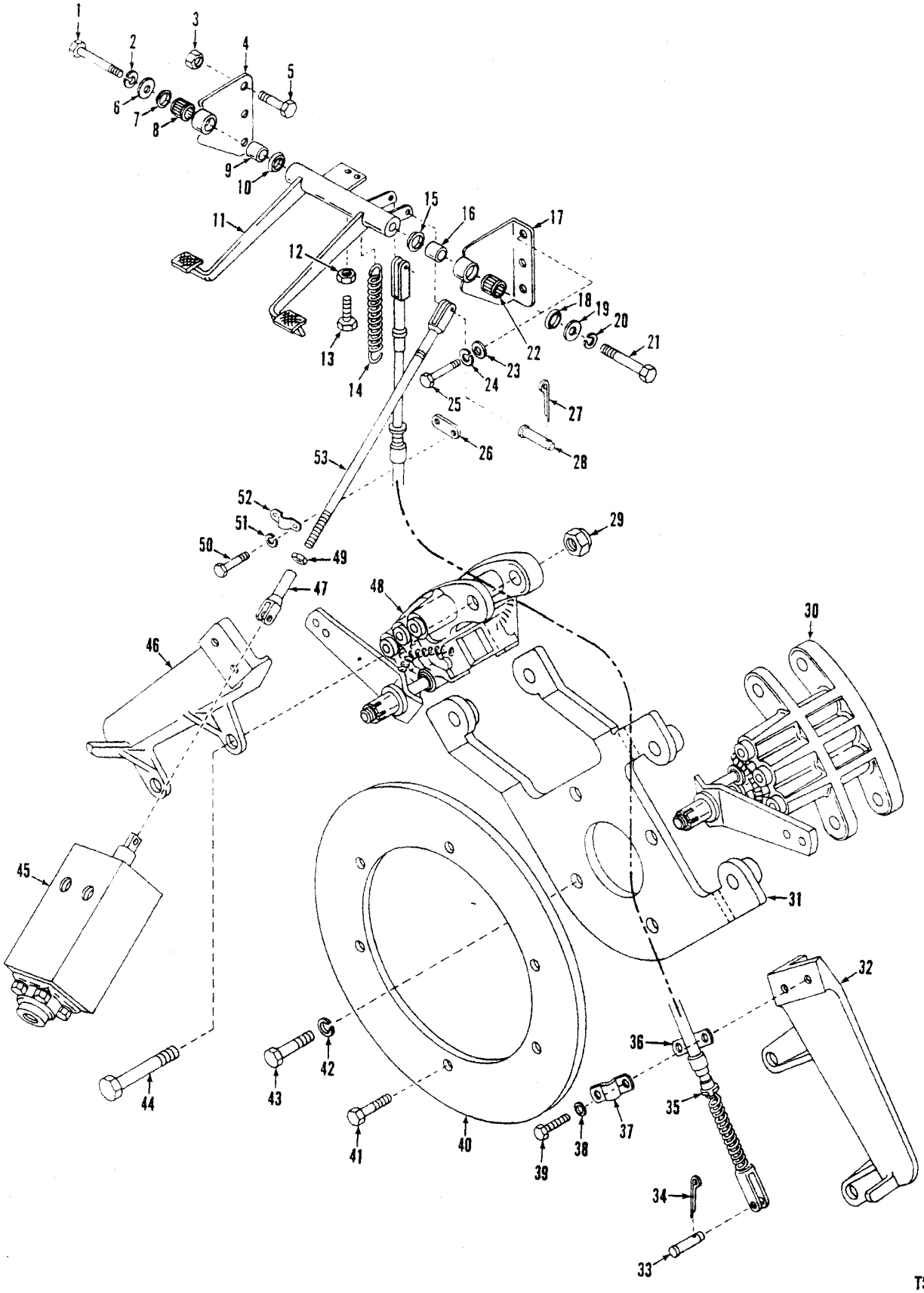
1
2
3
4
5
6
7
8
9
10
11
12
13
14
15
16
17
18
19
20
21
22
23
24
25
26
27
28
29
30
31
32
33
34
35
36
37
38
39
40
41
42
43
44
45
46
47
48
49
50
51
52
53

TS-20225

No.	Part No.	Qty.	Description
1	17C844	1	Bolt
2	4E8	1	Washer
3	59D6	3	Nut
4	[2]2516923	1	Bracket
5	17C516	3	Bolt
6	584502	1	Washer
7	1522535	1	Wiper
8	675227	1	Bearing
9	1503251	1	Sleeve
10	1522535	1	Wiper
11	[7]2516930	1	Pedal assy
11A	[8]2536403	1	Pedal assy
12	7D05	1	Nut
13	17C516	1	Bolt
14	1675618	1	Spring
15	1522535	1	Wiper
16	1503251	1	Sleeve
17	[3][7]2516926	1	Bracket
17A	[3][8]2536402	1	Bracket
18	1522535	1	Wiper
19	584502	1	Washer
20	4E8	1	Washer
21	17C844	1	Bolt
22	675227	1	Bearing
23	[5]567806	3	Washer
23A	[6]2525070	3	Washer
24	[5]4E5	3	Washer
25	[5]17C516	3	Bolt
25A	[6]17C512	3	Bolt
26	645092	2	Spacer
27	1F312	1	Pin cotter
28	4F06106	1	Clevis pin
29	66D10	4	Nut
30	[1]———	1	Brake head
31	2517592	1	Bracket
32	2517536	1	Bracket
33	4F06106	1	Clevis pin
34	1F312	1	Pin cotter
35	2520323	1	Cable
36	645092	1	Spacer
37	544512	1	Clamp
38	4E6	2	Washed
39	17C616	2	Bolt
40	2512058	1	Disc
41	18C616	6	Bolt
42	[5]4E9	4	Washer
42A	[6]2524849	4	Washer
43	17C924	4	Bolt
44	18C1064	4	Bolt
45	[1]———	1	Valve brake
46	124425	1	Bracket
47	2J6208	1	Clevis
48	[1]———	1	Brake head
49	8D6	1	Nut
50	17C616	2	Bolt
51	4E6	2	Washer
52	544512	1	Clamp
53	[4]2519188	1	Rod assy

[1]See Index
[2]Inc. 8
[3]Inc. 22
[4]Inc. 47, 49
[5]35C 45C
[6]55C
[7]458A 459A 472A 473A 480A, 480B101CB, 481A, 481B101 → 104CB
[8]480B102CB & → 481B105CB & →

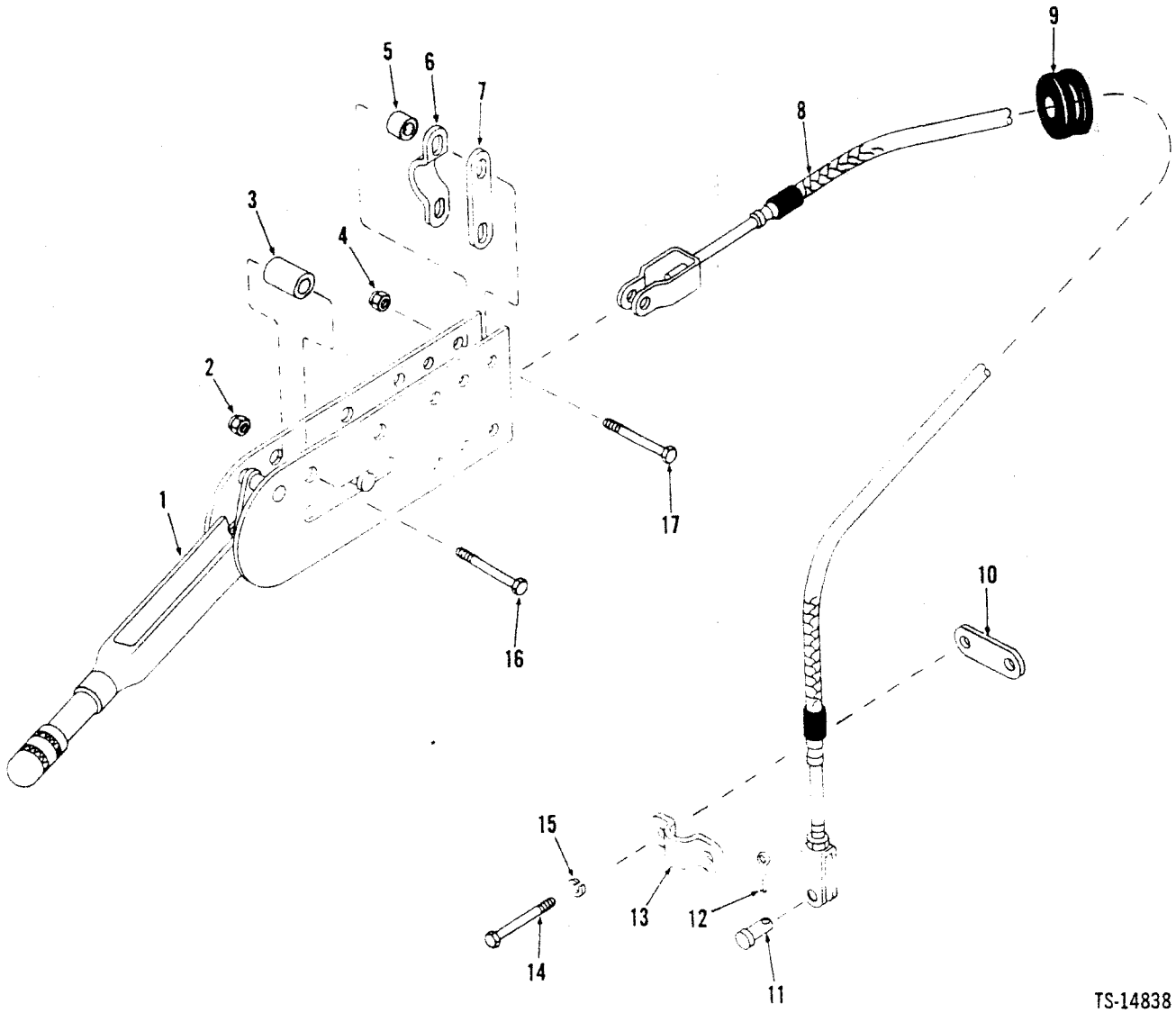

No.	Part No.	Qty.	Description
1	3951954	1	Lever
2	60D6	2	Nut
3	545005	2	Spacer
4	60D5	2	Nut
5	556690	2	Spacer
6	544512	1	Clamp
7	645092	1	Link
8	2516549	1	Cable
9	1513727	1	Grommet
10	645092	1	Link
11	4F06106	1	Pin
12	1F312	1	Pin cotter
13	544512	1	Clamp
14	17C616	2	Bolt
15	4E6	2	Lockwasher
16	18C632	2	Bolt
17	18C528	2	Bolt

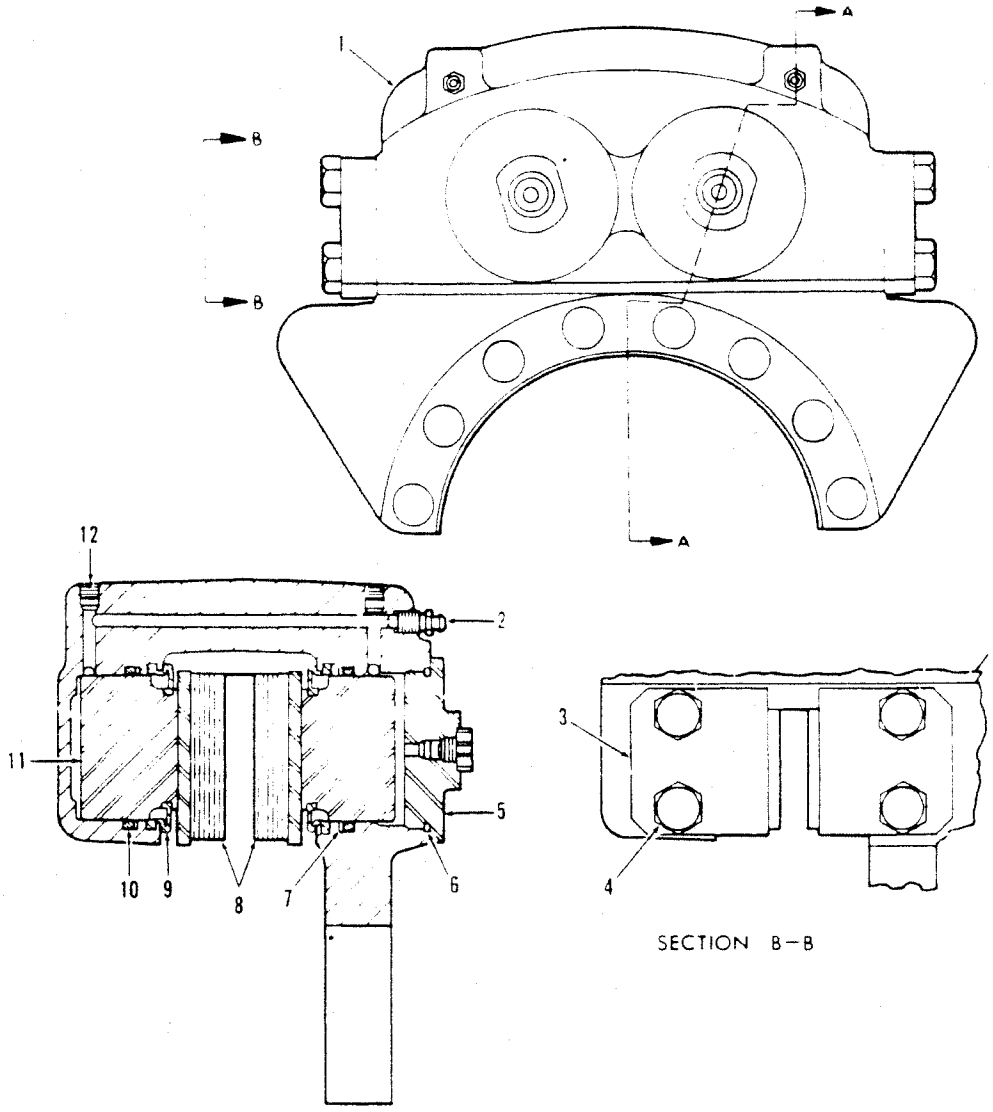

SECTION B–B

SECTION A–A

TS-15207

No.	Part No.	Qty.	Description
A	[2,3,9]129815	4	Brake head
B	[3,7,8]2107368	4	Brake head
C	[4]5294414	1	Seal kit
D	841194	1	Seal kit
1	§[5]_____	1	Housing
2	208805	2	Bleeder
2A	841190	2	Bleeder
3	840794	4	Plate
4	17C1024	8	Bolt
5	5293509	2	Cap

No.	Part No.	Qty.	Description
6	§[6]_____	2	O-ring
7	§[6]_____	4	Back-up ring
8	840793	2	Lining brake
9	§[6]_____	4	Seal
10	§[6]_____	4	Seal
11	5293505	4	Piston
11A	2107384	4	Piston
12	16F2	4	Plug
12A	841189	4	Plug

[2]Inc. 1, 2, 3 → 11, 12
[3]Quantities listed are for 1.
[4]Inc. 6, 7, 9, 10
[5]See A, B
[6]See C, D
[7]Inc. 1, 2A, 3 → 10, 11A, 12A
[8]480B181CB & →, 481B158CB & →
[9]480A, 480B101CB →180CB, 481A, 481B101CB → 157CB

Brake Head Assembly Parking & Emergency

CLARK

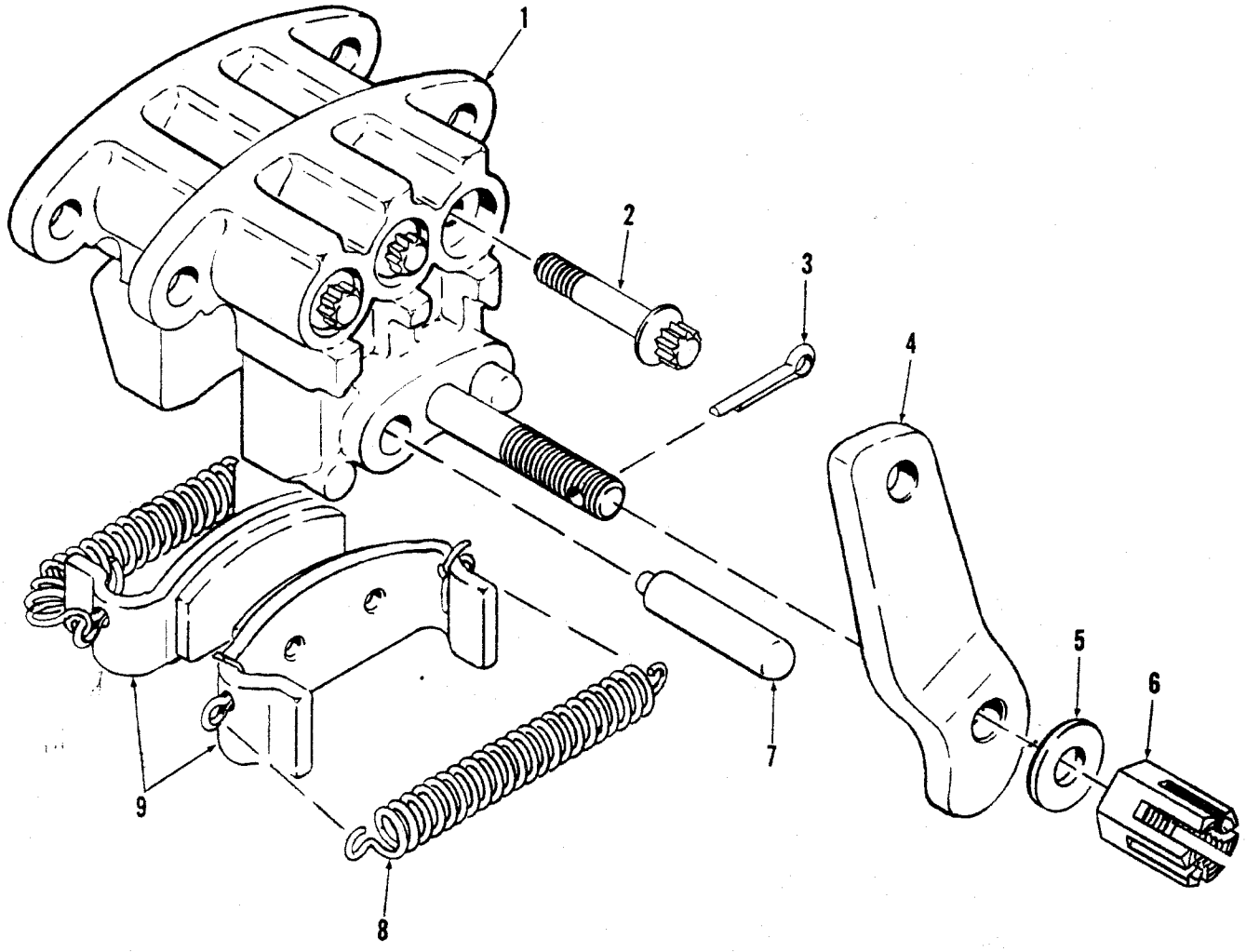

TS-14891

No.	Part No.	Qty.	Description
A	[2]2523155	1	Brake assy RH
B	[3]2517746	1	Brake assy LH
1	§[4]———	1	Housing
2	840644	3	Screw
3	1F516	1	Pin cotter
4	949445	1	Cam
4A	840943	1	Cam
5	840627	1	Washer
6	840789	1	Nut
7	840643	2	Pin
8	949444	2	Spring
9	[5]962462	1	Lining kit

[2]Inc. 1→4, 5→9
[3]Inc. 1→3, 4A→9
[4]See A, B
[5]Inc. 8

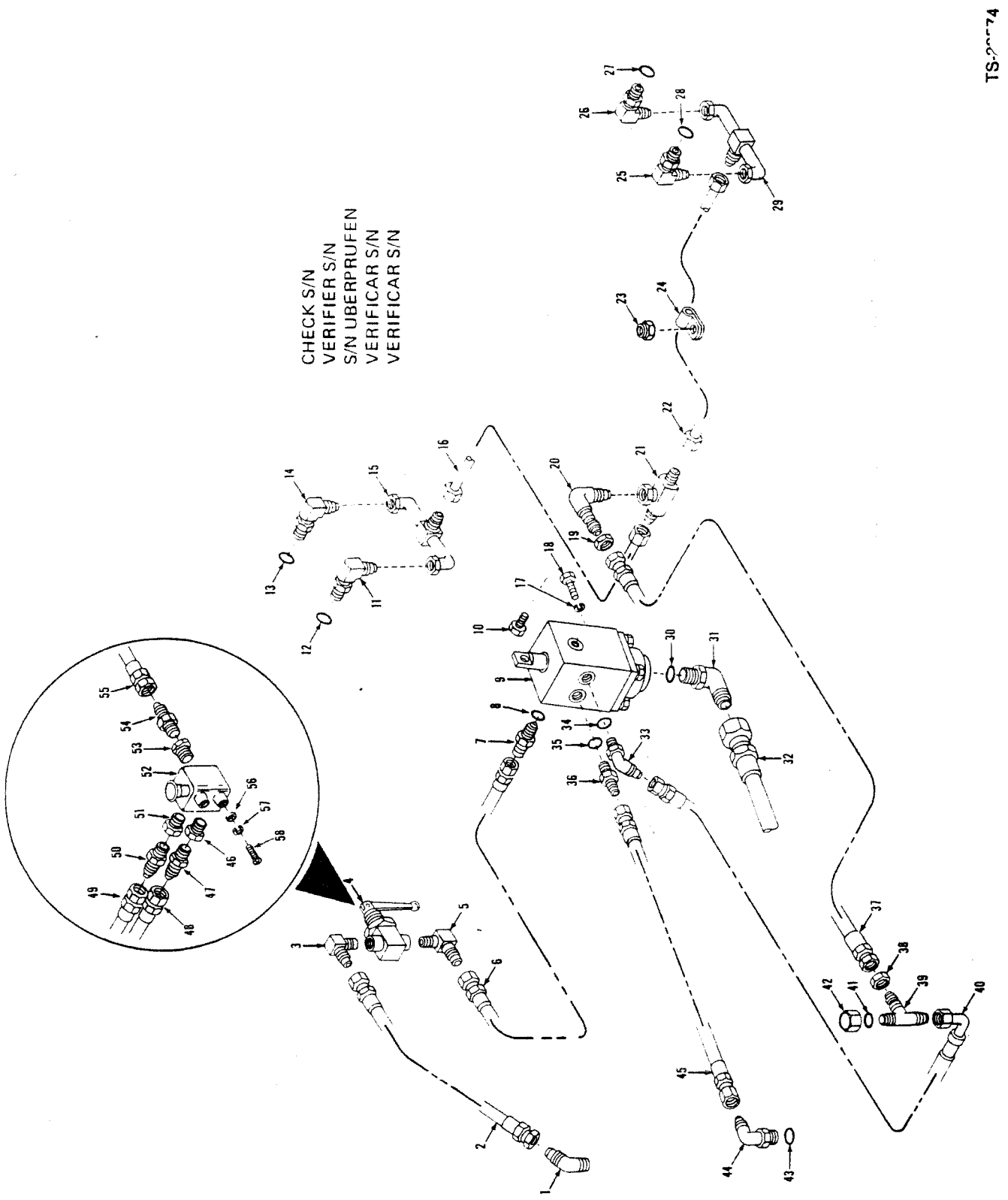
CHECK S/N
VERIFIER S/N
S/N UBERPRUFEN
VERIFICAR S/N
VERIFICAR S/N

No.	Part No.	Qty.	Description
1	84F4	1	Elbow
2	[15]2519335	1	Hose
3	[15]668386	1	Elbow
4	[15]1563419	1	Valve
5	[15]668386	1	Elbow
6	[15]2519336	1	Hose
7	[7]15K4	1	Connector
8	91F4	1	O-ring
9	[1]———	1	Valve brake
10	———	—	Omit
11	[3]18K4	1	Elbow
12	91F4	1	O-ring
13	91F4	1	O-ring
14	[4]18K4	1	Elbow
15	2521993	1	Tube assy
16	[13]2521940	1	Tube LH
16A	†[14]2521337	1	Tube LH
17	[13]4E6	2	Washer
17A	[14]27E6	2	Washer
18	[13]17C616	2	Bolt
18A	[14]33C614	2	Bolt
18B	†25E18	2	Washer
19	86F4	1	Nut
20	88F4	1	Elbow
21	14K4	1	Tee
22	[13]2521941	1	Tube RH
22A	†[14]2521336	1	Tube RH
23	59D6	2	Nut
24	30H20	2	Clip
25	[5]18K4	1	Elbow
26	[6]18K4	1	Elbow
27	91K4	1	O-ring
28	91K4	1	O-ring

No.	Part No.	Qty.	Description
29	2521993	1	Tube assy
30	91F8	1	O-ring
31	[7]17K8	1	Elbow
32	2524418	1	Hose
33	[8]18K4	1	Elbow
34	91F4	1	O-ring
35	91F5	1	O-ring
36	[9]15K5	1	Connector
37	[17]2513459	1	Hose
38	86F4	1	Nut
38A	†25E21	1	Washer
39	[10]90F4	1	Tee
40	[17]2520025	1	Hose
41	91F4	1	O-ring
42	[11]36K4	1	Cap
43	91F5	1	O-ring
44	[12]17K5	1	Elbow
45	1530076	1	Hose
46	[16]19F2	1	Reducer
47	[16]89F4	1	Adapter
48	[16]2532540	1	Hose
48A	[16]36F2	1	Adapter
49	[16]2519336	1	Hose
50	[16]89F4	1	Adapter
51	[16]19F2	1	Reducer
52	[16]2532541	1	Valve brake
52A	[16]964088	1	Seal kit
53	[16]19F2	1	Reducer
54	[16]89F4	1	Adapter
55	[16]2519335	1	Hose
56	[16]2525070	2	Washer
57	[16]4E5	2	Washer
58	[16]17C512	2	Bolt

[1]See Index
[2]Inc. 8
[3]Inc. 12
[4]Inc. 13
[5]Inc. 28
[6]Inc. 27
[7]Inc. 30
[8]Inc. 34
[9]Inc. 35
[10]Inc. 41
[11]Two wheel brakes only
[12]Inc. 43
[13]35C 45C
[14]55C
[15]458A 459A 472A 473A 480A 481A
[16]480B 481B
[17]For replacement use 1—2532723 Hose & 1—2532722 Hose.

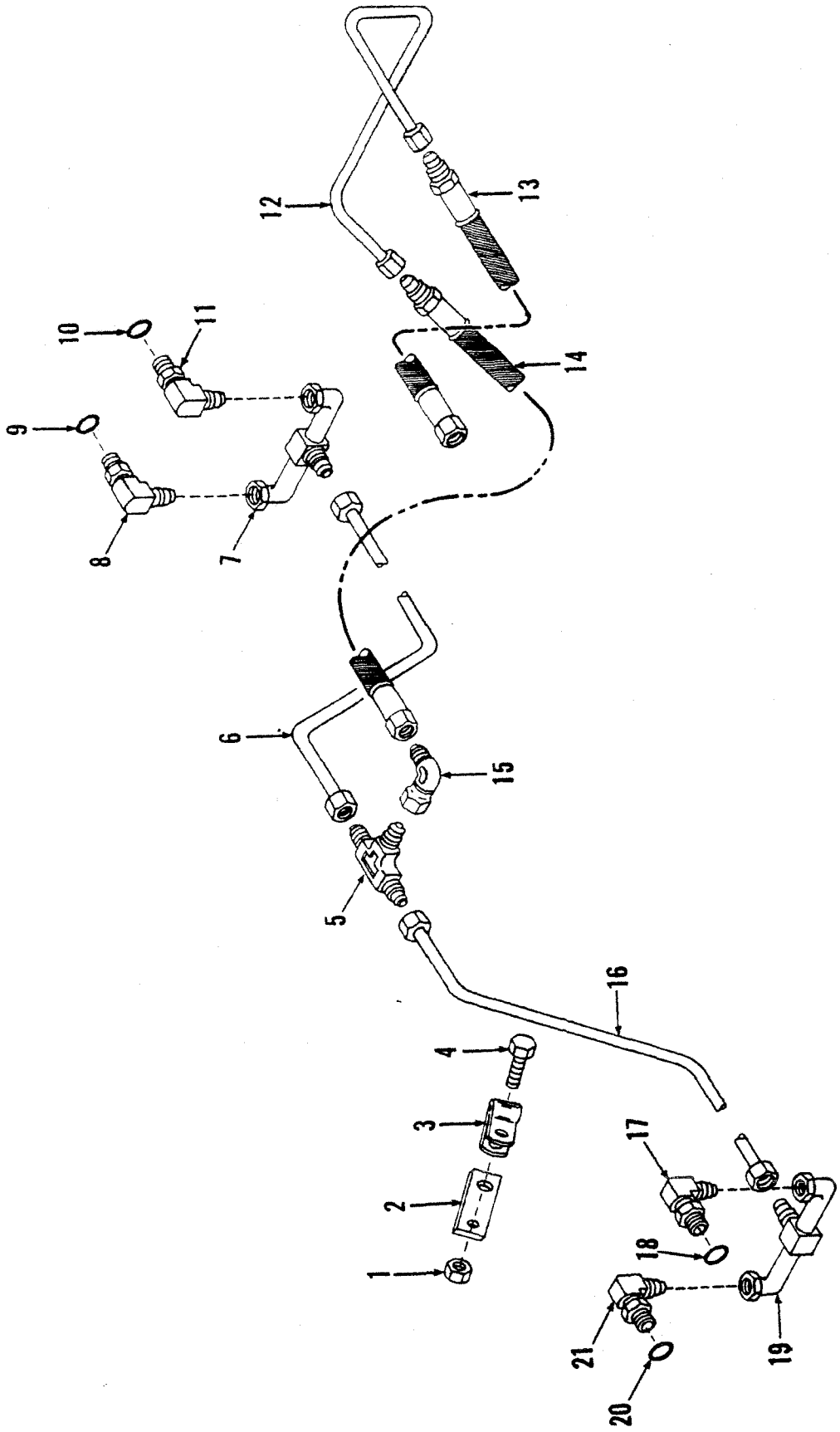
TS-20223
1
2
3
4
5
6
7
8
9
10
11
12
13
14
15
16
17
18
19
20
21

Brake Lines – Rear (Optional)

CLARK

No.	Part No.	Qty.	Description
1	59D6	4	Nut
2	1545204	2	Bracket
3	30H20	4	Clip
4	17C616	3	Bolt
5	10K4	1	Tee
6	2522360	1	Tube
7	2522359	1	Tube assy
8	[2]2522358	1	Elbow
9	91F4	1	O-ring
10	91F4	1	O-ring
11	[3]2522358	1	Elbow
12	[6]2523087	1	Tube
12A	[7]2524355	1	Tube
13	2523085	1	Hose
14	2523086	1	Hose
15	11K4	1	Fitting
16	2522361	1	Tube
17	[4]2522358	1	Elbow
18	91F4	1	O-ring
19	2522359	2	Tube assy
20	91F4	1	O-ring
21	[5]2522358	1	Elbow

[2]Inc. 9
[3]Inc. 10
[4]Inc. 18
[5]Inc. 20
[6]35C 45C
[7]55C

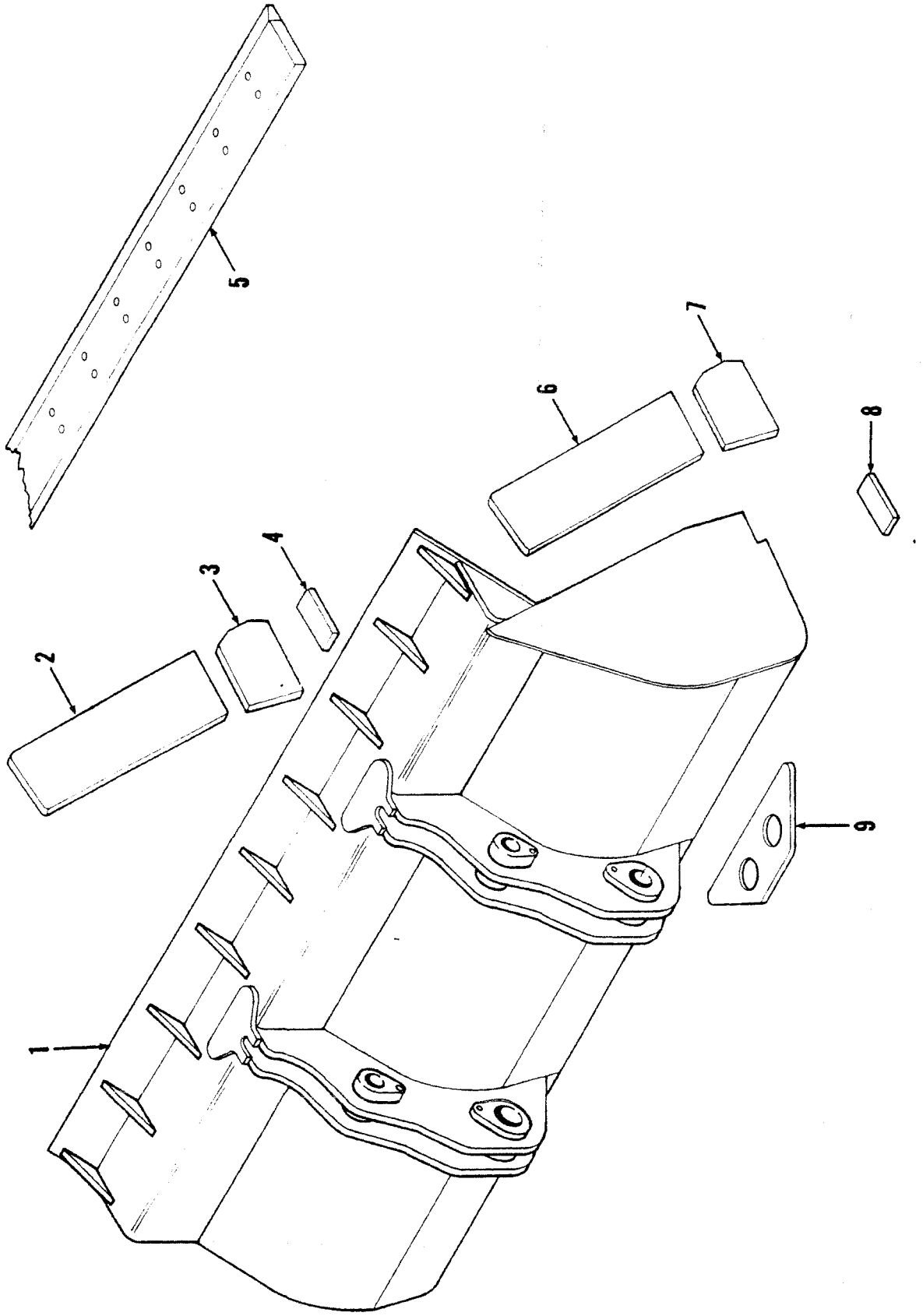

TS-14945

Bucket Assembly

CLARK

No.	Part No.	Qty.	Description
1	[2,6,16]2523140	1	Bucket
1A	[3,7,17]2522091	1	Bucket
1B	[4,8,18]2522090	1	Bucket
1C	[5,9]2521983	1	Bucket
1D	[5,10]2525387	1	Bucket
2	2519447	1	Side cutting edge LH
2A	2519471	1	Side cutting edge LH
2B	2519652	1	Side cutting edge LH
2C	2518561	1	Side cutting edge LH
3	2512706	1	Corner plate LH
3A	2512600	1	Corner plate LH
3B	2525350	1	Corner plate LH
4	1531891	1	Wear plate
4A	2512801	1	Wear plate
4B	2518761	1	Wear plate
4C	2518721	1	Wear plate
4D	2525494	1	Wear plate
5	[11]2514814	1	Main cutting edge
5A	[12]2512596	1	Main cutting edge
5B	[13]2518572	1	Main cutting edge
5C	[14]2525352	1	Main cutting edge
6	2519446	1	Side cutting edge RH
6A	2519470	1	Side cutting edge RH
6B	2519652	1	Side cutting edge RH
6C	2518561	1	Side cutting edge RH
7	2512705	1	Corner plate RH
7A	2512599	1	Corner plate RH
7B	2525350	1	Corner plate RH
8	1531891	1	Wear plate
8A	2512801	1	Wear plate
8B	2518761	1	Wear plate
8C	2518721	1	Wear plate
8D	2525494	1	Wear plate
9	2522142	1	Wear plate
9A	[15]2522143	1	Wear plate

[9] 6 M³ (1.25 cu. yd.)
[1] 14 M³ (1.50 cu. yd.)
[4] 34 M³ (1.75 cu. yd.)
[5] 53 M³ (2 cu. yd.)
[6] Inc. 2, 3, 4, 5, 6, 7, 8
[7] Inc. 2A, 3A, 4A, 5A, 6A, 7A, 8A, 9
[8] Inc. 2B, 3A, 4B, 5A, 6B, 7A, 8B, 9
[9] Inc. 2C, 3A, 4C, 5B, 6C, 7A, 8C, 9A
[10] Inc. 3B, 4D, 5C, 7B, 8D, 9A
[11] (19.1 x 203.2 x 2209.8) .75 x 8 x 87"
[12] (25.4 x 228.6 x 2374.9) 1 x 9 x 93.5"
[13] (25.4 x 228.6 x 2479.0) 1 x 9 x 97.6"
[14] (25.4 x 228.6 x 2464) 1 x 9 x 97"
[15] Item 1D uses Qty. 2
[16] For complete replacement use 2525910 Bucket Assy.
[17] For complete replacement use 2526028 Bucket Assy.
[18] For complete replacement use 2526558 Bucket Assy.

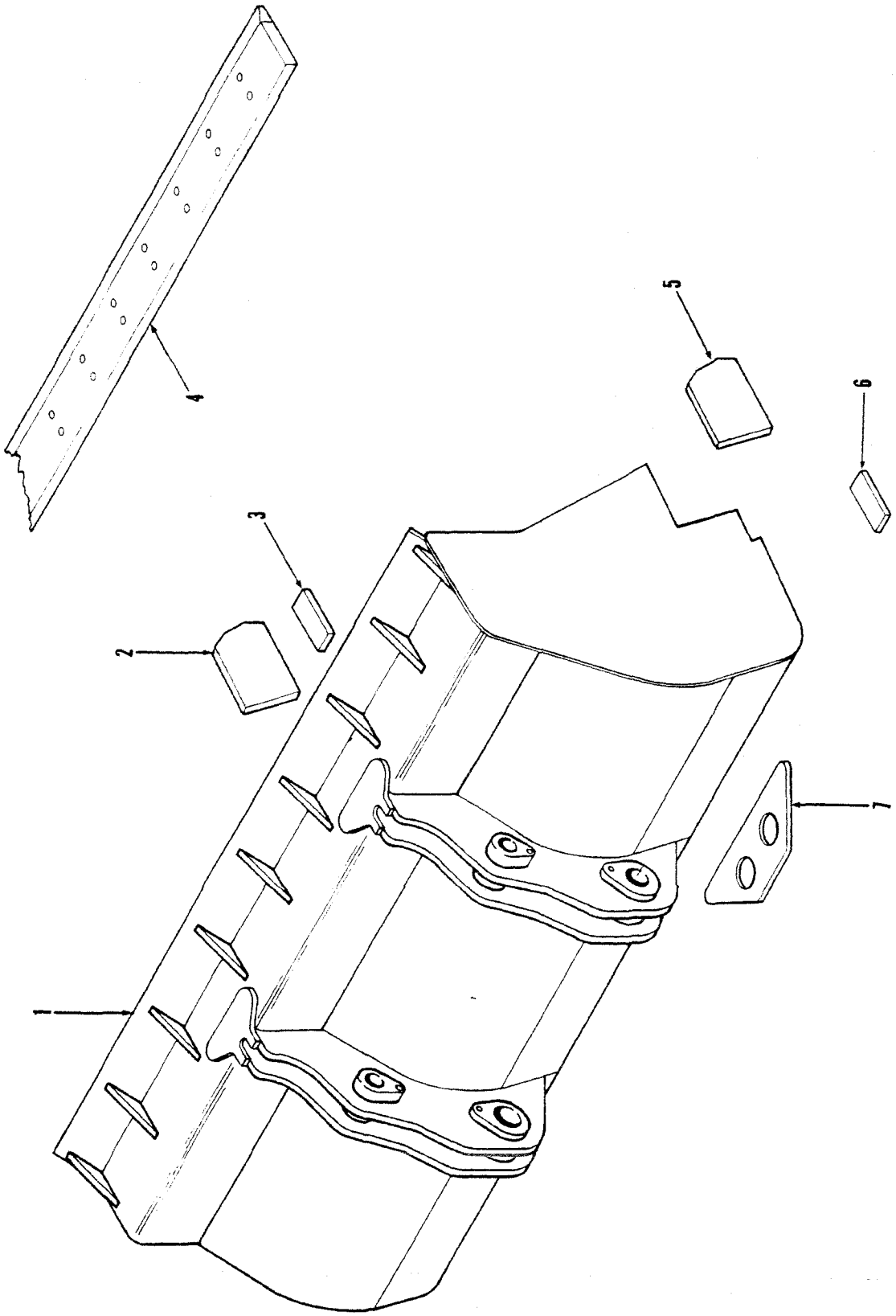
1
2
3
4
5
6
7
TS-15505

Bucket Assembly

CLARK

No.	Part No.	Qty.	Description
1	[2,3]2525910	1	Bucket
1A	[4,5]2526028	1	Bucket
1B	[6,7]2526558	1	Bucket
1C	[8,9]2529165	1	Bucket
1D	[10,11]2525608	1	Bucket
1E	[12,13]2525516	1	Bucket
1F	[14,15]2525807	1	Bucket
2	2525350	1	Corner plate
3	1531891	1	Wear plate
3A	2512801	1	Wear plate
3B	2518761	1	Wear plate
3C	2525494	1	Wear plate
3D	2522961	1	Wear plate
3E	~~2525554~~	1	Wear plate
3F	2522573	1	Wear plate

No.	Part No.	Qty.	Description
4	[16]2514814	1	Cutting edge
4A	[17]2512596	1	Cutting edge
4B	[18]2528832	1	Cutting edge
4C	[19]545602	1	Cutting edge
5	2525350	1	Corner plate
6	1531891	1	Wear plate
6A	2512801	1	Wear plate
6B	2518761	1	Wear plate
6C	2525494	1	Wear plate
6D	2522961	1	Wear plate
6E	~~2525554~~	1	Wear plate
6F	2522573	1	Wear plate
7	2522142	2	Wear plate
7A	2522143	2	Wear plate
7B	2522558	2	Wear plate

[2] 2.96 M³ (1.25 cu. yd.)
[3] Inc. 2, 3, 4, 5, 6, 7
[4] 1.14 M³ (1.50 cu. yd.)
[5] Inc. 2, 3A, 4A, 5, 6A, 7
[6] 1.34 M³ (1.75 cu. yd.)
[7] Inc. 2, 3B, 4A, 5, 6B, 7
[8] 1.53 M³ (2.00 cu. yd.)
[9] Inc. 2, 3C, 4B, 5, 6C, 7A
[10] 1.72 M³ (2.25 cu. yd.)
[11] Inc. 2, 3D, 4B, 5, 6D, 7A
[12] 1.90 M³ (2.50 cu. yd.)
[13] Inc. 2, 3E, 4B, 5, 6E, 7B
[14] 2.29 M³ (3.00 cu. yd.)
[15] Inc. 2, 3F, 4C, 5, 6F, 7B
[16] 19,1 x 203.2 x 2209.8 mm (.75 x 8 x 87 in)
[17] 2,5 x 228.6 x 2374,9 mm (1 x 9 x 93.5 in)
[18] 3,7 x 228.6 x 2464.0 mm (1.25 x 9 x 97.0 in)
[19] 2,5 x 228,6 x 2851.2 mm (1 x 9 x 112.25 in)

The following types of clips are used in connection with the various wiring, fuel, air and hydraulic piping systems employed in this unit. When replacing clips identification can be made by checking type and physical dimensions listed to obtain part number.

Clips — Insulated

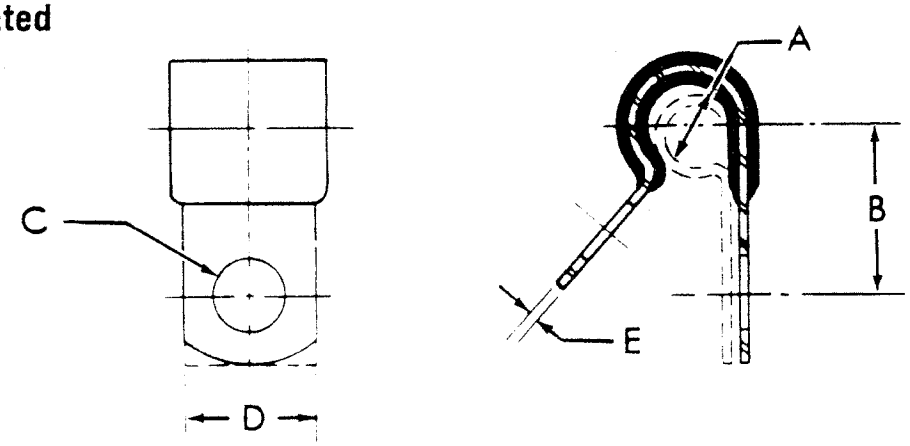

TS-5008

No.	Part No.	A		B		C		D		E	
		in.	mm	in.	mm	in.	mm	in.	mm	in.	mm
1	30H12	3/16	4.8	5/8	15.9	13/32	10,3	3/4	19.1	.032	0,8
2	30H15	1/4	6.4	19/32	15.1	11/32	8,7	5/8	15.8	.032	0,8
3	30H16	1/4	6.4	21/32	16.6	13/32	10,3	3/4	19.1	.032	0,8
4	30H20	5/16	7.9	11/16	17.5	13/32	10,3	3/4	19,1	.032	0,8
5	30H21	5/16	7,9	19/32	15.1	9/32	7,1	1/2	12.7	.032	0,8
6	30H23	3/8	9.5	23/32	18.3	13/32	10,3	3/4	19.1	.032	0,8
7	30H27	7/16	11.1	3/4	19.0	13/32	10,3	3/4	19.1	.032	0.8
8	30H35	9/16	14.3	13/16	20.6	13/32	10.3	3/4	19.1	.048	1,2
9	30H38	3/8	9.5	27/32	21.4	13/32	10.3	3/4	19.1	.050	1,3
10	30H40	5/8	15.9	31/32	24.6	11/32	13.5	1	25.4	.048	1,2
11	30H42	11/16	17.5	7/8	22,2	13/32	10,3	3/4	19.1	.048	1,2
12	30H46	13/16	20.6	15/16	23.8	13/32	10,3	3/4	19.1	.050	1,3
13	30H50	5/16	7.9	1	25,5	13/32	10,3	3/4	19.1	.050	1,3
14	30H53	5/8	15.9	23/32	18.3	9/32	7,1	1/2	12,7	.048	1,2

No.	Part No.	Qty.	Description
15	††1539058	—	Cable tie
16	1736910	—	Cable tie
17	††2512979	—	Cable tie

The following types of clips are used in connection with the various wiring, fuel, air and hydraulic piping systems employed in this unit. When replacing clips identification can be made by checking type and physical dimensions listed to obtain part number.

Insulated Double Clip

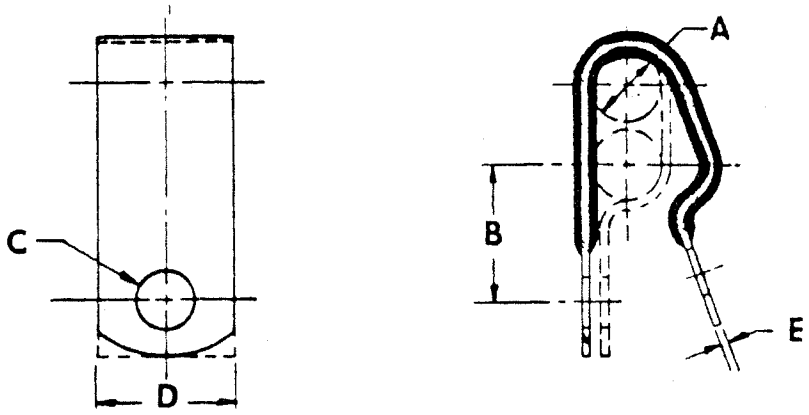

TS-7073

No.	Part No.	A		B		C		D		E	
		in.	mm	in.	mm	in.	mm	in.	mm	in.	mm
1	31H12	1/4	6,4	21/32	16,6	13/32	10,3	3/4	19,1	.036	0,9
2	31H36	5/8	15.8	31/32	24,6	17/32	13,4	1	25,4	.062	1,8
3	31H46	15/16	23.8	1	25,4	13/32	10,3	3/4	19,1	.062	1,8

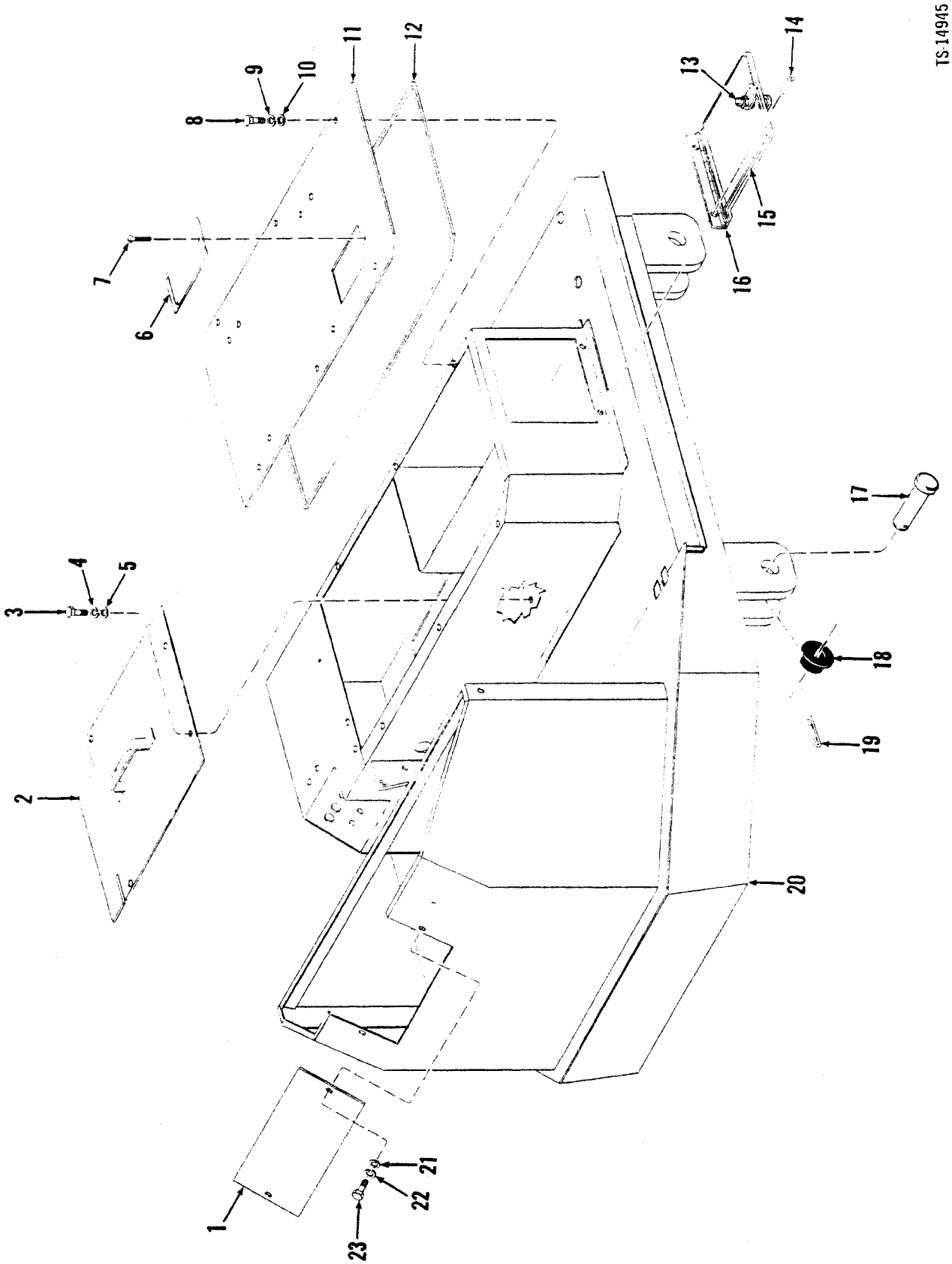
TS-14945
1
2
3
4
5
6
7
8
9
10
11
12
13
14
15
16
17
18
19
20
21
22
23

Cockpit Assembly

No.	Part No.	Qty.	Description
1	2517927	1	Cover
2	2517941	1	Cover
3	17C616	4	Bolt
4	4E6	4	Washer
5	25E17	4	Washer
6	2517944	1	Cover
7	65G1008	1	Screw
8	17C616	6	Bolt
9	4E6	6	Washer
10	25E17	6	Washer
11	2523122	1	Cover
12	2518002	1	Seal strip
13	2520491	1	Latch
14	1662965	2	Rivet
15	2503587	1	Seal strip
16	2501147	1	Hinge
17	2517849	4	Pin
18	2522755	4	Bushing
19	561626	4	Clip
20	[3]2517966	1	Cockpit assy
20A	[3]2532122	1	Cockpit assy
21	25E13	2	Washer
22	4E4	2	Washer
23	17C412	2	Bolt

[3]458A 459A 472A 473A 480A 481A
[3]480B 481B

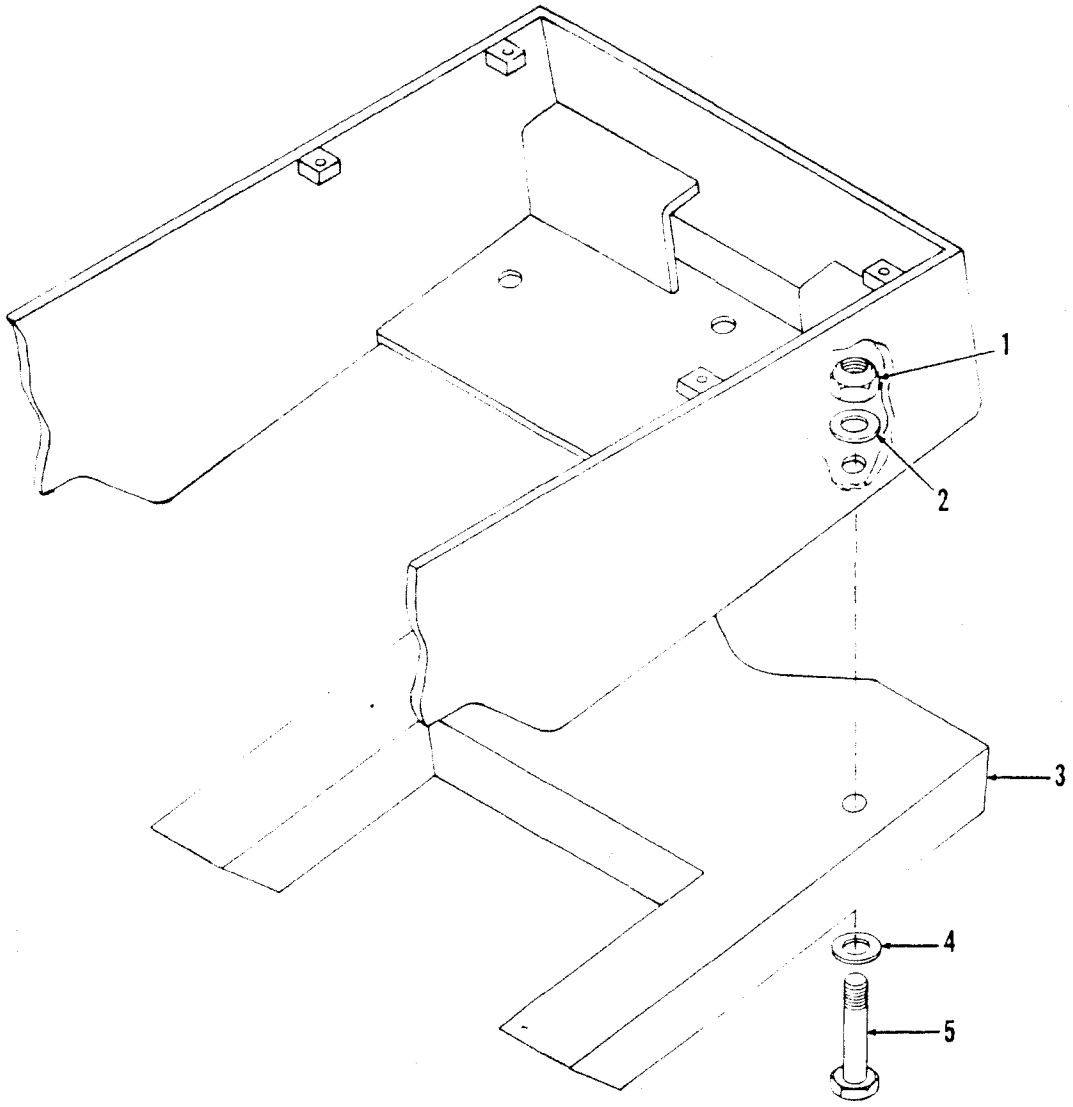

TS-15156

No.	Part No.	Qty.	Description
A	[2]2515128	1	Counterweight kit
1	60D16	2	Nut
2	1523350	2	Washer
3	[3]2518140	1	Counterweight
4	1523350	2	Washer
5	18C1680	2	Bolt

[2]Inc. 1→5
[3]932 lb (423 kg)

Counterweight – 55C*

CLARK

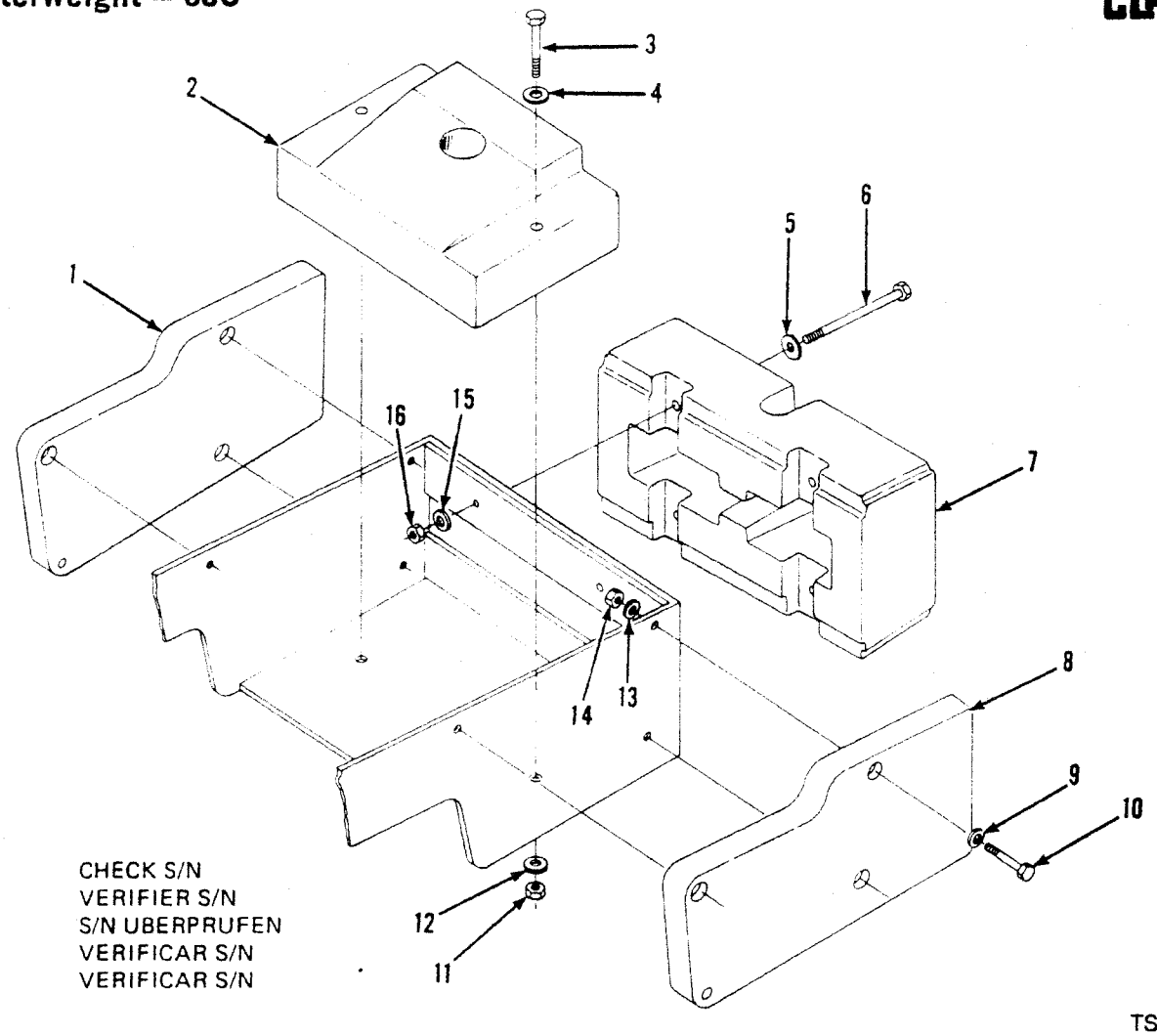

TS-16306

No.	Part No.	Qty.	Description
1	[2]2525066	1	Counterweight
1A	[3]2525143	1	Counterweight
2	[2]2526181	1	Counterweight
2A	[3]2524147	1	Counterweight
3	17C16176	2	Bolt
4	1523350	2	Washer
5	1523350	8	Washer
6	17C16176	4	Bolt
7	2519494	1	Counterweight
8	2525066	1	Counterweight
8A	2525143	1	Counterweight
9	539404	6	Washer
10	17C1680	6	Bolt
11	59D16	2	Nut
12	1523350	2	Washer
13	539404	6	Washer
14	59D16	6	Nut
15	1523350	4	Washer
16	59D16	4	Nut

***480A 481A**

[2]Torched
[3]Cast

Counterweight – 55C*

CLARK

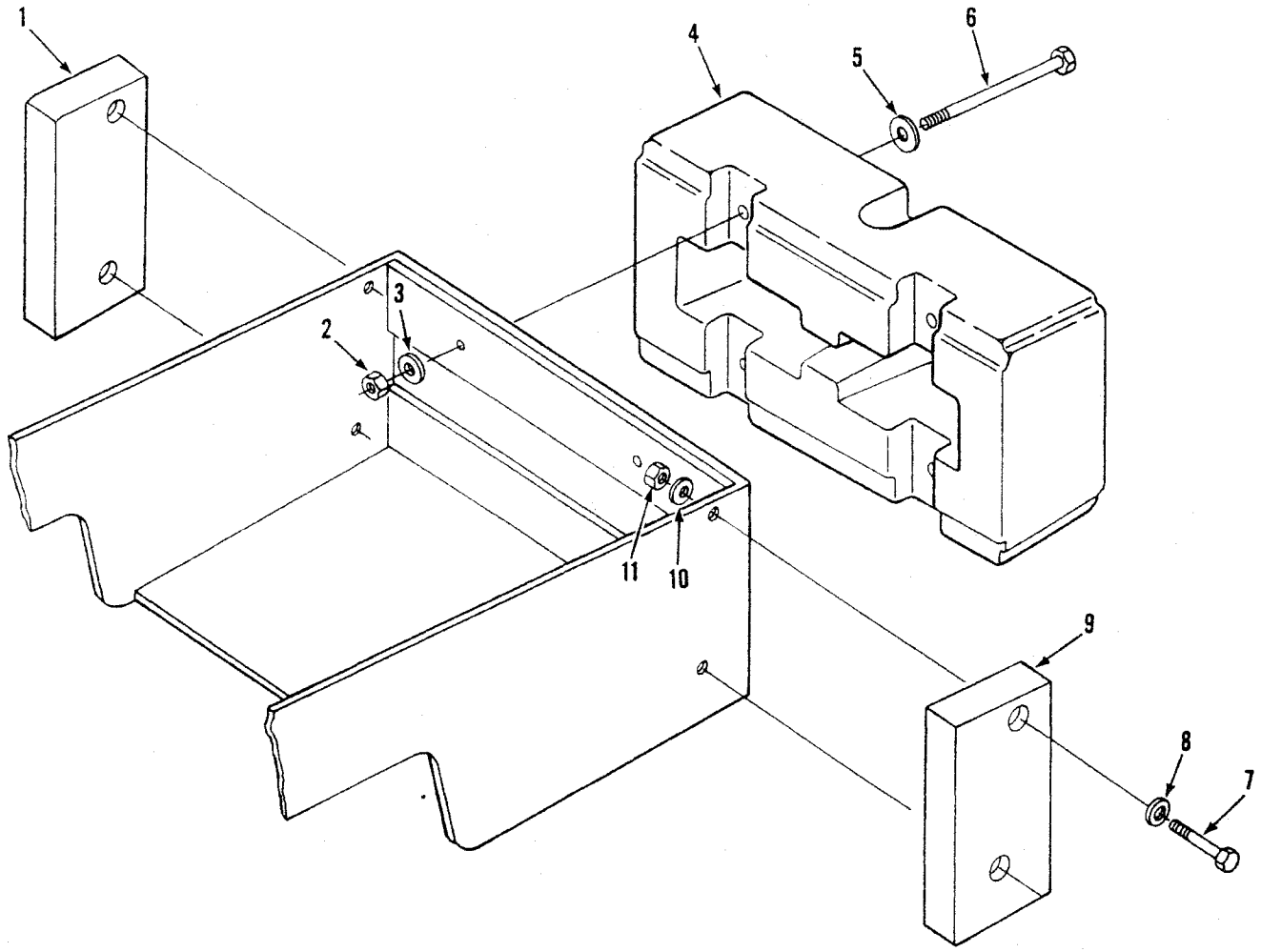

TS-20613

No.	Part No.	Qty.	Description
1	2534908	1	Counterweight
2	85D16	4	Nut
3	1523350	4	Washer
4	2534909	1	Counterweight
5	1523350	4	Washer
6	17C16216	4	Bolt
7	17C16184	4	Bolt
8	1523350	4	Washer
9	2534908	1	Counterweight
10	1523350	4	Washer
11	85D16	4	Nut

*480B 481B

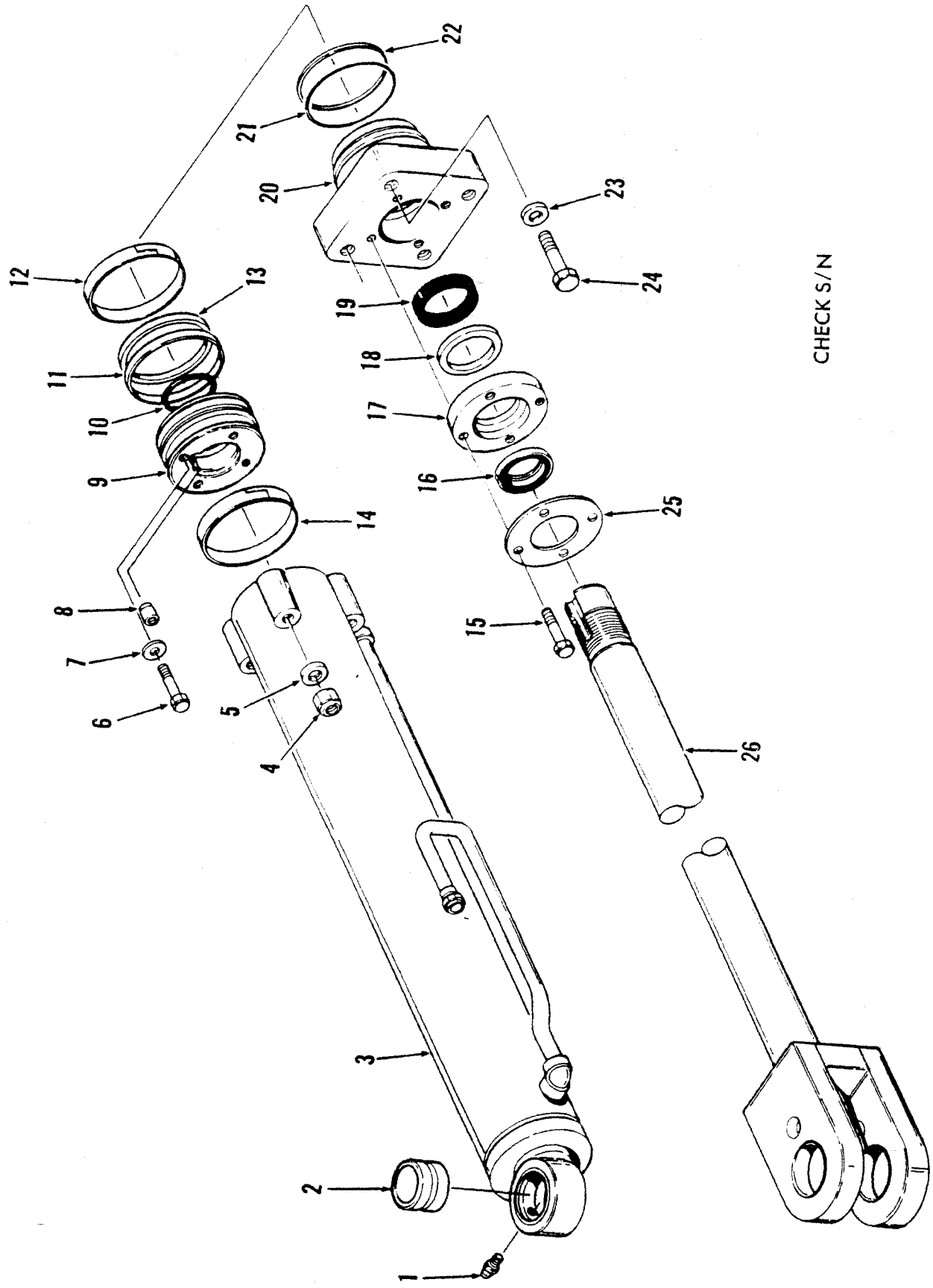
TS-20068
CHECK S/N
1
2
3
4
5
6
7
8
9
10
11
12
13
14
15
16
17
18
19
20
21
22
23
24
25
26

Cylinder Assembly, Boom — 35C *

CLARK

No.	Part No.	Qty.	Description
A	[2] 2521774	1	Cylinder assy LH
B	[2] 2521773	1	Cylinder assy RH
C	[3] 2530107	—	Seal kit
1	12H15	1	Fitting grease
2	2512014	1	Bushing
3	[2] 2518200	1	Cylinder LH
3A	[2] 2518202	1	Cylinder RH
4	60D10	4	Nut
5	2512008	4	Washer
6	33C512	1	Bolt
7	626787	1	Washer
8	2511955	1	Dowel
9	2516560	1	Piston
10	[4] ————	1	O-ring
11	[4] ————	1	Outer ring
12	[4] ————	1	Wear ring
13	[4] ————	1	Inner ring
14	————	1	Wear ring
15	33C622	4	Bolt
16	1511539	1	Wiper
17	2511993	1	Flange
18	2512011	1	Bearing
19	2512010	1	Seal
20	2518137	1	Cap
21	[5] ————	1	Back-up ring
22	[5] ————	1	O-ring
23	2512008	4	Washer
24	18C1096	4	Bolt
25	1511544	1	Retainer
26	2521772	1	Rod

*458A101CB→116CB, 472A101CB→255CB
[2] Inc. 2, 3, 4→26
[2] Inc. 2, 3A→26
[4] Inc. 10→14, 16, 19, 21, 22
[5] Inc. 2
[3] See C
[1] Ref. SG-763A

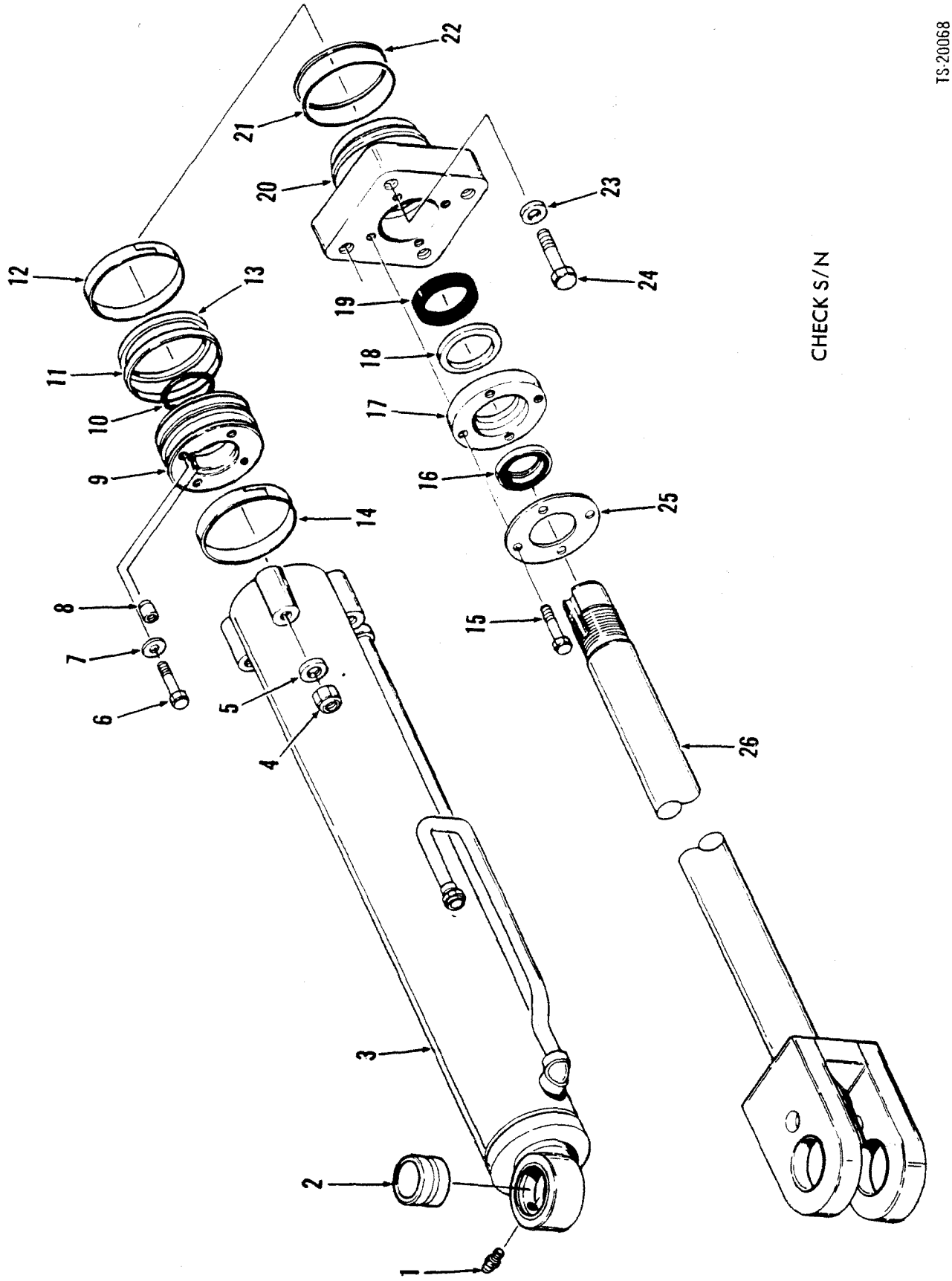
TS-20068
CHECK S/N
1
2
3
4
5
6
7
8
9
10
11
12
13
14
15
16
17
18
19
20
21
22
23
24
25
26

Cylinder Assembly, Boom – 35C *

CLARK

No.	Part No.	Qty.	Description
A	[2]2523265	1	Cylinder assy LH
B	[3]2523266	1	Cylinder assy RH
C	[4,7]2530107	–	Seal kit
1	12H15	1	Fitting grease
2	251014	1	Bushing
3	[5]2523262	1	Cylinder LH
3A	[5]2523263	1	Cylinder RH
4	60D10	4	Nut
5	2512008	4	Washer
6	33C512	1	Bolt
7	626787	1	Washer
8	2511955	1	Dowel
9	2516560	1	Piston
10	§[6]———	1	O-ring
11	§[6]———	1	Outer ring
12	§[6]———	1	Wear ring
13	§[6]———	1	Inner ring
14	§[6]———	1	Wear ring
15	33C622	4	Bolt
16	1511539	1	Wiper
17	2511993	1	Flange
18	2512011	1	Bearing
19	2512010	1	Seal
20	2518137	1	Cap
21	§[6]———	1	Back-up ring
22	§[6]———	1	O-ring
23	———	–	Omit
24	18C1072	4	Bolt
25	1511544	1	Retainer
26	2523264	1	Rod

*458A117CB & →, 472A256CB & →
[2]Inc. 2, 3, 4→26
[3]Inc. 2, 3A→26
[4]Inc. 10→14, 16, 19, 21, 22
[5]Inc. 2
[6]See C
[7]Ref. SG-763-A

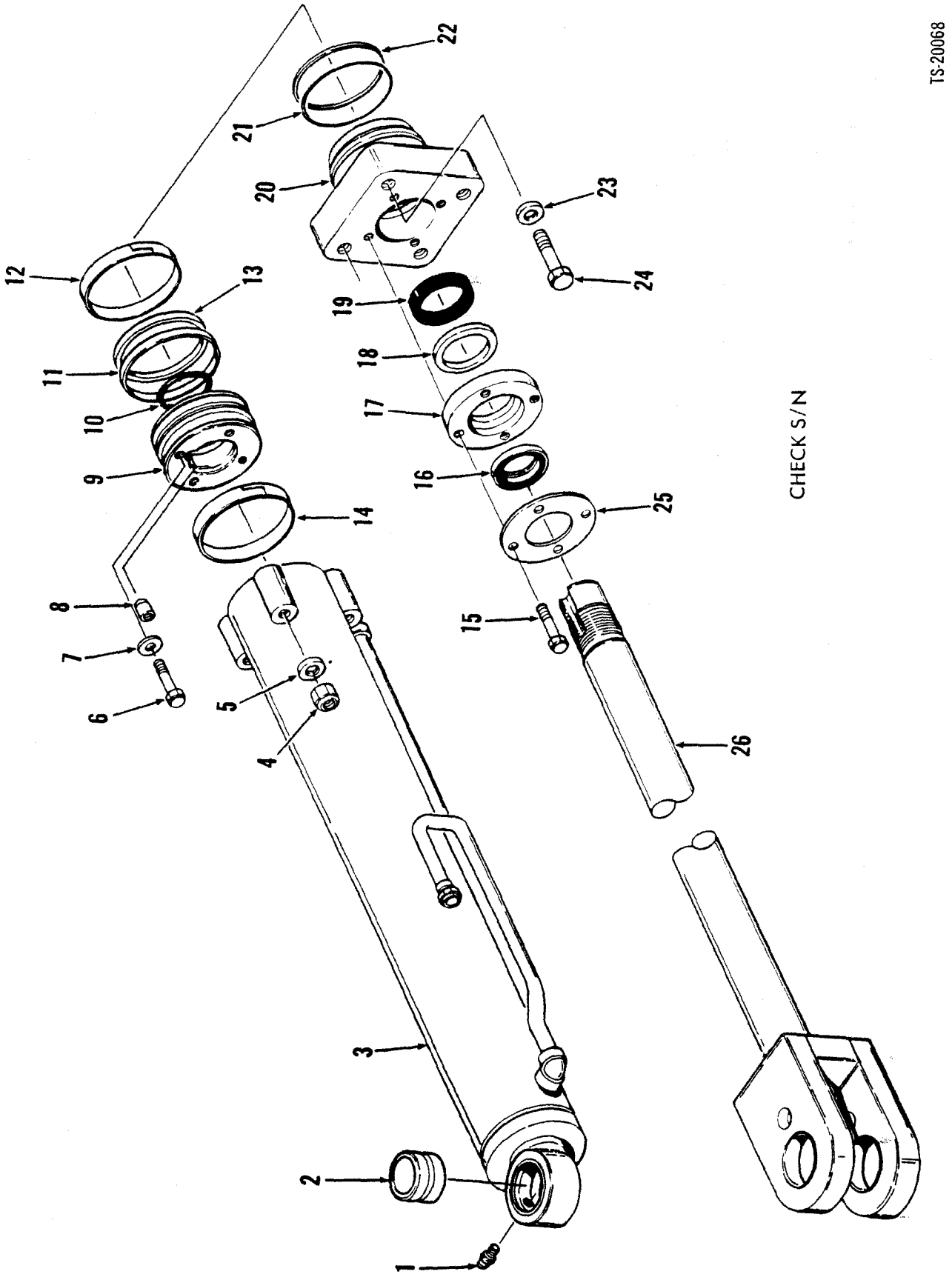
TS-20068
CHECK S/N
1
2
3
4
5
6
7
8
9
10
11
12
13
14
15
16
17
18
19
20
21
22
23
24
25
26

Cylinder Assembly, Boom — 45C *

CLARK

No.	Part No.	Qty.	Description
A	[2] 2521767	1	Cylinder assy LH
B	[2] 2521768	1	Cylinder assy RH
C	[4] [7] 2538178	1	Seal kit
1	12H15	1	Fitting grease
2	2512014	1	Bushing
3	2518205	1	Cylinder LH
3A	[7] 2518207	1	Cylinder RH
4	60D10	4	Nut
5	2512008	4	Washer
6	33C512	1	Bolt
7	626787	1	Washer
8	2511955	1	Dowel
9	2516450	1	Piston
10	[5] -----	1	O-ring
11	-----	1	Outer ring
12	[5] -----	1	Wear ring
13	[5] -----	1	Inner ring
14	[5] -----	1	Wear ring
15	33C622	4	Bolt
16	1511539	1	Wiper
17	2511993	1	Flange
18	2512011	1	Bearing
19	2512010	1	Seal
20	2512001	1	Cap
21	[5] -----	1	Back-up ring
22	[5] -----	1	O-ring
23	2512008	4	Washer
24	18C1096	4	Bolt
25	1511544	1	Retainer
26	2521766	1	Rod

*459A101CB→140CB, 473A101CB→322CB
[3] Inc. 2, 3, 4→26
[3] Inc. 2, 3A→26
[4] Inc. 10→14, 16, 19, 21, 22
[5] Inc. 2
[6] See C
[7] Ref. SG-763-A

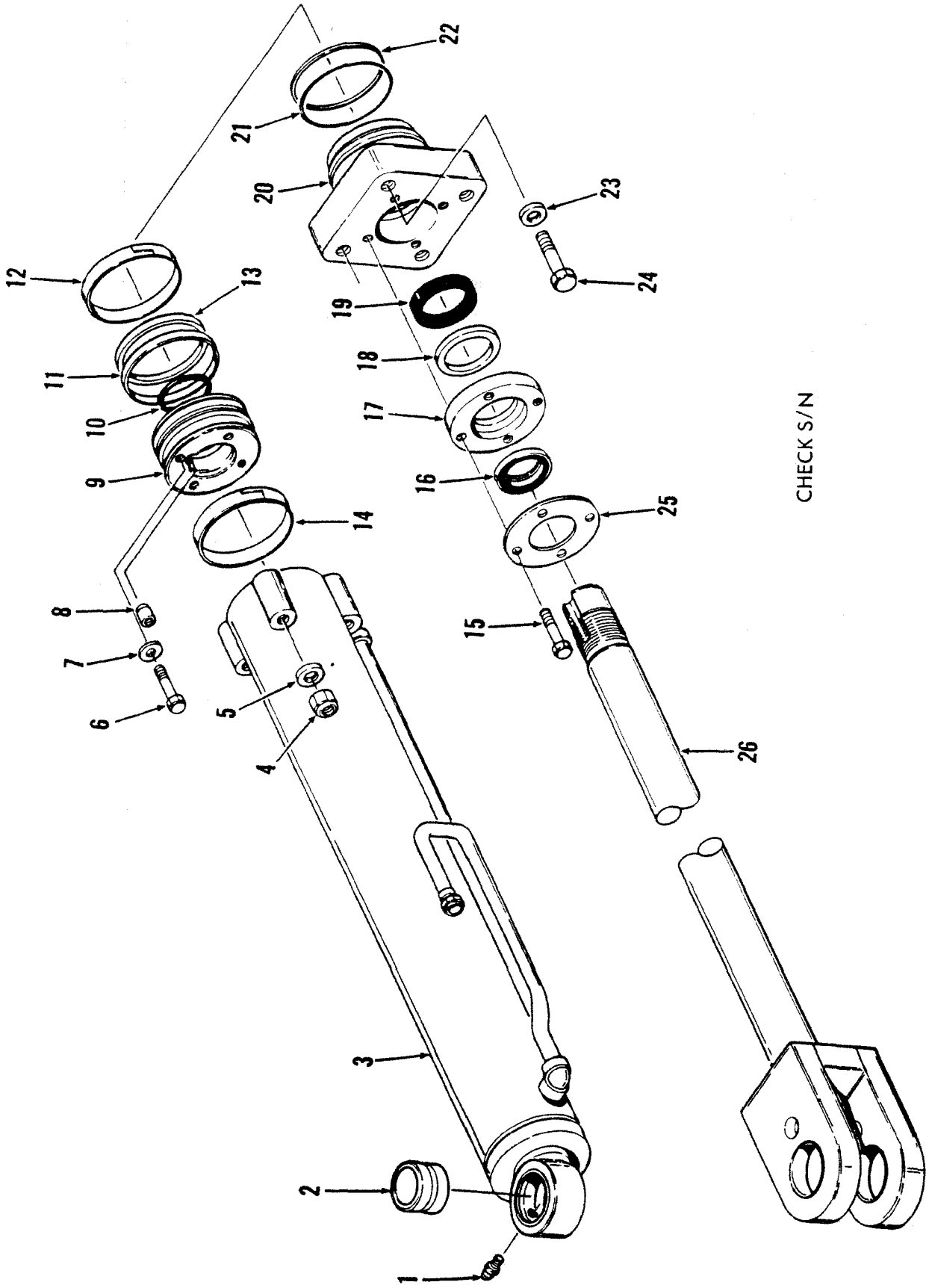
TS-20068
CHECK S/N
1
2
3
4
5
6
7
8
9
10
11
12
13
14
15
16
17
18
19
20
21
22
23
24
25
26

Cylinder Assembly, Boom — 45C ✻

CLARK

No.	Part No.	Qty.	Description
A	[2]2522735	1	Cylinder assy LH
B	[3]2522734	1	Cylinder assy RH
C	[4] [7]2538178	1	Seal kit
1	12H15	1	Fitting grease
2	2512014	1	Bushing
3	2522729	1	Cylinder LH
3A	†[5]2522730	1	Cylinder RH
4	60D10	4	Nut
5	2512008	4	Washer
6	17C512	1	Bolt
7	626787	1	Washer
8	2511955	1	Dowel
9	2516450	1	Piston
10	§[6]———	1	O-ring
11	§[6]———	1	Outer ring
12	§[6]———	1	Wear ring
13	§[6]———	1	Inner ring
14	§[6]———	1	Wear ring
15	33C622	4	Bolt
16	1511539	1	Wiper
17	2511993	1	Flange
18	2512011	1	Bearing
19	2512010	1	Seal
20	2512001	1	Cap
21	§[6]———	1	Back-up ring
22	§[6]———	1	O-ring
23	2512008	4	Washer
24	18C1072	4	Bolt
25	1511544	1	Retainer
26	2522733	1	Rod

✻459A141CB & →, 473A323CB & →
[2]Inc. 2, 3, 4→26
[3]Inc. 2, 3A→26
[4]Inc. 10→14. 16, 19, 21, 22
[5]Inc. 2
[6]See C
[7]Ref. SG-763-A

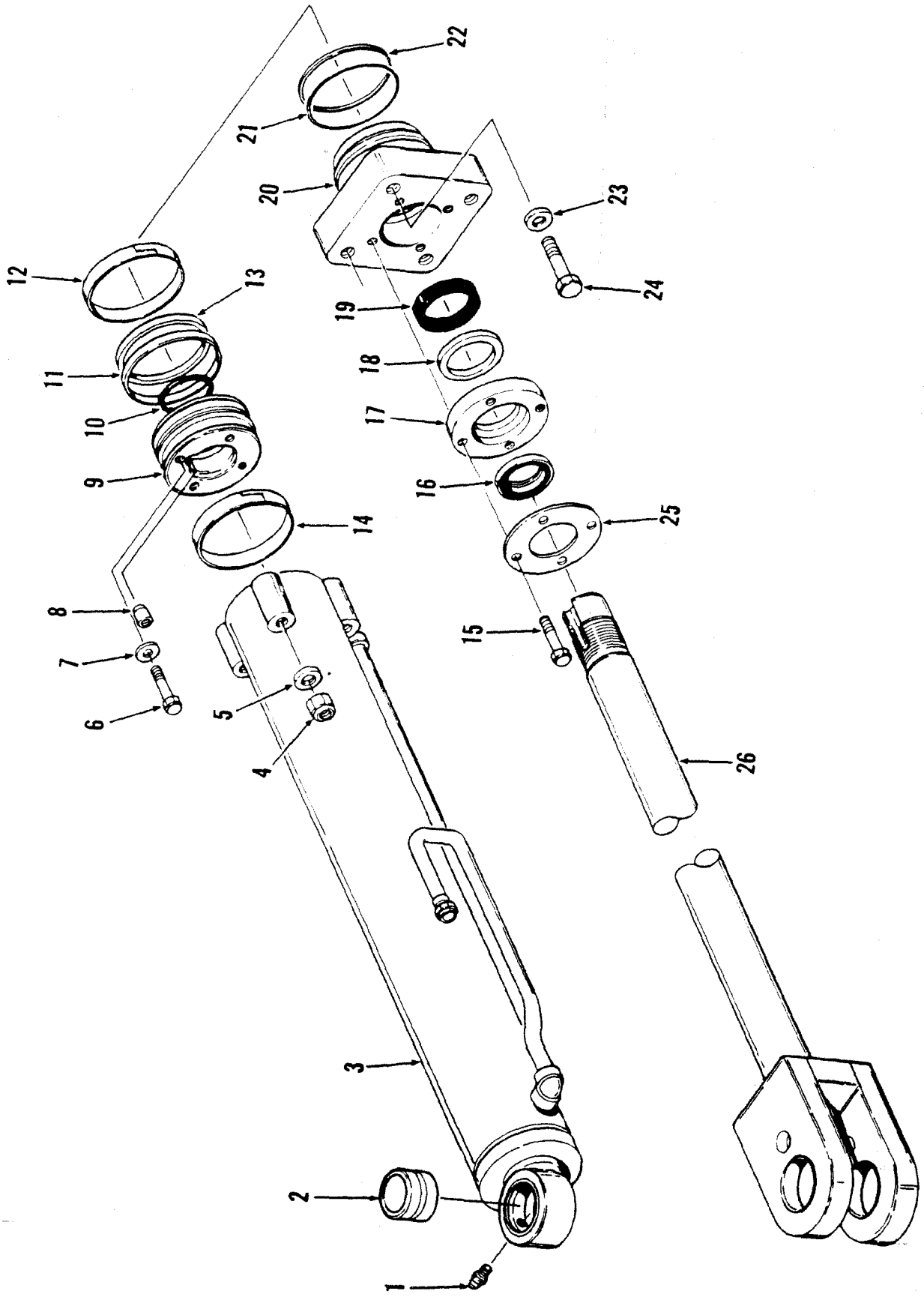
TS-20068
1
2
3
4
5
6
7
8
9
10
11
12
13
14
15
16
17
18
19
20
21
22
23
24
25
26

Cylinder Assembly, Boom – 55C

CLARK

No.	Part No.	Qty.	Description
A	[2,9,11]2523872	1	Cylinder assy LH
B	[7,12]2538707	1	Cylinder assy LH
C	[10,11]2523873	1	Cylinder assy RH
D	[8,12]2538706	1	Cylinder assy RH
E	[4]2530108	1	Seal kit
1	12H15	1	Fitting grease
2	2512014	1	Bushing
3	[5]2523870	1	Cylinder LH
3A	[5]2538704	1	Cylinder LH
3B	†[5]2523871	1	Cylinder RH
3C	[5]2538705	1	Cylinder RH
4	86D10	4	Nut
5	27E10	4	Washer
6	33C512	1	Bolt
7	626787	1	Washer
8	2511955	1	Dowel
9	2518612	1	Piston
10	§[6]———	1	O-ring
11	§[6]———	1	Outer ring
12	§[6]———	1	Wear ring
13	§[6]———	1	Inner ring
14	§[6]———	1	Wear ring
15	33C622	4	Bolt
16	1511750	1	Wiper
17	2514109	1	Flange
18	2529462	1	Bearing
19	2529467	1	Seal
20	2518614	1	Cap
21	§[6]———	1	Back-up ring
22	§[6]———	1	O-ring
23	———	—	Omit
24	18C1072	4	Bolt
25	2514107	1	Retainer
26	2523869	1	Rod

[2]Inc. 2, 3, 4 → 26
[3]Inc. 2, 3B, 4 → 26
[4]Inc. 10 → 14, 16, 19, 21, 22
[5]Inc. 2
[6]See C
[7]Inc. 2, 3A, 4 → 26
[8]Inc. 2, 3C, 4 → 26
[9]For complete replacement use 2538707 plus 1—2505198.
[10]For complete replacement use 2538706 plus 1—2505198.
[11]480A 480B101CB → 152CB 481A 481B101CB → 136CB
[12]480B153CB & → 481B137CB & →

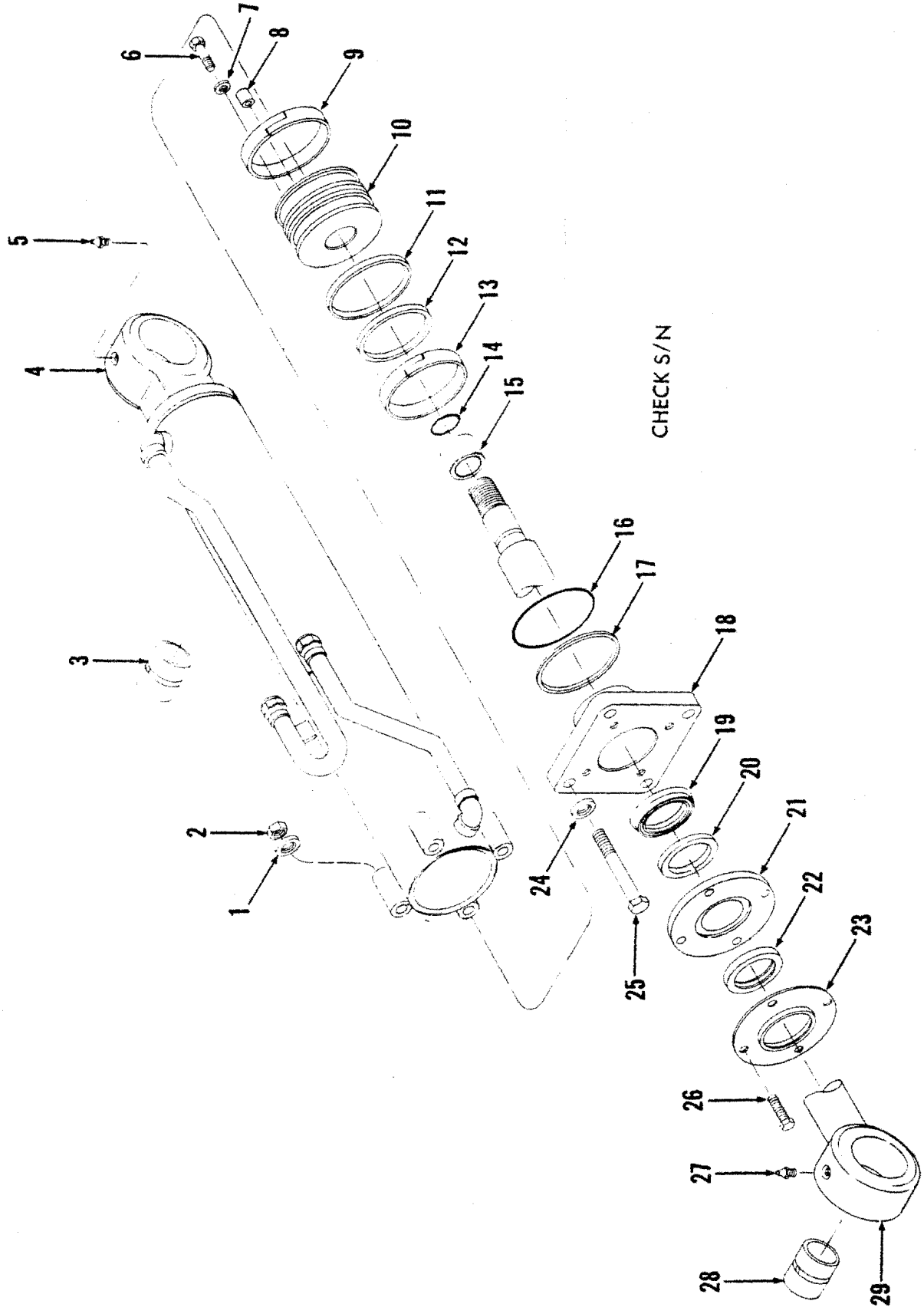
TS-20071
CHECK S/N
1
2
3
4
5
6
7
8
9
10
11
12
13
14
15
16
17
18
19
20
21
22
23
24
25
26
27
28
29

Cylinder Assembly, Bucket — 35C *

CLARK

No.	Part No.	Qty.	Description
A	[9,2]2521043	1	Cylinder assy LH
B	[3]2521041	1	Cylinder assy RH
C	[4,8]2538174	1	Seal kit
1	570988	4	Washer
2	60D8	4	Nut
3	2512013	1	Bushing
4	[5]2521075	1	Cylinder LH
4A	[5]2521078	1	Cylinder RH
5	12H15	2	Grease fitting
6	33C512	1	Bolt
7	626787	1	Washer
8	2511955	1	Dowel
9	[6]———	1	Wear ring
10	2518445	1	Piston
11	[6]———	1	Outer ring
12	[6]———	1	Inner ring
13	[6]———	1	Wear ring
14	[6]———	1	O-ring
15	2521082	1	Spacer
16	[6]———	1	O-ring
17	[6]———	1	Back-up ring
18	2511969	1	Cap
19	2512060	1	Seal
20	2511959	1	Bearing
21	2511962	1	Flange
22	2500234	1	Wiper
23	2511957	1	Retainer
24	570988	4	Washer
25	18C880	4	Bolt
26	33C420	4	Bolt
27	12H15	2	Grease fitting
28	2512013	1	Bushing
29	[7]2518154	1	Rod

*458A101CB→116CB, 472A101CB→255CB
[3]Inc. 1→4, 6→26, 28, 29
[3]Inc. 1→3, 4A, 6→26, 28, 29
[4]Inc. 9, 11→14, 16, 17, 19, 22
[5]Inc. 3
[6]See C
[7]Inc. 28
[8]Ref. SG-763-A
[9]For replacement use 2523230

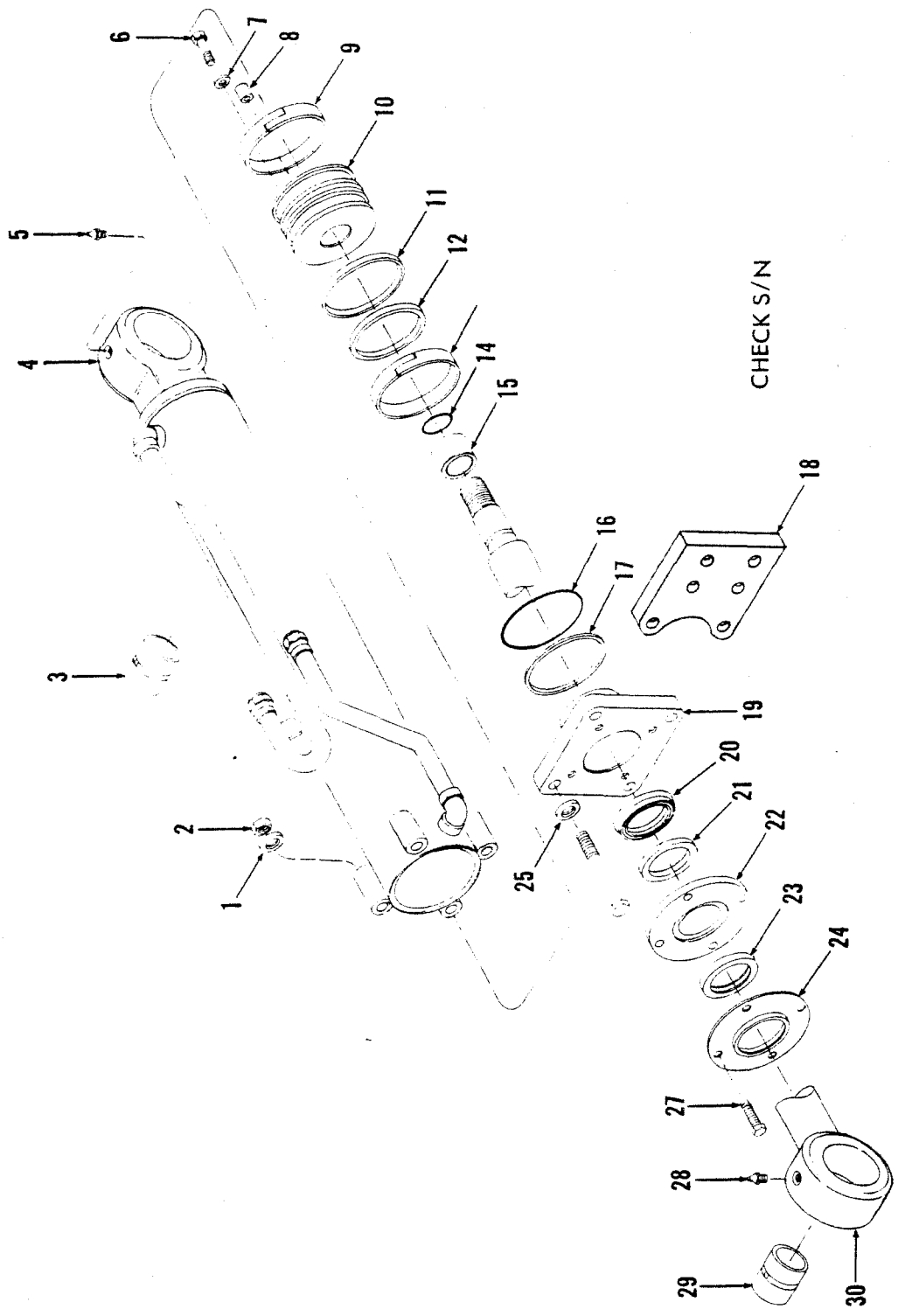
CHECK S/N
1
2
3
4
5
6
7
8
9
10
11
12
14
15
16
17
18
19
20
21
22
23
24
25
27
28
29
30

TS-15745

Cylinder Assembly, Bucket – 35C ✻

CLARK

No.	Part No.	Qty.	Description
A	[3]2523230	1	Cylinder assy LH
B	[3]2523229	1	Cylinder assy RH
C	[4][8]2538174	1	Seal kit
1	570988	4	Washer
2	60D8	4	Nut
3	2512013	1	Bushing
4	[5]2522921	1	Cylinder LH
4A	[5]2522922	1	Cylinder RH
5	12H15	2	Grease fitting
6	33C512	1	Bolt
7	626787	1	Washer
8	2511955	1	Dowel
9	[5][6]———	1	Wear ring
10	2518445	1	Piston
11	[5][6]———	1	Outer ring
12	[5][6]———	1	Inner ring
13	[5][6]———	1	Wear ring
14	[5][7]———	1	O-ring
15	2521082	1	Spacer
16	[5][7]———	1	O-ring
17	[5][7]———	1	Back-up ring
18	2515623	1	Bracket
19	2511969	1	Cap
20	2512060	1	Seal
21	2511959	1	Bearing
22	2511962	1	Flange
23	2500234	1	Wiper
24	2511957	1	Retainer
25	———	–	Omit
26	18C864	2	Bolt
26A	18C872	2	Bolt
27	33C420	4	Bolt
28	12H15	2	Grease fitting
29	2512013	1	Bushing
30	[3]2523225	1	Rod

✻458A117CB & →, 472A256CB→327CB
[2]Inc. 1→4, 6→26, 28, 29
[3]Inc. 1→3, 4A, 6→26, 28, 29
[4]Inc. 9, 11→14, 16, 17, 19, 22
[5]Inc. 3
[6]See C
[7]Inc. 28
[8]Ref. SG-763-A

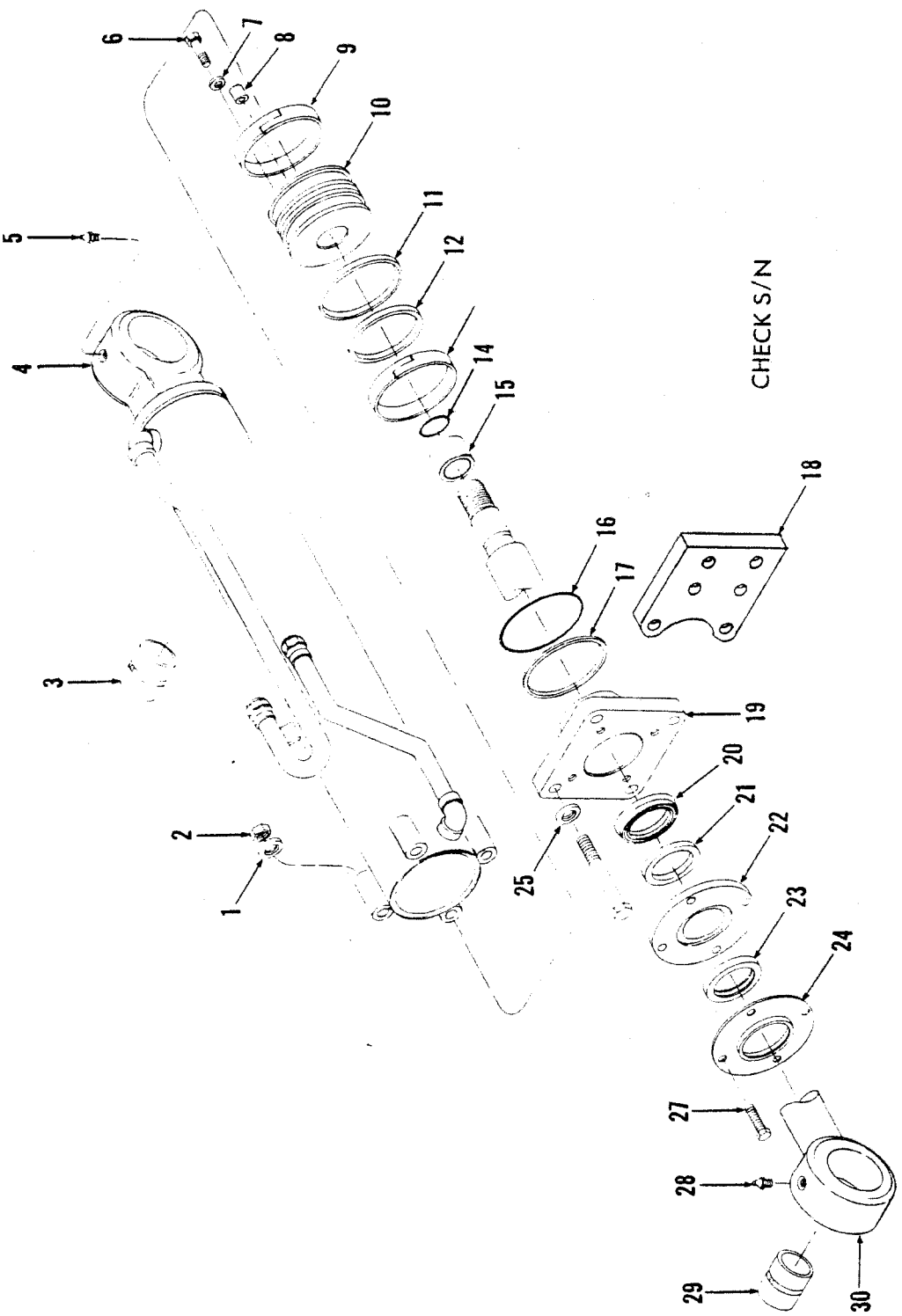
CHECK S/N
1
2
3
4
5
6
7
8
9
10
11
12
14
15
16
17
18
19
20
21
22
23
24
25
27
28
29
30

TS-15745

Cylinder Assembly, Bucket – 35C *

CLARK

No.	Part No.	Qty.	Description
A	[2]2526749	1	Cylinder assy LH
B	[3]2526750	1	Cylinder assy RH
C	[4] [8]2538174	1	Seal kit
1	570988	4	Washer
2	60D8	4	Nut
3	2512013	1	Bushing
4	[5]2526753	1	Cylinder LH
4A	[5]2526751	1	Cylinder RH
5	12H15	2	Fitting grease
6	33C512	1	Bolt
7	626787	1	Washer
8	2511955	1	Dowel
9	§[6]———	1	Wear ring
10	2518445	1	Piston
11	§[6]———	1	Outer ring
12	§[6]———	1	Inner ring
13	§[6]———	1	Wear ring
14	§[6]———	1	O-ring
15	2526747	1	Spacer
16	§[6]———	1	O-ring
17	§[6]———	1	Back-up ring
18	2515623	1	Bracket
19	2511969	1	Cap
20	2512060	1	Seal
21	2511959	1	Bearing
22	2511962	1	Flange
23	2500234	1	Wiper
24	2511957	1	Retainer
25	———	–	Omit
26	18C864	2	Bolt
26A	18C872	2	Bolt
27	33C420	4	Bolt
28	12H15	2	Fitting grease
29	2512013	1	Bushing
30	[7]2526756	1	Rod

*472A328CB & →
[2]Inc. 1→4, 6→26, 28, 29
[3]Inc. 1→3, 4A, 6→26, 28, 29
[4]Inc. 9, 11→14, 16, 17, 19, 22
[5]Inc. 3
[6]See C
[7]Inc. 28
[8]Ref. SG-763-A

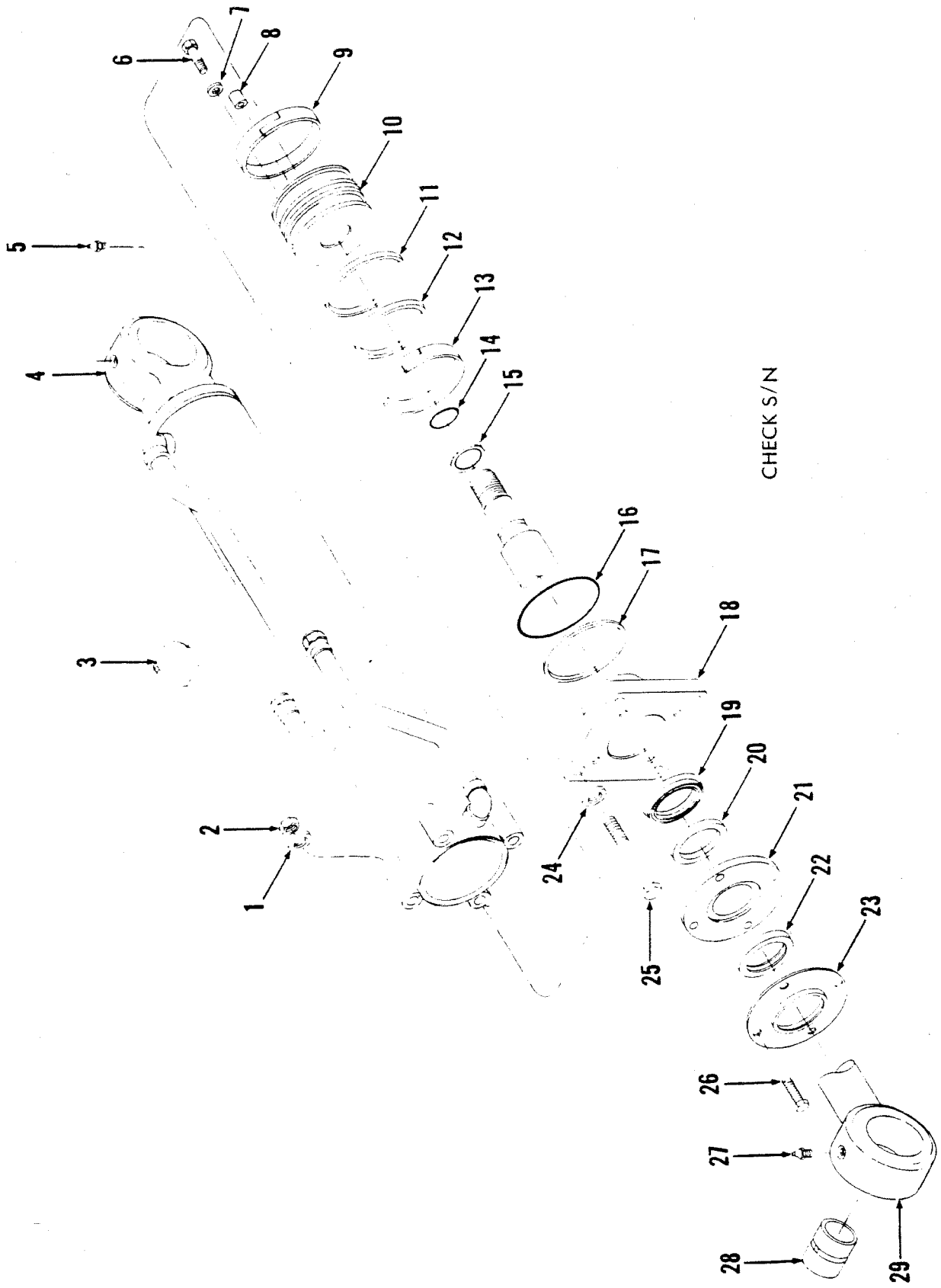
TS-20071
CHECK S/N
1
2
3
4
5
6
7
8
9
10
11
12
13
14
15
16
17
18
19
20
21
22
23
24
25
26
27
28
29

Cylinder Assembly, Bucket — 45C *

CLARK

No.	Part No.	Qty.	Description
A	[2]2521044	1	Cylinder assy LH
B	[3]2521042	1	Cylinder assy RH
C	[4,8]2538174	1	Seal kit
1	570988	4	Washer
2	60D8	4	Nut
3	2512013	1	Bushing
4	[5]2521075	1	Cylinder LH
4A	[5]2521078	1	Cylinder RH
5	12H15	1	Grease fitting
6	33C512	1	Bolt
7	626787	1	Washer
8	2511955	1	Dowel
9	[6]———	1	Wear ring
10	2518445	1	Piston
11	[6]———	1	Outer ring
12	[6]———	1	Inner ring
13	[6]———	1	Wear ring
14	[6]———	1	O-ring
15	2521083	1	Spacer
16	[6]———	1	O-ring
17	[6]———	1	Back-up ring
18	2511969	1	Cap
19	2512060	1	Seal
20	2511959	1	Bearing
21	2511962	1	Flange
22	2500234	1	Wiper
23	2511957	1	Retainer
24	570988	4	Washer
25	18C880	4	Bolt
26	33C420	4	Bolt
27	12H15	1	Grease fitting
28	2512013	1	Bushing
29	[7]2518151	1	Rod

*459A101CB→140CB, 473A101CB→322CB
[2]Inc. 1→4, 6→26, 28, 29
[3]Inc. 1→3, 4A, 6→26, 28, 29
[4]Inc. 9, 11→14, 16, 17, 19, 22
[5]Inc. 3
[6]See C
[7]Inc. 28
[8]Ref. SG-763-A

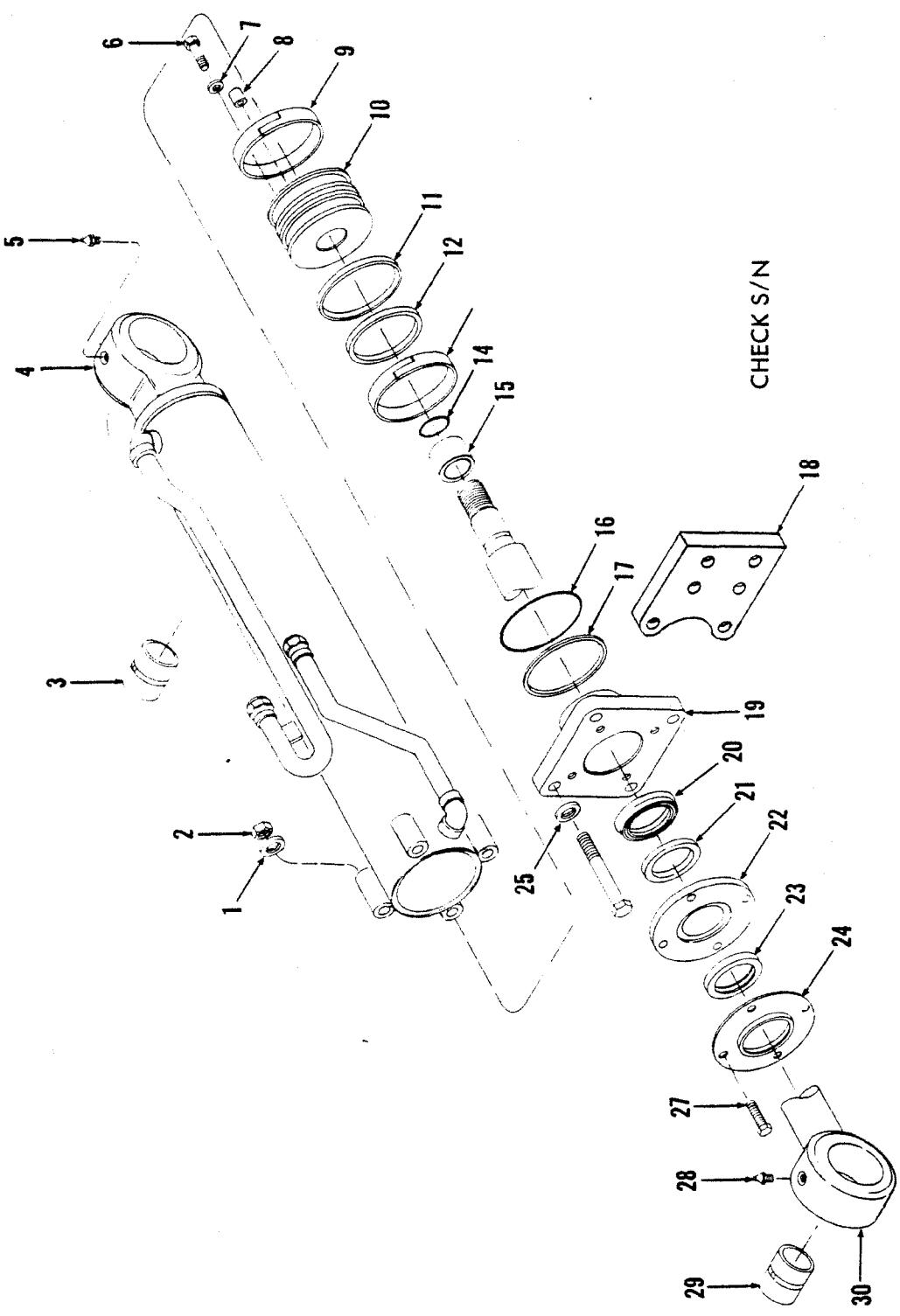
TS-157AE
CHECK S/N
1
2
3
4
5
6
7
8
9
10
11
12
14
15
16
17
18
19
20
21
22
23
24
25
27
28
29
30

Cylinder Assembly, Bucket — 45C *

CLARK

No.	Part No.	Qty.	Description
A	[2]2522924	1	Cylinder assy LH
B	[3]2522923	1	Cylinder assy RH
C	[4,8]2538174	1	Seal kit
1	570988	4	Washer
2	6008	4	Nut
3	2512013	1	Bushing
4	[5]2522920	1	Cylinder LH
4A	[5]2521078	1	Cylinder RH
5	12H15	1	Fitting grease
6	33C512	1	Bolt
7	626787	1	Washer
8	2511955	1	Dowel
9	§[6]———	1	Wear ring
10	2518445	1	Piston
11	§[6]———	1	Outer ring
12	§[6]———	1	Inner ring
13	§[6]———	1	Wear ring
14	§[6]———	1	O-ring
15	2521083	1	Spacer
16	§[6]———	1	O-ring
17	§[6]———	1	Back-up ring
18	2515623	1	Bracket
19	2511969	1	Cap
20	2512060	1	Seal
21	2511959	1	Bearing
22	2511962	1	Flange
23	2500234	1	Wiper
24	2511957	1	Retainer
25	———	—	Omit
26	18C864	2	Bolt
26A	18C872	2	Bolt
27	33C420	4	Bolt
28	12H15	1	Fitting grease
29	2512013	1	Bushing
30	[7]2522910	1	Rod

*459A141CB→155CB, 473A323CB→403CB
[2]Inc. 1→4, 6→26, 28, 29
[3]Inc. 1→3, 4A, 6→26, 28, 29
[4]Inc. 9, 11→14, 16, 17, 19, 22
[5]Inc. 3
[6]See C
[7]Inc. 28
[8]Ref. SG-763-A

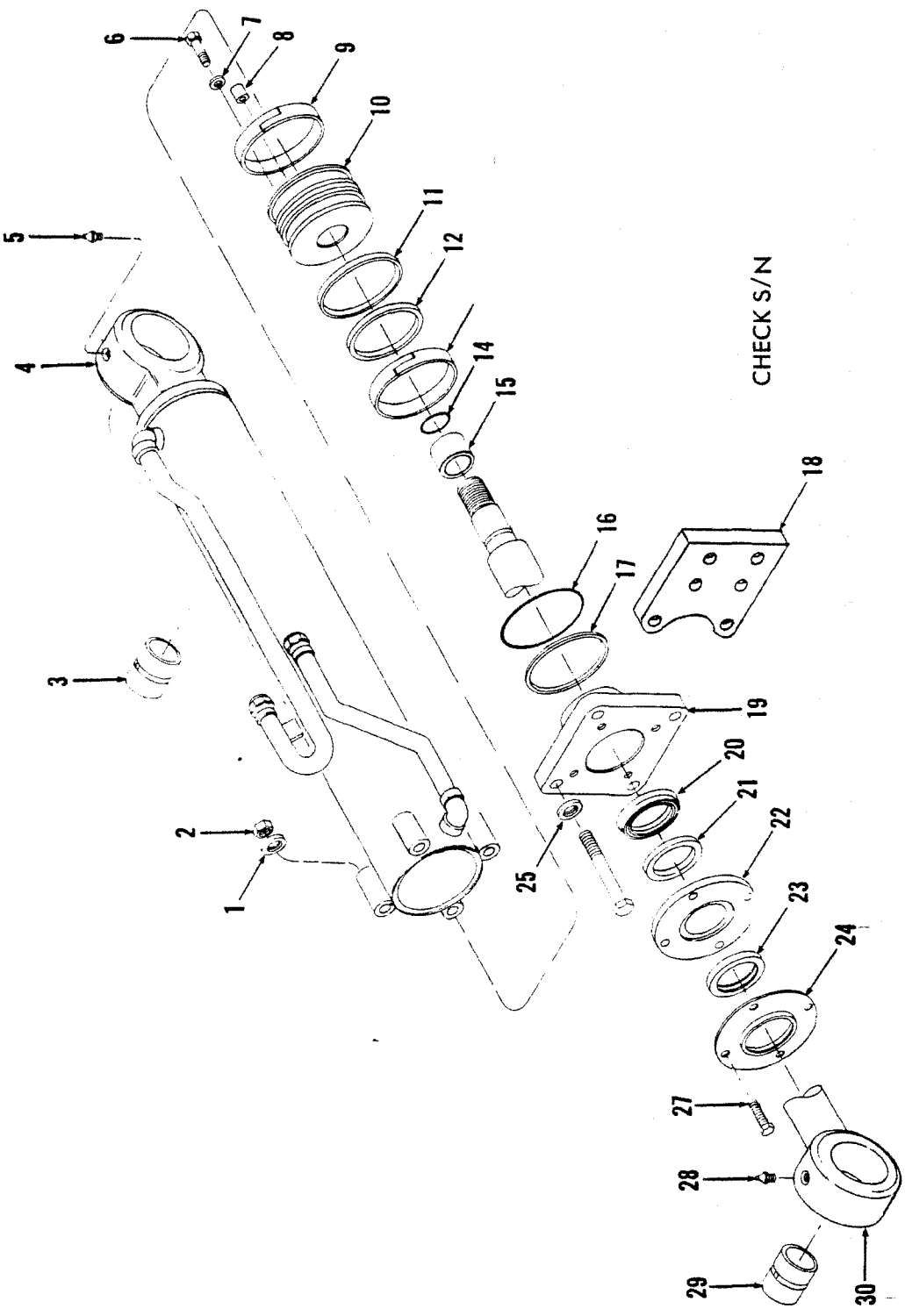
TS-15745
CHECK S/N
1
2
3
4
5
6
7
8
9
10
11
12
14
15
16
17
18
19
20
21
22
23
24
25
27
28
29
30

Cylinder Assembly, Bucket — 45C *

CLARK

No.	Part No.	Qty.	Description
A	[2]2526536	1	Cylinder assy LH
B	[3]2526537	1	Cylinder assy RH
C	[4 8]2538174	1	Seal kit
1	570988	4	Washer
2	60D8	4	Nut
3	2512013	1	Bushing
4	[5]2526539	1	Cylinder LH
4A	[5]2526538	1	Cylinder RH
5	12H15	1	Grease fitting
6	33C512	1	Bolt
7	626787	1	Washer
8	2511955	1	Dowel
9	§[6]———	1	Wear ring
10	2518445	1	Piston
11	§[6]———	1	Outer ring
12	§[6]———	1	Inner ring
13	§[6]———	1	Wear ring
14	§[6]———	1	O-ring
15	2526534	1	Spacer
16	§[6]———	1	O-ring
17	§[6]———	1	Back-up ring
18	2515623	1	Bracket
19	2511969	1	Cap
20	2512060	1	Seal
21	2511959	1	Bearing
22	2511962	1	Flange
23	2500234	1	Wiper
24	2511957	1	Retainer
25	———	—	Omit
26	18C864	2	Bolt
26A	18C872	2	Bolt
27	33C420	4	Bolt
28	12H15	1	Grease fitting
29	2512013	1	Bushing
30	[7]	1	Rod

*459A156CB & →, 473A404CB & →
[2]Inc. 1→4, 6→26, 28, 29
[3]Inc. 1→3, 4A, 6→26, 28, 29
[4]Inc. 9, 11→14, 16, 17, 19, 22
[5]Inc. 3
[6]See C
[7]Inc. 28
[8]Ref. SG-763-A

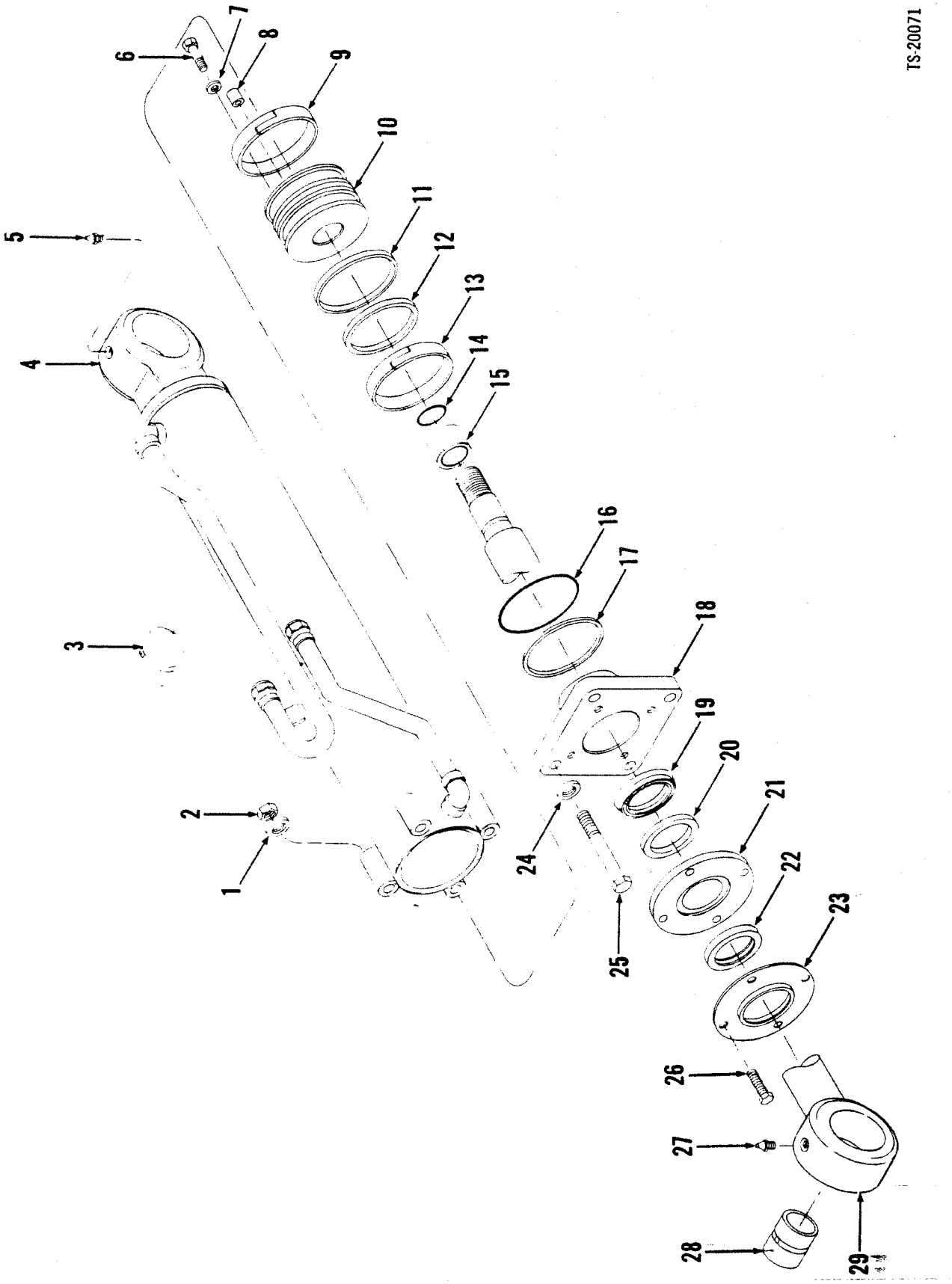
TS-20071
1
2
3
4
5
6
7
8
9
10
11
12
13
14
15
16
17
18
19
20
21
22
23
24
25
26
27
28
29

Cylinder Assembly, Bucket – 55C

CLARK

No.	Part No.	Qty.	Description
A	[2,10]2526668	1	Cylinder assy LH
B	[8]2538701	1	Cylinder assy LH
C	[3,11]2526667	1	Cylinder assy RH
D	[9]2538702	1	Cylinder assy RH
E	[4]2530107	1	Seal kit
1	27E10	4	Washer
2	86D10	4	Nut
3	2512013	1	Bushing
4	[5]2526665	1	Cylinder LH
4A	[5]2538699	1	Cylinder LH
4B	[5]2526664	1	Cylinder RH
4C	[5]2538700	1	Cylinder RH
5	12H15	1	Grease fitting
6	33C512	1	Bolt
7	626787	1	Washer
8	2511955	1	Dowel
9	§[6]———	1	Wear ring
10	2516560	1	Piston
11	§[6]———	1	Outer ring
12	§[6]———	1	Inner ring
13	§[6]———	1	Wear ring
14	§[6]———	1	O-ring
15	2526660	1	Spacer
16	§[6]———	1	O-ring
17	§[6]———	1	Back-up ring
18	2518137	1	Cap
19	2529466	1	Seal
20	2529463	1	Bearing
21	2511993	1	Flange
22	1511539	1	Wiper
23	1511544	1	Retainer
24	———	—	Omit
25	18C1064	4	Bolt
26	33C622	4	Bolt
27	12H15	1	Grease fitting
28	2512013	1	Bushing
29	[7]2526656	1	Rod

[2]Inc. 1 → 4, 6 → 26, 28, 29
[3]Inc. 1 → 3, 4B, 6 → 26, 28, 29
[4]Inc. 9, 11 → 14, 16, 17, 19, 22
[5]Inc. 3
[6]See C
[7]Inc. 28
[8]Inc. 1 → 3, 4A, 6 → 26, 28, 29
[9]Inc. 1 → 3, 4C, 6 → 26, 28, 29
[10]For complete replacement use 2538701 plus 1—2505198.
[11]For complete replacement use 2538702 plus 1—2505198.

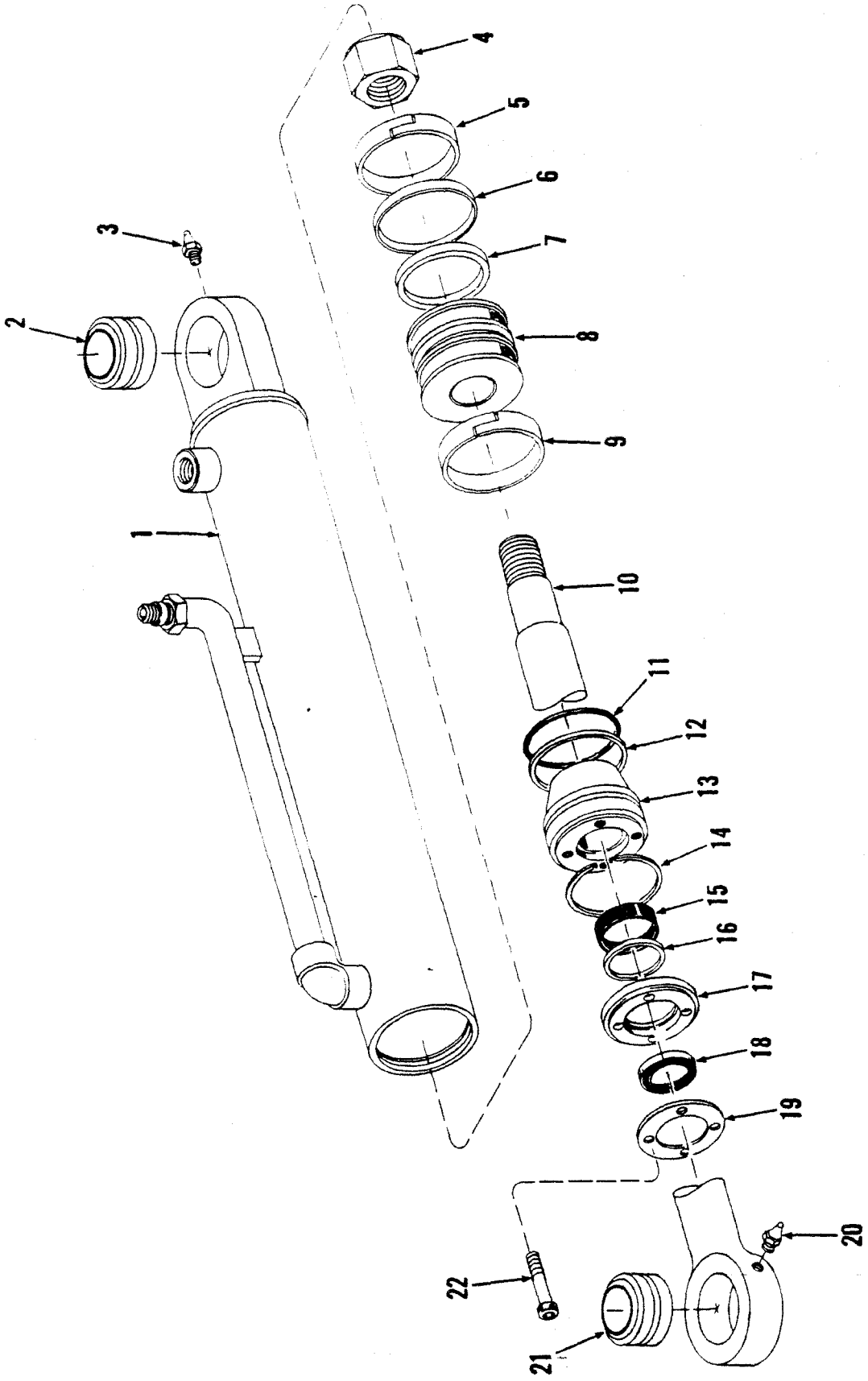
TS-14850
1
2
3
4
5
6
7
8
9
10
11
12
13
14
15
16
17
18
19
20
21
22

Cylinder Assembly, Steering — 35C — 45C

CLARK

No.	Part No.	Qty.	Description
A	[1][2]2518513	2	Cylinder assy strg
B	[4][6]2530106	1	Seal kit
1	2518512	1	Cylinder
2	1574465	2	Bearing
3	10H25	2	Grease fitting
4	60D12	1	Nut
5	[5]———	1	Wear ring
6	[5]———	1	Outer ring
7	[5]———	1	Inner ring
8	2518466	1	Piston
9	[5]———	1	Wear ring
10	2518467	1	Rod
11	[5]———	1	O-ring
12	[5]———	1	Back-up ring
13	2518475	1	Cap
14	2506408	1	Snap ring
15	6515805	1	Seal
16	2529461	1	Bearing
17	2511935	1	Flange
18	2500232	1	Wiper
19	2511934	1	Retainer
20	10H15	2	Grease fitting
21	1574465	2	Bearing
22	2511933	4	Bolt

[2] used. Quantities listed are for 1.
[3] Inc. 1, 4→19, 22
[4] Inc. 5, 6, 7, 9, 11, 12, 15, 18
[5] See B
[6] Ref SG 597

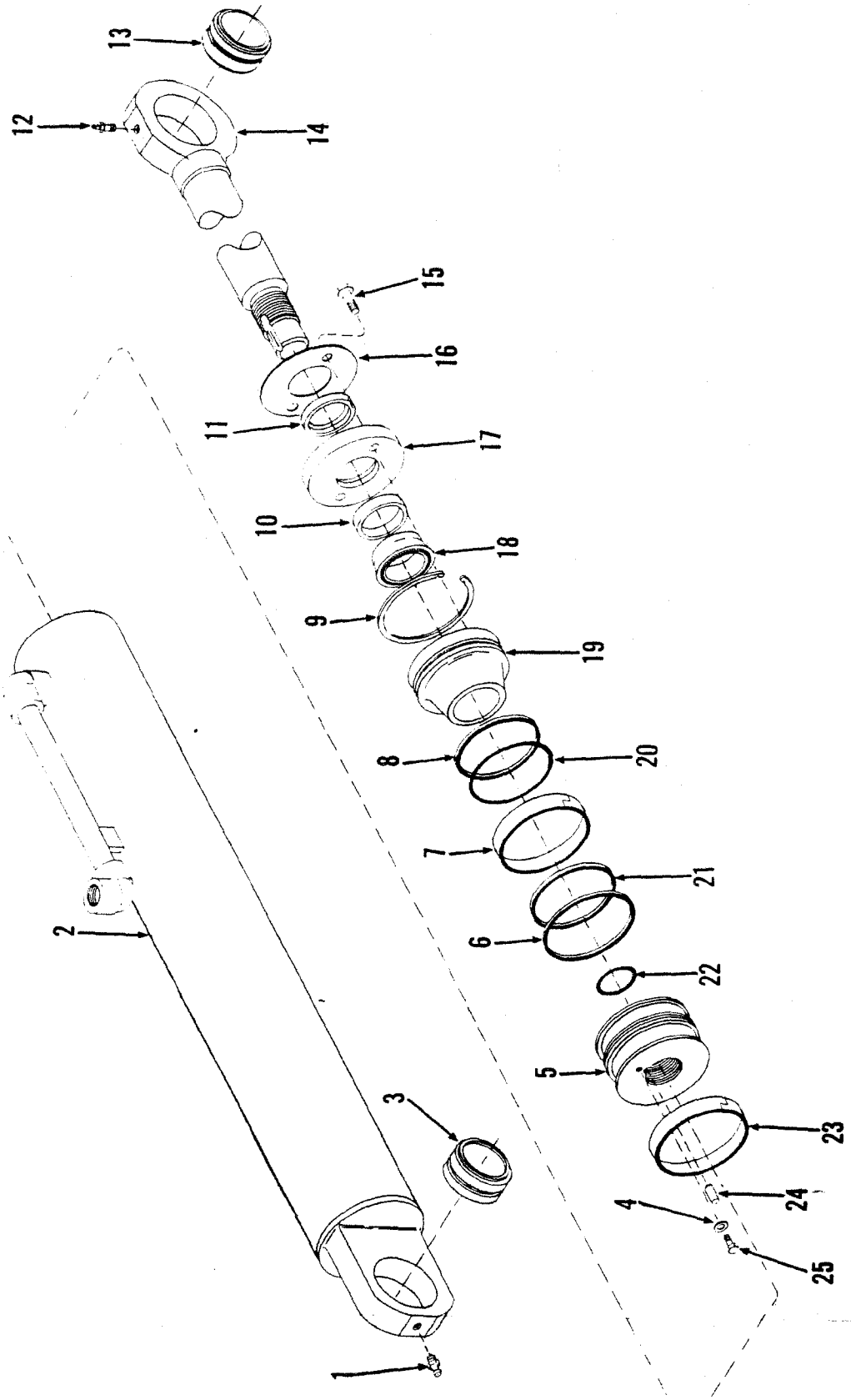

TS-15678

Cylinder Assembly, Steering – 55C

CLARK

No.	Part No.	Qty.	Description
A	[2] [3] 2526859	2	Cylinder assembly
B	[4] [6] 2530106	—	Seal kit
1	10H25	1	Fitting grease
2	2526861	1	Cylinder
3	1574465	1	Bushing
4	25E13	1	Washer
5	2526852	1	Piston
6	[5] ———	1	Ring inner
7	[5] ———	1	Wear ring
8	[5] ———	1	Ring
9	2506407	1	Snap ring
10	2529461	1	Bearing
11	2500232	1	Wiper
12	11H25	1	Fitting grease
13	1574465	1	Bushing
14	2526860	1	Rod
15	33C408	2	Bolt
16	2526849	1	Ring
17	2526858	1	Flange
18	2529465	1	Seal
19	2526856	1	Cap
20	[5] ———	1	O-ring
21	[5] ———	1	Ring outer
22	[5] ———	1	O-ring
23	[5] ———	1	Wear ring
24	2526850	1	Dowel
25	33C408	1	Bolt

[2] Inc. 2, 4→11, 14→25
[3] Two (2) used. Quantities listed are for 1.
[4] Inc. 6→9, 11, 18, 20→23
[5] See B

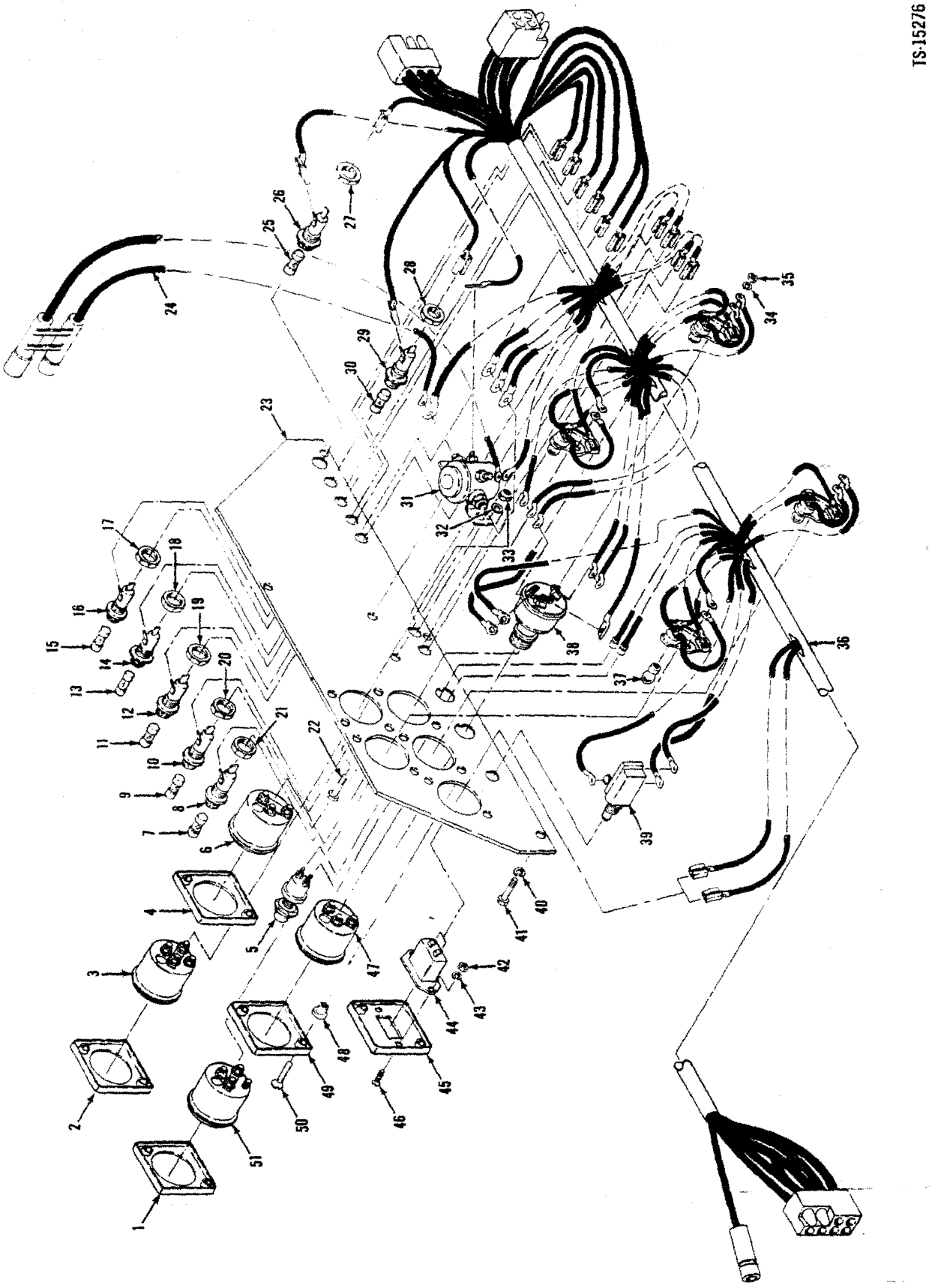
TS-15276

Electrical Instrument Panel — 35C — 45C

CLARK

No.	Part No.	Qty.	Description
1	2515307	1	Face plate
2	2515307	1	Face plate
3	2511894	1	Gauge conv temp
4	2515307	1	Face plate
5	[2]600259	1	Switch
6	2511892	1	Gauge oil press
7	601390	1	Fuse
8	[3]2511248	1	Fuse holder
9	601390	1	Fuse
10	[4]2511248	1	Fuse holder
11	2512760	1	Fuse
12	[5]2511248	1	Fuse holder
13	611074	1	Fuse
14	[6]2511248	1	Fuse holder
15	1310700	1	Fuse
16	[7]2511248	1	Fuse holder
17	§———	1	Nut
18	§———	1	Nut
19	§———	1	Nut
20	§———	1	Nut
21	§———	1	Nut
22	18C412	2	Bolt
23	2513048	1	Instrument panel
24	2521880	1	Wire
25	2522414	1	Fuse
26	[8]2512918	1	Fuse holder
27	§———	1	Nut
28	§———	1	Nut
29	[9]2511248	1	Fuse holder
30	601390	1	Fuse
31	1621325	1	Solenoid
32	2525069	2	Washer
33	60D4	2	Nut
34	12E6	4	Washer
35	12D6	4	Nut
36	2525340	1	Harness
37	895771	4	Bulb
38	2516981	1	Switch ign
39	2514253	1	Switch light
40	2525069	5	Washer
41	17C412	5	Bolt
42	[10]12D6	2	Nut
43	[10]12E6	2	Washer
44	[10]6506826	1	Hour meter
44A	[11]2524589	1	Hour meter
45	[10]2518045	1	Face plate
45A	[11]2515307	1	Face plate
46	[10]85G608	2	Screw
47	2511893	1	Gauge voltmeter
48	2515035	10	Nut
49	2515307	1	Face plate
50	1G612	10	Screw
51	2511891	1	Gauge eng temp

[2]Perkins only
[3]Inc. 21
[4]Inc. 20
[5]Inc. 19
[6]Inc. 18
[7]Inc. 17
[8]Inc. 26
[9]Inc. 27
[10]458A101CB & →, 459A101CB → 138CB, 472A101CB → 231CB, 473A101CB → 286CB
[11]459A139CB & →, 472A232CB & →, 473A287CB & →

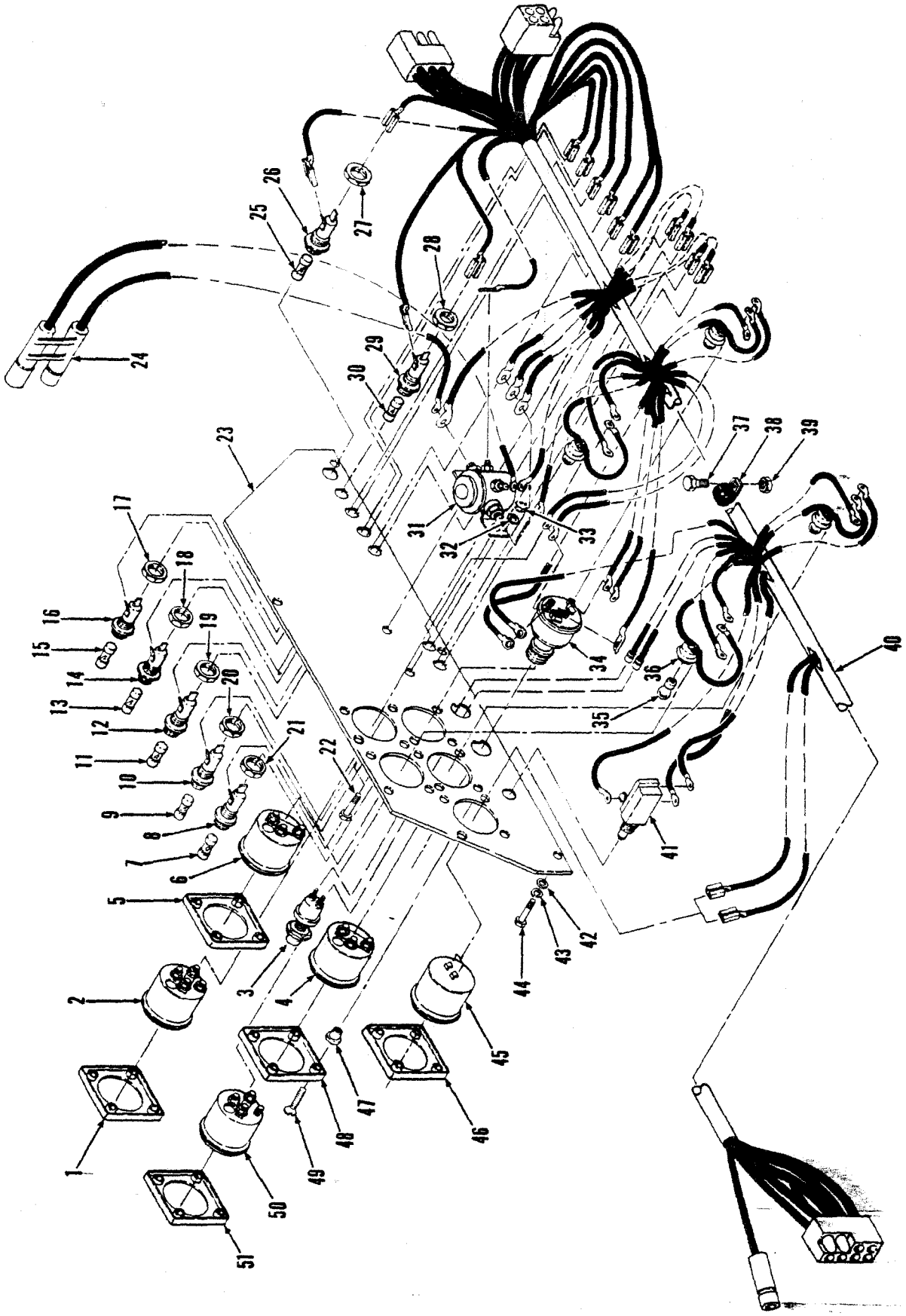
TS-15676
1
2
3
4
5
6
7
8
9
10
11
12
13
14
15
16
17
18
19
20
21
22
23
24
25
26
27
28
29
30
31
32
33
34
35
36
37
38
39
40
41
42
43
44
45
46
47
48
49
50
51

Electrical Instrument Panel — 55C

CLARK

No.	Part No.	Qty.	Description
1	2528758	1	Face plate
2	2528826	1	Gauge conv temp
3	———	—	Omit
4	2528827	1	Gauge voltmeter
5	2528758	1	Face plate
6	2528824	1	Gauge oil press
7	601390	1	Fuse
8	[2]2511248	1	Fuse holder
9	601390	1	Fuse
10	[3]2511248	1	Fuse holder
11	2512760	1	Fuse
12	[4]2511248	1	Fuse holder
13	611074	1	Fuse
14	[5]2511248	1	Fuse holder
15	1310700	1	Fuse
16	[6]2511248	1	Fuse holder
17	§———	1	Nut
18	§———	1	Nut
19	§———	1	Nut
20	§———	1	Nut
21	§———	1	Nut
22	17C412	2	Bolt
23	2513048	1	Instrument panel
24	2521880	1	Wire
25	2522414	1	Fuse
26	[7]2512918	1	Fuse holder
27	§———	1	Nut
28	§———	1	Nut
29	[8]2511248	1	Fuse holder
30	601390	1	Fuse
31	1621325	1	Solenoid
32	2525069	2	Washer
33	59D4	2	Nut
34	[9]2516981	1	Switch ign
34A	[9]1307998	1	Washer
34B	[10]2533949	1	Switch ign
35	895771	4	Bulb
36	2528760	4	Socket assy
37	17C412	1	Bolt
38	30H53	1	Clip
39	59D4	1	Nut
40	2528761	1	Harness
41	2514253	1	Switch light
42	2525069	5	Washer
43	———	—	Omit
44	17C412	5	Bolt
45	2524589	1	Hourmeter
46	2528758	1	Face plate
47	2515035	20	Nut
48	2528758	1	Face plate
49	1G612	20	Screw
50	2528825	1	Gauge eng temp
51	2528758	1	Face plate

[2]Inc. 21
[3]Inc. 20
[4]Inc. 19
[5]Inc. 18
[6]Inc. 17
[7]Inc. 27
[8]Inc. 28
[9]480A101CB → 174CB
[10]480A175CB & →

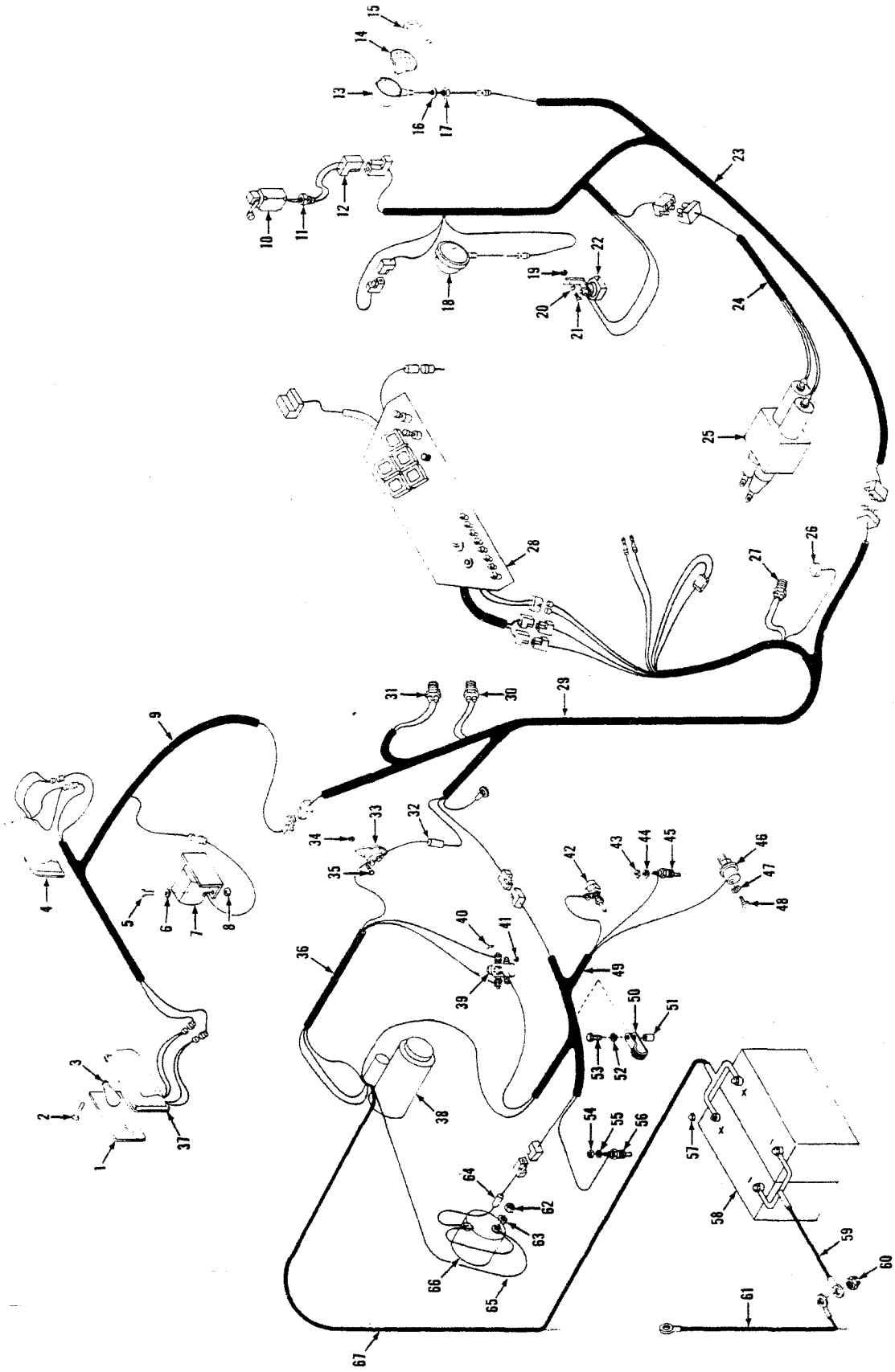

TS-20238

No.	Part No.	Qty.	Description
1	962192	2	Lens
2	59G1008	8	Screw
3	962193	2	Bulb
4	2519022	1	Tail light LH
5	18C416	4	Bolt
6	25E13	4	Washer
7	2516912	1	Back-up alarm
8	64D4	4	Nut
9	2517045	1	Wire harness
10	[2]1767898	1	Switch limit
10A	†990556	1	Arm
11	1549705	1	Connector
12	[9]2517020	1	Wiring harness
12A	[10]2526977	1	Wiring harness
12B	[11]2526995	1	Wiring harness
13	§[3]———	1	Housing
14	960503	2	Sealed beam
15	944872	2	Retainer
16	898539	2	Washer
17	18D8	2	Nut
18A	2532357	2	Headlamp
18	2503151	2	Headlamp
19	59D4	1	Nut
20	———	–	Omit
21	17C412	1	Bolt
22	6512873	1	Horn
22A	†[9]647310	1	Relay
22B	†[10]2528653	1	Relay
22C	†5207528	1	Nut
23	2517022	1	Wire harness
24	2517019	1	Wire harness
25	[1]———	1	Valve
26	5200219	1	Horn button
27	2516484	1	Switch brake light
28	[1]———	1	Instrument panel
29	2517056	1	Wire harness
30	2516008	1	Switch back-up alarm
31	233778	1	Switch neutral start
32	2514436	1	Wire
33	[4]1518449	1	Circuit breaker
34	85G1218	2	Screw
35	50D12	2	Nut
36	2514438	1	Wire harness
37	[5]2519021	1	Tail light
38	[1]———	1	Starter
39	551530	1	Solenoid switch
40	18C412	2	Bolt
41	60D4	2	Nut
42	§[8]———	1	Switch cold start
43	14D10	1	Nut
44	12E10	1	Washer
45	2338564	1	Switch trans temp
46	1534135	1	Pressure sender
47	12E10	1	Washer
48	14D10	1	Nut
49	[6]2517312	1	Wiring harness
49A	†[7]2517044	1	Wiring harness
50	30H40	3	Clip
51	511940	1	Spacer
52	4E8	1	Washer
53	17C828	1	Bolt
54	12E10	1	Washer
55	14D10	1	Nut
56	2338564	1	Switch eng temp
57	2512577	4	Nut
58	2511022	2	Battery
59	2512539	1	Cable
60	59D6	2	Nut
61	572299	1	Cable
62	12D12	1	Nut
63	12E12	1	Washer
64	2513067	1	Wire
65	[6]2518725	1	Wire
65A	†[7]2514435	1	Wire
66	[1]———	1	Alternator
67	2512540	1	Cable

[1]See Index
[2]Inc. 10A
[3]See 18
[4]80 Amp
[5]Inc. 1, 2, 3
[6]G.M.
[7]Perkins
[8]See Perkins Engine Manual
[9]458A101CB→999CB, 459A101CB→155CB, 972A101CB→327CB, 473A101CB→403CB
[10]459A156CB→999CB, 473A404CB→999CB, 480A101CB & →, 481A101CB & →
[11]472A328CB→999CB

CLARK

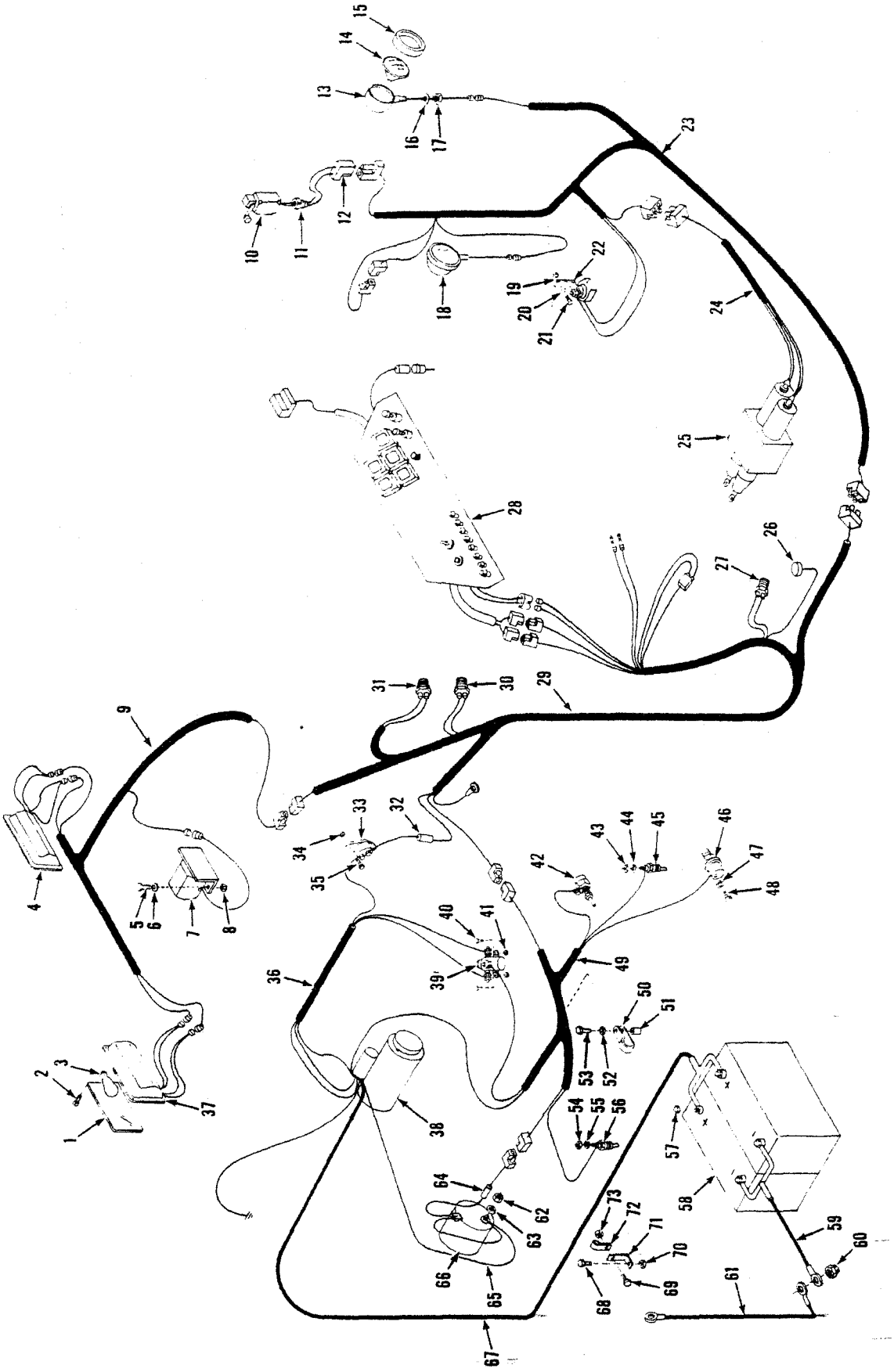

TS-20689

(1F19)

No.	Part No.	Qty.	Description
1	962192	2	Lens
2	59G1008	8	Screw
3	962193	2	Bulb
4	2519022	1	Tail light LH
5	18C416	4	Bolt
6	25E13	4	Washer
7	2516912	1	Back-up alarm
8	64D4	4	Nut
9	2517045	1	Wire harness
10	[2]1767898	1	Switch limit
10A	†990556	1	Arm
11	1549705	1	Connector
12	2526977	1	Wiring harness
13	§[3]———	1	Housing
14	960503	2	Sealed beam
15	944872	2	Retainer
16	898539	2	Washer
17	18D8	2	Nut
18	2503151	2	Headlamp
18A	2532357	2	Headlamp
19	59D4	1	Nut
20	———	—	Omit
21	17C412	1	Bolt
22	6512873	1	Horn
22A	†2528653	1	Relay
22B	†5207528	1	Nut
23	2517022	1	Wire harness
24	2517019	1	Wire harness
25	[1]———	1	Valve
26	5200219	1	Horn button
27	2516484	1	Switch brake light
28	[1]———	1	Instrument panel
29	2517056	1	Wire harness
30	[9]2516008	1	Switch back-up alarm
30A	[10]2531249	1	Switch back-up alarm
31	233778	1	Switch neutral start
32	2524707	1	Wire
33	[4]1518449	1	Circuit breaker
34	85G1218	2	Screw
35	50D12	2	Nut
36	2524692	1	Wire harness
37	[5]2519021	1	Tail light
38	[1]———	1	Starter
39	551530	1	Solenoid switch
40	18C412	2	Bolt
41	60D4	2	Nut
42	§[8]———	1	Switch cold start
43	14D10	1	Nut
44	12E10	1	Washer
45	2528822	1	Switch trans temp
46	2528823	1	Pressure sender
47	12E10	1	Washer
48	14D10	1	Nut
49	[6]2517312	1	Wiring harness
49A	†2524691	1	Wiring harness
50	30H40	3	Clip
51	511940	1	Spacer
52	4E8	1	Washer
53	17C828	1	Bolt
54	12E10	1	Washer
55	14D10	1	Nut
56	2528821	1	Switch eng temp
57	2512577	4	Nut
58	2511022	2	Battery
59	2526789	1	Cable
60	59D6	1	Nut
61	572299	1	Cable
62	12D12	1	Nut
63	12E12	1	Washer
64	[12]2513067	1	Wire
64A	[13]2531135	1	Wire
65	[6]2518725	1	Wire
65A	2524690	1	Wire
66	[1]———	1	Alternator
67	2531144	1	Cable
68	17C620	1	Bolt
69	17C616	1	Bolt
70	59D6	1	Nut
71	2530933	1	Bracket
72	30H42	1	Clip
73	59D6	1	Nut

[1]See Index
[2]Inc. 10A
[3]See 18
[4]80 Amp
[5]Inc. 1, 2, 3
[6]G.M.
[8]See Perkins Engine Manual
[9]480A101CB → 158CB, 481A101CB → 155CB
[10]480A159CB & → 481A156CB & →
[12]480A101CB → 132CB, 481A101CB → 131, 135CB
[13]480A133CB & →, 481A132CB → 134, 136 & →, 480B, 481B

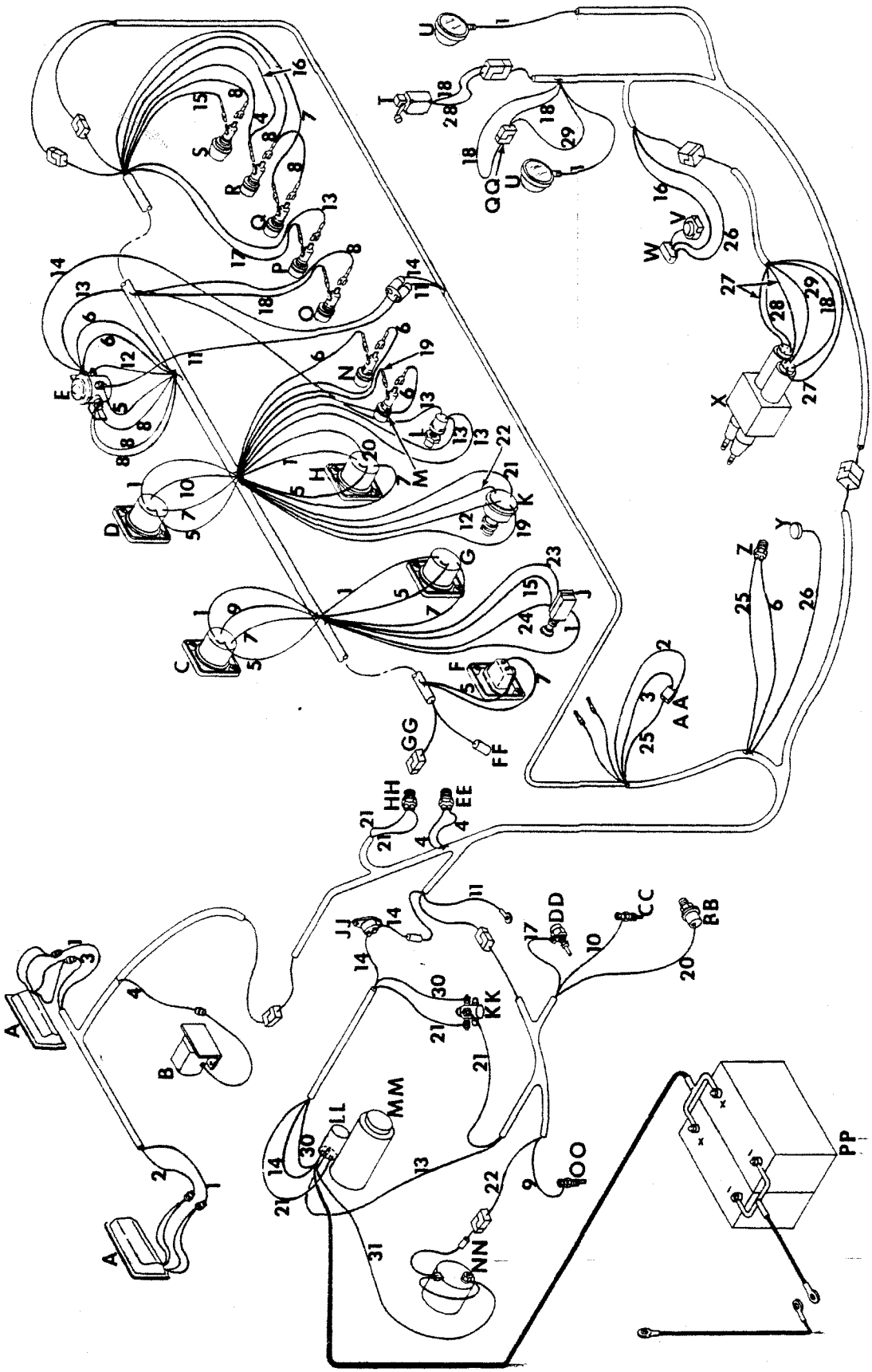
TS-15325

Electric Wiring Color Code

CLARK

Ref. No., Color	Color Code
1. Pink	Light Switch to Gauge Lights, Head Lights and Tail Lights
2. Dark Blue/White	Turn Signal Connector to R.H. Stop Light
3. Dark Green/White	Turn Signal Connector to L.H. Stop Light
4. Orange	Horn Fuse to Back-up Alarm Switch to Back-up Alarm
5. Black	Gauges to Solenoid
6. Red	Solenoid to Ignition Switch Fuse and Brake Light Fuse Brake Light Fuse to Brake Light Switch
7. Orange/Green	Gauge Fuse to Gauges
8. Red/White	Solenoid to Fuses and Accessories
9. Brown	Water Temperature Gauge to Water Temperature Sender
10. Gray	Converter Temperature Gauge to Converter Temperature Sender
11. Black #6	Solenoid to Ground
12. Brown/White	Ignition Switch to Solenoid
13. Yellow/Red	*Solenoid to Cold Start Switch Starter Solenoid to Cold Start Switch to Cold Start Fuse
14. Red #6	Starter Solenoid to 80 Amp Circuit Breaker to Solenoid
15. Violet	Light Fuse to Light Switch
16. Red	Horn Fuse to Horn Relay
17. Red/Black	*Cold Start Fuse to Cold Start Unit
18. Pink/Black	Bucket Leveler Fuse to Boom Kickout Plug, Boom Detent and Bucket Leveler Switch
19. Yellow/Red	Ignition Switch Fuse to Ignition Switch
20. Dark Green	Engine Oil Pressure Gauge to Engine Oil Pressure Sender
21. White	Ignition Switch to Neutral Start Switch to Starter Relay to Starter Solenoid
22. Purple/White	Ignition Switch to Generator
23. Dark Blue	Light Switch to Cab Connector (Side Lights)
24. Red	Light Switch to Cab Connector (Dome Light)
25. Tan	Brake Light Switch to Turn Signal Connector
26. Light Blue	Horn Relay to Horn Switch
27. Black	Boom and Bucket Detents Joins Black #6 to Ground
28. Orange/Black	Bucket Leveler Switch to Bucket Detent
29. Black/White	Boom Kickout Plug to Boom Detent
30. Red	Starter Solenoid to Starter Relay
31. Red	Starter Solenoid to Generator

A Brake & Tail Lights
B Back-up Alarm
C Water Temperature Gauge
D Converter Temperature Gauge
E Solenoid
F Hourmeter
G Voltmeter
H Engine Oil Pressure Gauge
J Light Switch
K Ignition Switch
L *Cold Start Switch
M Ignition Switch Fuse
N Brake Light Fuse
O Bucket Leveler Fuse
P *Cold Start Fuse
Q Gauge Fuse
R Horn Fuse
S Light Fuse
T Bucket Leveler Switch
U Headlights
V Horn
W Horn Relay
X Main Valve
Y Horn Switch
Z Brake Light Switch
AA Turn Signal Connector
BB Engine Oil Pressure Sender
CC Converter Temperature Sender
DD Cold Start Unit
EE Back-up Alarm Switch
FF Air Conditioner Connector
GG Cab Connector
HH Neutral Start Switch
JJ 80 Amp Circuit Breaker
KK Starter Relay
LL Starter Solenoid
MM Starter
NN Generator
OO Water Temperature Gauge
PP Batteries
QQ Boom Kickout Plug

*Perkins

All orders for engine assembly or components thereof should be placed with the nearest Cummins Distributor. To obtain proper items, it is necessary to provide your engine model, serial number and necessary group type number for the equipment required. This data is stamped on the options and accessories plate on the rocker cover of engine.

No.	Part No.	Qty.	Description
1	[6]2519323	1	Alternator
1A	[7]2530104	1	Alternator
2	[2 3]———	1	Starter
3	2520301	1	Fan
4	[4]1307511	1	Belt alternator
5	[4]1990515	1	Belt fan

[2]The above listed accessory items are furnished by the engine manufacturer. Specifications on these items are subject to change without notice. It is, therefore, recommended that complete model, specifications and serial number of the engine be provided to your Cummins Engine Distributor when ordering these parts.
[3]Cummins No. 3275183
[4]Matched set of 2.
[6]481A
[7]481B

Engine, Transmission & Hydraulic System Filter Replacement Elements

No.	Part No.	Qty.	Description
1	961000	1	Element air cleaner primary
2	961001	1	Element air cleaner secondary
3	[8]949096	1	Element engine oil
3A	[9]1992235	1	Element engine oil
4	963023	1	Element engine oil by-pass
5	234099	1	Element trans & conv
6	963006	1	Element oil resvr
7	[5]949095	1	Element fuel
7A	[7]3679734	1	Element fuel
8	949418	1	Element corrosion resister
9	[5]960978	1	Element corrosion resister

[5]Precharged Filter Element
[6]481A, 481B101CB → 163CB
[7]481B164CB & →
[8]Canister
[9]Spin-On

Engine Accessories — G.M. — 35C — 45C

CLARK

All orders for engine assembly or components thereof should be placed with the nearest G.M. Diesel Distributor. To obtain proper items, it is necessary to provide your engine model, serial number and necessary group type number for the equipment required. This data is stamped on the options and accessories plate on the rocker cover of the engine.

No.	Part No.	Qty.	Description
1	2519323	1	Alternator
2	962326	1	Starter
3	3575859	1	Fan 35C
3A	5208016	1	Fan 45C
4	[2]962325	1	Belt fan
5	[2]1702092	1	Belt alternator

[2]Matched set of 2

Engine, Transmission & Hydraulic System Filter Replacement Elements

No.	Part No.	Qty.	Description
1	961000	1	Element air cleaner primary 35C
1A	2521682	1	Element air cleaner primary 45C
2	961001	1	Element air cleaner secondary 35C
2A	2521683	1	Element air cleaner secondary 45C
3	945444	1	Element fuel primary
4	945443	1	Element fuel secondary
5	946008	1	Element full flow 35C
5A	215502	1	Element full flow 45C
6	234099	1	Element transmission & conv
7	960641	1	Element oil resvr

All orders for engine assembly or components thereof should be placed with the nearest G.M. Diesel Distributor. To obtain proper items, it is necessary to provide your engine model, serial number and necessary group type number for the equipment required. This data is stamped on the options and accessories plate on the rocker cover of the engine.

No.	Part No.	Qty.	Description
1	[6]2519323	1	Alternator
1A	[7]2530104	1	Alternator
2	[2 5]———	1	Starter
3	[4 5]———	1	Fan
4	[3]963206	1	Belt alternator
5	[3]962325	1	Belt fan

[2]Delco #1113245
[3]Matched set of 2
[4]See Engine Manual
[5]The above listed accessory items are furnished by the engine manufacturer. Specifications on these items are subject to change without notice. It is, therefore, recommended that complete model, specifications and serial number of the engine be provided to your G.M. Engine Distributor when ordering these parts.
[6]480A101CB → 132CB
[7]480A133CB & →, 480B

Engine, Transmission & Hydraulic System Filter Replacement Elements

No.	Part No.	Qty.	Description
1	2521682	1	Element air cleaner primary
2	2521683	1	Element air cleaner secondary
3	[8]215502	1	Element engine oil
3A	[9]961711	1	Element engine oil
4	[8]945444	1	Element fuel primary
4A	[9]963938	1	Element fuel primary
5	[8]945443	1	Element fuel secondary
5A	[9]1992215	1	Element fuel secondary
6	234099	1	Element transmission & conv
7	963006	1	Element oil resvr

[8]Canister
[9]Spin-On

Engine Accessories — Perkins

CLARK

All orders for engine assembly or components thereof should be placed with the nearest Perkins Distributor. To obtain proper items, it is necessary to provide your engine model, serial number and necessary group type number for the equipment required. This data is stamped on the options and accessories plate on the rocker cover of engine.

No.	Part No.	Qty.	Description
1	2519323	1	Alternator
2	1767120	1	Starter
3	6515772	1	Adapter starter
4	[2,3]———	1	Fan 35C
4A	[2,4]———	1	Fan 45C
5	[5]962401	1	Belt fan 35C
5A	[5]962402	1	Belt fan 45C
6	2518072	1	Belt alternator 35C
6A	1580531	1	Belt alternator 45C

[2]The above listed accessory items are furnished by the engine manufacturer. Specifications on these items are subject to change without notice. It is, therefore, recommended that complete model, specifications and serial number of the engine be provided to your Perkins Engine Distributor when ordering these parts.

[3]Perkins #31258155
[4]Perkins #31258146
[5]Matched set of 2

Engine Transmission & Hydraulic System Filter Replacement Elements

No.	Part No.	Qty.	Description
1	961000	1	Element air cleaner primary
2	961001	1	Element air cleaner secondary
3	961048	2	Element fuel
4	6511766	1	Element full flow 35C
4A	960698	1	Element full flow 45C
5	234099	1	Element trans & conv
6	960641	1	Element oil resvr

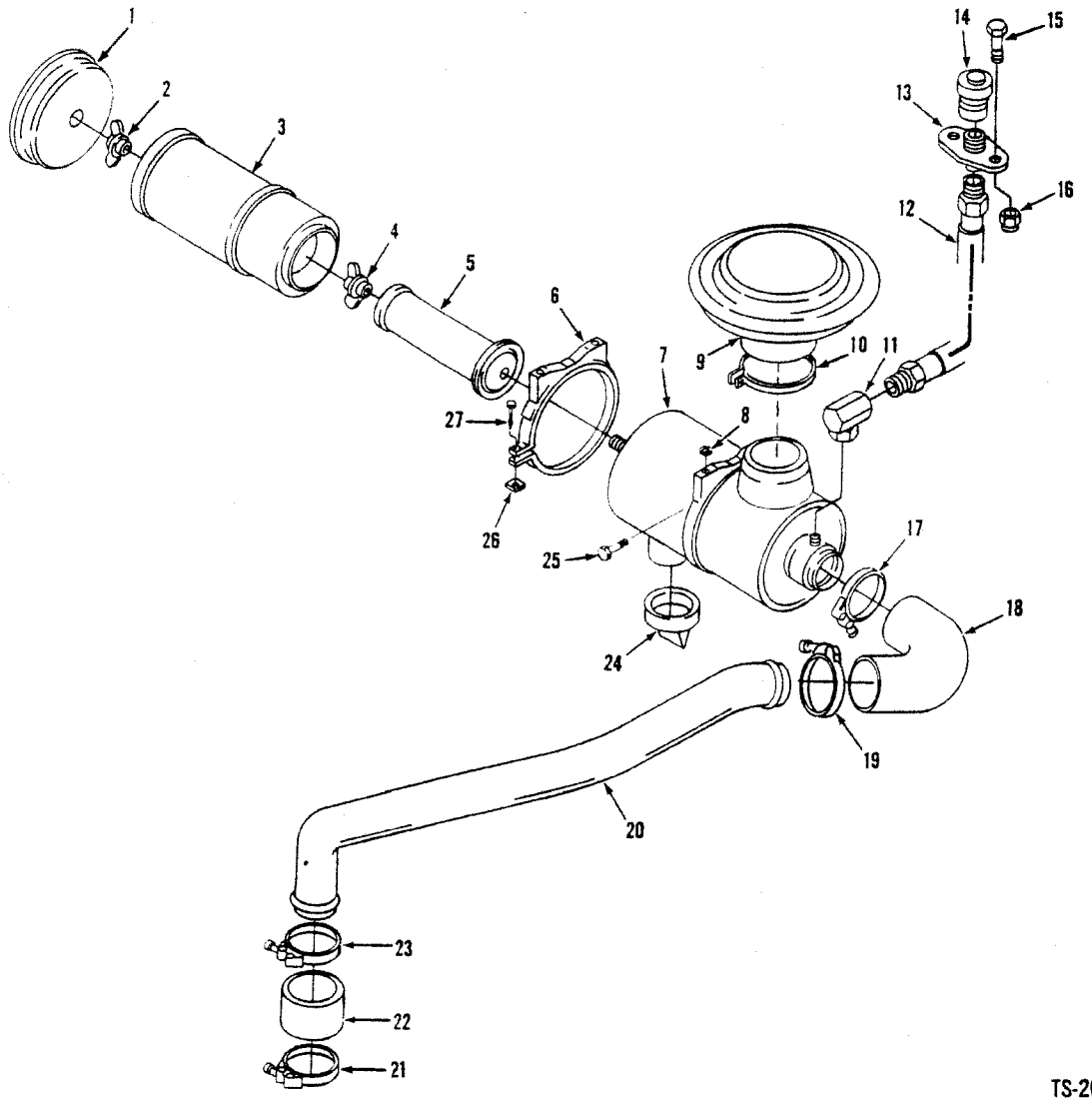

TS-20682

No.	Part No.	Qty.	Description
1	961002	1	Cover assy
2	3291290	1	Nut
3	961000	1	Element
4	3291290	1	Nut
5	961001	1	Element
6	[2]5205303	2	Clamp
7	[3,4]2518893	1	Air cleaner
7A	[3,5]2516429	1	Air cleaner
8	27E6	4	Washer
9	1642530	1	Rain cap
10	1516076	1	Clamp
11	32F1	1	Elbow
12	1520087	1	Hose
13	1901972	1	Flange
14	1529625	1	Indicator
15	17C412	2	Bolt
16	59D4	2	Nut
17	43H2450	1	Clamp
18	2518892	1	Hose
19	43H2394	1	Clamp
20	2519003	1	Tube
21	43H2394	1	Clamp
22	1M28030	1	Hose
23	43H2394	1	Clamp
24	3739636	1	Valve
25	17C612	4	Bolt
25A	27E6	4	Washer
26	24D5	2	Nut
27	4G524	2	Screw

[2]Inc. 26, 27
[3]Inc. 1→5, 24
[4]481A
[5]481B

Engine Air Cleaner & Connections — GM — 35C

CLARK

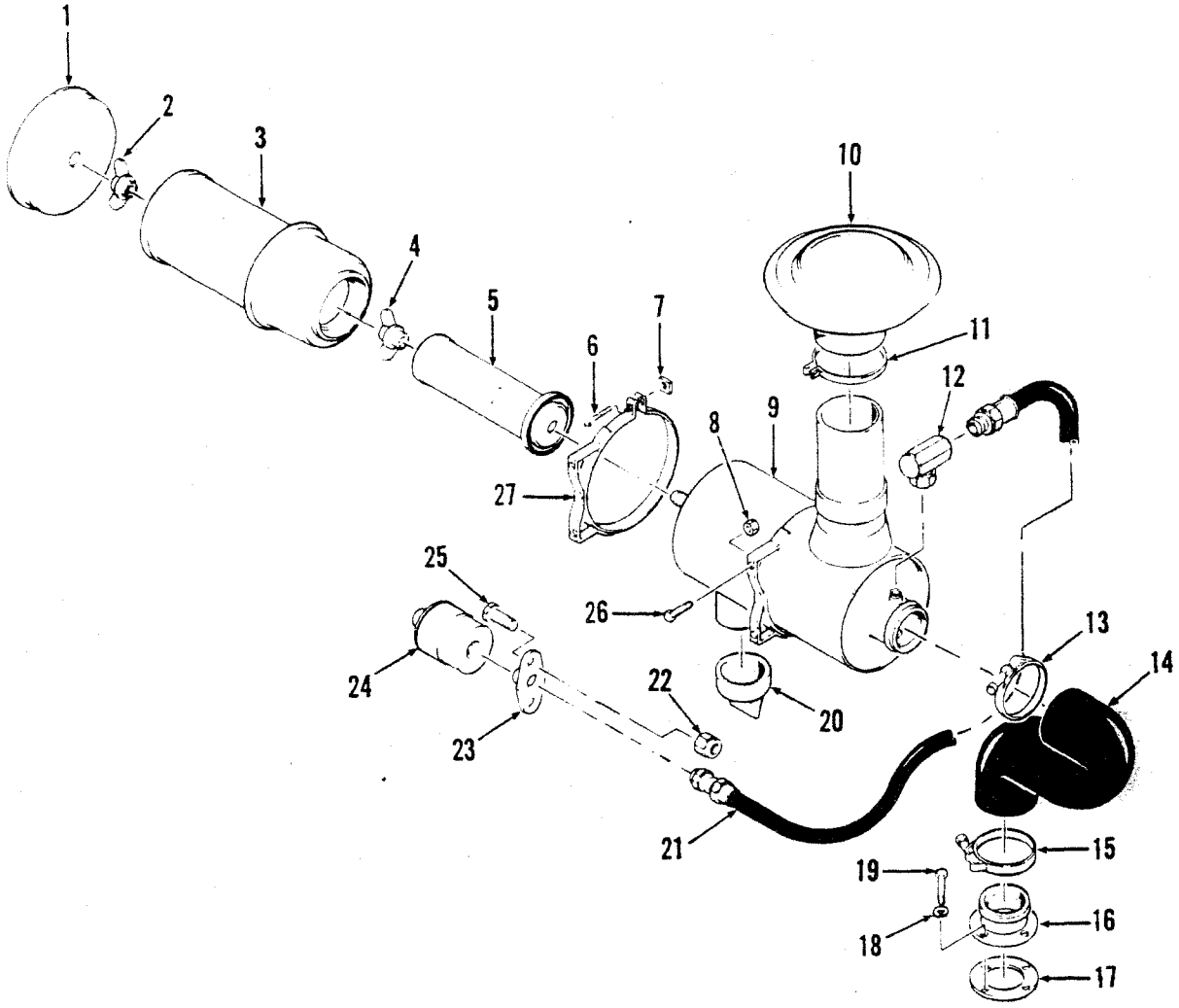

TS-15149

No.	Part No.	Qty.	Description
1	961002	1	Cover
2	3291290	1	Nut
3	961000	1	Element
4	3291290	1	Nut
5	961001	1	Element
6	4G524	2	Screw
7	24D5	2	Nut
8	60D6	4	Nut
9	[2]2516429	1	Air cleaner assy
10	1642530	1	Rain cap
11	509503	1	Clamp
12	32F1	1	Elbow
13	539042	1	Clamp
14	2516457	1	Elbow

No.	Part No.	Qty.	Description
15	539042	1	Clamp
16	1539062	1	Adapter
17	527096	1	Gasket
18	4E5	4	Washer
19	17C512	4	Bolt
20	3739636	1	Valve
21	1525588	1	Hose
22	60D4	2	Nut
23	1901972	1	Flange
24	1529625	1	Service indicator
25	18C412	2	Bolt
26	18C616	4	Bolt
27	[3]5205303	2	Clamp

[2]Inc. 1→5, 20
[3]Inc. 6, 7

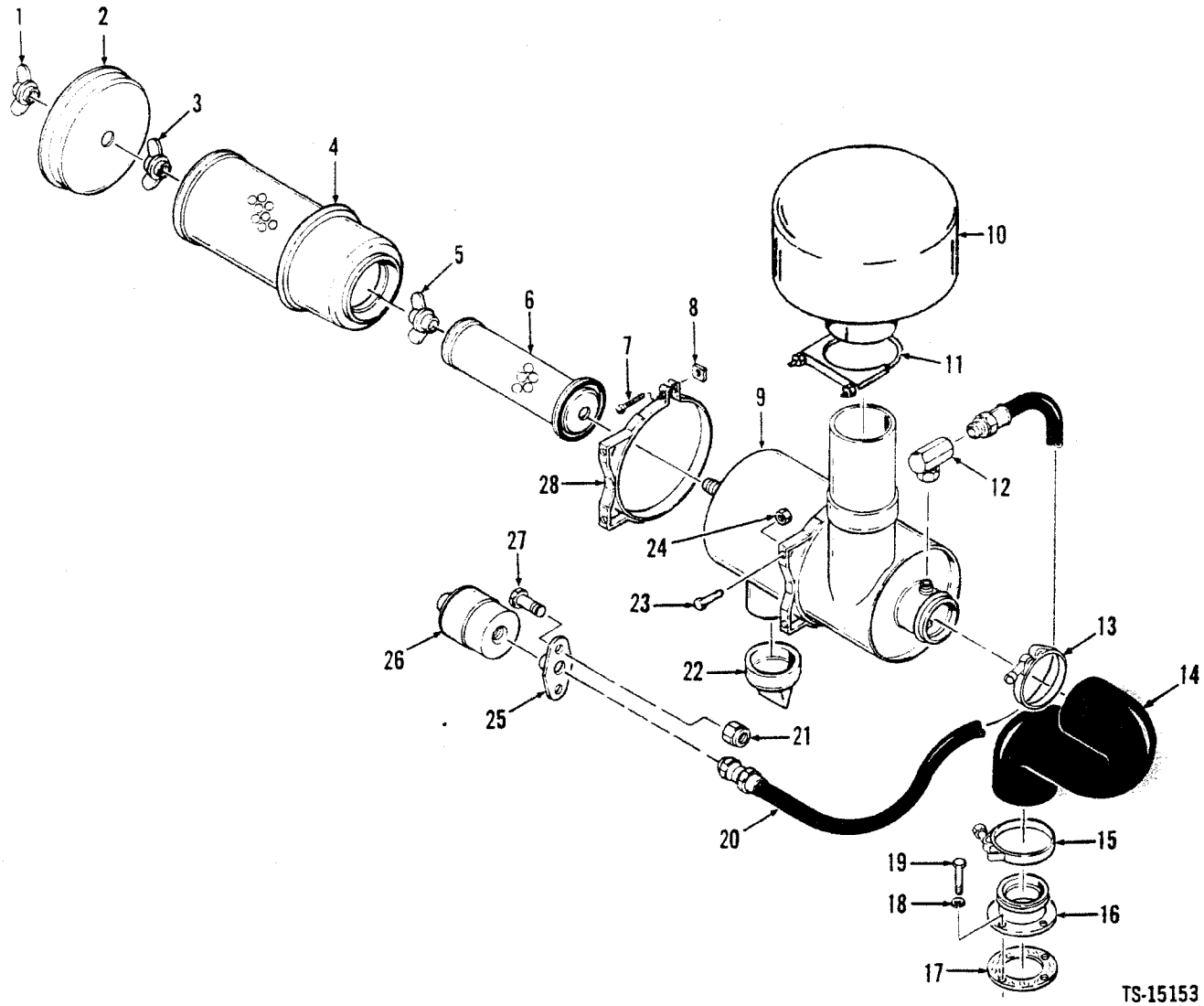

No.	Part No.	Qty.	Description
1	199857	1	Nut
2	962259	1	Cover
3	199856	1	Nut
4	2521682	1	Filter
5	3291290	1	Nut
6	2521683	1	Filter
7	§———	1	Screw
8	§———	1	Nut
9	[2]2521436	1	Air cleaner
10	1523149	1	Rain cap
11	1516076	1	Clamp
12	32F1	1	Elbow
13	539042	1	Clamp
14	2516457	1	Elbow

No.	Part No.	Qty.	Description
15	539042	1	Clamp
16	2521434	1	Adapter
17	527096	1	Gasket
18	4E5	4	Washer
19	17C512	4	Bolt
20	1525588	1	Hose
21	60D4	2	Nut
22	946860	1	Valve
23	18C616	4	Bolt
24	60D6	4	Nut
25	1901972	1	Flange
26	1529625	1	Indicator
27	18C412	2	Bolt
28	[3]2521435	2	Clamp

[2]Inc. 1→6, 22
[3]Inc. 7, 8

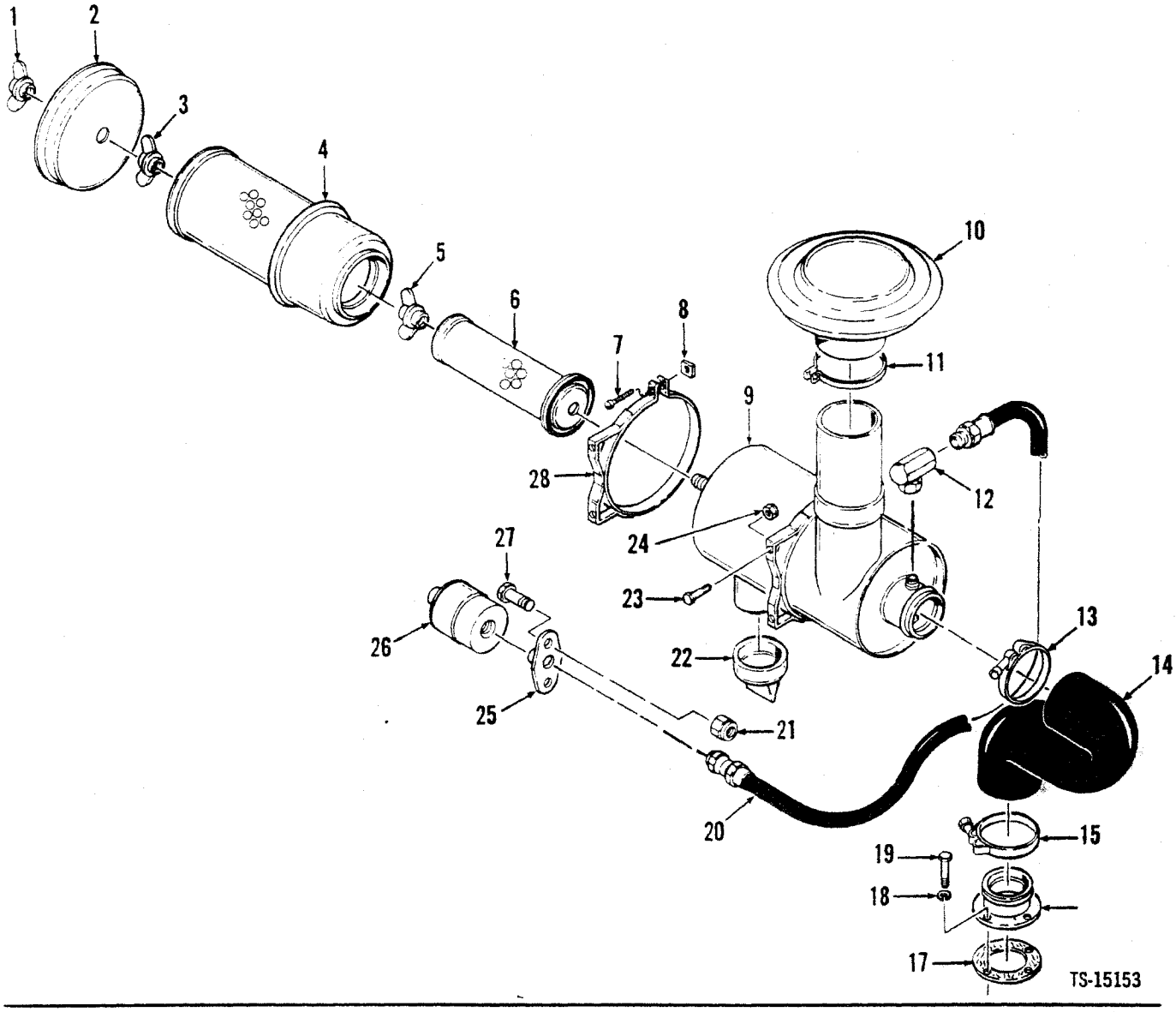

No.	Part No.	Qty.	Description
1	199857	1	Nut
2	962259	1	Cover
3	199856	1	Nut
4	2521682	1	Filter
5	3291290	1	Nut
6	2521683	1	Filter
7	§———	1	Screw
8	§———	1	Nut
9	[3]2521436	1	Air cleaner
10	1523149	1	Silencer
11	1516076	1	Clamp
12	32F1	1	Elbow
13	43H2450	1	Clamp
14	2516457	1	Elbow

[2]Inc. 1→6, 22 [4]480A
[3]Inc. 7, 8 [5]480B

No.	Part No.	Qty.	Description
15	43H2450	1	Clamp
16	[4]2524676	1	Adapter
16A	[5]2534470	1	Adapter
17	527096	1	Gasket
18	———	—	Omit
19	[4]17C512	4	Bolt
19A	[5]17C514	4	Bolt
20	1525588	1	Hose
21	59D4	2	Nut
22	946860	1	Valve
23	17C616	4	Bolt
24	59D6	4	Nut
25	1901972	1	Flange
26	1529625	1	Indicator
27	17C412	2	Bolt
28	[3]2521435	2	Clamp

Engine Air Cleaner & Connections — Perkins — 35C — 45C

CLARK

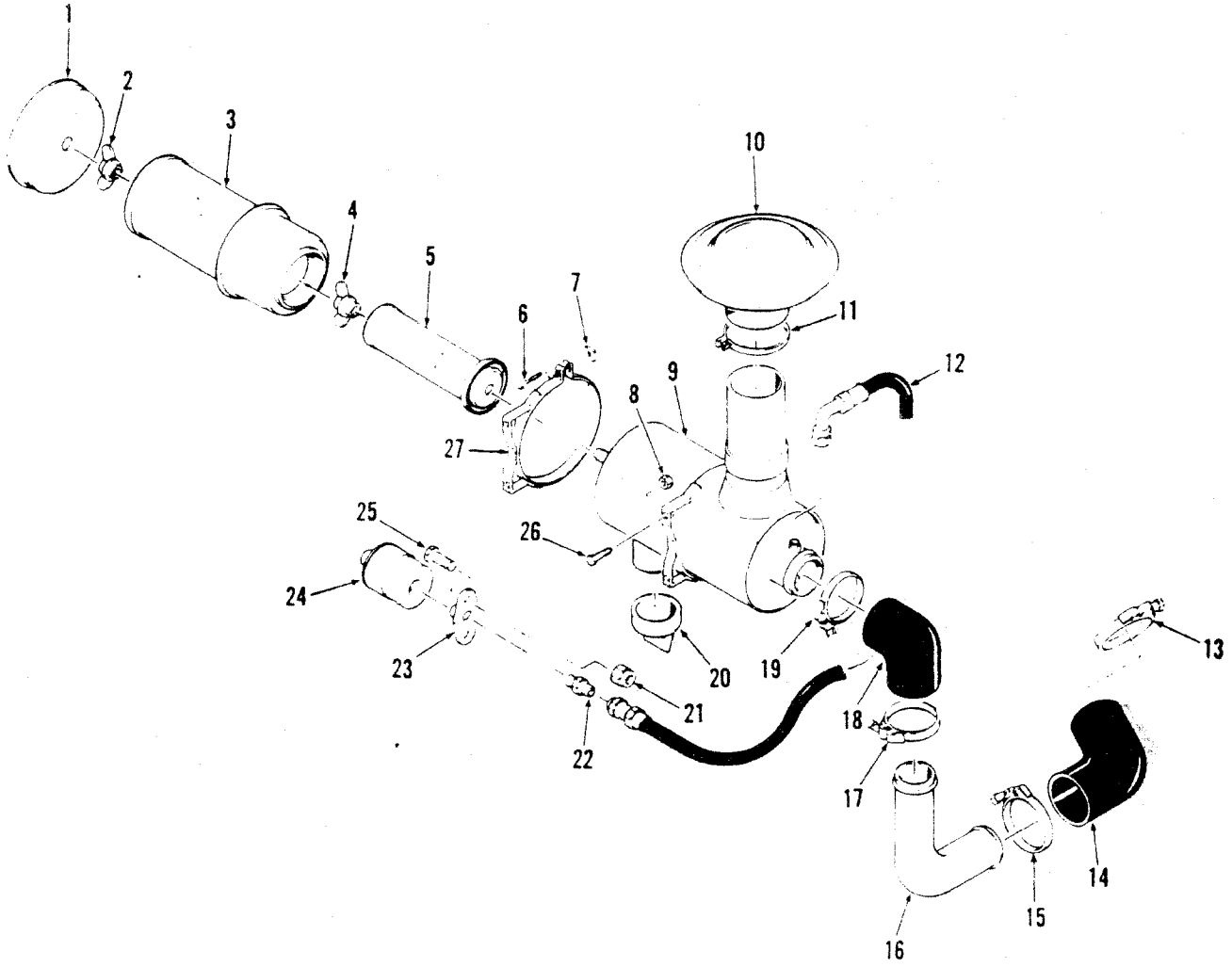

TS-15293

No.	Part No.	Qty.	Description
1	961002	1	Cover
2	3291290	1	Nut
3	961000	1	Element
4	3291290	1	Nut
5	961001	1	Element
6	4G524	2	Screw
7	24D5	2	Nut
8	60D6	4	Nut
9	[2]2516429	1	Air cleaner assy
10	[3]1642530	1	Cap
11	[4]———	1	Clamp
12	1525588	1	Hose
13	43H1319	1	Clamp
14	2512354	1	Elbow

No.	Part No.	Qty.	Description
15	545153	1	Clamp
16	2512362	1	Tube
17	43H1350	1	Clamp
18	2512351	1	Elbow
19	539042	1	Clamp
20	3739636	1	Valve
21	60D4	2	Nut
22	32F1	1	Adaptor
23	1901972	1	Flange
24	1529625	1	Service indicator
25	18C412	2	Bolt
26	18C616	4	Bolt
27	[5]5205303	1	Clamp

[2]Inc. 1→5, 20
[3]Inc. 11
[4]See 10
[5]Inc. 6, 7

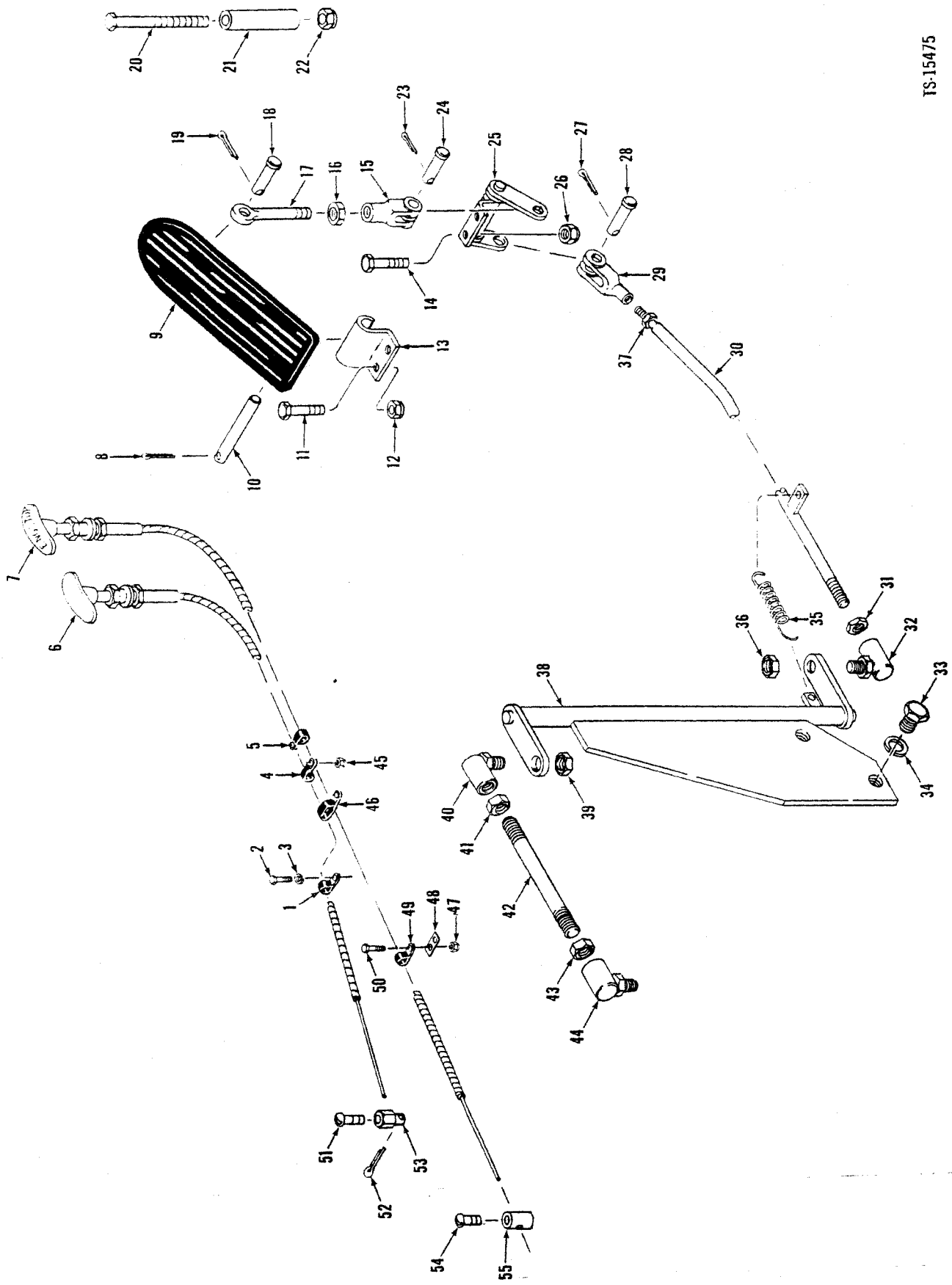
TS-15475

No.	Part No.	Qty.	Description
1	30H16	1	Clip
2	17C612	1	Bolt
3	59D6	1	Nut
4	30H16	1	Clip
5	[5]30H16	1	Clip
6	1520193	1	Cable
7	[5]1520190	1	Cable
8	1F316	1	Cotter pin
9	623829	1	Pedal
10	623762	1	Pin
11	18C412	2	Bolt
12	86D4	2	Nut
13	1518447	1	Bracket
14	18C412	2	Bolt
15	2J4200	1	Clevis
16	8D04	1	Nut
17	[2]2516722	1	Rod
18	4F04051	1	Pin
19	1F207	1	Cotter pin
20	18C444	1	Bolt
21	2515734	1	Spacer
22	86D4	1	Nut
23	1F207	1	Cotter pin
24	4F04051	1	Pin
25	2516721	1	Bellcrank assy
26	86D4	2	Nut
27	1F207	1	Cotter pin
28	4F04051	1	Pin
29	2J4200	1	Clevis
30	[3]2521629	1	Rod
31	8D5	1	Nut
32	2520346	1	Ball joint
33	17C824	2	Bolt
34	4E8	2	Washer
35	551014	1	Spring
36	60D5	1	Nut
37	8D4	1	Nut
38	2518181	1	Bellcrank assy
39	60D5	2	Nut
40	2520346	1	Ball joint
41	8D5	1	Nut
42	[4]2518180	1	Rod
43	8D5	1	Nut
44	2520346	1	Ball joint
45	59D6	1	Nut
46	[5]31H12	1	Clip
47	[5]59D6	1	Nut
48	[5]570832	1	Plate
49	[5]30H16	1	Clip
50	[5]17C612	1	Bolt
51	86G1008	1	Screw
52	1F208	1	Cotter pin
53	1523209	1	Connector
54	[5]85G806	1	Screw
55	[5]1523210	1	Connector

[2]Inc. 16
[3]Inc. 29, 31, 32, 36
[4]Inc. 40, 41, 43, 44
[5]473A101CB & → 473A208CB, 472A101CB → 472A164CB

TS-15685

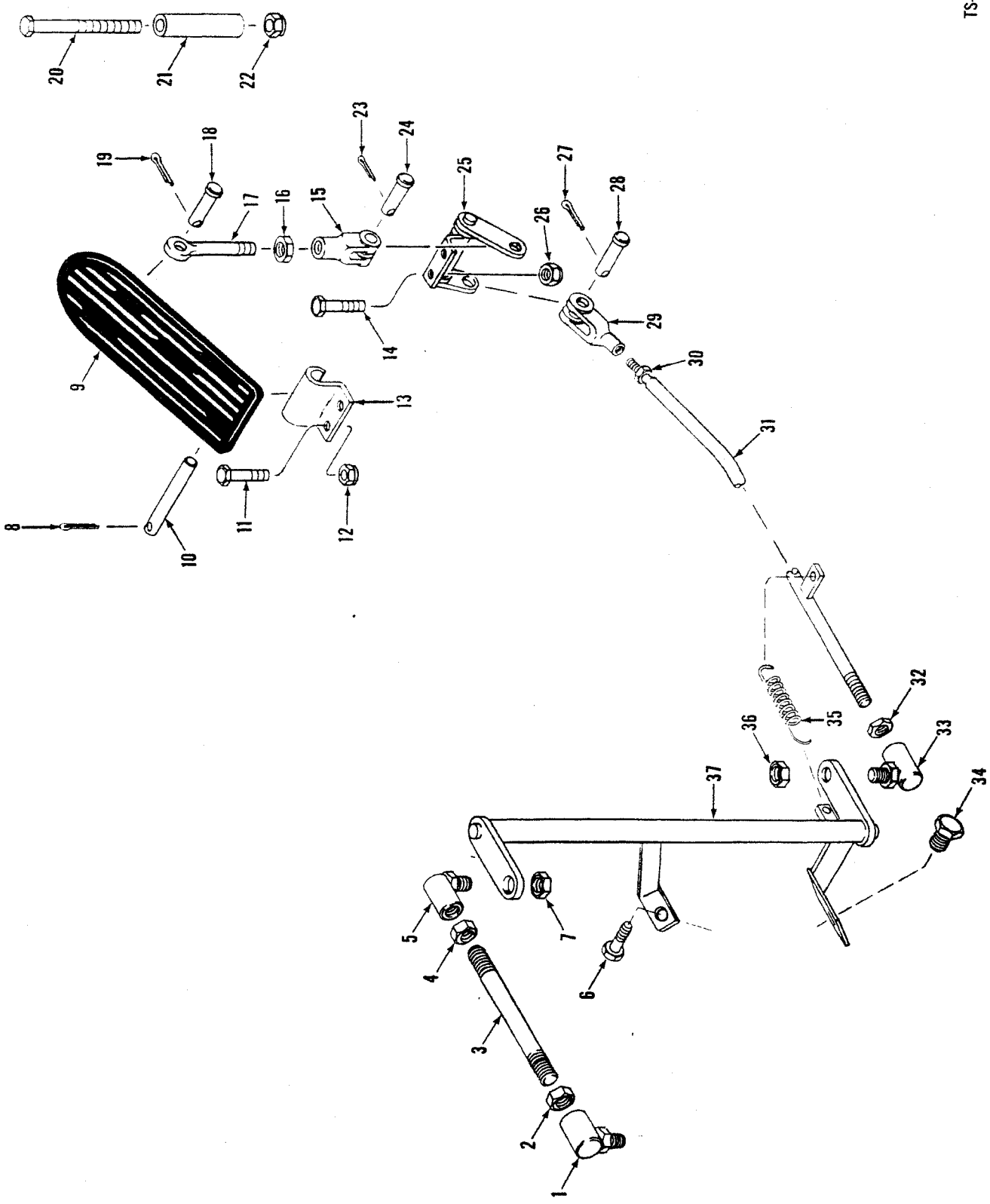
20
21
22
23
24
19
18
25
27
17
16
15
26
28
14
29
9
30
13
31
11
12
8
10
32
35
36
33
37
34
5
7
4
6
3
2
1

No.	Part No.	Qty.	Description
1	2523473	1	Ball joint
2	8D5	1	Nut
3	[2]2528401	1	Rod assy
4	8D5	1	Nut
5	2523473	1	Ball joint
6	17C712	1	Bolt
7	86D5	2	Nut
8	1F316	1	Cotter pin
9	623829	1	Pedal
10	623762	1	Pin
11	18C412	2	Bolt
12	86D4	2	Nut
13	1544695	1	Bracket
14	18C412	2	Bolt
15	2J4200	1	Clevis
16	8D4	1	Nut
17	2516722	1	Rod
18	4F4051	1	Pin
19	1F208	1	Cotter pin
20	18C444	1	Bolt
21	2515734	1	Spacer
22	86D4	1	Nut
23	4F4051	1	Pin
24	1F208	1	Cotter pin
25	2516721	1	Bellcrank
26	86D4	1	Nut
27	1F208	1	Cotter pin
28	4F4051	1	Pin
29	1J428	1	Clevis
30	8D5	1	Nut
31	[3]2524693	1	Rod
32	8D5	1	Nut
33	2523473	1	Ball joint
34	17C816	1	Bolt
35	551014	1	Spring
36	86D5	1	Nut
37	2528402	1	Bellcrank assy

[2]Inc. 1, 2, 4, 5
[3]Inc. 29, 30

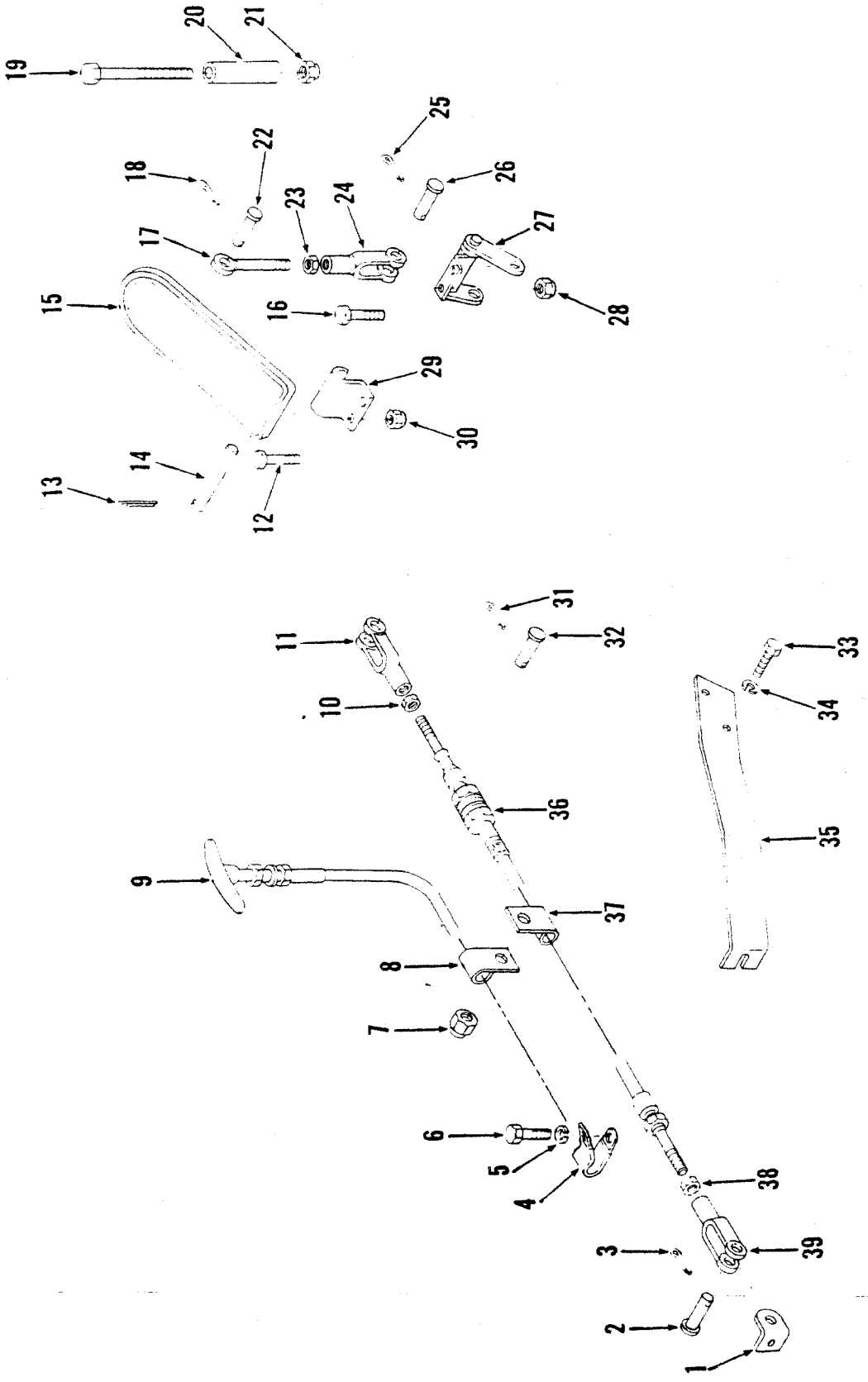
TS-20236
1
2
3
4
5
6
7
8
9
10
11
12
13
14
15
16
17
18
19
20
21
22
23
24
25
26
27
28
29
30
31
32
33
34
35
36
37
38
39

Engine Controls — Perkins — 35C

No.	Part No.	Qty.	Description
1	2522400	1	Clamp
2	4F4051	1	Pin
3	1F207	1	Pin cotter
4	30H15	1	Clip
5	4E5	1	Lockwasher
6	18C508	1	Bolt
7	59D6	1	Nut
8	30H16	1	Clip
9	1520193	1	Cable
10	14D10	1	Nut
11	549541	1	Clevis
12	18C412	2	Bolt
13	1F316	1	Pin cotter
14	623762	1	Pin
15	623829	1	Pedal
16	18C412	2	Bolt
17	[2]2516722	1	Rod assy
18	1F207	1	Pin cotter
19	18C444	1	Bolt
20	2515734	1	Spacer
21	60D4	1	Nut
22	4F4051	1	Pin
23	8D4	1	Nut
24	2J4200	1	Clevis
25	1F207	1	Pin cotter
26	4F4051	1	Pin
27	2516721	1	Bellcrank assy
28	60D4	2	Nut
29	1544695	1	Bracket
30	60D4	2	Nut
31	1F207	1	Pin cotter
32	4F4051	1	Pin
33	17C820	2	Bolt
34	4E8	2	Lockwasher
35	2521969	1	Bracket
36	2512825	1	Cable
37	30H16	1	Clip
38	14D10	1	Nut
39	549541	1	Clevis

[2]Inc. 23, 24

TS-15182

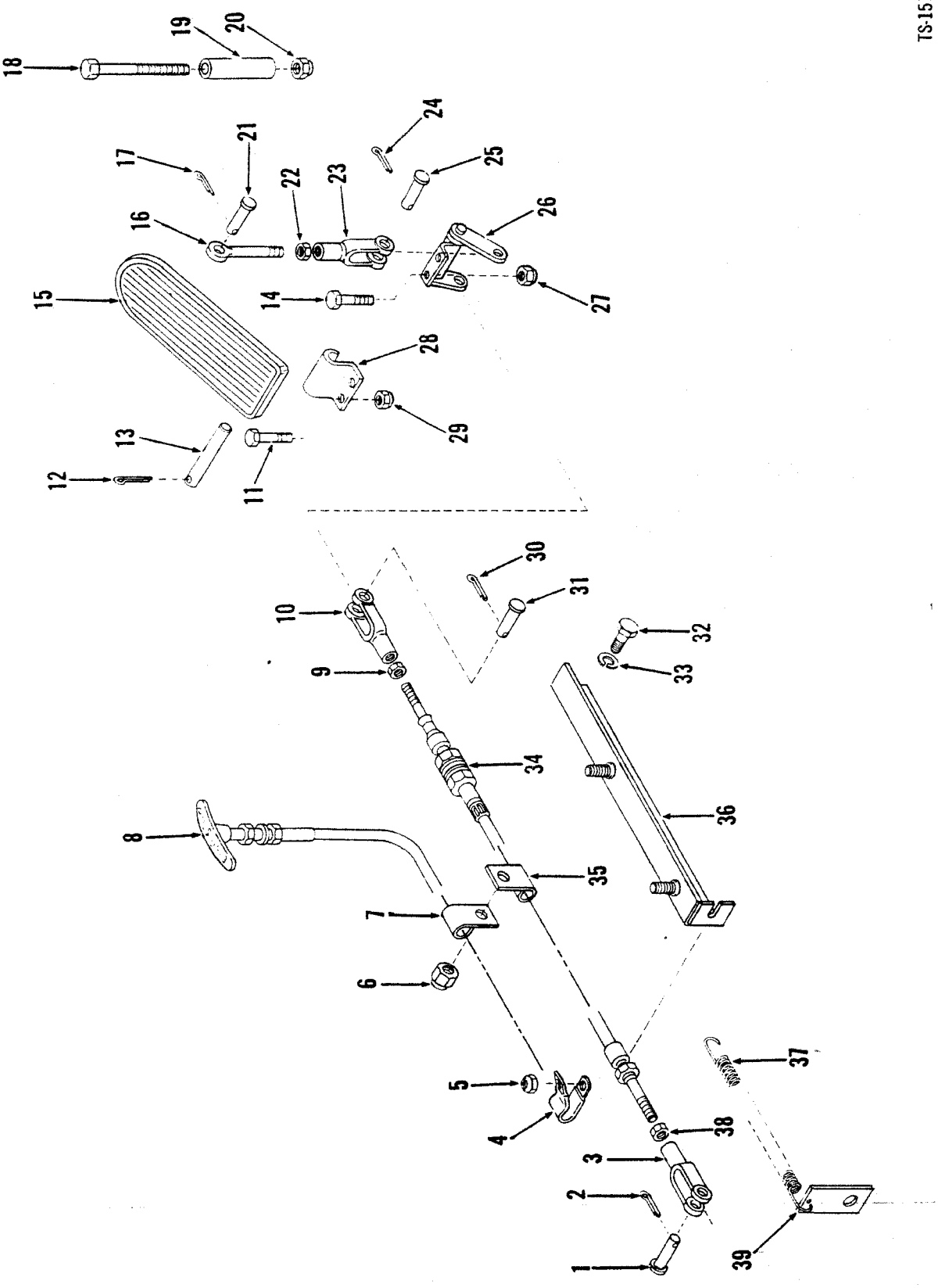
1
2
3
4
5
6
7
8
9
10
11
12
13
14
15
16
17
18
19
20
21
22
23
24
25
26
27
28
29
30
31
32
33
34
35
36
37
38
39

No.	Part No.	Qty.	Description
1	4F4051	1	Pin
2	1F207	1	Pin cotter
3	549541	1	Clevis
4	30H16	1	Clip
5	59D6	1	Nut
6	59D6	1	Nut
7	30H16	1	Clip
8	1520193	1	Cable
9	14D10	1	Nut
10	549541	1	Clevis
11	18C412	2	Bolt
12	1F316	1	Pin cotter
13	623762	1	Pin
14	18C412	2	Bolt
15	623829	1	Pedal
16	[2]2516722	1	Rod assy
17	1F207	1	Pin cotter
18	18C444	1	Bolt
19	2515734	1	Spacer
20	60D4	1	Nut
21	4F4051	1	Pin
22	8D4	1	Nut
23	2J4200	1	Clevis
24	1F207	1	Pin cotter
25	4F4051	1	Pin
26	2516721	1	Bellcrank assy
27	60D4	2	Nut
28	1544695	1	Bracket
29	60D4	2	Nut
30	1F207	1	Pin cotter
31	4F4051	1	Pin
32	17C816	2	Bolt
33	4E8	2	Lockwasher
34	2512825	1	Cable
35	30H16	1	Clip
36	2513418	1	Bracket assy
37	551014	1	Spring
38	14D10	1	Nut
39	2510390	1	Spring clip

[2]Inc. 22, 23

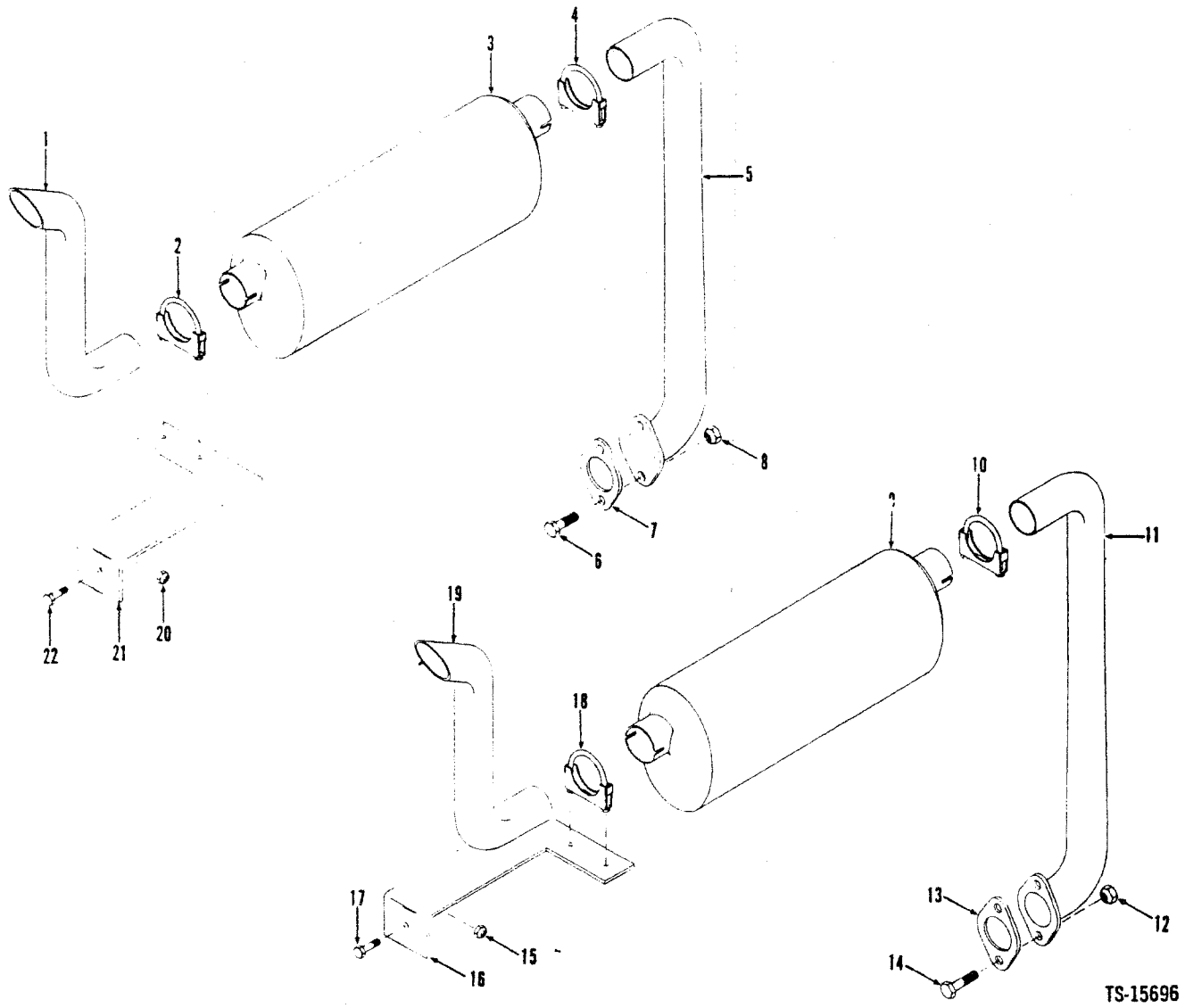

No.	Part No.	Qty.	Description
1	2519001	1	Tail pipe
2	550652	1	Clamp
3	2528429	1	Muffler
4	507068	1	Clamp
5	2519002	1	Pipe
6	17C624	2	Bolt
7	1990274	1	Gasket
8	15D6	2	Nut
9	2528429	1	Muffler
10	507068	1	Clamp
11	2519002	1	Pipe
12	15D6	2	Nut
13	1990274	1	Gasket
14	17C624	2	Bolt
15	59D8	1	Nut
16	[2]2518894	1	Bracket
16A	[3]2531140	1	Bracket
17	17C820	1	Bolt
18	550652	1	Clamp
19	2519001	1	Tail pipe
20	59D8	1	Nut
21	[2]2518895	1	Bracket
21A	[3]2531141	1	Bracket
22	17C820	1	Bolt

[2]481A
[3]481B

CLARK

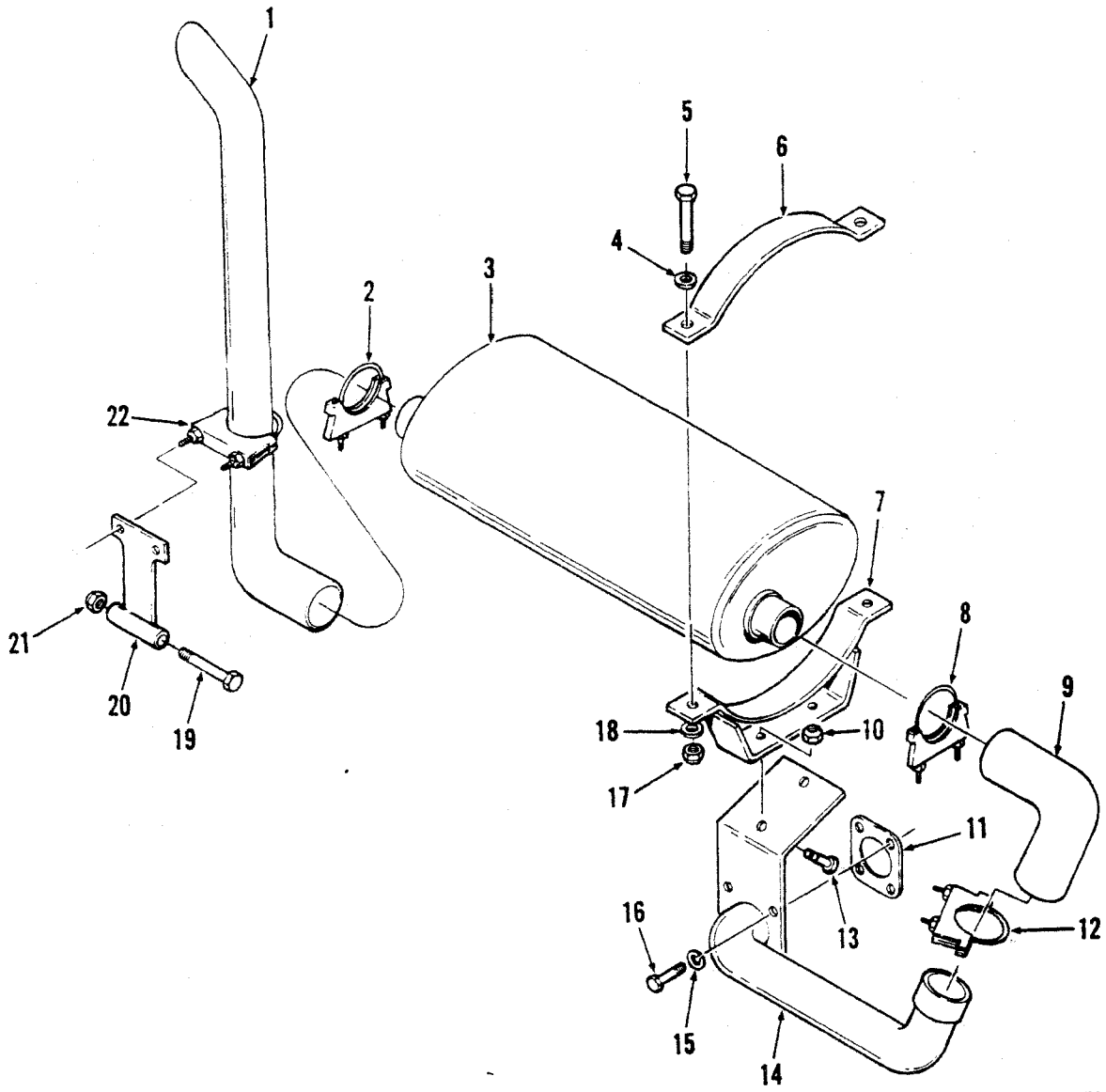

TS-20078

No.	Part No.	Qty.	Description
1	2522681	1	Tail pipe
2	507069	1	Clamp
3	2510883	1	Muffler
4	27E6	2	Washer
5	17C672	2	Bolt
6	2512288	1	Bracket
7	2516456	1	Bracket
8	507069	1	Clamp
9	2512361	1	Pipe
10	59D6	2	Nut
11	[2]1990270	1	Gasket
11A	†[3]5290078	1	Gasket

No.	Part No.	Qty.	Description
12	507069	1	Clamp
13	17C620	2	Bolt
14	[2]2516848	1	Pipe
14A	†[3]2516453	1	Pipe
15	4E6	4	Washer
16	17C620	4	Bolt
17	59D6	2	Bolt
18	27E6	2	Washer
19	18C880	1	Bolt
20	2516496	1	Bracket
21	60D8	1	Nut
22	507069	1	Clamp

[2]35C
[3]45C

Engine Exhaust System — G.M. — 55C

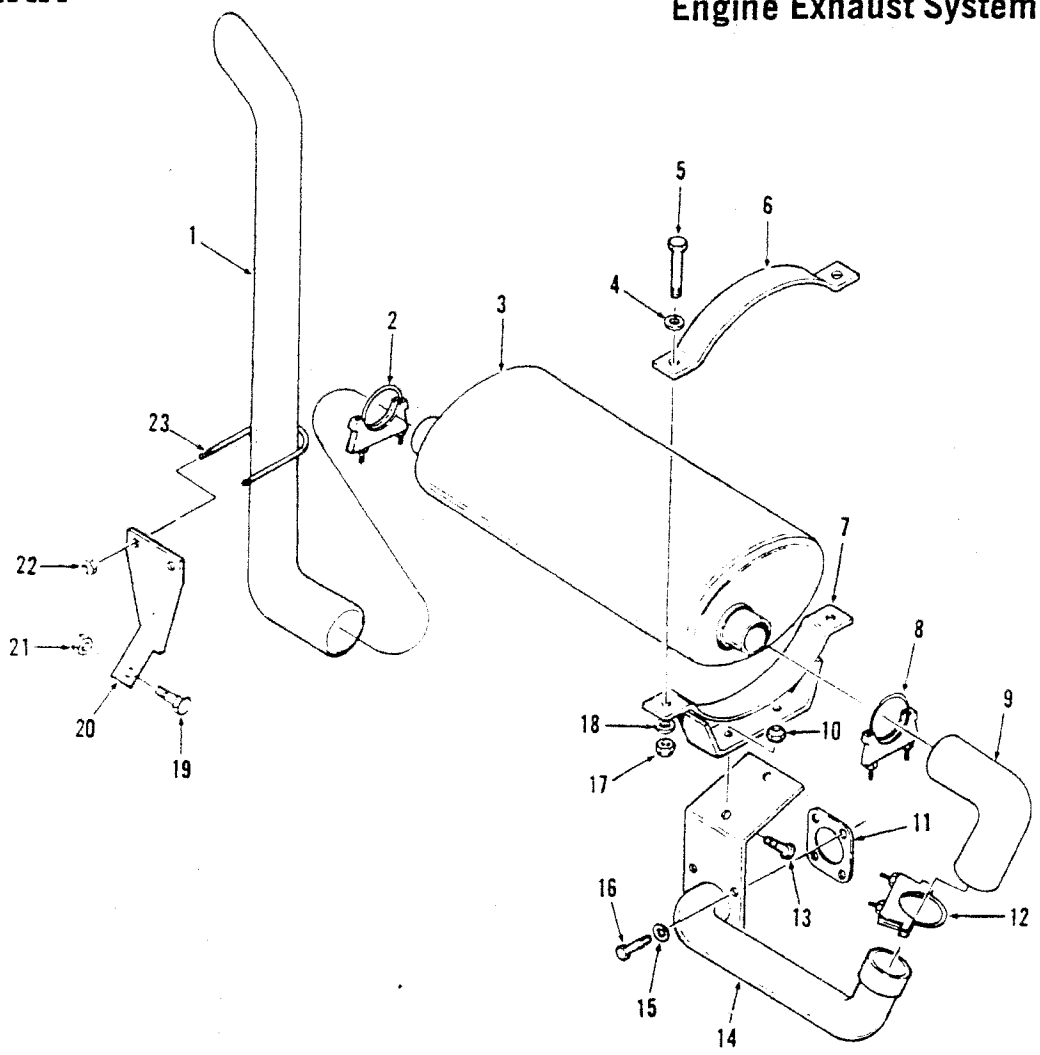

TS-15619

No.	Part No.	Qty.	Description
1	2526179	1	Tailpipe
2	507069	1	Clamp
3	[2]2510883	1	Muffler
3A	[3]2528407	1	Muffler
4	27E6	2	Washer
5	17C672	2	Bolt
6	2512288	1	Bracket
7	2516456	1	Bracket
8	507069	1	Clamp
9	2526738	1	Pipe
10	59D6	2	Nut
11	5290078	1	Gasket
12	507069	1	Clamp
13	17C620	2	Bolt
14	2526736	1	Pipe
15	27E6	4	Washer
16	17C620	4	Bolt
17	59D6	2	Bolt
18	27E6	2	Washer
19	17C820	1	Bolt
20	2526784	1	Bracket
21	59D8	1	Nut
22	30D6	2	Bolt
23	1506079	1	U-bolt

[2]480A
[3]480B

Engine Exhaust System — Perkins

CLARK

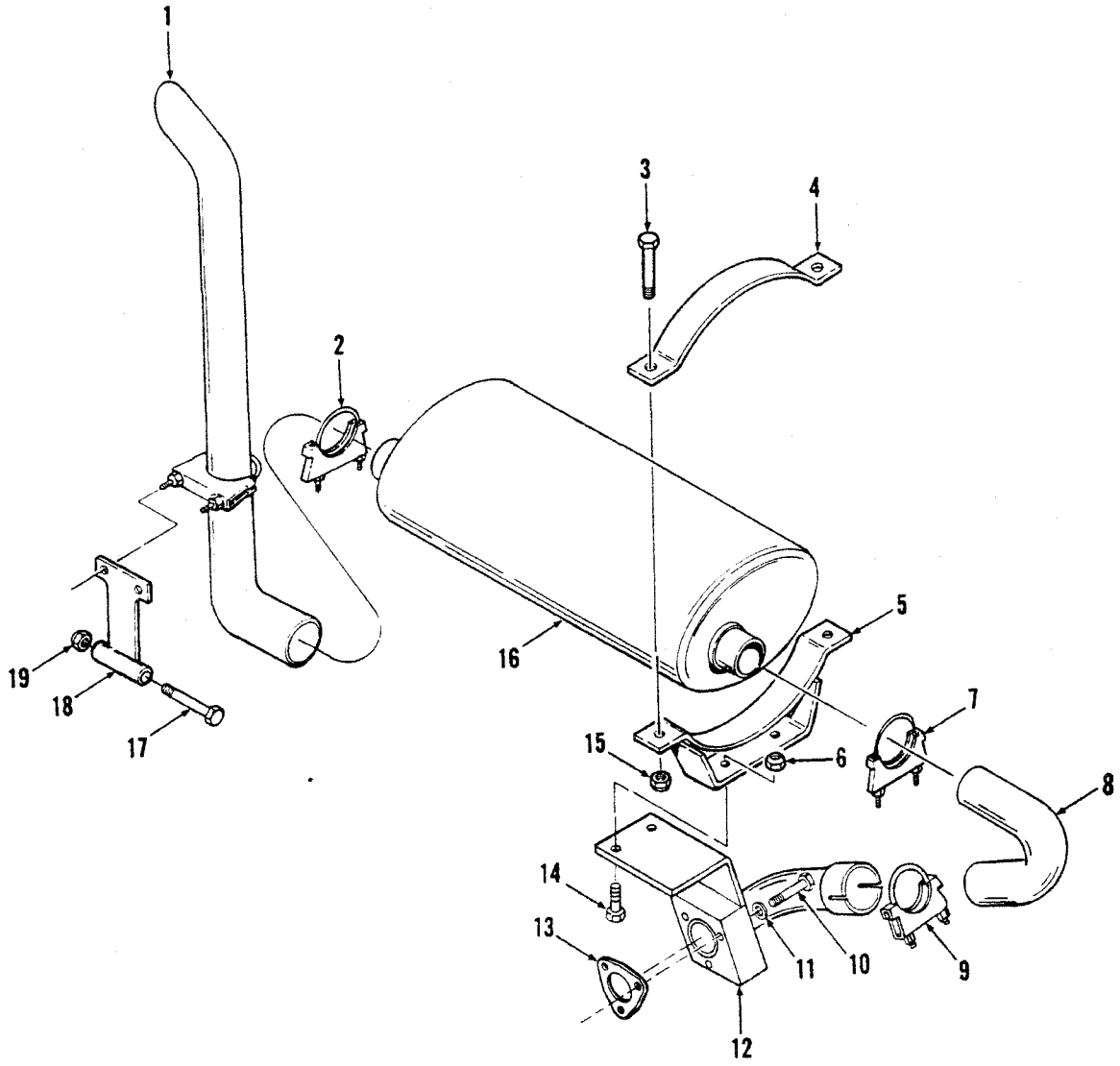

TS-20170

No.	Part No.	Qty.	Description
1	2522681	1	Tail pipe
2	507069	1	Clamp
3	17C672	2	Bolt
4	2512288	1	Bracket
5	2516456	1	Bracket
6	59D6	2	Nut
7	507069	1	Clamp
8	2520486	1	Pipe
9	507069	1	Clamp
10	[2]18C620	3	Bolt
10A	[3]3490186	3	Stud
10B	†[3]64D6	3	Nut

[2]45C
[3]35C

No.	Part No.	Qty.	Description
11	4E6	3	Washer
12	[2]2520599	1	Pipe
12A	†[3]2520483	1	Pipe
13	567258	1	Gasket
14	17C620	2	Bolt
15	59D6	2	Nut
16	2510883	1	Muffler
17	18C880	1	Bolt
18	2516496	1	Bracket
19	60D8	1	Nut
20	507069	1	Clamp

Engine Oil By-Pass Filter

CLARK

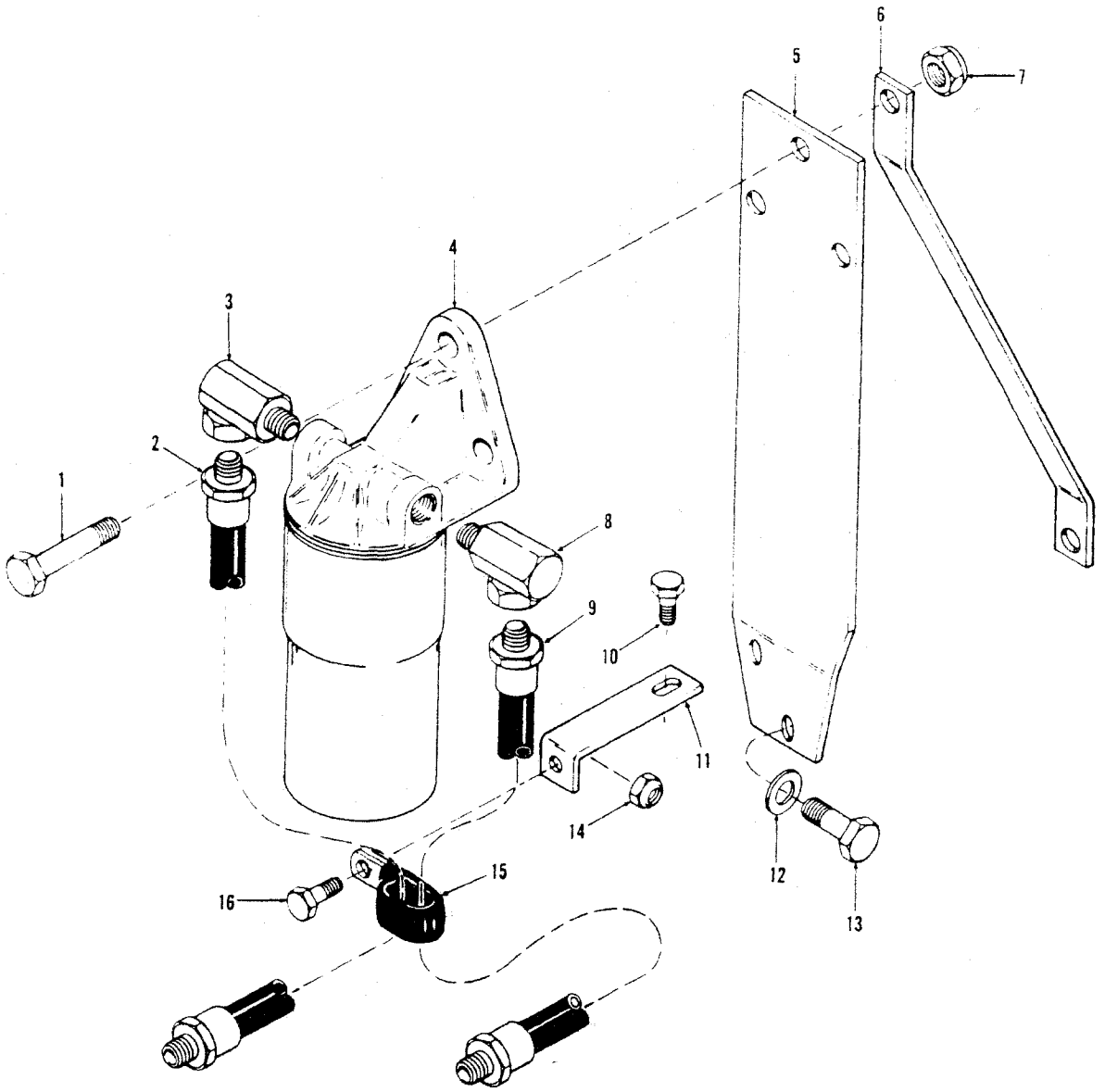

TS-15701

No.	Part No.	Qty.	Description
1	17C624	3	Bolt
1A	17C628	1	Bolt
2	2527026	1	Hose
3	31F3	1	Elbow
4	[2]———	1	Filter assy
5	2527017	1	Bracket
6	2527016	1	Bracket
7	59D6	3	Nut
8	31F3	1	Elbow
9	541223	1	Hose
10	17C616	1	Bolt
11	2524686	1	Bracket
12	27E6	2	Washer
13	17C616	1	Bolt
14	59D6	1	Nut
15	31H42	1	Clip
16	17C616	1	Bolt

[2]See Engine Manual

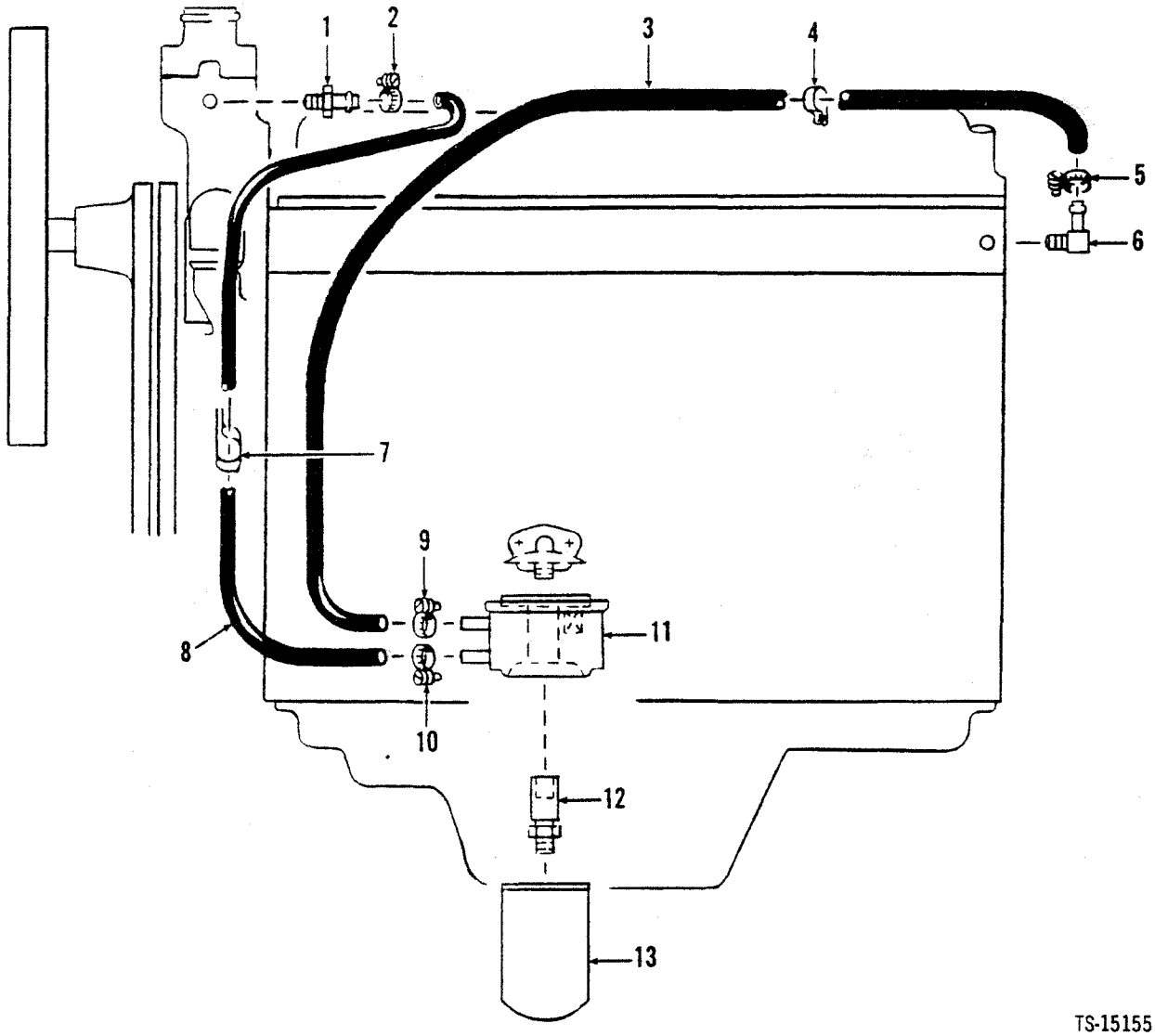

TS-15155

No.	Part No.	Qty.	Description
1	666867	1	Nipple
2	521874	1	Clamp
3	[2]1529688	1	Hose
4	30H50	1	Clip
5	521874	1	Clamp
6	666842	1	Elbow
7	31H46	1	Clip
8	[3]1529688	1	Hose
9	521874	1	Clamp
10	521874	1	Clamp
11	2342092	1	Oil cooler
12	2342091	1	Connector
13	[1]———	1	Oil filter

[1]See Index
[2]1321 mm (52.0 in.)
[3]660 mm (26.0 in.)

Engine Oil Cooler — Perkins — 45C

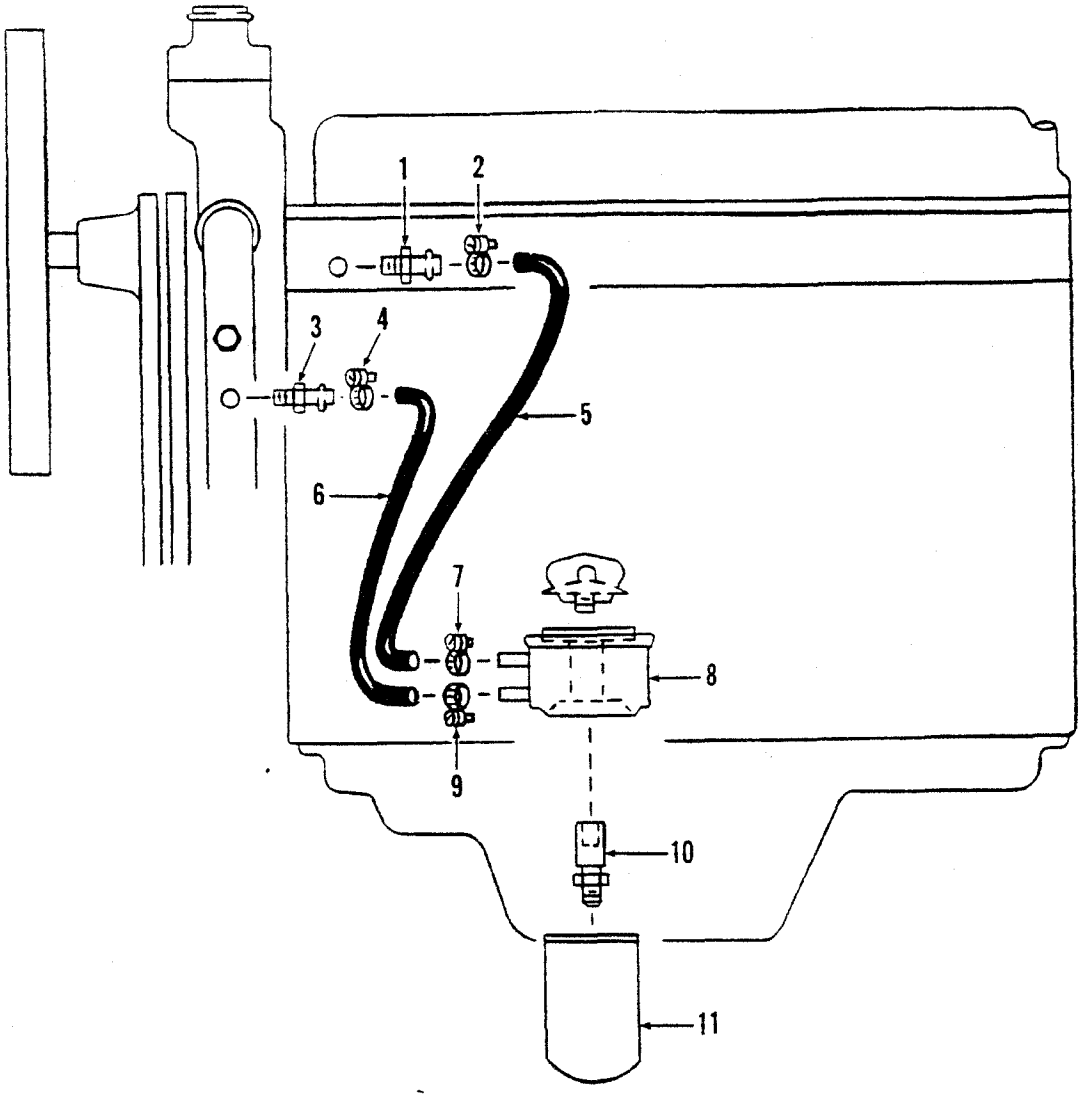

TS-15176

No.	Part No.	Qty.	Description
1	666867	1	Nipple
2	521874	1	Clamp
3	1316930	1	Elbow
4	521874	1	Clamp
5	[2]1529688	1	Hose
6	[3]1529688	1	Hose
7	521874	1	Clamp
8	2342092	1	Oil cooler
9	521874	1	Clamp
10	2342091	1	Connector
11	[1]———	1	Oil filter

[2]610 mm (24.0 in.)
[3]279 mm (11.0 in.)

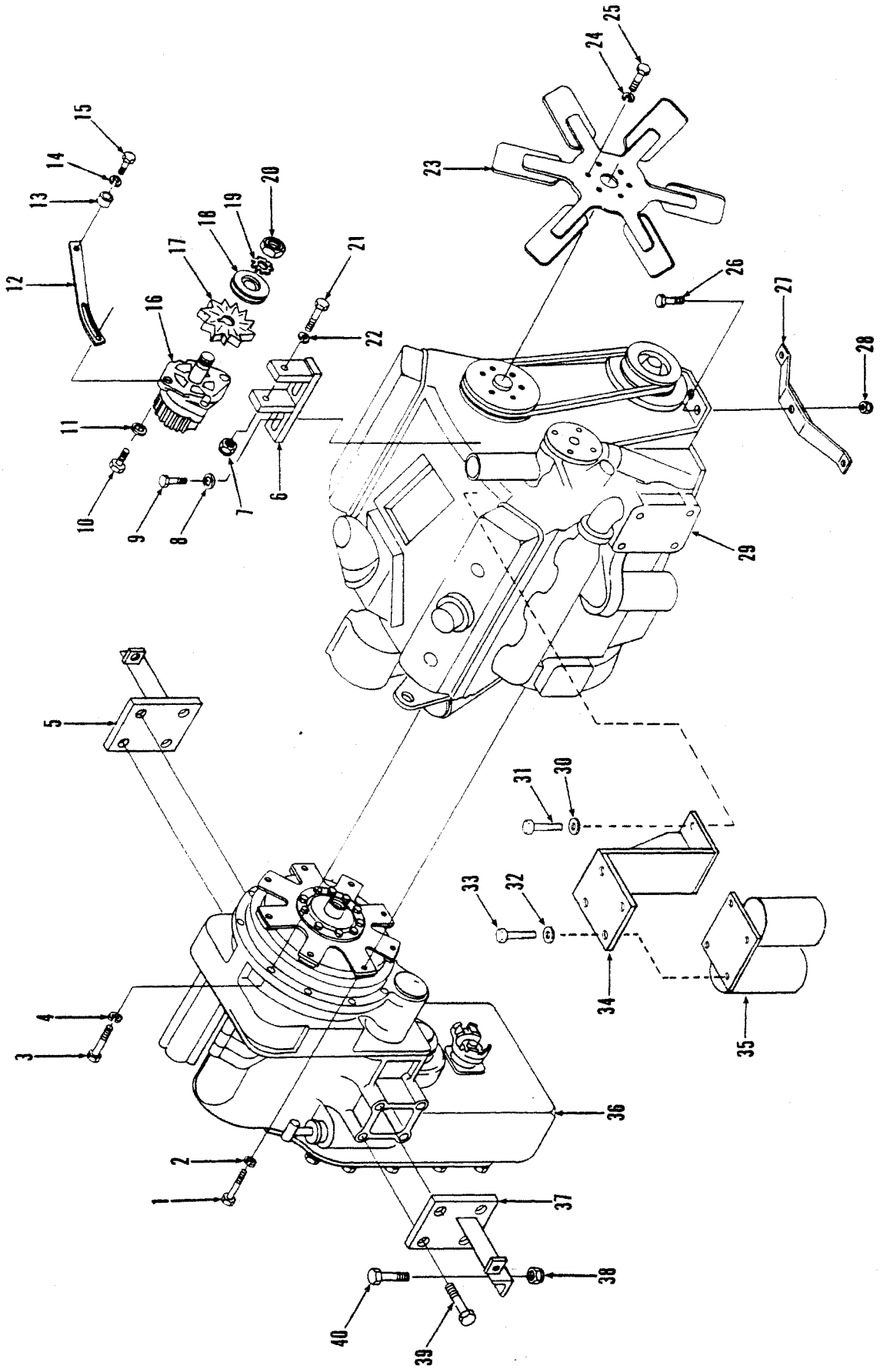
TS-20374
1
2
3
4
5
6
7
8
9
10
11
12
13
14
15
16
17
18
19
20
21
22
23
24
25
26
27
28
29
30
31
32
33
34
35
36
37
38
39
40

No.	Part No.	Qty.	Description
1	18C640	8	Bolt
2	4E6	8	Washer
3	17C624	11	Bolt
4	4E6	11	Washer
5	2511914	1	Mount trans
6	2524682	1	Bracket
7	59D6	1	Nut
8	27E6	2	Washer
9	17C620	2	Bolt
10	17C524	1	Bolt
11	2525070	1	Washer
12	2524694	1	Strap
13	652444	1	Spacer
14	27E6	1	Washer
15	17C616	1	Bolt
16	[2] [5]2519323	1	Alternator
16A	[6]2530104	1	Alternator
17	329884	1	Fan
18	557526	1	Pulley
19	[3]———	1	Washer
20	[3]———	1	Nut
21	17C656	1	Bolt
22	———	–	Omit
23	2525301	1	Fan
24	4E6	6	Washer
25	17C652	6	Bolt
26	17C1032	3	Bolt
27	2519000	1	Mount
28	59D10	3	Washer
29	[4]———	1	Engine
30	27E6	2	Washer
31	17C616	4	Bolt
32	27E6	4	Washer
33	17C616	2	Bolt
34	2527023	1	Bracket
35	[4]———	1	Fuel filter assy
36	[1]———	1	Transmission
37	2511914	1	Mount trans
38	59D8	4	Nut
39	17C1224	8	Bolt
40	17C824	4	Bolt

[1]See
[2]Inc. 19, 20
[3]See 16
[4]See Cummins Engine Manual
[5]481A
[6]481B

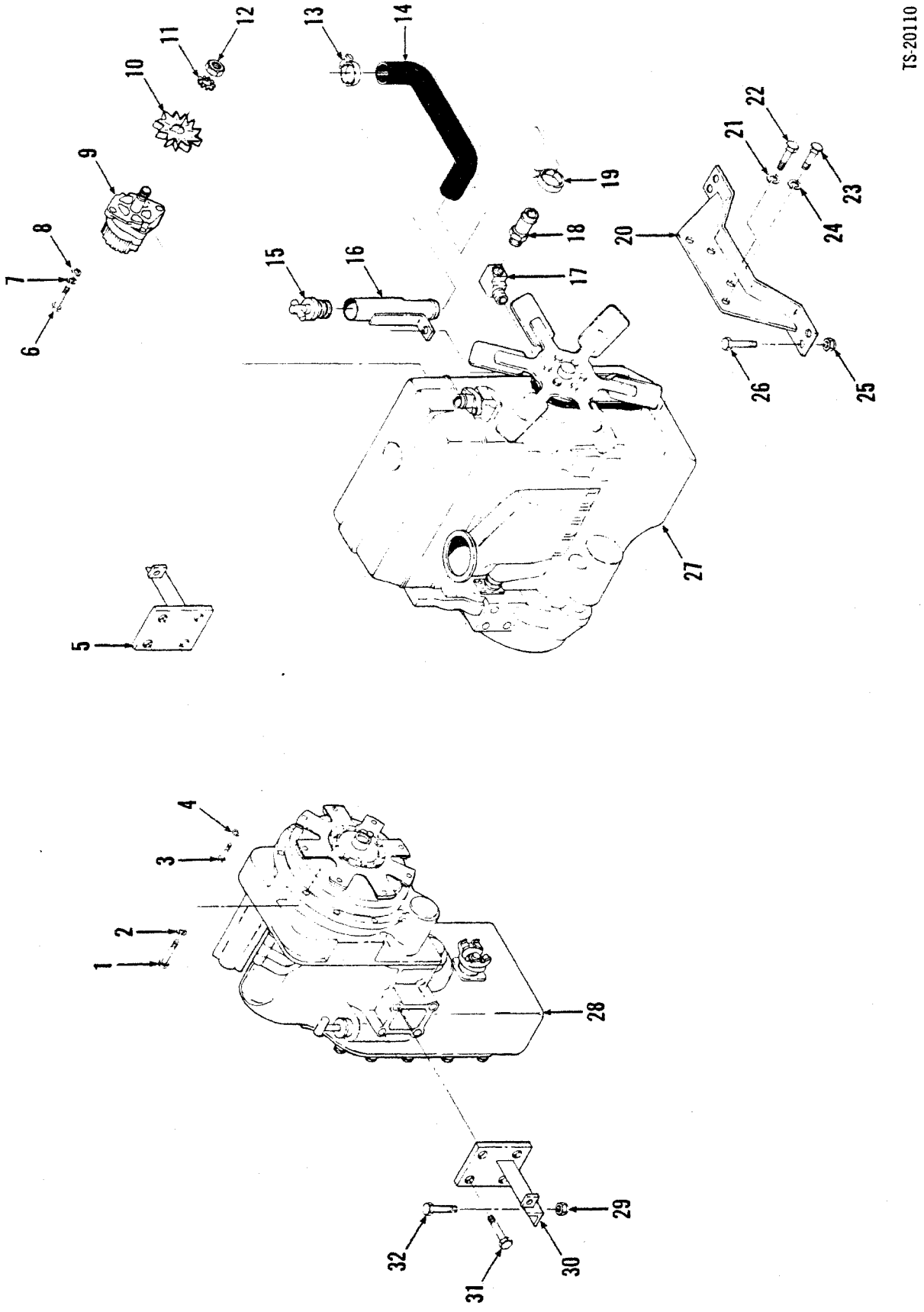
TS-20110
1
2
3
4
5
6
7
8
9
10
11
12
13
14
15
16
17
18
19
20
21
22
23
24
25
26
27
28
29
30
31
32

Engine & Transmission Mounting – G.M. – 35C, 45C

CLARK

No.	Part No.	Qty.	Description
1	17C624	11	Bolt
2	4E6	11	Washer
3	18C628	8	Bolt
4	4E6	8	Washer
5	2511914	1	Mount
6	17C516	1	Bolt
7	4E5	1	Washer
8	[5]25E16	1	Washer
8A	[5]2525070	1	Washer
9	[3,6]2519323	1	Alternator
9A	[7]2530104	1	Alternator
10	329884	1	Fan
11	[3]———	1	Washer
12	[3]———	1	Nut
13	1545186	1	Clamp
14	1577541	1	Hose
15	2505713	1	Cap
16	2520419	1	Tube
17	29F3	1	Elbow
18	1303489	1	Fitting
19	[4]1545186	1	Clamp
19A	[4]42H20	1	Clamp
20	2516460	1	Mount
21	[4]4E7	2	Washer
21A	[5]2524286	2	Washer
22	17C720	2	Bolt
23	17C656	2	Bolt
24	[4]4E6	2	Washer
24A	[5]27E6	2	Washer
25	[4]60D8	4	Nut
25A	[5]59D8	4	Nut
26	[4]18C824	4	Bolt
26A	[5]17C824	4	Bolt
27	[3]———	1	Engine
28	[3]———	1	Transmission
29	60D8	4	Nut
29A	59D8	4	Nut
30	2511914	1	Mount
31	17C1224	8	Bolt
32	[4]18C824	4	Bolt
32A	[5]17C824	4	Bolt

[1]See Index
[2]Inc. 11. 12
[3]See G.M. Engine Manual
[4]35C. 45C
[5]55C
[6]480A101CB→132CB
[7]480A133CB & →, 480B

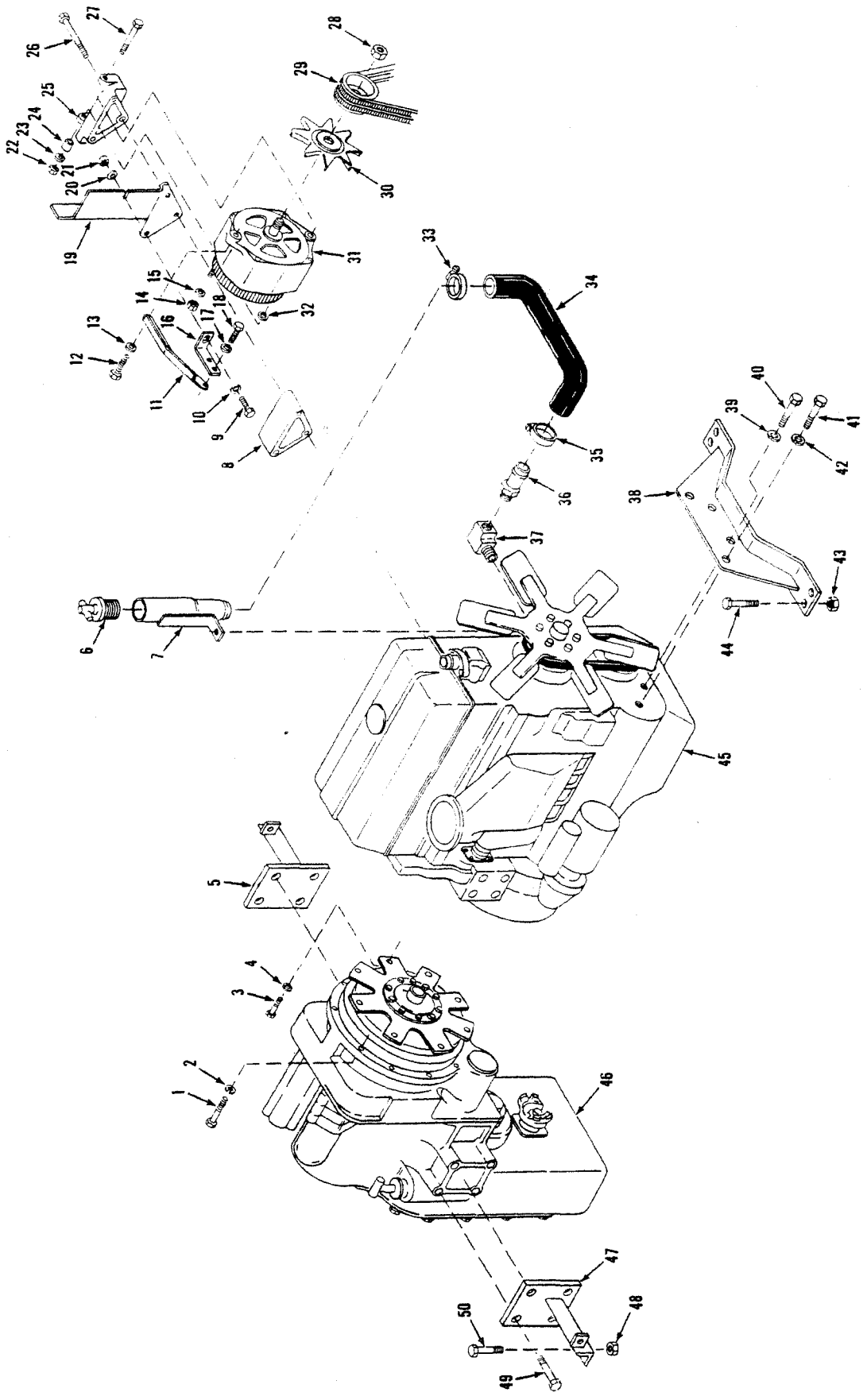
TS-20684

Engine & Transmission Mountings – G.M. – 55C

CLARK

No.	Part No.	Qty.	Description
1	17C624	11	Bolt
2	4E6	11	Washer
3	18C628	8	Bolt
4	4E6	8	Washer
5	2511914	1	Mount
6	2505713	1	Cap
7	2520419	1	Tube
8	§[2]———	—	Bracket
9	17C620	1	Bolt
10	27E6	1	Washer
11	2524426	1	Strap
12	17C620	1	Bolt
13	4E8	1	Washer
14	12D12	1	Nut
15	12E12	1	Washer
16	§[2]———	—	Bracket
17	27E6	1	Washer
18	17C620	1	Bolt
19	§[2]———	—	Shield
20	27E6	1	Washer
21	85D6	1	Nut
22	85D6	1	Nut
23	27E6	2	Washer
24	§[2]———	—	Spacer
25	§[2]———	—	Bracket
26	§[2]———	—	Bolt
27	17C664	1	Bolt
28	§[2]———	—	Nut
29	[3]———	—	Alternator belts
30	329884	1	Alternator fan
31	2530104	1	Alternator
32	27E6	1	Washer
33	42H20	1	Clamp
34	1577541	1	Hose
35	42H20	1	Clamp
36	1303489	1	Nipple
37	29F3	1	Elbow
38	2516460	1	Mount
39	27E6	2	Washer
40	33C656	2	Bolt
41	33C720	2	Bolt
42	27E6	2	Washer
43	85D8	4	Nut
44	17C824	4	Bolt
45	§[2]———	—	Engine
46	[1]———	—	Transmission

[2]See Detroit Engine Manual
[3]See Engine Accessories

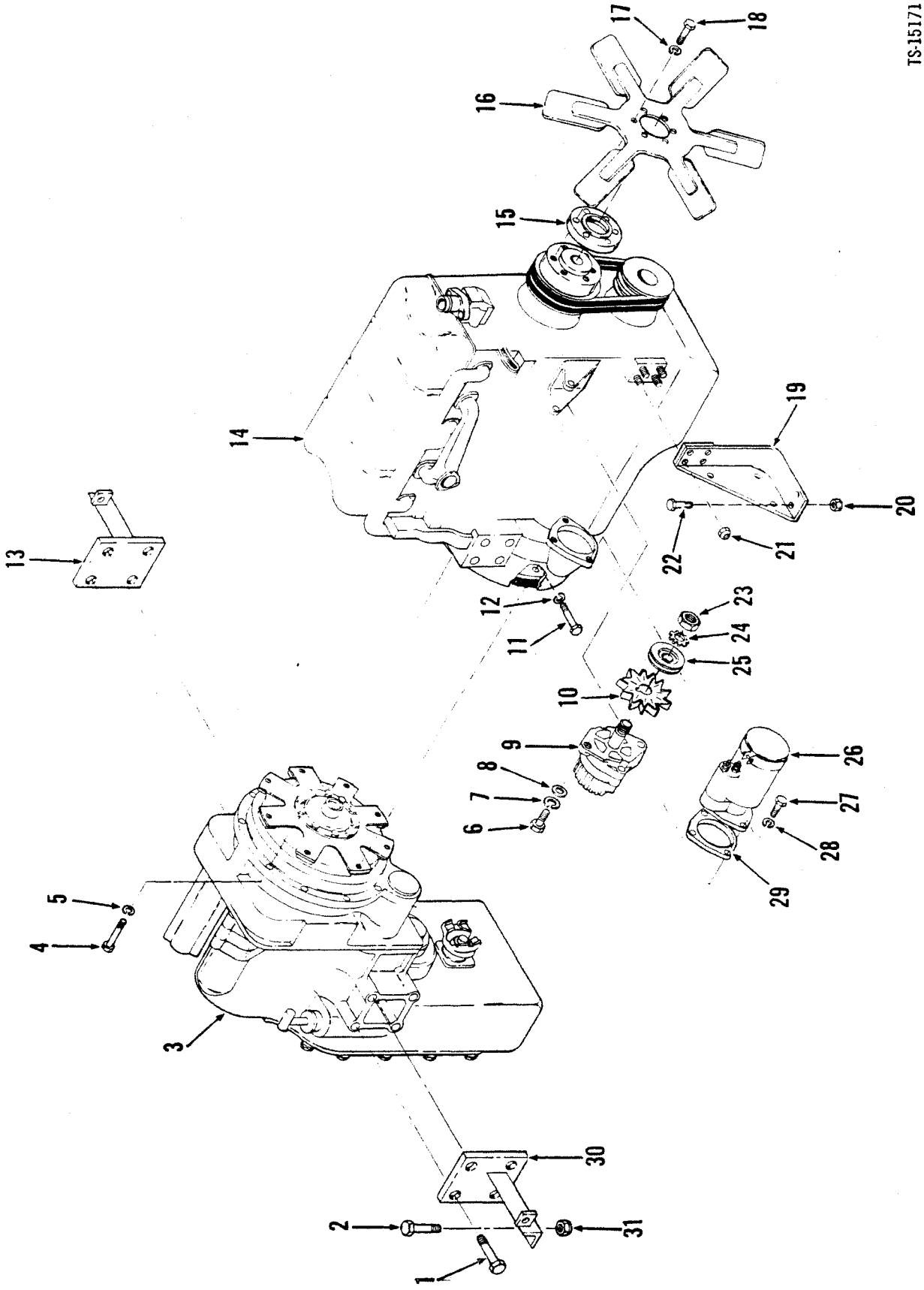
TS-15171
1
2
3
4
5
6
7
8
9
10
11
12
13
14
15
16
17
18
19
20
21
22
23
24
25
26
27
28
29
30
31

Engine & Transmission Mountings – Perkins

CLARK

No.	Part No.	Qty.	Description
1	17C1224	8	Bolt
2	18C824	4	Bolt
3	[1]———	1	Transmission
4	17C624	11	Bolt
5	4E6	11	Lockwasher
6	17C516	1	Bolt
7	4E5	1	Lockwasher
8	25E16	1	Washer
9	[2]2519323	1	Alternator
10	329884	1	Fan alternator
11	18C628	8	Bolt
12	4E6	8	Lockwasher
13	2511914	1	Mount transm
14	[4]———	1	Engine
15	2514461	1	Spacer
16	[1]———	1	Fan
17	4E6	6	Lockwasher
18	18C648	6	Bolt
19	2511913	2	Mount engine
20	60D8	4	Nut
21	60D7	8	Nut
22	18C824	8	Bolt
23	[3]———	1	Nut
24	[3]———	1	Lockwasher
25	6519315	1	Pulley
26	1767120	1	Starter motor
27	17C632	3	Bolt
28	4E6	3	Lockwasher
29	6515772	1	Adapter
30	2511914	1	Mount transm
31	60D8	4	Nut

[1]See Index
[2]Inc. 23, 24
[3]See 9
[4]See Perkins engine manual

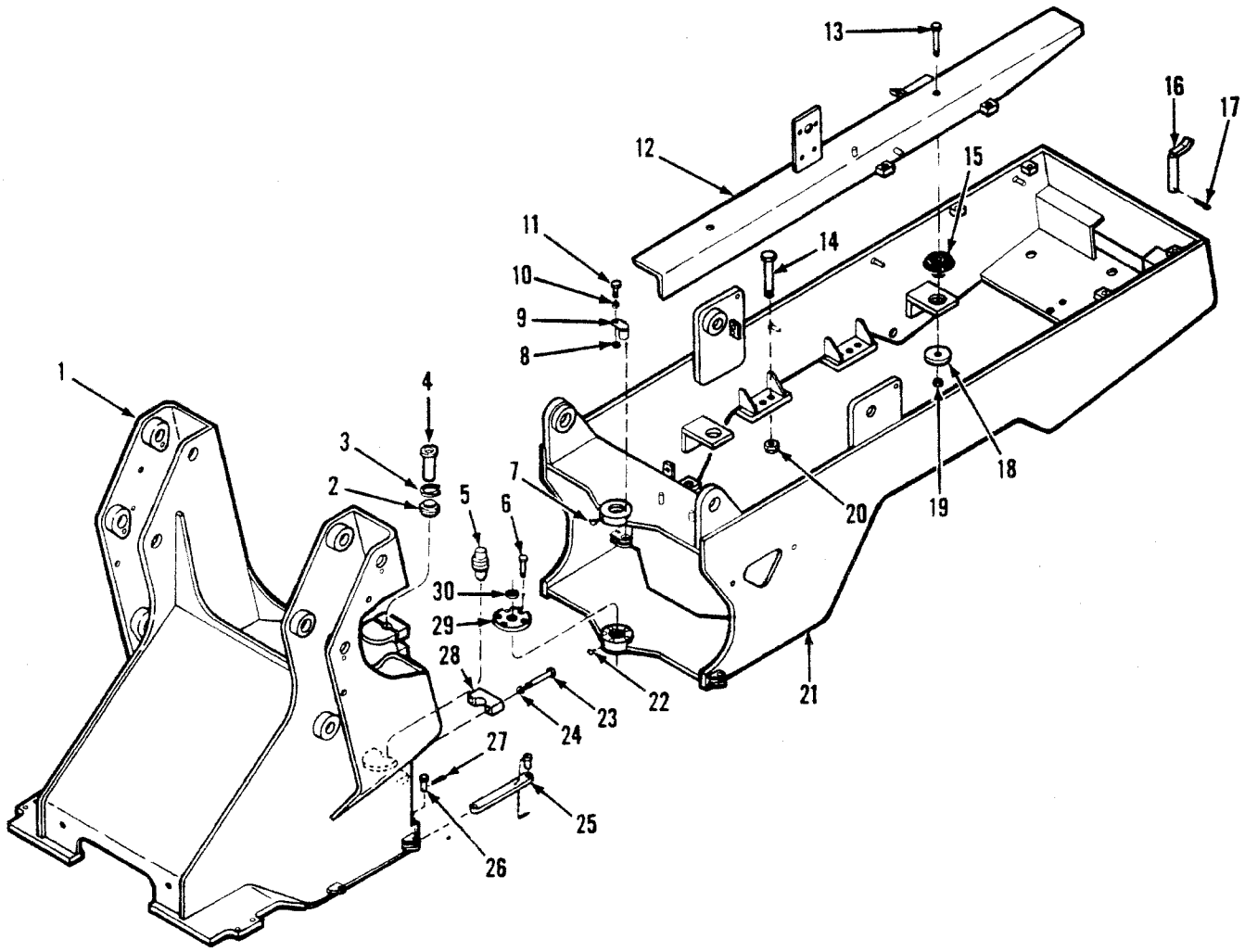

TS-21519

No.	Part No.	Qty.	Description
1	2517689	1	Frame front
2	1573309	1	Bushing
3	660883	1	Snap ring
4	2529486	1	Pin
5	2533549	1	Pin
6	34C820	10	Bolt
7	12H15	1	Grease fitting
8	2512036	4	Spacer
9	2512050	4	Pin
10	27E6	4	Washer
11	18C620	4	Bolt
12	2512543	1	Angle
12A	2512542	1	Angle
13	34C1264	4	Bolt
14	18C12104	8	Bolt
15	554686	4	Mount

[2]458A117CB & →, 459A139CB & →, 472A193CB & →, 473A249CB & →

No.	Part No.	Qty.	Description
16	2536534	1	Pin
17	1318238	1	Cotter pin
18	2503001	4	Washer
19	60D12	4	Nut
20	60D12	8	Nut
21	2517646	1	Frame rear
22	12H15	2	Grease fitting
23	34C1264	8	Bolt
24	1535626	8	Washer
25	[2]2525401	1	Safety link
26	[2]2F16240	1	Pin
27	[2]1F528	1	Cotter pin
28	2522386	4	Cap
29	2522385	2	Cap
30	2511956	2	Seal

Frame Front & Rear – 55C

CLARK

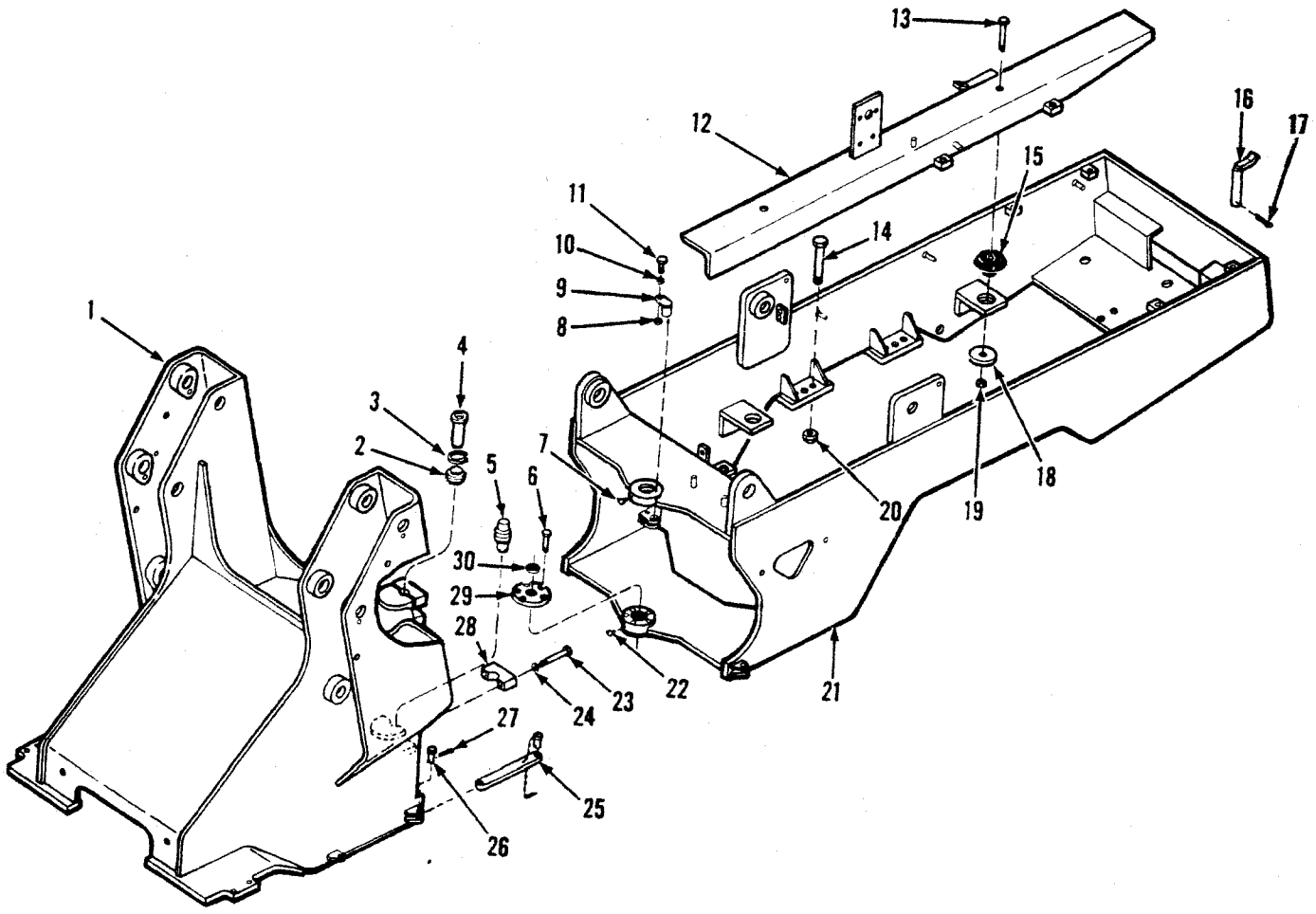

TS-21519

No.	Part No.	Qty.	Description
1	2519020	1	Frame front
2	1573309	1	Bushing
3	[4]660883	1	Snap ring
3A	[5]662003	1	Snap ring
4	2529486	1	Pin
5	2533549	1	Pin
6	34C820	10	Bolt
7	12H15	1	Grease fitting
8	2512036	4	Spacer
9	2512050	4	Pin
10	27E6	4	Washer
11	18C620	4	Bolt
12	[2]2522258	1	Angle RH
12A	[2]2522256	1	Angle LH
12B	[3]2524435	1	Angle RH
12C	[3]2524434	1	Angle LH
12D	[4]2530100	1	Angle RH
12E	[4]2530098	1	Angle LH
12F	[5]2533203	1	Angle RH

[2]481A
[3]480A
[4]481B
[5]480B

No.	Part No.	Qty.	Description
12G	[3,5]2533202	1	Angle LH
13	18C1264	4	Bolt
14	18C1210	8	Bolt
15	554686	4	Mount
16	2536534	1	Draw bar pin
17	1F316	1	Cotter pin
18	2503001	4	Washer
19	60D12	4	Nut
20	60D12	8	Nut
21	[4]2522004	1	Frame rear
21A	[5]2534910	1	Frame rear
22	12H15	2	Grease fitting
23	34C1264	8	Bolt
24	1535626	8	Washer
25	2525401	1	Safety link
26	2537902	1	Clevis pin
27	1F528	1	Cotter pin
28	2522386	1	Cap
29	2522385	2	Cap
30	2511956	2	Seal

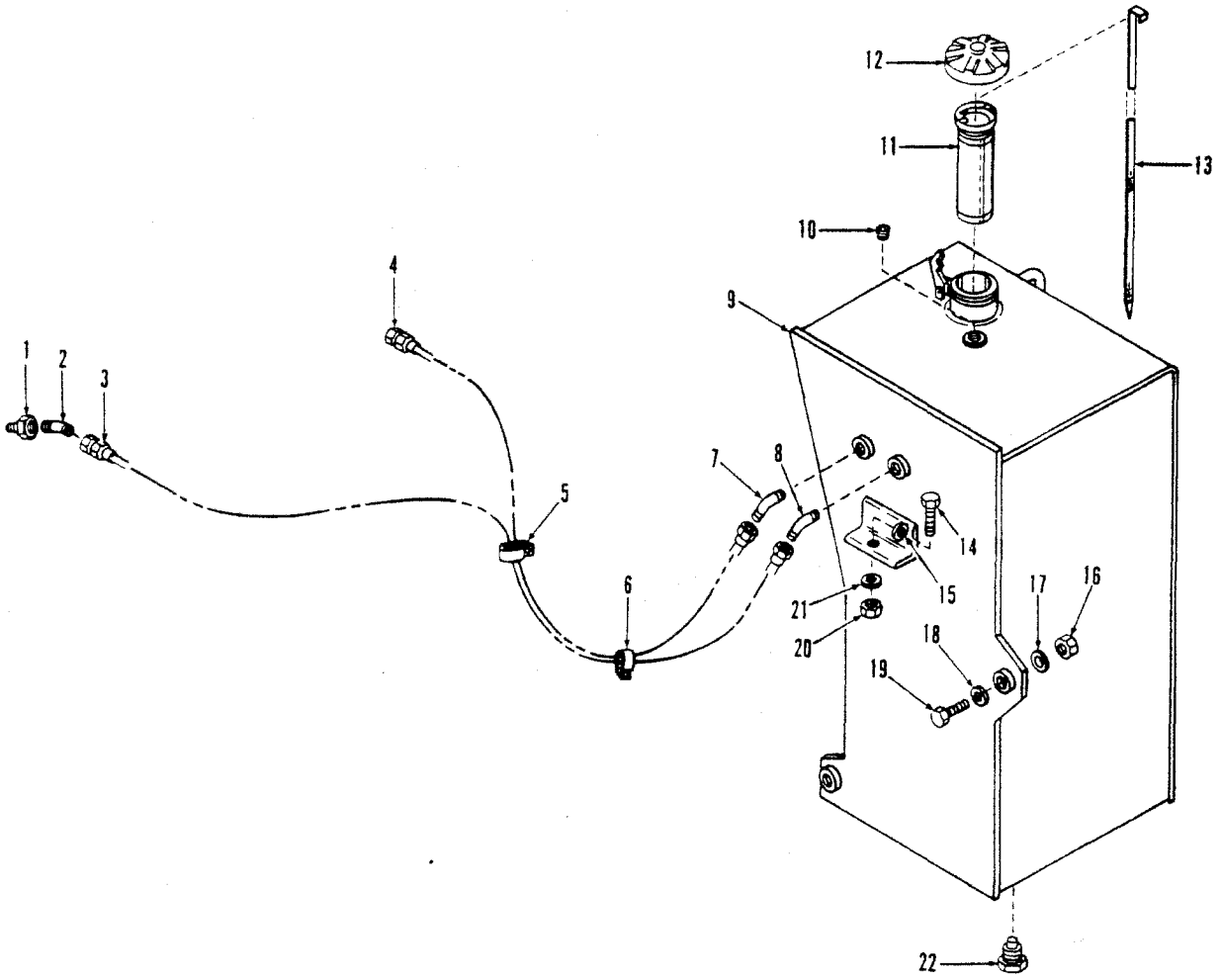

TS-15673

No.	Part No.	Qty.	Description
1	528691	1	Reducer
2	1545232	1	Elbow
3	2524674	1	Hose
4	2524673	1	Hose
5	31H42	1	Clip
6	31H43	1	Clip
7	1511770	1	Elbow
8	1545232	1	Elbow
9	2527743	1	Fuel tank
10	16F24	1	Plug
11	2522304	1	Strainer
12	2529803	1	Cap
13	2522306	1	Dipstick
14	17C832	1	Bolt
15	27E8	1	Washer
16	59D10	2	Nut
17	27E10	2	Washer
18	27E10	2	Washer
19	17C1056	2	Bolt
20	59D8	1	Nut
21	27E8	1	Washer
22	565295	1	Drain plug

Fuel Tank & Lines — G.M.*

CLARK

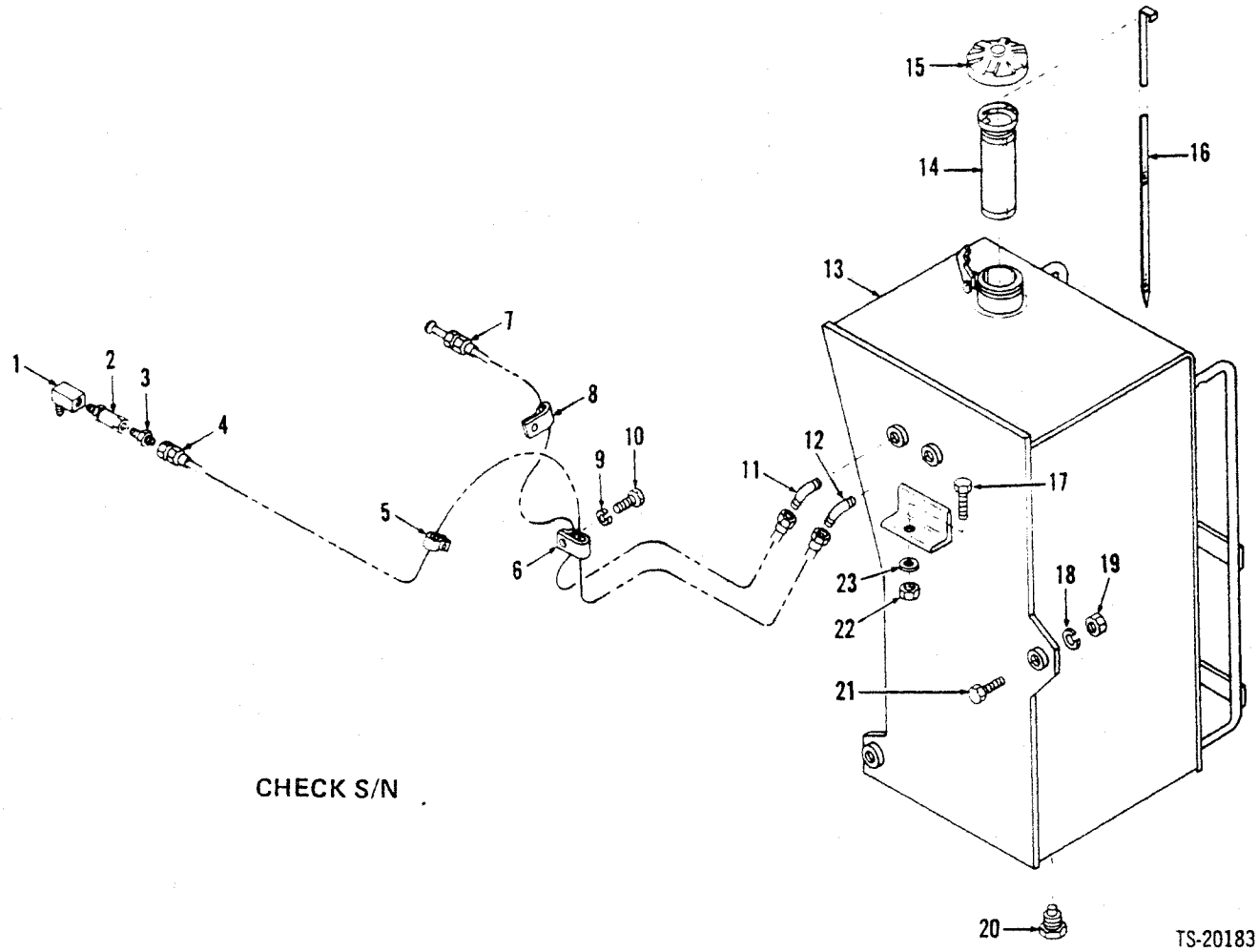

No.	Part No.	Qty.	Description
1	29F1	1	Elbow
2	1566517	1	Valve
3	38F7	1	Connector
4	2518360	1	Hose
5	30H38	1	Clip
6	31H36	1	Clip
7	2518359	1	Hose
8	30H35	1	Clip
9	4E8	1	Washer
10	17C816	1	Bolt
11	2526759	1	Elbow
11A	†19F3	1	Bushing
12	799392	1	Elbow

No.	Part No.	Qty.	Description
12A	†19F5	1	Bushing
13	2516513	1	Tank
14	2522304	1	Filter
15	2522303	1	Cap
16	2522306	1	Dipstick
17	17C840	1	Bolt
18	27E8	2	Washer
19	59D8	2	Nut
20	565295	1	Plug
21	17C852	2	Bolt
22	59D8	1	Nut
23	27E8	1	Washer

*458A101CB → 116CB, 459A101CB → 138CB, 472A101CB → 192CB, 473A101CB → 248CB

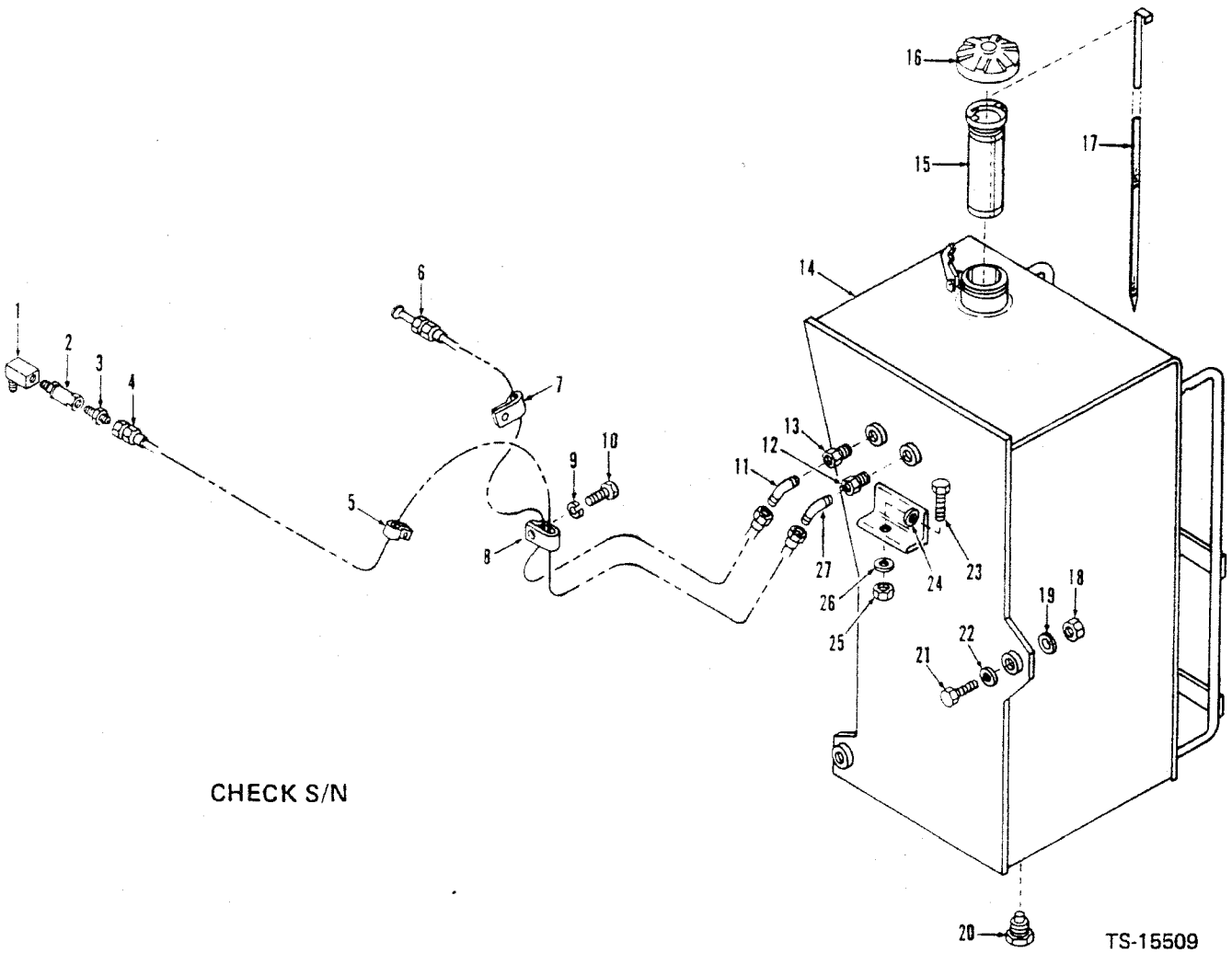

CHECK S/N

TS-15509

No.	Part No.	Qty.	Description
1	29F1	1	Elbow
2	1566517	1	Valve
3	38F7	1	Connector
4	2518360	1	Hose
5	31H34	1	Clip
6	2518359	1	Hose
7	30H35	1	Clip
8	31H36	1	Clip
9	4E8	1	Washer
10	17C816	1	Bolt
11	42F5	1	Elbow
12	19F5	1	Reducer
13	19F3	1	Reducer
14	2516513	1	Tank
15	2522304	1	Filter
16	2522303	1	Cap
17	2522306	1	Dipstick
18	59D10	2	Nut
19	27E10	2	Washer
20	565295	1	Plug
21	17C1056	2	Bolt
22	27E10	2	Washer
23	17C832	1	Bolt
24	27E8	1	Washer
25	59D8	1	Nut
26	27E8	1	Washer
27	42F6	1	Elbow

*458A117CB & →, 459A139CB & →, 472A193CB & →, 473A249CB & →

Fuel Tank & Lines — Perkins — 35C — 45C *

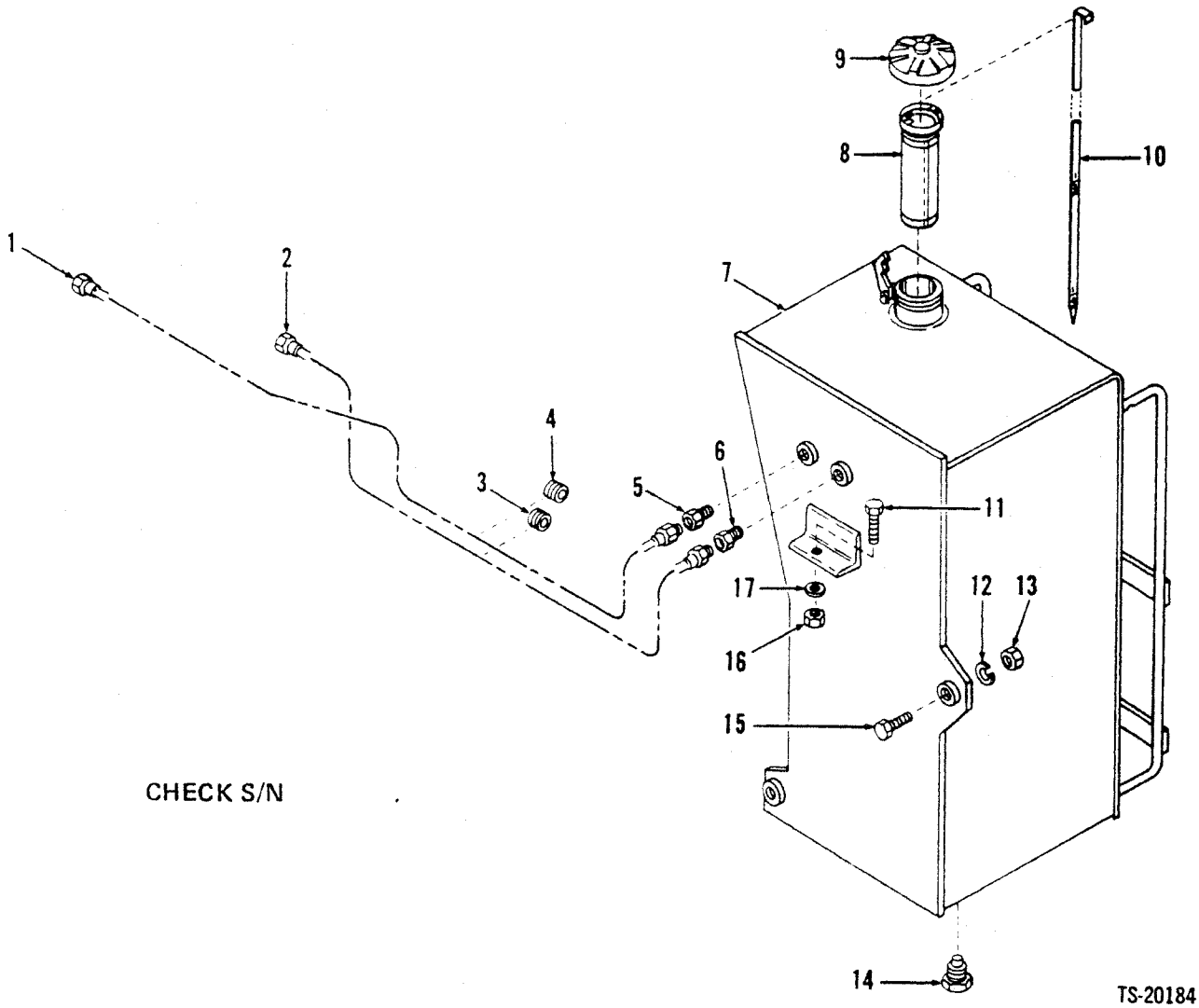

No.	Part No.	Qty.	Description
1	2513119	1	Tube
2	2513120	1	Tube
3	2512997	1	Grommet
4	2512997	1	Grommet
5	38F4	1	Connector
6	38F6	1	Connector
7	2516513	1	Tank
8	943957	1	Strainer assy
7	1558644	1	Cap
10	2522306	1	Dipstick
11	17C836	1	Bolt
12	584092	2	Washer
13	59D8	2	Nut
14	565295	1	Plug
15	17C848	2	Bolt
16	59D8	1	Nut
17	584092	1	Washer

*458A101CB → 116CB, 459A101CB → 138CB, 472A101CB → 192CB, 473A101CB → 248CB

Fuel Tank & Lines — Perkins — 35C — 45C *

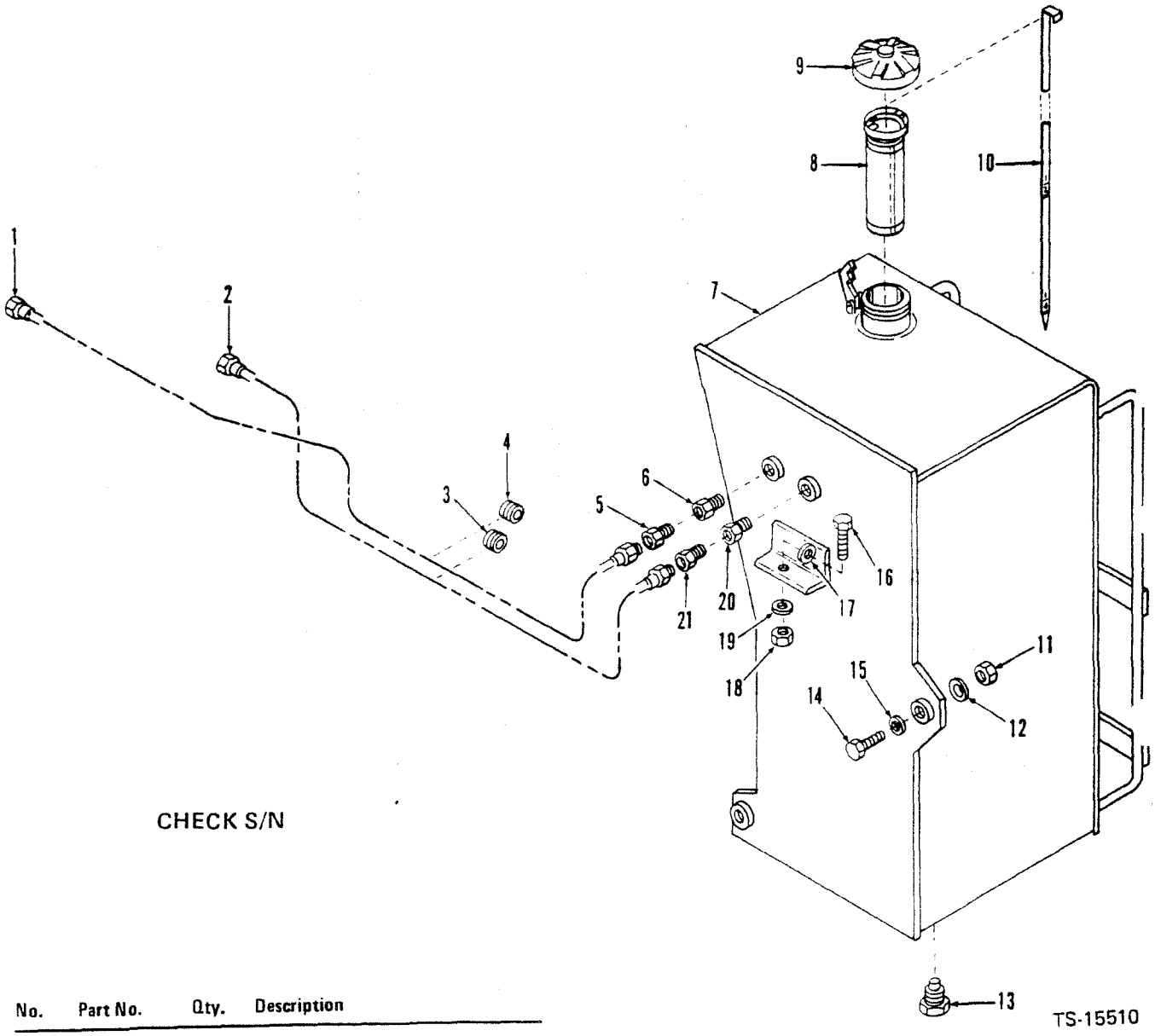

CHECK S/N

No.	Part No.	Qty.	Description
1	2513119	1	Tube
2	2513120	1	Tube
3	2512997	1	Grommet
4	2512997	1	Grommet
5	38F4	1	Connector
6	19F3	1	Reducer
7	2525161	1	Tank
8	2522304	1	Strainer assy
9	2522303	1	Cap
10	2522306	1	Dipstick
11	59D10	2	Nut
12	27E10	2	Washer
13	569295	1	Plug
14	17C1056	2	Bolt
15	27E10	2	Washer
16	17C832	1	Bolt
17	27E8	1	Washer
18	59D8	1	Nut
19	27E8	1	Washer
20	19F5	1	Reducer
21	38F6	1	Connector

*458A117CB & →, 459A139CB & →, 472A193CB & →, 473A249CB & →

Hydraulic Oil Reservoir* — 35C — 45C*

CLARK

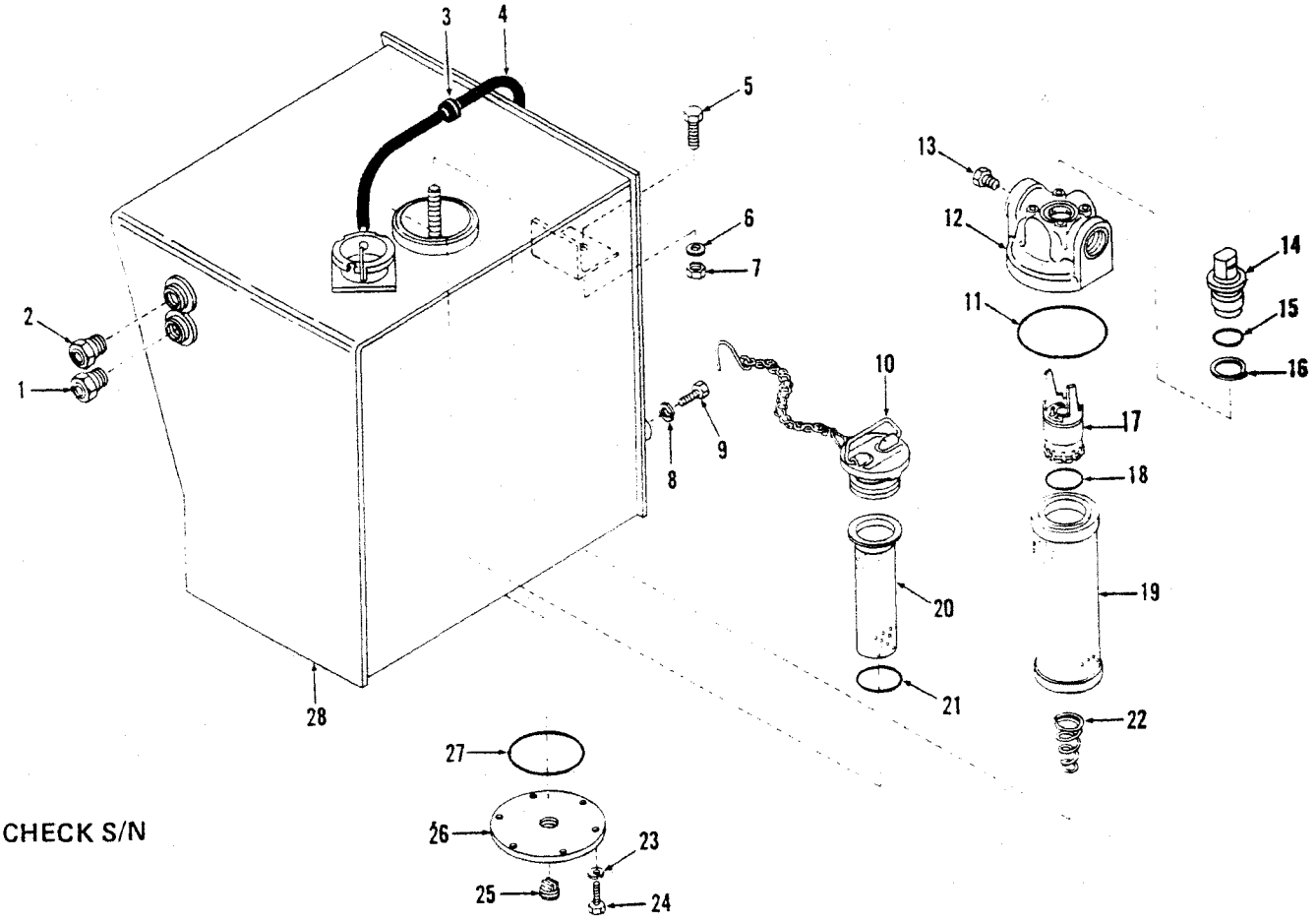

No.	Part No.	Qty.	Description
1	2544445	1	Gauge
2	2544445	1	Gauge
3	1011708	1	Grommet
4	[2]743563	1	Hose
4A	†1736910	1	Cable tie
5	17C840	2	Bolt
6	27E8	2	Washer
7	59D8	2	Nut
8	4E8	2	Washer
9	17C828	2	Bolt
10	554843	1	Filler cap
11	25K60424	1	O-ring
12	[3]2519388	1	Filter head
13	40K6	1	Plug
14	962267	1	Nut assy

No.	Part No.	Qty.	Description
15	[4]962266	1	O-ring kit
16	§[5]———	1	Retainer
17	[6]2519386	1	Indicator assy
18	962265	1	O-ring
19	[7]960641	1	Element
20	2519390	1	Strainer
21	60K40204	1	O-ring
22	2519384	1	Spring
23	4E6	6	Washer
24	18C612	6	Bolt
25	565295	1	Plug
26	587613	1	Cover
27	25K40428	1	O-ring
28	2521424	1	Reservoir

*458A101CB → 116CB, 459A101CB → 138CB, 472A101CB → 192CB, 473A101CB → 248CB

[2]1422 mm (56 in)
[3]Inc. 11
[4]Inc. 16
[5]See 15
[6]Inc. 18
[7]Inc. 11

Hydraulic Oil Reservoir — 35C — 45C*

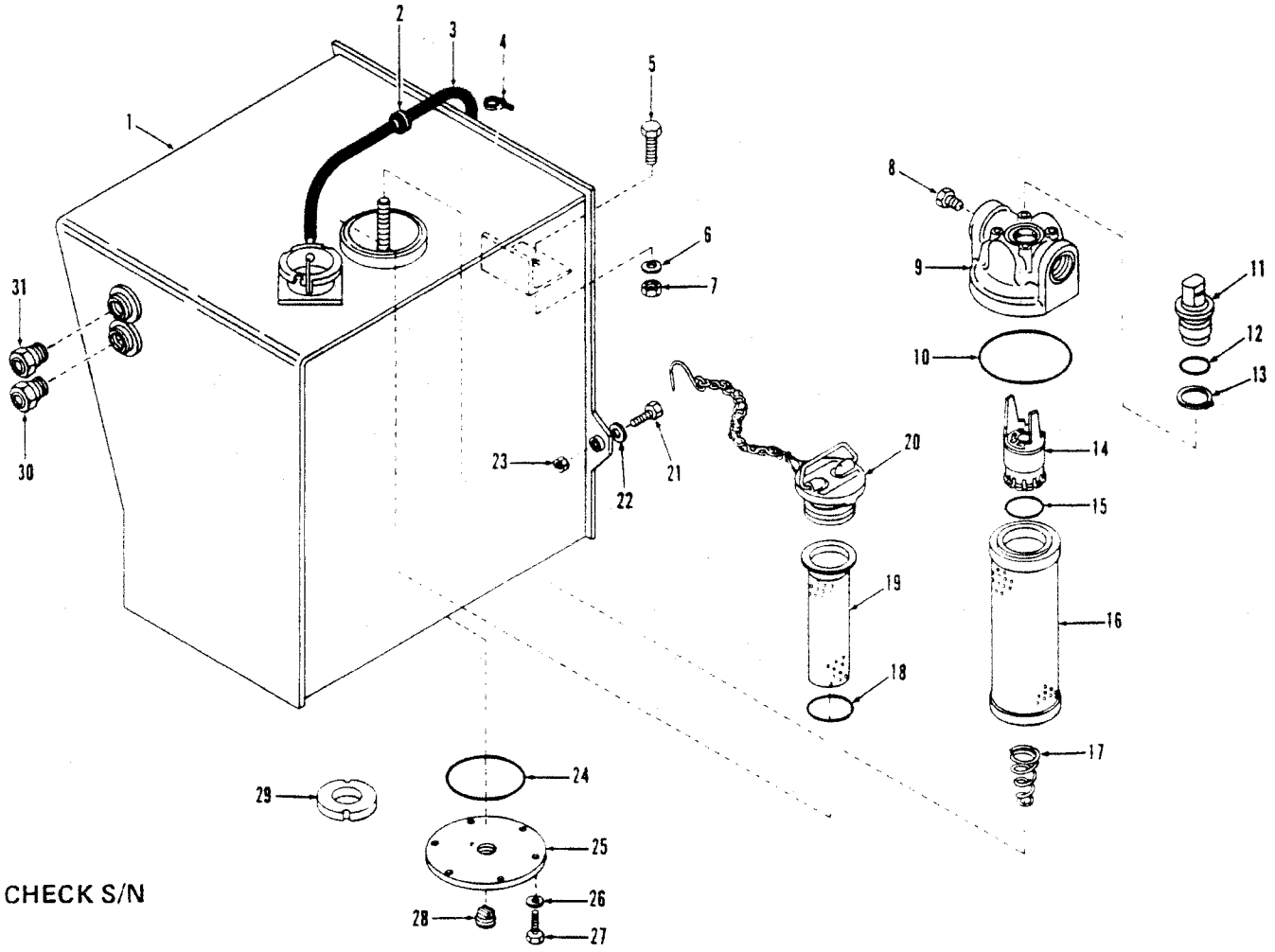

CHECK S/N

TS-15511

No.	Part No.	Qty.	Description
1	2525152	1	Reservoir
2	1011708	1	Grommet
3	[2]743563	1	Hose
4	1736910	1	Cable tie
5	17C832	1	Bolt
6	27E8	2	Washer
7	59D8	1	Nut
8	40K6	1	Plug
9	[3]2519388	1	Filter head
10	25K60424	1	O-ring
11	962267	1	Nut assy
12	[4]962266	1	O-ring kit
13	§[5]----	1	Retainer
14	[6]2519386	1	Indicator assy
15	962265	1	O-ring
16	[7]960641	1	Element
17	2519384	1	Spring
18	60K40204	1	O-ring
19	2519390	1	Strainer
20	554843	1	Filler cap
21	17C1056	2	Bolt
22	27E10	4	Washer
23	59D10	2	Nut
24	25K40428	1	O-ring
25	587613	1	Cover
26	27E6	6	Washer
27	18C612	6	Bolt
28	40K16	1	Plug
28A	2539757	1	Plug magnetic
29	525293	2	Magnet
30	2544445	1	Gauge
31	2544445	1	Gauge

*458A117CB & →, 459A139CB & →, 472A193CB & →, 473A249CB & →

[2]1422mm (56 in)
[3]Inc 10
[4]Inc 13
[5]See 12
[6]Inc 15

Electric Wiring Color Code

CLARK

Ref. No., Color	Color Code
1. Pink	Light Switch to Gauge Lights, Head Lights and Tail Lights
2. Dark Blue/White	Turn Signal Connector to R.H. Stop Light
3. Dark Green/White	Turn Signal Connector to L.H. Stop Light
4. Orange	Horn Fuse to Back-up Alarm Switch to Back-up Alarm
5. Black	Gauges to Solenoid
6. Red	Solenoid to Ignition Switch Fuse and Brake Light Fuse Brake Light Fuse to Brake Light Switch
7. Orange/Green	Gauge Fuse to Gauges
8. Red/White	Solenoid to Fuses and Accessories
9. Brown	Water Temperature Gauge to Water Temperature Sender
10. Gray	Converter Temperature Gauge to Converter Temperature Sender
11. Black #6	Solenoid to Ground
12. Brown/White	Ignition Switch to Solenoid
13. Yellow/Red	*Solenoid to Cold Start Switch Starter Solenoid to Cold Start Switch to Cold Start Fuse
14. Red #6	Starter Solenoid to 80 Amp Circuit Breaker to Solenoid
15. Violet	Light Fuse to Light Switch
16. Red	Horn Fuse to Horn Relay
17. Red/Black	*Cold Start Fuse to Cold Start Unit
18. Pink/Black	Bucket Leveler Fuse to Boom Kickout Plug, Boom Detent and Bucket Leveler Switch
19. Yellow/Red	Ignition Switch Fuse to Ignition Switch
20. Dark Green	Engine Oil Pressure Gauge to Engine Oil Pressure Sender
21. White	Ignition Switch to Neutral Start Switch to Starter Relay to Starter Solenoid
22. Purple/White	Ignition Switch to Generator
23. Dark Blue	Light Switch to Cab Connector (Side Lights)
24. Red	Light Switch to Cab Connector (Dome Light)
25. Tan	Brake Light Switch to Turn Signal Connector
26. Light Blue	Horn Relay to Horn Switch
27. Black	Boom and Bucket Detents Joins Black #6 to Ground
28. Orange/Black	Bucket Leveler Switch to Bucket Detent
29. Black/White	Boom Kickout Plug to Boom Detent
30. Red	Starter Solenoid to Starter Relay
31. Red	Starter Solenoid to Generator

A Brake & Tail Lights
B Back-up Alarm
C Water Temperature Gauge
D Converter Temperature Gauge
E Solenoid
F Hourmeter
G Voltmeter
H Engine Oil Pressure Gauge
J Light Switch
K Ignition Switch
L *Cold Start Switch
M Ignition Switch Fuse
N Brake Light Fuse
O Bucket Leveler Fuse
P *Cold Start Fuse
Q Gauge Fuse
R Horn Fuse
S Light Fuse
T Bucket Leveler Switch
U Headlights
V Horn
W Horn Relay
X Main Valve
Y Horn Switch
Z Brake Light Switch
AA Turn Signal Connector
BB Engine Oil Pressure Sender
CC Converter Temperature Sender
DD Cold Start Unit
EE Back-up Alarm Switch
FF Air Conditioner Connector
GG Cab Connector
HH Neutral Start Switch
JJ 80 Amp Circuit Breaker
KK Starter Relay
LL Starter Solenoid
MM Starter
NN Generator
OO Water Temperature Gauge
PP Batteries
QQ Boom Kickout Plug

*Perkins

All orders for engine assembly or components thereof should be placed with the nearest Cummins Distributor. To obtain proper items, it is necessary to provide your engine model, serial number and necessary group type number for the equipment required. This data is stamped on the options and accessories plate on the rocker cover of engine.

No.	Part No.	Qty.	Description
1	[6]2519323	1	Alternator
1A	[7]2530104	1	Alternator
2	[2 3]———	1	Starter
3	2520301	1	Fan
4	[4]1307511	1	Belt alternator
5	[4]1990515	1	Belt fan

[2]The above listed accessory items are furnished by the engine manufacturer. Specifications on these items are subject to change without notice. It is, therefore, recommended that complete model, specifications and serial number of the engine be provided to your Cummins Engine Distributor when ordering these parts.
[3]Cummins No. 3275183
[4]Matched set of 2.
[6]481A
[7]481B

Engine, Transmission & Hydraulic System Filter Replacement Elements

No.	Part No.	Qty.	Description
1	961000	1	Element air cleaner primary
2	961001	1	Element air cleaner secondary
3	[8]949096	1	Element engine oil
3A	[9]1992235	1	Element engine oil
4	963023	1	Element engine oil by-pass
5	234099	1	Element trans & conv
6	963006	1	Element oil resvr
7	[6]949095	1	Element fuel
7A	[7]3679734	1	Element fuel
8	949418	1	Element corrosion resister
9	[5]960978	1	Element corrosion resister

[5]Precharged Filter Element
[6]481A, 481B101CB → 163CB
[7]481B164CB & →
[8]Canister
[9]Spin-On

Engine Accessories — G.M. — 35C — 45C

CLARK

All orders for engine assembly or components thereof should be placed with the nearest G.M. Diesel Distributor. To obtain proper items, it is necessary to provide your engine model, serial number and necessary group type number for the equipment required. This data is stamped on the options and accessories plate on the rocker cover of the engine.

No.	Part No.	Qty.	Description
1	**2519323**	1	**Alternator**
2	**962326**	1	**Starter**
3	**3575859**	1	**Fan 35C**
3A	**5208016**	1	**Fan 45C**
4	[2]**962325**	1	**Belt fan**
5	[2]**1702092**	1	**Belt alternator**

[2]Matched set of 2

Engine, Transmission & Hydraulic System Filter Replacement Elements

No.	Part No.	Qty.	Description
1	**961000**	1	**Element air cleaner primary 35C**
1A	**2521682**	1	**Element air cleaner primary 45C**
2	**961001**	1	**Element air cleaner secondary 35C**
2A	**2521683**	1	**Element air cleaner secondary 45C**
3	**945444**	1	**Element fuel primary**
4	**945443**	1	**Element fuel secondary**
5	**946008**	1	**Element full flow 35C**
5A	**215502**	1	**Element full flow 45C**
6	**234099**	1	**Element transmission & conv**
7	**960641**	1	**Element oil resvr**

All orders for engine assembly or components thereof should be placed with the nearest G.M. Diesel Distributor. To obtain proper items, it is necessary to provide your engine model, serial number and necessary group type number for the equipment required. This data is stamped on the options and accessories plate on the rocker cover of the engine.

No.	Part No.	Qty.	Description
1	[6]2519323	1	Alternator
1A	[7]2530104	1	Alternator
2	[2 5]———	1	Starter
3	[4 5]———	1	Fan
4	[3]963206	1	Belt alternator
5	[3]962325	1	Belt fan

[2]Delco #1113245
[3]Matched set of 2
[4]See Engine Manual
[5]The above listed accessory items are furnished by the engine manufacturer. Specifications on these items are subject to change without notice. It is, therefore, recommended that complete model, specifications and serial number of the engine be provided to your G.M. Engine Distributor when ordering these parts.
[6]480A101CB → 132CB
[7]480A133CB & →. 480B

Engine, Transmission & Hydraulic System Filter Replacement Elements

No.	Part No.	Qty.	Description
1	2521682	1	Element air cleaner primary
2	2521683	1	Element air cleaner secondary
3	[8]215502	1	Element engine oil
3A	[9]961711	1	Element engine oil
4	[8]945444	1	Element fuel primary
4A	[9]963938	1	Element fuel primary
5	[8]945443	1	Element fuel secondary
5A	[9]1992215	1	Element fuel secondary
6	234099	1	Element transmission & conv
7	963006	1	Element oil resvr

[8]Canister
[9]Spin-On

Engine Accessories — Perkins

CLARK

All orders for engine assembly or components thereof should be placed with the nearest Perkins Distributor. To obtain proper items, it is necessary to provide your engine model, serial number and necessary group type number for the equipment required. This data is stamped on the options and accessories plate on the rocker cover of engine.

No.	Part No.	Qty.	Description
1	2519323	1	Alternator
2	1767120	1	Starter
3	6515772	1	Adapter starter
4	[2,3]———	1	Fan 35C
4A	[2,4]———	1	Fan 45C
5	[5]962401	1	Belt fan 35C
5A	[5]962402	1	Belt fan 45C
6	2518072	1	Belt alternator 35C
6A	1580531	1	Belt alternator 45C

[2]The above listed accessory items are furnished by the engine manufacturer. Specifications on these items are subject to change without notice. It is, therefore, recommended that complete model, specifications and serial number of the engine be provided to your Perkins Engine Distributor when ordering these parts.

[3]Perkins #31258155
[4]Perkins #31258146
[5]Matched set of 2

Engine Transmission & Hydraulic System Filter Replacement Elements

No.	Part No.	Qty.	Description
1	961000	1	Element air cleaner primary
2	961001	1	Element air cleaner secondary
3	961048	2	Element fuel
4	6511766	1	Element full flow 35C
4A	960698	1	Element full flow 45C
5	234099	1	Element trans & conv
6	960641	1	Element oil resvr

Engine Air Cleaner & Connections — Cummins — 55C

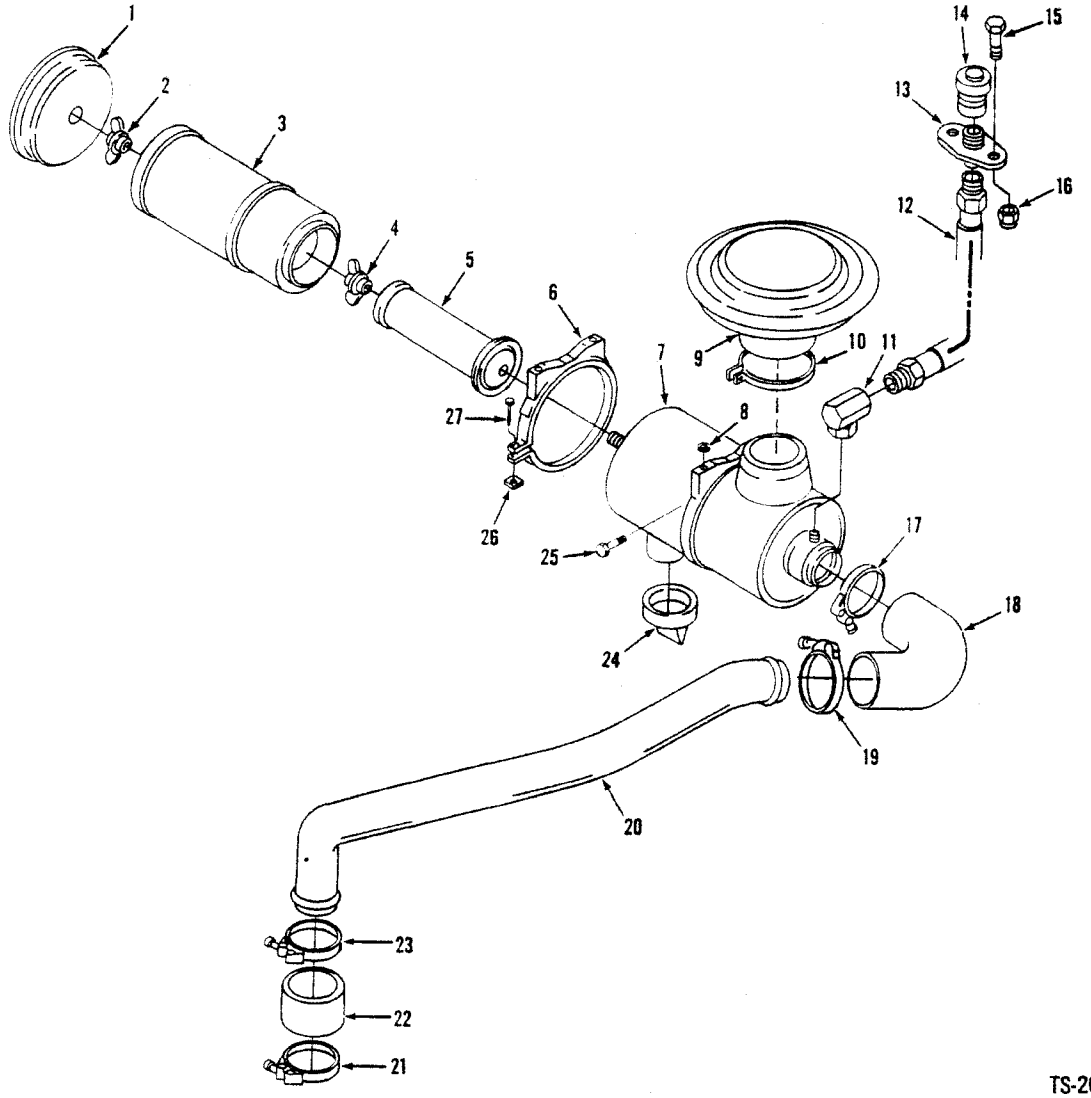

TS-20682

No.	Part No.	Qty.	Description
1	961002	1	Cover assy
2	3291290	1	Nut
3	961000	1	Element
4	3291290	1	Nut
5	961001	1	Element
6	[2]5205303	2	Clamp
7	[3,4]2518893	1	Air cleaner
7A	[3,5]2516429	1	Air cleaner
8	27E6	4	Washer
9	1642530	1	Rain cap
10	1516076	1	Clamp
11	32F1	1	Elbow
12	1520087	1	Hose
13	1901972	1	Flange
14	1529625	1	Indicator
15	17C412	2	Bolt
16	59D4	2	Nut
17	43H2450	1	Clamp
18	2518892	1	Hose
19	43H2394	1	Clamp
20	2519003	1	Tube
21	43H2394	1	Clamp
22	1M28030	1	Hose
23	43H2394	1	Clamp
24	3739636	1	Valve
25	17C612	4	Bolt
25A	27E6	4	Washer
26	24D5	2	Nut
27	4G524	2	Screw

[2]Inc. 26, 27
[3]Inc. 1→5, 24
[4]481A
[5]481B

Engine Air Cleaner & Connections — GM — 35C

CLARK

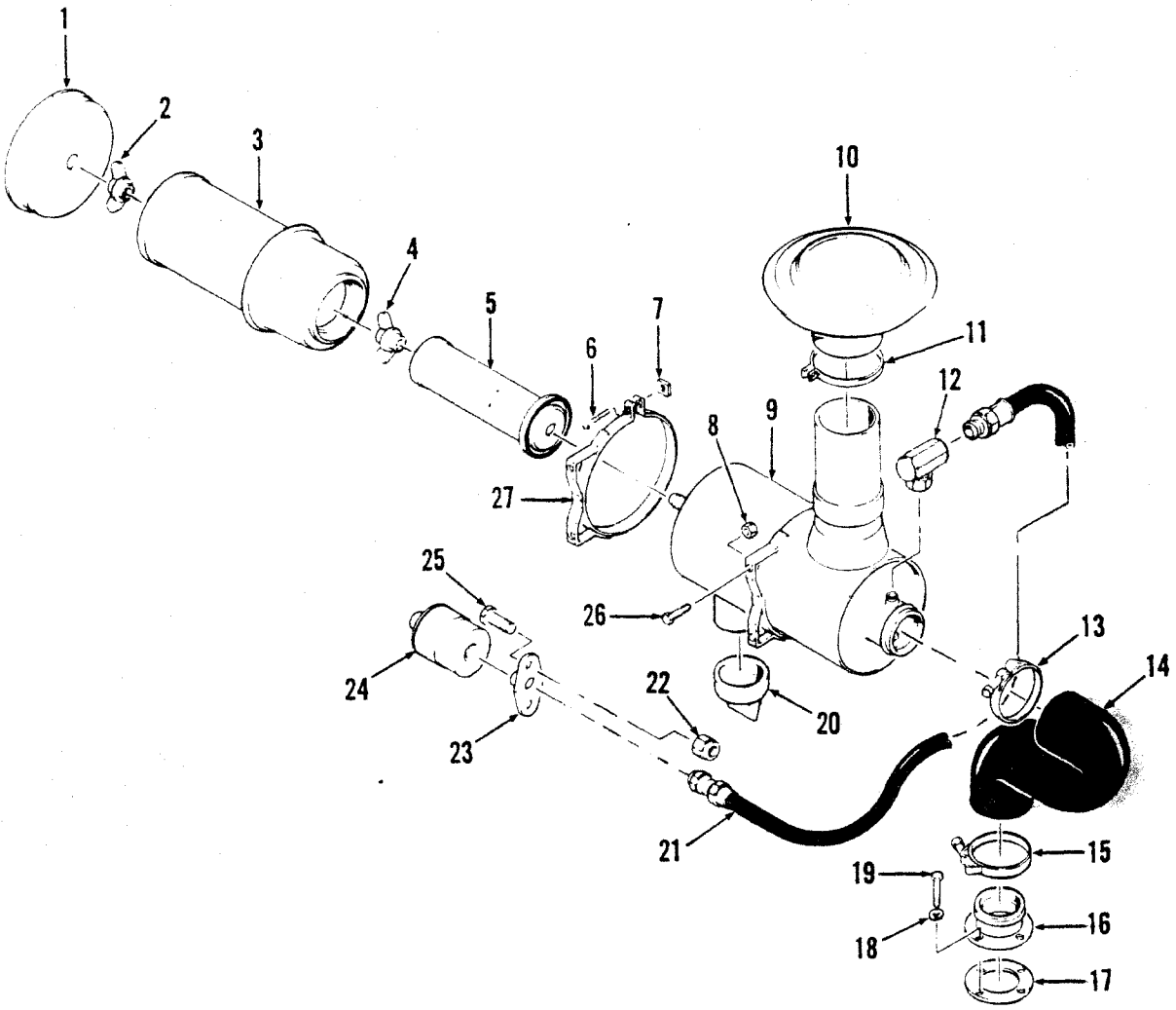

TS-15149

No.	Part No.	Qty.	Description
1	961002	1	Cover
2	3291290	1	Nut
3	961000	1	Element
4	3291290	1	Nut
5	961001	1	Element
6	4G524	2	Screw
7	24D5	2	Nut
8	60D6	4	Nut
9	[2]2516429	1	Air cleaner assy
10	1642530	1	Rain cap
11	509503	1	Clamp
12	32F1	1	Elbow
13	539042	1	Clamp
14	2516457	1	Elbow

No.	Part No.	Qty.	Description
15	539042	1	Clamp
16	1539062	1	Adapter
17	527096	1	Gasket
18	4E5	4	Washer
19	17C512	4	Bolt
20	3739636	1	Valve
21	1525588	1	Hose
22	60D4	2	Nut
23	1901972	1	Flange
24	1529625	1	Service indicator
25	18C412	2	Bolt
26	18C616	4	Bolt
27	[3]5205303	2	Clamp

[2]Inc. 1→5, 20
[3]Inc. 6, 7

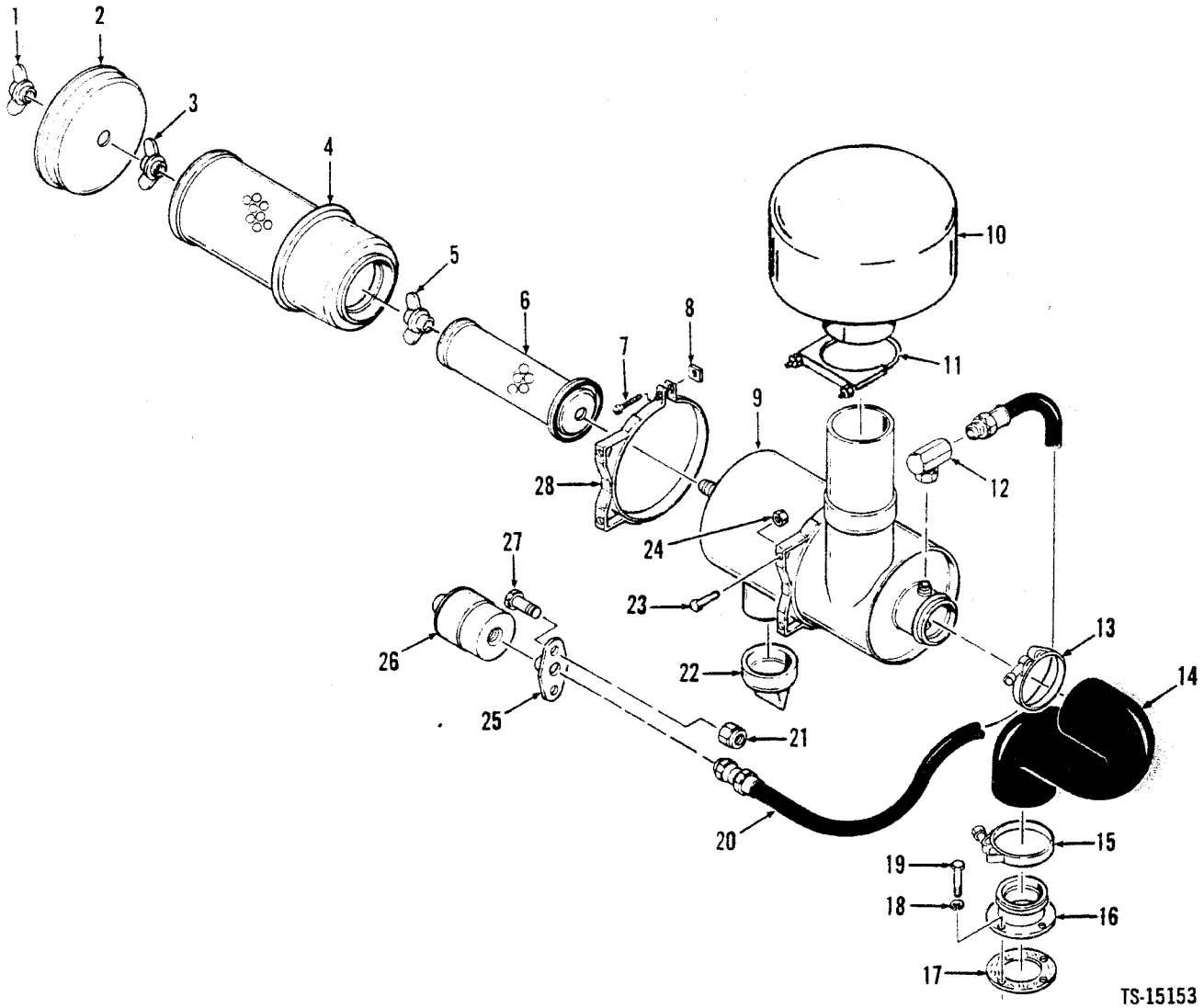

No.	Part No.	Qty.	Description
1	199857	1	Nut
2	962259	1	Cover
3	199856	1	Nut
4	2521682	1	Filter
5	3291290	1	Nut
6	2521683	1	Filter
7	§———	1	Screw
8	§———	1	Nut
9	[2]2521436	1	Air cleaner
10	1523149	1	Rain cap
11	1516076	1	Clamp
12	32F1	1	Elbow
13	539042	1	Clamp
14	2516457	1	Elbow

No.	Part No.	Qty.	Description
15	539042	1	Clamp
16	2521434	1	Adapter
17	527096	1	Gasket
18	4E5	4	Washer
19	17C512	4	Bolt
20	1525588	1	Hose
21	60D4	2	Nut
22	946860	1	Valve
23	18C616	4	Bolt
24	60D6	4	Nut
25	1901972	1	Flange
26	1529625	1	Indicator
27	18C412	2	Bolt
28	[3]2521435	2	Clamp

[2]Inc. 1→6, 22
[3]Inc. 7, 8

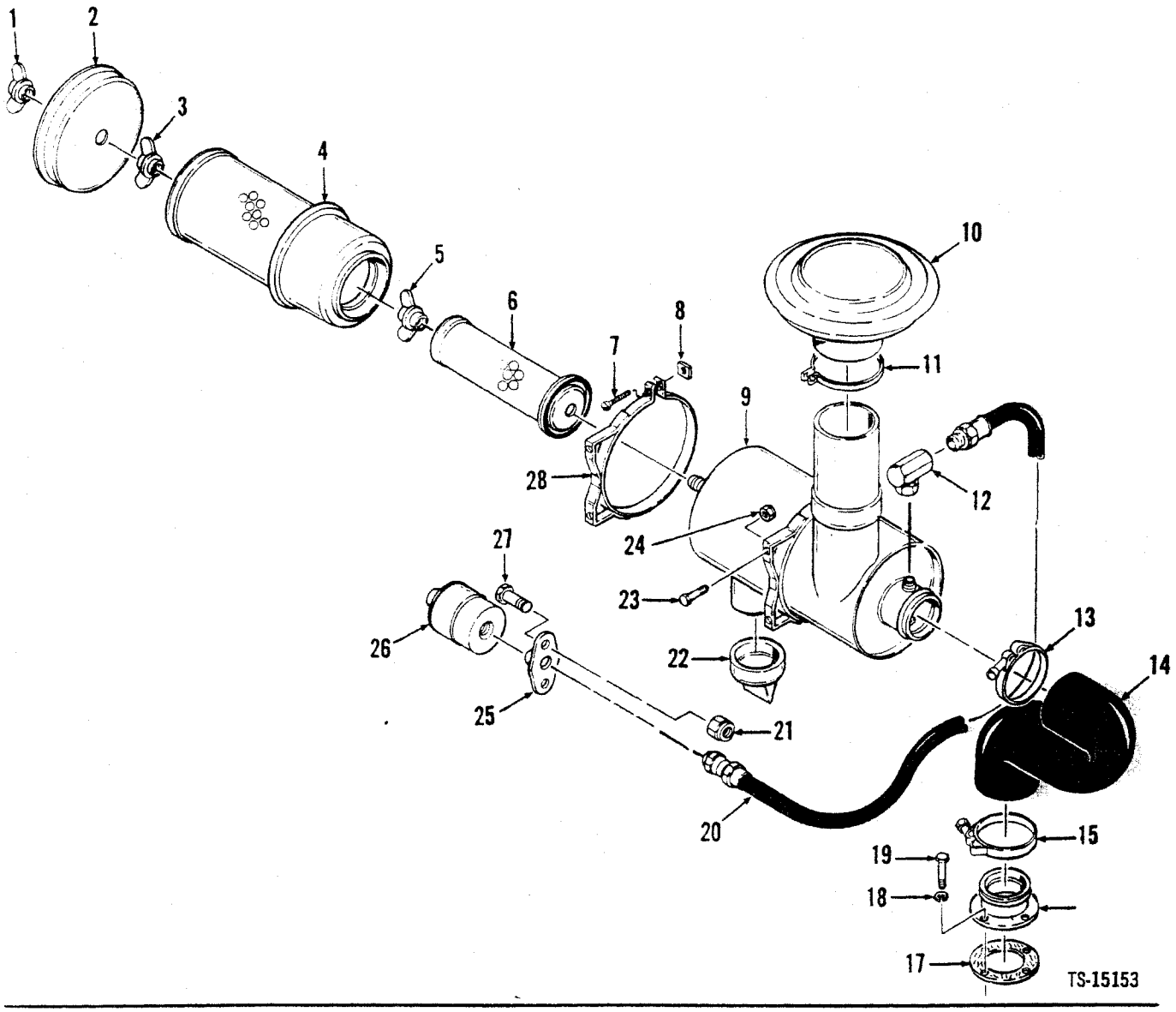

No.	Part No.	Qty.	Description
1	199857	1	Nut
2	962259	1	Cover
3	199856	1	Nut
4	2521682	1	Filter
5	3291290	1	Nut
6	2521683	1	Filter
7	§———	1	Screw
8	§———	1	Nut
9	[2]2521436	1	Air cleaner
10	1523149	1	Silencer
11	1516076	1	Clamp
12	32F1	1	Elbow
13	43H2450	1	Clamp
14	2516457	1	Elbow

[2]Inc. 1→6, 22 [4]480A
[3]Inc. 7, 8 [5]480B

No.	Part No.	Qty.	Description
15	43H2450	1	Clamp
16	[4]2524676	1	Adapter
16A	[5]2534470	1	Adapter
17	527096	1	Gasket
18	———	—	Omit
19	[4]17C512	4	Bolt
19A	[5]17C514	4	Bolt
20	1525588	1	Hose
21	59D4	2	Nut
22	946860	1	Valve
23	17C616	4	Bolt
24	59D6	4	Nut
25	1901972	1	Flange
26	1529625	1	Indicator
27	17C412	2	Bolt
28	[3]2521435	2	Clamp

Engine Air Cleaner & Connections — Perkins — 35C — 45C

CLARK

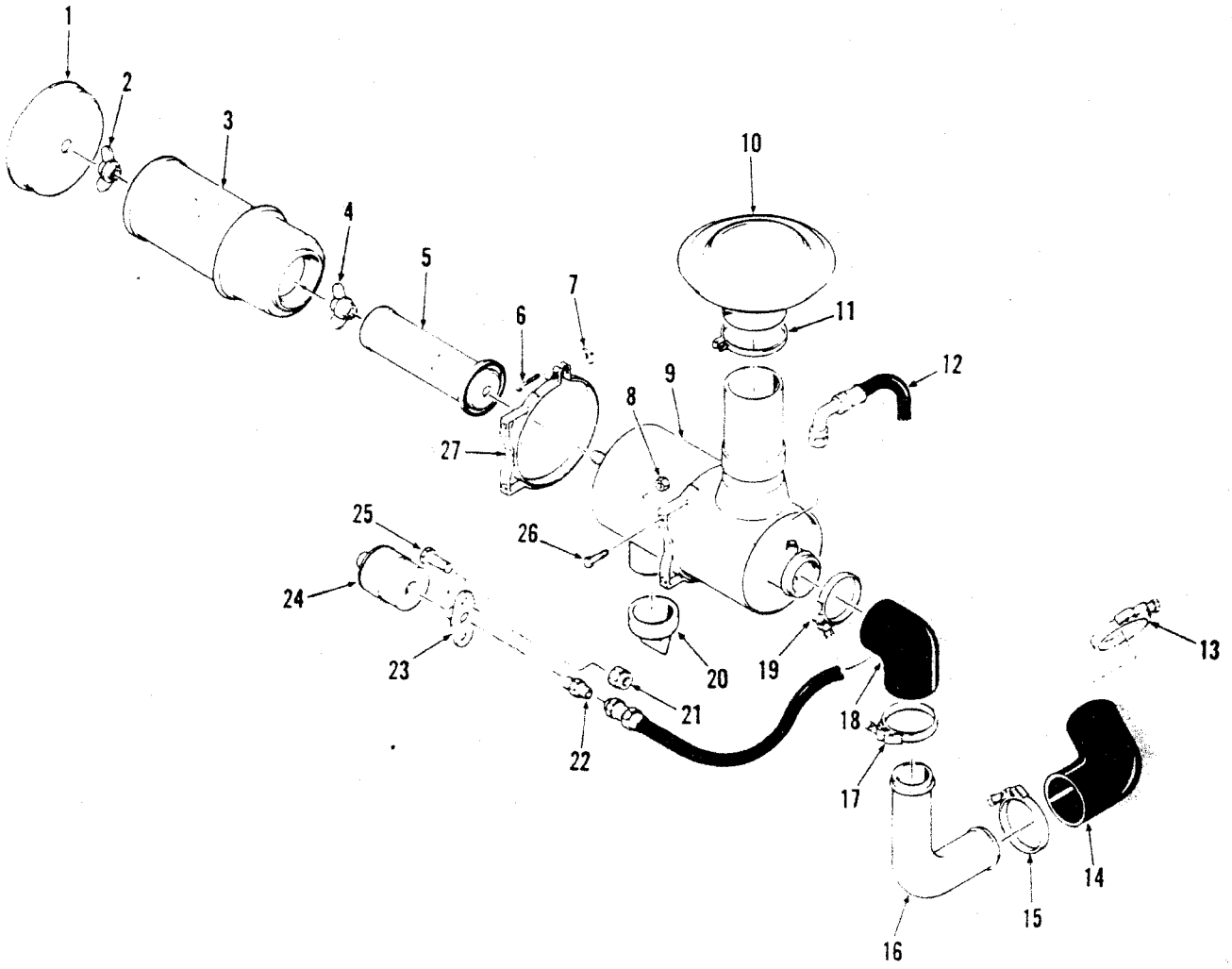

TS-15293

No.	Part No.	Qty.	Description
1	961002	1	Cover
2	3291290	1	Nut
3	961000	1	Element
4	3291290	1	Nut
5	961001	1	Element
6	4G524	2	Screw
7	24D5	2	Nut
8	60D6	4	Nut
9	[2]2516429	1	Air cleaner assy
10	[3]1642530	1	Cap
11	[4]———	1	Clamp
12	1525588	1	Hose
13	43H1319	1	Clamp
14	2512354	1	Elbow

No.	Part No.	Qty.	Description
15	545153	1	Clamp
16	2512362	1	Tube
17	43H1350	1	Clamp
18	2512351	1	Elbow
19	539042	1	Clamp
20	3739636	1	Valve
21	60D4	2	Nut
22	32F1	1	Adaptor
23	1901972	1	Flange
24	1529625	1	Service indicator
25	18C412	2	Bolt
26	18C616	4	Bolt
27	[5]5205303	1	Clamp

[2]Inc. 1→5, 20
[3]Inc. 11
[4]See 10
[5]Inc. 6, 7

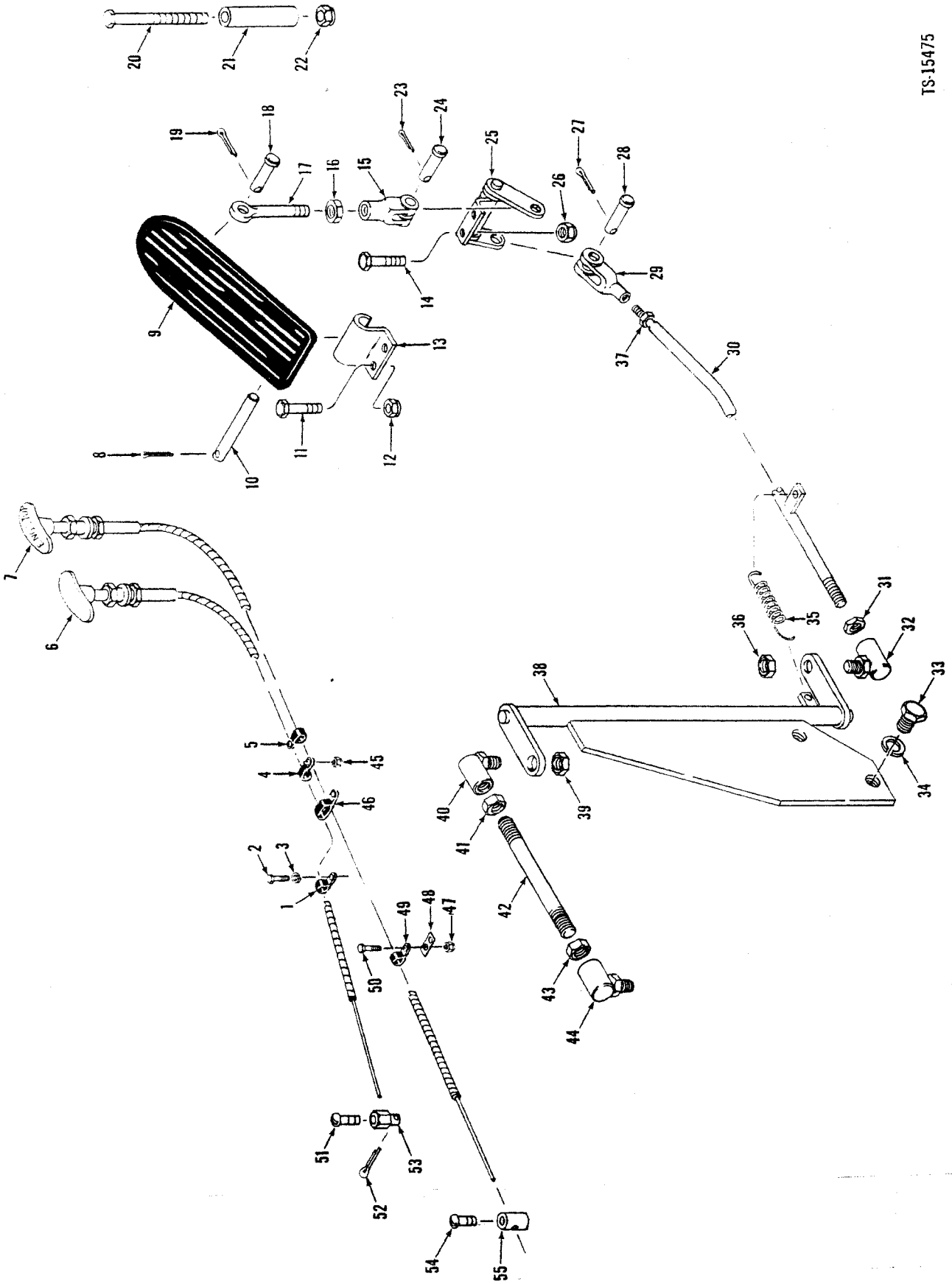
TS-15475

No.	Part No.	Qty.	Description
1	30H16	1	Clip
2	17C612	1	Bolt
3	59D6	1	Nut
4	30H16	1	Clip
5	[5]30H16	1	Clip
6	1520193	1	Cable
7	[5]1520190	1	Cable
8	1F316	1	Cotter pin
9	623829	1	Pedal
10	623762	1	Pin
11	18C412	2	Bolt
12	86D4	2	Nut
13	1518447	1	Bracket
14	18C412	2	Bolt
15	2J4200	1	Clevis
16	8D04	1	Nut
17	[2]2516722	1	Rod
18	4F04051	1	Pin
19	1F207	1	Cotter pin
20	18C444	1	Bolt
21	2515734	1	Spacer
22	86D4	1	Nut
23	1F207	1	Cotter pin
24	4F04051	1	Pin
25	2516721	1	Bellcrank assy
26	86D4	2	Nut
27	1F207	1	Cotter pin
28	4F04051	1	Pin
29	2J4200	1	Clevis
30	[3]2521629	1	Rod
31	8D5	1	Nut
32	2520346	1	Ball joint
33	17C824	2	Bolt
34	4E8	2	Washer
35	551014	1	Spring
36	60D5	1	Nut
37	8D4	1	Nut
38	2518181	1	Bellcrank assy
39	60D5	2	Nut
40	2520346	1	Ball joint
41	8D5	1	Nut
42	[4]2518180	1	Rod
43	8D5	1	Nut
44	2520346	1	Ball joint
45	59D6	1	Nut
46	[5]31H12	1	Clip
47	[5]59D6	1	Nut
48	[5]570832	1	Plate
49	[5]30H16	1	Clip
50	[5]17C612	1	Bolt
51	86G1008	1	Screw
52	1F208	1	Cotter pin
53	1523209	1	Connector
54	[5]85G806	1	Screw
55	[5]1523210	1	Connector

[2]Inc. 16
[3]Inc. 29, 31, 32, 36
[4]Inc. 40, 41, 43, 44
[5]473A101CB & → 473A208CB, 472A101CB → 472A164CB

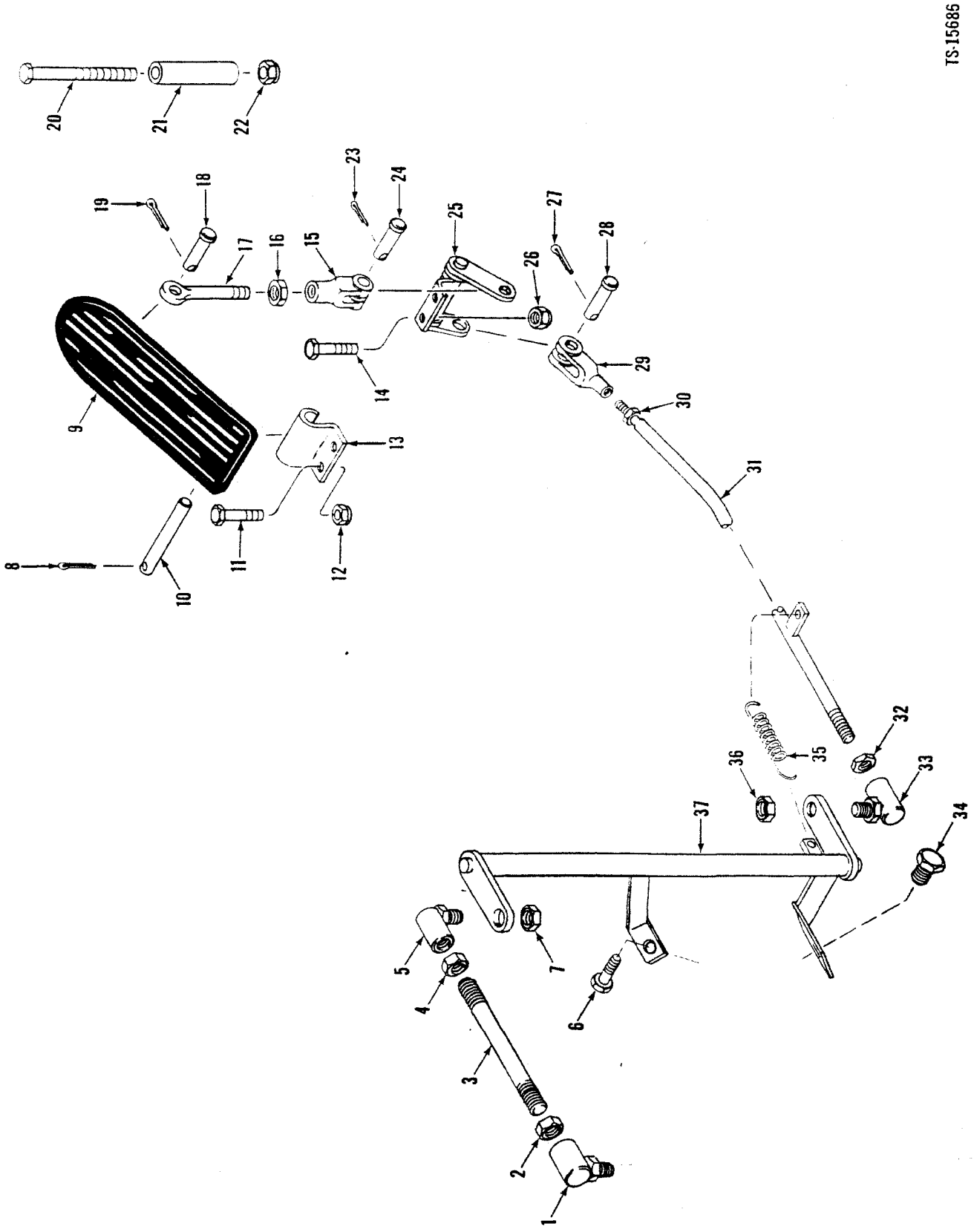
TS-15686
1
2
3
4
5
6
7
8
9
10
11
12
13
14
15
16
17
18
19
20
21
22
23
24
25
26
27
28
29
30
31
32
33
34
35
36
37

No.	Part No.	Qty.	Description
1	2523473	1	Ball joint
2	8D5	1	Nut
3	[2]2528401	1	Rod assy
4	8D5	1	Nut
5	2523473	1	Ball joint
6	17C712	1	Bolt
7	86D5	2	Nut
8	1F316	1	Cotter pin
9	623829	1	Pedal
10	623762	1	Pin
11	18C412	2	Bolt
12	86D4	2	Nut
13	1544695	1	Bracket
14	18C412	2	Bolt
15	2J4200	1	Clevis
16	8D4	1	Nut
17	2516722	1	Rod
18	4F4051	1	Pin
19	1F208	1	Cotter pin
20	18C444	1	Bolt
21	2515734	1	Spacer
22	86D4	1	Nut
23	4F4051	1	Pin
24	1F208	1	Cotter pin
25	2516721	1	Bellcrank
26	86D4	1	Nut
27	1F208	1	Cotter pin
28	4F4051	1	Pin
29	1J428	1	Clevis
30	8D5	1	Nut
31	[3]2524693	1	Rod
32	8D5	1	Nut
33	2523473	1	Ball joint
34	17C816	1	Bolt
35	551014	1	Spring
36	86D5	1	Nut
37	2528402	1	Bellcrank assy

[2]Inc. 1, 2, 4, 5
[3]Inc. 29, 30

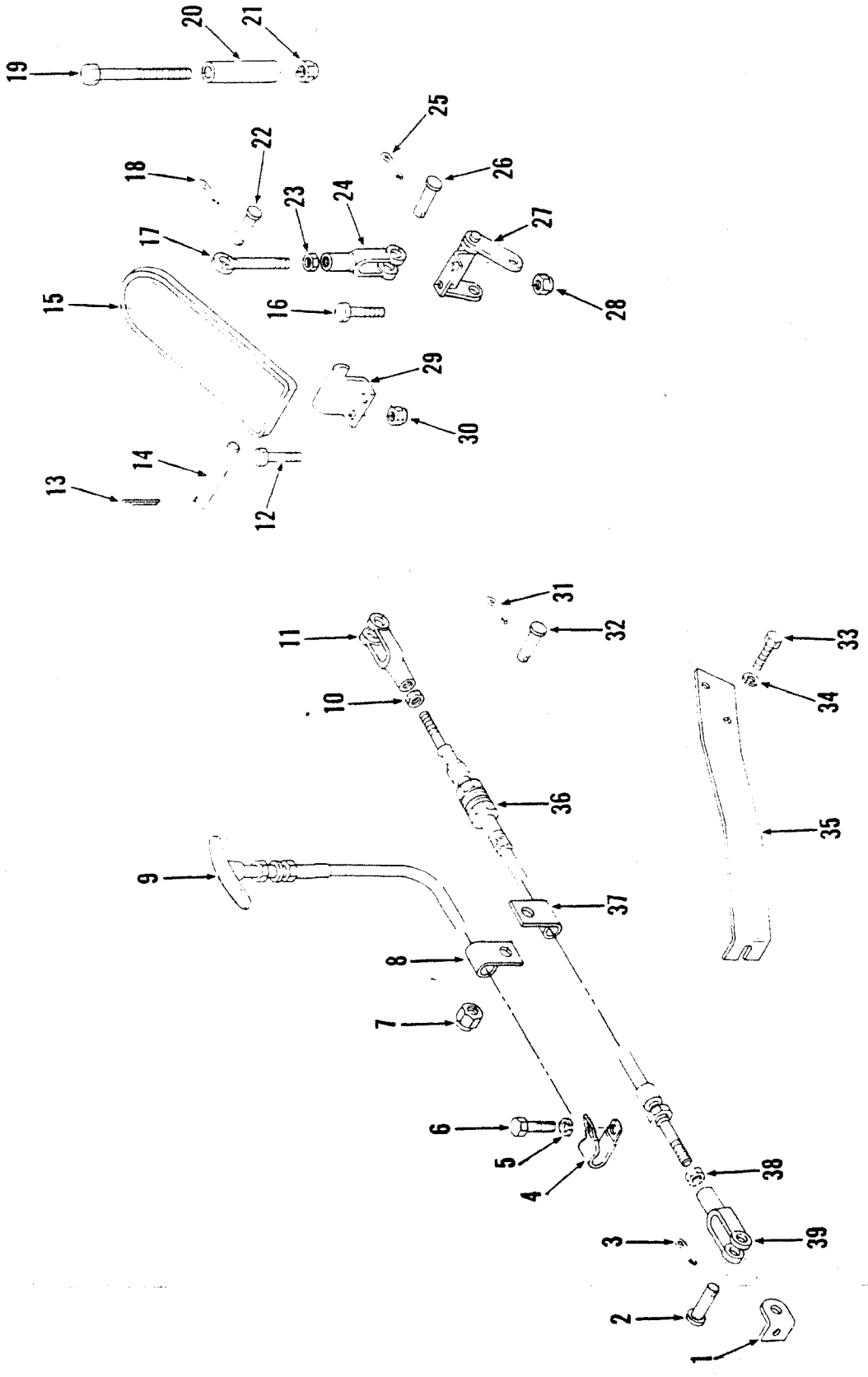
TS-20236
19
20
21
18
22
23
24
25
26
27
17
15
16
28
29
30
14
13
12
31
32
11
10
33
34
36
35
9
37
8
7
6
5
4
38
3
39
2
1

No.	Part No.	Qty.	Description
1	2522400	1	Clamp
2	4F4051	1	Pin
3	1F207	1	Pin cotter
4	30H15	1	Clip
5	4E5	1	Lockwasher
6	18C508	1	Bolt
7	59D6	1	Nut
8	30H16	1	Clip
9	1520193	1	Cable
10	14D10	1	Nut
11	549541	1	Clevis
12	18C412	2	Bolt
13	1F316	1	Pin cotter
14	623762	1	Pin
15	623829	1	Pedal
16	18C412	2	Bolt
17	[2]2516722	1	Rod assy
18	1F207	1	Pin cotter
19	18C444	1	Bolt
20	2515734	1	Spacer
21	60D4	1	Nut
22	4F4051	1	Pin
23	8D4	1	Nut
24	2J4200	1	Clevis
25	1F207	1	Pin cotter
26	4F4051	1	Pin
27	2516721	1	Bellcrank assy
28	60D4	2	Nut
29	1544695	1	Bracket
30	60D4	2	Nut
31	1F207	1	Pin cotter
32	4F4051	1	Pin
33	17C820	2	Bolt
34	4E8	2	Lockwasher
35	2521969	1	Bracket
36	2512825	1	Cable
37	30H16	1	Clip
38	14D10	1	Nut
39	549541	1	Clevis

[2]Inc. 23, 24

TS-15182

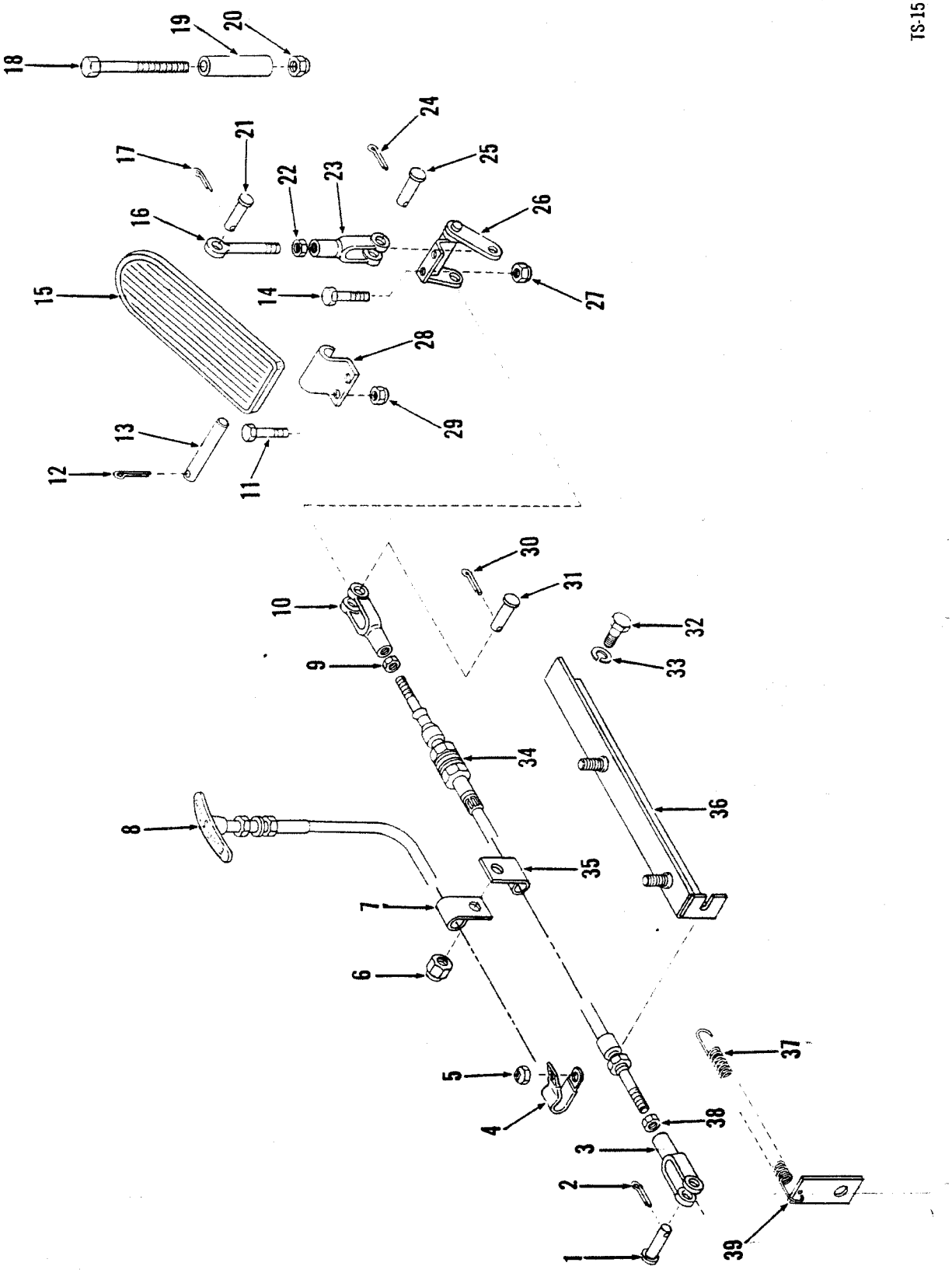
18
19
20
17
21
22
23
24
25
16
26
15
14
27
28
29
13
12
11
30
31
10
32
33
9
34
8
36
35
7
6
5
37
4
38
3
2
1
39

CLARK

No.	Part No.	Qty.	Description
1	4F4051	1	Pin
2	1F207	1	Pin cotter
3	549541	1	Clevis
4	30H16	1	Clip
5	59D6	1	Nut
6	59D6	1	Nut
7	30H16	1	Clip
8	1520193	1	Cable
9	14D10	1	Nut
10	549541	1	Clevis
11	18C412	2	Bolt
12	1F316	1	Pin cotter
13	623762	1	Pin
14	18C412	2	Bolt
15	623829	1	Pedal
16	[2]2516722	1	Rod assy
17	1F207	1	Pin cotter
18	18C444	1	Bolt
19	2515734	1	Spacer
20	60D4	1	Nut
21	4F4051	1	Pin
22	8D4	1	Nut
23	2J4200	1	Clevis
24	1F207	1	Pin cotter
25	4F4051	1	Pin
26	2516721	1	Bellcrank assy
27	60D4	2	Nut
28	1544695	1	Bracket
29	60D4	2	Nut
30	1F207	1	Pin cotter
31	4F4051	1	Pin
32	17C816	2	Bolt
33	4E8	2	Lockwasher
34	2512825	1	Cable
35	30H16	1	Clip
36	2513418	1	Bracket assy
37	551014	1	Spring
38	14D10	1	Nut
39	2510390	1	Spring clip

[2]Inc. 22, 23

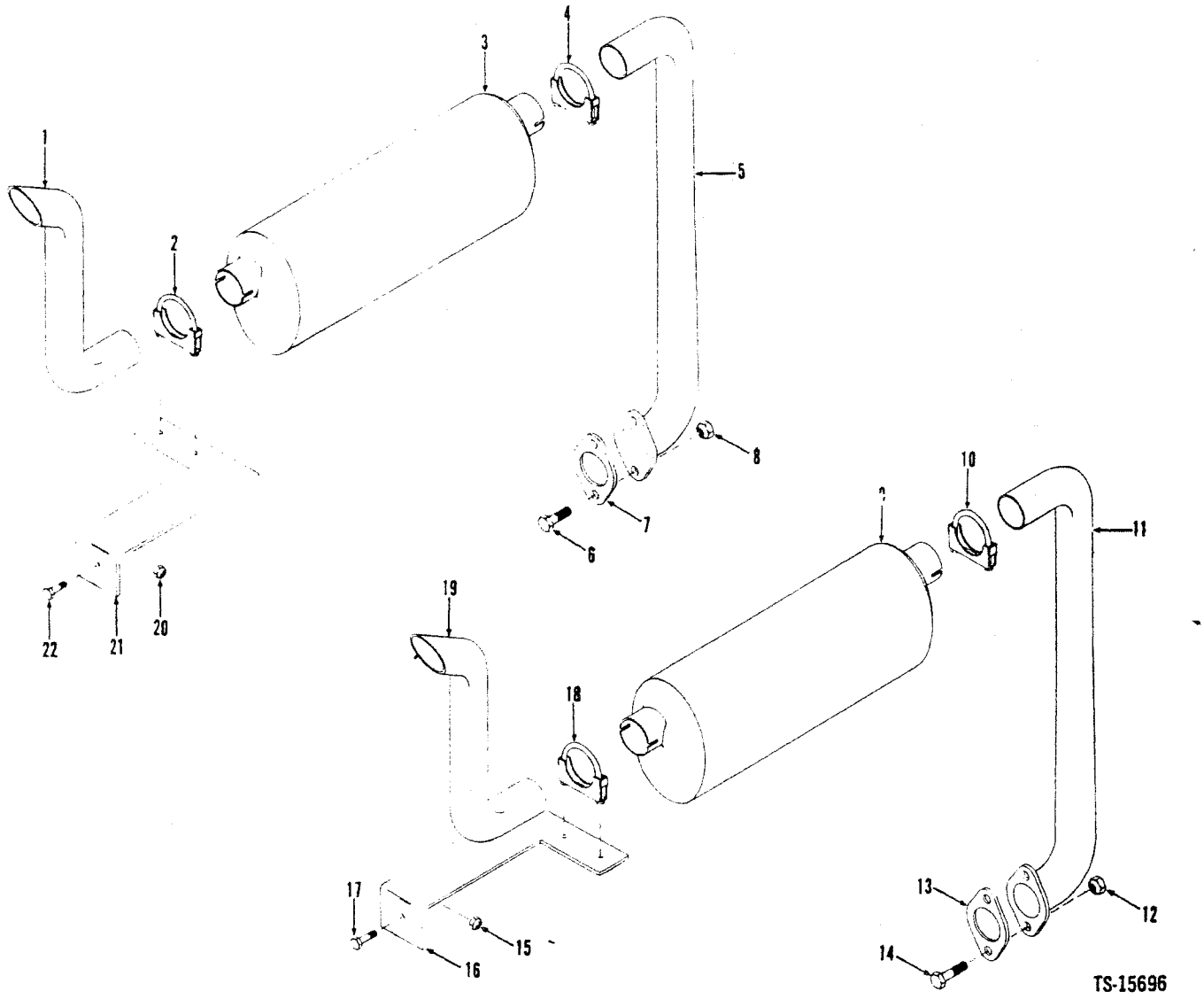

No.	Part No.	Qty.	Description
1	2519001	1	Tail pipe
2	550652	1	Clamp
3	2528429	1	Muffler
4	507068	1	Clamp
5	2519002	1	Pipe
6	17C624	2	Bolt
7	1990274	1	Gasket
8	15D6	2	Nut
9	2528429	1	Muffler
10	507068	1	Clamp
11	2519002	1	Pipe
12	15D6	2	Nut

No.	Part No.	Qty.	Description
13	1990274	1	Gasket
14	17C624	2	Bolt
15	59D8	1	Nut
16	[2]2518894	1	Bracket
16A	[3]2531140	1	Bracket
17	17C820	1	Bolt
18	550652	1	Clamp
19	2519001	1	Tail pipe
20	59D8	1	Nut
21	[2]2518895	1	Bracket
21A	[3]2531141	1	Bracket
22	17C820	1	Bolt

[2]481A
[3]481B

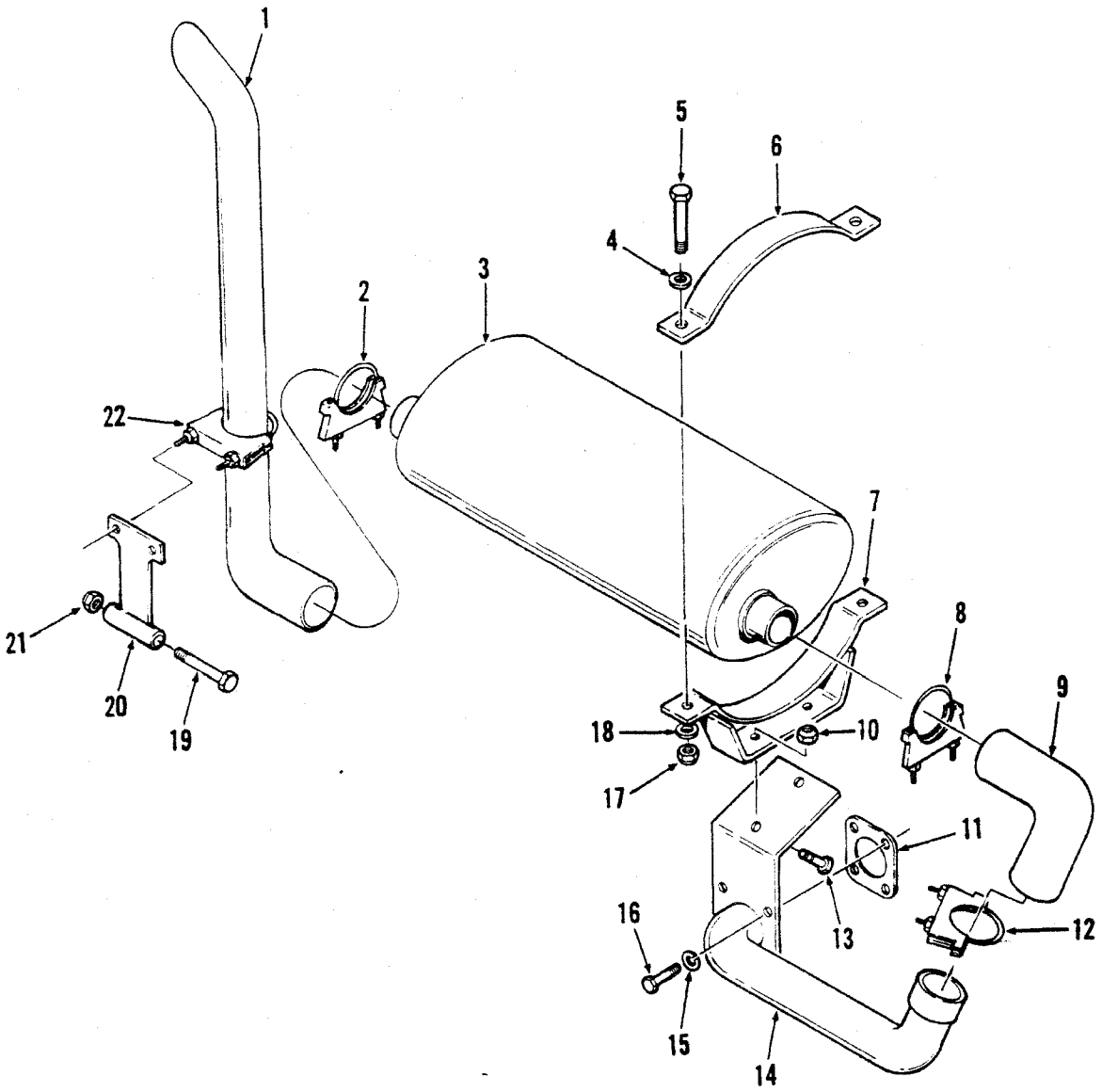

TS-20078

No.	Part No.	Qty.	Description
1	2522681	1	Tail pipe
2	507069	1	Clamp
3	2510883	1	Muffler
4	27E6	2	Washer
5	17C672	2	Bolt
6	2512288	1	Bracket
7	2516456	1	Bracket
8	507069	1	Clamp
9	2512361	1	Pipe
10	59D6	2	Nut
11	[2]1990270	1	Gasket
11A	†[3]5290078	1	Gasket
12	507069	1	Clamp
13	17C620	2	Bolt
14	[2]2516848	1	Pipe
14A	†[3]2516453	1	Pipe
15	4E6	4	Washer
16	17C620	4	Bolt
17	59D6	2	Bolt
18	27E6	2	Washer
19	18C880	1	Bolt
20	2516496	1	Bracket
21	60D8	1	Nut
22	507069	1	Clamp

[2]35C
[3]45C

Engine Exhaust System — G.M. — 55C

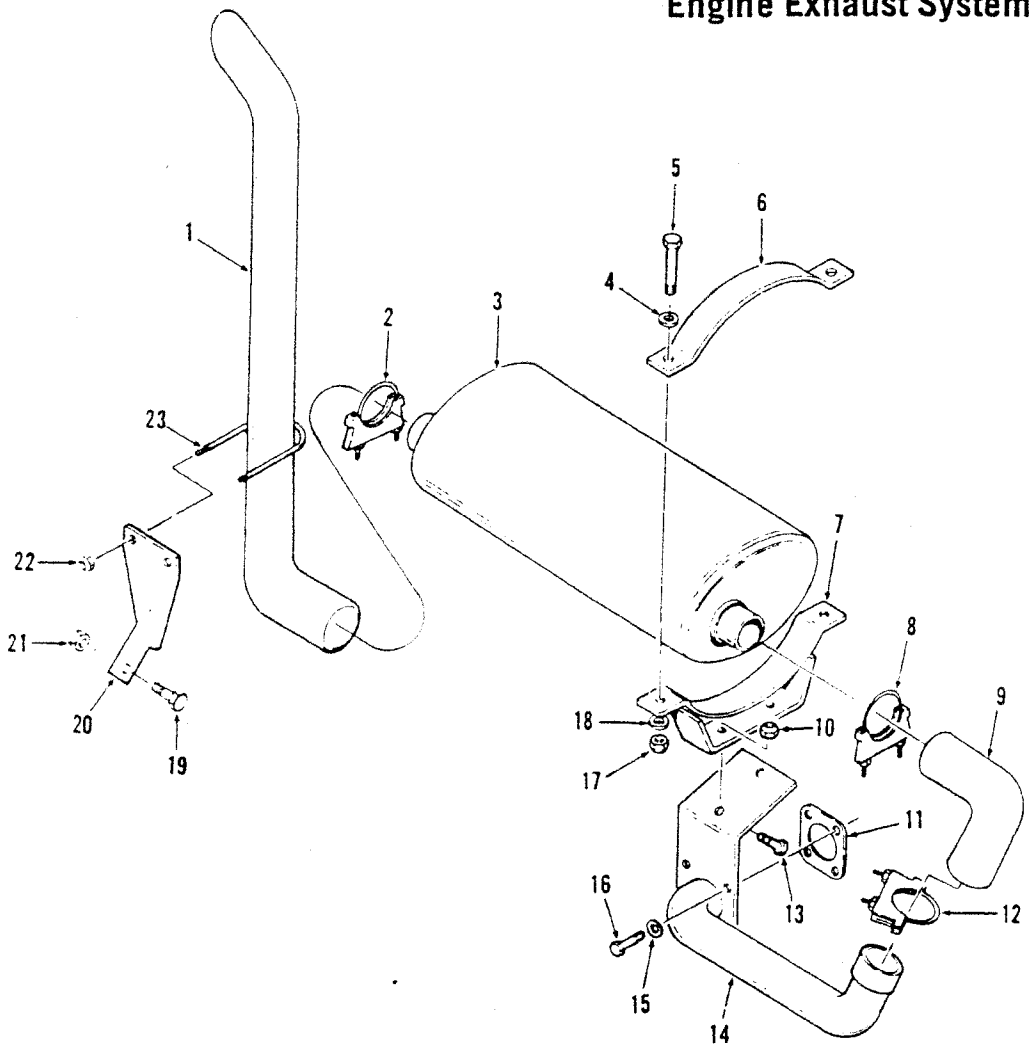

TS-15619

No.	Part No.	Qty.	Description
1	2526179	1	Tailpipe
2	507069	1	Clamp
3	[2]2510883	1	Muffler
3A	[3]2528407	1	Muffler
4	27E6	2	Washer
5	17C672	2	Bolt
6	2512288	1	Bracket
7	2516456	1	Bracket
8	507069	1	Clamp
9	2526738	1	Pipe
10	59D6	2	Nut
11	5290078	1	Gasket
12	507069	1	Clamp
13	17C620	2	Bolt
14	2526736	1	Pipe
15	27E6	4	Washer
16	17C620	4	Bolt
17	59D6	2	Bolt
18	27E6	2	Washer
19	17C820	1	Bolt
20	2526784	1	Bracket
21	59D8	1	Nut
22	30D6	2	Bolt
23	1506079	1	U-bolt

[2]480A
[3]480B

Engine Exhaust System – Perkins

CLARK

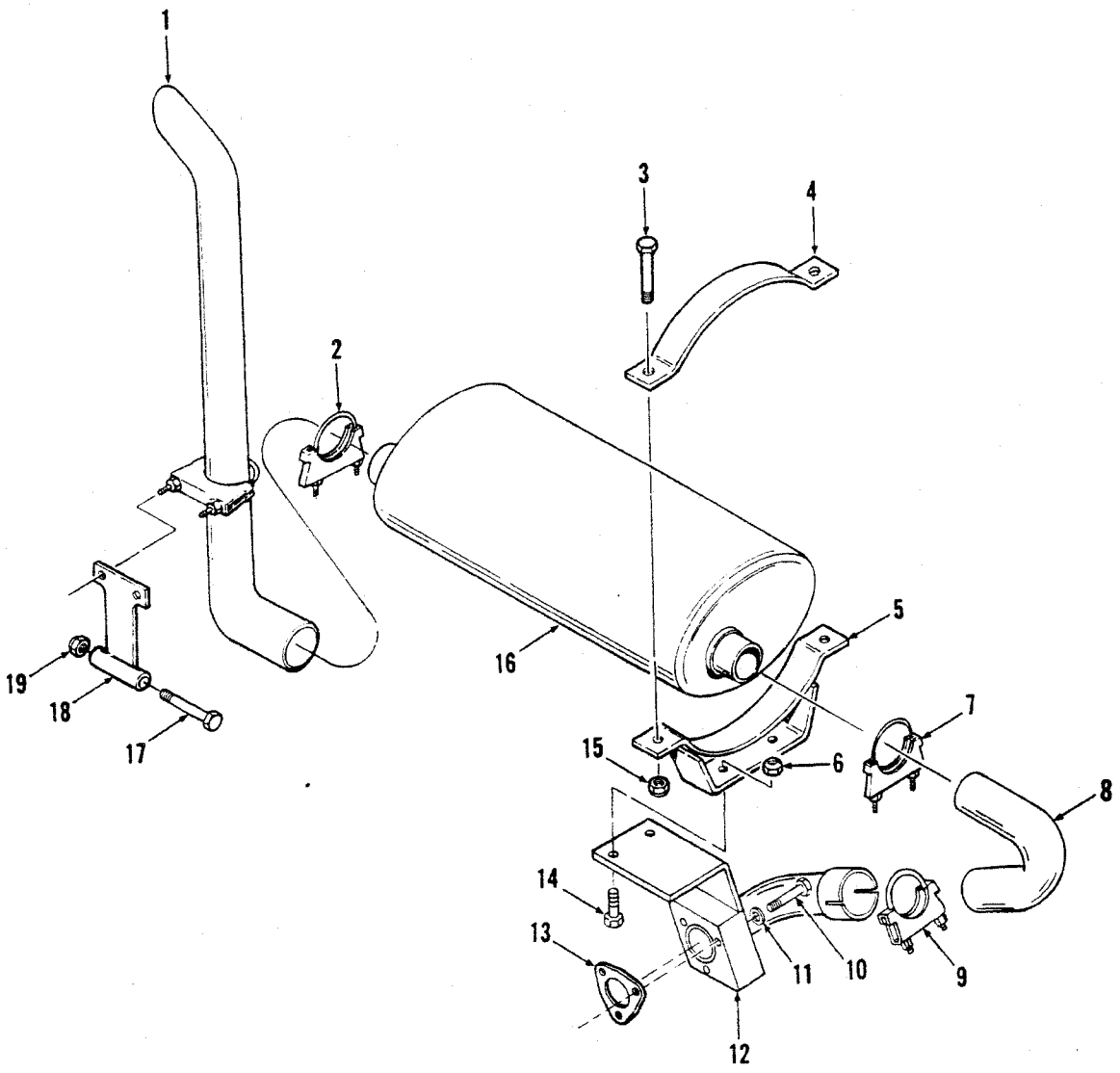

TS-20170

No.	Part No.	Qty.	Description
1	2522681	1	Tail pipe
2	507069	1	Clamp
3	17C672	2	Bolt
4	2512288	1	Bracket
5	2516456	1	Bracket
6	59D6	2	Nut
7	507069	1	Clamp
8	2520486	1	Pipe
9	507069	1	Clamp
10	[2]18C620	3	Bolt
10A	[3]3490186	3	Stud
10B	†[3]64D6	3	Nut

No.	Part No.	Qty.	Description
11	4E6	3	Washer
12	[2]2520599	1	Pipe
12A	†[3]2520483	1	Pipe
13	567258	1	Gasket
14	17C620	2	Bolt
15	59D6	2	Nut
16	2510883	1	Muffler
17	18C88D	1	Bolt
18	2516496	1	Bracket
19	60D8	1	Nut
20	507069	1	Clamp

[2]45C
[3]35C

Engine Oil By-Pass Filter

CLARK

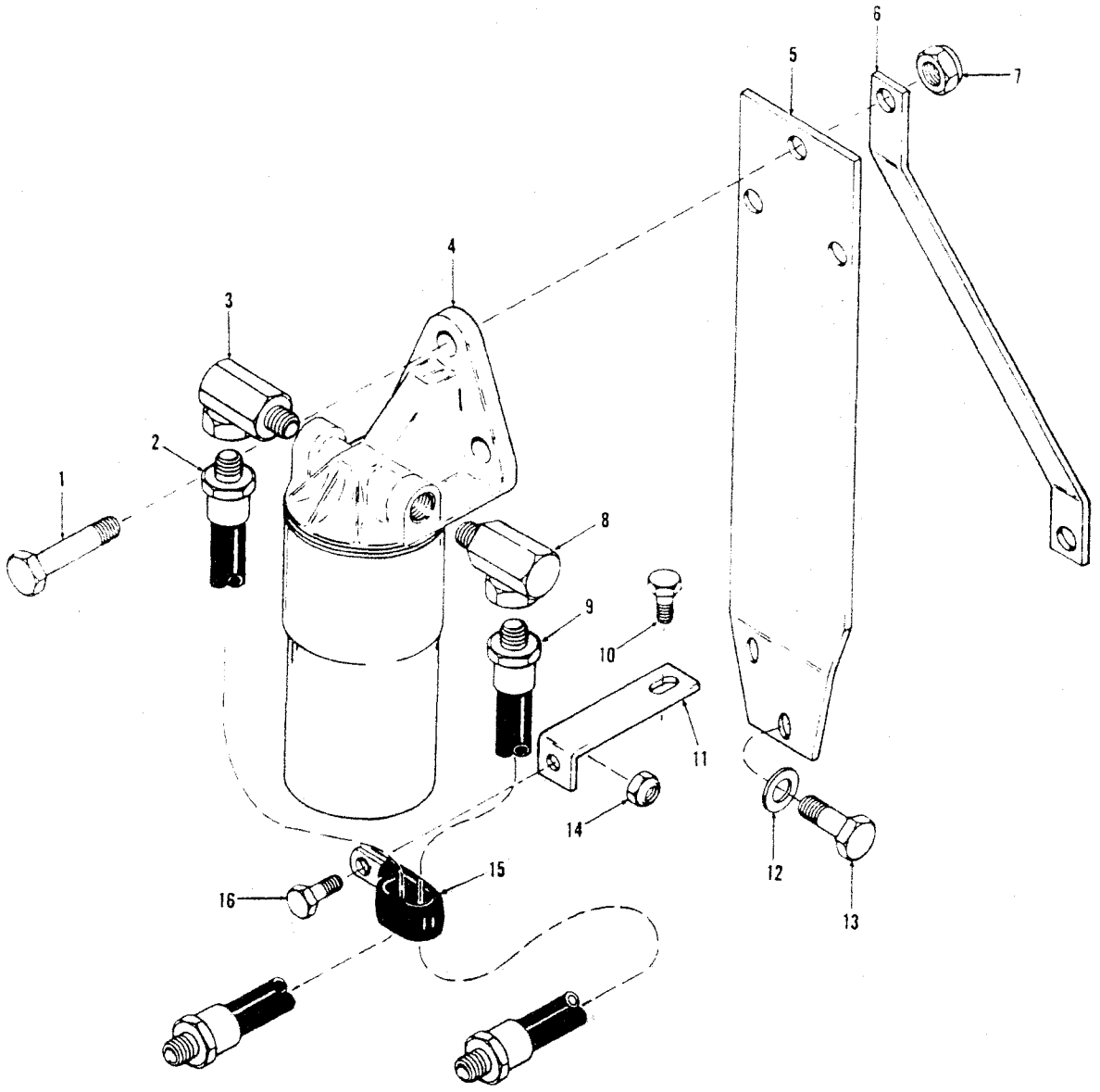

TS-15701

No.	Part No.	Qty.	Description
1	17C624	3	Bolt
1A	17C628	1	Bolt
2	2527026	1	Hose
3	31F3	1	Elbow
4	[2]———	1	Filter assy
5	2527017	1	Bracket
6	2527016	1	Bracket
7	5906	3	Nut
8	31F3	1	Elbow
9	541223	1	Hose
10	17C616	1	Bolt
11	2524686	1	Bracket
12	27E6	2	Washer
13	17C616	1	Bolt
14	5906	1	Nut
15	31H42	1	Clip
16	17C616	1	Bolt

[2]See Engine Manual

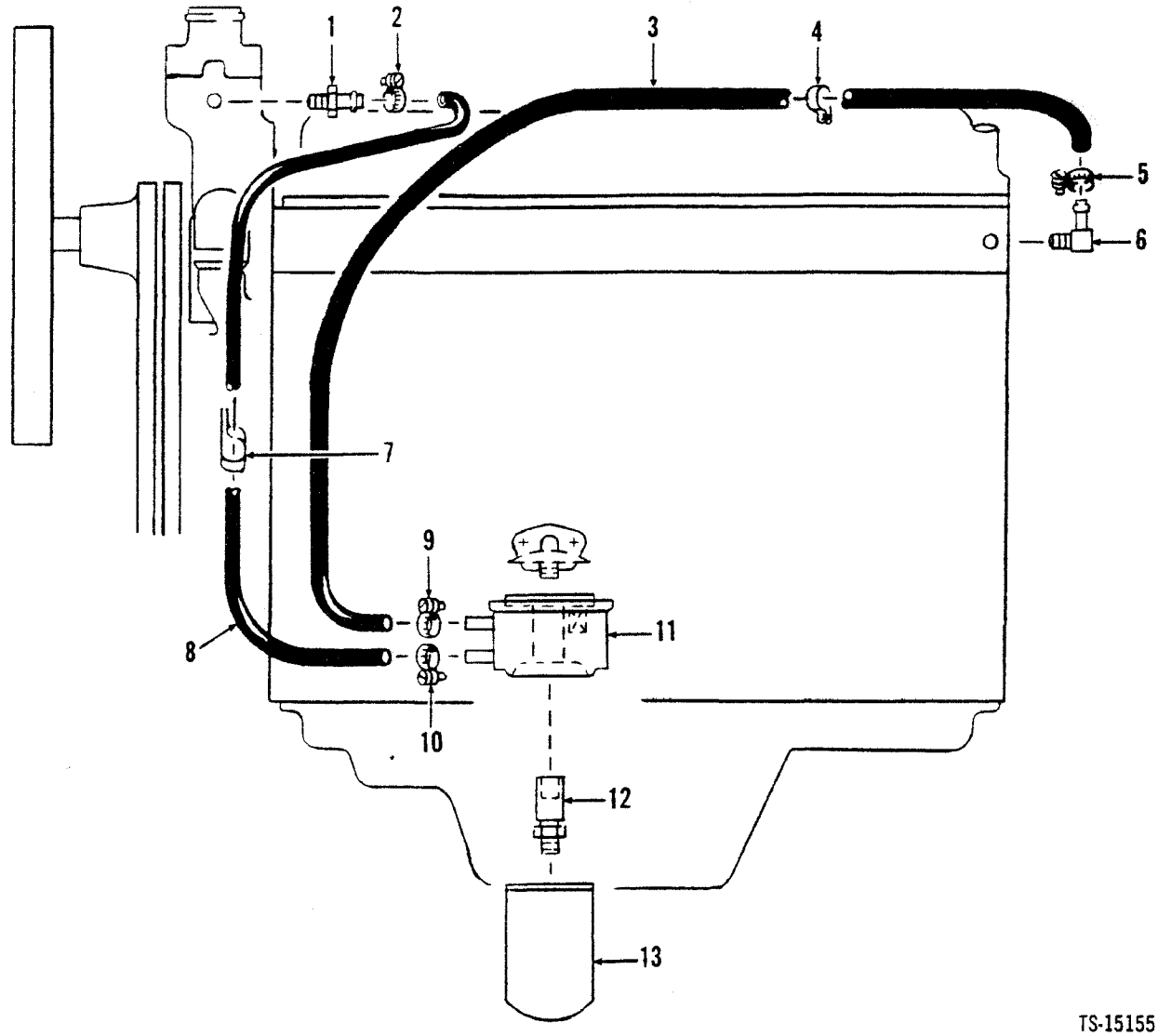

TS-15155

No.	Part No.	Qty.	Description
1	666867	1	Nipple
2	521874	1	Clamp
3	[2]1529688	1	Hose
4	30H50	1	Clip
5	521874	1	Clamp
6	666842	1	Elbow
7	31H46	1	Clip
8	[3]1529688	1	Hose
9	521874	1	Clamp
10	521874	1	Clamp
11	2342092	1	Oil cooler
12	2342091	1	Connector
13	[1]———	1	Oil filter

[1]See Index
[2]1321 mm (52.0 in.)
[3]660 mm (26.0 in.)

Engine Oil Cooler — Perkins — 45C

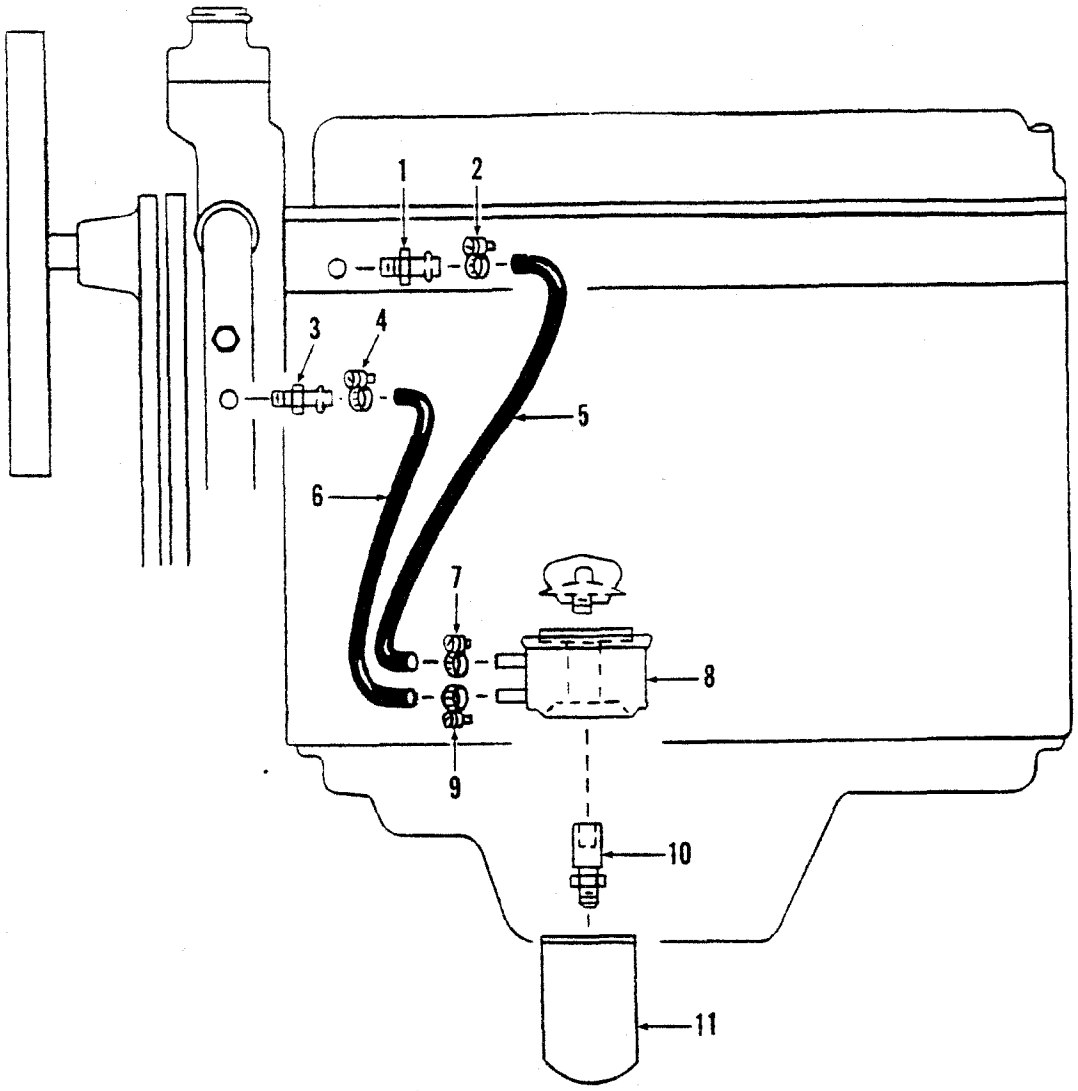

TS-15176

No.	Part No.	Qty.	Description
1	666867	1	Nipple
2	521874	1	Clamp
3	1316930	1	Elbow
4	521874	1	Clamp
5	[2]1529688	1	Hose
6	[3]1529688	1	Hose
7	521874	1	Clamp
8	2342092	1	Oil cooler
9	521874	1	Clamp
10	2342091	1	Connector
11	[1]———	1	Oil filter

[2]610 mm (24.0 in.)
[3]279 mm (11.0 in.)

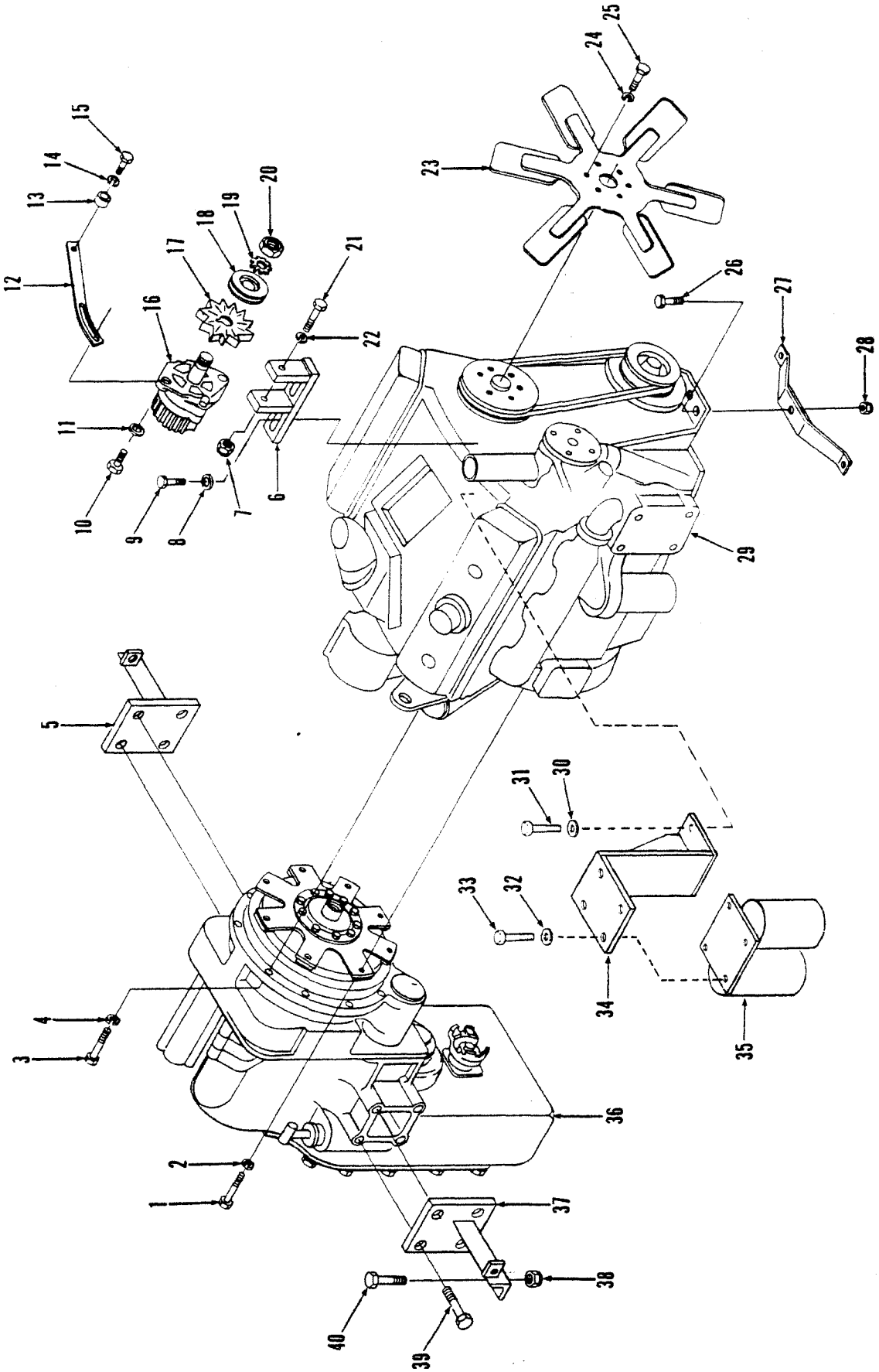
TS-20374
1
2
3
4
5
6
7
8
9
10
11
12
13
14
15
16
17
18
19
20
21
22
23
24
25
26
27
28
29
30
31
32
33
34
35
36
37
38
39
40

No.	Part No.	Qty.	Description
1	18C640	8	Bolt
2	4E6	8	Washer
3	17C624	11	Bolt
4	4E6	11	Washer
5	2511914	1	Mount trans
6	2524682	1	Bracket
7	59D6	1	Nut
8	27E6	2	Washer
9	17C620	2	Bolt
10	17C524	1	Bolt
11	2525070	1	Washer
12	2524694	1	Strap
13	652444	1	Spacer
14	27E6	1	Washer
15	17C616	1	Bolt
16	[2] [5]2519323	1	Alternator
16A	[6]2530104	1	Alternator
17	329884	1	Fan
18	557526	1	Pulley
19	[3]———	1	Washer
20	[3]———	1	Nut
21	17C656	1	Bolt
22	———	–	Omit
23	2525301	1	Fan
24	4E6	6	Washer
25	17C652	6	Bolt
26	17C1032	3	Bolt
27	2519000	1	Mount
28	59D10	3	Washer
29	[4]———	1	Engine
30	27E6	2	Washer
31	17C616	4	Bolt
32	27E6	4	Washer
33	17C616	2	Bolt
34	2527023	1	Bracket
35	[4]———	1	Fuel filter assy
36	[1]———	1	Transmission
37	2511914	1	Mount trans
38	59D8	4	Nut
39	17C1224	8	Bolt
40	17C824	4	Bolt

[1]See
[2]Inc. 19, 20
[3]See 16
[4]See Cummins Engine Manual
[5]481A
[6]481B

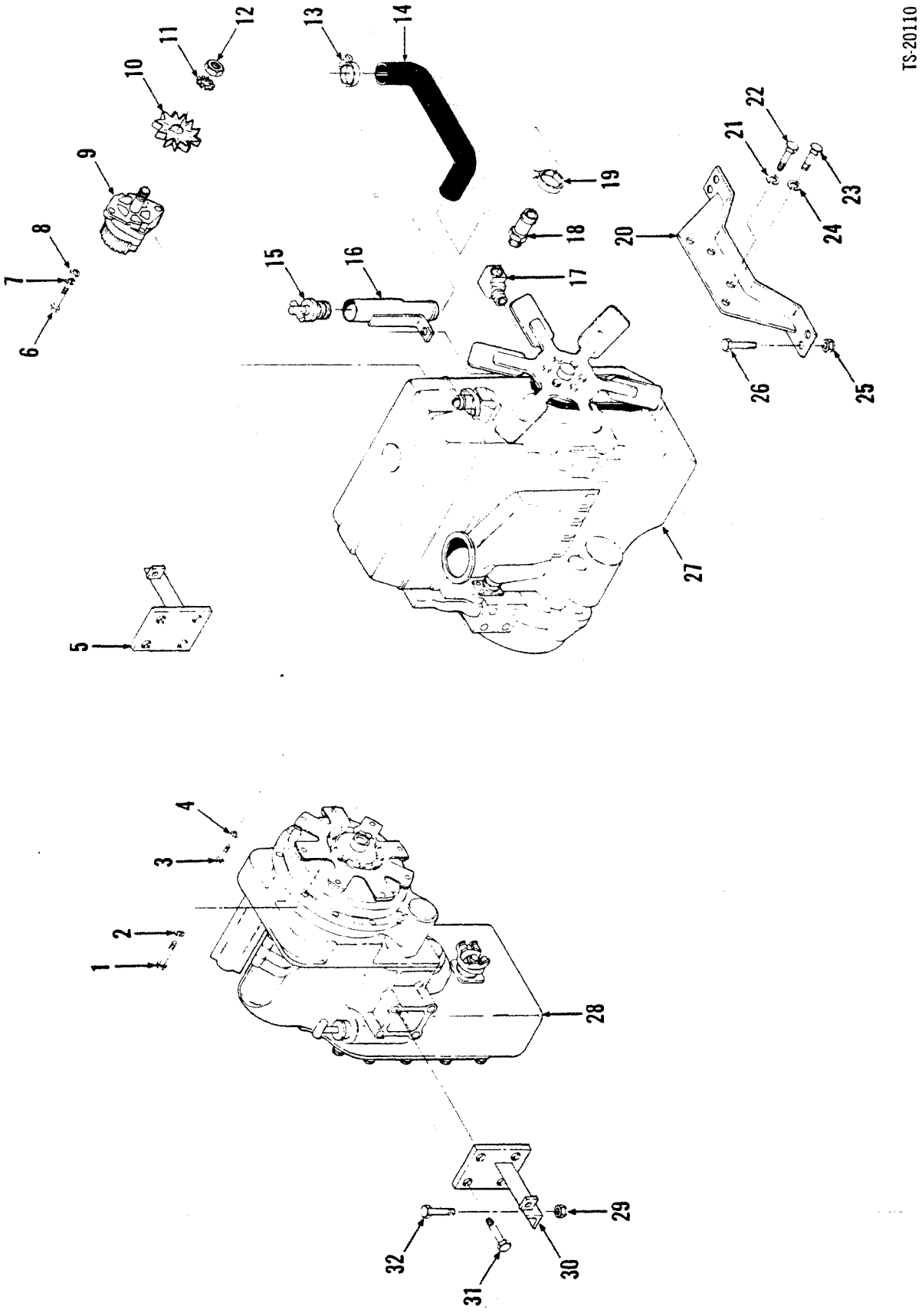
TS-20110
1
2
3
4
5
6
7
8
9
10
11
12
13
14
15
16
17
18
19
20
21
22
23
24
25
26
27
28
29
30
31
32

Engine & Transmission Mounting – G.M. – 35C, 45C

CLARK

No.	Part No.	Qty.	Description
1	17C624	11	Bolt
2	4E6	11	Washer
3	18C628	8	Bolt
4	4E6	8	Washer
5	2511914	1	Mount
6	17C516	1	Bolt
7	4E5	1	Washer
8	[4]25E16	1	Washer
8A	[5]2525070	1	Washer
9	[3,6]2519323	1	Alternator
9A	[7]2530104	1	Alternator
10	329884	1	Fan
11	[3]-----	1	Washer
12	[3]-----	1	Nut
13	1545186	1	Clamp
14	1577541	1	Hose
15	2505713	1	Cap
16	2520419	1	Tube
17	29F3	1	Elbow
18	1303489	1	Fitting
19	[4]1545186	1	Clamp
19A	[5]42H20	1	Clamp
20	2516460	1	Mount
21	[4]4E7	2	Washer
21A	[5]2524286	2	Washer
22	17C720	2	Bolt
23	17C656	2	Bolt
24	[4]4E6	2	Washer
24A	[5]27E6	2	Washer
25	[4]60D8	4	Nut
25A	[5]59D8	4	Nut
26	[4]18C824	4	Bolt
26A	[5]17C824	4	Bolt
27	[3]-----	1	Engine
28	[3]-----	1	Transmission
29	60D8	4	Nut
29A	59D8	4	Nut
30	2511914	1	Mount
31	17C1224	8	Bolt
32	[4]18C824	4	Bolt
32A	[5]17C824	4	Bolt

[1]See Index
[2]Inc. 11, 12
[3]See G.M. Engine Manual
[4]35C, 45C
[5]55C
[6]480A101CB→132CB
[7]480A133CB & →, 480B

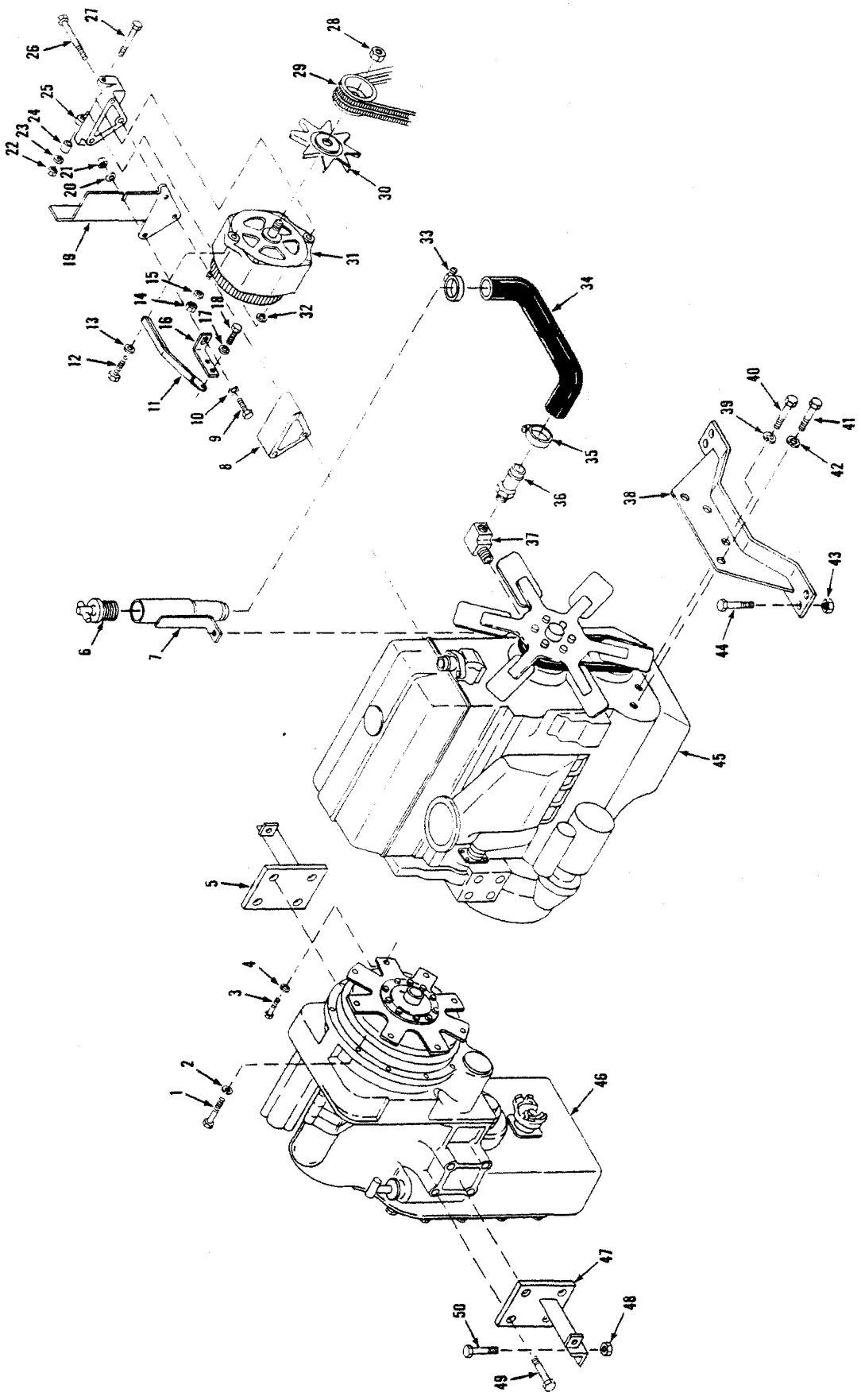
TS-20684

Engine & Transmission Mountings – G.M. – 55C

CLARK

No.	Part No.	Qty.	Description
1	17C624	11	Bolt
2	4E6	11	Washer
3	18C628	8	Bolt
4	4E6	8	Washer
5	2511914	1	Mount
6	2505713	1	Cap
7	2520419	1	Tube
8	§[2]———	–	Bracket
9	17C620	1	Bolt
10	27E6	1	Washer
11	2524426	1	Strap
12	17C620	1	Bolt
13	4E8	1	Washer
14	12D12	1	Nut
15	12E12	1	Washer
16	§[2]———	–	Bracket
17	27E6	1	Washer
18	17C620	1	Bolt
19	§[2]———	–	Shield
20	27E6	1	Washer
21	85D6	1	Nut
22	85D6	1	Nut
23	27E6	2	Washer
24	§[2]———	–	Spacer
25	§[2]———	–	Bracket
26	§[2]———	–	Bolt
27	17C664	1	Bolt
28	§[2]———	–	Nut
29	[3]———	–	Alternator belts
30	329884	1	Alternator fan
31	2530104	1	Alternator
32	27E6	1	Washer
33	42H20	1	Clamp
34	1577541	1	Hose
35	42H20	1	Clamp
36	1303489	1	Nipple
37	29F3	1	Elbow
38	2516460	1	Mount
39	27E6	2	Washer
40	33C656	2	Bolt
41	33C720	2	Bolt
42	27E6	2	Washer
43	85D8	4	Nut
44	17C824	4	Bolt
45	§[2]———	–	Engine
46	[1]———	–	Transmission

[2]See Detroit Engine Manual
[3]See Engine Accessories

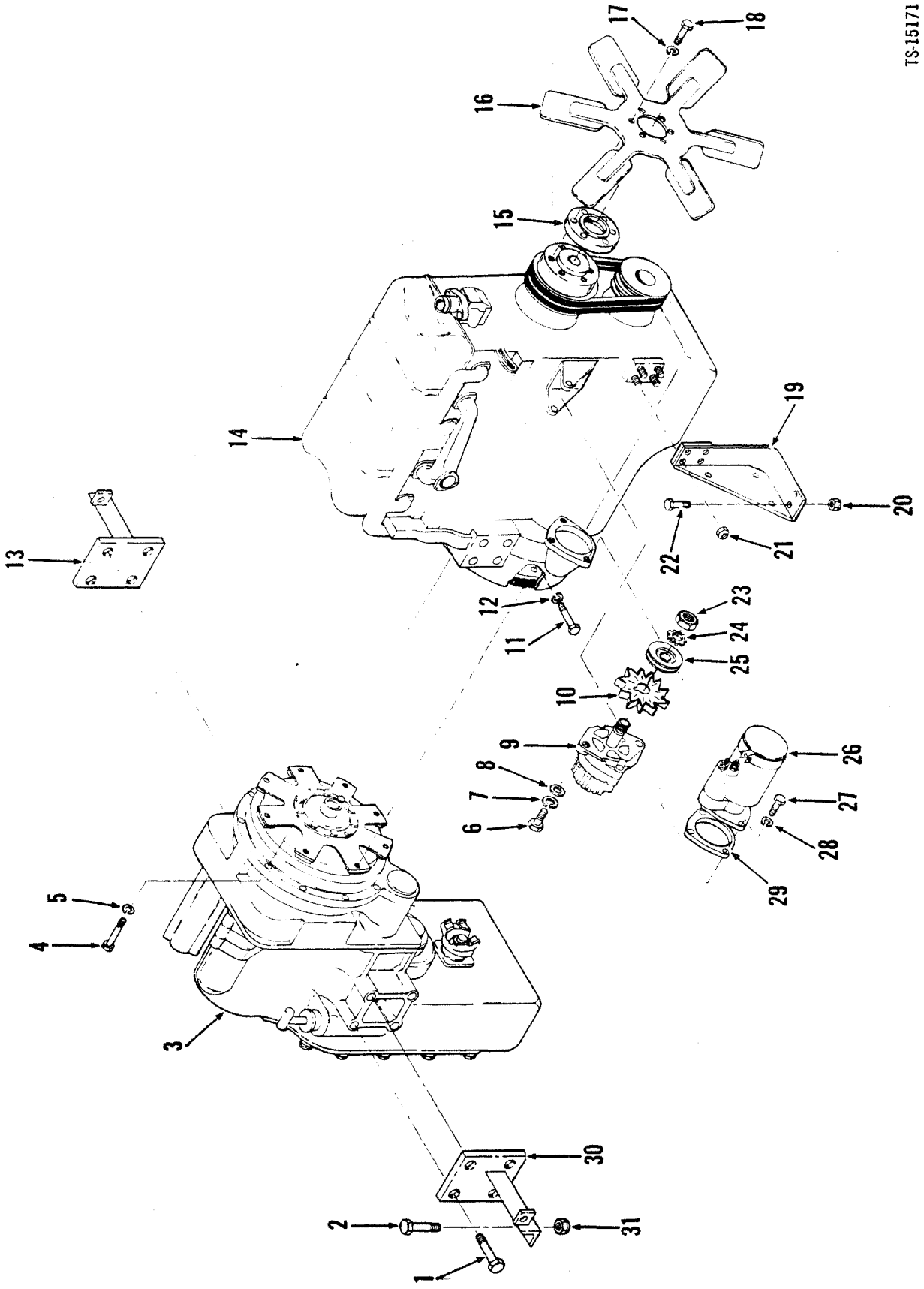
TS-15171
1
2
3
4
5
6
7
8
9
10
11
12
13
14
15
16
17
18
19
20
21
22
23
24
25
26
27
28
29
30
31

Engine & Transmission Mountings – Perkins

CLARK

No.	Part No.	Qty.	Description
1	17C1224	8	Bolt
2	18C824	4	Bolt
3	[1]———	1	Transmission
4	17C624	11	Bolt
5	4E6	11	Lockwasher
6	17C516	1	Bolt
7	4E5	1	Lockwasher
8	25E16	1	Washer
9	[2]2519323	1	Alternator
10	329884	1	Fan alternator
11	18C628	8	Bolt
12	4E6	8	Lockwasher
13	2511914	1	Mount transm
14	[4]———	1	Engine
15	2514461	1	Spacer
16	[1]———	1	Fan
17	4E6	6	Lockwasher
18	18C648	6	Bolt
19	2511913	2	Mount engine
20	60D8	4	Nut
21	60D7	8	Nut
22	18C824	8	Bolt
23	[3]———	1	Nut
24	[3]———	1	Lockwasher
25	6519315	1	Pulley
26	1767120	1	Starter motor
27	17C632	3	Bolt
28	4E6	3	Lockwasher
29	6515772	1	Adapter
30	2511914	1	Mount transm
31	60D8	4	Nut

[1]See Index
[2]Inc. 23, 24
[3]See 9
[4]See Perkins engine manual

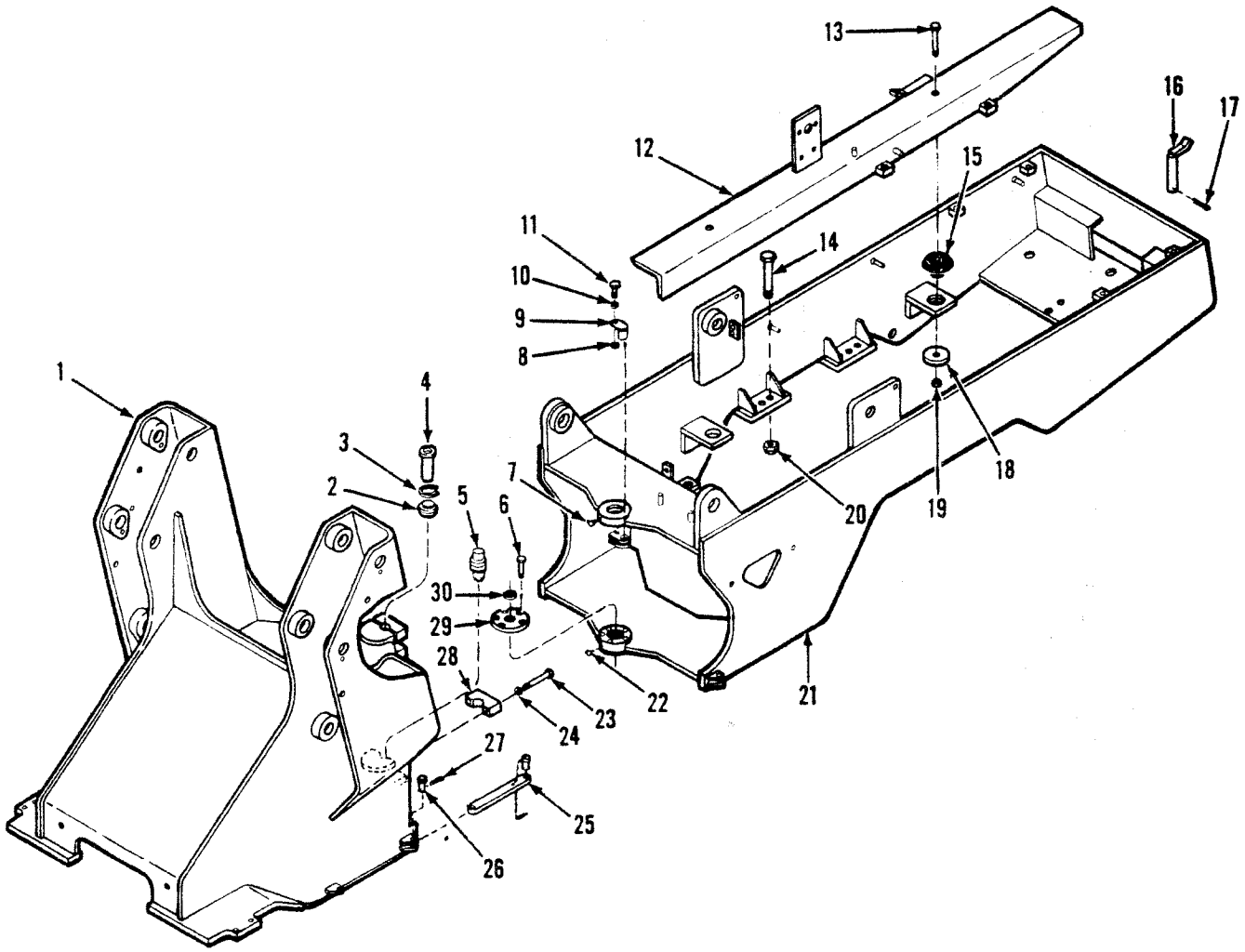

TS-21519

No.	Part No.	Qty.	Description
1	2517689	1	Frame front
2	1573309	1	Bushing
3	660883	1	Snap ring
4	2529486	1	Pin
5	2533549	1	Pin
6	34C820	10	Bolt
7	12H15	1	Grease fitting
8	2512036	4	Spacer
9	2512050	4	Pin
10	27E6	4	Washer
11	18C620	4	Bolt
12	2512543	1	Angle
12A	2512542	1	Angle
13	34C1264	4	Bolt
14	18C12104	8	Bolt
15	554686	4	Mount

[2]458A117CB & →, 459A139CB & →, 472A193CB & →, 473A249CB & →

No.	Part No.	Qty.	Description
16	2536534	1	Pin
17	1318238	1	Cotter pin
18	2503001	4	Washer
19	60D12	4	Nut
20	60D12	8	Nut
21	2517646	1	Frame rear
22	12H15	2	Grease fitting
23	34C1264	8	Bolt
24	1535626	8	Washer
25	[2]2525401	1	Safety link
26	[2]2F16240	1	Pin
27	[2]1F528	1	Cotter pin
28	2522386	4	Cap
29	2522385	2	Cap
30	2511956	2	Seal

Frame Front & Rear – 55C

CLARK

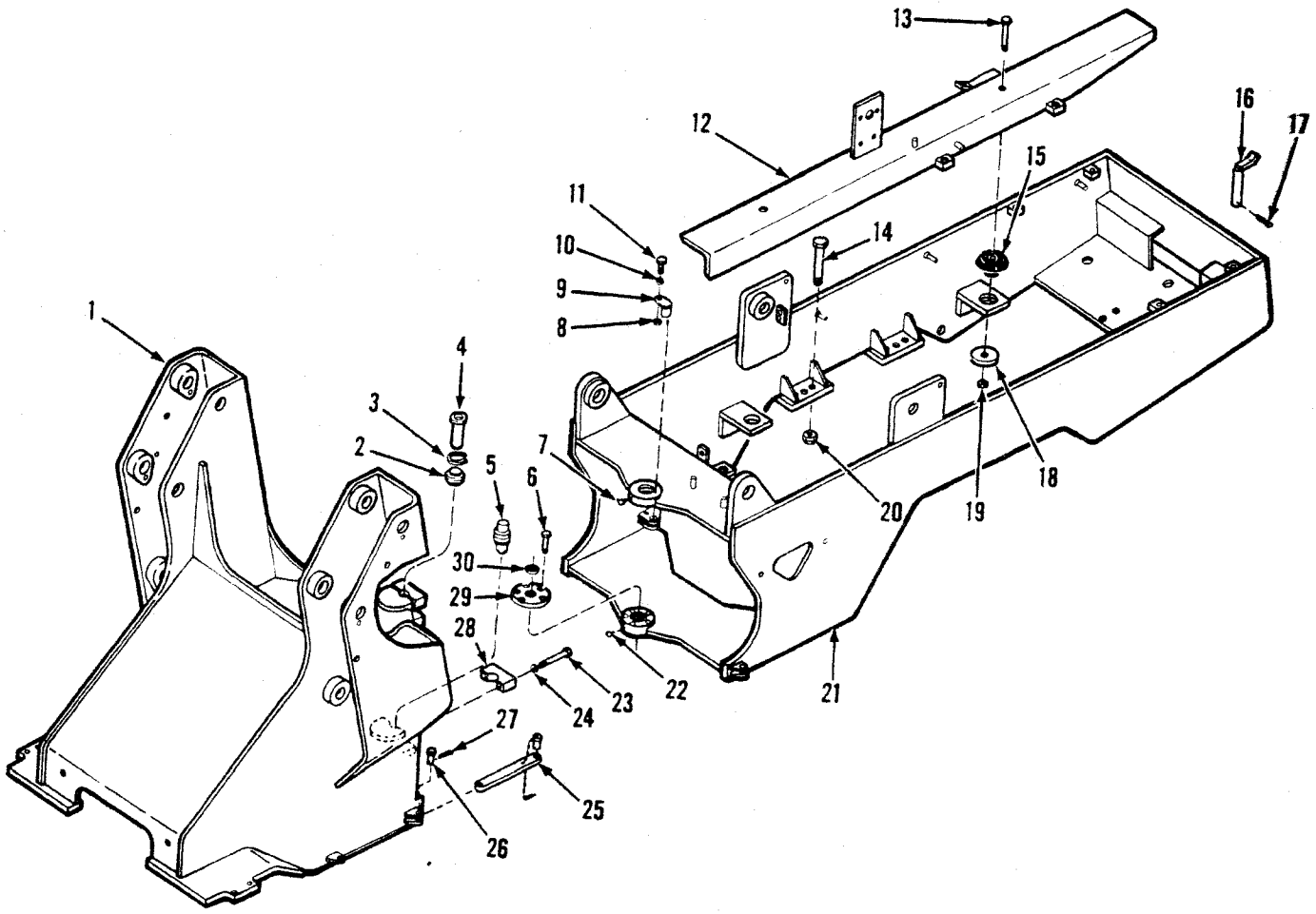

TS-21519

No.	Part No.	Qty.	Description
1	2519020	1	Frame front
2	1573309	1	Bushing
3	[4]660883	1	Snap ring
3A	[5]662003	1	Snap ring
4	2529486	1	Pin
5	2533549	1	Pin
6	34C820	10	Bolt
7	12H15	1	Grease fitting
8	2512036	4	Spacer
9	2512050	4	Pin
10	27E6	4	Washer
11	18C620	4	Bolt
12	[2]2522258	1	Angle RH
12A	[2]2522256	1	Angle LH
12B	[3]2524435	1	Angle RH
12C	[3]2524434	1	Angle LH
12D	[4]2530100	1	Angle RH
12E	[4]2530098	1	Angle LH
12F	[5]2533203	1	Angle RH
12G	[3,5]2533202	1	Angle LH
13	18C1264	4	Bolt
14	18C1210	8	Bolt
15	554686	4	Mount
16	2536534	1	Draw bar pin
17	1F316	1	Cotter pin
18	2503001	4	Washer
19	60D12	4	Nut
20	60D12	8	Nut
21	[4]2522004	1	Frame rear
21A	[5]2534910	1	Frame rear
22	12H15	2	Grease fitting
23	34C1264	8	Bolt
24	1535626	8	Washer
25	2525401	1	Safety link
26	2537902	1	Clevis pin
27	1F528	1	Cotter pin
28	2522386	1	Cap
29	2522385	2	Cap
30	2511956	2	Seal

[2]481A
[3]480A
[4]481B
[5]480B

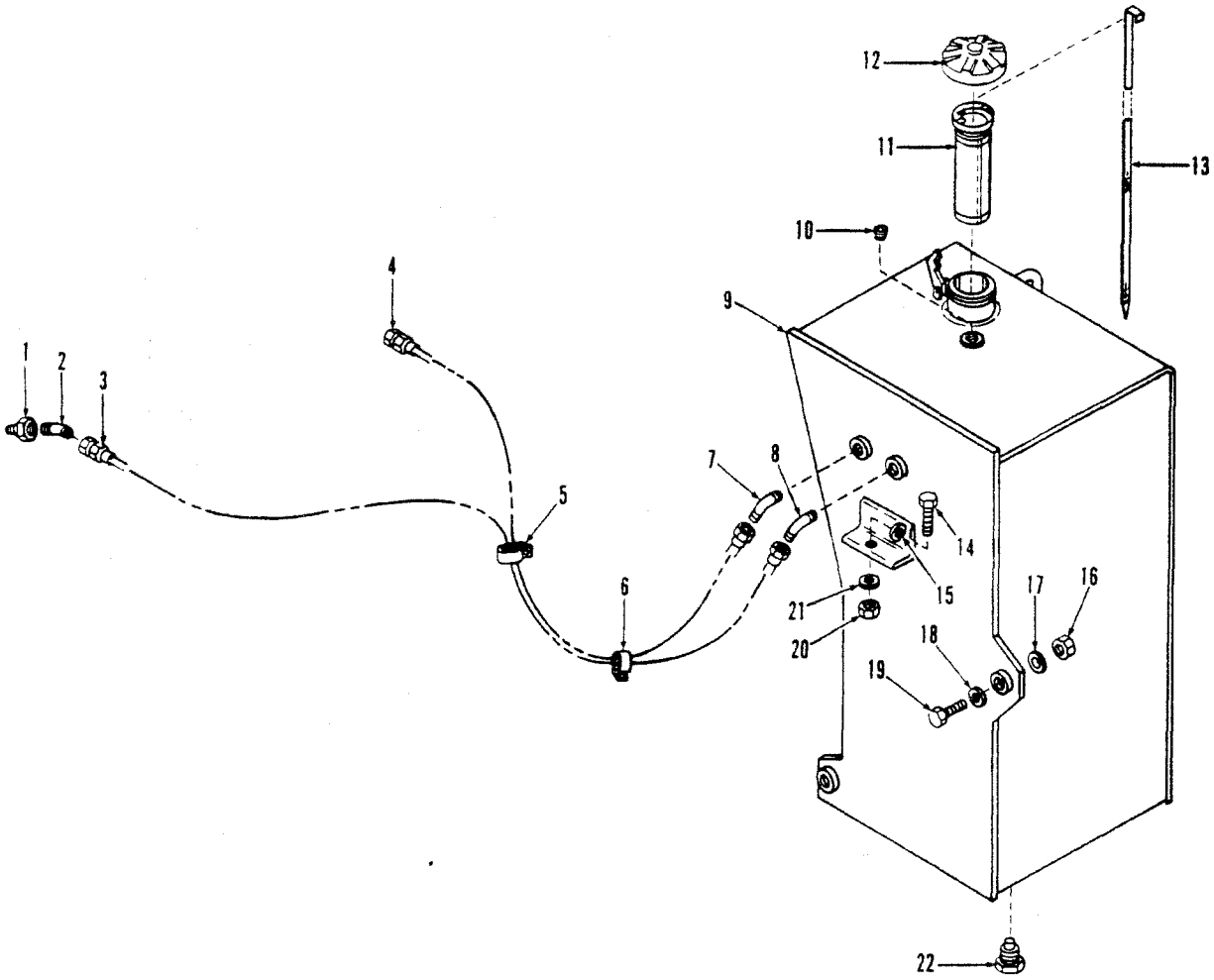

TS-15673

No.	Part No.	Qty.	Description
1	528691	1	Reducer
2	1545232	1	Elbow
3	2524674	1	Hose
4	2524673	1	Hose
5	31H42	1	Clip
6	31H43	1	Clip
7	1511770	1	Elbow
8	1545232	1	Elbow
9	2527743	1	Fuel tank
10	16F24	1	Plug
11	2522304	1	Strainer
12	2529803	1	Cap
13	2522306	1	Dipstick
14	17C832	1	Bolt
15	27E8	1	Washer
16	59D10	2	Nut
17	27E10	2	Washer
18	27E10	2	Washer
19	17C1056	2	Bolt
20	59D8	1	Nut
21	27E8	1	Washer
22	565295	1	Drain plug

Fuel Tank & Lines — G.M.*

CLARK

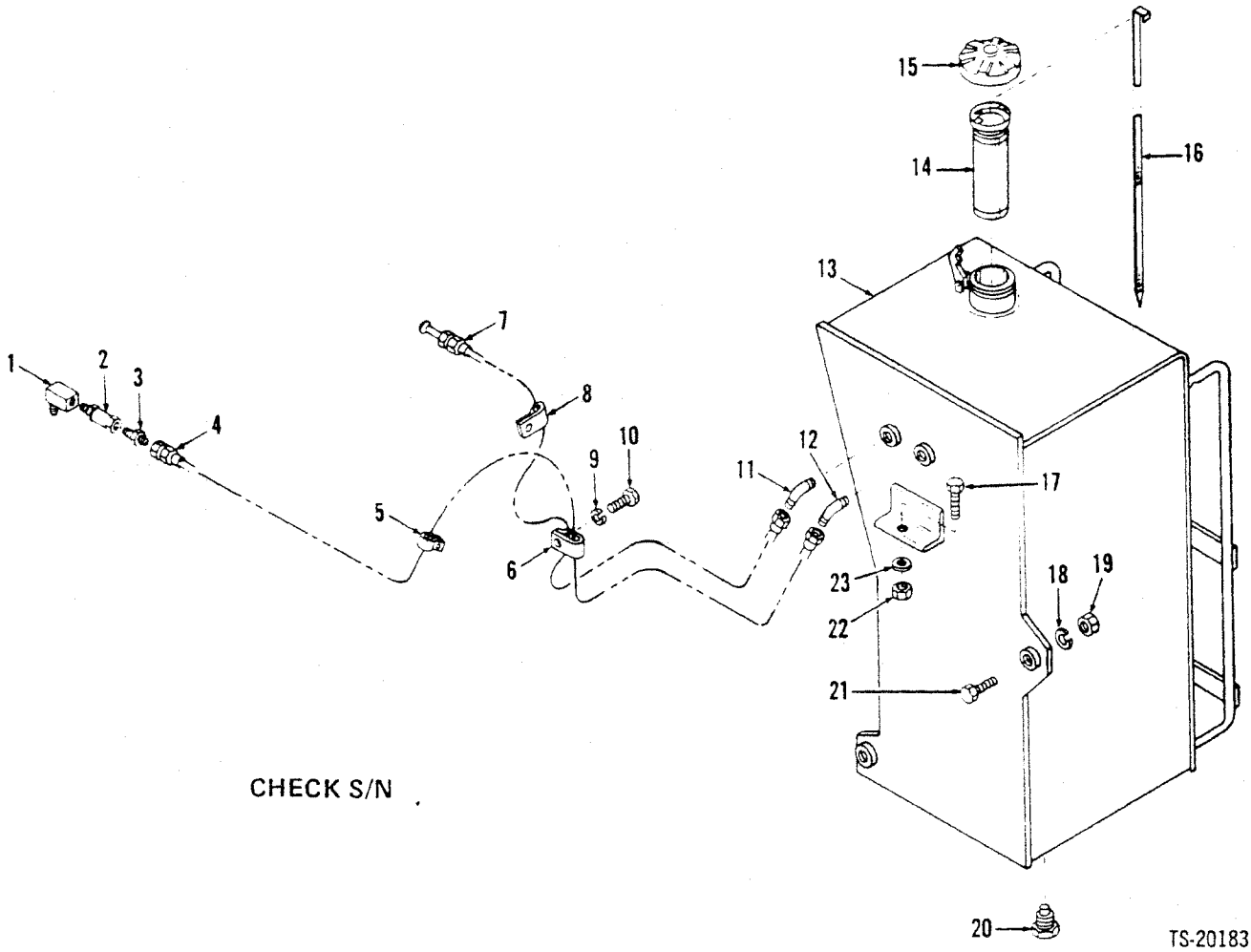

No.	Part No.	Qty.	Description
1	29F1	1	Elbow
2	1566517	1	Valve
3	38F7	1	Connector
4	2518360	1	Hose
5	30H38	1	Clip
6	31H36	1	Clip
7	2518359	1	Hose
8	30H35	1	Clip
9	4E8	1	Washer
10	17C816	1	Bolt
11	2526759	1	Elbow
11A	†19F3	1	Bushing
12	799392	1	Elbow
12A	†19F5	1	Bushing
13	2516513	1	Tank
14	2522304	1	Filter
15	2522303	1	Cap
16	2522306	1	Dipstick
17	17C840	1	Bolt
18	27E8	2	Washer
19	59D8	2	Nut
20	565295	1	Plug
21	17C852	2	Bolt
22	59D8	1	Nut
23	27E8	1	Washer

*458A101CB → 116CB, 459A101CB → 138CB, 472A101CB → 192CB, 473A101CB → 248CB

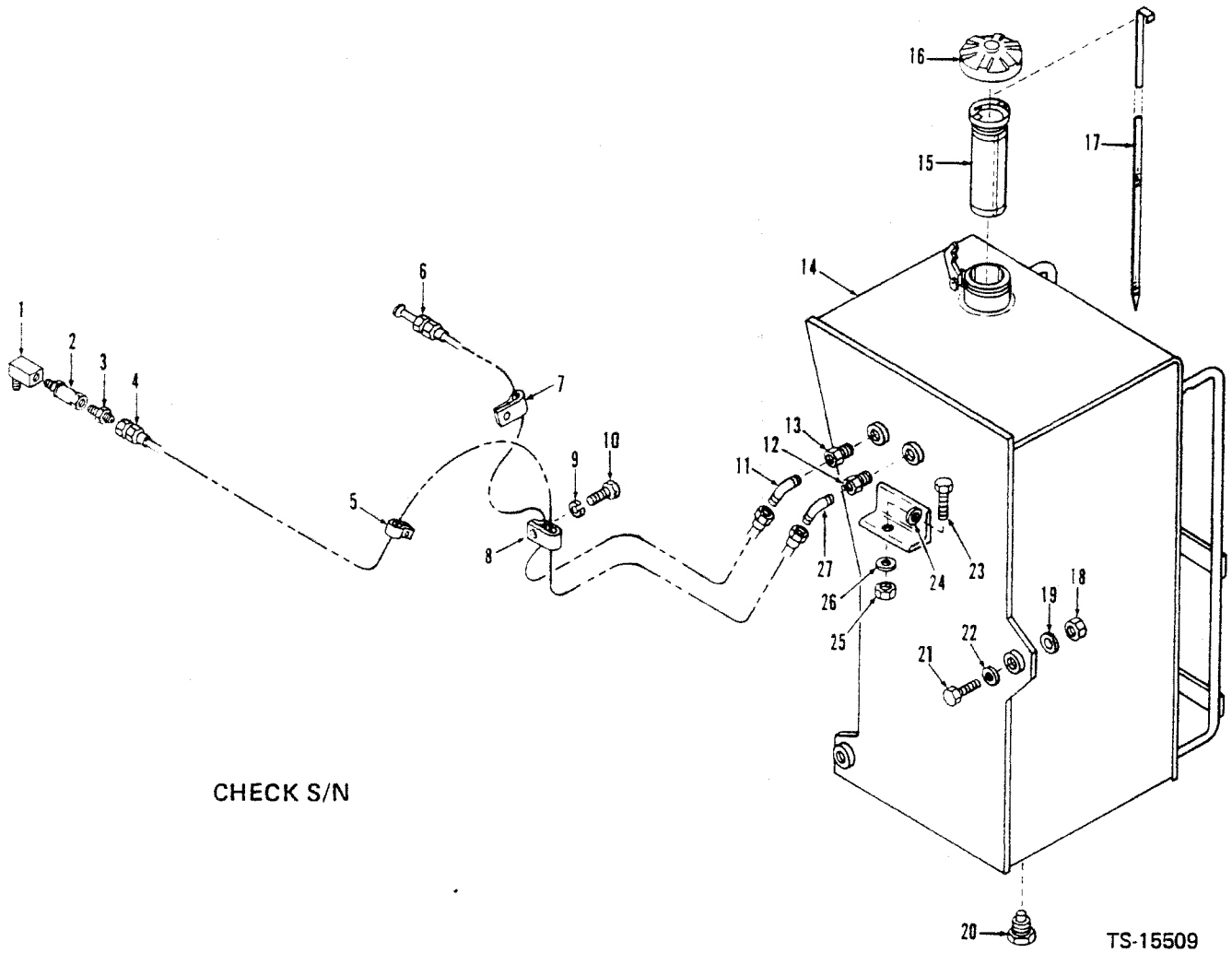

CHECK S/N

TS-15509

No.	Part No.	Qty.	Description
1	29F1	1	Elbow
2	1566517	1	Valve
3	38F7	1	Connector
4	2518360	1	Hose
5	31H34	1	Clip
6	2518359	1	Hose
7	30H35	1	Clip
8	31H36	1	Clip
9	4E8	1	Washer
10	17C816	1	Bolt
11	42F5	1	Elbow
12	19F5	1	Reducer
13	19F3	1	Reducer
14	2516513	1	Tank
15	2522304	1	Filter
16	2522303	1	Cap
17	2522306	1	Dipstick
18	59D10	2	Nut
19	27E10	2	Washer
20	565295	1	Plug
21	17C1056	2	Bolt
22	27E10	2	Washer
23	17C832	1	Bolt
24	27E8	1	Washer
25	59D8	1	Nut
26	27E8	1	Washer
27	42F6	1	Elbow

*458A117CB & →, 459A139CB & →, 472A193CB & →, 473A249CB & →

Fuel Tank & Lines — Perkins — 35C — 45C *

CLARK

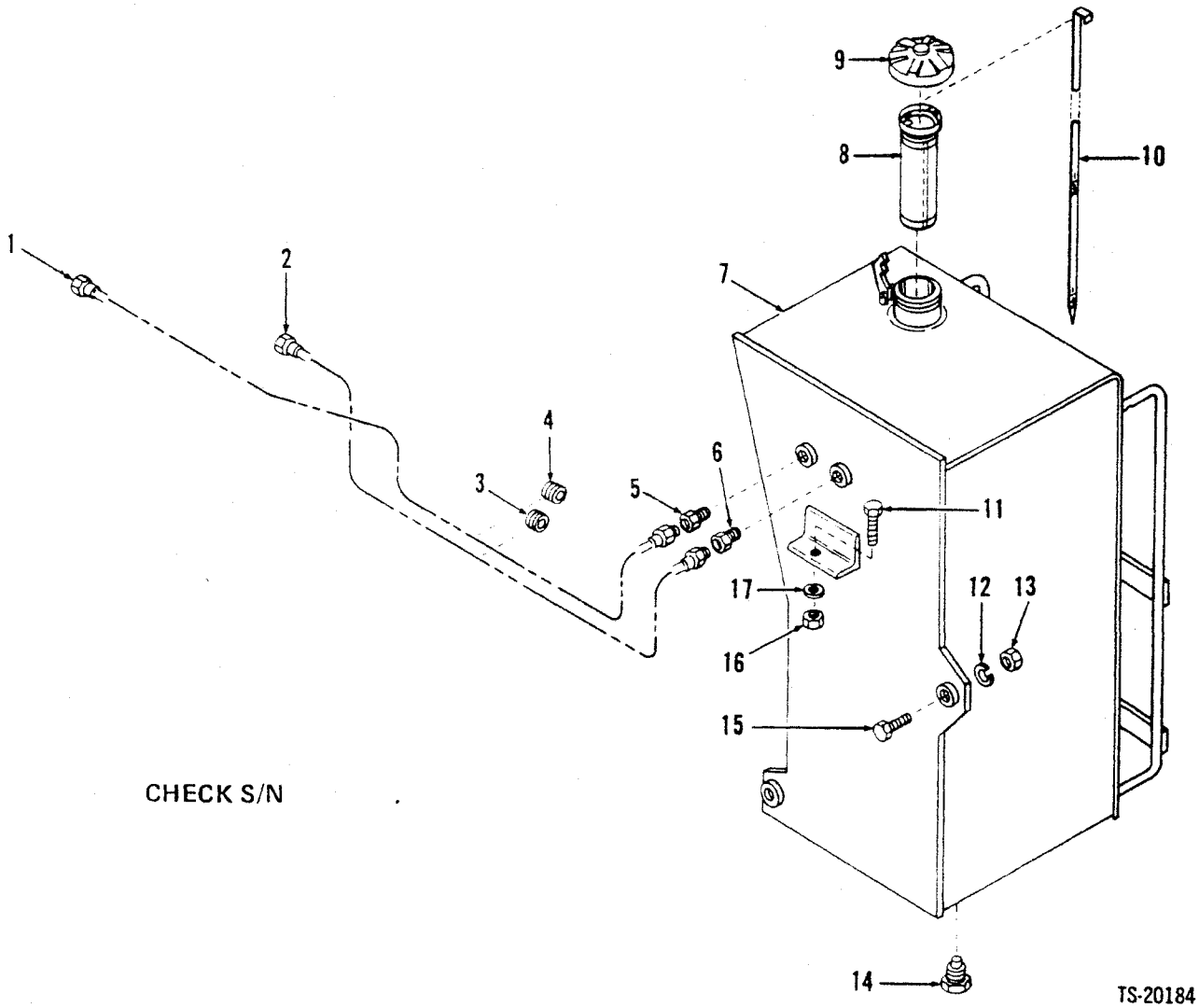

No.	Part No.	Qty.	Description
1	2513119	1	Tube
2	2513120	1	Tube
3	2512997	1	Grommet
4	2512997	1	Grommet
5	38F4	1	Connector
6	38F6	1	Connector
7	2516513	1	Tank
8	943957	1	Strainer assy
7	1558644	1	Cap
10	2522306	1	Dipstick
11	17C836	1	Bolt
12	584092	2	Washer
13	5908	2	Nut
14	565295	1	Plug
15	17C848	2	Bolt
16	5908	1	Nut
17	584092	1	Washer

*458A101CB → 116CB, 459A101CB → 138CB, 472A101CB → 192CB, 473A101CB → 248CB

Fuel Tank & Lines — Perkins — 35C — 45C *

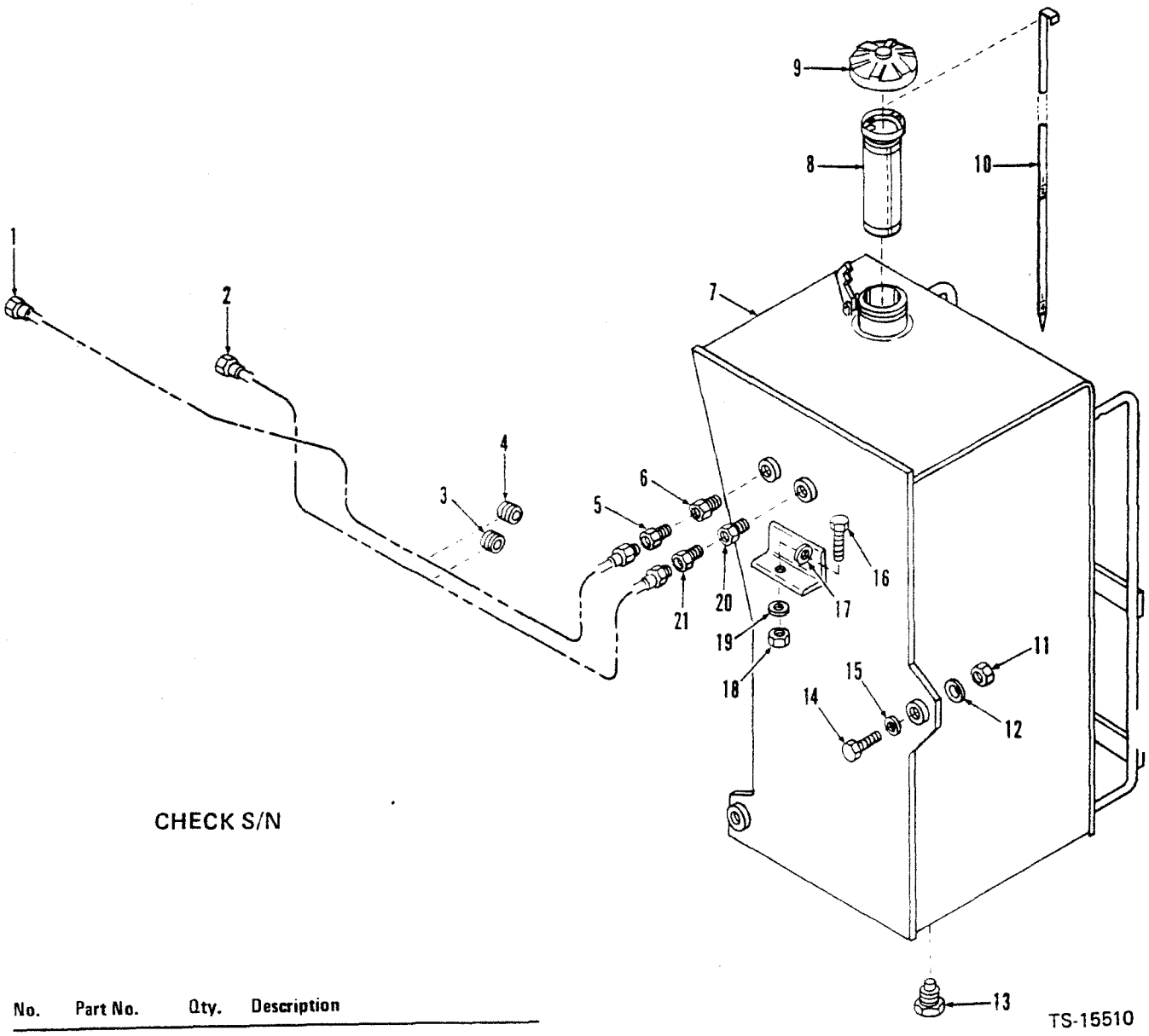

CHECK S/N

No.	Part No.	Qty.	Description
1	2513119	1	Tube
2	2513120	1	Tube
3	2512997	1	Grommet
4	2512997	1	Grommet
5	38F4	1	Connector
6	19F3	1	Reducer
7	2525161	1	Tank
8	2522304	1	Strainer assy
9	2522303	1	Cap
10	2522306	1	Dipstick
11	59D10	2	Nut
12	27E10	2	Washer
13	569295	1	Plug
14	17C1056	2	Bolt
15	27E10	2	Washer
16	17C832	1	Bolt
17	27E8	1	Washer
18	59D8	1	Nut
19	27E8	1	Washer
20	19F5	1	Reducer
21	38F6	1	Connector

*458A117CB & →, 459A139CB & →, 472A193CB & →, 473A249CB & →

Hydraulic Oil Reservoir* — 35C — 45C*

CLARK

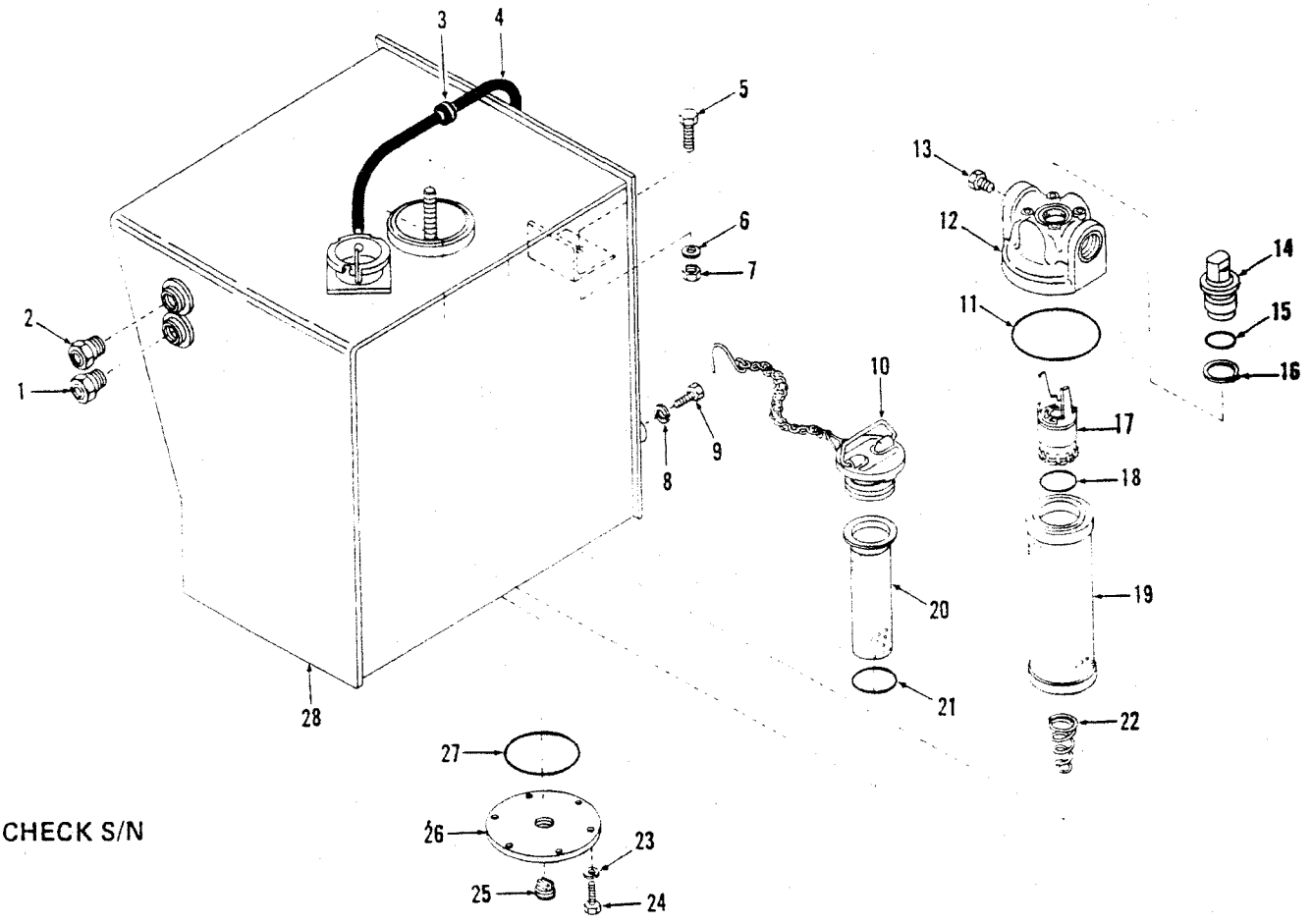

TS-20219

No.	Part No.	Qty.	Description
1	2544445	1	Gauge
2	2544445	1	Gauge
3	1011708	1	Grommet
4	[2]743563	1	Hose
4A	†1736910	1	Cable tie
5	17C840	2	Bolt
6	27E8	2	Washer
7	59D8	2	Nut
8	4E8	2	Washer
9	17C828	2	Bolt
10	554843	1	Filler cap
11	25K60424	1	O-ring
12	[3]2519388	1	Filter head
13	40K6	1	Plug
14	962267	1	Nut assy

No.	Part No.	Qty.	Description
15	[4]962266	1	O-ring kit
16	§[5]———	1	Retainer
17	[6]2519386	1	Indicator assy
18	962265	1	O-ring
19	[7]960641	1	Element
20	2519390	1	Strainer
21	60K40204	1	O-ring
22	2519384	1	Spring
23	4E6	6	Washer
24	18C612	6	Bolt
25	565295	1	Plug
26	587613	1	Cover
27	25K40428	1	O-ring
28	2521424	1	Reservoir

*458A101CB → 116CB, 459A101CB → 138CB, 472A101CB → 192CB, 473A101CB → 248CB

[2]1422 mm (56 in)
[3]Inc. 11
[4]Inc. 16
[5]See 15
[6]Inc. 18
[7]Inc. 11

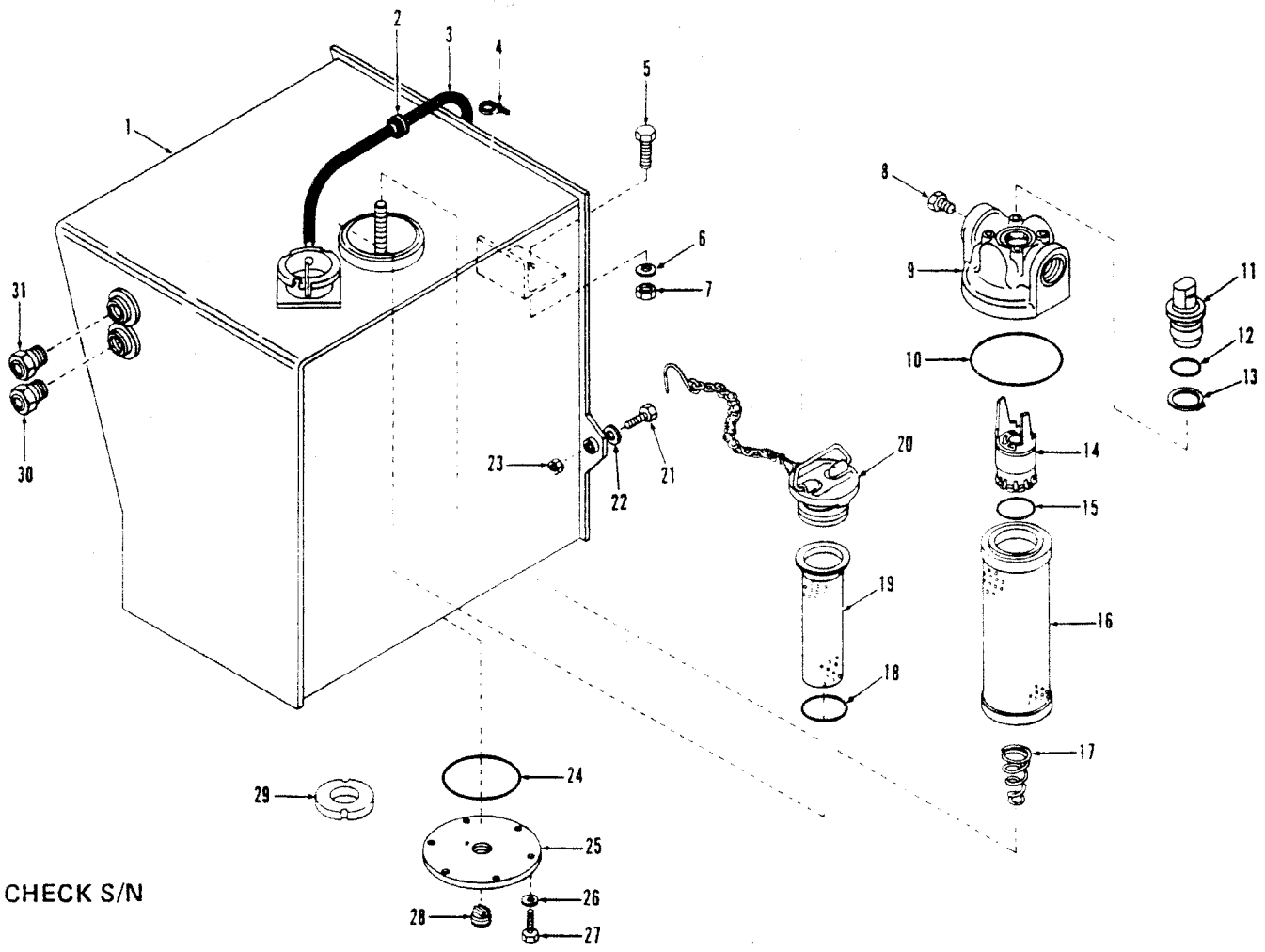

CHECK S/N

TS-15511

No.	Part No.	Qty.	Description
1	2525152	1	Reservoir
2	1011708	1	Grommet
3	[2]743563	1	Hose
4	1736910	1	Cable tie
5	17C832	1	Bolt
6	27E8	2	Washer
7	59D8	1	Nut
8	40K6	1	Plug
9	[3]2519388	1	Filter head
10	25K60424	1	O-ring
11	962267	1	Nut assy
12	[4]962266	1	O-ring kit
13	§[5]———	1	Retainer
14	[6]2519386	1	Indicator assy
15	962265	1	O-ring
16	[7]960641	1	Element

No.	Part No.	Qty.	Description
17	2519384	1	Spring
18	60K40204	1	O-ring
19	2519390	1	Strainer
20	554843	1	Filler cap
21	17C1056	2	Bolt
22	27E10	4	Washer
23	59D10	2	Nut
24	25K40428	1	O-ring
25	587613	1	Cover
26	27E6	6	Washer
27	18C612	6	Bolt
28	40K16	1	Plug
28A	2539757	1	Plug magnetic
29	525293	2	Magnet
30	2544445	1	Gauge
31	2544445	1	Gauge

***458A117CB & →, 459A139CB & →, 472A193CB & →, 473A249CB & →**

[2]1422mm (56 in)
[3]Inc 10
[4]Inc 13
[5]See 12
[6]Inc 15

Hydraulic Oil Reservoir – 55C

CLARK

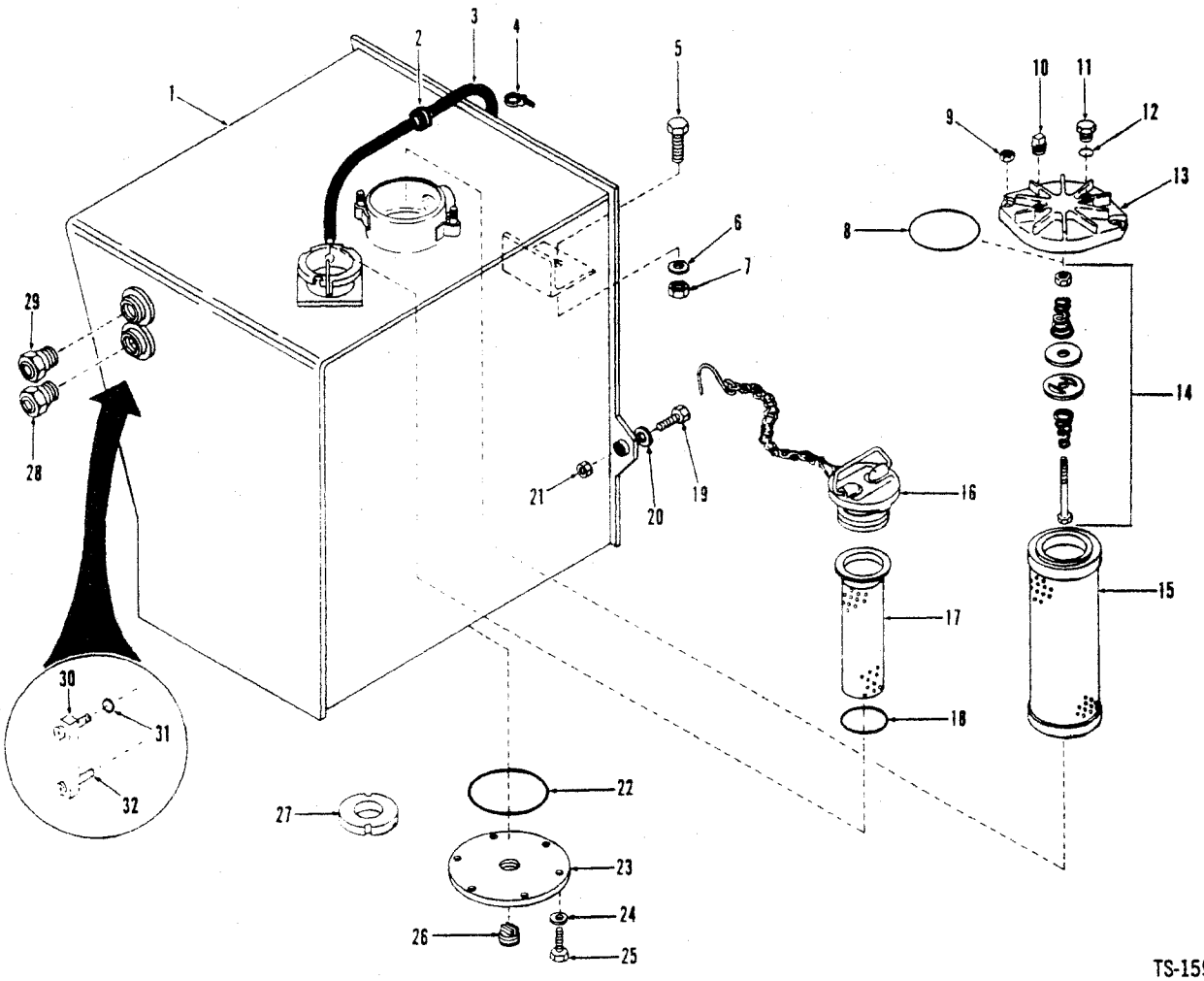

TS-15976

No.	Part No.	Qty.	Description
1	[5]2525994	1	Reservoir
1A	[6]2529660	1	Reservoir
2	1011708	1	Grommet
3	[2]743563	1	Hose
4	2526968	1	Cable tie
5	17C832	1	Bolt
6	27E8	2	Washer
7	85D8	1	Nut
8	25K60424	1	O-ring
9	85D6	2	Nut
10	10F2	1	Plug
11	[3]24K4	1	Plug
12	91F4	1	O-ring
13	[4]2526832	1	Filter head
14	963143	1	Valve
15	963006	1	Filter
16	554843	1	Filler cap

No.	Part No.	Qty.	Description
17	2519390	1	Strainer
18	60K40204	1	O-ring
19	17C1056	2	Bolt
20	27E10	2	Washer
21	85D10	2	Nut
22	25K40428	1	O-ring
23	587613	1	Cover
24	27E6	6	Washer
25	17C612	6	Bolt
26	40K16	1	Plug
26A	2539757	1	Plug magnetic
27	525293	2	Magnet
28	[5]2544445	1	Gauge
29	[5]2544445	2	Gauge
30	[6]2505256	1	Gauge
31	[6]91F6	2	O-ring
32	[6]85G3712	2	Screw

[2]1422 mm (56 in)
[3]Inc. 12
[4]Inc. 8, 10,11, 12, 14
[5]480A101CB→108CB, 481A101CB→109CB
[6]480A109CB & →, 481A110CB & →, 480B, 481B

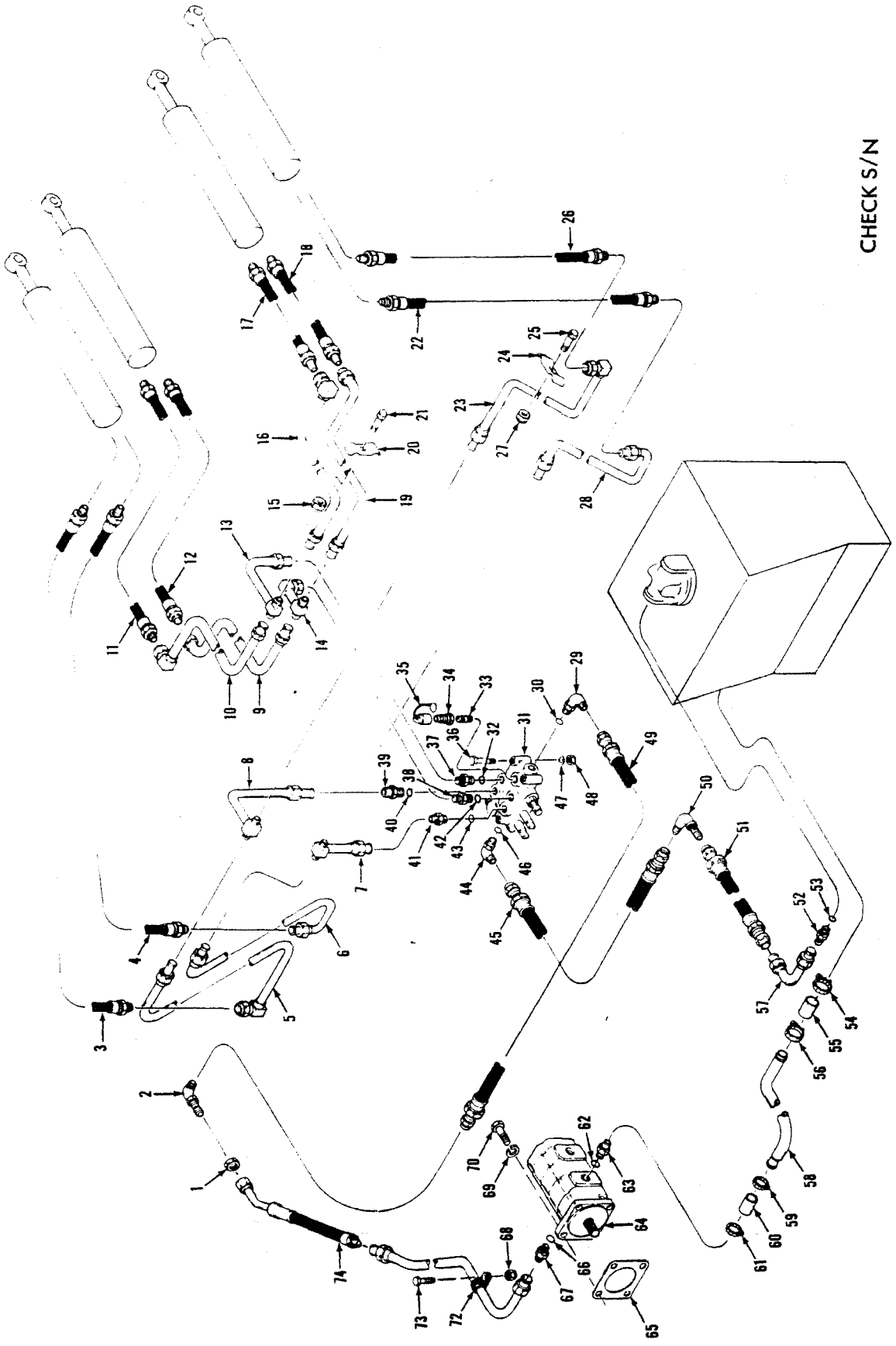
CHECK S/N
TS-15539

Hydraulic System Main *

CLARK

No.	Part No.	Qty.	Description
1	86F10	1	Nut
2	88F10	1	Elbow
3	2517788	1	Hose
4	2517788	1	Hose
5	[13,15]2517756	1	Tube
6	[13,15]2517754	1	Tube
7	2517749	1	Tube
8	2517759	1	Tube
9	[13,15]2517757	1	Tube
10	[13,15]2517763	1	Tube
11	2521207	1	Hose
12	2521207	1	Hose
13	2517758	1	Tube
14	2517760	1	Tube
15	59D6	2	Nut
16	2531316	1	Tube
17	2521207	1	Hose
18	2521207	1	Hose
19	[13,15]2517762	1	Tube
20	557430	2	Clamp
21	17C628	2	Bolt
22	2517788	1	Hose
23	[13,15]2517764	1	Tube
24	557430	2	Clamp
25	17C628	2	Bolt
26	2517788	1	Hose
27	59D6	2	Nut
28	[13,15]2517755	1	Tube
29	[2]17K10	1	Elbow
30	91F10	1	O-ring
31	[1]———	1	Valve control
32	91F10	1	O-ring
33	791052	1	Elbow
34	1306142	1	Coupling
35	6000689	1	Cap
36	17C872	3	Bolt
37	[3]15K10	1	Adapter
38	[4]15K10	1	Adapter
39	[5]15K10	1	Adapter
40	91F10	1	O-ring
41	[6]15K10	1	Adapter
42	91F10	1	O-ring
43	91F10	1	O-ring
44	[7]17K11	1	Elbow
45	2513020	1	Hose
46	91F11	1	O-ring
47	27E8	3	Washer
48	59D8	3	Nut
49	2513021	1	Hose
50	88F11	1	Elbow
50A	86F11	1	Nut
51	2521777	1	Hose
52	[13,8]15K11	1	Adapter
52A	[14,8]15K12	1	Adapter
53	[13]91F11	1	O-ring
53A	[14]91F2	1	O-ring
54	[11]43H1262	1	Clamp
55	[11]2526431	1	Hose
56	[13,11]43H1262	1	Clamp
56A	[14]43H1250	1	Clamp
57	[13]2521780	1	Tube
57A	[14]2525989	1	Tube
58	[13]2515708	1	Tube
58A	[14]2526669	1	Tube
59	[12]43H1212	1	Clamp
60	[12]2525793	1	Hose
61	[12]43H1212	1	Clamp
62	91F11	1	O-ring
63	[9]1310615	1	Fitting 35C
63A	[9]2516498	1	Fitting 45C
64	[1]———	1	Pump
65	2513124	1	Gasket
66	91F10	1	O-ring
67	[10]15K10	1	Connector
68	59D6	1	Nut
69	4E8	1	Washer
70	17C820	1	Bolt
71	2513034	1	Tube
72	6H20	1	Clip
73	[13]17C616	1	Bolt
73A	[14]17C620	1	Bolt
74	2520027	1	Hose

458A, 459A, 472A, 473A, 480A, 481A

[1]See Index
[2]Inc. 30
[3]Inc. 32
[4]Inc. 42
[5]Inc. 40
[6]Inc. 43
[7]Inc. 46
[8]Inc. 53
[9]Inc. 62
[10]Inc. 66
[11]Use 1—2526431 Hose & 43H1262 Clamp
[12]Use 1—2525793 Hose & 43H1212 Clamp
[13]35C 45C
[14]55C
[15]480A101CB → 158CB 481A101CB → 155CB

CLARK

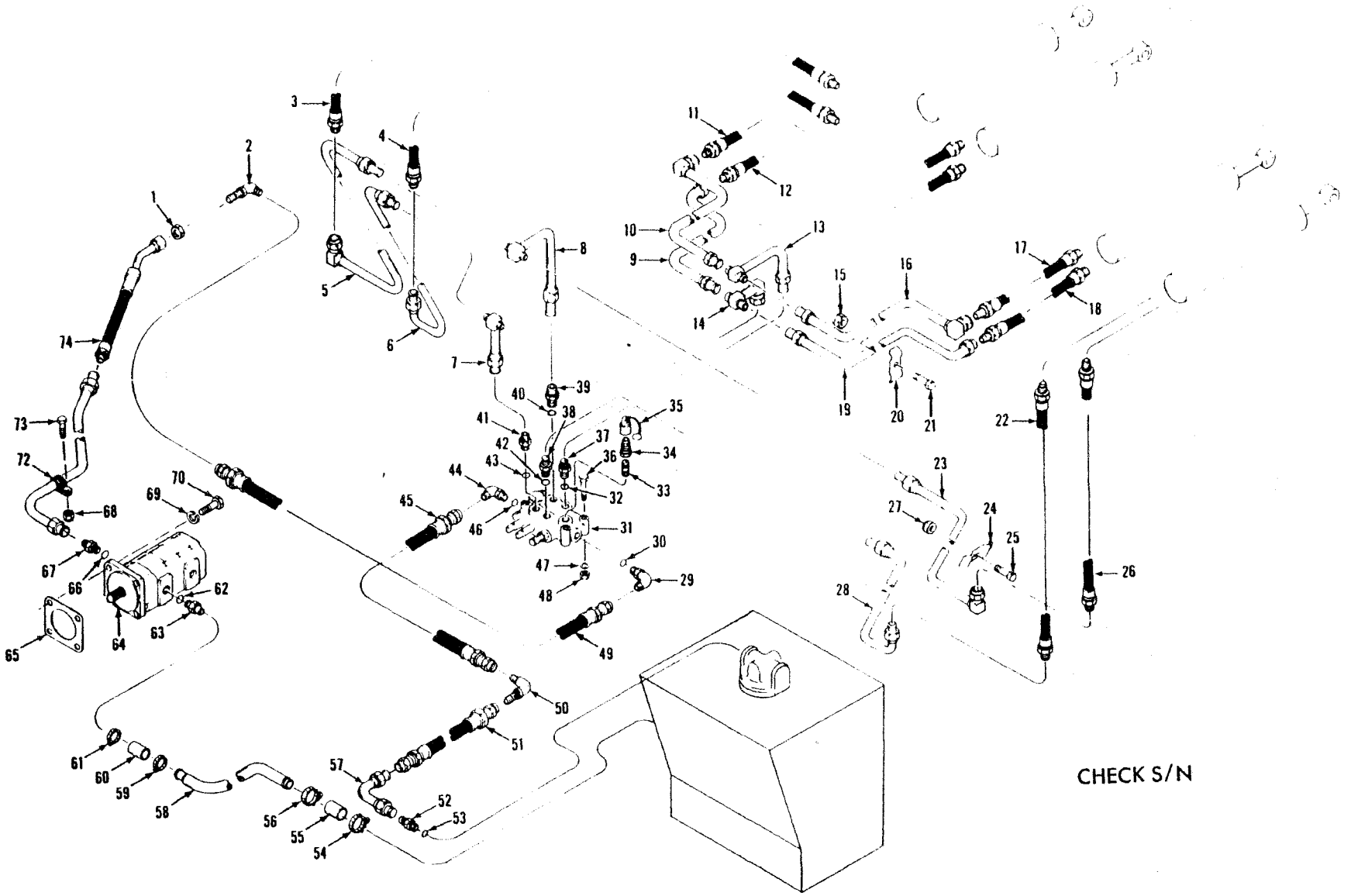

CHECK S/N

TS-15539

PM 3150
Printed in U.S.A.

Hydraulic System Main – 55C*

CLARK

No.	Part No.	Qty.	Description
1	86F10	1	Nut
2	88F10	1	Elbow
3	2517788	1	Hose
4	2517788	1	Hose
5	[11]2531314	1	Tube
6	[11]2531312	1	Tube
7	2517749	1	Tube
8	2517759	1	Tube
9	[11]2531315	1	Tube
10	[11]2531318	1	Tube
11	2521207	1	Hose
12	2521207	1	Hose
13	2517758	1	Tube
14	2517760	1	Tube
15	85D6	2	Nut
16	2531316	1	Tube
17	2521207	1	Hose
18	2521207	1	Hose
19	[11]2531317	1	Tube
20	557430	2	Clamp
21	17C628	2	Bolt
22	2517788	1	Hose
23	[11]2531319	1	Tube
24	557430	2	Clamp
25	17C628	2	Bolt
26	2517788	1	Hose
27	85D6	2	Nut
28	[11]2531313	1	Tube
29	[2]17K10	1	Elbow
30	91F10	1	O-ring
31	[1]———	1	Valve control
32	91F10	1	O-ring
33	791052	1	Elbow
34	1306142	1	Coupling
35	6000689	1	Cap
36	17C872	3	Bolt
37	[3]15K10	1	Adapter
38	[4]15K10	1	Adapter
39	[5]15K10	1	Adapter
40	91F10	1	O-ring
41	[6]15K10	1	Adapter
42	91F10	1	O-ring
43	91F10	1	O-ring
44	[7]17K11	1	Elbow
45	2513020	1	Hose
46	91F11	1	O-ring
47	27E8	3	Washer
48	59D8	3	Nut
49	2513021	1	Hose
50	88F11	1	Elbow
50A	86F11	1	Nut
51	2521777	1	Hose
52A	[8]15K12	1	Adapter
53A	91F2	1	O-ring
54	43H1250	1	Clamp
55	2526431	1	Hose
56	43H1250	1	Clamp
57	2532542	1	Tube
58	2526669	1	Tube
59	43H1212	1	Clamp
60	2525793	1	Hose
61	43H1212	1	Clamp
62	91F11	1	O-ring
63	[9]2516498	1	Fitting
64	[1]———	1	Pump
65	2513124	1	Gasket
66	91F10	1	O-ring
67	[10]15K10	1	Connector
68	59D6	1	Nut
69	4E8	1	Washer
70	17C820	1	Bolt
71	2513034	1	Tube
72	6H20	1	Clip
73A	17C620	1	Bolt
74	2520027	1	Hose

***480B, 481B**

[1]See Index
[2]Inc. 30
[3]Inc. 32
[4]Inc. 42
[5]Inc. 40
[6]Inc. 43
[7]Inc. 46
[8]Inc. 53
[9]Inc. 62
[10]Inc. 66
[11]480A159CB & → 481A156CB & →

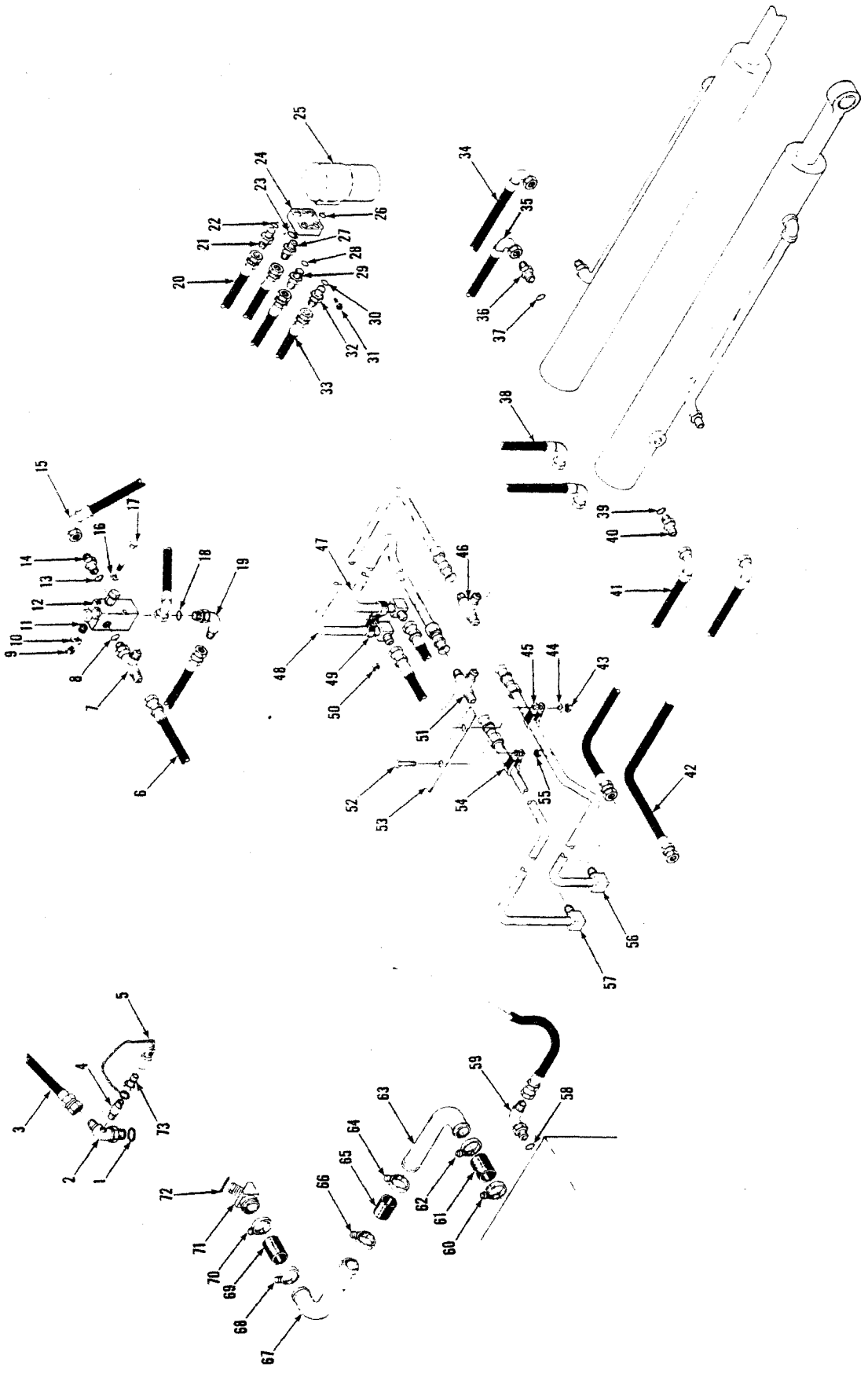
TS-15275

No.	Part No.	Qty.	Description
1	91F10	1	O-ring
2	[2]2514862	1	Elbow
3	1509473	1	Hose
4	5K207	1	Nipple
5	6000689	1	Cap
6	2521776	1	Hose
6A	†2521779	1	Tube
7	[3]21K10	1	Tee
8	91F10	1	O-ring
9	60D5	2	Nut
10	2525070	1	Washer
10A	†619021	4	Washer
11	2522569	2	Vibration mount
12	[1]———	1	Valve
13	91F6	1	O-ring
14	[4]15K6	1	Connector
15	2520024	1	Hose
16	25E15	1	Washer
17	18C580	2	Bolt
18	91F10	1	O-ring
19	[5]17K10	1	Elbow
20	2523734	1	Hose
21	[6]2515465	1	Connector
22	91F6	1	O-ring
23	91F6	1	O-ring
24	2521943	1	Block valve
25	[1]———	1	Valve steering
26	5299512	4	O-ring
27	[7]15K6	1	Connector
28	91F6	1	O-ring
29	[8]15K6	1	Connector
30	91F6	1	O-ring
31	962559	4	Bolt
32	[9]15K6	1	Connector
33	2520023	1	Hose
34	2515322	1	Hose
35	2515322	1	Hose
36	[10]15K6	1	Connector
37	91F6	1	O-ring
38	2526525	1	Hose
39	91F6	1	O-ring
40	[11]15K6	1	Connector
41	2515322	1	Hose
42	2515322	1	Hose
43	59D6	2	Nut
44	25E23	2	Washer
45	30H31	2	Clip
46	10K6	1	Tee
47	2513035	1	Tube
48	2513037	1	Tube
49	30H31	4	Clip
50	59D6	2	Nut
50A	27E6	1	Washer
51	10K6	1	Tee
52	17C620	2	Bolt
53	2513042	2	Bracket
54	30H31	2	Clip
55	59D6	2	Nut
56	2513036	1	Tube
57	2513038	1	Tube
58	91F10	1	O-ring
59	[12]15K10	1	Elbow
60	[14]43H1188	1	Clamp
61	[14]2526426	1	Hose
62	[14]43H1188	1	Clamp
63	2521775	1	Tube
64	[14]43H1188	1	Clamp
65	[14]2526426	1	Hose
66	[14]43H1188	1	Clamp
67	2521775	1	Tube
68	[15]43H1188	1	Clamp
69	[15]2526425	1	Hose
70	[15]43H1188	1	Clamp
71	[13]2517918	1	Elbow
72	91F11	1	O-ring
73	1306142	1	Coupling

[1]See Index
[2]Inc. 1
[3]Inc. 8
[4]Inc. 13
[5]Inc. 18
[6]Inc. 22
[7]Inc. 23
[8]Inc. 28
[9]Inc. 30
[10]Inc. 37
[11]Inc. 39
[12]Inc. 58
[13]Inc. 72
[14]Use 1 – 2526426 Hose & 2 – 43H1188 Clamp
[15]Use 1 – 2526425 Hose & 2 – 43H1188 Clamp

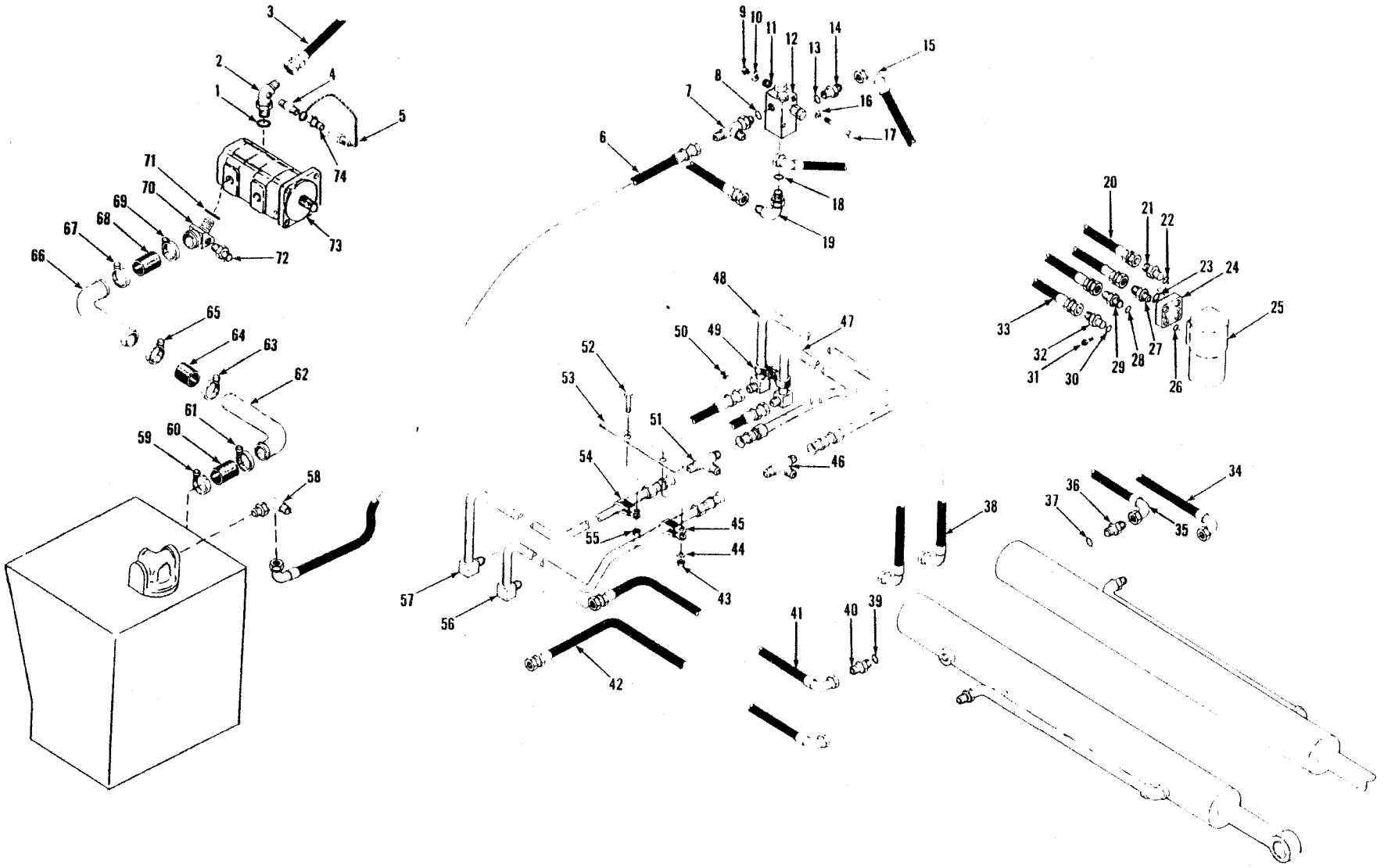

TS-15602

PM 3150
Printed in U.S.A.

Hydraulic System Steering – 55C

CLARK

No.	Part No.	Qty.	Description
1	91F10	1	O-ring
2	[2]2514862	1	Elbow
3	1509473	1	Hose
4	5K207	1	Nipple
5	6000689	1	Cap
6	2526000	1	Hose
7	[3]19K10	1	Tee
8	91F10	1	O-ring
9	60D5	2	Nut
10	2525070	1	Washer
10A	[5]619021	4	Washer
11	2522569	2	Vibration mount
12	[2]2524965	1	Valve
13	91F6	1	O-ring
14	[4]15K6	1	Connector
15	2526525	1	Hose
16	———	–	Omit
17	18C580	2	Bolt
18	91F10	1	O-ring
19	[7]17K10	1	Elbow
20	2525999	1	Hose
21	[2]2515465	1	Connector
22	91F6	1	O-ring
23	91F6	1	O-ring
24	2521943	1	Block valve
25	[1]———	1	Valve steering
26	5299512	4	O-ring
27	[7]15K6	1	Connector
28	91F6	1	O-ring
29	[8]15K6	1	Connector
30	91F6	1	O-ring
31	962559	4	Bolt
32	[7]15K6	1	Connector
33	2526526	1	Hose
34	2515322	1	Hose
35	2515322	1	Hose
36	[2]15K6	1	Connector
37	91F6	1	O-ring
38	2526525	1	Hose
39	91F6	1	O-ring
40	[11]15K6	1	Connector
41	2515322	1	Hose
42	2515322	1	Hose
43	59D6	2	Nut
44	27E10	2	Washer
45	30H31	2	Clip
46	10K16	1	Tee
47	2513035	1	Tube
48	2513037	1	Tube
49	30H31	4	Clip
50	59D6	2	Nut
51	10K16	1	Tee
52	17C620	2	Bolt
53	2513042	2	Bracket
54	30H31	2	Clip
55	59D6	2	Nut
56	2513036	1	Tube
57	2513038	1	Tube
58	2525989	1	Tube
59	43H1188	1	Clamp
60	2526426	1	Hose
61	43H1188	1	Clamp
62	2526675	1	Tube
63	43H1188	1	Clamp
64	2526674	1	Hose
65	43H1188	1	Clamp
66	2526075	1	Tube
67	43H1188	1	Clamp
68	2526425	1	Hose
69	43H1188	1	Clamp
70	[12]2517918	1	Elbow
71	91F11	1	O-ring
72	663013	1	Coupling
73	[1]———	1	Pump
74	1306142	1	Connector

[1]See Index
[2]Inc. 1
[3]Inc. 8
[4]Inc. 13
[5]Inc. 18
[6]Inc. 22
[7]Inc. 23
[8]Inc. 28
[9]Inc. 30
[10]Inc. 37
[11]Inc. 39
[12]Inc. 58
[13]Inc. 71

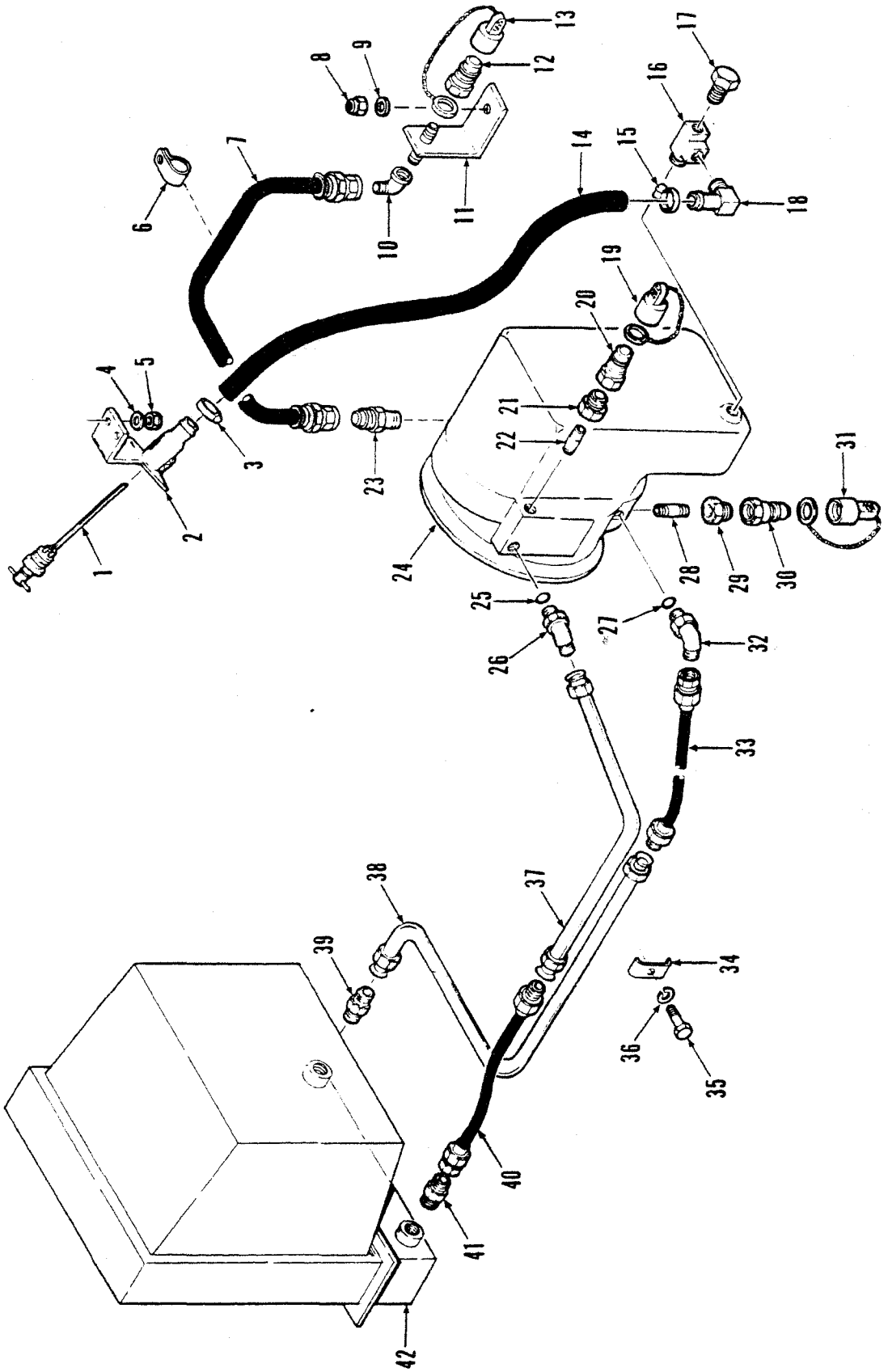
TS-20314
1
2
3
4
5
6
7
8
9
10
11
12
13
14
15
16
17
18
19
20
21
22
23
24
25
26
27
28
29
30
31
32
33
34
35
36
37
38
39
40
41
42

Hydraulic System Transmission & Converter — 35C — 45C

CLARK

No.	Part No.	Qty.	Description
1	2521090	1	Dipstick
2	2521089	1	Fill neck
3	[5]1545186	1	Clamp
3A	[6]42H20	1	Clamp
4	25E18	2	Washer
5	59D6	2	Nut
6	30H38	1	Clip
7	2524660	1	Hose
8	59D6	1	Nut
9	27E6	1	Washer
10	85F5	1	Elbow
11	2524647	1	Bracket
12	1306142	1	Coupling
13	6000689	1	Cap
14	[2]1307059	1	Hose
15	[5]1545186	1	Clamp
15A	[6]42H20	1	Clamp
16	30F4	1	Tee
17	2515757	1	Plug
18	666845	1	Adapter
19	6000689	1	Cap
20	1306142	1	Coupling
21	19F1	1	Bushing
22	5K106	1	Nipple
23	89F5	1	Connector
24	[1]———	1	Transmission assy
25	91F8	1	O-ring
26	[3]1300309	1	Elbow
27	91F8	1	O-ring
28	5K106	1	Nipple
29	19F1	1	Bushing
30	[4]1306142	1	Coupling
31	6000689	1	Cap
32	1300309	1	Elbow
33	2521981	1	Hose
34	2522049	2	Clamp
35	17C612	2	Bolt
36	4E6	2	Washer
37	2521786	1	Tube
38	2521785	1	Tube
39	656532	1	Connector
40	2521981	1	Hose
41	656532	1	Connector
42	[1]———	1	Radiator assy

[1]See Index
[2]540 mm (21 in)
[3]Inc. 25
[4]Inc. 31
[5]35C, 45C
[6]55C

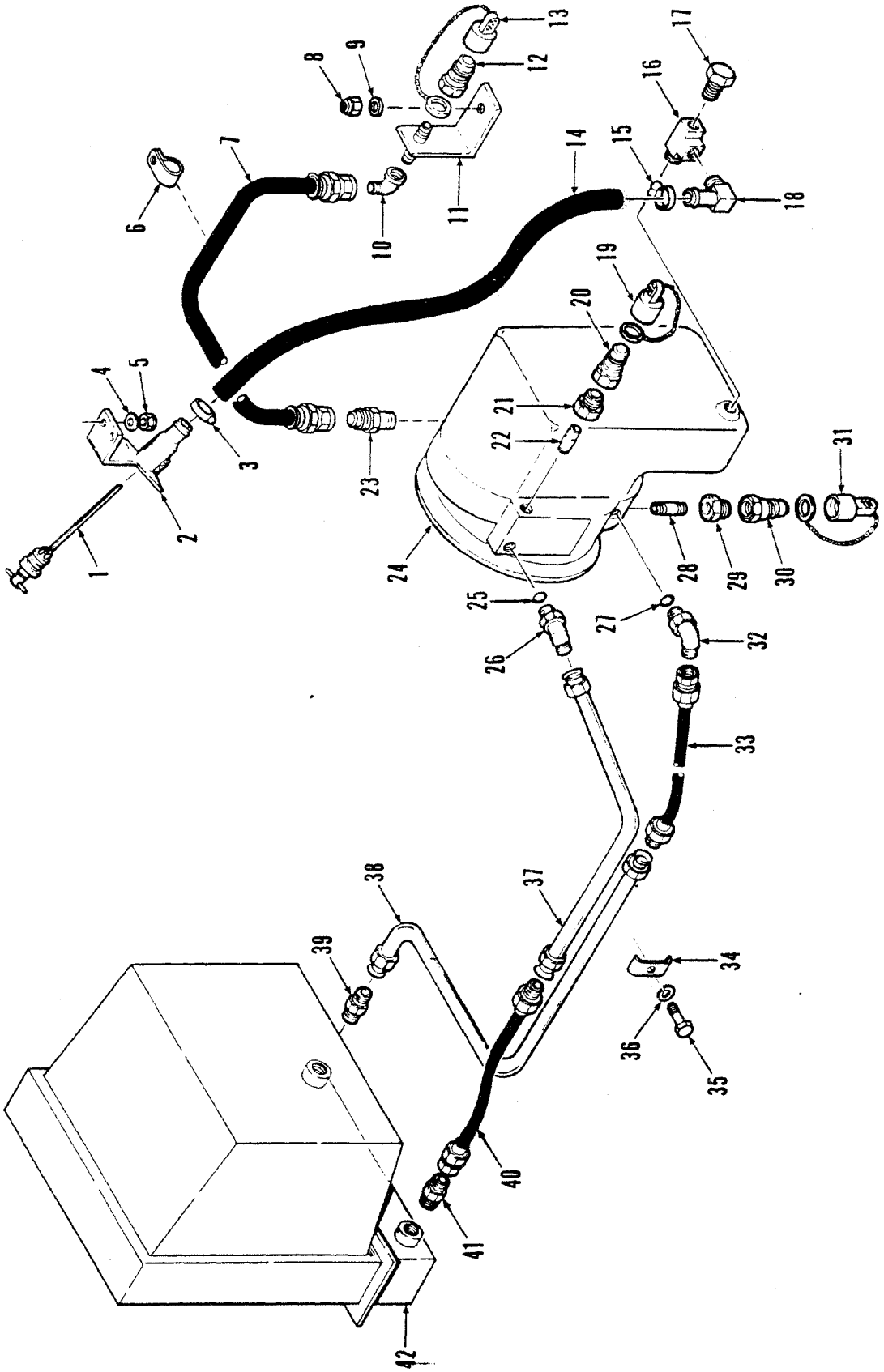
TS-20314
1
2
3
4
5
6
7
8
9
10
11
12
13
14
15
16
17
18
19
20
21
22
23
24
25
26
27
28
29
30
31
32
33
34
35
36
37
38
39
40
41
42

Hydraulic System Transmission & Converter – 55C

No.	Part No.	Qty.	Description
1	2521090	1	Dipstick
2	2521089	1	Fill neck
3	42H20	1	Clamp
4	25E18	2	Washer
5	59D6	2	Nut
6	———	–	Omit
7	———	–	Omit
8	———	–	Omit
9	———	–	Omit
10	791052	1	Elbow
11	———	–	Omit
12	1306142	1	Coupling
13	6000689	1	Cap
14	[2]1307059	1	Hose
15	42H20	1	Clamp
16	30F4	1	Tee
17	2515757	1	Plug
18	666845	1	Adapter
19	6000689	1	Cap
20	1306142	1	Coupling
21	19F1	1	Bushing
22	5K116	1	Nipple
23	2524901	1	Connector
24	[1]———	1	Transmission assy
25	91F8	1	O-ring
26	[3]1300309	1	Elbow
27	91F8	1	O-ring
28	5K116	1	Nipple
29	19F1	1	Bushing
30	1306142	1	Coupling
31	6000689	1	Cap
32	[4]1300309	1	Elbow
33	2521981	1	Hose
34	[5 6]2522049	1	Clamp
34A	[7]2527146	1	Clamp
35	17C612	1	Bolt
36	———	–	Omit
37	[6]2524427	1	Tube
37A	[5]2519068	1	Tube
38	[6]2524395	1	Tube
38A	[5]2519069	1	Tube
38B	[7]2531402	1	Tube
39	656532	1	Connector
40	[6]2521981	1	Hose
40A	[7]2513867	1	Hose
41	656532	1	Connector
42	[1]———	1	Radiator assy

[1]See Index
[2]540 mm (21 in)
[3]Inc. 25
[4]Inc. 27
[5]481A
[6]480A, 480B
[7]481B

Lubrication System

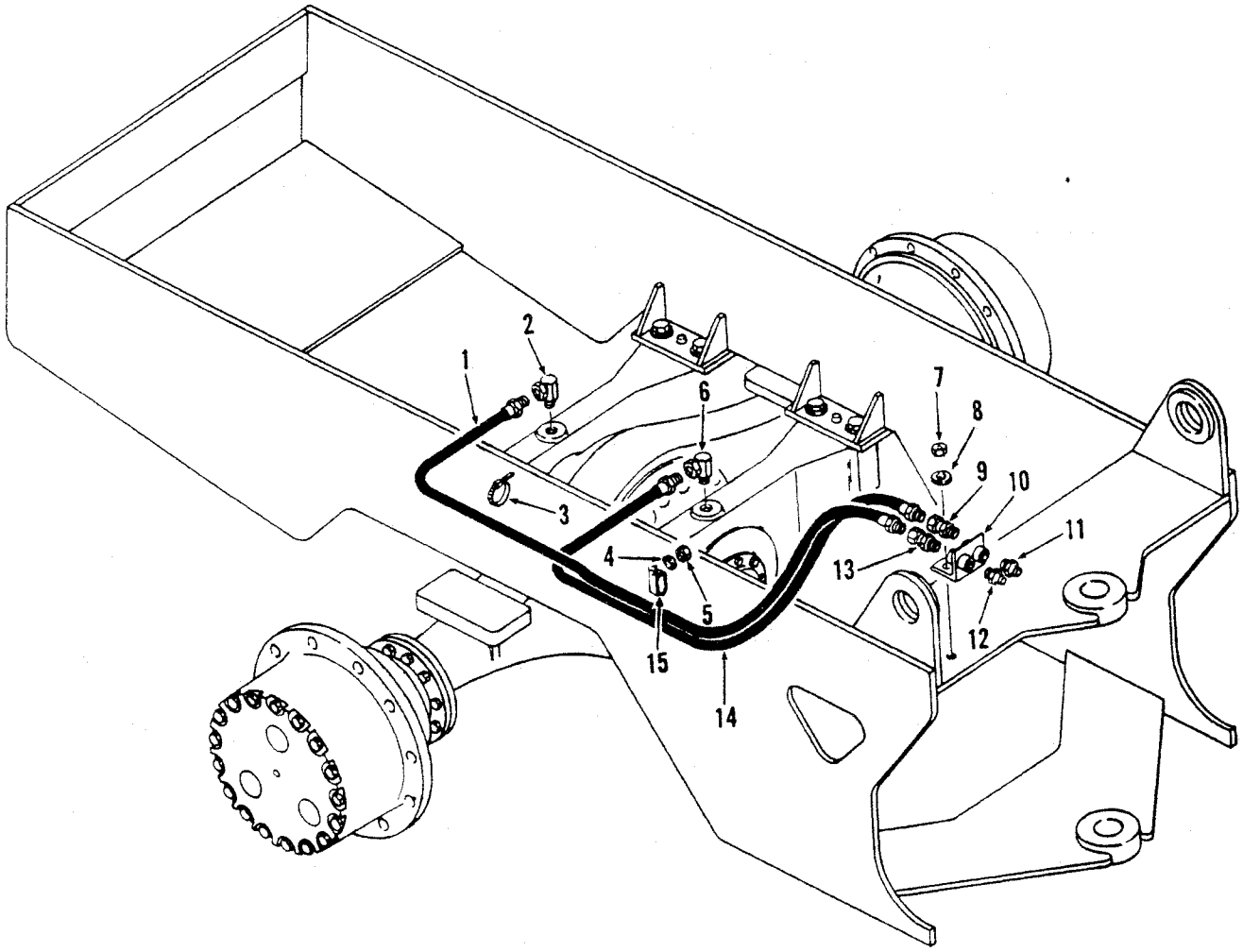

TS-20249

No.	Part No.	Qty.	Description
1	[2]1531342	1	Hose
1A	[3]1509185	1	Hose
2	31F1	1	Adapter
3	[2]1736910	2	Strap
3A	[3]2526968	2	Strap
4	27E6	1	Washer
5	59D6	1	Nut
6	31F1	1	Adapter
7	[2]59D6	1	Nut
8	[2]27E6	1	Washer
9	36F1	1	Adapter
10	2522682	1	Bracket
11	10H25	1	Fitting grease
12	10H25	1	Fitting grease
13	36F1	1	Adapter
14	[2]1538762	1	Hose
14A	[3]541547	1	Hose
15	31H27	1	Clip

[2]35C, 45C
[3]55C



1



2 3



4



5



6



7

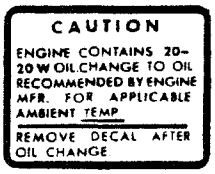

8



9

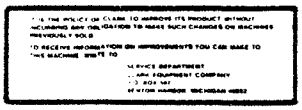

11



10

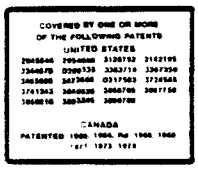

12

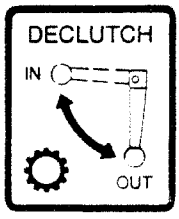

13

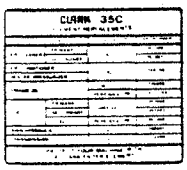

14

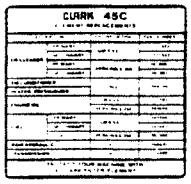

15

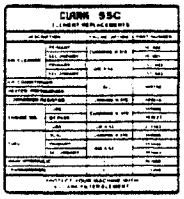

16



17



18

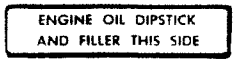

19



20



21

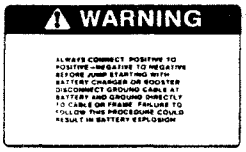

22

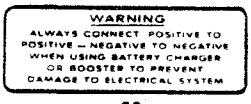

23

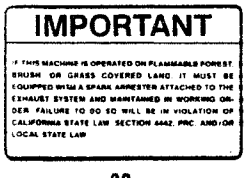

26



27

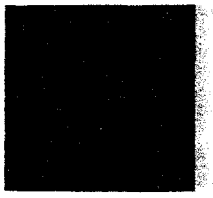

24



25



28

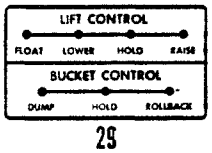

29

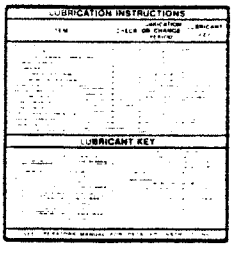

30



31

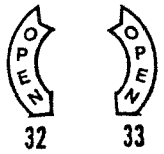

32

33



34

TS-15586

No.	Part No.	Qty.	Description
1	2513352	2	Decal
2	[2]2515356	2	Decal
3	[3]2515357	2	Decal
4	[4]2519738	2	Decal
5	[4]2513351	2	Decal
6	2513628	2	Decal
7	2513630	2	Decal
8	[5]2525419	1	Decal
8A	†[6]3587311	1	Decal
8B	†[7]3587312	1	Decal
8C	†[8]3900139	1	Decal
8D	†[9]3587313	1	Decal
8E	†[10]3240264	1	Decal
9	[5]2534194	2	Decal
9A	†[6]2537741	2	Decal
9B	†[7]2537742	2	Decal
9C	†[8]3966391	2	Decal
9D	†[9]3301471	2	Decal
9E	†[10]3240263	2	Decal
10	[5]2519348	1	Decal
10A	†[7]2520522	1	Decal
11	[5]2534209	1	Decal
11A	†[6]2537739	1	Decal
11B	†[7]2537940	1	Decal
12	2534215	1	Decal
13	[5]2523109	1	Decal
14	[2,5]2519469	1	Decal
15	[3,5]2519468	1	Decal
16	[4,5,13]2519765	1	Decal
16A	[4,5,14]2534994	1	Decal
16B	[4,5,14]2536236	1	Decal
17	[5]1513887	1	Tag
17A	†[6]3585991	1	Tag
17B	†[7]3585992	1	Tag
17C	†[8]3900140	1	Tag
17D	†[9]3301572	1	Tag
17E	†[10]3240254	1	Tag
18	[5]2519696	1	Decal
18A	†[7]2520525	1	Decal
19	[5]2506366	1	Decal
19A	†[7]2520523	1	Decal
20	[5]2519695	1	Decal
20A	†[7]2520524	1	Decal
21	[5]2508499	1	Decal
21A	†[7]2520526	1	Decal
22	[5]2534214	2	Decal
22A	†[6]2537735	2	Decal
22B	†[7]2537738	2	Decal
23	———	—	Omit
24	[2,3]2519431	4	Non skid
24A	[4]2528596	4	Non skid
24B	[4]2528203	1	Non skid
25	[5,11,12]1511708	1	Decal
25A	† [6,11,12]3586060	1	Decal
25B	† [7,11,12]3586061	1	Decal
25C	† [9,11,12]3587150	1	Decal
25D	†[10,11,12]3586993	1	Decal
26	[5]2534210	1	Decal
27	[5]1512863	1	Decal
27A	†[6]2526241	1	Decal
27B	†[7]2526242	1	Decal
28	[5]2534201	1	Decal
28A	†[6]2537736	1	Decal
28B	†[7]2537737	1	Decal
28C	†[8]3950540	1	Decal
28D	†[9]3300367	1	Decal
28E	†[10]3238055	1	Decal
29	[5]2534213	1	Decal
30	2524059	1	Decal
31	1509590	2	Non skid
31A	1531606	1	Non skid
32	[5]2522462	1	Decal
33	[5]2522461	1	Decal
34	[5]2508568	1	Decal
34A	[6]3586512	1	Decal
34B	[7]3586508	1	Decal
34C	[9]3586838	1	Decal
34C	[10]3586519	1	Decal
35	[4,5]2529446	1	Decal
35A	[4,6]2530016	1	Decal
35B	[4,7]2530017	1	Decal
36	[4,5]2535009	1	Decal

[2]35C
[3]45C
[4]55C
[5]English
[6]French
[7]German
[8]Japanese
[9]Portuguese
[10]Spanish
[11]G.M. only
[12]473A101CB → 473A208CB, 472A101CB → 472A164CB
[13]480A 481A
[14]480B 481B

Propeller Shaft Assembly: Mid-Mount Bearing/Front Axle — 35C — 45C

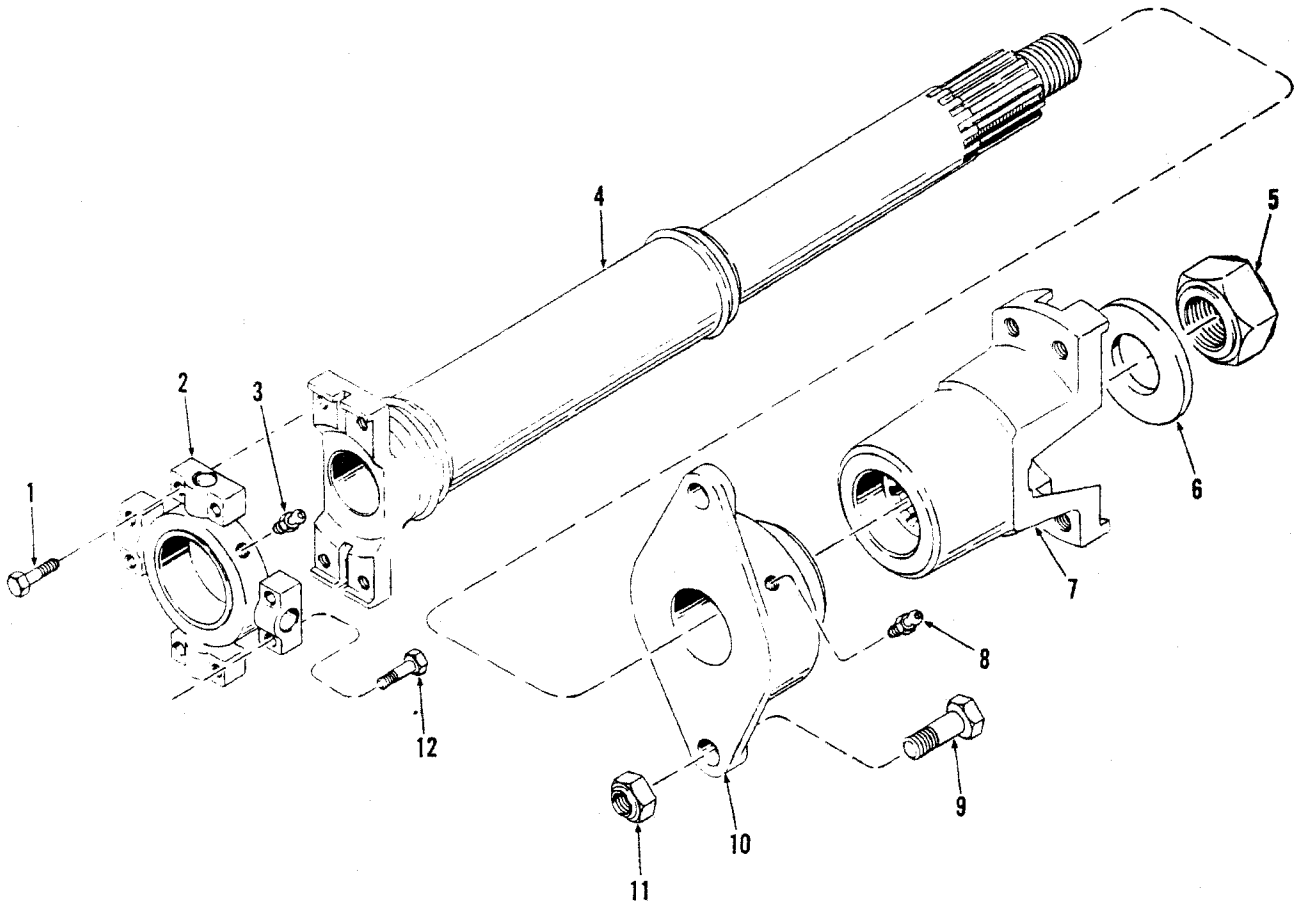

TS-14927

No.	Part No.	Qty.	Description
A	[2]2511899	1	Propeller shaft assy
1	18C628	4	Bolt
2	[3]944862	1	Spider u-joint
3	10H25	1	Grease fitting
4	961905	1	Tube assy
5	961909	1	Nut
6	25E32	1	Washer
7	961906	1	Yoke
8	10H25	1	Grease fitting
9	18C1040	2	Bolt
10	[4]961904	1	Bearing
11	60D10	2	Nut
12	18C628	4	Bolt

[2]Inc. 1→12
[3]Inc. 3
[4]Inc. 8

Propeller Shaft Assembly: Mid-Mount Bearing/Front Axle — 55C

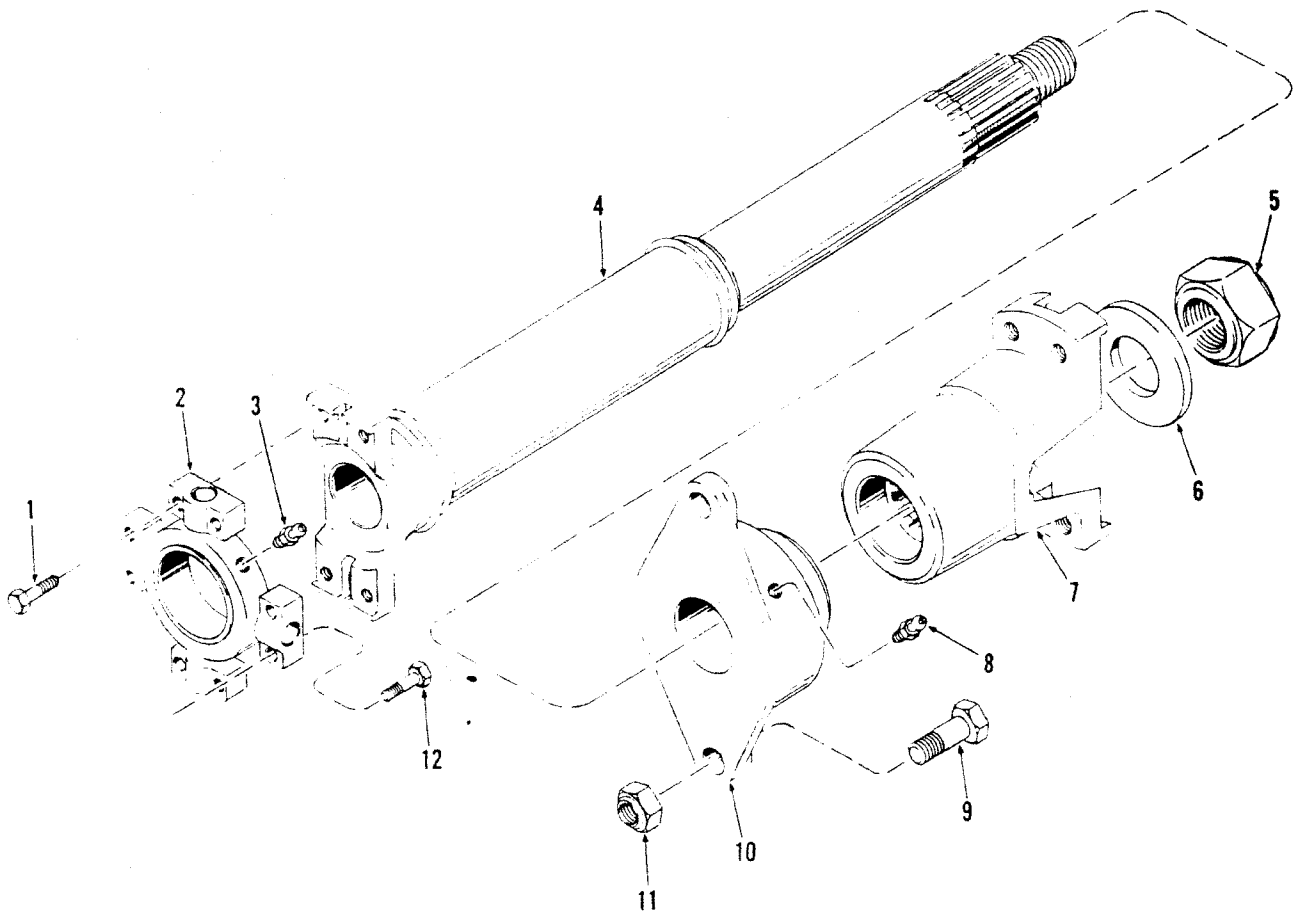

TS-14927

No.	Part No.	Qty.	Description
A	[2]2524562	1	Propeller shaft assy
1	18C628	4	Bolt
2	[3]944862	1	Spider u-joint
3	10H35	1	Grease fitting
4	963103	1	Tube assy
5	961909	1	Nut
6	963105	1	Washer
7	961906	1	Yoke
8	10H35	1	Grease fitting
9	18C1040	2	Bolt
10	[4]963104	1	Bearing
11	60D10	2	Nut
12	18C628	4	Bolt

[2]Inc. 1→8, 10, 12
[3]Inc. 3
[4]Inc. 8

Propeller Shaft Assembly, Transmission/Mid-Mount Bearing

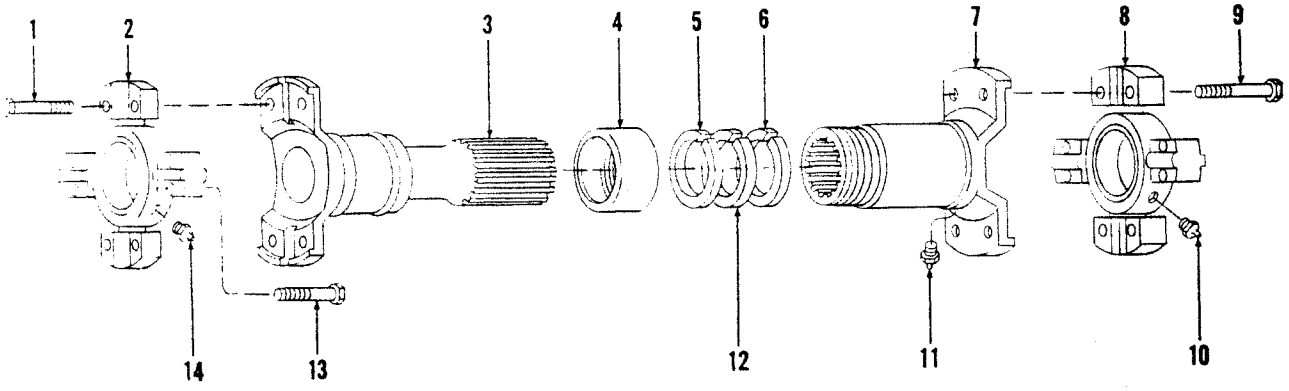

TS-15103

No.	Part No.	Qty.	Description
A	[2]2511928	1	Propeller shaft
1	18C628	4	Bolt
2	[3]944862	1	Spider u-joint
3	961903	1	Yoke
4	940090	1	Retainer
5	5299100	1	Washer
6	5299100	1	Washer
7	1991313	1	Yoke
8	[4]944862	1	Spider u-joint
9	18C628	4	Bolt
10	10H25	1	Grease fitting
11	10H25	1	Grease fitting
12	5299099	1	Seal
13	18C628	8	Bolt
14	10H25	1	Grease fitting

[2]Inc. 1→14
[3]Inc. 14
[4]Inc. 10

Propeller Shaft Assembly, Rear Axle/Transmission — 35C — 45C

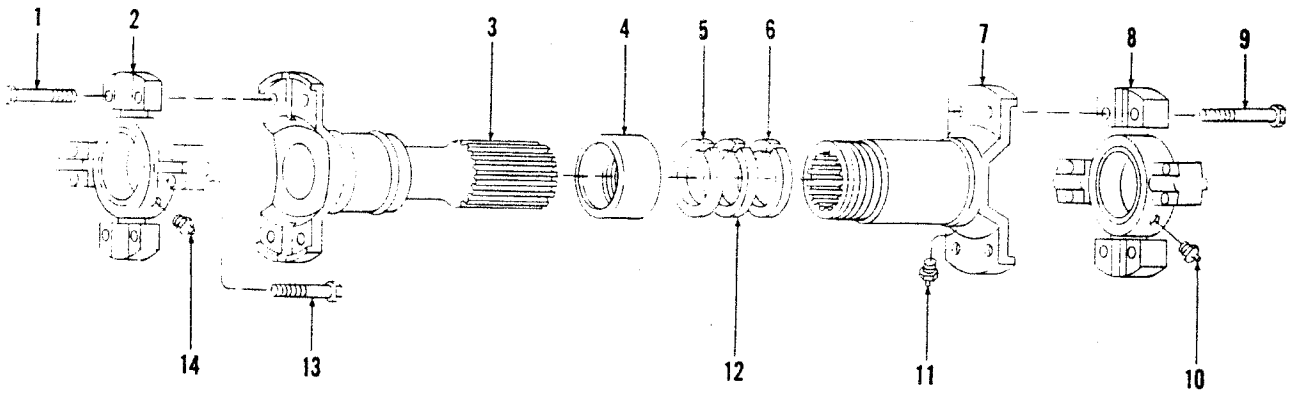

TS-15103

No.	Part No.	Qty.	Description
A	[2]2517047	1	Propeller shaft
1	18C628	4	Bolt
2	[3]944862	1	Spider u-joint
3	961907	1	Yoke
4	940090	1	Retainer
5	5299100	1	Washer
6	5299100	1	Washer
7	961908	1	Yoke
8	[4]944862	1	Spider u-joint
9	18C628	4	Bolt
10	10H25	1	Grease fitting
11	10H25	1	Grease fitting
12	5299099	1	Seal
13	18C628	8	Bolt
14	10H25	1	Grease fitting

[2]Inc. 1→14
[3]Inc. 14
[4]Inc. 10

Propeller Shaft Assembly, Rear Axle/Transmission – 55C

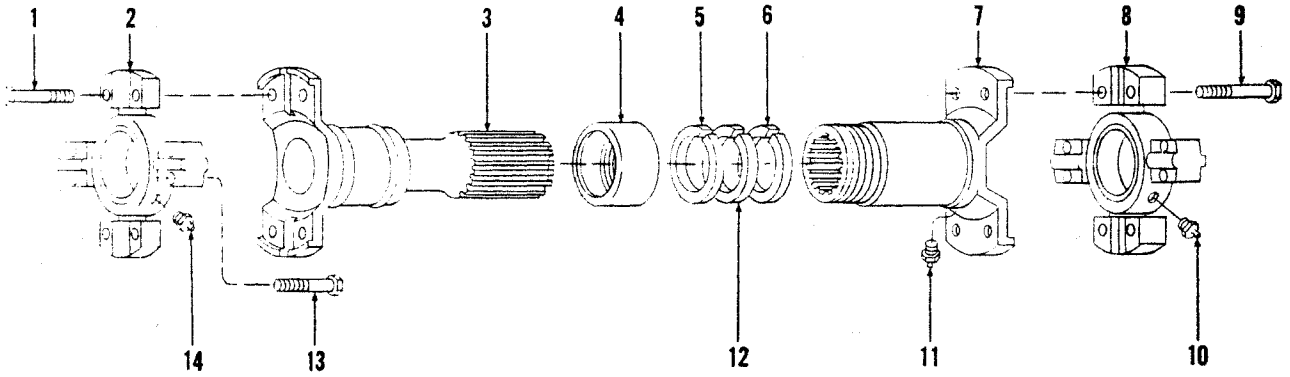

TS-15103

No.	Part No.	Qty.	Description
A	[2]2524144	1	Propeller shaft
1	18C628	4	Bolt
2	[3]963090	1	Spider u-joint
3	963204	1	Yoke
4	940090	1	Retainer
5	963086	1	Washer
6	963086	1	Washer
7	1991277	1	Yoke
8	[4]944862	1	Spider u-joint
9	18C628	4	Bolt
10	10H25	1	Grease fitting
11	10H25	1	Grease fitting
12	963087	1	Seal
13	18C628	8	Bolt
14	10H25	1	Grease fitting

[2]Inc. 1→14
[3]Inc. 14
[4]Inc. 10

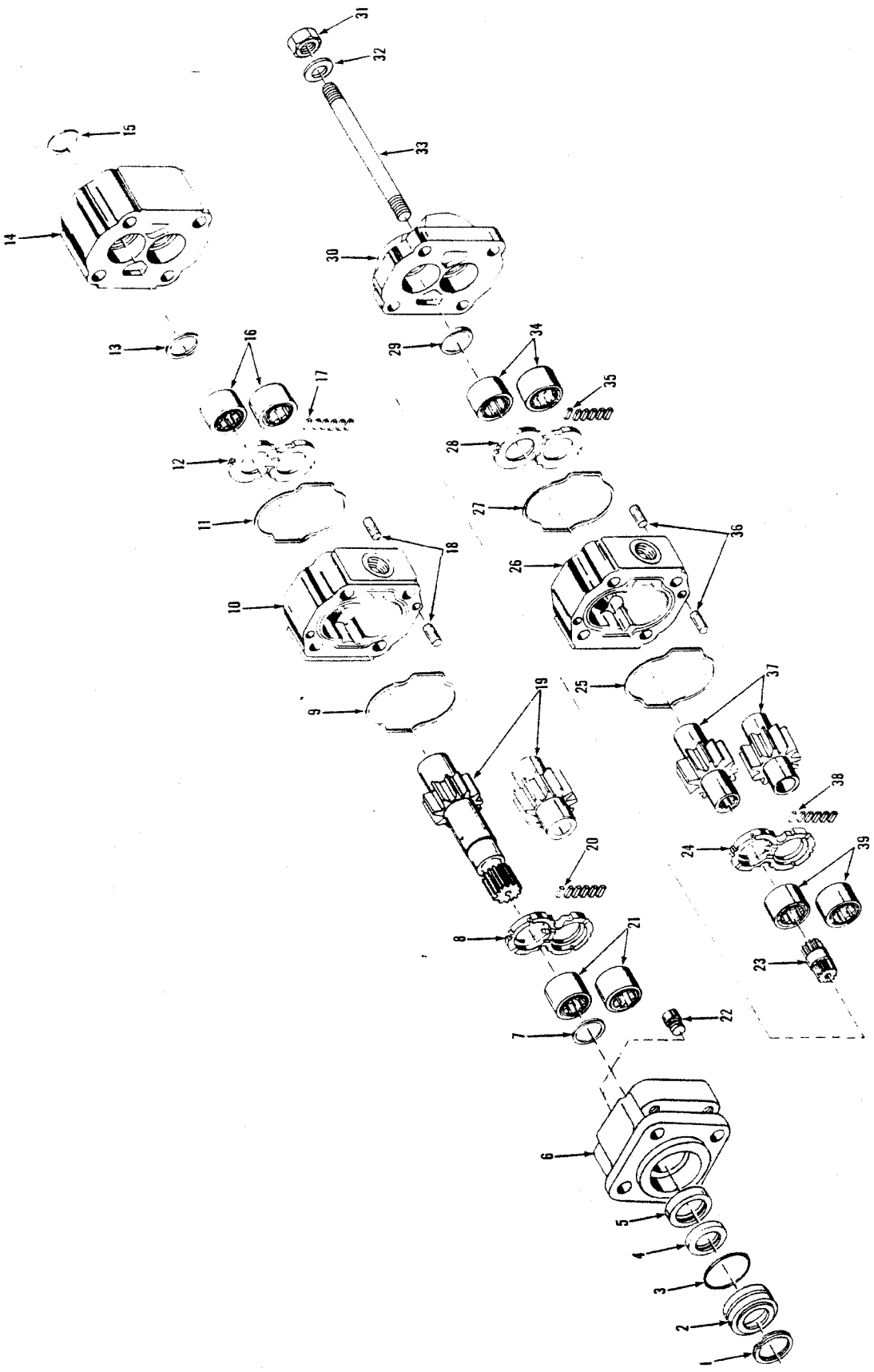
TS-15140
31
32
33
15
14
30
13
16
17
29
34
35
12
28
11
27
36
18
10
26
9
19
25
37
38
20
24
39
8
21
23
7
22
6
5
4
3
2
1

Pump Assembly — 35C

CLARK

No.	Part No.	Qty.	Description
A	[2]2517917	1	Pump assy
1	876354	1	Snap ring
2	948795	1	Retainer
3	25K30128	1	O-ring
4	946396	1	Seal
5	946397	1	Seal
6	961865	1	Cover
7	1566986	1	Seal
8	4525950	1	Thrust plate
9	1566982	1	Seal
10	961869	1	Housing
11	1566982	1	Seal
12	4525950	1	Thrust plate
13	1566986	1	Seal
14	961868	1	Carrier
15	1566986	1	Seal
16	1566983	2	Bearing
17	[3,4]1566984	1	Seal
18	4525576	4	Dowel
19	898704	1	Gear set
20	[5]———	1	Seal
21	1566983	2	Bearing
22	1566881	1	Plug
23	898706	1	Shaft
24	4525950	1	Thrust plate
25	1566982	1	Seal
26	961869	1	Housing
27	1566982	1	Seal
28	4525950	1	Thrust plate
29	1566986	1	Seal
30	4525754	1	Cover
31	61D10	4	Nut
32	946401	4	Washer
33	3284570	4	Studs
34	1566983	2	Bearing
35	[4,6]1566984	1	Seal
36	4525576	4	Dowel
37	1578503	1	Gear set
38	[7]———	1	Seal
39	1566983	2	Bearing

[2]Inc. 1→39
[3]Inc. 20
[4]Cut 12 pieces from this strip.
[5]See 17
[6]Inc. 38
[7]See 35

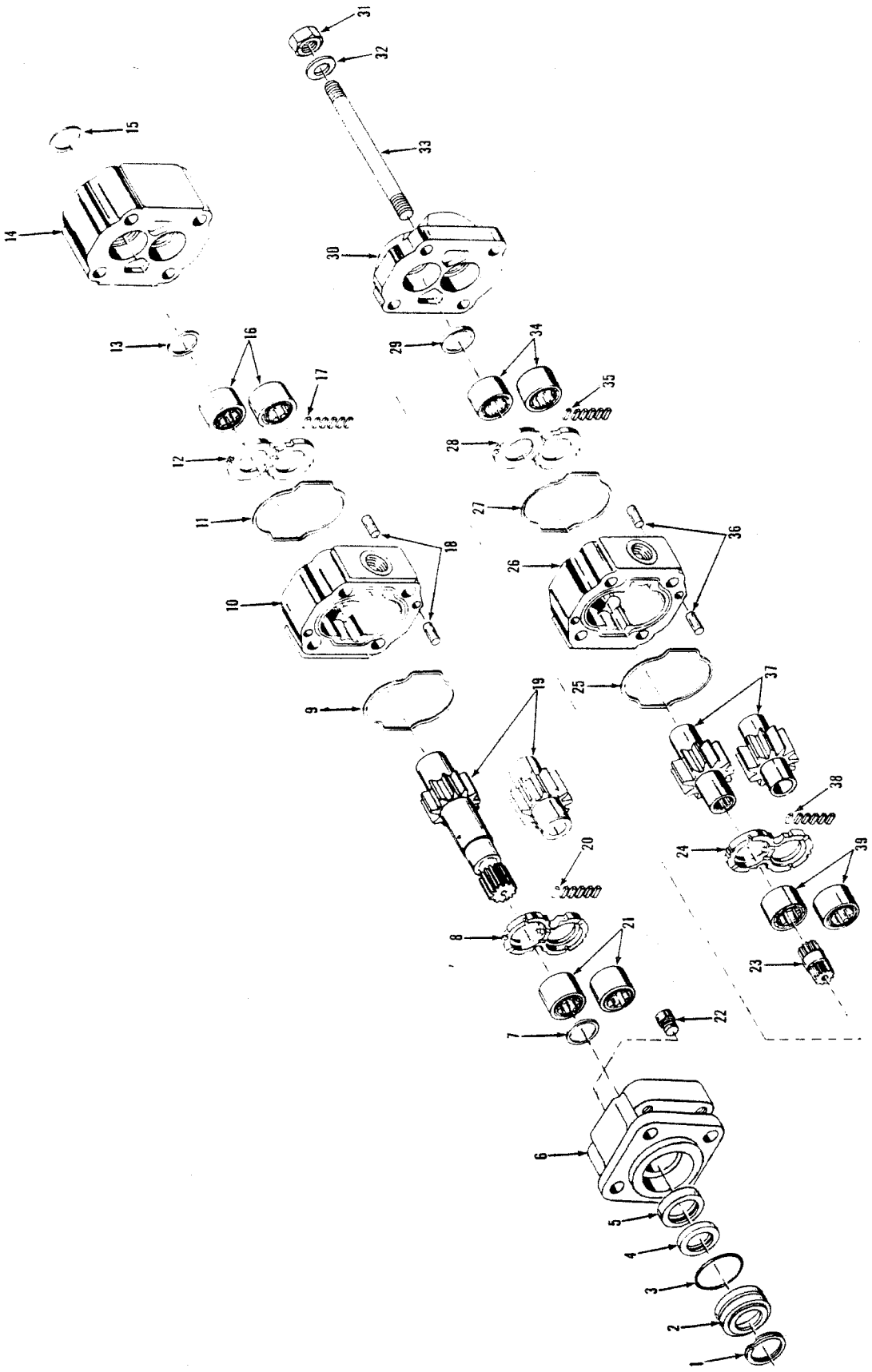
TS-15140
31
32
33
15
14
30
13
16
17
29
34
35
12
28
11
27
18
36
10
26
9
19
25
37
38
20
24
39
8
21
23
22
7
6
5
4
3
2

Pump Assembly — 45C

CLARK

No.	Part No.	Qty.	Description
A	[2]2518069	1	Pump assy
1	876354	1	Snap ring
2	948795	1	Retainer
3	25K30128	1	O-ring
4	946396	1	Seal
5	946397	1	Seal
6	961865	1	Cover
7	1566986	1	Seal
8	961866	1	Thrust plate
9	1566982	1	Seal
10	961867	1	Housing
11	1566982	1	Seal
12	961866	1	Thrust plate
13	1566986	1	Seal
14	961868	1	Carrier
15	1566986	1	Seal
16	1566983	2	Bearing
17	[3 4]1566984	1	Seal
18	4525576	4	Dowel
19	3284568	1	Gear set
20	[5]———	1	Seal
21	1566983	2	Bearing
22	1566881	1	Plug
23	898706	1	Shaft
24	961866	1	Thrust plate
25	1566982	1	Seal
26	961869	1	Housing
27	1566982	1	Seal
28	961866	1	Thrust plate
29	1566986	1	Seal
30	4525754	1	Cover
31	61D10	4	Nut
32	946401	4	Washer
33	948267	4	Studs
34	1566983	2	Bearing
35	[4 6]1566984	1	Seal
36	4525576	4	Dowel
37	1578503	1	Gear set
38	[7]———	1	Seal
39	1566983	2	Bearing

[2]Inc. 1→39
[3]Inc. 20
[4]Cut 12 pieces from this strip.
[5]See 17
[6]Inc. 38
[7]See 35

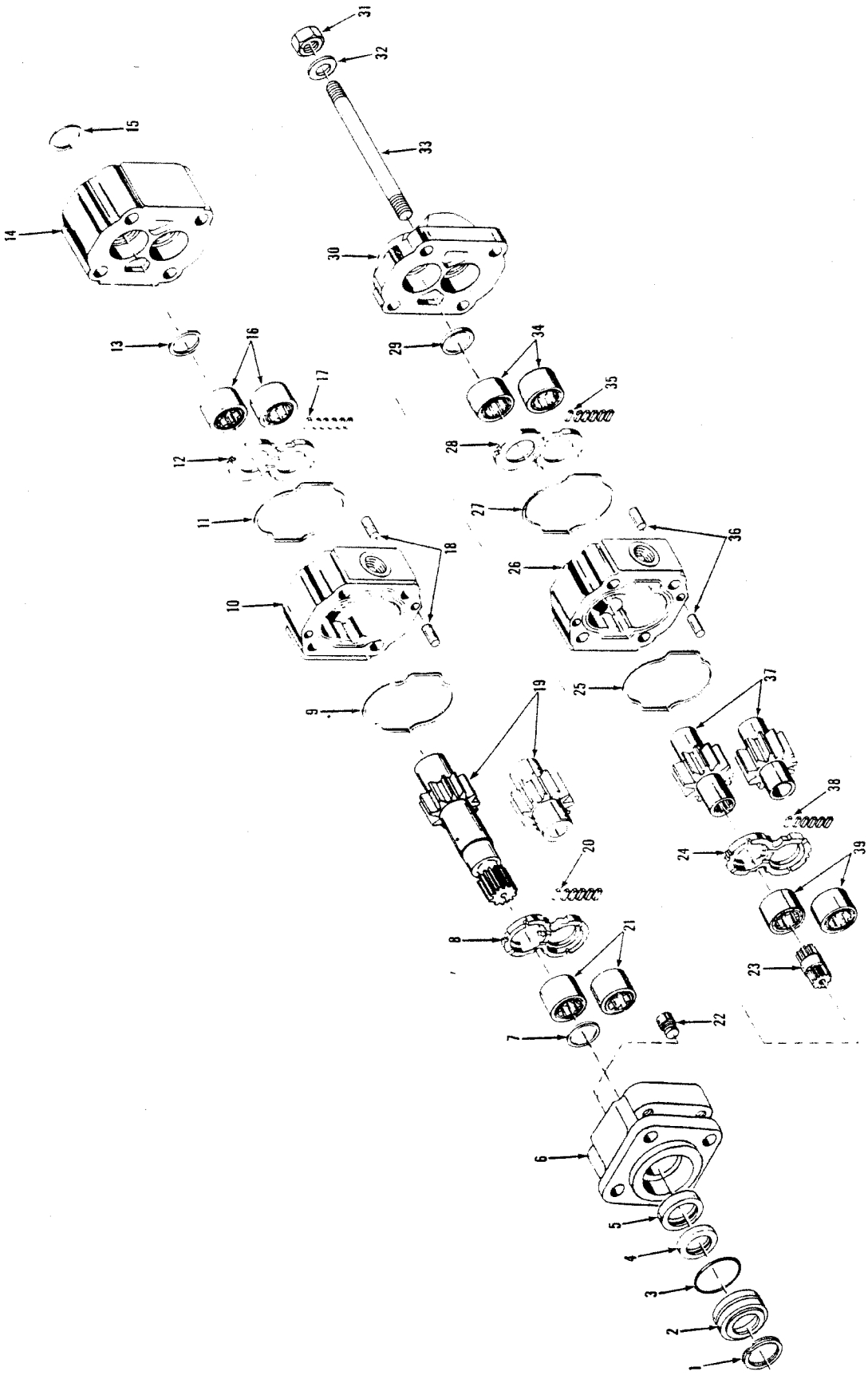
TS-15140
1
2
3
4
5
6
7
8
9
10
11
12
13
14
15
16
17
18
19
20
21
22
23
24
25
26
27
28
29
30
31
32
33
34
35
36
37
38
39

Pump Assembly — 55C

CLARK

No.	Part No.	Qty.	Description
A	[2]2515558	1	Pump assy
1	876354	1	Snap ring
2	948795	1	Retainer
3	25K30128	1	O-ring
4	946396	1	Seal
5	946397	1	Seal
6	961865	1	Cover
7	1566986	1	Seal
8	4525950	1	Thrust plate
9	1566982	1	Seal
10	963280	1	Housing
11	1566982	1	Seal
12	4525950	1	Thrust plate
13	1566986	1	Seal
14	961868	1	Carrier
15	1566986	1	Seal
16	1566983	2	Bearing
17	[3,4]5297074	1	Seal
18	4525576	4	Dowel
19	963279	1	Gear set
20	[5]———	1	Seal
21	1566983	2	Bearing
22	1566881	1	Plug
23	898706	1	Shaft
24	4525950	1	Thrust plate
25	1566982	1	Seal
26	961869	1	Housing
27	1566982		Seal
28	4525950	1	Thrust plate
29	1566986	1	Seal
30	4525754	1	Cover
31	61D10	4	Nut
32	946401	4	Washer
33	1566879	4	Studs
34	1566983	2	Bearing
35	[4,6]5297074	1	Seal
36	4525576	4	Dowel
37	1578503	1	Gear set
38	[7]———	1	Seal
39	1566983	2	Bearing

[2]Inc. 1→39
[3]Inc. 20
[4]Cut 12 pieces from this strip.
[5]See 17
[6]Inc. 38
[7]See 35

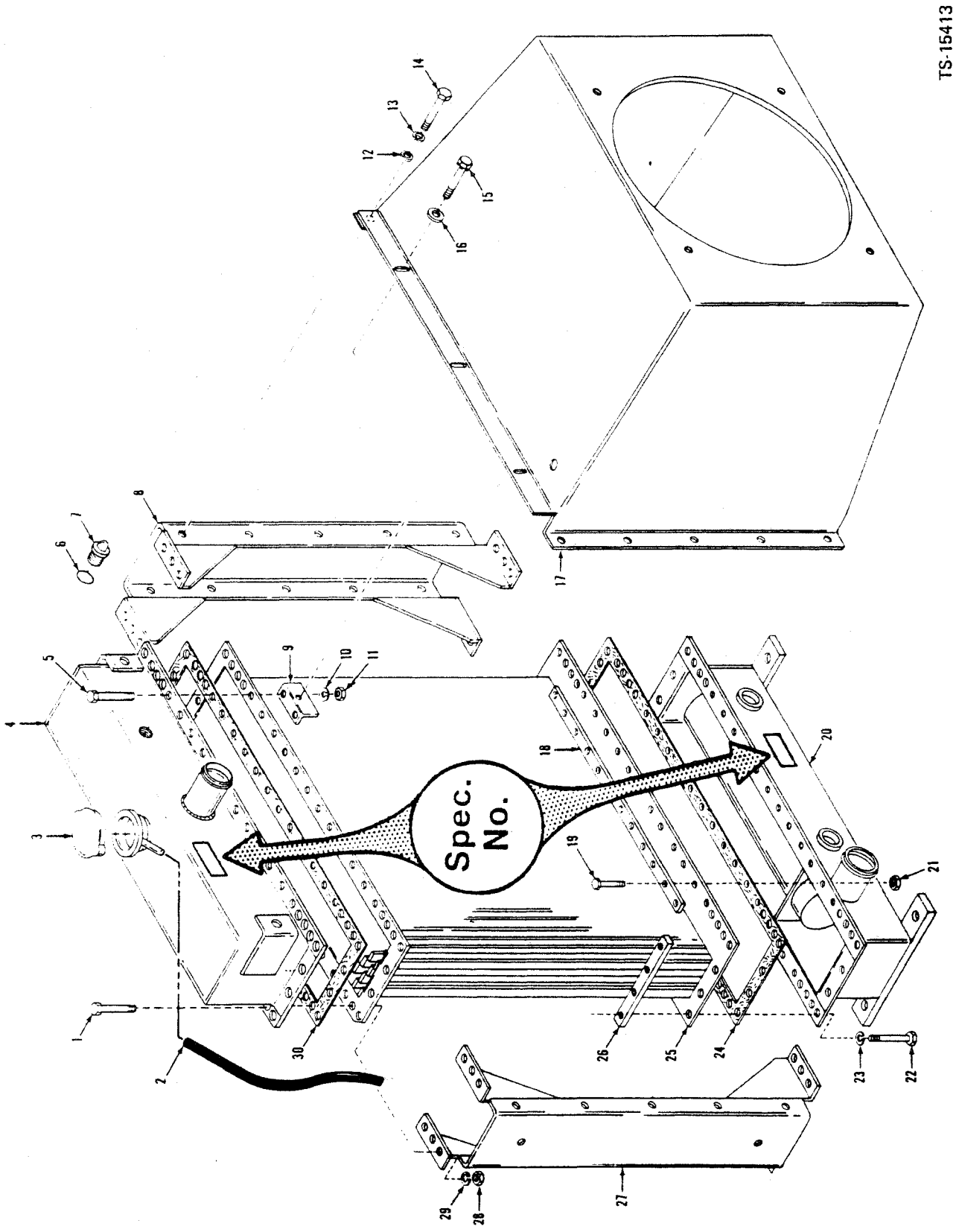
TS-15413
Spec. No.

Radiator Assembly —
G & O Spec. 2524592, 2530812, 2537384 ONLY

CLARK

No.	Part No.	Qty.	Description
A	[1,8]2524591	1	Radiator assy
B	[1,9]2530850	1	Radiator assy
C	[1,6]2537383	1	Radiator assy
1	17C618	36	Bolt
2	[2]784717	1	Hose
2A	†30H34	2	Clip
3	[3]962329	1	Cap
4	962295	1	Tank top
4A	964854	1	Tank top
5	17C618	35	Bolt
6	91F6	1	O-ring
7	[4]962330	1	Sight glass
8	962301	1	Side column
8A	964096	1	Side column
9	962302	6	Clip
10	4E6	35	Washer
11	63D6	35	Nut
12	2525070	10	Washer
13	———	—	Omit
14	17C512	10	Bolt
15	17C412	6	Bolt
16	2525069	6	Washer
17	[5]2526672	1	Shroud assy
17A	[7]2526673	1	Shroud assy
17B	[10]2524288	1	Shroud assy
18	962299	4	Bar
19	17C616	1	Bolt
20	[12]962303	1	Bottom tank
20A	964855	1	Bottom tank
21	59D6	1	Nut
22	17C614	16	Bolt
23	4E8	16	Washer
24	962297	1	Gasket
25	962300	1	Core assy
25A	964857	1	Core
26	962298	4	Bar
26A	964859	4	Bar
27	962301	1	Side column
27A	964096	1	Side column
28	63D6	36	Nut
29	4E6	36	Washer
30	962297	1	Gasket

[1]Inc. 1 → 4, 5 → 8, 9 → 20, 21 → 25, 26, 27, 28, 30
[2]1,27 m (4.2 ft.)
[3]3,2 kg (7 lbs.)
[4]Inc. 6
[5]G.M.
[7]Perkins
[8]458A 459A 472A 473A
[9]480A101CB & → 480B101CB → 155CB
[10]480A, 480B
[11]Inc. 1 → 3, 4A → 7, 8A → 19, 20A → 24, 25A, 26A, 27A, 28, 30
[12]For complete replacement use 964559 plus 2—15K10.

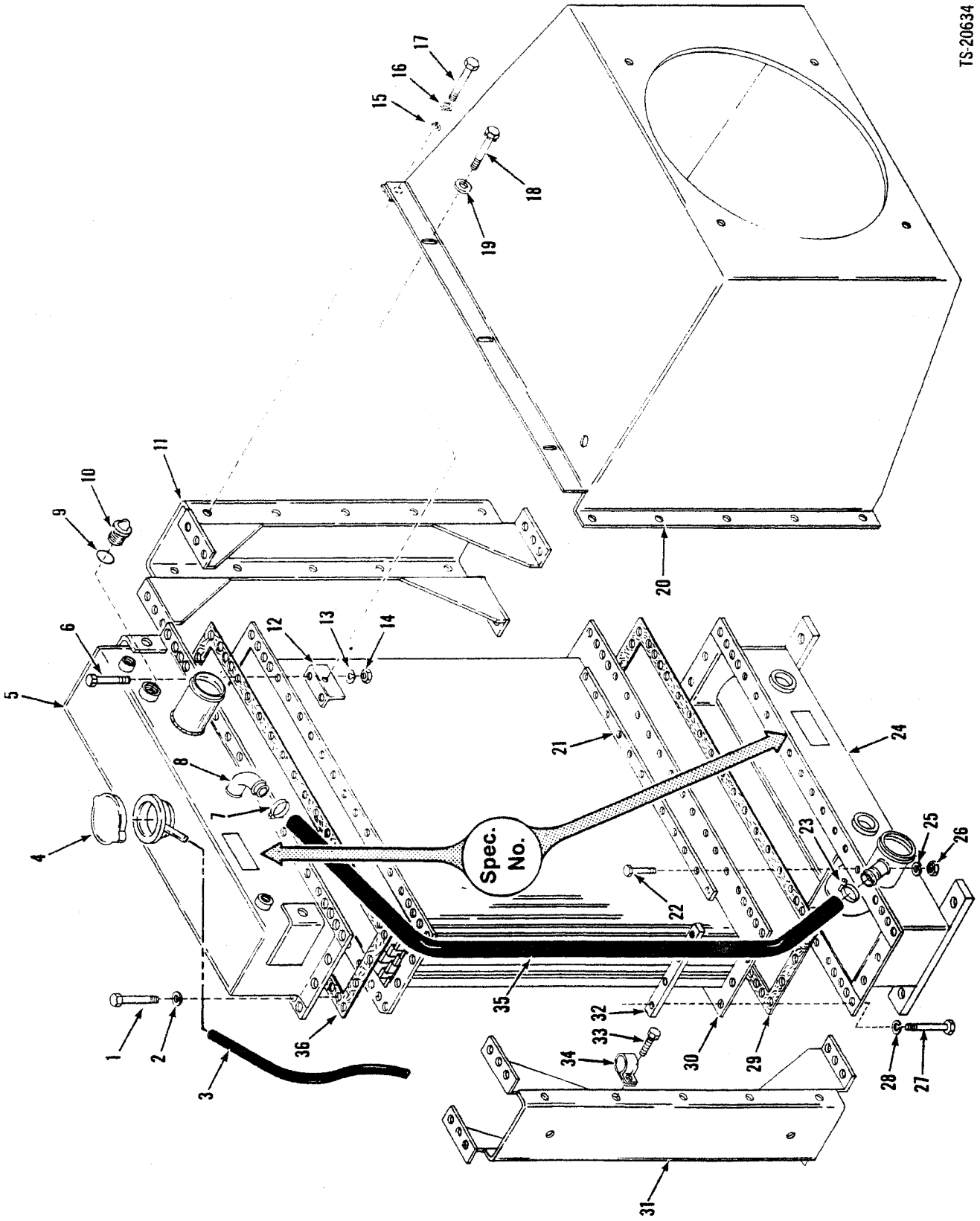
TS-20634
Spec. No.
1
2
3
4
5
6
7
8
9
10
11
12
13
14
15
16
17
18
19
20
21
22
23
24
25
26
27
28
29
30
31
32
33
34
35
36

Radiator Assembly, G & O —
Radiator for Spec. 2530813, 2537386 ONLY

No.	Part No.	Qty.	Description
A	[2,7]2530851	1	Radiator assy
B	[3,9]2537385	1	Radiator assy
1	17C614	8	Bolt
2	4E6	8	Washer
3	[3]784717	1	Hose
4	[4]962329	1	Cap
5	[7]964094	1	Top tank
5A	[9]964856	1	Top tank
6	17C618	36	Bolt
7	42H24	1	Clamp
8	§[5]———	—	Nipple
9	91F6	1	O-ring
10	962330	1	Slight glass
11	[7]964096	1	Side column
11A	[9]964858	1	Side column
12	962302	6	Clip
13	4E6	36	Washer
14	63D6	36	Nut
15	2525070	10	Washer
16	———	—	Omit
17	17C512	10	Bolt
18	17C412	6	Bolt
19	2525069	6	Washer
20	2531149	1	Shroud assy
21	[7]962299	4	Bar
21A	[9]964859	4	Bar
22	17C618	35	Bolt
23	42H24	1	Clamp
24	[7]964097	1	Bottom tank
24A	[9]964559	1	Bottom tank
25	4E6	35	Washer
26	63D6	35	Nut
27	17C614	8	Bolt
28	4E6	8	Nut
29	962297	1	Gasket
30	[7]962300	1	Core
30A	[9]964857	1	Core
31	[7]964096	1	Side column
31A	[9]964858	1	Side column
32	962298	4	Bar
33	5C408	2	Screw
34	964099	2	Clip
35	[6]1M3830	1	Hose
36	962297	1	Gasket

[2]Inc. 1 → 5, 6 → 11, 12 → 21, 22, 23, 24, 25 → 30, 31, 32 → 36
[3]1.27 m (4.2 ft.)
[4]3.2 kg (7 lbs.)
[5]See 5
[6](38.5 in.)
[7]481A101CB & →, 481B101CB → 142CB, 144CB → 147CB
[8]Inc. 1 → 4, 5A → 10, 11A → 20, 21A, 23, 24A → 29, 30A, 31A → 36
[9]481A143CB, 145CB, 146CB, 148CB & →

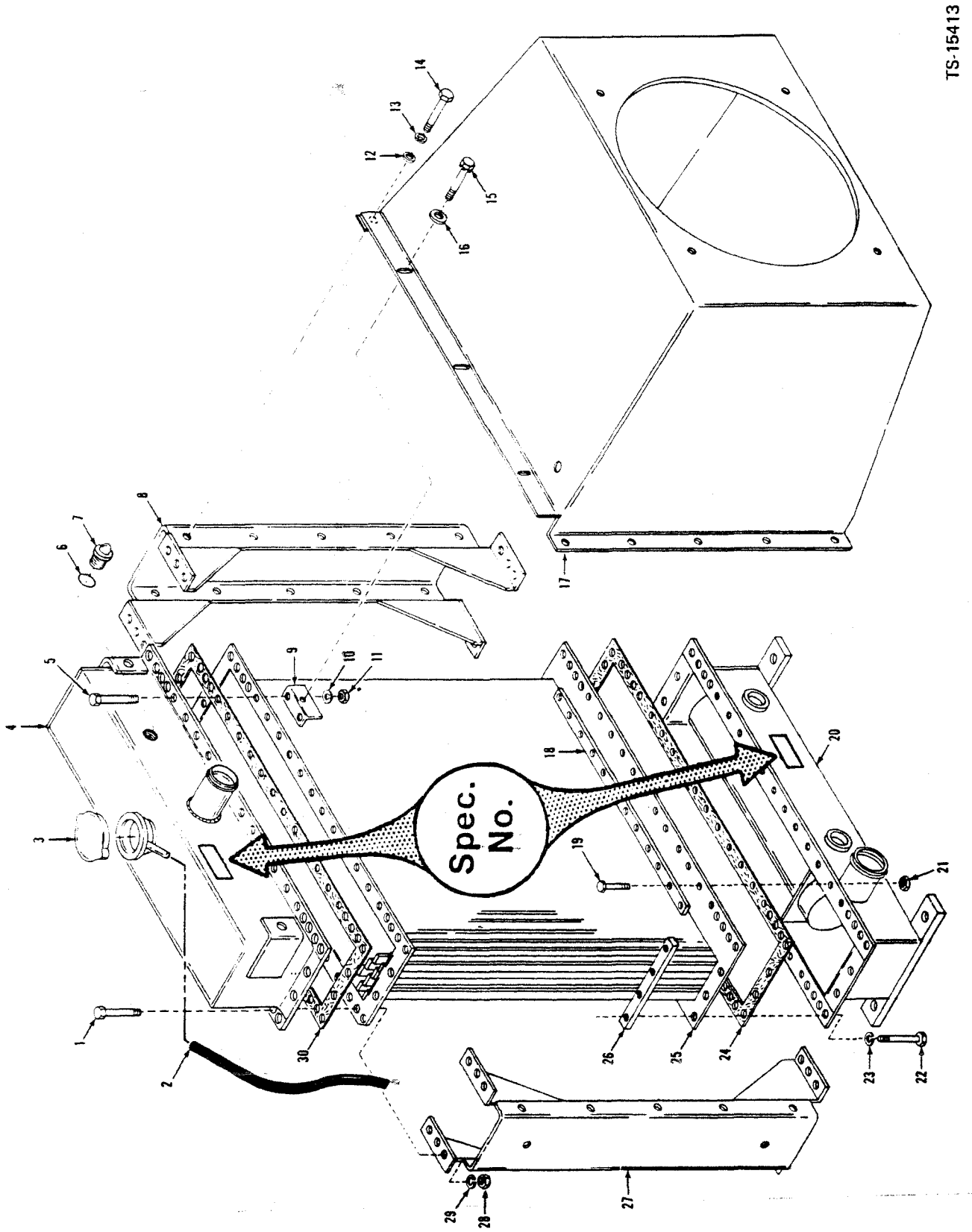
TS-15413
Spec. No.
1
2
3
4
5
6
7
8
9
10
11
12
13
14
15
16
17
18
19
20
21
22
23
24
25
26
27
28
29
30

Radiator Assembly, Stewart Warner – Radiator for Spec. 2524593 ONLY

CLARK

No.	Part No.	Qty.	Description
A	[1,12]2524591	1	Radiator assy
B	[11]2530850	1	Radiator assy
1	1C716	1	Bolt
2	[2]784717	1	Hose
3	[3]999244	1	Cap
4	963121	1	Tank top
5	1C616	12	Bolt
6	91F6	1	O-ring
7	[4]963141	1	Sight glass
8	963146	1	Side column LH
9	963128	6	Clip
10	4E6	12	Washer
11	1D6	12	Nut
12	2525070	10	Washer
13	———	—	Omit
14	17C512	10	Bolt
15	17C412	6	Bolt
16	2525069	6	Washer
17	[5]962305	1	Shroud assy
17A	[6]962306	1	Shroud assy
17B	[7]962307	1	Shroud assy
17C	[8]962308	1	Shroud assy
17D	[9]2524288	1	Shroud assy
18	963126	4	Bar
19	1C614	24	Bolt
20	963122	1	Bottom tank
21	1D6	24	Nut
21A	†4E6	24	Washer
22	1C714	16	Bolt
23	4E7	16	Washer
24	963127	1	Gasket
25	963124	1	Core assy
26	963135	4	Bar
27	963147	1	Side column RH
28	61D7	24	Nut
29	4E6	24	Washer
30	963127	1	Gasket

[1]Inc. 1 → 11, 18 → 30
[2]1.27 m (4.2 ft.)
[3]3.2 kg (7 lbs.)
[4]Inc. 6
[5]35C Detroit
[6]45C Detroit
[7]35C Perkins
[8]45C Perkins
[9]480A 480B
[10]481A, 481B
[11]480A101CB & → 480B101CB → 155CB
[12]458A 459A 472A 473A

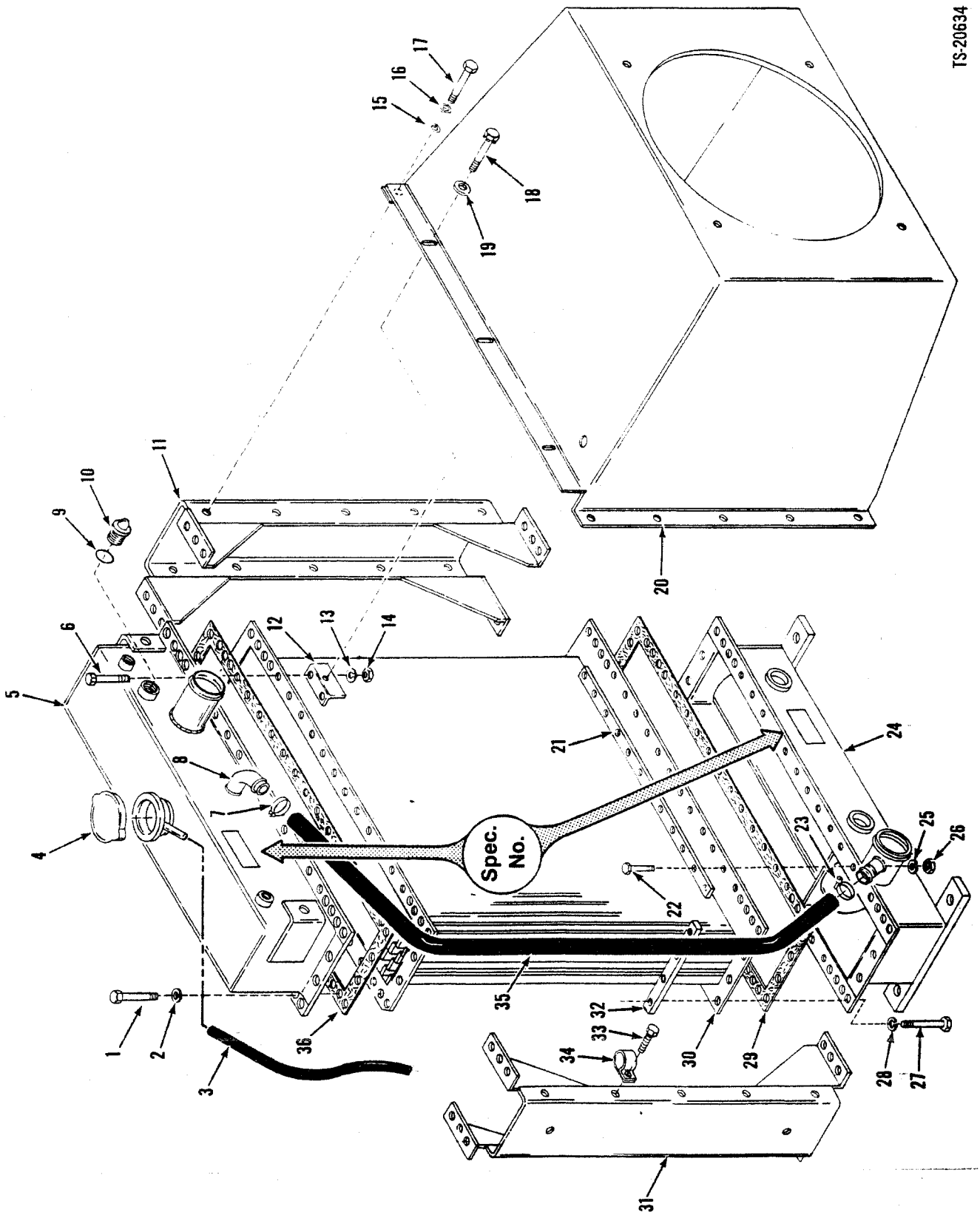
TS-20634
Spec. No.
1
2
3
4
5
6
7
8
9
10
11
12
13
14
15
16
17
18
19
20
21
22
23
24
25
26
27
28
29
30
31
32
33
34
35
36

Radiator Assembly, Stewart Warner — Radiator for Spec. 2524719 ONLY

CLARK

No.	Part No.	Qty.	Description
A	[2,8]2530851	1	Radiator
1	1C614	8	Bolt
2	4E6	8	Washer
3	[3]784717	1	Hose
4	[4]999244	1	Cap
5	964098	1	Top tank
6	1C714	36	Bolt
7	42H20	1	Clamp
8	§[5]———	—	Nipple
9	91F6	1	O-ring
10	963141	1	Sight glass
11	964104	1	Side column
12	963128	6	Clip
13	4E7	36	Washer
14	61D7	36	Nut
15	2525070	10	Washer
16	———	—	Omit
17	17C512	10	Bolt
18	17C412	6	Bolt
19	2525069	6	Washer
20	[7]2531149	1	Shroud assy
20A	[6]2524721	1	Shroud assy
21	963126	4	Bar
22	1C716	36	Bolt
23	42H20	1	Clamp
24	964106	1	Bottom tank
25	4E6	36	Washer
26	61D6	36	Nut
27	1C616	8	Bolt
28	4E6	8	Nut
29	963127	1	Gasket
30	963124	1	Core
31	964100	1	Side column
32	962126	4	Bar
33	1C512	2	Screw
34	964099	2	Clip
35	964101	1	Hose
36	963127	1	Gasket

[2]Inc. 1 → 15. 21 → 35
[3]1,27 m (4.2 ft.)
[4]3,2 kg (7 lbs.)
[5]See 5
[6]481A
[7]481B
[8]481A101CB & → 481B101CB → 142CB 144CB → 147CB

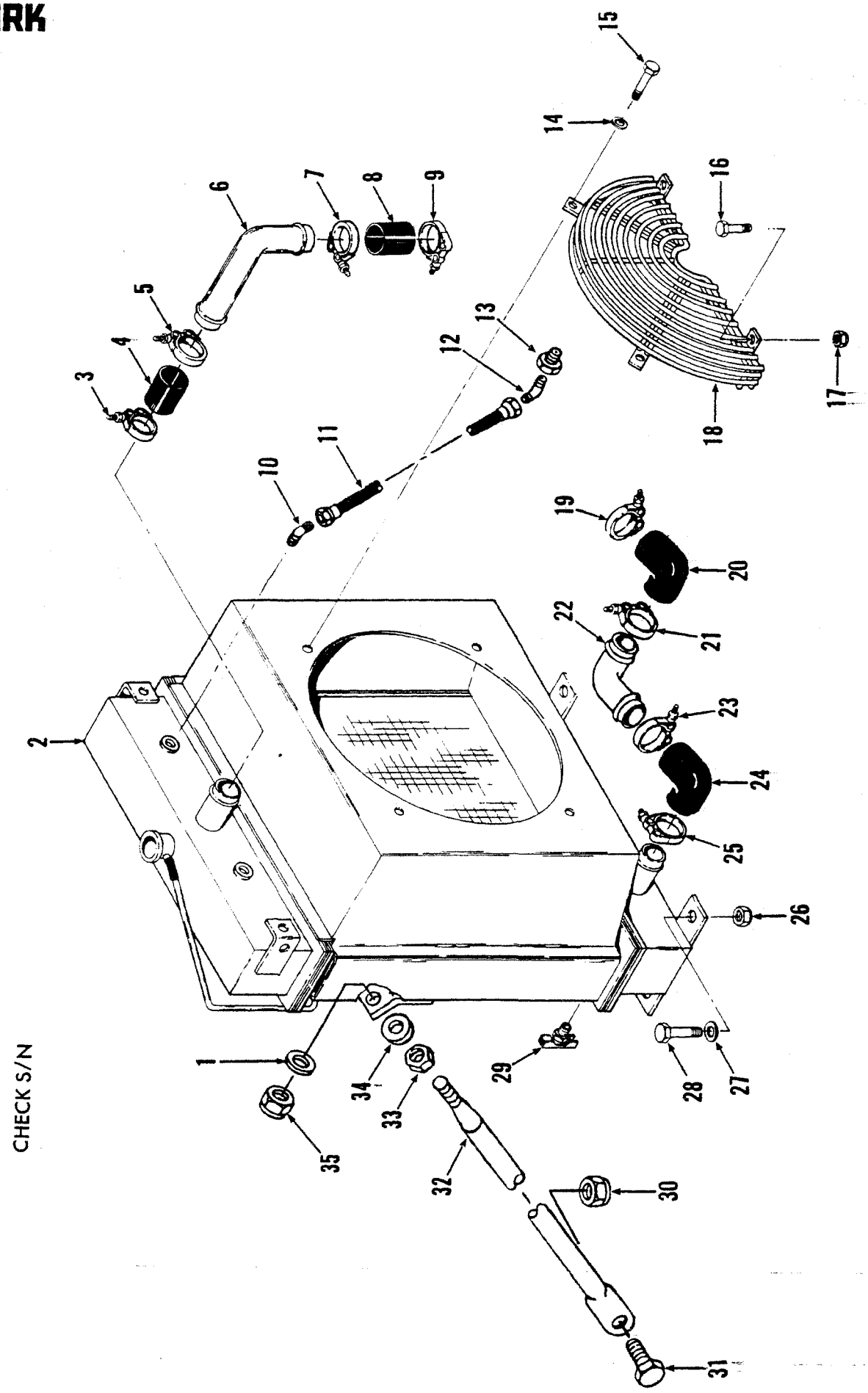
CHECK S/N
TS-15689

No.	Part No.	Qty.	Description
1	59D8	2	Nut
2	[1]———	1	Radiator
3	42H36	1	Clamp
4	1M16030	1	Hose
5	42H36	1	Clamp
6	2518897	1	Tube
7	42H36	1	Clamp
8	1M16030	1	Hose
9	42H36	1	Clamp
10	84F3	2	Elbow
11	1902362	2	Hose
12	84F3	2	Elbow
13	19F4	1	Reducer
14	27E6	4	Washer
15	17C616	4	Bolt
16	17C616	2	Bolt
17	59D6	2	Nut
18	2515118	2	Guard
19	42H36	1	Clamp
20	537473	1	Elbow
21	42H36	1	Clamp
22	2518896	1	Tube
23	42H36	1	Clamp
24	571570	1	Elbow
25	42H36	1	Clamp
26	59D8	4	Nut
27	27E8	8	Washer
28	17C832	4	Bolt
29	72F2	1	Drain cock
30	60D8	2	Nut
31	17C820	2	Bolt
32	2526812	2	Rod
33	8D8	2	Nut
34	27E8	2	Washer
35	27E8	2	Washer

*481A

[1]See Index

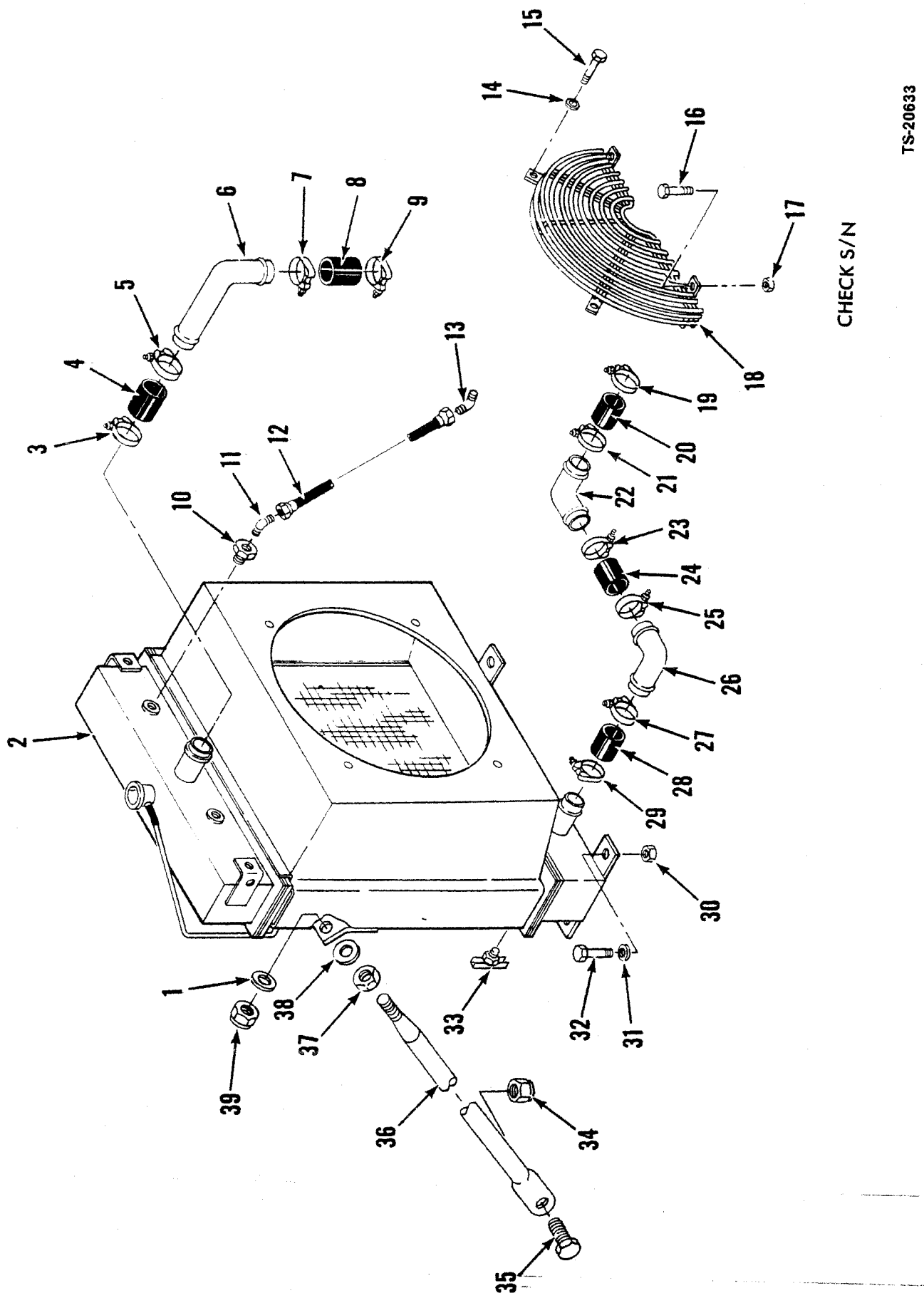
TS-20633
CHECK S/N
1
2
3
4
5
6
7
8
9
10
11
12
13
14
15
16
17
18
19
20
21
22
23
24
25
26
27
28
29
30
31
32
33
34
35
36
37
38
39

Radiator & Connections — Cummins — 55C*

CLARK

No.	Part No.	Qty.	Description
1	59D8	2	Nut
2	[1]———	1	Radiator
3	42H36	1	Clamp
4	1M16040	1	Hose
5	42H36	1	Clamp
6	2531160	1	Tube
7	42H36	1	Clamp
8	1M16040	1	Hose
9	42H36	1	Clamp
10	19F1	2	Reducer
11	84F3	2	Elbow
12	2500807	2	Hole
13	84F3	2	Elbow
14	27E6	4	Washer
12	2500807	2	Hose
16	17C616	2	Bolt
17	59D6	2	Nut
18	2515118	2	Guard
19	42H36	1	Clamp
20	1M16040	1	Hose
21	42H36	1	Clamp
22	2531143	1	Tube
23	42H36	1	Clamp
24	1M16040	1	Hose
25	42H36	1	Clamp
26	2531142	1	Tube
27	42H36	1	Clamp
28	1M16040	1	Hose
29	42H36	1	Clamp
30	59D8	4	Nut
31	27E8	8	Washer
32	17C832	4	Bolt
33	72F2	1	Drain cock
34	60D8	2	Nut
35	17C820		
36	2526812	2	Rod
37	8D8	2	Nut
38	27E8	2	Washer
39	89D8	2	Nut

*481B

[1]See Index

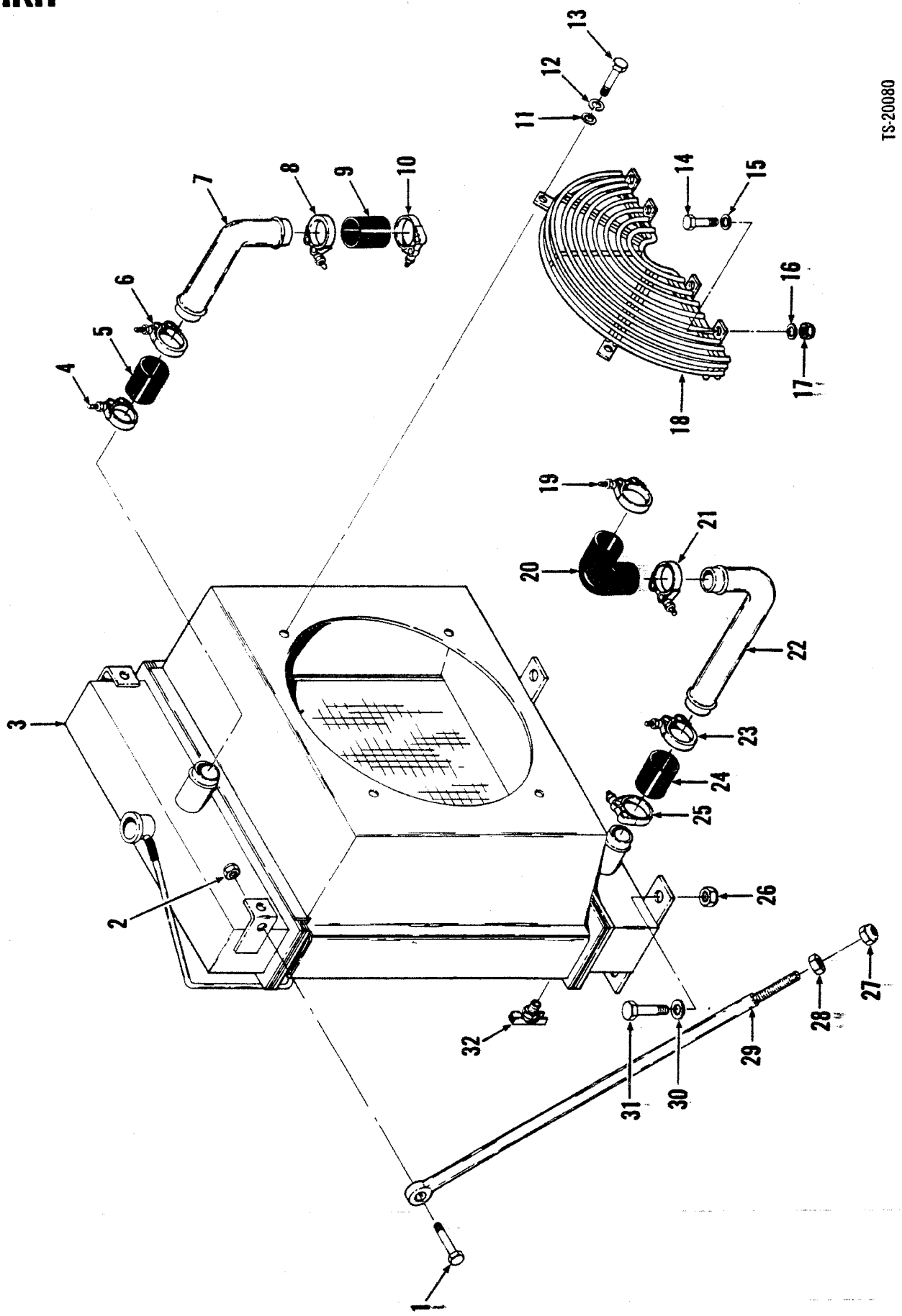
TS-20080
1
2
3
4
5
6
7
8
9
10
11
12
13
14
15
16
17
18
19
20
21
22
23
24
25
26
27
28
29
30
31
32

Radiator and Connections — G.M. — 35C — 45C

CLARK

No.	Part No.	Qty.	Description
1	17C820	2	Bolt
2	59D8	2	Nut
3	[1]———	1	Radiator
4	784663	1	Clamp
5	1M16030	1	Hose
6	784663	1	Clamp
7	[2]2522035	1	Tube
7A	†[3]2522034	1	Tube
8	784663	1	Clamp
9	1M16030	1	Hose
10	784663	1	Clamp
11	25E18	4	Washer
12	4E6	4	Washer
13	17C612	4	Bolt
14	17C616	4	Bolt
15	———	–	Omit
16	———	–	Omit
17	59D6	4	Nut
18	2515118	2	Guard
19	784663	1	Clamp
20	571570	1	Hose
21	784663	1	Clamp
22	2516510	1	Tube 35C
22A	2516511	1	Tube 45C
23	784663	1	Clamp
24	1M16030	1	Hose
25	784663	1	Clamp
26	60D8	4	Nut
27	60D8	2	Nut
28	8D8	2	Nut
29	2523685	2	Rod
30	25E22	4	Washer
31	18C828	4	Bolt
32	72F2	1	Drain cock

[1]See Index
[2]35C
[3]45C

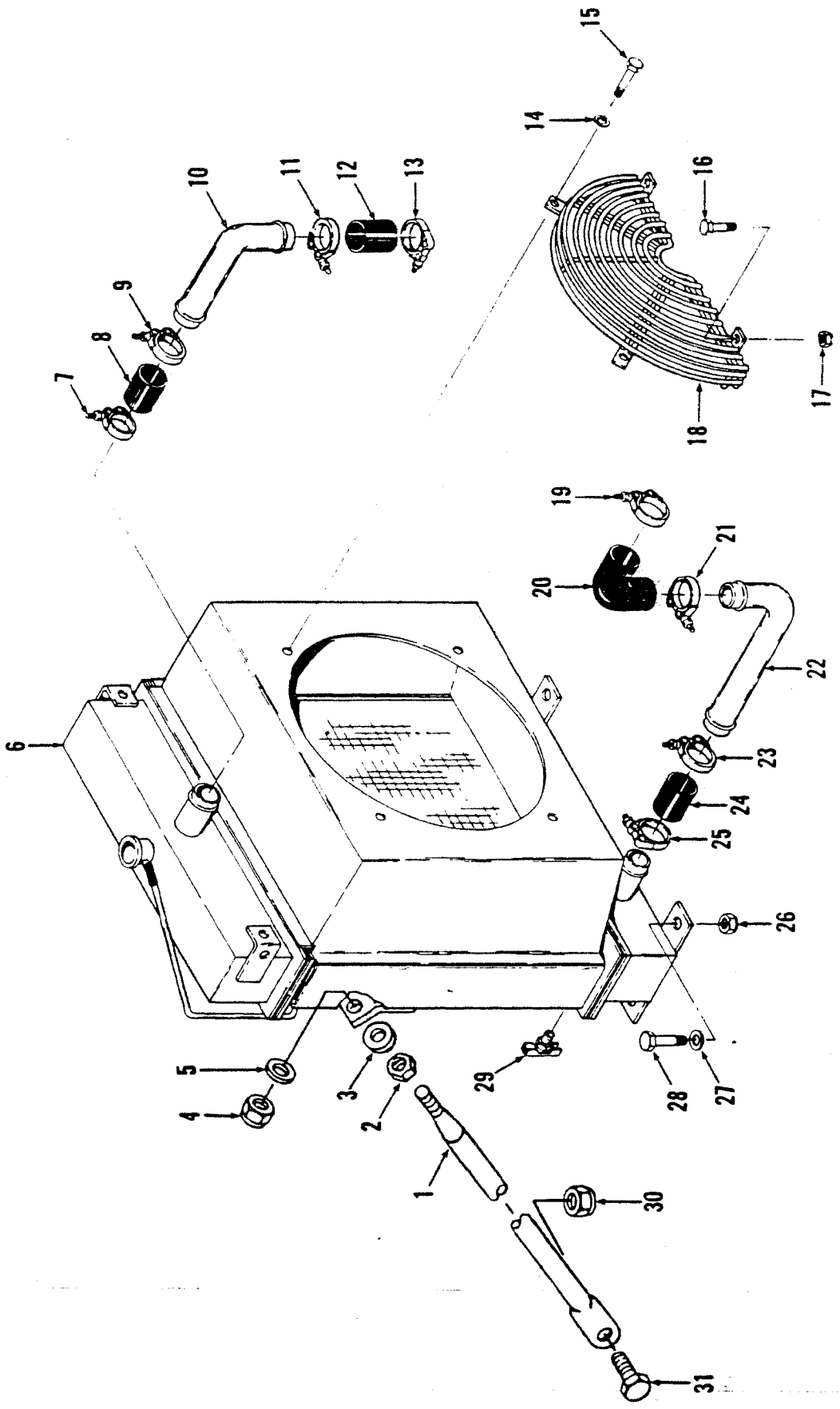
TS-15617
1
2
3
4
5
6
7
8
9
10
11
12
13
14
15
16
17
18
19
20
21
22
23
24
25
26
27
28
29
30
31

Radiator Connections — G.M. — 55C

CLARK

No.	Part No.	Qty.	Description
1	2526812	2	Rod
2	8D8	2	Nut
3	27E8	2	Washer
4	60D8	2	Nut
5	27E8	2	Washer
6	[1]———	1	Radiator
7	42H32	1	Clamp
8	1M16030	1	Hose
9	42H32	1	Clamp
10	2524254	1	Tube
11	42H32	1	Clamp
12	1M16030	1	Hose
13	42H32	1	Clamp
14	25E18	4	Washer
15	17C616	4	Bolt
16	17C616	2	Bolt
17	59D6	2	Nut
18	2515118	2	Guard
19	42H32	1	Clamp
20	571570	1	Hose
21	42H32	1	Clamp
22	2524253	1	Tube
23	42H32	1	Clamp
24	1M16030	1	Hose
25	42H32	1	Clamp
26	59D8	4	Nut
27	27E8	8	Washer
28	17C832	4	Bolt
29	72H2	1	Draincock
30	59D8	2	Nut
31	17C820	2	Bolt

[1]See Index

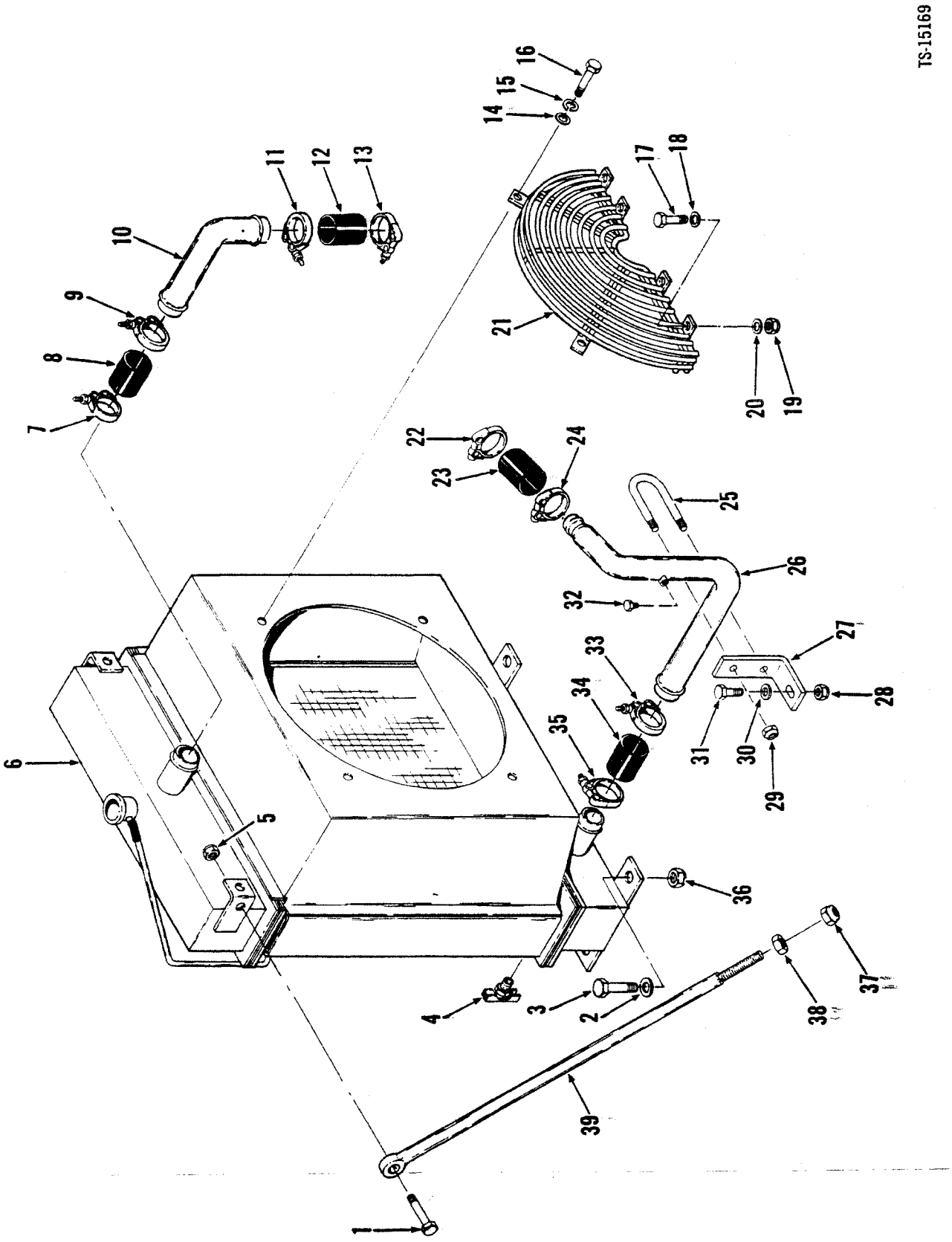
TS-15169
1
2
3
4
5
6
7
8
9
10
11
12
13
14
15
16
17
18
19
20
21
22
23
24
25
26
27
28
29
30
31
32
33
34
35
36
37
38
39

Radiator and Connections — Perkins — 35C

CLARK

No.	Part No.	Qty.	Description
1	17C820	2	Bolt
2	25E22	4	Washer
3	18C828	4	Bolt
4	72F2	1	Drain cock
5	60D8	2	Nut
6	[1]———	1	Radiator
7	784663	1	Clamp
8	1M16030	1	Hose
9	784663	1	Clamp
10	2522035	1	Tube
11	784663	1	Clamp
12	1M16030	1	Hose
13	784663	1	Clamp
14	25E18	4	Washer
15	4E6	4	Washer
16	17C612	4	Bolt
17	17C620	4	Bolt
18	25E18	4	Washer
19	59D6	4	Nut
20	25E18	4	Washer
21	2515118	2	Fan guard
22	1545004	1	Clamp
23	1M12030	1	Hose
24	1545004	1	Clamp
25	588199	1	U-bolt
26	2512615	1	Tube
27	2515745	1	Bracket
28	60D8	1	Nut
29	60D5	2	Nut
30	27E8	1	Washer
31	18C828	1	Bolt
32	40K8	1	Plug
33	784663	1	Clamp
34	1M16030	1	Hose
35	784663	1	Clamp
36	60D8	4	Nut
37	59D8	2	Nut
38	8D8	4	Nut
39	2523685	2	Rod

[1]See Index

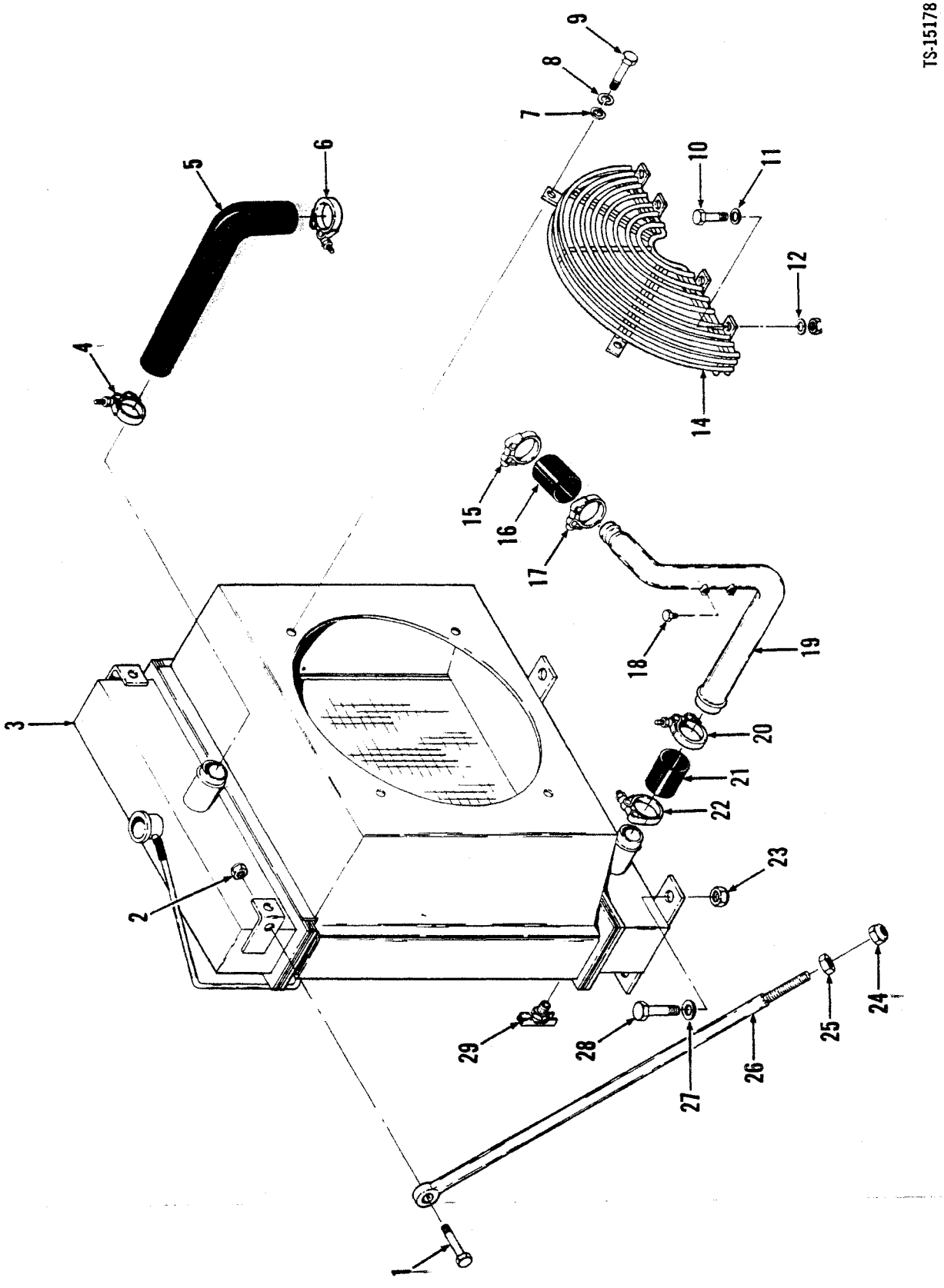
TS-15178
1
2
3
4
5
6
7
8
9
10
11
12
14
15
16
17
18
19
20
21
22
23
24
25
26
27
28
29

Radiator & Connection — Perkins — 45C

CLARK

No.	Part No.	Qty.	Description
1	17C820	2	Bolt
2	60D8	2	Nut
3	[1]———	1	Radiator
4	784663	1	Clamp
5	2512614	1	Hose
6	784663	1	Clamp
7	25E18	4	Washer
8	4E6	4	Washer
9	17C612	4	Bolt
10	17C620	4	Bolt
11	25E18	4	Washer
12	25E18	4	Washer
13	59D6	4	Nut
14	2515118	2	Fan guard
15	784663	1	Clamp
16	1M16030	1	Hose
17	784663	1	Clamp
18	40K6	1	Plug
19	2514211	1	Tube
20	784663	1	Clamp
21	1M16030	1	Hose
22	784663	1	Clamp
23	60D8	4	Nut
24	59D8	2	Nut
25	8D8	2	Nut
26	2523685	2	Rod
27	25E22	4	Washer
28	18C828	4	Bolt
29	72F2	1	Drain cock

[1]See Index

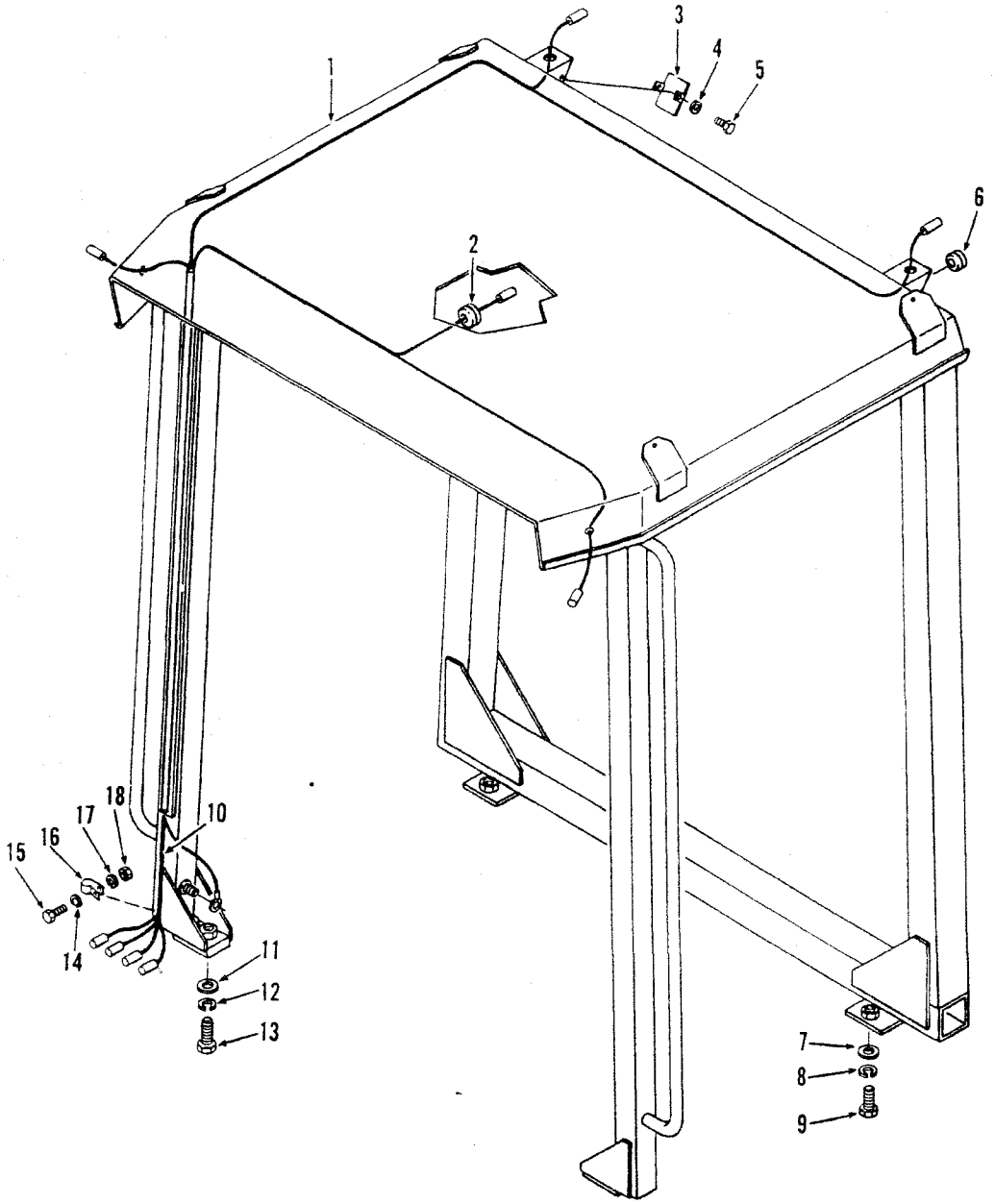

TS-20264

No.	Part No.	Qty.	Description
A	2517997	1	Canopy assy
1	[1]2518000	1	Canopy
2	1516653	1	Grommet
3	2519066	2	Cover
3A	†2519263	2	Plug
4	2511232	4	Washer
5	65G1008	4	Screw
6	302218	2	Grommet
7	27E12	8	Washer
8	4E12	8	Lockwasher

No.	Part No.	Qty.	Description
9	17C1240	8	Bolt
10	2519372	1	Harness
11	27E12	4	Washer
12	4E12	4	Lockwasher
13	17C1240	4	Bolt
14	4E6	1	Washer
15	17C616	1	Bolt
16	30H23	1	Clip
17	4E6	1	Lockwasher
18	63D6	1	Nut

[1]Inc. 1→18

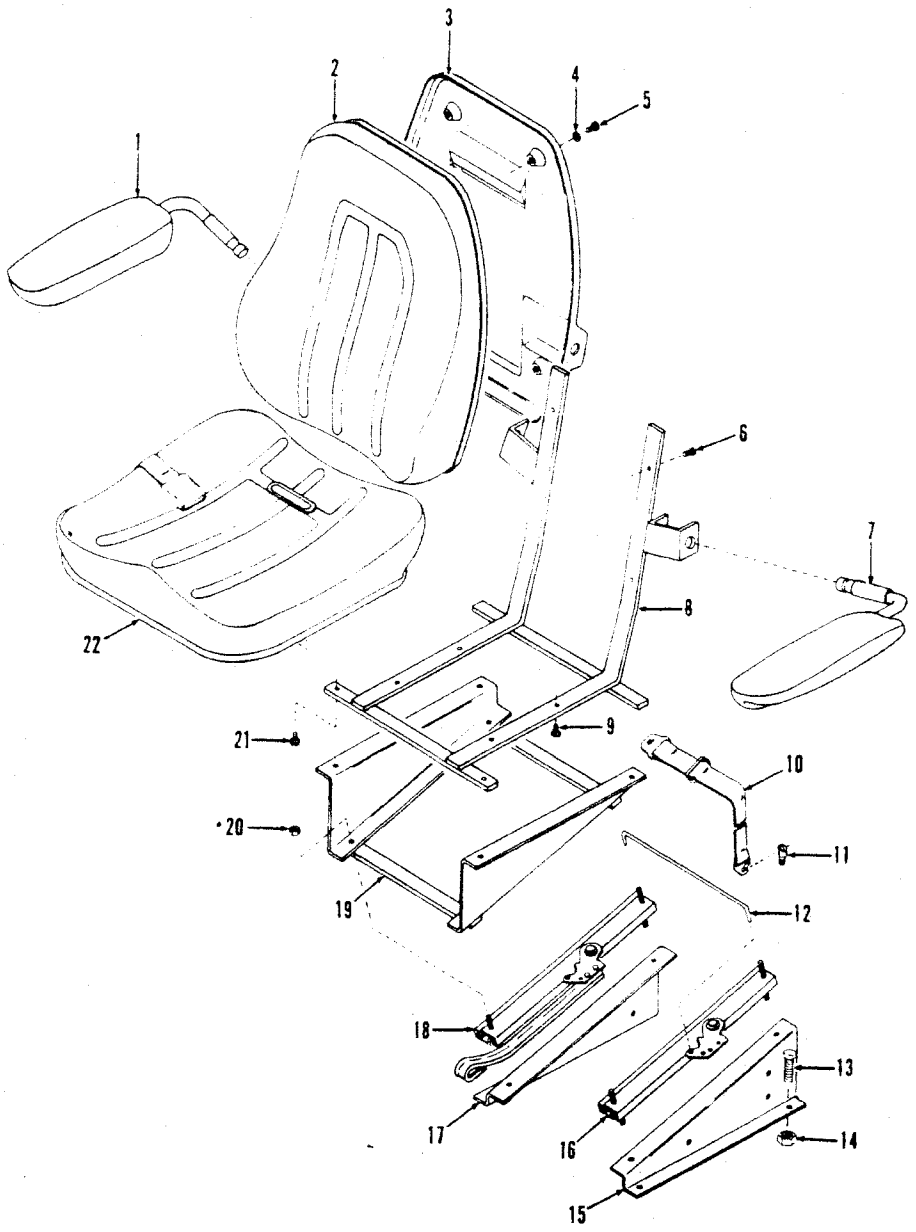

TS-15427

No.	Part No.	Qty.	Description
A	[2]2519028	1	Seat Assembly
B	[3]962279	1	Adjuster assembly
1	962277	1	Arm rest RH
2	962274	1	Cushion
3	962276	1	Back rest
4	25E15	4	Washer
5	18G2500	4	Screw
6	89G412	4	Screw
7	962278	1	Arm rest LH
8	962579	1	Frame
9	89G512	4	Screw
10	[4]2522107	1	Belt
11	[4]2522745	2	Eye bolt
11A	†[4]60D7	2	Nut
11B	†[4]2522744	2	Washer
12	962282	1	Wire
13	17C516	4	Bolt
13A	6515240	4	Washer
14	———	—	Omit
15	962288	1	Bracket LH
16	962281	1	Adapter
17	962287	1	Bracket RH
18	962280	1	Adjuster
19	962283	1	Bracket
20	59D5	8	Nut
21	1323000	4	Screw
22	962273	1	Cushion

[2]Inc. B → 9, 12 → 22
[3]Inc. 12, 15 → 20
[4]Optional

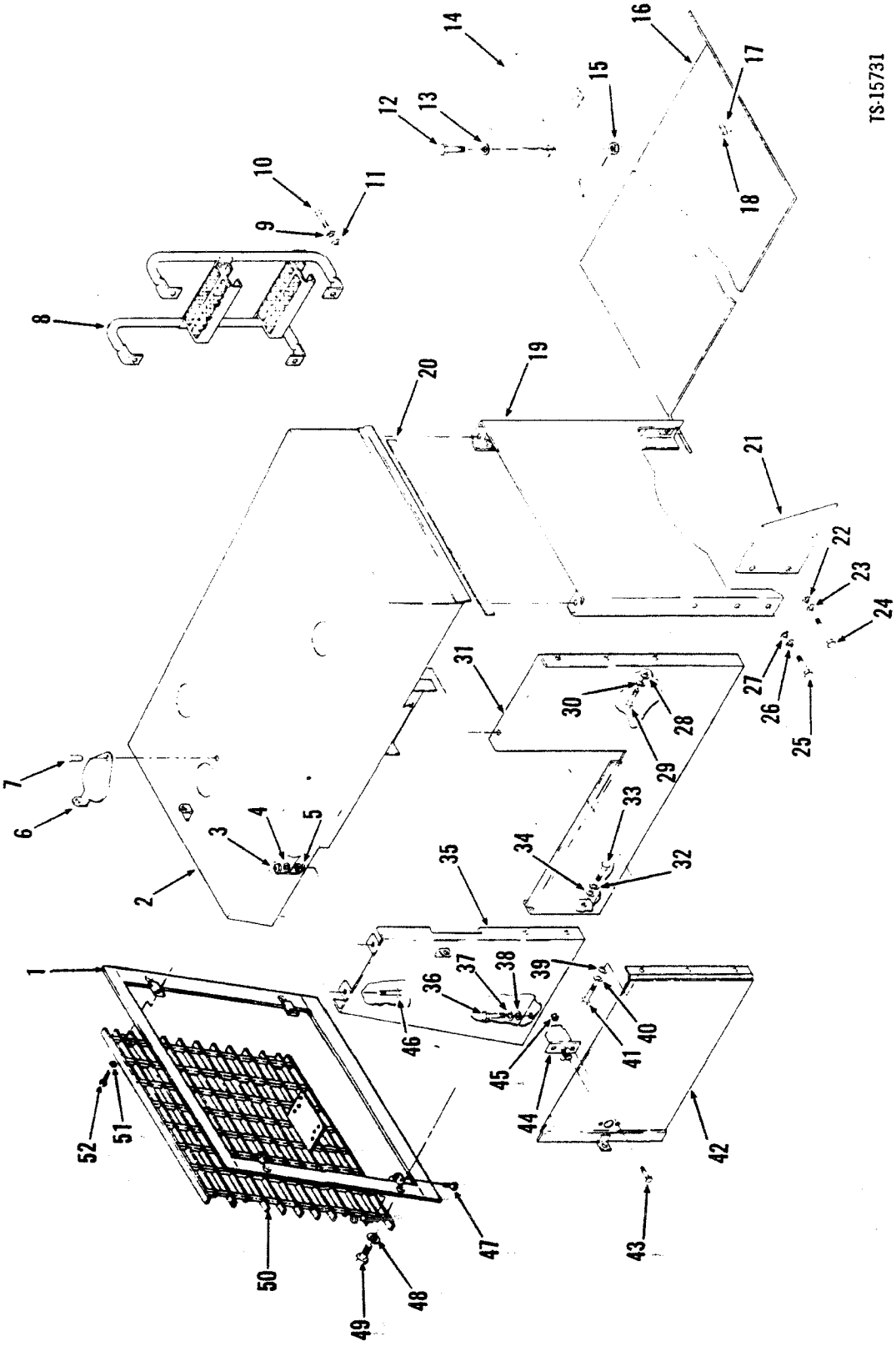
TS-15731

Sheet Metal Group — 35C — 45C

CLARK

No.	Part No.	Qty.	Description
1	[10]2525944	1	Bracket
2	[2 3]2517482	1	Hood
2A	†[3 4]2514611	1	Hood
2B	†[3 5]2521437	1	Hood
3	59D6	8	Nut
4	619021	8	Washer
5	568276	8	Vibration mount
6	1544449	1	Plate
7	1H512	1	Rivet
8	[6]2516474	1	Ladder
8A	†[7]2524879	1	Ladder
9	[6]4E6	4	Washer
10	[5]17C616	4	Bolt
10A	[7]17C724	4	Bolt
10B	†[7]59D7	4	Nut
11	[6]25E18	4	Washer
12	[6]18C420	4	Bolt
12A	[7]17C420	4	Bolt
13	25E14	4	Washer
13A	[7]2525069	4	Washer
14	2522001	2	Cover
15	[6]60D4	4	Nut
15A	[7]59D4	4	Nut
16	[6]2519361	1	Valve cover
17	[6]25E18	4	Washer
17A	[7]27E6	4	Washer
18	59D6	4	Nut
19	2516393	1	Barrier
20	———	—	Omit
21	2522150	2	Barrier
22	[6]4E6	6	Washer
23	[6]25E18	6	Washer
23A	[7]27E6	4	Washer
24	17C616	6	Bolt
25	17C628	4	Bolt
26	[6]4E6	4	Washer

No.	Part No.	Qty.	Description
27	[6]25E18	4	Washer
27A	[7]27E6	4	Washer
28	[6]25E18	6	Washer
28A	[7]27E6	6	Washer
29	17C616	6	Bolt
30	[6]4E6	6	Washer
31	2516396	1	Side plate RH
31A	†2516395	1	Side plate LH
32	[6]4E6	4	Washer
33	17C616	4	Bolt
34	[6]25E18	4	Washer
34A	[7]27E6	4	Washer
35	2522080	1	Side panel RH
35A	†2522078	1	Side panel LH
36	17C616	4	Bolt
37	[6]4E6	4	Washer
38	[6]25E18	4	Washer
38A	[7]27E6	4	Washer
39	[6]25E18	6	Washer
39A	[7]27E6	6	Washer
40	[6]4E6	6	Washer
41	17C616	6	Bolt
42	2517481	2	Side panel
43	17C412	4	Bolt
44	2517850	1	Latch RH
44A	†2517851	1	Latch LH
45	59D4	4	Nut
46	17C624	8	Bolt
47	[10]17C624	2	Bolt
48	[10]27E6	4	Washer
49	[10]17C616	4	Bolt
50	[9]2517476	1	Grille
50A	[10]2525945	1	Grille
51	[9]27E6	4	Washer
51A	[10]25E18	4	Washer
52	17C612	4	Bolt

[2]35 G.M.
[3]Inc. 6, 7
[4]35 & 45 Perk.
[5]45 G.M.
[6]458A101CB→116CB, 459A101CB→138CB, 472A101CB→192CB, 473A101CB→248CB
[8]For replacement use 2525945 Grille Assy plus 1 — 2525944 Bracket, 2 — 17C612 Bolt, 2 — 27E6 Washer, 2 — 17C624 Bolt & 2 — 59D6 Nut.
[9]458A101CB→121CB, 459A101CB→155CB, 472A101CB→319CB, 473A101CB→407CB
[10]458A122CB & →, 459A156CB & →, 472A320CB & →, 473A408CB & →
[11]For complete replacement use 1 — 2536396 Grille, 1 — 2536395 Bracket.

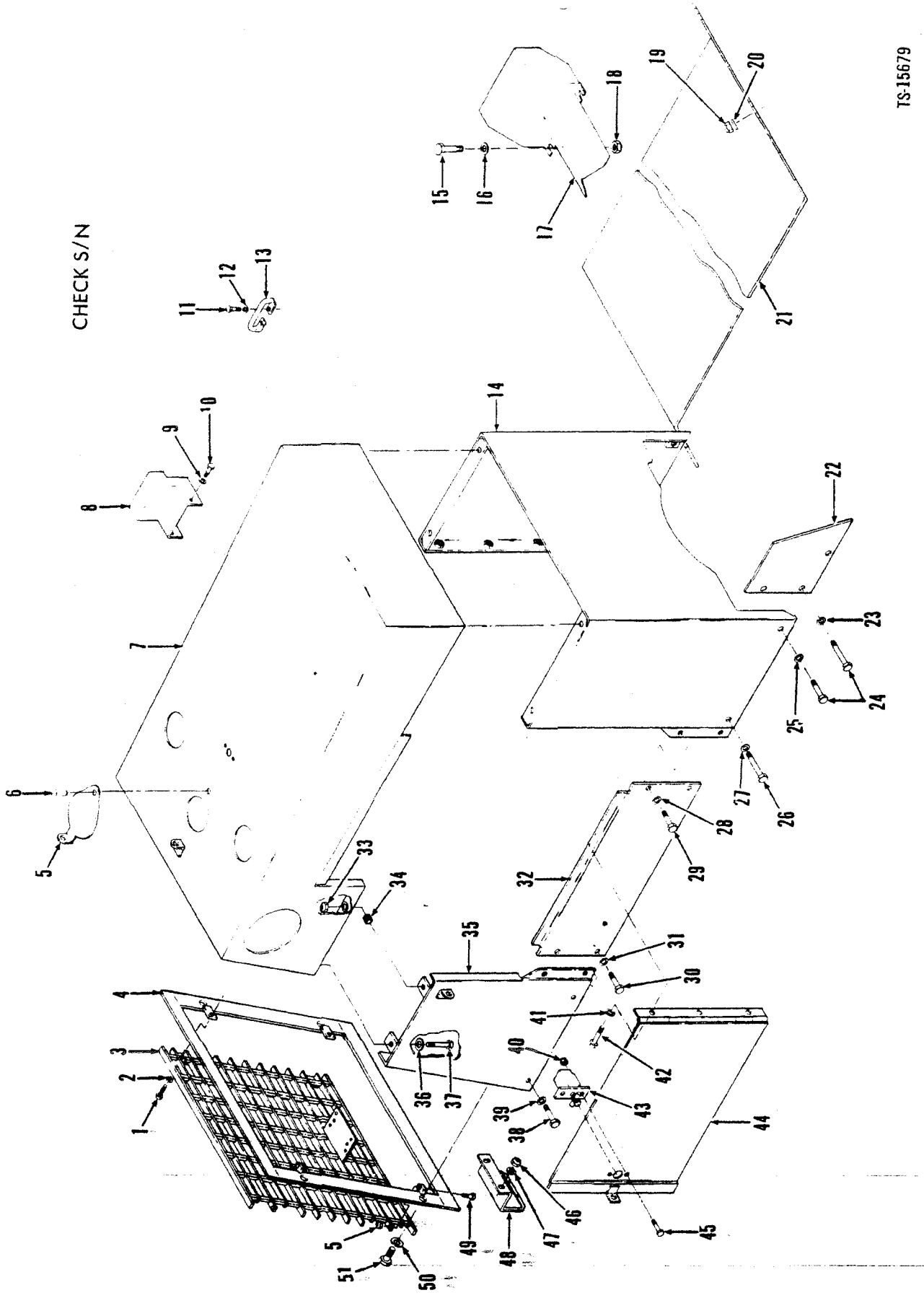
CHECK S/N
TS-15679

Sheet Metal Group — 55C*

CLARK

No.	Part No.	Qty.	Description
1	17C612	2	Bolt
2	27E6	2	Washer
3	[6]2525945	1	Grille
4	2525944	1	Bracket
5	1544449	1	Cover
6	1H512	1	Rivet
7	2519037	1	Hood
8	2522364	2	Cover rear
9	2525069	4	Washer
10	17C412	4	Bolt
11	17C612	2	Bolt
12	27E6	2	Washer
13	2527746	1	Handle
14	[2]2519036	1	Barrier
14A	[3]2531683	1	Barrier
15	17C420	4	Bolt
16	2525069	4	Washer
17	2522321	2	Cover front
18	59D4	4	Nut
19	59D6	4	Nut
20	27E6	4	Washer
21	2519361	1	Cover
22	2522150	2	Barrier
23	27E6	6	Washer
24	17C616	8	Bolt
25	27E6	2	Washer
26	17C628	4	Bolt
27	27E6	4	Washer
28	27E6	4	Washer
29	17C616	4	Bolt
30	17C616	4	Bolt

No.	Part No.	Qty.	Description
31	27E6	4	Washer
32	2519031	2	Panel
33	59D6	4	Nut
34	568276	8	Vibration mount
35	[4]2519033	1	Side panel RH
35A	[5]2532236	1	Side panel RH
35B	[4]2519035	1	Side panel LH
35C	[5]2532238	1	Side panel LH
36	614021	4	Washer
37	17C624	4	Bolt
38	17C616	4	Bolt
39	27E6	4	Washer
40	59D4	4	Nut
41	17C616	6	Bolt
42	27E6	6	Washer
43	[4]2517850	1	Latch RH
43A	[5]2517850	1	Latch RH
43B	†[4]5217851	1	Latch LH
43C	[5]2517851	1	Latch LH
44	[4]2517481	2	Door
44A	[5]2532239	2	Door
44B	[5]656727	2	Rod
45	17C412	4	Bolt
46	59D6	4	Nut
47	27E6	4	Washer
48	2522161	2	Bracket
49	17C624	2	Bolt
50	27E6	4	Washer
51	17C616	4	Bolt
52	59D6	2	Nut

*480A 481A

[2]480A101CB→158CB, 481A101CB→155CB
[3]480A159CB & →, 481A156CB & →
[4]480A101CB→154, 157→161CB, 481A101CB→158CB
[5]480A155, 156, 162CB & →, 481A159CB & →
[6]For complete replacement use 1 — 2536396 Grille, 1 — 2536395 Bracket.

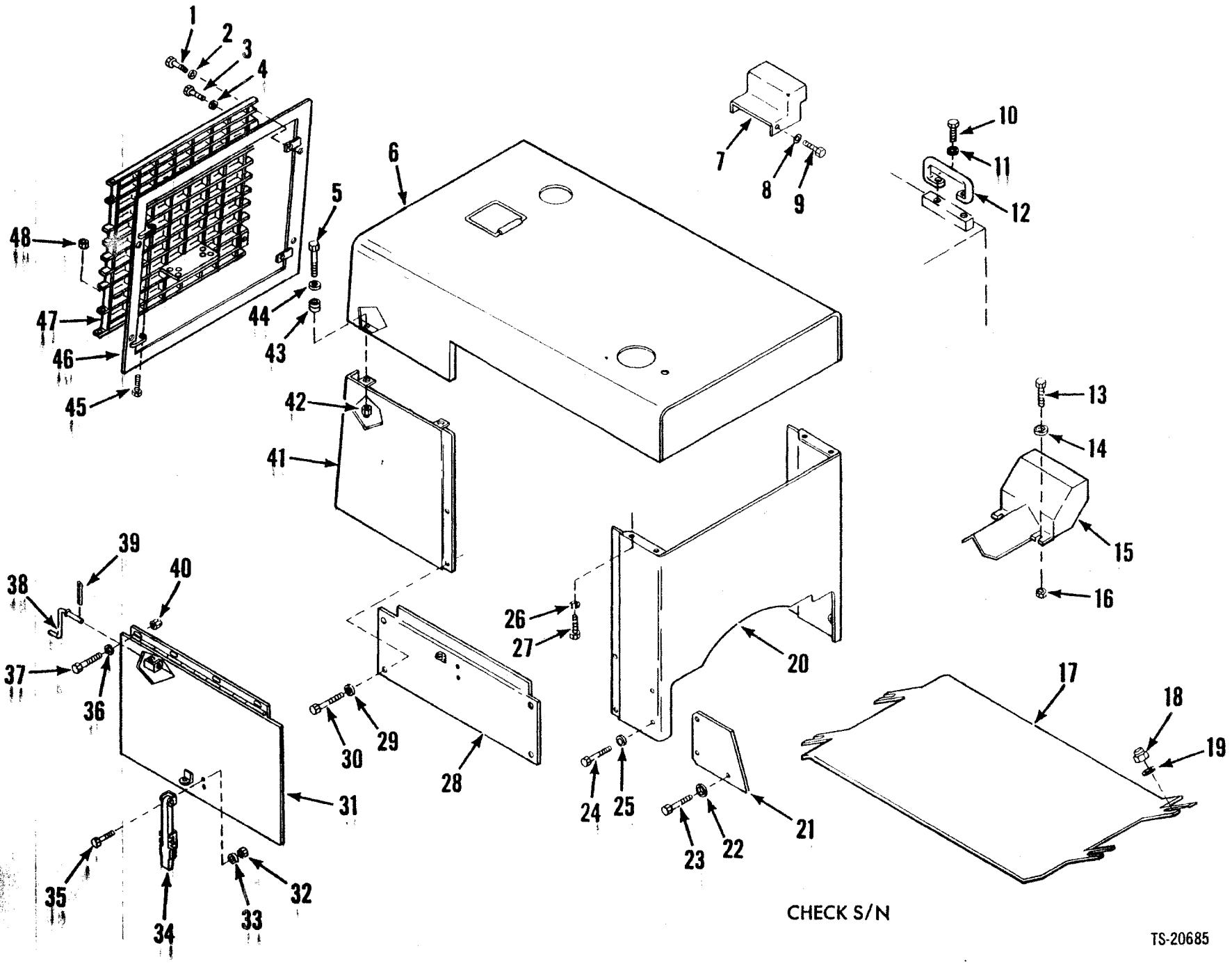

CHECK S/N

TS-20685

Sheet Metal Group — 55C*

CLARK

No.	Part No.	Qty.	Description
1	17C616	4	Bolt
2	27E6	4	Washer
3	17C616	4	Bolt
4	27E6	2	Washer
5	17C624	4	Bolt
6	[2]2532518	1	Hood
6A	†[3]2532521	1	Hood
7	2522364	2	Cover
8	2525069	4	Washer
9	17C412	4	Bolt
10	17C612	2	Bolt
11	27E6	2	Washer
12	2527746	1	Handle
13	17C420	4	Bolt
14	2525069	4	Washer
15	2522321	2	Cover
16	59D4	4	Nut
17	27E6	4	Washer
18	59D6	4	Nut
19	2519361	1	Cover
20	2532508	1	Barrier
21	2522150	2	Panel
22	27E6	6	Washer
23	17C616	6	Bolt
24	17C628	4	Bolt
25	27E6	4	Washer
26	619021	4	Washer
26A	†568276	4	Grommet
27	17C624	4	Bolt
27A	†59D6	4	Nut
28	2532509	2	Panel
29	27E6	14	Washer
30	17C616	14	Bolt
31	2532514	1	Side panel RH
31A	†2532515	1	Side panel LH
32	59D10	8	Nut
33	25E10	16	Washer
34	2529473	2	Latch
35	85G1012	8	Bolt
36	27E17	8	Washer
37	17C616	8	Bolt
38	2532507	2	Rod
39	1F316	2	Cotter pin
40	———	—	Omit
41	2532512	1	Panel RH
41A	†2532513	1	Panel LH
42	59D6	4	Nut
43	568276	4	Grommet
44	619021	4	Washer
45	17C624	2	Bolt
46	2536395	1	Bracket
47	2536396	1	Grille
48	85D6	2	Nut

*480B 481B

[2]Detroit
[3]Cummins

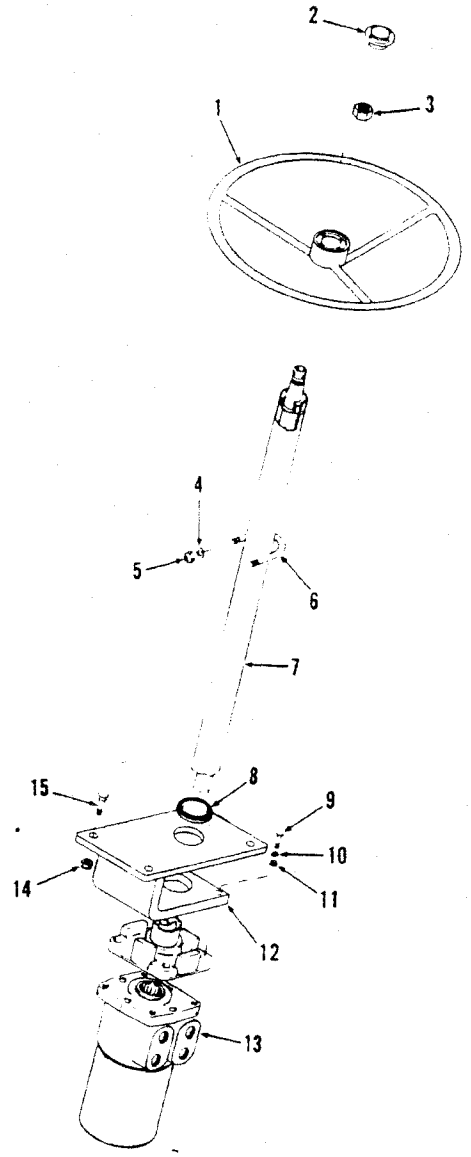

TS-14845

No.	Part No.	Qty.	Description
1	1519254	1	Steering wheel
2	5200219	1	Horn button kit
3	852333	1	Nut
4	2525070	2	Washer
5	6005	2	Nut
6	1505613	1	U-bolt
7	2521945	1	Steering column
8	2516246	1	Grommet
9	33C624	4	Bolt
10	-----	–	Omit
11	-----	–	Omit
12	1519991	1	Bracket
13	2521944	1	Valve steering
13A	†991697	1	Seal kit
14	-----	–	Omit
15	17C616	4	Bolt

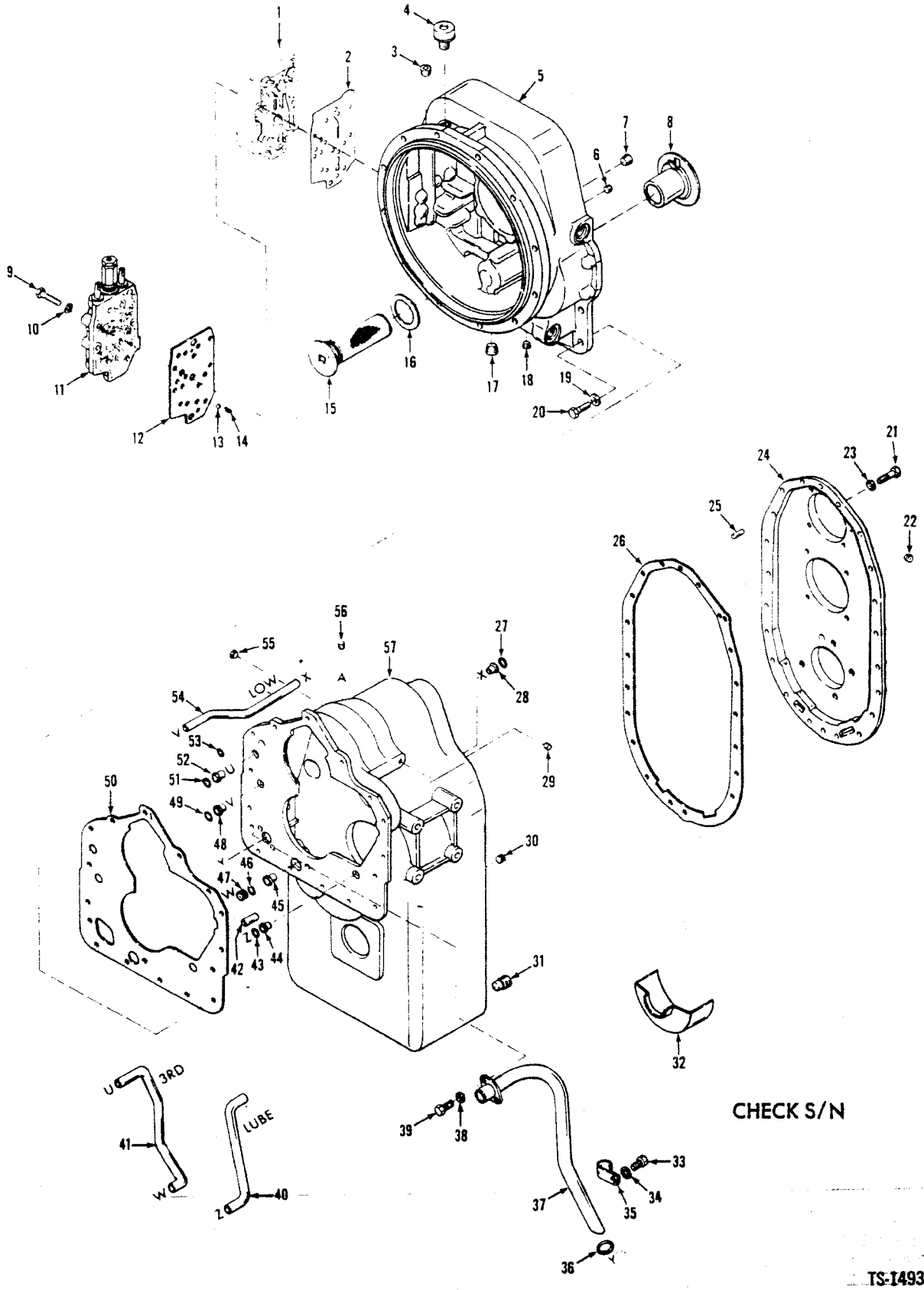
1
2
3
4
5
6
7
8
9
10
11
12
13
14
15
16
17
18
19
20
21
22
23
24
25
26
27
28
29
30
31
32
50
51
52
53
54
55
56
57
LOW
3RD
LUBE
41
40
39
38
37
36
35
34
33
42
43
44
45
46
47
48
49
CHECK S/N

TS-14936

Transmission & Converter Assembly*

CLARK

No.	Part No.	Qty.	Description
A	[2]286055	1	Trans & conv assy
B	[3]286056	1	Trans & conv assy
1	[1]———	1	Modulation valve assy
2	234279	1	Gasket
3	16F4	1	Plug
4	211433	1	Breather
4A	†356613	1	Reducer
5	237437	1	Housing
6	16F2	1	Plug
7	11F8	1	Plug
8	234265	1	Sleeve
9	1C660	9	Bolt
10	4E6	9	Washer
11	[1]———	1	Control valve assy
12	234166	1	Basket
13	10J12	2	Ball
14	235473	2	Spring
15	231390	1	Screen
16	219373	1	Gasket
17	11F8	1	Plug
18	16F2	1	Plug
19	4E7	16	Washer
20	1C720	16	Bolt
21	1C724	20	Bolt
22	16F2	1	Plug
23	4E7	20	Washer
24	[4]236620	1	Cover
25	214295	2	Pin
26	236646	1	Gasket
27	25K40026	1	O-ring
28	222067	1	Sleeve
29	16F4	1	Plug
30	16F12	1	Plug
31	215757	1	Plug
32	236651	1	Baffle
33	1C712	1	Bolt
34	4E7	1	Washer
35	6H24	1	Clip
36	25K40104	1	O-ring
37	236623	1	Tube
38	4E5	2	Washer
39	1C510	2	Bolt
40	237860	1	Tube
41	236624	1	Tube
42	214295	1	Pin
43	25K40026	1	O-ring
44	221871	1	Sleeve
45	222067	1	Sleeve
46	25K40104	1	O-ring
47	236637	1	Sleeve
48	222067	1	Sleeve
49	25K40026	1	O-ring
50	235297	1	Gasket
51	25K40026	1	O-ring
52	222067	1	Sleeve
53	25K30018	1	O-ring
54	234157	1	Tube
55	16F4	1	Plug
56	16F12	1	Plug
57	[5]237890	1	Case assy

[1]See Index

[2]11-2HR18323-3 Inc. 1→57 472A101CB→135CB – 473A101CB→118CB, 120CB→123CB, 125CB→135CB, 137CB→146CB, 148CB, 149CB, 151CB, 152CB, 159CB, 181CB→183CB, 214CB – 458A101CB→103CB – 459A101CB→109CB

[3]11-2HR18323-4 Inc. 1→51 472A136CB & → – 473A119CB, 124CB, 136CB, 147CB, 150CB, 153CB→158CB, 160CB→180CB, 184CB→213CB, 215CB & → – 458A104CB & → – 459A110CB & → – 480A101CB → 166CB – 481A101CB → 159CB

[4]Inc. 22

[5]Inc. 28, 33→41, 44→48, 52, 54

[6]For complete replacement use 287544 Trans. Assy.

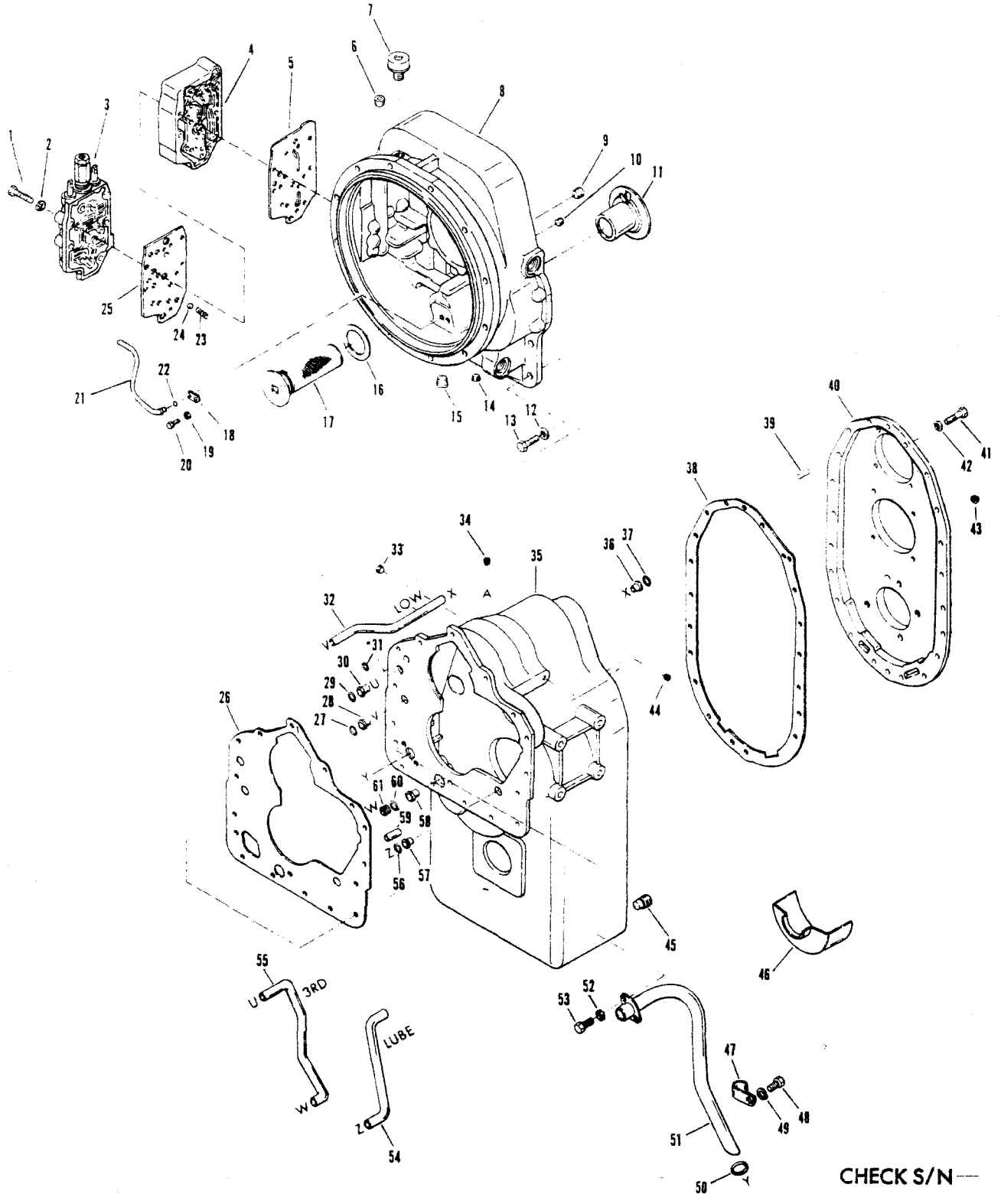

TS-20577

Transmission & Converter Assembly*

CLARK

No.	Part No.	Qty.	Description
A	[2]87544	1	Trans & conv assy
1	1C660	9	Bolt
2	4E6	9	Washer
3	[1]———	1	Control valve assy
4	[1]———	1	Modulation valve assy
5	234279	1	Gasket
6	239245	1	Plug
7	238535	1	Breather
8	239043	1	Housing
9	11F8	1	Plug
10	239244	1	Plug
11	234265	1	Sleeve
12	4E7	16	Washer
13	1C720	16	Bolt
14	239244	1	Plug
15	11F8	1	Plug
16	219373	1	Gasket
17	231390	1	Screen
18	237515	1	Clip
19	4E5	1	Washer
20	1C510	1	Bolt
21	237441	1	Tube
22	60K30016	1	O-ring
23	235473	2	Spring
24	10512	2	Ball
25	234166	1	Gasket
26	235297	1	Gasket
27	60K40026	1	O-ring
28	222067	1	Sleeve
29	60K40026	1	O-ring
30	222067	1	Sleeve
31	60K30018	1	O-ring
32	234157	1	Tube
33	239245	1	Plug
34	16F12	1	Plug
35	[3]237890	1	Case
36	222067	1	Sleeve
37	60K40026	1	O-ring
38	236646	1	Gasket
39	214295	2	Dowel
40	236620	1	Cover
41	1C724	20	Bolt
42	4E7	20	Washer
43	239244	1	Plug
44	16F6	1	Plug
45	215757	2	Plug
46	236651	1	Baffle
47	6H24	1	Clip
48	1C712	1	Bolt
49	4E7	1	Washer
50	60K40104	1	O-ring
51	236623	1	Tube
52	4E5	2	Washer
53	1C510	2	Bolt
54	237860	1	Tube
55	236624	1	Tube
56	60K40026	1	O-ring
57	221871	1	Sleeve
58	222067	1	Sleeve
59	214295	1	Dowel
60	60K40104	1	O-ring
61	236637	1	Sleeve

*480A167CB→999CB, 481A160CB→999CB, 480B, 481B
[1]See Index
[2]11-2HR18323-5 Inc. 1→61
[3]Inc. 28, 30, 32, 36, 47→55, 57, 58, 60, 61

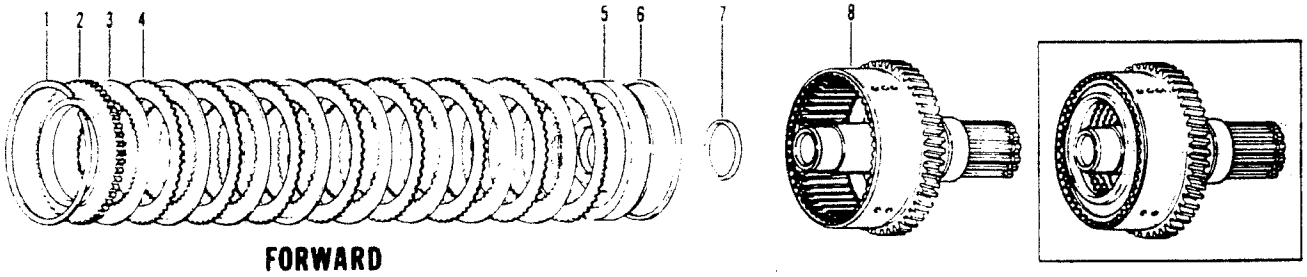

TS-15210

No.	Part No.	Qty.	Description
1	234111	1	Ring
2	236847	1	Plate
3	237016	8	Disc inner
4	234109	8	Disc outer
5	[4]237450	1	Piston
6	237032	1	Ring
7	234113	1	Seal
8	[3]237888	1	Drum shaft assy
8A	[3]237507	1	Drum shaft assy

[2]472A101CB→135CB – 473A101CB→108CB, 120CB→123CB, 125CB→135CB, 137CB→146CB, 148CB, 151CB, 152CB, 159CB, 181CB → 183CB, 214CB – 458A101CB→103CB – 459A101CB→109CB

[3]472A136CB & → – 473A119CB, 124CB, 136CB, 147CB, 150CB, 153CB→158CB, 160CB→180CB, 184CB→213CB, 215CB & → – 458A104CB & → – 459A110CB & → – 480A101CB & → – 481A101CB & →

[4]For identification see SG-752.

Transmission Clutch Group, Low

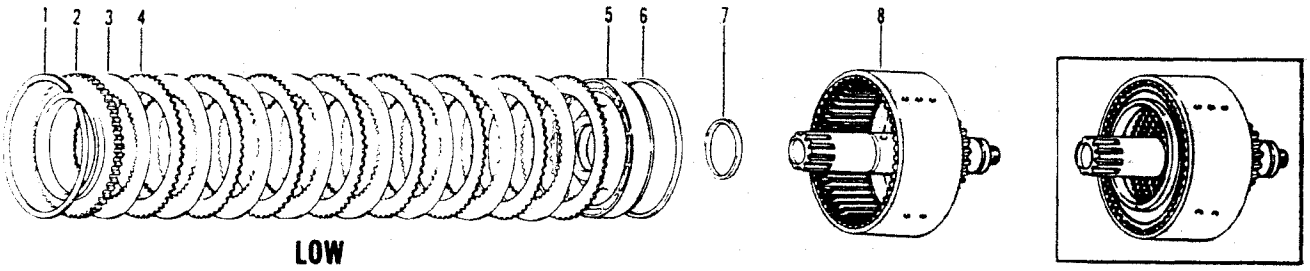

LOW

TS-15209

No.	Part No.	Qty.	Description
1	234111	1	Ring
2	236847	1	Plate
3	234336	8	Disc inner
4	234109	8	Disc outer
5	[2]236150	1	Piston
6	237032	1	Ring
7	234113	1	Seal
8	236656	1	Drum shaft assy

[2]For identification see SG-752.

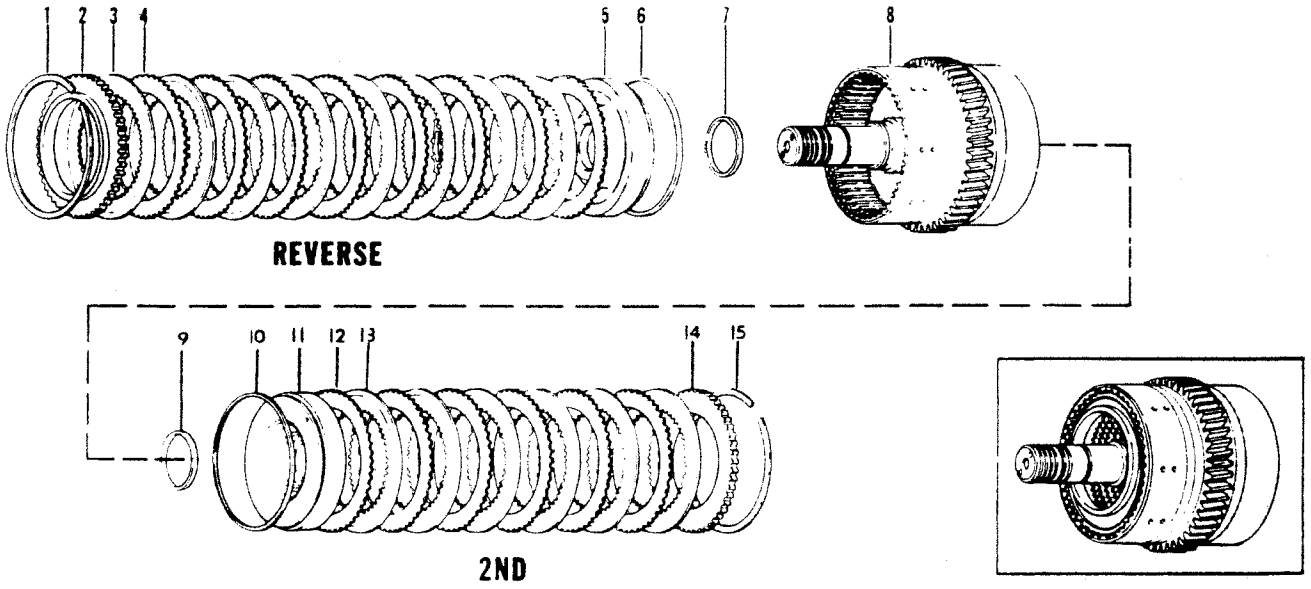

TS-15212

No.	Part No.	Qty.	Description
1	234111	1	Ring
2	236847	1	Plate
3	237016	8	Disc inner
4	234109	8	Disc outer
5	[2]237450	1	Piston
6	237032	1	Seal
7	234113	1	Seal
8	237453	1	Drum shaft assy
9	234113	1	Seal
10	237032	1	Seal
11	[2]236178	1	Piston
12	234109	6	Disc outer
13	237016	6	Disc inner
14	236847	1	Plate
15	234111	1	Ring

[2]For identification see SG-752.

Transmission Clutch Group, Third

CLARK

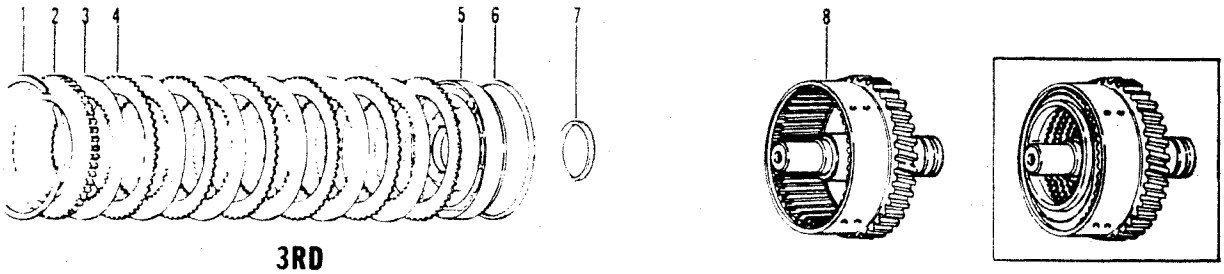

3RD

TS-15211

No.	Part No.	Qty.	Description
1	234111	1	Ring
2	236847	1	Plate
3	237016	6	Disc inner
4	234109	6	Disc outer
5	[2]236178	1	Piston
6	237032	1	Seal
7	234113	1	Seal
8	236611	1	Drum shaft assy

[2]For identification see SG-752.

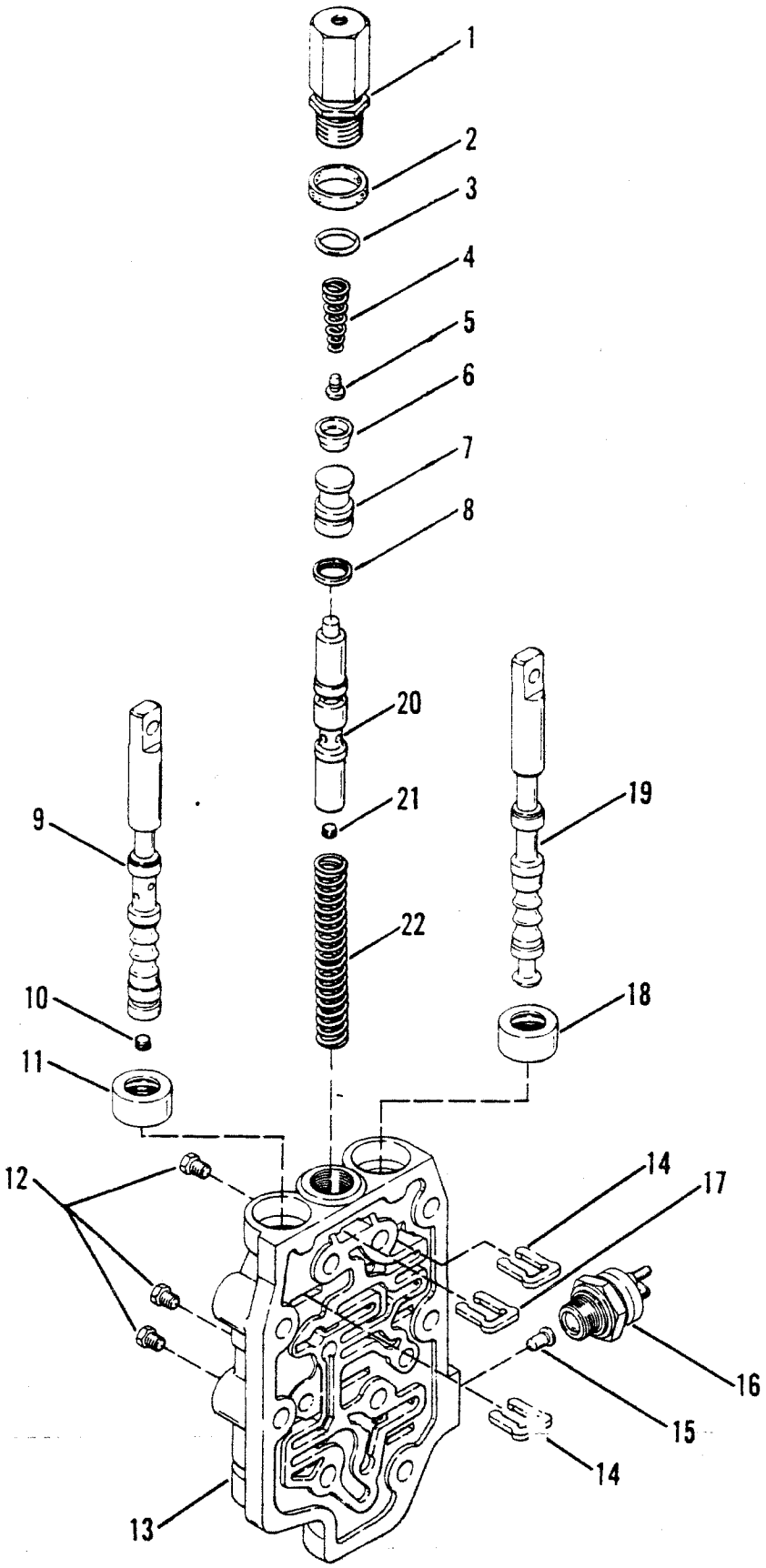

TS-I4940

Transmission Control Valve

CLARK

No.	Part No.	Qty.	Description
A	[2]234418	1	Control valve assy
1	[3]235327	1	De-clutch valve
2	135085	1	Disc
3	25K30022	1	O-ring
4	227880	1	Spring
5	233264	1	Retainer
6	227881	1	Seal
7	235315	1	Piston
8	234186	1	Ring
9	[4]234167	1	Spool
10	16F1	1	Plug
11	234650	1	Seal
12	40K2	3	Plug
13	[5]———	1	Housing
14	234170	2	Stop
15	233779	1	Pin
16	233778	1	Switch neutral start
17	234170	1	Stop
18	234650	1	Seal
19	234169	1	Spool
20	[6]234183	1	Spool
21	16F1	1	Plug
22	234181	1	Spring

[2]Inc. 1→22
[3]Inc. 2→8
[4]Inc. 10
[5]See A
[6]Inc. 21

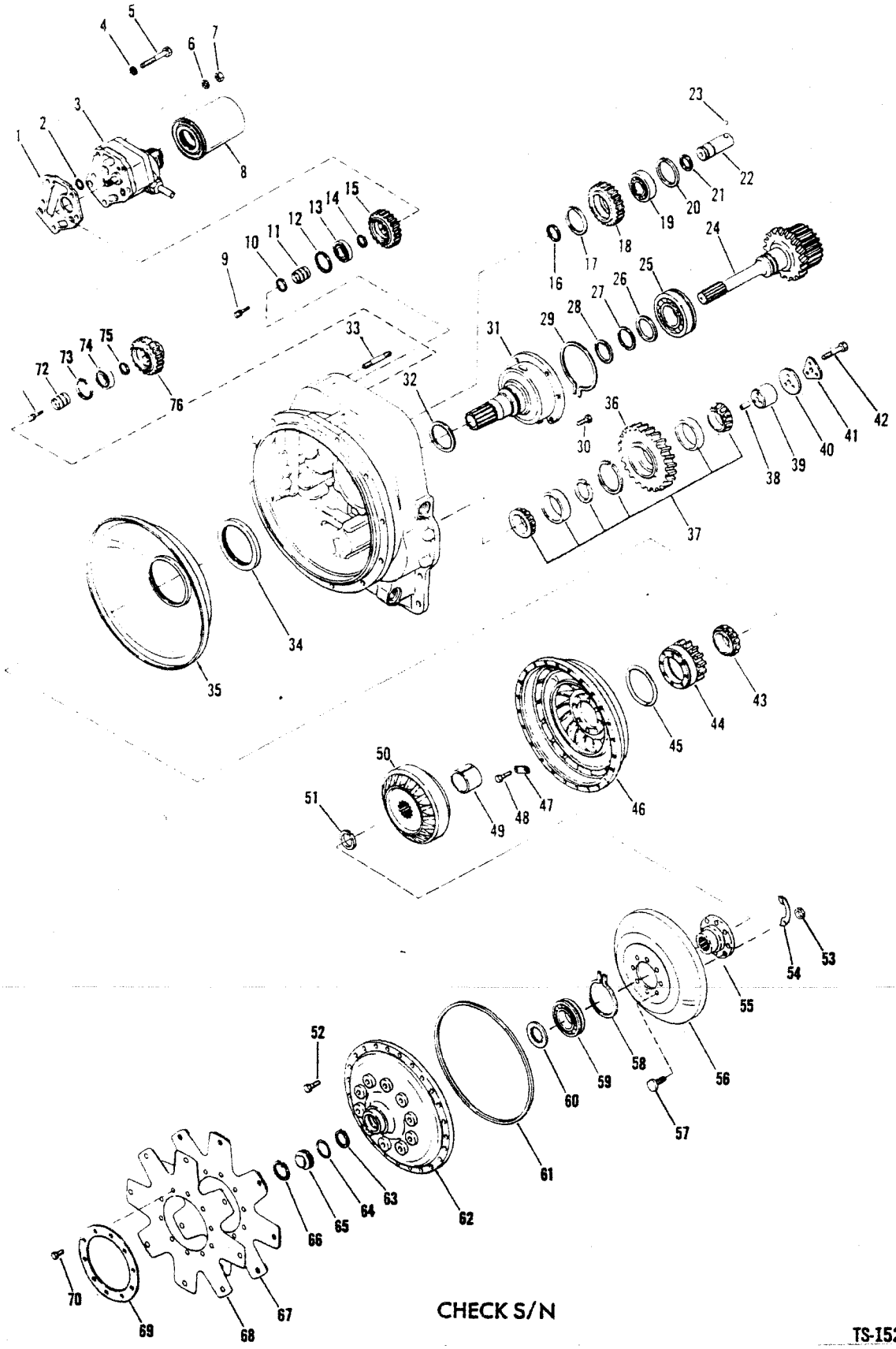

CHECK S/N

TS-15294

Transmission Converter Assembly *

CLARK

No.	Part No.	Qty.	Description
1	235283	1	Gasket
2	60K30018	1	O-ring
3	237454	1	Pump
4	4E7	3	Lockwasher
5	1C764	2	Bolt
5A	†1C772	1	Bolt
6	4E7	2	Lockwasher
7	62D7	2	Nut
8	234099	1	Filter
9	5C620	2	Bolt & lockwasher
10	234908	1	Ring
11	234327	1	Support
12	223922	1	Ring
13	743458	1	Bearing
14	234908	1	Ring
15	236584	1	Gear
16	234908	1	Ring
17	223878	1	Ring
18	236583	1	Gear
19	710047	1	Bearing
20	223878	1	Ring
21	234908	1	Ring
22	234248	1	Shaft
23	10J8	1	Ball
24	236140	1	Shaft & hub assy
25	234228	1	Bearing
26	234230	1	Washer
27	231776	1	Ring
28	223085	1	Ring
29	234229	1	Ring
30	1C616	6	Bolt
30A	†4E6	6	Lockwasher
31	235296	1	Stator support
32	237377	1	Ring
32A	†237378	1	Spring
33	234932	1	Stud
33A	†237518	1	Stud
34	235593	1	Seal
35	234362	1	Baffle
36	234256	1	Gear
37	234264	1	Bearing assy
38	234309	1	Pin
39	234257	1	Shaft
40	234299	1	Plate
41	234918	1	Lockplate
42	1C744	3	Bolt
43	231624	1	Bearing
44	236582	1	Gear
45	234973	1	O-ring
46	235214	1	Impeller
47	234210	4	Tab
48	2C612	8	Bolt
49	234226	1	Spacer
50	237936	1	Member
51	1300688	1	Ring
52	5C516	18	Bolt
53	237974	8	Nut
54	234210	4	Lock tab
55	234213	1	Hub
56	237815	1	Turbine
57	234214	8	Bolt
58	234216	1	Ring
59	234215	1	Bearing
60	235591	1	Washer
61	234237	1	O-ring
62	234207	1	Cover
63	1300688	1	Ring
64	60K30114	1	O-ring
65	223015	1	Plug
66	661415	1	Ring
67	235334	1	Plate
68	235333	2	Plate
69	234286	1	Ring
70	5C612	10	Bolt & lockwasher
71	5C620	2	Bolt & lockwasher
72	234327	1	Support
73	223878	1	Ring
74	710047	1	Bearing
75	234908	1	Ring
76	236585	1	Gear

*Inc. 1→76 (11-2HR18323-3) 472..101CB→135CB – 473A101CB→118CB. 120CB→123CB. 125CB→135CB. 137CB→146CB. 148CB. 149CB. 151CB, 152CB, 159CB. 181CB→183CB. 214CB – 458A101CB→458A103CB – 459A101CB→459A109CB

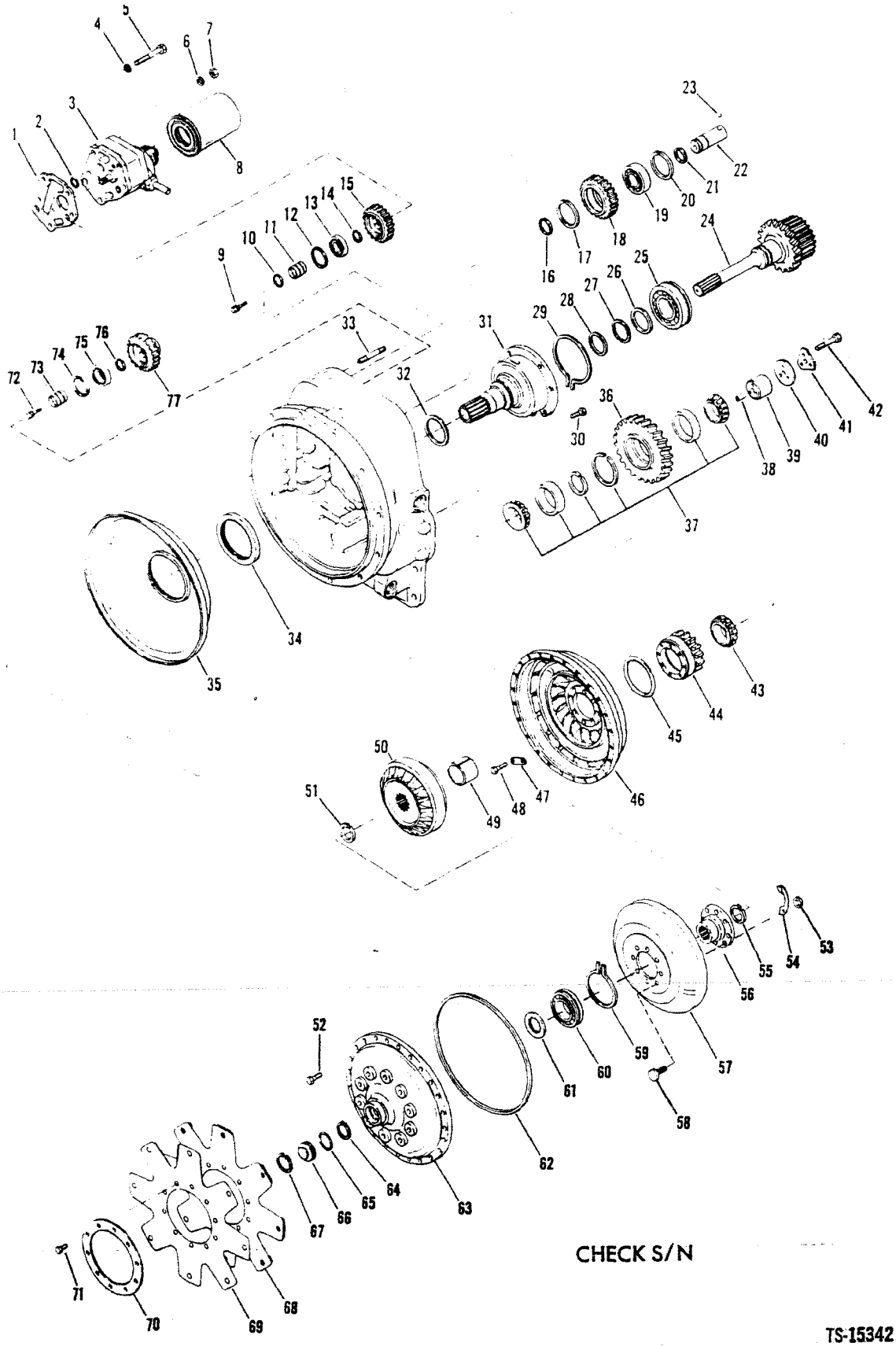
CHECK S/N
TS-15342

Transmission Converter Assembly *

CLARK

No.	Part No.	Qty.	Description
1	235283	1	Gasket
2	60K30018	1	O-ring
3	237454	1	Pump
4	4E7	3	Lockwasher
5	1C764	2	Bolt
5A	†1C772	1	Bolt
6	4E7	2	Lockwasher
7	62D7	2	Nut
8	234099	1	Filter
9	5C620	2	Bolt & lockwasher
10	234908	1	Ring
11	234327	1	Support
12	223922	1	Ring
13	743458	1	Bearing
14	234908	1	Ring
15	236584	1	Gear
16	234908	1	Ring
17	223878	1	Ring
18	236583	1	Gear
19	710047	1	Bearing
20	223878	1	Ring
21	234908	1	Ring
22	234248	1	Shaft
23	10J8	1	Ball
24	236140	1	Shaft & hub assy
25	234228	1	Bearing
26	234230	1	Washer
27	231776	1	Ring
28	223085	1	Ring
29	234229	1	Ring
30	1C616	6	Bolt
30A	†4E6	6	Lockwasher
31	235296	1	Stator support
32	237377	1	Ring
32A	†237378	1	Spring
33	234932	1	Stud
33A	†237518	1	Stud
34	235593	1	Seal
35	234362	1	Baffle
36	234256	1	Gear
37	234264	1	Bearing assy
38	234309	1	Pin
39	234257	1	Shaft
40	234299	1	Plate
41	234918	1	Lockplate
42	1C744	3	Bolt
43	231624	1	Bearing
44	236582	1	Gear
45	234973	1	O-ring
46	235214	1	Impeller
47	234210	4	Tab
48	2C612	8	Bolt
49	234226	1	Spacer
50	237936	1	Member
51	1300688	1	Ring
52	5C516	18	Bolt
53	237974	8	Nut
54	234210	4	Lock tab
55	664141	1	Ring
56	234213	1	Hub
57	237815	1	Turbine
58	234214	8	Bolt
59	234216	1	Ring
60	234215	1	Bearing
61	235591	1	Washer
62	234237	1	O-ring
63	234207	1	Cover
64	1300688	1	Ring
65	60K30114	1	O-ring
66	223015	1	Plug
67	661415	1	Ring
68	235334	1	Plate
69	235333	2	Plate
70	234286	1	Ring
71	5C612	10	Bolt & lockwasher
72	5C620	2	Bolt & lockwasher
73	234327	1	Support
74	223878	1	Ring
75	710047	1	Bearing
76	234908	1	Ring
77	236585	1	Gear

*Inc. 1→76 (11-2HR18323-4) 472A136CB & → – 473A119CB, 124CB, 136CB, 147CB, 150CB, 153CB→158CB, 160CB→180CB, 184CB→213CB, 215CB & → – 458A104CB & → – 459A110CB & → – 480A101CB→166CB – 481A101CB→159CB

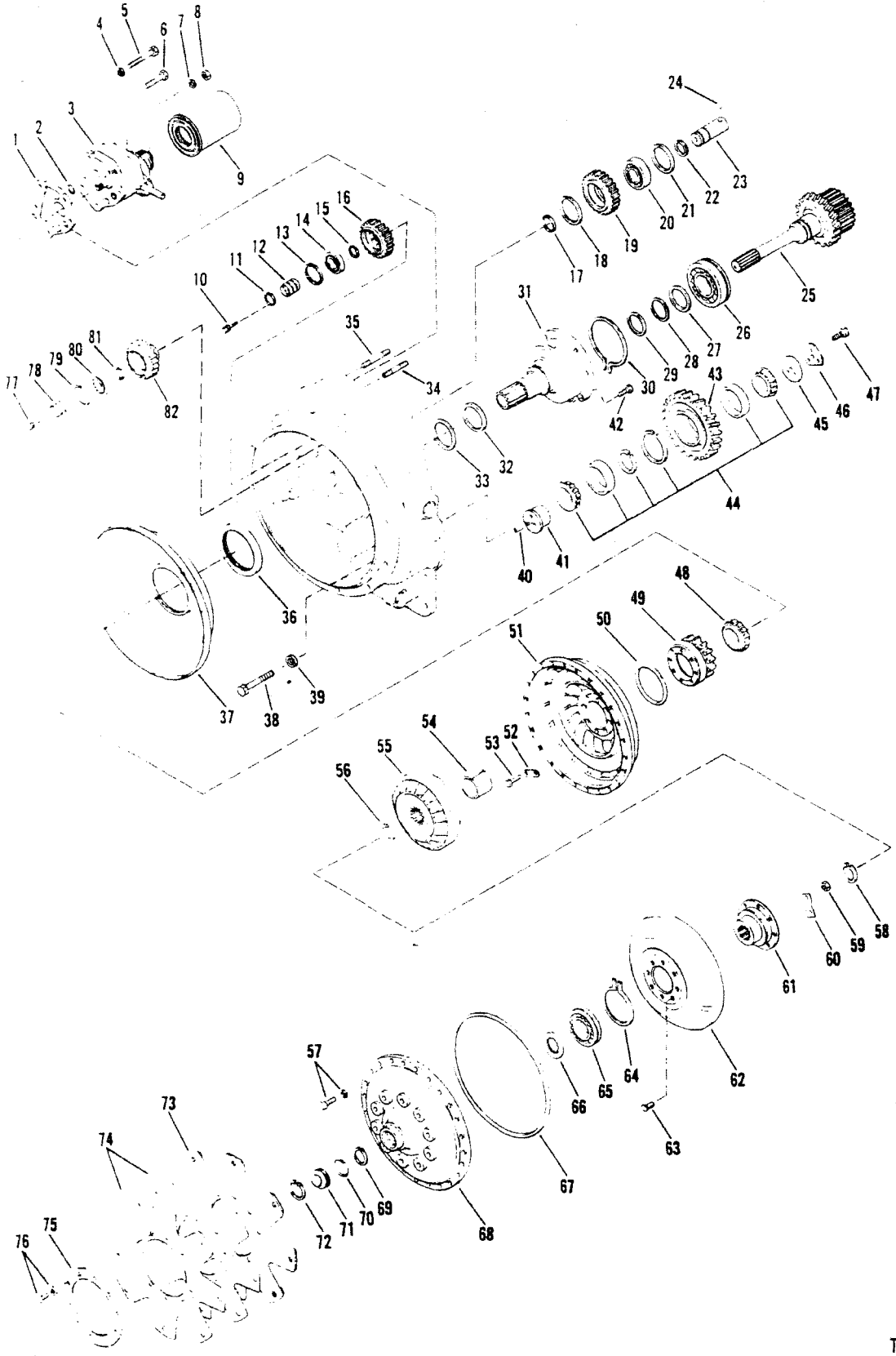
1
2
3
4
5
6
7
8
9
10
11
12
13
14
15
16
17
18
19
20
21
22
23
24
25
26
27
28
29
30
31
32
33
34
35
36
37
38
39
40
41
42
43
44
45
46
47
48
49
50
51
52
53
54
55
56
57
58
59
60
61
62
63
64
65
66
67
68
69
70
71
72
73
74
75
76
77
78
79
80
81
82

TS-20579

Transmission Converter Assembly*

CLARK

No.	Part No.	Qty.	Description
1	235283	1	Gasket
2	60K30018	1	O-ring
3	237454	1	Pump assembly
4	4E07	3	Lockwasher
5	1C772	1	Screw
6	1C764	2	Screw
7	4E07	2	Lockwasher
8	62D07	2	Nut
9	234099	1	Filter assembly
10	5C620	2	Screw
11	234908	1	Ring
12	234327	1	Support
13	223922	1	Ring
14	743458	1	Bearing
15	234908	1	Ring
16	236584	1	Gear
17	234908	1	Ring
18	223878	1	Ring
19	236583	1	Gear
20	710047	1	Bearing
21	223878	1	Ring
22	234908	1	Ring
23	234248	1	Shaft
24	10J08	1	Ball
25	236140	1	Shaft
26	234228	1	Bearing
27	234230	1	Washer
28	231776	1	Ring
29	223085	1	Ring
30	234229	1	Snap ring
31	235296	1	Support
32	237378	1	Spring
33	237377	1	Ring
34	238899	1	Stud
35	238900	1	Stud
36	235593	1	Oil seal
37	234362	1	Baffle
38	18C744	3	Screw
39	4E07	3	Lockwasher
40	234309	1	Pin
41	238884	1	Shaft
42	1C616	6	Screw

No.	Part No.	Qty.	Description
42A	4E06	6	Lockwasher
43	238887	1	Gear
44	238885	1	Bearing
45	234299	1	Plate
46	234918	1	Lockplate
47	18C716	3	Screw
48	231624	1	Bearing
49	236582	1	Gear
50	234973	1	O-ring
51	235214	1	Impeller
52	234210	4	Lock tab
53	2C612	8	Screw
54	234226	1	Spacer
55	237936	1	Member
56	664141	1	Ring
57	5C516	18	Screw
58	1300688	1	Ring
59	237974	8	Nut
60	234210	4	Lock tab
61	234213	1	Hub
62	239851	1	Turbine
63	234214	8	Nut
64	234216	1	Ring
65	234215	1	Bearing
66	235591	1	Washer
67	234237	1	O-ring
68	239576	1	Cover
69	1300688	1	Ring
70	60K30114	1	O-ring
71	223015	1	Plug
72	1321234	1	Ring
73	235334	1	Plate
74	235333	2	Plate
75	234286	1	Ring
76	5C612	1	Screw
77	5C620	1	Screw
78	234327	1	Support
79	223878	1	Ring
80	710047	1	Bearing
81	234908	1	Ring
82	236585	1	Gear

*480A166CB→999, 481A160CB→999, 480B, 481B

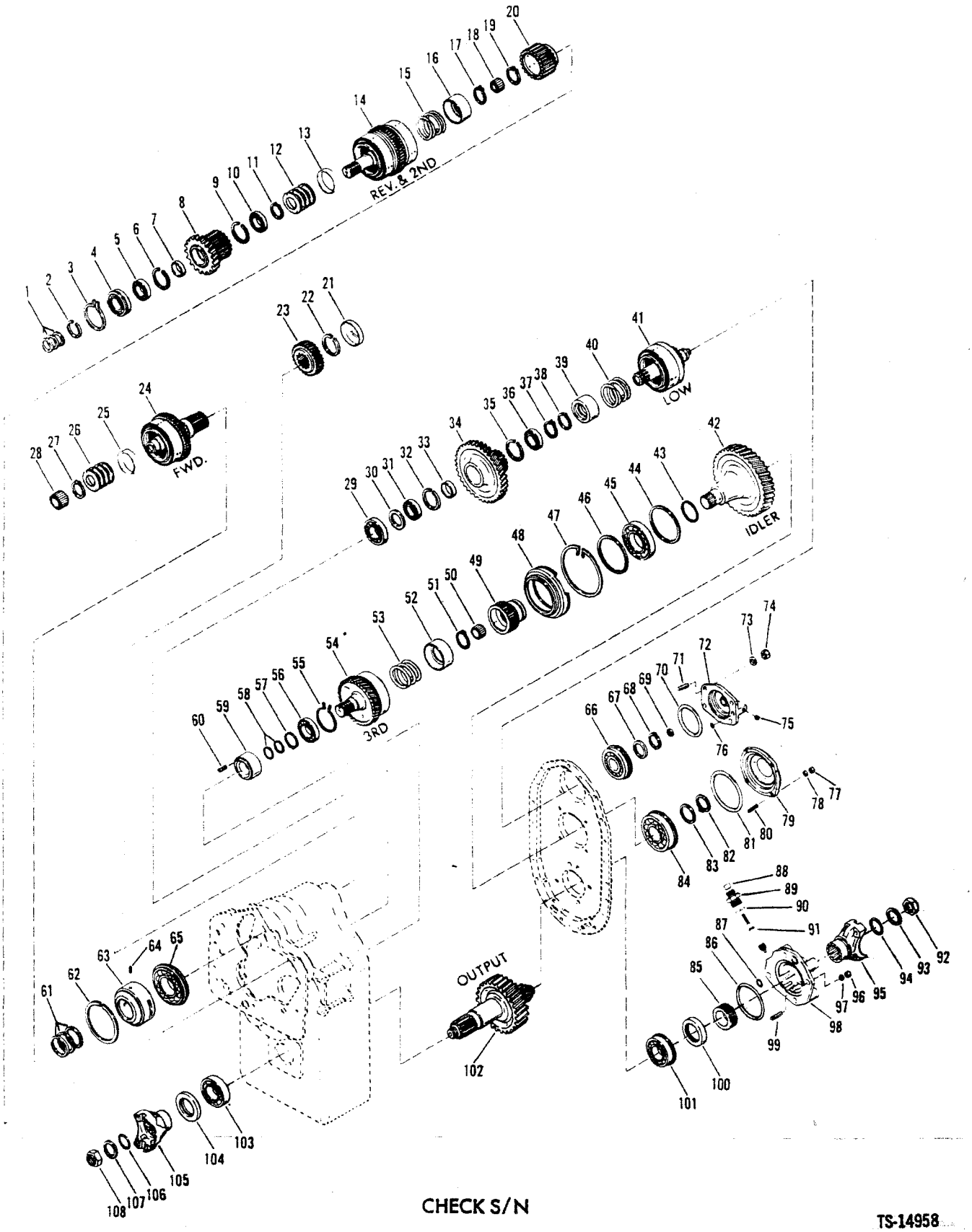

CHECK S/N

TS-14958

Transmission, Gear & Shaft Group *

CLARK

No.	Part No.	Qty.	Description
1	215183	3	Ring
2	224083	1	Ring
3	230889	1	Snap ring
4	223349	1	Bearing
5	233389	1	Bearing
6	234141	1	Ring
7	234304	1	Spacer
8	236151	1	Gear
9	234141	1	Ring
10	230829	1	Bearing
11	237669	1	Snap ring
12	237443	5	Spring
13	237442	1	Spacer
14	[1]———	1	Clutch assy
15	235960	1	Spring
16	235959	1	Retainer
17	234350	1	Snap ring
18	233065	1	Bearing
19	234347	1	Snap ring
20	236165	1	Hub
21	234999	1	Plug
22	224020	1	Snap ring
23	234328	1	Gear
24	[1]———	1	Clutch assy
25	237442	1	Spacer
26	237443	5	Spring
27	237669	1	Snap ring
28	235763	1	Bearing
29	225605	1	Bearing
30	234145	1	Spacer
31	230885	1	Bearing
32	223964	1	Ring
33	234305	1	Spacer
34	236361	1	Gear
35	223964	1	Ring
36	230885	1	Bearing
37	234347	1	Ring
38	237669	1	Snap ring
39	235959	1	Retainer
40	235960	1	Spring
41	[1]———	1	Clutch assy
42	236666	1	Gear
43	230067	1	Ring
44	223997	1	Ring
45	225843	1	Bearing
46	223997	1	Ring
47	236625	1	Ring
48	236622	1	Carrier
49	236613	1	Hub
50	233065	1	Bearing
51	234350	1	Snap ring
52	235959	1	Retainer
53	235960	1	Spring
54	[1]———	1	Clutch assy

*11-2HR18323-3 472A101CB→135CB – 473A101CB→108CB, 120CB→123CB, 125CB→135CB, 137CB→146CB, 148CB, 151CB, 152CB, 159CB, 181CB→183CB, 214CB – 458A101CB→103CB – 459A101CB→109CB

[1]See Index

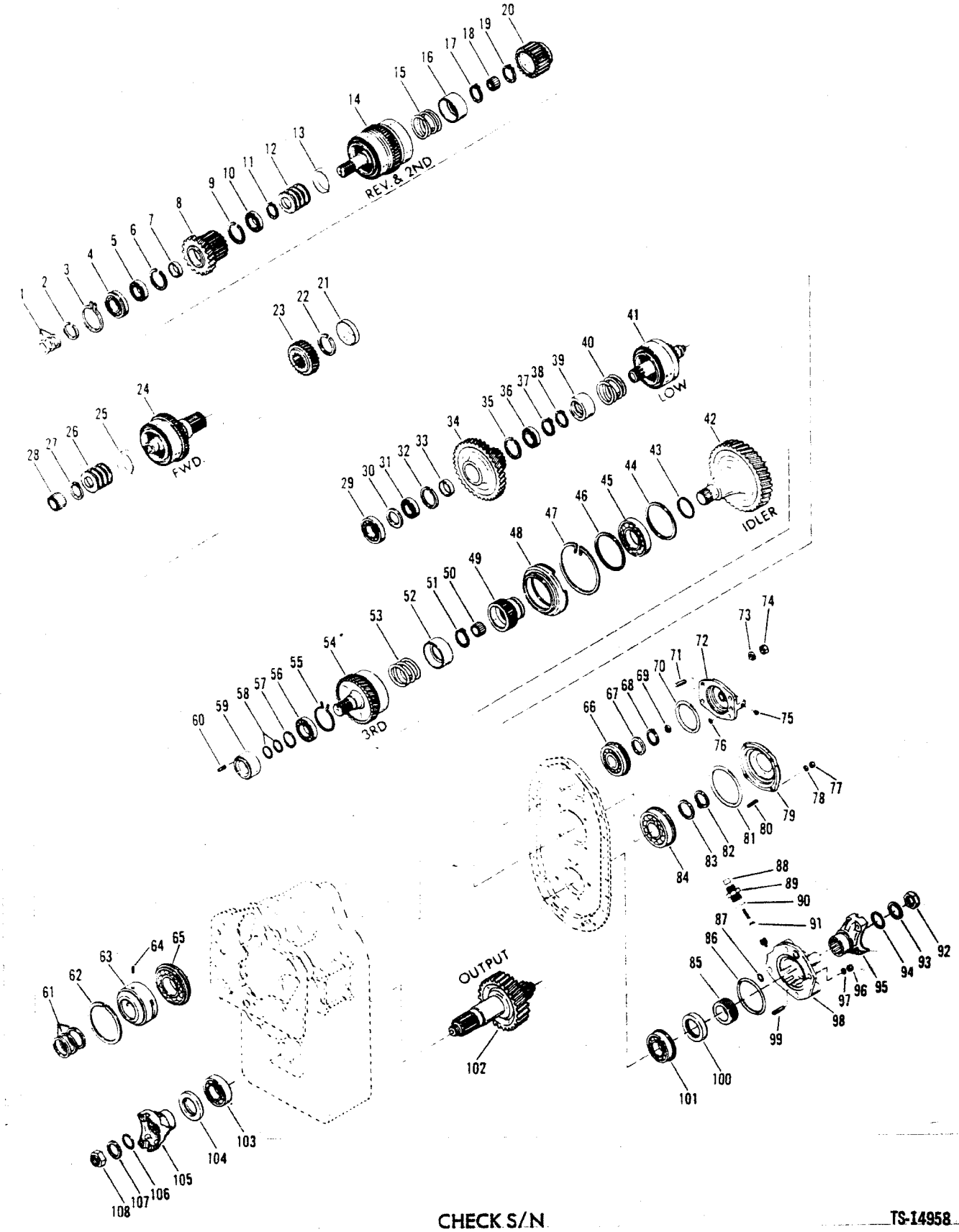

CHECK S/N

TS-14958

No.	Part No.	Qty.	Description
55	236614	1	Ring
56	230885	1	Bearing
57	654613	1	Retainer
58	215183	2	Ring
59	236612	1	Race
60	664131	1	Pin
61	222104	3	Ring
62	235764	1	Ring
63	235749	1	Sleeve
64	672572	1	Pin
65	743417	1	Bearing
66	225597	1	Bearing
67	234230	1	Washer
68	234347	1	Retainer
69	234130	1	Ring
70	25K40420	1	O-ring
71	226862	4	Stud
72	[2]236607	1	Cap
73	4E7	4	Washer
74	62D7	4	Nut
75	24K2	1	Plug
76	25K30012	1	O-ring
77	62D7	4	Nut
78	4E7	4	Washer
79	234902	1	Cap
80	226862	4	Stud
81	25K40508	1	O-ring
82	743669	1	Retainer
83	234904	1	Washer
84	658040	1	Bearing
85	236685	1	Gear
86	25K40328	1	O-ring
87	25K30022	1	O-ring
88	———	—	Omit
89	24K8	1	Plug
90	———	—	Omit
91	236686	1	Gear
92	216058	1	Nut
93	102745	1	Washer
94	25K40112	1	O-ring
95	215550	1	Flange
96	62D9	4	Nut
97	4E9	4	Washer
98	236677	1	Cap
99	234906	4	Stud
100	235751	1	Seal
101	225602	1	Bearing
102	801994	1	Gear
103	743439	1	Bearing
104	231798	1	Seal
105	214985	1	Flange
106	25K40112	1	O-ring
107	102745	1	Washer
108	216058	1	Nut

[2]Inc. 75

*472A101CB→135CB – 473A101CB→108CB, 120CB→123CB, 125CB→135CB, 137CB→146CB, 148CB, 151CB, 152CB, 159CB, 181CB→183CB, 214CB – 458A101CB→103CB – 459A101CB→109CB

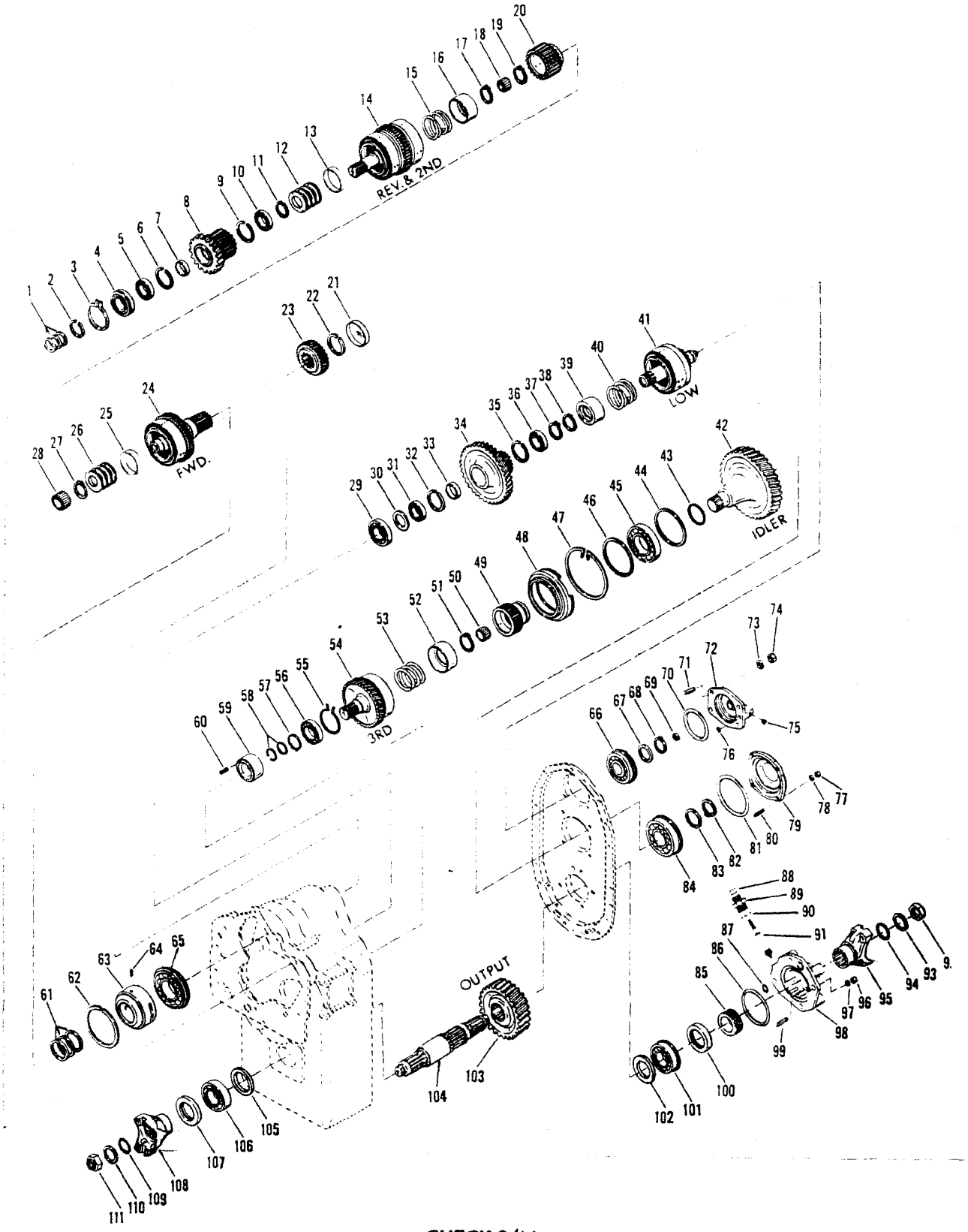

CHECK S/N

TS-15341

Transmission, Gear & Shaft Group *

CLARK

No.	Part No.	Qty.	Description
1	215183	3	Ring
2	224083	1	Ring
3	230889	1	Snap ring
4	223349	1	Bearing
5	233389	1	Bearing
6	234141	1	Ring
7	234304	1	Spacer
8	236151	1	Gear
9	234141	1	Ring
10	230829	1	Bearing
11	237669	1	Snap ring
12	237443	5	Spring
13	237442	1	Spacer
14	[1]———	1	Clutch assy
15	235960	1	Spring
16	235959	1	Retainer
17	234350	1	Snap ring
18	233065	1	Bearing
19	234347	1	Snap ring
20	236165	1	Hub
21	234999	1	Plug
22	238034	1	Snap ring
23	234328	1	Gear
24	[1]———	1	Clutch assy
25	237442	1	Spacer
26	237443	5	Spring
27	237669	1	Snap ring
28	235763	1	Bearing
29	225605	1	Bearing
30	234145	1	Spacer
31	230885	1	Bearing
32	223964	1	Ring
33	234305	1	Spacer
34	236361	1	Gear
35	223964	1	Ring
36	230885	1	Bearing
37	234347	1	Ring
38	234350	1	Snap ring
39	235959	1	Retainer
40	235960	1	Spring
41	[1]———	1	Clutch assy
42	236666	1	Gear
43	230067	1	Ring
44	223997	1	Ring
45	225843	1	Bearing
46	223997	1	Ring
47	236625	1	Ring
48	236622	1	Carrier
49	236613	1	Hub
50	233065	1	Bearing
51	234350	1	Snap ring
52	235959	1	Retainer
53	235960	1	Spring
54	[1]———	1	Clutch assy

*(11-2HR18323-4) 472A136CB & → – 473A119CB, 124CB, 136CB, 147CB, 150CB, 153CB→158CB, 160CB→180CB, 184CB→213CB, 215CB & → – 458A104CB & → – 459A110CB & →480A101CB→166CB – 481A101CB→159CB

[1]See Index

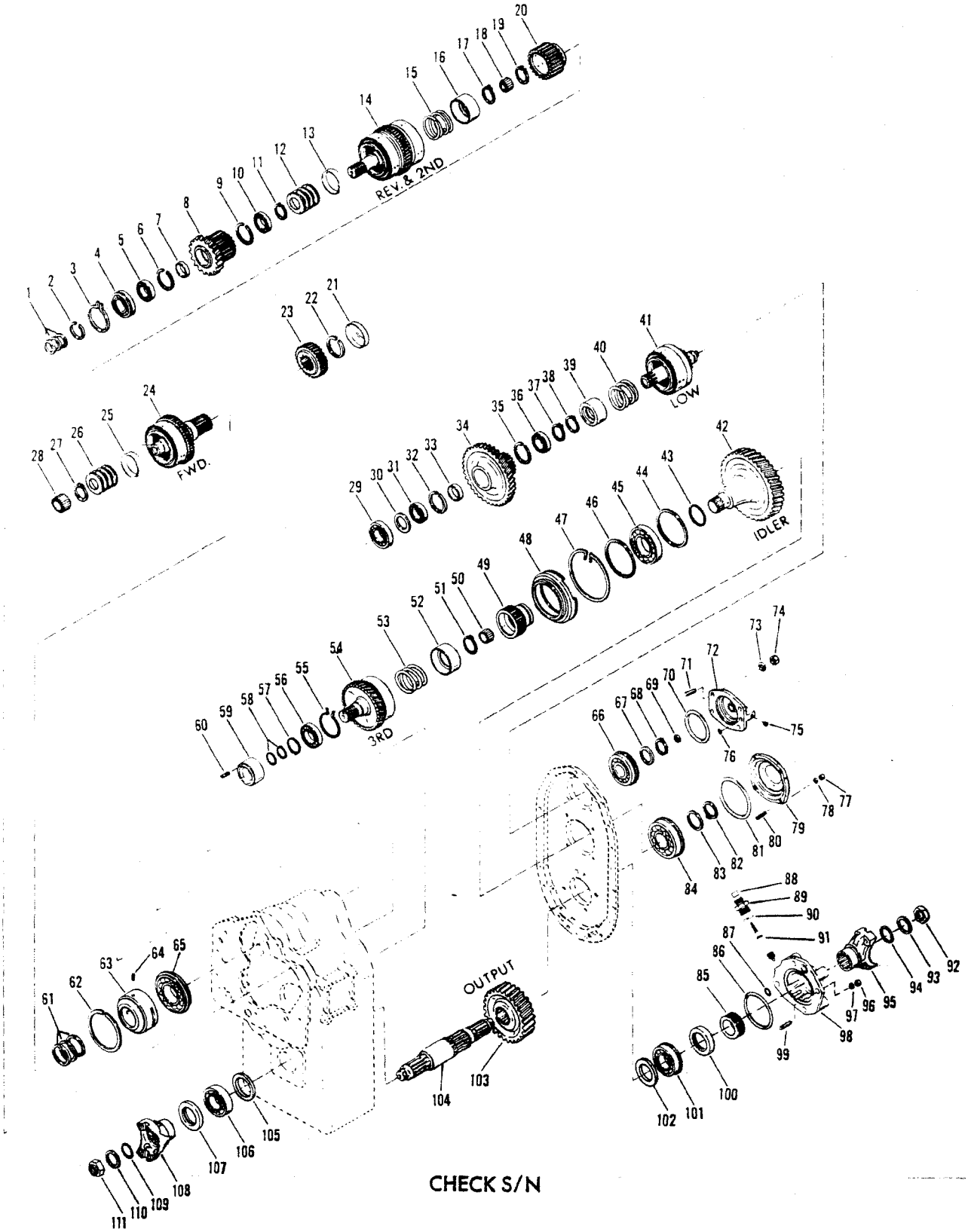

CHECK S/N

TS-15341

No.	Part No.	Qty.	Description
55	236614	1	Ring
56	230885	1	Bearing
57	654613	1	Retainer
58	215183	2	Ring
59	236612	1	Race
60	664131	1	Pin
61	222104	3	Ring
62	235764	1	Ring
63	235749	1	Sleeve
64	672572	1	Pin
65	743417	1	Bearing
66	225597	1	Bearing
67	234230	1	Washer
68	234347	1	Retainer
69	234130	1	Ring
70	25K40420	1	O-ring
71	226862	4	Stud
72	236607	1	Cap
73	4E7	4	Washer
74	62D7	4	Nut
75	24K2	1	Plug
76	25K30012	1	O-ring
77	62D7	4	Nut
78	4E7	4	Washer
79	234902	1	Cap
80	226862	4	Stud
81	25K40508	1	O-ring
82	743669	1	Retainer
83	234904	1	Washer
84	658040	1	Bearing
85	———	–	Omit
86	25K40328	1	O-ring
87	25K30022	1	O-ring
88	———	–	Omit
89	24K8	1	Plug
90	———	–	Omit
91	237886	1	Gear
92	216058	1	Nut
93	102745	1	Washer
94	25K40112	1	O-ring
95	215550	1	Flange
96	62D9	4	Nut
97	4E9	4	Washer
98	236677	1	Cap
99	234906	4	Stud
100	235751	1	Seal
101	225602	1	Bearing
102	237841	1	Spacer
103	237839	1	Gear
104	237835	1	Shaft
105	235910	1	Washer
106	743439	1	Bearing
107	231798	1	Seal
108	214985	1	Flange
109	25K40112	1	O-ring
110	102745	1	Washer
111	216058	1	Nut

[2]Inc. 75 472A136CB & → – 473A119CB, 124CB, 136CB, 147CB, 150CB, 153CB→158CB, 160CB→180CB, 184CB→213CB, 215CB & → – 458A104CB & → – 459A110CB & → – 480A101CB→166CB – 481A101CB→159CB

CLARK

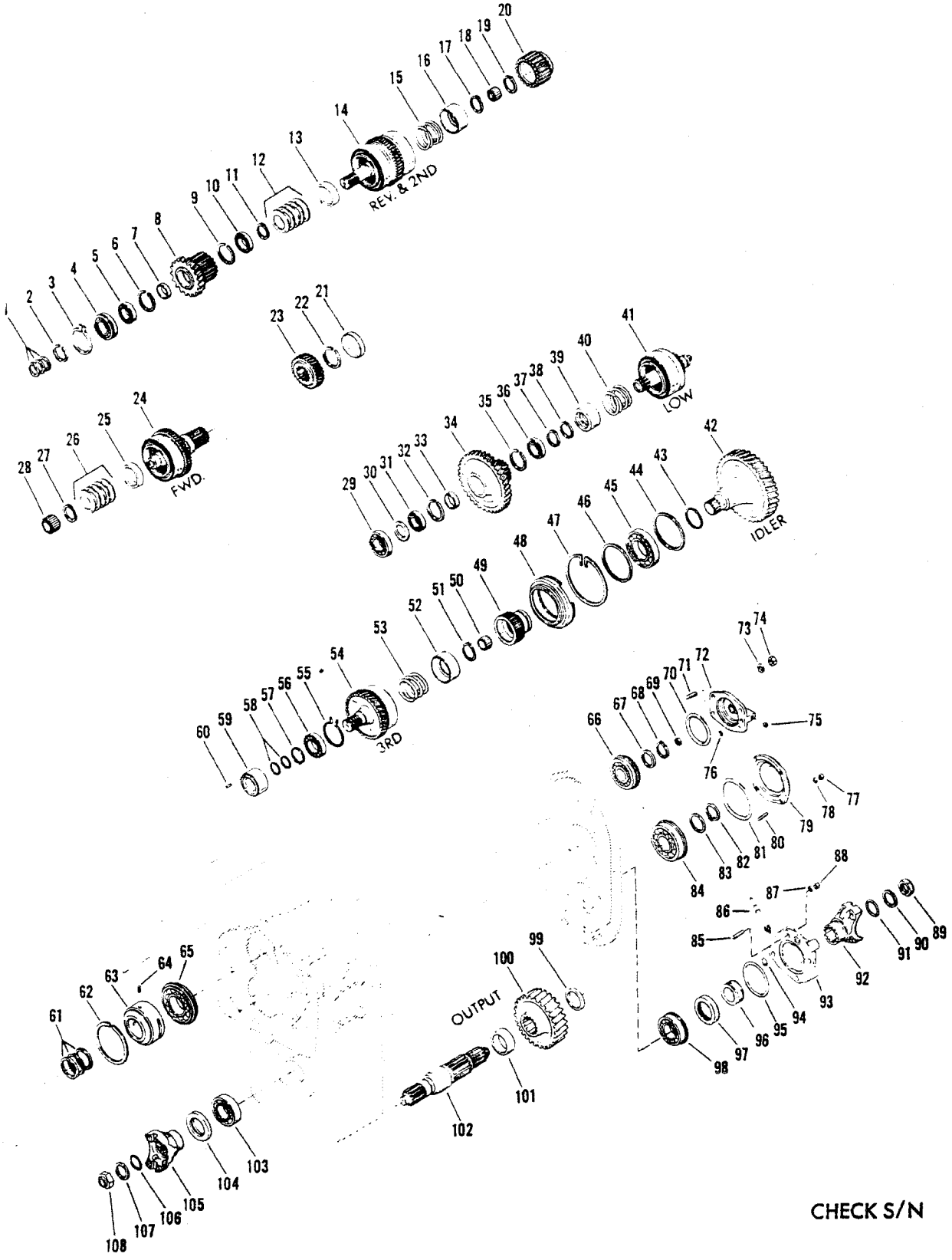

TS-20578

PM 3150
Printed in U.S.A.

Transmission — Gear & Shaft Group*

CLARK

No.	Part No.	Qty.	Description
1	215183	3	Ring
2	224083	1	Ring
3	230889	1	Snap ring
4	223349	1	Bearing
5	233389	1	Bearing
6	234141	1	Ring
7	234304	1	Spacer
8	236151	1	Gear
9	234141	1	Ring
10	230829	1	Bearing
11	237669	1	Snap ring
12	237443	5	Spring
13	237442	1	Spacer
14	[1]———	1	Clutch assy
15	235960	1	Spring
16	235959	1	Retainer
17	234350	1	Snap ring
18	233065	1	Bearing
19	234347	1	Snap ring
20	236165	1	Hub
21	234999	1	Plug
22	238034	1	Snap ring
23	234328	1	Gear
24	[1]———	1	Clutch assy
25	237442	1	Spacer
26	237443	5	Spring
27	237669	1	Snap ring
28	235763	1	Bearing
29	225605	1	Bearing
30	234145	1	Spacer
31	230885	1	Bearing
32	223964	1	Ring
33	234305	1	Spacer
34	236361	1	Gear
35	223964	1	Ring
36	230885	1	Bearing
37	234347	1	Ring
38	234350	1	Snap ring
39	235959	1	Retainer
40	235960	1	Spring
41	[1]———	1	Clutch assy
42	236666	1	Gear
43	230067	1	Ring
44	223997	1	Ring
45	225843	1	Bearing
46	223997	1	Ring
47	236625	1	Ring
48	236622	1	Carrier
49	236613	1	Hub
50	233065	1	Bearing
51	234350	1	Snap ring
52	235959	1	Retainer
53	235960	1	Spring
54	[1]———	1	Clutch assy

*(11.2HR18323-5) 458B127CB & →, 472B203CB→206CB, 211CB & →, 458C, 472C
[1]See Index
[2]Inc. 75

CLARK

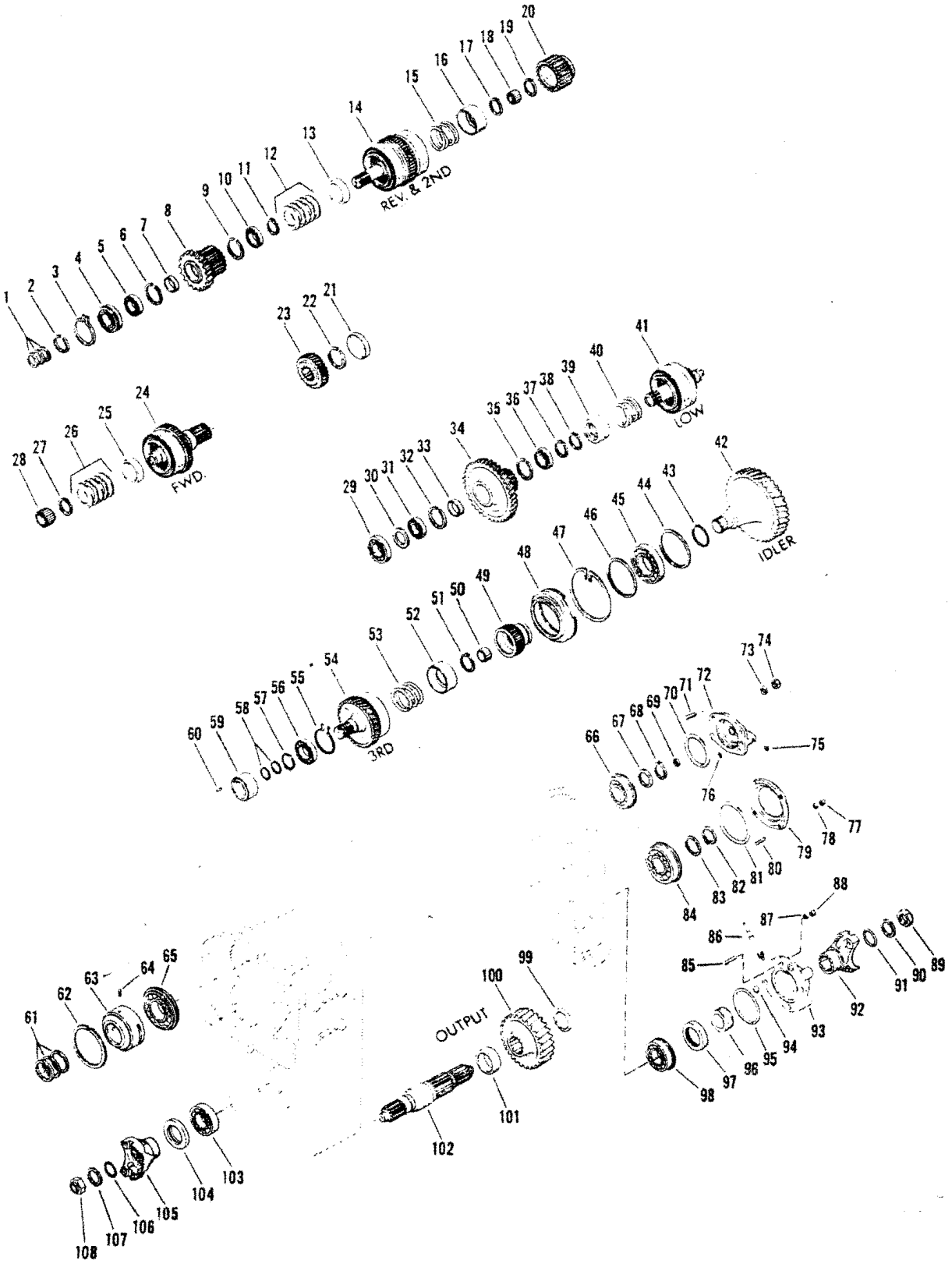

TS-20578

Transmission – Gear & Shaft Group*

CLARK

No.	Part No.	Qty.	Description
55	236614	1	Ring
56	230885	1	Bearing
57	654613	1	Ring
58	215183	2	Ring
59	236612	1	Race
60	664131	1	Roll pin
61	222104	3	Ring
62	235764	1	Ring
63	235749	1	Sleeve
64	672572	1	Roll pin
65	743417	1	Bearing
66	225597	1	Bearing
67	234230	1	Washer
68	234347	1	Ring
69	234130	1	Ring
70	60K40420	1	O-ring
71	238901	4	Stud
72	236607	1	Cap
73	4E7	4	Washer
74	62D7	4	Nut
75	24K2	1	Plug
76	60K30012	1	O-ring
77	62D7	4	Nut
78	4E7	4	Washer
79	234902	1	Cap
80	238901	4	Stud
81	60K40508	1	O-ring
82	743669	1	Ring
83	234904	1	Washer
84	658040	1	Bearing
85	238903	4	Stud
86	237886	1	Gear
87	4E9	4	Washer
88	62D9	4	Nut
89	216058	1	Nut
90	102745	1	Washer
91	60K40112	1	O-ring
92	215550	1	Flange
93	236677	1	Cap
94	60K30022	1	O-ring
95	60K40328	1	O-ring
96	237886	1	Gear
97	235751	1	Seal
98	225602	1	Bearing
99	237841	1	Spacer
100	237839	1	Gear
101	235910	1	Spacer
102	237835	1	Shaft
103	743439	1	Bearing
104	231798	1	Seal
105	214985	1	Flange
106	60K40112	1	O-ring
107	102745	1	Washer
108	216058	1	Nut

*(11.2HR18323-5) 458B127CB & →, 472B203CB→206CB, 211CB & →, 458C, 472C
[1]See Index
[2]Inc. 75

Transmission Modulated Valve Assembly

CLARK

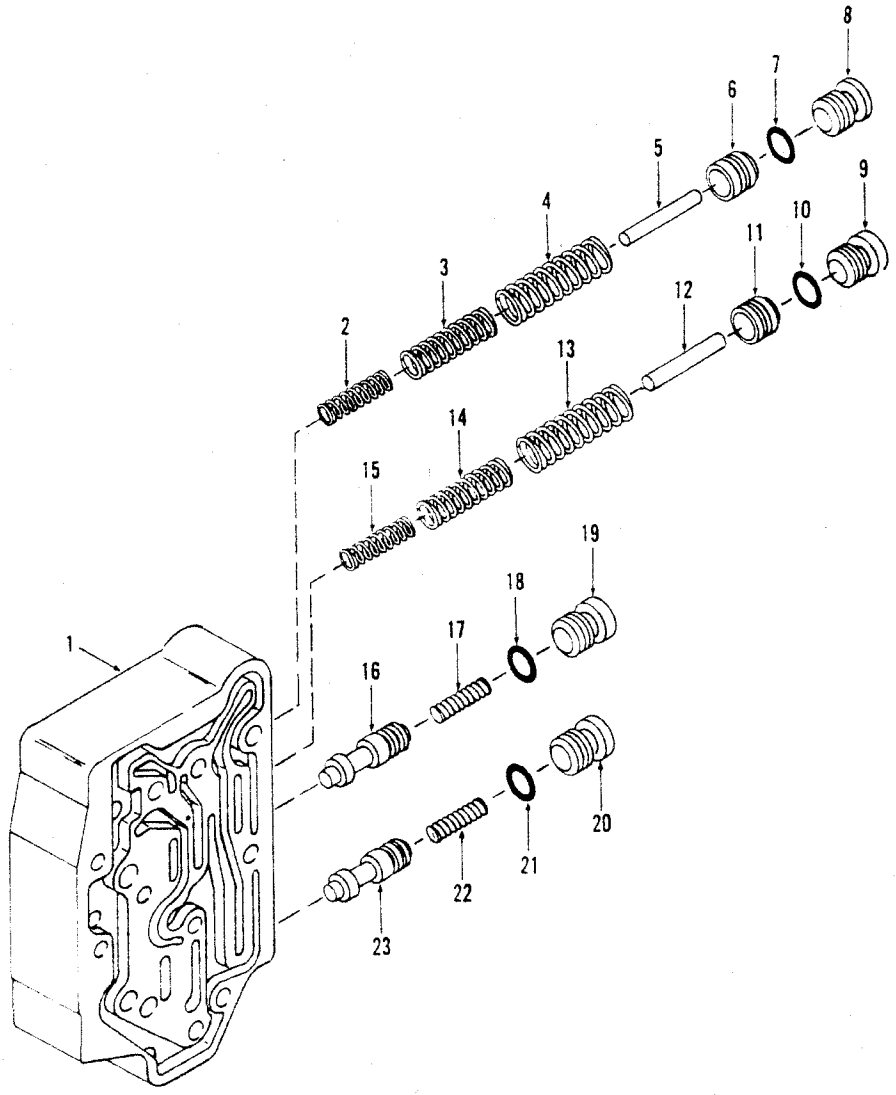

TS-15281

No.	Part No.	Qty.	Description
A	[2]237875	1	Valve assy
1	[3]———	1	Housing
2	237880	1	Spring
3	237879	1	Spring
4	237878	1	Spring
5	237881	1	Pin
6	237877	1	Spool
7	91F7	1	O-ring
8	[4]47K7	1	Plug
9	[5]47K7	1	Plug
10	91F7	1	O-ring
11	237877	1	Spool
12	237881	1	Pin
13	237878	1	Spring
14	237879	1	Spring
15	237880	1	Spring
16	237516	1	Spool
17	234665	1	Spring
18	91F7	1	O-ring
19	[6]47F7	1	Plug
20	[7]47F7	1	Plug
21	91F7	1	O-ring
22	234665	1	Spring
23	237516	1	Spool

[2]Inc. 1➔23
[3]See A
[4]Inc. 7
[5]Inc. 10
[6]Inc. 18
[7]Inc. 21

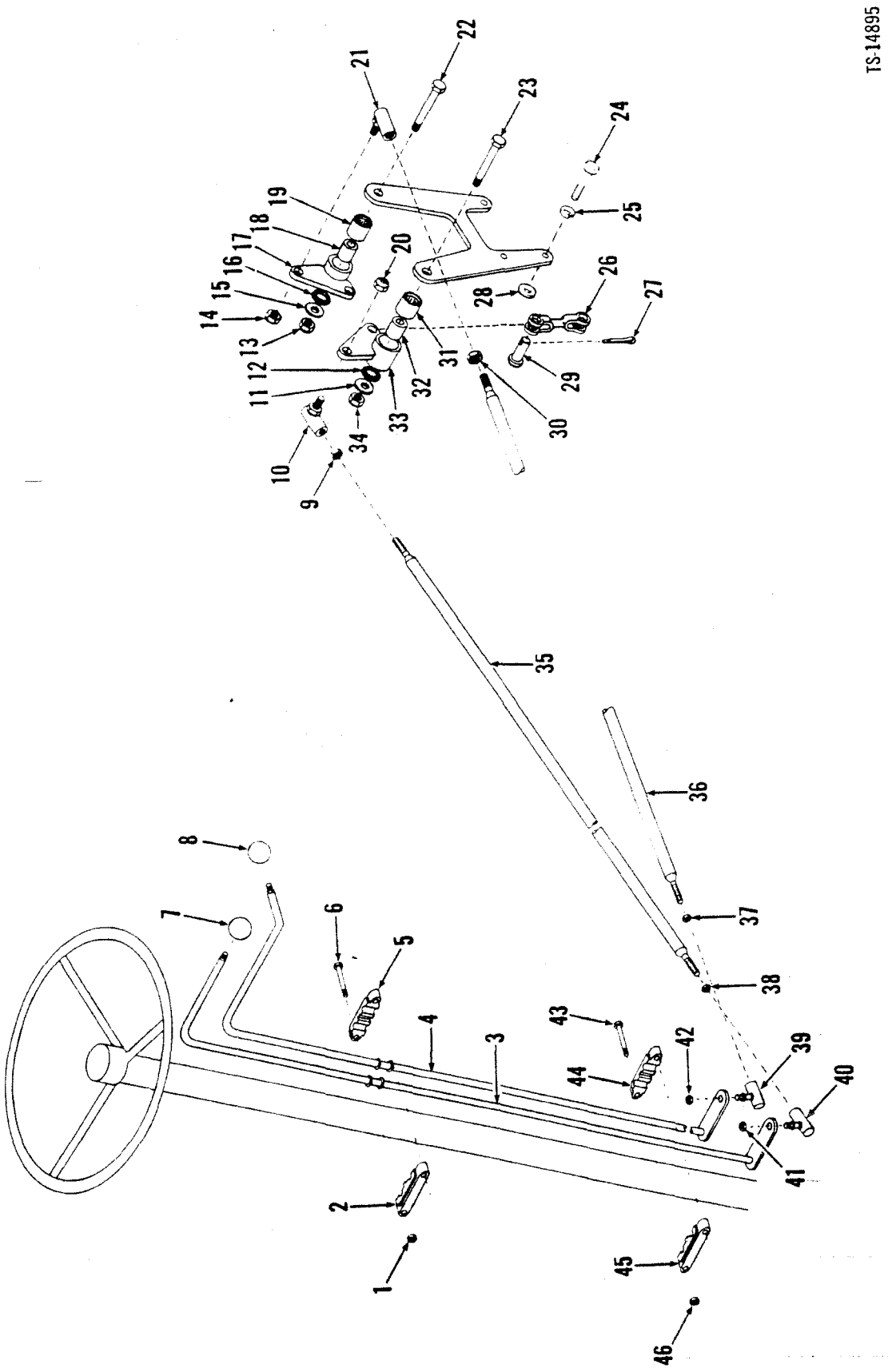
TS-14895
1
2
3
4
5
6
7
8
9
10
11
12
13
14
15
16
17
18
19
20
21
22
23
24
25
26
27
28
29
30
31
32
33
34
35
36
37
38
39
40
41
42
43
44
45
46

No.	Part No.	Qty.	Description
1	60D5	2	Nut
2	2501575	1	Support
3	2513005	1	Rod
4	2513006	1	Rod
5	2501575	1	Support
6	18C532	2	Bolt
7	509772	1	Knob
8	509772	1	Knob
9	8D5	1	Nut
10	2520346	1	Ball joint
11	561912	1	Washer
12	1522535	2	Wiper
13	60D8	1	Nut
14	66D5	1	Nut
15	561912	1	Washer
16	1522535	2	Wiper
17	2516482	1	Bellcrank assy
18	1503251	1	Sleeve
19	675227	1	Bearing
20	66D5	1	Nut
21	2520346	1	Ball joint
22	18C840	1	Bolt
23	18C840	1	Bolt
24	17C664	3	Bolt
25	4E6	3	Washer
26	2505200	2	Rod
27	1F308	4	Cotter pin
28	27E6	3	Washer
29	4F05062	4	Pin
30	8D5	1	Nut
31	675227	1	Bearing
32	1503251	1	Sleeve
33	2516482	1	Ball joint
34	60D5	1	Nut
35	2516477	1	Rod
36	2516479	1	Rod
37	8D5	1	Nut
38	8D5	1	Nut
39	2520346	1	Ball joint
40	2520346	1	Ball joint
41	66D5	1	Nut
42	66D5	1	Nut
43	18C532	2	Bolt
44	2501575	1	Support
45	2501575	1	Support
46	60D5	2	Nut

[1] Inc. 9, 10, 38, 40
[2] Inc. 21, 30, 37, 39

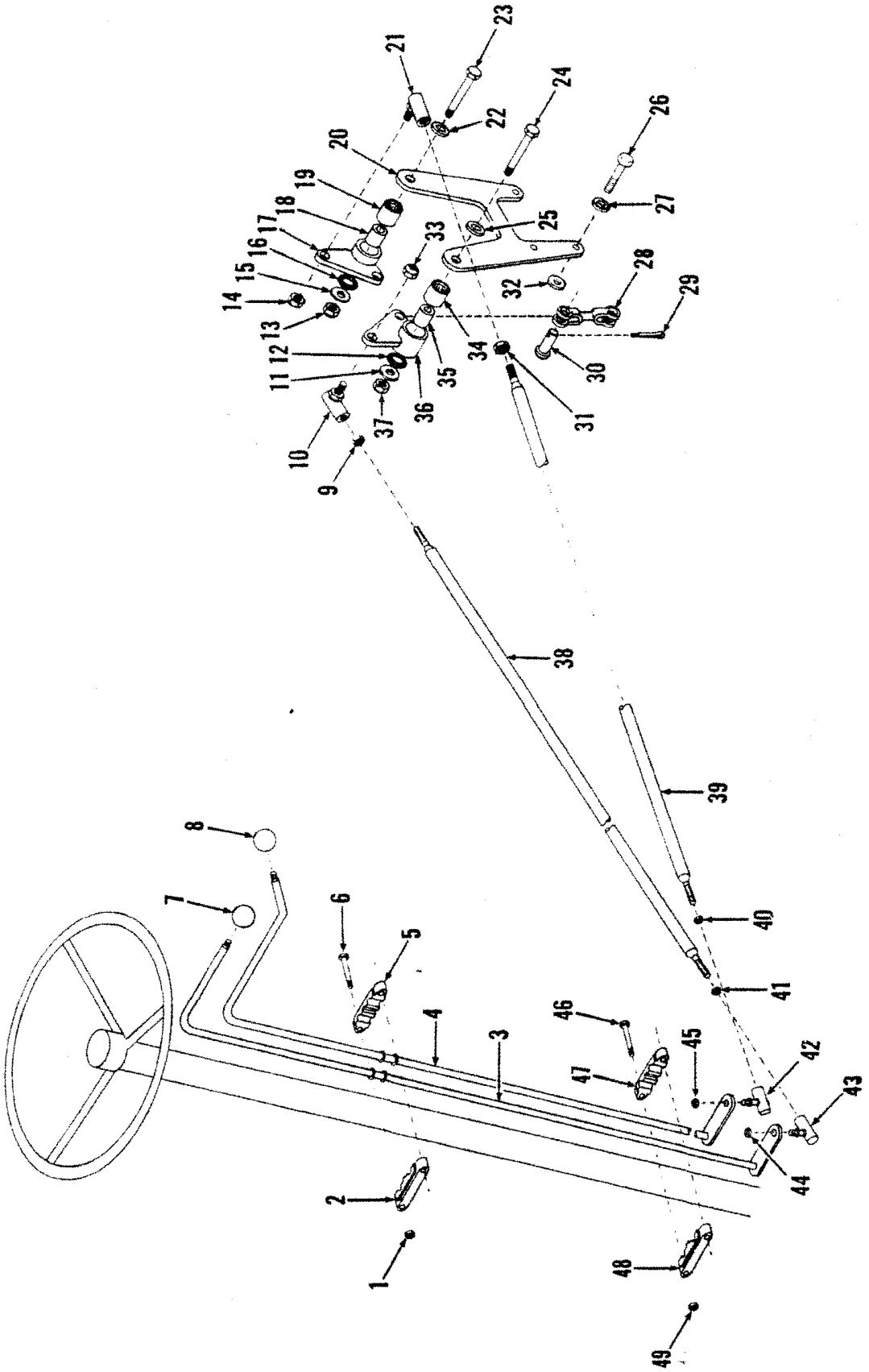
TS-15595
1
2
3
4
5
6
7
8
9
10
11
12
13
14
15
16
17
18
19
20
21
22
23
24
25
26
27
28
29
30
31
32
33
34
35
36
37
38
39
40
41
42
43
44
45
46
47
48
49

No.	Part No.	Qty.	Description
1	60D5	2	Nut
2	2501575	1	Support
3	2513005	1	Rod
4	2513006	1	Rod
5	2501575	1	Support
6	18C532	2	Bolt
7	509772	1	Knob
8	509772	1	Knob
9	8D5	1	Nut
10	2520346	1	Ball joint
11	561912	1	Washer
12	1522535	2	Wiper
13	59D8	1	Nut
14	66D5	1	Nut
15	561912	1	Washer
16	1522535	2	Wiper
17	[2]2516482	1	Bellcrank assy
18	1503251	1	Sleeve
19	675227	1	Bearing
20	2513007	1	Bracket
21	2520346	1	Ball joint
22	————	–	Omit
23	17C840	1	Bolt
24	17C840	1	Bolt
25	————	–	Omit
26	17C664	3	Bolt
27	27E6	3	Washer
28	2505200	2	Rod
29	1F308	4	Cotter pin
30	4F05062	4	Pin
31	8D5	1	Nut
32	27E6	3	Washer
33	66D5	1	Nut
34	675227	1	Bearing
35	1503251	1	Sleeve
36	[3]2516482	1	Bellcrank
37	59D8	1	Nut
38	[4]2516477	1	Rod
39	[5]2516479	1	Rod
40	8D5	1	Nut
41	8D5	1	Nut
42	2520346	1	Ball joint
43	2520346	1	Ball joint
44	66D5	1	Nut
45	66D5	1	Nut
46	18C532	2	Bolt
47	2501575	1	Support
48	2501575	1	Support
49	60D5	2	Nut

[2]Inc. 19
[3]Inc. 34
[4]Inc. 9, 10, 41, 43
[5]Inc. 21, 31, 40, 42

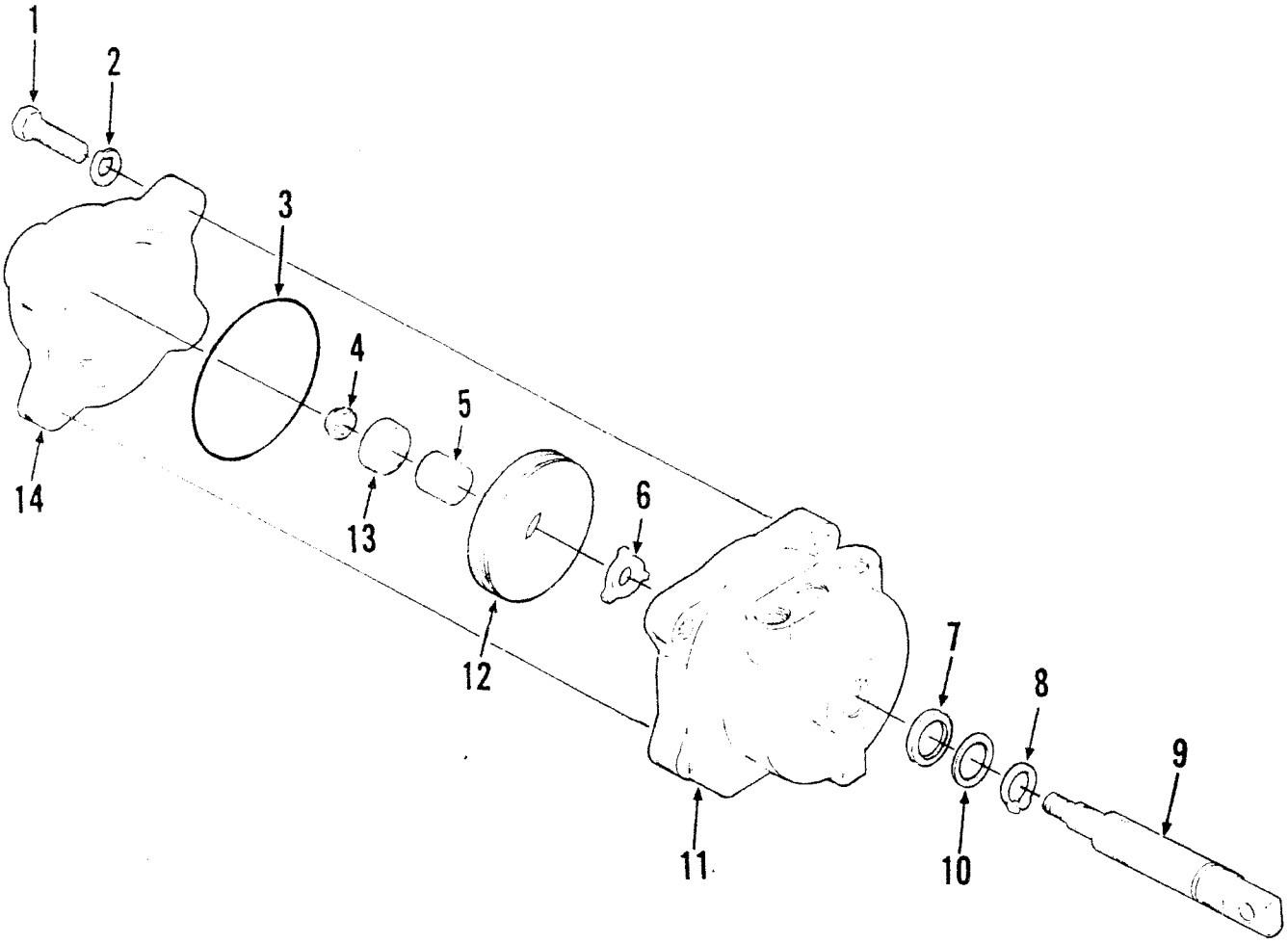

TS-15204

No.	Part No.	Qty.	Description
A	[2]2522942	1	Valve assembly
1	1C620	4	Bolt
2	4E6	4	Lockwasher
3	962423	1	O-ring
4	961883	1	Locknut
5	962425	1	Spacer
6	962427	1	Spacer
7	962430	1	Packing
8	962432	1	Ring
9	962428	1	Spool
10	962431	1	Ring
11	§[3]———	1	Housing
12	962426	1	Piston
13	962424	1	Seal
14	962422	1	Cap

[2]Inc. 1→14
[3]See A

Valve Assembly Brake

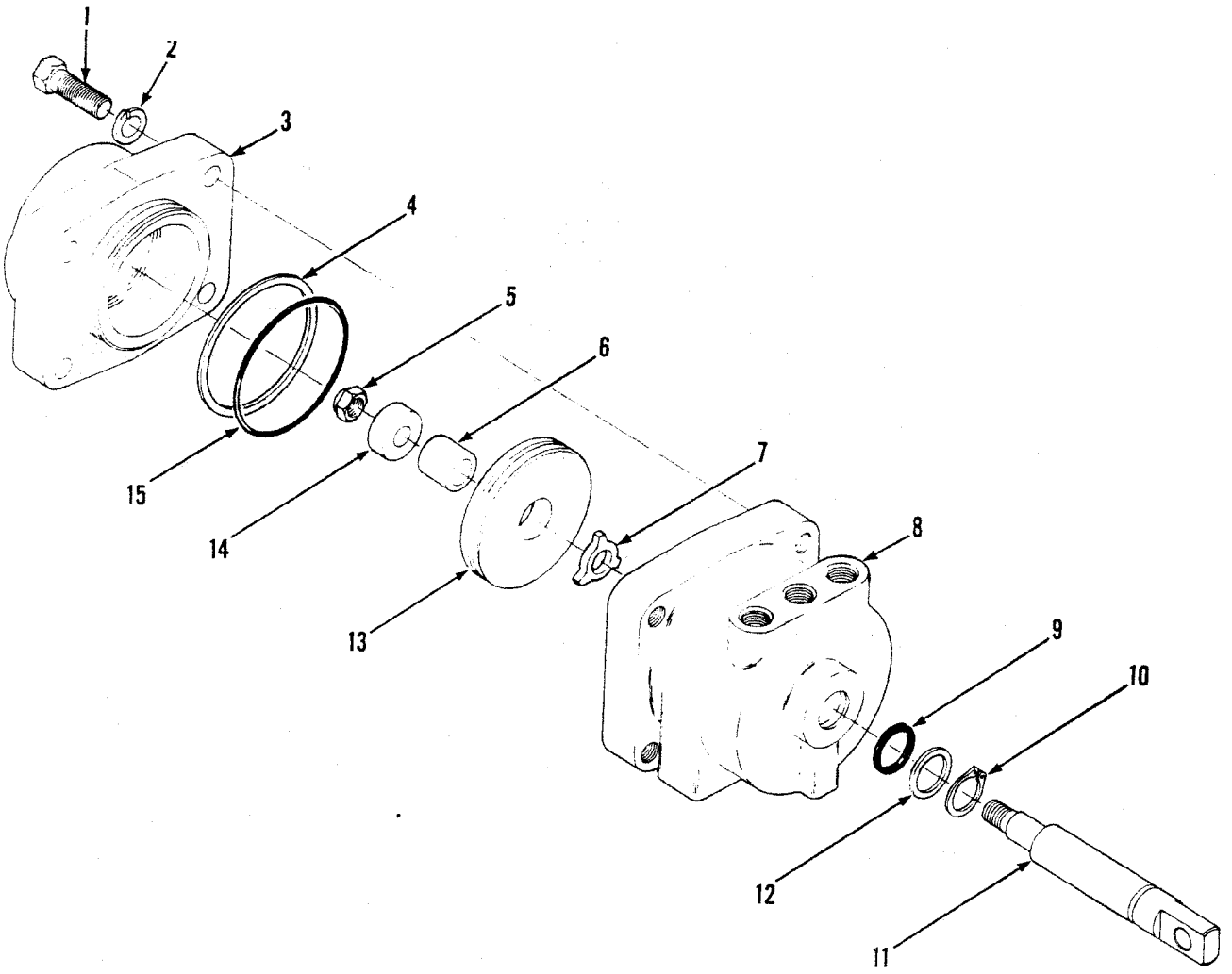

TS-15672

No.	Part No.	Qty.	Description
A	[2]2528766	1	Valve assy
1	1C624	4	Bolt
2	4E6	4	Washer
3	963191	1	Cap
4	963193	1	Back-up ring
5	961883	1	Nut
6	962425	1	Spacer
7	962427	1	Spacer
8	§[3]———	1	Housing
9	25K30024	1	O-ring
10	962432	1	Snap ring
11	963196	1	Spool
12	962431	1	Back-up ring
13	963194	1	Piston
14	963192	1	Seal
15	25K40224	1	O-ring

[2]Inc. 1→15
[3]See A

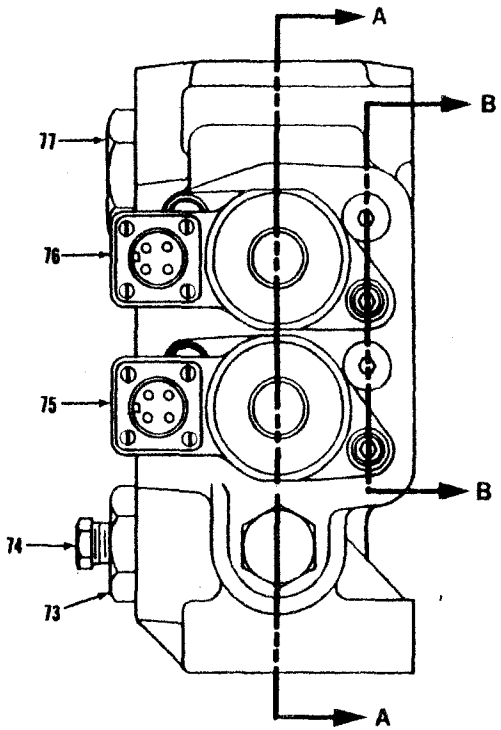

CHECK S/N
VERIFIER S/N
S/N UBERPRUFEN
VERIFICAR S/N
VERIFICAR S/N

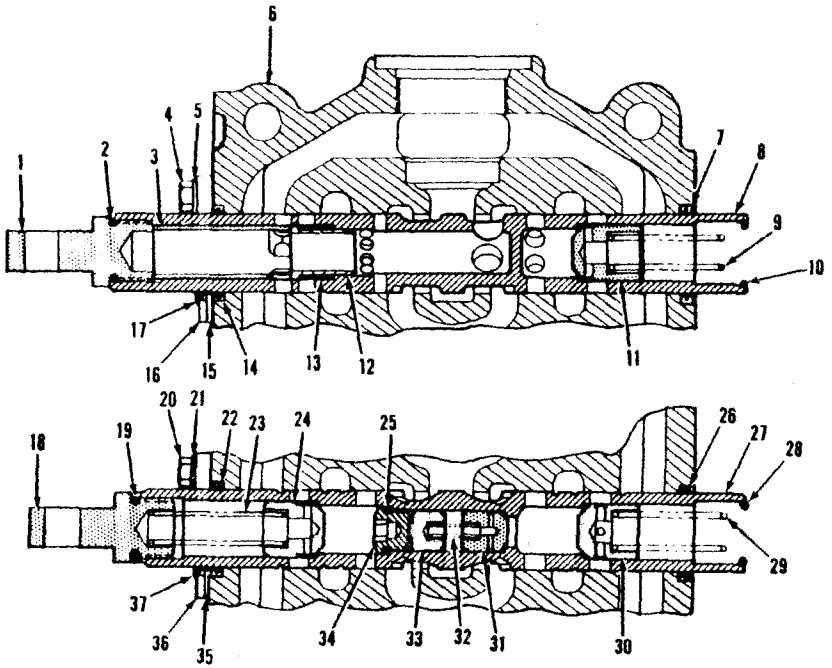

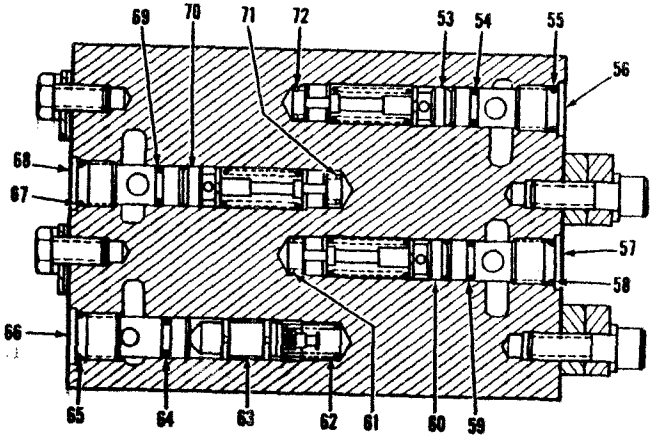

SECTION B-B

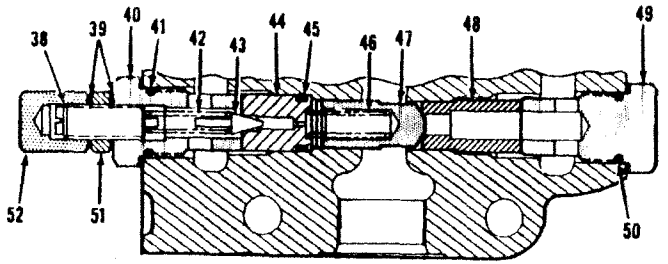

SECTION A-A

PM 3150
Printed in U.S.A.

Valve Assembly Two Spool

CLARK

No.	Part No.	Qty.	Description
A	[2,12,14]2525009	1	Valve assy
B	[3,13,15]2525838	1	Valve assy
1	893295	1	Eye
2	25K30022	1	O-ring
3	962440	1	Spacer
4	1C612	2	Bolt
5	4E6	2	Lockwasher
6	§[11]----	1	Housing
7	949304	1	Seal
8	§[4]----	1	Spool
9	893293	1	Spring
10	25K30022	1	O-ring
11	944885	1	Check
12	962439	1	Check
13	962441	1	Spring
14	949304	1	Seal
15	949302	1	Retainer plate
16	949303	1	Retainer plate
17	949305	1	Wiper
18	893295	1	Eye
19	25K30022	1	O-ring
20	1C612	2	Bolt
21	4E6	2	Lockwasher
22	949304	1	Seal
23	893293	1	Spring
24	944885	1	Check
25	25K30014	1	O-ring
26	949304	1	Seal
27	§[5]----	1	Spool
28	25K30022	1	O-ring
29	960975	1	Spring
30	960601	1	Check
31	962448	1	Check
32	962451	1	Spring
33	962450	1	Slug
34	962449	1	Cap
35	949302	1	Retainer plate
36	949303	1	Retainer plate
37	949305	1	Wiper
38	980834	1	Screw
39	613750	2	Washer
40	980835	1	Cap
41	893267	1	O-ring
42	886753	1	Spring
43	886739	1	Poppet
44	980836	1	Seat
45	25K30020	1	O-ring
46	947791	1	Spring
47	960965	1	Check
48	980840	1	Seat
49	980838	1	Cap
50	893267	1	O-ring
51	8D8	1	Jam nut
52	49D8	1	Acorn nut
53	[12,8]962706	1	Relief valve assy
53A	[13,8]963077	1	Relief valve assy
54	25K20014	1	O-ring
55	25K20016	1	O-ring
56	962704	1	Seat
57	962704	1	Seat
58	25K20016	1	O-ring
59	25K20014	1	O-ring
60	[12,9]962706	1	Relief valve assy
60A	[13,9]963077	1	Relief valve assy
61	962705	1	Spring
62	886764	1	Spring
63	962707	1	Relief valve assy
64	25K20014	1	O-ring
65	25K20016	1	O-ring
66	962435	1	Seat
67	25K20016	1	O-ring
68	962704	1	Seat
69	25K20014	1	O-ring
70	[12,10]962706	1	Relief valve assy
70A	[13,10]963077	1	Relief valve assy
71	962705	1	Spring
72	962705	1	Spring
73	946882	1	Cap
73A	91F10	1	O-ring
74	40K4	1	Plug
75	[6]----	1	Bucket detent
76	[7]----	1	Boom detent
77	24K11	1	Cap
77A	91F11	1	O-ring

[2]Inc. 1 → 53, 54 → 60, 61 → 70, 71 → 77A
[3]Inc. 1 → 52, 53A → 59, 60A → 69, 70A → 77A
[4]Inc. 1, 2, 3, 9, 11, 12, 13
[5]Inc. 18, 19, 23, 24, 25, 29 → 34
[6]See Page V9, Inc. 28
[7]See Page V7, Inc. 10
[8]Inc. 54, 55, 56, 72
[9]Inc. 57, 58, 59, 61
[10]Inc. 67, 68, 69, 71
[11]See A
[12]472A101 → 250CB, 473A101 → 298CB, Perkins 458A101CB → 116CB, 459A101CB → 140CB
[13]472A251CB → 999CB, 473A299CB → 999CB, 458A117CB → 999CB, 459A141CB → 999CB, 480A101CB → 999CB, 480B101CB → 105, 481A101CB → 999CB, 481B101CB, 105CB, 106CB
[14]For complete replacement use 2525838 Valve Assy.
[15]For complete replacement use 2535929 Valve Assy.

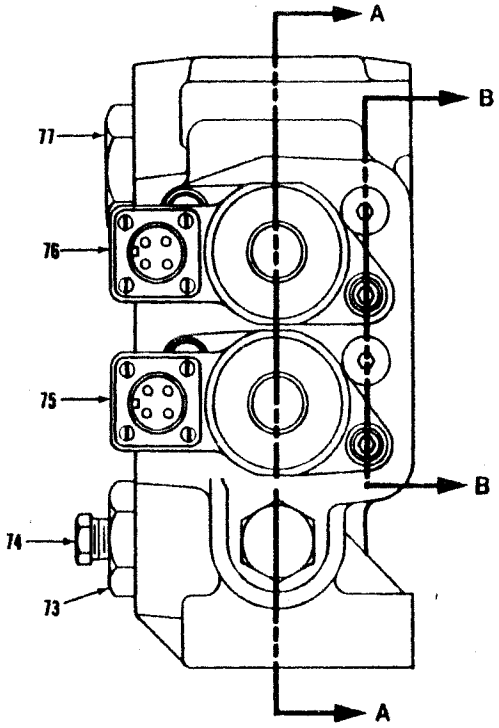

CHECK S/N
VERIFIER S/N
S/N UBERPRUFEN
VERIFICAR S/N
VERIFICAR S/N

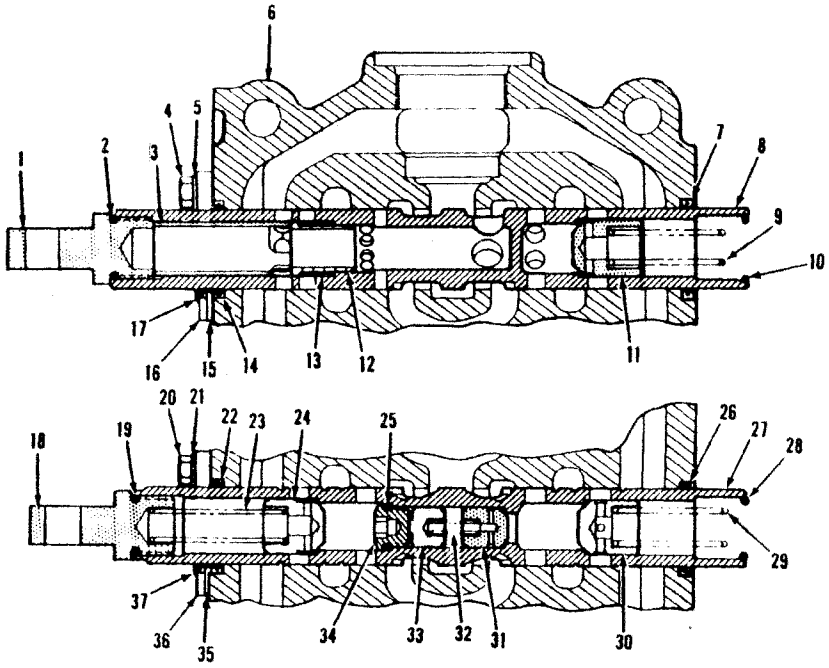

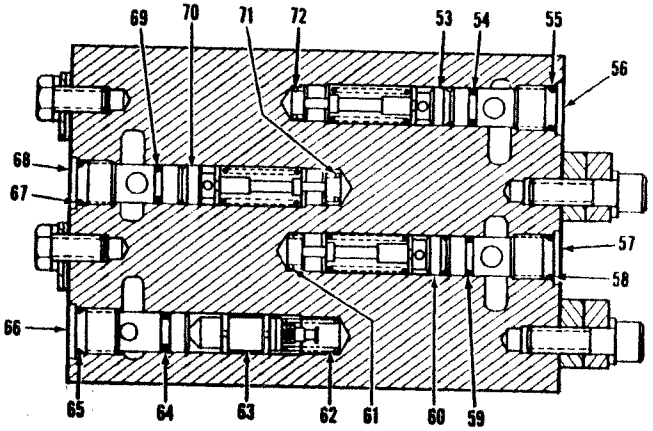

SECTION B-B

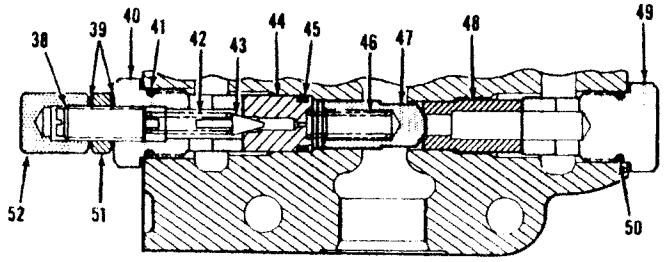

SECTION A-A

PM 3150
Printed in U.S.A.

Valve Assembly (Two Spool) *

CLARK

No.	Part No.	Qty.	Description
A	[2]2535929	1	Valve assy
1	893295	1	Eye
2	25K30022	1	O-ring
3	962440	1	Spacer
4	1C612	2	Bolt
5	4E6	2	Lockwasher
6	§[3]———	1	Housing
7	949304	1	Seal
8	§[4]———	1	Spool
9	893293	1	Spring
10	25K30022	1	O-ring
11	944885	1	Check
12	962439	1	Check
13	962441	1	Spring
14	949304	1	Seal
15	949302	1	Retainer plate
16	949303	1	Retainer plate
17	949305	1	Wiper
18	893295	1	Eye
19	25K30022	1	O-ring
20	1C612	2	Bolt
21	4E6	2	Lockwasher
22	949304	1	Seal
23	893293	1	Spring
24	944885	1	Check
25	25K30014	1	O-ring
26	949304	1	Seal
27	§[5]———	1	Spool
28	25K30022	1	O-ring
29	960975	1	Spring
30	960601	1	Check
31	962448	1	Check
32	962451	1	Spring
33	962450	1	Slug
34	962449	1	Cap
35	949302	1	Retainer plate
36	949303	1	Retainer plate
37	949305	1	Wiper
38	980834	1	Screw
39	613750	2	Washer
40	980835	1	Cap
41	58K210	1	O-ring
42	886753	1	Spring
43	886739	1	Poppet
44	980836	1	Seat
45	25K30020	1	O-ring
46	947791	1	Spring
47	960965	1	Check
48	980840	1	Seat
49	980838	1	Cap
50	58K210	1	O-ring
51	8D8	1	Jam nut
52	49D8	1	Acorn Nut
53	[8]964173	1	Relief valve assy
54	77K013	1	O-ring
55	25K20016	1	O-ring
56	962704	1	Seat
57	962704	1	Seat
58	25K20016	1	O-ring
59	77K013	1	O-ring
60	[9]964173	1	Relief valve assy
61	962705	1	Spring
62	886764	1	Spring
63	962707	1	Relief valve assy
64	25K20014	1	O-ring
65	25K20016	1	O-ring
66	962435	1	Seat
67	25K20016	1	O-ring
68	962704	1	Seat
69	77K013	1	O-ring
70	[10]964173	1	Relief valve assy
71	962705	1	Spring
72	962705	1	Spring
73	946882	1	Cap
73A	91F10	1	O-ring
74	40K4	1	Plug
75	[6]———	1	Detent bucket
76	[7]———	1	Detent boom
77	24K11	1	Cap
77A	91F11	1	O-ring

*480B106CB & →, 481B102CB, 103CB, 104CB, 107CB & →

[2]Inc. 1 → 77A
[3]See A
[4]Inc. 1, 2, 3, 9, 11, 12, 13
[5]Inc. 18, 19, 23, 24, 25, 27, 29 → 34
[6]See page V11A, Inc. 28
[7]See page V10A, Inc. 10
[8]Inc. 54, 55, 56, 72
[9]Inc. 57, 58, 59, 61
[10]Inc. 67, 68, 69, 71

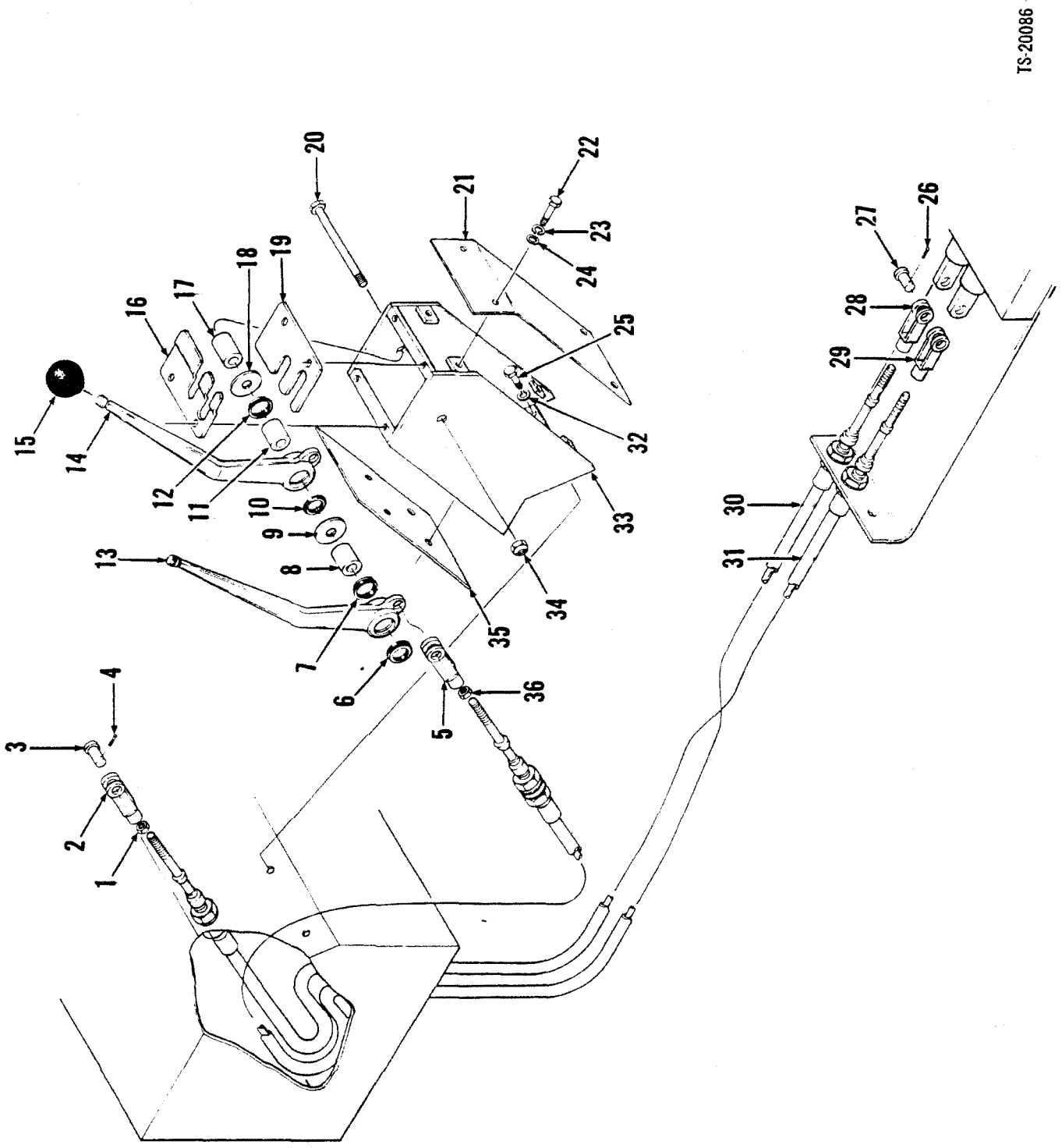
TS-20086
1
2
3
4
5
6
7
8
9
10
11
12
13
14
15
16
17
18
19
20
21
22
23
24
25
26
27
28
29
30
31
32
33
34
35
36

Valve Controls

No.	Part No.	Qty.	Description
1	8D5	2	Nut
2	556413	1	Clevis
3	4F01606	2	Pin
4	1F314	2	Cotter pin
5	556413	1	Clevis
6	1522535	1	Wiper
7	1522535	1	Wiper
8	1503251	1	Sleeve
9	584502	1	Washer
10	1522535	1	Wiper
11	1503251	1	Sleeve
12	1522535	1	Wiper
13	2512771	1	Lever
14	2512770	1	Lever
15	509772	2	Knob
16	[2]2516750	1	Plate
16A	[3]2531776	1	Plate
17	1503251	1	Sleeve
18	584502	2	Washer
19	[2]2516747	1	Plate
19A	[3]2531777	1	Plate
20	18C896	1	Bolt
21	[2]2516752	1	Plate front
21A	[3]2531774	1	Plate front
22	17C410	12	Bolt
23	4E6	12	Lockwasher
24	[2]25E14	12	Washer
24A	[3]2525069	12	Washer
25	[2]17C616	4	Bolt
25A	[3]17C620	4	Bolt
26	1F416	2	Cotter pin
27	4F08127	2	Pin
28	574099	1	Clevis
29	574099	1	Clevis
30	2506507	1	Cable
31	2506507	1	Cable
32	[4]4E6	4	Lockwasher
32A	[3]27E6	4	Washer
33	[2]2516746	1	Bracket assy
33A	[3]2535031	1	Bracket assy
34	6DD8	1	Nut
35	[2]2516751	1	Plate
35A	[3]2531775	1	Plate
36	8D5	2	Nut

[2]458A, 459A, 472A, 473A, 480A, 481A
[3]480B, 481B

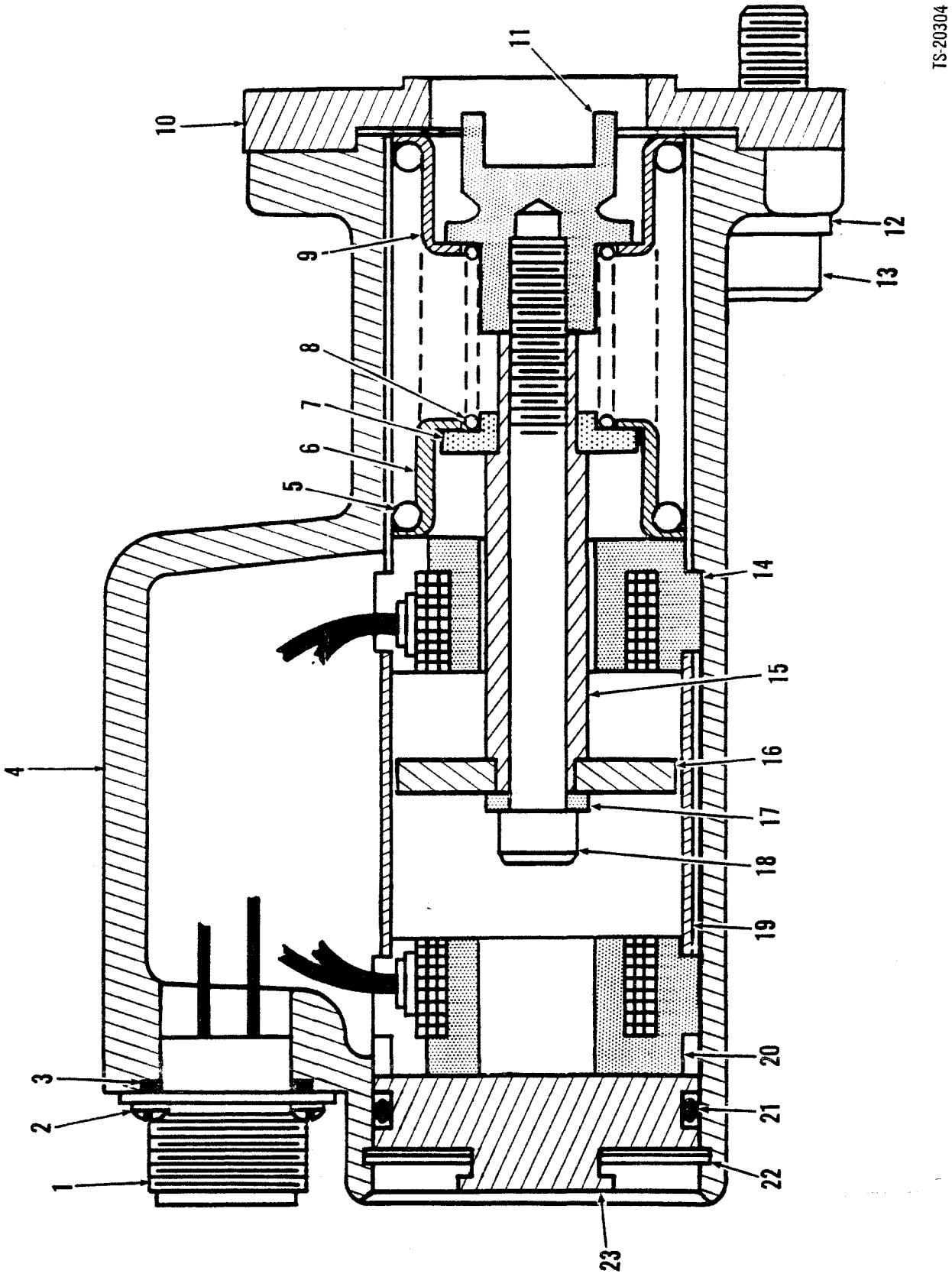
TS-20304
1
2
3
4
5
6
7
8
9
10
11
12
13
14
15
16
17
18
19
20
21
22
23

Valve, Main, Electric Detent Assembly, Boom

CLARK

No.	Part No.	Qty.	Description
A	962289	1	Detent assy
1	962480	1	Receptacle
2	961775	4	Screw
3	25K20026	1	O-ring
4	962359	1	Housing
5	980830	1	Spring
6	944878	1	Retainer
7	961018	1	Spacer
8	961020	1	Spring
9	944878	1	Retainer
10	949300	1	Retainer plate
11	960912	1	Cap
12	4E6	2	Lockwasher
13	11G620	2	Screw
14	960910	1	Coil
15	961017	1	Spacer
16	960914	1	Armature
17	961014	1	Spacer
18	11G552	1	Screw
19	961019	1	Spacer
20	960910	1	Coil
21	25K40120	1	O-ring
22	961021	1	Snap ring
23	961772	1	Plug

TS-20303

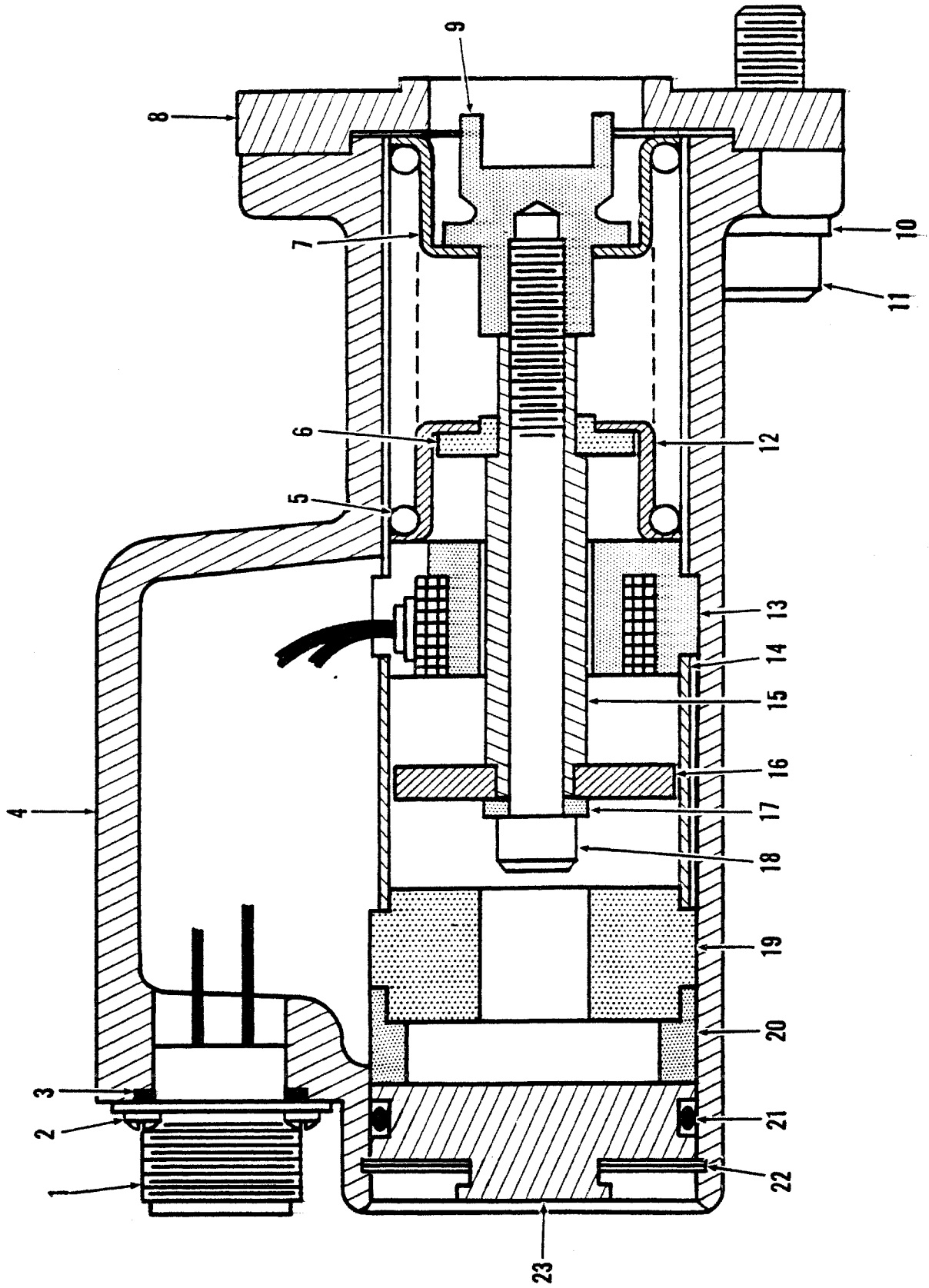

Valve, Main, Electric Detent Assembly, Bucket

CLARK

No.	Part No.	Qty.	Description
A	[2]962290	1	Detent assy
1	962480	1	Receptacle
2	961775	4	Screw
3	25K20026	1	O-ring
4	962359	1	Housing
5	980830	1	Spring
6	961018	1	Spacer
7	944878	1	Retainer
8	949300	1	Retainer plate
9	960912	1	Cap
10	4E6	2	Lockwashers
11	11G620	2	Screw
12	944878	1	Retainer
13	960910	1	Coil
14	961023	1	Spacer
15	961017	1	Spacer
16	960914	1	Armature
17	961014	1	Spacer
18	73G552	1	Screw
19	961015	1	Spacer
20	962361	1	Spacer
21	25K40120	1	O-ring
22	961021	1	Snap ring
23	961772	1	Plug

[2]Inc. 1→23

Valve Assembly — Flow Divider

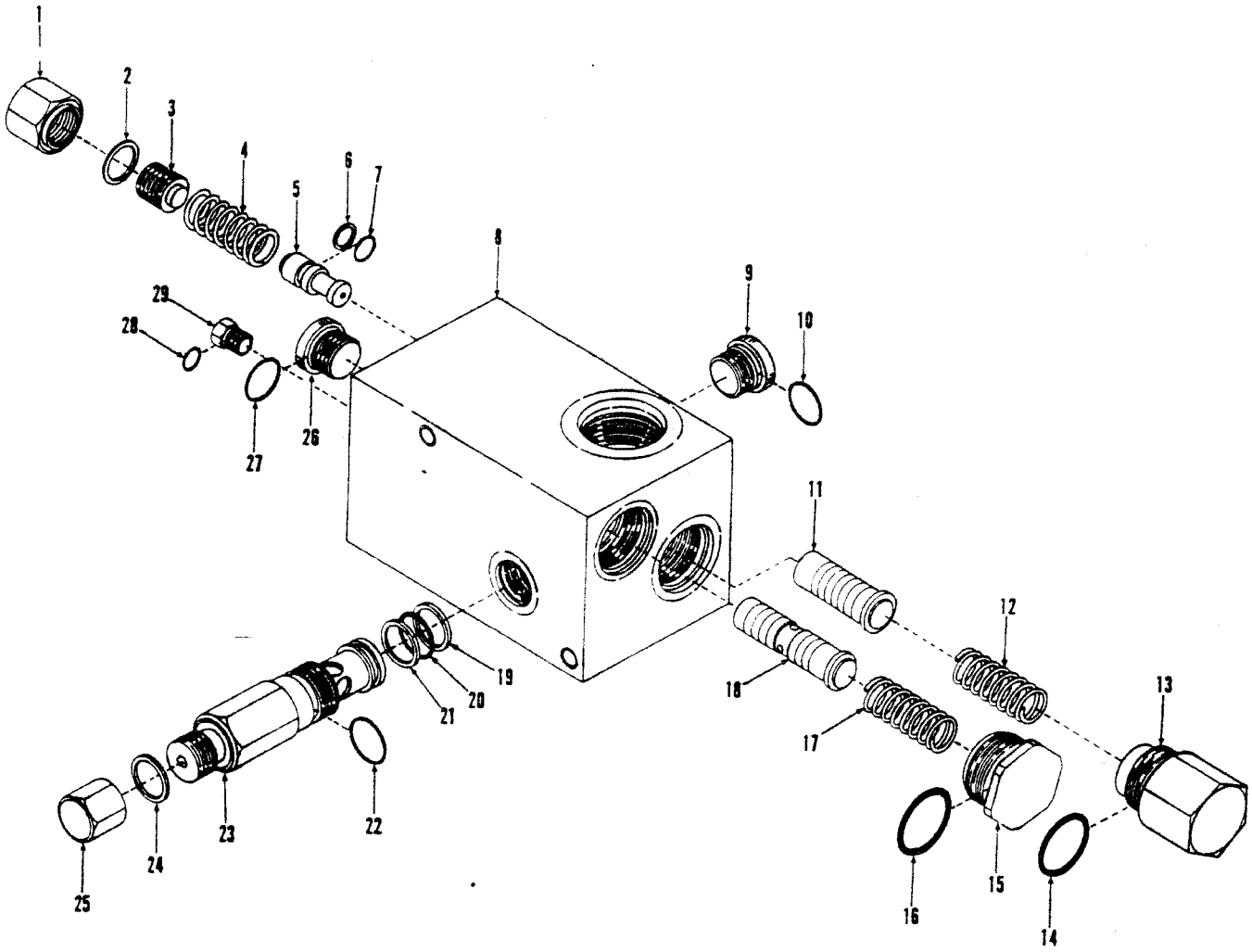

TS-20372

No.	Part No.	Qty.	Description
A	[2.3.9]2522352	1	Valve assy
B	[4.5]2524965	1	Valve assy
C	2541567	1	Valve assy
1	§———	1	Cap
2	865932	1	Gasket
3	§———	1	Screw
4	§———	1	Spring
5	§———	1	Spool
6	961732	1	Back-up ring
7	58K012	1	O-ring
8	§———	1	Housing
9	[6]962510	1	Plug
10	91F6	1	O-ring
11	§———	1	Spool
12	§———	1	Spring
13	§———	1	Cap
14	6192092	1	O-ring
15	§———	1	Cap
16	58K122	1	O-ring
17	§———	1	Spring
18	§———	1	Spool
19	962550	1	Back-up ring
20	58K16	1	O-ring
21	962550	1	Back-up ring
22	893341	1	O-ring
23	962508	1	Relief
24	865932	1	Gasket
25	§———	1	Cap
26	[7]962510	1	Plug
27	91F6	1	O-ring
28	91F2	1	O-ring
29	[8]962509	1	Plug

[2]Inc. 1 → 29
[3]35C, 45C
[4]Inc. 1 → 29
[5]55C
[6]Inc. 10
[7]Inc. 27
[8]Inc. 28
[9]For replacement use 2524965

Wheel & Tire Assembly

CLARK

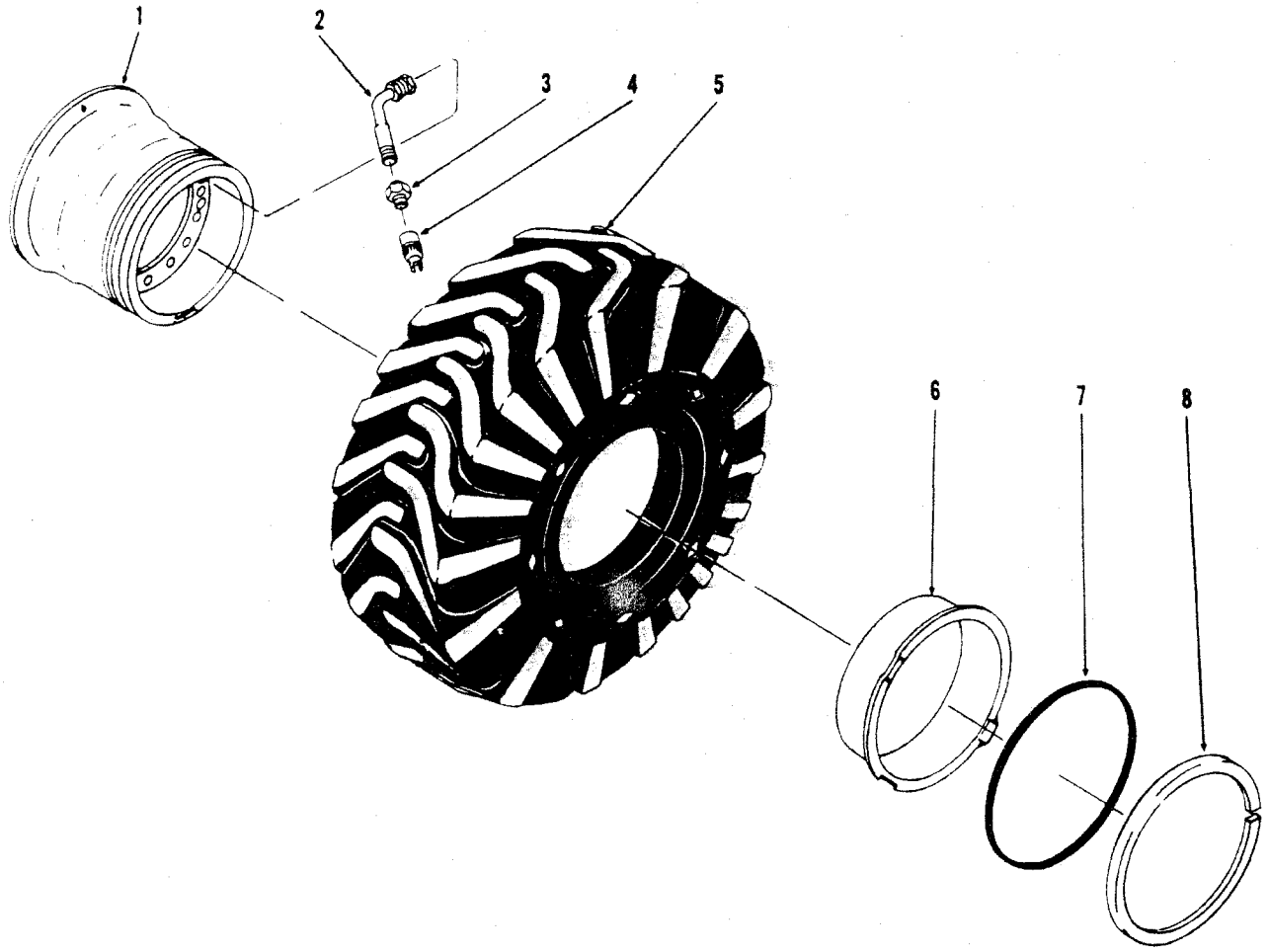

TS-6663

No.	12.0 x 24 & 13.0 x 24 & 14.0 x 24	15.5 x 25	17.5 x 25	Description	Qty.
1	2523380	2523382	2523384	Wheel	4
2	[1]509445	[1]509445	[1]509445	Stem	4
3	551684	551684	551684	Adapter	4
4	551685	551685	551685	Cap	4
5	§———	§———	§———	Tire	4
6	941326	589401	112461	Flange	4
7	941329	112462	112462	O-ring	4
8	941325	112460	112460	Lockring	4

[1]Inc. 3, 4

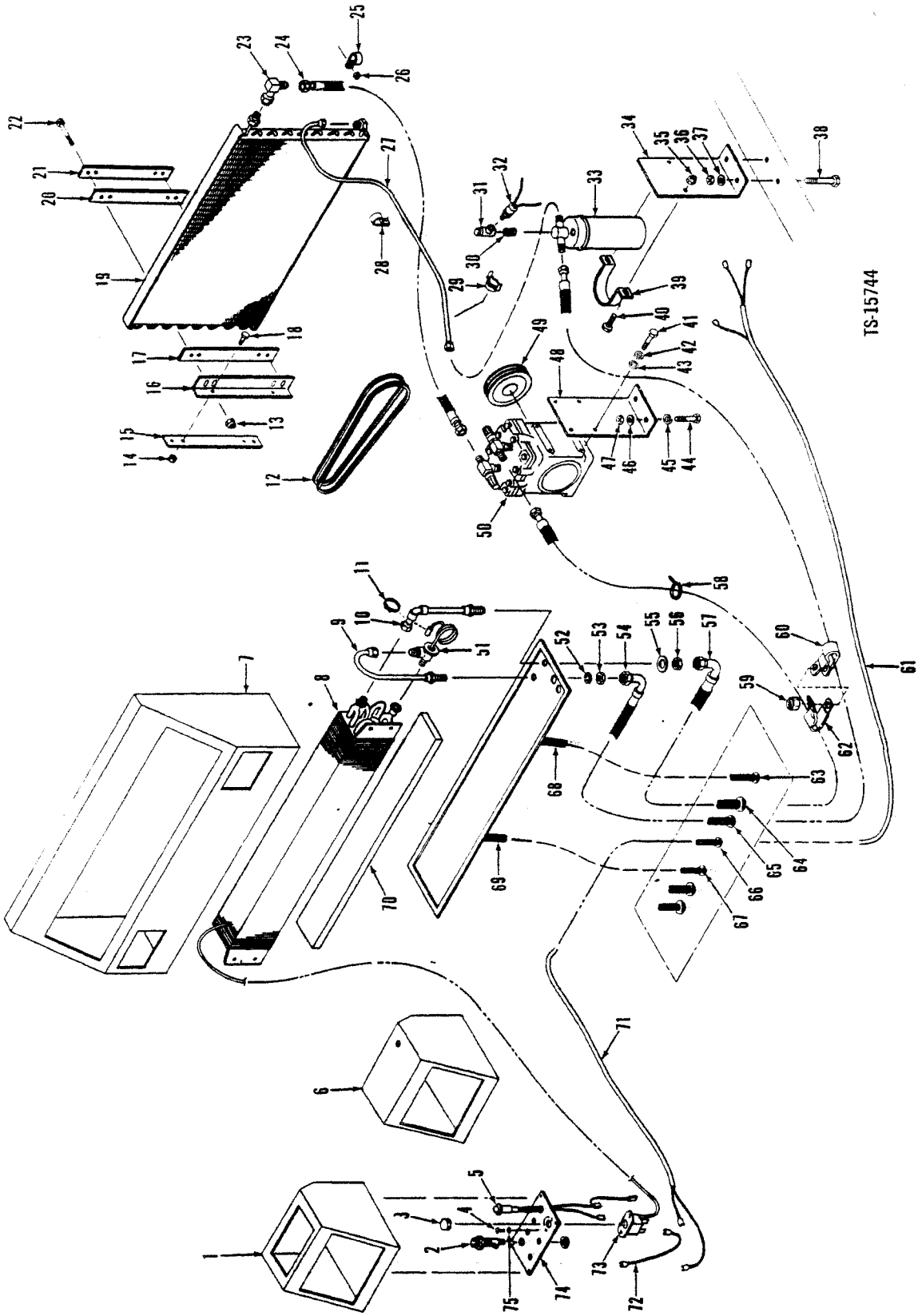
TS-15744

Air Conditioner Installation — Cummins — 55C

CLARK

No.	Part No.	Qty.	Description
A	[2] [11]2527607	1	Air cond kit
B	[10] [12]2535379	1	Air cond kit
1	2520283	1	Air duct assy RH
2	2511248	1	Fuse holder
2A	†2511491	1	Fuse
3	949639	1	Knob
4	85G806	2	Screw
5	2521572	1	Warning light
6	2520280	1	Air duct assy LH
7	2520310	1	Pressurizer assy
8	960654	1	Evaporator
9	2521576	1	Tube
10	2521581	1	Tube
10A	†949608	1	Tape
11	42H10	1	Clamp
12	1314817	1	Belt
13	[11]60D4	4	Nut
13A	[12]86D4	4	Nut
14	[11]60D4	4	Nut
14A	[12]86D4	4	Nut
15	2515208	2	Flat
16	2515337	2	Bracket
17	2511285	2	Strip
18	18C436	4	Bolt
19	2511177	2	Condenser core
20	2511185	2	Strip
21	2515208	2	Flat
22	18C416	4	Bolt
23	1519032	1	Elbow
24	[11]2526651	1	Hose
24A	[12]2535380	1	Hose
25	30H50	2	Clip
26	59D6	1	Nut
27	[11]2526643	1	Tube
27A	[12]2535382	1	Hose
28	30H23	1	Clip
29	949605	1	Switch overheat
30	552646	1	Nipple
31	6005044	1	Fitting
32	949623	1	Switch press
33	2511176	1	Air dryer
34	2521557	1	Bracket
35	[11]60D4	2	Nut
35A	[12]86D4	2	Nut
36	[11]60D4	2	Nut
36A	[12]86D4	2	Nut
37	25E14	3	Washer
38	18C420	2	Bolt
39	2521566	1	Clamp
40	18C412	2	Bolt
41	17C620	4	Bolt
42	4E6	4	Lockwasher
43	27E6	4	Washer
44	17C624	4	Bolt
45	4E6	4	Lockwasher
46	27E6	4	Washer
47	85D8	2	Nut
48	2526642	1	Bracket
49	1515383	1	Clutch
50	[9] [11]1519401	1	Compressor
50A	[12]949643	1	Compressor
50B	[12]949656	1	Valve
50C	[12]949698	1	Valve
51	949600	1	Valve
52	6E10	1	Lockwasher
53	2521573	1	Nut
54	2526650	1	Hose
55	6E14	1	Lockwasher
56	2521577	1	Nut
57	2526652	1	Hose suction
58	1736910	3	Strap
59	[11]59D6	1	Nut
59A	[12]85D6	1	Nut
60	30H50	1	Clip
61	[11]2526644	1	Harness
61A	[12]2535383	1	Harness
61B	[12]2535385	1	Harness
62	30H42	1	Clip
63	1302084	1	Grommet
64	1319124	1	Grommet
65	1013100	1	Grommet
66	2521569	1	Grommet
67	1302084	1	Grommet
68	‡[7]949626	—	Hose
69	‡[7]949626	—	Hose
70	2521570	1	Foam
71	[8]———	1	Harness
72	2511492	1	Wire
73	2526349	1	Switch
74	2520255	1	Panel
75	12E8	2	Lockwasher

[2]Inc. 1→13, 14, 15→24, 25→27, 28→35, 36, 37→50, 51→59, 60, 61, 62→75
[3]35C
[4]45C
[5]See 40
[6]See 50
[7]457 mm (18 in)
[8]See 60
[9]For complete replacement use 50A, 50B, 50C
[10]Inc. 1→12, 13A, 14A→23, 24A→26, 27A→34, 35A, 36A→49, 50A→58, 59A, 60, 61A, 61B→75
[11]481A
[12]481B

TS-20257

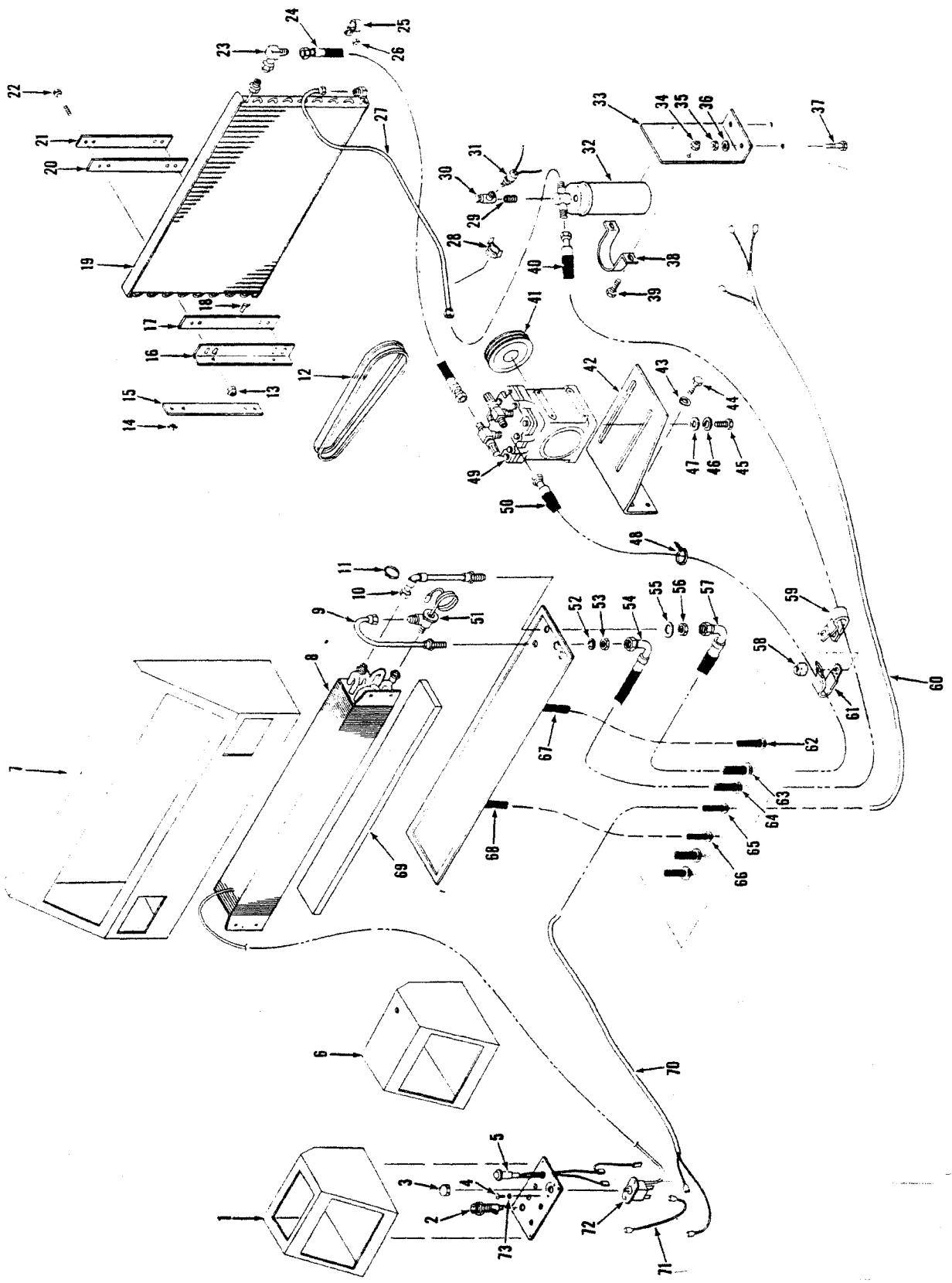

Air Conditioner Installation — G.M. — 35C — 45C

CLARK

No.	Part No.	Qty.	Description
A	[2]2521561	1	Air cond kit
1	2520283	1	Air duct assy RH
2	2511248	1	Fuse holder
2A	†2511491	1	Fuse
3	949639	1	Knob
4	85G806	2	Screw
5	2521572	1	Warning light
6	2520280	1	Air duct assy LH
7	2520310	1	Pressurizer assy
8	960654	1	Evaporator
9	2521576	1	Tube
10	2521581	1	Tube
10A	†949608	1	Tape
11	799476	1	Clamp
12	1307511	1	Belt
13	60D4	4	Nut
14	60D4	4	Nut
15	2515208	2	Flat
16	2515337	2	Bracket
17	2511285	2	Strip
18	18C436	4	Bolt
19	2511177	2	Condenser core
20	2511185	2	Strip
21	2515208	2	Flat
22	18C416	4	Bolt
23	1519032	1	Elbow
24	[3]2521559	1	Hose
24A	[4]2521558	1	Hose
25	30H50	2	Clip
26	59D6	1	Nut
27	2521556	1	Tube
27A	†30H21	1	Clip
27B	†18C412	1	Bolt
27C	†60D4	1	Nut
28	949605	1	Switch overheat
29	552646	1	Nipple
30	6005044	1	Fitting
31	949623	1	Switch press
32	2511176	1	Air dryer
33	2521557	1	Bracket
34	60D4	2	Nut
35	60D4	2	Nut
36	25E14	3	Washer
37	18C420	2	Bolt
38	2521566	1	Clamp
39	18C412	2	Bolt
40	2521567	1	Hose
41	1537882	1	Clutch
42	2518701	1	Bracket
43	4E6	4	Lockwasher
44	17C620	4	Bolt
45	17C620	4	Bolt
46	4E6	4	Lockwasher
47	27E6	4	Washer
48	1736910	3	Strap
49	1519401	1	Compressor
50	2521568	1	Hose suction
51	949600	1	Valve
52	6E10	1	Lockwasher
53	2521573	1	Nut
54	[5]———	1	Hose
55	6E14	1	Lockwasher
56	2521577	1	Nut
57	[6]———	1	Hose
58	59D6	1	Nut
59	30H50	1	Clip
60	2520923	1	Harness
61	30H42	1	Clip
62	1302084	1	Grommet
63	1319124	1	Grommet
64	1013100	1	Grommet
65	2521569	1	Grommet
66	1302084	1	Grommet
67	‡[7]949626	—	Hose
68	‡[7]949626	—	Hose
69	2521570	1	Foam
70	[8]———	1	Harness
71	2511492	1	Wire
72	2526349	1	Switch
73	12E8	2	Lockwasher

[2]Inc. 1→73
[3]35C
[4]45C
[5]See 40
[6]See 50
[7]457 mm (18 in)
[8]See 60

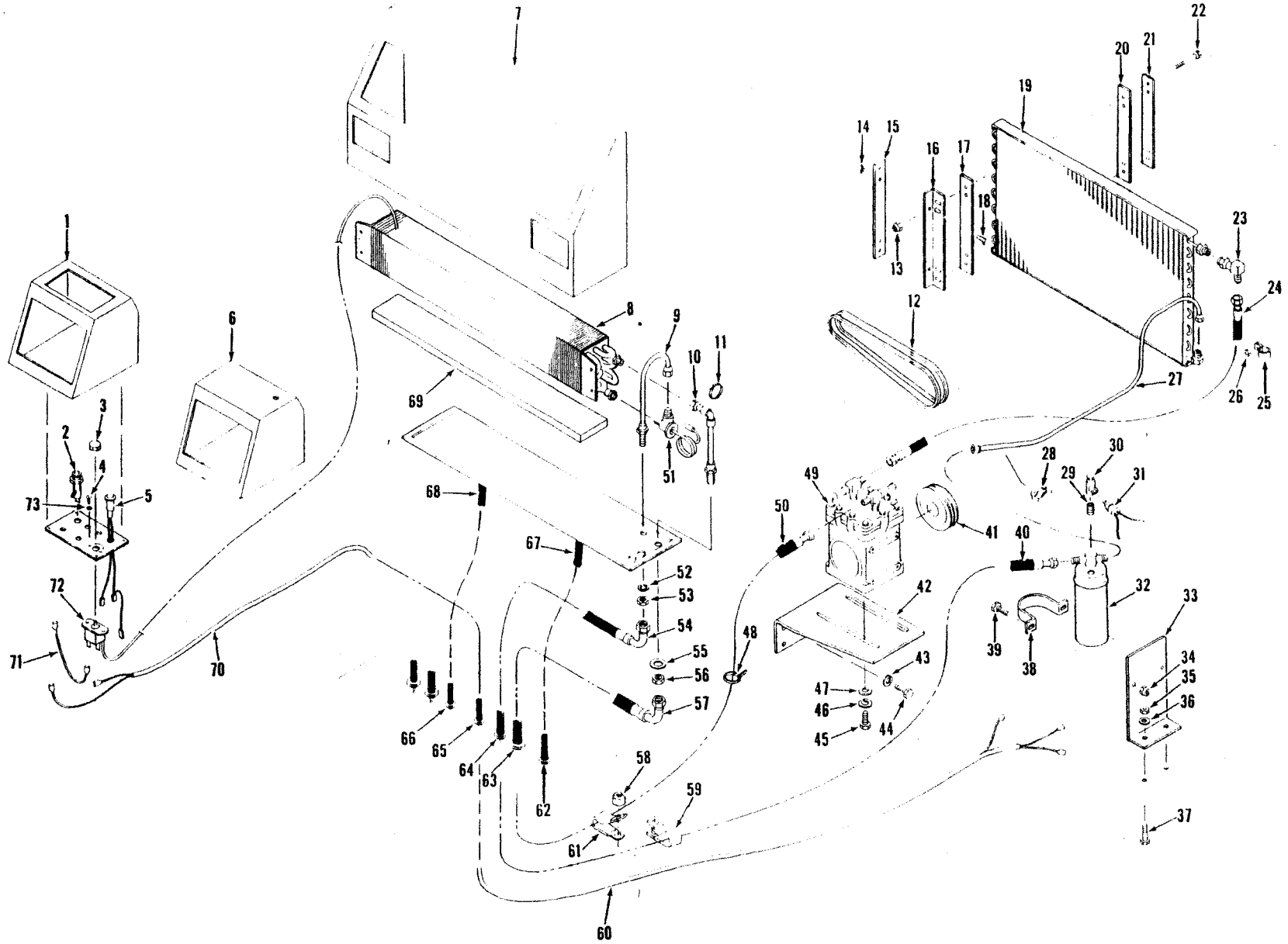

TS-20257

PM 3150
Printed in U.S.A.

Air Conditioner Installation — G.M. — 55C

CLARK

No.	Part No.	Qty.	Description
A	[2]2527651	1	Air conditioner kit
1	2520283	1	Air duct assy RH
2	2511248	1	Fuse holder
2A	†2511491	1	Fuse
3	949639	1	Knob
4	85G806	2	Screw
5	2521572	1	Warning light
6	2520280	1	Air duct assy LH
7	2520310	1	Pressurizer assy
8	960654	1	Evaporator
9	2521576	1	Tube
10	2521581	1	Tube
10A	†949608	1	Tape
11	799476	1	Clamp
12	1307511	1	Belt
13	86D4	4	Nut
14	86D4	4	Nut
15	2515208	2	Flat
16	2515337	2	Bracket
17	2511285	2	Strip
18	18C436	4	Bolt
18A	†25E14	4	Washer
19	2511177	2	Condenser core
20	2511185	2	Strip
21	2515208	2	Flat
22	18C416	4	Bolt
23	1519032	1	Elbow
24	2521558	1	Hose
25	30H50	2	Clip
26	85D6	1	Nut
27	2527652	1	Tube
27A	†30H21	1	Clip
27B	†18C412	1	Bolt
27C	†86D4	1	Nut
28	949605	1	Switch overheat
29	552646	1	Nipple
30	6005044	1	Fitting
31	949623	1	Switch pressure
32	2511176	1	Air dryer
33	2521557	1	Bracket
34	86D4	2	Nut

[2]Inc. 1→73

[3]For complete replacement use 49A, 49B, 49C

No.	Part No.	Qty.	Description
35	86D4	2	Nut
36	25E14	3	Washer
37	18C420	2	Bolt
38	2521566	1	Clamp
39	18C412	2	Bolt
40	2521567	1	Hose
41	1537882	1	Clutch
42	2518701	1	Bracket
43	4E6	4	Lockwasher
44	17C620	4	Bolt
45	17C624	4	Bolt
46	4E6	4	Lockwasher
47	27E6	4	Washer
48	1736910	3	Strap
49	[3]1519401	1	Compressor
49A	949643	1	Compressor
49B	949656	1	Valve
49C	949698	1	Valve
50	2521568	1	Hose suction
51	949600	1	Valve
52	6E10	1	Lockwasher
53	2521573	1	Nut
54	[5]———	1	Hose
55	6E14	1	Lockwasher
56	2521577	1	Nut
57	[6]———	1	Hose
58	59D6	1	Nut
59	30H50	1	Clip
60	2520923	1	Harness
61	30H42	1	Clip
62	1302084	1	Grommet
63	1319124	1	Grommet
64	1013100	1	Grommet
65	2521569	1	Grommet
66	1302084	1	Grommet
67	‡[7]949626	—	Hose
68	‡[7]949626	—	Hose
69	2521570	1	Foam
70	[8]———	1	Harness
71	2511492	1	Wire
72	949620	1	Switch
73	12E8	2	Lockwasher
73A	†25E8	2	Washer

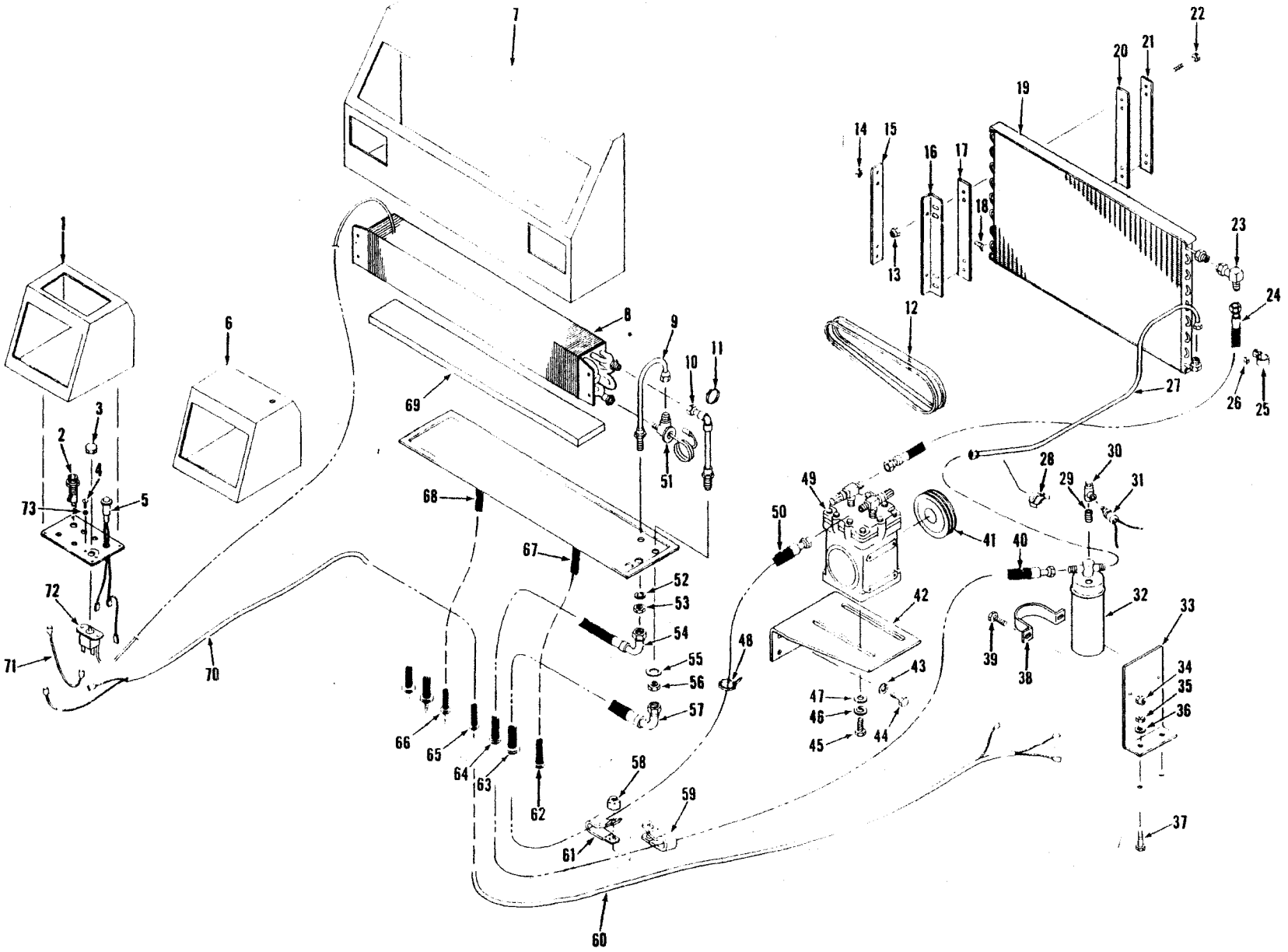

TS-20257

PM 3150
Printed in U.S.A.

Air Conditioner Installation — Perkins — 35C — 45C

CLARK

No.	Part No.	Qty.	Description
A	[2]2521583	1	Air conditioner kit
1	2520283	1	Air duct assy RH
2	2511248	1	Fuse holder
2A	†2511491	1	Fuse
3	949639	1	Knob
4	85G806	2	Screw
5	2521572	1	Warning light
6	2520280	1	Air duct assy LH
7	2520310	1	Pressurizer assy
8	960654	1	Evaporator
9	2521576	1	Tube
10	2521581	1	Tube
10A	†949608	1	Tape
11	799476	1	Clamp
12	1307511	1	Belt
13	60D4	4	Nut
14	60D4	4	Nut
15	2515208	2	Flat
16	2515337	2	Bracket
17	2511285	2	Strip
18	18C416	4	Bolt
19	2511177	2	Condenser core
20	2511185	2	Strip
21	2515208	2	Flat
22	18C436	4	Bolt
22A	†25E14	4	Washer
23	1519032	1	Elbow
24	2521565	1	Hose
25	30H50	2	Clip
26	59D6	1	Nut
27	2521563	1	Tube
27A	†30H21	1	Clip
27B	†18C412	1	Bolt
27C	†60D4	1	Nut
27D	25G14	1	Washer
28	949605	1	Switch overheat
29	542646	1	Nipple
30	6005044	1	Fitting
31	949623	1	Switch pressure
32	2511176	1	Air dryer
33	———	—	Omit

[2]Inc. 1→73

No.	Part No.	Qty.	Description
34	60D4	2	Nut
35	———	—	Omit
36	———	—	Omit
37	18C420	2	Bolt
38	2521566	1	Clamp
39	18C412	2	Bolt
40	2521567	1	Hose
41	1515383	1	Clutch
42	2513426	1	Bracket
43	4E6	4	Lockwasher
44	———	4	Bolt
45	———	4	Bolt
46	4E6	4	Lockwasher
47	27E6	4	Washer
48	1736910	3	Strap
49	1519401	1	Compressor
50	2521568	1	Hose suction
51	949600	1	Valve
52	6E10	1	Lockwasher
53	2521573	1	Nut
54	[5]———	1	Hose
55	6E14	1	Lockwasher
56	2521577	1	Nut
57	[6]———	1	Hose
58	59D6	1	Nut
59	30H50	1	Clip
60	2520923	1	Harness
61	30H42	1	Clip
62	1302084	1	Grommet
63	1319124	1	Grommet
64	1013100	1	Grommet
65	2521569	1	Grommet
66	1302084	1	Grommet
67	‡[7]949626	—	Hose
68	‡[7]949626	—	Hose
69	2521570	1	Foam
70	[8]———	1	Harness
71	2511492	1	Wire
72	2526349	1	Switch
72A	†25E8	2	Washer
73	12E8	2	Lockwasher

(2E8)

Battery Disconnect Kit

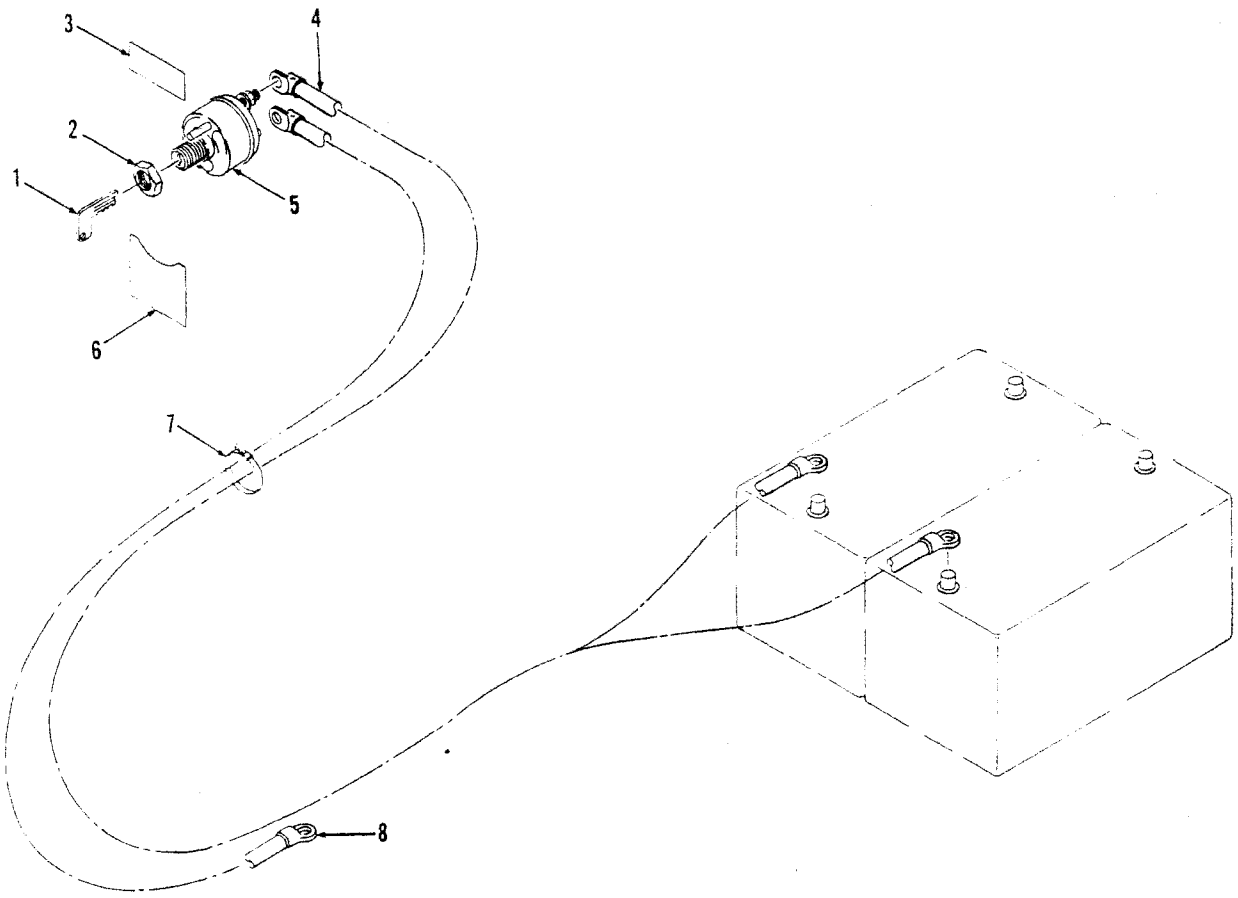

TS-15312

No.	Part No.	Qty.	Description
A	[2 4]2521259	1	Battery disconnect kit
B	[5 6]2532155	1	Battery disconnect kit
C	[7-8]2532156	1	Battery disconnect kit
1	961781	1	Key
2	§———	1	Nut
3	1922864	1	Decal
4	[4]2521091	1	Cable
4A	[6]2532151	1	Cable
4B	[8]2532149	1	Cable
5	[3]2529750	1	Switch
6	2517721	1	Decal
7	1736910	1	Tie strap
8	571042	1	Cable

[2]Inc. 1→4, 5→8
[3]Inc. 1 & 2
[4]35C, 45C
[5]Inc. 1→3, 4A, 5→8
[6]480A, 480B
[7]Inc. 1→3, 4B→8
[8]481A, 481B

Bolt-on Cutting Edge

CLARK

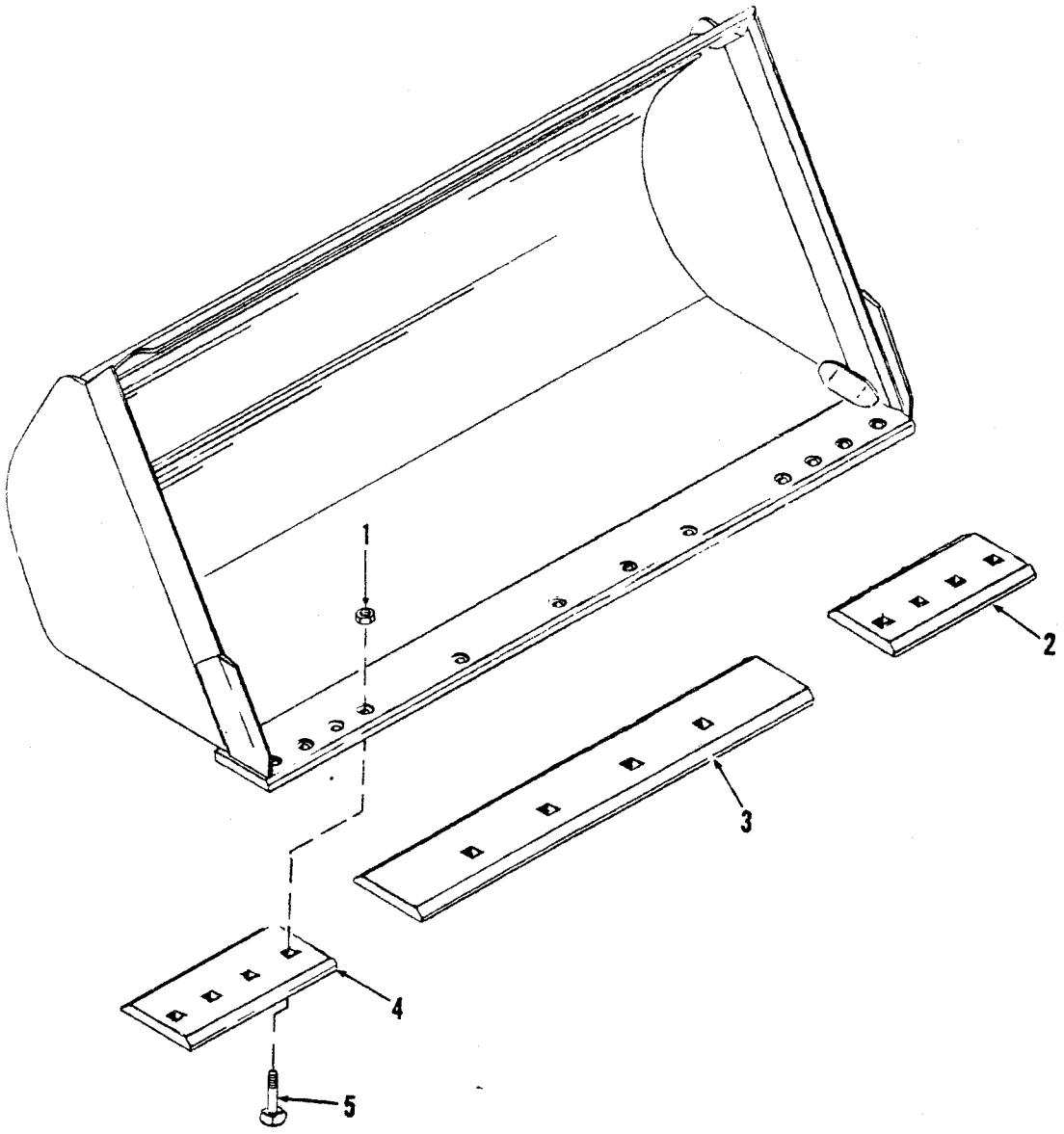

TS-14951

No.	Part No.	Qty.	Description
A	[2,3]2519490	1	Cutting edge kit 35C
B	[4,5]2518819	1	Cutting edge kit 35C 45C
C	[6,7]2519884	1	Cutting edge kit 45C
1	[3]63D8	12	Nut 35C
1A	[5,7]63D10	12	Nut 35C 45C
2	[3]2519492	1	Cutting edge 35C
2A	[5]2518689	1	Cutting edge 35C 45C
2B	[7]2519887	1	Cutting edge 45C
3	[3]2519491	1	Cutting edge 35C
3A	[5]2518690	1	Cutting edge 35C 45C
3B	[7]2519888	1	Cutting edge 45C
4	[3]2519492	1	Cutting edge 35C
4A	[5]2518689	1	Cutting edge 35C 45C
4B	[7]2519887	1	Cutting edge 45C
5	[3]2524615	12	Bolt 35C
5A	[5,7]2519861	12	Bolt 35C 45C

[2]Inc. 1, 2, 3, 4, 5
[3]1.25 yd
[4]Inc. 1A, 2A, 3A, 4A, 5A
[5]1.50 yd, 1.75 yd
[6]Inc. 1A, 2B, 3B, 4B, 5A
[7]2.00 yd

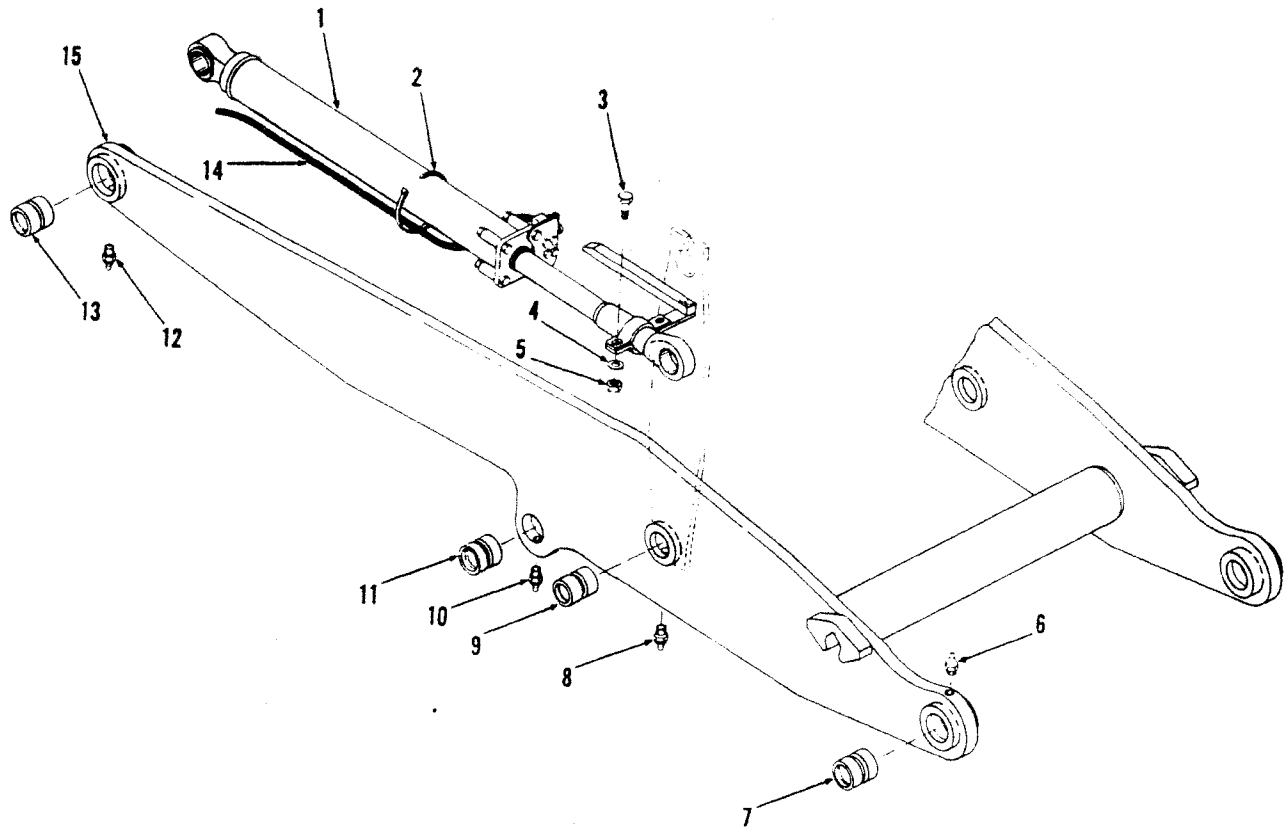

TS-15406

No.	Part No.	Qty.	Description
A	[2]2525273	1	High lift boom kit
1	[1]———	—	Bucket cylinder assy
2	1736910	2	Tie strap
3	17C632	2	Bolt
4	25E18	4	Washer
5	59D6	2	Nut
6	10H25	2	Grease fitting
7	2512014	2	Bushing
8	10H25	2	Grease fitting
9	2512013	2	Bushing
10	10H25	2	Grease fitting
11	2512014	2	Bushing
12	10H25	2	Grease fitting
13	2512014	2	Bushing
14	2525685	1	Wire harness
15	[3]2520902	1	Boom assy

[1]See Index
[2]Inc. 1→3, 6→15
[3]Inc. 7, 9, 11, 13

Boom Kickout Kit

CLARK

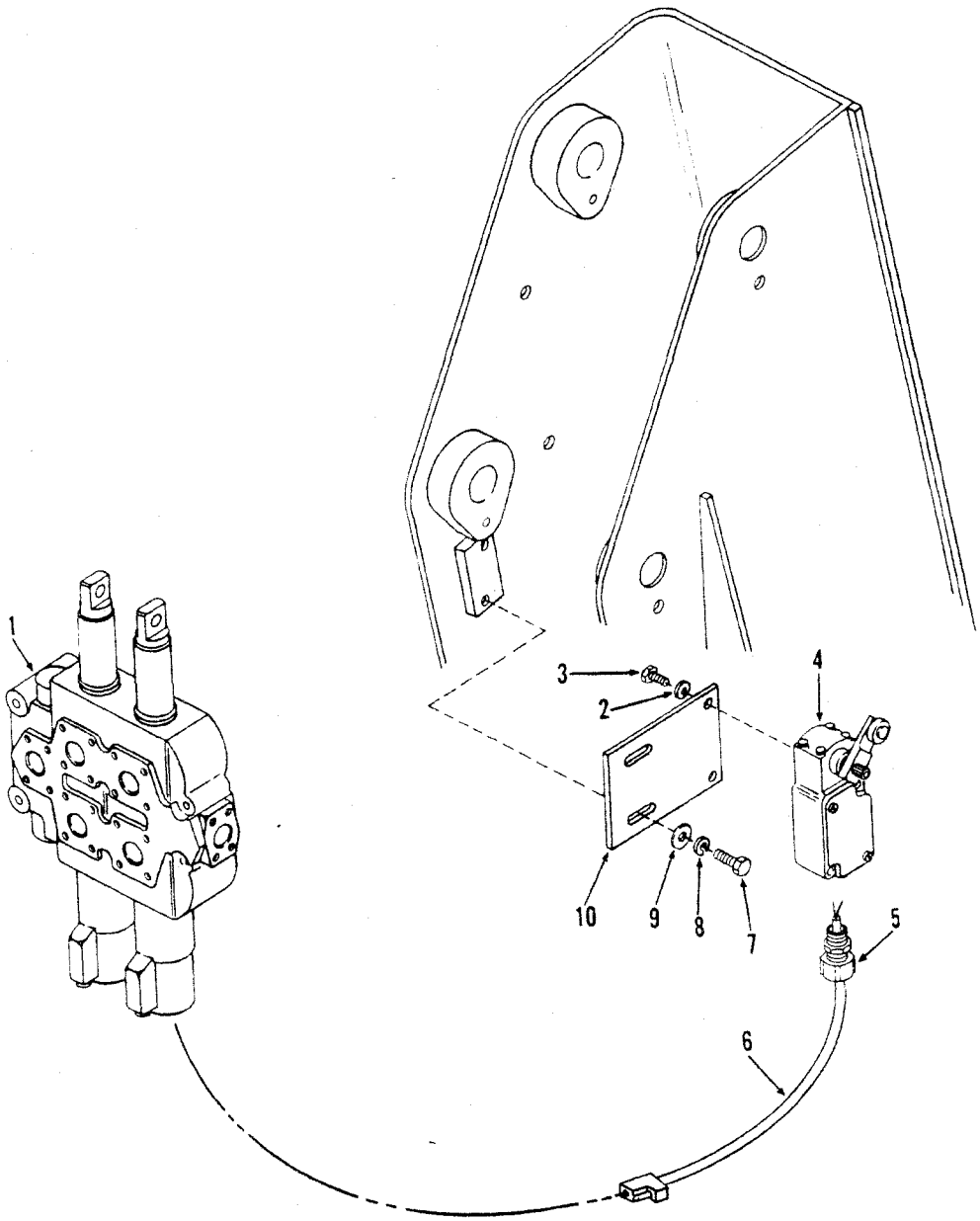

TS-20231

No.	Part No.	Qty.	Description
A	[2]2512861	—	Kit boom kickout
1	[1]———	1	Valve
2	4E4	2	Lockwasher
3	17C412	2	Bolt
4	2512610	1	Switch
5	1549705	1	Connector
6	2517021	1	Harness
7	17C616	2	Bolt
8	4E6	2	Lockwasher
9	25E18	2	Washer
10	2518306	1	Bracket

[1]See Index
[2]Inc. 2→10

Boom Support Kit

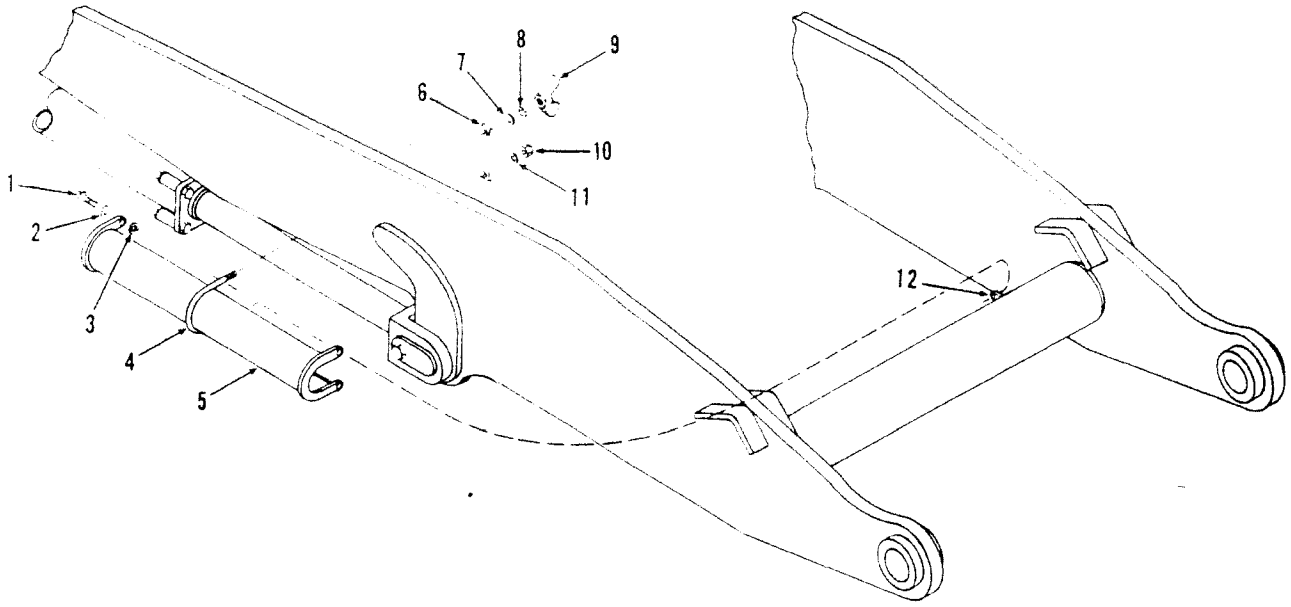

TS-15316

No.	Part No.	Qty.	Description
A	[2]2520730	1	Boom support kit
1	18C620	4	Bolt
2	4E6	4	Washer
3	25E17	4	Spacer
4	2520570	1	U-bolt
5	2520578	1	Support arm
6	2520568	1	Flat
7	25E14	1	Washer
8	4E4	1	Washer
9	16D4	1	Wing nut
10	59D4	1	Nut
11	25E14	1	Washer
12	2520567	4	Tab
13	†2520577	1	Decal
14	†2520572	1	Decal

[2]Inc. 1→12

Bucket Assembly Multi-Task — 35C

CLARK

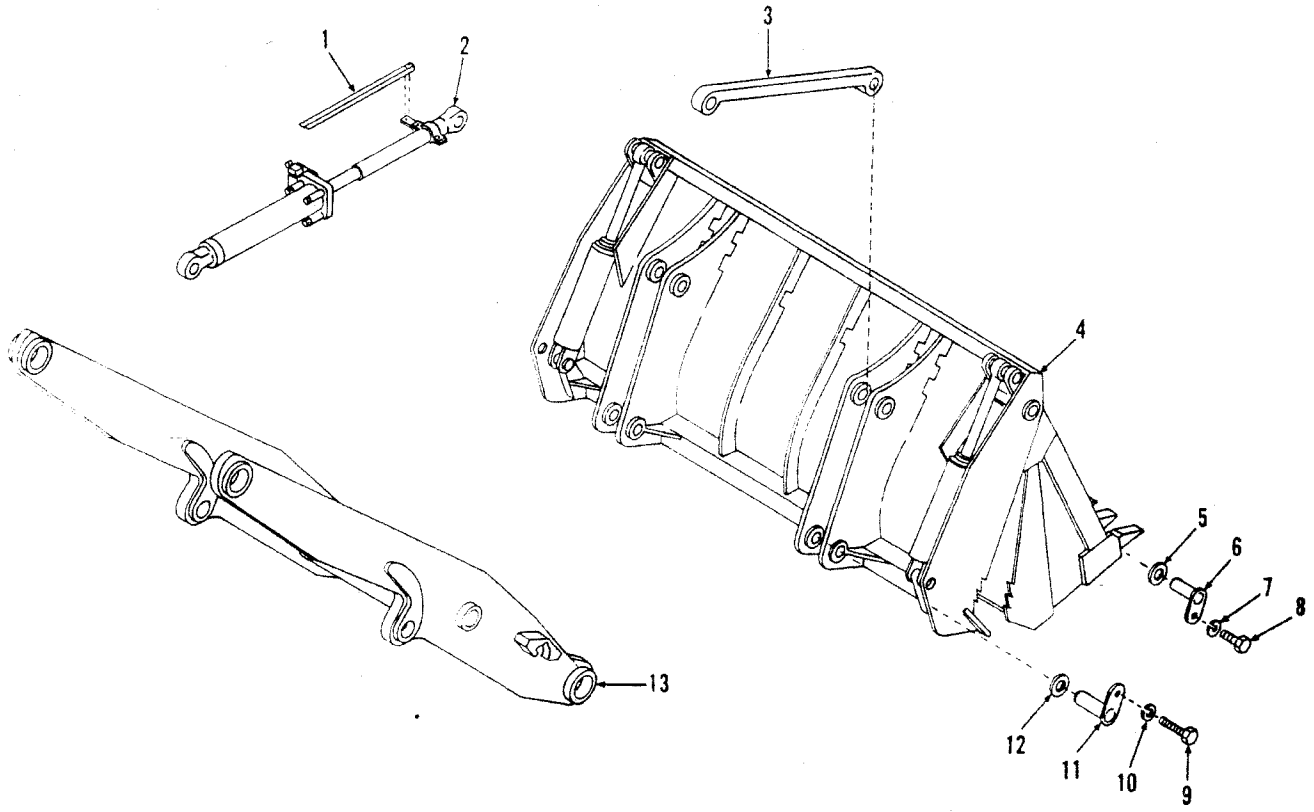

TS-20293

No.	Part No.	Qty.	Description
1	2515625	1	Cam
2	[1]———	1	Cylinder assy bucket
3	[1]———	2	Pushrod
4	[4-2-3]2520203	1	Bucket assy
5	‡2512168	—	Shim 3,0 mm .120 in
5A	‡2512169	—	Shim 1,6 mm .065 in
6	2512159	2	Pin
7	27E8	2	Washer
8	18C824	2	Bolt
9	18C824	2	Bolt
10	27E8	2	Washer
11	2514887	2	Pin
12	‡2515723	—	Shim 3,0 mm .120 in
12A	‡2515710	—	Shim 1,6 mm .065 in
13	[1]———	1	Boom

[1]See Index
[2]CMD Sales Item Only
[3]Yaun-Williams Bucket No. 610013
[4]Sold and Serviced by Yaun-Williams Buckets, Wellington, Ohio 44090

Bucket Assembly Multi-Task — 45C

CLARK

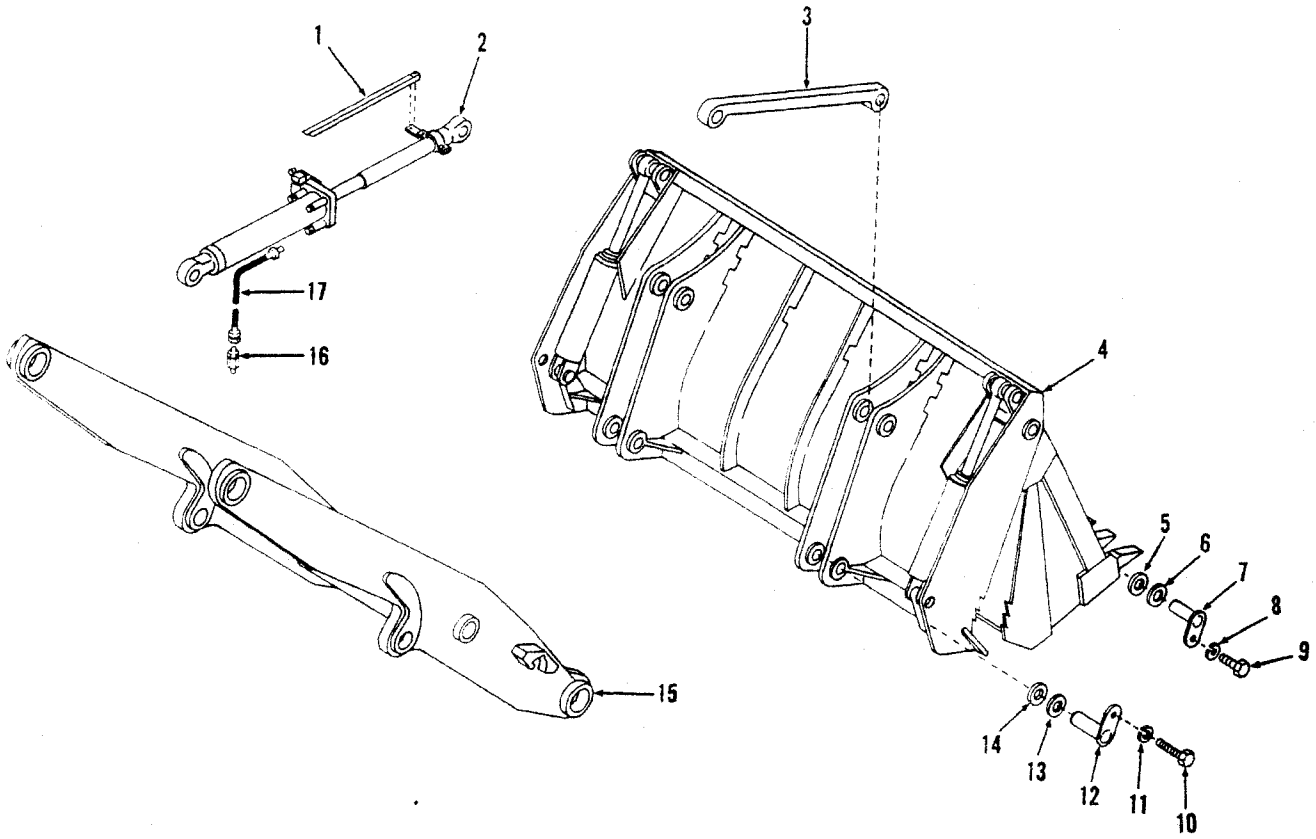

TS-15304

No.	Part No.	Qty.	Description
1	2515625	1	Cam
2	[1]———	1	Cylinder assy bucket
3	[1]———	2	Pushrod
4	[2,3,4]2520204	1	Bucket assy
5	‡2512169	—	Shim 1,65 mm (.060 in)
6	2512168	—	Shim 3,05 mm (.120 in)
7	2512159	2	Pin
8	27E8	2	Washer
9	18C824	2	Bolt
10	18C824	2	Bolt
11	27E8	2	Washer
12	2514887	2	Pin
13	‡2515723	—	Shim 3,05 mm (.120 in)
14	‡2515710	—	Shim 1,05 mm (.065 in)
15	[1]———	1	Boom
16	2523539	2	Valve restrictor
17	2523540	2	Hose

[1]See Index
[2]CMD Sales Item Only
[3]Yaun-Williams Bucket No. 610014
[4]Sold and Serviced by Yaun-Williams Buckets, Wellington, Ohio 44090

TS-15399

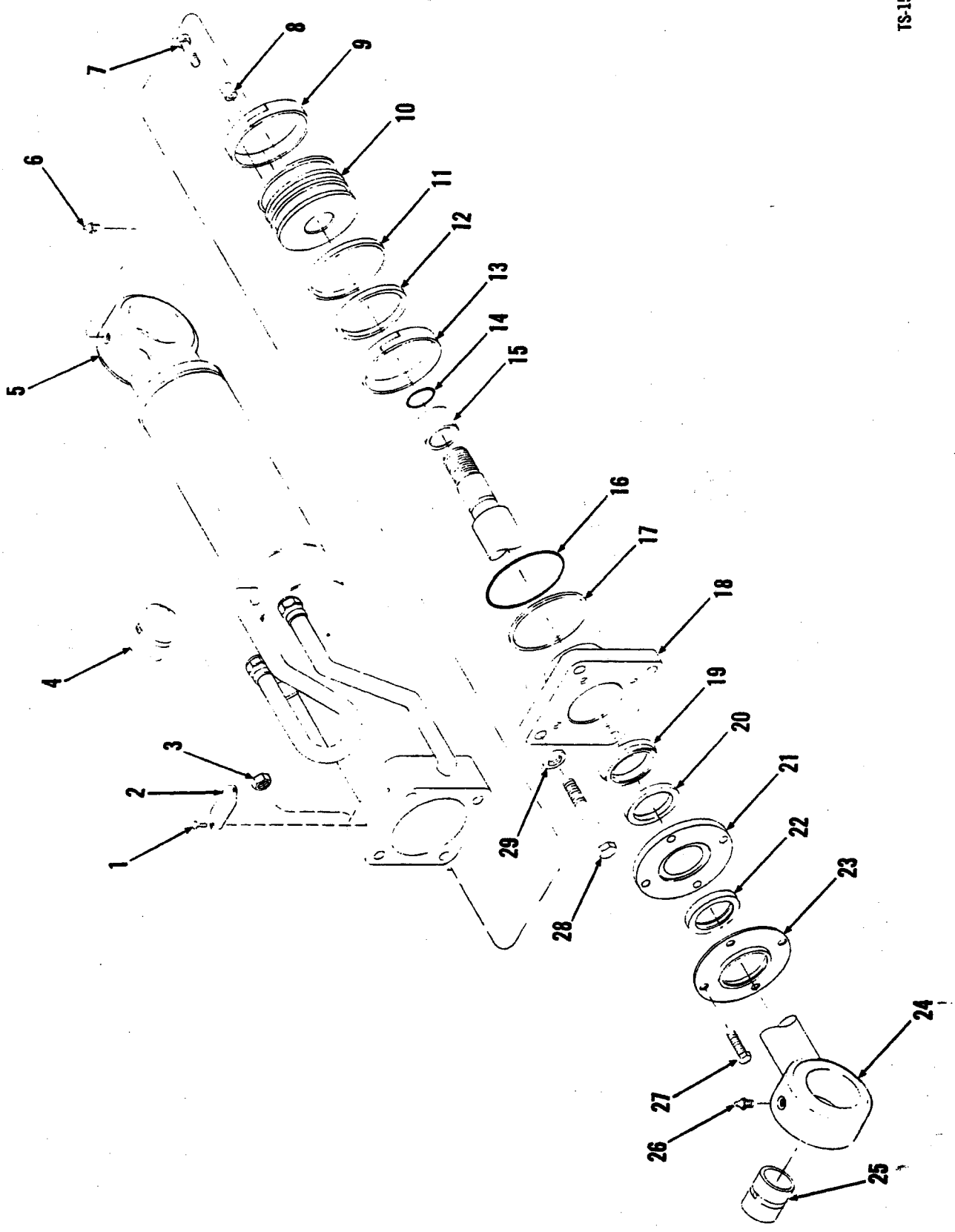

Bucket Cylinder, Assembly, High Lift – 45C

CLARK

No.	Part No.	Qty.	Description
A	[2]2520922	1	Cylinder assy LH
B	[3]2520921	1	Cylinder assy RH
1	6C202	2	Bolt
2	2520843	1	Identification plate
3	60D8	4	Nut
4	2512013	1	Bushing
5	[4]2520920	1	Cylinder LH
5A	[4]2520919	1	Cylinder RH
6	12H15	1	Grease fitting
7	33C512	1	Bolt
7A	†626787	1	Washer
8	2511955	1	Dowel
9	1530264	1	Wear ring
10	2518445	1	Piston
11	1503631	1	Outer ring
12	1503629	1	Inner ring
13	1530264	1	Wear ring
14	25K40124	1	O-ring
15	2520912	1	Spacer
16	58K236	1	O-ring
17	73K236	1	Back-up ring
18	2520915	1	Cap
19	2512010	1	Seal
20	2512011	1	Bearing
21	2526787	1	Flange
22	1511539	1	Wiper
23	2526786	1	Retainer
24	[5]2520907	1	Rod
25	2512013	1	Bushing
26	12H15	1	Grease fitting
27	33C620	4	Bolt
28	18C864	4	Bolt
29	570988	4	Washer
30	†2515623	1	Mounting bracket
31	†18C872	2	Bolt

[2]Inc. 3→5. 7→25. 27→29
[3]Inc. 3→4. 5A. 7→25. 27→31
[4]Inc. 4
[5]Inc. 25

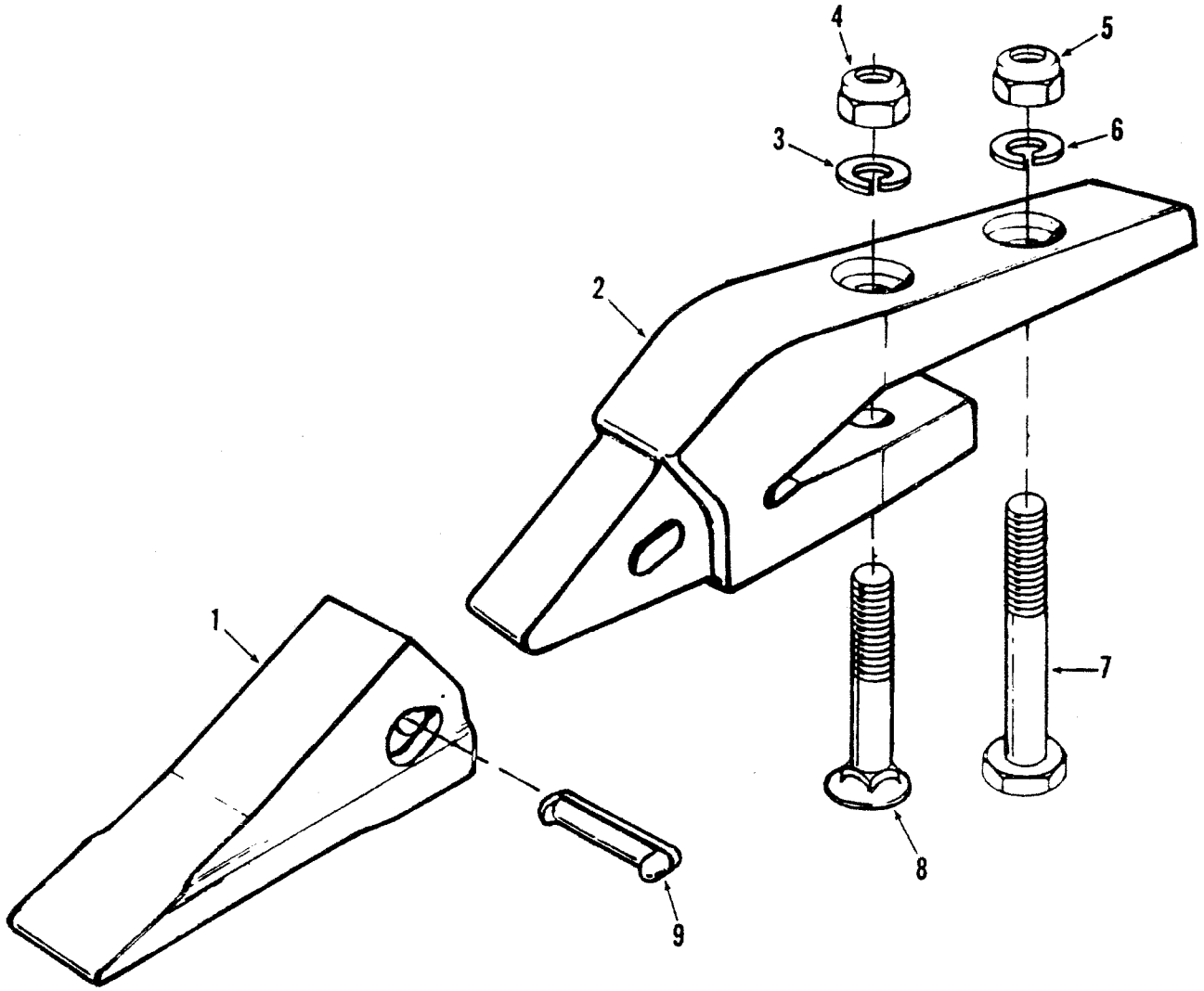

TS-11026

No.	Part No.	Qty.	Description
A	[2]2511482	—	Tooth assy
1	[3]562659	1	Tip
2	2511475	1	Shank
3	4E8	1	Lockwasher
4	63D8	1	Nut
5	63D8	1	Nut
6	4E8	1	Lockwasher
7	17C832	1	Bolt
8	[4]562743	1	Bolt assy
9	562660	1	Pin

[2]Inc. 1, 2, 9
[3]Check part number cast on part before ordering
[4]Inc. 4

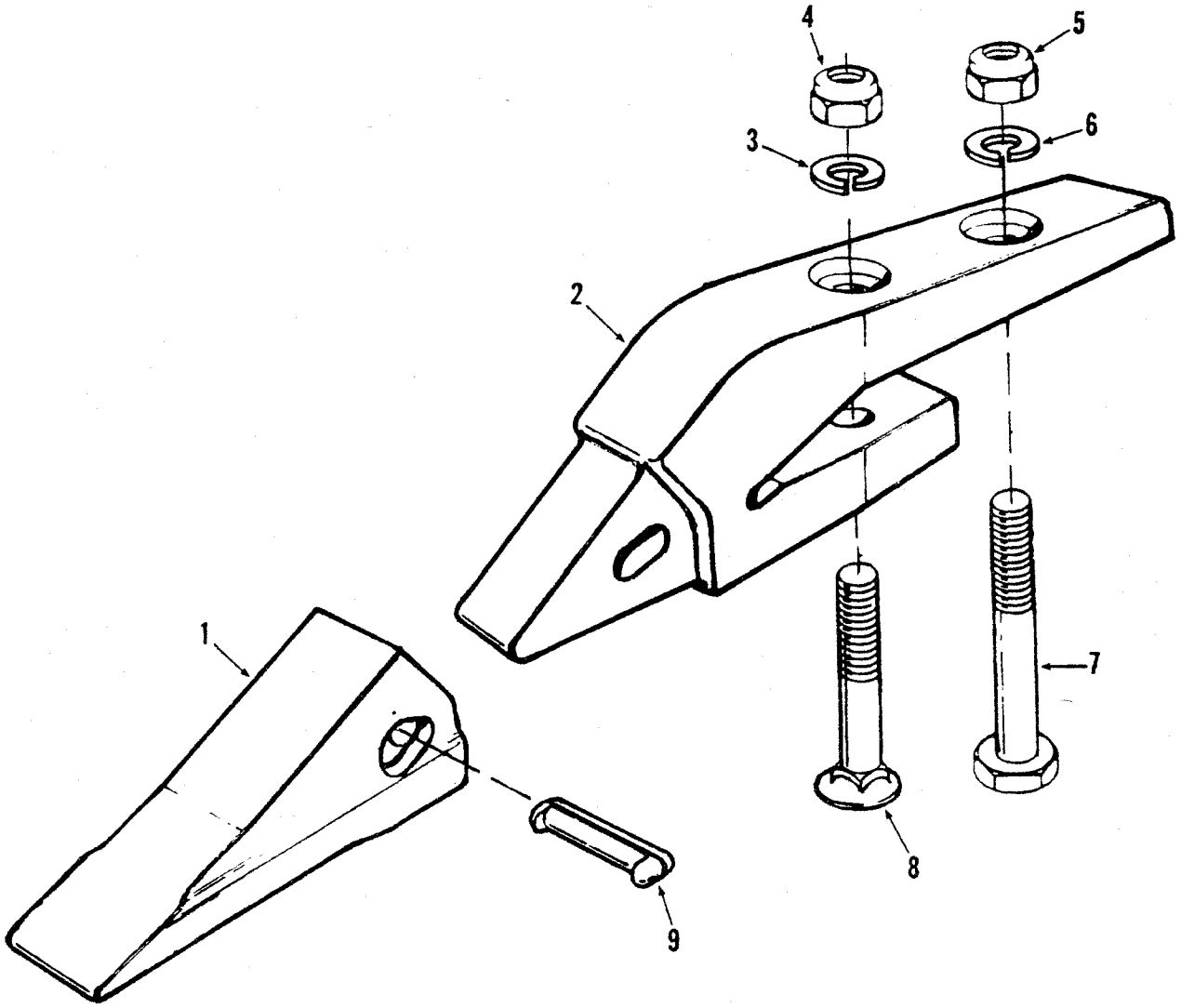

TS-11026

No.	Part No.	Qty.	Description
A	[2]2511481	—	Tooth assy
1	[3]2511478	1	Tip
2	2511476	1	Shank
3	4E10	1	Lockwasher
4	63D10	1	Nut
5	63D10	1	Nut
6	4E10	1	Lockwasher
7	17C1040	1	Bolt
8	[4]562742	1	Bolt assy
9	1572890	1	Pin

[2]Inc. 1, 2, 9
[3]Check part number cast on part before ordering
[4]Inc. 4

TS-20686

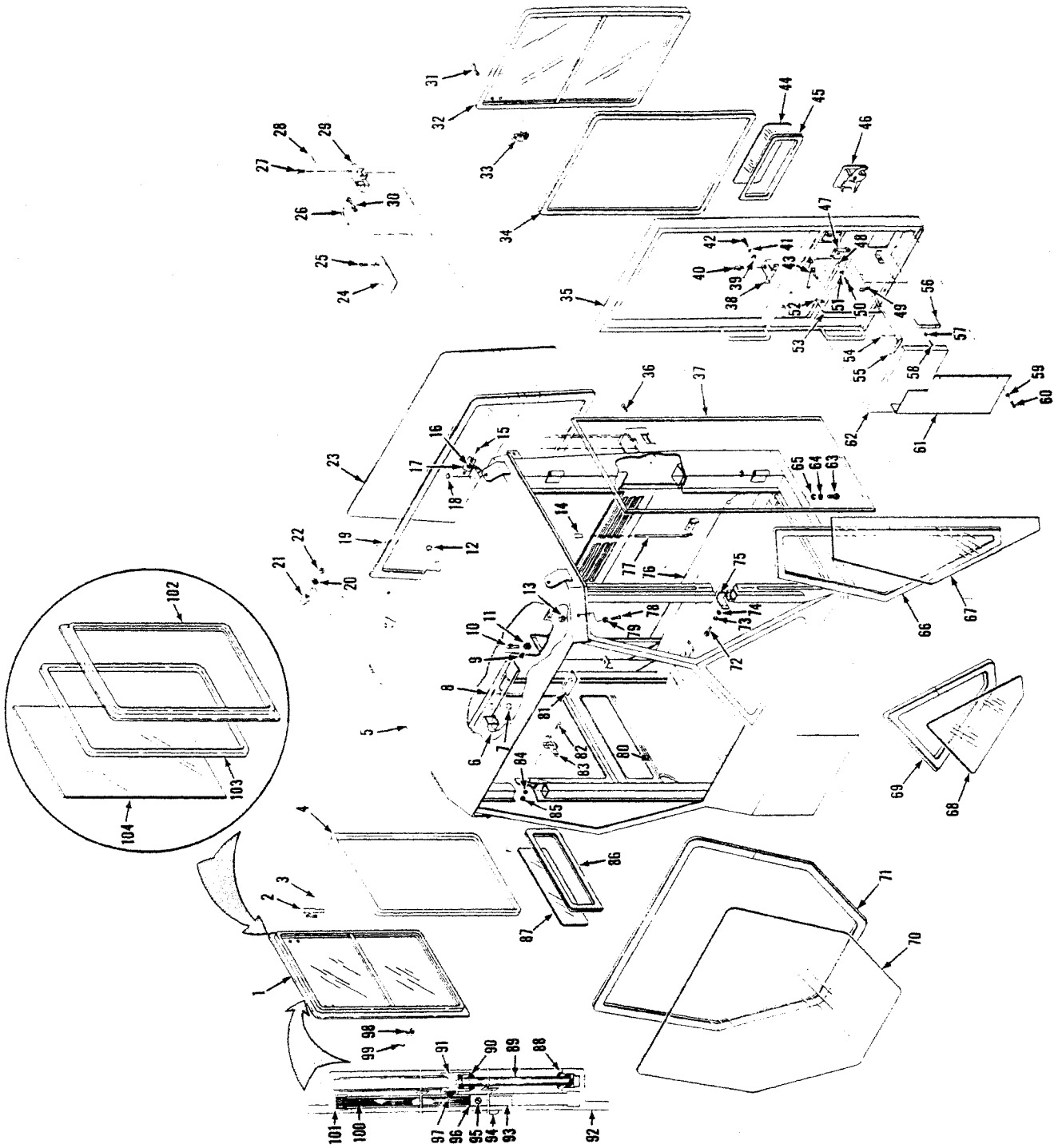

Cab Assembly – R.O.P.S.

CLARK

No.	Part No.	Qty.	Description
A	[2]2512053	1	Cab assy
1	[3]2523458	1	Window assy
1A	[16]2536247	1	Window assy
2	2523364	2	Hinge
3	1H308	6	Rivet
4	[4]2523628	1	Weather seal
5	§———	1	Cab body
6	2523327	1	Insulation roof F
7	742709	2	Plug button
8	2523320	1	Insulation roof R
9	———	—	Omit
10	2523305	1	Pin
11	———	—	Omit
12	6002456	1	Plug button
13	63D8	2	Nut
14	2523625	1	Knob
15	65G1008	4	Screw
16	302218	2	Grommet
17	2519066	2	Cover
18	2519263	2	Plug button
19	[5]2508901	1	Weather seal
20	4E5	2	Washer
21	2510132	2	Bumper
22	64D5	2	Nut
23	[6]———	1	Glass
24	2523316	1	Cover
25	65G1008	2	Screw
26	2523311	1	Rod
27	17C420	4	Bolt
28	2523989	1	Spring
29	2523353	1	Latch assy
30	2523628	1	Clip
31	962489	8	Screw
31A	962485	8	Nut
32	[3]2523456	1	Window assy
33	962473	1	Lock assy LH
33A	†962474	1	Lock assy RH
33B	§962475	2	Backing plate
34	[7]2508901	1	Weather seal
35	2523463	1	Door assy
36	85G1008	2	Screw
37	[8]949803	1	Gasket
38	2523390	1	Bracket
39	25E17	2	Washer
40	2523317	1	Stud
41	4E6	2	Washer
42	17C612	2	Bolt
43	2523392	1	Linkage
44	[6]———	1	Window
45	[9]2508901	1	Weather seal
46	2523466	1	Handle
47	2523452	1	Latch
48	2511632	4	Washer
49	2523626	1	Clip
50	85G1014	4	Screw

No.	Part No.	Qty.	Description
51	17E10	4	Washer
52	2523627	1	Clip
53	2523313	1	Rod
54	§[10]———	1	Pin
55	2523723	1	Handle
56	2523349	2	Strap
57	17E10	4	Washer
58	86G1010	4	Screw
59	17E10	2	Washer
60	85G1014	2	Screw
61	2523450	1	Cover
62	2523319	1	Foam
63	17C1240	8	Bolt
64	27E12	8	Washer
65	4E12	8	Washer
66	[5]2508901	1	Weather seal
67	[6]———	1	Glass
68	[6]———	1	Glass
69	[5]2508901	1	Weather seal
70	[6]———	1	Glass
71	[5]2508901	1	Weather seal
72	17C612	2	Bolt
73	4E6	2	Washer
74	25E18	2	Washer
75	2523344	1	Angle
76	2524063	1	Foam
77	2523395	1	Handle
78	2502443	2	Screw
79	2502444	2	Washer
80	2523318	1	Foam
81	2509846	1	Dome light
82	85G1008	2	Screw
83	2523624	1	Clamp
84	12E10	2	Washer
85	12D10	2	Nut
86	[5]2508901	1	Weather seal
87	[6]———	1	Glass
88	[11]961343	1	Weather seal
89	[6]———	1	Glass
90	[12]960981	1	Weather seal
91	§[13]———	1	Bar
92	§[13]———	1	Frame
93	962479	2	Stop
94	75G606	2	Screw
95	856604	8	Screw
96	962476	4	Step
97	[2]962507	1	Weather seal
98	2523397	1	Bracket
99	33H608	2	Rivet
100	[6]———	1	Glass
101	960986	1	Rubber
102	§[15]———	1	Frame
103	2523628	1	Weather seal
104	[6]———	1	Glass
105	†2537213	1	Floormat
105A	†2537243	1	Pad
106	†[14]949804	1	Gasket

[2]Inc. 1→99
[3]Inc. 88→97, 100, 101
[4]2489 mm (98 in)
[5]9144 mm (360 in)
[6]See cab glass pattern
[7]4877 mm (192 in)
[8]4667 mm (168 in)
[9]711 mm (28 in)
[10]See 55
[11]1397 mm (55 in)
[12]558 mm (22 in)
[13]See 1
[14]4978 mm (196 in) use between cab & cockpit
[15]See 1A
[16]Inc. 102, 103, 104

Glass Patterns, ROPS Cab

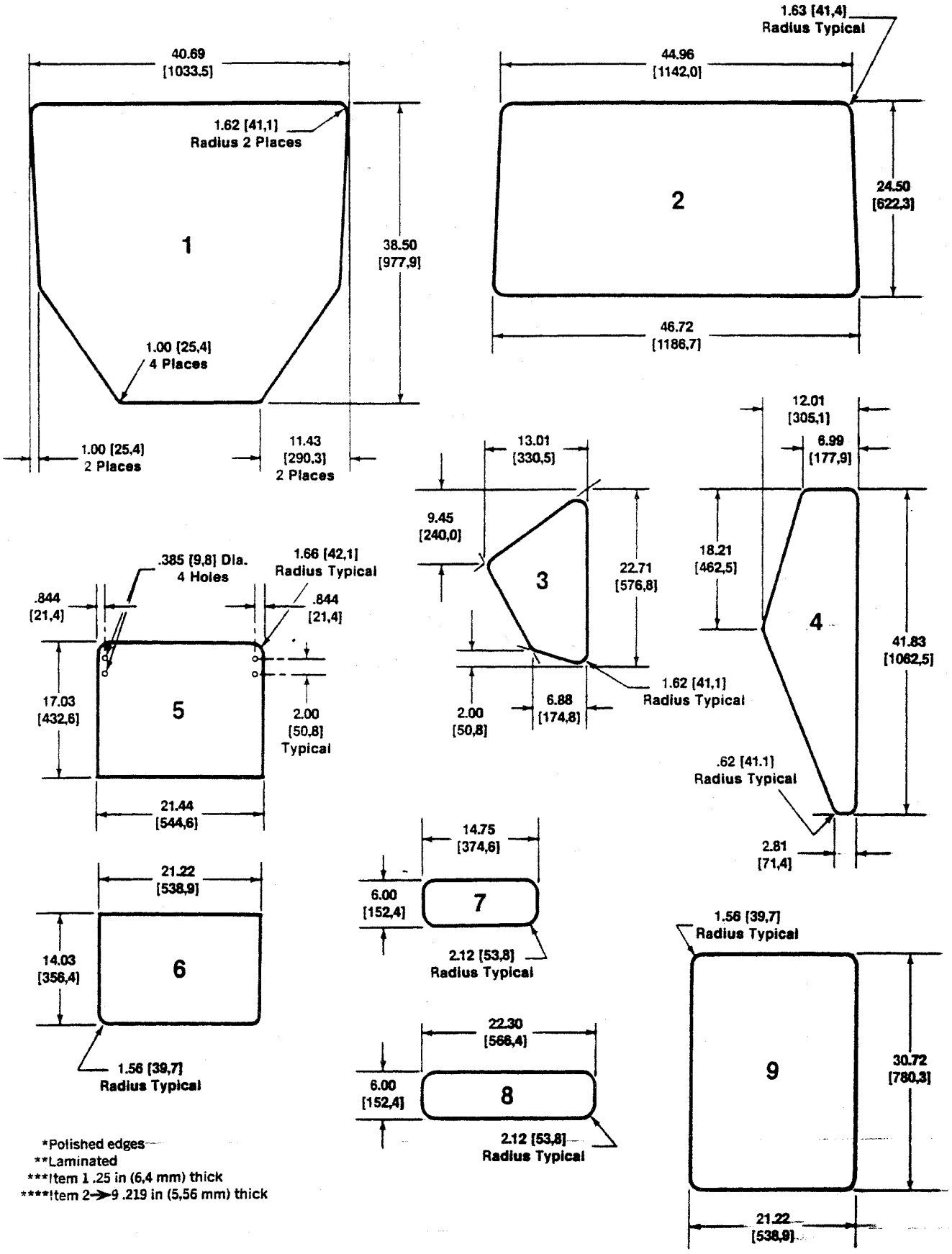

*Polished edges
**Laminated
***Item 1 .25 in (6,4 mm) thick
****Item 2→9 .219 in (5,56 mm) thick

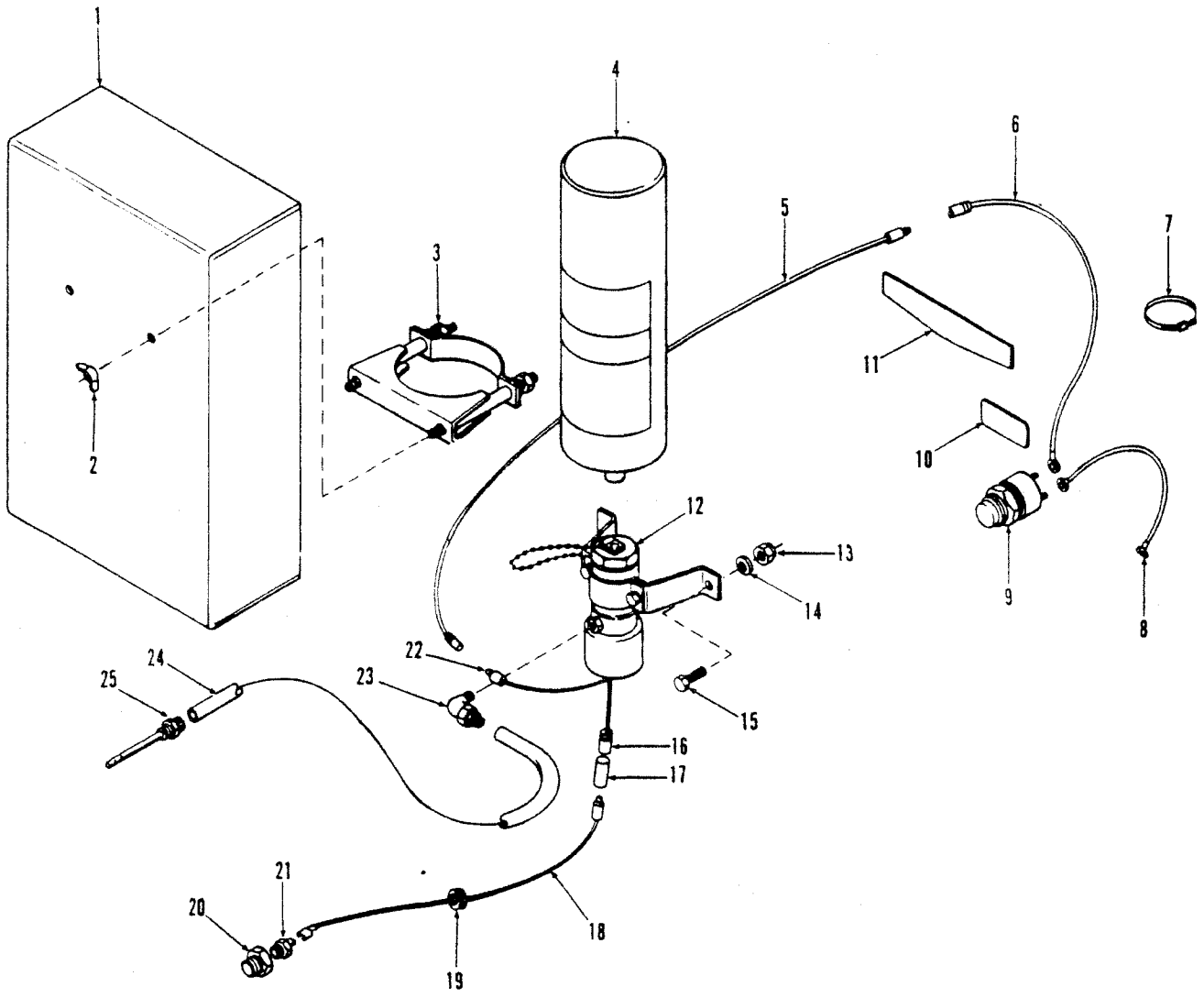

TS-15700

No.	Part No.	Qty.	Description
A	[2]2527689	1	Cold start kit
1	2528379	1	Cover
2	16D5	2	Wing nut
3	[3]1990400	1	Clamp
4	1572143	1	Cylinder
5	2527866	1	Wire
6	2527867	1	Wire
7	1736910	4	Cable tie
8	2527864	1	Wire
9	2504975	1	Switch
10	2527845	1	Decal
11	2527846	1	Decal
12	2519653	1	Valve
12A	†961873	1	Gasket
13	85D4	2	Nut
14	25E14	4	Washer
15	17C414	2	Bolt
16	1513575	1	Plug
17	742175	1	Sleeve
18	2527865	1	Wire
19	1307187	3	Grommet
20	19F1	1	Bushing
20A	30F3	1	Tee
21	[4]2520868	1	Thermostat
21A	2538374	1	Thermostat
21B	1517532	1	Wire
22	1513577	1	Terminal
23	2504973	1	Elbow
24	1990278	1	Tube
25	2504977	1	Atomizer

[2]Inc. 1 → 25
[3]Inc. 2
[4]For complete replacement use item 21A & 21B
[5]CMD sales item only.

Cold Start Kit — G.M. — 55C

CLARK

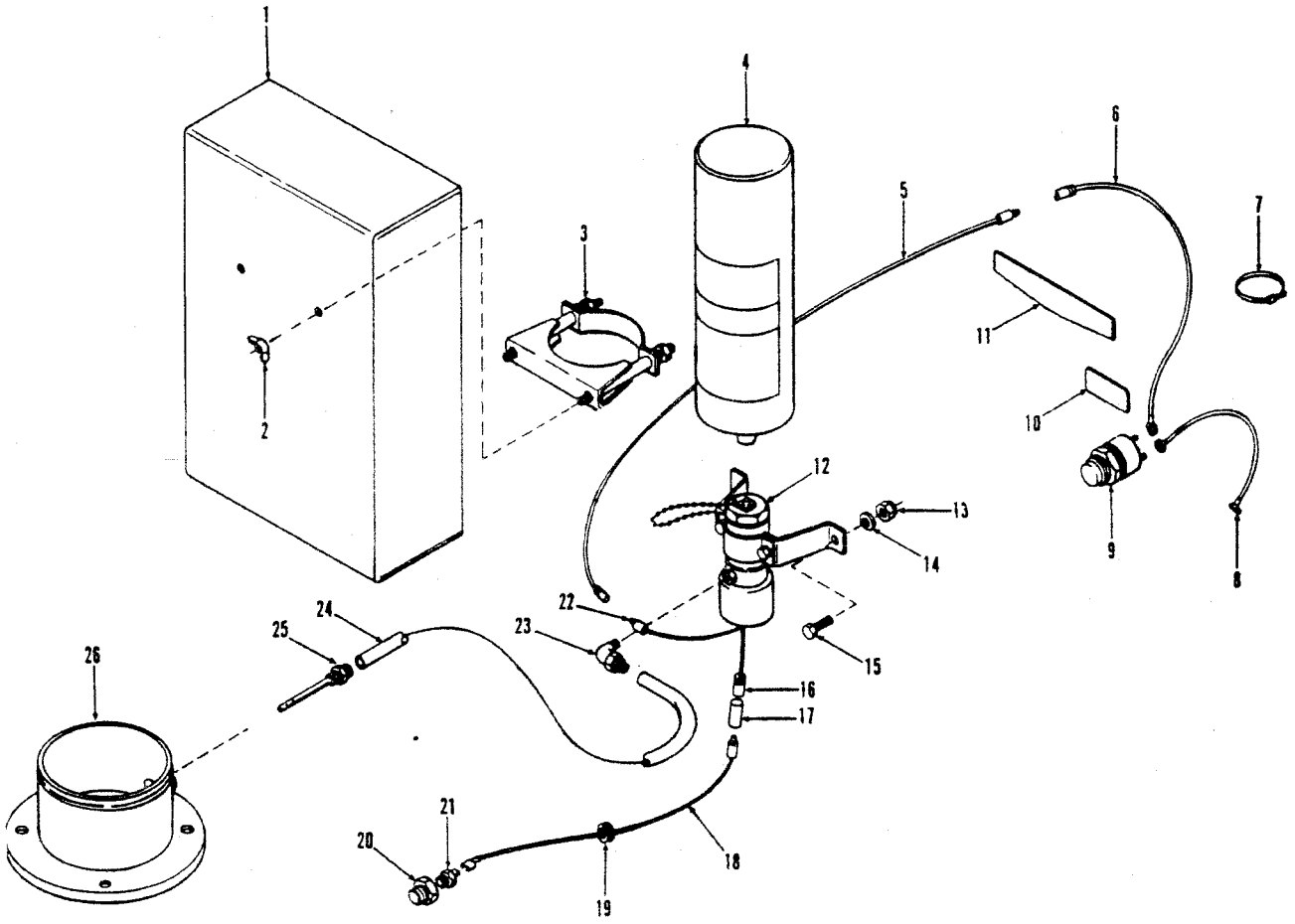

TS-20367

No.	Part No.	Qty.	Description
A	[2]2527868	1	Cold start kit
B			
1	2528379	1	Cover
2	16D5	2	Wing nut
3	[3]1990400	1	Clamp
4	1572143	1	Cylinder
5	2527866	1	Wire
6	2527867	1	Wire
7	1736910	4	Cable tie
8	2527864	1	Wire
9	2504975	1	Switch
10	2527845	1	Decal
11	2527846	1	Decal
12	2519653	1	Valve
12A	†961873	1	Gasket
13	59D4	2	Nut

No.	Part No.	Qty.	Description
14	25E14	2	Washer
15	17C414	2	Bolt
16	1513575	1	Plug
17	742175	1	Sleeve
18	2527865	1	Wire
19	2529471	3	Grommet
20	19F4	1	Reducer
21	2520868	1	Thermostat
21A	2538374	1	Thermostat
21B	1517532	1	Wire
22	1513577	1	Terminal
23	2504973	1	Elbow
24	2527799	1	Tube
25	961450	1	Atomizer
26	2527852	1	Adapter

[2]Inc. 1 → 26
[3]Inc. 2

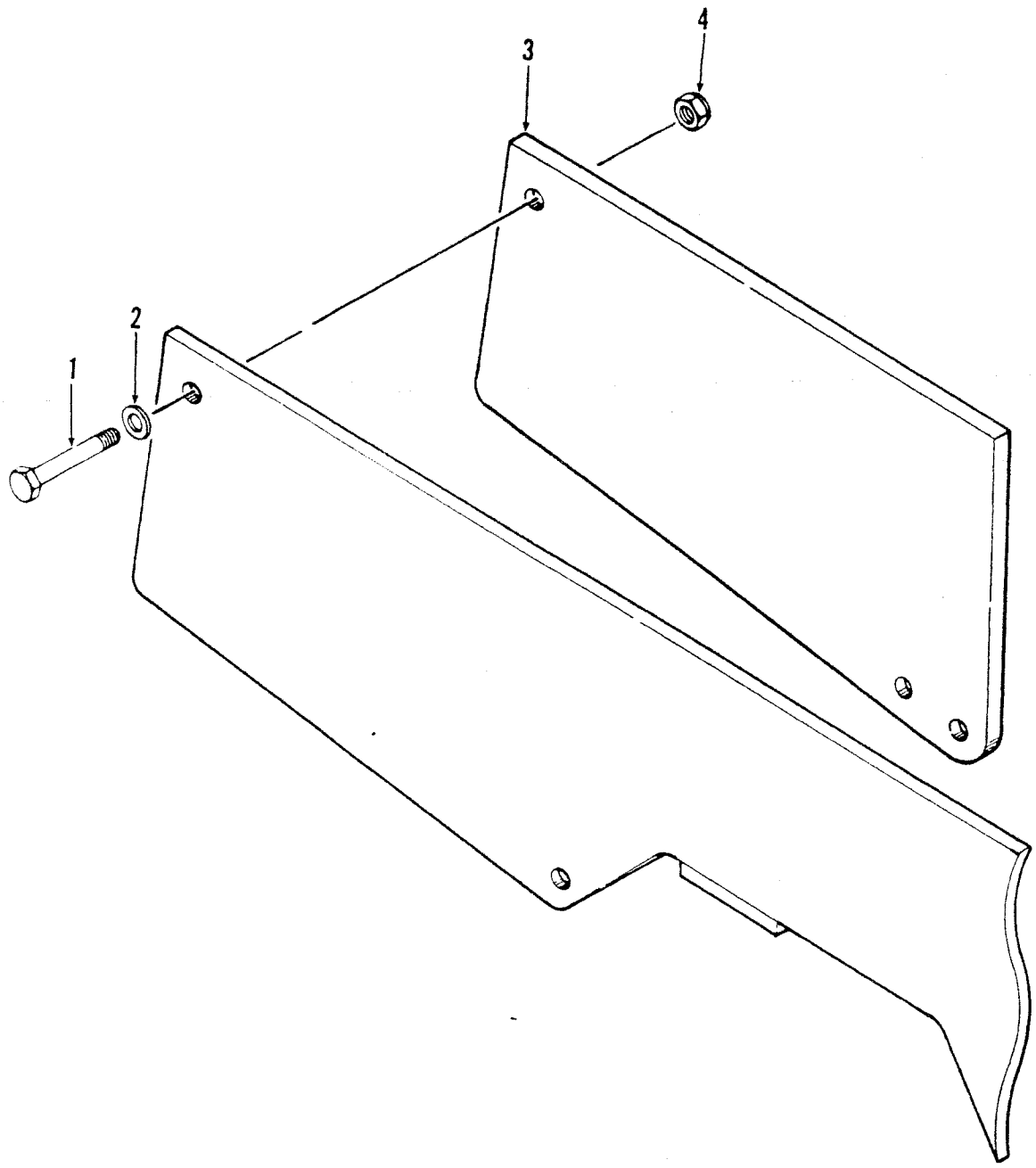

TS-20084

No.	Part No.	Qty.	Description
A	[2,3,4]2518469	1	Counterweight kit
1	18C1680	4	Bolt
2	1523350	8	Washer
3	2518470	2	Counterweight
4	60D16	4	Nut

[2]Inc. 1→4
[3]In lieu of hydroinflation
[4]CMD sales item only

Counterweight Kit — 55C

CLARK

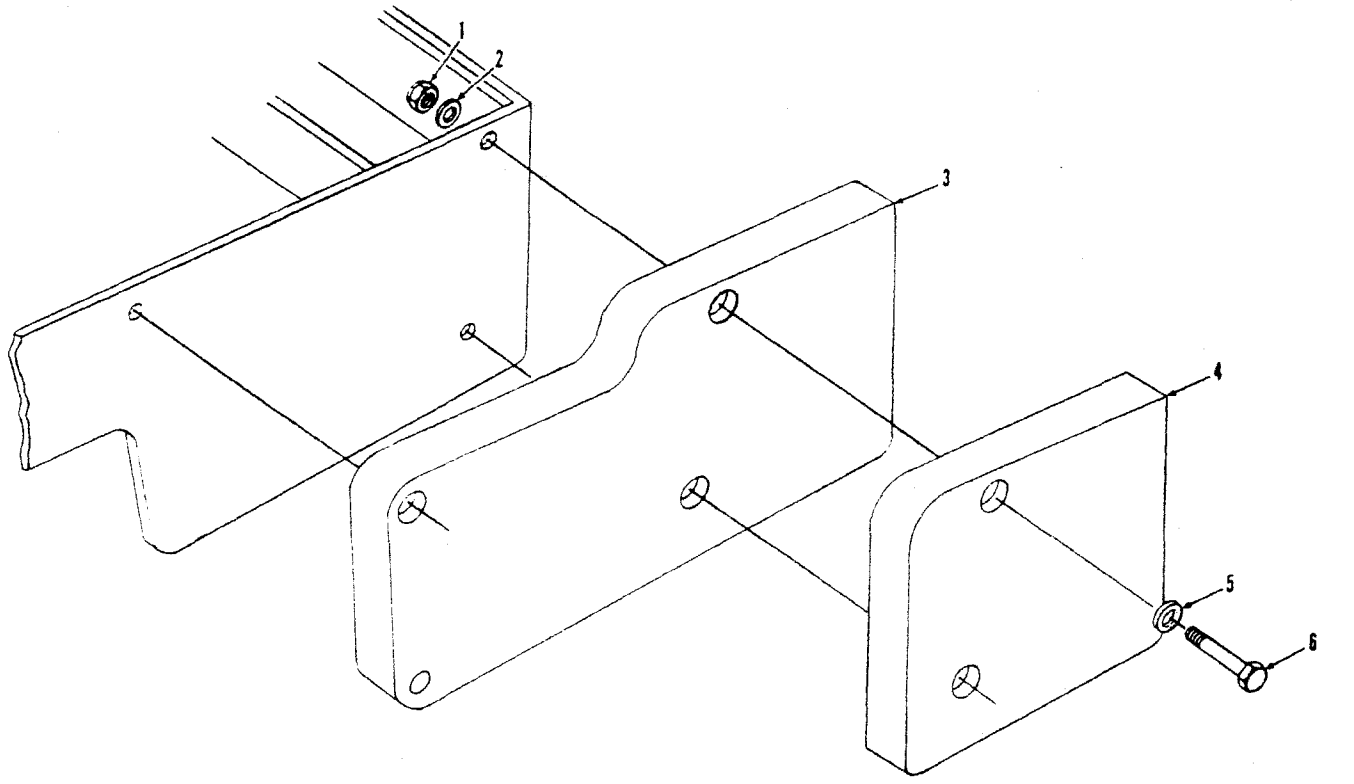

TS-15699

No.	Part No.	Qty.	Description
A	[5,6]2525140	1	Counterweight kit
1	59D16	4	Nut
2	539404	4	Washer
3	[2]———	1	Counterweight
4	[3]2525142	2	Counterweight
4A	[4]2525146	2	Counterweight
5	539404	4	Washer
6	17C16156	4	Bolt

[2]Standard Counterweight Page C7-1
[3]Torched
[4]Cast
[5]CMD sales item only.
[6]Inc. 1 → 6

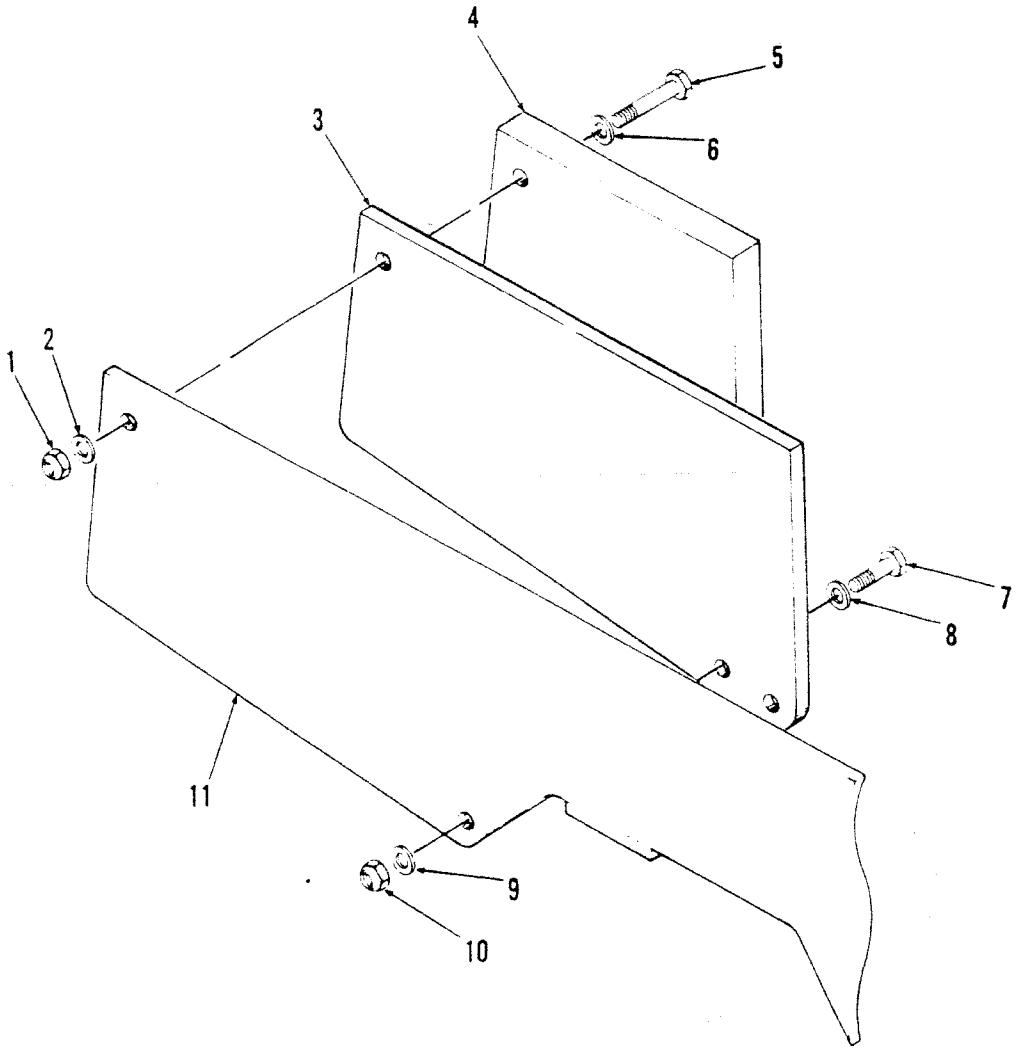

TS-15346

No.	Part No.	Qty.	Description
A	[2][3]2525270	1	Counterweight kit
B	[4][5]2525271	1	Counterweight kit
1	59D16	2	Nut
2	1523350	2	Washer
3	2518470	2	Counterweight
4	[6]2525245	2	Counterweight
5	[7]17C16152	2	Bolt
5A	[8]17C16216	2	Bolt
6	1523350	2	Washer
7	17C1688	2	Bolt
8	1523350	2	Washer
9	1523350	2	Washer
10	59D16	2	Nut
11	[1]———	—	Frame

[1]See Index
[2]Inc. 1→5, 6→10
[3]With hydroinflation
[4]Inc. 1→4, 5A→10
[5]In lieu of hydroinflation
[6]4 used in 2525271 Kit
[7]For A
[8]For B

Defroster Fan Assembly

CLARK

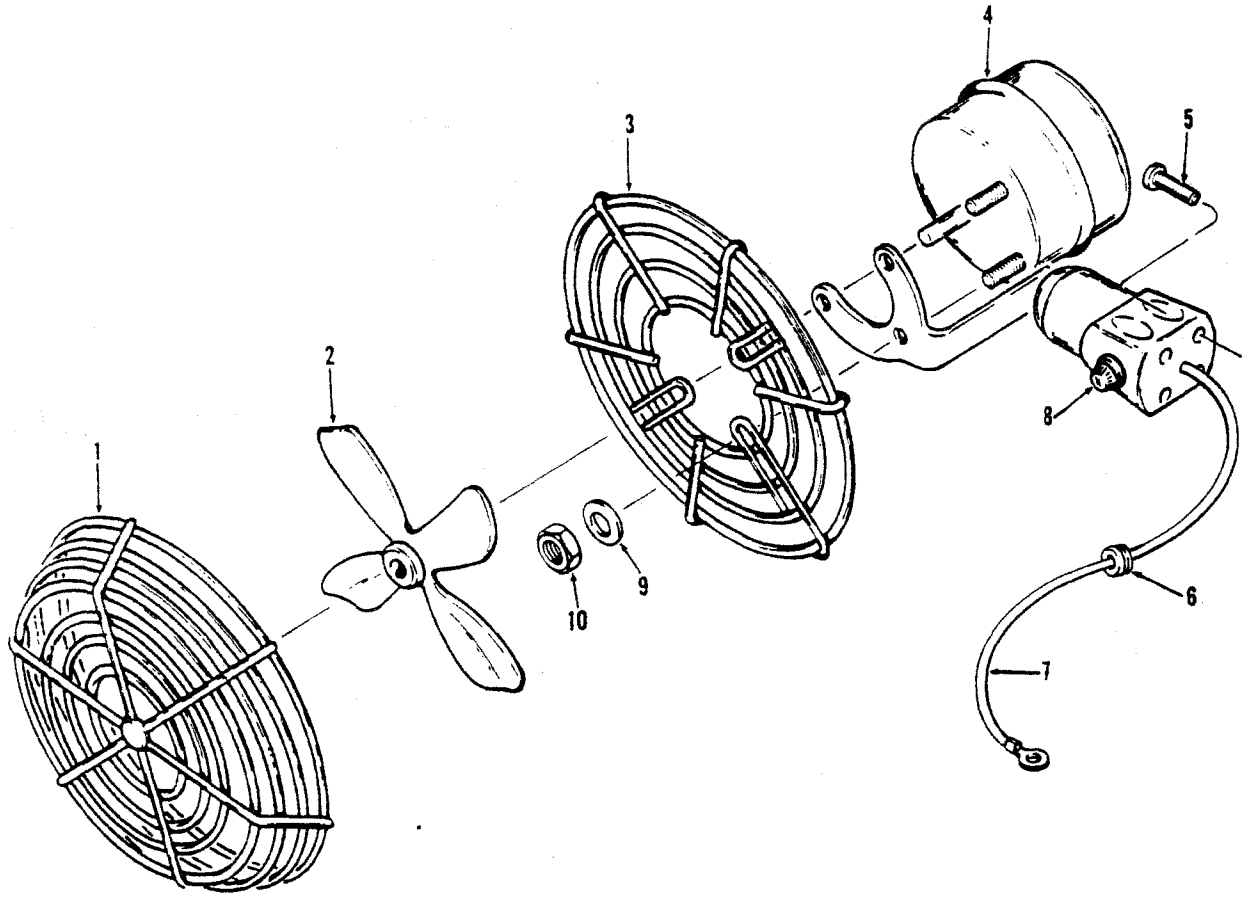

TS-20256

No.	Part No.	Qty.	Description
A	[2]517846	1	Fan assy
1	949036	1	Guard
2	949037	1	Fan
3	949039	2	Guard
4	949191	1	Motor
5	§[3]_____	4	Screw
6	552442	1	Grommet
7	755152	1	Wire
8	949192	1	Switch
8A	963078	1	Knob
9	25E10	2	Washer
10	949054	2	Nut

[2]Inc. 1 → 5, 8 → 10
[3]See 2

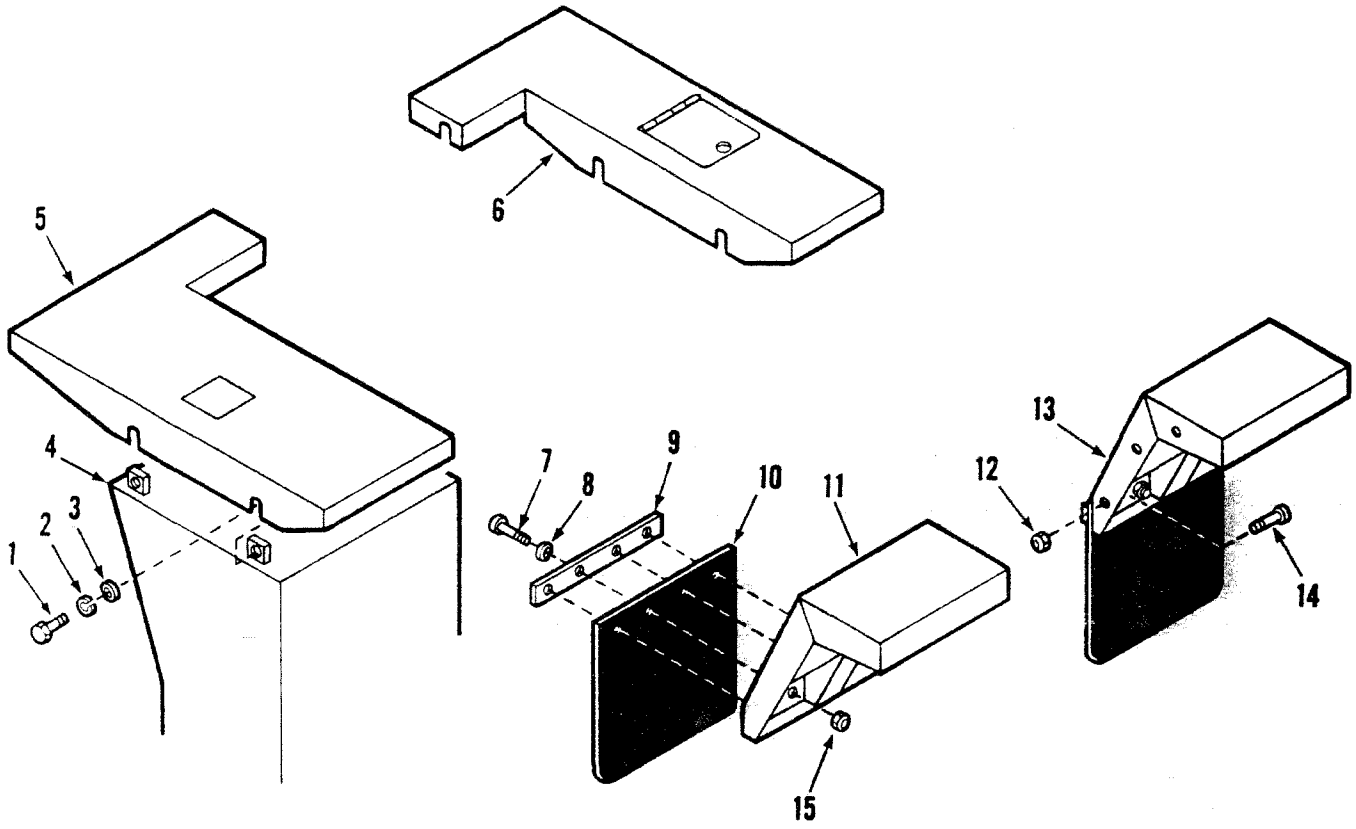

TS-20082

No.	Part No.	Qty.	Description
A	[2][5]2517823	1	Fender kit front
B	[6][3][5]2517834	1	Fender kit rear
C	[5][7]2525398	1	Fender kit rear
D	[3][5][8]2528195	1	Fender kit rear
E	[4][5]2515030	1	Mud flap kit
1	[6]2517337	1	Fender LH
1A	[7]2525403	1	Fender LH
1B	[8]2527741	1	Fender LH
2	2542208	1	Fender LH
3	18C824	6	Bolt
4	86D8	6	Nut
5	2542208	1	Fender RH
6	86D6	8	Nut
7	2515088	2	Mud flap

No.	Part No.	Qty.	Description
8	2515087	2	Flat
9	25E18	8	Washer
10	18C620	8	Bolt
11	[6]2517326	1	Fender RH
11A	[7]2525404	1	Fender RH
11B	[8]2526597	1	Fender RH
12	791635	8	Tapped block
13	[6]25E18	8	Washer
13A	[7]619021	8	Washer
14	17C616	8	Bolt
15	4E6	8	Lockwasher
16	‡†[6][7][8]1531606	—	Non skid
17	‡†[6][7]2519431	—	Non skid
18	‡†[8]1509590	—	Non skid

[2]Inc. 2→5
[3]Inc. 1. 11→15
[4]Inc. 6→10
[5]CMD Sales Item only
[6]458A101CB→116CB. 459A101CB→138CB. 472A101CB→192CB. 473A101CB→248CB
[7]458A117CB & →. 459A139CB & →. 472A193CB & →. 473A249CB & →
[8]480A101CB & →. 481A101CB & →

Fork Attachment

CLARK

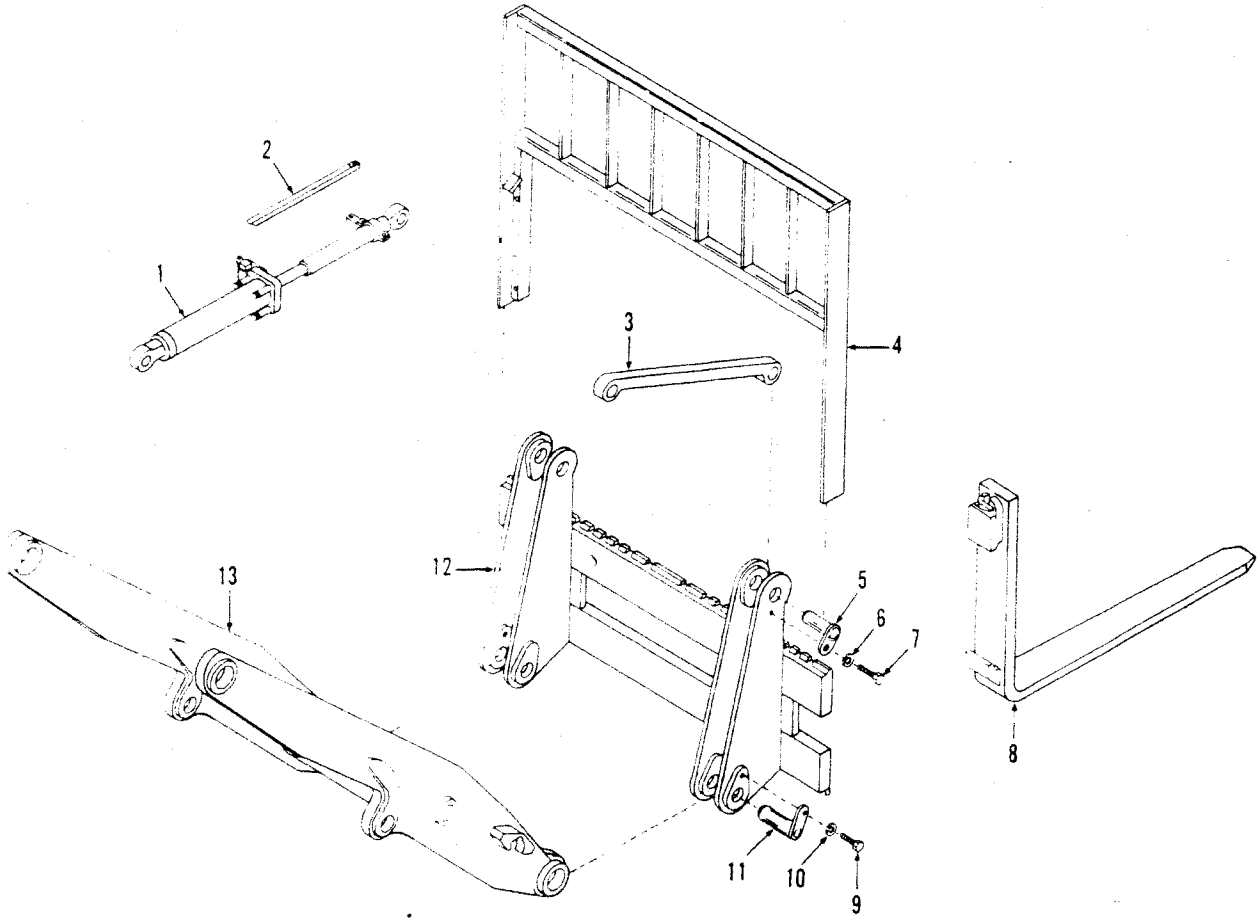

TS-20292

No.	Part No.	Qty.	Description
A	[4,5]2532354	1	**Fork kit**
1	[1]———	1	**Cylinder assy**
2	[2]2524358	1	**Cam**
2A	[3]2532301	1	**Cam**
3	[1]———	2	**Pushrod**
4	[2]2351139	1	**Back rest**
4A	[3]2362721	1	**Back rest**
5	2512159	2	**Pin**
6	27E8	2	**Washer**
7	18C824	2	**Bolt**
8	1772420	2	**Fork**
9	18C824	2	**Bolt**
10	27E8	2	**Washer**
11	2514887	2	**Pin**
12	2516717	1	**Carrier assy**
13	[1]———	1	**Boom**

[1]See Index
[2]35C 45C
[3]55C
[4]CMD sales item only.
[5]Inc. 3 → 12

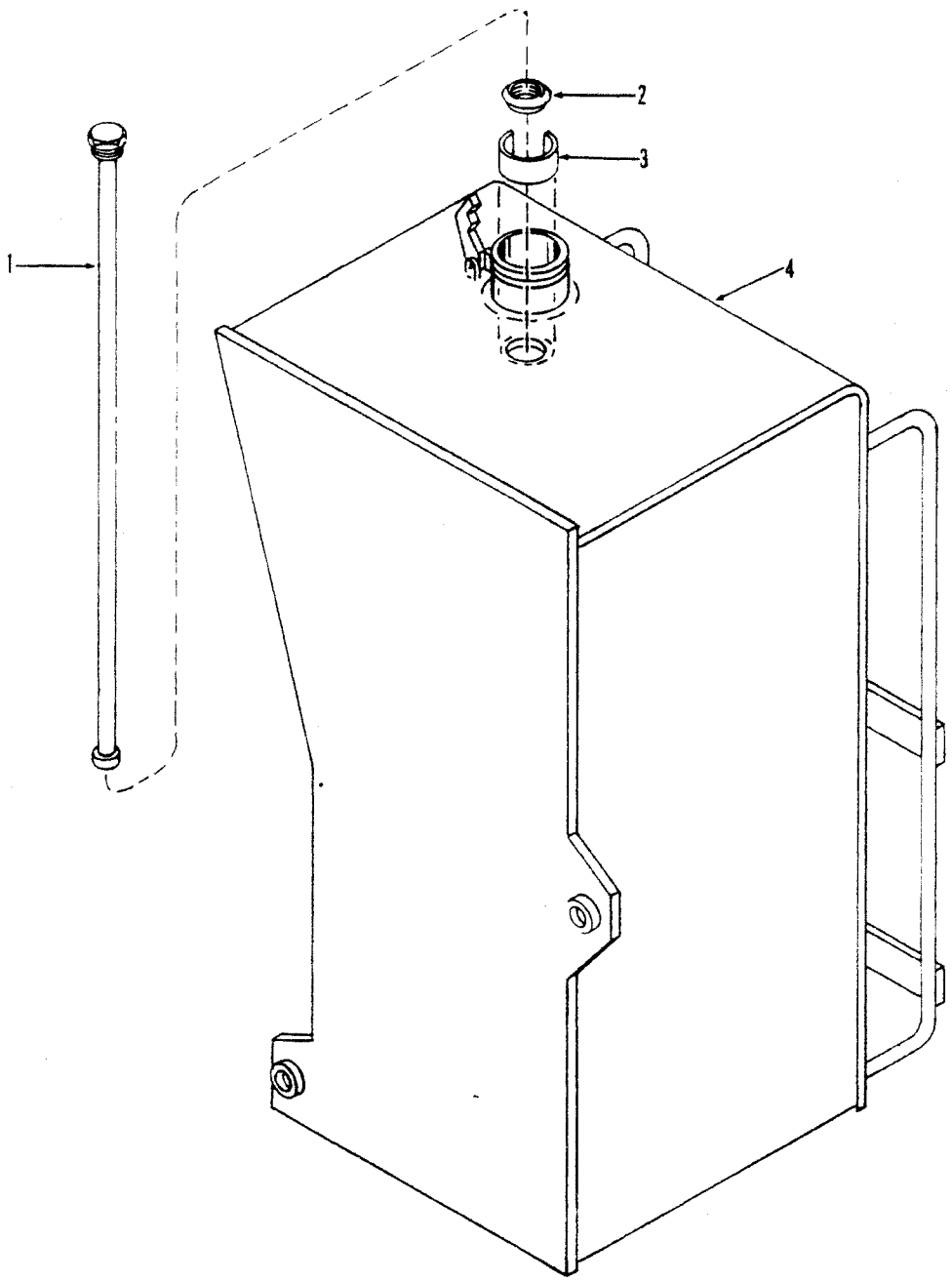

TS-15310

No.	Part No.	Qty.	Description
A	[2]2523445	1	Gauge kit
1	2521330	1	Gauge
2	51K20	1	Flange
3	2523402	1	Tube
4	[1]———	1	Tank fuel

[1]See Index
[2]Inc. 1→3

Handrail Kit

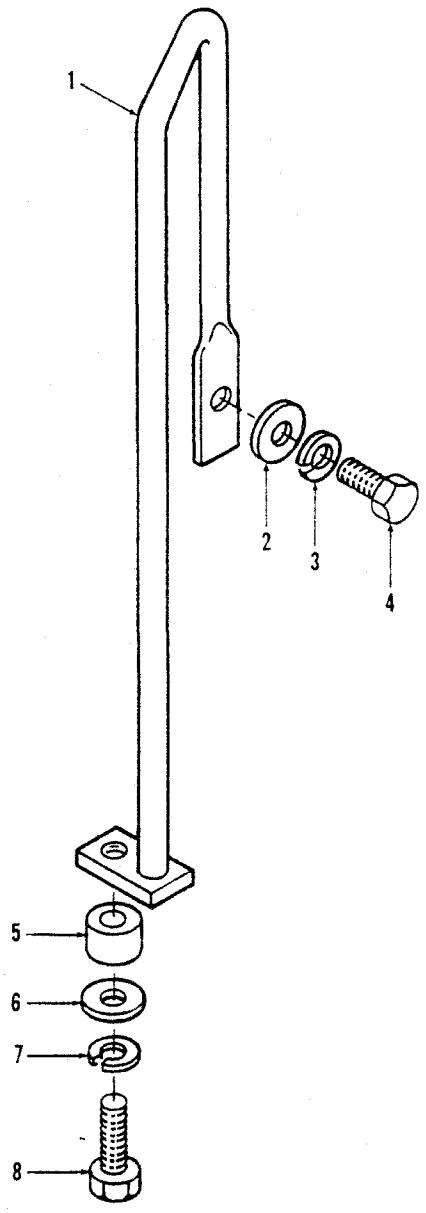

TS-20181

No.	Part No.	Qty.	Description
A	[2,3]2519703	1	Handrail kit
1	2519427	1	Handrail RH
1A	2519428	1	Handrail LH
2	799058	2	Washer
3	4E6	2	Washer
4	17C616	2	Bolt
5	131743	2	Spacer
6	799058	2	Washer
7	4E6	2	Washer
8	17C624	2	Bolt

[2]CMD sales item only
[3]Inc. 1→8

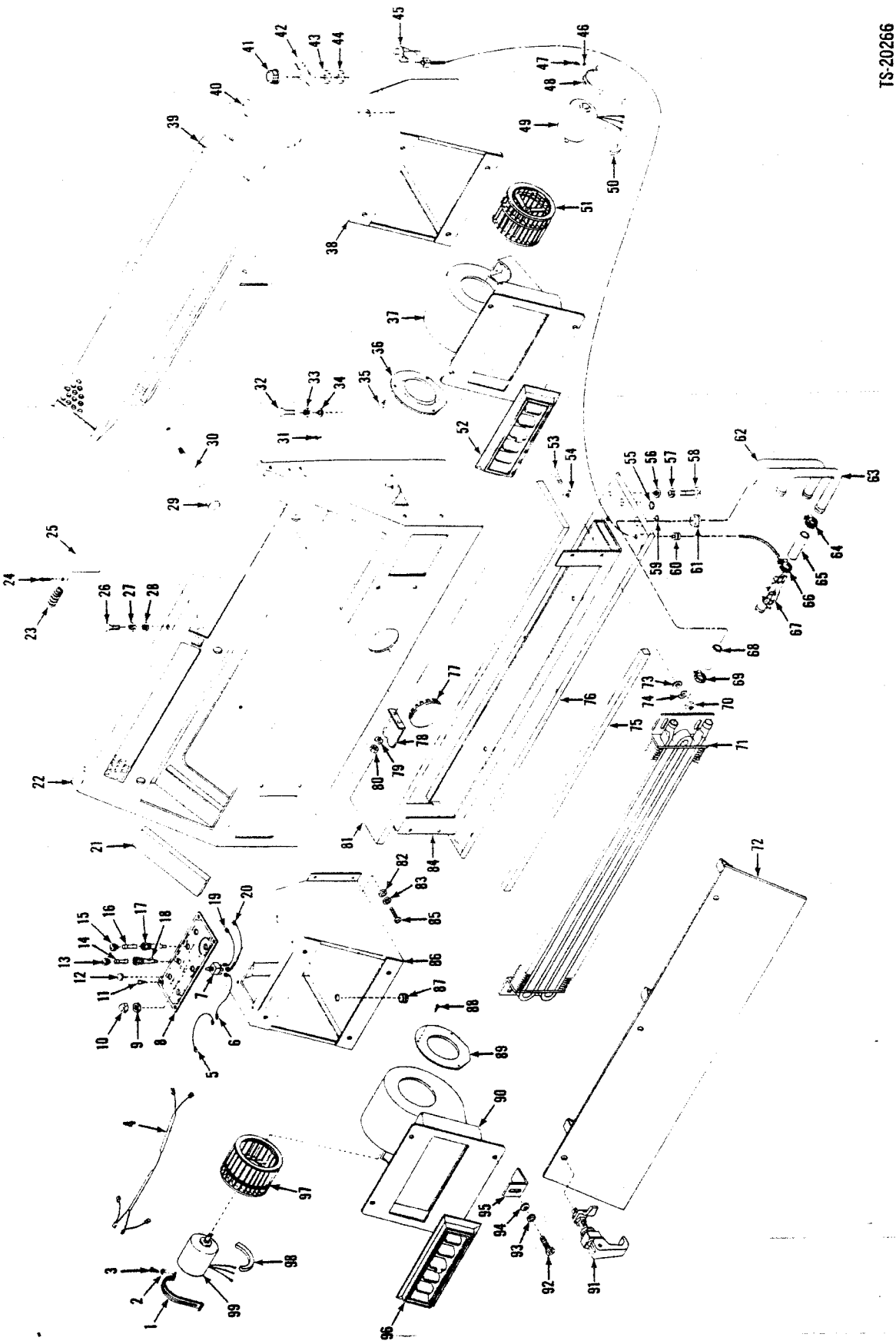

TS-20266

Heater & Pressurizer Kit

CLARK

No.	Part No.	Qty.	Description
A	[2]2512056	1	Heater assy
1	949736	1	Strap
2	15E10	2	Washer
3	65G1008	2	Screw
4	2511247	1	Wire
5	2520249	1	Wire
6	960681	1	Wire
7	960562	1	Switch
8	[3]2520255	1	Panel assy
9	949741	2	Nut
10	949639	1	Knob
11	65G1008	4	Screw
12	1300057	3	Plug button
13	[4]———	2	Cap
14	1319451	2	Fuse
15	[5]———	1	Cap
16	2520252	1	Fuse
17	2511248	1	Fuse holder
18	[6]2511248	2	Fuse holder
19	2520251	1	Wire
20	2520250	1	Wire
21	2520265	2	Foam
22	2520310	1	Pressurizer assy
23	2520247	1	Spring
24	1F312	1	Cotter pin
25	2520286	1	Damper assy
26	17C412	3	Bolt
27	4E4	3	Washer
28	25E14	3	Washer
29	2520246	1	Cap
30	2520266	1	Handle
31	17C408	2	Bolt
32	17C412	2	Bolt
33	4E4	2	Washer
34	25E14	2	Washer
35	2501949	3	Screw
36	949737	1	Ring
37	[7]2520273	1	Blower assy LH
38	2520280	1	Air duct
39	949758	1	Filter
40	949803	1	Gasket
41	960595	1	Knob
42	949767	1	Decal
43	949598	1	Nut
44	949598	1	Nut
45	2520262	1	Cable
46	15E10	2	Washer
47	65G1008	2	Screw
48	949736	1	Strap
49	2511233	1	Motor
50	[8]949602	1	Gasket

No.	Part No.	Qty.	Description
51	949734	1	Blower wheel
52	2520267	1	Louver assy
53	17C416	4	Bolt
54	25E14	4	Washer
55	896803	1	Plug button
56	25E14	6	Washer
57	4E4	6	Washer
58	17C412	6	Bolt
59	6002456	1	Plug button
60	2520245	1	Grommet
61	1303297	2	Grommet
62	2520257	1	Tube
63	2520256	1	Tube
64	799476	2	Clamp
65	[9]1529688	1	Hose
66	799476	2	Clamp
67	2000494	1	Valve
68	[10]1529688	2	Hose
69	799476	2	Clamp
70	63D4	4	Nut
71	2523078	1	Core
72	2520290	1	Cover
72A	†[12]2510261	1	Gasket
73	25E14	4	Washer
74	4E4	4	Washer
75	[11]2510276	1	Gasket
76	[13]2520261	—	Gasket
77	637739	1	Plug button
78	2520264	1	Angle
79	4E4	2	Washer
80	63D4	2	Nut
81	2520263	1	Foam
82	25E14	4	Washer
83	4E4	4	Washer
84	2520294	1	Housing
85	17C412	4	Bolt
86	2520283	1	Air duct
87	1303297	1	Grommet
88	2501949	3	Screw
89	949737	1	Ring
90	[14]2520277	1	Blower assy
91	2517176	2	Latch
92	17C412	2	Bolt
93	4E4	2	Washer
94	25E14	4	Washer
95	2522417	2	Bracket
96	2520267	1	Louver
97	949738	1	Blower
98	[7]949602	1	Gasket
99	2511234	1	Motor

[2]Inc. 1→101
[3]Inc. 5→10, 12→20
[4]See 18
[5]See 17
[6]Inc. 13
[7]Inc. 46→52
[8]216 mm (8.51 in)
[9]76 mm (3.0 in)
[10]114 mm (4.5 in)
[11]794 mm (31.25 in)
[12]2267 mm (89.25 in)
[13]2289 mm (90.12 in)
[14]Inc. 1, 2, 3, 88, 89, 90, 96→99

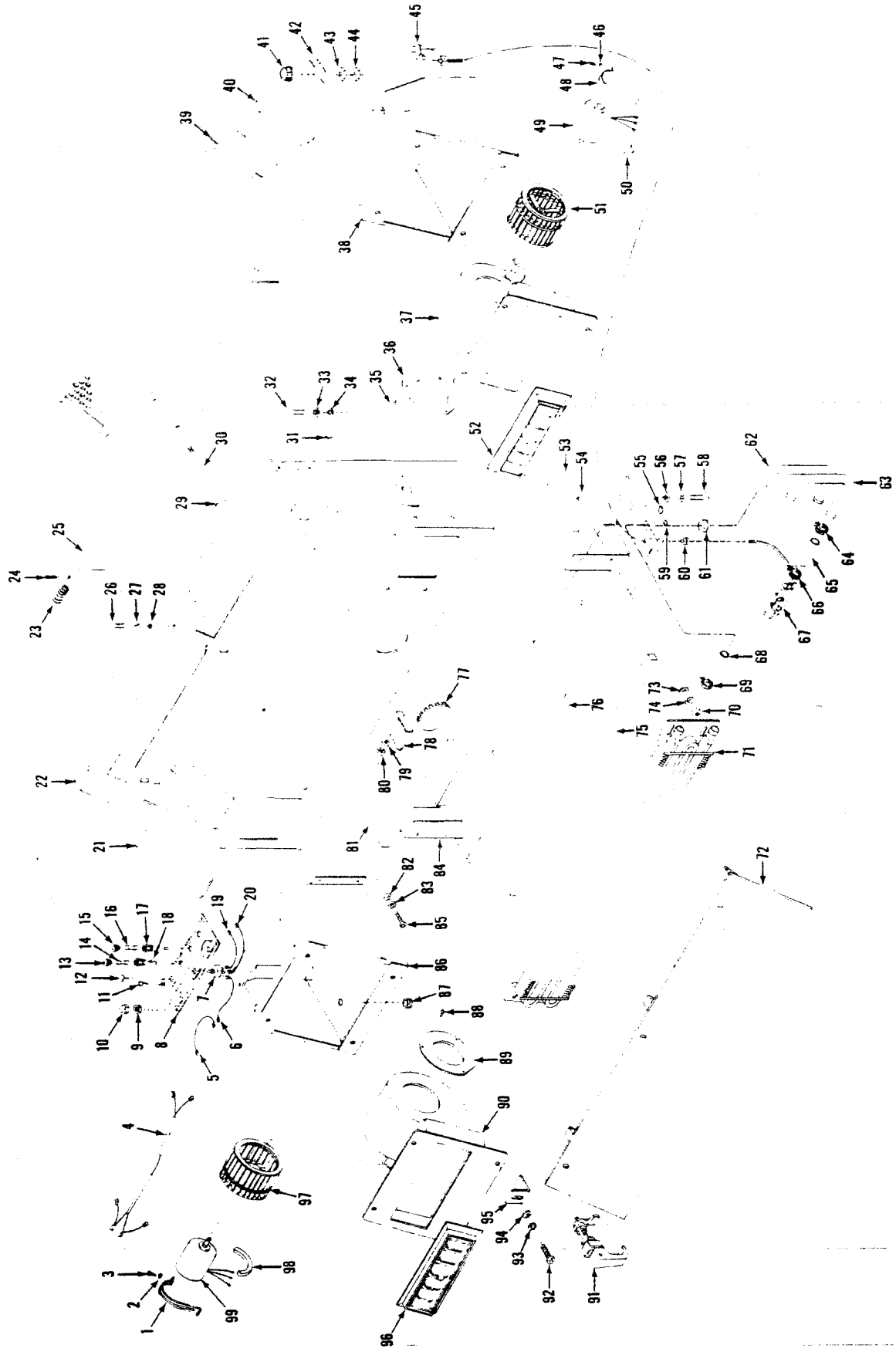

TS-20266

Heater & Pressurizer Kit 55C

CLARK

No.	Part No.	Qty.	Description
A	2529146	1	Heater assy
1	949736	1	Strap
2	15E10	2	Washer
3	65G1008	2	Screw
4	2528930	1	Wire
5	2528928	1	Wire
6	949806	1	Wire
7	[15]2526803	1	Switch
8	2528940	1	Panel assy
9	§———	—	Nut
10	§———	—	Knob
11	65G1008	4	Screw
12	1300057	3	Plug button
13	[4]———	2	Cap
14	2531813	2	Fuse
15	———	—	Omit
16	———	—	Omit
17	———	—	Omit
18	[6]2511248	2	Fuse holder
19	2528882	1	Wire
20	2528882	1	Wire
21	2520265	2	Foam
22	2520310	1	Pressurizer assy
23	2520247	1	Spring
24	1F312	1	Cotter pin
25	2520286	1	Damper assy
26	17C412	3	Bolt
27	4E4	3	Washer
28	25E14	3	Washer
29	2520246	1	Cap
30	2520266	1	Handle
31	896408	2	Bolt
32	17C412	2	Bolt
33	4E4	2	Washer
34	25E14	2	Washer
35	2501949	3	Screw
36	949737	1	Ring
37	[7]2528959	1	Blower assy LH
38	2520280	1	Air duct
39	949758	1	Filter
40	949803	1	Gasket
41	960595	1	Knob
42	949767	1	Decal
43	949598	1	Nut
44	949598	1	Nut
45	2520262	1	Cable
46	15E10	2	Washer
47	65G1008	2	Screw
48	949736	1	Strap
49	2528943	1	Motor
50	[8]949602	1	Gasket

No.	Part No.	Qty.	Description
51	949734	1	Blower wheel
52	2520267	1	Louver assy
53	17C416	4	Bolt
54	25E14	4	Washer
55	896803	1	Plug button
56	25E14	6	Washer
57	4E4	6	Washer
58	17C412	6	Bolt
59	6002456	1	Plug button
60	2520245	1	Grommet
61	1303297	2	Grommet
62	2520257	1	Tube
63	2520256	1	Tube
64	42H10	2	Clamp
65	[9]1529688	1	Hose
66	42H10	2	Clamp
67	2000497	1	Valve
68	[10]1529688	2	Hose
69	42H10	2	Clamp
70	63D4	4	Nut
71	2523078	1	Core
72	2520290	1	Cover
72A	†[12]2510261	1	Gasket
73	25E14	4	Washer
74	4E4	4	Washer
75	[11]2510276	1	Gasket
76	[13]2520261	—	Gasket
77	637739	1	Plug button
78	2529087	1	Angle
79	———	—	Omit
80	———	—	Omit
81	2520263	1	Foam
82	25E14	4	Washer
83	4E4	4	Washer
84	2520294	1	Housing
85	17C412	4	Bolt
86	2529082	1	Air duct
87	1303297	1	Grommet
88	2501949	3	Screw
89	949737	1	Ring
90	[14]2528958	1	Blower assy RH
91	2517176	2	Latch
92	17C412	2	Bolt
93	4E4	2	Washer
94	25E14	4	Washer
95	2522417	2	Bracket
96	2520267	1	Louver
97	949738	1	Blower
98	949635	1	Gasket
99	2528944	1	Motor

[2]Inc. 1→101
[3]Inc. 5→10, 12→20
[4]See 18
[5]See 17
[6]Inc. 13
[7]Inc. 46→52
[8]216 mm (8.51 in)
[9]76 mm (3.0 in)
[10]114 mm (4.5 in)
[11]794 mm (31.25 in)
[12]2267 mm (89.25 in)
[13]2289 mm (90.12 in)
[14]Inc. 1, 2, 3, 88, 89, 90, 96 → 99
[15]Inc. 9, 10

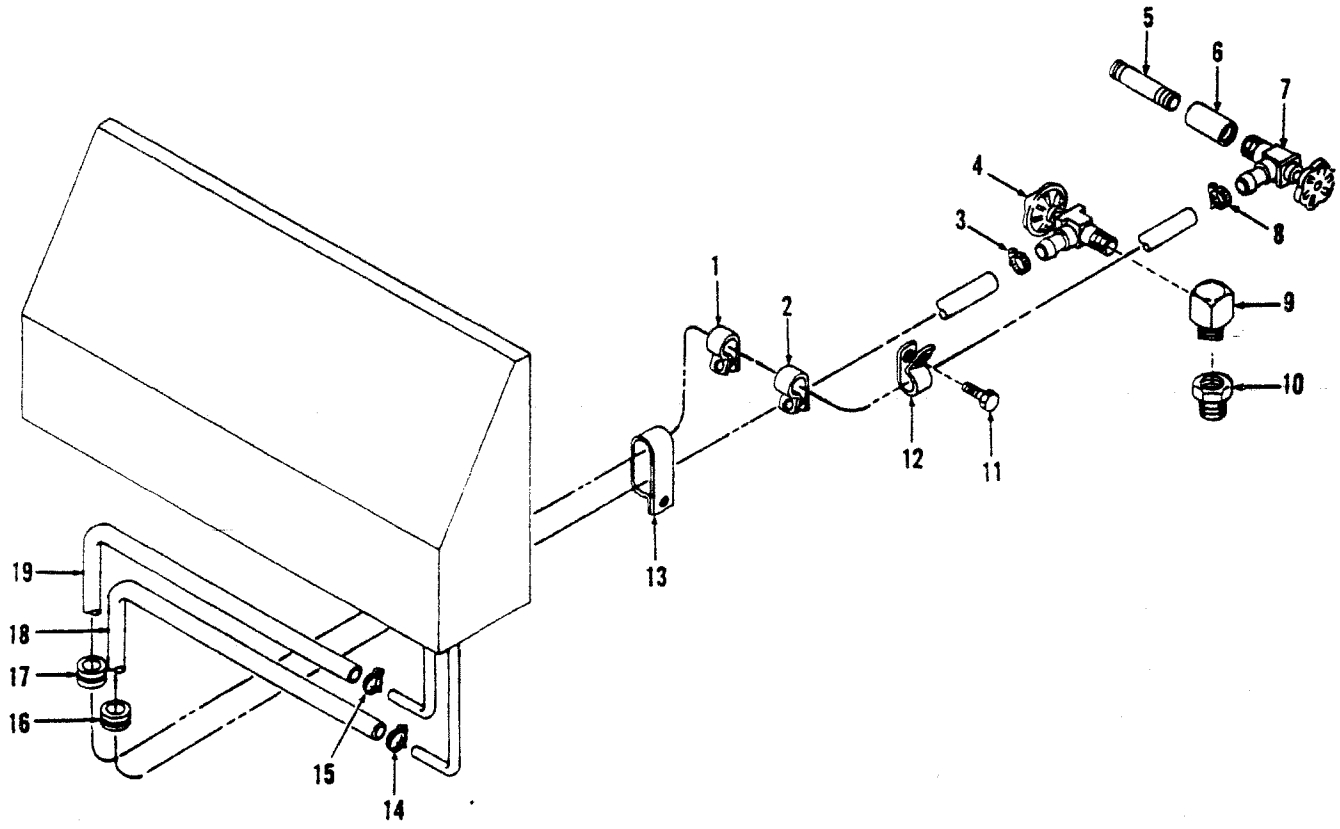

TS-20274

No.	Part No.	Qty.	Description
1	30H52	1	Clip
2	30H52	1	Clip
3	42H10	1	Clamp
4	1515349	1	Value
5	5K324	1	Nipple
6	37K306	1	Coupling
7	1515349	1	Valve
8	42H10	1	Clamp
9	661840	1	Elbow
10	356618	1	Reducer

No.	Part No.	Qty.	Description
11	17C612	1	Bolt
12	30H50	1	Clip
13	31H48	1	Clip
14	799476	1	Clamp
15	799476	1	Clamp
16	1319124	1	Grommet
17	1319124	1	Grommet
18	[2,3,7]1529688	1	Hose
19	[4,5,6]1529688	1	Hose

[2]35C 1981 mm (78.0 in)
[3]45C 1930 mm (76.0 in)
[4]35C 2286 mm (90.0 in)
[5]45C 2667 mm (105.0 in)
[6]55C 1800 mm (71.0 in)
[7]55C 2100 mm (83.0 in)

Heater Piping – Perkins – 35C

CLARK

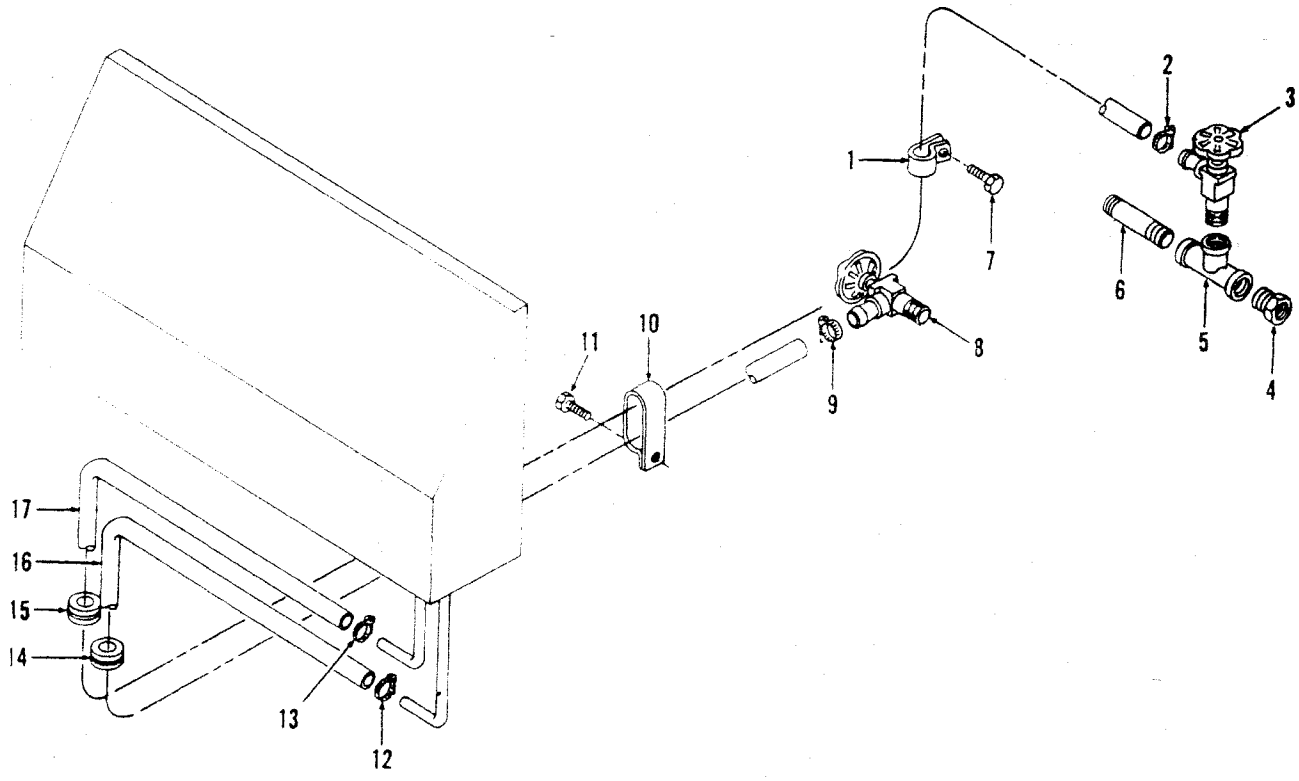

TS-20273

No.	Part No.	Qty.	Description
1	30H50	1	Clip
2	799476	1	Clamp
3	1515349	1	Valve
4	19F6	1	Reducer
5	18F4	1	Tee
6	5K416	1	Nipple
7	18C516	1	Bolt
8	1515349	1	Valve
9	799476	1	Clamp
10	31H48	1	Clip
11	7C816	1	Bolt
12	799476	1	Clamp
13	799476	1	Clamp
14	1319124	1	Grommet
15	1319124	1	Grommet
16	[2]1529688	1	Hose
17	[3]1529688	1	Hose

[2]1981 mm (78.0 in)
[3]2286 mm (90.0 in)

Heater Piping — Perkins — 45C

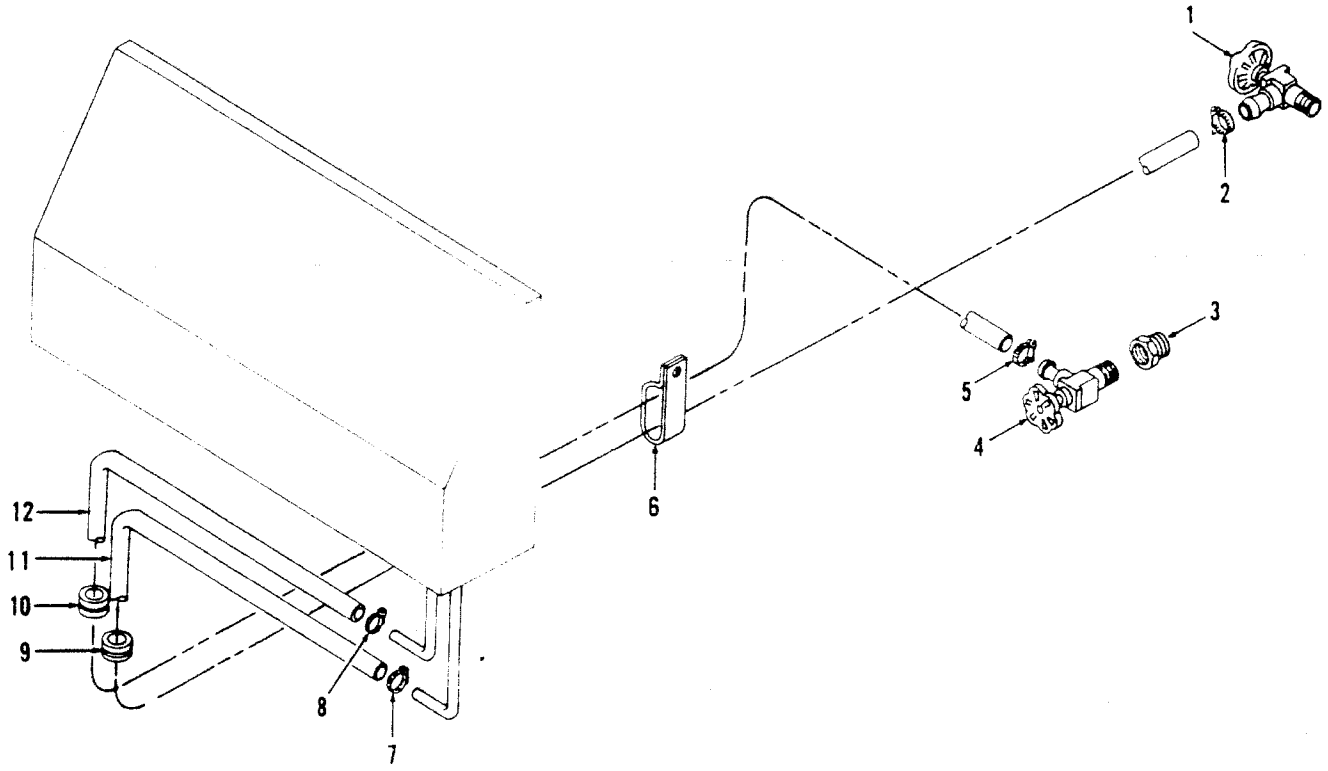

TS-20284

No.	Part No.	Qty.	Description
1	1515349	1	Valve
2	799476	1	Clamp
3	19F6	1	Reducer
4	1515349	1	Valve
5	799476	1	Clamp
6	31H48	1	Clip
7	799476	1	Clamp
8	799476	1	Clamp
9	1319124	1	Grommet
10	1319124	1	Grommet
11	[2]1529688	1	Hose
12	[3]1529688	1	Hose

[2]2159 mm (85.0 in)
[3]1524 mm (60.0 in)

Heater Piping — Cummins — 55C

CLARK

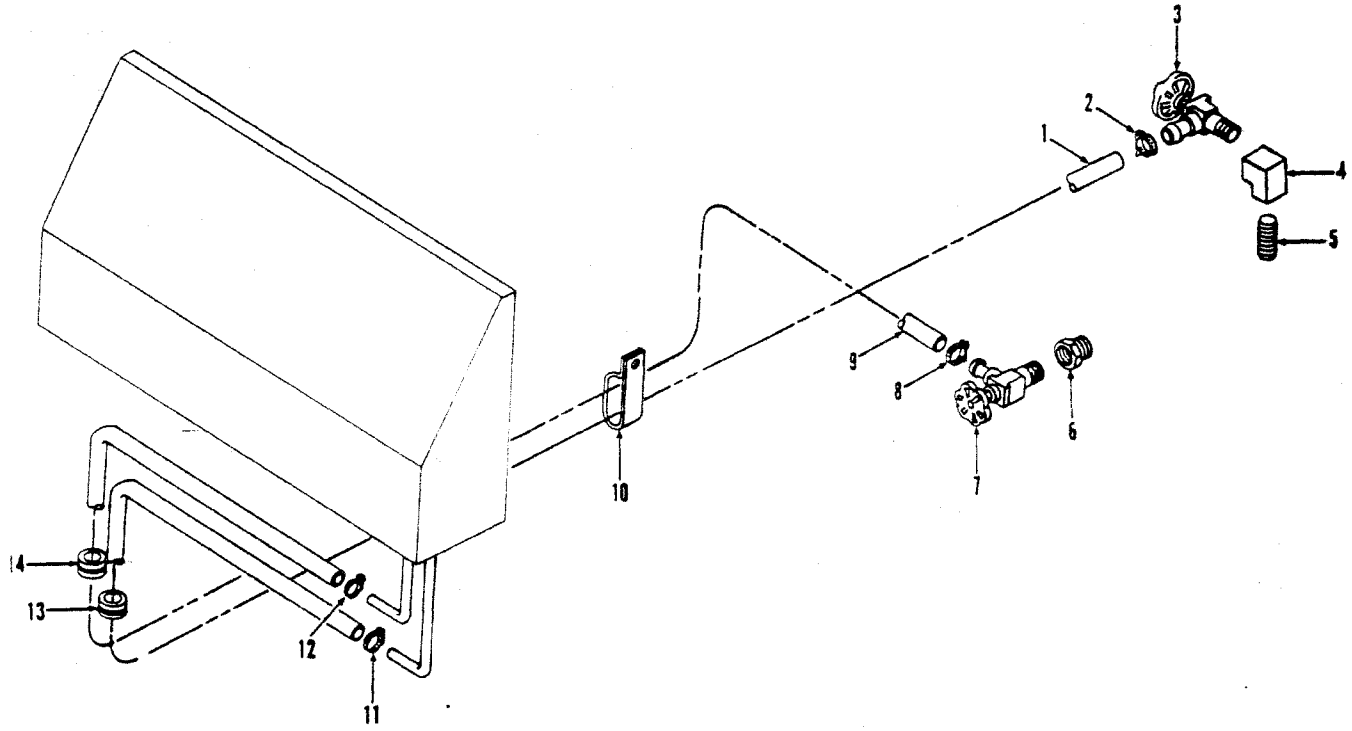

TS-15702

No.	Part No.	Qty.	Description
1	[2]1529688	1	Hose
2	42H10	1	Clamp
3	1515349	1	Valve
4	82F2	1	Elbow
5	5K324	1	Nipple
6	19F8	1	Reducer
7	1515349	1	Valve
8	42H10	1	Clamp
9	[3]1529688	1	Hose
10	31H48	1	Clip
10A	31H46	1	Clip
11	799476	1	Clamp
12	799476	1	Clamp
13	1319124	1	Grommet
14	1319124	1	Grommet

[2]2286 mm (90.0 in)
[3]2311 mm (91.0 in)

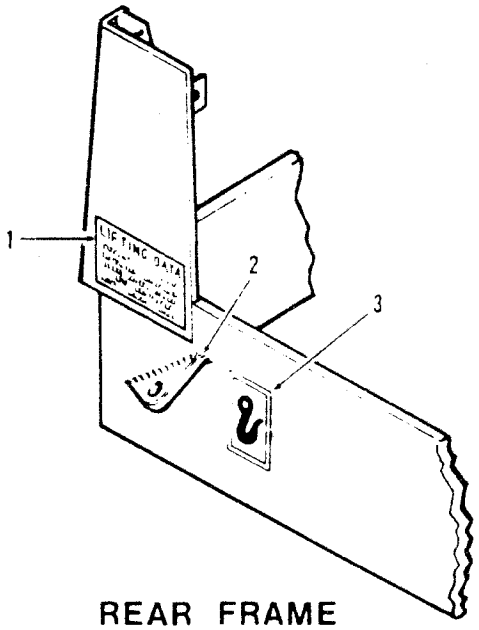

REAR FRAME LOCATION

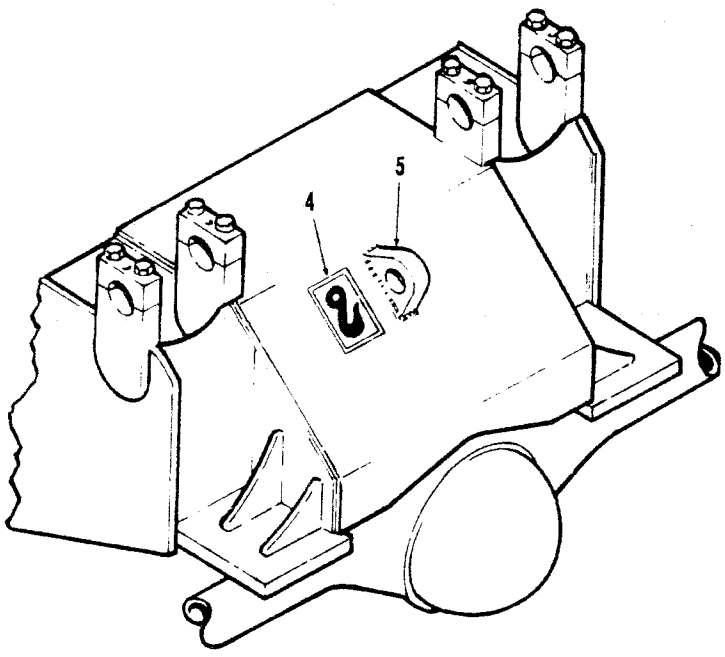

FRONT FRAME LOCATION

TS-11036

No.	Part No.	Qty.	Description
A	[2,8]2513116	1	Lifting lugs kit
B	[2,9]2533165	1	Lifting lugs kit
C	[2,9,10]2536557	1	Lifting lugs kit
1	[3]2523633	1	Decal
1A	†[4]2523635	1	Decal
1B	†[5]2523634	1	Decal
1C	†[6]2523637	1	Decal
1D	†[7]2523636	1	Decal
2	3981073	2	Lug
3	1511709	2	Decal
4	1511709	1	Decal
5	3981073	1	Lug

[2]Inc. 1, 2 → 5
[3]English
[4]German
[5]French
[6]Spanish
[7]Portuguese
[8]35C, 45C
[9]55C
[10]CMD sales item only

Mirror Kit

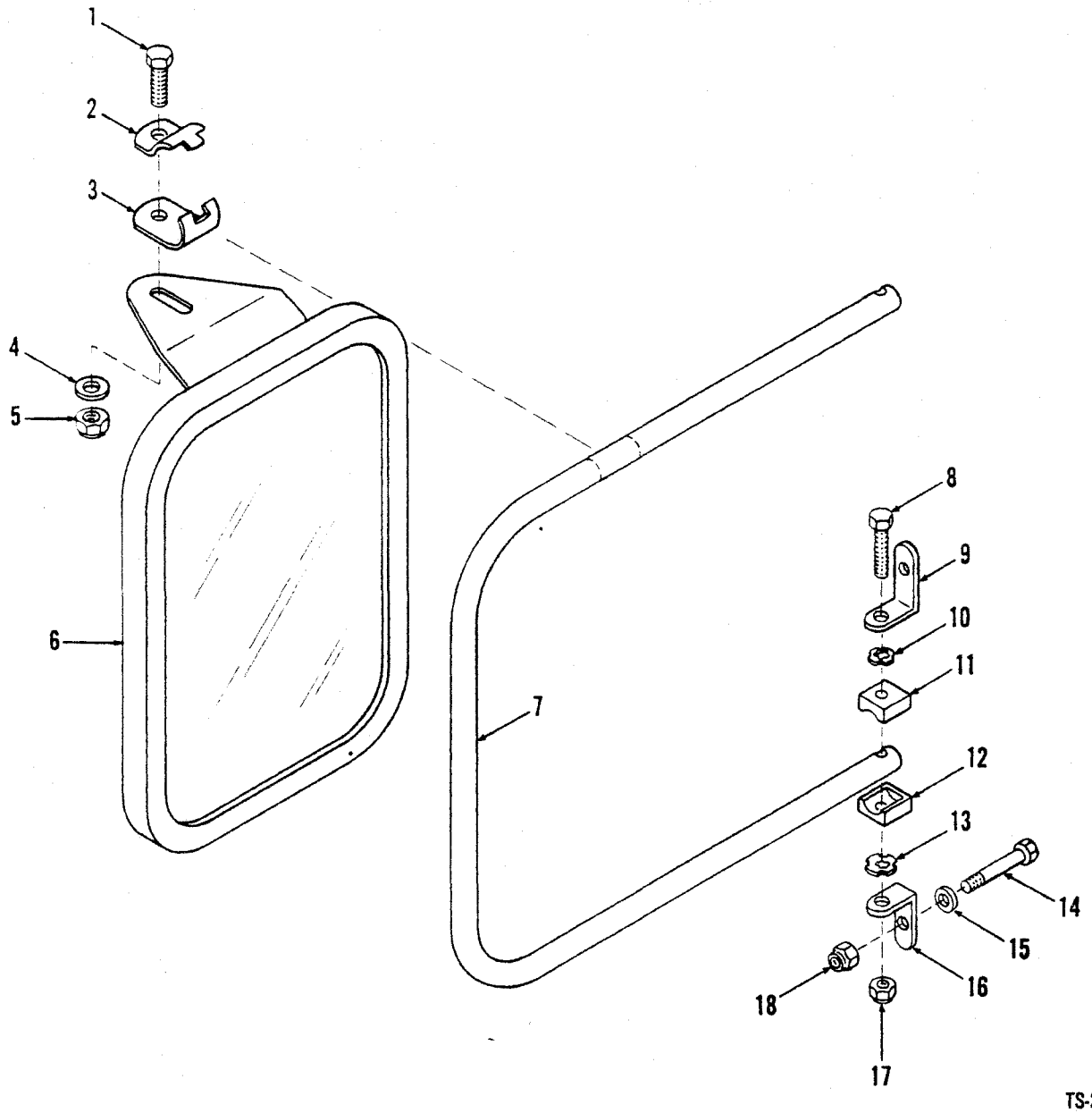

TS-20182

No.	Part No.	Qty.	Description
A	[2] [3] 2520084	1	Mirror kit
1	18C616	4	Bolt
2	2519949	4	Clamp half
3	2519950	4	Clamp half
4	25E17	4	Washer
5	60D6	4	Nut
6	2519952	2	Mirror
7	2519951	2	Bracket
8	18C636	4	Bolt
9	2520137	4	Angle

No.	Part No.	Qty.	Description
10	2520135	4	Washer
11	2519948	4	Clamp
12	2519948	4	Clamp
13	2520135	4	Washer
14	18C420	8	Bolt
15	25E13	8	Washer
16	2520137	4	Angle
17	60D6	4	Nut
18	60D4	8	Nut

[2]CMD sales item only
[3]Inc. 1→18

Piping Installation & Parts (Three Spool)

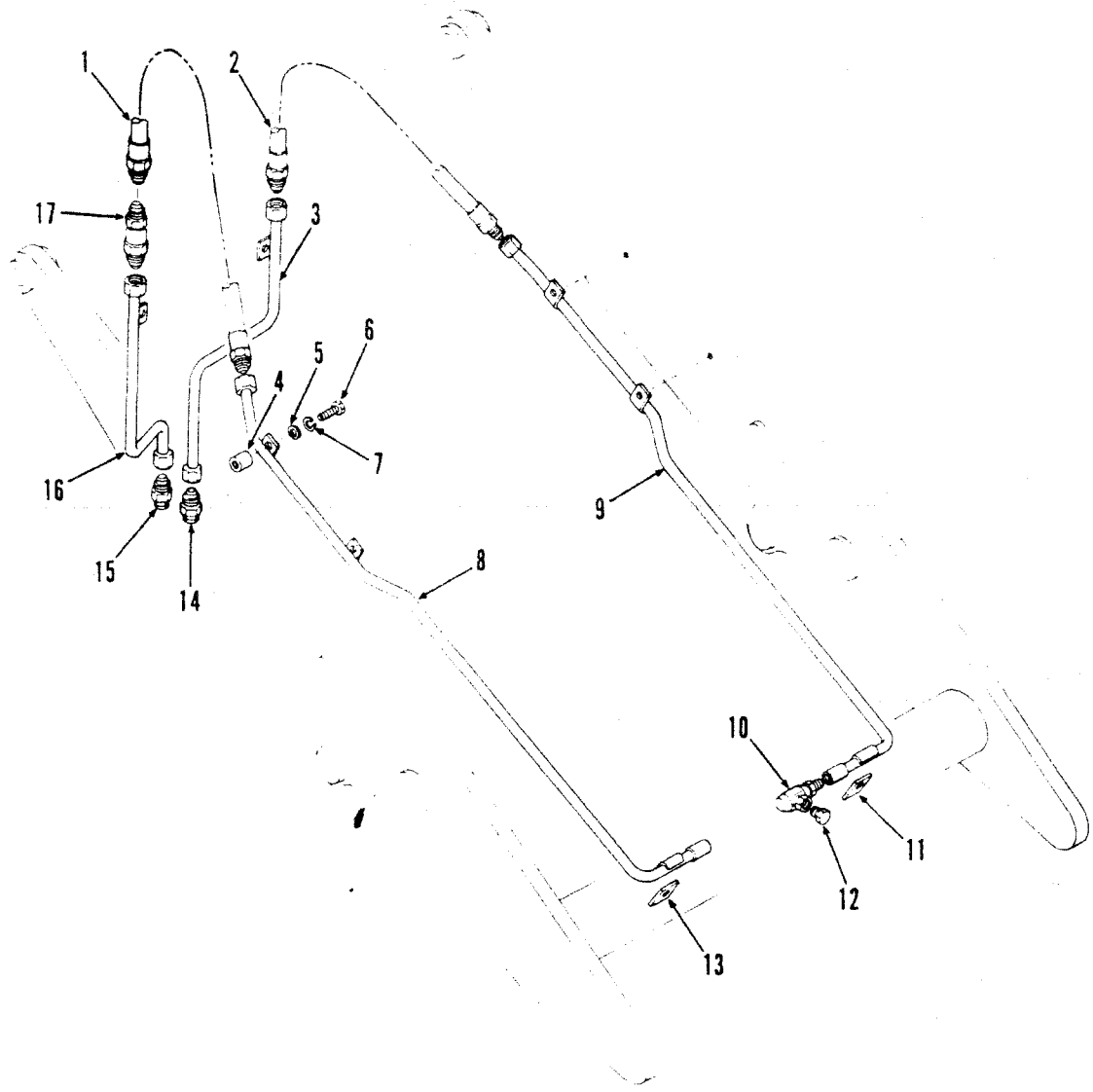

TS-15766

No.	Part No.	Qty.	Description
A	[5,6]2526865	1	Restrictor kit
1	[4]2516105	1	Hose
1A	[5]2523540	1	Hose
2	[4]2516105	1	Hose
2A	[5]2523540	1	Hose
3	2517752	1	Tube
4	550288	6	Boss
5	27E8	8	Washer
6	4E8	8	Lockwasher
7	18C820	8	Bolt
8	2513441	1	Tube RH
9	2513442	1	Tube LH

No.	Part No.	Qty.	Description
10	1509752	2	Swivel joint
11	2515282	1	Flat
12	40K12	2	Plug
13	2515282	1	Flat
14	[2]15K10	1	Connector
14A	†91F10	1	O-ring
15	[3]15K10	1	Connector
15A	91F10	1	O-ring
16	2517750	1	Tube
17	[5]2523539	2	Valve

[2]Inc. 14A
[3]Inc. 15A
[4]Standard machine
[5]Log loader, pipe handler
[6]Inc. 2A, 17

Rotating Beacon & Cab Lights

CLARK

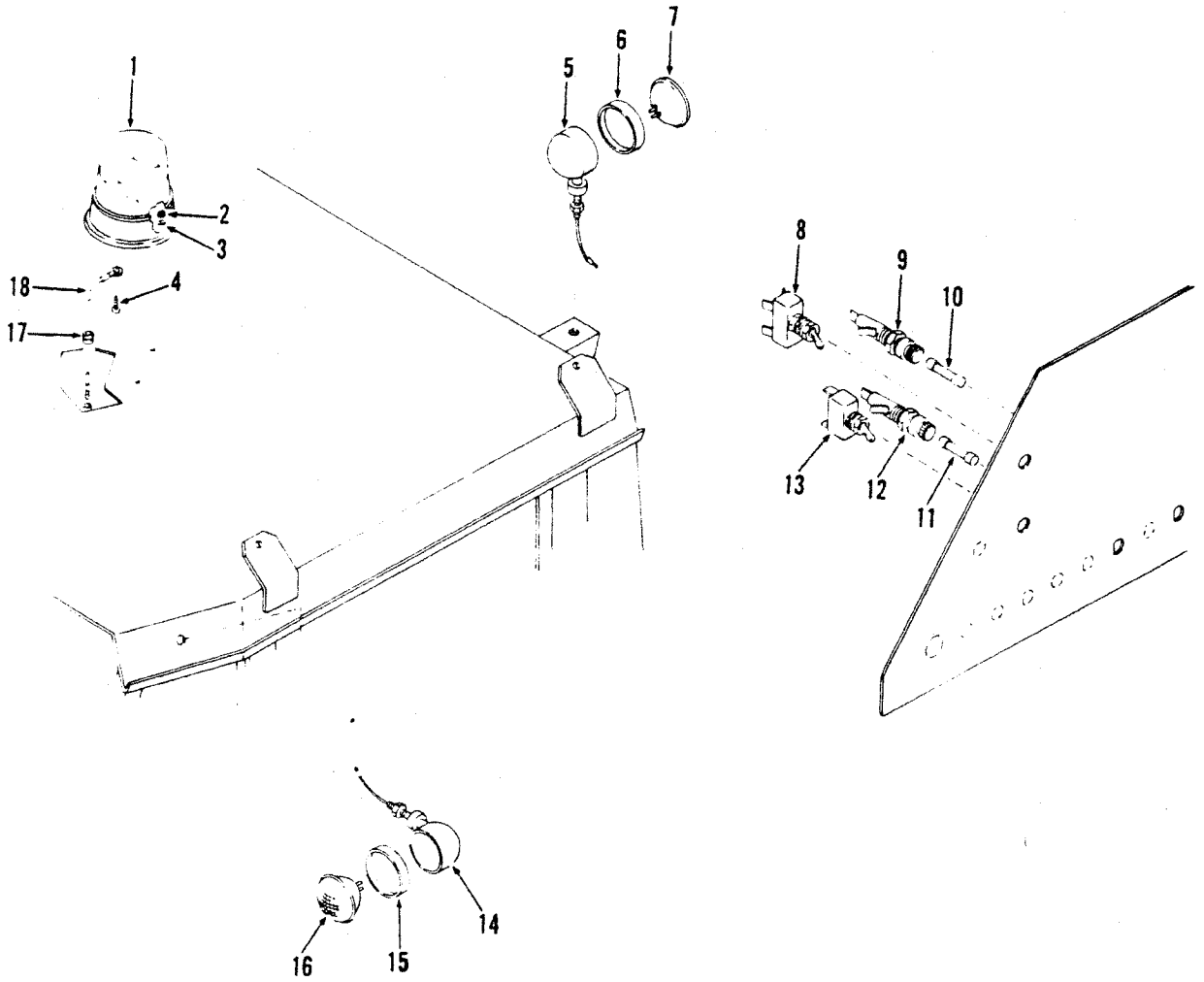

TS-20255

No.	Part No.	Qty.	Description
1	[2]1548069	1	Light
1A	†894300	2	Sealed unit
1B	†960962	1	Lens
2	18D4	3	Nut
3	25E13	3	Washer
4	18C464	3	Bolt
5	[3]2503151	2	Head light 12V
6	944872	2	Retainer
7	960503	2	Sealed unit
8	2509100	1	Switch
9	2511248	1	Holder fuse
10	635583	1	Fuse 15 amp
11	601390	1	Fuse 10 amp
12	2511248	1	Holder fuse
13	1516649	1	Switch
14	[4]2503151	2	Headlight 12V
15	944872	2	Retainer
16	960503	2	Sealed unit
17	552442	1	Grommet
18	2519533	1	Wire

[2]Inc. 1A, 1B
[3]Inc. 6, 7
[4]Inc. 15, 16

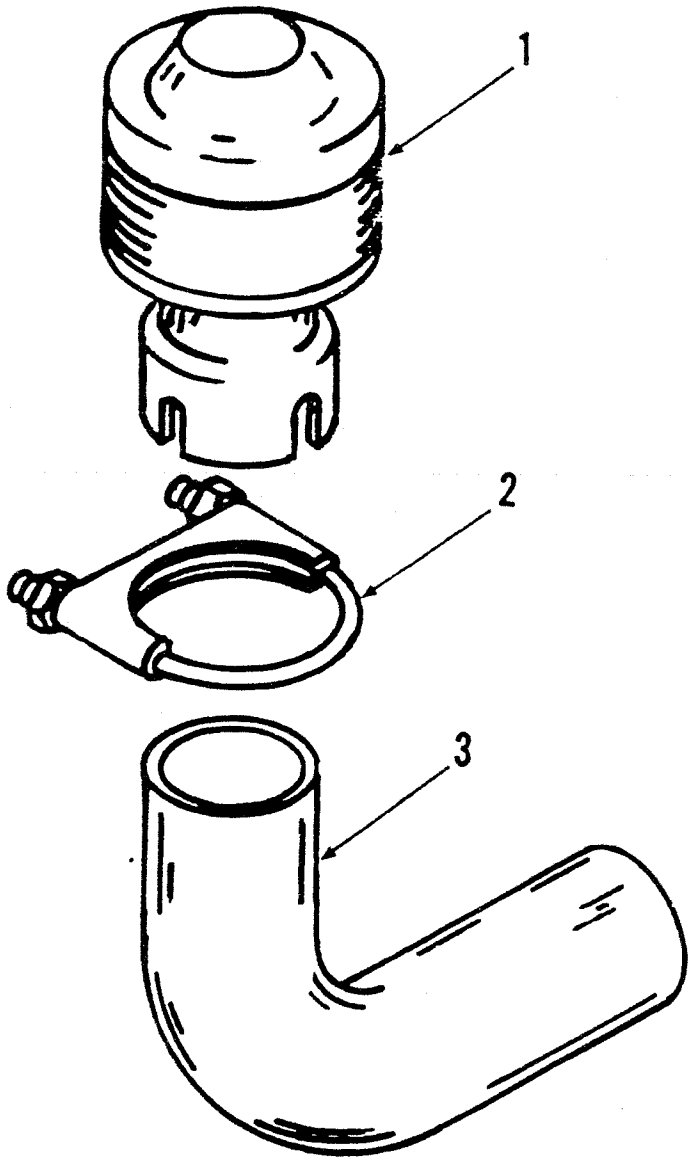

TS-15551

No.	Part No.	Qty.	Description
A	[2,3,5]2526475	1	Spark arrestor kit
B	[2,4,6]2528645	2	Spark arrestor kit
1	[3]2526338	1	Spark arrestor
1A	[4]2528578	2	Spark arrestor
2	[3]507069	3	Clamp
2A	[4]550652	4	Clamp
3	[3]2526339	1	Pipe
3A	[4]2528581	2	Pipe

[2]CMD sales item only
[3]35C, 45C Inc. 1, 2, 3
[4]Inc. 1A, 2A, 3A
[5]480B
[6]481B

Turn Lights

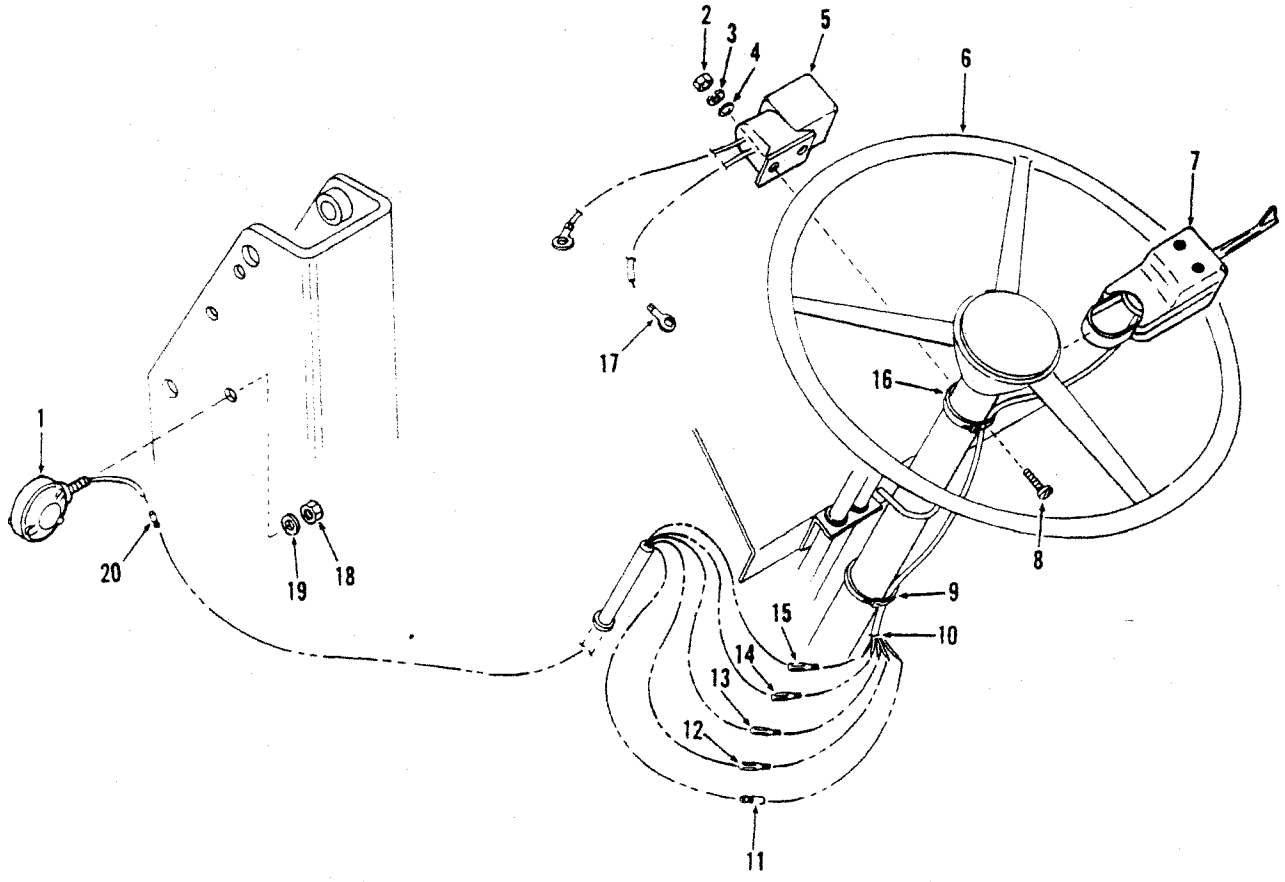

TS-20265

No.	Part No.	Qty.	Description
A	[3,2]2513152	—	Turn signal kit
1	2513153	2	Turn signal lamp
2	14D8	2	Nut
3	12E8	2	Lockwasher
4	25E8	2	Washer
5	5204207	1	Flasher
6	1519254	1	Steering wheel
7	1781581	1	Turn sig switch assy
8	85G310	2	Screw
9	1736910	2	Strap
10	1304601	1	Grommet
11	1513577	1	Terminal
12	1513575	1	Connector
13	1513575	1	Connector
14	1513575	1	Connector
15	1513575	1	Connector
16	1736910	1	Strap
17	1513577	1	Terminal
18	8D8	2	Nut
19	6E8	2	Lockwasher
20	1513577	2	Terminal

[2]Inc. 1→4, 7→20

[3](CMD sales item only)

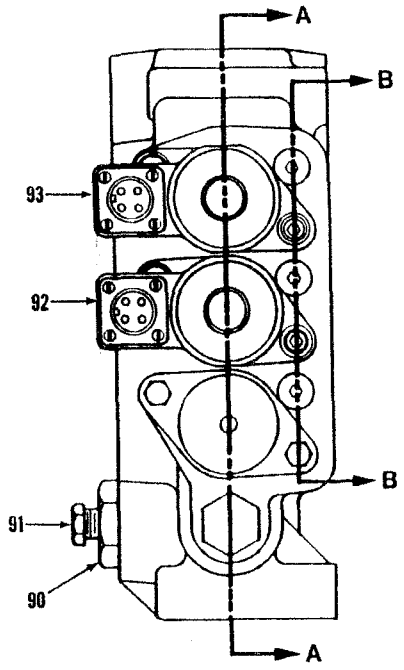

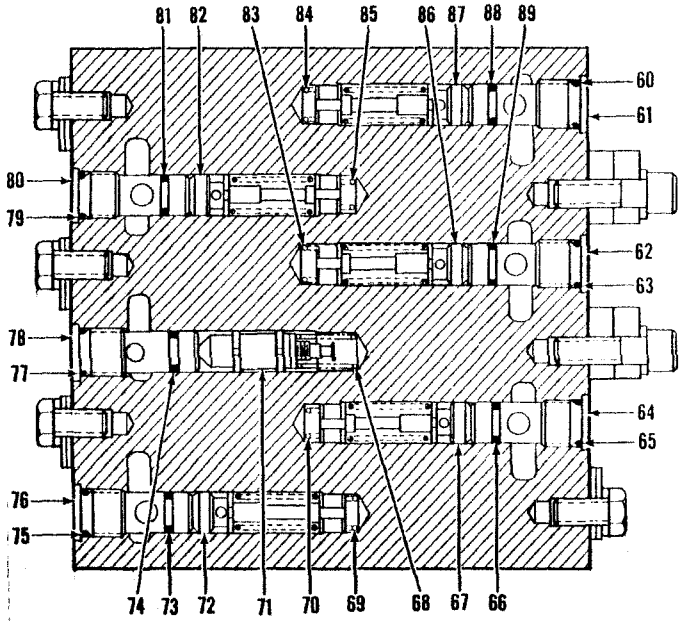

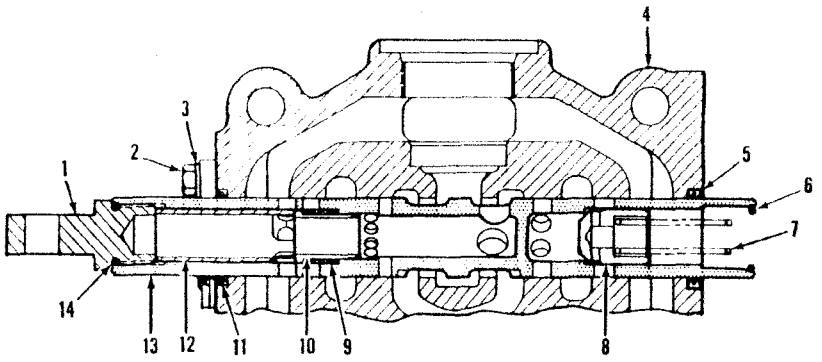

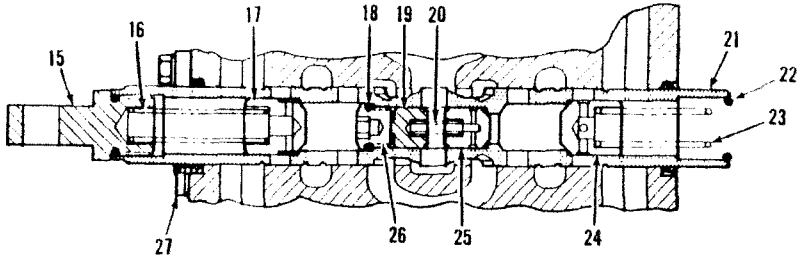

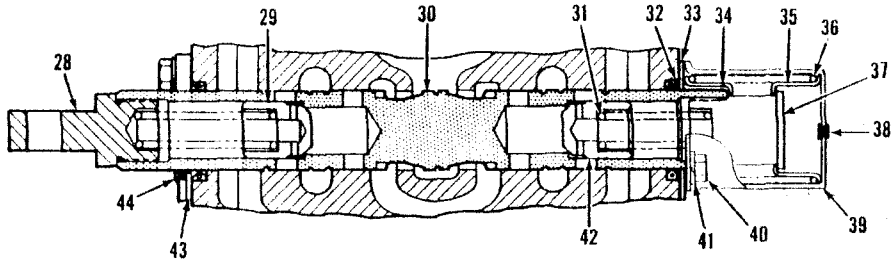

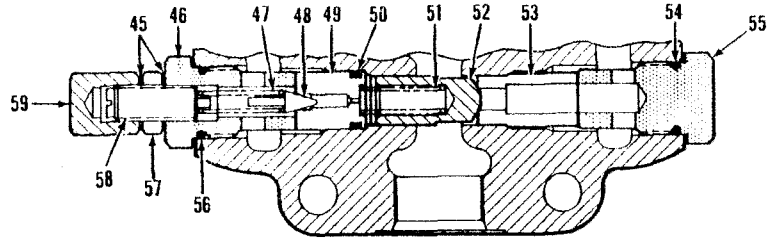

SECTION A-A

TS-15345

Valve Assembly, Three Spool

CLARK

No.	Part No.	Qty.	Description
A	[2]2525010	1	Valve assy
B	[3]2525839	1	Valve assy
1	893295	1	Eye
2	1C612	6	Bolt
3	4E6	6	Washer
4	§[14]----	1	Housing
5	949304	3	Seal
6	25K30022	1	O-ring
7	893293	1	Spring
8	944885	1	Check
9	962441	1	Check
10	962439	1	Check
11	949304	3	Seal
12	962440	1	Spacer
13	§[4]----	1	Spool
14	25K30022	1	O-ring
15	893295	1	Eye
15A	†25K30022	1	O-ring
16	893293	1	Spring
17	944885—	1	Check
18	25K30014	1	O-ring
19	962450	1	Slug
20	962451	1	Spring
21	§[5]----	1	Spool
22	25K30022	2	O-ring
23	960975	1	Spring
24	960601	1	Check
25	962448	1	Check
26	962449	1	Cap
27	949303	3	Plate
28	893295	1	Eye
28A	†25K30022	2	O-ring
29	944885	1	Check
30	§[6]----	1	Spool
31	893293	1	Spring
32	949349	1	Back-up ring
33	980832	1	Plate
34	945348	1	Retainer
35	945348	1	Retainer
36	980830	1	Spring
37	944895	1	Cap
38	886745	1	Plug
39	980828	1	Cover
40	1C612	2	Bolt
41	4E6	2	Washer
42	944885	1	Check
43	949302	3	Plate
44	949305	3	Wiper
45	613750	2	Washer
46	980835	1	Cap

[2]Inc. 1 → 67, 68 → 72, 73 → 82, 83 → 86, 87, 88 → 93
[3]Inc. 1 → 66, 67A → 71, 72A → 81, 82A → 85, 86A, 87A → 93
[4]Inc. 1, 7 → 10, 12, 14
[5]Inc. 15 → 20, 23 → 26
[6]Inc. 28, 28A, 29, 31, 34 → 37, 42
[7]See Page V9-2, Inc. 22
[8]See Page V7-2, Inc. 6
[9]Inc. 64, 65, 66, 70
[10]Inc. 69, 73, 75, 76
[11]Inc. 79, 80, 81, 85
[12]Inc. 62, 63, 83, 89
[13]Inc. 60, 61, 84, 88
[14]See A
[15]For complete replacement use 2535928 Valve Assy

No.	Part No.	Qty.	Description
47	886753	1	Spring
48	886739	1	Poppet
49	980836	1	Seat
50	25K30020	1	O-ring
51	947791	1	Spring
52	960965	1	Check
53	980840	1	Seat
54	893267	1	O-ring
55	980838	1	Cap
56	893267	1	O-ring
57	8D8	1	Jam nut
58	980834	1	Screw
59	49D8	1	Nut
60	25K20016	1	O-ring
61	962704	1	Seat
62	962704	1	Seat
63	25K20016	1	O-ring
64	962704	1	Seat
65	25K20016	1	O-ring
66	25K20014	1	O-ring
67	[9]962706	1	Relief valve
67A	[9]963077	1	Relief valve
68	886764	1	Spring
69	962705	1	Spring
70	962705	1	Spring
71	962707	1	Relief valve
72	[10]962706	1	Relief valve
72A	[10]963077	1	Relief valve
73	25K20014	1	O-ring
74	25K20014	1	O-ring
75	25K20016	1	O-ring
76	962704	1	Seat
77	25K20016	1	O-ring
78	962435	1	Seat
79	25K20016	1	O-ring
80	962704	1	O-ring
81	25K20014	1	O-ring
82	[11]962706	1	Relief valve
82A	[11]963077	1	Relief valve
83	962705	1	Spring
84	962705	1	Spring
85	962705	1	Spring
86	[12]962706	1	Relief valve
86A	[12]963077	1	Relief valve
87	[13]962706	1	Relief valve
87A	[13]963077	1	Relief valve
88	25K20014	1	O-ring
89	25K20014	1	O-ring
90	946882	1	Cap
90A	91F10	1	O-ring
91	40K4	1	Plug
92	[7]----	1	Detent
93	[8]----	1	Detent
94	†1516268	1	Decal

CLARK

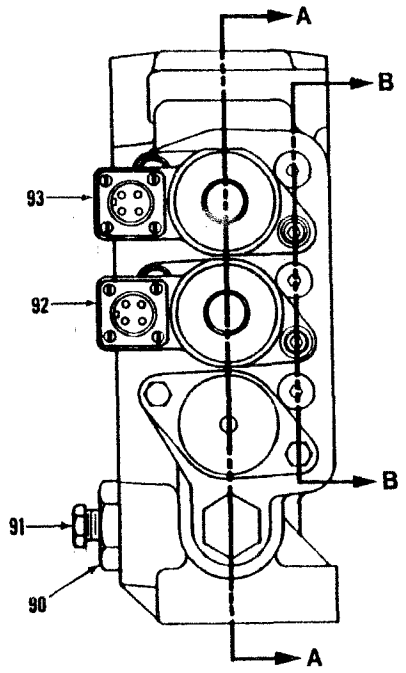

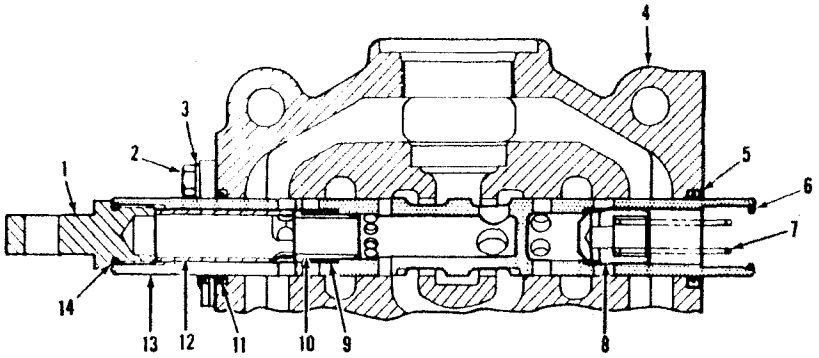

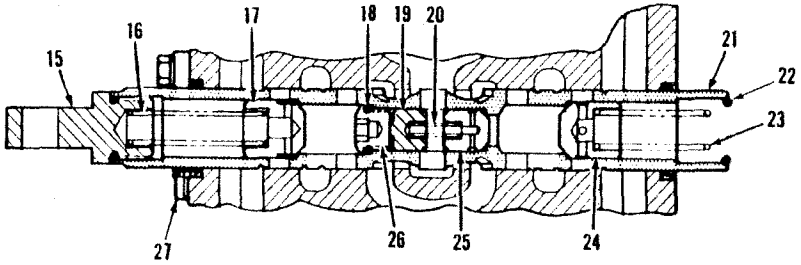

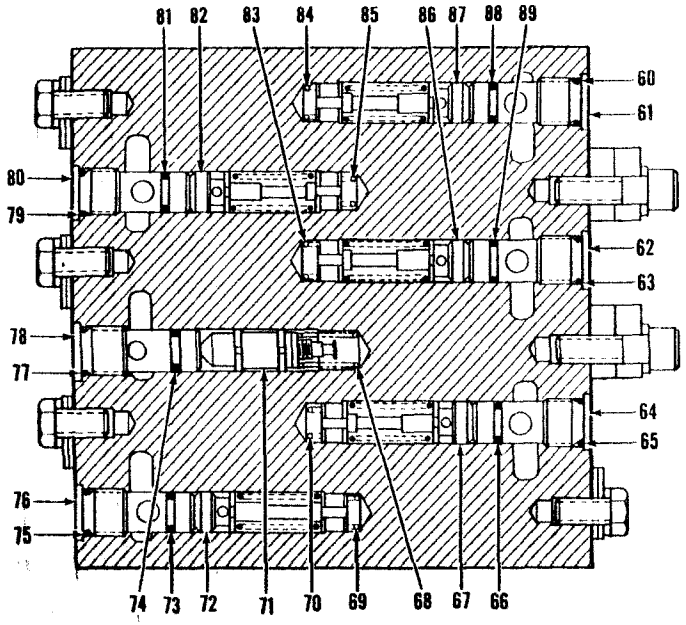

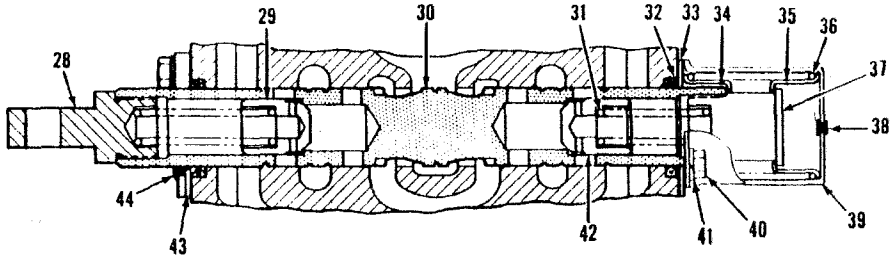

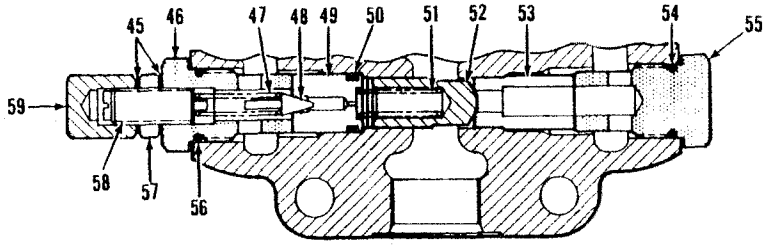

SECTION A-A

TS-15245

Valve Assembly (Three Spool)

CLARK

No.	Part No.	Qty.	Description
A	[2]2535928	1	Valve assy
1	893295	1	Eye
2	1C612	6	Bolt
3	4E6	6	Washer
4	§[14]———	1	Housing
5	949304	3	Seal
6	25K30022	1	O-ring
7	893293	1	Spring
8	944885	1	Check
9	962441	1	Check
10	962439	1	Check
11	949304	3	Seal
12	962440	1	Spacer
13	§[4]———	1	Spool
14	25K30022	1	O-ring
15	893295	1	Eye
15A	†25K30022	1	O-ring
16	893293	1	Spring
17	944885	1	Check
18	25K30014	1	O-ring
19	962450	1	Slug
20	962451	1	Spring
21	§[5]———	1	Spool
22	25K30022	2	O-ring
23	960975	1	Spring
24	960601	1	Check
25	962448	1	Check
26	962449	1	Cap
27	949303	3	Plate
28	893295	1	Eye
28A	†25K30022	2	O-ring
29	944885	1	Check
30	§[6]———	1	Spool
31	893293	1	Spring
32	949349	1	Back-up ring
33	980832	1	Plate
34	945348	1	Retainer
35	945348	1	Retainer
36	980830	1	Spring
37	944895	1	Cap
38	886745	1	Plug
39	980828	1	Cover
40	1C612	2	Bolt
41	4E6	2	Washer
42	944885	1	Check
43	949302	3	Plate
44	949305	3	Wiper
45	613750	2	Washer
46	980835	1	Cap
47	886753	1	Spring
48	886739	1	Poppet
49	980836	1	Seat
50	25K30020	1	O-ring
51	947791	1	Spring
52	960965	1	Check
53	980840	1	Seat
54	58K210	1	O-ring
55	980838	1	Cap
56	58K210	1	O-ring
57	8D8	1	Jam nut
58	980834	1	Screw
59	49D8	1	Nut
60	25K20016	1	O-ring
61	962704	1	Seat
62	962704	1	Seat
63	25K20016	1	O-ring
64	962704	1	Seat
65	25K20016	1	O-ring
66	77K013	1	O-ring
67	[9]964173	1	Relief valve
68	886764	1	Spring
69	962705	1	Spring
70	962705	1	Spring
71	962707	1	Relief valve
72	[10]964173	1	Relief valve
73	77K013	1	O-ring
74	25K20014	1	O-ring
75	25K20016	1	O-ring
76	962704	1	Seat
77	25K20016	1	O-ring
78	962435	1	Seat
79	25K20016	1	O-ring
80	962704	1	O-ring
81	77K013	1	O-ring
82	[11]964173	1	Relief valve
83	962705	1	Spring
84	962705	1	Spring
85	962705	1	Spring
86	[12]964173	1	Relief valve
87	[13]964173	1	Relief valve
88	77K013	1	O-ring
89	77K013	1	O-ring
90	946882	1	Cap
90A	91F10	1	O-ring
91	40K4	1	Plug
92	[7]———	1	Detent
93	[8]———	1	Detent

[2]Inc. 1 → 67, 68 → 72, 73 → 82, 83 → 86, 87, 88 → 93
[4]Inc. 1, 7 → 10, 12, 14
[5]Inc. 15 → 20, 23 → 26
[6]Inc. 28, 28A, 29, 31, 34 → 37, 42
[7]See page V11A, Inc. 22
[8]See page V10A, Inc. 6
[9]Inc. 64, 65, 66, 70
[10]Inc. 69, 73, 75, 76
[11]Inc. 79, 80, 81, 85
[12]Inc. 62, 63, 83, 89
[13]Inc. 60, 61, 84, 88
[14]See A

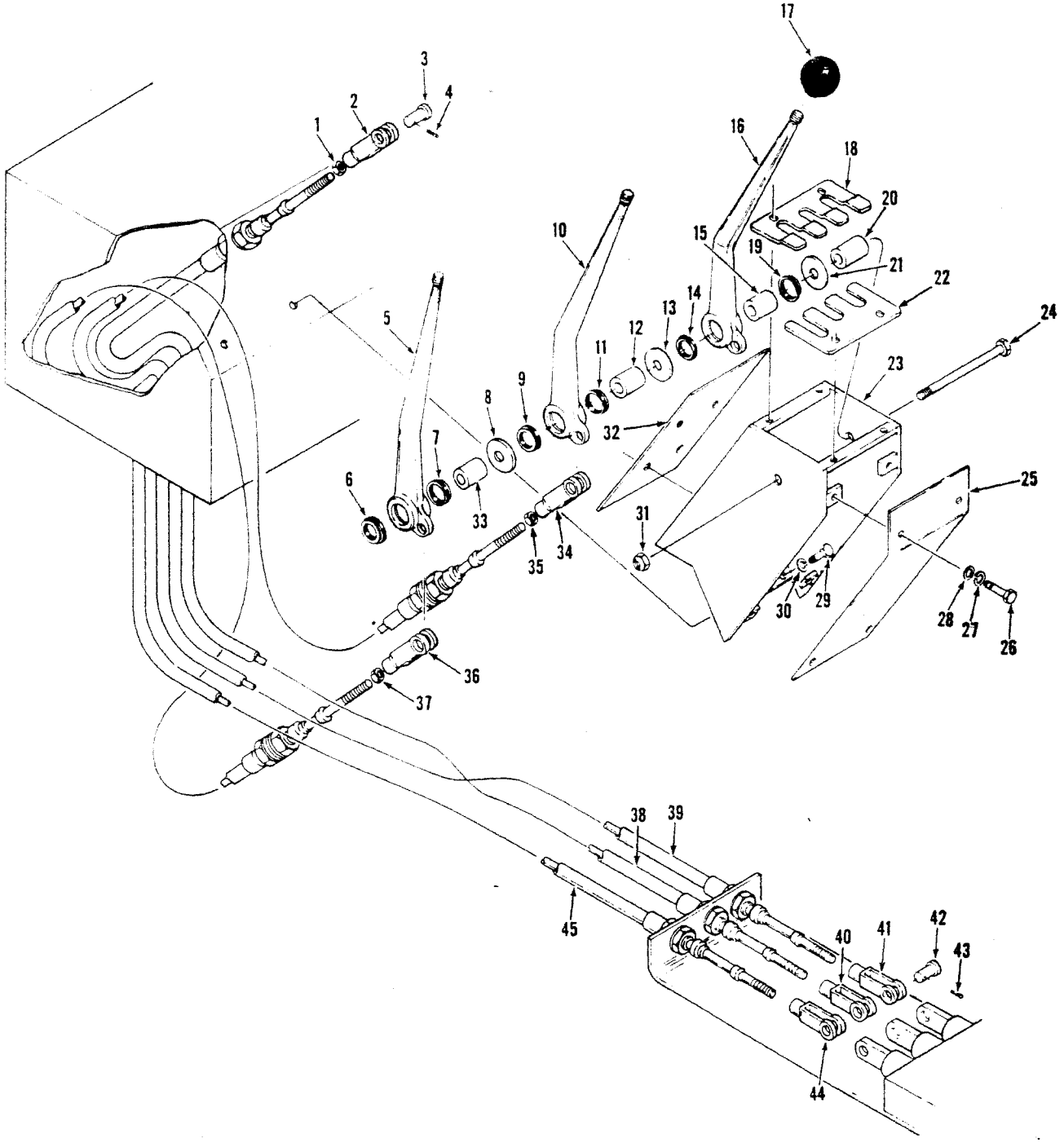
1
2
3
4
5
6
7
8
9
10
11
12
13
14
15
16
17
18
19
20
21
22
23
24
25
26
27
28
29
30
31
32
33
34
35
36
37
38
39
40
41
42
43
44
45

Valve Controls (Three Spool)

CLARK

No.	Part No.	Qty.	Description
1	8D5	2	Nut
2	556413	1	Clevis
3	4F6106	3	Pin
4	1F314	3	Cotter pin
5	2512772	1	Lever
6	1522535	1	Ring
7	1522535	1	Ring
8	584502	1	Washer
9	1522535	1	Ring
10	2512771	1	Lever
11	1522535	1	Ring
12	1503251	1	Sleeve
13	584502	1	Washer
14	1522535	1	Ring
15	1503251	1	Sleeve
16	2512770	1	Lever
17	509772	3	Knob
18	[2]2516749	1	Cover
18A	[3]2531779	1	Cover
19	1522535	1	Ring
20	1503251	1	Sleeve
21	584502	1	Washer
22	[2]2516748	1	Cover
22A	[3]2531778	1	Cover
23	2516746	1	Bracket assy
24	18C896	1	Bolt
25	2516752	1	Plate F
26	17C410	12	Bolt
27	4E6	12	Lockwasher
28	25E14	12	Washer
29	17C616	4	Bolt
30	4E6	4	Lockwasher
31	60D8	1	Nut
32	2516751	1	Plate
33	1503251	1	Sleeve
34	556413	1	Clevis
35	8D5	2	Nut
36	556413	1	Clevis
37	8D5	2	Nut
38	2506507	1	Cable
39	2506507	1	Cable
40	574099	1	Clevis
41	574099	1	Clevis
42	4F8127	3	Pin
43	1F416	3	Cotter pin
44	574099	1	Clevis
45	2506507	1	Cable
46	†2521800	1	Decal

[2]458A, 459A, 472A, 473A, 480A, 481A
[3]480B, 481B

Vandal Cover Assembly

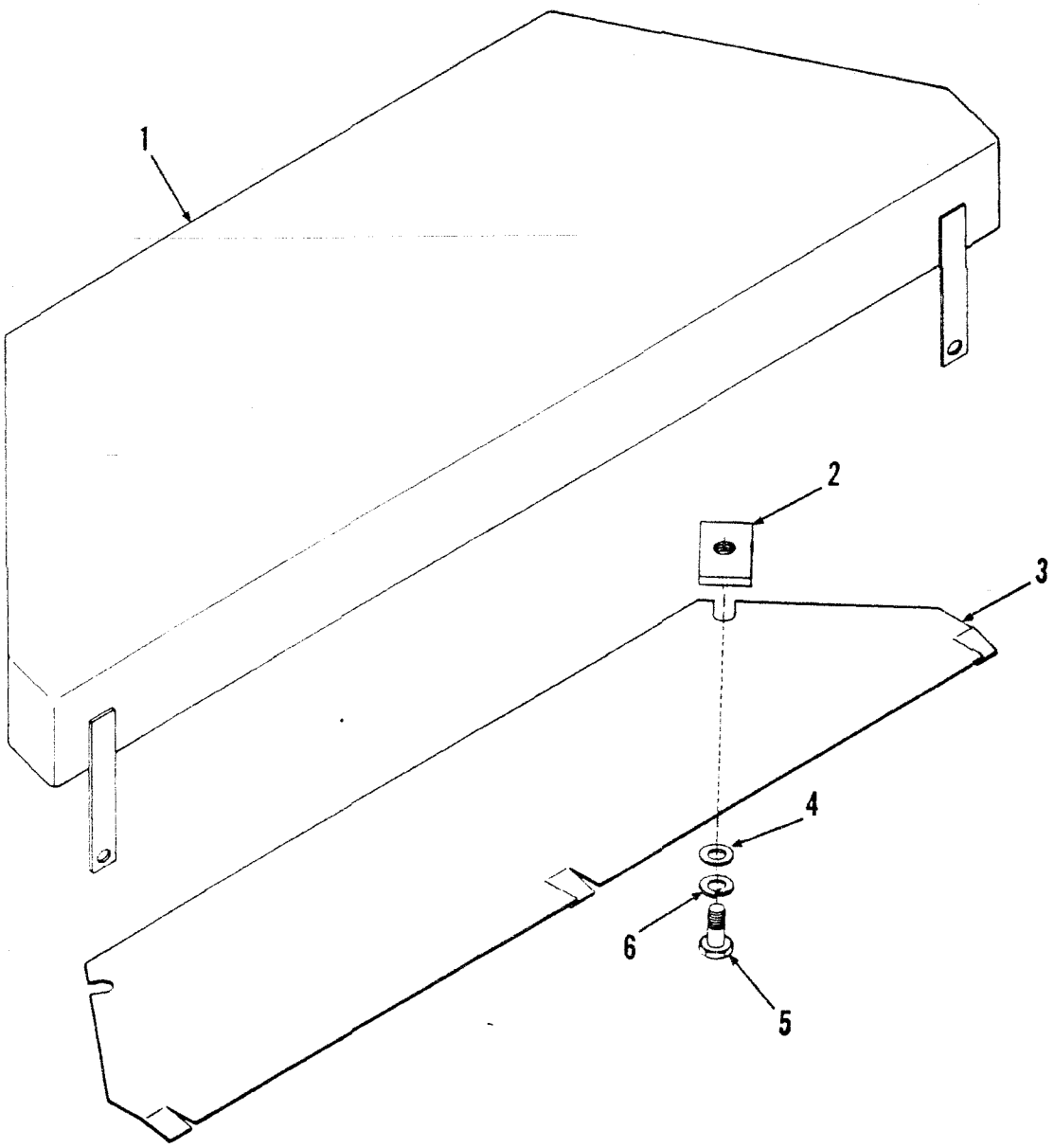

TS-15333

No.	Part No.	Qty.	Description
1	2524534	1	Vandal cover assembly
2	791633	2	Flat rectangular
3	2524533	1	Vandal cover
4	27E6	2	Washer
5	17C616	2	Bolt
6	4E6	2	Lockwasher

Windshield Washer Kit

CLARK

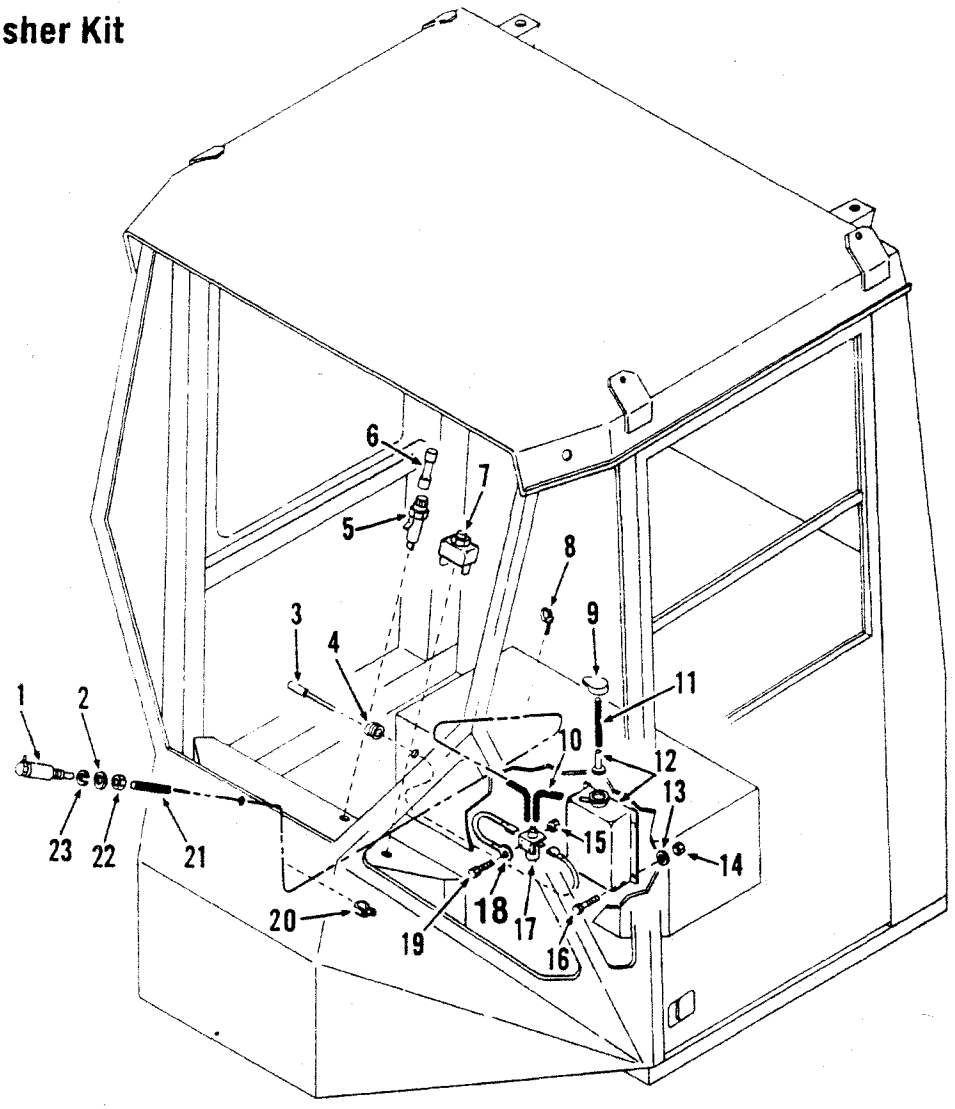

TS-20261

No.	Part No.	Qty.	Description
A	[2,3,9]2512899	—	Kit windsld washer
B	[3,8,10]2540709	1	Kit windsld washer
C	[4]960565	1	Tank group
1	2519344	1	Nozzle
2	25E17	1	Washer
2A	27E6	1	Washer
3	2519349	1	Wire
4	552442	1	Grommet
5	2511248	1	Holder fuse
6	542321	1	Fuse 5 amp
7	2512840	1	Switch
8	1736910	5	Strap
9	949745	1	Cap
10	[5]———	1	Hose
11	[6]949747	1	Hose
12	949744	1	Tank
12A	[9]962918	1	Tank assy
12B	949746	1	Filter
13	25E13	4	Washer
13A	27E4	4	Washer
14	85D4	4	Nut
15	50D10	2	Nut
16	18C412	4	Bolt
16A	17C416	4	Bolt
17	2517272	1	Pump
18	558960	1	Wire
19	85G1010	2	Screw
20	30H23	1	Clip
21	[7]949747	1	Hose
22	64D6	1	Nut
23	4E6	1	Lockwasher

[2]Inc. C 1, 2, 3 → 12, 12B, 13, 14, 15, 16, 17 → 23
[3]CMD sales item only
[4]Inc. 9, 11, 12, 12B
[5]See 21
[6]2 m (0.8 ft)
[7]2.8 m (9.2 ft)
[8]Inc. 1, 2A, 3 → 11, 12A, 13A, 14, 15, 16A → 23
[9]Old S/N
[10]New S/N

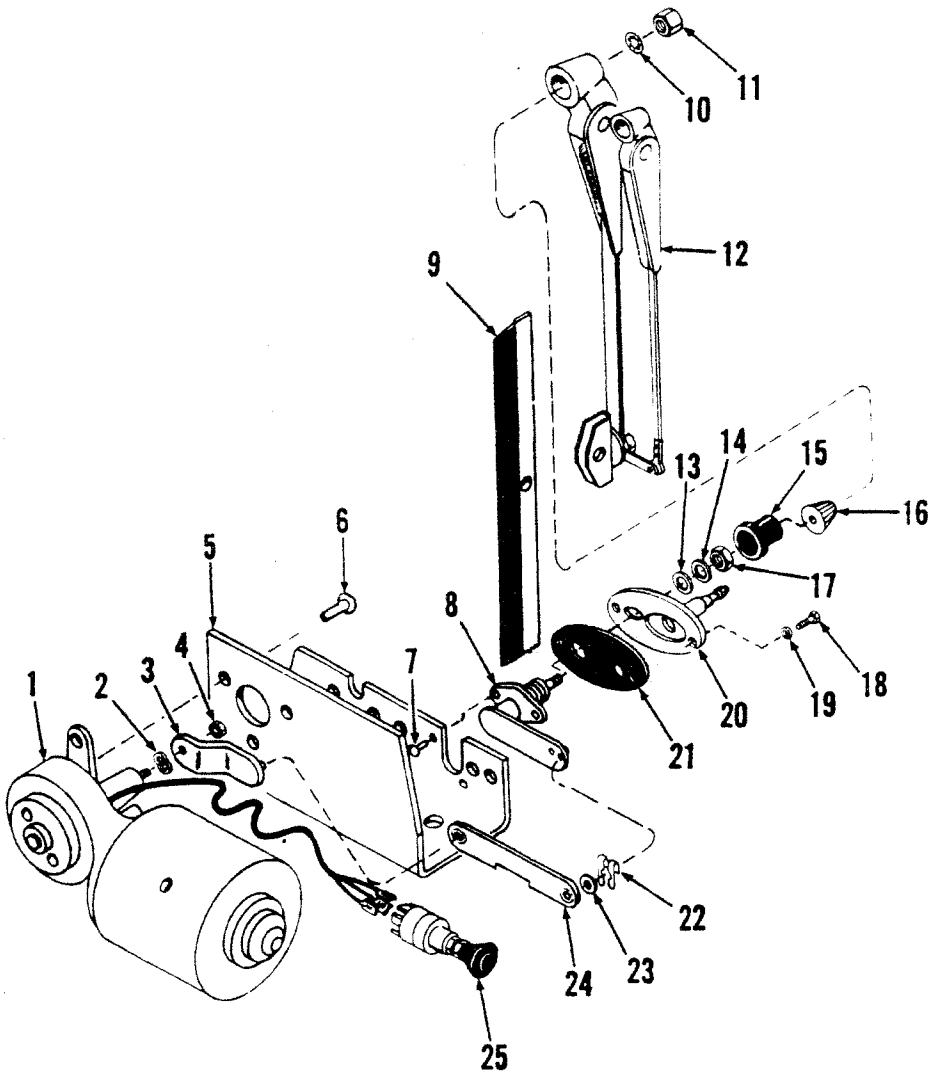

TS-13956

No.	Part No.	Qty.	Description
A	[2] [6] 2512578	1	Wndshld wpr motor kit
1	960096	1	Motor
2	993183	1	Washer
3	992891	1	Drive arm
4	949144	1	Nut
5	992892	1	Bracket
6	992896	3	Screw
7	949143	2	Screw
8	[3] 1580352	1	Shaft assy
9	949786	1	Wndshld wpr blade
10	9E05	1	Lockwasher
11	522028	1	Nut
12	2510280	1	Wndshld wiper arm
13	949180	1	Washer
14	949181	1	Washer
15	949183	1	Cap
16	949184	1	Driver
17	949182	1	Nut
18	24C428	2	Bolt
19	25E13	2	Washer
20	[4] 560164	1	Adapter kit
21	[5] ———	1	Gasket
22	890374	2	Clip
23	890375	2	Washer
24	890373	1	Link
25	2501082	1	Switch

[2] Inc. 1, 2, 4→7, 22→24
[3] Inc. 10, 11, 13→17
[4] Inc. 21
[5] See 20
[6] CMD sales item only

Windshield Wiper — Front

CLARK

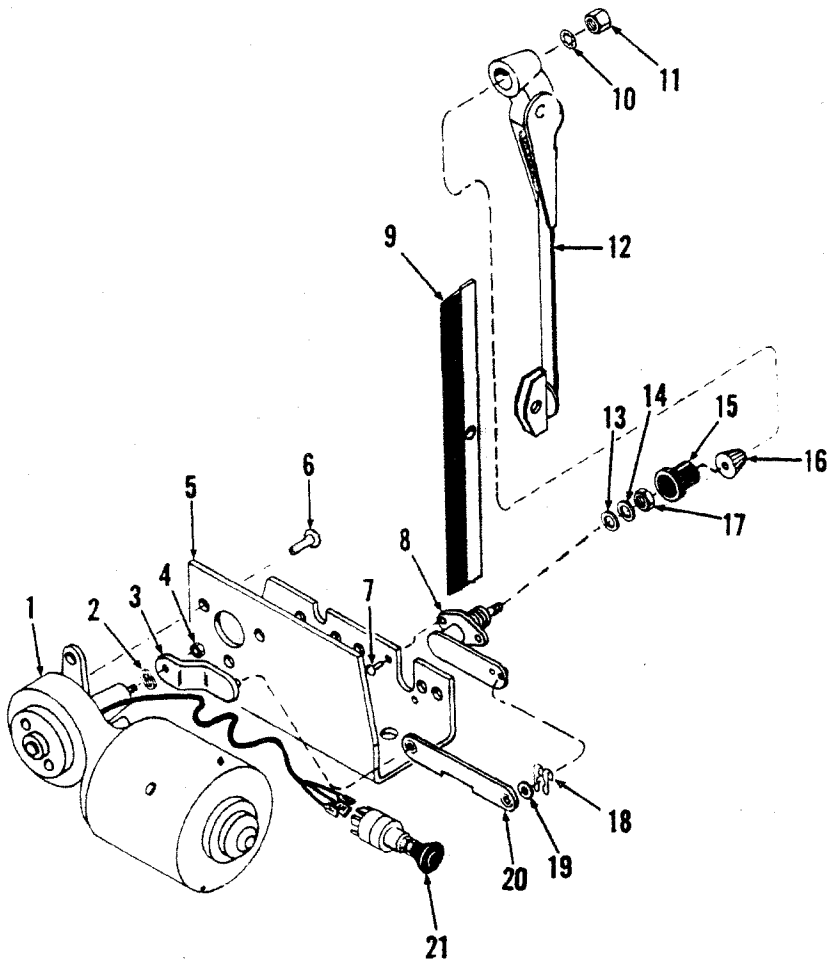

TS-20694

No.	Part No.	Qty.	Description
A	[2] [3]2512578	1	Wiper motor kit
1	960096	1	Motor
2	993183	1	Washer
3	992891	1	Drive arm
4	949144	1	Nut
5	992892	1	Bracket
6	992896	3	Screw
7	949143	2	Screw
8	[4]1580352	1	Shaft assy
9	2523630	1	Blade
10	9E5	1	Washer
11	522028	1	Nut
12	2526471	1	Arm
13	949180	1	Washer
14	949181	1	Washer
15	949183	1	Cap
16	949184	1	Driver
17	949182	1	Nut
18	890374	2	Clip
19	890375	2	Washer
20	890373	1	Link
21	2501082	1	Switch

[2]Inc. 1, 2, 4→7, 18→21
[3]CMD sales item only
[4]Inc. 10, 11, 13→17

Windshield Wiper Kit, Rear

CLARK

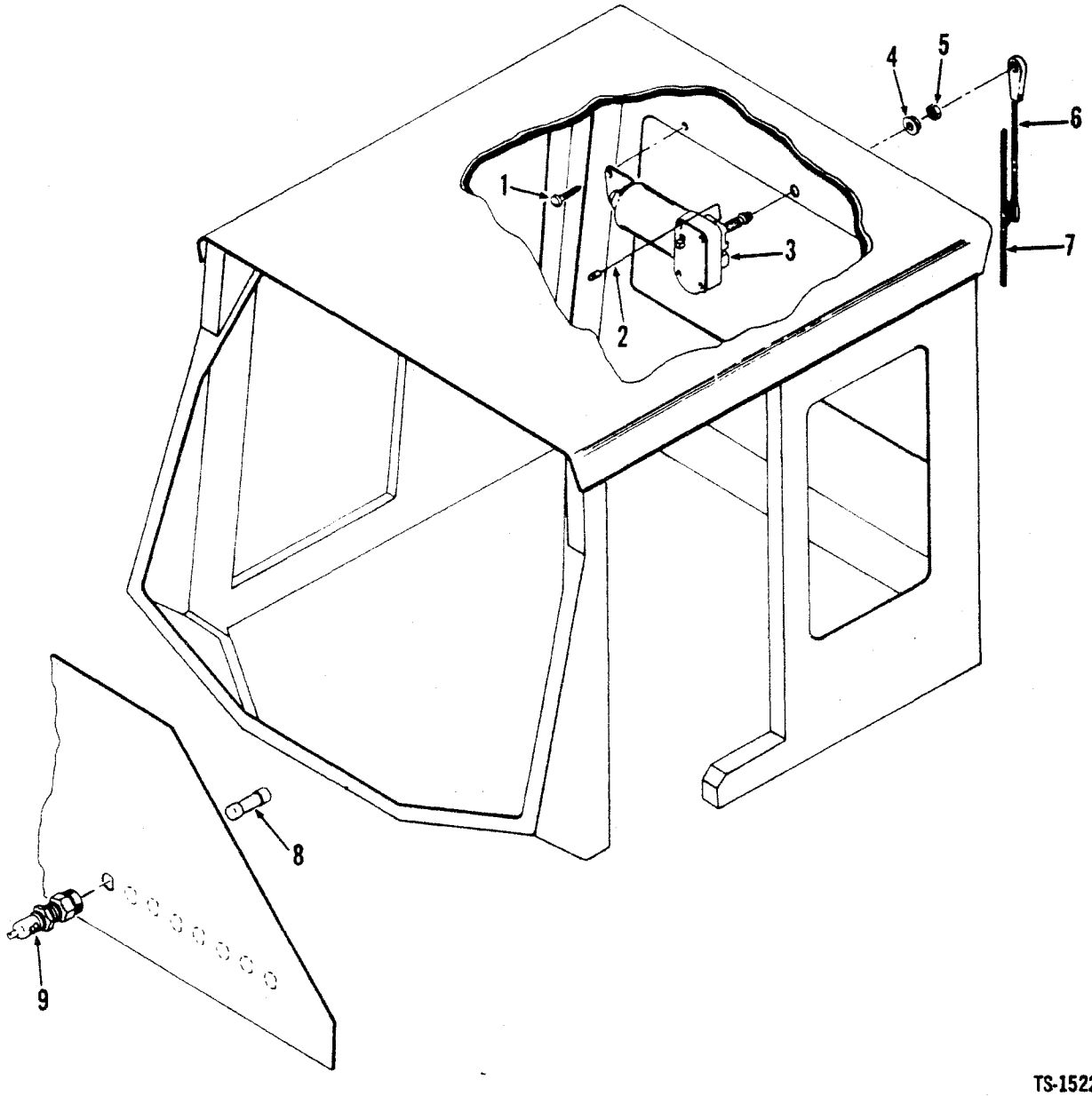

TS-15223

No.	Part No.	Qty.	Description
A	[2]2512735	—	Wndshld wpr kit R
1	85G1008	1	Screw
2	2519346	1	Wire
3	2336780	1	Motor
4	25E10	1	Washer
5	50D10	1	Nut
6	948610	1	Wndshld wiper arm R
7	2519253	1	Wndshld wiper blade R
8	542321	1	Fuse 5 amp
9	2511248	1	Fuse holder

[2]Inc. 1→9

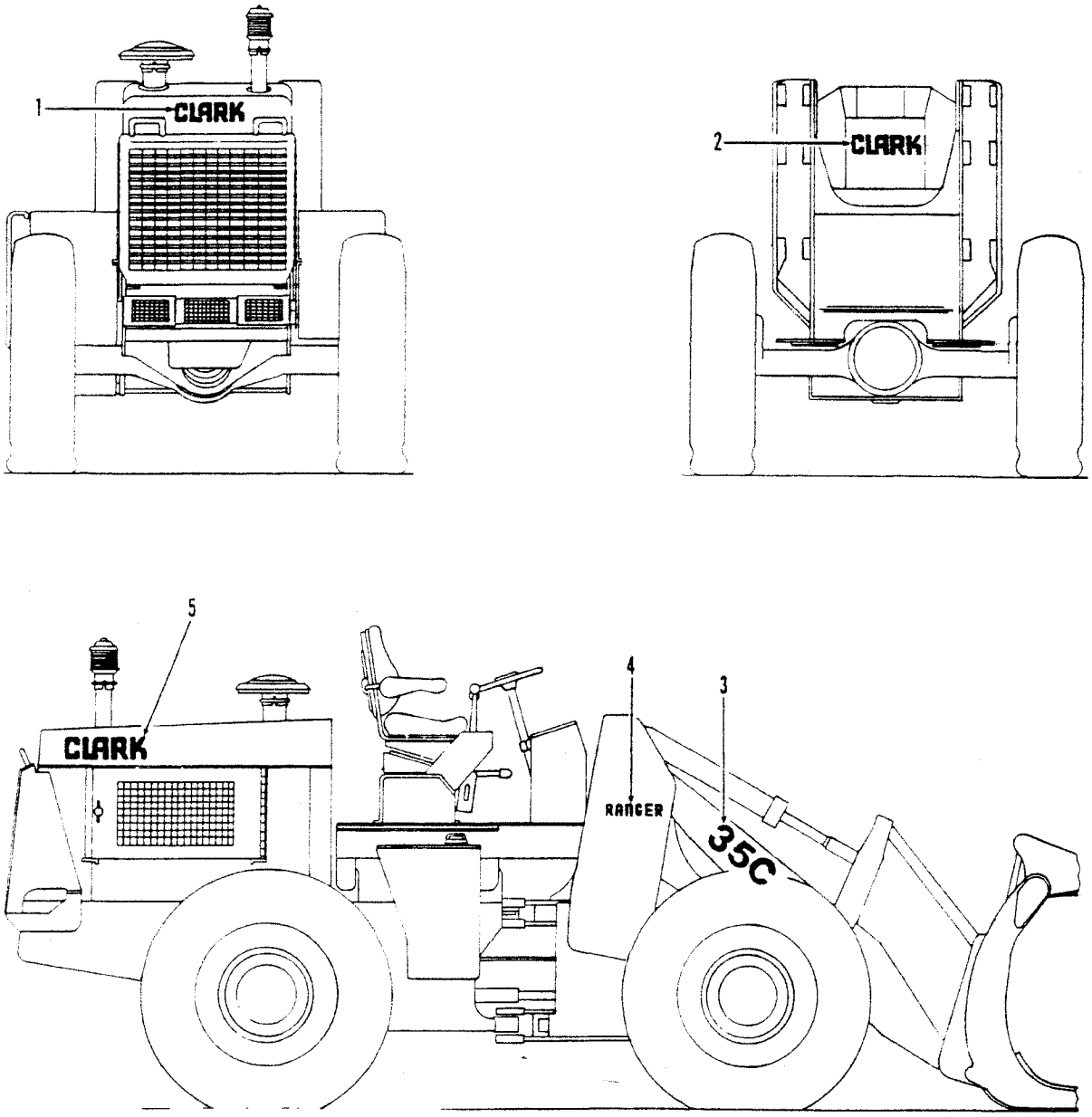

TS-15770

No.	Part No.	Qty.	Description
1	2518332	1	Decal
2	2518332	1	Decal
3	2526819	2	Decal 35C
3A	2526818	2	Decal 45C
3B	2526833	2	Decal 55C
4	2518366	2	Decal
5	2518334	2	Decal

Fire Extinguisher

CLARK

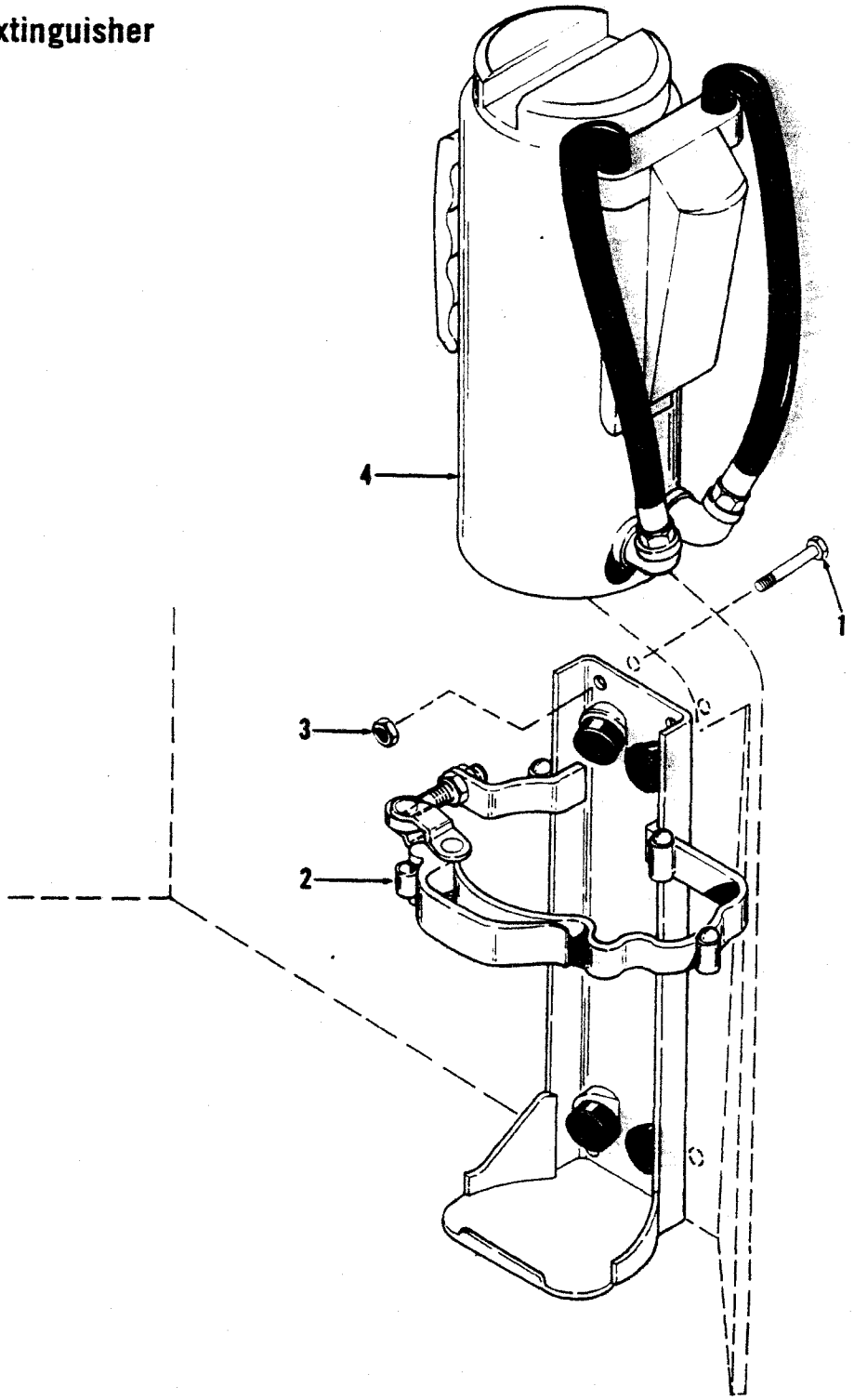

TS-14034

No.	Part No.	Qty.	Description
A	[2,3]2501074	1	Fire ext kit
1	25C520	4	Bolt
2	1541076	1	Bracket
3	18005	4	Nut
4	[4]1541075	1	Fire extinguisher

[2]CMD sales item only
[3]Inc. 1→4
[4]10 lbs. (4,5 kg)

CLARK

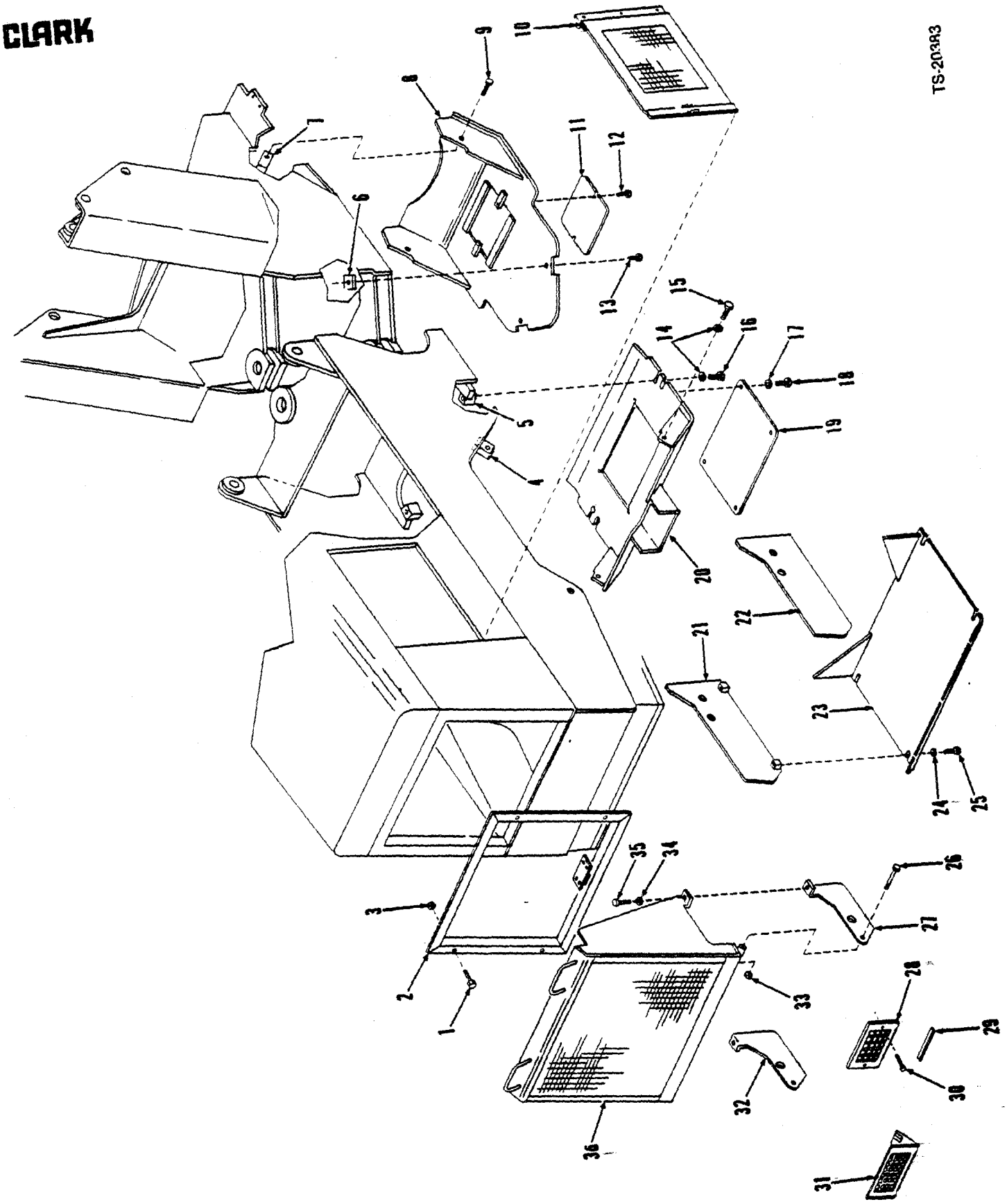

PM 3150
Printed in U.S.A.

(2H13)

Log Loader Attachment

CLARK

No.	Part No.	Qty.	Description
A	[2] [3]2525734	1	Belly guard kit front
B	[2] [4]2525798	1	Belly guard kit rear
C	[2] [5]2526180	1	Grille guard kit
1	17C616	4	Bolt
2	2526149	1	Frame
3	27E6	4	Washer
4	566068	2	Tapped block
5	1543787	2	Tapped block
6	1543787	2	Tapped block
7	566068	2	Tapped block
8	2515910	1	Belly guard
9	18C1232	2	Bolt
10	2515908	2	Side panel
11	2515900	1	Cover
12	17C816	2	Bolt
13	18C1232	2	Bolt
14	27E12	4	Washer
15	18C1224	2	Bolt
16	18C1228	2	Bolt
17	27E8	4	Washer
18	17C824	4	Bolt
19	2515907	1	Cover
20	2515903	1	Belly guard
21	2525693	1	Side plate
22	2525690	1	Side plate
23	2525691	1	Belly guard
24	27E12	4	Washer
25	18C1220	4	Bolt
26	17C852	2	Bolt
27	2526152	1	Plate
28	2526139	2	Guard
29	2526133	1	Flat
30	18C620	4	Bolt
31	2526145	1	Guard
32	2526153	1	Plate
33	59D8	2	Nut
34	27E8	2	Washer
35	17C824	2	Bolt
36	2526150	1	Grille guard

[2]CMD Sales item only
[3]Inc. 6→9, 11, 12, 13
[4]Inc. 4, 5, 14→25
[5]Inc. 1, 2, 3, 26→36

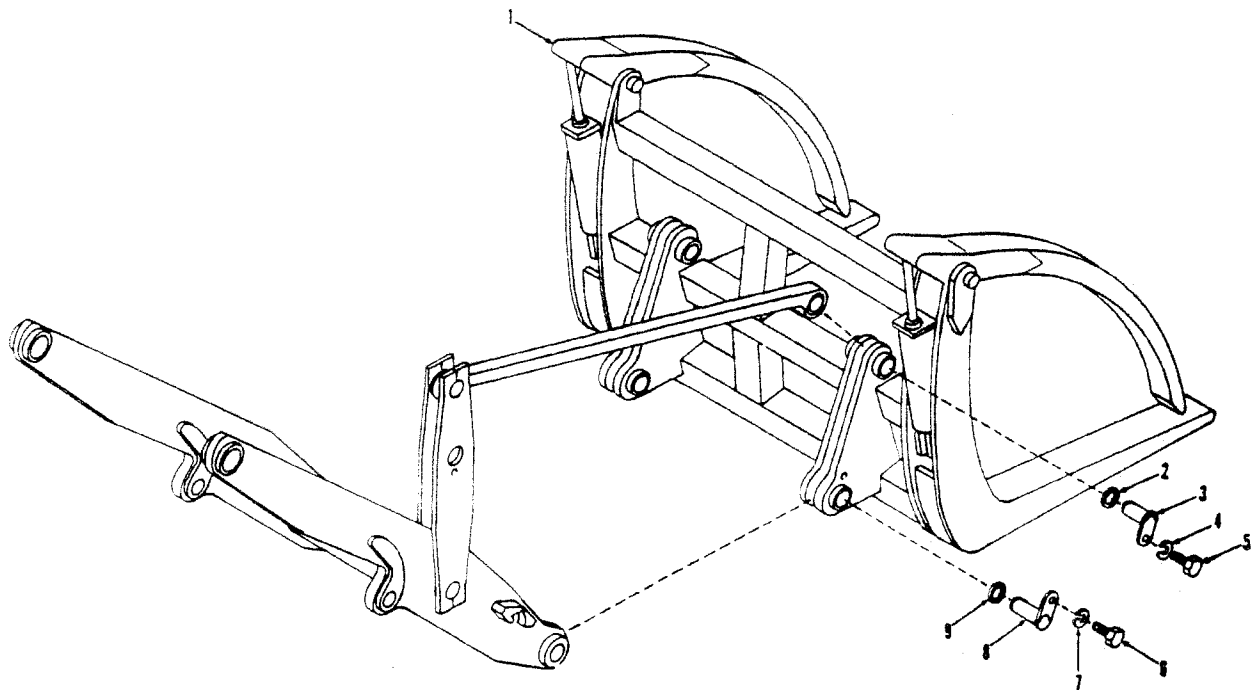

TS-15771

No.	Part No.	Qty.	Description
1	[2]2514317	1	Grapple assy 35C 45C
1A	[3]2523681	1	Grapple assy 55C
2	‡———	—	Spacer
2A	‡———	—	Spacer
3	———	2	Pin
4	27E8	2	Washer
5	18C824	2	Bolt
6	18C824	2	Bolt
7	27E8	2	Washer
8	———	2	Pin
9	‡———	—	Spacer
9A	‡———	—	Spacer

[2]Model 9J13-DTC sold and serviced by Medford Steel, Division of C.S.C. Inc., P.O. Box 1588, Medford, Oregon 97501
[3]Model 12J18-DTC sold and serviced by Medford Steel, Division of C.S.C. Inc., P.O. Box 1588, Medford, Oregon 97501

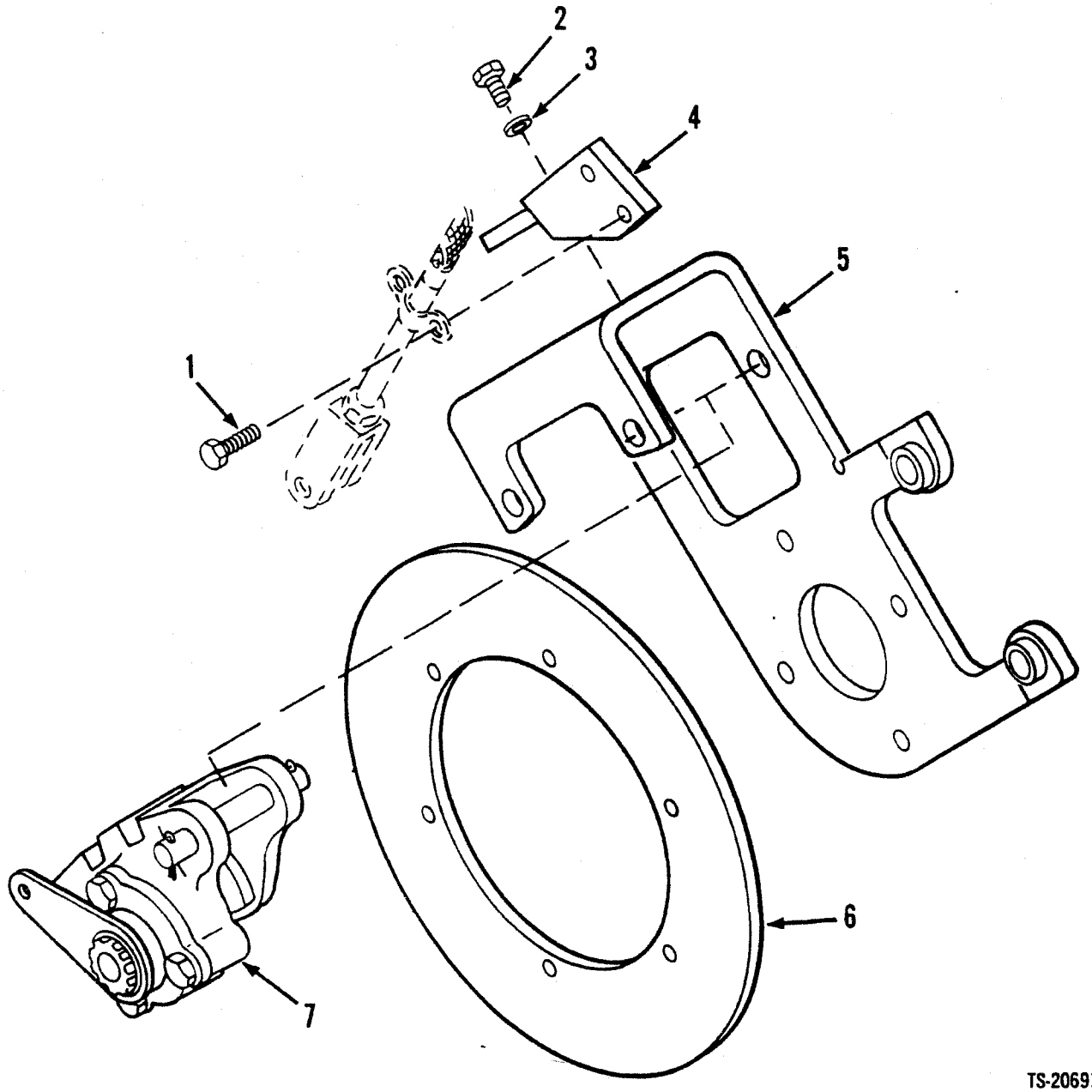

TS-20691

No.	Part No.	Qty.	Description
1	17C612	2	Bolt
2	17C620	2	Bolt
3	4E6	2	Washer
4	2534344	1	Bracket
5	2534347	1	Bracket
6	2512058	1	Disc
7	2534276	1	Brake head
A	[2] [3]2534414	1	Brake kit

[2]Inc. 1→7
[3]CMD sales item only

Radiator Sand Grid Kit — 55C

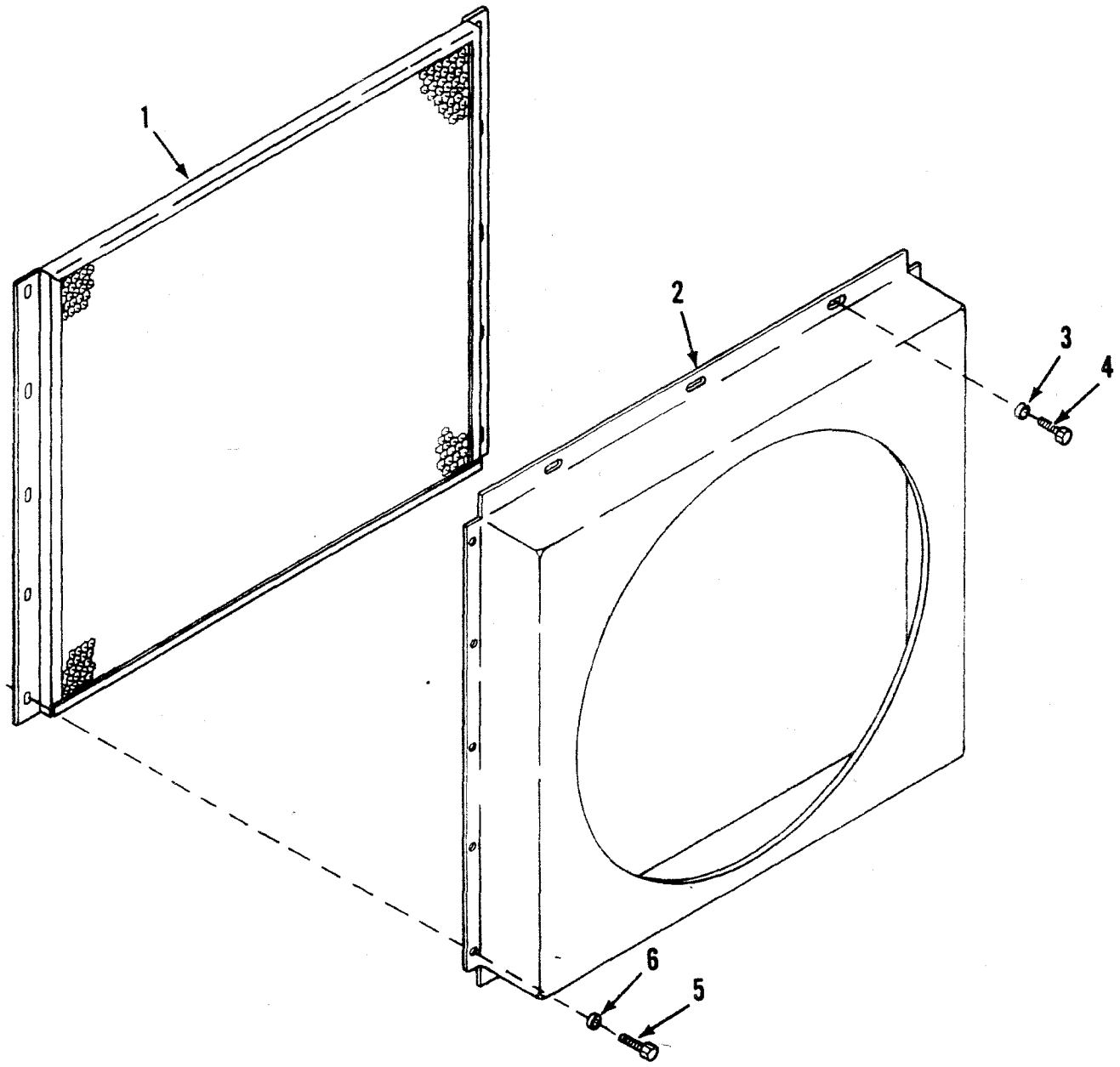

TS-20690

No.	Part No.	Qty.	Description
A	2531212	1	Sand grid kit
1	2531139	1	Grid assy
2	———	—	Radiator shroud
3	2525069	6	Washer
4	17C416	3	Bolt
5	17C516	10	Bolt
6	2525069	10	Washer

CLARK

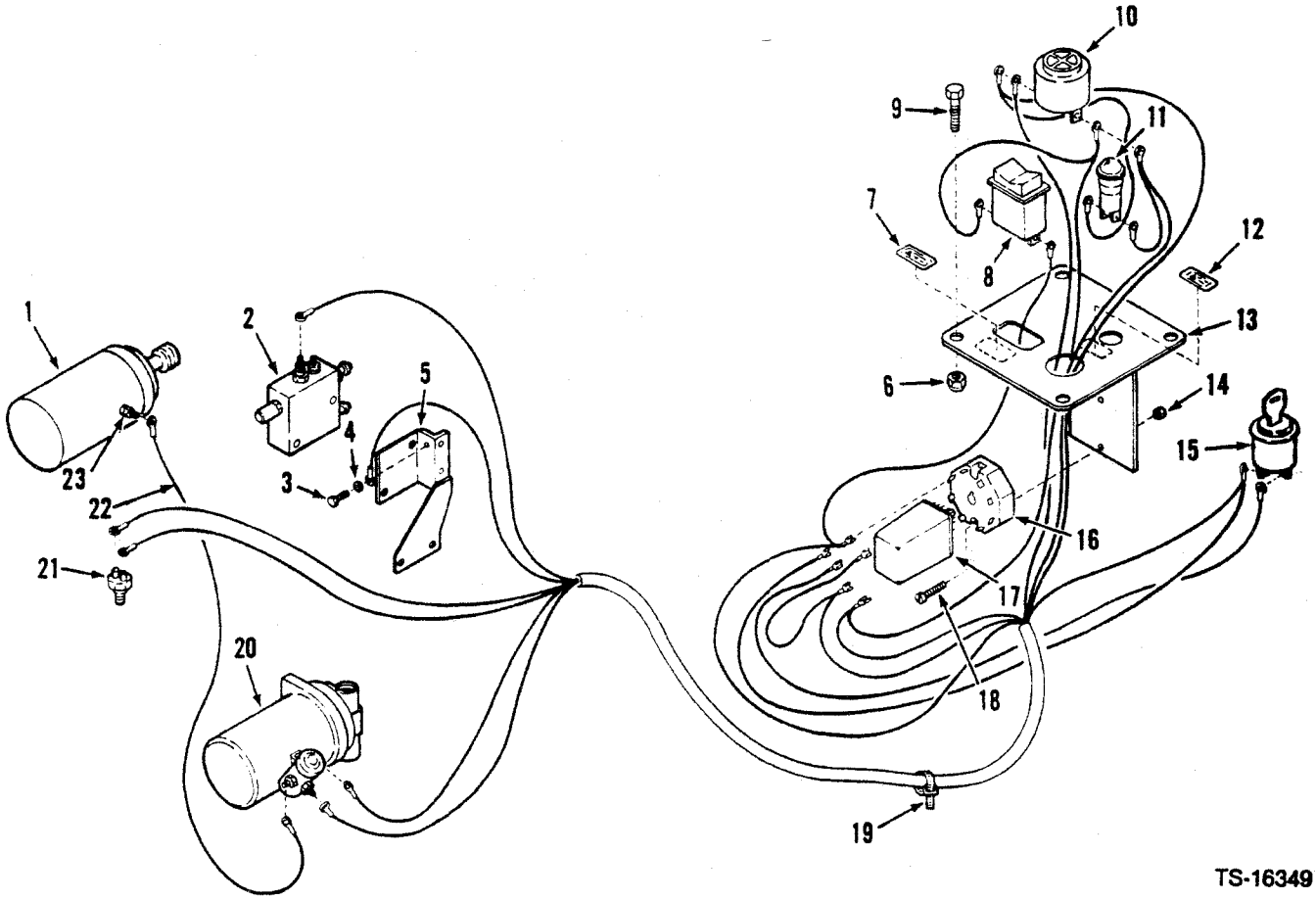

TS-16349

No.	Part No.	Qty.	Description
A	[2,3]2536480	1	Kit
1	[1]———	—	Starter
2	2536430	1	Switch
3	85G1008	1	Screw
4	12E10	1	Washer
5	2536262	1	Bracket
6	86D4	4	Nut
7	2536414	1	Decal
8	2531579	1	Switch
9	18C412	4	Bolt
10	2525656	1	Buzzer
11	2515828	1	Light
12	2536415	1	Decal
13	2536261	1	Bracket
14	51D6	2	Nut
15	[1]———	—	Ignition switch
16	2506492	1	Base
17	2536486	1	Relay
18	866612	2	Screw
19	‡1736910	—	Tie strap
20	2536481	1	Pump
21	1534135	1	Switch
22	2536423	1	Wire
23	2538127	1	Adapter

[1]See Index
[2]CMD sales item only
[3]Inc. 2 → 14, 16 → 20

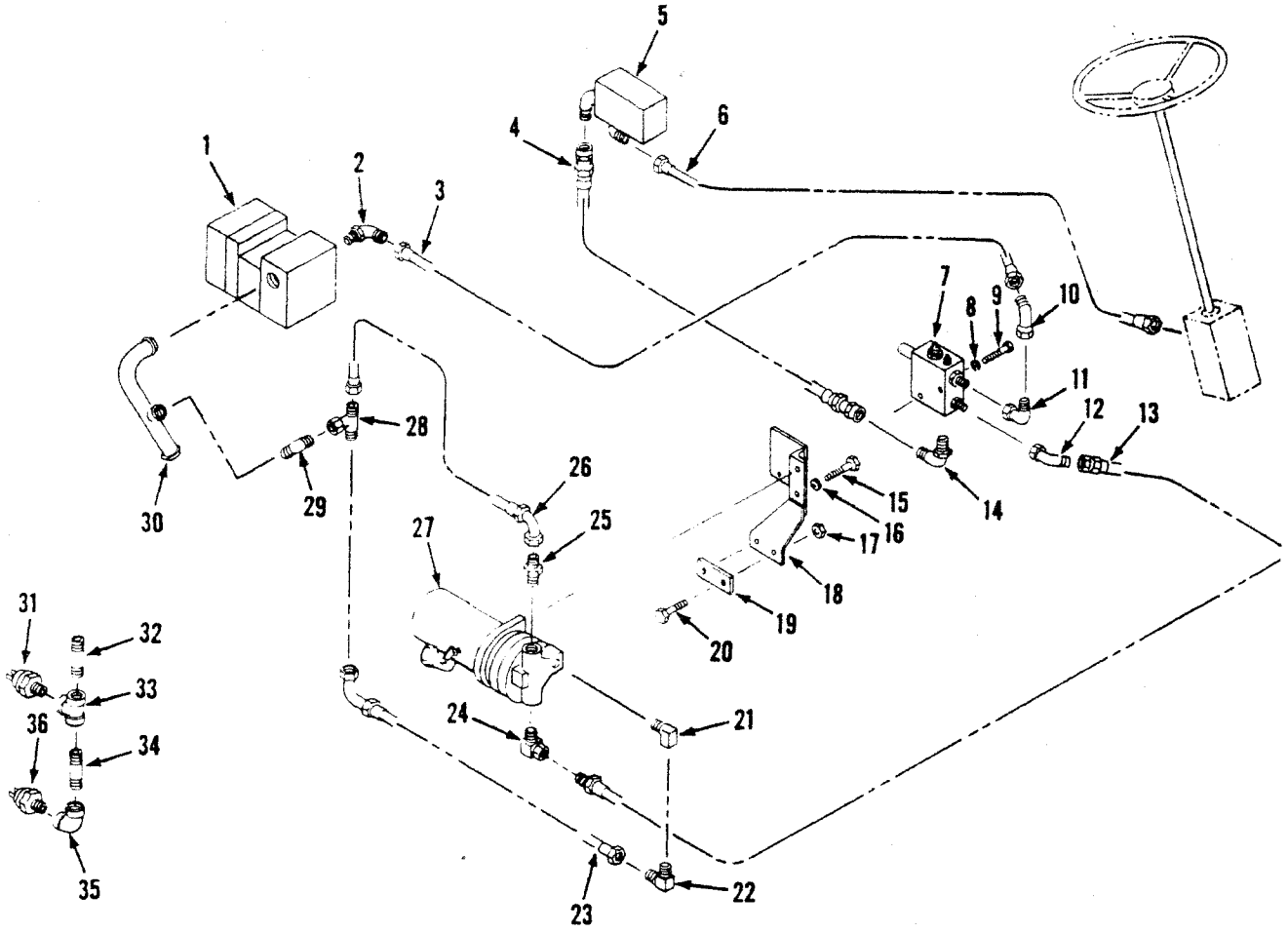

TS-20699

No.	Part No.	Qty.	Description
A	[2][3]2536480	1	**Kit**
1	[1]———	—	Steer pump
2	1309092	1	Elbow
2A	†41K4	1	Plug
2B	†91F10	1	O-ring
3	1509473	1	Hose
4	2536485	1	Hose
5	[1]———	—	Valve flow divider
6	2526525	1	Hose
7	2536430	1	Switch
8	27E6	2	Washer
9	17C640	2	Bolt
10	12K10	1	Elbow
11	11K10	1	Elbow
12	12K7	1	Elbow
13	2536482	1	Hose
14	17K10	1	Elbow
15	17C616	2	Bolt
16	27E6	2	Washer
17	85D8	2	Nut

No.	Part No.	Qty.	Description
18	2536262	1	Bracket
19	2536266	1	Bracket
20	17C832	2	Bolt
21	81F3	1	Elbow
22	730149	1	Elbow
23	2536483	1	Hose
24	1542832	1	Elbow
25	89F8	1	Connector
26	2536484	1	Hose
27	2536481	1	Pump
28	14K8	1	Tee
29	84F8	1	Elbow
30	2536490	1	Tube
31	1534135	1	Sender
32	5K110	1	Nipple
33	25K202	1	Tee
34	5K110	1	Nipple
35	26K202	1	Elbow
36	2520750	1	Sender

[1]See Index
[2]CMD sales item only
[3]Inc. 2, 4, 7 → 30, 32 → 36

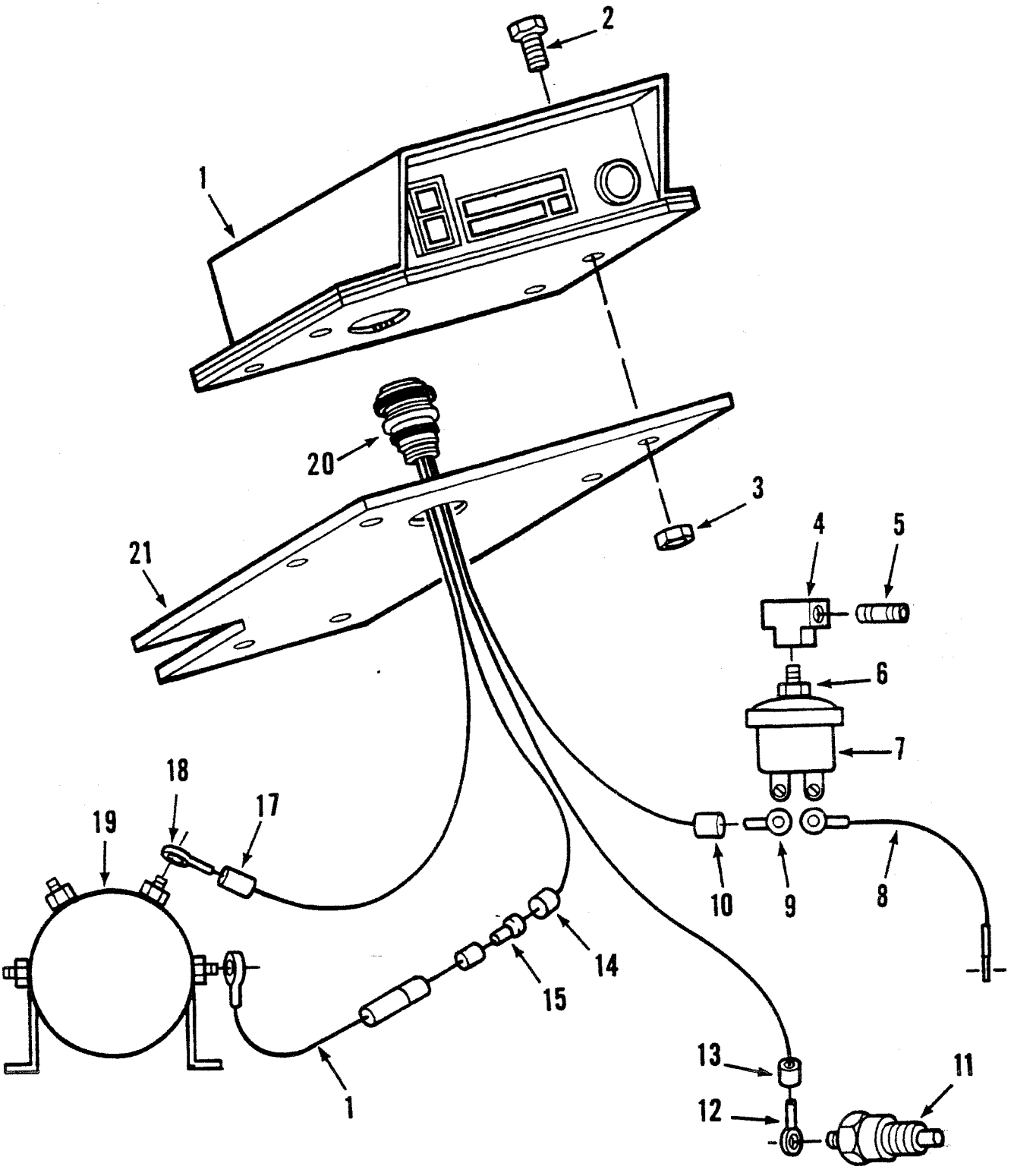
2
1
20
3
21
4
5
6
7
18
19
17
10
9
8
14
15
1
13
11
12

Alarm Indicating Device

CLARK

No.	Part No.	Qty.	Description
A	[2,3]2536083	1	Alarm kit
1	2535004	1	Alarm
2	18C416	6	Bolt
3	86D4	6	Nut
4	6005044	1	Tee
5	5K108	1	Nipple
6	19F1	1	Reducer
7	964861	1	Oil pressure switch
8	1543539	1	Wire
9	658477	1	Terminal
10	614142	1	Sleeve
11	964654	1	Water temp sender
12	614136	1	Terminal
13	614142	1	Sleeve
14	614142	1	Sleeve
15	1513577	1	Terminal
16	2527108	1	Wire assy
16A	†———	1	Fuse
17	614142	1	Sleeve
18	614136	1	Terminal
19	[4]———	1	Solenoid
20	964860	1	Harness

[2]CMD sales item only.
[3]Inc. 1, 7, 11, 20
[4]See Instrument Panel

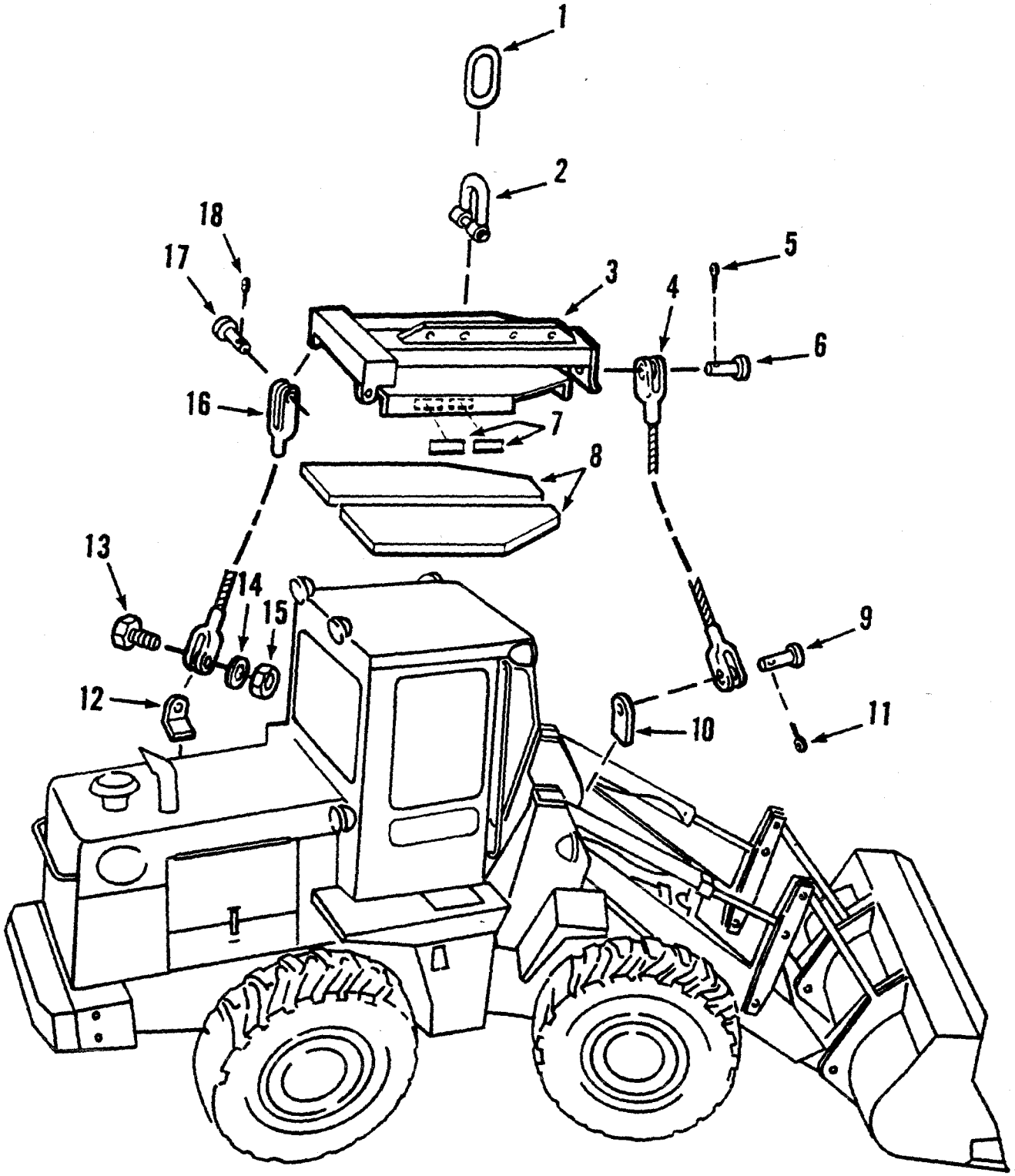
1
2
18
17
3
5
4
6
16
7
8
13
14
15
9
12
10
11

Lift Kit

CLARK

No.	Part No.	Qty.	Description
A	[2,3]2536381	1	Lift kit
1	2525021	1	Link
2	2536355	1	Shackle
3	2536379	1	Lift assy
4	[4]2525017	1	Wire rope assy
5	§[5]———	—	Cotter pin
6	§[5]———	—	Pin
7	2525023	2	Decal
7A	2525046	2	Decal
8	2525028	2	Rubber pad
9	§[5]———	—	Pin
10	2525024	1	Lug
11	§[5]———	—	Cotter pin
12	2525025	2	Lug
13	18C2080	2	Bolt
14	27E20	4	Washer
15	60D20	2	Nut
16	[6]2525016	2	Wire rope assy
17	§[7]———	—	Pin
18	§[7]———	—	Cotter pin

[2]CMD sales item only.
[3]Inc. 1 → 18
[4]Inc. 5, 6, 9, 11
[5]See 4
[6]Inc. 17, 18
[7]See 16

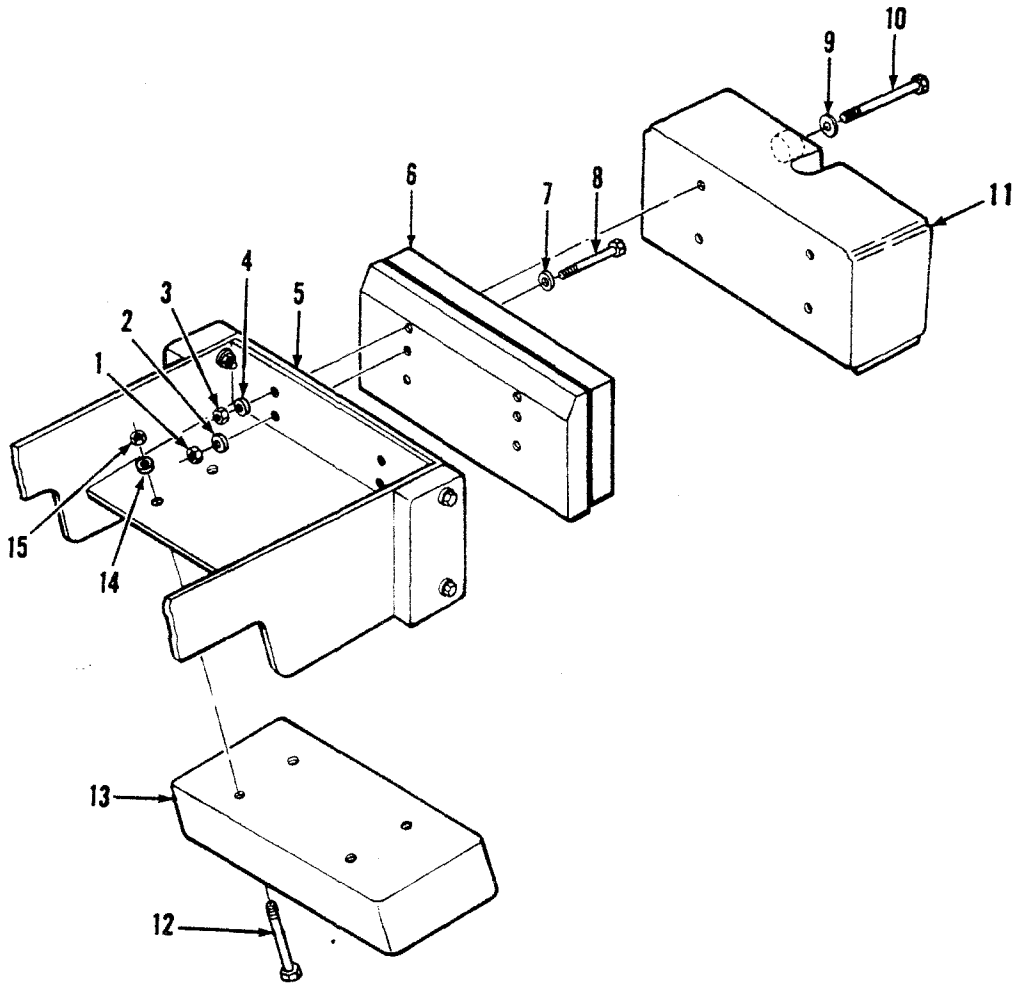

TS-21552

No.	Part No.	Qty	Description
A	[2,3]2542207	1	**Counterweight kit**
B	[2,4]2535191	1	**Counterweight kit**
1	**85D16**	4	**Nut**
2	**1523350**	3	**Washer**
3	**85D16**	2	**Nut**
4	**1523350**	3	**Washer**
5	[1]_____	—	**Frame rear**
6	**2542501**	1	**Counterweight**
7	**27E16**	2	**Washer**
8	**17C16152**	2	**Bolt**
9	**1523350**	4	**Washer**
10	**17C16312**	4	**Bolt**
11	[5]_____	—	**Counterweight**
12	**17C16168**	4	**Bolt**
13	**2534907**	1	**Counterweight**
14	**1523350**	8	**Washer**
15	**85D16**	4	**Nut**

[1]See Index
[2]CMD sales item only
[3]Inc. 1 → 11
[4]Inc. 12 → 15
[5]STD Counterweight

Pipe Handler Assembly

CLARK

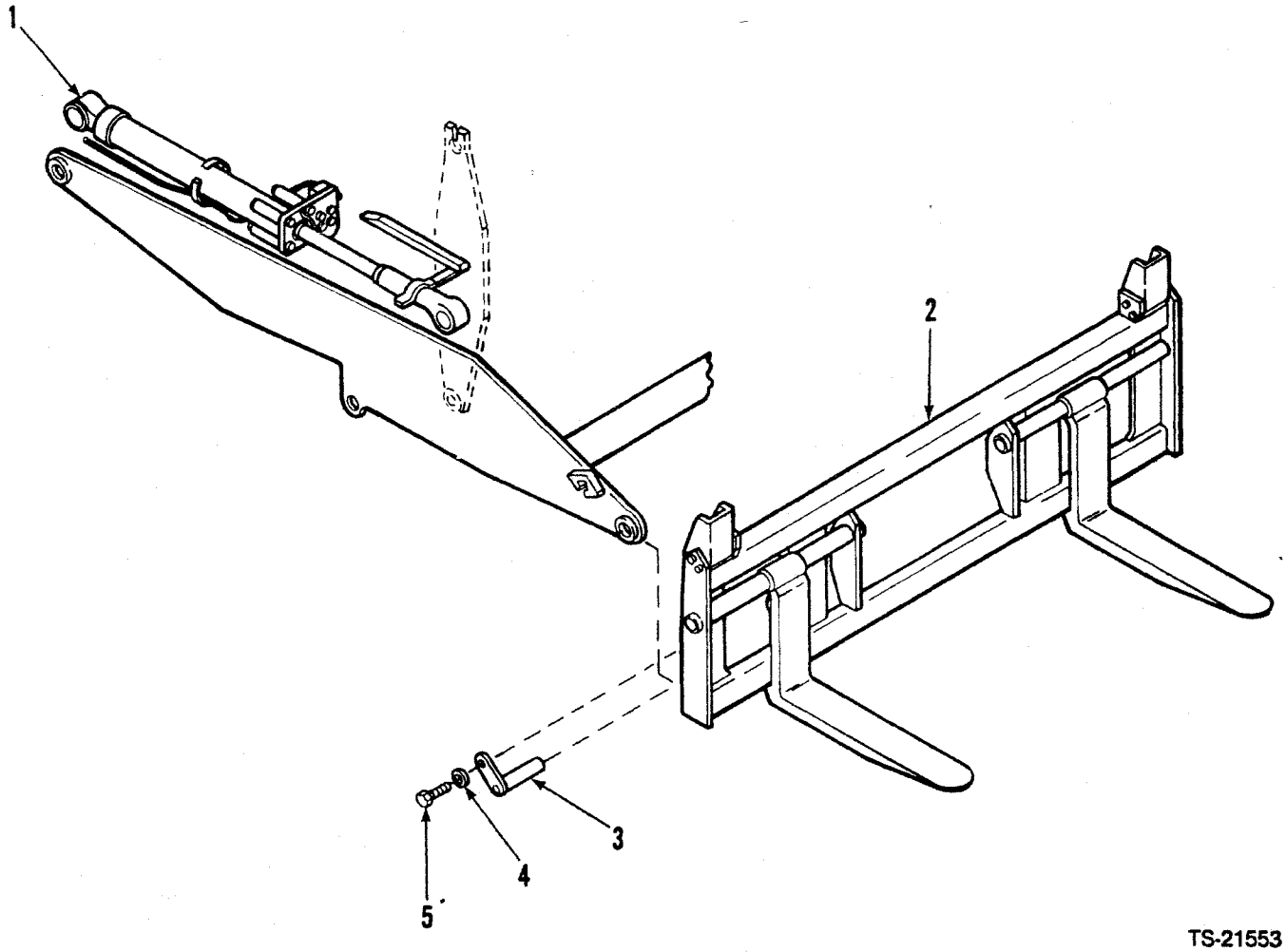

TS-21553

No.	Part No.	Qty.	Description
A	[2,3]2542490	1	Pipe handler kit
1	[1]_____	—	Cylinder assy
2	[4]2542482	1	Pipe fork kit
3	2514887	2	Pin
4	27E8	2	Washer
5	18C824	2	Bolt
5A	2512037	2	Spacer

[1]See Index
[2]CMD sales item only
[3]Inc. 2
[4]Sold & serviced by Uni-Tool Attachments, Inc.
1607 Woodland Ave.
Columbus, Ohio 43219

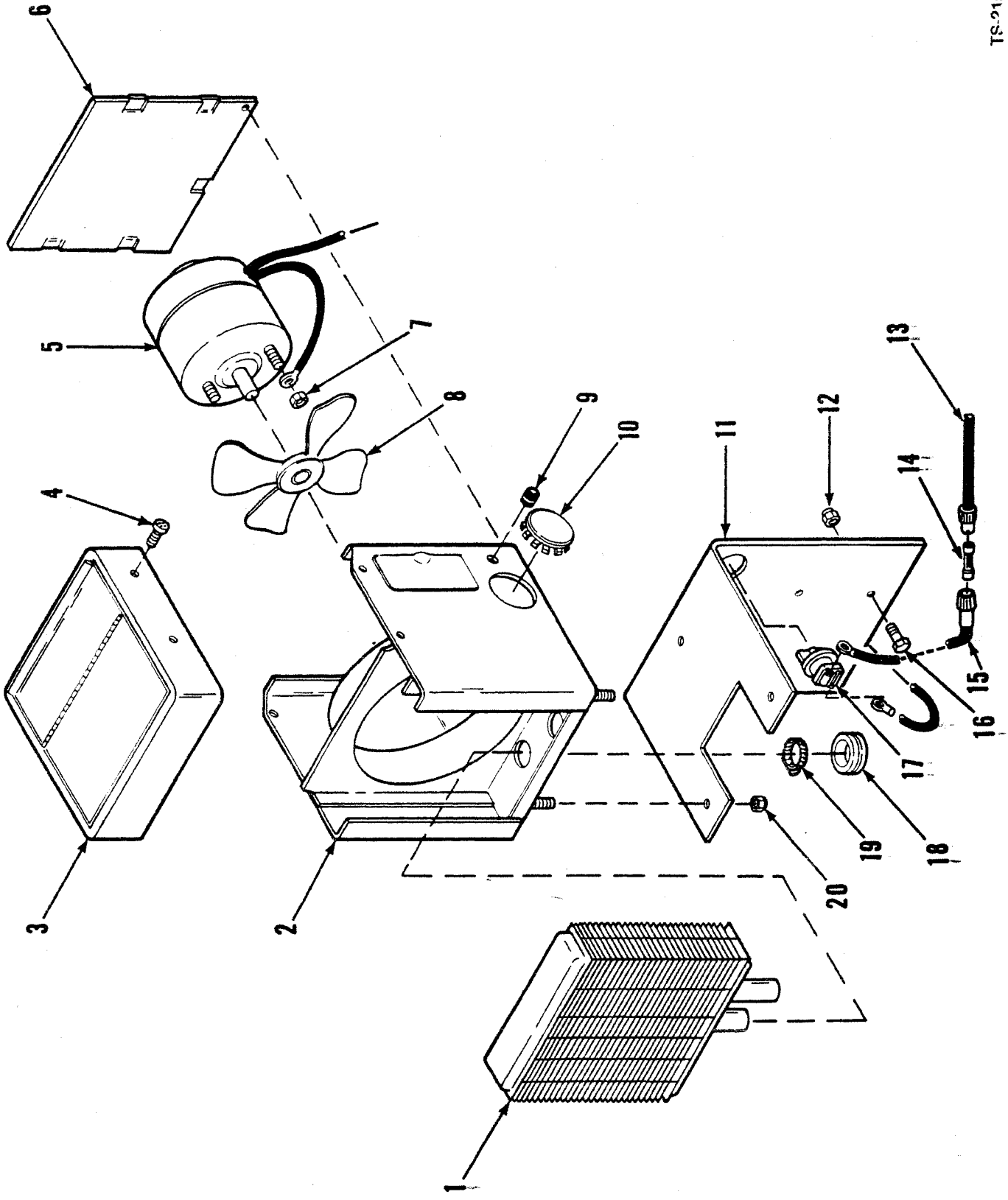
TS-21518
6
5
7
8
9
10
11
12
13
14
15
16
17
4
3
2
19
18
20
1

Heater Kit

CLARK

No.	Part No.	Qty.	Description
A	[2,3]2538755	1	**Heater kit**
B	[4]2551576	1	**Heater assy**
1	993630	1	**Core**
2	964996	1	**Housing**
3	964997	1	**Cover top**
4	65G1008	4	**Screw**
5	[5]945890	1	**Motor**
6	964998	1	**Cover back**
7	§[6]———	—	**Nut**
8	993632	1	**Fan**
9	§———	1	**Grommet**
10	2540419	1	**Plug button**
11	2538760	1	**Bracket**
12	85D6	2	**Nut**
13	[7]2538939	1	**Wire assy**
14	[8]———	1	**Fuse**
15	[9]———	1	**Wire assy**
16	17C616	2	**Bolt**
17	993631	1	**Switch**
18	1319124	2	**Grommet**
19	42H10	2	**Clamp**
20	85D5	4	**Nut**

[2]CMD sales item only
[3]Inc. 1 → 20
[4]Inc. 1 → 9
[5]Inc. 7
[6]See 6
[7]Inc. 15
[8]3 Amp
[9]See 13

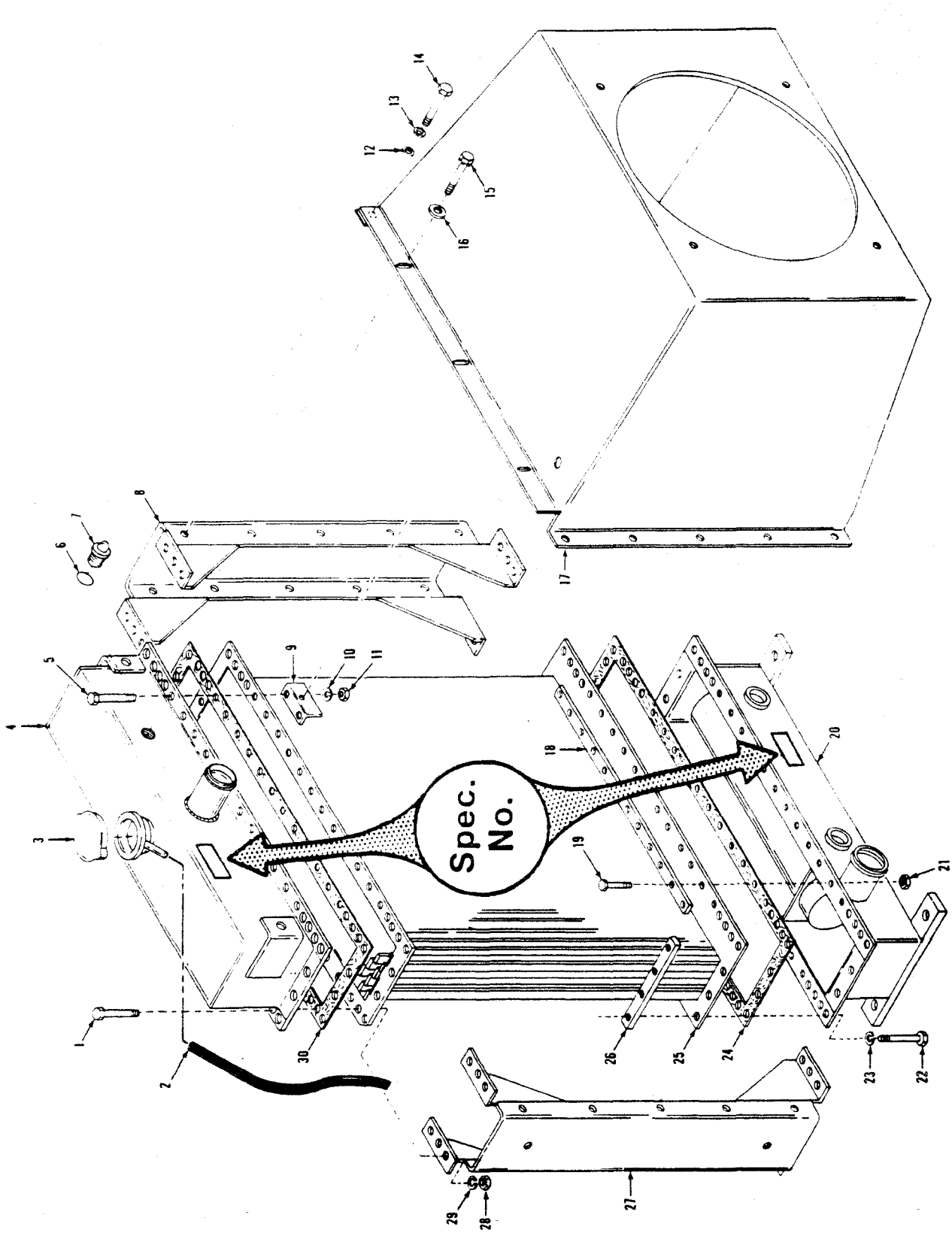
TS-21534
Spec. No.

Radiator Assembly — G & O Spec. 2540424 ONLY

CLARK

No.	Part No.	Qty.	Description
A	[1]2540423	1	Radiator assy
1	17C618	36	Bolt
2	[2]784717	1	Hose
2A	†30H34	2	Clip
3	[3]962329	1	Cap
4	964987	1	Tank top
5	17C618	35	Bolt
6	91F6	1	O-ring
7	[4]962330	1	Sight glass
8	964985	1	Side column
9	962302	6	Clip
10	4E6	35	Washer
11	63D6	35	Nut
12	2525070	10	Washer
13	———	—	Omit
14	17C512	10	Bolt
15	17C412	6	Bolt
16	2525069	6	Washer
17	———	1	Shroud assy
18	962299	4	Bar
19	17C616	1	Bolt
20	964986	1	Bottom tank
21	59D6	1	Nut
22	17C614	16	Bolt
23	4E8	16	Washer
24	962297	1	Gasket
25	964984	1	Core assy
26	964859	4	Bar
27	964985	1	Side column
28	63D6	36	Nut
29	4E6	36	Washer
30	962297	1	Gasket

[1]Inc. 1 → 11, 18 → 30
[2]1.27 m (4.2 ft.)
[3]3.2 kg (7 lbs.)
[4]Inc. 6

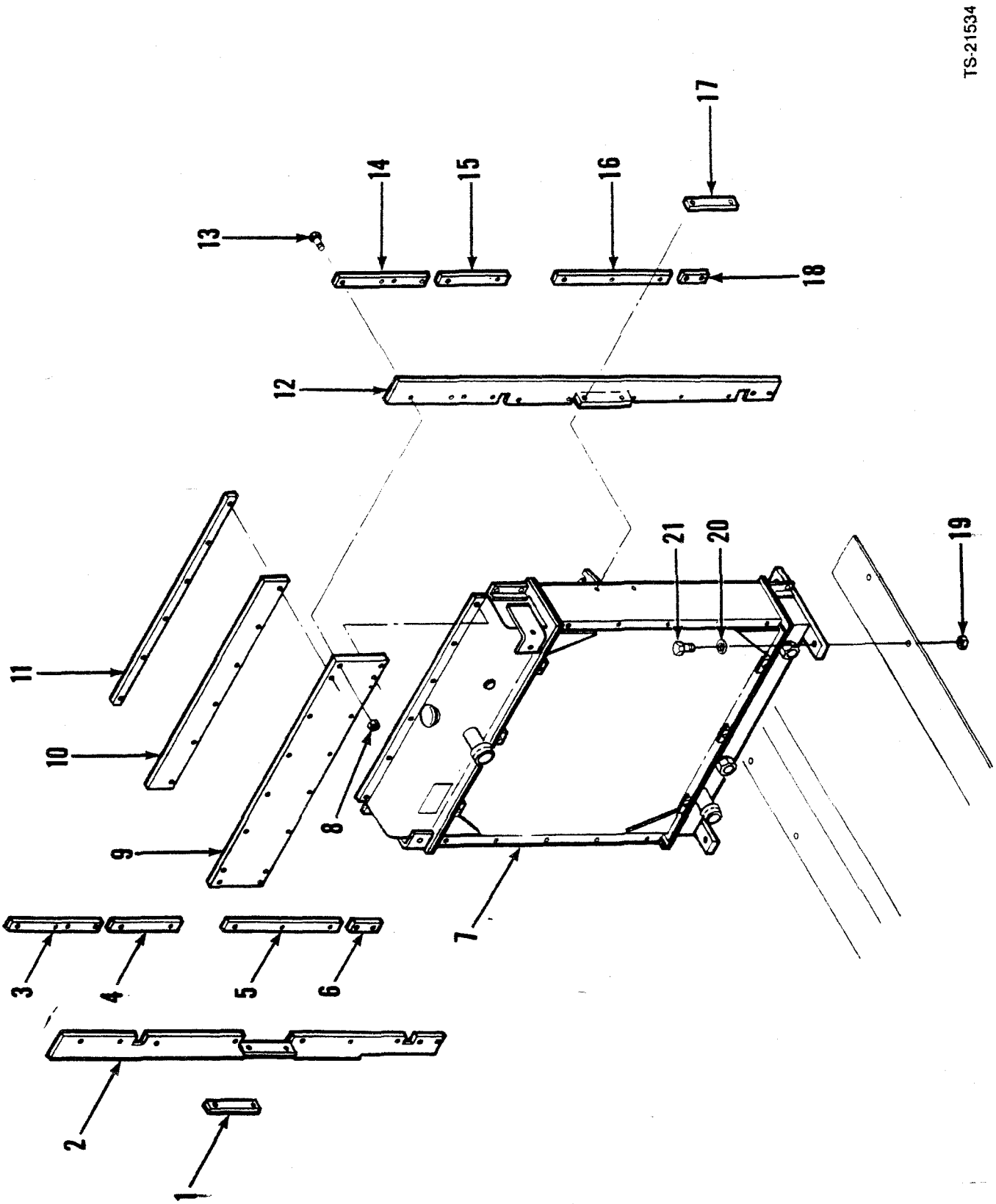
TS-21534
1
2
3
4
5
6
7
8
9
10
11
12
13
14
15
16
17
18
19
20
21

Radiator — Inline Installation

CLARK

No.	Part No.	Qty.	Description
A	[2,4]2541266	1	Kit
B	[3,5]2541267	1	Kit
1	2541270	1	Rectangular flat
2	2541279	1	Rubber strip
3	2541273	1	Plate
4	2541271	1	Rectangular flat
5	2541272	1	Plate
6	2541269	1	Rectangular flat
7	[1]———	1	Radiator
8	85D4	24	Nut
9	[4]2541278	1	Plate
9A	[5]2541280	1	Plate
10	2541275	1	Rubber strip
11	2541276	1	Plate
12	2541279	1	Rubber strip
13	17C412	38	Bolt
14	2541273	1	Plate
15	2541271	1	Rectangular flat
16	2541272	1	Plate
17	2541270	1	Rectangular flat
18	2541269	1	Rectangular flat
19	85D8	4	Nut
20	27E8	4	Washer
21	17C832	4	Bolt

[1]See Index
[2]Inc. 1 → 9, 10 → 21
[3]Inc. 1 → 8, 9A → 21
[4]480B
[5]481B

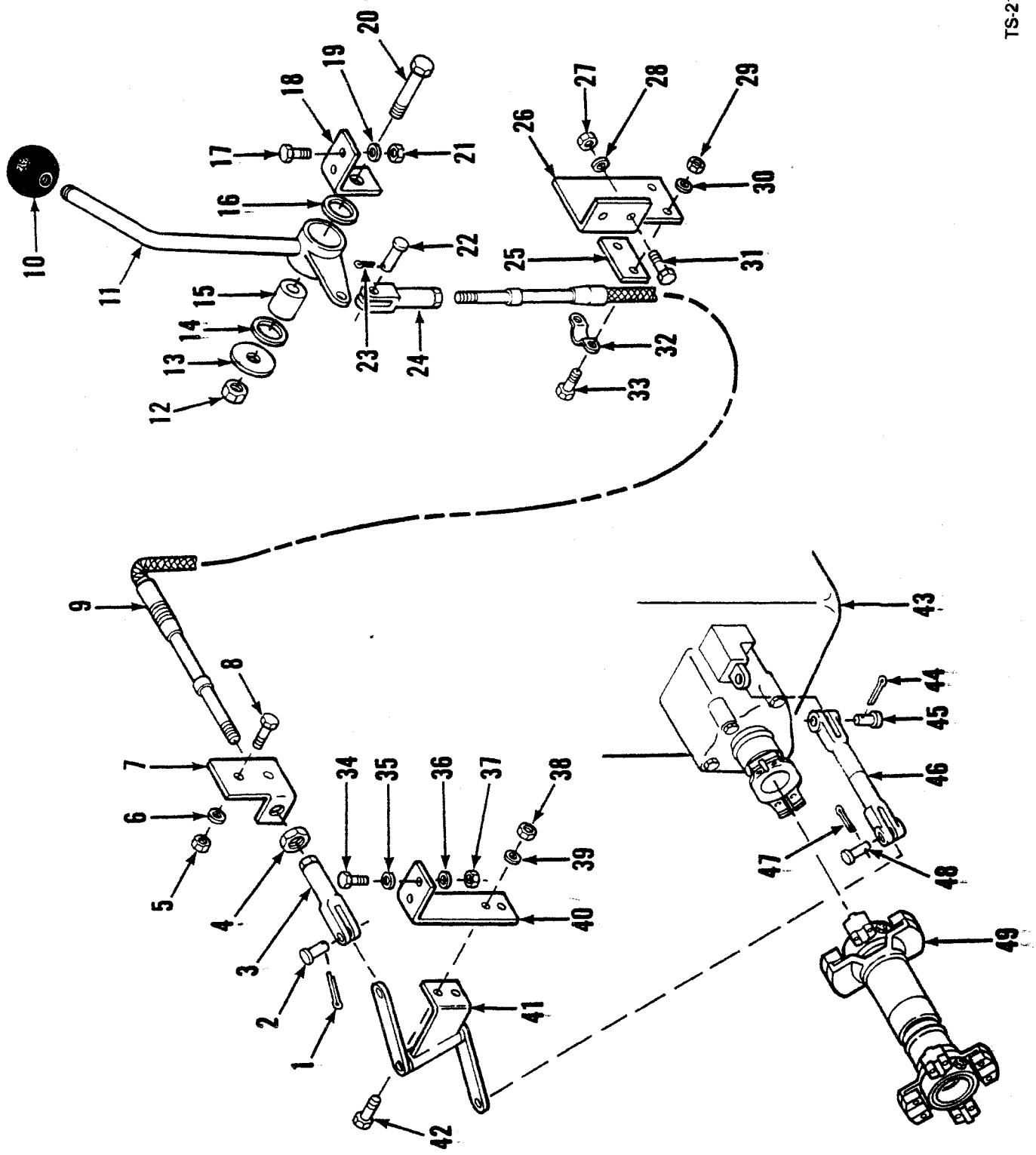
TS-21550
1
2
3
4
5
6
7
8
9
10
11
12
13
14
15
16
17
18
19
20
21
22
23
24
25
26
27
28
29
30
31
32
33
34
35
36
37
38
39
40
41
42
43
44
45
46
47
48
49

Rear Axle Disconnect Assembly

CLARK

No.	Part No.	Qty.	Description
A	2536704	1	Rear axle disconnect kit
1	1F308	1	Cotter pin
2	4F6106	1	Pin
3	556413	1	Clevis
4	8D12	1	Nut
5	85D6	2	Nut
6	27E6	2	Washer
7	2536696	1	Bracket
8	17C624	2	Bolt
9	2536709	1	Cable
10	509772	1	Knob
11	2536701	1	Lever
12	85D8	1	Nut
13	561912	1	Washer
14	1522535	1	Seal
15	1503251	1	Sleeve
16	1522535	1	Seal
17	17C620	2	Bolt
18	2536697	1	Bracket
19	27E6	2	Washer
20	17C840	1	Bolt
21	85D6	2	Nut
22	4F6106	1	Pin
23	1F308	1	Cotter pin
24	556413	1	Clevis
25	2536711	1	Flat
26	2536695	1	Bracket
27	85D4	2	Nut
28	27E4	2	Washer
29	85D4	2	Nut
30	27E4	2	Washer
31	17C414	2	Bolt
32	1566748	1	Clamp
33	17C416	2	Bolt
34	17C624	2	Bolt
35	27E6	2	Washer
36	27E6	2	Washer
37	85D6	2	Nut
38	85D6	2	Nut
39	27E6	2	Washer
40	2536698	1	Bracket
41	2536702	1	Bracket
42	17C624	2	Bolt
43	———	1	Transmission
44	1F308	1	Cotter pin
45	4F6106	1	Pin
46	2536693	1	Rod
47	1F308	1	Cotter pin
48	4F6106	1	Pin
49	192548	1	Propshaft

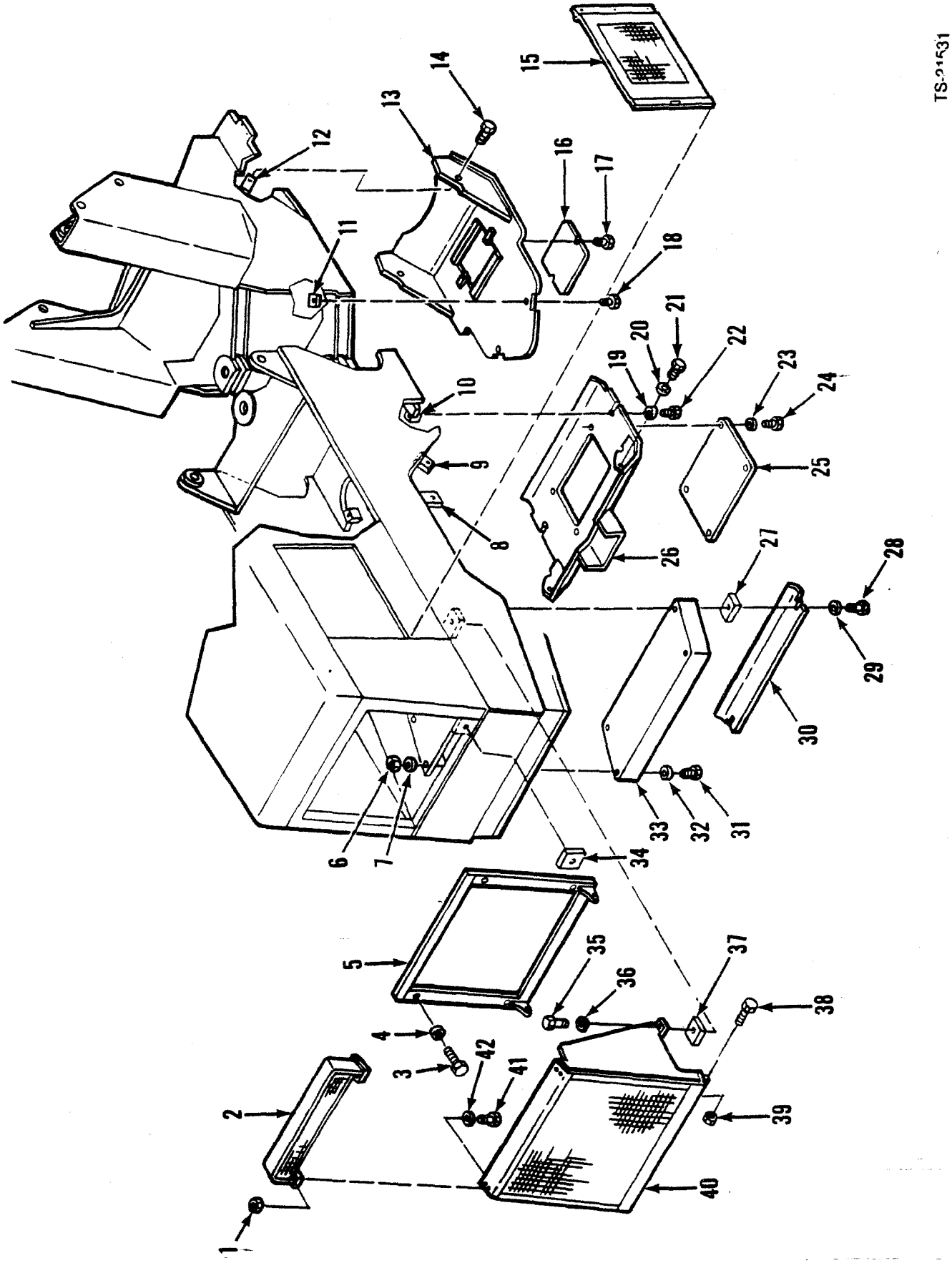
TS-21531
1
2
3
4
5
6
7
8
9
10
11
12
13
14
15
16
17
18
19
20
21
22
23
24
25
26
27
28
29
30
31
32
33
34
35
36
37
38
39
40
41
42

Log Loader Attachment

CLARK

No.	Part No.	Qty.	Description
A	[2][3]2525734	1	Belly guard kit — front
B	[2][4]2538987	1	Trans guard kit
C	[2][5]2538986	1	Belly guard kit — rear
D	[2][6]2538796	1	Grille guard kit
E	[2][7]2538795	1	Rear light guard kit
F	[2][8]2538797	1	Side panel kit
G	[2][9]2535191	1	Counterweight kit
1	85D6	4	Nut
2	2539017	1	Guard
3	17C616	4	Bolt
4	27E6	4	Washer
5	2538334	1	Frame
6	85D16	4	Nut
7	1523350	4	Washer
8	743995	2	Weld block
9	2527999	4	Weld block
10	2527998	2	Weld block
11	2527998	2	Weld block
12	2527999	2	Weld block
13	2515910	1	Belly guard front
14	17C1232	2	Bolt
15	2537718	2	Side panel
16	2515900	1	Cover
17	17C816	2	Bolt
18	17C1232	2	Bolt

No.	Part No.	Qty.	Description
19	27E12	2	Washer
20	27E12	4	Washer
21	17C1232	4	Bolt
22	17C1228	2	Bolt
23	———	—	Omit
24	17C816	4	Bolt
25	2515907	1	Cover
26	2528002	1	Belly guard trans
27	2527998	2	Weld block
28	17C1228	2	Bolt
29	27E12	2	Washer
30	2528000	1	Belly guard
31	17C16168	4	Bolt
32	1523350	4	Washer
33	2534907	1	Counterweight
34	791635	2	Weld block
35	17C820	2	Bolt
36	27E8	2	Washer
37	2538330	2	Weld block
38	17C860	2	Bolt
39	85D8	2	Nut
40	2539018	1	Grille guard
41	17C620	4	Bolt
42	27E6	4	Washer

[2]CMD sales item only
[3]Inc. 11 → 14, 16, 17 & 18
[4]Inc. 8, 9, 10, 19 → 26
[5]Inc. 27 → 30
[6]Inc. 3, 4, 5, 34 → 40
[7]Inc. 1, 2, 41, 42
[8]Inc. 15
[9]Inc. 6, 7, 31, 32 & 33

NUMERICAL INDEX

Part No.	Page No.
100171	A13, E15
100172	A13, A15, A19, A21
100173	A13, A15, A19, A21
100176	A13, A15, A17, A19, A21, A23, A25
100950	A13, A15, A17, A19, A21, A23, A35
102745	T17, T21
103216	A3
103522	A3, A5, A7, A9, A11
104412	A3, A5, A9, A11
106081	A13, A15, A17, A19, A21, A23, A25
106656	A11
106762	A3, A5, A7, A9, A11, A13, A15, A17, A19, A21, A23, A25
107348	A3, A5, A7, A9, A11
111656	A3, A5, A7, A9, A11
111720	A13, A15, A17, A19, A21, A23, A25
112278	A3
112279	A13
112287	A5, A7, A9, A11
112352	A13, A15, A17, A19, A21, A25
112354	A13, A15, A17, A19, A21, A23, A25
112460	W1
112461	W1
112462	W1
113936	A7, A9
113938	A7, A9
113939	A7, A9, A11
113941	A7, A9
113956	A11
119141	A3, A5, A9, A11
119270	A3
119298	A13, A15, A17, A19, A21, A23, A25
119469	A3
121013	A3, A5, A7, A9, A11
121014	A3, A5, A7, A9, A11
121166	A26
121214	A3, A5, A7, A9
121632	A13, A15
121808	A3, A5, A7, A9, A11
122565	A21, A25
122765	A13, A15, A17, A19, A21, A23, A25
123800	A13, A15, A17
123830	A13, A15, A17, A19, A21, A23, A25
123904	A3, A5, A7, A9, A11
124041	A13, A15, A17, A19, A21, A23, A25
124425	B7
124543	A3, A5, A9, A11
124573	A26
124574	A26
124575	A26
124576	A26
124577	A26
125576	A13, A15, A17, A19, A21, A23, A25
125577	A13, A15, A17, A19, A21, A23, A25
126132	A15, A19, A21
126133	A17, A23, A25
126135	A13, A15, A19, A21
126136	A17, A23, A25, A27
126243	A5
126415	A3, A5, A7, A9, A11
126416	A5
126463	A3, A5, A7, A9, A11
126468	A13, A15, A17, A19, A21, A23, A25
126894	A13, A17, A19, A21, A23, A25
127206	A3, A7, A9, A11
127398	A26
127399	A26
128117	A3, A5, A7, A9, A11
128213	A3, A5, A9, A11
128724	A3, A5, A9, A11
128730	A23
128731	A19, A25
128738	A7, A9
128746	A7, A9, A11
128747	A7, A9
128748	A7, A9, A11
128749	A7, A9, A11
128750	A7, A9, A11
128781	A21
128830	A3, A5, A7, A9, A11
128943	A7, A9, A11
129232	A13, A15
129235	A17, A19, A23
129242	A13
129776	A7, A9, A11
129777	A7, A9, A11
129778	A19
129779	A19, A21, A23, A25
129782	A23
129784	A3, A5, A7, A9, A11
129787	A3, A5, A7, A9, A11
129788	A3
129791	A7, A9
129793	A3, A5, A9, A11
129796	A3, A5, A9, A11
129815	B9
131743	Z27
188152	A11
188153	A11
188207	A5
188208	A5
195592	A3
195652	A7
195653	A9
195654	A9
195655	A7
199856	E16, E17
199857	E16, E17
200494	Z29
208805	B9
211433	T3
214295	T3
214985	T17, T21
215183	T15, T17, T19, T21
215502	E11, E12
215550	T17, T21
215757	T3
216058	T17, T21
219373	T3
221871	T3
222067	T3
222104	T17, T21
223015	T11, T13
223085	T11, T13
223349	T15, T19
223878	T11, T13
223922	T11, T13
223964	T15, T19
223997	T15, T19
224020	T15
224026	A3, A5, A7, A9, A11
224083	T15, T19
225597	T17, T21
225602	T17, T21
225605	T15, T19
225843	T15, T19
226862	T17, T21
227880	T9
227881	T9
228931	T9
230067	T15, T19
230829	T15, T19
230885	T15, T17, T19, T21
230889	T15, T19
231390	T3
231624	T11, T13
231776	T11, T13
231798	T17, T21
231815	T11, T13
233065	T15, T19
233264	T9
233389	T15, T19
233778	E7, T9
233779	T9
234020	T19
234099	E10, E11, E12, E13, T11, T13
234109	T4, T5, T6, T7
234111	T4, T5, T6, T7
234113	T4, T5, T6, T7
234130	T17, T21
234141	T15, T19
234145	T15, T19
234157	T3
234166	T3
234167	T9
234169	T9
234170	T9
234181	T9
234183	T9
234186	T9
234207	T11, T13
234210	T11, T13
234213	T11, T13
234214	T11, TT13
234215	T11, T13
234216	T11, T13
234226	T11, T13
234228	T11, T13
234229	T11, T13
234230	T11, T13, T17, T21
234237	T11, T13
234248	T11, T13
234256	T11, T13
234257	T11, T13
234264	T11, T13
234265	T3
234279	T3
234286	T11, T13
234299	T11, T13
234304	T15, T19
234305	T15, T19
234309	T11, T13
234327	T11, T13
234328	T15, T19
234336	T5
234347	T15, T17, T19, T21
234350	T15, T19
234362	T11, T13
234418	T9
234650	T9
234665	T23
234902	T17, T21
234904	T17, T21
234906	T17, T21
234908	T11, T13
234918	T11
234932	T11, T13
234973	T11, T13
234999	T15, T19
235214	T11, T13
235283	T11, T13
235296	T11, T13
235297	T3
235315	T9
235327	T9
235333	T11, T13
235334	T11, T13
235473	T3
235591	T11, T13
235593	T11, T13
235749	T17, T21
235751	T17, T21
235763	T15, T19
235764	T17, T21
235910	T21
235959	T15, T19
235960	T15, T19
236140	T11, T13
236150	T5
236151	T15, T19
236165	T15, T19
236178	T6, T7
236361	T15, T19
236582	T11, T13
236583	T11, T13
236584	T11, T13
236585	T11, T13
236607	T17, T21
236611	T7
236612	T17, T21
236613	T15, T19
236614	T17, T21
236620	T3
236622	T15, T19
236623	T3
236624	T3
236625	T15, T19
236637	T3
236646	T3
236651	T3
236656	T5
236666	T15, T19
236677	T17, T21
236685	T17
236686	T17
236847	T4, T5, T6, T7
237016	T4, T6, T7
237032	T4, T5, T6, T7
237377	T11, T13
237378	T11, T13
237437	T3
237442	T15, T19
237443	T15, T19
237450	T4, T6
237453	T6
237454	T11, T13
237507	T4
237516	T23

Part No.	Page No.
237518	T11, T13
237669	T15, T19
237835	T21
237839	T21
237841	T21
237860	T3
237875	T23
237877	T23
237878	T23
237879	T23
237880	T23
237881	T23
237886	T21
237888	T4
237890	T3
237936	T11, T13
237974	T11, T13
252387	C13
286055	T3
286056	T3
302218	R17, Z17
308031	B5
329884	E37, E39, E41
356618	T3, Z30, T13
507068	E28
507069	E29, E30, E31, Z38
509445	W1
509503	E15
509772	T25, T27, V7, Z43
511940	E7
513372	B5
517846	Z23
521874	E34, E35
522028	Z46
525293	H2, H3
527096	E15, E16, E17
528691	F4
537473	R7
538256	N3
539042	E15, E16, E19
539404	C7, Z21
541223	E33
541547	L1
542321	Z45, Z47
544512	B7, B8
545005	B8
545153	E19
549541	E25, E27
550288	Z36
550652	E28
551014	E21, E23, E27
551530	E7
551684	W1
551685	W1
552442	Z23, Z37, E45
552646	Z3
554686	F2, F3
554843	H1, H2, H3
556413	V7, Z43
556690	B8
557430	H5
557526	E37
558960	Z45
560164	Z46
561626	C5
561912	T25, T27
562659	Z14
562660	Z14
562742	Z15
562743	Z14
565295	F4, F5, F6, F7, H1, H2
567258	E31
567806	B7
568276	S3, S5
569295	F8
570832	E21
570988	C15, C17, Z13
571042	Z4
571570	R7, R9, R11
572299	E7, V7, Z43
574689	Z4
584092	F7
584502	B7, V7, Z43
587613	H1, H2, H3
588199	R13
589401	W1
600259	E3
601390	E3, E5, Z37
611074	E3, E5
613750	V5, Z41
614021	S5, H7, H9, S3
623762	E21, E23, E25, E27
623829	E21, E23, E25, E27
626787	C9, C11, C13, C15, C17, C19, Z13
635583	Z37
637739	Z29
645092	B7, E8
647310	E7
652444	E37
654613	T17, T21
656532	H11, H13
658040	T17, T21
660863	F2, F3
661415	T11
661840	Z30
663013	H9
664131	T17, T21
664141	T13
666842	E34
666845	H11, H13
666867	E34, E35
667266	A9, A11
667277	A13, A15, A17, A19, A21, A23, A25
667278	A13, A15, A17, A19, A21, A23, A25
668386	B13
668553	A3, A5, A7, A9, A11
672004	A3, A5, A7, A9, A11
672005	A3, A5, A7, A9, A11
672572	T17, T21
672907	A26
675227	B7, T25, T27
675248	A13, A15, A17, A19, A21, A23, A25
675249	A13, A15, A17, A19, A21, A23, A25
675257	A13, A15, A17, A19, A21, A23, A25
675261	A3, A5, A7, A9, A11
675536	A13, A15, A17, A19, A21, A23, A25
710047	T11, T13
710288	A13, A15, A17, A19, A21, A23, A25
742175	Z18, Z19
742709	Z17
743417	T17, T21
743439	T17, T21
743458	T11, T13
743563	H1, H2, H3
743669	T17, T21
755152	Z23, Z39
784663	R9, R13, R15
784717	R3, R5
791052	H5, H13
791633	Z44
791635	Z24
799058	Z27
799476	Z3, Z29, Z30, Z31, Z32, Z33
801994	T17
815744	A13, A15, A19, A21
840446	A13, A15, A17, A19, A21, A23, A25
840597	A27
840598	A27
840627	B11
840643	B11
840644	B11
840789	B11
840794	B9
840803	B9
840873	A27
840874	A27
840943	B11
840964	A27
840968	B9
856604	Z17
865932	V12
876354	P7, P9
886739	V5, Z41
886745	Z41
886753	V5, Z41
886764	V5, Z41
890373	Z46
890374	Z46
890375	Z46
893267	V5, Z41
893293	V5, Z41
893295	V5, Z41
893341	V12
894300	Z37
895771	E3, E5
896803	Z29
898539	E7
898704	P7
898706	P7, P9
940090	P3, P4, P5
941325	W1
941326	W1
941329	W1
943957	F7
944862	P1, P2, P3, P4, P5
944872	E7, Z37
944878	V9, V11
944885	V5, Z41
944895	Z41
945348	Z41
945443	E11, E12
945444	E11, 12
946008	E11
946396	P7, P9
946397	P7, P9
946401	P7, P9
946860	E16, E17
946882	V5, Z41
947791	V5, Z41
948267	P9
948610	Z47
948795	P7, P9
949036	Z23
949037	Z23
949039	Z23
949054	Z23
949095	E10
949096	E10
949143	Z46
949144	Z46
949180	Z46
949181	Z4
949182	Z46
949183	Z46
949184	Z46
949191	Z23
949192	Z23
949300	V9, V11
949302	V5, Z41
949303	V5, Z41
949304	V5, Z41
949305	V5, Z41
949349	Z41
949418	E10
949444	B11
949445	B11
949598	Z29
949600	Z3
949602	Z2
949605	Z3
949608	Z3
949620	Z3
949623	Z3
949626	Z3
949639	Z3, Z29
949734	Z2
949736	Z29
949737	Z29
949738	Z29
949741	Z29
949744	Z45
949745	Z45
949746	Z45
949747	Z45
949758	Z2
949767	Z4
949786	Z4
949803	Z17, Z29
949804	Z17
949885	Z41
960096	Z46
960503	E7, Z37
960562	Z29
960565	Z45
960595	Z29
960601	V5, Z41
960641	E11, E13, H1, H2
960646	Z17
960654	Z3
960681	Z29
960698	E13
960910	V9, V11
960912	V9, V11
960914	V9, V11
960962	Z37
960965	V5, Z41
960975	V5, Z41
960978	E10
960981	Z17
960986	Z17
961000	E10, E11, E13, E14, E15, E19
961001	E10, E11, E13, E14, E15, E9
961002	E14, E15, E19
961014	V9, V11
961015	V11
961017	V9, V11
961018	V9, V1
961019	V
961020	V5
961021	V9, V11
961023	V11
961048	E13
961343	Z17

Part No.	Page No.
961450	Z19
961732	V12
961772	V9, V11
961775	V9, V11
961781	Z4
961865	P7, P9
961866	P7, P9
961867	P9
961868	P7, P9
961869	P7, P9
961873	Z18, V2
961883	V2, V3
961903	P3
961904	P1
961905	P1
961906	P1, P2
961907	P4
961908	P4
961909	P1, P2
962192	E7
962193	E7
962259	E16, E17
962265	H1, H2
962266	H1, H2
962267	H1, H2
962273	S1
962274	S1
962276	S1
962277	S1
962278	S1
962279	S1
962280	S1
962281	S1
962282	S1
962283	S1
962287	S1
962288	S1
962289	V9
962290	V11
962295	R3
962297	R3
962298	R3
962299	R3
962300	R3
962301	R3
962302	R3
962303	R3
962305	R3
962306	R3, R5
962307	R3, R5
962308	R3, R5
962325	E11
962326	E11
962329	R3
962330	R3
962359	V9, V11
962361	V11
962401	E13
962402	E13
962422	V2
962423	V2
962424	V2
962425	V2, V3
962426	V2
962427	V2, V3
962428	V2
962430	V2
962431	V2, V3
962432	V2, V3
962435	V5, Z41
962439	V5, Z41
962440	V5, Z41
962441	V5, Z41
962448	V5, Z41
962449	V5, Z41
962450	V5, Z41
962451	V5, Z41
962462	B11
962473	Z17
962474	Z17
962475	Z17
962476	Z17
962479	Z17
962480	V9, V11
962485	Z17
962489	Z17
962507	Z17
962508	V12
962509	V12
962510	V12
962550	V12
962559	H7, H9
962579	S1
962704	V5, Z41
962705	V5, Z41
962706	V5, Z41
962707	V5, Z41
963006	E10, E12, H3
963023	E10, V5, Z41
963086	P5
963087	P5
963090	P5
963103	P2
963104	P2
963105	P2
963121	R5
963122	R5
963124	R5
963126	R5
963127	R5
963128	R5
963135	R5
963141	R5
963143	H3
963146	R5
963147	R5
963191	V3
963192	V3
963193	V3
963194	V3
963196	V3
963204	P5
963205	E12
963206	E12
980828	Z41
980830	V9, V11, Z41
980832	Z41
980834	V5, Z41
980835	V5, Z41
980836	V5, Z41
980838	V5, Z41
980840	V5, Z41
990556	B5, E7
991697	S7
992891	Z46
992892	Z46
992896	Z46
993183	Z46
999244	R5
1011708	H1, H2, H3
1013100	Z3
1300057	Z29
1300309	H11, H13
1300688	T11, T13
1301700	E5
1302084	Z3
1303297	Z29
1303489	E39
1304601	Z39
1306142	H5, H7, H9, H11, H13
1307059	H11, H13
1307187	Z18, Z19
1307511	E10, Z3
1307998	E5
1308261	B2
1310615	H5
1310700	E3
1316930	E35
1319124	Z3, Z30, Z31, Z32, Z33
1319451	Z29
1323000	S1
1503251	B7, T25, T27, V7, Z43
1503629	Z13
1503631	Z13
1505581	N3
1505613	S7
1506079	E30
1509185	L1
1509473	H7, H9
1509590	N3, Z24
1509752	Z36
1511539	C9, C11, C19, Z13
1511544	C9, C11, C19, Z13
1511708	N3
1511709	Z34
1511711	N3
1511750	C13
1511770	F4
1512006	N3
1512863	N3
1513575	Z18, Z19, Z39
1513577	Z18, Z19, Z39
1513727	B8
1513887	N3
1515349	Z30, Z31, Z32, Z33
1516076	E16, E17
1516649	Z37
1516653	R17
1518449	E7
1519032	Z3
1519254	S7, Z39
1519401	Z3
1519991	S7
1520087	E14
1520190	E21
1520193	E21, E25, E27
1522535	B7, T25, T27, V7, Z43
1523149	E17
1523209	E21
1523210	E21
1523338	N3
1523350	C6, C7, Z20, Z22
1525588	E15, E16, E17, E19
1529625	E14, E15, E16, E17, E19
1529688	E34, E35, Z29, Z30, Z31, Z32, Z33
1530076	B13
1530264	Z13
1531342	L1
1531606	Z24
1531891	B17
1534135	E7
1535626	F2, F3
1537882	Z3
1538762	L1
1539058	C2
1539062	E15
1544449	S3, S5
1544695	E21, E23, E25, E27
1545004	R13
1545186	E39, H11
1545204	B15
1545232	F4
1548069	Z37
1549705	E7, Z7
1558644	F7
1563419	B13
1566517	F5, F6
1566881	P7, P9
1566982	P7, P9
1566983	P7, P9
1566984	P7, P9
1566986	P7, P9
1572143	Z18, Z19
1572890	Z15
1573309	F2, F3
1574465	C21, C23
1577541	E39
1578503	P7, P9
1580352	Z46
1580531	E13
1621325	E3, E5
1642530	E19
1662965	C5
1675618	B7
1702092	E11
1736910	C2, H1, H2, L1, Z3, Z4, Z6, Z18, Z19, Z39, Z45
1767120	E13, E41
1767898	B5, E7
1772420	Z25
1781581	Z39
1900712	F2, F3
1901972	E14, E15, E16, E17, E19
1902362	R7
1922864	Z4
1990270	E29
1990274	E28
1990278	Z18
1990400	Z18, Z19
1990515	E10
1991277	P5
1991313	P3
2105902	A11
2106009	A11
2106010	A11
2106012	A11
2106013	A21, A25
2106014	A11
2106015	A11
2106206	A15
2106207	A15, A17
2106209	A5
2106211	A17
2106726	A21
2106728	A25
2336780	Z47
2338564	E7
2342091	E34, E35
2342092	E34, E35
2351139	Z25
2500232	C21, C23
2500234	C15, C17
2501082	Z46
2501147	C5
2501575	T25, T27
2501949	Z29
2502443	Z17
2502444	Z17

Part No.	Page No.
2503001	F2, F3
2503151	E7, Z37
2503587	C5
2504973	Z18, Z19
2504975	Z18, Z19
2504977	Z18
2505200	T25, T27
2505713	E39
2506366	N3
2506407	C23
2506408	C21
2506507	V7, Z43
2508499	N3
2508568	N3
2508901	Z17
2509100	Z37
2509846	Z17
2510132	Z17
2510261	Z29
2510276	Z29
2510280	Z46
2510390	E27
2510883	E29, E30, E31
2511022	B2, E3, E7
2511176	Z3
2511177	Z3
2511185	Z3
2511232	R17
2511233	Z29
2511234	Z29
2511247	Z29
2511248	E3, E5, Z3, Z29, Z37, Z45, Z47
2511285	Z3
2511475	Z14
2511476	Z15
2511478	Z15
2511481	Z15
2511482	Z14
2511491	Z3
2511492	Z3
2511632	Z17
2511891	E3
2511892	E3
2511893	E3
2511894	E3
2511899	P1
2511913	E41
2511914	E37, E39, E41
2511928	P3
2511931	C21
2511933	C21
2511934	C21
2511935	C21
2511955	C9, C11, C13, C15, C17, C19, Z13
2511956	B5, F2, F3
2511957	C15, C17
2511959	C15, C17
2511962	C15, C17
2511969	C15, C17
2511993	C9, C11, C19, Z13
2512001	C11
2512008	C9, C11
2512010	C9, C11, Z13
2512011	C9, C11, Z13
2512012	B5
2512013	B5, C15, C17, C19, Z6, Z13
2512014	B5, C9, C11, C13, Z6
2512036	F3
2512037	B5
2512050	F3
2512051	B5
2512052	B5
2512053	Z17
2512056	Z29
2512058	B7
2512060	C15, C17
2512159	B5, Z9, Z11, Z25
2512168	B5, Z9, Z11
2512169	B5, Z9, Z11
2512288	E29, E30, E31
2512351	E19
2512354	E19
2512361	E29
2512362	E19
2512539	E7
2512540	E7
2512541	B2
2512542	F2
2512543	F2
2512577	E7
2512578	Z46
2512596	B17
2512599	B17
2512600	B17
2512610	Z7
2512614	R15
2512615	R13
2512705	B17
2512706	B17
2512735	Z47
2512760	E3, E5
2512770	V7, Z43
2512771	V7, Z43
2512772	Z43
2512801	B17
2512825	E25, E27
2512840	Z45
2512861	Z7
2512899	Z45
2512918	E3, E5
2512979	C2
2512997	F7, F8
2513005	T25, T27
2513006	T25, T27
2513007	T27
2513020	H5
2513021	H5
2513034	H5
2513035	H7, H9
2513036	H7, H9
2513037	H7, H9
2513038	H7, H9
2513042	H7, H9
2513048	E3, E5
2513067	E7
2513116	Z34
2513119	F7, F8
2513120	F7, F8
2513124	H5
2513152	Z39
2513153	Z39
2513351	N3
2513352	N3
2513418	E27
2513441	Z36
2513442	Z36
2513459	B13
2513470	E3
2513474	Z36
2513628	N3
2513630	N3
2514107	C13
2514109	C13
2514211	R15
2514253	E3, E5
2514435	E7
2514436	E7
2514438	E7
2514461	E41
2514611	S3
2514814	B17
2514862	H7, H9
2514887	B5, Z9, Z11, Z25
2515030	Z24
2515035	E3, E5
2515087	Z24
2515088	Z24
2515118	R7, R9, R11, R13, R15
2515208	Z3
2515282	Z36
2515307	E3
2515322	H7, H9
2515337	Z3
2515356	N3
2515357	N3
2515465	H7, H9
2515558	P11
2515623	B5, Z13
2515624	B5
2515625	Z9, Z11
2515626	B5
2515708	H5
2515710	B5, Z9, Z11
2515723	B5, Z9, Z11
2515734	E21, E23, E25, E27
2515745	R13
2515757	H11, H13
2516008	E7
2516105	Z36
2516246	S7
2516393	S3
2516395	Z3
2516396	Z3
2516429	E15, E19
2516450	C11
2516453	E29
2516456	E29, E30, E31
2516457	E15, E16, E17
2516460	E39
2516474	S3
2516477	T25, T27
2516479	T25, T27
2516482	T25, T27
2516484	E7
2516496	E29, E31
2516498	H5
2516510	R9
2516511	R9
2516513	F5, F6, F7
2516549	B8
2516560	C9, C19
2516717	Z25
2516721	E21, E23, E25, E27
2516722	E21, E23, E25, E27
2516746	V7, Z43
2516747	V7
2516748	Z43
2516749	Z43
2516750	V7
2516751	V7, Z43
2516752	V7, Z43
2516803	B5
2516848	E29
2516912	E7
2516923	B7
2516926	B7
2516930	B7
2516981	E3, E5
2517019	E7
2517020	E7
2517021	Z7
2517022	E7
2517044	E7
2517045	E7
2517047	P4
2517056	E7
2517176	Z29
2517272	Z45
2517312	E7
2517326	Z24
2517337	Z24
2517476	S3
2517481	S5, Z3
2517482	S3
2517536	B7
2517592	B7
2517634	Z24
2517635	Z24
2517646	F2
2517689	F2
2517721	Z4
2517746	B11
2517749	H5
2517750	Z36
2517752	Z36
2517754	H5
2517755	H5
2517756	H5
2517757	H5
2517758	H5
2517759	H5
2517760	H5
2517761	H5
2517762	H5
2517763	H5
2517764	H5
2517788	H5
2517823	Z24
2517824	Z24
2517849	C5
2517850	S5, Z3
2517851	S5, Z3
2517917	P7
2517918	H7, H9
2517927	C5
2517941	C5
2517944	C5
2517966	C5
2517997	R17
2518000	R17
2518002	C5
2518016	B2
2518045	E3
2518069	P9
2518072	E13
2518137	C9, C19
2518140	C6
2518151	C17
2518154	C15
2518180	E21
2518181	E21
2518200	C9
2518202	C9
2518205	C11
2518207	C11
2518306	Z7
2518316	B5
2518321	B5
2518359	F5, F6
2518360	F5, F6
2518445	C15, C17, Z13

Part No.	Page No.
2518466	C21
2518467	C21
2518469	Z20
2518470	Z20, Z22
2518475	C21
2518512	C21
2518513	C21
2518561	B17
2518572	B17
2518612	C13
2518614	C13
2518689	Z5
2518690	Z5
2518701	Z3
2518708	B2
2518721	B17
2518725	E7
2518761	B17
2518819	Z5
2518892	E14
2518893	E14
2518894	E28
2518895	E28
2518896	R7
2518897	R7
2519000	E37
2519001	E28
2519002	E28
2519003	E14
2519020	F3
2519021	E7
2519022	E7
2519028	S1
2519031	S5
2519033	S5
2519035	S5
2519036	S5
2519037	S5
2519066	R17, Z17
2519068	H13
2519069	H13
2519115	B3
2519116	B3
2519125	Z17
2519188	B7
2519253	Z47
2519263	R17, Z17
2519323	E10, E11, E12, E13, E37, E39, E41
2519335	B13
2519336	B13
2519337	N3
2519344	Z45
2519346	Z47
2519348	N3
2519349	Z45
2519361	S3, S5
2519372	R17
2519384	H1, H2
2519386	H1, H2
2519388	H1, H2
2519390	H1, H2, H3
2519427	Z27
2519428	Z27
2519431	N3, Z24
2519446	B17
2519447	B17
2519468	N3
2519469	N3
2519470	B17
2519471	B17
2519490	Z5
2519491	Z5
2519492	Z5
2519533	Z37
2519652	B17
2519653	Z18, Z19
2519695	N3
2519696	N3
2519703	Z27
2519861	Z5
2519948	Z35
2519949	Z35
2519950	Z35
2519951	Z35
2519952	Z35
2519971	C15, C17
2519972	C9, C19
2519973	C21, C23
2519987	C11
2520023	H7
2520024	H7
2520025	B13
2520027	H5
2520084	Z35
2520135	Z35
2520137	Z35
2520203	Z9
2520204	Z11
2520245	Z29
2520246	Z29
2520247	Z29
2520249	Z29
2520250	Z29
2520251	Z29
2520252	Z29
2520255	Z29
2520256	Z29
2520257	Z29
2520261	Z29
2520262	Z29
2520263	Z29
2520264	Z29
2520265	Z29
2520266	Z29
2520267	Z29
2520273	Z29
2520277	Z29
2520280	Z3, Z29
2520283	Z3, Z29
2520286	Z29
2520290	Z29
2520294	Z29
2520301	E10
2520310	Z3, Z29
2520323	B7
2520346	E21, E23, T25, T27
2520419	E39
2520483	E31
2520486	E31
2520491	C5
2520521	N3
2520522	N3
2520523	N3
2520524	N3
2520525	N3
2520526	N3
2520567	Z8
2520568	Z8
2520570	Z8
2520572	Z8
2520577	Z8
2520578	Z8
2520599	E31
2520730	Z8
2520843	Z13
2520868	Z18, Z19
2520902	Z6
2520907	Z13
2520912	Z13
2520915	Z13
2520919	Z13
2520920	Z13
2520921	Z13
2520922	Z13
2520923	Z3
2521000	B5
2521005	B5
2521041	C15
2521042	C17
2521043	C15
2521044	C17
2521075	C15, C17
2521078	C15, C17
2521082	C15
2521083	C17
2521089	H11, H13
2521090	H11, H13
2521091	Z4
2521207	H5
2521259	Z4
2521330	Z26
2521336	B13
2521337	B13
2521424	H1, H2
2521434	E16
2521435	E16, E17
2521436	E16, E17
2521437	S3
2521556	Z3
2521557	Z3
2521558	Z3
2521559	Z3
2521561	Z3
2521566	Z3
2521567	Z3
2521568	Z3
2521569	Z3
2521570	Z3
2521572	Z3
2521573	Z3
2521576	Z3
2521577	Z3
2521581	Z3
2521629	E21
2521682	E11, E12, E16, E17
2521683	E11, E12, E16, E17
2521766	C11
2521767	C11
2521768	C11
2521772	C9
2521773	C9
2521774	C9
2521775	H7
2521776	H7
2521777	H5
2521779	H7
2521780	H5
2521785	H11
2521786	H11
2521800	N3
2521880	E3, E5
2521940	B13
2521941	B13
2521943	H7, H9
2521944	S7
2521945	S7
2521969	E25
2521981	H11, H13
2521983	B17
2521993	B13
2522001	S3
2522004	F3
2522034	R9
2522035	R9, R13
2522049	H11, H13
2522078	Z3
2522080	Z3
2522090	B17
2522091	B17
2522142	B17
2522143	B17
2522150	S3, S5
2522161	S5
2522256	F3
2522258	F3
2522303	F4, F5, F6, F8
2522304	F4, F5, F6, F8
2522306	F4, F5, F6, F7, F8
2522321	S5
2522352	H7, V12
2522358	B15
2522359	B15
2522360	B15
2522361	B15
2522364	A9, A11, S5
2522384	F2, F3
2522385	F2, F3
2522386	F2, F3
2522393	F2, F3
2522400	E25
2522414	E3, E5
2522417	Z29
2522461	N3
2522462	N3
2522569	H7, H9
2522681	E29, E31
2522682	L1
2522745	S1
2522755	C5
2522804	E15
2522805	E16
2522942	V2
2523013	B5
2523015	B5
2523017	B5
2523078	Z29
2523085	B15
2523086	B15
2523087	B15
2523109	N3
2523122	C5
2523140	B17
2523155	B11
2523269	Z5
2523305	Z17
2523311	Z17
2523313	Z17
2523316	Z17
2523317	Z17
2523318	Z17
2523319	Z17
2523320	Z17
2523327	Z17
2523344	Z17
2523349	Z17
2523353	Z17
2523364	Z17
2523380	W1
2523382	W1
2523384	W1
2523390	Z17
2523392	Z17
2523395	Z17
2523397	Z17
2523402	Z26

Part No.	Page No.
2523445	Z26
2523450	Z17
2523452	Z17
2523456	Z17
2523458	Z17
2523463	Z17
2523466	Z17
2523539	Z11
2523540	Z11
2523624	Z17
2523625	Z17
2523626	Z17
2523627	Z17
2523628	Z17
2523633	Z34
2523634	Z34
2523635	Z34
2523636	Z34
2523637	Z34
2523685	R9, R13, R15
2523723	Z17
2523734	H7
2523869	C13
2523871	C13
2523872	C13
2523873	C13
2523989	Z17
2524059	N3
2524063	Z17
2524144	P5
2524147	C7
2524253	R11
2524254	R11
2524255	B3
2524258	B3
2524259	E30
2524260	B3
2524286	E39
2524288	R3, R5
2524355	B15
2524358	Z25
2524395	H13
2524418	B13
2524427	H13
2524434	F3
2524435	F3
2524533	Z44
2524534	Z44
2524562	P2
2524589	E3, E5
2524591	R3, R5
2524647	H11
2524660	H11
2524673	F4
2524674	F4
2524676	E17
2524682	E37
2524686	E33
2524693	E23
2524694	E37
2524721	R3, R5
2524849	B7
2524879	S3
2524901	H13
2524965	H9, V12
2525009	V5
2525010	Z41
2525066	C7
2525069	A11, B3, B5, E5, R3, R5, S3, S5
2525070	B7, E37, E39, H7, H9, R3, R5
2525107	Z36
2525140	Z21
2525142	Z21
2525143	C7
2525146	Z21
2525161	F8
2525245	Z22
2525270	Z22
2525271	Z22
2525273	Z6
2525301	E37
2525350	B17
2525352	B17
2525387	B17
2525398	Z24
2525401	F3
2525403	Z24
2525404	Z24
2525440	Z5
2525441	Z5
2525458	Z5
2525494	B17
2525685	Z6
2525728	B5
2525793	H5
2525838	V5
2525839	Z41
2525944	S5
2525945	S5
2525949	C13
2525989	H5, H9
2525994	H3
2525999	H9
2526000	H9
2526075	H9
2526181	C7
2526241	N3
2526242	N3
2526338	Z38
2526339	Z38
2526425	H7, H9
2526426	H7
2526431	H5
2526475	Z38
2526525	H9
2526526	H9
2526597	Z24
2526656	C19
2526660	C19
2526664	C19, H5
2526665	C19
2526667	C19
2526668	C19
2526674	H9
2526675	H9
2526736	E30
2526738	E30
2526784	E30
2526812	R7, R11
2526832	H3
2526849	C23
2526850	C23
2526852	C23
2526856	C23
2526858	C23
2526859	C23
2526860	C23
2526861	C23
2526968	H3, L1
2526977	E7
2526994	B5
2527016	E33
2527017	E33
2527023	E37
2527026	E33
2527689	Z18
2527741	Z24
2527743	F4
2527746	S5
2527799	Z19
2527845	Z18, Z19
2527846	Z18, Z19
2527852	Z19
2527864	Z18, Z19
2527865	Z18, Z19
2527866	Z18, Z19
2527867	Z18, Z19
2527868	Z19
2528195	Z24
2528379	Z18, Z19
2528401	E23
2528402	E23
2528429	E28
2528758	E5
2528760	E5
2528761	E5
2528766	V3
2528824	E5
2528825	E5
2528826	E5
2528827	E5
2529461	C23
2529462	C13
2529463	C19
2529465	C23
2529466	C19
2529467	C13
2544445	H1, H2, H3
3237998	N3
3238021	N3
3238026	N3
3238050	N3
3238055	N3
3240253	N3
3240254	N3
3240263	N3
3240264	N3
3284568	P9
3284570	P7
3291290	E14, E15, E16, E17, E19
3300367	N3
3300368	N3
3301471	N3
3301572	N3
3490186	E31
3575859	E11
3585983	N3
3585984	N3
3585991	N3
3585992	N3
3586060	N3
3586061	N3
3586508	N3
3586512	N3
3586519	N3
3586838	N3
3586993	N3
3587150	N3
3587311	N3
3587312	N3
3587313	N3
3739636	E14, E15, E19
3900139	N3
3900140	N3
3950540	N3
3951954	B8
3966391	N3
3981073	Z34
4525576	P7, P9
4525754	P7, P9
5200219	E7, S7
5205303	E14, E15, E19
5207528	E7
5208016	E11
5209947	S7
5290078	E29, E30
5293505	B9
5299099	P3, P4
5299100	P3, P4
5299512	H7, H9
5307245	N3
5962305	R5
6000689	H5, H7, H9, H11, H13
6002456	Z17, Z29
6005044	Z3
6192092	V12
6506826	E3
6511766	E13
6512873	E7
6515772	E13, E41
6515805	C21
6519315	E41
7522107	S1