RUTHZIL TRATOR COMERCIAL DE PEÇAS LTDA 11 97083-6812 ROLANDO

ABRIL 2005

463

Bobcat®

Parts Manual

S/N 5222 11001 & Above
S/N 5221 11001 & Above
S/N 5389 11001 & Above
S/N 5390 11001 & Above

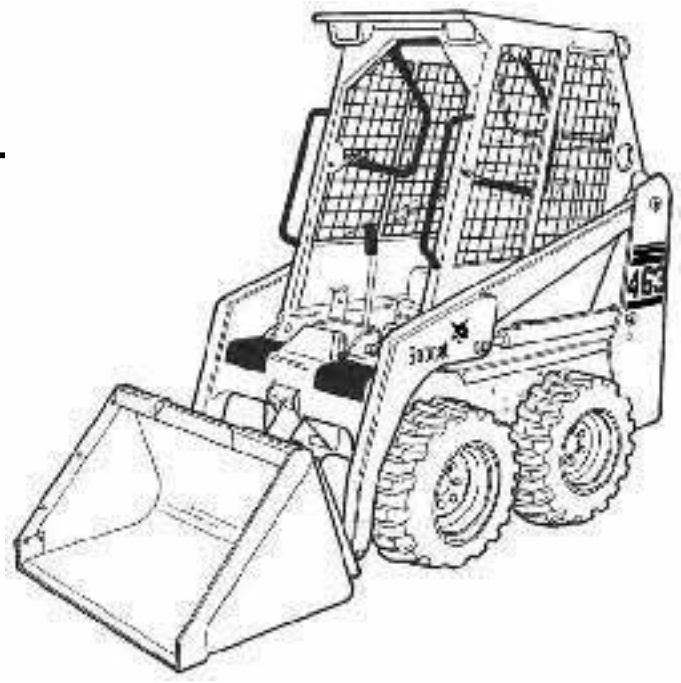

EQUIPPED WITH BOBCAT INTERLOCK CONTROL SYSTEM (BICS™)

An IR Ingersoll-Rand business

6902178 (9-02) Revised (4-05)

Printed in U.S.A.

© Bobcat Company 2005

GENERAL INFORMATION

When using the machine serial number, use the complete number. When Serial Numbers do not appear below the page heading, parts information applies to all loaders.

Some Serial Number breaks are not available at time of printing. These are listed as & Below or & Above.

The number shown in the quantity column in this manual is the number of parts needed for the illustration on the page. For some parts an "x" will be shown in the quantity column. This "x" indicates that the quantity to be used is "As Needed".

When references L.H. and R.H. are used in this manual, it is done from the operator's seat in the forward operating position.

To find the size and kind of bolt use the Bobcat Standard Microfiche (P/N 6566077).

Some of the illustrations and information found in this parts manual were supplied to Bobcat Company by machine component companies.

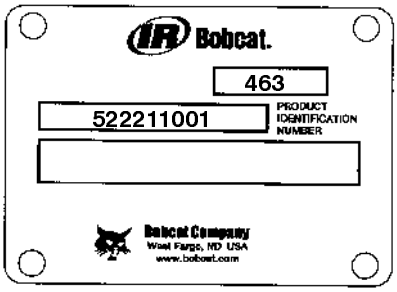

DOMESTIC

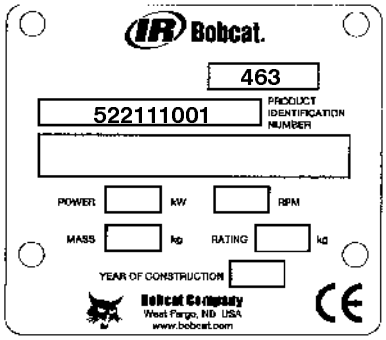

EXPORT

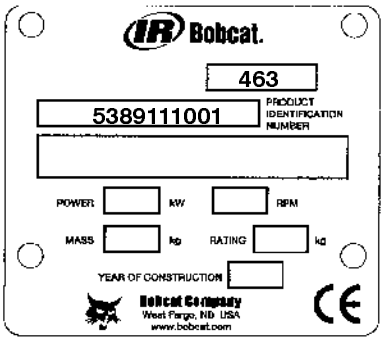

DOMESTIC

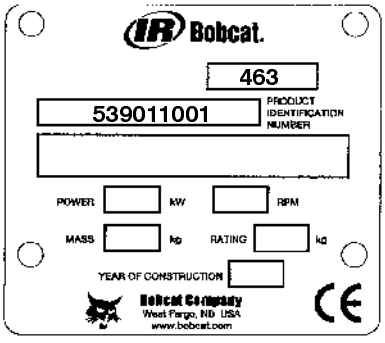

EXPORT

ABBREVIATIONS & SYMBOLS

SALES = Order from Gwinner Sales Department

NSS = Not Serviced Seperately

NAP = Not Available as Parts

* = Changed or Added Sections, Pages or Part Number

Disposition Code Definition
(Found in the Remarks Column)

[A] = Use Up

[B] = Use Up on Other Appplication (See PNI)

[C] = File PDR Report With Bobcat Parts Sales

[D] = Part Number Error

Explications en francais	Grid Nb	3
Erklärungen auf deutsch	Grid Nb	4
Spiegazioni in italiano	Grid Nb	5
Explicaciones en espanol	Grid Nb	6
Verklaring in het Nederlands	Grid Nb	7

NOTE D'INFORMATION

Pour toute référence au numéro de série de l'engin, toujours donner le numéro complet.

Le chiffré apparaissant dans la colonne des quantités de ce manuel représentent le nombre de pièces nécessaires pour l'illustration reprise sur la page. Dans certains cas, on lira un "x" dans la colonne des quantités. Cet "x" indique que la quantité nécessaire est "selon besoin".

Pour toute référence vers la GAUCHE ou la DROITE dans ce manuel, considérer que la personne se trouve assise dans le siège de l'opérateur, en position de fonctionnement en marche avant.

Certaines illustrations et informations reprises dans ce manuel de pièces de rechange ont été fournies à Bobcat par des fabricants de composants.

ABREVIATIONS & SYMBOLES

SALES	= Commander au Service Ventes à Bruxelles
NSS	= Pas vendu séparément
NAP	= Non disponible comme pièce de rechange
*****	= Chapitre, page ou numéro de pièce modifié ou supplémentaire
BTI	= Bobcat Technical Information Bulletin : voir à la fin de la microfiché du modèle concerné ou la microfiche générale reprenant l' ensemble des "BTI".
was 6535403	= était avant 6535403
adj. (adjustment)	= réglage
Assembly	= ensemble
available W/Ref.	= disponible avec réf.
bulk/sold per foot	= en vrac/vendu par pied
does not include	= ne comprend pas
included with	= compris dans
I.D.	= D.I. (diamètre intérieur)
O.D.	= D.E. (diamètre extérieur)
not in kit	= pas en kit
W/ - WO/	= inclus/ - non inclus/
Qty	= quantité requise
see page/ref.	= voir page/réf.
used with ref/	= utilisé avec réf.
0,05 inch thickness	= 0,05 pouce d'épaisseur (un pouce = 25.4 mm)
weld on	= à souder

ALLGEMEINE INFORMATIONEN

Bei Angabe der Maschinen-Seriennummer stets die komplette Nummer angeben.

Bei der in der Mengenspalte (Anzahl) in diesem Handbuch angegebenen Zahl handelt es sich um die Anzahl von Teilen, die für die Abbildung auf der betreffenden Seite benötigt werden. Bei manchen Teilen in der Mengenspalte ist ein “x” angegeben. Dieses “x” weist darauf hin, dass sich die Anzahl der verwendeten Teile auf den “Bedarf” bezieht.

Bei Verwendung der Seitenangaben links und rechts in diesem Handbuch gelten diese für die Blickrichtung vom Fahrersitz aus, und zwar in Vorwärts-Betriebsrichtung.

Einige der in diesem Ersatzteilhandbuch aufgeführten Abbildungen und Informationen wurden der Bobcat von den Herstellern von Maschinenbauteilen zur Verfügung gestellt.

ABKÜRZUNGEN UND SYMBOLE

SALES	= Bestellung bei der Verkaufsabteilung in Brüssel
NSS	= Nicht einzeln erhältlich
NAP	= Nicht als Ersatzteil erhältlich
*****	= Geänderte oder hinzugefügte Abschnitte, Seiten oder Teilenummern
BTI	= Bobcat Technical Information Bulletin : Siehe am Ende der Mikrokarte des jeweiligen Modells oder der allgemeinen Mikrokarte der BTI.
was 6535403	= War 6535403
adj.	= Einstellung
Assembly	= Baugruppe
available W/Ref.	= erhältlich mit der Referenz
bulk/sold per foot	= Mengenabnahme / Verkauf pro Fuss
does not include	= beinhaltet nicht
included with	= enthalten in
I.D.	= Innendurchmesser
O.D.	= Aussendurchmesser
not in kit	= nicht in Bausatz
W/ - WO/	= mit/ - ohne/
Qty	= Anzahl
see page/ref.	= Siehe Seite / Referenz
used with ref.	= verwendet mit Referenz
0.05 inch thickness	= Dicke : 0.05 Zoll (ein Zoll = 25.4 mm)
weld on	= anschweissen

INFORMAZIONI GENERALI

Quando si usa il numero di serie della macchina usare il numero completo.

Il numero mostrato nella colonna della quantità di questo manuale corrisponde al numero di componenti necessari per l'illustrazione della pagina. Per alcuni componenti appare "X" nella colonna delle quantità. Questa "X" indica che la quantità da usare è "come necessario".

See in questo manuale si fa riferimento alla parte destra o sinistra, si intende dal sedile dell'operatore nella posizione in avanti di funzionamento.

Alcune delle illustrazioni e informazioni trovate in questo manuale di componenti sono state fornite alla Bobcat da società di componenti di macchine.

SIMBOLI E ABBREVIAZIONI

SALES	= Ordinare al servizio vendite di Bruxelles
NSS	= Non vendute separatamente
NAP	= Non disponibile come componente
*	= Sezioni, pagine o numeri di componente cambiati o aggiunti
BTI	= (Bobcat Technical information) Ved. al termine del microfiche del modello relativo oppure microfiche generale
was 6535403	= era 6535403
adj. (adjustment)	= regol. (regolazione)
Assembly	= Complessivo
available W/ref.	= disponibile con rif.
bulk/sold per foot	= alla rinfusa/venduto al piede
does not include	= non comprende
Included with	= compreso con
I.D.	= d. i.
O.D.	= d. e.
not in kit	= non fa parte del kit
W/ - WO/	= con – senza
Qty	= Qtà
see page/ref	= ved. pagina/rif.
used with ref.	= usato con il rif.
0,05 inch thickness	= spessore 0,05 pollici (un pollice = 25,4 mm)
weld on	= a saldare

INFORMACION GENERAL

Al utilizar el número de serie de la máquina, debe emplearse el número completo.

El número que figura en la columna de “Unidades” en este manual es el número de piezas que se necesitan para la ilustración que consta en la página. En algunas piezas aparece una “x” en la columna de “Unidades”. Esta “x” indica que las unidades a utilizar son “según sea necesario”.

Cuando se empleen las referencias izq. y dcha., éstas se entienden mirando desde el asiento del conductor, en posición de marcha adelante.

Algunas de las ilustraciones y la información que figuran en este manual de piezas han sido facilitadas a Bobcat por empresas de componentes de máquinas.

ABREVIATURAS Y SIMBOLOS

VENTAS	= Pedido al Departamento de Ventas de Bruselas
NSS	= No se vende por separado
NAP	= No disponible como pieza de repuesto
*****	= Secciones, páginas o referencias modificadas o añadidas
BTI	= (Bobcat Tecnical Information) Ver al final de la microficha del modelo afectado o en la microficha general “Boletín de Información Técnica Bobcat”.
was 6535403	= era anteriormente el 6535403
adj. (adjustment)	= ajuste
assembly	= conjunto
available W/Ref.	= disponible con la ref.
bulk/sold per foot	= a granel/vendido por pies
does not include	= no incluye
included with	= incluido en
I.D.	= diámetro interior
O.D.	= diámetro exterior
not in kit	= no en el kit
W/ - WO/	= con/ – sin
Qty	= Unidades
see page /ref.	= ver página/ref.
used with ref.	= empleado con la ref.
0,05 inch thickness	= 0,05 pulgadas de espesor (1 pulgada = 25,4 mm)
weld on	= debe ser soldado

ALGEMENE INFORMATIE

Als u het serienummer van de machine gebruikt, geef dan het gehele serienummer.

Het cijfer dat voorkomt in de kolom “Aantal”, in deze handleiding, is het aantal onderdelen dat nodig is van de illustratie op de pagina. Voor sommige onderdelen staat er een “x” in de kolom “Aantal”. Deze “x” betekent dat er een aantal “zoals nodig” vereist is.

Wanneer er in deze handleiding naar “links” en naar “rechts” gerefereerd wordt, moet dit verstaan worden voor een bestuurder die in de bestuurdersstoel zit in de voorwaartse bedrijfsstand.

Sommige van de illustraties en informatie in deze onderdelen-handleiding werden door firma’s van machine-componenten geleverd aan Bobcat.

AFKORTINGEN EN SYMBOLEN

SALES	= Bestellen bij de Verkoopafdeling te Brussel
NSS	= Niet afzonderlijk te verkrijgen
NAP	= Niet beschikbaar als onderdeel
*****	= Gewijzigde of toegevoegde paragrafen, pagina’s of onderdeelnummers
BTI	= Bobcat Technical Information Bulletin : Zie einde van de microfiche van het desbetreffende model of einde van de algemene microfiche die het geheel van alle “BTI” herneemt.
was 6535403	= was vroeger 6535403
adj. (adjustment)	= afstelling
Assembly	= geheel
available W/Ref.	= beschikbaar met ref.
bulk/sold per foot	= bulk/aan de meter verkocht
does not include	= bevat niet
includes with	= is bevat in
I.D.	= ϕ inw. (inwendige diameter)
O.D.	= ϕ uitw. (uitwendige diameter)
not in kit	= niet in de kit
W/ - WO/	= met/ - zonder/
Qty	= vereiste aantal
see page/ref.	= zie pagina/ref.
used with ref/	= gebruikt met ref.
0,05 inch thickness	= 0.05 inch dik (een inch = 25.4 mm)
weld on	= te lassen

CONTENTS

MAINTENANCE ITEMS 1-2
MAINTENANCE ITEMS 1
MAIN FRAME 3-20
LIFT ARMS & BOB-TACH 11
BOB-TACH 13
FUEL SYSTEM 15
REAR DOOR 17
PANELS 19
MAIN FRAME 3
OPERATOR CAB 5
SEAT & SEAT BAR 7
SEAT 9
DRIVE TRAIN 21-26
DRIVE TRAIN 21
AXLE 23
BRAKES 25
HYDRAULIC SYSTEM 27-44
HYDRAULIC CIRCUITRY 27
AUXILIARY HYDRAULICS 29
LIFT CYLINDER 31
TILT CYLINDER 33
HYDRAULIC CONTROL VALVE 35-38
BICS VALVE 39
BUCKET POSITIONING VALVE 41
CONTROL PEDALS 43
HYDROSTATIC SYSTEM 45-62
HYDROSTATIC CIRCUITRY 45-50
HAND CONTROLS 51
HYDROSTATIC PUMP 53-58
GEAR PUMP 59
HYDROSTATIC MOTOR 61
ELECTRICAL SYSTEM 63-72
CAB ELECTRICAL CIRCUITRY 63
ENGINE ELECTRICAL CIRCUITRY 65
CONTROLS ELECTRICAL 67
STARTER 69
ALTERNATOR 71
POWER UNIT 73-166
FUEL CAMSHAFT 101-144
ENGINE STOP LEVER 103-146
INJECTION PUMP & FUEL PUMP 105-148
INJECTION PUMP 107
GOVERNOR 109-150
SPEED CONTROL PLATE 111-152
INJECTOR NOZZLES 113-154
NOZZLE HOLDER 115-156
WATER FLANGE & THERMOSTAT 117-158
WATER PUMP 119-160
OIL PAN 121-162
INTAKE & EXHAUST MANIFOLDS 123-164
ENGINE 125
ROCKER ARM COVER 127

CONTENTS (Cont'd)

POWER UNIT

CYLINDER HEAD 129
AIR CLEANER 165
ENGINE & ATTACHING PARTS 73-80
THROTTLE 81
ENGINE & GASKET KITS (Kubota D1005) 83
ROCKER ARM COVER (Kubota D1005) 85
CYLINDER HEAD (Kubota D1005) 87
ROCKER ARM & VALVES 89-132
CRANKCASE 91-134
GEAR CASE 93-136
CAMSHAFT 95-138
MAIN BEARING CASE 97-140
PISTON & CRANKSHAFT 99-142

ACCESSORIES & OPTIONS 167-258

ATTACHMENT CONTROL KIT 167-170
BACK-UP ALARM 171
BEACON LIGHT 173
BLOCK HEATER 175
BUCKET POSITON KIT 177
CAB DOOR 179-182
CAB ENCLOSURE 183-188
CAB WINDOWS 189
COOLING FAN HARNESS KIT 191
DECALS 193-196
EUROPEAN ACCESSORIES 197-216
EXTERNAL WINDOW REMOVAL KIT 217
FIRE EXTINGUISHER 219
FLOOR COVER KIT 221
HEATER KIT 223
HORN KIT 225
KEYLESS IGNITION 227
LIGHT KIT 229
LOCKING CAP & COVER 231
MUFFLER/PURIFIER KIT 233
RENTAL KIT 235
SEAT BELT 237
SIDE INSTRUMENT PANEL KIT 239
SINGLE POINT LIFT 241
SOUND REDUCTION HARDHAT 243
STROBE LIGHT 245
SUSPENSION SEAT 247-250
TIRES & RIMS 251
TOWING KIT 253
WATER LEVEL SENSOR KIT 255
BULK ITEMS 257

NUMERICAL INDEX 259-293

MAINTENANCE ITEMS

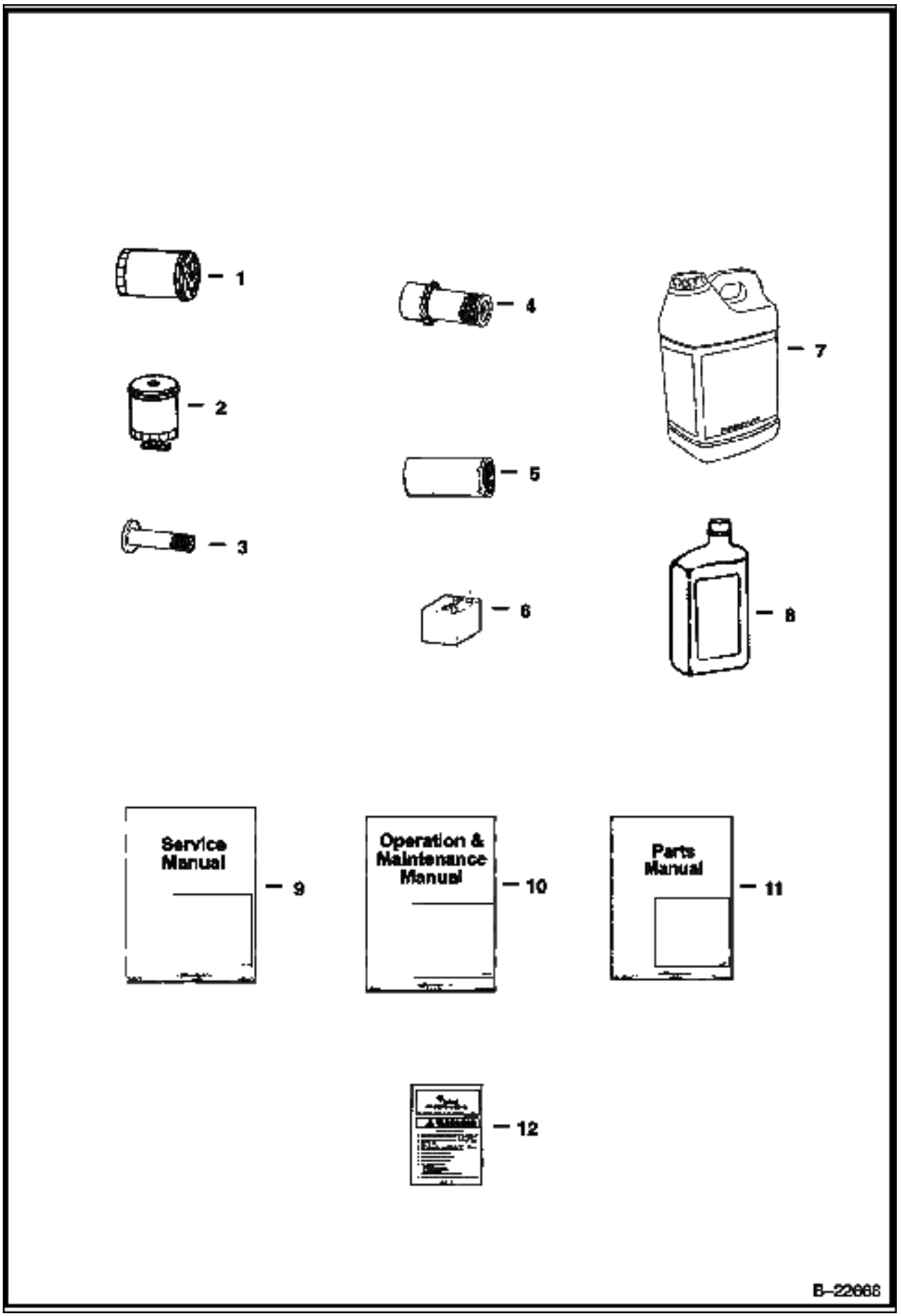

MAINTENANCE ITEMS (Cont'd)

Ref No	Part Number	Description	Remarks	Serial Number	Qty
1	6657635	OIL FILTER	See Illustration GEAR CASE/ B17088 engine oil		x
2	6667352	FILTER FUEL	See Illustration FUEL SYSTEM/ PE1686 FUEL		x
3	6672468	CARTRIDGE	See Illustration AIR CLEANER/ C3490 INNER AIR CLEANER		x
4	6672467	CARTRIDGE	See Illustration AIR CLEANER/ C3490 OUTER AIR CLEANER		x
5	6677652	FILTER	See Illustration HYDROSTATIC CIRCUITRY/ PE1652 HYDROSTATIC # 10 MICRON		x
6	6674687	BATTERY	See Illustration ENGINE ELECTRICAL CIRCUITRY/ PE1757		x
7	6903117	HYD FLUID 2.5 GAL.	Was 6563328 [A]		x
7	6903118	HYD. FLUID 5GAL	Was 6722344 [A]		x
7	6903119	HYD. FLUID 55GAL	Was 6563330 [A]		x
8	6903107	OIL 10W30 QT. 12	Was 6657301 [A]		x
8	6903108	OIL 10W30 GAL. 6	Was 6724557 [A]		x
8	6903112	OIL 10W30 2.5 GAL 2	Was 6674205 [A]		x
8	6903105	OIL 15W40 QT. 12	Was 6657299 [A]		x
8	6903106	OIL 15W40 GAL. 6	Was 6724558 [A]		x
8	6903113	OIL 15W40 2.5 GAL. 2	Was 6674204 [A]		x
8	6903109	OIL 30W QT. 12	Was 6657303 [A]		x
8	6903110	OIL 30W GAL. 6	Was 6724559 [A]		x
8	6903111	OIL 30W 2.5 GAL 2	Was 6674206 [A]		x
9	6901812	463 AF SM	Service Manual		1
10	6901811	463F O/M	Operation & Maintenance Manual		1
11	6902178	P/M 463AF	Parts Manual		1
12	6708375	KIT	See Illustration DECALS/ B20885 Operator Handbook		1

MAIN FRAME

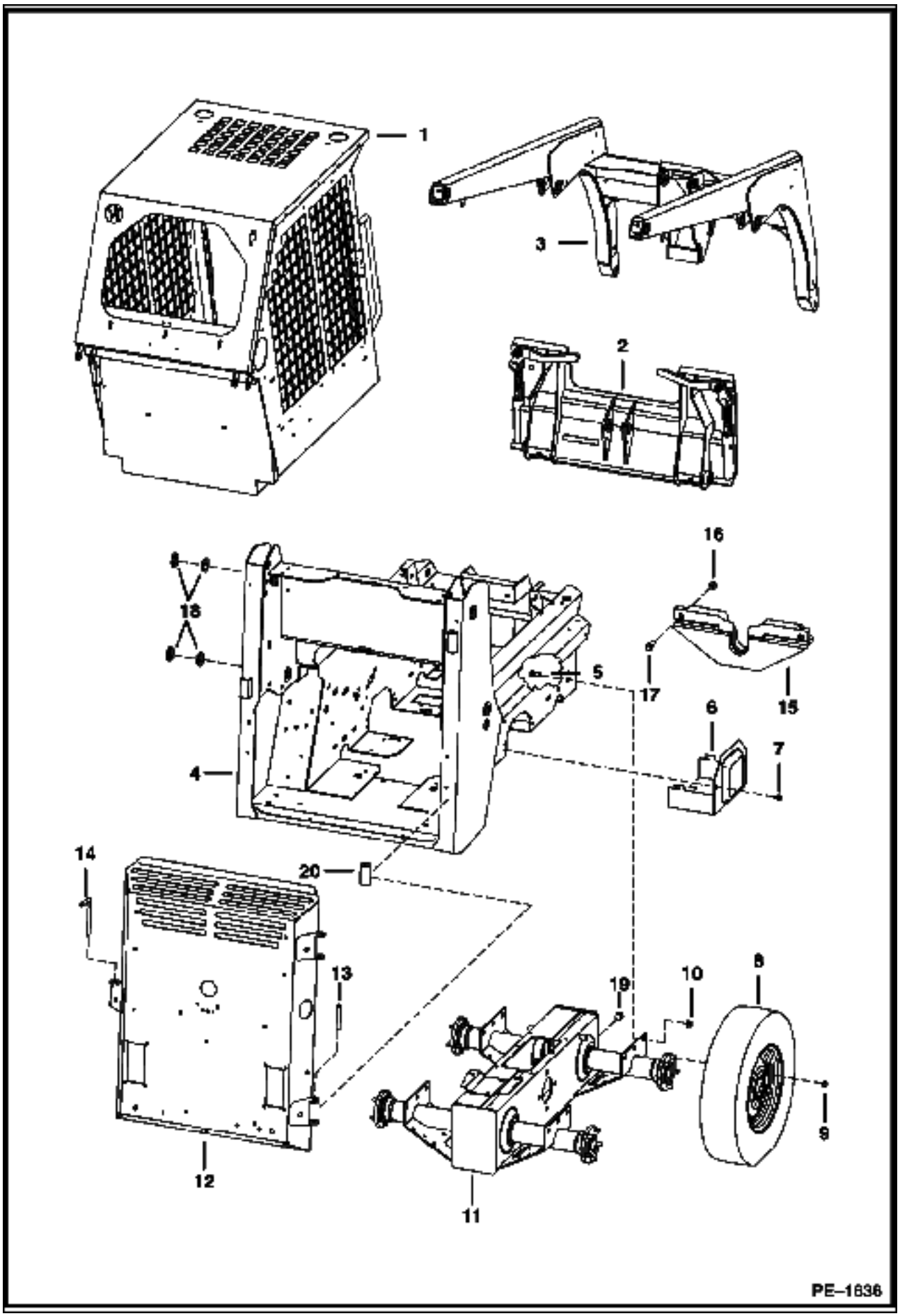

MAIN FRAME (Cont'd)

Ref No	Part Number	Description	Remarks	Serial Number	Qty
1		CAB	See Illustration OPERATOR CAB/ PE1655		1
2		BOB-TACH	See Illustration BOB-TACH/ PE1026		1
3		LIFT ARM	See Illustration LIFT ARMS & BOB-TACH/ PE1245		1
4	6727836	MAIN FRAME	May Need To Order Battery Pan 6715086 and (2) 7C000624B bolts		1
5	37C000820B	BOLT			12
6	6718144	COVER			2
7	84G003712B	BOLT			4
8		TIRES & RIMS	See Illustration TIRES & RIMS/ B17527		4
9	6561152	NUT			20
10	83D000008B	NUT			12
11		CHAINCASE	See BTI344 NAP - Was 6706429 [A]		1
11	6733369	CHAINCASE-463F			1
12		REAR DOOR	See Illustration REAR DOOR/ PE1637		1
13	6564340	PIN			2
14	6564192	PIN			1
15	6564681	WEIGHT			1
16	57D000008B	NUT			2
17	31C000832B	BOLT	Was 17C000828B [B]		2
18	6563829	BUSHING	Weld On		8
19	6731121	PLUG			1
20	6562224	BUSHING	Weld On		2
21	6732848	TOOL CONTAINER			1

OPERATOR CAB

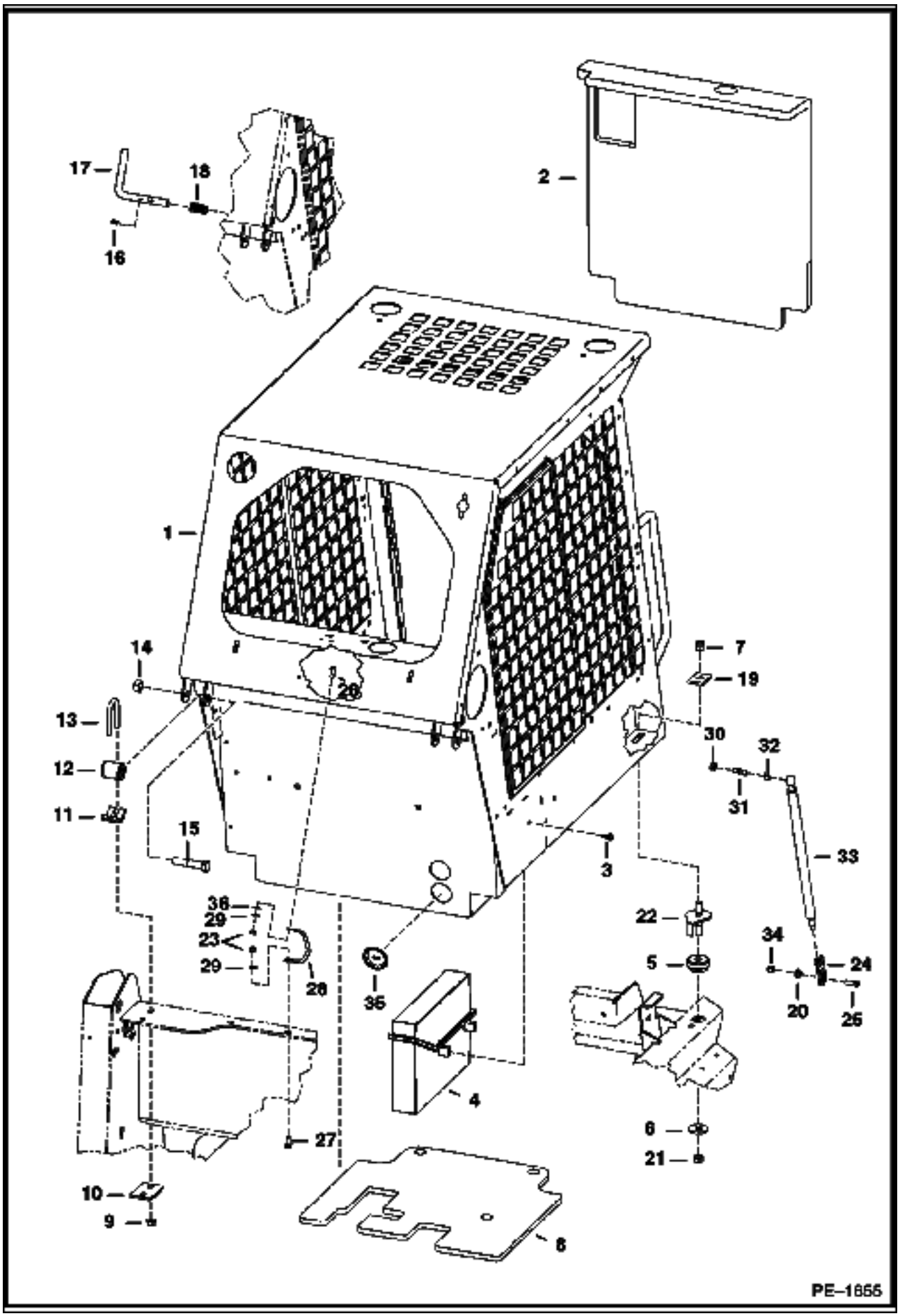

OPERATOR CAB (Cont'd)

Ref No	Part Number	Description	Remarks	Serial Number	Qty
1	6734641	CAB ASSY 463	Was 6708601 [A]		1
2	6708486	INSULATION			1
3	6702642	SCREW			2
4	6708827	CONTAINER			1
5	6560633	DAMPENER	rubber		2
6	6515817	WASHER			2
7	59D000008B	NUT			2
8	6734908	INSULATION	Was 6708487 [A]		1
9	83D000006B	NUT			4
10	6565068	PLATE			2
11	6563997	RETAINER			2
12	6562602	BUSHING			2
13	6563998	U-BOLT			2
14	85D000010B	NUT			2
15	17C001048B	BOLT			2
16	1306637B	PIN			1
17	6593389	PIN			1
18	6593390	SPRING			1
19	6553709	WASHER			2
20	6706272	BUSHING			1
21	85D000008B	NUT			2
22	6702971	BOLT			2
23	61D000005B	NUT		& Below	2
23	61D000005B	NUT		& Above	1
24	6706092	END	gas spring		1
25	25G000616B	BOLT			1
26	17C000512B	BOLT			1
27	84G003112B	BOLT		& Below	1
28	6594283	WIRE			1
29	25E000015B	WASHER			2
30	83D000005B	NUT			1
31	6706519	STUD	ball		1
32	6706520	RING	retaining		1
33	6664206	GAS SPRING			1
34	59D000006B	NUT			1
35	6680961	PLUG			2
36	6E000005B	WASHER		& Above	2

SEAT & SEAT BAR

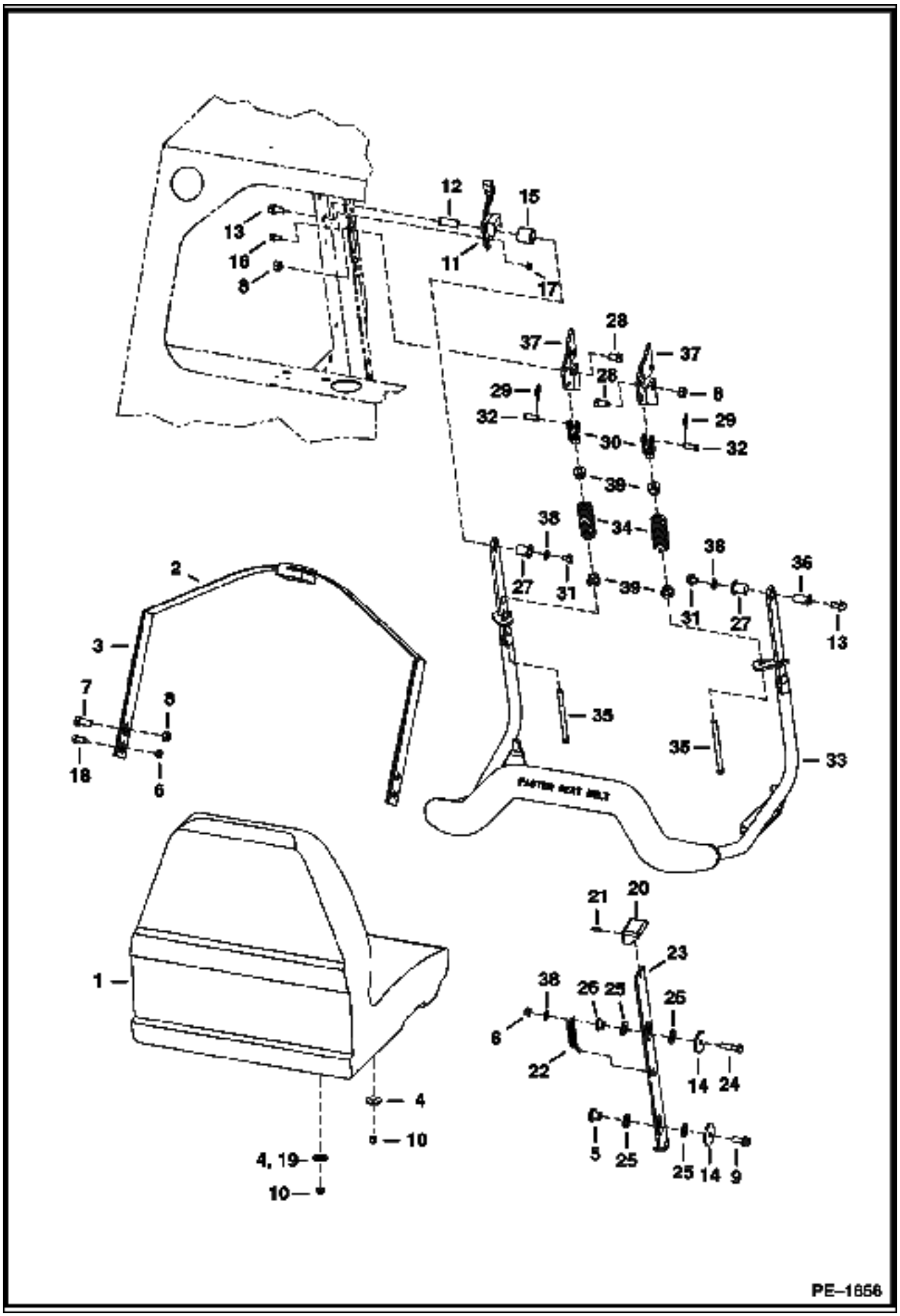

SEAT & SEAT BAR (Cont'd)

Ref No	Part Number	Description	Remarks	Serial Number	Qty
1		SEAT	See Illustration SEAT/ B14720		1
2	6675074	SEAT BELT	W/O spring plates		1
3	6725373	SPRING PLATE			2
4	619021B	WASHER		& Below	2
4	619021B	WASHER		& Above	4
5	6594298	NUT			2
6	85D000006B	NUT		& Below	4
7	17C000716B	BOLT		& Below	2
7	17C000716B	BOLT		& Above	4
8	85D000007B	NUT		& Below	2
8	85D000007B	NUT		& Above	4
9	45C000616B	BOLT	Was 35C000616B [B]		2
10	59D000005B	NUT			4
11	7105252	SENSOR	Also Order 6680523 - Was 6680430 [A]		2
11	6680523	KEY,MAGNETIC	magnet bushing - Was 6664881 [A]		1
12	6706685	BUSHING			1
13	35C000612B	BOLT			2
14	872229	WASHER			2
15	6680473	BUSHING	Was 6671135 [A]		2
16	35C000410B	BOLT	fastens thru tab - 5/8" (15,9 mm)		2
17	83D000004B	NUT	fastens thru tab		2
18	17C000612B	BOLT			2
19	6571991	GUIDE		& Below	2
20	6702343	BLOCK			2
21	14J002512B	ROLL PIN			2
22	6594284	SPRING			2
23	6704557	LOCK	L.H.		1
23	6704556	LOCK	R.H.		1
24	17C000624B	BOLT			2
25	6700170	WASHER	plastic		8
26	6559479	NUT			4
27	6680441	BUSHING	keyed - Was 6664882 [A]		2
28	17C000712B	BOLT			2
29	6631418	PIN			2
30	6713589	CLEVIS			2
31	17C000608B	BOLT			2
32	4F006106B	PIN			2
33	6713886	SEAT BAR	for use W/ compression spring		1
34	6701535	SPRING			2
35	6713887	BOLT			2
36	6706962	BUSHING			1
37	6710660	MOUNT			2
38	25E000017B	WASHER			4
39	6710659	BUSHING			4

SEAT
(Michigan)

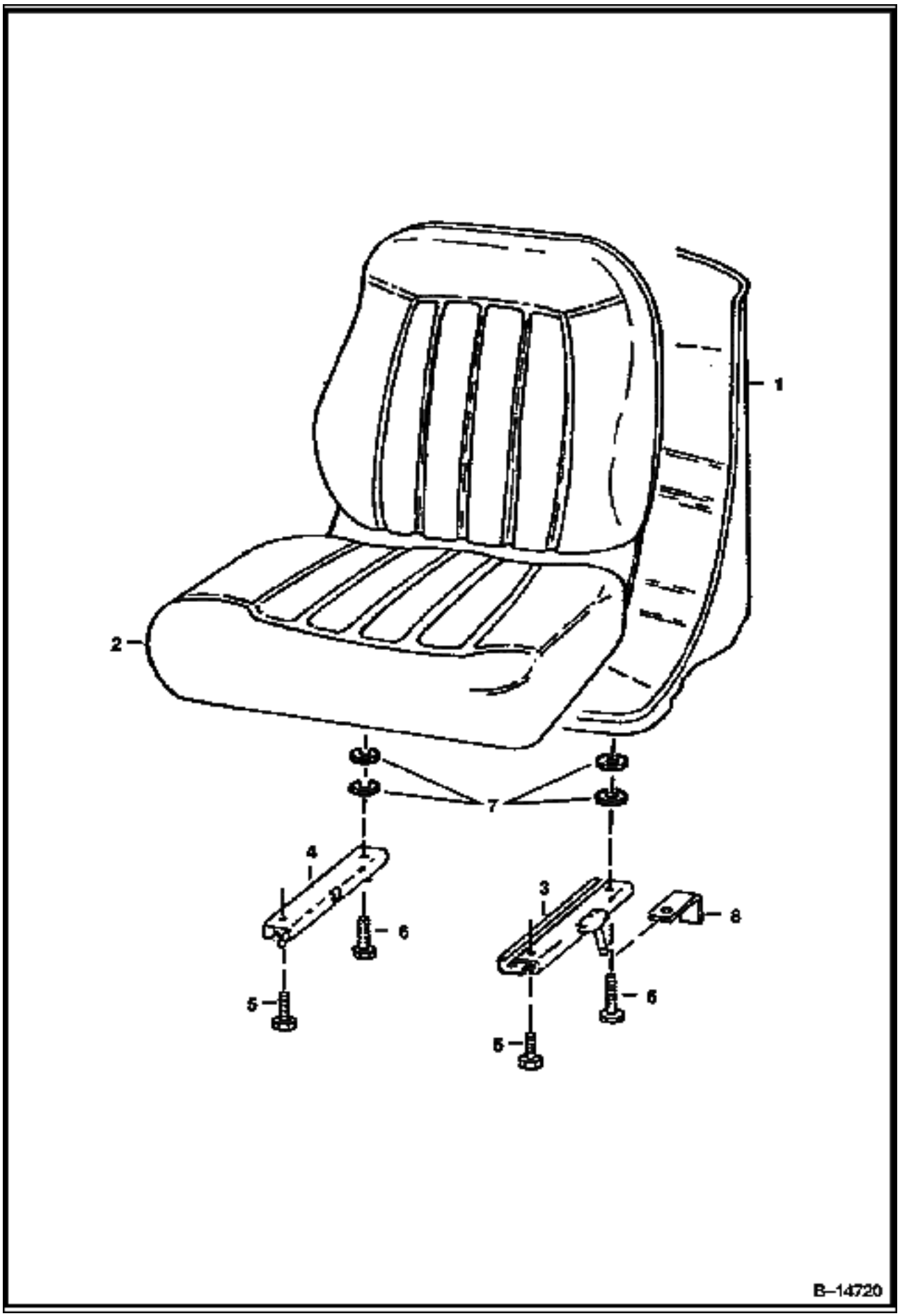

SEAT (Cont'd)
(Michigan)

Ref No	Part Number	Description	Remarks	Serial Number	Qty
1	6669135	SEAT	W/Ref. 2-8		1
2	6670160	CUSHION	W/edging, clip & (2) grommets		1
2		EDGING	NSS		1
2		CLIP	NSS		1
3	6674013	TRACK	L.H. - W/ 10" (254mm) Latch		1
4	6669089	TRACK	R.H. - W/O Latch		1
5	25G000512B	BOLT			2
6	25G000520B	BOLT			2
7	6672715	SPACER			4
8	6668953	BRACKET	See S/L Dated 16 April 1996		2

LIFT ARMS & BOB-TACH

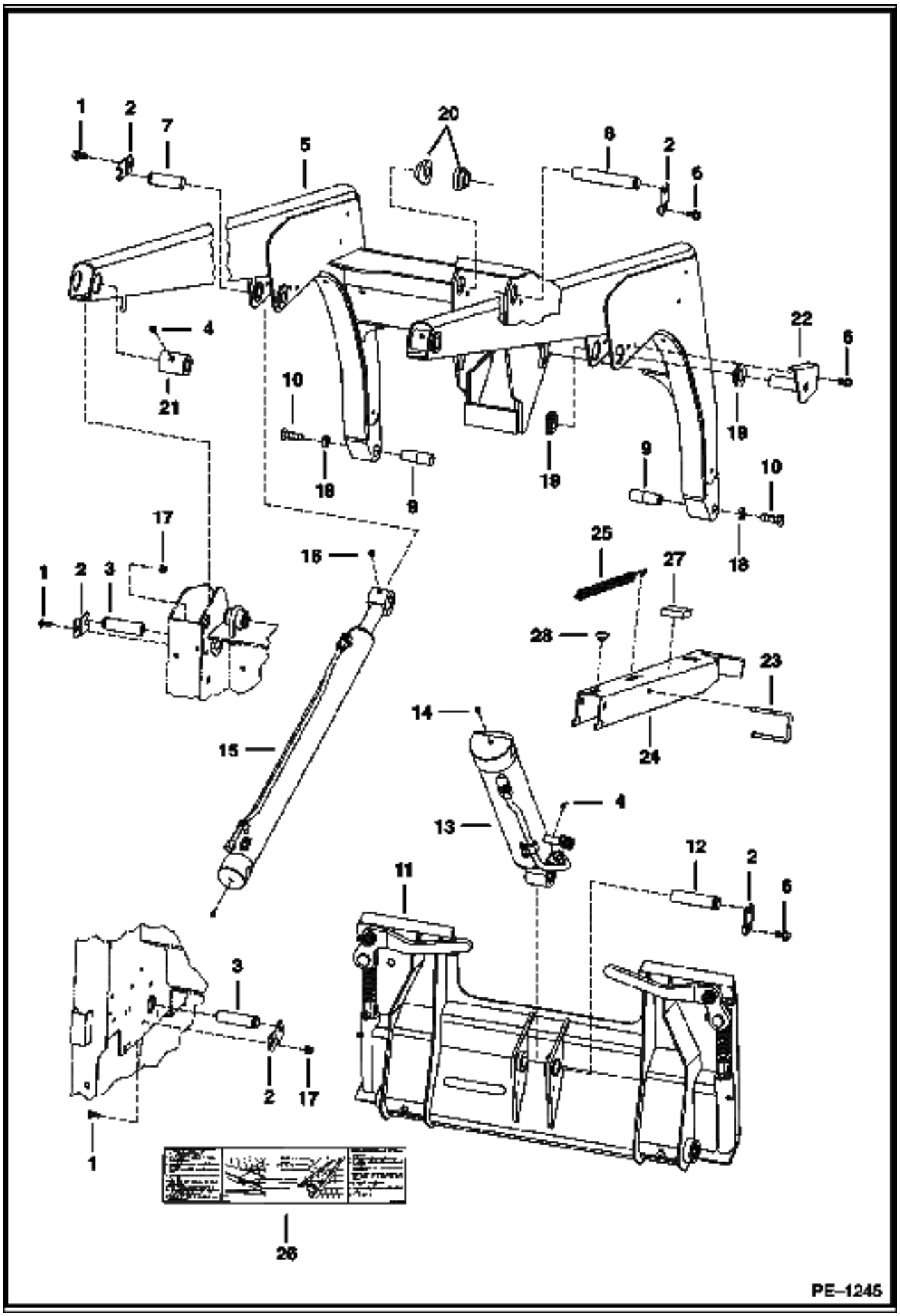

Ref No	Part Number	Description	Remarks	Serial Number	Qty
1	10C000512B	BOLT			4
2	6586307	RETAINER			8
3	6563848	PIN			4
4	10H000025B	GREASE ZERK			3
5	6726519	LIFT ARM 463	Also Order 6579528 , 6569233 6727449 , 6727448		1
6	84G003712B	BOLT			4
7	6563847	PIN			2
8	6563846	PIN			1
9	6564198	PIN			2
10	17C000824B	BOLT			2
10	33C000824B	BOLT	w/ pre-applied loctite		2
11		BOB-TACH	See Illustration BOB-TACH/ PE1026		1
12	6563845	PIN	rod end - drilled		1
12	6731749	PIN	rod end - grooved		1
13		CYLINDER	See Illustration TILT CYLINDER/ PE1349 TILT		1
14	10H000035B	GREASE ZERK			1
15		CYLINDER	See Illustration LIFT CYLINDER/ PE1646 LIFT		2
16	11H000025B	GREASE ZERK			4
17	83D000005B	NUT			4
18	6701097	WASHER			2
19	6563829	BUSHING	Weld On		4
20	6728130	BUSHING	Weld On - Was 6563830 [B]		2
21	6727579	PIVOT BUSHING	Weld On - Was 6563831 [B]		2
22	6706663	PIN			1
23	6714811	PIN	Retainer		1
24	6728115	SUPPORT	Lift arm		1
25	6579072	SPRING	For lift arm support		1
26	6711659	DECAL			1
27	6704436	PAD			1
28	6519178	BUMPER			1

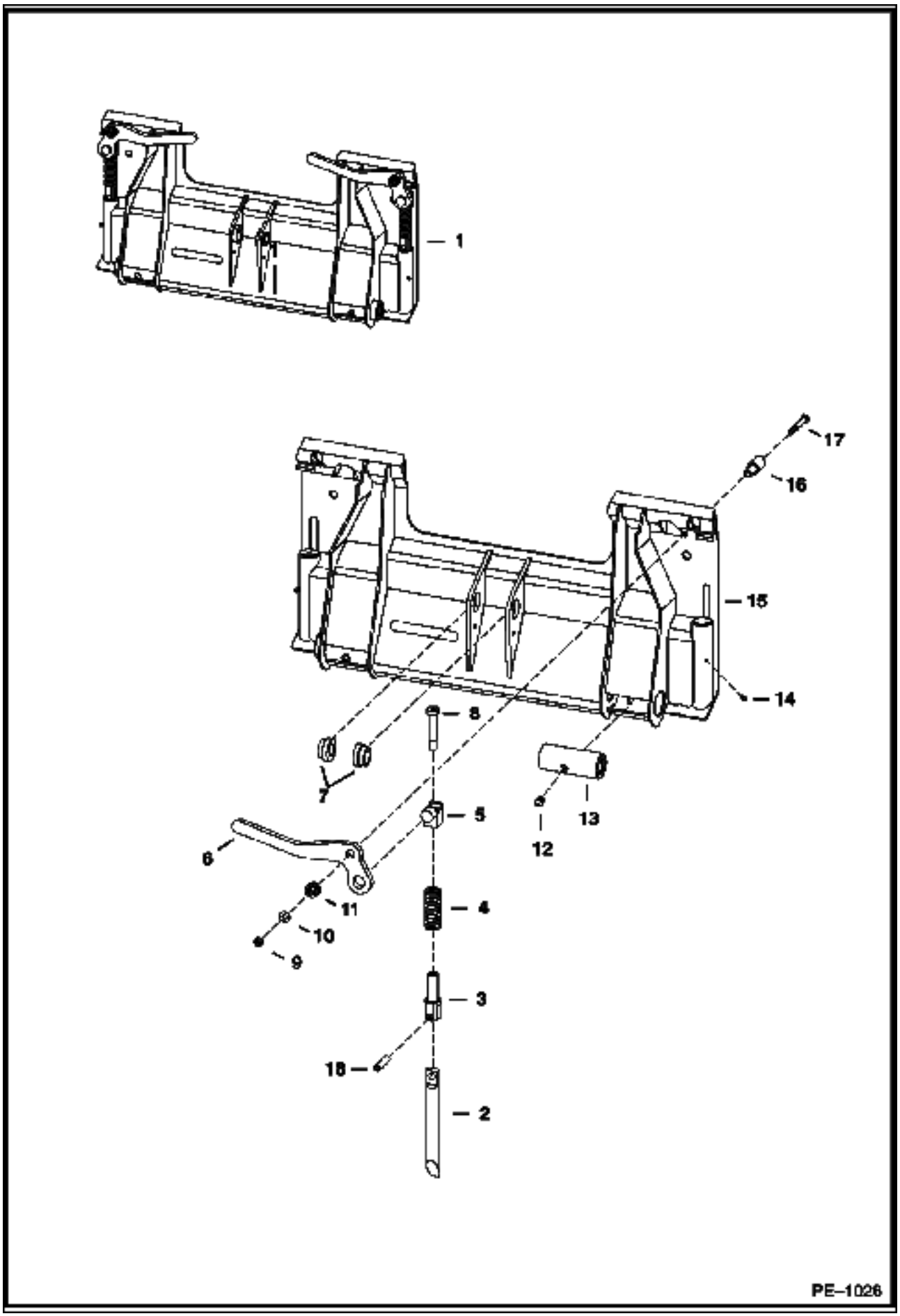
1
17
16
15
14
8
7
5
13
12
6
11
10
9
4
3
18
2
PE–1026

Ref No	Part Number	Description	Remarks	Serial Number	Qty
1	6727229	BOBTACH 463-MT52	See Illustration DECALS/ B20885 ALSO ORDER 6561383 - Was 6726597 [A]		1
2	6737363	WEDGE	Was 6726899 [B]		2
3	6704248	PIVOT	wedge		2
4	6578253	SPRING			2
5	6704240	PIVOT ASSY.			2
6	6719501	LEVER	R.H.		1
6	6719502	LEVER	L.H.		1
7	6563830	BUSHING			2
8	6728473	BOLT			2
9	85D000006B	NUT			2
10	619021B	WASHER	Was 6557831 [B]		2
11	6704453	SPRING			2
12	743332B	GREASE ZERK			2
13	6726436	BUSHING	weld on		2
13	6809825	BUSHING	wear		2
14	10H000035B	GREASE ZERK			2
15		FRAME	NAP		1
16	6702958	BUSHING			2
17	17C000648B	BOLT			2
18	14J005032B	PIN			2

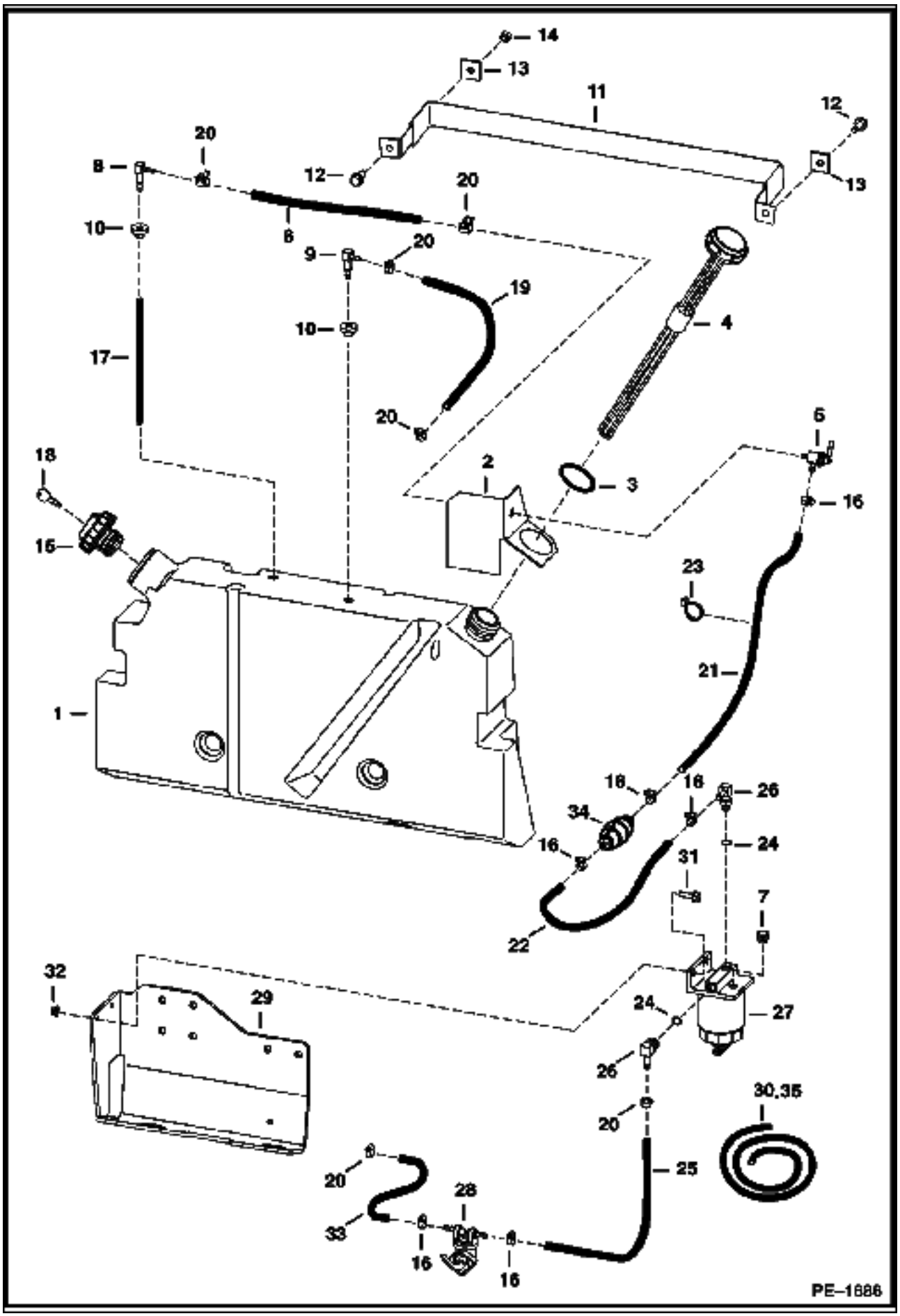
14
13
11
12
20
8
12
13
10
6
20
9
20
19
10
4
17
20
6
18
2
3
16
15
23
21
1
18
16
26
34
24
16
31
7
22
32
29
24
27
26
30,35
20
25
20
28
33
16
16
PE-1686

FUEL SYSTEM (Cont'd)

Ref No	Part Number	Description	Remarks	Serial Number	Qty
1	6733225	TANK	Was 6708327 [A]		1
2	6564038	MOUNT		& Below	1
3	6700631	GASKET	Was 25K060204B [B]		1
4	6598910	GAUGE			1
5	6599455	VALVE	shut-off	& Below	1
6		HOSE	NAP - Order Ref. 30 - 13.00" (325 mm) long	& Below	1
6		HOSE	NAP - 69"(1752mm) long - Order Ref. 35	& Above	1
7	6658180	BREATHER	breather		1
8	6666302	ELBOW	Was 6681462 [B]		1
9	7101291	ELBOW	Was 6681462 [A]		1
10	6553411	BUSHING			2
11	6564037	BAND			1
11	6728472	INSULATION			1
12	84G003724B	BOLT			2
13	6559447	WASHER			2
14	57D000006B	NUT			1
15	6661114	CAP	green		1
15	6654373	CAP	locking - W/Ref. 18		1
16	5HM00015B	CLAMP	constant tension - Was 5HM00014B [B]		4
17	6729855	HOSE	15.125"(384,2mm) long		1
18	6654374	KEY			1
19		HOSE	NAP - Order Ref. 30 - 9.25"(235mm) long		1
20	5HM00013B	CLAMP	constant tension		6
21		HOSE	NAP - Order Ref. 30 - 66"(1676,4mm) long	& Below	1
22		HOSE	NAP - Order Ref. 30 - 11"(279,4mm) long	& Below	1
22		HOSE	NAP - 11"(279,4mm) long - Order Ref. 35	& Above	1
23	6624289	STA STRAP			2
24	99K000005B	O-RING	tapered boss face		2
24	79K000005B	O-RING	flat boss face		2
25		HOSE	NAP - Order Ref. 30 - 32.25"(819mm) long		1
26	6715183	ELBOW	W/Ref. 24 - check boss face to determine correct replacement o-ring		2
27	6667353	FILTER ASSY			1
27	6667352	FILTER FUEL			1
27	72F000001B	DRAIN COCK			1
28		FUEL PUMP	See Illustration INJECTION PUMP & FUEL PUMP/ B15036		1
29	6730731	MOUNT	Engine		1
30	6577821	HOSE	bulk - Sold Per Foot		x
31	35C000516B	BOLT			2
32	57D000005B	NUT			2
33		HOSE	NAP - Order Ref. 30 - 4"(101,6mm) long		1
34	6667170	PUMP	hand primer - Was 6657734 [B]		1
35	6577822	HOSE	bulk - sold per foot		x

REAR DOOR

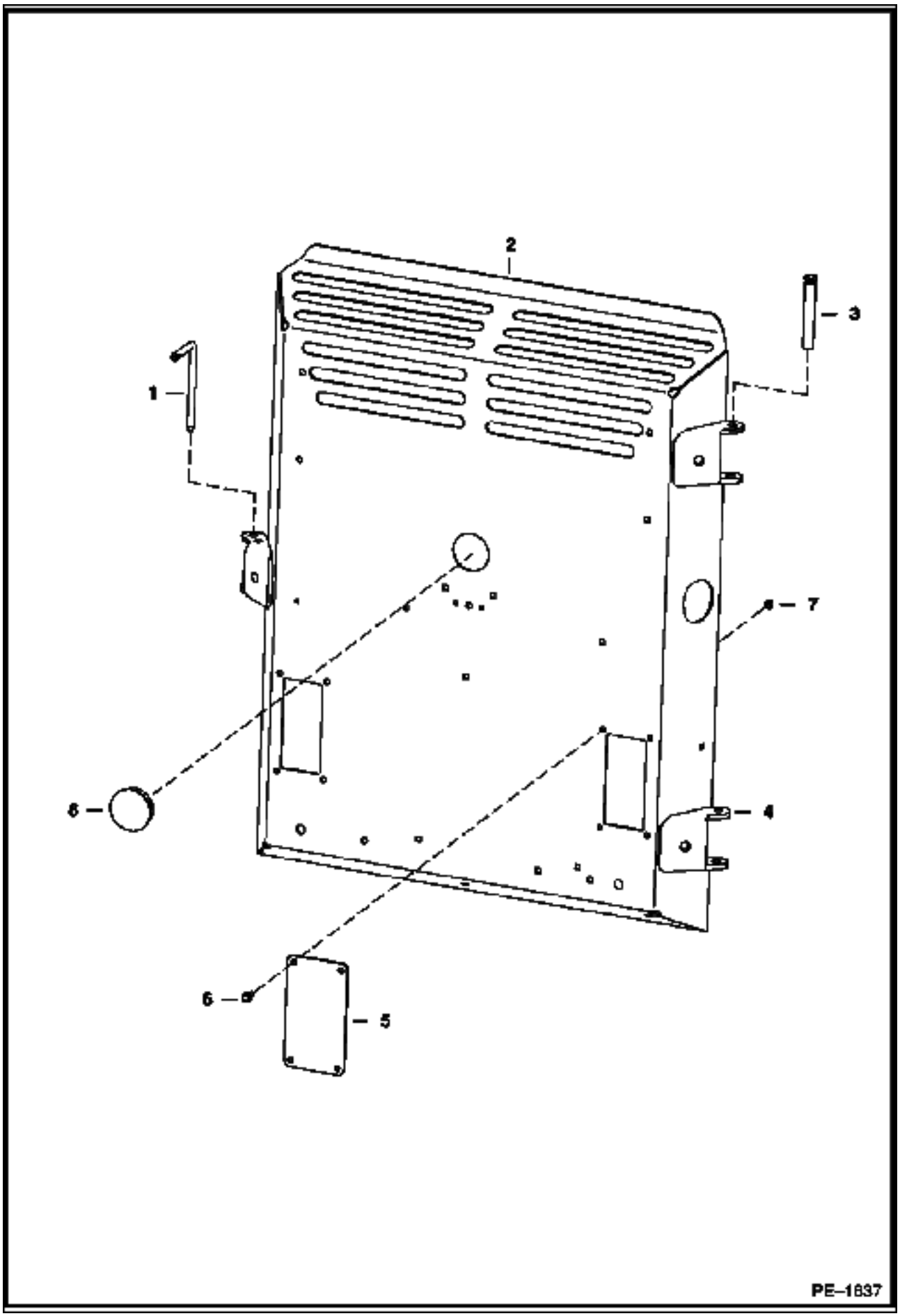

Ref No	Part Number	Description	Remarks	Serial Number	Qty
1	6564192	PIN			1
2	6730217	DOOR			1
3	6564340	PIN			2
4	6562225	HINGE			3
5	6714004	COVER			2
6	35C000412B	BOLT			8
7	83D000004B	NUT	Was 61D000004B [B]		8
8	6718796	PLUG	Was 6660646 [A]		1

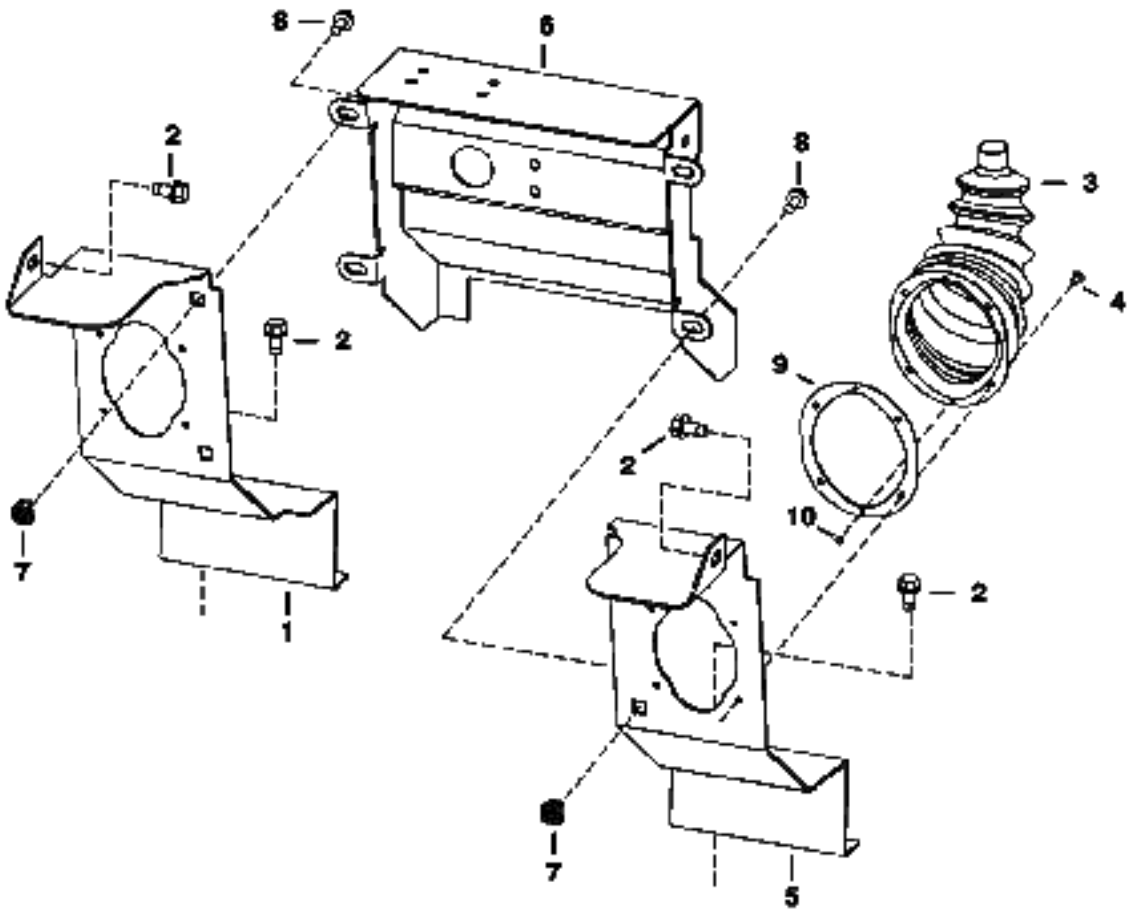
8
6
2
8
3
2
4
9
2
10
2
7
1
7
5
PE–1649

Ref No	Part Number	Description	Remarks	Serial Number	Qty
1	6728449	SHIELD			1
2	84G003712B	BOLT			4
3	6532127	BOOT			2
4	6630207	RIVET			8
5	6728343	SHIELD			1
6	6728448	SHIELD			1
7	6678765	NUT			4
8	35C000510B	BOLT			4
9		PLATE	NSS		2
10	6658511	RIVET			4
11	6734637	FOAM STRIP			2

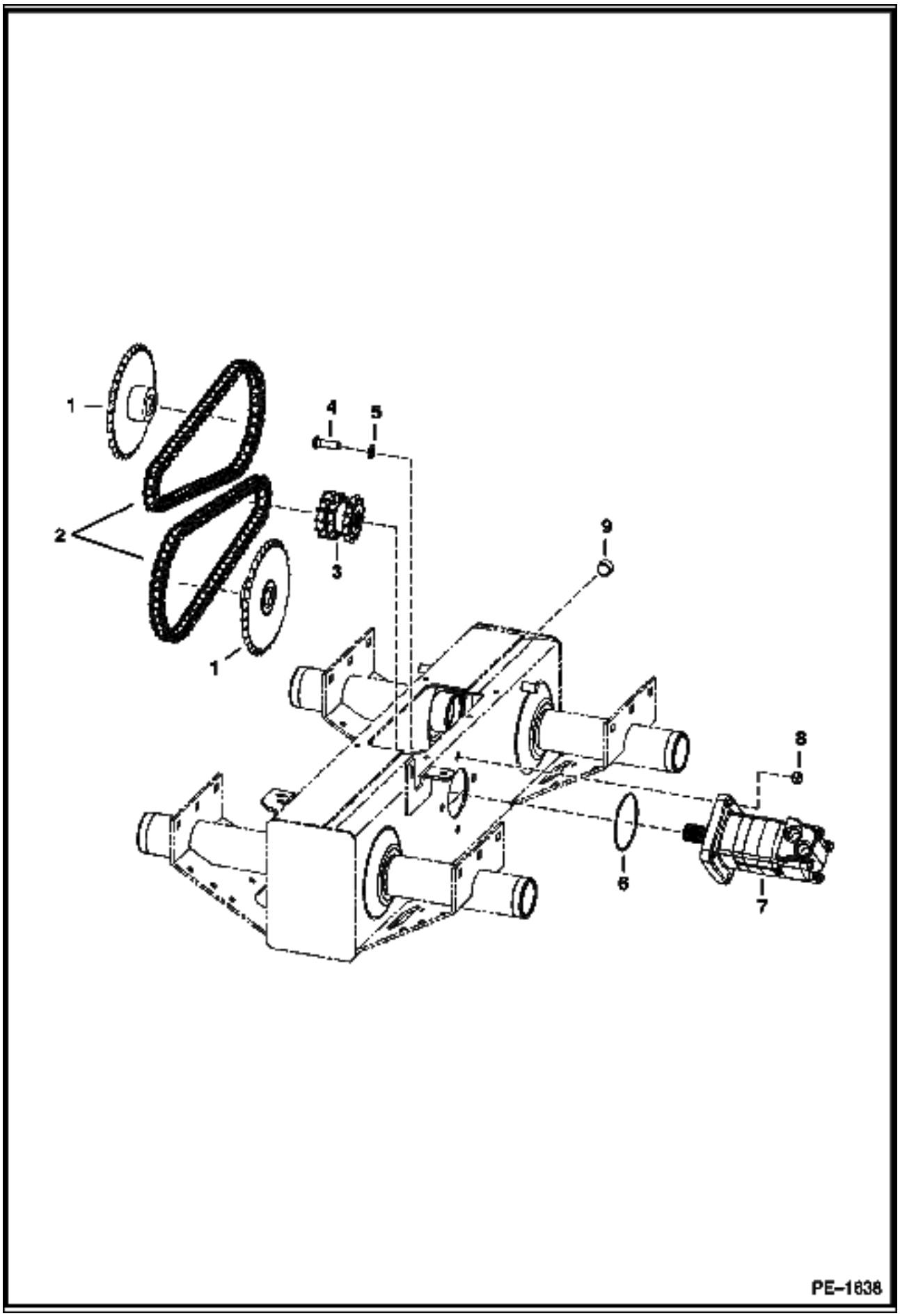
1
2
1
4
5
3
9
8
6
7
PE–1638

Ref No	Part Number	Description	Remarks	Serial Number	Qty
1	6563798	SPROCKET			4
2	7101393	CHAIN DRIVE	Was 6733854 [A]		4
2		LINK	conn.		4
3	6708239	SPROCKET			2
4	6564741	BOLT			8
5	6564740	WASHER			8
6	25K040400B	O-RING			2
7		MOTOR	See Illustration ENGINE ELECTRICAL CIRCUITRY/ PE1757 HYDRO.		2
8	86D000008B	NUT			8
9	6731121	PLUG			1

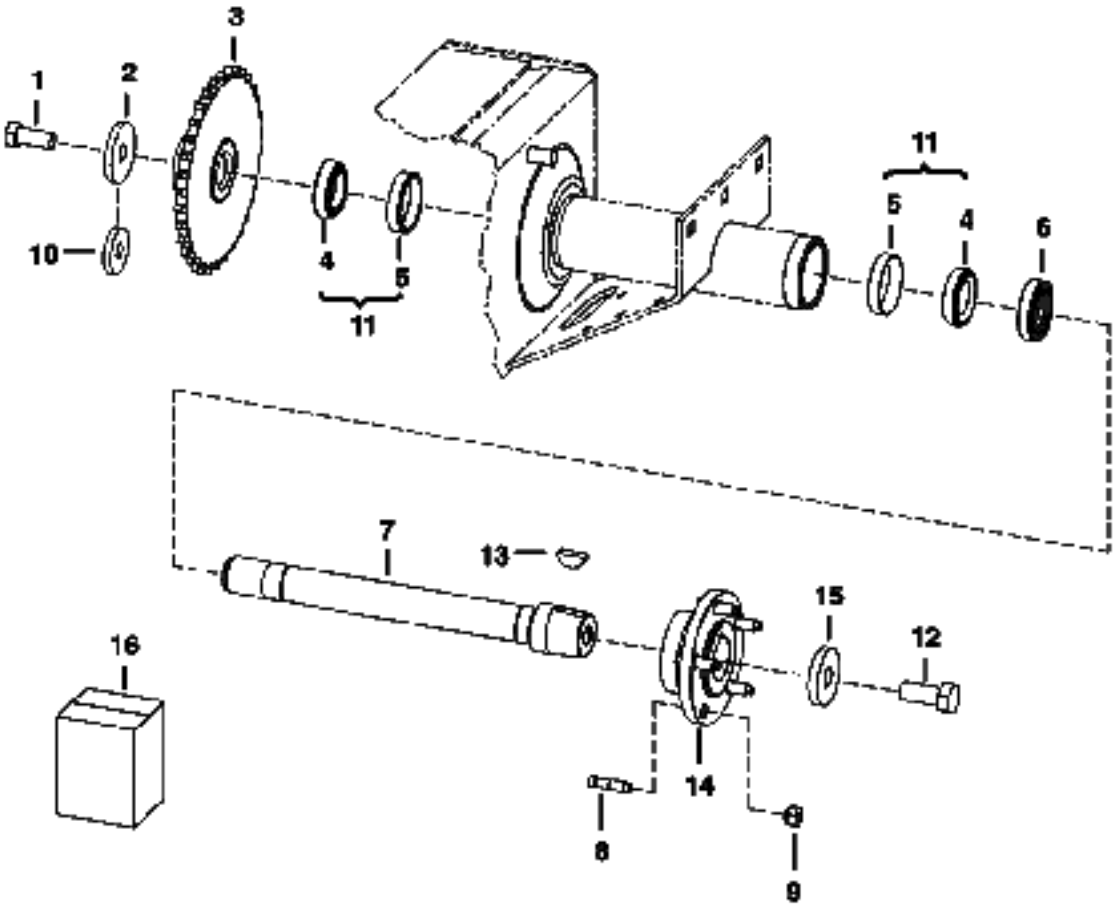

Note: Bearing & Race must be of same brand.	**Note:** Assemble Kit per illustration and torque Ref. 12 to 175–190 Ft. lbs.

PE–1639

Ref No	Part Number	Description	Remarks	Serial Number	Qty
1	48C001024B	BOLT	pre-applied loctite		4
2	6563795	WASHER			1
3	6563798	SPROCKET			1
4		BEARING	NSS - Order Ref. 11 - See Note		2
5		RACE	NSS - Order Ref. 11 - See Note		2
6	6598829	SEAL			1
7	6706032	AXLE			4
8	6679105	STUD			5
9	6561152	NUT			5
10	6592765	WASHER	recessed - To take up end play		x
11	6633672	BEARING	W/Race		2
12	48C001228B	BOLT	pre-applied loctite		4
13	6J001210B	KEY			4
14	6706031	HUB	W/Ref. 8		4
15	6552871	WASHER			4
16	6722929	KIT	W/Ref. 7, 12-15		4

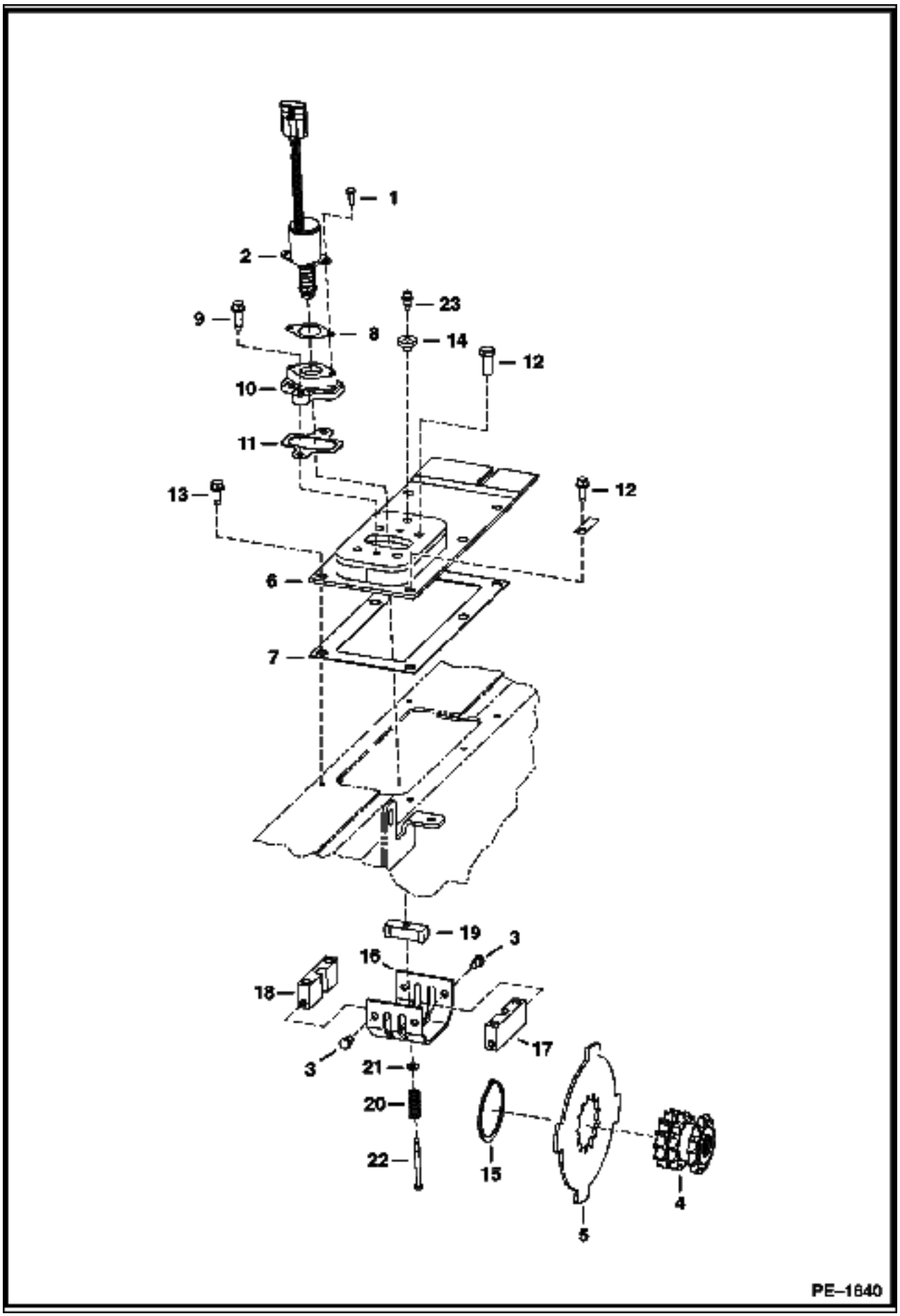
1
2
23
9
8
14
12
10
11
13
12
6
7
19
3
16
18
17
3
21
20
22
15
4
5
PE–1640

Ref No	Part Number	Description	Remarks	Serial Number	Qty
1	17C000412B	BOLT			2
2	6681512	SOLENOID	See Service Letter Dated 4/96 - Was 6667992 [A]		1
3	43C000610B	BOLT	pre-applied loctite		4
4		SPROCKET	See Illustration DRIVE TRAIN/ PE1638		2
5	6706736	BRAKE	disc		2
6	6706684	COVER			1
7	6593418	GASKET			1
8	6706737	GASKET			1
9	84G003720B	BOLT			2
10	6706718	MOUNT			1
11	6708016	GASKET			1
12	47C000820B	BOLT			4
13	84G003716B	BOLT			10
14	6553411	BUSHING			1
15	791442	SNAP RING			2
16	6708787	GUIDE			1
17	6705898	BLOCK	guide - R.H.		1
18	6705897	BLOCK	guide - L.H.		1
19	6705896	GUIDE			1
20	6708018	SPRING			1
21	25E000013B	WASHER			1
22	6708267	BOLT			2
23	6680970	BREATHER	Was 6670627 [A]		1

HYDRAULIC CIRCUITRY
(W/O Bucket Positioning Valve)

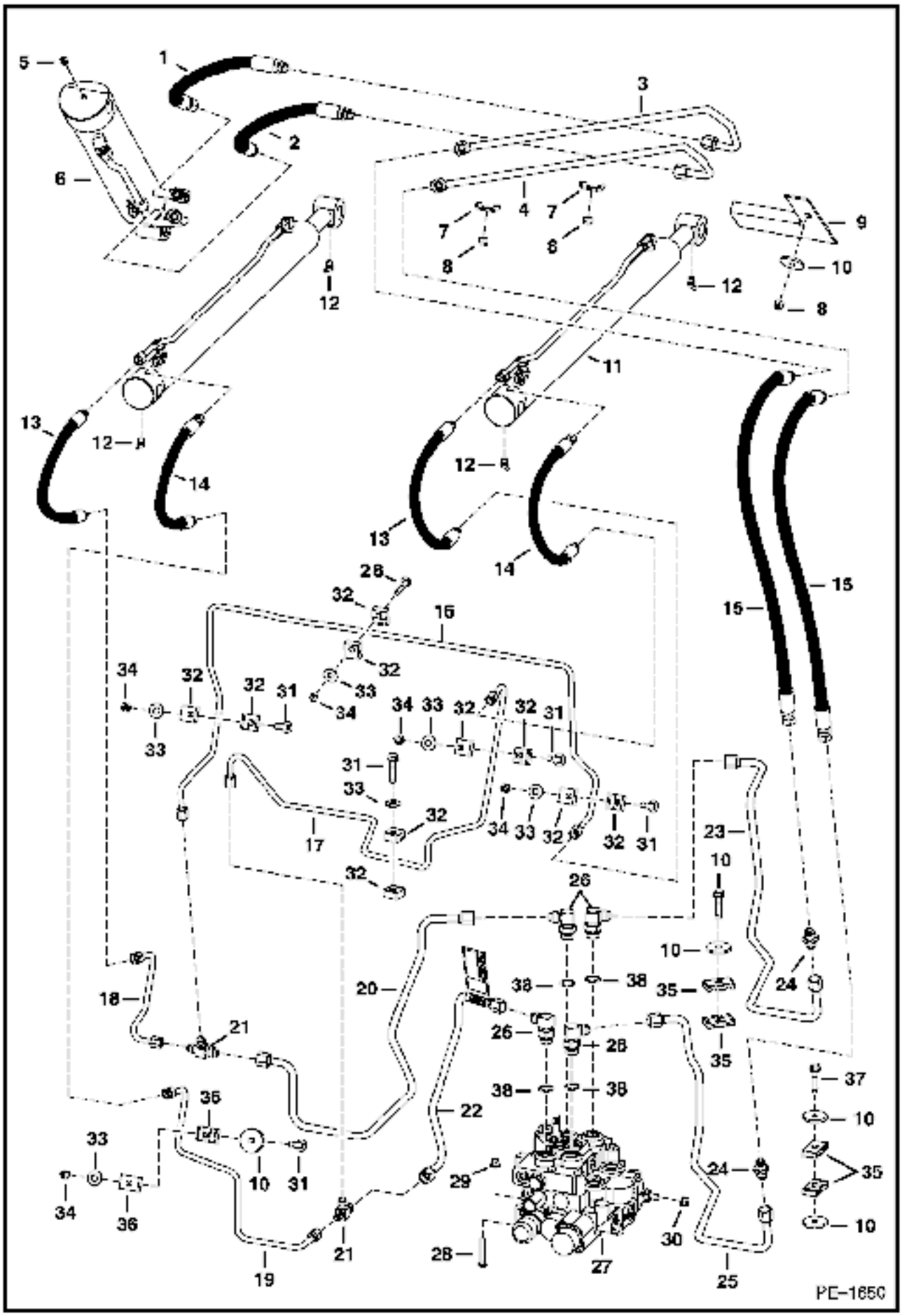

HYDRAULIC CIRCUITRY (Cont'd)
(W/O Bucket Positioning Valve)

Ref No	Part Number	Description	Remarks	Serial Number	Qty
1	6733737	HOSE			1
2	6733736	HOSE			1
3	6706073	TUBELINE			1
4	6706072	TUBELINE			1
5	10H000025B	GREASE ZERK			1
6		CYLINDER	See Illustration TILT CYLINDER/ PE1349 TILT		1
7	6500989	CLAMP			2
8	59D000006B	NUT			3
9	6553422	COVER			1
10	872229	WASHER			5
11		CYLINDER	See Illustration LIFT CYLINDER/ PE1646 LIFT		2
12	11H000015B	GREASE ZERK			4
13	6728044	HOSE			2
14	6530859	HOSE			2
15	6708501	HOSE			2
16	6732782	TUBELINE			1
17	6732241	TUBELINE			1
18	6732783	TUBELINE			1
19	6732239	TUBELINE			1
20	6732763	TUBELINE			1
21	6719424	TEE			2
22	6733987	TUBELINE			1
23	6732243	TUBELINE			1
24	87F000006B	ADAPTER			2
25	6732244	TUBELINE			1
26	17KB00810B	ELBOW	W/Ref. 38		4
27		VALVE	See Illustration HYDRAULIC CONTROL VALVE/ PE1654		1
28	37C000532B	BOLT			4
29	83D000005B	NUT			1
30	83D000006B	NUT			1
31	37C000632B	BOLT			5
32	6727707	CLAMP			10
33	27E000006B	WASHER			6
34	95D000006B	NUT			5
35	6701892	CLAMP			4
36	6726277	CLAMP	Was 6578870 [B]		2
37	84G003728B	BOLT			2
38	79K000010B	O-RING			4

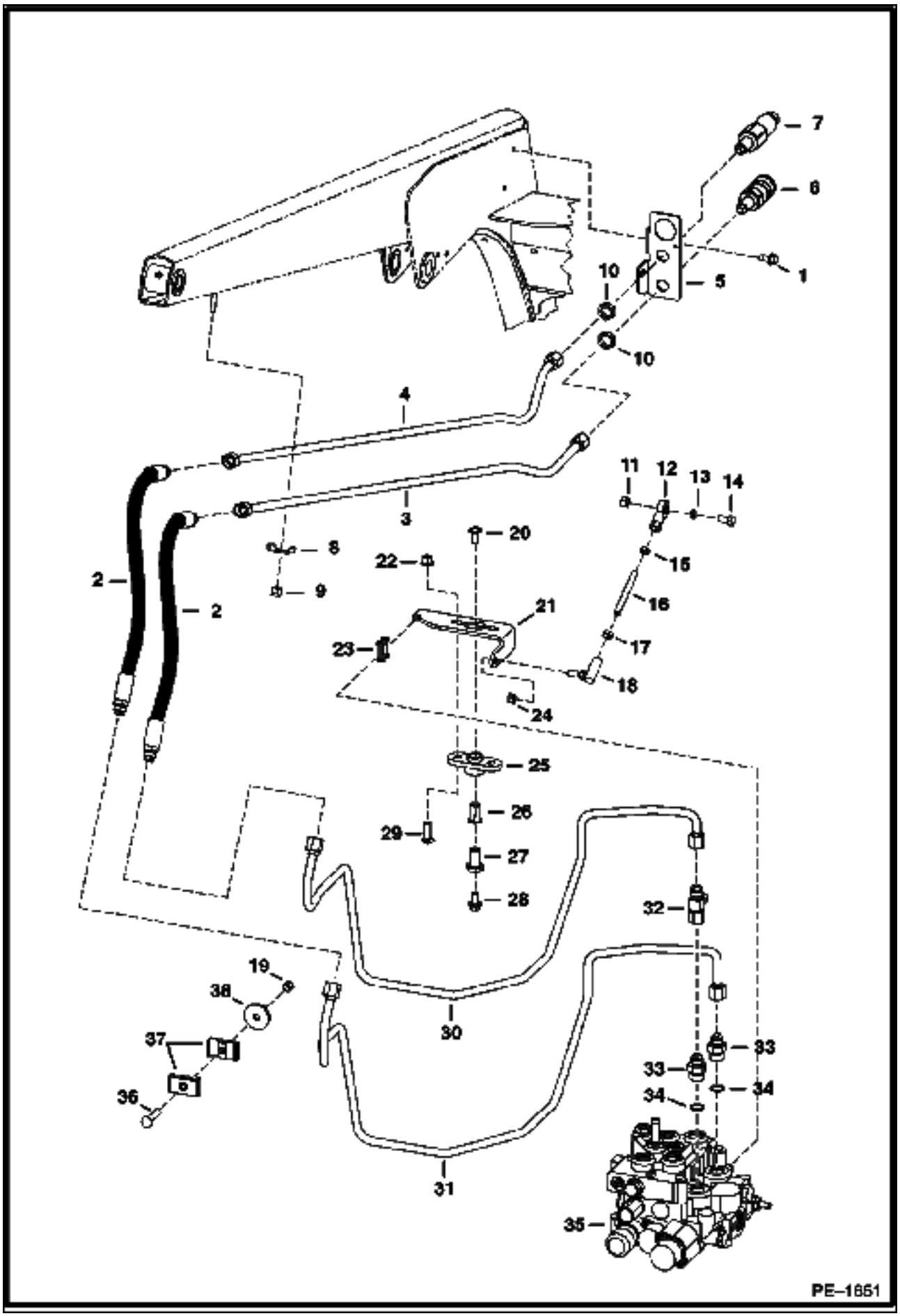
7
6
1
10
5
10
4
3
11
12
13
14
20
8
22
15
2
9
2
16
21
23
17
18
24
25
26
29
27
28
32
19
38
30
37
33
33
36
34
34
31
35
PE–1651

Ref No	Part Number	Description	Remarks	Serial Number	Qty
1	84G003712B	BOLT			2
2	6728013	HOSE			2
3	6711637	TUBELINE			1
4	6711636	TUBELINE			1
5	6727541	BRACKET	aux line		1
6	6676559	COUPLER	Flush Face - 1/2" female		1
7	6676560	COUPLER	Flush Face - 1/2" male		1
8	6500989	CLAMP			1
9	59D000006B	NUT			1
10	86F000006B	NUT			2
11	95D000006B	NUT			1
12	6512955	SWIVEL			1
13	6810385	BUSHING	Was 6564535 [B]		1
14	17C000620B	BOLT			1
15	13D000006B	NUT			1
16	6733371	ROD LINKAGE			1
17	8D000006B	NUT			1
18	6599744	BALL JOINT			1
19	85D000005B	NUT			1
20	6665839	BOLT			1
21	6732295	BRACKET	aux lever		1
22	83D000006B	NUT			2
23	6515186	CONNECTOR			1
24	62D000006B	NUT			1
25	6708043	BUSHING	flange		1
26	6512026	BUSHING			1
27	6706104	RETAINING NUT			1
28	35C000612B	BOLT			1
29	37C000620B	BOLT			2
30	6732062	TUBELINE		5222 11539 & Bel.	1
30	6734766	TUBELINE		5222 11540 & Abv.	1
31	6732059	TUBELINE		5222 11539 & Bel.	1
31	6734767	TUBELINE		5222 11540-11860	1
31	6736639	TUBELINE AUX		5222 11861 & Abv.	1
32	6680287	TEE			1
33	15KB00810B	CONNECTOR	W/Ref. 34	5222 11539 & Bel.	2
33	15KB00810B	CONNECTOR	W/Ref. 34	5222 11540-11860	1
33	6736553	TEE	W/Ref. 34	5222 11861 & Abv.	1
34	79K000010B	O-RING			x
35		VALVE	See Illustration HYDRAULIC CONTROL VALVE/ PE1654		1
36	37C000532B	BOLT	Was 10C000528B [B]		1
37	6701892	CLAMP			2
38	872229	WASHER			1

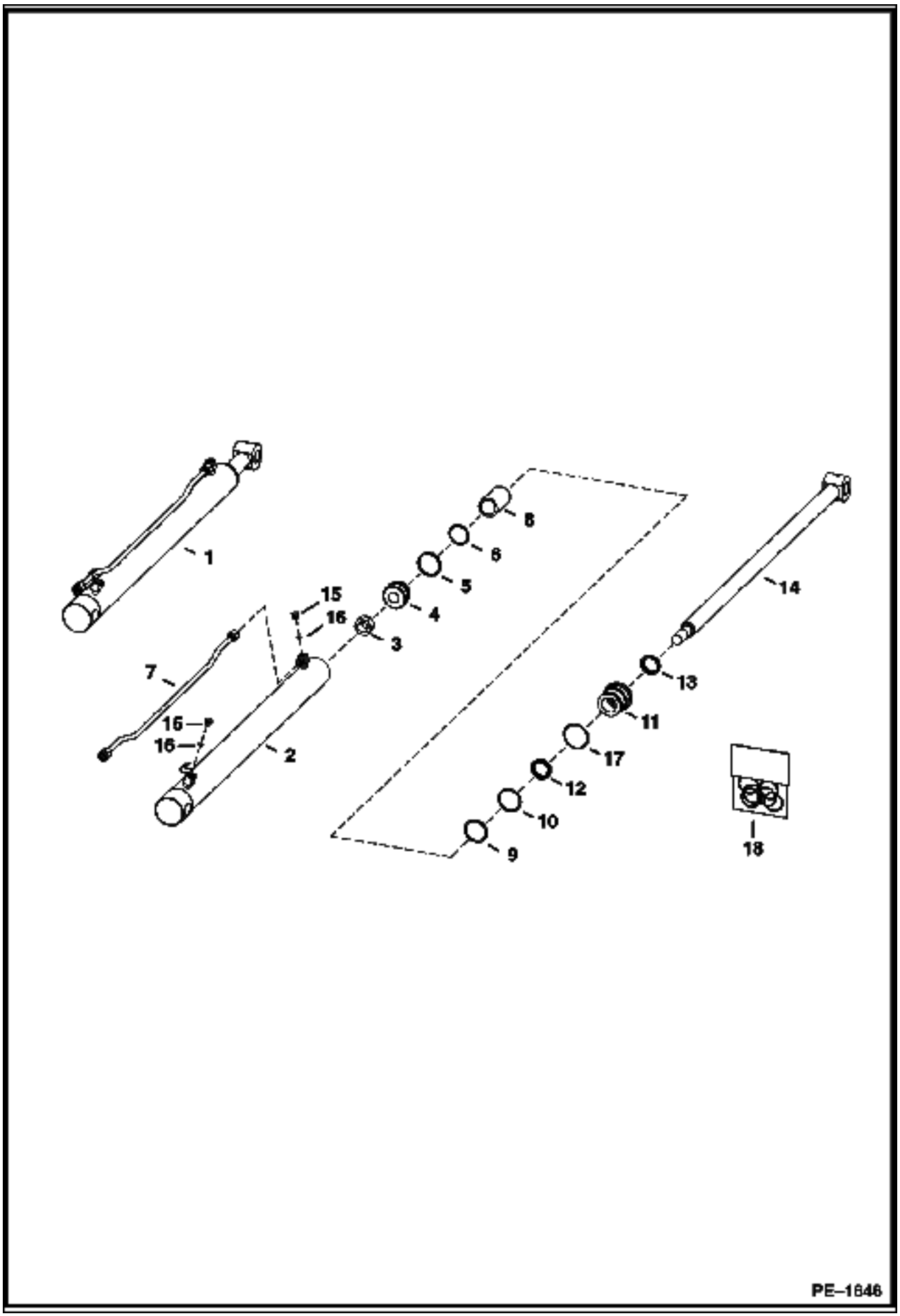
1
2
3
4
5
6
8
7
9
10
11
12
13
14
15
16
17
18
PE–1646

Ref No	Part Number	Description	Remarks	Serial Number	Qty
1	6812771	CYLINDER	Ref. 2-17		2
2	6812773	CASE			1
3	92D000014B	NUT			1
4	6808338	PISTON			1
5	54K030118B	O-RING			1
6	6516231	RING			1
7	6808626	TUBE			1
8	6808336	SPACER			1
9	54K040124B	O-RING			1
10	73K000224B	WASHER			1
11	6539323	HEAD			1
12	6667324	SEAL			1
13	6665208	SEAL			1
14	6807141	ROD	chrome		1
15	6812170	PLUG	W/Ref. 16		2
16	75K000003B	O-RING	Was 95K000003B [B,D]		2
17	58K000136B	O-RING			1
18	6804927	SEAL KIT	Ref. 3, 5, 6, 9, 10, 12, 13 & 17		1

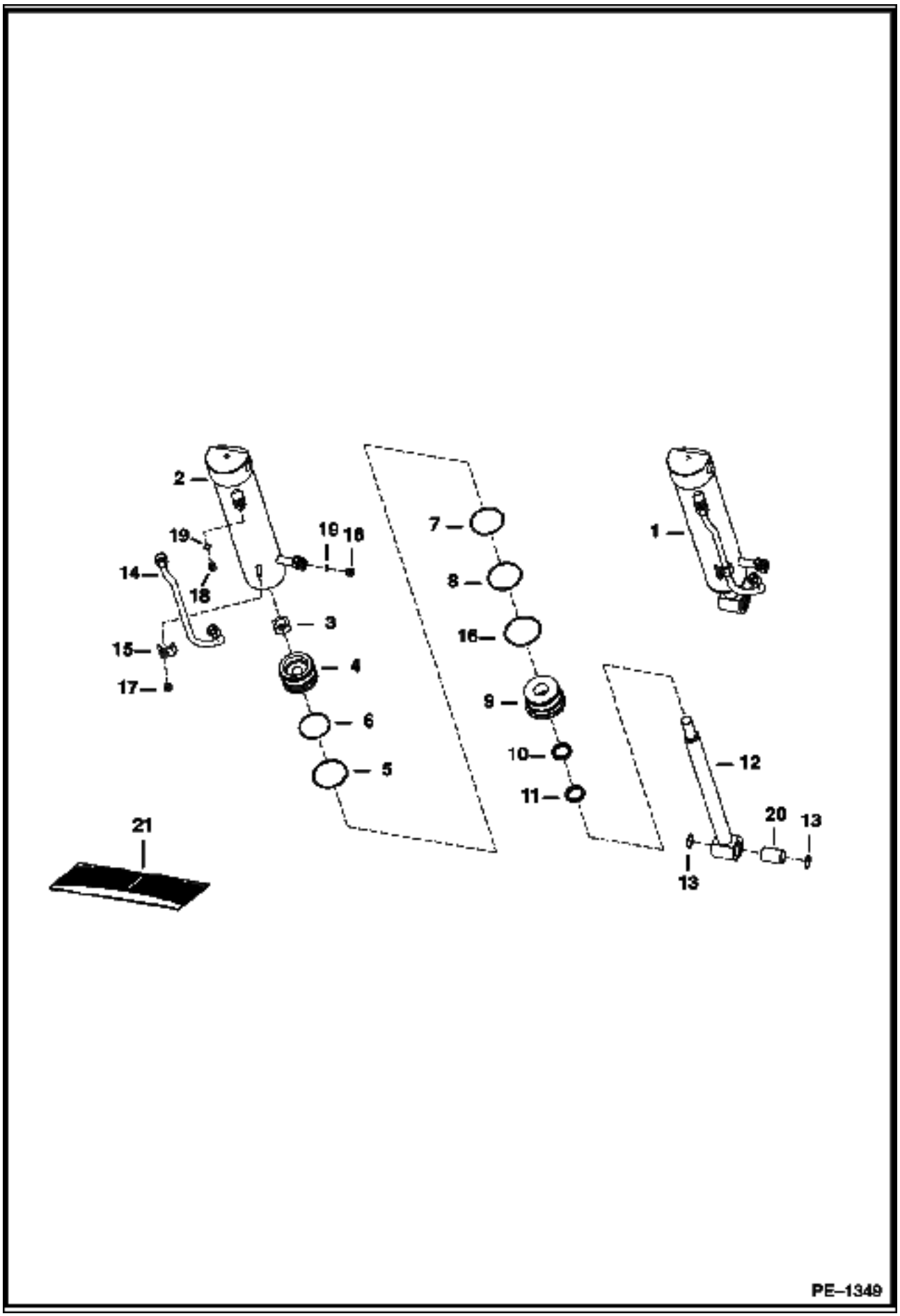
2
19
19
18
14
18
3
15
4
17
6
5
21
7
8
16
9
10
11
1
12
20
13
13
PE–1349

TILT CYLINDER (Cont'd)

Ref No	Part Number	Description	Remarks	Serial Number	Qty
1	6815746	CYLINDER	tilt - Ref. 2-20 - Was 6812106 [A]		1
2	6808668	CASE			1
3	92D000014B	NUT			1
4	6807977	PISTON			1
5	947088B	SEAL			1
6	54K030218B	O-RING			1
7	54K040224B	O-RING			1
8	73K000232B	WASHER			1
9	6808669	HEAD			1
10	6667324	SEAL			1
11	6665208	SEAL			1
12	6815747	ROD	chrome - W/Ref. 13 - Was 6812130 [A]		1
13	1990599B	SEAL			2
14	6808625	TUBELINE			1
15	6562266	CLAMP			1
16	54K040300B	O-RING			1
17	95D000006B	NUT			1
18	90KV00005B	PLUG	W/Ref. 19		2
19	95K000006B	O-RING			x
20	6812132	BUSHING	wear - w/ grease hole		1
21	6803334	SEAL KIT	Ref. 3, 5 - 8, 10, 11 & 16		1

HYDRAULIC CONTROL VALVE

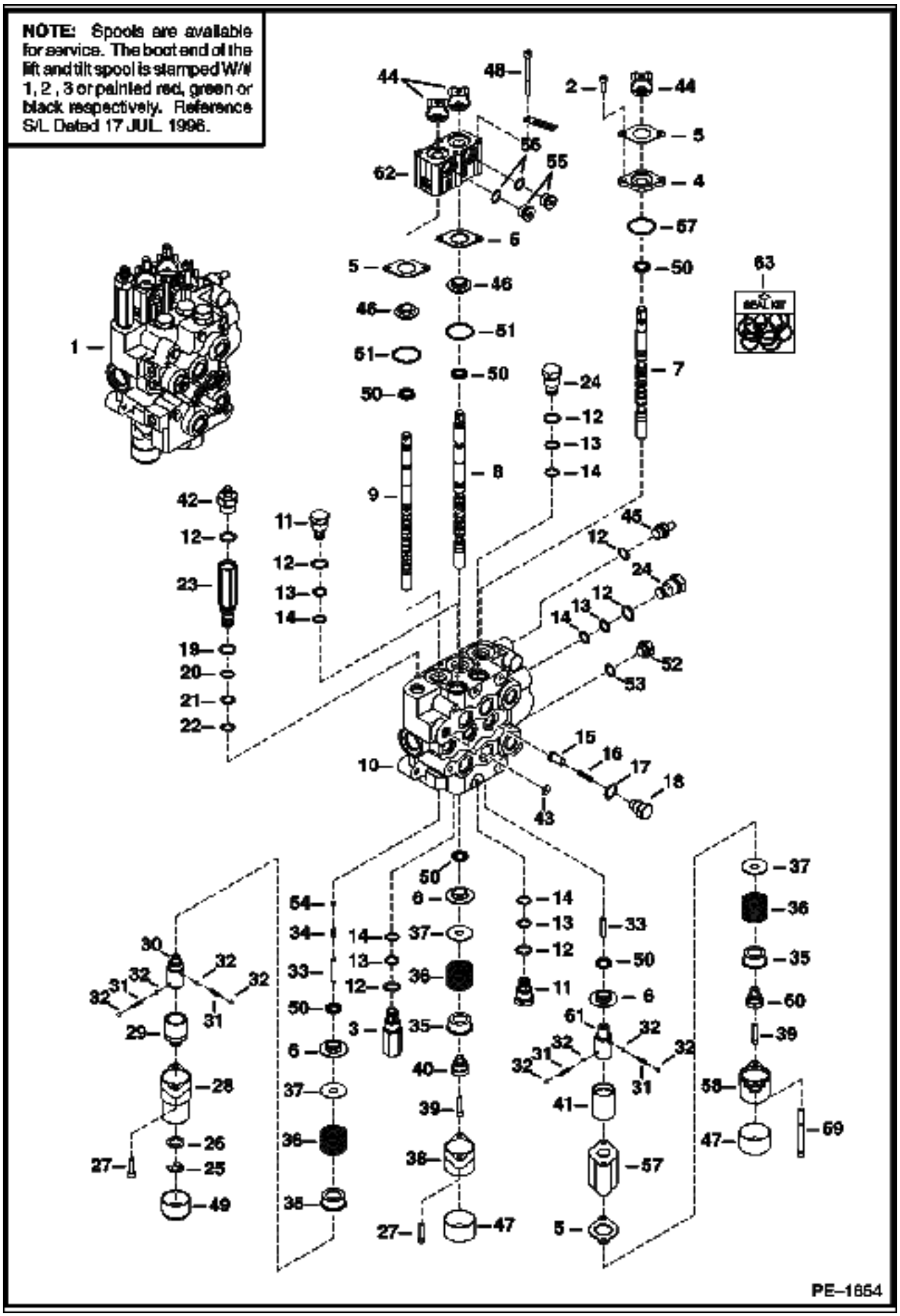

Ref No	Part Number	Description	Remarks	Serial Number	Qty
1		VALVE	NAP - Ref. 2 - 53 - Order 6816418 - Was 6813442 [A]	5222 11860 & Bel.	1
1	6816418	VALVE ASSY 463F	Ref. 2 - 53	5222 11861 & Abv.	1
1		VALVE	See Illustration BICS VALVE/ PE1688 BICS		1
2	29G000412B	SCREW			2
3	6678552	VALVE	relief - W/Ref. 12-14		1
4	6589565	BUSHING			1
5	6589564	RETAINER			4
6	6595663	BUSHING	Seal Backup		3
7	6813753	SPOOL	auxiliary		1
8	6815152	SPOOL	tilt - Was 6674814 [A]		1
9	6814511	SPOOL	lift - Was 6674808 [A]		1
10		BODY	NSS		1
11	6667549	VALVE	anticav check - W/Ref. 12-14		2
12	79K000010B	O-RING			1
13	80K000014B	RING			1
14	58K000014B	O-RING	back-up washer required		1
14	6677106	O-RING	back-up washer not required		1
15	6592115	SEAT			3
16	6592117	SPRING			3
17	79K000008B	O-RING			3
18	6592116	NUT			3
19	73K000017B	WASHER	Was 80K000017B [A]		1
20	58K000017B	O-RING			1
21	80K000015B	WASHER			1
22	58K000015B	O-RING			1
23		VALVE	NAP - main relief - W/Ref. 19 - 22 - Order 6683817 - Was 6680011 [A]	5222 11860 & Bel.	1
23	6683817	RELIEF VALVE 2 STAGE	main relief - W/Ref. 19 - 22 - Order 6736035	5222 11861 & Abv.	1
24	6592720	PLUG	W/Ref. 12-14		2
25	799119B	SNAP RING			1
26	6592098	WASHER			1
27	29G000416B	SCREW			4
28	6589226	BONNET			1
29	6531270	SLEEVE	lift		1
30	6587575	ADAPTER			1
31	6592107	SPRING			4
32	6592105	BALL			8
33	6586918	SCREW			2
34	6596807	PLUG	plastic		1
35	6592100	COLLAR			3
36	6587580	SPRING			3
37	6587523	WASHER			3
38	7101345	BONNET	Was 6587633 [A]		1
39	7102652	SCREW	Was 30G000416B [B]		2
40	6592109	ADAPTER			1
41	6813095	SLEEVE	auxiliary		1
42	15KB00610B	ADAPTER	W/Ref. 12		1
43	55K000204B	O-RING			1
44	6587763	BOOT			3
45	6732357	PLUG	W/Ref. 12		1
46	6805102	BUSHING			2
47	6662848	CAP			2
48	29G000444B	BOLT			4
49	6660644	CAP			1

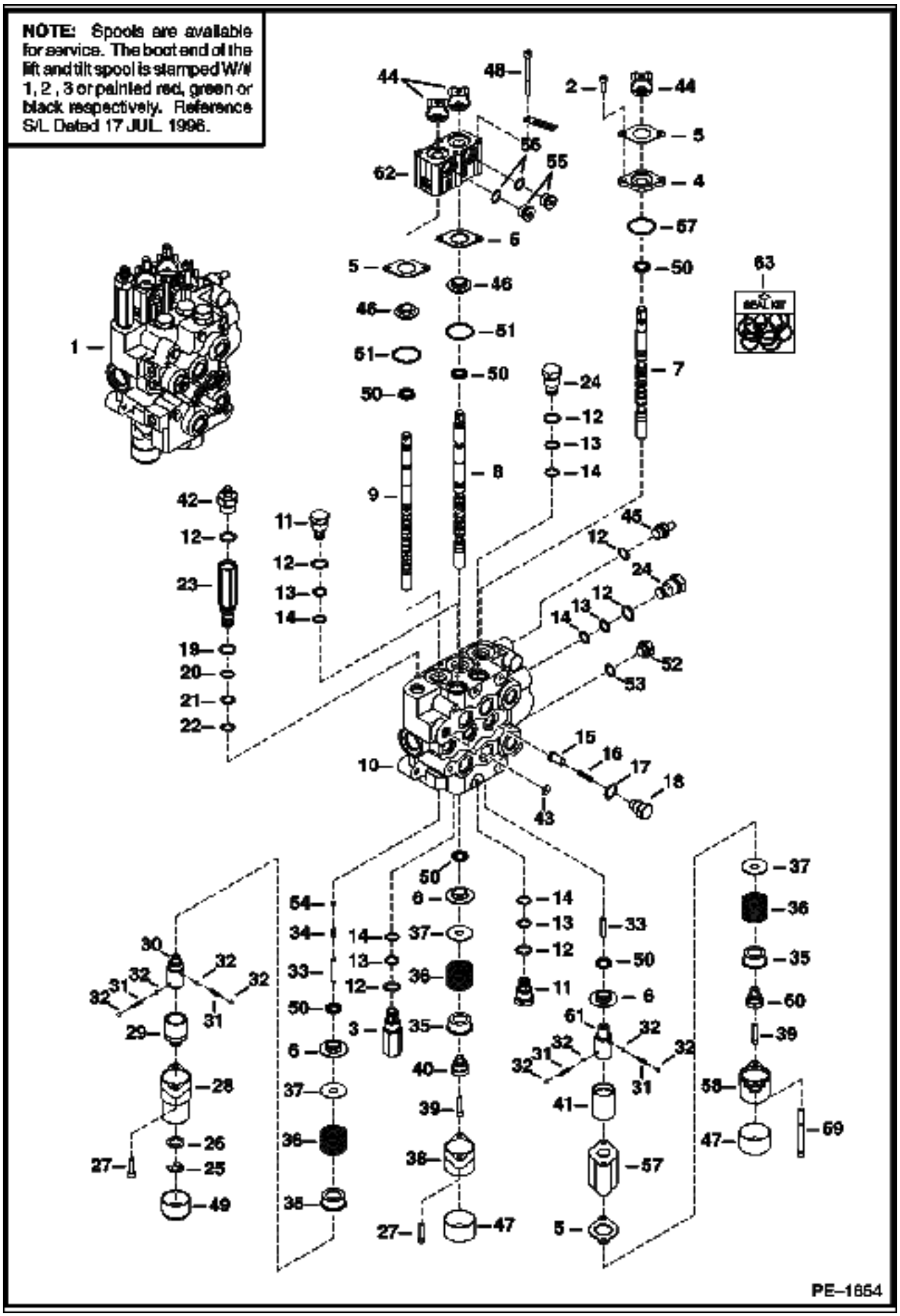
NOTE: Spools are available for service. The boot end of the lift and tilt spool is stamped W/# 1, 2, 3 or painted red, green or black respectively. Reference S/L Dated 17 JUL 1996.
PE-1654

Ref No	Part Number	Description	Remarks	Serial Number	Qty
50	6683274	SEAL	spool - Was 6665846 [B]		6
51	58K000127B	O-RING			3
52	6534973	PLUG	W/Ref. 53		1
53	79K000007B	O-RING			2
54	54K020002B	O-RING			1
55	90KN00006B	PLUG	W/Ref. 56 - tapered boss face		2
55	47K000006B	FITTING	W/Ref. 56 - flat boss face		2
56	95K000008B	O-RING	tapered boss face		x
56	79K000008B	O-RING	flat boss face		x
57	6813097	BONNET			1
58	6813480	COVER			1
59	29G000448B	SCREW			2
60	6813098	ADAPTER			1
61	6813096	ADAPTER			1
62	7106751	BLOCK	Was 6813449 [A]		1
63	6809425	SEAL KIT	Upper Deck - Ref. 12-14 & 17		1
63	6816252	SEAL KIT	Spool - Was 6806941 [A]		x
63	6661328	SEAL KIT	Main Relief		1
63	6816253	SEAL KIT	Complete Valve - Was 6809448 [A]		1

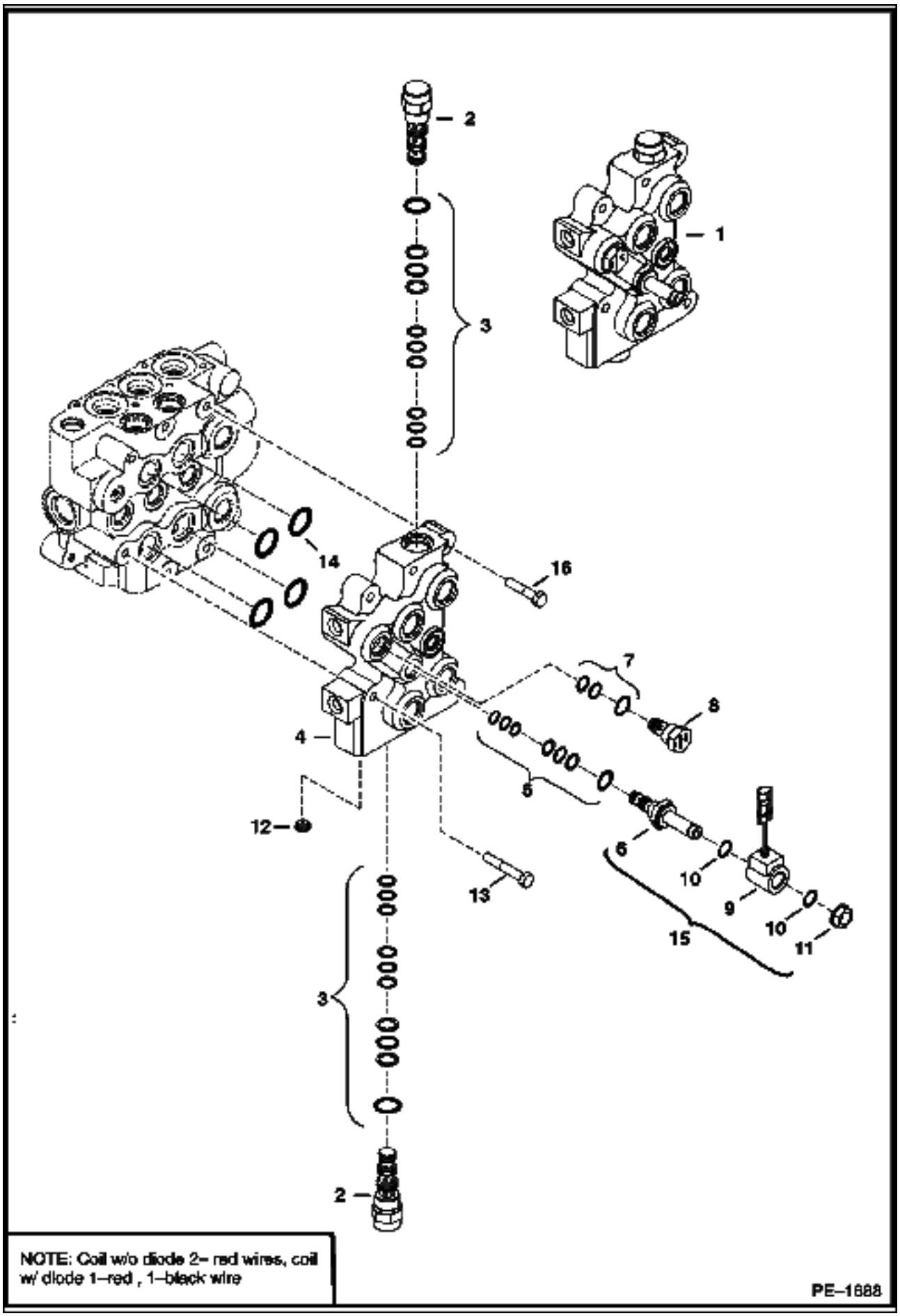
2
1
3
14
16
7
8
4
5
12
6
10
9
10
11
15
13
3
2
NOTE: Coil w/o diode 2– red wires, coil w/ diode 1–red , 1–black wire
PE–1688

Ref No	Part Number	Description	Remarks	Serial Number	Qty
1	6628571	VALVE ASSY	Ref. 2 - 8		1
2	6668765	VALVE	pilot operated		2
3	6669734	SEAL KIT			x
4		BODY	NSS		1
5	6669732	SEAL KIT			x
6	6667687	STEM	solenoid valve		1
7	6669733	SEAL KIT			x
8	6669057	CHECK VALVE	filter		1
9	6671025	COIL	w/diode		1
10	54K020028B	O-RING	pwm		2
11	6668820	NUT	pwm		1
12	6668791	ORIFICE			1
13	43C000532B	BOLT			4
14	55K000212B	O-RING			4
15	6672471	VALVE	solenoid- - w/diode - Ref. 6 & 9-11		1
16	43C000524B	BOLT			2
17	55K000204B	O-RING			1

BUCKET POSITIONING VALVE

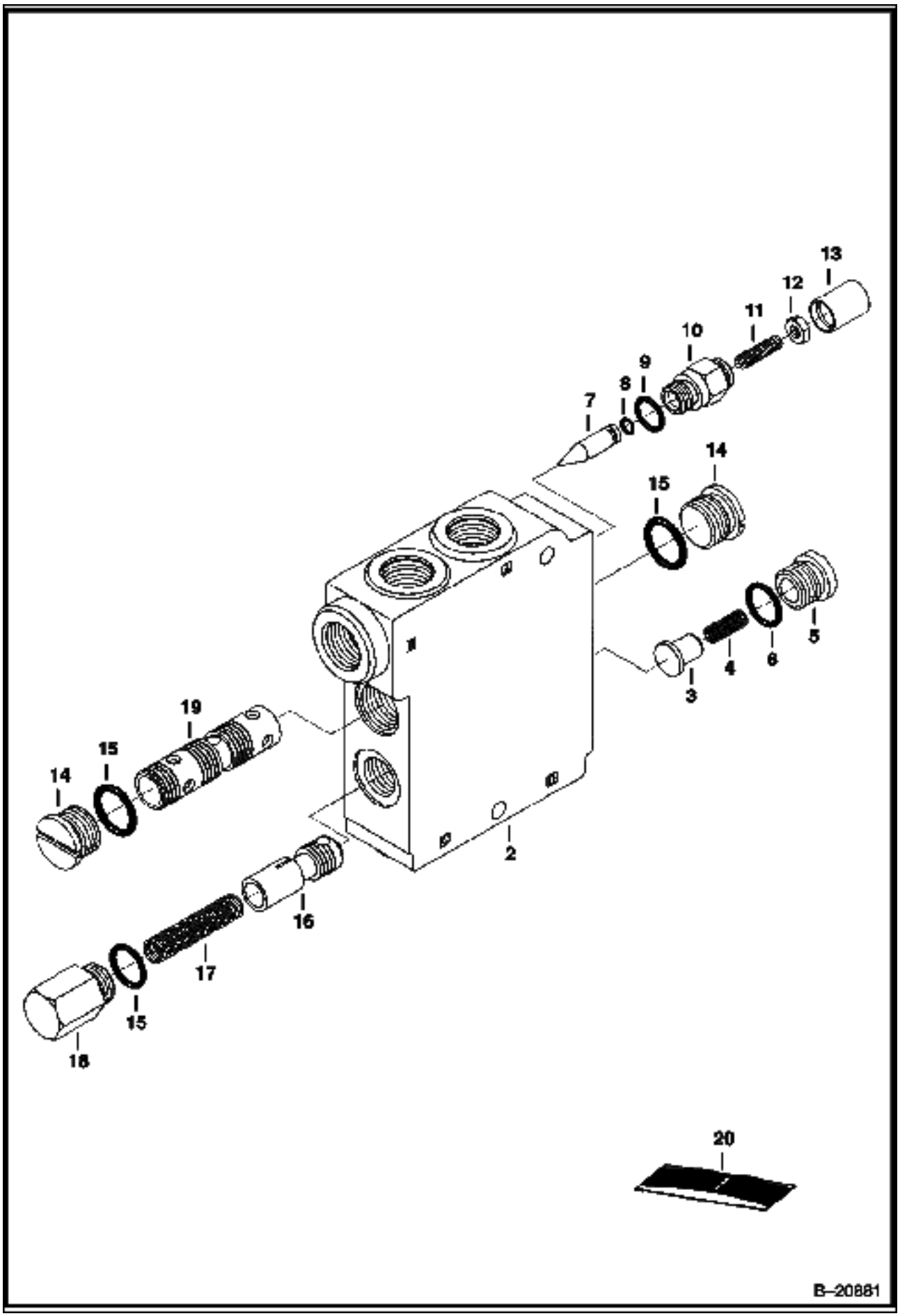

BUCKET POSITIONING VALVE (Cont'd)

Ref No	Part Number	Description	Remarks	Serial Number	Qty
1	6680984	VALVE	Ref. 2-19		1
2		BODY	NSS		1
3	6647783	LOAD CHECK			1
4	6647785	SPRING	load check		1
5	6647784	PLUG	W/Ref. 6		1
6	79K000008B	O-RING			1
7	6647777	PIN			1
8	6647677	SECTION			1
9	6634874	O-RING			1
10	6647778	CAP	adjustment		1
11	6648293	SCREW			1
12	6631561	NUT	jam		1
13	6667676	COVER			1
14	6647780	PLUG	W/Ref. 15		2
15	58K000116B	O-RING			2
16		SPOOL	NSS - unloading		1
17	6648294	SPRING			1
18	6667176	PLUG	W/Ref. 15		1
19		SPOOL	NSS - flow divider		1
20	6647786	SEAL KIT	Ref. 6, 8, 9, 13, & 15		1

CONTROL PEDALS

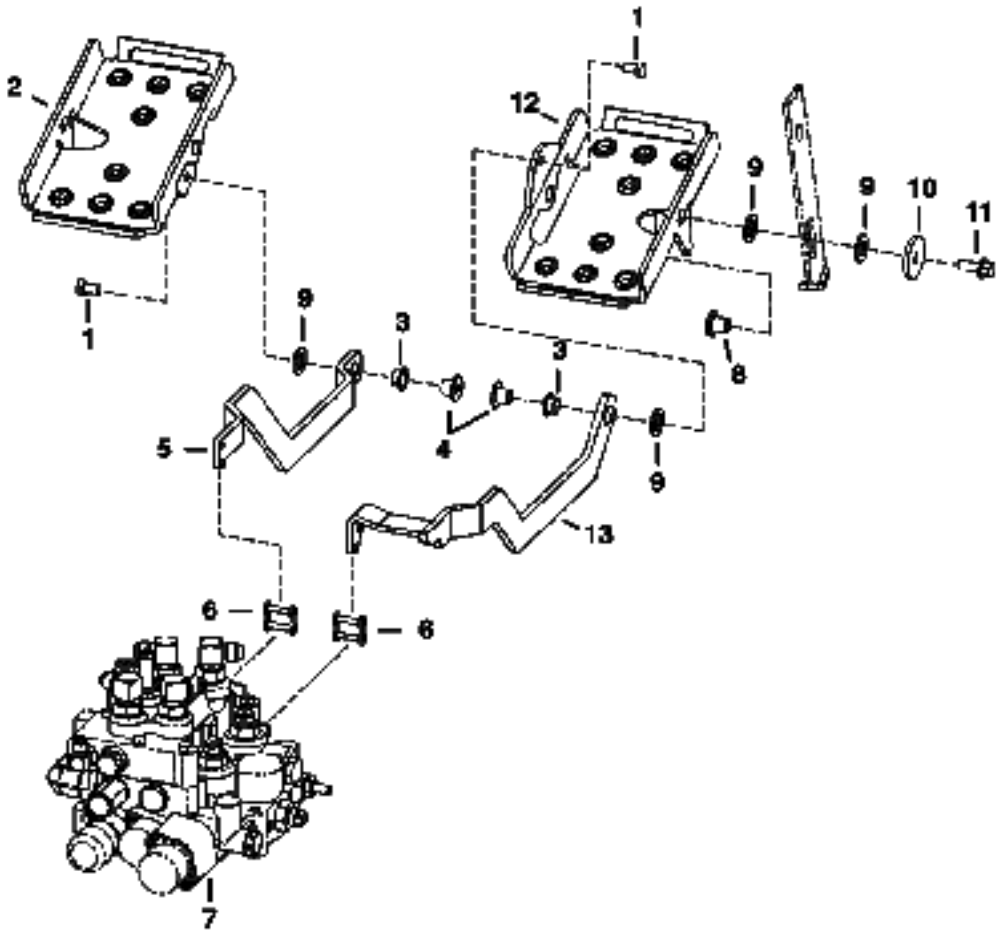

CONTROL PEDALS (Cont'd)

Ref No	Part Number	Description	Remarks	Serial Number	Qty
1	43C000610B	BOLT	Was 17C000610B [B]		2
2	6707056	PEDAL			1
3	6598906	BUSHING	nylon		2
4	6729750	NUT			2
5	6732009	BAR			1
6	6515186	CONNECTOR	connector		2
7		VALVE	See Illustration HYDRAULIC CONTROL VALVE/ PE1654		1
8	6594298	NUT	retaining		2
9	6700170	WASHER	nylon		6
10	872229	WASHER			2
11	35C000616B	BOLT			2
12	6732021	PEDAL			1
13	6732010	BAR			1

HYDROSTATIC CIRCUITRY

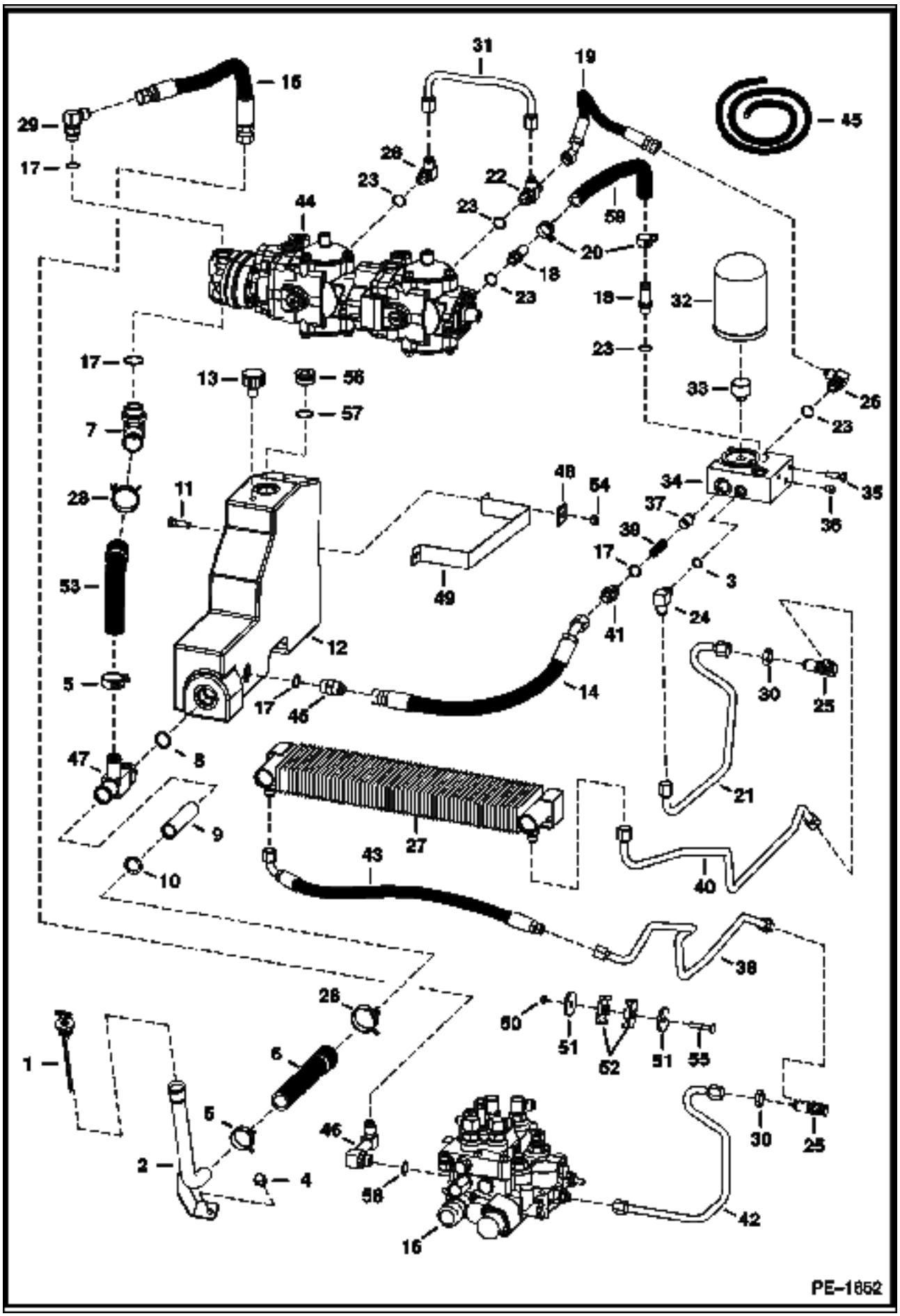

Ref No	Part Number	Description	Remarks	Serial Number	Qty
1	6564143	DIPSTICK			1
2	6732254	TUBE			1
3	79K000006B	O-RING			x
4	84G003112B	BOLT			1
5	5HM00035B	CLAMP			2
6	6714557	HOSE	hyd fill		1
7	1312337B	ELBOW	W/Ref. 17		1
8	79K000016B	O-RING			x
9		SCREEN	NAP - Order 6729982 - Was 6714555 [A]	& Below	1
9	6729982	SCREEN		& Above	1
10	6729189	SEAL			1
11	17C000620B	BOLT			2
12	6714556	TANK			1
13	6684923	BREATHER	Was 6648944 [A]		1
14	6729723	HOSE			1
15	6734176	HOSE			1
16		VALVE	See Illustration HYDRAULIC CONTROL VALVE/ PE1654		1
17	79K000010B	O-RING			x
18	1314348B	CONNECTOR			2
19	6732293	HOSE			1
20	5HM00023B	CLAMP			2
21	6732721	TUBELINE		& Below	1
21	6734904	TUBELINE		& Above	1
22	21KB00808B	TEE	W/Ref. 23		1
23	79K000008B	O-RING			x
24	17KB00806B	FITTING	W/Ref. 3 - Was 672942B [A]	& Below	1
25	88F000006B	ELBOW			2
26	17KB00808B	ELBOW	W/Ref. 23		3
27	6732772	OIL COOLER			1
28	5HM00038B	CLAMP			2
29	17KB01010B	ELBOW	W/Ref. 17		1
30	86F000006B	NUT			2
31	6732057	TUBELINE			1
32	6677652	FILTER			1
33	6563977	INSERT			1
34	6729316	BLOCK		& Below	1
34	6734226	FILTER BLOCK		& Above	1
35	17C000612B	BOLT			2
36	40K000002B	PLUG			1
37	6734350	POPPET			1
38	6732316	TUBELINE			1
39	6563978	SPRING			1
40	6732329	TUBELINE			1
41	6562656	ADAPTER	W/Ref. 17		1
42	6732269	TUBELINE			1
43	6732330	HOSE			1
44		PUMP	See Illustration HYDROSTATIC PUMP/ B17504		1
45	15KB01010B	ADAPTER	W/Ref. 17 - Was 15K000007B [A]		1
46	6681494	FITTING	W/Ref. 58		1
47	6727935	TEE	W/Ref. 8		1
48	6559447	WASHER			2
49	6564151	BAND			1
50	85D000005B	NUT			2
51	872229	WASHER			2

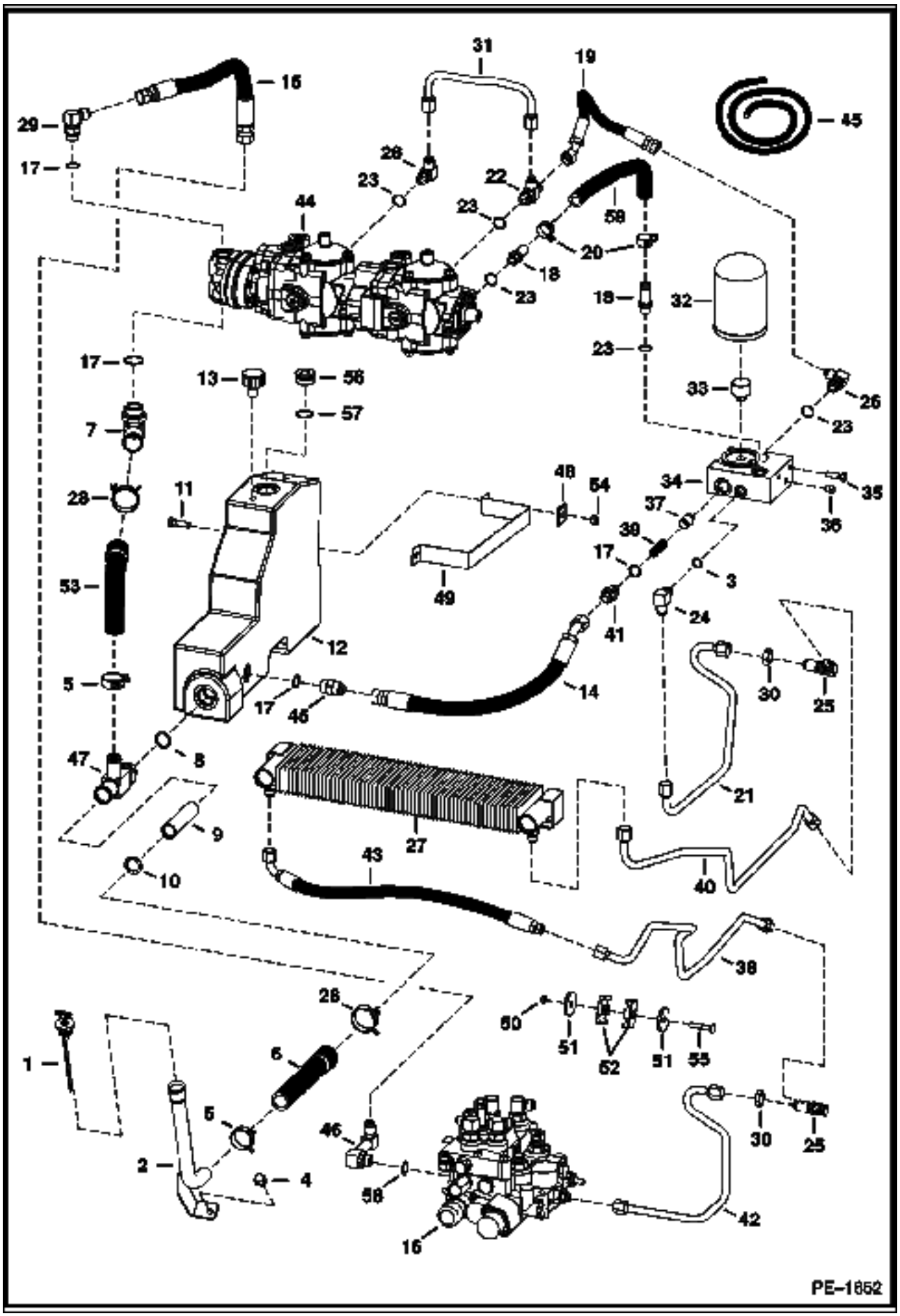
PE-1652

Ref No	Part Number	Description	Remarks	Serial Number	Qty
52	6701892	CLAMP			2
53	6733666	HOSE			1
54	95D000006B	NUT			2
55	37C000532B	BOLT	Was 10C000528B [B]		1
56		PLUG	NAP - W/Ref. 57 - tapered boss face - Was 90KN00010B [A]		1
56	24K000010B	PLUG	W/Ref. 57 - flat boss face		1
57	95K000006B	O-RING	tapered boss face		x
57	75K000006B	O-RING	flat boss face		x
58	79K000012B	O-RING			x
59	6732267	HOSE	suction	& Below	1
59	6734911	SUCTION HOSE	suction	5221 11263 & Abv.	1
60	6563920	FILTER		& Above	1
61	15KB00810B	CONNECTOR	W/Ref. 17		1

HYDROSTATIC CIRCUITRY

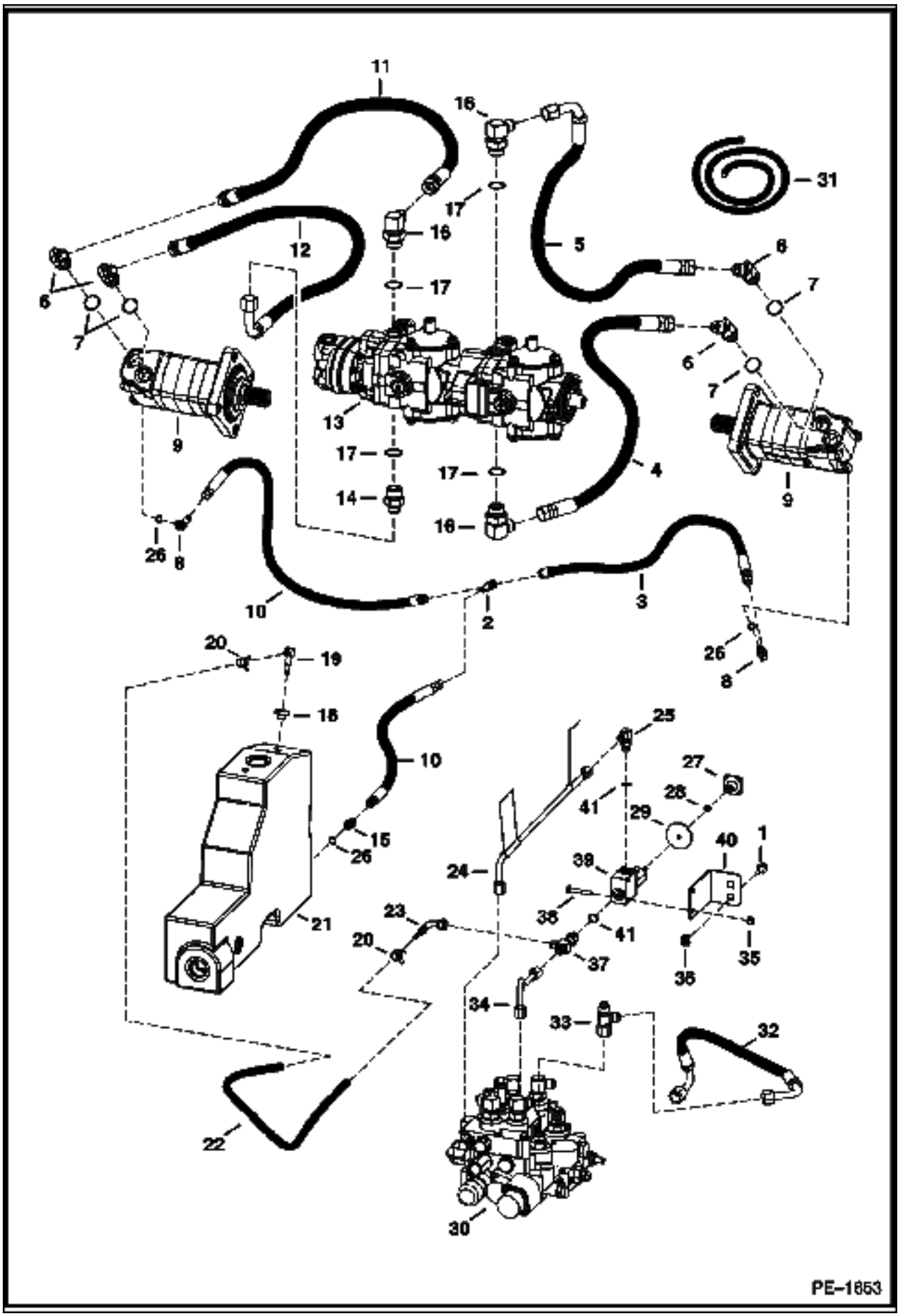

Ref No	Part Number	Description	Remarks	Serial Number	Qty
1	35C000512B	BOLT			2
2		TEE	NAP - Was 10KN00003B [A]		1
2	10K000003B	TEE	flat boss face		1
2	97K000004B	O-RING	flared end		x
3	6728470	HOSE			1
4	6732112	HOSE			1
5	6732113	HOSE			1
6	18KB01010B	ADAPTER	W/Ref. 7		4
7	79K000010B	O-RING			x
8	17KB00404B	ELBOW	W/Ref. 37		2
9		MOTOR	See Illustration HYDROSTATIC MOTOR/ D1635		2
10	6728469	HOSE			2
11	6732060	HOSE			1
12	6732240	HOSE			1
13		PUMP	See Illustration HYDROSTATIC PUMP/ B17504		1
14	15KB01012B	ADAPTER	W/Ref. 17		1
15	15KB00404B	ADAPTER	W/Ref. 37		1
16	17KB01012B	ELBOW	W/Ref. 17		3
17	79K000012B	O-RING			x
18	6553411	BUSHING			1
19	6598908	ELBOW			1
20	5HM00013B	CLAMP			2
21	6714556	TANK	hydraulic		1
22		HOSE	NAP - 22.5"(571,5mm) long - Order Ref. 31		1
23	6680431	ELBOW			1
24	6733986	TUBELINE			1
24	6809511	DECAL			2
25	17KB00606B	ELBOW	W/Ref. 41		2
26	79K000004B	O-RING	flat boss face		1
27	6737524	KNOB	red square - Was 6668913 [A]		1
28	7D000004B	NUT			1
29	6707101	SEAL	neoprene		1
30		VALVE	See Illustration HYDRAULIC CONTROL VALVE/ PE1654		1
31	6577821	HOSE	bulk - Sold Per Foot		1
32	6732268	HOSE		5222 11860 & Bel.	1
33	6680287	TEE		5222 11860 & Bel.	1
34	6732270	TUBELINE			1
35	83D000004B	NUT			1
36	6678765	NUT			2
37	6805243	TEE	W/Ref. 41		1
38	17C000428B	BOLT			2
39	6667844	VALVE ASSY	manual lift release		1
40	6732299	BRACKET			1
41	79K000006B	O-RING			x
42	15KB00606B	ADAPTER	W/Ref. 41	5222 11861 & Abv.	1
43	6736035	TUBELINE RELIEF		5222 11861 & Abv.	1

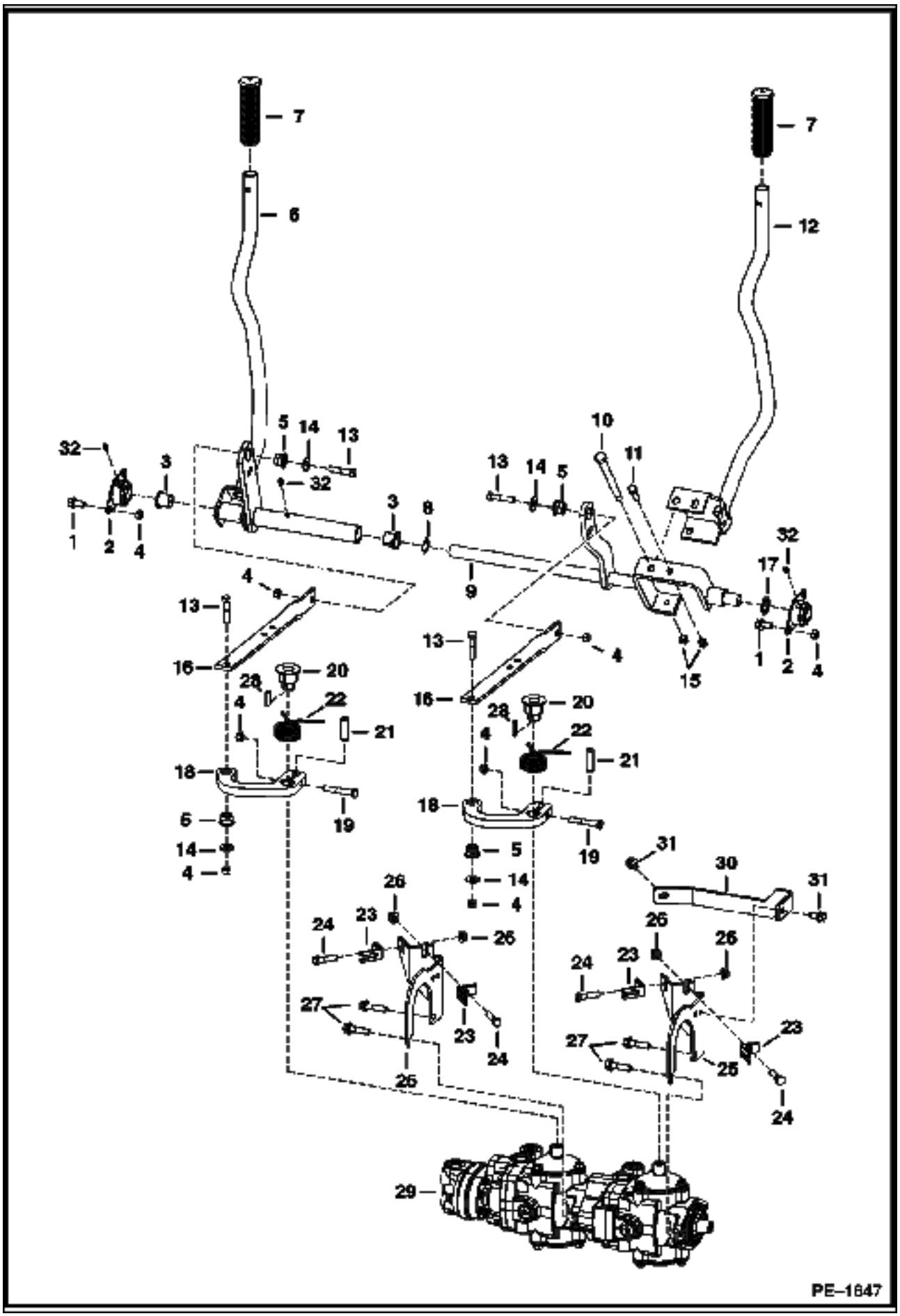
PE–1647

Ref No	Part Number	Description	Remarks	Serial Number	Qty
1	35C000612B	BOLT			4
2	6558736	FLANGE			2
3	6512027	BUSHING			4
4	85D000006B	NUT			8
5	6665701	BUSHING			4
6	6732740	LEVER			1
7	6513963	GRIP			2
8	6599741	WASHER			1
9	6732741	SHAFT			1
10	6553081	BOLT			1
11	17C000620B	BOLT			1
12	6733306	LEVER			1
13	17C000624B	BOLT	Was 17C000628B [B]		4
14	6563914	WASHER			4
15	61D000006B	NUT			1
16	6709397	LINK			2
17	6733130	WASHER			1
18	6564244	PINTLE LEVER			2
19	17C000636B	BOLT			2
20	6728605	HUB			2
21	6728615	PIN			2
22	6728150	SPRING			2
23	6564241	GUIDE			4
24	6678089	BOLT			4
25	6727831	MOUNT			2
26	81D000006B	NUT	Was 57D000006B [B]		4
27	35C000624B	BOLT			4
28	6630170	KEY			2
29		PUMP	See Illustration HYDROSTATIC PUMP/ B17504		1
30	6728723	BRACKET	centering		1
31	84G003712B	BOLT			2
32	6518200	GREASE ZERK			3
33	95D000006B	NUT			5
34	25E000017B	WASHER			4

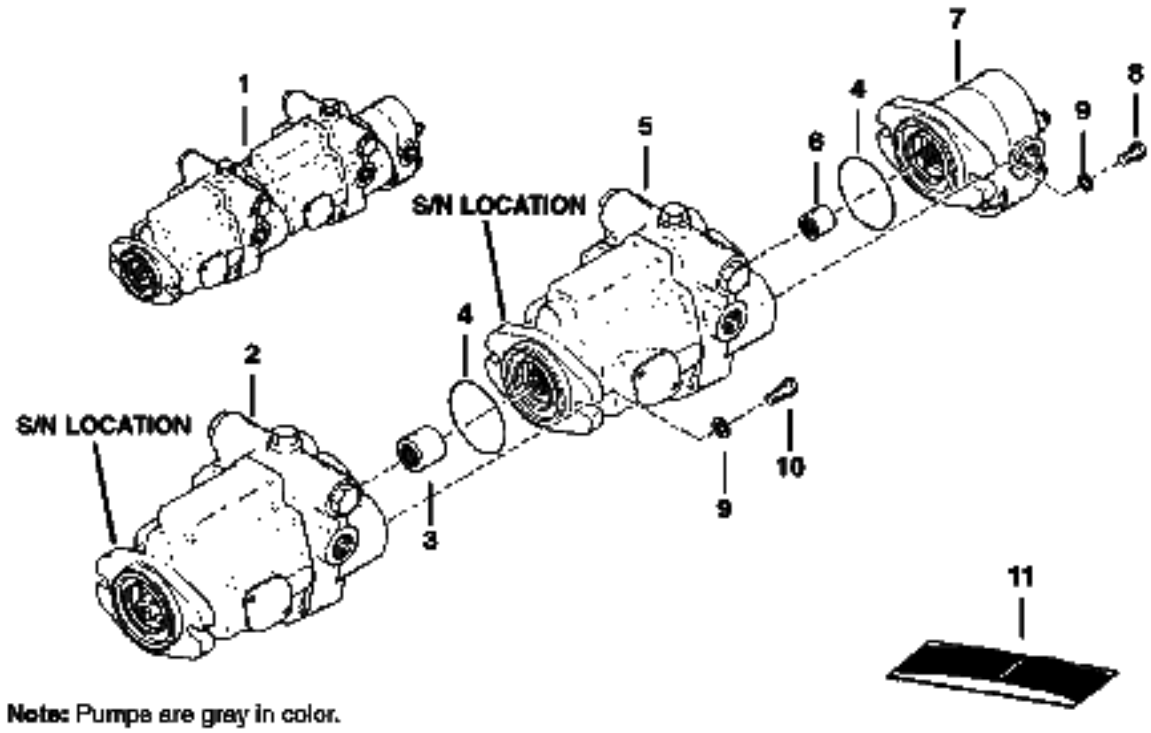

Note: Pumps are gray in color.

B–17504

Ref No	Part Number	Description	Remarks	Serial Number	Qty
1	6733895	PUMP	New - Ref. 2-11 - Tapered Keyed Front Shaft - 78163-LAC-03		1
2		PUMP	See Illustration HYDROSTATIC PUMP/ B20883 NEW - TAPERED		1
3	6598855	COUPLER			1
4	25K020308B	O-RING			2
5		PUMP	See Illustration HYDROSTATIC PUMP/ B20882 NEW		1
6	6677650	COUPLER			1
7		GEAR PUMP	See Illustration GEAR PUMP/ B17518		1
8	6677612	BOLT			2
9	6677593	WASHER			2
10	6677611	BOLT			2
11	6677608	SEAL KIT			2

HYDROSTATIC PUMP
(Gear Pump End)

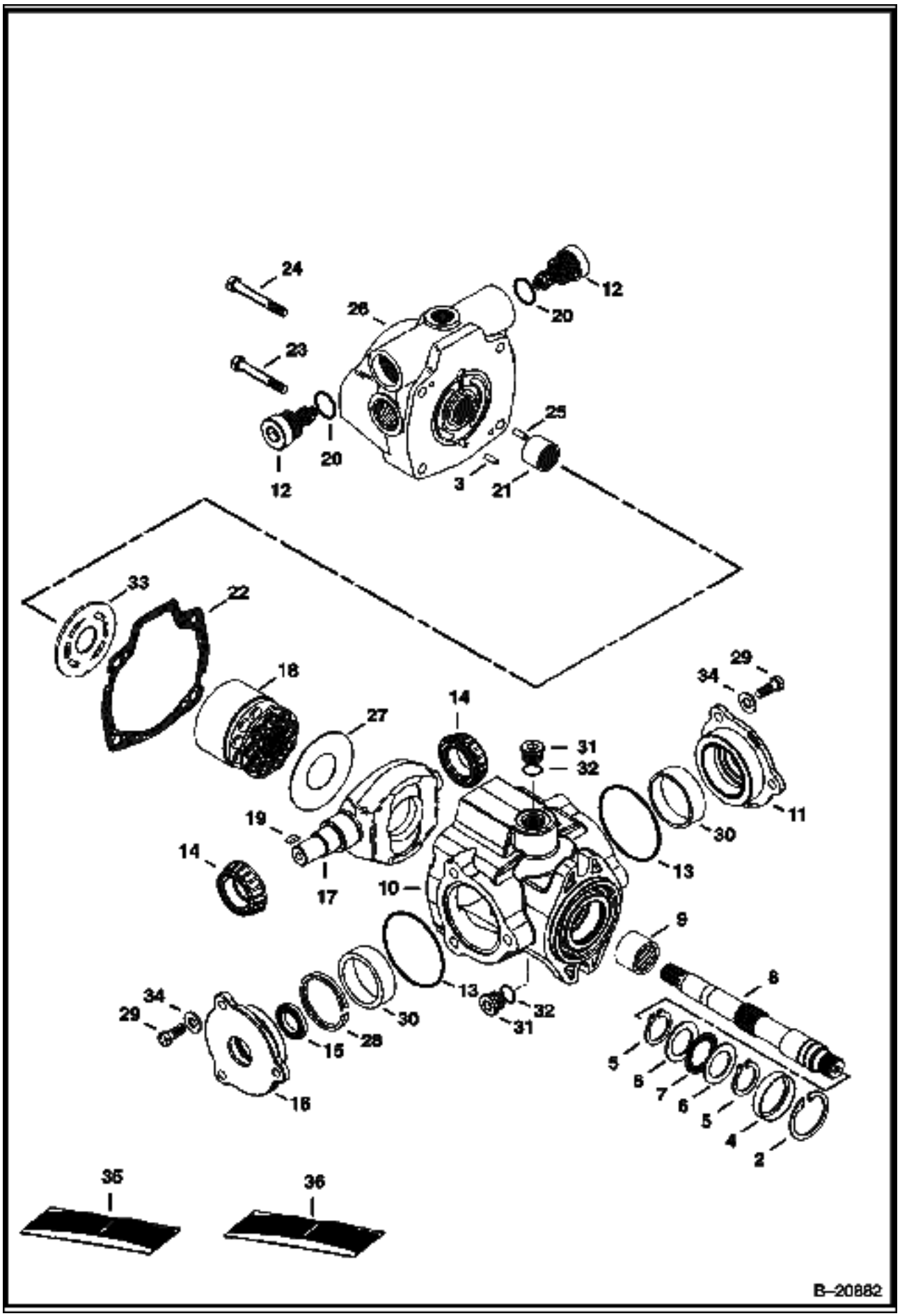

HYDROSTATIC PUMP (Cont'd)
(Gear Pump End)

Ref No	Part Number	Description	Remarks	Serial Number	Qty
1	6681918	PUMP	New - 70160-LBM-03 - Gear pump end - Ref. 2-34		1
2	661415B	SNAP RING			1
3	6677588	PIN			3
4	6677591	SPACER			1
5	710776B	SNAP RING			2
6	6598878	RACE			2
7	3292657B	BEARING	thrust		1
8	6677586	SHAFT			1
9	851239B	BEARING			1
10	6677589	HOUSING	Also Order Ref. 36 - W/Ref. 9		1
11	6677600	COVER			1
12	6681916	RELIEF VALVE	W/Ref. 20		2
13	6677605	O-RING			2
14	6677598	BEARING			2
15		SEAL	NSS - Order Ref. 35		1
16	6677599	COVER	Also Order Ref. 36		1
17	6677590	PLATE	yoke - Also Order Ref. 36		1
18	6598893	GROUP			1
19	6630170	KEY			1
20	6677596	O-RING			2
21	654386B	BEARING			1
22		GASKET	NSS - Also Order Ref. 35		1
23	6677601	BOLT			2
24	6677602	BOLT			2
25	214028B	DOWEL			2
26	6677587	PLATE	back - W/Ref. 21		1
27	6677592	PLATE	thrust		1
28		CRUSH RING	NSS - Order Ref. 36		1
29	6677594	SCREW			6
30	6677603	CUP	bearing		2
31	6677607	PLUG	W/Ref. 32		2
32	6634874	O-RING			1
33	6677606	PLATE			1
34	6677593	WASHER			6
35	6677608	SEAL KIT			1
36	6677502	SHIM KIT			1

HYDROSTATIC PUMP
(Pulley End)

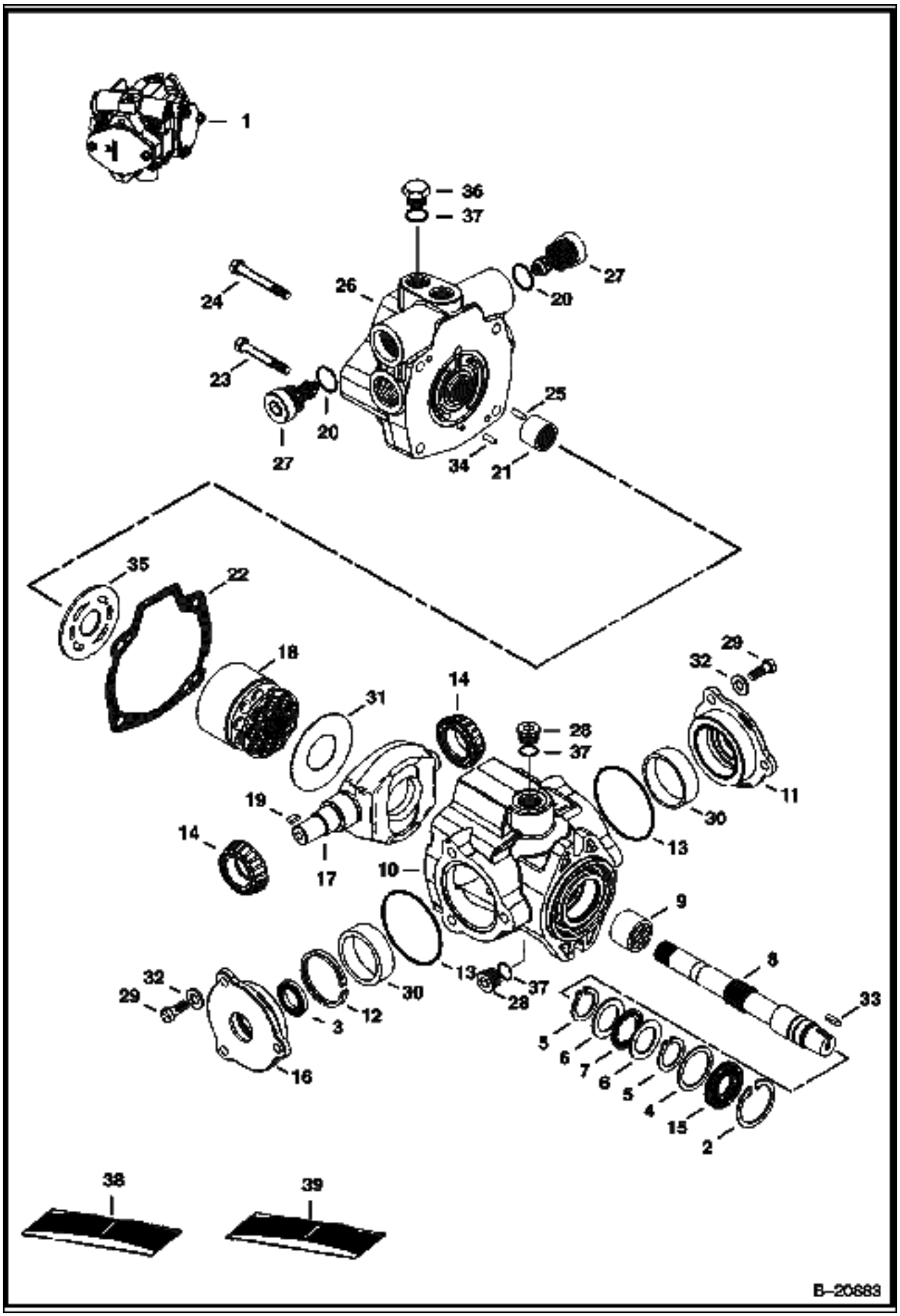

HYDROSTATIC PUMP (Cont'd)
(Pulley End)

Ref No	Part Number	Description	Remarks	Serial Number	Qty
1	6681917	PUMP	New - 70160-LBL-03 - Pulley end of pump - Ref. 2 - 36		1
2	661415B	SNAP RING			1
3		SEAL SHAFT	NSS		1
4	6598875	WASHER			1
5	710776B	SNAP RING			2
6	6598878	RACE			2
7	3292657B	BEARING	thrust		1
8	6598894	SHAFT	drive - tappered		1
9	851239B	BEARING			1
10	6677610	HOUSING	W/Ref. 9 - Also Order Ref. 39		1
11	6677600	COVER			1
12		CRUSH RING	NSS		1
13	6677605	O-RING			2
14	6677598	BEARING			2
15	6635527	SEAL			1
16	6677599	COVER	Also Order Ref. 39		1
17	6677590	PLATE	yoke - Also Order Ref. 39		1
18	6598893	GROUP			1
19	6630170	KEY			1
20	6677596	O-RING			2
21	654386B	BEARING			1
22		GASKET	NSS		1
23	6677601	BOLT			2
24	6677602	BOLT			2
25	214028B	DOWEL			2
26	6677609	PLATE	back - W/Ref. 21		1
27	6681916	RELIEF VALVE	W/Ref. 20		2
28	6677607	PLUG	W/Ref. 37		2
29	6677594	SCREW			6
30	6677603	CUP	bearing		2
31	6677592	PLATE	swash		1
32	6677593	WASHER			6
33	6598880	KEY			1
34	6677588	PIN			3
35	6677606	PLATE			1
36	6634873	PLUG	W/Ref. 37		1
37	6634874	O-RING			x
38	6677608	SEAL KIT			1
39	6677502	SHIM KIT			1

Note: Do not install Shaft Seal in this pump

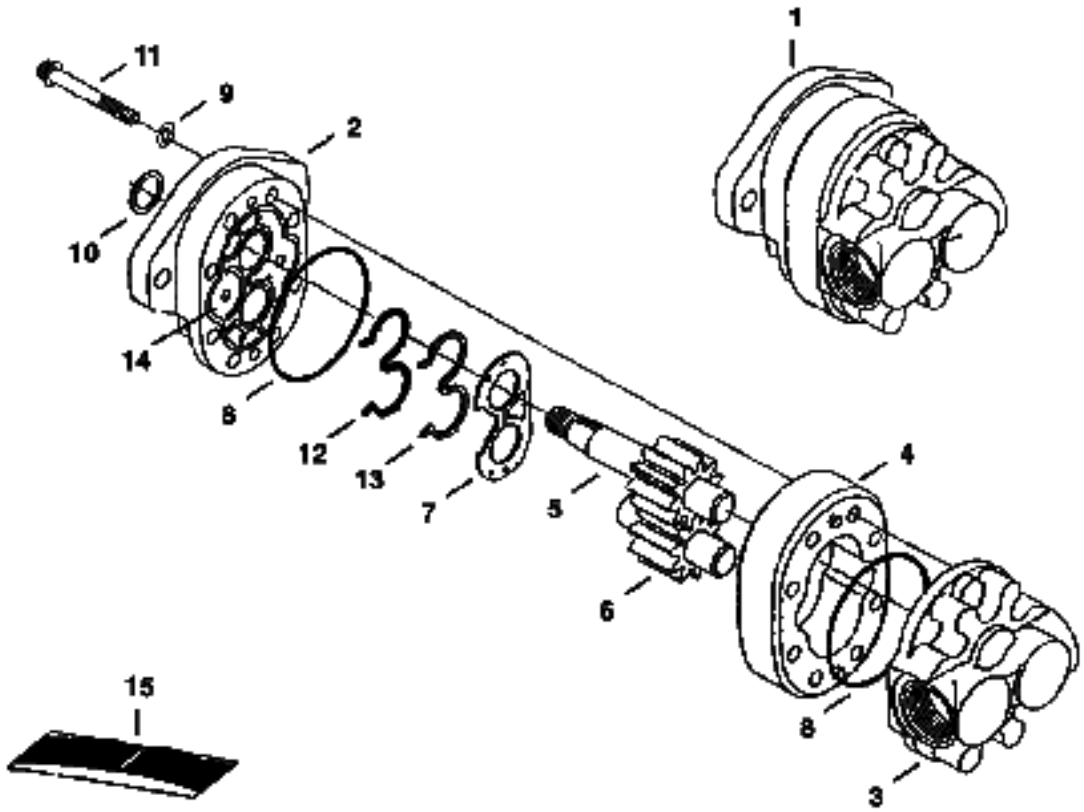

Ref No	Part Number	Description	Remarks	Serial Number	Qty
1	6677581	PUMP			1
2		PLATE	NAP - Order Ref. 1		1
3	6677582	PLATE			1
4	6677583	BODY			1
5	6677584	GEAR	drive		1
6	6677585	GEAR	idler		1
7	6668703	PLATE	wear		1
8	6672629	O-RING			2
9	6672630	WASHER			1
10	945412B	WASHER			1
11	93G000536B	BOLT	Was 1G000536B [A]		8
12	6668701	O-RING			1
13	6668702	SEAL			1
14	6668700	PLUG			1
15	6668013	SEAL KIT	Ref. 7-10 & 12-14		1

HYDROSTATIC MOTOR
(167-0005-001)

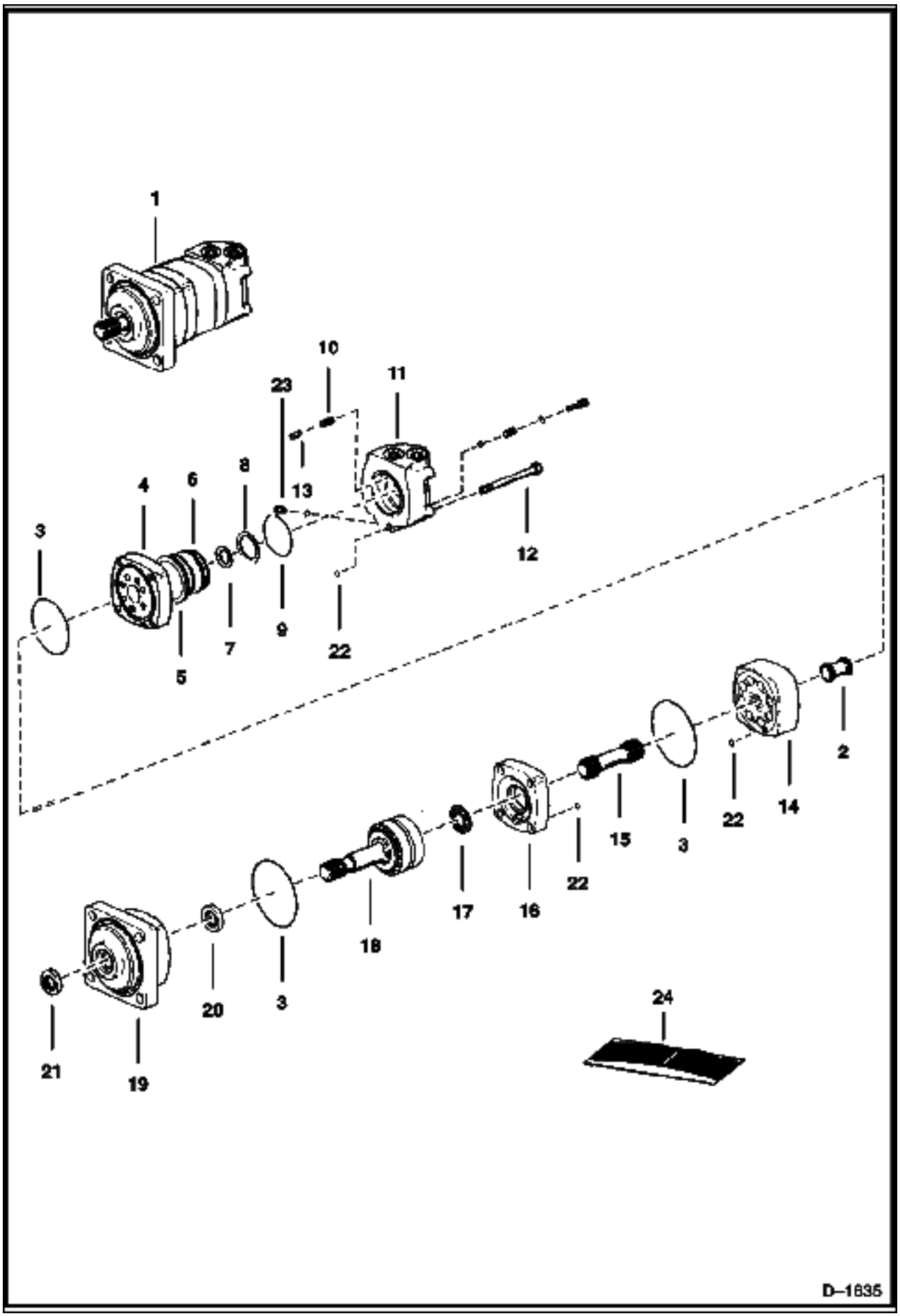

HYDROSTATIC MOTOR (Cont'd)
(167-0005-001)

Ref No	Part Number	Description	Remarks	Serial Number	Qty
1	6674304	MOTOR			1
2	6674398	LOCK ASSY.			1
3		SEAL	NSS		3
4	6674397	PLATE	valve		1
5	6632288	VALVE			1
6	6630027	BALANCE RING	balancing		1
7		SEAL	NSS - inner		1
8		SEAL	NSS - outer		1
9		SEAL	NSS		1
10	1992088B	SPRING			2
11	6632348	HOUSING	W/Ref. 23 & 24		1
12	6651950	BOLT			4
13	1992102B	PIN			2
14	6674396	GEROLER			1
15	6674395	SHAFT			1
16	6674394	PLATE	wear		1
17		SEAL	NSS		1
18	6674393	BEARING ASSY	W/Shaft		1
19	6674399	HOUSING			1
20		SEAL	NSS		1
21		SEAL	NSS		1
22		O-RING	NSS		3
23	1992104B	PLUG	W/O-Ring		2
24	6677775	SEAL KIT	Ref. 3, 7-9, 17 & 20-22		1

DRAWING NOT AVAILABLE AT TIME OF PRINTING

PE-1768

Ref No	Part Number	Description	Remarks	Serial Number	Qty
1	898731B	BULB			1
2	6519548	CONNECTOR			4
3	6531618	CROSSMEMBER			1
4	6558142	HOUSING			1
5	6563740	LAMP			1
6	6564907	SOCKET ASSY			1
7	6577801	LIGHT			2
8	6594283	WIRE			1
9	6648391	PLUG			1
10	6665000	CLIP			1
11	6665321	RIVET			1
12	6665322	RIVET			1
13	6680411	CONTROLLER			1
14	6702642	SCREW			6
15	6707674	PLUG			1
16	6733755	PANEL, ASSY 463AF			1
17	1C000512B	BOLT			1
18	25E000015B	WASHER			2
19	25G000412B	BOLT			3
20	30H000055B	CLAMP			1
21	30H000056B	CLAMP			2
22	35C000410B	BOLT			3
23	61D000005B	NUT			1
24	6E000005B	WASHER			2
25	83D000004B	NUT			3

ENGINE ELECTRICAL CIRCUITRY

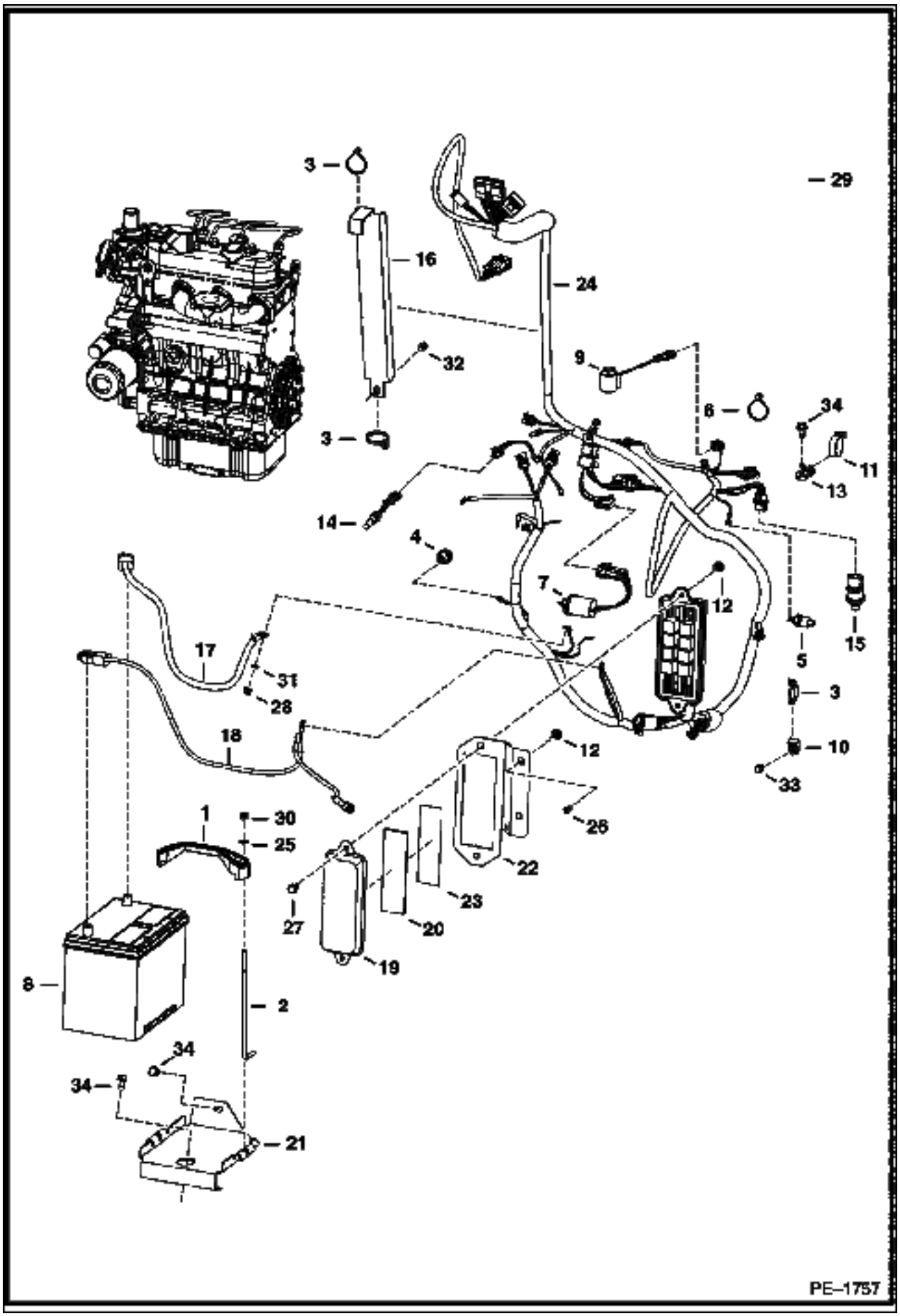

ENGINE ELECTRICAL CIRCUITRY (Cont'd)

Ref No	Part Number	Description	Remarks	Serial Number	Qty
1	6569203	CLAMP	battery		1
2	6576280	BOLT	bent		2
3	6624289	STA STRAP			9
4	6631010	SWITCH	engine oil pressure		1
5	6632633	SWITCH	oil temp		1
6	6665527	TIE			2
7	6670602	SOLENOID	shutdown		1
8	6674687	BATTERY			1
9	6675559	COIL	W/diode		1
10	6678667	MOUNT			4
11	6678669	STRAP			1
12	6678765	NUT	steering lever		4
13	6679034	MOUNT	deluxe		1
14	6680004	SENDER	engine temp/fan	& Below	1
15	6682585	SWITCH	oil pressure		1
16	6707415	BRACKET			1
17	6714436	CABLE	positive		1
18	6714437	CABLE	negative		1
19	6716621	COVER	fusebox		1
20	6731275	INSULATION	fusebox		1
21	6732224	PAN BATTERY			1
22	6732917	BRACKET	fusebox		1
23	6733650	DECAL	fuse/relay		1
24	6735878	HARNESS MFR	engine	& Below	1
24	7105747	HARNESS 463AF MFR	engine	& Above	1
24	6679820	RELAY			5
24	6654806	FUSE	15 amp		1
24	6718033	FUSE	10 amp		3
24	6733838	FUSE	40 amp		1
24	6702444	FUSE	25 amp		4
24	6625575	FUSE	20 amp		2
24	6669415	TIMER			1
25	25E000015B	WASHER			2
26	25G000510B	SCREW			2
27	35C000512B	BOLT			2
28	43DM00008B	NUT			1
29	4DM00006B	NUT			1
30	59D000005B	NUT			2
31	6E000005B	WASHER			2
32	14D000010B	NUT		& Above	1
33	84G003112B	BOLT			6
34	84G003712B	BOLT			3
35	7104468	HARNESS 463 JUMPER	jumper - cooling fan	& Below	1
36	19F000002B	BUSHING		& Above	1
37	6658818	SENDER	temp.	& Above	1

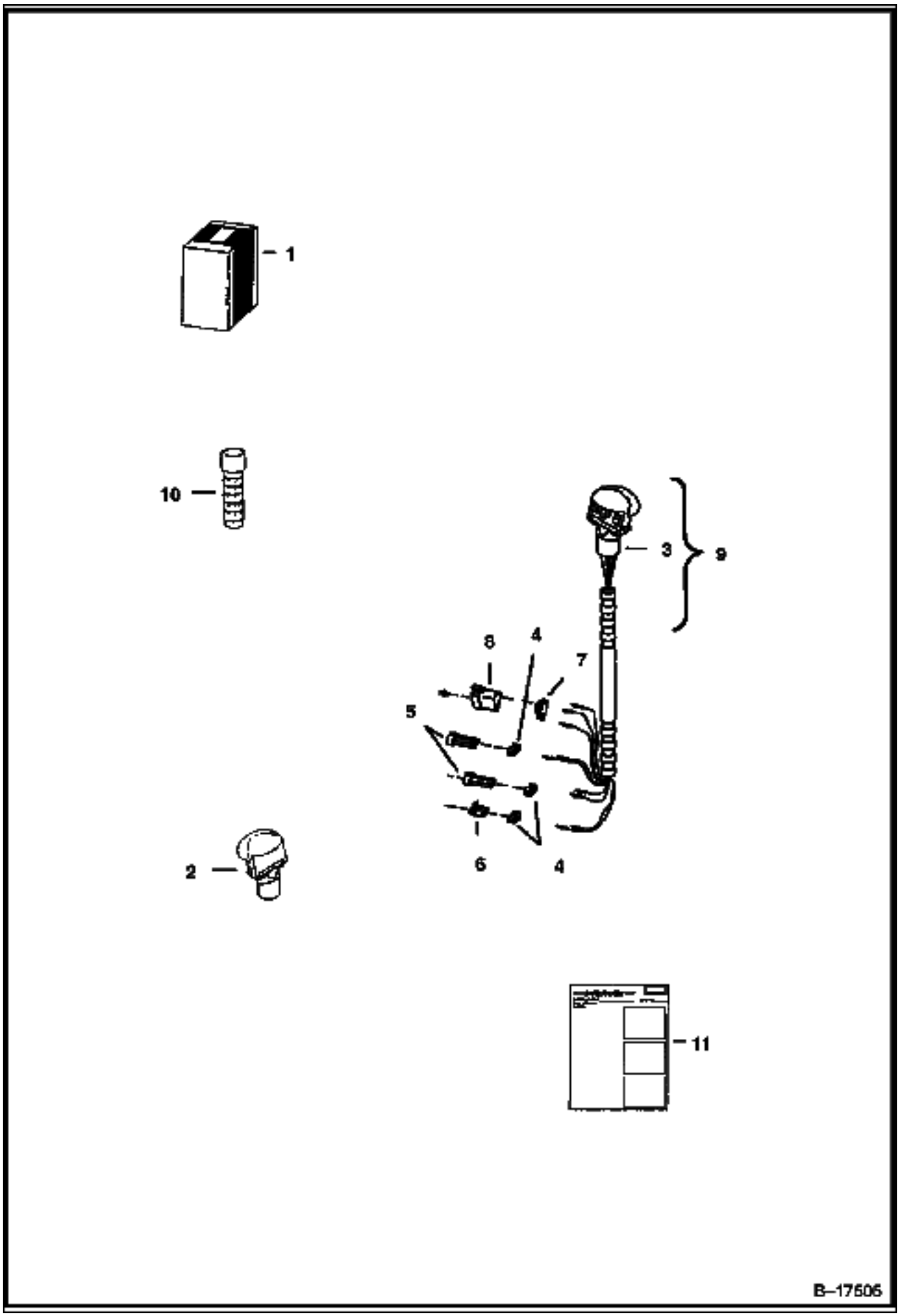
1
10
3
9
8
4
7
5
6
4
2
11
B–17606

Ref No	Part Number	Description	Remarks	Serial Number	Qty
1	6706565	KIT	R.H. - blank handle - Ref. 2 & 11		1
2	6680415	HANDLE	R.H. - blank - Was 6705920 [A]		1
3	6680412	HANDLE ASSY	L.H. - Ref. 4, 5 & 6 - 8 - Was 6707976 [A]		1
3	6640690	PIN			5
3	6640691	PIN			2
3	6641176	SEAL			7
3	6662257	PIN			3
4	6641180	LOCK	2 - pin		2
4	6640700	LOCK	3 - pin		2
5	6641179	CONNECTOR	2 - pin		2
5	6640699	CONNECTOR	3 - pin		2
6	6641178	CONNECTOR	2 - pin		1
7	6664800	LOCK	3 - pin triangle		1
8	6664599	CONNECTOR	3 - pin triangle		1
9	6706568	KIT	handle - Ref. 3 - 5, 6 - 8 & 11		1
10	6702621	GRIP			2
11	6722759	INSTRUCTIONS			1

STARTER
(1.4 KW) (Nippondenso - 228000-5740)

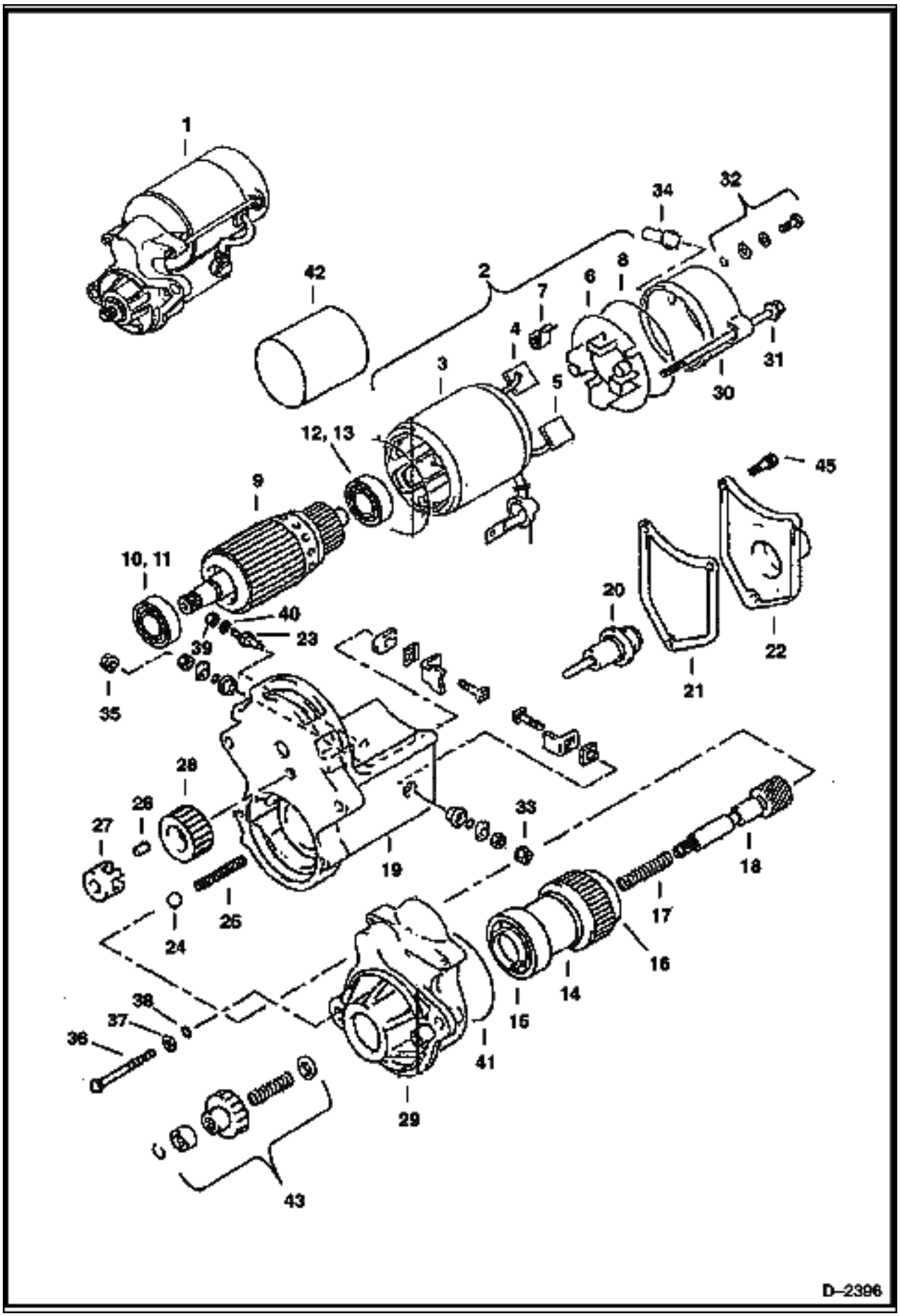

STARTER (Cont'd)
(1.4 KW) (Nippondenso - 228000-5740)

Ref No	Part Number	Description	Remarks	Serial Number	Qty
1	6667987	STARTER			1
2	6671976	YOKE ASSY.	W/Ref. 3 - 8 & 42		1
3	6671977	YOKE	W/Ref. 4		1
4	6671978	BRUSH KIT			2
5	6671979	BRUSH KIT			2
6	6671980	HOLDER	W/Ref. 7		1
7	6671981	SPRING			4
8	6671982	O-RING			2
9	6671983	ARMATURE	W/Ref. 10 - 13		1
10	6671984	BEARING			1
11	6671985	BEARING			1
12	6671986	BEARING			1
13	6671987	BEARING			1
14	6671988	CLUTCH	W/Ref. 15 & 16		1
15	6671989	BEARING			1
16	6671990	BEARING			1
17	6671991	SPRING			1
18	6671992	SHAFT			1
19	6671993	HOUSING			1
20	6671994	PLUNGER			1
21	6671995	GASKET			1
22	6671996	COVER			1
23	6671997	BOLT			1
24	6632435	BALL			1
25	6671998	SPRING			1
26	6671999	ROLLER			5
27	6672000	RETAINER			1
28	6672001	PINION			1
29	6672002	HOUSING			1
30	6672003	FRAME			1
31	6672004	BOLT			2
32	6672005	SCREW	W/ O-rings		2
33	6672006	NUT			1
34	6672007	BUSHING			1
35	6672008	NUT			1
36	6672009	BOLT			2
37	6672010	WASHER			2
38	6666631	WASHER			2
39	6672011	NUT			1
40	6672012	WASHER			1
41	6672013	O-RING			1
42	6672205	COVER			1
43	6672172	KIT			1

ALTERNATOR
(Valeo)

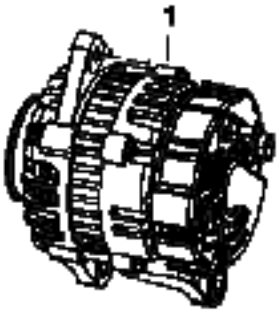

B–20884

ALTERNATOR (Cont'd)
(Valeo)

Ref No	Part Number	Description	Remarks	Serial Number	Qty
1	6678560	ALTERNATOR			1

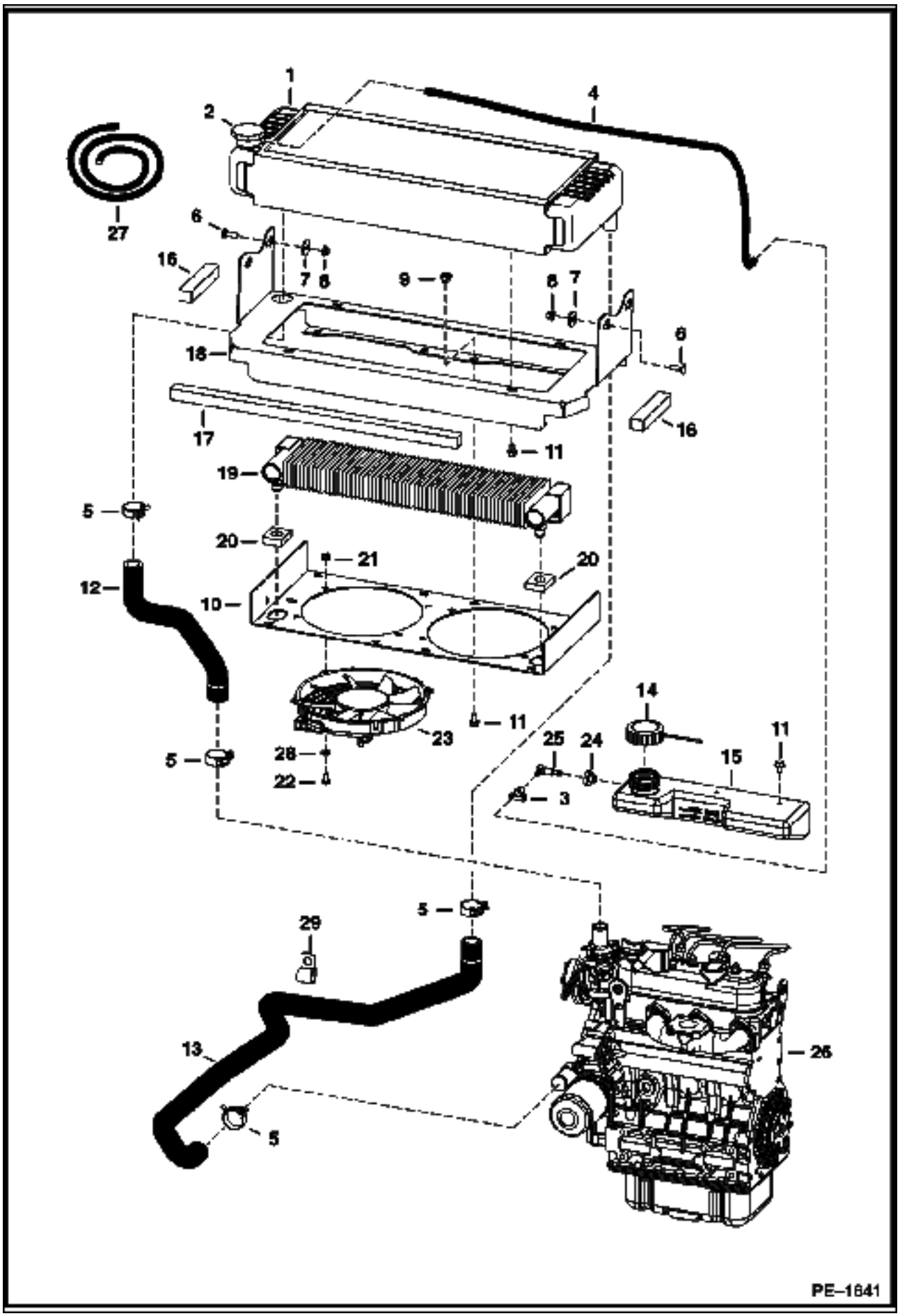
1
2
4
27
6
16
7
8
9
18
17
11
19
5
20
21
12
10
23
28
22
25
24
14
15
3
29
13
26
PE–1641

ENGINE & ATTACHING PARTS (Cont'd)
(Cooling Group)

Ref No	Part Number	Description	Remarks	Serial Number	Qty
1	6678820	RADIATOR			1
2	6682274	CAP	14 pound - Was 6646678 [B]		1
3	42HS00004B	CLAMP	Was 42HL00050B [B]		2
4		HOSE	NAP - 14" (355,6 mm) - Order Ref. 27		1
5	5HM00035B	CLAMP			4
6	37C000516B	BOLT			4
7	6701174	WASHER			4
8	83D000005B	NUT			4
9	6678765	NUT			11
10	6731466	MOUNT	fan		1
11	35C000508B	BOLT			17
12	6734745	HOSE COOLANT	Was 6731674 [A]		1
13	6734744	HOSE COOLANT	Was 6731677 [A]		1
14	7108309	CAP	Was 6675551 [B]		1
15	6731696	TANK	overflow		1
16	6733961	SEAL			2
17	6732946	SEAL			1
18	6730799	MOUNT	water exchanger		1
19	6732772	OIL COOLER			1
20	6731773	NUT			2
21	6678766	NUT			8
22	6733377	BOLT			8
23	6680160	FAN			2
24	6553411	BUSHING			1
25	6598908	ELBOW			1
26		ENGINE	See Illustration ENGINE & GASKET KITS (Kubota D1005)/ B17086		1
27	6577822	HOSE	bulk - Sold Per Foot		x
28	25E000011B	WASHER			8
29	30H000060B	CLAMP			1
30	6682275	TUBE	overflow		1
31	6682277	TANK END	plastic end		1
32	6682278	TANK END	plastic end		1
33	6682276	GASKET	between end caps and core		2
34	35C000512B	BOLT			1
35	6734634	SHIELD BELT	belt		1
36	83D000005B	NUT			1
36	5HM00036B	CLAMP			1

ENGINE & ATTACHING PARTS
(Intake & Exhaust)

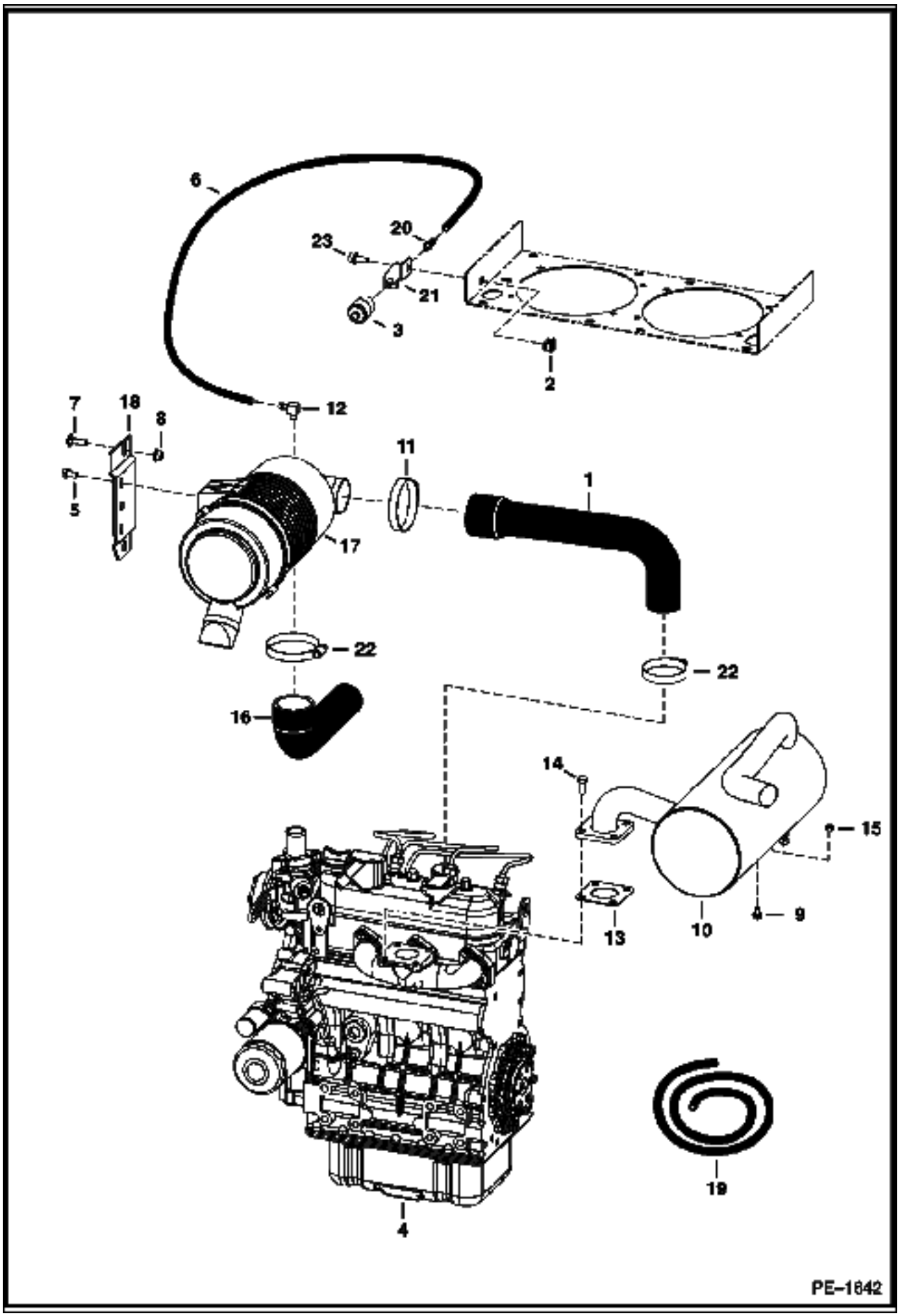

ENGINE & ATTACHING PARTS (Cont'd)
(Intake & Exhaust)

Ref No	Part Number	Description	Remarks	Serial Number	Qty
1	6731667	HOSE			1
2	6678765	NUT			1
3	6515007	GAUGE			1
4		ENGINE	See Illustration ENGINE & GASKET KITS (Kubota D1005)/ B17086		1
5	55CM00816B	BOLT			1
6		HOSE	NAP - 18" (457,2 mm) long - Order Ref. 19		1
7	37C000516B	BOLT			2
8	57D000005B	NUT			2
9	35C000616B	BOLT			2
10	6732282	MUFFLER	spark arrestor		1
11	42HL00250B	CLAMP			1
12	6515156	CONNECTOR	Was 6592277 [A]		1
13	6575580	GASKET	exhaust		1
14	6701123	SCREW	exhaust		2
15	6678785	NUT			2
16	6731715	HOSE			1
17		AIR CLEANER	See Illustration AIR CLEANER/ C3490		1
18	6731396	MOUNT			1
19	6557720	HOSE			x
20	6505813	CONNECTOR			1
21	6704823	BRACKET			1
22	42HL00300B	CLAMP			2
23	35C000512B	BOLT			1

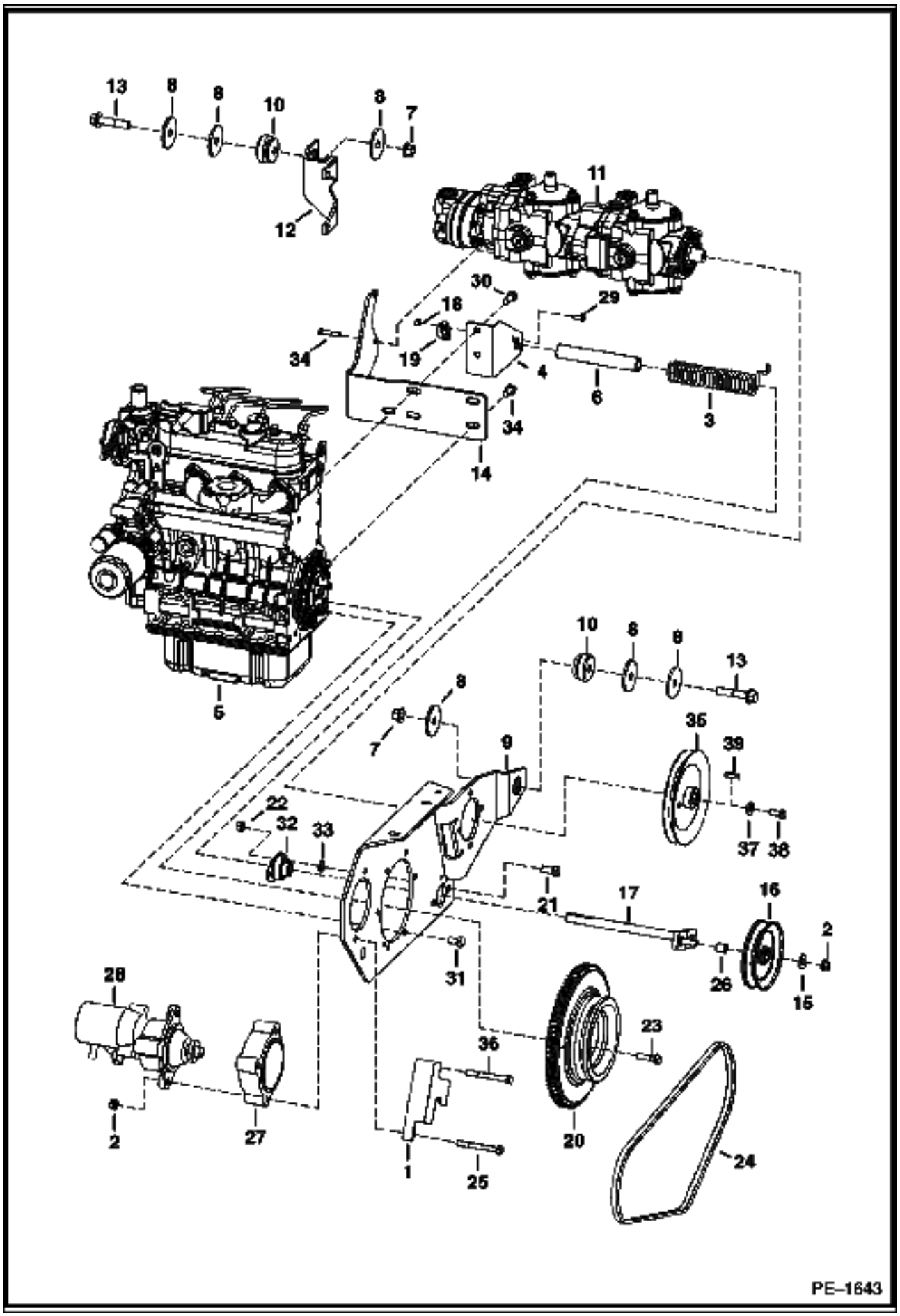
PE–1643

Ref No	Part Number	Description	Remarks	Serial Number	Qty
1	6713874	SHIELD	starter		1
2	83D000006B	NUT		& Below	3
2	83D000006B	NUT		& Above	2
3	6680315	TORSION SPRING	Was 6678782 [B]		1
4	6730814	BRACKET	idler		1
5		ENGINE	See Illustration ENGINE & GASKET KITS (Kubota D1005)/ B17086		1
6	6733662	SPACER TUBE	Was 6564788 [B]		1
7	83D000008B	NUT			2
8	6515817	WASHER	Was 6564692 [B]		4
9	6730733	MOUNT	Engine		1
10	6560633	DAMPENER	Rubber		2
11		PUMP	See Illustration HYDROSTATIC PUMP/ B17504		1
12	6727711	MOUNT			1
13	35C000840B	BOLT			2
14	6730808	MOUNT			1
15	6563914	WASHER			1
16		PULLEY	NAP - Order 6685626 - Was 6564011 [A]	5221 11123 & Bel.	1
16		PULLEY	NAP - Order 6685626 - Was 6564011 [A]	52221 1356 & Bel.	1
16	6685626	PULLY IDLER		5221 11124 & Abv.	1
16	6685626	PULLY IDLER		5222 11357 & Abv.	1
17		BRACKET	NAP - With Stud - Order 7104424 - SL 5065 - Was 6733660 [A]	& Below	1
17	7104424	BRACKET IDLER		& Above	1
18	83D000004B	NUT	Was 61D000004B [B]		2
19		BEARING	NAP - Was 6681506 [A]	& Below	1
19	6685122	BEARING FLANGE		& Above	1
20	6730760	FLYWHEEL	W/Ring Gear		1
20	6510470	RING GEAR			1
21	17C000716B	BOLT			2
22	85D000007B	NUT			2
23	6661636	BOLT	Washer face		6
24	6678973	BELT	drive		1
25	17C000652B	BOLT			2
26	6532347	SPACER		5221 11123 & Bel.	1
26	6532347	SPACER		5222 11356 & Bel.	1
27	6562198	SPACER			1
28		STARTER	See Illustration STARTER/ D2396		1
29	25G000412B	BOLT			2
30	6719825	BOLT			2
31	6733378	SCREW			9
32	6681504	BEARING			1
33	6701097	WASHER			2
34	6733378	BOLT			2
35	6731766	PULLEY			1
36	25E000018B	WASHER		5221 11124 & Abv.	1
37	616783B	WASHER			1
38	18C000616B	BOLT			1
39	6598880	KEY			1
40	45C000620B	BOLT		5222 11357 & Abv.	1

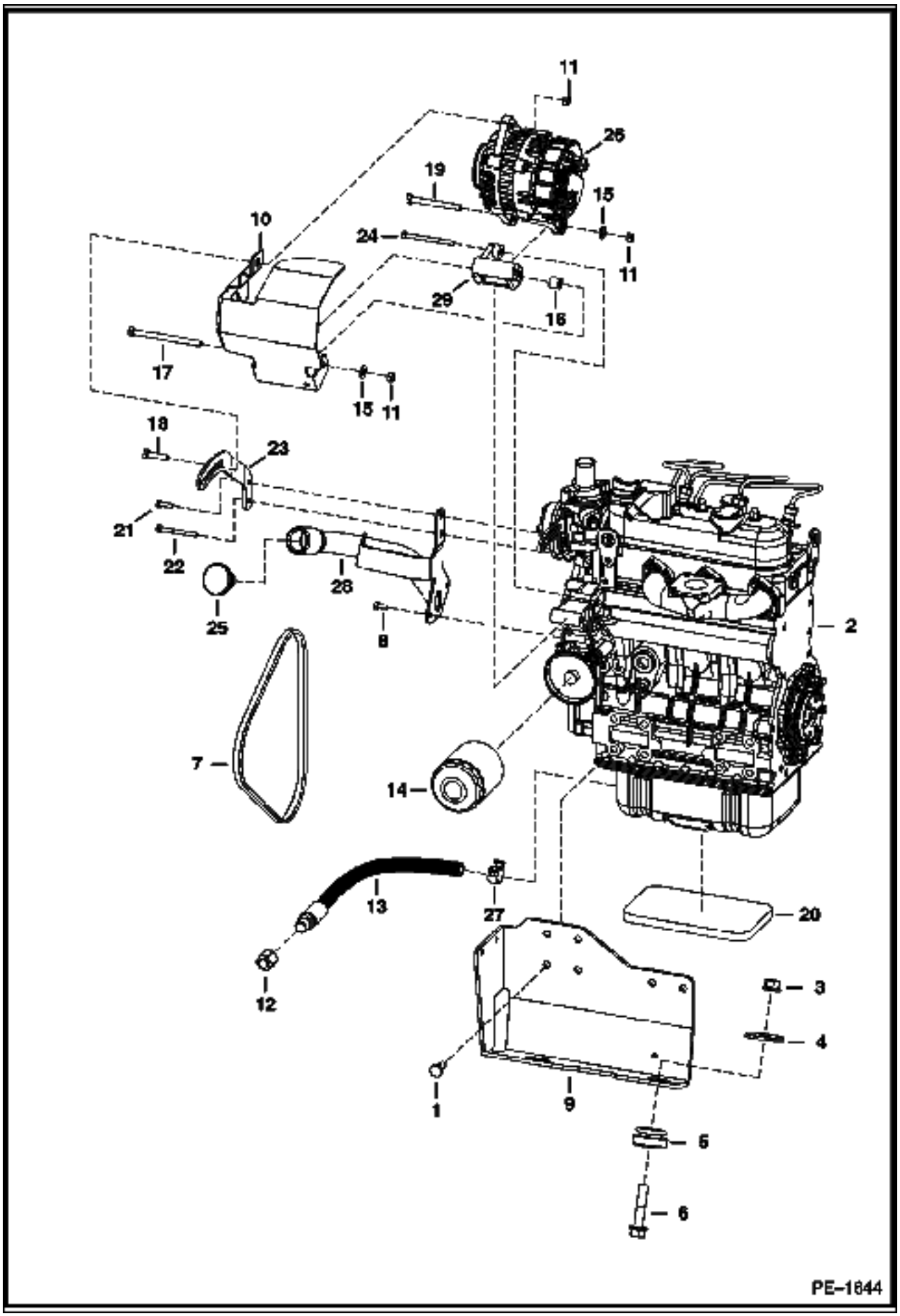
11
26
19
15
10
24
11
29
16
17
15
11
18
23
21
22
28
25
8
2
7
14
13
27
20
12
3
4
1
9
5
6
PE-1644

ENGINE & ATTACHING PARTS (Cont'd)
(Belt Drive, Alt.)

Ref No	Part Number	Description	Remarks	Serial Number	Qty
1	6733378	SCREW			6
2		ENGINE	See Illustration ENGINE & GASKET KITS (Kubota D1005)/ B17086		1
3	83D000008B	NUT			2
4	6515817	WASHER	Was 6564692 [B]		2
5	6560633	DAMPENER	Rubber		2
6	35C000840B	BOLT			2
7	6571857	BELT			1
8	1CM00614B	BOLT			2
9	6730731	MOUNT			1
10	6733018	SHIELD	belt		1
11	53DM00008B	NUT			3
12	36K000006B	CAP			1
13	6715530	HOSE			1
14		CARTRIDGE	See Illustration GEAR CASE/ B17088 OIL FILTER		1
15	6557831	WASHER			2
16	6675838	BUSHING			1
17	1CM00880B	SCREW			1
18	4CM00835B	BOLT			1
19	1CM08110B	SCREW			1
20	6733154	SPACER	foam		1
21	1CM00620B	BOLT			1
22	1CM00660B	BOLT			1
23	6730867	BRACKET	alt.		1
24	1CM00665B	BOLT			1
25	6703736	CAP			1
26		ALTERNATOR	See Illustration ALTERNATOR/ B20884		1
27	5HM00020B	CLAMP			1
28	6732960	TUBE	oil fill		1
29	6731765	MOUNT			1
30	6734475	GASKET OIL FILL	oil fill		1

THROTTLE

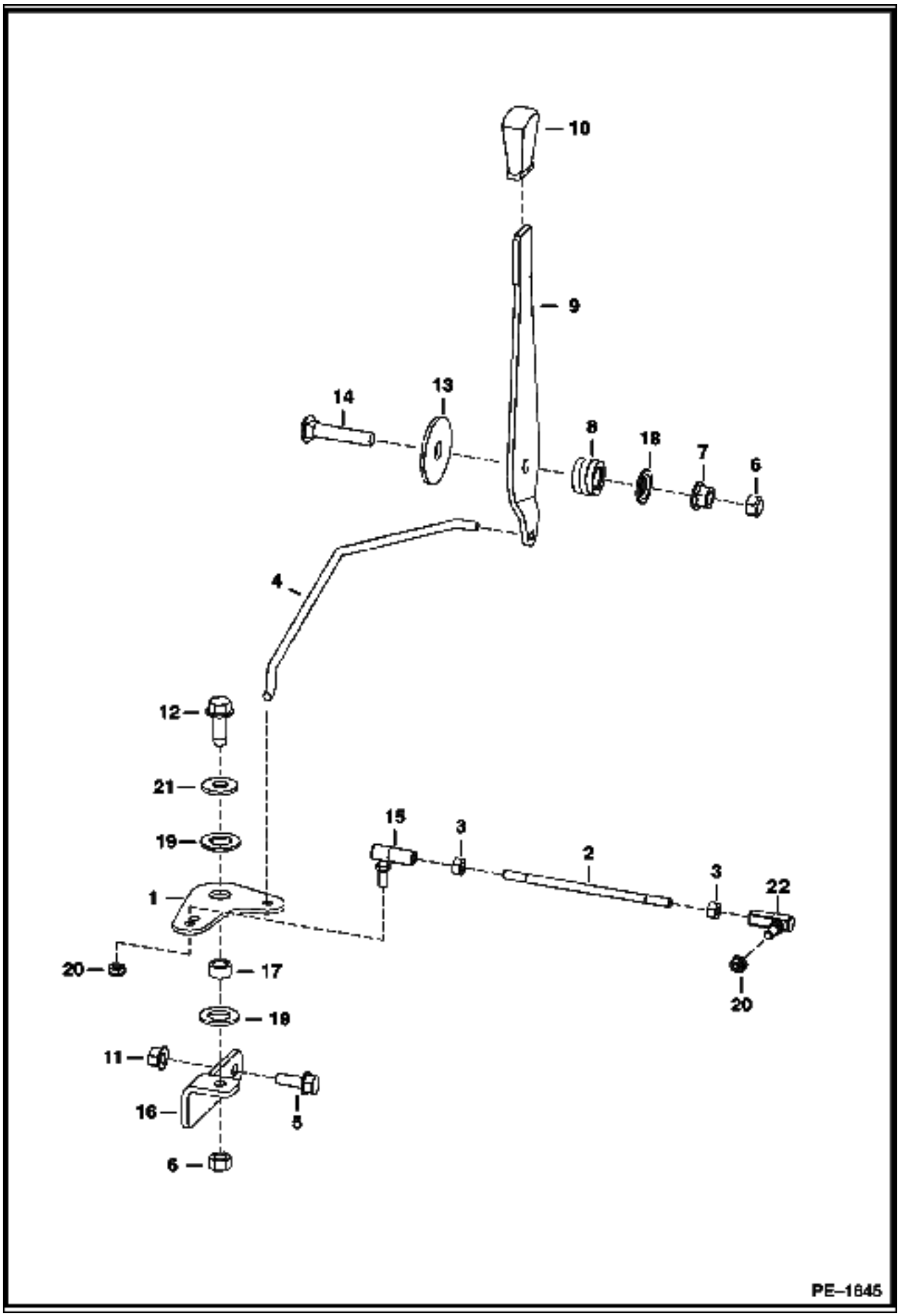

Ref No	Part Number	Description	Remarks	Serial Number	Qty
1	6578268	BELLCRANK			1
2	6733284	ROD			1
3	62D000004B	NUT			1
4	6733269	ROD			1
5	35C000514B	BOLT			4
6	85D000006B	NUT			1
7	61D000006B	NUT			1
8	6704453	SPRING			1
9	6564275	LEVER			1
10	6564452	GRIP			1
11	57D000005B	NUT			2
12	84G003716B	BOLT			1
13	6562127	WASHER			1
14	37C000632B	BOLT			1
15	6554858	BALL JOINT			1
16	6732675	MOUNT			1
17	6564343	SPACER			1
18	6505623	WASHER			1
19	6700170	WASHER			2
20	66D000004B	NUT			2
21	25E000018B	WASHER			1
22	6598830	BALL JOINT			1

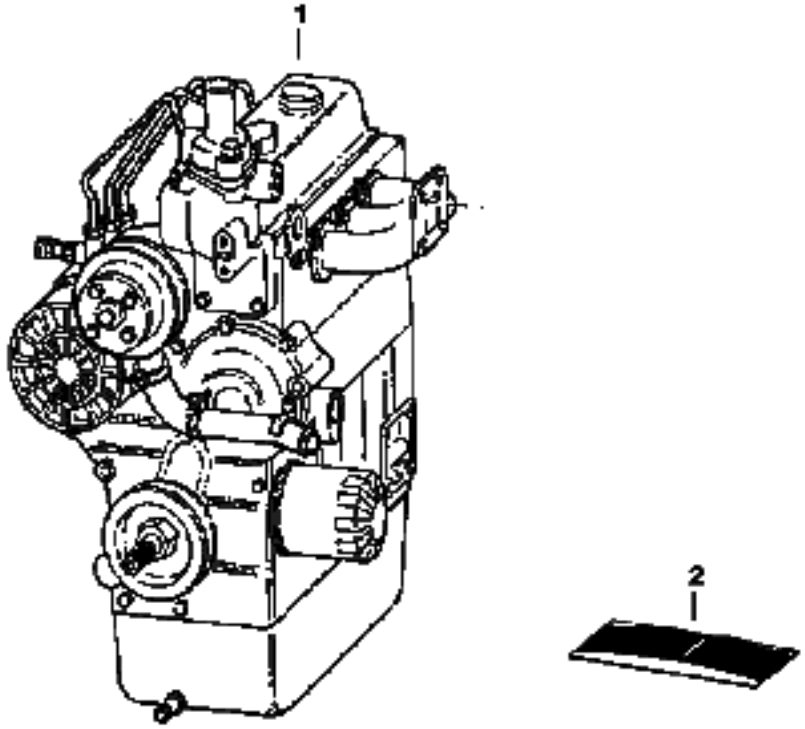
1
2
B–17086

ENGINE & GASKET KITS (Kubota D1005) (Cont'd)
S/N 522211001 & Above, 522111001 & Above

Ref No	Part Number	Description	Remarks	Serial Number	Qty
1	6679670	ENGINE-KUBOTA D1005	Kubota D1005 - Was 6670670 [D]		1
2	6674179	GASKET KIT	Upper		1
2	6674180	GASKET KIT	Lower		1

ROCKER ARM COVER (Kubota D1005)
S/N 522211001 & Above, 522111001 & Above

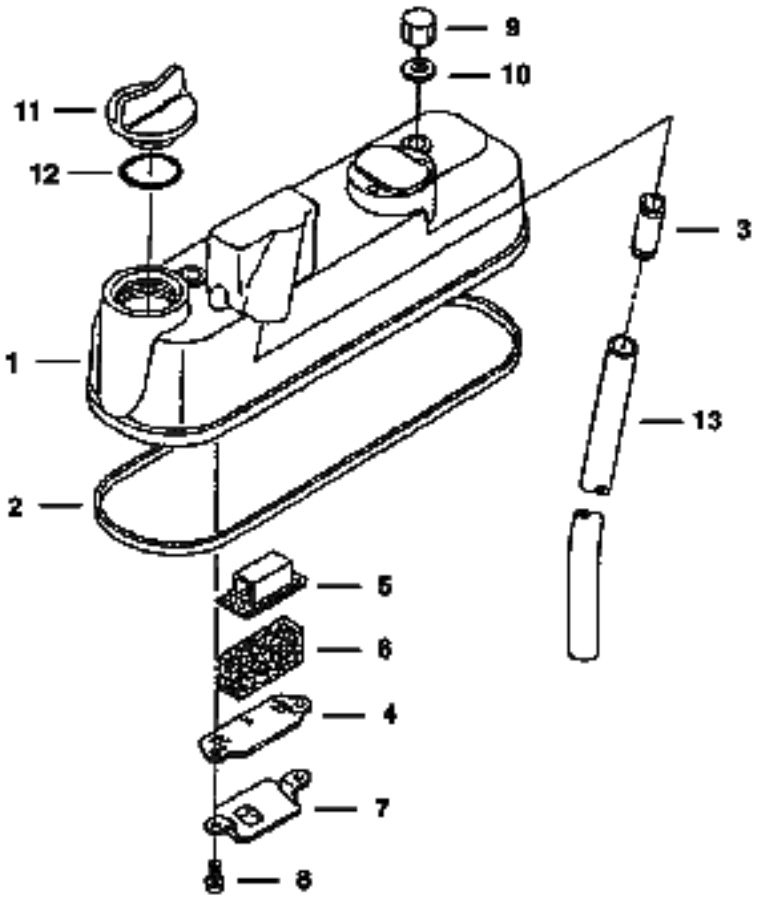

ROCKER ARM COVER (Kubota D1005) (Cont'd)
S/N 522211001 & Above, 522111001 & Above

Ref No	Part Number	Description	Remarks	Serial Number	Qty
1	6672364	COVER	W/Ref. 2 - 8		1
2	6672365	GASKET			1
3	6657490	JOINT			1
4	6657486	PLATE			1
5	6657487	PLATE			1
6	6657491	ELEMENT			1
7	6657488	OIL SHIELD			1
8	3974928B	SCREW			2
9	6657050	CAP			3
10	6599116	GASKET			3
11	6652653	PLUG			1
12	3966602B	O-RING			1
13	6657489	PIPE			1

CYLINDER HEAD (Kubota D1005)
S/N 522211001 & Above, 522111001 & Above

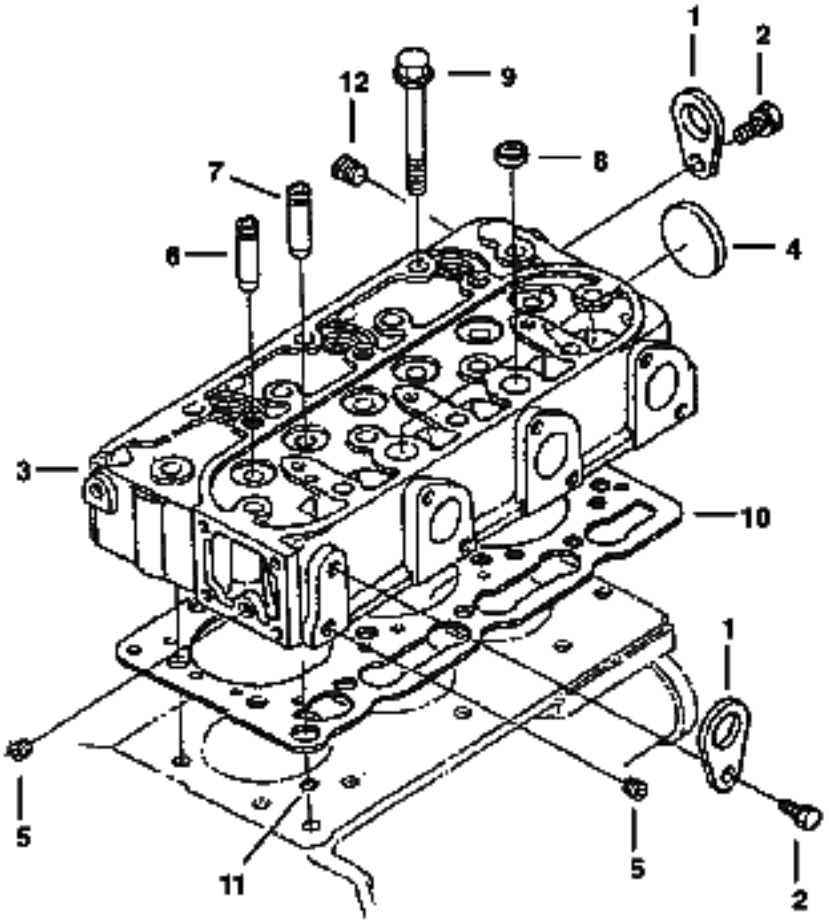

CYLINDER HEAD (Kubota D1005) (Cont'd)
S/N 522211001 & Above, 522111001 & Above

Ref No	Part Number	Description	Remarks	Serial Number	Qty
1	3974882B	BRACKET			2
2	6667420	BOLT			2
3	6672357	CYLINDER HEAD	W/Ref. 4 - 8		1
4	3974033B	CAP	sealing		1
5	6598116	PLUG			2
6	6657498	GUIDE	inlet valve		3
7	6657499	GUIDE	exhaust valve		3
8	3974056B	CAP	sealing		2
9	6657478	BOLT			14
10	6672358	GASKET			1
11	3974038B	O-RING			1
12	6657465	PLUG			1

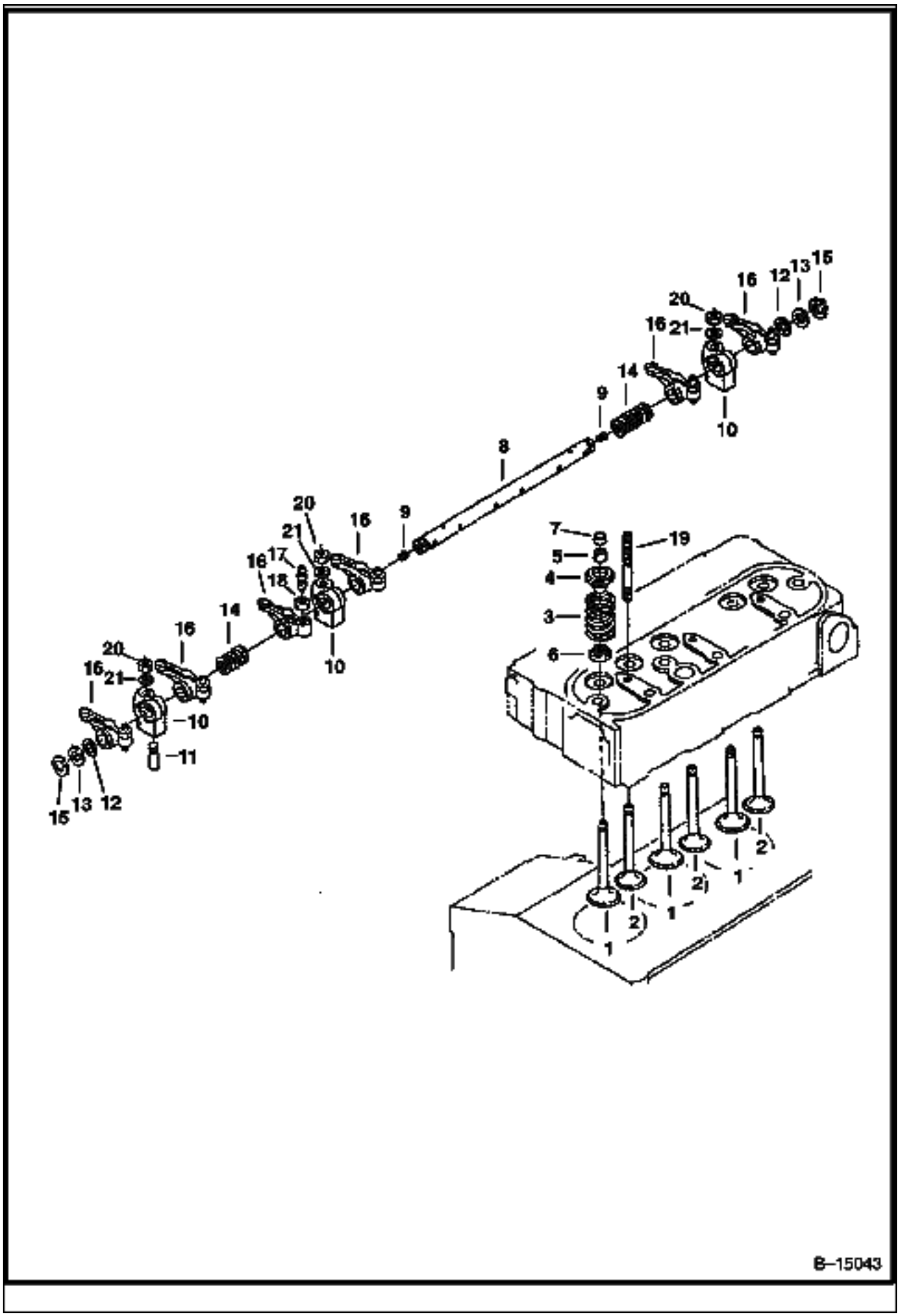
B–15043

Ref No	Part Number	Description	Remarks	Serial Number	Qty
1	6657495	VALVE	Intake		3
2	6657496	VALVE	Exhaust		3
3	6657630	SPRING			6
4	6652616	RETAINER			6
5	3974161B	COLLET			6
6	6672436	SEAL			6
7	6672437	CAP			6
8	6672438	SHAFT ASSY	W/Ref. 9		1
9	6672439	SET SCREW			2
10	6657509	BRACKET			3
11	3974171B	ORIFICE			1
12	6657511	WASHER			2
13	6657512	WASHER			2
14	6657508	SPRING			2
15	6657420	SNAP RING			2
16	6657502	ROCKER ARM	W/Ref. 17 & 18		6
17	6657506	SCREW			6
18	6657507	NUT			6
19	6657510	STUD			3
20	1DM00007B	NUT			3
21	2EM00007B	WASHER			3

CRANKCASE

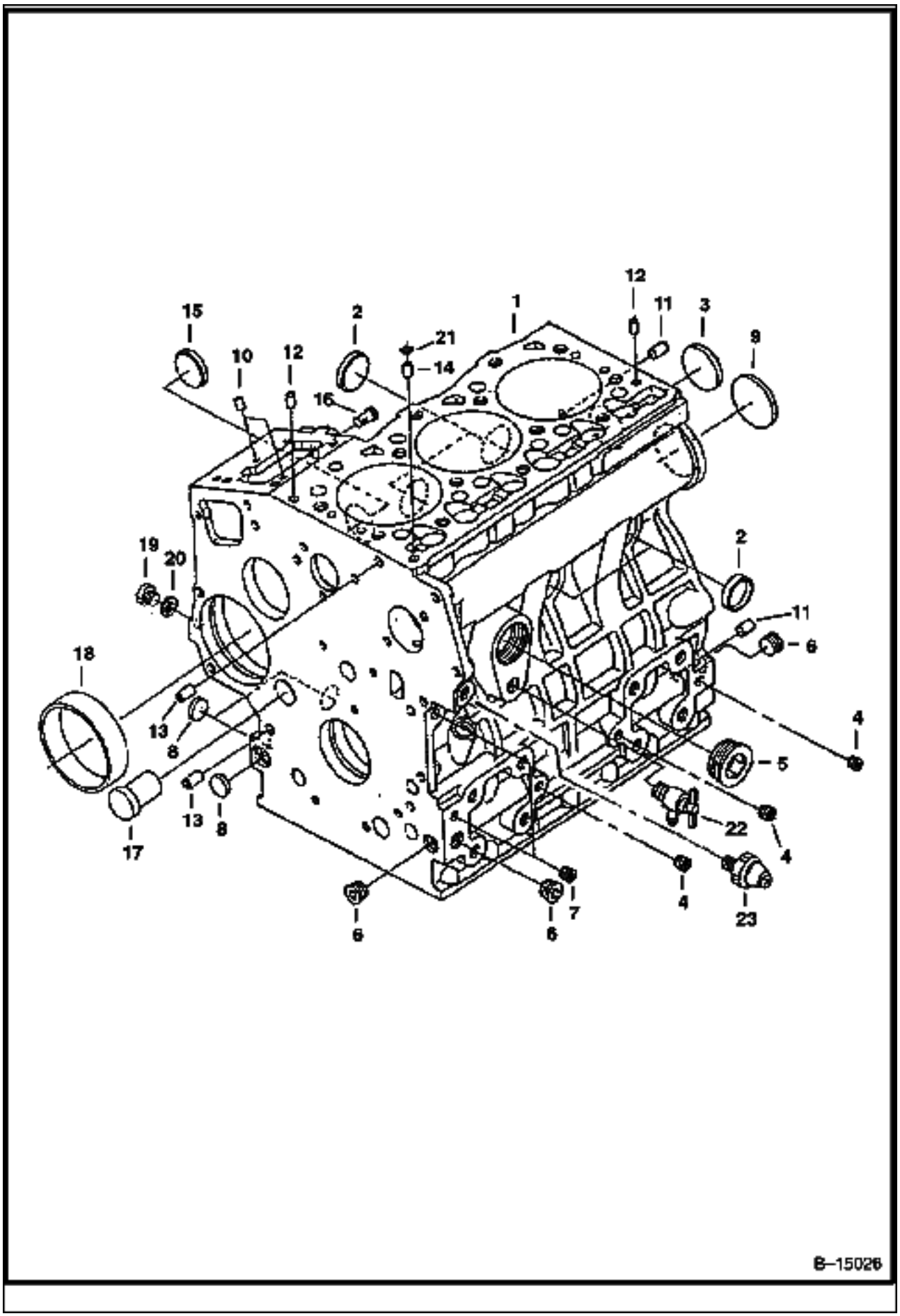
12
15
2
1
11
3
21
9
10
12
14
16
19
20
2
11
18
6
4
13
8
5
13
8
22
17
4
4
23
6
6
7
B–15026

CRANKCASE (Cont'd)

Ref No	Part Number	Description	Remarks	Serial Number	Qty
1	6672353	CRANKCASE	W/Ref. 2 - 20		1
2	6657431	CAP	sealing		4
3	3974433B	CAP	sealing		1
4	6598116	PLUG			3
5	6672354	PLUG			1
6	6657600	PLUG			3
7	6652574	PLUG			2
8	6667418	PLUG	expansion		3
9	6657663	PLUG	expansion		1
10	6657423	PIN			2
11	21JM00814B	PIN			2
12	6657424	PIN			2
13	3974039B	PIN			2
14	6657548	PIN			1
15	6657601	PLUG			1
16	6672355	PIN			1
17	6657675	PLUG			1
18	6657647	BUSHING			1
19	6655884	PLUG			1
20	3974095B	GASKET			1
21	3974038B	O-RING			1
22	6657456	DRAINCOCK			1
23	6652576	SWITCH			1

GEAR CASE

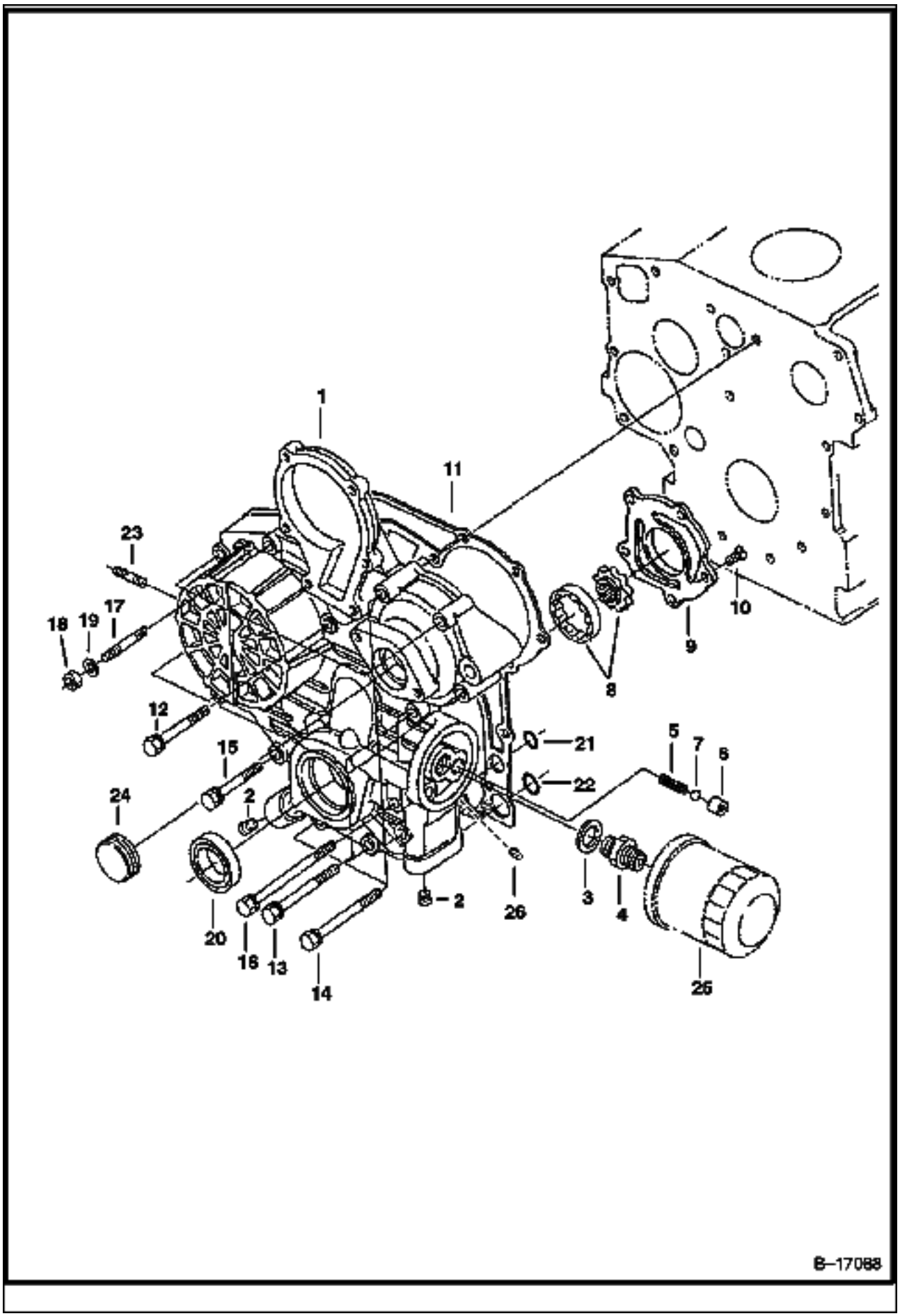
1
11
23
18
19
17
12
15
24
2
20
16
13
14
8
9
10
21
22
5
7
6
3
4
26
25
B–2
B–17088

GEAR CASE (Cont'd)

Ref No	Part Number	Description	Remarks	Serial Number	Qty
1	6672359	GEARCASE ASSY	W/Ref. 2 - 10		1
2	6672360	PLUG			2
3	15EM00180B	WASHER			1
4	3974114B	JOINT			1
5	6657554	SPRING			1
6	6657553	SEAT			1
7	6657426	BALL			1
8	6657549	ROTOR ASSY	oil pump		1
9	6672361	COVER	oil pump		1
10	6657594	BOLT			5
11	6672362	GASKET			1
12	6657412	BOLT			3
13	6670770	BOLT			6
14	6657413	BOLT			2
15	6657457	BOLT			1
16	6657589	BOLT			1
17	6657418	STUD			1
18	1DM00006B	NUT			1
19	6667419	WASHER			1
20	6657603	SEAL			1
21	6598097	O-RING			2
22	3966515B	O-RING			2
23	3974503B	STUD			2
24	6672363	COVER			1
25	6657635	OIL FILTER			1
26	6652574	PLUG			1

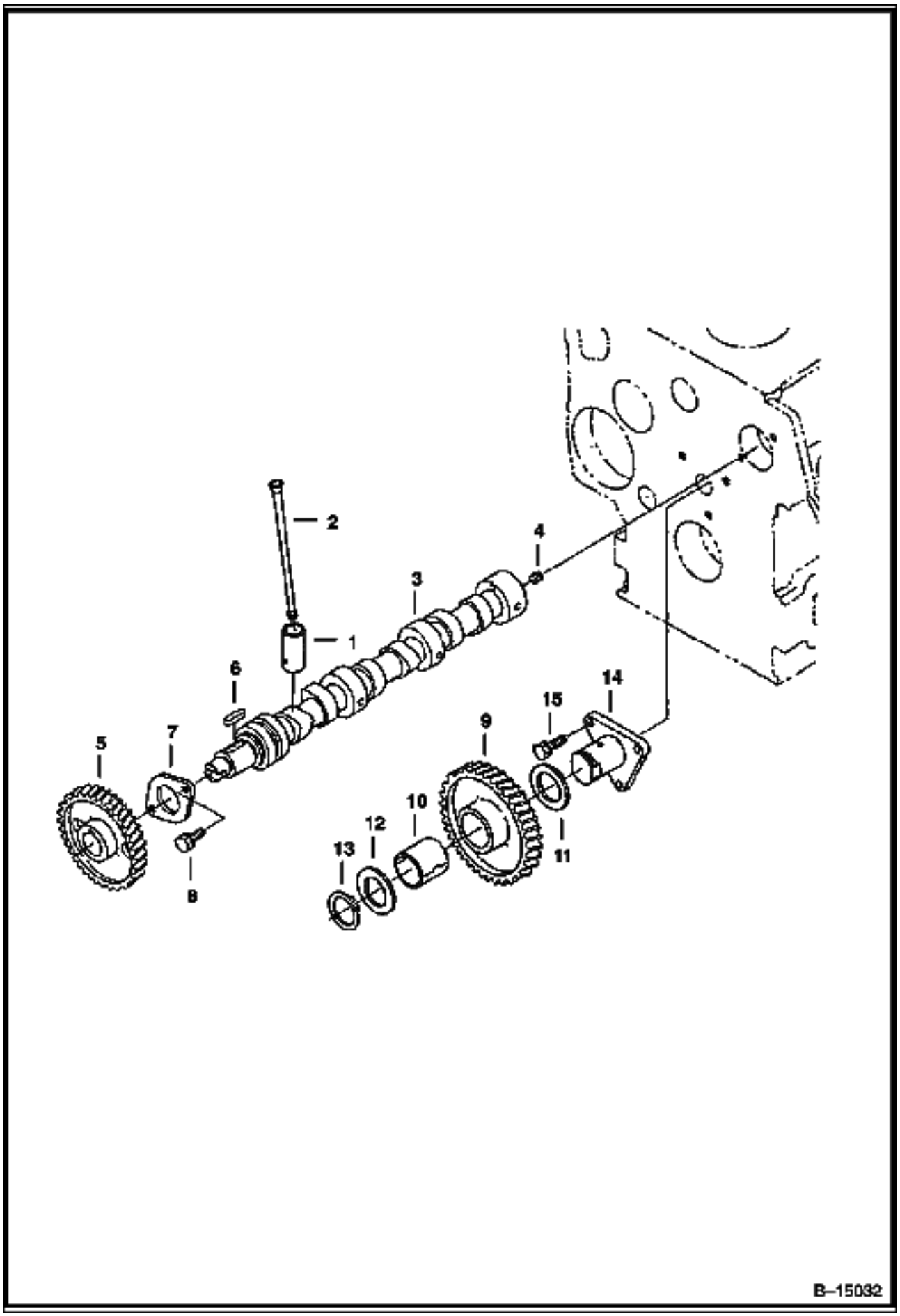
2
4
3
1
6
14
15
9
5
7
10
12
13
11
8
B–15032

Ref No	Part Number	Description	Remarks	Serial Number	Qty
1	6672371	TAPPET			6
2	6657515	PUSH ROD			6
3	6672372	CAMSHAFT ASSY	W/Ref. 4 - 8		1
4	6598168	SCREW			1
5	6653841	GEAR	cam		1
6	6653842	KEY			1
7	6657517	STOPPER			1
8	6653836	BOLT			2
9	6657632	GEAR	idler - W/Ref. 10		1
10	6657634	BUSHING			1
11	6657544	COLLAR			1
12	6657545	COLLAR			1
13	6657543	SNAP RING			1
14	6657542	SHAFT			1
15	4CM00616B	BOLT			3

MAIN BEARING CASE

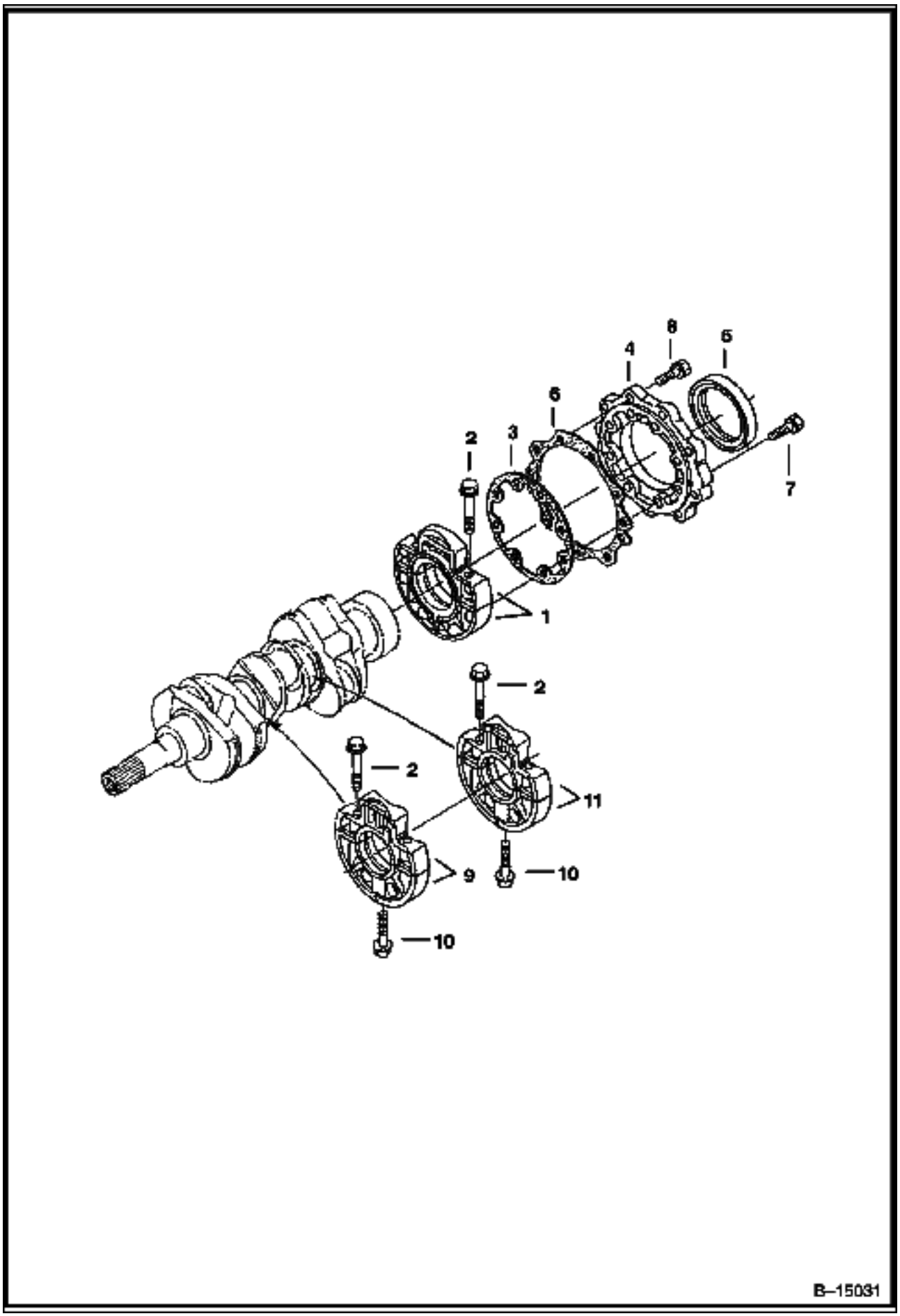

MAIN BEARING CASE (Cont'd)

Ref No	Part Number	Description	Remarks	Serial Number	Qty
1	6672366	CASE	main bearing		1
2	6657482	BOLT			6
3	6672367	GASKET			1
4	6657484	COVER			1
5	6657481	SEAL			1
6	6672368	GASKET			1
7	4CM00625B	BOLT			8
8	4CM00620B	BOLT			9
9	6672369	CASE	main bearing		1
10	6657483	BOLT			2
11	6672370	CASE	main bearing		1

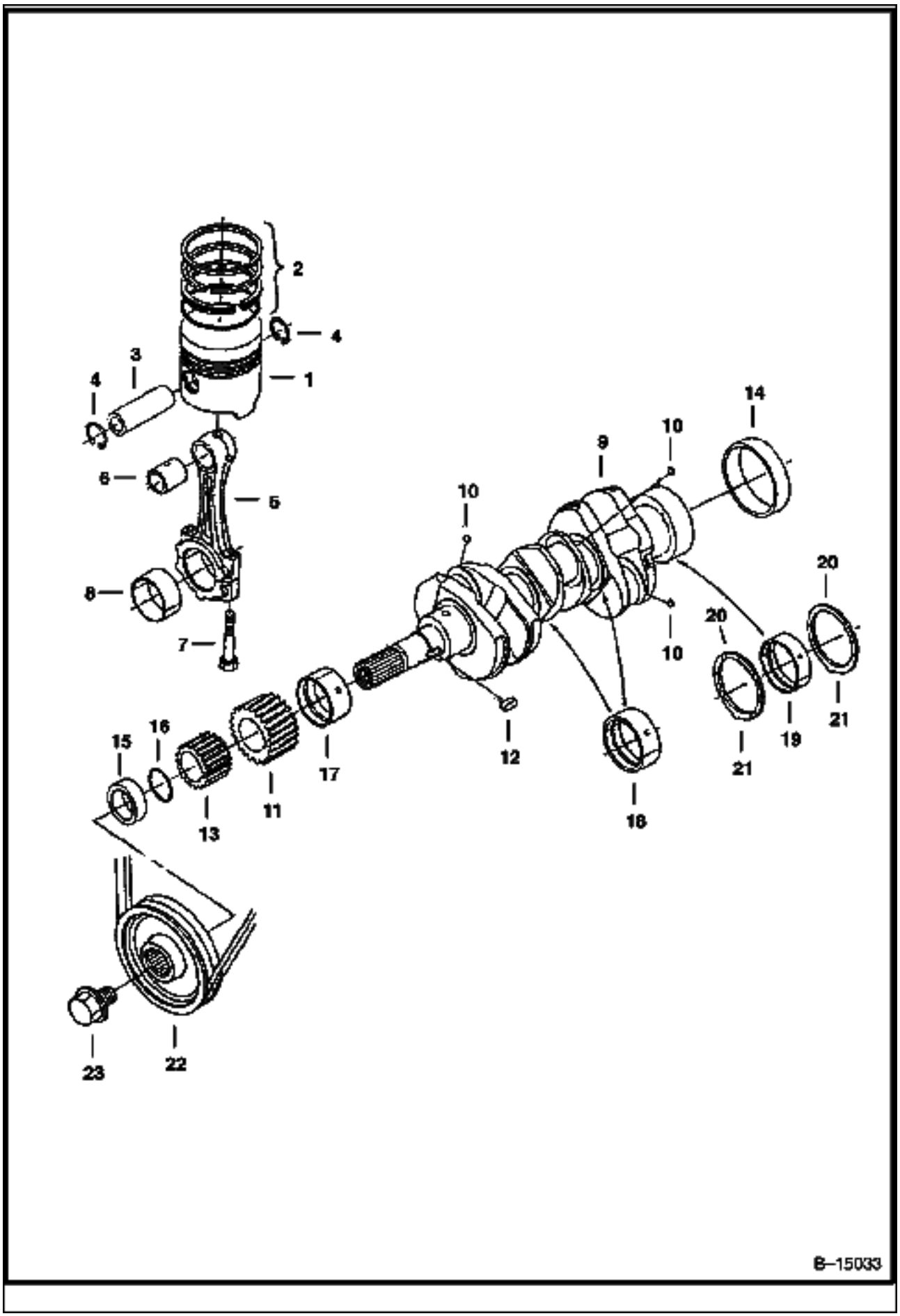
2
4
3
4
1
6
5
8
7
10
9
10
14
10
20
20
19
21
21
15
16
13
11
17
12
18
23
22
B–15033

Ref No	Part Number	Description	Remarks	Serial Number	Qty
1	6672373	PISTON	standard		3
1	6672374	PISTON	+0.5mm		3
2	6672375	RING ASSY	standard		3
2	6672376	RING ASSY	+0.5mm		3
3	6657521	PIN			3
4	6657522	SNAP RING			6
5	6672377	ROD ASSY	W/Ref. 6 - 8		3
6	6657524	BUSHING			3
7	6657526	BOLT			6
8	6657527	ROD BEARING	standard		3
8	6657528	ROD BEARING	-0.2mm		3
8	6657529	ROD BEARING	-0.4mm		3
9	6672378	CRANKSHAFT	W/Ref. 10 - 14		1
10	6652633	BALL			3
11	6657541	GEAR			1
12	6657661	KEY			1
13	6657552	GEAR			1
14	6657531	SLEEVE			1
15	6657530	COLLAR			1
16	6657421	O-RING			1
17	6657532	BEARING	standard		1
17	6657537	BEARING	-0.2mm		1
17	6657538	BEARING	-0.4mm		1
18	6657533	BEARING	standard		2
18	6657539	BEARING	-0.2mm		2
18	6657540	BEARING	-0.4mm		2
19	6657534	BEARING	standard		1
19	6657535	BEARING	-0.2mm		1
19	6657536	BEARNG	-0.4mm		1
20	3974945B	WASHER	standard		2
20	6654715	WASHER	+0.2mm		2
20	6657434	WASHER	+0.4mm		2
21	6653865	WASHER	standard		2
21	6654002	WASHER	+0.2mm		2
21	6654003	WASHER	+0.4mm		2
22	6672428	PULLEY			1
23	6657588	BOLT			1

FUEL CAMSHAFT

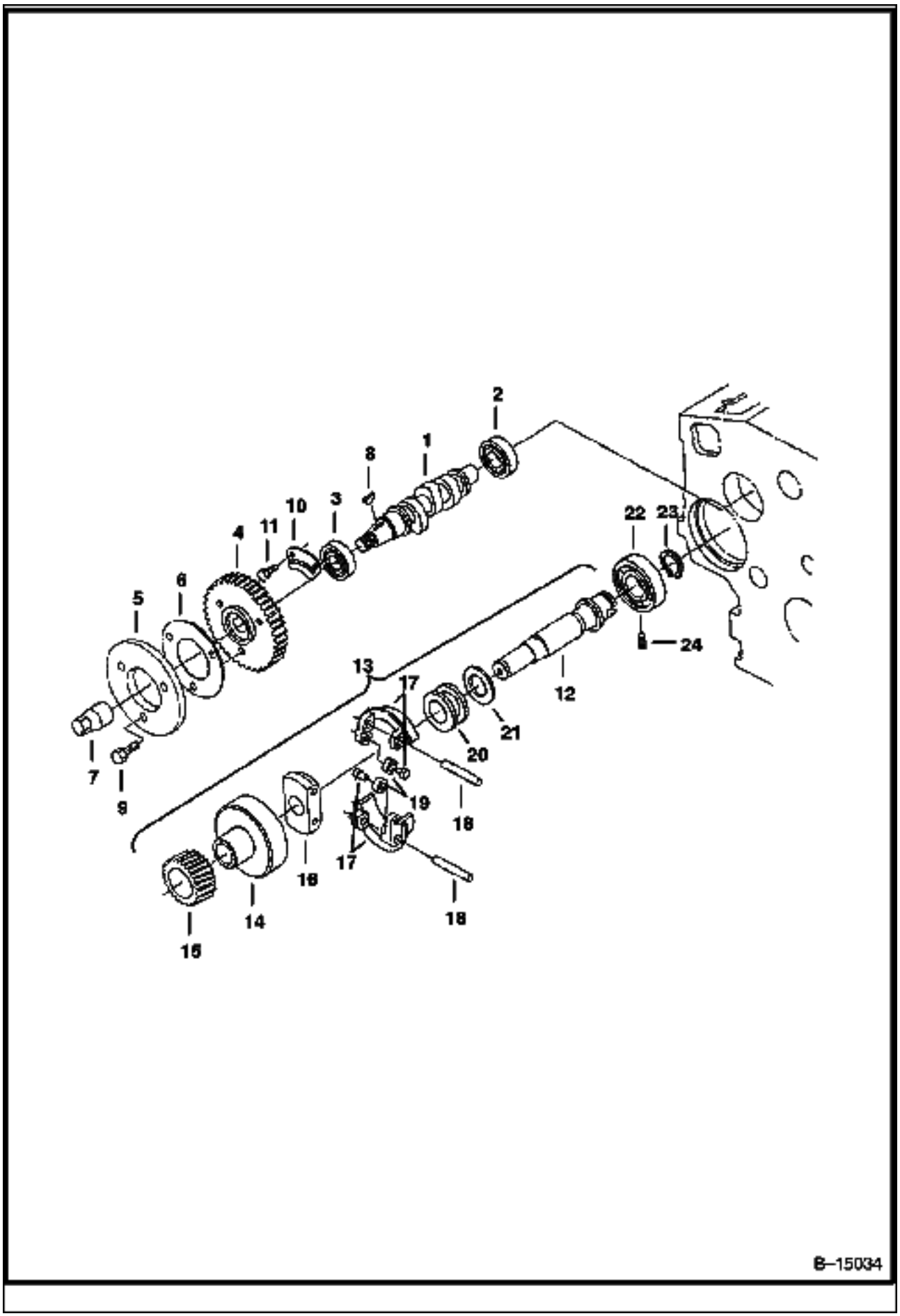

Ref No	Part Number	Description	Remarks	Serial Number	Qty
1	6672379	CAMSHAFT	fuel		1
2	6657429	BEARING			1
3	6657430	BEARING			1
4	6657664	GEAR			1
5	6657558	CAM			1
6	6672380	WASHER			1
7	6657593	NUT			1
8	6657597	KEY			1
9	6652580	BOLT			3
10	6657518	STOPPER			1
11	6652682	BOLT			2
12		SHAFT	NSS - Order Ref. 13		1
13	6672381	SHAFT ASSY	W/Ref. 14 - 21		1
14	6657565	HOLDER			1
15	6657671	GEAR			1
16	6657564	HOLDER			1
17	6657562	WEIGHT			2
18	6657563	SHAFT			2
19	6657690	ROLLER			2
20	6657566	SLEEVE			1
21	6657567	WASHER			1
22	6657428	BEARING			1
23	6657648	SNAP RING			1
24	6657568	SET SCREW			1

ENGINE STOP LEVER

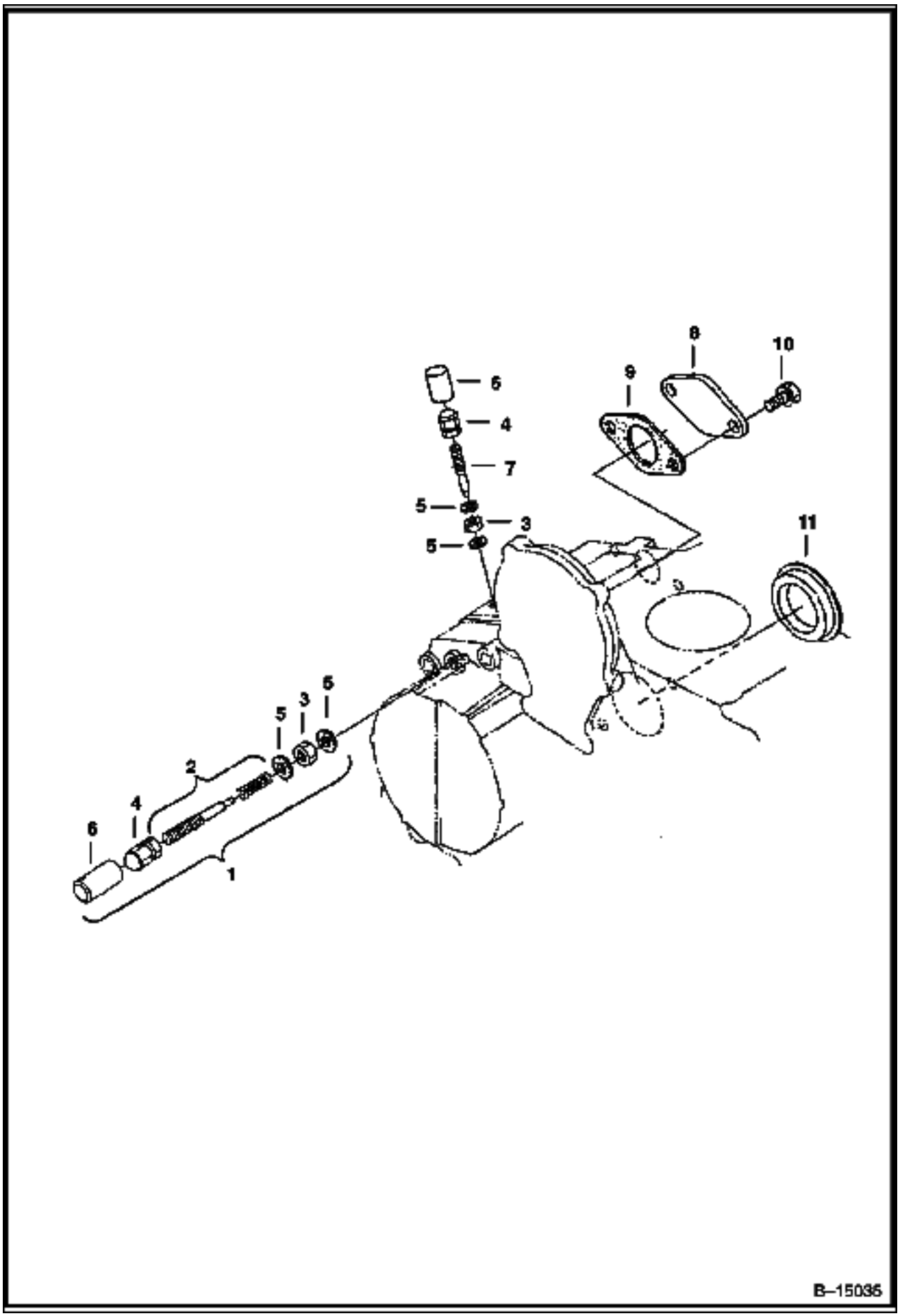

Ref No	Part Number	Description	Remarks	Serial Number	Qty
1	6672382	IDLER ASSY			1
2	6672383	BOLT	adjusting		1
3	6657459	NUT			2
4	6670462	NUT			2
5	3974972B	GASKET			4
6	6672384	CAP			2
7	6657560	BOLT	adjusting		1
8	6672385	COVER			1
9	6672386	GASKET	fuel shut-off		1
10	4CM00614B	BOLT			2
11	6672387	COVER			1

INJECTION PUMP & FUEL PUMP

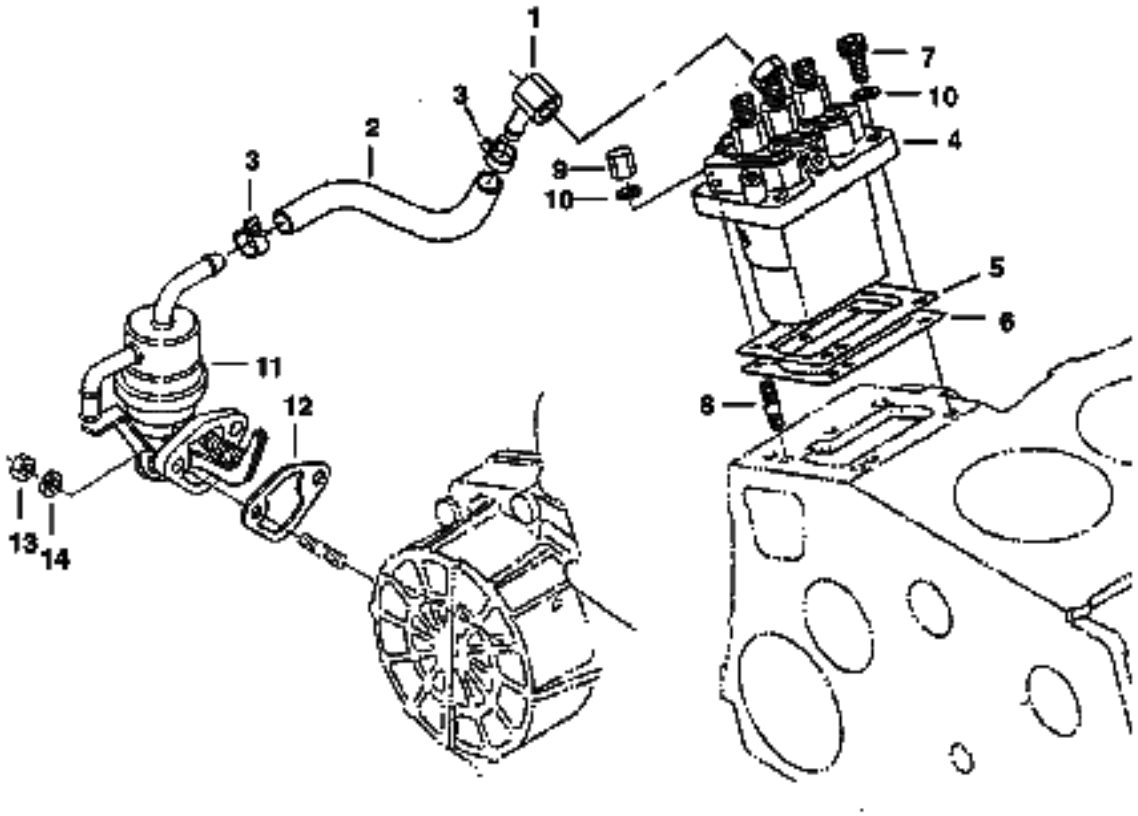

Ref No	Part Number	Description	Remarks	Serial Number	Qty
1	6657598	JOINT			1
2	6672388	TUBE			1
3	6657557	CLAMP			2
4	6672389	INJECTION PUMP	See Illustration INJECTION PUMP/ B15037		1
5	6672390	SHIM	0.20mm		1
6	6672391	SHIM	0.25mm		1
6	6670777	SHIM	0.30mm		1
7	6670435	BOLT			2
8	6657458	STUD			2
9	6657461	NUT			2
10	6667419	WASHER			4
11	6672427	FUEL PUMP			1
12	6670782	GASKET			1
13	1DM00006B	NUT			2
14	6667419	WASHER			2

INJECTION PUMP

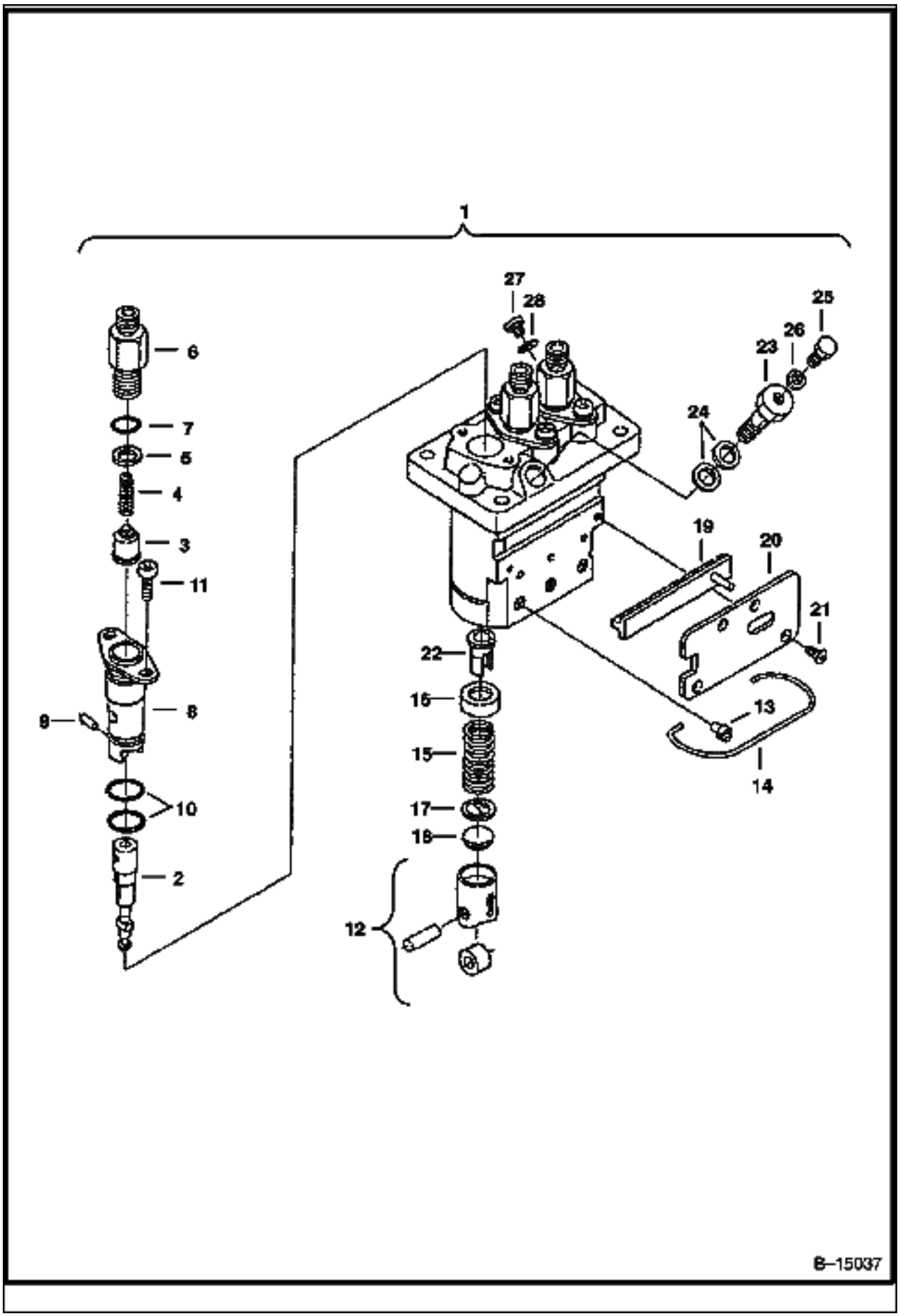

INJECTION PUMP (Cont'd)

Ref No	Part Number	Description	Remarks	Serial Number	Qty
1	6672389	INJECTION PUMP	W/Ref. 2 - 28		1
2	6672392	PLUNGER			3
3	6657436	VALVE	delivery		3
4	6657439	SPRING			3
5	6657440	GASKET			3
6	6657639	HOLDER			3
7	6657468	O-RING			3
8	6657449	FLANGE			3
9	6657464	PIN			3
10	6657438	O-RING			6
11	6657471	SCREW			6
12	6657437	TAPPET ASSY			3
13	6657441	PIN			3
14	6670441	PIN			1
15	6657443	SPRING			3
16	6657442	SEAT			3
17	6657444	SEAT			3
18	6657448	SHIM			3
19	6672393	RACK			1
20	6672394	PLATE			1
21	6657462	SCREW			4
22	6657447	SLEEVE			3
23	6672395	BOLT			1
24	6657466	GASKET			2
25	6657445	SCREW			1
26	6657467	GASKET			1
27	6672396	PLUG			1
28	6657466	GASKET			1

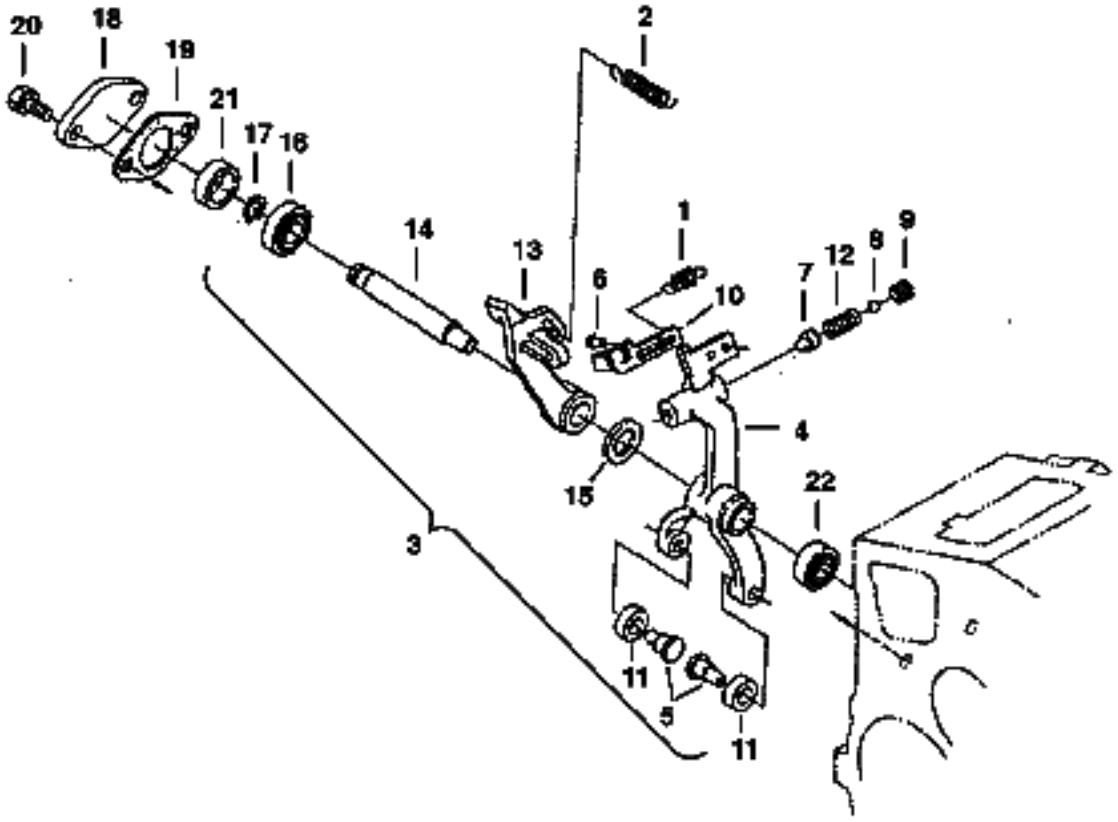
20
18
19
21
17
16
14
13
2
1
6
10
7
12
8
9
4
15
22
3
11
5
11
B–15038

Ref No	Part Number	Description	Remarks	Serial Number	Qty
1	6672397	SPRING			1
2	6657685	SPRING			1
3	6672398	LEVER ASSY	W/Ref. 4 - 17		1
4	6672399	LEVER ASSY	W/Ref. 5 - 12		1
5		PIN	NSS		2
6		BOLT	NSS		2
7		RETAINER	NSS		1
8		BALL	NSS		1
9		SCREW	NSS		1
10		BRACKET	NSS		1
11	6657690	ROLLER			2
12	6672400	SPRING			1
13	6657652	LEVER			1
14	6657570	SHAFT			1
15	6657595	WASHER			1
16	6657575	BEARING			1
17	6657419	WASHER			1
18	6657573	COVER			1
19	6672401	GASKET			1
20	6653836	BOLT			2
21	6657572	COLLAR			1
22	6657576	BEARING			1

SPEED CONTROL PLATE

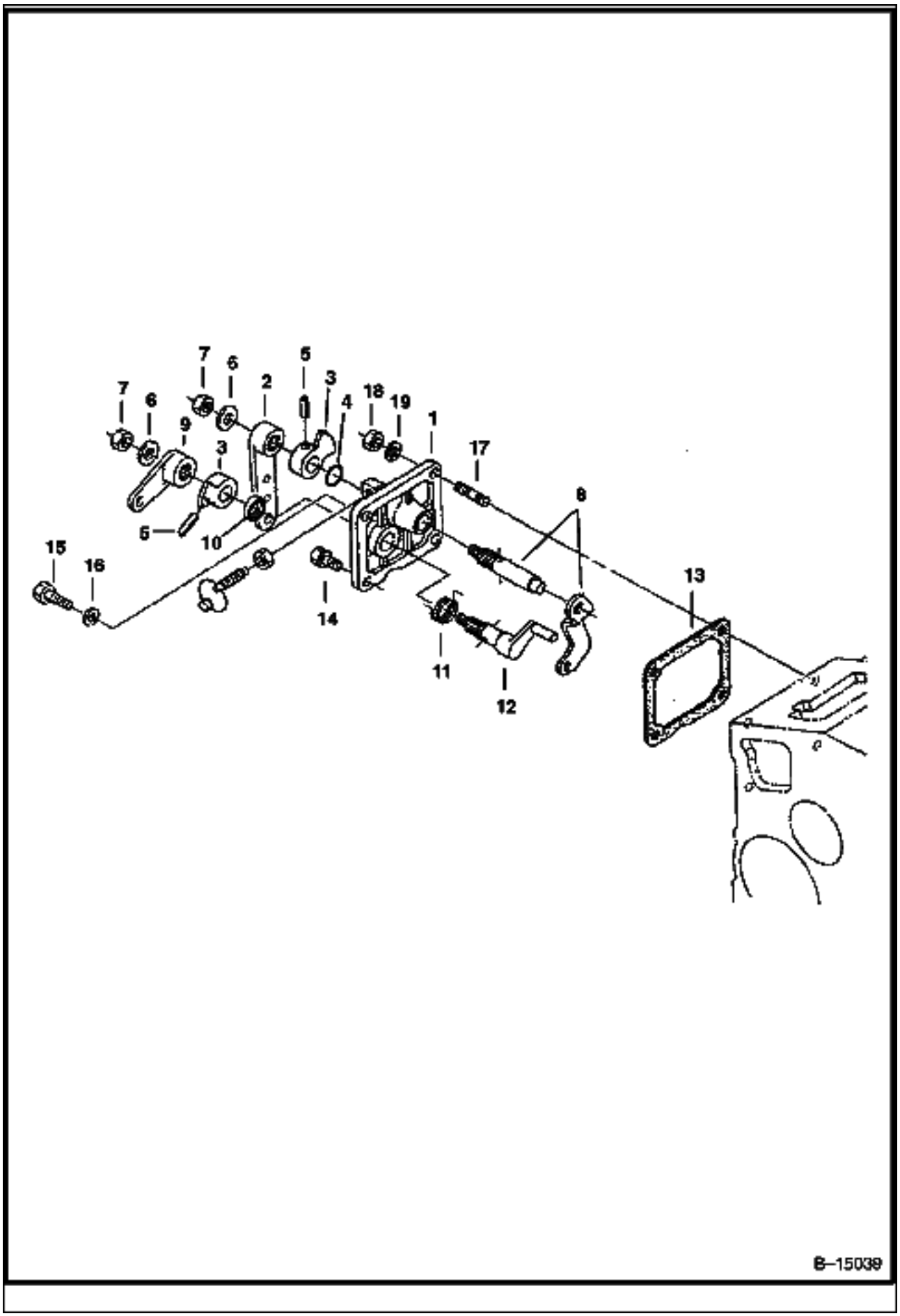

SPEED CONTROL PLATE (Cont'd)

Ref No	Part Number	Description	Remarks	Serial Number	Qty
1	6672402	PLATE ASSY	W/Ref. 2 - 12		1
2	6657655	LEVER			1
3	6657577	LEVER			2
4	2KM00100B	O-RING			1
5	6598098	PIN			2
6	6657596	WASHER			2
7	6657592	NUT			2
8	6657649	LEVER ASSY			1
9	6657656	LEVER			1
10	6598703	SEAL			1
11	6657474	SPRING			1
12	6657657	SHAFT			1
13	6672403	GASKET			1
14	4CM00616B	BOLT			2
15	4CM00618B	BOLT			1
16	3974972B	GASKET			1
17	3974503B	STUD			2
18	1DM00006B	NUT			2
19	6667419	WASHER			2

INJECTOR NOZZLES

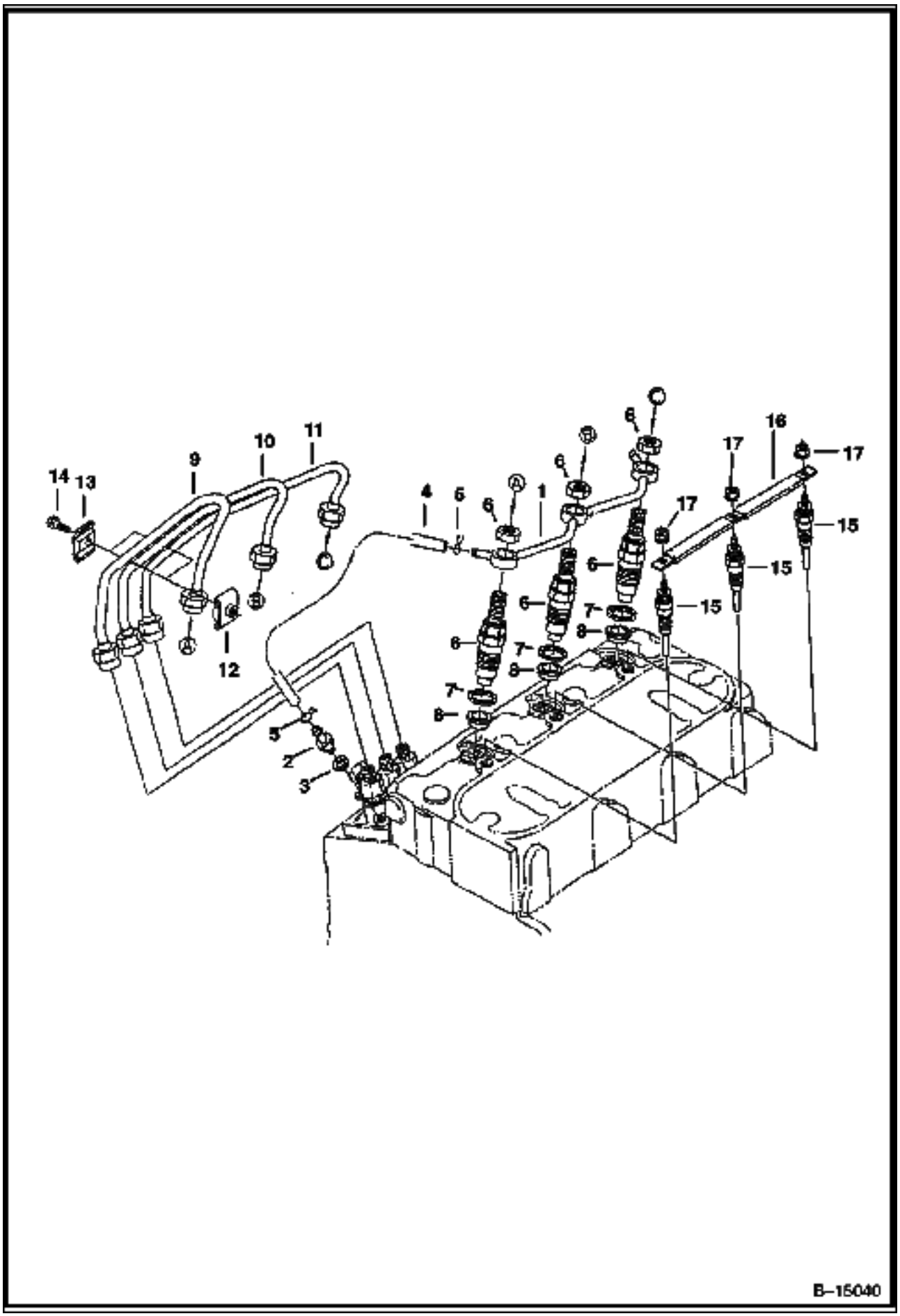

INJECTOR NOZZLES (Cont'd)

Ref No	Part Number	Description	Remarks	Serial Number	Qty
1	6672404	PIPE ASSY			1
2	6657446	SCREW			1
3	3974972B	GASKET			1
4	6670464	PIPE	W/Ref. 5		1
5	6599136	CLIP			2
6	6672405	HOLDER	See Illustration NOZZLE HOLDER/ B17432 W/ NUT		3
7	6655218	GASKET			3
8	6655872	HEAT SEAL			3
9	6672406	PIPE			1
10	6657643	PIPE			1
11	6657644	PIPE			1
12	6652688	CLAMP			2
13	6652689	CLAMP			2
14	3974260B	BOLT	W/ washer		2
15	6670470	GLOW PLUG	W/ nut		3
16	6672407	CORD			1
17	6670472	NUT			3

NOZZLE HOLDER

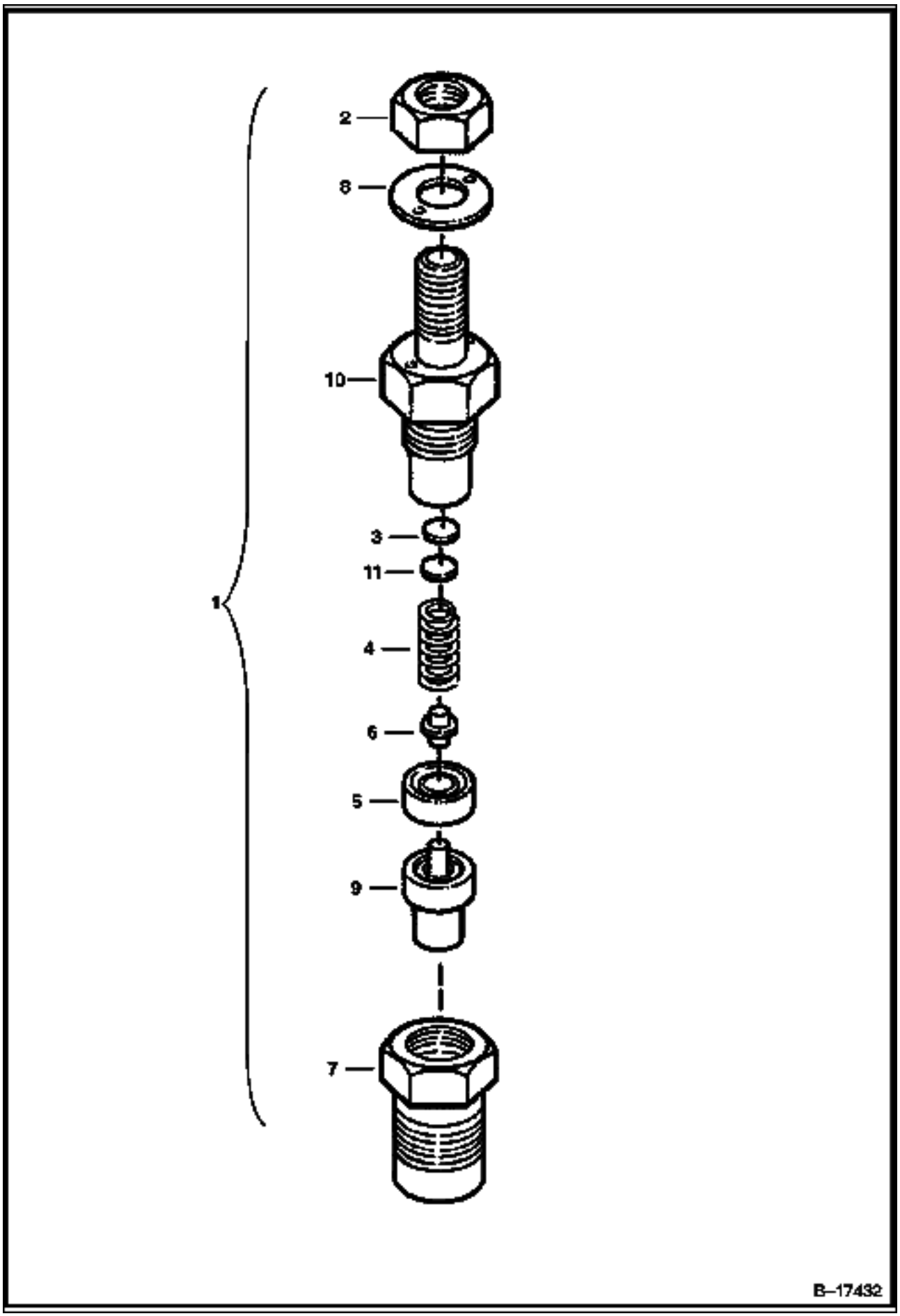

NOZZLE HOLDER (Cont'd)

Ref No	Part Number	Description	Remarks	Serial Number	Qty
1	6672405	HOLDER	W/Ref. 2 - 10		3
2	6672408	NUT			3
3	6672409	WASHER			3
4	6672410	SPRING			3
5	6672411	SPACER			3
6	6672412	PUSH ROD			3
7	6672413	NUT			3
8	6672414	WASHER			3
9	6672415	NOZZLE			3
10		HOLDER	NSS - Order Ref. 1		3
11	6672416	WASHER SET			3
11	6672417	WASHER	adjusting - 0.10mm		3
11	6672418	WASHER	adjusting - 0.20mm		3
11	6672419	WASHER	adjusting - 0.30mm		3
11	6672420	WASHER	adjusting - 0.40mm		3
11	6672421	WASHER	adjusting - 0.50mm		3
11	6672422	WASHER	adjusting - 0.52mm		3
11	6672423	WASHER	adjusting - 0.54mm		3
11	6672424	WASHER	adjusting - 0.56mm		3
11	6672425	WASHER	adjusting - 0.58mm		3
11	6672426	WASHER	adjusting - 0.80mm		3

WATER FLANGE & THERMOSTAT

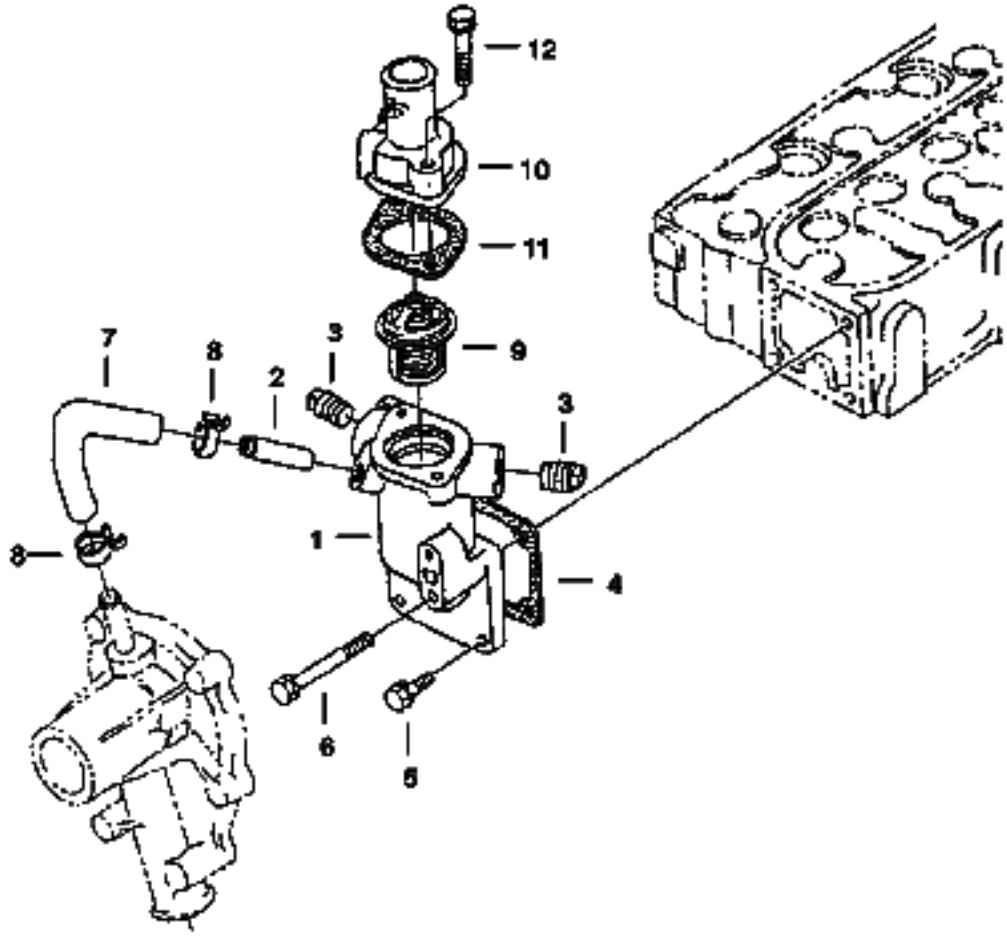

WATER FLANGE & THERMOSTAT (Cont'd)

Ref No	Part Number	Description	Remarks	Serial Number	Qty
1	6672482	FLANGE	W/Ref. 2		1
2	6670785	PIPE			1
3	6670504	PLUG			2
4	6672444	GASKET			1
5	4CM00616B	BOLT			3
6	6657413	BOLT			1
7	6657584	PIPE			1
8	6652748	CLAMP			2
9	6653948	THERMOSTAT			1
10	6672479	COVER			1
11	6666790	GASKET			1
12	1CM00835B	BOLT			2

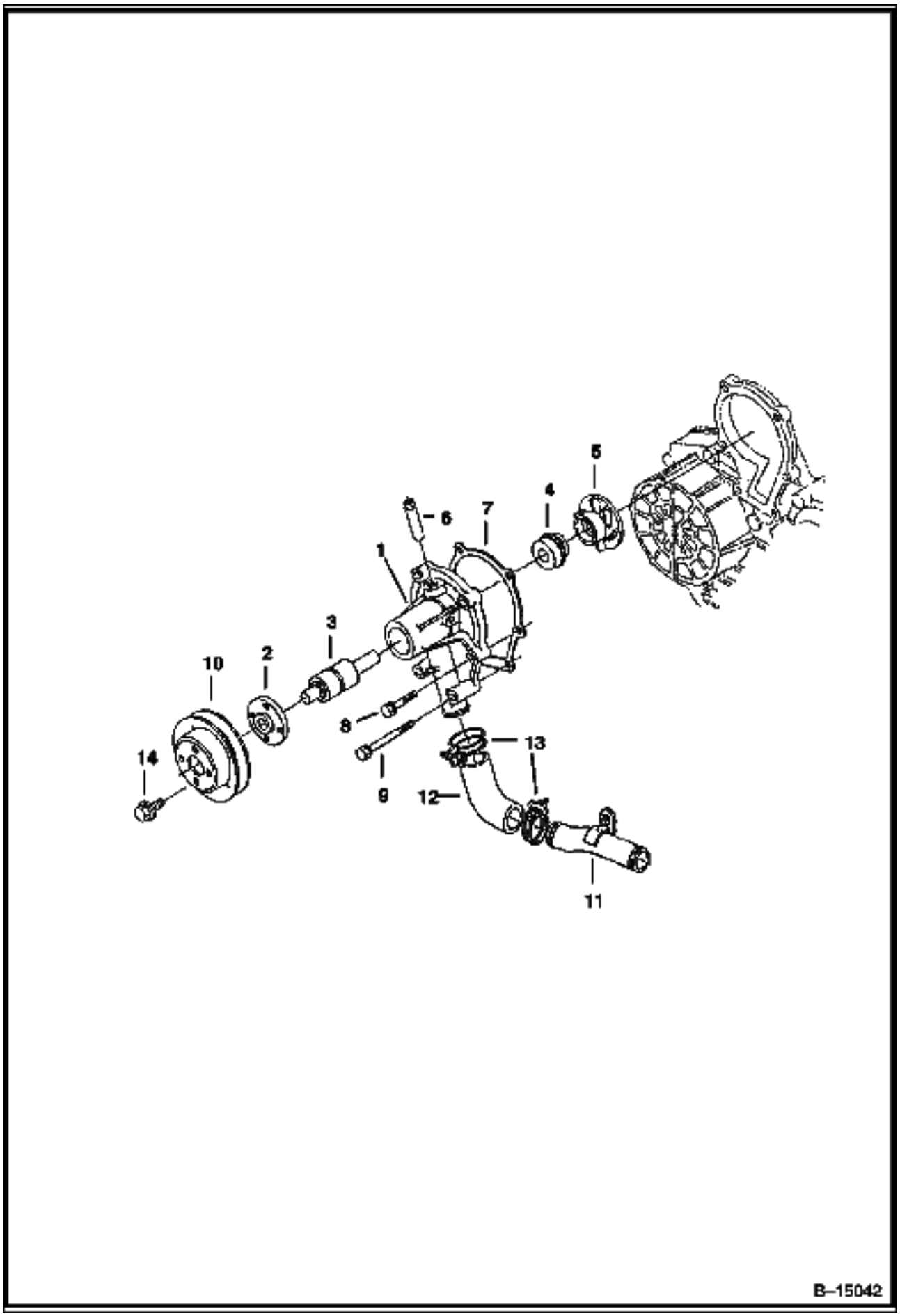
1
2
3
4
5
6
7
8
9
10
11
12
13
14
B–15042

WATER PUMP (Cont'd)

Ref No	Part Number	Description	Remarks	Serial Number	Qty
1	6672429	WATER PUMP	W/Ref. 2 - 6 - Eng. S/N 1U7903 & Bel.		1
1	6680278	WATER PUMP	W/Ref. 2 - 6 - Eng. S/N 1W0006 & Abv.		1
2	6672430	FLANGE			1
3	6672431	BEARING			1
4	6672432	SEAL ASSY			1
5	6672433	IMPELLER			1
6	6652745	PIPE			1
7	6672434	GASKET			1
8	4CM00630B	BOLT			4
9	6657414	BOLT			2
10	6657585	PULLEY			1
11	6672435	PIPE			1
12	6657582	PIPE			1
13	6657691	CLAMP			2
14	6652762	BOLT			4

OIL PAN

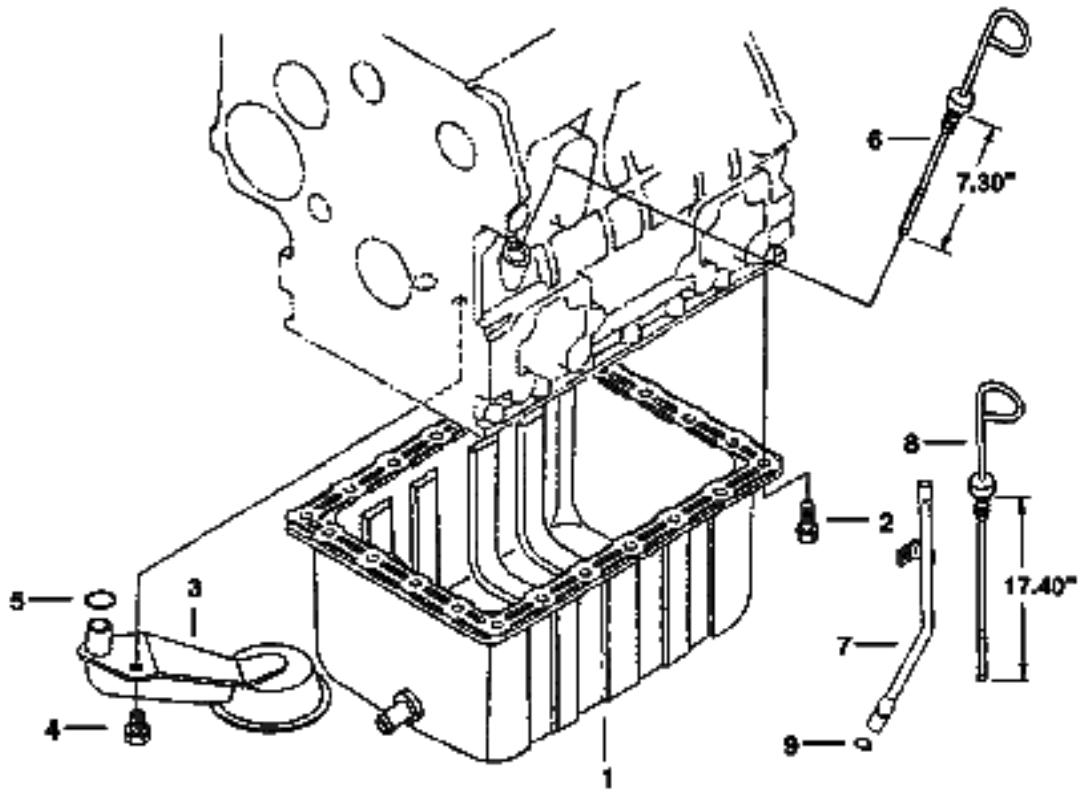

OIL PAN (Cont'd)

Ref No	Part Number	Description	Remarks	Serial Number	Qty
1	6672356	OIL PAN			1
2	6652682	BOLT			22
3	6657547	SCREEN			1
4	6667421	BOLT			1
5	3966516B	O-RING			1
6	6672480	DIPSTICK	7.30"(185.4mm) long		1
7	6672745	TUBE	Used W/Ref. 8		1
8	6672746	DIPSTICK	17.40"(442.0mm) long - Used W/Ref. 7		1
9	6673314	O-RING			1

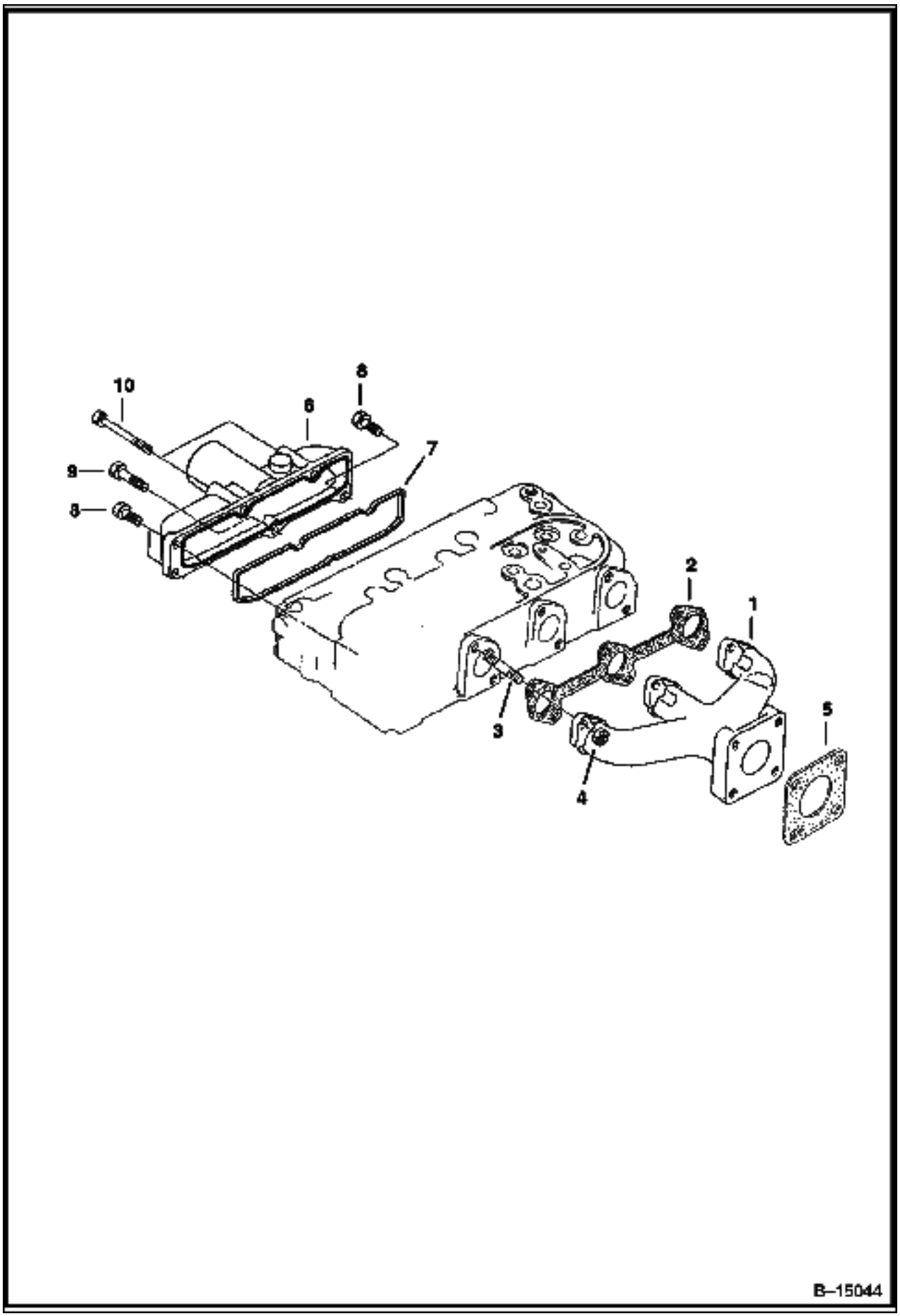
10
6
8
7
9
8
2
1
3
5
4
B–15044

Ref No	Part Number	Description	Remarks	Serial Number	Qty
1	6686502	MANIFOLD EXHAUST	Exhaust - Was 6672440 [B,D]		1
2	6672441	GASKET			1
3	6657590	STUD			6
4	6657591	NUT			6
5	6575580	GASKET			1
6	6672442	MANIFOLD	Intake - W/Ref. 7		1
7	6672443	GASKET			1
8	6652580	BOLT			3
9	4CM00630B	BOLT			1
10	6670501	BOLT			2

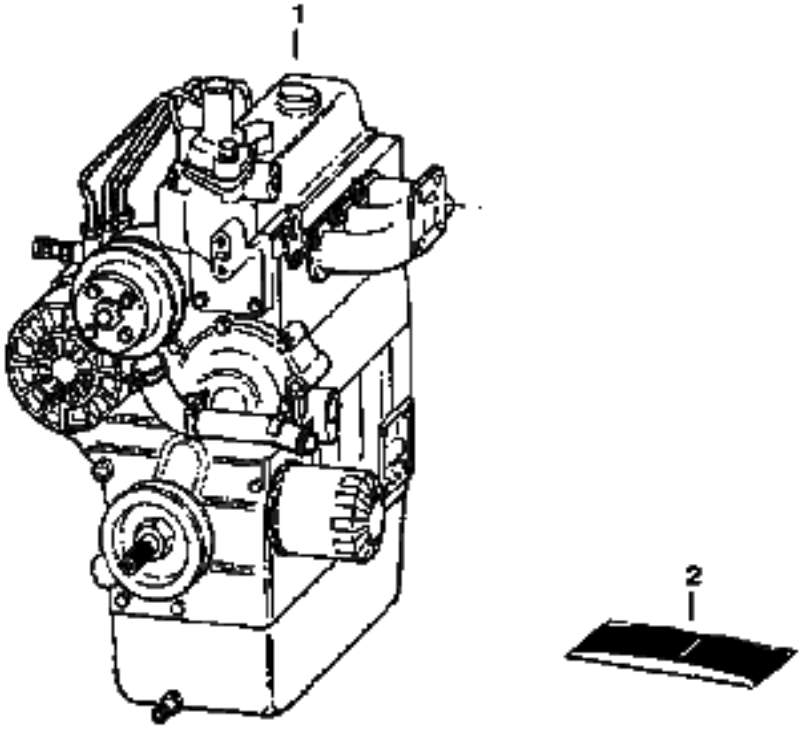
1
2
B–17086A

Ref No	Part Number	Description	Remarks	Serial Number	Qty
1	6686645	ENGINE D1005	Kubota D1005 Tier II		1
2	6674179	GASKET KIT	UPPER		1
2	6674180	GASKET KIT	LOWER		1

ROCKER ARM COVER
Kubota D1005 Tier II

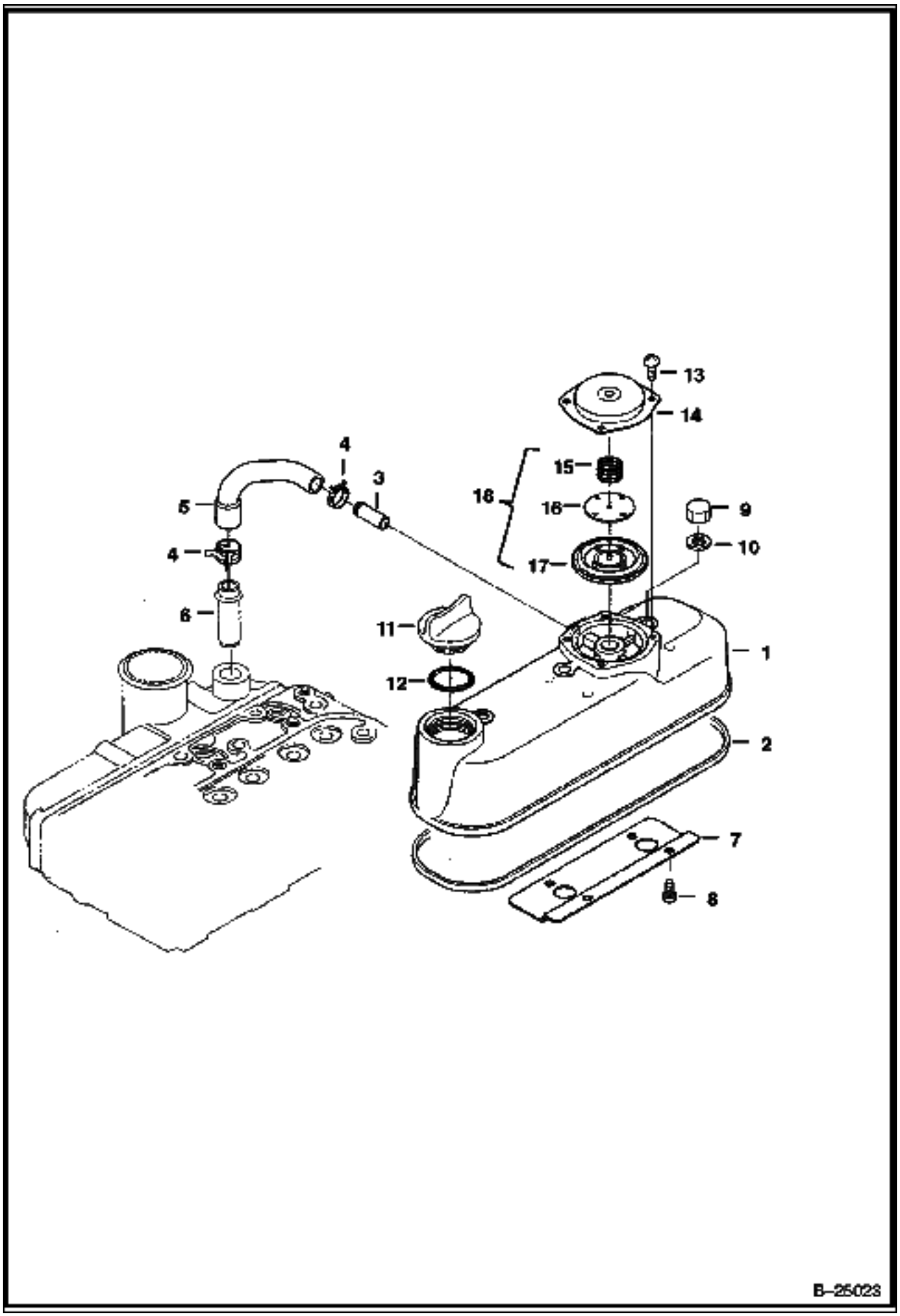

ROCKER ARM COVER (Cont'd)
Kubota D1005 Tier II

Ref No	Part Number	Description	Remarks	Serial Number	Qty
1	6686166	COVER	W/Ref. 2-8		1
2	6672365	GASKET			1
3	6655880	PIPE			1
4	6684776	CLAMP			1
5		HOSE			1
6	6680689	ADAPTER			1
7	6686167	SHIELD			1
8	3974928B	SCREW			2
9	6657050	CAP			3
10	6599116	GASKET			3
11	6685924	CAP	oil fill		1
12	6683009	O-RING			1
13	6667426	SCREW			4
14	6685086	COVER	breather		1
15		SPRING	NSS		1
16		PLATE	NSS		1
17		VALVE	NSS		1
18	6685087	VALVE	breather		1
19	6686171	CLAMP			1

CYLINDER HEAD
Kubota D1005 Tier II

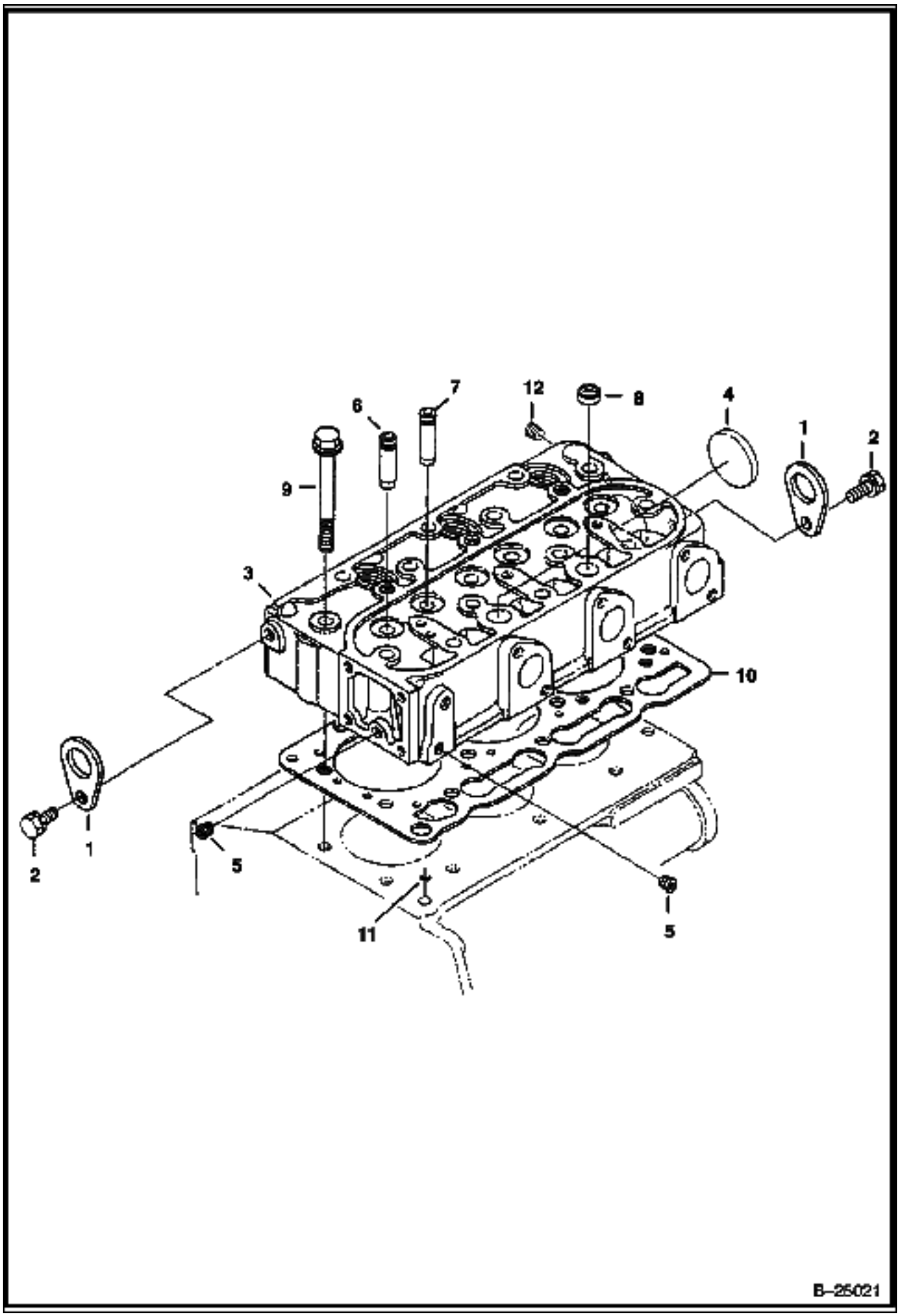

Ref No	Part Number	Description	Remarks	Serial Number	Qty
1	3974882B	BRACKET			2
2	6667421	BOLT			2
3		CYLINDER HEAD	W/Ref. 4 - 8		1
4	3974033B	CAP	sealing		1
5	6598116	PLUG			2
6	6685957	GUIDE	inlet valve		3
7	6685958	GUIDE	exhaust valve		3
8	3974056B	CAP	sealing		2
9	6657478	BOLT			14
10		GASKET			1
11	3974038B	O-RING			1
12	6657465	PLUG			1

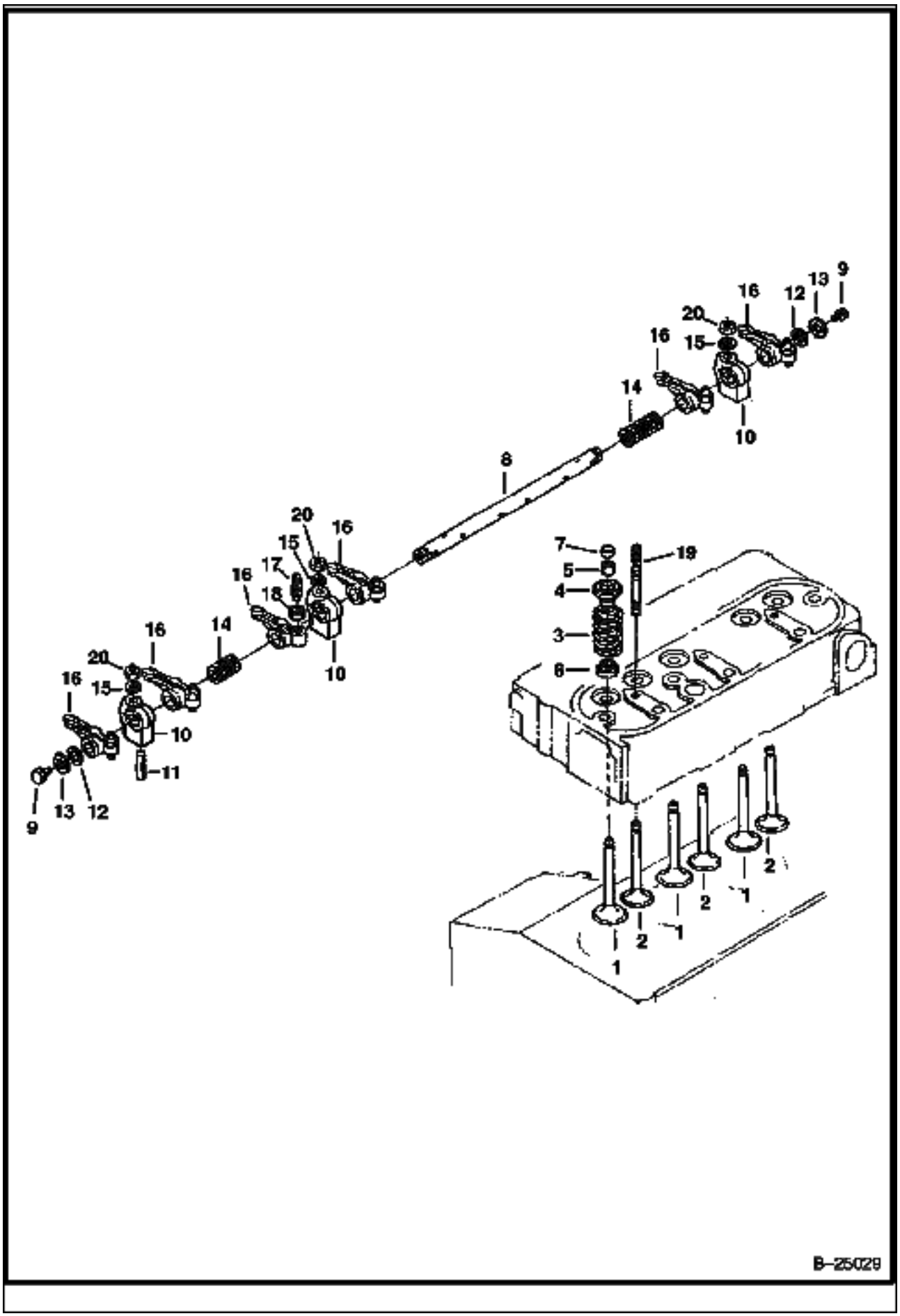
9
13
12
16
20
15
16
14
10
8
20
16
15
17
16
18
10
16
14
20
16
15
10
11
9
13
12
7
5
4
3
6
19
1
2
1
2
1
2
B-25029

ROCKER ARM & VALVES (Cont'd)
Kubota D1005 Tier II

Ref No	Part Number	Description	Remarks	Serial Number	Qty
1	6657495	VALVE	Intake		3
2	6657496	VALVE	Exhaust		3
3	6657630	SPRING			6
4	6685959	RETAINER			6
5	3974161B	COLLET			6
6	6672436	SEAL			6
7	6672437	CAP			6
8	6680255	SHAFT ASSY	W/Ref. 9		1
9	6670521	BOLT			2
10	6657509	BRACKET			3
11	6680256	PIN			1
12	6657511	WASHER			2
13	6670520	WASHER			2
14	6657508	SPRING			2
15	2EM00007B	WASHER			3
16	6657502	ROCKER ARM	W/Ref. 17 & 18		6
17	6657506	SCREW			6
18	6657507	NUT			6
19	6657510	STUD			3
20	1DM00007B	NUT			3

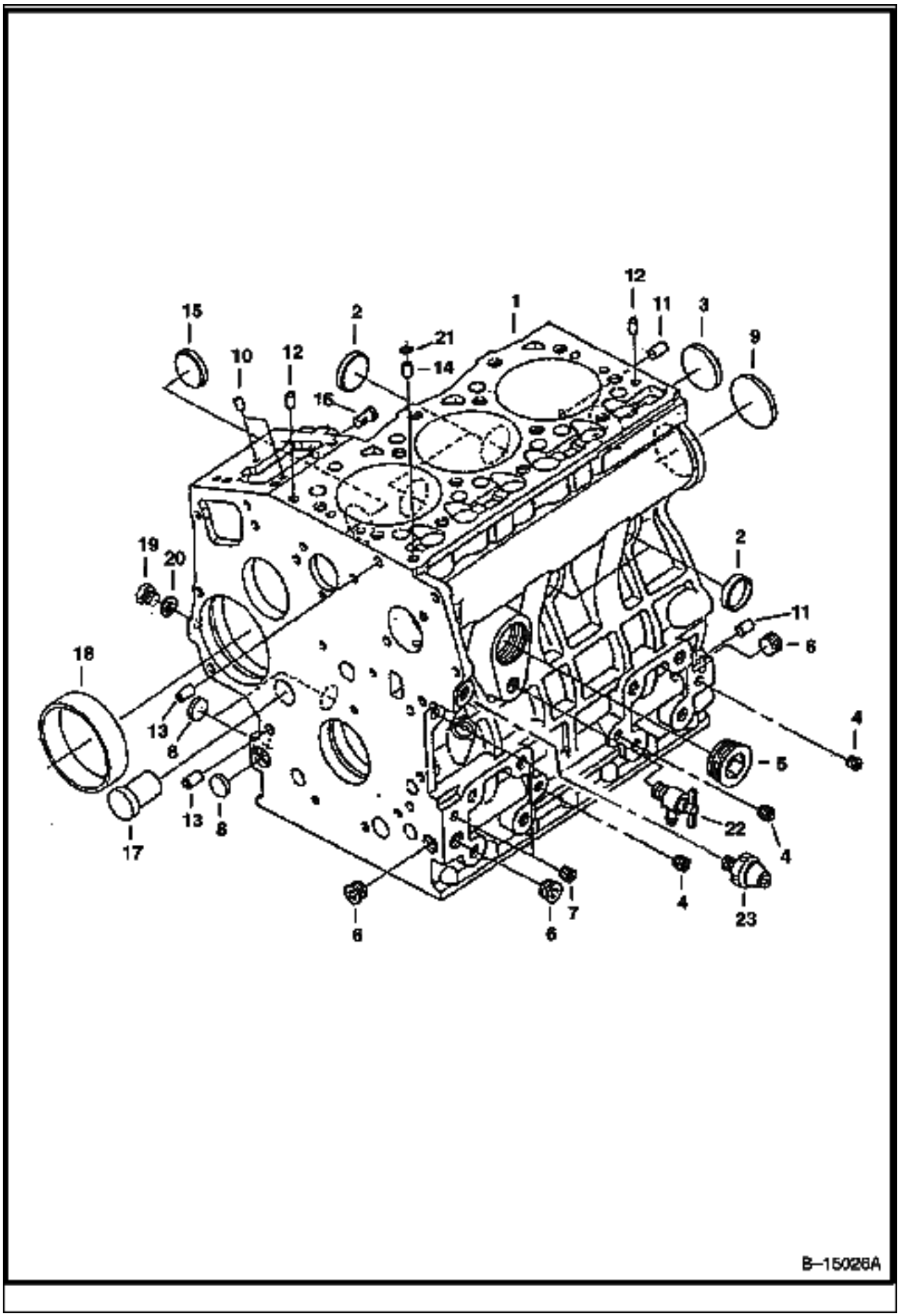
12
15
2
1
11
3
21
9
10
12
14
16
19
20
2
11
6
18
4
13
8
5
13
8
22
17
4
4
23
7
6
6
B–15026A

Ref No	Part Number	Description	Remarks	Serial Number	Qty
1		CRANKCASE	W/Ref. 2 - 20		1
2	6657431	CAP	sealing		4
3	3974433B	CAP	sealing		1
4	6598116	PLUG			3
5	6672354	PLUG			1
6	6657600	PLUG			3
7	6652574	PLUG			2
8	6667418	PLUG	expansion		3
9	6657663	PLUG	expansion		1
10	6657423	PIN			2
11	21JM00814B	PIN			2
12	6680260	PIN			2
13	3974039B	PIN			2
14	6657548	PIN			1
15	6657601	PLUG			1
16	6672355	PIN			1
17	6657675	PLUG			1
18	6657647	BUSHING			1
19	6655884	PLUG			1
20	3974095B	GASKET			1
21	3974038B	O-RING			1
22	6657456	DRAINCOCK			1
23	6652576	SWITCH			1

GEAR CASE
Kubota D1005 Tier II

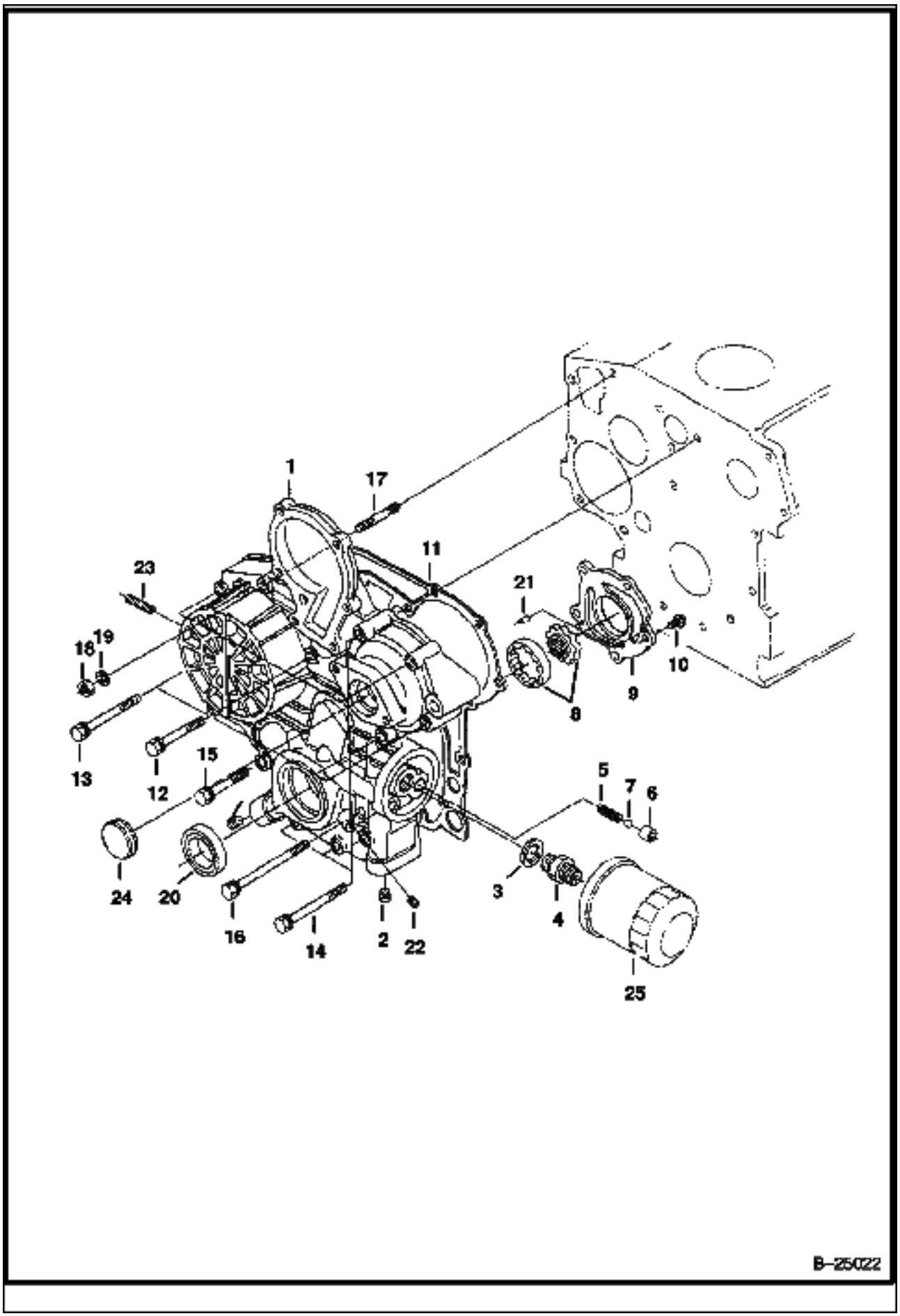

GEAR CASE (Cont'd)
Kubota D1005 Tier II

Ref No	Part Number	Description	Remarks	Serial Number	Qty
1	6680261	GEARCASE ASSY	W/Ref. 2 - 10		1
2	6672360	PLUG			2
3	15EM00180B	WASHER			1
4	6652597	ADAPTER			1
5	6657554	SPRING			1
6	6657553	SEAT			1
7	6657426	BALL			1
8	6657549	ROTOR ASSY	oil pump		1
9	6672361	COVER	oil pump		1
10	6680262	BOLT			5
11	6672362	GASKET			1
12	6657412	BOLT			3
13	6670770	BOLT			6
14	6657413	BOLT			2
15	6652594	BOLT			1
16	6657589	BOLT			1
17	6680263	STUD			1
18	1DM00006B	NUT			1
19	6667419	WASHER			1
20	6657603	SEAL			1
21	6686174	PIN			2
22	6652574	PLUG			1
23	6680264	STUD			2
24	6672363	COVER			1
25	6657635	OIL FILTER			1

CAMSHAFT
Kubota D1005 Tier II

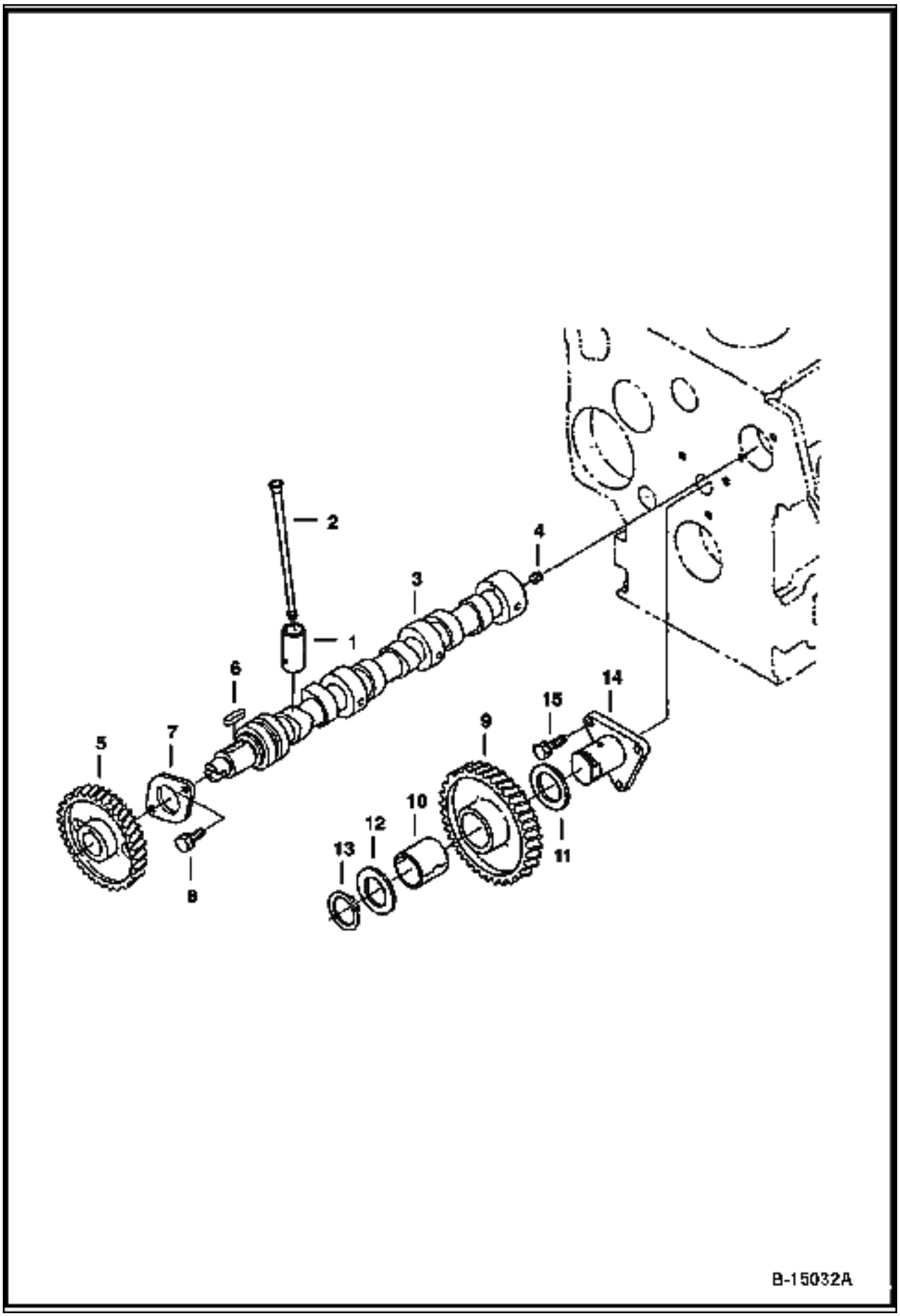

Ref No	Part Number	Description	Remarks	Serial Number	Qty
1	6672371	TAPPET			6
2	6657515	PUSH ROD			6
3	6672372	CAMSHAFT ASSY	W/Ref. 4 - 8		1
4	6653839	SCREW			1
5	6653841	GEAR	cam		1
6	6653842	KEY			1
7	6657517	STOPPER			1
8	4CM00616B	BOLT			2
9	6657632	GEAR	idler - W/Ref. 10		1
10	6657634	BUSHING			1
11	6657544	COLLAR			1
12	6657545	COLLAR			1
13	6657543	SNAP RING			1
14	6657542	SHAFT			1
15	4CM00616B	BOLT			3

MAIN BEARING CASE
Kubota D1005 Tier II

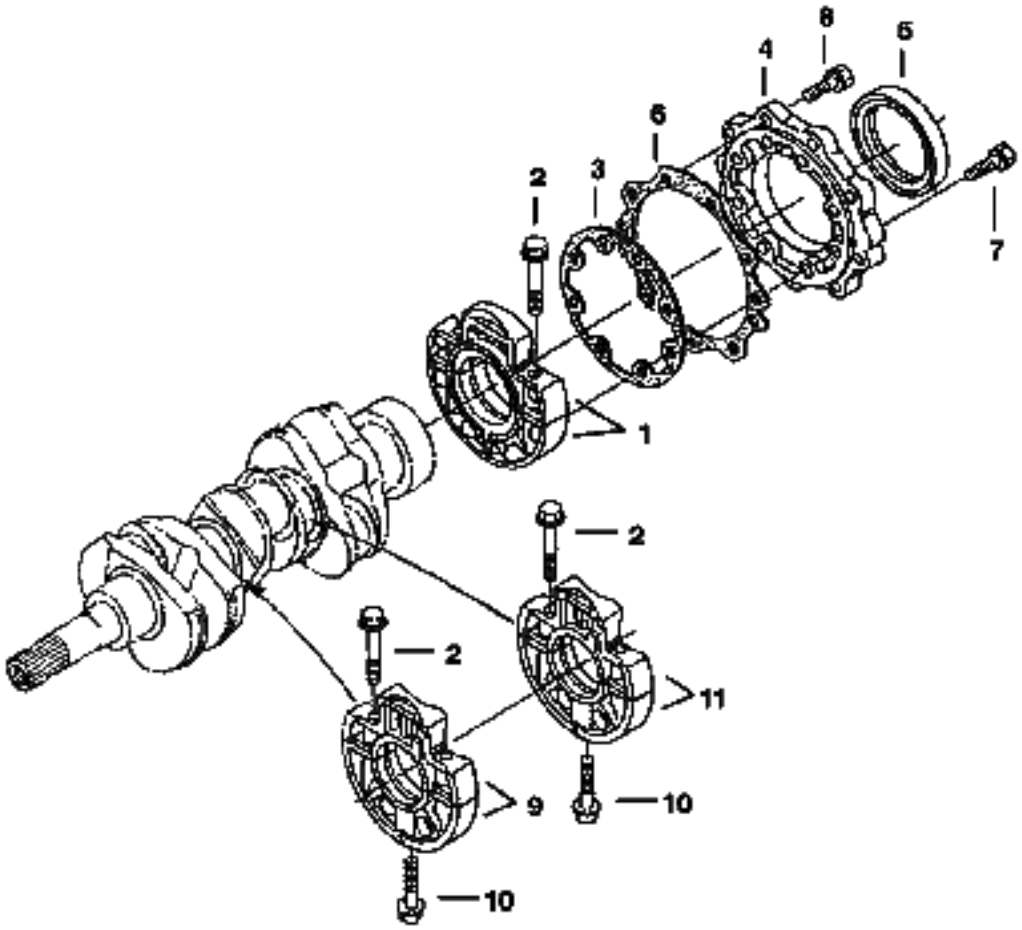

MAIN BEARING CASE (Cont'd)
Kubota D1005 Tier II

Ref No	Part Number	Description	Remarks	Serial Number	Qty
1	6672366	CASE	main bearing		1
2	6657482	BOLT			6
3	6672367	GASKET			1
4	6657484	COVER			1
5	6657481	SEAL			1
6	6672368	GASKET			1
7	4CM00625B	BOLT			8
8	4CM00620B	BOLT			9
9	6672369	CASE	main bearing		1
10	6657483	BOLT			2
11	6672370	CASE	main bearing		1

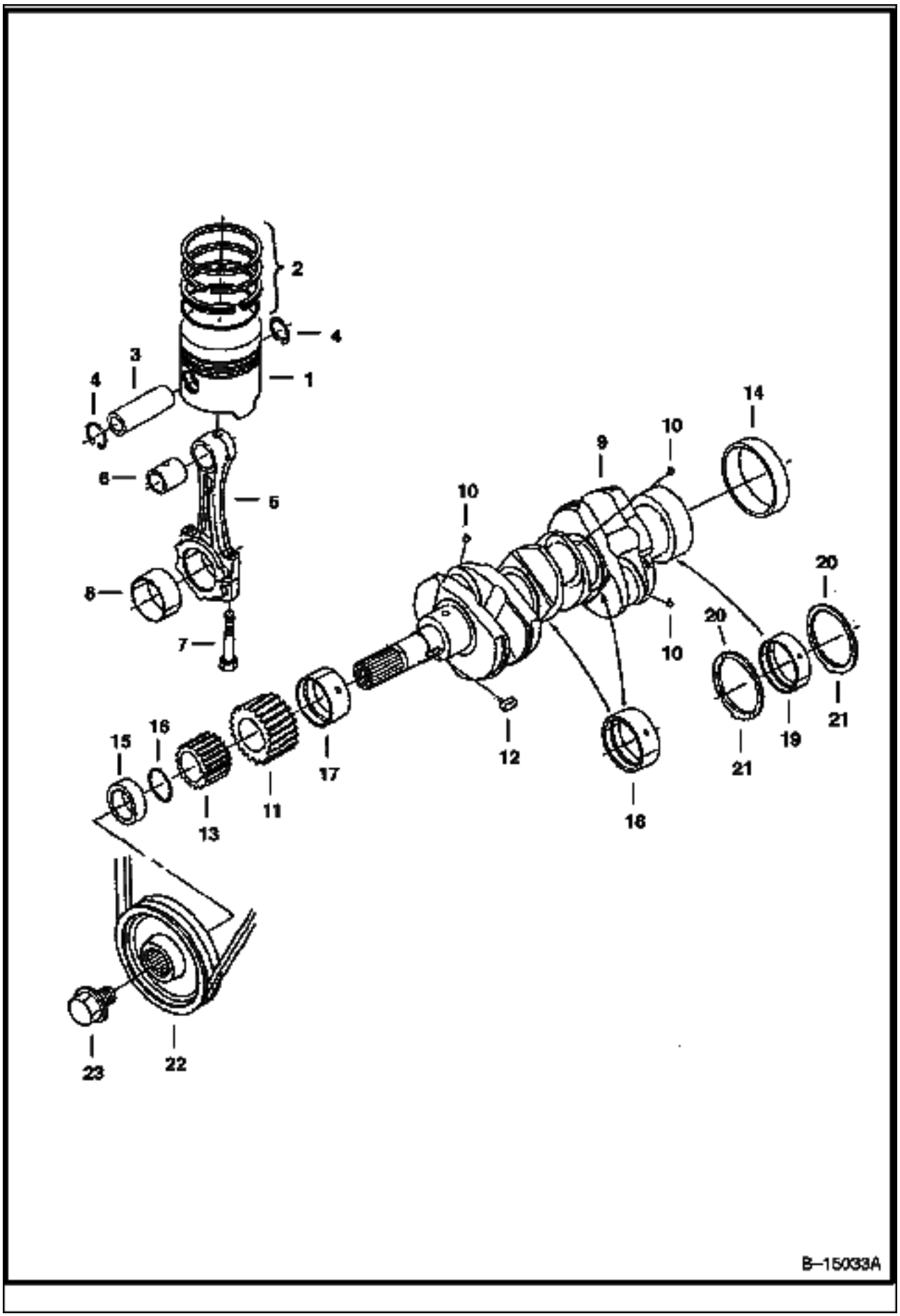
2
4
3
4
1
6
5
8
7
10
9
10
14
10
20
20
19
21
21
15
16
13
11
17
12
16
23
22
B–15033A

Ref No	Part Number	Description	Remarks	Serial Number	Qty
1	6672373	PISTON	standard		3
1	6672374	PISTON	+0.5mm		3
2	6672375	RING ASSY	standard		3
2	6672376	RING ASSY	+0.5mm		3
3	6657521	PIN			3
4	6657522	SNAP RING			6
5	6672377	ROD ASSY	W/Ref. 6 - 8		3
6	6657524	BUSHING			3
7	6657526	BOLT			6
8	6657527	ROD BEARING	standard		3
8	6657528	ROD BEARING	-0.2mm		3
8	6657529	ROD BEARING	-0.4mm		3
9	6672378	CRANKSHAFT	W/Ref. 10 - 14		1
10	6652633	BALL			3
11	6657541	GEAR			1
12	6657661	KEY			1
13	6657552	GEAR			1
14	6657531	SLEEVE			1
15	6657530	COLLAR			1
16	6680268	O-RING			1
17	6657532	BEARING	standard		1
17	6657537	BEARING	-0.2mm		1
17	6657538	BEARING	-0.4mm		1
18	6657533	BEARING	standard		2
18	6657539	BEARING	-0.2mm		2
18	6657540	BEARING	-0.4mm		2
19	6657534	BEARING	standard		1
19	6657535	BEARING	-0.2mm		1
19	6657536	BEARNG	-0.4mm		1
20	3974945B	WASHER	standard		2
20	6654715	WASHER	+0.2mm		2
20	3975022B	WASHER	+0.4mm		2
21	6653865	WASHER	standard		2
21	6654002	WASHER	+0.2mm		2
21	6654003	WASHER	+0.4mm		2
22	6672428	PULLEY			1
23	6657588	BOLT			1

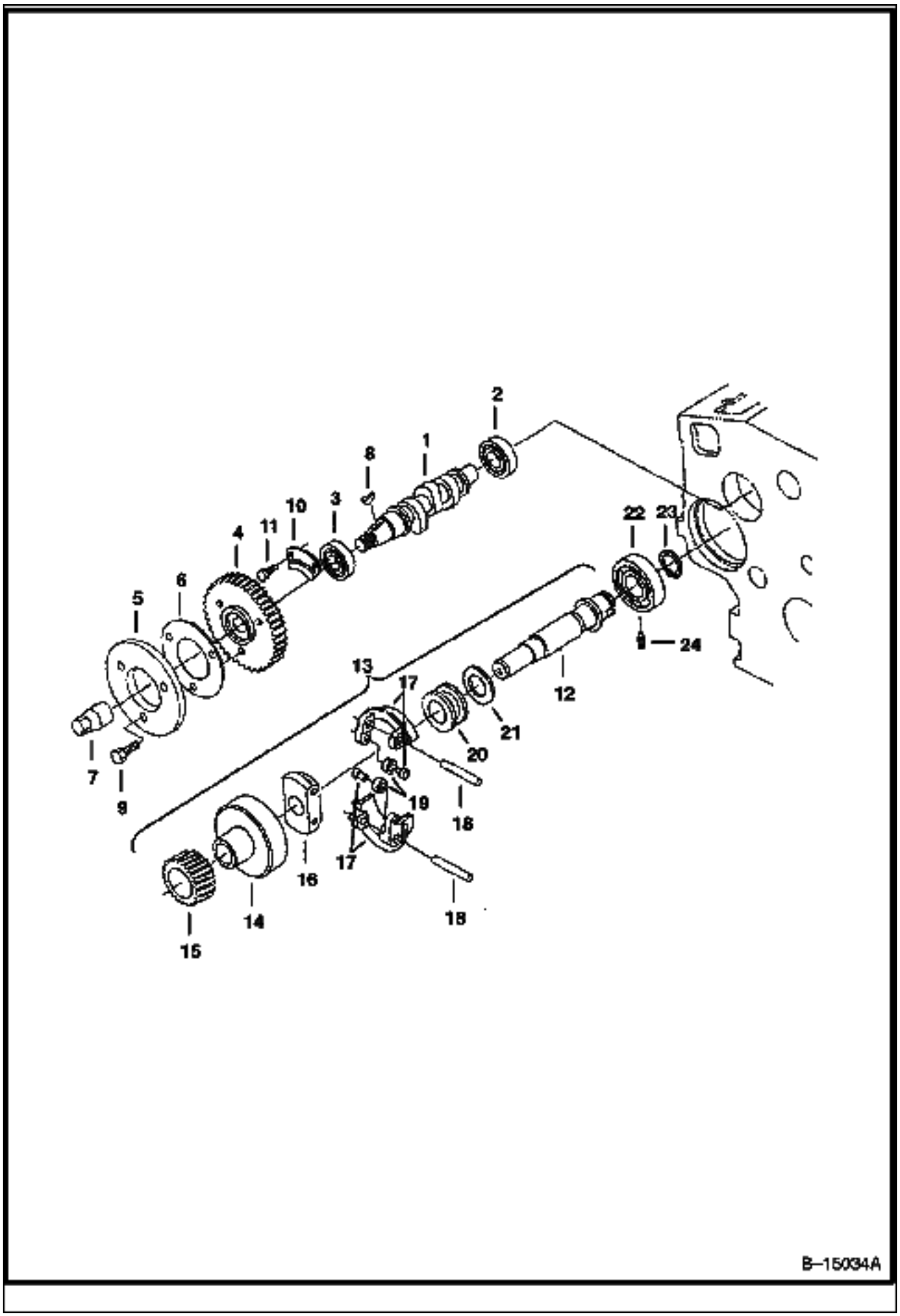
1
2
3
4
5
6
7
8
9
10
11
12
13
14
15
16
17
18
19
20
21
22
23
24
B–15034A

Ref No	Part Number	Description	Remarks	Serial Number	Qty
1	6672379	CAMSHAFT	fuel		1
2	6686175	BEARING			1
3	6686176	BEARING			1
4	6657664	GEAR			1
5	6657558	CAM			1
6	6672380	WASHER			1
7	6657593	NUT			1
8	6657597	KEY			1
9	6652580	BOLT			3
10	6657518	STOPPER			1
11	4CM00616B	BOLT			2
12		SHAFT	NSS - Order Ref. 13		1
13	6672381	SHAFT ASSY	W/Ref. 14 - 21		1
14	6657565	HOLDER			1
15	6657671	GEAR			1
16	6657564	HOLDER			1
17	6657562	WEIGHT			2
18	6657563	SHAFT			2
19	6657690	ROLLER			2
20	6657566	SLEEVE			1
21	6657567	WASHER			1
22	6686178	BEARING			1
23	6657648	SNAP RING			1
24	6657568	SET SCREW			1

ENGINE STOP LEVER
Kubota D1005 Tier II

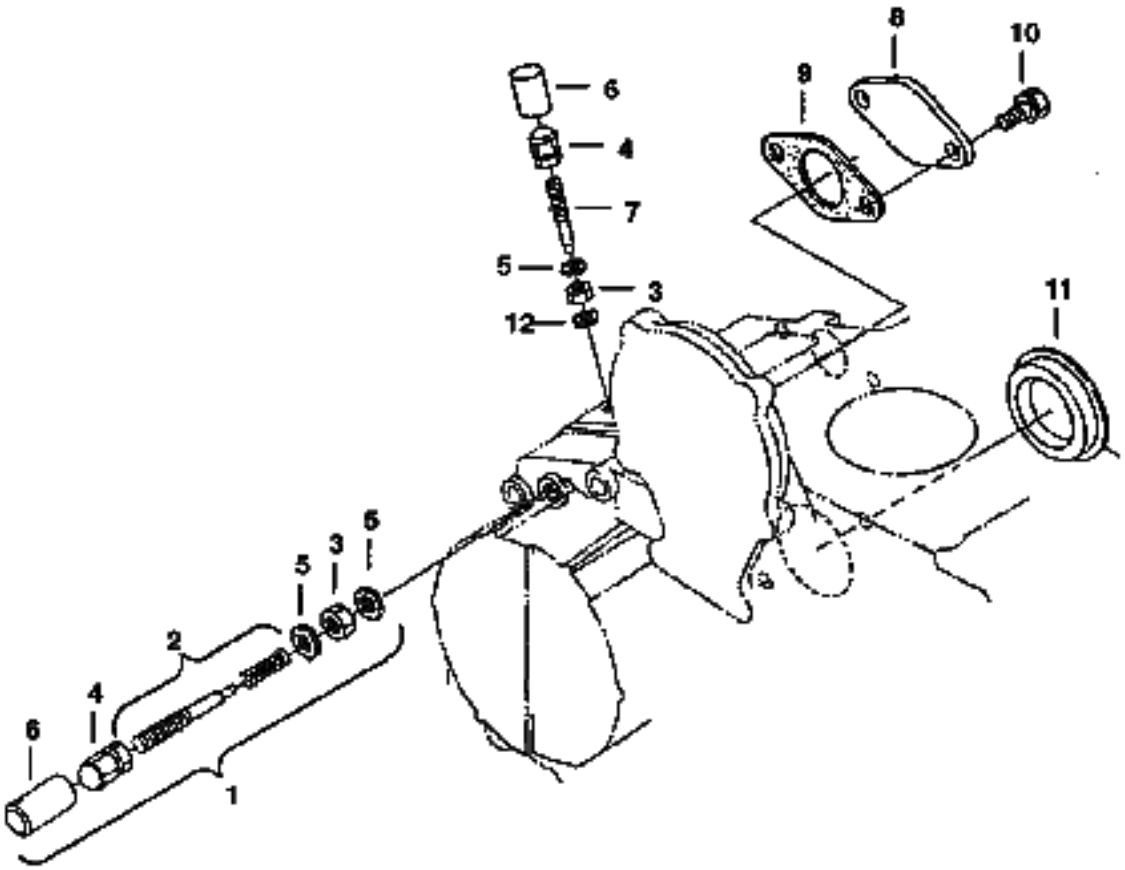

ENGINE STOP LEVER (Cont'd)
Kubota D1005 Tier II

Ref No	Part Number	Description	Remarks	Serial Number	Qty
1	6672382	IDLER ASSY			1
2	6672383	BOLT	adjusting		1
3	6657459	NUT			2
4	6670462	NUT			2
5	3974972B	GASKET			3
6	6672384	CAP			2
7	6657560	BOLT	adjusting		1
8	6672385	COVER			1
9	6672386	GASKET	fuel shut off		1
10	4CM00614B	BOLT			2
11	6672387	COVER			1
12	6687687	GASKET			1

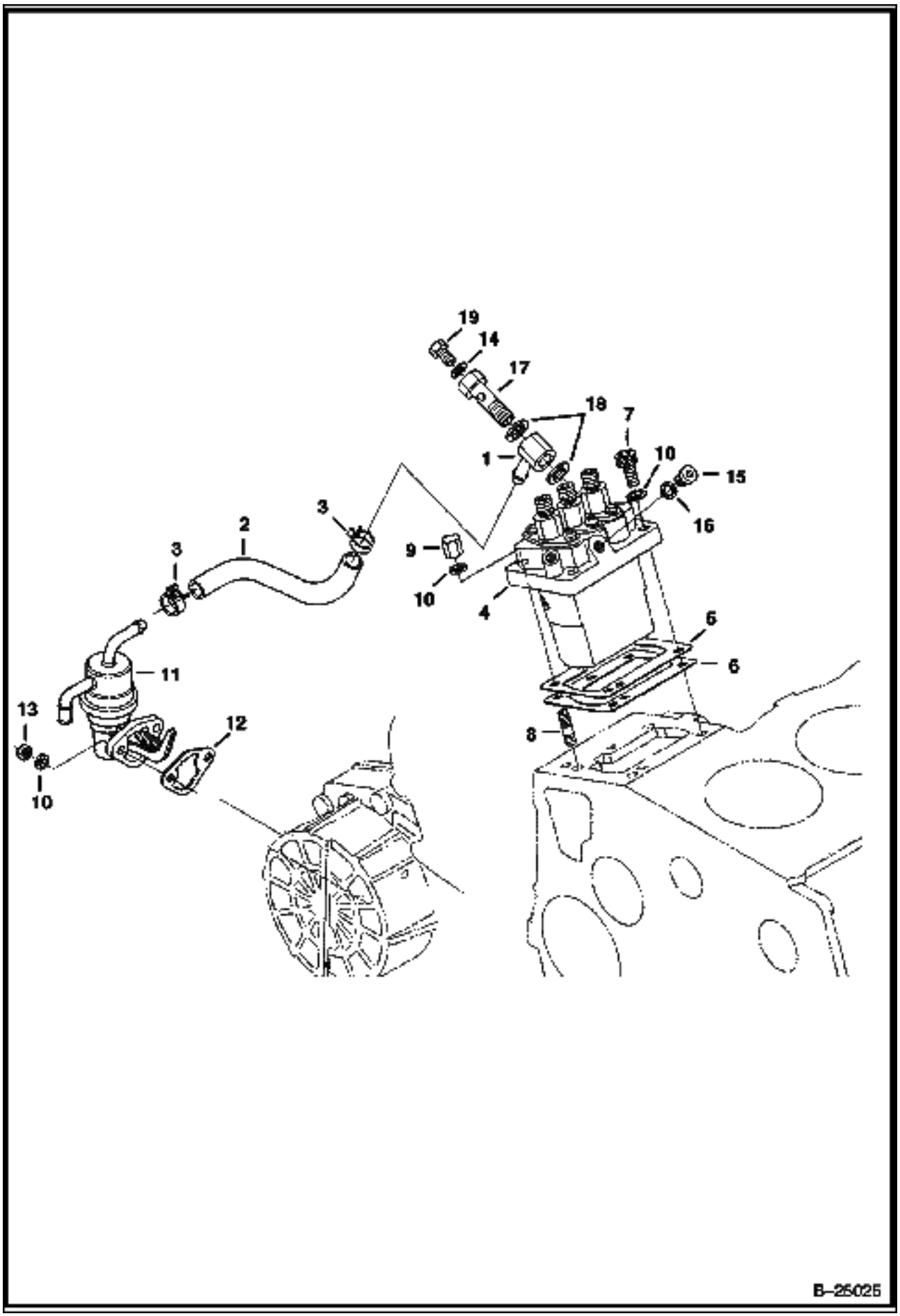
19
14
17
18
7
1
10
15
16
3
2
3
9
10
4
6
6
11
13
12
8
10
B–25025

INJECTION PUMP & FUEL PUMP (Cont'd)
Kubota D1005 Tier II

Ref No	Part Number	Description	Remarks	Serial Number	Qty
1	6657598	JOINT			1
2	6672388	TUBE			1
3	6680274	CLAMP			2
4	6672389	INJECTION PUMP			1
5	6670433	SHIM	0.20mm		1
6	6672391	SHIM	0.25mm		1
6	6670777	SHIM	0.30mm		1
7	6657417	BOLT			2
8	6657458	STUD			2
9	6657461	NUT			2
10	6667419	WASHER			4
11	6672427	FUEL PUMP			1
12	6670782	GASKET			1
13	1DM00006B	NUT			2
14	6657467	GASKET			1
15	6672396	PLUG			1
16	6670446	WASHER			1
17	6672395	BOLT			1
18	6657466	GASKET			2
19	6657445	SCREW			1

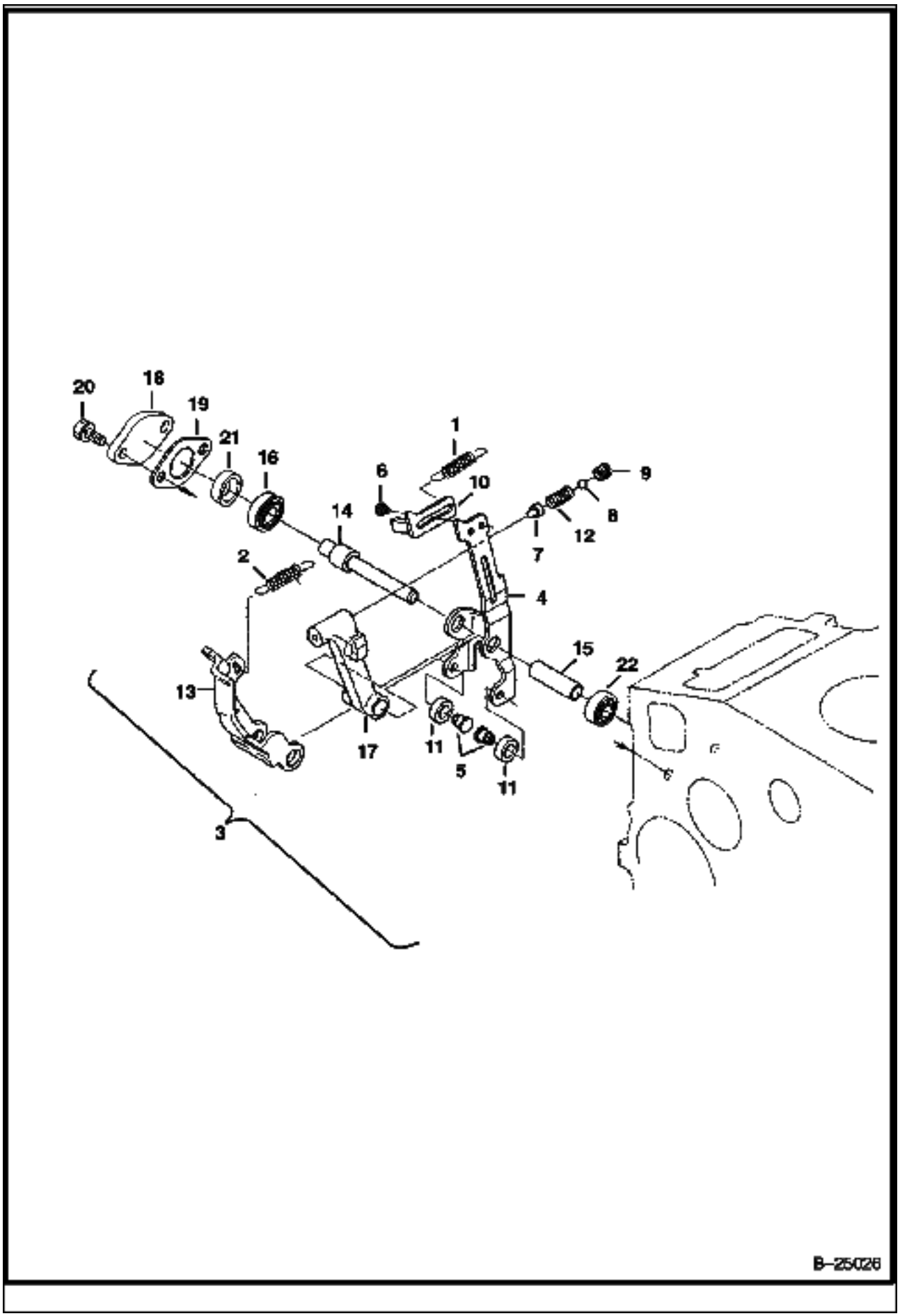
20
18
19
21
16
1
6
10
9
8
12
7
14
2
4
15
22
13
17
11
5
11
3
B-25026

Ref No	Part Number	Description	Remarks	Serial Number	Qty
1	6672397	SPRING			1
2	6657685	SPRING			1
3	6686179	LEVER ASSY	W/Ref. 4 - 17		1
4		LEVER ASSY	NSS - W/Ref. 5 - 12		1
5		PIN	NSS		2
6		BOLT	NSS		2
7		RETAINER	NSS		1
8	10J000005B	BALL			1
9		SCREW	NSS		1
10		BRACKET	NSS		1
11	6657690	ROLLER			2
12	6672400	SPRING			1
13	6686180	LEVER			1
14	6686182	SHAFT			1
15	6686181	SHAFT			1
16	6657575	BEARING			1
17		WASHER	NSS		1
18	6657573	COVER			1
19	6672401	GASKET			1
20	6653836	BOLT			2
21	6657572	COLLAR			1
22	6657576	BEARING			1

SPEED CONTROL PLATE
Kubota D1005 Tier II

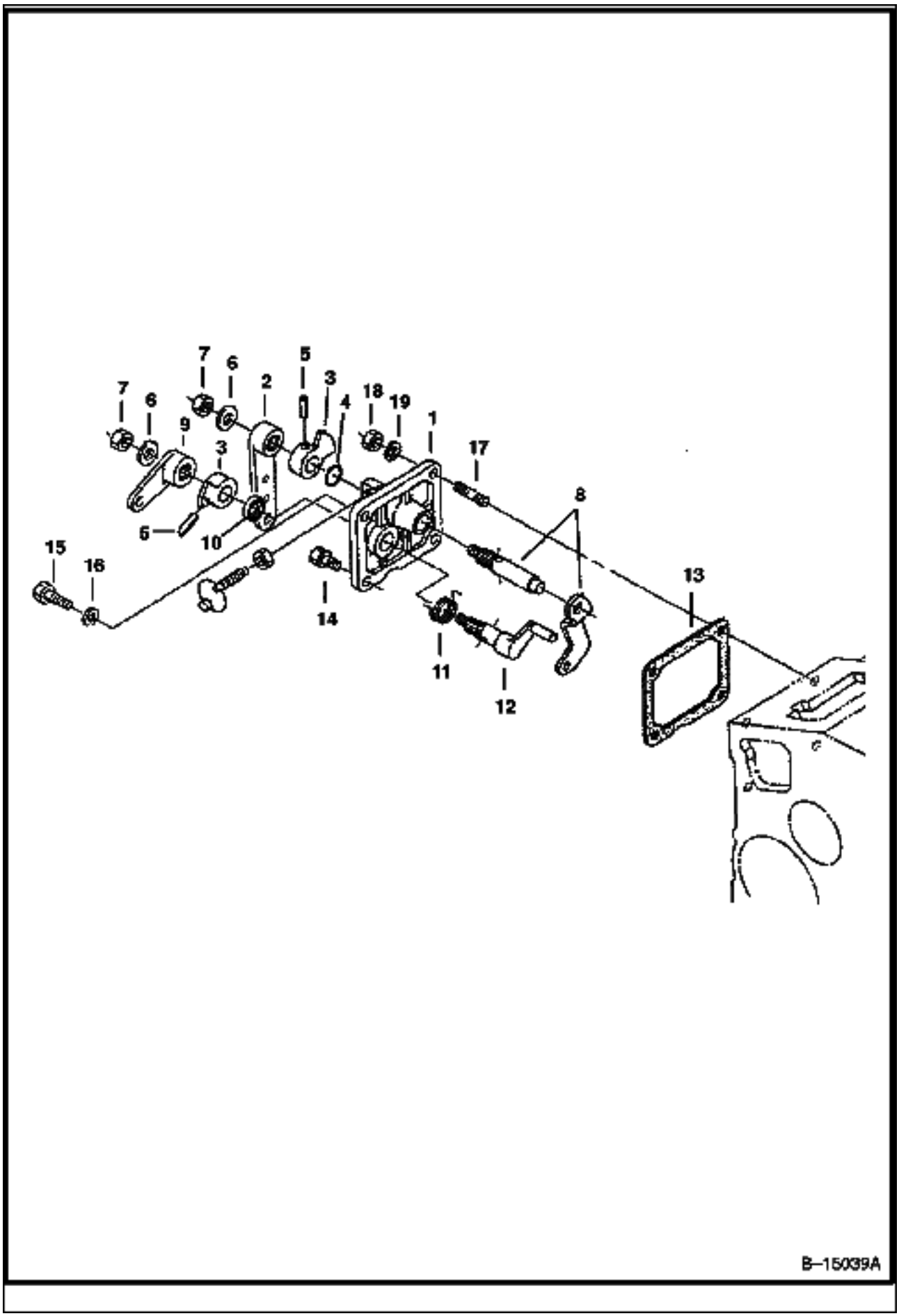

SPEED CONTROL PLATE (Cont'd)
Kubota D1005 Tier II

Ref No	Part Number	Description	Remarks	Serial Number	Qty
1	6680501	PLATE ASSY	W/Ref. 2 - 12		1
2	6657655	LEVER			1
3	6657577	LEVER			2
4	6680277	O-RING			1
5	6598098	PIN			2
6	6657596	WASHER			2
7	6657592	NUT			2
8	6657649	LEVER ASSY			1
9	6657656	LEVER			1
10	6598703	SEAL			1
11	6657474	SPRING			1
12	6657657	SHAFT			1
13	6672403	GASKET			1
14	4CM00616B	BOLT			1
15	4CM00618B	BOLT			1
16	3974972B	GASKET			1
17	6680264	STUD			2
18	1DM00006B	NUT			2
19	6667419	WASHER			2

INJECTOR NOZZLES
Kubota D1005 Tier II

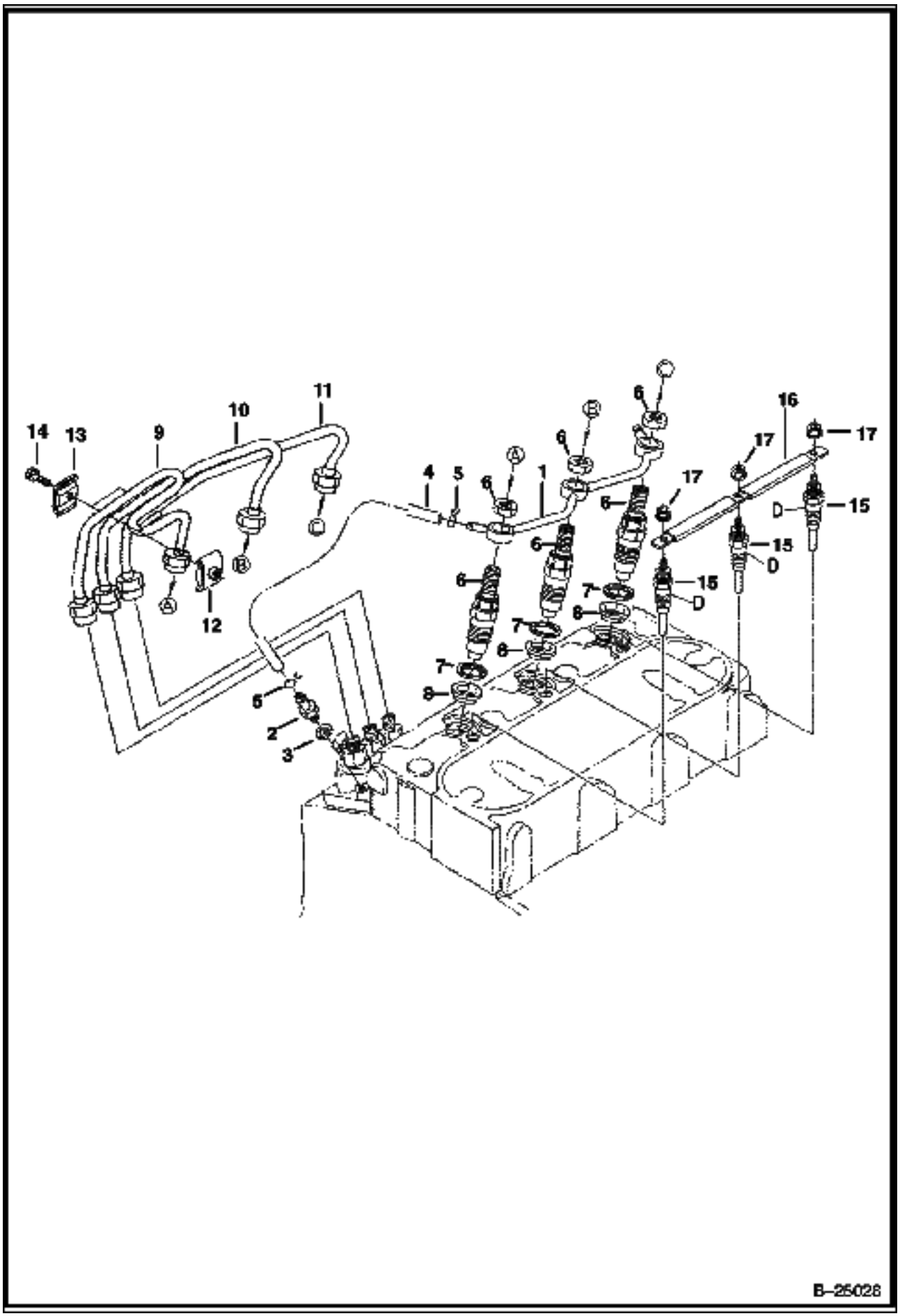

INJECTOR NOZZLES (Cont'd)
Kubota D1005 Tier II

Ref No	Part Number	Description	Remarks	Serial Number	Qty
1	6672404	PIPE ASSY			1
2	6657446	SCREW			1
3	3974972B	GASKET			1
4	6670464	PIPE	W/Ref. 5		1
5	6599136	CLIP			2
6	6686183	HOLDER	W/ NUT		3
7	6655218	GASKET			3
8	6655872	HEAT SEAL			3
9		PIPE			1
10	6657643	PIPE			1
11	6657644	PIPE			1
12	6652688	CLAMP			2
13	6652689	CLAMP			2
14	3974260B	BOLT	W/ washer		2
15	6670470	GLOW PLUG	W/ nut		3
16	6672407	CORD			1
17	6670472	NUT			3

NOZZLE HOLDER
Kubota D1005 Tier II

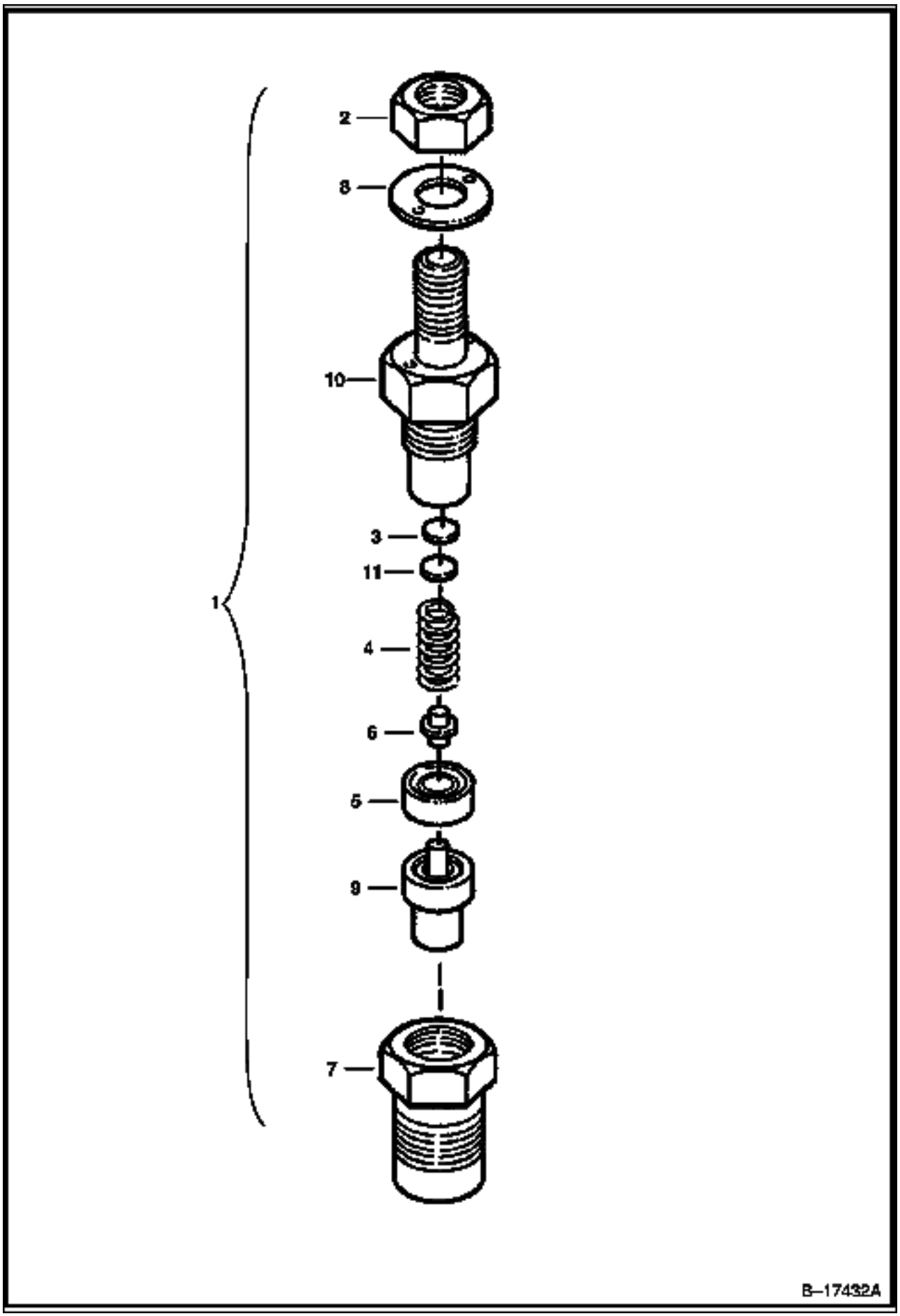

NOZZLE HOLDER (Cont'd)
Kubota D1005 Tier II

Ref No	Part Number	Description	Remarks	Serial Number	Qty
1		HOLDER	W/Ref. 2 - 10		3
2	6672408	NUT			3
3	6672409	WASHER			3
4	6672410	SPRING			3
5	6672411	SPACER			3
6	6672412	PUSH ROD			3
7	6672413	NUT			3
8	6672414	WASHER			3
9	6672415	NOZZLE			3
10		HOLDER	NSS - Order Ref. 1		3
11	6672416	WASHER SET			3
11	6672417	WASHER	adjusting - 0.10mm		3
11	6672418	WASHER	adjusting - 0.20mm		3
11	6672419	WASHER	adjusting - 0.30mm		3
11	6672420	WASHER	adjusting - 0.40mm		3
11	6672421	WASHER	adjusting - 0.50mm		3
11	6672422	WASHER	adjusting - 0.52mm		3
11	6672423	WASHER	adjusting - 0.54mm		3
11	6672424	WASHER	adjusting - 0.56mm		3
11	6672425	WASHER	adjusting - 0.58mm		3
11	6672426	WASHER	adjusting - 0.80mm		3

WATER FLANGE & THERMOSTAT
Kubota D1005 Tier II

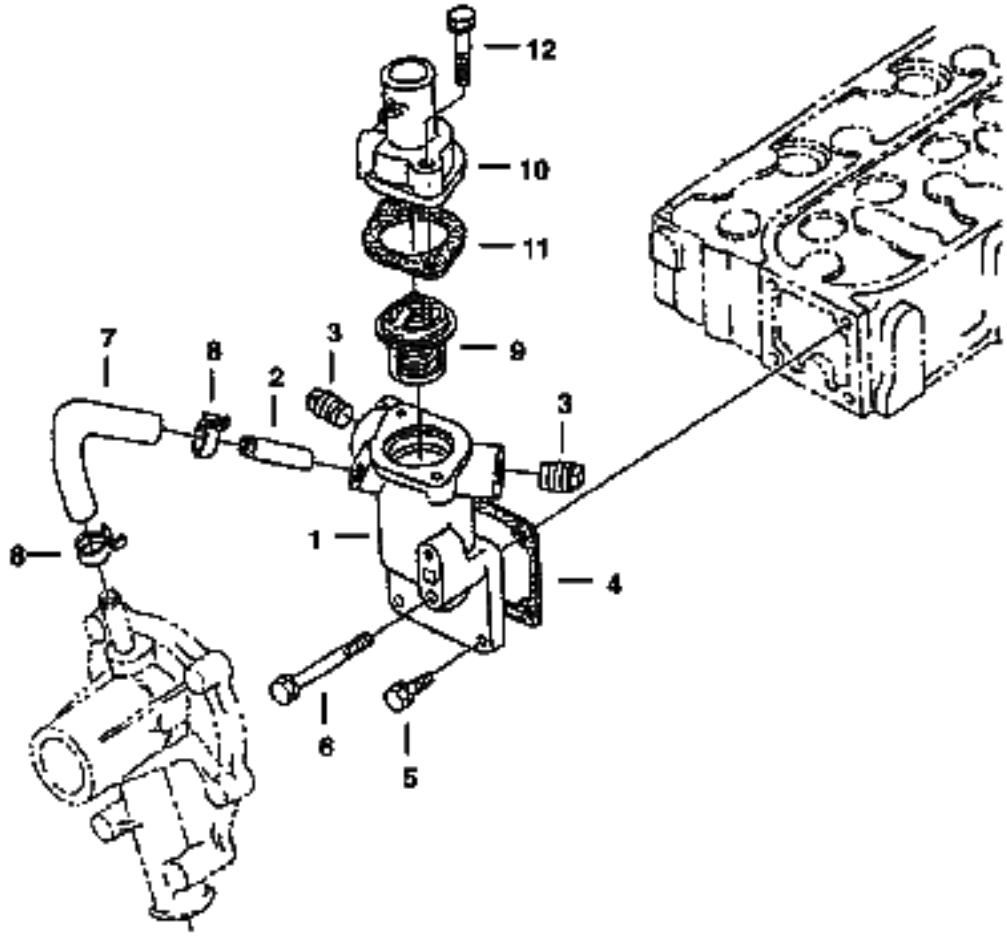

WATER FLANGE & THERMOSTAT (Cont'd)
Kubota D1005 Tier II

Ref No	Part Number	Description	Remarks	Serial Number	Qty
1	6672482	FLANGE	W/Ref. 2		1
2	6670785	PIPE			1
3	6670504	PLUG			2
4	6672444	GASKET			1
5	4CM00616B	BOLT			3
6	6657413	BOLT			1
7	6657584	PIPE			1
8	6652748	CLAMP			2
9	6680512	THERMOSTAT			1
10	6672479	COVER			1
11	6684863	GASKET			1
12	1CM00835B	BOLT			2

WATER PUMP
Kubota D1005 Tier II

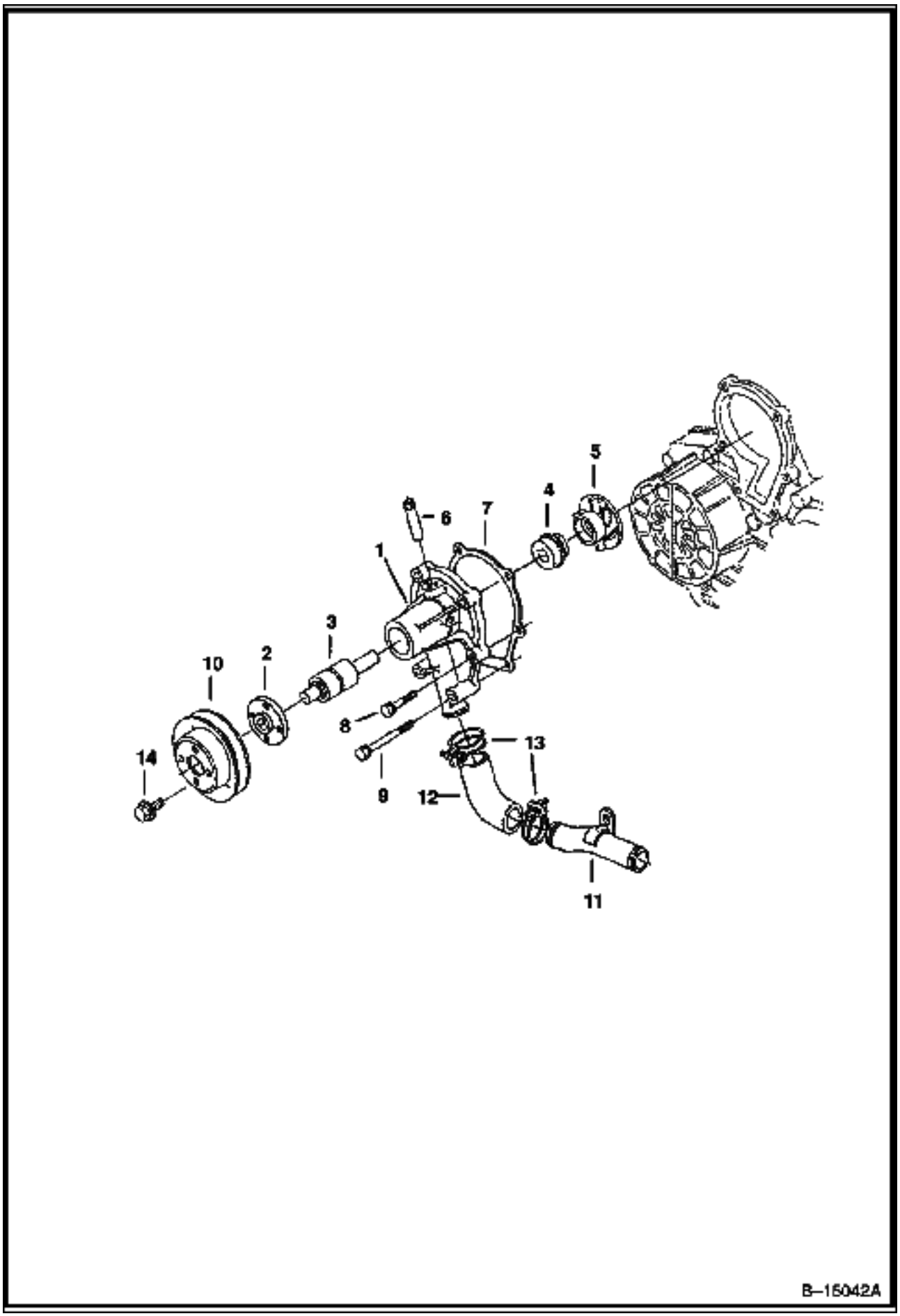

WATER PUMP (Cont'd)
Kubota D1005 Tier II

Ref No	Part Number	Description	Remarks	Serial Number	Qty
1	6680278	WATER PUMP	W/Ref. 2 - 6		1
2	6680279	FLANGE			1
3	6657612	BEARING			1
4	6680280	SEAL			1
5	6657611	IMPELLER			1
6	6652745	PIPE			1
7	6680281	GASKET			1
8	4CM00630B	BOLT			4
9	6686034	BOLT			2
10	6657585	PULLEY			1
11	6672435	PIPE			1
12	6680282	PIPE			1
13	6657691	CLAMP			2
14	29CM00612B	SCREW			4

OIL PAN
Kubota D1005 Tier II

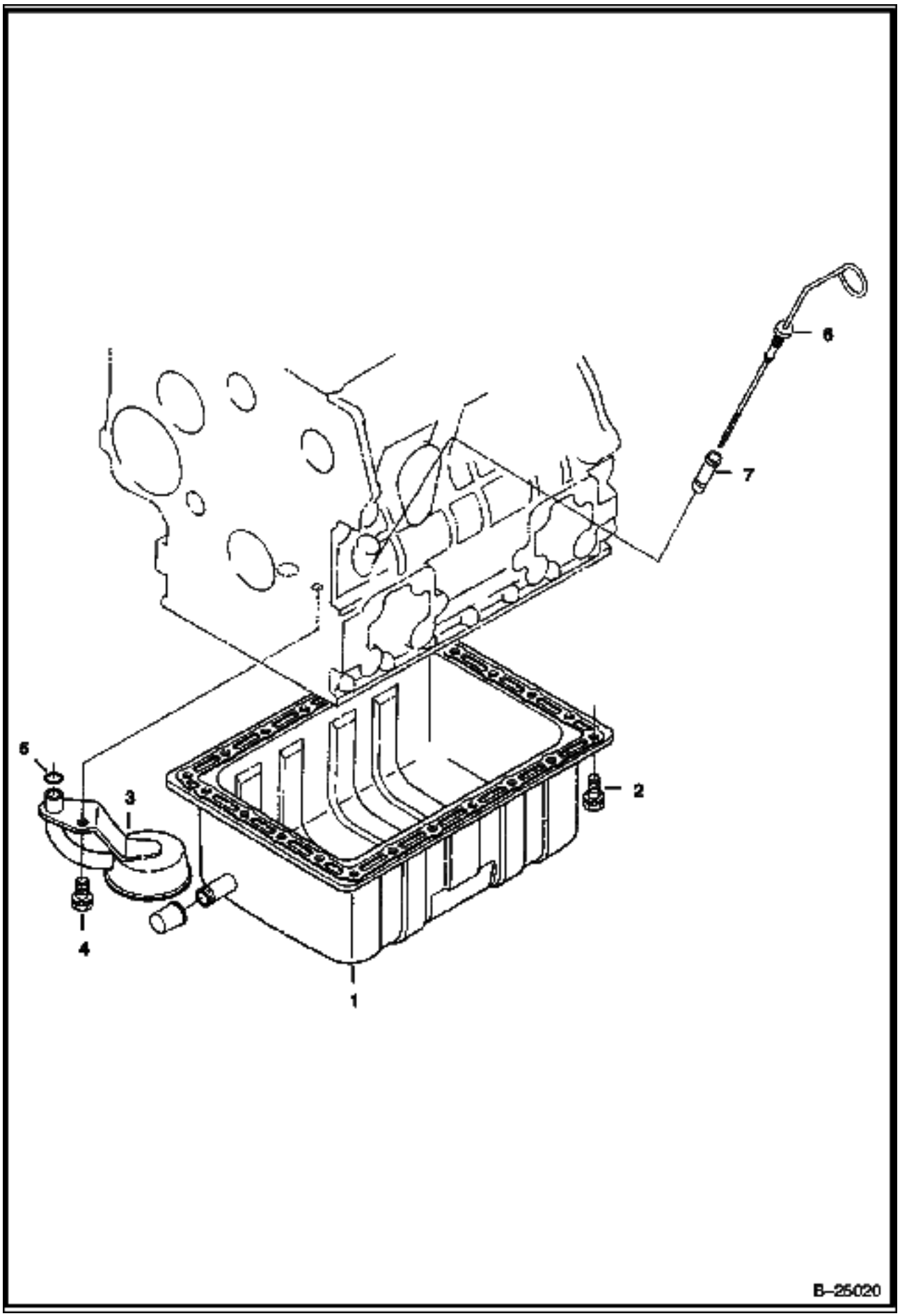

OIL PAN (Cont'd)
Kubota D1005 Tier II

Ref No	Part Number	Description	Remarks	Serial Number	Qty
1		OIL PAN			1
2	6686186	BOLT			22
3		SCREEN			1
4	6667421	BOLT			1
5	6680284	O-RING			1
6		DIPSTICK	7.30"(185.4mm) long		1
7		TUBE	Used W/Ref. 8		1

INTAKE & EXHAUST MANIFOLDS
Kubota D1005 Tier II

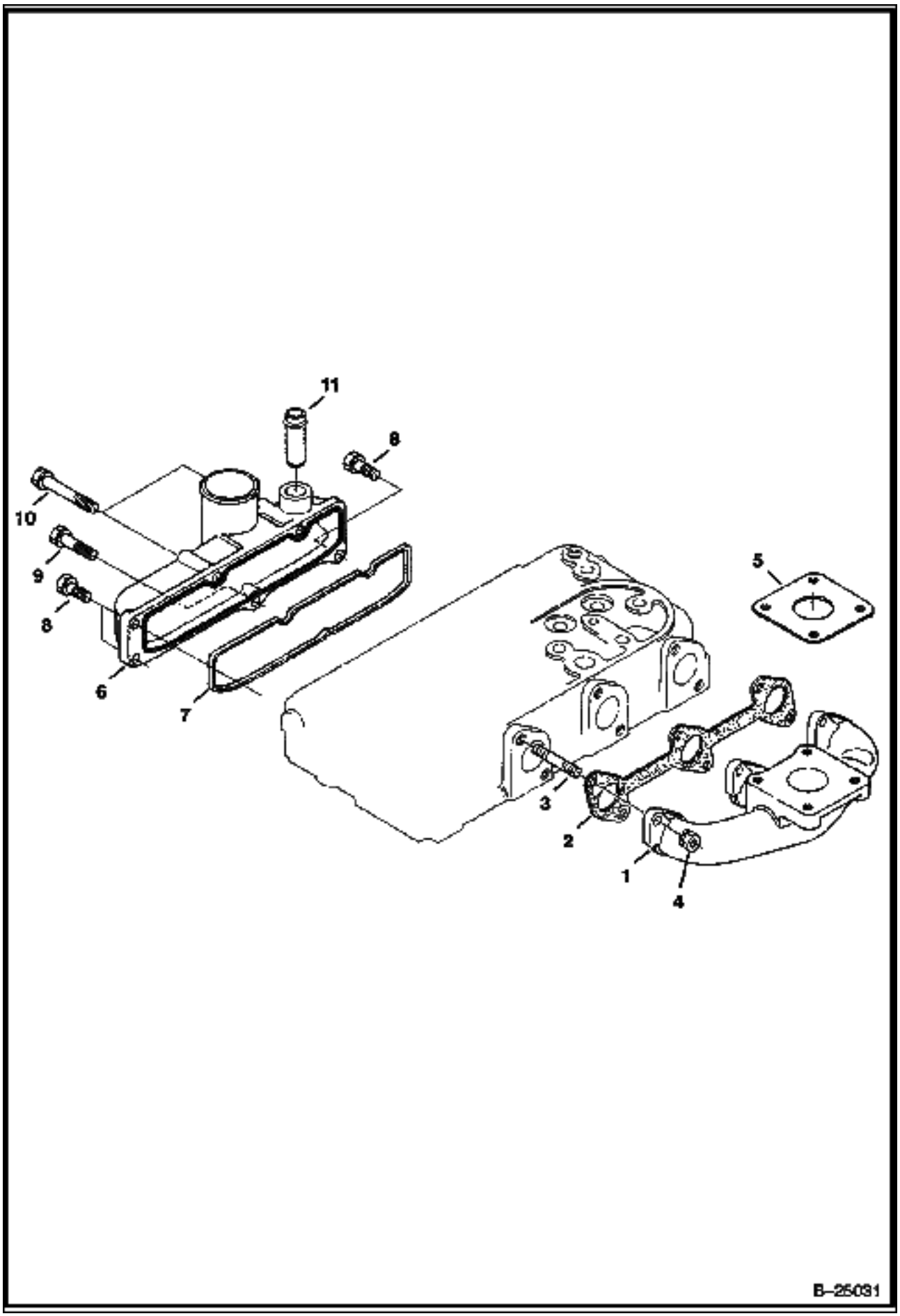

INTAKE & EXHAUST MANIFOLDS (Cont'd)
Kubota D1005 Tier II

Ref No	Part Number	Description	Remarks	Serial Number	Qty
1	6686502	MANIFOLD EXHAUST	Exhaust		1
2	6672441	GASKET			1
3	6657590	STUD			6
4	6657591	NUT			6
5	6680583	GASKET MUFFLER			1
6		MANIFOLD	Intake - W/Ref. 7		1
7	6672443	GASKET			1
8	6652580	BOLT			3
9	4CM00630B	BOLT			1
10	6670770	BOLT			2
11	6680689	ADAPTER			1

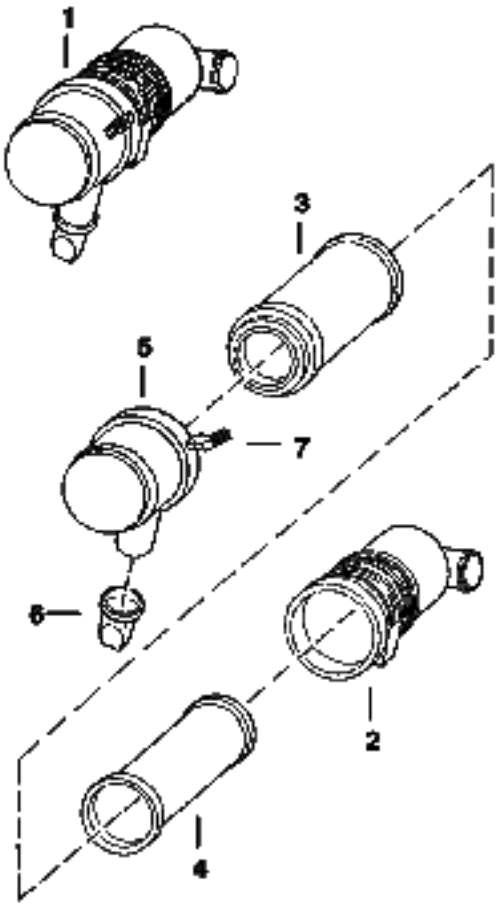

C-3480

Ref No	Part Number	Description	Remarks	Serial Number	Qty
1	6670851	AIR CLEANER	W/Ref. 2 - 7		1
2		TANK	NAP		1
3	6672467	CARTRIDGE	outer		1
4	6672468	CARTRIDGE	inner		1
5	6672469	COVER	W/Ref. 7		1
6	6655937	VALVE	evacuator		1
7	6670298	CLIP			3

ATTACHMENT CONTROL KIT

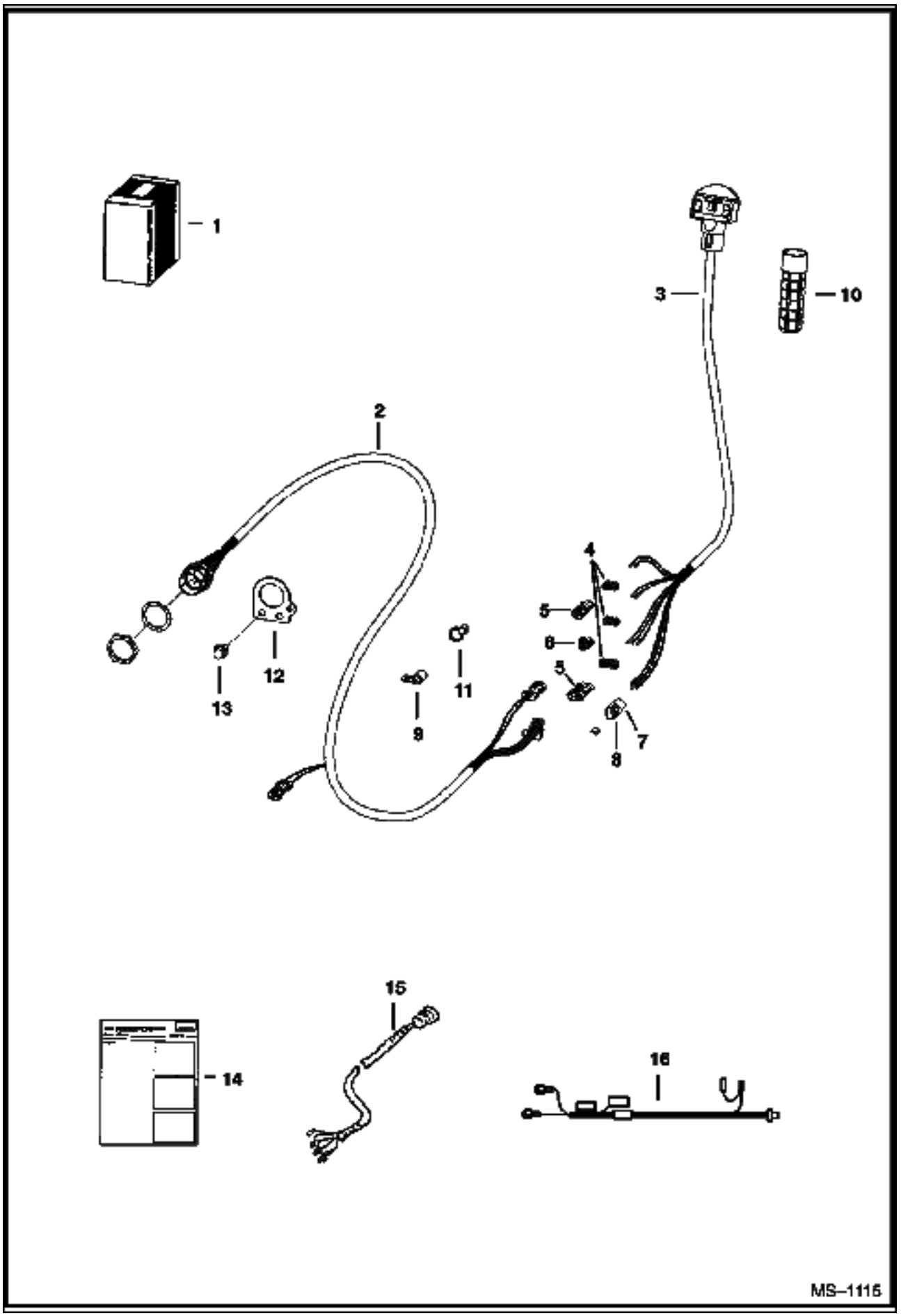

ATTACHMENT CONTROL KIT (Cont'd)

Ref No	Part Number	Description	Remarks	Serial Number	Qty
1		KIT	SALES - Attach Control - Ref. 2-16		1
2	6727870	HARNESS			1
3	30H000027B	CLIP			2
4	6624289	STA STRAP			10
5	6640699	CONNECTOR			1
6	6640700	LOCK			1
7	6641178	CONNECTOR			1
8	6641179	CONNECTOR			1
9	6641180	LOCK			2
10	6664599	CONNECTOR			1
11	6664800	LOCK			1
12	6702621	GRIP	Steering Lever		1
13	6680412	HANDLE ASSY	Deluxe - Was 6707976 [A]		1
14	6714999	MOUNT			1
15	84G003112B	BOLT			2
16	6901273	INSTRUCTIONS			1

ATTACHMENT CONTROL KIT
(463 with 1412 Snow Blower)

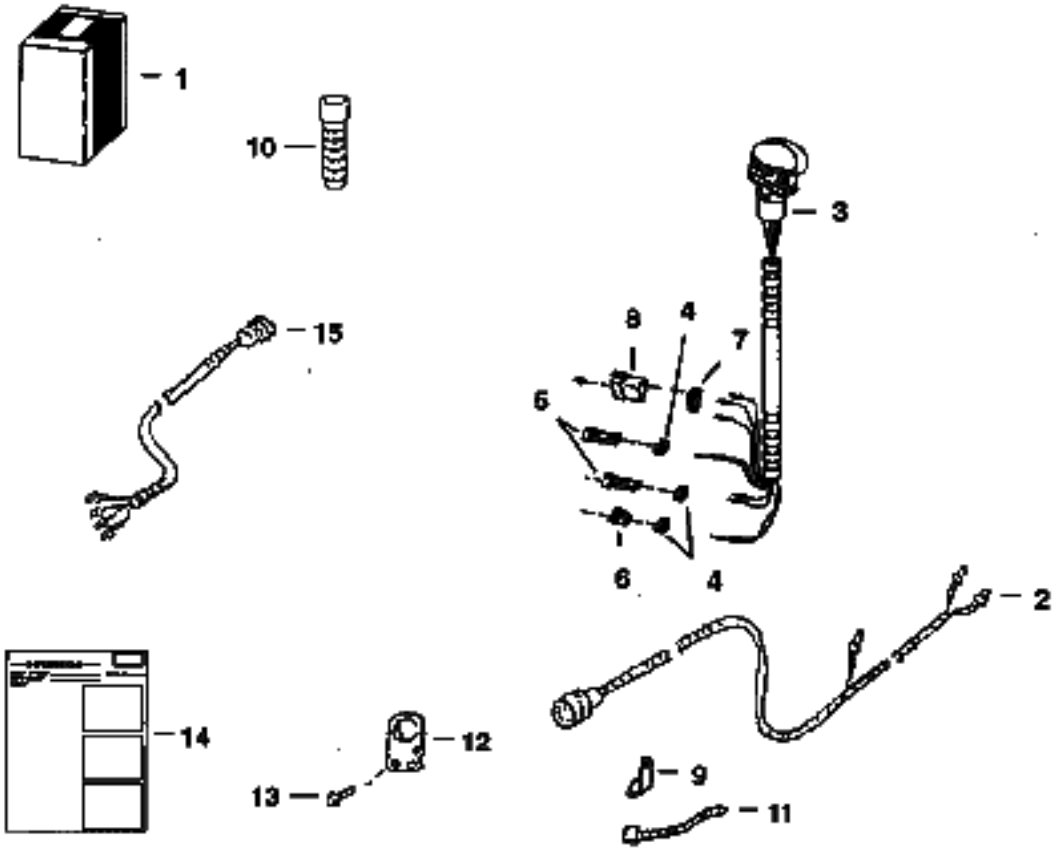

ATTACHMENT CONTROL KIT (Cont'd)
(463 with 1412 Snow Blower)

Ref No	Part Number	Description	Remarks	Serial Number	Qty
1	6729313	KIT	attach control - Ref. 2-14		1
2	6727870	HARNESS	mounts on loader arm - 14-pin		1
3	6680412	HANDLE ASSY	L.H. - Also Order Ref. 4, 5 & 6-8		1
4	6641180	LOCK	2-pin		2
4	6640700	LOCK	3-pin		1
5	6641179	CONNECTOR	2-pin		1
5	6640699	CONNECTOR	3-pin		1
6	6641178	CONNECTOR	2-pin		1
7	6664800	LOCK	3-pin triangle		1
8	6664599	CONNECTOR	3-pin triangle		1
9	30H000027B	CLIP			2
10	6702621	GRIP			1
11	6624289	STA STRAP			10
12	6714999	MOUNT			1
13	84G003112B	BOLT			2
14	6901273	INSTRUCTIONS			1
15	6728614	HARNESS	14-pin - Not in Kit - mounts on 1412 snow blower		1
16	6736214	HARNESS	accessory - Used when attach control kit is installed on loader with a heater kit - Not in Kit		1

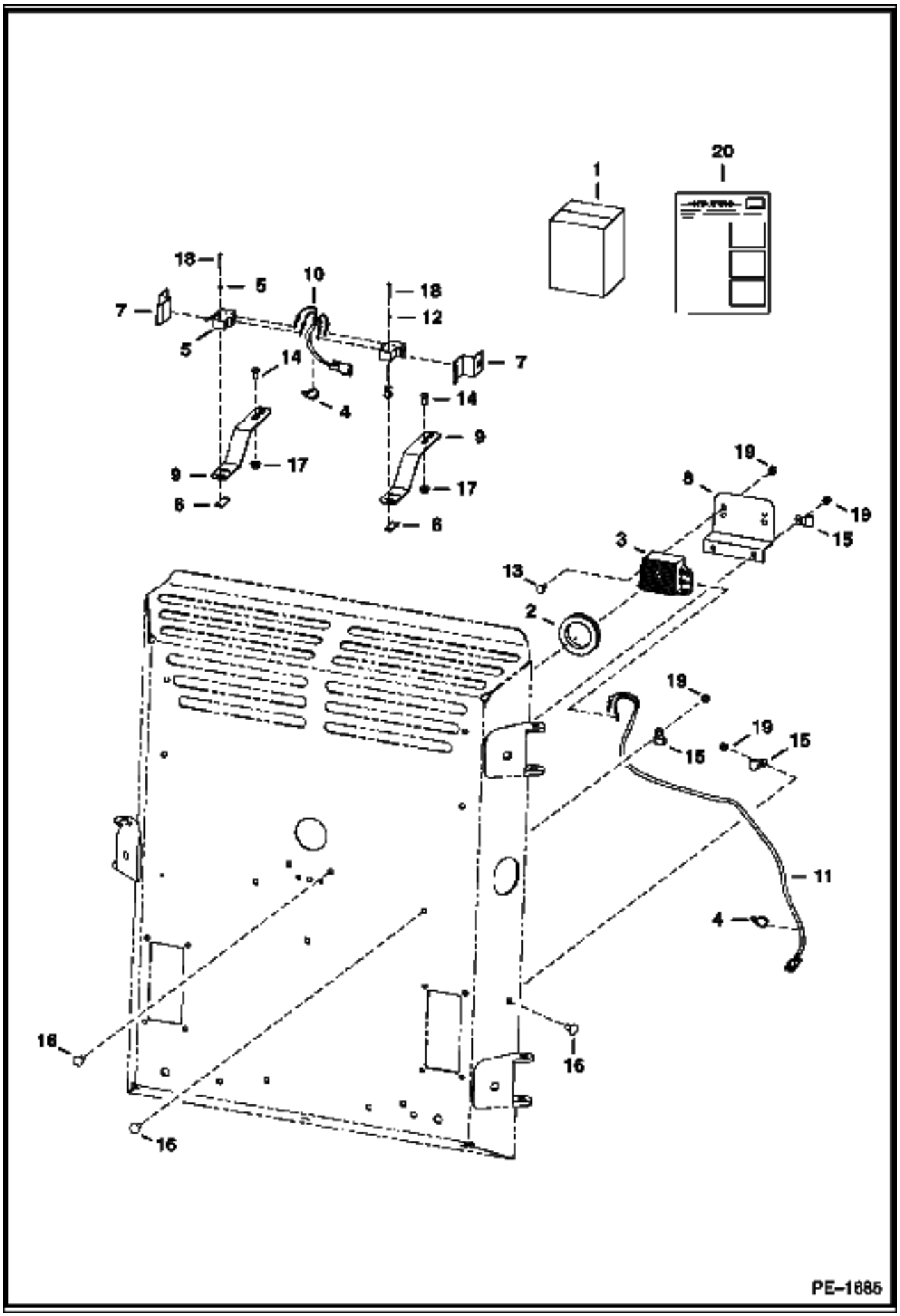
1
20
18
5
10
18
12
7
5
7
14
4
5
14
9
17
9
17
6
6
19
8
19
15
3
13
2
19
8
15
19
15
11
4
16
16
16
PE-1685

BACK-UP ALARM (Cont'd)

Ref No	Part Number	Description	Remarks	Serial Number	Qty
1	6733638	KIT	Ref. 3-20		1
2	6577545	GROMMET			1
3	6599931	ALARM			1
3	6668879	DECAL			1
4	6610510	TIE	nylon		4
5	6646781	SWITCH			2
6	6702593	SPACER	strip		2
7	6707720	GUIDE			2
8	6733970	MOUNT	alarm - Was 6707726 [A]		1
9	6733290	BRACKET	switch		2
10	6733734	HARNESS			1
11	6733735	HARNESS			1
12	17E000006B	WASHER			4
13	35C000410B	BOLT	Was 17C000512B [B]		2
14	25G000510B	SCREW			4
15	30H000022B	CLIP			4
16	37C000512B	BOLT			5
17	55D000005B	NUT			4
18	84G001320B	BOLT	Was 85G000616B [B]		4
19	85D000005B	NUT	Was 91D000005B [B]		6
20	97D000004B	NUT			2
21	6902065	INSTRUCTIONS			1
22	6737189	DECAL			1

BEACON LIGHT

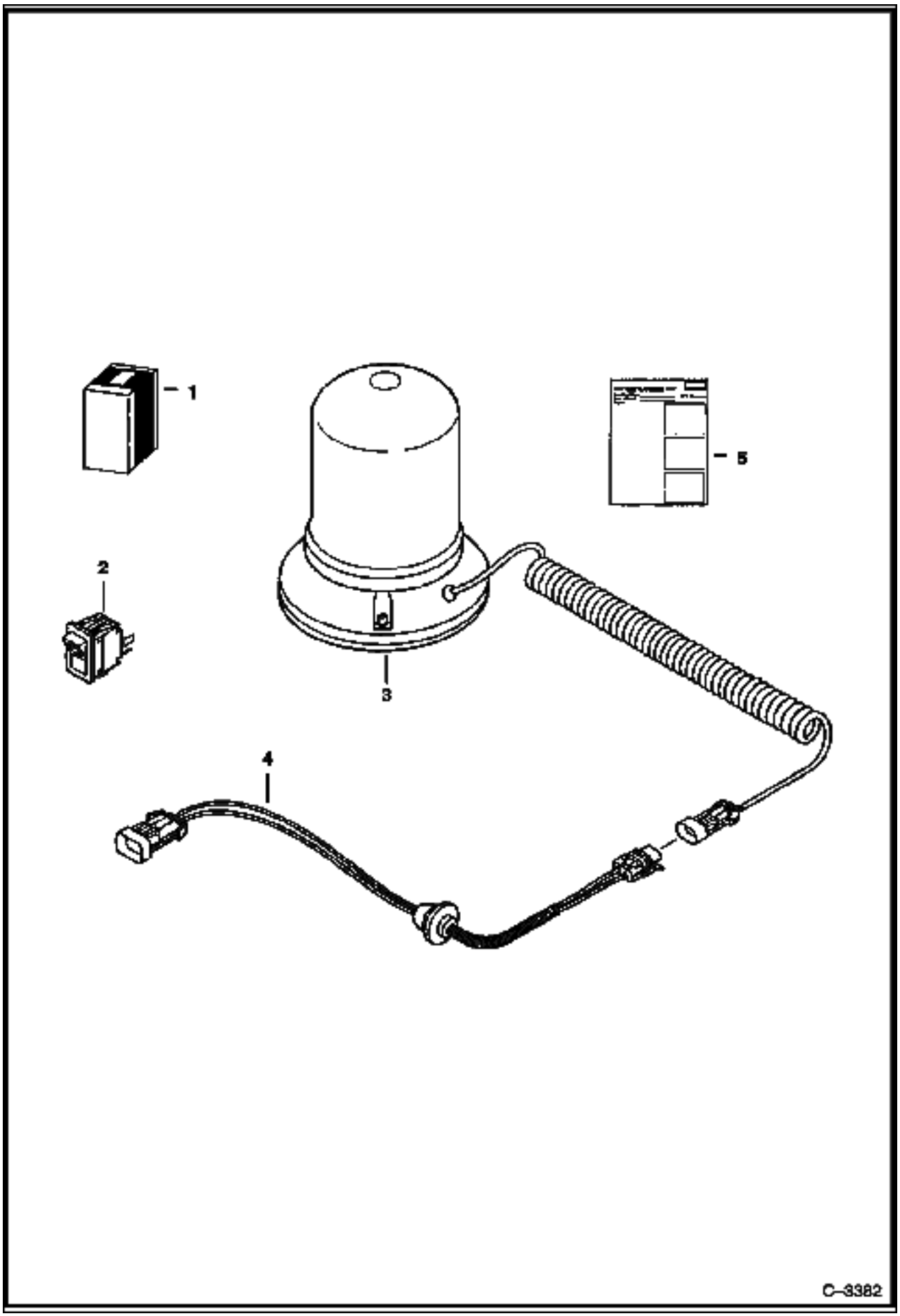

Ref No	Part Number	Description	Remarks	Serial Number	Qty
1	6708342	KIT	Ref. 2 - 5		1
2	6665317	SWITCH			1
3	6665730	LIGHT			1
3	6666571	BULB			1
3	6666572	LENS			1
4	6708318	HARNESS			1
5	6724071	INSTRUCTIONS			1

BLOCK HEATER
(Engine)

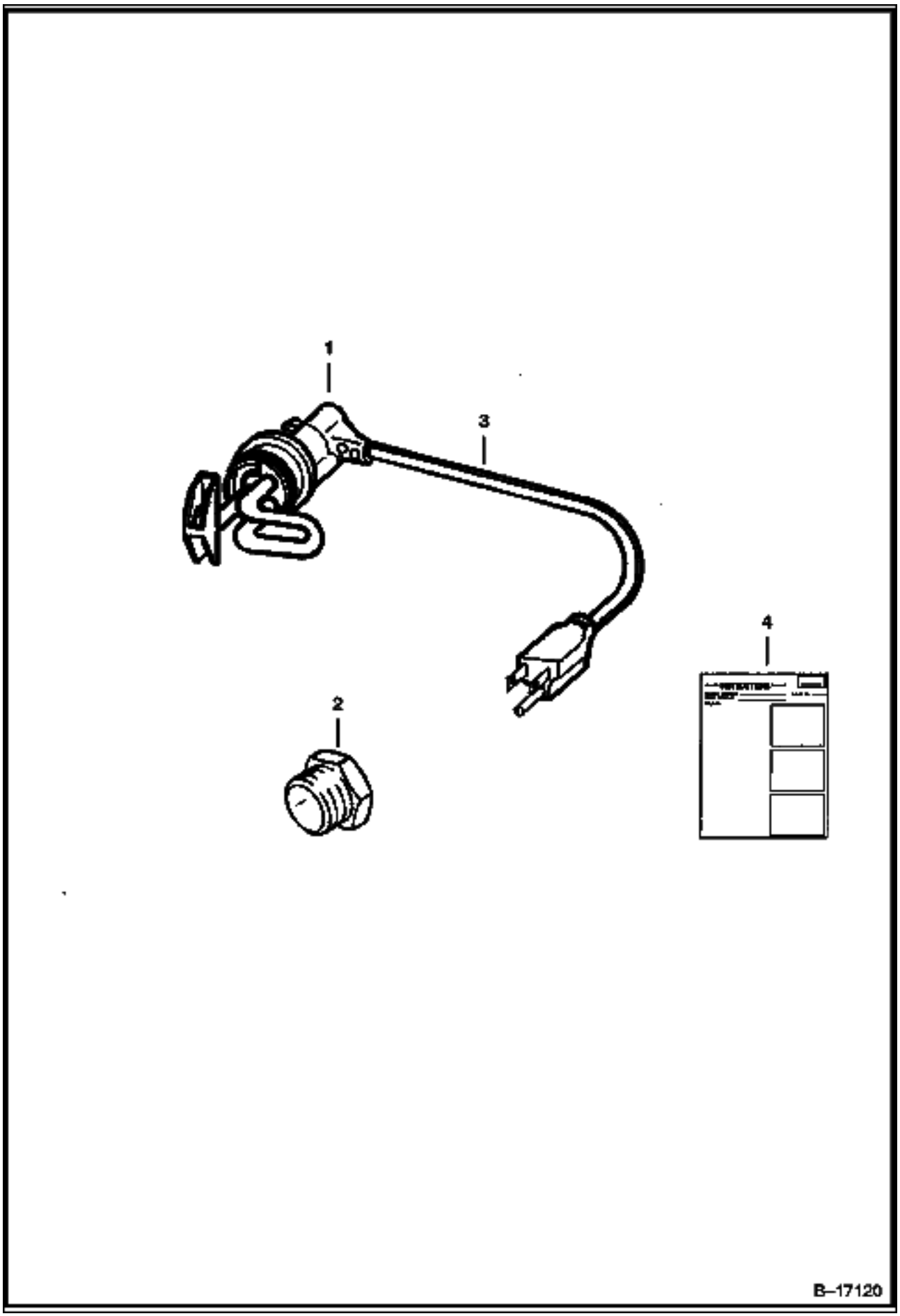

BLOCK HEATER (Cont'd)
(Engine)

Ref No	Part Number	Description	Remarks	Serial Number	Qty
1	6720808	KIT	block heater - W/Ref. 2-4 -		1
2	19F000012B	BLOCK HEATER	Order Ref. 1		1
3	6668881	CORD			1
4	6720038	INSTRUCTIONS			1

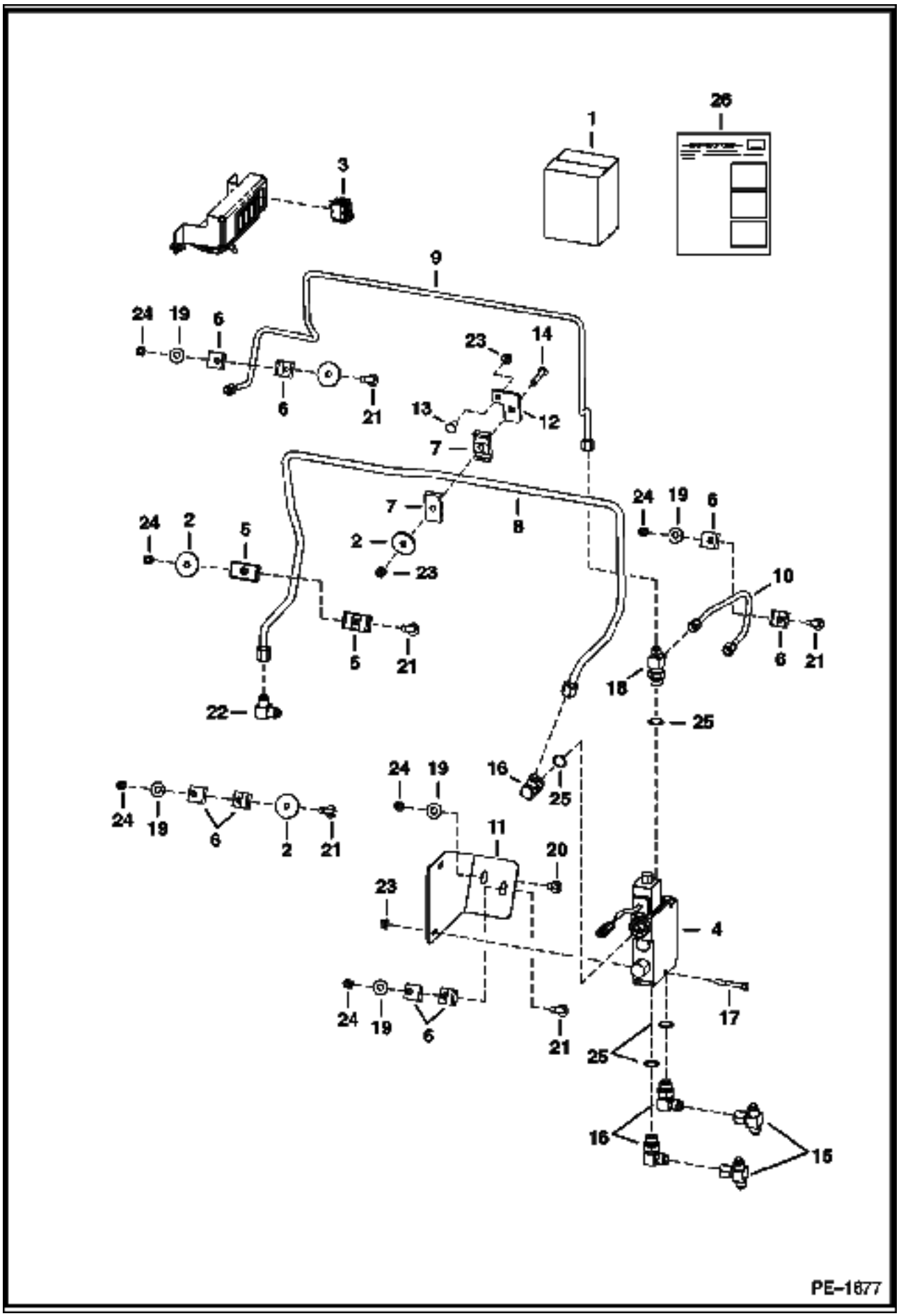
PE-1677

BUCKET POSITON KIT (Cont'd)

Ref No	Part Number	Description	Remarks	Serial Number	Qty
1	6733814	KIT	Ref. 2 - 26		1
2	872229	WASHER			3
3	6665319	SWITCH	bucket level		1
4	6680984	VALVE	bucket position		1
5	6701892	CLAMP			2
6	6727707	CLAMP			8
7	6727708	CLAMP			2
8	6732764	TUBELINE			1
9	6732773	TUBELINE			1
10	6732776	TUBELINE			1
11	6732840	BRACKET			1
12	6733688	PLATE			1
13	10C000512B	BOLT			1
14	37C000532B	BOLT	Was 10C000528B [B]		1
15	14K000006B	TEE			2
16	17KB00810B	ELBOW	W/Ref. 25		3
17	17C000536B	BOLT			2
18	21KB00610B	TEE	W/Ref. 25		1
19	27E000006B	WASHER			5
20	37C000620B	BOLT			1
21	37C000632B	BOLT			5
22	77FN00006B	ELBOW			1
23	83D000005B	NUT			4
24	95D000006B	NUT			6
25	79K000010B	O-RING			x
26	6902048	INSTRUCTIONS			1

CAB DOOR
(Standard)

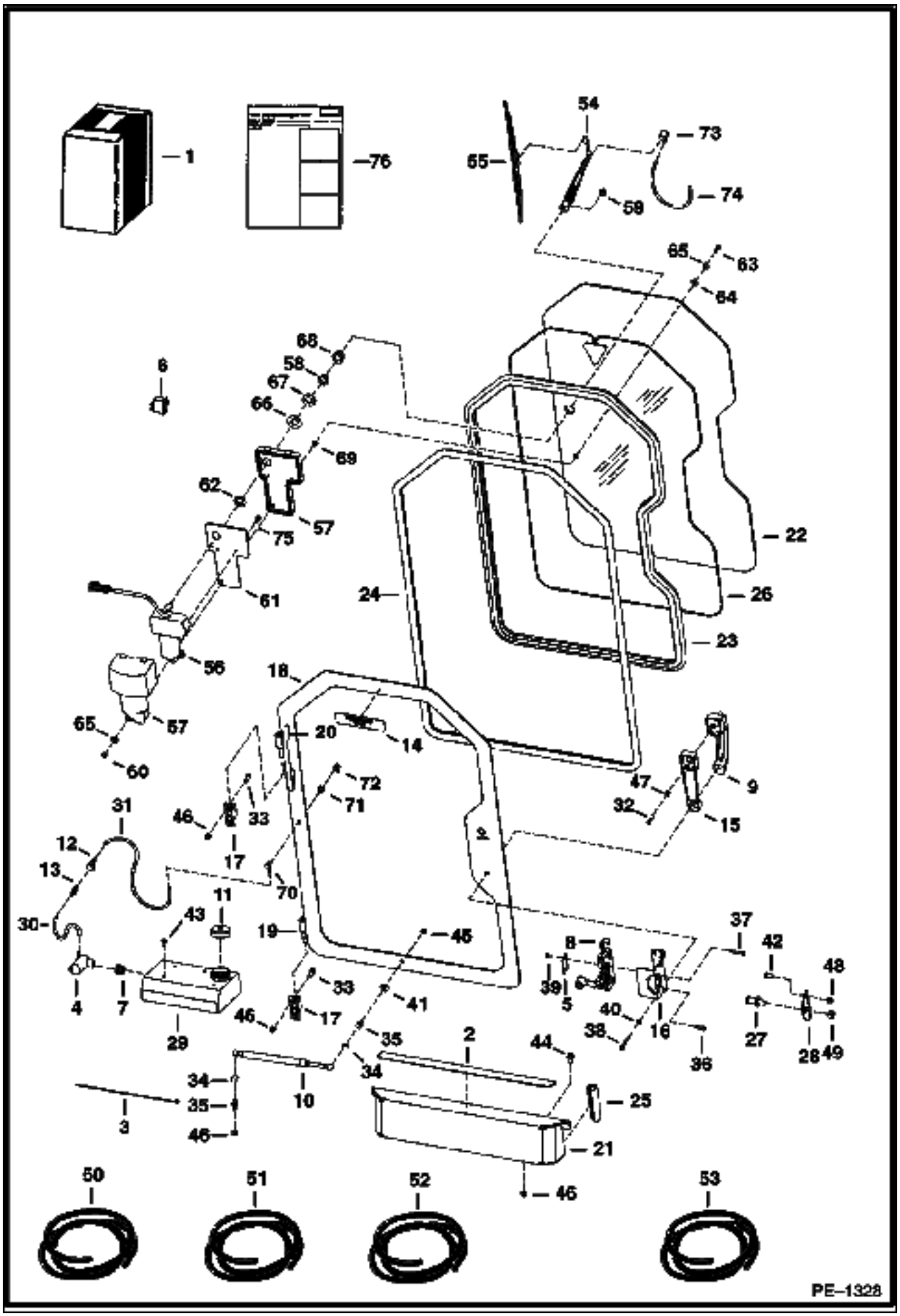

CAB DOOR (Cont'd)
(Standard)

Ref No	Part Number	Description	Remarks	Serial Number	Qty
1	6729392	KIT	Ref. 2-76 - Also Order Side Instrument Panel Kit # 6730835 - Was SALES [A]		1
2	6542731	SAFETY TREAD			1
3	6610510	TIE			1
4	6664554	PUMP	washer		1
5	6718520	COVER	latch		1
6	6665707	SWITCH	wiper		1
7	6666766	GROMMET	washer		1
8	6674666	LATCH			1
9	6674667	HANDLE	door		1
10	6678091	GAS SPRING			1
11	6674993	CAP	vented		1
12	6675298	COUPLER	body		1
13	6675299	COUPLER	insert		1
14	6707852	DECAL	emergency		1
15	6717146	SPACER	handle		1
16	6717369	BRACKET	latch		1
17	6717593	HINGE	base		1
18	6729260	DOOR			1
19	6718376	HINGE	door		2
20	6718521	HANDLE	grab		1
21	6729283	SHIELD	enclosure		1
22	6729284	WINDOW	front - .25" thick glass		1
23		SEAL	NAP - window - 105.5"(2679,7mm) long - Order Ref. 50		1
24		SEAL	NAP - door - 119"(3022,6mm) long - Order Ref. 51		1
25		SEAL	NAP - shield - 4.5"(114,3mm) long - Order Ref. 51		2
26		CORD	NAP - window - 106.5"(2705mm) long Order Ref. 52		1
27	6685233	BOLT	striker - Was 6729413 [A]		1
28	6729486	MOUNT	striker		1
29	6729648	TANK	washer		1
30		HOSE	NAP - washer - 91"(2311mm) long - Order Ref. 53		1
31		HOSE	NAP - washer - 5"(127mm) long - Order Ref. 53		1
32	17C000420B	BOLT			1
33	17C000512B	BOLT			4
34	6649245	RETAINER	spring		2
35	6678548	SOCKET	ball		2
36	1CM00620B	BOLT			2
37	4CM00635B	BOLT	Was 1CM00635B [D]		2
38	1CM00640B	BOLT			3
39	4DM00006B	NUT			2
40	6EM00060B	WASHER			3
41	25E000016B	WASHER			1
42	25G000412B	BOLT	Was 25G000410B [B]		4
43	25G000508B	SCREW			4
44	35C000512B	BOLT	Was 31C000512B [B]		2
45	46D000005B	NUT			1
46	59D000005B	NUT			9
47	61D000004B	NUT			1
48	83D000004B	NUT			4
49	85D000007B	NUT	Was 91D000007B [B]		1
50	6665568	SEAL	bulk - Sold Per Foot		x
51	6675558	SEAL	bulk - Sold Per Foot		x
52	6554149	CORD	bulk - Sold Per Foot		x
53	6708310	HOSE	bulk - Sold Per Foot		x
54	6678260	ARM ASSY			1

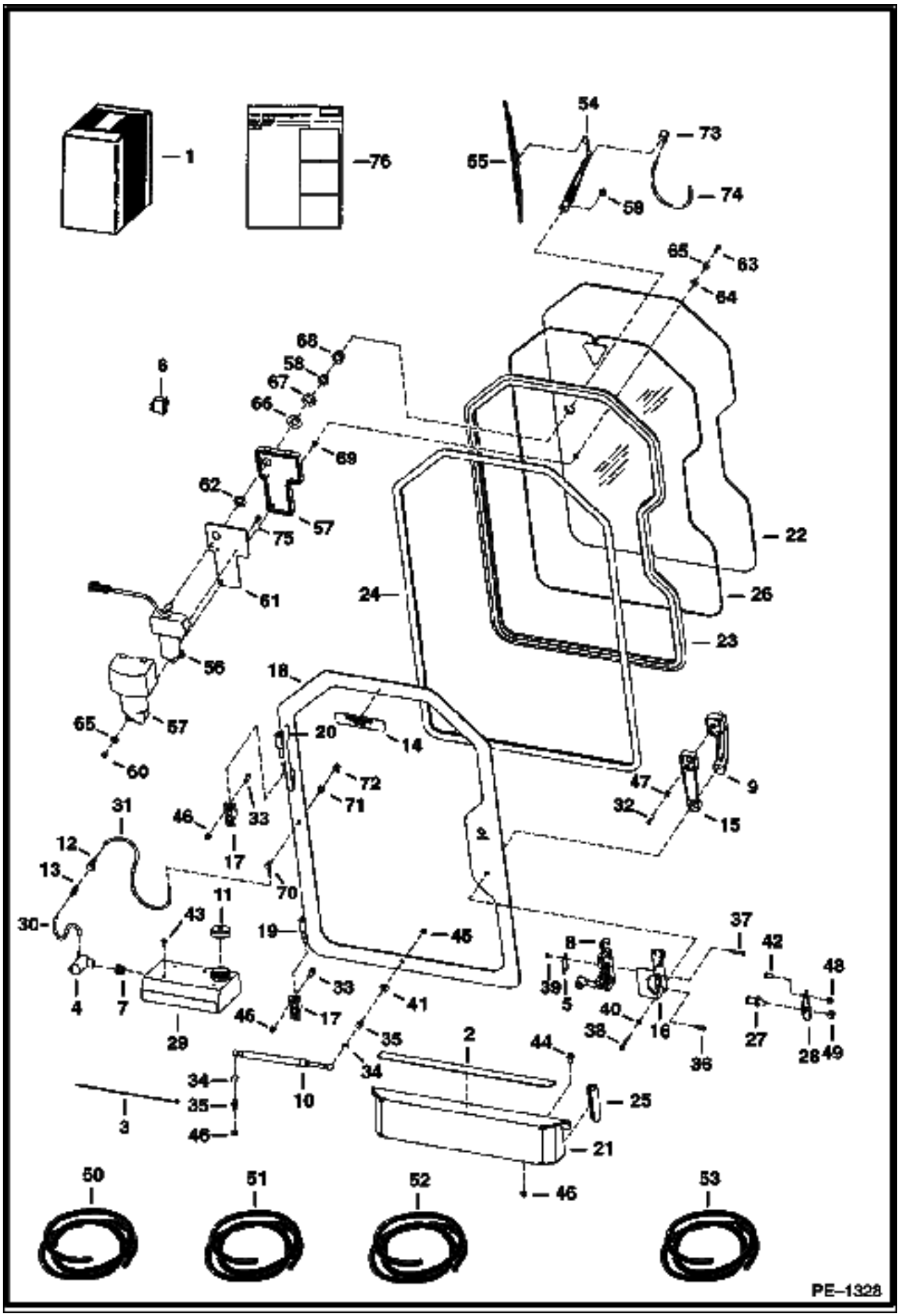
1
76
54
73
55
74
58
65
63
64
68
58
67
66
6
69
62
57
75
22
61
24
26
23
56
18
57
65
20
14
60
72
71
47
9
32
15
31
46
33
12
17
13
70
11
30
43
19
45
8
6
37
42
48
39
5
40
16
38
36
27
28
49
4
7
29
46
33
17
41
35
2
44
34
34
10
25
35
3
46
21
46
50
51
52
53
PE-1328

CAB DOOR (Cont'd)
(Standard)

Ref No	Part Number	Description	Remarks	Serial Number	Qty
55	6678259	BLADE			1
56	6678323	MOTOR			1
57	6677836	COVER			1
58	6677842	NUT			1
59	43DM00008B	NUT	Was 6677843 [B]		1
60	6677844	NUT			1
61	6677846	GASKET	motor		1
62	6677847	GROMMET	rubber		1
63	6678198	BOLT			1
64	6801059	WASHER	neoprene		1
65	6678739	WASHER	steel		2
66	6678324	WASHER			1
67	6678325	WASHER			1
68	6678326	RAIN SHIELD			1
69	6664085	BUSHING			1
70	6676917	ELBOW	inside		1
71	6676499	GROMMET			1
72	6676500	ELBOW	outside		1
73		NOZZLE	wiper		1
74		HOSE	NAP - 12" (304,8mm) long - Order Ref. 53		1
75	1CM00614B	BOLT			2
76	6901254	INSTRUCTIONS			1

CAB ENCLOSURE
(Canvas)

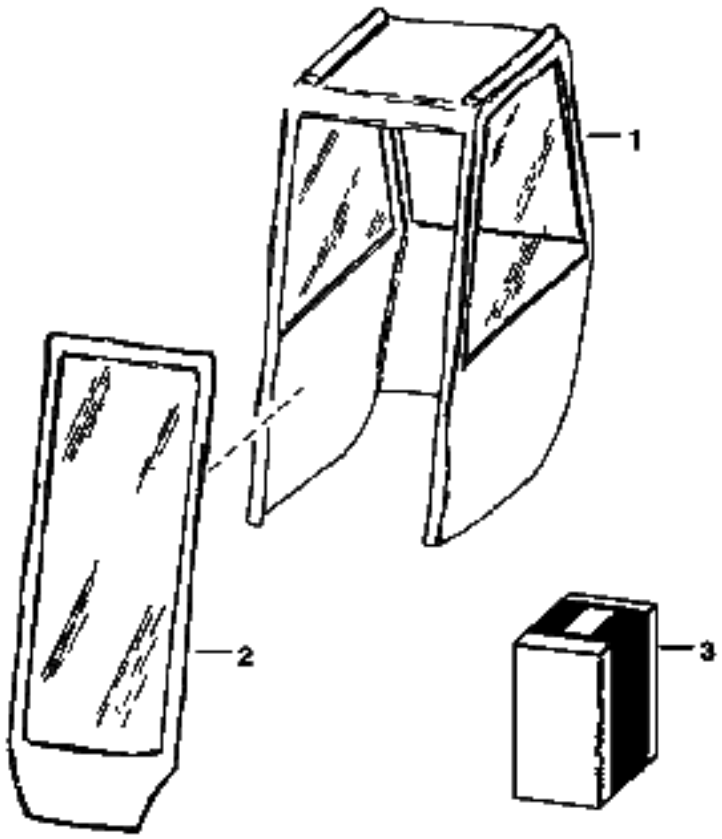

NOTE: Cab enclosure is held on by shock cords not Velcro.

B–17520

CAB ENCLOSURE (Cont'd)
(Canvas)

Ref No	Part Number	Description	Remarks	Serial Number	Qty
1	6653437	ENCLOSURE	W/Ref. 2		1
2	6666913	DOOR	vinyl		1
3	6662839	HINGE KIT			1

NOTE: Order Standard Door Kit from Gwinner Sales # 6729392.
Order Standard Window Kit from Gwinner Sales # 6706993
Order Top Window Kit From Gwinner Sales # 6729714
Also Order Side Instrument Panel Kit # 6730835



B–17509

Ref No	Part Number	Description	Remarks	Serial Number	Qty
1		KIT	See Illustration CAB DOOR/ PE1328 See Illustration CAB WINDOWS/ B17522 SALES - cab enclosure- SEE NOTE - includes items from illustrations - Order from SALES #6732187		1

CAB ENCLOSURE
(Special Applications)

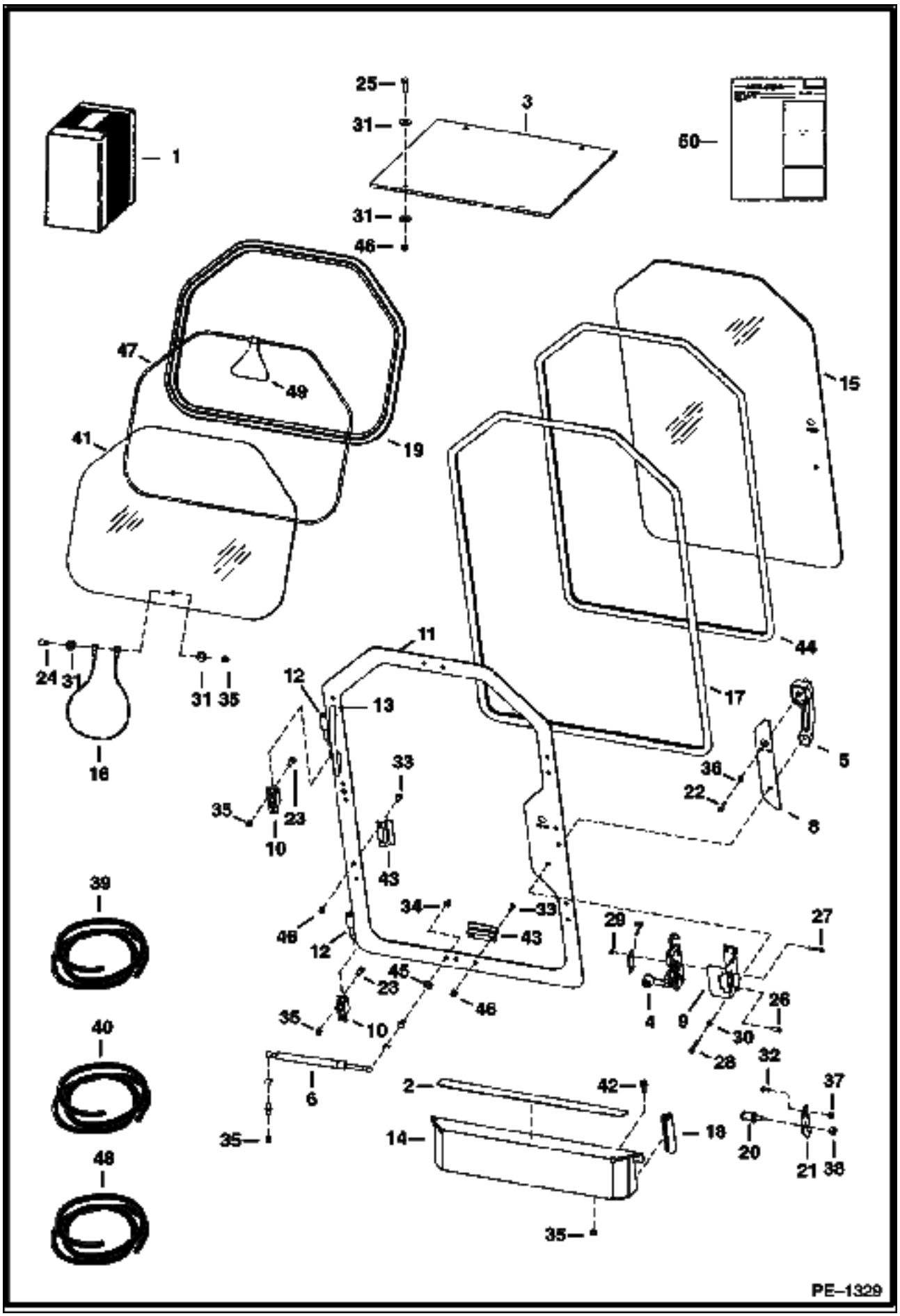

CAB ENCLOSURE (Cont'd)
(Special Applications)

Ref No	Part Number	Description	Remarks	Serial Number	Qty
1	6729391	KIT	Ref. 2-50		1
2	6542731	SAFETY TREAD			1
3	6593243	WINDOW	top		1
4	6674666	LATCH			1
5	6674667	HANDLE	door		1
6	6678091	GAS SPRING			1
6	6678548	SOCKET	ball		2
6	6649245	RETAINER	spring		2
7	6718520	COVER	latch		1
8	6731529	SPACER	window		1
9	6717369	BRACKET	latch		1
10	6717593	HINGE	base		1
11	6729260	DOOR			1
12	6718376	HINGE	door		2
13	6718521	HANDLE	grab		1
14	6729283	SHIELD	enclosure		1
15	6729235	WINDOW	front - .25" lexan		1
16	6555331	WIRE ROPE			1
17		SEAL	NAP - door - 119"(3022,6mm) long - Order Ref. 39		1
18		SEAL	NAP - shield - 4.5"(114,3mm) long - Order Ref. 39		2
19		MOULDING	NAP - rear - 70"(1778mm) long - Order Ref. 40		1
20	6685233	BOLT STRIKER	striker - Was 6729413 [A]		1
21	6729486	MOUNT	striker		1
22	17C000420B	BOLT			1
23	17C000512B	BOLT			4
24	17C000516B	BOLT			1
25	17C000616B	BOLT			4
26	1CM00620B	BOLT			2
27	1CM00635B	SCREW			2
28	1CM00640B	BOLT			3
29	4DM00006B	NUT			2
30	6EM00060B	WASHER			3
31	25E000018B	WASHER			10
32	25G000410B	BOLT			4
33	35C000620B	BOLT			16
34	46D000005B	NUT			1
35	59D000005B	NUT			10
36	61D000004B	NUT			1
37	83D000004B	NUT			4
38	85D000007B	NUT	Was 91D000007B [B]		1
39	6675558	SEAL	bulk - Sold Per Foot		x
40	6658352	MOULDING	bulk - Sold Per Foot		x
41	6593244	WINDOW	rear		1
42	31C000512B	BOLT			4
43	6725937	CLAMP	window		8
44		SEAL	NAP - 105.6"(1260mm) long - Order Ref. 39		1
45	25E000016B	WASHER			1
46	85D000006B	NUT			16
47		CORD	NAP - 70"(1778mm) long - Order Ref. 48		1
48	6554149	CORD	bulk - Sold Per Foot		x
49	6731478	EXIT TAG			1
50	6901254	INSTRUCTIONS			1

CAB WINDOWS
(Top, Rear & Side)

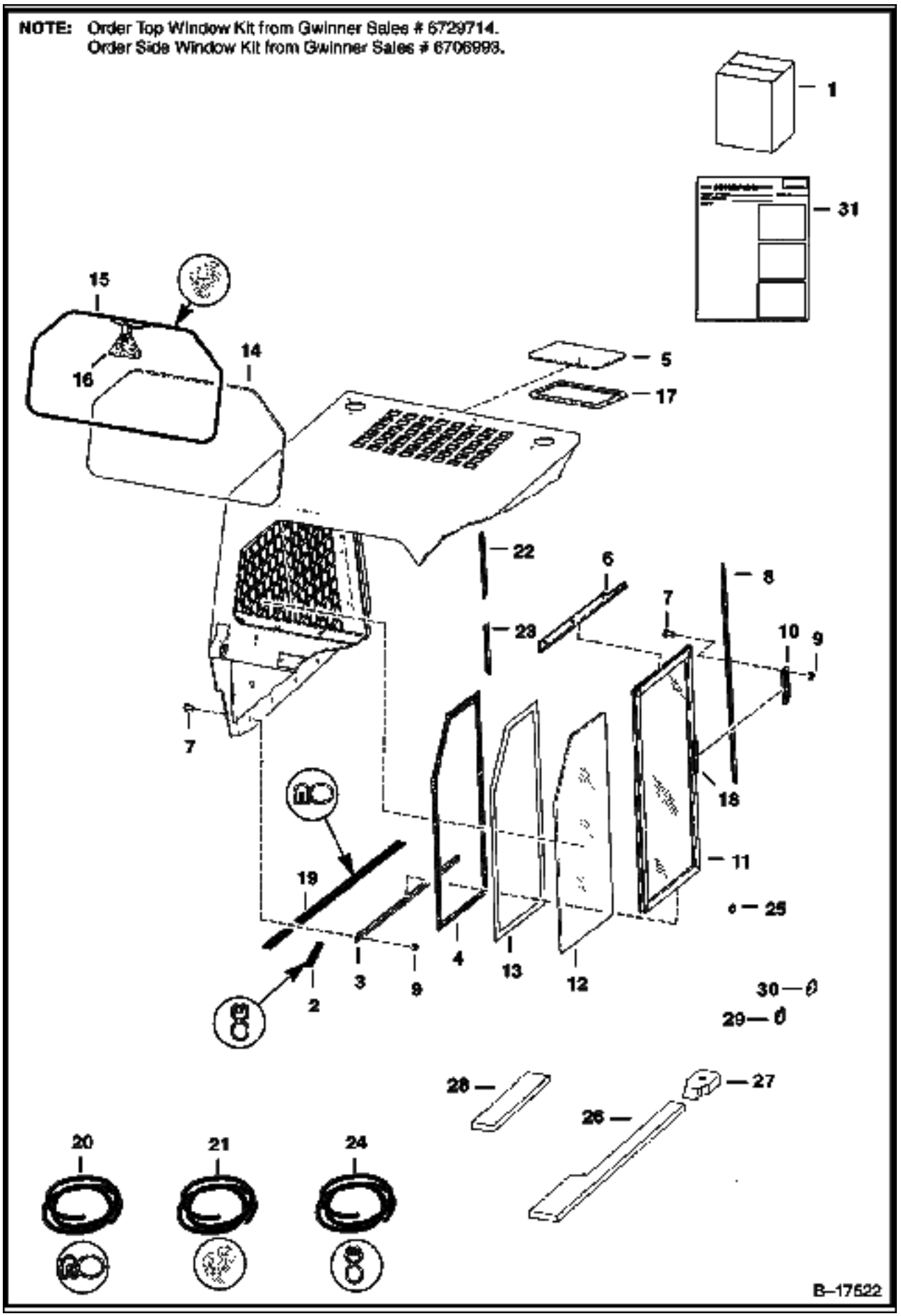

CAB WINDOWS (Cont'd)
(Top, Rear & Side)

Ref No	Part Number	Description	Remarks	Serial Number	Qty
1		KIT	SALES - Top Window - SEE NOTE		1
1		KIT	SALES - Side Window - SEE NOTE		1
2		SEAL	NAP - 8"(203,2mm) long - Order Ref. 24		x
3	6661689	TRACK	L.H.		1
3	6661690	TRACK	R.H.		1
4	6631549	HOOK	scotchmate		2
5	6705735	WINDOW			1
6	6703160	TRACK	L.H.		1
6	6703159	TRACK	R.H.		1
7	35C000410B	BOLT			24
8	6630919	TRACK	R.H.		1
9	83D000004B	NUT			24
10	6630924	BRACKET			2
11	6658143	WINDOW	L.H.		1
11	6658142	WINDOW	R.H.		1
12	6702731	WINDOW			2
13	6631548	LOOP	scotchmate		2
14		WINDOW	NAP - rear - .25" thick safety glass - Was 6707819 [A]	& Below	1
14	6733532	WINDOW REAR		& Above	1
15		EXTRUSION	NAP - 81.5"(2070 mm) long - Order Ref. 21	& Below	1
15		CORD	NAP - 81.5"(2070 mm) long - Order Ref. 21	& Below	1
15		SEAL	NAP - 65.25" (1657 mm) long - Order Ref. 21	& Above	1
15		CORD	NAP - 65.25" (1657 mm) long - Order Ref. 21	& Above	1
16	6731478	EXIT TAG	Was 6559515 [A]		1
17	6665012	SEAL			1
18	6659949	LATCH			2
19		SEAL	NAP - 24.5"(622mm) long - Order Ref. 20		2
20	6555351	SEAL	bulk - Sold Per Foot		x
21	6665568	SEAL	bulk - Sold Per Foot	& Below	1
21	6554149	CORD	bulk - Sold Per Foot	& Below	1
21	6675387	EXTRUSION	bulk - Sold Per Foot	& Above	x
21	6554149	CORD	bulk - Sold Per Foot	& Above	x
22	6706744	TRACK	L.H. - top half		1
23	6706745	TRACK	L.H. - bottom half		1
24	6513152	SEAL	bulk - Sold Per Foot		x
25	6632265	PLUG	button		2
26	6729009	SEAL	right side fender		1
26	6729010	SEAL	left side fender		1
27	6729011	SEAL	cab mount		2
28	6734241	CAB SEAL	cab		2
29	6677198	TAB	vinyl		2
30	6719063	STOP	window		2
31	6566957	INSTRUCTIONS	INSTRUCTIONS Side Windows		1
31	6724220	INSTRUCTIONS	INSTRUCTIONS Rear Window		1
31	6902343	INSTRUCTIONS	INSTRUCTIONS Top Window - Was 6720598 [D]		1

DRAWING NOT AVAILABLE AT TIME OF PRINTING

MS-1934

COOLING FAN HARNESS KIT (Cont'd)

Ref No	Part Number	Description	Remarks	Serial Number	Qty
1	7104672	KIT COOLING FAN HARN	Ref. 2 - 4		1
2	6624289	STA STRAP			3
3	7104468	HARNESS 463 JUMPER	jumper		1
3	6670312	SOLENOID			1
4	6903100	INSTRUCTION			1

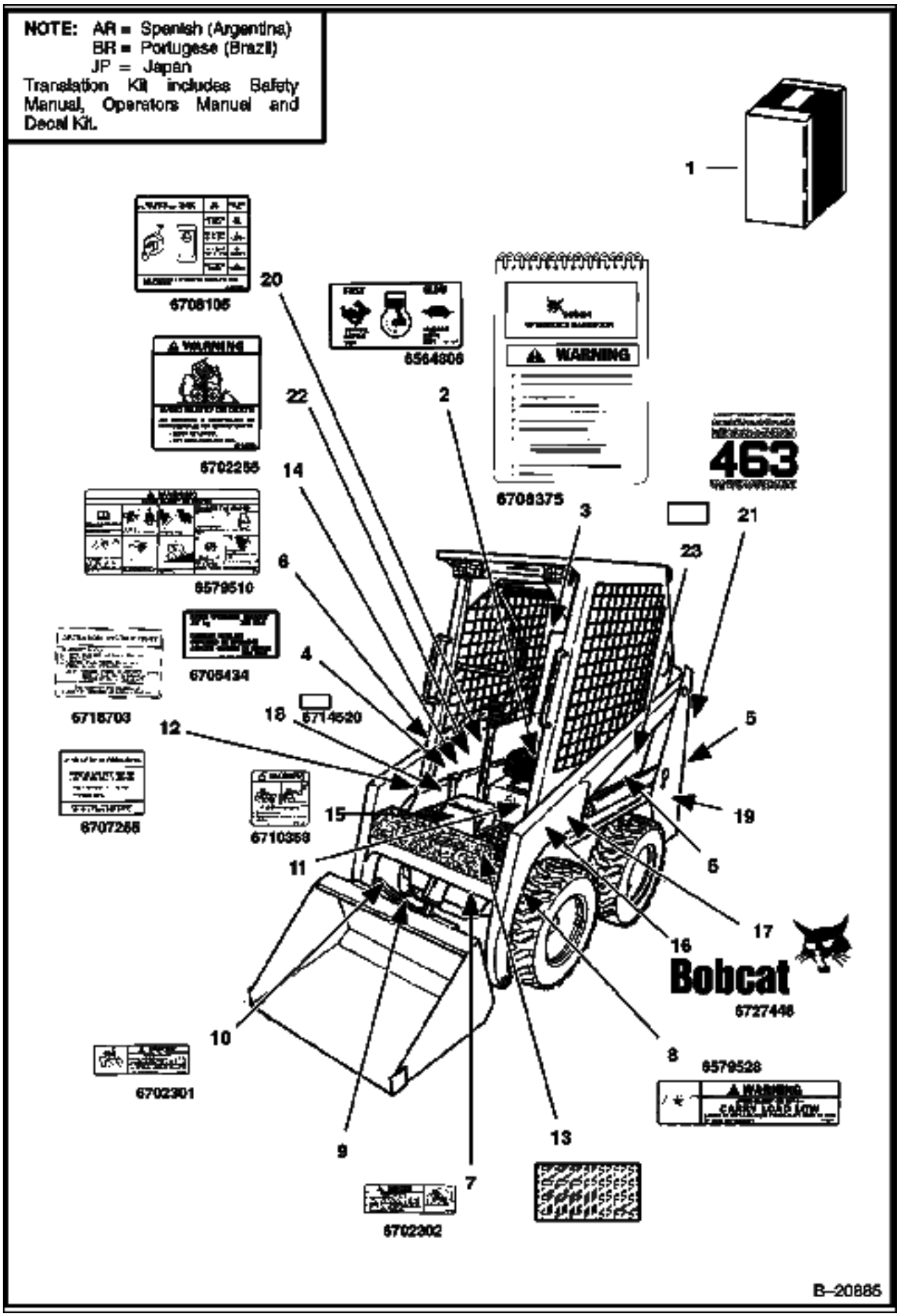
NOTE: AR = Spanish (Argentina)
BR = Portugese (Brazil)
JP = Japan
Translation Kit includes Safety Manual, Operators Manual and Decal Kit.
1
6708106
20
6564808
WARNING
6702255
22
2
WARNING
6708375
463
14
3
21
23
6579510
6
4
6705434
6716703
18
6714520
12
5
6707255
6710358
15
19
11
6
17
16
Bobcat
6727446
10
8
6579528
6702301
9
13
7
6702302
B–20885

Ref No	Part Number	Description	Remarks	Serial Number	Qty
1	6902214	DECAL KIT			1
1	6728665AR	KIT	decal - SEE NOTE		1
1	6728665BR	KIT	decal - SEE NOTE		1
1	6728665JP	KIT	decal - SEE NOTE		1
1	6734544AR	KIT	translation- SEE NOTE		1
1	6734544BR	KIT	translation- SEE NOTE		1
2	6735140	DECAL	throttle - Was 6564806 [A]		1
3	6708375	KIT	handbook - W/Wire Rope		1
3	6558309	WIRE ROPE	33" (838,2 mm) bulk - Sold Per Foot - Also Order 2 - 6558310 Sleeve		x
3	6558310	SLEEVE	wire rope		2
4	6705434	DECAL	capacity		1
5	6731571	DECAL	operating		1
6	6579510	DECAL	warning		1
7	6702302	DECAL			1
8	6579528	DECAL	carry load low		1
9	6561383	DECAL	bobtach		1
10	6702301	DECAL	danger		1
11	6711840	DECAL			1
12	6727926	DECAL	Was 6718703 [A]		1
13	6677814	SAFETY TREAD	6" x 28" (152 mm x 711 mm)		1
13	6540714	SAFETY TREAD	5" x 11" (127 mm x 279 mm)		2
13	6554100	TREAD	6" x 6" (152 mm x 152 mm)		2
14	6702255	DECAL	operating		1
15	6710358	DECAL	warning		1
16	6731336	DECAL	Bobcat		2
17	6732149	DECAL	Bobcat Head - L.H.		1
17	6731337	DECAL	Bobcat Head - R.H.		1
18	6714858	DECAL	"F" Series		1
19	6735864	DECAL	IR Logo - Was 6732495 [B]		2
20	6708105	DECAL	Preheat		1
21	6733367	DECAL 463	Model - Used On Both Sides - Was 6728139 [B]		2
22	6715912	DECAL	40th Anniv.		1
23	6717343	DECAL	danger		2
24	6713507	DECAL	stay clear - european - Not in kit		2

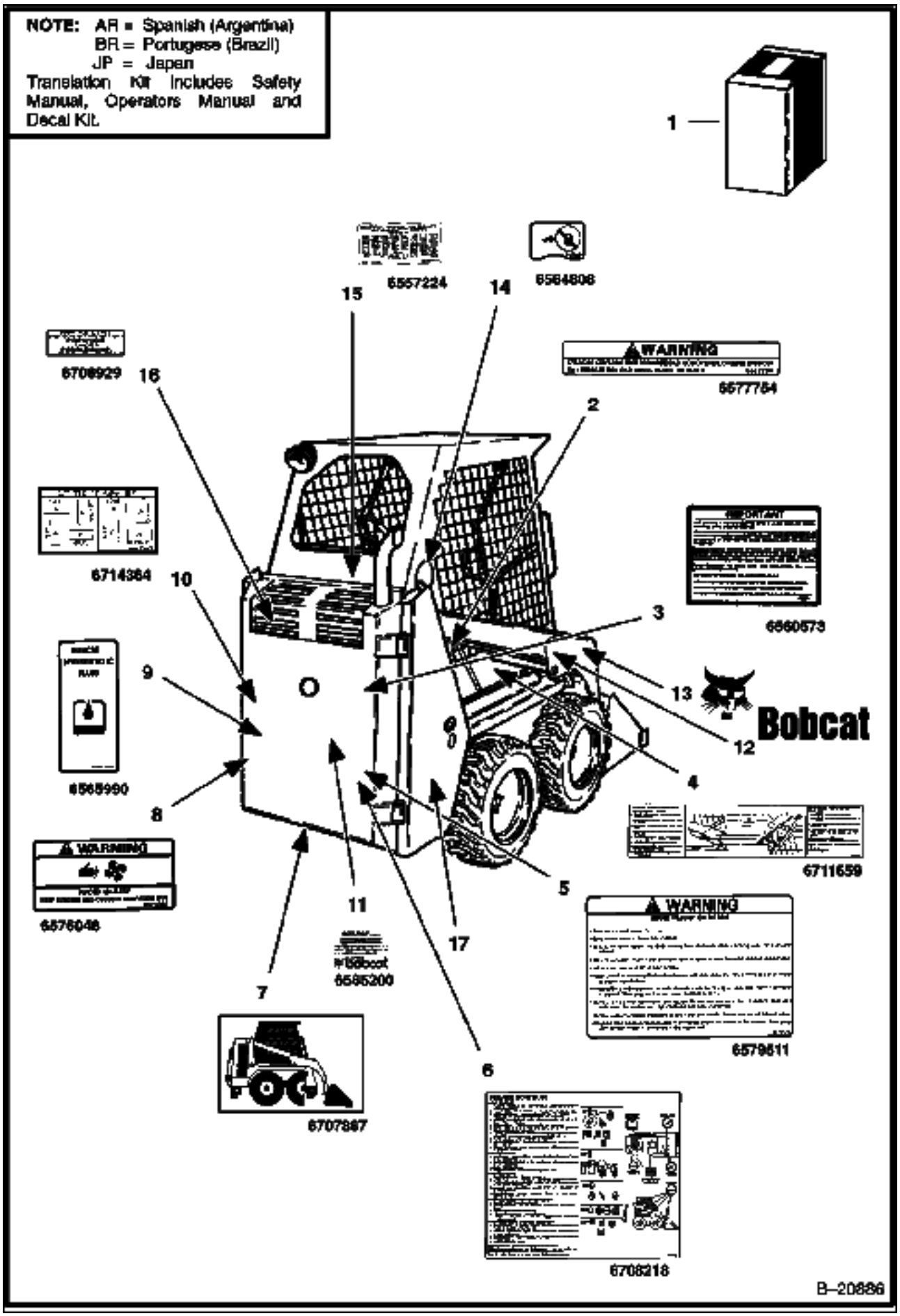
NOTE: AR = Spanish (Argentina)
BR = Portugese (Brazil)
JP = Japan
Translation Kit Includes Safety Manual, Operators Manual and Decal Kit.
1
6557224
6564806
15
14
6706929
16
WARNING
6577764
2
6714364
10
6560573
3
9
13
Bobcat
12
6565990
4
8
6711659
WARNING
6576048
5
11
WARNING
17
6579611
6595200
7
6
6707887
6708218
B-20686

Ref No	Part Number	Description	Remarks	Serial Number	Qty
1	6902214	DECAL KIT			1
1	6728665AR	KIT	decal - SEE NOTE		1
1	6728665BR	KIT	decal - SEE NOTE		1
1	6728665JP	KIT	decal - SEE NOTE		1
1	6734544AR	KIT	translation- SEE NOTE		1
1	6734544BR	KIT	translation- SEE NOTE		1
2	6577754	DECAL	gas cylinder		1
3	6560573	DECAL	spark arrestor		1
4	6711659	DECAL	liftarm stop		1
5	6579511	DECAL	warning		1
6	6708212	DECAL	service		1
7	6727595	DECAL	tie down - Was 6595014 [B]		2
8	6576048	DECAL	fan		1
9	6565990	DECAL	hydraulic/hydrostatic fluid		1
10	6735900	DECAL BOBCAT	Bobcat Head & Bobcat - tailgate - Was 6732489 [B]		1
11	6565200	DECAL	eng. oil filter		1
12	6727307	DECAL	Bobcat-Ingersoll Rand		1
13	6727449	DECAL	Bobcat Head - R.H.		1
13	6727448	DECAL	Bobcat Head - L.H.		1
14	6564808	DECAL	Fuel shutoff		1
15	6557224	DECAL	Patent		1
16	6708929	DECAL	PG Coolant		1
17	6735864	DECAL	IR Logo -Was 6732495 [B]		2

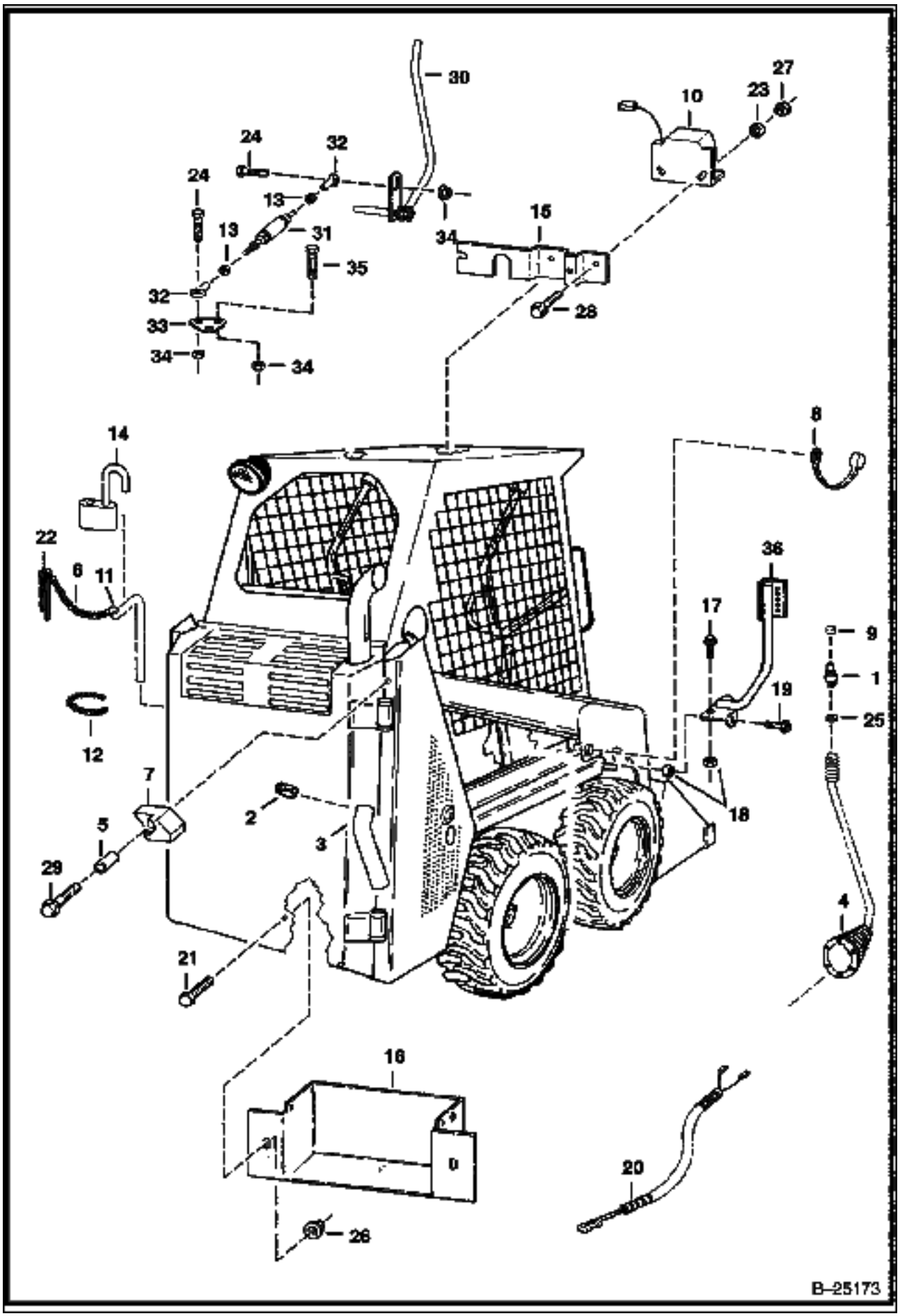
30
27
23
10
24
32
24
13
13
31
35
15
34
32
33
34
34
28
14
8
22
6
11
36
17
9
1
19
25
12
7
2
3
18
5
29
4
21
16
20
26
B-25173

Ref No	Part Number	Description	Remarks	Serial Number	Qty
1	6513482	SWITCH			1
2	42H000032B	CLAMP			1
3	6520555	HOSE	air intake		1
4	6532127	BOOT			2
5	6563612	BUSHING			1
6		CHAIN	NAP - 8"(203,2mm) - Order Ref. 12		x
7	6565526	STOP	door		1
8	6652943	COVER			10
9	6660205	SEAL	Switch		1
10	6660294	HORN			1
11	6661212	RING	retainer		1
12	6565227	CHAIN	bulk - sold per foot		x
13	62D000006B	NUT			4
14	6665400	PADLOCK			1
15	6704641	MOUNT	horn		1
16	6732848	TOOL CONTAINER	Was 6714738 [B]		1
17	35C000512B	BOLT	Japan		2
18	85D000005B	NUT	Japan		3
19	35C000516B	BOLT	Japan		1
20	6708506	HARNESS	horn		1
21	10C000512B	BOLT	Was 17C000512B [B]		2
22	1F000612B	PIN, COTTER			1
23	25E000013B	WASHER			2
24	17C000620B	BOLT			2
25	25E000021B	WASHER			1
26	83D000005B	NUT	Was 55D000006B [B]		2
27	59D000004B	NUT			2
28	84G002516B	BOLT			2
29	84G003728B	BOLT			1
30	6709408	LEVER	for use with gas shocks		1
31	6649551	SHOCK	shocks		2
32	6512954	ROD END			4
33	6709396	MOUNT	shock		2
34	57D000006B	NUT			8
35	17C000616B	BOLT			4
36	6710526	MIRROR MT	Japan		1

EUROPEAN ACCESSORIES
(Light Kit)

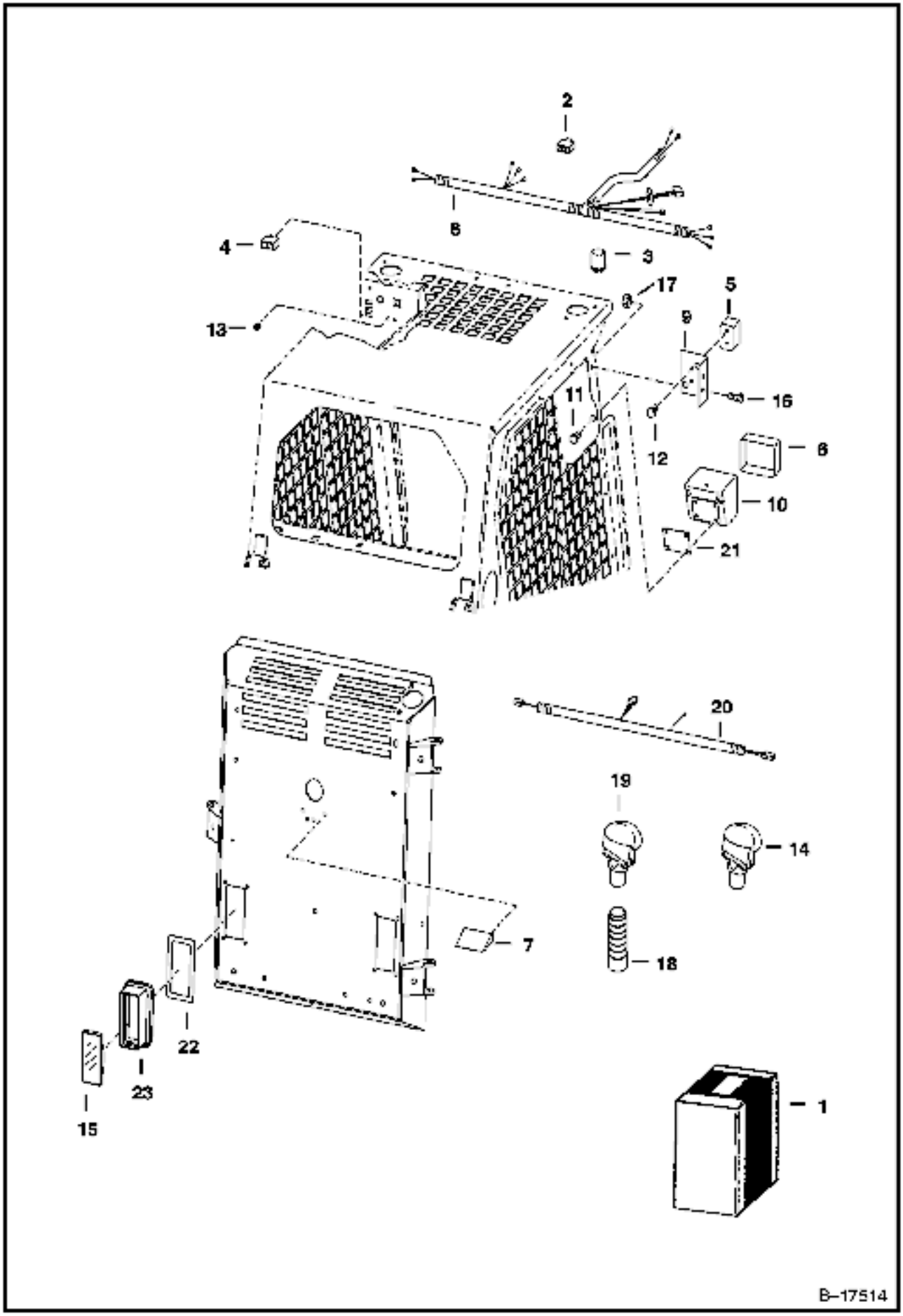

EUROPEAN ACCESSORIES (Cont'd)
(Light Kit)

Ref No	Part Number	Description	Remarks	Serial Number	Qty
1			See Illustration CONTROLS ELECTRICAL/ B17505 SALES - LIGHT - REF. 2-13 & 15-17 - FOR ELECTRICAL CONTROLS KIT		1
2	6519548	CONNECTOR			1
3	6557904	FLASHER			1
4	6665316	SWITCH	hazard		1
4	6665315	SWITCH	headlight		1
5	6665727	LIGHT	front turn		2
5		BULB	NAP - 5W - Order 6666568 - Was 6666567 [A]		2
5	6666568	BULB	21W		2
5	6666563	LENS			2
6	6665728	LIGHT	front		2
6	6666570	BULB	40/45W		2
6	6666564	HOUSING			2
6	6666565	LENS			2
6	6666566	GASKET			2
7	6665729	LIGHT	license plate		1
7	6666569	BULB	5W		2
8	6707672	HARNESS			1
9	6707706	MOUNT	light		2
10	6707804	HOUSING	light		2
11	17C000508B	BOLT			4
12	58G000808B	SCREW			4
13	6665757	LIGHT	indicator		2
14	6680412	HANDLE ASSY	dlx switch - Was 6707976 [A]		1
15	6707789	LIGHT	rear EUROPEAN		2
15	6666568	BULB	21W		2
15	6667887	BULB	21/5W		2
16	35C000410B	BOLT			2
17	83D000004B	NUT			2
18	6702621	GRIP			2
19	6680415	HANDLE	R.H. - blank - Was 6705920 [A]		1
20	6707509	HARNESS			1
21	6708824	MOUNT			2
22	6714005	SPACER			1
23	6705774	MOUNT			1

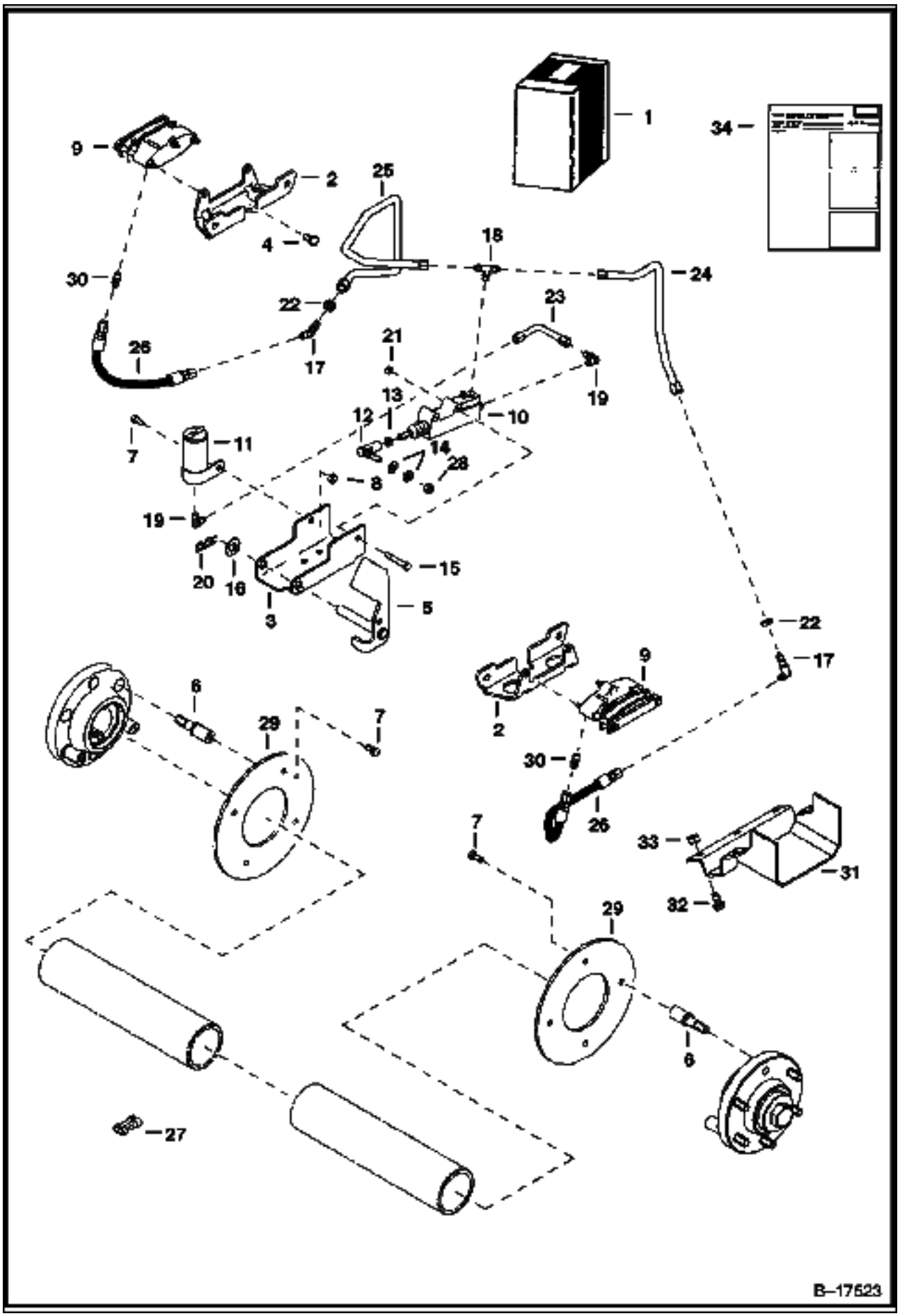
1
34
9
2
25
4
18
24
30
22
23
26
17
21
19
13
12
10
7
11
14
28
8
19
20
16
15
3
5
22
17
9
2
6
29
7
30
26
7
33
31
32
29
6
27
B–17523

EUROPEAN ACCESSORIES (Cont'd)
(Caliper Brake Kit)

Ref No	Part Number	Description	Remarks	Serial Number	Qty
1	6710374	KIT	W/Ref. 2-34		1
2	6710373	CALIPER MOUNT			2
3	6709236	MOUNT			1
4	37C000816B	BOLT			2
5	6709239	PEDAL ASSY.			1
6	6710372	WHEEL BOLT			6
7	17C000612B	BOLT			7
8	97D000006B	NUT			5
9	6666932	BRAKE			2
10	6666933	CYLINDER	Master		1
11	6661117	TANK			1
12	6599744	BALL JOINT			1
13	8D000006B	NUT			1
14	25E000017B	WASHER			2
15	17C000532B	BOLT			2
16	25E000025B	WASHER			1
17	88F000003B	NUT	W/O O-ring		2
17	88FN00003B	ELBOW	W/ O-ring		2
17	97K000004B	O-RING	flared end		4
18	98F000003B	TEE			1
19	83F000003B	ELBOW			2
20	1318565B	PIN			1
21	97D000005B	NUT			2
22	86F000003B	NUT			2
23	6710645	TUBELINE			1
24	6710369	TUBELINE			1
25	6710370	TUBELINE			1
26	6710676	HOSE			2
27	6667139	CAP			1
28	62D000006B	NUT			1
29	6710371	BRAKE DISC			2
30	89F000003B	ADAPTER			2
31	6712635	SHIELD			2
32	35C000616B	BOLT			10
33	97D000006B	NUT			11
34	6724568	INSTRUCTIONS			1

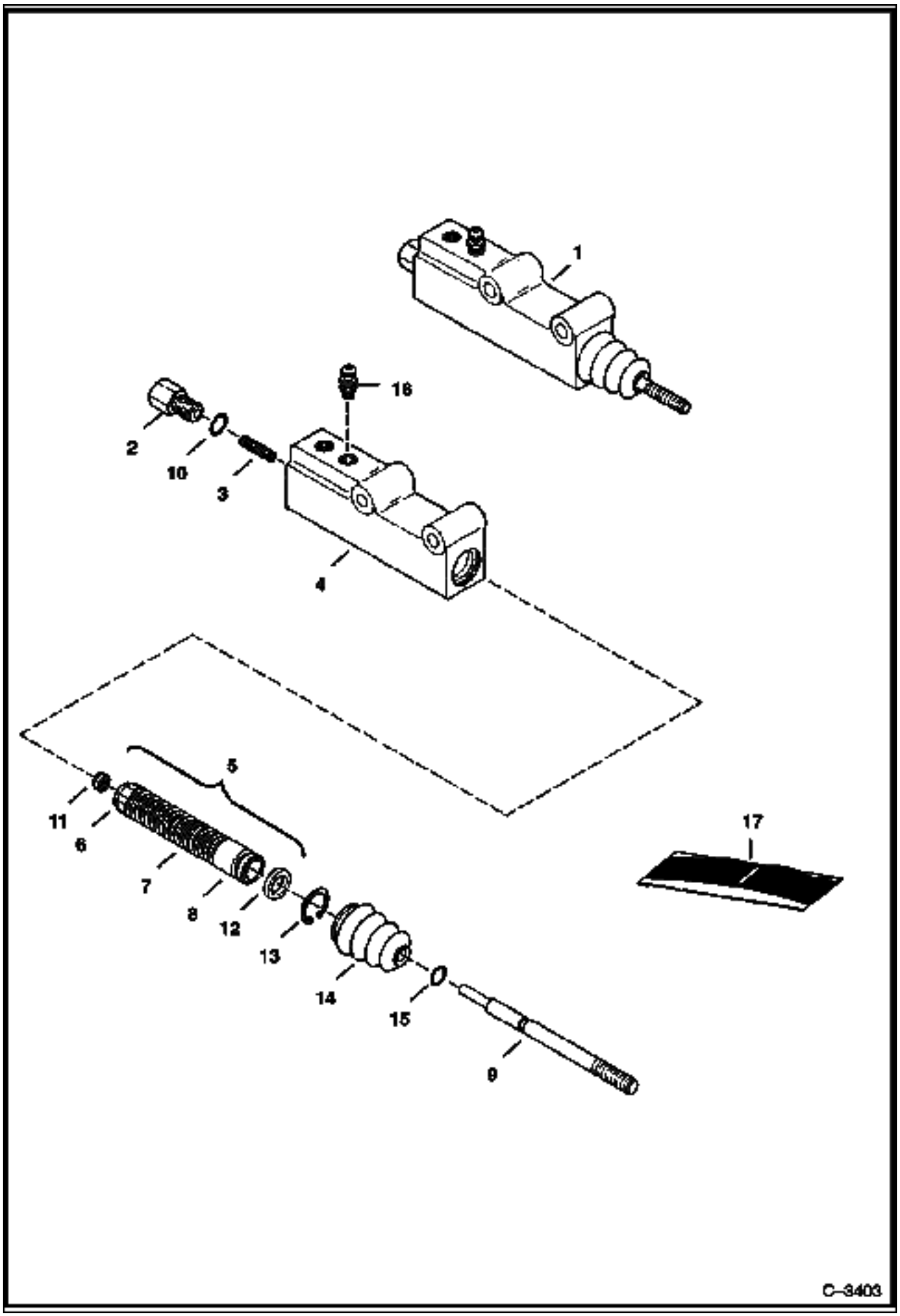
1
16
2
10
3
4
5
11
6
7
8
12
13
14
15
9
17
C-3403

EUROPEAN ACCESSORIES (Cont'd)
(Master Cylinder - Caliper Brakes)

Ref No	Part Number	Description	Remarks	Serial Number	Qty
1	6666933	CYLINDER	master brake - Ref. 2-16		1
2		ADAPTER	NSS		1
3		SPRING	NSS		1
4		BODY	NSS		1
5		SPRING ASSY	NSS - W/Ref. 6 - 8 & 11		1
6		RETAINER	NSS		1
7		SPRING	NSS		1
8		PISTON	NSS		1
9		PUSH ROD	NSS		1
10		O-RING	NSS		1
11		SEAT	NSS		1
12		CUP	NSS		1
13		SNAP RING	NSS		1
14		BOOT	NSS		1
15		O-RING	NSS		1
16	6668097	SCREW	bleeder		1
17	6661608	SEAL KIT	Ref. 10-15		1

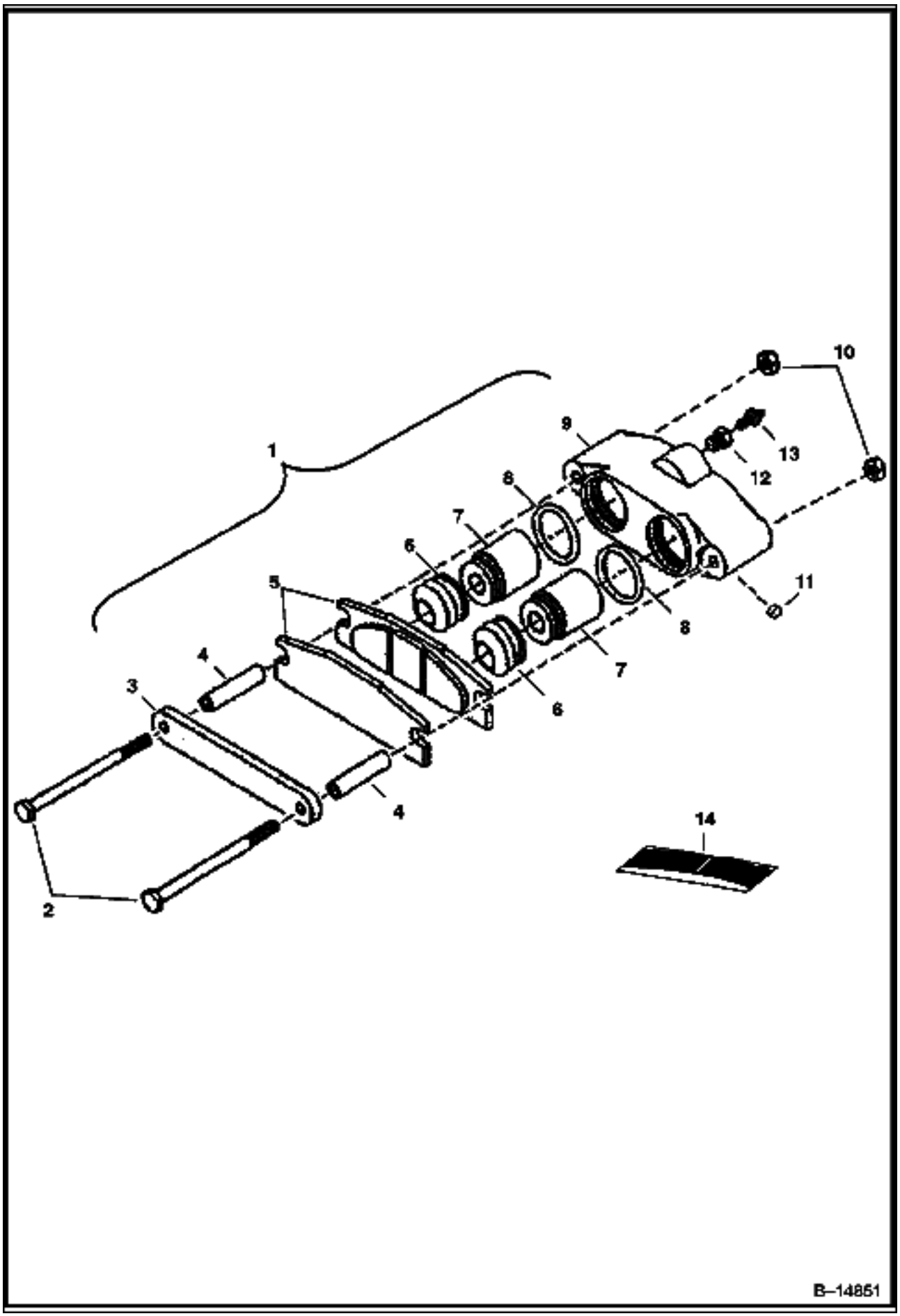
1
2
3
4
4
5
6
6
7
7
8
8
9
10
11
12
13
14
B–14851

EUROPEAN ACCESSORIES (Cont'd)
(Brake Assy)

Ref No	Part Number	Description	Remarks	Serial Number	Qty
1	6666932	BRAKE	W/Ref. 2-13		1
2	6669154	BOLT			2
3	6669155	PLATE			1
4	6669156	SPACER			2
5	6669184	STATOR ASSY.			1
6		BOOT	NSS - Order Ref. 14		2
7	6669159	PISTON			2
8		O-RING	NSS - Order Ref. 14		2
9		HOUSING	NSS - Order Ref. 1		1
10	6669162	NUT			2
11	6669163	PLUG			1
12	6669164	ADAPTER			1
13	6669165	SCREW	bleeder		1
14	6669185	SEAL KIT	W/Ref. 6 & 8		1

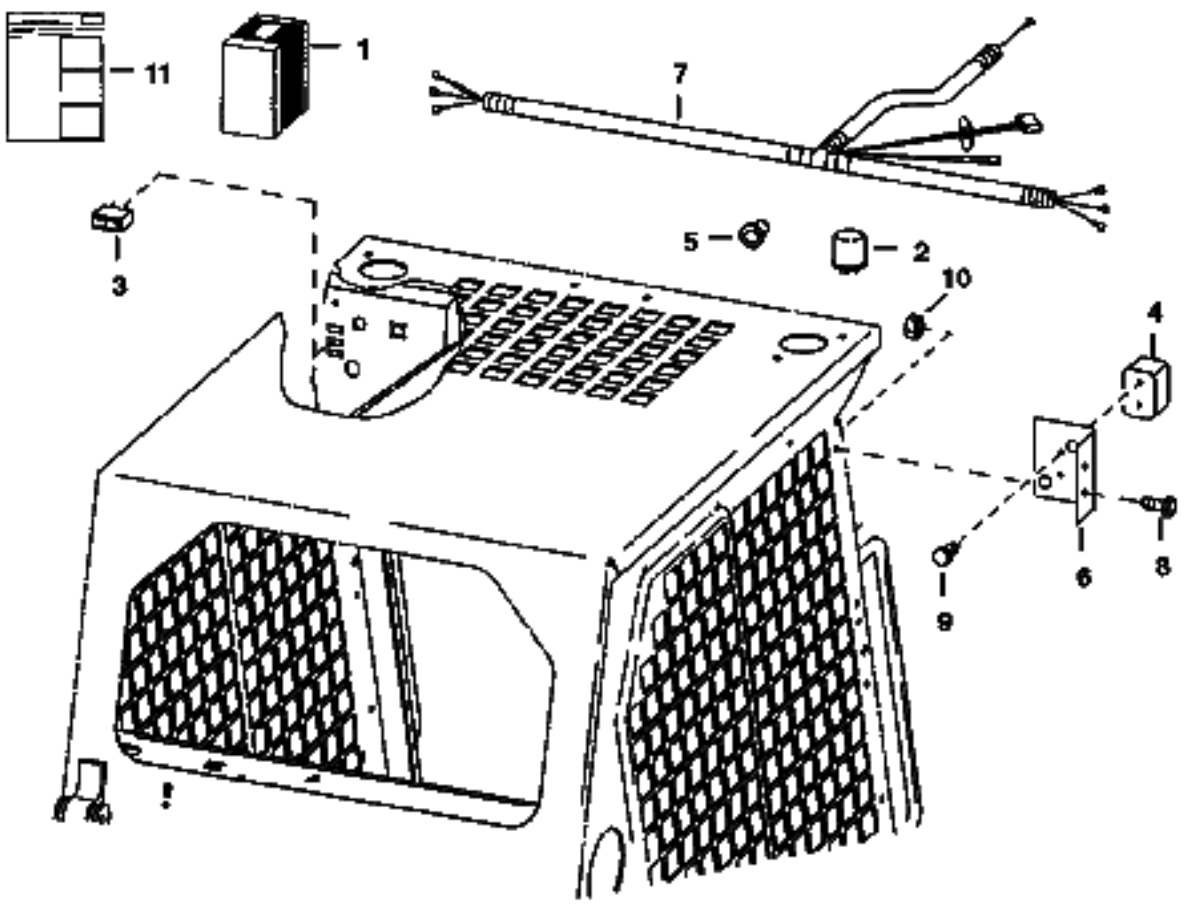

NOTE: L.H. multi–switch handle is required.

TS–1319

EUROPEAN ACCESSORIES (Cont'd)
(4 Way Flashers)

Ref No	Part Number	Description	Remarks	Serial Number	Qty
1		KIT	NAP - Note: To equip domestic loaders with this style flashers, order Ref. 2 - 11 as well as qty. (2) of 6707789 lights and 6707669 light harness - L.H. multi-switch handle is required - Was 6709755		1
2	6557904	FLASHER			1
3	6665316	SWITCH			1
4	6665727	LIGHT			2
5	6665757	LIGHT	indicator		2
6	6707706	MOUNT	light		2
7	6709530	HARNESS			1
8	35C000410B	BOLT			2
9	58G000808B	SCREW			4
10	83D000004B	NUT			2
11	6724372	INSTRUCTIONS			1

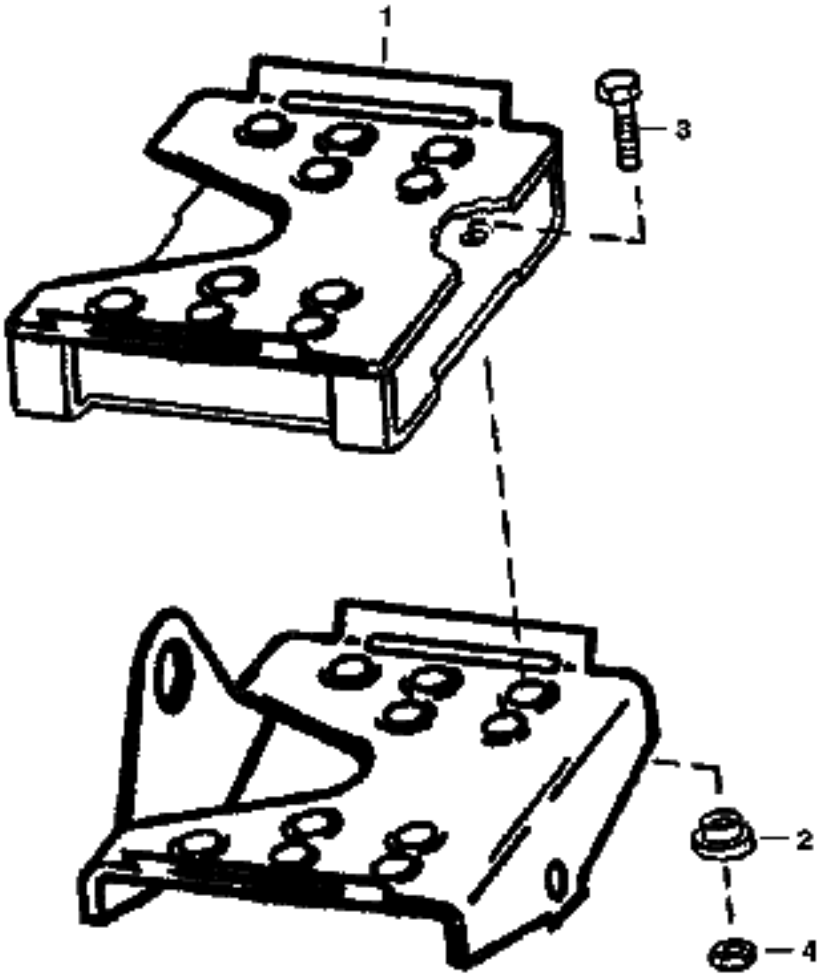
1
3
5
2
4
B–14856

EUROPEAN ACCESSORIES (Cont'd)
(Pedal Extenders)

Ref No	Part Number	Description	Remarks	Serial Number	Qty
1	6713115	PEDAL	extender		2
2	6713116	BUSHING			8
3	17C000516B	BOLT			8
4	85D000005B	NUT			8

EUROPEAN ACCESSORIES
(Road Kit)

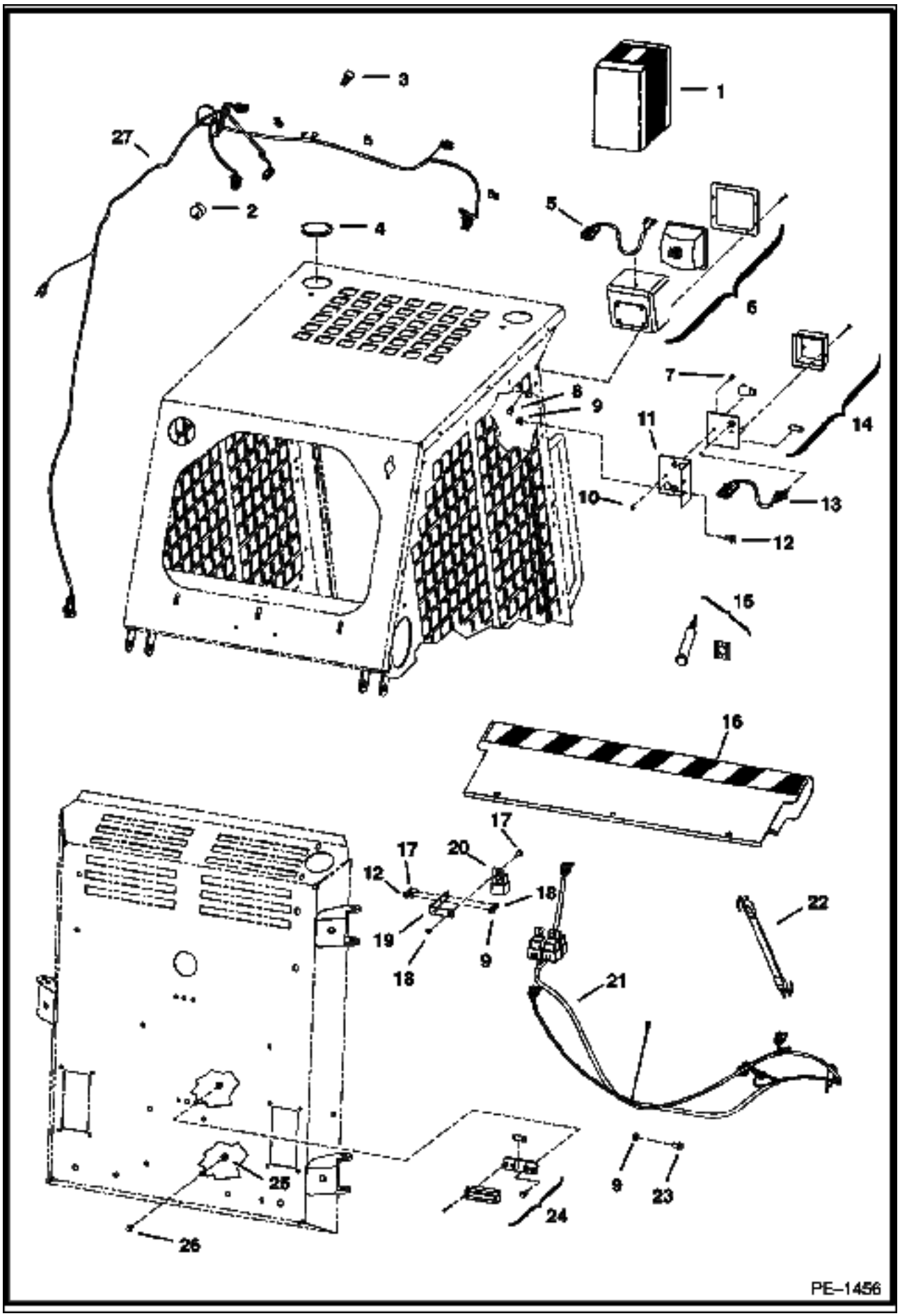

EUROPEAN ACCESSORIES (Cont'd)
(Road Kit)

Ref No	Part Number	Description	Remarks	Serial Number	Qty
1			See Illustration EUROPEAN ACCESSORIES/ PE1697 SALES - ROAD - REF. 2-27 & REF. 2-25		1
2	6557904	FLASHER			1
3	6675064	TERMINAL	Was 6731821 [A]		2
4	6620452	PLUG			2
5	6713994	HARNESS			2
6	6665728	LIGHT			2
7	85G000808B	BOLT			4
8	17C000508B	BOLT			8
9	83D000005B	NUT			4
10	12D000008B	NUT			4
11	6707706	MOUNT	light		2
12	35C000510B	BOLT			3
13	6713993	HARNESS			2
14	6665727	LIGHT	front turn		2
15	6675908	LAMP			2
16	6714836	BRACKET			1
16	6714835	BRACKET			1
17	17C000410B	BOLT			3
18	85D000004B	NUT			3
19	6731223	MOUNT			1
20	6670312	SOLENOID			4
21	6731610	HARNESS			1
22	6731819	STRAP			3
23	7C000512B	BOLT			1
24	6665729	LIGHT	license plate		1
25	83D000004B	NUT			4
26	35C000410B	BOLT			4
27	6731563	HARNESS			1

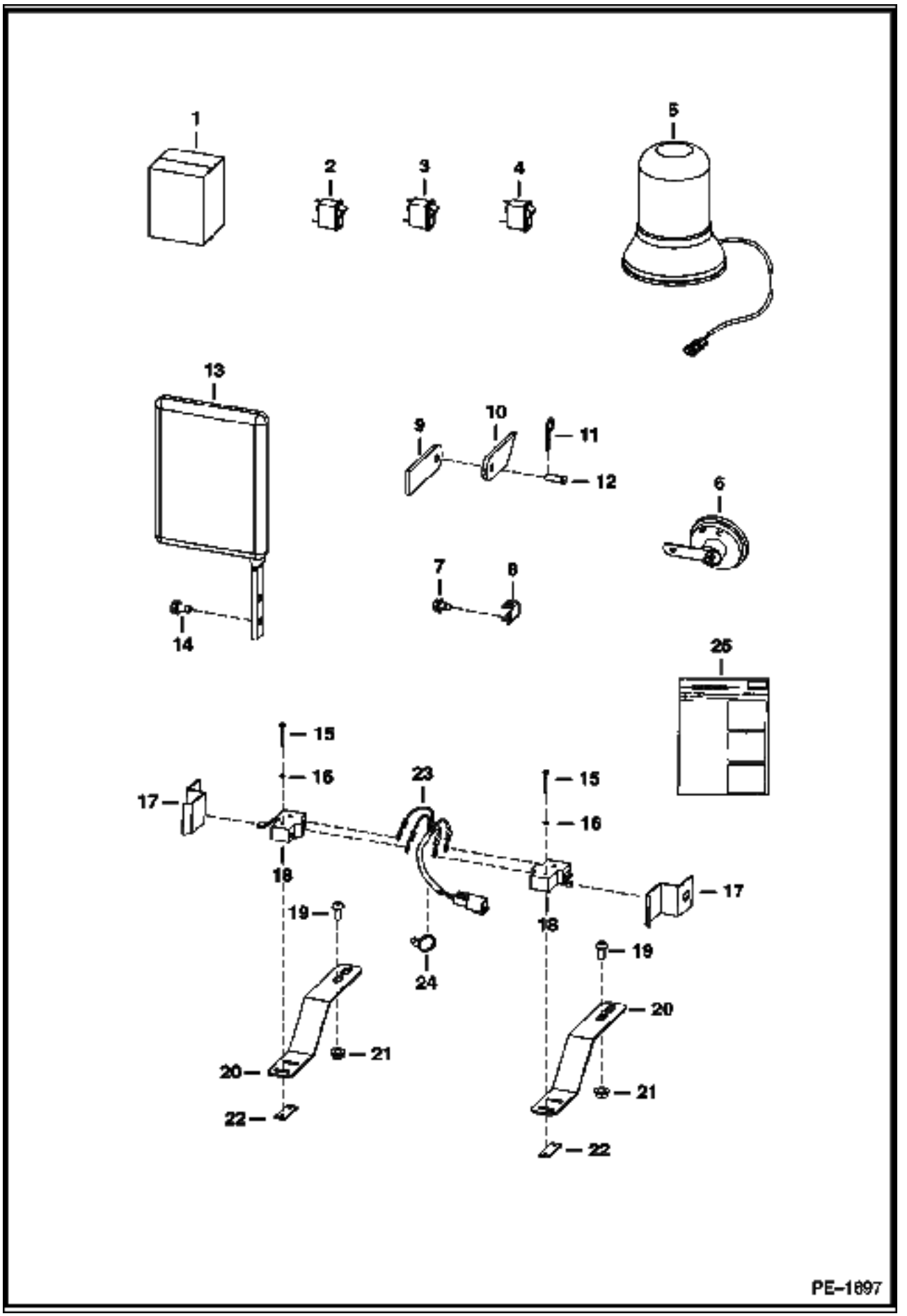
1
2
3
4
5
6
7
8
9
10
11
12
13
14
15
16
17
18
19
20
21
22
23
24
25
PE-1697

EUROPEAN ACCESSORIES (Cont'd)
(Road Kit)

Ref No	Part Number	Description	Remarks	Serial Number	Qty
1		KIT	See Illustration EUROPEAN ACCESSORIES/ PE1456 SALES - road - Ref. 2-25 & Ref. 2-27 on Ill. PE-1456		1
2	6668742	SWITCH	travel control		1
3	6668815	SWITCH	hazard		1
4	6668816	SWITCH	beacon		1
5	6675523	BEACON	beacon		1
6	6671106	HORN			1
7	84G003710B	BOLT			1
8	6731998	BRACKET	pin holder		1
9	6731999	BRACKET	boom lock		1
10	6732000	BRACKET	bucket lock		1
11	6512664	COTTER PIN			1
12	2F006106B	PIN			1
13	6665860	KIT	assy		1
14	85G003712B	SCREW			2
15	85G000616B	SCREW			4
16	17E000006B	WASHER			4
17	6734057	GUIDE SWITCH	switch - Was 6707720 [B]		2
18	6646781	SWITCH	roller		2
19	25G000510B	SCREW			4
20	6733290	BRACKET			2
21	55D000005B	NUT			4
22	6702593	SPACER			2
23	6734224	HARNESS BRAKE LT	Was 6733734 [B]		1
24	6610510	TIE			6
25	6901662	INSTRUCTIONS			1

EUROPEAN ACCESSORIES
(Sound Option)

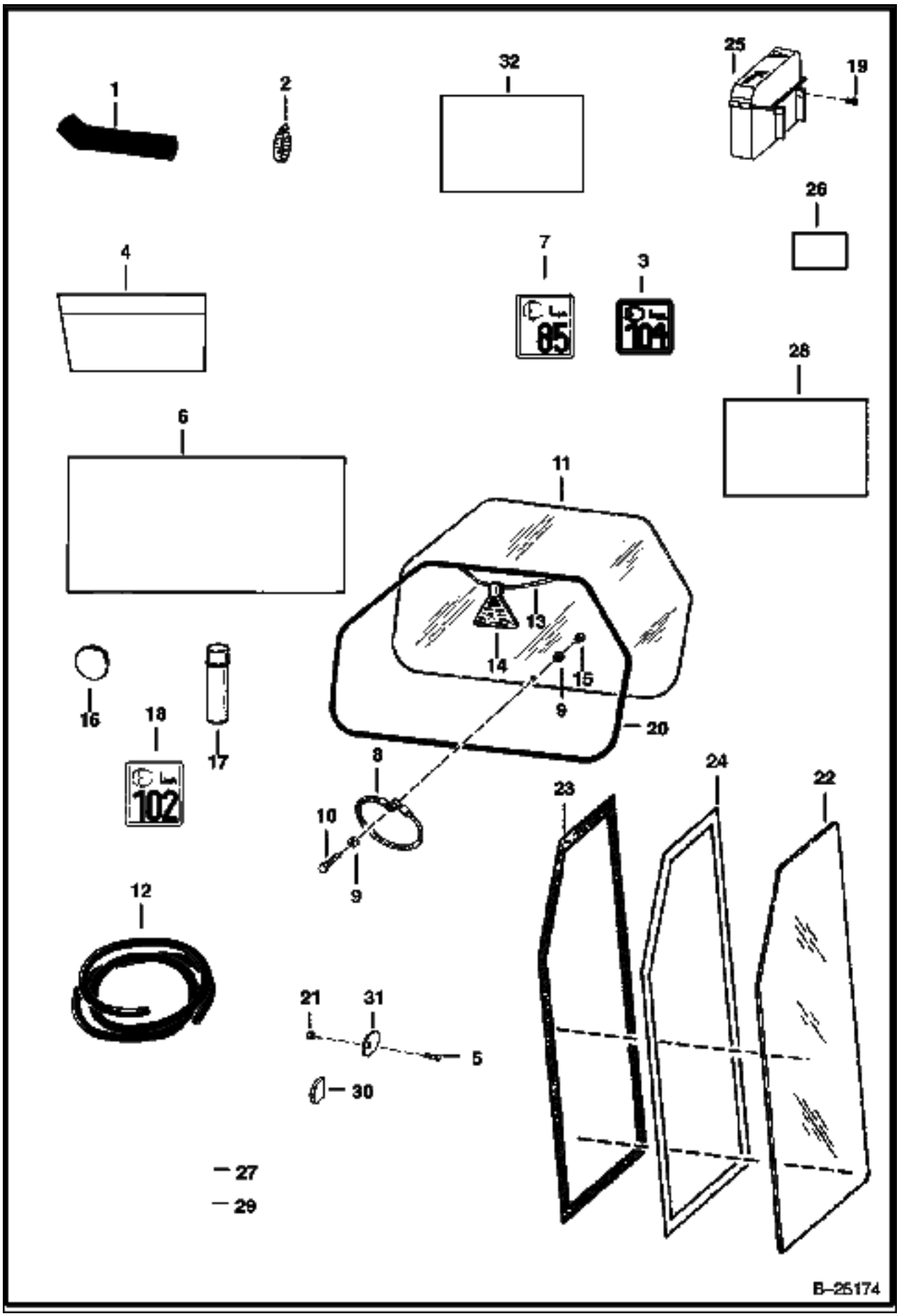

EUROPEAN ACCESSORIES (Cont'd)
(Sound Option)

Ref No	Part Number	Description	Remarks	Serial Number	Qty
1	6729040	HOSE	air cleaner inlet		1
2	42HC00250B	CLAMP	air inlet hose		1
3	6731994	DECAL	104 decibel		1
4	6706886	INSULATOR	cab - lower right rear - With self adhesive back		1
5	35C000410B	BOLT			10
6	6565524	HEADLINER			1
7	6579385	DECAL	sound level warning		1
8	6555331	WIRE ROPE			1
9	25E000015B	WASHER			2
10	17C000516B	BOLT			1
11	6707819	WINDOW	rear		1
12	6665568	SEAL	bulk - Sold Per Foot		x
13	6554149	CORD	bulk - Sold Per Foot		x
14	6731478	EXIT TAG	Was 6559515 [A]		1
15	85D000005B	NUT			1
16	6620452	PLUG			1
17	6632469	ADHESIVE	spray can 24 oz.		x
18	6579402	DECAL	sound level warning		1
19	6702642	SCREW	BOLT		2
20		SEAL	NAP - window - 70"(1778mm) - Order Ref. 12		1
21	83D000004B	NUT			10
22	6702731	WINDOW			2
23	6631549	HOOK	Scotchmate		2
24	6631548	LOOP	Scotchmate		2
25	6708827	CONTAINER	for manuals		1
26	6734908	INSULATION	seat pan - Was 6708487 [A]		1
27	6664351	SEAL			1
28	6705735	WINDOW	top		1
29	6700875	RETAINER	window		4
30	6677198	TAB	vinly		2
31	6719063	STOP	window		2
32	6708486	INSULATION	cab back		1

EXTERNAL WINDOW REMOVAL KIT

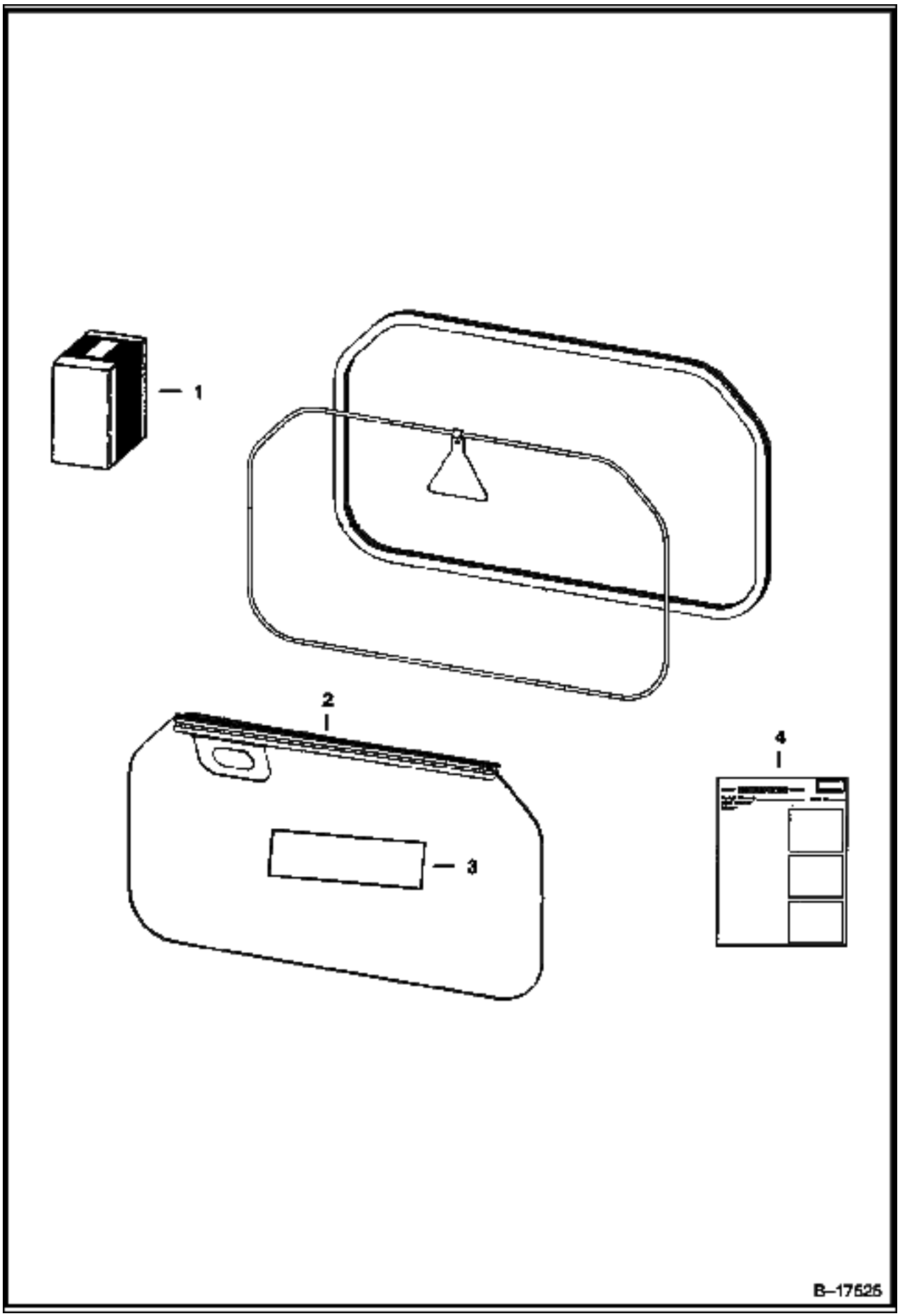

EXTERNAL WINDOW REMOVAL KIT (Cont'd)

Ref No	Part Number	Description	Remarks	Serial Number	Qty
1	6726392	KIT	Ref. 2 - 4		1
2	6726391	HANDLE			1
3	6726393	DECAL			1
4	6901029	INSTRUCTIONS			1

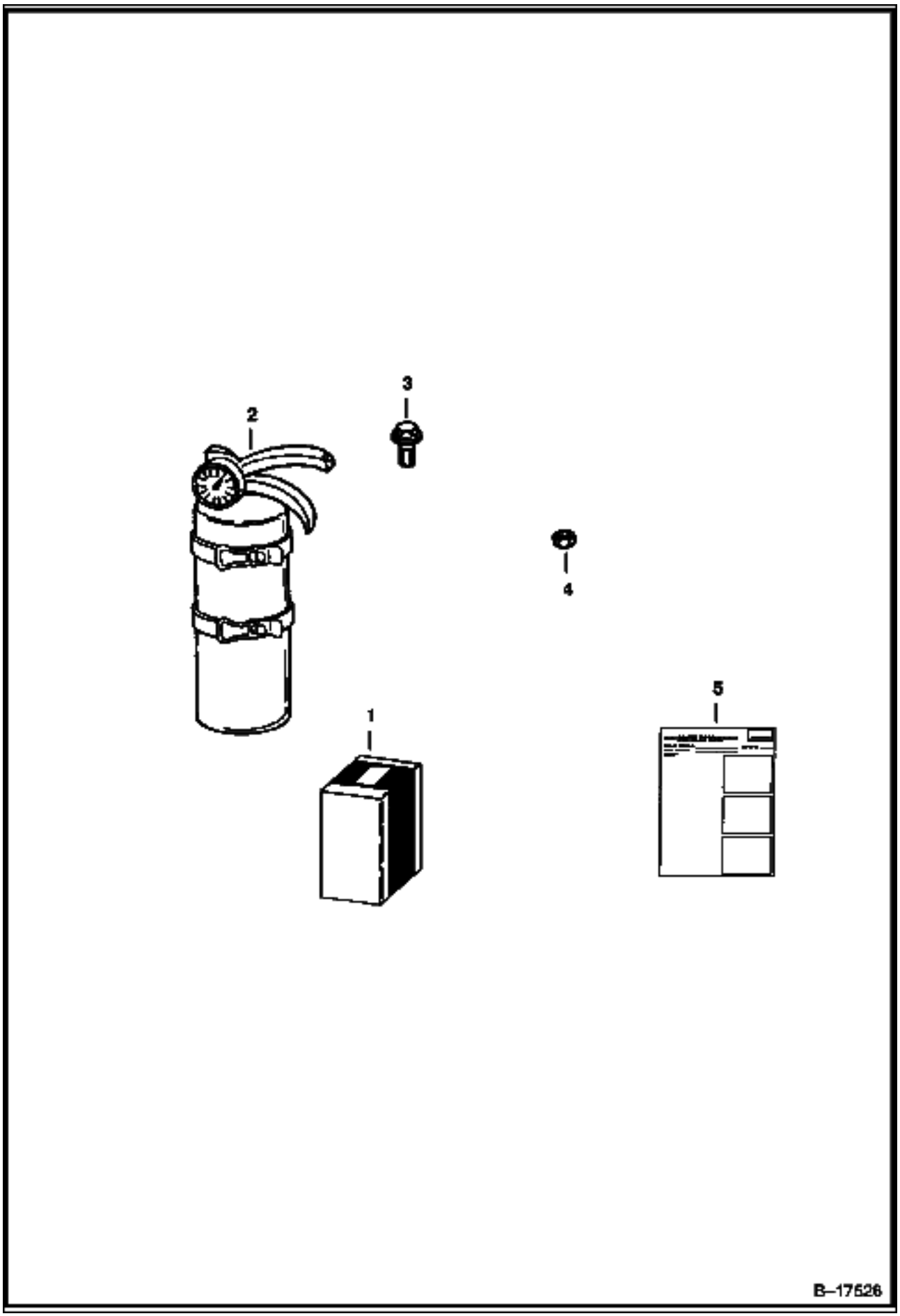
3
2
4
5
1
B–17526

Ref No	Part Number	Description	Remarks	Serial Number	Qty
1	6565793	KIT	fire extinguisher - Ref. 2-5		1
2	6630100	EXTINGUISHER			1
3	45G001006B	BOLT			4
4	12D000010B	NUT			4
5	6566539	INSTRUCTIONS			1

FLOOR COVER KIT

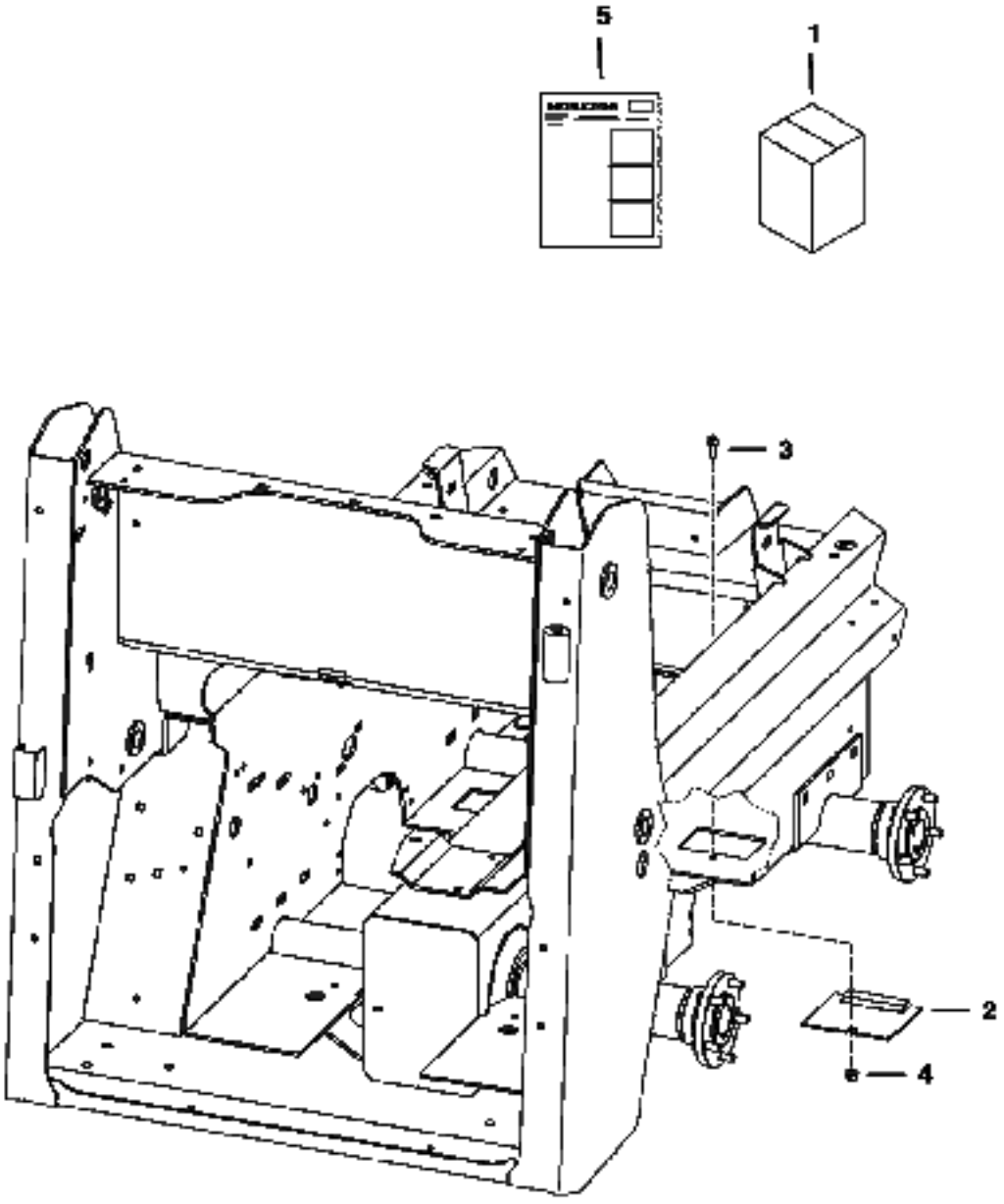

FLOOR COVER KIT (Cont'd)

Ref No	Part Number	Description	Remarks	Serial Number	Qty
1	7110082	KIT	floor cover - W/Ref. 2-5		1
2	7100364	COVER			2
3	84G003720B	BOLT			2
4	83D000006B	NUT			2
5	6903849	INSTRUCTIONS			1

DRAWING NOT AVAILABLE AT TIME OF PRINTING

PE-1679

Ref No	Part Number	Description	Remarks	Serial Number	Qty
1	6733893	HEATER KIT	Ref. 2 - 23		1
2	6679136	CAB HEATER			1
3	17C000412B	BOLT			4
4	5HM00023B	CLAMP			6
5		HOSE			1
6		VALVE	heater		1
7	6733859	INSULATION CAB BACK			1
8		HOSE COVER	NAP - 19"(483mm) long - Order Ref. 30		1
9		HOSE	NAP - 20"(508mm) long - Order Ref. 28		1
10		HOSE	NAP - 26"(660mm) long - Order Ref. 28		1
11		HOSE COVER	NAP - 25"(635mm) long - Order Ref. 30		1
12		HOSE	NAP - 10"(254mm) long - Order Ref. 29		4
13	5HM00015B	CLAMP			8
14	6680949	FITTING H PATTERN	h pattern		1
15	6680951	FITTING 90 DEG BARB			2
16	6680917	COUPLER, FEM BRASS			2
17	5JM00032B	SNAP RING			4
18	6732857	BRACKET			1
19	83D000006B	NUT			1
20	35C000614B	BOLT			1
21	83D000005B	NUT			1
22	35C000514B	BOLT			1
23	6733884	SEAL	cab		1
24	5JM00024B	CIRCLIP			2
25	6735284	WASHER			2
26	6680918	COUPLER, MAL BRASS			2
27	6680952	FITTING 90 DEG BARB			2
28	889269B	HOSE	bulk - sold per foot		x
29	6586251	HOSE	bulk - sold per foot		x
30	6649389	HOSE COVER	bulk - sold per foot		x
31	6732775	DECAL 463 HEATER			1
32	6902034	INSTRUCTIONS			1

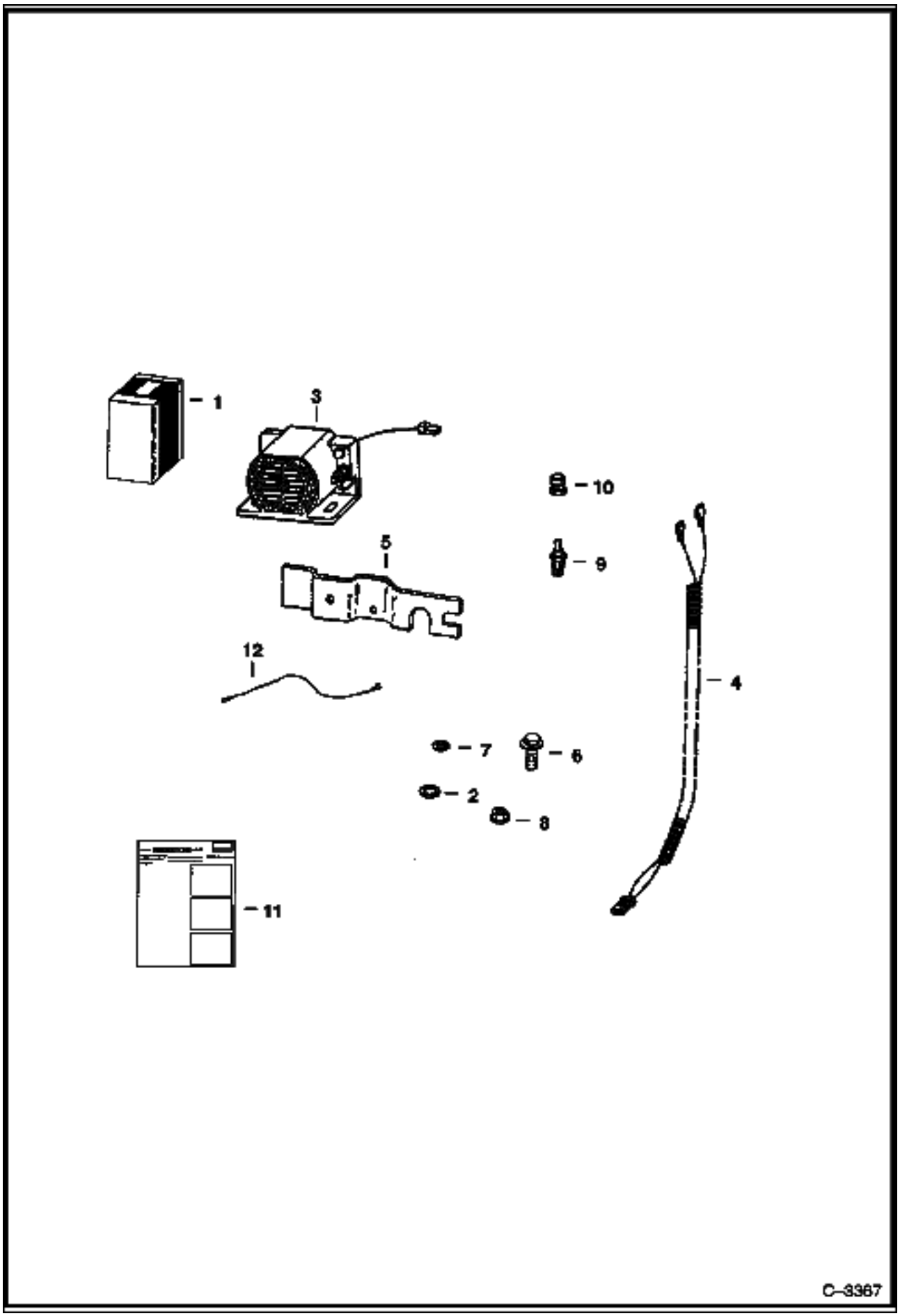
1
3
10
5
9
12
4
7
6
2
8
11
C–3367

Ref No	Part Number	Description	Remarks	Serial Number	Qty
1	6708548	HORN KIT	Ref. 2 - 11		1
2	25E000021B	WASHER			1
3	6660294	HORN			1
4	6709526	HARNESS			1
5	6704641	MOUNT			1
6	84G002516B	BOLT			1
7	25E000013B	WASHER			2
8	59D000004B	NUT			2
9	6513482	SWITCH			1
10	6660205	SEAL	switch		1
11	6724162	INSTRUCTIONS			1
12	6714666	WIRE ASSY			1

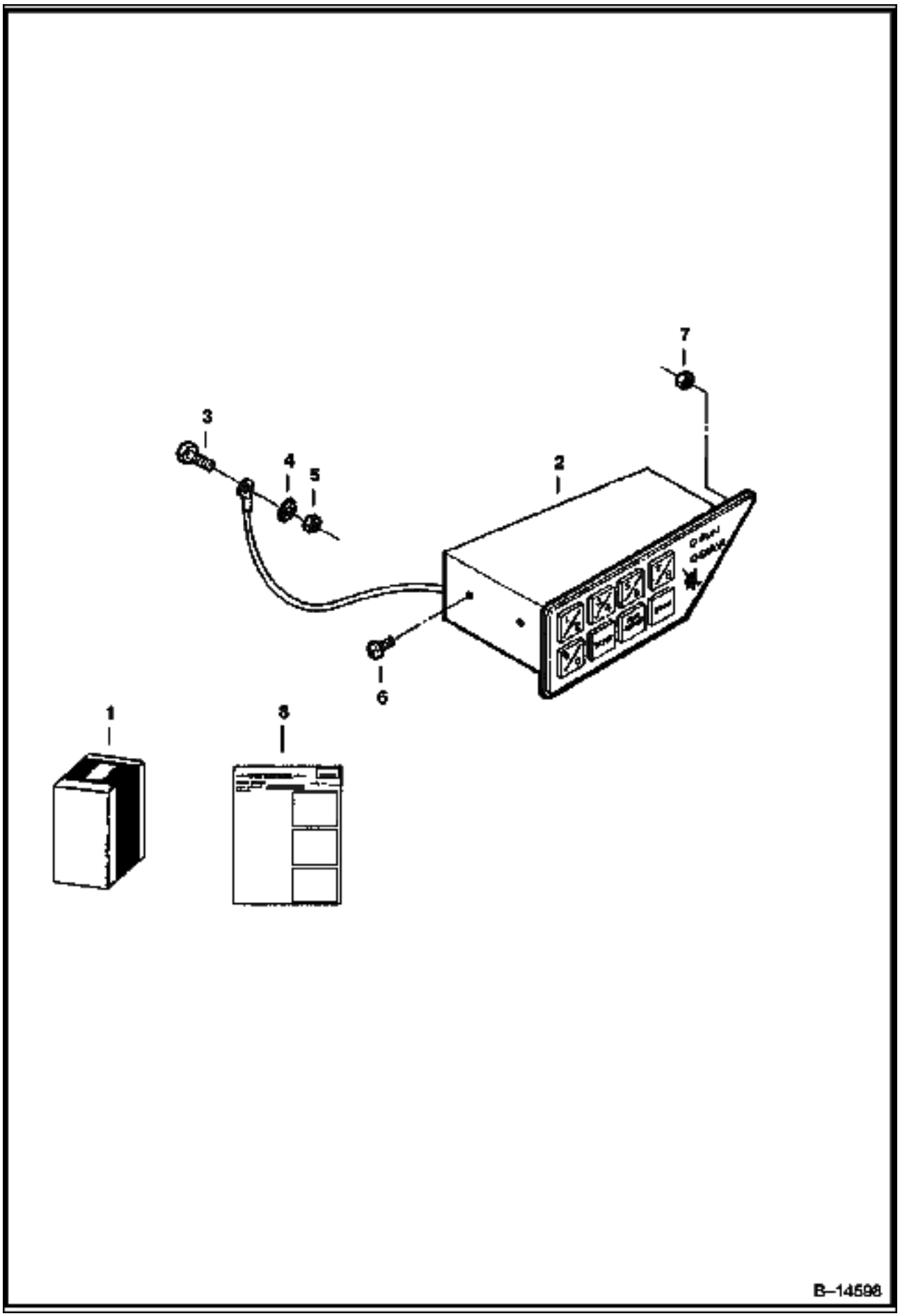
7
3
4
5
2
6
1
8
B–14598

Ref No	Part Number	Description	Remarks	Serial Number	Qty
1	6712972	KIT	Keyless Ignition - W/Ref. 2-8		1
2		MODULE	NSS - Order Ref. 1		1
3	35C000410B	BOLT			1
4	6E000004B	WASHER	Star		1
5	83D000004B	NUT			1
6	87G000806B	BOLT			2
7	12D000006B	NUT			1
8	6724586	INSTRUCTIONS			1

LIGHT KIT

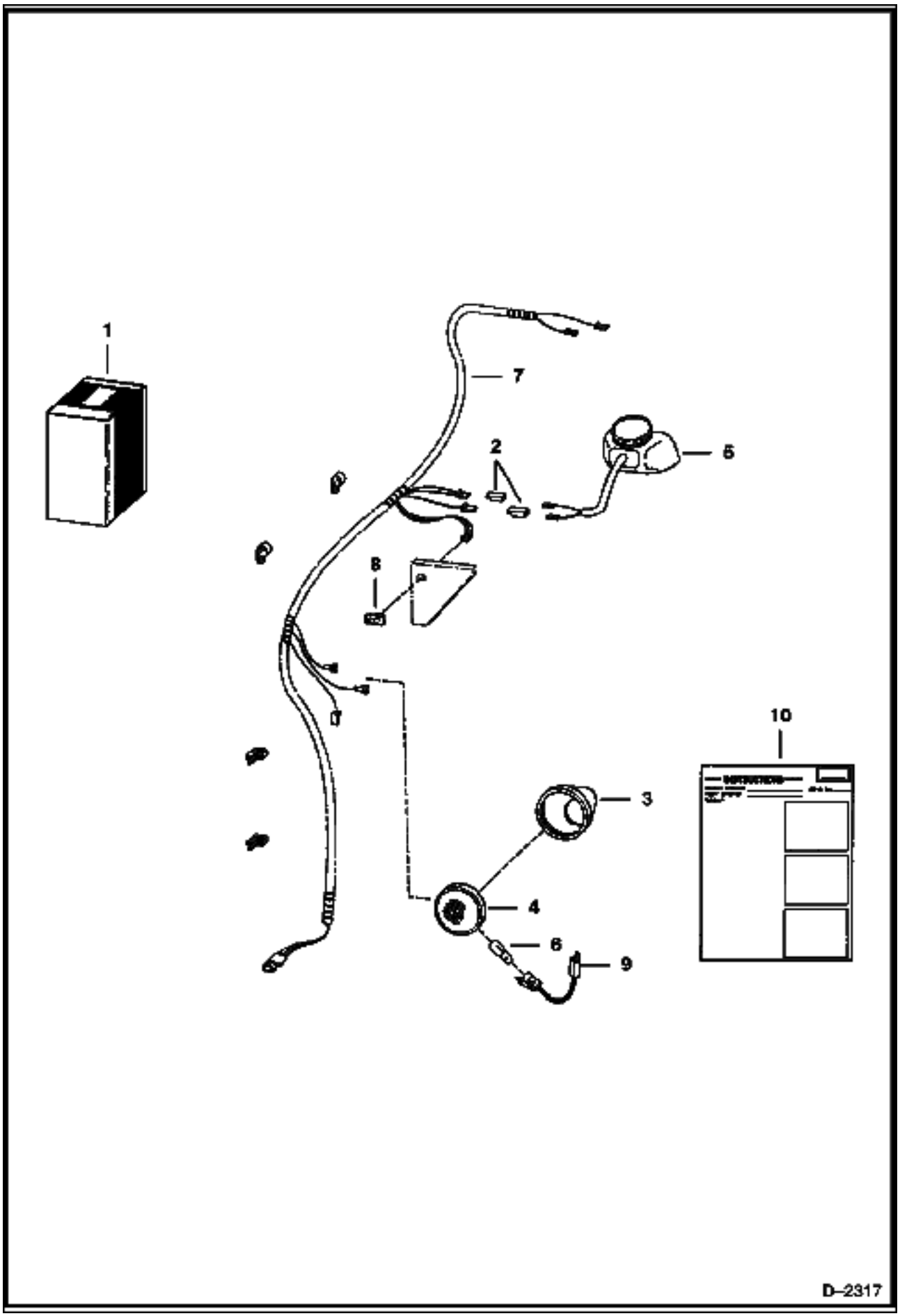

LIGHT KIT (Cont'd)

Ref No	Part Number	Description	Remarks	Serial Number	Qty
1	6708719	LIGHT KIT	Ref. 2-6, 8-10		1
2	6519548	CONNECTOR			4
3	6558142	HOUSING	rubber		1
4	6563740	LAMP	W/Ref. 6		1
5	6577801	LIGHT			2
5	6667934	BULB			2
6	898731B	BULB			1
7	6707498	HARNESS	not in kit		1
8	6665410	SWITCH			1
9	6564907	SOCKET ASSY			2
10	6724070	INSTRUCTIONS			1

LOCKING CAP & COVER

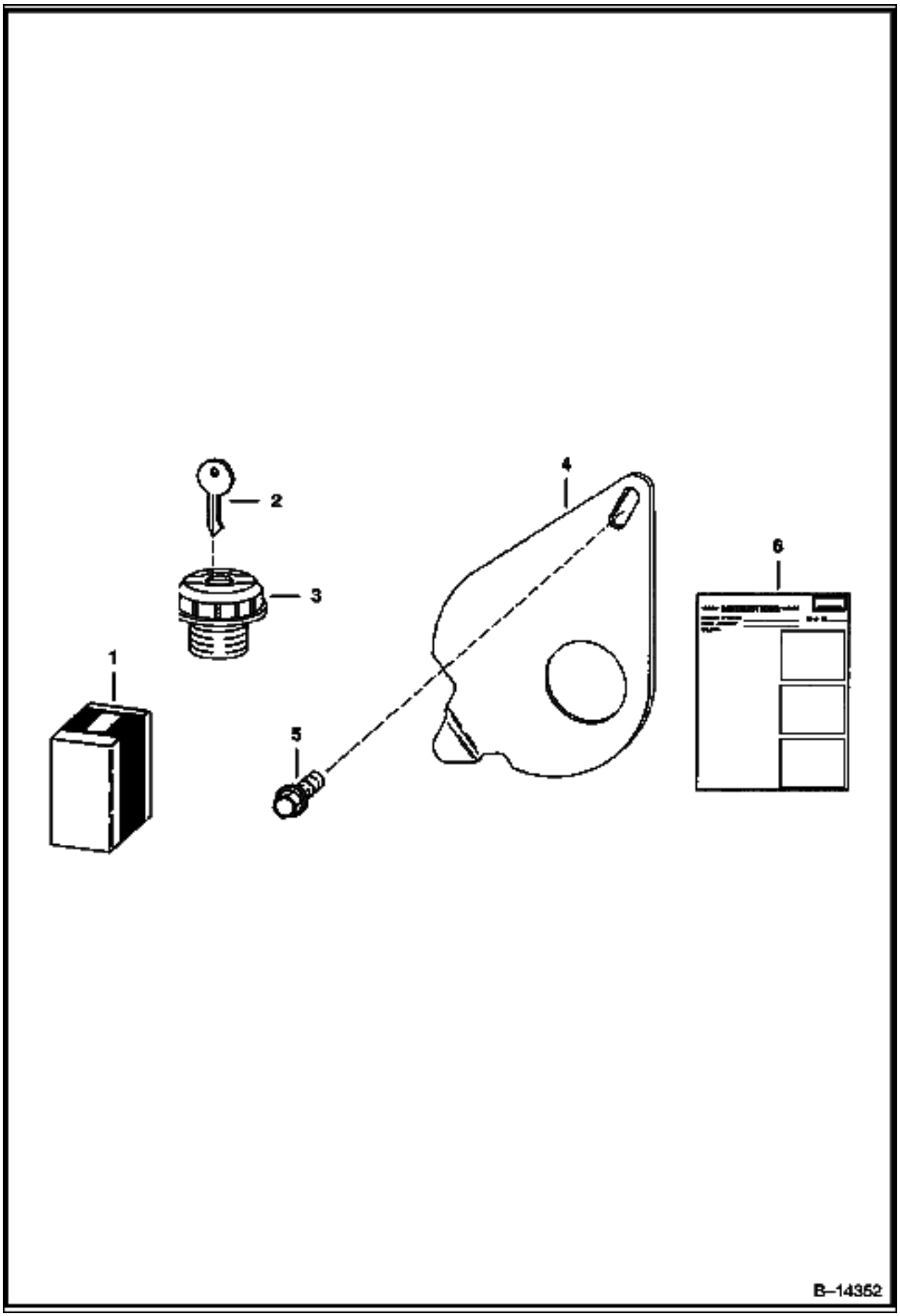

LOCKING CAP & COVER (Cont'd)

Ref No	Part Number	Description	Remarks	Serial Number	Qty
1	6708689	KIT	Ref. 2-6		1
2	6587458	KEY			1
3	6661696	CAP			1
4	6707704	COVER			1
5	84G003710B	BOLT			1
6	6724221	INSTRUCTIONS			1

MUFFLER/PURIFIER KIT

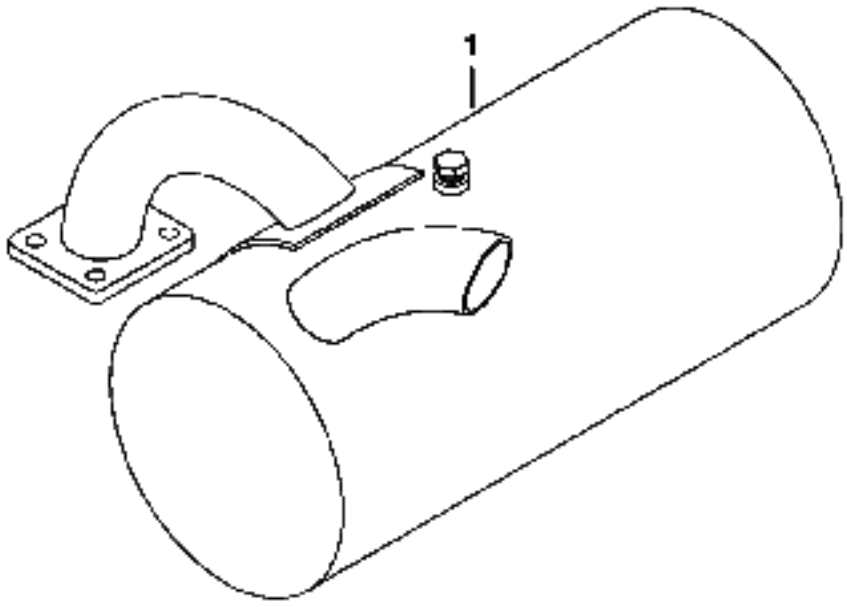

MS–1660

MUFFLER/PURIFIER KIT (Cont'd)

Ref No	Part Number	Description	Remarks	Serial Number	Qty
1	6680999	PURIFIER			1

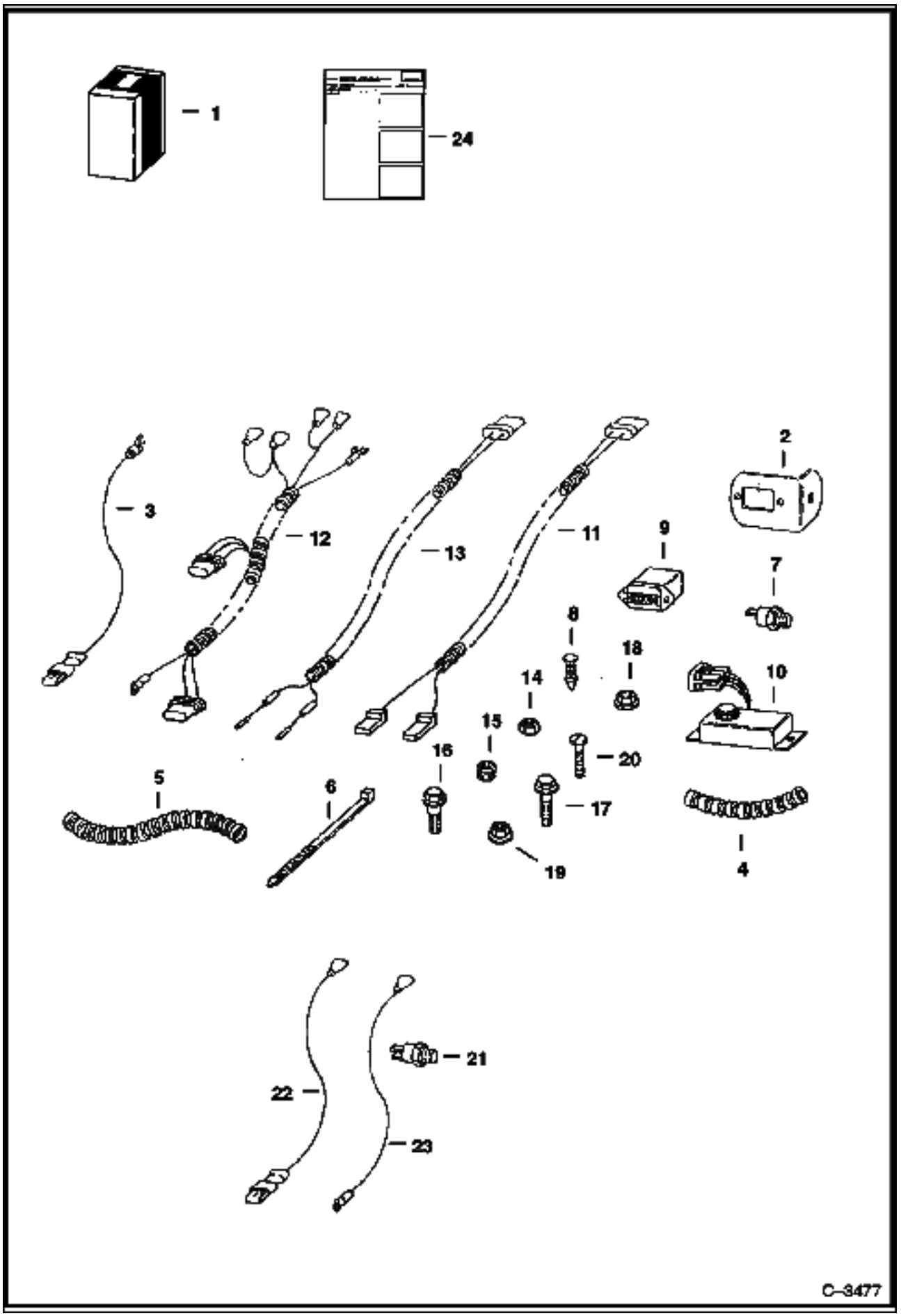
1
24
3
12
13
11
2
9
7
8
18
14
10
15
16
20
5
6
17
19
4
21
22
23
C-3477

Ref No	Part Number	Description	Remarks	Serial Number	Qty
1	6712750	KIT	W/Ref. 2-21		1
2	6552906	BRACKET			1
3	6567968	WIRE	assy.		1
3	614142B	SLEEVE			1
3	733611B	TERMINAL	female		1
3	6517924	CONNECTOR			1
3	30R000107B	TERMINAL			1
4		CONDUIT	NAP - 76.50"(1943,1 mm) - Order Ref. 5		1
5	6584978	CONDUIT	bulk - Sold Per Foot		x
6	6610510	TIE			12
7	6630821	SWITCH	temp.		1
8	6664221	RETAINER			1
9	6664886	HOURMETER			1
10	6669420	CONTROLLER			1
11	6700228	HARNESS	Hourmeter		1
11	733611B	TERMINAL	female		1
11	6517924	CONNECTOR			1
11	6640690	PIN	male		x
11	6641176	SEAL	cable		x
11	6641179	CONNECTOR			x
11	6641180	LOCK			x
12	6714038	HARNESS			1
12	733616	TERMINAL	male		x
12	6640691	PIN	female		x
12	6641176	SEAL	cable		x
12	6641178	CONNECTOR			x
12	6641180	LOCK			x
12	6641181	LOCK			x
13	6714039	HARNESS			1
13	6640690	PIN	male		x
13	6641176	SEAL	cable		x
13	6641179	CONNECTOR			x
13	6641180	LOCK			x
14	12D000006B	NUT			2
15	19F000005B	REDUCER			1
16	35C000408B	BOLT			2
17	35C000716B	BOLT			1
18	55D000004B	NUT			2
19	55D000007B	NUT			1
20	85G000608B	SCREW			2
21	6671964	SENDER	oil temp		1
22	6714990	WIRE			1
23	6714991	WIRE	temp sw		1
24	6900133	INSTRUCTIONS			1

SEAT BELT
(3" Wide)

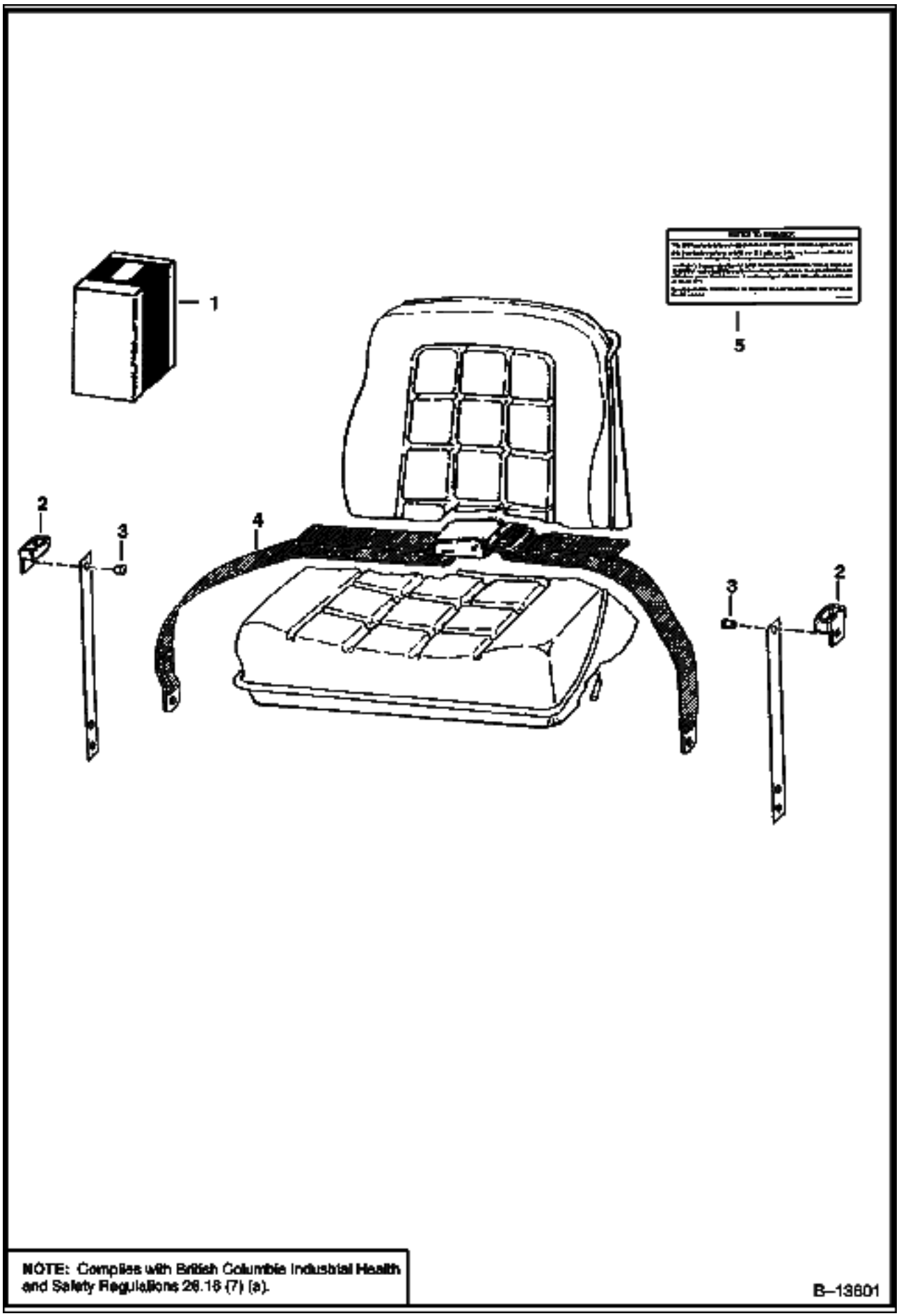

SEAT BELT (Cont'd)
(3" Wide)

Ref No	Part Number	Description	Remarks	Serial Number	Qty
1	6703640	KIT	W/Ref. 2-5		1
2	6703703	GUIDE			2
3	6630207	RIVET			4
4	6659999	BELT			1
5	6703641	DECAL			1

SIDE INSTRUMENT PANEL KIT

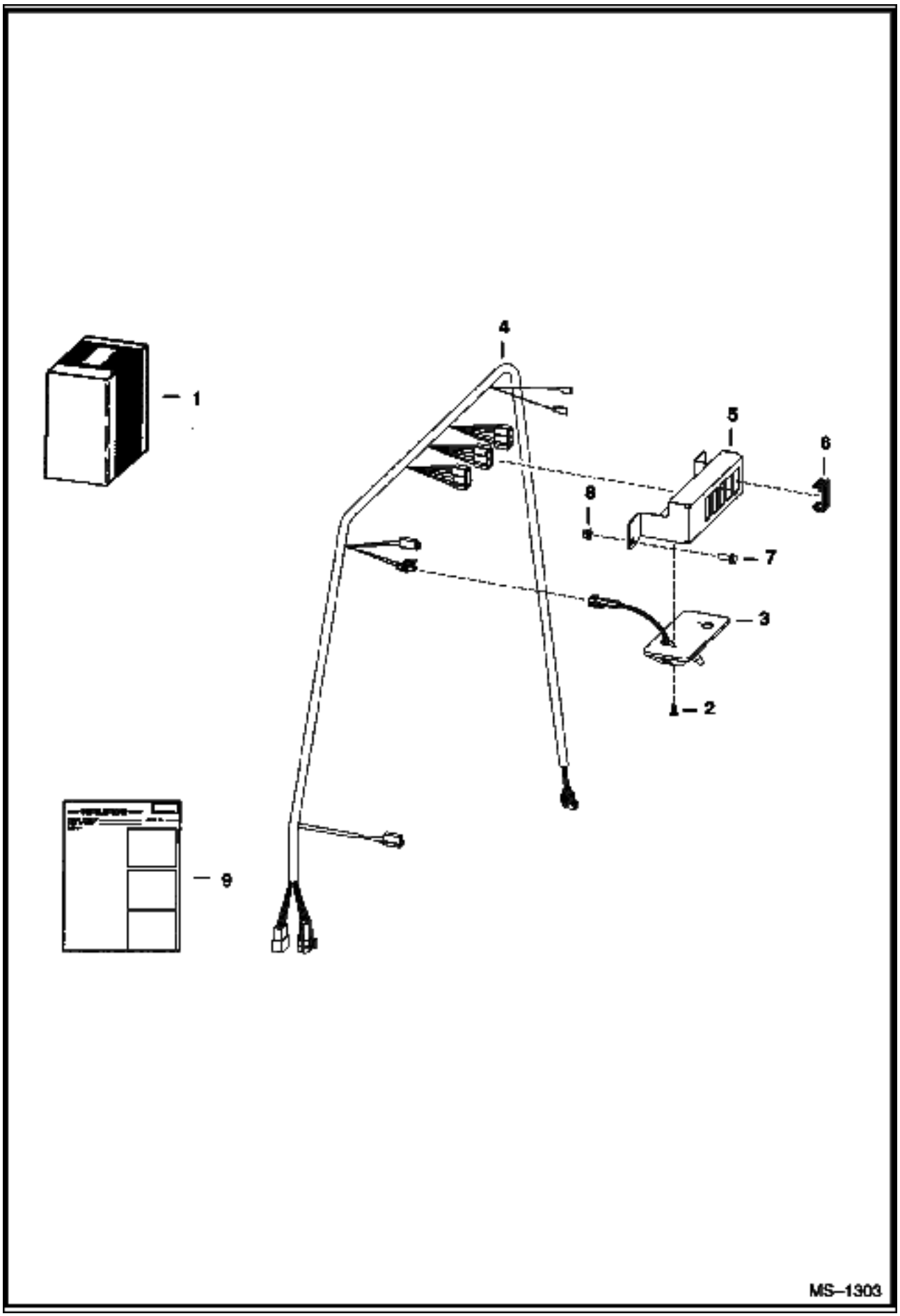

SIDE INSTRUMENT PANEL KIT (Cont'd)

Ref No	Part Number	Description	Remarks	Serial Number	Qty
1	6730835	KIT	side panel - Ref. 2 - 9		1
2	6664221	RETAINER			1
3	6680326	LIGHT	assy - Was 6664368 [A]		1
3	6665367	BULB			1
4	6729789	HARNESS	accessory		1
5	6730826	SIDE PANEL			1
6	6665314	PLUG	switch		5
7	35C000412B	BOLT			2
8	83D000004B	NUT			2
9	6901440	INSTRUCTIONS			1

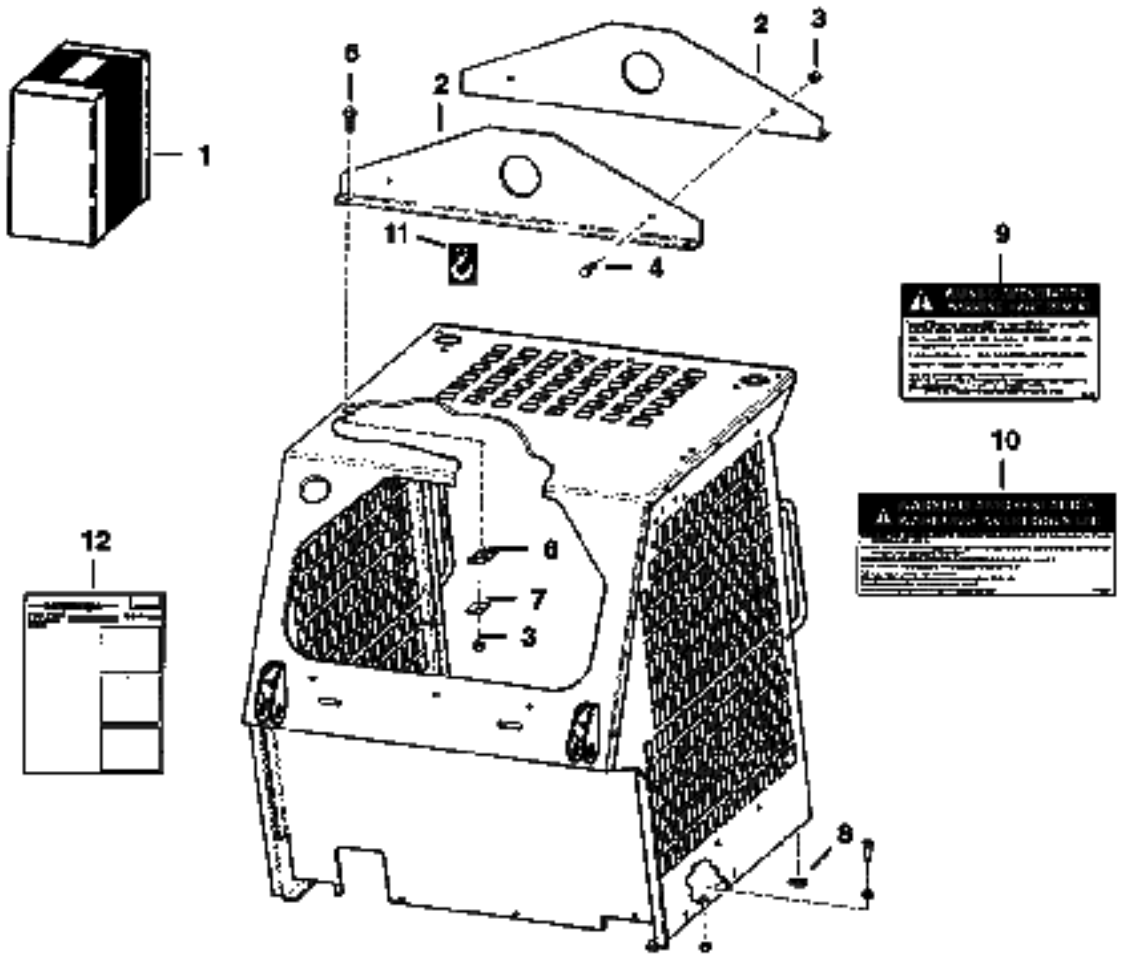
1
2
3
5
2
11
4
9
10
12
6
7
3
8
D–1558

Ref No	Part Number	Description	Remarks	Serial Number	Qty
1	6565785	KIT	Ref. 2-12		1
2	6565492	HITCH			2
3	85D000006B	NUT			6
4	17C000612B	BOLT			2
5	17C000620B	BOLT			4
6	6565493	SHIM			4
7	6559447	WASHER			4
8	6565600	RETAINER			2
9	6565491	DECAL	safety		2
10	6592879	DECAL			2
11	6533898	DECAL			1
12	6566541	INSTRUCTIONS			1

SOUND REDUCTION HARDHAT

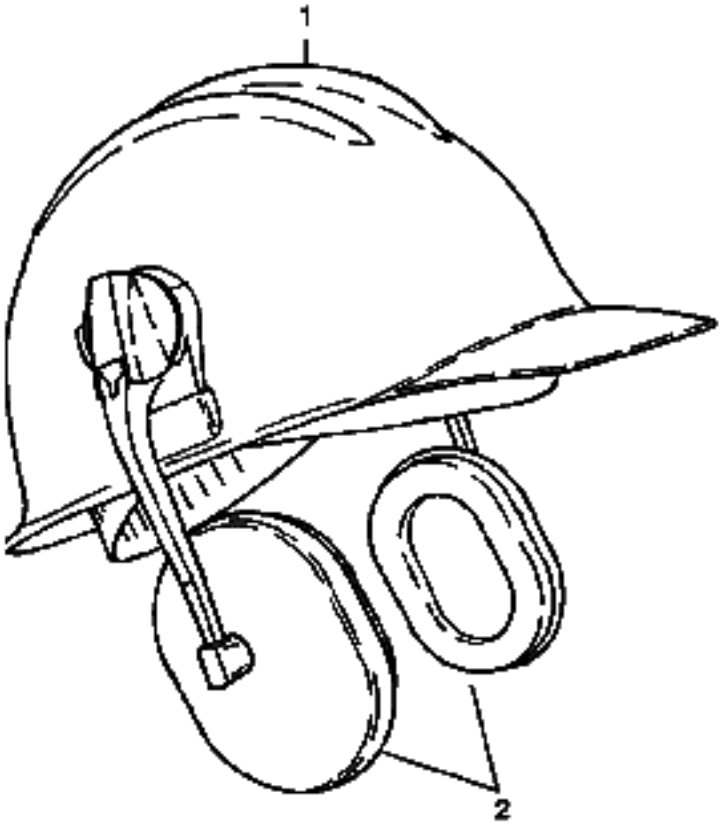

Ref No	Part Number	Description	Remarks	Serial Number	Qty
1	6559552	HARDHAT			1
2	6559775	EARMUFFS			1

STROBE LIGHT
(Amber - 3414ALW)

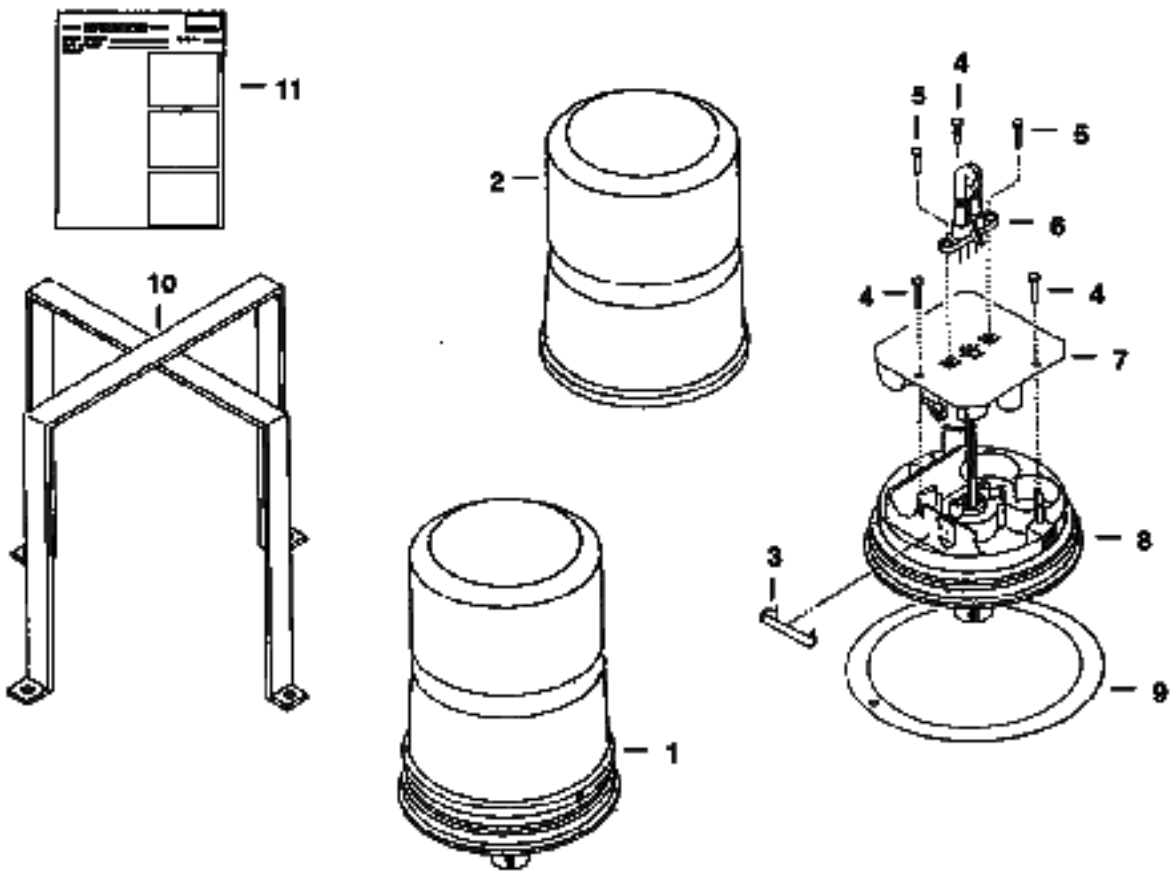

STROBE LIGHT (Cont'd)
(Amber - 3414ALW)

Ref No	Part Number	Description	Remarks	Serial Number	Qty
1	6587526	KIT	strobe light - Ref. 2 - 11		1
2	6665021	LENS	amber		1
2	6665025	LENS	blue - Not in Kit		1
3		RETAINER	NSS		1
4		SCREW	NSS		3
5		SCREW	NSS		1
6	6665022	FLASH TUBE			1
7		POWER SUPPLY	NSS		1
8		BASE	NSS		1
9	6665023	GASKET			1
10	6665024	BRANCH GUARD			1
11	6720856	INSTRUCTIONS			1

SUSPENSION SEAT
(Grammer)

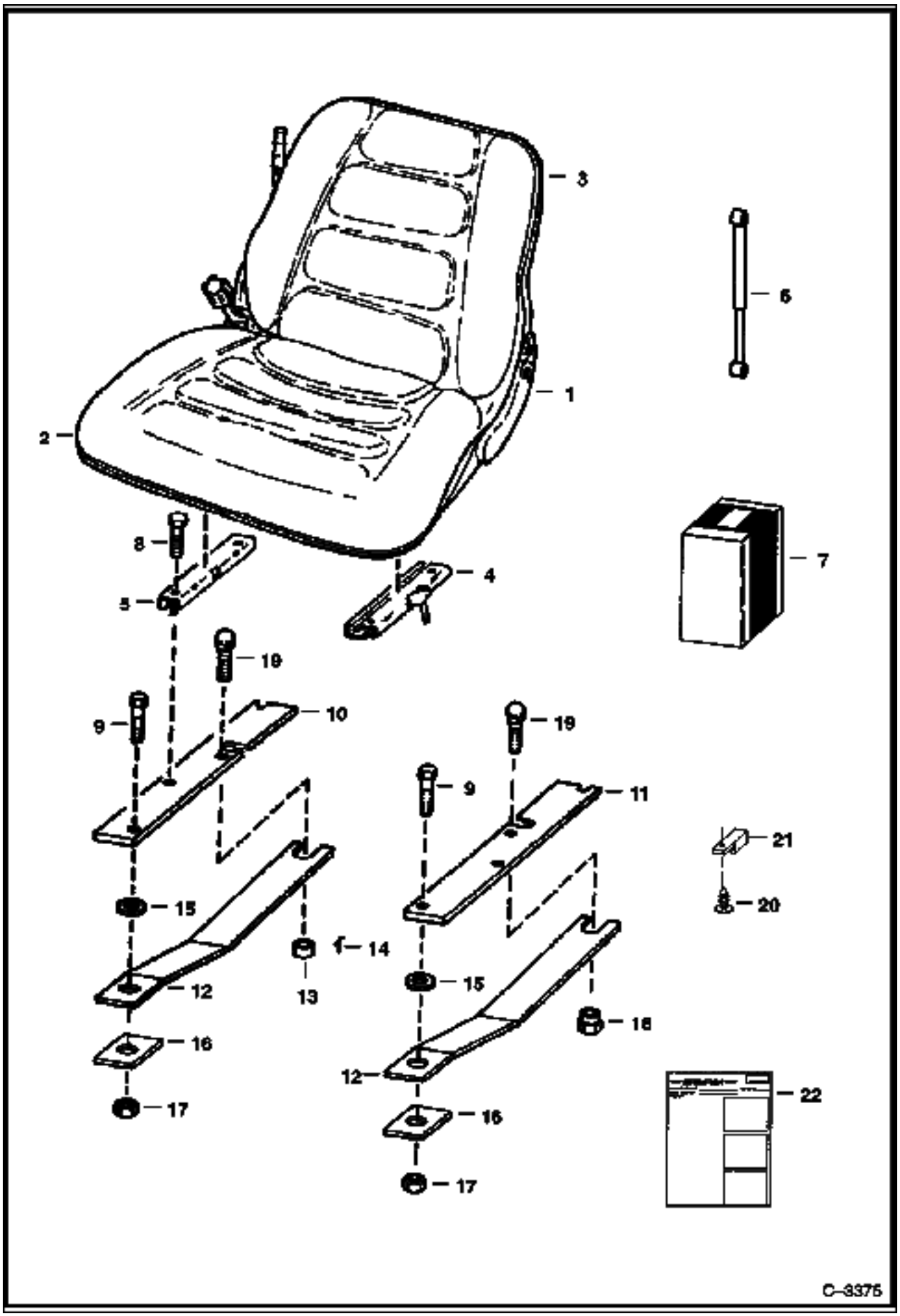

SUSPENSION SEAT (Cont'd)
(Grammer)

Ref No	Part Number	Description	Remarks	Serial Number	Qty
1	6632388	SEAT	Also Order Ref. 7 - Seat Mount Kit for first time conversions		1
2	3737010B	CUSHION	seat		1
3	3737081B	CUSHION	backrest		1
4	3737000B	TRACK	W/Adjusting Handle		1
5	3737001B	TRACK	W/O Adjusting Handle		1
6	6660348	GAS SPRING			1
7	6708523	KIT	seat mount - Ref. 9 - 11, 16 & 19 - 22 - used to relocate seat sensor forward a distance of 4.6"(116,8 mm) & widens seat mount holes to 12.91"(327,9 mm)		1
8	17C000512B	BOLT			4
9	17C000508B	BOLT		& Below	4
10	6712183	MOUNT	R.H.	& Below	1
11	6712186	MOUNT	L.H.	& Below	1
12	6706966	SPRING	plate		2
13	6710751	BUSHING	spacer		1
14	6680523	KEY	magnet bushing - Was 6664881 [A]		1
15	6706890	WASHER			2
16	6710622	WASHER			2
17	61D000005B	NUT			2
18	6707319	NUT	spacer		1
19	37C000516B	BOLT	carriage	& Below	2
20	6664221	RETAINER			1
21	6665000	CLIP			1
22	6724161	INSTRUCTIONS			1

SUSPENSION SEAT
(Michigan)

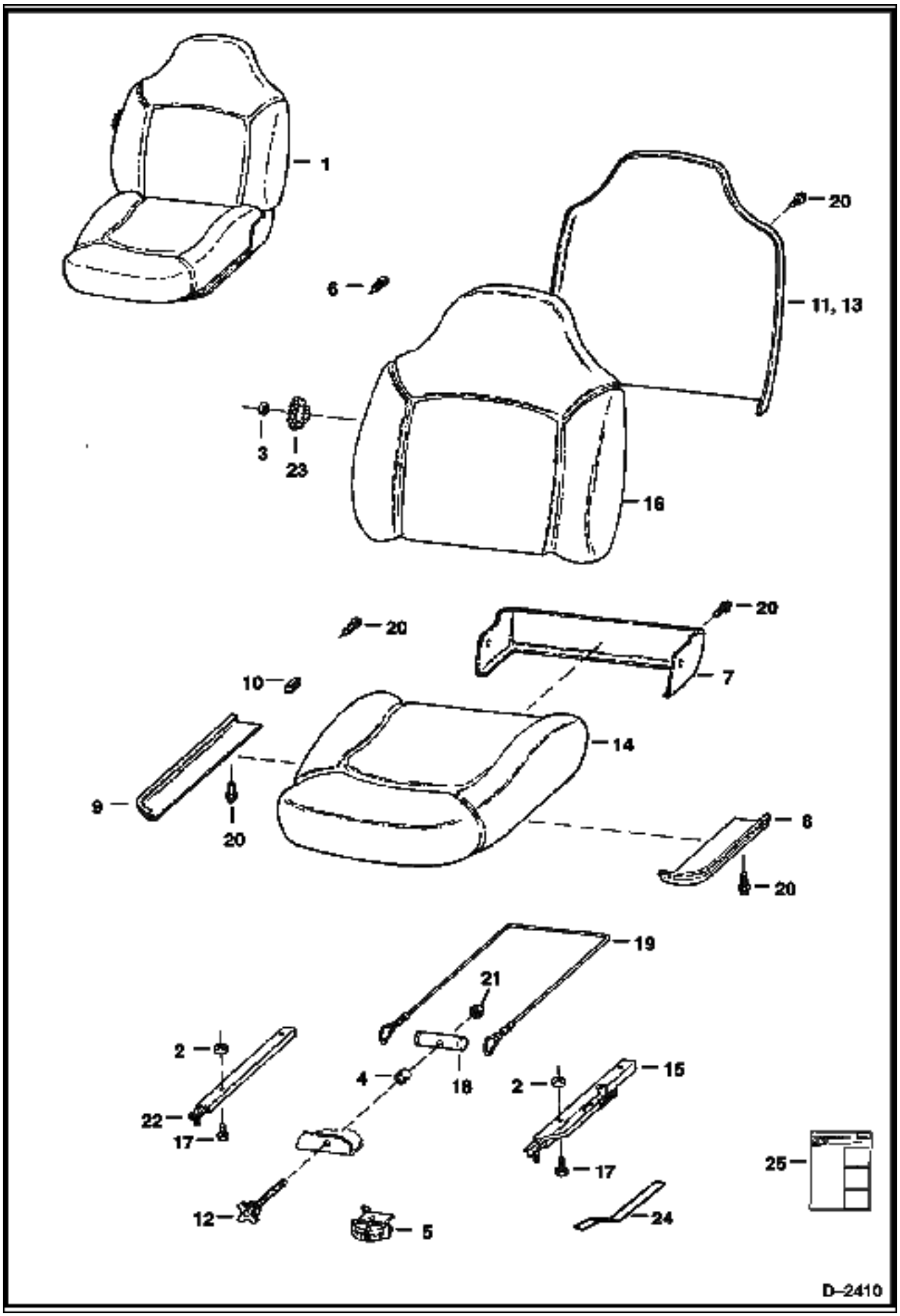

SUSPENSION SEAT (Cont'd)
(Michigan)

Ref No	Part Number	Description	Remarks	Serial Number	Qty
1	6674019	SEAT	Ref. 2 - 23- Also Order Ref. 24 & 25		1
2	6672715	SPACER			4
3	6672738	NUT			1
4	6672717	SPACER			1
5	6672718	INDICATOR			1
6	6672719	CLIP			7
7	6672720	COVER			1
8	6672721	FENDER	L.H.		1
9	6672722	FENDER	R.H.		1
10	6672723	CLIP			2
11	6672724	PANEL			1
12	6672725	KNOB			1
13	6672726	FRAME			1
14	6672727	CUSHION	seat		1
15	6674013	TRACK	L.H. - W/8" (203,2mm) latch		1
16	6672729	CUSHION	back		1
17	6672730	BOLT			4
18	6672731	BAR			1
19	6672732	CABLE			2
20	6672733	BOLT			14
21	6672734	NUT			1
22	6669089	TRACK			1
23	6674263	KNOB			1
23	6672736	DECAL			1
24	6706966	SPRING	plate		1
25	6724017	INSTRUCTIONS			1

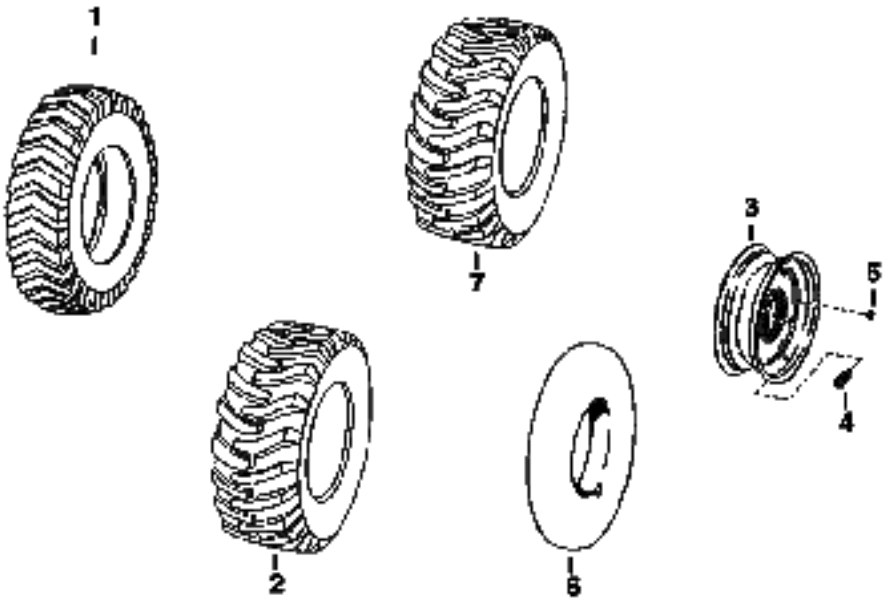
1
7
3
5
4
2
6
B–17627

Ref No	Part Number	Description	Remarks	Serial Number	Qty
1		TIRE	NAP - 23 x 5.70 x 12 - 4 Ply Rating Goodyear - Was 6555716 [A]		4
1		TIRE	NAP - 23 x 5.70 x 12 - 4 Ply Rating Armstrong-Dico - Order 6730103 - Was 6652526 [A]		4
2		TIRE	NAP - 23 x 8.50 x 12 - 4 Ply Rating Goodyear - Was 6555715 [A]		4
2	6652525	TIRE	23 x 8.50 x 12 - 4 Ply Rating Armstrong-Dico		4
2		TIRE	NA"P - Dico-Heavy Duty - 8.5 x 12 - 6 Ply Rating - Order 6661602 - Was 6667891 [A]		4
2		TIRE	NAP - 23 x 8.50 x 12 - turf - Order 6730104 - Was 6677708 [A]		4
3	6716074	RIM	See BTI197 Use W/Ref. 1 - 12 x 5		4
3	6716075	RIM	See BTI197 Use W/Ref. 2 - 12 x 7		4
4	6500879	VALVE STEM			4
5	6561152	NUT			20
6	6593430	TUBE	Use W/Ref. 2		4
7		TIRE	NAP - Bobcat 23 x 8.50-12 - 6 Ply Rating - Order 6661602 - Was 6729894 [A]		4

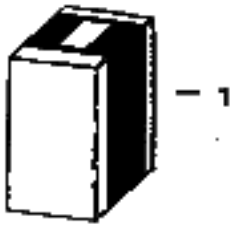

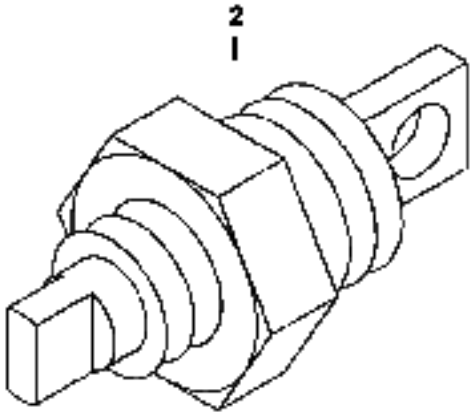



M3-1198

Ref No	Part Number	Description	Remarks	Serial Number	Qty
1	6729334	KIT	tow - Ref. 2 - 11		1
2	6677670	VALVE			2
3	6901249	INSTRUCTIONS			1

WATER LEVEL SENSOR KIT

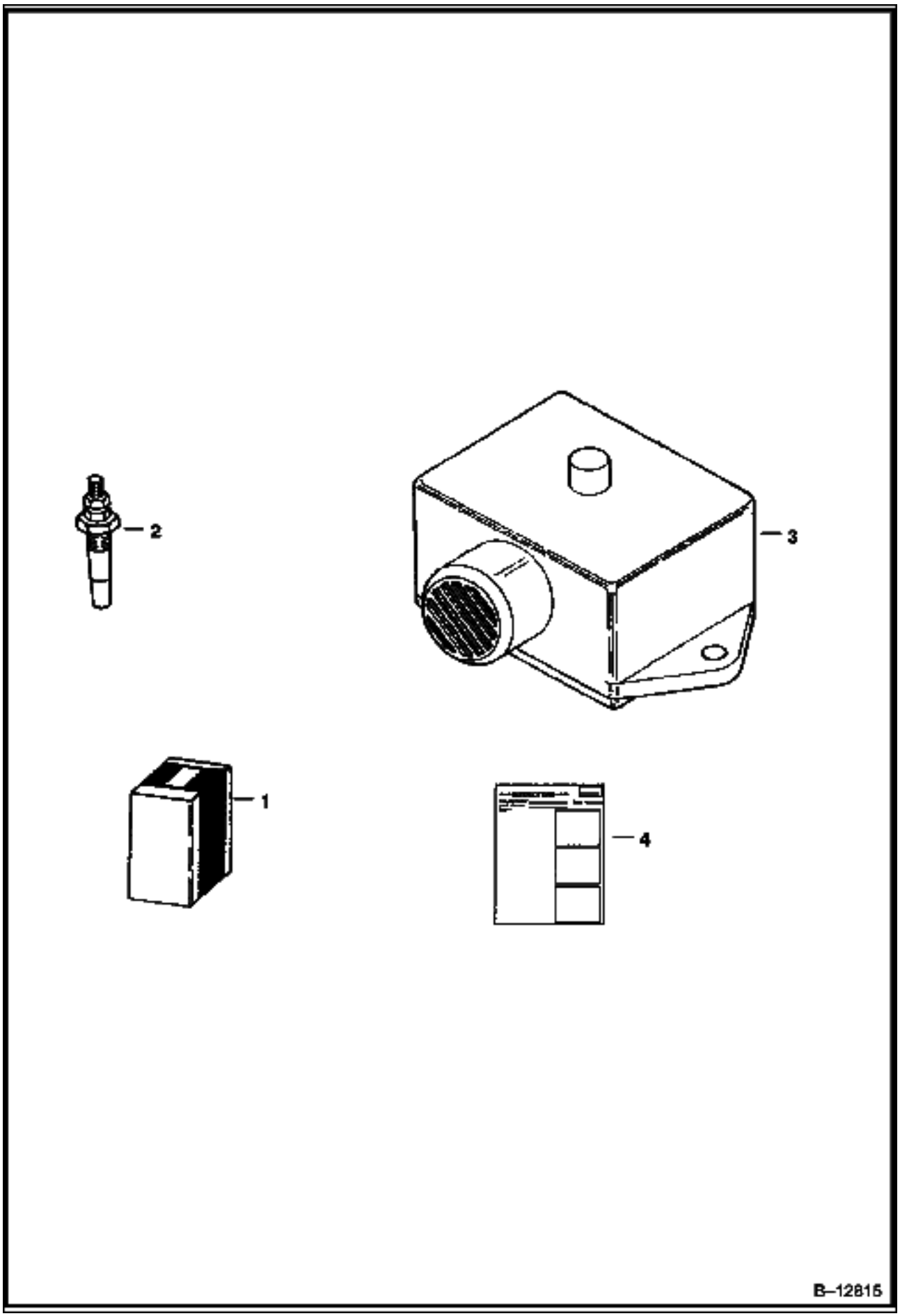

WATER LEVEL SENSOR KIT (Cont'd)

Ref No	Part Number	Description	Remarks	Serial Number	Qty
1	6571700	KIT	water level sensor - Ref. 3 - 4		1
2	6632954	PROBE			1
3		ALARM	NSS		1
4	6570238	INSTRUCTIONS			1

BULK ITEMS
(See Note)

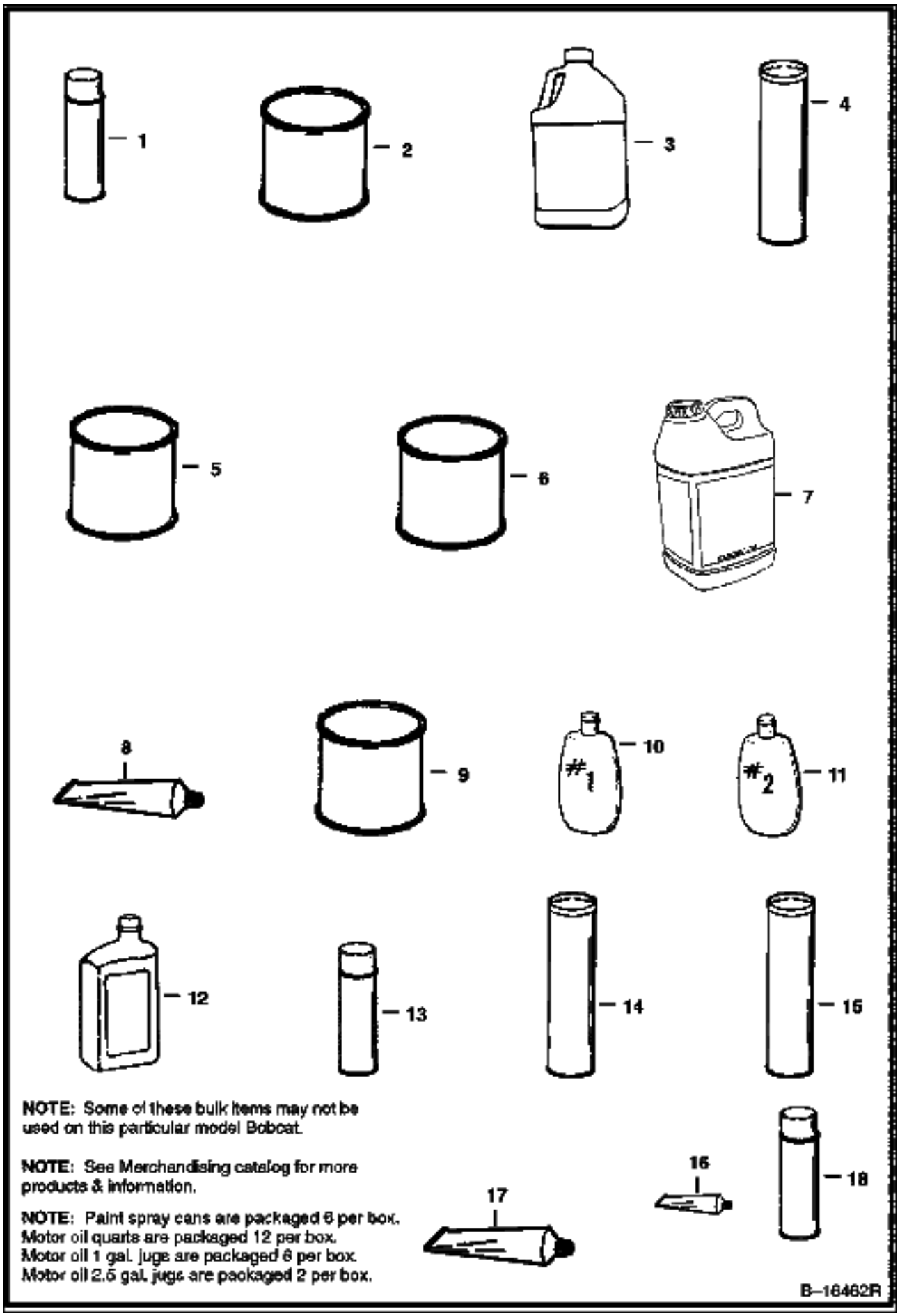

BULK ITEMS (Cont'd)
(See Note)

Ref No	Part Number	Description	Remarks	Serial Number	Qty
1	6902228	PAINT	orange - Spray Can - See Note - Was 6722783 [A]		x
1	6902229	PAINT	charcoal - Spray Can - See Note - Was 6722786 [A]		x
1	6902230	PAINT	white - Spray Can - See Note - Was 6722789 [A]		x
2		PAINT	NAP - orange - Gal. - Also Order Ref. 5 - Was 6722781 [A]		x
2	6902233	PAINT	orange - Qt. - Also Order Ref. 5 - Was 6722782 [A]		x
2		PAINT	NAP - CHARCOAL - GAL. - Also Order Ref. 5 - Was 6722784 [A]		x
2	6902234	PAINT	charcoal - Qt. - Also Order Ref. 5 - Was 6722785 [A]		x
2		PAINT	NAP - white - Gal. - Also Order Ref. 5 - Was 6722787 [A]		x
2	6902235	PAINT	white - Qt. - Also Order Ref. 5 - Was 6722788 [A]		x
3	6724094	ANTI-FREEEZE	gallon - premixed PG		x
3	6724354	ANTI-FREEZE	gallon - concentrate PG		x
4	6633583	SEALANT	chaincase covers		x
5		REDUCER	NAP - gallon - Was 6653517 [A]		x
6		PRIMER	NAP - gallon - Was 6653518 [A]		x
6	6653519	PRIMER	Qt.		x
7	6903117	HYD FLUID 2.5 GAL.	Was 6563328 [A]		x
7	6903118	HYD. FLUID 5GAL	Was 6722344 [A]		x
7	6903119	HYD. FLUID 55GAL	Was 6563330 [A]		x
8	6599360	SEALANT	electrical - 3 oz. tube		x
9	6903121	GEAR LUBE 12	Was 6634393 [A]		x
10	6630188	POLISH	window-1 (8 oz.)		x
11	6630189	POLISH	window-2 (8 oz.) - scratch remover		x
12	6903109	OIL 30W QT. 12	Was 6657303 [A]		x
12	6903110	OIL 30W GAL. 6	Was 6724559 [A]		x
12	6903111	OIL 30W 2.5 GAL 2	Was 6674206 [A]		x
12	6903107	OIL 10W30 QT. 12	Was 6657301 [A]		x
12	6903108	OIL 10W30 GAL. 6	Was 6724557 [A]		x
12	6903112	OIL 10W30 2.5 GAL 2	Was 6674205 [A]		x
12	6903105	OIL 15W40 QT. 12	Was 6657299 [A]		x
12	6903106	OIL 15W40 GAL. 6	Was 6724558 [A]		x
12	6903113	OIL 15W40 2.5 GAL. 2	Was 6674204 [A]		x
13	6675380	ADHESIVE	insulation - spray can		x
14	6903122	GREASE 10	Was 6658266 [A]		x
15	6599719	GREASE	14.5 oz. cart. - For fan idler brg.		x
16	6650407	ADHESIVE	1 oz. tube		x
17	6650388	SEALANT	flange		x
18	6736644	PAINT	orange - 5 oz. spray can		x
18	6736641	PAINT	charcoal - 5 oz. spray can		x
18	6736642	PAINT	white - oz. spray can		x
18	6736645	PAINT	red - oz. spray can		x

Code for disposition of old part number

A -- Use up

B -- Use on other application (See PNI)

C -- File PDR Report with Bobcat Parts Sales

D -- Part Number Error

Part No.	Description	Was	Code	Page
10C000512B	BOLT	17C000512B	B	11, 12, 178, 198
10C000512B	BOLT			11, 12, 178, 198
10H000025B	GREASE ZERK			12, 28
10H000035B	GREASE ZERK			12, 14
10J000005B	BALL			150
10K000003B	TEE			50
11H000015B	GREASE ZERK			28
11H000025B	GREASE ZERK			12
12D000006B	NUT			228, 236
12D000008B	NUT			212
12D000010B	NUT			220
1306637B	PIN			6
1312337B	ELBOW			46
1314348B	CONNECTOR			46
1318565B	PIN			202
13D000006B	NUT			30
14D000010B	NUT			66
14J002512B	ROLL PIN			8
14J005032B	PIN			14
14K000006B	TEE			178
15EM00180B	WASHER			94, 136
15KB00404B	ADAPTER			50
15KB00606B	ADAPTER			50
15KB00610B	ADAPTER			36
15KB00810B	CONNECTOR			30, 48
15KB01010B	ADAPTER	15K000007B	A	46
15KB01012B	ADAPTER			50
17C000410B	BOLT			212
17C000412B	BOLT			25, 26, 224
17C000420B	BOLT			180, 188
17C000428B	BOLT			50
17C000508B	BOLT			200, 212, 248
17C000512B	BOLT			6, 180, 188, 248
17C000516B	BOLT			188, 210, 216
17C000532B	BOLT			202
17C000536B	BOLT			178
17C000608B	BOLT			8
17C000612B	BOLT			8, 46, 202, 242
17C000616B	BOLT			188, 198
17C000620B	BOLT			30, 46, 52, 198, 242
17C000624B	BOLT	17C000628B	B	8, 52
17C000624B	BOLT			8, 52
17C000636B	BOLT			52
17C000648B	BOLT			14
17C000652B	BOLT			78
17C000712B	BOLT			8
17C000716B	BOLT			8, 78
17C000824B	BOLT			12
17C001048B	BOLT			6
17E000006B	WASHER			172, 214
17KB00404B	ELBOW			50
17KB00606B	ELBOW			50
17KB00806B	FITTING	672942B	A	46
17KB00808B	ELBOW			46

Code for disposition of old part number

A -- Use up

B -- Use on other application (See PNI)

C -- File PDR Report with Bobcat Parts Sales

D -- Part Number Error

Part No.	Description	Was	Code	Page
17KB00810B	ELBOW			28, 178
17KB01010B	ELBOW			46
17KB01012B	ELBOW			50
18C000616B	BOLT			78
18KB01010B	ADAPTER			50
1990599B	SEAL			34
1992088B	SPRING			62
1992102B	PIN			62
1992104B	PLUG			62
19F000002B	BUSHING			66
19F000005B	REDUCER			236
19F000012B	BUSHING			176
1C000512B	BOLT			64
1CM00614B	BOLT			80, 182
1CM00620B	BOLT			80, 180, 188
1CM00635B	SCREW			188
1CM00640B	BOLT			180, 188
1CM00660B	BOLT			80
1CM00665B	BOLT			80
1CM00835B	BOLT			118, 158
1CM00880B	SCREW			80
1CM08110B	SCREW			80
1DM00006B	NUT			94, 106, 112, 136, 148, 152
1DM00007B	NUT			90, 132
1F000612B	PIN, COTTER			198
214028B	DOWEL			56, 58
21JM00814B	PIN			92, 134
21KB00610B	TEE			178
21KB00808B	TEE			46
24K000010B	PLUG			48
25E000011B	WASHER			74
25E000013B	WASHER			26, 198, 226
25E000015B	WASHER			6, 64, 66, 216
25E000016B	WASHER			180, 188
25E000017B	WASHER			8, 52, 202
25E000018B	WASHER			78, 82, 188
25E000021B	WASHER			198, 226
25E000025B	WASHER			202
25G000410B	BOLT			188
25G000412B	BOLT	25G000410B	B	64, 78, 180
25G000412B	BOLT			64, 78, 180
25G000508B	SCREW			180
25G000510B	SCREW			66, 172, 214
25G000512B	BOLT			10
25G000520B	BOLT			10
25G000616B	BOLT			6
25K020308B	O-RING			54
25K040400B	O-RING			22
27E000006B	WASHER			28, 178
29CM00612B	SCREW			160
29G000412B	SCREW			36
29G000416B	SCREW			36
29G000444B	BOLT			36
29G000448B	SCREW			38

Code for disposition of old part number

A -- Use up
B -- Use on other application (See PNI)
C -- File PDR Report with Bobcat Parts Sales
D -- Part Number Error

Part No.	Description	Was	Code	Page
2EM00007B	WASHER			90, 132
2F006106B	PIN			214
2KM00100B	O-RING			112
30H000022B	CLIP			172
30H000027B	CLIP			168, 170
30H000055B	CLAMP			64
30H000056B	CLAMP			64
30H000060B	CLAMP			74
30R000107B	TERMINAL			236
31C000512B	BOLT			188
31C000832B	BOLT	17C000828B	B	4
3292657B	BEARING			56, 58
33C000824B	BOLT			12
35C000408B	BOLT			236
35C000410B	BOLT	17C000512B	B	8, 64, 172, 190, 200, 208, 212, 216, 228
35C000410B	BOLT			8, 64, 172, 190, 200, 208, 212, 216, 228
35C000412B	BOLT			18, 240
35C000508B	BOLT			74
35C000510B	BOLT			20, 212
35C000512B	BOLT	31C000512B	B	49, 50, 66, 74, 76, 180, 198
35C000512B	BOLT			49, 50, 66, 74, 76, 180, 198
35C000514B	BOLT			82, 224
35C000516B	BOLT			16, 198
35C000612B	BOLT			8, 30, 51, 52
35C000614B	BOLT			224
35C000616B	BOLT			44, 76, 202
35C000620B	BOLT			188
35C000624B	BOLT			52
35C000716B	BOLT			236
35C000840B	BOLT			78, 80
36K000006B	CAP			80
3737000B	TRACK			248
3737001B	TRACK			248
3737010B	CUSHION			248
3737081B	CUSHION			248
37C000512B	BOLT			172
37C000516B	BOLT			74, 76, 248
37C000532B	BOLT	10C000528B	B	28, 30, 48, 178
37C000532B	BOLT			28, 30, 48, 178
37C000620B	BOLT			30, 178
37C000632B	BOLT			28, 82, 178
37C000816B	BOLT			202
37C000820B	BOLT			4
3966515B	O-RING			94
3966516B	O-RING			122
3966602B	O-RING			86
3974033B	CAP			88, 130
3974038B	O-RING			88, 92, 130, 134
3974039B	PIN			92, 134
3974056B	CAP			88, 130
3974095B	GASKET			92, 134
3974114B	JOINT			94
3974161B	COLLET			90, 132
3974171B	ORIFICE			90

Code for disposition of old part number

A -- Use up

B -- Use on other application (See PNI)

C -- File PDR Report with Bobcat Parts Sales

D -- Part Number Error

Part No.	Description	Was	Code	Page
3974260B	BOLT			114, 154
3974433B	CAP			92, 134
3974503B	STUD			94, 112
3974882B	BRACKET			87, 88, 129, 130
3974928B	SCREW			86, 128
3974945B	WASHER			100, 142
3974972B	GASKET			104, 112, 114, 146, 152, 154
3975022B	WASHER			142
40K000002B	PLUG			46
42H000032B	CLAMP			198
42HC00250B	CLAMP			216
42HL00250B	CLAMP			76
42HL00300B	CLAMP			76
42HS00004B	CLAMP	42HL00050B	B	74
43C000524B	BOLT			40
43C000532B	BOLT			40
43C000610B	BOLT	17C000610B	B	26, 43, 44
43C000610B	BOLT			26, 43, 44
43DM00008B	NUT	6677843	B	66, 182
43DM00008B	NUT			66, 182
45C000616B	BOLT	35C000616B	B	8
45C000620B	BOLT			78
45G001006B	BOLT			220
46D000005B	NUT			180, 188
47C000820B	BOLT			26
47K000006B	FITTING			38
48C001024B	BOLT			23, 24
48C001228B	BOLT			24
4CM00614B	BOLT			104, 146
4CM00616B	BOLT			96, 112, 118, 138, 144, 152, 158
4CM00618B	BOLT			112, 152
4CM00620B	BOLT			98, 140
4CM00625B	BOLT			98, 140
4CM00630B	BOLT			120, 124, 160, 164
4CM00635B	BOLT	1CM00635B	D	180
4CM00835B	BOLT			80
4DM00006B	NUT			66, 180, 188
4F006106B	PIN			8
53DM00008B	NUT			80
54K020002B	O-RING			38
54K020028B	O-RING			40
54K030118B	O-RING			32
54K030218B	O-RING			34
54K040124B	O-RING			32
54K040224B	O-RING			34
54K040300B	O-RING			34
55CM00816B	BOLT			76
55D000004B	NUT			236
55D000005B	NUT			172, 214
55D000007B	NUT			236
55K000204B	O-RING			36, 40
55K000212B	O-RING			40
57D000005B	NUT			16, 76, 82
57D000006B	NUT			16, 198

Code for disposition of old part number

A -- Use up
B -- Use on other application (See PNI)
C -- File PDR Report with Bobcat Parts Sales
D -- Part Number Error

Part No.	Description	Was	Code	Page
57D000008B	NUT			4
58G000808B	SCREW			200, 208
58K000014B	O-RING			36
58K000015B	O-RING			36
58K000017B	O-RING			36
58K000116B	O-RING			42
58K000127B	O-RING			38
58K000136B	O-RING			32
59D000004B	NUT			198, 226
59D000005B	NUT			8, 66, 180, 188
59D000006B	NUT			6, 28, 30
59D000008B	NUT			6
5HM00013B	CLAMP			16, 50
5HM00015B	CLAMP	5HM00014B	B	16, 224
5HM00015B	CLAMP			16, 224
5HM00020B	CLAMP			80
5HM00023B	CLAMP			46, 224
5HM00035B	CLAMP			46, 74
5HM00036B	CLAMP			74
5HM00038B	CLAMP			46
5JM00024B	CIRCLIP			224
5JM00032B	SNAP RING			224
614142B	SLEEVE			236
616783B	WASHER			78
619021B	WASHER	6557831	B	8, 14
619021B	WASHER			8, 14
61D000004B	NUT			180, 188
61D000005B	NUT			6, 64, 248
61D000006B	NUT			52, 82
62D000004B	NUT			82
62D000006B	NUT			30, 198, 202
6500879	VALVE STEM			252
6500989	CLAMP			28, 30
6505623	WASHER			82
6505813	CONNECTOR			76
6510470	RING GEAR			78
6512026	BUSHING			30
6512027	BUSHING			52
6512664	COTTER PIN			214
6512954	ROD END			198
6512955	SWIVEL			30
6513152	SEAL			190
6513482	SWITCH			197, 198, 226
6513963	GRIP			52
6515007	GAUGE			76
6515156	CONNECTOR	6592277	A	76
6515186	CONNECTOR			30, 44
6515817	WASHER	6564692	B	6, 78, 80
6515817	WASHER			6, 78, 80
6516231	RING			32
6517924	CONNECTOR			236
6518200	GREASE ZERK			52
6519178	BUMPER			12
6519548	CONNECTOR			64, 200, 230

Code for disposition of old part number

A -- Use up
B -- Use on other application (See PNI)
C -- File PDR Report with Bobcat Parts Sales
D -- Part Number Error

Part No.	Description	Was	Code	Page
6520555	HOSE			198
6530859	HOSE			28
6531270	SLEEVE			36
6531618	CROSSMEMBER			64
6532127	BOOT			20, 198
6532347	SPACER			78
6533898	DECAL			242
6534973	PLUG			38
6539323	HEAD			32
6540714	SAFETY TREAD			194
6542731	SAFETY TREAD			180, 188
654386B	BEARING			56, 58
6552871	WASHER			24
6552906	BRACKET			236
6553081	BOLT			52
6553411	BUSHING			16, 26, 50, 74
6553422	COVER			28
6553709	WASHER			6
6554100	TREAD			194
6554149	CORD			180, 188, 190, 216
6554858	BALL JOINT			82
6555331	WIRE ROPE			188, 216
6555351	SEAL			190
6557224	DECAL			196
6557720	HOSE			76
6557831	WASHER			80
6557904	FLASHER			200, 208, 212
6558142	HOUSING			64, 230
6558309	WIRE ROPE			194
6558310	SLEEVE			194
6558736	FLANGE			52
6559447	WASHER			16, 46, 242
6559479	NUT			8
6559552	HARDHAT			243, 244
6559775	EARMUFFS			244
6560573	DECAL			196
6560633	DAMPENER			6, 78, 80
6561152	NUT			4, 24, 252
6561383	DECAL			194
6562127	WASHER			82
6562198	SPACER			78
6562224	BUSHING			4
6562225	HINGE			18
6562266	CLAMP			34
6562602	BUSHING			6
6562656	ADAPTER			46
6563612	BUSHING			198
6563740	LAMP			64, 230
6563795	WASHER			24
6563798	SPROCKET			21, 22, 24
6563829	BUSHING			4, 12
6563830	BUSHING			14
6563845	PIN			12
6563846	PIN			12

Code for disposition of old part number

A -- Use up

B -- Use on other application (See PNI)

C -- File PDR Report with Bobcat Parts Sales

D -- Part Number Error

Part No.	Description	Was	Code	Page
6563847	PIN			12
6563848	PIN			12
6563914	WASHER			52, 78
6563920	FILTER			48
6563977	INSERT			46
6563978	SPRING			46
6563997	RETAINER			6
6563998	U-BOLT			6
6564037	BAND			16
6564038	MOUNT			16
6564143	DIPSTICK			45, 46
6564151	BAND			46
6564192	PIN			4, 17, 18
6564198	PIN			12
6564241	GUIDE			52
6564244	PINTLE LEVER			52
6564275	LEVER			82
6564340	PIN			4, 18
6564343	SPACER			82
6564452	GRIP			82
6564681	WEIGHT			4
6564740	WASHER			22
6564741	BOLT			22
6564808	DECAL			196
6564907	SOCKET ASSY			64, 230
6565068	PLATE			6
6565200	DECAL			196
6565227	CHAIN			198
6565491	DECAL			242
6565492	HITCH			242
6565493	SHIM			242
6565524	HEADLINER			216
6565526	STOP			198
6565600	RETAINER			242
6565785	KIT			241, 242
6565793	KIT			219, 220
6565990	DECAL			196
6566539	INSTRUCTIONS			220
6566541	INSTRUCTIONS			242
6566957	INSTRUCTIONS			190
6567968	WIRE			236
6569203	CLAMP			65, 66
6570238	INSTRUCTIONS			256
6571700	KIT			255, 256
6571857	BELT			80
6571991	GUIDE			8
6575580	GASKET			76, 124
6576048	DECAL			196
6576280	BOLT			66
6577545	GROMMET			172
6577754	DECAL			196
6577801	LIGHT			64, 230
6577821	HOSE			16, 50
6577822	HOSE			16, 74

Code for disposition of old part number

A -- Use up

B -- Use on other application (See PNI)

C -- File PDR Report with Bobcat Parts Sales

D -- Part Number Error

Part No.	Description	Was	Code	Page
6578253	SPRING			14
6578268	BELLCRANK			81, 82
6579072	SPRING			12
6579385	DECAL			216
6579402	DECAL			216
6579510	DECAL			194
6579511	DECAL			196
6579528	DECAL			194
6584978	CONDUIT			236
6586251	HOSE			224
6586307	RETAINER			12
6586918	SCREW			36
6587458	KEY			232
6587523	WASHER			36
6587526	KIT			245, 246
6587575	ADAPTER			36
6587580	SPRING			36
6587763	BOOT			36
6589226	BONNET			36
6589564	RETAINER			36
6589565	BUSHING			36
6592098	WASHER			36
6592100	COLLAR			36
6592105	BALL			36
6592107	SPRING			36
6592109	ADAPTER			36
6592115	SEAT			36
6592116	NUT			36
6592117	SPRING			36
6592720	PLUG			36
6592765	WASHER			24
6592879	DECAL			242
6593243	WINDOW			188
6593244	WINDOW			188
6593389	PIN			6
6593390	SPRING			6
6593418	GASKET			26
6593430	TUBE			252
6594283	WIRE			6, 64
6594284	SPRING			8
6594298	NUT			8, 44
6595663	BUSHING			36
6596807	PLUG			36
6598097	O-RING			94
6598098	PIN			112, 152
6598116	PLUG			88, 92, 130, 134
6598168	SCREW			96
6598703	SEAL			112, 152
6598829	SEAL			24
6598830	BALL JOINT			82
6598855	COUPLER			54
6598875	WASHER			58
6598878	RACE			56, 58
6598880	KEY			58, 78

Code for disposition of old part number

A -- Use up
B -- Use on other application (See PNI)
C -- File PDR Report with Bobcat Parts Sales
D -- Part Number Error

Part No.	Description	Was	Code	Page
6598893	GROUP			56, 58
6598894	SHAFT			58
6598906	BUSHING			44
6598908	ELBOW			50, 74
6598910	GAUGE			16
6599116	GASKET			86, 128
6599136	CLIP			114, 154
6599360	SEALANT			258
6599455	VALVE			16
6599719	GREASE			258
6599741	WASHER			52
6599744	BALL JOINT			30, 202
6599931	ALARM			172
6610510	TIE			172, 180, 214, 236
661415B	SNAP RING			56, 58
6620452	PLUG			212, 216
6624289	STA STRAP			16, 66, 168, 170, 192
6625575	FUSE			66
6628571	VALVE ASSY			39, 40
6630027	BALANCE RING			62
6630100	EXTINGUISHER			220
6630170	KEY			52, 56, 58
6630188	POLISH			258
6630189	POLISH			258
6630207	RIVET			20, 238
6630821	SWITCH			236
6630919	TRACK			190
6630924	BRACKET			190
6631010	SWITCH			66
6631418	PIN			8
6631548	LOOP			190, 216
6631549	HOOK			190, 216
6631561	NUT			42
6632265	PLUG			190
6632288	VALVE			62
6632348	HOUSING			62
6632388	SEAT			247, 248
6632435	BALL			70
6632469	ADHESIVE			216
6632633	SWITCH			66
6632954	PROBE			256
6633583	SEALANT			258
6633672	BEARING			24
6634873	PLUG			58
6634874	O-RING			42, 56, 58
6635527	SEAL			58
6640690	PIN			68, 236
6640691	PIN			68, 236
6640699	CONNECTOR			68, 168, 170
6640700	LOCK			68, 168, 170
6641176	SEAL			68, 236
6641178	CONNECTOR			68, 168, 170, 236
6641179	CONNECTOR			68, 168, 170, 236
6641180	LOCK			68, 168, 170, 236

Code for disposition of old part number

A -- Use up
B -- Use on other application (See PNI)
C -- File PDR Report with Bobcat Parts Sales
D -- Part Number Error

Part No.	Description	Was	Code	Page
6641181	LOCK			236
6646781	SWITCH			172, 214
6647677	SECTION			42
6647777	PIN			42
6647778	CAP			42
6647780	PLUG			42
6647783	LOAD CHECK			42
6647784	PLUG			42
6647785	SPRING			42
6647786	SEAL KIT			42
6648293	SCREW			42
6648294	SPRING			42
6648391	PLUG			64
6649245	RETAINER			180, 188
6649389	HOSE COVER			224
6649551	SHOCK			198
6650388	SEALANT			258
6650407	ADHESIVE			258
6651950	BOLT			62
6652525	TIRE			252
6652574	PLUG			92, 94, 134, 136
6652576	SWITCH			92, 134
6652580	BOLT			102, 124, 144, 164
6652594	BOLT			136
6652597	ADAPTER			136
6652616	RETAINER			90
6652633	BALL			100, 142
6652653	PLUG			86
6652682	BOLT			102, 122
6652688	CLAMP			114, 154
6652689	CLAMP			114, 154
6652745	PIPE			120, 160
6652748	CLAMP			118, 158
6652762	BOLT			120
6652943	COVER			198
6653437	ENCLOSURE			183, 184
6653519	PRIMER			258
6653836	BOLT			96, 110, 150
6653839	SCREW			138
6653841	GEAR			96, 138
6653842	KEY			96, 138
6653865	WASHER			100, 142
6653948	THERMOSTAT			118
6654002	WASHER			100, 142
6654003	WASHER			100, 142
6654373	CAP			16
6654374	KEY			16
6654715	WASHER			100, 142
6654806	FUSE			66
6655218	GASKET			114, 154
6655872	HEAT SEAL			114, 154
6655880	PIPE			128
6655884	PLUG			92, 134
6655937	VALVE			166

Code for disposition of old part number

A -- Use up

B -- Use on other application (See PNI)

C -- File PDR Report with Bobcat Parts Sales

D -- Part Number Error

Part No.	Description	Was	Code	Page
6657050	CAP			86, 128
6657412	BOLT			94, 136
6657413	BOLT			94, 118, 136, 158
6657414	BOLT			120
6657417	BOLT			148
6657418	STUD			94
6657419	WASHER			110
6657420	SNAP RING			90
6657421	O-RING			100
6657423	PIN			92, 134
6657424	PIN			92
6657426	BALL			94, 136
6657428	BEARING			102
6657429	BEARING			102
6657430	BEARING			102
6657431	CAP			92, 134
6657434	WASHER			100
6657436	VALVE			108
6657437	TAPPET ASSY			108
6657438	O-RING			108
6657439	SPRING			108
6657440	GASKET			108
6657441	PIN			108
6657442	SEAT			108
6657443	SPRING			108
6657444	SEAT			108
6657445	SCREW			108, 148
6657446	SCREW			114, 154
6657447	SLEEVE			108
6657448	SHIM			108
6657449	FLANGE			108
6657456	DRAINCOCK			92, 134
6657457	BOLT			94
6657458	STUD			106, 148
6657459	NUT			104, 146
6657461	NUT			106, 148
6657462	SCREW			108
6657464	PIN			108
6657465	PLUG			88, 130
6657466	GASKET			108, 148
6657467	GASKET			108, 148
6657468	O-RING			108
6657471	SCREW			108
6657474	SPRING			112, 152
6657478	BOLT			88, 130
6657481	SEAL			98, 140
6657482	BOLT			98, 140
6657483	BOLT			98, 140
6657484	COVER			98, 140
6657486	PLATE			86
6657487	PLATE			86
6657488	OIL SHIELD			86
6657489	PIPE			86
6657490	JOINT			86

Code for disposition of old part number

A -- Use up
B -- Use on other application (See PNI)
C -- File PDR Report with Bobcat Parts Sales
D -- Part Number Error

Part No.	Description	Was	Code	Page
6657491	ELEMENT			86
6657495	VALVE			89, 90, 131, 132
6657496	VALVE			90, 132
6657498	GUIDE			88
6657499	GUIDE			88
6657502	ROCKER ARM			90, 132
6657506	SCREW			90, 132
6657507	NUT			90, 132
6657508	SPRING			90, 132
6657509	BRACKET			90, 132
6657510	STUD			90, 132
6657511	WASHER			90, 132
6657512	WASHER			90
6657515	PUSH ROD			96, 138
6657517	STOPPER			96, 138
6657518	STOPPER			102, 144
6657521	PIN			100, 142
6657522	SNAP RING			100, 142
6657524	BUSHING			100, 142
6657526	BOLT			100, 142
6657527	ROD BEARING			100, 142
6657528	ROD BEARING			100, 142
6657529	ROD BEARING			100, 142
6657530	COLLAR			100, 142
6657531	SLEEVE			100, 142
6657532	BEARING			100, 142
6657533	BEARING			100, 142
6657534	BEARING			100, 142
6657535	BEARING			100, 142
6657536	BEARNG			100, 142
6657537	BEARING			100, 142
6657538	BEARING			100, 142
6657539	BEARING			100, 142
6657540	BEARING			100, 142
6657541	GEAR			100, 142
6657542	SHAFT			96, 138
6657543	SNAP RING			96, 138
6657544	COLLAR			96, 138
6657545	COLLAR			96, 138
6657547	SCREEN			122
6657548	PIN			92, 134
6657549	ROTOR ASSY			94, 136
6657552	GEAR			100, 142
6657553	SEAT			94, 136
6657554	SPRING			94, 136
6657557	CLAMP			106
6657558	CAM			102, 144
6657560	BOLT			104, 146
6657562	WEIGHT			102, 144
6657563	SHAFT			102, 144
6657564	HOLDER			102, 144
6657565	HOLDER			102, 144
6657566	SLEEVE			102, 144
6657567	WASHER			102, 144

Code for disposition of old part number

A -- Use up
B -- Use on other application (See PNI)
C -- File PDR Report with Bobcat Parts Sales
D -- Part Number Error

Part No.	Description	Was	Code	Page
6657568	SET SCREW			102, 144
6657570	SHAFT			110
6657572	COLLAR			110, 150
6657573	COVER			110, 150
6657575	BEARING			110, 150
6657576	BEARING			110, 150
6657577	LEVER			112, 152
6657582	PIPE			120
6657584	PIPE			118, 158
6657585	PULLEY			120, 160
6657588	BOLT			100, 142
6657589	BOLT			94, 136
6657590	STUD			124, 164
6657591	NUT			124, 164
6657592	NUT			112, 152
6657593	NUT			102, 144
6657594	BOLT			94
6657595	WASHER			110
6657596	WASHER			112, 152
6657597	KEY			102, 144
6657598	JOINT			105, 106, 147, 148
6657600	PLUG			92, 134
6657601	PLUG			92, 134
6657603	SEAL			94, 136
6657611	IMPELLER			160
6657612	BEARING			160
6657630	SPRING			90, 132
6657632	GEAR			96, 138
6657634	BUSHING			96, 138
6657635	OIL FILTER			1, 2, 94, 136
6657639	HOLDER			108
6657643	PIPE			114, 154
6657644	PIPE			114, 154
6657647	BUSHING			92, 134
6657648	SNAP RING			102, 144
6657649	LEVER ASSY			112, 152
6657652	LEVER			110
6657655	LEVER			112, 152
6657656	LEVER			112, 152
6657657	SHAFT			112, 152
6657661	KEY			100, 142
6657663	PLUG			92, 134
6657664	GEAR			102, 144
6657671	GEAR			102, 144
6657675	PLUG			92, 134
6657685	SPRING			110, 150
6657690	ROLLER			102, 110, 144, 150
6657691	CLAMP			120, 160
6658142	WINDOW			190
6658143	WINDOW			190
6658180	BREATHER			16
6658352	MOULDING			188
6658511	RIVET			20
6658818	SENDER			66

Code for disposition of old part number

A -- Use up
B -- Use on other application (See PNI)
C -- File PDR Report with Bobcat Parts Sales
D -- Part Number Error

Part No.	Description	Was	Code	Page
6659949	LATCH			190
6659999	BELT			238
6660205	SEAL			198, 226
6660294	HORN			198, 226
6660348	GAS SPRING			248
6660644	CAP			36
6661114	CAP			16
6661117	TANK			202
6661212	RING			198
6661328	SEAL KIT			38
6661608	SEAL KIT			204
6661636	BOLT			78
6661689	TRACK			190
6661690	TRACK			190
6661696	CAP			232
6662257	PIN			68
6662839	HINGE KIT			184
6662848	CAP			36
6664085	BUSHING			182
6664206	GAS SPRING			6
6664221	RETAINER			236, 240, 248
6664351	SEAL			216
6664554	PUMP			180
6664599	CONNECTOR			68, 168, 170
6664800	LOCK			68, 168, 170
6664886	HOURMETER			236
6665000	CLIP			64, 248
6665012	SEAL			190
6665021	LENS			246
6665022	FLASH TUBE			246
6665023	GASKET			246
6665024	BRANCH GUARD			246
6665025	LENS			246
6665208	SEAL			32, 34
6665314	PLUG			240
6665315	SWITCH			200
6665316	SWITCH			200, 208
6665317	SWITCH			174
6665319	SWITCH			178
6665321	RIVET			64
6665322	RIVET			64
6665367	BULB			240
6665400	PADLOCK			198
6665410	SWITCH			230
6665527	TIE			66
6665568	SEAL			180, 190, 216
6665701	BUSHING			52
6665707	SWITCH			180
6665727	LIGHT			200, 208, 212
6665728	LIGHT			200, 212
6665729	LIGHT			200, 212
6665730	LIGHT			174
6665757	LIGHT			200, 208
6665839	BOLT			30

Code for disposition of old part number

A -- Use up
B -- Use on other application (See PNI)
C -- File PDR Report with Bobcat Parts Sales
D -- Part Number Error

Part No.	Description	Was	Code	Page
6665860	KIT			214
6666302	ELBOW	6681462	B	16
6666563	LENS			200
6666564	HOUSING			200
6666565	LENS			200
6666566	GASKET			200
6666568	BULB			200
6666569	BULB			200
6666570	BULB			200
6666571	BULB			174
6666572	LENS			174
6666631	WASHER			70
6666766	GROMMET			180
6666790	GASKET			118
6666913	DOOR			184
6666932	BRAKE			202, 205, 206
6666933	CYLINDER			202, 203, 204
6667139	CAP			202
6667170	PUMP	6657734	B	16
6667176	PLUG			42
6667324	SEAL			32, 34
6667352	FILTER FUEL			2, 16
6667353	FILTER ASSY			16
6667418	PLUG			92, 134
6667419	WASHER			94, 106, 112, 136, 148, 152
6667420	BOLT			88
6667421	BOLT			122, 130, 162
6667426	SCREW			128
6667549	VALVE			36
6667676	COVER			42
6667687	STEM			40
6667844	VALVE ASSY			50
6667887	BULB			200
6667934	BULB			230
6667987	STARTER			69, 70
6668013	SEAL KIT			60
6668097	SCREW			204
6668700	PLUG			60
6668701	O-RING			60
6668702	SEAL			60
6668703	PLATE			60
6668742	SWITCH			214
6668765	VALVE			40
6668791	ORIFICE			40
6668815	SWITCH			214
6668816	SWITCH			214
6668820	NUT			40
6668879	DECAL			172
6668881	CORD			176
6668953	BRACKET			10
6669057	CHECK VALVE			40
6669089	TRACK			10, 250
6669135	SEAT			9, 10
6669154	BOLT			206

Code for disposition of old part number

A -- Use up
B -- Use on other application (See PNI)
C -- File PDR Report with Bobcat Parts Sales
D -- Part Number Error

Part No.	Description	Was	Code	Page
6669155	PLATE			206
6669156	SPACER			206
6669159	PISTON			206
6669162	NUT			206
6669163	PLUG			206
6669164	ADAPTER			206
6669165	SCREW			206
6669184	STATOR ASSY.			206
6669185	SEAL KIT			206
6669415	TIMER			66
6669420	CONTROLLER			236
6669732	SEAL KIT			40
6669733	SEAL KIT			40
6669734	SEAL KIT			40
6670160	CUSHION			10
6670298	CLIP			166
6670312	SOLENOID			192, 212
6670433	SHIM			148
6670435	BOLT			106
6670441	PIN			108
6670446	WASHER			148
6670462	NUT			104, 146
6670464	PIPE			114, 154
6670470	GLOW PLUG			114, 154
6670472	NUT			114, 154
6670501	BOLT			124
6670504	PLUG			118, 158
6670520	WASHER			132
6670521	BOLT			132
6670602	SOLENOID			66
6670770	BOLT			94, 136, 164
6670777	SHIM			106, 148
6670782	GASKET			106, 148
6670785	PIPE			118, 158
6670851	AIR CLEANER			165, 166
6671025	COIL			40
6671106	HORN			214
6671964	SENDER			236
6671976	YOKE ASSY.			70
6671977	YOKE			70
6671978	BRUSH KIT			70
6671979	BRUSH KIT			70
6671980	HOLDER			70
6671981	SPRING			70
6671982	O-RING			70
6671983	ARMATURE			70
6671984	BEARING			70
6671985	BEARING			70
6671986	BEARING			70
6671987	BEARING			70
6671988	CLUTCH			70
6671989	BEARING			70
6671990	BEARING			70
6671991	SPRING			70

Code for disposition of old part number

A -- Use up
B -- Use on other application (See PNI)
C -- File PDR Report with Bobcat Parts Sales
D -- Part Number Error

Part No.	Description	Was	Code	Page
6671992	SHAFT			70
6671993	HOUSING			70
6671994	PLUNGER			70
6671995	GASKET			70
6671996	COVER			70
6671997	BOLT			70
6671998	SPRING			70
6671999	ROLLER			70
6672000	RETAINER			70
6672001	PINION			70
6672002	HOUSING			70
6672003	FRAME			70
6672004	BOLT			70
6672005	SCREW			70
6672006	NUT			70
6672007	BUSHING			70
6672008	NUT			70
6672009	BOLT			70
6672010	WASHER			70
6672011	NUT			70
6672012	WASHER			70
6672013	O-RING			70
6672172	KIT			70
6672205	COVER			70
6672353	CRANKCASE			91, 92
6672354	PLUG			92, 134
6672355	PIN			92, 134
6672356	OIL PAN			121, 122
6672357	CYLINDER HEAD			88
6672358	GASKET			88
6672359	GEARCASE ASSY			93, 94
6672360	PLUG			94, 136
6672361	COVER			94, 136
6672362	GASKET			94, 136
6672363	COVER			94, 136
6672364	COVER			85, 86
6672365	GASKET			86, 128
6672366	CASE			97, 98, 139, 140
6672367	GASKET			98, 140
6672368	GASKET			98, 140
6672369	CASE			98, 140
6672370	CASE			98, 140
6672371	TAPPET			95, 96, 137, 138
6672372	CAMSHAFT ASSY			96, 138
6672373	PISTON			99, 100, 141, 142
6672374	PISTON			100, 142
6672375	RING ASSY			100, 142
6672376	RING ASSY			100, 142
6672377	ROD ASSY			100, 142
6672378	CRANKSHAFT			100, 142
6672379	CAMSHAFT			101, 102, 143, 144
6672380	WASHER			102, 144
6672381	SHAFT ASSY			102, 144
6672382	IDLER ASSY			103, 104, 145, 146

Code for disposition of old part number

A -- Use up
B -- Use on other application (See PNI)
C -- File PDR Report with Bobcat Parts Sales
D -- Part Number Error

Part No.	Description	Was	Code	Page
6672383	BOLT			104, 146
6672384	CAP			104, 146
6672385	COVER			104, 146
6672386	GASKET			104, 146
6672387	COVER			104, 146
6672388	TUBE			106, 148
6672389	INJECTION PUMP			106, 107, 108, 148
6672390	SHIM			106
6672391	SHIM			106, 148
6672392	PLUNGER			108
6672393	RACK			108
6672394	PLATE			108
6672395	BOLT			108, 148
6672396	PLUG			108, 148
6672397	SPRING			109, 110, 149, 150
6672398	LEVER ASSY			110
6672399	LEVER ASSY			110
6672400	SPRING			110, 150
6672401	GASKET			110, 150
6672402	PLATE ASSY			111, 112
6672403	GASKET			112, 152
6672404	PIPE ASSY			113, 114, 153, 154
6672405	HOLDER			114, 115, 116
6672406	PIPE			114
6672407	CORD			114, 154
6672408	NUT			116, 156
6672409	WASHER			116, 156
6672410	SPRING			116, 156
6672411	SPACER			116, 156
6672412	PUSH ROD			116, 156
6672413	NUT			116, 156
6672414	WASHER			116, 156
6672415	NOZZLE			116, 156
6672416	WASHER SET			116, 156
6672417	WASHER			116, 156
6672418	WASHER			116, 156
6672419	WASHER			116, 156
6672420	WASHER			116, 156
6672421	WASHER			116, 156
6672422	WASHER			116, 156
6672423	WASHER			116, 156
6672424	WASHER			116, 156
6672425	WASHER			116, 156
6672426	WASHER			116, 156
6672427	FUEL PUMP			106, 148
6672428	PULLEY			100, 142
6672429	WATER PUMP			119, 120
6672430	FLANGE			120
6672431	BEARING			120
6672432	SEAL ASSY			120
6672433	IMPELLER			120
6672434	GASKET			120
6672435	PIPE			120, 160
6672436	SEAL			90, 132

Code for disposition of old part number

A -- Use up

B -- Use on other application (See PNI)

C -- File PDR Report with Bobcat Parts Sales

D -- Part Number Error

Part No.	Description	Was	Code	Page
6672437	CAP			90, 132
6672438	SHAFT ASSY			90
6672439	SET SCREW			90
6672441	GASKET			124, 164
6672442	MANIFOLD			124
6672443	GASKET			124, 164
6672444	GASKET			118, 158
6672467	CARTRIDGE			2, 166
6672468	CARTRIDGE			2, 166
6672469	COVER			166
6672471	VALVE			40
6672479	COVER			118, 158
6672480	DIPSTICK			122
6672482	FLANGE			117, 118, 157, 158
6672629	O-RING			60
6672630	WASHER			60
6672715	SPACER			10, 250
6672717	SPACER			250
6672718	INDICATOR			250
6672719	CLIP			250
6672720	COVER			250
6672721	FENDER			250
6672722	FENDER			250
6672723	CLIP			250
6672724	PANEL			250
6672725	KNOB			250
6672726	FRAME			250
6672727	CUSHION			250
6672729	CUSHION			250
6672730	BOLT			250
6672731	BAR			250
6672732	CABLE			250
6672733	BOLT			250
6672734	NUT			250
6672736	DECAL			250
6672738	NUT			250
6672745	TUBE			122
6672746	DIPSTICK			122
6673314	O-RING			122
6674013	TRACK			10, 250
6674019	SEAT			249, 250
6674179	GASKET KIT			84, 126
6674180	GASKET KIT			84, 126
6674263	KNOB			250
6674304	MOTOR			61, 62
6674393	BEARING ASSY			62
6674394	PLATE			62
6674395	SHAFT			62
6674396	GEROLER			62
6674397	PLATE			62
6674398	LOCK ASSY.			62
6674399	HOUSING			62
6674666	LATCH			180, 188
6674667	HANDLE			180, 188

Code for disposition of old part number

A -- Use up
B -- Use on other application (See PNI)
C -- File PDR Report with Bobcat Parts Sales
D -- Part Number Error

Part No.	Description	Was	Code	Page
6674687	BATTERY			2, 66
6674993	CAP			180
6675064	TERMINAL	6731821	A	212
6675074	SEAT BELT			8
6675298	COUPLER			180
6675299	COUPLER			180
6675380	ADHESIVE			258
6675387	EXTRUSION			190
6675523	BEACON			214
6675558	SEAL			180, 188
6675559	COIL			66
6675838	BUSHING			80
6675908	LAMP			212
6676499	GROMMET			182
6676500	ELBOW			182
6676559	COUPLER			30
6676560	COUPLER			30
6676917	ELBOW			182
6677106	O-RING			36
6677198	TAB			190, 216
6677502	SHIM KIT			56, 58
6677581	PUMP			59, 60
6677582	PLATE			60
6677583	BODY			60
6677584	GEAR			60
6677585	GEAR			60
6677586	SHAFT			56
6677587	PLATE			56
6677588	PIN			56, 58
6677589	HOUSING			56
6677590	PLATE			56, 58
6677591	SPACER			56
6677592	PLATE			56, 58
6677593	WASHER			54, 56, 58
6677594	SCREW			56, 58
6677596	O-RING			56, 58
6677598	BEARING			56, 58
6677599	COVER			56, 58
6677600	COVER			56, 58
6677601	BOLT			56, 58
6677602	BOLT			56, 58
6677603	CUP			56, 58
6677605	O-RING			56, 58
6677606	PLATE			56, 58
6677607	PLUG			56, 58
6677608	SEAL KIT			54, 56, 58
6677609	PLATE			58
6677610	HOUSING			58
6677611	BOLT			54
6677612	BOLT			54
6677650	COUPLER			54
6677652	FILTER			2, 46
6677670	VALVE			254
6677775	SEAL KIT			62

Code for disposition of old part number

A -- Use up

B -- Use on other application (See PNI)

C -- File PDR Report with Bobcat Parts Sales

D -- Part Number Error

Part No.	Description	Was	Code	Page
6677814	SAFETY TREAD			194
6677836	COVER			182
6677842	NUT			182
6677844	NUT			182
6677846	GASKET			182
6677847	GROMMET			182
6678089	BOLT			52
6678091	GAS SPRING			180, 188
6678198	BOLT			182
6678259	BLADE			181, 182
6678260	ARM ASSY			180
6678323	MOTOR			182
6678324	WASHER			182
6678325	WASHER			182
6678326	RAIN SHIELD			182
6678548	SOCKET			180, 188
6678552	VALVE			36
6678560	ALTERNATOR			71, 72
6678667	MOUNT			66
6678669	STRAP			66
6678739	WASHER			182
6678765	NUT			20, 50, 66, 74, 76
6678766	NUT			74
6678785	NUT			76
6678820	RADIATOR			73, 74
6678973	BELT			78
6679034	MOUNT			66
6679105	STUD			24
6679136	CAB HEATER			224
6679670	ENGINE-KUBOTA D1005	6670670	D	83, 84
6679820	RELAY			66
6680004	SENDER			66
6680160	FAN			74
6680255	SHAFT ASSY			132
6680256	PIN			132
6680260	PIN			134
6680261	GEARCASE ASSY			135, 136
6680262	BOLT			136
6680263	STUD			136
6680264	STUD			136, 152
6680268	O-RING			142
6680274	CLAMP			148
6680277	O-RING			152
6680278	WATER PUMP			120, 159, 160
6680279	FLANGE			160
6680280	SEAL			160
6680281	GASKET			160
6680282	PIPE			160
6680284	O-RING			162
6680287	TEE			30, 50
6680315	TORSION SPRING	6678782	B	78
6680326	LIGHT	6664368	A	240
6680411	CONTROLLER			64

Code for disposition of old part number

A -- Use up
B -- Use on other application (See PNI)
C -- File PDR Report with Bobcat Parts Sales
D -- Part Number Error

Part No.	Description	Was	Code	Page
6680412	HANDLE ASSY	6707976	A	68, 168, 170, 200
6680412	HANDLE ASSY			68, 168, 170, 200
6680415	HANDLE	6705920	A	68, 200
6680431	ELBOW			50
6680441	BUSHING	6664882	A	8
6680473	BUSHING	6671135	A	8
6680501	PLATE ASSY			151, 152
6680512	THERMOSTAT			158
6680523	KEY,MAGNETIC	6664881	A	8, 248
6680583	GASKET MUFFLER			164
6680689	ADAPTER			128, 164
6680917	COUPLER, FEM BRASS			224
6680918	COUPLER, MAL BRASS			224
6680949	FITTING H PATTERN			224
6680951	FITTING 90 DEG BARB			224
6680952	FITTING 90 DEG BARB			224
6680961	PLUG			6
6680970	BREATHER	6670627	A	26
6680984	VALVE			41, 42, 178
6680999	PURIFIER			233, 234
6681494	FITTING			46
6681504	BEARING			78
6681512	SOLENOID	6667992	A	26
6681916	RELIEF VALVE			56, 58
6681917	PUMP			57, 58
6681918	PUMP			55, 56
6682274	CAP	6646678	B	74
6682275	TUBE			74
6682276	GASKET			74
6682277	TANK END			74
6682278	TANK END			74
6682585	SWITCH			66
6683009	O-RING			128
6683274	SEAL	6665846	B	36, 37, 38
6683817	RELIEF VALVE 2 STAGE			36
6684776	CLAMP			128
6684863	GASKET			158
6684923	BREATHER	6648944	A	46
6685086	COVER			128
6685087	VALVE			128
6685122	BEARING FLANGE			78
6685233	BOLT STRIKER	6729413	A	180, 188
6685626	PULLY IDLER			78
6685924	CAP			128
6685957	GUIDE			130
6685958	GUIDE			130
6685959	RETAINER			132
6686034	BOLT			160

Code for disposition of old part number

A -- Use up

B -- Use on other application (See PNI)

C -- File PDR Report with Bobcat Parts Sales

D -- Part Number Error

Part No.	Description	Was	Code	Page
6686166	COVER			127, 128
6686167	SHIELD			128
6686171	CLAMP			128
6686174	PIN			136
6686175	BEARING			144
6686176	BEARING			144
6686178	BEARING			144
6686179	LEVER ASSY			150
6686180	LEVER			150
6686181	SHAFT			150
6686182	SHAFT			150
6686183	HOLDER			154
6686186	BOLT			162
6686502	MANIFOLD EXHAUST	6672440	B,D	123, 124, 163, 164
6686502	MANIFOLD EXHAUST			123, 124, 163, 164
6686645	ENGINE D1005			125, 126
6687687	GASKET			146
66D000004B	NUT			82
6700170	WASHER			8, 44, 82
6700228	HARNESS			236
6700631	GASKET	25K060204B	B	16
6700875	RETAINER			216
6701097	WASHER			12, 78
6701123	SCREW			76
6701174	WASHER			74
6701535	SPRING			8
6701892	CLAMP			28, 30, 47, 48, 178
6702255	DECAL			194
6702301	DECAL			194
6702302	DECAL			194
6702343	BLOCK			8
6702444	FUSE			66
6702593	SPACER			172, 214
6702621	GRIP			68, 168, 170, 200
6702642	SCREW			6, 64, 216
6702731	WINDOW			190, 216
6702958	BUSHING			14
6702971	BOLT			6
6703159	TRACK			190
6703160	TRACK			190
6703640	KIT			237, 238
6703641	DECAL			238
6703703	GUIDE			238
6703736	CAP			80
6704240	PIVOT ASSY.			14
6704248	PIVOT			14
6704436	PAD			12
6704453	SPRING			14, 82
6704556	LOCK			8
6704557	LOCK			8
6704641	MOUNT			198, 226
6704823	BRACKET			76

Code for disposition of old part number

A -- Use up

B -- Use on other application (See PNI)

C -- File PDR Report with Bobcat Parts Sales

D -- Part Number Error

Part No.	Description	Was	Code	Page
6705434	DECAL			194
6705735	WINDOW			190, 216
6705774	MOUNT			200
6705896	GUIDE			26
6705897	BLOCK			26
6705898	BLOCK			26
6706031	HUB			24
6706032	AXLE			24
6706072	TUBELINE			28
6706073	TUBELINE			28
6706092	END			6
6706104	RETAINING NUT			30
6706272	BUSHING			6
6706519	STUD			6
6706520	RING			6
6706565	KIT			67, 68
6706568	KIT			68
6706663	PIN			12
6706684	COVER			26
6706685	BUSHING			8
6706718	MOUNT			26
6706736	BRAKE			26
6706737	GASKET			26
6706744	TRACK			190
6706745	TRACK			190
6706886	INSULATOR			216
6706890	WASHER			248
6706962	BUSHING			8
6706966	SPRING			248, 250
6707056	PEDAL			44
6707101	SEAL			50
6707319	NUT			248
6707415	BRACKET			66
6707498	HARNESS			230
6707509	HARNESS			200
6707672	HARNESS			200
6707674	PLUG			64
6707704	COVER			232
6707706	MOUNT			200, 208, 212
6707720	GUIDE			172
6707789	LIGHT			200
6707804	HOUSING			200
6707819	WINDOW			216
6707852	DECAL			180
6708016	GASKET			26
6708018	SPRING			26
6708043	BUSHING			30
6708105	DECAL			194
6708212	DECAL			196
6708239	SPROCKET			22
6708267	BOLT			26
6708310	HOSE			180
6708318	HARNESS			174
6708342	KIT			173, 174

Code for disposition of old part number

A -- Use up

B -- Use on other application (See PNI)

C -- File PDR Report with Bobcat Parts Sales

D -- Part Number Error

Part No.	Description	Was	Code	Page
6708375	KIT			2, 194
6708486	INSULATION			6, 216
6708501	HOSE			28
6708506	HARNESS			198
6708523	KIT			248
6708548	HORN KIT			225, 226
6708689	KIT			231, 232
6708719	LIGHT KIT			229, 230
6708787	GUIDE			26
6708824	MOUNT			200
6708827	CONTAINER			6, 216
6708929	DECAL			196
6709236	MOUNT			202
6709239	PEDAL ASSY.			202
6709396	MOUNT			198
6709397	LINK			52
6709408	LEVER			198
6709526	HARNESS			226
6709530	HARNESS			208
6710358	DECAL			194
6710369	TUBELINE			202
6710370	TUBELINE			202
6710371	BRAKE DISC			202
6710372	WHEEL BOLT			202
6710373	CALIPER MOUNT			202
6710374	KIT			201, 202
6710526	MIRROR MT			198
6710622	WASHER			248
6710645	TUBELINE			202
6710659	BUSHING			8
6710660	MOUNT			8
6710676	HOSE			202
6710751	BUSHING			248
6711636	TUBELINE			30
6711637	TUBELINE			30
6711659	DECAL			12, 196
6711840	DECAL			194
6712183	MOUNT			248
6712186	MOUNT			248
6712635	SHIELD			202
6712750	KIT			235, 236
6712972	KIT			227, 228
6713115	PEDAL			209, 210
6713116	BUSHING			210
6713507	DECAL			194
6713589	CLEVIS			8
6713874	SHIELD			77, 78
6713886	SEAT BAR			8
6713887	BOLT			8
6713993	HARNESS			212
6713994	HARNESS			212
6714004	COVER			18
6714005	SPACER			200
6714038	HARNESS			236

Code for disposition of old part number

A -- Use up
B -- Use on other application (See PNI)
C -- File PDR Report with Bobcat Parts Sales
D -- Part Number Error

Part No.	Description	Was	Code	Page
6714039	HARNESS			236
6714436	CABLE			66
6714437	CABLE			66
6714556	TANK			46, 50
6714557	HOSE			46
6714666	WIRE ASSY			226
6714811	PIN			12
6714835	BRACKET			212
6714836	BRACKET			212
6714858	DECAL			194
6714990	WIRE			236
6714991	WIRE			236
6714999	MOUNT			168, 170
6715183	ELBOW			16
6715530	HOSE			80
6715912	DECAL			194
6716074	RIM			252
6716075	RIM			252
6716621	COVER			66
6717146	SPACER			180
6717343	DECAL			194
6717369	BRACKET			180, 188
6717593	HINGE			180, 188
6718033	FUSE			66
6718144	COVER			4
6718376	HINGE			180, 188
6718520	COVER			180, 188
6718521	HANDLE			180, 188
6718796	PLUG	6660646	A	18
6719063	STOP			190, 216
6719424	TEE			28
6719501	LEVER			14
6719502	LEVER			14
6719825	BOLT			78
6720038	INSTRUCTIONS			176
6720808	KIT			175, 176
6720856	INSTRUCTIONS			246
6722759	INSTRUCTIONS			68
6722929	KIT			24
6724017	INSTRUCTIONS			250
6724070	INSTRUCTIONS			230
6724071	INSTRUCTIONS			174
6724094	ANTI-FREEEZE			258
6724161	INSTRUCTIONS			248
6724162	INSTRUCTIONS			226
6724220	INSTRUCTIONS			190
6724221	INSTRUCTIONS			232
6724354	ANTI-FREEZE			258
6724372	INSTRUCTIONS			208
6724568	INSTRUCTIONS			202
6724586	INSTRUCTIONS			228
6725373	SPRING PLATE			8
6725937	CLAMP			188
6726277	CLAMP	6578870	B	28

Code for disposition of old part number

A -- Use up
B -- Use on other application (See PNI)
C -- File PDR Report with Bobcat Parts Sales
D -- Part Number Error

Part No.	Description	Was	Code	Page
6726391	HANDLE			218
6726392	KIT			217, 218
6726393	DECAL			218
6726436	BUSHING			14
6726519	LIFT ARM 463			12
6727229	BOBTACH 463-MT52	6726597	A	13, 14
6727307	DECAL			196
6727448	DECAL			196
6727449	DECAL			196
6727541	BRACKET			30
6727579	PIVOT BUSHING	6563831	B	12
6727595	DECAL	6595014	B	196
6727707	CLAMP			28, 178
6727708	CLAMP			178
6727711	MOUNT			78
6727831	MOUNT			52
6727836	MAIN FRAME			4
6727870	HARNESS			168, 170
6727926	DECAL	6718703	A	194
6727935	TEE			46
6728013	HOSE			30
6728044	HOSE			28
6728115	SUPPORT			12
6728130	BUSHING	6563830	B	12
6728150	SPRING			52
6728343	SHIELD			20
6728448	SHIELD			20
6728449	SHIELD			19, 20
6728469	HOSE			50
6728470	HOSE			50
6728472	INSULATION			16
6728473	BOLT			14
6728605	HUB			52
6728614	HARNESS			170
6728615	PIN			52
6728665AR	KIT			194, 196
6728665BR	KIT			194, 196
6728665JP	KIT			194, 196
6728723	BRACKET			52
6729009	SEAL			190
6729010	SEAL			190
6729011	SEAL			190
6729040	HOSE			215, 216
6729189	SEAL			46
6729235	WINDOW			188
6729260	DOOR			180, 188
6729283	SHIELD			180, 188
6729284	WINDOW			180
6729313	KIT			169, 170
6729316	BLOCK			46
6729334	KIT			253, 254
6729391	KIT			187, 188
6729392	STD CAB DOOR KIT	SALES	A	179, 180
6729486	MOUNT			180, 188

Code for disposition of old part number

A -- Use up
B -- Use on other application (See PNI)
C -- File PDR Report with Bobcat Parts Sales
D -- Part Number Error

Part No.	Description	Was	Code	Page
6729648	TANK			180
6729723	HOSE			46
6729750	NUT			44
6729789	HARNESS			240
6729855	HOSE			16
6729982	SCREEN			46
6730217	DOOR			18
6730731	MOUNT			16, 80
6730733	MOUNT			78
6730760	FLYWHEEL			78
6730799	MOUNT			74
6730808	MOUNT			78
6730814	BRACKET			78
6730826	SIDE PANEL			240
6730835	KIT			239, 240
6730867	BRACKET			80
6731121	PLUG			4, 22
6731223	MOUNT			212
6731275	INSULATION			66
6731336	DECAL			194
6731337	DECAL			194
6731396	MOUNT			76
6731466	MOUNT			74
6731478	EXIT TAG	6559515	A	188, 190, 216
6731478	EXIT TAG			188, 190, 216
6731529	SPACER			188
6731563	HARNESS			212
6731571	DECAL			194
6731610	HARNESS			212
6731667	HOSE			75, 76
6731696	TANK			74
6731715	HOSE			76
6731749	PIN			12
6731765	MOUNT			80
6731766	PULLEY			78
6731773	NUT			74
6731819	STRAP			212
6731994	DECAL			216
6731998	BRACKET			214
6731999	BRACKET			214
6732000	BRACKET			214
6732009	BAR			44
6732010	BAR			44
6732021	PEDAL			44
6732057	TUBELINE			46
6732059	TUBELINE			30
6732060	HOSE			50
6732062	TUBELINE			30
6732112	HOSE			50
6732113	HOSE			50
6732149	DECAL			194
6732224	PAN BATTERY			66
6732239	TUBELINE			28
6732240	HOSE			50

Code for disposition of old part number

A -- Use up
B -- Use on other application (See PNI)
C -- File PDR Report with Bobcat Parts Sales
D -- Part Number Error

Part No.	Description	Was	Code	Page
6732241	TUBELINE			28
6732243	TUBELINE			28
6732244	TUBELINE			28
6732254	TUBE			46
6732267	HOSE			48
6732268	HOSE			50
6732269	TUBELINE			46
6732270	TUBELINE			50
6732282	MUFFLER			76
6732293	HOSE			46
6732295	BRACKET			30
6732299	BRACKET			50
6732316	TUBELINE			46
6732329	TUBELINE			46
6732330	HOSE			46
6732357	PLUG			36
6732675	MOUNT			82
6732721	TUBELINE			46
6732740	LEVER			52
6732741	SHAFT			52
6732763	TUBELINE			28
6732764	TUBELINE			178
6732772	OIL COOLER			46, 74
6732773	TUBELINE			178
6732775	DECAL 463 HEATER			224
6732776	TUBELINE			178
6732782	TUBELINE			28
6732783	TUBELINE			28
6732840	BRACKET			178
6732848	TOOL CONTAINER	6714738	B	4, 198
6732848	TOOL CONTAINER			4, 198
6732857	BRACKET			224
6732917	BRACKET			66
6732946	SEAL			74
6732960	TUBE			80
6733018	SHIELD			80
6733130	WASHER			52
6733154	SPACER			80
6733225	TANK	6708327	A	15, 16
6733269	ROD			82
6733284	ROD			82
6733290	BRACKET			172, 214
6733306	LEVER			52
6733367	DECAL 463	6728139	B	194
6733369	CHAINCASE-463F			4
6733371	ROD LINKAGE			30
6733377	BOLT			74
6733378	SCREW			78, 79, 80
6733532	WINDOW REAR			190
6733638	KIT			171, 172
6733650	DECAL			66
6733662	SPACER TUBE	6564788	B	78
6733666	HOSE			48
6733688	PLATE			178

Code for disposition of old part number

A -- Use up
B -- Use on other application (See PNI)
C -- File PDR Report with Bobcat Parts Sales
D -- Part Number Error

Part No.	Description	Was	Code	Page
6733734	HARNESS			172
6733735	HARNESS			172
6733736	HOSE			28
6733737	HOSE			27, 28
6733755	PANEL, ASSY 463AF			64
6733814	KIT			177, 178
6733838	FUSE			66
6733859	INSULATION CAB BACK			224
6733884	SEAL			224
6733893	HEATER KIT			223, 224
6733895	PUMP			53, 54
6733961	SEAL			74
6733970	MOUNT	6707726	A	172
6733986	TUBELINE			50
6733987	TUBELINE			28
6734057	GUIDE SWITCH	6707720	B	214
6734176	HOSE			46
6734224	HARNESS BRAKE LT	6733734	B	214
6734226	FILTER BLOCK			46
6734241	CAB SEAL			190
6734350	POPPET			46
6734475	GASKET OIL FILL			80
6734544AR	KIT			194, 196
6734544BR	KIT			194, 196
6734634	SHIELD BELT			74
6734637	FOAM STRIP			20
6734641	CAB ASSY 463	6708601	A	5, 6
6734744	HOSE COOLANT	6731677	A	74
6734745	HOSE COOLANT	6731674	A	74
6734766	TUBELINE			30
6734767	TUBELINE			30
6734904	TUBELINE			46
6734908	INSULATION	6708487	A	6, 216
6734911	SUCTION HOSE			48
6735140	DECAL	6564806	A	194
6735284	WASHER			224
6735864	DECAL	6732495	B	194, 196
6735878	HARNESS MFR			66
6735900	DECAL BOBCAT	6732489	B	196
6736035	TUBELINE RELIEF			50
6736214	HARNESS			170
6736553	TEE			30
6736639	TUBELINE AUX			30
6736641	PAINT			258
6736642	PAINT			258
6736644	PAINT			258
6736645	PAINT			258
6737189	DECAL			172
6737363	WEDGE	6726899	B	14
6737524	KNOB	6668913	A	50
6801059	WASHER			182
6803334	SEAL KIT			34

Code for disposition of old part number

A -- Use up
B -- Use on other application (See PNI)
C -- File PDR Report with Bobcat Parts Sales
D -- Part Number Error

Part No.	Description	Was	Code	Page
6804927	SEAL KIT			32
6805102	BUSHING			36
6805243	TEE			50
6807141	ROD			32
6807977	PISTON			34
6808336	SPACER			32
6808338	PISTON			32
6808625	TUBELINE			34
6808626	TUBE			32
6808668	CASE			34
6808669	HEAD			34
6809425	SEAL KIT			38
6809511	DECAL			50
6809825	BUSHING			14
6810385	BUSHING	6564535	B	30
6812132	BUSHING			34
6812170	PLUG			32
6812771	CYLINDER			31, 32
6812773	CASE			32
6813095	SLEEVE			36
6813096	ADAPTER			38
6813097	BONNET			38
6813098	ADAPTER			38
6813480	COVER			38
6813753	SPOOL			36
6814511	SPOOL	6674808	A	36
6815152	SPOOL	6674814	A	36
6815746	CYLINDER	6812106	A	33, 34
6815747	ROD	6812130	A	34
6816252	SEAL KIT	6806941	A	38
6816253	SEAL KIT	6809448	A	38
6816418	VALVE ASSY 463F			36
6900133	INSTRUCTIONS			236
6901029	INSTRUCTIONS			218
6901249	INSTRUCTIONS			254
6901254	INSTRUCTIONS			182, 188
6901273	INSTRUCTIONS			168, 170
6901440	INSTRUCTIONS			240
6901662	INSTRUCTIONS			214
6901811	463F O/M			2
6901812	463 AF SM			2
6902034	INSTRUCTIONS			224
6902048	INSTRUCTIONS			178
6902065	INSTRUCTIONS			172
6902178	P/M 463AF			2
6902214	DECAL KIT			193, 194, 195, 196
6902228	PAINT	6722783	A	257, 258
6902229	PAINT	6722786	A	258
6902230	PAINT	6722789	A	258
6902233	PAINT	6722782	A	258
6902234	PAINT	6722785	A	258
6902235	PAINT	6722788	A	258
6902343	INSTRUCTIONS	6720598	D	190
6903100	INSTRUCTION			192

Code for disposition of old part number

A -- Use up

B -- Use on other application (See PNI)

C -- File PDR Report with Bobcat Parts Sales

D -- Part Number Error

Part No.	Description	Was	Code	Page
6903105	OIL 15W40 QT. 12	6657299	A	2, 258
6903106	OIL 15W40 GAL. 6	6724558	A	2, 258
6903107	OIL 10W30 QT. 12	6657301	A	2, 258
6903108	OIL 10W30 GAL. 6	6724557	A	2, 258
6903109	OIL 30W QT. 12	6657303	A	2, 258
6903110	OIL 30W GAL. 6	6724559	A	2, 258
6903111	OIL 30W 2.5 GAL 2	6674206	A	2, 258
6903112	OIL 10W30 2.5 GAL 2	6674205	A	2, 258
6903113	OIL 15W40 2.5 GAL. 2	6674204	A	2, 258
6903117	HYD FLUID 2.5 GAL.	6563328	A	2, 258
6903118	HYD. FLUID 5GAL	6722344	A	2, 258
6903119	HYD. FLUID 55GAL	6563330	A	2, 258
6903121	GEAR LUBE 12	6634393	A	258
6903122	GREASE 10	6658266	A	258
6903849	INSTRUCTIONS			222
6E000004B	WASHER			228
6E000005B	WASHER			6, 64, 66
6EM00060B	WASHER			180, 188
6J001210B	KEY			24
7100364	COVER			222
7101291	ELBOW	6681462	A	16
7101345	BONNET	6587633	A	36
7101393	CHAIN DRIVE	6733854	A	22
7102652	SCREW	30G000416B	B	36
7104424	BRACKET IDLER			78
7104468	HARNESS 463 JUMPER			66, 192
7104672	KIT COOLING FAN HARN			191, 192
7105252	SENSOR	6680430	A	8
7105747	HARNESS 463AF MFR			66
7106751	BLOCK	6813449	A	38
710776B	SNAP RING			56, 58
7108309	CAP	6675551	B	74
7110082	KIT			221, 222
72F000001B	DRAIN COCK			16
733611B	TERMINAL			236
733616	TERMINAL			236
73K000017B	WASHER	80K000017B	A	36
73K000224B	WASHER			32
73K000232B	WASHER			34
743332B	GREASE ZERK			14
75K000003B	O-RING	95K000003B	B,D	32
75K000006B	O-RING			48
77FN00006B	ELBOW			178
791442	SNAP RING			26
799119B	SNAP RING			36
79K000004B	O-RING			50
79K000005B	O-RING			16
79K000006B	O-RING			46, 50

Code for disposition of old part number

A -- Use up

B -- Use on other application (See PNI)

C -- File PDR Report with Bobcat Parts Sales

D -- Part Number Error

Part No.	Description	Was	Code	Page
79K000007B	O-RING			38
79K000008B	O-RING			36, 38, 42, 46
79K000010B	O-RING			28, 30, 36, 46, 50, 178
79K000012B	O-RING			48, 50
79K000016B	O-RING			46
7C000512B	BOLT			212
7D000004B	NUT			50
80K000014B	RING			36
80K000015B	WASHER			36
81D000006B	NUT	57D000006B	B	52
83D000004B	NUT	61D000004B	B	8, 18, 50, 64, 78, 180, 188, 190, 200, 208, 212, 216, 228, 240
83D000004B	NUT			8, 18, 50, 64, 78, 180, 188, 190, 200, 208, 212, 216, 228, 240
83D000005B	NUT	55D000006B	B	6, 12, 28, 74, 178, 198, 212, 224
83D000005B	NUT			6, 12, 28, 74, 178, 198, 212, 224
83D000006B	NUT			6, 28, 30, 78, 222, 224
83D000008B	NUT			4, 78, 80
83F000003B	ELBOW			202
84G001320B	BOLT	85G000616B	B	172
84G002516B	BOLT			198, 226
84G003112B	BOLT			6, 46, 66, 168, 170
84G003710B	BOLT			214, 232
84G003712B	BOLT			4, 12, 20, 29, 30, 52, 66
84G003716B	BOLT			26, 82
84G003720B	BOLT			26, 222
84G003724B	BOLT			16
84G003728B	BOLT			28, 198
851239B	BEARING			56, 58
85D000004B	NUT			212
85D000005B	NUT	91D000005B	B	30, 46, 172, 198, 210, 216
85D000005B	NUT			30, 46, 172, 198, 210, 216
85D000006B	NUT			8, 14, 52, 82, 188, 242
85D000007B	NUT	91D000007B	B	8, 78, 180, 188
85D000007B	NUT			8, 78, 180, 188
85D000008B	NUT			6
85D000010B	NUT			6
85G000608B	SCREW			236
85G000616B	SCREW			214
85G000808B	BOLT			212
85G003712B	SCREW			214
86D000008B	NUT			22
86F000003B	NUT			202
86F000006B	NUT			30, 46
872229	WASHER			8, 28, 30, 44, 46, 178
87F000006B	ADAPTER			28
87G000806B	BOLT			228
889269B	HOSE			224
88F000003B	NUT			202
88F000006B	ELBOW			46
88FN00003B	ELBOW			202
898731B	BULB			63, 64, 230
89F000003B	ADAPTER			202
8D000006B	NUT			30, 202

Code for disposition of old part number

A -- Use up

B -- Use on other application (See PNI)

C -- File PDR Report with Bobcat Parts Sales

D -- Part Number Error

Part No.	Description	Was	Code	Page
90KN00006B	PLUG			38
90KV00005B	PLUG			34
92D000014B	NUT			32, 34
93G000536B	BOLT	1G000536B	A	60
945412B	WASHER			60
947088B	SEAL			34
95D000006B	NUT			28, 30, 34, 48, 52, 178
95K000006B	O-RING			34, 48
95K000008B	O-RING			38
97D000004B	NUT			172
97D000005B	NUT			202
97D000006B	NUT			202
97K000004B	O-RING			50, 202
98F000003B	TEE			202
99K000005B	O-RING			16

Code for disposition of old part number

A -- Use up

B -- Use on other application (See PNI)

C -- File PDR Report with Bobcat Parts Sales

D -- Part Number Error