RUTHZIL TRATOR COMERCIAL DE PEÇAS LTDA 11 97083-6812 ROLANDO CITRANGULO

TOYOTA FORKLIFT

JUNHO 1984

Repair Manual



MODELS 4FG10, 14, 15
FG18, 23, 28
3FG20, 25
2FG30
3FD10, 14, 15, 20, 25, 30
FD18, 23, 28

TOYOTA
LIFT TRUCKS
B & L EQUIPMENT INC.
7313 NORTHERN BOULEVARD
EAST SYRACUSE, NEW YORK 13057
PHONE (315) 458-9500

TOYOTA MOTOR CORPORATION

TOYOTA FORKLIFT

REPAIR MANUAL

TOYOTA MOTOR CORPORATION

FOREWORD

This repair manual applies to the Toyota Forklift 4FG10, 4FG15, 3FG20, and 3FD30 series, and covers the procedures essential for performing the inspection, adjustment, and repair on the engine, chassis, and material handling system with special attention directed to overhaul.

It is emphasized that this manual be fully utilized to preserve the high standard of performance and durability originally built into the Toyota forklifts, and to maintain top operating condition through appropriate maintenance.

The vehicles as of March 1980 have been used as the standard in the preparation of this manual. All subsequent modifications shall be notified to you through the Toyota Parts and Service News.

The following repair manuals should be as reference in connection with this manual.

TOYOTA 4P ENGINE REPAIR MANUAL No. 95649
TOYOTA 5R ENGINE REPAIR MANUAL No. 95648
TOYOTA 5P ENGINE REPAIR MANUAL No. 95647
TOYOTA 2J ENGINE REPAIR MNAUAL No. 95646

TOYOTA MOTOR CORPORATION

SECTION INDEX

NAME	SECT
GENERAL	0
ENGINE	1
CLUTCH	2
TOROUE CONVERTER	3
TRANSMISSION & DIFFERENTIAL	4
FRONT AXLE	5
REAR AXLE	6
STEERING	7
BRAKE	8
BODY	9
MATERIAL HANDLING SYSTEM	10
APPENDIX	11

GENERAL

	Page
VEHICLE EXTERIOR VIEWS	0– 2
VEHICLE LISTING	0– 3
FRAME NUMBERING SYSTEM	0– 5
LOADING CURVE	0– 6
VEHICLE DIMENSIONS	0– 7
TIGHTENING TORQUE FOR GENERAL STANDARD BOLTS	0– 9
ABBREVIATIONS AND OPERATIONAL TIPS	0–11
RECOMMENDED LUBRICANT QUANTITY & KIND	0–12
PERIODIC MAINTENANCE	0–13
LUBRICATION CHARTS	0–21

VEHICLE EXTERIOR VIEWS



Fig. 0-1 Front View



Fig. 0-2 Rear View

VEHICLE LISTING

Payload	Model	Engine Type	Drive System	Remarks
1.0 Ton	4FG10	4P	11" Clutch	(PS)
	02-4FG10		Torque Converter	(PS)
	40-4FG10	5R	11" Clutch	(PS)
	42-4FG10		Torque Converter	(PS)
	3FD10	2J	11" Clutch	(PS)
	02-3FD10		Torque Converter	(PS)
1.35 Ton	4FG14	4P	11" Clutch	(PS)
	02-4FG14		Torque Converter	(PS)
	40-4FG14	5R	11" Clutch	(PS)
	42-4FG14		Torque Converter	(PS)
	3FD14	2J	11" Clutch	(PS)
	02-3FD14		Torque Converter	(PS)
1.5 Ton	4FG15	4P	11" Clutch	(PS)
	02-4FG15		Torque Converter	(PS)
	40-4FG15	5R	11" Clutch	(PS)
	42-4FG15		Torque Converter	(PS)
	3FD15	2J	11" Clutch	(PS)
	02-3FD15		Torque Converter	(PS)
1.75 Ton	FG18	4P	11" Clutch	(PS)
	02-FG18		Torque Converter	(PS)
	40-FG18	5R	11" Clutch	(PS)
	42-FG18		Torque Converter	(PS)
	FD18	2J	11" Clutch	(PS)
	02-FD18		Torque Converter	(PS)
2.0 Ton	3FG20	4P	11" Clutch	(PS) (PB) (PC)
	02-3FG20		Torque Converter	(PS) (PB)
	40-3FG20	5R	11" Clutch	(PS) (PB) (PC)
	42-3FG20		Torque Converter	(PS) (PB)
	60-3FG20	5P	11" Clutch	(PS) (PB) (PC)
	62-3FG20		Torque Converter	(PS) (PB)
	3FD20	2J	11" Clutch	(PS) (PB) (PC)
	02-3FD20		Torque Converter	(PS) (PB)

Payload	Model	Engine Type	Drive System	Remarks
2.25 Ton	FG23	4P	11" Clutch	(PS) (PB) (PC)
	02-FG23		Torque Converter	(PS) (PB)
	40-FG23	5R	11" Clutch	(PS) (PB) (PC)
	42-FG23		Torque Converter	(PS) (PB)
	60-FG23	5P	11" Clutch	(PS) (PB) (PC)
	62-FG23		Torque Converter	(PS) (PB)
	FD23	2J	11" Clutch	(PS) (PB) (PC)
	02-FD23		Torque Converter	(PS) (PB)
2.5 Ton	3FG25	4P	11" Clutch	(PS) (PB) (PC)
	02-3FG25		Torque Converter	(PS) (PB)
	40-3FG25	5R	11" Clutch	(PS) (PB) (PC)
	42-3FG25		Torque Converter	(PS) (PB)
	60-3FG25	5P	11" Clutch	(PS) (PB) (PC)
	62-3FG25		Torque Converter	(PS) (PB)
	3FD25	2J	11" Clutch	(PS) (PB) (PC)
	02-3FD25		Torque Converter	(PS) (PB)
2.75 Ton	FG28	5P	11" Clutch	(PS) (PB) (PC)
	02-FG28		Torque Converter	(PS) (PB)
	FD28	2J	11" Clutch	(PS) (PB) (PC)
	02-FD28		Torque Converter	(PS) (PB)
3.0 Ton	2FG30	5P	11" Clutch	(PS) (PB) (PC)
	02-2FG30		Torque Converter	(PS) (PB)
	3FD30	2J	11" Clutch	(PS) (PB) (PC)
	02-3FD30		Torque Converter	(PS) (PB)

(PS) : Power Steering Standard Equipment

(PB) : Power Brake Standard Equipment

(PC) : Power Clutch Standard Equipment

FRAME NUMBERING SYSTEM



Fig. 0-3 Frame Serial Number Location

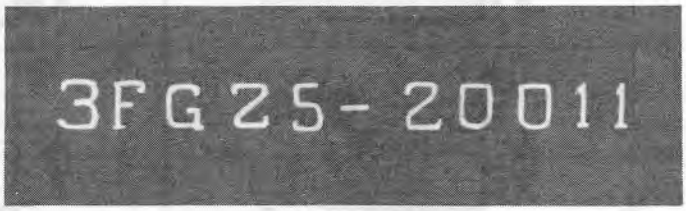

Fig. 0-4 Frame Serial Number

FRAME NUMBERING SYSTEM

Payload / Engine Type	1.0 ~ 1.75 Ton	2.0 ~ 2.5 Ton	2.75 & 3.0 Ton
4P Engine	FG18-20011	3FG25-20011	–
5R Engine	40 FG18-20011	40 3FG25-20011	–
5P Engine	–	60 3FG25-20011	2FG30-20011
2J Engine	FD18-20011	3FD25-20011	3FD30-20011

LOADING CURVE

	kg-cm	lb-in
1 Ton	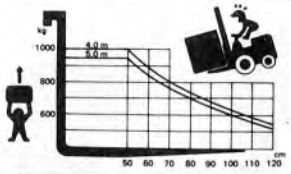	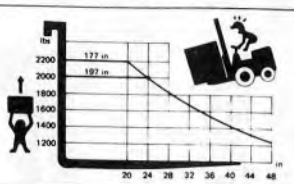
1.35 Ton	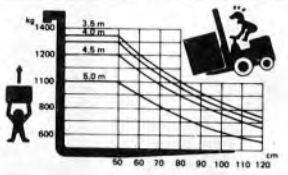	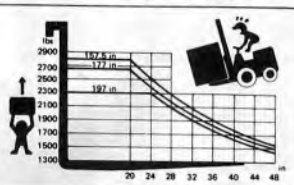
1.5 Ton	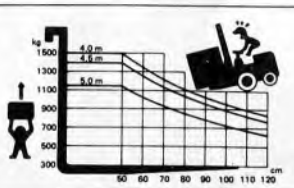	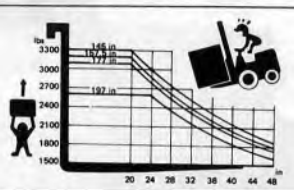
1.75 Ton	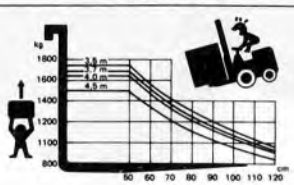	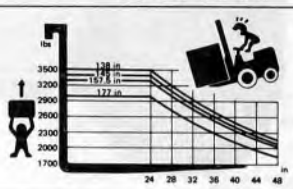
2 Ton	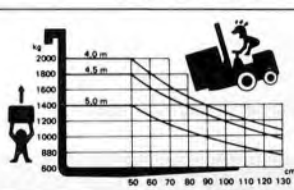	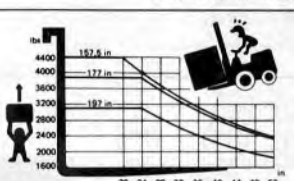
2.25 Ton	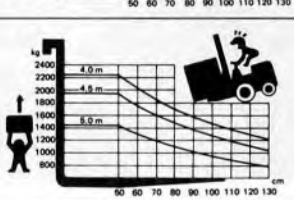	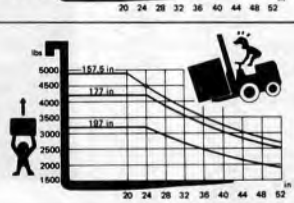
2.5 Ton	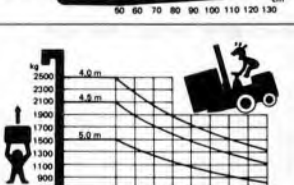	
2.75 Ton	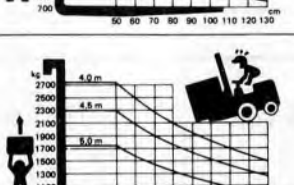	
3 Ton	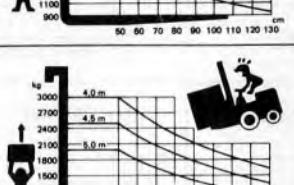	

Fig. 0-5 Loading Curve

Fig. 0-6 Loading Curve

mm (in.)

	1 ton	1.35 ton	1.5 ton
A	1050 (41.5")	←	1110 (43.5")
B	920 (36")	←	←
C(TREAD)	885 (34.8")	←	915 (36")
D	200 (8")	←	←
E	100 (4")	←	←
F	1740 (69")	1760 (69")	1800 (71")
G(TREAD)	895 (35.2")	←	←
H	R160 (6.5")	←	R150 (6")
I	R1900 (75")	R1940 (76")	R1980 (78")
J	2280 (90")	2320 (91")	2360 (93")
K	4220 (166")	←	←
L	3000 (118")	←	←
M	1980 (78")	←	←
N	430 (17")	←	←
O	1220 (48")	←	←
P	35 (1.4")	←	←
Q	1070 (42")	←	←
R	380 (15")	←	←
S	1300 (51")	←	←
T	2090 (82.5")	2140 (84.5")	2180 (86")
U	400 ~ 520 (15.5 ~ 20.5")	←	←
V	39 %	←	←
W	48 %	45 %	40 %
X	255 (10")	←	←
Y	900 (35.5")	←	←
Z	1985 (78")	←	←
AA	6.00–9–10PR (I)	←	21 x 8–9–10PR (I)
AB	5.00–8–8PR (I)	←	←

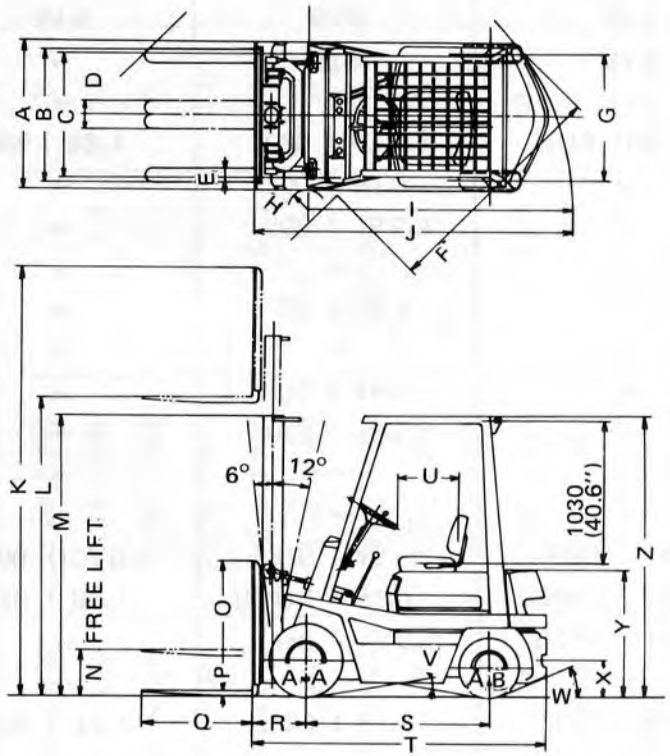

Fig. 0-7 Vehicle Two Faces Chart

mm (in.)

	1.75 ton	2 ton	2.25 ton	2.5 ton	2.75 ton	3 ton
A	1110 (43.5")	1150 (45.5")	←	←	1205 (47.5")	1225 (48")
B	920 (36")	1020 (40")	←	←	1070 (42")	←
C(TREAD)	915 (36")	960 (37.8")	←	←	1010 (39.8")	←
D	200 (8")	250 (10")	←	←	←	←
E	100 (4")	125 (5")	←	←	←	←
F	1810 (71")	1920 (76")	1930 (76")	1950 (77")	2050 (81")	2080 (82")
G(TREAD)	895 (35.2")	960 (37.8")	←	←	←	←
H	R150 (6")	R190 (7.5")	←	←	R340 (13.5")	R350 (14")
I	R2010 (79")	R2165 (85")	R2190 (86")	R2220 (87")	R2410 (95")	R2440 (96")
J	2390 (94")	2605 (102.5")	2630 (103.5")	2660 (104.5")	2875 (113.5")	2905 (114.5")
K	4220 (166")	←	←	←	←	←
L	3000 (118")	←	←	←	←	←
M	1980 (78")	1995 (78.5")	←	←	2015 (79.5")	←
N	430 (17")	←	←	←	410 (16")	←
O	1220 (48")	←	←	←	←	←
P	35 (1.4")	45 (1.8")	←	←	50 (2")	←
Q	1070 (42")	←	←	←	←	←
R	380 (15")	440 (17.5")	←	←	465 (18.5")	←
S	1300 (51")	1550 (61")	←	←	1700 (67")	←
T	2210 (87")	2425 (95.5")	2455 (96.5")	2495 (98")	2630 (103.5")	2675 (105.5")
U	400 ~ 520 (15.5 ~ 20.5")	←	←	←	←	←
V	39 %	54 %	←	←	67 %	64 %
W	38 %	56 %	50 %	44 %	63 %	54 %
X	225 (10")	310 (12.2")	←	←	345 (13.6")	←
Y	900 (35.5")	965 (38")	←	←	1040 (41")	←
Z	1985 (78")	2050 (80.5")	←	←	2100 (82.5")	←
AA	21 x 8–9–10PR (I)	7.00–12–12PR (I)	←	←	7.00–15–12PR (I)	8.15–15–12PR(I)
AB	5.00–8–8PR (I)	6.00–9–10PR (I)	←	←	6.50–10–10PR (I)	←

TIGHTENING TORQUE FOR GENERAL STANDARD BOLTS

Type	Nominal Diameter	Pitch	Specified Torque kg-cm (ft-lb)	
			Specified	Tightening Range
4T Bolts with "4" mark on head Part No. example 91OOO-4OOOO	6	1.0	47 (3.39)	40 ~ 70 (2.9 ~ 5.1)
	8	1.25	111 (8.01)	100 ~ 160 (7.2 ~ 11.6)
	10	1.25	225 (16.2)	190 ~ 310 (13.7 ~ 22.4)
	10	1.5	214 (15.5)	180 ~ 300 (13.0 ~ 21.7)
	12	1.25 (ISO)	441 (31.8)	350 ~ 550 (25.3 ~ 39.7)
	12	1.5	389 (28.1)	350 ~ 500 (25.3 ~ 36.1)
	12	1.75	374 (27.0)	300 ~ 500 (21.7 ~ 36.1)
	13	1.5	508 (36.7)	450 ~ 700 (32.5 ~ 50.5)
	14	1.5	633 (45.7)	500 ~ 800 (36.1 ~ 57.6)
	14	2.0	593 (42.8)	470 ~ 770 (33.9 ~ 55.6)
	16	1.5	957 (69.1)	750 ~ 1100 (54.2 ~ 79.4)
	16	2.0	906 (65.4)	710 ~ 1060 (51.3 ~ 76.5)
5T Bolts with "5" mark on head Part No. example 91OOO-5OOOO	6	1.0	71 (5.13)	60 ~ 90 (4.3 ~ 6.5)
	8	1.25	166 (12.0)	150 ~ 220 (10.8 ~ 15.9)
	10	1.25	337 (24.3)	300 ~ 450 (21.7 ~ 32.5)
	10	1.5	322 (23.2)	270 ~ 420 (19.5 ~ 30.3)
	12	1.25 (ISO)	662 (47.8)	500 ~ 800 (36.1 ~ 57.6)
	12	1.5	584 (42.2)	500 ~ 700 (36.1 ~ 50.5)
	12	1.75	561 (40.5)	480 ~ 680 (34.7 ~ 49.1)
	13	1.5	763 (55.1)	650 ~ 900 (46.9 ~ 65.0)
	14	1.5	890 (64.3)	700 ~ 1050 (50.5 ~ 75.8)
	14	2.0	950 (68.6)	750 ~ 1100 (54.2 ~ 79.4)
	16	1.5	1436 (103.7)	1200 ~ 1700 (86.6 ~ 122.7)
	16	2.0	1358 (98.0)	1150 ~ 1650 (83.0 ~ 119.1)
6T Bolts with "6" mark on head Part No. example 91OOO-6OOOO	6	1.0	71 (5.13)	60 ~ 90 (4.3 ~ 6.5)
	8	1.25	166 (12.0)	150 ~ 220 (10.8 ~ 15.9)
	10	1.25	337 (24.3)	300 ~ 450 (21.7 ~ 32.5)
	10	1.5	322 (23.2)	270 ~ 420 (19.5 ~ 30.3)
	12	1.25 (ISO)	662 (47.8)	500 ~ 800 (36.1 ~ 57.6)
	12	1.5	584 (42.2)	500 ~ 700 (36.1 ~ 50.5)
	12	1.75	561 (40.5)	480 ~ 680 (34.7 ~ 49.1)

Type	Nominal Diameter	Pitch	Specified Torque kg-cm (ft-lb)	
			Specified	Tightening Range
	6	1.0	95 (6.86)	80 ~ 120 (5.8 ~ 8.7)
	8	1.25	221 (16.0)	200 ~ 300 (14.4 ~ 21.7)
	10	1.25	449 (32.4)	400 ~ 550 (28.9 ~ 39.7)
7T	10	1.5	429 (31.0)	370 ~ 520 (26.7 ~ 37.5)
Bolts with "7" mark on head	12	1.25 (ISO)	883 (63.8)	750 ~ 1050 (54.2 ~ 75.8)
	12	1.5	778 (56.2)	700 ~ 900 (50.5 ~ 65.0)
Part No. example 91OOO-7OOOO	12	1.75	748 (54.0)	680 ~ 850 (49.1 ~ 61.4)
	13	1.5	1017 (73.4)	800 ~ 1200 (57.6 ~ 86.6)
	14	1.5	1267 (91.5)	1000 ~ 1500 (72.2 ~ 108.3)
	14	2.0	1186 (85.6)	950 ~ 1400 (68.6 ~ 101.1)
	16	1.5	1915 (138.3)	1500 ~ 2300 (108.3 ~ 166.1)
	16	2.0	1811 (130.8)	1400 ~ 2200 (101.1 ~ 158.8)

Note:

1. Example 9 1 1 1 1 - 4 0 6 2 0

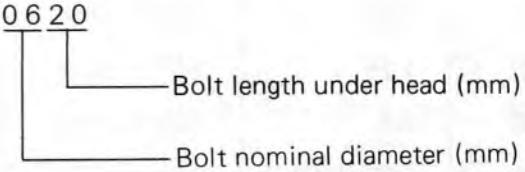

2. The torques specified above are for tightening steel material.
   In case of tightening materials other than steel, or when the bolt is subjected to heat, vibration, or other stresses, appropriate corrections should be made to the values in the above list.

ABBREVIATIONS AND OPERATIONAL TIPS

Abbreviation (Code)	Meaning
ASSY	Assembly
LH	Left Hand
OPT	Option
O/S	Oversize
PS	Power Steering
RH	Right Hand
SAE	Society of Automotive Engineers (USA)
SST	Special Service Tool
SUB-ASSY	Sub-Assembly
T=	Tightening Torque
U/S	Undersize

OPERATIONAL TIPS

1. Safe operation
   (1) Make sure that correct size wire is used when lifting heavy material.
   (2) After jacking up, always be sure to support with rigid rack or stand.

2. Availability of SST and measuring tools
   Have the SST's and measuring tools available before starting work.

3. Neatness and orderliness
   (1) Keep the working place neat and orderly so as to make it easier to work on your job.
   (2) Disassembly of hydraulic equipment should always be done in clean place.

4. Genuine Toyota parts
   Genuine Toyota parts should be used even in the replacement of packings, gaskets, "O" rings, and similar parts.

5. Repairs on electrical system
   Before doing any repairs on the electrical system, disconnect the cables from the battery terminals. Always disconnect the (–) cable first.

6. Tightening torque when installing
   Be sure to observe the tightening torque given in this manual. If not specified, tighten to the torque listed in "Tightening Torques for Standard Bolts".

RECOMMENDED LUBRICANT QUANTITY & KIND

Location	Kind	Capacity			Remarks
Engine	Motor oil		Oil Pan	Oil Filter	
		4P	3.2 ℓ (0.85 US gal.)	0.7 ℓ (0.18 US gal.)	
		5R	4.0 ℓ (1.06 US gal.)	0.8 ℓ (0.21 US gal.)	
		5P	6.0 ℓ (1.58 US gal.)	1.0 ℓ (0.26 US gal.)	
	Diesel engine oil	2J	6.0 ℓ (1.58 US gal.)	1.0 ℓ (0.26 US gal.)	
Pneumatic Governor	Diaphragm oil	2 to 3 drops			Diesel vehicles only
Transmission & Differential	Hypoid gear oil SAE 90	Clutch model	1.0 ~ 1.75 Ton type	11 ℓ (2.9 US gal.)	
			2.0 ~ 3.0 Ton type	12 ℓ (3.2 US gal.)	
		Torque converter model	5 ℓ (1.32 US gal.)		Differential capacity
Torque Converter	Auto fluid	13.2 ℓ (3.5 US gal.)			Refer to torque converter
Brake Fluid	Glycol 2400 G	——			Used only in 1.0 ~ 1.75 Ton vehicles
Chassis Parts	Multipurpose grease	——			Refer to lubrication
	Chassis grease special	——			
Fuel	4P, 5R, 5P engine: Gasoline		1.0 ~ 1.75 Ton type	33 ℓ (8.7 US gal.)	
	2J: Light oil		2.0 ~ 3.0 Ton type	45 ℓ (11.9 US gal.)	
Hydraulic Oil	Hydraulic oil 90		1.0 ~ 1.75 Ton type	23 ℓ (6.1 US gal.)	
			2.0 ~ 3.0 Ton type	28 ℓ (7.4 US gal.)	
Coolant	Long life coolant	4P	7.0 ℓ (1.85 US gal.)		General use 30 % (–15°C) Cold area 50 % (–35°C)
		5R	8.7 ℓ (2.30 US gal.)		
		5P	10.6 ℓ (2.77 US gal.)		
		2J	10.0 ℓ (2.64 US gal.)		

PERIODIC MAINTENANCE

To maintain your forklift in best running condition and to prevent unexpected trouble from developing, the following periodic servicing should be strictly observed.

D: Diesel vehicles G: Gasoline vehicles (1) 1.0 ~ 1.75 ton vehicles (2) 2.0 ~ 3.0 ton vehicles
○ Inspect, clean, adjust ● Replace

Item	Operation	Hours	170	340	500	660	830	1000	1170	1340	1500	1660	1830	2000
		Months	1	2	3	4	5	6	7	8	9	10	11	12
Oil and water leakage	Check, retighten		○	○	○	○	○	○	○	○	○	○	○	○
Tire damage & unusual wear	Check		○	○	○	○	○	○	○	○	○	○	○	○
Tire inflation	Check, adjust		○	○	○	○	○	○	○	○	○	○	○	○
Rim, hub nuts loosening & damage	Check, retighten		○	○	○	○	○	○	○	○	○	○	○	○
All lights	Check		○	○	○	○	○	○	○	○	○	○	○	○
Mirrors dirty, damage, reflective state	Check, adjust, clean		○	○	○	○	○	○	○	○	○	○	○	○
Hydraulic oil amount & contamination	Check, replace		○	○	○	○	○	●	○	○	○	○	○	●
Radiator coolant amount	Check, replace		○	○	○	○	○	○	○	○	○	○	○	●
Engine oil	Check, replace		●	●	●	●	●	●	●	●	●	●	●	●
Engine exhaust color & unusual noise	Check		○	○	○	○	○	○	○	○	○	○	○	○
Brake operation & effectiveness	Check		○	○	○	○	○	○	○	○	○	○	○	○
Parking brake operation & effectiveness	Check		○	○	○	○	○	○	○	○	○	○	○	○
Clutch operation (engage-disengage state)	Check		○	○	○	○	○	○	○	○	○	○	○	○
Steering wheel operation (steering state)	Check		○	○	○	○	○	○	○	○	○	○	○	○
Horn	Check		○	○	○	○	○	○	○	○	○	○	○	○
Actuation of instruments	Check		○	○	○	○	○	○	○	○	○	○	○	○

Item	Operation	Hours	170	340	500	660	830	1000	1170	1340	1500	1660	1830	2000
		Month	1	2	3	4	5	6	7	8	9	10	11	12
Fan belt tension & damage	Check, adjust		○	○	○	○	○	○	○	○	○	○	○	○
Torque converter fluid (Torque converter vehicles only)	Check, replenish, replace		○	○	○	○	○	●	○	○	○	○	○	●
Engine starting condition	Check, adjust		○	○	○	○	○	○	○	○	○	○	○	○
Rotating state when idling	Check, adjust		○	○	○	○	○	○	○	○	○	○	○	○
Rotating state when accelerating	Check, adjust		○	○	○	○	○	○	○	○	○	○	○	○
Engine oil contamination & oil leakage	Check		○	○	○	○	○	○	○	○	○	○	○	○
Engine oil cleaner clogging & dirtying	Check, replace		●	○	●	○	○	●	○	○	●	○	○	●
Fuel leakage & fuel pipe line	Check, retighten		○	○	○	○	○	○	○	○	○	○	○	○
Fuel filter element clogging	Check, replace		○	○	○	○	○	●	○	○	○	○	○	●
Feed pump filter clogging (D)	Check, clean		○	○	○	○	○	○	○	○	○	○	○	○
Carburetor linkage wear (G)	Check		○	○	○	○	○	○	○	○	○	○	○	○
Radiator water leakage	Check		○	○	○	○	○	○	○	○	○	○	○	○
Rubber hose deterioration	Check		○	○	○	○	○	○	○	○	○	○	○	○
Radiator cap operation & installed state	Check		○	○	○	○	○	○	○	○	○	○	○	○
Fan blade and holder wear	Check		○	○	○	○	○	○	○	○	○	○	○	○
Fan mounting loose & rattle	Check, retighten		○	○	○	○	○	○	○	○	○	○	○	○
Clutch pedal play & floor clearance	Check, adjust		○	○	○	○	○	○	○	○	○	○	○	○
Clutch unusual noise & slippage	Check		○	○	○	○	○	○	○	○	○	○	○	○
Clutch booster function & oil leakage (2)	Check		○	○	○	○	○	○	○	○	○	○	○	○
Transmission oil leakage	Check, retighten		○	○	○	○	○	○	○	○	○	○	○	○
Transmission control function & loosening	Check, adjust		○	○	○	○	○	○	○	○	○	○	○	○

Item	Operation	Hours	170	340	500	660	830	1000	1170	1340	1500	1660	1830	2000
		Month	1	2	3	4	5	6	7	8	9	10	11	12
Torque converter fluid leakage	Check, retighten		O	O	O	O	O	O	O	O	O	O	O	O
Torque converter control function & loosening	Check, adjust		O	O	O	O	O	O	O	O	O	O	O	O
Torque converter control valve & clutch function	Check		O	O	O	O	O	O	O	O	O	O	O	O
Torque converter inching valve function	Check		O	O	O	O	O	O	O	O	O	O	O	O
Torque converter clutch and brake pedal and clearance	Check, adjust		O	O	O	O	O	O	O	O	O	O	O	O
Differential oil leakage	Check, retighten		O	O	O	O	O	O	O	O	O	O	O	O
Tire tread groove depth	Check		O	O	O	O	O	O	O	O	O	O	O	O
Metal piece, stone & others lodged in tire	Check		O	O	O	O	O	O	O	O	O	O	O	O
Hub bolts loosening & damage	Check, retighten		O	O	O	O	O	O	O	O	O	O	O	O
Rim, side ring & disc wheel damage	Check		O	O	O	O	O	O	O	O	O	O	O	O
Wheel bearing excessive clearance	Check, adjust		O	O	O	O	O	O	O	O	O	O	O	O
Wheel bearing abnormal noise	Check		O	O	O	O	O	O	O	O	O	O	O	O
Steering wheel play	Check, adjust		O	O	O	O	O	O	O	O	O	O	O	O
Steering wheel axial & radial excessive play	Check, adjust		O	O	O	O	O	O	O	O	O	O	O	O
Steering gear box mounting loose	Check		O	O	O	O	O	O	O	O	O	O	O	O
Steering gear box oil leakage	Check, retighten		O	O	O	O	O	O	O	O	O	O	O	O
Rod, arm, bell crank excessive play & loosening	Check, retighten		O	O	O	O	O	O	O	O	O	O	O	O
Power steering oil leakage	Check		O	O	O	O	O	O	O	O	O	O	O	O
Power steering mounting & connection loose	Check, retighten		O	O	O	O	O	O	O	O	O	O	O	O
Brake pedal play & floor clearance	Check, adjust		O	O	O	O	O	O	O	O	O	O	O	O
Air in brake system	Check, adjust		O	O	O	O	O	O	O	O	O	O	O	O

Item	Operation	Hours	170	340	500	660	830	1000	1170	1340	1500	1660	1830	2000
		Month	1	2	3	4	5	6	7	8	9	10	11	12
Head guard & back rest-deformation, cracks, injury	Check		○	○	○	○	○	○	○	○	○	○	○	○
Direction indicator & warnings—operation, mounted state	Check		○	○	○	○	○	○	○	○	○	○	○	○
Lighting devices & reverse warning device—operation, mounted state	Check		○	○	○	○	○	○	○	○	○	○	○	○
Seat loosened or damage	Check, retighten		○	○	○	○	○	○	○	○	○	○	○	○
Tappet clearance	Check, adjust		○ (new vehicle)		○			○			○			○
Battery fluid specific gravity	Check				○			○			○			○
Hydraulic pressure	Check, adjust				○			○			○			○
Ignition timing (G)	Check, adjust							○						○
Injection timing (D)	Check, adjust							○						○
Glow plugs (D)	Check							○						○
Engine compression	Measure							○						○
Torque converter oil filter	Replace							●						●
Torque converter oil strainer	Check, clean							○						○
Gear oils (except steering gear box)	Check, replenish, replace		○	○	○	○	○	●	○	○	○	○	○	●
Differential oil	Check, clean		○	○	○	○	○	●	○	○	○	○	○	●
Hydraulic oil tank strainer	Check, clean							○						○
Hydraulic oil tank	Check							○						○
Hyraulic oil filter	Replace		● (new vehicle)					●						●
Wheel bearing grease	Check, clean, replace							○						○
PCV valve operation (G)	Check, clean, replace		○	○	○	○	○	○	○	○	○	○	○	●

Item	Operation	Hours	170	340	500	660	830	1000	1170	1340	1500	1660	1830	2000
		Month	1	2	3	4	5	6	7	8	9	10	11	12
Torque converter stall	Check		○	○	○	○	○	○	○	○	○	○	○	○
Lifting speed	Check		○	○	○	○	○	○	○	○	○	○	○	○
Stop switch	Check, replace		○	○	○	○	○	○	○	○	○	○	○	○ ● (2 years)
Governor operation (No-load maximim rpm)	Check, adjust		○	○	○	○	○	○	○	○	○	○	○	○
Injection nozzles—Injection pressure spray pattern (D)	Check, adjust													○
Injection pump injection (D)	Check, adjust													○
Axle—damage	Check													○
Suspension—damage	Check													○
Rods, arms, bearings, etc.—lost cotter pin	Check													○
Knuckle & king pin—looseness, damage	Check													○
Rear axle beam—bending, damage	Check, repair													○
Parking breake lever ratchet wear	Check													○
Parking brake lever ratchet operation	Check													○
Master & wheel cylinder operation	Check													○
Master & wheel cylinders—fluid leakage, damage	Check, repair													○
Pistons, cups, check valves—wear, damage	Check, replace													●
Brake drum mounting loose	Check, retighten													○
Linings—wear, damage	Check													○
Shoe operating condition	Check													○
Anchor pins—rusted tight	Check													○

Item	Operation	Hours	170	340	500	660	830	1000	1170	1340	1500	1660	1830	2000
		Month	1	2	3	4	5	6	7	8	9	10	11	12
Return spring weakend	Check													○
Automatic adjuster operation	Check													○
Brake drums-wear, damage	Check													○
Backing brake—deformation, cracks	Check													○
Backing brake mounting loose	Check, retighten													○
Forks—deformation	Check, repair													○
Fork base part—cracks	Check													○
Mast support metal—wear, damage	Check													○
Relief pressure	Check													○
Distributor cap high tension cord insertion (G)	Check													○
Terminals at distributor burned (G)	Check													○
Distributor cap enter terminal—wear, damage (G)	Check													○
Plug cords-open (G)	Check													○
Charger charging condition	Check, adjust													○
Frame, cross members, etc.—damage, cracks	Check													○
Power steering hoses	Replace													● (2 years)
Power steering rubber parts	Replace													● (2 years)
Masterial handling equipment hoses	Replace													● (2 years)

LUBRICATION CHARTS

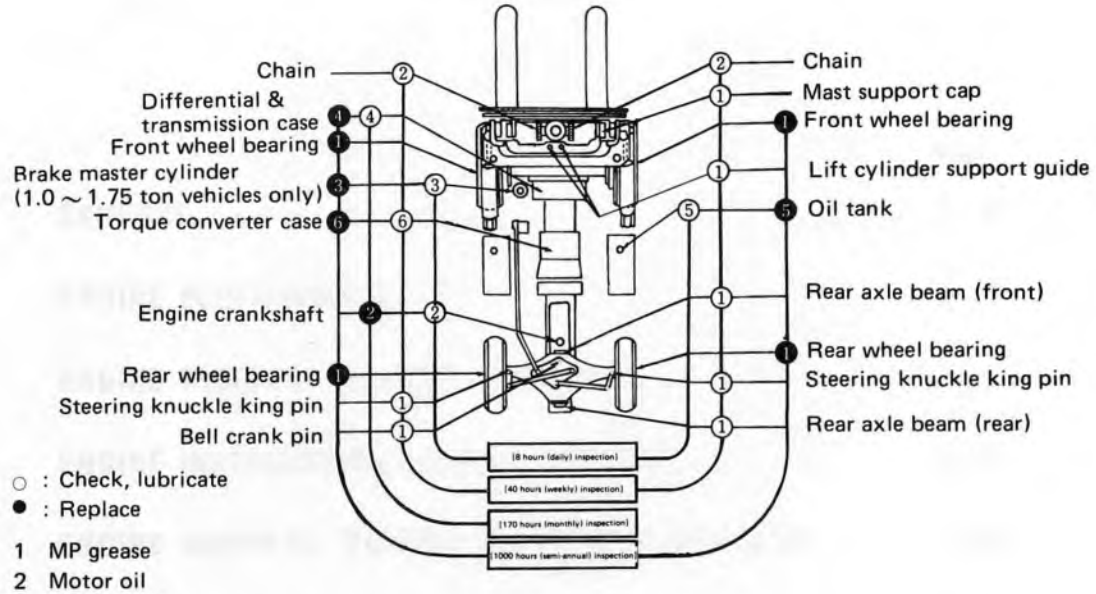

○ : Check, lubricate
● : Replace

1 MP grease
2 Motor oil
3 Brake fluid
4 Hypoid gear oil SAE 90
5 Hydraulic oil 90
6 Auto fluid special

Fig. 0-8 Gasoline Vehicle Lubrication Chart

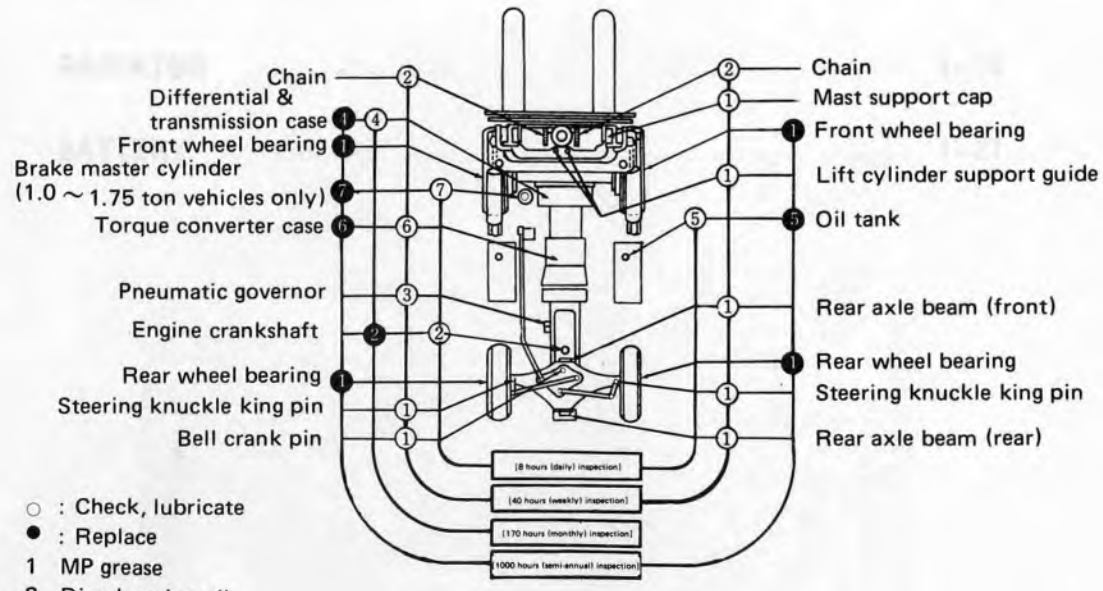

○ : Check, lubricate
● : Replace

1 MP grease
2 Diesel engine oil
3 Diaphragm oil
4 Hypoid gear oil SAE 90
5 Hydraulic oil 90
6 Auto fluid special
7 Brake fluid

Fig. 0-9 Diesel Vehicle Lubrication Chart



ENGINE

	Page
GENERAL	1– 2
ENGINE PERFORMANCE	1– 4
ENGINE REMOVAL (CLUTCH VEHICLE)	1– 5
ENGINE INSTALLATION (CLUTCH VEHICLE)	1–10
ENGINE REMOVAL (TORQUE CONVERTER VEHICLES)	1–10
ENGINE IMPORTANT SPECIFICATIONS	1–12
ENGINE SPEED ADJUSTMENT	1–14
AIR CLEANER	1–17
MUFFLER	1–18
RADIATOR	1–19
BATTERY	1–21

GENERAL

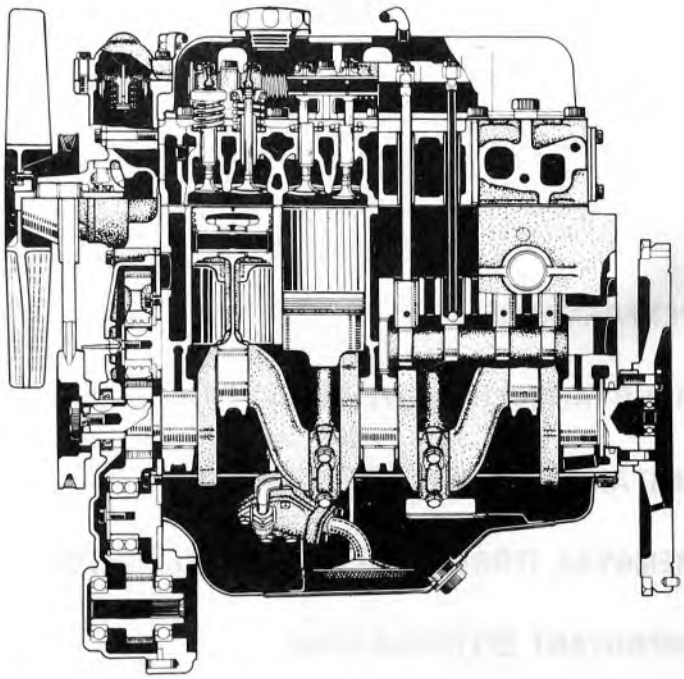

Fig. 1-1 Engine Sectional View (4P)

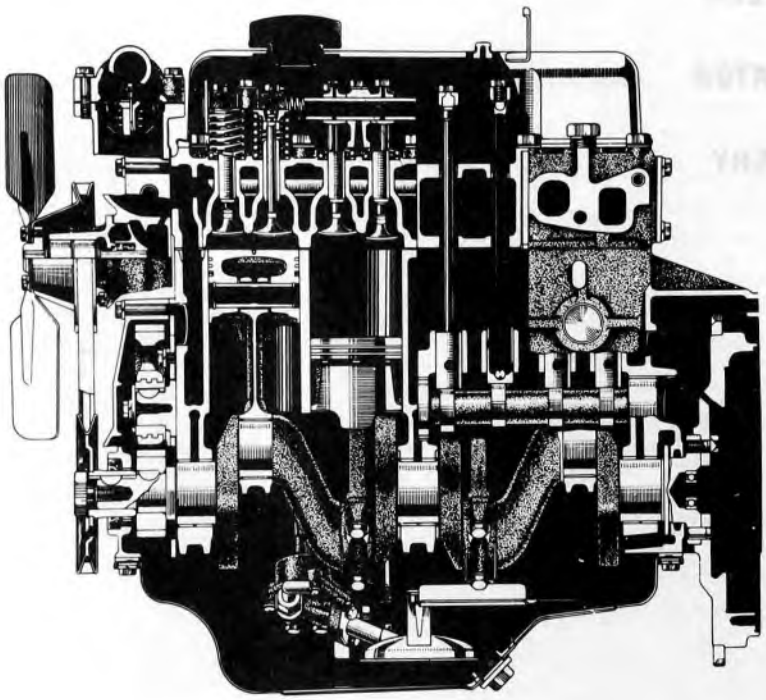

Fig. 1-2 Engine Sectional View (5R)

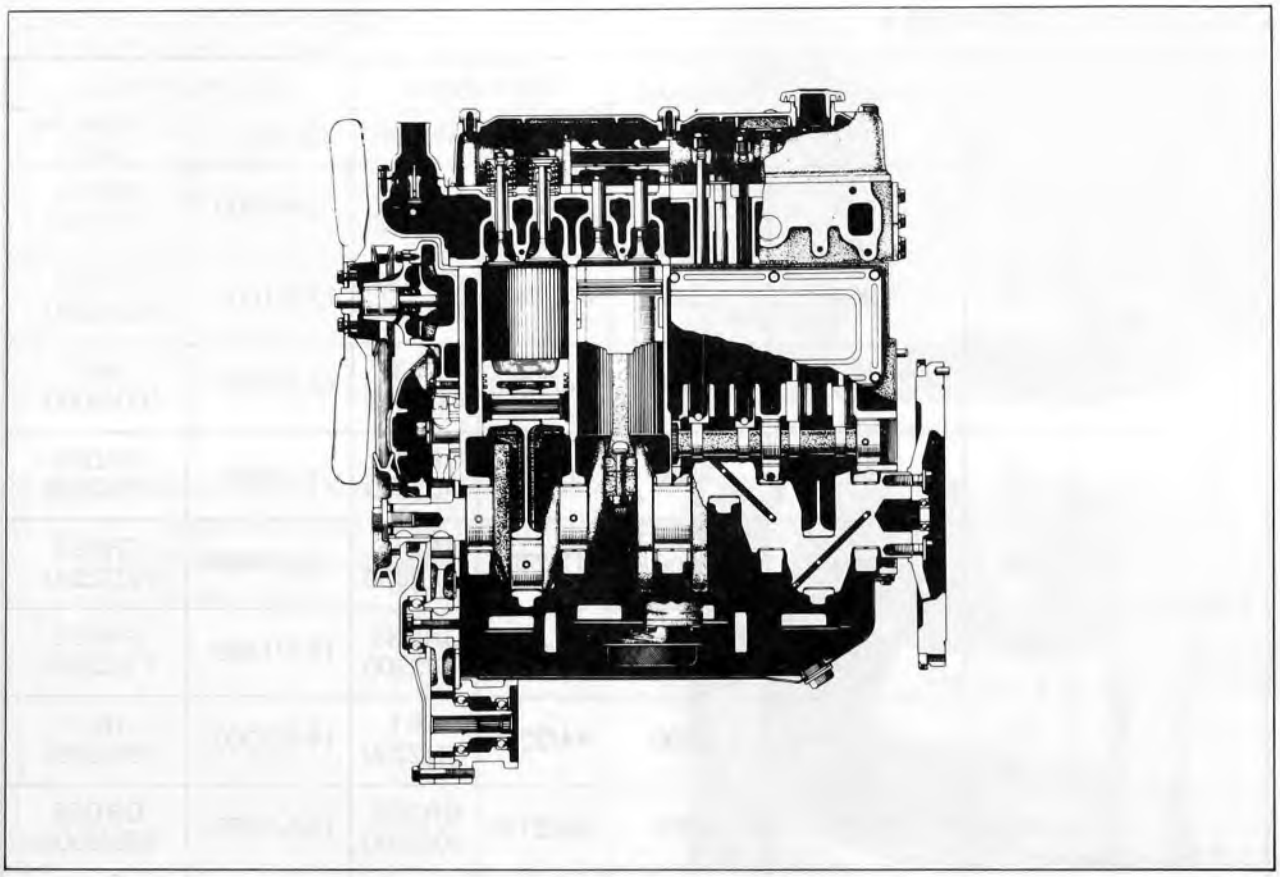

Fig. 1-3 Engine Sectional View (5P)

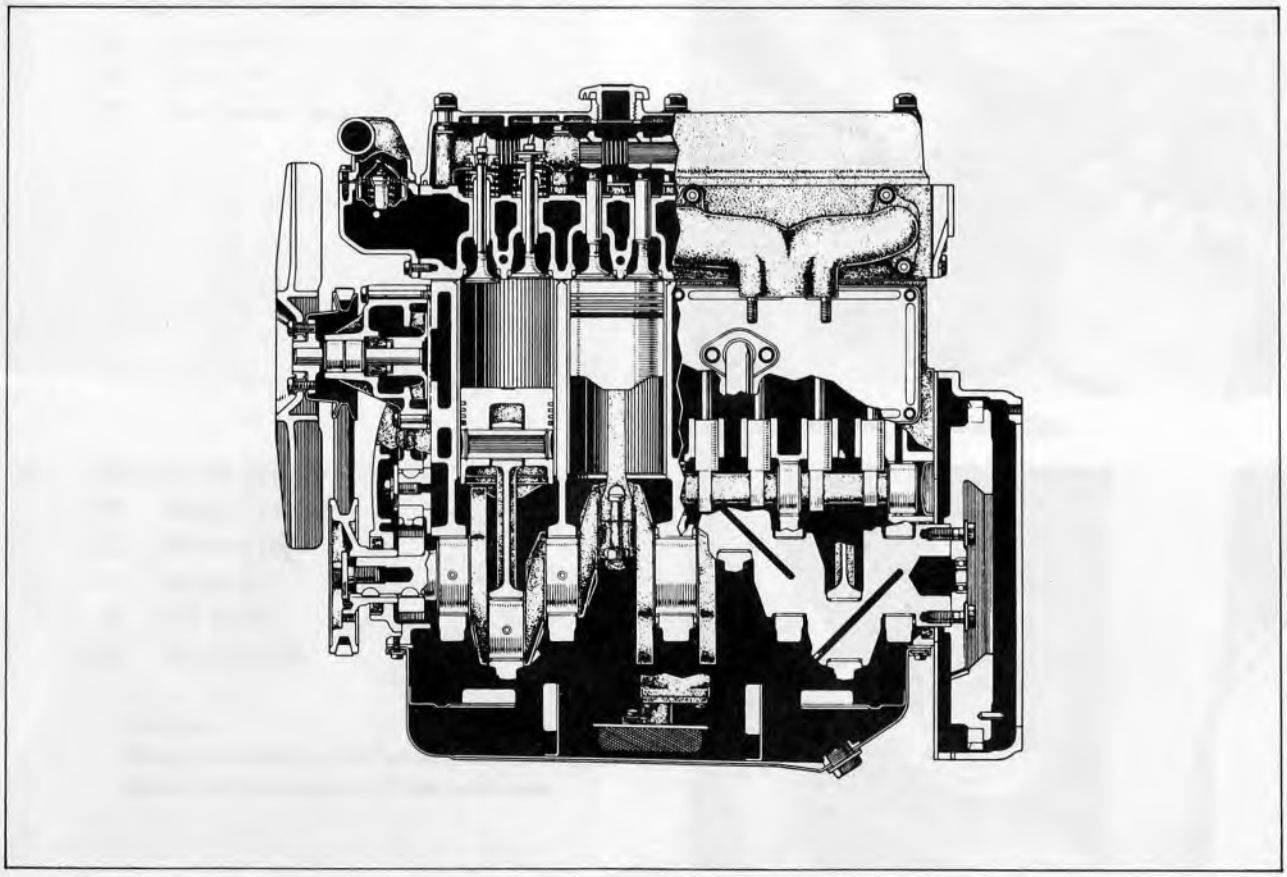

Fig. 1-4 Engine Sectional View (2J)

ENGINE PERFORMANCE

Item / Vehicle	Engine	Displacement CC	No-load steady rpm	Rated Output		Maximum Torque	
				PS/rpm	HP/rpm	kg-m/rpm	ft-lb/rpm (SAE)
1 ton ~ 1.75 ton	4P	1493	2600	30/2400	GROSS 38/2600	9.5/1800	GROSS 77/2600
	5R	1994	2600	41/2300	GROSS 50/2600	13.5/1800	GROSS 103/2200
	2J	2481	2300	44/2200	NET 41/2200	14.5/2000	NET 100/2000
2 ton ~ 2.5 ton	4P	1493	3050	35/2800	GROSS 44/3000	10/1800	GROSS 77/2600
	5R	1994	2600	41/2300	GROSS 50/2600	13.5/1800	GROSS 103/2200
	5P	2771	2300	54/2100	GROSS 60/2300	18.5/1400	GROSS 138/2000
	2J	2481	2300	44/2200	NET 41/2200	14.5/2000	NET 100/2000
2.75 ton, 3 ton	5P	2771	2300	54/2100	GROSS 60/2300	18.5/1400	GROSS 138/2000
	2J	2481	2600	50/2500	NET 47/2500	14.5/2200	NET 100/2200

ENGINE REMOVAL (CLUTCH VEHICLE)

1. Remove the rear toeboard.
   (1) Set bolts
   (2) Rear toeboard

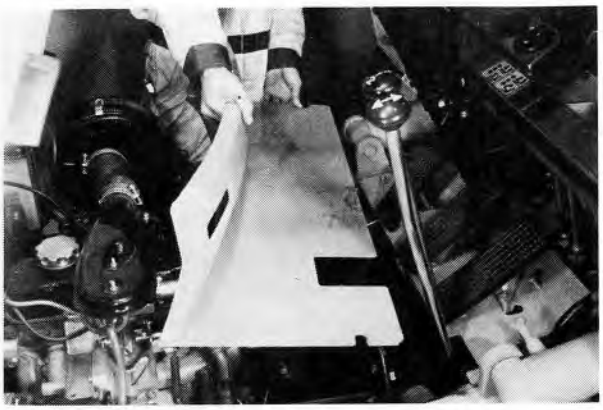

Fig. 1-5 Removing Toeboard

2. Remove the engine hood.
   (1) Engine hood stay cotter pins
   (2) Radiator cover set bolts
   (3) Engine hood



Fig. 1-6 Removing Engine Hood

3. Remove the air cleaner case.
   (1) Hose clip
   (2) Set bolts
   (3) Air cleaner case



Fig. 1-7 Removing Air Cleaner Case

4. Remove the battery
   (1) Battery cables
   (2) Battery cap
   (3) Battery
   (4) Set bolts
   (5) Battery case

Caution:
When disconnecting the battery cables, always disconnect the minus terminal cable first.



Fig. 1-8 Removing Battery

5. Disconnect the wiring.
   (1) Wiring to alternator
   (2) Wiring to distributor ignition coil
   (3) Wiring to starter
   (4) Engine ground wire

   Caution:
   In case of diesel engine, disconnect the wiring to glow plugs.

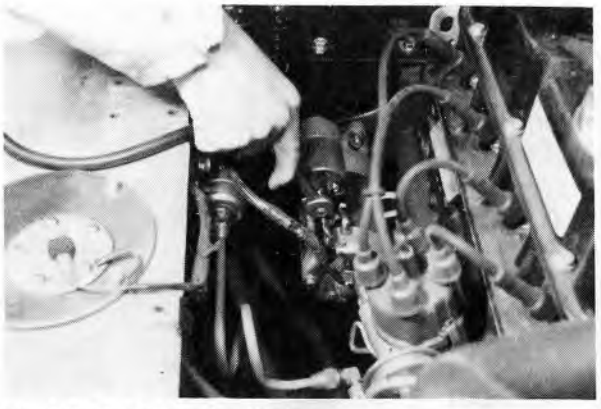

Fig. 1-9 Disconnecting Wiring

6. Disconnect the piping and wires.
   (1) Fuel piping
   (2) Accelerator wire
   (3) Choke wire or engine stop wire



Fig. 1-10 Disconnecting Wires

7. Remove the balanceweight.
   (1) Suspend the weight with wire rope
   (2) Set bolt
   (3) Balanceweight

   Weights
   1.0 ton Vehicle:
   Approx. 540 kg (1191 lb)
   1.35 ton Vehicle:
   Approx. 750 kg (1654 lb)
   1.5 ton Vehicle:
   Approx. 880 kg (1940 lb)
   1.75 ton Vehicle:
   Approx. 1020 kg (2249 lb)
   2.0 ton Vehicle:
   Approx. 1260 kg (2778 lb)
   2.25 ton Vehicle:
   Approx. 1400 kg (3087 lb)
   2.5 ton Vehicle:
   Approx. 1595 kg (3517 lb)
   2.75 ton Vehicle:
   Approx. 1780 kg (3925 lb)
   3.0 ton Vehicle:
   Approx. 1990 kg (4388 lb)



Fig. 1-11 Removing Balanceweight

8. Remove the muffler.
   (1) Exhaust pipe connector
   (2) Muffler set bolts
   (3) Muffler



Fig. 1-12 Removing Muffler

9. Drain out the coolant.
   (1) Drain out the radiator
   (2) Drain out the engine

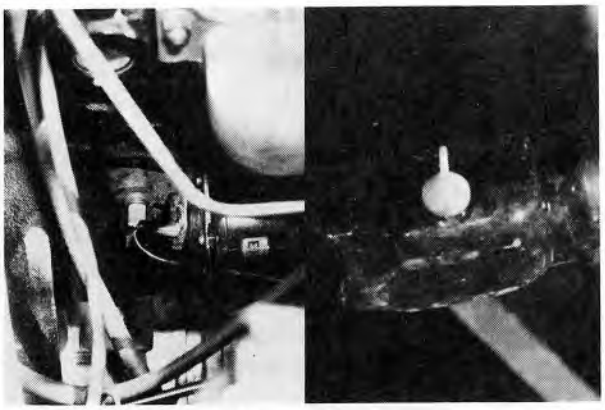

Fig. 1-13 Draining Out Coolant

10. Remove the radiator.
   (1) Hose clamps
   (2) Radiator set bolts
   (3) Radiator fan shroud

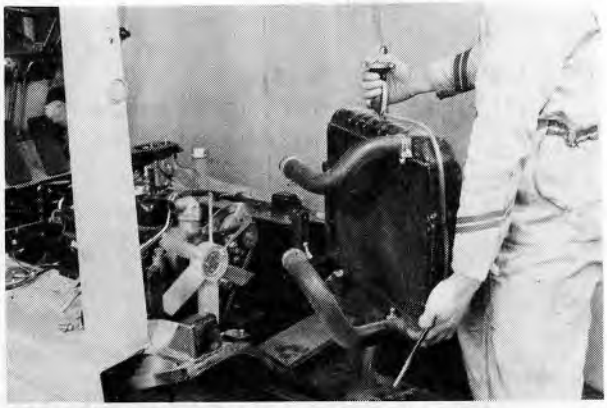

Fig. 1-14 Removing Radiator

11. Disconnect the oil pump.
   (1) Loosen the alternator set bolt
   (2) Remove the fan belt from pulley
   (3) Oil pipes
   (4) Oil pump set bolts
   (5) Disconnect the oil pump

Caution:
Just disconnect the oil pump from the engine.
There is no need of disconnecting the piping.

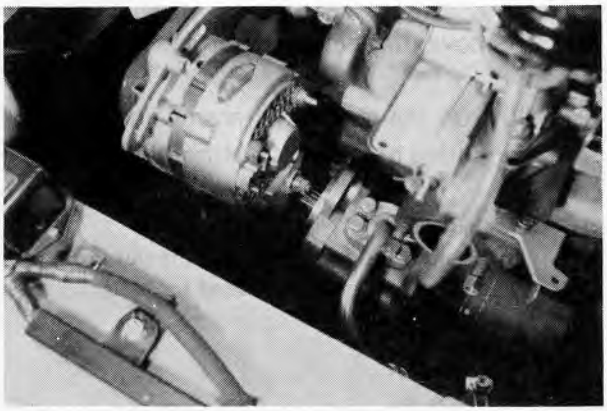

Fig. 1-15 Disconnecting Oil Pump

12. Remove the starter motor.
   (1) Starter motor wiring
   (2) Set nut
   (3) Starter motor



Fig. 1-16 Removing Starter Motor

13. Remove the clutch disc, clutch cover, and flywheel.

Note:
For procedures on removing the clutch disc, clutch cover, and flywheel, refer to par. 2–6.

(1) Clutch housing cover
(2) Main drive shaft
Use SST 09210-20170-71
(3) Disconnect clutch rod
(4) Clutch cover
(5) Clutch disc
(6) Flywheel

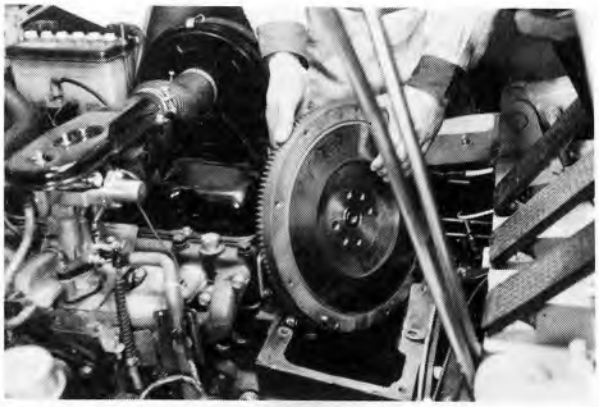

Fig. 1-17 Removing Flywheel

14. Lightly suspend the engine.
(1) Pass wire rope on the engine hooks and lightly suspend the engine.
SST used:
09010-20110-71 when hoist is used.
09020-20110-71 when lift is used.

Caution:
The SST is considerably heavy so exercise sufficient care.
Make sure that the wire rope is securely hooked. It would be preferable to use a shackle.



Fig. 1-18 Engine Lightly Suspended

15. Remove the engine mounting set nuts.

16. Lift up the engine w/transmission until the mounting bolts pull out from the bracket.

Caution:
Do not lift up too high since the clutch housing and engine are still attached together.



Fig. 1-19 Removing Engine Mounting Set Nut

17. Insert wooden block under the transmission.

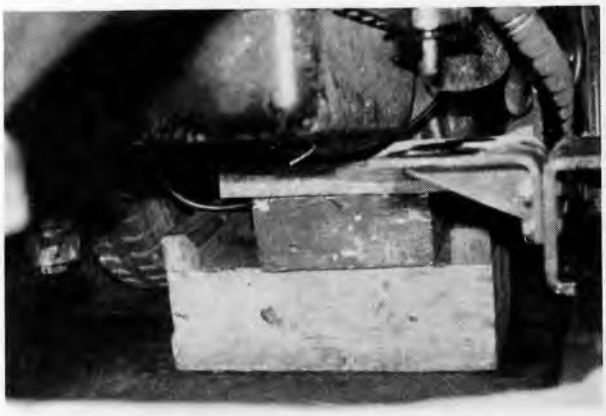

Fig. 1-20 Transmission Blocked

18. Separate the clutch housing from the engine.
    (1) Set bolts

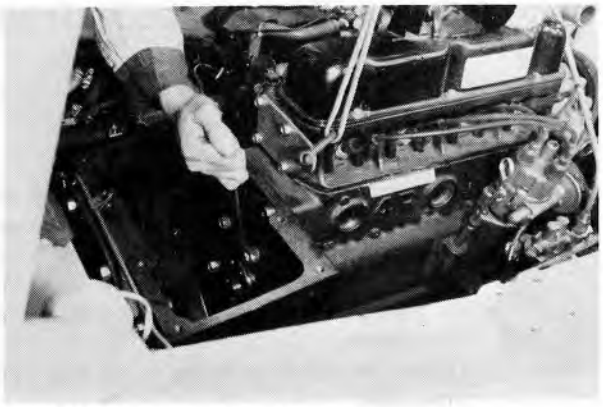

Fig. 1-21 Separating Engine

19. Lift up the engine and remove it from the vehicle.

    Caution:
    Use care not to damage the oil pump.
    Make sure that all wiring and piping have been disconnected.



Fig. 1-22 Removing Engine

ENGINE INSTALLATION (CLUTCH VEHICLE)

Install by performing the disassembly in reverse order.

Caution:

- The important point in assembling the engine to clutch housing is to fit in the dowel pins. First insert the upper or lower dowel pin and then fit on the engine by slightly raising or lowering it.
- Have the wooden block under the engine removed before starting to install the engine set nuts.
- Position the oil pump in an easy-to-assemble position before bolting down the engine. If during assembly, the oil pump splines fail to mesh in with those at the engine, slightly turn the engine crankshaft.
- Check the electrical wiring to see that there are no wrong connections before connecting the battery minus terminal.
- Check the coolant and engine oil, and replenish if low before starting to tune up the engine.
- Tighten the flywheel bolts to the following torque.

T = 5.8 ~ 6.6 kg-m (41.9 ~ 47.7 ft-lb) (4P, 5R)
T = 10 ~ 11 kg-m (72.2 ~ 79.4 ft-lb) (5P, 2J)

ENGINE REMOVAL (TORQUE CONVERTER VEHICLES)

Note:
The procedures for removing the gasoline vehicle engine up to the end of operation 15, engine mounting set nuts, are the same for removing the torque converter vehicle engine so that they should be utilized.
The following are the procedures from separating the engine from the torque converter.

16. Disconnect the forward and reverse shift rods and the inching rod.

17. Lift up the engine w/torque converter assembly until the mounting bolts are pulled out from the bracket.

Caution:
Do not lift up too much as the torque converter and engine are still connected together.

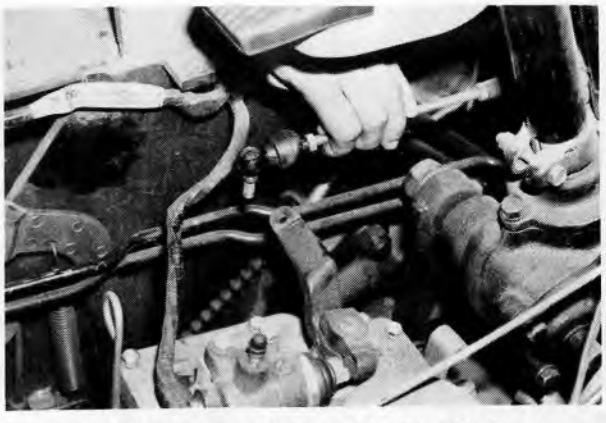

Fig. 1-23 Disconnecting Shift and Inching Rods



Fig. 1-24 Removing Engine w/Torque Converter Set Nut

18. Insert a wooden block under the transmission.

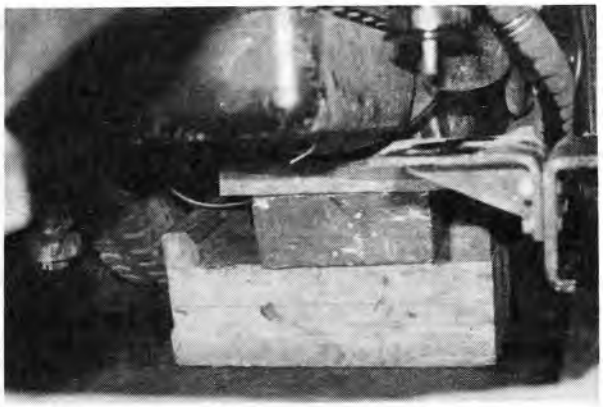

Fig. 1-25 Transmission Underside Blocked

19. Separate the torque converter from the drive plate.
    (1) Set bolts (6).

    Important:
    To turn the drive plate, turn it by hooking a box wrench or open-end wrench on the crank pulley bolt.

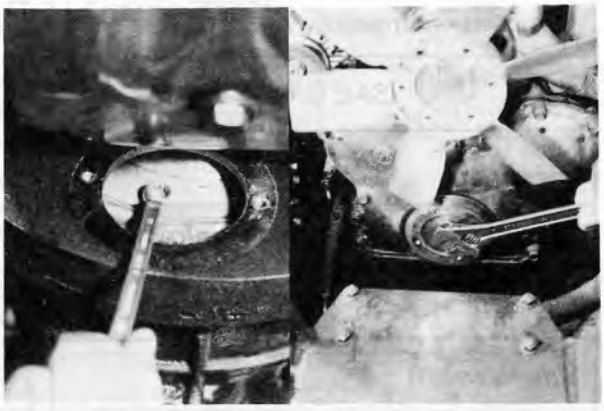

Fig. 1-26 Removing Drive Plate Bolt

20. Separate the torque converter from the engine.
    (1) Housing set bolts



Fig. 1-27 Separating Torque Converter from Engine

21. Lift up the engine and remove it from the vehicle.

    Caution:
    Use care not to damage the oil pump.
    Make sure that all wiring and piping have been disconnected.



Fig. 1-28 Engine Removal

ENGINE IMPORTANT SPECIFICATIONS (GASOLINE)

Item \ Engine Type		4P		5R	5P
		1 Ton Series	2 Ton Series		
Total displacement	cc	1493 (91 cu-in)		1994 (122 cu-in)	2771 (169 cu-in)
Bore x stroke	mm	76.6 x 81.0 (3.01 x 3.18 in)		88.0 x 82.0 (3.46 x 3.22 in)	93.0 x 102.0 (3.66 x 4.01 in)
Compression ratio		8.5		8.2	8.3
Compression pressure	kg/cm^2 (rpm)	11.0 (250) (156.4 psi) (250)		11.0 (250) (156.4 psi) (250)	11.0 (250) (156.4 psi) (250)
Rated output PS/rpm (SAE Gross HP/rpm)		30/2400 (38/2600)	35/2800 (44/3000)	41/2300 (50/2600)	54/2100 (60/2300)
Max. torque kg-m/rpm (SAE Gross ft-lb/rpm)		9.5/1800 (77/2600)	10.0/1800 (77/2600)	13.5/1800 (103/2200)	18.5/1400 (138/2000)
Full load max. fuel consumption	g/PS-h/rpm	215/2600		220/1800	230/2300
Engine dimensions	mm	622x530x641 (24.5x20.9x25.2 in)		695x540x625 (27.4x21.3x24.6 in)	671x587x660 (26.4x23.1x26.0 in)
Service weight	kg	138 (304 lb)		163 (359 lb)	230 (507 lb)
Ignition timing	BTDC/rpm	8°/550		10°/550	5°/700
Firing order		1 – 3 – 4 – 2		1 – 3 – 4 – 2	1 – 2 – 4 – 3
Total coolant	ℓ	7.0 (1.85 US gal)		8.7 (2.30 US gal)	10.6 (2.77 US gal)
Total engine oil	ℓ	3.9 (1.03 US gal)		4.8 (1.27 US gal)	7.0 (1.85 US gal)
No-load governed speed	rpm	2600 ± 50	3050 ± 50	2600 ± 50	2300 ± 50
Idling speed	rpm	500 $^{+50}_{-0}$		500 $^{+50}_{-0}$	700 ± 50

ENGINE IMPORTANT SPECIFICATIONS (DIESEL)

Item \ Engine Type		2J	
		1 ton ~ 2.5 ton	2.75 ton & 3 ton
Total displacement	cc	2481 (151 cu-in)	
Bore x stroke	mm	88.0 x 102.0 (3.46 x 4.01 in)	
Compression ratio		21.0	
Compression pressure	kg/cm² (rpm)	27.0 (260) (383.9 psi) (260)	
Rated output PS/rpm	(SAE Net HP/rpm)	44/2200 (41/2200)	50/2500 (47/2500)
Max. torque kg-m/rpm	(SAE Net ft-lb/rpm)	14.5/2000 (100/2000)	14.5/2200 (100/2200)
Full-load max. fuel consumption	g/PS-h/rpm	190/1600	
Engine dimensions	mm	713 x 565 x 689 (28.1 x 22.2 x 27.1 in)	
Service weight	kg	242 (534 lb)	
Injection pump type		Bosch	
Injection timing		13° stopped	
Injection order		1 – 2 – 4 – 3	
Total coolant	ℓ	10 (2.64 US gal)	
Total engine oil	ℓ	7.0 (1.85 US gal)	
No-load governed speed	rpm	2300 ± 25	2600 ± 25
Idling speed	rpm	650 ± 25	

ENGINE SPEED ADJUSTMENT (GASOLINE VEHICLES)

1. Idling speed adjustment.
   (1) Warm up the engine (Coolant temperature 75° ~ 85°C, 167° ~ 185°F)
   (2) Mount the engine tachometer
   (3) Turn the adjusting screw and adjust the specified idling speed.

   Clockwise
   Raises idling speed
   Counterclockwise
   Lowers idling speed

Engine	Idling Speed
4P	550^{+50}_{-0} rpm
5R	550^{+50}_{-0} rpm
5P	700 ± 50 rpm

2. No-load governed maximum speed adjustment (4P and 5R engines)
   (1) Warm up the engine (Coolant temperature 75° ~ 85°C, 167° ~ 185°F)
   (2) Mount the engine tachometer and measure the speed when the accelerator is fully depressed.

Engine	No-load governed max. speed
4P (1 ~ 1.75 ton)	2600 ± 50 rpm
4P (2 ~ 2.5 ton)	3050 ± 50 rpm
5R	2600 ± 50 rpm

   (3) Operate the cargo handling lever, and while at full relief, measure the engine speed.
   (4) Adjust the no-load maximum speed by turning the adjusting nut and screw in the air gevernor until the speed stabilizes at the value shown above. At the same time, adjust such that the engine speed drop will be at minimum when at full relief.

   A: Adjusting nut
   B: Adjusting screw

   Speed drop at full relief within 300 rpm

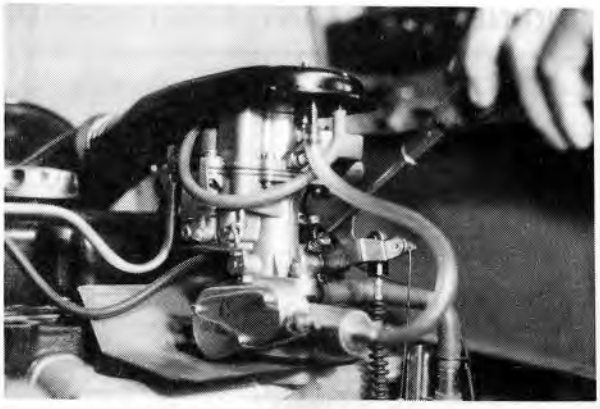

Fig. 1-29 Adjusting Idling Speed

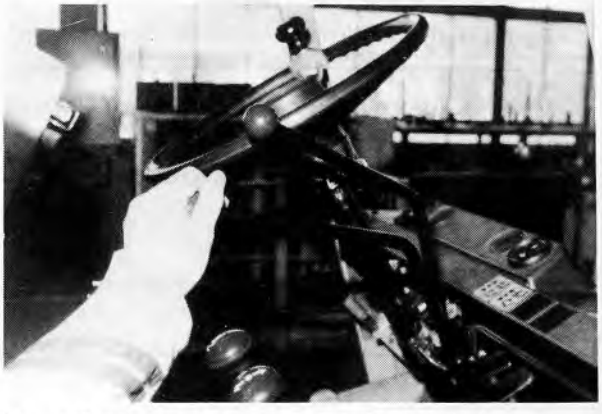

Fig. 1-30 Measuring Engine rpm at Full Relief

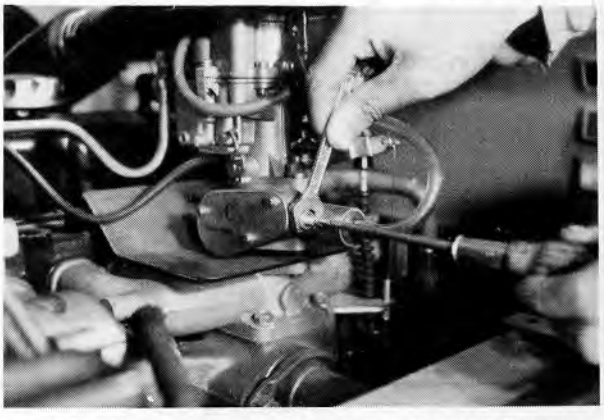

Fig. 1-31 No-load Governed Maximum Speed Adjustment

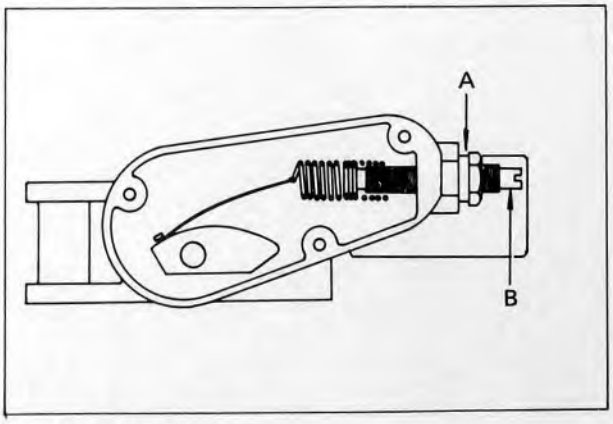

Fig. 1-32 Air Governor

Important:

- Turning the adjusting nut clockwise will cause the engine speed to rise. (After turning the adjusting nut, tap it lightly toward the body side so as to fix it.)
- Turning the screw clockwise will cause the engine speed to rise.
- If the engine speed drop is large at full relief, turn the adjusting nut clockwise and the screw counterclockwise. Keep adjusting in this manner until the engine tends to develop hunting. Stop adjusting just before coming to this point.
- If the engine speed is not stable at maximum speed (hunting), turn the adjusting nut counterclockwise and the screw clockwise. If turned too far, the engine speed drop at full relief will become large, and in this case, hunting could also develop.
- The engine speed drop at full relief is around 200 rpm when the vehicle is new. If the speed drop becomes larger than 300 rpm, the engine, carburetor, and governor should be adjusted.
- The governor should be sealed after adjusting.

(5P engine)

(1) Adjust the length of governor connecting rod (with engine stopped). Adjust the length of governor connecting rod so as to have the governor levers No.1 and No.2 come in intimate contact at "A" when the accelerator lever is fully open.

B: Governor connecting rod
C: No.2 governor lever
D: No.1 governor lever
E: Nut
F: Spring tension
G: Governor main spring

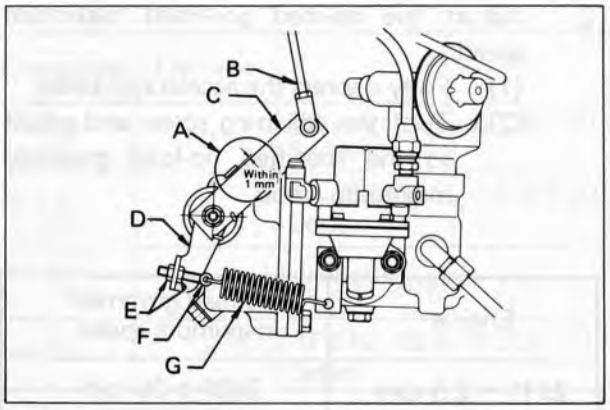

Fig. 1-33 Governor Connecting Rod Length Adjustment

(2) Warm up the engine.
(Coolant temperature 75° ~ 85°C, 167° ~ 185°F)

(3) Mount the engine tachometer

(4) Adjust the no-load governed maximum speed by means of the mechanical governor adjust screw.

A: Adjust nut
B: No.1 governor lever
C: Governor main spring
D: Spring tension
E: Lead ball

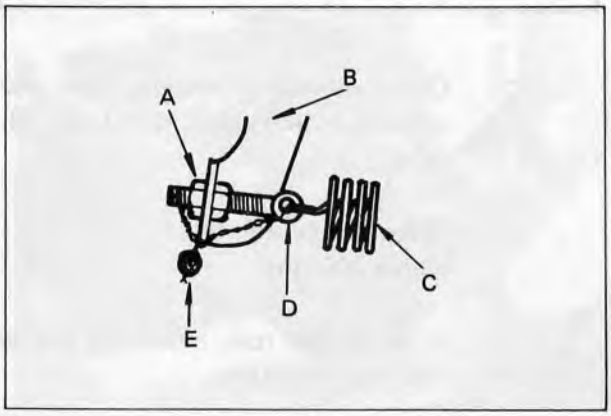

Fig. 1-34 No-load Governed Maximum Speed

No-load governed maximum speed
5P engine 2300 ± 50 rpm

ENGINE SPEED ADJUSTMENT (DIESEL VEHICLE)

1. Adjust the idling speed.
   (1) Warm up the engine
   (Coolant temperature 75° ~ 85°C, 167° ~ 185°F)
   (2) Mount the engine tachometer
   (3) Turn the adjusting screw and adjust to the specified idling speed.

Engine	Idling Speed
2J	650 ± 25 rpm

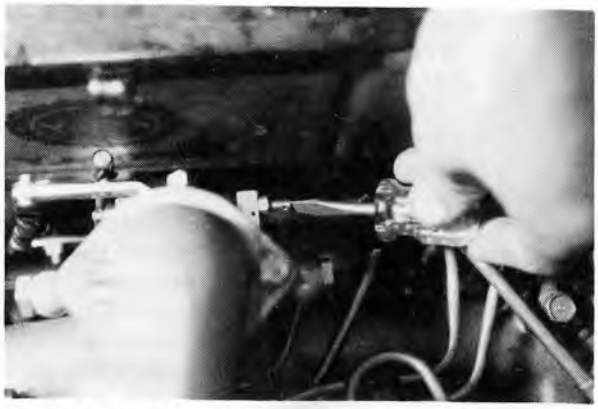

Fig. 1-35 Adjusting Idling



Fig. 1-36 Measuring Engine Speed (Diesel)

2. Adjust the no-load governed maximum speed.
   (1) Fully depress the accelerator pedal.
   (2) Turn the adjusting screw and adjust to the specified no-load governed maximum speed

Engine	No-load governed maximum speed
2J (1 ~ 2.5-ton)	2300 ± 25 rpm
2J (2.75 ~ 3-ton)	2600 ± 25 rpm

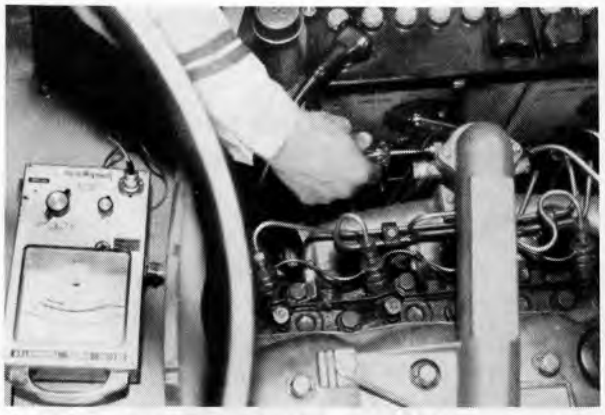

Fig. 1-37 Adjusting No-load Governed Maximum Speed

   (3) Operate the cargo handling lever, and measure the engine speed at full relief.

   Speed drop at full relief
   within 300 rpm

   If above 300 rpm, adjust the engine and injection pump.



Fig. 1-38 Measuring Engine Speed a Speed at Full Relief

AIR CLEANER

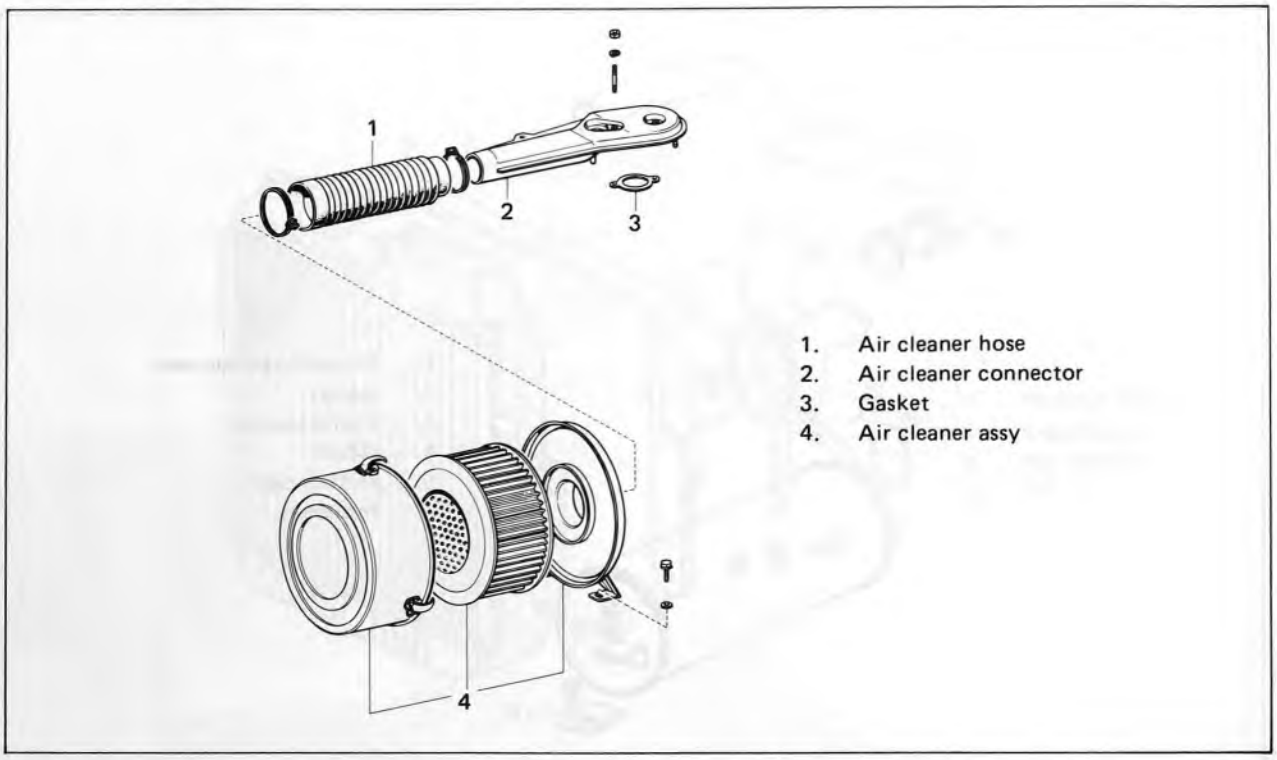

1. Air cleaner hose
2. Air cleaner connector
3. Gasket
4. Air cleaner assy

Fig. 1-39 Air Cleaner Component Parts (4P & 5R)

LIST OF AIR CLEANER COMMON PARTS

	Case	Hose	Connector	Element	
4P engine equipped vehicle	○	○	○	○	4FG10, 15 Series, 3FG20 Series
5R engine equipped vehicle	↑	↑	↑	↑	40-4FG10, 15, 40-3FG20 Series
5P engine equipped vehicle	○	○	○	○	2FG30 Series
2J engine equipped vehicle	↑	↑	○	↑	3FD10, 15 & 3FD20, 30 Series

Note: ○ Exclusive part ↑ Common part

INSPECTION AND CLEANING

1. Open the engine hood.
2. Loosen the air cleaner case wing nut, and take off the case cover.
3. Take out the element.
4. Clean the element by blowing with compressed air.

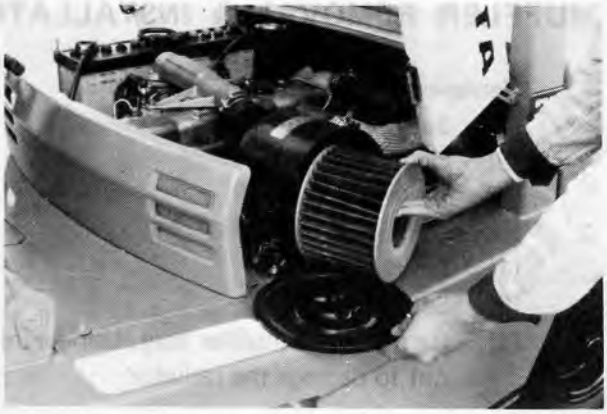

Fig. 1-40 Inspecting Air Cleaner

MUFFLER

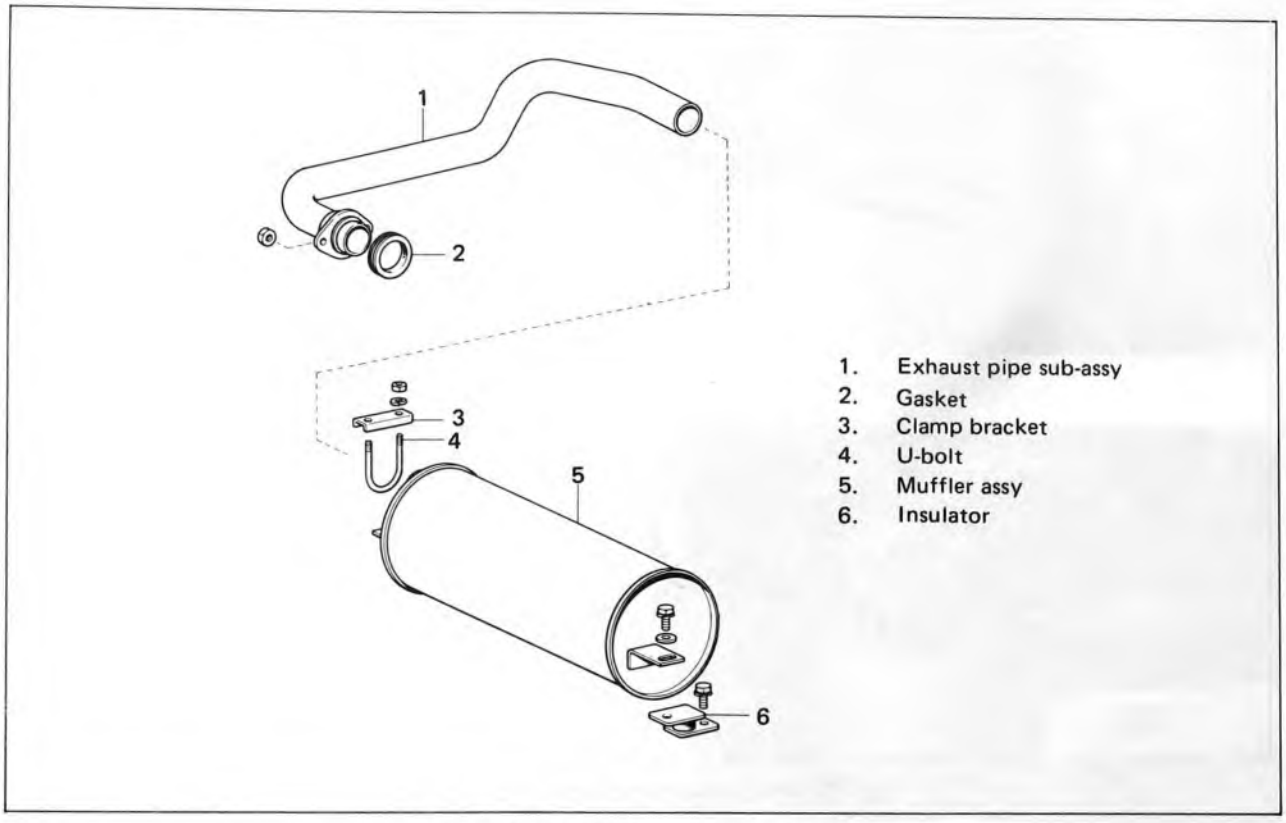

Fig. 1-41 Muffler Component Parts (5R)

LIST OF MUFFLER COMMON PARTS

	Muffler	Exhaust Pipe	U-bolt	Gasket
4P engine equipped vehicle	○	○	○	○
	↑	↑	↑	↑
5P engine equipped vehicle	↑	○	○	↑
2J engine equipped vehicle	↑	↑	↑	↑

Note: ○ **Exclusive part** ↑ **Common part**

MUFFLER REMOVAL & INSTALLATION

1. Remove the counterweight.
   (1) Set bolts
   (2) Counterweight

2. Remove the muffler.
   (1) Set nuts
   (2) Set bolts
   (3) Remove the muffler assy, using care not to damage the radiator.



Fig. 1-42 Removing muffler

RADIATOR

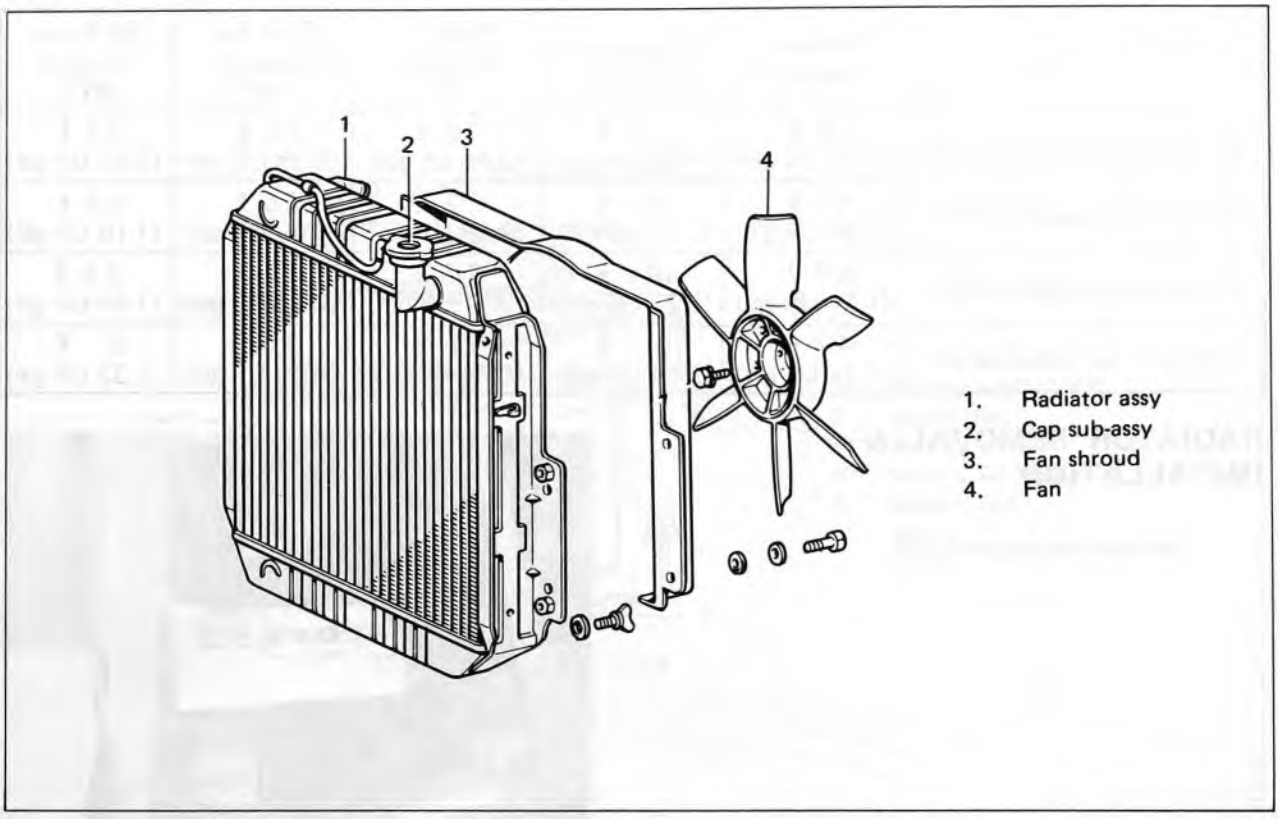

Fig. 1-43 Radiator Component Parts (5R, Clutch Vehicle)

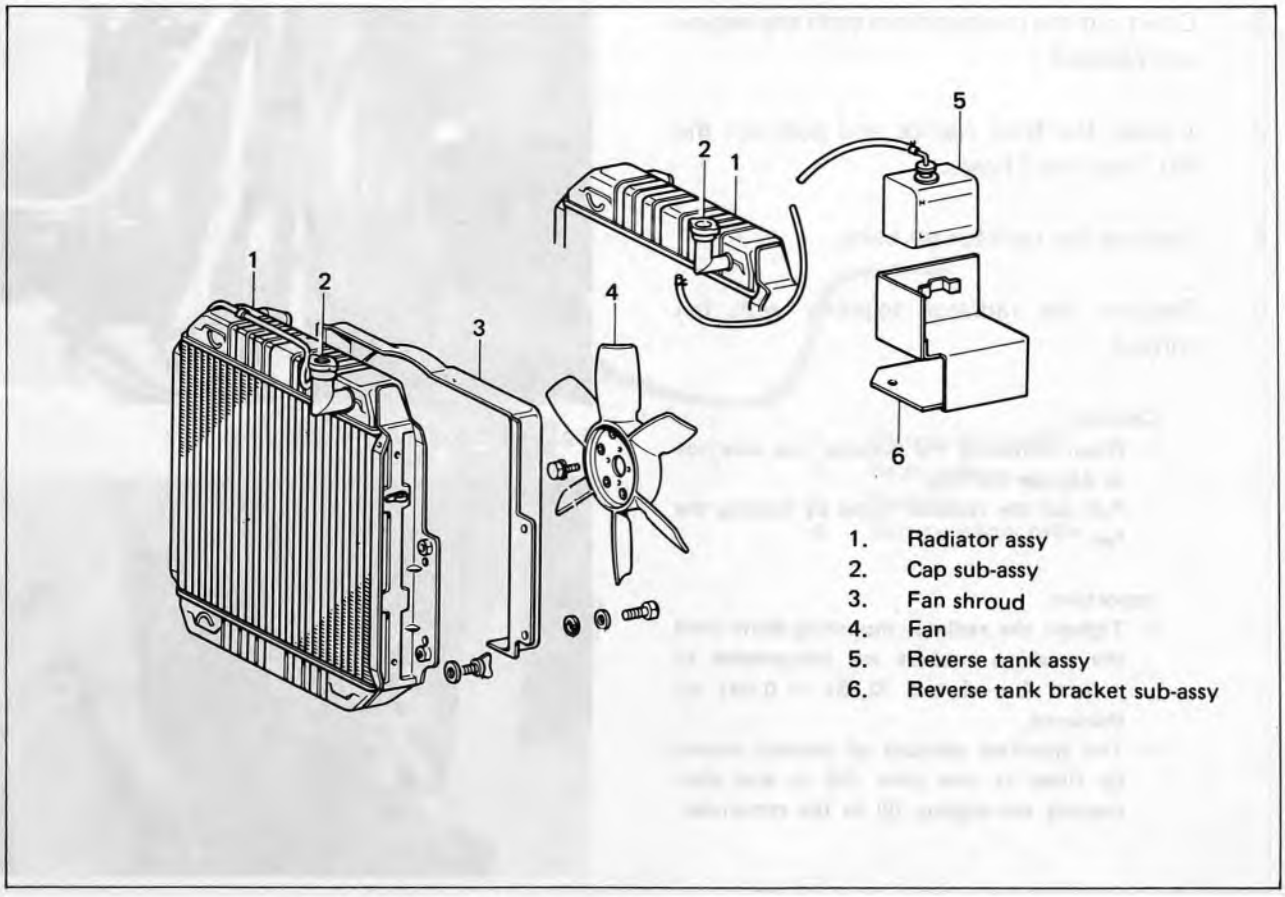

Fig. 1-44 Radiator Component Parts (2J Torque Converter Vehicle)

COOLANT CAPACITIES AND LONG-LIFE COOLANT QUANTITIES

	Radiator Capacity	Coolant Quantity	25 % L.L. Coolant −12°C	30 % L.L. Coolant −15°C	50 % L.L. Coolant −35°C
4P engine equipped vehicel	3.8 ℓ (1.00 US gal)	7 ℓ (1.85 US gal)	1.8 ℓ (0.48 US gal)	2.1 ℓ (0.55 US gal)	3.5 ℓ (0.92 US gal)
5R engine equipped vehicle	4.7 ℓ (1.24 US gal)	8.7 ℓ (2.30 US gal)	2.2 ℓ (0.58 US gal)	2.6 ℓ (0.69 US gal)	4.4 ℓ (1.16 US gal)
5P engine equipped vehicle	4.7 ℓ (1.24 US gal)	10.6 ℓ (2.77 US gal)	2.7 ℓ (0.71 US gal)	3.2 ℓ (0.84 US gal)	5.3 ℓ (1.40 US gal)
2J engine equipped vehicle	4.7 ℓ (1.24 US gal)	10 ℓ (2.64 US gal)	2.5 ℓ (0.64 US gal)	3 ℓ (0.79 US gal)	5 ℓ (1.32 US gal)

RADIATOR REMOVAL & INSTALLATION

1. Remove the engine hood.



Fig. 1-45 Engine Hood Removed

2. Drain out the coolant from both the engine and radiator.
3. Loosen the hose clamps and pull out the No.1 and No.2 hoses.
4. Remove the radiator set bolts.
5. Remove the radiator together with fan shroud.

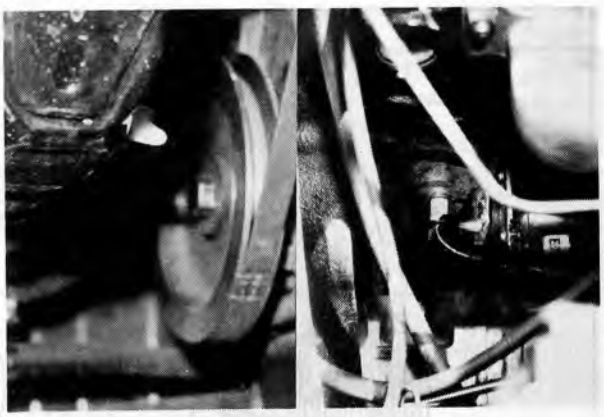

Fig. 1-46 Coolant Drain Holes

Caution:
- When removing the radiator, use care not to damage the fins.
- Pull out the radiator hoses by turning the fan.

Important:
- Tighten the radiator mounting bolts until the cushion rubbers are compressed to around 4 ~ 5 mm (0.167 ~ 0.197 in) thickness.
- The specified amount of coolant cannot be filled at one time. Fill in and after starting the engine, fill in the remainder.



Fig. 1-47 Removing Radiator

BATTERY

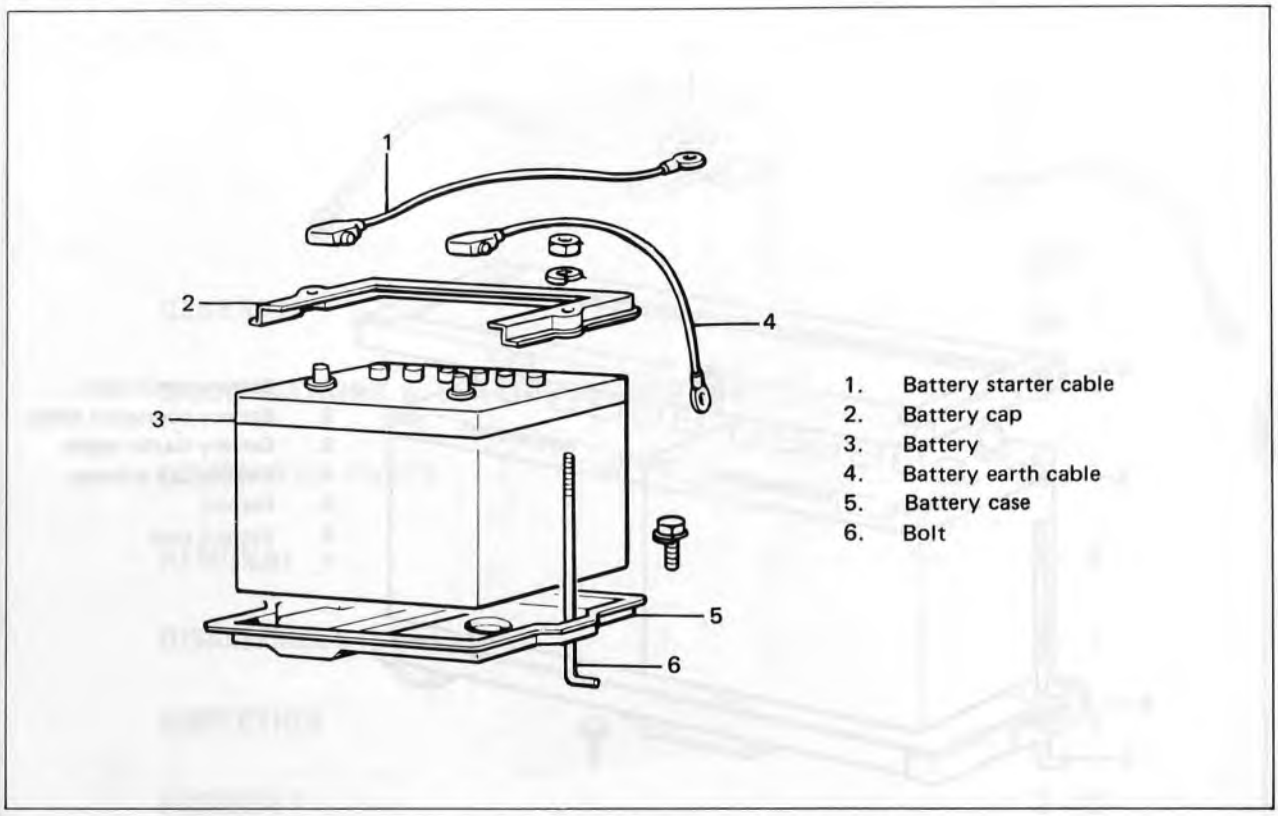

Fig. 1-48 Battery Component Parts (4P, 5R)

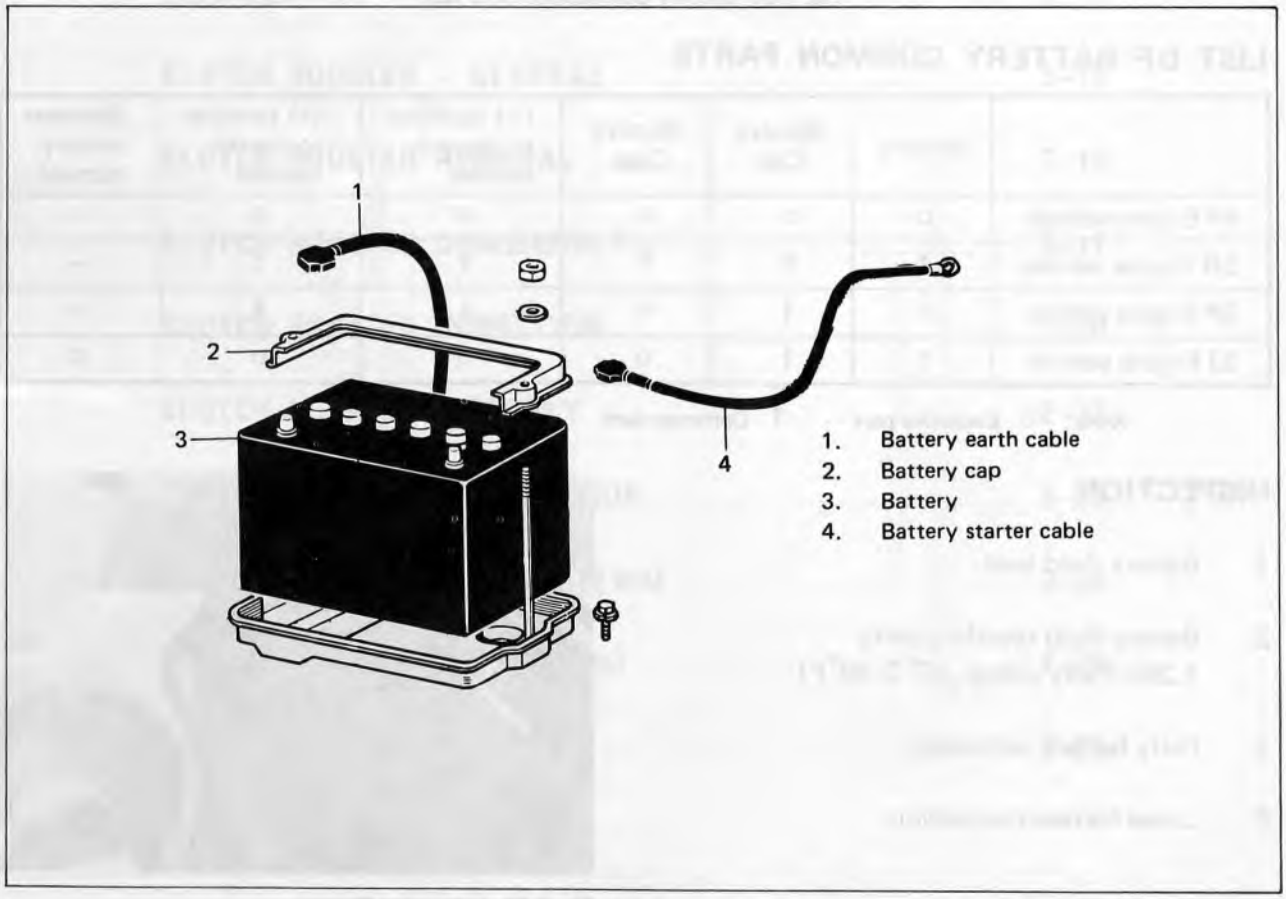

Fig. 1-49 Battery Component Parts (5P)

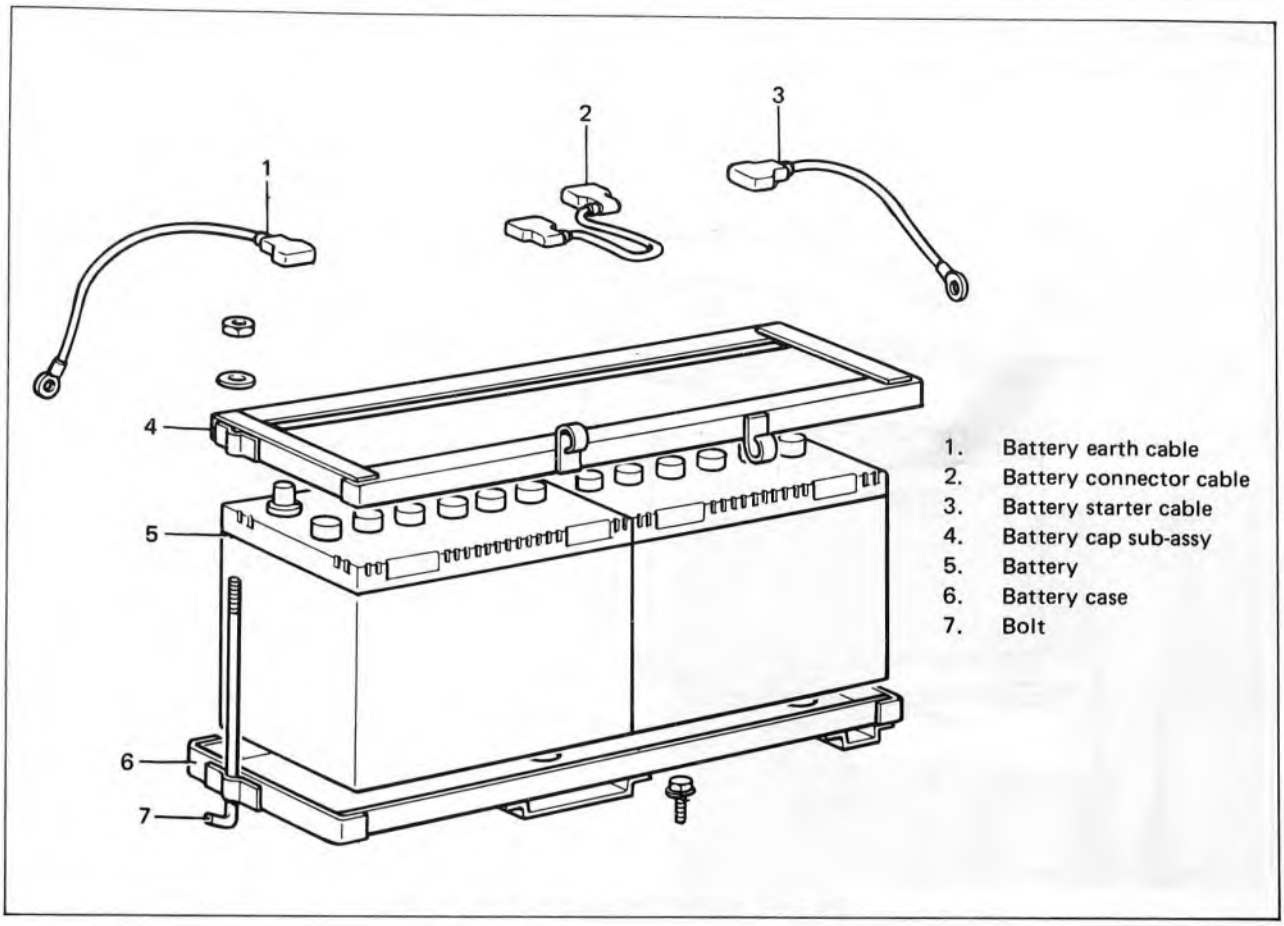

Fig. 1-50 Battery Component Parts (2J)

LIST OF BATTERY COMMON PARTS

	Battery	Battery Cap	Battery Case	(–) terminal to ground harness	(+) terminal to starter harness	Between battery harness
4P Engine vehicle	○	○	○	○	○	–
5R Engine vehicle	↑	↑	↑	↑	↑	–
5P Engine vehicle	○	↑	○	↑	↑	–
2J Engine vehicle	↑	↑	○	○	○	○

Note: ○ Exclusive part ↑ Common part

INSPECTION

1. Battery fluid level.
2. Battery fluid specific gravity
   1.260 (Fully charge, 20°C, 68°F)
3. Dirty battery terminals.
4. Loose harness connection.



Fig. 1-51 Inspecting Battery

CLUTCH

	Page
GENERAL	2– 2
SPECIFICATIONS & SERVICE STANDARDS	2– 3
COMPONENT PARTS	2– 4
REMOVAL	2– 5
DISASSEMBLY	2– 7
INSPECTION	2– 9
ASSEMBLY	2–12
INSTALLATION	2–13
CLUTCH BOOSTER – GENERAL	2–14
CLUTCH BOOSTER REMOVAL	2–16
CLUTCH BOOSTER DISASSEMBLY	2–17
CLUTCH BOOSTER INSPECTION	2–20
CLUTCH BOOSTER ASSEMBLY	2–22
CLUTCH BOOSTER INSTALLATION	2–23
CLUTCH ADJUSTMENT (1 – 1.75 ton)	2–24
CLUTCH ADJUSTMENT (2 – 3 ton)	2–25
RELEASE FORK SHAFT	2–26

GENERAL

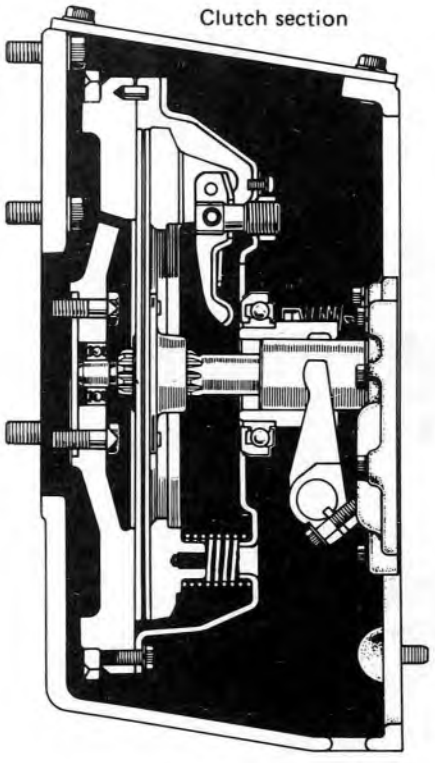

(4P Engine)

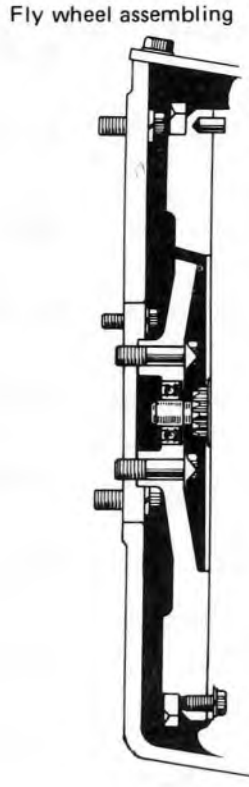

(5R Engine)

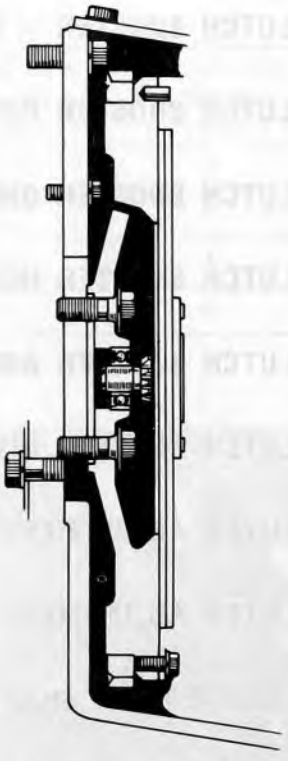

(2J & 5P Engine)

Fig. 2-1 Clutch

SPECIFICATIONS & SERVICE STANDARDS

CLUTCH PEDAL

	1.0 ~ 1.75 ton	2.0 ~ 3.0 ton
Clutch Pedal Type	Pendant Type	Treadle Type
Clutch Pedal Height (to toeboard)	129 mm (5.08 in)	128 mm (5.04 in)
Clutch Pedal Play	15 ~ 20 mm (0.59 ~ 0.79 in)	2 ~ 3 mm (0.079 ~ 0.118 in) at pedal tip
Release Lever Tip Play	———	5 mm (0.197 in)

CLUTCH COVER

Type		Coil spring (Chordal strap)	
Springs	Number	6 (4P), 9 (5R, 5P, 2J)	
	Free Height	62.0 mm (4P) (2.44 in)	58.8 mm (5R, 5P, 2J) (2.31 in)
	Installed Height	37.7 mm (1.48 in)	
	Installed Load	45.4 kg (4P) (100.1 lb)	39.5 kg (5R, 5P, 2J) (87.1 lb)
	Squareness (at free height)	2.5 mm max. (0.098 in)	
Non-uniformity at Release Lever Tips		0.35 mm max. (0.014 in)	

CLUTCH DISC

Type	Dry, single-plate
Outside Diameter	275 mm (10.83 in)
Inside Diameter	175 mm (6.89 in)
Thickness	8.6 mm (0.338 in)
Material	A50
Rivet Depth Limit	0.3 mm (0.012 in)
Runout Limit	1.5 mm (0.059 in)

COMPONENT PARTS

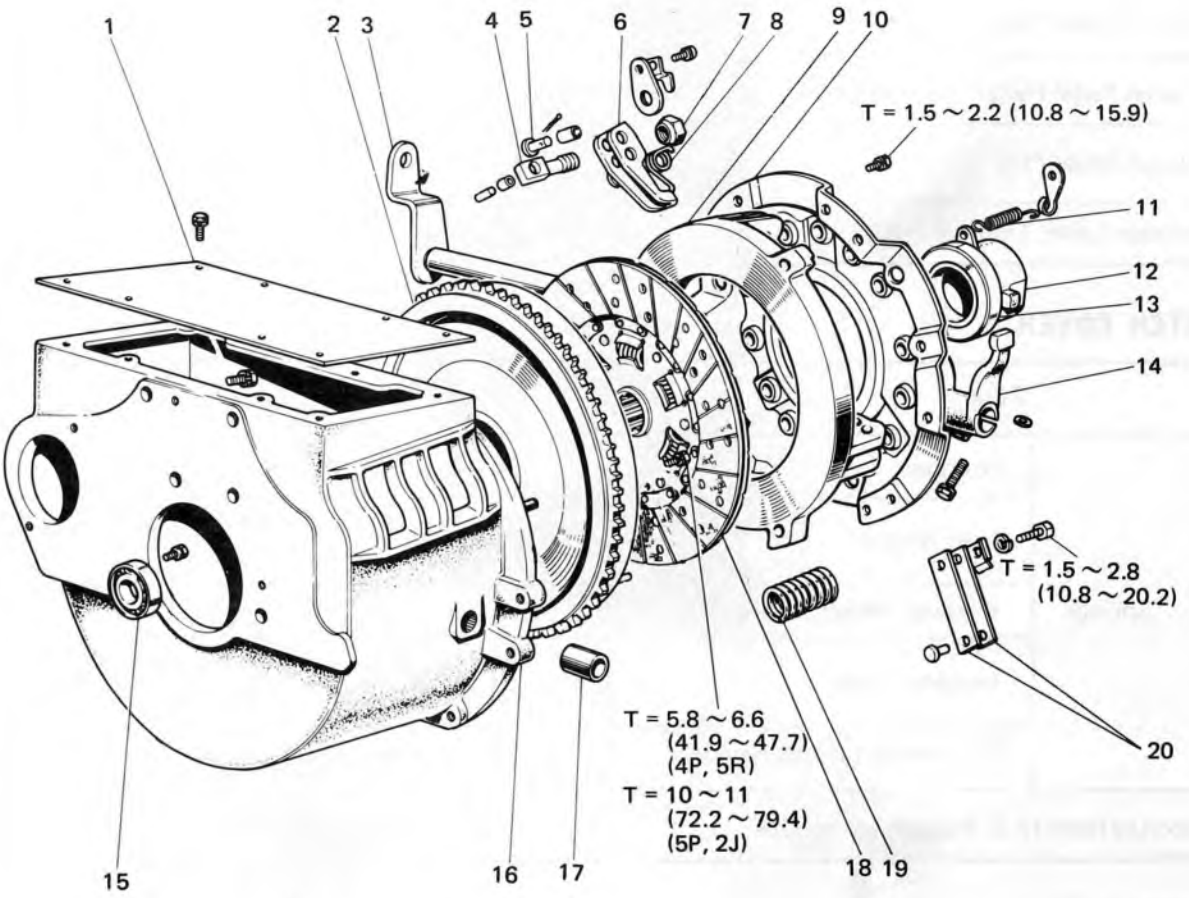

Tightening torque unit: kg-m (ft-lb)

1. Clutch housing cover
2. Flywheel
3. Release fork shaft
4. Eye bolt
5. Plate pin
6. Release lever
7. Adjust nut
8. Torsion spring
9. Pressure plate
10. Clutch cover
11. Spring
12. Bearing hub
13. Release bearing
14. Release fork
15. Pilot bearing
16. Clutch housing
17. Needle bearing
18. Clutch disc
19. Compression spring
20. Strut plate

Fig. 2-2 Clutch Component Parts

REMOVAL

1. Remove the toeboard.
   (1) Open the engine hood.
   (2) Rear toeboard.
   (3) Pull out the ignition coil cord.
   (On gasoline engine vehicle).
   (4) Pull the stop button all the way out.
   (On diesel engine vehicle).

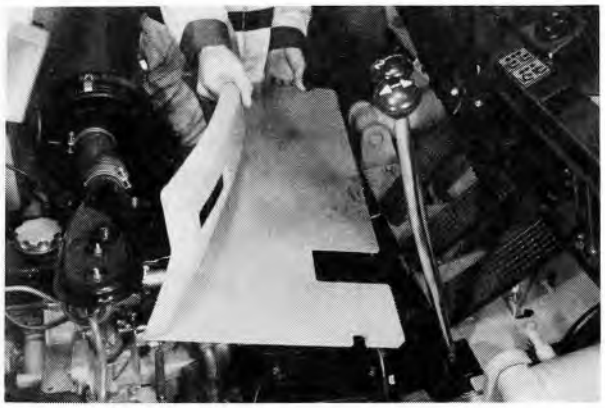

Fig. 2-3 Removing Toeboard

2. Remove the clutch housing cover.

3. Disconnect the push rod.
   (1) Dust cover.
   (2) Clevis pin.
   (3) Push rod

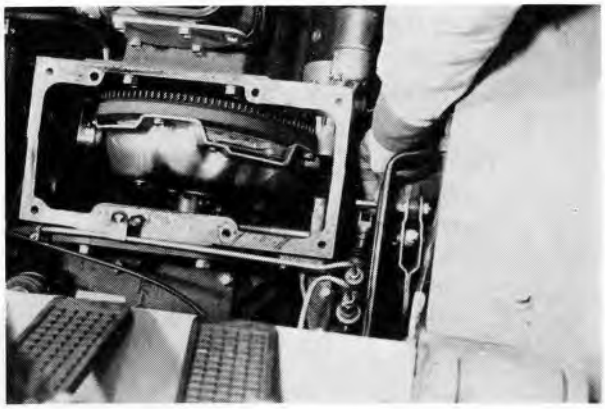

Fig. 2-4 Disconnecting Push Rod

4. Pull out the main drive shaft.
   (1) Front plug
   (2) Main drive shaft
   Use SST 09210-20170-71

   Caution:
   - **Make sure that end of SST is properly screwed in.**
   - **Main drive shaft cannot be pulled outside the front axle housing.**



Fig. 2-5 Pull out Main Drive Shaft

5. Install the service bolts in the clutch cover.
   Service bolt M8 x 40 (P = 1.25)

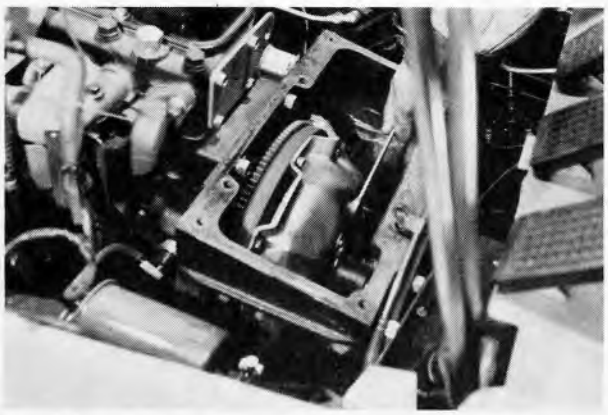

Fig. 2-6 Installing Service Bolt

6. Remove the clutch cover set bolts.

Caution:
- Use crankshaft pulley set bolt to turn the flywheel to position that will allow easy removal of the clutch cover set bolts.
- Never turn the fan by hand as means of turning the flywheel.



Fig. 2-7 Removing Set Bolts

7. Remove the clutch disc.
   (1) Shift the clutch cover fully over to the release bearing side.

Caution:
- Use care not to get oil or grease on the clutch disc facings.
- If only the clutch disc is to be removed, the 7 operations up to now will be sufficient.

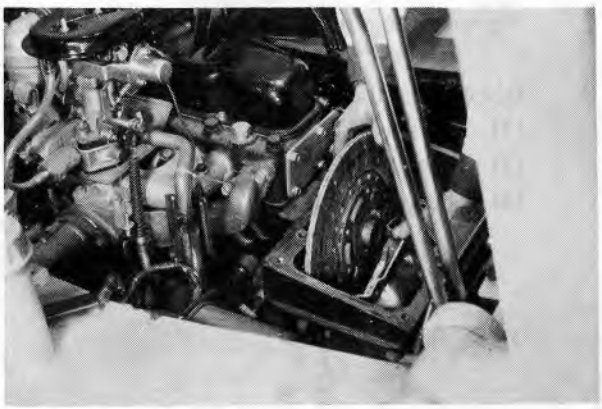

Fig. 2-8 Removing Clutch Disc

8. Remove the clutch cover.

9. Remove the release bearing hub.
   (1) Tension spring
   (2) Bearing hub

Caution:
Remove only in the case where there is evidence of defect in the release bearing rotation, surface contacting on the fork, and sliding condition with release bearing guide.

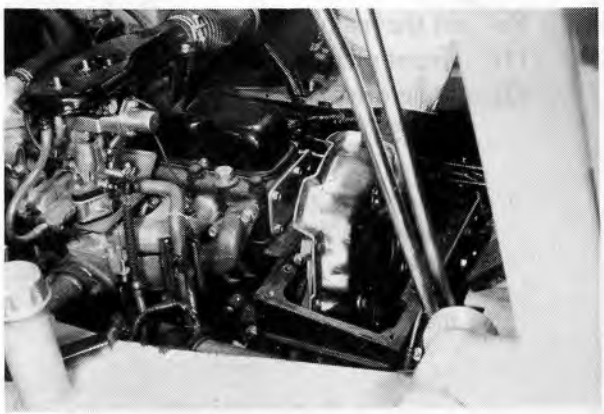

Fig. 2-9 Removing Clutch Cover

10. Remove the flywheel.
    (1) Set bolts
    (2) Flywheel

Caution:
Check the clutch disc contacting surface, starter gear, and pilot bearing, and remove only in case any defect is observed.

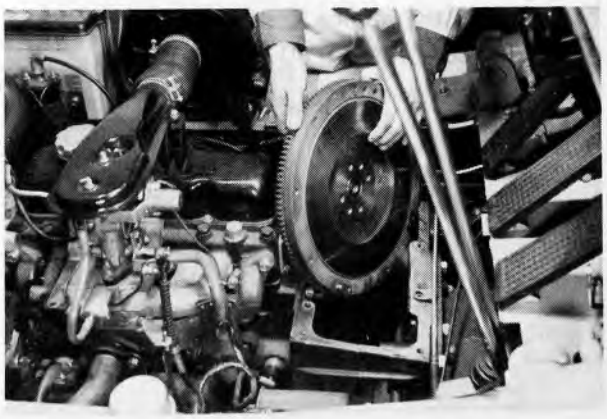

Fig. 2-10 Removing Flywheel

DISASSEMBLY

Caution:
Before disassembling, check for defects in pressure plate contacting surface, and for cracks in cover, wear in release lever, and other troubles.

1. Punch aligning marks (match marks).
   (1) Clutch cover
   (2) Pressure plate

Important:
The clutch cover has been balanced in assembled state so that it should be reassembled to the same initial position.

2. Remove the straps.
   (1) Set bolts
   (2) Straps

3. Remove the adjusting nuts.
   (1) Screws
   (2) Nut lock springs
   (3) Nut lock plates

   (4) Adjusting nuts

Catuion:
Position the wooden blocks so that they are not contacting on the release levers, adjusting nuts, or service bolts, and will also allow easy removal of the nuts.



Fig. 2-11 Punching Aligning Marks



Fig. 2-12 Removing Straps



Fig. 2-13 Removing Nut Lock Springs

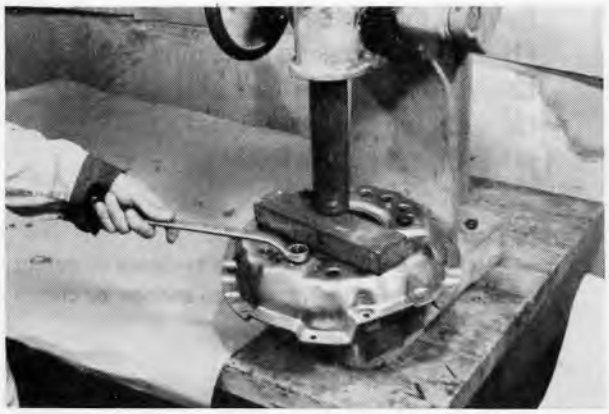

Fig. 2-14 Removing Adjusting Nuts

4. Remove the clutch cover.
   (1) Service bolts



Fig. 2-15 Removing Service Bolts

   (2) Clutch cover

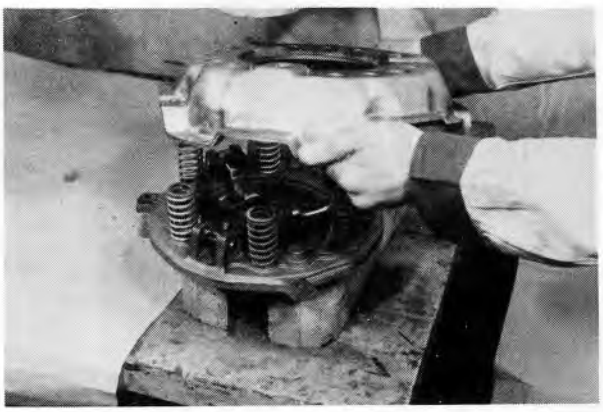

Fig. 2-16 Removing Clutch Cover

   (3) Compression springs

   Caution:
   - **Place matching marks at the place where the compression springs are to be installed.**
   - **It should be noted that the number of springs differ with vehicle types.**

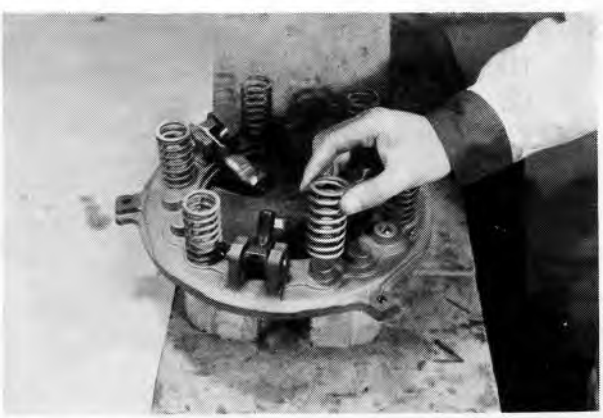

Fig. 2-17 Removing Springs

5. Remove the release levers.
   (1) Clutch pressure plate pins
   (2) Clutch release lever pins
   (3) Clutch torsion springs
   (4) Clutch release levers

   Caution:
   Remove only when there is evidence of defect in the release levers, torsion springs, or clutch pressure plate.



Fig. 2-18 Removing Release Levers

INSPECTION

Caution:
Inspect the parts and repair or replace any part found defective.

1. Pressure plate.
   (1) Wear or damage in clutch disc contacting surface.
   (2) Damage in compression spring contacting surfaces.
   (3) Wear in eye bolt contacting surfaces.
   (4) Wear in release lever contacting surfaces.

2. Clutch cover
   (1) Warping, cracks, deformation, or wear in clutch cover.

Caution:
Always replace if found defective. Do not attempt to repair or weld.

3. Compression springs
   (1) Deformation, loss of tension, or breakage
   (2) Free height (A), squareness (B)

Compression Spring Specifications

	4P Engine Vehicles	5R, 2J, 5P Engine Vehicles
No. of springs	6	9
Free height	62.0 mm (2.44 in)	58.8 mm (2.31 in)
Installed height	37.7 mm (1.48 in)	37.7 mm (1.48 in)
Installed load	45.4 kg (100.1 lb)	39.5 kg (87.1 lb)
Squareness limit	below 2.5 mm (0.098 in)	below 2.5 mm (0.098 in)
Discrimination	Pink	Green

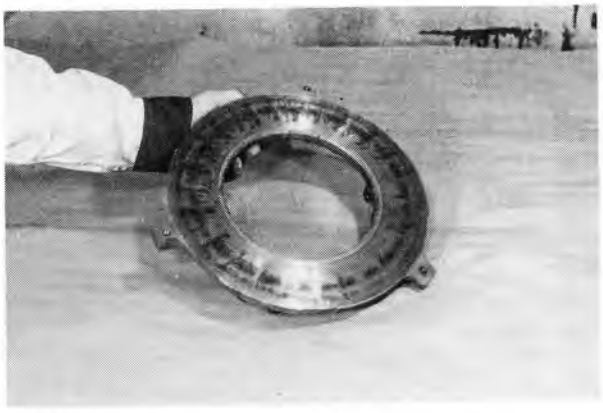

Fig. 2-19 Inspecting Pressure Plate

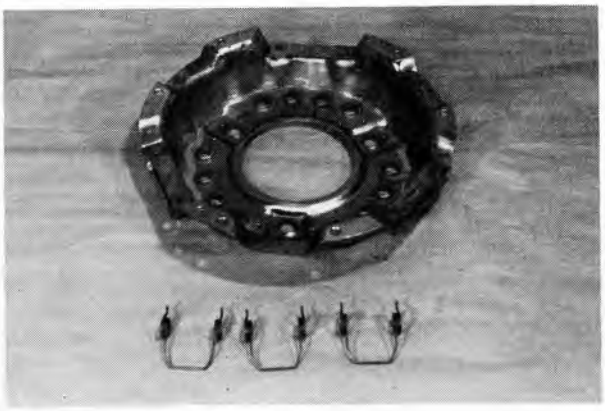

Fig. 2-20 Inspecting Clutch Cover

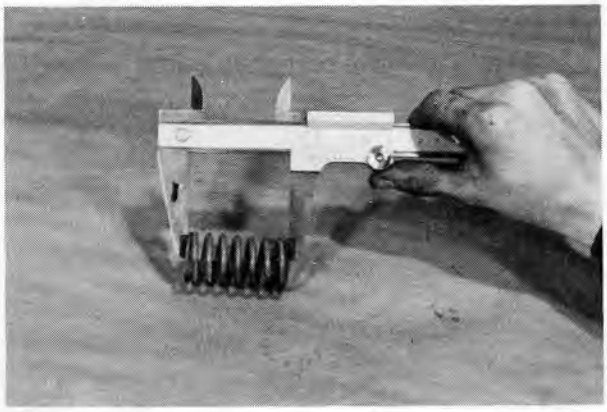

Fig. 2-21 Inspecting Compression Springs

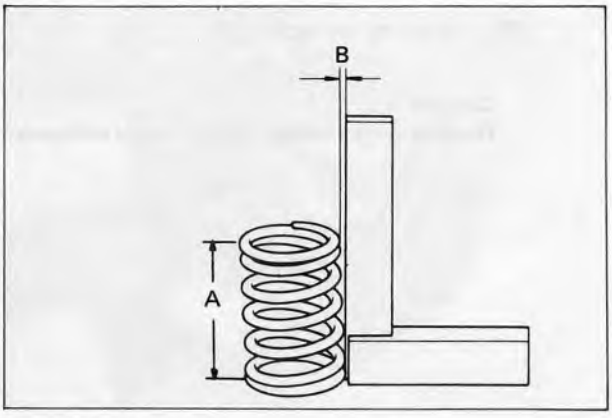

Fig. 2-22 Compression Spring Inspection

4. Release levers and stops
   (1) Wear, damage, or deformation in release levers.
   (2) Looseness in release levers (when installed)
   (3) Deformation or damage in strap.

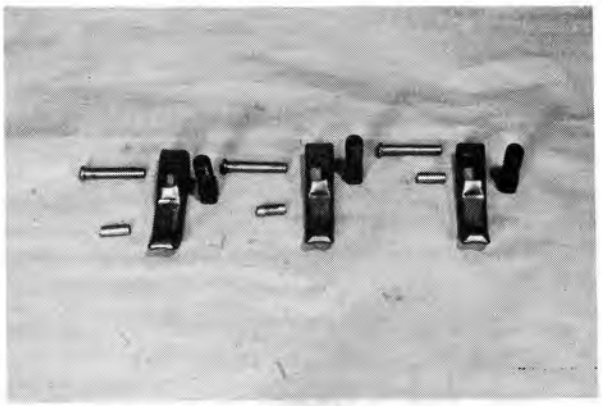

Fig. 2-23 Release Lever Inspection

5. Flywheel
   (1) Wear or damage in clutch disc contacting surface.



Fig. 2-24 Flywheel Inspection

6. Pilot bearing
   (1) Defective bearing rotation

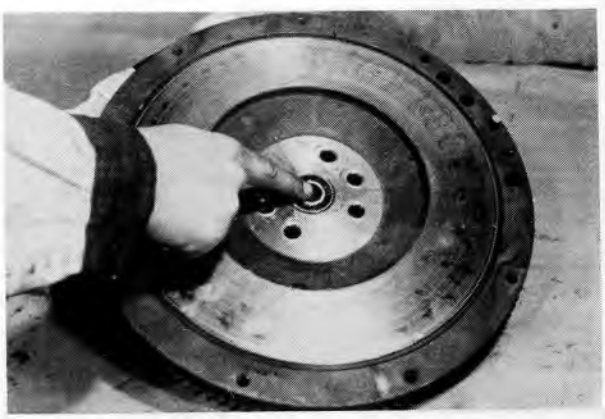

Fig. 2-25 Inspecting Pilot Bearing

   (2) Bearing replacement

Caution:
Replace pilot bearing only if found defective.



Fig. 2-26 Removing Pilot Bearing

7. Release bearing
   (1) Defective bearing rotation, wear in contacting surface, or noise



Fig. 2-27 Inspecting Release Bearing

   (2) Bearing replacement
   SST used: 09950-20012
   Tool used: Hand press

Caution:
Never wash the release bearing as it is grease-sealed type (oilless type). Replace if found defective.



Fig. 2-28 Replacing Release Bearing

8. Bearing hub
   (1) Wear in release fork contacting surface.
   (2) Wear in release guide sliding surface or sticking.

9. Clutch disc
   (1) Wear, cracks, or loose rivets in facing.
   Wear limit (rivet depth) 0.3 mm (0.012 in)
   (2) Disc runout
   Runout limit 1.5 mm (0.059 in)
   (3) Hardened (glazed) facing or oil or grease on surface.
   (4) Weakened or broken torsion springs.
   (5) Worn or damaged splines.



Fig. 2-29 Inspecting Clutch Disc Wear

Caution:
- **Always replace the clutch disc if found defective.**
- **Care should take on repairing or continuing usage as this will lead to poor disengaging, slipping, or chattering.**

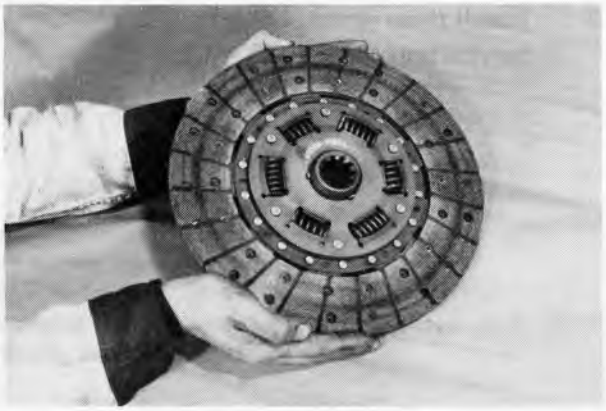

Fig. 2-30 Inspecting Clutch Disc

ASSEMBLY

1. Assemble the release levers.
   (1) Release levers
   (2) Eye bolts

   Caution:
   - Caution should be taken on assembling the release lever and eyebolt in correct direction.
   - Apply molybdenum disulfide grease on the release lever fulcrum parts.

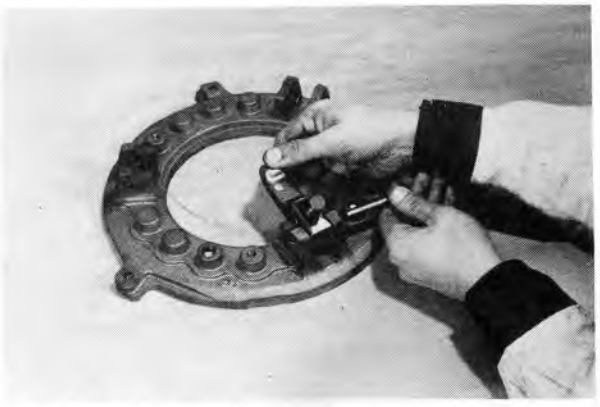

Fig. 2-31 Assembling Release Levers

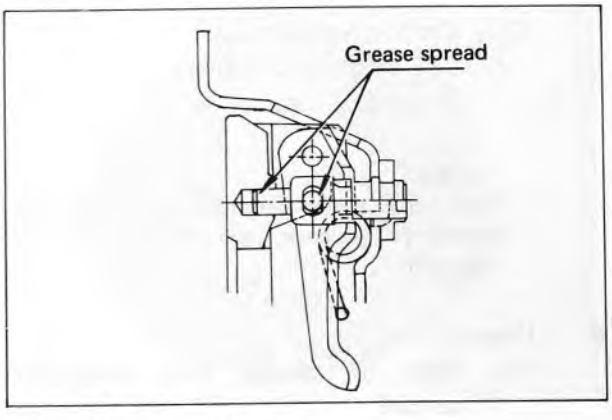

Fig. 2-32 Greasing Points

2. Assemble the compression springs.
   (1) Compression springs.
   (2) Clutch cover

   Caution:
   - If the clutch cover and pressure plate are to be reused, make sure to align their matching marks.
   - Do not forget to assemble the torsion springs on the clutch cover.



Fig. 2-33 Assembling Clutch Cover

3. Install three service bolts.
   Service bolt M8 x 40 (P = 1.25)



Fig. 2-34 Installing Service Bolts

4. Install the strap plates.
   T = 1.5 ~ 2.8 kg-m (10.8 ~ 20.2 ft-lb)

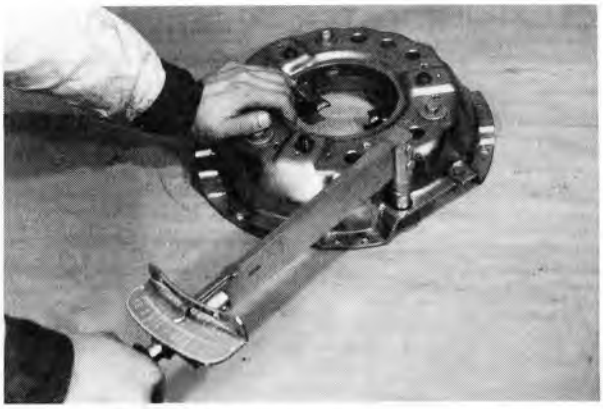

Fig. 2-35 Installing Strap Plates

5. Adjust the clutch release lever heights.
   (1) Use the three service bolts and set the pressure plate to the following distance from the clutch cover mounting surface.
   Set height: 8.3 mm (0.327 in)



Fig. 2-36 Adjusting Pressure Plate Height

   (2) Install the eye bolts nuts and adjust the release lever heights to following value.
   From clutch cover mounting surface:
   56 mm (2.20 in)

6. Assemble the eyebolt nut lock plates

Caution:
Upon completing the assembly, set the press on the release lever ends and operate the press up and down 2 or 3 times to check the lever operation.



Fig. 2-37 Adjusting Release Lever Heights

INSTALLATION

Install by performing the removal in reverse order.

Important:
- **Apply molybdenum disulfide grease lightly to the main drive shaft splines and release bearing.**
- **Position the clutch disc with the longer boss pointed toward the transmission.**
- **Polish the pressure plate frictional surface with sandpaper (about #180).**
- **It is recommended that long nose plier be used in inserting the clutch disc on to the main drive shaft.**
- **After installing the clutch cover, do not forget to remove the service bolts.**

CLUTCH BOOSTER – GENERAL

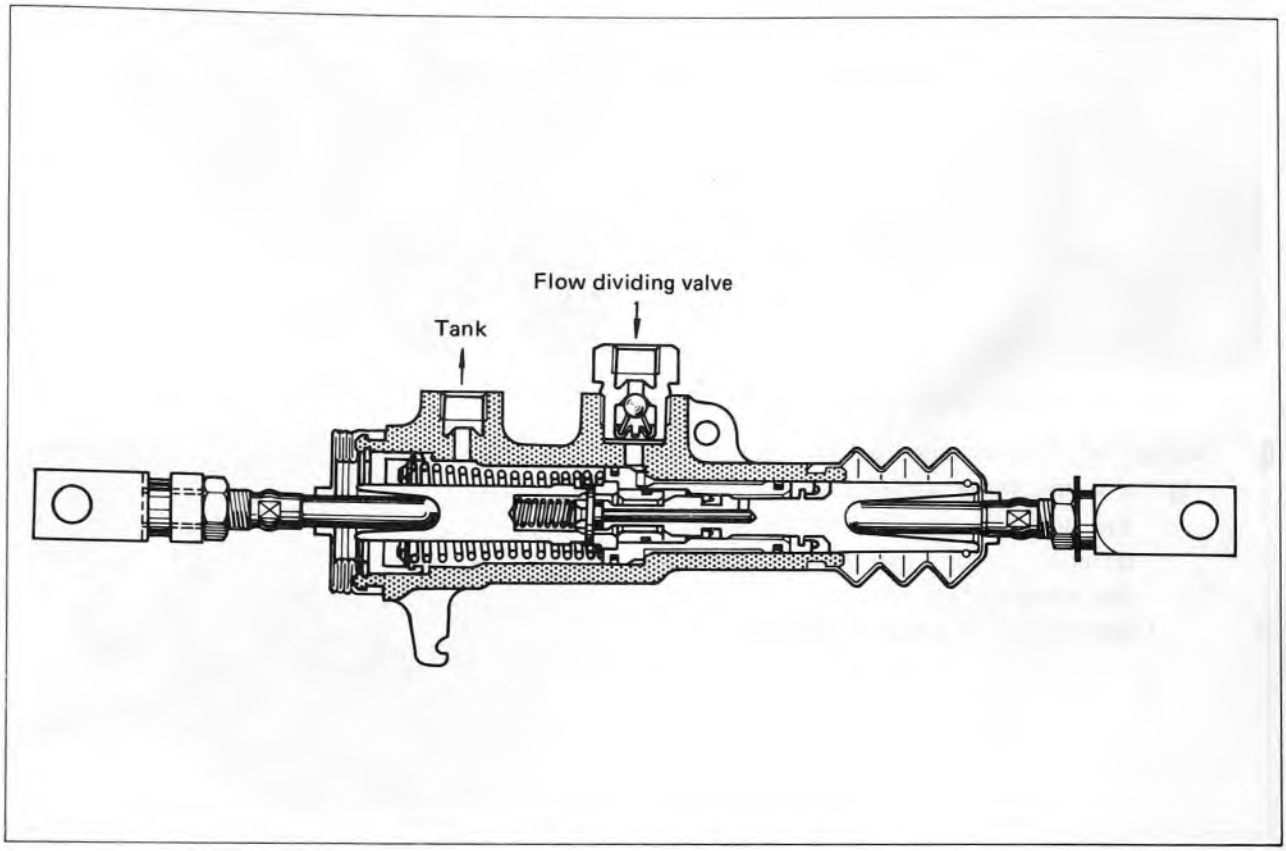

Fig. 2-38 Clutch Booster Sectional View

COMPONENT PARTS

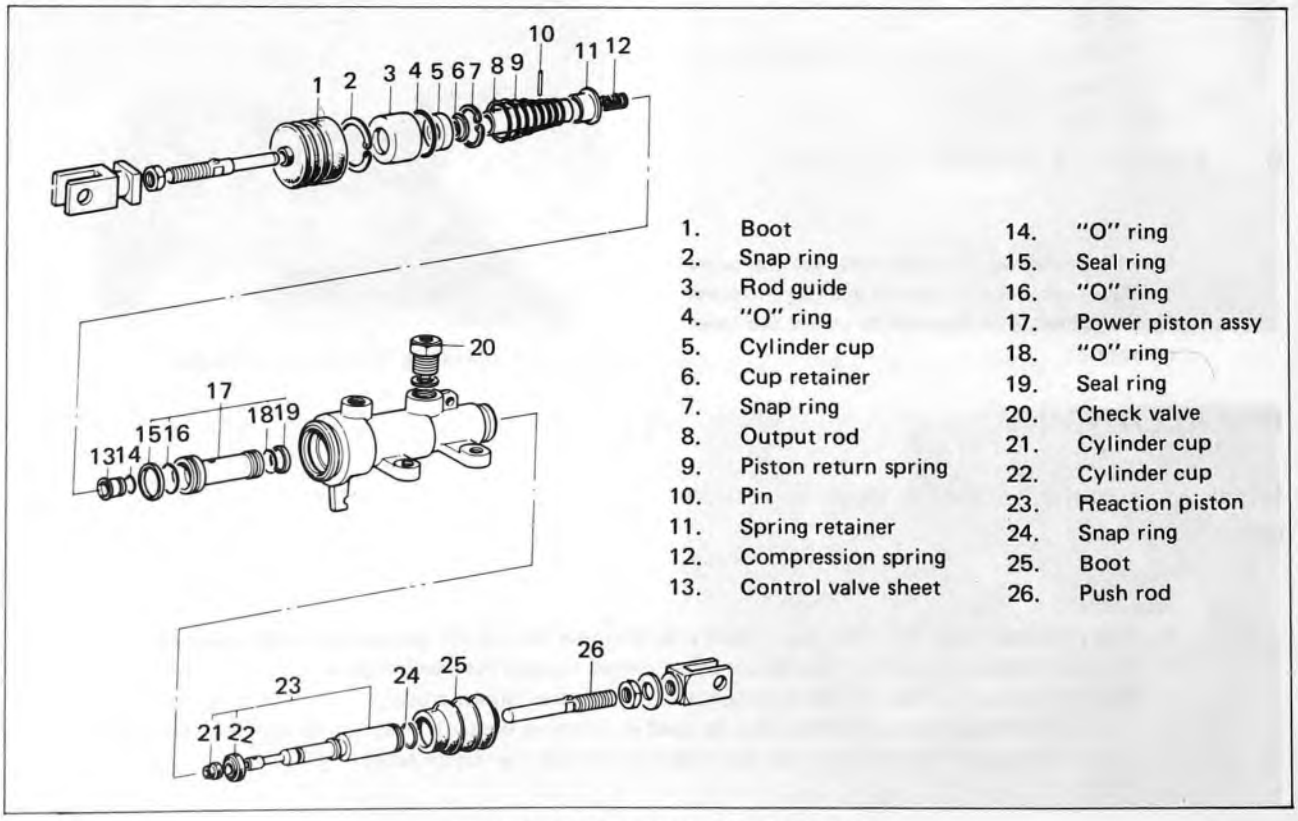

1. Boot
2. Snap ring
3. Rod guide
4. "O" ring
5. Cylinder cup
6. Cup retainer
7. Snap ring
8. Output rod
9. Piston return spring
10. Pin
11. Spring retainer
12. Compression spring
13. Control valve sheet
14. "O" ring
15. Seal ring
16. "O" ring
17. Power piston assy
18. "O" ring
19. Seal ring
20. Check valve
21. Cylinder cup
22. Cylinder cup
23. Reaction piston
24. Snap ring
25. Boot
26. Push rod

Fig. 2-39 Clutch Booster Component Parts

TROUBLE SHOOTING

Symptom	Possible Cause	Remedy
Pedal heavy	Push rod binding due to improper installation of clutch booster.	Adjust installation.
	Valve seal defective.	Replace valve seat, reaction piston.
	Seat defective	Replace
	Flow divider orifice clogged. (In case pedal is normal when depressed slowly but defective when depressed suddenly.)	Clean
Pedal returned violently when engine stalls.	Seal in check valve sub-assy is defective or clogged	Clean or replace.
	Valve seal defective.	Replace valve seat, reaction piston.
	Seal defective	Replace

CLUTCH BOOSTER REMOVAL

Caution:
- Be sure to have the engine stopped.
- Since oil will run out, have waste ready on hand.

1. Rear toeboard
   (1) Set bolts
   (2) Rear toeboard

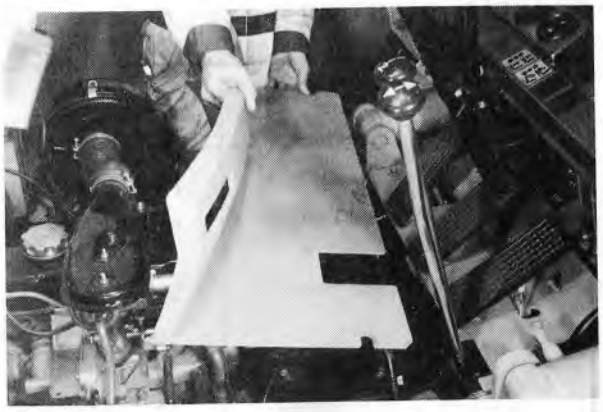

Fig. 2-40 Removing Rear Toeboard

2. Disconnect the front and rear push rods
   (1) Dust cover
   (2) Clevis pins

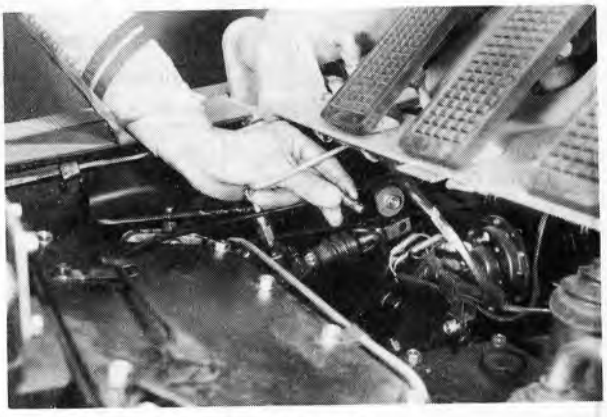

Fig. 2-41 Disconnecting Push Rods

3. Disconnect the piping.



Fig. 2-42 Disconnecting Piping

4. Remove the clutch booster.
   (1) Set bolts
   (2) Clutch booster



Fig. 2-43 Removing Clutch Booster

CLUTCH BOOSTER DISASSEMBLY

1. Remove the boot and push rod.

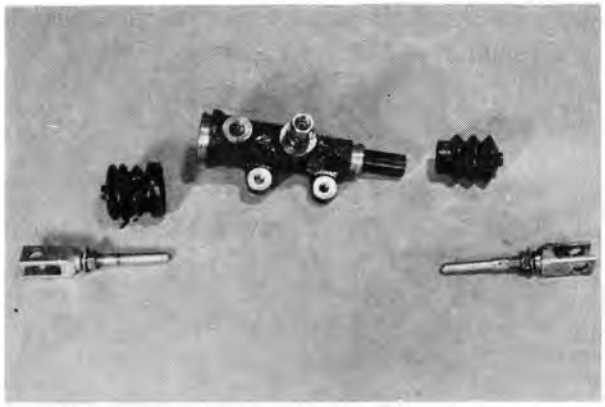

Fig. 2-44 Removing Push Rod

2. Remove the rod guide
   (1) Snap ring
   (2) Rod guide

   Caution:
   Be careful of the rod guide jumping out.

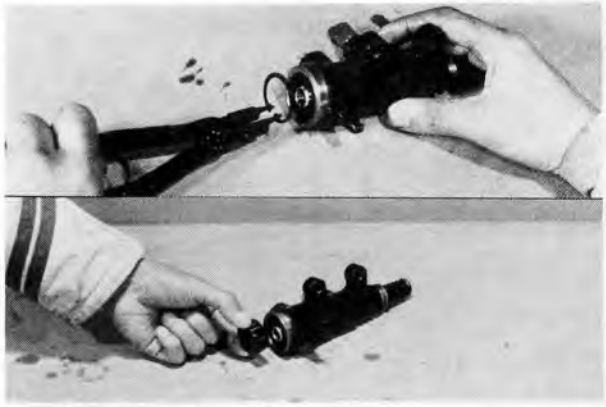

Fig. 2-45 Removing Rod Guide

3. Remove the cup retainer and cylinder cup from the rod guide.
   (1) Snap ring



Fig. 2-46 Removing Snap Ring

   (2) Cup retainer
   (3) Cylinder cup



Fig. 2-47 Removing Cylinder Cup

4. Take out the output rod, reaction piston, and power piston together.
   (1) Piston return spring



Fig. 2-48 Removing Return Spring

   (2) Reaction piston snap ring



Fig. 2-49 Removing Snap Ring

   (3) Output rod, reaction piston, power piston

   Caution:
   Pull out by pushing out from the reaction piston end.



Fig. 2-50 Removing Piston

5. Disconnect the output rod from the reaction piston.
   (1) Spring retainer

   Caution:
   Loosen the two staked parts with screwdriver, using care not to break.



Fig. 2-51 Removing Spring Retainer

(2) Pin



Fig. 2-52 Removing Pin

(3) Output piston
(4) Compression spring



Fig. 2-53 Removing Piston and Spring

6. Disconnect the reaction piston from the power piston.

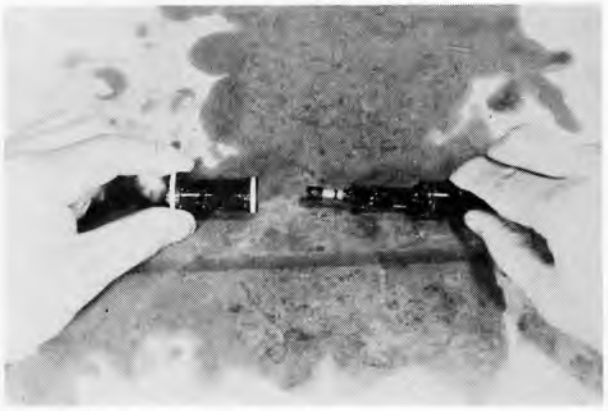

Fig. 2-54 Disconnecting Pistons

7. Remove the check valve.



Fig. 2-55 Removing Check Valve

CLUTCH BOOSTER INSPECTION

Caution:
Inspect all parts after washing them with fresh hydraulic fluid, and replace any part found defective.

1. Inspect the booster body.
   (1) Damage or binding in "O" ring.
   (2) Wear or damage in body inside surface.



Fig. 2-56 Inspecting Booster Body

2. Inspect the reaction cylinder.
   (1) Deformation in snap ring.
   (2) Damage or degradation in cylinder cup.
   (3) Fitting parts wear limit
   wear limit: 0.16 mm (0.0063 in)
   (Diameter clearance)



Fig. 2-57 Reaction Cylinder Inspection

3. Inspect the booster power piston.
   (1) Damage or binding in "O" ring.
   (2) Damage or binding in seal ring.



Fig. 2-58 Booster Power Piston Inspection

4. Inspect the output rod.
   (1) Output rod sliding surface.
      a. Extreme damage
      b. Worn out-of-round
      c. Corroded
   (2) Breakage or weakening at spring retainer staked parts.
   (3) Fit between rod and rod guide
   Wear limit: 0.13 mm (0.0051 in)
   (Diameter clearance)

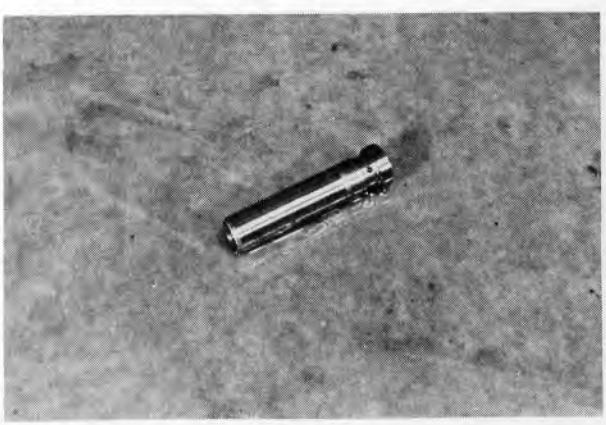

Fig. 2-59 Output Rod Inspection

5. Inspect the springs
   (1) Breakage or loss-of-tension in compression spring.
   Free length: 21 mm (0.827 in)
   (2) Breakage or loss-of-tension in piston return spring.
   Free length: 56 mm (2.20 in)

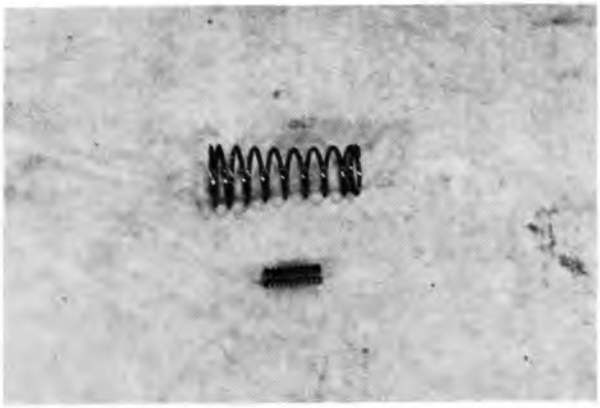

Fig. 2-60 Spring Inspection

6. Inspect the check valve.
   (1) Check ball movement, spring action.
   (2) Extreme damage, wear, or rusting in valve seat contacting surface.



Fig. 2-61 Check Valve Inspection

7. Inspect the rod guide, retainer cup, and cylinder cup.
   (1) Damage or degradation in cup retainer.
   (2) Damage or degradation in cylinder cup.



Fig. 2-62 Rod Guide Inspection

CLUTCH BOOSTER ASSEMBLY

Caution:
Apply hydraulic fluid on all parts and assemble them such that there will be no binding.

1. Assemble the reaction piston to the power piston.



Fig. 2-63 Assembling Piston

2. Assemble the output rod.
   (1) Compression spring
   (2) Output rod

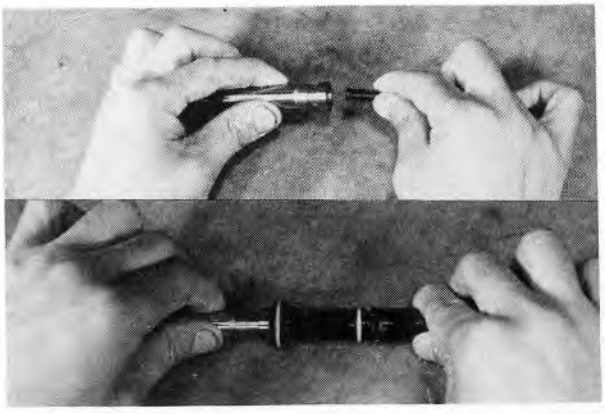

Fig. 2-64 Assembling Output Rod

3. Connect the output rod to reaction piston with pin.
   (1) Pin
   (2) Spring retainer

Caution:
After assembling the spring retainer, be sure to stake it.

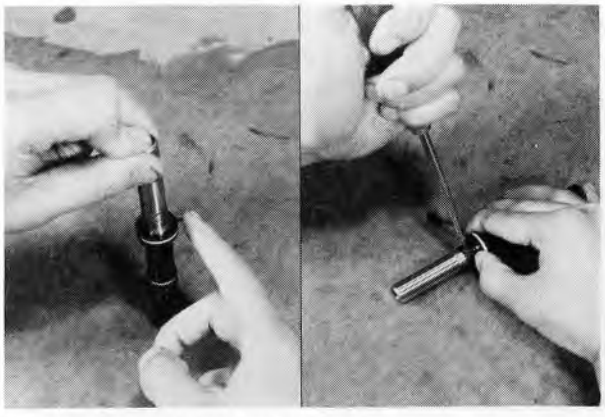

Fig. 2-65 Assembling Spring Retainer

4. Assemble the pistons into booster body.
   (1) Output rod, power piston, reaction piston
   (2) Piston return spring



Fig. 2-66 Assembling Pistons

5. Assemble the cup to the rod guide.
   (1) Cylinder cup
   (2) Cup retainer
   (3) Snap ring

6. Assemble the rod guide into booster body.



Fig. 2-67 Assembling Cup

7. Assemble the snap rings.
   (1) Snap ring at rod guide side
   (2) Snap ring at reaction piston



Fig. 2-68 Assembling Snap Rings

8. Install the check valve.
   T = 6 ~ 9.6 kg-m (43.3 ~ 69.3 ft-lb)



Fig. 2-69 Installing Check Valve

9. Assemble the push rod and bushing.

CLUTCH BOOSTER INSTALLATION

Install by performing the removal in reverse order.



Fig. 2-70 Assembling Push Rod

CLUTCH ADJUSTMENT (1 ~ 1.75 ton)

1. Clutch pedal height adjustment
   Adjust the distance from the pedal pad upper surface to the rear toeboard floor surface to the specified height by means of the adjust bolt on the pedal bracket.
   Pedal height: 129 mm (5.08 in)

   Important:
   Clutch pedal height should be made the same as the brake pedal height. The brake pedal height should always be set before setting the clutch pedal height.

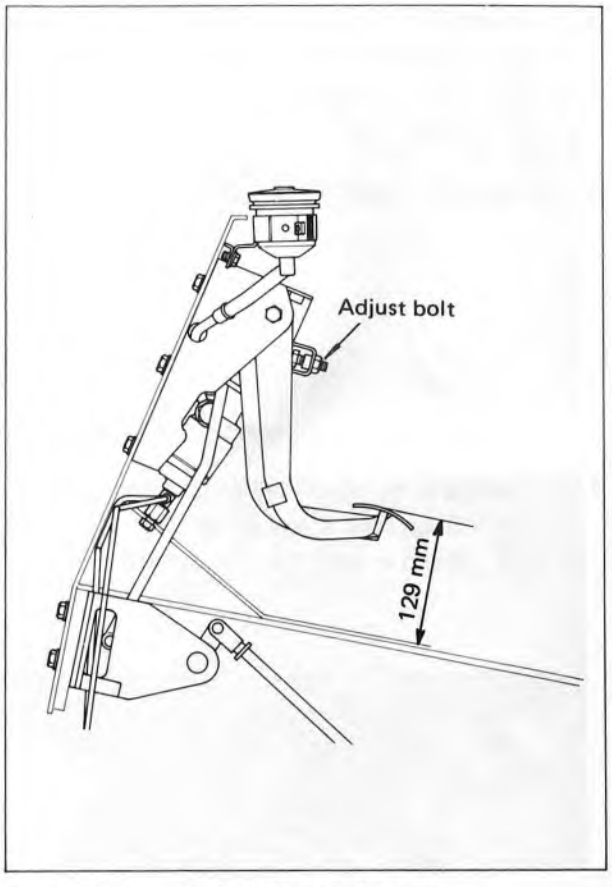

Fig. 2-71 Clutch Pedal Height Adjustment

2. Clutch pedal play adjustment
   (1) Remove the clutch housing cover, and measure the clearance between the clutch release lever and the clutch release bearing.
   (2) Disconnect the tension spring, and with the release lever contacting on the bearing, measure the clearance between the release fork and hub.
   Standard clearance:
   2.4 ~ 3.0 mm (0.094 ~ 0.118 in)

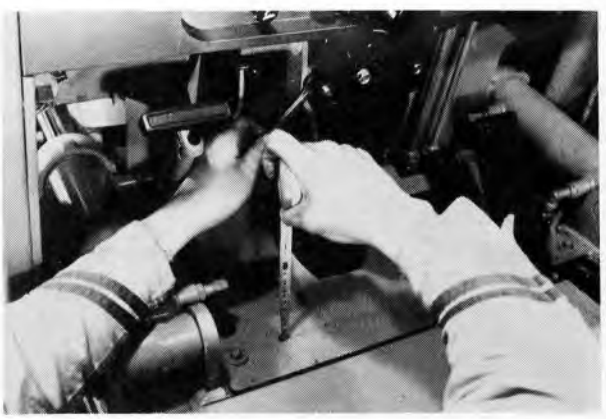

Fig. 2-72 Measuring Clutch Pedal Height

   (3) If not to the standard value, make the adjustment with the turn buckle on the pedal push rod. After adjusting, depress the clutch pedal several times and check that pedal play is up to the standard value.
   Standard play: 15 ~ 20 mm
   (0.59 ~ 0.79 in)



Fig. 2-73 Adjusting Pedal

CLUTCH ADJUSTMENT (2.0 ~ 3.0 ton)

1. Adjust the length of stopper bolt (1) so as to make the pedal height 128 mm (5.04 in).

Caution:
Stopper bolt length (Reference only):
19 mm (0.748in)

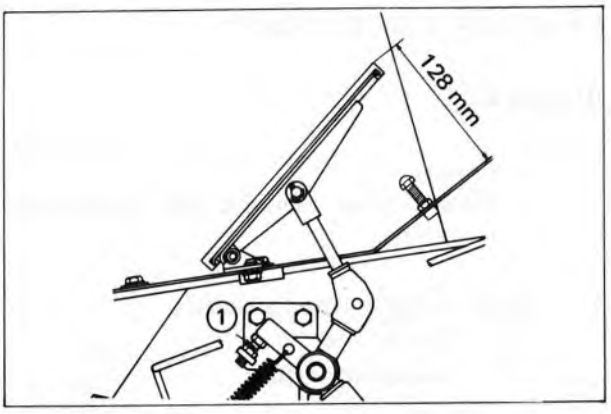

Fig. 2-74 Pedal Height Adjustment

Adjust the length of push rod (2) so as to provide 2 ~ 3 mm (0.079 ~ 0.118 in) at the pedal tip.

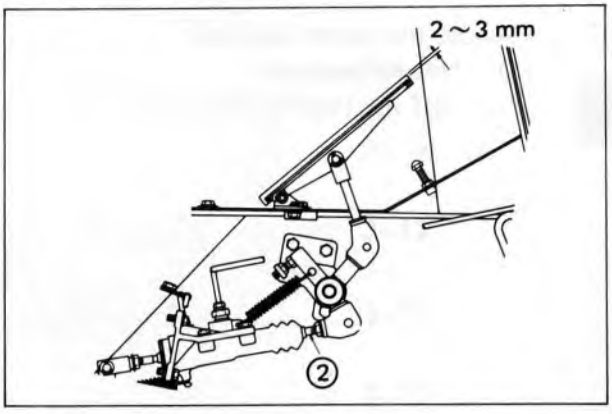

Fig. 2-75 Pedal Play Adjustment

3. Adjust the length of stopper bolt (3) so as to have the release lever move 27 mm (1.06 in) when the clutch pedal is depressed.

Reference:
Stopper bolt length (Reference only):
22 mm (0.866 in)
The purpose is to prevent the pedal tip from striking the toeboard when the pedal is depressed.

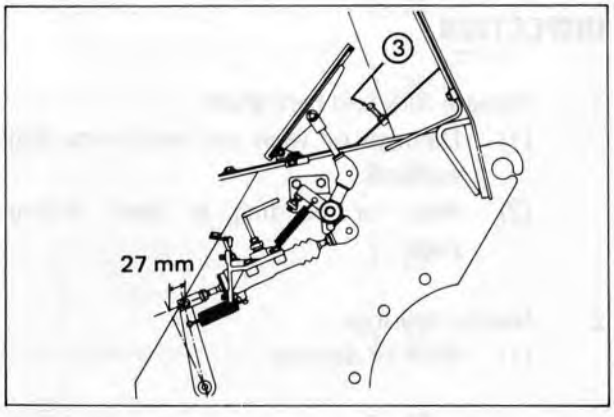

Fig. 2-76 Pedal Adjustment

4. Adjust the length of push rod (4) so as to provide 5 mm (0.197 in) play in the release lever.

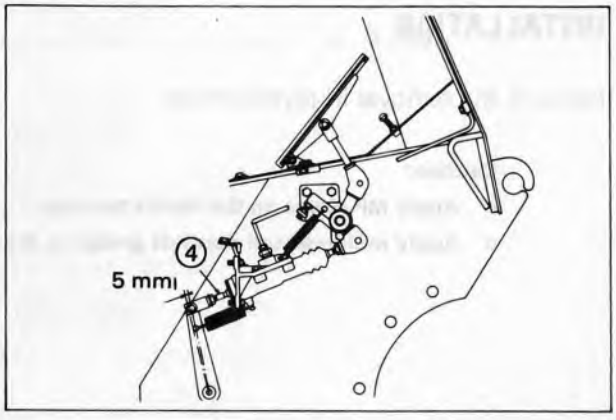

Fig. 2-77 Release Lever Play Adjustment

RELEASE FORK SHAFT

REMOVAL

Caution:
Perform after removing the transmission assembly.

1. Remove the release fork shaft.
   (1) Release fork
   (2) Release fork shaft

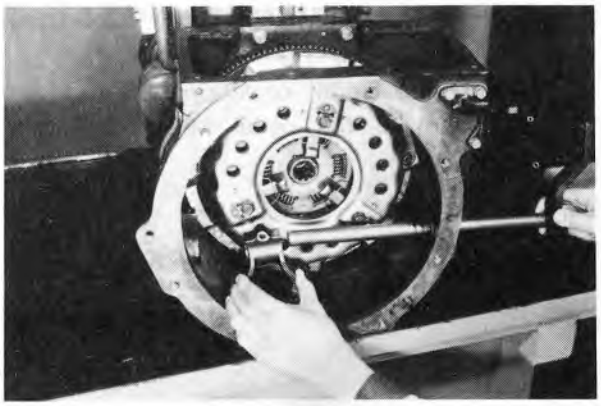

Fig. 2-78 Removing Release Fork Shaft

2. Remove the needle bearings.
   (1) Needle bearings
   SST used 09601-30011



Fig. 2-79 Removing Needle Bearings

INSPECTION

1. Release fork and fork shaft
   (1) Damage or wear on hub contacting surfaces.
   (2) Wear or bending in shaft sliding parts.

2. Needle bearings
   (1) Wear or damage

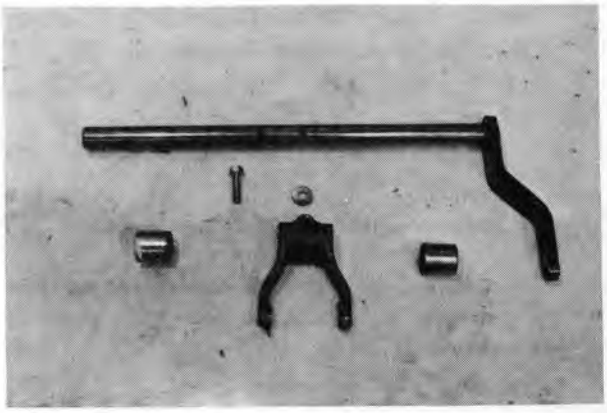

Fig. 2-80 Release Fork Shaft Inspection

INSTALLATION

Perform the removal in reverse order.

Caution:
- Apply MP grease on the needle bearings.
- Apply molybdenum disulfide grease on the contacting surfaces between release fork and bearing hub.

TORQUE CONVERTER

	Page
GENERAL	3– 2
HYDRAULIC CIRCUIT DIAGRAM	3– 2
SPECIFICATIONS	3– 3
TROUBLE SHOOTING	3– 4
COMPONENT PARTS	3–11
SERVICE STANDARDS	3–15
UNDER COVER REMOVAL	3–17
LEVERS	3–18
OIL CONTROL VALVE	3–22
TORQUE CONVERTER	3–27
OIL PUMP	3–39
TRANSMISSION ASSY	3–46
MEASUREMENTS & TESTS	3–67
INCHING PEDAL ADJUSTMENT	3–69

GENERAL

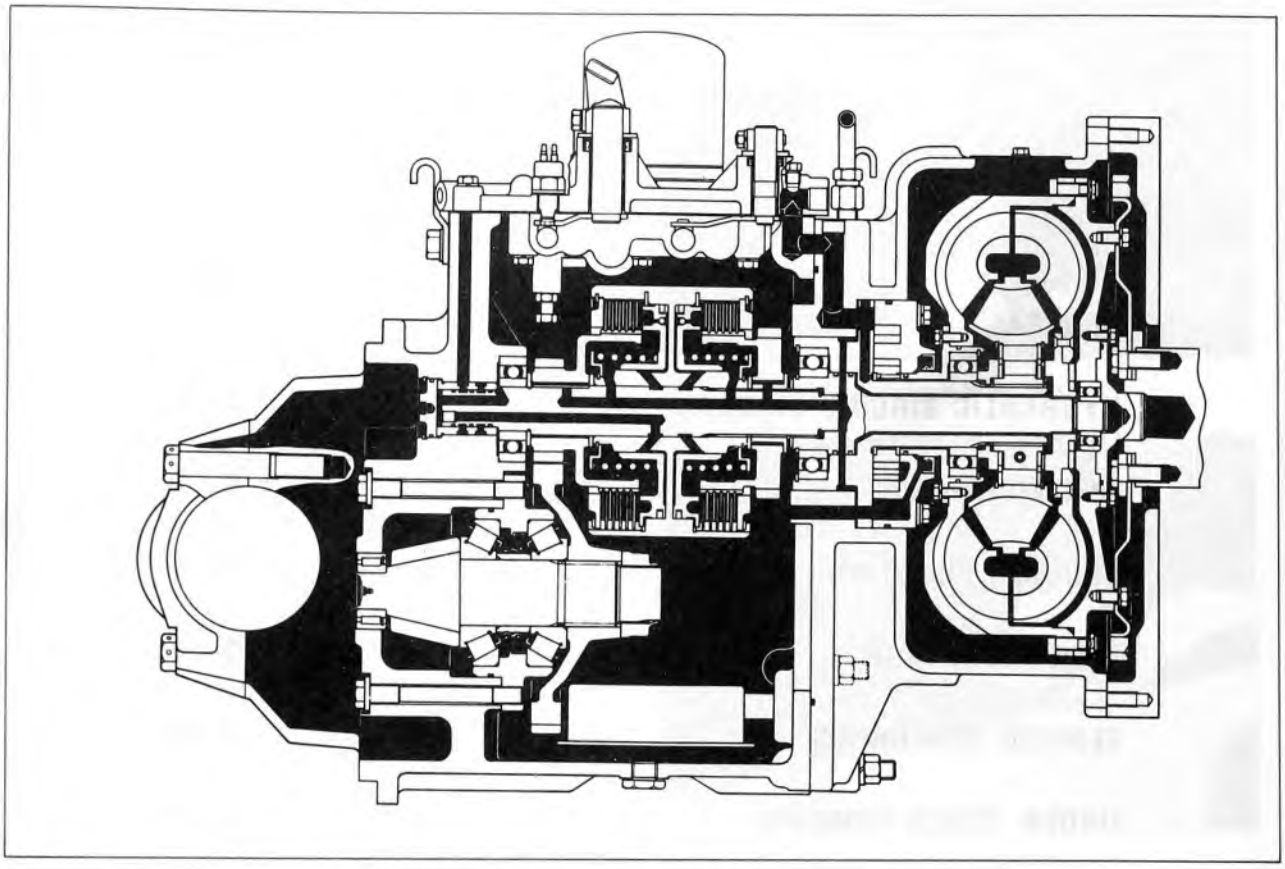

Fig. 3-1 Sectional View of Torque Converter

HYDRAULIC CIRCUIT DIAGRAM

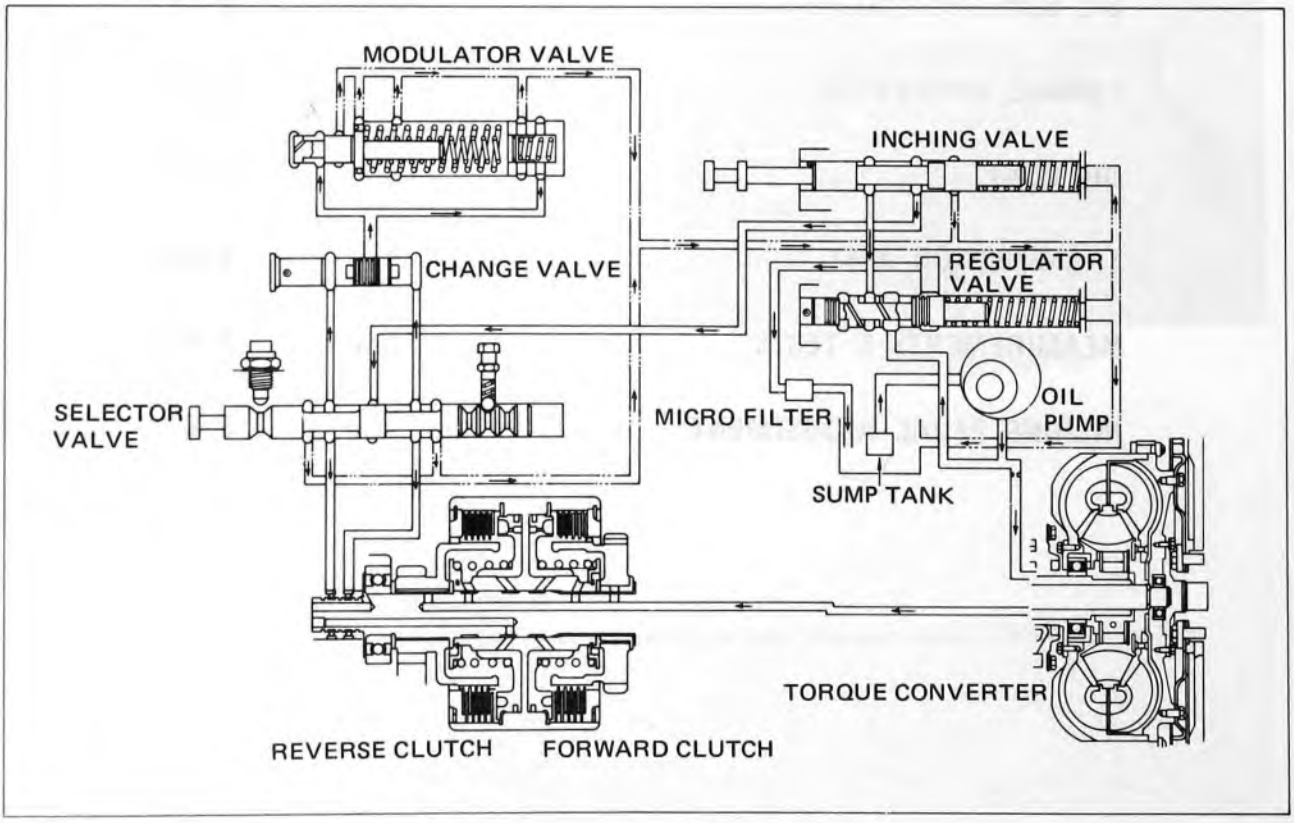

Fig. 3-2 Hydraulic Circuit Diagram

SPECIFICATIONS

Item \ Vehicle Model	02-4FG10 02-4FG14 02-4FG15 02-FG18	42-4FG10 42-4FG14 42-4FG15 42-FG18	02-3FD10 02-3FD14 02-3FD15 02-FD18	02-3FG20 ⟨02-FG23 02-3FG25⟩	42-3FG20 42-FG23 42-3FG25	62-3FG20 62-FG23 62-3FG25	02-3FD20 02-FD23 02-3FD25	02-FG28 02-2FG30	02-FD28 02-3FD30
Type	3-element, single stage 2-phase	3-element, single stage 2-phase	3-element, single stage 2-phase	3-element, single stage 2-phase	3-element, single stage 2-phase	3-element, single stage 2-phase	3-element, single stage 2-phase	3-element, single stage 2-phase	3-element, single stage 2-phase
Designation	AISIN	AISIN	AISIN	AISIN	AISIN	AISIN	AISIN	AISIN	AISIN
Stall torque ratio	3.78	3.75	3.75	3.78	3.75	2.6	3.75	2.6	3.1
Stall speed (rpm)	1800	1850	1950	1800	1850	1700	1950	1700	1800
Speed gear ratio — Forward	2.453	2.453	2.453	2.914 ⟨4.239⟩	2.914	2.453	2.914	2.914	2.914
Speed gear ratio — Reverse	2.458	2.458	2.458	2.952 ⟨4.188⟩	2.952	2.458	2.952	2.952	2.952
Speed selection system	Hydraulic pressure	Hydraulic pressure	Hydraulic pressure	Hydraulic pressure	Hydraulic pressure	Hydraulic pressure	Hydraulic pressure	Hydraulic pressure	Hydraulic pressure
Clutch actuating pressure (Main pressure)	1.5 ~ 6 kg/cm² (idling) (21.3 ~ 85.3 psi) 8.5 ~ 13 kg/cm² (2000 rpm) (111 ~ 185 psi)	1.5 ~ 6 kg/cm² (idling) (21.3 ~ 85.3 psi) 8.5 ~ 13 kg/cm² (2000 rpm) (111 ~ 185 psi)	1.5 ~ 6 kg/cm² (idling) (21.3 ~ 85.3 psi) 8.5 ~ 13 kg/cm² (2000 rpm) (111 ~ 185 psi)	1.5 ~ 6 kg/cm² (idling) (21.3 ~ 85.3 psi) 8.5 ~ 13 kg/cm² (2000 rpm) (111 ~ 185 psi)	1.5 ~ 6 kg/cm² (idling) (21.3 ~ 85.3 psi) 8.5 ~ 13 kg/cm² (2000 rpm) (111 ~ 185 psi)	1.5 ~ 6 kg/cm² (idling) (21.3 ~ 85.3 psi) 8.5 ~ 13 kg/cm² (2000 rpm) (111 ~ 185 psi)	1.5 ~ 6 kg/cm² (idling) (21.3 ~ 85.3 psi) 8.5 ~ 13 kg/cm² (2000 rpm) (111 ~ 185 psi)	1.5 ~ 6 kg/cm² (idling) (21.3 ~ 85.3 psi) 8.5 ~ 13 kg/cm² (2000 rpm) (111 ~ 185 psi)	1.5 ~ 6 kg/cm² (idling) (21.3 ~ 85.3 psi) 8.5 ~ 13 kg/cm² (2000 rpm) (111 ~ 185 psi)
Converter internal pressure (Outlet pressure)	1.0 ~ 1.6 kg/cm² (2000 rpm) (14.2 ~ 22.8 psi)	1.0 ~ 1.6 kg/cm² (2000 rpm) (14.2 ~ 22.8 psi)	1.0 ~ 1.6 kg/cm² (2000 rpm) (14.2 ~ 22.8 psi)	1.0 ~ 1.6 kg/cm² (2000 rpm) (14.2 ~ 22.8 psi)	1.0 ~ 1.6 kg/cm² (2000 rpm) (14.2 ~ 22.8 psi)	1.0 ~ 1.6 kg/cm² (2000 rpm) (14.2 ~ 22.8 psi)	1.0 ~ 1.6 kg/cm² (2000 rpm) (14.2 ~ 22.8 psi)	1.0 ~ 1.6 kg/cm² (2000 rpm) (14.2 ~ 22.8 psi)	1.0 ~ 1.6 kg/cm² (2000 rpm) (14.2 ~ 22.8 psi)
Oil capacity	13.2 ℓ (3.5 US gal)	13.2 ℓ (3.5 US gal)	13.2 ℓ (3.5 US gal)	13.2 ℓ (3.5 US gal)	13.2 ℓ (3.5 US gal)	13.2 ℓ (3.5 US gal)	13.2 ℓ (3.5 US gal)	13.2 ℓ (3.5 US gal)	13.2 ℓ (3.5 US gal)
Operating fluid	Auto fluid	Auto fluid	Auto fluid	Auto fluid	Auto fluid	Auto fluid	Auto fluid	Auto fluid	Auto fluid
Speed reduction ratio	5.833	5.833	5.143	5.833	5.143	5.143	5.143	5.143	5.833
No-load governed maximum speed (rpm)	2600	2600	2300	3050	2600	2300	2300	2300	2600
Coupled engine	4P	5R	2J	4P	5R	5P	2J	5P	2J

TROUBLE SHOOTING

Symptom	Inspection Method	Probable Cause & Remedy
1. Vehicle totally inoperative or operates extremely sluggishly. [Due to clutch not transmitting power]	1.1 Check main hydraulic pressure. Std. { Idling 2 ~ 6 kg/cm² (28.4 ~ 85.3 psi) 2000 rpm 9 ~ 13 kg/cm² (128 ~ 185 psi) Check while shifting to forward and reverse, and also to neutral.	○ Check fluid amount. → Check with level gage.
	1.1a Pressure at neutral much lower than std. pressure.	○ Regulator valve sticking. → Check for clogging. Clean. ○ Regulator valve spring broken or weakened → Replace ○ Oil pump malfunction. 1) Oil pump defect → Replace 2) Extension spring broken → Replace ○ Suction system defective 1) Suction filter clogged → Clean or replace 2) Air drawn in → Check joint "O" rings, gaskets ○ Oil passage from pump to control valve clogged or fluid leakage → check passage → replace "O" ring, gaskets.
	1.1b Pressure abnormally high.	○ Regulator valve orifice clogged → check and wash valves.
	1.1c Pressure far lower than std. at both forward and reverse. (Normal at neutral)	○ Inching spool sticking → Check for clogging, wash. ○ Inching lever defective sliding → Repair, replace ○ Inching rod defective return → Check rod link, replace ○ Modulator valve sticking → Check for clogging, wash. ○ Orifice valve clogged → Wash.

Symptom	Inspection Method	Probable Cause & Remedy
	1.1d Pressure far lower than std. at either forward or reverse only.	→ Continued on 1.2
	1.2 Check clutch pressure Std. { 1.5 ~ 6 kg/cm² (21.3 ~ 85.3 psi) at idling 8.5 ~ 13 kg/cm² (111 ~ 185 psi) at 2000 rpm Clutch pressure appears slightly lower than main pressure.	
	1.2a Pressure far lower than std. at either forward or reverse only.	○ Hydraulic oil leaking between selector valve and servo collar → Check oil passage → Replace. ○ Seal ring (servo collar) worn or broken → Replace ○ Main shaft oil passage plug fell out → Repair, replace ○ Clutch piston damaged, piston ring broken, piston loosened, etc. → Overhaul clutch
	1.3 Main pressure and clutch both normal.	○ Clogging in oil passage between selector valve and clutch piston (forward side oil passage clogged if no forward advance) → Check ○ Clutch piston stuck.
	1.3a Mechanical trouble in transmission or differential. Such cases are usually accompanied by rapid rise in torque converter oil and noise.	
2. Lack of hill climbing and tractive performance. (Insufficent power) [Due to torque converter not developing torque]	2.1 Check engine no-load governed maximum speed and maximum speed when laden.	
	2.1a Check engine no-load governed maximum speed. Standard { 4P { 2600 rpm / 3050 rpm 5R 2600 rpm 5P 2300 rpm 2J { 2300 rpm / 2600 rpm	a. Tune-up engine if rpm is not at standard value. Note: Refer to engine tune-up section.

Symptom	Inspection Method	Probable Cause & Remedy
	2.1b Check engine maximum speed when laden. After checking maximum speed in 2.1a, set the tilt lever forward or backward, and at relief state and accelerator full depressed, measure the maximum speed. In case of gasoline engine: about 150 ~ 200 rpm down from no-load maximum governed speed. In case of diesel engine: about 100 rpm down from no-load governed maximum speed.	b. If speed drop is larger than standard (Engine power insufficient) o Readjust air governor. Note: Refer to air governor adjustment section. o Check carburetor throttle to see if it opens fully when accelerator pedal is fully depressed. o Power tends to drop easier with LPG than gasoline so that closer adjustment of governor and regulator will be required when using LPG. c. When engine rpm and output are normal. Cont'd in 2.2
	2.2 Check main pressure and clutch pressure. Standard pressures: Main press. { $2 \sim 6$ kg/cm² ($28.4 \sim 85.3$ psi) at idling; $9 \sim 13$ kg/cm² ($128 \sim 185$ psi) at 2000 rpm Clutch press. { $1.5 \sim 6$ kg/cm² ($21.3 \sim 85.3$ psi) at idling; $8.5 \sim 13$ kg/cm² ($111 \sim 185$ psi) at 2000 rpm	o When main or clutch pressure is abnormal → Check in accordance with 1.1 or 1.2.
	2.3 Check stall rpm. o Perform the stall test and measure the engine speed at that time. Note: Before checking stall rpm, always check engine output (full load maximum rpm) and main and clutch pressures to confirm that engine system is in normal state.	Checking the stall speed enables determining whether the converter or clutch is at fault.

Symptom	Inspection Method	Probable Cause & Remedy
	Stall speeds (Standard) Max. rpm / Stall rpm 4P: 2600 / 1600; 3050 / 1600 5R: 2600 / 1700 5P: 2300 / 1700 2J: 2300 / 1750; 2600 / 1800 Caution: Stall speed could vary about 100 rpm from the above values due to slight differences in engine and torque converter inherent performances. Thus, the above values should only be used as guide to determine troubles.	a. Stall speed too low (Drops more than 300 rpm) ○ Stator one-way clutch is slipping. → Dissasemble, inspect, replace stator. b. Stall speed too high ○ Clutch slipping badly. → Disassemble, inspect, replace clutch.
3. Large time lag when starting	3.1 Depress accelerator pedal together with shifting to determine delay in starting. It would be desirable if comparison could be made with normal vehicle.	
	3.2 Check main and clutch pressures. At same time, check clutch pressure rise characteristics. Standard pressures: Main press.: 2 ~ 6 kg/cm² (28.4 ~ 85.3 psi) at idling; 9 ~ 13 kg/cm² (128 - 185 psi) at 2000 rpm Clutch press.: 1.5 ~ 6 kg/cm² (21.3 ~ 85.3 psi) at idling; 8.5 ~ 13 kg/cm² (111 ~ 185 psi) at 2000 rpm	a. Main or clutch pressure abnormal. Refer to 1.1 or 1.2 b. Clutch pressure rise up characteristic abnormal. ○ Modulator valve spring weak or broken → Disassemble, inspect, replace. ○ Orifice valve clogged → Disassemble, inspect, clean. ○ Inching spool defective return → Foreign object lodged, spring weak, broken flush out, replace. ○ Inching lever sliding defective → lever repair, replace. ○ Inching rod return defective → Rod link inspect, replace.
	3.3 Check oil	Oil insufficent, suction filter clogged, air drawn in → Replenish, disassemble, wash.

Symptom	Inspection Method	Probable Cause & Remedy
4. Inching defective, jerking (shock) develops	4.1 Check inching rod operation.	a. Inching rod malfunction o Inching spring defective → Replace. o Inching lever sliding defective → Apply grease, replace o Inching spool return defective → Foreign object lodged, spring weak, broken → flush out replace.
	4.2 Check main and clutch pressures. Operate inching valve and check variation in clutch pressure. Standard pressures: Main press. { 2 ~ 6 kg/cm² (28.4 ~ 85.3 psi) at idling 9 ~ 13 kg/cm² (128 ~ 185 psi) at 2000 rpm Clutch press. { 1.5 ~ 6 kg/cm² (21.3 ~ 85.3 psi) at idling 8.5 ~ 13 kg/cm² (111 ~ 185 psi) at 2000 rpm	a. If clutch rise up pressure is abnormal: o Inching spool sticking → Foreign object lodged → wash o Inching lever sliding defective → apply grease, replace. o Inching lever sliding defective → Apply grease, replace o Inching rod defective return → Return spring defective → Replace o Orifice valve clogged → Wash b. If clutch pressure rise-up characteristic is normal. (Check clutch parts) o Clutch return spring broken, weak → Disassemble, replace o Clutch piston malfunction → Disassemble, check, replace o Clutch plate abnormal wear → Disassemble, check, replace
5. Entry of differential oil	5.1 Check by smelling torque converter oil for entry of hypoid gear oil.	a. If hypoid gear oil smell is detected. o Pinion oil seal installed position defective, lip turned up → Disassemble, check, replace o Pinion "O" ring defective → Disassemble, check, replace o Retainer bolt seal defective → Repair, retighten o Air breather clogged → Replace

Symptom	Inspection Method	Probable Cause & Remedy
6. Overheating	6.1 Check torque converter oil amount and quality.	a. Torque converter oil amount insufficient, quality defective ○ Check if excessive or insufficient and correct to proper level. ○ Air drawn in → Check and replace "O" ring at joining surface. ○ Water mixed in oil → Replace oil
	6.2 Check main press., clutch press., converter press. (outlet press.) Standard pressures: Main press. { 2 ~ 6 kg/cm² (28.4 ~ 85.3 psi) at idling; 9 ~ 13 kg/cm² (128 ~ 185 psi) at 2000 rpm Clutch press. { 1.5 ~ 6 kg/cm² (21.3 ~ 85.3 psi) at idling; 8.5 ~ 13 kg/cm² (111 ~ 185 psi) at 2000 rpm Conv. press. { 1.0 ~ 1.6 kg/cm² (14.2 ~ 22.8 psi) at 2000 rpm	a. Main and clutch pressures below standard. ○ Stator shaft orifice clogged → Disassemble, check, wash ○ Large resistance in internal oil passages and piping → Check internal oil passages, wash ○ Suction filter clogged → Disassemble, wash, replace.
	6.3 Check clutch parts Check if vehicle runs when at neutral.	a. Moves ahead or backward when at neutral. ○ Clutch plates seized by burning, clutch pack damaged → Disassemble, check, replace
	6.4 Check torque converter parts.	a. Converter parts defective. ○ Stator sticking → Disassemble stator, check, replace ○ Impeller contacting → Determine through oil filter. Replace if defective. ○ Decrease in oil circulation → Stator shaft orifice clogged → Disassemble, check, wash.

Symptom	Inspection Method	Probable Cause & Remedy
	6.5 Check transmission parts	a. Transmission parts defective. o Clutch dragging → Disassemble, check, replace o Bearing worn, burned and seized → Disassemble, check, replace
	6.6 Check user's operating condition	a. Check driver's operating methods, using conditions, and place used. o Check if pushing in operation is done while inching. o Check if excessive switch back is being done.
7. Noise develops	7.1 Check torque converter	o Drive plate damaged → Replace o Bearing damaged → Replace o Impeller contacting → Check by oil and oil filter → Repair or replace. o Bolts loosened → Retighten o Gear pump damaged → Repair or replace.
	7.2 Check transmission parts	o Dragging noise due to seized clutch → Check, replace o Bearing worn or damaged → Check, replace o Gears damaged → Replace o Splines worn → Replace
	7.3 Check differential parts	o Pinion and ring gear tooth contact or backlash defective → Adjust, replace o Bearings or gears damaged → Check, replace
8. Oil leakage	8.1 Check oil seals	o Check all seals for wear or damage at lips and on their contacting parts surfaces, and replace any part found defective.
	8.2 Check case joints	o Retighten bolts, replace "O" rings and packings.
	8.3 Check for blowholes and cracks.	o Repair or replace
	8.4 Oil blowing out from air breather	o Overheating Refer to 6 above. o Excessive oil

COMPONENT PARTS

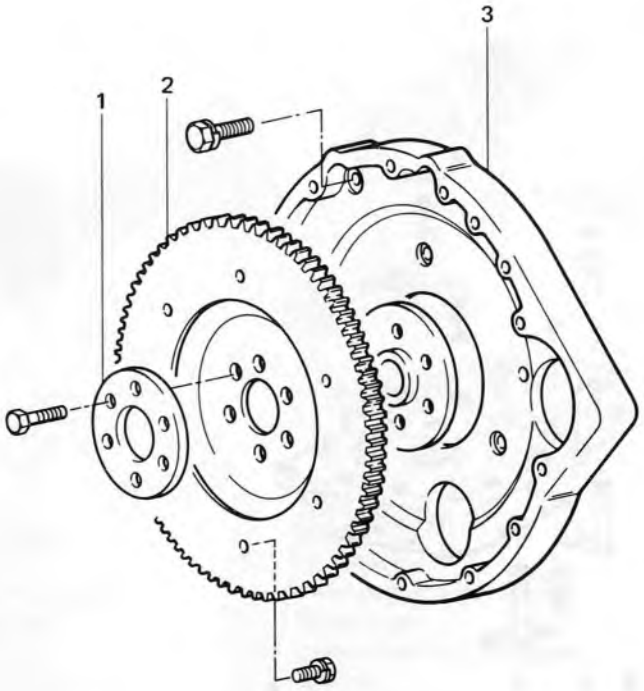

1. Drive plate rear spacer
2. Flywheel
3. Flywheel housing

Fig. 3-3 Flywheel Housing

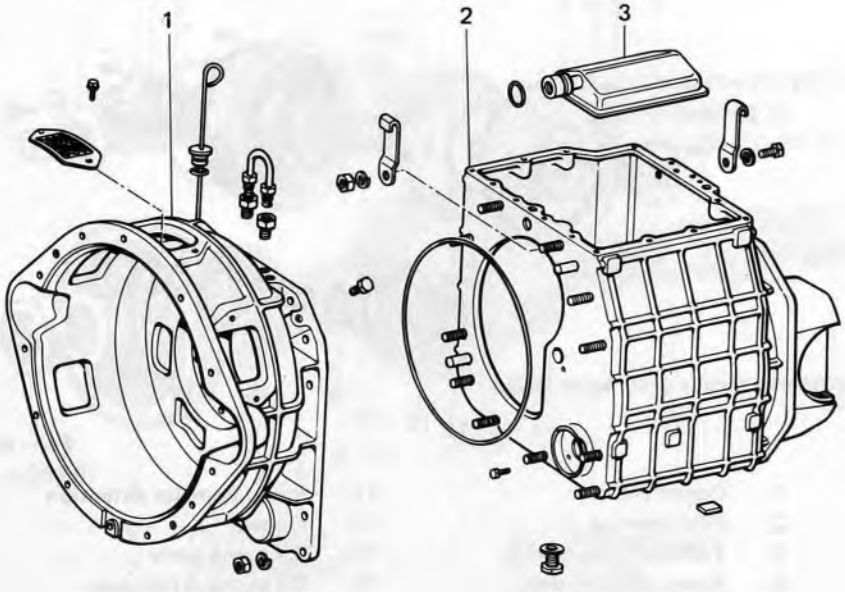

1. Torque converter housing
2. Transmission housing
3. Filter

Fig. 3-4 Torque Converter Housing

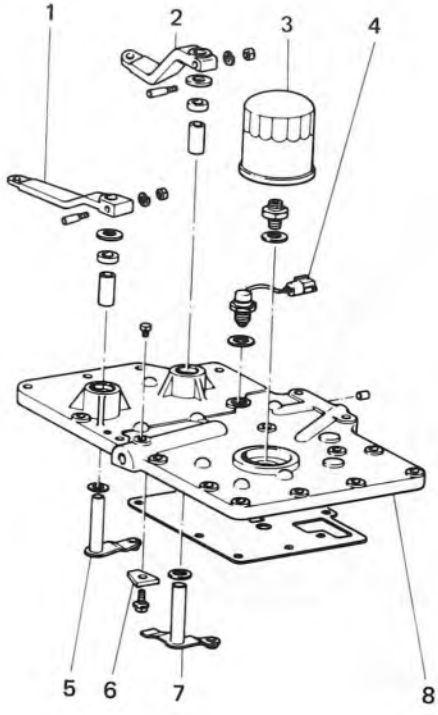

1. Inching valve lever
2. Shift lever
3. Oil cleaner
4. Neutral safety switch
5. Inching cam lever
6. Cam lever stopper
7. Cam lever
8. Upper cover

Fig. 3-5 Torque Converter Upper Cover

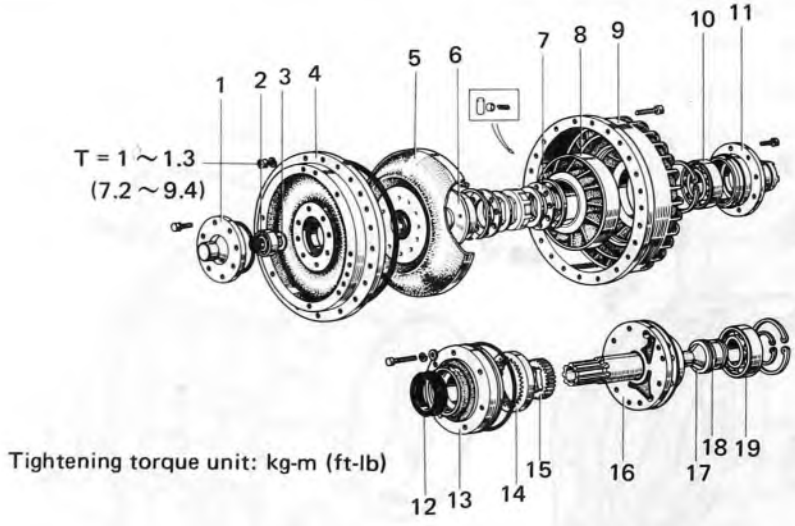

1. Center piece
2. Pilot bearing
3. Turbine front washer
4. Pump impeller disk
5. Turbine runner
6. Turbine runner hub
7. Stator wheel rear collar
8. Stator
9. Pump impeller
10. Bearing
11. Pump impeller extension
12. Oil seal
13. Oil pump body
14. Oil pump driven gear
15. Oil pump drive gear
16. Stator shaft
17. Input shaft
18. Seal ring
19. Bearing

Fig. 3-6 Torque Converter

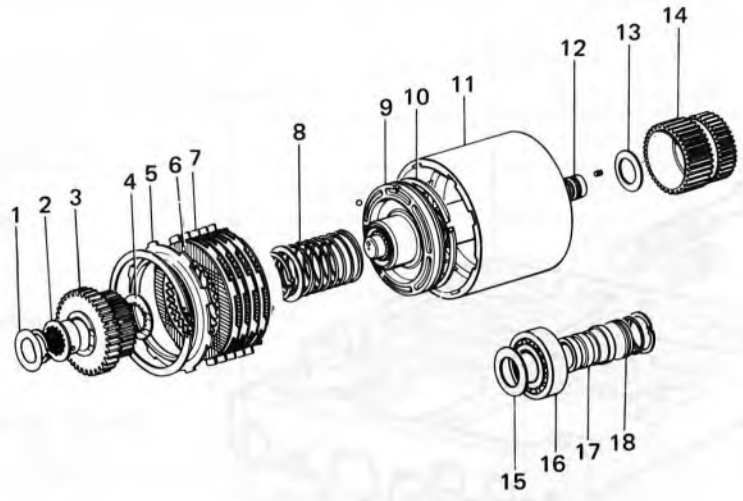

1. Wave washer
2. Forward gear collar
3. Forward gear
4. Forward gear thrust washer
5. Clutch backing plate
6. Clutch driven plate
7. Clutch drive plate No. 1
8. Clutch return spring
9. Clutch piston
10. Seal ring
11. Clutch drum
12. Main shaft
13. Reverse gear thrust washer
14. Reverse gear
15. Reverse gear thrust washer
16. Bearing
17. Main shaft collar
18. Main shaft cap

Fig. 3-7 Torque Converter Clutch

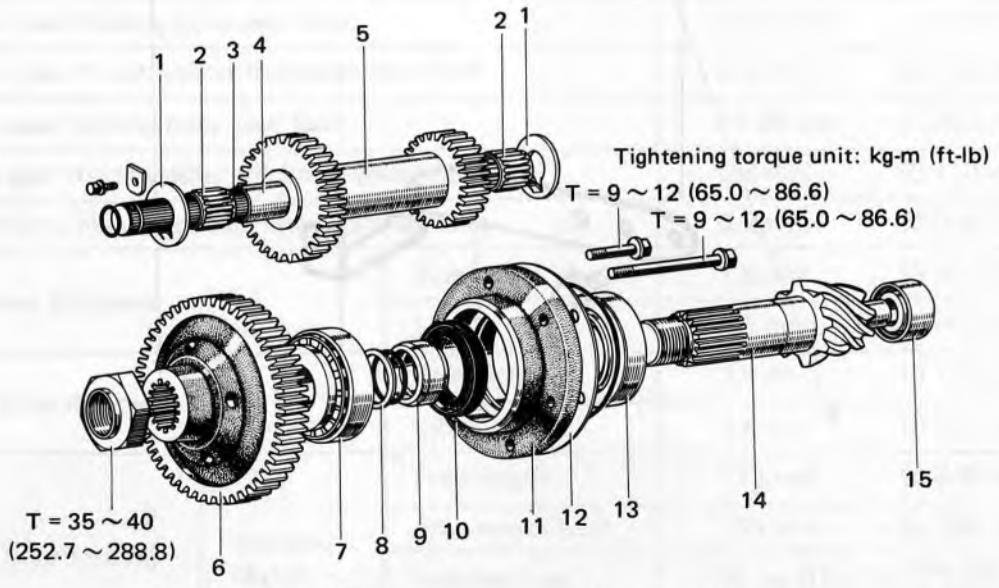

1. Thrust washer
2. Needle bearing
3. Idle shaft
4. Idle shaft spacer
5. Idle gear
6. Output gear
7. Bearing
8. Shim
9. Bearing spacer
10. Oil seal
11. Bearing retainer
12. Shim
13. Bearing
14. Drive pinion
15. Pilot bearing

Fig. 3-8 Torque Converter Gears

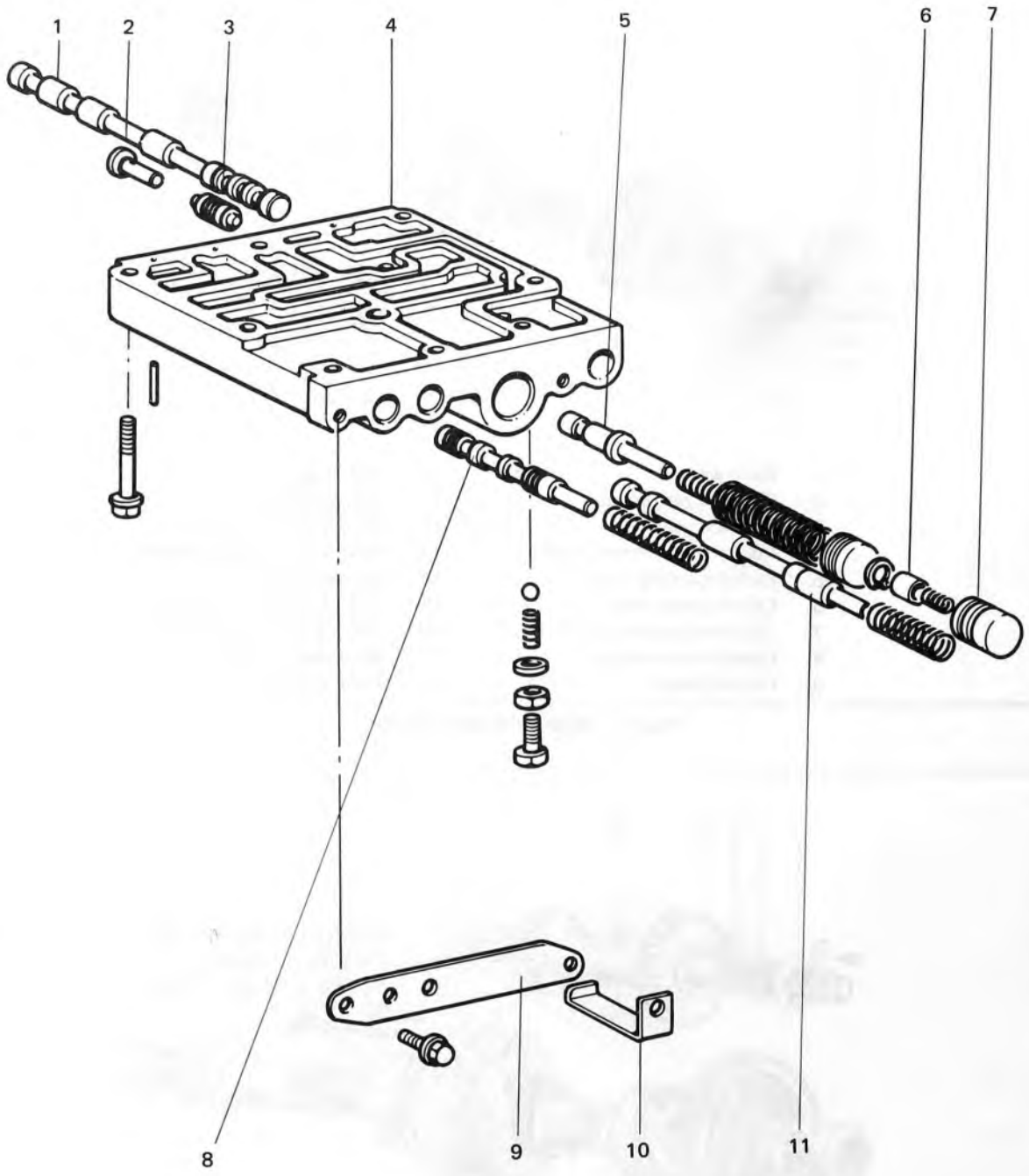

1. Selector valve
2. Change valve stopper
3. Change valve
4. Control valve body
5. Modulator valve
6. Orifice valve
7. Orifice valve body
8. Regulator valve
9. Spring holder
10. Separator plate
11. Inching valve

Fig. 3-9 Oil Control Valve

SERVICE STANDARDS

Item			Standards Value	
Shift lever stopper to shift lever clearance limit			below 0.5 mm	(0.020 in)
Shift lever actuating force			4 ~ 8 kg	(9 ~ 18 lb)
Inching valve spring		Free length	70 mm	(2.760 in)
		Limit	60 mm	(2.362 in)
Regulator valve spring		Free length	91 mm	(3.583 in)
		Limit	86 mm	(3.386 in)
Modulator valve spring (Small)		Free length	76 mm	(2.992 in)
		Limit	73 mm	(2.874 in)
Modulator valve spring (Large)		Free length	84.5 mm	(3.327 in)
		Limit	81.5 mm	(3.209 in)
Orifice valve spring		Free length	27 mm	(1.063 in)
		Limit	25 mm	(0.984 in)
Driven gear to pump body clearance limit			0.4 mm	(0.016 in)
Driven gear to crescent clearance limit			0.3 mm	(0.012 in)
Drive gear to crescent clearance limit			0.3 mm	(0.012 in)
Pump body to gears clearance limit			0.2 mm	(0.008 in)
Pump drive gear bushing to stator shaft clearance limit			0.15 mm	(0.006 in)
Forward gear bushing bore wear limit			40.36 mm	(1.589 in)
Forward gear thrust washer thickness wear limit			2.8 mm	(0.110 in)
Reverse gear bushing bore wear limit			34.36 mm	(1.353 in)
Reverse gear thrust washer thickness wear limit			2.8 mm	(0.110 in)
Main shaft to main shaft seal ring clearance limit			0.2 mm	(0.008 in)
Drive plate thickness		Standard	1.8 mm	(0.071 in)
		Limit	1.6 mm	(0.063 in)
Driven plate thickness		Standard	2.9 mm	(0.114 in)
		Limit	2.6 mm	(0.102 in)
Clutch return spring	150 mm clutch	Free length	113 mm	(4.449 in)
		Free length limit	103 mm	(4.055 in)
		Installed load	70 kg (154 lb)	[Ins.lgth 43 mm (1.693 in)]
		Squareness	2° max.	

Item	Standards Value
Clutch piston to piston seal ring clearance limit	0.15 mm (0.006 in)
Reverse idler gear thrust washer thickness wear limit	1.9 mm (0.075 in)
Reverse idler gear thrust clearance	0.2 ~ 0.7 mm (0.008 ~ 0.028 in)

UPPER COVER REMOVAL

REMOVAL

1. Remove the toeboard.
   (1) Rear toeboard
   (2) Front toeboard



Fig. 3-10 Removing Toeboard

2. Remove the upper cover.
   (1) Disconnect inching rod.



Fig. 3-11 Disconnecting Inching Rod

   (2) Disconnect shifting rod.



Fig.3-12 Disconnecting Shifting Rod

   (3) Remove upper cover.



Fig. 3-13 Removing Upper Cover

LEVERS

DISASSEMBLY

1. Remove the shifting lever.
   (1) Set bolt
   (2) Screw on service nut to bolt threads and drive out with hammer.
   (3) Shifting lever
   (4) Plate



Fig. 3-14 Removing Shifting Lever

2. Remove the inching valve lever.
   (1) Set bolt
   (2) Screw on service nut to bolt threads and drive out with hammer.
   (3) Inching valve lever
   (4) Plate



Fig. 3-15 Removing Inching Valve Lever

3. Remove the oil control valve.
   (1) Separator plate
      a. Set bolt
      b. Separator plate

   Caution:
   Valve set bolt is located at separator plate lower part.

   (2) Control valve
      a. Set bolt
      b. Oil control valve

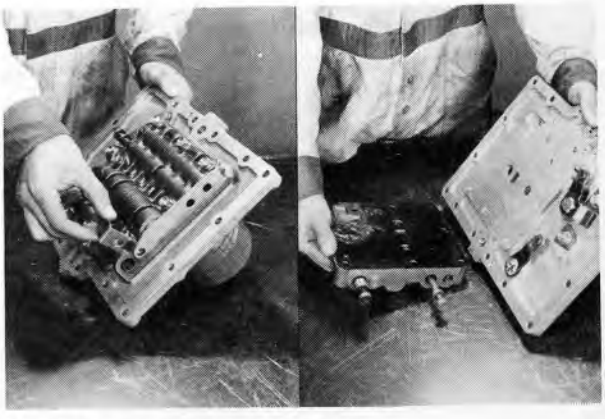

Fig. 3-16 Removing Control Valve

4. Remove the cam lever.
   (1) Cam lever
   (2) Plate

   Caution:
   Remove oil seal only when found necessary to do so.

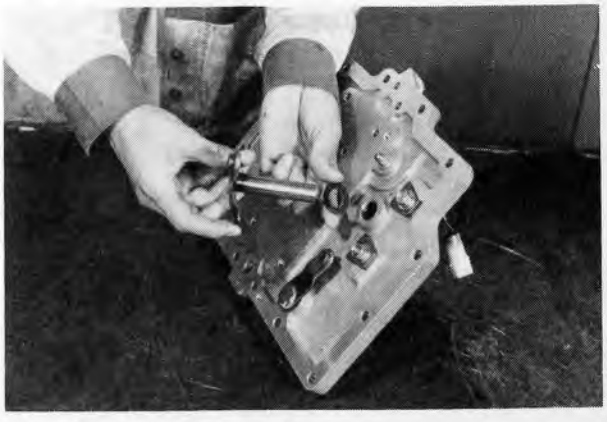

Fig. 3-17 Removing Cam Lever

5. Remove the inching cam lever.
   (1) Inching cam lever
   (2) Plate

   Caution:
   Remove oil seal only when found necessary to do so.

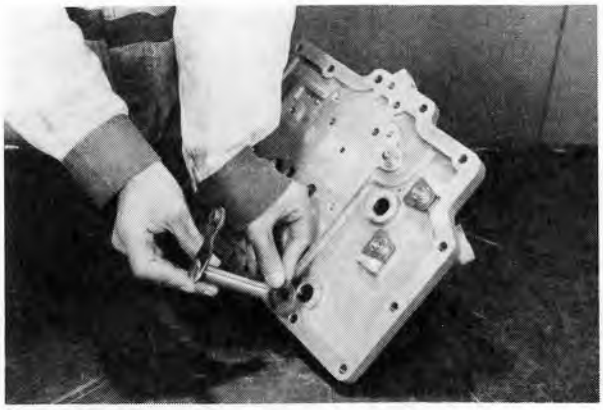

Fig. 3-18 Removing Inching Cam Lever

INSPECTION

1. Wear, damage, or deformation in shifting lever, cam lever, inching valve lever, and inching cam lever.

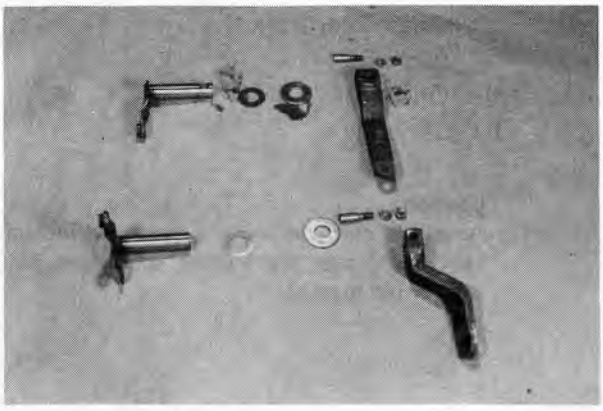

Fig. 3-19 Lever Inspection

ASSEMBLY

1. Assemble the oil seal.
   SST used 09620-30010

   Essential:
   - **Apply grease to oil seal outer side and lip.**
   - **Drive in the oil seal until its surface is flush with the cover.**



Fig. 3-20 Assembling Oil Seal

2. Assemble the inching cam lever.
   (1) Apply grease to upper cover interior.
   (2) Washer
   (3) Inching cam lever



Fig. 3-21 Assembling Cam Lever

3. Assemble the cam lever.
   (1) Apply grease to upper cover interior.
   (2) Plate
   (3) Cam lever

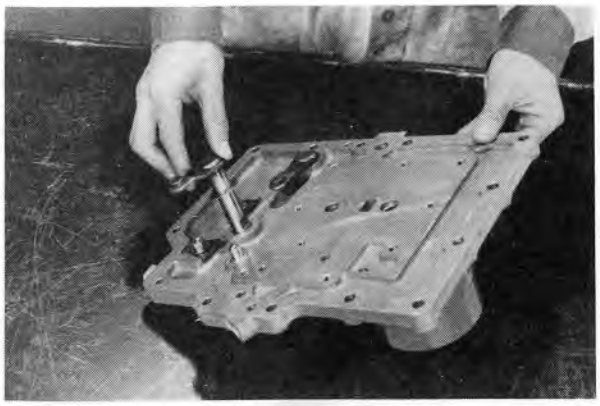

Fig. 3-22 Assembling Cam Lever

4. Install the oil control valve.
   (1) Packing
   (2) Oil control valve
   (3) Set bolt

   Caution:
   Assemble with the inching spool and inching cam lever, and the inching spool and cam lever fitted together.

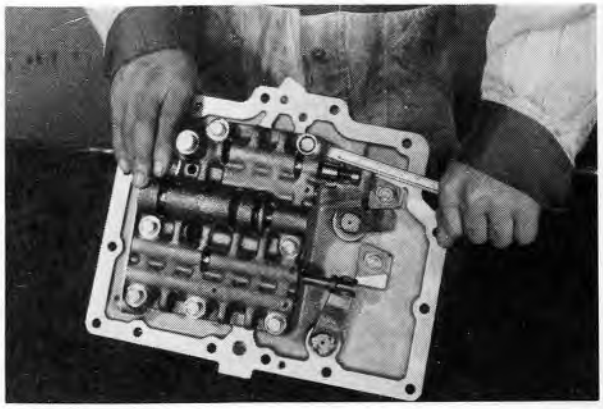

Fig. 3-23 Assembling Oil Control Valve

5. Assemble the inching valve lever.
   (1) Plate
   (2) Inching valve lever
   (3) Set bolt and nut

   Caution:
   Assemble the inching valve lever by aligning it with the inching cam lever groove position.



Fig. 3-24 Assembling Inching Valve Lever

6. Assemble the shifting lever.
   (1) Plate
   (2) Shifting lever
   (3) Set bolt

   Caution:
   Assemble the shifting lever by aligning it with the inching cam lever groove position.



Fig. 3-25 Assembling Shifting Lever

7. Adjust the shifting lever stopper.
With the steel ball properly fitting into the selector valve groove, adjust the stopper position so as to provide a clearance of within 0.5 mm (0.020 in) between the shift lever stopper and shift lever.

A : Below 0.5 mm (0.02 in.)

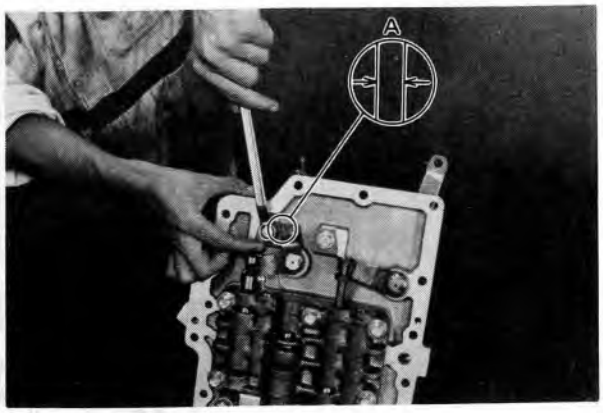

Fig. 3-26 Adjusting Stopper

OIL CONTROL VALVE

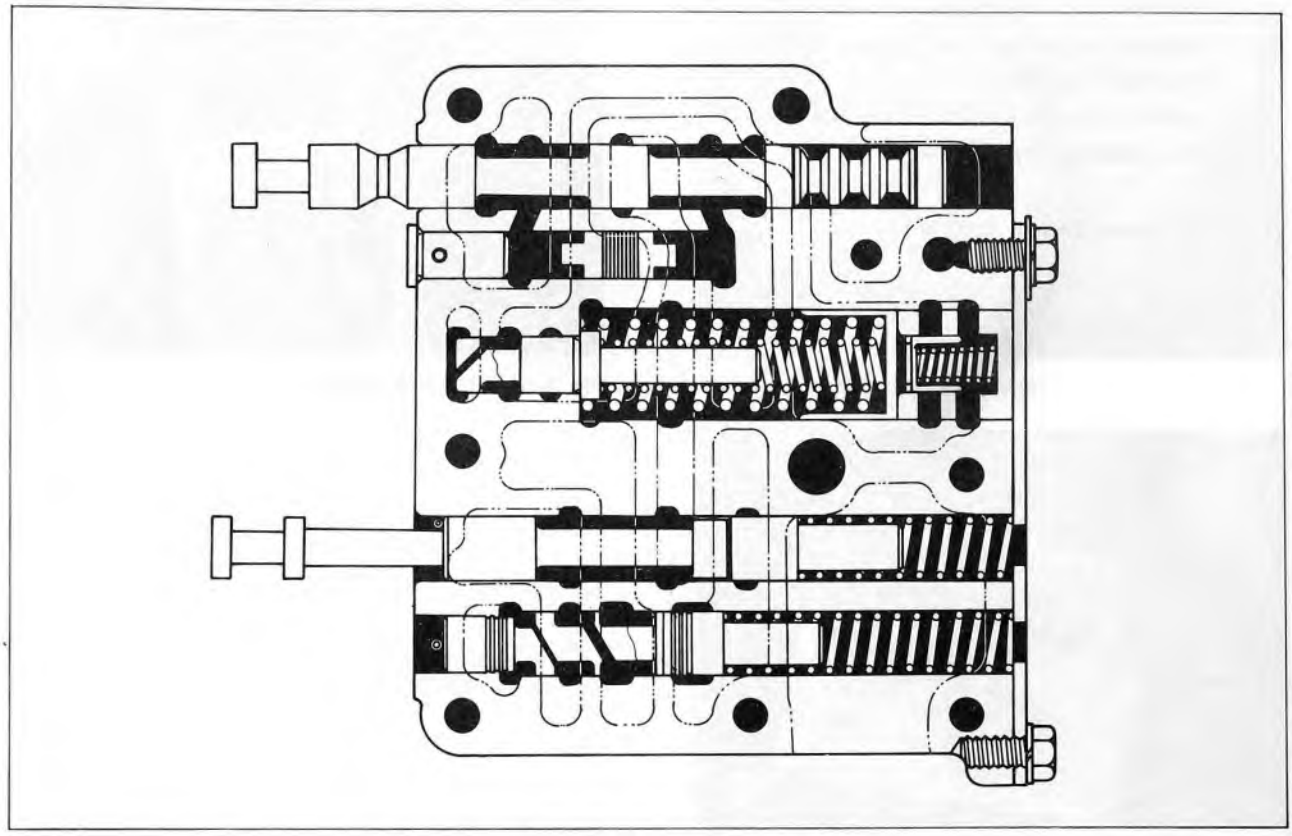

Fig. 3-27 Sectional View of Oil Control Valve

DISASSEMBLY

1. Remove the oil control valve.
   (1) Sparator plate
      a. Set bolt
      b. Separator plate

   Caution:
   Valve set bolt is located at lower part of separator plate.

   (2) Oil control valve
      a. Set bolt
      b. Oil control valve

2. Remove the valves
   (1) Set bolt
   (2) Spring holder
   (3) Spring (Inching valve)
   (4) Spring, regulator valve
   (5) Modulator valve, etc.



Fig. 3-28 Removing Control Valve

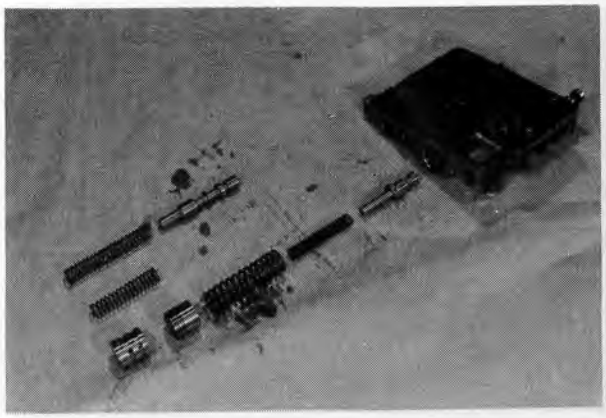

Fig. 3-29 Removing Valves

3. Remove the orifice valve.
   (1) Snap ring
   (2) Piston
   (3) Spring

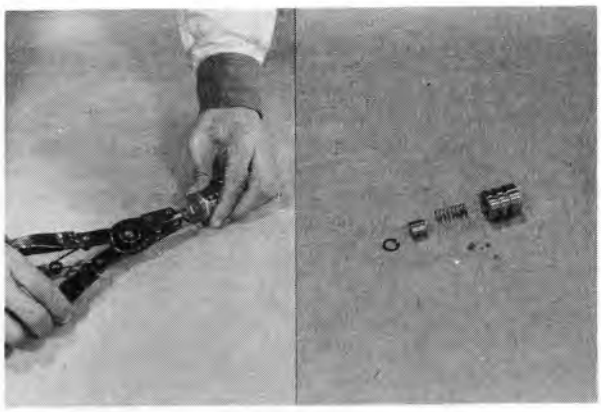

Fig. 3-30 Removing Orifice Valve

4. Remove the steel ball.
   (1) Adjust screw
   (2) Spring
   (3) Steel ball



Fig. 3-31 Removing Steel Ball

5. Remove the selector valve.

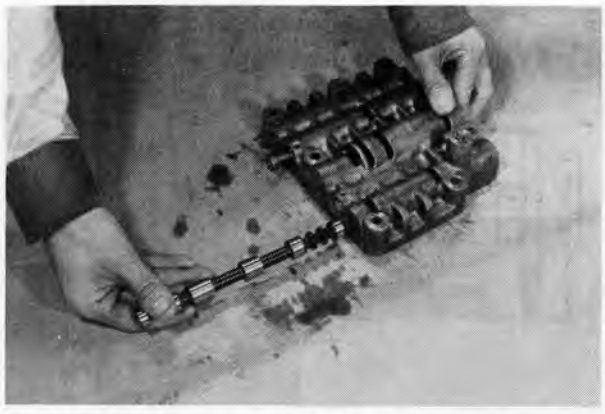

Fig. 3-32 Removing Selector Valve

6. Remove the inching valve.
   (1) Spring pin
   (2) Inching valve

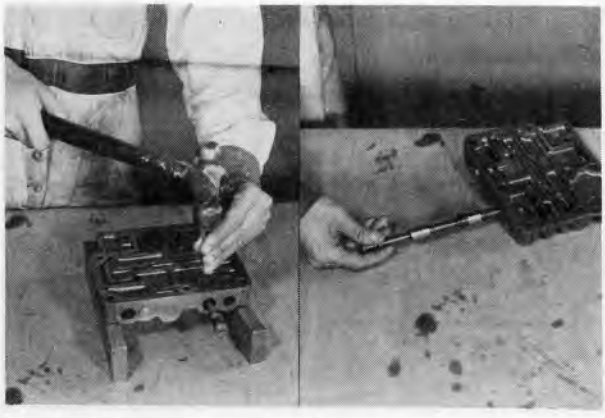

Fig. 3-33 Removing Inching Valve

7. Remove the change valve.
   (1) Spring pin
   (2) Change valve stopper

   Caution:
   Before disassembling, check the change valve for free drop action. If normal, there is no need to disassemble the change valve.

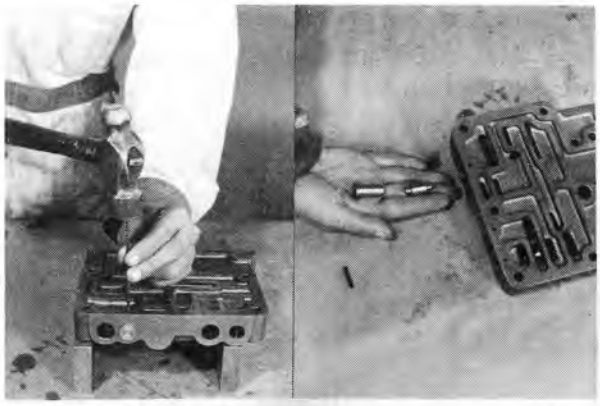

Fig. 3-34 Removing Change Valve

INSPECTION

Caution:
Before starting inspection, wash all parts thoroughly in solvent.

1. All valves and spools
   (1) Damage

2. Body
   (2) Damage

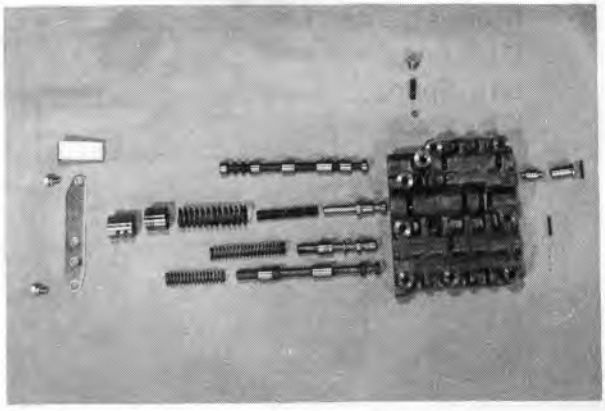

Fig. 3-35 Inspection of Valves and Body

3. Clogged orifices in orifice valve, regulator valve and modulator valve.

   A: Orifice

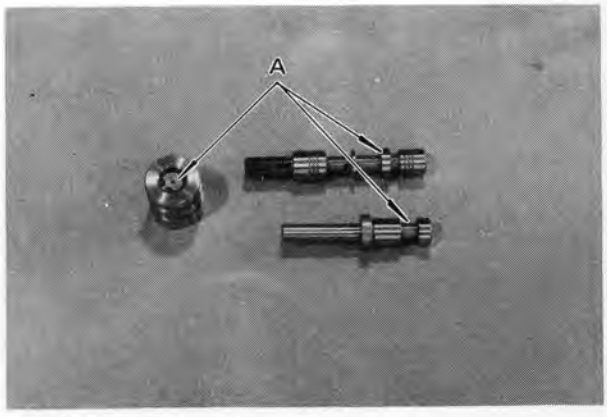

Fig. 3-36 Checking Clogged Orifices

4. Sliding action between the valve spools and valve body.

   Essential:
   Apply torque converter oil to the valve body and spool. With the body positioned upright, insert the spool into the body. The spool should slide down smoothly by its own weight.



Fig. 3-37 Checking Sliding Action

5. Springs

(1) Loss-of-tension, breakage

Spring	Free Length mm (in)	Limit mm (in)
Inching valve	70 (2.760)	66 (2.362)
Regulator valve	91 (3.583)	86 (3.386)
Modulator valve (Large)	84.5 (3.327)	81.5 (3.209)
Modulator valve (Small)	76 (2.992)	73 (2.874)
Orifice valve	27 (1.063)	25 (0.984)

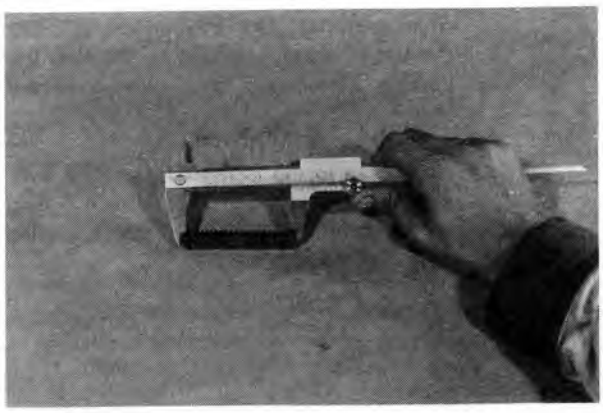

Fig. 3-38 Inspecting Spring

ASSEMBLY

Perform the disassembly in reverse order.

Caution:

- Wash all parts once more before assembling, and assemble with the parts liberally coated with torque converter fluid.
- Orifice valve
  After assembling, push the valve to its stop position and then release to make sure that it returns properly.

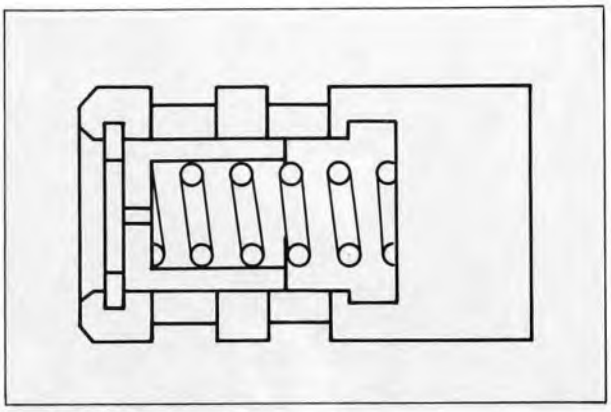

Fig. 3-39 Assembling Orifice Valve

- Change valve
  Spring pin is driven in the direction shown in sketch. Drive in until the pin end is flush with the body surface.

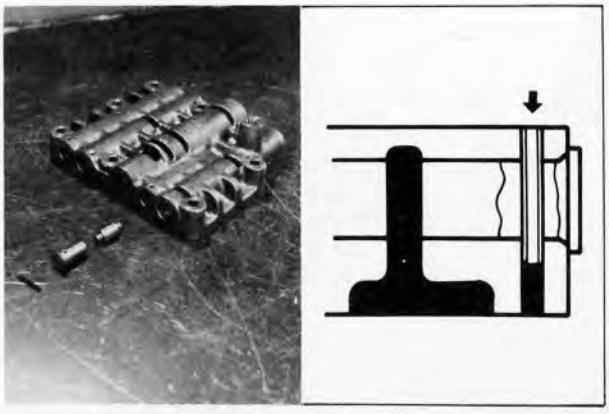

Fig. 3-40 Assembling Change Valve

- Inching valve
  Spring pin is driven in the direction shown in sketch. Drive in until pin end is flush with body surface.

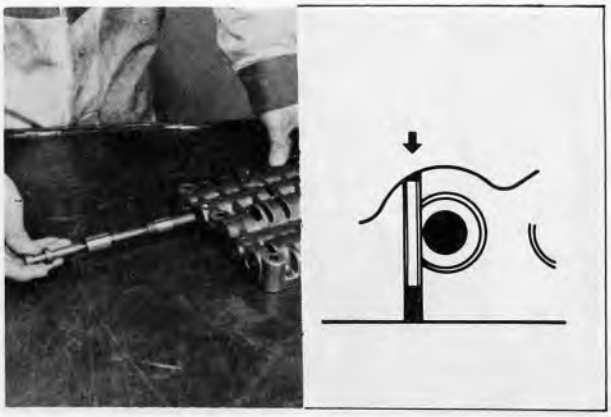

Fig. 3-41 Assembling Inching Valve

- When installing the oil control valve to the upper cover, use care to see that the inching cam lever and cam lever are correctly positioned.
- Selector valve
  Hook on a spring scale to the shifting lever hole and adjust the shift load to 4 ~ 8 kg (9 ~ 18 lb) by means of the adjusting bolt.

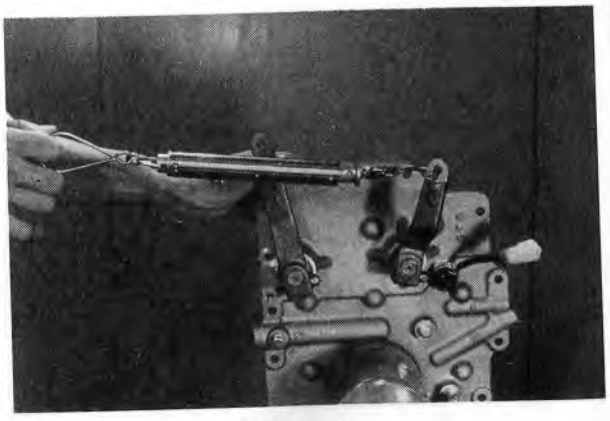

Fig. 3-42 Measuring Shift Load

TORQUE CONVERTER

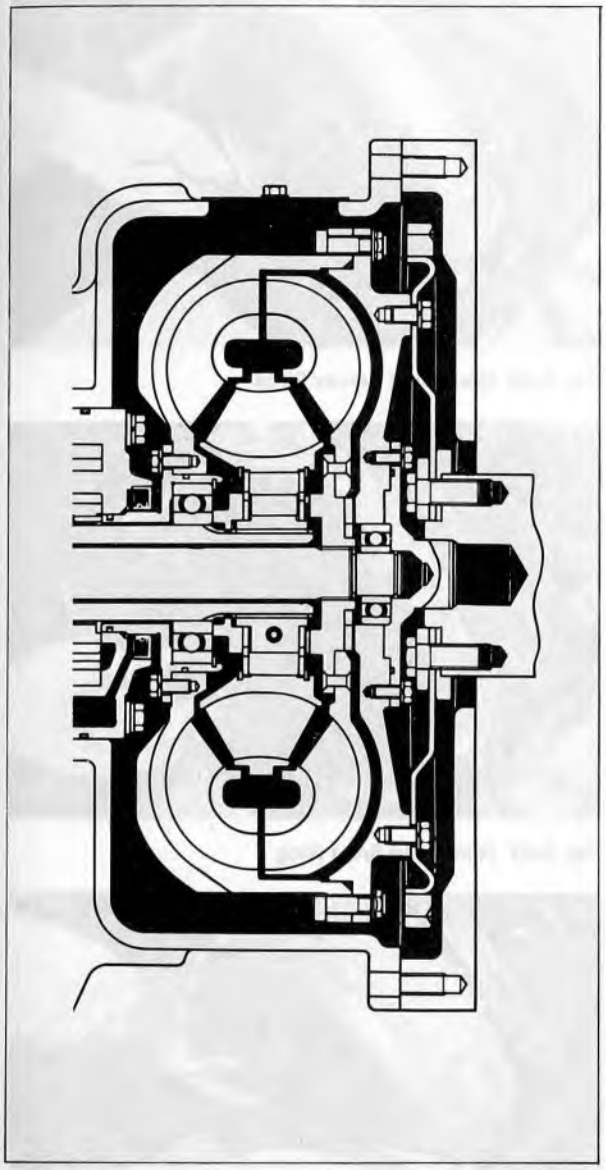

Fig. 3-43 Torque Converter Sectional View

REMOVAL

1. Remove the drive plate set bolts
   (1) Cover set bolts
   (2) Cover
   (3) Set bolts (6)

   Caution:
   When turning the flywheel, do it by means of the crankshaft pulley set bolts.

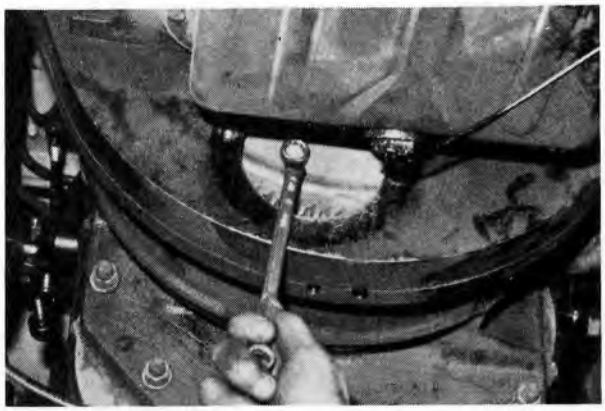

Fig. 3-44 Removing Set Bolts

2. Remove the engine.

   Reference:
   For engine removal, refer to Engine Removal section.



Fig. 3-45 Removing Engine

3. Remove the torque converter.
   (1) Set bolt
   (2) Center piece

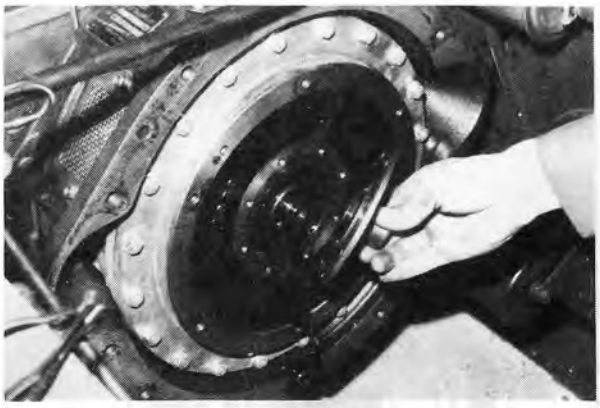

Fig. 3-46 Removing Center Piece

   (3) Snap ring

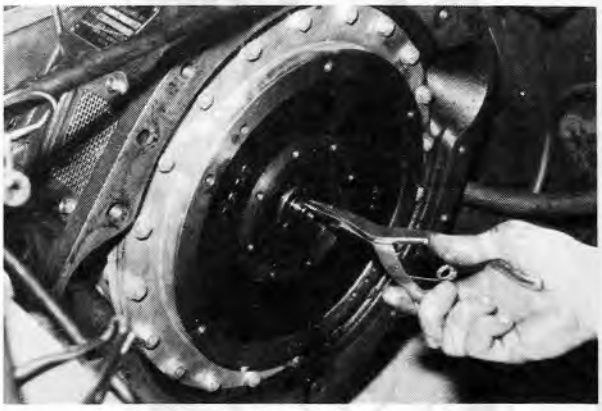

Fig. 3-47 Removing Snap Ring

   (4) Torque converter assy.

   Caution:
   - Use care when pulling out the torque converter assy from the stator shaft so as not to damage the lugs on the pump impeller extension.
   - Handle the torque converter carefully when removing as there is still oil contained in the interior.



Fig. 3-48 Removing Torque Converter Assy

DISASSEMBLY

1. Punch aligning marks on the pump impeller disc and pump impeller.



Fig. 3-49 Punching Aligning Marks

2. Remove the pump impeller disc.
   (1) Set bolts
   (2) Mount the center piece with four bolts. (Positioned 90° apart).



Fig. 3-50 Mounting Center Piece

   (3) Use a suitable round bar and lightly tap the center piece from the pump impeller extension lug end, and remove the center piece and pump impeller.
   (4) Remove the center piece.
   (5) Pilot bearing

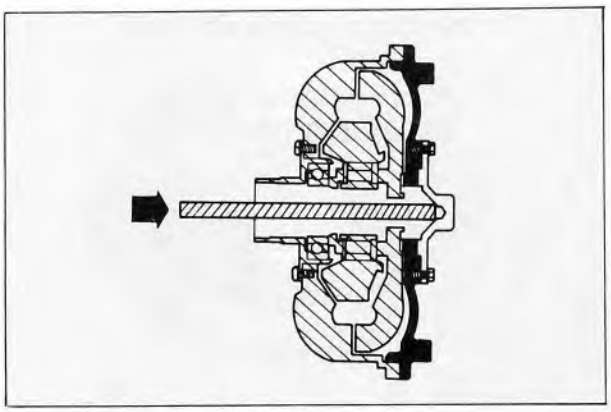

Fig. 3-51 Removing Pump Impeller Disc

3. Remove the turbine runner sub-assy.



Fig. 3-52 Removing Turbine Runner Sub-assy

4. Disassemble the stator.
   (1) Snap ring
   (2) Stator thrust washer, one-way clutch inner race thrust plates.



Fig. 3-53 Disassembling Stator (1)

(3) One-way clutch inner race, rollers, one-way clutch roller springs, spring caps.

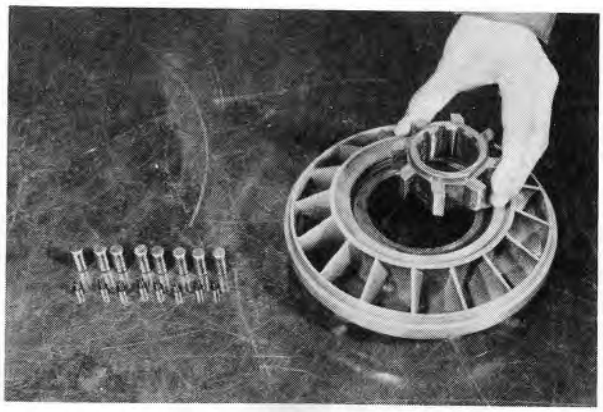

Fig. 3-54 Disassembling Stator (2)

5. Remove pump impeller extension.
   (1) Set bolts
   (2) Pump impeller extension.
   SST used 09608-35010



Fig. 3-55 Removing Extension

6. Remove the bearing.
   (1) Snap ring
   (2) Bearing
   SST used 09620-30010



Fig. 3-56 Removing Bearing

INSPECTION

Caution:
Wash all parts thoroughly with cleaning solvent before inspection.

1. Pump impeller disc
   (1) Cracks, damages



Fig. 3-57 Pump Impeller Disc Inspection

2. Pump impeller
   (1) Cracks, damages

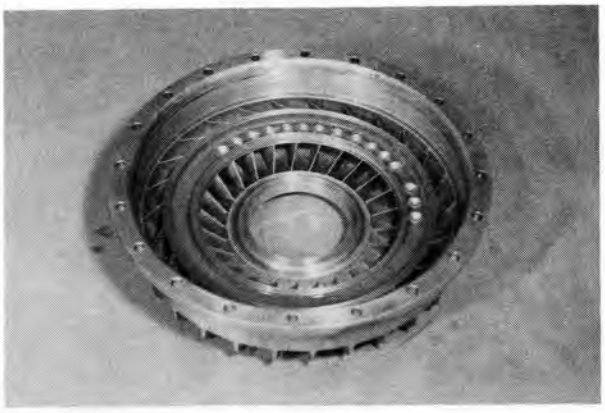

Fig. 3-58 Pump Impeller Inspection

3. Pump impeller extension
   (1) Cracks, damages

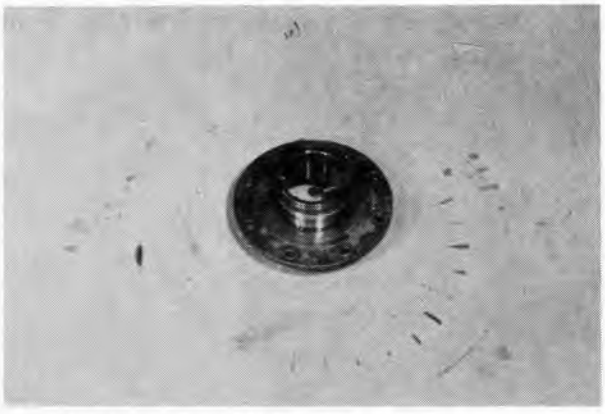

Fig. 3-59 Pump Impeller Extension Inspection

4. Turbine runner sub-assy.
   (1) Cracks or damage in turbine runner
   (2) Loosening in the fit between turbine runner and turbine runner hub.
   (3) Damage in turbine runner hub.



Fig. 3-60 Turbine Runner Sub-assy Inspection

5. Center piece
   (1) Cracks, damages



Fig. 3-61 Center Piece Inspection

6. Bearings
   (1) Rotating condition
   (2) Wear, damage

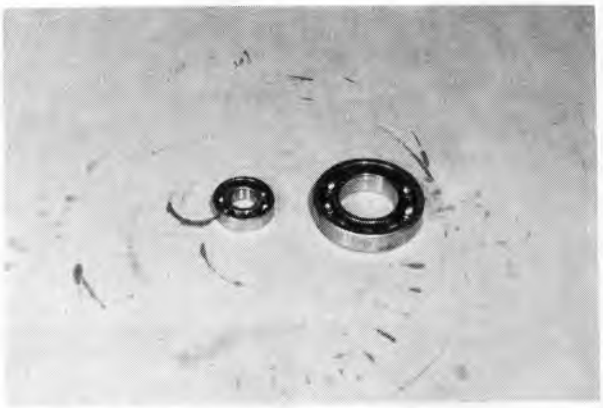

Fig. 3-62 Bearing Inspection

7. Stator wheel rear collar, turbine front washer.
   (1) Damage

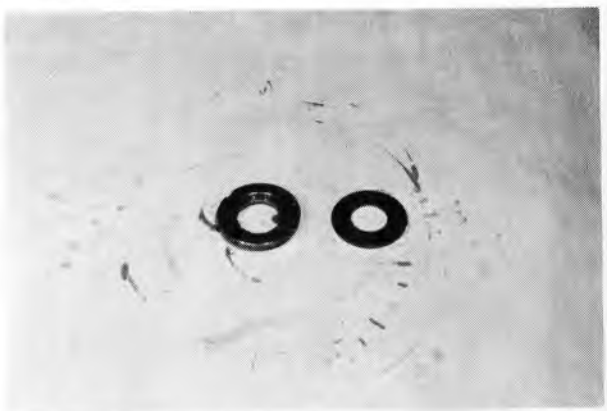

Fig. 3-63 Collar and Washer Inspection

8. Stator
   (1) Stator wheel
      a. Cracks, damage
   (2) One-way clutch inner race, outer race
      a. Cracks, damage
   (3) Stator thrust washer, one-way clutch inner race thrust washer.
      a. Damage

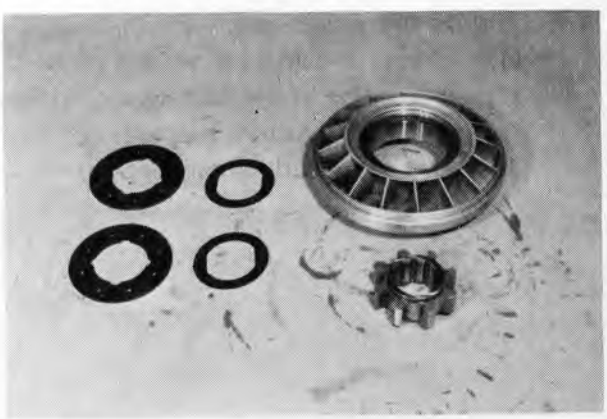

Fig. 3-64 Stator Inspection (1)

(4) Rollers, springs, caps.
a. Damages



Fig. 3-65 Stator Inspection (2)

ASSEMBLY

1. Assemble the bearing to the pump impeller extension.
   (1) Bearing
   SST used 09608-30011

   Caution:
   Take care not to damge the tension lugs.



Fig. 3-66 Installing Bearing

   (2) Snap ring



Fig. 3-67 Installing Snap Ring

2. Assemble the pump impeller extension.
   (1) Pump impeller.
   (2) Pump impeller extension
   SST used 09370-10410-71

   Caution:
   Apply grease on the "O" ring before installing.

   (3) Set bolts



Fig. 3-68 Assembling Extension

3. Assemble the stator.

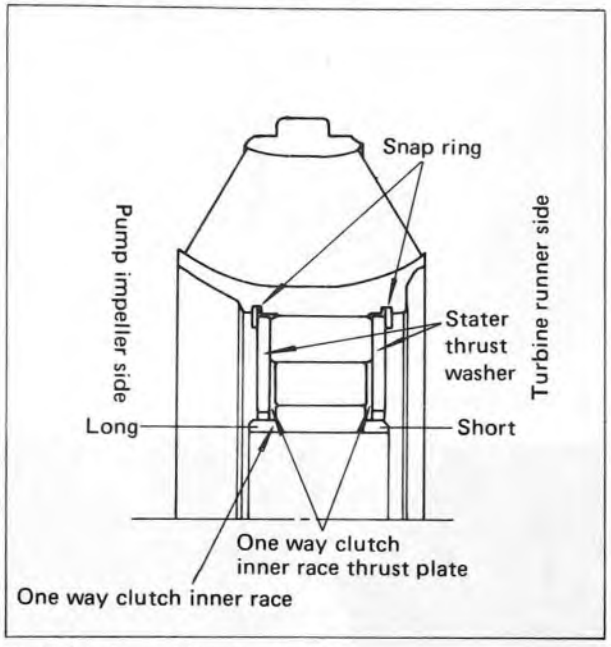

Fig 3-69 Assembling Stator (1)

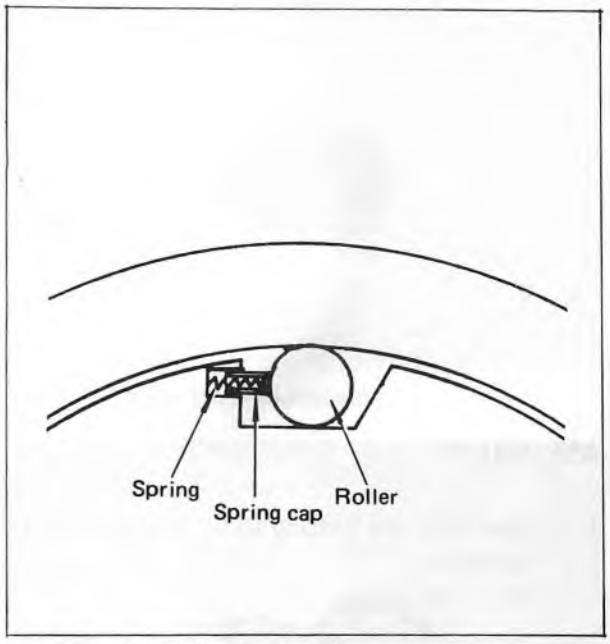

Fig. 3-70 Assembling Stator (2)

Caution:
Apply torque converter fluid thoroughly on all parts before assembling.

(1) Assemble the stator thrust washer on pump impeller side.
   a. Thrust washer
   b. Snap ring



Fig. 3-71 Assembling Thrust Washer

(2) Assemble the one-way clutch inner race.
   a. One-way clutch inner race thrust plates.
   b. One-way clutch inner race

Essential:
The inner race has directivity. When assembling, make sure to position it so that the wider shoulder side is directed toward the pump impeller side and narrower shoulder side toward the turbine runner.

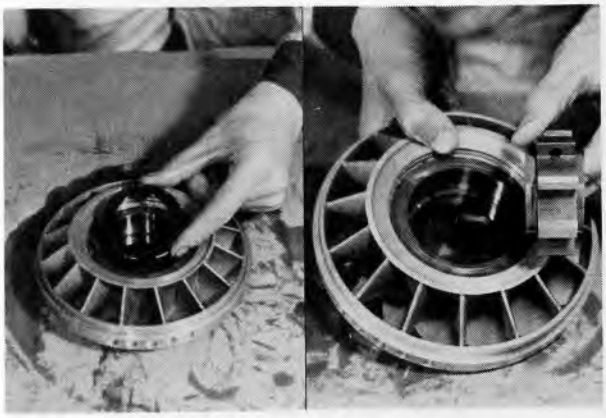

Fig. 3-72 Assembling Inner Thrust

(3) Use tweezers and assemble the spring caps, springs, and rollers.



Fig. 3-73 Assembling Rollers

(4) Check the stator turning condition.

Essential:
After assembling the rollers, hold the inner race stationary and check the stator rotation. When pressure is applied toward the curved vane outer side, the stator wheel should turn (in clockwise direction). When pressure is applied toward the curved vane inner side, the stator wheel should not turn. (Should not turn in counterclockwise direction).

A: Turn
B: No turn
C: Settle

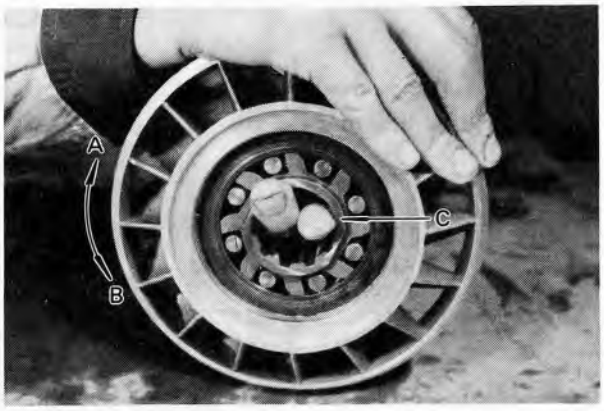

Fig. 3-74 Checking Stator Rotation

(5) Assemble the one-way clutch inner race thrust plate.
(6) Assemble the startor thrust washer.
(7) Install the snap ring.

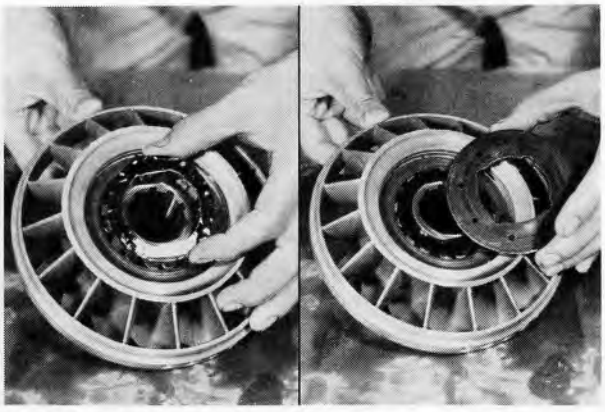

Fig. 3-75 Assembling Plate & Washer

(8) Install the stator on the stator shaft, and rotate by hand to check that it turns and locks.
A: Rotates
B: Does not rotate

Essential:
If it is possible to turn the stator in lock direction by hand, replace the stator assy.

A: Turn
B: No turn

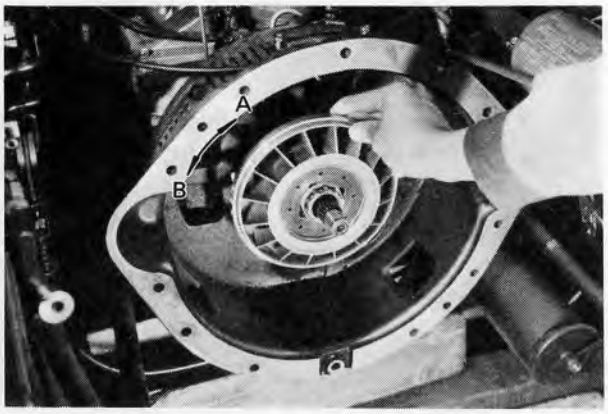

Fig. 3-76 Checking Stator Assy Action

4. Assemble the stator wheel rear collar and stator assy to the pump bearing sub-assy.
   (1) Set the pump impeller so that its inner side faces upward.
   (2) Stator wheel rear collar.

   A : Oil grooves

   Caution:
   Have the grooved side facing the stator (upward).



Fig. 3-77 Assembling Rear Collar

A: Pumps impeller side
B: Turbine runner side

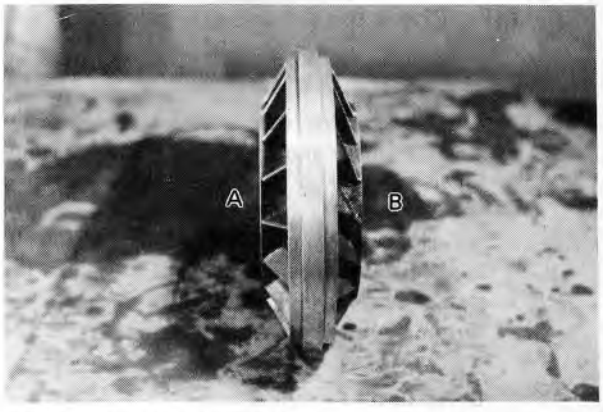

Fig. 3-78 Stator Directivity

   (3) Stator assy.

   Caution:
   - Stator has directivity so make sure to position it correctly.
   - After assembling the stator, rotate the stator to make sure that there is no interference.

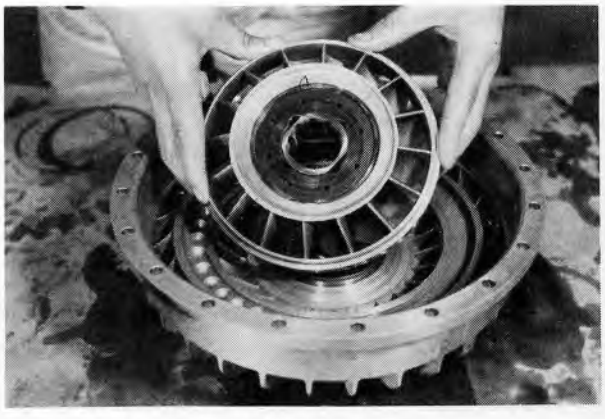

Fig. 3-79 Assembling Stator

5. Assemble the turbine runner sub-assy.

   Caution:
   If turbine runner or turbine runner hub had been replaced, hub should be installed on the hub by riveting.



Fig. 3-80 Assembling Turbine Runner

SELECTION OF TURBINE FRONT WASHER

6. Assemble the turbine front washer.
   (1) Install SST 09230-30150-71 on turbine runner.



Fig. 3-81 Installing SST

   (2) Install the pump impeller disc on the impeller, and with thickness gage, measure the clearance A at 3 places on the circumference.

Caution:
Have the "O" ring on pump impeller disc and pilot bearing removed.

   (3) Select the front washer from the following table to conform with the measured results of A clearance.

Front Washer Part No.	Thickness mm	Clearance A mm
32291-12010-71	2.8	0.6 ~ 0.9
32292-12010-71	3.1	0.3 ~ 0.5
32293-12010-71	3.4	0.1 ~ 0.2
32294-12010-71	3.7	0

Example: If clearance A is 0.5 mm, use 3.1 mm front washer.

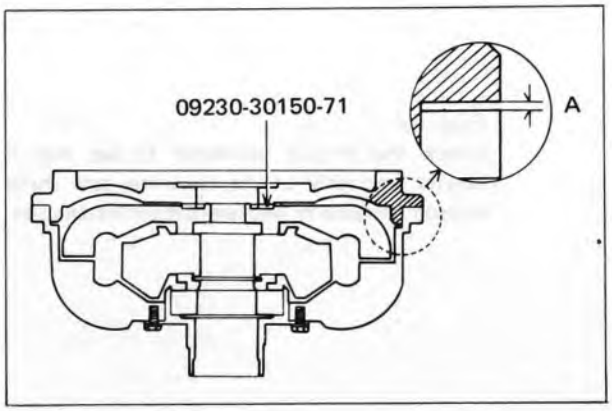

Fig. 3-82 Part A

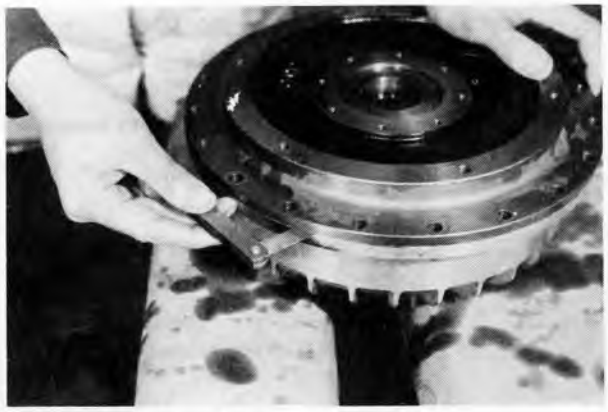

Fig. 3-83 Measuring A Dimension

7. Install the front washer.

8. Assemble the pump impeller disc.
   T = 1.5 ~ 2.0 kg-m
   (10.8 ~ 14.4 ft-lb)

Caution:
- **Apply grease on "O" ring before installing.**
- **Make sure to align the aligning marks before assembling.**
- **After assembling the converter assy, rotate the pump inpeller by fingers to make sure that there is no interference.**

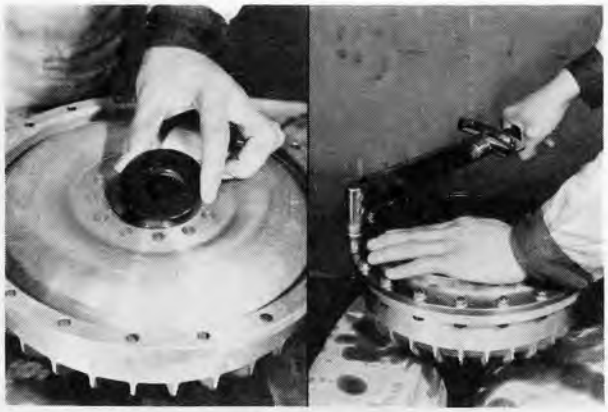

Fig. 3-84 Assembling Pump Impeller Disc

INSTALLATION

1. Install the torque converter.
   (1) Install the torque converter assy to the stator shaft.
   (2) Pilot bearing
   SST used 09620-30010
   (3) Snap ring
   (4) Center piece

Caution:
Apply grease on "O" ring before installing.



Fig. 3-85 Installing Converter Assy

Essential:
Check the torque converter to see that it rotates smoothly as the converter assy shifts slightly forward or backward after installation.

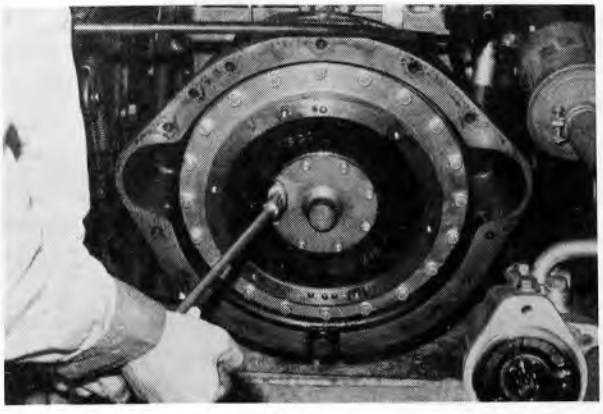

Fig. 3-86 Installing Center Piece

2. Install the engine.

Reference:
For installation procedure, refer to section on engine installation.



Fig. 3-87 Installing Engine

OIL PUMP

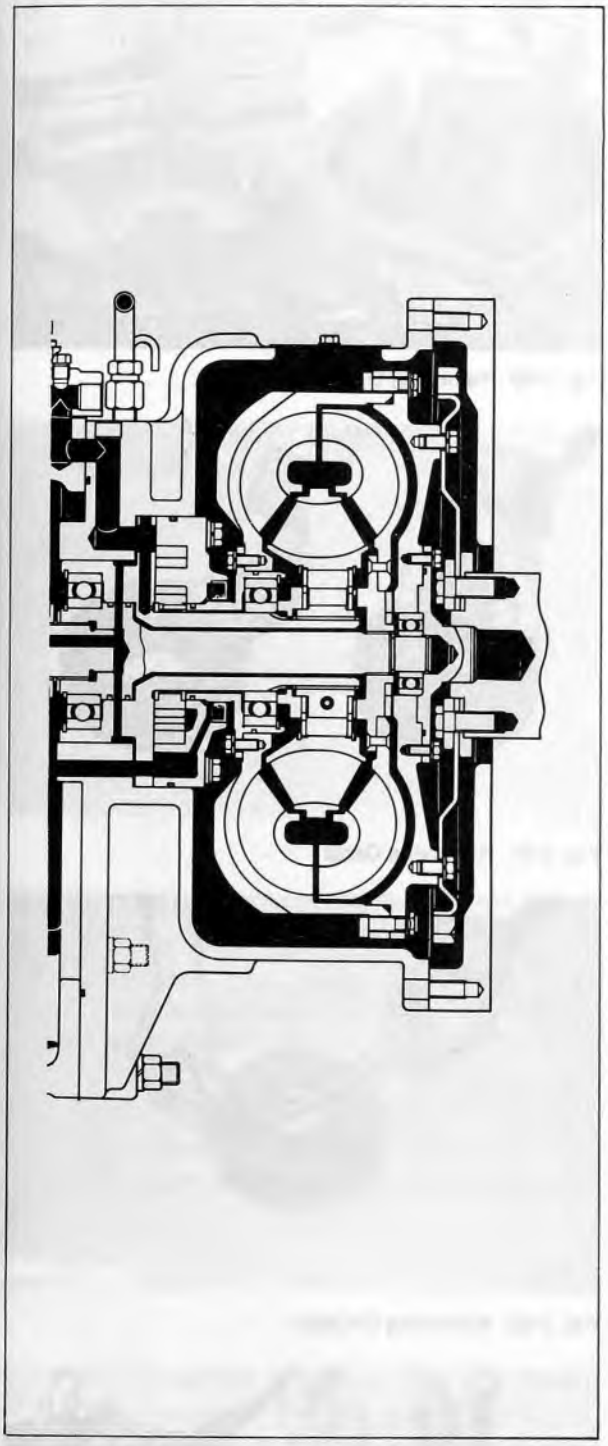

Fig. 3-88 Oil Pump Sectional View

REMOVAL

Reference:
The oil pump is removed after removing the torque converter. For procedures on removing the torque converter, refer to section on torque converter removal.

1. Remove the transmission housing.
   (1) Set nuts
   (2) Transmission housing.

Caution:
Be careful not to injure the stud bolts.

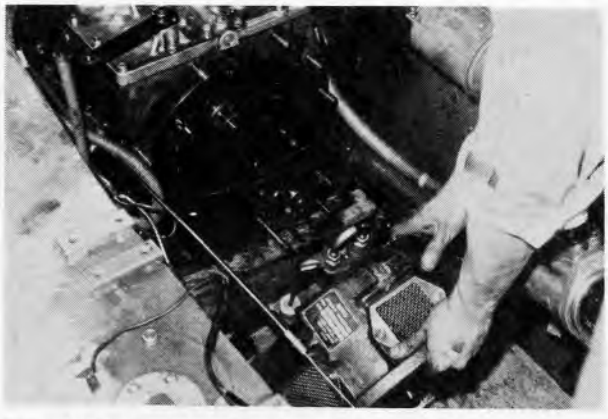

Fig. 3-89 Removing Housing

DESASSEMBLY

1. Remove the oil pump.
   (1) Set bolts
   (2) Oil pump assy
   SST used 09310-10160-71

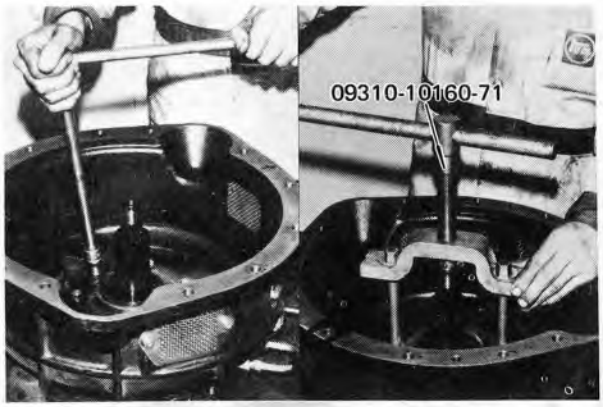

Fig. 3-90 Removing Oil Pump

   (3) Gears



Fig. 3-91 Removing Geras

   (4) Oil seal

   Caution:
   Remove the oil seal only when found necessary.



Fig. 3-92 Removing Oil Seal

2. Remove the input shaft.
   (1) Snap ring
   (2) Input shaft

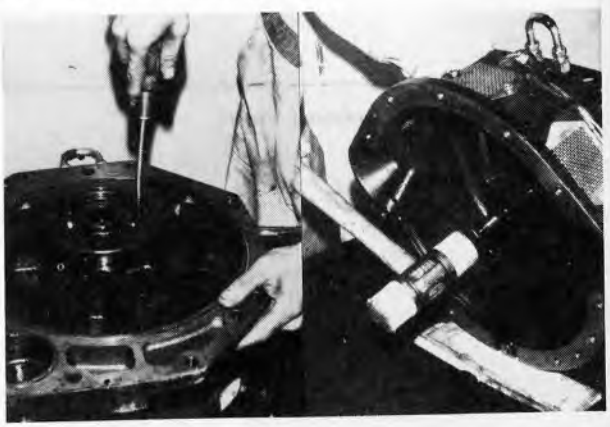

Fig. 3-93 Removing Input Shaft

(3) Remove the bearing.
a. Snap ring
b. Bearing

Caution:
Use SST if bearing is tight fit.
SST used 09950-20012

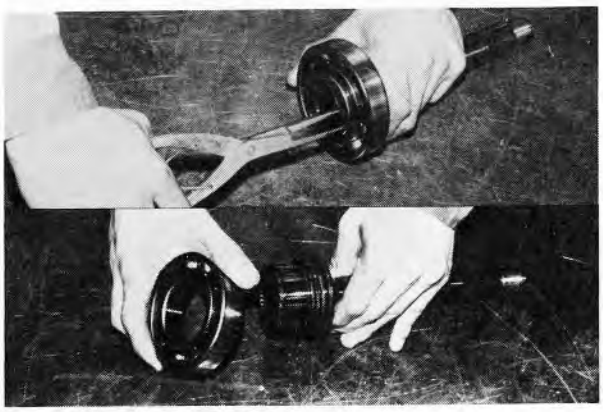

Fig. 3-94 Removing Bearing

3. Remove the stator shaft.
SST used 09608-30011

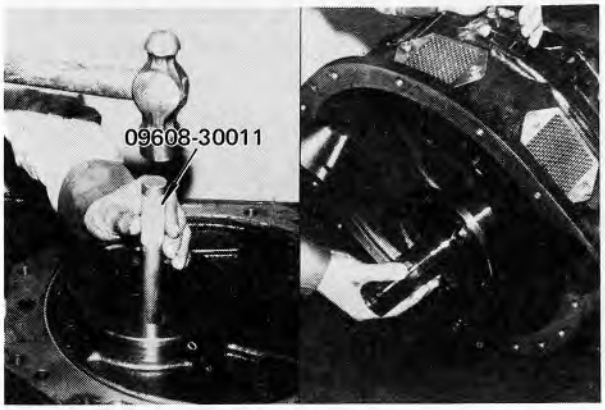

Fig. 3-95 Removing Stator Shaft

INSPECTION

Caution:
Thoroughly wash all parts with solvent before starting inspection.

1. Oil pump body, oil pump gears
(1) Cracks and damages in oil pump body
(2) Damage in drive and driven gears

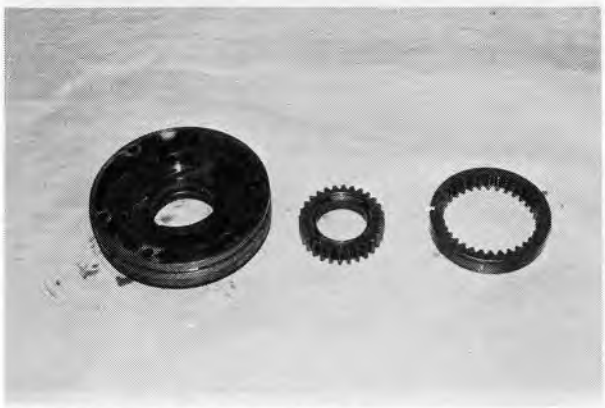

Fig. 3-96 Oil Pump Inspection (1)

(3) Assemble the drive gear and driven gear into the oil pump body and measure the clearances at the various parts.
a. Drive gear to pump body clearance
Limit 0.4 mm (0.016 in)



Fig. 3-97 Oil Pump Inspection (2)

b. Driven gear to crescent clearance
Limit 0.3 mm (0.012 in)



Fig. 3-98 Oil Pump Inspection (3)

c. Drive gear to crescent clearance
Limit 0.3 mm (0.012 in)



Fig. 3-99 Oil Pump Inspection (4)

d. Clearance between pump body surface and gears
Limit 0.2 mm (0.008 in)



Fig. 3-100 Oil Pump Inspection (5)

(4) Measure the clearance between the pump drive gear bushing and stator shaft.
Limit 0.15 mm (0.006 in)

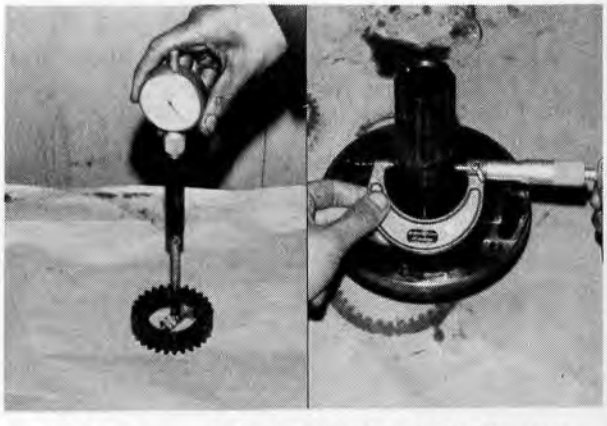

Fig. 3-101 Measuring Bushing Bore & Shaft Diameter

2. Stator shaft
   (1) Wear and damages in splines
   (2) Clogged orifices
   (3) Wear and damages in surface sliding against oil pump gears

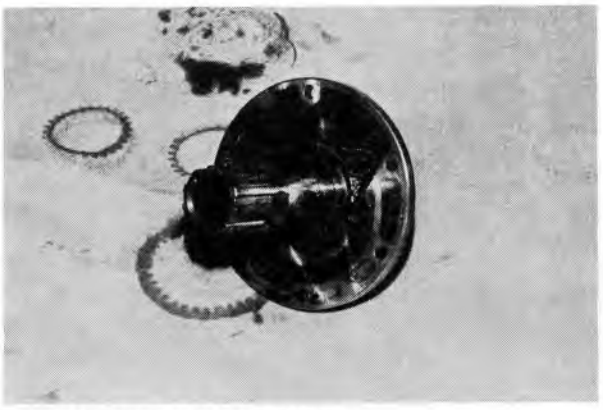

Fig. 3-102 Stator Shaft Inspection

3. Input shaft
   (1) Wear and damages in splines
   (2) Clogged orifices
   (3) Wear and damages in seal ring

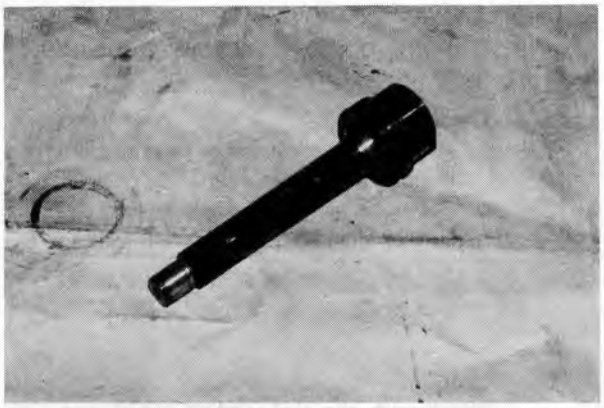

Fig. 3-103 Input Shaft Inspection

4. Bearing
   (1) Wear and rotating condition



Fig. 3-104 Bearing Inspection

ASSEMBLY

1. Assemble the stator shaft and oil pump to the transmission housing.
   (1) Stator shaft

   Caution:
   Assemble with the oil holes and bolt holes properly aligned.



Fig. 3-105 Assembling Stator Shaft

   (2) Assemble the pump gears into the oil pump body, and install as one unit.

   Caution:
   - **Apply torque converter fluid to body and gears before assembling.**
   - **Set bolts are not equally spaced so make sure to align all holes before installing.**

   (3) Set bolts.

   Caution:
   Install with the seal washers positioned such that their rubber or coated sides are faced toward the pump body.

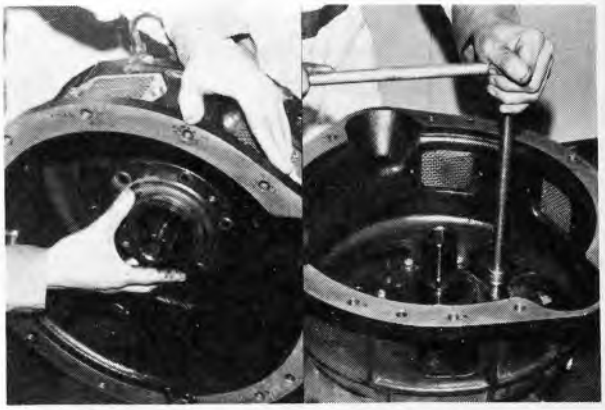

Fig. 3-106 Assembling Pump Body & Gears

2. Install the input shaft.
   (1) Bearing



Fig. 3-107 Installing Bearing

   (2) Snap ring
   (3) Seal ring

   Caution:
   - **Carefully insert the seal ring into the input shaft groove, using care not to break it. Close the ring open ends.**
   - **Apply grease to the ring and groove.**



Fig. 3-108 Installing Snap Ring

(4) Input shaft
(5) Snap ring

Caution:
- Drive in the seal ring little by little, using care not to break it.
- After assembling, fill torque converter fluid into the bearings and rotate the input shaft 5 or 6 times.

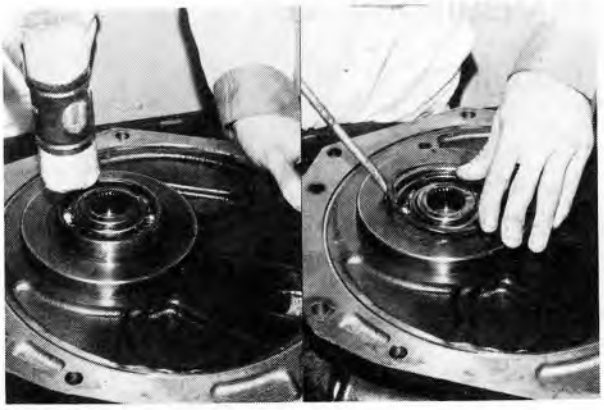

Fig. 3-109 Installing Input Shaft

INSTALLATION

Perform the removal in reverse order.

Essential:
- Apply grease on all "O" rings before installing.
- For procedures on installing the torque converter and engine, refer to the respective sections.

TRANSMISSION ASSY

REMOVAL

1. Remove the engine, radiator, etc.

   Reference:
   For procedures on removing the engine, radiator, and related parts, refer to the section on engine removal.

2. Drain out the differential oil.
   (1) Drain plug
   Differential oil 5 ℓ (1.32 US gal)

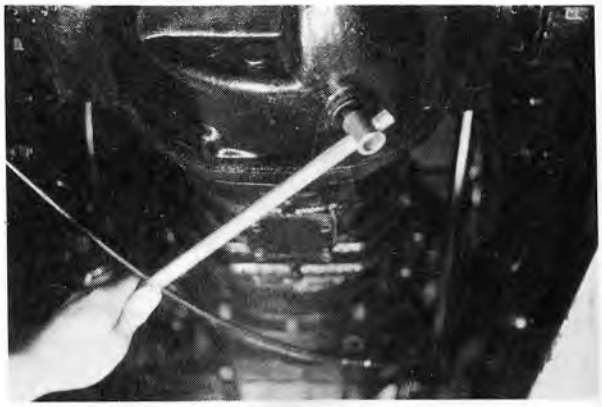

Fig. 3-110 Draining Differential Oil

3. Remove the steering wheel.
   SST used 09609-20010

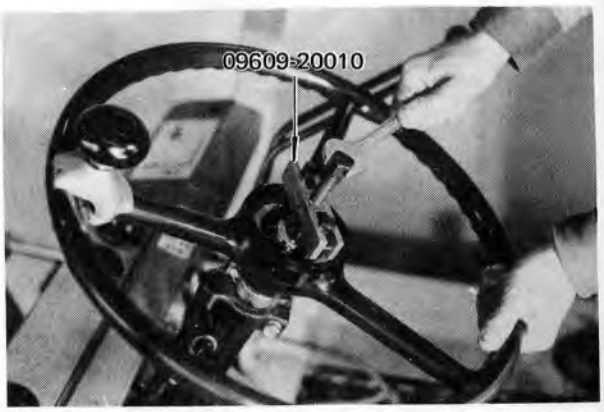

Fig. 3-111 Removing Steering Wheel

4. Remove the front toeboard.



Fig. 3-112 Removing Front Toeboard

5. Disconnect the inching rod.



Fig. 3-113 Disconnecting Inching Rod

6. Disconnect shaft lever connecting rod.



Fig. 3-114 Disconnecting Shift Lever Connecting Rod

7. Pull out the axle shaft.

(In case of 1.5 and 1.75 ton vehicles)
(1) Jack up the vehicle and remove the front tire.



Fig. 3-115 Removing Tire (1.5, 1.75-ton)

(2) Front axle shaft



Fig. 3-116 Removing Axle Shaft

(In case of 1, 1.35, 2, 2.25, 2.5, 2.75, 3 ton vehicles)
(3) Front axle shaft



Fig. 3-117 Removing Axle Shaft

8. Remove the differential housing set bolts.

Essential:
Do not remove all set bolts. Leave 1 or 2 of the easy removable bolts for safety.

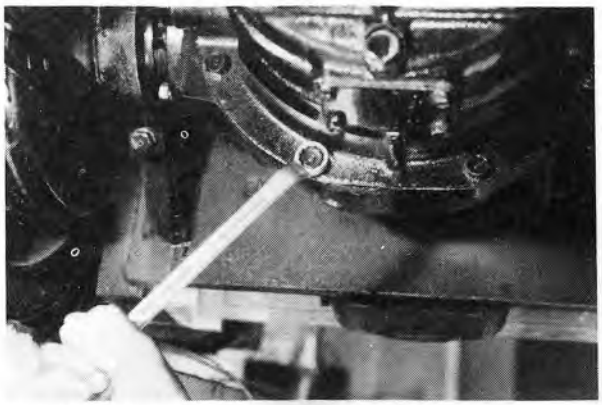

Fig. 3-118 Removing Differential Set Bolts

9. Remove the engine and transmission assy.

(1) SST used 09010-20120-71

(2) SST used 09010-20110-71
(when using hoist)
SST used 09020-20110-71
(when using lift)

(3) To make removal and installation easier, slightly lift up the torque converter and transmission, and slightly tilt the differential housing.

Caution:
Be careful to overlift.

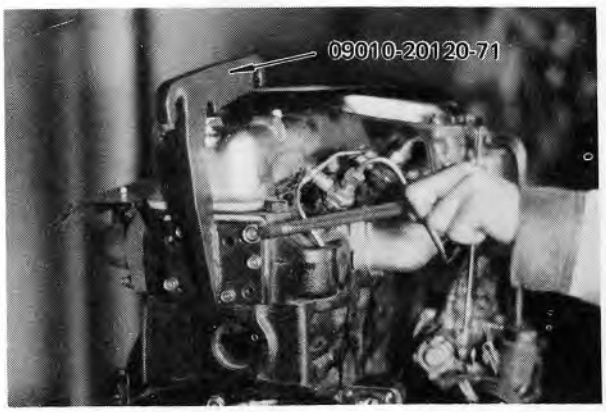

Fig. 3-119 Mounting SST

(4) Remove the remaining differential housing set bolts.

(5) Engine and transmission assy

Caution:
- **Have the parking brake cable clamp on transmission underside removed beforehand.**
- **Carefully pass through the oil pump.**
- **When removing, be very careful not to strike against any object in the vicinity.**

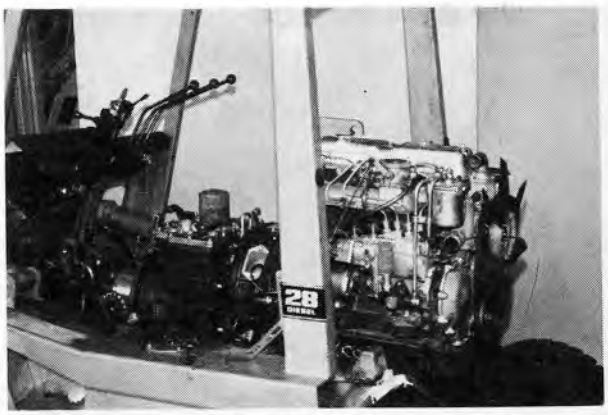

Fig. 3-120 Removing Engine & Torque Converter

10. Drain out the torque converter oil.
(1) Drain plug
Oil capacity
13.2 ℓ
(3.5 US gal)



Fig. 3-121 Draining Out Oil

11. Remove the drive plate set bolts.
    (1) Cover
    (2) Drive plate set bolts (6 ea)

    Caution:
    Turn the flywheel by rotating the clutch shaft pulley set bolts.



Fig. 3-122 Removing Set Bolts

12. Separate the engine from the torque converter.
    (1) Set nuts
    (2) Separation



Fig. 3-123 Engine and Torque Converter Separation

13. Remove the torque converter upper cover.
    (1) Set bolts
    (2) Upper cover

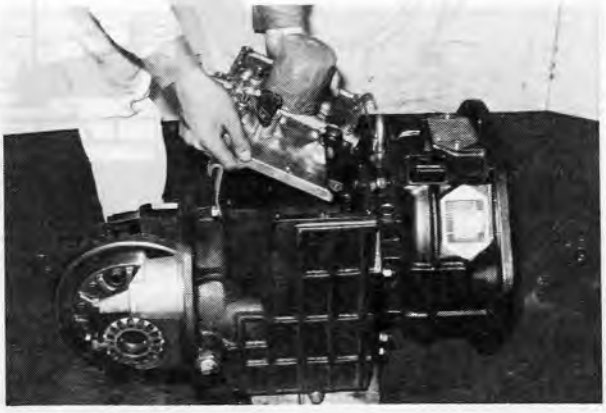

Fig. 3-124 Removing Upper Cover

14. Separate the transmission housing from the transmission case.
    (1) Set bolts
    (2) Separation



Fig. 3-125 Separation

DISASSEMBLY

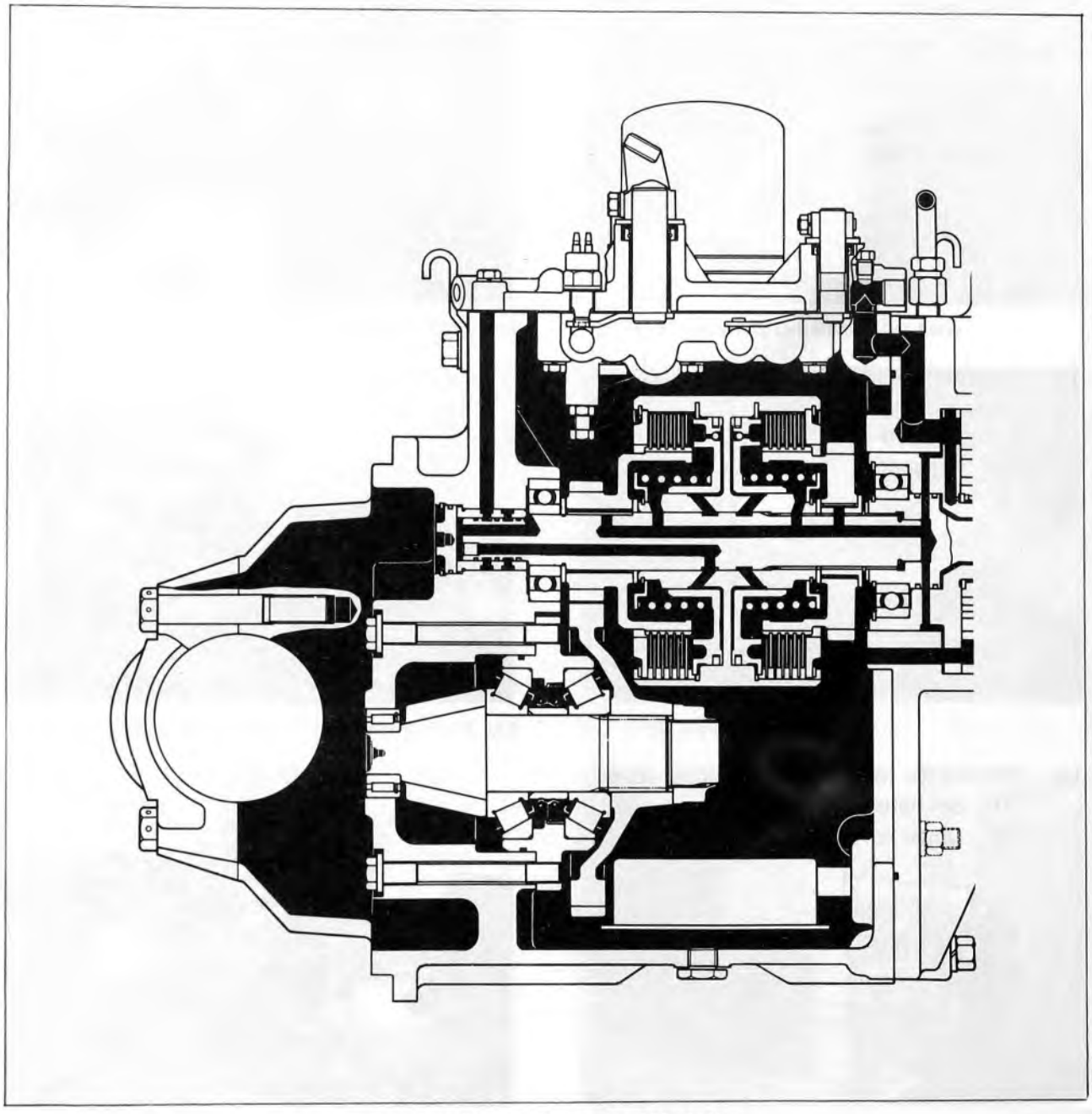

Fig. 3-126 Transmission Sectional View

1. Remove the suction filter.
   (1) Filter lock set bolt
   (2) Filter lock
   (3) Suction filter
   (4) "O" ring



Fig. 3-127 Removing Suction Filter

2. Remove the idler gear.
   (1) Shaft lock set bolt
   (2) Shaft lock
   (3) Idler gear shaft
   (4) Idler gear, washer, idler gear spacer, needle bearing, shaft spacer.

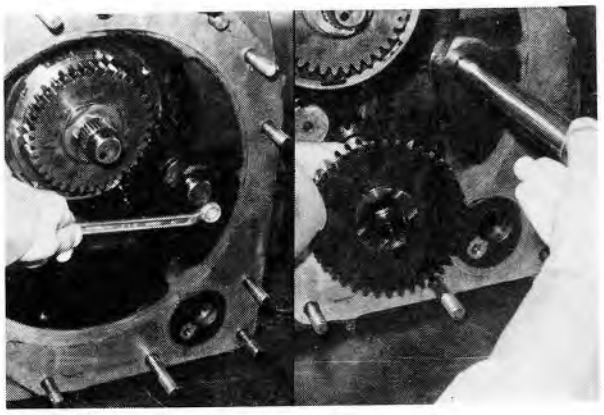

Fig. 3-128 Removing Idler Gear

3. Remove the clutch assy.
   (1) Snap ring
   (2) Main shaft cap
   SST used 09810-20170-71

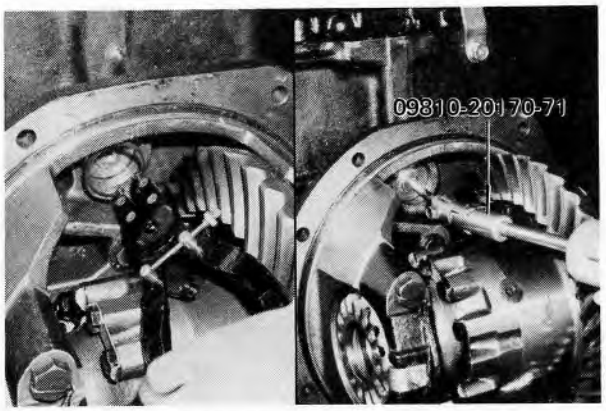

Fig. 3-129 Removing Cap

   (3) From the differential side, strike the main shaft with a brass rod so as to drive the clutch assy into the transmission case.

Caution:
- **When driving out the clutch assy, use care not to damage the main shaft collar and main shaft ring.**
- **When taking out the clutch assy, be careful not to drop the clutch assy.**

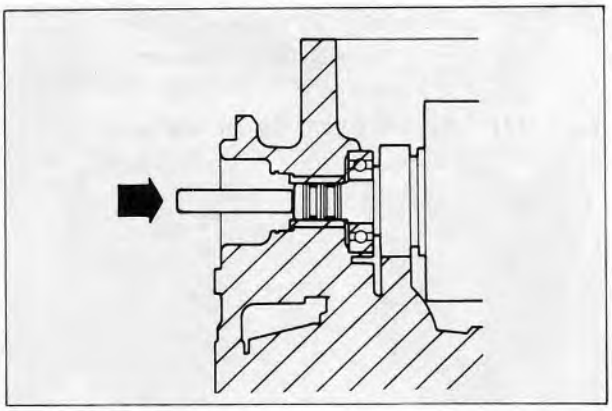

Fig. 3-130 Removing Clutch Assy

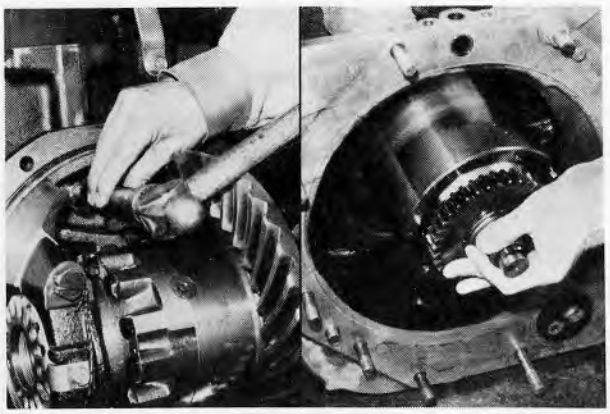

Fig. 3-131 Removing Clutch Assy

4. Remove the main shaft collar.
SST used 09620-30010

Caution:
There is no necessity of removing the main shaft collar except replacement.

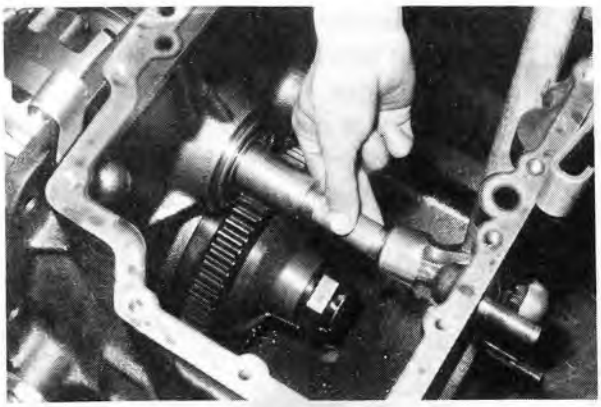

Fig. 3-132 Removing Main Shaft Collar

5. Remove the main shaft and gears.
   (1) Wave washer
   (2) Snap ring
   (3) Use plastic hammer and drive out the main shaft from forward gear side.

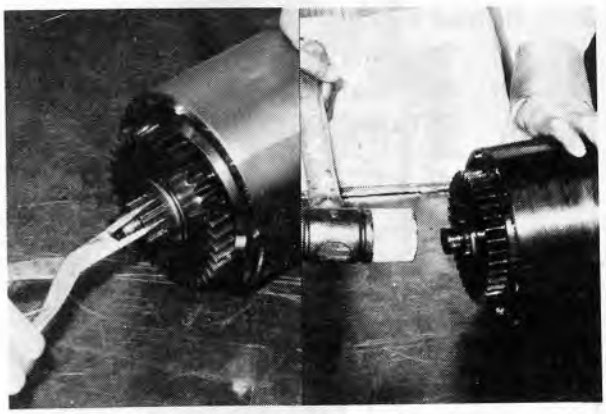

Fig. 3-133 Driving Out Main Shaft

   (4) Reverse gear
   (5) Reverse gear thrust washer
   (6) Forward gear
   (7) Forward gear thrust washer

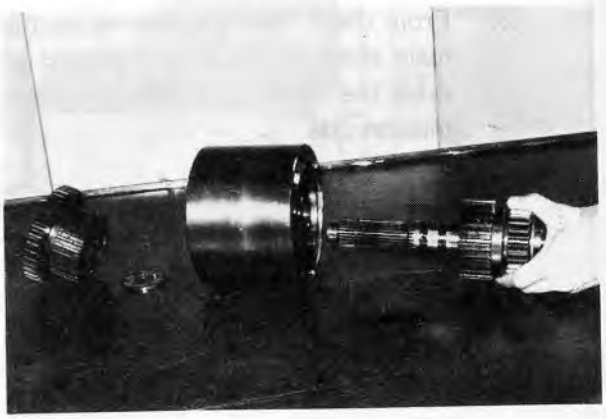

Fig. 3-134 Removing Gears

   (8) Forward gear collar

Caution:
There is no necessity of removing the reverse gear bushing except replacement.



Fig. 3-135 Removing Collar

6. Disassemble the clutch drum assy.
   (1) Snap ring
   (2) Clutch backing plate



Fig. 3-136 Removing Snap Ring

   (3) Drive plates and driven plates

Essential:
There are two kinds of drive plates, No.1 and No.2. These should be clearly differentiated and stored.



Fig. 3-137 Removing Plates

   (4) Remove the clutch return spring.
      a. Mount the SST.
         SST used 09220-30200-71
      b. Snap ring
      c. Plate and spring

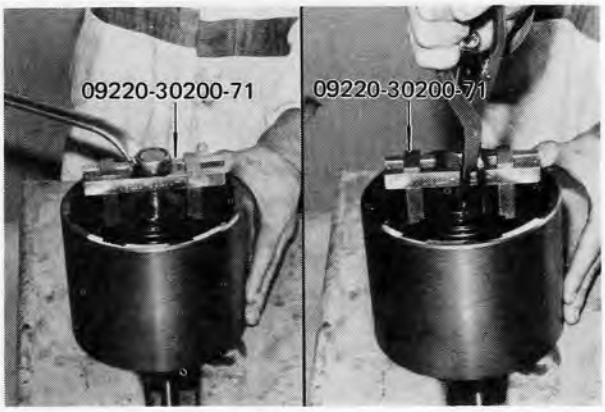

Fig. 3-138 Removing Snap Ring



Fig. 3-139 Removing Spring

(5) Pistion sub-assy



Fig. 3-140 Removing Piston Assy

(6) Seal ring

Caution:
For drive pinion, ring gear, and other parts related to the differential, refer to Transmission and Differential section.



Fig. 3-141 Removing Seal Ring

INSPECTION

1. Idler gear and related parts
   (1) Cracks and damages in gears
   (2) Damage in needle bearings
   (3) Damage in idler shaft
   (4) Wear in thrust washer
   Wear limit 1.9 mm (0.075 in)

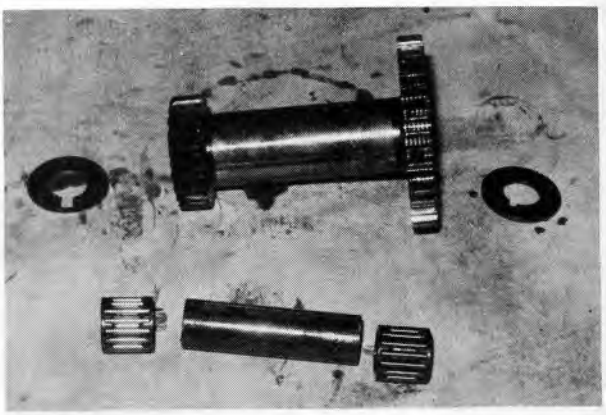

Fig. 3-142 Idler Gear Inspection



Fig. 3-143 Inspecting Thrust Washer

2. Suction filter
   (1) Clogging
   (2) Damages in wire mesh

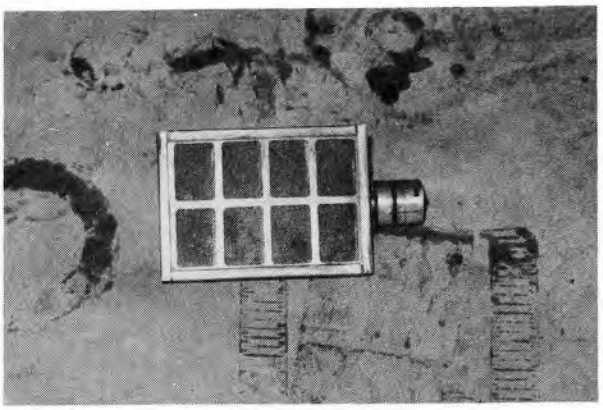

Fig. 3-144 Suction Filter Inspection

3. Forward gear and related parts
   (1) Forward gear
      a. Cracks, damages
      b. Clogged orifice
      c. Wear in forward gear bushing
         Bore limit 40.36 mm
         (1.589 in)
   (2) Forward gear collar
      a. Wear, damage



Fig. 3-145 Forward Gear Inspection

   (3) Thrust washer
      a. Wear, damage
         Wear limit 2.8 mm (0.110 in)



Fig. 3-146 Inspecting Thrust Washer

4. Reverse gear and related parts
   (1) Reverse gear
      a. Cracks, damages
      b. Wear in reverse gear bushing
         Bore limit 34.36 mm
         (1.353 in)

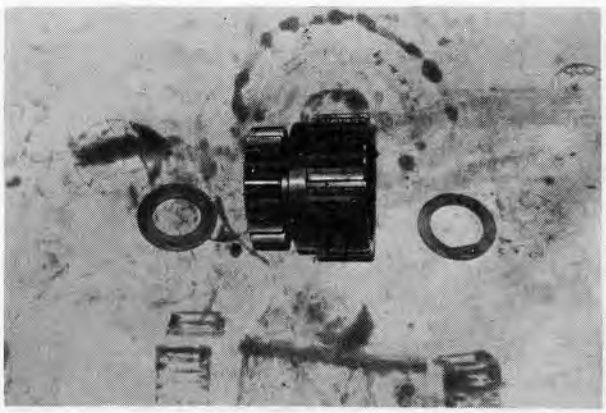

Fig. 3-147 Reverse Gear Inspection

(2) Reverse gear thrust washer
a. Wear, damages
Wear limit 2.8 mm (0.110 in)



Fig. 3-148 Inspecting Thrust Washer

5. Main shaft
(1) Cracks and damage in main shaft
(2) Damage in splines
(3) Clogged oil passages

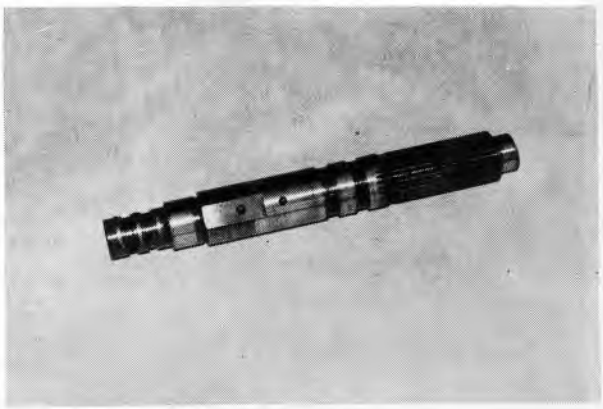

Fig. 3-149 Main Shaft Inspection

(4) Measure seal ring side clearance
Clearance limit 0.2 mm (0.008 in)



Fig. 3-150 Inspecting Clearance

6. Main shaft collar
(1) Interior damage or clogging

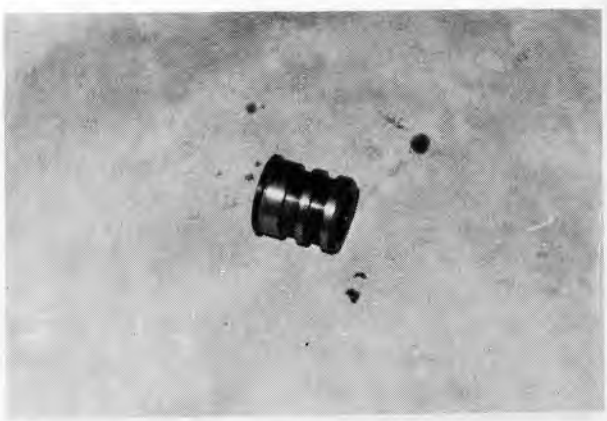

Fig. 3-151 Main Shaft Collar Inspection

7. Clutch drum assy.
   (1) Pressure, drive, driven plates

Caution:
If the plates have been badly discolored by overheating, replace the drive and driven plates with new set of plates.

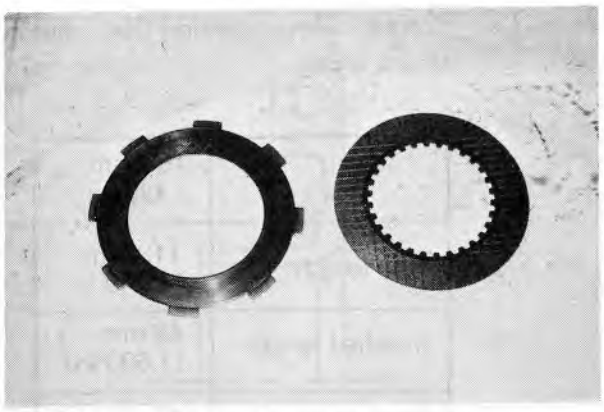

Fig. 3-152 Clutch Plate Inspection

   (2) Wear and damages in clutch backing plate
   4.0 mm (0.157 in)
   4.5 mm (0.177 in)
   (use by selection)



Fig. 3-153 Inspecting Pressure Plate

   (3) Wear, damages, burning, distortion, discoloring in drive plates
   Standard thickness
   1.8 mm (0.071 in)
   Service limit
   1.6 mm (0.063 in)

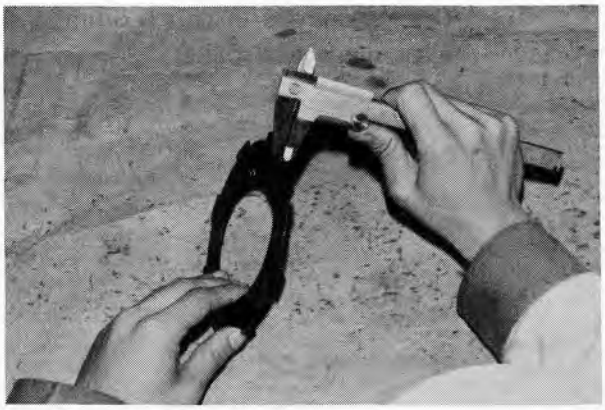

Fig. 3-154 Inspecting Drive Plate

   (4) Wear, damages, burning, distortion, discoloring in driven plates
   Standard thickness
   2.9 mm (0.114 in)
   Service limit
   2.6 mm (0.102 in)

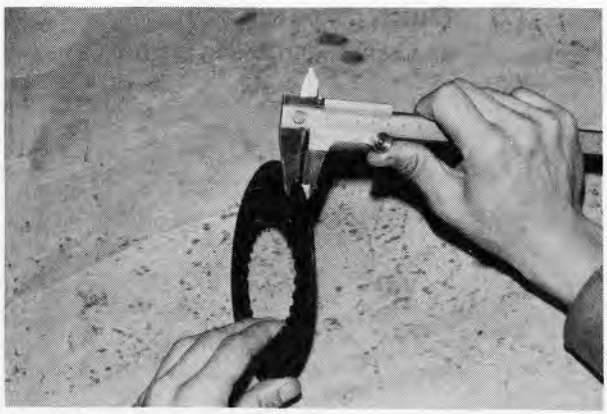

Fig. 3-155 Inspecting Driven Plate

(5) Cracks, loss-of-tension in clutch return spring

	150 mm Clutch
Free length	113 mm (4.449 in)
Installed length	43 mm (1.693 in)
Squareness	2° max.
Installed load	70 kg (154 lb)
Free length limit	103 mm (4.055 in)

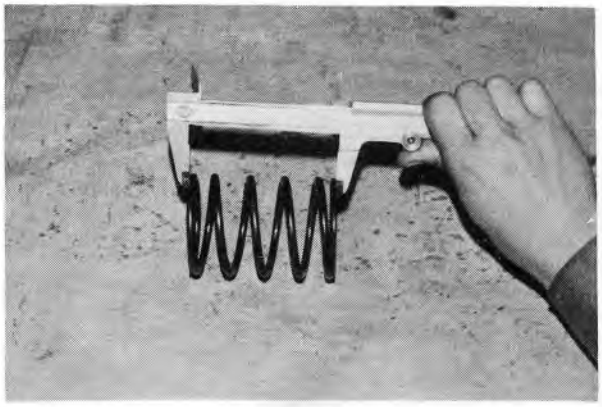

Fig. 3-156 Inspecting Spring (1)

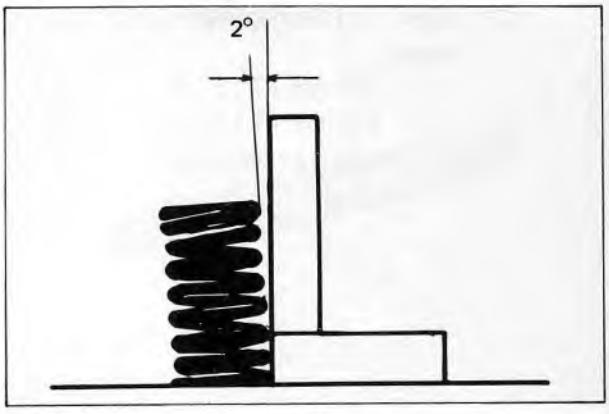

Fig. 3-157 Inspecting Spring (2)

(6) Cracks, damage in clutch drum, and wear, damage in splines



Fig. 3-158 Clutch Drum Inspection

(7) Clutch piston sub-assy
a. Cracks, damage in piston



Fig. 3-159 Piston Inspection (1)

(2) Steel ball movement in piston

A : Steel ball

Essential:
Move the piston and inspect the steel ball check valve mechanism. Action is satisfactory if steel ball shifts.

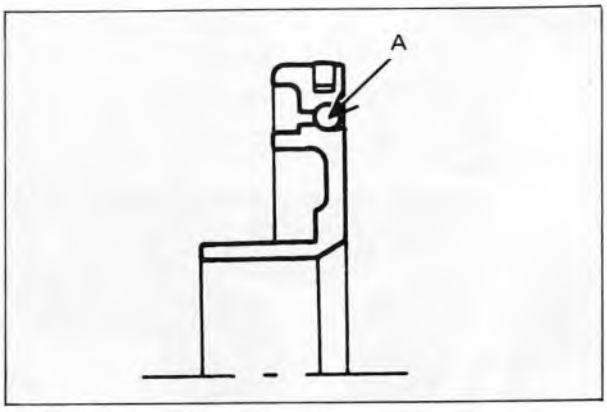

Fig. 3-160 Piston Inspection (2)

(3) Damage in seal ring and ring side clearance with piston

Side clearance limit
0.15 mm (0.006 in)



Fig. 3-161 Inspecting Clearance

ASSEMBLY

1. Assemble the clutch drum assy.

Caution:
Thoroughly wash all parts in torque coverter fluid before assembling.



Fig. 3-162 Assembling Seal Ring

(1) Assemble the seal ring to the piston.

Caution:
Assemble with side punched with letter "R" faced toward the pressure side. Drop converter fluid in the seal ring groove and turn the seal ring 2 or 3 times.

A: Oil Pressure side

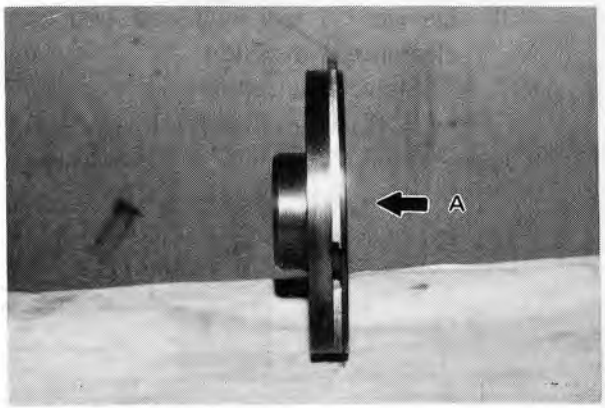

Fig. 3-163 Piston

(2) Assemble the clutch piston sub-assy to the drum.
   a. Set the clutch piston, spring, spring retainer, and snap ring in the drum.
   b. Mount SST-09220-30200-71 and tighten the bolt slightly so as to apply pressure on the srping.

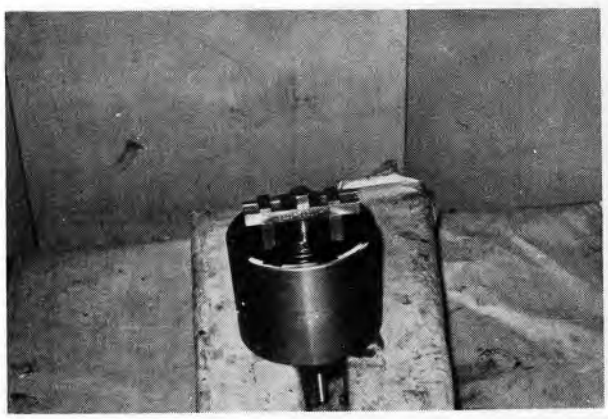

Fig. 3-164 Setting S.S.T

   c. Use a screwdriver, and while pressing the seal ring, fit in the piston.



Fig. 3-165 Assembling Piston (1)

d. Tighten the SST bolt further so as to compress the spring to the snap ring position, and then install the snap ring.



Fig. 3-166 Assembling Plate (2)

(3) Assemble the drive and driven plates.
a. Assemble in the sequence of drive plate, driven plate, drive plate, etc.

Drive plate thickness
Std: 1.8 mm (0.071 in)
Limit: 1.6 mm (0.063 in)
Driven plate thickness
Std: 2.9 mm (0.114 in)
Limit: 2.6 mm (0.102 in)

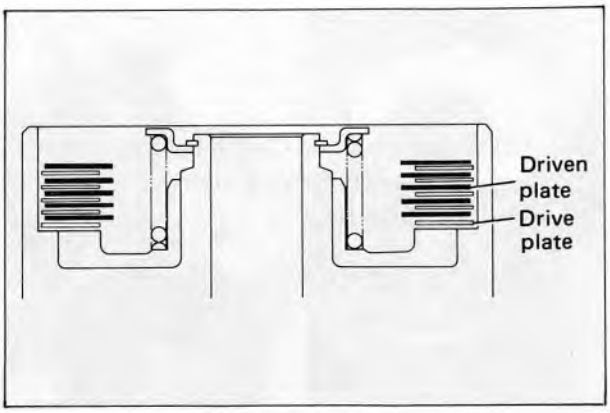

Fig. 3-167 Assembling Plates (150 mm Clutch)

(4) Adjust the clearance C between the clutch backing plate and driven plate by selecting proper thickness clutch backing plate.
a. Put a straightedge on the clutch drum upper side, and measure dimension A and dimension B with a vernier caliper.
b. Calculate dimension C by the following equation.
C = A – B
c. Assemble the clutch backing plate after selcting proper one by dimension C.

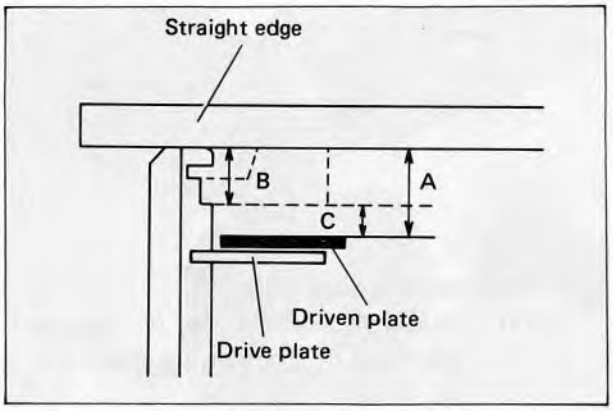

Fig. 3-168 Pressure Plate Selection

[150 mm dia. clutch]

Size C mm (in)	Clutch Backing Plate Used	Thickness
For 1.0 ~ 1.5 (0.039 ~ 0.059)	32437-12050-71	4.0 mm (0.157 in)
For 1.5 ~ 2.0 (0.059 ~ 0.079)	32438-12050-71	4.5 mm (0.177 in)

Std. clearance 1.0 ~ 1.5 mm (0.039 ~ 0.059 in)

Reference:

- The two kinds of pressure plates shown at right are available.
- If dimension C is not to standard value, the following are the possible causes.

When below 0.95 mm (0.037 in) .....
Drive plates warped
When above 2.05 mm (0.081 in) .....
Drive and driven plates worn

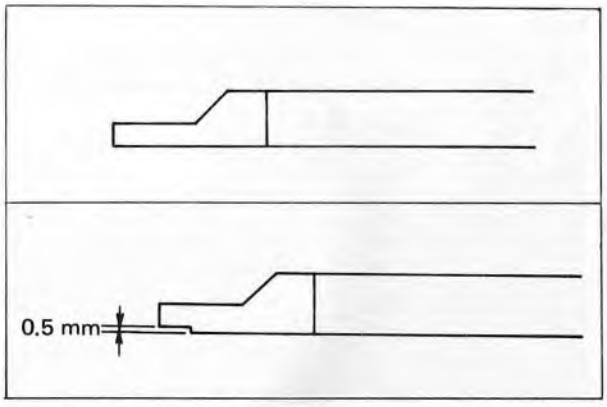

Fig. 3-169 Kinds of Pressure Plates

(5) Assemble the Clutch backing plate
a. Clutch backing plate
b. Snap ring



Fig. 3-170 Assembling Pressure Plate

2. Assemble the main shaft.
(1) Assemble the seal ring on the main shaft and fit together the ends.



Fig. 3-171 Assembling Seal Ring

Caution:

- Assemble the seal ring carefully so as not to damage it.
- After assembling, apply torque converter fluid liberally to the seal ring and groove, and turn the ring 2 or 3 times.

(2) Assemble the main shaft from the clutch drum reverse gear side.

Caution:
Assemble by fitting together the clutch drum splined part without valleys to the main shaft splined part without teeth.

A: Reverse gear side
B: Forward gear side C: Spline

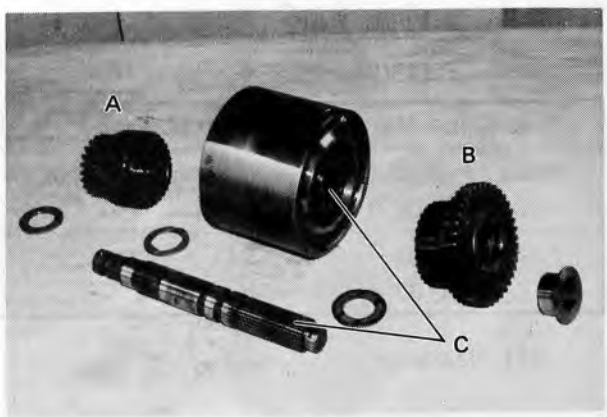

Fig. 3-172 Assembling Main Shaft

3. Assemble the gears.

Caution:
Apply torque converter to the washers, gear bores, and bushings beofre assembling.

A: Reverse gear side
B: Forward gear side

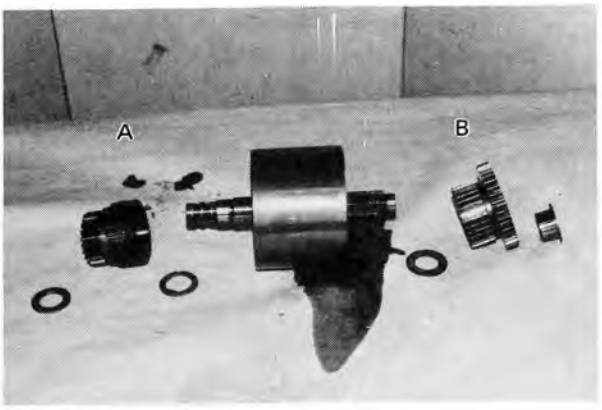

Fig. 3-173 Gear Directivity

(1) Assemble the forward gear.
a. Forward gear thrust washer.

Caution:
Assemble with oil groove surface faced toward gear.

b. Forward gear
c. Collar

Caution:
Assemble by fitting together the main shaft splined part without teeth and the collar splined part with one valley missing.

d. Snap ring
e. Wave washer

A : Oil groove

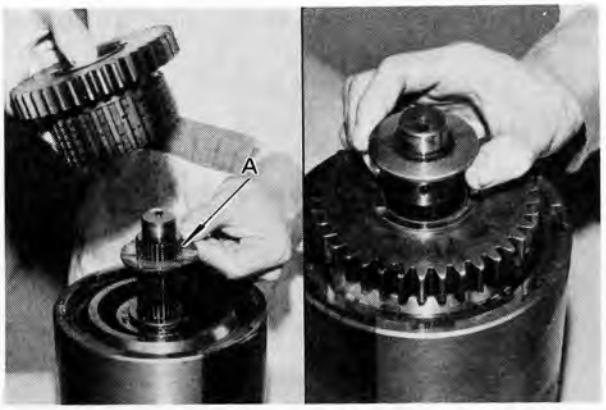

Fig. 3-174 Assembling Forward Gear & Collar



Fig. 3-175 Assembling Snap Ring

(2) Assemble the reverse gear
a. Reverse gear thrust washer

Caution:
Assemble with oil groove surface faced toward gear.

A: Oil groove



Fig. 3-176 Assembling Thust Washer

b. Reverse gear
c. Thrust washer



Fig. 3-177 Assembling Reverse Gear & Washer

4. Drive in the main shaft collar into transmission case.
SST used 09620-30010

Caution:
Apply torque converter fluid on the main shaft collar.

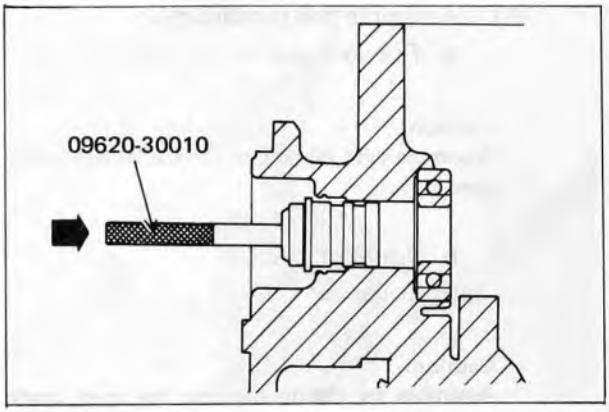

Fig. 3-178 Driving in Main Shaft Collar

5. Assemble the main shaft cap.
(1) Main shaft cap
SST used 09620-30010

Caution:
Use new "O" ring and be sure to grease it before installing.

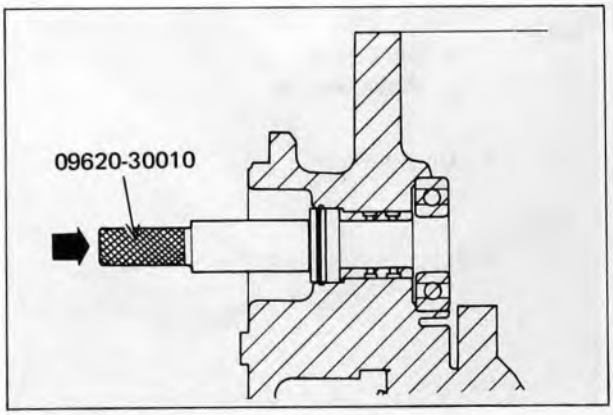

Fig. 3-179 Assembling Main Shaft Cap

(2) Snap ring

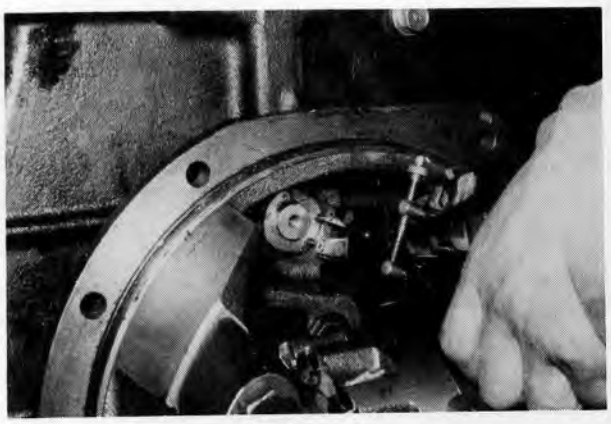

Fig. 3-180 Installing Snap Ring

6. Assemble the clutch assy to case.
   (1) Apply grease on the seal ring
   (2) Clutch assy



Fig. 3-181 Assembling Clutch Assy

7. Assemble the idler gear into case.
   (1) Grease the thrust washer and stick it on so that the stopper comes on the case side groove.
   (2) Apply grease on the needle bearings.
   (3) Needle bearing
   (4) Spacer
   (5) Needle bearing
   (6) Idler gear
   (7) Idler gear shaft

Caution:
- **Apply grease on the "O" rings**
- **Be sure to position shaft lock groove in correct direction.**

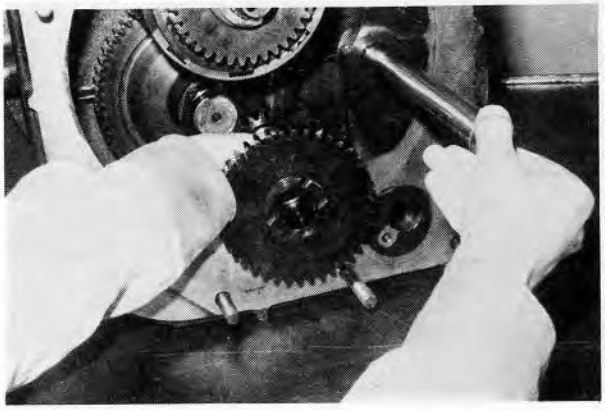

Fig. 3-182 Installing Idler Gear

8. (8) Measure the idler gear thrust clearance.

Place Measure	Thrust Clearance
Transmission case & washer	0.2 ~ 0.7 mm (0.008 ~ 0.028 in)

Caution:
If thrust clearance is too large, use new thrust washer.

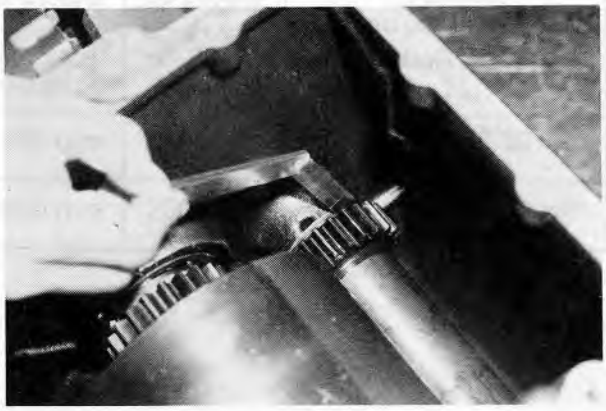

Fig. 3-183 Measuring Thrust Clearance

9. Install the shaft lock.
   (1) Shaft lock
   (2) Set bolt

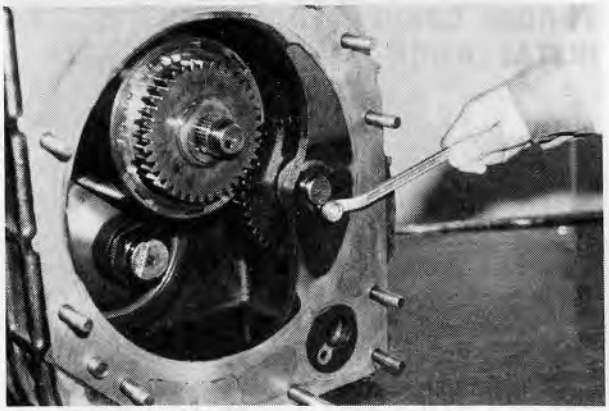

Fig. 3-184 Installing Shaft Lock

10. Install the suction filter.
    (1) "O" ring (apply grease)
    (2) Filter
    (3) Filter lock
    (4) Set bolt

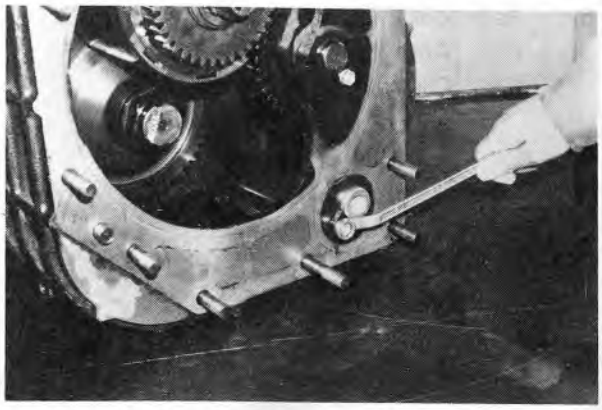

Fig. 3-185 Installing Filter

11. Install the transmission case.
    (1) Transmission housing
    (2) Set nuts

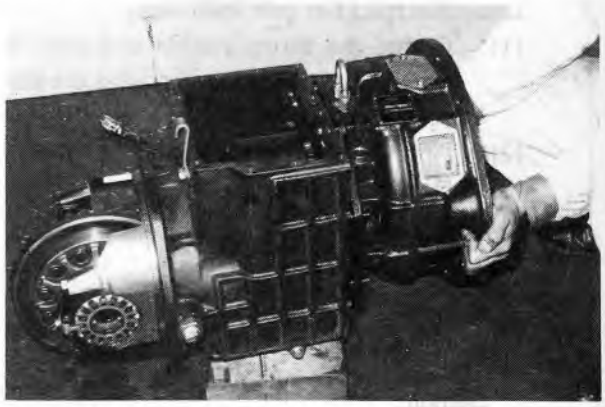

Fig. 3-186 Installing Housing

12. Install the upper cover.
    (1) Gasket

    Essential:
    Apply liquid seal.

    (2) Upper cover
    (3) Set bolts

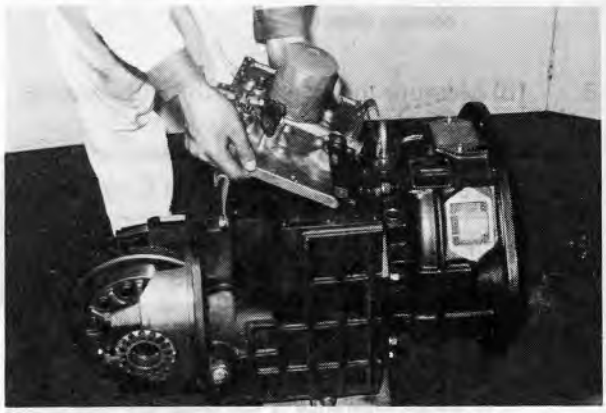

Fig. 3-187 Installing Upper Cover

TORQUE CONVERTER & TRANSMISSION INSTALLATION

Install by performing the removal in reverse order.

Caution:
- **Connect the battery (–) terminal only after checking the electrical wiring to see that there is no error.**
- **Fill in the differential and torque converter oils, and check to see that the proper amounts have been filled in.**
- **Check the coolant and engine oil quantities, and replenish if found insufficient.**

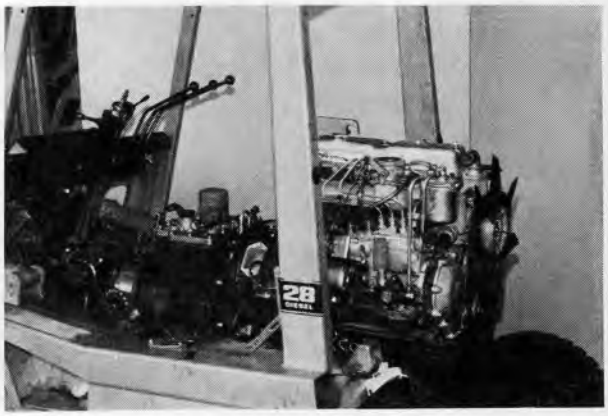

Fig. 3-188 Installing Torque Converter & Transmission

MEASUREMENTS & TESTS

Determination of the measurement and test results and their disposition should be made in accordance with Trouble Shooting procedures.

1. Measure oil quantity.
   (1) Maintain the vehicle level, shift lever in neutral, and engine idling.
   (2) After warming up, keep the engine idling and measure the oil level with oil level gage. Level should be between F ⟷ L lines.

   Torque converter oil quantity
   Approx. 13.2 ℓ (3.5 US gal)

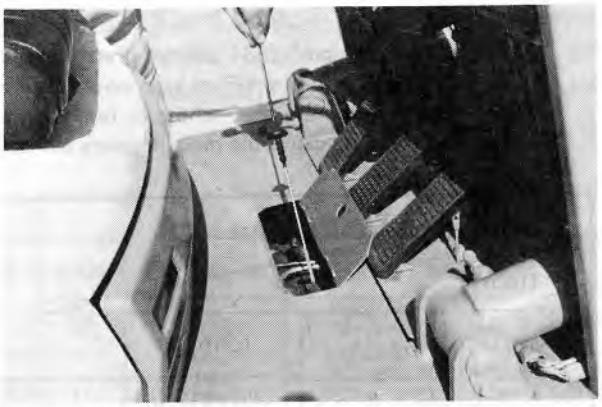

Fig. 3-189 Measuring Oil Quantity

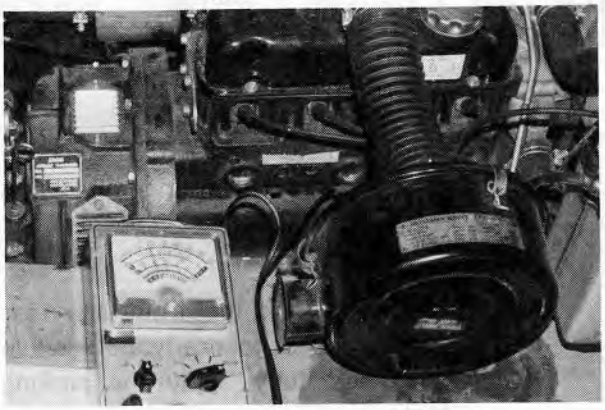

Fig. 3-190 Measuring Engine RPM

2. Measure hydraulic pressure
   (1) Warm up the engine and measure the idling speed and no-load governed maximum speed.

   Reference:
   If engine speed is found defective, adjust by referring to section Engine Speed Adjustment under ENGINE.

Vehicle Type / Item	4P Engine		5R Engine	5P Engine	2J Engine	
	1–1.75 ton Vehicle	2–2.5 ton Vehicle	1–2.5 ton Vehicle	2–3 ton Vehicle	1–2.5 ton Vehicle	2.75 & 3 ton Vehicle
Idling speed	550 rpm	550 rpm	550 rpm	700 rpm	650 rpm	650 rpm
No-load maximum governed speed	2600 rpm	3050 rpm	2600 rpm	2300 rpm	2300 rpm	2600 rpm

   (2) After finishing speed adjustments, shut off the engine
   (3) Jack up the front axle so as to float the tires. (both wheels)
   (4) Remove the rear toeboard and mount the pressure gage. If three gages are used, the main pressure, clutch pressure and torque converter pressure can all be measured at the same time.
   (5) Start the engine, set the shift lever to neutral, and measure the main pressure and outlet pressure.
   (6) Set the shift lever to forward and reverse, and measure the clutch actuating pressure.

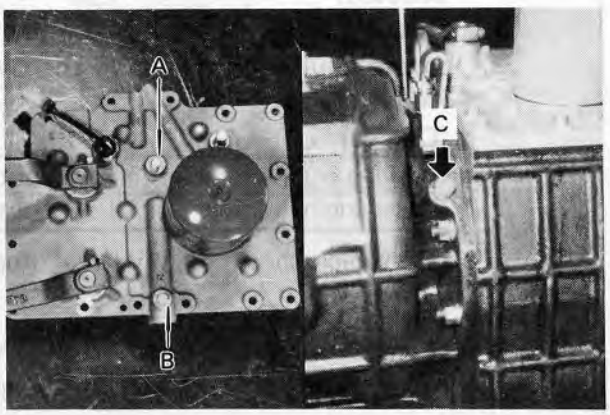

Fig. 3-191 Mounting Pressure Gage

A: Clutch pressure measurement point
B: Main pressure measurement point
C: Outlet pressure measurement point

Caution:
- Use 20 kg/cm^2 (284 psi) oil pressure gages. For torque converter pressure (outlet pressure), about a 5 kg/cm^2 (71 psi) oil pressure gage would be more preferable.
- Do not operate the inching or brake pedal while measuring the hydraulic pressures. (Operating the inching valve could cause the main pressure to rise about 15 to 20 kg/cm^2 (213 to 284 psi)).

Item \ Vehicle Type		All Vehicle
Main pressure	Idling	2 ~ 6 kg/cm^2 (28.4 ~ 85.3 psi)
	2000 rpm	9 ~ 13 kg/cm^2 (128 ~ 185 psi)
Clutch pressure	Idling	1.5 ~ 6 kg/cm^2 (21.3 ~ 85.3 psi)
	2000 rpm	8.5 ~ 13 kg/cm^2 (111 ~ 185 psi)
Outlet pressure	2000 rpm	1.0 ~ 1.6 kg/cm^2 (14.2 ~ 22.8 psi)

Main and clutch pressure limits 9 kg/cm^2 (128 psi) at 2000 rpm

3. Stall test.

(1) Securely block the front and rear wheels. Load to nearly permissible limit and fully apply the parking brake.

Caution:
Maintain the vehicle in perfectly immovable state.

(2) Warm up the engine and measure the idling speed and no-load governed maximum speed.

Reference:
For rpm, refer to table in par. 2 above.

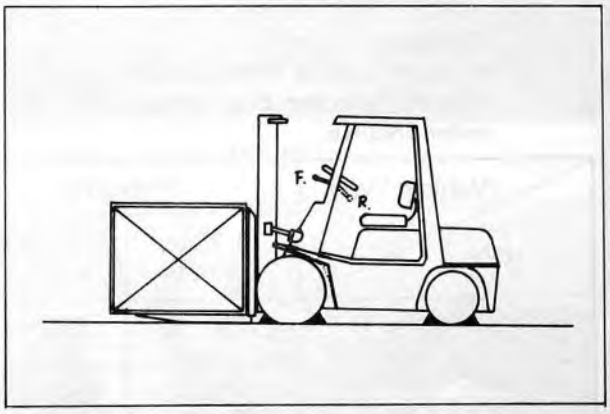

Fig. 3-192 Stall Test

(3) Check the engine output by means of engine no-load maximum rpm.

(Method)
After adjusting no-load governed maximum speed, set the tilt lever forward or backward so as to create full relief condition. Then with the accelerator wide open, measure the maximum rpm.

(Criteria)

Gasoline engine vehicle	About 150 to 200 rpm down from no-load max. rpm.
Diesel engine vehicle	About 100 rpm down from no-load max. rpm.

LPG vehicle shown slightly larger drop then shown above.

(Disposition)
If engine rpm drops considerably, this is an indication that engine is still out-of-adjustment. Adjust the air governor and other engine parts. (Refer to engine adjustment).

(4) Start the engine and set the shift lever to forward or reverse. Race the engine and measure the speed (stall speed) when the speed becomes constant.

(5) For a vehicle equipped with power brake, stall speed must not be measured with the brake pedal pressed.

Item \ Vehicle Type	4P Engine		5R Engine	5P Engine	2J Engine	
	1–1.75 ton Vehicle	2–2.5 ton Vehicle	1–2.5 ton Vehicle	2–3 ton Vehicle	1–2.5 ton Vehicle	2.75 & 3 ton Vehicle
Stall speed	1800 ± 100 rpm	1800 ± 100 rpm	1850 ± 100 rpm	1850 ± 100 rpm	1950 ± 100 rpm	1800 ± 100 rpm
No-load maximum governed speed	2600 rpm	3050 rpm	2600 rpm	2300 rpm	2300 rpm	2600 rpm

4. Measure time lag
   (1) Warm up the engine and have it idling. Do not operate the inching pedal at this time.
   (2) Move the shift lever to forward or reverse speed and at the same time press the stop watch ON.
   (3) A small shock will be felt at the instant the clutch engages. Press the stop watch OFF at this instant and read the time.
   (4) Make the measurment several times in both forward and reverse directions and take the average of the readings taken.

INCHING PEDAL ADJUSTMENT

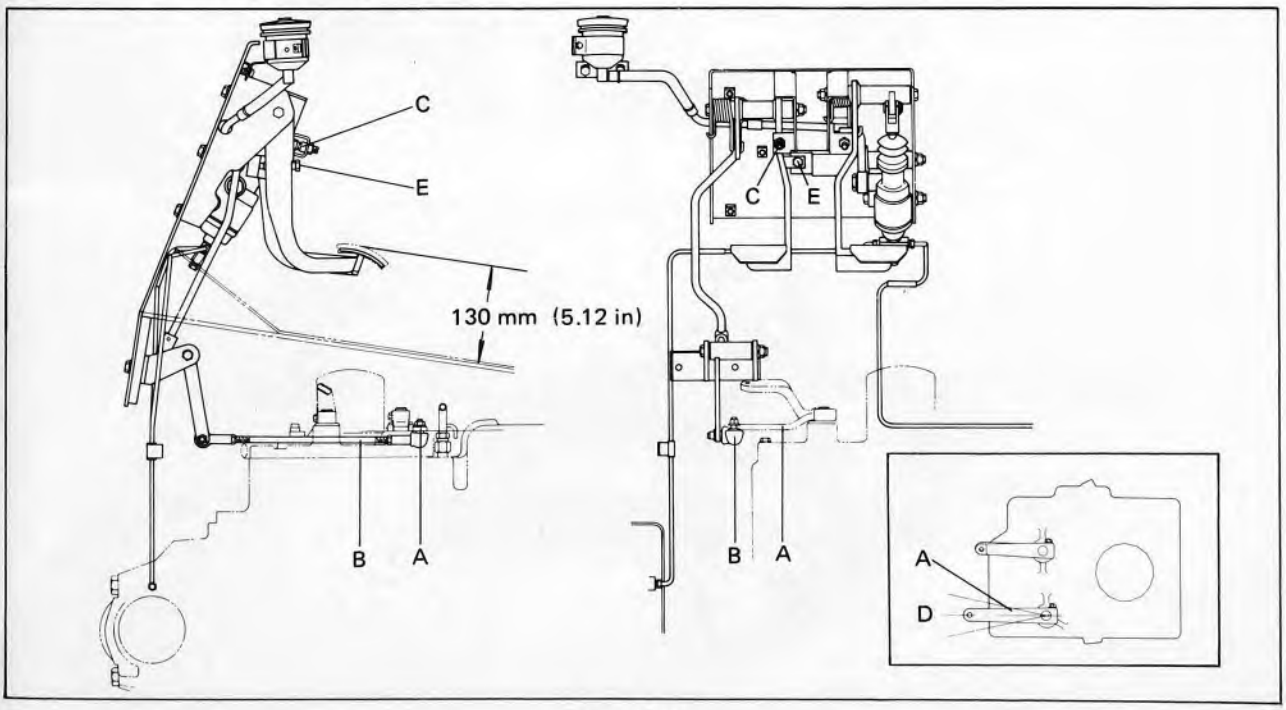

Fig. 3-193

1.0 – 1.75 TON TORQUE CONVERTER TYPE VEHICLES

(1) Separating inching lever A and inching rod B.
(2) Using the pedal height adjustment bolt C, adjust the inching pedal and brake pedal height.
Pedal height 130 mm (5.12")
(3) Adjust the inching rod length and fasten to the inching lever. At this time confirm that the inching lever completely returns without moving the inching lever as it is fastened.
(4) While looking at the inching lever movement step on the inching pedal the inching lever A as illustrated below move to a right angle to the torque converter upper cover position D in order for the adjust bolt E to contact the brake pedal adjust the E bolt length.
(Until the adjust bolt is contacted the pedal stroke is about 35 mm – 40 mm (1.38" – 1.57").

Caution:
When the inching rod and the inching lever are joined in this way absolutely avoid adjusting the pedal height. When the inching lever location is in poor condition it will cause the burn damage and overheating of the clutch.

2.0 – 3.0 TON TORQUE CONVERTER TYPE VEHICLES

2.0 – 3.0 ton vehicles with the inching rod adjust the pedal height to 128 mm.
In this way the inching lever position can normally be clinched at construction.

TRANSMISSION & DIFFERENTIAL

	Page
GENERAL	4– 2
SPECIFICATIONS	4– 4
SERVICE STANDARDS	4– 5
COMPONENT PARTS	4– 8
REMOVAL	4–12
DISASSEMBLY	4–16
INSPECTION	4–29
ASSEMBLY & ADJUSTMENT	4–37
INSTALLATION	4–57

GENERAL

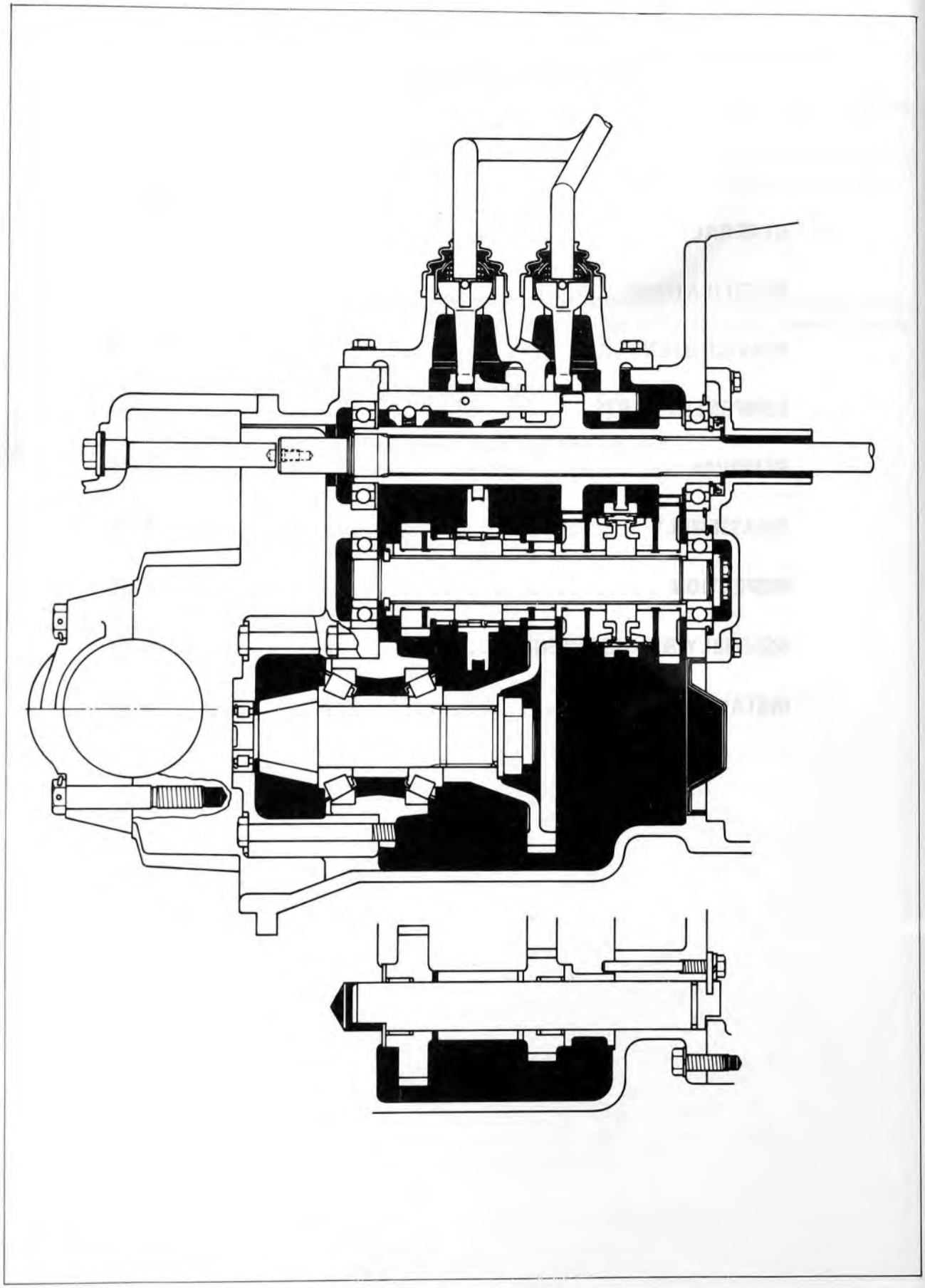

Fig. 4-1 Transmission Sectional View (1 ~ 1.75 ton)

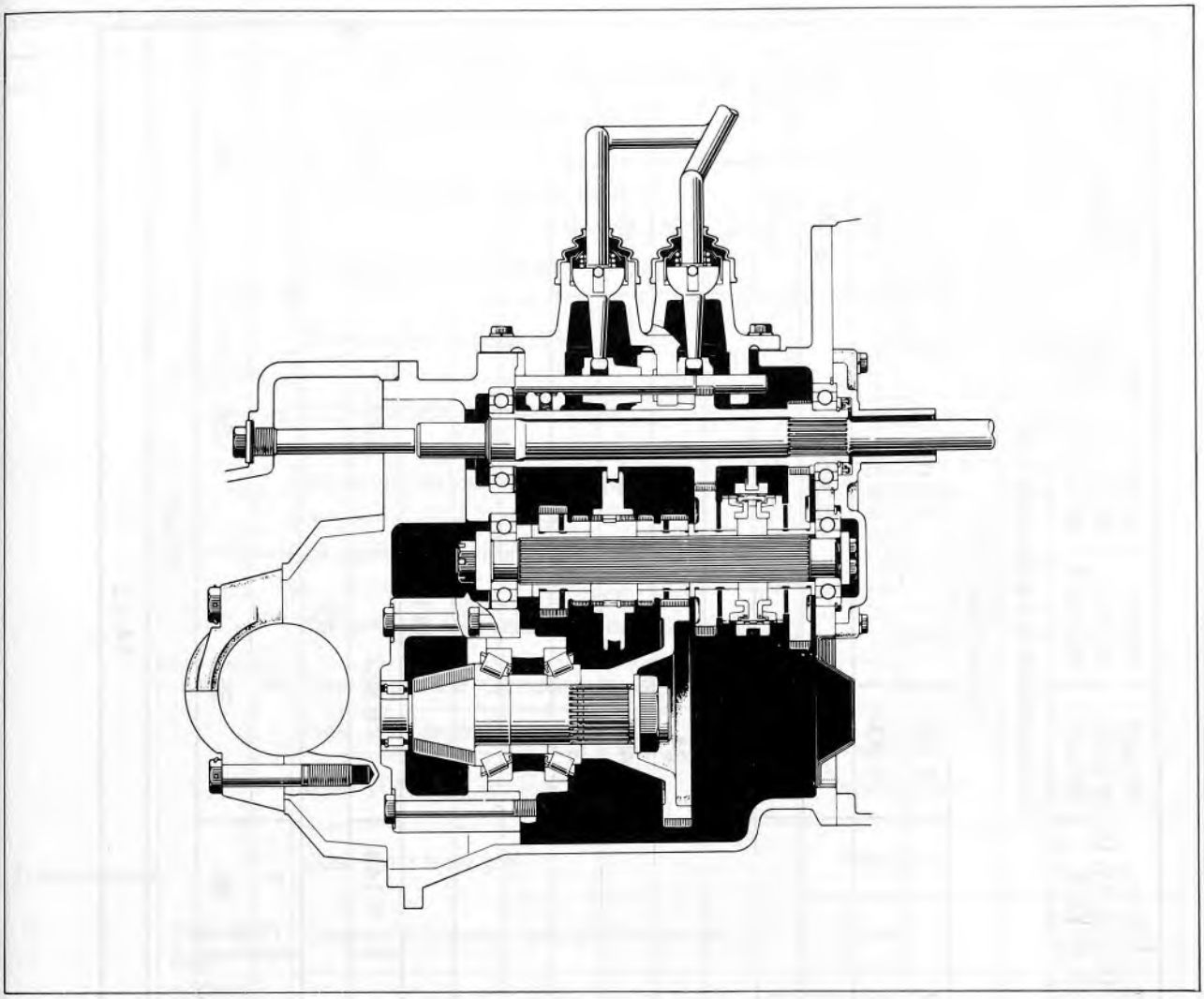

Fig. 4-2 Transmission Sectional View (2 ~ 3 ton)

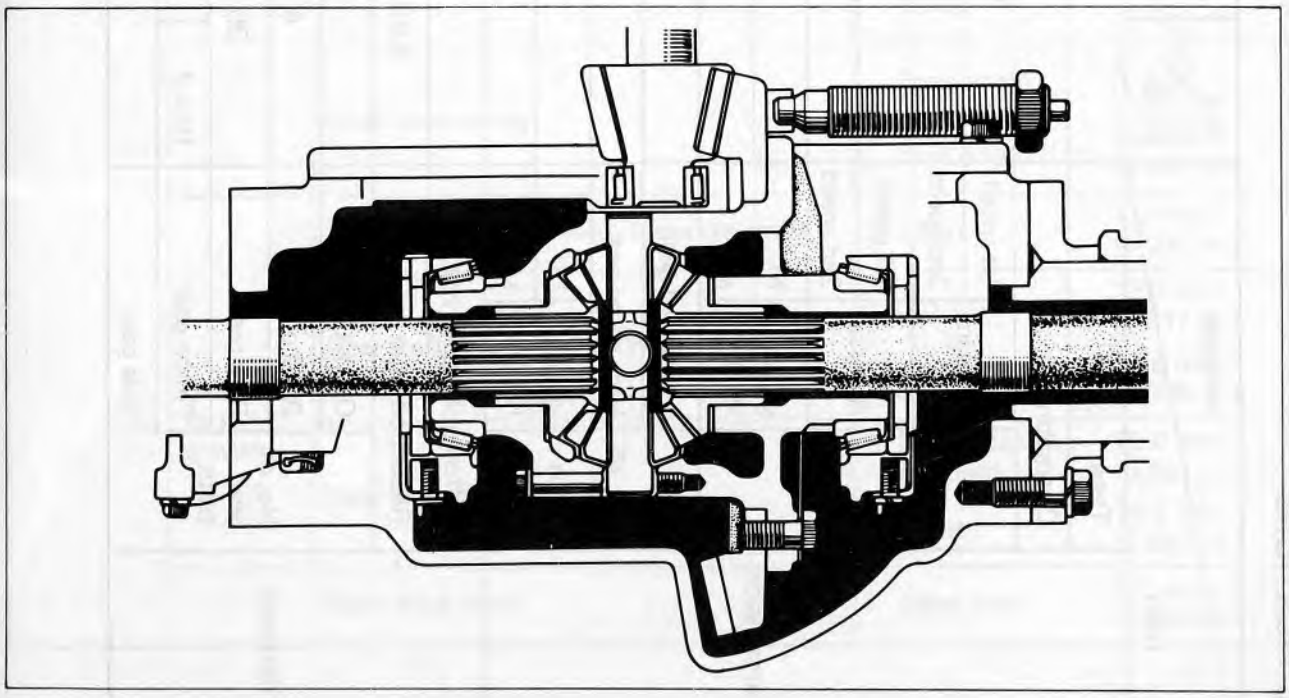

Fig. 4-3 Differential Sectional View

SPECIFICATIONS

Item \ Vehicles				4FG 10, 14, 15 FG18	40-4FG 10, 14, 15 40-FG18	3FD 10, 14, 15 FD18	3FG20 (FG23, 3FG25)	40-3FG 20, 25 40-FG23	60-3FG 20, 25 60-FG23	3FD 20, 25 FD23	FG28 2FG30	FD28 3FD30
Transmission	Type			Constant-mesh, Synchromesh type								
	Operation			Direct, floor shift								
	Gear ratio	Forward	1st speed	5.072			7.384	6.819			5.313	6.819
			2nd speed	2.297			4.300	2.975			2.615	3.078
		Reverse	1st speed	5.195			7.564	6.985			5.443	6.985
			2nd speed	2.353			4.405	3.048			2.679	3.153
		Speed shaft	No. 1	22			17	18			21	18
			No. 2	34			24	30			32	29
	No. of gear teeth	Low speed gear		40			45	44			40	44
		High speed gear		28			37	32			30	32
		Reverse idler gear	No. 1	23								
			No. 2	31								
Differential	Differential case type			Banjo type								
	Reduction ratio			5.833		5.143	5.833		5.143		5.833	
	No. of gear teeth	Output gear		53								
		Drive pinion		6		7	6		7		6	
		Ring gear		35		36	35		36		35	
		Pinion gear		10 x 2	10 x 4							
		Side gear		14 x 2								

SERVICE STANDARDS

Measuring Location			Standard	
Transmission	Backlash	Low speed gear x speed shaft	0.05 ~ 0.13 mm (0.0020 ~ 0.0051 in.)	
		High speed gear x speed shaft	0.05 ~ 0.13 mm (0.0020 ~ 0.0051 in.)	
		Forward gear x reverse idler gear	0.05 ~ 0.13 mm (0.0020 ~ 0.0051 in.)	
		Reverse gear x reverse idler gear	0.05 ~ 0.13 mm (0.0020 ~ 0.0051 in.)	
		Forward gear x output gear	0.05 ~ 0.13 mm (0.0020 ~ 0.0051 in.)	
		Reverse idler gear x output gear	0.05 ~ 0.13 mm (0.0020 ~ 0.0051 in.)	
		Drive Pinion x ring gear	0.2 ~ 0.3 mm (0.008 ~ 0.012 in.)	
		Differential side gear x differential pinion	0.1 ~ 0.25 mm (0.0039 ~ 0.0098 in.)	
	Gear shift lever system	Gear shift lever operating force	3 ~ 4 kg (6.6 ~ 8.8 lb)	
		Gear shift lever side play	3 ~ 7 mm (0.12 ~ 0.28 in.)	
		Gear shift lever groove	Width limit	8.8 mm (0.346 in.)
		Gear shift lever pin	Wear limit	7.5 mm (0.295 in.)
		Clearance between gear shift lever and pin	Limit	1.0 mm (0.039 in.)
		Gear shift lever end	Standard	13.0 mm (0.512 in.)
			Wear limit	12.5 mm (0.492 in.)
		Shift lever spring	Free length	27 mm (1.06 in.)
			Free length limit	25 mm (0.984 in.)
	Gear shift fork system	Shift fork to clutch hub sleeve clearance	Limit	1.0 mm (0.039 in.)
		Gear shift lever insertion part	Std. bore	13.0 mm (0.512 in.)
			Limit	13.6 mm (0.535 in.)
		Gear shift fork shaft	Outer diameter standard	15.0 mm (0.591 in.)
			Limit	14.9 mm (0.587 in.)
		Main drive shaft	Bend limit	0.1 mm (0.0039 in.)

Measuring Location			Standard	
Transmission	Counter shaft system	High and low speed gear	Std. bore	40.0 mm (1.575 in.)
			Bore limit	40.1 mm (1.579 in.)
		Forward and reverse gear	Std. bore	40.0 mm (1.575 in.)
			Bore limit	40.1 mm (1.579 in.)
		Synchronizer ring to gear clearance	Standard	1.10 ~ 1.90 mm (0.0433 ~ 0.0748 in.)
			Limit	0.8 mm (0.031 in.)
		Bushing	Outer diameter standard	45.0 mm (1.772 in.)
			Outer diameter limit	44.7 mm (1.760 in.)
		Forward gear and clutch hub thrust clearance	Standard	0.10 ~ 0.25 mm (0.0039 ~ 0.0098 in.)
			Limit	0.5 mm (0.020 in.)
		Reverse gear and clutch hub thrust clearance	Standard	0.10 ~ 0.25 mm (0.0039 ~ 0.0098 in.)
			Limit	0.5 mm (0.020 in.)
		High speed gear to bushing thrust clearance	Standard	0.10 ~ 0.25 mm (0.0039 ~ 0.0098 in.)
			Limit	0.5 mm (0.020 in.)
		Low speed gear to bushing thrust clearance	Standard	0.10 ~ 0.25 mm (0.0039 ~ 0.0098 in.)
			Limit	0.5 mm (0.020 in.)
	Reverse idler shaft	Reverse idler shaft	Outer diameter standard	35.0 mm (1.378 in.)
			Outer diameter limit	34.9 mm (1.374 in.)
		Reverse idler gear collar	Length standard	37.0 mm (1.457 in.)
			Length limit	36.7 mm (1.445 in.)
		Thrust washer	Thickness std.	2.95 ~ 3.05 mm (0.116 ~ 0.120 in.)
			Thickness limit	2.65 mm (0.104 in.)
		Reverse idler gear thrust clearance	Standard	0.05 ~ 0.55 mm (0.0020 ~ 0.0217 in.)
			Limit	0.8 mm (0.031 in.)

Measuring Location			Standard
Differential	Side gear thrust washer		Thickness std. 1.6 mm (0.063 in.) Thickness limit 1.3 mm (0.051 in.)
	Spider		Outer diameter standard 22.0 mm (0.866 in.) Outer diameter limit 21.75 mm (0.856 in.)
	Pinion thrust washer		Thickness std. 1.6 mm (0.063 in.) Thickness limit 1.0 mm (0.039 in.)
	Differential pinion		Bore std. 22.12 mm (0.871 in.) Bore limit 22.22 mm (0.875 in.)
	Thrust screw cap		Thickness std. 13.0 mm (0.512 in.) Thickness limit 12.2 mm (0.480 in.)
	Drive pinion bearing pre-load (measured with the output gear)		Starting force: 12.7 ~ 15.6 kg (28.0 ~ 34.4 lb)
	Differential side bearing pre-load (measured with the output gear)		Starting force: above figure + 2 kg (4.4 lb)
Differential and transmission oil quantity		1 ~ 1.75-ton vehicle	Clutch vehicle 11ℓ (2.9 US gal) Converter vehicle 5ℓ (1.32 US gal)
		2 ~ 3-ton vehicle	Clutch vehicle 12ℓ (3.2 US gal) Converter vehicle 5ℓ (1.32 US gal)

COMPONENT PARTS
TRANSMISSION CASE

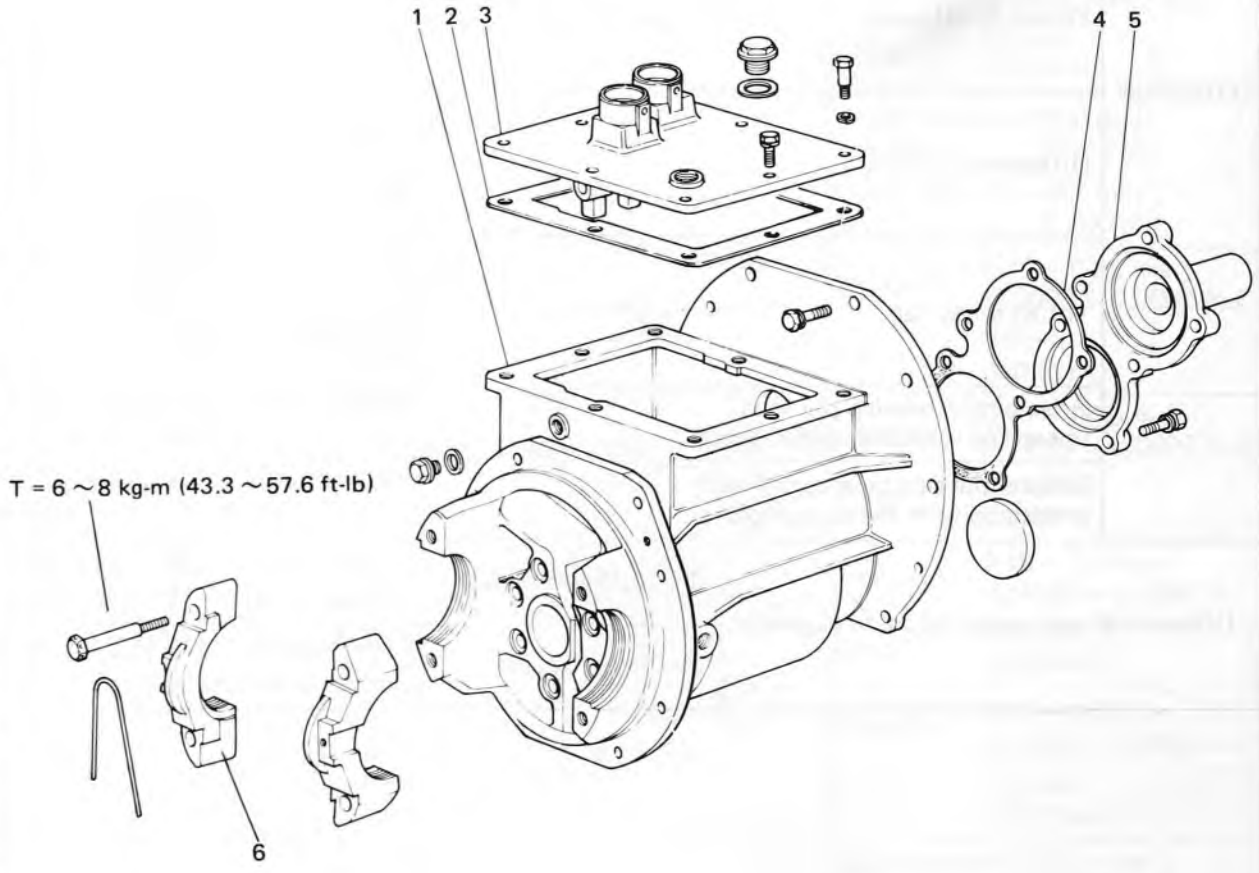

1. Transmission case sub-assy
2. Gasket
3. Transmission case upper cover
4. Gasket
5. Transmission case rear cover
6. Bearing cap

Fig. 4-4 Transmission Component Parts (1)

TRANSMISSION GEARS

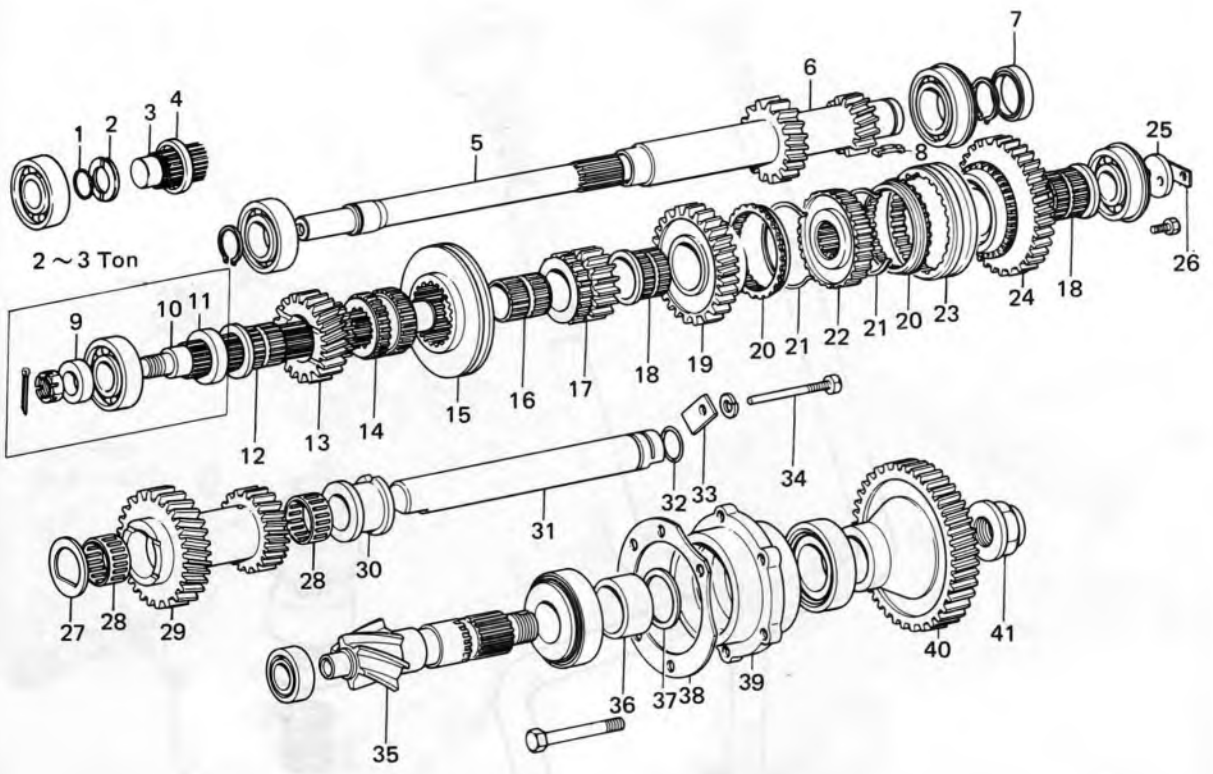

1. Stop plate spring
2. Stop plate
3. Counter shaft (1 ~ 1.75 ton)
4. Stopper
5. Main drive shaft
6. Speed shaft
7. Oil seal
8. Synchromesh shifting key
9. Plate washer
10. Counter shaft (2 ~ 3 ton)
11. Spacer
12. Reverse gear bushing
13. Reverse gear
14. High & Low clutch hub
15. Transmission hub sleeve
16. Forward gear bushing
17. Forward gear
18. Speed gear bushing
19. High speed gear
20. Synchronizer ring
21. Synchromesh shifting key spring
22. Transmission clutch hub
23. Transmission hub sleeve
24. Low speed gear
25. Bearing plate
26. Lock plate
27. Thrust washer
28. Needle bearing
29. Reverse idler gear
30. Reverse idler gear spacer
31. Reverse idler gear shaft
32. "O" ring
33. Lock plate
34. Spacer set bolt
35. Differential drive pinion
36. Bearing spacer
37. Bearing preload adjust shim
38. Diff. drive pinion adjust shim
39. Bearing retainer
40. Output gear
41. Lock nut

Fig. 4-5 Transmission Component Parts (2)

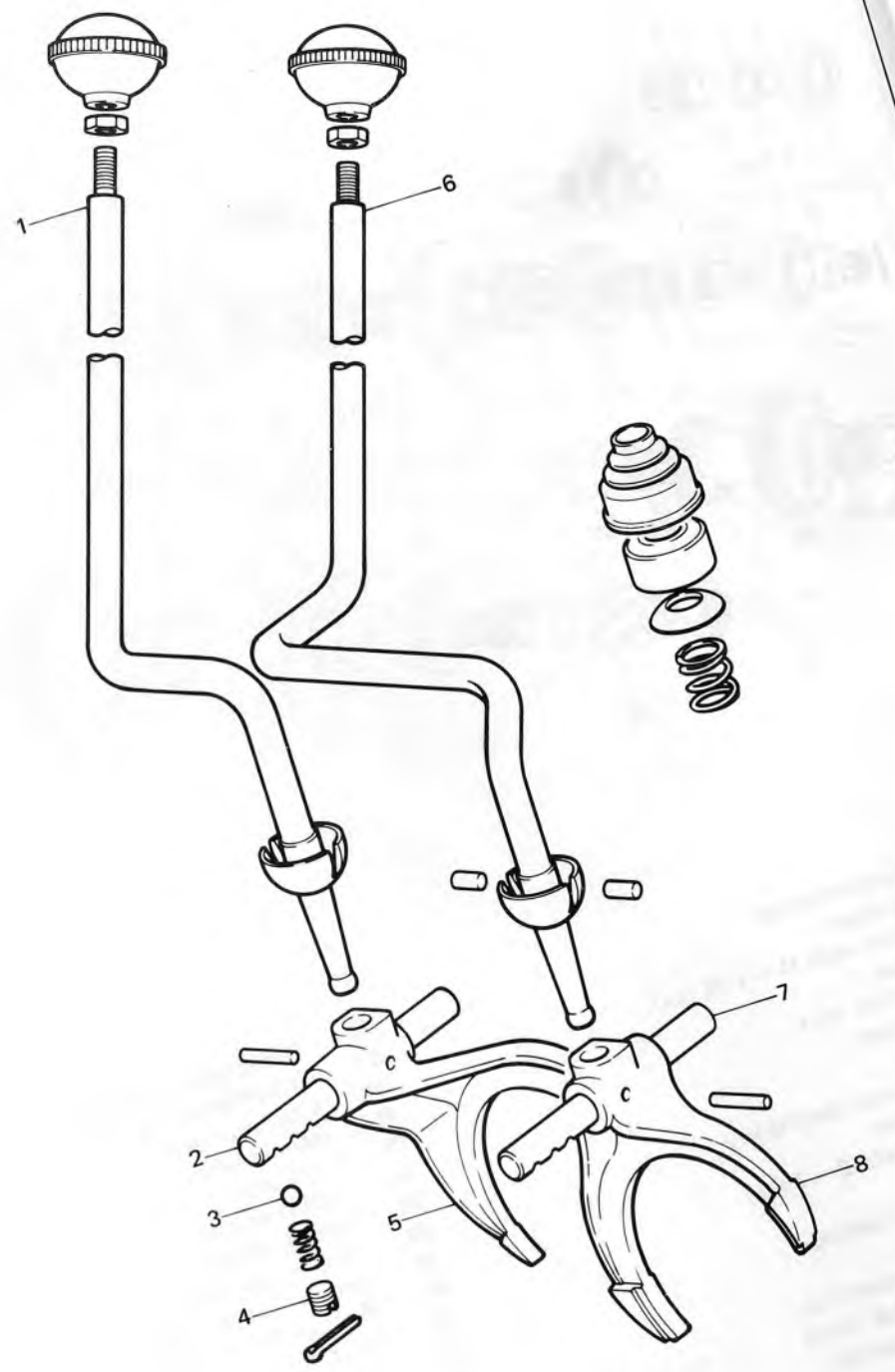

1. High & low shift lever sub-assy
2. High & low speed fork shaft
3. Gear shift fork lock ball
4. Straight screw plug
5. High & low speed gear shift fork
6. Forward & reverse shift lever sub-assy
7. Forward & reverse shift fork shaft
8. Forward & reverse gear shift fork

Fig. 4-6 Transmission Component Parts (3)

DIFFERENTIAL

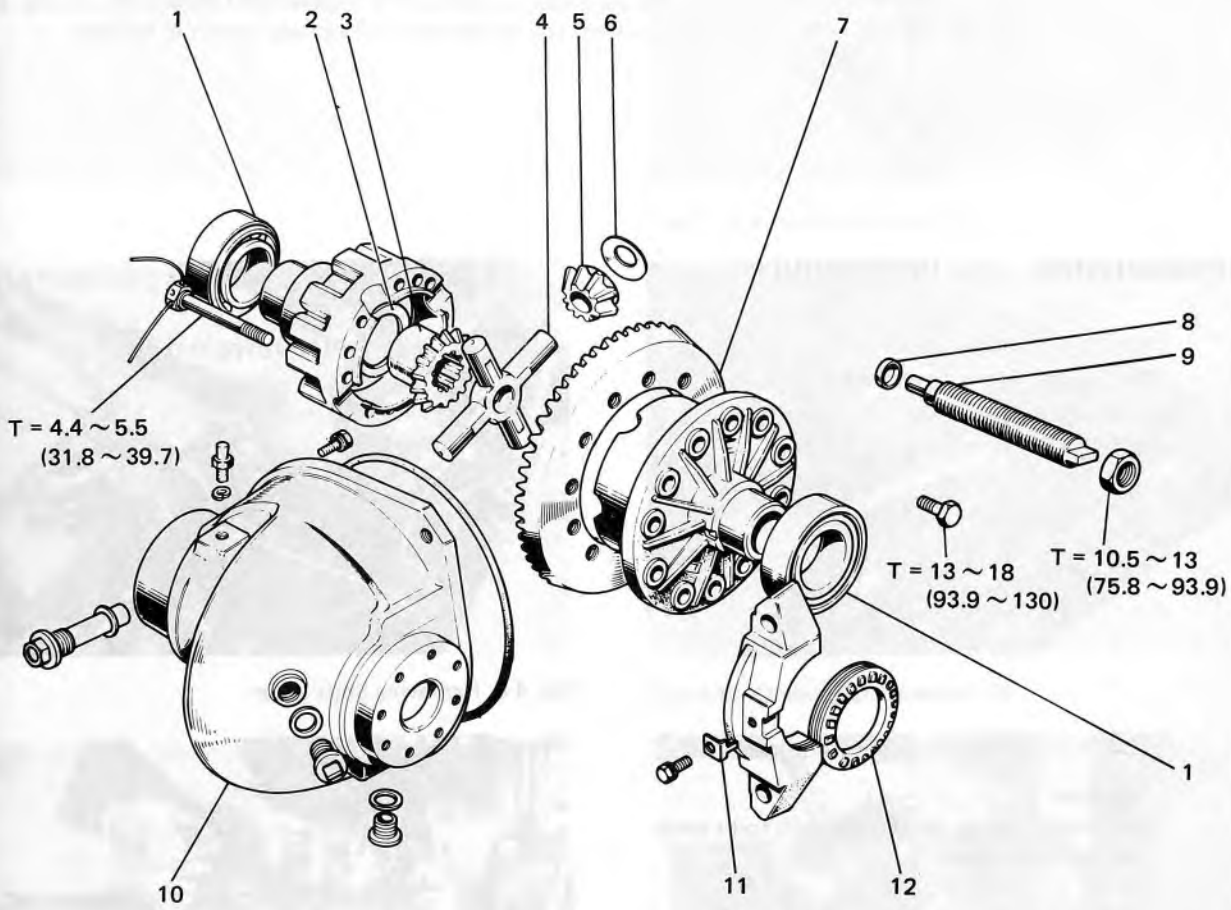

Tightening torque unit: kg-m (ft-lb)

1. Side bearing
2. Differential side gear thrust washer
3. Differential side gear
4. Differential spider
5. Differential pinion
6. Differential pinion thrust washer
7. Differential ring gear & pinion set
8. Ring gear thrust screw cap
9. Differential ring gear thrust screw
10. Differential housing
11. Adjust lock nut
12. Adjust nut

Fig. 4-7 Differential Component Parts

REMOVAL

Caution:
- The transmission assembly cannot be either removed or installed apart from the engine. The installation or removal of the transmission assembly must be done together with the engine.
  For details on the procedure for removing the engine, refer to the section on "Engine Removal".
- The upper case and shift lever parts on the transmission case can be disassembled aboard the vehicle. Depending on the nature of the trouble encountered, you can decide on the proper action to be taken.

TRANSMISSION CASE UPPER COVER

1. Remove the rear toeboard.
2. Remove the front toeboard.
3. Remove the shift lever.
   Use SST 09130-10170-71



Fig. 4-8 Removing Shift Lever

4. Remove the transmission case upper cover.

   Caution:
   Be careful not to damage the shift forks when removing the cover.



Fig. 4-9 Removing Upper Cover

5. Disassemble the upper cover.

   Caution:
   In order to prevent erroneous assembly of the components, mark with magic ink the installation positions on the shift forks and shift fork shafts.

   (1) Spring pins
   Use SST 09700 -30200-71.



Fig. 4-10 Removing Spring Pins

(2) Cotter pins
(3) Straight screw plugs
(4) Springs
(5) Steel balls
(6) Fork shafts, shift forks

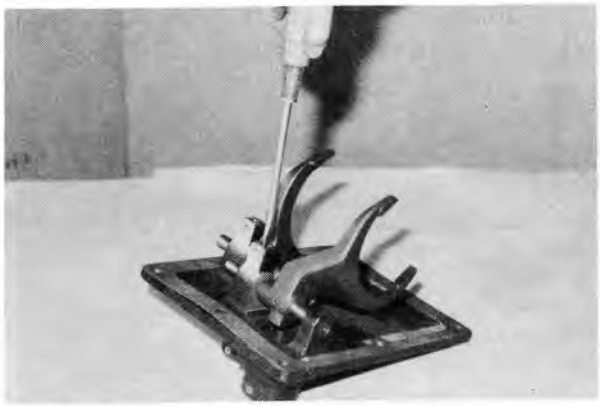

Fig. 4-11 Removing Screw Plug

TRANSMISSION WITH DIFFERENTIAL

1. Drain the differential oil.
   Oil capacity:
   1 ~ 1.75-ton vehicle
   11 liters (2.9 US gal)
   2 ~ 3-ton vehicle
   12 liters (3.2 US gal)



Fig. 4-12 Draining Differential Oil

2. Remove the steering wheel.
   (1) Horn button
   (2) Set bolts
   (3) Steering wheel
   Use SST 09609-20010

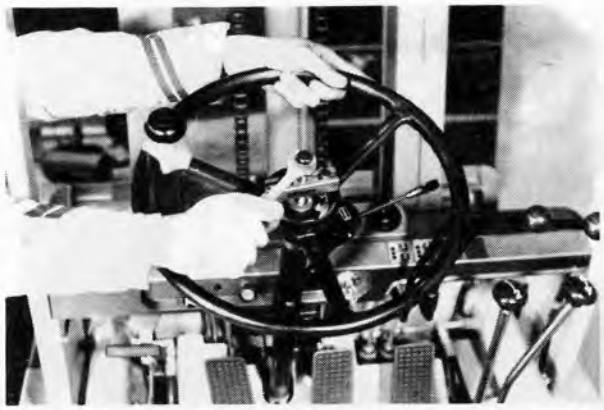

Fig. 4-13 Removing Steering Wheel

3. Remove the front toeboard.
   (1) Clevis pins (Clutch and brake pedals)
   (2) Accelerator bracket

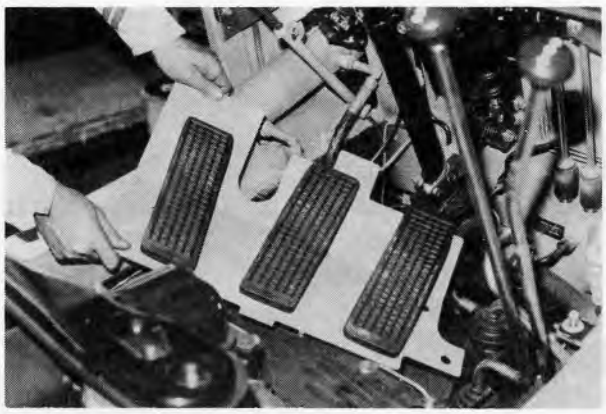

Fig. 4-14 Removing Front Toeboard

4. Disconnect the clutch pedal No. 2 rod. (1 ~ 1.75 ton vehicles)



Fig. 4-15 Disconnecting Rod

5. Remove the clutch booster. (2 ~ 3 ton vehicles)
   (1) Spring
   (2) Cotter pin
   (3) Push rod clevis pin
   (4) Set bolts
   (5) Clutch booster
   (6) Clutch booster return pipe

   Caution:
   Be careful not to bend the pipes when you remove them.

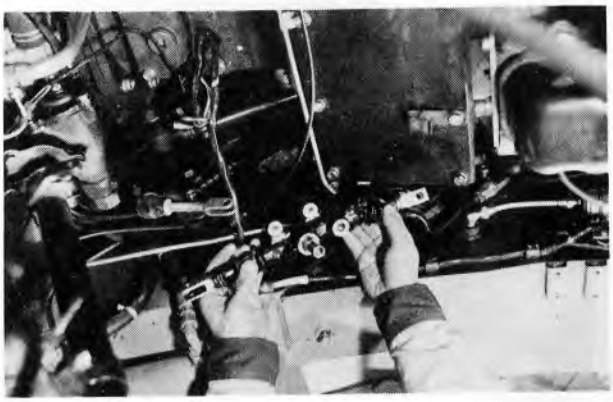

Fig. 4-16 Removing Clutch Booster

6. Remove the differential housing set bolts.

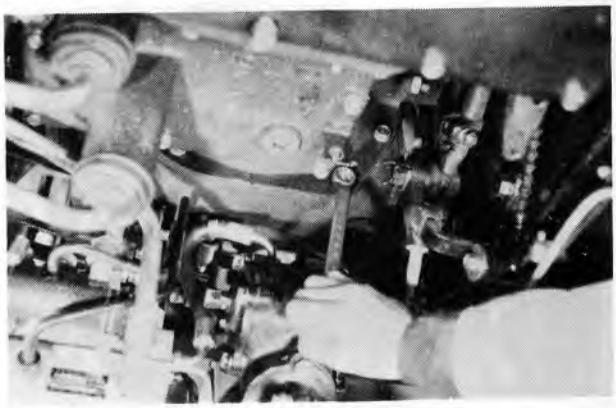

Fig. 4-17 Removing Differential Housing Set Bolts

7. Remove the front axle shaft.
   (For 1.5 and 1.75 ton vehicles)
   (1) Jack up the vehicle, and remove the front tires.
   (2) Axle shafts.
   (For 1, 1.35, 2, 2.25, 2.75, 3 ton vehicles)
   (1) Axle shafts



Fig. 4-18 Removing Axle Shaft

8. Remove the engine with transmission.
   (1) Cylinder head rear plate.
   (2) Install SST 09010-20120-71.

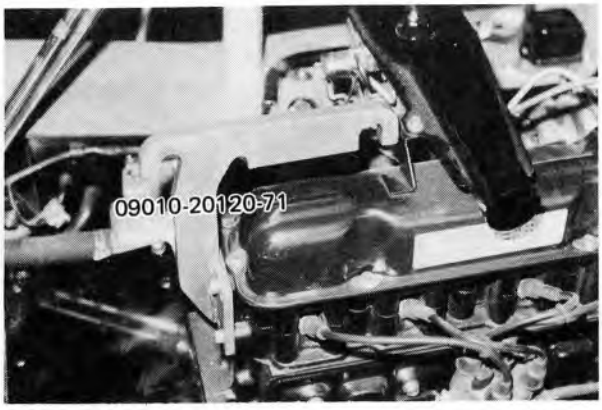

Fig. 4-19 Installing SST

   (3) Engine with transmission.
   Use SST 09010-20110-71 (For hoist)
   Use SST 09020-20110-71 (For lift)



Fig. 4-20 Removing Engine with Transmission

9. Remove the main drive shaft.
   Use SST 09210-20170-71.



Fig. 4-21 Removing Main Drive Shaft

10. Remove the engine from the transmission.
   (1) Clutch upper cover.
   (2) Clutch release bearing tension spring
   (3) Set bolts

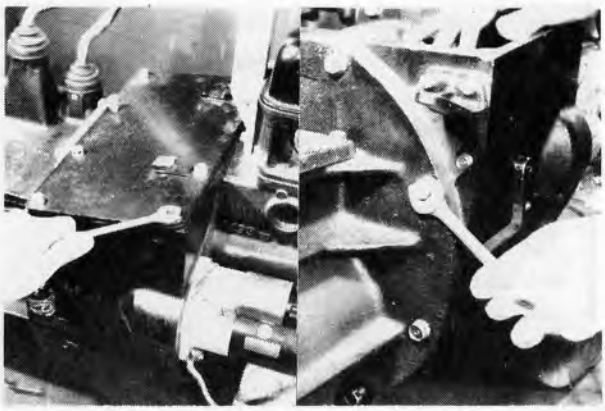

Fig. 4-22 Removing Engine from Transmission

5. Remove the counter shaft front bearing plate.

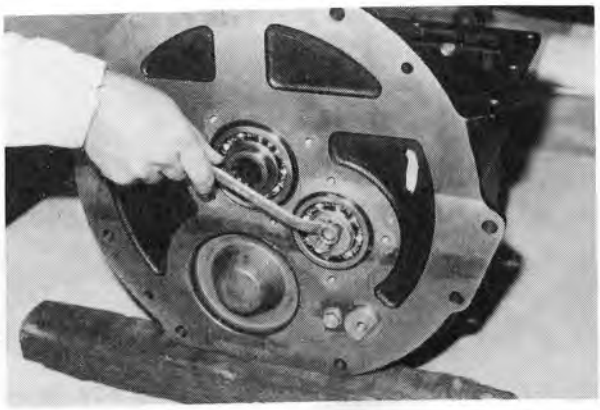

Fig. 4-29 Removing Bearing Plate

6. Remove the counter shaft, forward & reverse gears, high & low speed gears.
(For 1 ~ 1.75-ton vehicles)
   (1) Mount SST 09810-20170-71 to the counter shaft.
   (2) Drive out the counter shaft and gear assembly until the low speed gear comes into contact with the transmission case.



Fig. 4-30 Driving Out Counter Shaft

   (3) Insert the handle of a hammer between the reverse gear and transmission case to hold the gear assembly stationary.

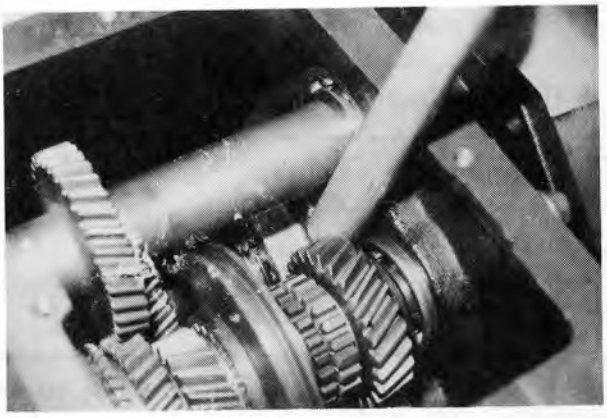

Fig. 4-31 Holding Gear Assembly Stationary

   (4) Drive in the counter shaft with a brass bar.



Fig. 4-32 Driving in Counter Shaft

(5) Remove the stop plate.

Note:
The stop plate is split.

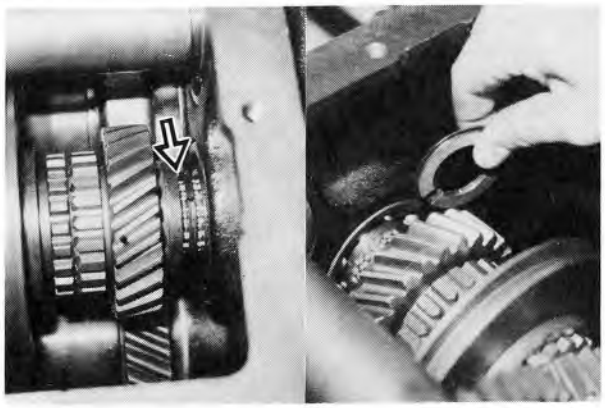

Fig. 4-33 Removing Stop Plate

(6) Mount the SST 09810-20170-71 to the counter shaft again, and drive out the counter shaft.

Caution:
Set the stop plate collar (A) to the same height as that of the bushing, and drive out the counter shaft carefully while checking the position of the collar (A). Otherwise, the stop plate collar (A) would be stuck in the stop plate groove.
Be careful: If the collar (A) moves away from the shaft center, the shaft cannot be removed.

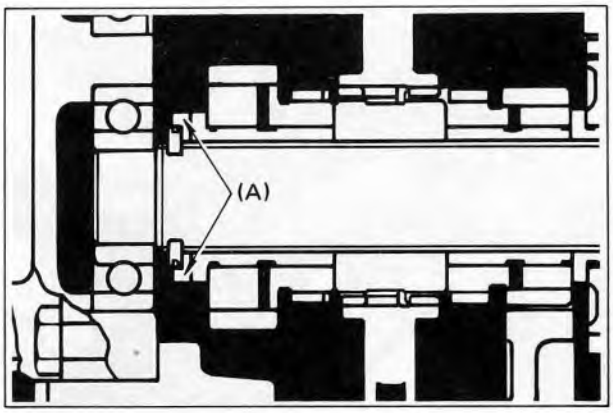

Fig. 4-34 Driving Out Counter Shaft (1)



Fig. 4-35 Driving Out Counter Shaft (2)

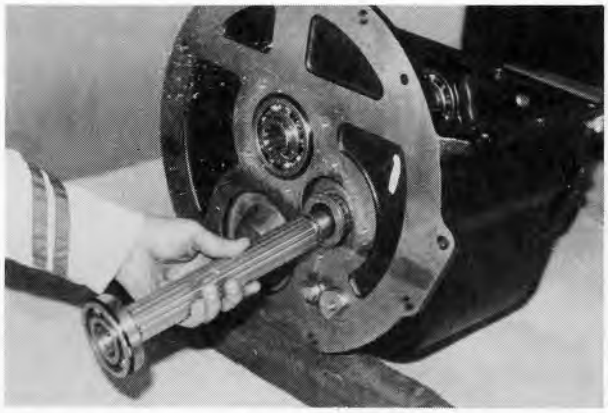

Fig. 4-36 Driving Out Counter Shaft (3)

(For 2 ~ 3-ton vehicles)

(1) Remove the cotter pins
(2) Remove the castle nuts
(3) Remove the collar

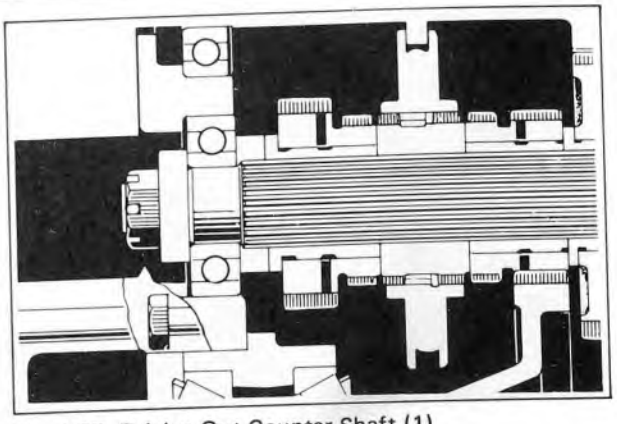

Fig. 4-37 Driving Out Counter Shaft (1)
(2 ~ 3 ton Vehicle)

(4) Drive out the counter shaft with a brass bar to remove it from the differential side.

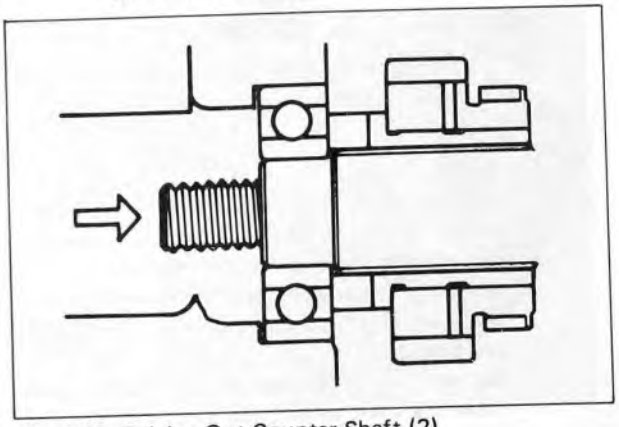

Fig. 4-38 Driving Out Counter Shaft (2)
(2 ~ 3 ton Vehicle)

7. Remove the forward and reverse gear assembly.

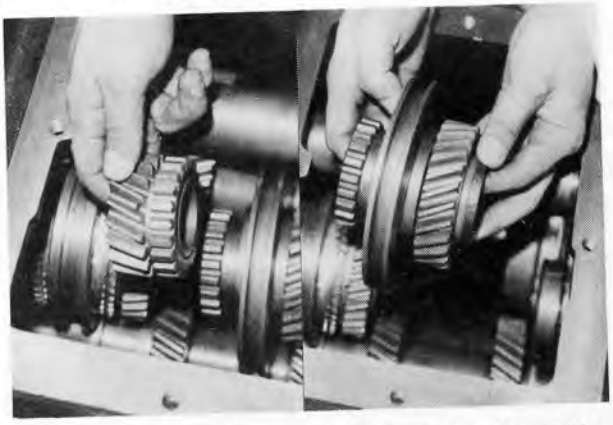

Fig. 4-39 Removing Forward & Reverse Gear Assembly

8. Remove the high and low speed gear assembly.



Fig. 4-40 Removing High and Low Speed Gear Assembly

9. Remove the speed shaft.
   (1) Drive out the speed shaft from the differential side.
   Use SST 09608-20011.



Fig. 4-41 Driving Out Speed Shaft

   (2) Snap ring
   (3) Bearings
   Use SST 09950-20012.

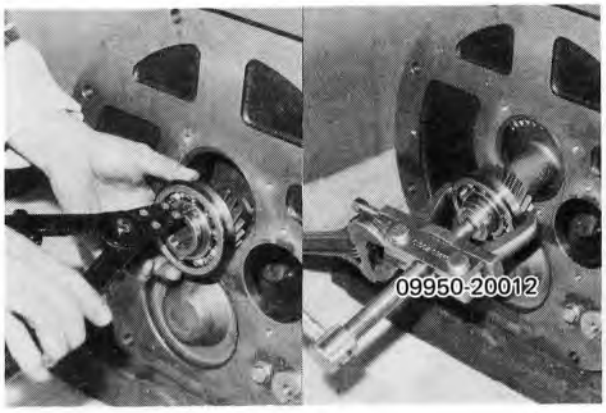

Fig. 4-42 Removing Bearings

   (4) Speed shaft



Fig. 4-43 Removing Speed Shaft

10. Remove the reverse idler gear and shaft.
   (1) Set bolts
   (2) Lock plate

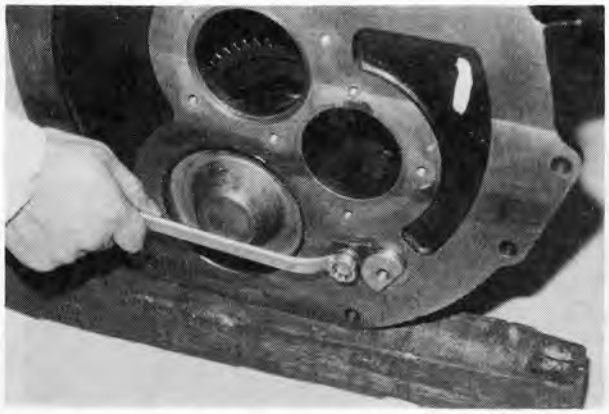

Fig. 4-44 Removing Lock Plate

(3) Reverse idler gear shaft.
Use SST 09810-20170-71.



Fig. 4-45 Removing Reverse Idler Shaft

(4) Collar
(5) Reverse idler gear

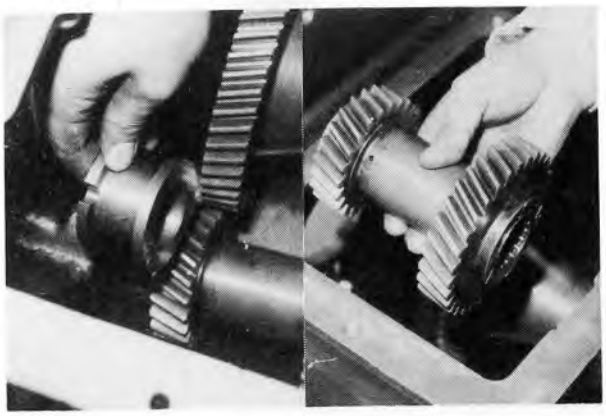

Fig. 4-46 Removing Collar and Reverse Idler Gear

(6) Thrust plate



Fig. 4-47 Removing Thrust Plate

11. Remove the output shaft cover.

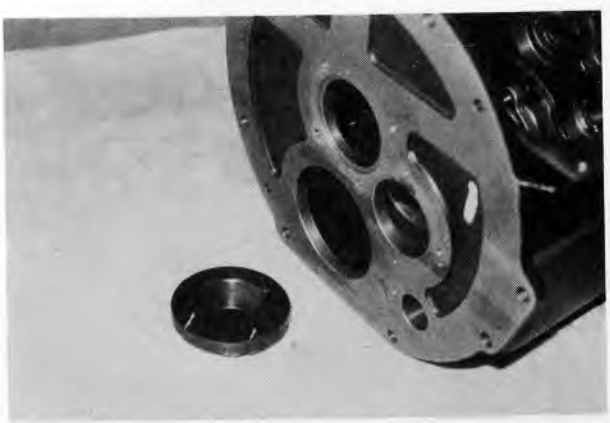

Fig. 4-48 Removing Output Shaft Cover

DIFFERENTIAL

12. Measure the runout at the ring gear back surface.
    Runout limit: 0.1 mm (0.0039 in)

    Essential:
    Set a dial gauge perpendicular to the ring gear back surface, and rotate the ring gear by turning the output gear lock nut.

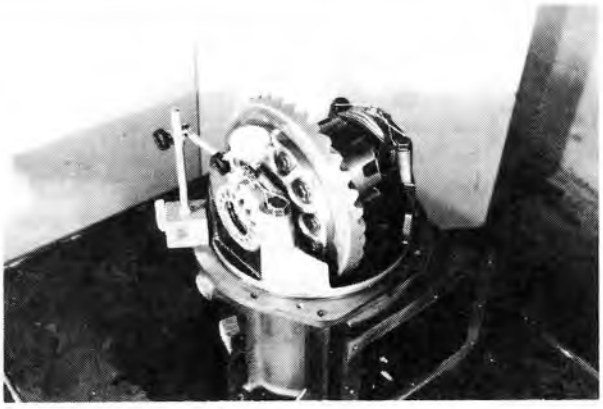

Fig. 4-49 Measuring Ring Gear Back Side Runout

13. Measure the backlash.
    Standard backlash: 0.2 – 0.3 mm
    (0.008 – 0.021 in)

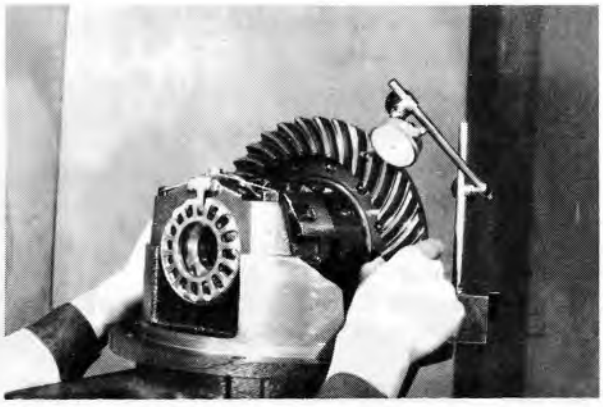

Fig. 4-50 Measuring Backlash

14. Measure the side bearing pre-load.
    (1) Wind a cord around the output gear and measure the starting force with a spring scale for the reference when assembling.

    Reference:
    The value indicated by the spring scale includes also the pinion bearing pre-load.



Fig. 4-51 Measuring Bearing Pre-load

15. Remove the thrust screw cap.
    (1) Lock nut
    (2) Thrust screw, cap

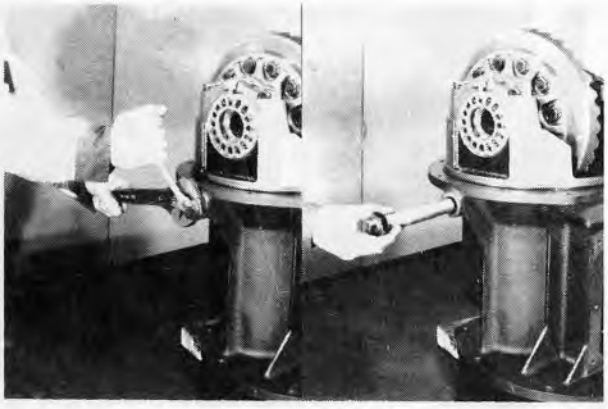

Fig. 4-52 Removing Thrust Screw

16. Punch matching marks on the transmission case and bearing caps.

Essential:
The transmission case and bearing caps have been machined together. Thus, the left and right sides are not interchangeable. Before removing the bearing caps, punch matching marks to make it possible to correctly re-install the parts in their initial location.

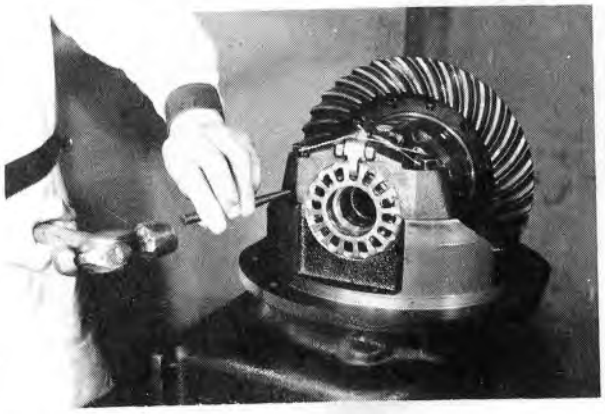

Fig. 4-53 Punching Matching Marks

17. Remove the bearing caps.
    (1) Lock wires
    (2) Lock bolts
    (3) Adjusting nut locks
    (4) Set bolts
    (5) Bearing caps

Essential:
The caps can be removed easily by lightly tapping them with a plastic hammer.

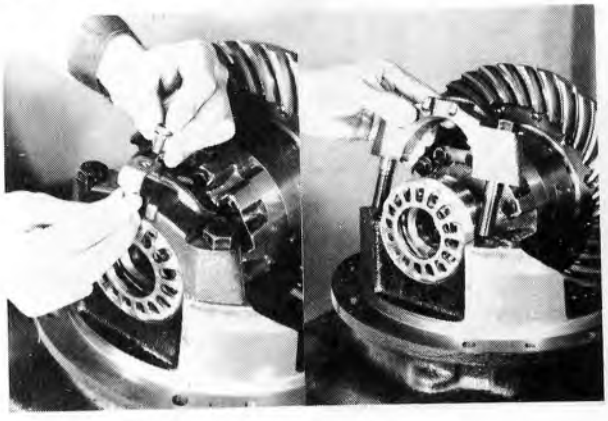

Fig. 4-54 Removing Bearing Caps

18. Remove the adjusting nuts.

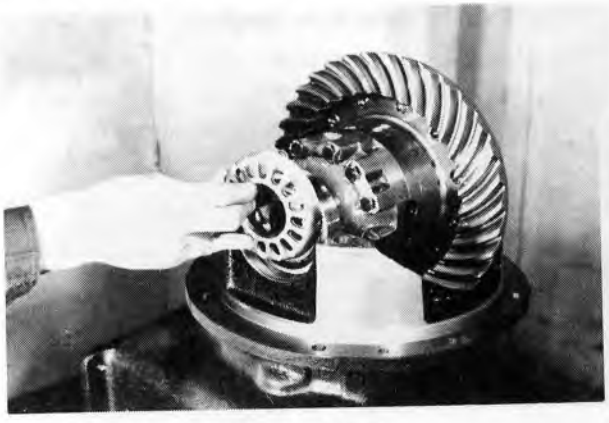

Fig. 4-55 Removing Adjusting Nuts

19. Remove the differential case assembly.



Fig. 4-56 Removing Differential Case Assembly

20. Measure the drive pinion bearing pre-load.
    (1) Wind a cord around the output gear and measure the starting force with a spring scale for the reference when assembling.

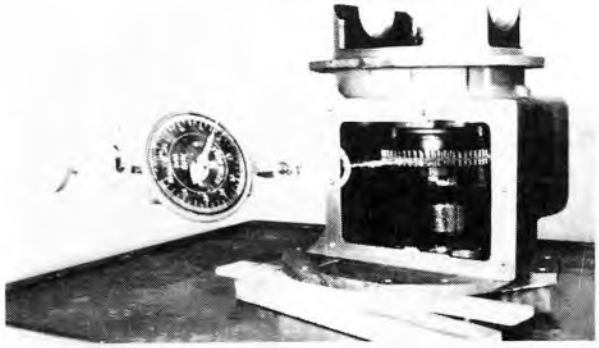

Fig. 4-57 Measuring Bearing Pre-load

21. Remove the speed shaft bearing and counter shaft bearing from the transmission case by using a brass rod.

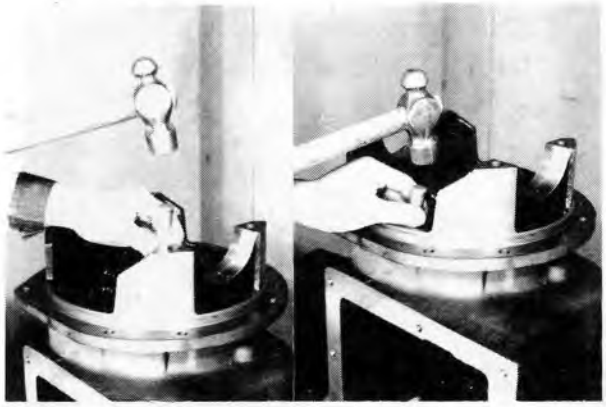

Fig. 4-58 Removing Bearings

22. Remove the output gear and drive pinion assembly.
    (1) Set bolts



Fig. 4-59 Removing Drive Pinion Assembly (1)

    (2) Use a brass rod for removal.
    (3) Output gear and drive pinion assembly.

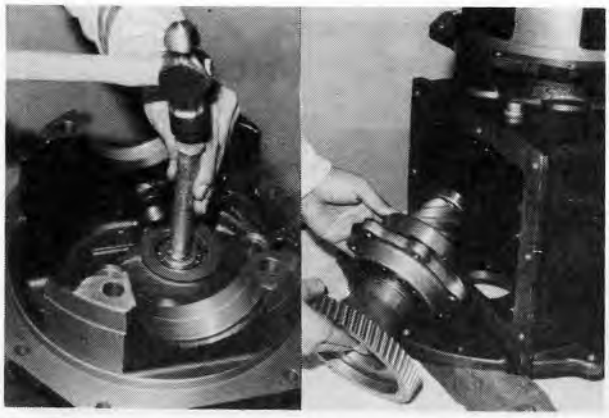

Fig. 4-60 Removing Drive Pinion Assembly (2)

23. Remove the output gear.
    (1) Loosen the lock nut.

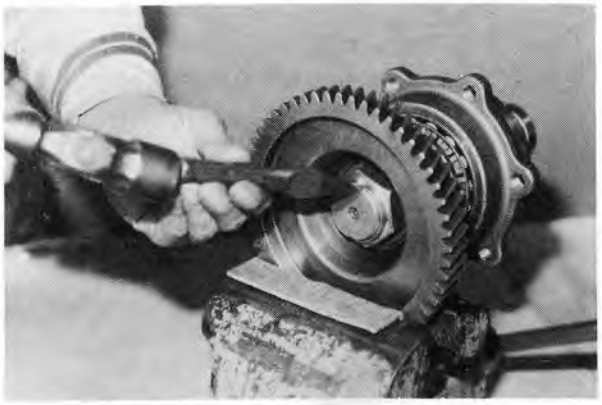

Fig. 4-61 Removing Output Gear (1)

    (2) Remove the lock nut.
    (3) Output gear.



Fig. 4-62 Removing Output Gear (2)

24. Remove the drive pinion.
    (1) Drive out the drive pinion.

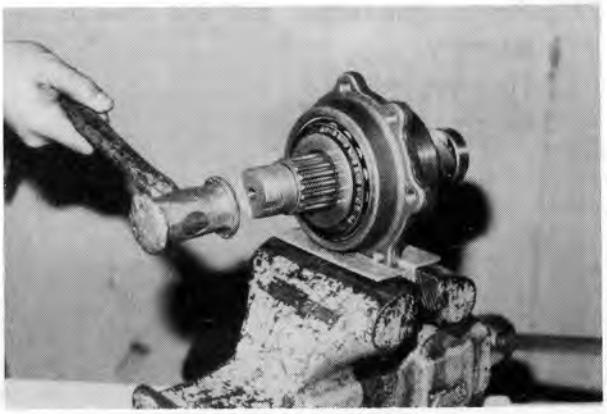

Fig. 4-63 Driving Out Drive Pinion

    (2) Bearing spacer.
    (3) Shims

    Caution:
    Record the number and thickness of the bearing pre-load adjusting shims used.



Fig. 4-64 Removing Shims

25. Remove the tapered roller bearing inner race.
Use SST 09950-20012.

Caution:
Remove the bearing inner race only when the bearing is found defective.

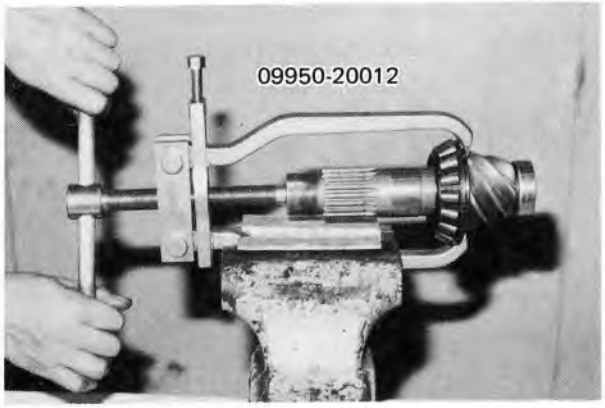

Fig. 4-65 Removing Bearing Inner Race

26. Remove the pilot bearing.
(1) Loosen the caulked end of the drive pinion.
(2) Pilot bearing
Use SST 09950-20012.

Caution:
Inspect bearing, and remove only when a defect is detected.



Fig. 4-66 Removing Pilot Bearing

27. Remove the tapered roller bearing outer race from the retainer.

Caution:
Inspect the retainer and bearing, and remove only when a defect is detected.



Fig. 4-67 Removing Outer Race

28. Remove the differential side bearings.
Use SST 09950-20012.

Caution:
Remove the bearings only when they are found defective.



Fig. 4-68 Removing Differential Side Bearing

29. Remove the differential upper case.
    (1) Check the match marks on the upper and lower cases.

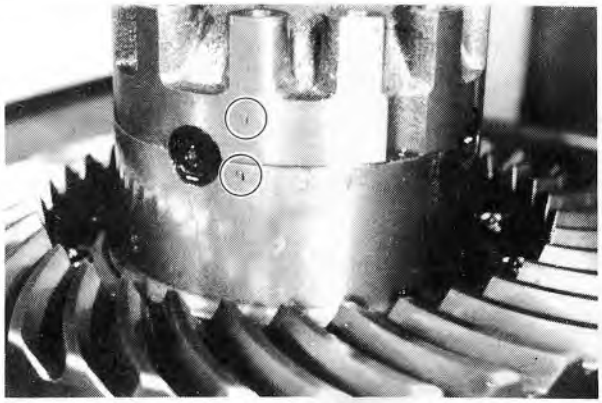

Fig. 4-69 Checking Match Marks

    (2) Lock plates
    (3) Set bolts
    (4) Upper case

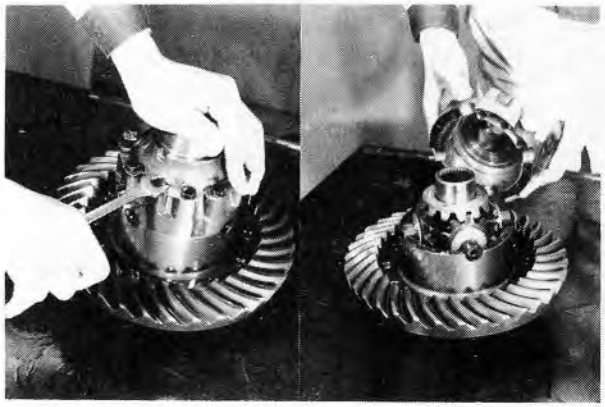

Fig. 4-70 Removing Upper Case

30. Remove the side gears and differential pinion gears.
    (1) Side gear, thrust washer.
    (2) Differential spider, differential pinion gears, thrust washer.
    (3) Side gear, thrust washer.

    Reference:
    Two differential pinion gears are installed in vehicles equipped with 4P engines. Four pinion gears are installed in other vehicles.

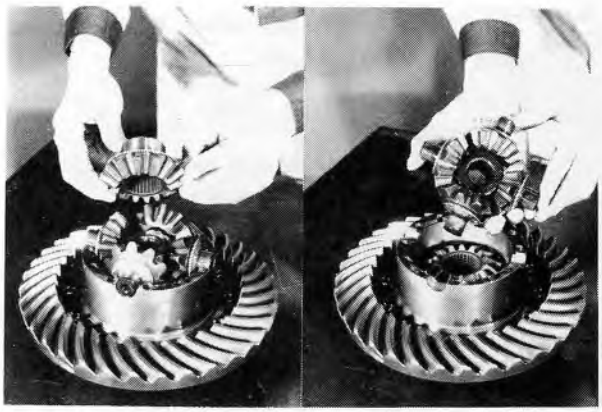

Fig. 4-71 Removing Side & Pinion Gears

31. Remove the differential ring gear.
    (1) Loosen the caulked set bolts.
    (2) Set bolts
    (3) Ring gear

    Caution:
    Remove the ring gear, drive pinion, and differential case only when they are found defective.



Fig. 4-72 Removing Ring Gear

INSPECTION

Caution:
Wash all disassembled parts and inspect them in accordance with the following items. Repair or replace any part found defective.

1. Gear shift lever parts
   (1) Bending, cracks in gear shift levers, wear, damage on lever ends.
   Lever end standard: 13.0 mm (0.512 in)
   Lever end wear limit: 12.5 mm (0.492 in)
   (2) Wear on the fitting part of the shift lever retainer.
   Shift lever groove width limit: 8.8 mm (0.346 in)
   Shift lever pin wear limit: 7.5 mm (0.295 in)

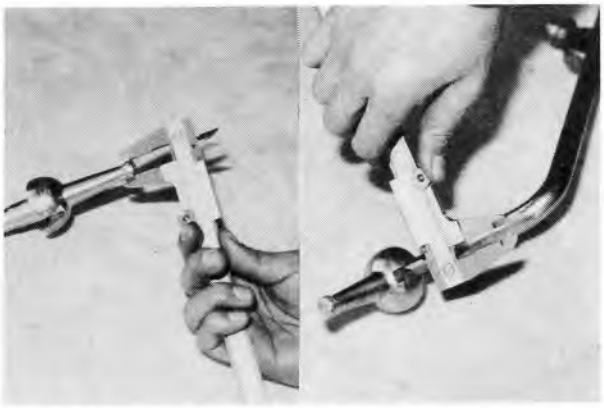

Fig. 4-73 Inspecting Gear Shift Lever



Fig. 4-74 Inspecting Gear Shift Lever Pin

   (3) Weak or broken shift lever spring.
   Free length standard: 27 mm (1.06 in)
   Free length limit: 25 mm (0.984 in)



Fig. 4-75 Inspecting Shift Lever Spring

2. Gear shift forks
   (1) Wear, damage of the gear shift lever insertion part.
   Inner diameter standard: 13.0 mm (0.512 in)
   Inner diameter limit: 13.6 mm (0.535 in)

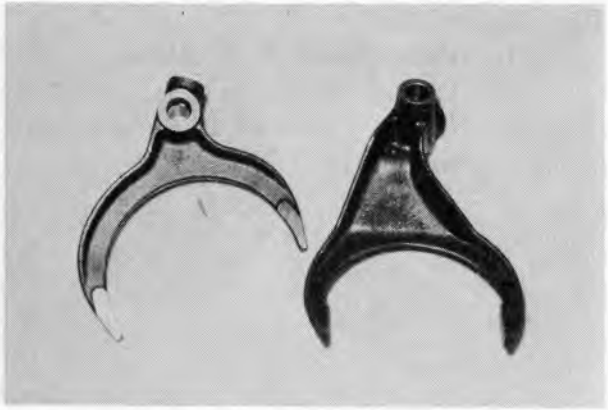

Fig. 4-76 Inspecting Gear Shift Fork (1)

(2) Wear, damage of the shift fork and hub sleeve.
Clearance limit: 1.0 mm (0.039 in)

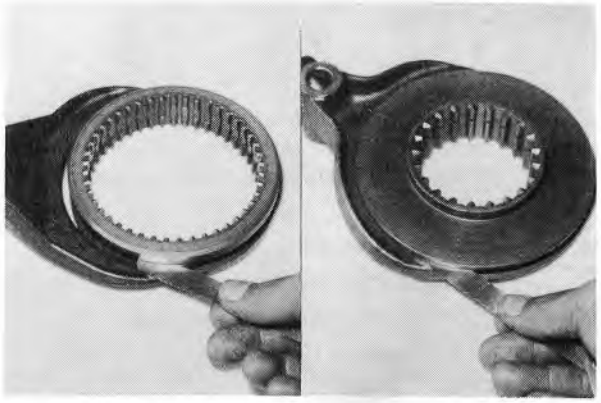

Fig. 4-77 Inspecting Gear Shift Fork

3. Gear shift fork shafts.
   (1) Wear on the shaft sliding surface.
   Outer diameter standard:
   15.0 mm (0.591 in)
   Outer diameter limit:
   14.9 mm (0.587 in)
   (2) Damage, bending of shift fork shaft, wear in ball stopper grooves.
   (3) Damage of the lock ball springs.
   (4) Wear, damage of the lock balls.

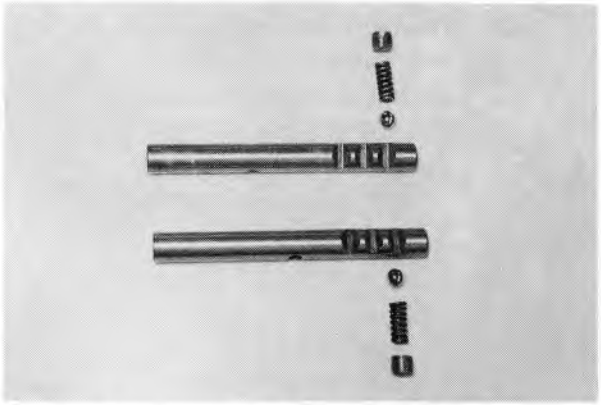

Fig. 4-78 Inspecting Gear Shift Fork Shaft

4. Main drive shaft.
   (1) Damage, wear on shaft ends.
   (2) Damage, stepped wear on the splines.
   (3) Bending of the shaft.
   Bend limit: 0.1 mm (0.0039 in)

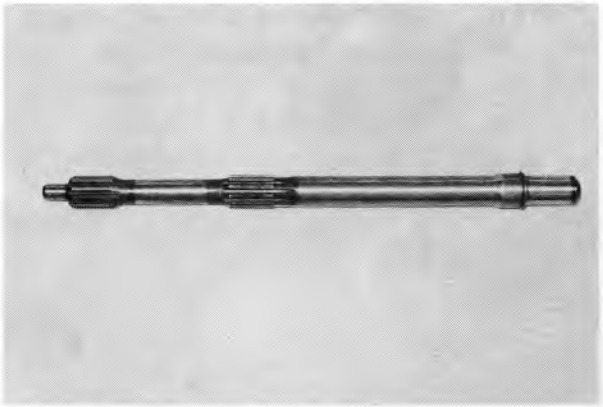

Fig. 4-79 Inspecting Main Drive Shaft

5. Counter shaft.
   (1) Wear, damage of the splines.
   (2) Damage of the stop plate.
   (3) Damage, breakage of the stop plate set ring.

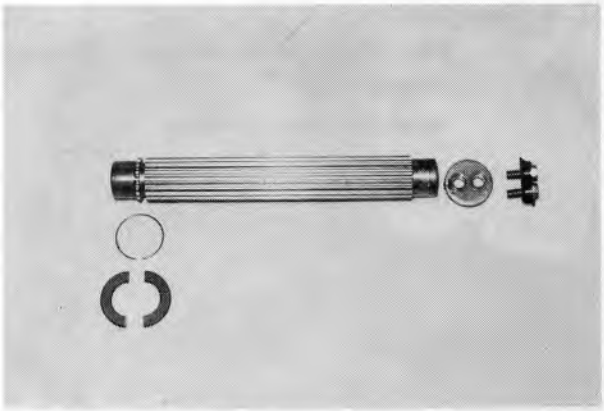

Fig. 4-80 Counter Shaft Inspection

6. Reverse idler shaft, collar.
   Shaft outer diameter standard:
   35.0 mm (1.378 in)
   Shaft outer diameter limit:
   34.9 mm (1.374 in)
   Collar length standard: 37.0 mm (1.457 in)
   Collar length limit: 36.7 mm (1.445 in)

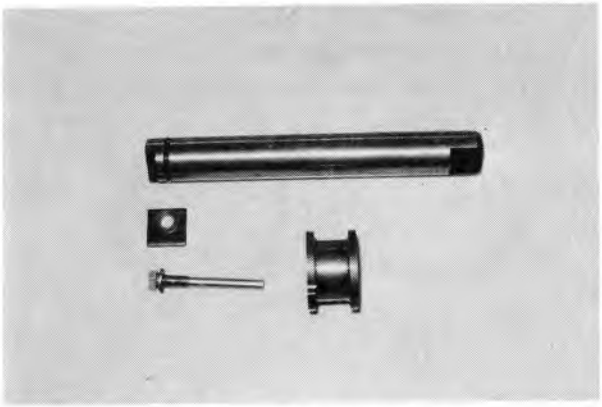

Fig. 4-81 Inspecting Reverse Idler Shaft, Collar

7. Bearings.
   Wear, damage, abnormal noise and rotation condition of the bearings.
   (1) Ball bearings
   Turn the balls by applying pressure onto them and check to see whether they rotate smoothly without abnormal noise.
   (2) Tapered roller bearings
   Inspect to see if the rollers are pitted or worn, and if the bearing holder and outer race are damaged. Check the rotating condition of the rollers.

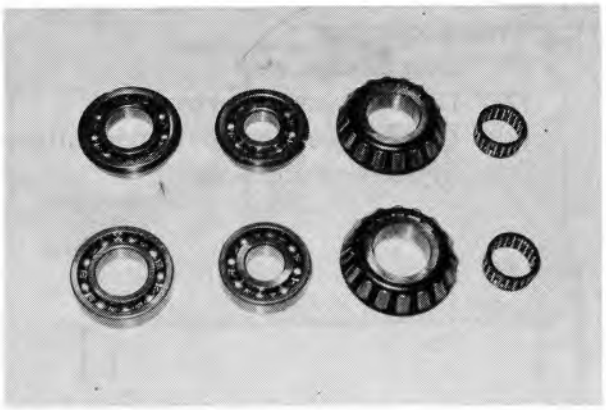

Fig. 4-82 Inspecting Bearings

8. High and low speed gears.
   (1) Damage, wear of the cones.
   (2) Damage, wear of the splines.
   (3) Damage of the gears.
   (4) Damage, wear of the gear ends.
   (5) Damage, wear of the gear inner surface.
   Gear inner diameter standard:
   40.0 mm (1.575 in)
   Gear inner diameter limit:
   40.1 mm (1.579 in)



Fig. 4-83 High and Low Speed Gear Inspection

9. Forward & reverse gears.
   (1) Damage, wear of the splines.
   (2) Damage, wear of the gears.
   (3) Damage, wear of the gear ends.
   (4) Damage, wear of the gear inner surface.
   Gear inner diameter standard:
   40.0 mm (1.575 in)
   Gear inner diameter limit:
   40.1 mm (1.579 in)

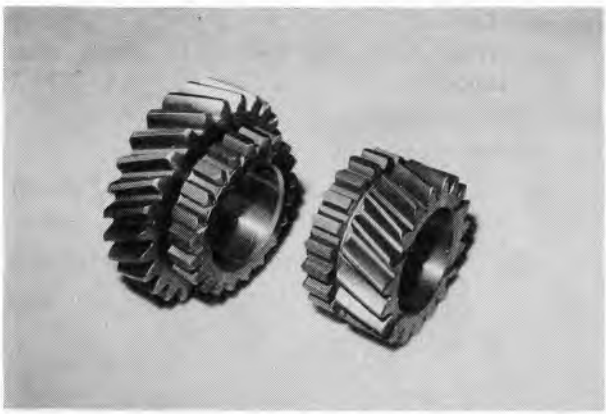

Fig. 4-84 Forward and Reverse Gear Inspection

10. Speed shaft.
    (1) Gear damage, wear
    (2) Wear and damage of the internal splines.



Fig. 4-85 Speed Shaft Inspection

11. Reverse idler gear.
    (1) Gear damage, wear
    (2) Damage, wear of the gear ends
    (3) Damage, wear on the sliding surface of the needle bearing.

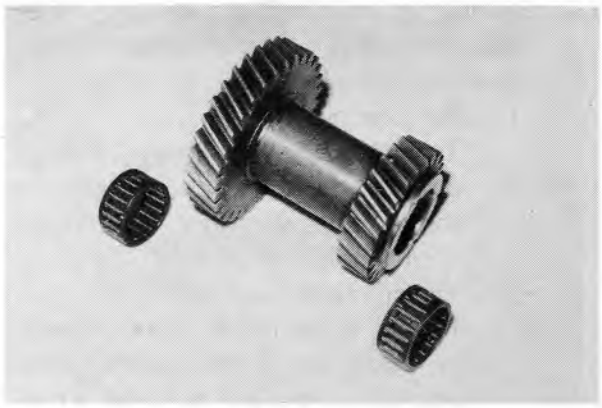

Fig. 4-86 Reverse Idler Gear

12. 1st/2nd speeds clutch hub and sleeve.
    (1) Damage and wear of the external splines.
    (2) Damage and wear of the shifting key fitting part.
    (3) Damage and wear of the surface of the hub in contact with the gear.
    (4) Damage and wear of the internal splines.
    (5) Damage and wear of the shift fork contact groove. Fork to hub sleeve clearance limit: 1.0 mm (0.039 in)

    Caution:
    When fitting the hub to the sleeve, slide smoothly.

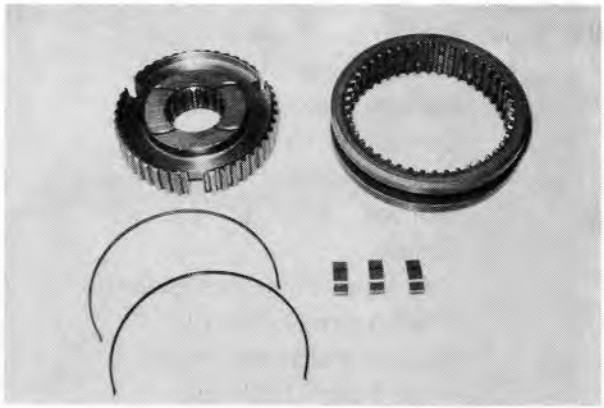

Fig. 4-87 1st/2nd Speeds Clutch Hub Sleeve

13. Shifting key, key spring.
    (1) Damage and wear of the key center protrusion.
    (2) Damage of the spring, wear of the contact part between the key and spring.

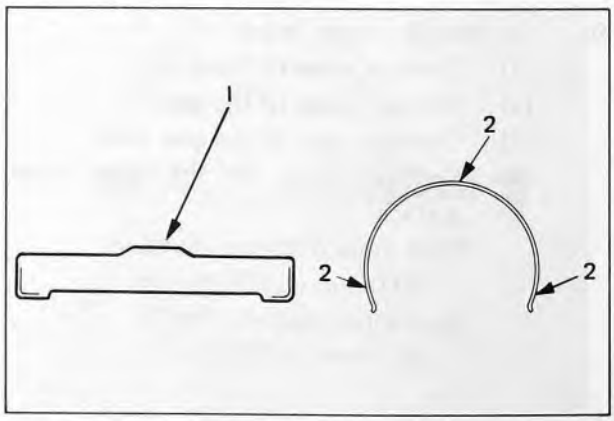

Fig. 4-88 Inspecting Key and Spring

14. Synchronizer rings.
    (1) Damage and wear of the splines.
    (2) Damage and wear of the tapered part.
    (3) Gear braking action.

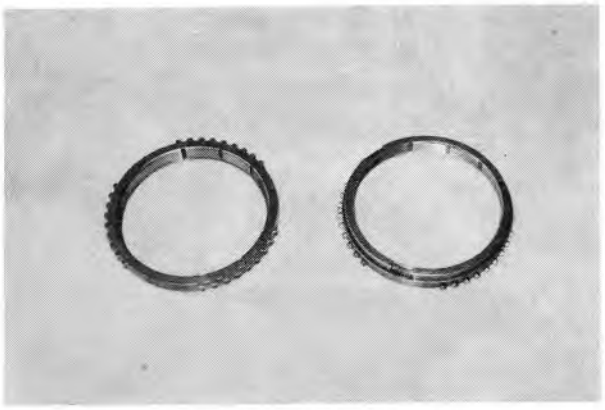

Fig. 4-89 Synchronizer Ring Inspection (1)

    (4) Gear to ring clearance.
    Standard: 1.10 ~ 1.90 mm
    (0.0433 ~ 0.0748 in)
    Limit: 0.8 mm
    (0.031 in)

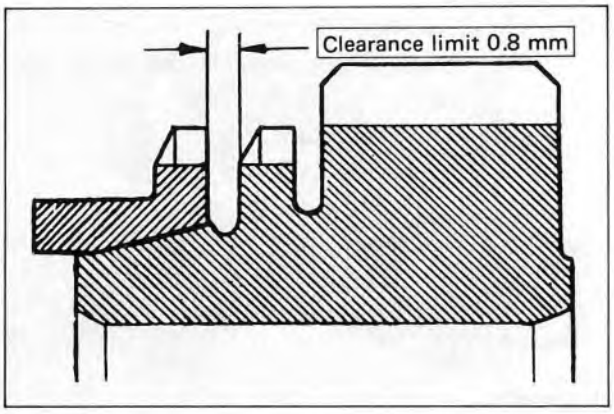

Fig. 4-90 Synchronizer Ring Inspection (2)

15. Forward & reverse clutch hub and sleeve.
    (1) Damage, wear of the external splines.
    (2) Damage and wear of the hub surface in contact with the gear.
    (3) Damage and wear of the internal splines.
    (4) Damage and wear of the shift fork contact groove.
    Fork to hub sleeve clearance:
    1.0 mm (0.039 in)

    Caution:
    When fitting the hub to the sleeve, slide smoothly.



Fig. 4-91 Inspecting Forward & Reverse Clutch Hub and Sleeve

16. Bushing.
    (1) Damage and wear of the sliding surface.



Fig. 4-92 Bushing Inspection (1)

Outer diameter standard:
45.0 mm (1.772 in)
Outer diameter limit:
44.7 mm (1.760 in)

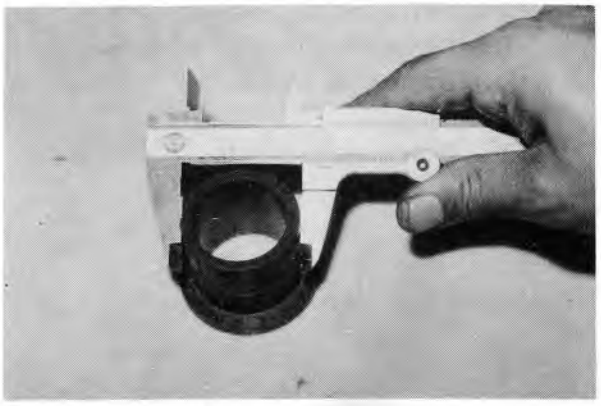

Fig. 4-93 Bushing Inspection (2)

17. Thrust washer.
    (1) Damage and wear of the thrust surfaces.
    Thickness standard:
    2.95 ~ 3.05 mm
    (0.116 ~ 0.120 in)
    Thickness limit:
    2.65 mm
    (0.104 in)



Fig. 4-94 Inspecting Thrust Washer

18. Transmission case rear cover.
    (1) Damage and wear of the oil seal lip.
    (2) Damage and wear of the release bearing hub sliding part.
    (3) Damage and cracks in the cover.



Fig. 4-95 Inspecting Transmission Case Rear Cover

19. Transmission case.
    (1) Damage, cracks in the transmission case and upper cover.
    (2) Damage of the transmission carrier cap.

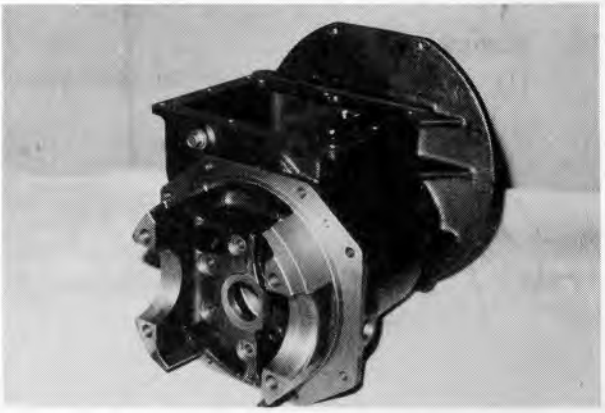

Fig. 4-96 Inspecting Transmission Case

20. Thrust screw cap.
    (1) Damage of the threaded part.
    (2) Damage, wear of the cap.
    Standard:
    13.0 mm (0.512 in)
    Wear limit:
    12.2 mm (0.480 in)



Fig. 4-97 Inspecting Thrust Screw, Cap

21. Side bearings.
    (1) Cracks, damage and wear in the rollers.
    (2) Damage of the bearing holders.
    (3) Damage, wear of the bearing outer race.

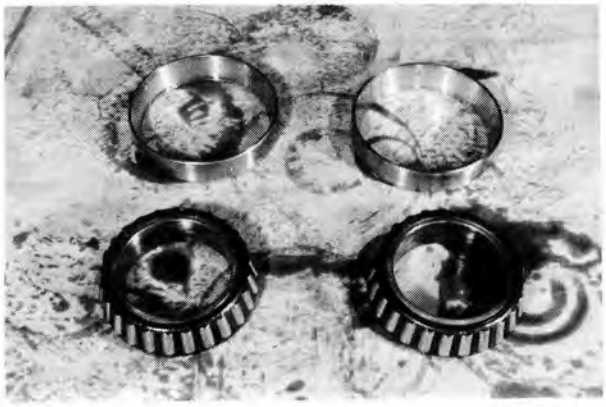

Fig. 4-98 Inspecting Side Bearing

22. Drive pinion and ring gear.
    (1) Damage and wear in the teeth surfaces.
    (2) Damage, cracks in the pilot bearing.
    (3) Damage of the pinion splines.
    (4) Damage of the pinion threaded part.

    Caution:
    If either the drive pinion or ring gear is defective, both of them must be replaced as a set.



Fig. 4-99 Pinion and Ring Gear Inspection

23. Side gears, differential pinions, spider, and thrust washers.
    Check them for damage and wear.
    (1) Differential pinion
    Bore standard:
    22.12 mm (0.871 in)
    Bore wear limit:
    22.22 mm (0.875 in)

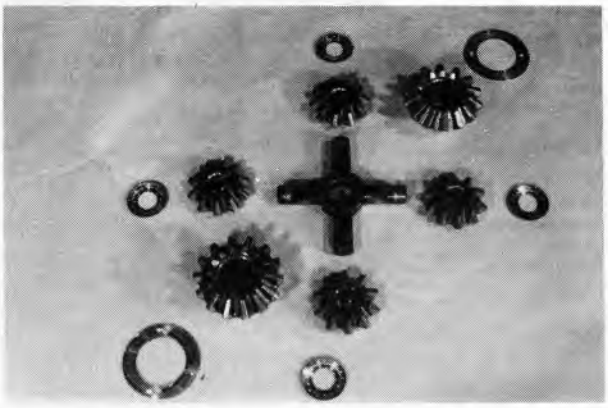

Fig. 4-100 Differential Gear and Side Gear Inspection

(2) Thrust washer (differential pinion)
Thickness standard:
1.6 mm (0.063 in)
Wear limit:
1.0 mm (0.039 in)

(3) Thrust washer (side gear)
Thickness standard:
1.6 mm (0.063 in)
Wear limit:
1.3 mm (0.051 in)

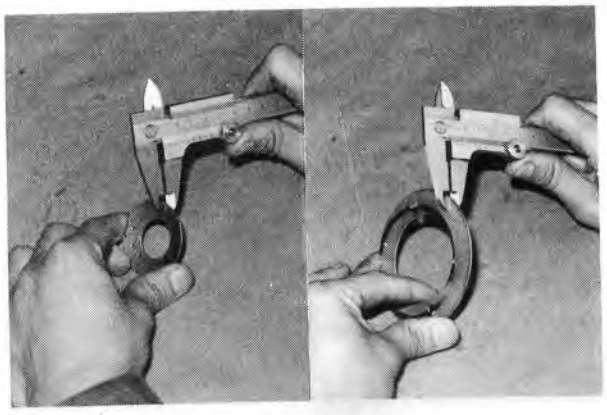

Fig. 4-101 Inspecting Thrust Washer

(4) Spider
Outer diameter standard:
22.00 mm (0.866 in)
Outer diameter wear limit:
21.75 mm (0.856 in)



Fig. 4-102 Inspecting Spider

24. Differential case.
(1) Cracks, damage in the case.



Fig. 4-103 Inspecting Differential Case

25. Adjusting nuts.
(1) Damage in the nut threaded part.

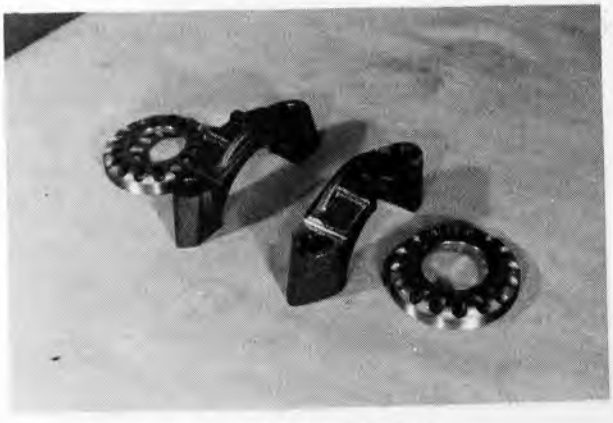

Fig. 4-104 Inspection of Adjusting Nut

ASSEMBLY AND ADJUSTMENT
DIFFERENTIAL

1. Assemble the ring gear.
   (1) Differential lower case
   (2) Ring gear
   (3) Set bolts
   T = 13 ~ 18 kg-m
   (93.9 ~ 130 ft-lb)

   Essential:
   - **Use new set bolts for assembly, and coat their threads with a locking compound.**
   - **Tighten each pair of bolts opposite to each other, and finally tighten the bolts to the specified torque successively in a circular sequence.**

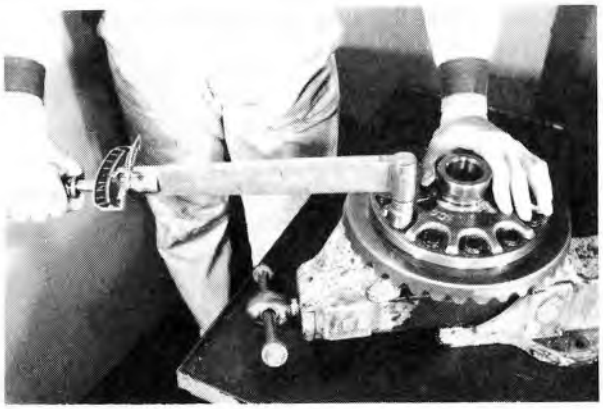

Fig. 4-105 Assembling Ring Gear

2. Caulk the set bolts.
   (1) Caulk the set bolt ends in cross forms.



Fig. 4-106 Caulking Set Bolts

3. Assemble the side gears.
   (1) Thrust washer

   Caution:
   Assembly must be performed with the oil groove side on the gear side.

   (2) Side gear



Fig. 4-107 Assembling Side Gear

4. Assemble the spider pinion set.
   (1) Spider
   (2) Pinions
   (3) Thrust washers
   } Must be assembled as a set



Fig. 4-108 Assembling Spider Pinion

5. Assemble the side gear and thrust washer.
   (1) Side gear
   (2) Thrust washer

   Caution:
   Assembly must be performed with the oil groove side on the gear side.



Fig. 4-109 Assembling Side Gear

6. Assemble the differential upper case.
   (1) Differential upper case

   Caution:
   Duly align the match marks.

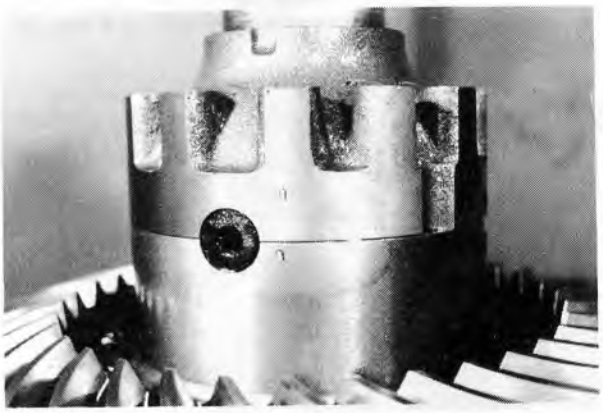

Fig. 4-110 Aligning Match Marks

   (2) Lock plate
   (3) Set bolts
   T = 4.4 ~ 5.5 kg-m
   (31.8 ~ 39.7 ft-lb)

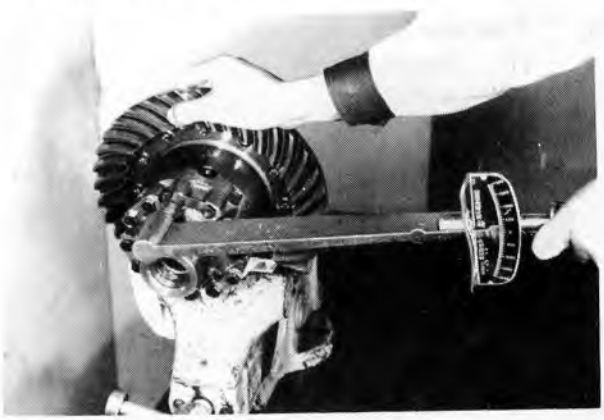

Fig. 4-111 Tightening Set Bolts

   (4) Caulk the lock plate.



Fig. 4-112 Caulking Lock Plate

7. Install the side bearings.
Use SST 09370-10410-71

Caution:
Be careful not to install the bearing in the reverse direction.

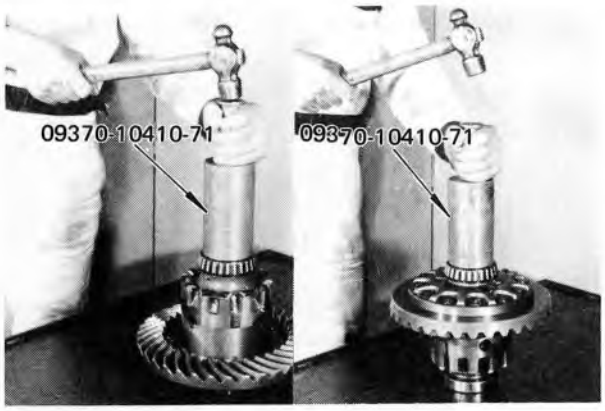

Fig. 4-113 Installing Side Bearing

8. Assemble the bearing outer race.
(1) Bearing retainer
(2) Drive in the oil seal from the torque converter side (in the case of the converter vehicle only).
Use SST 09608-30011

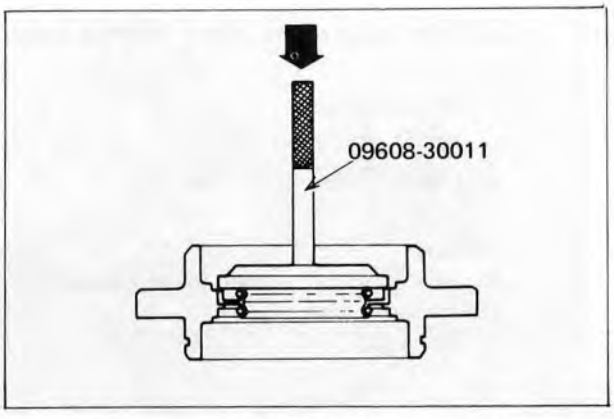

Fig. 4-114 Installing Oil Seal (For Converter Vehicle)

(3) Bearing outer race.
Use SST 09130-30200-71



Fig. 4-115 Installing Bearing Outer Race

9. Install the pilot bearing.
(1) Drive pinion
(2) Pilot bearing
Use SST 09608-30011



Fig. 4-116 Installing Pilot Bearing

(3) Caulk the drive pinion end at 3 points.

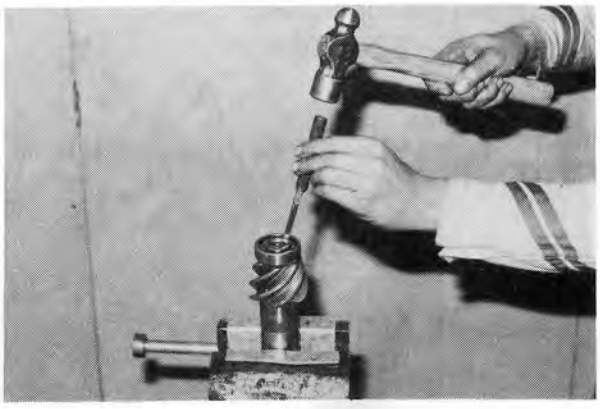

Fig. 4-117 Caulking Drive Pinion

10. Install the drive pinion front bearing inner race.
    (1) Drive pinion.
    (2) Front side inner race.
    Use SST 09370-20270-71

    Caution:
    Be careful not to install the bearing in the reverse direction.



Fig. 4-118 Installing Bearing Inner Race

11. Assemble the drive pinion.
    (1) Bearing retainer.
    (2) Drive pinion.
    (3) Bearing spacer.
    (4) Shim

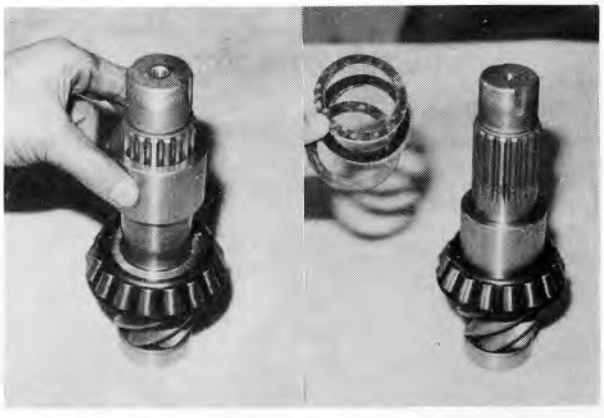

Fig. 4-119 Assembling Drive Pinion

12. Install the drive pinion rear bearing inner race.
    Use SST 09370-20270-71



Fig. 4-120 Installing Bearing Inner Race

13. Assemble the output gear.
    (1) Output gear



Fig. 4-121 Assembling Output Gear

    (2) Lock nut.
        T = 35 – 45 kg-m
        (253 – 289 ft-lb)

Caution:
- **Use new lock nut.**
- **After tightening the nut, tap the shaft with a plastic hammer, and retighten the nut to the specified torque.**
- **The lock nut is to be caulked after the pre-load of the bearing is measured.**

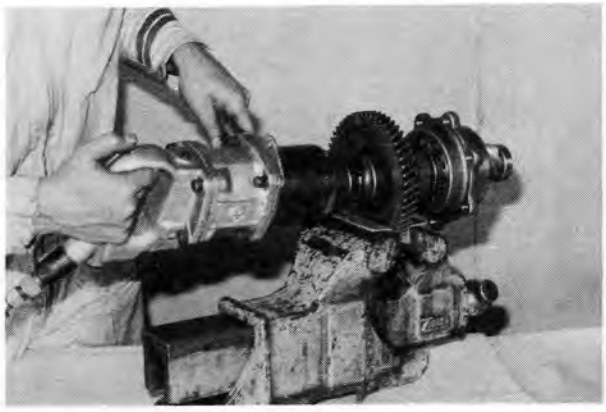

Fig. 4-122 Tightening Lock Nut (1)

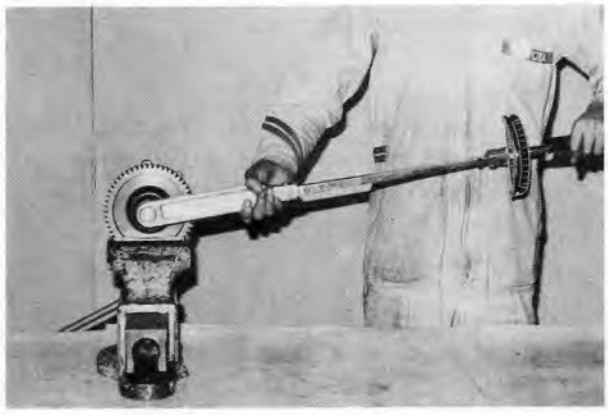

Fig. 4-123 Tightening Lock Nut (2)

14. Measure the drive pinion bearing pre-load.
    (1) Hold the bearing retainer in a vise.
    (2) Measure the starting force of the output gear.
        Starting force:
        Transmission vehicle
        12.7 ~ 15.6 kg (28.0 ~ 34.4 lb)
        Converter vehicle
        12.7 ~ 15.6 kg (28.0 ~ 34.4 lb)

Note:
Wind a cord around the output gear and measure the starting force by pulling the spring scale at a constant speed.



Fig. 4-124 Measuring Bearing Pre-Load

(3) If the starting force is outside the above range, disassemble the output gear, adjust the shim thickness, and tighten the lock nut to the specified torque. Afterward, remeasure the starting force.

Essential:
If the starting force measured is below the specified value, use less shims. Where the starting force is above the specified value, use more shims.

Transmission Vehicle Shims (1 ~ 3-ton)

Shim		Thickness mm (in)
No. 1	41216-20540-71	0.10 (0.0039)
No. 2	41217-20540-71	0.15 (0.0059)
No. 3	41218-20540-71	0.35 (0.0138)
No. 4	41219-20540-71	0.45 (0.0177)
No. 5	41213-20540-71	0.03 (0.0012)

Torque Converter Vehicle Shims (1 ~ 3-ton)

Shim		Thickness mm (in)
No. 1	41216-10510-71	0.08 (0.0032)
No. 2	41217-10510-71	0.1 (0.0039)
No. 3	41218-10510-71	0.3 (0.012)
No. 4	41219-10510-71	0.5 (0.020)

15. Caulk the lock nut.

Caution:
- Duly caulk the lock nut at 2 points.
- Parts "A" should be set in contact as shown in the figure to the right.



Fig. 4-125 Caulking Lock Nut (1)

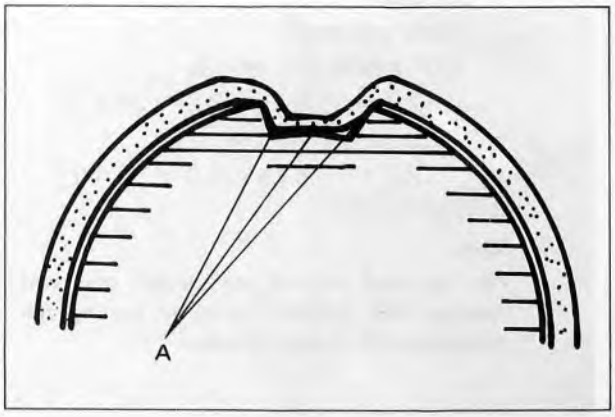

Fig. 4-126 Caulking Lock Nut (2)

DRIVE PINION PROTRUSION ADJUSTMENT

16. Adjust the drive pinion protrusion by varying the shim thickness.

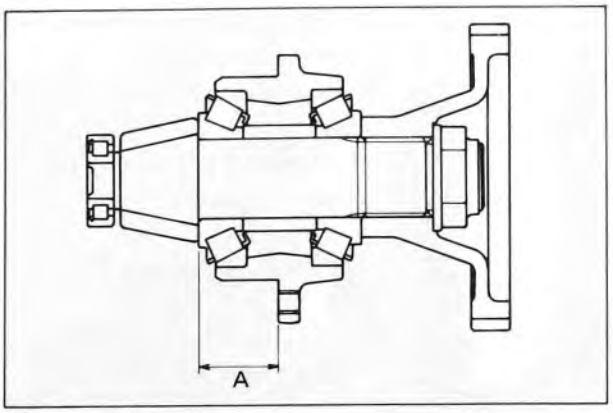

Fig. 4-127 Dimension A

<Shim Thickness Calculation Method>

(1) Measure the dimension A to 1/100 mm, using a height gauge.

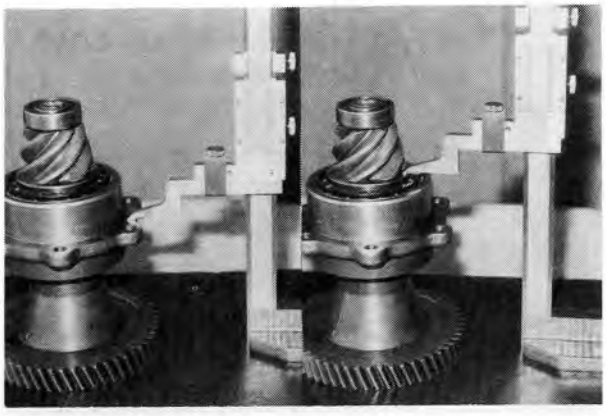

Fig. 4-128 Measuring Dimension A

(2) Read the dimension B punched on the transmission case.

Note:
If 15 is punched on the case, the dimension is 0.15 mm (0.0059 in).

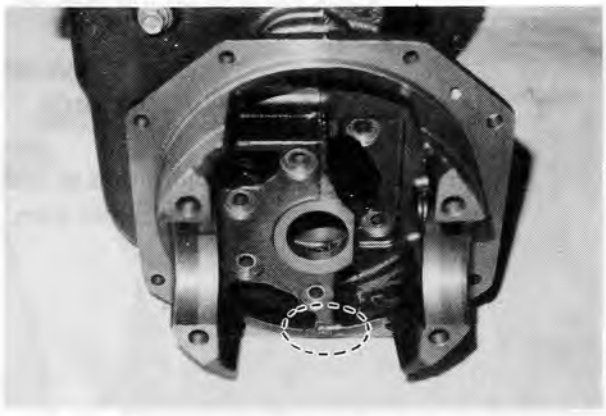

Fig. 4-129 Dimension B Punched Location

(3) Read the dimension C marked on the drive pinion rear end with an electric pen.

Note:
ooo ± △△ is marked. Regard it as ± △△ only.



Fig. 4-130 Dimension C Marked Location

(4) Calculate the shim thickness by using the following equation

1) Transmission vehicle (1 ~ 1.75 ton)
t = (A–44) + B/100 + C/100
t: Shim thickness

2) Transmission vehicle (2 ~ 3 ton)
t = (A–34) + B/100 + C/100
t: Shim thickness

3) Converter vehicle (1 ~ 1.75 ton)
t = (A–39) + B/100 + C/100
t: Shim thickness

4) Converter vehicle (2 ~ 3 ton)
t = (A–29) + B/100 + C/100
t: Shim thickness

Example:
2) 2 ~ 3 ton transmission vehicle
For dimension A:
Value actually measured: 34.14
For dimension B:
Value stamped on the case: 08
For dimension C:
Value marked on the pinion: 00
t = (34.14–34) + 8/100 + 0/100
= 0.22
Use either two 0.10-mm shims or one 0.1-mm shim and one 0.15-mm shim.

Shims to be Used for Transmission Vehicle

Shim		Thickness mm (in)
No. 1	33436-20540-71	0.10 (0.0039)
No. 2	33437-20540-71	0.15 (0.0059)
No. 3	33438-20540-71	0.35 (0.0138)
No. 4	33439-20540-71	0.45 (0.0177)

Shims to be Used for Converter Vehicle

Shim		Thickness mm (in)
No. 1	32566-10510-71	0.1 (0.0039)
No. 2	32567-10510-71	0.2 (0.0079)
No. 3	32568-10510-71	0.3 (0.0118)



Fig. 4-131 Installing Drive Pinion Assembly (1)

17. Install the drive pinion assembly.
(1) Shims
(2) Set bolts
T = 9 ~ 12 kg-m
(65.0 ~ 86.6 ft-lb)

Essential:
Apply a locking compound to the set bolt threads before installing.



Fig. 4-132 Installing Drive Pinion Assembly (2)

18. Install the differential case assembly.
    (1) Side bearing outer race.
    (2) Differential case assembly.

    Caution:
    Assembly must be performed in such a way that the ring gear meshes with the drive pinion.



Fig. 4-133 Installing Differential Case Assembly

19. Install the bearing caps.
    (1) Adjusting nuts.



Fig. 4-134 Installing Adjusting Nut

    (2) Bearing caps.

    Caution:
    Check the match marks when installing.

    (3) Tighten the set bolts temporarily.
        T = 2 kg-m (14.44 ft-lb)



Fig. 4-135 Tightening Set Bolts Temporarily

RING GEAR BACKLASH & SIDE BEARING PRE-LOAD ADJUSTMENT

20. Tighten the adjusting nuts.
    (1) Set a dial gauge perpendicular to the ring gear back surface.
    (2) Tighten the left and right adjusting nuts alternately.
        Use SST 09330-30010
    (3) Measure the thrust clearance, and tighten the nuts until the thrust clearance is reduced to zero.
    (4) Tighten the left and right adjusting nuts by one notch each.

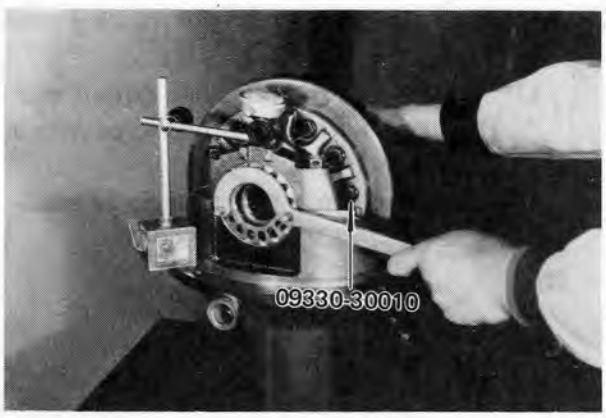

Fig. 4-136 Tightening Adjusting Nut

21. Measure the ring gear backlash.
    (1) Set a dial gauge perpendicular to the ring gear teeth surface.
    (2) Turn the ring gear to the left and right, and measure the backlash.
    Standard backlash:
    0.2 ~ 0.3 mm (0.0079 ~ 0.0118 in)



Fig. 4-137 Measuring Backlash

22. If the backlash measured is outside the above-mentioned range, adjust the ring gear backlash in the following way:
    (1) If the value measured is larger than the standard backlash:
    After loosening the adjusting nut on the ring gear teeth side, tighten the adjusting nut on the ring gear back side to bring the ring gear closer to the drive pinion.
    (2) If the value measured is smaller than the standard backlash:
    After loosening the adjusting nut on the ring gear back side, tighten the adjusting nut on the ring gear teeth side to move the ring gear away from the drive pinion.

    Essential:
    To adjust the backlash, loosen the adjusting nut on one side by one notch and tighten the adjusting nut on the other side by one notch to gradually shift the differential case, while watching the dial indicator.



Fig. 4-138 Adjusting Backlash (1)



Fig. 4-139 Adjusting Backlash (2)

23. Measure the differential side bearing pre-load.
    (1) Wind a cord around the output gear and measure the starting force with a spring scale.
    Starting force = Starting force specified in 14 (2) + 2 kg (4.4 lb)

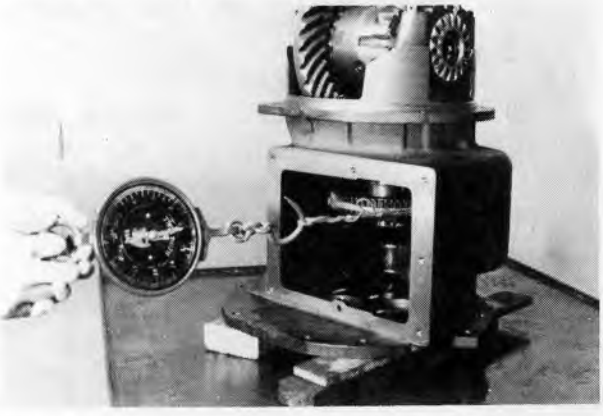

Fig. 4-140 Measuring Differential Side Bearing Pre-Load

Caution:
The value indicated by the spring scale also includes the pinion bearing starting force.

(2) If the starting force measured is outside the abovementioned standard range, adjust the starting force in the following way:

1) In case the pre-load is to be increased:
Tighten the left and right adjusting nuts by the same amount.

2) In case the pre-load is to be decreased:
Loosen the left and right adjusting nuts by the same amount.

Caution:
After adjusting the pre-load, remeasure the backlash and check that the backlash measured is within the standard range.

24. Tighten the bearing cap set bolts to the specified torque.
T = 6 ~ 8 kg-m (43.3 ~ 57.6 ft-lb)

CHECKING GEAR TEETH CONTACT

25. Check the teeth contact between the ring gear and drive pinion.
Apply uniformly a light coat of red lead on both faces of 7 to 8 gear teeth, and turn the ring gear forward and backward several times. Then check the teeth contact between the ring gear and drive pinion by observing the pattern formed on the gear teeth. If the ring gear and drive pinion are not in good contact, carry out the "Drive Pinion Protrusion Adjustment" and "Ring Gear Backlash and Side Bearing Pre-Load Adjustment" procedures.

(1) Good teeth contact.
The ring gear and drive pinion are in proper contact with each other if the above-mentioned pattern is roughly on the centerline of each tooth surface and has an appropriate width.



Fig. 4-141 Adjusting Pre-load

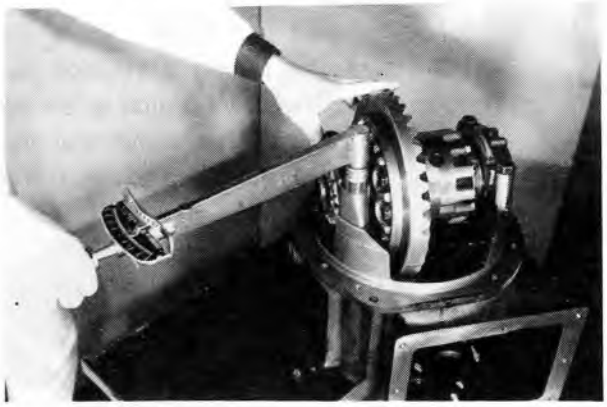

Fig. 4-142 Tightening Set Bolts



Fig. 4-143 Turning Ring Gear

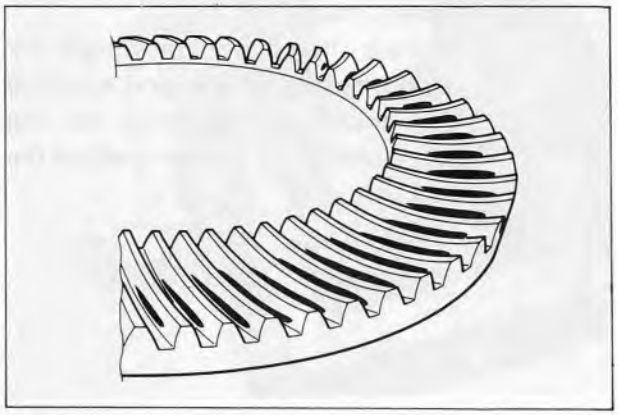

Fig. 4-144 Correct Teeth Contact

(2) Heel contact.
Increase the pinion protrusion by decreasing the drive pinion adjusting shim thickness. Then move the ring gear away from the pinion to adjust the backlash.

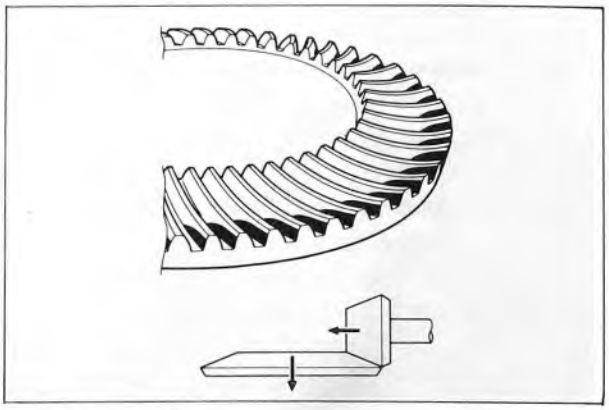

Fig. 4-145 Heel Contact

(3) Toe contact.
Decrease the pinion protrusion by increasing the drive pinion adjusting shim thickness. Then move the ring gear closer to the pinion to adjust the backlash.

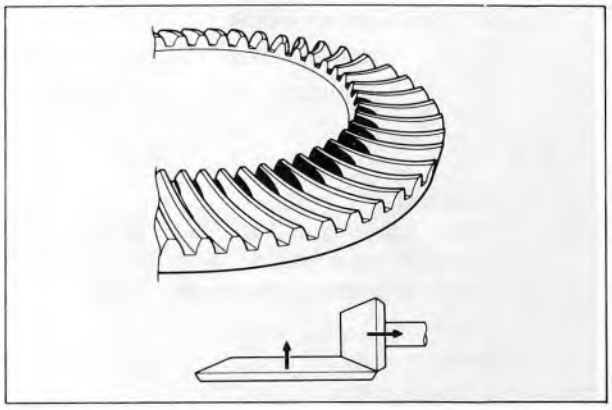

Fig. 4-146 Toe Contact

(4) Flank contact.
Decrease the pinion protrusion by increasing the drive pinion adjusting shim thickness. Then move the ring gear away from the pinion to adjust the backlash.

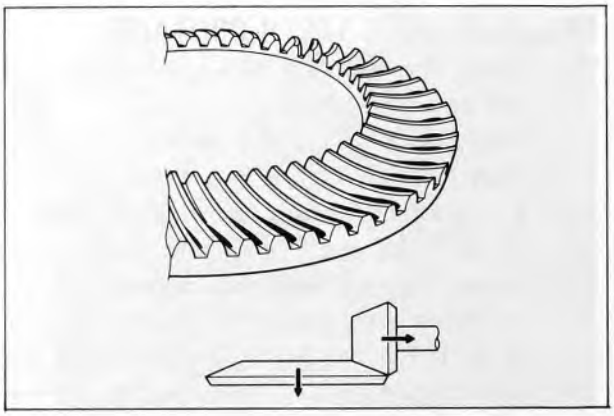

Fig. 4-147 Flank Contact

(5) Face contact.
Increase the pinion protrusion by decreasing the drive pinion adjusting shim thickness. Then move the ring gear closer to the pinion to adjust the backlash.

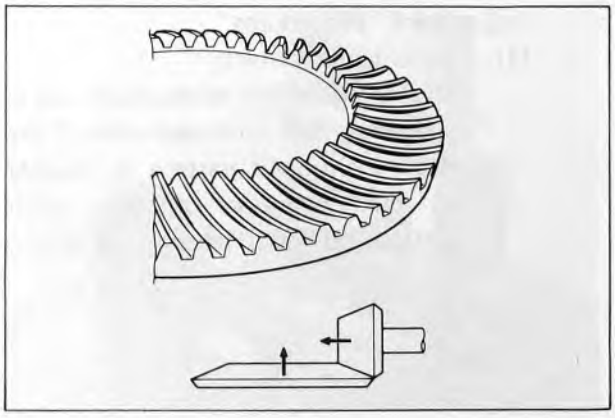

Fig. 4-148 Face Contact

26. Lock the bearing cap set bolts with a wire.
    (1) Adjusting nut lock.

    Caution:
    When aligning the positions of the adjusting nut lock, align the nuts by turning them in the direction for tightening.

    (2) Wire lock.



Fig. 4-149 Wire Lock

27. Install the ring gear thrust screw and cap.
    (1) Thrust screw and cap.

    Caution:
    Apply a liquid seal to the thrust screw before installing it.

    (2) Thrust screw cap clearance adjustment.
    Clearance: 0.2 ~ 0.3 mm

    Essential:
    Fully tighten the thrust screw and loosen it by 1/8 turn (45 degrees).

    (3) Thrust screw lock nut.
    T = 10.5 ~ 13 kg-m
    (75.8 ~ 93.9 ft-lb)



Fig. 4-150 Thrust Screw Adjustment (1)

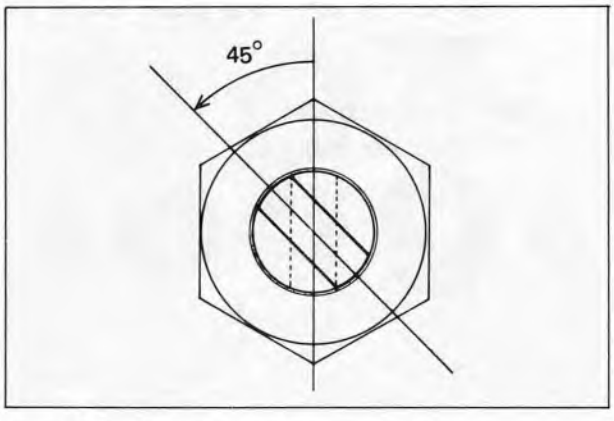

Fig. 4-151 Thrust Screw Adjustment (2)

TRANSMISSION

28. Install the bearings to the transmission case.
    (1) Counter shaft bearing.
    Use SST 09608-30011

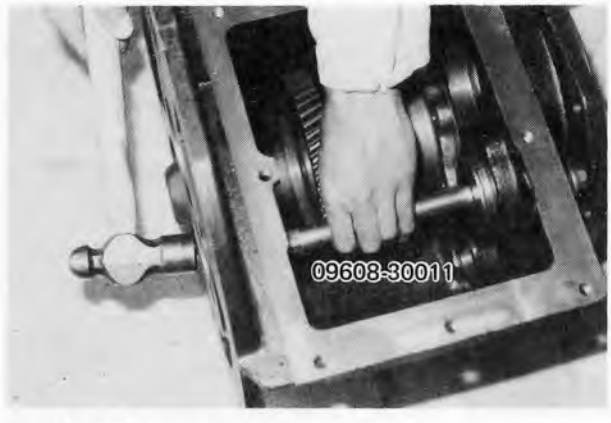

Fig. 4-152 Bearing Installation

(2) Speed shaft bearing.
Use SST 09608-30011

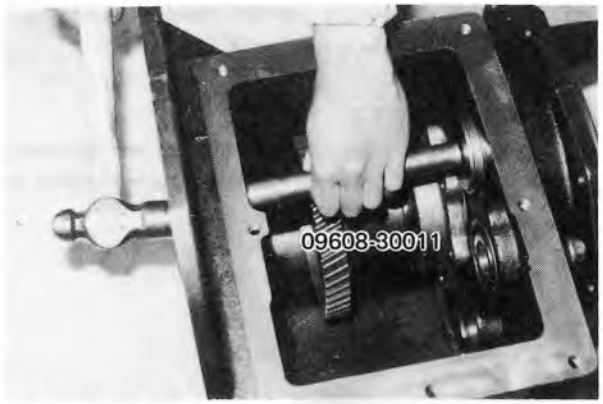

Fig. 4-153 Bearing Installation

29. Install the reverse idler gear.
(1) Reverse idler gear.
(2) Needle bearing.
(3) Thrust washer.

Essential:
Apply a small amount of grease to the thrust washer when fixing the washer.

(4) Idler shaft.
(5) Collar.

Caution:
Position the collar stop groove toward the stopper bolt.

(6) Stopper plate.
(7) Stopper bolt.

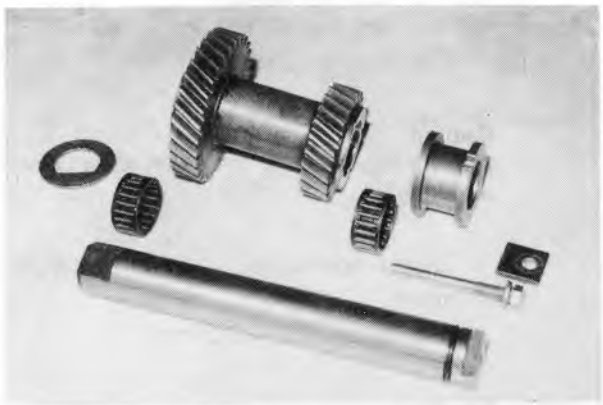

Fig. 4-154 Reverse Idler Gear Installation (1)

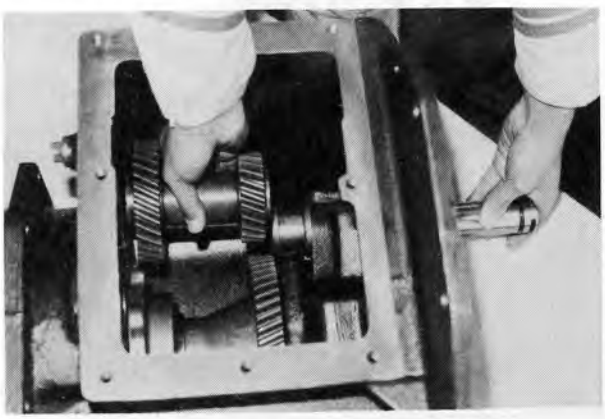

Fig. 4-155 Reverse Idler Gear Installation (2)

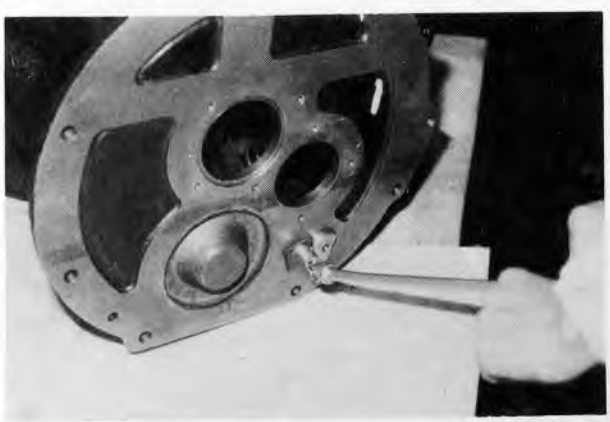

Fig. 4-156 Reverse Idler Gear Installation (3)

30. Install the speed shaft.
    (1) Insert the speed shaft into the case and tap the shaft with a copper hammer.

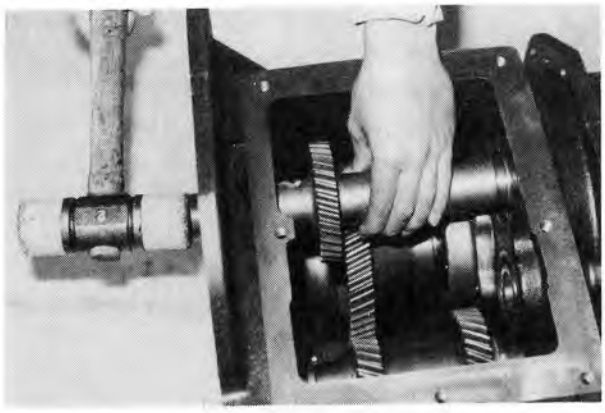

Fig. 4-157 Installing Speed Shaft

    (2) Drive in the bearing by tapping it. Use SST 09370-20270-71
    (3) Snap ring



Fig. 4-158 Tapping Bearing

31. Install the high & low speed gear assembly.

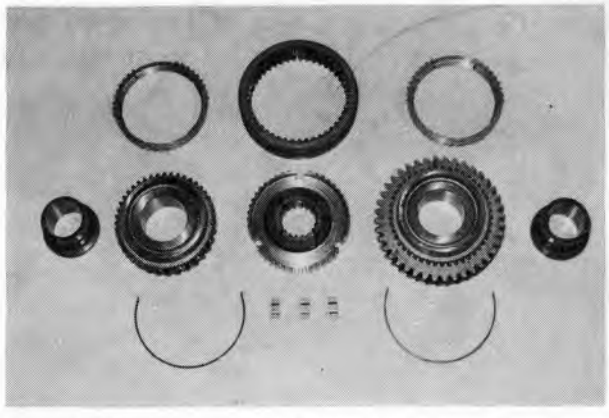

Fig. 4-159 Installing High & Low Gear Assembly

    (1) Install the clutch hub.
        a. Hub sleeve
        b. Shifting key
        c. Key spring

    Caution:
    - **When installing the key spring, be careful not to set the fitting parts of the spring in the same direction.**
    - **Check that the hub and hub sleeve slide smoothly.**



Fig. 4-160 Clutch Hub Installation

(2) Assemble the high and low speed gear.
   a. Bushing
   b. Low speed gear
   c. Synchronizer ring
   d. Clutch hub

Caution:
Fit the clutch hub keys into the synchronizer ring key ways.

   e. Synchronizer ring
   f. High speed gear
   g. Bushing

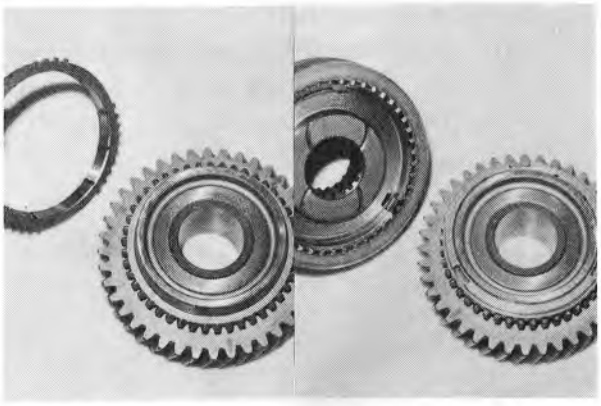

Fig. 4-161 Assembling High & Low Speed Gear (1)

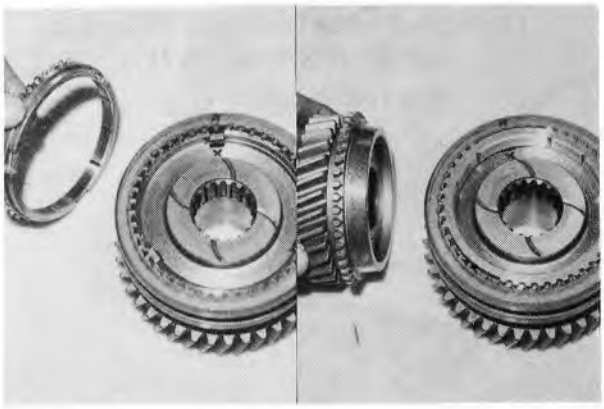

Fig. 4-162 Assembling High & Low Speed Gear (2)

(3) Install the high & low speed gear assembly, and fit the counter shaft to the assembly.

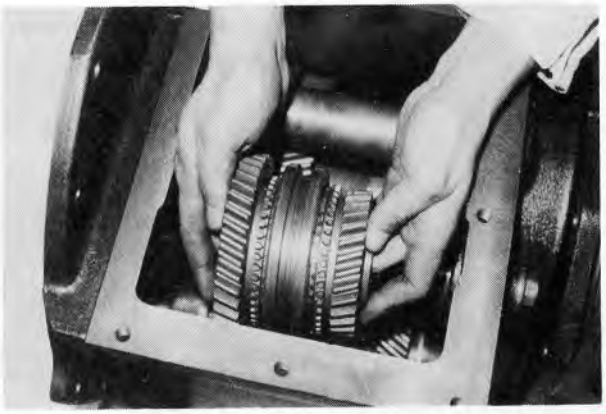

Fig. 4-163 Installing High & Low Speed Gear Assembly

32. Assemble the forward & reverse gear assembly.
Install the forward gear (1) on the engine side.
Fit the reverse gear (2) on the differential side.

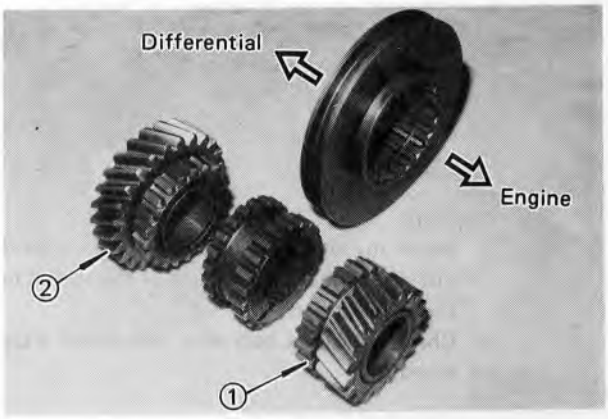

Fig. 4-164 Assembling Forward & Reverse Gear

(1) Direction for assembling the clutch hub and sleeve.
   a. Clutch hub
      Its narrow splines must be on the differential side.
   b. Sleeve
      Its wide splines must be on the differential side.

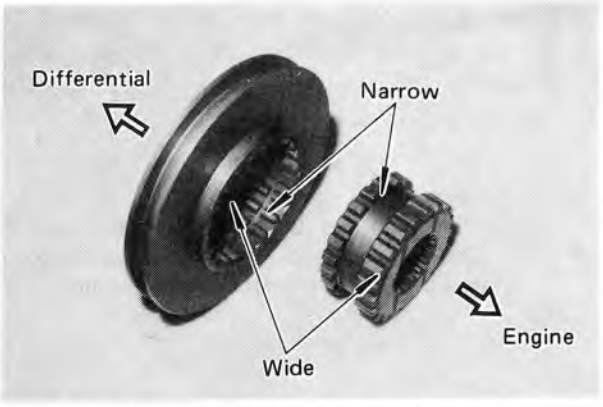

Fig. 4-165 Assembling Clutch Hub and Sleeve

(2) Direction for assembling the forward gear bushing

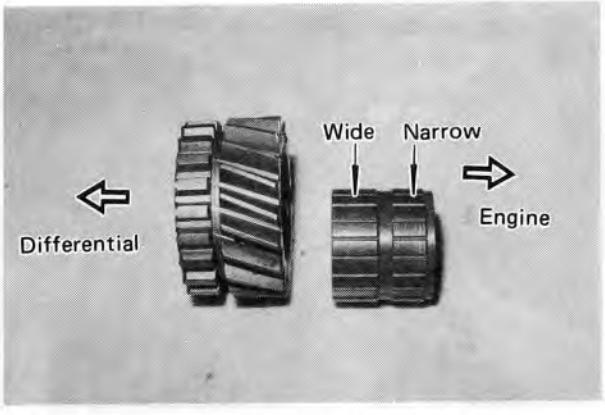

Fig. 4-166 Assembling Forward Gear Bushing

(3) Install the forward & reverse gear assembly.
(4) Stop plate collar (for 1~ 1.75-ton vehicle), collar (for 2 ~ 3-ton vehicle)

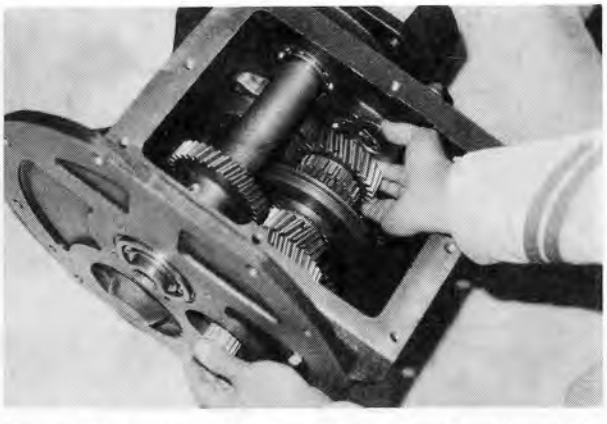

Fig. 4-167 Installing Forward & Reverse Gear Assembly

33. Drive in the counter shaft by tapping it with a brass hammer.

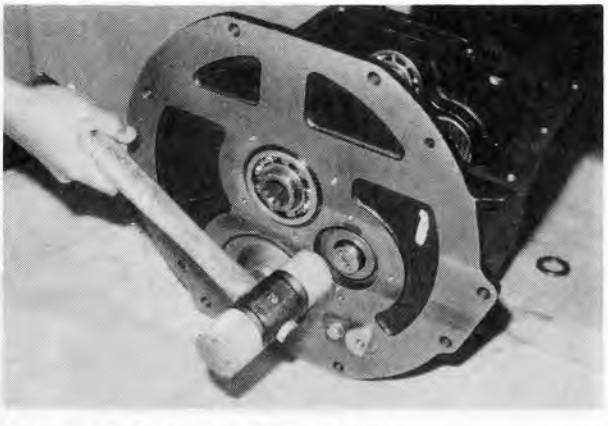

Fig. 4-168 Driving in Counter Shaft

34. Bring the high & low speed, forward & reverse gear assembly to the engine side, and install the stop plate (on 1 ~ 1.75-ton vehicle).

Caution:
After installing the stop plate and spring, turn the spring to the position where both separating parts are not on the same line.

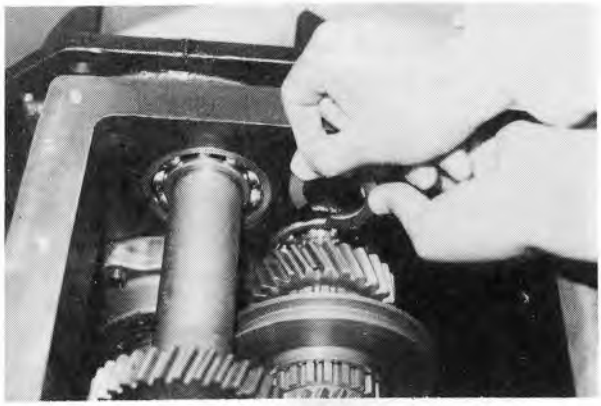

Fig. 4-169 Installing Stop Plate

35. Tap the bearing onto the counter shaft.
    (1) Snap ring
    (2) Bearing
    Use SST 09602-30010



Fig. 4-170 Tapping Bearing

36. Install the collar, castle nut.
    (1) Collar
    (2) Castle nut
    (3) Cotter pin
    (on 2 ~ 3-ton vehicle only)

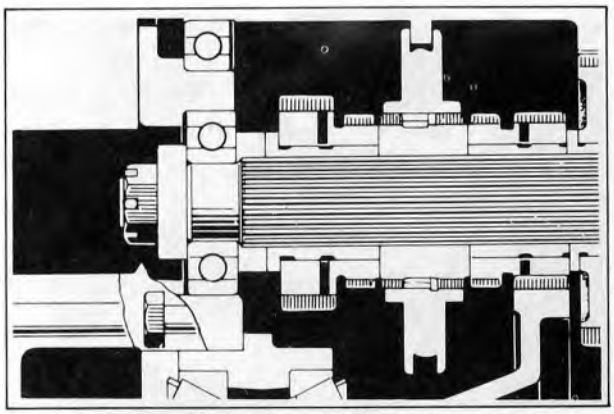

Fig. 4-171 Installing Collar and Castle Nut
(2 ~ 3 ton vehicle)

37. Install the counter shaft front bearing plate.
    (1) Front bearing plate
    (2) Lock plate
    (3) Set bolts
    T = 1.5 ~ 2.2 kg-m
    (10.8 ~ 15.9 ft-lb)

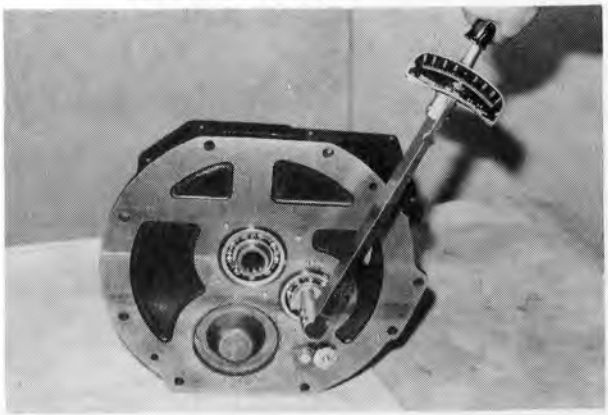

Fig. 4-172 Installing Bearing Plate

38. Install the transmission case rear cover.
    (1) Install the oil seal to the rear cover.
    (2) Apply grease to the oil seal.
    (3) Gasket
    (4) Set bolts

    Caution:
    Apply liquid seal to the gasket and set bolts.

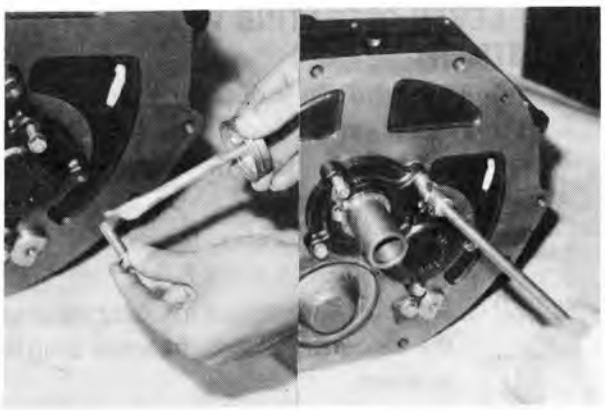

Fig. 4-173 Installing Rear Cover

39. Install the clutch release bearing, tension spring.
    (1) Release bearing
    (2) Tension spring

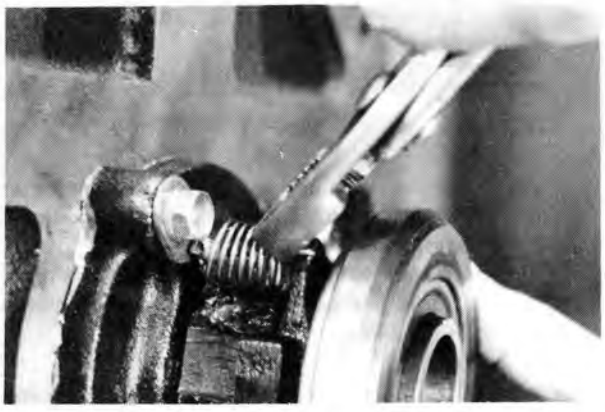

Fig. 4-174 Installing Tension Spring

40. Install the shift forks.
    (1) Shift fork shafts
    (2) Gear shift forks
    (3) Spring pins
    (4) Lock balls, compression springs, straight screw plugs

    Caution:
    Make sure that the shift forks and shafts are positioned in the correct directions.



Fig. 4-175 Installing Shift Fork

41. Install the shift levers.
    (1) Shift lever
    (2) Pins
    (3) Spring and spring seat
        Use SST 09130-10170-71
    (4) Lever cap and cap cover
    (5) Lock nut, knob



Fig. 4-176 Installing Shift Lever

SHIFT LEVER OPERATING FORCE ADJUSTMENT

38. Adjust the shift lever operating force.
    (1) Hook on a spring scale to the shift lever end and pull in the perpendicular direction.
    Shift lever operating force:
    3 ~ 4 kg (6.6 ~ 8.8 lb)
    (2) Adjust the operating force by varying the amount the straight screw plug is screwed.
    (3) Cotter pin

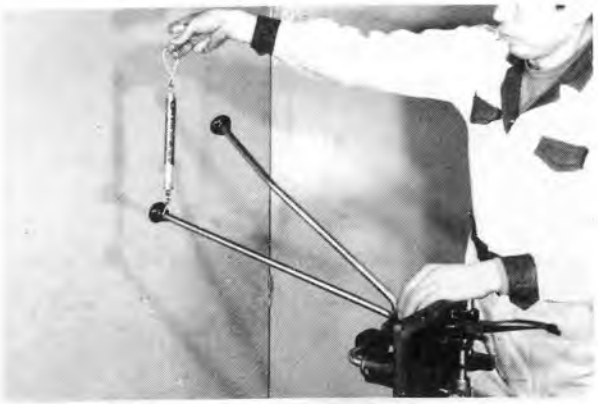

Fig. 4-177 Measuring Shift Lever Operating Force

39. Install the transmission case upper cover.
    (1) Gasket
    (2) Upper cover

    Essential:
    - Install with the gear and shift lever set in the forward and high speed positions, respectively.
    - Install while making sure that the shift forks are properly inserted in the clutch hub sleeve.

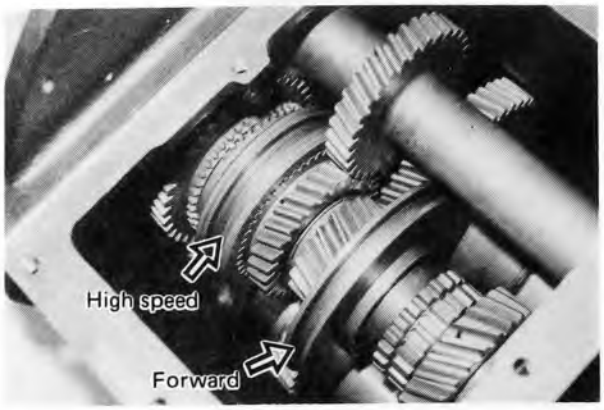

Fig. 4-178 Installing Upper Cover

    (3) Set bolts
    (4) Operate the shift lever to check that the gears mesh smoothly.
    Shift lever side play standard:
    3.0 ~ 7.0 mm (0.118 ~ 0.276 in)

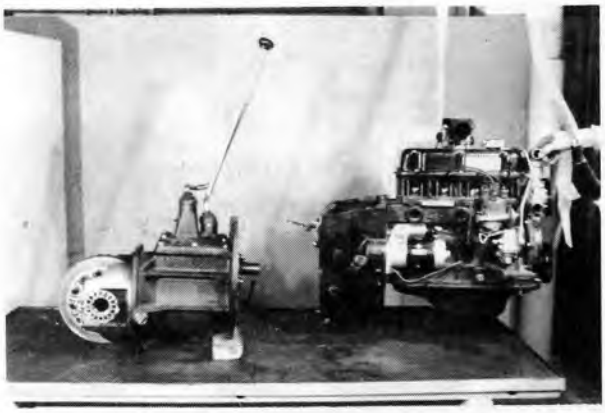

Fig. 4-179 Installing Engine to Transmission

40. Install the engine to the transmission.

41. Install the main drive shaft.
    Use SST 09210-20170-71



Fig. 4-180 Installing Main Drive Shaft

INSTALLATION

Perform installation in the reverse order of the removal procedure.

Caution:

- **Set the oil pump in a location where it is easy to install it during the installation of the transmission with engine.**
- **Connect the battery (–) terminal only after checking that the electrical wiring is correctly installed.**
- **Install the main drive shaft as follows:**

1. Adjust the clearance between the main drive shaft end and main drive shaft cap to 0.5 ~ 2 mm (0.020 ~ 0.079 in.) by varying the number of gaskets used.

   Essential:
   Measure the distance between the cap installation surface and the shaft end with either a convex rule or a vernier caliper.

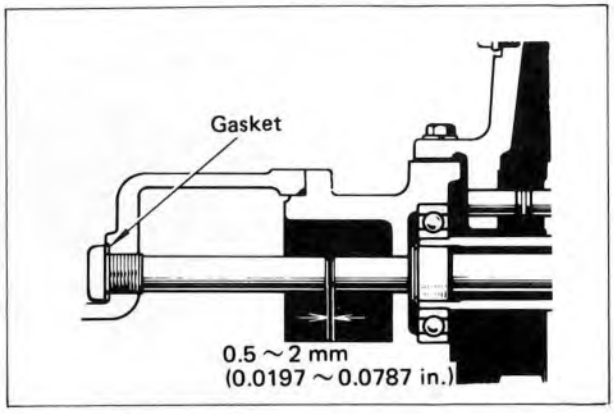

Fig. 4-181 Installing Cap

2. Apply grease liberally on the main drive shaft cap end.
   Use chassis grease.
   - Differential, transmission oil capacity
     Oil used: Hypoid gear oil SAE90

1 ~ 1.75-ton vehicle	Clutch vehicle	11ℓ (2.9 US gal)
	Converter vehicle	5ℓ (1.32 US gal)
2 ~ 3-ton vehicle	Clutch vehicle	12ℓ (3.2 US gal)
	Converter vehicle	5ℓ (1.32 US gal)

FRONT AXLE

	Page
GENERAL	5– 2
COMPONENT PARTS (1.0, 1.35 ton)	5– 5
COMPONENT PARTS (1.5, 1.75 ton)	5– 6
COMPONENT PARTS (2.0, 2.25, 2.5 ton)	5– 7
COMPONENT PARTS (2.75, 3.0 ton)	5– 8
COMPONENT PARTS (2.0, 2.25, 2.5 ton)	5– 9
SPECIFICATIONS	5–10
REMOVAL	5–10
ASSEMBLY	5–13
INSTALLATION	5–14
FRONT AXLE HOUSING, DIFFERENTIAL HOUSING REMOVAL	5–16
INSPECTION, INSTALLATION	5–17

GENERAL

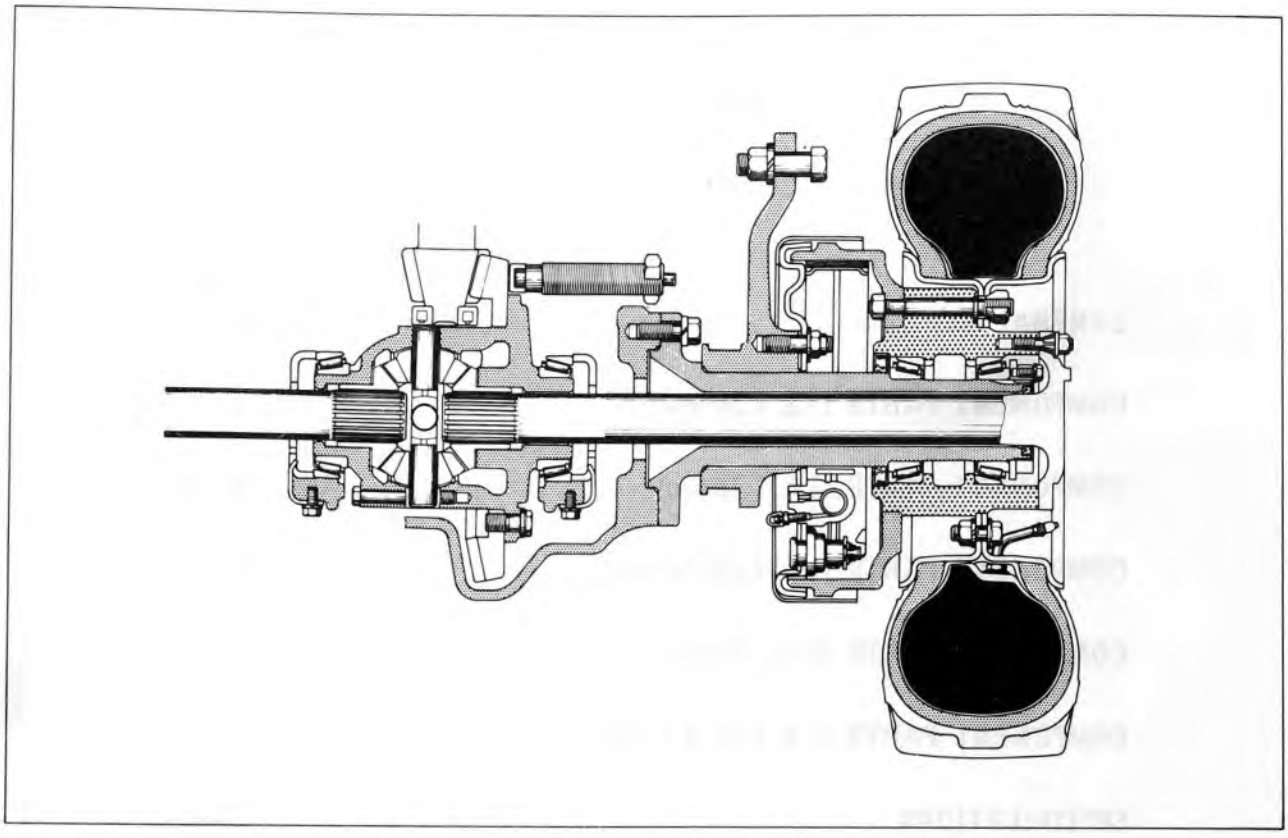

Fig. 5-1 Front Axle Sectional View (1-ton, 1.35-ton)

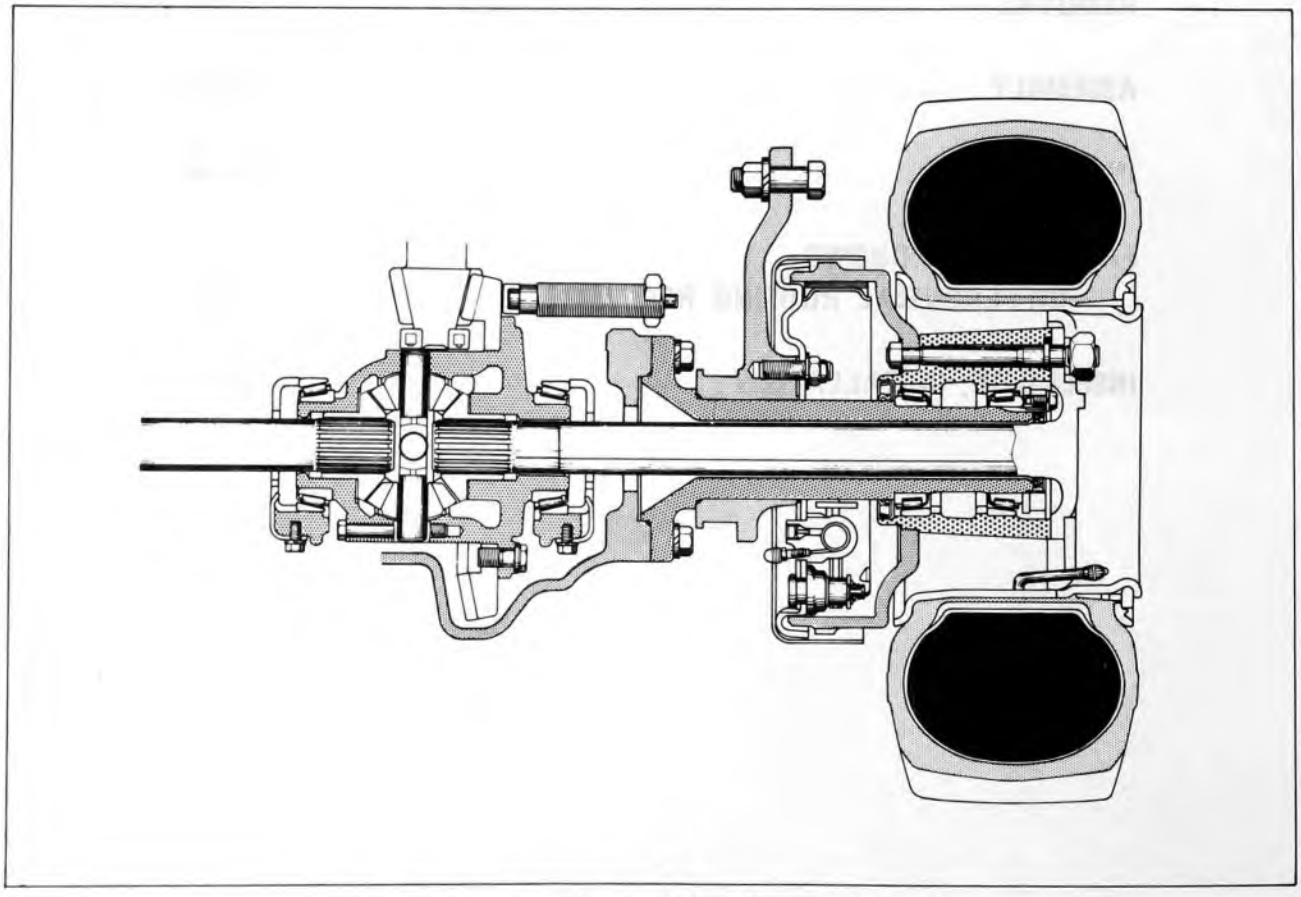

Fig. 5-2 Front Axle Sectional View (1.5-ton, 1.75-ton)

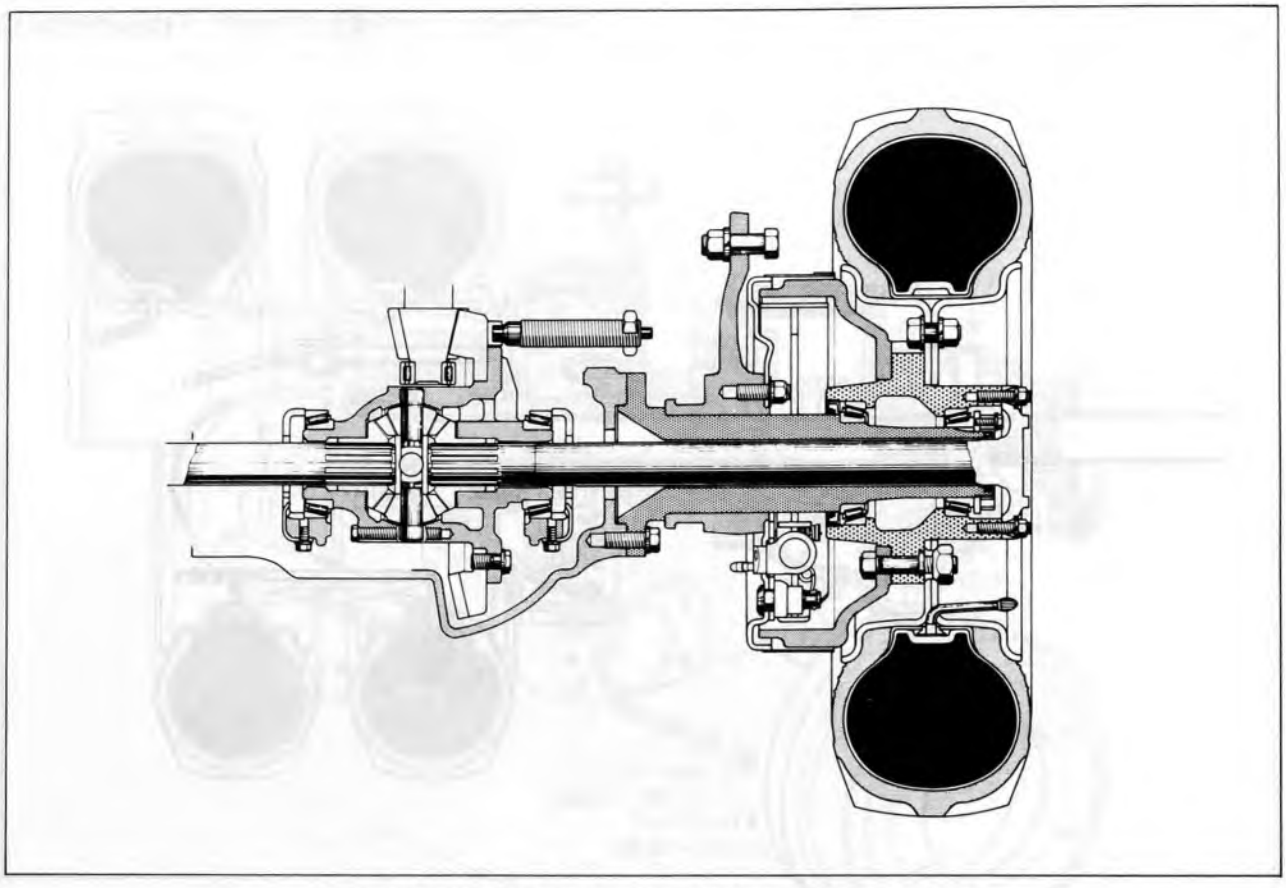

Fig. 5-3 Front Axle Sectional View (2-ton, 2.25-ton, 2.5-ton)

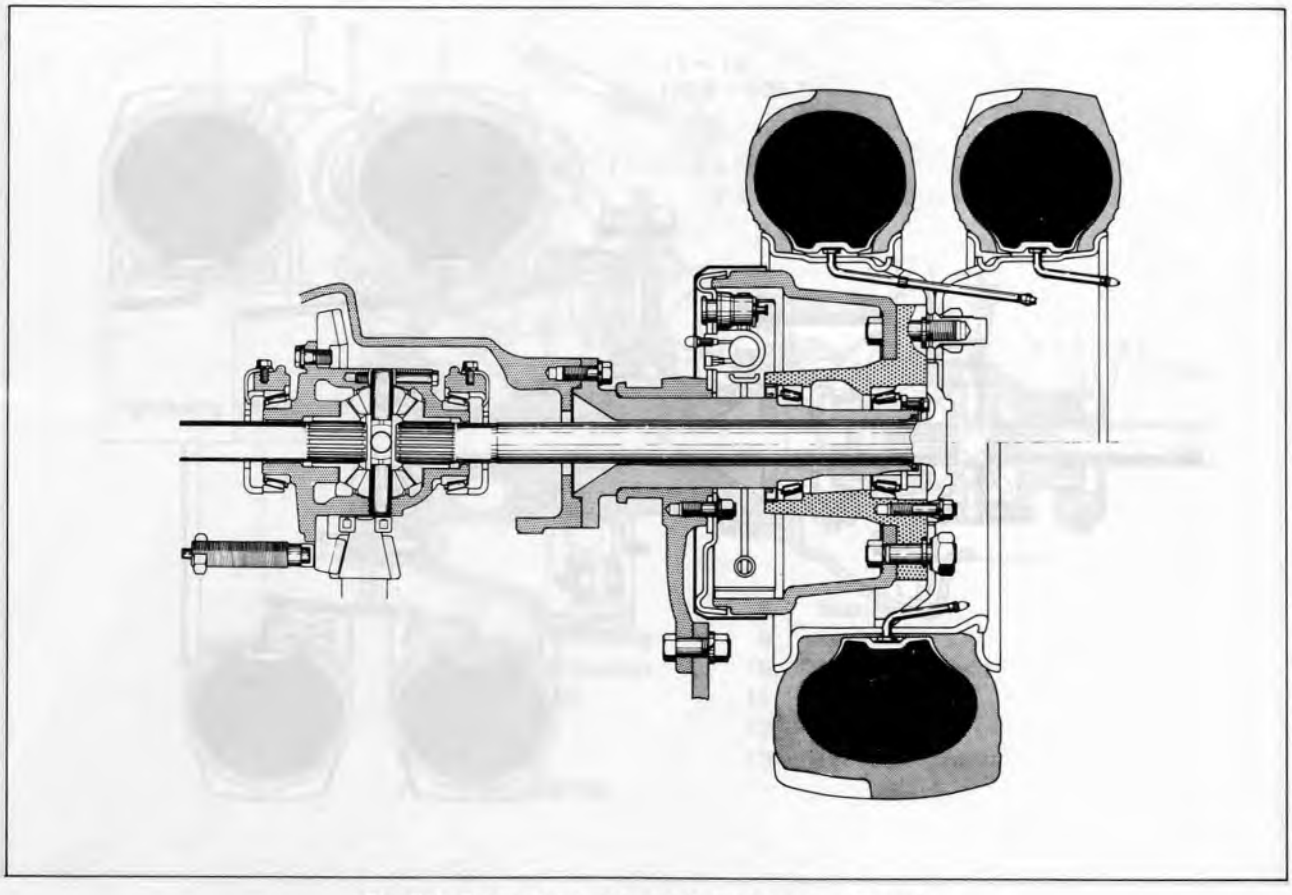

Fig. 5-4 Front Axle Sectional View (2.75-ton, 3-ton)

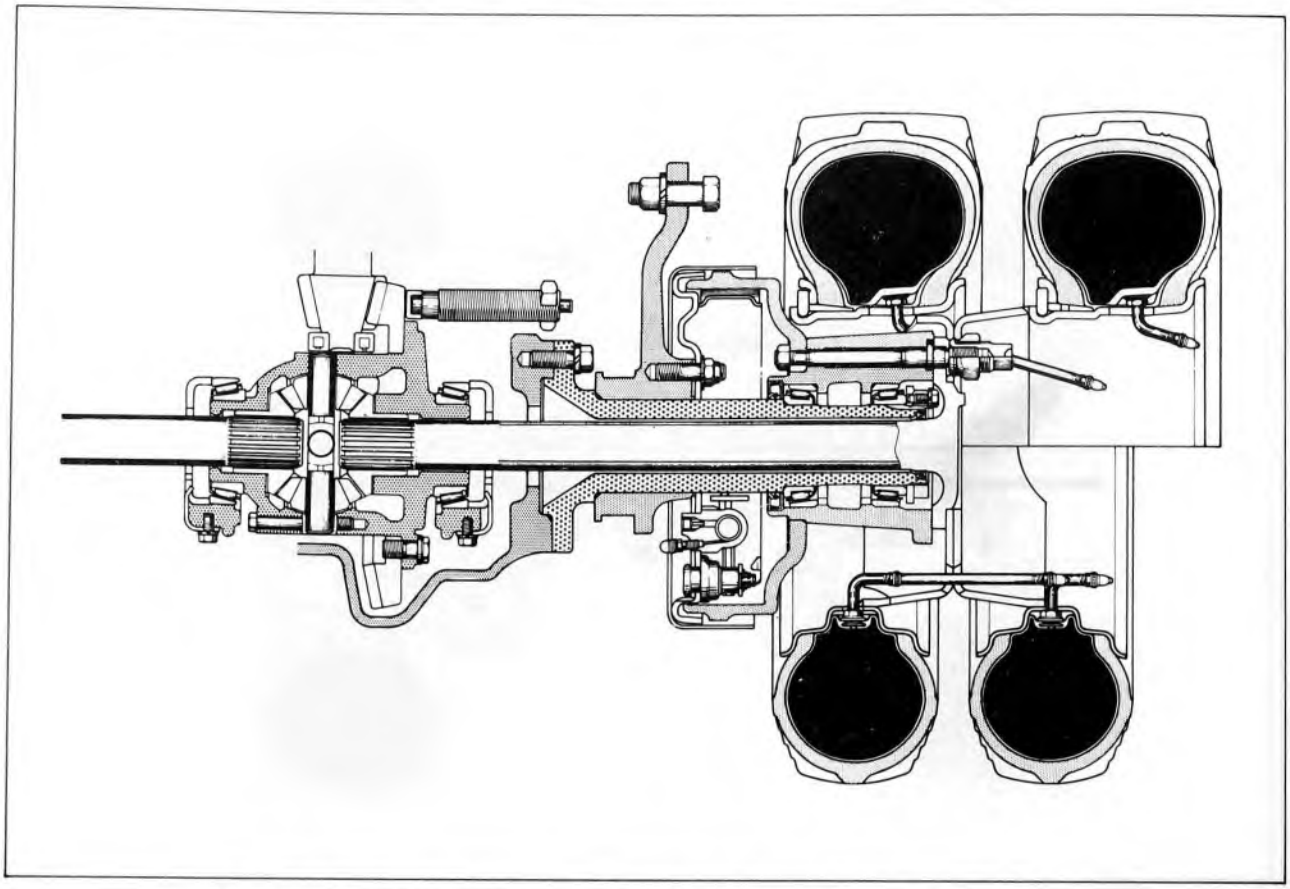

Fig. 5-5 Front Axle Sectional View [Dual] (1-ton, 1.35-ton, 1.5-ton, 1,75-ton)

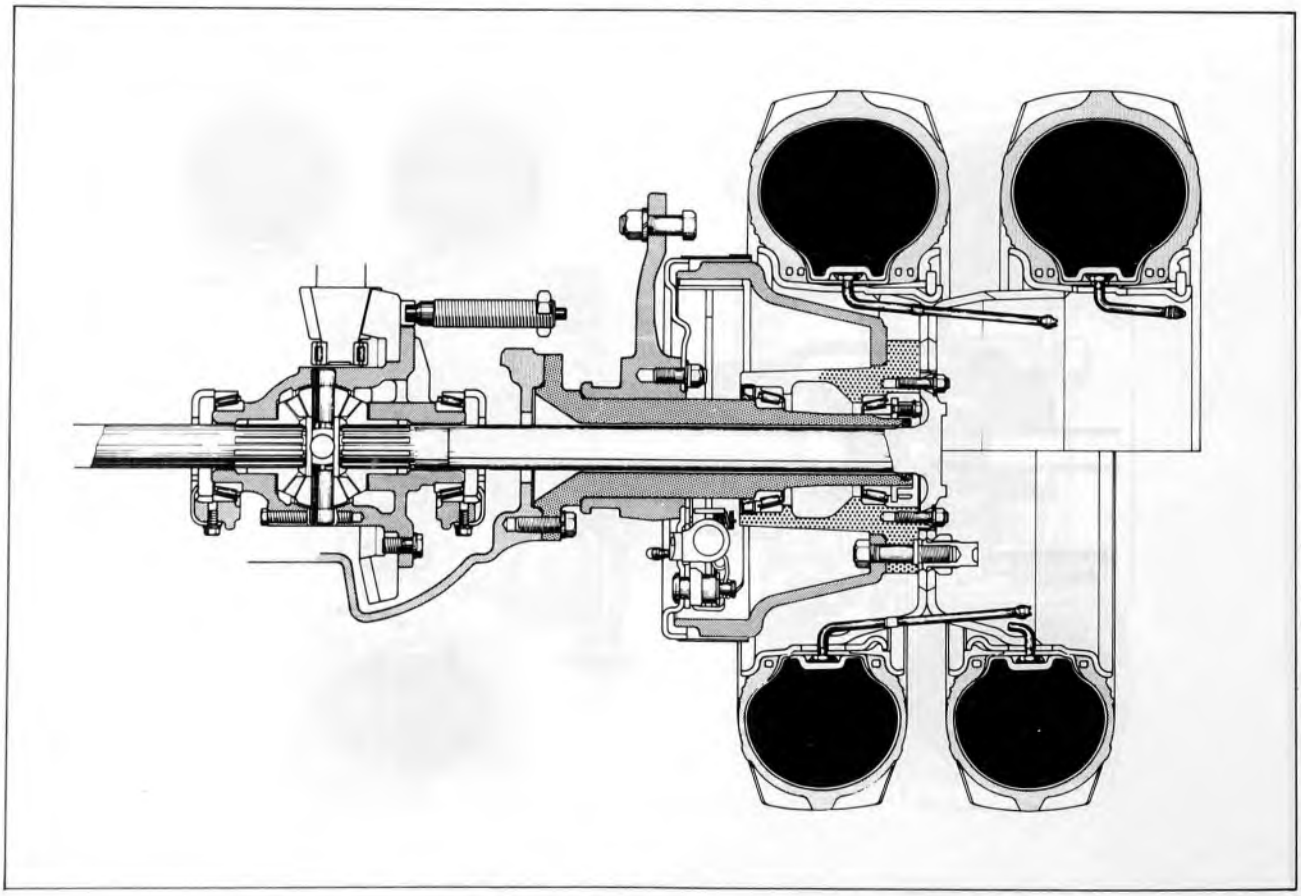

Fig. 5-6 Front Axle Sectional View [Dual] (2-ton, 2.25-ton, 2,5-ton)

COMPONENT PARTS (1-Ton, 1.35-Ton)

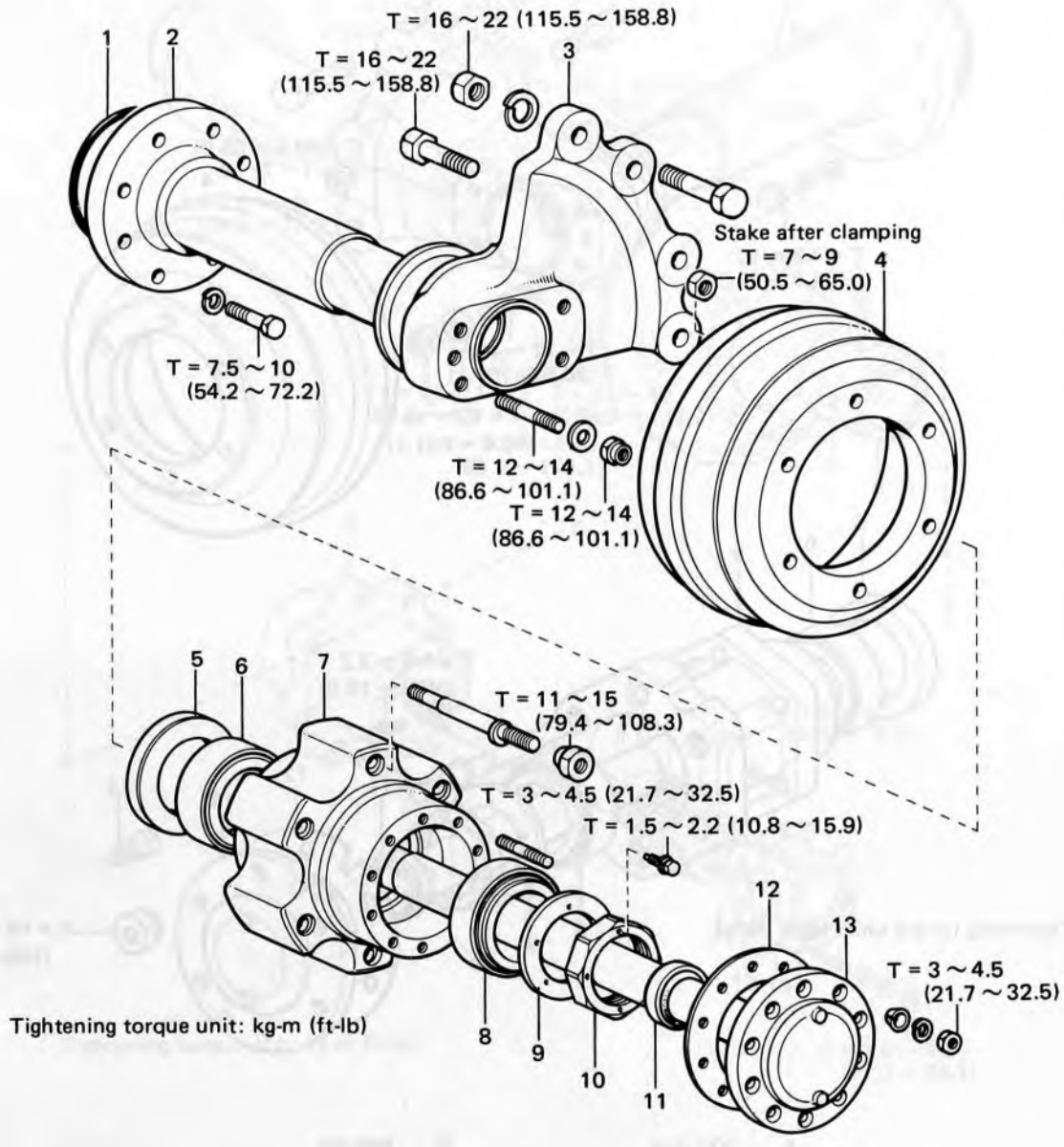

1. "O" ring
2. Front axle housing
3. Front axle bracket
4. Brake drum
5. Oil seal
6. Bearing
7. Front axle hub
8. Bearing
9. Lock nut
10. Bearing lock nut
11. Oil seal
12. Gasket
13. Front axle shaft

Fig. 5-7 Front Axle Component Parts (1-Ton, 1.35-Ton)

COMPONENT PARTS (1.5-Ton, 1.75-Ton)

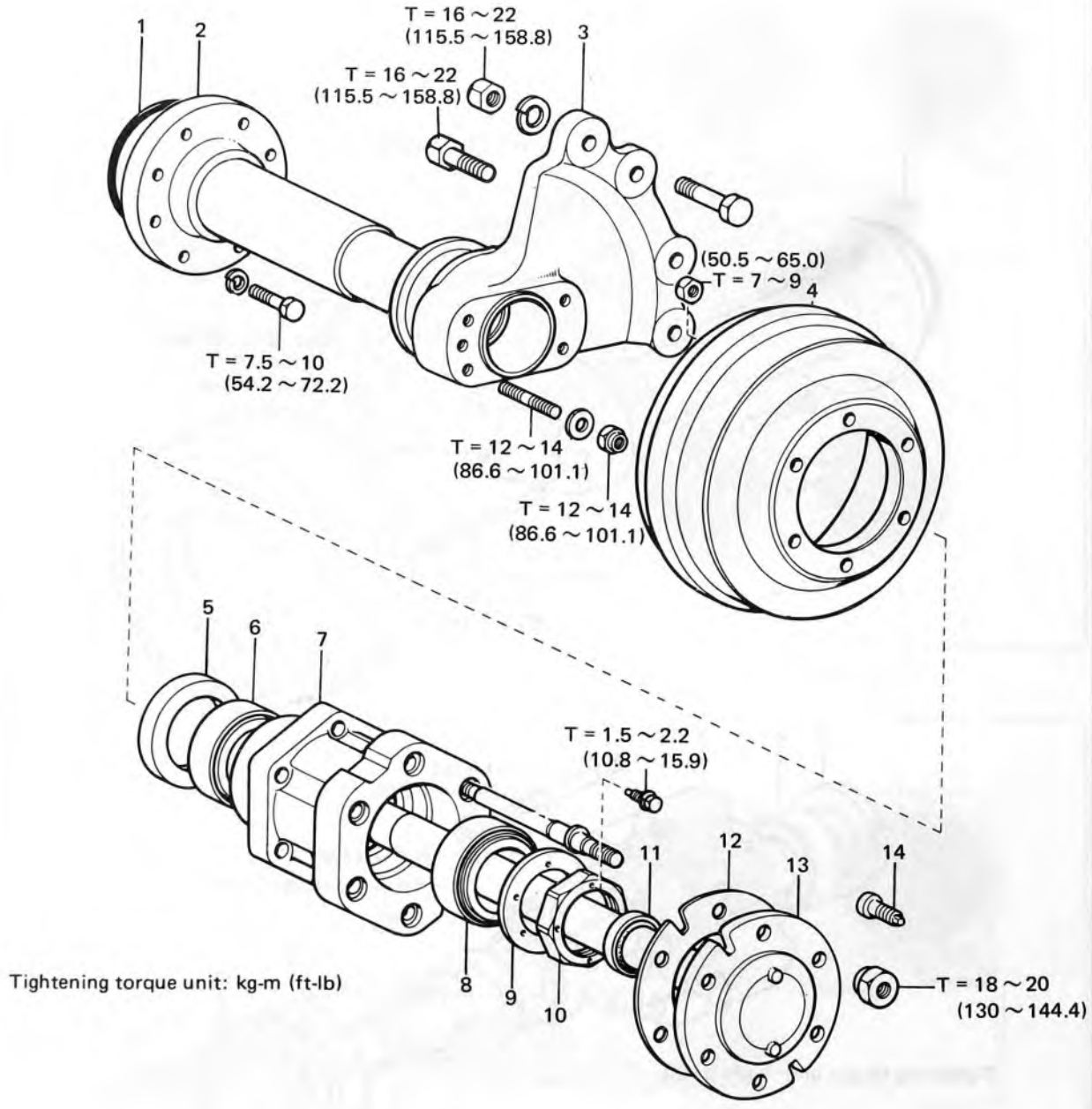

1. "O" ring
2. Front axle housing
3. Front axle bracket
4. Brake drum
5. Oil seal
6. Bearing
7. Front axle hub
8. Bearing
9. Lock nut
10. Bearing lock nut
11. Oil seal
12. Gasket
13. Front axle shaft
14. Dual wheel stop bolt (Dual wheel only)

Fig. 5-8 Front Axle Component Parts (1.5-Ton, 1.75-Ton)

COMPONENT PARTS (2-Ton, 2.25-Ton, 2.5-Ton)

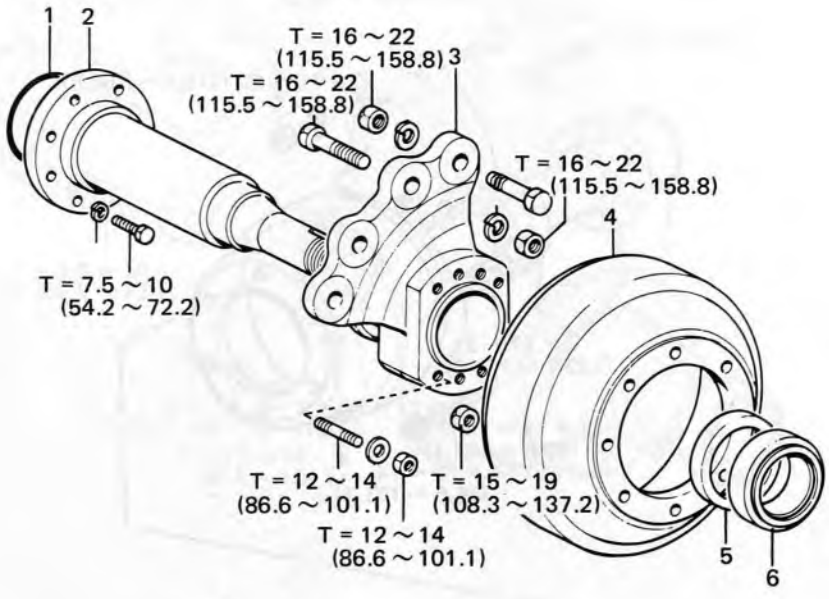

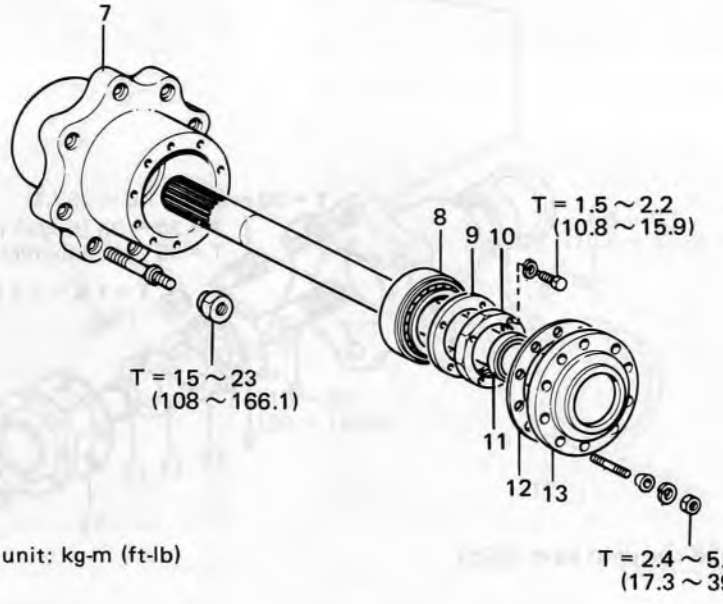

Tightening torque unit: kg-m (ft-lb)

1. "O" ring
2. Front axle housing
3. Front axle bracket
4. Brake drum
5. Oil seal
6. Bearing
7. Front axle hub
8. Bearing
9. Lock nut
10. Bearing lock nut
11. Oil seal
12. Gasket
13. Front axle shaft

Fig. 5-9 Front Axle Component Parts (2-Ton, 2.25-Ton, 2.5-Ton)

COMPONENTSPARTS (2.75-Ton, 3-Ton)

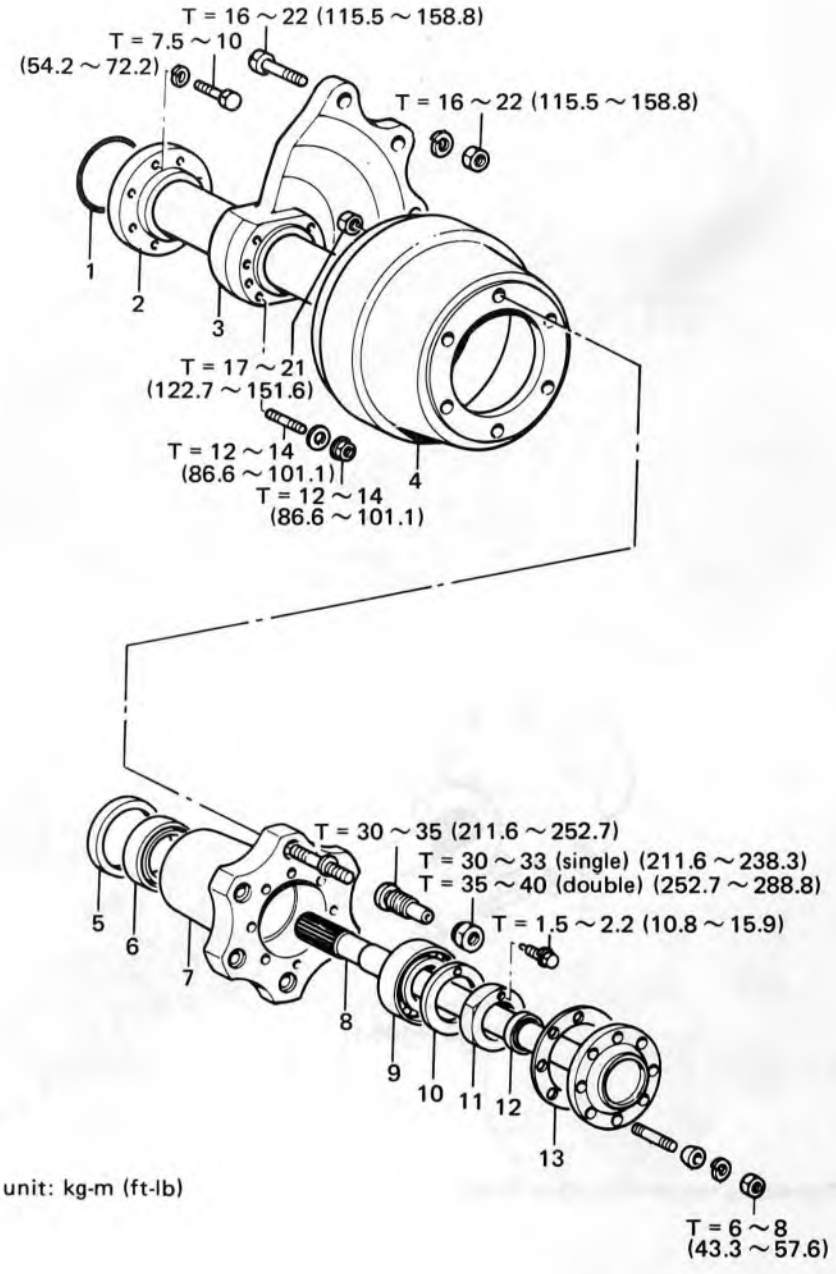

Tightening torque unit: kg-m (ft-lb)

1. "O" ring
2. Front axle housing
3. Front axle bracket
4. Brake drum
5. Oil seal
6. Bearing
7. Front axle hub
8. Front axle shaft
9. Bearing
10. Lock nut
11. Bearing lock nut
12. Oil seal
13. Gasket

Fig. 5-10 Front Axle Component Part (2.75-Ton, 3-Ton)

COMPONENT PARTS (2-Ton, 2.25-Ton, 2.5-Ton Dual Wheel)

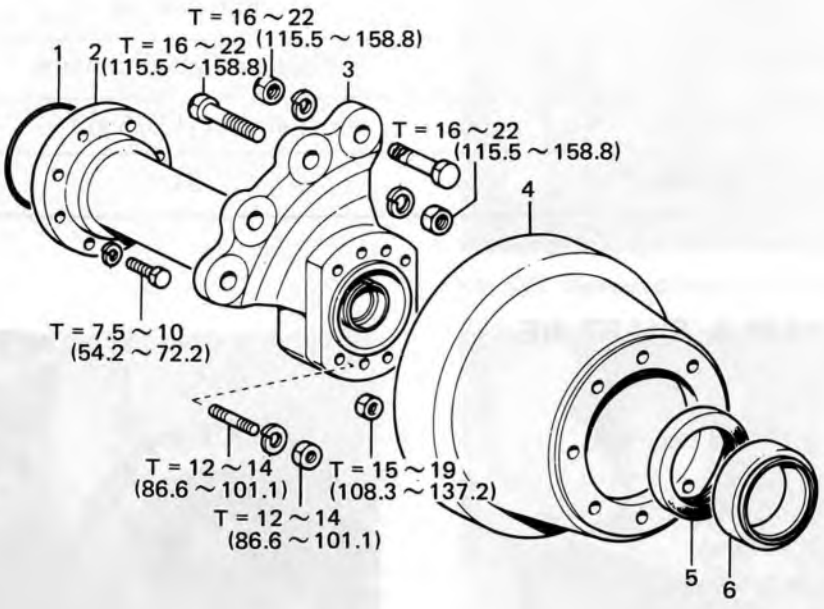

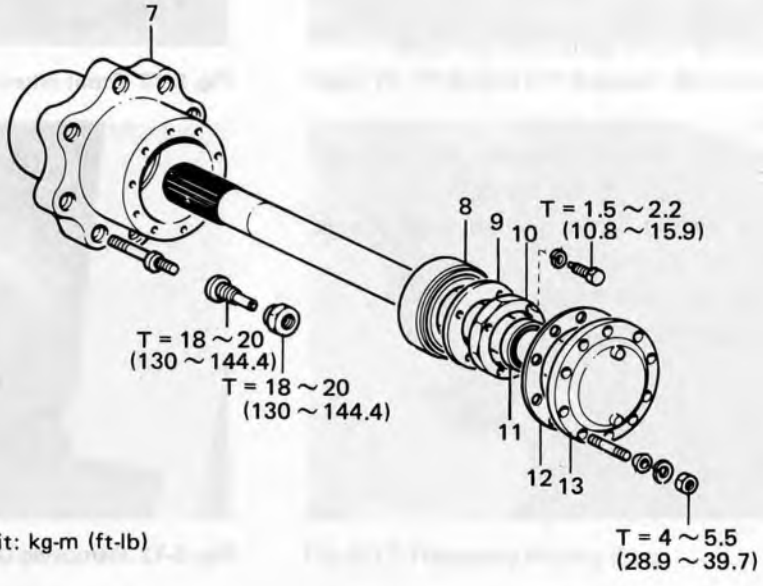

Tightening torque unit: kg-m (ft-lb)

1. "O" ring
2. Front axle housing
3. Front axle bracket
4. Brake drum
5. Oil seal
6. Bearing
7. Front axle hub
8. Bearing
9. Lock nut
10. Bearing lock nut
11. Oil seal
12. Gasket
13. Front axle shaft

Fig. 5-11 Front Axle Component Parts (2-Ton, 2.25-Ton, 2.5-Ton)

SPECIFICATIONS

Item \ Models	1.0 ~ 3.0 ton vehicles
Front axle shaft system	Full floating
Front axle suspension	Rigidly attached to frame
Front axle shaft diameter	40 mm (1.575 in.)
No. of axle shaft spline teeth	31

FRONT AXLE HUB & SHAFT REMOVAL

1. Loosen the front wheel hub nuts.
2. Jack up the frame.
   (1) Block the rear wheels.
   (2) Jack up the frame.
   (3) Support with stands.
3. Remove the front wheels.
   (1) Hub nuts
   (2) Front wheel
4. Remove the front axle shaft set nuts. (All vehicles except 1.5 and 1.75 ton types.)
5. Remove the set screw dowels. (All vehicles except 1.5 and 1.75 ton types.)
   (1) Strike the center of axle shaft flange with a hammer.
   (2) Spring washers.
   (3) Set screw dowels.



Fig. 5-12 Front Wheel Removal



Fig. 5-13 Removing Dowels

6. Pull out the front axle shaft.

Caution:
- When removing the axle shaft, use care not to damage the oil seal.
- If the axle on one side only is to be removed, using about a 30 cm (11.8 in.) block under the frame on the side to be removed will make it unnecessary to drain out the gear oil.



Fig. 5-14 Removing Axle Shaft

7. Remove the bearing lock nut stopper bolts.



Fig. 5-15 Removing Bearing Lock Nut Stopper Bolt

8. Remove the bearing lock nut.
   Use SST 09509-55020



Fig. 5-16 Removing Bearing Lock Nut

9. Use screwdrivers and remove bearing ring.



Fig. 5-17 Removing Bearing Ring

10. Remove the front axle hub and brake drum assy.
    Use SST 09310-10160-71
    Use SST 09950-20012 (1.5,1.75 ton vehicles only)



Fig. 5-18 Removing Front Axle Hub

DISASSEMBLY

Note:
Inspect the various parts and disassemble if any defect is found in the bearings, front axle hub, or brake drum.

1. Drive out the bearing outer race with brass rod.
   (1) Inner bearing outer race and oil seal.
   (2) Outer bearing outer race.

2. Separate the front axle hub from brake drum.
   (1) Loosen the nut staked parts with round bar and hammer.
   (2) Remove the nuts.
   (3) Drive out the hub bolts with press or brass rod.
   (4) Separate the front axle hub from brake drum.



Fig. 5-19 Removing Bearing Outer Race



Fig. 5-20 Separating Hub from Brake Drum

INSPECTION

1. Front axle shaft
   (1) Cracks, wear, damage in splines.
   (2) Bending.
2. Front axle hub
   (1) Damage in hub bolts.
   (2) Damage in hub bolt lock slots.
   (3) Damage or loosening in axle shaft set studs.
   (4) Cracks or damge in front axle hub.
3. Outer and inner bearings
   (1) Damage, spalling, rotating state of bearings.
4. Oil seal
   (1) Damage, deformation, deterioration in lip.
5. Bearing lock nuts and bearing ring.

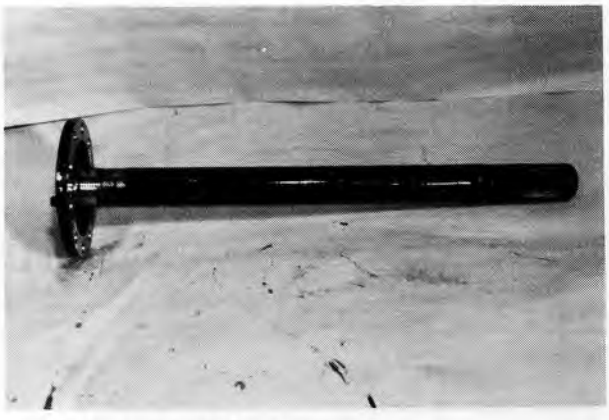

Fig. 5-21 Axle Shaft Inspection



Fig. 5-22 Hub and Bearing Inspection

ASSEMBLY

1. Assemble the brake drum.
   (1) Drive the hub bolts into lock grooves.
   (2) Fit together the hub and brake drum.
   (3) Nuts.
   T = 7~9 kg-m (50.5~65.0 ft-lb) [1~1.75 ton vehicles]
   T = 15~19 kg-m (108.3~137.2 ft-lb) [2~2.5 ton vehicles]
   T = 17~21 kg-m (122.7~151.6 ft-lb) [2.75, 3 ton vehicles]
   (4) Stake the nuts.

   Caution:
   - **There should be no clearance between the hub and drum joining surface.**
   - **Stake the nuts in cross form.**



Fig. 5-23 Assembling Brake Drum



Fig. 5-24 Staking

2. Install the bearing outer races.
   (1) Inner bearing outer race.
   (2) Outer bearing outer race.
   Use SST 09130-30200-71



Fig. 5-25 Installing Bearing

3. Install the oil seal.
   (1) Inner bearing.
   (2) Oil seal.

   Caution:
   Apply grease to inner bearing rollers and seal lip.



Fig. 5-26 Installing Oil Seal

INSTALLATION

1. Pack grease into front axle hub.

2. Install the front axle hub w/brake drum to the front axle.

   Caution:
   Make sure that brake shoes are properly positioned.
   Have the adjusting screw returned about 5 to 10 notches.

3. Drive in the front wheel outer bearing.
   Use SST 09370-10410-71

   Caution:
   Apply grease to the outer bearing rollers.

4. Install the bearing ring.

5. Tighten the bearing lock nut.
   Use SST 09509-55020
   (1) Bearing adjusting nuts.
   (2) Tighten fully and then return 1/12 to 1/6 turn.

   (3) Mesure the preload.
   Preload 2.6~7.4 kg (5.73~16.32 lb)

   Essential:
   Measure the preload by utilizing the hub bolt.



Fig. 5-27 Installing Axle Hub

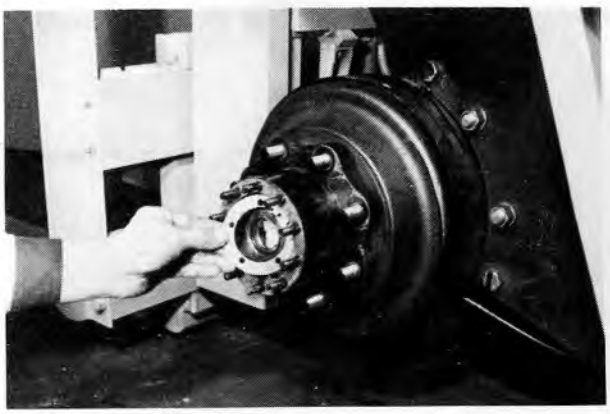

Fig. 5-28 Installing Bearing Ring



Fig. 5-29 Tightening Bearing Locknut



Fig. 5-30 Measuring Preload

6. Install the bearing lock nut stopper bolts.
   (1) Apply locking compound.
   (2) Tighten the stopper bolts.
   T = 1.5~2.2 kg-m (10.8~15.9 ft-lb)

Caution:
To prevent the bearing lock nut stopper bolts from loosening, be sure to apply locking compound and tighten to the specified torque.



Fig. 5-31 Tightening Stopper Bolts

7. Install the front axle shaft.
   (1) Gasket
   (2) Front axle shaft
   (3) Set screw dowels.
   (4) Spring washers
   (5) Set nuts.
   T = 3~4.5 kg-m (21.7~32.5 ft-lb)
   [1, 1.35 ton vehicles]
   T = 4~5.5 kg-m (28.9~39.7 ft-lb)
   [2~2.5 ton vehicles]
   T = 6~8 kg-m (43.3~57.6 ft-lb)
   [2.75, 3 ton vehicles]



Fig. 5-32 Installing Axle Shaft

Caution:
When installing the axle shaft, use care not to injure the oil seal.

8. Install the front wheel.
   (1) Tighten the hub nuts finger tight.
   (2) Remove the stands.
   (3) Tighten the hub nuts to the specified torque.
   T = 11~15 kg-m (79.4~108.3 ft-lb)
   [1, 1.35 ton vehicles]
   T = 18~22 kg-m (130~158.8 ft-lb)
   [1.5~2.5 ton vehicles]
   T = 30~33 kg-m (211.6~238.3 ft-lb)
   [2.75, 3 ton vehicles]



Fig. 5-33 Installing Front Wheel

9. Upon completing the job, perform the following inspection and adjustment.
   (1) Differential oil quantity
   (2) Foot brake effectiveness. If the auto adjuster had been returned, advance and reverse the vehicle more than 10 times, depressing the brake pedal each time.
   (3) Parking brake effectiveness.
   (4) Presence of abnormal noise or conditon.

FRONT AXLE HOUSING, DIFFERENTIAL HOUSING REMOVAL

1. Remove the mast.

   Essential:
   - **For mast removal, refer to procedures under mast removal section, and endeavor toward safe operation.**
   - **Have the steering wheel turned fully to right.**



Fig. 5-34 Removing Mast

2. Loosen the front wheel hub nuts.
3. Jack up the differential housing, and support the side frame underside on stands.
4. Remove the front wheels.



Fig. 5-35 Removing Front Wheels

5. Drain out the differential oil.
   Clutch vehicles 12 liters (3.2 US gal)
   (Together with transmission)
   Converter vehicles 5 liters (1.32 US gal)
6. Pull out the axle shafts.

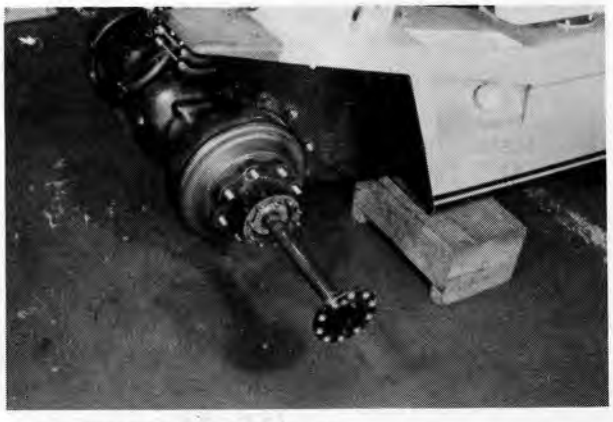

Fig. 5-36 Removing Axle Shaft

7. Remove the set bolts attaching the differential housing to the transmission case.

8. Screw on hub nuts to the left and right stud bolts and hook on wire rope.

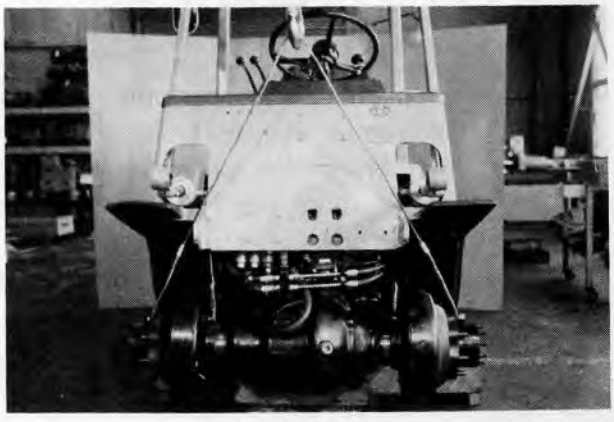

Fig. 5-37 Wire Rope Hooked On

9. Remove the set bolts attaching the front axle bracket to the frame.
   (1) 2 bolts at middle of each side.
   (2) 2 reamer bolts at upper and lower of each side.
   Use SST 09310-22000-71



Fig. 5-38 Removing Reamer Bolt

10. Disconnect the parking brake cable.

11. Take out the front axle assy from the vehicle.

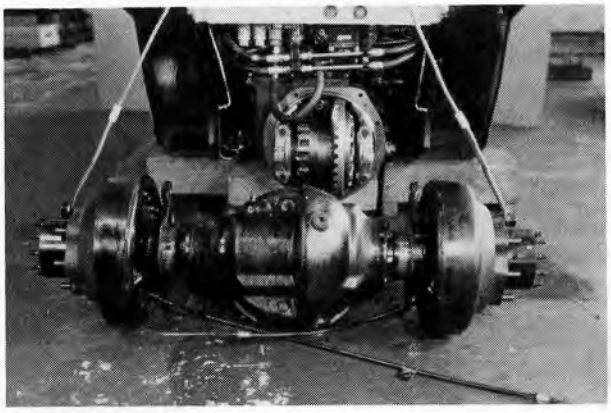

Fig. 5-39 Removing Front Axle Assy

12. Separate the differential housing from the front axle housing.

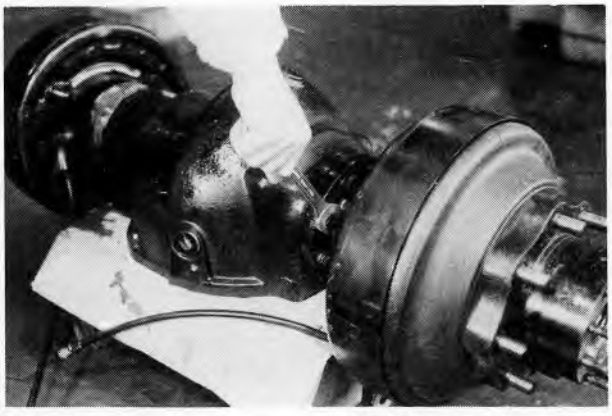

Fig. 5-40 Removing Differential Housing

INSPECTION

1. Differential housing and front axle housing.
   Inspect for cracks visually or by performing color check.

INSTALLATION

Perform the removal in reverse order.

Caution:
- Check the mast to see that its forward tilt angle is 6° and backward tilt angle 12°.
- Check the parking brake to see that there is from 4 to 6 notches pull reserve, and that the braking effectiveness is the same on left and right sides.
- Check all connections to see that there is no oil leakage.
- Check the differential oil quantity.
- Check the differential housing to see that no unusual noise is produced.

REAR AXLE

	Page
GENERAL	6– 2
SPECIFICATIONS	6– 3
SERVICE STANDARDS	6– 4
COMPONENT PARTS	6– 5
REAR AXLE ASSY	6– 7
REAR AXLE HUB	6–20
STEERING KNUCKLE & KING PIN	6–24
REAR WHEEL ALIGNMENT	6–28

GENERAL

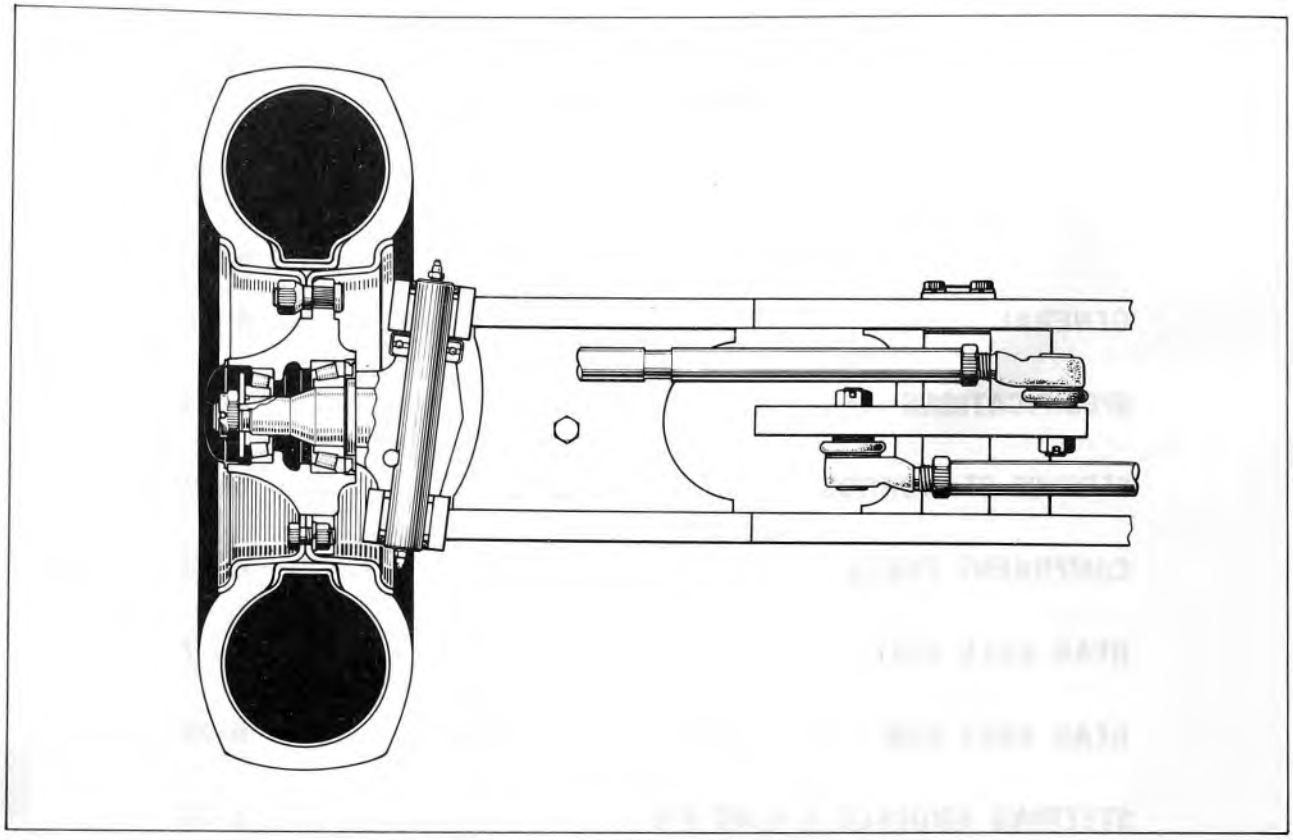

Fig. 6-1 Rear Axle Sectional View (1.0 ~ 1.75 Ton Vehicles)

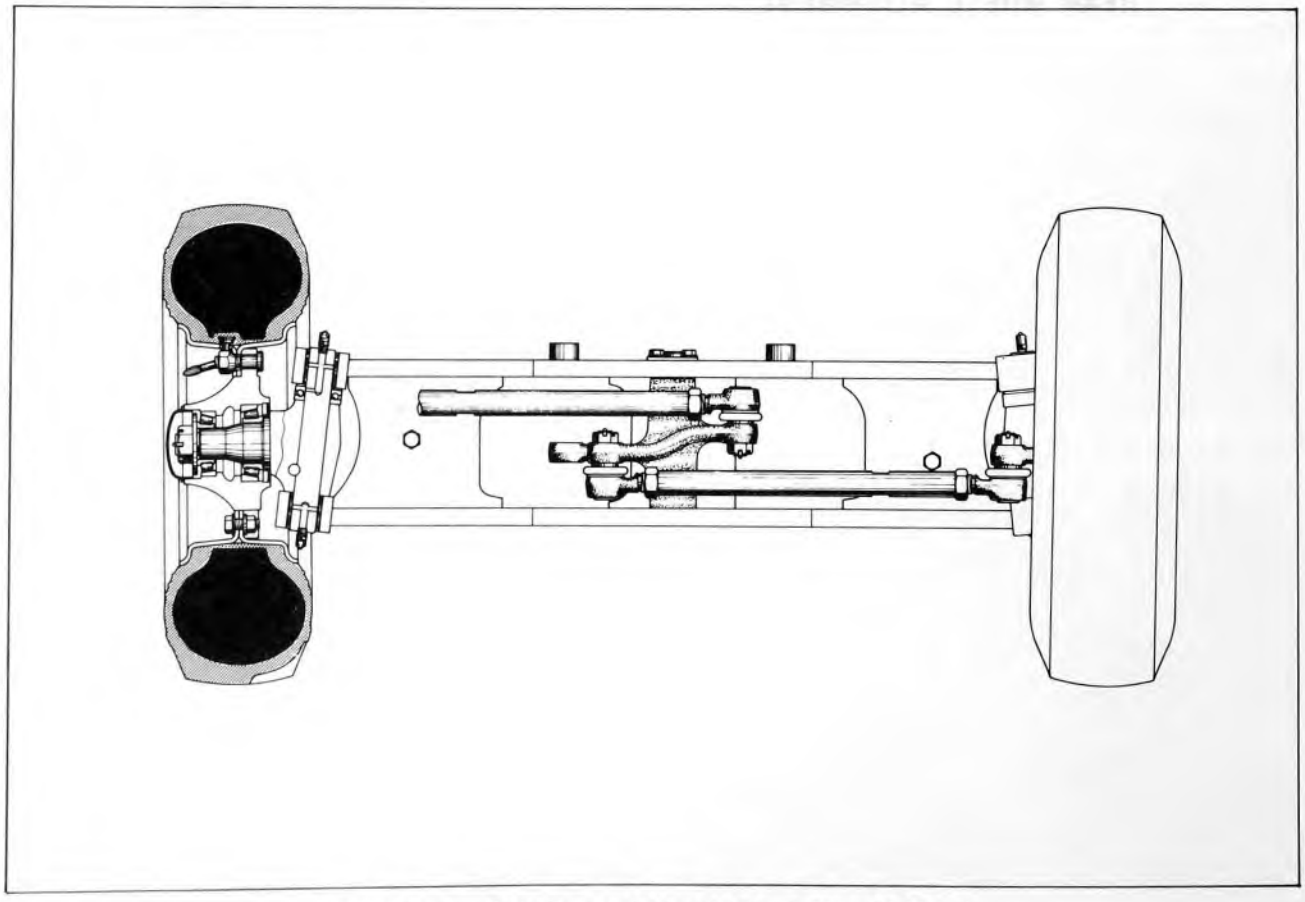

Fig. 6-2 Rear Axle Sectional View (2.0 ~ 3.0 Ton Vehicles)

SPECIFICATIONS (1.0 ~ 1.75 Ton Vehicles)

Item \ Models		1.0 ton	1.35 ton	1.5 ton	1.75 ton
Rear axle type		Eliot type			
Rear axle suspension		Center supported swing type			
Wheel alignment	Toe in	0 mm			
	Camber	1°			
	Caster	0°			
	King pin Inclination	6°			
Minimum turning radius	Inner mm (in.)	160 (6.5)	160 (6.5)	150 (6)	150 (6)
	Outer mm (in.)	1900 (75)	1940 (76)	1980 (78)	2010 (79)
Tire size		5.00-8-8PR(I)			
Rim size		3.00D X 8DT			
Tire inflation	kg/cm^2 (psi)	7.0 (99.5)			

SPECIFICATIONS (2.0 ~ 3.0 Ton Vehicles)

Item \ Models		2.0 ton	2.25 ton	2.5 ton	2.75 ton	3.0 ton
Rear axle type		Eliot type				
Rear axle suspension		Center supported swing type				
Wheel Alignment	Toe in	0 mm				
	Camber	1°				
	Caster	0°				
	King pin inclination	6°				
Minimum turning radius	Inner mm (in.)	190 (7.5)	190 (7.5)	190 (7.5)	340 (13.5)	350 (14)
	Outer mm (in.)	2165 (85)	2190 (86)	2220 (87)	2410 (95)	2440 (96)
Tire size		6.00-9-10PR(I)			6.50-10-10PR(I)	
Rim size		4.00E X 9DT			5.00F X 10DT	
Tire inflation	kg/cm^2 (psi)	7.0 (99.5)				

SERVICE STANDARDS (1.0 ~ 1.75 Ton Vehicles)

King pin	Diameter standard	mm (in.)	28.0 (1.10)
	Wear limit	mm (in.)	27.8 (1.09)
Support pin	Diameter standard	mm (in.)	50.0 (1.97)
	Wear limit	mm (in.)	48.5 (1.91)
Bell crank pin	Diameter standard	mm (in.)	28.0 (1.10)
	Wear limit	mm (in.)	27.8 (1.09)
Bushing wear limit		mm (in.)	52.0 (2.05)
Steering knuckle starting foce		kg (lb)	3 ~ 5 (6.6 ~ 11.0)
Rear axle hub starting force		kg (lb)	1.5 ~ 4.0 (3.3 ~ 8.8)
Rear axle front-rear play standard		mm (in.)	0.02 ~ 0.40 (0.0008 ~ 0.016)
Hub nut	T =	kg-m (ft-lb)	9 ~ 12 (65.0 ~ 86.6)
Fitting bolt	T =	kg-m(ft-lb)	3 ~ 4.5 (21.7 ~ 32.5)

SERVICE STANDARDS (2.0 ~ 3.0 Ton Vehicles)

King pin	Diameter standard	mm (in.)	28.0 (1.10)
	Wear limit	mm (in.)	27.8 (1.09)
Support pin	Diameter standard	mm (in.)	50.0 (1.97)
	Wear limit	mm (in.)	48.5 (1.91)
Bell crank pin	Diameter standard	mm (in.)	28.0 (1.10)
	Wear limit	mm (in.)	27.8 (1.09)
Bushing wear limit		mm (in.)	52.0 (2.05)
Steering knuckle starting force		kg (lb)	3 ~ 5 (6.6 ~ 11.0)
Rear axle hub starting force		kg (lb)	1.5 ~ 4.5 (3.3 ~ 9.9)
Rear axle front-rear play standard		mm (in.)	0.02 ~ 0.40 (0.0008 ~ 0.016)
Hub nut	T =	kg-m(ft-lb)	12 ~ 15 (86.6 ~ 108.3)
Fitting bolt	T =	kg-m(ft-lb)	5 ~ 8 (36.1 ~ 57.6)

COMPONENT PARTS

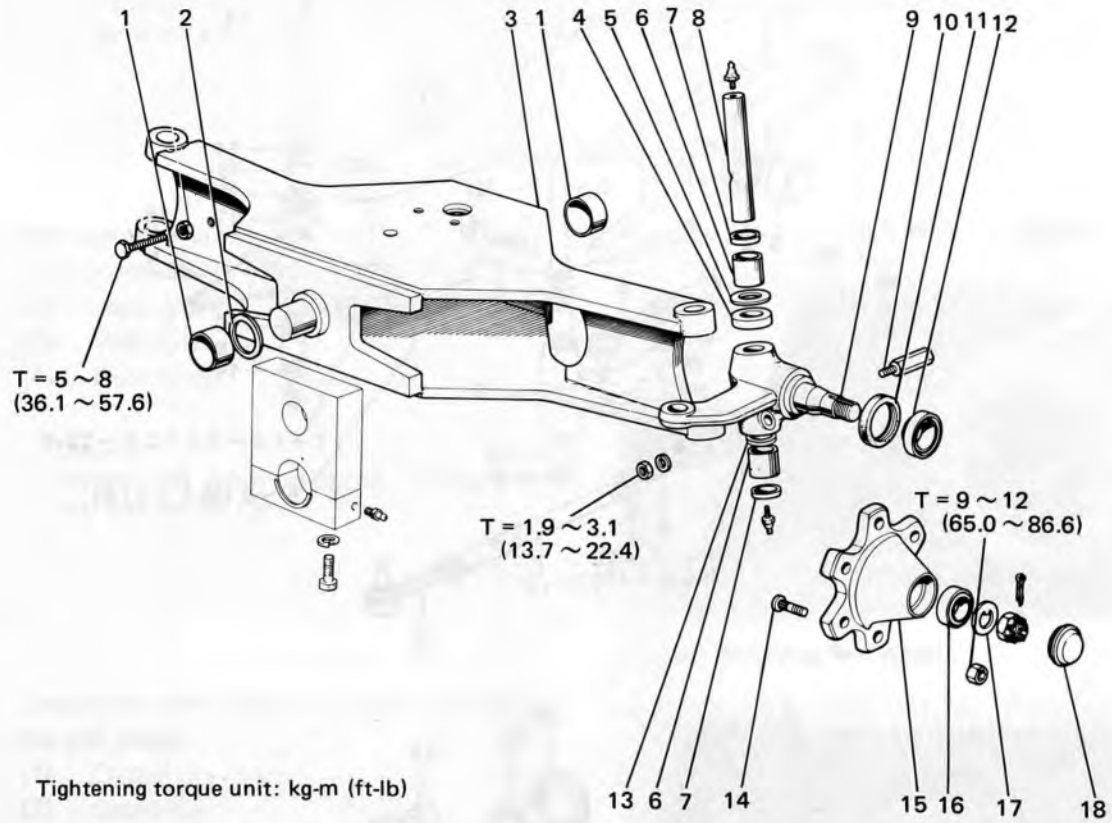

1. Bushing
2. Shim
3. Rear axle beam
4. Bearing
5. Shim
6. Needle bearing
7. Oil seal
8. King pin
9. Knuckle
10. King pin lock pin
11. Oil seal
12. Bearing
13. Oil seal
14. Hub bolt
15. Rear axle hub
16. Bearing
17. Claw washer
18. Hub cap

Fig. 6-3 Rear Axle Component Parts (1.0 ~ 1.75 Ton Vehicles)

COMPONENT PARTS

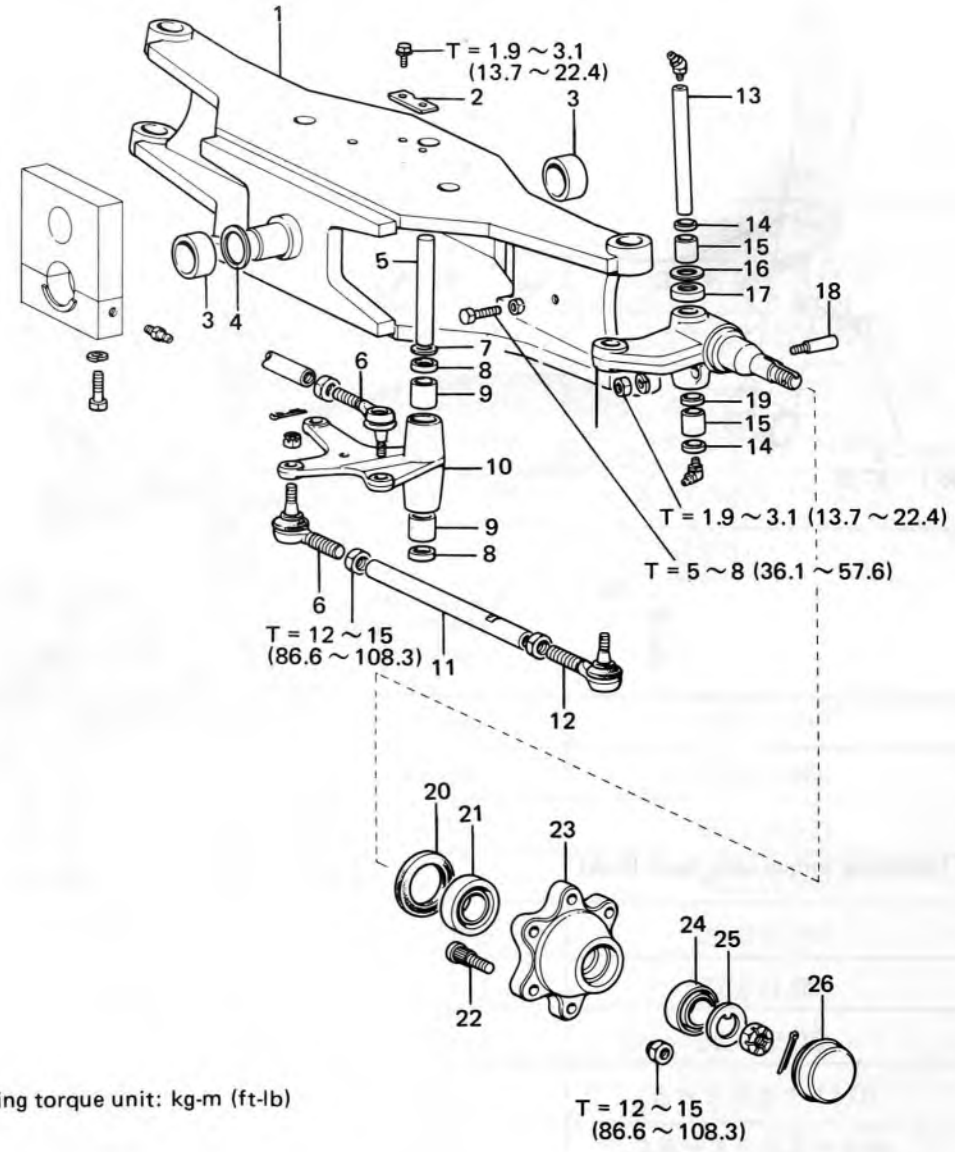

Tightening torque unit: kg-m (ft-lb)

1. Rear axle beam
2. Stopper plate
3. Bushing
4. Shim
5. Bearing pin
6. Tie rod end No. 2
7. Shim
8. Oil seal
9. Needle bearing
10. Bell crank
11. Tie rod
12. Tie rod end No. 1
13. King pin
14. Oil seal
15. Needle bearing
16. Shim
17. Bearing
18. King pin lock pin
19. Oil seal
20. Oil seal
21. Bearing
22. Hub bolt
23. Rear axle hub
24. Bearing
25. Claw washer
26. Hub cap

Fig. 6-4 Rear Axle Component Parts (2.0 ~ 3.0 Ton Vehicles)

REAR AXLE ASSY

REMOVAL

Caution:
- Make sure to use blocks or other stands to support the frame underside on the left and right sides.
- Make sure to apply the parking brakes and to block the wheels.
- To enable doing the job easier, the counterweight underside should be about 400 to 500 mm (16 to 20 in.) above the ground

1. Remove the rear wheel.
   (1) Loosen the hub nuts.
   (2) Jack up the vehicle.
   (3) Hub nuts
   (4) Rear wheel

   Caution:
   Support the frame underside, making sure that they do not slip off.



Fig. 6-5 Removing Rear Wheel

2. Disconnect the power cylinder rod from the bell crank.
   (1) Cotter pin
   (2) Castle nut
   (3) Power cylinder rod
   SST used 09610-20011



Fig. 6-6 Disconnecting Rod

3. Punch matching marks.
   (1) Front bracket
   (2) Rear bracket

   Caution:
   To prevent intermixing the front and rear, use different punch marks.



Fig. 6-7 Punching Match Marks

4. Measure the rear axle play in front-rear direction.
   (1) Push the rear axle beam fully forward.
   (2) Measure the rear axle play on the rear side.
   Front-rear play standard:
   0.02 ~ 0.40 mm
   (0.0008~0.016 in.)



Fig. 6-8 Measuring Front-Rear Play

5. Remove the rear axle brackets.
   (1) Set the jack under rear axle center.
   (2) Bracket bolts
   (3) Rear axle brackets



Fig. 6-9 Removing Bracket

6. Remove the rear axle assy.
   (1) Carefully lower the jack.
   (2) Draw out in vehicle left-right direction.



Fig. 6-10 Removing Rear Axle Assy

DISASSEMBLY

Caution:
The procedures described here are for the case of the rear axle assy removed from the vehicle. However, the rear axle hub, steering knuckle, and allied parts can be disassembled, corrected, or adjusted while still installed on the vehicle. For their removal and installation, refer to the applicable paragraphs.

1. Remove the grease cap.
   (1) Mount the rear axle on work stand.
   (2) Use a screwdriver and take off the grease cap.
2. Remove the rear axle hub.
   (1) cotter pin
   (2) Castle nut
   (3) Claw washer
   (4) Rear axle hub
   Use SST 09950-20012



Fig. 6-11 Removing Grease Cap



Fig. 6-12 Removing Rear Axle Hub

3. Remove the inner bearing
   Use SST 09950-20012
4. Remove the outer race from the hub.

   Caution:
   Remove only when the bearing is found worn, noisy, or otherwise defective.

5. Remove the oil retainer.



Fig. 6-13 Removing Bearing

6. Disconnect the tie rod end.
   (1) Cotter pin
   (2) Castle nut
   (3) Tie Rod End
   Use SST 09610-20011

   Caution:
   Disconnect the left side tie rod when removing the knuckel. (2.0 ~ 3.0 ton vehicles)



Fig. 6-14 Disconnecting Tie Rod End

7. Remove the king pin lock pin.
   (1) Set nut
   (2) Screw on a service nut and drive out with suitable round bar.

   Essential:
   To protect the lock pin threads against damages, always screw on a service nut (one that can be scrapped).



Fig. 6-15 Removing Lock Pin

8. Remove the king pin.
   (1) Grease fitting
   (2) King pin

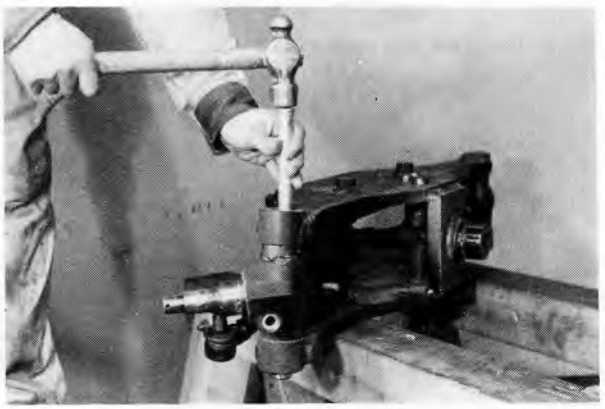

Fig. 6-16 Removing King Pin

9. Remove the steering knuckle.
   (1) Thrust bearing
   (2) Shims
   (3) Steering knuckle

   Caution:
   Be careful not to lose the shims, and keep a record of the number used and their thicknesses.



Fig. 6-17 Removing Steering Knuckle

10. Remove the oil seals.

    Caution:
    Remove only when the needle bearings or oil seals are found damaged or worn.



Fig. 6-18 Removing Oil Seal

11. Remove the needle bearings.
Use SST 09620-30010

Caution:
Remove the needle bearings only when found worn or damaged.

12. Remove the support pin bushings.

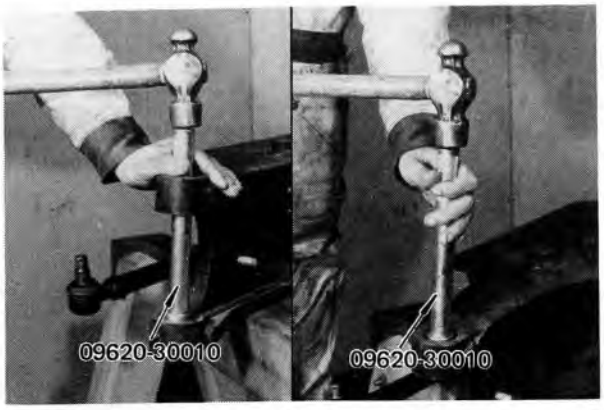

Fig. 6-19 Removing Needle Bearings

13. Remove the bearing pin.
(1) Stopper plate
(2) Bearing pin



Fig. 6-20 Removing Bearing Pin

14. Remove the bearing together with tie rod.

Caution:
When removing the bearing, use care not to lose the adjusting shim.



Fig. 6-21 Removing Bearing

15. Remove the tie rod from the bearing.
(1) Cotter pin
(2) Castle nut
(3) Tie rod
Use SST 09610-20011

16. Remove the oil seals and neelde bearings from the bearing.
(1) Oil seals
(2) Needle bearings

Caution:
Remove the oil seals and needle bearings only when found damaged or worn.



Fig. 6-22 Removing Tie Rod

INSPECTION

Caution:
- Clean or wash all disassembled parts. Inspect the following parts and replace any found defective.
- Inspect the bearings for defective rotation, noise, looseness, and damages visually and by inserting them on a shaft.

1. Steering knuckle
   (1) Cracks or damages at spindle root and threads.

   Caution:
   It is desirable that inspection be made with flaw detector or flaw detecting liquid penetrant.



Fig. 6-23 Steering Knuckle Inspection

2. King Pin.
   (1) Wear or damage in king pin.
   Diameter standard: 28.0 mm (1.10 in.)
   Wear limit: 27.8 mm (1.09 in.)
   (2) Bending in king pin.

   Caution:
   When worn over the limit, replace together with knuckle bearings.

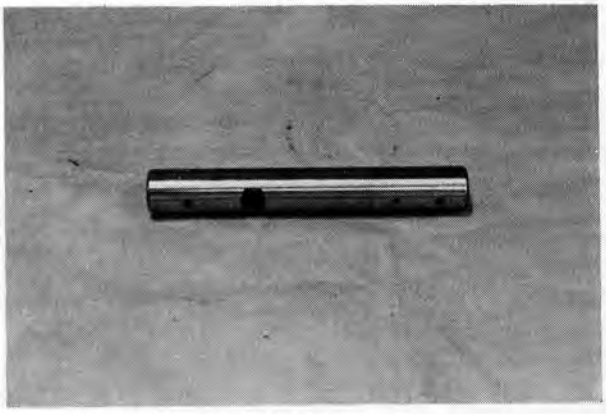

Fig. 6-24 King Pin Inspection

3. Needle bearings.
   (1) Wear or damage in king pin needle bearings
   (2) Damage in king pin oil seals
   (3) Wear or damage in bearing pin needle bearings
   (4) Damage in bearing pin oil seals

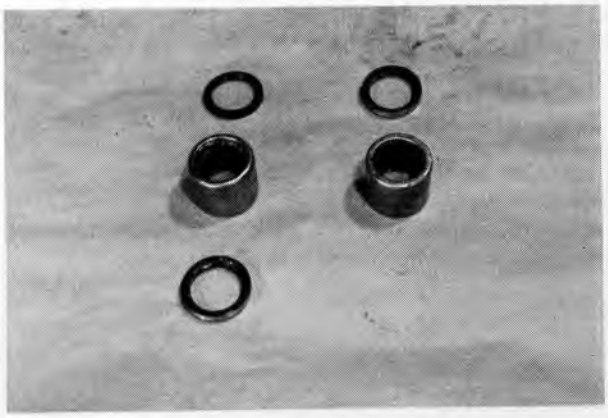

Fig. 6-25 King Pin Needle Bearing Inspection

4. Support pin bushings.
   (1) Wear in bushing bore
   Wear limit: 52.0 mm (2.05 in.)

   Essential:
   Always replace when the bushing oil reservoir is worn out.

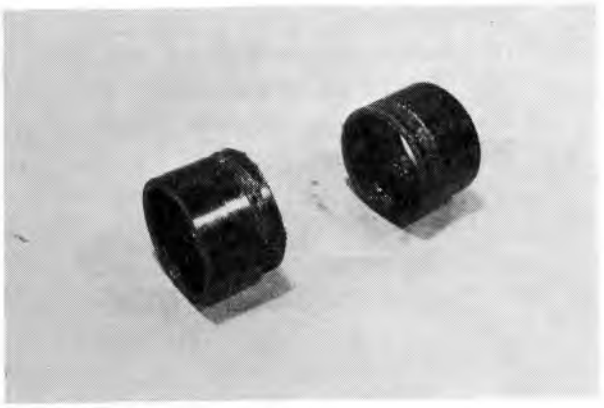

Fig. 6-26 Bushing Inspection

5. Bell crank
   (1) Cracks or damages in bell crank.
   (2) Wear, bending, or cracks in knob.



Fig. 6-27 Bell Crank Inspection

6 Bell crank pin.
   (1) Wear or damage in bell crank pin.
   Diameter standard: 28.0 mm (1.10 in.)
   Wear limit: 27.8 mm (1.09 in.)
   (2) Bending in bell crank pin.

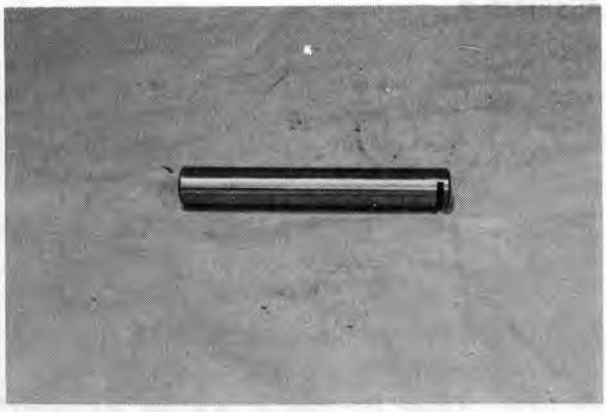

Fig. 6-28 Bell Crank Pin Inspection

7. Rear axle hub.
   (1) Damage and cracks in rear axle hub.
   (2) Damage, breakage, or bending in rear axle hub bolts.
   (3) Damage in wheel bearing race surfaces.
   (4) Defective rotation, noise, or wear in wheel bearings, and wear or damage in rollers and holders.
   (5) Damage in steering knuckle oil retainer.



Fig. 6-29 Rear Axle Hub Inspection

8. Rear axle beam.
   (1) Bending or cracks in rear axle beam.
   (2) Measure the king pin inclination.
   King pin inclination standard 6°.
   (3) Wear in support pins.
   Diameter standard: 50.0 mm (1.97 in.)
   Wear limit: 48.5 mm (1.91 in.)

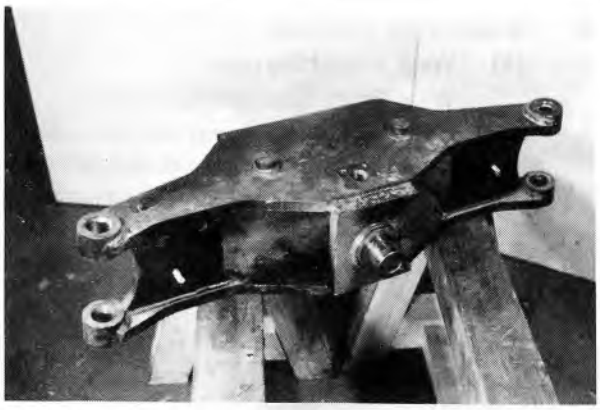

Fig. 6-30 Rear Axle Beam Inspection

9. Tie rods.
   (1) Bending in tie rods.
   (2) Damage in tie rod end threads.

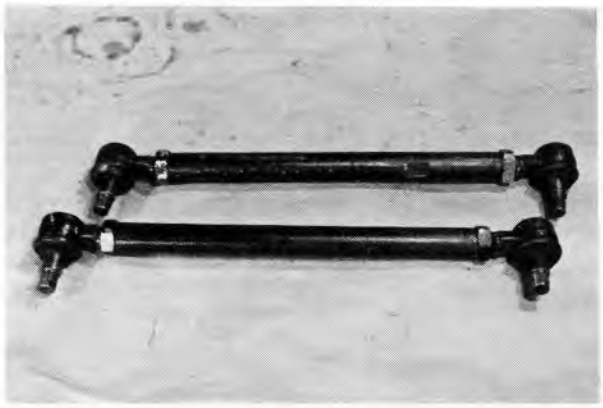

Fig. 6-31 Tie Rod Inspection

ASSEMBLY

Caution:
- **After inspection, clean the parts once more before assembly. Be sure to apply grease on the bearings and king pin needle bearings.**
- **Always replace rubber parts like oil seals when disassembled.**

1. Drive the needle bearings into the rear axle beam.
   (1) Drive the needle bearings into king pin holes until flush with the inner surfaces.
   Use SST 09620-30010

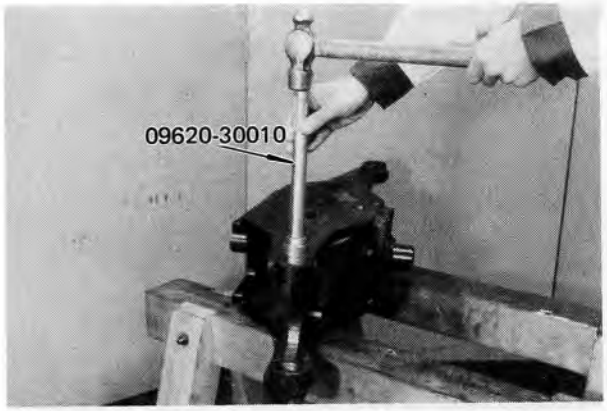

Fig. 6-32 Driving in Needle Bearings

2. Drive the needle bearings into the bearing.
   (1) Drive the needle bearing into the bearing pin hole.
   Use SST 09620-30010



Fig. 6-33 Driving in Needle Bearing

3. Drive in the oil seals.
   (1) Drive the oil seals in the rear axle beam king pin holes to outer side of needle bearings.
   (2) Drive the oil seals into the bearing pin hole over the needle bearings.
   Use SST 09620-30010

   Caution:
   Install the oil seals with the lip sides facing outward.



Fig. 6-34 Driving in Oil Seals

4. Install the tie rods to the bell crank.
   (1) Tie rod
   (2) Castle nut
   T = 7~8 kg-m (50.5~57.6 ft-lb)
   (3) Cotter pin

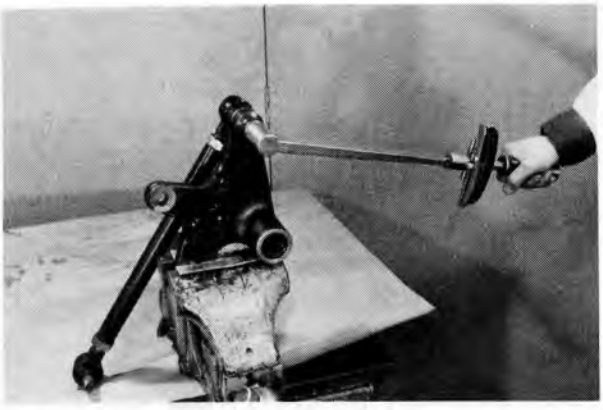

Fig. 6-35 Installing Tie Rod

5. Install the bearing with tie rod to the rear axle beam.
   (1) Set the bearing with tie rod into the rear axle beam.
   (2) Make the shim adjustment.
      1) Insert 1.0 mm (0.039 in.) into bearing lower side.
      2) Adjust the bearing upper side with shims.
      Clearance standard:
      0.02~0.55 mm
      (0.0008~0.0217 in.)
      Sim sizes:
      0.5 mm (0.00197 in.)
      1.0 mm (0.039 in)
      3) Check the bearing to see that it turns lightly.



Fig. 6-36 Installing Bearing with Tie Rod

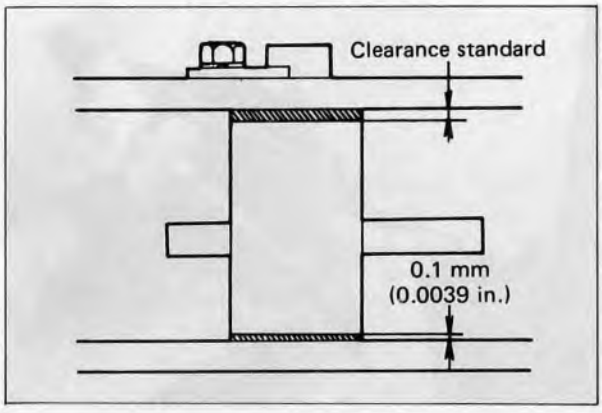

Fig. 6-37 Shim Adjustment



Fig. 6-38 Shim Adjustment

(3) Insert the bearing pin and install the stopper plate.
T = 1.9~3.1 kg-m (13.7~22.4 ft-lb)



Fig. 6-39 Inserting Bearing Pin

6. Make steering knucle shim adjustment.
   (1) Install the steering knuckle and thrust bearing to rear axle beam.
   (2) Adjust the steering knuckle rotation with shim.
   Make the adjustment on thrust bearing upper side.
   Clearance standard:
   0.02~0.12 mm
   (0.0008~0.0047 in)
   Shim sizes:
   0.1, 0.2, 0.5, 1.0 mm
   (0.0039, 0.0079, 0.0197, 0.039 in)



Fig. 6-40 Steering Knuckle Shim Adjustment

7. Adjust the steering knuckle preload.
   (1) After shim adjustment, hook a spring scale to the end of steering knuckle spindle, and measure the preload.
   Steering knuckle starting force:
   3~5 kg (6.6~11.0 lb)
   (2) If specified starting force cannot be obtained, readjust the shims and remeasure.

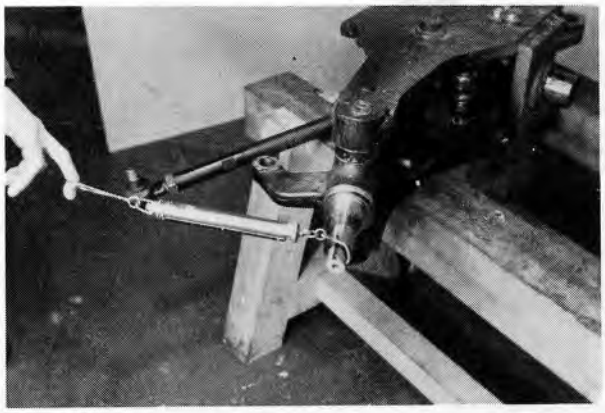

Fig. 6-41 Measuring Preload

8. Install the steering knucle.
   (1) After adjusting preload, align the king pin to lock pin hole position.
   (2) Drive in the lock pin.
   (3) Lock nut.
   T = 1.9~3.1 kg-m (13.7~22.4 ft-lb)

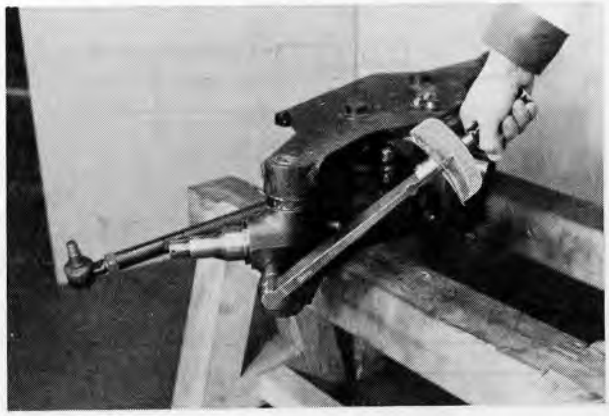

Fig. 6-42 Installing Steering Knuckle

9. Install the inner bearing.
   (1) Oil retainer
   Use SST 09370-10410-71
   (2) Inner bearing
   Use SST 09370-20270-71

Caution:
Be careful not to cock the bearing when driving it in since this will damage the knuckle spindle.



Fig. 6-43 Installing Inner Bearing

10. Install the bearing outer race to the rear axle hub.



Fig. 6-44 Installing Bearing Outer Race

11. Install the rear axle hub.
   (1) Pack grease into the hub.
   (2) Apply grease to inner and outer bearings.
   (3) Install the rear axle hub and drive in the outer bearing.
   Use SST 09370-20270-71
   (4) Claw washer
   (5) Castle nut



Fig. 6-45 Installing Rear Axle Hub

12. Measure the rear axle hub preload.
   (1) Hook a spring scale to the hub bolt and measure the force required to start turning the rear axle hub.
   Rear axle hub starting force:
   1.5~4.0 kg (3.3~8.8 lb)
   (1.0 ~ 1.75 ton vehicles)
   1.5~4.5 kg (3.3~9.9 lb)
   (2.0 ~ 3.0 ton vehicles)

Essential:
For preload adjustment, fully tighten the castle nut and then loosen it about 1/4 turn. Lightly tap the hub so as to make it turn easier and retighten the nut, after which measure the starting force.

   (2) Cotter pin

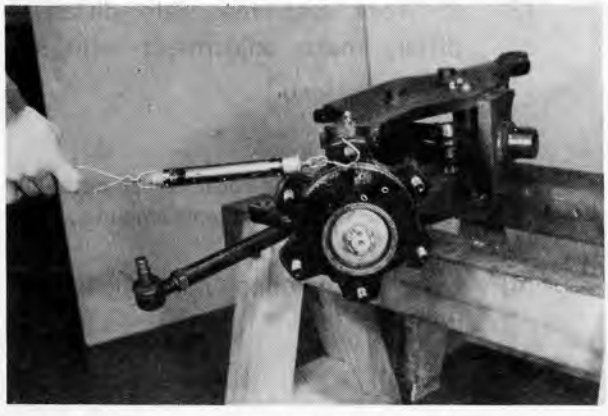

Fig. 6-46 Measuring Rear Axle Hub Preload

13. Install the grease cap.
    (1) Pack grease into the grease cap
    (2) Grease cap

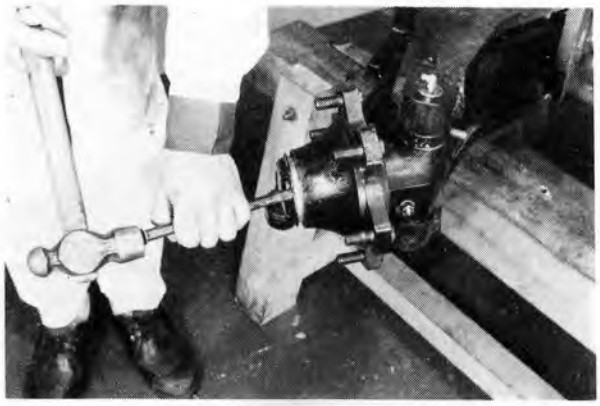

Fig. 6-47 Installing Grease Cap

14. Connect the tie rod to the steering knuckle.

    Caution:
    Connect the left side tie rod at the time the steering knuckle is installed. (2.0 ~ 3.0 ton vehicles).

    (1) Tie rod
    (2) Castle nut
        T = 7~8 kg-m (50.5~57.6 ft-lb)
    (3) Cotter pin



Fig. 6-48 Connecting Tie Rod

15. Measure the toe-in.
    (1) Align the rear axle beam and bell crank holes, insert a suitable round bar and bring to straight ahead position.
    (2) Install tires on the rear axle hubs and measure the center distance between the treads (front and rear).
        Toe-in: 0 mm

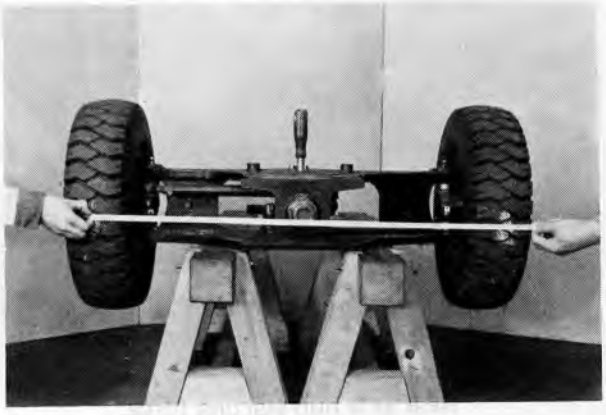

Fig. 6-49 Measuring Toe-in

    (3) If front and rear side distances differ, make adjustment with tie rods.

    Essential:
    In adjusting with tie rods, adjust both the left and right sides to the same amounts.

    (4) Upon completing adjustment, remove the tires.



Fig. 6-50 Adjusting Toe-in

INSTALLATION

1. Install the rear axle assy to the vehicle.
   (1) Set the rear axle assy on a jack.
   (2) Install shims on the center pin (to thickness measured at removal).
   (3) Apply grease on the bushings, and insert the bushings on the pins.
   (4) Position the rear axle assy under the frame and raise the jack.
   (5) Install the rear axle brackets in accordance with the match marks.

2. Measure the rear axle play.
   Front-rear play standard:
   0.02~0.40 mm (0.0008~0.016 in.)
   Shim sizes:
   0.3, 0.5, 1.2, 2.3, 3.2 mm
   (0.0118, 0.0197, 0.047, 0.091, 0.126 in.)

   Caution:
   - **Make the shim adjustments on the rear side.**
   - **Use the thickest possible shims when making the adjustment.**
   - **If the play exceeds the standard, remove the rear axle from the vehicle and readjust the shims.**

3. Tighten the rear axle brackets.
   (1) Rear axle bracket
   (2) Set bolts
4. Connect the power cylinder rod to the bell crank.
5. Install the rear wheels, remove the stands, tighten the hub nuts to the specified torque.
   T = 9~12 kg-m (65.0~86.6 ft-lb)
   (1.0~1.75 ton vehicles)
   T = 12~15 kg-m (86.6~108.3 ft-lb)
   (2.0~2.5 ton vehicles)
   T = 12~15 kg-m (86.6 ~ 108.3 ft-lb)
   (2.75, 3.0 ton vehicles)



Fig. 6-51 Installing Rear Axle



Fig. 6-52 Measuring Rear Axle Play



Fig. 6-53 Installing Rear Wheel

Caution:
The following covers the procedures for removing the necessary parts from the vehicle and performing the disassembly and adjustment, without removing the rear axle assy from the vehicle.

REAR AXLE HUB

REMOVAL AND DISASSEMBLY

1. Remove the rear wheel.
   (1) Loosen the hub nuts
   (2) Jack up
   (3) Hub nuts
   (4) Rear wheel

   Caution:
   Set supports under the frame, and make sure they do not slip off.



Fig. 6-54 Removing Rear Wheel

2. Remove the grease cap.
   (1) Pry off the grease cap with screwdriver.



Fig. 6-55 Removing Grease Cap

3. Remove the rear axle hub.
   (1) Cotter pin
   (2) Castle nut
   (3) Claw washer
   (4) Rear axle hub
   Use SST 09950-20012



Fig. 6-56 Removing Rear Axle Hub

4. Remove the inner bearing
Use SST 09950-20012

Caution:
Remove the bearing only when found to be worn, noisy, or otherwise defective.



Fig. 6-57 Removing Inner Bearing

5. Remove the oil retainer.



Fig. 6-58 Removing Oil Retainer

6. Remove the bearing outer race from the rear axle hub.

Caution:
Remove only when found defective.



Fig. 6-59 Removing Outer Race

INSPECTION

1. Rear axle hub.
   (1) Damage or cracks in rear axle hub.
   (2) Damage, breakage, or bending in rear axle hub bolts.
   (3) Damage in wheel bearing race surfaces.
   (4) Defective rotation, noise, or wear in wheel bearings, and damage in rollers and holders.
   (5) Damage in steering knuckle oil retainer.



Fig. 6-60 Rear Axle Hub Inspection

ASSEMBLY & ADJUSTMENT

1. Install the inner bearing.
   (1) Oil retainer
   Use SST 09370-10410-71



Fig. 6-61 Installing Oil Retainer

   (2) Inner bearing
   Use SST 09370-20270-71

   Caution:
   Be careful not to cock the bearing when driving it in since this will damage the knuckle spindle.



Fig. 6-62 Installing Inner Bearing

2. Install the bearing outer race to rear axle hub.



Fig. 6-63 Installing Bearing Outer Race

3. Install the rear axle hub.
   (1) Pack grease into the hub.
   (2) Apply grease to the inner and outer bearings.
   (3) Install the rear axle hub, and drive in the outer bearing.
   Use SST 09370-20270-71
   (4) Claw washer.
   (5) Castle nut.



Fig. 6-64 Installing Rear Axle Hub

4. Measure the rear axle hub preload.
   (1) Hook a spring scale to hub bolt and measure the force required to start turning the rear axle hub.
   Rear axle hub starting force:
   1.5~4.0 kg (3.3~8.8 lb)
   (1.0~1.75 ton vehicles)
   1.5~4.5 kg (3.3~9.9 lb)
   (2.0~3.0 ton vehicles)

   Essential:
   For preload adjustment, first fully tighten the castle nut and then loosen it about 1/4 turn. Lightly tap the hub so as to make it turn lighetr, after which retighen the nut and measure the starting force.

   (2) Cotter pin.

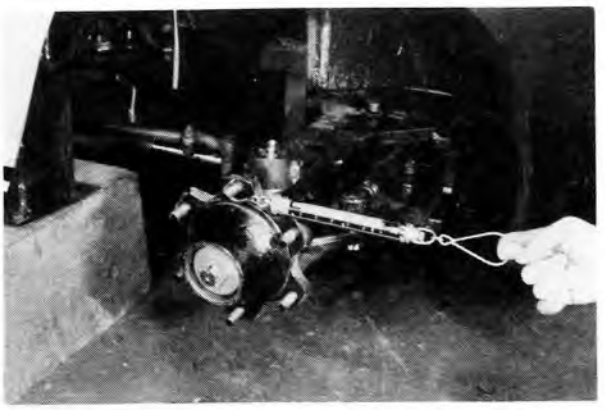

Fig. 6-65 Measuring Rear Axle Hub Preload

5. Install the grease cap.
   (1) Pack grease into the grease cap.
   (2) Grease cap.



Fig. 6-66 Installing Grease Cap

6. Fit on the rear wheels, remove the stands, and tighten the hub nuts to the specified torque.
   T = 9~12 kg-m (65.0~86.6 ft-lb)
   (1.0~1.75 ton vehicles)
   T = 12~15 kg-m (86.6~108.3 ft-lb)
   (2.0~2.5 ton vehicles)
   T = 12~15 kg-m (86.6 ~ 108.3 ft-lb)
   (2.75, 3.0 ton vehicles)



Fig. 6-67 Installing Rear Wheel

STEERING KNUCKLE & KING PIN

Caution:
It is necessary that the rear axle hub be removed before the steering knuckle or king pin can be removed or installed. For this removal, refer to the procedures described in rear axle hub section.

REMOVAL & DISASSEMBLY

1. Disconnect the tie rod end.
   (1) Cotter pin
   (2) Castle nut
   (3) Tie rod end
   Use SST 09610-20011

   Essential:
   Disconnect the left side tie rod during knuckle removal (2.0 ~ 3 ton vehicles).

2. Remove the king pin lock pin.
   (1) Set nut
   (2) Screw on a service nut, and drive out with suitable round bar.

   Essential:
   To protect the lock pin threads against damage, always screw on a service nut. (One than can be scrapped.)

3. Remove the king pin.
   (1) Grease fitting
   (2) King pin

4. Remove the steering knuckle.
   (1) Thrust bearing
   (2) Shims
   (3) Steering knuckle

   Caution:
   Be careful not to lose the shims, and keep a record of the number of shims used and their thicknesses.



Fig. 6-68 Disconnecting Tie Rod End



Fig. 6-69 Removing Lock Pin

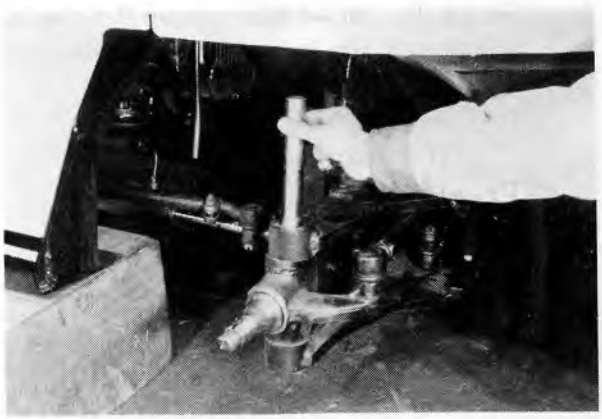

Fig. 6-70 Removing King Pin



Fig. 6-71 Removing Steering Knuckle

5. Remove the oil seals.

Caution:
Remove only when the oil seals or needle bearings are found damaged or worn.



Fig. 6-72 Removing Oil Seal

6. Remove the needle bearings.
Use SST 09620-30010

Caution:
Remove the needle bearings only when found worn or damaged.

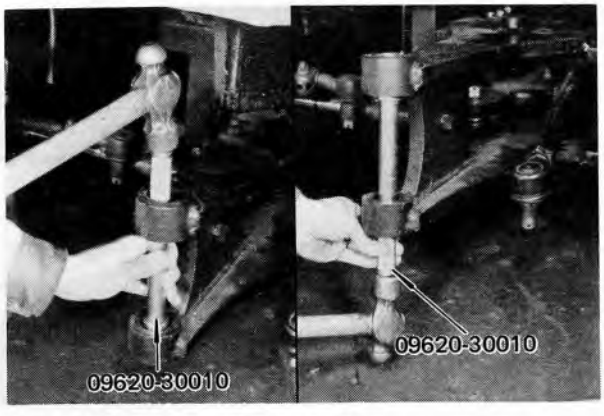

Fig. 6-73 Removing Needle Bearings

INSPECTION

1. Steering knuckle.
   (1) Cracks or damages at spindle root and threads.

Caution:
It is desirable that the inspection be made by using flaw detector or flaw detecting liquid penetrant.



Fig. 6-74 Steering Knuckle Inspection

2. King pin.
   (1) Wear or damage in king pin.
   Diameter standard: 28.0 mm (1.10 in.)
   Wear limit: 27.8 mm (1.09 in.)
   (2) Bending in king pin.

Caution:
When worn over the limit, replace together with knuckle bearings.

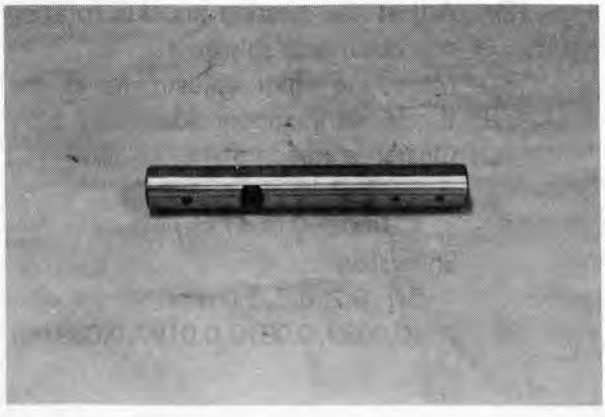

Fig. 6-75 King Pin Inspection

3. Needle bearings.
   (1) Wear or damage in king pin needle bearings.
   (2) Damage in king pin oil seal.
   (3) Wear or damage in bearing pin needle bearings.
   (4) Damage in bearing pin oil seal.

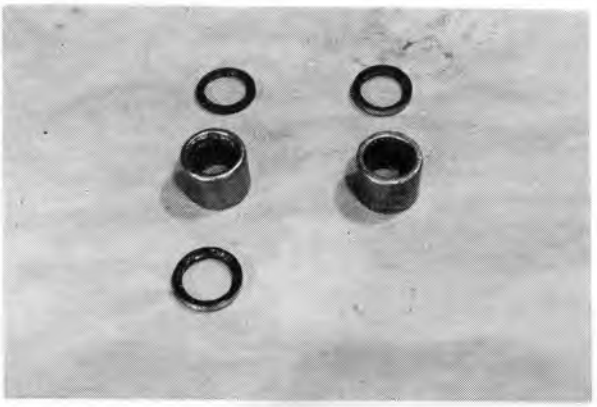

Fig. 6-76 King Pin Needle Bearing Inspection

ASSEMBLY & ADJUSTMENT

1. Drive the needle bearings into the king pin holes until flush with the inner surfaces.
   Use SST 09620-30010

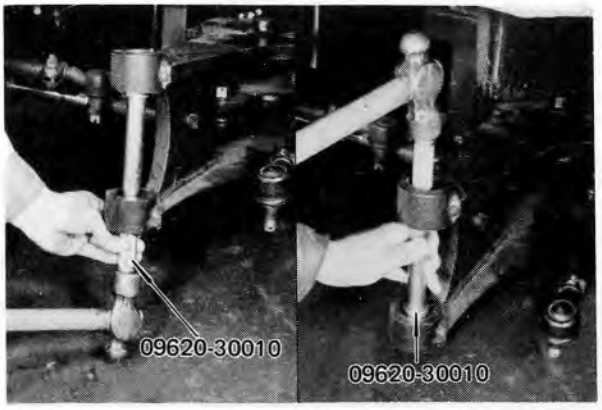

Fig. 6-77 Driving-in Needle Bearings

2. Drive the oil seals into the outer side of the king pin needle bearings installed in king pin holes.

   Caution:
   Install the oil seals with their lip sides facing outward.



Fig. 6-78 Driving-in Oil Seal

3. Make the steering knuckle shim adjustment.
   (1) Install the steering knuckle and thrust bearing to the rear axle beam.
   (2) Adjust the steering knuckle rotating condition with shims.
   Make the shim adjustment at the thrust bearing upper side.
   Clearance standard:
   0.02~0.12 mm
   (0.0008~0.0047 in.)
   Shim sizes:
   0.1, 0.2, 0.5, 1.0 mm
   (0.0039, 0.0079, 0.0197, 0.039 in.)



Fig. 6-79 Making Steering Knuckle Shim Adjustment

4. Adjust the steering knuckle preload.
   (1) After finishing shim adjustment, hook a spring scale to the end of steering knuckle and measure the preload.
   Steering knuckle starting force:
   3~5 kg (6.6~11.0 lb)
   (2) If specified starting force cannot be obtained, readjust the shims and remeasure.

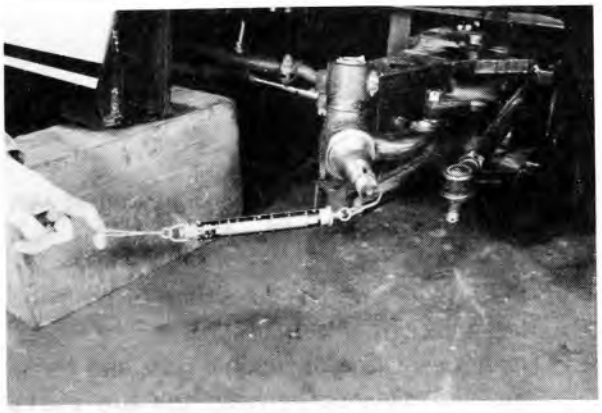

Fig. 6-80 Measuring Preload

5. Install the steering knuckle.
   (1) After adjusting the preload, align the king pin to lock pin hole position.
   (2) Drive in the lock pin.



Fig. 6-81 Installing Steering Knuckle

   (3) Lock nut.
   T = 1.9~3.1 kg-m (13.7~22.4 ft-lb)



Fig. 6-82 Connecting Tie Rod

6. Connect the tie rod to the steering knuckle.

Caution:
Connect the left side tie rod at the time the steering knuckle is installed. (2.0 ~ 3.0 ton vehicles.)

   (1) Tie rod
   (2) Castle nut
   T = 7~8 kg-m (50.5~57.6 ft-lb)
   (3) Cotter pin

REAR WHEEL ALIGNMENT

TOE-IN

Caution:
Make the measurement and adjustment with the rear axle removed.

1. Place marks on the centerline of both the left and right wheels.
2. Use toe-in gage or flexible rule, and measure the distance between the tire marks parallel to the ground.
   Measured value: A
   Measure the distance between the tires 180° at oppsite side.
   Measured value: B
   Toe-in = A – B
   Toe-in standard: 0 mm
3. If the toe-in is outside the standard value, loosen the lock nut at the tie rod end, and adjust the length by turning the tie rod.

Caution:
Adjust the left and right tie rod lengths to equal amounts.

STEERING ANGLE

1. Adjust the rear wheel steering angle by screwing in or out the knuckle stopper bolt.
2. After adjusting the steering angle, check it measuring the minimum turning radius.
   Minimum steering radius (Maximum outer side):

1900 mm (75 in.)	1.0 ton vehicle
1940 mm (76 in.)	1.35 ton vehicle
1980 mm (78 in.)	1.5 ton vehicle
2010 mm (79 in.)	1.75 ton vehicle
2165 mm (85 in.)	2.0 ton vehicle
2190 mm (86 in.)	2.25 ton vehicle
2220 mm (87 in.)	2.5 ton vehicle
2410 mm (95 in.)	2.75 ton vehicle
2440 mm (96 in.)	3.0 ton vehicle

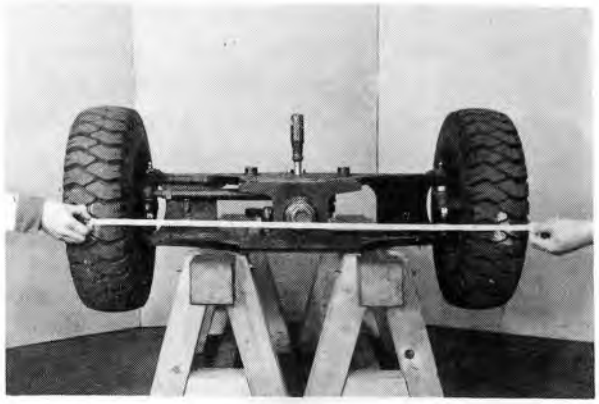

Fig. 6-83 Measuring Toe-In



Fig. 6-84 Adjusting Toe-In



Fig. 6-85 Adjusting Steering Angle



Fig. 6-86 Measuring Minimum Steering Radius

CASTER, CAMBER, KING PIN INCLINATION

The above measurements are made with alignment tester.
However, adjustments cannot be made.

Camber 1°
Caster 0°
King pin inclination 6°

STEERING

	Page
STEERING POST ASSY	7– 2
COMPONENT PARTS	7– 3
SPECIFICATIONS & SERVICE STANDARDS	7– 7
DISASSEMBLY (1.0 – 2.0 ton VEHICLES)	7–11
DISASSEMBLY (2.25 – 3.0 ton VEHICLES)	7–19
POWER CYLINDER	7–26
STEERING LINKAGE	7–32

STEERING POST ASSY

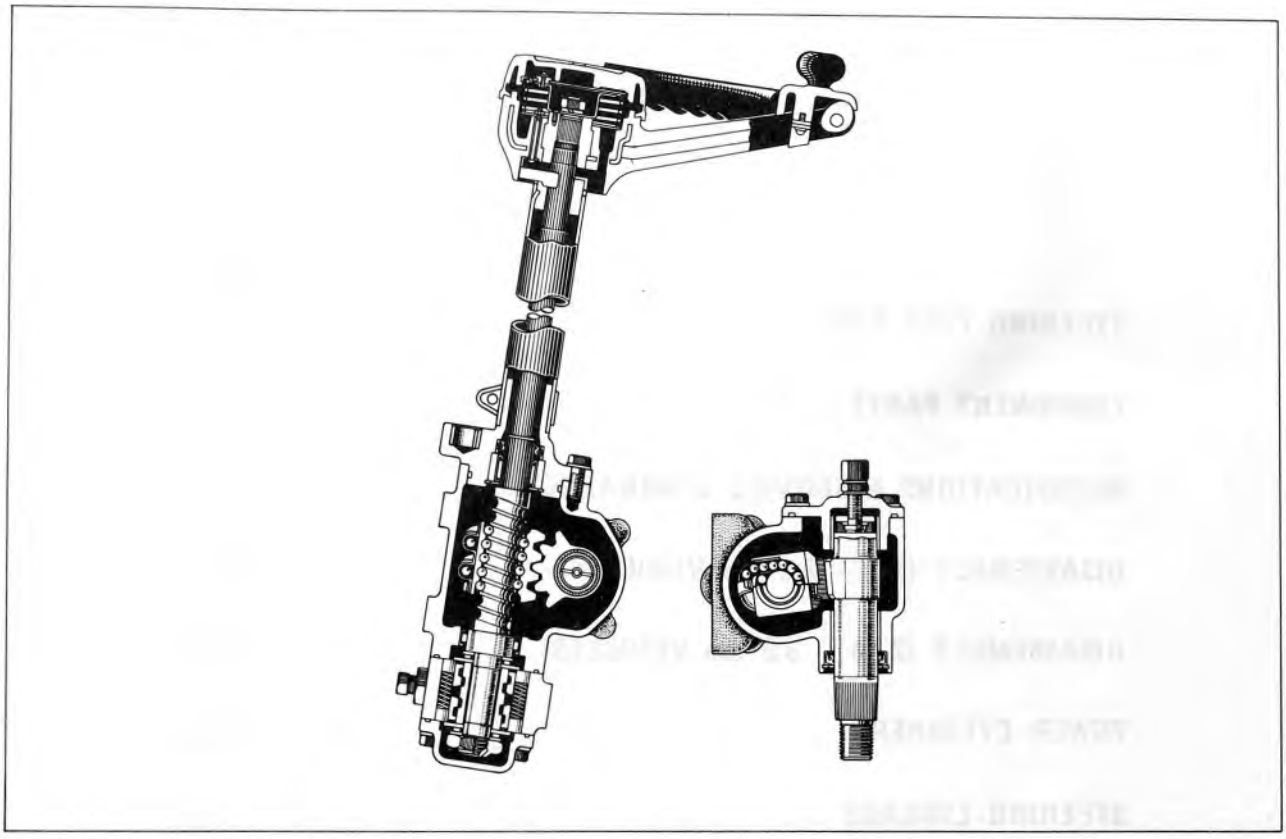

Fig. 7-1 Steering Gear Sectional View (1.0～ 2.0 Ton Vehicles)

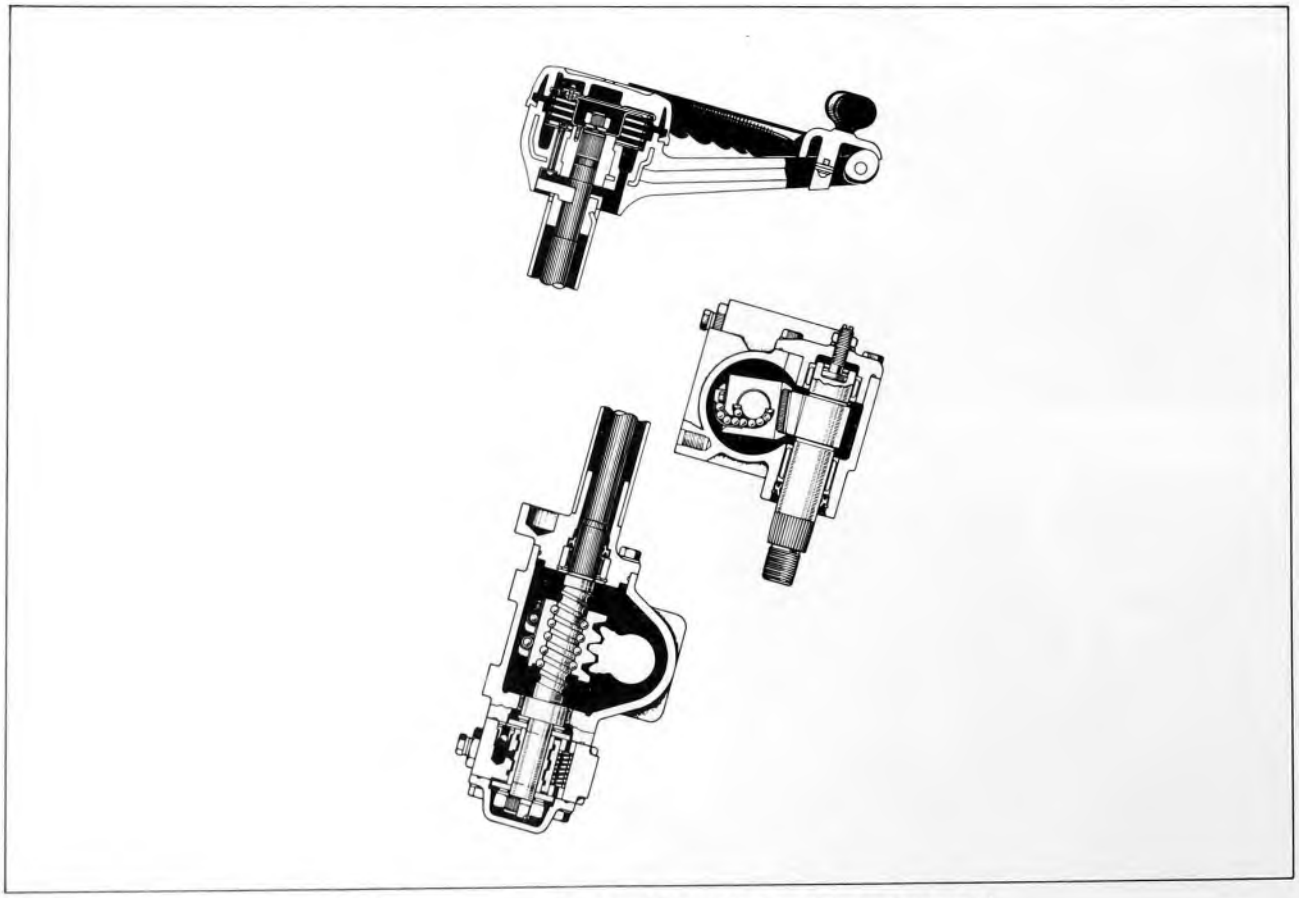

Fig. 7-2 Steering Gear Sectional View (2.25～ 3.0 Ton Vehicles)

COMPONENT PARTS

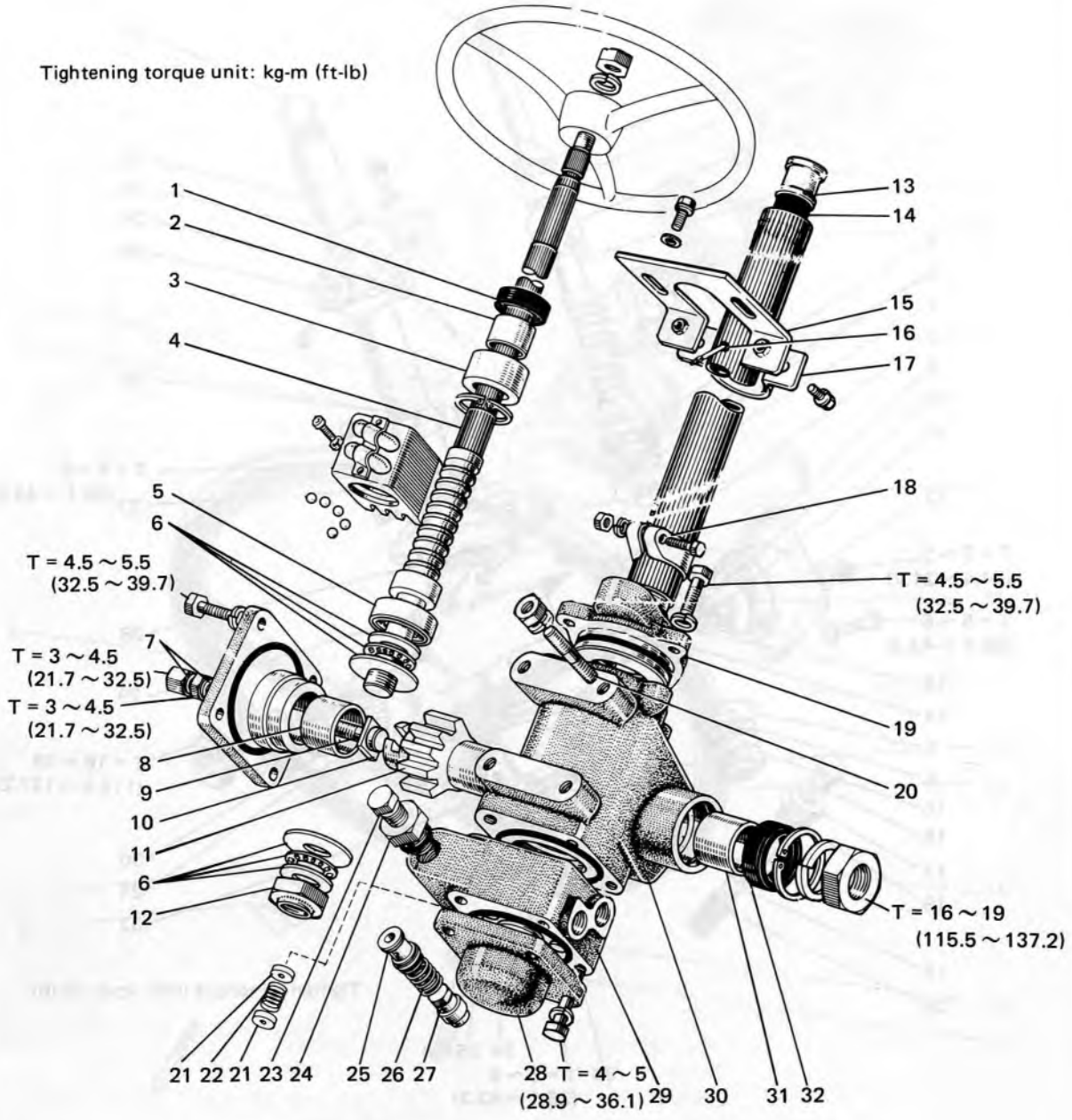

1.	Oil seal	12.	Lock nut	23.	Oil plug
2.	Needle bearing	13.	Insulator	24.	Piston stopper
3.	Holder	14.	Mast jacket	25.	Balance piston
4.	Ball screw set	15.	Steering stay	26.	Balance spring
5.	Needle bearing	16.	Grommet	27.	Relief valve set
6.	Needle bearing	17.	Clamp	28	End cover
7.	Gasket	18.	Clamp	29.	Valve body
8.	Bushing	19.	Top cover	30.	Gear box
9.	Adjusting bolt	20.	Stud bolt	31.	Bushing
10.	Adjusting plate	21.	Seat	32.	Oil seal
11.	Cross shaft	22.	Spring		

Fig. 7-3 Steering Gear Component Parts (1.0 ~ 2.0 Ton Vehicles)

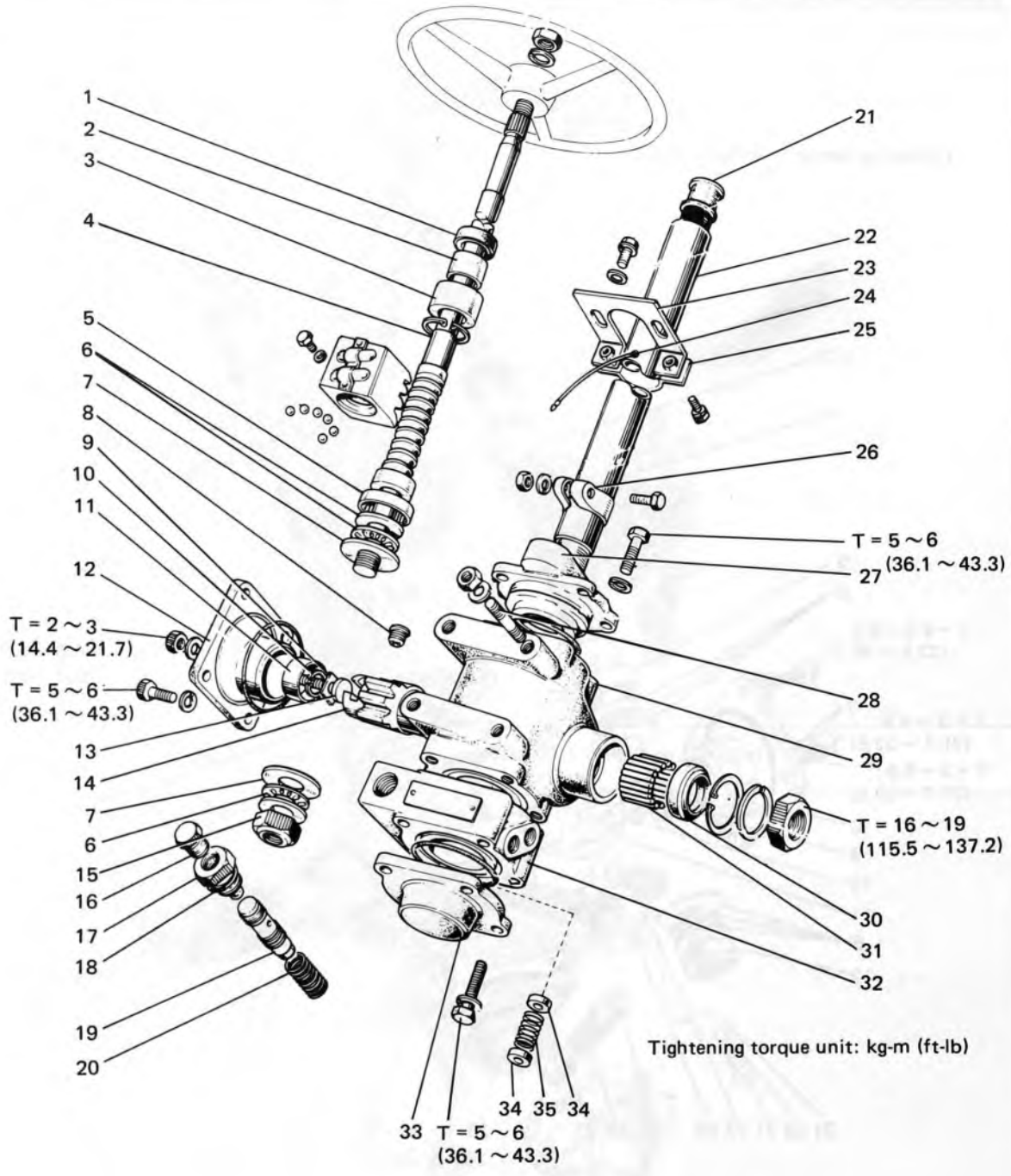

1.	Oil seal	13.	Adjusting bolt	25.	Clamp
2.	Neelde bearing	14.	Cross shaft	26.	Clamp
3.	Holder	15.	Lock nut	27.	Top cover
4.	Ball screw set	16.	Oil plug	28.	Stud bolt
5.	Needle bearing	17.	Plug	29.	Gear box
6.	Needle bearing	18.	"O" ring	30.	Oil seal
7.	Plate	19.	Relief valve	31.	Needle bearing
8.	Plug	20.	Relief valve spring	32.	Valve body
9.	Adjusting plate	21.	Insulator	33.	End cover
10.	Snap ring	22.	Mast jacket	34.	Sprign retainer
11.	Needle bearing	23.	Steering stay	35.	Spring
12.	Side cover	24.	Grommet		

Fig. 7-4 Steering Gear Component Parts (2.25 ~ 3.0 Ton Vehicles)

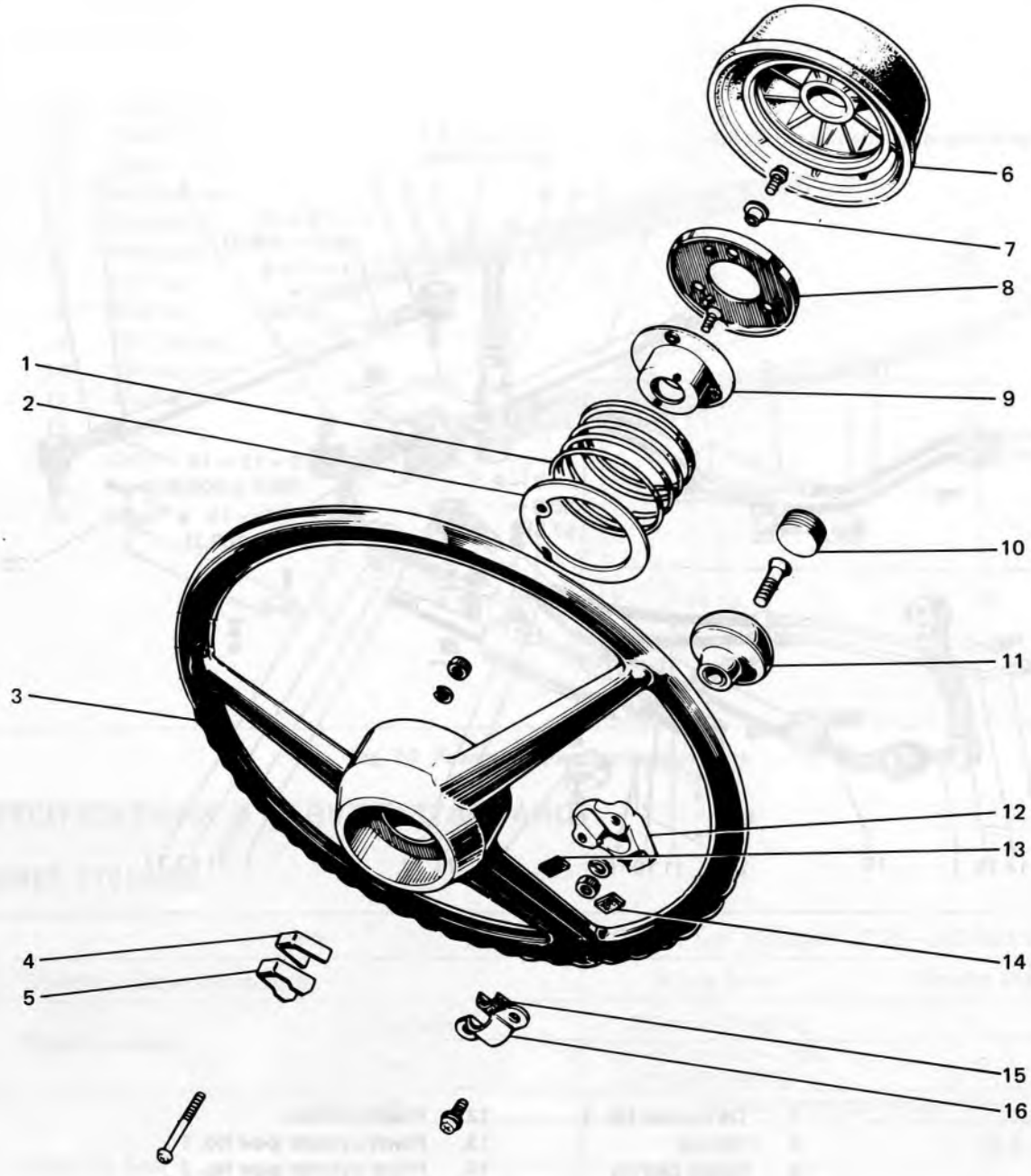

1.	Horn spring	9.	Contact seat
2.	Lead plate	10.	Cap
3.	Steering wheel	11.	Knob
4.	Contact spring	12.	Knob bracket
5.	Contact bushing	13.	Bracket sheet
6.	Horn button	14.	Bracket sheet
7.	Washer	15.	Sheet
8.	Contact plate	16.	Set plate

Fig. 7-5 Steering Wheel Component Parts

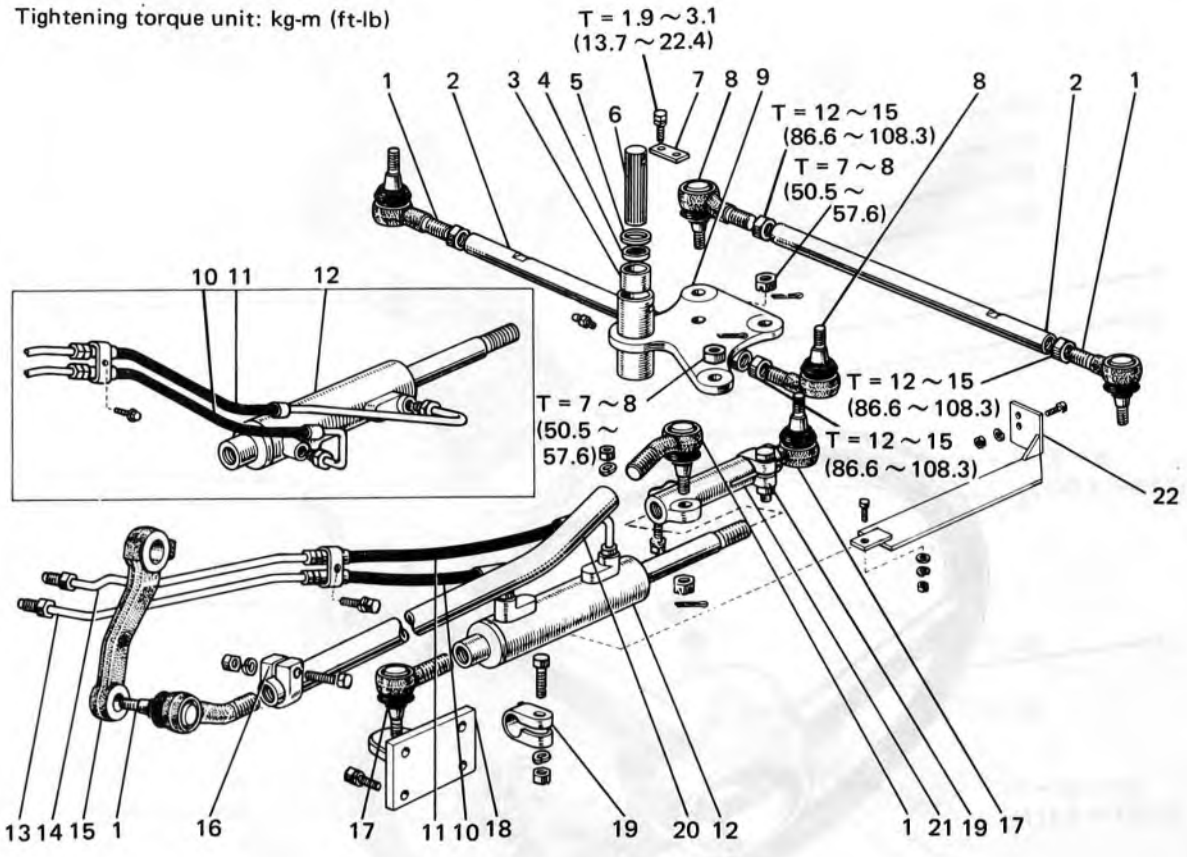

1. Tie rod end No. 1
2. Tie rod
3. Needle bearing
4. Oil seal
5. Shim (selective)
6. Bearing pin
7. Stopper plate
8. Tie rod end No. 2
9. Bell crank
10. High pressure hose No. 1
11. High pressure hose No. 2
12. Power cylinder
13. Power cylinder pipe No. 1
14. Power cylinder pipe No. 2
15. Pitman arm
16. Tie rod end clamp
17. Power cylinder end
18. Power cylinder bracket
19. Tie rod end plug
20. Drag link
21. Power cylinder rear end
22. Cylinder cover (Opt)

Fig. 7-6 Steering Linkage Component Parts

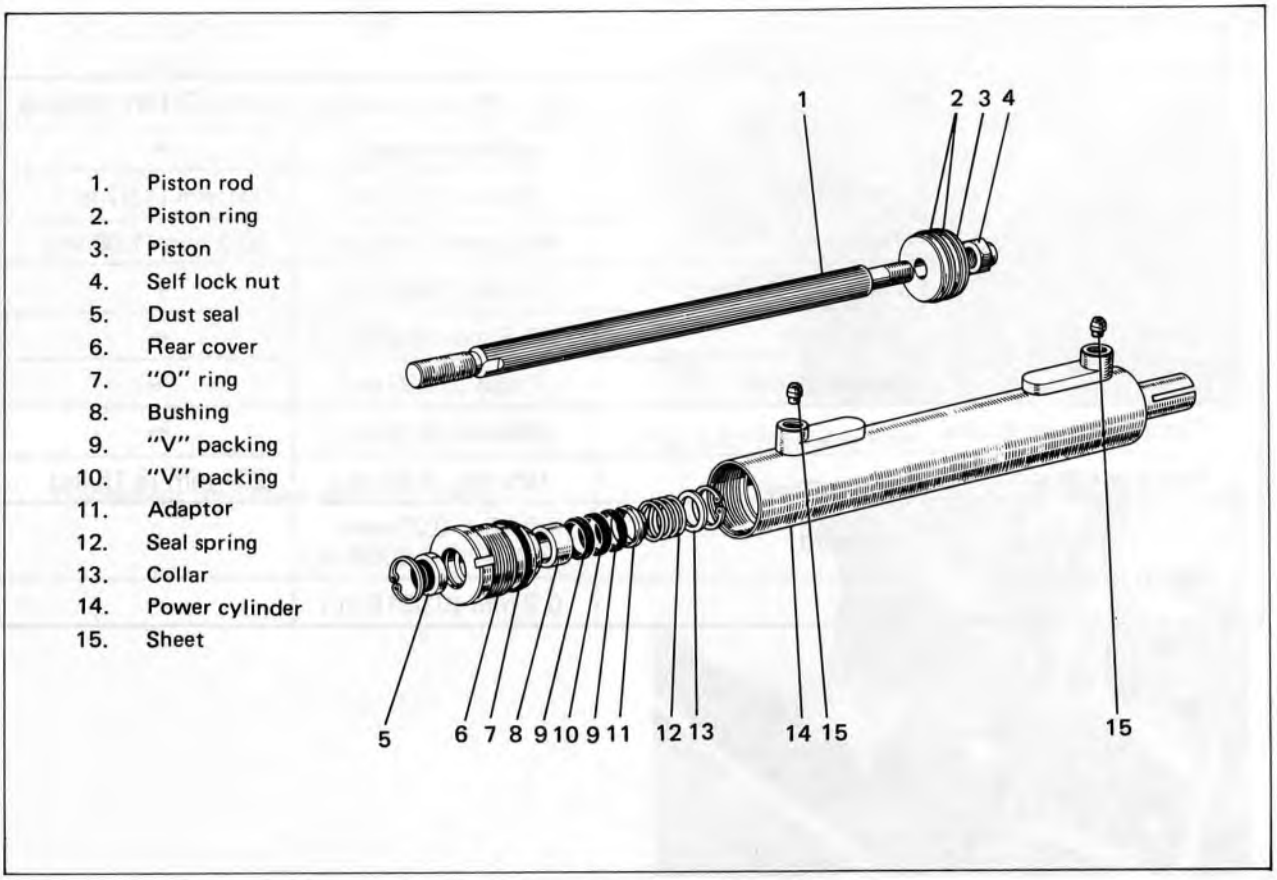

Fig. 7-7 Power Cylinder Component Parts

SPECIFICATIONS & SERVICE STANDARDS

POWER STEERING

Item			1.0~2.0 Ton Vehicles	2.25~3.0 Ton Vehicles
Steering post manufacturer			Koyo Seiko	Jidosha Kiki
Steering wheel		Diameter	420mm (16.5 in.)	←
		Play	25~50 mm(1~2 in.) (Engine idling)	←
Steering Gear	Gear type		Recirculating ball screw type	
	Gear ratio		1 : 18.5	1 : 19.8
	Lock to lock		4.1	4.5
	Ball screw turn		Left	←
Cross shaft adjust plate thrust clearance			Below 0.1 mm (0.0039 in.)	←
Ball screw set starting torque	w/o cross shaft		0.3 ~ 0.7 kg (0.66 ~ 1.54 lb)	–
	w/ cross shaft		0.7 ~ 1.5 kg (1.54 ~ 3.31 lb)	1.0 ~ 2.1 kg (2.21 ~ 4.63 lb)
Booster	Type		Semi integral	←
	Relief valve set press.		75 ~ 85 kg/cm^2 (1067 ~ 1209 psi)	←
	Reaction system		Spring type	←

POWER CYLINDER

Item		1.0~1.75 Ton Vehicles	2.0~3.0 Ton Vehicles
Type		w/reducing valve	←
Cylinder bore	Standard	40mm (1.57 in.)	50 mm (1.97 in.)
	Wear limit	40.2 mm (1.58 in.)	50.2 mm (1.98 in.)
Piston rod	Diameter standard	22 mm (0.886 in.)	←
	Wear limit	21.8 mm (0.858 in.)	←
	Bending limit	1 mm (0.039 in.)	←
Piston effective stroke		230 mm (9.06 in.)	←
Piston actual storke		195 mm (7.68 in.)	207 mm (8.15 in.)
Piston ring end gap	Standard	0.05 ~ 0.25 mm (0.00197 ~ 0.0098 in.)	←
	Limit	0.8 mm (0.0315 in.)	←

REMOVAL

1. Remove the steering wheel.
   (1) Horn button
   (2) Set bolt
   (3) Steering wheel
   Use SST 09609-20010



Fig. 7-8 Removing Steering Wheel

2. Remove the toeboards.
   (1) Rear toeboard
   (2) Front toeboard



Fig. 7-9 Removing Toeboard

3. Remove the horn.
   (1) Harness
   (2) Horn

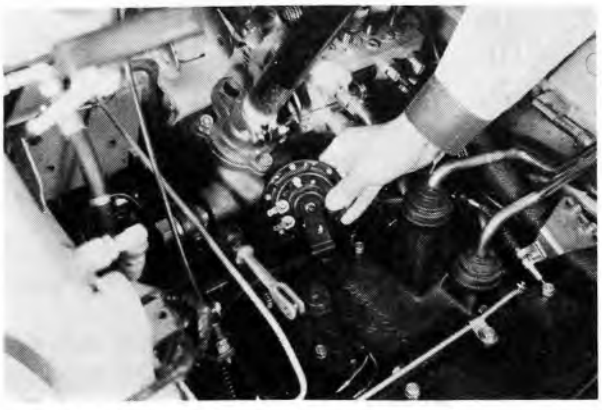

Fig. 7-10 Removing Horn

4. Disconnect the power steering piping.



Fig. 7-11 Disconnecting Piping

5. Disconnect the drag link end.
   (1) Cotter pin, castle nut
   (2) Drag link rod end (Pitman arm)
   Use SST 09611-20014

   Essential:
   Remove from back side of pitman arm.



Fig. 7-12 Disconnecting Rod End

6. Remove the mast jacket set plate.
   (1) Set nuts
   (2) Set plate



Fig. 7-13 Removing Set Plate

7. Remove the steering gear box.
   (1) Set nuts
   (2) Steering gear box

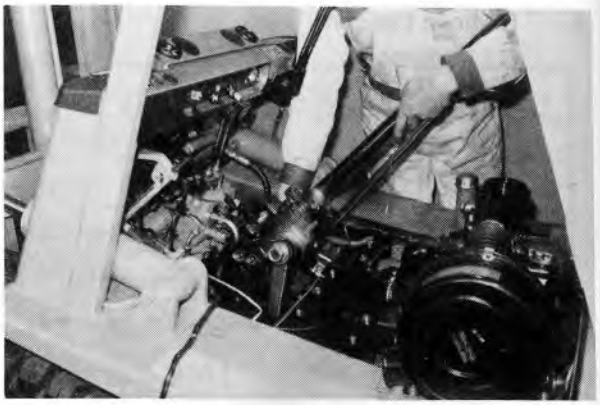

Fig. 7-14 Removing Steering Gear Box

Essential:

*Before starting to remove the steering box, check on the following points:

- Is the steering heavy?
- Is the vehicle straight ahead steering good?
- Is there any oil leakage?
- Is there any sticking while steering?
- Is the PS vehicle relief valve operating properly?
- Is there any damage in the power steering mounting parts and in the drag link?
- Others.

*If any steering trouble develops, identify the possible location before starting to remove and disassemble.

RELIEF PRESSURE MEASUREMENT

1. Raise the fork.
2. Remove the relief valve plug and mount the oil pressure gage. (Plug PF 1/4)
3. Start the engine and turn the steering wheel slowly in both directions.

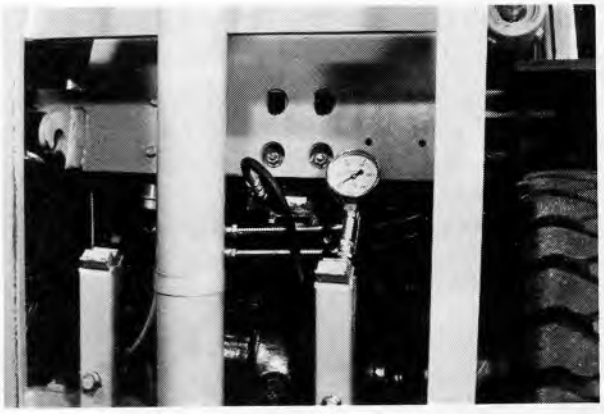

Fig. 7-15 Measuring Relief Pressure

4. Lock the rear wheels after turning them slightly from straight ahead position, turn the engine at maximum speed and measure the relief pressure.
   Specified relief pressure:
   75 ~ 85 kg/cm^2 (1067 ~ 1209 psi)
   A: Wood



Fig. 7-16 Rear Wheel Locked

1.0 ~ 2.0 Ton Vehicle (POWER STEERING MANUFACTURED BY KOYO SEIKO)

DISASSEMBLY

1. Remove the mast jacket.
2. Remove the pitman arm.
   Use SST 09420-10410-71

   Caution:
   Before starting disassembly, place match marks on the cross shaft and pitman arm.



Fig. 7-17 Removing Pitman Arm

3. Remove the end cover.
   (1) Set bolts
   (2) End cover

   Essential:
   After taking off the end cover, use two of the end cover set bolts and bolt down the control valve body temporarily.

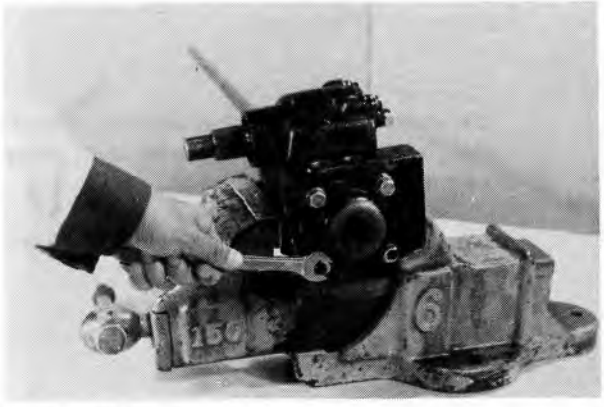

Fig. 7-18 Removing End Cover

4. Remove the lock nut.
   (1) Loosen the lock nut staked parts.
   (2) Lock nut.



Fig. 7-19 Removing Lock Nut

5. Remove the control valve body.
   (1) Remove the temporary bolts.
   (2) Control valve body and spool.

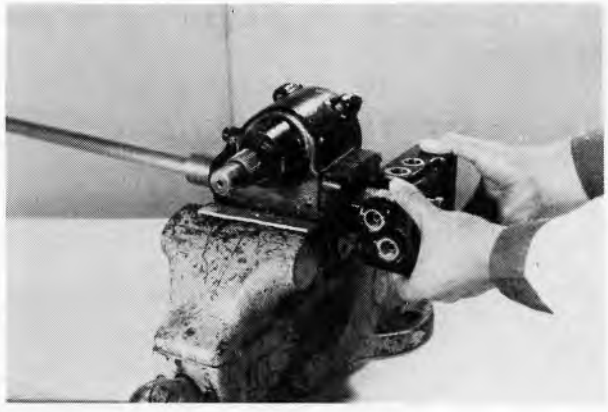

Fig. 7-20 Removing Valve Body

6. Remove the side cover.
   (1) Set bolts
   (2) Adjusting bolt lock nut.
   (3) Side cover

   Caution:
   After removing the adjusting bolt lock nut, screwing in the adjusting bolt will enable removing the side cover with ease.

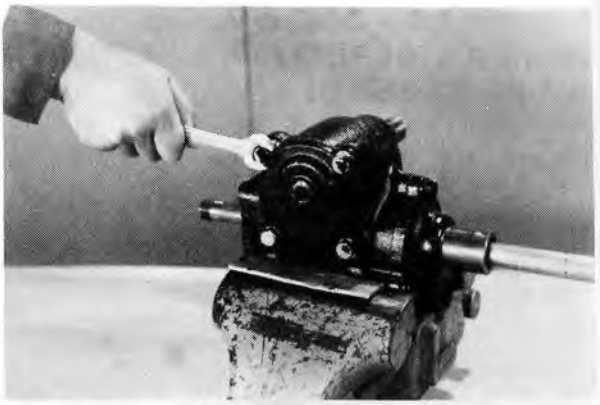

Fig. 7-21 Removing Side Cover

7. Remove the cross shaft.

   Caution:
   Set the ball nut to lock-to-lock center position, and then remove the cross shaft, using care not to damage the oil seal.

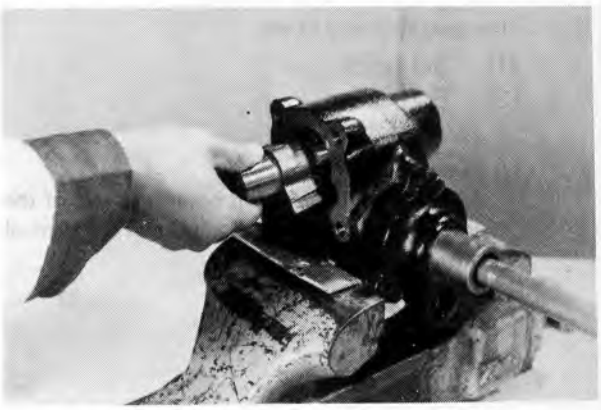

Fig. 7-22 Removing Cross Shaft

8. Remove the top cover.
   (1) Set bolts
   (2) Top cover



Fig. 7-23 Removing Top Cover

9. Take out the ball screw set from the gear box.

10. Remove the relief valve assy.
    (1) Plug
    (2) Balance piston and spring
    (3) Relief valve assy.



Fig. 7-24 Removing Ball Screw Set

INSPECTION

Caution:
Wash the disassembled parts in petroleum solvent, and inspect them on the following items.

1. Ball screw set.
   (1) Damage or crack in shaft.
   (2) Damage in threaded parts.
   (3) Damage or wear in ball nut tooth surfaces.
   (4) Ball screw rotating condition.

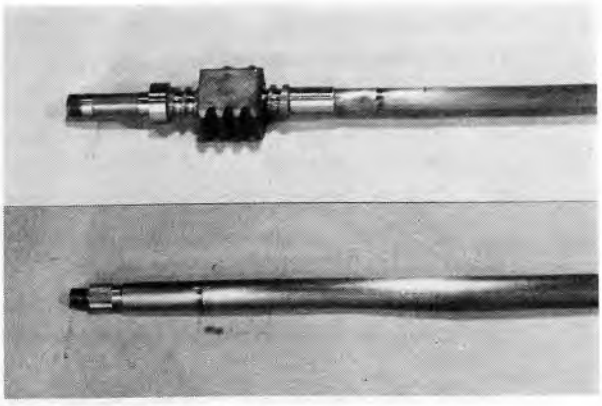

Fig. 7-25 Ball Screw Set Inspection

2. Cross shaft.
   (1) Wear or damage in cross shaft serrations and gear.
   (2) Measure the clearance between the cross shaft and adjusting plate, and select an adjusting plate that will bring the clearance to within the limit.
   Clearance limit: 0.1 mm (0.0039 in.)

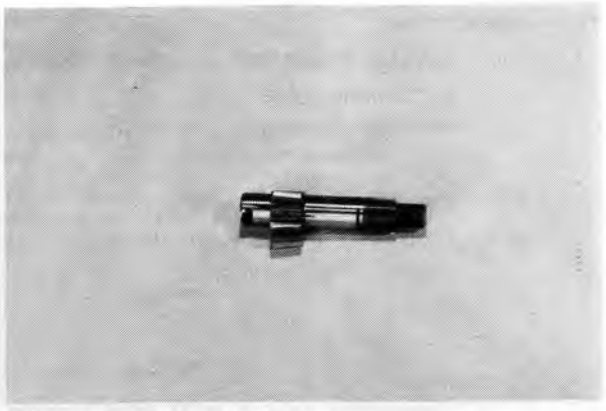

Fig. 7-26 Cross Shaft Inspection

Adjusting Plates

No. 1	Thickness	2.00	mm	(0.079	in.)
No. 2	Thickness	1.95	mm	(0.077	in.)



Fig. 7-27 Inspecting Adjusting Plate

3. Steering gear box.
   (1) Damage or crack in gear box.
   (2) Wear or damage in oil seal lip.
   (3) Wear or damage in needle bearing.

Caution:
- **Inspect the oil seal and needle bearing in assembled state in the gear box.**
- **In case of oil leakage, remove the oil seal and needle bearing with bushing tool and a press, and replace with new parts.**



Fig. 7-28 Gear Box Inspection

4. Control valve.
   (1) Damage or crack in valve body.
   (2) Warping or damage in valve spool.
   (3) Weakening or bending in reaction chamber springs.
   (4) Sliding action between body and spool.

   Caution:
   - **Clean with compressed air before inspecting.**
   - **If any defects are found, replace the entire valve body assy.**



Fig. 7-29 Control Valve Inspection

5. Relief valve.
   (1) Sliding action and action in balance piston and valve body.
   (2) Deterioration or bending in balance spring.
   (3) Foreign matter lodged in.
   (4) Disassemble the relief valve set and check for weakened relief valve spring.

   Caution:
   - **Disassemble only if relief valve pressure was defective before removal.**
   - **If any defect is found, replace the entire relief valve set.**

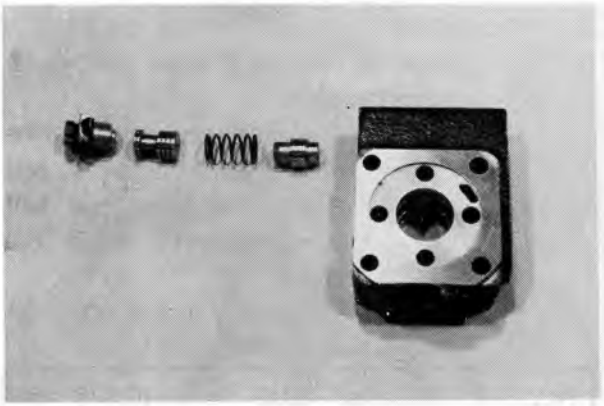

Fig. 7-30 Balance Piston Inspection

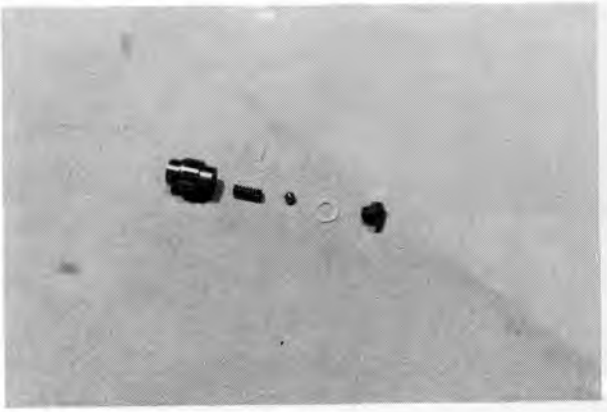

Fig. 7-31 Relief Valve Inspection

6. Bearing Inspection.
   Inspect for damage in bearing and wear in bushings, and replace any found defective.

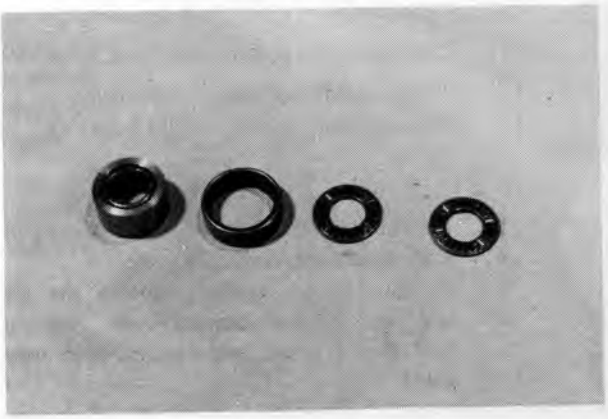

Fig. 7-32 Bearing Inspection

ASSEMBLY & ADJUSTMENT

1. Assemble the ball screw set into the gear box.

   Caution:
   Check the ball screw set and gear box interior to see that no foreign matter is present before starting assembly.



Fig. 7-33 Assembling Ball Screw Set

2. Install the top cover.
   (1) Needle bearing and snap ring
   (2) Top cover
   (3) Set bolts
   T = 4.5~5.5 kg-m
   (32.5~39.7 ft-lb)

   Caution:
   - **Do not forget to assemble in the top cover "0" ring.**
   - **Apply hydraulic oil on the "0" ring and top cover insertion part.**

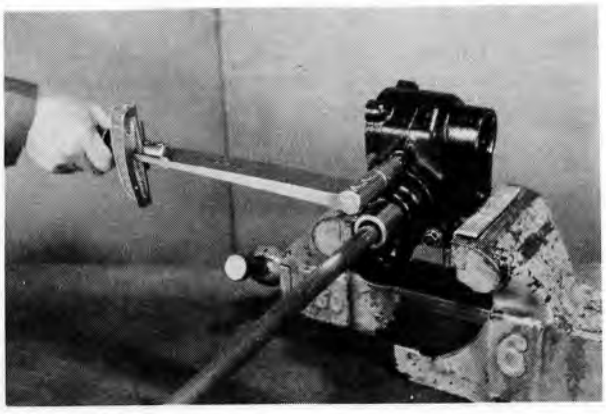

Fig. 7-34 Installing Top Cover

3. Install the control valve body.
   (1) Plate, needle bearing, thrust plate
   (2) Control valve (Valve spool and 4 sets of reaction springs)

   Caution:
   - **Position the larger diameter thrust plate on the valve body side.**
   - **Apply hydraulic oil on the "0" ring.**



Fig. 7-35 Installing Control Valve

4. Install the ball screw set lock nut.
   (1) Bolt down the valve body temporarily with 2 bolts
   (2) Thrust plate, needle bearing, plate

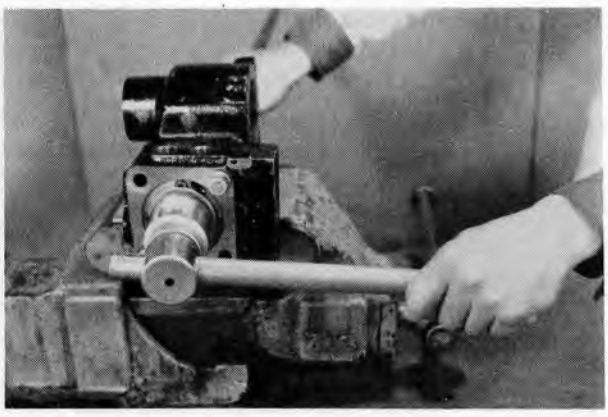

Fig. 7-36 Installing Lock Nut

(3) Lock nut

Turn the ball screw set shaft 3 or 4 times and tighten the lock nut initially to 1.5~2 kg-m (7.2~14.5 ft-lb). After wearing in, loosen.

Next, use SST 09470-10170-71 and measure the starting force.

Starting force: 0.3~0.7 kg (0.66~1.54 lb)

Tighten the lock nut to obtain the above range.

After tightening, stake the lock nut securely.

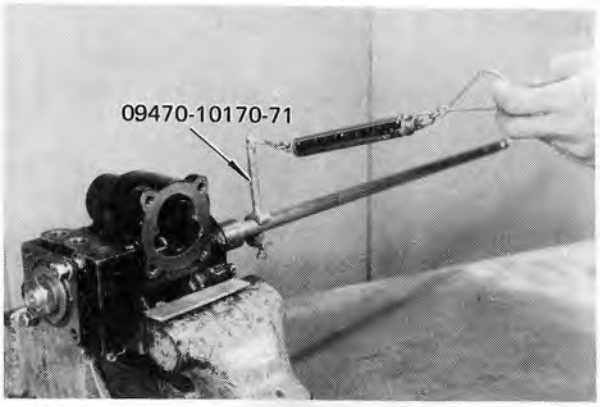

Fig. 7-37 Measuring Starting Force

Caution:
When staking, formation of fissures in the lock nut is permissible.



Fig. 7-38 Staking Lock Nut

5. Install the end cover.
   (1) Remove the temporarily installed bolts.
   (2) End cover
   (3) Set bolts
   T = 4~5 kg-m (28.9 ~ 36.1 ft-lb)

Caution:
Apply hydraulic oil on the "O" ring before installing.

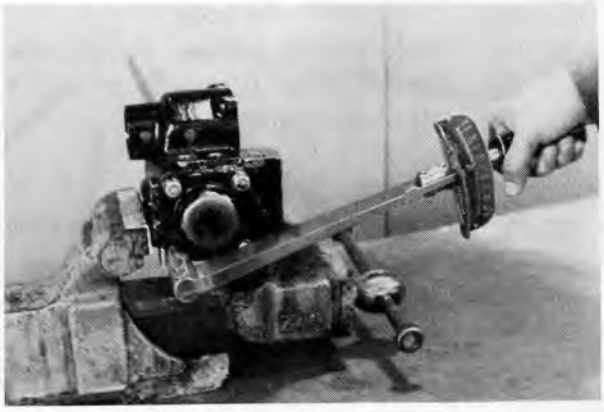

Fig. 7-39 Installing End Cover

6. Install the cross shaft.

Essential:
- **Insert the cross shaft by aligning the top end of its center tooth to the tooth bottom at center of ball screw set.**
- **Have the ball screw set at lock-to-lock center position.**



Fig. 7-40 Installing Cross Shaft

7. Install the side cover.
   (1) Side cover
   (2) Adjusting plate and bolts.
   (3) Set bolts
   T = 4.5~5.5 kg-m
   (32.5~39.7 ft-lb)

Caution:
Apply hydraulic oil on the "0" ring.



Fig. 7-41 Installing Side Cover

8. Install the pitman arm.
   T = 16~19 kg-m (115.5~137.2 ft-lb)

Caution:
With the cross shaft set at center of lock to lock position, align the match mark with that on the cross shaft.



Fig. 7-42 Installing Pitman Arm

9. Adjust the backlash.
   (1) With the cross shaft set at center of lock to lock position, tighten the adjusting bolt until the backlash becomes 0 mm as measured at end of pitman arm.
   (2) Turn the ball screw set shaft 3 or 4 times, and with the pitman arm set at lock-to-lock center position, measure the combined starting force with SST 09470-10170-71.
   Combined starting force:
   0.7~1.5 kg (1.54~3.31 lb)
   (3) If the specified combined starting force cannot be obtained, screw in the adjusting bolt from the above position.



Fig. 7-43 Measuring Combined Starting Force



Fig. 7-44 Tightening Adjusting Bolt

(4) Set a dial gage against the end of pitman arm and check the backlash.

Lock to lock center position: 0 mm

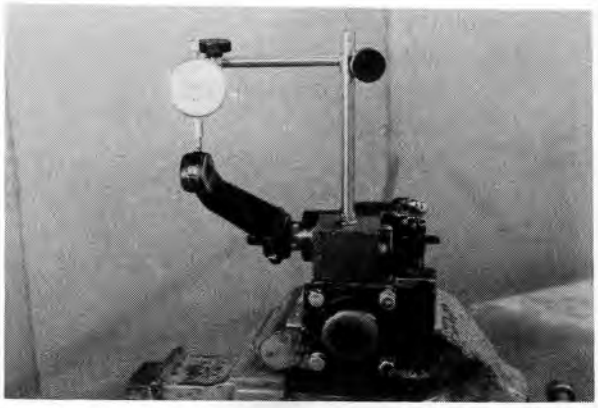

Fig. 7-45 Measuring Backlash

(5) Tighten the adjusting bolt lock nut.
Lock nut: T = 3~4.5 kg-m
(21.7~32.5 ft-lb)
Cap nut: T = 3~4.5 kg-m
(21.7~32.5 ft-lb)



Fig. 7-46 Tightening Lock Nut

10. Install the mast jacket.

11. After completing assembling, check the following points.
(1) Turn the ball screw set shaft 3 or 4 times and check to see that it turns smoothly, without undue effort.
(2) Turn the ball screw set shaft up to the lock position, and check that shaft return smoothly by reaction spring action.

INSTALLATION

Perform the removal in reverse order.
After installing, measure the relief pressure to see that it is at specified value.

Relief pressure standard: 75~85 kg/cm^2 (1067~1209 psi)

2.25 ~ 3.0 Ton Vehicles (Power Steering Manufactured by Jidosha Kiki)

DISASSEMBLY

1. Remove the mast jacket.
2. Remove the pitman arm.
   Use SST 09420-10410-71

   Caution:
   Before starting disassembly, place match marks on the cross shaft and pitman arm.



Fig. 7-47 Removing Pitman Arm

3. Remove the cross shaft.
   (1) Side cover set bolts
   (2) Adjusting bolt lock nut.
   (3) Side cover and cross shaft

   Caution:
   - **At lock to lock center, set the ball nut at center of gear box.**
   - **The side cover and cross shaft can be easily removed by gradually screwing in the adjusting bolt.**

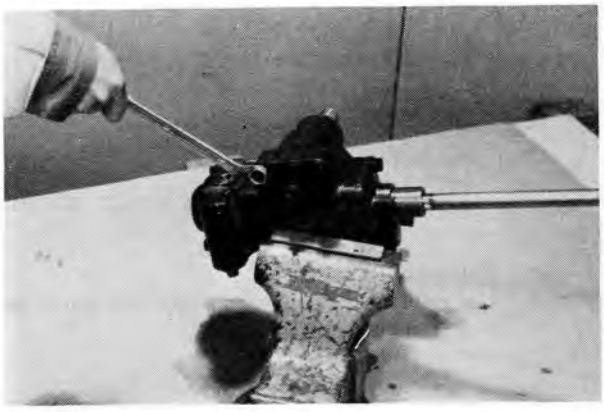

Fig. 7-48 Removing Set Bolts



Fig. 7-49 Removing Cross Shaft

4. Remove the top cover.
   (1) Set bolts.
   (2) Top cover



Fig. 7-50 Removing Top Cover

5. Remove the end cover.
   (1) Set bolts
   (2) End cover

   Essential:
   After removing the end cover, use two of the end cover set bolts and bolt down the control valve body temporarily.



Fig. 7-51 Removing End Cover

6. Remove the control valve body.
   (1) Loosen the lock nut staked parts.
   (2) Lock nut
   (3) Temporarily installed bolts
   (4) Valve body and spool
   (5) Needle bearings and thrust plates

   Caution:
   Use care not to mar or injure the spool as this is a high precision part.



Fig. 7-52 Removing Valve Body

7. Take out the ball nut with main shaft from the gear box.



Fig. 7-53 Removing Main Shaft

8. Remove the relief valve assy.
   (1) Relief valve and spring



Fig. 7-54 Removing Relief Valve

INSPECTION

Inspection:
Wash the disassembled parts in petroleum solvent, and inspect them on the following items.

1. Ball screw set with main shaft.
   (1) Damage or cracks in shaft
   (2) Damage in threaded parts
   (3) Damage or wear in ball nut toothed surfaces
   (4) Ball screw rotating condition

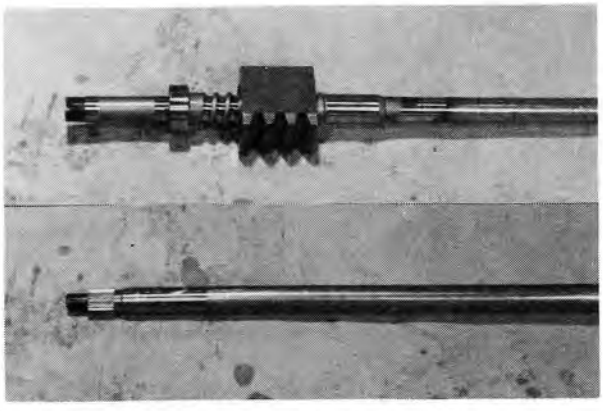

Fig. 7-55 Ball Screw Set Inspection

2. Cross shaft.
   (1) Wear or damage in cross shaft serrations and gear
   (2) Measure the clearance between the cross shaft and adjusting plate. Clearance limit. 0.1 mm (0.0039 in.)

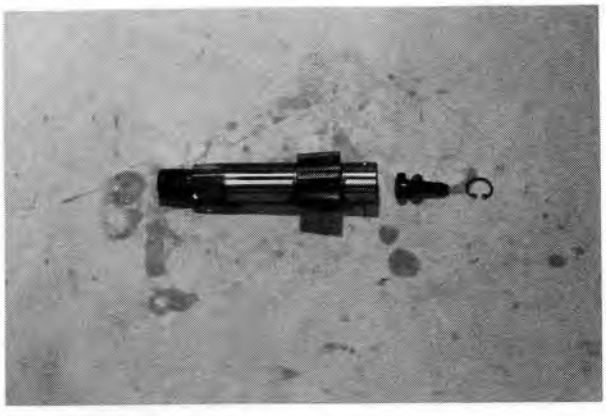

Fig. 7-56 Cross Shaft Inspection

Adjusting Plate

No. 1	Thickness 2.0 mm (0.079 in.)
No. 2	Thickness 2.1 mm (0.083 in.)
No. 3	Thickness 2.2 mm (0.087 in.)
No. 4	Thickness 2.3 mm (0.091 in.)

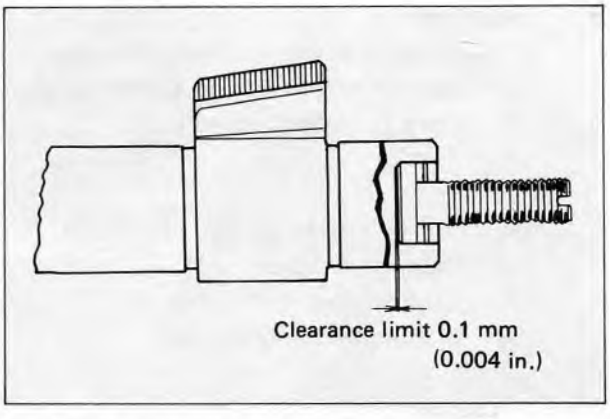

Fig. 7-57 Adjusting Plate Selection

3. Steering gear box.
   (1) Damage or cracks in gear box
   (2) Wear or damage in oil seal lip
   (3) Wear or damage in formed bushing

Caution:
- **Inspect the oil seal and formed bushing while still installed in the gear box.**
- **In case of oil leakage, drive out the old oil seal and formed bushing with bushing tool and press, and replace with new parts.**

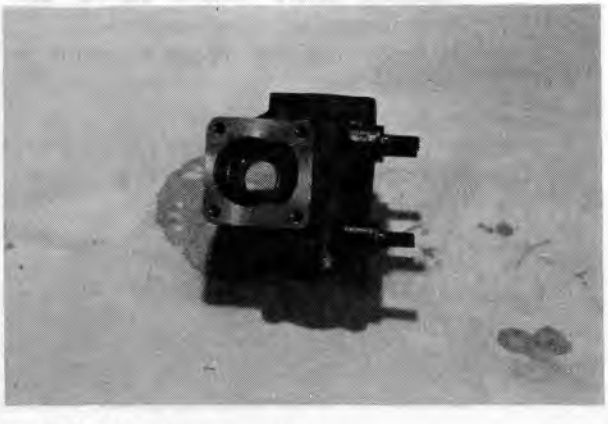

Fig. 7-58 Gear Box Inspection

4. Control valve.
   (1) Damage or crack in valve body
   (2) Warping or damage in spool
   (3) Weakening or bending in reaction chamber springs.
   (4) Sliding action between body and spool.

   Caution:
   - **Clean the parts with compressed air prior to inspection.**
   - **If any defects are found, replace the entire valve assy.**

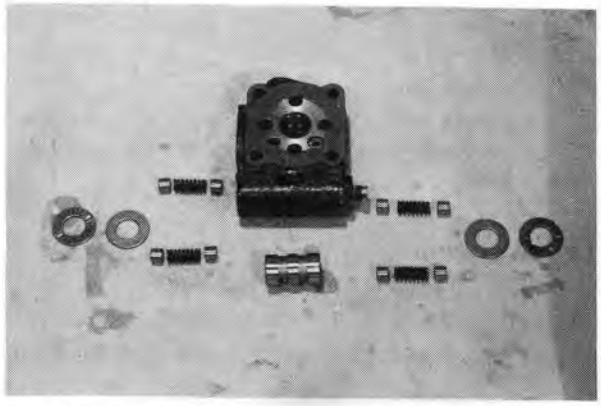

Fig. 7-59 Control Valve Inspection



Fig. 7-60 Inspecting Spool

5. Relief valve.
   (1) Damage or wear in relief valve assy.
   (2) Weakening or bending in valve spring.
   (3) Foreign matter lodged in.

6. Relief valve disassembly and inspection.
   (1) Damage in piston
   (2) Loss of tension in spring
   (3) Malfunction in check ball

   Caution:
   - **Disassemble only when the relief pressure measured before removal did not conform to specified value.**
   - **If found defective, replace the entire relief valve assy.**

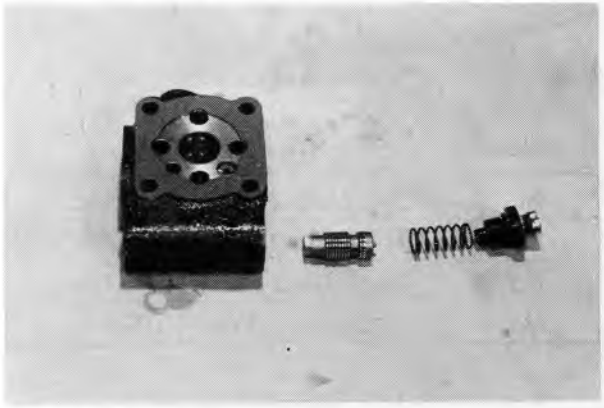

Fig. 7-61 Relief Valve Inspection

7. Bearing inspection.
   (1) Needle bearings

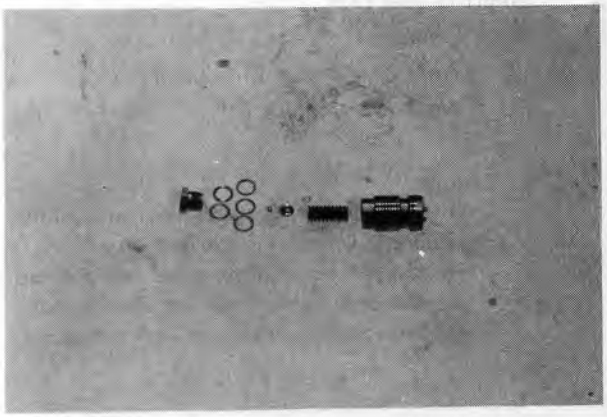

Fig. 7-62 Relief Valve Disassembly & Inspection

ASSEMBLY & ADJUSTMENT

1 Assemble the ball screw set into the gear box.

Caution:
Check the ball screw set and gear box interior to see that no foreign object is present before assembly.



Fig. 7-63 Assembling Ball Screw Set

2. Install the control valve body.
   (1) Plate, needle bearing, thrust bearing
   (2) Control valve
   (Valve spool and 4 sets of reaction springs)

Caution:
- **Spool has no directivity, but position the larger chamfered end at upper side.**
- **Position the larger diameter thrust plate on the valve body side.**
- **Apply hydraulic oil on the "0" ring.**



Fig. 7-64 Installing Control Valve

3. Install the ball screw set lock nut.
   (1) Ball down the valve body temporarily with 3 bolts.
   (2) Thrust plate, needle bearing, plate
   (3) Lock nut
   First tighten the lock nut to 400 kg-cm (28.88 ft-lb). After running in, loosen and then tighten to 40 kg-cm (2.89 ft-lb).

Essential:
- **Use new lock nut.**
- **If 40 kg-cm (2.89 ft-lb) measurement cannot be made, screw in finger tight and then tighten about 1/8 turn further with a wrench.**



Fig. 7-65 Installing Control Valve

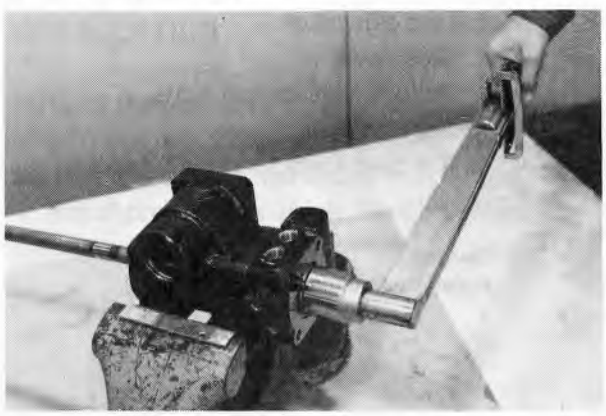

Fig. 7-66 Tightening Lock Nut

4. Install the top cover.
   (1) Needle bearing, snap ring
   (2) Top cover
   (3) Set bolts
   T = 5~6 kg-m (36.1~43.3 ft-lb)

   Caution:
   - Do not forget to install the top cover "0" ring.
   - Apply hydraulic oil to "0" ring and top cover insertion part.

5. Stake the lock nut.

   Caution:
   Stake the lock nut securely. Fissures formed at staked part is permissible.

6. Install the end cover.
   (1) Remove the temporarily installed bolts
   (2) End cover
   (3) Set bolts
   T = 5~6 kg-m (36.1~43.3 ft-lb)

   Caution:
   Apply hydraulic oil to the "0" ring.

7. Install the cross shaft.

   Caution:
   - Align the tooth bottom at center of ball screw set to the top end of cross shaft center tooth when inserting the cross shaft.
   - Have the ball screw set at lock-to-lock center position.

8. Install the side cover
   (1) Side cover
   (2) Adjusting plate and bolts.
   (3) Set bolts
   T = 5~6 kg-m (36.1~43.3 ft-lb)

   Caution:
   Apply hydraulic oil to the "0" ring.



Fig. 7-67 Installing Top Cover



Fig. 7-68 Installing End Cover

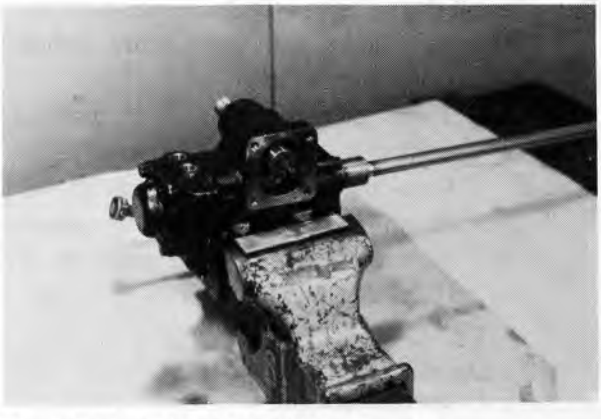

Fig. 7-69 Installing Cross Shaft

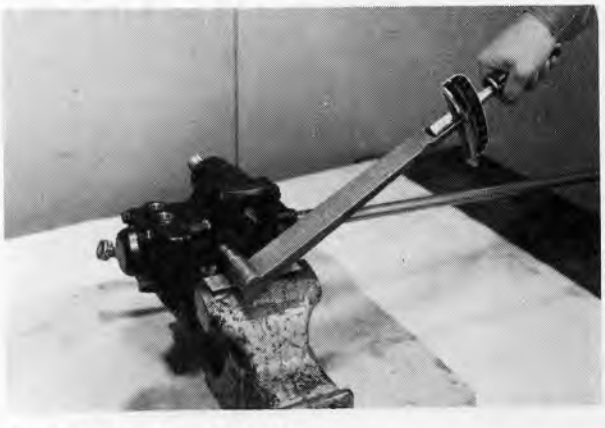

Fig. 7-70 Installing Side Cover

9. Check the starting torque and main shaft turning condition as follows:
   (1) Turn from lock to lock 3 or 4 times. Does shaft turn smoothly?
   (2) Are the reaction springs acting when at lock?
   (3) Hook on a spring scale to the steering wheel and measure the starting torque.
   Starting force: 1.0~2.1 kg (2.21~4.63 lb)

Caution:
If the starting force within the above limits cannot be obtained, adjust by varying the lock nut tightened state.

10. Install the pitman arm.
T = 16~19 kg-m (115.5~137.2 ft-lb)

Caution:
Align the match mark with that on the cross shaft when the cross shaft is at center of lock to lock position.

11. Adjust the backlash.
   (1) With the cross shaft set at center of lock to lock position, tighten the adjusting bolt until the backlash becomes 0 mm when measured at end of pitman arm.
   (2) Tighten the adjusting bolt and nut.
   T = 2~3 kg-m (14.4~21.7 ft-lb)
12. Install the mast jacket.

13. Upon finishing the installation, make the follwing check.
   (1) Turn the main shaft 3 or 4 times to see that it turns smoothly and uniformally without undue effort.
   (2) Turn the main shaft up to the lock position, and check that the shaft will be returned smoothly by the reaction springs.



Fig. 7-71 Measuring Starting Force

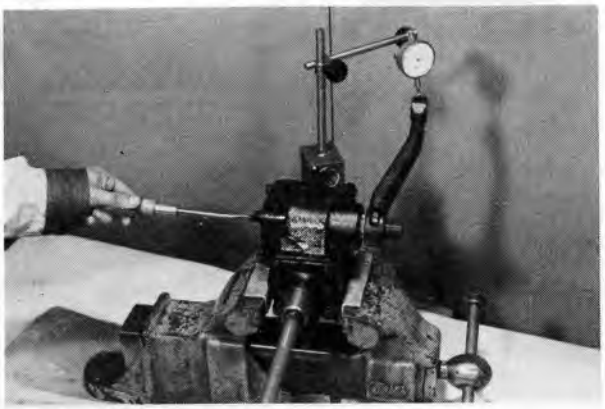

Fig. 7-72 Measuring Backlash



Fig. 7-73 Installing Mast Jacket

INSTALLATION

Perform the removal in reverse order.
After installing, measure the relief pressure to see that it is at specified value.
Relief pressure standard: 75~85 kg/cm^2 (1067~1209 psi)

POWER CYLINDER

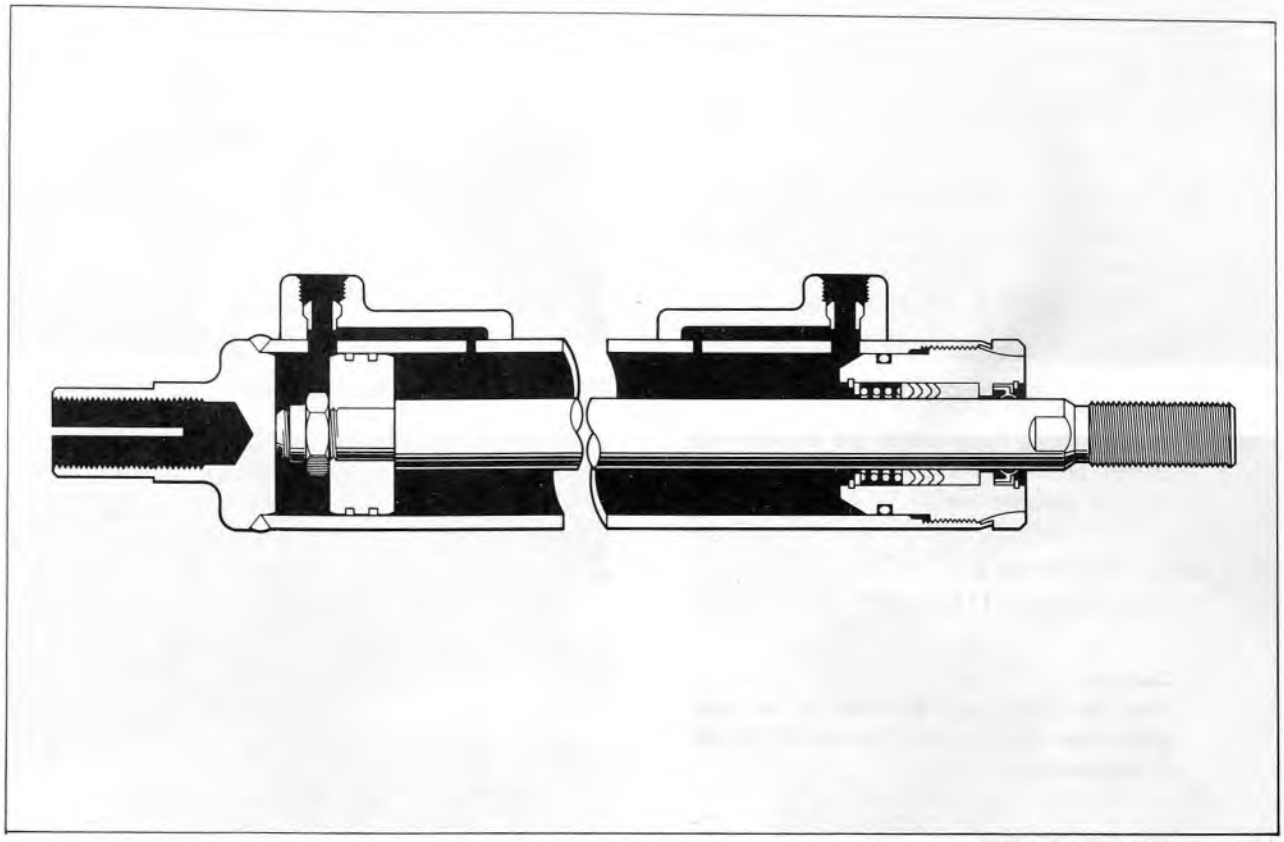

Fig. 7-74 Power Cylinder Sectional View

REMOVAL

1. Disconnet the power cylinder piping.

   Essential:
   - Turn the steering wheel until the power cylinder end sticks out from the rear axle.
   - Disconnect the power steering connection by loosening and gently hand-tighten, being careful not to spill the hydraulic oil.



Fig. 7-75 Removing Piping

2. Disconnect the drag link end.
   (1) Cotter pin
   (2) Castle nut
   (3) Drag link end
   Use SST 09950-20012



Fig. 7-76 Disconnecting Drag Link End

3. Disconnect the power cylinder end. (Bell crank end)
   (1) Cotter pin
   (2) Castle nut
   (3) Power cylinder end
   Use SST 09610-20011



Fig. 7-77 Disconnecting Power Cylinder End

4. Disconnect the power cylinder end (Frame end).
   (1) Cotter pin
   (2) Castle nut
   Use SST 09950-20012



Fig. 7-78 Disconnecting Power Cylinder End

5. Remove the power cylinder assy from the vehicle.



Fig. 7-79 Removing Power Cylinder

DISASSEMBLY

Caution:
- Before disassembling, check for oil leakage, injury to piston rod, etc.
- For use as reference for assembly, measure the distance between the power cylinder ends when contracted.

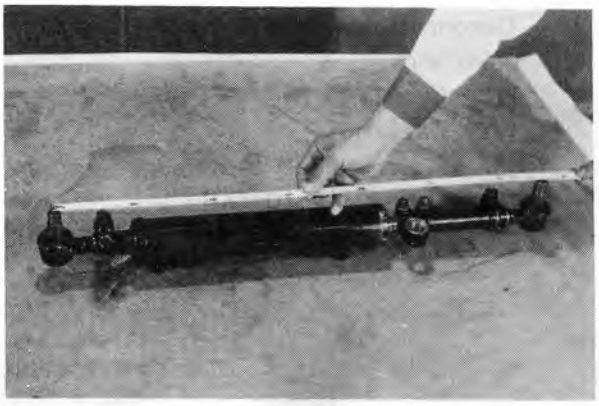

Fig. 7-80 Measuring Length

1. Remove the power cylinder ends.
   (1) Clamps
   (2) Front and rear

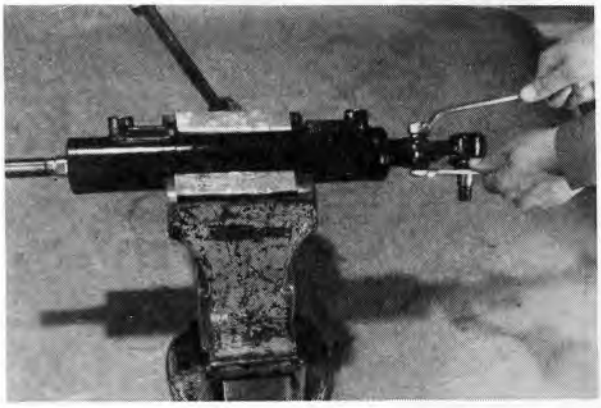

Fig. 7-81 Removing Cylinder End

2. Remove the power cylinder rear cover.
   (1) Loosen the staked parts.
   (2) Power cyliner rear cover.
   Use SST 09620-10100-71

Caution:
Use care not to damage the power cylinder when holding it in vise.



Fig. 7-82 Removing Rear Cover

3. Pull out the piston rod from the cylinder.



Fig. 7-83 Removing Piston Rod

4. Remove the piston from the piston rod.

Caution:
- Use care not to injure the piston rod when clamping it in a vise.
- Also hold the other end with the wrench to prevent the rod from turning.

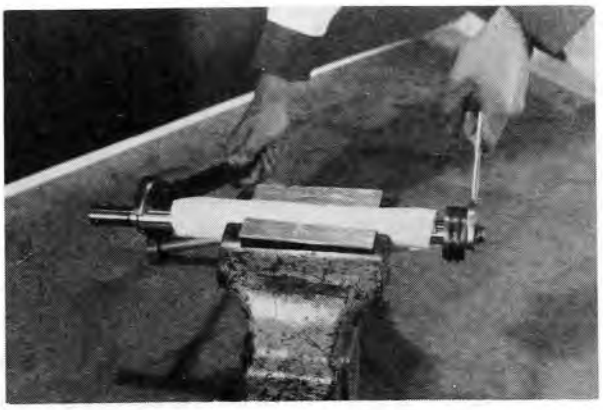

Fig. 7-84 Removing Piston

5. Remove the piston rings from the piston.

Caution:
- Be very careful when removing the piston rings.
- Never pry off forcibly with screwdriver.



Fig. 7-85 Removing Piston Ring

6. Remove the "V" packing and dust seal from the cylinder rear cover.
   (1) Snap ring and collar
   (2) Spring and adaptor
   (3) "V" packing and bushing
   (4) Snap ring and dust seal

Caution:
Disassemble only in case of oil leakage from rear cover.



Fig. 7-86 Removing "V" Packing

INSPECTION

1. Damage or wear in power cylinder bore.

   Essential:
   Use a bore gage and measure the wear and out-of-roundness at place about 200 mm from the cylinder end.

   Cylinder bore standard:
   1.0 ~ 1.75 ton vehicles 40 mm (1.57 in.)
   2.0 ~ 3.0 ton vehicles 50 mm (1.97 in.)
   Cylinder bore limit:
   1.0~1.75 ton vehicles 40.2 mm (1.58 in.)
   2.0 ~ 3.0 ton vehicles 50.2 mm (1.98 in.)

2. Piston rod.
   (1) Wear, damage
   Diameter standard: 22 mm (0.886 in.)
   Wear limit: 21.8 mm (0.858 in.)
   (2) Bending
   Bending limit: 1 mm (0.039 in.)

3. Piston and piston rings.
   (1) Wear or damage in piston
   (2) Wear or damage in piston rings
   (3) Piston ring end gap
   Gap limit: 0.8 mm (0.0315 in.)

   Essential:
   To check the piston end gap, insert the ring into the cylinder and measure the end gap with thickness gage.

4. "V" packing.
   (1) Wear and damage in "V" packing
   (2) Wear and damage in dust seal

   Caution:
   Remove and replace the dust seal only when found defective.



Fig. 7-87 Inspecting Cylinder

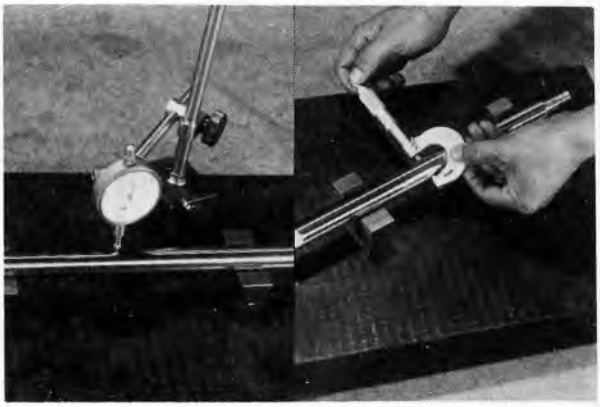

Fig. 7-88 Inspection Piston Rod

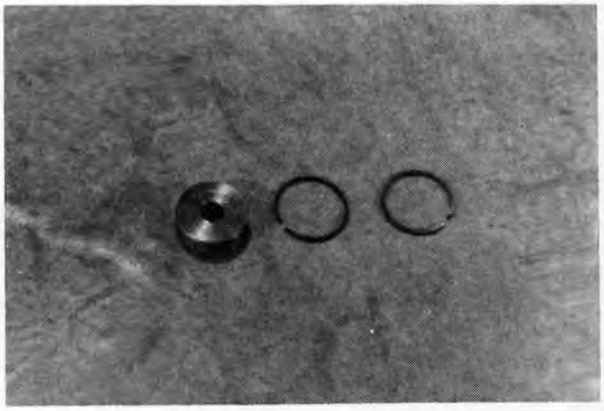

Fig. 7-89 Piston and Ring Inspection



Fig. 7-90 "V" Packing Inspection

ASSEMBLY

1. Assemble the seal and other parts to the cylinder rear cover.
   (1) Bushing, "V" packing
   (2) Adapter, spring
   (3) Collar, snap ring

   Caution:
   Drive in the dust seal with hand press only when it is being replaced.



Fig. 7-91 Assembling "V" Packing

2. Assemble the piston to the piston rod.
   Caution:
   Use new self locking nut.

3. Assemble the piston rings to the piston.

   Caution:
   - **Assemble the piston rings so that their "T" marks will be positioned toward the outer side.**
   - **Position the piston rings so that their end gaps will be on opposed sides.**



Fig. 7-92 Assembling Piston

4. Insert the piston into the cylinder.
   Use SST 09450-12000-71 (1.0~1.75 ton vehicles)
   Use SST 09490-20340-71 (2~3 ton vehicles)



Fig. 7-93 Inserting Piston

5. Assemble the rear cover to the power cylinder.
   Use SST 09620-10100-71
   (1) Rear cover
   (2) Stake

   Essential:
   Apply liquid seal to the threaded part of power cylinder rear cover.



Fig. 9-94 Staking Rear Cover

6. Install the front end and the drag link end.

Caution:
Set to the dimension measured before disassembly.

7. Install the power cylinder to the vehicle.

Caution:
For power cylinder installed dimension, refer to the steering linkage adjustment standard.

STEERING LINKAGE

INSTALLATION

With the steering wheel positioned at center of lock to lock, set the rear wheel to straight ahead state, and connect the bell crank to the pitman arm with drag link rod.

Essential:
- **In the case of manual steering, use the above method.**
- **In case of power cylinder, adjust the amount of protrusion at the power cylinder rod ends A and B, and then make the connection. For details, refer to the steering linkage adjustment procedures below.**

STEERING LINKAGE ADJUSTMENT

1. Set the power cylinder piston rod and power cylinder end B into the power cylinder rear by screwing in 40 mm (1.57 in.) respectively.

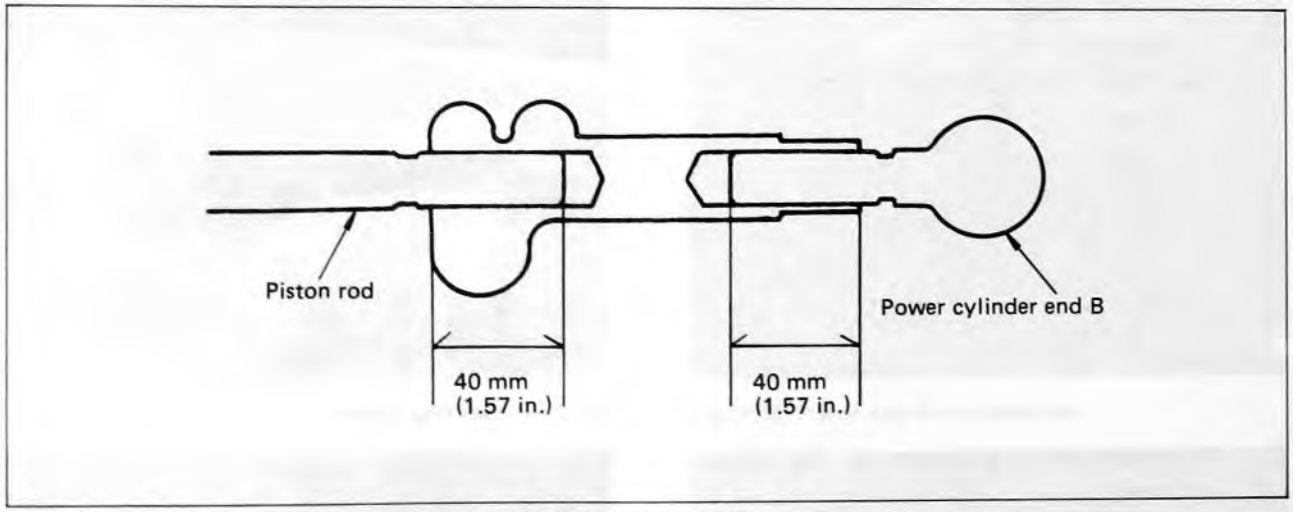

Fig. 7-95 Cylinder End Adjustment

2. Set the power cylinder end A into the power cylinder by screwing in.
   1.0 ~ 1.75 ton vehicles .. 40 mm (1.57 in.)
   2.0 ~ 3.0 ton vehicles .... 45 mm (1.77 in.)

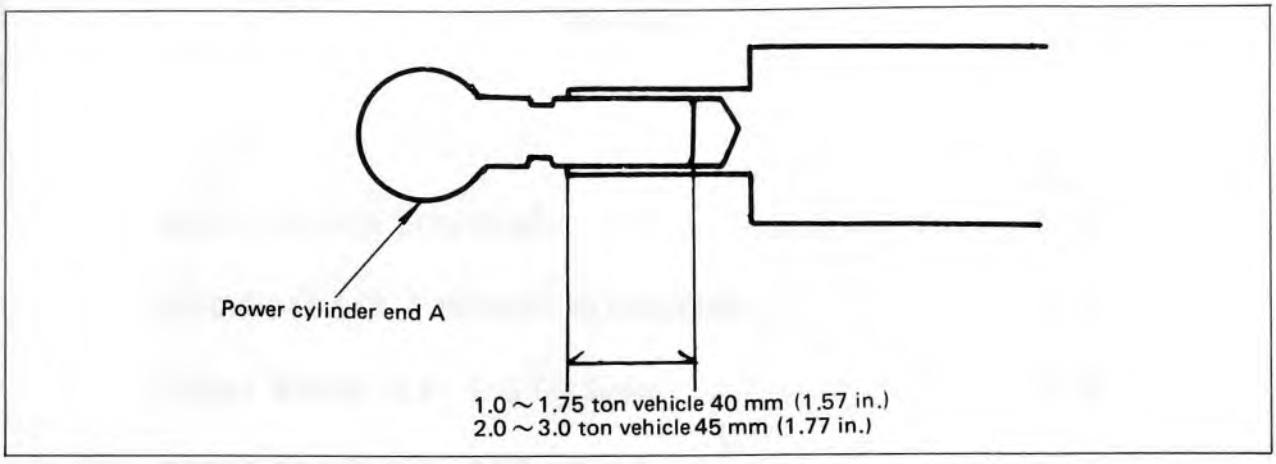

Fig. 7-96 Cylinder End Adjustment

3. Withe rear wheels set at straight ahead position, install the power cylinder assy. Make the installation adjustment by varying power cylinder rod stroke C.

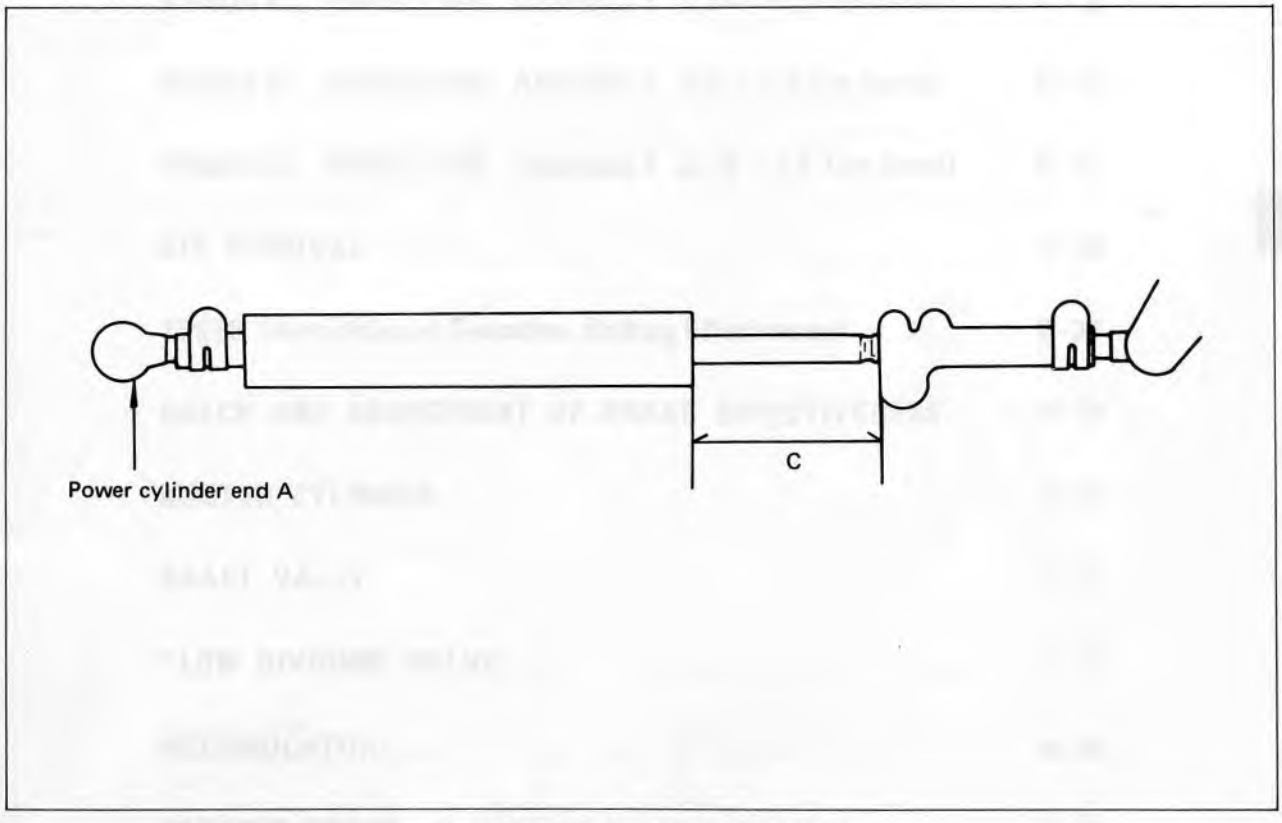

Fig. 7-97 Power Cylinder Installed State

4. With the steering wheel set at the center of lock to lock position, connect the pitman arm to the power cylinder rear end with the drag link rod.

Essential:
Make the adjustment by varying the amounts which the power cylinder ends A and B protrude out, and making it such that both A and B are screwed in to the same amounts.

BRAKE

	Page
BRAKE SYSTEM DIAGRAMS	8– 2
SPECIFICATIONS & SERVICE STANDARDS	8– 4
FRONT BRAKE (1.0 – 1.75 Ton Series)	8– 6
FRONT BRAKE (2.0 – 2.5 Ton Series)	8– 7
FRONT BRAKE (2.75 – 3.0 Ton Series)	8– 8
REMOVAL, INSPECTION, ASSEMBLY (1.0 – 1.75 Ton Series)	8– 9
REMOVAL, INSPECTION, ASSEMBLY (2.0 – 2.5 Ton Series)	8–16
REMOVAL, INSPECTION, ASSEMBLY (2.75 – 3.0 Ton Series)	8–23
AIR REMOVAL	8–30
TESTS (Auto Adjuster Operation, Braking Effectiveness)	8–31
CHECK AND ADJUSTMENT OF BRAKE EFFECTIVENESS	8–32
MASTER CYLINDER	8–33
BRAKE VALVE	8–37
FLOW DIVIDING VALVE	8–47
ACCUMULATOR	8–50
PARKING BRAKE	8–53
BRAKE PEDAL	8–57

BRAKE SYSTEM DIAGRAMS

1.0 ~ 1.75 Ton Clutch Type Vehicles

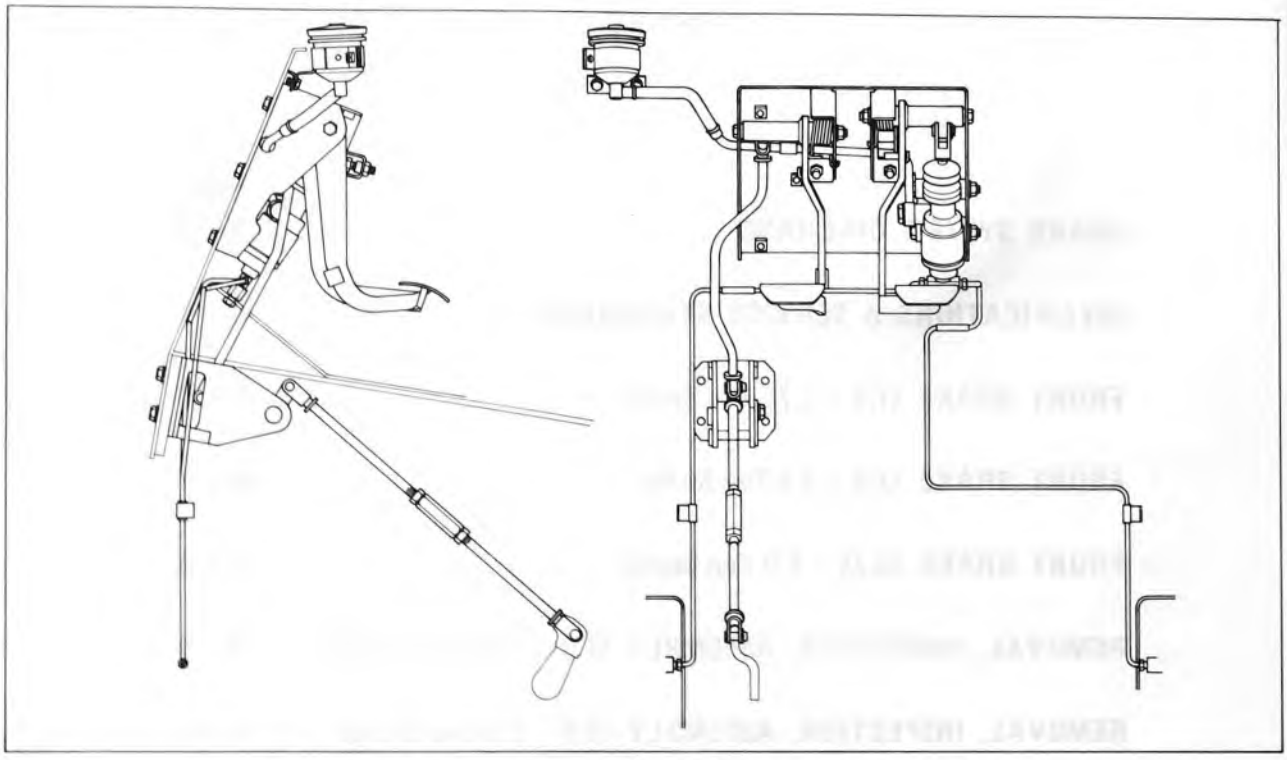

Fig. 8-1 Brake System Diagram (1.0 ~ 1.75 Ton Clutch Type Vehicles)

1.0 ~ 1.75 Ton Torque Converter Type Vehicles

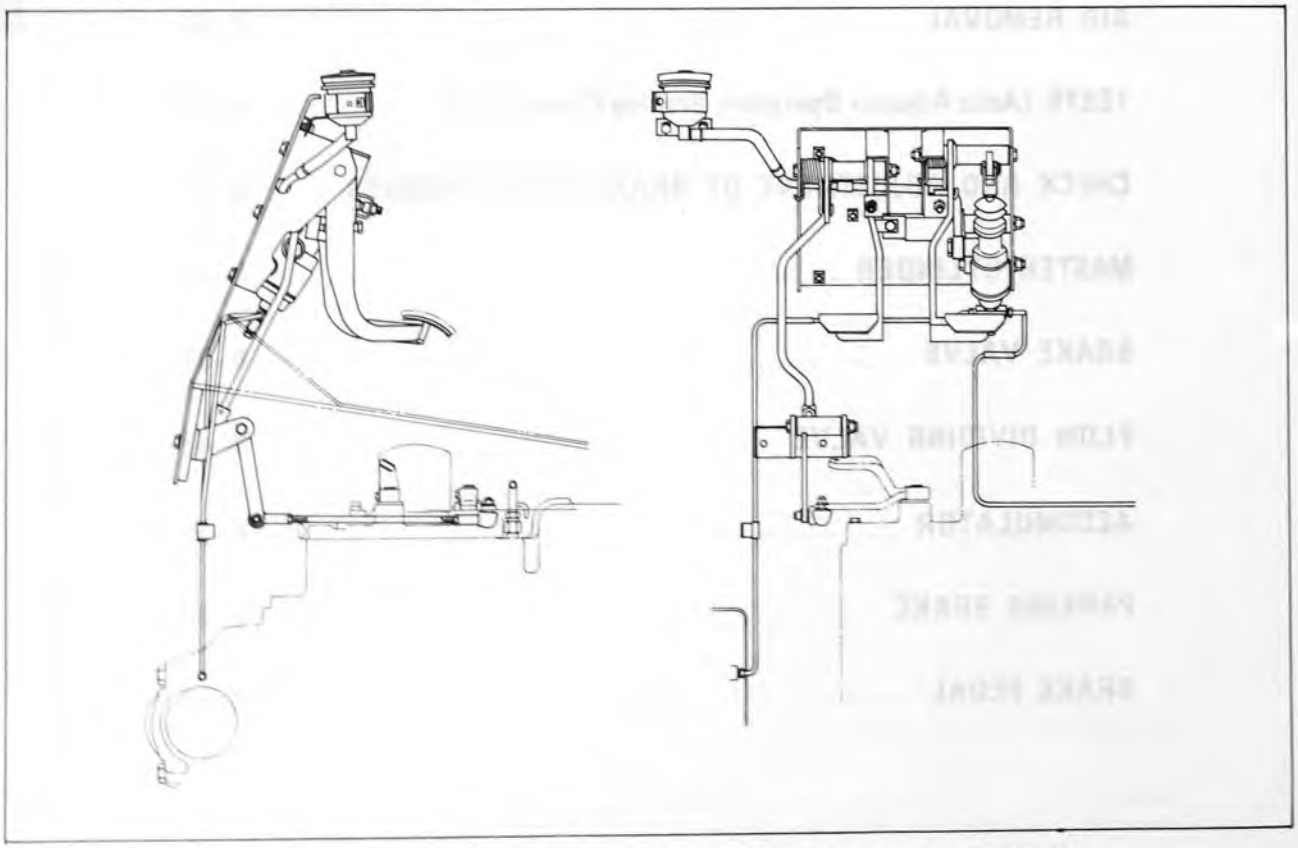

Fig. 8-2 Brake System Diagram (1.0 ~ 1.75 Ton Torque Converter Type Vehicles)

2.0 ~ 3.0 Ton Clutch Type Vehicles

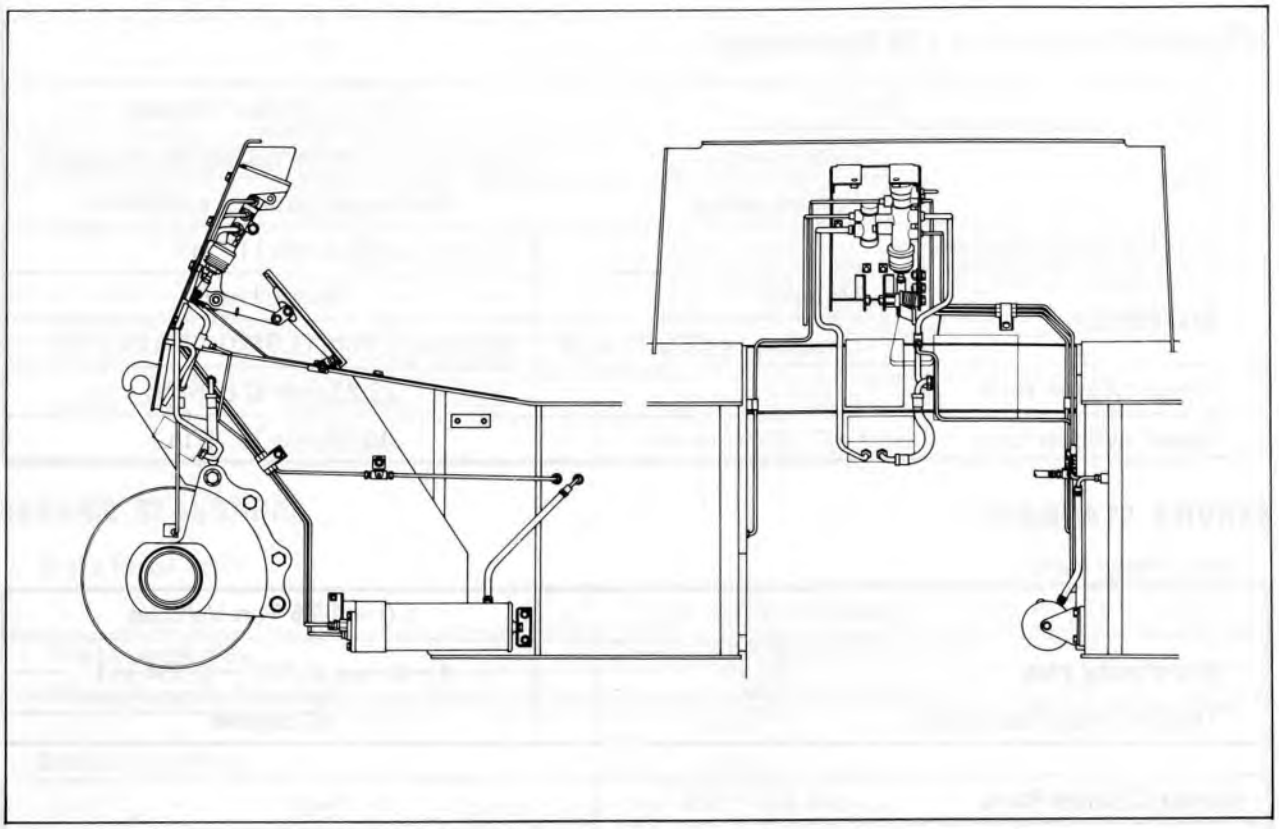

Fig. 8-3 Brake System Diagram (2.0 ~ 3.0 Ton Clutch Type Vehicles)

2.0 ~ 3.0 Ton Torque Converter Type Vehicles

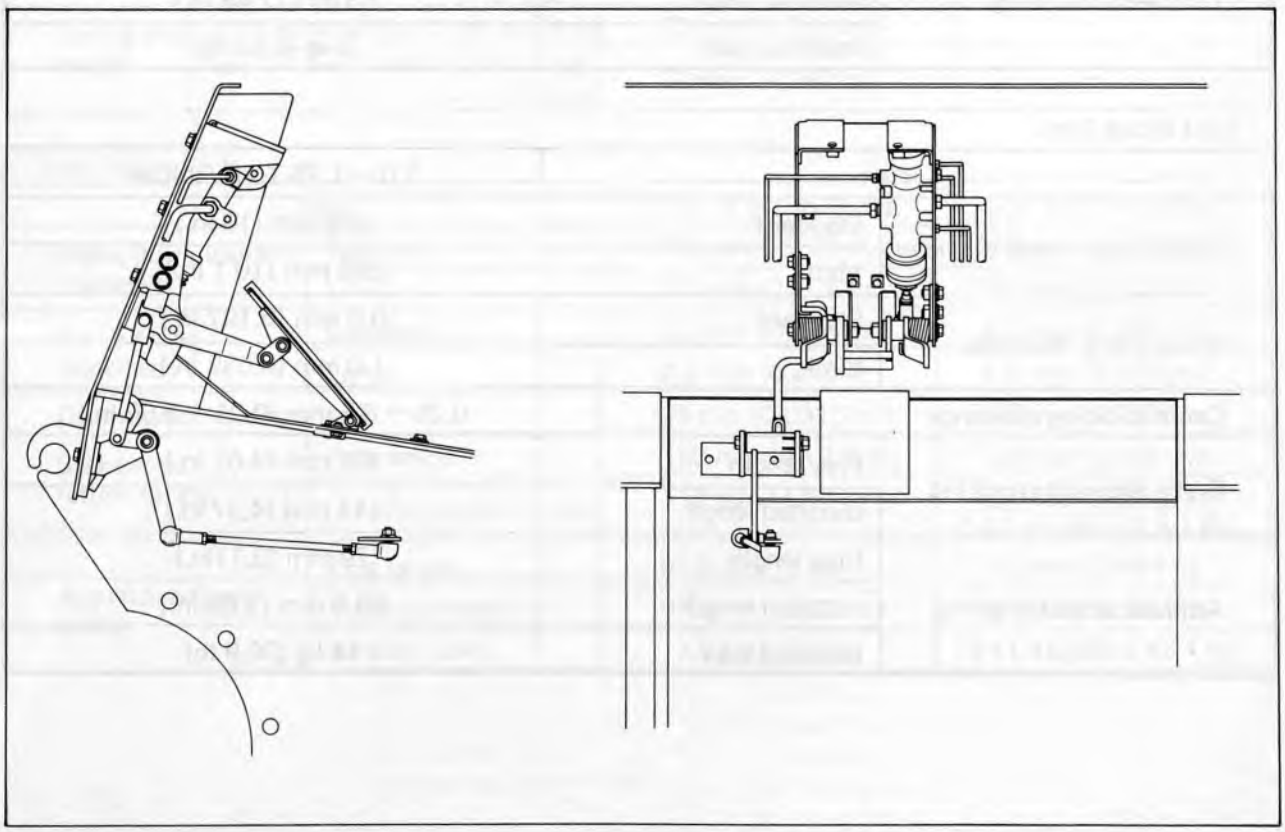

Fig. 8-4 Brake System Diagram (2.0 ~ 3.0 Ton Torque Converter Tyep Vehicles)

SPECIFICATIONS & SERVICE STANDARDS

SPECIFICATIONS (1.0 ~ 1.75 Ton Vehicles)

Item		1.0 ~ 1.75 Ton Vehicles
Type	Foot brake	Hydraulic, internal expanding, duo-servo
	Parking brake	Mechanical, internal expanding
Brake drum inside diameter		254 mm (10 in.)
Brake lining	Material	Molded resin
	Dimensions (W x Th x L)	48.5x5x279mm (1.91x0.197x11.0 in.)
Wheel cylinder bore		22.22 mm (0.875 in.)
Master cylinder bore		19.05 mm (0.75 in.)

SERVICE STANDARD

Brake Pedal Parts

Item	1.0 ~ 1.75 Ton Vehicles
Brake pedal play	4 ~ 9 mm (0.157 ~ 0.354 in.)
Torsion spring free angle	40 degrees

Master Cylinder Parts

Item		1.0 ~ 1.75 Ton Vehicles
Compression spring	Free length	97 mm (3.82 in.)
	Installed length	63 mm (2.48 in.)
	Installed load	3 kg (6.62 lb)

Foot Brake Parts

Item		1.0 ~ 1.75 Ton Vehicles
Brake drum inside diameter	Standard	254 mm (10 in.)
	Limit	256 mm (10.1 in.)
Brake lining thickness	Standard	5.0 mm (0.197 in.)
	Limit	1.0 mm (0.039 in.)
Drum to lining clearance		0.25 ~ 0.5 mm (0.01 ~ 0.02 in.)
Brake shoe return spring	Free length	102 mm (4.02 in.)
	Installed length	111 mm (4.37 in.)
Adjuster actuator spring	Free length	79 mm (3.11in.)
	Installed length	98.5 mm (3.88 in.)
	Installed load	14 kg (30.9 lb)

SPECIFICATIONS (2.0 ~ 3.0 Ton Vehicles)

Item		2.0 ~ 2.5 Ton Vehicles	2.75, 3.0 Ton Vehicles
Type	Foot brake	Hydraulic, internal expanding, duo-servo	
	Parking brake	Mechanical, internal expanding	
Brake drum inside diameter		310mm (12.2 in.)	←
Brake lining	Material	Molded resin	←
	Dimensions (WxThxL)	60x7.0x323mm (2.36x0.276x12.72in.)	60x6.3x346mm (2.36x0.248x13.62in.)
Wheel cylinder bore		28.5 mm (1.122 in.)	28.58 mm (1.125 in.)
Brake valve	Valve spool diameter	20 mm (0.787 in.)	←
	Valve spool stroke	4.3 mm (0.169 in.)	←
	Inlet flow	11.5ℓ/min (3.036 USgal/min)	←

SERVICE STANDARDS

Brake Pedal Parts

Item	2.0~2.5 Ton Series	2.75, 3.0 Ton Series
Brake pedal play	2~3mm(0.078~0.118 in.)	←
Torsion spring free angle	90°	←

Brake Valve Parts

Item		2.0 ~ 2.5 Ton	2.75, 3.0 Ton
Wear limit in sliding parts	Body to input piston (25.4ϕ) (1 in)	0.16 mm (0.0063 in.)	←
	Body to valve spool (20ϕ) (0.787 in)	0.032 mm (0.00126 in.)	←
	Reaction piston to guide (12ϕ, 0.48 in) (13ϕ, 0.52 in)	0.16mm (0.0063in.) (13ϕ) (0.52 in)	← (12ϕ) (0.48 in)
Spring free length	Compression spring (12.4ϕ) (0.496 in)	20 mm (0.787 in.)	←
	Reaction piston return spring (19.9ϕ) (0.796 in)	20 mm (0.787 in.)	←

Foot Brake Parts

Item		2.0 ~ 2.5 Ton Series	2.75, 3.0 Ton Series
Brake drum inside diameter	Standard	310 mm (12.20 in.)	310 mm (12.20 in.)
	Limit	312 mm (12.28 in.)	312 mm (12.28 in.)
Brake lining thickness	Standard	7.0 mm (0.276 in.)	6.3 mm (0.248 in.)
	Limit	2.0 mm (0.079 in.)	1.0 mm (0.039 in.)
Drum to lining clearance		0.8 mm (0.0315 in.)	0.35 mm (0.0138 in.)
Brake shoe return spring	Free length	106 mm (4.17 in.)	124 mm (4.88 in.)
	Installed length (Load)	116 mm (4.57 in.)	138 mm (23±2.3 kg) 5.43 in. (50.7 ± 5.1 lb)
Actuator adjuster spring	Free length	91.3 mm (3.59 in.)	88 mm (3.46 in.)
	Installed length	97.0 mm (3.82 in.)	108 mm (4.25 in.)
	Installed load	7.5 kg (16.5 lb)	14 ±1.4kg(30.9 ±3.1 lb)

FRONT BRAKE (1.0 ~ 1.75 Ton Series)

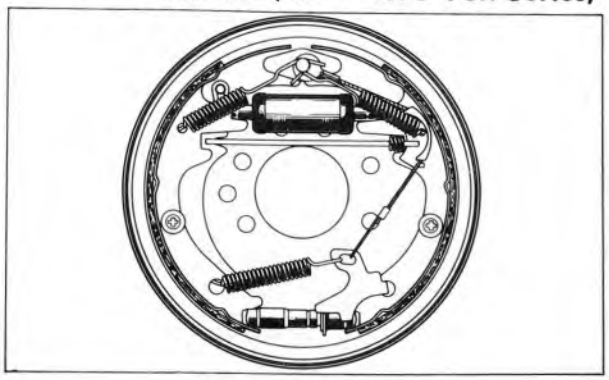

Fig. 8-5 Front Brake

WHEEL CYLINDER (1.0 ~ 1.75 Ton Series)

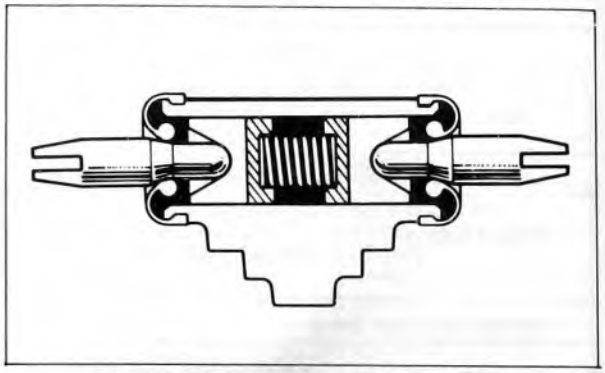

Fig. 8-6 Wheel Cylinder Sectional View

COMPONENT PARTS (1.0 ~ 1.75 Ton Series)

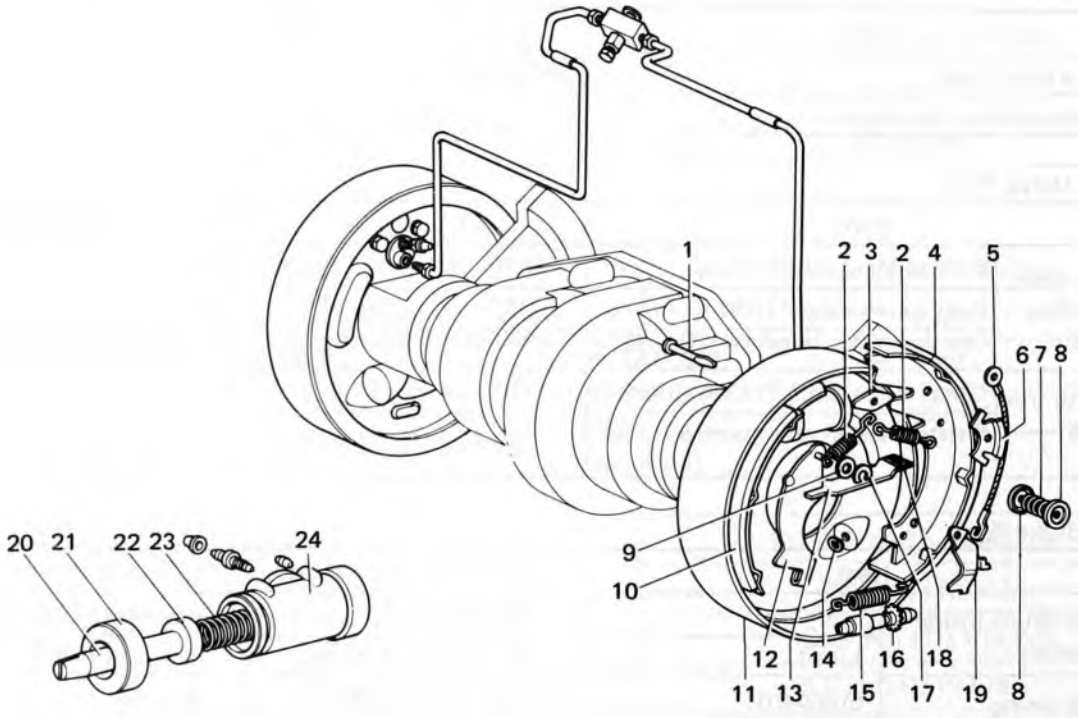

1.	Shoe hold-down pin	13.	Strut
2.	Anchor to shoe spring	14.	Snap ring
3.	Shoe guide plate	15.	Adjustment spring
4.	Secondary shoe sub-assy	16.	Adjusting screw
5.	Cable & fitting sub-assy	17.	Lever pin retainer
6.	Cable guide	18.	Strut to shoe spring
7.	Shoe hold-down spring	19.	Automatic adjustment lever
8.	Shoe hold-down cup	20.	Connecting rod
9.	Spring washer	21.	Wheel cylinder cover
10.	Primary shoe sub-assy	22.	Wheel cylinder cup
11.	Backing plate	23.	Wheel cylinder spring
12.	Parking lever	24.	Wheel cylinder body

Fig. 8-7 Component Parts

FRONT BRAKE (2.0 ~ 2.5 Ton Series)

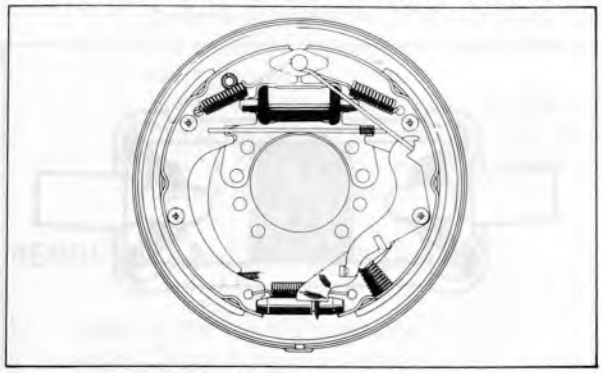

Fig. 8-8 Front Brake

WHEEL CYLINDER (2.0 ~ 2.5 Ton Series)

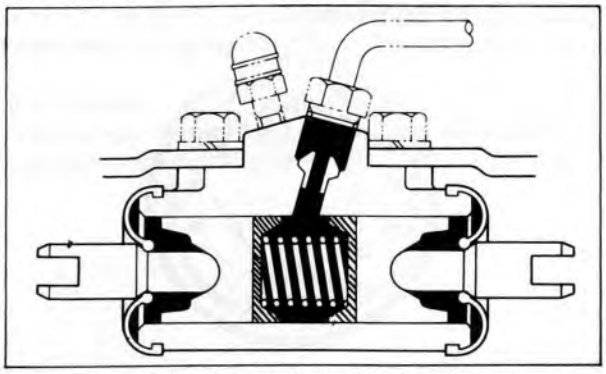

Fig. 8-9 Wheel Cylinder Sectional View

COMPONENT PARTS (2.0 ~ 2.5 Ton Series)

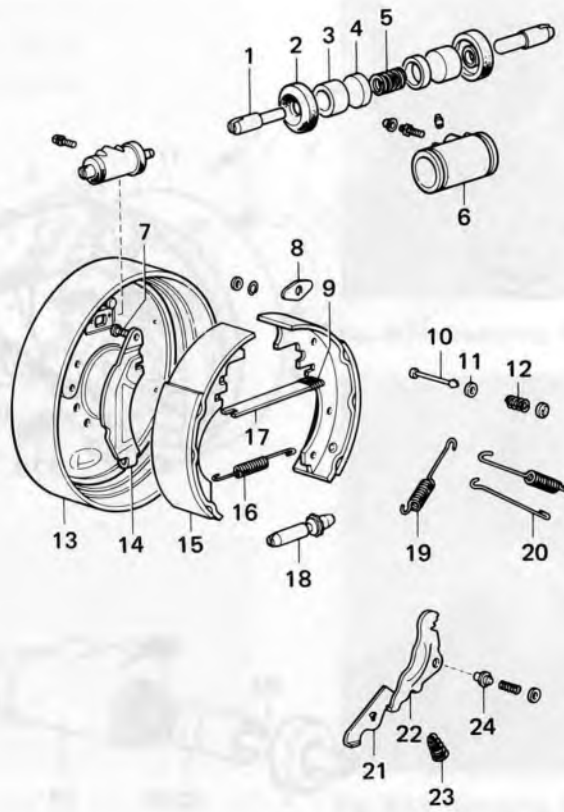

1.	Connecting rod	13.	Backing plate
2.	Dust cover	14.	Brake lever
3.	Piston	15.	Brake shoe sub-assy
4.	Piston cup	16.	Adjusting spring
5.	Spring	17.	Strut
6.	Wheel cylinder body	18.	Adjuster
7.	Lever pin	19.	Shoe return spring
8.	Shoe guide plate	20.	Link
9.	Anti-rattle spring	21.	Pawl lever
10.	Shoe hold pin	22.	Actuator lever
11.	Cup washer	23.	Actuator spring
12.	Shoe hold-down spring	24.	Sleeve

Fig. 8-10 Component Parts

FRONT BRAKES (2.75, 3.0 Ton Series)

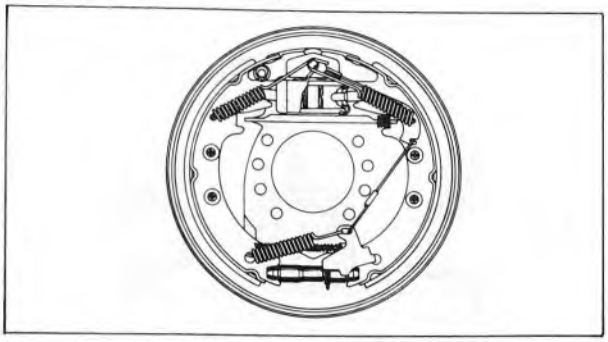

Fig. 8-11 Front Brake

WHEEL CYLINDER (2.75, 3.0 Ton Series)

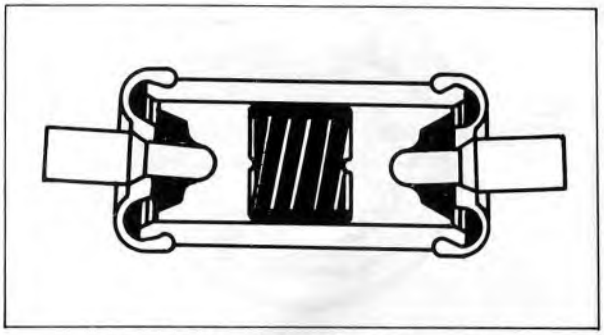

Fig. 8-12 Wheel Cylinder Sectional View

COMPONENT PARTS (2.75, 3.0 Ton Series)

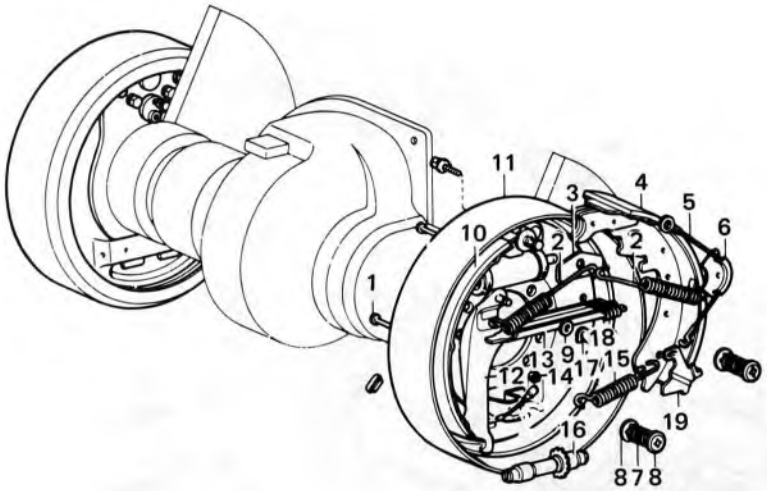

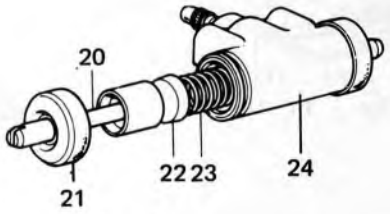

1.	Shoe hold-down pin	13.	Strut
2.	Anchor to shoe spring	14.	Snap ring
3.	Shoe guide plate	15.	Adjustment spring
4.	Cable & fitting sub-assy	16.	Adjusting screw
5.	Cable & fitting sub-assy	17.	Lever pin retainer
6.	Cable guide	18.	Strut to shoe spring
7.	Shoe hold-down spring	19.	Automatic adjustment lever
8.	Shoe hold-down cup	20.	Connecting rod
9.	Spring washer	21.	Wheel cylinder cover
10.	Primary shoe sub-assy	22.	Wheel cylinder cup
11.	Backing plate	23.	Wheel cylinder spring
12.	Parking lever	24.	Wheel cylinder body

Fig. 8-13 Component Parts

Important:

- Brake fluid (vegetable oil) is used in the brakes for 1.0~1.75 ton series. Hydraulic oil (mineral oil) is used in the brakes for 2.0~3.0 ton series. Thus, care must be taken not to intermix the parts at disassembly and when replacing the parts.
- For removal of the front axle hub, refer to the front axle section.
- The brake can be disassembled after removing the brake assy from the vehicle, or it can be disassembled part by part while on board the vehicle. The suitable method should be taken to conform with the kind of trouble to be repaired.

REMOVAL (1.0~1.75 TON SERIES)

1. Jack up the vehicle front end.
2. Remove the following parts.
   (1) Front wheel
   (2) Axle shaft
   (3) Front axle hub
   Use SST 09310-10160-71
   (1.0, 1.35 ton vehicles)
   Use SST 09950-20012
   (1.5, 1.75 ton vehicles)



Fig. 8-14 Removing Front Axle Hub

3. Remove the adjusting screw.
   (1) Adjusting screw
   (2) Automatic adjustment lever
   (3) Adjusting screw



Fig. 8-15 Removing Adjusting Screw

4. Anchor to shoe springs.
   (1) Anchor to shoe springs
   Use SST 09717-20010
   (2) Strut lever, strut to shoe spring
   (3) Cable guide
   (4) Cable



Fig. 8-16 Removing Anchor to Shoe Spring

5. Remove the hold down springs.
   (1) Hold-down cups
   Use SST 09510-10170-71
   (2) Hold-down springs

6. Remove the brake shoes.
   (1) Brake shoes
   (2) Parking brake cable



Fig. 8-17 Removing Brake Shoe

7. Remove the parking lever.
   (1) "U" ring
   (2) Lever pin
   (3) Brake lever



Fig. 8-18 Removing Parking Lever

8. Disconnect the parking brake cable.
   (1) Snap ring
   (2) Parking brake cable



Fgi. 8-19 Disconnecting Parking Brake Cable

9. Drain out the brake fluid.
   (1) Reservoir tank

   Caution:
   - **In case the wheel cylinder and backing plate are to be removed, always drain out the brake fluid.**
   - **If the brake fluid is to be reused, keep it in a clean container and use care to prevent intermixing with mineral oil.**

   (2) Breather screw



Fig. 8-20 Draining Out Brake Fluid

10. Remove the backing plate.
    (1) Brake pipe
    (2) Backing plate nut set
    (3) Backing plate

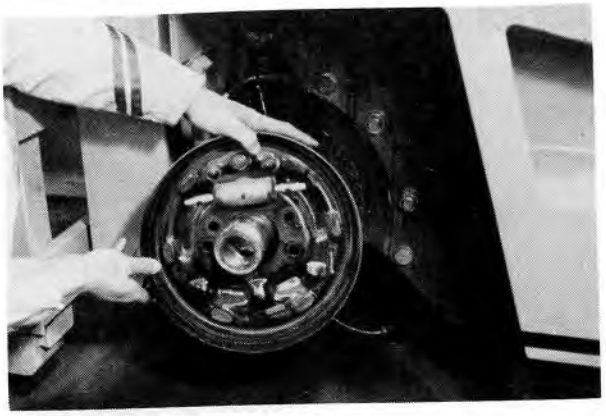

Fig. 8-21 Remove Backing Plate

11. Remove the wheel cylinder.
    (1) Set bolts
    (2) Wheel cylinder



Fig. 8-22 Removing Wheel Cylinder

12. Disassemble the wheel cylinder.
    (1) Wheel cylinder covers
    (2) Connecting rods
    (3) Pistons
    (4) Wheel cylinder cups
    (5) Wheel cylinder spring

Caution:
- **Disassemble just before inspection. Replace any defective parts found and reassemble immediately.**
- **Never allow any mineral oil or grease to to come in contact.**

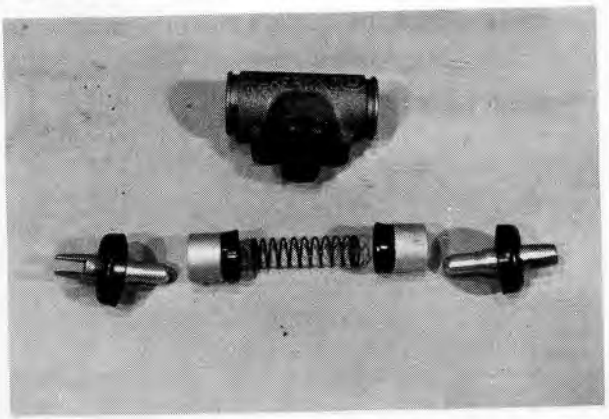

Fig. 8-23 Wheel Cylinder Disassembed

INSPECTION (1.0~1.75 TON SERIES)

Caution:
Inspect the disassembled parts and repair or replace any found defective.

1. Wheel cylinder.
   (1) Rusting, damage or wear in the wheel cylinder bore and pistons.
   Cylinder to piston clearance standard: 0.040~0.125 mm (0.00016~0.0049 in.)
   (2) Wear, damage, deformation in piston cups

Caution:
At overhaul, replace the cups with new parts.

   (3) Damage or deterioration in cylinder boots
   (4) Damage or deformation in connecting rods
   (5) Deformation or loss-of-tension in spring

2. Brake drum.
   (1) Eccentric wear, tapering, scoring in brake drum interior
   Inside diameter standard: 254 mm (10 in.)
   Repair limit: 256 mm (10.1 in.)

3. Brake shoes.
   (1) Wear, damage, or oil adherence on shoe linings
   Lining thickness standard: 5.0 mm (0.197 in.)
   Lining thickness limit: 1.0 mm (0.039 in.)



Fig. 8-24 Inspecting Wheel Cylinder (1)

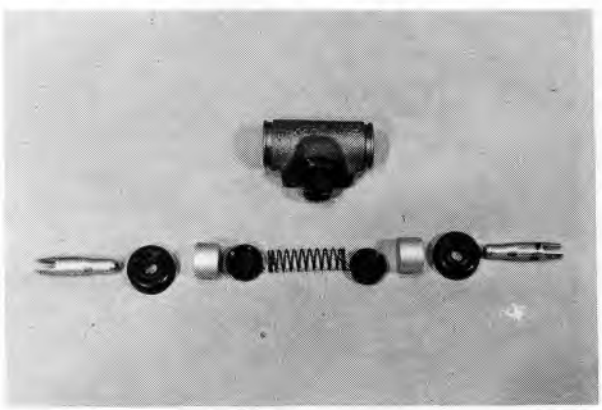

Fig. 8-25 Inspecting Wheel Cylinder (2)

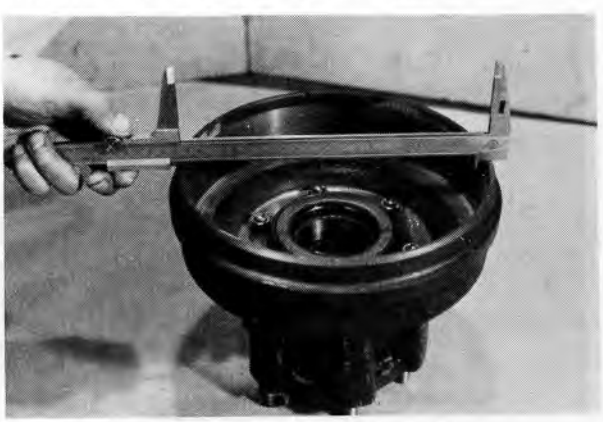

Fig. 8-26 Inspecting Brake Drum



Fig. 8-27 Inspecting Brake Lining

4. Spring
   (1) Deformation or weakening in shoe return springs
   Free length: 102 mm (4.02 in.)
   (2) Deformation or weakening in adjusting spring
   Free length: 79 mm (3.11 in.)
   (3) Deformation or weakening in strut shoe spring
   Free length: 18 mm (0.71 in.)
   (4) Deformation or weakening in hold down springs
   Free length: 25.7 mm (1.01 in.)

5. Adjusting screw.
   (1) Wear, damage, deformation in teeth
   (2) Wear, defective rotation in screw

6. Shoe hold-down cups.
   (1) Deformation or cracks in cups

7. Strut lever.
   (1) Bending, deformation, damage in lever

8. Adjusting parking lever.
   (1) Deformation, cracks, wear in lever

9. Cable guide.
   (1) Deformation, damage in cable guide

10. Cable and links.
    (1) Stretching or damage in cable

11. Backing plate.
    (1) Deformation, cracks, damage in backing plate

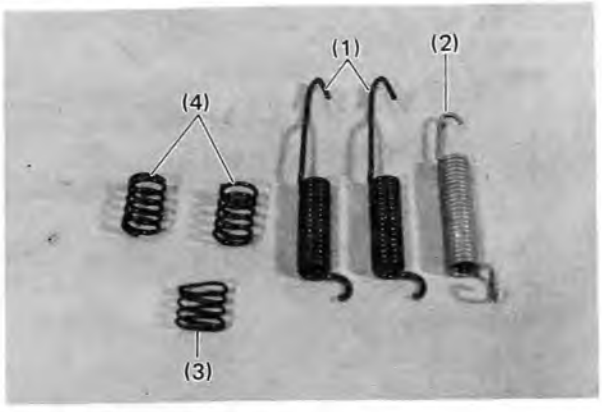

Fig. 8-28 Spring Inspection



Fig. 8-29 Inspecting Adjusting Screw



Fig. 8-30 Adjuster, Backing Plate Parts Inspection



Fig. 8-31 Backing Plate Inspection

ASSEMBLY (1.0~1.75 TON SERIES)

Caution:
- Apply new brake fluid to all parts before assembly.
- Do not use any oil other than brake fluid.

1. Assemble the wheel cylinder.
   (1) Wheel cylinder spring
   (2) Wheel cylinder cups
   (3) Pistons
   (4) Connecting rods and boots
   (5) Breather screw

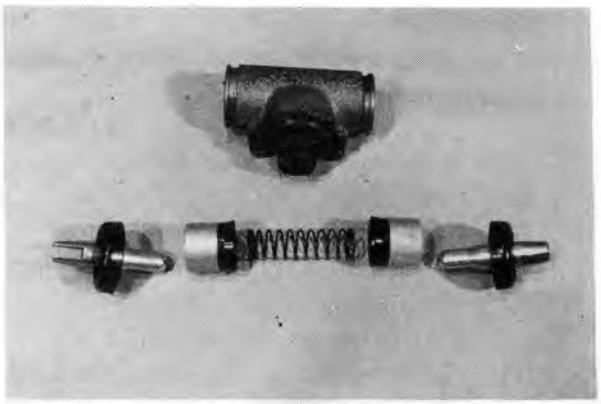

Fig. 8-32 Assembling Wheel Cylinder

2. Install the wheel cylinder assy.
   (1) Backing plate
   (2) Wheel cylinder assy
   (3) Set bolt
   T = 0.8~1.2 kg-m (5.78~8.66 ft-lb)

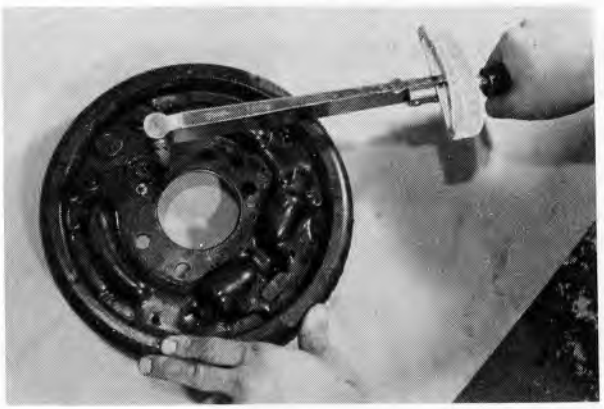

Fig. 8-33 Installing Wheel Cylinder

3. Install the backing plate.
   (1) Backing plate
   (2) Shoe hold pins
   (3) Set nuts
   T = 5~8 kg-m (36.1~57.6 ft-lb)

4. Connect the brake pipe.

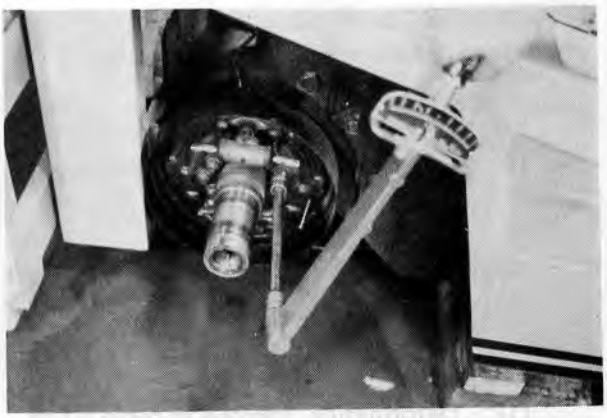

Fig. 8-34 Installing Backing Plate

5. Apply "Non melt lube" grease.
   (1) 6 places contacting on brake shoes
   (2) Anchor pins

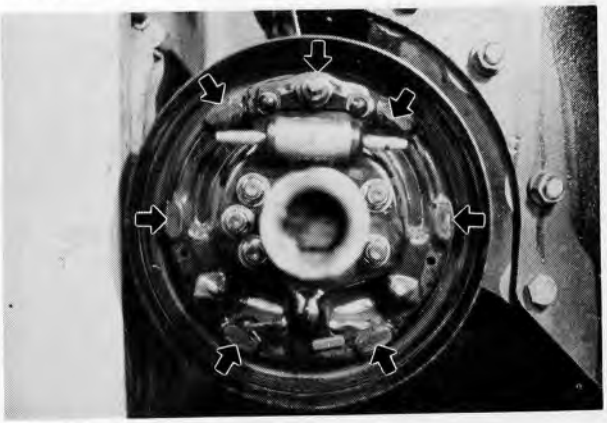

Fig. 8-35 Greasing Points

6. Connect the parking brake cable.
   (1) Apply rubber packing
   (2) Parking brake cable
   (3) "U" ring

7. Install the parking lever.
   (1) Brake shoe (front side)
   (2) Brake lever, lever pin, "U" ring



Fig. 8-36 Connecting Parking Brake Cable

8. Install the brake shoes.
   (1) Parking brake cable
   (2) Brake shoes
   (3) Cup washers, shoe hold down springs
   (4) Cup washers
   Use SST 09510-31960-71
   (5) Shoe guide plate



Fig. 8-37 Installing Brake Shoes

9. Install the shoe return springs.
   (1) Cable, cable guide
   (2) Strut, anti-rattle spring
   (3) Brake shoe return springs
   (Front side first and then rear side)
   Use SST 09718-20010



Fig. 8-38 Installing Shoe Return Springs

10. Install adjusting lever and screw.
    (1) Adjusting screw
    (2) Automatic adjustment lever
    (3) Adjuster spring

11. Remove air by bleeding and then adjust the brake.



Fig. 8-39 Assembling Lever and Spring

REMOVAL (2.0~2.5 TON SERIES)

1. Jack up the vehicle front end.
2. Remove the following parts:
   (1) Front wheel
   (2) Axle shaft
   (3) Front axle hub
   Use SST 09310-10160-71
3. Remove the shoe return springs.
   (1) Adjuster link
   (2) Shoe return springs
   Use SST 09510-20180-71



Fig. 8-40 Removing Shoe Return Spring

4. Remove the hold-down springs.
   (1) Cup washers
   Use SST 09510-10170-71
   (2) Hold-down springs
   (3) Sleeve
   (4) Actuator lever
   (5) Pawl lever
   (6) Actuator spring



Fig. 8-41 Removing Hold-Down Spring and Lever

5. Remove the brake shoes.
   (1) Adjuster spring
   (2) Adjuster
   (3) Strut
   (4) Anti-rattle spring
   (5) Brake shoes



Fig. 8-42 Removing Brake Shoes

6. Remove the parking lever.
   (1) "U" ring
   (2) Lever pin
   (3) Brake lever



Fig. 8-43 Removing Parking Lever

7. Disconnect the parking brake cable.
   (1) "U" ring
   (2) Parking brake cable
   (3) Rubber packing

8. Remove the backing plate.

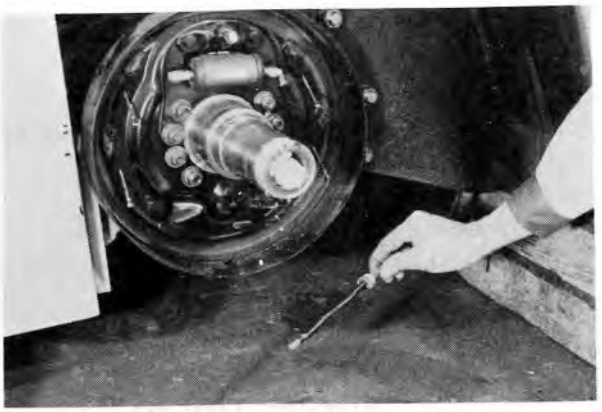

Fig. 8-44 Disconnecting Parking Brake Cable

9. Remove the backing plate.
   (1) Brake pipe
   (2) Backing plate set nuts
   (3) Backing plate



Fig. 8-45 Removing Backing Plate

10. Remove the wheel cylinder.
    (1) Set bolt
    (2) Wheel cylinder



Fig. 8-46 Removing Wheel Cylinder

11. Disassemble the wheel cylinder.
    (1) Dust covers
    (2) Connecting rods
    (3) Pistons
    (4) Piston cups
    (5) Spring

Caution:
Hydraulic oil is used so do not intermix the parts with those using brake fluid.

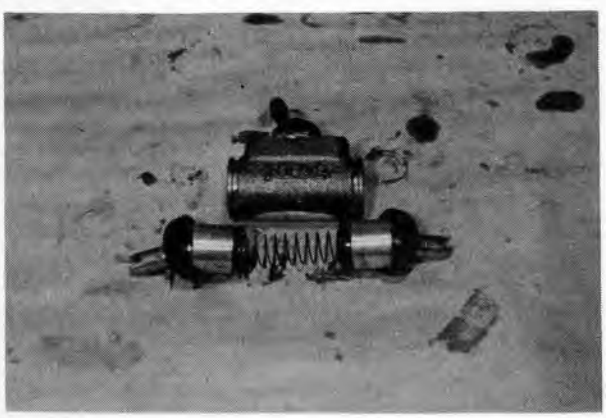

Fig. 8-47 Wheel Cylinder Disassembled

INSPECTION (2.0~2.5 TON SERIES)

Caution:
Inspect the disassembled parts and repair or replace any found defective.

1. Wheel cylinder
   (1) Rusting, damage, wear in wheel cylinder bore and pistons
   Cylinder to piston clearance standard: 0.065~0.145 mm (0.0026~0.0057 in.)

   (2) Wear, damage, deformation in piston cups

   Caution:
   At overhaul, replace the cups with new parts (for mineral oil use).

   (3) Damage or deterioration in cylinder boots
   (4) Damage or deformation in connecting rods
   (5) Deformation or weakening in spring

2. Brake drum.
   (1) Eccentric wear, taper, scoring in brake shoe linings
   Inside diameter standard: 310 mm (12.20 in.)
   Repair limit: 312 mm (12.28 in.)

3. Brake shoes.
   (1) Wear, damage, oil adherence on brake shoe linings
   Lining thickness standard: 7.0 mm (0.276 in.)
   Lining thickness limit: 2.0 mm (0.079 in.)
   (2) Bending, wear, damage on brake shoes



Fig. 8-48 Wheel Cylinder Inspection (1)

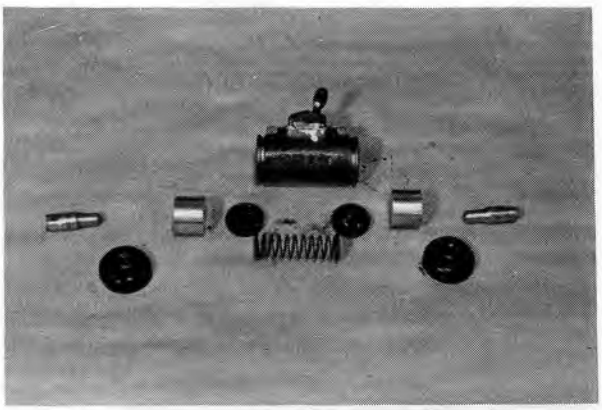

Fig. 8-49 Wheel Cylinder Inspection (2)

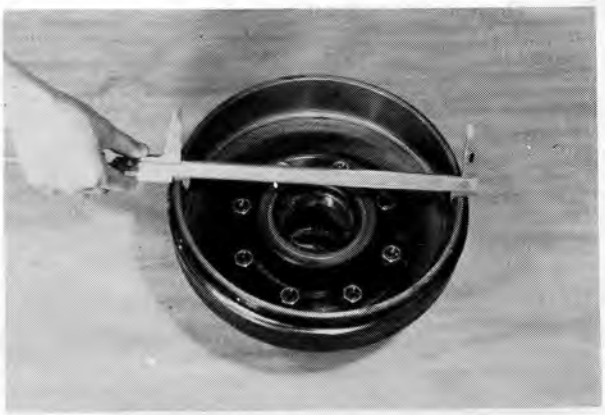

Fig. 8-50 Inspecting Brake Drum

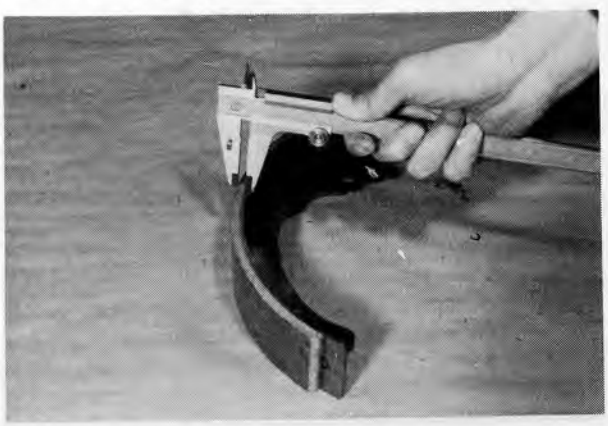

Fig. 8-51 Inspecting Brake Lining

4. Springs.
   (1) Deformation or weakening in shoe return springs
   Free length: 106 mm (4.17 in.)
   (2) Deformation or weakening in adjusting spring
   Free length: 91.3 mm (3.59 in.)
   (3) Deformation or weakening in anti rattle spring
   Free length: 20 mm (0.787 in.)
   (4) Deformation or weakening in hold-down springs
   Free length: 20 mm (0.787 in.)
   (5) Deformation or weakening in actuator spring

5. Adjusting screw.
   (1) Wear, damage, deformation in teeth
   (2) Wear, defective rotation in screw

6. Shoe hold-down cups.
   (1) Deformation or cracks in cups

7. Strut lever.
   (1) Bending, deformation, cracks in lever

8. Brake, actuator, and pawl levers.
   (1) Bending, deformation, cracks in levers

9. Link.
   (1) Stretched or damaged link

10. Backing plate.
    (1) Deformation, cracks, damage in backing plate

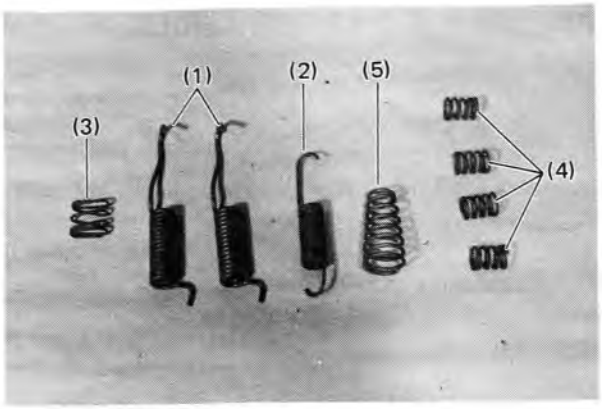

Fig. 8-52 Spring Inspection

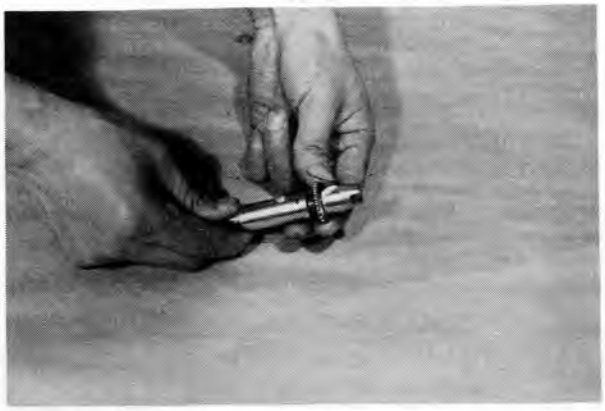

Fig. 8-53 Inspecting Adjusting Screw

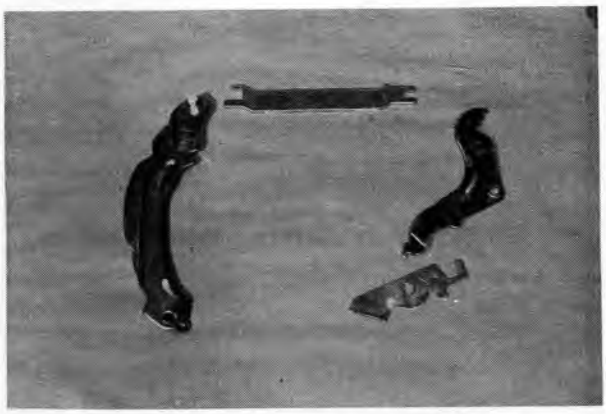

Fig. 8-54 Inspection of Levers and Allied Parts



Fig. 8-55 Backing Plate Inspection

ASSEMBLY (2.0~2.5 TON SERIES)

Caution:
- Coat the parts with hydraulic oil before assembling.
- Brake fluid (vegetable oil) is not used. Be careful not to allow intermixture.

1. Assemble the wheel cylinder.
   (1) Spring
   (2) Piston cups
   (3) Pistons
   (4) Connecting rods, dust covers
   (5) Breather screw

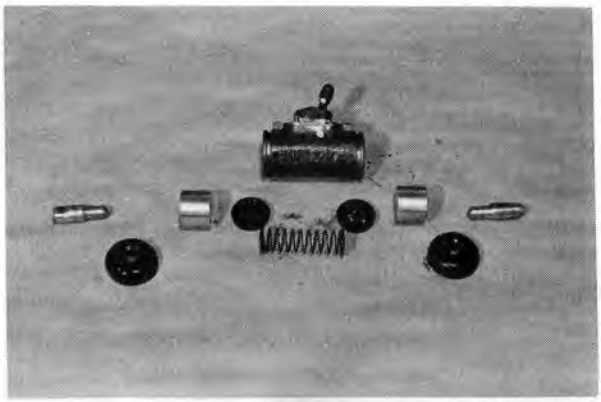

Fig. 8-56 Assembling Wheel Cylinder

2. Install the wheel cylinder assy.
   (1) Backing plate
   (2) Wheel cylinder assy.
   (3) Set bolt



Fig. 8-57 Installing Wheel Cylinder Assy

3. Install the backing plate.
   (1) Backing plate
   (2) Shoe hold pins
   (3) Set nuts
   T = 7~10.5 kg-m (50.5~75.8 ft-lb)



Fig. 8-58 Installing Backing Plate

4. Connect the brake pipe.

5. Apply "Non melt lube" grease.
   (1) 6 places contacting on brake shoes
   (2) Anchor pins

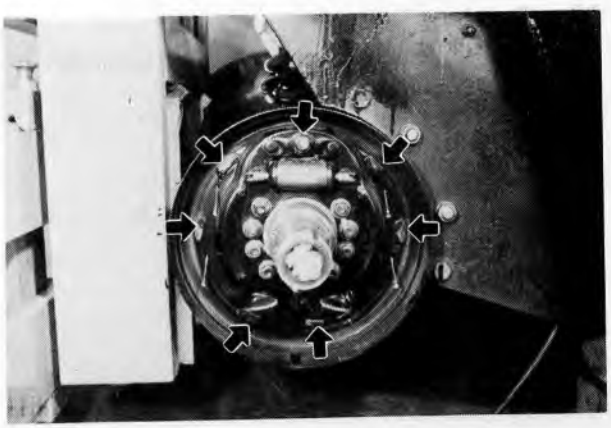

Fig. 8-59 Greasing Points

6. Connect the parking brake cable.
   (1) Rubber packing
   (2) Parking brake cable
   (3) "U" ring

7. Install the brake lever.
   (1) Brake shoe (front)
   (2) Brake lever, lever pin, "U" ring



Fig. 8-60 Installing Brake Lever

8. Apply "Non melt lube" grease.
   (1) Brake shoe, sleeve (rear)
   (2) Actuator lever (at fitting part)



Fig. 8-61 Greasing Points

   (3) Adjusting screw threads and washered part

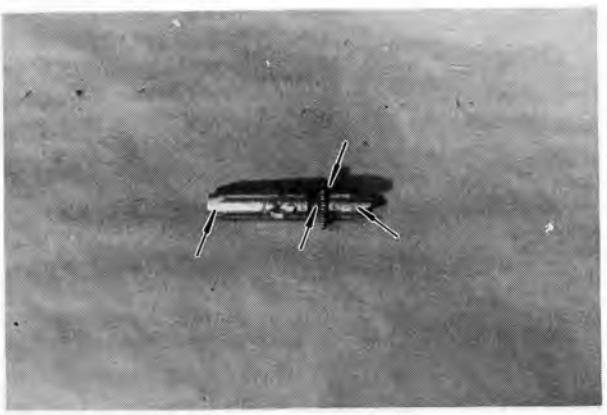

Fig. 8-62 Greasing Points

9. Install the brake shoes.
   (1) Parking brake cable (Front end)
   (2) Adjusting spring
   (3) Adjusting screw
   (4) Brake shoes
   (5) Cup washer, shoe hold-down, cup washer
   Use SST 09510-10170-71
   (Front side 2 places, rear side only at upper part)

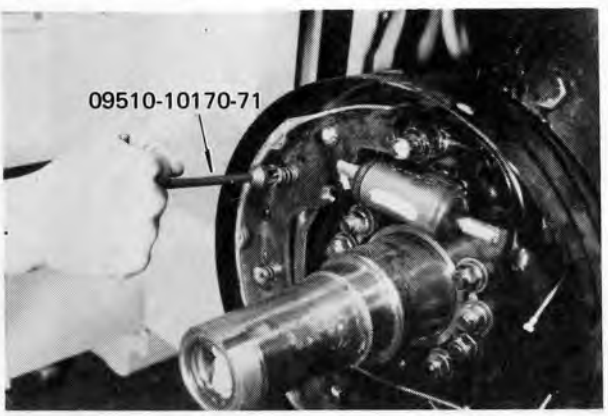

Fig. 8-63 Installing Brake Shoes

10. Install the actuator lever.
    (1) Pawl lever
    (2) Actuator lever, spring
    (3) Cup washer, shoe hold-down spring, cup washer
        Use SST 09510-10170-71
        (Rear brake shoe lower part only)
    (4) Actuator spring
    (5) Strut, strut to shoe spring



Fig. 8-64 Installing Actuator Lever

11. Install the return springs
    (1) Rear side return spring
    (2) Front side return spring
    (3) Link

12. Remove air by bleeding and then adjust the brake.



Fig. 8-65 Installing Springs

REMOVAL (2.75, 3.0 TON SERIES)

1. Jack up the vehicle front end.
2. Remove the following parts:
   (1) Front wheel
   (2) Axle shaft
   (3) Front axle hub
   Use SST 09310-10160-71



Fig. 8-66 Removing Front Axle Hub

3. Remove the adjusting screw.
   (1) Adjusting spring
   (2) Automatic adjustment lever
   (3) Adjusting screw



Fig. 8-67 Removing Adjusting Screw

4. Remove the anchor to shoe springs.
   (1) Anchor to shoe springs
   Use SST 09717-20010
   (2) Strut lever, strut to shoe spring
   (3) Cable guide
   (4) Cable



Fig. 8-68 Removing Anchor to Shoe Spring

5. Remove the hold-down springs.
   (1) Hold-down cups
   Use SST 09510-31960-71
   (2) Hold-down springs



Fig. 8-69 Removing Hold-Down Springs

6. Remove the secondary shoe.
   (1) Secondary shoe

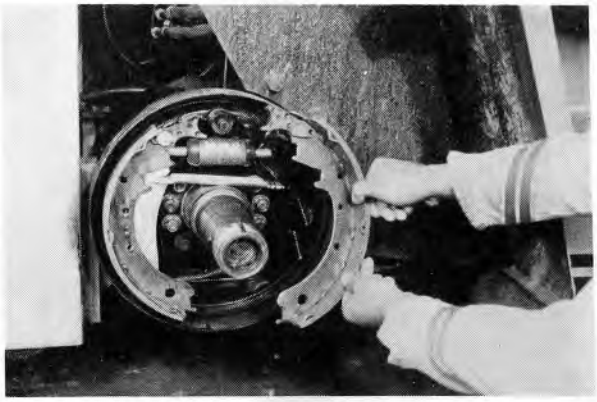

Fig. 8-70 Removing Secondary Shoe

7. Remove the strut.
   (1) Strut
   (2) Strut spring

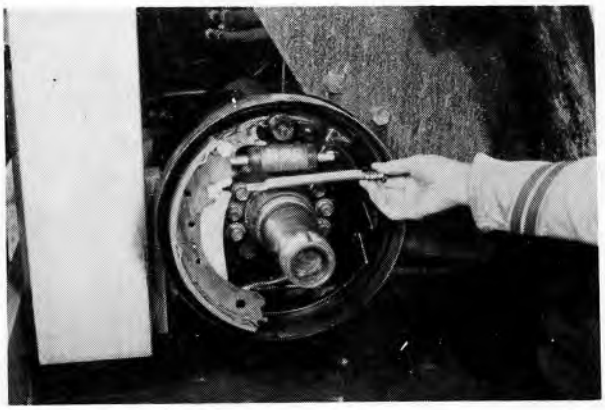

Fig. 8-71 Removing Strut

8. Remove the primary shoe.
   (1) Primary shoe
   (2) Parking brake cable



Fig. 8-72 Removing Primary Shoe

9. Remove the parking lever.
   (1) "U" ring
   (2) Lever pin
   (3) Brake lever



Fig. 8-73 Removing Parking Lever

10. Disconnect the parking brake cable.
    (1) Snap ring
    (2) Parking brake cable



Fig. 8-74 Disconnecting Parking Brake Cable

11. Remove the backing plate.
    (1) Brake pipe
    (2) Backing plate set nuts
    (3) Backing plate

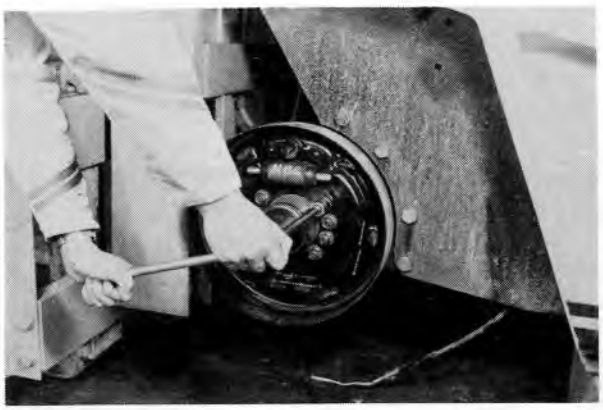

Fig. 8-75 Removing Backing Plate

12. Remove the wheel cylinder.
    (1) Set bolts
    (2) Wheel cylinder



Fig. 8-76 Removing Wheel Cylinder

13. Disassemble the wheel cylinder.
    (1) Dust covers
    (2) Connecting rods
    (3) Pistons
    (4) Wheel cylinder cups
    (5) Wheel cylinder spring

Caution:
Hydraulic oil is used. Never confuse with brake fluid (vegetable oil).

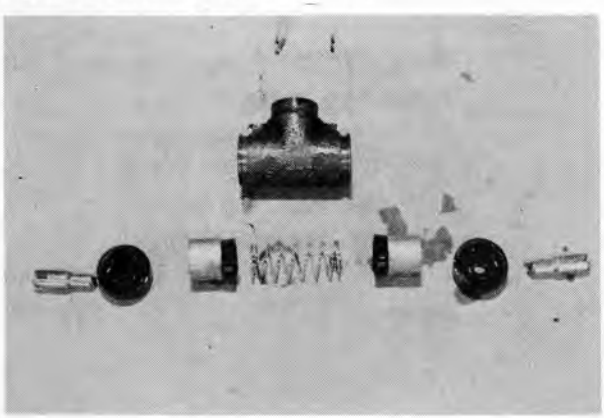

Fig. 8-77 Wheel Cylinder Disassembled

INSPECTION (2.75, 3.0 TON SERIES)

Caution:
Inspect the disassembled parts and repair or replace any found defective.

1. Wheel cylinder.
   (1) Rusting, damage, wear in the wheel cylinder bore and pistons
   Cylinder to piston clearance standard: 0.054~0.087 mm (0.00216~0.0034 in.)
   (2) Wear or damage in piston cups

Note:
At overhaul, replace the cups with new parts (For mineral oil).

   (3) Damage or deterioration in cylinder boots
   (4) Damage or deformation in connecting rods
   (5) Deformation or weakening in spring

2. Brake drum.
   (1) Eccentric wear, tapering, scoring in brake drum inside surface.
   Inside dimameter standard:
   310 mm (12.20 in.)
   Wear limit:
   312 mm (12.28 in.)

3. Brake shoe.
   (1) Wear, damage, oil adherence on brake shoe linings
   Lining thickness standard:
   6.3 mm (0.248 in.)
   Lining thickness limit:
   1.0 mm (0.039 in.)
   (2) Bending, wear, damage in brake shoes



Fig. 8-78 Wheel Cylinder Inspection (1)

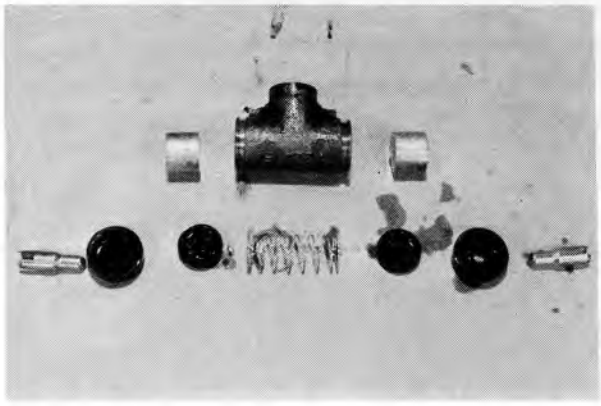

Fig. 8-79 Wheel Cylinder Inspection (2)



Fig. 8-80 Inspecting Brake Drum



Fig. 8-81 Inspecting Brake Lining

4. Springs.
   (1) Deformation or weakening in shoe return springs
   Free length: 124 mm (4.88 in.)
   (2) Deformation or weakening in adjusting spring
   Free length: 88 mm (3.46 in.)
   (3) Deformation or weakening in strut to shoe springs
   Free length: 29.8 mm (1.17 in.)
   (4) Deformation or weakening in hold-down springs
   Free length: 25.7 mm (1.01 in.)

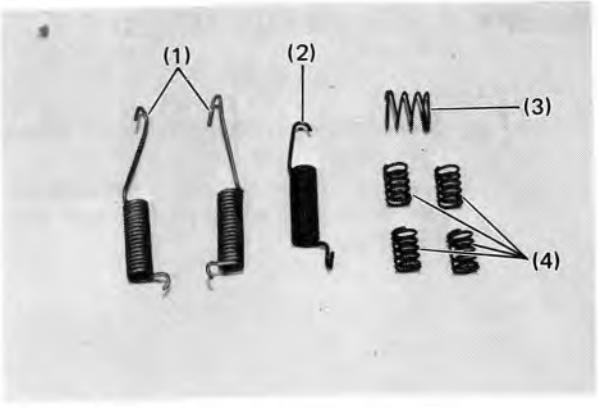

Fig. 8-82 Spring Inspection

5. Adjusting screw.
   (1) Wear, damage, deformation in teeth
   (2) Wear,defective rotation in screw



Fig. 8-83 Inspecting Adjusting Screw

6. Shoe hold-down cups.
   (1) Deformation or cracks in cups

7. Strut lever.
   (1) Bending, deformation, damage in lever

8. Adjusting parking lever.
   (1) Deformation, cracks, wear in lever

9. Cable guide.
   (1) Deformation or damage in cable guide

10. Cable link.
    (1) Stretching or damage in cable

11. Backing plate.
    (1) Deformation, cracks, damage in backing plate

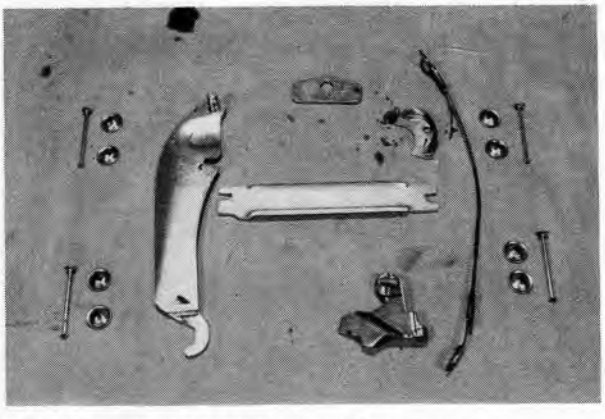

Fig. 8-84 Adjuster and Backing Parts Inspection

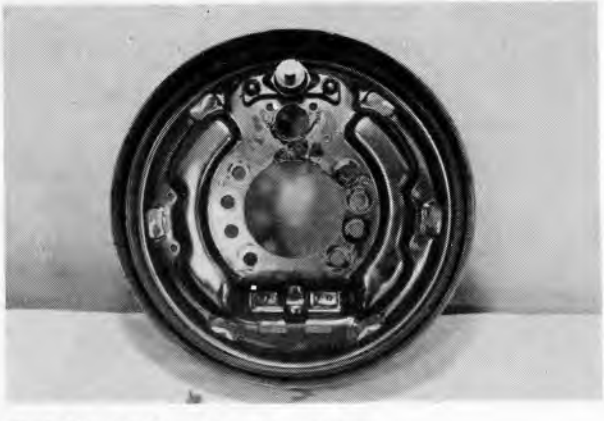

Fig. 8-85 Backing Plate Inspection

ASSEMBLY (2.75, 3.0 TON SERIES)

Caution:
- Coat the parts with hydraulic oil before assembling.
- Brake fluid (vegetable oil) is not used. Be careful not to allow any contact with brake fluid.

1. Assemble the wheel cylinder.
   (1) Spring
   (2) Piston cups
   (3) Pistons
   (4) Connecting rods, boots
   (5) Breather screw

2. Install the wheel cylinder assy.
   (1) Backing plate
   (2) Wheel cylinder assy
   (3) Set bolts
   T = 1.8~2.7 kg-m (13.0~19.5 ft-lb)

3. Install the backing plate.
   (1) Backing plate
   (2) Shoe hold pins
   (3) Set nuts
   T = 12~14 kg-m (86.6~101.1 ft-lb)

4. Connect the brake pipe.

5. Apply "Non melt Lube" grease.
   (1) 6 places contacting on brake shoes
   (2) Anchor pins

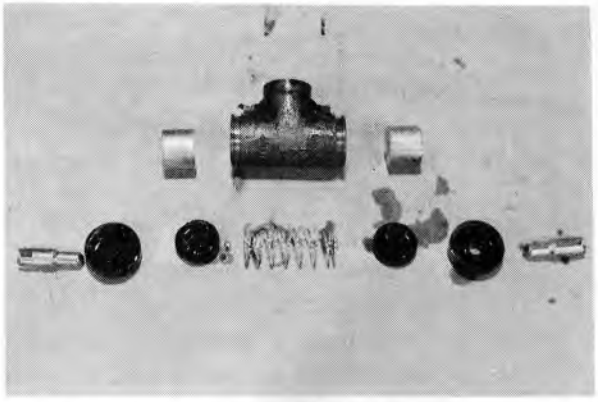

Fig. 8-86 Assembling Wheel Cylinder



Fig. 8-87 Installing Wheel Cylinder

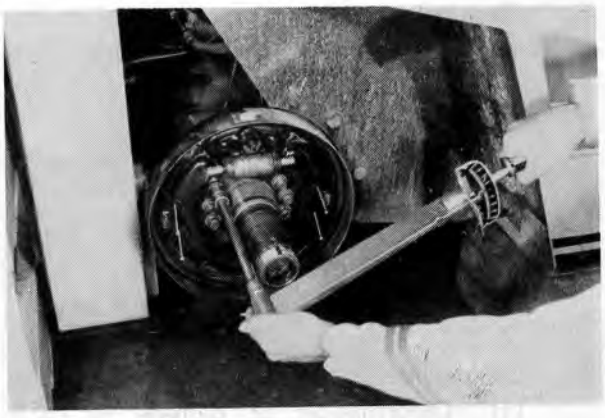

Fig. 8-88 Installing Backing Plate

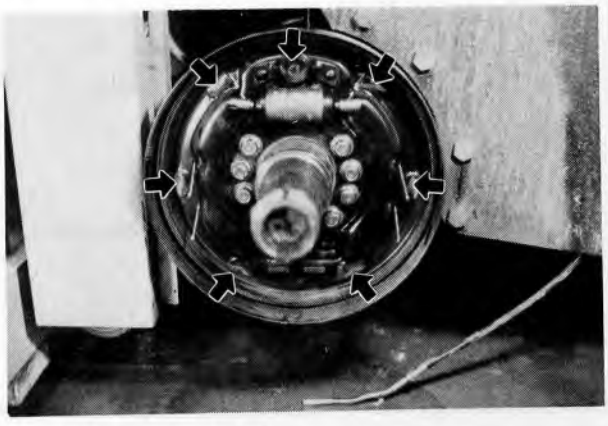

Fig. 8-89 Greasing Points

6. Connect the parking brake cable.
   (1) Parking brake cable
   (2) "U" ring

7. Install the parking lever.
   (1) Primary shoe
   (2) Brake lever
   (3) Lever pin
   (4) "U" ring

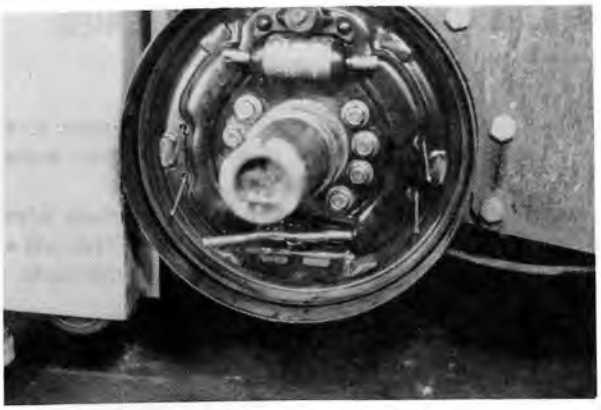

Fig. 8-90 Connecting Parking Brake Cable

8. Install the brake shoes.
   (1) Parking brake cable
   (2) Brake shoes
   (3) Cup washers and shoe hold-down springs
   (4) Cup washers
   Use SST 09510-31960-71
   (5) Shoe guide plate



Fig. 8-91 Installing Brake Shoe

9. Install return springs.
   (Front side first and then read side)
   Use SST 09718-20010

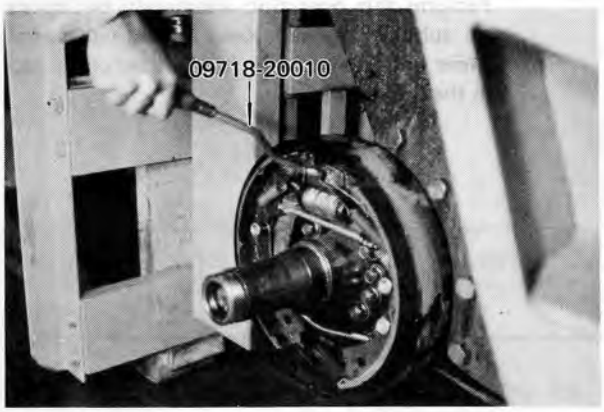

Fig. 8-92 Installing Shoe Return Spring

10. Install adjusting lever and spring.
    (1) Adjusting screw
    (2) Automatic adjustment lever
    (3) Adjusting spring

11. Remove air by bleeding and then adjust brake.



Fig. 8-93 Installing Lever and Spring

AIR REMOVAL (1.0~1.75 TON SERIES)

Caution:
- During the bleeding operation, make sure that the there is always sufficient brake fluid in the reservoir.
- The replenishment should be made with the same brand of brake fluid. Never use a container that has mineral adhered inside.

1. Replenish the brake fluid.



Fig. 8-94 Replenishing Brake Fluid

2. Bleed the air from the wheel cylinders.

3. Bleed the air from the master cylinder.

Caution:
The bleeding operation should be done by two persons, one to pump the brake pedal and the other to air removal at the breather valve.
1) Depress the brake and clutch pedals several times so as to compress the air in the piping, and hold this condition.
2) Loosen the breather plug and allow the air to run out with the brake fluid. Close the valve just before the air stops coming out.

Perform this operation alternately by means of suitable signals. Keep repeating several times until no more air bubbles are contained in the brake fluid.



Fig. 8-95 Bleeding Master Cylinder

AIR REMOVAL (2.0~3.0 TON SERIES)

1. Bleed the air from the wheel cylinder.

Essential:
- Perform the bleeding operation with two persons.

1) Start the engine, and with the brake pedal depressed, loosen the breather plug and allow the hydraulic oil to flow out until no more air bubbles can be seen. Then close the breather plug.

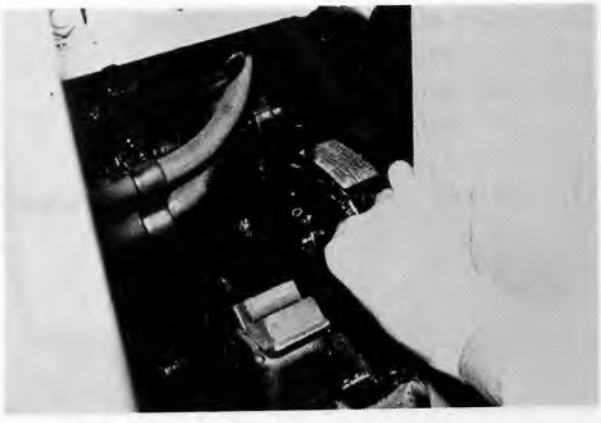

Fig. 8-96 Bleeding Wheel Cylinder

TEST

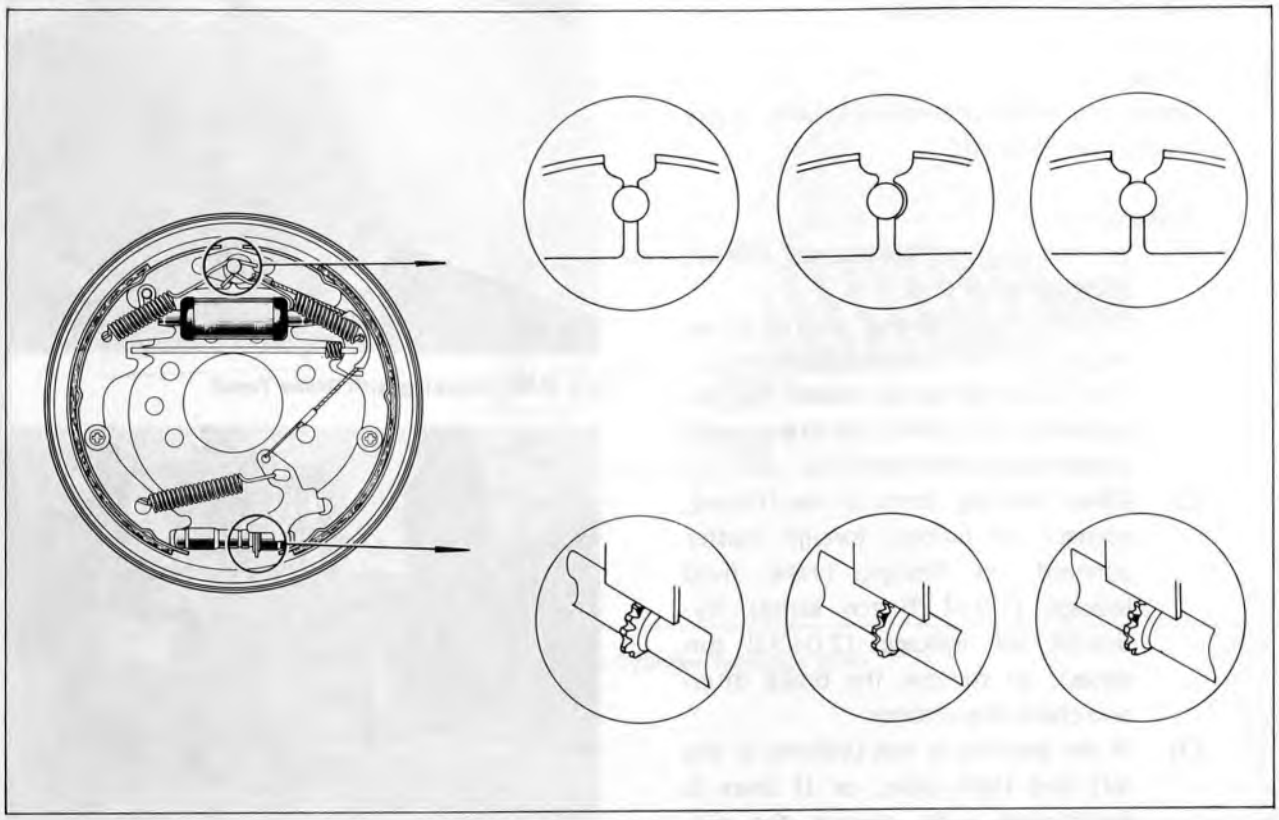

Fig. 8-97 Operating Sequence

OPERATIONAL TEST

1. Adjust the brake shoe diameter until it is 1 mm (0.039 in.) smaller than the brake drum inside diameter, by turning the adjusting screw.

	1.0~1.75 ton series	2.0~2.5 ton series	2.75, 3.0 ton series
Shoe outside diam.	253 mm (10 in.)	309 mm (12.17 in.)	←

2. Test the adjusting screw action.
   (1) Push with finger the fitting cable (1.0~1.75 ton and 2.75, 3.0 ton series) and actuator lever (2.0~2.5 ton series) toward the rear side shoe and then release.
      1) When the above movement is made, the adjusting lever should mesh into the next notch in the adjusting screw.
      2) When returned, the adjusting lever should release one notch and return to inital position.

3. In case of malfunction, check on the following points:
   (1) The adjusting lever should contact on the adjusting screw tooth at right angles.
   (2) The adjusting lever should contact on the adjusting screw at a point 5~7 mm (0.197~0.276 in.) above its center line.

Caution:
If the above position (1) or (2) is defective, the adjusting lever may operate but it will fail to mesh properly so that the adjusting screw will fail to adjust.

CHECK AND ADJUSTMENT OF BRAKE EFFECTIVENESS

1. Check.
   Check the brake effectiveness with brake tester or by road test.

2. Adjustment.
   (1) In case of insufficient pedal reserve, proceed as follows.
   Advance and reverse several times, and adjust the brake shoe clearance.
   The adjusting screw makes the adjustment only when the brake pedal is depressed while reversing.
   (2) When braking force is insufficient, contact of linings, foreign matter adhered on linings, brake fluid leakage (1.0~1.75 ton series), hydraulic oil leakage (2.0~3.0 ton series), so remove the brake drum and check the interior.
   (3) If the braking is not uniform at the left and right sides, or if there is insufficient pedal reserve, the probable causes would be the same as in (2) above.



Fig. 8-98 Checking with Brake Tester



Fig. 8-99 Checking by Road Test

MASTER CYLINDER (1.0 ~ 1.75 Ton Series)

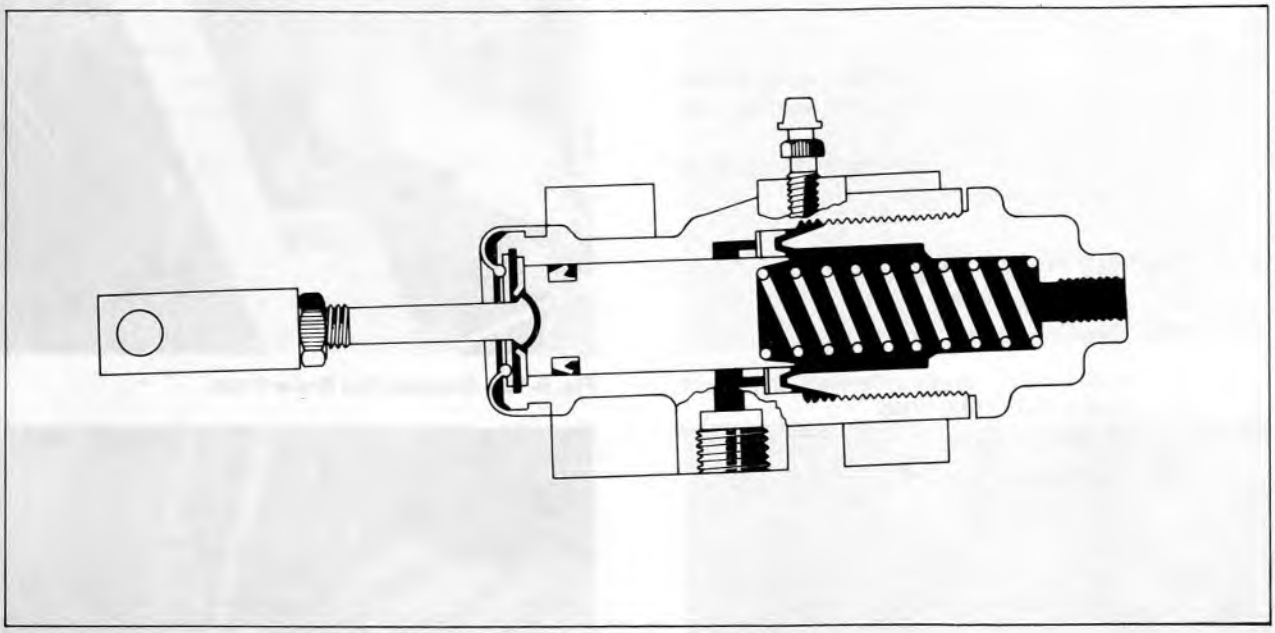

Fig. 8-100 Master Cylinder Sectional View

COMPONENT PARTS

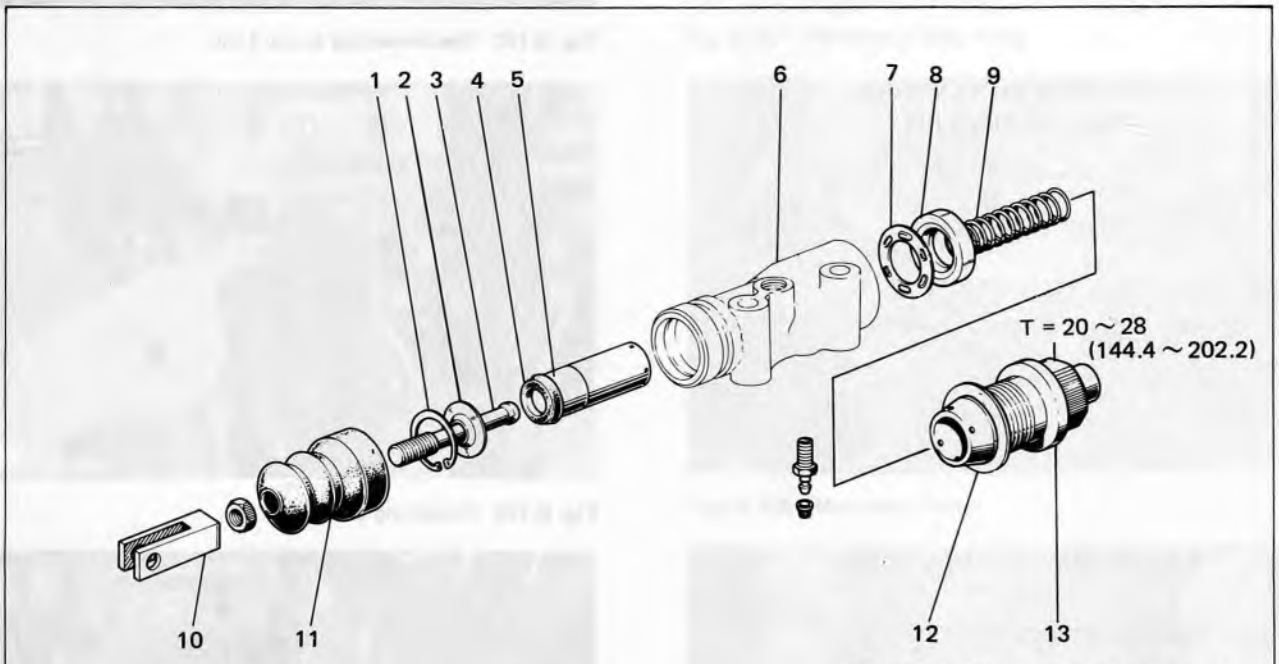

Tightening torque unit: kg-m (ft-lb)

1. Snap ring
2. Piston stop plate
3. Push rod
4. Piston cup
5. Piston
6. Cylinder body
7. Piston cup spacer
8. Cylinder cup
9. Compression spring
10. Push rod clevis
11. Boot
12. Gasket
13. Cylinder cap

Fig. 8-101 Master Cylinder Component Parts

REMOVAL

Caution:
- To prevent the brake fluid from flowing out, drain it out from the reservoir tank and breather plug.
- Use care not to get the brake fluid on the painted surfaces.

1. Drain out the brake fluid.
   (1) Reservoir tank
   (2) Breather plug



Fig. 8-102 Draining Out Brake Fluid

2. Disconnect the brake lines.
   (1) Reservoir pipe
   (2) Brake pipe



Fig. 8-103 Disconnecting Brake Line

3. Remove the master cylinder.
   (1) Push rod clevis pin.

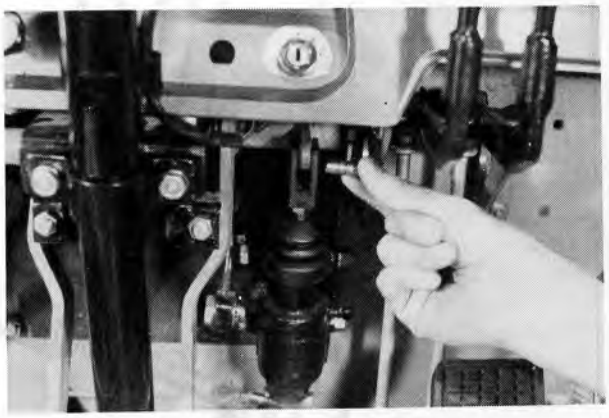

Fig. 8-104 Removing Clevis Pin

   (2) Master cylinder set bolts

   (3) Master cylinder



Fig. 8-105 Removing Master Cylinder

REMOVAL

Caution:
Use only brake fluid. (brake fluid 2400G).
Never allow mineral oil to come in contact.

1. Remove the master cylinder boot.

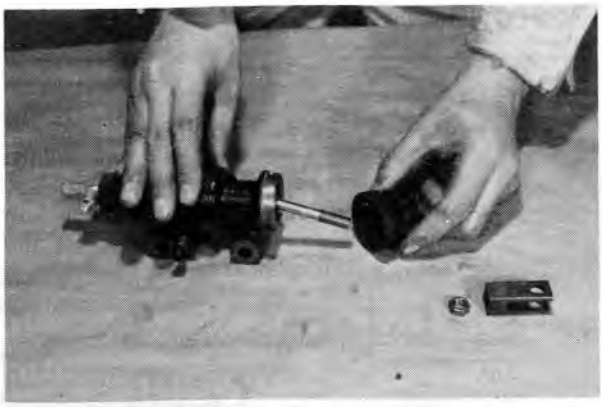

Fig. 8-106 Removing Master Cylinder Boot

2. Remove the push rod.
   (1) Snap ring
   (2) Piston stop plate
   (3) Push rod



Fig. 8-107 Removing Snap Ring

3. Remove the piston.
   (1) Piston
   (2) Compression sping

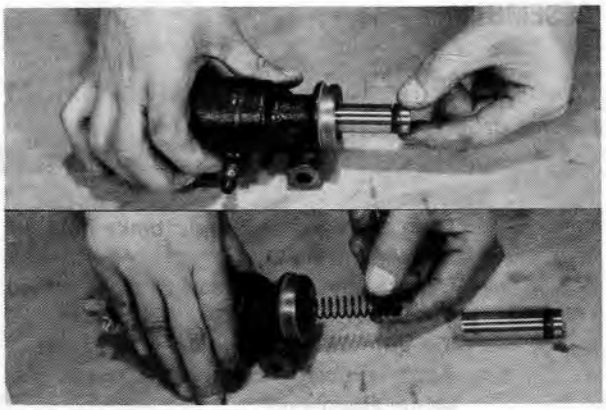

Fig. 8-108 Removing Piston

4. Remove the cylinder cap.
   (1) Cylinder cap
   (2) Cylinder cup
   (3) Cylinder cup spacer



Fig. 8-109 Removing Cylinder Cap

INSPECTION

Caution:
- Wash the parts in fresh brake fluid and inspect them on the following points. Replace any part found defective.
- If cylinder body, piston, or cylinder cap should be found defective, replace the entire master cylinder assy.

1. Wear, damage, deterioration in cylinder cup.
   (1) Distortion or clogging in cylinder cup spacer
2. Rusting, damage, wear in piston and cylinder bore.
   (1) Wear, damage, deterioration in piston cup
3. Damage or clogging in cylinder cap.
4. Weakening or deformation in compression spring.
   Free length: 97 mm (3.82 in.)
5. Deformation or damage in push rod.
6. Clogging in breather plug.

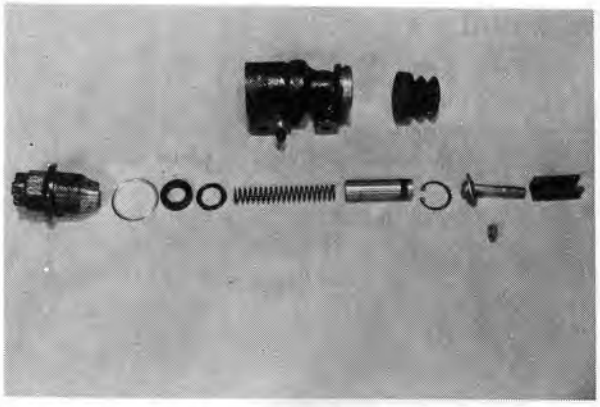

Fig. 8-110 Master Cylinder Inspection

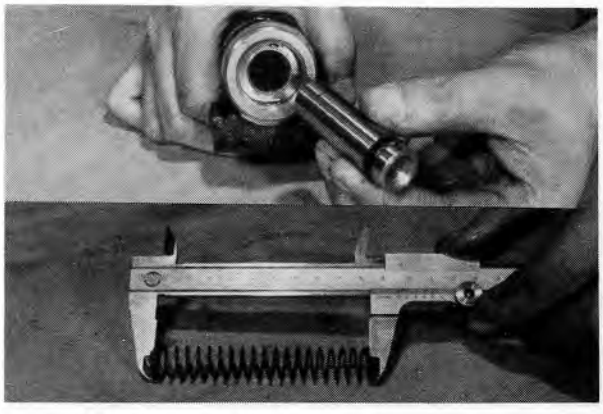

Fig. 8-111 Inspecting Piston, Cylinder, etc.

ASSEMBLY

Assemble by performing the disassembly in reverse order.

Caution:
- Wash the parts and apply brake fluid before assembling.
- Tighten the cylinder cap to the specified torque.
  T = 20 ~ 28 kg-m (144.4 ~ 202.2 ft-lb)
- Apply rubber grease on the piston cup before assembling.



Fig. 8-112 Installing Cylinder Cap

INSTALLATION & ADJUSTMENT

Install by performing the removal in reverse order.

1. Set the master cylinder push rod and clevis.
   Dimension A = 105 mm (4.13 in.)
2. Adjust the brake pedal height.
   Refer to section on pedal height adjustment.
3. Remove the air by bleeding.
   Refer to section on foot brake air removal.

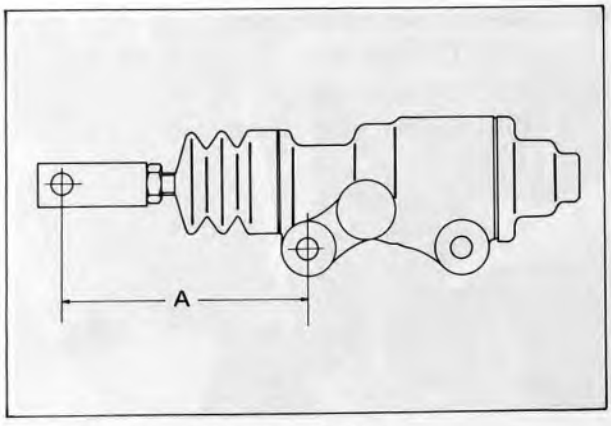

Fig. 8-113 Brake Pedal Adjustment

BRAKE VALVE

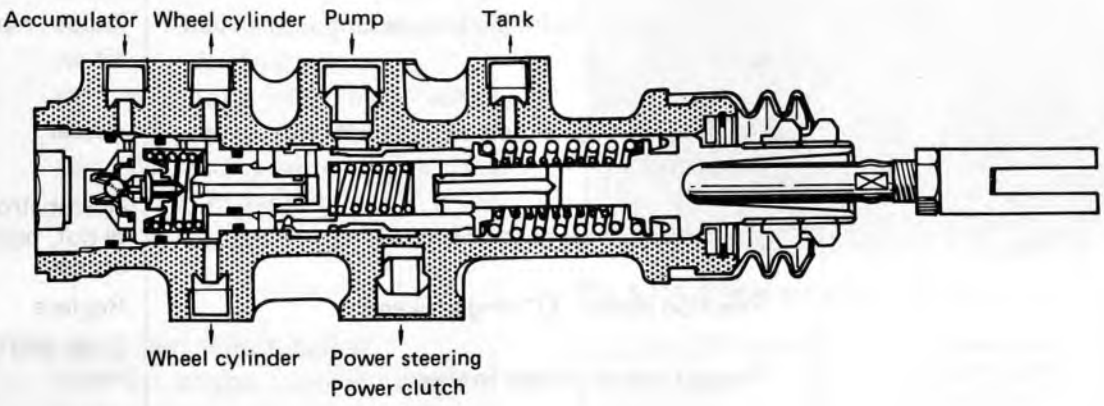

Fig. 8-114 Brake Valve Sectional View

COMPONENT PARTS

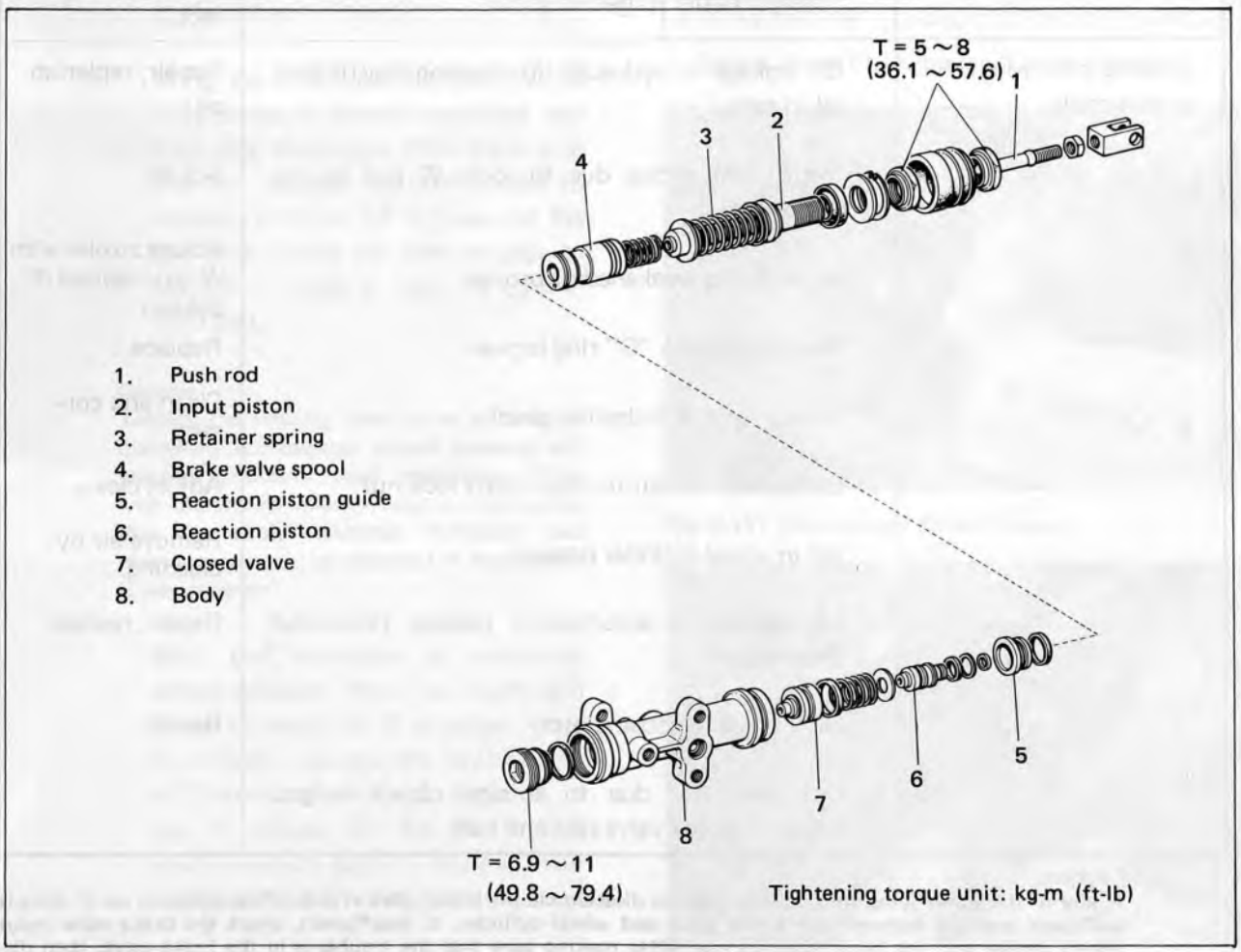

1. Push rod
2. Input piston
3. Retainer spring
4. Brake valve spool
5. Reaction piston guide
6. Reaction piston
7. Closed valve
8. Body

Fig. 8-115 Brake Valve Component Parts

TROUBLE SHOOTING

Symptom	Possible Cause	Remedy
Braking action slow	Oil leakage in hydraulic line causing insufficient oil in tank.	Repair, replenish oil.
	Insufficient stroke due to loose W nut on input piston.	Adjust
	Input spring weakened or broken.	Adjust stroke with W nut, replace if broken
	Reaction piston "O" ring broken.	Replace
	Foreign matter lodged in spool.	Clean and correct.
	Excessive play due to loose clevis lock nut.	Adjust clevis.
	Air in wheel cylinder passage.	Remove air by bleeding.
Brake drags	Spool kept pushed dut to loose piston lock nut.	Adjust
	Foreign matter lodged in spool.	Clean and correct.
Braking poor when engine stalls	Oil leakage in hydraulic line causing insufficient oil in tank.	Repair, replenish oil.
	Insufficient stroke due to loose W nut on input piston.	Adjust
	Input spring weakened or broken.	Adjust stroke with W nut, replace if broken
	Reaction piston "O" ring broken.	Replace.
	Foreign matter lodged in spool.	Clean and correct.
	Excessive play dut to loose clevis lock nut.	Adjust clevis
	Air in wheel cylinder passage.	Remove air by bleeding.
	Oil leakage in accumulator passage (including check valve).	Repair, replace
	Oil leakage in accumulator.	Repair
	Defective seal due to foreign object lodged between closed valve seat and ball.	

Caution:
If any of the above symptoms develop, do not disassemble the brake valve at once. First check to see if there is sufficient pressure between the brake valve and wheel cylinder. If insufficient, check the brake valve input piston stroke and the pump pressure rise. After making sure that the trouble is in the brake valve, then disassemble and inspect.

BRAKE VALVE OPERATIONAL CHECK

(a) Check the brake operating pressure.

1. Mount an oil pressure gage (150 kg/cm^2, 2133 psi) on brake valve wheel cylinder pressure putlet.
2. With the engine idling, fully depress the brake pedal and check if the oil gage reading conforms to the value shown in Table 1.

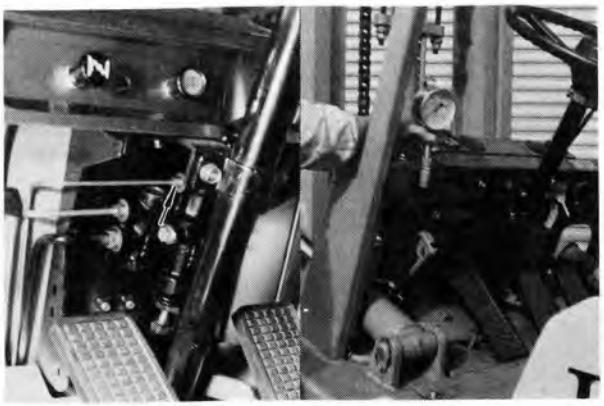

Fig. 8-116 Checking Hydraulic Pressure

Vehicle	Pressure Gage kg/cm^2 (psi)
2.0~2.5 ton series	62 (924)
2.75, 3.0 ton series	73 (1038)
Std. temp. 50°C (122°F), flow 11.5ℓ/min (3.04 US gal/min)	

Table 1. Brake Operating Pressure (Engine idling)

(b) Check the accumulator function.

3. With the engine running at around 1,000 rpm, turn the steering to full lock in both left and right directions 4 or 5 times, and when the accumulator is at maximum pressure storage, turn off the engine.
   At this condition, fully depress the brake pedal (maximum stroke) and check if the oil gage reading conforms to the value in Table 2.

Vehicle	Pressure Gage
2.0~2.5 ton series	35 kg/cm^2 (498 psi) minimum
2.75, 3.0 ton series	45 kg/cm^2 (640 psi) minimum

Table 2..Brake Fluid Pressure (Engine Stopped)

4. Bring the accumulator once more to fully pressure stored condition and then stop the engine. With the engine stopped, depress the brake pedal to maximum stroke for 5 times. At the 5th time, check the pressure gage to see that it reads at least 35 kg/cm^2 (498 psi).



Fig. 8-117 Accumulator Stored Pressure

Caution:
Turning the steering wheel so as to build up maximum accumulator stored pressure will require sufficient road resistance. Thus, with the vehicle unladen, select a road surface that has ample resistance. Sufficient road resistance cannot be obtained if the surface is wet or sandy.

5. With the acumlator at maximum stored pressure, stop the engine and allow to stand for 5 minutes. After 5 minutes, depress the brake pedal to maximum stroke 5 times as in par. 4 above. At the 5th stroke, check pressure gage to see that there is no change from that in par. 4.



Fig. 8-118 Checking Hydraulic Pressure

REMOVAL

Caution:
With the engine stopped, pump the brake pedal to full stroke for about 10 times so as to relieve all pressure in the accumulator before starting work.

1. Disconnect the brake valve piping.

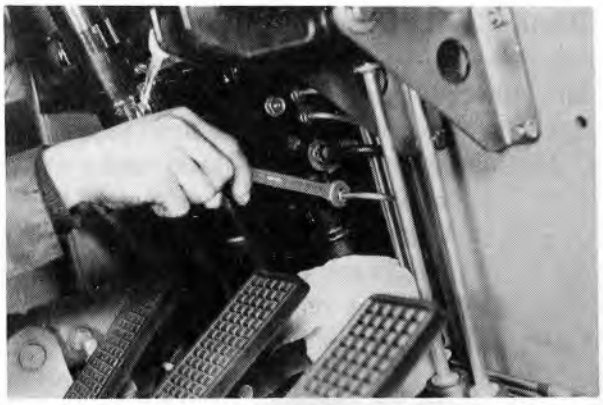

Fig. 8-119 Disconnecting Pipe

2. Remove the brake valve.
   (1) Brake valve set bolts



Fig. 8-120 Removing Set Bolt

   (2) Brake valve



Fig. 8-121 Removing Brake Valve

3. Remove the flow dividing valve.



Fig. 8-122 Removing Flow Dividing Valve

DISASSEMBLY

1. Remove the boot.



Fig. 8-123 Removing Boot

2. Remove the lock nut.

Caution:
Avoid removing unless the piston is to be replaced. (If removed, stroke adjustment or pressure adjustment becomes necessary.)



Fig. 8-124 Removing Lock Nut

3. Remove the input piston.
   (1) Snap ring



Fig. 8-125 Removing Snap Ring

   (2) Plate washer
   (3) Input piston



Fig. 8-126 Removing Input Piston

4. Remove the compression spring.



Fig. 8-127 Removing Spring

5. Remove the hole plug.

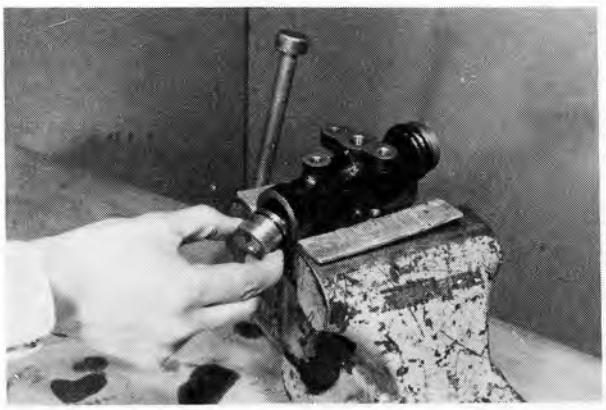

Fig. 8-128 Removing Hole Plug

6. Remove the closed valve.
   (1) Closed valve
   (2) Valve return spring



Fig. 8-129 Removing Closed Valve

7. Remove the brake valve spool.
   (1) Reaction piston guide
   (2) Reaction piston
   (3) Brake valve spool



Fig. 8-130 Removing Brake Valve Spool

INSPECTION

1. Brake valve inspection.

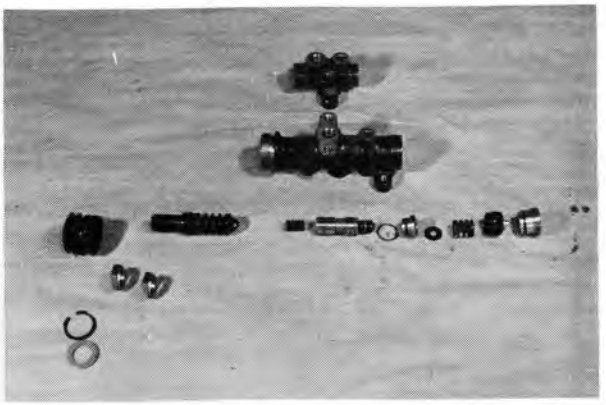

Fig. 8-131 Brake Valve Inspection

2. Valve body.
   (1) Spool sliding surface
      1) Extreme marring
      2) Eccentric wear
      3) Rusting



Fig. 8-132 Inspecting Valve Body

3. Closed valve.
   (1) Damage or foreign matter lodged in valve
   (2) Damage in "0" ring

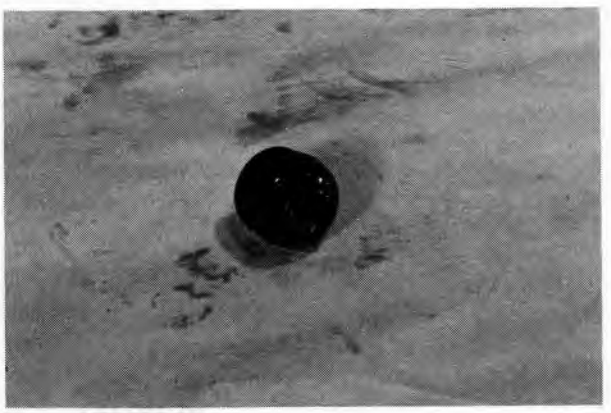

Fig. 8-133 Closed Valve Inspection

4. Reaction piston guide.
   (1) Reaction piston sliding surface
      1) Extreme marring
      2) Eccentric wear
      3) Rusting
   (2) Damage in "0" ring
   (3) Reaction piston fit wear limit
      Wear limit: 0.16 mm (0.0063 in.)
      (Diameter clearance)



Fig. 8-134 Reaction Piston Guide Inspection

5. Brake valve spool, reaction piston.
   (1) Spalling or wear in sliding surface
   (2) Damage in "0" ring
   (3) Wear in fitting surface
   Wear limit: 0.032 mm (0.00126 in.) (Diameter clearance)



Fig. 8-135 Brake Valve Spool Inspection

6. Input piston.
   (1) Wear, damage, deformation in cylinder cup
   (2) Weakening or deformation in spring
   (3) Spool outer diameter sliding surface
      1) Extreme marring
      2) Eccentric wear
      3) Rusting
   (4) Wear in fitting surface
   Wear limit: 0.16 mm (0.0063 in.) (Diameter clearance)

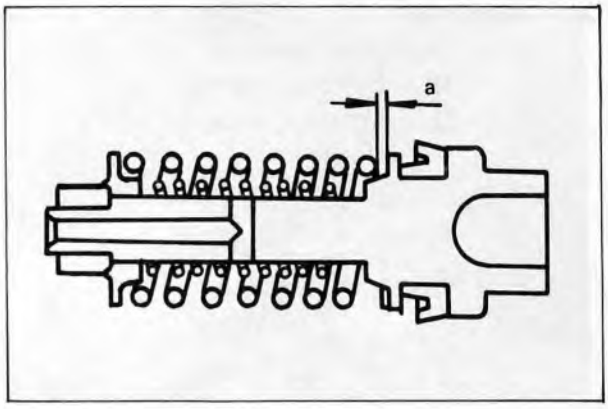

Fig. 8-136 Input Piston Inspection

7. Springs.
   (1) Weakening or deformation in springs
      1) No clearance at part a in input piston sub-assy spring (outer diameter side).
      2) Compression spring within spool
      Free length: 20 mm (0.787 in.)
      3) Reaction piston return spring
      Free length: 20 mm (0.787 in.)

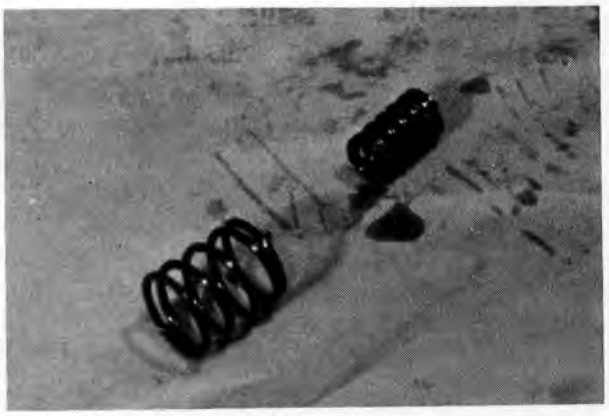

Fig. 8-137 Spring Inspection

ASSEMBLY

Caution:
- **Coat the parts with hydraulic oil before assembling.**
- **Apply silicone grease on the cylinder cup and hydraulic oil on the "0" rings and similar parts.**

1. Assemble the reaction piston into the brake valve.
   (1) Brake valve
   (2) Reaction piston
   (3) Reaction piston guide
   (4) Spring retainer

2. Assemble the piston into the valve body.
   (1) Brake valve body
   (2) Brake valve, reaction piston, reaction piston guide
   (3) Valve return spring
   (4) Closed valve

3. Install the plug hole.

Caution:
Check the piston to see that it moves smoothly.

4. Install the input piston.
   (1) Compression spring
   (2) Input piston



Fig. 8-138 Assembling Piston (1)

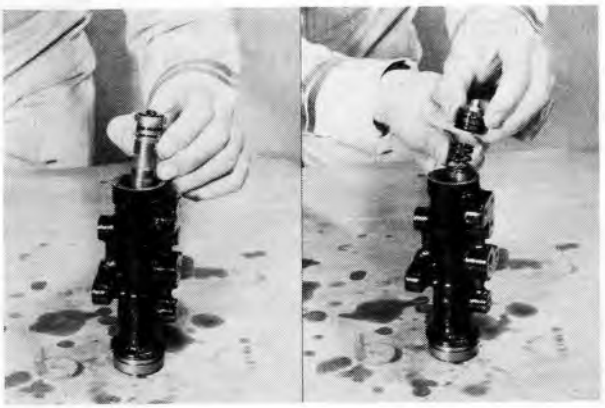

Fig. 8-139 Assembling Piston (2)



Fig. 8-140 Installing Plug Hole



Fig. 8-141 Installing Input Piston

5. Install the snap ring.
   (1) Plate washer
   (2) Snap ring

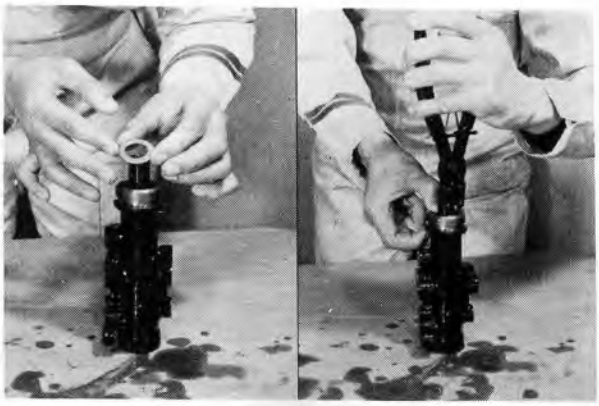

Fig. 8-142 Installing Snap Ring

6. Tighten the hole plug to specified torque.
   T = 6.9~11 kg-m (49.8~79.4 ft-lb)

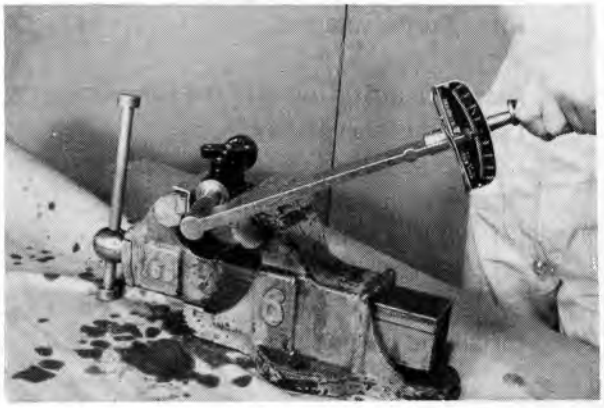

Fig. 8-143 Tightening Hole Plug

7. Adjust the input piston stroke.
   Dimension A: 11±0.3 mm
   (0.43±0.0118 in.)

8. Lock the nuts after adjusting.
   T = 5~8 kg-m (36.1~57.6 ft-lb)

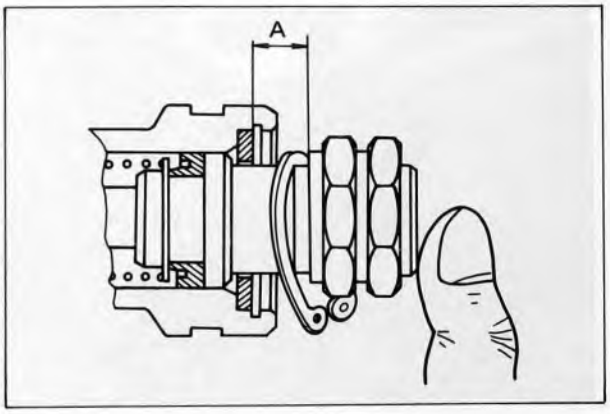

Fig. 8-144 Adjusting Input Piston Stroke

INSTALLATION

Perform the removal in reverse order.
After installing, check the brake valve operating pressure. (Refer to section 8-39 on checking brake valve operation.)
Adjust the brake operating pressure as follows:
If above specified value, increase dimension A.
If below specified value, decrease dimension A.



Fig. 8-145 Locking the Nuts

FLOW DIVIDING VALVE

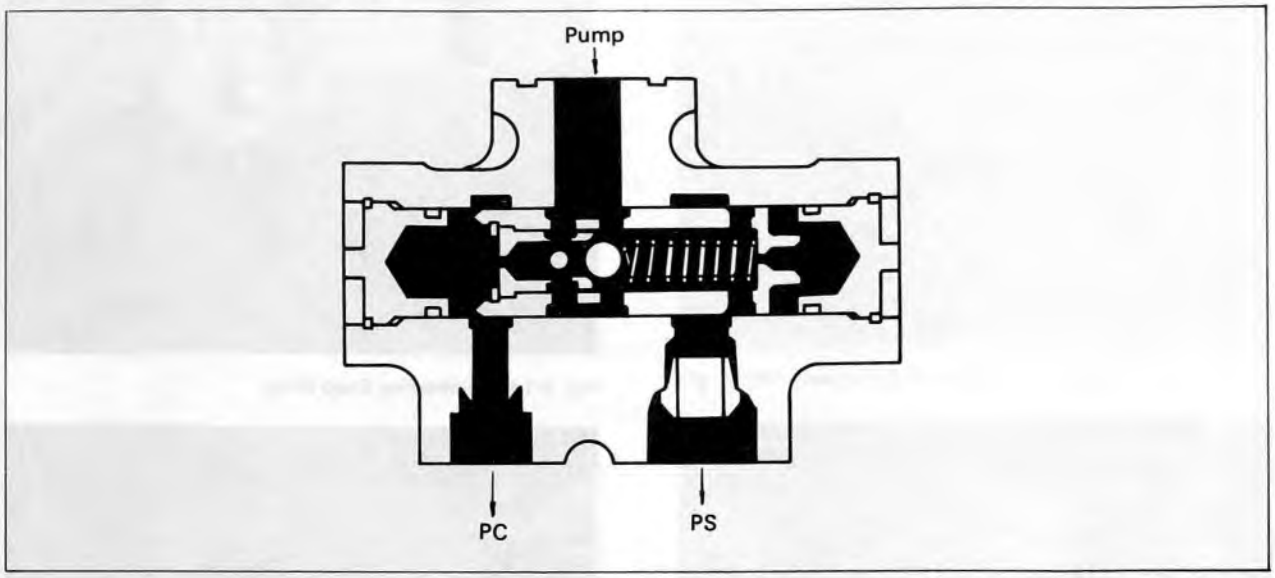

Fig. 8-146 Flow Dividing Valve

COMPONENT PARTS

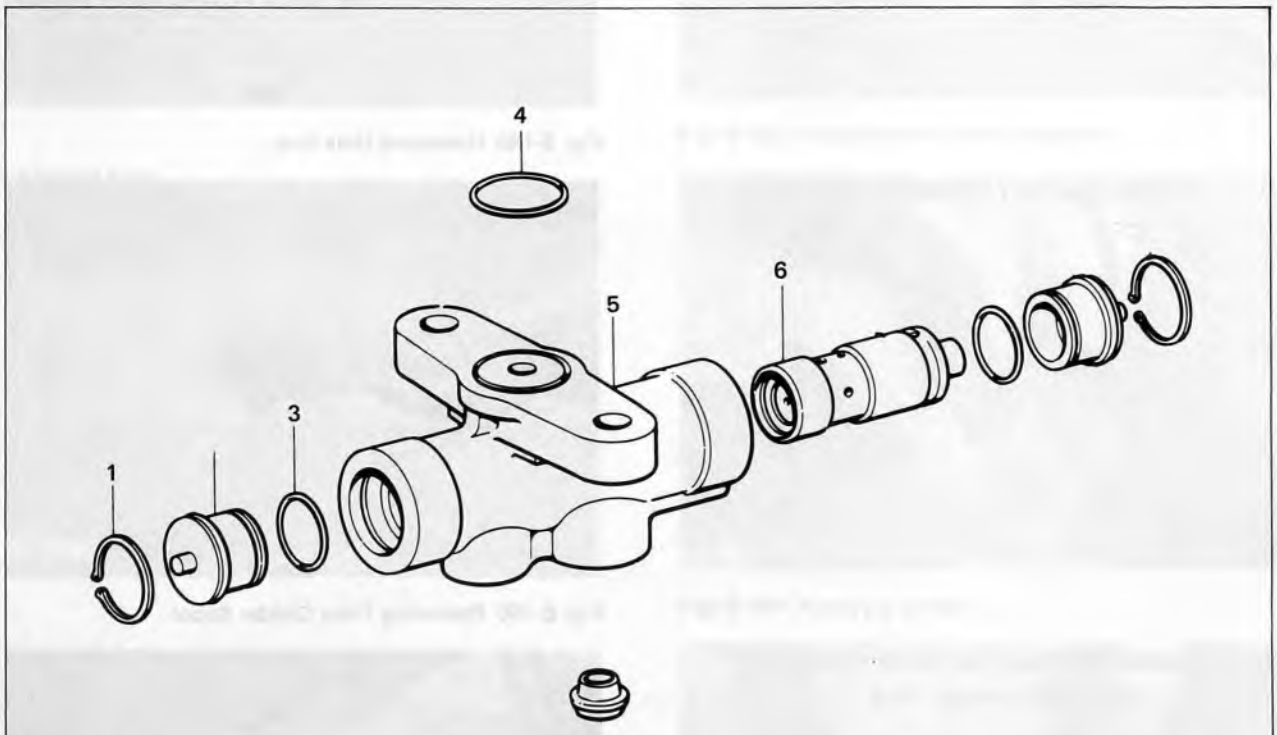

1. Snap ring
2. Hole plug
3. "O" ring
4. "O" ring
5. Flow dividing valve
6. Flow dividing spool

Fig. 8-147 Flow Dividing Valve Component Parts

DISASSEMBLY

1. Remove the snap ring.

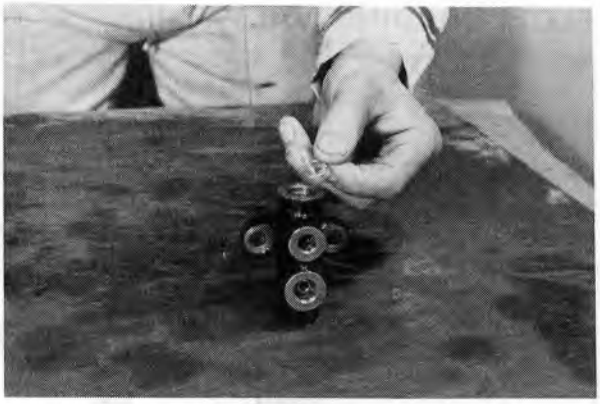

Fig. 8-148 Removing Snap Ring

2. Remove the hole plug.

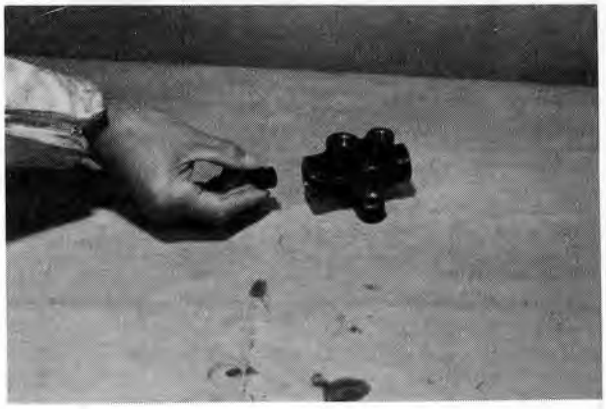

Fig. 8-149 Removing Hole Plug

3. Remove the flow divider spool.

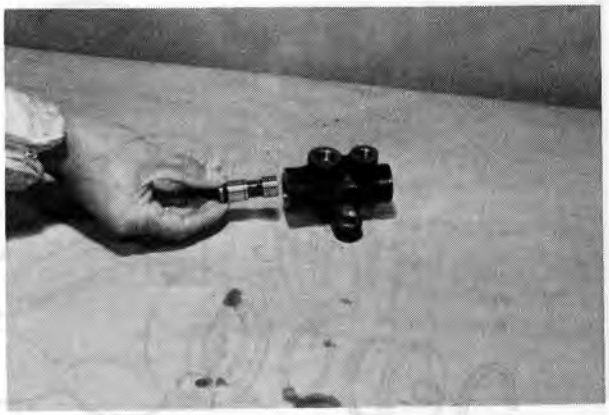

Fig. 8-150 Removing Flow Divider Spool

4. Disassemble the flow divider spool.
   (1) Remove the snap ring.



Fig. 8-151 Removing Snap Ring

5. Remove the flow divider orifice.
   (1) Flow divider orifice
   (2) Steel ball
   (3) Flow divider spring



Fig. 8-152 Removing Flow Divider Orifice

INSPECTION

1. Damage in body, mars on sliding surface.
2. Damage on flow divider spool sliding surface.
3. Breakage or weakening in spring.
4. Stepped wear in steel ball.

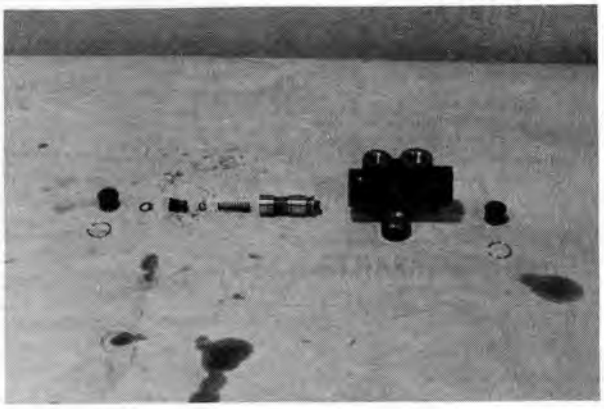

Fig. 8-153 Flow Dividing Valve Inspection

ASSEMBLY

Perform the disassembly in reverse order.

INSTALLATION

1. Apply grease on brake valve joining surface "0" ring.



Fig. 8-154 Applying Grease

2. Tighten the set bolts.



Fig. 8-155 Installing Valve

ACCUMULATOR

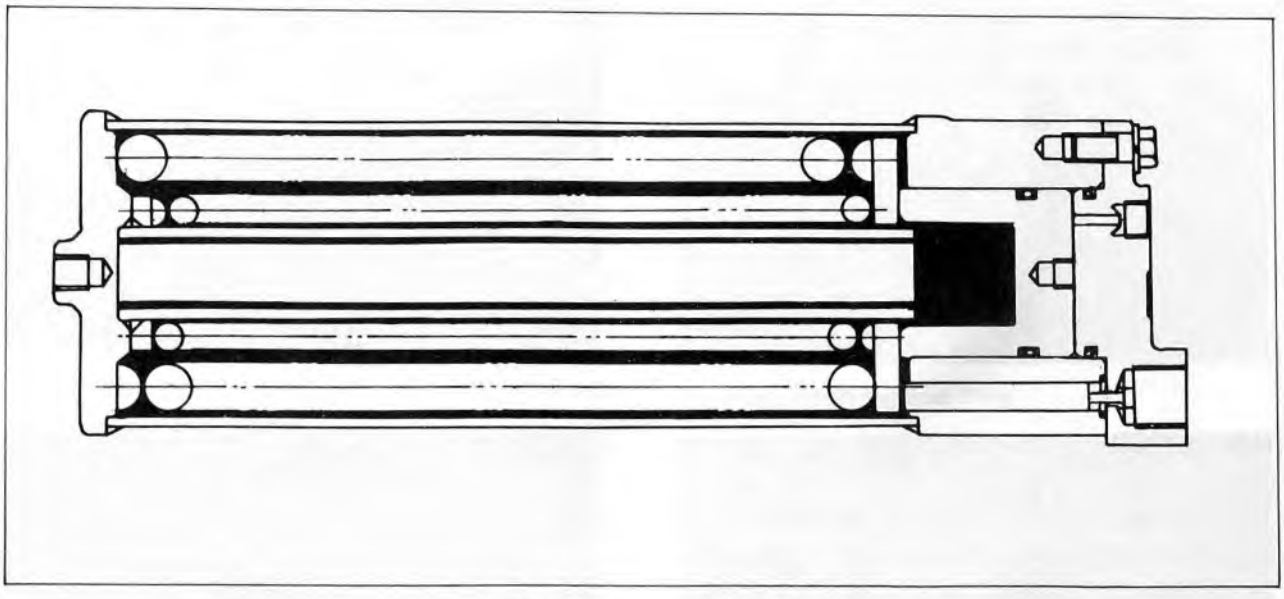

Fig. 8-156 Accumulator Sectional View

COMPONENT PARTS

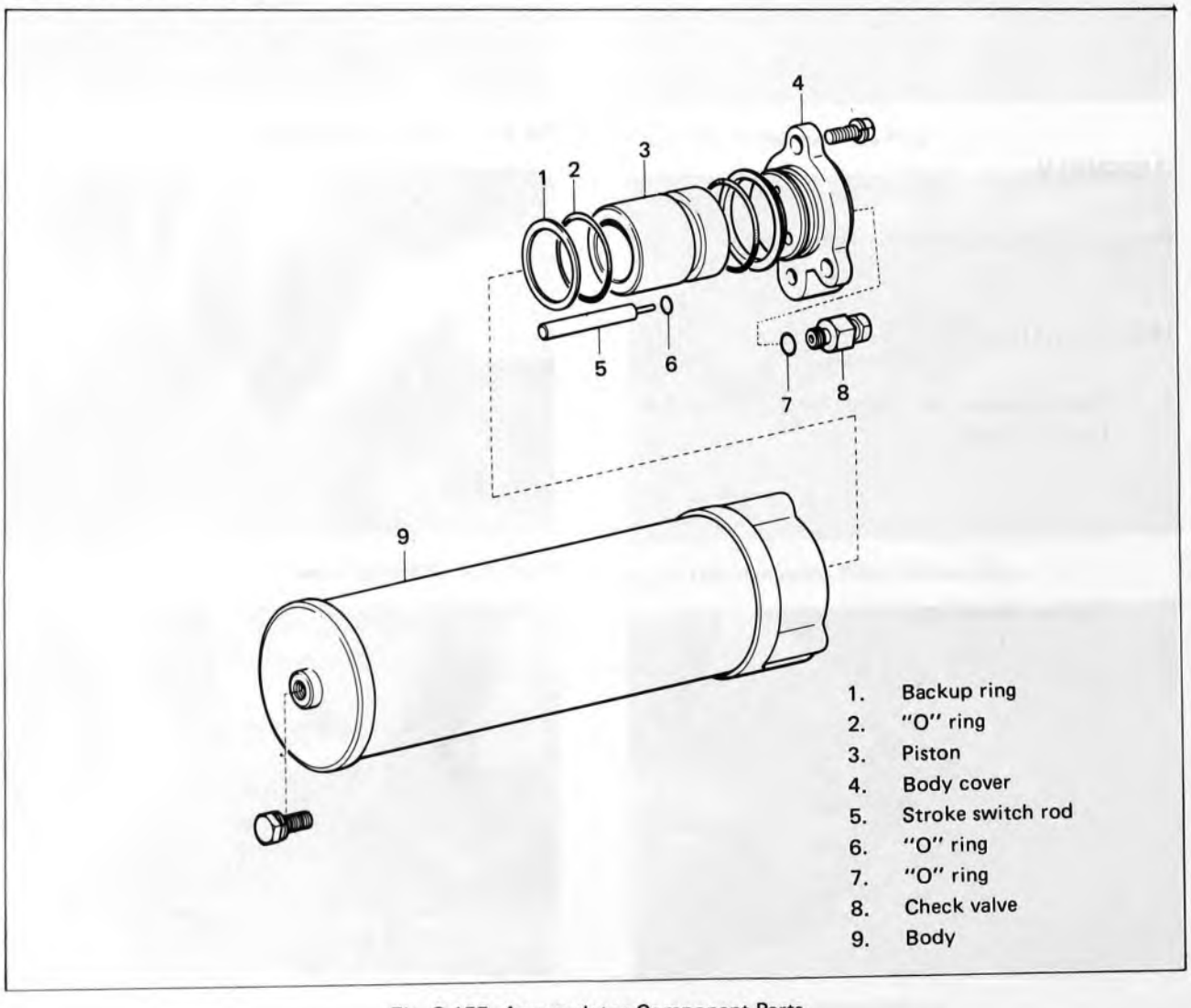

Fig. 8-157 Accumulator Component Parts

REMOVAL

Caution:
Before starting to remove the accumulator, stop the engine and pump the brake pedal 5 to 10 times so as to completely drain out the hydraulic oil from the accumulator.

1. Disconnect the accumulator pilot light switch wiring.

2. Disconnect the piping.
   (1) Accumulator pipe
   (2) Accumulator to valve pipe
   (3) Low pressure hose

3. Remove the accumulator.
   (1) Set bolts
   (2) Accumulator



Fig. 8-158 Disconnecting Piping



Fig. 8-159 Removing Accumulator

DISASSEMBLY

1. Remove the accumulator pilot switch.
2. Remove the body cover.

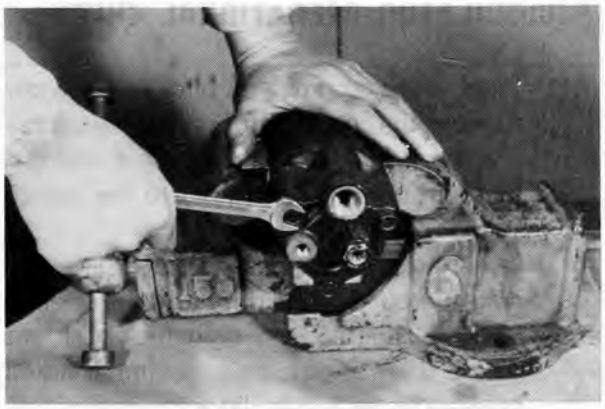

Fig. 8-160 Removing Body Cover

3. Remove the stroke switch rod.

4. Remove the accumulator piston.



Fig. 8-161 Removing Accumulator Piston

INSPECTION

1. Body and cover.
   (1) Damage on piston sliding surface
   (2) Spring breakage
   (3) Cracks in body



Fig. 8-162 Body Inspection

2. Piston.
   (1) Damage in piston outer surface
   (2) Damage in "0" ring

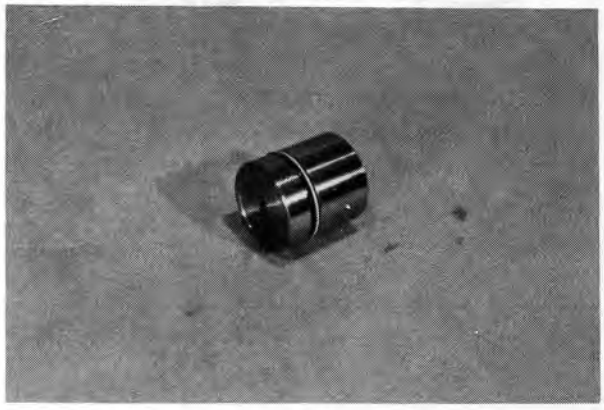

Fig. 8-163 Piston Inspection

ACCUMULATOR OPERATIONAL CHECK

1. Remove the accumulator pilot light switch.
2. Remove the accumulator internal pressure.
3. Use vernier caliper and measure the distance from the switch hole to the switch stroke rod (dimension A).
4. Start the engine, and with the engine running at around 1,000 rpm, turn the steering wheel to the left and right lock positions 4 or 5 times so as to have maximum stored pressure in the accumulator.
5. At this condition, measure the distance to the switch stroke rod (dimension B).
   Standard stroke (B–A): 30 mm (1.18 in.)
6. Also check the brake valve operating pressure. (Refer to section 8-39 on checking brake valve operation.)



Fig. 8-164 Checking Accumulator

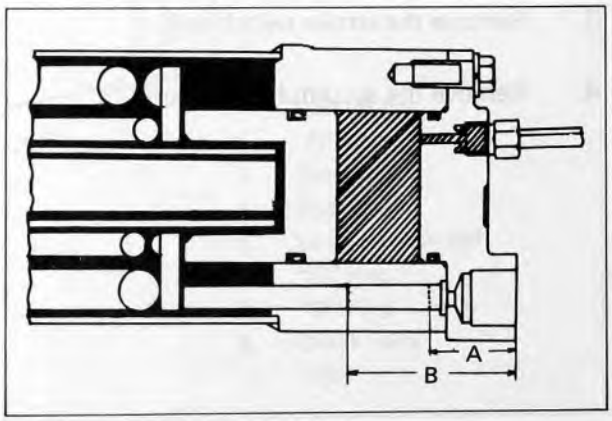

Fig. 8-165 Checking Accumulator

PARKING BRAKE

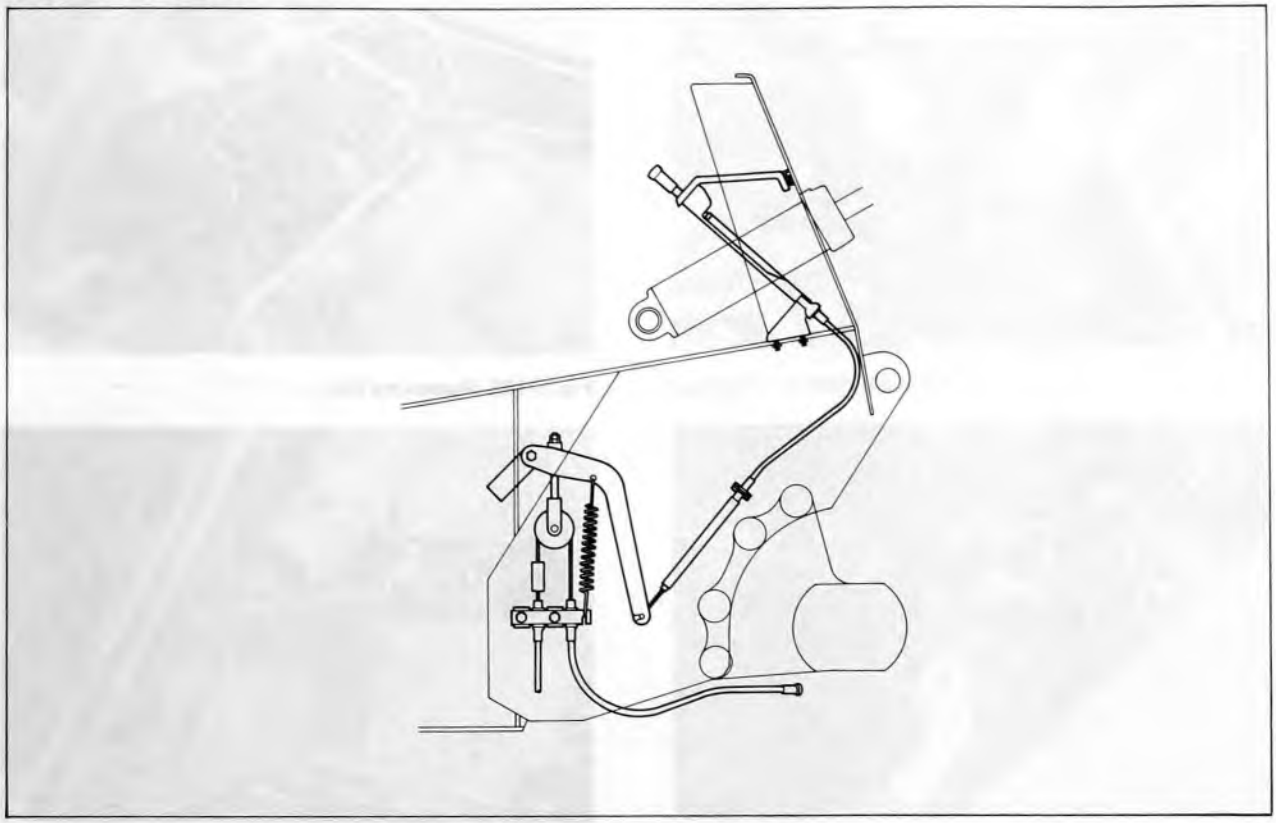

Fig. 8-166 Parking Brake System Diagram

COMPONENT PARTS

1. Parking brake handle assy
2. Bushing
3. Parking brake lever sub-assy
4. Equalizer bar sub-assy
5. Parking brake wire pulley
6. Parking brake wire set clip
7. Hand brake RH cable sub-assy
8. Hand brake LH cable sub-assy
9. Wire sub-assy
10. Clip

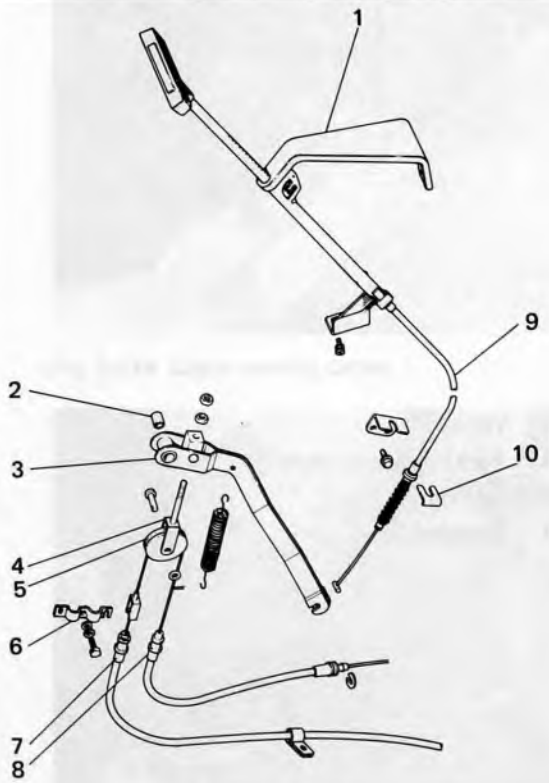

Fig. 8-167 Parking Component Parts

PARKING BRAKE REMOVAL

1. Remove the parking brake handle.
   (1) Clip

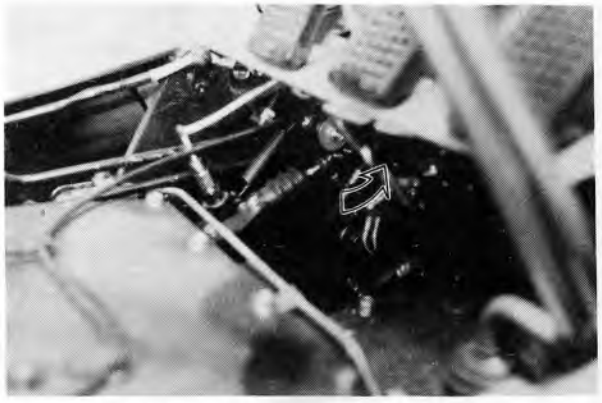

Fig. 8-168 Removing Clip

   (2) Set bolts
   (3) Wire



Fig. 8-169 Removing Parking Brake Handle

2. Remove the wire sub-assy.
   (1) Straight pin
   (2) Clip



Fig. 8-170 Driving Out Pin

   (3) Wire
   (4) Parking brake lever
   (5) Spring
   (6) Stopper



Fig. 8-171 Pulling Out Wire

3. Disconnect the cables.
   (1) Loosen the lock nut.

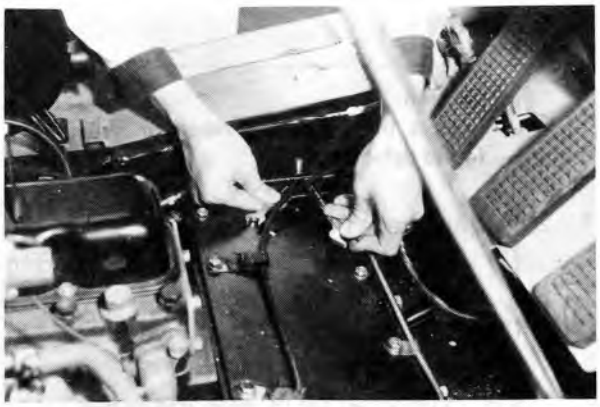

Fig. 8-172 Loosening Lock Nut

   (2) Remove the wire set clamp.



Fig. 8-173 Removing Wire Set Clamp

   (3) Disconnect the left and right cables.



Fig. 8-174 Disconnecting Cables

4. Remove the brake lever and wire pulley.
   (1) Set bolts
   (2) Brake lever, wire pulley
   (3) Return spring.

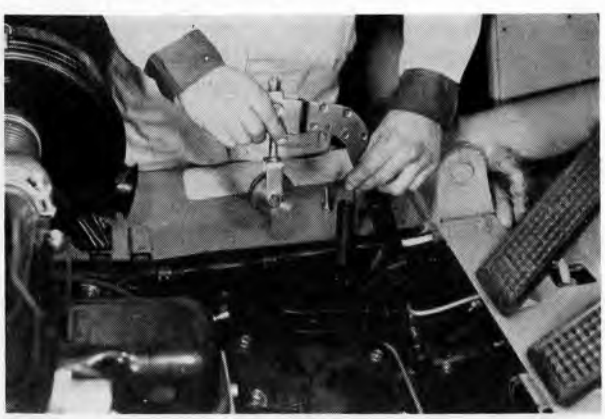

Fig. 8-175 Removing Brake Lever

INSPECTION

Caution:
Inspect the parts, and repair or replace any found defective.

1. Parking brake handle assy.
   (1) Damage or deformation in parking brake lever bracket
   (2) Deformation, crack, weakening in spring
   (3) Deformation or wear in stopper
   (4) Bending or worn groove in parking brake lever

2. Wire.
   (1) Fracture in wire
   (2) Damage in wire end

3. Parking brake lever.
   (1) Damage or deformation in parking brake lever
4. Return spring.
   (1) Deformation or weakening in spring
5. Parking brake wire pulley.
   (1) Damage or deformation in wire pulley

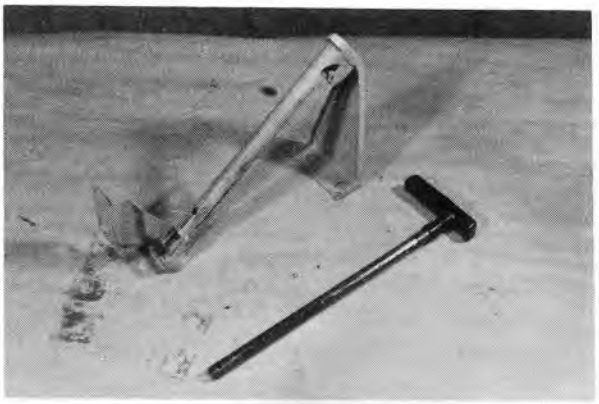

Fig. 8-176 Handle Assy Inspection



Fig. 8-177 Inspecting Wire

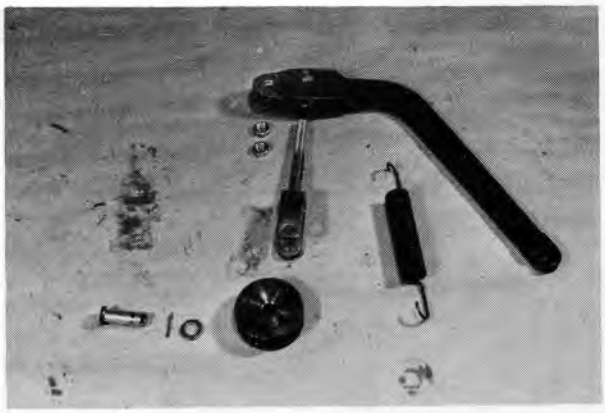

Fig. 8-178 Brake Lever Inspection

INSTALLATION

Perform the removal in reverse order.

Caution:
Apply a light coat of MP grease uniformally on the handle sliding surfaces.

ADJUSTMENT

Adjust the parking brake handle pull reserve by means of the economizer adjusting nut, and lock securely with lock nut.

Pull reserve: 4 to 6 notches

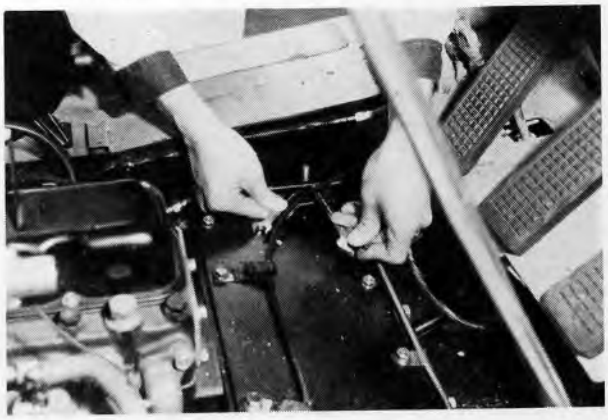

Fig. 8-179 Adjusting Parking Brake

BRAKE PEDAL (1.0~1.75 TON SERIES)

1. Reserver tank
2. Pedal bracket
3. Reservoir bracket
4. Reservoir plate
5. Brake pedal
6. Master cylinder
7. Pedal pad

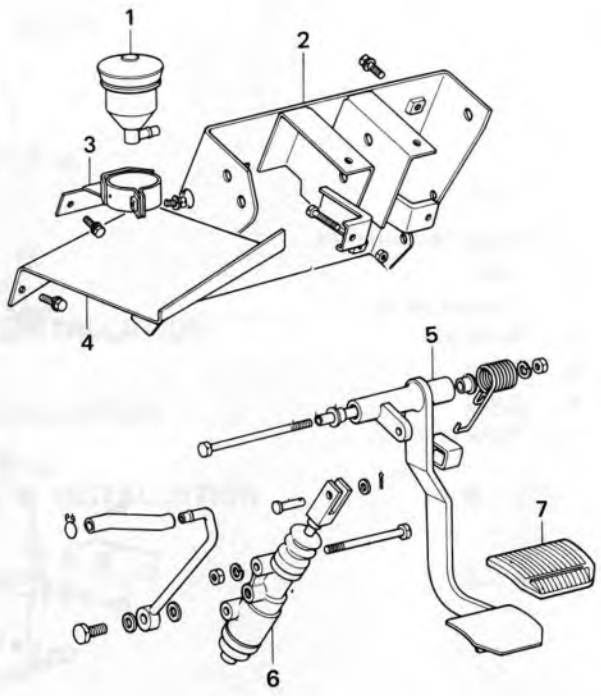

Fig. 8-180 Brake Pedal Component Parts

ADJUSTMENT

1. Brake pedal height and play.
   (1) Adjust the pedal stop set bolt and make pedal height as follows:
   Pedal height: 130 mm (5.12 in.)
   (2) Move the master cylinder push rod up and down by hand to check that the rod moves freely.
   (3) If defective, change the push rod length so as to obtain free movement.
   (4) After determining the pedal height, measure the pedal play.
   Pedal play: 4~7 mm (0.157~0.276 in.)

2. Brake pedal reserve travel.
   (1) Measure the distance between brake pedal lever and protector to check that its is over 40 mm (1.57 in.).

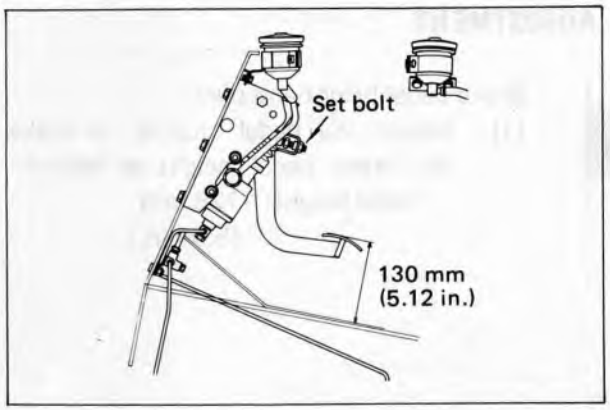

Fig. 8-181 Brake Pedal Adjustment



Fig. 8-182 Adjusting Brake Pedal

BRAKE PEDAL (2.0~3.0 TON SERIES)

1. Brake valve bracket
2. Link
3. Torsion spring
4. Pedal pad
5. Pedal
6. Link
7. Pedal bracket

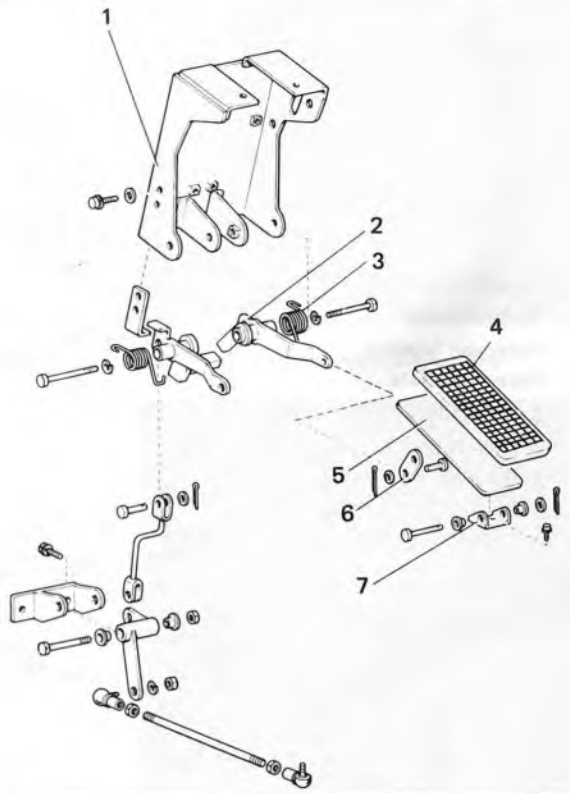

Fig. 8-183 Brake Pedal Component Parts

ADJUSTMENT

1. Brake pedal height and play.
   (1) Adjust the pedal stopper to make the brake pedal height as follows:
   Pedal height: 128 mm (5.04 in.)



Fig. 8-184 Adjusting Brake Pedal

   (2) Adjust the brake valve push rod length so as to obtain brake pedal play of 2~3 mm (0.079~0.118 in.) at pedal tip.
   The push rod must be in free state.

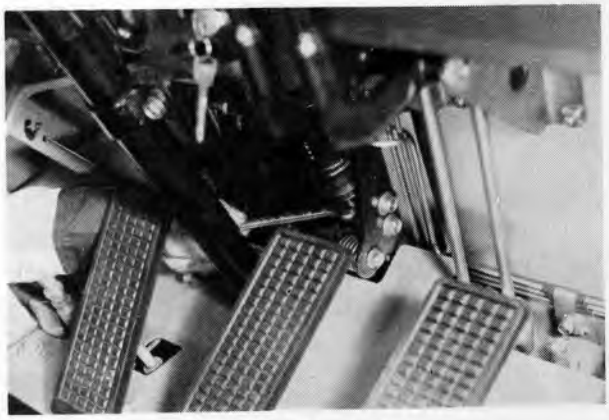

Fig. 8-185 Adjusting Brake Pedal

BODY

	Page
COMPONENT PARTS	9– 2
ENGINE HOOD REMOVAL & INSTALLATION	9– 3
TOEBOARD REMOVAL & INSTALLATION	9– 3
BALANCE WEIGHT REMOVAL & INSTALLATION	9– 3
WIRING DIAGRAMS	9– 4

COMPONENT PARTS

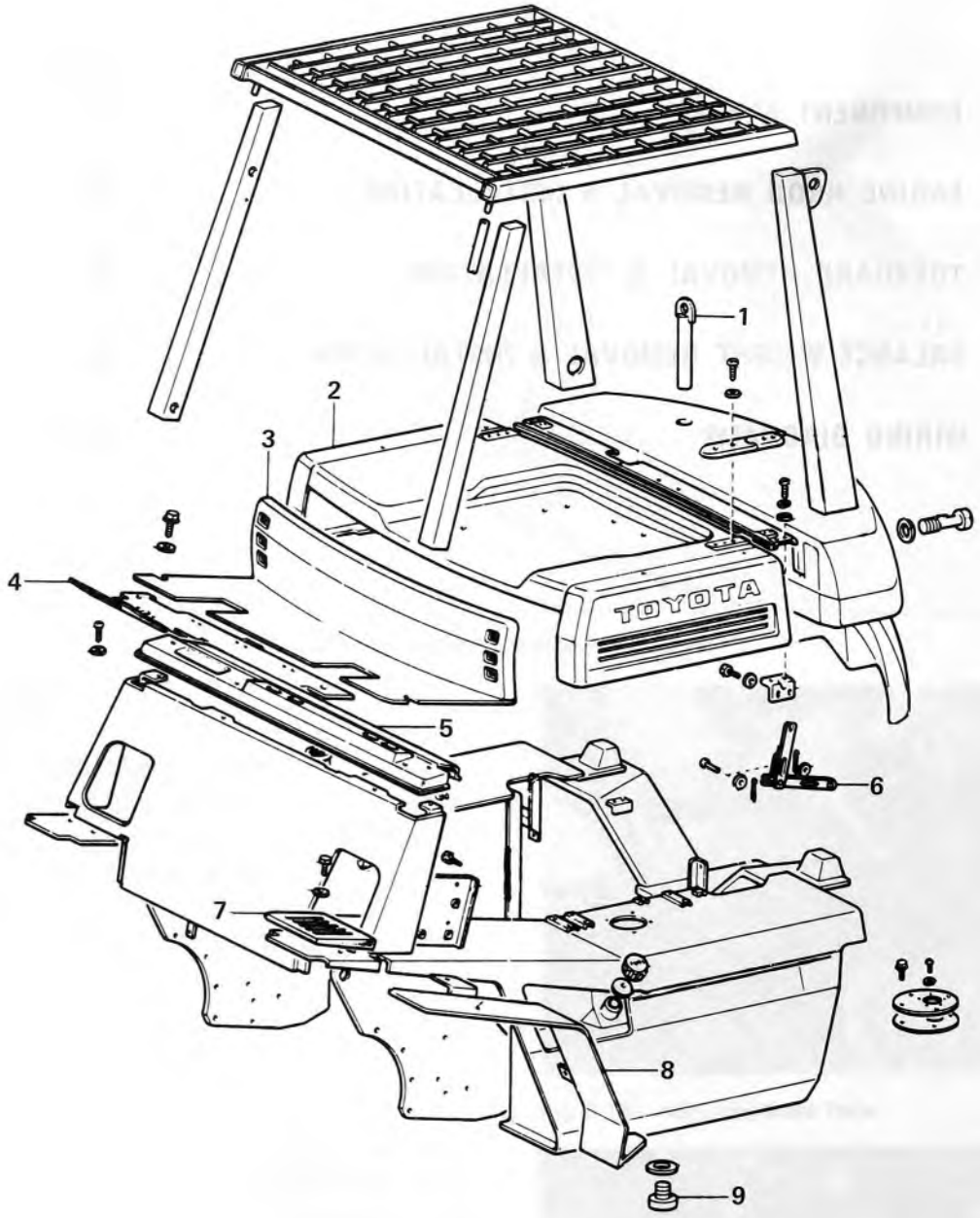

1. Draw bar
2. Engine hood
3. Rear toeboard
4. Front toeboard
5. Instrument panel
6. Engine hood stay
7. Front mud guard
8. Mud guard
9. Drain plug

Fig. 9-1 Body & Frame Component Parts

ENGINE HOOD REMOVAL & INSTALLATION

1. Remove the engine hood.
   (1) Engine hood stay
   (2) Radiator cover set bolts
   (3) Engine hood (w/driver's seat)



Fig. 9-2 Engine Hood Removal & Installation

TOEBOARD REMOVAL & INSTALLATION

1. Remove the rear toeboard.
   (1) Open the engine hood.
   (2) Rear toeboard

2. Remove the front toeboard.
   (1) Clutch, brake, and accelerator pedal links (2~3 ton series)
   (2) Accelerator pedal bracket set bolts (2~3 ton series)
   (3) Front toeboard set bolts
   (4) Front toeboard



Fig. 9-3 Removing Front Toeboard

BLANCE WEIGHT REMOVAL & INSTALLATION

1. Remove the balance weights.
   (1) Suspend the balnce weight (just enough so that rear end stays on ground)
   (2) Weight set bolts
   (3) Balance weight (Approximate weight shown below)

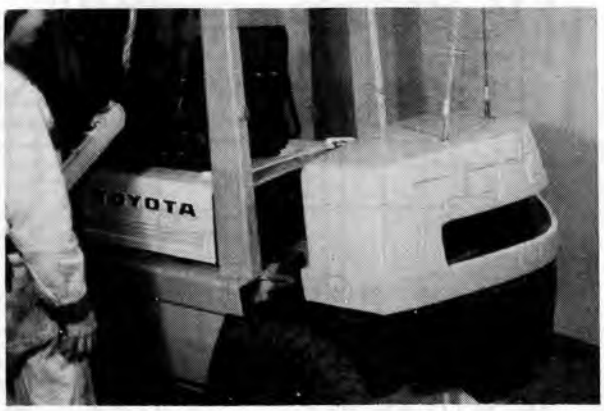

Fig. 9-4 Removing Balance Weight

Vehicle	Weight kg (lb)	Vehicle	Weight kg (lb)
1.0 ton	540 (1191)	2.0 ton	1260 (2778)
1.35 ton	750 (1654)	2.25 ton	1400 (3087)
1.5 ton	880 (1940)	2.5 ton	1595 (3517)
1.75 ton	1020 (2249)	2.75 ton	1780 (3925)
		3.0 ton	1990 (4388)

WIRING DIAGRAM (DIESEL ENGINE VEHICLES)

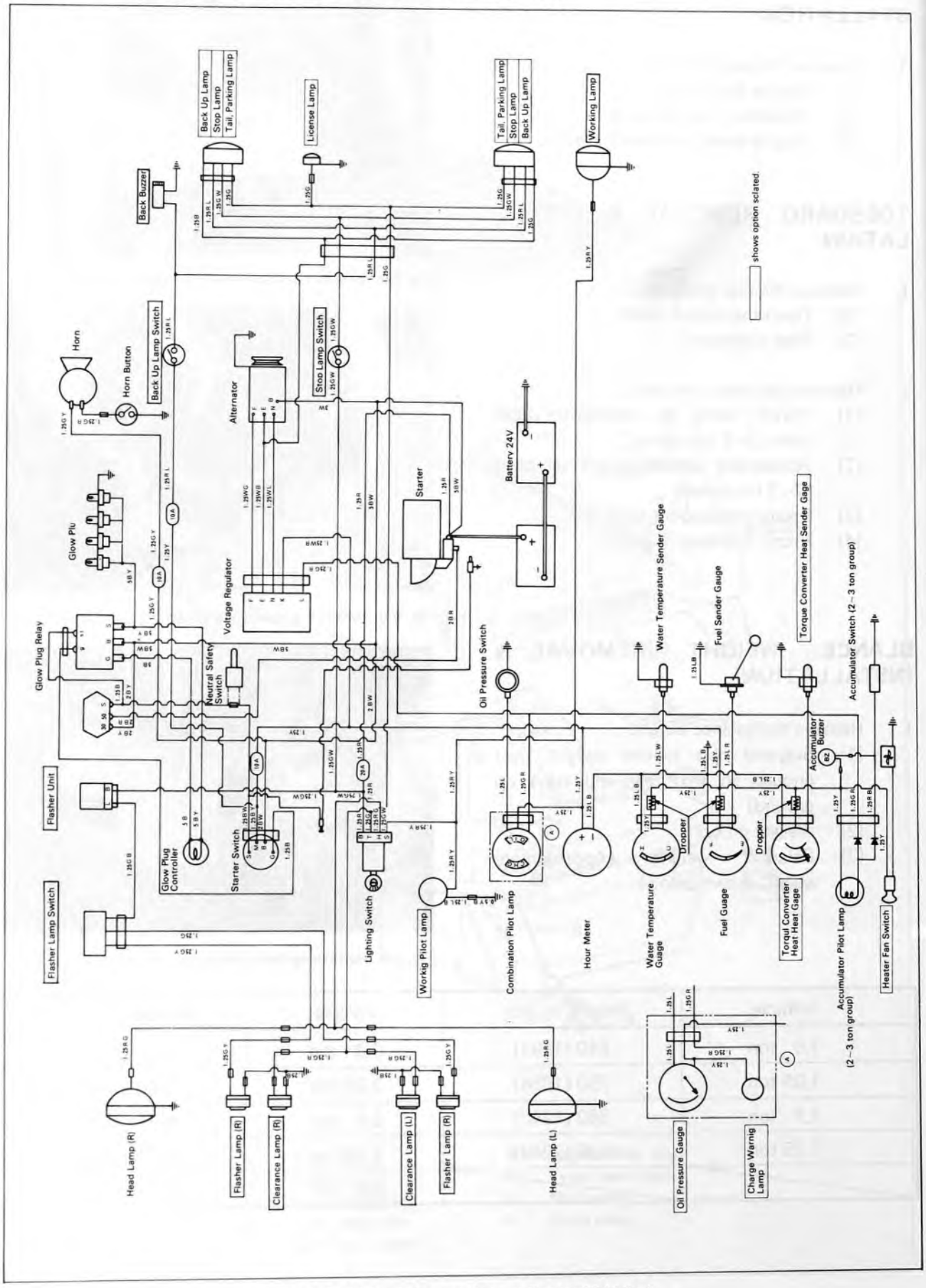

Fig. 9-5 Wiring Diagram (Diesel Engine Vehicles)

WIRING DIAGRAM (GASOLINE ENGINE VEHICLES)

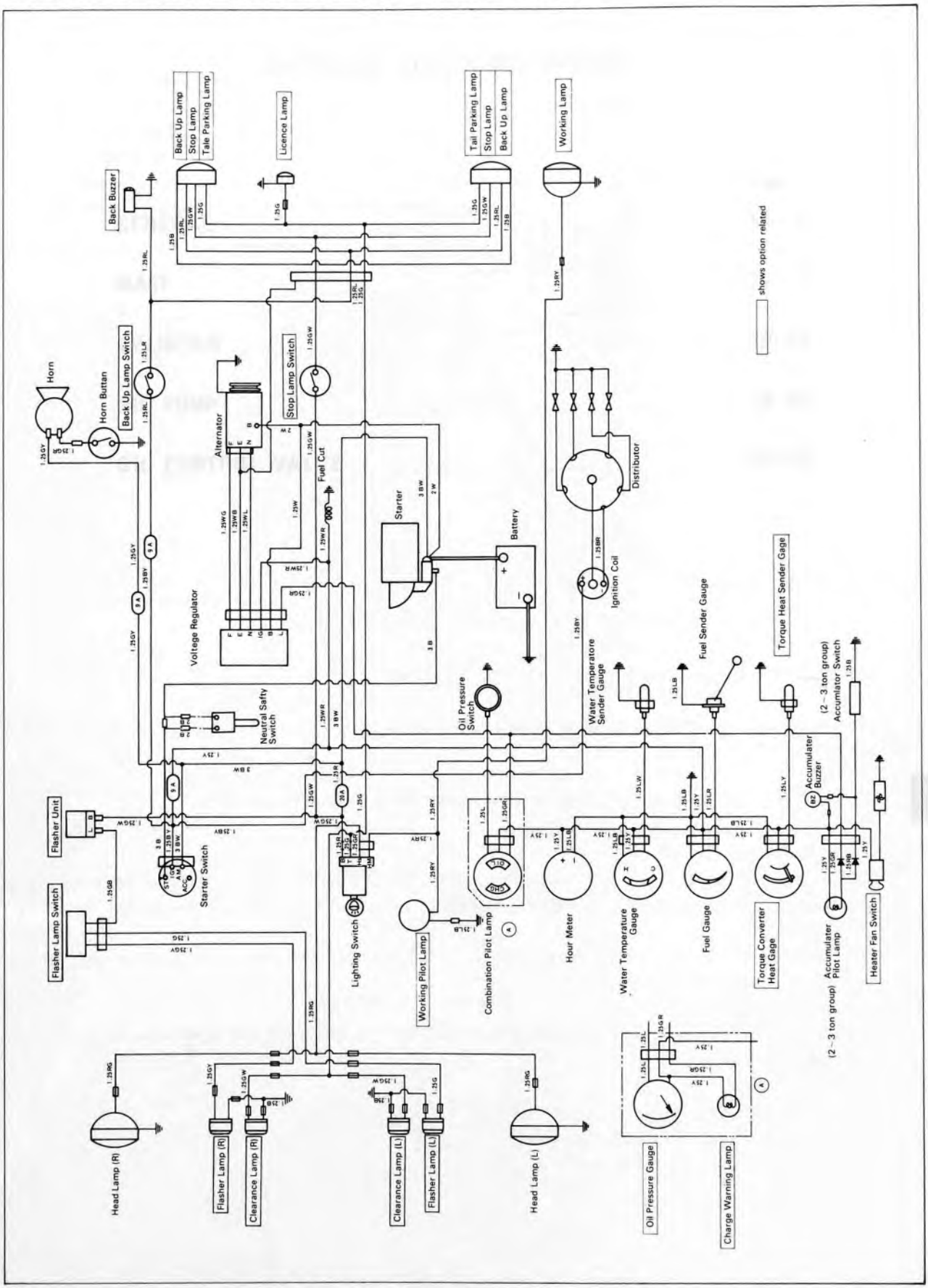

Fig. 9-6 Wiring Diagram (Gasoline Engine Vehicles)

MATERIAL HANDLING SYSTEM

	Page
GENERAL	10– 2
MAST	10– 7
CYLINDER	10–27
OIL PUMP	10–45
OIL CONTROL VALVE	10–55

GENERAL

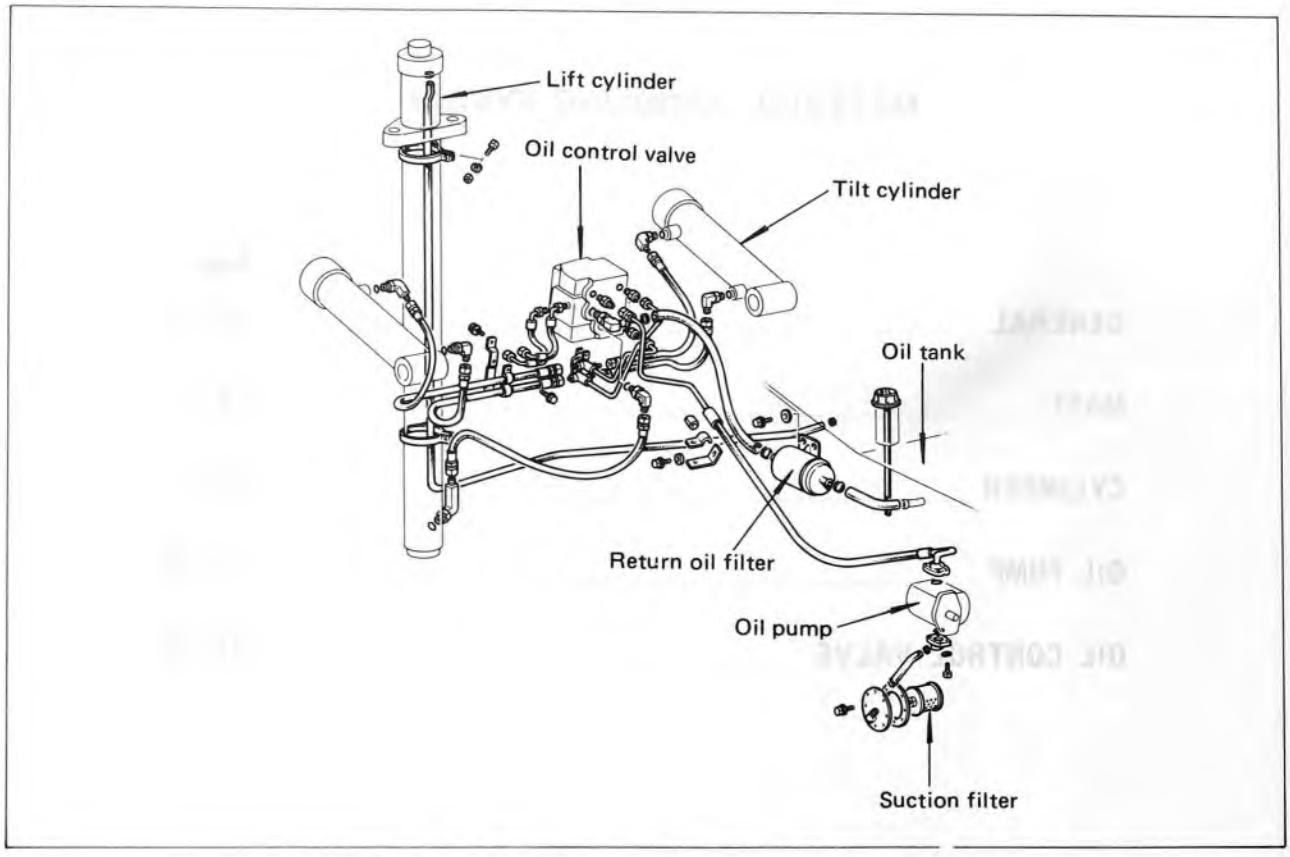

Fig. 10-1 Schematic View of Hydraulic System

The material handling system consists of the following components:

1. Mast.
   The construction remains the same as before but inner mast cushion has been provided to reduce knocking noise.
2. Chains.
   Roller chains (1.0~2.0 ton, 2.75 ton, 3.0 ton vehicles)
   Leaf chains (2.25 ton and 2.5 ton vehicles)
3. Lift cylinder and tilt cylinder.
   Lift cylinder remains unchanged but the tilt cylinders have been made shorter and their mounting positions on the frame located further ahead so as to afford easier access into the vehicle.
4. Oil pump.
   New type KRP4 series having 10-tooth gears have been adopted. The oil pump is directly driven by PTO gear, the same as before.
5. Oil control valve.
   The construction remains unchanged but has now been made so that the levers do not pass under the instrument panel.
6. Oil tank.
   23 liters (6.1 US gal) (1.0~1.75 ton series)
   28 liters (7.4 US gal) (2.0~3.0 ton series)

7. Oil filters.
   Return oil filter is the same as before.
   Two kinds of suction oil filters have been adopted.
   100 mesh, height 76 mm (2.99 in.) (1.0~1.75 ton series)
   100 mesh, height 97 mm (3.82 in.) (2.0~3.0 ton series)
8. Hydraulic oil.
9. Hydraulic piping.
   The piping in the 1.0~1.75 ton series remains unchanged, but in the 2.0~3.0 ton series, additional piping has been provided as shown in the diagram below due to the central hydraulic system required by the adoption of the power clutch and power brake.

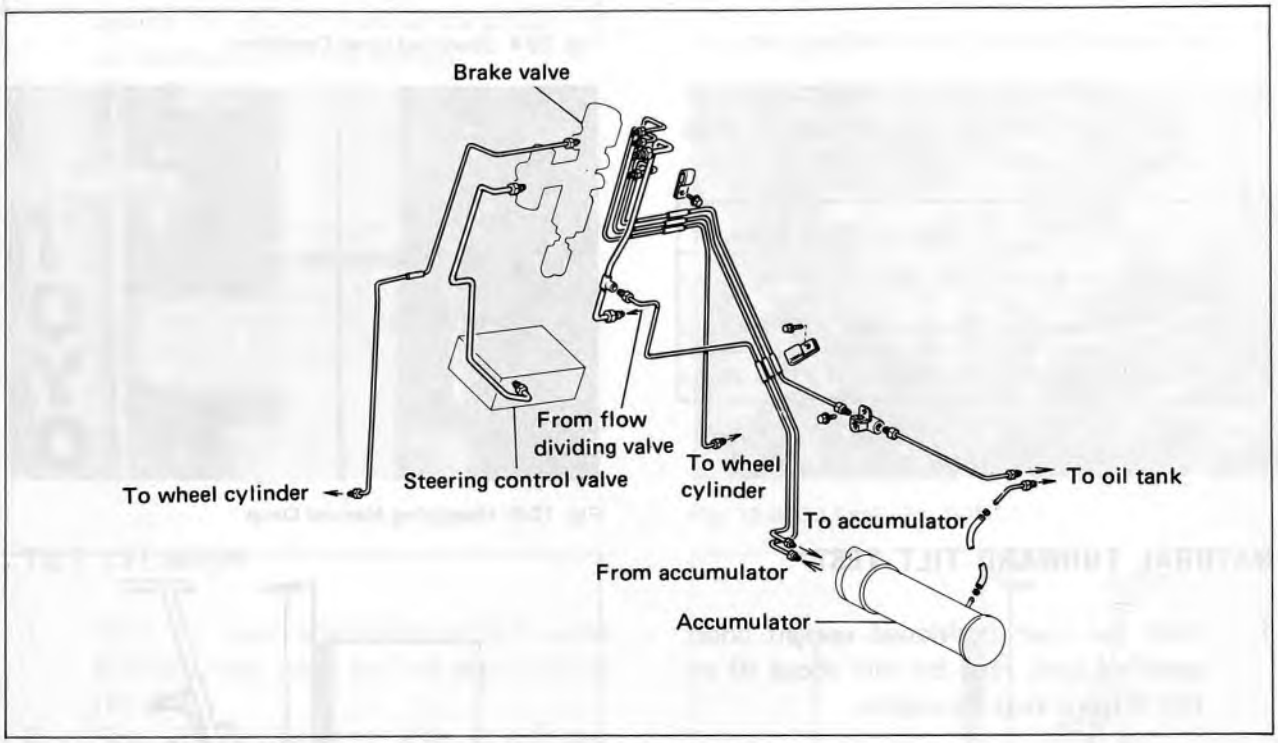

Fig. 10-2 Brake Hydraulic Piping Diagram

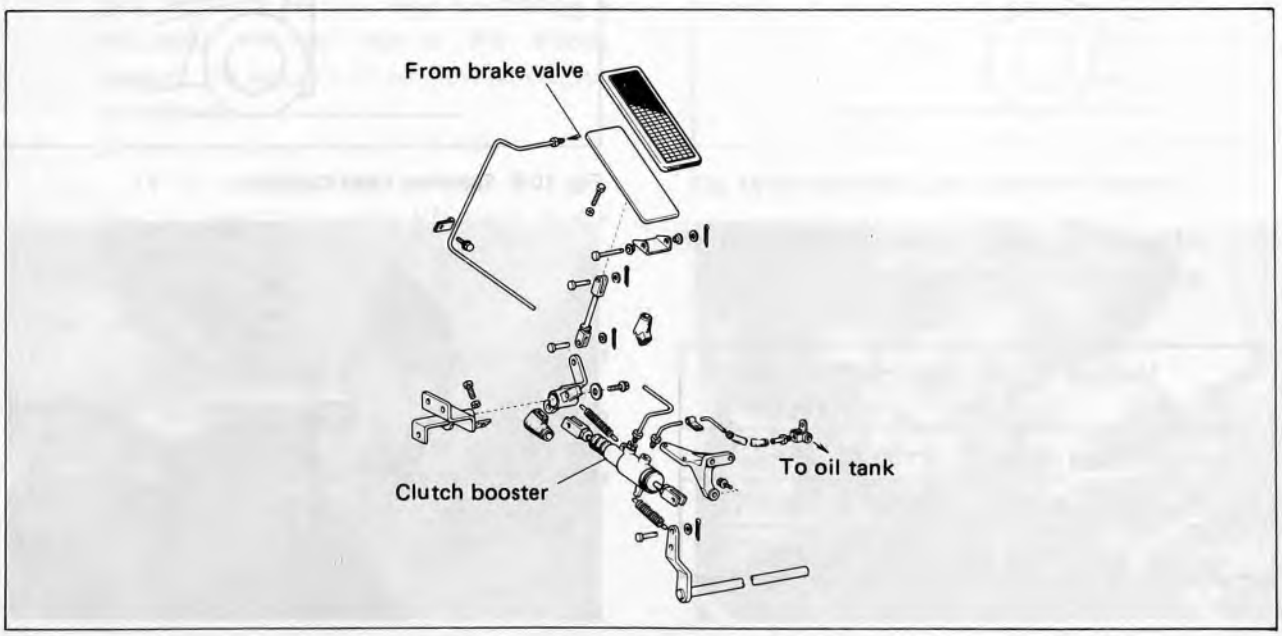

Fig. 10-3 Clutch Hydraulic Piping Diagram

NATURAL DROP TEST

1. With the mast positioned upright under specified load, raise the fork about 1~1.5 m (40~60 in.), and stop the engine.

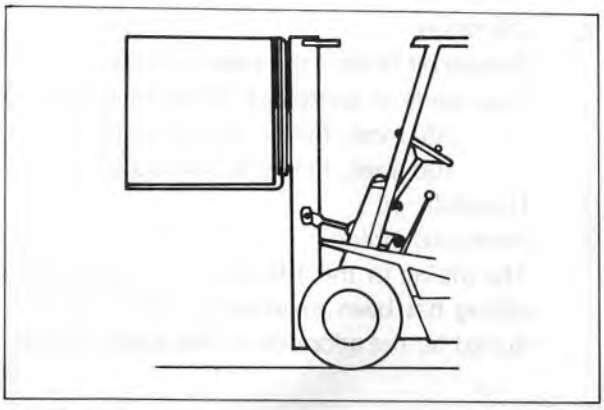

Fig. 10-4 Specified Load Condition

2. Draw reference lines on the inner and outer mast, and measure the amount of drop after 15 minutes.

Vehicle	Natural Drop Amount
1.0~1.75 ton series	50~160mm (1.97~6.30 in.)
2.0~2.5 ton series	80~240mm (3.15~9.45 in.)
2.75, 3.0 ton series	50~160mm (1.97~6.30 in.)

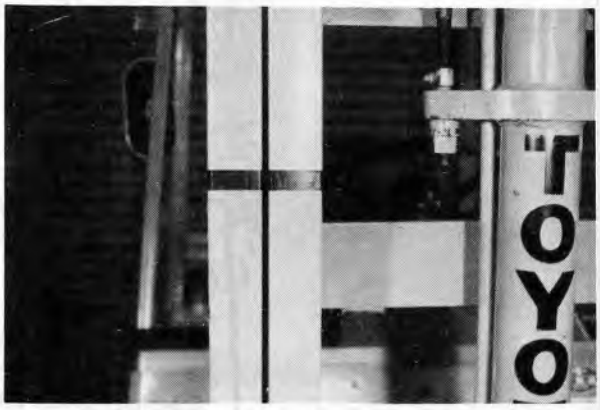

Fig. 10-5 Measuring Natural Drop

NATURAL FORWARD TILT TEST

1. With the mast positioned upright under specified load, raise the fork about 50 cm (20 in.), and stop the engine.

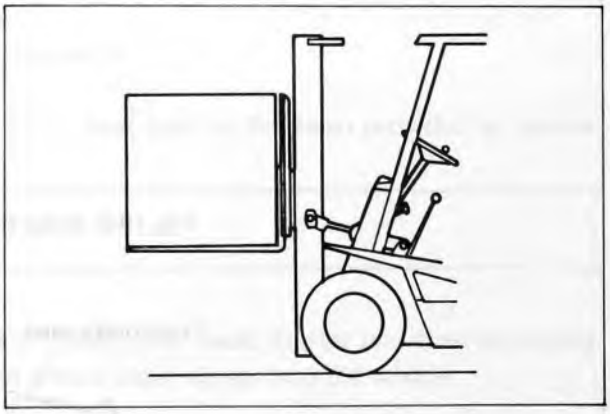

Fig. 10-6 Specified Load Condition

2. After 15 minutes, measure the amount of elongation in the tilt cylinder.

Vehicle	Natural Tilt Amount mm (in.)
1.0~1.75 ton series	8~30 (0.315~1.18)
2.0~2.5 ton series	14~50 (0.55~1.97)
2.75, 3.0 ton series	18~60 (0.71~2.36)



Fig. 10-7 Measuring Amount of Natural Forward Tilt

OIL LEAK TEST

LIFT CYLINDER

1. With the mast positioned upright under specified load, raise the fork about 1~1.5 m (40~60 in.).
2. Carefully tilt the fork forward, and stop the engine. After 5 minutes, disconnect the oil control valve to oil tank hose connection, and by placing a graduated cylinder against the elbow, measure the amount of oil flowing out for one minute.
   Oil leak standard (at lift port):
   6 ~ 16 cc (0.37 ~ 0.98 cu.in.)

   Essential:
   - **Measure at hydraulic oil temperature of 50°~60°C (122°~140°F)**
   - **If natural drop is large even when oil leak is at specified value, the lift cylinder packing is defective.**

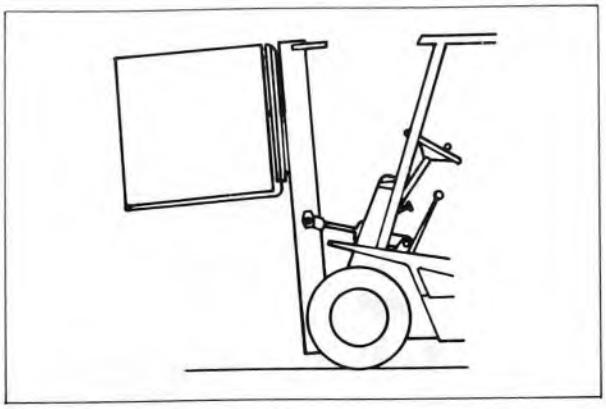

Fig. 10-8 Specified Load Condition (Forward Tilt)

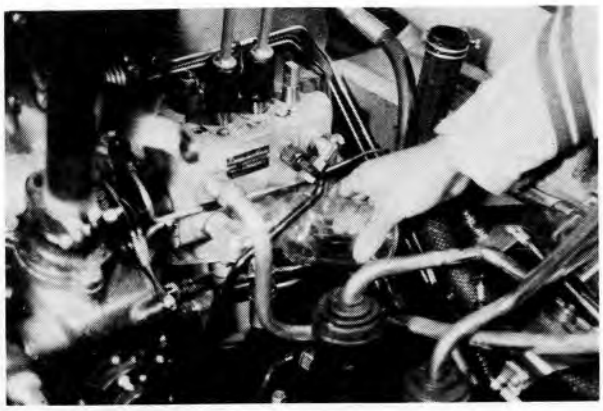

Fig. 10-9 Oil Leak Test (Lift)

TILT CYLINDER

1. With the mast positioned upright under specified load, raise the fork about 50 cm (20 in.).
2. Stop the engine and after 5 minutes, disconnect the oil control valve to oil tank hose connection, and by placing a graduated cylinder against the elbow, measure the amount of oil flowing out for one minute.
   Oil leak standard (Total lift & tilt):
   14~34 cc (0.85~2.08 cu.in.)
3. The oil leak (for entire lift part) is the amount of leak from the tilt port.

   Essential:
   - **Measure at hydraulic oil temperature of 50~60°C (122~140°F).**
   - **If natural forward tilt is large even when the oil leak is at specified value, the tilt lock valve or tilt cylinder packing is defective.**

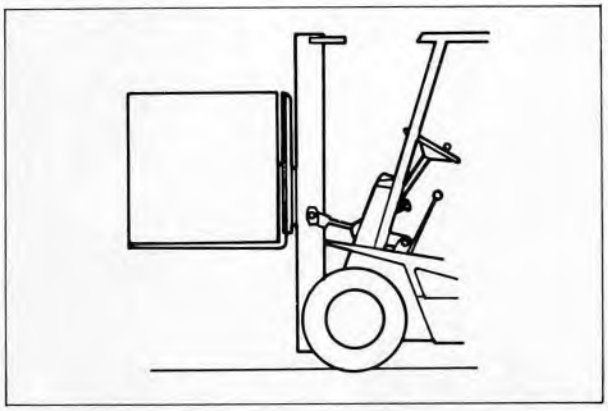

Fig. 10-10 Specified Load Condition (Neutral)



Fig. 10-11 Oil Leak Test (Total)

MAST

	Page
COMPONENT PARTS	10– 8
MAST ASSY	10– 9
LIFT BRACKET	10–15
CHAIN	10–16
CHAIN WHEEL	10–18
FORK	10–19
MAST ADJUSTMENT	10–20

COMPONENT PARTS

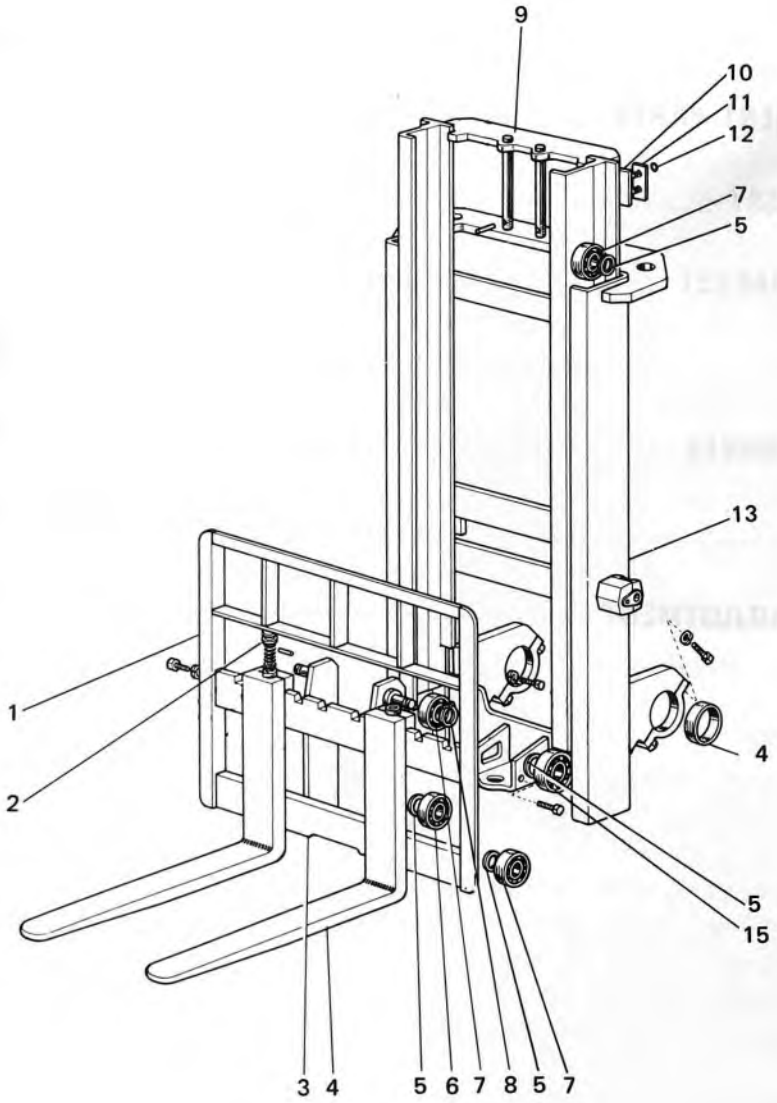

1.	Backrest	9.	Inner mast
2.	Fork stopper	10.	Mast strip
3.	Lift bracket	11.	Shim
4.	Fork	12.	"O" ring
5.	Shim	13.	Outer mast
6.	Lift roller	14.	Mast support metal
7.	Lift roller	15.	Lift roller
8.	Snap ring		

Fig. 10-12 Mast Component Parts

MAST ASSY

REMOVAL

Caution:
- **Before removing the mast, check the operating condition of the various parts and the roller clearances, and accurately determine the location of trouble.**
- **In removing the mast assy, the work will be made relatively easier if the lift bracket is first removed.**

1. Disconnect the chains.
   (1) Slacken the chains by operating the lift and tilt levers so as to bring the lift bracket to the maximum lowered and forward tilted position.
   (2) Remove the chain adjusting nuts at the lift cylinder chain anchor bracket.

   Caution:
   When removing the chain adjusting nuts, hold the chain by hand to prevent the chain from dropping down by its own weight.

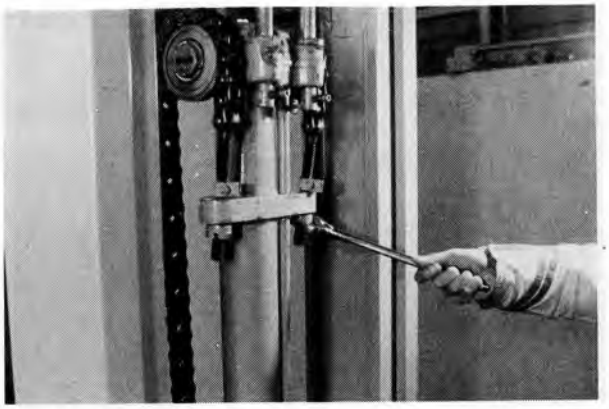

Fig. 10-13 Disconnecting Chain

2. Remove the lift bracket.
   (1) With the inner mast positioned upright, raise it up until it clears the lift brackt.
   (2) Back up the vehicle.

   Caution:
   Support the lift bracket to prevent toppling over and carefully back out the vehicle.



Fig. 10-14 Removing Lift Bracket

3. Disconnect the hoses.
   (1) Overflow hose (Oil tank end)
   (2) High pressure hoses

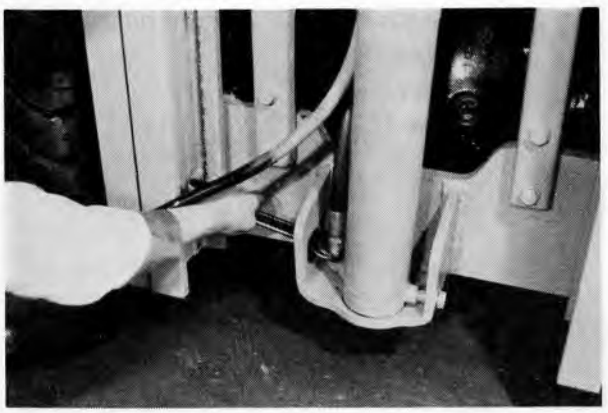

Fig. 10-15 Disconnecting Hose

4. Pass wire rope around the mast hooks, and have the mast lifted up slightly.



Fig. 10-16 Mast Suspended

5. Punch match marks on the mast support caps.

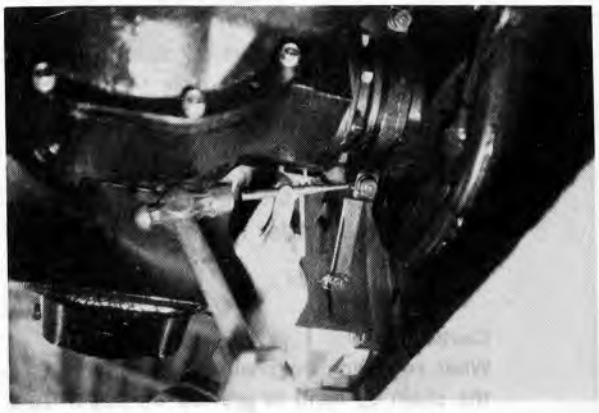

Fig. 10-17 Punching Match Marks

6. Remove the mast support caps.
   (1) Set bolts
   (2) Mast support cap



Fig. 10-18 Removing Mast Support

7. Remove the tilt cylinder front pins.
   (1) Lock bolt
   (2) Front pin
   Use SST 09810-20170-71



Fig. 10-19 Removing Front Pin

8. Remove the mast assy.



Fig. 10-20 Removing Mast Assy

9. Lay down the mast.
Rest the outer mast upper and lower tie beams on wood blocks or stands.

Caution:
It would be extremely dangerous to have the mast standing against a wall. Always have it resting down on stands.

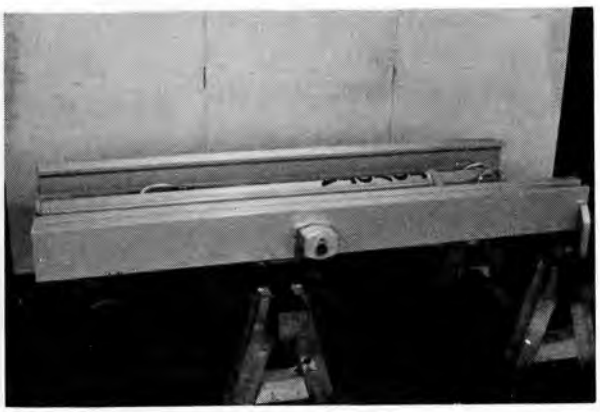

Fig. 10-21 Mast Resting Method

DISASSEMBLY

1. Remove the spring pins.
(Lift cylinder support guide)
Use SST 09700-30200-71



Fig. 10-22 Removing Spring Pin

2. Remove the stopper bolt.



Fig. 10-23 Removing Stopper Bolt

3. Remove the lift cylinder.

Caution:
Wrap waste around the lift cylinder to prevent marring the painted surface.

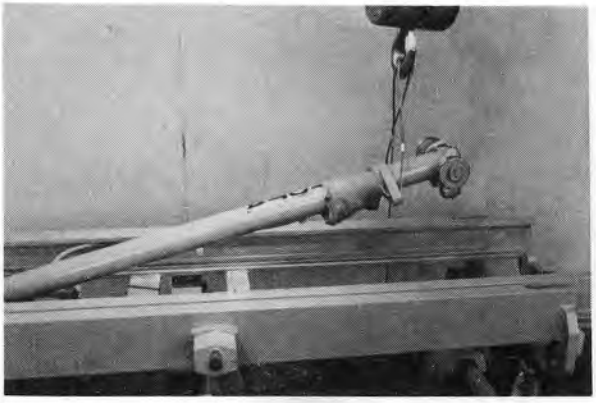

Fig. 10-24 Removing Lift Cylinder

4. Remove the inner mast stoppers.
   (1) Set bolts
   (2) Inner mast stoppers

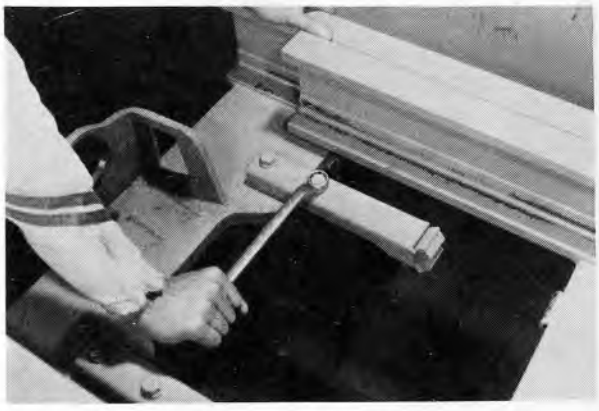

Fig. 10-25 Removing Inner Mast Stopper

5. Remove the lift rollers.
   (1) Outer mast lift rollers
   (2) Shims
   (3) Inner mast lift rollers
   (4) Shims
   Use SST 09950-20012



Fig. 10-26 Removing Lift Roller

6. Remove the mast strips.
   (1) Mast strip
   (2) "0" ring
   (3) Shim

Caution:
Replace the mast strips when the oil pockets are worn off.



Fig. 10-27 Removing Mast Strip

7. Lift out the inner mast from outer mast upper end.

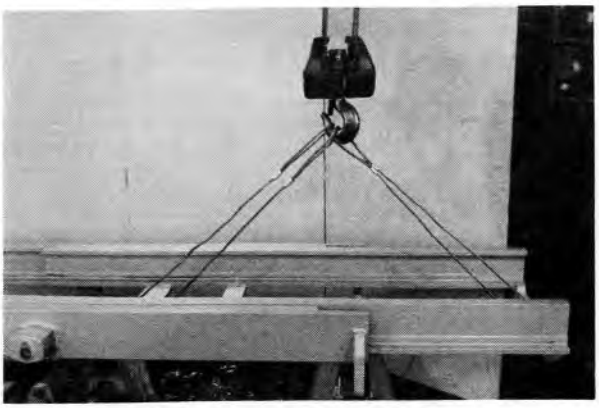

Fig. 10-28 Removing Inner Mast

INSPECTION

1. Lift rollers.
   (1) Wear, damage, excessive looseness, rolling state



Fig. 10-29 Inspecting Lift Roller

(2) Lift roller list.

Places Used	Item		1.0~1.75 ton series	2.0~2.5 ton series	2.75, 3.0 ton series
(A) Lift bracket upper & lower	O.D. mm(in.)	Standard	94.5 (3.72)	109.7 (4.32)	109.7 (4.32)
		Limit	93.5 (3.68)	108.7 (4.28)	108.7 (4.28)
	I.D. mm(in.)	Standard	35.0 (1.377)	40.0 (1.57)	40.0 (1.57)
		Limit	35.02 (1.379)	40.02 (1.576)	40.02 (1.576)
(B) Lift bracket center	O.D. mm(in.)	Standard	93.3 (3.67)	108.5 (4.27)	108.5 (4.27)
		Limit	92.5 (3.64)	107.5 (4.23)	107.5 (4.23)
	I.D. mm(in.)	Standard	35.0 (1.377)	40.0 (1.57)	65.0 (2.558)
		Limit	35.02 (1.379)	40.02 (1.576)	65.02 (2.56)
(C) Inner mast lower	O.D. mm(in.)	Standard	114.5 (4.51)	125.5 (4.94)	125.5 (4.94)
		Limit	113.5 (4.47)	124.5 (4.90)	124.5 (4.90)
	I.D. mm(in.)	Standard	35.0 (1.377)	40.0 (1.57)	40.0 (1.57)
		Limit	35.02 (1.379)	40.02 (1.576)	40.02 (1.576)
(D) Outer mast upper	O.D. mm(in.)	Standard	94.5 (3.72)	109.7 (4.32)	109.7 (4.32)
		Limit	93.5 (3.68)	108.7 (4.28)	108.7 (4.28)
	I.D. mm(in.)	Standard	35.0 (1.377)	40.0 (1.57)	40.0 (1.57)
		Limit	35.02 (1.397)	40.02 (1.576)	40.02 (1.576)

(3) Lift roller O/S list

O/S lift rollers have been prescribed for (A) and (C) lift rollers.

1) (A) lift bracket upper and lower

	1.0 ~ 1.75 ton series	2.0 ~ 2.5 ton series	2.75, 3.0 ton series
STD O.D. std. mm (in.)	94.5 (3.72)	109.7 (4.32)	109.7 (4.32)
M size O.D. std. mm(in.)	95.2 (3.75)	110.4 (4.35)	110.2 (4.34)
L size O.D. std. mm (in.)	95.9 (3.78)	111.1 (4.37)	111.1 (4.37)

2) (C) inner mast lower

	1.0 ~ 1.75 ton series	2.0 ~ 2.5 ton series	2.75, 3.0 ton series
STD O.D. std. mm (in.)	114.5 (4.51)	125.5 (4.94)	←
M size O.D. std. mm(in.)	115.3 (4.54)	126.3 (4.97)	←

2. Outer mast and inner mast.
   (1) Warping, bending, spalling
   (2) Cracks at welded parts (Visually or with flaw detecting penetrant)
   (3) Spreading
3. Mast strips.
   (1) Damage, spalling
   (2) Wear (Replace when oil pockets are worn out)

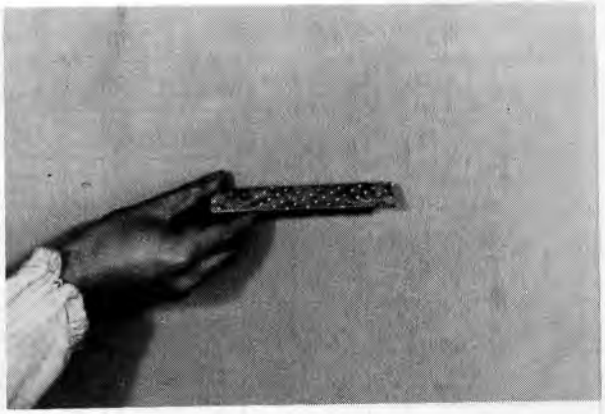

Fig. 10-30 Inspecting Mast Strips

ASSEMBLY

Caution:

- **Install the rollers in the mast in sequence while making shim adjustments in accordance with mast adjustment standards.**
- **Apply MP grease to the mast strip inner mast sliding surfaces.**
- **Apply chassis grease special to the mast support metals and tilt cylinder front pins before installing them.**

Assemble by performing the disassembly in reverse order.

INSTALLATION

Install by performing the removal in reverse order.

LIFT BRACKET

REMOVAL

Caution:
The lift bracket alone should be removed when replacing the lift bracket rollers or adjusting its shims.

1. Remove the chains.
   (1) Slacken the chain by bringing the mast to its maximum lowered and forward tilted position.
   (2) Remove the chains from the chain wheels.

2. Remove the lift bracket.
   (1) Position the inner mast upright, and lift it until its clears the bracket.
   (2) Backward the vehicle.

Caution:
Support the lift bracket to prevent it from toppling over, and carefully back up the vehicle so as to leave enough working space. Have the lift bracket supported for safety.

DISASSEMBLY

1. Remove the lift rollers.
   (1) Lift rollers
   Use SST 09950-20012
   (2) Shims

ASSEMBLY AND INSTALLATION

Assemble and install by performing the disassembly and removal in reverse order.

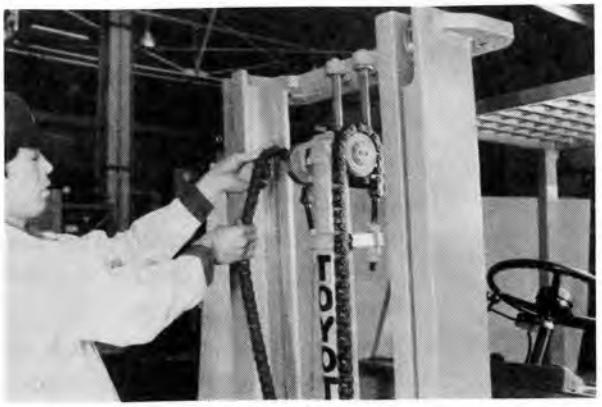

Fig. 10-31 Removing Chains

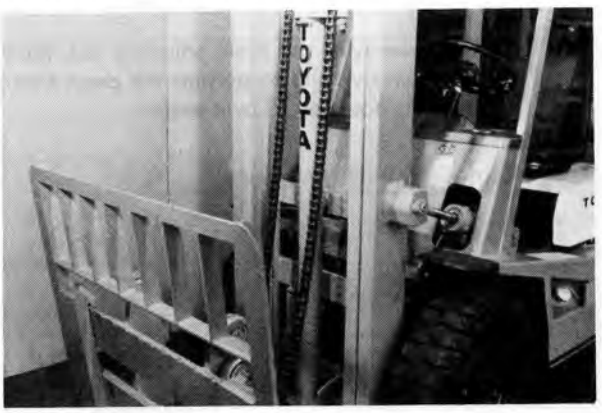

Fig. 10-32 Removing Lift Bracket



Fig. 10-33 Removing Lift Roller

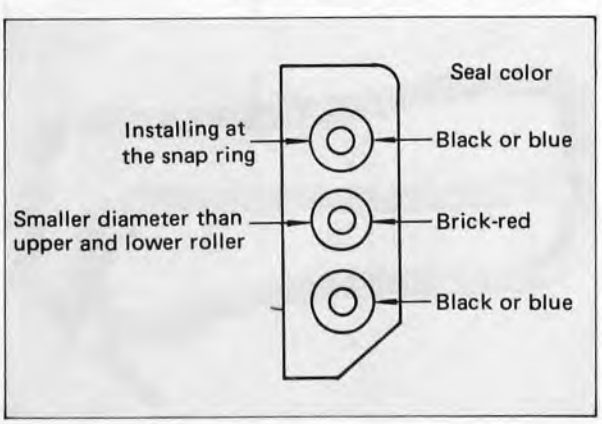

Fig. 10-34 Lift Roller (1~2.5 ton series)

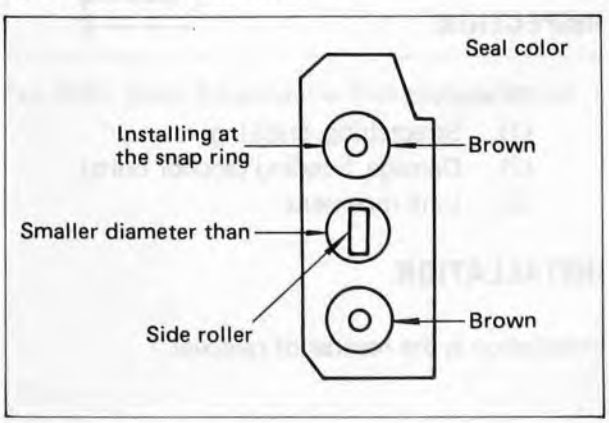

Fig. 10-35 Lift Roller (2.75, 3.0 ton series)

CHAIN

REMOVAL

1. Disconnet the chains.
   (1) Slacken the chains by operating the lift and tilt levers so as to bring the lift bracket to its maximum lowered and forward tilted position.
   (2) Remove the chain adjusting nuts at the lift cylinder chain anchor bracket.

   Caution:
   When removing the chain adjusting nut, hold the chain by hand to prevent the chain from dropping down by its own weight.

2. Remove the lift bracket.

3. Remove the chains.
   (1) Cotter pin
   (2) Plate washer
   (3) Chain

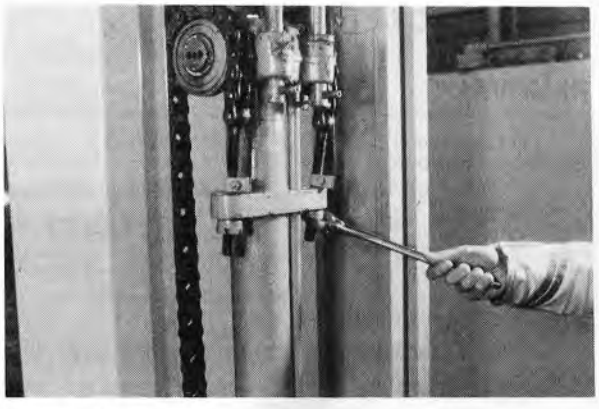

Fig. 10-36 Disconnecting Chain



Fig. 10-37 Removing Lift Bracket



Fig. 10-38 Removing Chain

INSPECTION

1. Chains.
   (1) Strectching, cracking
   (2) Damage, bending (anchor bolts)
   (3) Link movment



Fig. 10-39 Chain Inspection

INSTALLATION

Installation is the reverse of removal.

ADJUSTMENT

1. Set the vehicle on level surface, and position the mast upright.

2. Raise and lower the fork several times without load and then check left and right chains to see if they are equally tensioned.

3. Adjust the chains with the chain adjusting nuts such that the chains will not slacken and that fork underside will not contact on the ground.

   Essential:
   - **The clearance between the fork underside and ground is the distance "h" measured at the location indicated in Fig. 10-41.**
   - **When the fork is fully lowered, the lift bracket rollers should not protrude out from the inner mast more than distance "A".**
   - **When the fork is fully raised, the chain anchor on the lift bracket should not approach the chain wheel closer than distance "B".**

4. Check that the chain tensions are equal at left and right sides.

5. Check that specified lift can be attained.

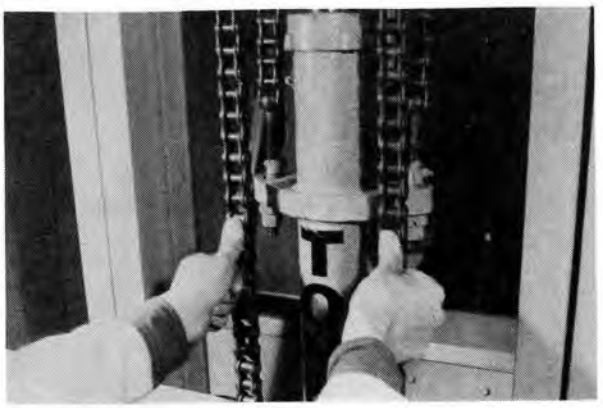

Fig. 10-40 Checking Chain Tension

	h mm(in.)	A mm(in.)	B mm(in.)
1.0 ton Vehicle	0~5 (0~0.197)	5 (0.197)	76 (2.99)
1.35 ~ 1.75 ton vehicles	0~10 (0~0.39)	30 (1.18)	101 (3.98)
2.0 ~ 2.5 ton vehicles	0~10 (0~0.39)	40 (1.57)	99 (3.90)
2.75, 3.0 ton vehicles	0~5 (0~0.197)	40 (1.57)	80 (3.15)

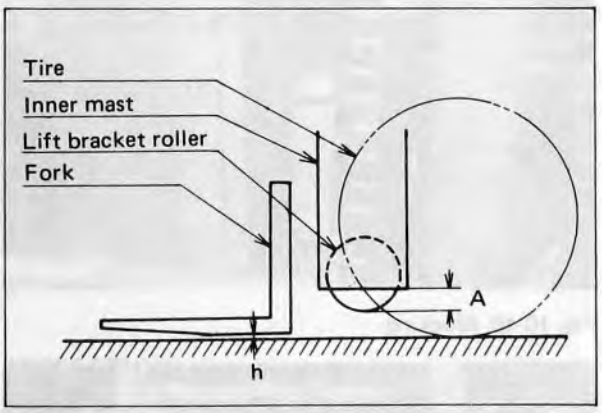

Fig. 10-41 Chain Adjustment at Fork Lowest Position

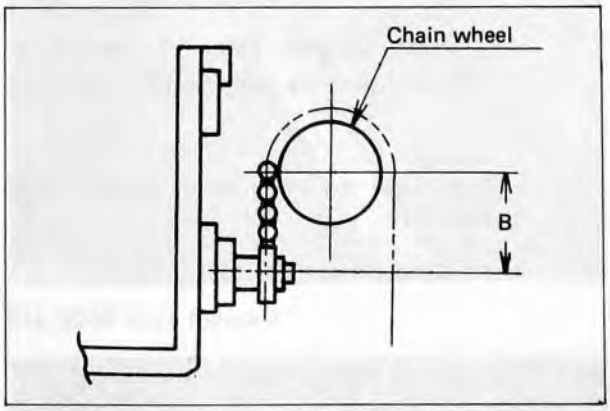

Fig. 10-42 Chain Adjustment at Fork Highest Position

CHAIN WHEEL

REMOVAL

1. Remove the chains.
   (1) Fork fully lowered, mast fully tilted forward.
   (2) Chains (chain wheels)

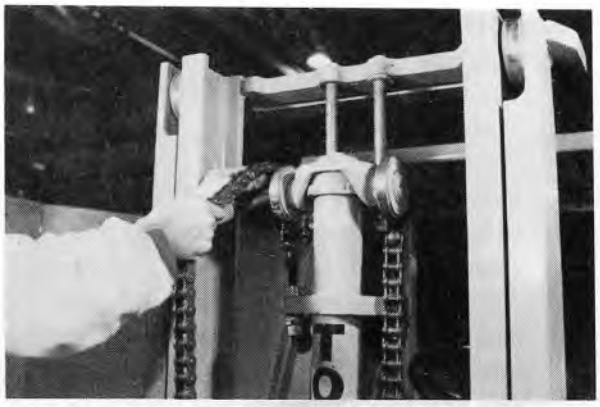

Fig. 10-43 Removing Chains

2. Remove the spring pins.
   (1) Raise the chain wheel support.
   (2) Spring pin
   Use SST 09700-30200-71



Fig. 10-44 Removing Spring Pins

3. Block the inner mast to prevent it from lowering.
   (1) Raise the lift cylinder about 50 cm (20 in.).
   (2) Insert wooden block between inner mast lower tie beam and upper mast.

   Caution:
   Raise until the chain wheel support guide pulls out.

   A : Wooden block

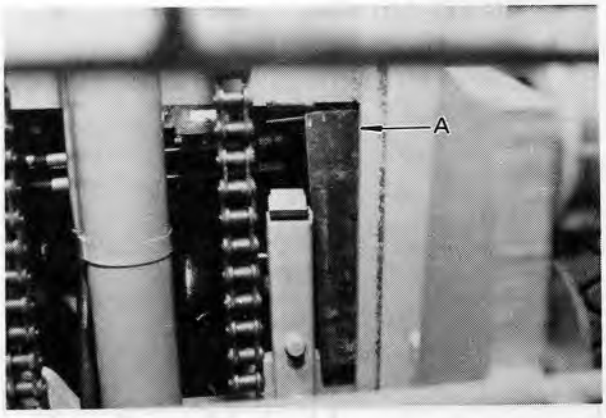

Fig. 10-45 Blocking

4. Support the lift cylinder.

5. Lower the lift cylinder to lowest position, and turn the chain wheel support 90 degrees.

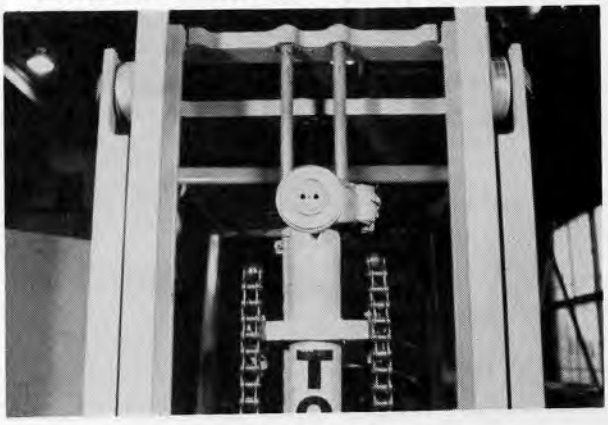

Fig. 1-46 Chain Wheel Support Rotated

6. Remove the chain wheels.
   (1) Snap ring
   (2) Chain wheel

Caution:
If tight fit, use SST 09950-20012.

INSPECTION

1. Chain wheels.
   (1) Cracks, damage
   (2) Poor rotation, noise, looseness in chain wheel bearings

INSTALLATION

Perform the removal in reverse order.

ADJUSTMENT

Refer to Chain Adjustment.

FORK

REMOVAL

1. Raise the fork about 20 cm (7.9 in.)
2. Place a block under the fork rail slot.
3. Move the forks one at a time to the rail center.
4. Lower the fork and remove.

INSTALLATION

Perform the removal in reverse order.

INSPECTION

1. Forks.
   (1) Bending, cracks
   Fork end uneveness limit:
   10 mm (0.39 in.)
   Bending limit:
   15 mm (0.59 in.)

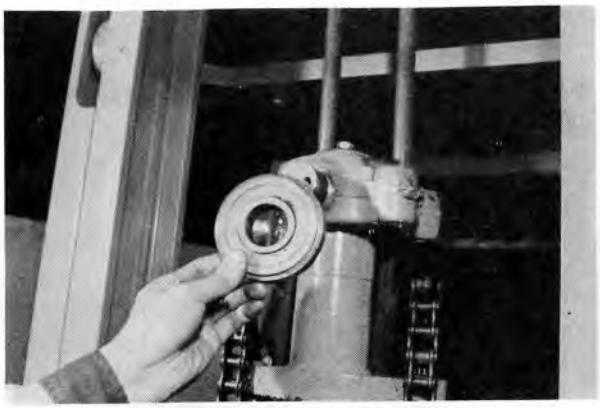

Fig. 10-47 Removing Chain Wheel



Fig. 10-48 Inspecting Chain Wheel

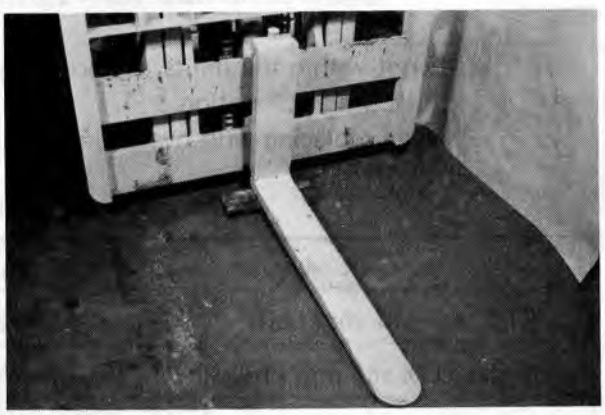

Fig. 10-49 Fork Removal

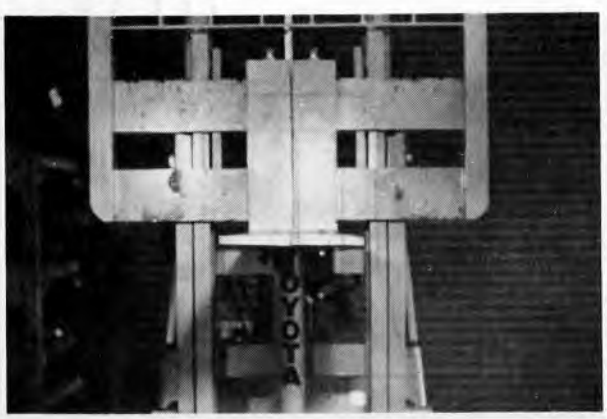

Fig. 10-50 Fork Inspection

MAST ADJUSTMENT

LIFT BRACKET LIFT ROLLER ADJUSTMENT

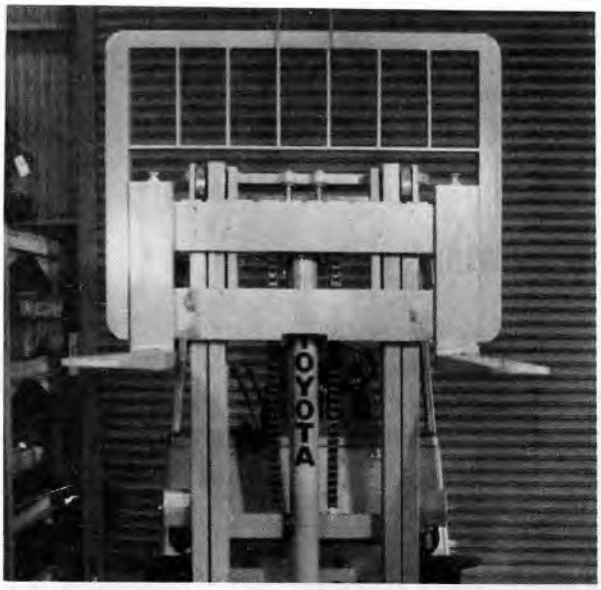

Fig. 10-51 Lift Bracket at Raised Position

1. Preparations for adjustment.
   (1) Have available screwdriver, thickness gage, dial gage, wire rope.
   (2) Spread out the forks to maximum, and slightly tilt the mast forward.
   (3) When adjusting upper rollers, attach wire rope to the back rest and raise. When adjusting lower rollers, attach wire rope to finger bar underside and raise.

   Essential:
   Stop raising just before the lift bracket upper rollers start to protrude out from the inner mast.

2. Adjustment in fore-and-aft direction.
   (1) Insert a screwdriver between the inner mast and finger bar, and press the lift bracket upper and lower rollers against the inner mast.
   (2) Insert thickness gage between the roller and inner mast rolling surface, and measure the clearance.
   Clearance standard: 0.5 ~ 2.0 mm (0.0197 ~ 0.079 in.)
   (3) If not within the limits, replace with oversize lift rollers. For replacement procedure, refer to "Lift Bracket" section.
   When replacing with oversize rollers, do not reduce the clearance to less than 0.5 mm (0.0197 in.).

O/S lift roller list

	1.0 ~ 1.75 ton series	2.0 ~ 2.5 ton series	2.75, 3.0 ton series
STD O.D. std. mm (in.)	94.5 (3.72)	109.7 (4.32)	109.5 (4.31)
M size O.D. std. mm (in.)	95.2 (3.75)	110.4 (4.35)	–
L size O.D. std. mm (in.)	95.9 (3.78)	111.1 (4.37)	–

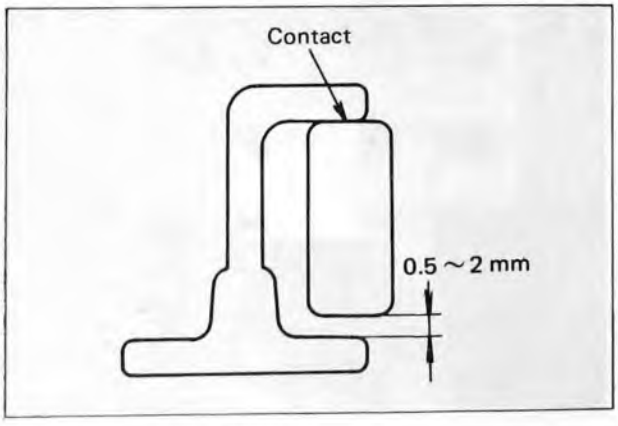

Fig. 10-52 Standard Clearance



Fig. 10-53 Adjusting in Lateral Direction

3. Adjustment in lateral direction.
   (1) Mount dial gage on the inner mast.
   (2) From the opposite side, press the inner mast against the bracket with a screwdriver. Then, contact dial gage on the lift bracket and set indication to 0.
   (3) Insert a screwdriver between the lift bracket (dial gage side) and inner mast, and press the lift bracket center and lower rollers against the inner mast.
   (4) Measure the amount of shift in lateral direction at the center of lower roller.
   Shift standard: 0 ~0.8 mm
   (0~0.315 in.)
   (5) If defective, correct by adjusting with shims, evenly divided between the left and right sides.
   Shim sizes:
   . . . . . Thickness 0.5,1.0 mm
   (0.0197, 0.039 in.)

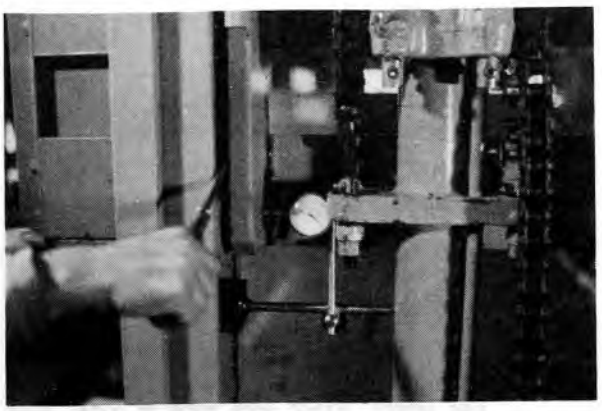

Fig. 10-54 Adjusting in Lateral Direction



Fig. 10-55 Shim Adjustment

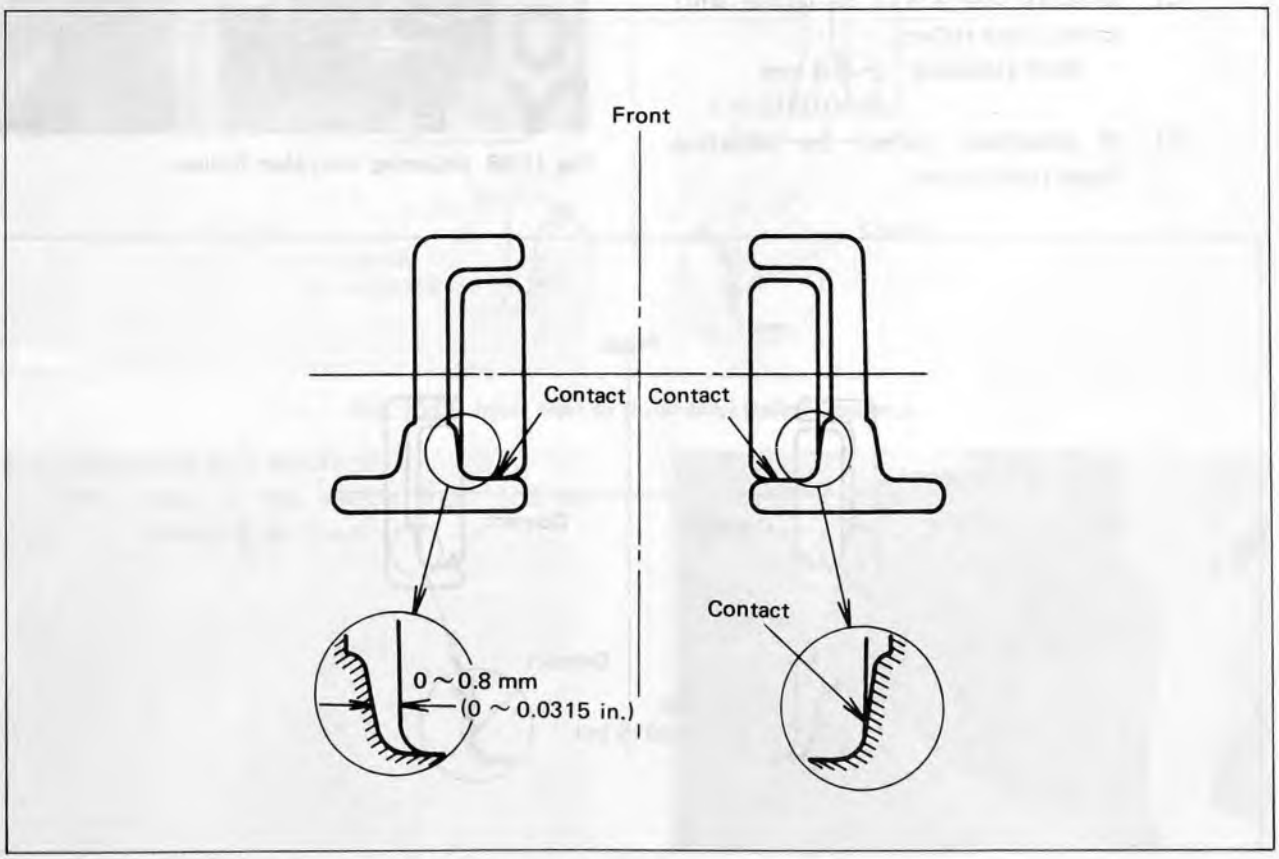

Fig. 10-56 Input Bracket Roller to Inner Mast Clearance

MAST LIFT ROLLER ADJUSTMENT

1. Preparations for adjustment.
   (1) Have available screwdriver, dial gage, and wire rope.
   (2) Spread out the forks to maximum and slightly tilt the mast forward.
   (3) Raise the inner mast fully, and stop the engine.

   Essential:
   For safety, attach wire rope to inner mast lower tie beam, and suspend with hoist.

2. Adjust the inner mast rollers.
   (1) Mount the dial gage on outer mast inner side.
   (2) From the opposite side, press the inner mast roller against the outer mast with a screwdriver. Then contact the dial gage against the inner mast inner side and set it to 0 indication.
   (3) Insert a screwdriver between the inner mast (dial gage side) and outer mast so as to press the inner mast rollers against the outer mast.
   (4) Measure the amout of lateral shift in the inner rollers.
   Shift standard: 0~0.8 mm (0~0.0315 in.)
   (5) If defective, correct by adjusting inner roller shims.

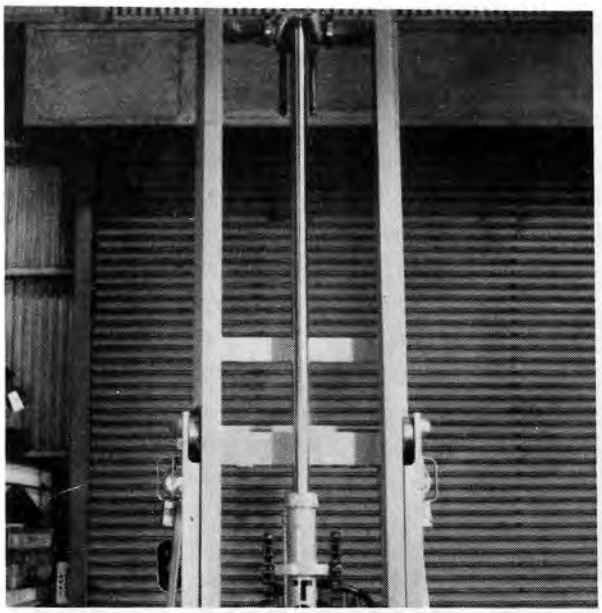

Fig. 10-57 Inner Mast Raised

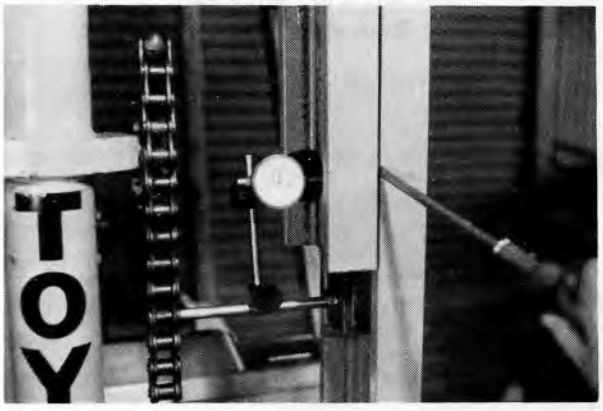

Fig. 10-58 Adjusting Inner Mast Rollers

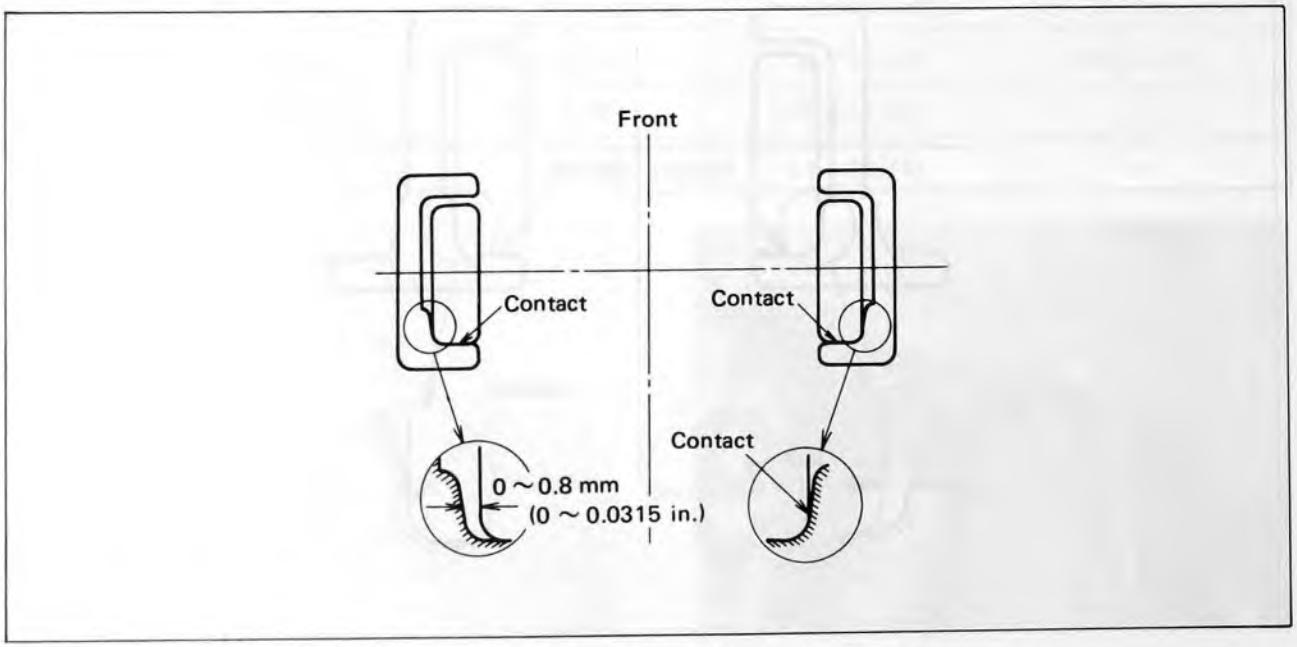

Fig. 10-59 Outer Mast to Inner Mast Roller Clearance

3. Outer mast roller adjustment.
   (1) Mount a dial gage on the outer mast side.
   (2) From the opposite side, press the inner mast against the out mast roller with a screw driver. Then, contact the dial gage against the inner mast inner surface and set its indication to 0.
   (3) Insert a screwdriver between the inner mast (dial gage side) and the outer mast, and press the inner mast against the outer mast rollers.
   (4) Measure the amount of lateral shift in inner mast.
   Shift standard: 0~0.8 mm
   (0~0.0315 in.)
   (5) If defective, correct by adjusting outer mast rollers.

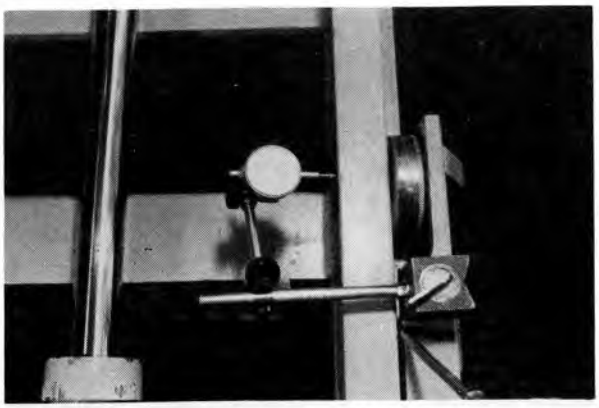

Fig. 10-60 Adjusting Outer Mast Roller

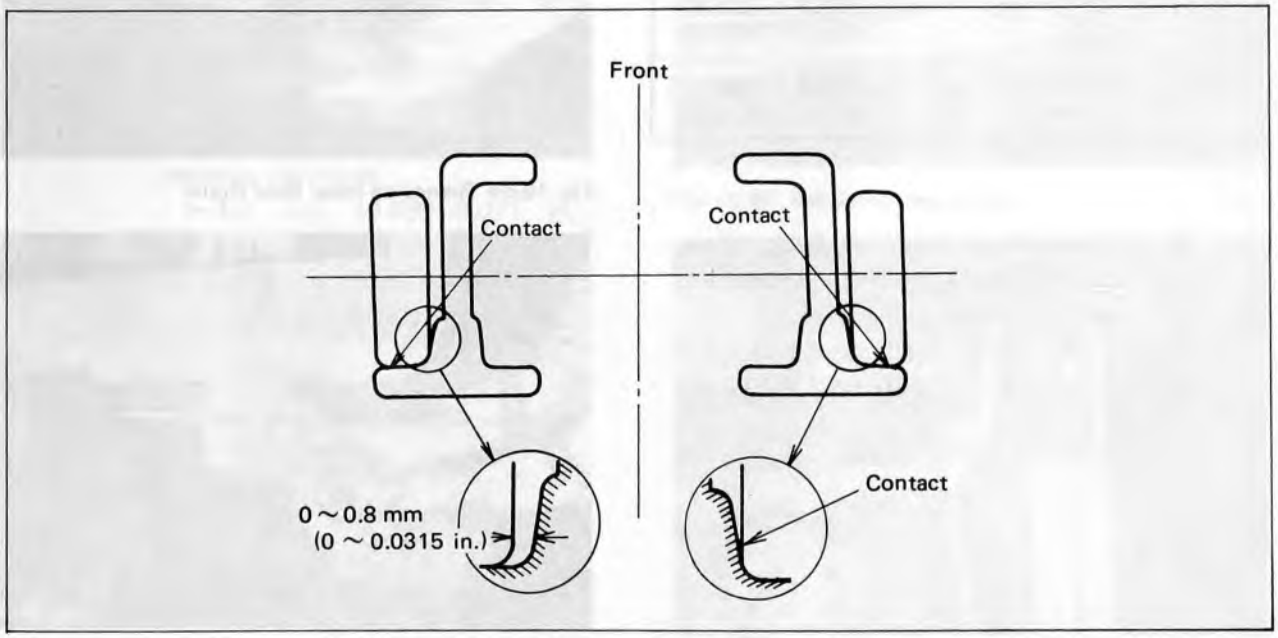

Fig. 10-61 Inner Mast to Outer Mast Roller Clearance

4. Roller and shim adjustment.
   (1) Jack up the vehicle front and set blocks under the tires.



Fig. 10-62 Wood Block Set Under Tire

(2) Suspend the inner mast.
(3) Remove the inner mast stoppers.
(4) Lower the suspended inner mast.

Essential:
Have the mast positioned at maximum backward tilt.

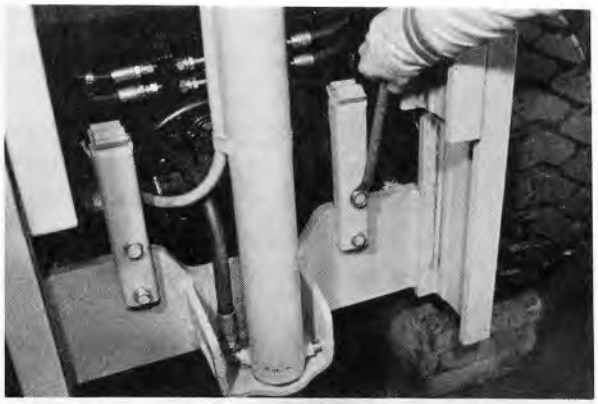

Fig. 10-63 Removing Stoppers

(5) Remove the inner mast rollers.
Use SST 09950-20012

O/S Lift Roller List

	1.0~1.75 ton series	2.0~3.0 ton series
STD O.D. std. mm (in.)	114.5 (4.51)	125.5 (4.94)
M size O.D. std. mm (in.)	115.3 (4.54)	126.3 (4.97)

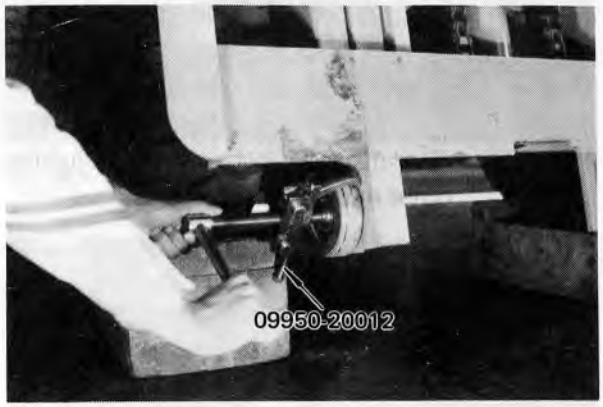

Fig. 10-64 Removing Inner Mast Roller

(6) Select shims for inner mast rollers, and distribute evenly between left and right sides.
Shim sizes: Thickness 0.5, 1.0 mm (0.0197, 0.039 in.)



Fig. 10-65 Adjusting with Shims

(7) Remove the outer mast rollers.
Use SST 09950-20012



Fig. 10-66 Removing Outer Mast Roller

(8) Select shims for outer mast rollers and distribute evenly between left and right sides.
Shim sizes: Thickness 0.5, 1.0 mm (0.0197, 0.039 in.)



Fig. 10-67 Adjusting with Shims

MAST STRIP ADJUSTMENT

1. Preparations for Adjustment.
   (1) Have thickness gage available.
   (2) Have inner mast fully raised and fully tilted forward.
2. Adjust clearance between mast strip (outer mast side) and inner mast.
   (1) Measure the clearance between the mast strip and inner strip with thickness gage.
   Clearance standards:
   1~1.8 mm (0.039~0.071 in.) (1.0~1.75 ton Series)
   0.5~0.8 mm (0.0079~0.0315 in.) (2.0~3.0 ton Series)

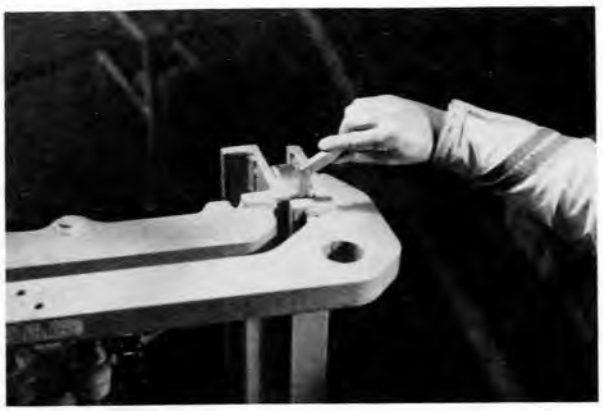

Fig. 10-68 Adjusting Mast Strips

Note:
Confirm that inner mast is contacting on outer mast rollers.

(2) If defective, correct by adjusting with shims.
Remove the inner mast stoppers, and lower the inner mast. Then, remove the mast strips and adjust with shims.
Shim sizes: Thickness 0.5, 1.0 mm (0.0197, 0.039 in.)



Fig. 10-69 Adjusting with Shims

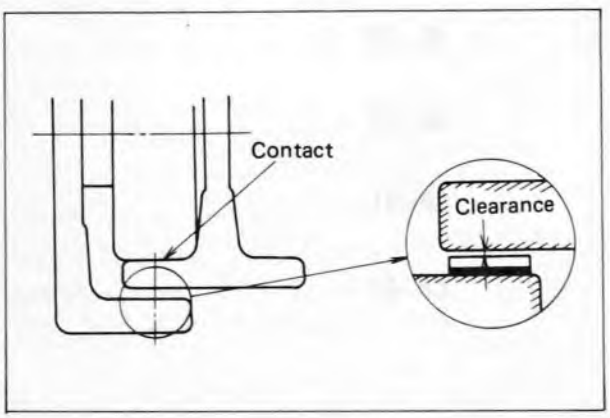

Fig. 10-70 Mast Strip to Inner Mast Clearance

CYLINDERS

	Page
LIFT CYLINDER	10–28
SPECIFICATIONS	10–28
SERVICE STANDARDS	10–28
COMPONENT PARTS	10–29
REMOVAL	10–30
DISASSEMBLY	10–32
INSPECTION	10–33
ASSEMBLY & INSTALLATION	10–34
FLOW REGULATOR VALVE	10–35
TILT CYLINDER	10–37
SPECIFICATIONS	10–37
SERVICE STANDARDS	10–37
COMPONENT PARTS	10–38
REMOVAL	10–39
DISASSEMBLY	10–40
INSPECTION	10–42
ASSEMBLY & INSTALLATION	10–43

LIFT CYLINDER

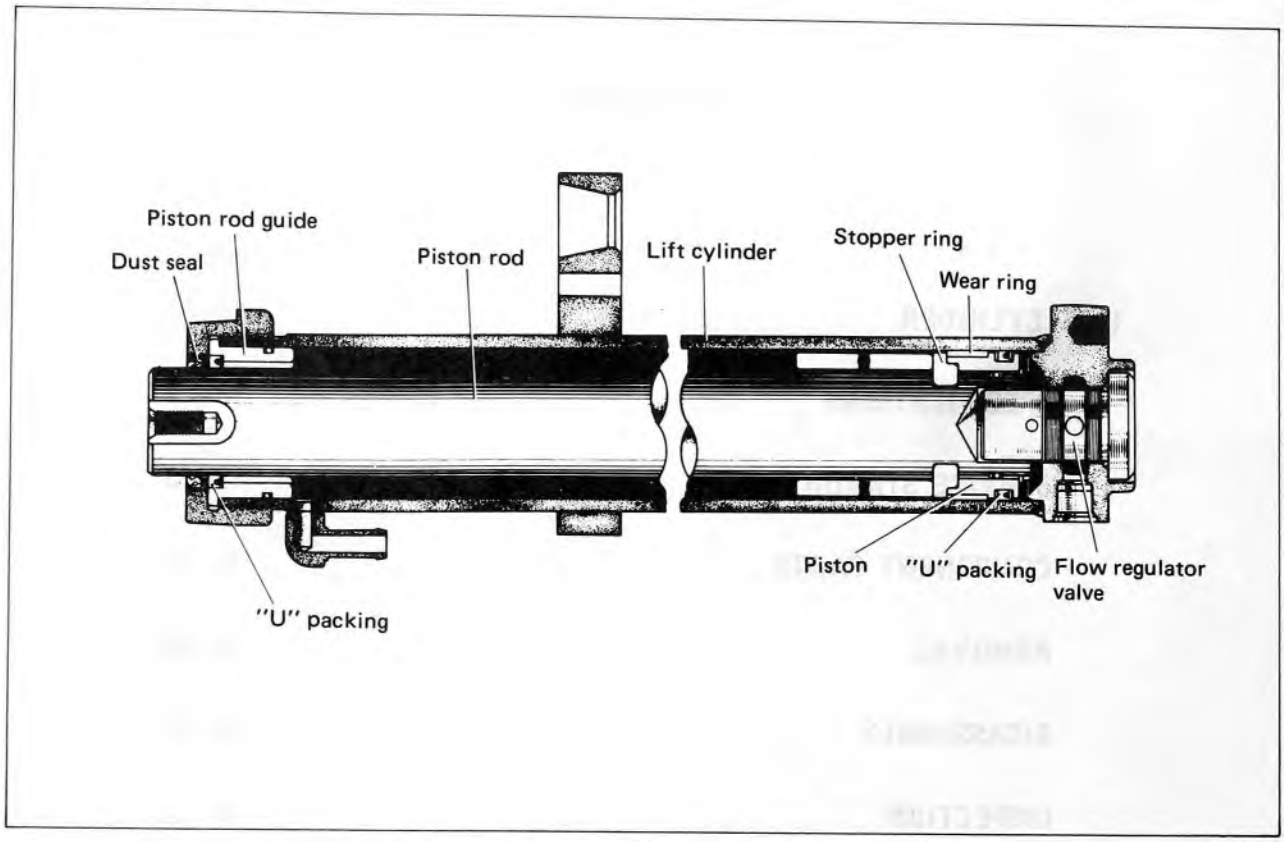

Fig. 10-71 Lift Cylinder Sectional View

SPECIFICATIONS

Lift cylinder type	Single action
Piston stroke	1,500mm (59 in.) [Lift height 3,000 mm (118 in.)]
Piston sealing system	"U" packing
Rod sealing system	"U" packing
Others	W/flow regulator valve

SERVICE STANDARDS

Item	Standard	Limit
Lift cylinder bore mm (in.)	1 ~ 2.5 ton series 70.00(2.76)	70.35 (2.77)
	2.75, 3 ton series 80.00(3.15)	80.40 (3.17)
Piston rod diameter mm (in.)	1 ~ 2.5 ton series 50.00(1.97)	49.96 (1.970)
	2.75, 3 ton series 60.00(2.36)	59.96 (2.360)
Piston rod bending mm (in.)	–	2.0 (0.08)
Piston rod to sleeve clearance mm (in.)	0.1 (0.0039)	0.4 (0.016)

COMPONENT PARTS

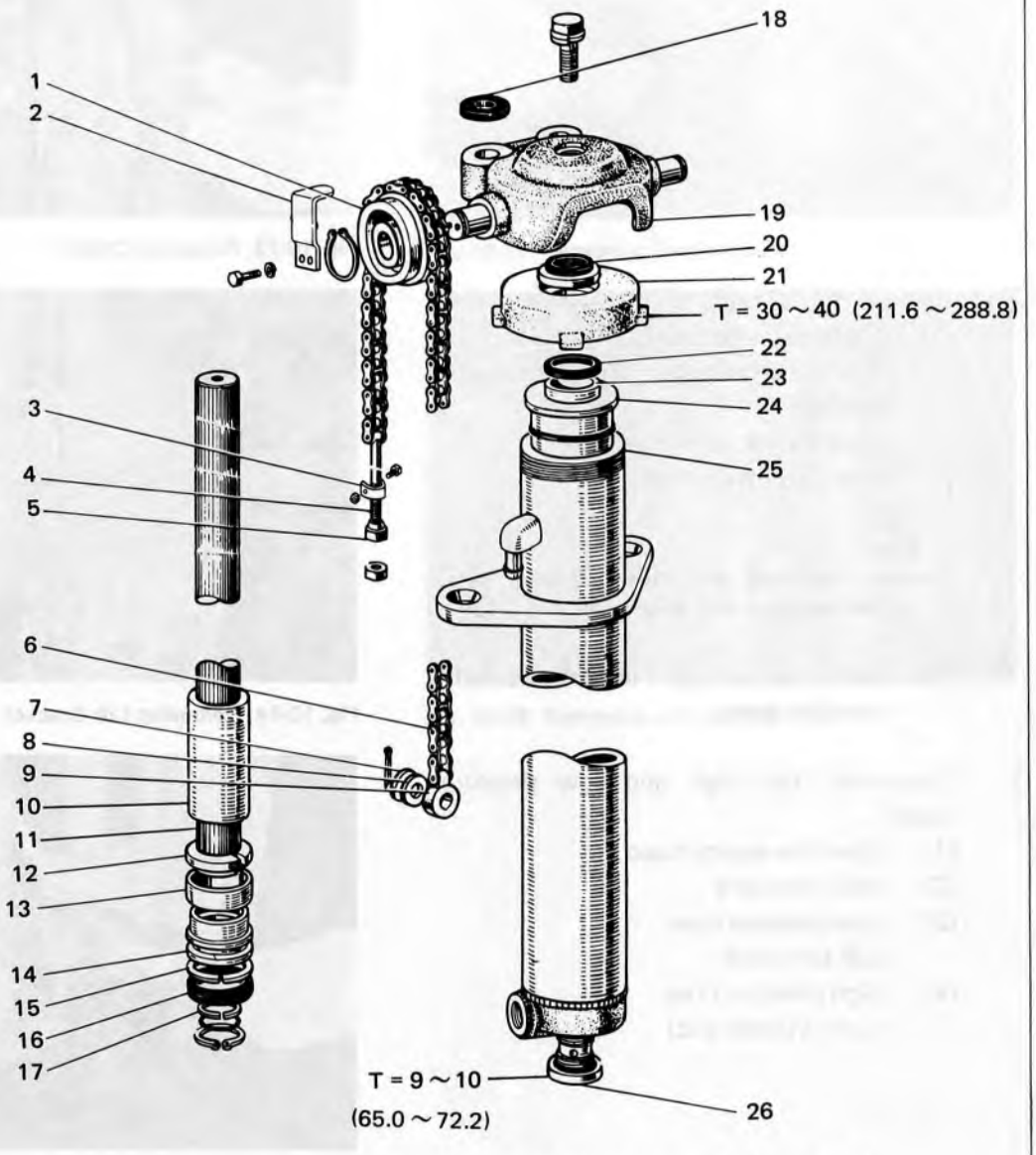

Tightening torque unit: kg-m (ft-lb)

1.	Chain wheel	10.	Lift cylinder spacer	19.	Chain wheel support
2.	Stopper plate	11.	Piston rod	20.	Dust sheet
3.	Anchor bolt clamp	12.	Stopper ring	21.	Lift cylinder cover
4.	Anchor bolt	13.	Wear ring	22.	"U" packing
5.	Adjusting nut	14.	Piston	23.	Bushing
6.	Chain	15.	Back up ring	24.	Rod guide
7.	Special washer	16.	"U" packing	25.	Lift cylinder
8.	Special washer	17.	Back up ring	26.	Flow regulator valve
9.	Chain eye joint kit	18.	Damper		

Fig. 10-72 Lift Cylinder Component Parts

REMOVAL

1. Fully lower the fork and remove the chains from the chain wheels.

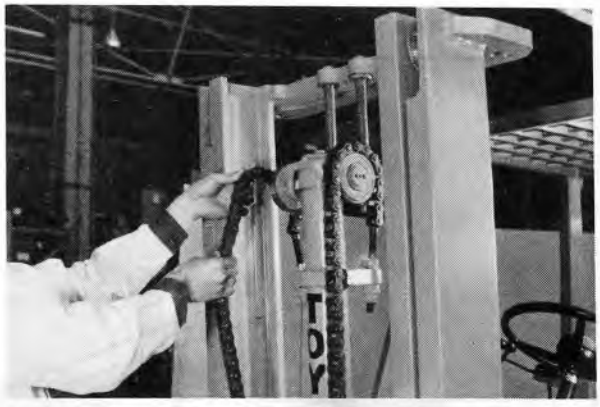

Fig. 10-73 Removing Chain

2. Remove the lift bracket.
   (1) Raise the inner mast.
   (Until it pulls out from the inner bracket)
   (2) Slowly back up the vehicle.
   (3) Chain adjusting nuts

   Note:
   When removing the chain adjusting nuts, remove the paint with wire brush.

   (4) Backward enough to provide safe working space.



Fig. 10-74 Removing Lift Bracket

3. Disconnect the high and low pressure hoses.
   (1) Open the engine hood.
   (2) Rear toeboard
   (3) Low pressure hose
   (Oil tank end)
   (4) High pressure hose
   (Lift cylinder end)

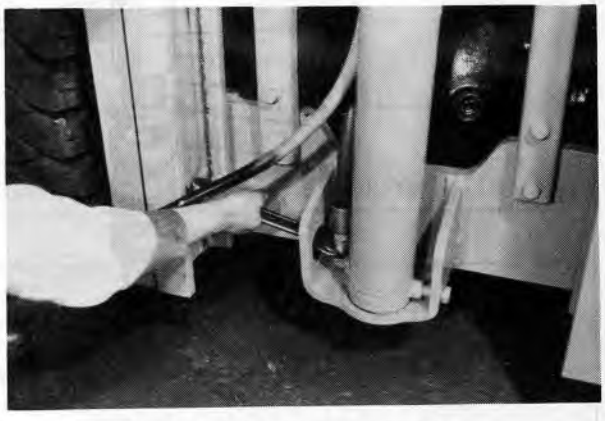

Fig. 10-75 Disconnecting High Pressure Hose

4. Attach wire rope on the lift cylinder.
5. Remove the chain wheel support.
   (1) Set bolts
   (2) Chain wheel support

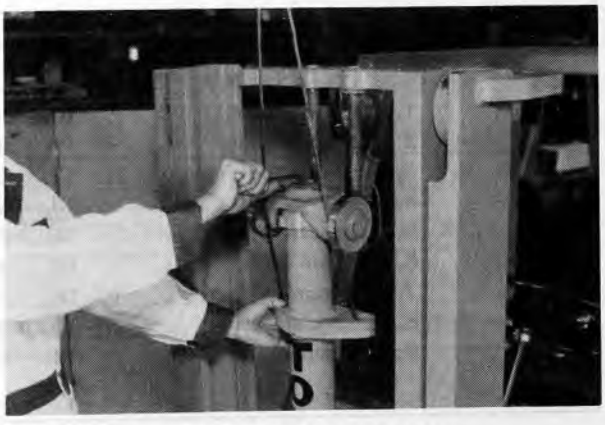

Fig. 10-76 Removing Chain Wheel Support

6. Remove the lift cylinder stopper bolt.



Fig. 10-77 Removing Stopper Bolt

7. Take out the lift cylinder assy.

Caution:
Always rest the lift cylinder on its side.

8. Disconnect the low pressure hose.
   (1) Hose Clamp
   (2) Low pressure hose

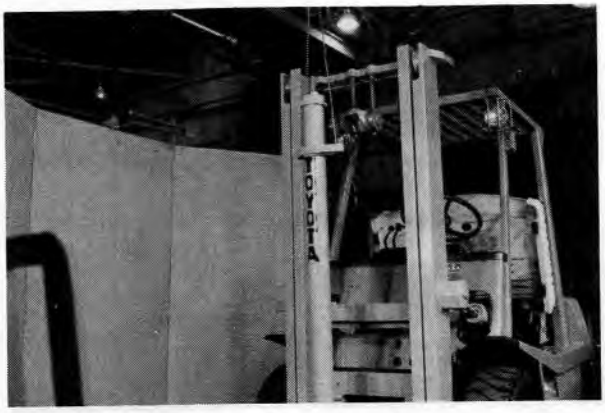

Fig. 10-78 Removing Lift Cylinder Assy

DISASSEMBLY

1. Remove the lift cylinder cover.
   (1) Cover
   Use SST 09620-10160-71



Fig. 10-79 Removing Lift Cylinder Cover

2. Draw out the piston rod.
   Use SST 09810-20170-71

   Caution:
   - **Use care not to mar the piston rod plated surface.**
   - **Draw the piston parallel to the cylinder.**

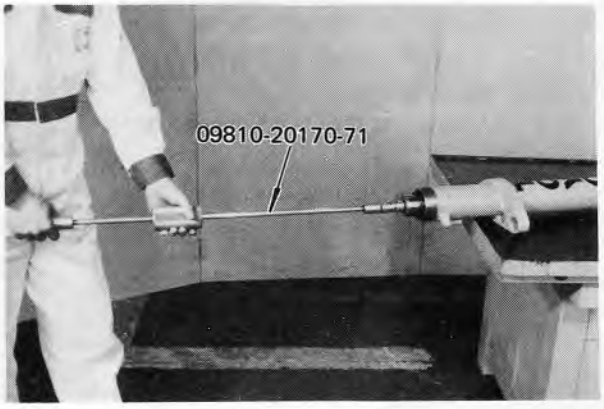

Fig. 10-80 Drawing Out Piston Rod

3. Remove the piston.
   (1) Snap ring
   (2) Piston
   (3) Snap ring
   (4) Wear ring, "U" packing, back up ring

   Caution:
   Remove only when visual inspection of the piston shows evidence of wear, damage, or other defect.



Fig. 10-81 Removing Piston

4. Remove the flow regulator valve.

   Caution:
   Remove only when the flow regulator valve or cylinder is found to be defective.



Fig. 10-82 Removing Flow Regulator Valve

INSPECTION

Caution:
- **Oil leakage develops when the rod guide "U" packing or dust seal becomes defective.**
- **Defective "U" packing in piston will be accompanied by natural drop.**
- **Wash the parts and replace any found defective.**

1. Lift cylinder inspection.
   (1) Damage or wear in cylinder bore
   Cylinder bore wear limit:
   70.35 mm (2.77 in.)
   (1~2.5 ton series)
   80.40 mm (3.17 in.)
   (2.75, 3.0 ton series)
   (2) Deformation, damage, rusting in cylinder
   (3) Excessive dents in cylinder outside surface
2. Piston rod inspection.
   (1) Damage or wear in piston rod sliding surface
   Piston rod wear limit:
   49.96 mm (1.970 in.)
   (1~2.5 ton series)
   59.96 mm (2.360 in.)
   (2.75, 3.0 ton series)
   (2) Peeling, damage, rusting in plated surface
   (3) Bending in piston rod.
   Piston rod bending limit: 2.0 mm (0.08 in.)
3. Rod guide inspection
   (1) Wear or damage in guide sleeve
   Rod to sleeve clearance standard:
   0.1 mm (0.0039 in.)
   Rod to sleeve clearance limit:
   0.4 mm (0.016 in.)
   (2) Wear, damage, deterioration in "U" packing
   (3) Wear, damage, deterioration in dust seal and "O" ring
   (4) Damage in cylinder cover

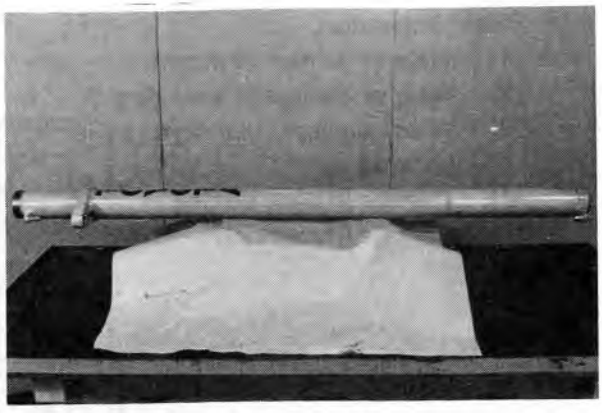

Fig. 10-83 Lift Cylinder Inspection



Fig. 10-84 Piston Rod Inspection



Fig. 10-85 Rod Guide Inspection



Fig. 10-86 Cylinder Cover Inspection

4. Piston inspection.
   (1) Wear or damage in piston
   (2) Wear or damage in wear ring
   (3) Wear, damage, deterioration in "U" packing
   (4) Damage in back up ring
   (5) Damage in stop ring

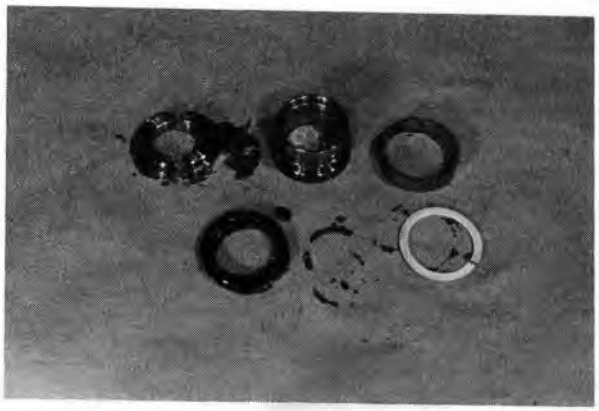

Fig. 10-87 Piston Parts Inspection

ASSEMBLY

Perform the disassembly in reverse order.

Caution:
- **Do not assemble the parts in dry condition. Always coat them with hydraulic oil before assembling.**
- **When reassembling, always use new "0" rings, "U" packings, and dust seals.**

INSTALLATION

Perform the removal in reverse order.

Caution:
- **Adjust the lift chain tensions equally on left and right sides.**
- **Raise and lower to full stroke under no load several times to drive out the air and to see if operating properly.**
- **After confirming the operation, check the hydraulic oil with oil level gage, and replenish with hydraulic oil #90 if found low.**
- **Check the lift to see if at specified value.**

FLOW REGULATOR VALVE

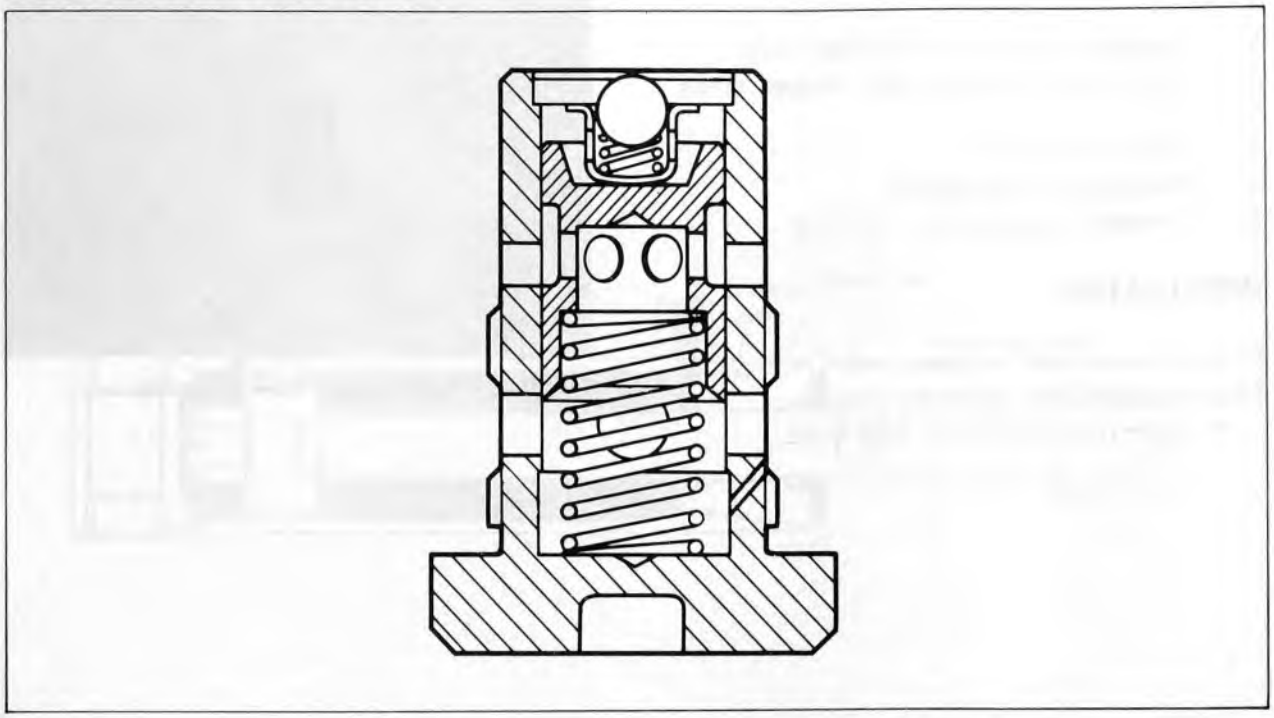

Fig. 10-88 Flow Regulator Valve Sectional View

Lowering Speed Specifications

Vehicle	Unladen mm/sec (fpm)	Laden mm/sec (fpm)	Vehicle	Unladen mm/sec (fpm)	Laden mm/sec (fpm)
1 ton series	550 (108)	420 (82)	2 ton series	550 (108)	400 (78)
1.5 ton series	550 (108)	420 (82)	3 ton series	530 (104)	400 (78)

REMOVAL

Caution:

- **In repairing a faulty flow regulator valve, the disassembly may be made on board the vehicle if it is judged that the job can be done properly and without difficulty.**

1. Spread the forks fuily apart.
2. Lower the fork to lowest position and tilt the mast fully backward.
3. Remove the flow regulator valve.



Fig. 10-89 Removing Flow Regulator Valve

INSPECTION

1. Damage or pulling out from top cover.
2. Check ball movment, and clogged check hole.
3. Piston movment.
4. Breakage in return spring.
5. Damage or weakening in "0" ring.

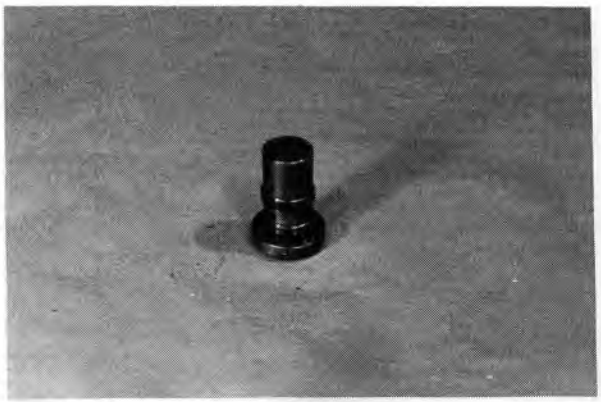

Fig. 10-90 Flow Regulator Valve Inspection

INSTALLATION

Perform the removal in reverse order.
Flow regulator valve tightening torque.
T = 9.0~10.0 kg-m (65.0~72.2 ft-lb)

TILT CYLINDER

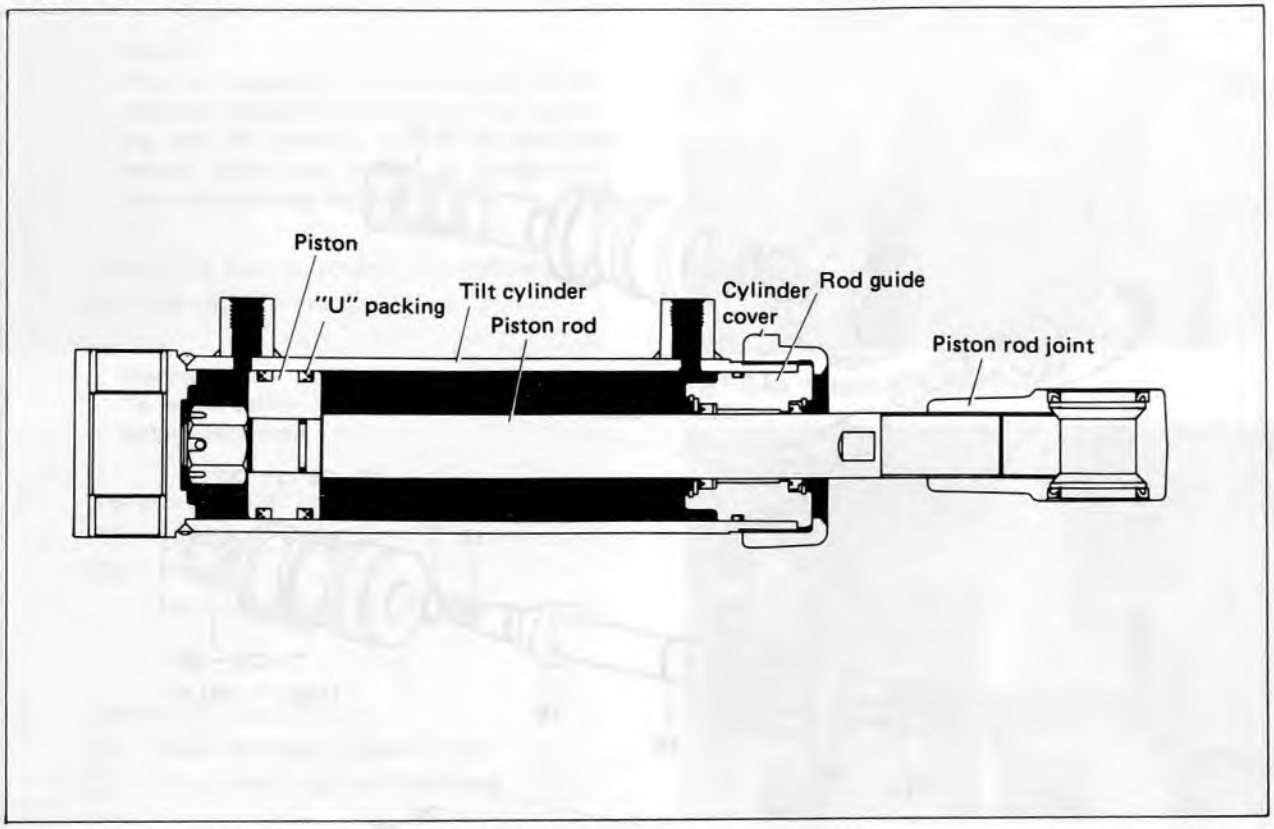

Fig. 10-91 Tilt Cylinder Sectional View

SPECIFICATIONS

Tilt cylinder type	Double action
Piston stroke mm (in.)	171 (6.73)
Piston sealing system	"U" packing
Rod sealing system	"U" packing

SERVICE STANDARD

Tilt cylinder bore mm (in.)	70.00 (2.76)	70.35 (2.77)
Piston rod diameter mm (in.)	30.00 (1.18)	29.96 (1.179)
Piston rod bending mm (in.)	–	1.0 (0.039)
Piston rod to sleeve clearance mm (in.)	0.1 (0.0039)	0.4 (0.016)

COMPONENT PARTS

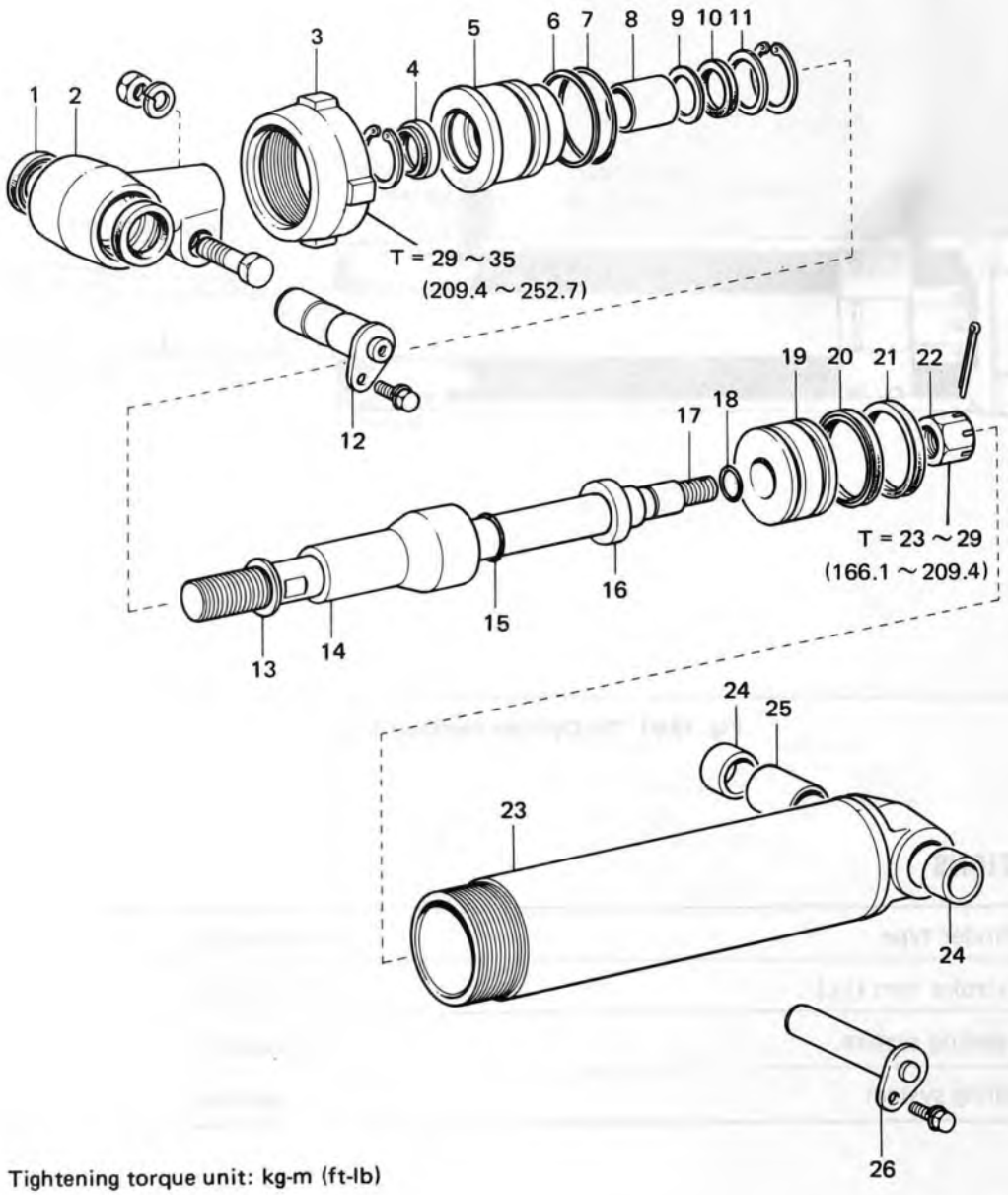

Tightening torque unit: kg-m (ft-lb)

1.	Grease seal	10.	"U" packing	19.	Piston
2.	Rod joint	11.	Stopper plate	20.	"U" packing
3.	Tilt cylinder cover	12.	Front pin	21.	"U" packing
4.	Dust seal	13.	Shim	22.	Castle nut
5.	Rod guide	14.	Spacer	23.	Tilt cylinder
6.	Back up ring	15.	"O" ring	24.	Bushing
7.	"O" ring	16.	Spacer	25.	Collar
8.	Guide rod sleeve	17.	Piston rod	26.	Rear Pin
9.	Back up ring	18.	"O" ring		

Fig. 10-92 Tilt Cylinder Component Parts

REMOVAL

Caution:
The "U" packing in the tilt cylinder can be replaced on board the vehicle without removing the tilt cylinder, but the procedures related below are mainly on disassembly after removal from the vehicle.

1. Lower the fork to lowest position and tilt the mast fully forward.

Caution:
To ensure safety, have the mast assy suspended with wire rope.

2. Remove the tilt cylinder front pin.
   (1) Set bolt
   (2) Front pin
   Use SST 09810-20170-71

3. Disconnect the piping.
   (1) Rear end high pressure hose
   (2) Front end high pressure hose

4. Remove the tilt cylinder rear pin.
   (1) Set bolt
   (2) Rear pin

5. Remove the tilt cylinder assy.



Fig. 10-93 Removing Front Pin

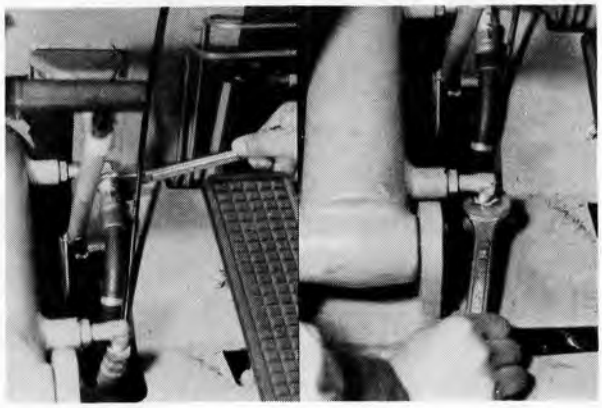

Fig. 10-94 Disconnecting Piping



Fig. 10-95 Removing Set Bolt



Fig. 10-96 Removing Tilt Cylinder Assy

DISASSEMBLY

1. Remove the piston rod joint.
   (1) Set bolt
   (2) Rod joint

   Caution:
   Record the amount the joint has been screwed in.



Fig. 10-97 Removing Rod Joint

2. Wind vinyl tape around the rod threads and slot.



Fig. 10-98 Winding Vinyl Tape

3. Remove the tilt cylinder cover.
   Use SST 09620-10160-71



Fig. 10-99 Removing Tilt Cylinder Cover

4. Draw out the piston rod.

   Caution:
   Draw out the piston rod parallel to the cylinder.



Fig. 10-100 Drawing Out Piston Rod

5. Remove the rod guide.

6. Remove the piston.
   (1) Cotter pin, castle nut
   (2) Piston

   Caution:
   - Remove only when the piston or piston rod is found defective.
   - Inspect the "U" packings while still in the piston, and replace if found defective.



Fig. 10-101 Removing Rod Guide

7. Remove the "U" packings.

   Caution:
   Wind tape around a spatula, and carefully remove the "U" packings using care not to damage them.

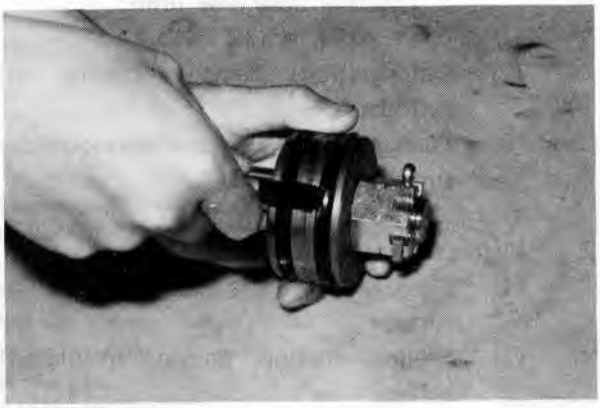

Fig. 10-102 Removing "U" Packing

8. Disassemble the piston rod guide.
   (1) Snap ring
   (2) Stop plate
   (3) "U" packings
   (4) Back up ring

   Caution:
   Force out the sleeve with a press only if found defective.



Fig. 10-103 Disassembling Rod Guide

9. Remove the dust seal.
   (1) Snap ring
   (2) Dust seal

   Caution:
   Remove and replace with new part only when oil leakage or other defects develop.



Fgi. 10-104 Removing Dust Seal

INSPECTION

Caution:
- Oil leakage develops when the "U" packing or dust seal at the rod guide becomes defective.
- Defective "U" packings in the cylinder will be accompanied by natural tilt in forward direction.
- Wash the parts and replace any found defective or damaged.

1. Tilt cylinder inspection.
   (1) Damage or wear in cylinder bore
   Cylinder bore wear limit:
   70.35 mm (2.77 in.)
   (2) Deformation, damage, rusting in cylinder
   (3) Partial dents in cylinder outside surface

2. Piston rod inspection.
   (1) Damage or wear in piston rod sliding surface
   (2) Peeling, rusting, damage in plated surface
   (3) Bending in piston rod
   Piston rod bending limit:
   1.0 mm (0.039 in.)

3. Piston inspection.
   (1) Wear or damage in piston
   (2) Wear, damage, deformation in "U" packings

4. Rod guide inspection.
   (1) Wear of damage in guide sleeve
   Rod to sleeve clearance standard:
   0.1 mm (0.0039 in.)
   Rod to sleeve clearance limit:
   0.4 mm (0.016 in.)
   (2) Wear, damage, deterioration in "U" packing
   (3) Wear, damage, deterioration in dust seal, "0" ring, back up ring
   (4) Damage in rod guide
   (5) Damage in cylinder cover



Fig. 10-105 Tilt Cylinder Inspection

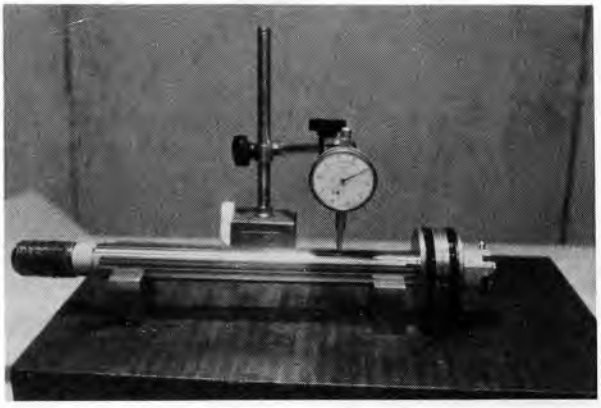

Fig. 10-106 Inspecting Piston Rod



Fig. 10-107 Pison Inspection



Fig. 10-108 Rod Guide Inspection

ASSEMBLY

Perform the disassembly in reverse order.

Caution:
- Avoid assembling the parts in dry condition. Coat them with hydraulic oil before assembling.
- Replace the "U" packings and "0" rings with new parts unless they are in good condition or have been in use for short time.
- Cylinder cover tightening torque
  T = 29 ~ 35 kg-m (209.4 ~ 252.7 ft-lb)
- Piston castle nut tightening torque
  T = 23 ~ 29 kg-m (166.1 ~ 209.4 ft-lb)

INSTALLATION

Perform the removal in reverse order.

Caution:
- When installing the rod joint, make sure that the rod joint installed length has been made to the same length recorded at removal.
- Raise the fork about 200 mm (8 in.), and check and adjust the forward and backward tilt angles.
- Tighten the rod joint set bolt to T = 4 ~ 8 kg-m (29 ~ 58 ft-lb).
- Place match marks on the joint and rod (red paint).
- Slowly tilt the mast forward and backward 2 or 3 times and check the operating condition.
- Check the hydraulic oil level with level gauge and replenish if low.
- Apply chassis grease on the insertion part of tilt cylinder front pin.
- Apply MP grease on the insertion part of tilt cylinder rear pin.
- Tilt fully forward and backward, and check for mast lameness.
  Lameness limit: 1.5 mm (0.059 in.) (At piston rod)

OIL PUMP

	Page
OIL PUMP DRIVE	10–46
OIL PUMP	10–46
SPECIFICATIONS & SERVICE STANDARDS	10–47
COMPONENT PARTS	10–47
REMOVAL	10–48
DISASSEMBLY	10–48
INSPECTION	10–51
ASSEMBLY	10–53
TEST PROCEDURES	10–54

OIL PUMP DRIVE

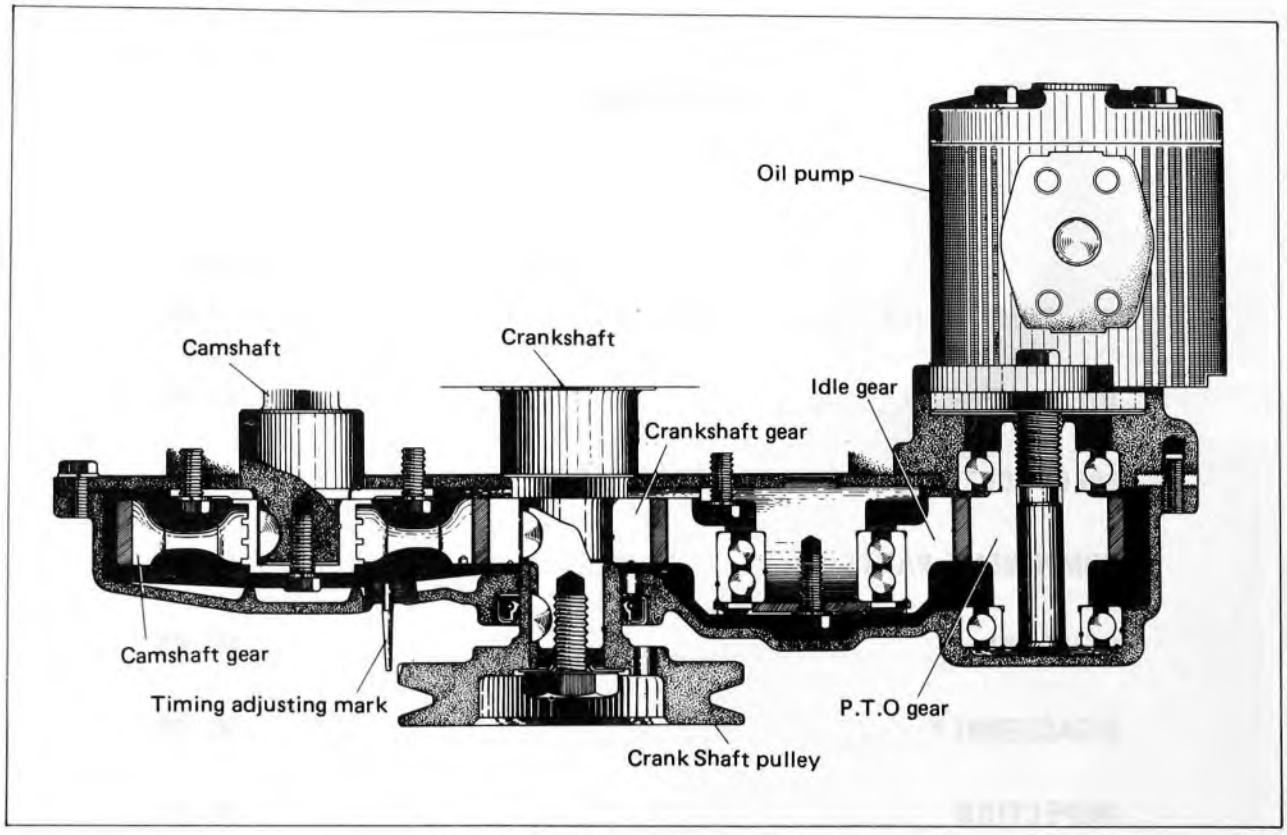

Fig. 10-109 Oil Pump Drive Sectional View

OIL PUMP

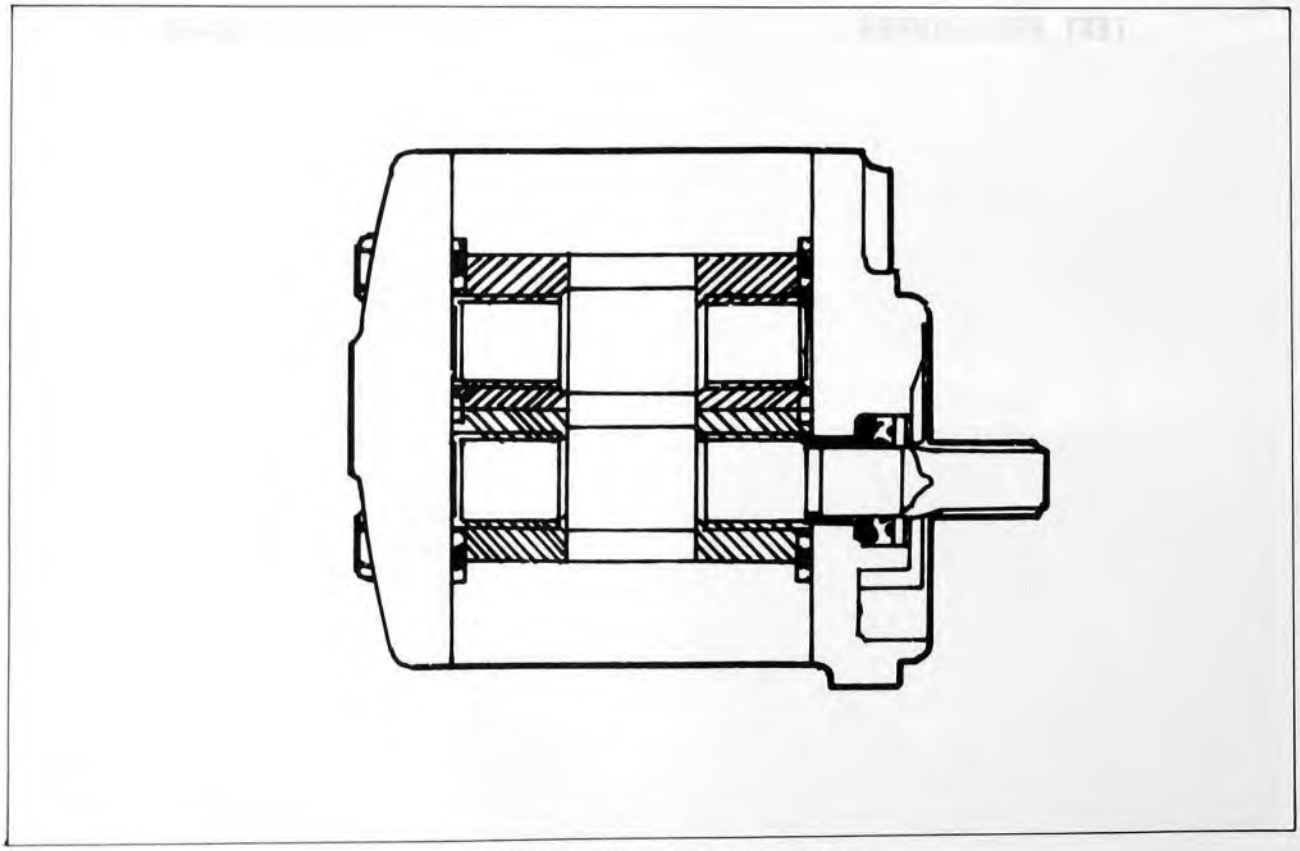

Fig. 10-110 Oil Pump Sectional View

SPECIFICATIONS & SERVICE STANDARD

Application	2 ton series 4P	1, 1.5ton series 4P, 5R 2ton series 5R, 5P, 2J 3ton series 2J	1, 1.5ton series 2J 3t series 5P
Oil pump type	KRP4–21C	KRP4–23C	KRP4–27C
Drive system	PTO gear drive	←	←
Discharge ℓ/min (Pump 1500 rmp)(USgal/min)	30.0 (17.9)	32.8 (18.7)	38.3 (10.1)
Speed ratio with engine	1 : 1.190 (1.0-1.75ton series) (4P engine) 1 : 1.087 (2.0-2.5ton series) (4P engine)	1 : 1.235 (5R engine) 1 : 1.25 (2J engine)	1 : 1.25 (5P engine)
Theoretical suction cc/rev (cu-in/rev)	21.0 (1.28)	22.9 (1.4)	26.5 (1.6)
Body inner surface scoring depth limit	0.1 mm (0.0039 in.)	←	←
Gear shaft dia. limit	18.935 mm (0.745 in.)	←	←
Bushing bore limit	19.123mm (0.753 in.)	←	←
Bushing axial length limit	26.411mm (1.040 in.)	←	←

COMPONENT PARTS

1. Pump body
2. Bushing
3. Bushing seal
4. Backing ring RH
5. Backing ring LH
6. Mounting flange
7. Oil pump gasket
8. Oil seal
9. Snap ring
10. Pump cover
11. Body seal
12. Gear set

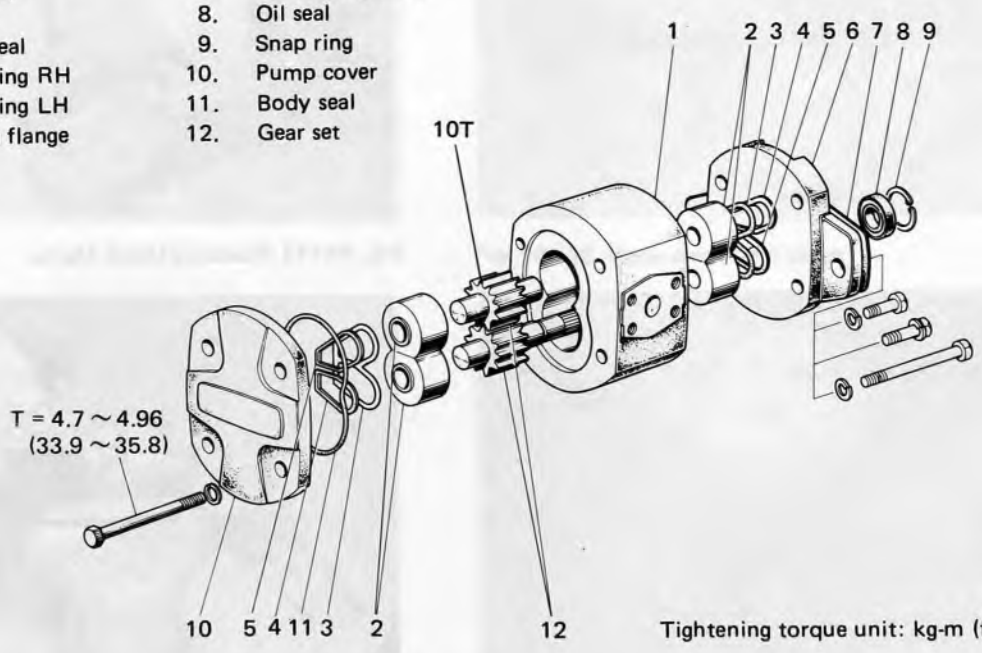

Fig. 10-111 Oil Pump Component Parts

REMOVAL

1. Drain out the hydraulic oil from hydraulic oil tank drain.
   Hydraulic oil: 23ℓ (6.1 US gal)
   (1.0~1.75 ton series)
   28ℓ (10.0 US gal)
   (2.0~3.0 ton series)

2. Remove the engine hood.

3. Remove the air cleaner. (5P & 2J engines only.)

4. Remove the oil pump.
   (1) Inlet hose
   (2) Outlet pipe pump end set bolts
   (3) Oil pump set bolts
   (4) Oil pump

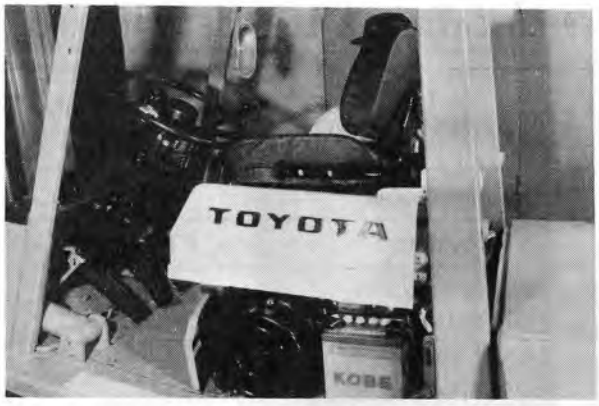

Fig. 10-112 Engine Hood Removal

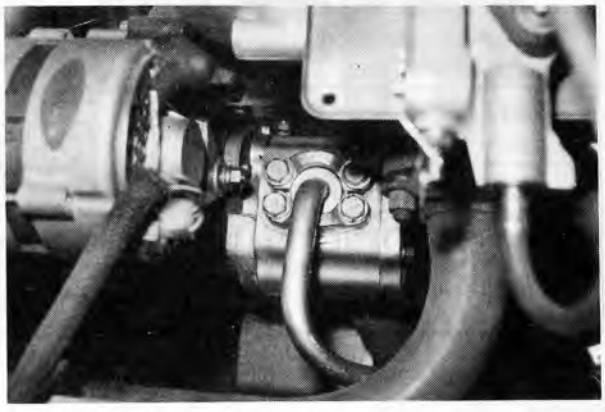

Fig. 10-113 Oil Pump Removal

DISASSEMBLY

Caution:
- **Perform the work in a clean place.**
- **Use fresh hydraulic oil to wash the parts.**

1. Punch match marks on the pump body and cover.



Fig. 10-114 Punching Match Marks

2. Remove the pump cover.
   (1) Set bolts
   (2) Pump cover



Fig. 10-115 Removing Pump Cover

3. Take off the seals.
   (1) Body seal
   (2) Packing rings
   (3) Bushing seals

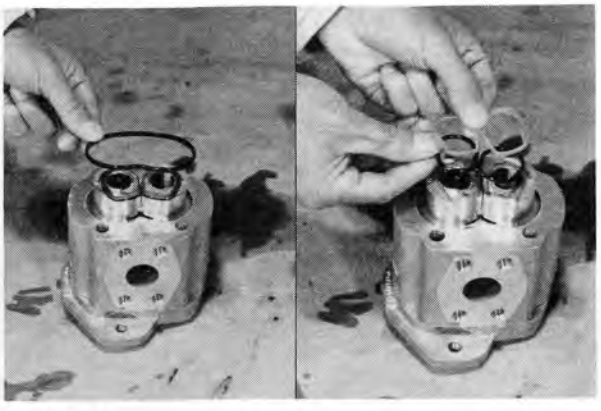

Fig. 10-116 Removing Seals

4. Remove the bushings.



Fig. 10-117 Removing Bushings

5. Remove the pump gears.
   (1) Place match marks
   (2) Drive gear
   (3) Driven gear

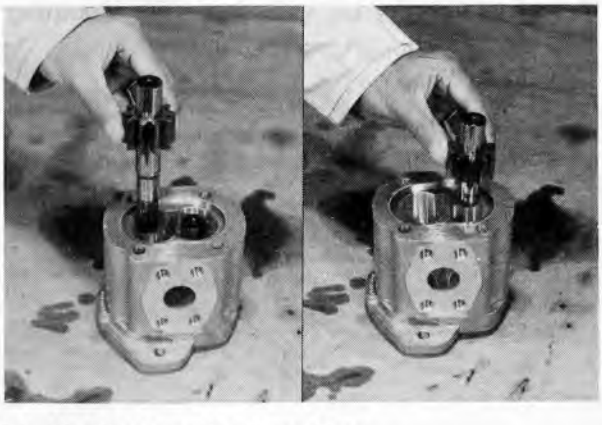

Fig. 10-118 Removing Pump Gears

6. Remove the mounting flange.
   (1) Turn the oil pump upside down
   (2) Mounting flange



Fig. 10-119 Removing Mounting Flange

7. Take off the seals.
   (1) Body seal
   (2) Backing rings
   (3) Bushing seals

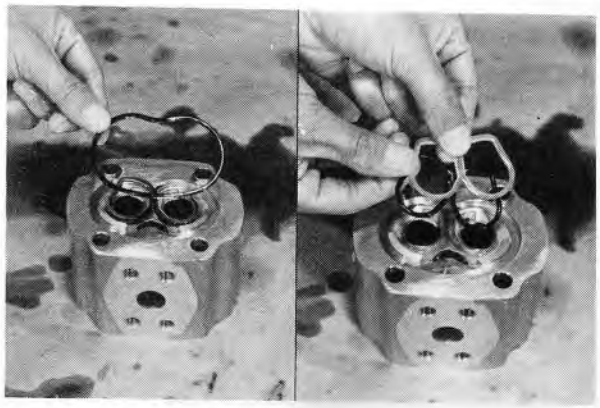

Fig. 10-120 Removing Seals

8. Remove the bushings.



Fig. 10-121 Removing Bushings

9. Remove the oil seals from the mounting flange.
   (1) Snap ring
   (2) Oil seal

   Caution:
   Remove the oil seal only if found defective.



Fig. 10-122 Removing Oil Seal

INSPECTION

Caution:
Check the degree of dirtying or discoloration on the disassembled parts, and then wash and inspect.

1. Body, cover, flange.
   (1) Gear contact abrasion on body inner surface at suction side
   (Normal = Abrasion on about 1/3 of body inner circumference)
   (2) Damage on joining surfaces of body, cover, and flange
   (3) Damaged threads in mounting parts
   (4) Scars in body inner surface
   Body inner surface scar depth limit: 0.1 mm (0.0039 in.)

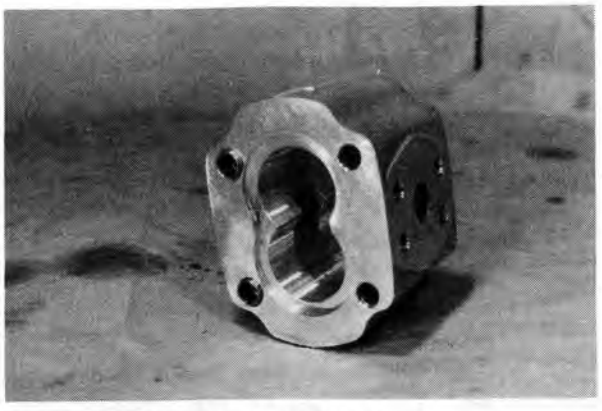

Fig. 10-123 Pump Body Inspection

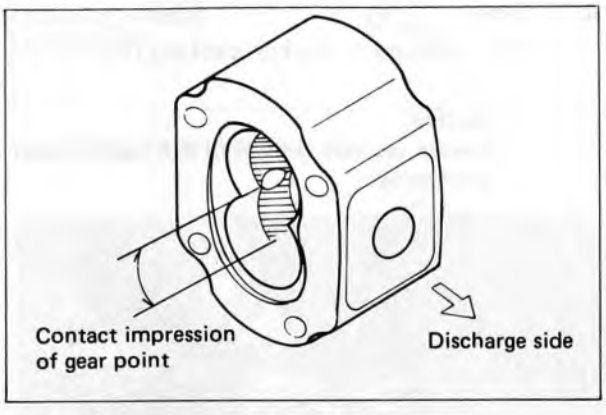

Fig. 10-124 Gear Tooth Tip Contact

2. Bushings.
   (1) Bore sliding surface contacting condition
   (Normal = About 1/2 of suction side should show shiny contact.)
   (2) Scars in bore sliding surface
   Bushing bore limit: 19.123 mm (0.753 in.)

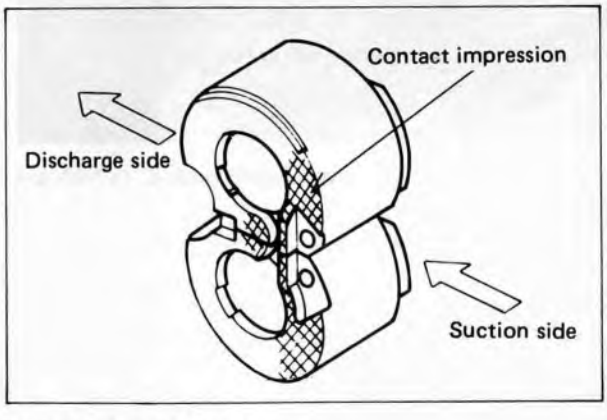

Fig. 10-125 Bushing Contact

   (3) Side surface contact
   (Normal = Contact in which suction side is rather strong and discharge side slight.)
   (4) Side surface scars
   Bushing axial length limit: 26.411 mm (1.040 in.)



Fig. 10-126 Checking Bushing

3. Gears.
   (1) Cracks in tooth tips, scars in side surfaces
   (2) Damage or deterioration in tooth faces
   (3) Damage in gear shaft
   Gear shaft limit: 18.935 mm (0.745 in.)

Essential:
Gear replacement must always be done by set.

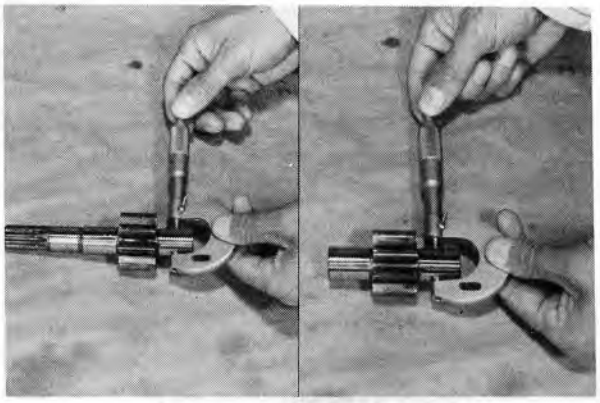

Fig. 10-127 Inspecting Gears

4. Seals.
   (1) Frayed or broken packing ring

Caution:
Always use new body seals and bushing seals at reassembly.

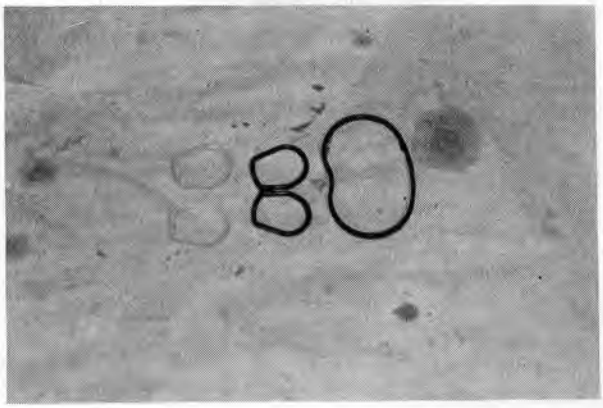

Fig. 10-128 Seal Inspection

   (2) Damage or distortion of lips on oil seal of mounting flange

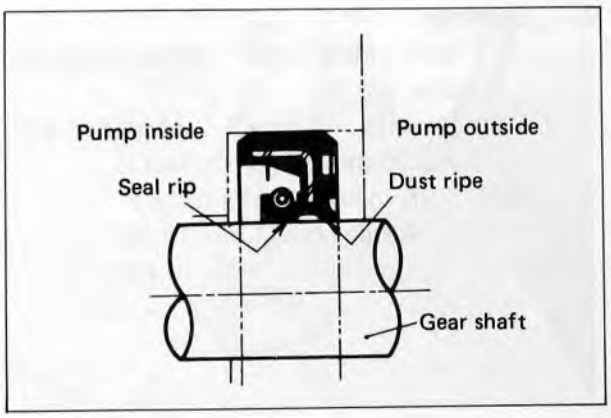

Fig. 10-129 Oil Seal Inspection

ASSEMBLY

1. Wash the parts and blow dry with compressed air.
2. Coat the parts lightly with grease.
   (1) Body seals
   (2) Bushing seals
   (3) Oil seal lip
3. Insert the two mounting flange side bushings into the body.

   Essential:
   - **Position such that the dowels are facing the suction side.**
   - **Have the body interior coated with hydarulic oil.**
   - **Do not pound in the bushings.**
   - **Make sure that the bushings are in correct combination.**
   - **Have the bushing joining surfaces properly aligned.**

4. Install the drive and driven gears.
   (1) Turn the body upside down.
   (2) Drive gear and driven gear

   Caution:
   Position such that the previously meshing surfaces will again be contacting together.

5. Insert the two cover side bushings into the body.
6. Assemble the seals.
   (1) Bushings seals
   (2) Backing rings
   (3) Body seals

   Caution:
   Assemble the backing rings such that they do not overlap at center.

7. Fit on the mounting flange and pump cover to the body and tighten down with set bolts.
   (1) Mounting flange
   (2) Pump cover
   (3) Set bolts
   T = 4.7~4.96 kg-m (33.9~35.8 ft-lb)
8. Check the oil pump assembled condition.
   (1) Lightly clamp the drive gear shaft in a vise.
   (2) Turn the oil pump.
   (3) Pump is satisfactory if it turns lightly. If heavy to turn, disassemble and repeat.
9. Upon completing assembly, fill hydraulic oil into the oil pump.

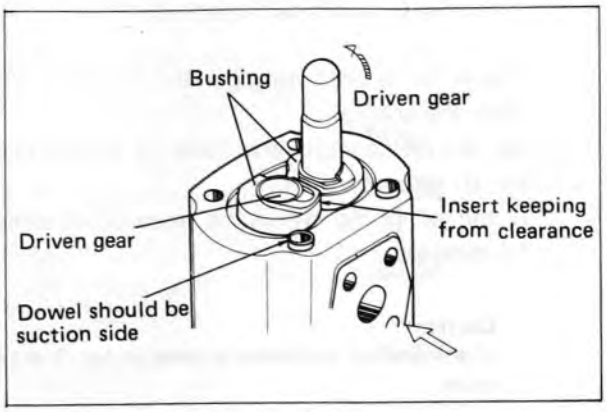

Fig. 10-130 Assembling Bushing



Fig. 10-131 Bolting Down Cover

INSTALLATION

Perform the removal in reverse order.

TEST PROCEDURES

Caution:
To attain accurate results, a bench test must be performed. As this is not possible under actual service conditons, the pump is installed on the vehicle, and the oil pump discharge capacity checked to see if satisfactory by raising the lift cylinder.

1. Mount an oil pressure gage (200 kg/cm²) (2844 psi) and engine tachometer.
2. Start the engine.
3. Set the oil control valve lever to neutral position, and run the engine at around 1,500 to 2,000 rpm for 10 minutes.
4. If the oil pump shows no unusual condition, run the engine at around 1,500 to 2,000 rpm for 10 minutes.

Caution:
If any unusual condition is noted in par. 3 and 4 above, stop the engine at once and disassemble the pump once more.

5. Check the oil control valve relief set pressure to see if according to specifications. For details, refer to Oil Control Valve Adjustment.
6. Check the engine speed to see if according to specifications.
   For details, refer to Engine Speed Adjustment.
7. Lifting speed list

Vehicles	Engine	Oil Pump	Lift Speed mm/sec (fpm)	
			Unladen	Laden
1.0–1.75 ton series	4P	KRP4–23C	490 (96)	470 (92)
	5R	KRP4–23C	510 (100)	490 (96)
	2J	KRP4–27C	520 (102)	500 (98)
2.0–2.5 ton series	4P	KRP4–21C	430 (84)	420 (82)
	5R	KRP4–23C	470 (92)	450 (88)
	5P	KRP4–23C	440 (86)	430 (84)
	2J	KRP4–23C	440 (86)	430 (84)
2.75, 3.0 ton series	5P	KRP4–27C	400 (78)	400 (78)
	2J	KRP4–23C	400 (78)	400 (78)

OIL CONTROL VALVE

	Page
OIL CONTROL VALVE	10–56
RELIEF VALVE	10–56
CHECK VALVE	10–57
TILT LOCK VALVE	10–57
FLOW DIVIDER VALVE	10–57
SPECIFICATIONS	10–58
COMPONENT PARTS	10–59
REMOVAL	10–60
DISASSEMBLY	10–61
INSPECTION	10–64
ASSEMBLY	10–66
ADD-ON PROCEDURE	10–68
ADJUSTMENT	10–69

OIL CONTROL VALVE

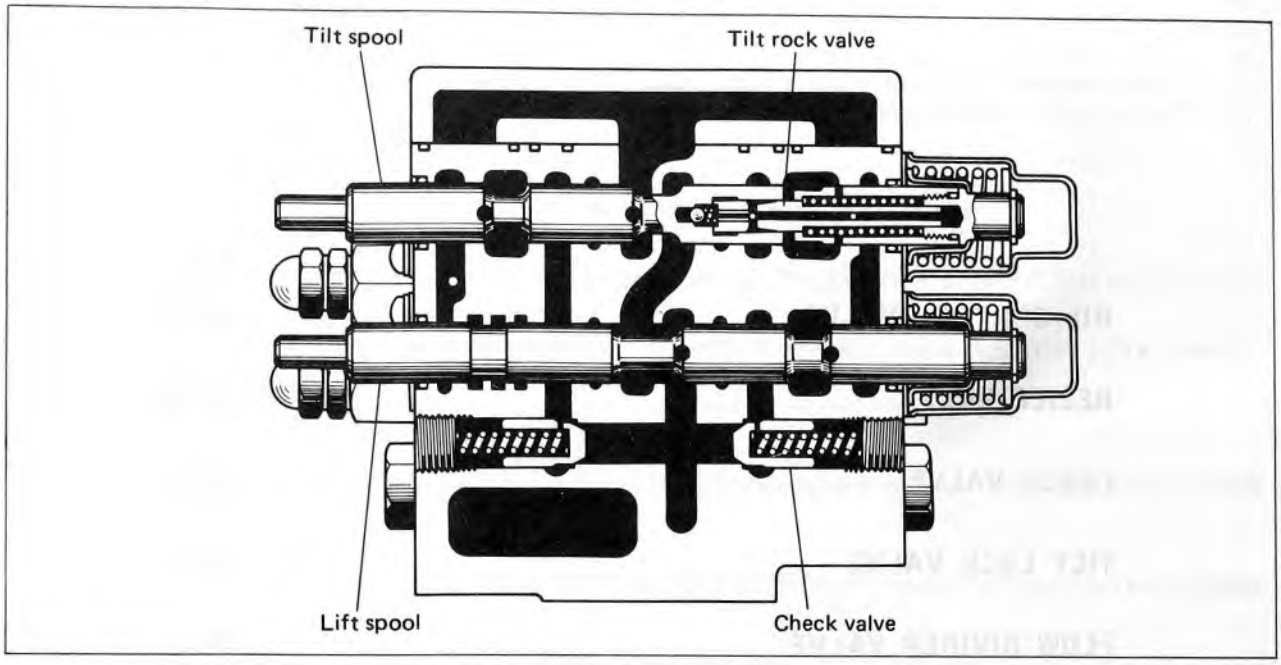

Fig. 10-132 Oil Control Valve Sectional View

RELIEF VALVE

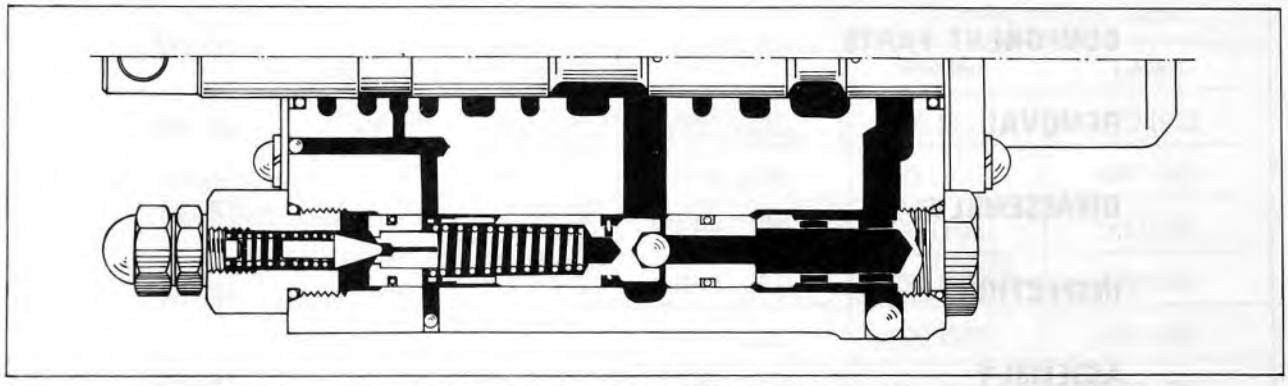

Fig. 10-133 Relief Valve Sectional View (Lift)

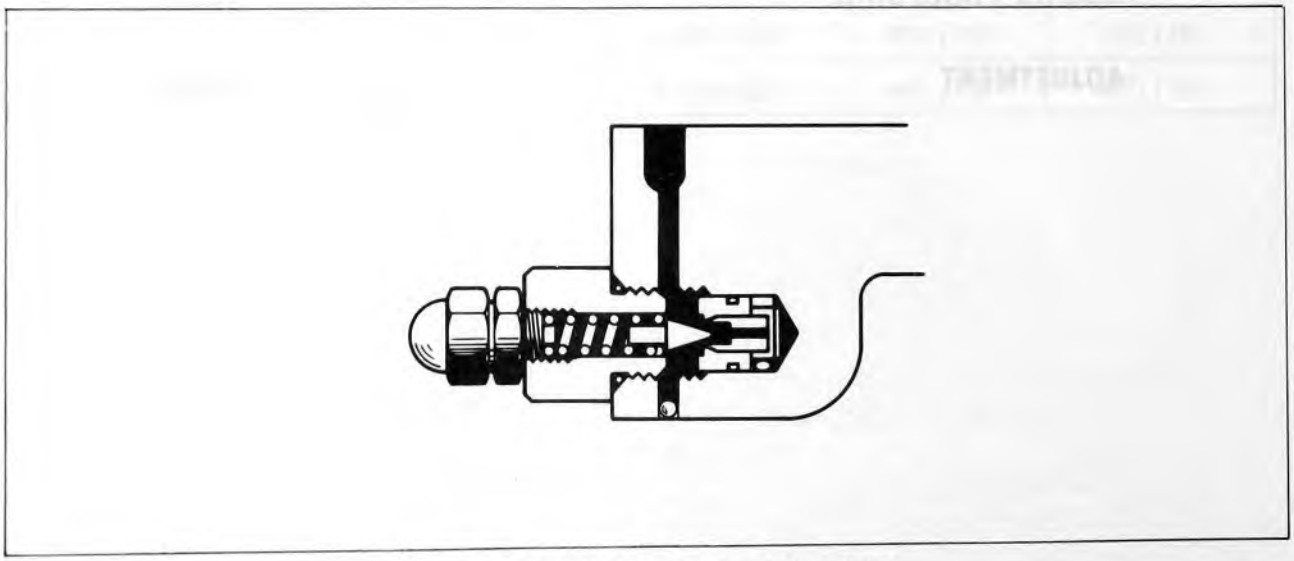

Fig. 10-134 Relief Valve Sectional View (Tilt)

CHECK VALVE

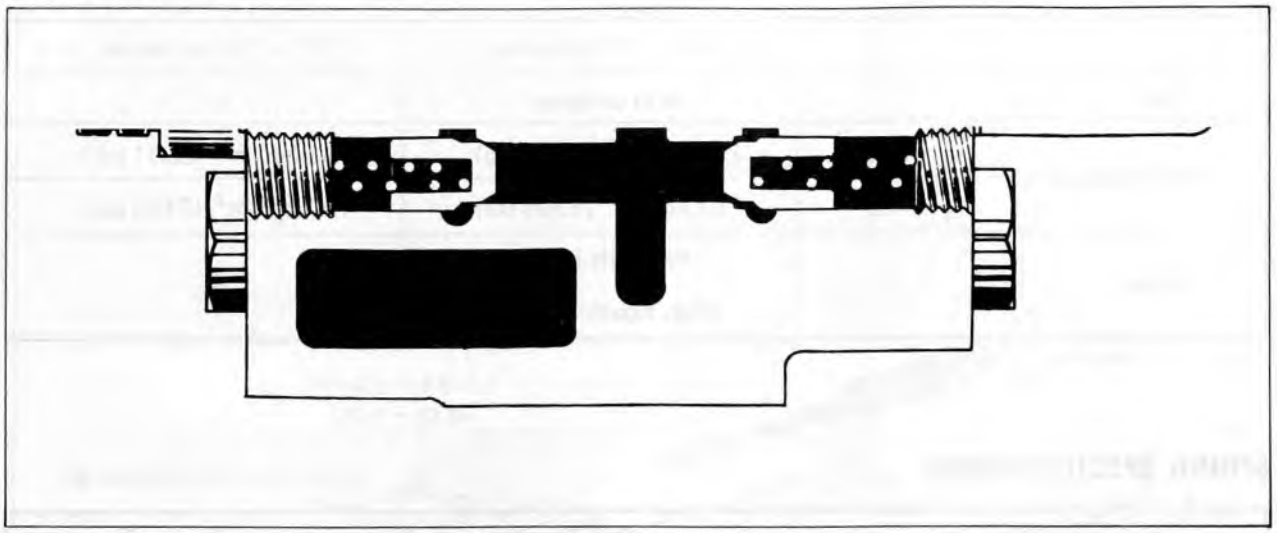

Fig. 10-135 Check Valve Sectional View

TILT LOCK VALVE

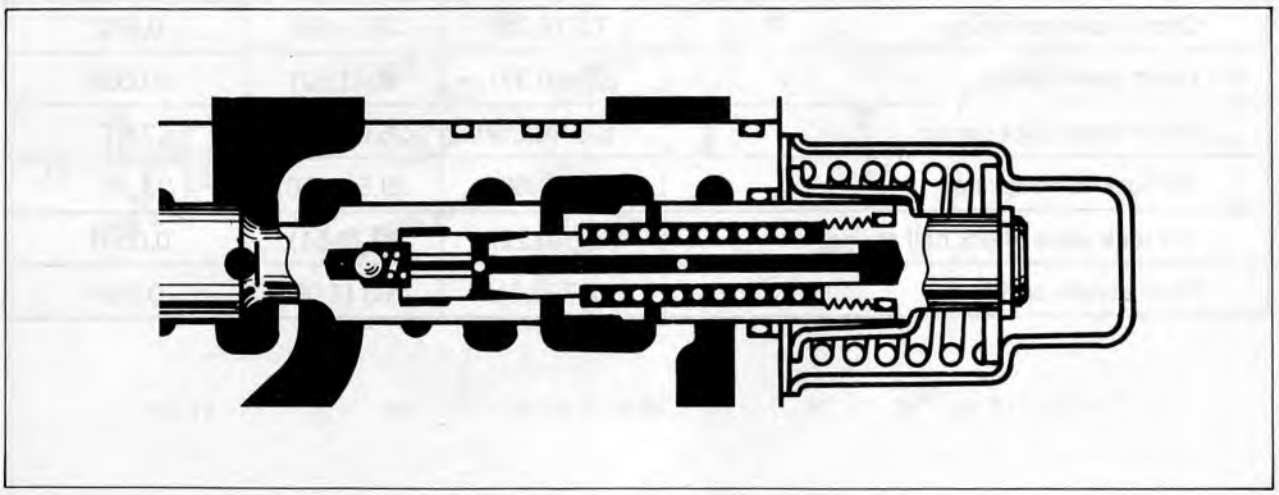

Fig. 10-136 Tilt Lock Sectional View

FLOW DIVIDER VALVE

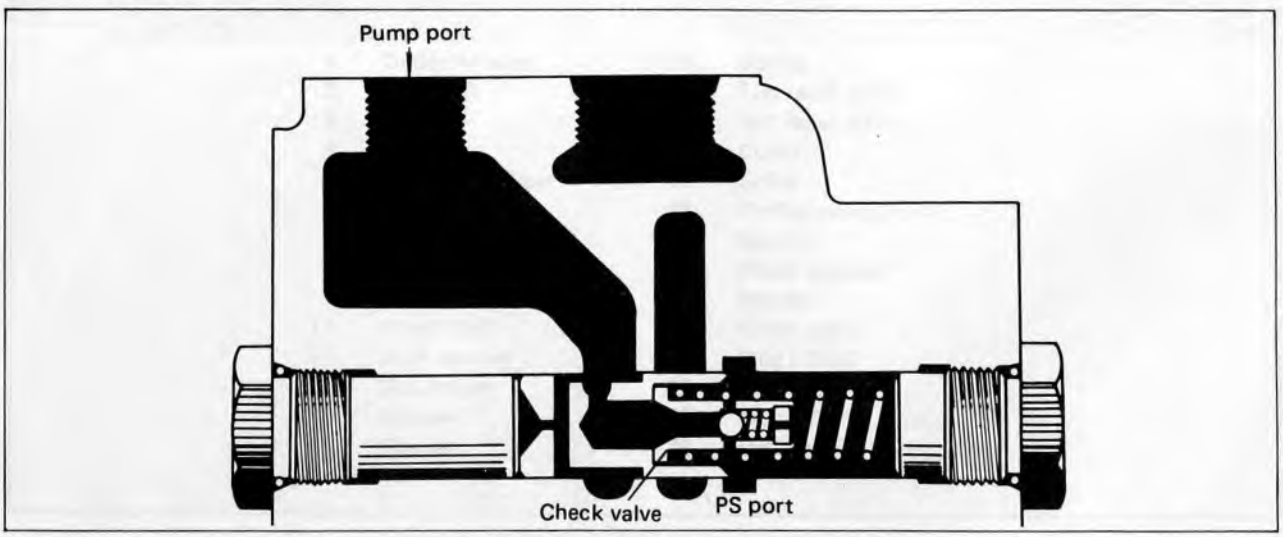

Fig. 10-137 Flow Divider Valve Sectional View

SPECIFICATIONS

		1.0 ~ 1.75 ton series	2.0 ~ 3.0 ton series
Type		Add on type	←
Relief set press	Lift	140 kg/cm^2 (1991 psi)	185 kg/cm^2 (2631 psi)
	Tilt	120 kg/cm^2 (1706 psi)	150 kg/cm^2 (2133 psi)
Others		With tilt lock With floating valve	←

SPRING SPECIFICATIONS

Spring Name	Coil Diameter mm (in.)	Free Length mm (in.)	Spring Constant kg/mm
Spool spring	26.0 (1.02)	37 (1.46)	1.03
Check valve spring	7.2 (0.28)	38 (1.50)	0.072
Relief valve spring	9.5 (0.37)	40 (1.57)	0.0335
Relief valve pilot spring	6.3 (0.25)	26.5 (1.04)	7.47
Tilt lock valve spring	9.2 (0.36)	39.5 (1.56)	3.35
Tilt lock valve check ball spring	5.7 (0.22)	13 (0.51)	0.0581
Flow divider spring	12.7 (0.5)	103 (4.06)	0.559

COMPONENT PARTS

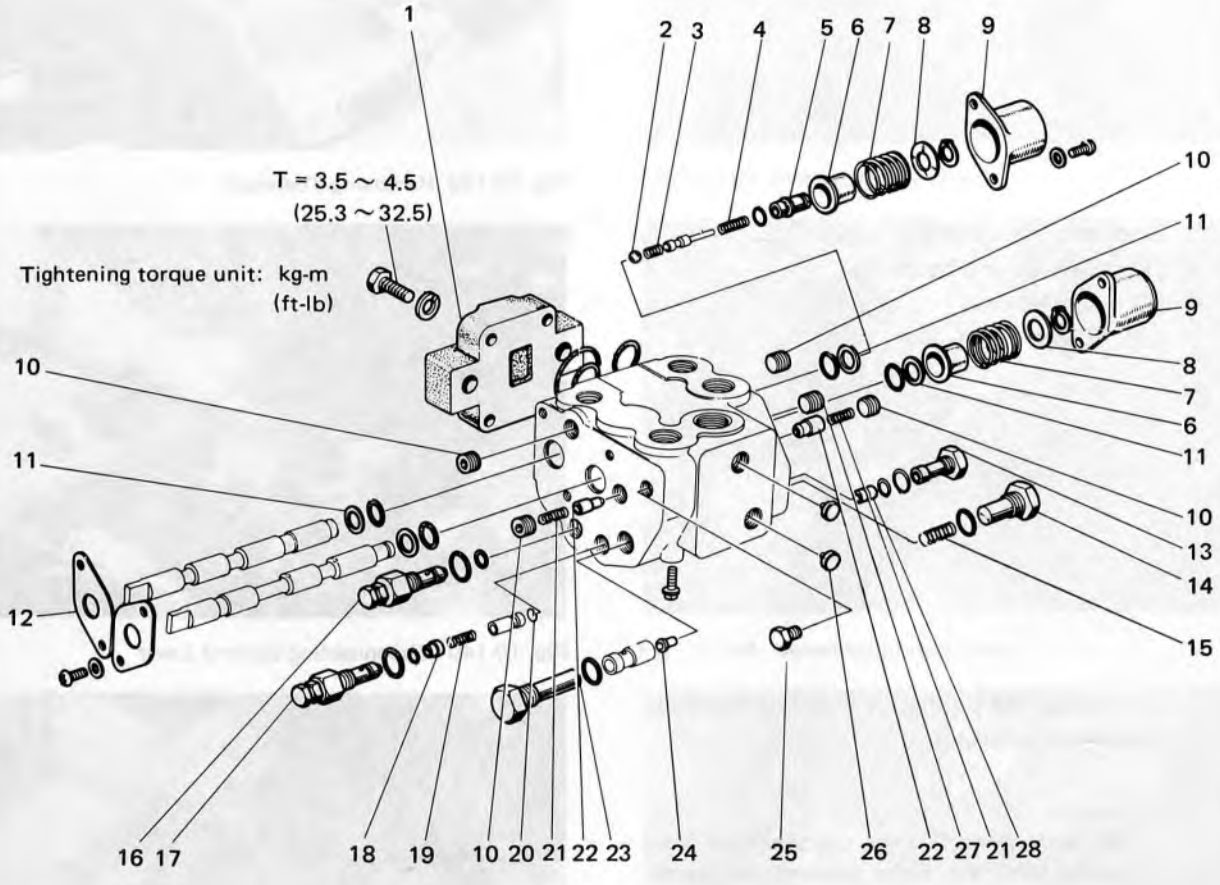

1.	Outlet housing	15.	Spring
2.	Steel ball	16.	Lift relief valve
3.	Spring	17.	Tilt relief valve
4.	Spring	18.	Collar
5.	Tilt lock stopper	19.	Collar
6.	Spring holder	20.	Orifice tuning wire
7.	Spring	21.	Spring
8.	Washer plate	22.	Check plunger
9.	Spring cover	23.	Stopper
10.	Plug PT3/8	24.	Check valve
11.	Back up ring	25.	Plug PT1/4
12.	Seal holder	26.	Insert seat
13.	Stopper	27.	Plug PT1/4
14.	Stopper	28.	Valve seat

Fig. 10-138 Oil Control Valve Component Parts

REMOVAL

1. Remove the toeboards.
   (1) Open the engine hood.
   (2) Rear toeboard
   (3) Front toeboard



Fig. 10-139 Removing Toeboard

2. Disconnect the control levers.
   (1) Slip up the boots
   (2) Cotter pins
   (3) Clevis pins



Fig. 10-140 Disconnecting Control Lever

3. Disconnect the piping for material handling and power steering.

   Caution:
   Before disconnecting the piping, set the mast upright and the forks lowered to lowest position, and relieve all residual pressure in the material handling system piping.

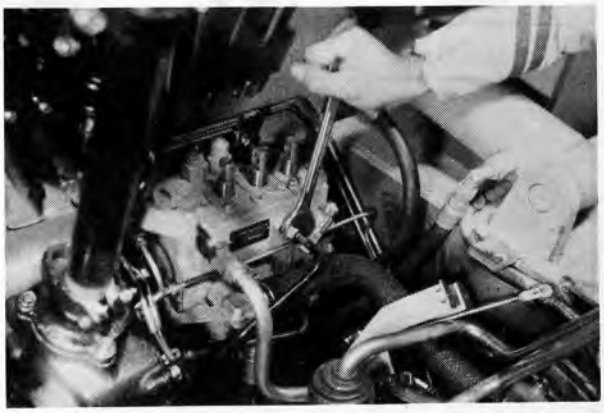

Fig. 10-141 Disconnecting Wiring

4. Remove the oil control valve.
   (1) Set bolts
   (2) Oil control valve



Fig. 142 Removing Control Valve

DISASSEMBLY

Caution:
- Perform the work in a clean place.
- Parts have all been finished to high precision so use care not to injure them.

1. Remove the seal holders.
   (1) Set screws
   (2) Seal holder

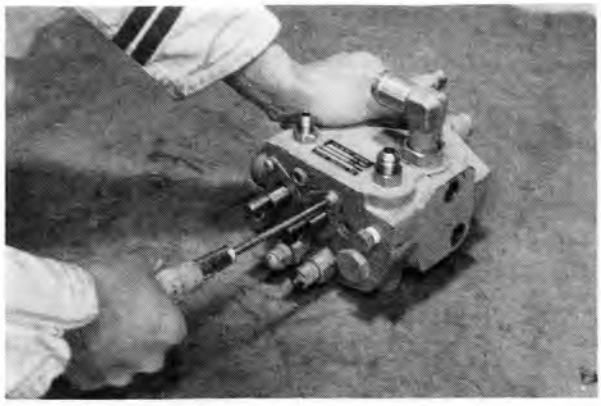

Fig. 10-143 Removing Seal Holder

2. Remove the spring covers.
   (1) Set screws
   (2) Spring cover

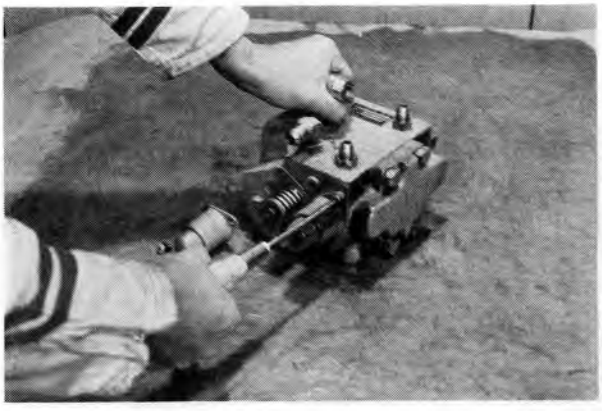

Fig. 10-144 Removing Spring Cover

3. Take out the lift and tilt spools.

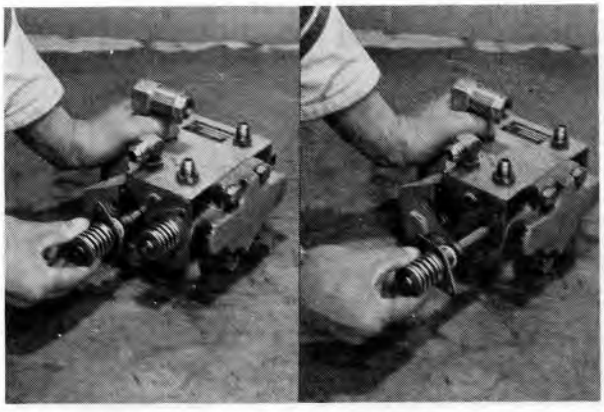

Fig. 10-145 Removing Spool

4. Disassemble the lift and tilt spools.
   (1) Set the SST.
   Use SST 09610-10160-71
   (2) Snap ring
   (3) Plate washer
   (4) Compression spring
   (5) Spring holder
   (6) Seal holder
   (7) Back up ring
   (8) "0" ring



Fig. 10-146 Disassembling Spool

5. Remove the lift relief valve.
   (1) Relief valve
   (2) Spring
   (3) Collar
   (4) Main plunger

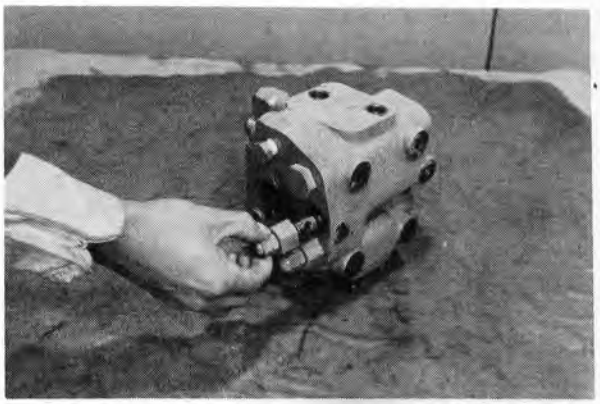

Fig. 10-147 Removing Lift Relief Valve

   (5) Stopper

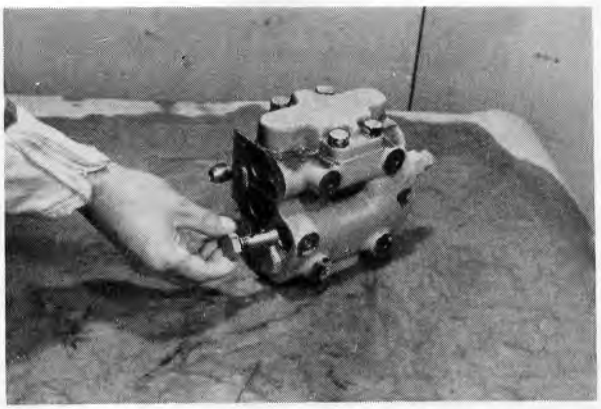

Fig. 10-148 Removing Stopper

   (6) Valve seat
   Use SST 09700-30200-71



Fig. 10-149 Removing Valve Seat

6. Remove the tilt relief valve.

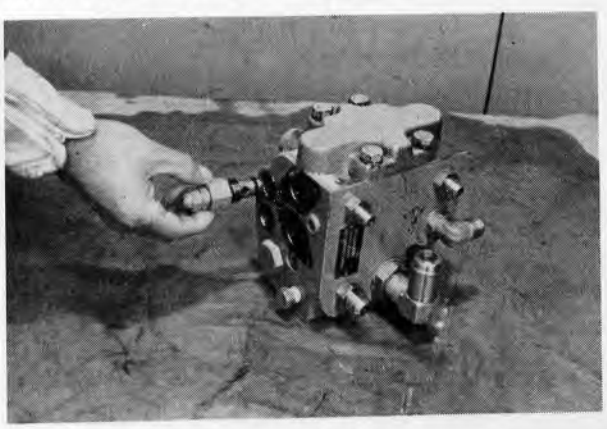

Fig. 10-150 Removing Tilt Relief Valve

7. Use an Allen (hollow) wrench, and disassemble the relief valves.
   (1) Lock nut
   (2) Adjusting nut
   (3) Adjusting screw
   (4) Stopper
   (5) Needle valve



Fig. 10-151 Disassembling Valve

8. Remove the flow divider valve.
   (1) Stopper (upper)
   (2) Stopper (lower)
   (3) Spring
   (4) Piston
   (5) Check valve

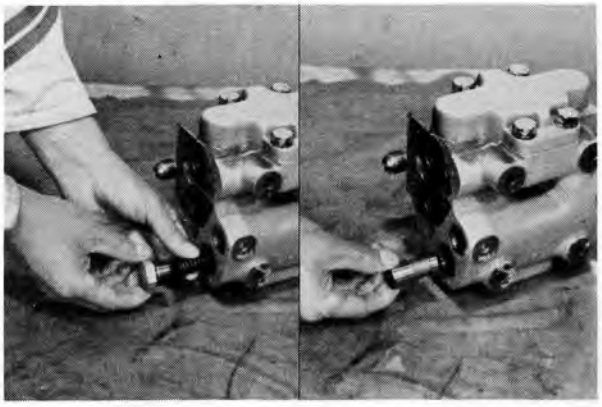

Fig. 10-152 Removing Flow Divider Valve

9. Use an Allen wrench and remove the check valve.
   (1) Plug
   (2) Spring
   (3) Check plunger

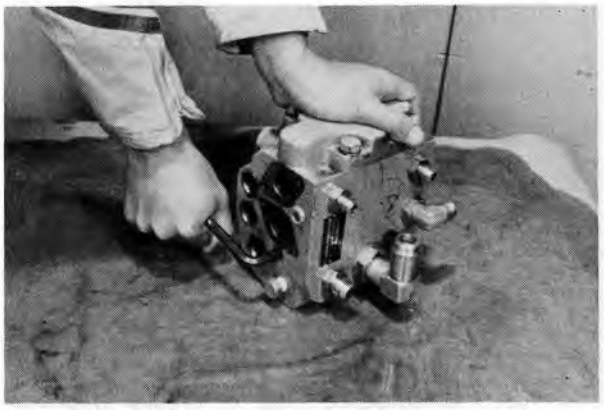

Fig. 10-153 Removing Check Valve

10. Remove the tilt lock valve from the tilt spool.
    Use SST 09700-30200-71 and vise.
    (1) Clamp the spool upper end in the vise.
    (2) Insert the SST through the tilt lock stopper and loosen it.
    (3) Tilt lock stopper



Fig. 10-154 Removing Tilt Lock Stopper

(4) Spring
(5) Tilt lock plunger
(6) Spring
(7) Steel ball

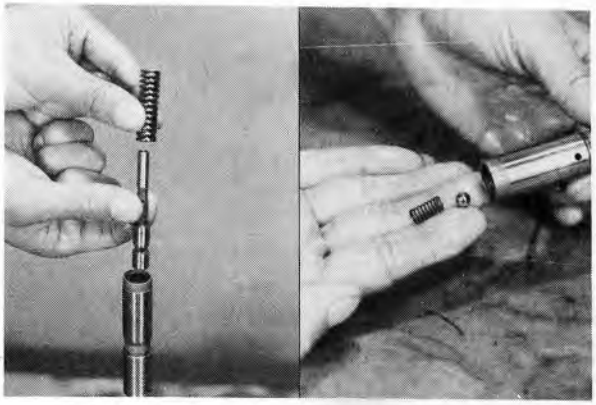

Fig. 10-155 Disassembling Tilt Lock Valve

11. Remove the outlet housing.
    (1) Set bolts
    (2) Outlet housing

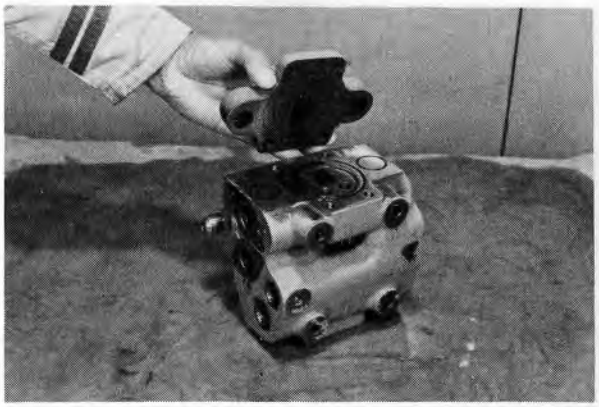

Fig. 10-156 Removing Outlet Housing

INSPECTION

Caution:
- **Thoroughly wash the parts and repair or replace any found defective.**
- **Some of the parts can be disassembed but are not provided with service parts. In such cases, the replacement must be made as an assembly.**

1. Body and outlet housing.
   (1) Sliding damage by spools
   (2) Shouldered wear or cracks in check valve seat
   (3) Damages in eblows and caps
2. Spools.
   (1) Damage in lift spool
   (2) Damage in tilt spool

Essential:
Determine the spool wear by oil leak test.

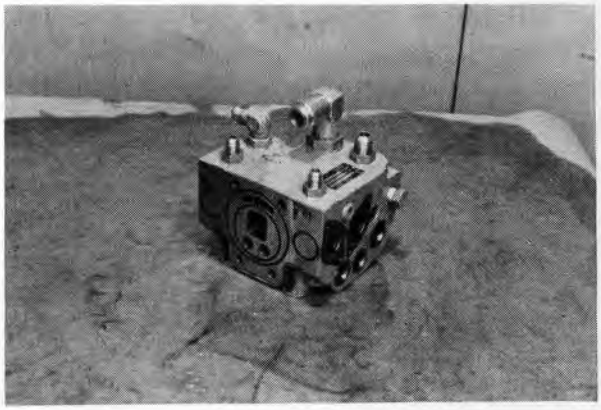

Fig. 10-157 Body Inspection

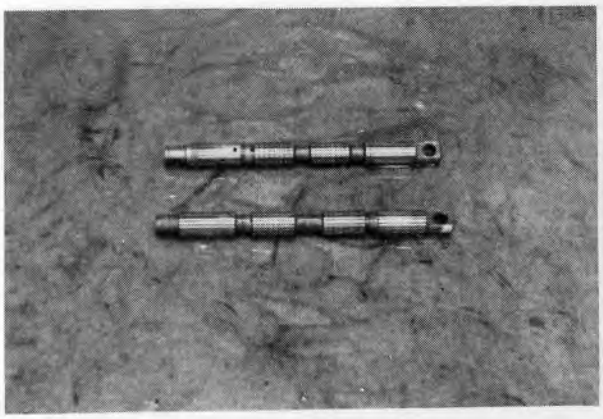

Fig. 10-158 Spool Inspection

3. Lift relief valve.
   (1) Shouldered wear in needle valve
   (2) Defective contact or damage in valve seat
   (3) Weakening in springs

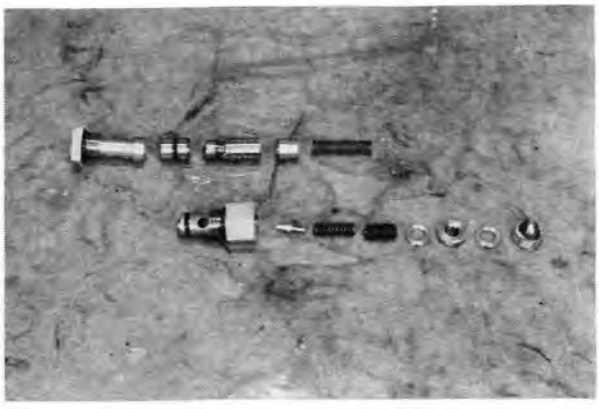

Fig. 10-159 Lift Relief Valve Inspection

4. Tilt relief valve.
   (1) Dirt or clogging in filter cap
   (2) Shouldered wear in needle valve
   (3) Defective contact or damage in valve seat
   (4) Weakening in springs

   A: Filter cap

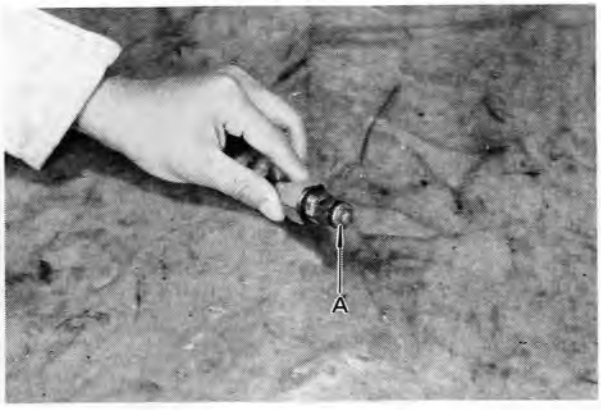

Fig. 10-160 Tilt Relief Valve Inspection

5. Tilt lock valve.
   (1) Sliding condition of tilt lock plunger
   (2) Breakage or weakening in springs
   (3) Shouldered wear in steel ball



Fig. 10-161 Tilt Lock Valve Inspection

6. Flow divider valve.
   (1) Piston sliding condition
   (2) Damage in check valve
   (3) Breakage or weakening in spring



Fig. 10-162 Flow Divider Valve Inspection

7. Check valve.
   (1) Shouldered wear in check plunger
   (2) Breakage or weakening in spring



Fig. 10-163 Check Valve Inspection

ASSEMBLY

1. Wash the parts and blow dry with compressed air.
2. Install the outlet housing.
   (1) Outlet housing
   (2) Set bolts
   T = 3.5~4.5 kg-m (25.3~32.5 ft-lb)

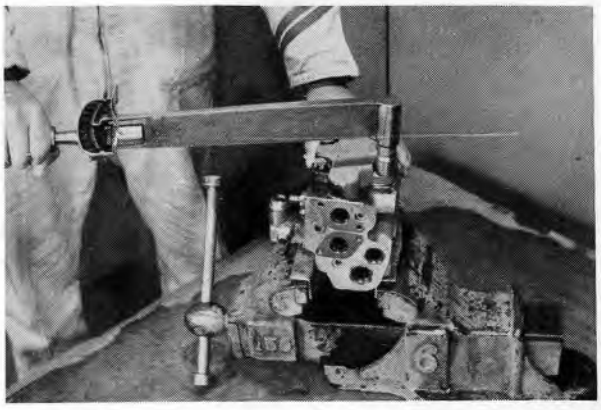

Fig. 10-164 Installing Outlet Housing

3. Assemble the tilt lock valve to tilt spool.
   (1) Steel ball
   (2) Spring
   (3) Tilt lock plunger
   (4) Spring
   (5) Apply locking compound on the tilt lock stopper and tighten.
   Use SST 09700-30200-71



Fig. 10-165 Assembling Tilt Lock Valve

4. Assemble the check valve.
   (1) Check plunger
   (2) Spring
   (3) Plug

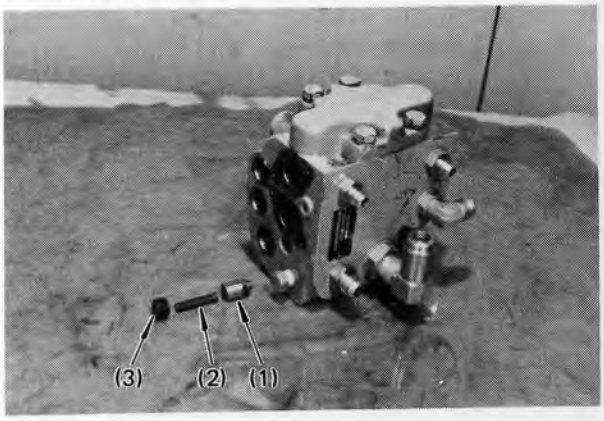

Fig. 10-166 Assembling Check Valve

5. Assemble the flow divider valve.
   (1) Piston
   (2) Check valve
   (3) Spring
   (4) Stopper (lower)
   (5) Stopper (upper)

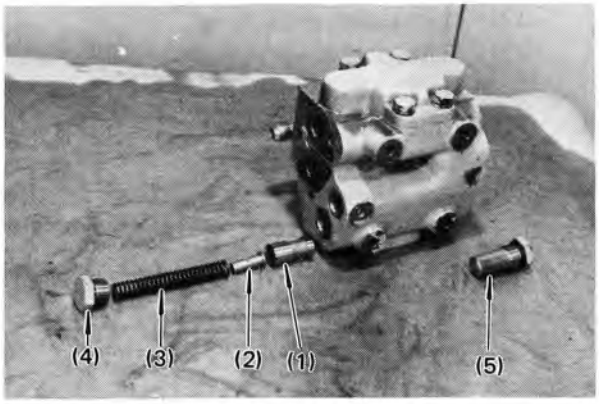

Fig. 10-167 Assembling Flow Divider Valve

6. Assemble the relief valve had been disassembled, make sure to fully return the adjusting screw.

   Essential:
   If the relief valve had been disassembled, make sure to fully return the adjusting screw.

   (1) Tilt relief valve
   (2) Lift relief valve
      1) Valve seat
      2) Stopper
      3) Main plunger
      4) Collar
      5) Spring
      6) Relief valve



Fig. 10-168 Returning Adjusting Screw

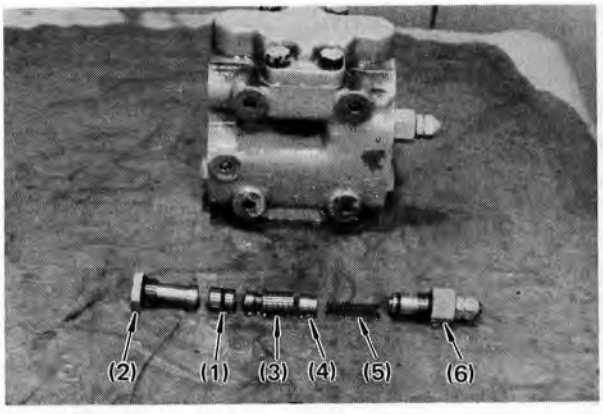

Fig. 10-169 Assembling Relief Valve

7. Install the lift and tilt spools into control valve.
   (1) "0" ring, back up ring
   (2) Seal holder
   (3) Spring holder
   (4) Compression spring
   (5) Plate washer
   (6) Snap ring
      Use SST 09610-10160-71



Fig. 10-170 Assembling Springs

(7) Lift spool
(8) Tilt spool

8. Install the spring covers.
   (1) Spring covers
   (2) Set screws

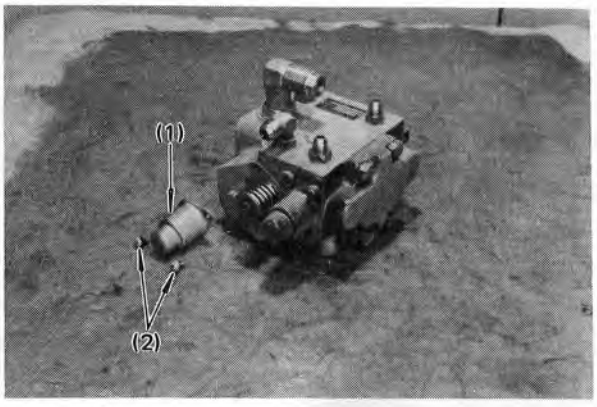

Fig. 10-171 Installing Spring Covers

9. Install the seal holders.
   (1) Seal holders
   (2) Set screws

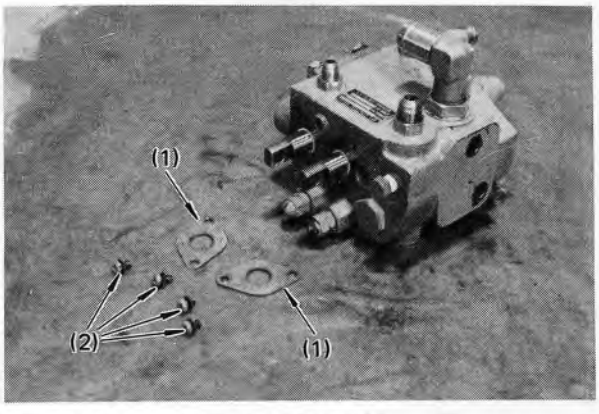

Fig. 10-172 Installing Seal Holders

ADD-ON PROCEDURES

1. Remove the outlet housing.
2. Add on a three-port valve body assy.

Caution:
Apply light coat of grease to prevent the "0" ring from folding or coming off.

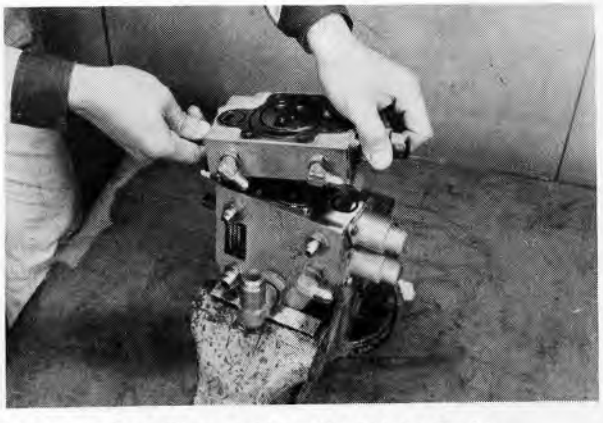

Fig. 10-173 Adding on Three-Port Valve Body

3. Install the outlet housing.
   (1) Outlet housing
   (2) Set bolts
   T = 3.5~4.5 kg-m (25.3~32.5 ft-lb)



Fig. 10-174 Installing Outlet Housing

INSTALLATION

Install by performing the removal in reverse order.

Essential:
- Install the toeboard after finishing the adjustment.
- Apply special chassis grease on the oil control valve lever linkage.

ADJUSTMENT

Caution:
The adjustment must be made in accordance with the following procedures. Any unwarrented adjustment made could result in faulty pressure, with possible danger of damaging the oil pump or other hydraulic equipment.

A: Pressure detecting plug

1. Remove the plug (PT 1/4) from upper part of oil control valve, and mount an oil pressure gage.
2. Remove the cap nut from the lift relief valve at upper part of oil control valve, and verify that the relief valve adjusting screw is fully loosened. If not, loosen fully.
3. Start the engine and verify that there is no oil leakage or unusual noise.
4. Set the control lever to lift position, and screw in the adjusting screw gradually until the lift starts to rise. Read the pressure gage when the fork reaches its highest position. Adjust the set screw to obtain the specified pressure at this point.

Essential:
- Confirm that the no-load controlled maximum speed conforms to specified value. For details, refer to Engine Adjustment.
- If specified pressure is exceeded, return the control lever to neutral position at once.

A: Follow wrench

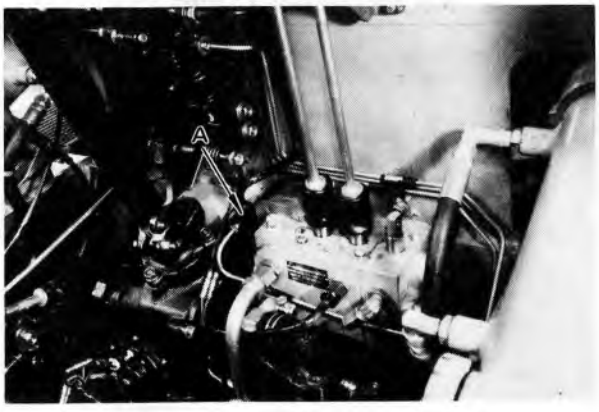

Fig. 10-175 Pressure Gage Mounting Location

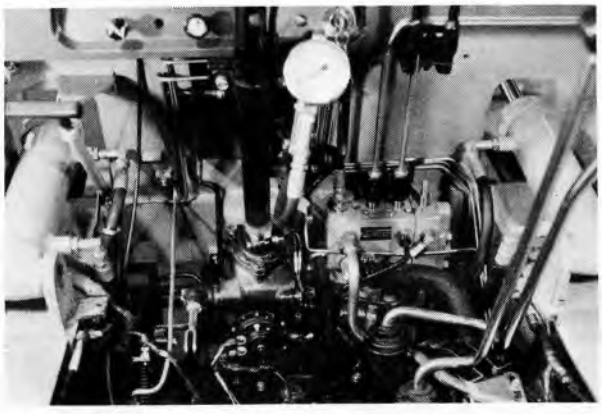

Fig. 10-176 Measuring Hydraulic Pressure

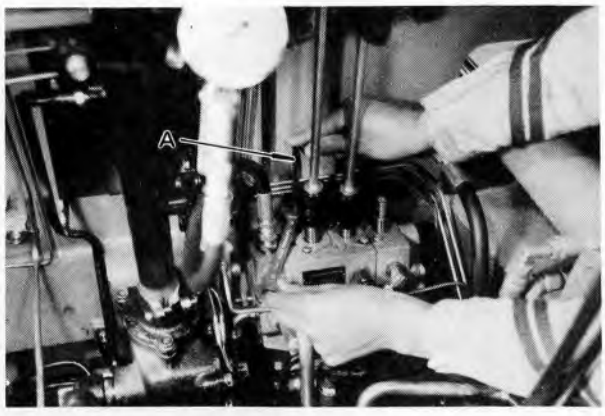

Fig. 10-177 Adjusting Hydraulic Pressure

5. After completing pressure adjustment, tighten the lock nut and cap nut.
6. Next, remove the cap nut from tilt relief valve, and check the adjusting screw to see if fully loosened, as in par. 2 above.
7. Set the control lever to backward tilt position and gradually tighten the adjusting nut until the mast starts to tilt backward. Read the pressure gage when the mast is fully tilted backward. Adjust the set screw to obtain the specified pressure at this point.
8. After completing pressure adjustment, tighten the lock nut and cap nut.
9. Remove the pressure gage and install the toeboard.

	1.0 ~ 1.75 ton series	2.0 ~ 3.0 ton series
Lift relief set pressure kg/cm^2 (psi)	140 (1991)	185 (2631)
Tilt relief set pressure kg/cm^2 (psi)	120 (1706)	150 (2133)

APPENDIX

	Page
LIST OF SST	11– 2

Fig. No.	S. S. T.	Part Number	Part Name
1		09010-20110-71	Hanger, engine
2		09010-20120-71	Hook, engine
3		09120-20110-71	Hanger, engine
4		09130-10170-71	Remover & replacer, gear shift lever cap
5		09130-30200-71	Replacer, oil tight transmission case
6		SST 09210-20170-71	Shaft Puller Remover & replacer, main drive shaft
7	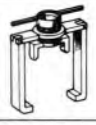	09220-20200-71	Remover & replacer, torque converter clutch drum spring
8		09220-30200-71	Remover & replacer, torque converter clutch drum spring
9		09228-44010	Wrench, oil filter
10	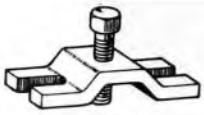	09230-20150-71	Remover, torque converter drive cover
11		09230-30150-71	Gage, torque converter driver cover
12		09310-10160-71	Remover, front axle hub
13	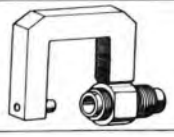	09310-22000-71	Remover, front axle set bolt
14		09330-30010	Holding tool, universal joint

Fig. No.	S. S. T.	Part Number	Part Name
15		09370-10410-71	Replacer, front axle bearing
16		09370-20270-71	Replacer, drive pinion bearing
17	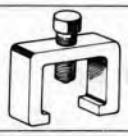	09420-10410-71	Puller, pitman arm
18		09450-12000-71	Replacer, booster piston ring
19		09470-10170-71	Preload tool, main shaft
20		09490-20340-71	Replacer, booster piston ring
21		09509-55020	Remover & replacer, bearing nut wrench
22	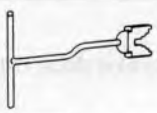	09510-31960-71	Remover & replacer, brake hold-down spring
23		09510-20180-71	Remover, brake spring
24		09601-30011	Remover & replacer, king pin bushing
25	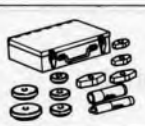	09608-20011	Tool set, front hub & drive pinion bearing
26	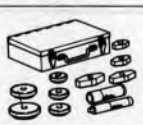	09608-30011	Tool set, front hub & drive pinion bearing
27	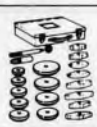	09608-35012	Tool set, axle hub & differential drive pinion bearing
28	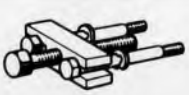	09609-20010	Puller, steering wheel

Fig. No.	S. S. T.	Part Number	Part Name
29		09610-10160-71	Remover & replacer, oil control valve spring
30		09610-20011	Puller, pitman arm
31	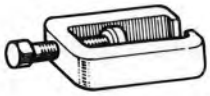	09611-20014	Puller, pitman arm
32		09620-10100-71	Remover, cylinder cap
33	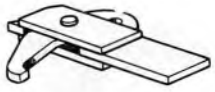	09620-10160-71	Remover & replacer, cylinder cap
34	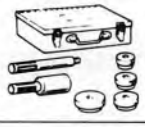	09620-30010	Replacer set, steering gear box
35		09700-30200-71	Pin tool, spring
36		09717-20010	Remover, brake shoe return spring
37		09718-20010	Remover, brake shoe return spring
38		09810-20170-71	Remover, joint pin
39		09950-20012	Puller, universal

Prepared by

TOYOTA MOTOR CORPORATION

No. 23-22 Izumi 1-chome, Higashi-ku

Nagoya, Japan

1st Printing: April 1980

6th Printing: June 1984

No. 95650-1

Printed in Japan