JANEIRO 2004

YANMAR

PARTS CATALOG

RUTHZIL TRATOR COMERCIAL DE PEÇAS LTDA 11 97083-6812 ROLANDO CITRANGULO

4TNV84T - DSA - DSA2 - DSA3 - GGE

0CR10-M56500EN

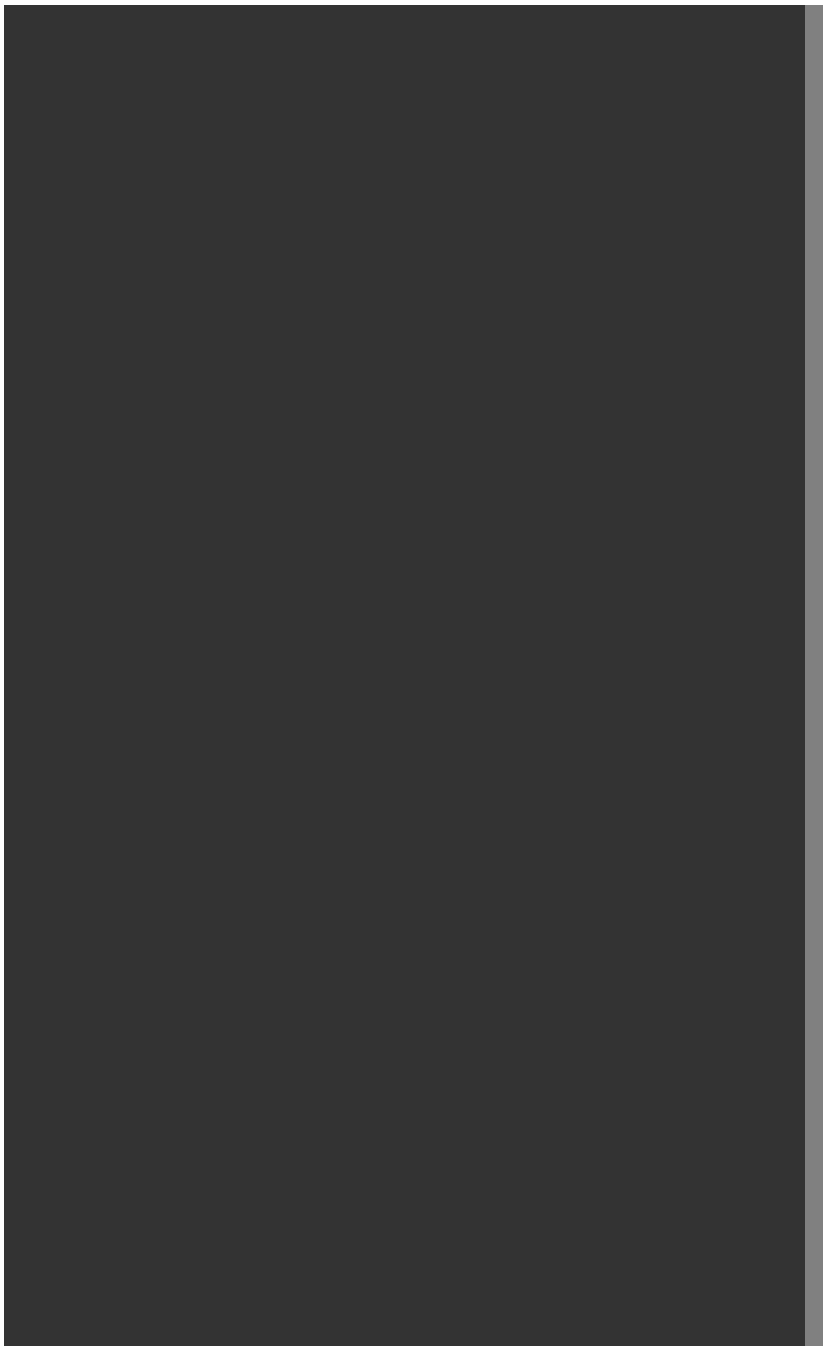

Last update Feb., 2013

PREFACE

1.This Parts Catalog carries all parts incorporated in YANMAR Model 4TNV84T-DSA, 4TNV84T-DSA2, 4TNV84T-DSA3 and 4TNV84T-GGE engine manufactured since January, 2004.

2.Each illustration corresponds to the parts list on the following page.

3.When ordering parts,clearly write down the engine model and serial number,as well as the name and number of each part in your order sheet. This will help insure reliable delivery of the parts you have ordered.

Directions for the Parts Catalog.

1.This Parts Catalog shows both standard and optional parts.

2.Parts may change without prior notice.

3.The following is an example of the Parts Catalog format.

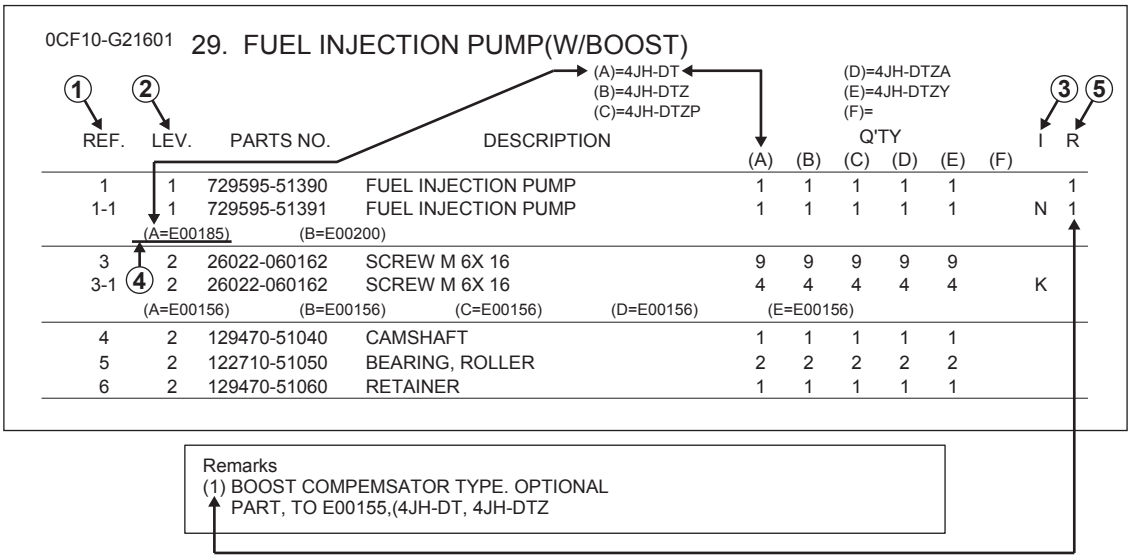

0CF10-G21601 29. FUEL INJECTION PUMP(W/BOOST)

(A)=4JH-DT
(B)=4JH-DTZ
(C)=4JH-DTZP
(D)=4JH-DTZA
(E)=4JH-DTZY
(F)=

REF.	LEV.	PARTS NO.	DESCRIPTION	Q'TY (A)	(B)	(C)	(D)	(E)	(F)	I	R
1	1	729595-51390	FUEL INJECTION PUMP	1	1	1	1	1			1
1-1	1	729595-51391	FUEL INJECTION PUMP	1	1	1	1	1		N	1
	(A=E00185)	(B=E00200)									
3	2	26022-060162	SCREW M 6X 16	9	9	9	9	9			
3-1	2	26022-060162	SCREW M 6X 16	4	4	4	4	4		K	
	(A=E00156)	(B=E00156)	(C=E00156) (D=E00156)	(E=E00156)							
4	2	129470-51040	CAMSHAFT	1	1	1	1	1			
5	2	122710-51050	BEARING, ROLLER	2	2	2	2	2			
6	2	129470-51060	RETAINER	1	1	1	1	1			

Remarks
(1) BOOST COMPEMSATOR TYPE. OPTIONAL
PART, TO E00155,(4JH-DT, 4JH-DTZ

①Ref. No.

The Ref. No. listed may not be in accordance with the illustration Ref. No.

(Ex.) Illustration No. 1 — List Ref No. 1 (Before change) → 1- 1 (After change)

For interchangeable symbols N, R and K, illustrations for new parts may be abbreviated.

②Lev. (Level)

Level indication

The numbers below indicate the level of relativity towards the main part.

1 ----- Main parts (Assembly parts)

2 ----- Sub component included in ” 1 ”.

3 ----- Sub component included in ” 2 “.

Note) Parts that are not for sale are partially illustrated but not listed.

③Interchangeability Symbol

When a part change takes place, one of the following interchangeability symbols is indicated beside the part.

Symbol	Interchangeability	Contents note
N	Old ← Yes / No → New	New Part is interchangeable for Old Part but Old Part is not interchangeable for New Part.
Q	Old ← No / Yes → New	New Part is not interchangeable for Old Part but Old Part is interchangeable for New Part.
R	Old ← Yes / Yes → New	New/ Old Parts are both interchangeable.
S	Old ← No / No → New	New/ Old Parts are both not interchangeable.
W		Part newly added.
Z		Part discontinued.
F		Not interchangeable by a single part but interchangeable together with related parts.
K		Changes only for used parts quantities.

④Effective Machine No.

When a part changes, the effective Machine No. will be indicated in the (A)-(F) column.

Product Symbol	Product No.	Product Symbol	Product No.
C	Clutch No. Compressor No.	F	Machine No. (Agricultural Equip.)
D	Drive No.	M	Machine No.
E	Engine No.		

Note 1) A date may follow the symbol. (Ex.) 1996.01

Note 2) ” XXXXX ” and ” ZZZZZ ” are for parts that could not be predicted or for engine models that could not be identified.

Note 3) (A=E00185) is the E (Engine Serial Number) for the column (A) model (in this case 4JH-DT) after the parts design change.

⑤Remarks

Figures or alphabets (symbols) are entered in the remarks column.

The comments (remarks) on parts that are indicated at the bottom of the illustration are the same symbols as those stated above.

Contents

Fig. No. Fig. Name

ENGINE SECTION (4TNV84T-DSA,2,3,GGE)

1. CYLINDER BLOCK
2. GEAR HOUSING
3. GEAR HOUSING
4. FLYWHEEL HOUSING & OIL SUMP
5. CYLINDER HEAD & BONNET
6. SUCTION MANIFOLD
7. EXHAUST MANIFOLD
8. CAMSHAFT & DRIVING GEAR
9. TURBINE
10. CRANKSHAFT & PISTON
11. LUB. OIL SYSTEM
12. LUB. OIL LINE
13. COOLING WATER SYSTEM
14. FUEL INJECTION PUMP
15. FUEL INJECTION PUMP
16. FUEL INJECTION VALVE
17. FUEL INJECTION VALVE
18. FUEL LINE
19. STARTING MOTOR
20. STARTING MOTOR
21. GENERATOR
22. GASKET SET
23. FUEL INJECTION PUMP(INNER PARTS)
24. GOVERNOR(INNER PARTS)

Fig. No. Fig. Name

25. FUEL INJECTION PUMP(INNER PARTS)
26. GOVERNOR(INNER PARTS)

Fig.1. CYLINDER BLOCK

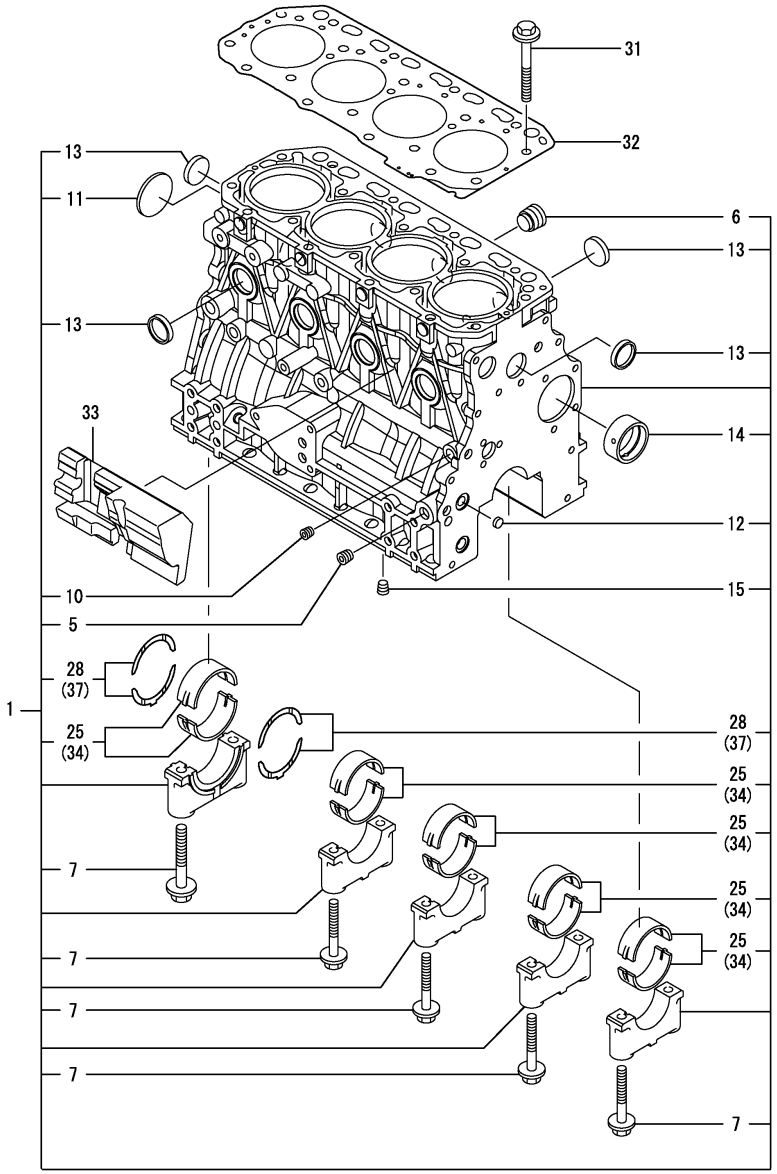

(A)=4TNV84T-DSA
(B)=4TNV84T-DSA2
(C)=4TNV84T-DSA3
(D)=4TNV84T-GGE
(E)=
(F)=

No.	Lev.	Parts No.	Description	Q'ty (A)	(B)	(C)	(D)	(E)	(F)	I	R
1	1	729508-01560	BLOCK ASSY, CYLINDER	1	1	1	1				
5	2	124160-01910	PLUG, PT1/4	2	2	2	2				
6	2	171051-01921	PLUG, NPTF1	1	1	1	1				
7	2	129150-02020	BOLT, METAL CAP	10	10	10	10				
10	2	124060-01050	PLUG, PT1/8	1	1	1	1				
11	2	129001-01250	PLUG, 50	1	1	1	1				
12	2	27241-120000	PLUG, 12	2	2	2	2				
13	2	27241-300000	PLUG 30	8	8	8	8				
14	2	129795-02411	BUSH, CAMSHAFT	1	1	1	1				
15	2	124160-01910	PLUG, PT1/4	1	1	1	1				
25	2	129001-02930	BEARING, MAIN	5	5	5	5				3
28	2	129150-02930	BEARING, THRUST	2	2	2	2				
31	1	129150-01200	BOLT, HEAD	18	18	18	18				
32	1	129508-01330	GASKET, HEAD	1	1	1	1				
33	1	129004-01190	SPACER	1	1	1	1				
34	1	129150-02870	BEARING, 0.25 US	5	5	5	5				1
37	1	129150-02940	BEARING, THRUST 0.25	1	1	1	1				2

Remarks
(1) UNDER-SIZE(U.S=0.25)PART.
(2) OVER-SIZE(O.S=0.25)PART.
(3) REPAIR PART.

N:Old $\overset{\text{Yes}}{\underset{\text{No}}{\leftrightarrows}}$ New, Q:Old $\overset{\text{No}}{\underset{\text{Yes}}{\leftrightarrows}}$ New, R:Old $\overset{\text{Yes}}{\underset{\text{Yes}}{\leftrightarrows}}$ New, S:Old $\overset{\text{No}}{\underset{\text{No}}{\leftrightarrows}}$ New, W:Add, Z:Discontinued, F:Interchangeable by set, K:Q'ty Change

Copyright (C) YANMAR CO., LTD. All RightsReserved.

Fig.2. GEAR HOUSING

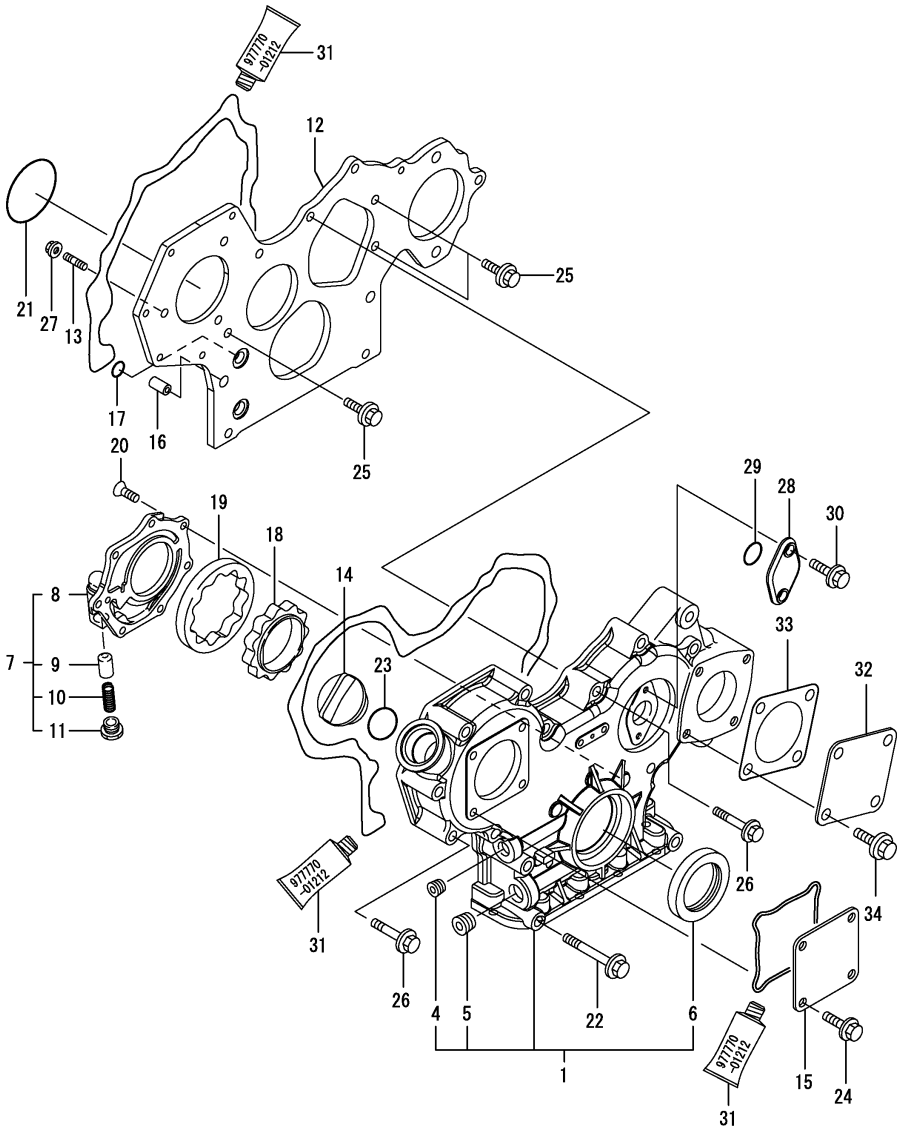

(A)=4TNV84T-DSA
(B)=4TNV84T-DSA2
(C)=4TNV84T-DSA3
(D)=4TNV84T-GGE
(E)=
(F)=

No.	Lev.	Parts No.	Description	Q'ty (A)	(B)	(C)	(D)	(E)	(F)	I	R
1	1	729508-01520	CASE ASSY, GEAR	1	1	1					
4	2	23876-030000	PLUG, R03	1	1	1					
5	2	23876-040000	PLUG, R04	1	1	1					
6	2	129795-01800	SEAL, OIL	1	1	1					
7	1	119802-32100	COVER ASSY	1	1	1					
8	2	119802-32070	COVER	1	1	1					
9	2	129900-32130	VALVE, RELIEF	1	1	1					
10	2	129418-32320	SPRING	1	1	1					
11	2	129001-32330	PLUG	1	1	1					
12	1	129005-01520	FLANGE, GEAR CASE	1	1	1					
13	1	119802-01560	STUD, M8X25	3	3	3					
14	1	124160-01751	COVER, FILLER	1	1	1					
15	1	124240-01871	COVER	1	1	1					
16	1	129795-01950	PIPE, KNOCK L=18	2	2	2					
17	1	119609-32040	O-RING, P16	4	4	4					
18	1	129508-32111	ROTOR, INNER	1	1	1					
19	1	129508-32120	ROTOR, OUTER	1	1	1					
20	1	119802-32130	SCREW, M6X16	7	7	7					
21	1	121850-51960	O-RING	1	1	1					
22	1	129001-91841	BOLT, M8X85	3	3	3					
23	1	24311-000320	O-RING, 1AP32.0	1	1	1					
24	1	26106-080162	BOLT, M8X 16 PLATED	4	4	4					
25	1	26106-080162	BOLT, M8X 16 PLATED	3	3	3					
26	1	26106-080552	BOLT, M8X 55 PLATED	11	11	11					
27	1	26306-080002	NUT, M8	3	3	3					
28	1	121023-01550	COVER	1	1	1					
29	1	24341-000240	O-RING, 1AS24.0	1	1	1					
30	1	26106-060162	BOLT, M6X 16 PLATED	2	2	2					
31	1	977770-01212	GASKET, LIQUID	1	1	1					1
32	1	124240-01871	COVER	1	1	1					
33	1	124240-01883	GASKET	1	1	1					
34	1	26106-080162	BOLT, M8X 16 PLATED	4	4	4					

Remarks
(1) OPTIONAL PART.

N:Old $\overset{\text{Yes}}{\underset{\text{No}}{\rightleftarrows}}$ New, Q:Old $\overset{\text{No}}{\underset{\text{Yes}}{\rightleftarrows}}$ New, R:Old $\overset{\text{Yes}}{\underset{\text{Yes}}{\rightleftarrows}}$ New, S:Old $\overset{\text{No}}{\underset{\text{No}}{\rightleftarrows}}$ New, W:Add, Z:Discontinued, F:Interchangeable by set, K:Q'ty Change

Copyright (C) YANMAR CO., LTD. All RightsReserved.

Fig.3. GEAR HOUSING

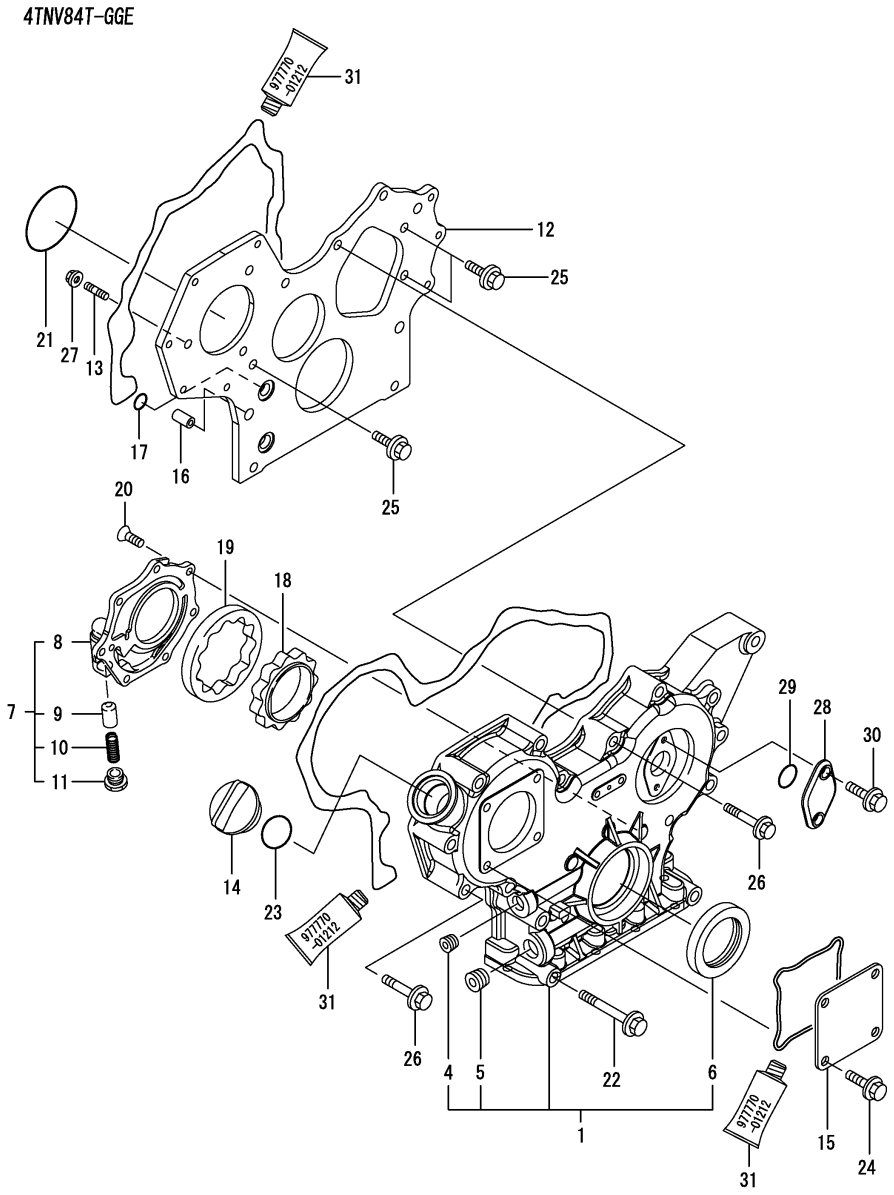

(A)=4TNV84T-DSA
(B)=4TNV84T-DSA2
(C)=4TNV84T-DSA3
(D)=4TNV84T-GGE
(E)=
(F)=

No.	Lev.	Parts No.	Description	Q'ty (A)	(B)	(C)	(D)	(E)	(F)	I	R
1	1	729508-01500	CASE ASSY, GEAR				1				
4	2	23876-030000	PLUG, R03				1				
5	2	23876-040000	PLUG, R04				1				
6	2	129795-01800	SEAL, OIL				1				
7	1	119802-32100	COVER ASSY				1				
8	2	119802-32070	COVER				1				
9	2	129900-32130	VALVE, RELIEF				1				
10	2	129418-32320	SPRING				1				
11	2	129001-32330	PLUG				1				
12	1	119802-01520	FLANGE, GEAR CASE				1				
13	1	119802-01560	STUD, M8X25				3				
14	1	124160-01751	COVER, FILLER				1				
15	1	124240-01871	COVER				1				
16	1	129795-01950	PIPE, KNOCK L=18				2				
17	1	119609-32040	O-RING, P16				4				
18	1	129508-32111	ROTOR, INNER				1				
19	1	129508-32120	ROTOR, OUTER				1				
20	1	119802-32130	SCREW, M6X16				7				
21	1	121850-51960	O-RING				1				
22	1	129001-91841	BOLT, M8X85				3				
23	1	24311-000320	O-RING, 1AP32.0				1				
24	1	26106-080162	BOLT, M8X 16 PLATED				4				
25	1	26106-080162	BOLT, M8X 16 PLATED				3				
26	1	26106-080552	BOLT, M8X 55 PLATED				12				
27	1	26306-080002	NUT, M8				3				
28	1	121023-01550	COVER				1				
29	1	24341-000240	O-RING, 1AS24.0				1				
30	1	26106-060162	BOLT, M6X 16 PLATED				2				
31	1	977770-01212	GASKET, LIQUID				1				1

Remarks
(1) OPTIONAL PART.

N:Old $\overset{\text{Yes}}{\underset{\text{No}}{\leftrightarrows}}$ New, Q:Old $\overset{\text{No}}{\underset{\text{Yes}}{\leftrightarrows}}$ New, R:Old $\overset{\text{Yes}}{\underset{\text{Yes}}{\leftrightarrows}}$ New, S:Old $\overset{\text{No}}{\underset{\text{No}}{\leftrightarrows}}$ New, W:Add, Z:Discontinued, F:Interchangeable by set, K:Q'ty Change

Copyright (C) YANMAR CO., LTD. All RightsReserved.

Fig.4. FLYWHEEL HOUSING & OIL SUMP

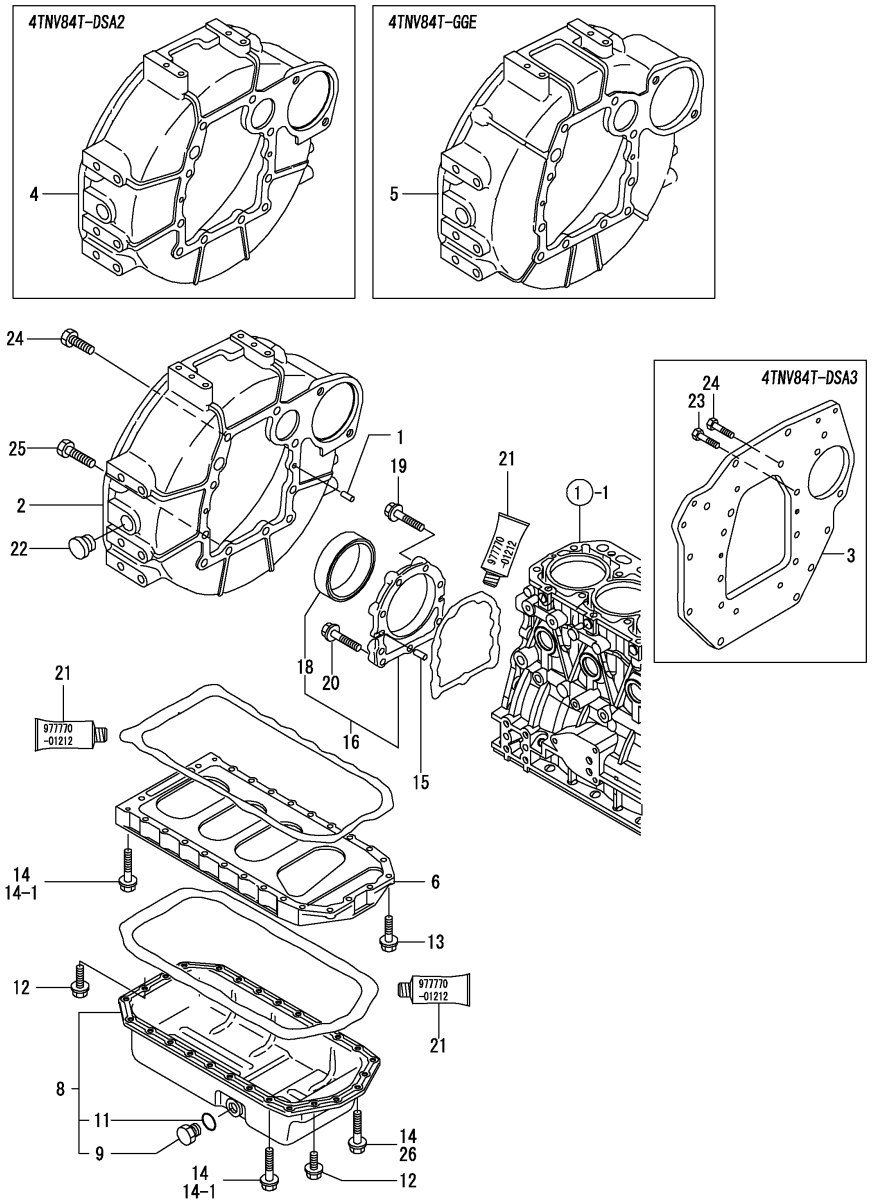

(A)=4TNV84T-DSA (D)=4TNV84T-GGE
(B)=4TNV84T-DSA2 (E)=
(C)=4TNV84T-DSA3 (F)=

No.	Lev.	Parts No.	Description	Q'ty (A)	(B)	(C)	(D)	(E)	(F)	I	R
1	1	129100-01580	PIN, M8X16	2	2	2	2				
2	1	119888-01600	HOUSING, FLYWHEEL	1							
3	1	129129-01600	FLANGE, MOUNTING			1					
4	1	129612-01600	HOUSING, FLYWHEEL		1						
5	1	171420-01600	HOUSING, FLYWHEEL				1				
6	1	129400-01730	SPACER, OIL SUMP	1	1	1	1				
8	1	129400-01770	SUMP ASSY, OIL	1	1	1	1				
9	2	119640-01640	PLUG, DRAIN M22	1	1	1	1				
11	2	22190-220002	WASHER, SEAL 22	1	1	1	1				
12	1	26106-080162	BOLT, M8X 16 PLATED	4	4	4	4				
13	1	26106-080252	BOLT, M8X 25 PLATED	2	2	2	2				
14	1	26106-080452	BOLT, M8X 45 PLATED	24	24	24	24				
14-1	1	26106-080452	BOLT, M8X 45 PLATED	20	20	20	20			K	
	(A=FROM 1ST)	(B=FROM 1ST)	(C=FROM 1ST) (D=FROM 1ST)								
15	1	129100-01580	PIN, M8X16	2	2	2	2				
16	1	129100-01640	CASE ASSY, OIL SEAL	1	1	1	1				
18	2	129795-01780	SEAL, OIL	1	1	1	1				
19	1	129486-01670	BOLT, M8X30	6	6	6	6				
20	1	26106-080352	BOLT, M8X 35 PLATED	3	3	3	3				
21	1	977770-01212	GASKET, LIQUID	1	1	1	1				1
22	1	119620-01750	CAP	1	1		1				
23	1	26206-100202	BOLT, M10X 20 PLATED			6					
24	1	26206-100252	BOLT, M10X 25 PLATED	6	6	2	6				
25	1	26206-100302	BOLT, M10X 30 PLATED	4	4		4				
26	1	26106-080502	BOLT, M8X 50 PLATED	4	4	4	4			W	
	(A=FROM 1ST)	(B=FROM 1ST)	(C=FROM 1ST) (D=FROM 1ST)								

Remarks
(1) OPTIONAL PART.

N:Old ⇔ New, Q:Old ⇔ New, R:Old ⇔ New, S:Old ⇔ New, W:Add, Z:Discontinued, F:Interchangeable by set, K:Q'ty Change

Copyright (C) YANMAR CO., LTD. All RightsReserved.

Fig.5. CYLINDER HEAD & BONNET

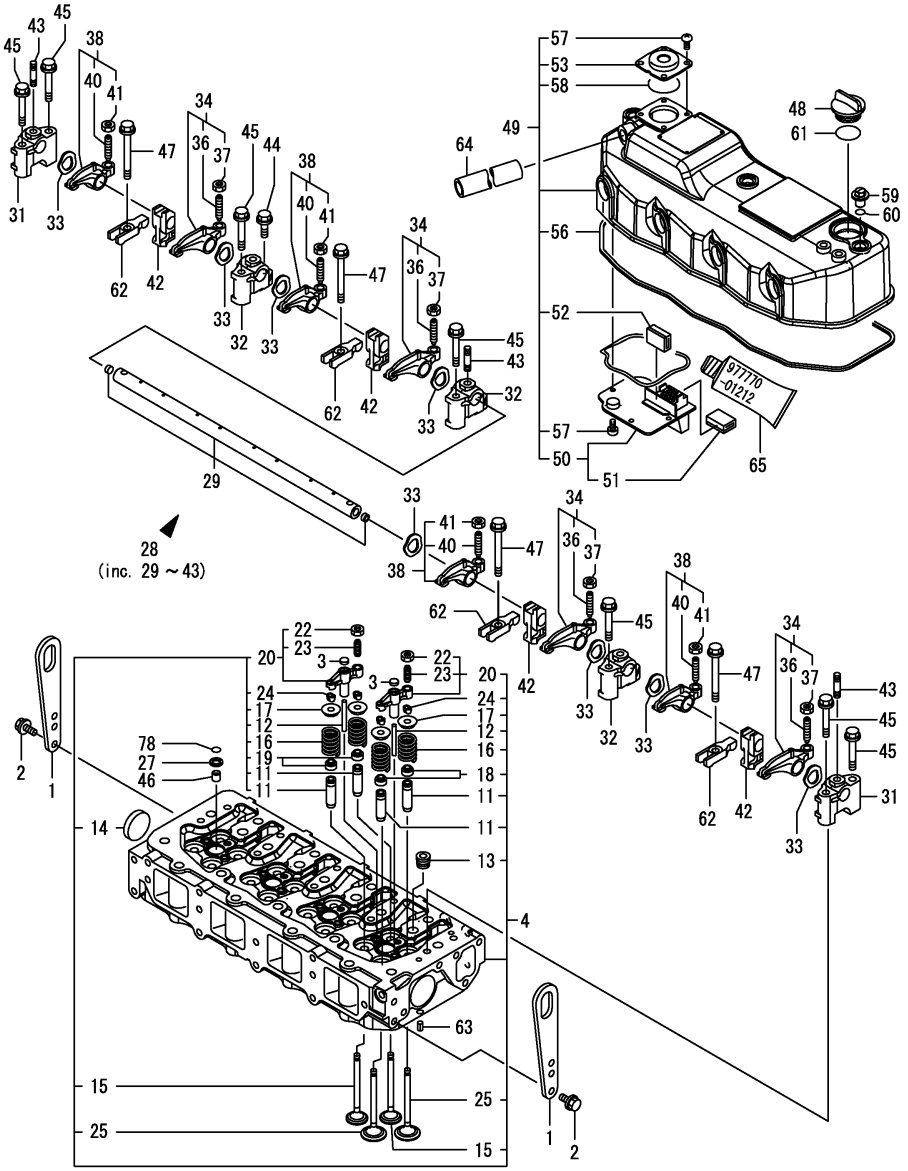

(A)=4TNV84T-DSA (D)=4TNV84T-GGE
(B)=4TNV84T-DSA2 (E)=
(C)=4TNV84T-DSA3 (F)=

No.	Lev.	Parts No.	Description	Q'ty (A)	(B)	(C)	(D)	(E)	(F)	I	R
1	1	129900-07900	LIFTER	2	2	2	2				
2	1	26106-080142	BOLT, M8X 14 PLATED	4	4	4	4				
3	1	129508-11840	SEAT, VALVE BRIDGE	8	8	8	8				
4	1	129508-11700	HEAD ASSY, CYLINDER	1	1	1	1				
11	2	119717-11800	GUIDE, VALVE	16	16	16	16				1
12	2	129508-11820	GUIDE	8	8	8	8				
13	2	23876-020000	PLUG, R02	4	4	4	4				
14	2	27241-400000	PLUG, 40	2	2	2	2				
15	2	129508-11110	VALVE, EXHAUST	8	8	8	8				
16	2	129508-11130	SPRING, VALVE	16	16	16	16				
17	2	129508-11180	RETAINER, SPRING	16	16	16	16				
18	2	119717-11340	SEAL, VALVE STEM	8	8	8	8				
19	2	119717-11350	SEAL, VALVE STEM	8	8	8	8				
20	2	129508-11800	BRIDGE ASSY, VALVE	8	8	8	8				
22	3	129150-11750	NUT, M8	8	8	8	8				
23	3	123907-11830	ADJUSTER	8	8	8	8				
24	2	119717-11190	COTTER	32	32	32	32				
25	2	129508-11100	VALVE, INTAKE	8	8	8	8				
27	1	119625-11880	SEAT, NOZZLE	4	4	4	4				
28	1	129508-11241	SHAFT ASSY, ROCKER	1	1	1	1				
29	2	129508-11250	SHAFT, ROCKER ARM	1	1	1	1				
31	2	129508-11260	SUPPORT, ROCKER ARM	2	2	2	2				
32	2	129508-11270	SUPPORT, ROCKER ARM	3	3	3	3				
33	2	129508-11280	WASHER	8	8	8	8				
34	2	129508-11650	ARM, ROCKER	4	4	4	4				
36	3	129150-11230	SCREW, VALVE ADJUST	4	4	4	4				
37	3	129150-11750	NUT, M8	4	4	4	4				
38	2	129508-11660	ARM, ROCKER	4	4	4	4				
40	3	129150-11230	SCREW, VALVE ADJUST	4	4	4	4				
41	3	129150-11750	NUT, M8	4	4	4	4				
42	2	129508-11920	RETAINER	4	4	4	4				
43	2	26226-080352	STUD, M8X 35	3	3	3	3				
44	1	26106-080252	BOLT, M8X 25 PLATED	3	3	3	3				
45	1	26106-080502	BOLT, M8X 50 PLATED	7	7	7	7				
46	1	119802-11870	PROTECTOR, NOZZLE	4	4	4	4				
47	1	129907-11950	BOLT, M8X75	4	4	4	4				
48	1	124160-01751	COVER, FILLER	1	1	1	1				
49	1	129508-11350	BONNET ASSY, HEAD	1	1	1	1				
50	2	129508-03010	PLATE	1	1	1	1				
51	3	119802-03070	BAFFLE, BREATHER	1	1	1	1				
52	2	129150-03070	BAFFLE, BREATHER	1	1	1	1				
53	2	129006-03120	COVER, DIAPHRAGM	1	1	1	1				
56	2	129508-11310	GASKET, BONNET	1	1	1	1				
57	2	22857-500100	SCREW, 5X10	8	8	8	8				
58	2	24341-000400	O-RING, 1AS40.0	1	1	1	1				
59	1	124160-11360	KNOB	3	3	3	3				
60	1	24311-000120	O-RING, 1AP12.0	3	3	3	3				
61	1	24311-000320	O-RING, 1AP32.0	1	1	1	1				
62	1	129508-11900	RETAINER, NOZZLE	4	4	4	4				
63	1	22351-060012	PIN, SPRING 6.0X12	2	2	2	2				
64	1	129150-03090	HOSE, ID16X2T	1	1	1	1				

Remarks
(1) REPAIR PART.
(2) OPTIONAL PART.

N:Old <-Yes/No-> New, Q:Old <-No/Yes-> New, R:Old <-Yes/Yes-> New, S:Old <-No/No-> New, W:Add, Z:Discontinued, F:Interchangeable by set, K:Q'ty Change

++ CONTINUE ++

Copyright (C) YANMAR CO., LTD. All RightsReserved.

Fig.5. CYLINDER HEAD & BONNET

(A)=4TNV84T-DSA
(B)=4TNV84T-DSA2
(C)=4TNV84T-DSA3
(D)=4TNV84T-GGE
(E)=
(F)=

No.	Lev.	Parts No.	Description	Q'ty (A)	(B)	(C)	(D)	(E)	(F)	I	R
65	1	977770-01212	GASKET, LIQUID	1	1	1	1				2
78	1	24311-000120	O-RING, 1AP12.0	4	4	4	4				

Remarks
(1) REPAIR PART.
(2) OPTIONAL PART.

N:Old $\overset{\text{Yes}}{\underset{\text{No}}{\leftrightarrows}}$ New, Q:Old $\overset{\text{No}}{\underset{\text{Yes}}{\leftrightarrows}}$ New, R:Old $\overset{\text{Yes}}{\underset{\text{Yes}}{\leftrightarrows}}$ New, S:Old $\overset{\text{No}}{\underset{\text{No}}{\leftrightarrows}}$ New, W:Add, Z:Discontinued, F:Interchangeable by set, K:Q'ty Change

Copyright (C) YANMAR CO., LTD. All RightsReserved.

Fig.6. SUCTION MANIFOLD

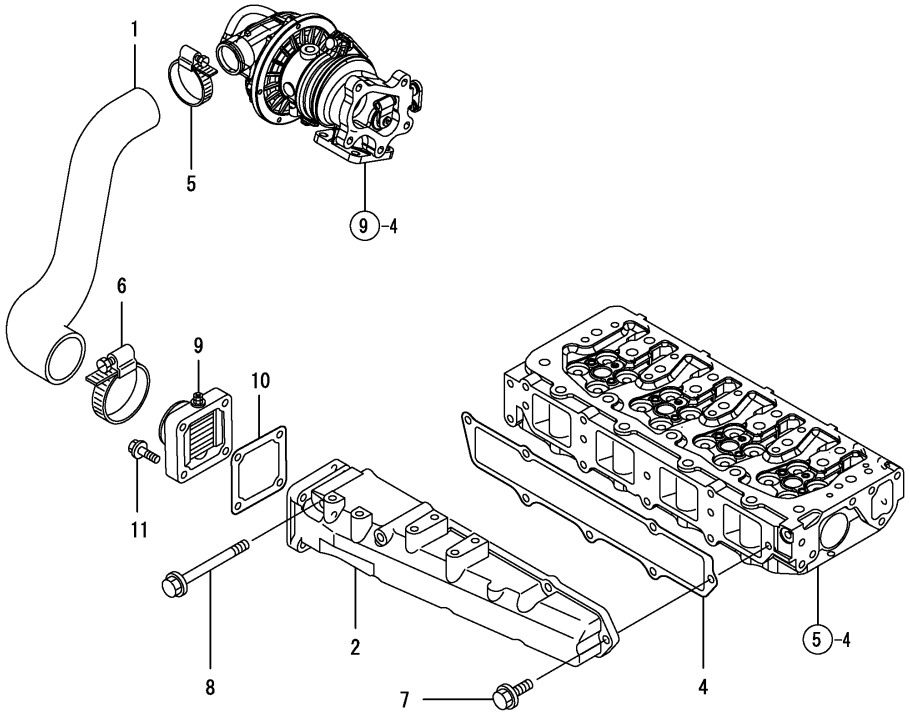

(A)=4TNV84T-DSA
(B)=4TNV84T-DSA2
(C)=4TNV84T-DSA3
(D)=4TNV84T-GGE
(E)=
(F)=

No.	Lev.	Parts No.	Description	Q'ty (A)	(B)	(C)	(D)	(E)	(F)	I	R
1	1	129508-12060	PIPE, AIR INTAKE	1	1	1	1				
2	1	129508-12100	MANIFOLD, AIR INTAKE	1	1	1	1				
4	1	129508-12110	GASKET, MANIFOLD	1	1	1	1				
5	1	23000-048000	CLAMP, 48	1	1	1	1				
6	1	23000-060000	CLAMP, 60	1	1	1	1				
7	1	26106-080202	BOLT, M8X 20 PLATED	5	5	5	5				
8	1	26106-080802	BOLT, M8X 80 PLATED	2	2	2	2				
9	1	129120-77501	HEATER	1	1	1	1				
10	1	129150-77511	GASKET	1	1	1	1				
11	1	26106-080352	BOLT, M8X 35 PLATED	4	4	4	4				

N:Old $\overset{\text{Yes}}{\underset{\text{No}}{\leftrightarrows}}$ New, Q:Old $\overset{\text{No}}{\underset{\text{Yes}}{\leftrightarrows}}$ New, R:Old $\overset{\text{Yes}}{\underset{\text{Yes}}{\leftrightarrows}}$ New, S:Old $\overset{\text{No}}{\underset{\text{No}}{\leftrightarrows}}$ New, W:Add, Z:Discontinued, F:Interchangeable by set, K:Q'ty Change

Copyright (C) YANMAR CO., LTD. All RightsReserved.

Fig.7. EXHAUST MANIFOLD

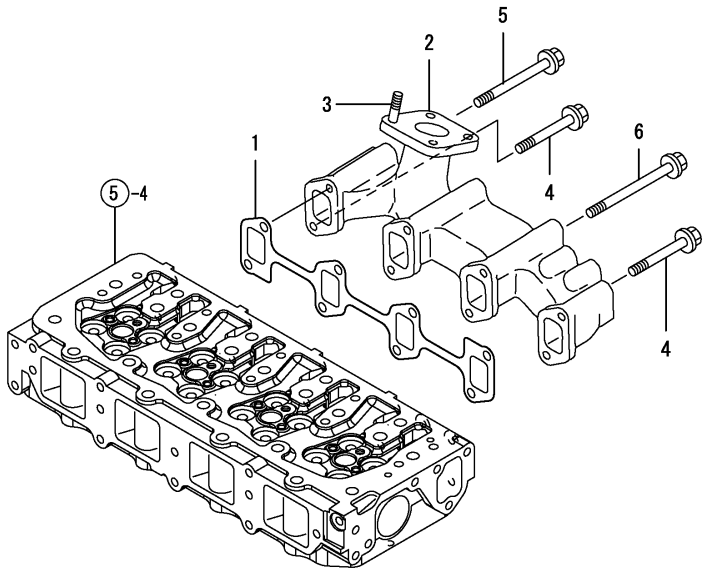

(A)=4TNV84T-DSA
(B)=4TNV84T-DSA2
(C)=4TNV84T-DSA3
(D)=4TNV84T-GGE
(E)=
(F)=

No.	Lev.	Parts No.	Description	Q'ty (A)	(B)	(C)	(D)	(E)	(F)	I	R
1	1	129550-13110	GASKET	1	1	1	1				
2	1	129403-13120	MANIFOLD, EXHAUST	1	1	1	1				
3	1	119131-18320	STUD, M8X22	4	4	4	4				
4	1	119802-13650	BOLT, M8X65	3	3	3	3				
5	1	119802-13670	BOLT, M8X85	1	1	1	1				
6	1	129693-44310	BOLT	4	4	4	4				
6-1	1	119802-13820	BOLT, M8X100 9.8T	4	4	4	4			N	
	(A=*2009.12)		(B=*2009.12)	(C=*2009.12)		(D=*2009.12)					

N:Old ◄Yes/No► New, Q:Old ◄No/Yes► New, R:Old ◄Yes/Yes► New, S:Old ◄No/No► New, W:Add, Z:Discontinued, F:Interchangeable by set, K:Q'ty Change

Copyright (C) YANMAR CO., LTD. All RightsReserved.

Fig.8. CAMSHAFT & DRIVING GEAR

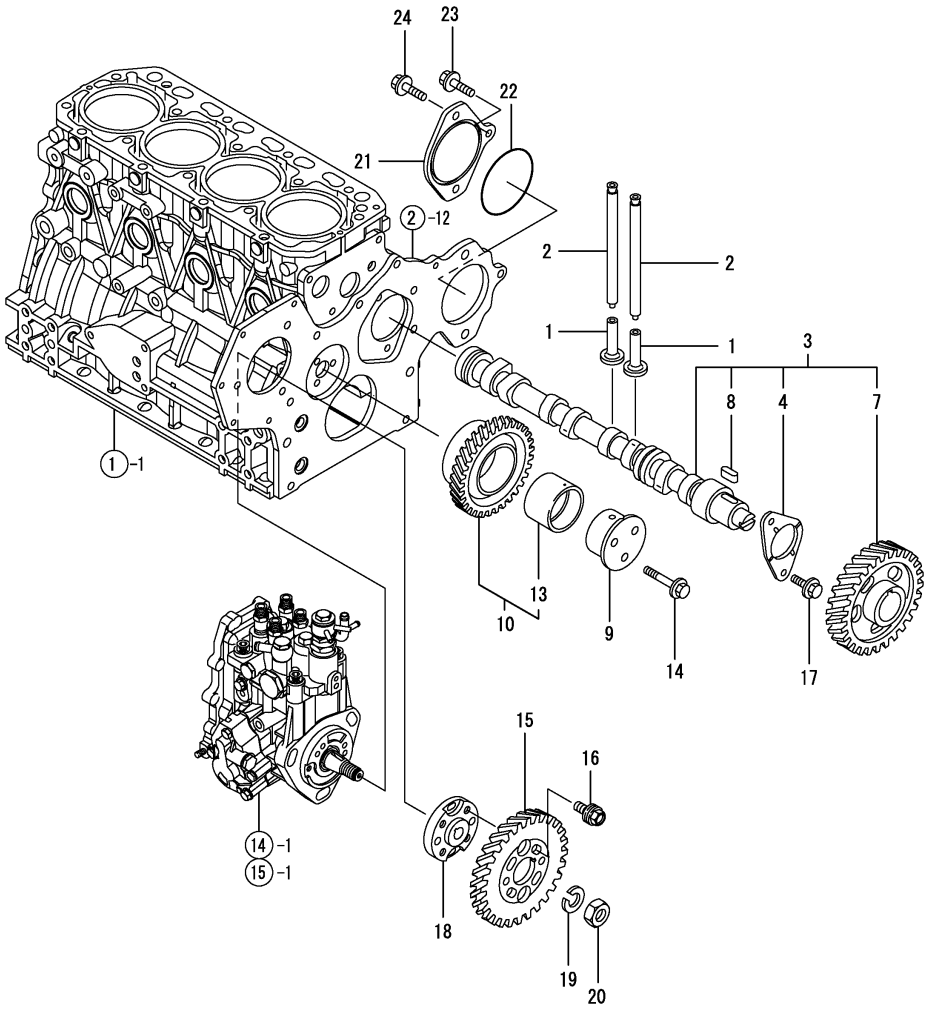

(A)=4TNV84T-DSA
(B)=4TNV84T-DSA2
(C)=4TNV84T-DSA3
(D)=4TNV84T-GGE
(E)=
(F)=

No.	Lev.	Parts No.	Description	Q'ty (A)	(B)	(C)	(D)	(E)	(F)	I	R
1	1	129150-14200	TAPPET	8	8	8	8				
2	1	129150-14400	ROD, PUSH L=178	8	8	8	8				
3	1	129508-14580	CAMSHAFT ASSY	1	1	1	1				
4	2	129150-02450	BEARING, THRUST	1	1	1	1				
7	2	129150-14101	GEAR, CAMSHAFT	1	1	1	1				
8	2	22512-070140	KEY, 7X 14	1	1	1	1				
9	1	119802-25051	SHAFT, IDLE	1	1	1	1				
10	1	119802-25100	GEAR ASSY, IDLE	1	1	1	1				
13	2	119802-25070	BUSH, IDLE GEAR	1	1	1	1				1
14	1	26106-080402	BOLT, M8X 40 PLATED	3	3	3	3				
15	1	119802-25901	GEAR, PUMP	1	1	1	1				
16	1	129150-25301	BOLT	4	4	4	4				
17	1	26106-080142	BOLT, M8X 14 PLATED	2	2	2	2				
18	1	158552-51151	FLANGE	1	1	1	1				
19	1	22217-140000	WASHER, SPRING 14	1	1	1	1				
20	1	26776-140002	NUT, LOCK M14	1	1	1	1				
21	1	129430-26070	COVER	1	1	1					
22	1	24321-000800	O-RING, 1AG80.0	1	1	1					
23	1	26106-080252	BOLT, M8X 25 PLATED	1	1	1					
24	1	26106-100302	BOLT, M10X 30 PLATED	2	2	2					

Remarks
(1) REPAIR PART.

N:Old $\overset{\text{Yes}}{\underset{\text{No}}{\leftrightarrows}}$ New, Q:Old $\overset{\text{No}}{\underset{\text{Yes}}{\leftrightarrows}}$ New, R:Old $\overset{\text{Yes}}{\underset{\text{Yes}}{\leftrightarrows}}$ New, S:Old $\overset{\text{No}}{\underset{\text{No}}{\leftrightarrows}}$ New, W:Add, Z:Discontinued, F:Interchangeable by set, K:Q'ty Change

Copyright (C) YANMAR CO., LTD. All RightsReserved.

Fig.9. TURBINE

発行No. 000Y00R5650-2
更新年月: 2006. 10
REVISED:Oct., 2006

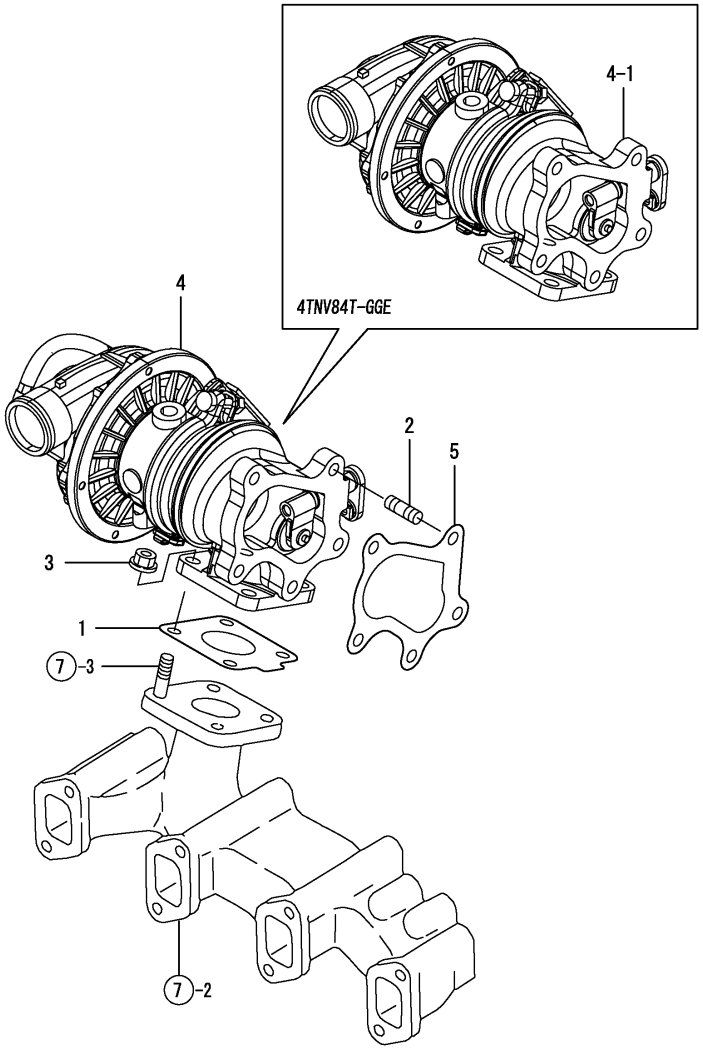

(A)=4TNV84T-DSA
(B)=4TNV84T-DSA2
(C)=4TNV84T-DSA3
(D)=4TNV84T-GGE
(E)=
(F)=

No.	Lev.	Parts No.	Description	Q'ty (A)	(B)	(C)	(D)	(E)	(F)	I	R
1	1	129508-18080	GASKET	1	1	1	1				
2	1	129418-18320	STUD, M8X20	5	5	5	5				
3	1	26306-080002	NUT, M8	5	5	5	5				
4	1	129508-18010	TURBINE, RHF4	1	1	1	1				
4-1	1	129508-18020	TURBINE, RHF4 (D=E03848)				1			S	
5	1	129508-18090	GASKET	1	1	1	1				

N:Old $\overset{\text{Yes}}{\underset{\text{No}}{\rightleftarrows}}$ New, Q:Old $\overset{\text{No}}{\underset{\text{Yes}}{\rightleftarrows}}$ New, R:Old $\overset{\text{Yes}}{\underset{\text{Yes}}{\rightleftarrows}}$ New, S:Old $\overset{\text{No}}{\underset{\text{No}}{\rightleftarrows}}$ New, W:Add, Z:Discontinued, F:Interchangeable by set, K:Q'ty Change

Copyright (C) YANMAR CO., LTD. All RightsReserved.

Fig.10. CRANKSHAFT & PISTON

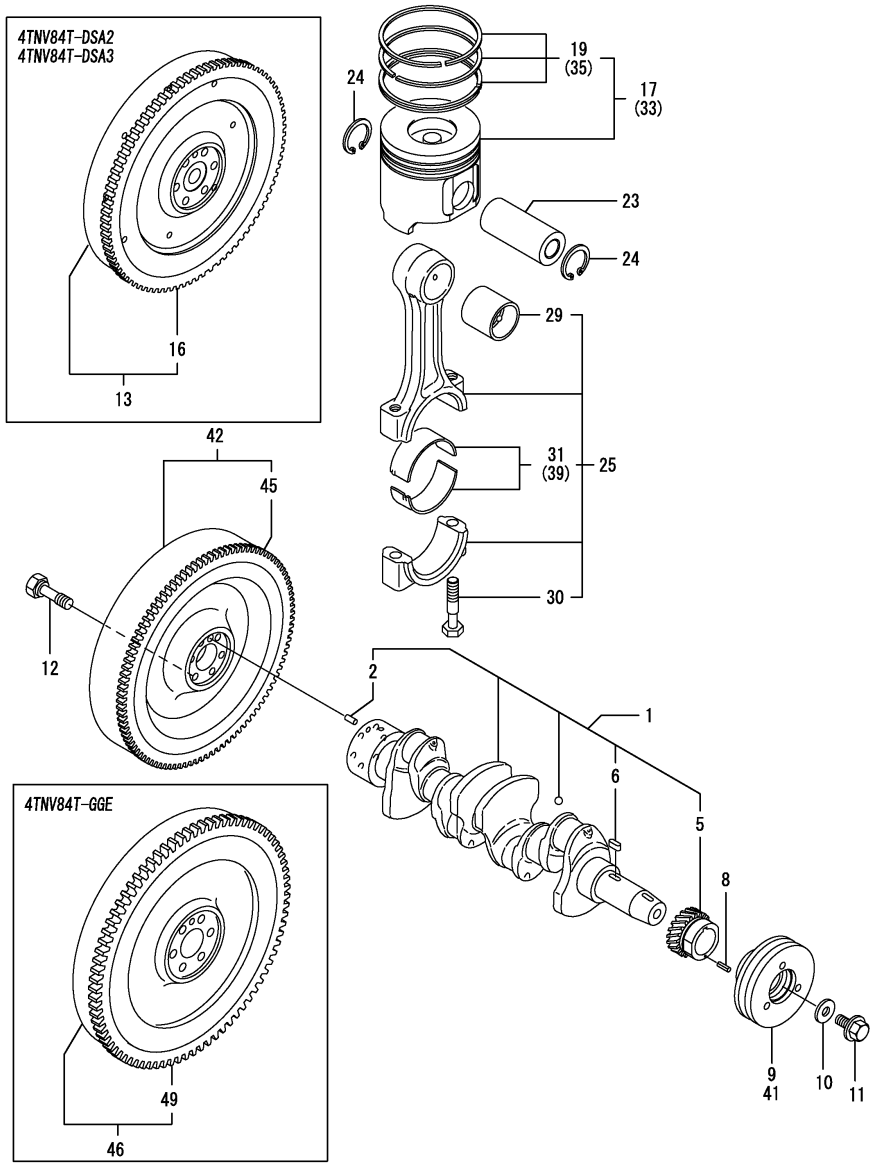

(A)=4TNV84T-DSA
(B)=4TNV84T-DSA2
(C)=4TNV84T-DSA3
(D)=4TNV84T-GGE
(E)=
(F)=

No.	Lev.	Parts No.	Description	Q'ty (A)	(B)	(C)	(D)	(E)	(F)	I	R
1	1	129508-21002	CRANKSHAFT ASSY	1	1	1	1				
2	2	129100-01580	PIN, M8X16	1	1	1	1				
5	2	119802-21202	GEAR, CRANKSHAFT	1	1	1	1				
6	2	22512-070140	KEY, 7X 14	1	1	1	1				
8	1	22351-030010	PIN, SPRING 3.0X10	1	1	1	1				
9	1	119802-21650	V-PULLEY, 110	1	1	1					
10	1	129795-21661	WASHER	1	1	1	1				
11	1	121850-21680	BOLT	1	1	1	1				
12	1	121111-21501	BOLT, FLYWHEEL	6	6	6	6				
13	1	171420-21580	FLYWHEEL ASSY		1	1					
16	2	119865-21600	GEAR, RING		1	1					
17	1	129508-22080	PISTON ASSY	4	4	4	4				
19	2	129004-22500	RING SET, PISTON	4	4	4	4				
23	1	129202-22300	PIN, PISTON D26 L70	4	4	4	4				
24	1	22252-000260	RING, 26	8	8	8	8				
25	1	729402-23100	ROD ASSY, CONNECTING	4	4	4	4				
29	2	129100-23910	BEARING, PISTON PIN	4	4	4	4				1
30	2	121550-23200	BOLT, CONNECTING ROD	8	8	8	8				
31	2	129150-23600	BEARING, CRANK PIN	4	4	4	4				
33	1	129508-22900	PISTON ASSY, 0.25 OS	4	4	4	4				2
35	2	129004-22950	RING SET, 0.25 OS	4	4	4	4				2
39	1	129150-23610	BEARING, 0.25 US	4	4	4	4				3
41	1	119802-21660	V-PULLEY, 120				1				
42	1	129488-21590	FLYWHEEL ASSY	1							
45	2	119865-21600	GEAR, RING	1							
46	1	171420-21590	FLYWHEEL ASSY				1				
49	2	124550-21600	GEAR, RING				1				

Remarks
(1) REPAIR PART.
(2) OVER-SIZE(O.S=0.25)PART.
(3) UNDER-SIZE(U.S=0.25)PART.

N:Old $\overset{\text{Yes}}{\underset{\text{No}}{\rightleftarrows}}$ New, Q:Old $\overset{\text{No}}{\underset{\text{Yes}}{\rightleftarrows}}$ New, R:Old $\overset{\text{Yes}}{\underset{\text{Yes}}{\rightleftarrows}}$ New, S:Old $\overset{\text{No}}{\underset{\text{No}}{\rightleftarrows}}$ New, W:Add, Z:Discontinued, F:Interchangeable by set, K:Q'ty Change

Copyright (C) YANMAR CO., LTD. All RightsReserved.

Fig.11. LUB. OIL SYSTEM

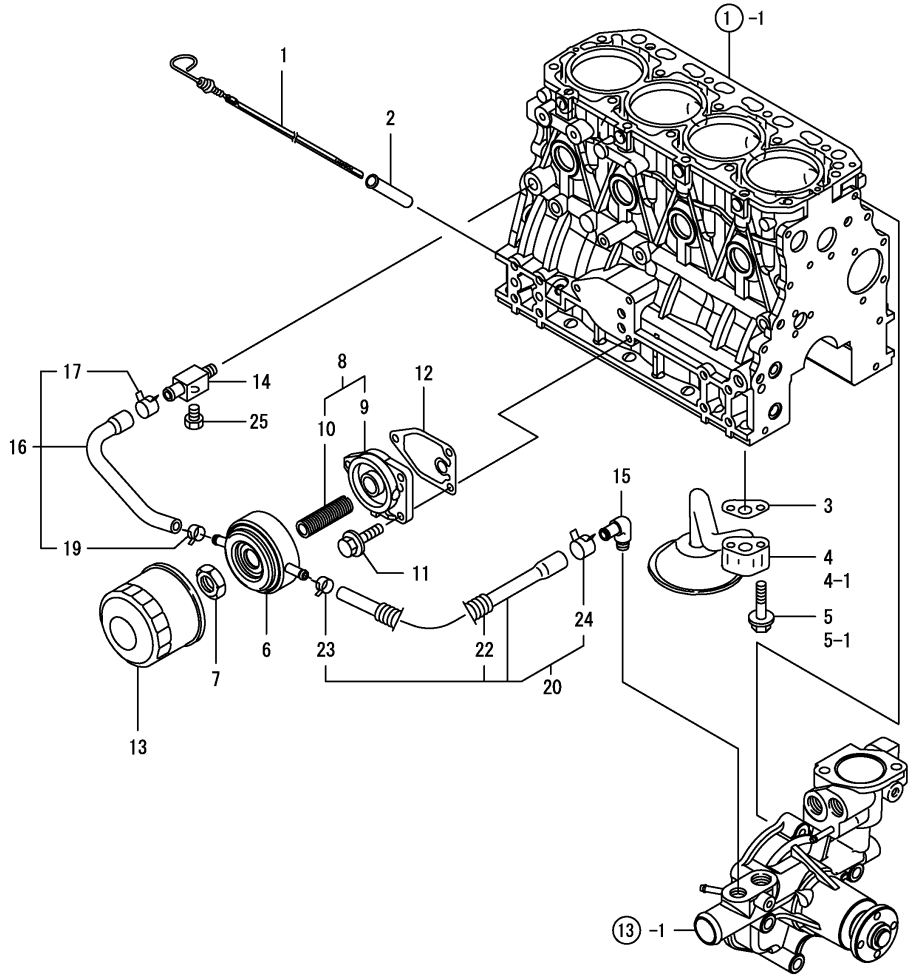

(A)=4TNV84T-DSA
(B)=4TNV84T-DSA2
(C)=4TNV84T-DSA3
(D)=4TNV84T-GGE
(E)=
(F)=

No.	Lev.	Parts No.	Description	Q'ty (A)	(B)	(C)	(D)	(E)	(F)	I	R
1	1	129004-34801	DIPSTICK, OIL	1	1	1	1				
2	1	121520-34810	GUIDE, DIPSTICK	1	1	1	1				
3	1	129150-35041	GASKET	1	1	1	1				
3-1	1	129150-35042	GASKET				1			N	
			(D=EXXXXX)								
4	1	129436-35091	PIPE ASSY, OIL INLET	1	1	1	1				
4-1	1	129436-35070	PIPE ASSY				1			S	
			(D=EZZZZZ)								
5	1	26106-080352	BOLT, M8X 35 PLATED	2	2	2	2				
5-1	1	26106-080552	BOLT, M8X 55 PLATED				2			S	
			(D=EZZZZZ)								
6	1	129508-33010	COOLER ASSY, OIL	1	1	1	1				
7	1	129417-33110	NUT	1	1	1	1				
8	1	129006-35100	BRACKET ASSY, FILTER	1	1	1	1				
9	2	119802-35110	BRACKET, FILTER	1	1	1	1				
10	2	129417-35150	STUD, L=67	1	1	1	1				
11	1	26106-080202	BOLT, M8X 20 PLATED	3	3	3	3				
12	1	129150-35111	GASKET	1	1	1	1				
13	1	129150-35153	FILTER	1	1	1	1				1
14	1	129006-44480	JOINT	1	1	1	1				
15	1	129103-49301	ELBOW, PT1/4	1	1	1	1				
16	1	129508-49030	PIPE ASSY, WATER	1	1	1	1				
17	2	171008-03990	CLIP, HOSE 18.5	1	1	1	1				
19	2	23080-015000	CLAMP, 15	1	1	1	1				
20	1	129508-49040	PIPE ASSY, WATER	1	1	1	1				
22	2	119940-59130	TUBE, CORRUGATED	1	1	1	1				
23	2	23080-015000	CLAMP, 15	1	1	1	1				
24	2	23080-018000	CLAMP, 18	1	1	1	1				
25	1	171056-49120	PLUG, DRAIN	1	1	1	1				

Remarks
(1) REPAIR PART.

N:Old $\overset{\text{Yes}}{\underset{\text{No}}{\leftrightarrows}}$ New, Q:Old $\overset{\text{No}}{\underset{\text{Yes}}{\leftrightarrows}}$ New, R:Old $\overset{\text{Yes}}{\underset{\text{Yes}}{\leftrightarrows}}$ New, S:Old $\overset{\text{No}}{\underset{\text{No}}{\leftrightarrows}}$ New, W:Add, Z:Discontinued, F:Interchangeable by set, K:Q'ty Change

Copyright (C) YANMAR CO., LTD. All RightsReserved.

Fig.12. LUB. OIL LINE

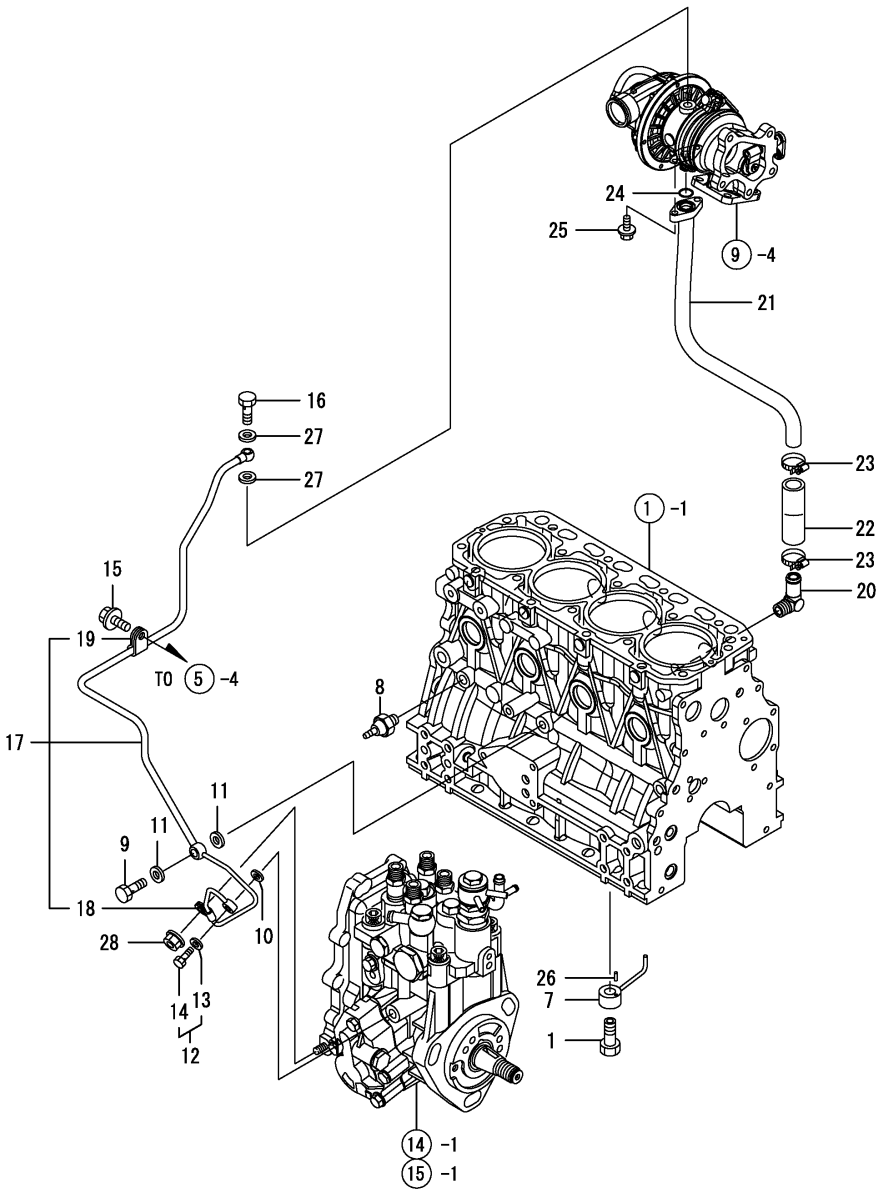

(A)=4TNV84T-DSA
(B)=4TNV84T-DSA2
(C)=4TNV84T-DSA3
(D)=4TNV84T-GGE
(E)=
(F)=

No.	Lev.	Parts No.	Description	Q'ty (A)	(B)	(C)	(D)	(E)	(F)	I	R
1	1	129792-39410	VALVE ASSY, CHECK	4	4	4	4				
7	1	129553-39650	NOZZLE	4	4	4	4				
8	1	114250-39450	SWITCH, 0.5KG	1	1	1	1				
9	1	124160-39140	BOLT, PIPE JOINT M10	1	1	1	1				
10	1	22190-080002	WASHER, SEAL 6	1	1	1	1				
11	1	22190-100002	WASHER, SEAL 10	2	2	2	2				
12	1	129005-59830	BOLT ASSY, JOINT M8	1	1	1	1				
13	2	22190-080002	WASHER, SEAL 6	1	1	1	1				
14	2	23857-030000	BOLT, JOINT 3	1	1	1	1				
15	1	26106-080122	BOLT, M8X 12 PLATED	1	1	1	1				
16	1	121252-39150	BOLT, JOINT M10X1.5	1	1	1	1				
17	1	129508-39450	PIPE ASSY, OIL	1	1	1	1				
18	2	119802-39500	RETAINER, PIPE	1	1	1	1				
19	2	124223-39900	RETAINER	1	1	1	1				
20	1	124070-13300	ELBOW, PT3/8	1	1	1	1				
21	1	129508-39600	PIPE, OIL	1	1	1	1				
22	1	123901-39820	HOSE	1	1	1	1				
23	1	23000-025000	CLAMP, 25	2	2	2	2				
24	1	24314-000160	O-RING, 4CP16.0	1	1	1	1				
25	1	26106-060162	BOLT, M6X 16 PLATED	2	2	2	2				
26	1	22351-030010	PIN, SPRING 3.0X10	4	4	4	4				
27	1	23414-100000	GASKET, 10X1.0	2	2	2	2				
28	1	26366-060002	NUT, M6	1	1	1	1				

N:Old $\overset{\text{Yes}}{\underset{\text{No}}{\rightarrow}}$ New, Q:Old $\overset{\text{No}}{\underset{\text{Yes}}{\rightarrow}}$ New, R:Old $\overset{\text{Yes}}{\underset{\text{Yes}}{\rightarrow}}$ New, S:Old $\overset{\text{No}}{\underset{\text{No}}{\rightarrow}}$ New, W:Add, Z:Discontinued, F:Interchangeable by set, K:Q'ty Change

Copyright (C) YANMAR CO., LTD. All RightsReserved.

Fig.13. COOLING WATER SYSTEM

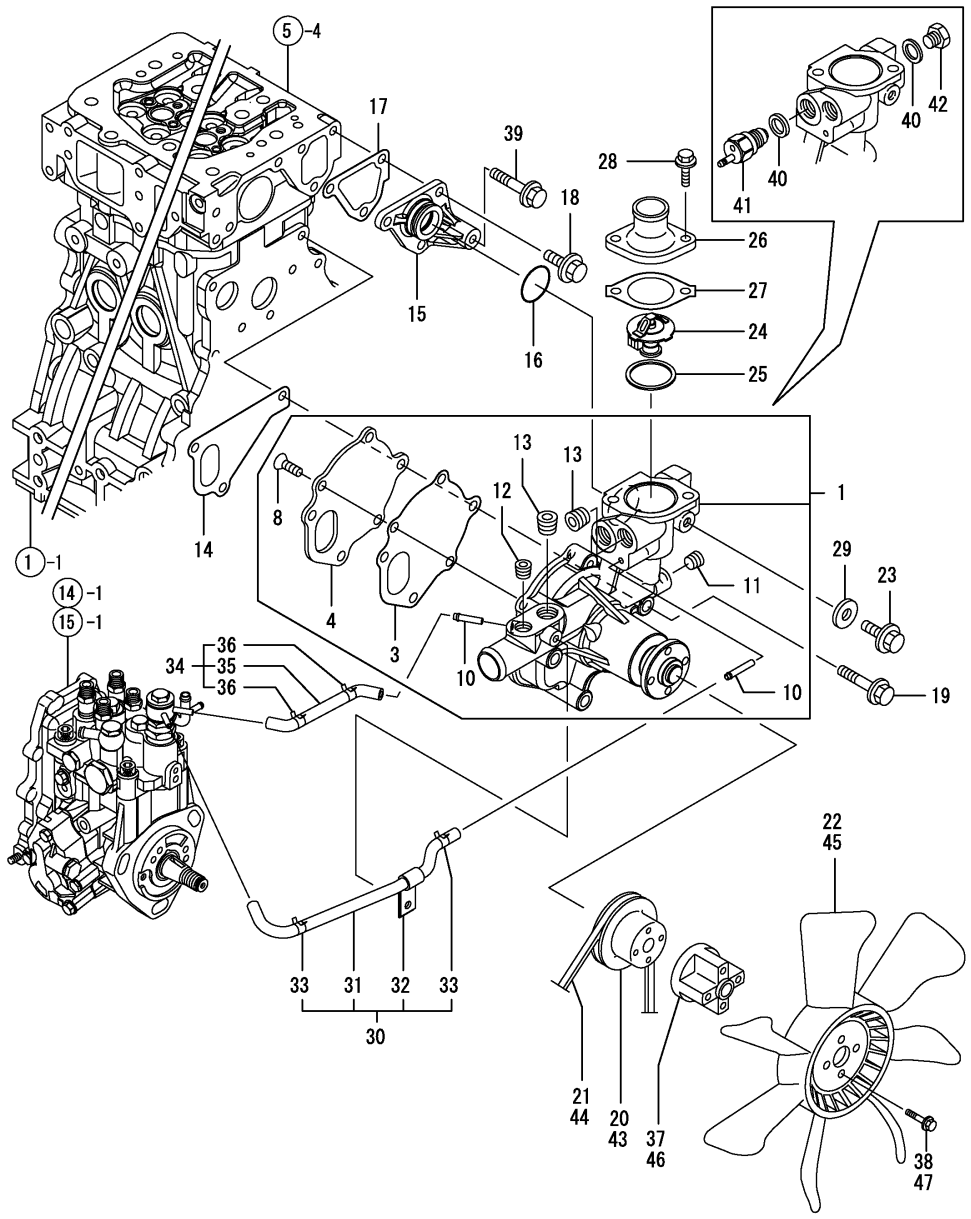

(A)=4TNV84T-DSA (D)=4TNV84T-GGE
(B)=4TNV84T-DSA2 (E)=
(C)=4TNV84T-DSA3 (F)=

No.	Lev.	Parts No.	Description	Q'ty (A)	(B)	(C)	(D)	(E)	(F)	I	R
1	1	129508-42001	PUMP ASSY, WATER	1	1	1	1				
3	2	129100-42051	GASKET, WATER PUMP	1	1	1	1				
4	2	129100-42121	PLATE	1	1	1	1				
8	2	121850-42410	SCREW	3	3	3	3				
10	2	119802-49113	JOINT, PIPE	2	2	2	2				
11	2	23876-010000	PLUG, R01	1	1	1	1				
12	2	23876-020000	PLUG, R02	1	1	1	1				
13	2	129916-49740	PLUG, R03	2	2	2	2				
14	1	129486-42021	GASKET, WATER PUMP	1	1	1	1				
15	1	129004-42040	JOINT	1	1	1	1				
16	1	129486-42140	O-RING, G30	1	1	1	1				
17	1	124395-49840	GASKET	1	1	1	1				
18	1	26106-080162	BOLT, M8X 16 PLATED	3	3	3	3				
19	1	26106-080602	BOLT, M8X 60 PLATED	3	3	3	3				
20	1	129155-42350	V-PULLEY				1				
21	1	119831-42290	V-BELT, A37.5				1				
22	1	129612-44700	FAN, COOLING				1				
23	1	26106-080122	BOLT, M8X 12 PLATED	1	1	1	1				
24	1	129155-49801	THERMOSTAT, 71	1	1	1	1				
25	1	129150-49811	GASKET, THERMOSTAT	1	1	1	1				
26	1	129350-49530	COVER, THERMOSTAT	1	1	1	1				
27	1	129795-49551	GASKET	1	1	1	1				
28	1	26106-080222	BOLT, M8X 22 PLATED	2	2	2	2				
29	1	23414-080000	GASKET, 8X1.0	1	1	1	1				
30	1	129004-49610	PIPE ASSY, WATER	1	1	1	1				
31	2	129004-49711	PIPE ASSY, WATER	1	1	1	1				
32	2	119802-49730	RETAINER, PIPE	1	1	1	1				
33	2	124722-59050	CLIP, HOSE 9	2	2	2	2				
34	1	129004-49620	PIPE ASSY, WATER	1	1	1	1				
35	2	129004-49721	PIPE ASSY, WATER	1	1	1	1				
36	2	124722-59050	CLIP, HOSE 9	2	2	2	2				
37	1	121267-44760	SPACER				1				
38	1	26106-060302	BOLT, M6X 30 PLATED				4				
39	1	26106-080452	BOLT, M8X 45 PLATED	1	1	1	1				
40	1	124465-44950	GASKET, 16	2	2	2	2				
41	1	121250-44901	SWITCH, 110	1	1	1	1				
42	1	121450-42450	PLUG, M16	1	1	1	1				
43	1	129403-42380	V-PULLEY, D=110	1	1	1					
44	1	119865-42290	V-BELT, A36.5	1	1	1					
44-1	1	25152-003600	V-BELT, A36	1	1	1					N
	(A=EXXXXX)		(B=EXXXXX) (C=EXXXXX)								
45	1	129655-44740	FAN, COOLING D380	1	1	1					
46	1	171353-44760	SPACER, FAN	1	1	1					
47	1	26106-060402	BOLT, M6X 40 PLATED	4	4	4					

N:Old ^{Yes}⇔_{No} New, Q:Old ^{No}⇔_{Yes} New, R:Old ^{Yes}⇔_{Yes} New, S:Old ^{No}⇔_{No} New, W:Add, Z:Discontinued, F:Interchangeable by set, K:Q'ty Change

Copyright (C) YANMAR CO., LTD. All RightsReserved.

Fig.14. FUEL INJECTION PUMP

(A)=4TNV84T-DSA
(B)=4TNV84T-DSA2
(C)=4TNV84T-DSA3
(D)=4TNV84T-GGE
(E)=
(F)=

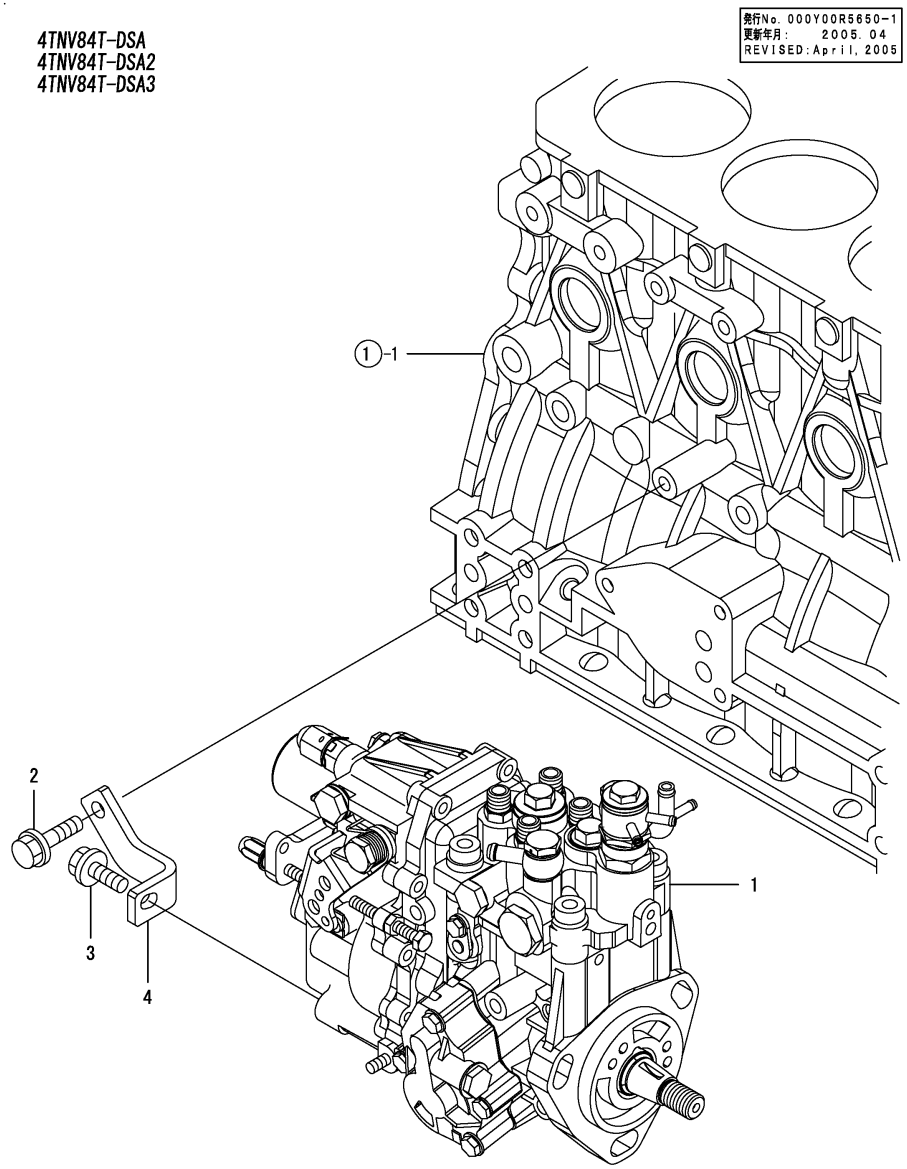

No.	Lev.	Parts No.	Description	Q'ty (A)	(B)	(C)	(D)	(E)	(F)	I	R
1	1	729508-51310	PUMP ASSY, INJECTION	1	1	1					1
2	1	26106-080302	BOLT, M8X 30 PLATED	1	1	1					
3	1	26106-080202	BOLT, M8X 20 PLATED	1	1	1					
4	1	129508-51250	RETAINER, PUMP	1	1	1					

Remarks
(1) REFER TO FI.23 & 24 FOR INNER PARTS.

N:Old $\overset{\text{Yes}}{\underset{\text{No}}{\leftrightarrows}}$ New, Q:Old $\overset{\text{No}}{\underset{\text{Yes}}{\leftrightarrows}}$ New, R:Old $\overset{\text{Yes}}{\underset{\text{Yes}}{\leftrightarrows}}$ New, S:Old $\overset{\text{No}}{\underset{\text{No}}{\leftrightarrows}}$ New, W:Add, Z:Discontinued, F:Interchangeable by set, K:Q'ty Change

Copyright (C) YANMAR CO., LTD. All RightsReserved.

Fig.15. FUEL INJECTION PUMP

(A)=4TNV84T-DSA
(B)=4TNV84T-DSA2
(C)=4TNV84T-DSA3
(D)=4TNV84T-GGE
(E)=
(F)=

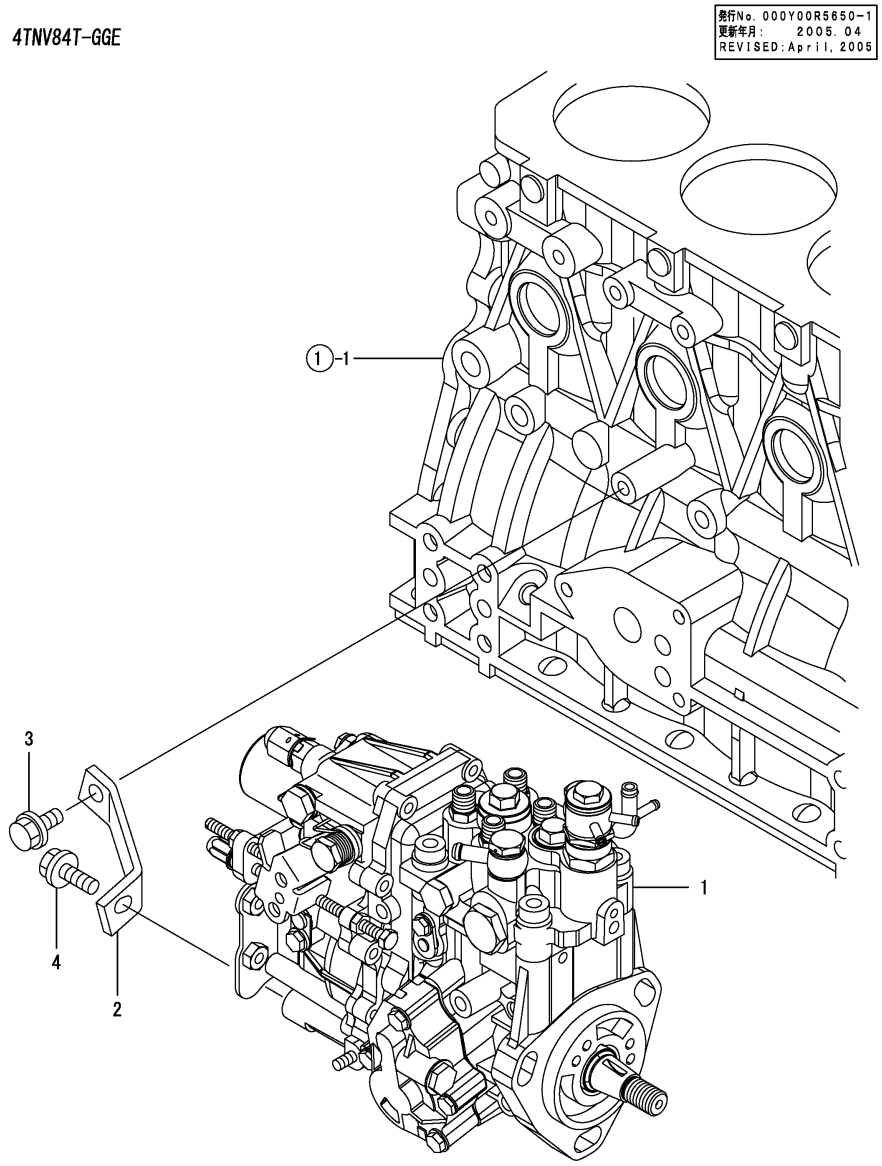

No.	Lev.	Parts No.	Description	Q'ty (A)	(B)	(C)	(D)	(E)	(F)	I	R
1	1	729649-51390	PUMP ASSY, INJECTION				1				1
2	1	129601-51250	RETAINER, PUMP				1				
3	1	26106-080162	BOLT, M8X 16 PLATED				1				
4	1	26106-080202	BOLT, M8X 20 PLATED				1				

Remarks
(1) REFER TO FI.25 & 26 FOR INNER PARTS.

N:Old $\overset{\text{Yes}}{\underset{\text{No}}{\leftrightarrows}}$ New, Q:Old $\overset{\text{No}}{\underset{\text{Yes}}{\leftrightarrows}}$ New, R:Old $\overset{\text{Yes}}{\underset{\text{Yes}}{\leftrightarrows}}$ New, S:Old $\overset{\text{No}}{\underset{\text{No}}{\leftrightarrows}}$ New, W:Add, Z:Discontinued, F:Interchangeable by set, K:Q'ty Change

Copyright (C) YANMAR CO., LTD. All RightsReserved.

Fig.16. FUEL INJECTION VALVE

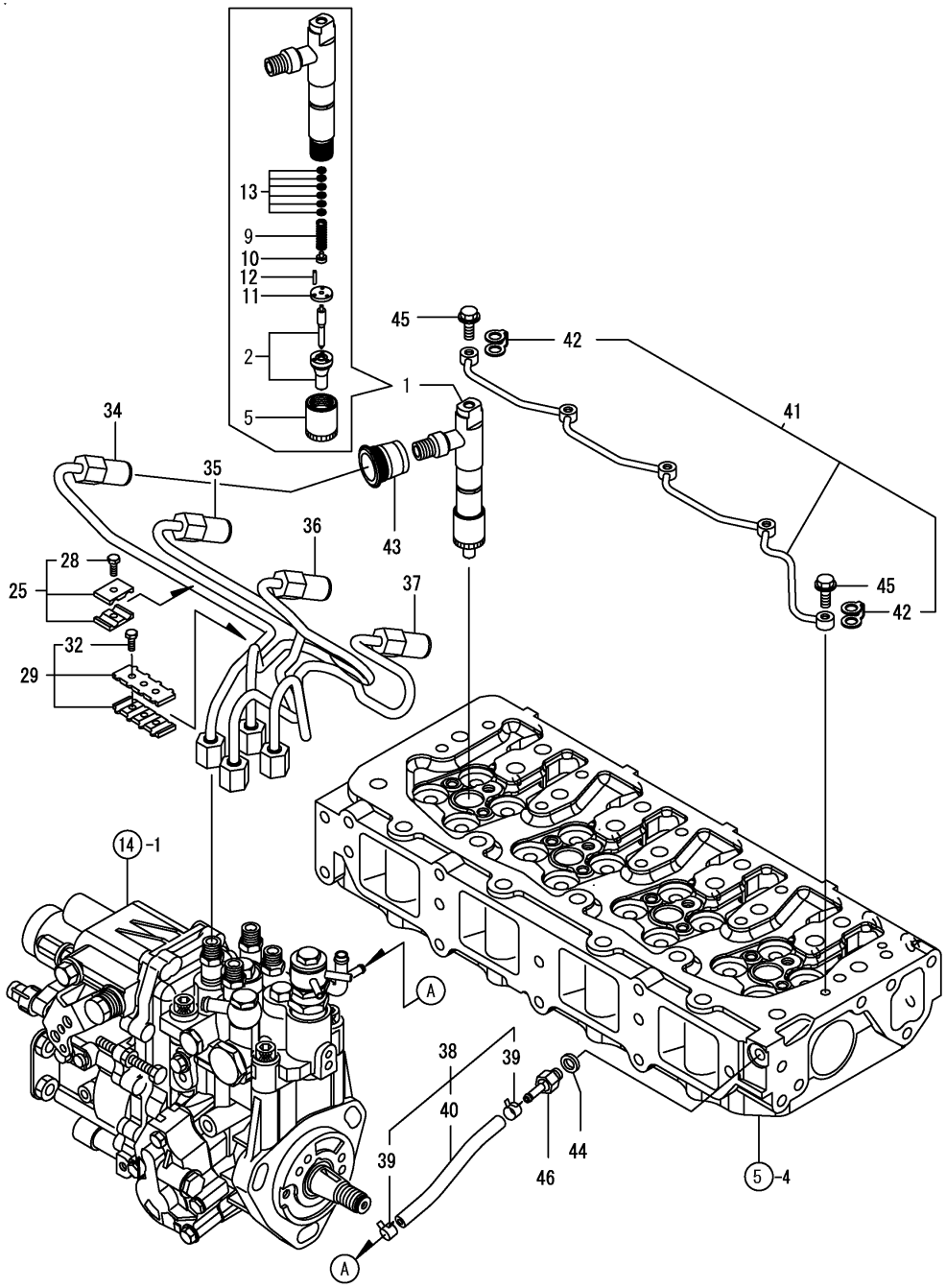

(A)=4TNV84T-DSA
(B)=4TNV84T-DSA2
(C)=4TNV84T-DSA3
(D)=4TNV84T-GGE
(E)=
(F)=

No.	Lev.	Parts No.	Description	Q'ty (A)	(B)	(C)	(D)	(E)	(F)	I	R
1	1	729508-53100	VALVE ASSY,INJECTION	4	4	4					
2	2	129508-53000	VALVE ASSY,INJECTION	4	4	4					
5	2	114250-53080	NUT, NOZZLE D16.95	4	4	4					
9	2	114250-53120	SPRING, NOZZLE	4	4	4					
10	2	114250-53130	SEAT, SPRING	4	4	4					
11	2	114250-53140	PLATE	4	4	4					
12	2	114250-53210	PIN	8	8	8					
13	2	114250-53400	SHIM SET	4	4	4					
25	1	119305-59120	RETAINER, PIPE	2	2	2					
28	2	129150-59131	BOLT, M4X14	2	2	2					
29	1	129550-59120	RETAINER, PIPE	1	1	1					
32	2	129150-59131	BOLT, M4X14	2	2	2					
34	1	129508-59910	PIPE ASSY, INJECTION	1	1	1					
35	1	129508-59920	PIPE ASSY, INJECTION	1	1	1					
36	1	129508-59930	PIPE ASSY, INJECTION	1	1	1					
37	1	129508-59940	PIPE ASSY, INJECTION	1	1	1					
38	1	129508-59570	PIPE ASSY, RETURN	1	1	1					
39	2	124722-59050	CLIP, HOSE 9	2	2	2					
40	2	129508-59510	PIPE, FUEL RETURN	1	1	1					
41	1	129508-59550	PIPE ASSY, RETURN	1	1	1					
42	2	123907-59550	GASKET	5	5	5					
43	1	123907-11601	SEAL	4	4	4					
44	1	22190-080002	WASHER, SEAL 6	1	1	1					
45	1	123907-59540	BOLT, PIPE JOINT M6	5	5	5					
46	1	123907-59560	JOINT	1	1	1					

N:Old $\overset{\text{Yes}}{\underset{\text{No}}{\leftrightarrows}}$ New, Q:Old $\overset{\text{No}}{\underset{\text{Yes}}{\leftrightarrows}}$ New, R:Old $\overset{\text{Yes}}{\underset{\text{Yes}}{\leftrightarrows}}$ New, S:Old $\overset{\text{No}}{\underset{\text{No}}{\leftrightarrows}}$ New, W:Add, Z:Discontinued, F:Interchangeable by set, K:Q'ty Change

Copyright (C) YANMAR CO., LTD. All RightsReserved.

Fig.17. FUEL INJECTION VALVE

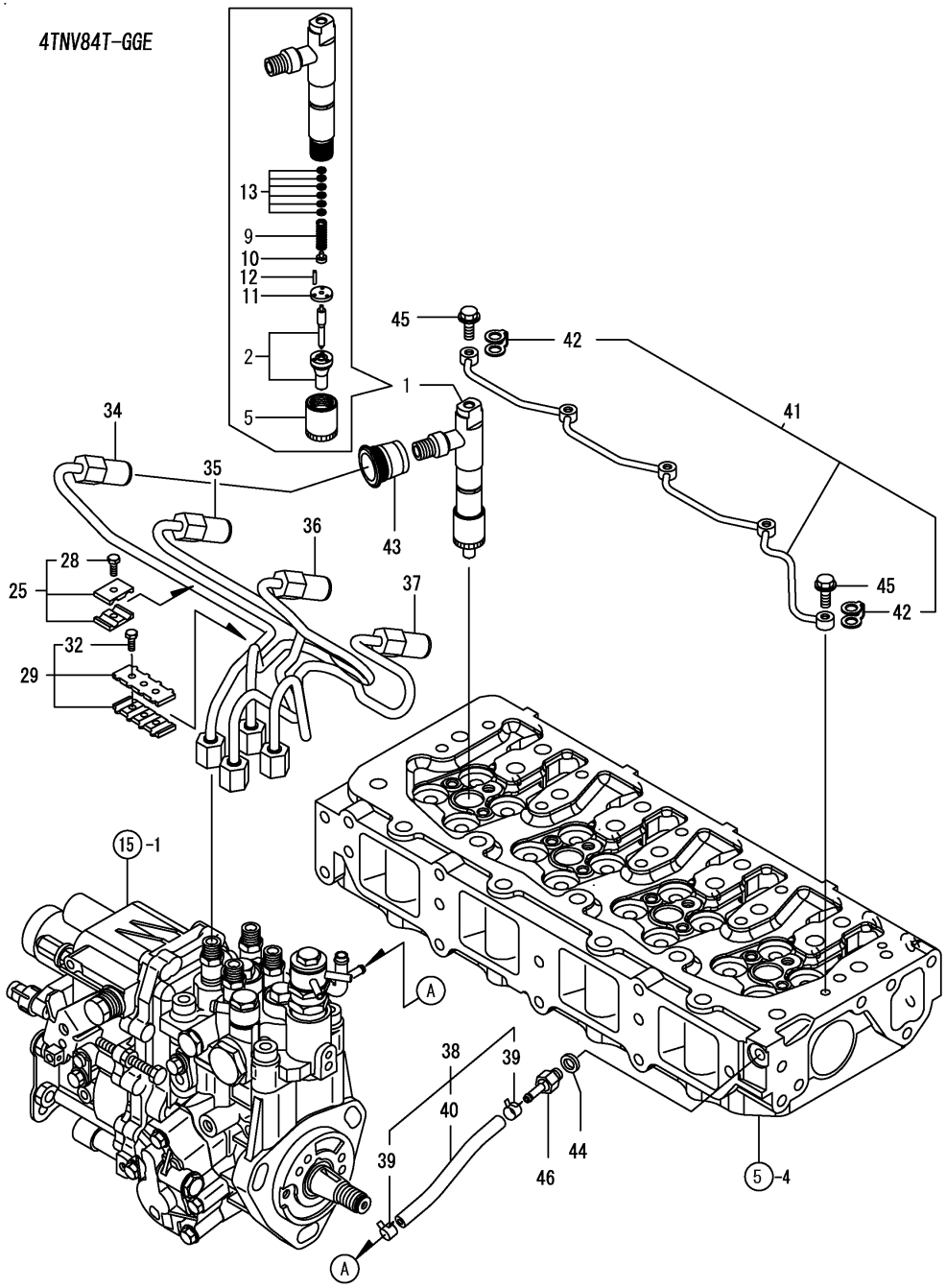

(A)=4TNV84T-DSA
(B)=4TNV84T-DSA2
(C)=4TNV84T-DSA3
(D)=4TNV84T-GGE
(E)=
(F)=

No.	Lev.	Parts No.	Description	Q'ty (A)	(B)	(C)	(D)	(E)	(F)	I	R
1	1	729649-53100	VALVE ASSY,INJECTION				4				
2	2	129649-53000	VALVE ASSY,INJECTION				4				
5	2	114250-53080	NUT, NOZZLE D16.95				4				
9	2	114250-53120	SPRING, NOZZLE				4				
10	2	114250-53130	SEAT, SPRING				4				
11	2	114250-53140	PLATE				4				
12	2	114250-53210	PIN				8				
13	2	114250-53400	SHIM SET				4				
25	1	119305-59120	RETAINER, PIPE				2				
28	2	129150-59131	BOLT, M4X14				2				
29	1	129550-59120	RETAINER, PIPE				1				
32	2	129150-59131	BOLT, M4X14				2				
34	1	129508-59910	PIPE ASSY, INJECTION				1				
35	1	129508-59920	PIPE ASSY, INJECTION				1				
36	1	129508-59930	PIPE ASSY, INJECTION				1				
37	1	129508-59940	PIPE ASSY, INJECTION				1				
38	1	129508-59570	PIPE ASSY, RETURN				1				
39	2	124722-59050	CLIP, HOSE 9				2				
40	2	129508-59510	PIPE, FUEL RETURN				1				
41	1	129508-59550	PIPE ASSY, RETURN				1				
42	2	123907-59550	GASKET				5				
43	1	123907-11601	SEAL				4				
44	1	22190-080002	WASHER, SEAL 6				1				
45	1	123907-59540	BOLT, PIPE JOINT M6				5				
46	1	123907-59560	JOINT				1				

N:Old ◂Yes/No▸ New, Q:Old ◂No/Yes▸ New, R:Old ◂Yes/Yes▸ New, S:Old ◂No/No▸ New, W:Add, Z:Discontinued, F:Interchangeable by set, K:Q'ty Change

Copyright (C) YANMAR CO., LTD. All RightsReserved.

Fig.18. FUEL LINE

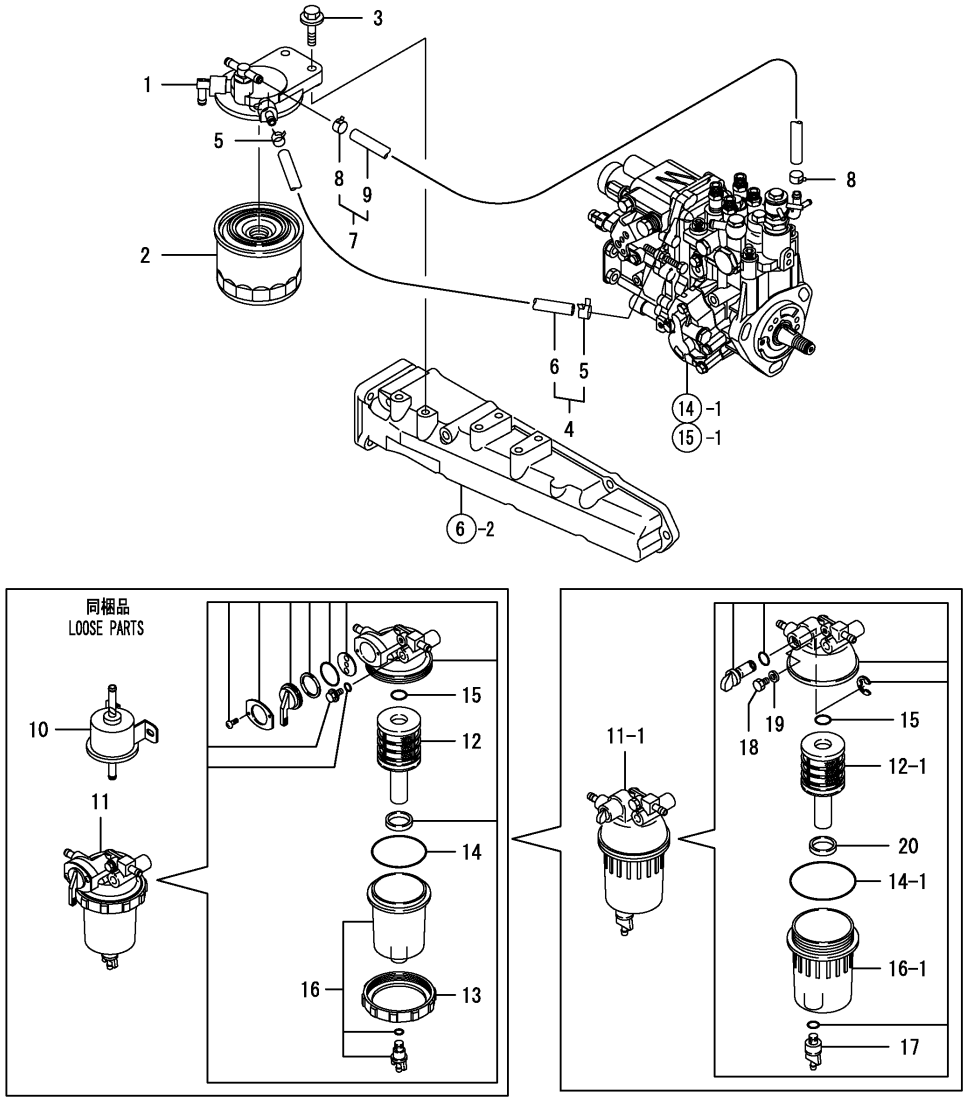

(A)=4TNV84T-DSA (D)=4TNV84T-GGE
(B)=4TNV84T-DSA2 (E)=
(C)=4TNV84T-DSA3 (F)=

No.	Lev.	Parts No.	Description	Q'ty (A)	(B)	(C)	(D)	(E)	(F)	I	R
1	1	129004-55610	BRACKET, FILTER	1	1	1	1				
2	1	119802-55800	FILTER, FUEL	1	1	1	1				
3	1	26106-080302	BOLT, M8X 30 PLATED	2	2	2	2				
4	1	129210-59110	PIPE ASSY, FUEL	1	1	1	1				
5	2	124766-59050	CLIP, HOSE 12	2	2	2	2				
6	2	105025-59560	PIPE, FUEL	1	1	1	1				
7	1	129210-59160	PIPE ASSY, FUEL	1	1	1	1				
8	2	124766-59050	CLIP, HOSE 12	2	2	2	2				
9	2	129612-59520	PIPE, FUEL	1	1	1	1				
10	1	119225-52102	PUMP ASSY, FUEL FEED	1	1	1	1				
11	1	119802-55700	SEPARATOR ASSY	1	1	1	1				
11-1	1	129242-55700	SEPARATOR ASSY	1	1	1	1			N	
	(A=*2008.08.)	(B=*2008.08.)	(C=*2008.08.)	(D=*2008.08.)							
12	2	119802-55710	ELEMENT	1	1	1	1				
12-1	2	129242-55730	ELEMENT	1	1	1	1			S	
	(A=*2008.08.)	(B=*2008.08.)	(C=*2008.08.)	(D=*2008.08.)							
13	2	129100-55690	RING, RETAINING	1	1	1	1			Z	
	(A=*2008.08.)	(B=*2008.08.)	(C=*2008.08.)	(D=*2008.08.)							
14	2	24321-000650	O-RING, 1AG65.0	1	1	1	1				
14-1	2	24321-000750	O-RING, 1AG75.0	1	1	1	1			S	
	(A=*2008.08.)	(B=*2008.08.)	(C=*2008.08.)	(D=*2008.08.)							
15	2	24311-000160	O-RING, 1AP16.0	1	1	1	1				
16	2	119802-55730	CUP ASSY	1	1	1	1			W	
	(A=FROM 1ST)	(B=FROM 1ST)	(C=FROM 1ST)	(D=FROM 1ST)							
16-1	2	129242-55720	CUP	1	1	1	1			S	
	(A=*2008.08.)	(B=*2008.08.)	(C=*2008.08.)	(D=*2008.08.)							
17	2	129242-55740	PLUG, DRAIN	1	1	1	1			W	
	(A=*2008.08.)	(B=*2008.08.)	(C=*2008.08.)	(D=*2008.08.)							
18	2	129242-55750	VALVE, AIR VENT	1	1	1	1			W	
	(A=*2008.08.)	(B=*2008.08.)	(C=*2008.08.)	(D=*2008.08.)							
19	2	129242-55760	GASKET	1	1	1	1			W	
	(A=*2008.08.)	(B=*2008.08.)	(C=*2008.08.)	(D=*2008.08.)							
20	2	129242-55770	FLOAT	1	1	1	1			W	
	(A=*2008.08.)	(B=*2008.08.)	(C=*2008.08.)	(D=*2008.08.)							

N:Old $\overset{\text{Yes}}{\underset{\text{No}}{\leftrightarrows}}$ New, Q:Old $\overset{\text{No}}{\underset{\text{Yes}}{\leftrightarrows}}$ New, R:Old $\overset{\text{Yes}}{\underset{\text{Yes}}{\leftrightarrows}}$ New, S:Old $\overset{\text{No}}{\underset{\text{No}}{\leftrightarrows}}$ New, W:Add, Z:Discontinued, F:Interchangeable by set, K:Q'ty Change

Copyright (C) YANMAR CO., LTD. All RightsReserved.

Fig.19. STARTING MOTOR

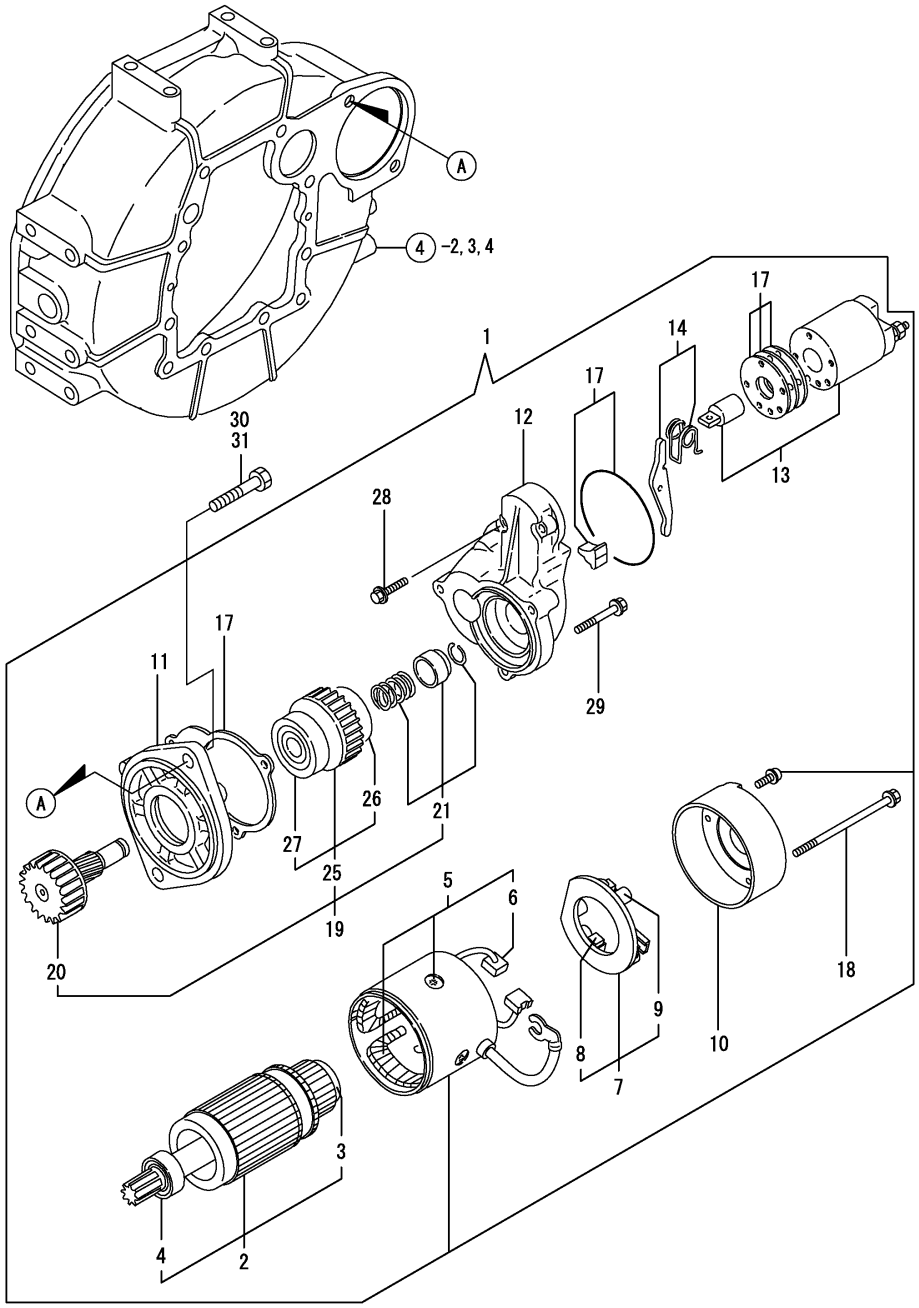

(A)=4TNV84T-DSA
(B)=4TNV84T-DSA2
(C)=4TNV84T-DSA3
(D)=4TNV84T-GGE
(E)=
(F)=

No.	Lev.	Parts No.	Description	Q'ty (A)	(B)	(C)	(D)	(E)	(F)	I	R
1	1	129400-77012	STARTER	1	1	1					
2	2	129486-77400	ARMATURE	1	1	1					
3	3	171008-77410	BEARING	1	1	1					
4	3	171008-77420	BEARING	1	1	1					
5	2	129400-77441	COIL ASSY, FIELD	1	1	1					
6	3	129486-77460	BRUSH	2	2	2					
7	2	129486-77470	HOLDER ASSY, BRUSH	1	1	1					
8	3	129486-77460	BRUSH	2	2	2					
9	3	129486-77490	SPRING	4	4	4					
10	2	129900-77460	COVER	1	1	1					
11	2	171008-77510	CASE, GEAR	1	1	1					
12	2	129400-77520	HOUSING	1	1	1					
13	2	129400-77531	SWITCH ASSY	1	1	1					
14	2	171008-77540	LEVER SET	1	1	1					
17	2	129400-77571	COVER ASSY, DUST	1	1	1					
18	2	129900-77640	BOLT, THROUGH	2	2	2					
19	2	171008-77650	PINION ASSY	1	1	1					
20	3	171008-77660	SHAFT	1	1	1					
21	3	171008-77670	STOPPER SET	1	1	1					
25	3	X2114555500	CLUTCH ASSY	1	1	1					
26	4	X2114955020	BEARING, BALL	1	1	1					
27	4	X2240410100	BEARING, BALL	1	1	1					
28	2	26106-060322	BOLT, M6X 32 PLATED	2	2	2					
29	2	26106-060402	BOLT, M6X 40 PLATED	3	3	3					
30	1	26116-120252	BOLT, M12X 25 PLATED	2	2						
31	1	26116-120202	BOLT, M12X 20 PLATED			2					

N:Old ⇔(Yes/No) New, Q:Old ⇔(No/Yes) New, R:Old ⇔(Yes/Yes) New, S:Old ⇔(No/No) New, W:Add, Z:Discontinued, F:Interchangeable by set, K:Q'ty Change

Copyright (C) YANMAR CO., LTD. All RightsReserved.

Fig.20. STARTING MOTOR

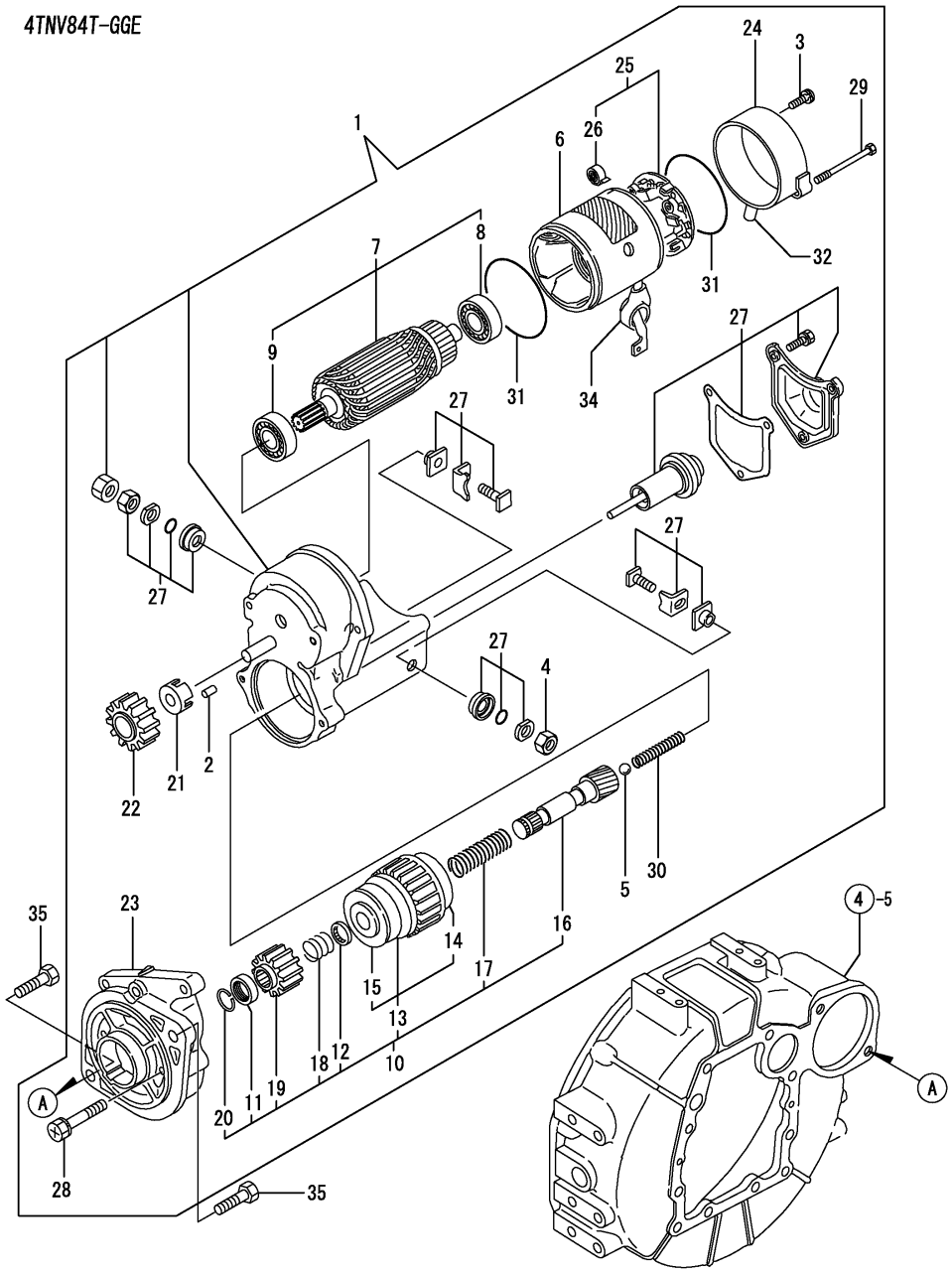

(A)=4TNV84T-DSA
(B)=4TNV84T-DSA2
(C)=4TNV84T-DSA3
(D)=4TNV84T-GGE
(E)=
(F)=

No.	Lev.	Parts No.	Description	Q'ty (A)	(B)	(C)	(D)	(E)	(F)	I	R
1	1	129407-77010	STARTER, RA1.4				1				
2	2	X0283060061	ROLLER				5				
3	2	129129-77460	SCREW				2				
4	2	X9490561370	NUT				1				
5	2	X9491200240	BALL				1				
6	2	129407-77210	YOKE ASSY				1				
7	2	129407-77220	ARMATURE ASSY				1				
8	3	129129-77230	BEARING				1				
9	3	129129-77240	BEARING				1				
10	2	129407-77250	STARTER				1				
11	3	X0280210230	NUT				1				
12	3	X0283270140	RETAINER				1				
13	3	129407-77390	CLUTCH ASSY				1				
14	4	129129-77440	BEARING, BALL				1				
15	4	129129-77450	BEARING, BALL				1				
16	3	129129-77400	SHAFT				1				
17	3	129129-77410	SPRING, COIL				1				
18	3	X9491703371	SPRING, COIL				1				
19	3	129129-77420	PINION, STARTER				1				
20	3	129129-77430	RING				1				
21	2	129129-77260	RETAINER				1				
22	2	129129-77270	PINION				1				
23	2	129407-77280	HOUSING				1				
24	2	129407-77290	FRAME				1				
25	2	129407-77300	HOLDER ASSY				1				
26	3	X9491730461	SPRING				4				
27	2	129407-77310	SWITCH ASSY				1				
28	2	129129-77320	BOLT				2				
29	2	129407-77330	BOLT				2				
30	2	129129-77340	SPRING				1				
31	2	129129-77350	O-RING				2				
32	2	129129-77362	COVER				1				
34	2	129129-77380	CAP				1				
35	1	26116-120252	BOLT, M12X 25 PLATED				2				

N:Old ←Yes/No→ New, Q:Old ←No/Yes→ New, R:Old ←Yes/Yes→ New, S:Old ←No/No→ New, W:Add, Z:Discontinued, F:Interchangeable by set, K:Q'ty Change

Copyright (C) YANMAR CO., LTD. All RightsReserved.

Fig.21. GENERATOR

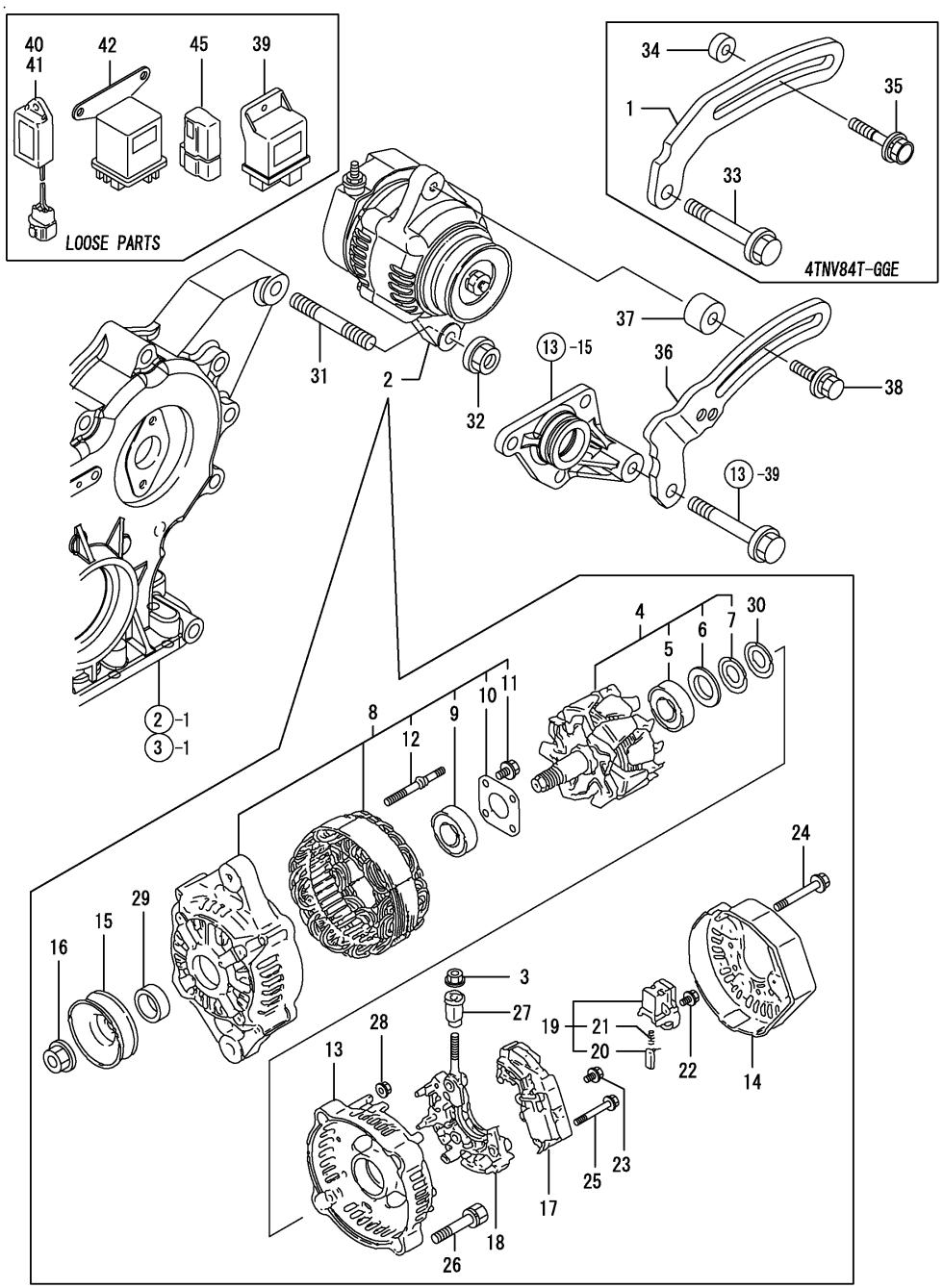

(A)=4TNV84T-DSA
(B)=4TNV84T-DSA2
(C)=4TNV84T-DSA3
(D)=4TNV84T-GGE
(E)=
(F)=

No.	Lev.	Parts No.	Description	Q'ty (A)	(B)	(C)	(D)	(E)	(F)	I	R
1	1	119940-77330	ADJUSTER				1				
2	1	129423-77200	GENERATOR, 12V-40A	1	1	1	1				
3	2	X9490561001	NUT	1	1	1	1				
4	2	119620-77380	ROTOR ASSY	1	1	1	1				
5	3	119620-79240	BEARING, BALL	1	1	1	1				
6	3	119620-79250	COVER	1	1	1	1				
7	3	119620-79360	WASHER, THRUST	1	1	1	1				
8	2	119620-77421	FRAME ASSY, DRIVE	1	1	1	1				
9	3	119620-79200	BEARING, BALL	1	1	1	1				
10	3	119620-79210	PLATE, RETAINER	1	1	1	1				
11	3	119620-79220	SCREW	4	4	4	4				
12	3	119620-79230	STUD	2	2	2	2				
13	2	119620-77440	FRAME ASSY	1	1	1	1				
14	2	129240-79300	COVER	1	1	1	1				
15	2	119620-77461	PULLEY	1	1	1	1				
16	2	119620-77471	NUT	1	1	1	1				
17	2	129423-77710	REGULATOR ASSY	1	1	1	1				
18	2	119620-79260	HOLDER	1	1	1	1				
19	2	119620-79270	HOLDER, BRUSH	1	1	1	1				
20	3	119620-77480	BRUSH ASSY	2	2	2	2				
21	3	119620-79280	SPRING	2	2	2	2				
22	2	119620-79290	SCREW	1	1	1	1				
23	2	119620-79300	SCREW	1	1	1	1				
24	2	119620-79310	BOLT	3	3	3	3				
25	2	119620-79320	SCREW	2	2	2	2				
26	2	119620-79330	BOLT	2	2	2	2				
27	2	119620-79340	BUSH, INSULATION	1	1	1	1				
28	2	119620-79350	NUT	2	2	2	2				
29	2	119620-77490	COLLAR	1	1	1	1				
30	2	119620-79360	WASHER, THRUST	1	1	1	1				
31	1	129795-01900	STUD	1	1	1	1				
32	1	26306-100002	NUT, M10	1	1	1	1				
33	1	26106-080452	BOLT, M8X 45 PLATED				1				
34	1	119940-77270	SPACER, GENERATOR				1				
35	1	119802-77340	BOLT, ADJUSTER				1				
36	1	129064-77330	ADJUSTER	1	1	1					
37	1	129067-77340	SPACER	1	1	1					
38	1	26014-080452	BOLT, M8X 45	1	1	1					
39	1	119802-77200	RELAY, SAFETY				1				
40	1	128300-77920	TIMER	1	1	1	1				
41	1	129211-77920	TIMER	1	1	1	1				
42	1	119650-77910	RELAY ASSY, GLOW	1	1	1	1				
45	1	119643-66900	DIODE	1	1	1					

N:Old $\overset{\text{Yes}}{\underset{\text{No}}{\rightleftarrows}}$ New, Q:Old $\overset{\text{No}}{\underset{\text{Yes}}{\rightleftarrows}}$ New, R:Old $\overset{\text{Yes}}{\underset{\text{Yes}}{\rightleftarrows}}$ New, S:Old $\overset{\text{No}}{\underset{\text{No}}{\rightleftarrows}}$ New, W:Add, Z:Discontinued, F:Interchangeable by set, K:Q'ty Change

Copyright (C) YANMAR CO., LTD. All RightsReserved.

Fig.22. GASKET SET

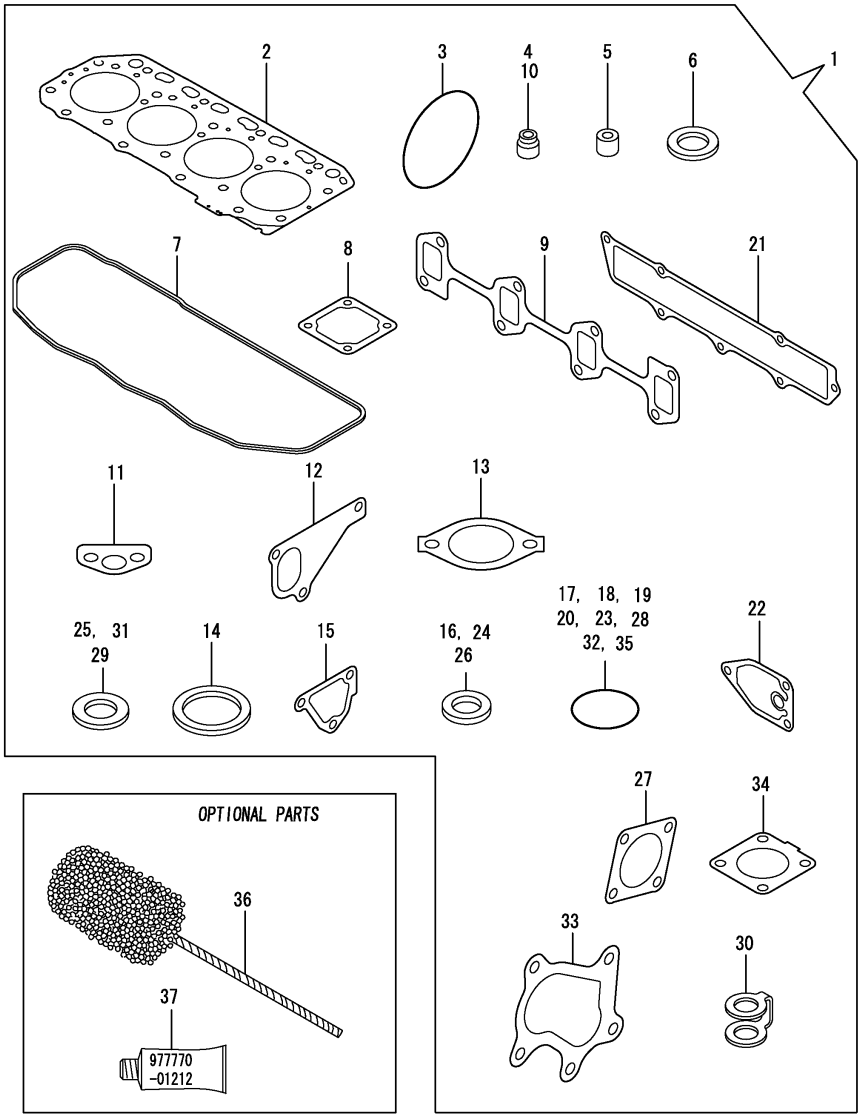

(A)=4TNV84T-DSA (D)=4TNV84T-GGE
(B)=4TNV84T-DSA2 (E)=
(C)=4TNV84T-DSA3 (F)=

No.	Lev.	Parts No.	Description	Q'ty (A)	(B)	(C)	(D)	(E)	(F)	I	R
1	1	729508-92630	GASKET SET	1	1	1	1				1
2	2	129508-01330	GASKET, HEAD	1	1	1	1				
3	2	121850-51960	O-RING	1	1	1	1				
4	2	119717-11340	SEAL, VALVE STEM	8	8	8	8				
5	2	119802-11870	PROTECTOR, NOZZLE	4	4	4	4				
6	2	119625-11880	SEAT, NOZZLE	4	4	4	4				
7	2	129508-11310	GASKET, BONNET	1	1	1	1				
8	2	129150-77511	GASKET	1	1	1	1				
9	2	129550-13110	GASKET	1	1	1	1				
10	2	119717-11350	SEAL, VALVE STEM	8	8	8	8				
11	2	129150-35041	GASKET	1	1	1	1				
12	2	129486-42021	GASKET, WATER PUMP	1	1	1	1				
13	2	129795-49551	GASKET	1	1	1	1				
14	2	129150-49811	GASKET, THERMOSTAT	1	1	1	1				
15	2	124395-49840	GASKET	1	1	1	1				
16	2	22190-080002	WASHER, SEAL 6	3	3	3	3				
17	2	24311-000120	O-RING, 1AP12.0	3	3	3	3				
18	2	24311-000320	O-RING, 1AP32.0	2	2	2	2				
19	2	24341-000240	O-RING, 1AS24.0	1	1	1	1				
20	2	129486-42140	O-RING, G30	1	1	1	1				
21	2	129508-12110	GASKET, MANIFOLD	1	1	1	1				
22	2	129150-35111	GASKET	1	1	1	1				
23	2	119609-32040	O-RING, P16	4	4	4	4				
24	2	22190-100002	WASHER, SEAL 10	2	2	2	2				
25	2	23414-080000	GASKET, 8X1.0	1	1	1	1				
26	2	22190-220002	WASHER, SEAL 22	1	1	1	1				
27	2	124240-01883	GASKET	1	1	1	1				
28	2	24321-000800	O-RING, 1AG80.0	1	1	1	1				
29	2	23414-100000	GASKET, 10X1.0	2	2	2	2				
30	2	123907-59550	GASKET	5	5	5	5				
31	2	124465-44950	GASKET, 16	2	2	2	2				
32	2	24341-000400	O-RING, 1AS40.0	1	1	1	1				
33	2	129508-18090	GASKET	1	1	1	1				
34	2	129508-18080	GASKET	1	1	1	1				
35	2	24314-000160	O-RING, 4CP16.0	1	1	1	1				
36	1	129400-92420	HONE	1	1	1	1				1
37	1	977770-01212	GASKET, LIQUID	1	1	1	1				1

Remarks
(1) OPTIONAL PART.

N:Old $\overset{\text{Yes}}{\underset{\text{No}}{\leftrightarrows}}$ New, Q:Old $\overset{\text{No}}{\underset{\text{Yes}}{\leftrightarrows}}$ New, R:Old $\overset{\text{Yes}}{\underset{\text{Yes}}{\leftrightarrows}}$ New, S:Old $\overset{\text{No}}{\underset{\text{No}}{\leftrightarrows}}$ New, W:Add, Z:Discontinued, F:Interchangeable by set, K:Q'ty Change

Copyright (C) YANMAR CO., LTD. All RightsReserved.

Fig.23. FUEL INJECTION PUMP(INNER PARTS)

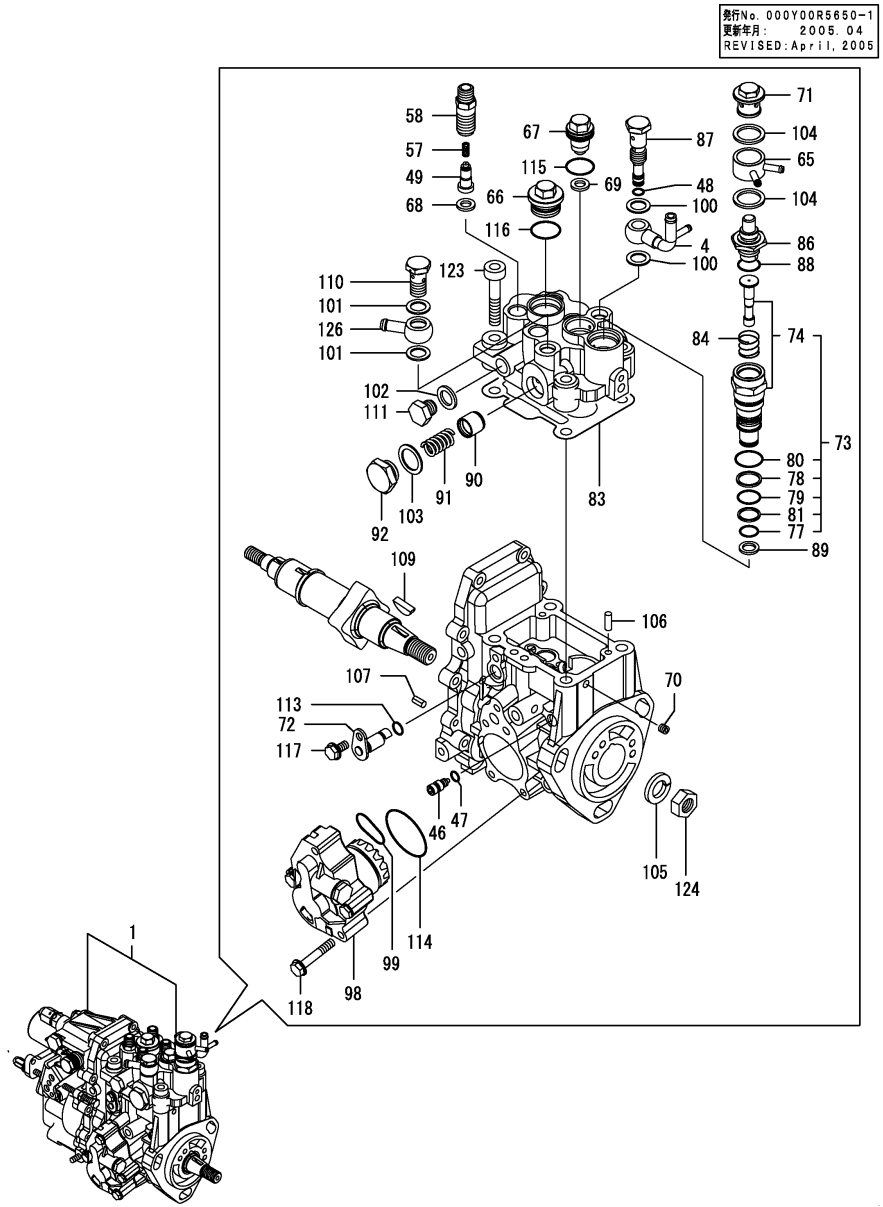

Remarks
(1) GOVERNOR ASSY(FIG.24) IS INCORPORATED IN THIS FOP.CMP (REF.NO.1).

(A)=4TNV84T-DSA
(B)=4TNV84T-DSA2
(C)=4TNV84T-DSA3
(D)=4TNV84T-GGE
(E)=
(F)=

No.	Lev.	Parts No.	Description	Q'ty (A)	(B)	(C)	(D)	(E)	(F)	I	R
1	1	729508-51310	PUMP ASSY, INJECTION	1	1	1					1
4	2	158552-51670	JOINT, OVER FLOW	1	1	1					
46	2	158600-51270	STOPPER, TAPPET	1	1	1					
47	2	158563-51281	O-RING, 4D S6	1	1	1					
48	2	158563-51281	O-RING, 4D S6	1	1	1					
49	2	158560-51300	VALVE ASSY, DELIVERY	4	4	4					
57	2	158563-51330	SPRING, DELIVERY	4	4	4					
58	2	158601-51340	HOLDER, DELIVERY	4	4	4					
65	2	158553-51551	JOINT	1	1	1					
66	2	158601-51550	PLUG	1	1	1					
67	2	119802-51560	PLUG, BARREL	1	1	1					
68	2	158552-51570	GASKET	4	4	4					
69	2	158552-51570	GASKET	1	1	1					
70	2	158557-51570	PLUG	1	1	1					
71	2	158601-51570	PLUG	1	1	1					
72	2	158552-51580	LIFTER	1	1	1					
73	2	119802-51590	TIMER SET	1	1	1					
74	3	119802-51600	TIMER ASSY	1	1	1					
77	3	158553-51670	O-RING, 1011	1	1	1					
78	3	119802-51680	RING, BACK UP	1	1	1					
79	3	119802-51690	O-RING	1	1	1					
80	3	24356-010200	O-RING, 4D1020	1	1	1					
81	3	24372-000150	RING, BACK UP T2P15	1	1	1					
83	2	158552-51600	GASKET	1	1	1					
84	2	158553-51630	SPRING, TIMER	1	1	1					
86	2	158553-51640	ELEMENT	1	1	1					
87	2	158601-51650	JOINT, OVER FLOW	1	1	1					
88	2	158553-51660	O-RING, P14	1	1	1					
89	2	158553-51680	GASKET	1	1	1					
90	2	158601-51770	PISTON	1	1	1					
91	2	158552-51780	SPRING	1	1	1					
92	2	158601-51790	PLUG	1	1	1					
98	2	158552-52100	PUMP ASSY, FUEL FEED	1	1	1					
99	2	158552-52310	O-RING	1	1	1					
100	2	22190-120002	WASHER, SEAL 12	2	2	2					
101	2	22190-120002	WASHER, SEAL 12	2	2	2					
102	2	22190-120002	WASHER, SEAL 12	1	1	1					
103	2	22190-180002	WASHER, SEAL 18	1	1	1					
104	2	22190-180002	WASHER, SEAL 18	2	2	2					
105	2	22217-140000	WASHER, SPRING 14	1	1	1					
106	2	22312-050140	PIN, PARALLEL M5X14	2	2	2					
107	2	22351-050010	PIN, SPRING 5.0X10	2	2	2					
109	2	119802-51090	KEY, 4X16	1	1	1					
110	2	23857-060000	BOLT, JOINT 6	1	1	1					
111	2	23887-120002	PLUG, 12	1	1	1					
113	2	24311-000070	O-RING, 1AP7.0	1	1	1					
114	2	158552-52400	O-RING, 4E S42	1	1	1					
115	2	24356-010180	O-RING, 4D1018	1	1	1					
116	2	24356-010200	O-RING, 4D1020	1	1	1					
117	2	26106-060102	BOLT, M6X 10 PLATED	1	1	1					
118	2	158553-51770	BOLT	4	4	4					

N:Old $\overset{\text{Yes}}{\underset{\text{No}}{\rightleftarrows}}$ New, Q:Old $\overset{\text{No}}{\underset{\text{Yes}}{\rightleftarrows}}$ New, R:Old $\overset{\text{Yes}}{\underset{\text{Yes}}{\rightleftarrows}}$ New, S:Old $\overset{\text{No}}{\underset{\text{No}}{\rightleftarrows}}$ New, W:Add, Z:Discontinued, F:Interchangeable by set, K:Q'ty Change

++ CONTINUE ++

Copyright (C) YANMAR CO., LTD. All RightsReserved.

Fig.23. FUEL INJECTION PUMP(INNER PARTS)

(A)=4TNV84T-DSA
(B)=4TNV84T-DSA2
(C)=4TNV84T-DSA3
(D)=4TNV84T-GGE
(E)=
(F)=

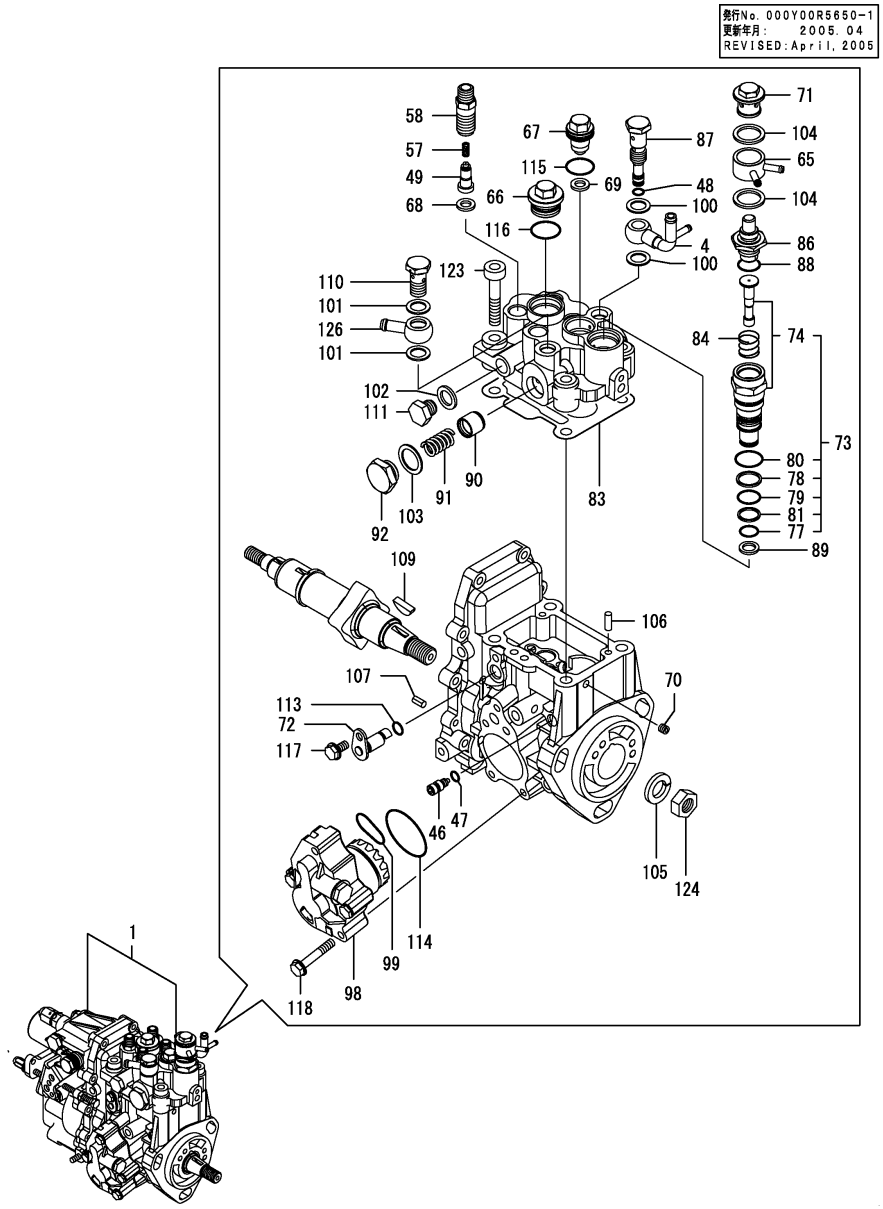

No.	Lev.	Parts No.	Description	Q'ty (A)	(B)	(C)	(D)	(E)	(F)	I	R
123	2	26450-080452	BOLT, M8X 45	4	4	4					
124	2	26776-140002	NUT, LOCK M14	1	1	1					
126	2	129916-59020	JOINT, PIPE 12	1	1	1					

Remarks
(1) GOVERNOR ASSY(FIG.24) IS INCORPORATED IN THIS FOP.CMP (REF.NO.1).

N:Old $\overset{\text{Yes}}{\underset{\text{No}}{\leftrightarrows}}$ New, Q:Old $\overset{\text{No}}{\underset{\text{Yes}}{\leftrightarrows}}$ New, R:Old $\overset{\text{Yes}}{\underset{\text{Yes}}{\leftrightarrows}}$ New, S:Old $\overset{\text{No}}{\underset{\text{No}}{\leftrightarrows}}$ New, W:Add, Z:Discontinued, F:Interchangeable by set, K:Q'ty Change

Copyright (C) YANMAR CO., LTD. All RightsReserved.

Fig.24. GOVERNOR(INNER PARTS)

発行No. 000Y00R5650-1
更新年月: 2005. 04
REVISED:April, 2005

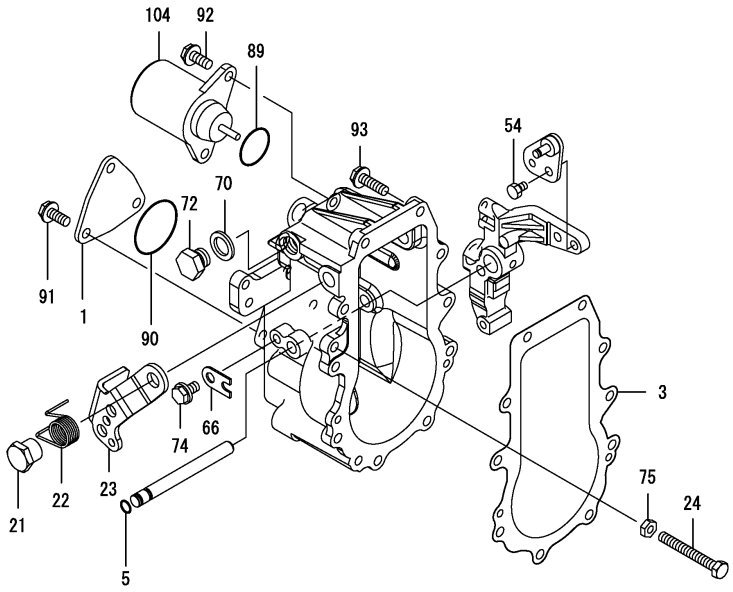

(A)=4TNV84T-DSA
(B)=4TNV84T-DSA2
(C)=4TNV84T-DSA3
(D)=4TNV84T-GGE
(E)=
(F)=

No.	Lev.	Parts No.	Description	Q'ty (A)	(B)	(C)	(D)	(E)	(F)	I	R
1	2	158563-61060	COVER, GOVERNOR CASE	1	1	1					
3	2	158553-61050	GASKET	1	1	1					
5	2	129155-51280	O-RING, S6	1	1	1					
21	2	129255-61410	NUT, LOCK	1	1	1					
22	2	119807-61420	SPRING, RETURN	1	1	1					
23	2	158552-61441	LEVER, REGULATOR	1	1	1					
24	2	129155-61460	BOLT, IDLE	1	1	1					
54	2	26116-060102	BOLT, M6X 10 PLATED	1	1	1					
66	2	119660-61901	RETAINER, SHAFT	1	1	1					
70	2	22190-120000	WASHER, SEAL 12	1	1	1					
72	2	23887-120002	PLUG, 12	1	1	1					
74	2	26106-060102	BOLT, M6X 10 PLATED	1	1	1					
75	2	26756-060002	NUT, LOCK M6	1	1	1					
89	2	24341-000280	O-RING, 1AS28.0	1	1	1					
89-1	2	158552-61900	O-RING	1	1	1				N	
	(A=EXXXXX)		(B=EXXXXX) (C=EXXXXX)								
90	2	24341-000360	O-RING, 1AS36.0	1	1	1					
91	2	26106-060102	BOLT, M6X 10 PLATED	3	3	3					
92	2	26106-060142	BOLT, M6X 14 PLATED	2	2	2					
93	2	26106-060202	BOLT, M6X 20 PLATED	10	10	10					
104	2	119653-77950	SOLENOID, STOP	1	1	1					

Remarks
* THIS FIGURE(GOVERNOR ASSY)IS INCORPORATED IN THE FUEL INJECTION PUMP ASSY(FIG.23).

N:Old $\overset{\text{Yes}}{\underset{\text{No}}{\leftrightarrows}}$ New, Q:Old $\overset{\text{No}}{\underset{\text{Yes}}{\leftrightarrows}}$ New, R:Old $\overset{\text{Yes}}{\underset{\text{Yes}}{\leftrightarrows}}$ New, S:Old $\overset{\text{No}}{\underset{\text{No}}{\leftrightarrows}}$ New, W:Add, Z:Discontinued, F:Interchangeable by set, K:Q'ty Change

Copyright (C) YANMAR CO., LTD. All RightsReserved.

Fig.25. FUEL INJECTION PUMP(INNER PARTS)

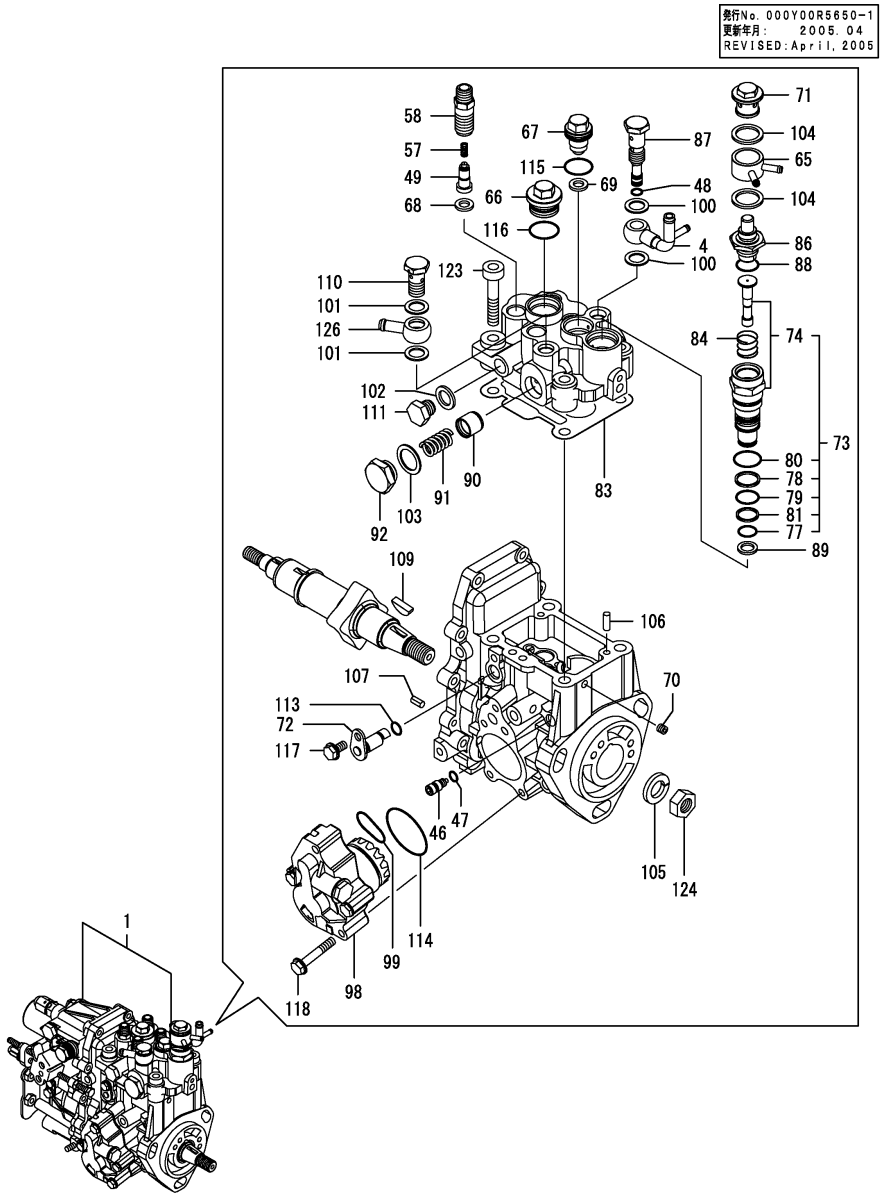

Remarks
(1) GOVERNOR ASSY(FIG.26) IS INCORPORATED IN THIS FOP.CMP (REF.NO.1).

(A)=4TNV84T-DSA
(B)=4TNV84T-DSA2
(C)=4TNV84T-DSA3
(D)=4TNV84T-GGE
(E)=
(F)=

No.	Lev.	Parts No.	Description	Q'ty (A)	(B)	(C)	(D)	(E)	(F)	I	R
1	1	729649-51390	PUMP ASSY, INJECTION				1				1
4	2	158552-51670	JOINT, OVER FLOW				1				
46	2	158600-51270	STOPPER, TAPPET				1				
47	2	158563-51281	O-RING, 4D S6				1				
48	2	158563-51281	O-RING, 4D S6				1				
49	2	158560-51300	VALVE ASSY, DELIVERY				4				
57	2	158563-51330	SPRING, DELIVERY				4				
58	2	158601-51340	HOLDER, DELIVERY				4				
65	2	158553-51551	JOINT				1				
66	2	158601-51550	PLUG				1				
67	2	119802-51560	PLUG, BARREL				1				
68	2	158552-51570	GASKET				4				
69	2	158552-51570	GASKET				1				
70	2	158557-51570	PLUG				1				
71	2	158601-51570	PLUG				1				
72	2	158552-51580	LIFTER				1				
73	2	119802-51590	TIMER SET				1				
74	3	119802-51600	TIMER ASSY				1				
77	3	158553-51670	O-RING, 1011				1				
78	3	119802-51680	RING, BACK UP				1				
79	3	119802-51690	O-RING				1				
80	3	24356-010200	O-RING, 4D1020				1				
81	3	24372-000150	RING, BACK UP T2P15				1				
83	2	158552-51600	GASKET				1				
84	2	158553-51630	SPRING, TIMER				1				
86	2	158553-51640	ELEMENT				1				
87	2	158601-51650	JOINT, OVER FLOW				1				
88	2	158553-51660	O-RING, P14				1				
89	2	158553-51680	GASKET				1				
90	2	158601-51770	PISTON				1				
91	2	158552-51780	SPRING				1				
92	2	158601-51790	PLUG				1				
98	2	158552-52100	PUMP ASSY, FUEL FEED				1				
99	2	158552-52310	O-RING				1				
100	2	22190-120002	WASHER, SEAL 12				2				
101	2	22190-120002	WASHER, SEAL 12				2				
102	2	22190-120002	WASHER, SEAL 12				1				
103	2	22190-180002	WASHER, SEAL 18				1				
104	2	22190-180002	WASHER, SEAL 18				2				
105	2	22217-140000	WASHER, SPRING 14				1				
106	2	22312-050140	PIN, PARALLEL M5X14				2				
107	2	22351-050010	PIN, SPRING 5.0X10				2				
109	2	119802-51090	KEY, 4X16				1				
110	2	23857-060000	BOLT, JOINT 6				1				
111	2	23887-120002	PLUG, 12				1				
113	2	24311-000070	O-RING, 1AP7.0				1				
114	2	158552-52400	O-RING, 4E S42				1				
115	2	24356-010180	O-RING, 4D1018				1				
116	2	24356-010200	O-RING, 4D1020				1				
117	2	26106-060102	BOLT, M6X 10 PLATED				1				
118	2	158553-51770	BOLT				4				

N:Old ⇔(Yes/No) New, Q:Old ⇔(No/Yes) New, R:Old ⇔(Yes/Yes) New, S:Old ⇔(No/No) New, W:Add, Z:Discontinued, F:Interchangeable by set, K:Q'ty Change

++ CONTINUE ++

Copyright (C) YANMAR CO., LTD. All RightsReserved.

Fig.25. FUEL INJECTION PUMP(INNER PARTS)

(A)=4TNV84T-DSA
(B)=4TNV84T-DSA2
(C)=4TNV84T-DSA3
(D)=4TNV84T-GGE
(E)=
(F)=

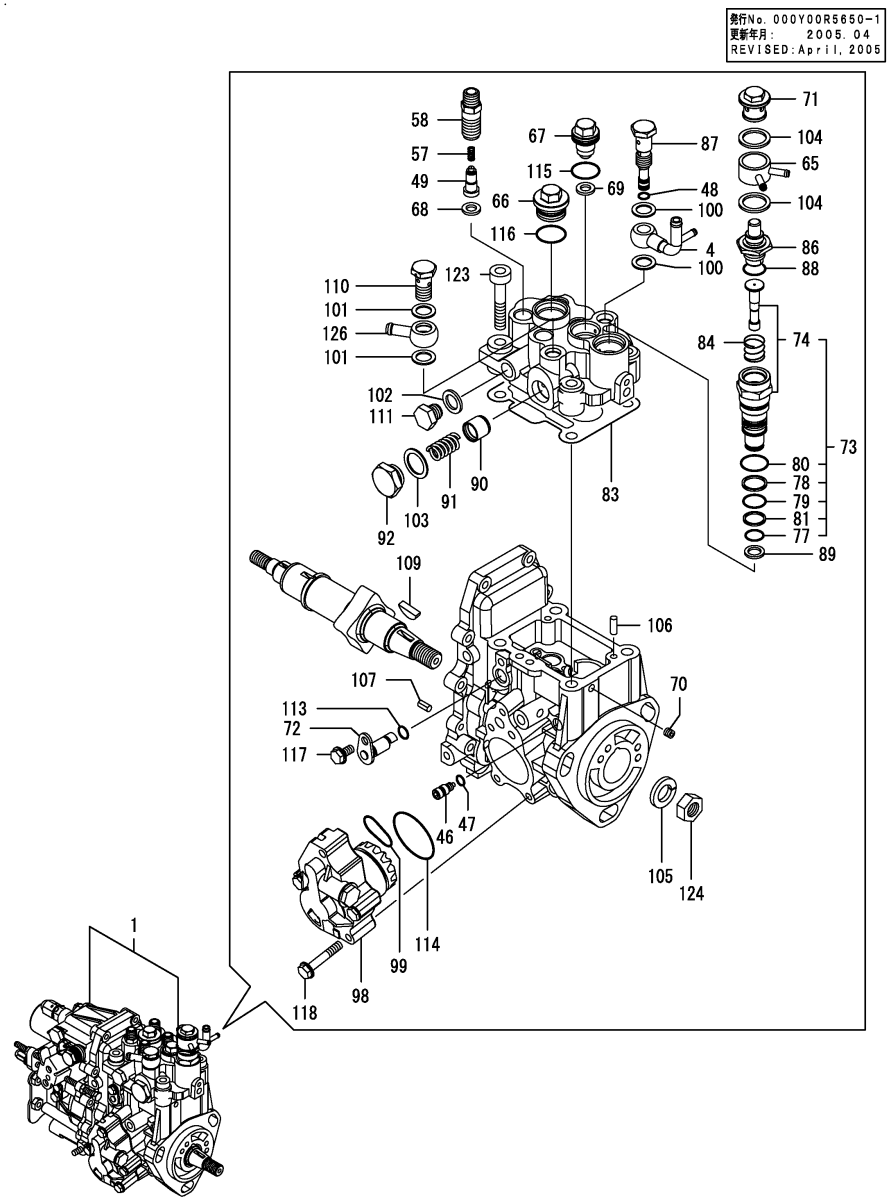

No.	Lev.	Parts No.	Description	Q'ty (A)	(B)	(C)	(D)	(E)	(F)	I	R
123	2	26450-080452	BOLT, M8X 45				4				
124	2	26776-140002	NUT, LOCK M14				1				
126	2	129916-59020	JOINT, PIPE 12				1				

Remarks
(1) GOVERNOR ASSY(FIG.26) IS INCORPORATED IN THIS FOP.CMP (REF.NO.1).

N:Old $\overset{\text{Yes}}{\underset{\text{No}}{\leftrightarrows}}$ New, Q:Old $\overset{\text{No}}{\underset{\text{Yes}}{\leftrightarrows}}$ New, R:Old $\overset{\text{Yes}}{\underset{\text{Yes}}{\leftrightarrows}}$ New, S:Old $\overset{\text{No}}{\underset{\text{No}}{\leftrightarrows}}$ New, W:Add, Z:Discontinued, F:Interchangeable by set, K:Q'ty Change

Copyright (C) YANMAR CO., LTD. All RightsReserved.

Fig.26. GOVERNOR(INNER PARTS)

発行No. 000Y00R5650-1
更新年月: 2005. 04
REVISED: April, 2005

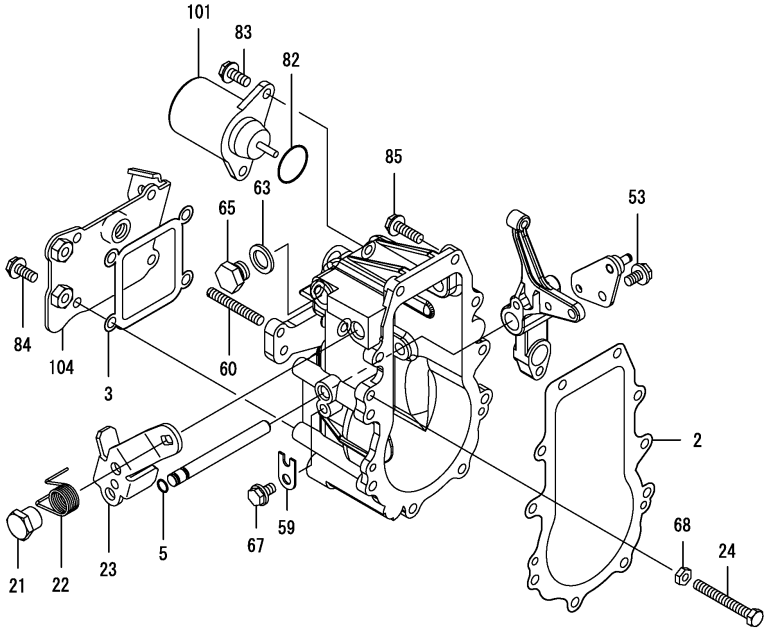

(A)=4TNV84T-DSA
(B)=4TNV84T-DSA2
(C)=4TNV84T-DSA3
(D)=4TNV84T-GGE
(E)=
(F)=

No.	Lev.	Parts No.	Description	Q'ty (A)	(B)	(C)	(D)	(E)	(F)	I	R
2	2	158553-61050	GASKET				1				
3	2	158553-61070	GASKET				1				
5	2	129155-51280	O-RING, S6				1				
21	2	129255-61410	NUT, LOCK				1				
22	2	119807-61420	SPRING, RETURN				1				
23	2	129246-61441	LEVER, REGULATOR				1				
24	2	129155-61460	BOLT, IDLE				1				
53	2	26106-060102	BOLT, M6X 10 PLATED				1				
59	2	119660-61901	RETAINER, SHAFT				1				
60	2	171002-66830	SCREW				1				
63	2	22190-120000	WASHER, SEAL 12				1				
65	2	23887-120002	PLUG, 12				1				
67	2	26106-060102	BOLT, M6X 10 PLATED				1				
68	2	26756-060002	NUT, LOCK M6				1				
82	2	24341-000280	O-RING, 1AS28.0				1				
82-1	2	158552-61900	O-RING (D=EXXXXX)				1			N	
83	2	26106-060142	BOLT, M6X 14 PLATED				2				
84	2	26106-060142	BOLT, M6X 14 PLATED				4				
85	2	26106-060202	BOLT, M6X 20 PLATED				10				
101	2	119653-77950	SOLENOID, STOP				1				
104	2	129246-61061	COVER, GOVERNOR CASE				1				

Remarks
* THIS FIGURE(GOVERNOR ASSY)IS INCORPORATED IN THE FUEL INJECTION PUMP ASSY(FIG.25).

N:Old $\overset{\text{Yes}}{\underset{\text{No}}{\leftrightarrows}}$ New, Q:Old $\overset{\text{No}}{\underset{\text{Yes}}{\leftrightarrows}}$ New, R:Old $\overset{\text{Yes}}{\underset{\text{Yes}}{\leftrightarrows}}$ New, S:Old $\overset{\text{No}}{\underset{\text{No}}{\leftrightarrows}}$ New, W:Add, Z:Discontinued, F:Interchangeable by set, K:Q'ty Change

Copyright (C) YANMAR CO., LTD. All RightsReserved.

Parts No. Index

Parts No.	Fig. No.	Ref. No.
105025-59560	18	6
114250-39450	12	8
114250-53080	16	5
	17	5
114250-53120	16	9
	17	9
114250-53130	16	10
	17	10
114250-53140	16	11
	17	11
114250-53210	16	12
	17	12
114250-53400	16	13
	17	13
119131-18320	7	3
119225-52102	18	10
119305-59120	16	25
	17	25
119609-32040	2	17
	3	17
	22	23
119620-01750	4	22
119620-77380	21	4
119620-77421	21	8
119620-77440	21	13
119620-77461	21	15
119620-77471	21	16
119620-77480	21	20
119620-77490	21	29
119620-79200	21	9
119620-79210	21	10
119620-79220	21	11
119620-79230	21	12
119620-79240	21	5
119620-79250	21	6
119620-79260	21	18
119620-79270	21	19
119620-79280	21	21
119620-79290	21	22
119620-79300	21	23
119620-79310	21	24
119620-79320	21	25
119620-79330	21	26
119620-79340	21	27
119620-79350	21	28
119620-79360	21	7
		30
119625-11880	5	27
	22	6
119640-01640	4	9
119643-66900	21	45
119650-77910	21	42
119653-77950	24	104
	26	101
119660-61901	24	66
	26	59
119717-11190	5	24
119717-11340	5	18
	22	4
119717-11350	5	19
	22	10
119717-11800	5	11
119802-01520	3	12
119802-01560	2	13
	3	13
119802-03070	5	51
119802-11870	5	46
	22	5
119802-13650	7	4
119802-13670	7	5
119802-13820	7	6 -1
119802-21202	10	5
119802-21650	10	9
119802-21660	10	41
119802-25051	8	9
119802-25070	8	13
119802-25100	8	10
119802-25901	8	15
119802-32070	2	8
	3	8
119802-32100	2	7
	3	7
119802-32130	2	20
	3	20
119802-35110	11	9
119802-39500	12	18
119802-49113	13	10
119802-49730	13	32
119802-51090	23	109
	25	109
119802-51560	23	67
	25	67
119802-51590	23	73
	25	73
119802-51600	23	74
	25	74
119802-51680	23	78
	25	78
119802-51690	23	79
	25	79
119802-55700	18	11
119802-55710	18	12
119802-55730	18	16
119802-55800	18	2
119802-77200	21	39
119802-77340	21	35
119807-61420	24	22
	26	22
119831-42290	13	21
119865-21600	10	16
		45
119865-42290	13	44
119888-01600	4	2
119940-59130	11	22
119940-77270	21	34
119940-77330	21	1
121023-01550	2	28
	3	28
121111-21501	10	12
121250-44901	13	41
121252-39150	12	16
121267-44760	13	37
121450-42450	13	42
121520-34810	11	2
121550-23200	10	30
121850-21680	10	11
121850-42410	13	8
121850-51960	2	21
	3	21
	22	3
123901-39820	12	22
123907-11601	16	43
	17	43
123907-11830	5	23
123907-59540	16	45
	17	45
123907-59550	16	42
	17	42
	22	30
123907-59560	16	46
	17	46
124060-01050	1	10
124070-13300	12	20
124160-01751	2	14
	3	14
	5	48
124160-01910	1	5
		15
124160-11360	5	59
124160-39140	12	9
124223-39900	12	19
124240-01871	2	15
		32
	3	15
124240-01883	2	33
	22	27
124395-49840	13	17
	22	15
124465-44950	13	40
	22	31
124550-21600	10	49
124722-59050	13	33
		36
	16	39
	17	39
124766-59050	18	5
		8
128300-77920	21	40
129001-01250	1	11
129001-02930	1	25
129001-32330	2	11
	3	11
129001-91841	2	22
	3	22
129004-01190	1	33
129004-22500	10	19
129004-22950	10	35
129004-34801	11	1
129004-42040	13	15
129004-49610	13	30
129004-49620	13	34
129004-49711	13	31
129004-49721	13	35
129004-55610	18	1
129005-01520	2	12
129005-59830	12	12
129006-03120	5	53
129006-35100	11	8
129006-44480	11	14
129064-77330	21	36
129067-77340	21	37
129100-01580	4	1
		15
	10	2
129100-01640	4	16
129100-23910	10	29
129100-42051	13	3
129100-42121	13	4
129100-55690	18	13
129103-49301	11	15

Parts No. Index

Parts No.	Fig. No.	Ref. No.
129120-77501	6	9
129129-01600	4	3
129129-77230	20	8
129129-77240	20	9
129129-77260	20	21
129129-77270	20	22
129129-77320	20	28
129129-77340	20	30
129129-77350	20	31
129129-77362	20	32
129129-77380	20	34
129129-77400	20	16
129129-77410	20	17
129129-77420	20	19
129129-77430	20	20
129129-77440	20	14
129129-77450	20	15
129129-77460	20	3
129150-01200	1	31
129150-02020	1	7
129150-02450	8	4
129150-02870	1	34
129150-02930	1	28
129150-02940	1	37
129150-03070	5	52
129150-03090	5	64
129150-11230	5	36
		40
129150-11750	5	22
		37
		41
129150-14101	8	7
129150-14200	8	1
129150-14400	8	2
129150-23600	10	31
129150-23610	10	39
129150-25301	8	16
129150-35041	11	3
	22	11
129150-35042	11	3 -1
129150-35111	11	12
	22	22
129150-35153	11	13
129150-49811	13	25
	22	14
129150-59131	16	28
		32
	17	28
		32
129150-77511	6	10

Parts No.	Fig. No.	Ref. No.
129150-77511	22	8
129155-42350	13	20
129155-49801	13	24
129155-51280	24	5
	26	5
129155-61460	24	24
	26	24
129202-22300	10	23
129210-59110	18	4
129210-59160	18	7
129211-77920	21	41
129240-79300	21	14
129242-55700	18	11 -1
129242-55720	18	16 -1
129242-55730	18	12 -1
129242-55740	18	17
129242-55750	18	18
129242-55760	18	19
129242-55770	18	20
129246-61061	26	104
129246-61441	26	23
129255-61410	24	21
	26	21
129350-49530	13	26
129400-01730	4	6
129400-01770	4	8
129400-77012	19	1
129400-77441	19	5
129400-77520	19	12
129400-77531	19	13
129400-77571	19	17
129400-92420	22	36
129403-13120	7	2
129403-42380	13	43
129407-77010	20	1
129407-77210	20	6
129407-77220	20	7
129407-77250	20	10
129407-77280	20	23
129407-77290	20	24
129407-77300	20	25
129407-77310	20	27
129407-77330	20	29
129407-77390	20	13
129417-33110	11	7
129417-35150	11	10
129418-18320	9	2
129418-32320	2	10
	3	10
129423-77200	21	2

Parts No.	Fig. No.	Ref. No.
129423-77710	21	17
129430-26070	8	21
129436-35070	11	4 -1
129436-35091	11	4
129486-01670	4	19
129486-42021	13	14
	22	12
129486-42140	13	16
	22	20
129486-77400	19	2
129486-77460	19	6
		8
129486-77470	19	7
129486-77490	19	9
129488-21590	10	42
129508-01330	1	32
	22	2
129508-03010	5	50
129508-11100	5	25
129508-11110	5	15
129508-11130	5	16
129508-11180	5	17
129508-11241	5	28
129508-11250	5	29
129508-11260	5	31
129508-11270	5	32
129508-11280	5	33
129508-11310	5	56
	22	7
129508-11350	5	49
129508-11650	5	34
129508-11660	5	38
129508-11700	5	4
129508-11800	5	20
129508-11820	5	12
129508-11840	5	3
129508-11900	5	62
129508-11920	5	42
129508-12060	6	1
129508-12100	6	2
129508-12110	6	4
	22	21
129508-14580	8	3
129508-18010	9	4
129508-18020	9	4 -1
129508-18080	9	1
	22	34
129508-18090	9	5
	22	33
129508-21002	10	1

Parts No.	Fig. No.	Ref. No.
129508-22080	10	17
129508-22900	10	33
129508-32111	2	18
	3	18
129508-32120	2	19
	3	19
129508-33010	11	6
129508-39450	12	17
129508-39600	12	21
129508-42001	13	1
129508-49030	11	16
129508-49040	11	20
129508-51250	14	4
129508-53000	16	2
129508-59510	16	40
	17	40
129508-59550	16	41
	17	41
129508-59570	16	38
	17	38
129508-59910	16	34
	17	34
129508-59920	16	35
	17	35
129508-59930	16	36
	17	36
129508-59940	16	37
	17	37
129550-13110	7	1
	22	9
129550-59120	16	29
	17	29
129553-39650	12	7
129601-51250	15	2
129612-01600	4	4
129612-44700	13	22
129612-59520	18	9
129649-53000	17	2
129655-44740	13	45
129693-44310	7	6
129792-39410	12	1
129795-01780	4	18
129795-01800	2	6
	3	6
129795-01900	21	31
129795-01950	2	16
	3	16
129795-02411	1	14
129795-21661	10	10
129795-49551	13	27

Parts No. Index

Parts No.	Fig. No.	Ref. No.
129795-49551	22	13
129900-07900	5	1
129900-32130	2	9
	3	9
129900-77460	19	10
129900-77640	19	18
129907-11950	5	47
129916-49740	13	13
129916-59020	23	126
	25	126
158552-51151	8	18
158552-51570	23	68
		69
	25	68
		69
158552-51580	23	72
	25	72
158552-51600	23	83
	25	83
158552-51670	23	4
	25	4
158552-51780	23	91
	25	91
158552-52100	23	98
	25	98
158552-52310	23	99
	25	99
158552-52400	23	114
	25	114
158552-61441	24	23
158552-61900	24	89 -1
	26	82 -1
158553-51551	23	65
	25	65
158553-51630	23	84
	25	84
158553-51640	23	86
	25	86
158553-51660	23	88
	25	88
158553-51670	23	77
	25	77
158553-51680	23	89
	25	89
158553-51770	23	118
	25	118
158553-61050	24	3
	26	2
158553-61070	26	3
158557-51570	23	70

Parts No.	Fig. No.	Ref. No.
158557-51570	25	70
158560-51300	23	49
	25	49
158563-51281	23	47
		48
	25	47
		48
158563-51330	23	57
	25	57
158563-61060	24	1
158600-51270	23	46
	25	46
158601-51340	23	58
	25	58
158601-51550	23	66
	25	66
158601-51570	23	71
	25	71
158601-51650	23	87
	25	87
158601-51770	23	90
	25	90
158601-51790	23	92
	25	92
171002-66830	26	60
171008-03990	11	17
171008-77410	19	3
171008-77420	19	4
171008-77510	19	11
171008-77540	19	14
171008-77650	19	19
171008-77660	19	20
171008-77670	19	21
171051-01921	1	6
171056-49120	11	25
171353-44760	13	46
171420-01600	4	5
171420-21580	10	13
171420-21590	10	46
22190-080002	12	10
		13
	16	44
	17	44
	22	16
22190-100002	12	11
	22	24
22190-120000	24	70
	26	63
22190-120002	23	100
		101

Parts No.	Fig. No.	Ref. No.
22190-120002	23	102
	25	100
		101
		102
22190-180002	23	103
		104
	25	103
		104
22190-220002	4	11
	22	26
22217-140000	8	19
	23	105
	25	105
22252-000260	10	24
22312-050140	23	106
	25	106
22351-030010	10	8
	12	26
22351-050010	23	107
	25	107
22351-060012	5	63
22512-070140	8	8
	10	6
22857-500100	5	57
23000-025000	12	23
23000-048000	6	5
23000-060000	6	6
23080-015000	11	19
		23
23080-018000	11	24
23414-080000	13	29
	22	25
23414-100000	12	27
	22	29
23857-030000	12	14
23857-060000	23	110
	25	110
23876-010000	13	11
23876-020000	5	13
	13	12
23876-030000	2	4
	3	4
23876-040000	2	5
	3	5
23887-120002	23	111
	24	72
	25	111
	26	65
24311-000070	23	113
	25	113

Parts No.	Fig. No.	Ref. No.
24311-000120	5	60
		78
	22	17
24311-000160	18	15
24311-000320	2	23
	3	23
	5	61
	22	18
24314-000160	12	24
	22	35
24321-000650	18	14
24321-000750	18	14 -1
24321-000800	8	22
	22	28
24341-000240	2	29
	3	29
	22	19
24341-000280	24	89
	26	82
24341-000360	24	90
24341-000400	5	58
	22	32
24356-010180	23	115
	25	115
24356-010200	23	80
		116
	25	80
		116
24372-000150	23	81
	25	81
25152-003600	13	44 -1
26014-080452	21	38
26106-060102	23	117
	24	74
		91
	25	117
	26	53
		67
26106-060142	24	92
	26	83
		84
26106-060162	2	30
	3	30
	12	25
26106-060202	24	93
	26	85
26106-060302	13	38
26106-060322	19	28
26106-060402	13	47
	19	29

Parts No. Index

Parts No.	Fig. No.	Ref. No.
26106-080122	12	15
	13	23
26106-080142	5	2
	8	17
26106-080162	2	24
		25
		34
	3	24
		25
	4	12
	13	18
	15	3
26106-080202	6	7
	11	11
	14	3
	15	4
26106-080222	13	28
26106-080252	4	13
	5	44
	8	23
26106-080302	14	2
	18	3
26106-080352	4	20
	6	11
	11	5
26106-080402	8	14
26106-080452	4	14
		14 -1
	13	39
	21	33
26106-080502	4	26
	5	45
26106-080552	2	26
	3	26
	11	5 -1
26106-080602	13	19
26106-080802	6	8
26106-100302	8	24
26116-060102	24	54
26116-120202	19	31
26116-120252	19	30
	20	35
26206-100202	4	23
26206-100252	4	24
26206-100302	4	25
26226-080352	5	43
26306-080002	2	27
	3	27
	9	3
26306-100002	21	32

Parts No.	Fig. No.	Ref. No.
26366-060002	12	28
26450-080452	23	123
	25	123
26756-060002	24	75
	26	68
26776-140002	8	20
	23	124
	25	124
27241-120000	1	12
27241-300000	1	13
27241-400000	5	14
729402-23100	10	25
729508-01500	3	1
729508-01520	2	1
729508-01560	1	1
729508-51310	14	1
	23	1
729508-53100	16	1
729508-92630	22	1
729649-51390	15	1
	25	1
729649-53100	17	1
977770-01212	2	31
	3	31
	4	21
	5	65
	22	37
X0280210230	20	11
X0283060061	20	2
X0283270140	20	12
X2114555500	19	25
X2114955020	19	26
X2240410100	19	27
X9490561001	21	3
X9490561370	20	4
X9491200240	20	5
X9491703371	20	18
X9491730461	20	26

Parts No.	Fig. No.	Ref. No.

Parts No.	Fig. No.	Ref. No.