AGOSTO 1959

# JOHN DEERE

# Parts Catalog

RUTHZIL TRATOR COMERCIAL DE PEÇAS LTDA  11 97083-6812 ROLANDO CITRANGULO

## MODEL “50” TRACTOR

**PC264**

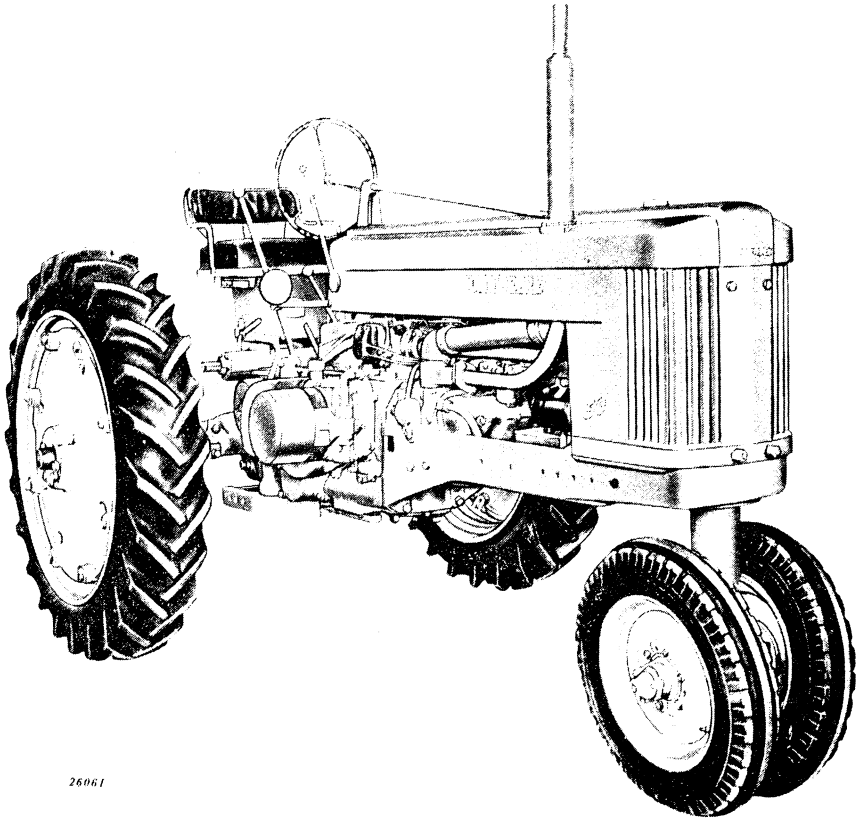

26061

*John Deere Model "50" Tractor—Pulley Side*

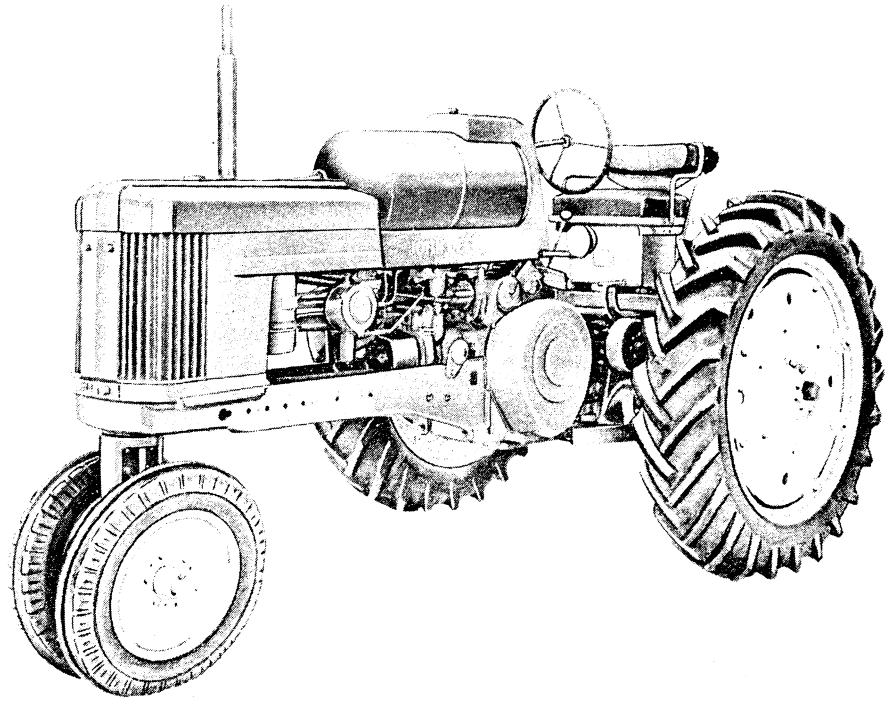

42179

*John Deere Model "50" LP-Gas Tractor—Flywheel Side*

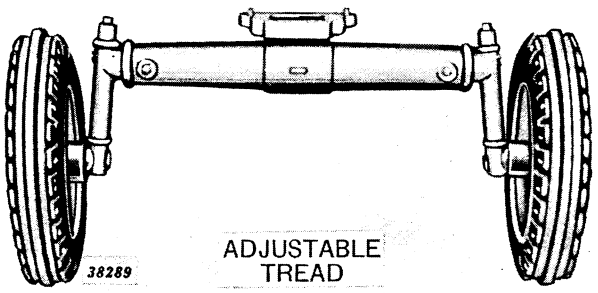


ADJUSTABLE TREAD

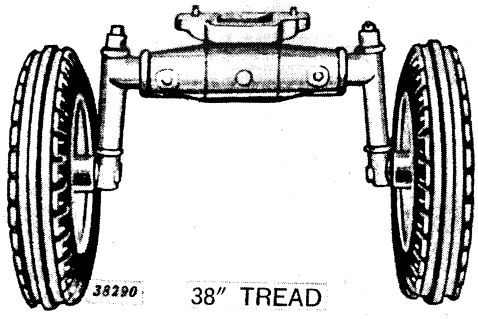


38″ TREAD

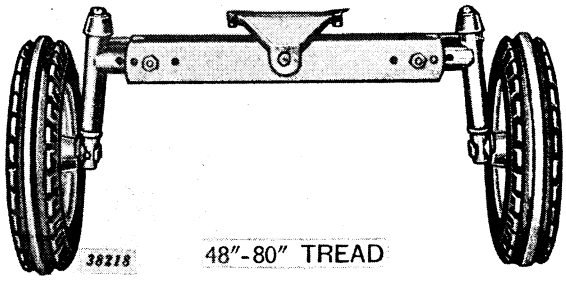


48″-80″ TREAD

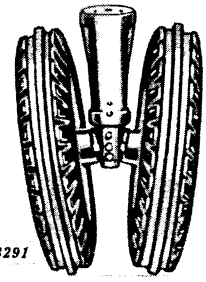


DOUBLE

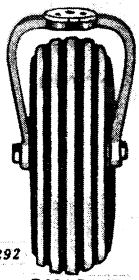


SINGLE

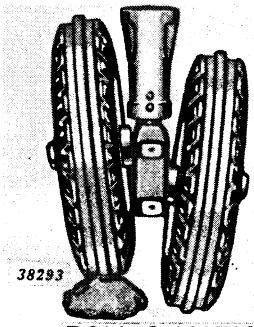


ROLL-O-MATIC

***Front Wheel Equipment Available for John Deere Model "50" Tractor with Convertible Pedestal***

## EXPLANATION OF SERIAL NUMBERS

Serial number information given on any page is applicable only to parts listed and illustrated on that page.

| | |
|---|---|
| When the parentheses include only the dash the part is used on all Model "50" Tractors. | ( – ) |
| When a serial number appears before the dash the part was introduced beginning with that serial number and is still being used. | (0000000– ) |
| When a serial number appears after the dash the part was used up to and including that serial number but was not used after that serial number. | ( –0000000) |
| When serial numbers appear both before and after the dash the part was used beginning with the first serial number but was not used after the second serial number. | (0000000–0000000) |
| When a serial number begins with PCV or 3RC it refers to the power take-off shaft, Powr-Trol, or remote cylinder, and not to the tractor. | (PCV000– ) |
| When a serial number contains xxxxxxx before the dash the part is approved for production but the beginning serial number was not established when this catalog went to press. | ( xxxxxxx– ) |
| When a serial number contains xxxxxxx after the dash the part is discontinued but the last serial number was not established when this catalog went to press. | ( –xxxxxxx ) |

## EXPLANATION OF SUBSTITUTION INFORMATION

Part substitution information given on any page is applicable only to parts listed and illustrated on that page.

## EXPLANATION OF PACKAGED PARTS

For added protection and ease of handling between the factory and branch houses and between the branch houses and most dealers, some parts which appear in this catalog, such as gaskets, are packed in packages which contain more than one of the part—usually five or ten. Dealers may order either the packages or the individual parts from the branch houses. However, when possible the package or multiples of the package should be specified.

These parts should not be confused with other packaged items which are packaged in certain quantities but cannot be ordered individually.

Both types of packaged parts are identified by a statement which appears in the Description Column.

When the statement reads:

**"Packed 5 in a pkg." or "Packed 10 in a pkg.," etc.,** dealers may order either the packages or the individual parts from the branch houses. The packages bear the same part number as the individual parts.

When the statement reads:

**"Package of 25" or "Package of 50," etc.,** the parts cannot be ordered individually. The number which appears in the Part Number Column is a "package" number and not the part number of the individual part.

# SECTIONAL INDEX


| | Page |
|---|---|
| Section 5—General Information | 5-1, 6 |
| Section 10—Front End Support and Engine-Transmission Case | 10-1, 5 |
| Section 15—Engine | 15-2, 25 |
| Section 20—Pulley and Clutch | 20-2, 7 |
| Section 25—Cooling System | 25-2, 13 |
| Section 30—Fuel System | 30-2, 31 |
| Section 35—Electrical System | 35-2, 35 |
| Section 40—Transmission, Differential, Final Drives, Power Shaft, and Brakes | 40-2, 13 |
| Section 41—Power Steering | 41-2, 13 |
| Section 45—Steering Mechanism, Front End Equipment, and Rear Wheels | 45-2, 29 |
| Section 50—Tools, Instrument Panel, Gauges, Hood, Grille, and Fenders | 50-2, 12 |
| Section 55—Drawbar and Seat | 55-1, 5 |
| Section 60—Power Shaft and Power Shaft Clutch | 60-2, 19 |
| Section 65—Hydraulic Mechanism | 65-2, 18 |
| Section 70—Umbrella Holder, Decals, and Gasket Sets | 70-1, 10 |
| Section 75—Numerical Index | 75-1 |


# ALPHABETICAL INDEX


| | Page |
|---|---|
| **A** | |
| Air Cleaner | 30-14, 16 |
| **B** | |
| Battery Box | 55-2 |
| Brakes | 40-12 |
| Brake, Pulley | 20-4 |
| Breakaway Coupling | 65-16 |
| **C** | |
| Cab, Weatherbrake | 50-12 |
| Cam Followers | 15-16 |
| Camshaft | 15-16 |
| Carburetor Choke Lever Kit | 70-4 |
| Carburetor (Dual Induction) | 30-18 |
| Carburetor (Single Induction) | 30-20 |
| Carburetor (LP-Gas) | 30-22 |
| Case, Engine and Transmission | 10-4 |
| Choke Lever Kit, Carburetor | 70-4 |
| Choke Rod | 30-4 |
| Clutch, Pulley | 20-2 |
| Clutch, Power Shaft | 60-18 |
| Clutch Fork Bearing | 20-4 |
| Clutch Operating Parts | 20-4 |
| Coil, Ignition | 35-16, 17 |
| Connecting Rods | 15-8 |
| Control, Power Shaft Clutch | 60-14 |
| Controls, Starting Motor | 35-10 |
| Control, Throttle | 30-4 |
| Convertible Front End, Double Front Wheel | 45-12 |
| Convertible Front End, Roll-O-Matic | 45-14 |
| Convertible Front End, Single Front Wheel | 45-16 |
| Convertible Pedestal | 45-10 |
| Cooling System | 25-2, 4, 6 |
| Countershaft | 40-6 |
| Coupling, Breakaway | 65-16 |
| Cover, First Reduction Gear | 20-6 |
| Cover, Flywheel | 10-4 |
| Cover, Crankcase | 10-4 |
| Cover, Fourth and Sixth Speed Gear | 10-4 |
| Cover, Transmission Case | 40-2 |
| Crankshaft | 15-6 |
| Cylinder Block | 15-8 |
| Cylinder Head (Dual Induction Carburetion) | 15-12 |
| Cylinder Head (Single Induction Carburetion) | 15-14 |
| Cylinder, Remote (Fixed-Stop Type) | 65-12 |
| Cylinder, Remote (Hydraulic-Stop Type) | 65-14 |
| **D** | |
| Decalcomania Sets | 70-3 |
| Differential | 40-8 |
| Distributor (Wico) | 35-12 |
| Distributor (Delco-Remy) | 35-14 |
| Distributor Drive (LP-Gas) | 35-18 |
| Distributor (LP-Gas) | 35-20 |
| Double Front Wheel, Convertible | 45-12 |
| Drawbar | 55-1 |
| **E** | |
| Exhaust Pipe | 15-18, 20, 22 |
| **F** | |
| Fan | 25-12 |
| Fan and Power Steering Pump | 41-4 |
| Fan Shaft | 25-10 |
| Fan Shaft Support | 25-10 |
| Fenders | 50-12 |
| Final Drive | 40-10 |
| Flywheel | 15-6 |
| Front End Support | 10-2 |
| Front Axle Knee | 45-22 |
| Front Axle Knee (48" to 80" Tread) | 45-26 |
| Front Axle Housing | 45-20 |
| Front Axle Housing (48" to 80" Tread) | 45-24 |
| Front Wheels (Except Single Front Wheel) | 45-18 |
| Fuel Convertor (LP-Gas) | 30-26 |
| Fuel Convertor Parts (LP-Gas) | 30-30 |
| Fuel Strainer (LP-Gas) | 30-26 |
| Fuel Strainer Parts (LP-Gas) | 30-28 |
| Fuel System (LP-Gas) | 30-24 |
| Fuel Filter (All-Fuel) | 30-9 |
| Fuel Filter (Gasoline) | 30-8 |
| Fuel Filter with Automatic Shut-Off | 30-10 |
| Fuel Tank (All-Fuel) | 30-12 |
| Fuel Tank (Gasoline) | 30-6 |
| **G** | |
| Gasket Sets | 70-3, 4, 5, 6, 7, 8, 9 |
| Gauges | 50-4 |
| Gear, Countershaft Idler | 40-6 |
| Gears, Transmission Drive and First Reduction | 40-6 |
| Gear, Power Shaft Idler | 40-6 |

# ALPHABETICAL INDEX—Continued


Page

Gear Shift ... 40-2
Gear Shift Forks ... 40-4
Generator and Mounting Bracket ... 35-2
Generator (Parts) ... 35-4, 6, 34
Governor ... 30-2
Grille ... 50-10

H

Hood ... 50-6, 8
Hose, Remove Cylinder ... 65-12, 14
Hour Meter ... 50-4
Housing, Power Shaft Clutch ... 60-16
Housing, Power Shaft and Powr-Trol (Engine-Driven Power Shaft) ... 60-10
Housing, Power Shaft and Powr-Trol (Transmission-Driven Power Shaft) ... 60-4
Housing, Power Shaft, less Powr-Trol (Engine-Driven Power Shaft) ... 60-12
Housing, Power Shaft, less Powr-Trol (Transmission-Driven Power Shaft) ... 60-6
Housing, Powr-Trol Valve ... 65-8, 10

I

Instrument Panel ... 50-4
Instrument Panel and Wiring (LP-Gas) ... 35-33

L

Lamp, Combination Rear and Warning ... 35-23
Lamp, Dash ... 35-32
Lamps, Front and Rear (Parts) ... 35-22, 23
Lamp, Implement Warning ... 35-24
Lamp, Warning, for Towed Implements ... 35-25
Lamps and Wiring ... 35-26, 28, 30
Lighter, Cigarette ... 35-32

M

Main Bearings ... 15-6
Manifold (Gasoline) ... 15-18
Manifold (All-Fuel) ... 15-20, 22
Manual, Operator's ... 70-3
Muffler and Exhaust Pipe (Gasoline) ... 15-18
Muffler and Exhaust Pipe (All-Fuel) ... 15-20, 22
Muffler and Tail Pipe ... 15-24

O

Oil Filter and Oil Pipes ... 15-2
Oil Line, Flexible Bulk ... 65-18
Oil Pump and Oil Pipes ... 15-4
Oil Tubes (Power Steering) ... 41-12
Oil Tubes, Powr-Trol Pump ... 65-4
Operator's Manual ... 70-3

P

Pedestal (Except Convertible) ... 45-6
Pedestal and Steering Spindle (Power Steering) ... 41-10
Pedestal (Convertible) ... 45-10
Pistons ... 15-8
Piston Rings ... 15-8
Platform ... 55-2
Power Shaft (Transmission-Driven) ... 60-2
Power Shaft (Engine-Driven) ... 60-8
Power Shaft Clutch ... 60-18
Pulley ... 20-2
Pump, Oil ... 15-4
Pump, Ventilator ... 25-10
Pump, Powr-Trol ... 65-2
Pump, Power Shaft ... 60-10, 12
Pump, Water ... 25-8

R

Page

Radiator ... 25-2, 4
Rear Axle Shafts ... 40-10
Rear Wheels ... 45-28
Regulator, Current and Voltage ... 35-8
Replacement Assemblies ... 10-1
Reusable Oil Line Couplings ... 65-18
Rim, Demountable ... 45-28
Rockshaft Assembly ... 65-6
Roll-O-Matic (Except Convertible) ... 45-8
Roll-O-Matic (Convertible) ... 45-14

S

Seat, Float Ride ... 55-4, 5
Seat, Regular ... 55-2
Selector Valve ... 65-16
Shaft, Steering, and Wheel ... 45-2
Shifter, Shafts ... 40-4
Shutter and Controls ... 25-8
Single Front Wheels ... 45-16
Sliding Gear Shaft ... 40-6
Socket, Electrical Outlet ... 55-2
Speed-Hour Meter ... 50-3
Starting Motor (Parts) ... 35-10
Starting Motor and Controls ... 35-10
Steering Shaft, Worm and Housing (Power Steering) ... 41-6
Steering Spindle (Except Convertible) ... 45-6
Steering Spindle (Convertible) ... 45-10
Steering Valve (Power Steering) ... 41-8
Steering Wheel and Shaft ... 45-2
Step, Tractor ... 50-2
Support, Steering Shaft ... 45-2, 4
Switch, Ignition ... 35-32

T

Tappets ... 15-12, 14
Thermostat ... 25-2, 4, 6
Tools ... 50-2
Tool Box ... 10-2
Transmission ... 40-6
Tubes, Oil (Power Steering) ... 41-10
Tubes, Oil, Powr-Trol Pump ... 65-4

U

Umbrella Bracket ... 70-2

V

Valves ... 15-12, 14
Valve Housing, Powr-Trol ... 65-8, 10
Ventilator Pump ... 25-12
Ventilator Pump and Fan Drive (Power Steering) ... 41-2
Voltage and Current Regulator ... 35-8

W

Water, Pump ... 25-10
Weatherbrake ... 50-12
Weight, Front End Support ... 10-2
Wheels, Front (Except Single Front Wheel) ... 45-18
Wheels, Single Front ... 45-16
Wheels, Rear ... 45-28
Wiring ... 35-26, 28, 30

# ORDERING JOHN DEERE PARTS FROM THE BRANCH HOUSE

## PART AND KEY NUMBERS

1. Order by part numbers **exactly** as shown in catalog including prefix and suffix letters. Be especially cautious when ordering such items as lock washers, rivets, bolts, and other hardware.
2. Key numbers should not be listed. They are used only as reference between illustrations and parts lists.
3. When ordering parts for carburetors, generators, magnetos, etc., in addition to including a short description of the part, include name of unit, as for example—"Wico Magneto," "Hercules Engine," etc.
4. When ordering items not on hand or regularly carried in stock, be sure to check machine and vintage (date or serial number) information.

## USE OF PARTS CATALOG INDEX

1. Use index in front of each catalog to locate groups of parts such as axles, beams, cylinders, etc.
2. To locate information on individual part numbers, use numerical index in back of catalog (printed on yellow pages.)
3. Orders for parts should never be made up from information in numerical index—always refer to illustration and parts list pages.

## WRITING UP ORDERS

1. To insure quick service, use Standard Parts Order Blanks furnished by branch house. (You may assign your own order number to be used as reference.)
2. Order parts separately from whole goods.
3. Correspondence should be separate from orders for parts.
4. List part numbers in alphabetical and numerical sequence by factory lines (which can be determined by the last suffix letter after each part number.)
5. Write or print information or orders plainly.

## SHIPPING INFORMATION

1. Specify how goods are to be shipped—whether by Freight (specify routing), Truck (specify carrier), Express, Air Express, Parcel Post, or Air Parcel Post.
2. Telegraph orders should give shipping instructions. Shipment will be made by Express or Parcel Post unless otherwise specified.
3. Send order to branch house. Do not order directly from factory.

## IF NO PART NUMBER OR DESCRIPTION IS AVAILABLE

If part number cannot be located, send a sketch or return the broken part (shipping charges prepaid) to the branch house. Give the branch house parts department all information available concerning the name of the machine, age or serial number, location and description of part or numbers of adjacent parts, so new part can be identified and shipped quickly.

# ENGINE REPLACEMENT ASSEMBLIES

**(Serial No. 5000001- )**

## CRANKSHAFT WITH BEARING GROUP

This Group Is Made Up of Three Assemblies (1) of Crankshaft with Gear, (2) of Main Bearing Housings with Bushings and Connecting Rod Bushings, (3) of Gaskets.

Crankshaft with Bearing Group ..... ( - )

Order: 1—AB 4684 R Crankshaft
1—AB 4680 R Main Bearing Housings with Bushings and Connecting Rod Bushings
1—AB 4675 R Gasket Set*

## CYLINDER BLOCK, PISTONS, RINGS, AND GASKET GROUP

This Group Is Made Up of Three Assemblies (1) of Cylinder Block, (2) of Pistons with Rings and Pins, (3) of Gaskets.

Cylinder Block, Pistons, Rings, and Gasket Group (**All-Fuel**) ..... ( -5015950)

Order: 1—AB 4513 R Cylinder Block
1—AB 3919 R Pistons with Rings and Pins
1—AB 4676 R Gasket Set*

Cylinder Block, Pistons, Rings, and Gasket Group (**Gasoline**) ..... ( - )
(**All-Fuel**) ..... (5015951- )

Order: 1—AB 4630 R Cylinder Block
1—AB 4641 R Pistons with Rings and Pins (**Gasoline**)
1—AB 4742 R Piston with Rings and Pins (**All-Fuel**)
1—AB 4677 R Gasket Set*

## COMBINATION CYLINDER BLOCK AND CRANKSHAFT GROUP

This Group Is Made Up of Six Assemblies (or Two Groups)—Crankshaft with Bearings and Cylinder Block with Pistons, Rings, Gaskets, Etc. (1) Crankshaft, (2) Main Bearing Housings with Bushings and Connecting Rod Bushings, (3) Cylinder Block, (4) Pistons with Rings and Pins, (5 and 6) Gaskets.

Cylinder Block and Crankshaft Group (**All-Fuel**) ..... ( -5015950)

Order: 1—AB 4513 R Cylinder Block
1—AB 3919 R Pistons with Rings and Pins
1—AB 4684 R Crankshaft
1—AB 4680 R Main Bearing Housings with Bushings and Connecting Rod Bushings
1—AB 4675 R Gasket Set*
1—AB 4676 R Gasket Set*

Cylinder Block and Crankshaft Group (**Gasoline**) ..... ( - )
(**All-Fuel**) ..... (5015951- )

Order: 1—AB 4630 R Cylinder Block
1—AB 4641 R Pistons with Rings and Pins (**Gasoline**)
1—AB 4742 R Pistons with Rings and Pins (**All-Fuel**)
1—AB 4684 R Crankshaft
1—AB 4680 R Main Bearing Housings with Bushings and Connecting Rod Bushings
1—AB 4675 R Gasket Set*
1—AB 4677 R Gasket Set*

*For illustrations and contents of gasket sets, see Gasket Set Groupings.

## FRONT END SUPPORT AND TOOL BOX
(Serial No. 5000001- )

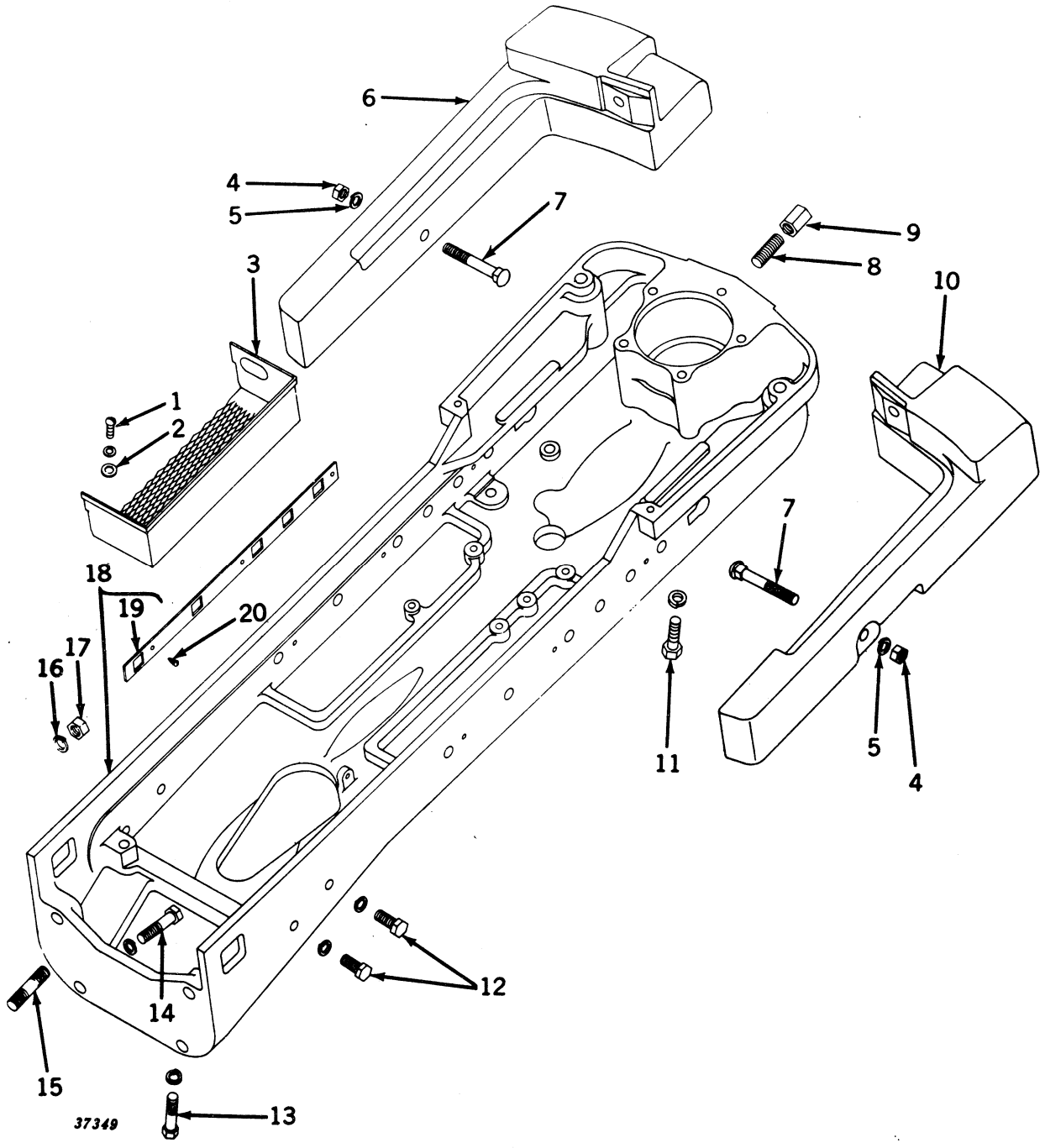

## FRONT END SUPPORT AND TOOL BOX—Continued
**(Serial No. 5000001- )**

| Key | Part No. | Serial No. | Description |
|---|---|---|---|
| 1 | 19H 1056 H | ( – ) | Screw, Cap, 7/16" x 1" (2 used) (Sub. for 19H325R) |
| | 12H 12 R | ( – ) | Washer, Lock, 7/16" (2 used) |
| 2 | 24H 169 R | ( – ) | Washer, 15/32" x 15/16" x 16 Gauge (2 used) |
| 3 | AB 4518 R | ( – ) | Box, Tool |
| 4 | 14H 399 R* | ( – ) | Nut, 5/8" (2 used) |
| 5 | 12H 15 R* | ( – ) | Washer, Lock, 5/8" (2 used) |
| 6 | **A 5347 R** | ( – ) | **Weight, Front End, L.H. (ATTACHMENT) (Tractors Equipped with Double Front Wheels, Single Front Wheels, and Roll-O-Matic) (Sub. for B3281R)** |
| 7 | 3H 736 H* | ( – ) | Bolt, Cge., 5/8" x 4" (2 used) |
| 8 | A 5292 R | ( – ) | Stud, 5/8" x 1-3/4" (2 used) (Packed 25 in a Pkg.) (Sub. for C1479R) |
| 9 | A 1892 R | ( – ) | Nut (2 used) (Packed 25 in a Pkg.) (Sub. for AA4963R) |
| 10 | **A 5346 R** | ( – ) | **Weight, Front End, R.H. (ATTACHMENT) (Tractors Equipped with Double Front Wheels, Single Front Wheels, and Roll-O-Matic) (Sub. for B3280R)** |
| 11 | 19H 1404 R | ( – ) | Screw, Cap, 5/8" x 2-1/2" (2 used) (Sub. for 19H1394R) |
| | 12H 15 R | ( – ) | Washer, Lock, 5/8" (2 used) |
| 12 | **19H 1356 R** | ( – ) | **Screw, Cap, 5/8" x 1-3/4" (4 used) (Sub. for 19H670R)** |
| | **12H 15 R** | ( – ) | **Washer, Lock, 5/8" (4 used)** |
| 13 | 19H 1439 N | ( – ) | Screw, Cap, 5/8" x 3" (2 used) (Sub. for 19H704R and 19H1430R) |
| | 12H 15 R | ( – ) | Washer, Lock, 5/8" (2 used) |
| 14 | 19H 1425 R | ( – ) | Screw, Cap, 3/4" x 2-3/4" (2 used) (Sub. for 19H800R) |
| | 12H 17 R | ( – ) | Washer, Lock, 3/4" (2 used) |
| 15 | R 1548 R | ( – ) | Stud, 3/4" x 3-7/16" (2 used) |
| 16 | 12H 17 R | ( – ) | Washer, Lock, 3/4" (2 used) |
| 17 | 14H 400 R | ( – ) | Nut, 3/4" (2 used) (Sub. for 14H267R and 14H266R) |
| 18 | AB 4529 R | ( – ) | Support, B3097R or B3103R, Front End, with Bolt Lock Straps |
| 19 | B 3228 R | ( – ) | Strap, Bolt Lock (2 used) |
| 20 | A 4322 R | ( – ) | Screw, Drive (6 used) |

(Part listed below is an assembly of certain parts in this grouping.)

| | | | |
|---|---|---|---|
| | **AA 6315 R** | ( – ) | **Bolts, Nuts, and Washers, Front End Weight (ATTACHMENT) (Assembly contains parts marked [*]) (Sub. for AA5700R)** |

(Parts listed below are not illustrated.)

| | | | |
|---|---|---|---|
| | A 5345 R | ( – ) | Weight, Frame, Front |
| | A 5351 R | ( – ) | Stud, Frame Weight, Front (2 used) |
| | A 5352 R | ( – ) | Nut, Frame Weight Stud (2 used) |
| | A 5353 R | ( – ) | Stud, 5/8" x 5-1/2", Front Frame Weight (2 used) |

## ENGINE AND TRANSMISSION CASE AND COVERS
(Serial No. 5000001- )

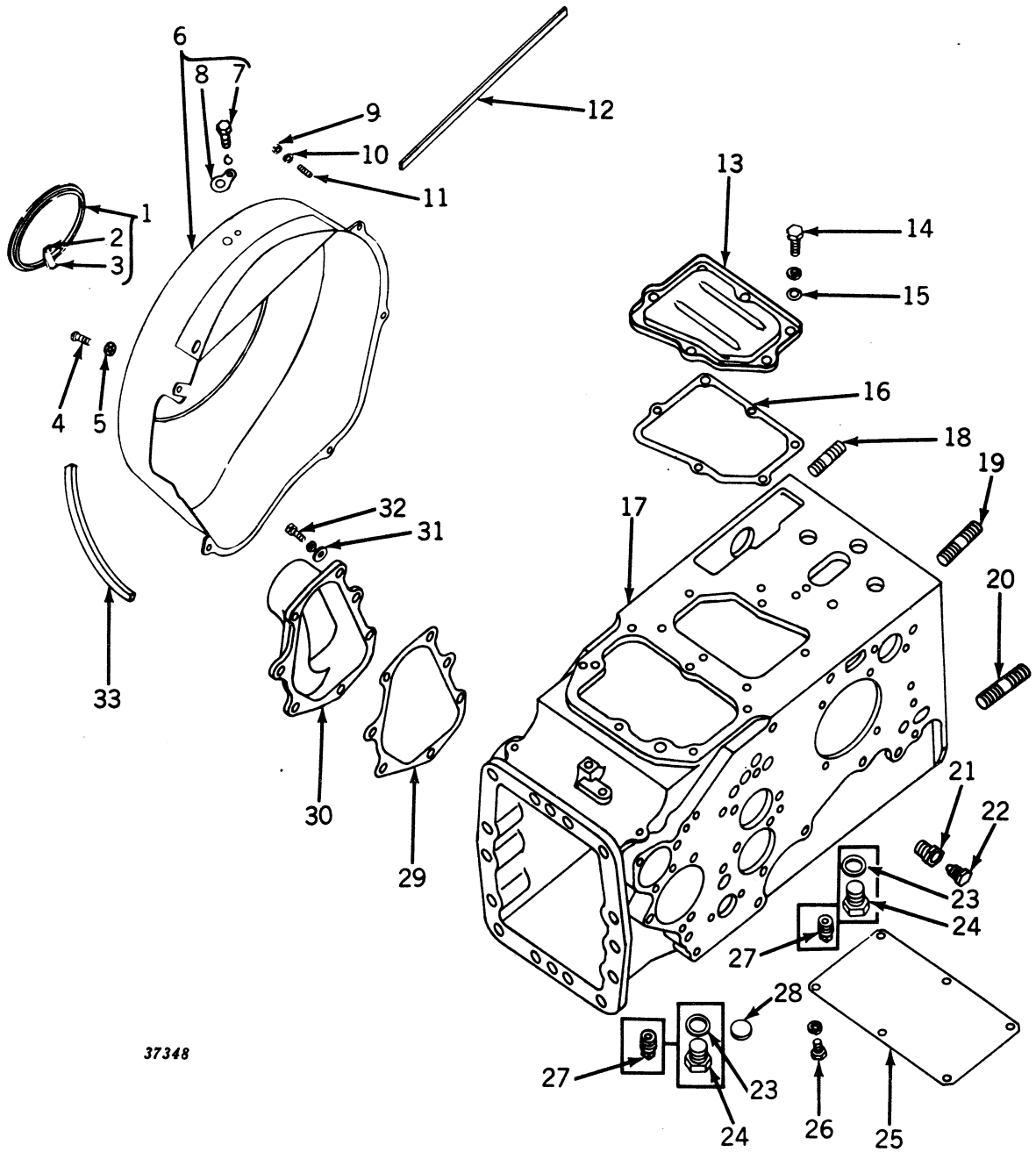

## ENGINE AND TRANSMISSION CASE AND COVERS—Continued
(Serial No. 5000001- )

| Key | Part No. | | Description |
|---|---|---|---|
| 1 | AB 3579 R | ( – ) | Cover, with Springs |
| 2 | B 2553 R | ( – ) | Rivet (3 used) |
| 3 | B 2552 R | ( – ) | Spring (3 used) |
| 4 | A 3232 R | ( – ) | Screw, Mach., 5/16" x 1/2" (4 used) (Packed 50 in a Pkg.) |
| 5 | 12H 291 R | ( – ) | Washer, Lock (Shake-Proof) (4 used) |
| 6 | AR 20036 R | ( – ) | Cover, Flywheel, with Timing Hole Cover (Sub. for AB3578R) |
| 7 | 19H 11 R | ( – ) | Screw, Cap, 1/4" x 3/8" |
| | 12H 9 R | ( – ) | Washer, Lock, 1/4" |
| 8 | A 4272 R | ( – ) | Cover, Timing Hole |
| 9 | 14H 785 R | ( – ) | Nut, 5/16" |
| 10 | 12H 10 R | ( – ) | Washer, Lock, 5/16" |
| 11 | B 1504 R | ( – ) | Stud, 5/16" x 15/16" |
| 12 | A 3311 R | ( – ) | Packing, Strip (Felt) (Sub. for B2549R) |
| 13 | B 3162 R | ( – ) | Cover, Crankcase (Sub. One B3592R and One B3593R) |
| 14 | F 2272 R | ( – ) | Screw, Cap, 3/8" x 3/4" (6 used) (Sub. for 19H203R) |
| | 12H 11 R | ( – ) | Washer, Lock, 3/8" (6 used) |
| 15 | A 4624 R | ( – ) | Washer (6 used) |
| 16 | B 2662 R | ( – ) | Gasket (Packed 5 in a Pkg.) |
| 17 | AB 4509 R | ( – ) | Case, B3082R, Engine and Transmission |
| 18 | B 1333 R | ( – ) | Stud, 5/8" x 2-1/2" (2 used) |
| 19 | B 2484 R | ( – ) | Stud, 5/8" x 3" (6 used) |
| 20 | R 1548 R | ( – ) | Stud, 5/8" x 3-7/16" (2 used) (Sub. for B2703R) |
| 21 | D 793 R | ( – ) | Body, Oil Level Cock (Gas and LP-Gas) |
| | D 793 R | (5029200– ) | Body, Oil Level Cock (2 used) (All-Fuel) |
| | 15H 255 R | (5029200– ) | Plug, Pipe (Gas and LP-Gas) |
| 22 | D 794 R | (5029200– ) | Plug, Oil Level Cock (2 used) (Packed 5 in a Pkg.) (All-Fuel) |
| | D 794 R | ( – ) | Plug, Oil Level Cock (Packed 5 in a Pkg.) (Gas and LP-Gas) |
| 23 | A 4827 R | (5015558– ) | Washer (2 used) |
| 24 | F 3128 R | (5015558– ) | Plug, Drain (2 used) (Sub. for F1250R) |
| 25 | B 2483 R | ( – ) | Cover, Starter Opening |
| 26 | 19H 99 R | ( – ) | Screw, Cap, 5/16" x 9/16" (6 used) |
| | 12H 10 R | ( – ) | Washer, Lock, 5/16" (6 used) |
| 27 | 15H 238 R | ( –5015557) | Plug, Pipe, 3/4" (2 used) |
| 28 | 30H 11 R | ( – ) | Plug, Expansion, 7/8" |
| 29 | B 2447 R | ( – ) | Gasket (Packed 5 in a Pkg.) |
| 30 | B 2446 R | ( – ) | Cover, Fourth and Sixth Speed Gear |
| 31 | 24H 550 R | ( – ) | Washer, 13/32" x 1-1/16" x 11 Gauge (7 used) |
| 32 | F 2272 R | ( – ) | Screw, Cap, 3/8" x 3/4" (7 used) (Sub. for 19H203R) |
| | 12H 11 R | ( – ) | Washer, Lock, 3/8" (7 used) |
| 33 | B 2550 R | ( – ) | Packing, Strip (Rubber) |

## OIL FILTER AND OIL PIPES
(Serial No. 5000001- )

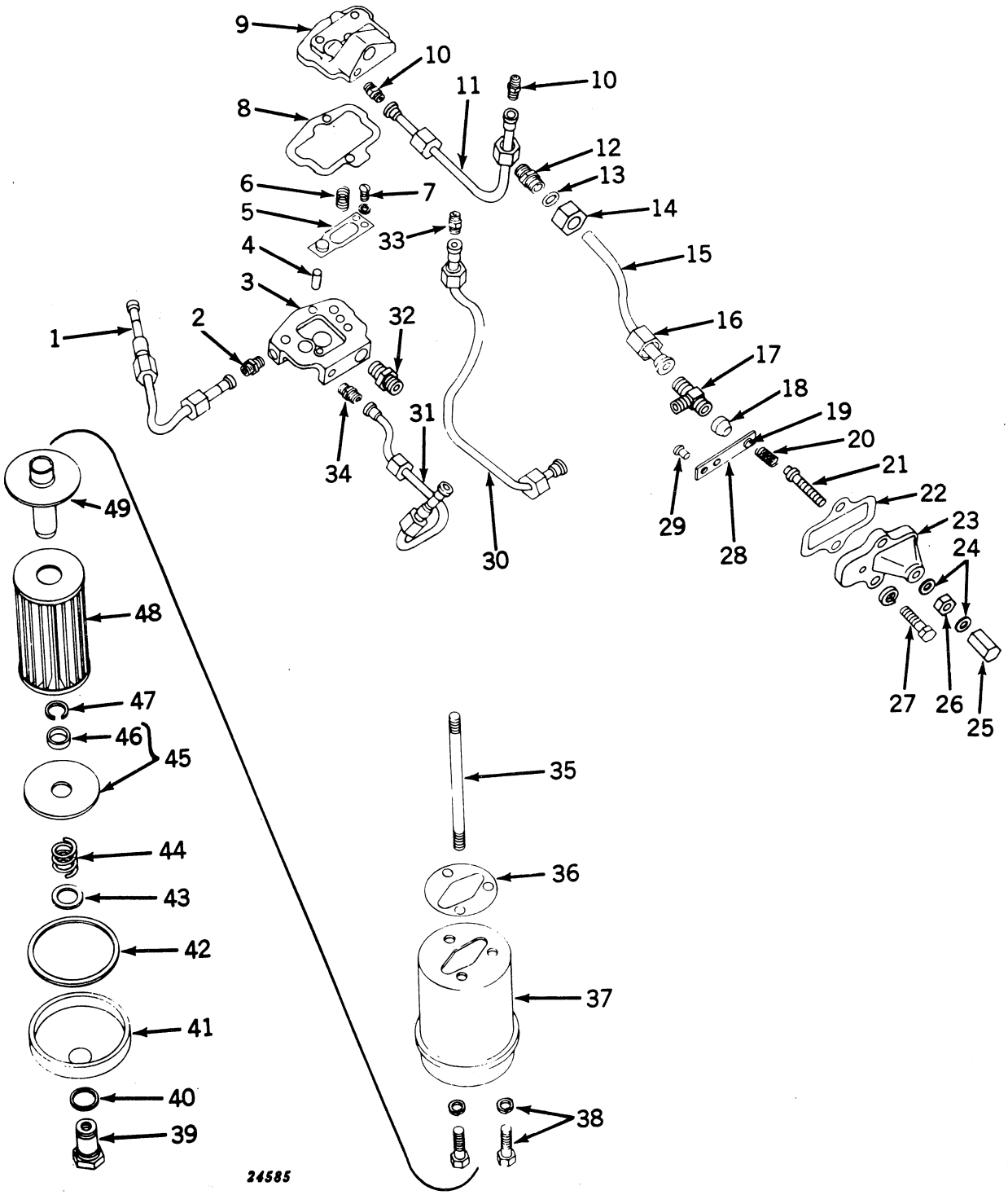

## OIL FILTER AND OIL PIPES—Continued
(Serial No. 5000001- )

| Key | Part No. | Serial No. | Description |
|---|---|---|---|
| 1 | AB 4465 R | ( – ) | Pipe, Oil, Main Bearing, L.H. |
| 2 | A 258 R | ( – ) | Connector |
| 3 | B 2303 R | ( – ) | Head, Oil Filter (Sub. for AB4210R) |
| 4 | F 1743 R | ( – ) | Pin, Dowel (Sub. for D186R) |
| 5 | AB 326 R | ( – ) | Spring, Leaf, with Centering Button |
| 6 | B 1744 R | ( – ) | Spring |
| 7 | 21H 597 R | ( – ) | Screw, Mach. (2 used) |
| | 12H 9 R | ( – ) | Washer, Lock, 1/4" (2 used) |
| 8 | F 98 R | ( – ) | Gasket (Packed 5 in a Pkg.) |
| 9 | B 2304 R | ( – ) | Cover, Oil Filter Head |
| 10 | E 1994 R | ( – ) | Connector (2 used) |
| 11 | AB 3456 R | ( – ) | Pipe, Oil, Camshaft |
| 12 | D 2440 R | ( – ) | Connector |
| 13 | F 3384 R | ( – ) | Washer (Packed 2 in a Pkg.) (Sub. for D2439R) |
| 14 | D 2438 R | ( – ) | Nut, Packing |
| 15 | AB 3461 R | ( – ) | Pipe, Oil Pressure Relief |
| 16 | A 2880 R | ( – ) | Nut, Packing |
| 17 | AR 20707 R | ( – ) | Tee, Oil Pressure Relief Pipe (Sub. for B2449R) |
| 18 | F 3468 R | ( – ) | Bushing (Sub. for B2568R) |
| 19 | D 2425 R | ( – ) | Pilot, Relief Spring |
| 20 | A 1280 R | ( – ) | Spring |
| 21 | B 2307 R | ( – ) | Screw, Adjusting |
| 22 | B 2308 R | ( – ) | Gasket (Packed 2 in a Pkg.) |
| 23 | AB 3452 R | ( – ) | Housing, B2305R, Complete |
| 24 | A 3098 R | ( –5030599) | Washer, Copper (2 used) (Packed 5 in a Pkg.) |
| | A 5364 R | (5030600– ) | Washer, Aluminum (2 used) (Packed 5 in a Pkg.) |
| 25 | B 427 R | ( – ) | Nut, Cap |
| 26 | 14H 732 R | ( – ) | Nut, Jam, 3/8" |
| 27 | 19H 337 N | ( – ) | Screw, Cap, 7/16" x 1-1/4" (2 used) (Sub. for 19H332R) |
| | 12H 12 R | ( – ) | Washer, Lock, 7/16" (2 used) |
| 28 | AB 3453 R | ( – ) | Spring, Leaf, with Pilot |
| 29 | 16H 663 A | ( – ) | Rivet, 1/4" x 5/8" |
| 30 | AB 3457 R | ( – ) | Pipe, Oil, Oil Indicator |
| 31 | AB 4464 R | ( – ) | Pipe, Oil, Main Bearing, R.H. |
| 32 | D 2440 R | ( – ) | Connector |
| 33 | E 1994 R | ( – ) | Connector |
| 34 | E 1994 R | ( – ) | Connector |
| 35 | B 1745 R | ( – ) | Stud, 1/2" x 8-7/8" |
| 36 | R 20249 R | ( – ) | Gasket (Packed 2 in a Pkg.) (Sub. for A1149R) |
| 37 | R 20248 R | ( – ) | Body, Oil Filter (Sub. for A1152R) |
| 38 | F 2271 R | ( – ) | Screw, Cap, 5/16" x 1-3/4" (3 used) |
| | 12H 10 R | ( – ) | Washer, Lock, 5/16" (3 used) |
| 39 | AF 2889 R | ( – ) | Nut |
| 40 | A 521 R | ( – ) | Gasket |
| 41 | A 522 R | ( – ) | Bottom, Oil Filter |
| 42 | A 519 R | ( – ) | Gasket (Packed 5 in a Pkg.) |
| 43 | 24H 234 R | ( – ) | Washer |
| 44 | A 2441 R | ( – ) | Spring (Packed 5 in a Pkg.) |
| 45 | AA 2095 R | ( – ) | Plate, End, and Spacer |
| 46 | A 2530 R | ( – ) | Spacer |
| 47 | A 2444 R | ( – ) | Snap Ring (Packed 5 in a Pkg.) |
| 48 | ..... | ( – ) | Element, Oil Filter (Order AA3680R, Pkg. of 4) |
| 49 | AA 2096 R | ( – ) | Outlet, Oil Filter |

## OIL PUMP AND OIL PIPES
(Serial No. 5000001- )

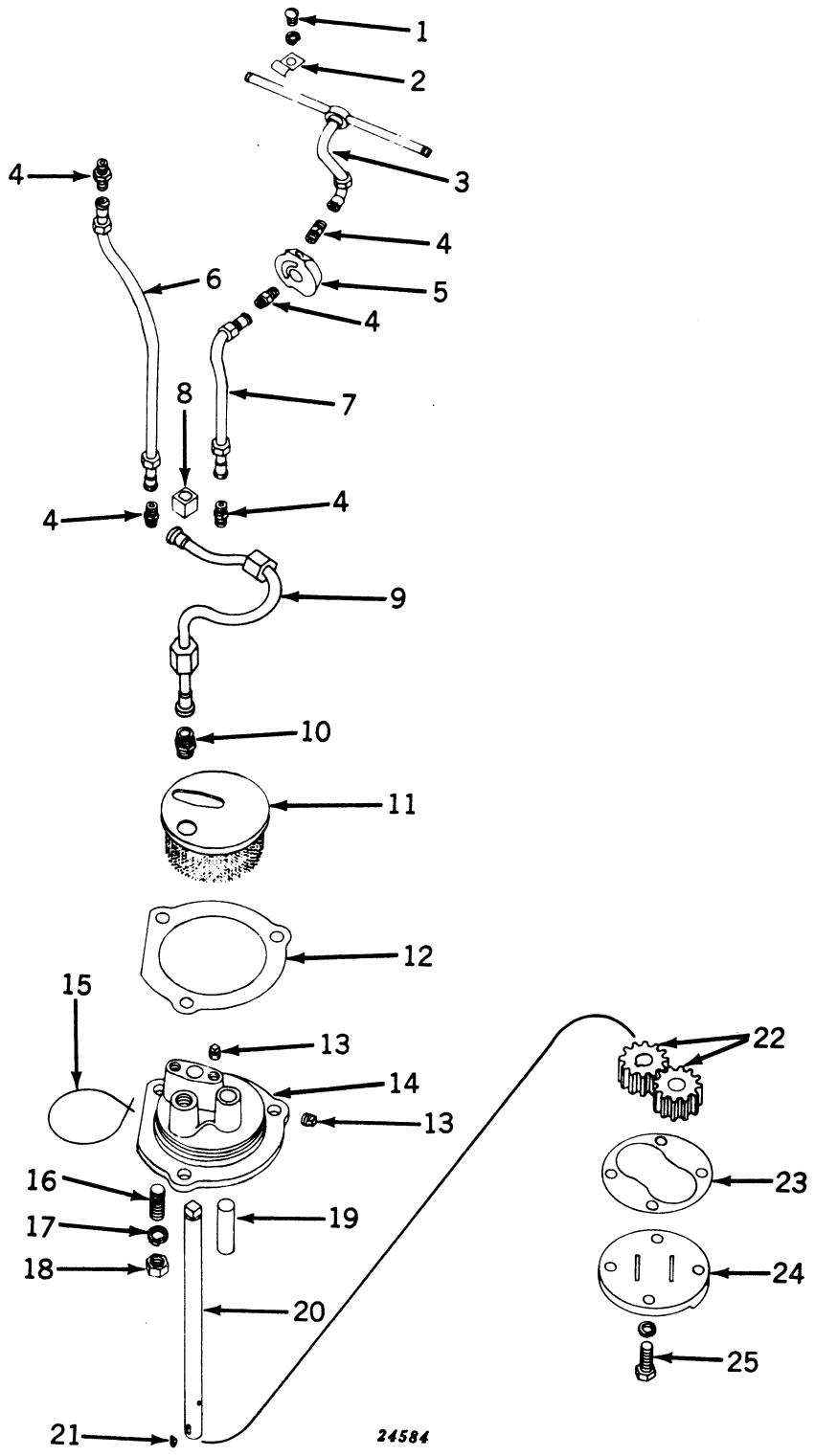

## OIL PUMP AND OIL PIPES—Continued
(Serial No. 5000001- )

| Key | Part No. | | | Description |
|---|---|---|---|---|
| 1 | 21H 597 R | ( | – ) | Screw, Mach., 1/4" x 1/2" (2 used) |
| | 12H 9 R | ( | – ) | Washer, Lock, 1/4" (2 used) |
| 2 | A 2421 R | ( | – ) | Clip (2 used) |
| 3 | AB 4639 R | ( | – ) | Pipe, Oiler, Tappet Lever |
| 4 | E 1994 R | ( | – ) | Connector (5 used) |
| 5 | A 4227 R | ( | – ) | Washer, Oil Lead |
| 6 | AB 3458 R | ( | – ) | Pipe, Oil, Governor |
| 7 | AB 3459 R | ( | – ) | Pipe, Oil, Tappet Lever |
| 8 | B 250 R | ( | – ) | Coupling |
| 9 | AB 3460 R | ( | – ) | Pipe, Oil, Pump Discharge |
| 10 | D 2440 R | ( | – ) | Connector |
| 11 | AB 3450 R | ( | – ) | Screen, Strainer |
| 12 | B 251 R | ( | – ) | Gasket (Packed 5 in a Pkg.) |
| 13 | 15H 253 R | ( | – ) | Plug, Pipe, 1/8" (2 used) |
| 14 | B 2300 R | ( | – ) | Body, Pump (Sub. for AB4219R) |
| 15 | ..... | ( | – ) | Wire, 16 Gauge x 15" Long |
| 16 | B 1353 R | ( | – ) | Stud, 1/2" x 1-3/4" (3 used) |
| 17 | 12H 13 R | ( | – ) | Washer, Lock, 1/2" (3 used) |
| 18 | 14H 392 R | ( | – ) | Nut, 1/2" (3 used) (Sub. for 14H260R) |
| 19 | B 244 R | ( | – ) | Shaft, Idler Gear |
| 20 | B 2302 R | ( | – ) | Shaft, Pump Drive |
| 21 | 26H 10 R | ( | – ) | Key, Woodruff, 5/32" x 5/8" |
| 22 | AB 4168 R | ( | – ) | Gears, Drive and Idler (One B243R and One B245R) |
| 23 | B 246 R | ( | – ) | Gasket (Packed 5 in a Pkg.) |
| 24 | B 247 R | ( | – ) | Cover, Pump |
| 25 | 19H 218 D | ( | – ) | Screw, Cap, 3/8" x 1" (4 used) (Sub. for 19H211R) |
| | 12H 11 R | ( | – ) | Washer, Lock, 3/8" (4 used) |

## FLYWHEEL, CRANKSHAFT, AND MAIN BEARINGS
(Serial No. 5000001- )

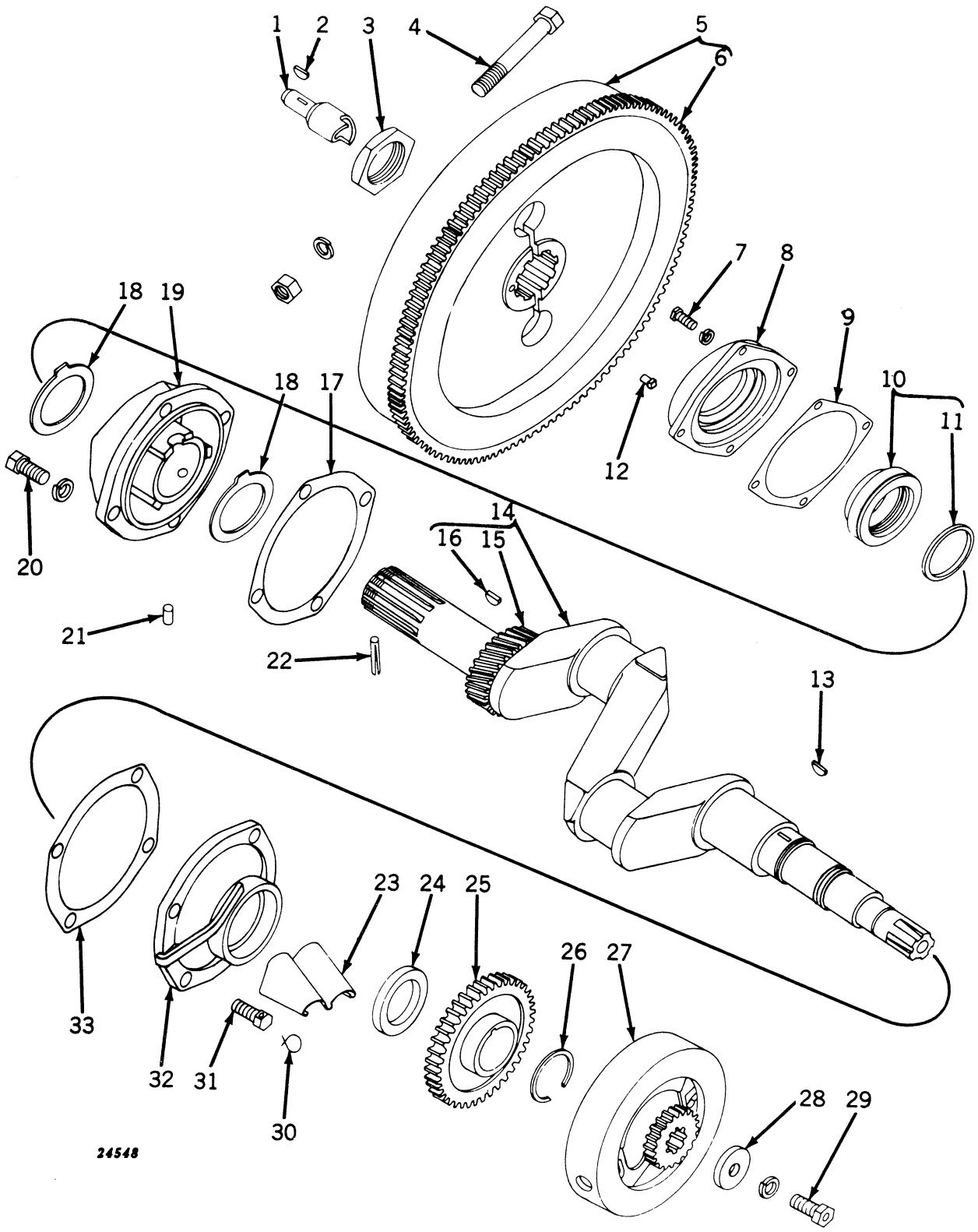

## FLYWHEEL, CRANKSHAFT, AND MAIN BEARINGS—Continued
(Serial No. 5000001- )

| Key | Part No. | Serial No. | Description |
|---|---|---|---|
| 1 | AB 3580 R | ( – ) | Pilot, Crank Wheel |
| 2 | 26H 17 R | ( – ) | Key, Woodruff, 3/16" x 7/8" |
| 3 | B 2464 R | ( – ) | Nut, Lock |
| 4 | 8H 1103 R | ( – ) | Bolt, Mach., High-Strength, 5/8" x 4", with Nut (2 used) |
| | 12H 15 R | ( –5026099) | Washer, Lock, 5/8" (2 used) |
| | 14H 399 R | ( – ) | Nut, 5/8" (2 used) |
| 5 | AB 3844 R | ( – ) | Flywheel, B2461R, with Starter Gear |
| 6 | B 2462 R | ( – ) | Gear, Starter |
| 7 | 19H 118 T | ( – ) | Screw, Cap, 5/16" x 1" (4 used) (Sub. for 19H112R) |
| | 12H 10 R | ( – ) | Washer, Lock, 5/16" (4 used) |
| 8 | B 3029 R | ( – ) | Cover |
| 9 | B 3030 R | ( – ) | Gasket (Packed 2 in a Pkg.) |
| 10 | AB 4463 R | ( – ) | Spacer, B129R, with Oil Seal |
| 11 | B 3028 R | ( – ) | Seal, Oil (Rubber) (Packed 2 in a Pkg.) |
| 12 | D 2009 R | ( – ) | Pin, Spacer Drive (Packed 5 in a Pkg.) |
| 13 | 26H 19 R | ( – ) | Key, Woodruff, 1/4" x 7/8", Power Shaft Drive Gear (Tractors Equipped with Engine-Driven Power Shaft) |
| 14 | AB 4684 R | ( – ) | Crankshaft, B3019R, with Gear and Key (See Page 10-1 for Special Replacement Assemblies) |
| 15 | B 115 R | ( – ) | Gear, Crankshaft (Sub. for AB4117R) |
| 16 | 26H 17 R | ( – ) | Key, Woodruff, 3/16" x 7/8" |
| 17 | B 3026 R | ( – ) | Gasket (Packed 2 in a Pkg.) |
| 18 | B 3027 R | ( – ) | Washer, Thrust (2 used) |
| 19 | AB 4461 R | ( – ) | Housing, B3022R, Main Bearing, with Bushing, L.H. (Exchange Credit Allowable) |
| | AB 4891 R | ( – ) | Housing, B3022R, Main Bearing, with .002" Undersize Bushing, L.H. (Exchange Credit Allowable) |
| | AB 4893 R | ( – ) | Housing, B3022R, Main Bearing, with .004" Undersize Bushing, L.H. (Exchange Credit Allowable) |
| | B 3024 R | ( – ) | Bushing, Main Bearing, L.H. (To Be Sized After Installing in Housing. Always Provide .004" to .006" Clearance.) |
| 20 | 19H 1254 R | ( – ) | Screw, Cap, 9/16" x 1-1/4" (4 used) (Sub. for 19H564R) |
| | 12H 14 R | ( – ) | Washer, Lock, 9/16" (4 used) |
| 21 | A 3959 R | ( – ) | Pin, Dowel (2 used) (Not Furnished for This Use) |
| 22 | 34H 119 C | ( – ) | Pin, 1-5/16" x 1-3/4" (Sub. for 25H125T) |
| 23 | AB 4623 R | ( – ) | Baffle, Transmission Oil, with Support |
| 24 | AB 4462 R | ( – ) | Seal, Oil, R.H. Main Bearing (2 used) |
| 25 | B 3164 R | ( – ) | Gear, Power Shaft Drive (Tractors Equipped with Engine-Driven Power Shaft) |
| 26 | B 3166 R | ( – ) | Snap Ring (Tractors Equipped with Engine-Driven Power Shaft) |
| 27 | B 3020 R | ( – ) | Disk, Clutch Drive |
| 28 | R 20135 R | ( – ) | Washer (Sub. for A198R) |
| 29 | B 2360 R | ( –5017010) | Screw, Cap (Sub. 19H1335R) |
| | 19H 1335 R | (5017011– ) | Screw, Cap, 5/8" x 1-1/2" |
| | 12H 15 R | ( – ) | Washer, Lock, 5/8" |
| 30 | ..... | ( – ) | Wire, 16 Gauge x 18" Long (2 used) |
| 31 | B 123 R | ( – ) | Screw, Cap, 9/16" x 1-1/4" (Drilled) (4 used) |
| 32 | AB 4681 R | ( – ) | Housing, B3021R, Main Bearing, with Bushing and Oil Seals, R.H. (Exchange Credit Allowable) |
| | AB 4890 R | ( – ) | Housing, B3021R, Main Bearing, with .002" Undersize Bushing and Oil Seals, R.H. (Exchange Credit Allowable) |
| | AB 4892 R | ( – ) | Housing, B3021R, Main Bearing, with .004" Undersize Bushing and Oil Seals, R.H. (Exchange Credit Allowable) |
| | B 3023 R | ( – ) | Bushing, Main Bearing, R.H. (To Be Sized After Installing in Housing. Always Provide .004" to .006" Clearance.) |
| 33 | B 3025 R | ( – ) | Gasket (Packed 2 in a Pkg.) |

(Part listed below is not illustrated.)

| | | | |
|---|---|---|---|
| | AB 4675 R | ( – ) | Gasket Set, Crankshaft and Bearing Replacement (See Gasket Grouping for Illustrations and Contents) |

## CYLINDER BLOCK, CONNECTING RODS, AND PISTONS
(Serial No. 5000001- )

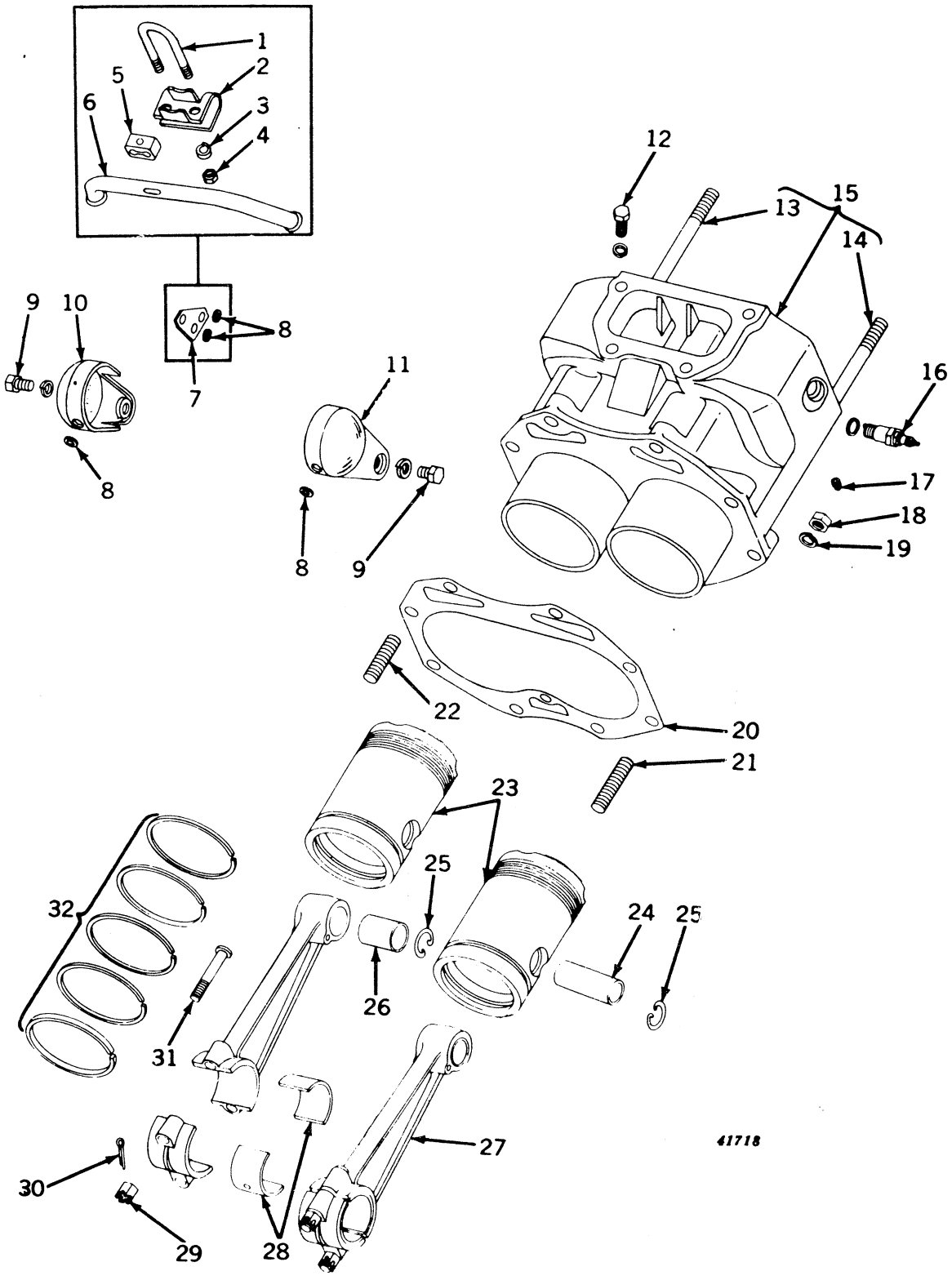

## CYLINDER BLOCK, CONNECTING RODS, AND PISTONS—Continued

(Serial No. 5000001- )

| Key | Part No. | Serial No. | Description |
|---|---|---|---|
| 1 | A 4166 R | ( -5018449) | U-Bolt |
| 2 | A 4165 R | ( -5018449) | Bracket |
| 3 | 12H 9 R | ( -5018449) | Washer, Lock, 1 4" (2 used) |
| 4 | 14H 251 R | ( -5018449) | Nut, 1/4" (2 used) |
| 5 | A 470 R | ( -5018449) | Clamp, Spark Plug Cable |
| 6 | B 3091 R | ( -5018449) | Tube, Spark Plug Cable |
| 7 | A 5166 R | (5018450- ) | Clip, Cable |
| 8 | H 987 R | (5018450- ) | Grommet, Rubber (2 used) (Packed 5 in a Pkg.) |
| 9 | 19H 1255 T | ( - ) | Screw, Cap, 3/8" x 5/8" (2 used) (Sub. for 19H199R) |
| | 12H 11 R | ( - ) | Washer, Lock, 3/8" (2 used) |
| 10 | A 4589 R | ( -5018449) | Shield, Spark Plug, L.H. |
| | A 5168 R | (5018450- ) | Shield, Spark Plug, L.H. |
| 11 | A 4588 R | ( -5018449) | Shield, Spark Plug, R.H. |
| | A 5167 R | (5018450- ) | Shield, Spark Plug, R.H. |
| 12 | 19H 462 N | ( - ) | Screw, Cap, 1/2" x 1-1/2" (4 used) (Sub. for 19H457R) |
| | 12H 13 R | ( - ) | Washer, Lock, 1/2" (4 used) |
| 13 | B 1789 R | ( - ) | Stud, 9 16" x 6-1/2" |
| 14 | B 1788 R | ( -5015950) | Stud, 9 16" x 5-7/8" (8 used) (All-Fuel) |
| | B 1788 R | (5015951- ) | Stud, 9 16" x 5-7/8" (9 used) (All-Fuel) |
| | B 1788 R | ( - ) | Stud, 9 16" x 5-7/8" (9 used) (Gasoline) |
| 15 | AB 4513 R | ( 5015950) | Cylinder, B3087R, with Studs (All-Fuel) |
| | AB 4630 R | (5015951- ) | Cylinder, B3203R, with Studs (All-Fuel) |
| | AB 4630 R | ( - ) | Cylinder, B3203R, with Studs (Gasoline) |
| 16 | AH 830 R | ( - ) | Spark Plug (Champion) (No. 8 Comm. C) (2 used) (All-Fuel) (Sub. AA4369F |
| | AA 3846 R | ( - ) | Spark Plug (Champion) (Hot Type No. 10 Comm.)( For Light Service) (2 use (All-Fuel and Gasoline) (Sub. AA5593R) |
| | AA 4053 R | ( - ) | Spark Plug (Champion) (No. 6 Comm.) (2 used) (Gasoline) (Heavy-Duty ar LP-Gas) |
| | AA 4369 R | ( - ) | Spark Plug (Champion) (No. 8 Comm.) (2 used) (For Light Service whe Burning Gasoline) |
| | AA 4660 R | ( - ) | Spark Plug (AC88L Comm.) (2 used) (Hot Type when Burning Gasoline) |
| | AA 5593 R | ( - ) | Spark Plug (Champion) (No. 10 Comm. 64) (2 used) (Hot Type when Burı ing Gasoline) |
| | AA 5594 R | ( - ) | Spark Plug (AC86 Comm.) (2 used) (All-Fuel) |
| | AA 5818 R | ( - ) | Spark Plug (Auto-Lite) (Type BD9) (2 used) (All-Fuel) (Sub. AA6331R) |
| | AA 5819 R | ( - ) | Spark Plug (Auto-Lite) (Type BD12) (2 used) (All-Fuel) |
| | AA 5972 R | ( - ) | Spark Plug (AC85 Comm.) (2 used) (Gas) |
| | AA 6330 R | ( - ) | Spark Plug (Auto-Lite) (Type BT-10F) (2 used) (Gas and All-Fuel, Hot Typ |
| | AA 6331 R | ( - ) | Spark Plug (Auto-Lite) (Type BT-8J) (2 used) (Gas and All-Fuel, Mediu Type) |
| | AA 6332 R | ( - ) | Spark Plug (Auto-Lite) (Type BT-4G) (2 used) (Gas and All-Fuel, Cold Typ and LP-Gas) |
| 17 | A 4242 R | ( - ) | Plug, Pipe (2 used) |
| 18 | 14H 800 R | ( -5006565) | Nut, 5/8" (8 used) (Sub. for 14H264R) |
| | A 5237 R | (5006566- ) | Nut, 5/8" (8 used) (Sub. for 14H397T) |
| 19 | 12H 15 R | ( -5006565) | Washer, Lock, 5/8" (8 used) |
| 20 | B 3742 R | ( - ) | Gasket (Packed 2 in a Pkg.) (Sub. for B3088R) |
| 21 | B 2484 R | ( - ) | Stud, 5/8" x 3" (6 used) |
| 22 | B 1333 R | ( - ) | Stud, 5/8" x 2-1/2" (2 used) |
| 23 | AB 3919 R | ( -5015950) | Piston, Two B2380R, with Rings and Pins (All-Fuel) |
| | AB 4742 R | (5015951- ) | Piston, Two B3290R, with Rings and Pins (All-Fuel) |
| | AB 3921 R | ( -5015950) | Piston, Two B2382R, .045" Oversize with Rings (All-Fuel) |
| | AB 4766 R | (5015951- ) | Piston, Two B3312R, .045" Oversize with Rings (All-Fuel) |
| | AB 4641 R | ( - ) | Piston, Two B3206R, with Rings and Pins (Gasoline) |
| | AB 4687 R | ( - ) | Piston, Two B3247R, .045" Oversize with Rings (Gasoline) |
| | AB 4717 R | ( - ) | Piston, Two B3265R, with Rings (High Altitude) (Gasoline) |
| | AB 4718 R | ( - ) | Piston, Two B3266R, .045" Oversize with Rings (High Altitude) (Gasolin |
| | AB 4855 R | (5024000- ) | Piston, Two B3385R, with Rings and Pins (LP-Gas) |
| | AB 4856 R | (5024000- ) | Piston, Two B3386R, .045" Oversize with Rings (LP-Gas) |
| | AB 4970 R | ( - ) | Piston, Two B3500R, with Rings and Pins (High Altitude) (All-Fuel) |
| | AB 4971 R | ( - ) | Piston, Two B3501R, .045" Oversize with Rings (High Altitude) (All-Fuel) |
| 24 | B 2218 R | ( - ) | Pin, Piston, .003" Oversize (Marked with Yellow) (2 used) (Sub. for AB3445F |
| | B 2392 R | ( - ) | Pin, Piston, Standard (2 used) (Sub. for AB3492R) |
| | B 2393 R | ( - ) | Pin, Piston, .005" Oversize (Marked with Red) (2 used) (Sub. for AB3493F |
| 25 | B 1775 R | ( - ) | Ring, Snap (4 used (Packed 2 in a Pkg.) |
| 26 | B 1777 R | ( - ) | Bushing, Piston Pin (2 used) (Sub. for AB2722R) |
| 27 | AB 4626 R | ( - ) | Rod, B3201R, Connecting, with Piston Pin Bushing only (2 used) |
| 28 | AB 4941 R | ( - ) | Bearing, Connecting Rod (Pkg. of 2) (2 Pkgs. used) (Sub. for AB4627R) |
| | AB 4942 R | ( - ) | Bearing, Connecting Rod, .002" Undersize (Pkg. of 2) (2 Pkgs. used) (Su for AB4643R) |
| | AB 4943 R | ( - ) | Bearing, Connecting Rod, .004" Undersize (Pkg. of 2) (2 Pkgs. used) (Sul for AB4644R) |
| | AB 4789 R | ( - ) | Bearing, Connecting Rod, .020" Undersize (Pkg. of 2) (2 Pkgs. used) (Excep LP-Gas) (Sub. AB4944R) |
| | AB 4790 R | ( - ) | Bearing, Connecting Rod, .022" Undersize (Pkg. of 2) (2 Pkgs. used) (Excep LP-Gas) |
| | AB 4944 R | ( - ) | Bearing, Connecting Rod, .020" Undersize (Pkg. of 2) (2 Pkgs. used) (LP-Ga only) |
| | AB 4945 R | ( - ) | Bearing, Connecting Rod, .022" Undersize (Pkg. of 2) (2 Pkgs. used) (LP-Ga only) |

## CYLINDER BLOCK, CONNECTING RODS, AND PISTONS—Continued
(Serial No. 5000001- )

| Key | Part No. | Serial No. | Description |
|---|---|---|---|
| 29 | B 9 R | ( -5017012) | Nut, Slotted, 1/2" (4 used) (Sub. F1474R) |
| | F 1474 R | (5017013- ) | Nut, Lock, 1/2" (Special) (4 used) (Packed 25 in a Pkg.) (Sub. for B9R) |
| 30 | 11H 22 R | ( -5017012) | Pin, Cotter, 3/32" x 1" (4 used) |
| 31 | AB 2716 R | ( - ) | Bolt, with Nut (4 used) |
| 32 | AB 4039 R | ( -5015950) | Ring, Piston (Set of 2 Oil Control and 8 Compression) (All-Fuel) (Sub. for AB3672R) |
| | AB 4958 R | (5015951- ) | Ring, Piston (Set of 10) (All-Fuel) (Sub. for AB4642R) |
| | AB 4958 R | ( - ) | Ring, Piston (Set of 10) (Gasoline, High Altitude, and LP-Gas) (Sub. for AB4642R) |
| | AB 4040 R | ( -5015950) | Ring, Piston, .045" Oversize (Set of 2 Oil Control and 8 Compression) (All-Fuel) (Sub. for AB3673R) |
| | AB 4959 R | (5015951- ) | Ring, Piston, .045" Oversize (Set of 10) (All-Fuel) (Sub. for AB4688R) |
| | AB 4959 R | ( - ) | Ring, Piston, .045" Oversize (Set of 10) (Gasoline, High Altitude and LP-Gas) (Sub. for AB4688R) |
| | AB 4754 R | ( -5015950) | Ring, Piston, Oil Control (Pkg. of 2) (2 used) (All-Fuel) |
| | AB 4756 R | (5015951- ) | Ring, Piston, Oil Control (Pkg. of 2) (2 used) (All-Fuel and LP-Gas) |
| | AB 4756 R | ( - ) | Ring, Piston, Oil Control (Pkg. of 2) (2 used) (Gasoline and High Altitude) |
| | AB 4755 R | ( -5015950) | Ring, Piston, .045" Oversize Oil Control (Pkg. of 2) (2 used) (All-Fuel) |
| | AB 4757 R | (5015951- ) | Ring, Piston, .045" Oversize Oil Control (Pkg. of 2) (2 used) (All-Fuel and LP-Gas) |
| | AB 4757 R | ( - ) | Ring, Piston, .045" Oversize Oil Control (Pkg. of 2) (2 used) (Gasoline and High Altitude) |

(Parts listed below are not illustrated.)

| | | | |
|---|---|---|---|
| | AB 4676 R | ( -5015950) | Gasket Set, Valve, Ring, and Cylinder Replacement (All-Fuel) (See Gasket Set Grouping for Illustrations and Contents) |
| | AB 4677 R | (5015951- ) | Gasket Set, Valve, Ring, and Cylinder Replacement (All-Fuel) (See Gasket Set Grouping for Illustrations and Contents) |
| | AB 4677 R | ( - ) | Gasket Set, Valve, Ring, and Cylinder Replacement (Gasoline) (See Gasket Set Grouping for Illustrations and Contents) |

# MEMORANDA

## CYLINDER HEAD, VALVES, AND TAPPETS (DUAL INDUCTION CARBURETION)
(Serial No. 5000001- )

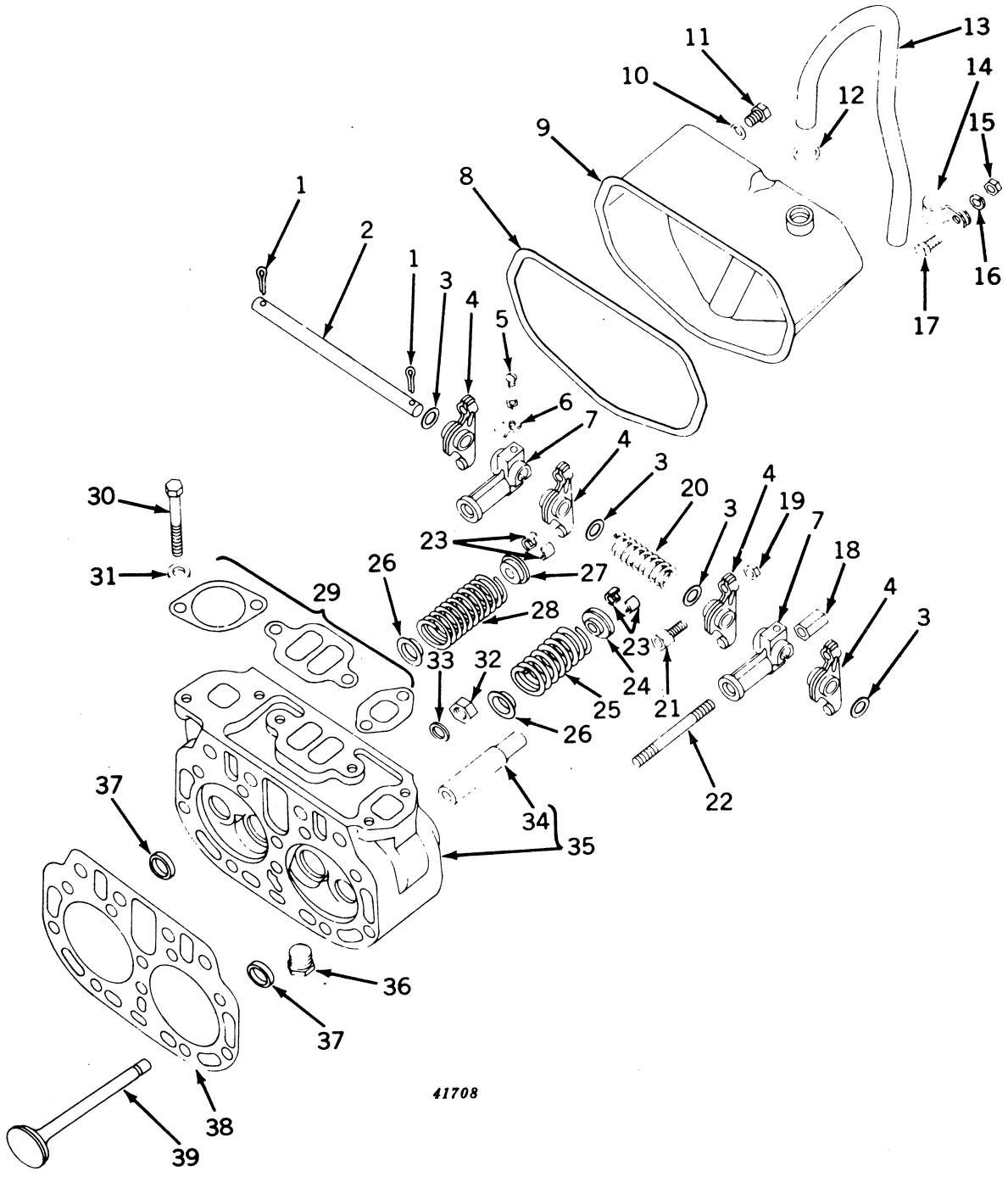

## CYLINDER HEAD, VALVES, AND TAPPETS (DUAL INDUCTION CARBURETION)—Continued
(Serial No. 5000001- )

| Key | Part No. | | Description |
|---|---|---|---|
| 1 | 11H 80 R | ( – ) | Pin, Cotter, 3/16" x 1" (2 used) |
| 2 | B 206 R | ( – ) | Shaft, Tappet Lever |
| 3 | 24H 200 R | ( – ) | Washer, 5/8" x 7/8" x 16 Gauge (4 used) |
| 4 | AB 2567 R | ( – ) | Lever, Tappet (4 used) |
| 5 | 21H 597 R | ( – ) | Screw, Mach., 1/4" x 1/2" (2 used) |
| | 12H 9 R | ( – ) | Washer, Lock, 1/4" (2 used) |
| 6 | A 2421 R | ( – ) | Clip, Oiler Pipe (2 used) |
| 7 | B 1711 R | ( – ) | Bracket (2 used) |
| 8 | B 3221 R | ( – ) | Gasket (Packed 5 in a Pkg.) |
| 9 | AB 4497 R | ( – ) | Cover, Tappet Lever, with Bushing |
| 10 | B 425 R | ( – ) | Washer (Copper) (2 used) (Packed 5 in a Pkg.) |
| 11 | 19H 314 R | ( – ) | Screw, Cap, 7/16" x 1/2" (2 used) |
| 12 | R 495 R | ( – ) | Packing, "O" Ring (Packed 5 in a Pkg.) |
| 13 | B 3222 R | ( – ) | Tube, Ventilator Outlet |
| 14 | A 4656 R | ( – ) | Clamp |
| 15 | 14H 255 R | ( – ) | Nut, 3/8" (Sub. for 14H382T) |
| 16 | 12H 11 R | ( – ) | Washer, Lock, 3/8" |
| 17 | F 2273 R | ( – ) | Screw, Cap, 3/8" x 1-1/4" (Sub. for 19H221R and 19H1099R) |
| 18 | B 2783 R | ( – ) | Nut (Special) (2 used) (Packed 25 in a Pkg.) |
| 19 | 14H 383 R | ( – ) | Nut, 3/8" (4 used) |
| 20 | B 207 R | ( – ) | Spring |
| 21 | B 1859 R | ( – ) | Screw, Adjusting (4 used) |
| 22 | B 359 R | ( – ) | Stud, 7/16" x 4-3/4" (2 used) |
| 23 | B 1797 R | ( – ) | Lock, Retainer (8 used) |
| 24 | AB 4777 R | ( –5022011) | Rotator, Exhaust Valve (2 used) (Can Be used If Installed with B3331R) |
| | AB 4777 R | (5022012– ) | Rotator, Exhaust Valve (2 used) |
| 25 | B 3331 R | (5022012– ) | Spring, Exhaust Valve (2 used) (Packed 2 in a Pkg.) |
| | B 3331 R | ( –5022011) | Spring, Exhaust Valve (2 used) (Can Be used If Installed with AB4777R) (Packed 2 in a Pkg.) |
| 26 | B 1796 R | ( – ) | Washer, Valve Spring Centering (4 used) |
| 27 | B 1795 R | ( –5022011) | Cap, Valve Spring (4 used) |
| | B 1795 R | (5022012– ) | Cap, Intake Valve Spring (2 used) |
| 28 | B 1794 R | ( –5022011) | Spring, Valve (4 used) (Packed 2 in a Pkg.) |
| | B 1794 R | (5022012– ) | Spring, Intake Valve (2 used) |
| 29 | AB 4728 R | ( – ) | Gasket, Manifold (Packed 5 in a Pkg.) (Sub. for B3214R) |
| 30 | 19H 1090 T | ( – ) | Screw, Cap, 7/16" x 3-3/4" (6 used) (Gasoline) (Sub. for 19H395T) |
| | 19H 1253 R | (5015951– ) | Screw, Cap, 7/16" x 3-1/2" (6 used) (All-Fuel) |
| 31 | 24H 169 R | ( – ) | Washer, 15/32" x 15/16" x 16 Gauge (6 used) |
| 32 | 14H 261 R | ( – ) | Nut, 9/16" (10 used) (Sub. for 14H395R and 14H393T) |
| 33 | B 369 R | ( – ) | Washer, Lead (10 used) (Packed 100 in a Pkg.) (Sub. for AB4277R) |
| 34 | B 1927 R | ( – ) | Guide, Valve (Pkg. of 4) (4 used) (Sub. for AB2859R) |
| 35 | AB 4634 R | ( – ) | Head, B3204R, Cylinder, with Valve Guides |
| | AB 4850 R | (5024000– ) | Head, B3204R, Cylinder, with Valve Guides and Inserts (LP-Gas) |
| 36 | A 2093 R | ( – ) | Plug, Drain (Packed 5 in a Pkg.) |
| 37 | B 3416 R | (5024000– ) | Insert, Exhaust Valve Seat (LP-Gas) (Packed 2 in a Pkg.) (Sub. for B3380R) |
| 38 | B 3205 R | ( – ) | Gasket (Packed 5 in a Pkg.) |
| 39 | B 2503 R | ( – ) | Valve, Exhaust (2 used) (Sub. for AB3545R) (Pkg. of Two) |
| | B 2863 R | ( – ) | Valve, Intake (2 used) (Sub. for AB4091R) (Pkg. of Two) |

## CYLINDER HEAD, VALVES, AND TAPPETS (SINGLE INDUCTION CARBURETION)
(Serial No. 5000001-5015950)

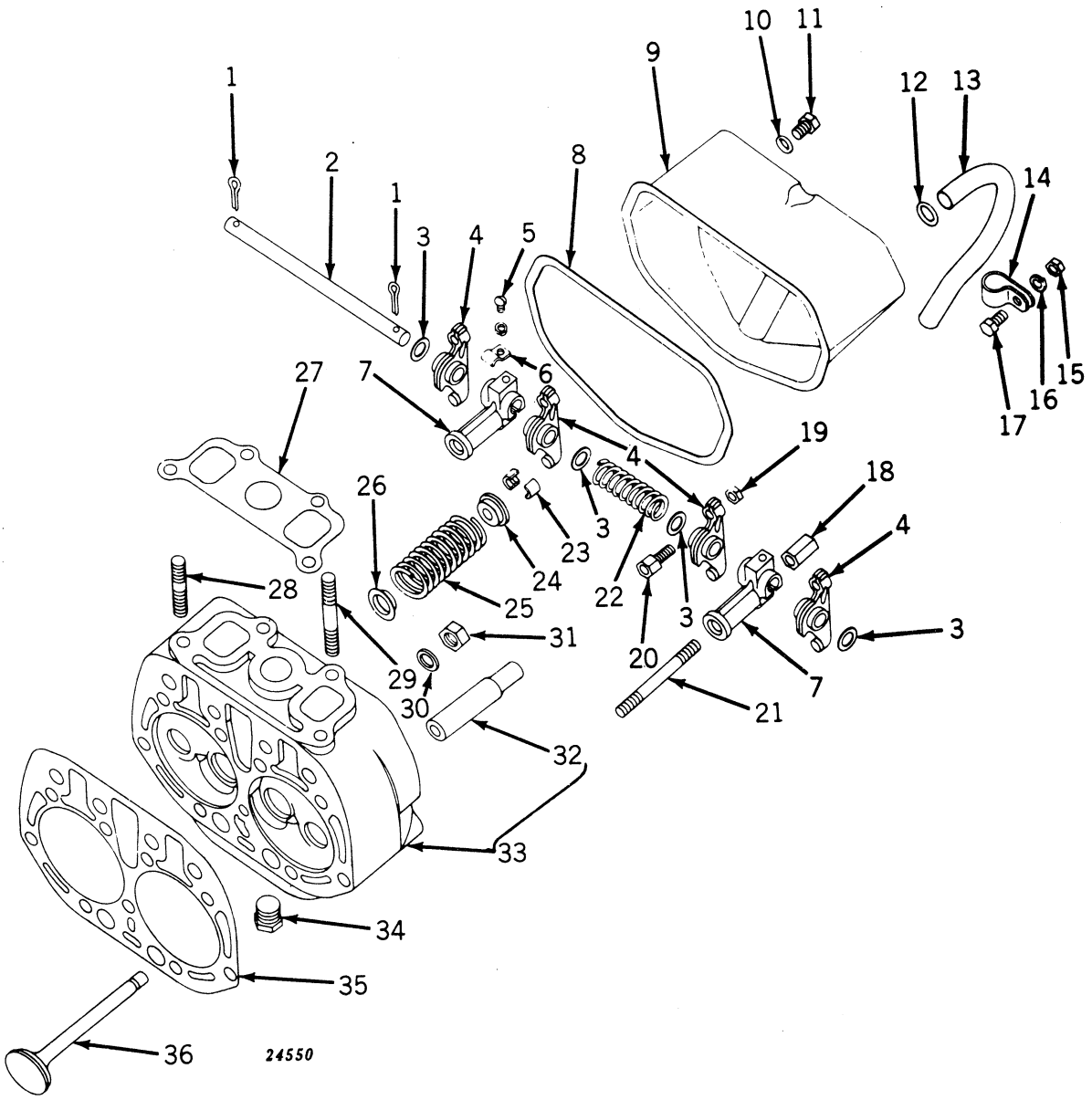

## CYLINDER HEAD, VALVES, AND TAPPETS (SINGLE INDUCTION CARBURETION)—Continued
(Serial No. 5000001-5015950)

| Key | Part No. | | | Description |
|---|---|---|---|---|
| 1 | 11H 80 R | ( – ) | | Pin, Cotter, 3/16" x 1" (2 used) |
| 2 | B 206 R | ( – ) | | Shaft, Tappet Lever |
| 3 | 24H 200 R | ( – ) | | Washer, 5/8" x 7/8" x 16 Gauge (4 used) |
| 4 | AB 2567 R | ( – ) | | Lever, Tappet (4 used) |
| 5 | 21H 597 R | ( – ) | | Screw, Mach., 1/4" x 1/2" (2 used) |
| | 12H 9 R | ( – ) | | Washer, Lock, 1/4" (2 used) |
| 6 | A 2421 R | ( – ) | | Clip, Oiler Pipe (2 used) |
| 7 | B 1711 R | ( – ) | | Bracket (2 used) |
| 8 | B 3221 R | ( – ) | | Gasket (Packed 5 in a Pkg.) |
| 9 | AB 4624 R | ( | –5015950) | Cover, Tappet Lever, with Bushing |
| 10 | B 425 R | ( – ) | | Washer (Copper) (2 used) (Packed 5 in a Pkg.) |
| 11 | 19H 314 R | ( – ) | | Screw, Cap, 7/16" x 1/2" (2 used) |
| 12 | R 495 R | ( – ) | | Packing, "O" Ring (Packed 10 in a Pkg.) |
| 13 | B 3055 R | ( | –5015950) | Tube, Ventilator Outlet |
| 14 | A 4656 R | ( – ) | | Clamp |
| 15 | 14H 255 R | ( – ) | | Nut, 3/8" (Sub. for 14H382T) |
| 16 | 12H 11 R | ( – ) | | Washer, Lock, 3/8" |
| 17 | F 2273 R | ( – ) | | Screw, Cap, 3/8" x 1-1/4" (Sub. for 19H221R and 19H1099R) |
| 18 | B 2783 R | ( – ) | | Nut (Special) (2 used) (Packed 25 in a Pkg.) |
| 19 | 14H 383 R | ( – ) | | Nut, 3/8" (4 used) |
| 20 | B 1859 R | ( – ) | | Screw, Adjusting (4 used) |
| 21 | B 359 R | ( – ) | | Stud, 7/16" x 4-3/4" (2 used) |
| 22 | B 207 R | ( – ) | | Spring |
| 23 | B 1797 R | ( – ) | | Lock, Retainer (8 used) |
| 24 | B 1795 R | ( – ) | | Cap, Valve Spring (4 used) |
| 25 | B 1794 R | ( – ) | | Spring, Valve (4 used) (Packed 2 in a Pkg.) |
| 26 | B 1796 R | ( – ) | | Washer, Valve Spring Centering (4 used) |
| 27 | B 1787 R | ( | –5015950) | Gasket, Manifold (Packed 5 in a Pkg.) |
| 28 | A 674 R | ( | –5015950) | Stud, 7/16" x 2-15/16" (2 used) |
| 29 | R 2622 R | ( | –5015950) | Stud, 7/16" x 4-3/8" (2 used) (Sub. for A126R) |
| 30 | B 369 R | ( – ) | | Washer, Lead (9 used) (Packed 100 in a Pkg.) (Sub. for AB4277R) |
| 31 | 14H 261 R | ( – ) | | Nut, 9/16" (9 used) (Sub. for 14H395R and 14H393T) |
| 32 | B 1927 R | ( – ) | | Guide, Valve (Pkg. of 4) (4 used) (Sub. for AB2859R) |
| 33 | AB 4204 R | ( | –5015950) | Head, B2871R, Cylinder, with Valve Guides |
| 34 | A 2093 R | ( – ) | | Plug, Drain |
| 35 | B 3089 R | ( | –5015950) | Gasket (Packed 10 in a Pkg.) |
| 36 | B 2503 R | ( – ) | | Valve, Exhaust (2 used) (Sub. for A3545R) (Pkg. of Two) |
| | B 2863 R | ( – ) | | Valve, Intake (2 used) (Sub. for AB4091R) (Pkg. of Two) |

(Parts listed below are not illustrated.)

| | | | |
|---|---|---|---|
| AB 4777 R | ( – ) | | Rotator, Exhaust Valve (2 used) (Can Be used If Installed with B3331R) |
| B 3331 R | ( – ) | | Spring, Exhaust Valve (2 used) (Packed 2 in a Pkg.) (Can Be used If Installed with AB4777R) |

## CAMSHAFT AND CAM FOLLOWERS
(Serial No. 5000001- )

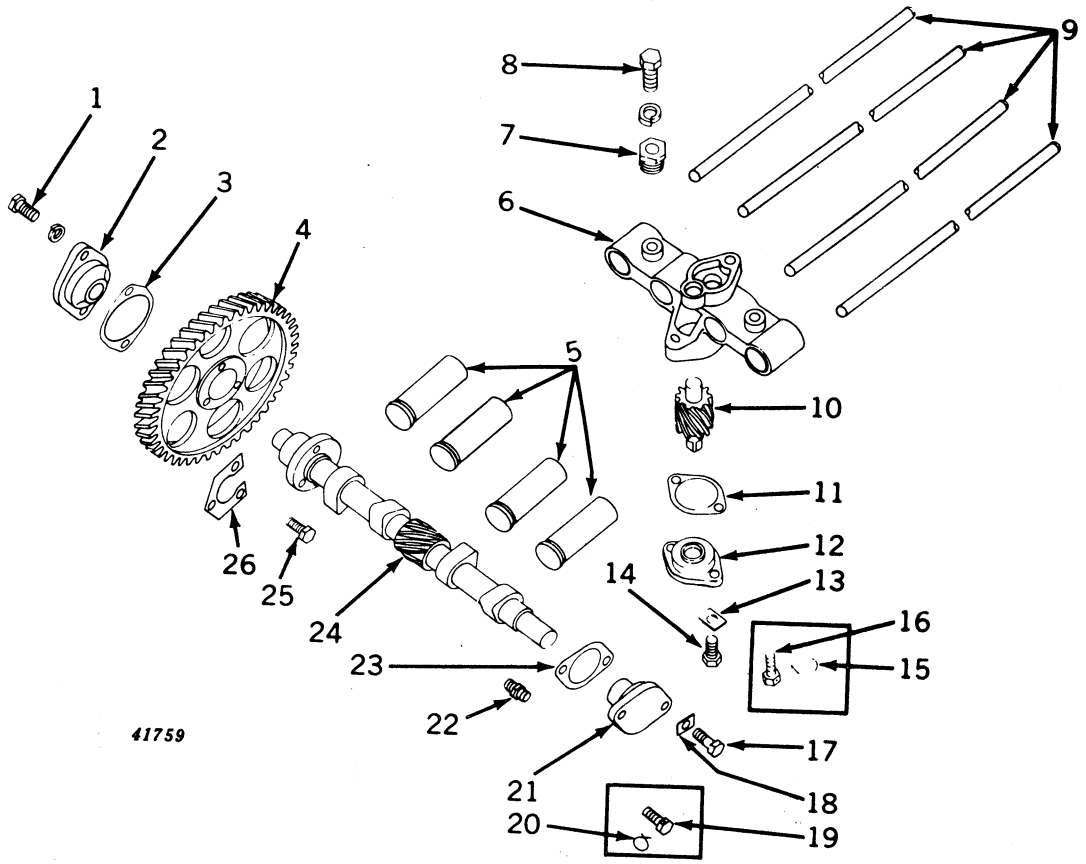

## CAMSHAFT AND CAM FOLLOWERS—Continued
(Serial No. 5000001- )

| Key | Part No. | | Description |
|---|---|---|---|
| 1 | 19H 218 D | ( – ) | Screw, Cap, 3/8" x 1" (2 used) (Sub. for 19H211R) |
| | 12H 11 R | ( – ) | Washer, Lock, 3/8" (2 used) |
| 2 | B 2468 R | ( – ) | Bearing, Camshaft, L.H. (Sub. for AB4238R) |
| 3 | B 3982 R | ( – ) | Gasket (Thin) (Packed 5 in a Pkg.) (Sub. for B2469R) |
| | B 2470 R | ( – ) | Gasket (Thick) (Packed 5 in a Pkg.) |
| 4 | B 3711 R | ( – ) | Gear, Cam (Sub. for B195R and AB4116R) |
| 5 | AB 271 R | ( – ) | Follower, Cam (4 used) |
| 6 | B 1103 R | ( – ) | Guide, Cam Follower |
| 7 | A 178 R | ( – ) | Support, Guide (3 used) |
| 8 | 19H 472 N | ( – ) | Screw, Cap, 1/2" x 1-3/4" (3 used) (Sub. for 19H467R) |
| | 12H 13 R | ( – ) | Washer, Lock, 1/2" (3 used) |
| 9 | B 1454 R | ( – ) | Rod, Tappet (4 used) |
| 10 | AB 4170 R | ( – ) | Gear, Oil Pump Drive |
| 11 | A 1598 R | ( – ) | Gasket (Packed 2 in a Pkg.) |
| 12 | A 1597 R | ( – ) | Bearing, Drive Gear |
| 13 | H 246 R | (5016075– ) | Plate, Lock (2 used) |
| 14 | F 2272 R | (5016075– ) | Screw, Cap, 3/8" x 3/4" (2 used) (Sub. for 19H203R) |
| 15 | ..... | ( –5016074) | Wire, 16 Gauge x 9" Long |
| 16 | D 916 R | ( –5016074) | Screw, Cap, 3/8" x 3/4" (Drilled) (2 used) |
| 17 | 19H 218 D | (5020390– ) | Screw, Cap, 3/8" x 1" (2 used) (Sub. for 19H211R) |
| 18 | H 246 R | (5020390– ) | Plate, Lock (2 used) |
| 19 | D 459 R | ( –5020389) | Screw, Cap, 3/8" x 1" (Drilled) (2 used) |
| 20 | ..... | ( –5020389) | Wire, 16 Gauge x 9" Long |
| 21 | B 2279 R | ( – ) | Bearing, Camshaft, R.H. |
| 22 | E 1994 R | ( – ) | Connector |
| 23 | B 3337 R | (5020390– ) | Gasket (Packed 2 in a Pkg.) |
| 24 | B 2284 R | ( – ) | Camshaft |
| 25 | A 487 R | ( – ) | Screw, Cap, 3/8" x 1" (Special) (3 used) (Packed 5 in a Pkg.) |
| 26 | B 196 R | ( – ) | Plate, Locking |

## MANIFOLD, EXHAUST PIPE, AND MUFFLER

(Gasoline) (Serial No. 5000001- )
(All-Fuel) (Serial No. 5015951- )
(LP-Gas) (Serial No. 5024000- )

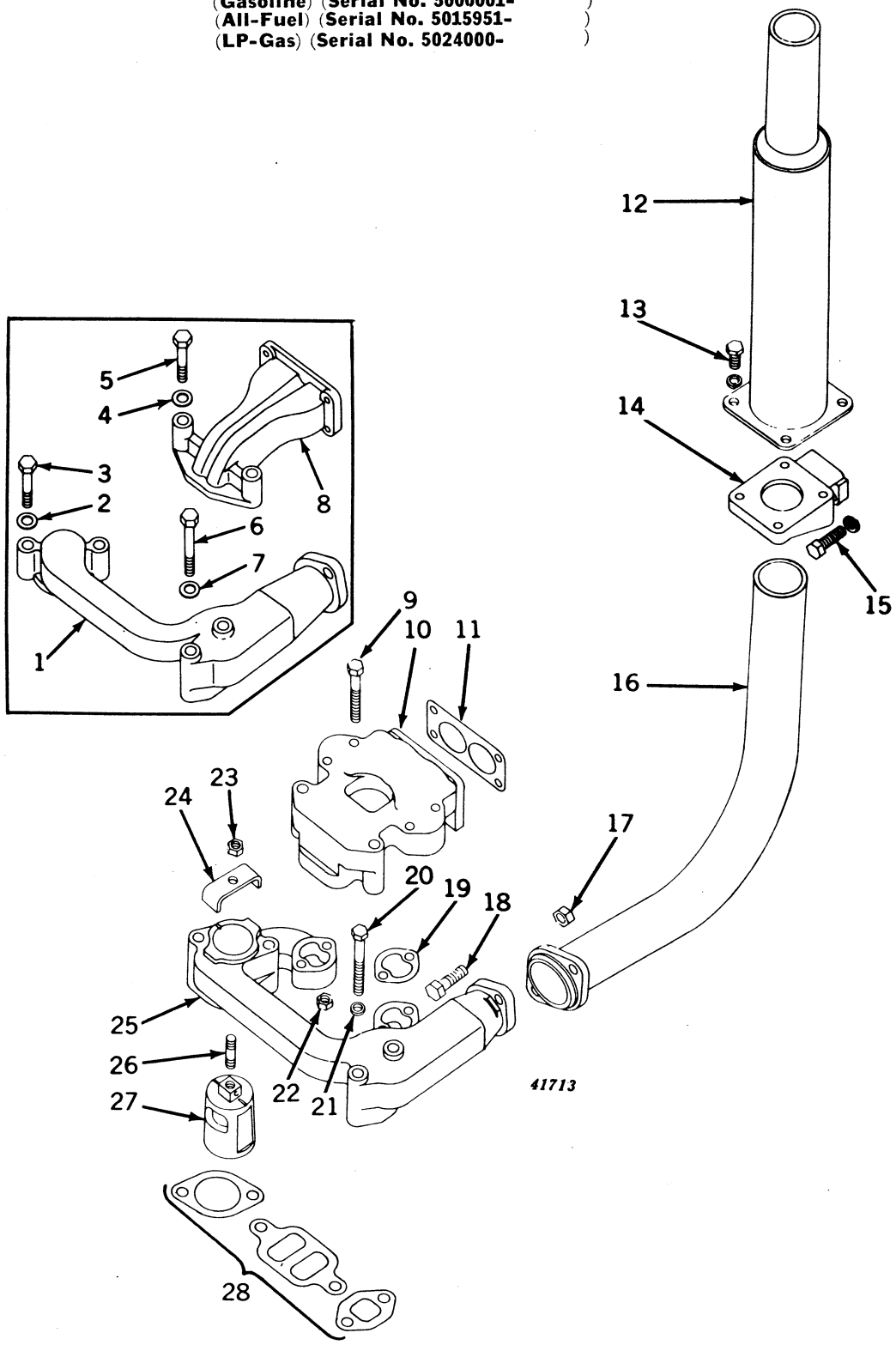

## MANIFOLD, EXHAUST PIPE, AND MUFFLER—Continued
**(Gasoline) (Serial No. 5000001- )**
**(All-Fuel) (Serial No. 5015951- )**
**(LP-Gas) (Serial No. 5024000- )**

| Key | Part No. | Serial No. | Description |
|---|---|---|---|
| 1 | B 3391 R | (5024000– ) | Manifold, Exhaust (LP-Gas) |
| 2 | 24H 169 R | (5024000– ) | Washer, 15/32" x 15/16" x 16 Gauge (2 used) (LP-Gas) |
| 3 | 19H 1242 M | (5024000– ) | Screw, Cap, 7/16" x 2-3/4" (2 used) (LP-Gas) |
| 4 | 24H 169 R | (5024000– ) | Washer, 15/32" x 15/16" x 16 Gauge (2 used) (LP-Gas) |
| 5 | 19H 1242 M | (5024000– ) | Screw, Cap, 7/16" x 2-3/4" (2 used) (LP-Gas) |
| 6 | 19H 1090 T | (5024000– ) | Screw, Cap, 7/16" x 3-3/4" (2 used) (LP-Gas) (Sub. for 19H395T) |
| 7 | 24H 169 R | (5024000– ) | Washer, 15/32" x 15/16" x 16 Gauge (2 used) (LP-Gas) |
| 8 | B 3390 R | (5024000– ) | Manifold, Intake (LP-Gas) |
| 9 | 19H 1211 N | ( – ) | Bolt, Mach., 3/8" x 3-1/4" (4 used) (Sub. for 7H460R) |
| 10 | B 3211 R | ( – ) | Manifold, Intake |
| 11 | A 4631 R | ( – ) | Gasket (Packed 5 in a Pkg.) |
| 12 | AB 4486 R | ( – ) | Muffler |
| 13 | 19H 1112 H<br>12H 10 R | ( – )<br>( – ) | Screw, Cap, 5/16" x 3/4" (4 used) (Sub. for 19H105R)<br>Washer, Lock, 5/16" (4 used) |
| 14 | B 3299 R | (5016616– ) | Muffler, Support |
| 15 | 19H 1166 H<br>12H 12 R | (5016616– )<br>(5016616– ) | Screw, Cap, 7/16" x 1-1/2" (2 used)<br>Washer, Lock, 7/16" (2 used) |
| 16 | AR 20582 R | ( – ) | Pipe, Exhaust, with Flange (Sub. for AB4638R) |
| 17 | 14H 259 R | ( – ) | Nut, 1/2" (2 used) |
| 18 | 14H 472 N | ( – ) | Bolt, Mach., 1/2" x 1-3/4" (2 used) (Sub. for 7H784R) |
| 19 | A 4642 R | ( – ) | Gasket (2 used) (Packed 2 in a Pkg.) |
| 20 | 19H 1090 T | ( – ) | Screw, Cap, 7/16" x 3-3/4" (6 used) (Sub. for 19H395R) |
| 21 | 24H 169 R | ( – ) | Washer, 15/32" x 15/16" x 16 Gauge (6 used) |
| 22 | 14H 255 R | ( – ) | Nut, 3/8" (4 used) (Sub. for 14H382T) |
| 23 | A 4646 R | ( – ) | Nut, 3/8" (Brass) (Packed 5 in a Pkg.) |
| 24 | A 4645 R | ( – ) | Clamp, Manifold Valve |
| 25 | B 3212 R | ( – ) | Manifold, Exhaust |
| 26 | A 119 R | ( – ) | Stud, 3/8" x 1-3/8", Manifold Valve Clamp |
| 27 | B 3213 R | ( – ) | Valve, Manifold |
| 28 | AB 4728 R | ( – ) | Gasket, Manifold (Pkg. of 3) (Sub. for B3214R) |

## MANIFOLD, EXHAUST PIPE, AND MUFFLER (ALL-FUEL)
(Serial No. 5000001-5015950)

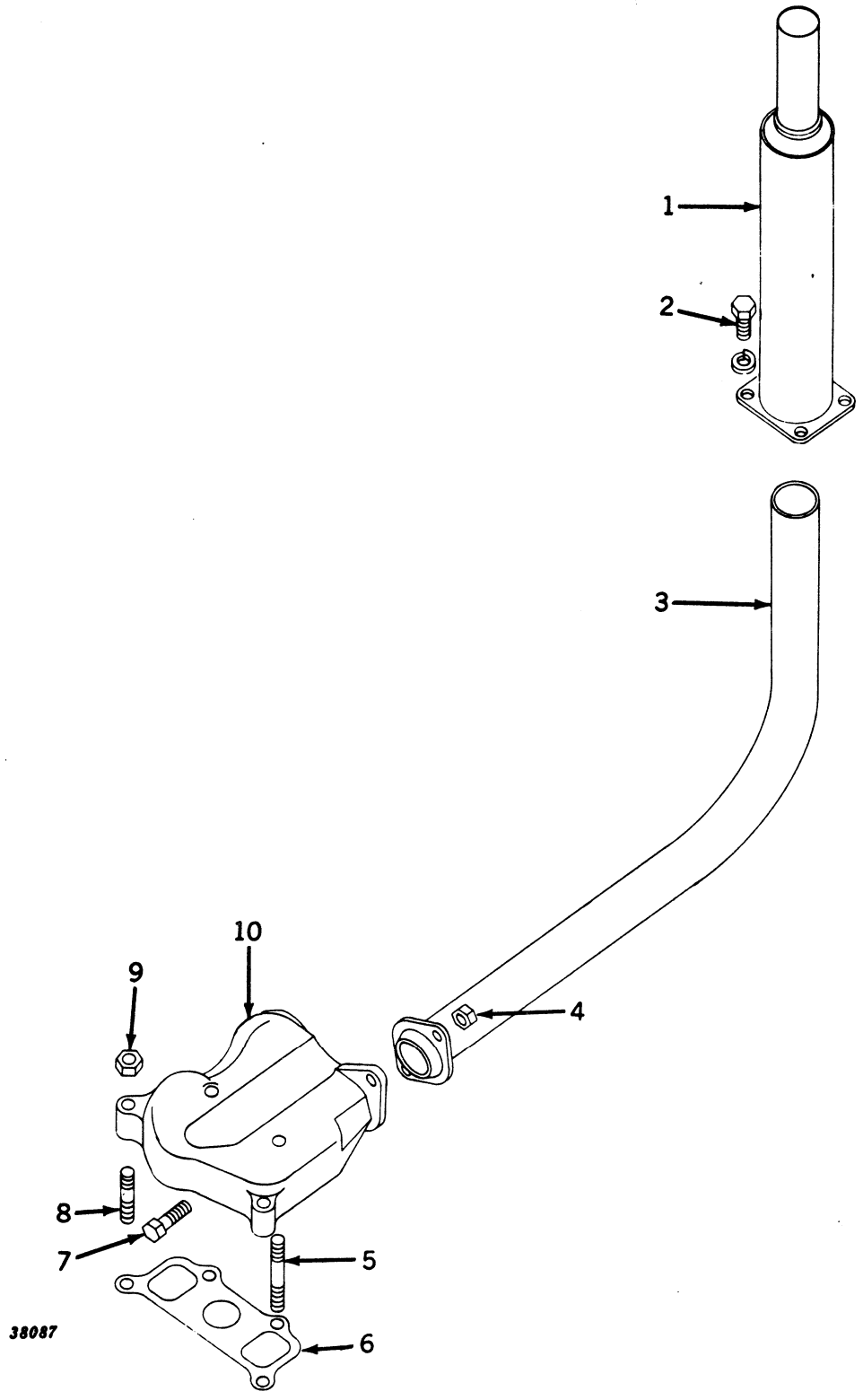

## MANIFOLD, EXHAUST PIPE, AND MUFFLER (ALL-FUEL)—Continued
(Serial No. 5000001-5015950)

| Key | Part No. | Serial No. | Description |
|---|---|---|---|
| 1 | AB 4486 R | ( – ) | Muffler |
| 2 | 19H 1112 H | ( – ) | Screw, Cap, 5/16" x 3/4" (4 used) (Sub. for 19H105R) |
| | 12H 10 R | ( – ) | Washer, Lock, 5/16" (4 used) |
| 3 | AB 4499 R | ( –5015950) | Pipe, Exhaust, with Flange |
| 4 | 14H 259 R | ( – ) | Nut, 1/2" (2 used) |
| 5 | R 2622 R | ( –5015950) | Stud, 7/16" x 4-3/8" (2 used) (Sub. for A126R) |
| 6 | B 1787 R | ( –5015950) | Gasket (Packed 5 in a Pkg.) |
| 7 | 19H 472 N | ( – ) | Bolt, Mach., with Nut, 1/2" x 1-3/4" (2 used) (Sub. for 7H784R) |
| 8 | A 674 R | ( –5015950) | Stud, 7/16" x 2-15/16" (2 used) |
| 9 | 14H 257 R | ( –5015950) | Nut, 7/16" (4 used) |
| 10 | B 2282 R | ( –5015950) | Manifold |

## MANIFOLD, EXHAUST PIPE, AND MUFFLER (ALL-FUEL)
(Serial No. 5015951- )

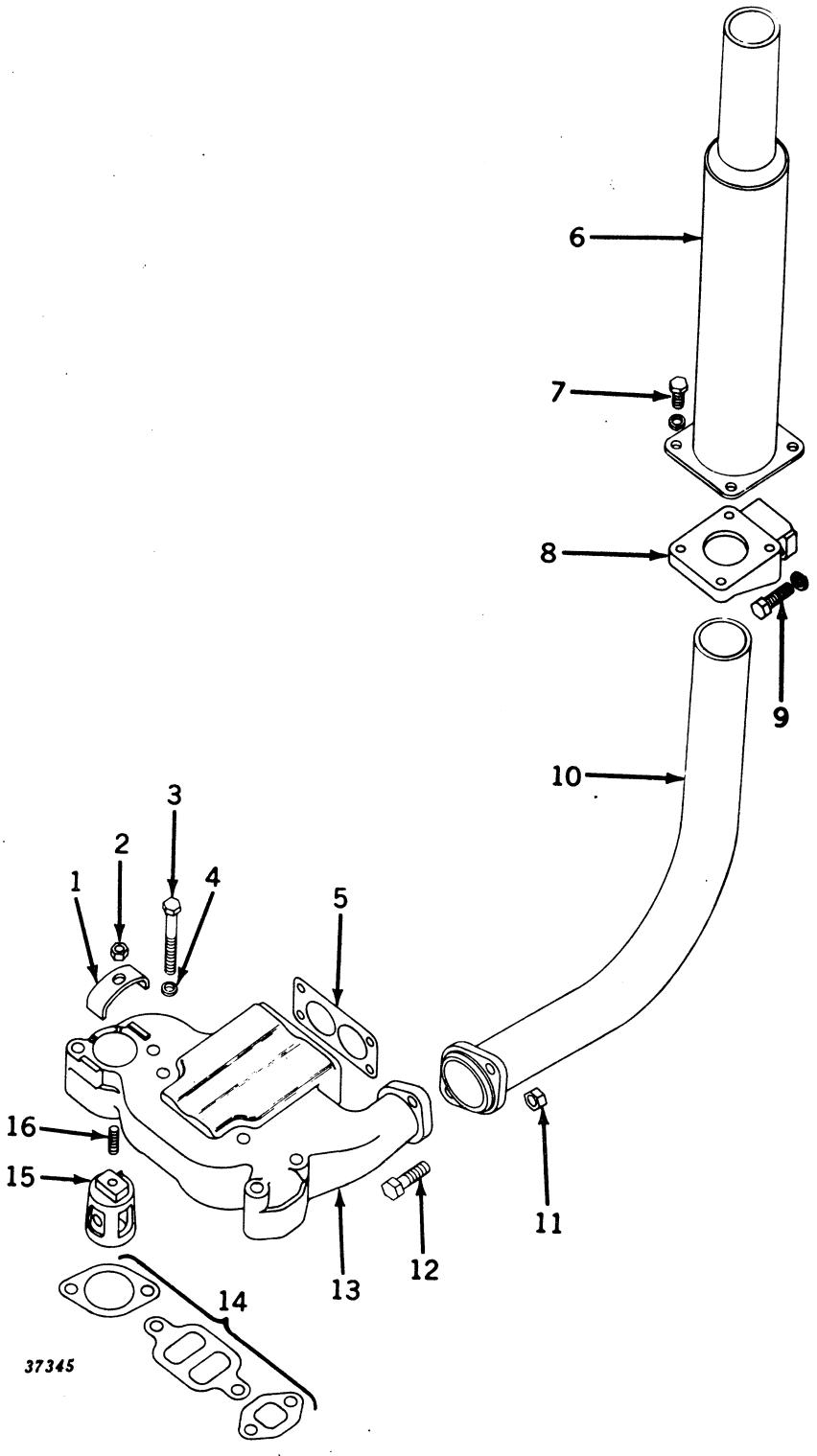

## MANIFOLD, EXHAUST PIPE, AND MUFFLER (ALL-FUEL)—Continued
(Serial No. 5015951- )

| Key | Part No. | | Description |
|---|---|---|---|
| 1 | A 4645 R | (5015951– ) | Clamp, Manifold Valve |
| 2 | A 4646 R | (5015951– ) | Nut, 3/8" (Brass) (Packed 10 in a Pkg.) |
| 3 | 19H 1253 R | (5015951– ) | Screw, Cap, 7/16" x 3-1/2" (6 used) |
| 4 | 24H 169 R | (5015951– ) | Washer, 15/32" x 15/16" x 16 Gauge (6 used) |
| 5 | A 4631 R | (5015951– ) | Gasket (Packed 5 in a Pkg.) |
| 6 | AB 4486 R | ( – ) | Muffler |
| 7 | 19H 1112 H | ( – ) | Screw, Cap, 5/16" x 3/4" (4 used) (Sub. for 19H105R) |
| | 12H 10 R | ( – ) | Washer, Lock, 5/16" (4 used) |
| 8 | B 3299 R | (5016616– ) | Support, Muffler |
| 9 | 19H 1166 H | (5016616– ) | Screw, Cap, 7/16" x 1-1/2" (2 used) |
| | 12H 12 R | (5016616– ) | Washer, Lock, 7/16" (2 used) |
| 10 | AR 20582 R | (5015951– ) | Pipe, Exhaust, with Flange (Sub. for AB4638R) |
| 11 | 14H 259 R | ( – ) | Nut, 1/2" (2 used) |
| 12 | 19H 472 N | ( – ) | Bolt, Mach., 1/2" x 1-3/4" (2 used) (Sub. for 7H784R) |
| 13 | B 3291 R | (5015951– ) | Manifold |
| 14 | AB 4728 R | (5015951– ) | Gasket, Manifold (Pkg. of 3) |
| 15 | B 3292 R | (5015951– ) | Valve, Manifold |
| 16 | A 119 R | (5015951– ) | Stud, 3/8" x 1-3/8", Manifold Valve Clamp |

## MUFFLER AND TAIL PIPE
(Gasoline) (Serial No. 5000001-
(All-Fuel) (Serial No. 5015951-

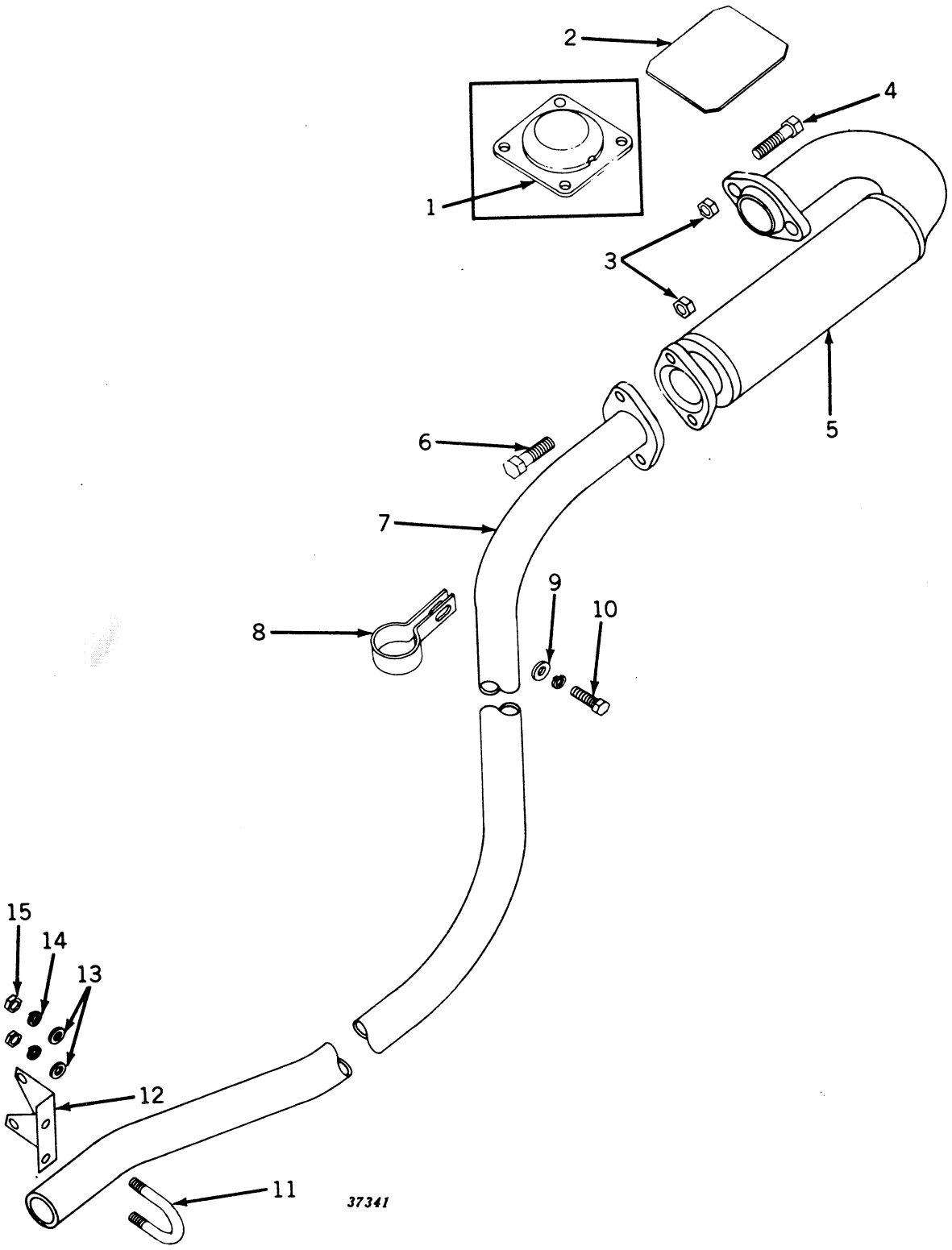

**MUFFLER AND TAIL PIPE—Continued**
**(Gasoline) (Serial No. 5000001- )**
**(All-Fuel) (Serial No. 5015951- )**

| Key | Part No. | Serial No. | Description |
|---|---|---|---|
| 1 | B 3242 R | ( -5016615) | Cover, Muffler Opening |
| 2 | AB 4743 R | (5016616- ) | Cover, Muffler Opening, with Clips |
| 3 | 14H 259 R | ( - ) | Nut, 1/2" (4 used) |
| 4 | 19H 482 B | ( - ) | Screw, Cap, 1/2" x 2" (2 used) (Sub. for 19H475R) |
| 5 | AB 4670 R | ( - ) | Muffler |
| 6 | 19H 472 N | ( - ) | Bolt, Mach., 1/2" x 1-3/4" (2 used) (Sub. for 7H784R) |
| 7 | AB 5198 R | ( - ) | Pipe, Tail, with Flange (Sub. for AB4671R) |
| 8 | A 4123 R | ( - ) | Clamp |
| 9 | 24H 154 R | ( - ) | Washer, 25/64" x 7/8" x 16 Gauge |
| 10 | F 2273 R | ( - ) | Screw, Cap, 3/8" x 1-1/4" (Sub. for 19H221R and 19H1099R) |
| | 12H 11 R | ( - ) | Washer, Lock, 3/8" |
| 11 | A 4376 R | ( - ) | U-Bolt |
| 12 | B 3639 R | ( - ) | Bracket, Tail Pipe (Sub. for B3241R) |
| 13 | 24H 143 R | ( - ) | Washer, 21/64" x 3/4" x 16 Gauge (2 used) |
| 14 | 12H 10 R | ( - ) | Washer, Lock, 5/16" (2 used) |
| 15 | 14H 785 R | ( - ) | Nut, 5/16" (2 used) (Sub. for 14H253R) |

## PULLEY AND CLUTCH
(Serial No. 5000001- )

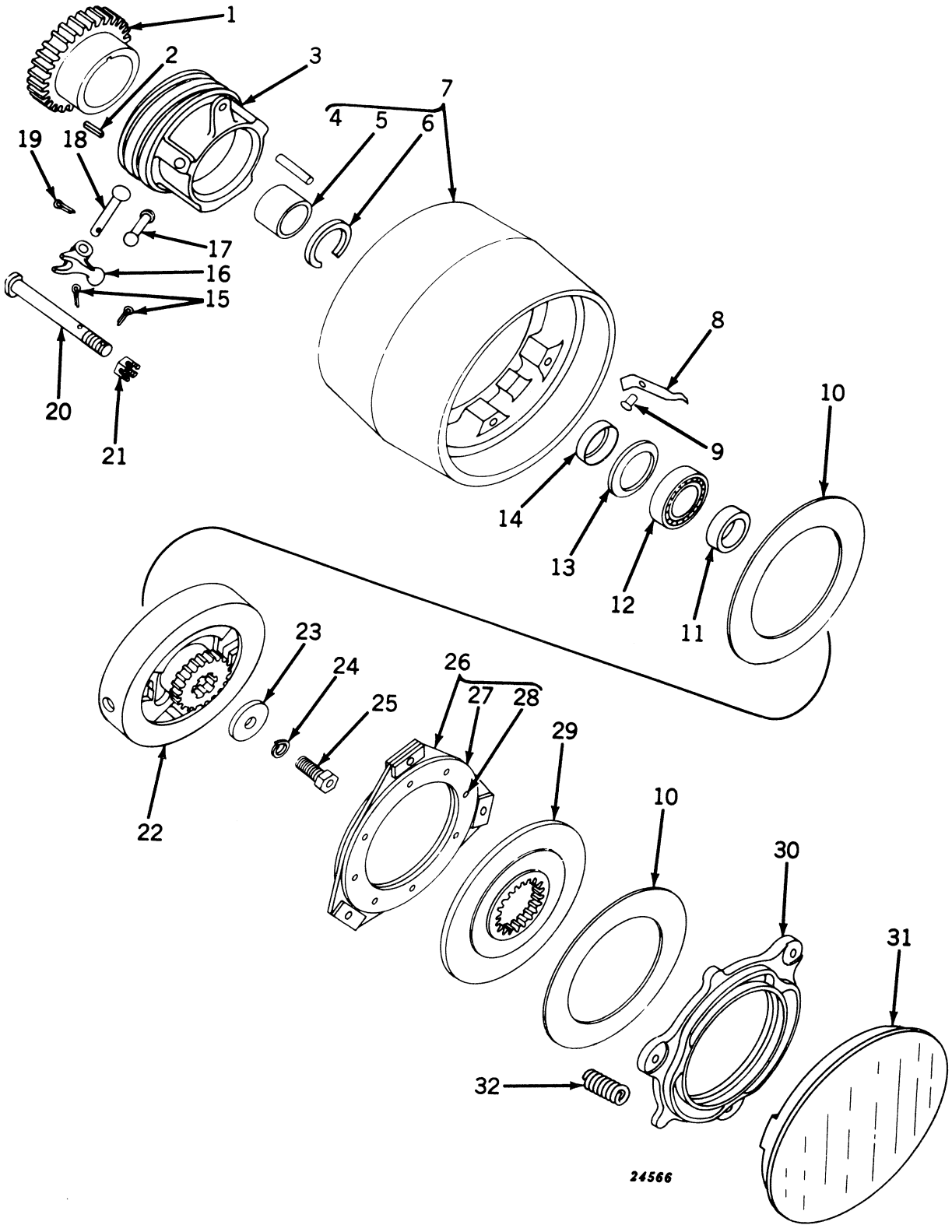

## PULLEY AND CLUTCH—Continued
(Serial No. 5000001- )

| Key | Part No. | | Description |
|---|---|---|---|
| 1 | B 3116 R | ( – ) | Gear |
| 2 | D 403 R | ( – ) | Key |
| 3 | B 3119 R | ( – ) | Sleeve, Clutch Operating |
| 4 | A 5866 R | ( – ) | Pin, Drive (Sub. for B2346R) |
| 5 | B 3117 R | ( – ) | Bushing |
| 6 | B 3118 R | ( – ) | Snap Ring |
| 7 | AB 4574 R | ( – ) | Pulley, B3115R, Belt, with Bushing, Snap Ring, Drive Pin, and Springs |
| 8 | A 6121 R | ( – ) | Spring, Dust Cover (3 used) (Packed 5 in a Pkg.) (Sub. for A351R) |
| 9 | 16H 648 A | ( – ) | Rivet, 1/4" x 1/2" (3 used) |
| 10 | B 2354 R | ( – ) | Facing, Clutch (2 used) (Packed 10 in a Pkg.) |
| 11 | B 2350 R | ( – ) | Retainer, Bearing |
| 12 | JD 7502 R | ( – ) | Bearing, Roller, and Outer Race |
| 13 | 24H 996 R | ( – ) | Washer, 1-13/16" x 2-13/16" x 11 Gauge |
| 14 | B 2349 R | ( – ) | Retainer, Oil |
| 15 | 11H 22 R | ( – ) | Pin, Cotter, 3/32" x 1" (6 used) |
| 16 | B 2351 R | ( – ) | Dog, Clutch (3 used) |
| 17 | B 144 R | ( – ) | Toggle, Clutch Dog (3 used) |
| 18 | B 2352 R | ( – ) | Pin, Clutch Dog (3 used) |
| 19 | 11H 39 R | ( – ) | Pin, Cotter, 1/8" x 3/4" (3 used) |
| 20 | B 3120 R | ( –5020399) | Bolt, Clutch, Operating (3 used) |
| | B 3278 R | (5020400– ) | Bolt, Clutch, Operating |
| 21 | B 3129 R | ( –5020399) | Nut, Slotted, 7/16" |
| | B 3279 R | (5020400– ) | Nut, Slotted, 1/2" (Packed 5 in a Pkg.) |
| 22 | B 3020 R | ( – ) | Disk, Fixed Clutch Drive |
| 23 | R 20135 R | ( – ) | Washer (Sub. for A108R) |
| 24 | 12H 15 R | ( – ) | Washer, Lock, 5/8" |
| 25 | B 2360 R | ( – ) | Screw, Cap, 5/8" x 1-1/2" (Special) |
| 26 | AB 4828 R | ( – ) | Disk, Clutch Facing, with Facings (Sub. for AB4569R) |
| 27 | B 2357 R | ( – ) | Facing (2 used) (Packed 10 in a Pkg.) |
| 28 | D 2309 R | ( – ) | Rivet (8 used) (Packed 100 in a Pkg.) |
| 29 | B 3127 R | ( – ) | Disk, Sliding Drive |
| 30 | B 3128 R | ( –5020399) | Disk, Clutch Adjusting |
| | B 3277 R | (5020400– ) | Disk, Clutch Adjusting |
| 31 | B 3764 R | ( – ) | Cover, Dust (Sub. for B2361R) |
| 32 | B 161 R | ( – ) | Spring (3 used) (Packed 5 in a Pkg.) |

## CLUTCH OPERATING PARTS
(Serial No. 5000001- )

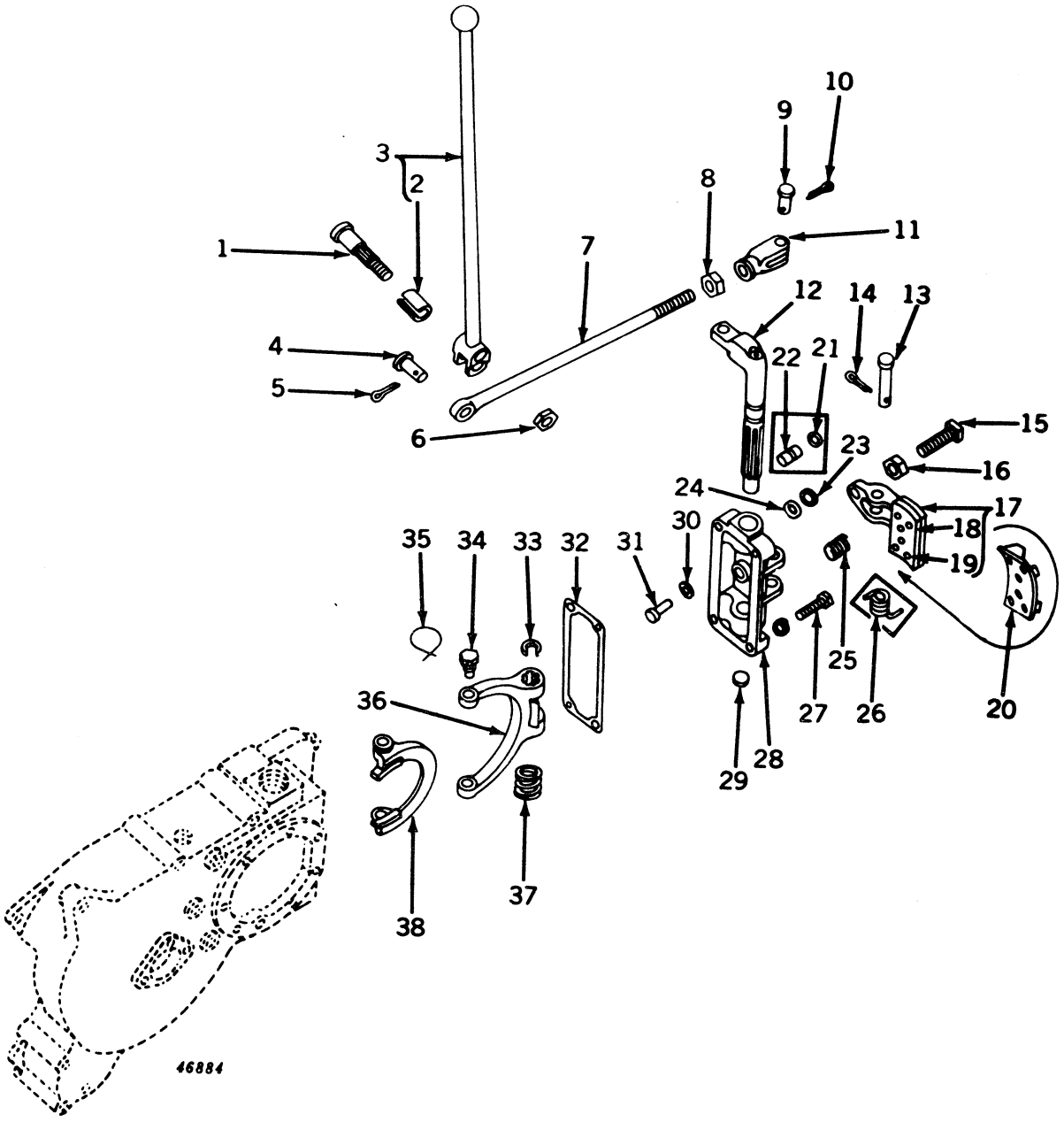

## CLUTCH OPERATING PARTS—Continued
(Serial No. 5000001- )

| Key | Part No. | Serial No. | Description |
|---|---|---|---|
| 1 | B 180 R | ( – ) | Bolt, Pivot |
| 2 | B 177 R | ( – ) | Bushing |
| 3 | AB 4572 R | ( – ) | Lever, B3136R, Clutch Operating, with Bushing |
| 4 | B 178 R | ( – ) | Pin (Packed 5 in a Pkg.) |
| 5 | 11H 41 R | ( – ) | Pin, Cotter, 1/8" x 1" |
| 6 | 14H 261 R | ( – ) | Nut, 9/16" |
| 7 | B 3137 R | ( – ) | Rod, Operating |
| 8 | 14H 259 R | ( – ) | Nut, 1/2" |
| 9 | B 178 R | ( – ) | Pin (Packed 5 in a Pkg.) |
| 10 | 11H 41 R | ( – ) | Pin, Cotter, 1/8" x 1" |
| 11 | B 175 R | ( – ) | Yoke |
| 12 | B 3134 R | ( – ) | Shaft, Clutch Fork |
| 13 | A 4366 R | ( –5014801) | Pin, Pivot |
| | R 20448 R | (5014802– ) | Pin, Pivot (Sub. for F1446R) |
| 14 | 11H 41 R | ( – ) | Pin, Cotter, 1/8" x 1/8" (Sub. for 11H38R) |
| 15 | 22H 172 R | ( – ) | Screw, Set |
| 16 | 14H 259 R | ( –5014801) | Nut, 1/2" (Packed 5 in a Pkg.) |
| | 14H 473 R | (5014802– ) | Nut, Jam, 1/2" (Sub. for 14H347R) |
| 17 | AB 4571 R | ( –5014801) | Brake, B3135R, Pulley, with Lining |
| | B 3646 R | (5014802– ) | Brake, Pulley (Sub. for AB4715R) |
| 18 | B 166 R | ( – ) | Lining, Brake (Packed 5 in a Pkg.) |
| 19 | A 4363 R | ( – ) | Rivet (6 used) (Packed 100 in a Pkg.) |
| 20 | AB 4748 R | ( – ) | Lining, Brake, with Adapter (Packed 20 in a Pkg.) |
| 21 | A 4365 R | ( –5029199) | Packing, "O" Ring (Packed 2 in a Pkg.) |
| 22 | A 4364 R | ( –5029199) | Pin, Operating, Pulley Brake |
| 23 | R 1472 R | (5029200– ) | Plug, Expansion |
| 24 | A 3917 R | (5029200– ) | Packing, "O" Ring (Packed 2 in a Pkg.) |
| 25 | R 673 R | (5014802– ) | Spring |
| 26 | A 2454 R | ( –5014801) | Spring |
| 27 | F 2274 R | ( – ) | Screw, Cap, 3/8" x 1-3/4" (4 used) |
| | 12H 11 R | ( – ) | Washer, Lock, 3/8" (4 used) |
| 28 | AB 4662 R | ( –5014801) | Bearing, Clutch Fork, with Plug |
| | B 3263 R | (5014802–5029199) | Bearing, Clutch Fork |
| | B 3466 R | (5029200– ) | Bearing, Clutch Fork (Sub. One A6112R, One AB5548R, One AB5549R, One B3979R, One B3980R, One F3586R, Twelve F3587R, One F3590R, One R459R, and Two 14H257R) |
| 29 | 30H 11 R | ( – ) | Plug, Expansion |
| 30 | 24H 1 R | (5029200– ) | Washer, 13/32" x 11/16" x 16 Gauge |
| | 24H 41 H | (5029200– ) | Washer, 13/32" x 3/4" x 20 Gauge |
| | 24H 156 R | (5029200– ) | Washer, 27/64" x 3/4" x 26 Gauge |
| | R 1820 R | (5029200– | Washer, 25/64" x 11/16" x .010" |
| 31 | R 1471 R | (5029200– ) | Pin, Operating, Pulley Brake |
| 32 | B 3467 R | ( – ) | Gasket (Packed 5 in a Pkg.) (Sub. for B3131R) |
| 33 | R 271 R | ( – ) | Snap Ring |
| 34 | D 178 R | ( – ) | Pivot, Fork (2 used) |
| 35 | ..... | ( – ) | Wire, 16 Gauge x 16" Long (2 used) |
| 36 | B 3133 R | ( – ) | Fork, Clutch |
| 37 | R 273 R | ( – ) | Spring, Clutch Fork |
| 38 | B 3132 R | ( – ) | Collar, Clutch |

## FIRST REDUCTION GEAR COVER
(Serial No. 5000001- )

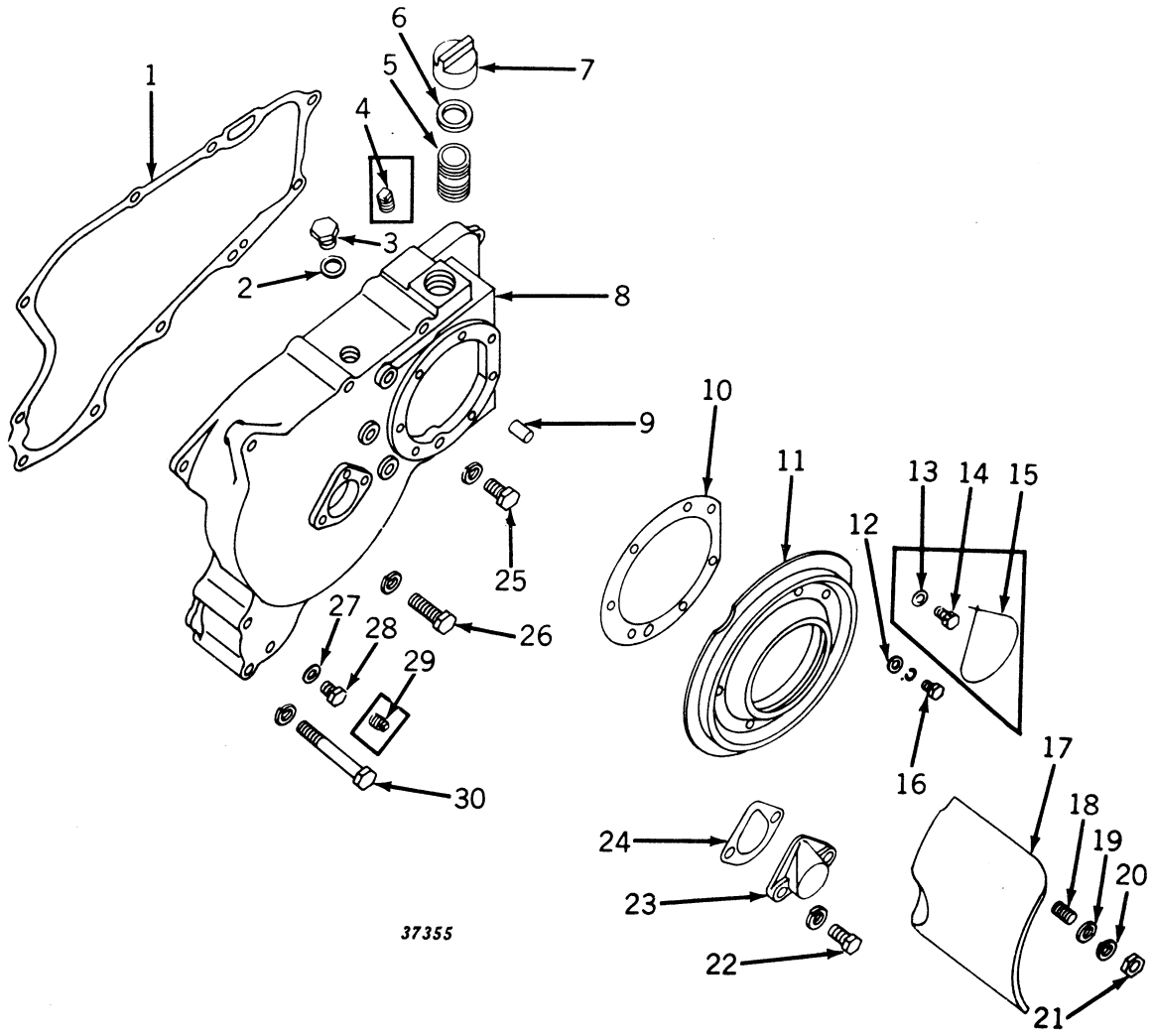

## FIRST REDUCTION GEAR COVER—Continued
(Serial No. 5000001- )

| Key | Part No. | Serial No. | Description |
|---|---|---|---|
| 1 | B 3084 R | ( - ) | Gasket (Packed 5 in a Pkg.) |
| 2 | A 4827 R | (5015544 - ) | Washer |
| 3 | F 3128 R | (5015544- ) | Plug (Sub. for A4992R and F1250R) |
| 4 | 15H 238 R | ( -5015543) | Plug, Pipe, 3/4" |
| 5 | A 4234 R | ( - ) | Nipple |
| 6 | A 4235 R | ( - ) | Gasket (Packed 2 in a Pkg.) |
| 7 | A 4233 R | ( - ) | Cap |
| 8 | AB 4657 R | ( -5029199) | Cover, B3083R, with Oil Filler Nipple, Cap, and Plugs (Sub. AB4938R) |
| | AB 4938 R | (5029200- ) | Cover, B3465R, with Oil Filler Nipple, Cap, and Plugs |
| 9 | A 4879 R | ( - ) | Pin, Dowel (2 used) (Sub. for B153R) |
| 10 | B 3122 R | ( - ) | Gasket (Packed 2 in a Pkg.) |
| 11 | AB 4568 R | ( - ) | Shield, Dust, with Oil Seal |
| 12 | 24H 930 R | ( - ) | Washer, 11/32" x 3/4" x 11 Gauge (7 used) |
| 13 | C 932 R | ( -5015156) | Washer, Lead (7 used) (Packed 5 in a Pkg.) |
| 14 | H 313 R | ( -5015156) | Screw, Cap, 5/16" x 3/4" (Drilled) (7 used) |
| 15 | ..... | ( -5015156) | Wire, 16 Gauge x 30" Long |
| 16 | 19H 1112 H | (5015157- ) | Screw, Cap, 5/16" x 3/4" (7 used) |
| | 12H 10 R | (5015157- ) | Washer, Lock, 5/16" (7 used) |
| 17 | B 3124 R | ( - ) | Guard, Pulley |
| 18 | A 119 R | ( - ) | Stud, 3/8" x 1-3/8" (3 used) |
| 19 | 24H 454 R | ( - ) | Washer, 13/32" x 11/16" x 12 Gauge (3 used) |
| 20 | 12H 11 R | ( - ) | Washer, Lock, 3/8" (3 used) |
| 21 | 14H 255 R | ( - ) | Nut, 3/8" (3 used) |
| 22 | 19H 218 D | ( - ) | Screw, Cap, 3/8" x 1" (2 used) (Sub. for 19H211R) |
| | 12H 11 R | ( - ) | Washer, Lock, 3/8" (2 used) |
| 23 | A 3816 R | ( - ) | Cover |
| 24 | A 3817 R | ( - ) | Gasket (Packed 5 in a Pkg.) |
| 25 | 19H 337 N | ( - ) | Screw, Cap, 7/16" x 1-1/4" (5 used) (Sub. for 19H332R) |
| | 12H 12 R | ( - ) | Washer, Lock, 7/16" (5 used) |
| 26 | 19H 1687 R | ( - ) | Screw, Cap, 7/16" x 4-3/4" (3 used) (Sub. for 19H405R) |
| | 12H 12 R | ( - ) | Washer, Lock, 7/16" (3 used) |
| 27 | A 3098 R | (5015544- ) | Washer (Packed 5 in a Pkg.) |
| 28 | 19H 1710 T | (5015544- ) | Screw, Cap, 3/8" x 1/2" (Sub. for 19H196H) |
| 29 | 15H 254 R | ( -5015543) | Plug, Pipe, 1/4" |
| 30 | 19H 1688 R | ( - ) | Screw, Cap, 7/16" x 5-1/2" (2 used) (Sub. for 19H410R) |
| | 12H 12 R | ( - ) | Washer, Lock, 7/16" (2 used) |

## RADIATOR AND PIPING
(Serial No. 5000001-5016615)

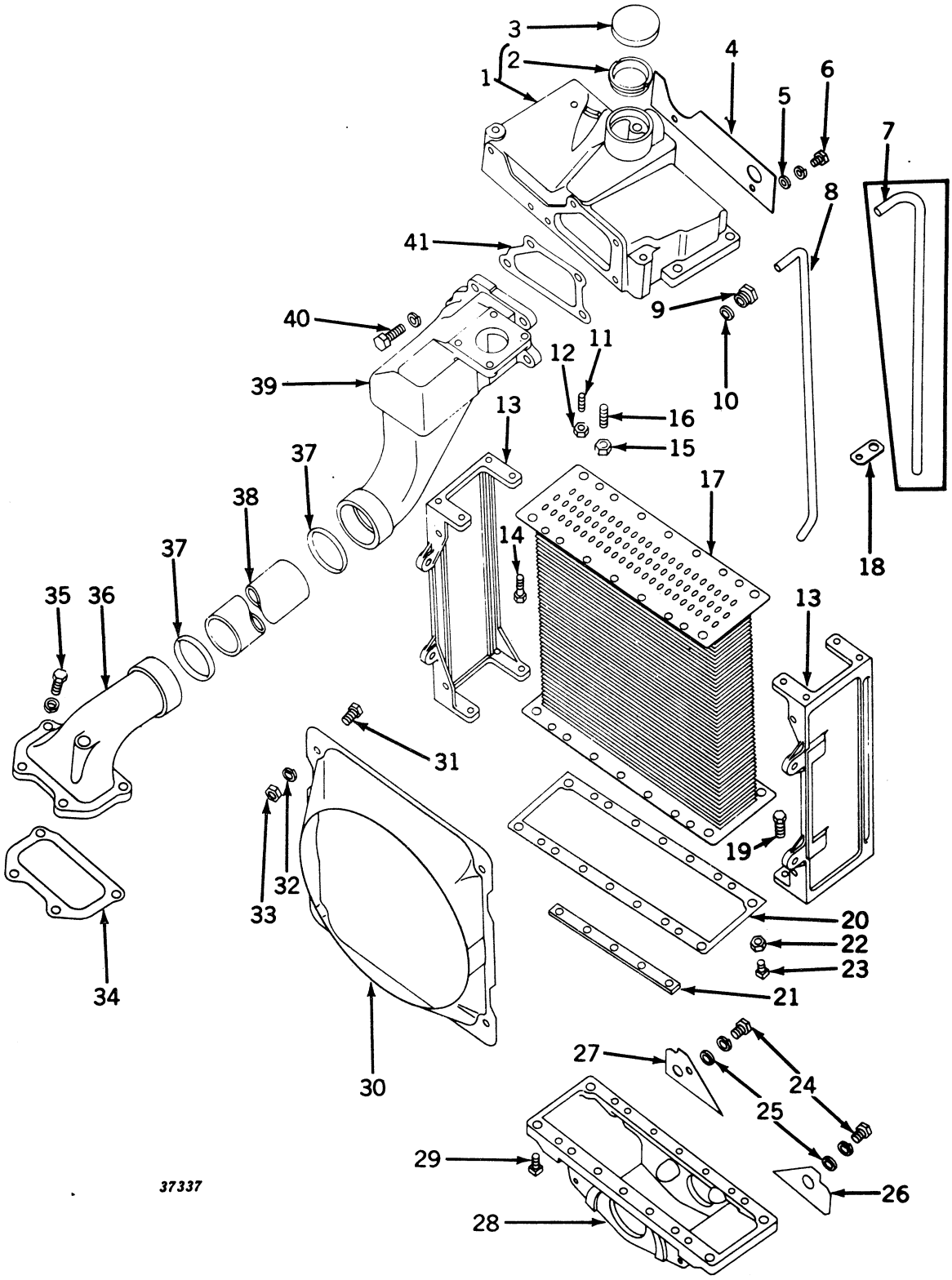

## RADIATOR AND PIPING—Continued
**(Serial No. 5000001-5016615)**

| Key | Part No. | | Description |
|---|---|---|---|
| 1 | AB 4652 R | ( –5016615) | Tank, B3071R, Top, and Filler Flange |
| 2 | AA 5153 R | ( –5016615) | Flange, Filler |
| 3 | AA 5158 R | ( –5016615) | Cap, Radiator |
| 4 | B 3073 R | ( – ) | Baffle |
| 5 | 24H 143 R | ( – ) | Washer, 21/64" x 3/4" x 16 Gauge (2 used) |
| 6 | 19H 1140 N | ( – ) | Screw, Cap, 5/16" x 1/2" (2 used) (Sub. for 19H96R) |
| | 12H 10 R | ( – ) | Washer, Lock, 5/16" (2 used) |
| 7 | B 3076 R | ( –5011101) | Tube, Vent Drain (Sub. One A4780R, One B3251R, and One B3252R) |
| 8 | B 3251 R | (5011102–5016615) | Tube, Vent Drain |
| 9 | C 1705 R | ( –5016615) | Gland, Packing |
| 10 | B 60 R | ( –5016615) | Packing (Packed 10 in a Pkg.) |
| 11 | B 1504 R | ( – ) | Stud, 5/16" x 15/16" (5 used) |
| 12 | 14H 785 R | ( – ) | Nut, 5/16" (5 used) (Sub. for 14H253R) |
| 13 | B 1804 R | ( – ) | Side, Radiator (2 used) |
| 14 | 19H 1166 H | ( – ) | Screw, Cap, 7/16" x 1-1/2" (8 used) (Sub. for 19H340R) |
| 15 | 14H 255 R | ( – ) | Nut, 3/8" (2 used) |
| 16 | A 119 R | ( – ) | Stud, 3/8" x 1-3/8" (2 used) |
| 17 | AB 4666 R | ( – ) | Core, Radiator (Sub. for AB3599R) |
| 18 | A 4440 R | ( –5011101) | Clip, Vent Drain Tube Support (Sub. A4780R) |
| | A 4780 R | (5011102– ) | Clip, Vent Drain Tube Support (Sub. for A4440R) |
| 19 | 7H 328 R | ( – ) | Bolt, Mach., 3/8" x 1-1/8" (6 used) (Packed 50 in a Pkg.) |
| 20 | B 1507 R | ( – ) | Gasket (2 used) (Packed 2 in a Pkg.) |
| 21 | B 398 R | ( – ) | Strap (4 used) |
| 22 | 14H 785 R | ( – ) | Nut, 5/16" (5 used) (Sub. for 14H253R) |
| 23 | 19H 1118 N | ( – ) | Screw, Cap, 5/16" x 7/8" (5 used) (Sub. for 19H110R) |
| 24 | 19H 1140 N | ( – ) | Screw, Cap, 5/16" x 1/2" (2 used) (Sub. for 19H96R) |
| | 12H 10 R | ( – ) | Washer, Lock, 5/16" (2 used) |
| 25 | 24H 143 R | ( – ) | Washer, 21/64" x 3/4" x 16 Gauge (2 used) |
| 26 | B 3081 R | ( – ) | Baffle, Frame, R.H. |
| 27 | B 3081 R | ( –5011101) | Baffle, Frame, L.H. |
| | B 3252 R | (5011102– ) | Baffle, Frame, L.H. |
| 28 | B 3072 R | ( –5016615) | Tank, Bottom |
| 29 | 19H 1118 N | ( – ) | Screw, Cap, 5/16" x 7/8" (10 used) (Sub. for 19H110R) |
| 30 | B 1512 R | ( –5018449) | Shroud (Sub. AB4775R) |
| | AB 4775 R | (5018450– ) | Shroud |
| 31 | F 2272 R | ( – ) | Screw, Cap, 3/8" x 3/4" (4 used) |
| 32 | 12H 11 R | ( – ) | Washer, Lock, 3/8" (4 used) |
| 33 | 14H 255 R | ( – ) | Nut, 3/8" (4 used) |
| 34 | B 3224 R | ( – ) | Gasket (Packed 5 in a Pkg.) |
| 35 | 19H 462 N | ( – ) | Screw, Cap, 1/2" x 1-1/2" (4 used) (Sub. for 19H457R) |
| | 12H 13 R | ( – ) | Washer, Lock, 1/2" (4 used) |
| 36 | B 3078 R | ( –5016615) | Outlet, Cylinder Water |
| 37 | A 4444 R | ( –5016615) | Packing, "O" Ring, Upper Water Pipe (2 used) (Packed 2 in a Pkg.) |
| 38 | A 4443 R | ( –5016615) | Pipe, Upper Water |
| 39 | B 3079 R | ( –5016615) | Pipe, Radiator Inlet |
| 40 | 19H 462 N | ( –5016615) | Screw, Cap, 1/2" x 1-1/2" (4 used) (Sub. for 19H457R) |
| | 12H 13 R | ( –5016615) | Washer, Lock, 1/2" (4 used) |
| 41 | B 3080 R | ( –5016615) | Gasket (Packed 2 in a Pkg.) |

## RADIATOR (PRESSURE COOLING)
(Serial No. 5016616- )

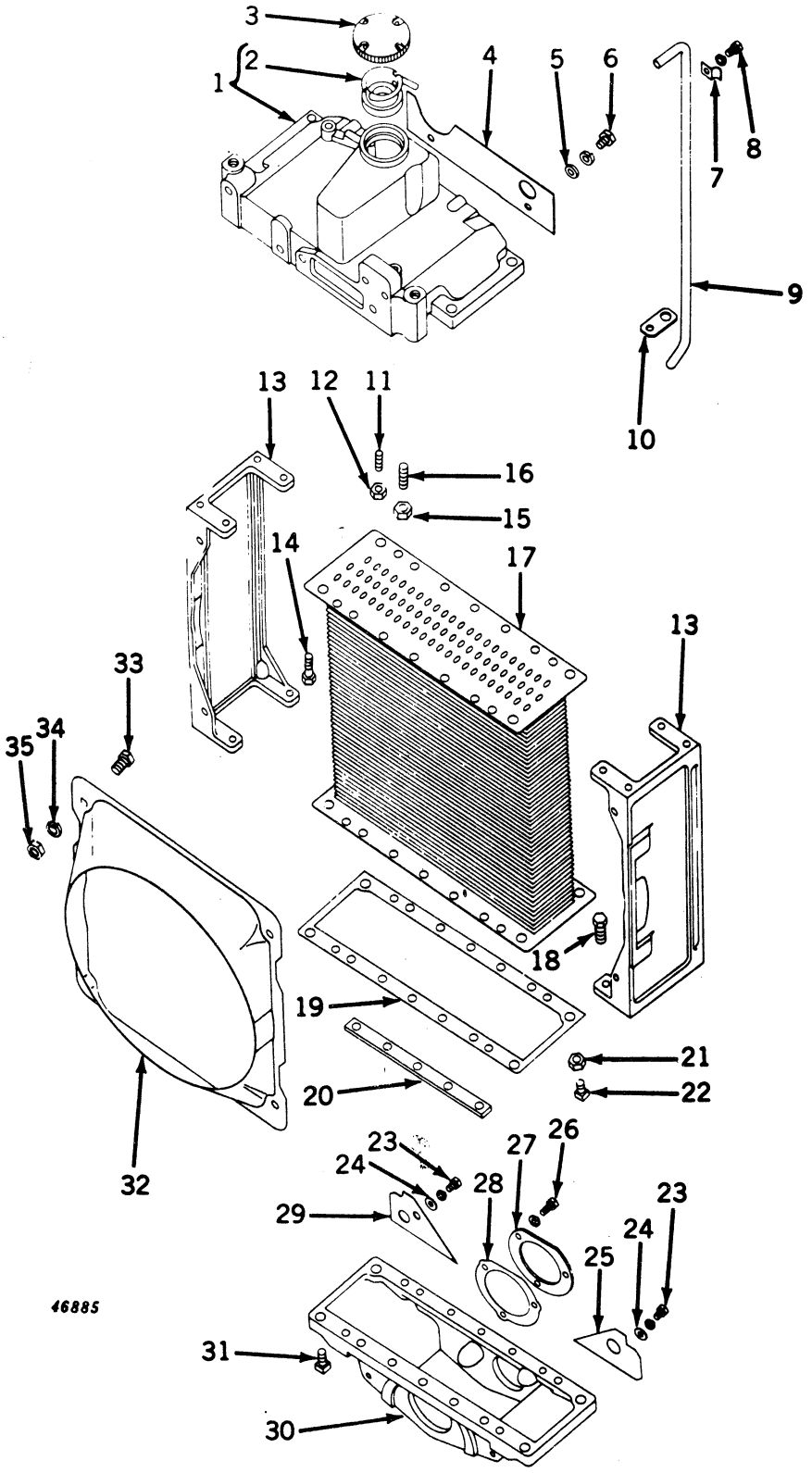

## RADIATOR (PRESSURE COOLING)—Continued
(Serial No. 5016616- )

| Key | Part No. | Serial No. | Description |
|---|---|---|---|
| 1 | AB 4760 R | (5016616- ) | Tank, B3302R, Top, and Filler Flange (On 5000001-5020399 Also Furnish One B3359R) (Sub. B3566R) |
| 2 | AA 5756 R | (5016616- ) | Flange, Filler, with Adapter and Tube |
| 3 | AA 5757 R | (5016616- ) | Cap, Radiator |
| 4 | B 3073 R | ( -5020399) | Baffle |
| | B 3359 R | (5020400- ) | Baffle |
| 5 | 24H 143 R | ( - ) | Washer, 21/64" x 3/4" x 16 Gauge (2 used) |
| 6 | 19H 1140 N | ( - ) | Screw, Cap, 5/16" x 1/2" (2 used) (Sub. for 19H96R) |
| | 12H 10 R | ( - ) | Washer, Lock, 5/16" (2 used) |
| 7 | R 183 R | (5016616- ) | Clip |
| 8 | 19H 1140 N | (5016616- ) | Screw, Cap, 5/16" x 1/2" (Sub. for 19H96R) |
| | 12H 10 R | (5016616- ) | Washer, Lock, 5/16" |
| 9 | B 3303 R | (5016616- ) | Tube, Vent Drain |
| 10 | A 4961 R | (5016616- ) | Clip, Vent Drain Tube Support |
| 11 | B 1504 R | ( - ) | Stud, 5/16" x 15/16" (5 used) |
| 12 | 14H 785 R | ( - ) | Nut, 5/16" (5 used) (Sub. for 14H253R) |
| 13 | B 1804 R | ( -5029199) | Side, Radiator (2 used) |
| | B 3412 R | (5029200- ) | Side, Radiator (2 used) |
| 14 | 19H 1166 H | ( - ) | Screw, Cap, 7/16" x 1-1/2" (8 used) (Sub. for 19H340R) |
| 15 | 14H 255 R | ( - ) | Nut, 3/8" (2 used) |
| 16 | A 119 R | ( - ) | Stud, 3/8" x 1-3/8" (2 used) |
| 17 | AB 3599 R | ( - ) | Core, Radiator |
| 18 | 7H 328 R | ( - ) | Bolt, Mach., 3/8" x 1-1/8" (6 used) (Packed 50 in a Pkg.) |
| 19 | B 1507 R | ( - ) | Gasket (2 used) (Packed 2 in a Pkg.) |
| 20 | B 398 R | ( - ) | Strap (4 used) |
| 21 | 14H 785 R | ( - ) | Nut, 5/16" (5 used) (Sub. for 14H253R) |
| 22 | 19H 1118 N | ( - ) | Screw, Cap, 5/16" x 7/8" (5 used) (Sub. for 19H110R) |
| 23 | 19H 1140 N | ( - ) | Screw, Cap, 5/16" x 1/2" (2 used) (Sub. for 19H96R) |
| | 12H 10 R | ( - ) | Washer, Lock, 5/16" (2 used) |
| 24 | 24H 143 R | ( - ) | Washer, 21/64" x 3/4" x 16 Gauge (2 used) |
| 25 | B 3081 R | ( - ) | Baffle, Frame, R.H. |
| 26 | 19H 1112 H | (5016616- ) | Screw, Cap, 5/16" x 3/4" (3 used) (Sub. for 19H105R) |
| | 12H 10 R | (5016616- ) | Washer, Lock, 5/16" (3 used) |
| 27 | F 1318 R | (5016616- ) | Cover |
| 28 | A 4433 R | (5016616- ) | Gasket (Packed 2 in a Pkg.) |
| 29 | B 3252 R | ( - ) | Baffle, Frame, L.H. |
| 30 | B 3300 R | (5016616-5029199) | Tank, Bottom (Sub. One B3072R, One F1318R, One A4433R, Three 19H1112H, and Three 12H10R) |
| 31 | 19H 1118 N | ( - ) | Screw, Cap, 5/16" x 7/8" (10 used) (Sub. for 19H110R) |
| 32 | B 1512 R | ( - ) | Shroud (Sub. AB4775R) |
| 33 | F 2272 R | ( - ) | Screw, Cap, 3/8" x 3/4" (4 used) |
| 34 | 12H 11 R | ( - ) | Washer, Lock, 3/8" (4 used) |
| 35 | 14H 255 R | ( - ) | Nut, 3/8" (4 used) |

## PIPING
(Serial No. 5000001- )

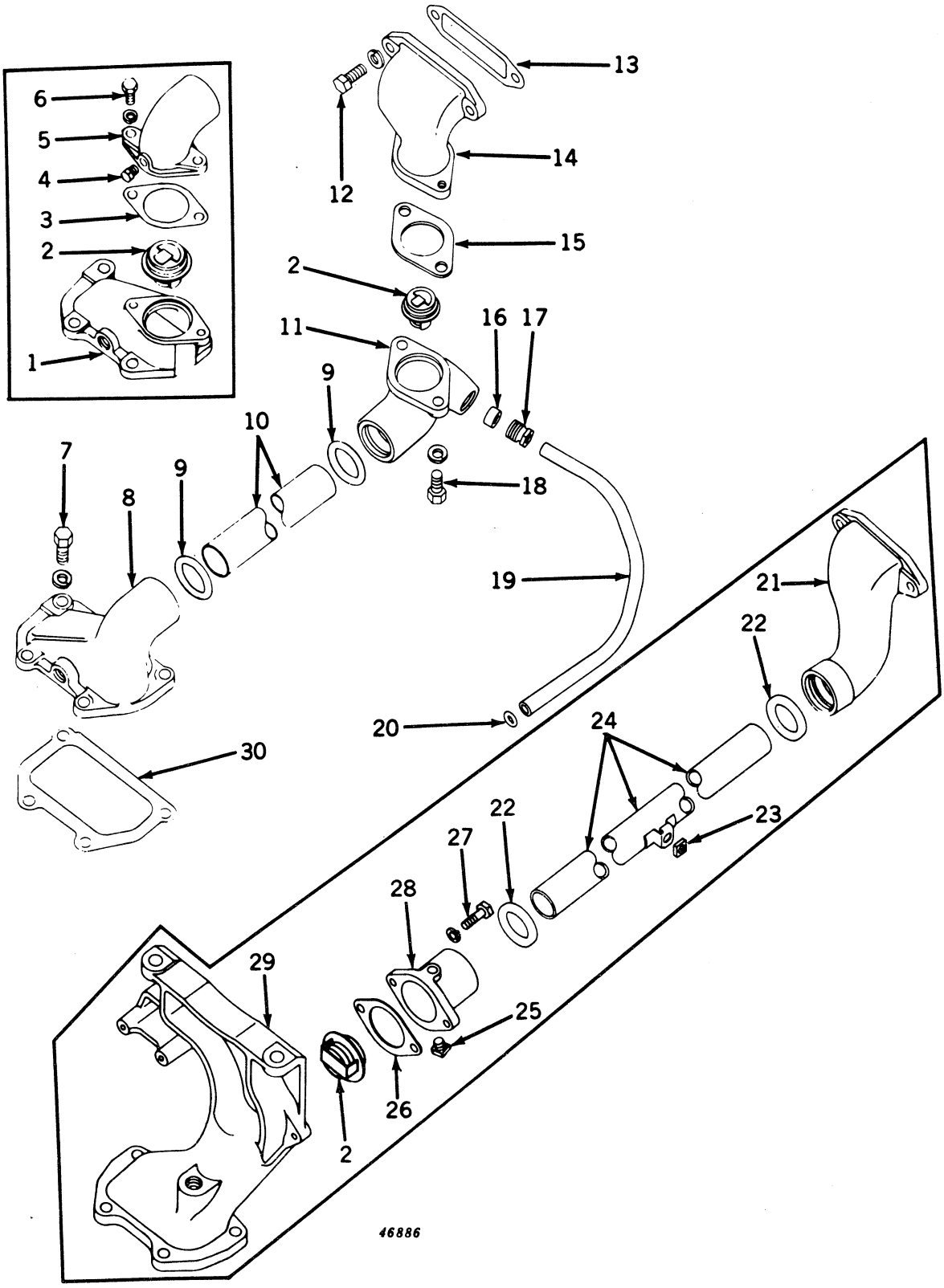

## PIPING—Continued
(Serial No. 5000001- )

| Key | Part No. | Serial No. | Description |
|---|---|---|---|
| 1 | B 3293 R | (5016616-5029199) | Outlet, Cylinder Water (Except LP-Gas) |
| 2 | AB 4744 R | (5016616- ) | Thermostat (Range 160°-183°F.) (Gasoline) |
| | AB 4744 R | (5024000- ) | Thermostat (Range 160°-183°F.) (LP-Gas) |
| | AB 4745 R | (5016616-5029199) | Thermostat (Range 180°-202°F.) (All-Fuel) |
| | AA 6292 R | (5029200- ) | Thermostat (Range 195°-212°F.) (All-Fuel) |
| | AA 6293 R | (5029200- ) | Thermostat (Range 205°-225°F.) (All-Fuel) |
| 3 | B 3295 R | (5016616-5029199) | Gasket (Packed 2 in a Pkg.) |
| 4 | R 10160 R | (5016616-5029199) | Plug, Drain (Sub. for S-98) |
| 5 | B 3294 R | (5016616-5029199) | Cover, Thermostat (Except LP-Gas) |
| 6 | 19H 218 D | (5016616-5029199) | Screw, Cap, 3/8" x 1" (2 used) (Sub. for 19H211R) |
| | 12H 11 R | (5016616-5029199) | Washer, Lock, 3/8" (2 used) |
| 7 | 19H 462 N | ( - ) | Screw, Cap, 1/2" x 1-1/2" (4 used) (Sub. for 19H457R) |
| | 12H 13 R | ( - ) | Washer, Lock, 1/2" (4 used) |
| 8 | B 3409 R | (5029200- ) | Outlet, Cylinder Water (Except LP-Gas) |
| 9 | F 1056 R | (5016616- ) | Packing, "O" Ring, Upper Water Pipe (2 used) (Packed 10 in a Pkg.) |
| 10 | B 3296 R | (5016616- ) | Pipe, Upper Water (Except LP-Gas) |
| 11 | B 3414 R | (5029200- ) | Housing, Thermostat (Except LP-Gas) |
| 12 | 19H 462 N | (5016616- ) | Screw, Cap, 1/2" x 1-1/2" (2 used) (Sub. for 19H457R) |
| | 12H 13 R | (5016616- ) | Washer, Lock, 1/2" (2 used) |
| 13 | B 3298 R | (5016616- ) | Gasket (Packed 2 in a Pkg.) |
| 14 | B 3413 R | (5029200- ) | Inlet, Radiator Water Inlet (Except LP-Gas) |
| 15 | B 3295 R | (5029200- ) | Gasket (Packed 5 in a Pkg.) |
| 16 | A 5322 R | (5029200- ) | Washer, Packing (Packed 2 in a Pkg.) |
| 17 | A 5323 R | (5029200- ) | Gland, Packing |
| 18 | 19H 218 D | (5029200- ) | Screw, Cap, 3/8" x 1" (2 used) (Sub. for 19H211R) |
| | 12H 11 R | (5029200- ) | Washer, Lock, 3/8" (2 used) |
| 19 | B 3410 R | (5029200- ) | Pipe, Water By-Pass |
| 20 | R 375 R | (5029200- ) | Packing, "O" Ring (Packed 2 in a Pkg.) |
| 21 | B 3297 R | (5016616-5029199) | Pipe, Radiator Inlet (Except LP-Gas) |
| | B 3297 R | (5024000- ) | Pipe, Radiator Inlet (LP-Gas) |
| 22 | F 1056 R | (5024000- ) | Packing, "O" Ring, Upper Water Pipe (2 used) (Packed 5 in a Pkg.) |
| 23 | 14H 785 R | (5024000- ) | Nut, Sq., 5/16" (Sub. for 14H253R) |
| 24 | AB 4946 R | (5024000- ) | Pipe, Upper Water (LP-Gas) (Sub. for B3394R) |
| 25 | R 10160 R | (5024000- ) | Plug, Drain (LP-Gas) (Sub. for S-98) |
| 26 | B 3295 R | (5024000- ) | Gasket (Packed 2 in a Pkg.) (LP-Gas) |
| 27 | F 2273 R | (5024000- ) | Screw, Cap, 3/8" x 1-1/4" (2 used) (LP-Gas) |
| | 12H 11 R | (5024000- ) | Washer, Lock, 3/8" (2 used) (LP-Gas) |
| 28 | B 3393 R | (5024000- ) | Cover, Thermostat (LP-Gas) (On 5029200 Also Furnish One 15H254R) |
| 29 | B 3392 R | (5024000- ) | Outlet, Cylinder Water (LP-Gas) |
| 30 | B 3224 R | ( - ) | Gasket (Packed 2 in a Pkg.) |

(Part listed below consists of most of the parts in this grouping.)
AB 4894 R (5016616-5029199) Set, By-Pass Cooling (All-Fuel)

## SHUTTER, SHUTTER CONTROLS, AND THERMOSTAT
(Serial No. 5000001-5016615)

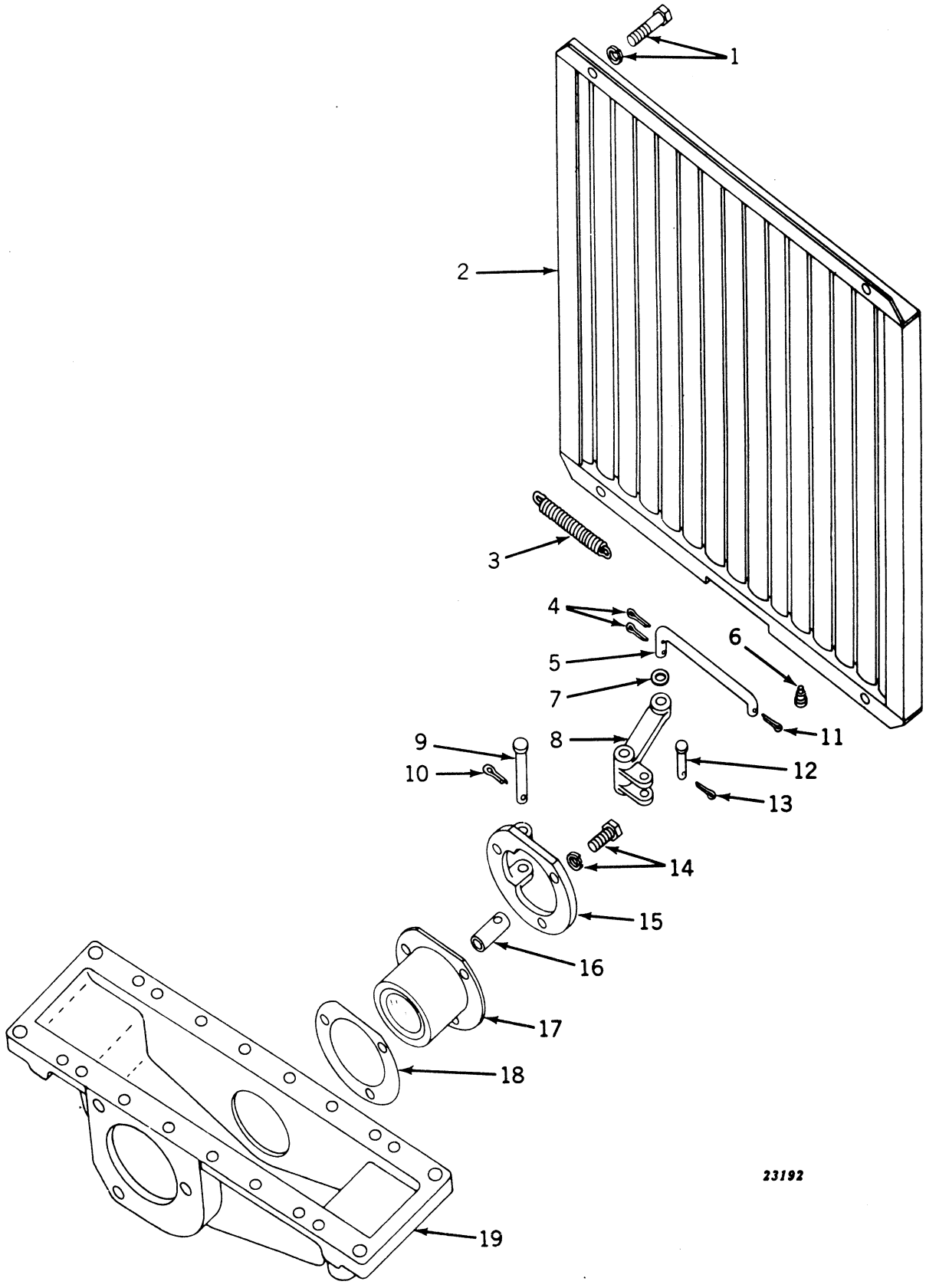

## SHUTTER, SHUTTER CONTROLS, AND THERMOSTAT—Continued
**(Serial No. 5000001-5016615)**

| Key | Part No. | Serial No. | Description |
|---|---|---|---|
| 1 | A 3232 R | ( -5016615) | Screw, Mach., 5/16" x 1/2" (4 used) (Packed 50 in a Pkg.) |
| | 12H 10 R | ( -5016615) | Washer, Lock, 5/16" (4 used) |
| 2 | AB 4508 R | ( -5016615) | Shutter, Complete |
| | AB 4625 R | ( -5016615) | Operating Bar (Sub. AB4508R) |
| 3 | B 3138 R | ( -5016615) | Spring, Shutter |
| 4 | 11H 3 R | ( -5016615) | Pin, Cotter, 1/16" x 1/2" (2 used) |
| 5 | A 4438 R | ( -5016615) | Link, Shutter Control |
| 6 | A 1855 R | ( -5016615) | Rivet, Operating Bar to Shutter (13 used) |
| 7 | 24H 132 R | ( -5016615) | Washer, 9/32" x 1/2" x 16 Gauge |
| 8 | A 4434 R | ( -5016615) | Crank, Thermostat Bell |
| 9 | A 4435 R | ( -5016615) | Pin |
| 10 | 11H 22 R | ( -5016615) | Pin, Cotter, 3/32" x 2" (Sub. for 11H18R) |
| 11 | 11H 3 R | ( -5016615) | Pin, Cotter, 1/16" x 1/2" |
| 12 | A 4437 R | ( -5016615) | Pin |
| 13 | 11H 3 R | ( -5016615) | Pin, Cotter, 1/16" x 1/2" |
| 14 | 19H 118 T | ( -5016615) | Screw, Cap, 5/16" x 1" (3 used) (Sub. for 19H112R) |
| | 12H 10 R | ( -5016615) | Washer, Lock, 5/16" (3 used) |
| 15 | A 4432 R | ( -5016615) | Cover, Thermostat |
| 16 | A 4436 R | ( -5016616) | Connector |
| 17 | AA 5155 R | ( -5016615) | Thermostat (Gasoline) |
| | AA 5385 R | ( -5016615) | Thermostat (All-Fuel) |
| | AA 5386 R | ( -5016615) | Thermostat (Non-Permanent Antifreeze) (Gasoline and All-Fuel) |
| 18 | A 4433 R | ( -5016615) | Gasket (Packed 2 in a Pkg.) |
| 19 | B 3072 R | ( -5016615) | Tank, Bottom |

## WATER PUMP
(Serial No. 5000001- )

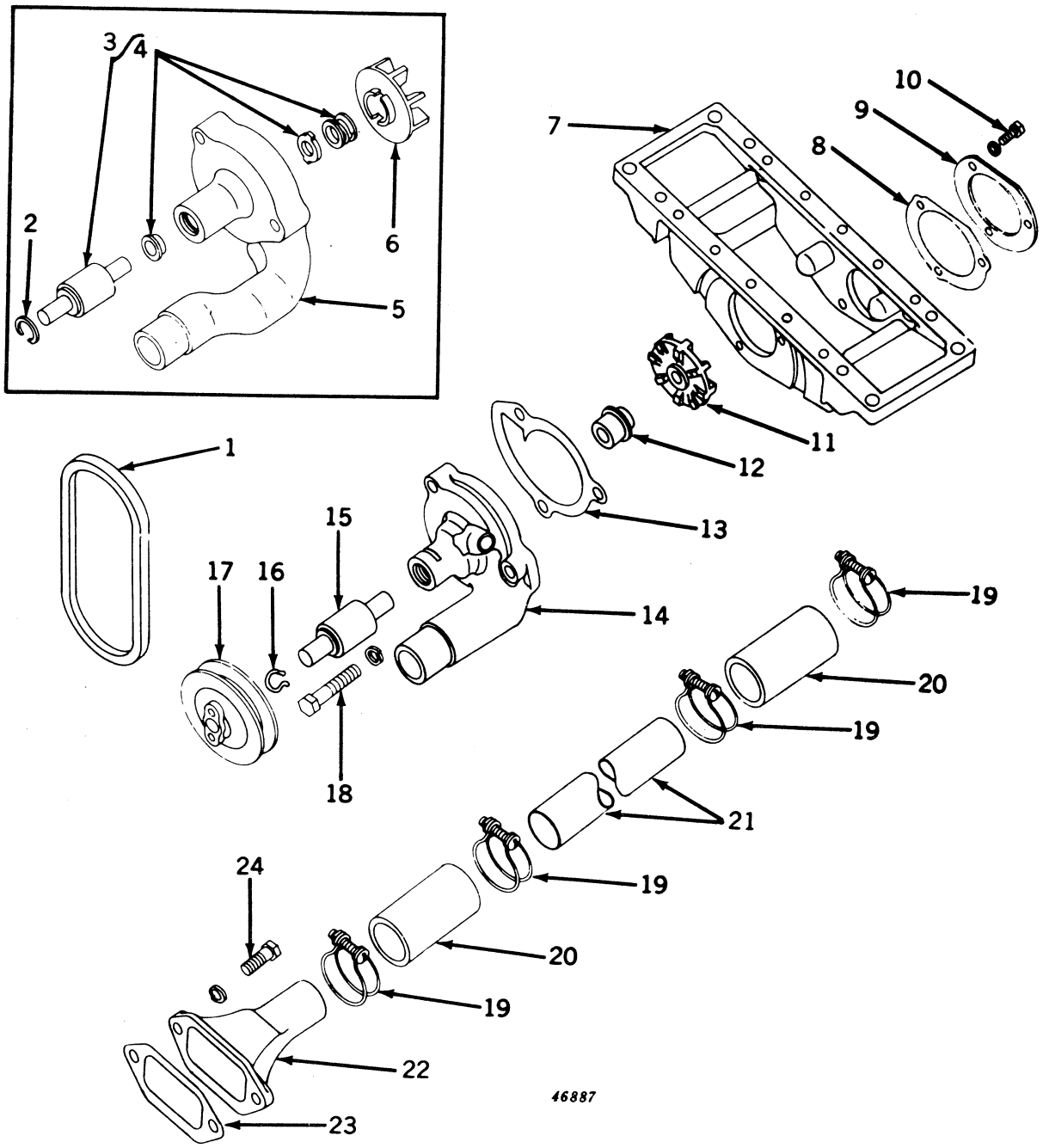

## WATER PUMP—Continued
(Serial No. 5000001- )

| Key | Part No. | Serial No. | Description |
|---|---|---|---|
| 1 | B 2893 R | ( -5016057) | Belt, Generator and Water Pump |
| | B 3288 R | (5016058- ) | Belt, Generator and Water Pump |
| 2 | A 4275 R | ( -5029199) | Snap Ring |
| 3 | AA 5579 R | ( -5029199) | Bearing, with Slinger, Washer, and Seal |
| 4 | AA 5580 R | ( -5029199) | Slinger, Washer, and Seal |
| 5 | AB 4951 R | ( -5029199) | Housing, B3407R (Sub. for B2886R) |
| 6 | B 2897 R | ( -5029199) | Impeller |
| 7 | B 3072 R | ( -5016615) | Tank, Bottom |
| | B 3300 R | (5016616-5029199) | Tank, Bottom (Sub. One B3072R, One A4433R, One F1318R, Three 19H1112H, and Three 12H10R) |
| | B 3411 R | (5029200- ) | Tank, Bottom |
| 8 | A 4433 R | (5016616- ) | Gasket (Packed 2 in a Pkg.) |
| 9 | F 1318 R | (5016616- ) | Cover |
| 10 | 19H 1112 H | (5016616- ) | Screw, Cap, 5/16" x 3/4" (3 used) (Sub. for 19H105R) |
| | 12H 10 R | (5016616- ) | Washer, Lock, 5/16" (3 used) |
| 11 | B 3408 R | (5029200- ) | Impeller |
| 12 | AF 2057 R | (5029200- ) | Seal, Water Pump |
| 13 | B 2887 R | ( - ) | Gasket (Packed 2 in a Pkg.) |
| 14 | B 3407 R | (5029200- ) | Housing |
| 15 | JD 8515 R | (5029200- ) | Bearing, Ball |
| 16 | R 1529 R | (5029200- ) | Retainer, Spring |
| 17 | A 4283 R | ( -5016059) | Pulley |
| | A 4898 R | (5016058- ) | Pulley |
| 18 | 19H 482 B | ( - ) | Screw, Cap, 1/2" x 2" (3 used) (Sub. for 19H475R) |
| | 12H 13 R | ( - ) | Washer, Lock, 1/2" (3 used) |
| 19 | B 78 R | ( - ) | Clamp, Hose (4 used) (Packed 2 in a Pkg.) |
| 20 | B 2891 R | ( - ) | Hose (2 used) |
| 21 | B 2890 R | ( - ) | Pipe, Lower Water |
| 22 | B 2889 R | ( - ) | Pipe, Water Inlet |
| 23 | B 1799 R | ( - ) | Gasket (Packed 5 in a Pkg.) |
| 24 | 19H 337 N | ( - ) | Screw, Cap, 7/16" x 1-1/4" (2 used) (Sub. for 19H332R) |
| | 12H 12 R | ( - ) | Washer, Lock, 7/16" (2 used) |

(Parts listed below are made up of some of the parts in this grouping.)

| | | |
|---|---|---|
| AB 4262 R | ( -5016057) | Water Pump Assembly—Consisting of Seal, Bearing with Slinger, Housing, Pulley, Impeller, Washer, and Snap Ring (Sub. One AB4951R Water Pump Assembly and One A4283R Pulley) |
| AB 4761 R | (5016058-5029199) | Water Pump Assembly—Consisting of Seal, Bearing with Slinger, Housing, Pulley, Impeller, Washer, and Snap Ring (Sub. A4898R and AB4951R) |
| AB 4881 R | (5029200- ) | Water Pump Assembly—Consisting of Seal, Bearing, Housing, Pulley, Impeller, and Retainer (Sub. AB4951R Water Pump Assembly and One A4898R Pulley) |

## FAN AND VENTILATOR PUMP
(Serial No. 5000001- )

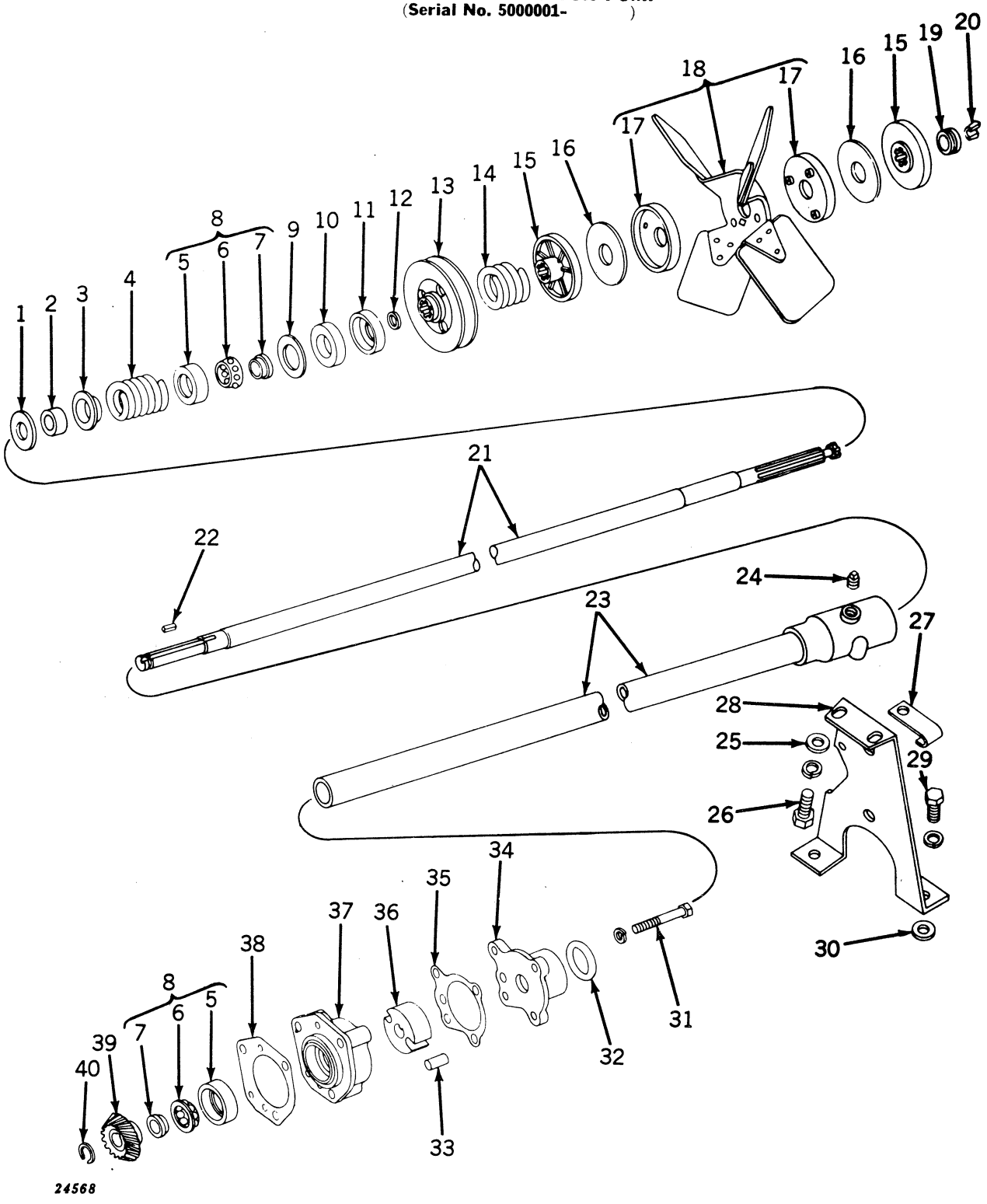

## FAN AND VENTILATOR PUMP—Continued
(Serial No. 5000001- )

| Key | Part No. | Serial No. | Description |
|---|---|---|---|
| 1 | D 1736 R | ( – ) | Washer (Packed 5 in a Pkg.) |
| 2 | B 2127 R | ( – ) | Packing |
| 3 | B 2121 R | ( – ) | Retainer |
| 4 | B 295 R | ( – ) | Spring |
| 5 | JD 7655 R | ( – ) | Cup (2 used) |
| 6 | JD 7657 R | ( – ) | Retainer, with Balls (2 used) |
| 7 | JD 7656 R | ( – ) | Cone (2 used) |
| 8 | JD 7654 R | ( – ) | Bearing, Complete (2 used) (Composed of JD7655R, JD7656R, and JD7657R) |
| 9 | 24H 847 R | ( – ) | Washer, 1-19/64" x 27/32" x 16 Gauge |
| 10 | B 297 R | ( – ) | Washer, Felt (Sub. for AB518R) |
| 11 | B 298 R | ( – ) | Retainer, Felt |
| 12 | A 3190 R | ( – ) | Packing, "O" Ring (Packed 5 in a Pkg.) |
| 13 | B 2874 R | ( –5016057) | Pulley, Generator Drive |
| | A 4895 R | (5016058– ) | Pulley, Generator Drive |
| 14 | H 1039 R | ( – ) | Spring |
| 15 | AB 3314 R | ( – ) | Disk, Friction (Pkg. of 2) (2 used) |
| 16 | D 399 R | ( – ) | Washer, Friction (2 used) (Packed 5 in a Pkg.) |
| 17 | A 4059 R | ( – ) | Cup, Fan Drive (2 used) |
| 18 | AB 3315 R | ( – ) | Fan, with Two A4059R Cups |
| 19 | A 3645 R | ( – ) | Keeper, Fan |
| 20 | D 1720 R | ( – ) | Lock (Half) (2 used) (Packed 2 in a Pkg.) |
| 21 | AB 3961 R | ( – ) | Shaft, Fan |
| 22 | D 403 R | ( – ) | Key |
| 23 | AB 3988 R | ( – ) | Housing, B290R, Fan Bearing, with Tube |
| 24 | 15H 254 R | ( – ) | Plug, Pipe, 1/4" |
| 25 | 24H 43 R | ( – ) | Washer, 7/16" x 1" x 20 Gauge |
| 26 | F 2272 R | ( – ) | Screw, Cap, 3/8" x 3/4" (2 used) |
| | 12H 11 R | ( – ) | Washer, Lock, 3/8" (2 used) |
| 27 | B 1986 R | ( – ) | Clip |
| 28 | B 3001 R | ( – ) | Support, Fan |
| 29 | 19H 337 N | ( – ) | Screw, Cap, 7/16" x 1-1/4" (2 used) (Sub. for 19H332R) |
| | 12H 12 R | ( – ) | Washer, Lock, 7/16" (2 used) |
| 30 | 24H 2 R | ( – ) | Washer, 29/64" x 13/16" x 26 Gauge (8 used) |
| 31 | 19H 1152 H | ( – ) | Screw, Cap, 3/8" x 2-3/4" (3 used) (Sub. for 19H272R) |
| | 12H 11 R | ( – ) | Washer, Lock, 3/8" (3 used) |
| 32 | B 293 R | ( – ) | Packing, "O" Ring (Packed 5 in a Pkg.) |
| 33 | R 820 R | ( – ) | Roller, Ventilator Pump Rotor (2 used) (Packed 2 in a Pkg.) |
| 34 | A 4188 R | ( – ) | Cover, Ventilator Pump |
| 35 | A 4190 R | ( – ) | Gasket (Packed 5 in a Pkg.) |
| 36 | A 4191 R | ( – ) | Rotor, Ventilator Pump |
| 37 | A 4189 R | ( – ) | Housing, Fan Shaft Rear Bearing |
| 38 | B 2642 R | ( – ) | Gasket (Thin) (Packed 5 in a Pkg.) |
| | B 2643 R | ( – ) | Gasket (Thick) (Sub. B2642R) |
| 39 | AB 3706 R | ( – ) | Gear and Pinion (One B289R and One B2637R) |
| 40 | A 369 R | ( – ) | Snap Ring (Packed 5 in a Pkg.) |

(Part listed below is an assembly of some of the parts in this grouping.)
AA 6240 R ( – ) Bearing Kit, Front Fan—Consisting of Packings, Retainers, Washers, and Bearings (Manual Steering only)

## GOVERNOR
(Serial No. 5000001- )

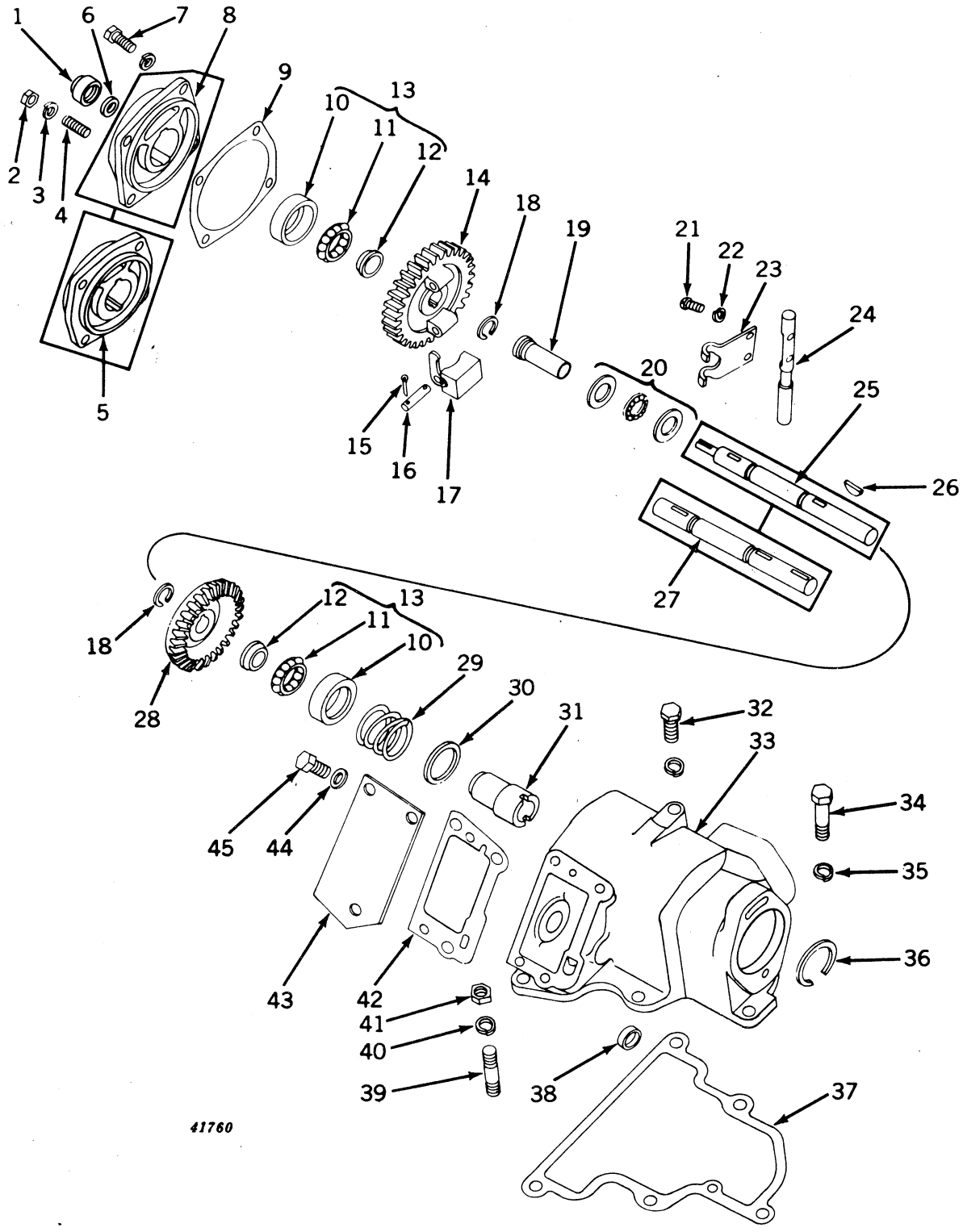

## GOVERNOR—Continued
(Serial No. 5000001- )

| Key | Part No. | Serial No. | Description |
|---|---|---|---|
| 1 | B 3362 R | (5020400- ) | Cap |
| 2 | 14H 255 R | ( -- ) | Nut, 3/8" |
| 3 | 12H 11 R | ( - ) | Washer, Lock, 3/8" |
| 4 | A 119 R | ( - ) | Stud, 3/8" x 1-3/8" |
| 5 | AB 4236 R | ( -5020399) | Housing, B283R, L.H. Governor Bearing (Sub. B3283R, B3285R, and B3362R) |
| 6 | B 3285 R | (5020400- ) | Washer, Copper |
| 7 | 19H 218 D | ( - ) | Screw, Cap, 3/8" x 1" (3 used) (Sub. for 19H211R) |
| | 12H 11 R | ( - ) | Washer, Lock, 3/8" (3 used) |
| 8 | B 3283 R | (5020400- ) | Housing, L.H. Governor Bearing |
| 9 | B 284 R | ( - ) | Gasket (Thick) (Packed 5 in a Pkg.) |
| | B 569 R | ( - ) | Gasket (Thin) (Packed 5 in a Pkg.) |
| 10 | JD 7655 R | ( - ) | Cup, Bearing (2 used) |
| 11 | JD 7657 R | ( - ) | Retainer, with Balls (2 used) |
| 12 | JD 7656 R | ( - ) | Cone, Bearing (2 used) |
| 13 | JD 7654 R | ( - ) | Bearing, Complete (2 used) |
| 14 | B 2632 R | ( - ) | Gear, Drive (Sub. for AB4146R) |
| 15 | 11H 22 R | ( - ) | Pin, Cotter, 3/32" x 1" (4 used) (Sub. for 11H18R) |
| 16 | F 3326 R | ( - ) | Pin, Weight (2 used) (Packed 10 in a Pkg.) (Sub. for C902R) |
| 17 | AB 295 R | ( - ) | Weight, Governor (2 used) (Packed 2 in a Pkg.) |
| 18 | A 369 R | ( - ) | Snap Ring (2 used) (Packed 5 in a Pkg.) |
| 19 | B 2633 R | ( - ) | Sleeve, Governor (Sub. for AB4235R) |
| 20 | C 998 R | ( - ) | Bearing, Thrust |
| 21 | 21H 597 R | ( - ) | Screw, Mach., 1/4" x 1/2" (2 used) |
| 22 | 12H 9 R | ( - ) | Washer, Lock, 1/4" (2 used) |
| 23 | H 401 R | ( - ) | Lever, Inside Governor |
| 24 | B 2634 R | ( - ) | Shaft, Lever |
| 25 | B 3284 R | (5020400- ) | Shaft, Governor |
| 26 | 26H 17 R | ( - ) | Key, Woodruff (3 used) |
| 27 | B 2631 R | ( -5020399) | Shaft, Governor (Sub. B3284R) |
| 28 | AB 3706 R | ( - ) | Gear and Pinion, B289R and B2637R |
| 29 | A 584 R | ( - ) | Spring |
| 30 | B 280 R | ( - ) | Washer, Bearing |
| 31 | A 2303 R | ( - ) | Flange, Drive (Sub. for AA5546R) |
| 32 | 19H 337 N | ( - ) | Screw, Cap, 7/16" x 1-1/4" (2 used) (Sub. for 19H332R) |
| | 12H 12 R | ( - ) | Washer, Lock, 7/16" (2 used) |
| 33 | B 3000 R | ( - ) | Case, Governor |
| 34 | B 1693 R | ( - ) | Screw, Shoulder (2 used) |
| 35 | 12H 13 R | ( - ) | Washer, Lock, 1/2" (2 used) |
| 36 | B 276 R | ( - ) | Snap Ring |
| 37 | B 2655 R | ( - ) | Gasket (Packed 5 in a Pkg.) |
| 38 | A 3910 R | ( - ) | Plug (2 used) (Tractors without Powr-Trol) |
| 39 | F 393 R | ( - ) | Stud, 7/16" x 1-7/16" |
| 40 | 12H 12 R | ( - ) | Washer, Lock, 7/16" |
| 41 | 14H 257 R | ( - ) | Nut, 7/16" |
| 42 | A 4479 R | ( - ) | Gasket (Packed 5 in a Pkg.) |
| 43 | A 4053 R | ( - ) | Cover (Tractors without Powr-Trol) |
| 44 | A 3105 R | ( - ) | Washer (Copper) (3 used) (Packed 5 in a Pkg.) (Tractors without Powr-Trol) |
| 45 | F 2275 R | ( - ) | Screw, Cap, 1/2" x 3/4" (3 used) (Tractors without Powr-Trol) |

(Part listed below is not illustrated.)

| | | | |
|---|---|---|---|
| | AB 4678 R | ( - ) | Gasket Set, Governor Overhaul (See Page 70-8 for Illustrations and Contents) |

## CHOKE ROD AND THROTTLE CONTROLS
(Serial No. 5000001- )

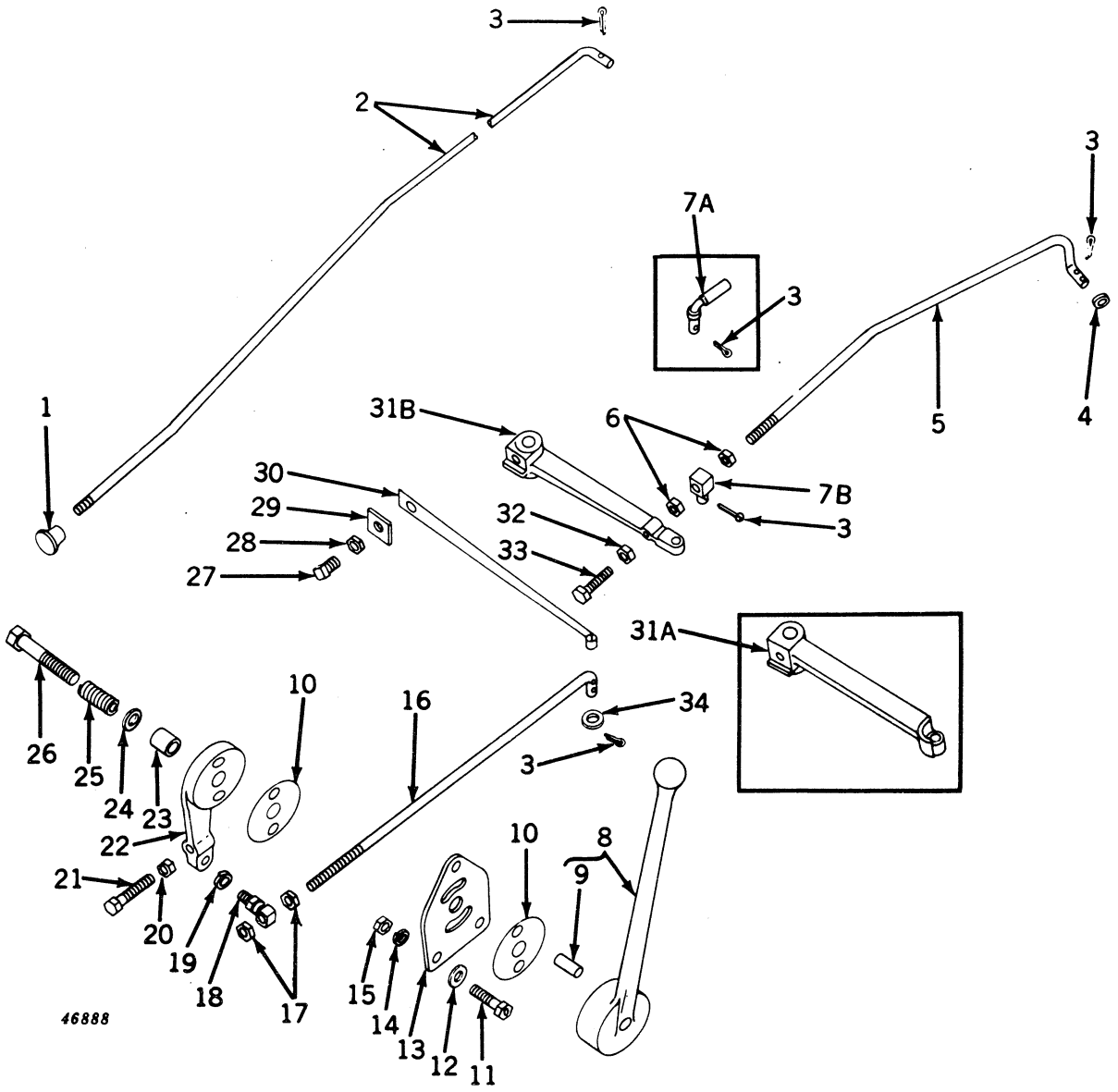

## CHOKE ROD AND THROTTLE CONTROLS—Continued
**(Serial No. 5000001- )**

| Key | Part No. | Serial No. | Description |
|---|---|---|---|
| 1 | B 1951 R | ( - ) | Knob, Choke |
| 2 | B 3161 R | ( -5015950) | Rod, Choke (All-Fuel) |
| | B 3218 R | (5015951- ) | Rod, Choke (All Fuel) |
| | B 3218 R | ( - ) | Rod, Choke (Gasoline) |
| | B 3953 R | (5030600- ) | Rod, Fuel Control Choke (LP-Gas) (Sub. for B3486R) |
| 3 | 11H 22 R | ( - ) | Pin, Cotter, 3.32" x 1" (6 used) (Sub. for 11H18R) |
| 4 | 24H 132 R | ( -5015950) | Washer, 9/32" x 1/2" x 16 Gauge (All-Fuel) |
| 5 | B 2544 R | ( -5015950) | Rod, Throttle (All-Fuel) |
| | B 3217 R | (5015951-5020083) | Rod, Throttle (All Fuel) |
| | B 3217 R | ( -5020083) | Rod, Throttle (Gasoline) |
| | B 3321 R | (5020084- ) | Rod, Throttle |
| 6 | 14H 338 R | ( -5020083) | Nut, Jam, 1/4" |
| | 14H 338 R | (5020084- ) | Nut, Jam, 1/4" (2 used) |
| 7A | D 2887 R | ( -5020083) | End, Throttle Rod |
| 7B | A 4948 R | (5020084- ) | Swivel, Throttle Rod |
| 8 | AF 2247 R | ( - ) | Lever, Speed Control, with Pins (Sub. for AA5301R) |
| 9 | R 1800 R | ( -5016551) | Pin, Dowel (2 used) (Sub. for A4681R) |
| | A 4879 R | (5016552- ) | Pin, Dowel (3/8" x 1", Plated) (2 used) |
| 10 | A 4601 R | ( -5017402) | Washer, Friction (2 used) (Sub. AA6077R) |
| 11 | H 1109 R | ( -5016551) | Screw, Mach., 5/16" x 1-3/8" (3 used) (Packed 50 in a Pkg.) |
| | 19H 118 T | (5016552- ) | Screw, Cap, 5/16" x 1" (3 used) (Sub. for 19H112R) |
| 12 | 24H 143 R | ( - ) | Washer, 21/64" x 3/4" x 16 Gauge (3 used) |
| 13 | B 3153 R | ( -5016551) | Plate, Speed Control (Sub. One AA6077R and Three 19H1118N) |
| | A 4880 R | (5016552-5017402) | Plate, Speed Control (Sub. AA6077R) |
| | AA 6077 R | (5017403- ) | Plate, Speed Control, with Facings (Packed 2 in a Pkg.) |
| 14 | 12H 10 R | ( - ) | Washer, Lock, 5/16" (3 used) |
| 15 | 14H 785 R | ( -5016551) | Nut, 5/16" (3 used) |
| 16 | B 3984 R | ( - ) | Rod, Speed Control (Sub. for B3160R and B3461R) |
| 17 | 14H 338 R | ( - ) | Nut, Jam, 1/4" (2 used) |
| 18 | AA 5302 R | ( - ) | Joint, Ball Speed Control Rod |
| 19 | 12H 9 R | ( - ) | Washer, Lock, 1/4" |
| 20 | 14H 785 R | ( - ) | Nut, 5/16" |
| 21 | F 2270 R | ( - ) | Screw, Cap, 5/16" x 1-1/4" (Special) |
| 22 | A 4603 R | ( -5016551) | Arm, Speed Control (Sub. One A4878R, One AA6077R, and Three 19H1118N) |
| | A 4878 R | (5016552- ) | Arm, Speed Control |
| 23 | A 3699 R | ( - ) | Spacer |
| 24 | 24H 169 R | ( - ) | Washer, 15/32" x 15/16" x 16 Gauge |
| 25 | K 2172 R | ( - ) | Spring |
| 26 | 19H 1242 M | ( - ) | Screw, Cap, 7/16" x 2-3/4" |
| 27 | 22H 87 R | ( - ) | Screw, Set |
| 28 | 14H 255 R | ( - ) | Nut, 3/8" |
| 29 | B 274 R | ( - ) | Clamp |
| 30 | B 2636 R | ( - ) | Spring, Speed Change |
| 31A | B 2635 R | ( -5029199) | Arm, Governor (Except LP-Gas) (Sub. B3406R, F2269R, 14H251R) |
| 31B | B 3406 R | (5024000-5029199) | Arm, Governor (LP-Gas) |
| | B 3406 R | (5029200- ) | Arm, Governor |
| 32 | 14H 251 R | (5024000- ) | Nut, 1/4" |
| 33 | F 2269 R | (5024000- ) | Screw, Cap, 1/4" x 1-1/2" (Special) (Sub. for 19H1281R) |
| 34 | 24H 132 R | ( - ) | Washer |

## FUEL TANK (GASOLINE)
(Serial No. 5000001- )

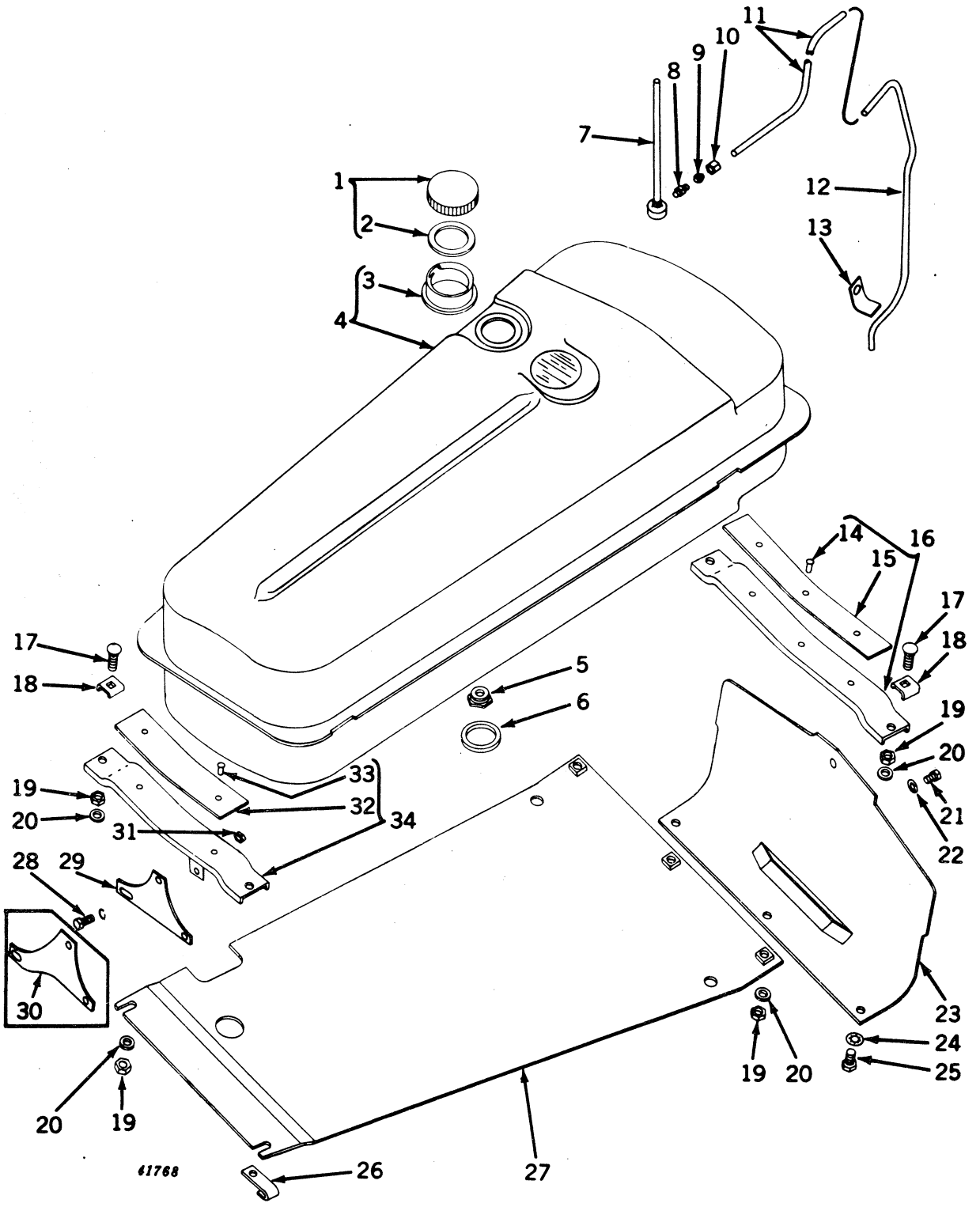

## FUEL TANK (GASOLINE)—Continued
(Serial No. 5000001- )

| Key | Part No. | Serial No. | Description |
|---|---|---|---|
| 1 | AD 709 R | ( -5018449) | Cap, Filler |
| | AF 2914 R | (5018450- ) | Cap, Filler (Sub. for AA5795R) |
| 2 | D 1851 R | ( -5018449) | Gasket (Packed 5 in a Pkg.) |
| | A 5221 R | (5018450- ) | Gasket (Use with AA5795R) |
| | F 3083 R | (5018450- ) | Gasket (Packed 5 in a Pkg.) (Use with AF2914R) |
| 3 | D 1837 R | ( -5015356) | Neck, Filler (Sub. A4872R) |
| | A 4872 R | (5015357-5018449) | Neck, Filler |
| | B 3315 R | (5018450- ) | Neck, Filler |
| 4 | AB 4475 R | ( -5018449) | Tank, Gasoline, with Filler Neck |
| | AB 5030 R | (5018450- ) | Tank, Gasoline, with Filler Neck (Sub. for AB4771R) |
| 5 | B 2509 R | ( - ) | Bushing, Outlet |
| 6 | D 996 R | ( - ) | Washer, Felt |
| 7 | AB 4772 R | (5018450- ) | Tube, Vent, with Elbow |
| 8 | A 2502 R | (5018450- ) | Connector, Vent Drain Tube |
| 9 | A 2499 R | (5018450- ) | Sleeve, Vent Drain Tube (Packed 5 in a Pkg.) |
| 10 | A 2500 R | (5018450- ) | Nut, Compression Type, Vent Drain Tube (Packed 5 in a Pkg.) |
| 11 | A 5161 R | (5018450- ) | Tube, Vent Drain |
| 12 | B 3322 R | (5018450- ) | Tube, Vent Drain Extension |
| 13 | A 5172 R | (5018450- ) | Clip |
| 14 | D 1520 R | ( - ) | Rivet (3 used) (Packed 100 in a Pkg.) |
| 15 | A 2406 R | ( - ) | Cushion |
| 16 | AB 4476 R | ( - ) | Support, Front, with Cushion |
| 17 | 2H 337 R | ( - ) | Bolt, Cge., 3/8" x 1-1/2" (4 used) (Order Two P338R, Pkg. of 50) |
| 18 | B 1441 R | ( - ) | Clip (4 used) |
| 19 | 14H 255 R | ( - ) | Nut, 3/8" (8 used) |
| 20 | 24H 154 R | ( - ) | Washer, 25/64" x 7/8" x 16 Gauge (8 used) |
| 21 | A 3232 R | ( - ) | Screw, Mach., 5/16" x 1/2" (Packed 50 in a Pkg.) |
| 22 | 12H 291 R | ( - ) | Washer, Lock (Shake-Proof) |
| 23 | B 3043 R | ( - ) | Shield, Heat, Front |
| 24 | 12H 291 R | ( - ) | Washer, Lock (Shake-Proof) (3 used) |
| 25 | A 3232 R | ( - ) | Screw, Mach., 5/16" x 1/2" (3 used) (Packed 50 in a Pkg.) |
| 26 | B 1986 R | ( - ) | Clip |
| 27 | AB 4485 R | ( - ) | Shield, Heat, Lower, with Nuts |
| 28 | 19H 1112 H | (5016578- ) | Screw, Cap, 5/16" x 3/4" |
| | 12H 10 R | (5016578- ) | Washer, Lock, 5/16" |
| 29 | B 3325 R | (5016578- ) | Bracket, Support (Manual Steering) |
| 30 | B 3384 R | (5020400- ) | Bracket, Support (Power Steering) |
| 31 | 14H 785 R | (5016578- ) | Nut, 5/16" |
| 32 | B 1820 R | ( - ) | Cushion |
| 33 | D 1520 R | ( - ) | Rivet (2 used) (Packed 100 in a Pkg.) |
| 34 | AB 4478 R | ( -5016577) | Support, Rear, with Cushion (Sub. AB4778R, B3325R, 19H1112H, 14H253R, and 12H10R) |
| | AB 4778 R | (5016578- ) | Support, Rear, with Cushion |

## FUEL FILTER, SHUT-OFF, AND FUEL LINE
(Gasoline) (Serial No. 5000001-5016132)

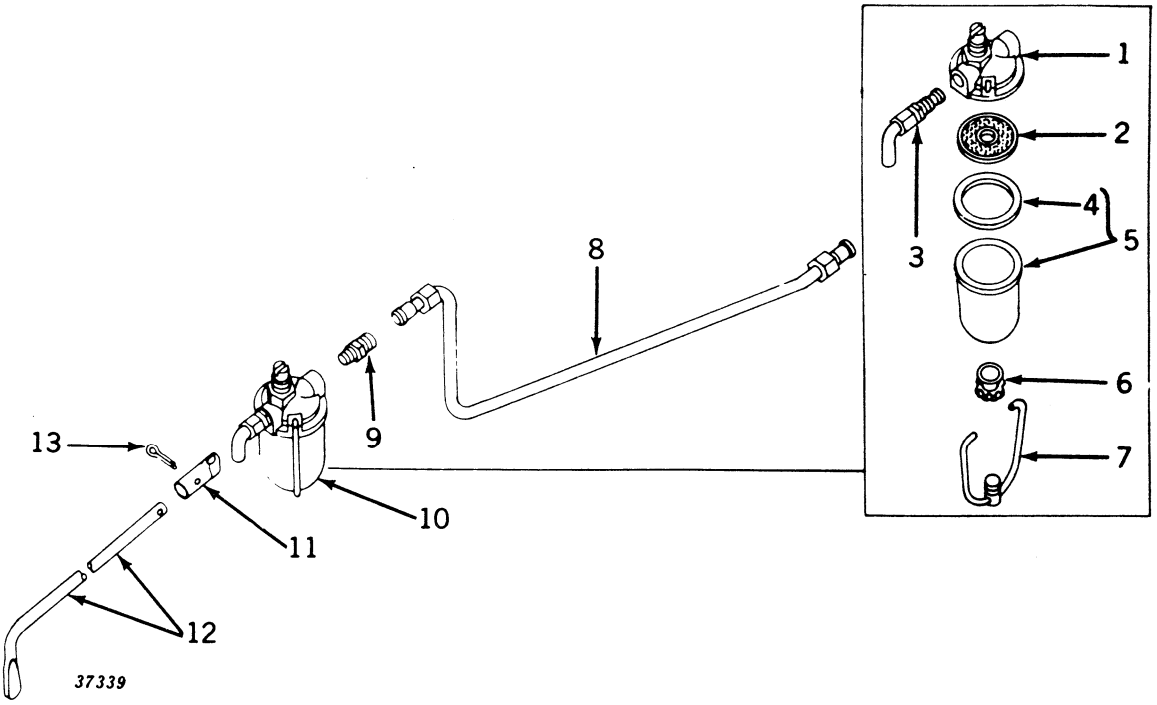


| Key | Part No. | Serial No. | Description |
|---|---|---|---|
| 1 | AA 4296 R | ( –5016132) | Body, Filter |
| 2 | AA 4297 R | ( –5016132) | Screen (Packed 5 in a Pkg.) |
| 3 | AA 4298 R | ( –5016132) | Valve |
| 4 | C 1778 R | ( –5016132) | Gasket (Packed 25 in a Pkg.) |
| 5 | AA 4507 R | ( –5016132) | Bowl and Gasket (Heat Resistant Bowl) |
| 6 | AA 518 R | ( –5016132) | Nut, with Washer (Packed 10 in a Pkg.) |
| 7 | AA 517 R | ( –5016132) | Bail (Packed 10 in a Pkg.) |
| 8 | AB 4640 R | ( –5016132) | Pipe, Gasoline (Sub. for AB4490R) |
| 9 | A 258 R | ( –5016132) | Connector |
| 10 | AA 4331 R | ( –5016132) | Filter, Fuel |
| 11 | B 3272 R | (5010457–5016132) | Coupling |
| 12 | B 3271 R | (5010457–5016132) | Rod, Fuel Shut-Off |
| 13 | 11H 39 R | (5010457–5016132) | Pin, Cotter, 1/8" x 3/4" |

## FUEL FILTERS AND FUEL PIPES (ALL-FUEL)

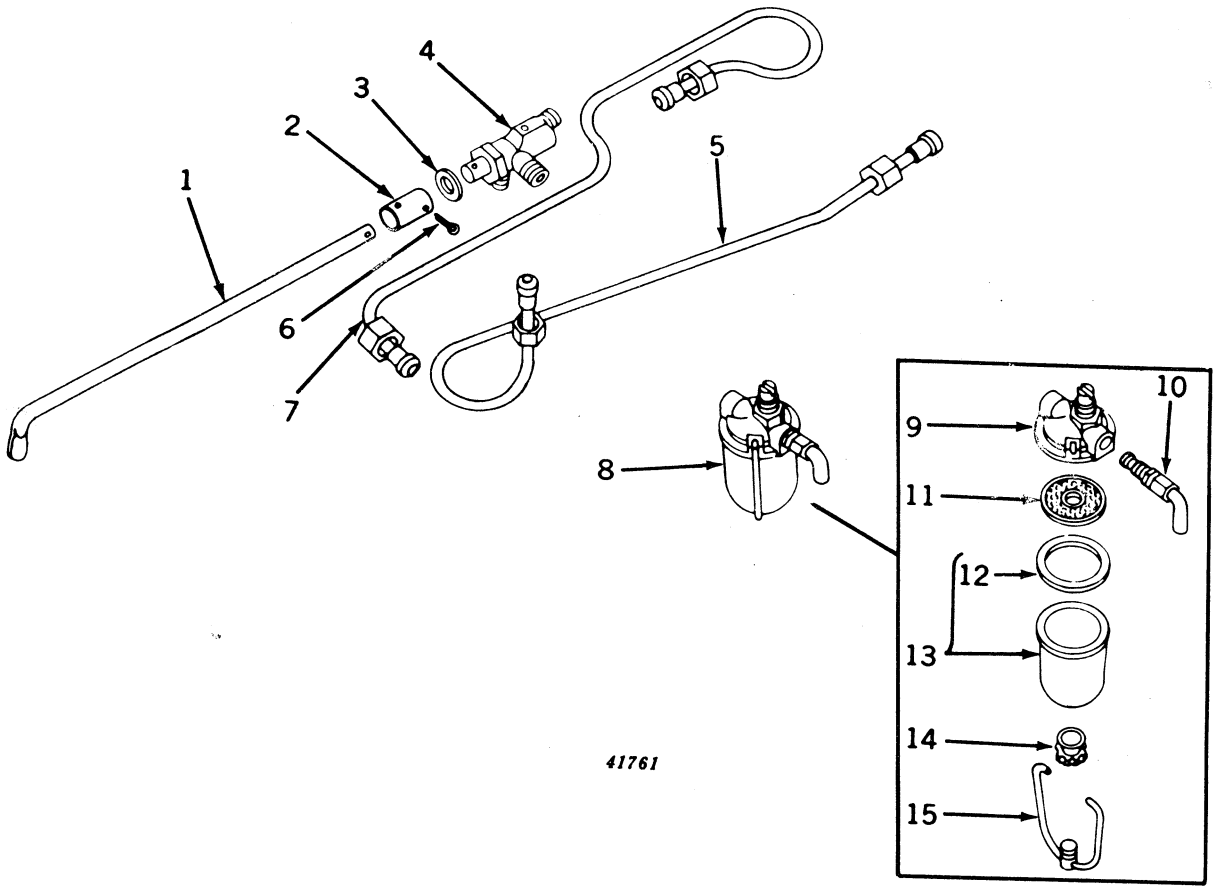


| Key | Part No. | Serial No. | Description |
|---|---|---|---|
| 1 | B 3049 R | ( – ) | Rod, Fuel Control |
| 2 | A 2230 R | ( – ) | Link, Fuel Control Rod |
| 3 | D 2122 R | ( – ) | Gasket (Packed 2 in a Pkg.) |
| 4 | AA 5333 R | ( – ) | Cock, Three-Way |
| 5 | AB 4489 R | ( – ) | Pipe, Fuel |
| 6 | AB 4488 R | ( – ) | Pipe, Gasoline |
| 7 | 11H 41 R | ( – ) | Pin, Cotter, 1/8" x 1" (2 used) |
| 8 | AA 5334 R | ( – ) | Filter, Fuel |
| 9 | AA 5309 R | ( – ) | Body, Filter |
| 10 | AA 4298 R | ( – ) | Valve, Shut-Off |
| 11 | AA 4297 R | ( – ) | Screen, Filter (Packed 5 in a Pkg.) |
| 12 | AA 4507 R | ( – ) | Bowl and Gasket (Heat-Resistant Bowl) |
| 13 | C 1778 R | ( – ) | Gasket (Packed 25 in a Pkg.) |
| 14 | AA 518 R | ( – ) | Nut, with Washer (Packed 10 in a Pkg.) |
| 15 | AA 517 R | ( – ) | Bail (Packed 10 in a Pkg.) |

## FUEL FILTER WITH AUTOMATIC SHUT-OFF
(Gasoline) (Serial No. 5016133- )

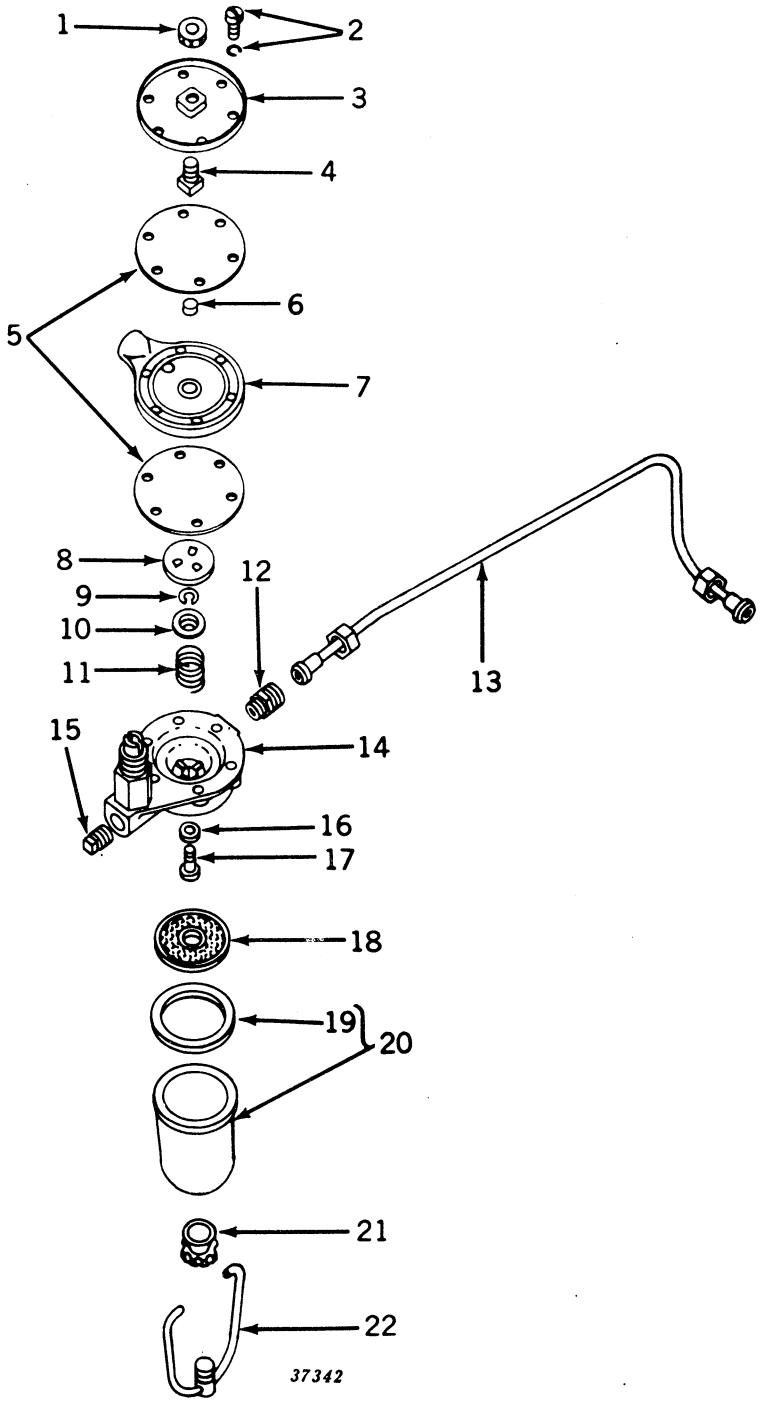

## FUEL FILTER WITH AUTOMATIC SHUT-OFF—Continued
(Gasoline) (Serial No. 5016133- )

| Key | Part No. | Serial No. | Description |
|---|---|---|---|
| 1 | A 4987 R | (5016133– ) | Nut, Primer Bolt (Packed 5 in a Pkg.) |
| 2 | 21H 976 R | (5016133– ) | Screw, Mach. (6 used) |
| | A 766 R | (5016133– ) | Washer, Lock (6 used) |
| 3 | A 4985 R | (5016133– ) | Cover, Fuel Filter |
| 4 | A 4986 R | (5016133– ) | Bolt, Primer (Packed 5 in a Pkg.) |
| 5 | A 4983 R | (5016133– ) | Diaphragm (2 used) (Packed 5 in a Pkg.) |
| 6 | A 4988 R | (5016133– ) | Pin, Valve (Packed 2 in a Pkg.) |
| 7 | A 4984 R | (5016133– ) | Spacer, Diaphragm (On 5016133-5017222 Also Furnish One A4988R) |
| 8 | A 4982 R | (5016133– ) | Plate, Pressure |
| 9 | A 4981 R | (5016133– ) | Ring, Retaining, Valve Spring (Packed 2 in a Pkg.) |
| 10 | A 4980 R | (5016133– ) | Retainer, Valve Spring (Packed 2 in a Pkg.) |
| 11 | A 4979 R | (5016133– ) | Spring Valve |
| 12 | A 258 R | (5016133– ) | Connector |
| 13 | AB 4747 R | (5016133– ) | Pipe, Gasoline |
| 14 | AA 6223 R | (5016133– ) | Body (Sub. for A4976R) |
| 15 | 15H 253 R | (5016133– ) | Plug, Pipe |
| 16 | A 4978 R | (5016133– ) | Washer, Valve Seat, Rubber (Packed 2 in a Pkg.) |
| 17 | A 4977 R | (5016133– ) | Valve (Packed 2 in a Pkg.) |
| 18 | AA 4297 R | (5016133– ) | Screen (Packed 5 in a Pkg.) |
| 19 | C 1778 R | (5016133– ) | Gasket (Packed 25 in a Pkg.) |
| 20 | AA 4507 R | (5016133– ) | Bowl and Gasket |
| 21 | AA 518 R | (5016133– ) | Nut, Adjusting (Packed 10 in a Pkg.) |
| 22 | AA 517 R | (5016133– ) | Bail (Packed 10 in a Pkg.) |
| . . . | **AA 5776 R** | ( –5016132) | **Filter, Fuel, with Automatic Shut-Off (ATTACHMENT) Consisting of:** |
| | | | A 5162 R Tube, Fuel Filter to Oil Gauge |
| | | | A 5163 R Tube, Fuel Filter to Main Case |
| | | | AA 4936 R Elbow, Oil Pressure Gauge Tube to Gauge |
| | | | AA 4937 R Connector, Fuel Filter Oil Tube to Main Case |
| | | | AA 5777 R Filter, Fuel, with Automatic Shut-Off (See Above for Parts) |
| | | | AA 5778 R Tee, Fuel Filter |

(Part listed below is an assembly of most of the parts in this grouping.)

AA 5777 R (5016133– ) Filter, Fuel, with Automatic Shut-Off

## FUEL TANK AND FILTER (ALL-FUEL)
(Serial No. 5000001- )

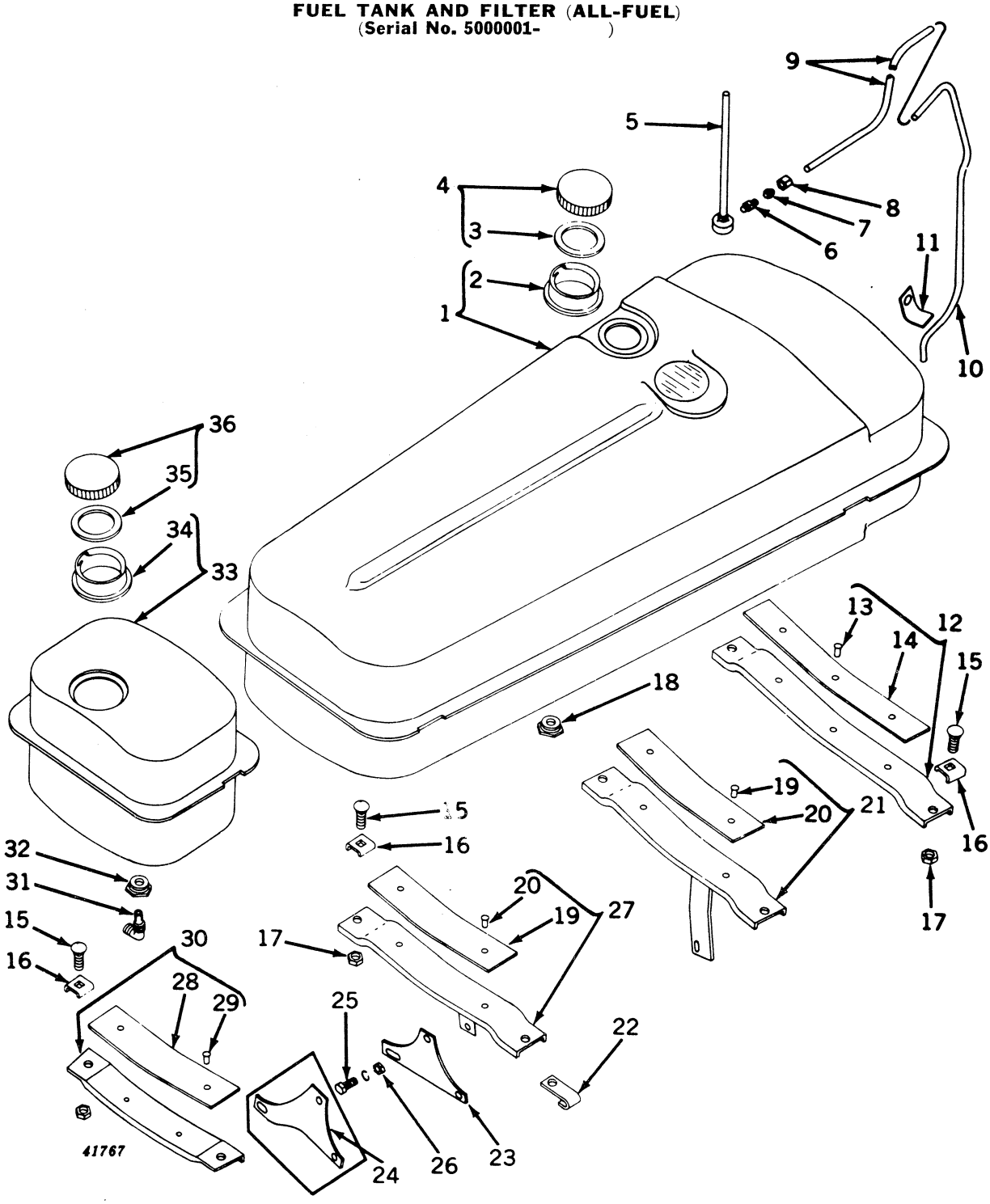

## FUEL TANK AND FILTER (ALL-FUEL)—Continued
(Serial No. 5000001- )

| Key | Part No. | Serial No. | Description |
|---|---|---|---|
| 1 | AB 4475 R | ( -5018449) | Tank, Fuel |
| | AB 5030 R | (5018450- ) | Tank, Fuel (Sub. for AB4771R) |
| 2 | D 1837 R | ( -5015356) | Neck, Fuel Filler (Sub. A4872R) |
| | A 4872 R | (5015357-5018449) | Neck, Fuel Filler |
| | B 3315 R | (5018450- ) | Neck, Filler |
| 3 | D 1851 R | ( -5018449) | Gasket (Packed 5 in a Pkg.) |
| | A 5221 R | (5018450- ) | Gasket, Fuel Filler Cap |
| 4 | AD 709 R | ( -5018449) | Cap, Fuel Filler |
| | AF 2914 R | (5018450- ) | Cap, Fuel Filler (Sub. for AA5795R) |
| 5 | AB 4772 R | (5018450- ) | Tube, Fuel Vent, with Elbow |
| 6 | A 2502 R | (5018450- ) | Connector, Tank Vent Drain Tube |
| 7 | A 2499 R | (5018450- ) | Sleeve, Tank Vent Drain Tube (Packed 5 in a Pkg.) |
| 8 | A 2500 R | (5018450- ) | Nut, Compression Type, Tank Vent Drain Tube (Packed 5 in a Pkg.) |
| 9 | A 5161 R | (5018450- ) | Tube, Tank Vent Drain |
| 10 | B 3322 R | (5018450- ) | Tube, Tank Vent Drain Extension |
| 11 | A 5172 R | (5018450- ) | Clip |
| 12 | AB 4476 R | ( - ) | Support, Front, with Cushion |
| 13 | D 1520 R | ( - ) | Rivet (3 used) (Packed 100 in a Pkg.) |
| 14 | A 2406 R | ( - ) | Cushion, Front Support |
| 15 | 2H 321 D | ( - ) | Bolt, Cge., 3/8" x 1-1/2" (6 used) |
| 16 | B 1441 R | ( - ) | Clip (6 used) |
| 17 | 14H 255 R | ( - ) | Nut, 3/8" (6 used) |
| 18 | B 2509 R | ( - ) | Bushing, Outlet |
| 19 | D 1520 R | ( - ) | Rivet, Brass Tubular (2 used) (Packed 100 in a Pkg.) |
| 20 | B 1820 R | ( - ) | Cushion |
| 21 | AB 4477 R | ( -5019425) | Support, Rear, with Cushion (Sub. AB4778R, B3325R, 19H1112H, 14H253R and 12H10R) |
| 22 | B 1986 R | ( - ) | Clip |
| 23 | B 3325 R | (5016578- ) | Bracket, Support (Manual Steering) |
| 24 | B 3384 R | (5020400- ) | Bracket, Support (Power Steering) |
| 25 | 19H 1112 H | (5019426- ) | Screw, Cap, 5/16" x 3/4" |
| | 12H 10 R | (5019426- ) | Washer, Lock, 5/16" |
| 26 | 14H 785 R | (5019426- ) | Nut, 5/16" |
| 27 | AB 4778 R | (5019426- ) | Support, Rear, with Cushion (Sub. AB4778R, B3325R and 19H1112H) |
| 28 | B 1820 R | ( - ) | Cushion |
| 29 | D 1520 R | ( - ) | Rivet (2 used) (Packed 100 in a Pkg.) |
| 30 | AB 3559 R | ( - ) | Support, Gasoline Tank, with Cushion |
| 31 | A 2956 R | ( - ) | Elbow, Gasoline Strainer |
| 32 | A 3068 R | ( - ) | Bushing |
| 33 | AB 4954 R | ( - ) | Tank, Gasoline (Sub. for AB2873R) |
| 34 | B 1539 R | ( -5015606) | Neck, Gasoline Filler |
| | D 3043 R | (5015607- ) | Neck, Gasoline Filler |
| 35 | D 1851 R | ( - ) | Gasket (Packed 5 in a Pkg.) |
| 36 | AD 709 R | ( - ) | Cap, Filler |

## AIR CLEANER AND CARBURETOR INTAKE (DUAL INDUCTION CARBURETION)
(Serial No. 5000001- )

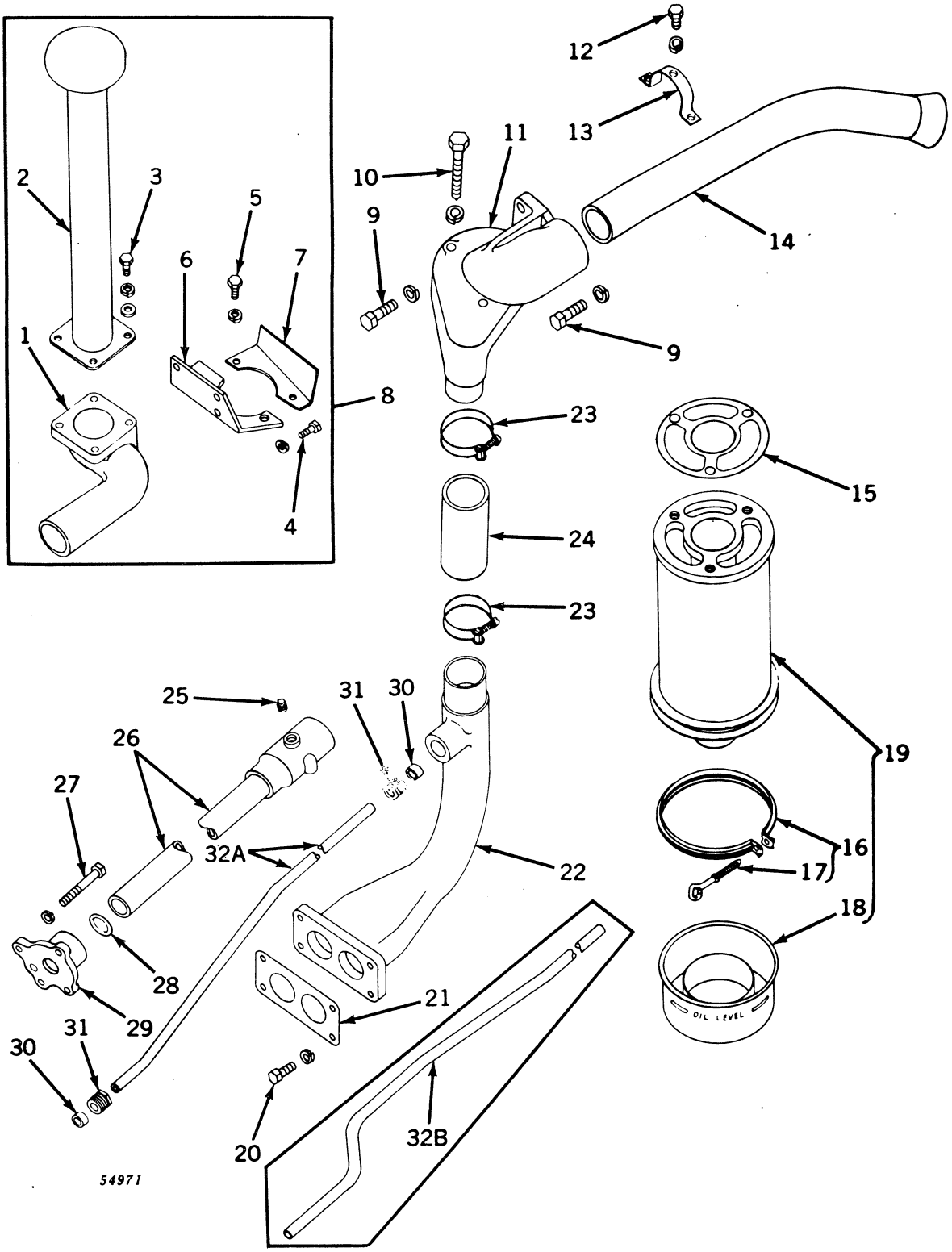

## AIR CLEANER AND CARBURETOR INTAKE (DUAL INDUCTION CARBURETION)—Continued
(Serial No. 5000001- )

| Key | Part No. | Serial No. | Description |
|---|---|---|---|
| 1 | B 3363 R | (5016616– ) | Bracket, Air Stack |
| 2 | AF 2281 R | (5016616– ) | Stack, Air |
| 3 | 19H 99 R | (5016616– ) | Screw, Cap, 5/16" x 9/16" (4 used) |
| | 12H 10 R | (5016616– ) | Washer, Lock, 5/16" (4 used) |
| 4 | 19H 99 R | (5016616– ) | Screw, Cap, 5/16" x 9/16" (3 used) |
| | 12H 10 R | (5016616– ) | Washer, Lock, 5/16" (3 used) |
| 5 | 19H 1112 H | (5016616– ) | Screw, Cap, 5/16" x 3/4" (2 used) |
| | 12H 10 R | (5016616– ) | Washer, Lock, 5/16" (2 used) |
| 6 | B 3364 R | (5016616– ) | Support, Bracket |
| 7 | B 3365 R | (5016616– ) | Baffle, Grille |
| 8 | **AB 4830 R** | (5016616– ) | **Stack, Air, with Bracket, Support, and Baffle (ATTACHMENT)** |
| 9 | 19H 462 N | ( – ) | Screw, Cap, 1/2" x 1-1/2" (2 used) (Sub. for 19H457R) |
| | 12H 13 R | ( – ) | Washer, Lock, 1/2" (2 used) |
| 10 | 19H 269 R | ( – ) | Screw, Cap, 3/8" x 2-1/2" (2 used) |
| | 12H 11 R | ( – ) | Washer, Lock, 3/8" (2 used) |
| 11 | AR 20524 R | ( – ) | Bracket, Air Cleaner (Sub. for B3051R) |
| 12 | 19H 1112 H | ( – ) | Screw, Cap, 5/16" x 3/4" (2 used) (Sub. for 19H105R) |
| | 12H 10 R | ( – ) | Washer, Lock, 5/16" (2 used) |
| 13 | A 4371 R | ( – ) | Strap, Air Intake |
| 14 | B 3052 R | ( – ) | Pipe, Air Intake |
| 15 | R 20029 R | ( – ) | Gasket (Packed 2 in a Pkg.) (Sub. for B80R) |
| 16 | AB 1629 R | ( – ) | Clamp, with Bolt |
| 17 | B 1569 R | ( – ) | Bolt, Clamp |
| 18 | AB 3477 R | ( – ) | Cup, Oil |
| 19 | AB 4233 R | ( – ) | Air Cleaner, with Cup and Clamp |
| 20 | 19H 218 D | ( – ) | Screw, Cap, 3/8" x 1" (2 used) (Sub. for 19H211R) |
| | 12H 11 R | ( – ) | Washer, Lock, 3/8" (2 used) |
| 21 | A 4634 R | ( – ) | Gasket (Packed 5 in a Pkg.) |
| 22 | B 3343 R | ( – ) | Intake, Carburetor (Sub. for B3210R) |
| 23 | B 2373 R | ( – ) | Clamp (2 used) (Packed 2 in a Pkg.) |
| 24 | B 2372 R | ( – ) | Hose |
| 25 | 15H 254 R | ( – ) | Plug, Pipe, 1/4" |
| 26 | AB 3988 R | ( – ) | Housing, B290R, with Support Tube |
| 27 | 19H 1152 H | ( – ) | Screw, Cap, 3/8" x 2-3/4" (3 used) (Sub. for 19H272R) |
| | 12H 11 R | ( – ) | Washer, Lock, 3/8" (3 used) |
| 28 | B 293 R | ( – ) | Packing, "O" Ring |
| 29 | A 4188 R | ( – ) | Cover, Ventilator Pump |
| 30 | B 60 R | ( – ) | Washer, Packing (2 used) (Packed 10 in a Pkg.) |
| 31 | C 1705 R | ( – ) | Gland, Packing (2 used) |
| 32A | B 3054 R | ( – ) | Pipe, Ventilator Inlet |
| 32B | B 3493 R | ( –5032539) | Pipe, Ventilator Inlet (Special for Tractor with Power Steering) |

## AIR CLEANER AND CARBURETOR INTAKE (SINGLE INDUCTION CARBURETION)
(Serial No. 5000001-5015950)

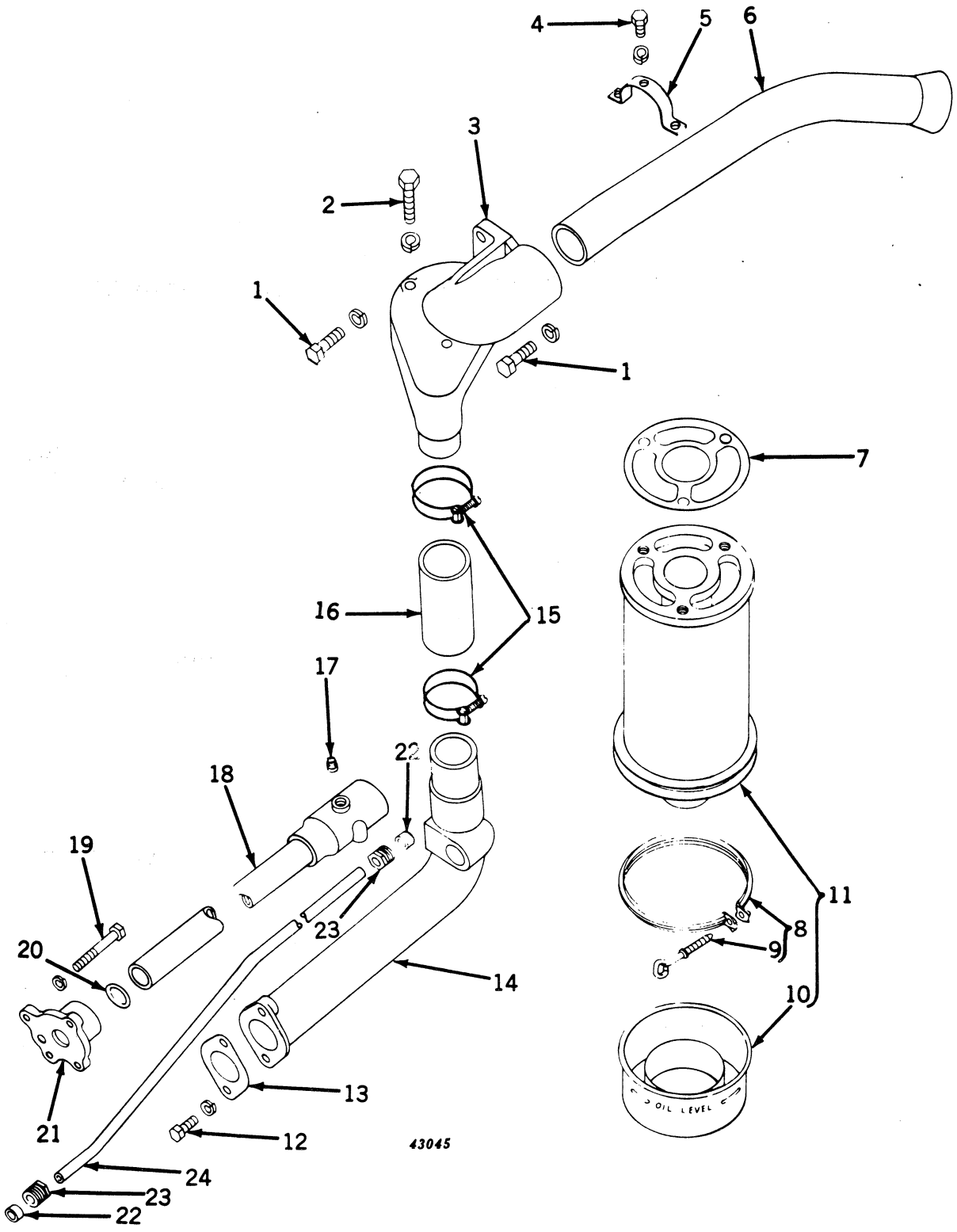

## AIR CLEANER AND CARBURETOR INTAKE (SINGLE INDUCTION CARBURETION)—Continued
(Serial No. 5000001-5015950)

| Key | Part No. | | | Description |
|---|---|---|---|---|
| 1 | 19H 462 N | ( | – ) | Screw, Cap, 1/2" x 1-1/2" (2 used) (Sub. for 19H457R) |
| | 12H 13 R | ( | – ) | Washer, Lock, 1/2" (2 used) |
| 2 | 19H 269 R | ( | – ) | Screw, Cap, 3/8" x 2-1/2" (2 used) |
| | 12H 11 R | ( | – ) | Washer, Lock, 3/8" (2 used) |
| 3 | AR 20524 R | ( | – ) | Bracket, R21072R Air Cleaner, with B3557R Cover and B3558R Gaske (Sub. for B3051R) |
| 4 | 19H 1112 H | ( | – ) | Screw, Cap, 5/16" x 3/4" (2 used) (Sub. for 19H105R) |
| | 12H 10 R | ( | – ) | Washer, Lock, 5/16" (2 used) |
| 5 | A 4371 R | ( | – ) | Strap, Air Intake |
| 6 | B 3052 R | ( | – ) | Pipe, Air Intake |
| 7 | R 20029 R | ( | – ) | Gasket (Packed 2 in a Pkg.) (Sub. for B80R) |
| 8 | AB 1629 R | ( | – ) | Clamp, with Bolt |
| 9 | B 1569 R | ( | – ) | Bolt, Clamp |
| 10 | AB 3477 R | ( | – ) | Cup, Oil |
| 11 | AB 4233 R | ( | – ) | Air Cleaner, with Cup and Clamp |
| 12 | 19H 218 D | ( | – ) | Screw, Cap, 3/8" x 1" (2 used) (Sub. for 19H211R) |
| | 12H 11 R | ( | – ) | Washer, Lock, 3/8" (2 used) |
| 13 | D 1034 R | ( | –5015950) | Gasket (Packed 25 in a Pkg.) |
| 14 | B 3056 R | ( | –5015950) | Elbow, Carburetor Intake |
| 15 | B 2373 R | ( | – ) | Clamp (2 used) |
| 16 | B 2372 R | ( | – ) | Hose |
| 17 | 15H 254 R | ( | – ) | Plug, 1/4" |
| 18 | AB 3988 R | ( | – ) | Housing, B290R, with Support Tube |
| 19 | 19H 1152 H | ( | – ) | Screw, Cap, 3/8" x 2-3/4" (3 used) (Sub. for 19H272R) |
| | 12H 11 R | ( | – ) | Washer, Lock, 3/8" (3 used) |
| 20 | B 293 R | ( | – ) | Packing, "O" Ring (Packed 2 in a Pkg.) |
| 21 | A 4188 R | ( | – ) | Cover, Ventilator Pump |
| 22 | B 60 R | ( | – ) | Washer, Packing (2 used) (Packed 10 in a Pkg.) |
| 23 | C 1705 R | ( | – ) | Gland, Packing (2 used) |
| 24 | B 3054 R | ( | – ) | Pipe, Ventilator Inlet |

## CARBURETOR (DOUBLE INDUCTION SYSTEM)
(Gasoline) (Serial No. 5000001- )
(All-Fuel) (Serial No. 5015951- )

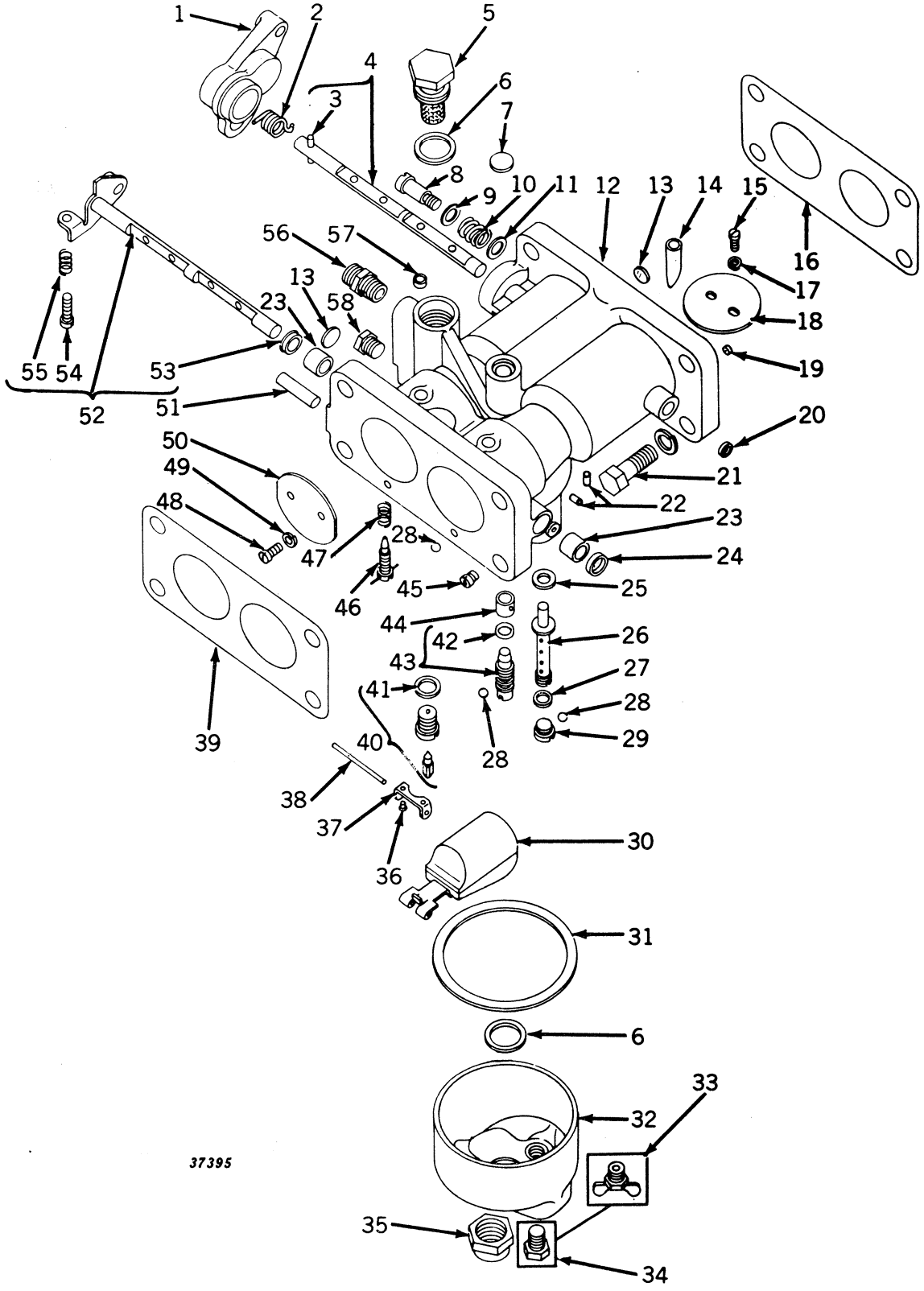

## CARBURETOR (DOUBLE INDUCTION SYSTEM)—Continued
(Gasoline) (Serial No. 5000001- )
(All-Fuel) (Serial No. 5015951- )

| Key | Part No. | Serial No. | Description |
|---|---|---|---|
| 1 | R 10105 R | ( – ) | Lever, Choke (Sub. for 25-275) |
| 2 | R 10099 R | ( – ) | Spring, Choke Return (Sub. for 24-A140) |
| 3 | 62-238 | ( – ) | Pin, Choke Shaft (Not Furnished, Sub. AR10064R) |
| 4 | AR 10064 R | ( – ) | Shaft, Choke, with Pin (Sub. for 26-775 and 26-833) |
| 5 | R 10159 R | ( – ) | Plug, Fuel Inlet Strainer (Sub. for 95-520) |
| 6 | ..... | ( – ) | *Gasket, Strainer (2 used) |
| 7 | R 10165 R | ( – ) | Plug, Expansion (Sub. for 179-39) |
| 8 | R 10085 R | ( – ) | Screw, Choke Friction Spring (Sub. for 15-A109) |
| 9 | R 10010 R | ( – ) | Washer, Choke Friction Spring Screw (Sub. for 78-433) |
| 10 | R 10079 R | ( – ) | Spring, Choke Friction (Sub. for 24-A165) |
| 11 | R 10147 R | ( – ) | Washer (Sub. for 78-434) |
| 12 | AR 10048 R | ( –5022299) | Body, Carburetor, with Bushings (Gasoline) (AB4635R only) (Sub. fo 10-3520) |
| | AR 10053 R | (5022300– ) | Body, Carburetor, with Bushings (Gasoline) (AB4749R only) (Sub. fo 10-3833) |
| | 10-3605 | (5015951– ) | Body, Carburetor, with Bushings (All-Fuel) |
| 13 | R 10164 R | ( – ) | Plug, Expansion (3 used) (Sub. for 179-15) |
| 14 | R 10169 R | ( – ) | Tube, Pitot (2 used) (Sub. for 229-199) |
| 15 | 21H 962 R | ( – ) | Screw, Mach., Fillister Hd., No. 6 x 1/4" (4 used) |
| 16 | A 4634 R | ( – ) | Gasket, Carburetor to Intake (Packed 5 in a Pkg.) |
| 17 | A 765 R | ( – ) | Washer, Lock (4 used) |
| 18 | R 10112 R | ( – ) | Disk, Choke (2 used) (Sub. for 27-223) |
| 19 | 60-251 | ( – ) | Bushing, Nozzle Well Vent (2 used) (Sub. AR10048R, AR10053R, or 10-3605 |
| 20 | R 10134 R | ( – ) | Cup, Choke Shaft (Sub. for 55-358) |
| 21 | 19H 218 D | ( – ) | Screw, Cap, 3/8" x 1" (8 used) (Sub. for 19H211R) |
| | 12H 11 R | ( – ) | Washer, Lock, 3/8" (8 used) |
| 22 | R 10169 R | ( – ) | Tube, Idle Channel (4 used) (Sub. for 229-209) |
| 23 | R 10135 R | ( – ) | Bushing, Throttle Shaft (2 used) (Sub. for 60-A13) |
| 24 | R 10133 R | ( – ) | Cup, Throttle Shaft (Sub. for 55-214) |
| 25 | ..... | ( – ) | *Gasket, Nozzle (2 used) |
| 26 | R 10125 R | ( –5022299) | Nozzle (2 used) (Gasoline) (AB4635R only) (Sub. for 47-362) |
| | R 10125 R | (5022300– ) | Nozzle (2 used) (AB4794R only) (Sub. for 47-412) |
| | R 10125 R | (5015951– ) | Nozzle (2 used) (All-Fuel )(Sub. for 47-412) |
| 27 | ..... | ( – ) | *Gasket, Main Nozzle (2 used) |
| 28 | R 10167 R | ( – ) | Ball, Channel Plug (6 used) (Sub. for 206-59) |
| 29 | R 10153 R | ( – ) | Plug, Nozzle (2 used) (Gasoline) (Sub. for 80-217) |
| 30 | AR 10069 R | ( – ) | Float, with Lever (Sub. for 30-713) |
| 31 | R 10171 R | ( – ) | *Gasket (Packed 2 in a Pkg.) |
| 32 | AR 10074 R | ( – ) | Bowl, with Bushing (Sub. for 65-703) |
| 33 | AR 10075 R | (5015951– ) | Cock, Drain (All-Fuel) (Packed 5 in a Pkg.) (Sub. for 87-3) |
| 34 | R 10160 R | ( – ) | Plug (Gasoline) (Sub. for S98) |
| 35 | R 10156 R | ( – ) | Nut, Bowl, Retaining (Sub. for 81-166) |
| 36 | R 10087 R | ( – ) | Screw, Drive (2 used) (Sub. for 15-343) |
| 37 | R 10162 R | ( – ) | Bracket, Float (Sub. for 136-54) |
| 38 | R 10113 R | ( – ) | Shaft, Float Lever (Sub. for 32-25) |
| 39 | A 4631 R | ( – ) | Gasket, Carburetor to Manifold (Packed 5 in a Pkg.) |
| 40 | 233-543 | ( – ) | **Valve, Float, Seat, and Gasket |
| 41 | ..... | ( – ) | *Gasket, Float, Valve Seat |
| 42 | R 10093 R | ( – ) | *Packing "O" Ring (Sub. for 16-A166) |
| 43 | AR 10072 R | ( – ) | Valve, Metering, with Packing (Sub. for 43-661) |
| 44 | R 10136 R | ( – ) | Bushing, Metering Pin (Sub. for 60-A17) |
| 45 | R 10129 R | ( – ) | Jet, Power (2 used) (AB4635R and AB4738R only) (Sub. for 49-192) |
| | 49-196 | (5022300– ) | **Jet, Power (2 used) (AB4794R only) |
| 46 | AR 10073 R | ( – ) | Needle, Idle Adjusting (2 used) (Sub. for 43-129 and 43-665) |
| 47 | R 10098 R | ( – ) | Spring, Idle Adjusting Screw (2 used) (Sub. for 24-A136) |
| 48 | 21H 971 R | ( – ) | Screw, Mach., Fillister Hd., No. 8 x 5/16" (4 used) |
| 49 | 12H 64 R | ( – ) | Washer, Lock, No. 8 (4 used) |
| 50 | R 10082 R | ( – ) | Disk, Throttle (2 used) (Sub. for 14-243) |
| 51 | R 10143 R | ( – ) | Pin, Throttle Stop (Sub. for 62-254) |
| 52 | AR 10059 R | ( – ) | Shaft, Throttle, with Packing, Adjusting Screw, and Spring (Sub. for 13-103( |
| 53 | R 10115 R | ( – ) | Packing, Throttle Shaft (Sub. for 44-65) |
| 54 | 21H 977 R | ( – ) | Screw, Mach., Fillister Hd., No. 8 x 3/4" (Sub. for 15-421) |
| 55 | R 10104 R | ( – ) | Spring, Adjusting (Sub. for 24-262) |
| 56 | A 258 R | ( – ) | Connector |
| 57 | 80-171 | ( – ) | **Plug, Drill (2 used) (Sub. for 80-169) |
| 58 | R 10160 R | ( – ) | Plug (Sub. for S-98) |

(Parts listed below are assemblies of parts in this grouping.)

| | | |
|---|---|---|
| AA 6343 R | ( – ) | Kit, Carburetor Gasket (Sub. for 16-671) |
| AB 4635 R | ( –5022299) | Carburetor (Gasoline) (DLTX75) (Sub. AB4794R) |
| AB 4794 R | (5022300– ) | Carburetor (Gasoline) (DLTX86) |
| AB 4738 R | (5015951– ) | Carburetor (All-Fuel) (DLTX83) |
| AB 4888 R | ( – ) | Kit, Carburetor Service |

(Part listed below is not illustrated.)

| | | |
|---|---|---|
| R 10166 R | (5015951– ) | Plug, Expansion (2 used) (All-Fuel) (Sub. for 179-40) |

*Part of AA6343R Gasket Set, Carburetor Service (Individual Gaskets not Sold except R10093R and R10171R)
**Furnished by John Deere Dubuque Tractor Works.

## CARBURETOR (SINGLE INDUCTION SYSTEM) (ALL-FUEL)
(Serial No. 5000001-5015950)

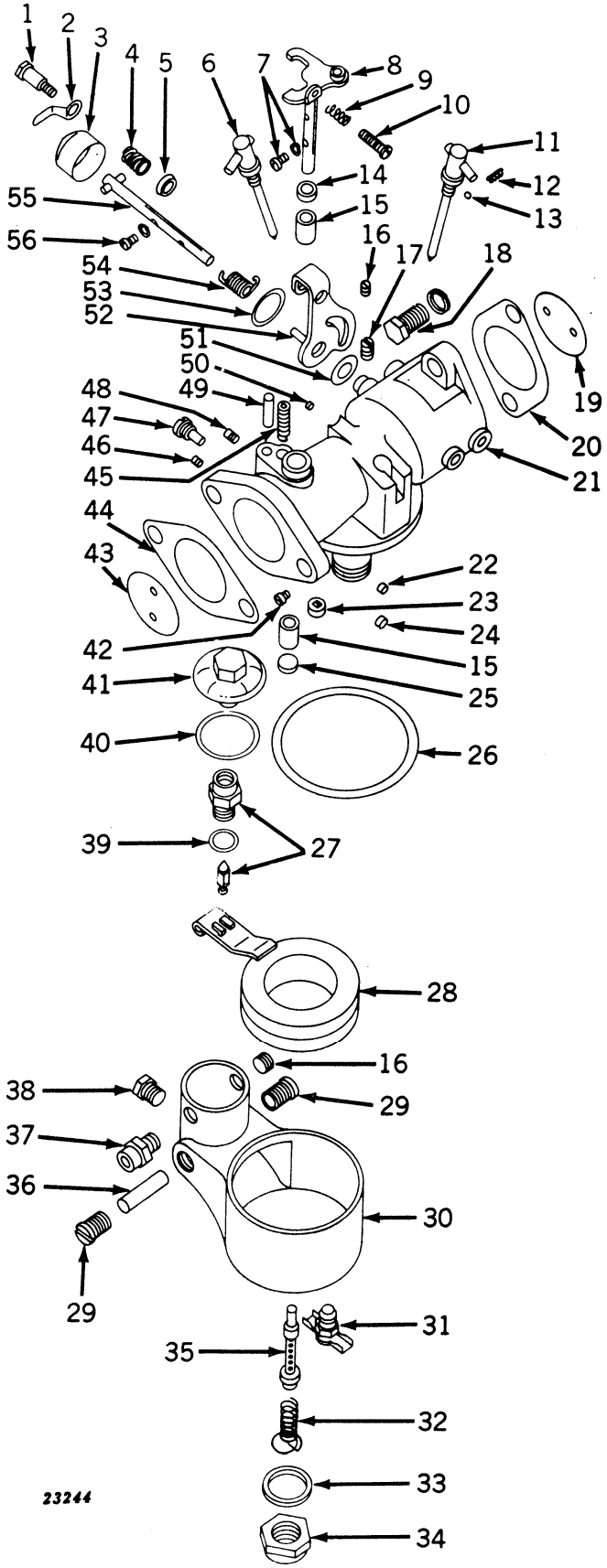

## CARBURETOR (SINGLE INDUCTION SYSTEM) (ALL-FUEL)—Continued
(Serial No. 5000001-5015950)

| Key | Part No. | Serial No. | Description |
|---|---|---|---|
| 1 | R 10057 R | (–5015950) | Screw, Choke Friction (Sub. for S2154) |
| 2 | R 10096 R | (–5015950) | Spring, Cover Retaining (Sub. for 24–A58) |
| 3 | R 10157 R | (–5015950) | Cover, Choke Dust (Sub. for 91–178) |
| 4 | R 10079 R | (–5015950) | Spring (Sub. for 25–V) |
| 5 | R 10147 R | (–5015950) | Washer (Sub. for P850 and 78–434) |
| 6 | AR 10020 R | (–5015950) | Needle, Idle (Sub. for X2461 No. 2) |
| 7 | 21H 971 R | (–5015950) | Screw (2 used) |
| | 12H 64 R | (–5015950) | Washer, Lock (2 used) |
| 8 | AR 10058 R | (–5015950) | Shaft, Throttle, and Lever (Packed 5 in a Pkg.) (Sub. for 13–939) |
| 9 | R 10104 R | (–5015950) | Spring, Lever Adjusting (Sub. for 24–262) |
| 10 | 21H 994 R | (–5015950) | Screw, Lever Adjusting |
| 11 | AR 10018 R | (–5015950) | Needle, Load (Sub. for X2458 No. 1) |
| 12 | R 10075 R | (–5015950) | Spring, Friction Ball (2 used) (Sub. for 1K) |
| 13 | R 10038 R | (–5015950) | Ball, Friction (2 used) (Sub. for S251A) |
| 14 | R 10114 R | (–5015950) | Felt (Packed 10 in a Pkg.) (Sub. for 44–62) |
| 15 | R 10140 R | (–5015950) | Bushing (2 used) (Packed 2 in a Pkg.) (Sub. for 60-477) |
| 16 | R 10160 R | (–5015950) | Plug (2 used) (Sub. for S98) |
| 17 | 15–223* | (–5015950) | Plug, Drill, 1/4″–28 (Sub. for S2041) |
| 18 | 19H 218 D | (–5015950) | Screw, Cap, 3/8″ x 1″ (4 used) (Sub. for 19H211R) |
| | 12H 11 R | (–5015950) | Washer, Lock, 3/8″ (4 used) |
| 19 | R 10108 R | (–5015950) | Disk, Choke (Sub. for 27–181) |
| 20 | D 1034 R | (–5015950) | Gasket (Packed 25 in a Pkg.) |
| 21 | AR 10039 R | (–5015950) | Body (Sub. for 10–3114) |
| 22 | R 10150 R | (–5015950) | Plug, Choke Shaft and Economizer (Sub. for 80–169) |
| 23 | R 10163 R | (–5015950) | Baffle, Bowl Vent (2 used) (Sub. for 178–33) |
| 24 | R 10149 R | (–5015950) | Plug (Sub. for 80–167) |
| 25 | R 10151 R | (–5015950) | Plug, Throttle Shaft Hole (Packed 5 in a Pkg.) (Sub. for 80–175) |
| 26 | R 10026 R | (–5015950) | Gasket, Bowl (Sub. for P951) |
| 27 | AR 10077 R | (–5015950) | Valve, Float and Seat Assembly (Sub. for X2653, 233–576, and 233–584) |
| 28 | AR 10068 R | (–5015950) | Float and Lever (Sub. for 30–700) |
| 29 | R 10050 R | (–5015950) | Screw, Float Bearing (2 used) (Sub. for S2147) |
| 30 | R 10009 R | (–5015950) | Bowl (Sub. for DLT–13) |
| 31 | AR 10075 R | (–5015950) | Cock, Drain (Packed 5 in a Pkg.) (Sub. for 87–3) |
| 32 | R 10078 R | (–5015950) | Spring, Retaining (Sub. for 25–J) |
| 33 | R 10014 R | (–5015950) | Gasket (Sub. for P710) |
| 34 | R 10063 R | (–5015950) | Nut, Bowl (Sub. for S2424) |
| 35 | R 10119 R | (–5015950) | Nozzle (Sub. for 47–314) |
| 36 | R 10049 R | (–5015950) | Pin, Float Pivot (Packed 2 in a Pkg.) (Sub. for S2146) |
| 37 | A 258 R | (–5015950) | Connector |
| 38 | R 10160 R | (–5015950) | Plug (Sub. for S98) |
| 39 | R 10172 R | (–5015950) | Gasket, Float Valve Seat (Sub. for P1209) |
| 40 | R 10025 R | (–5015950) | Gasket, Strainer (Sub. for P950) |
| 41 | AR 10021 R | (–5015950) | Strainer Assembly (Packed 2 in a Pkg.) (Sub. for X2462) |
| 42 | R 10067 R | (–5015950) | Plug, Drill, No. 10–32 (2 used) (Sub. for S2502) |
| 43 | R 10080 R | (–5015950) | Disk, Throttle (Sub. for 14–183) |
| 44 | 321 R | (–5015950) | Gasket (Packed 25 in a Pkg.) |
| 45 | R 10076 R | (–5015950) | Spring, Stop (Sub. for 18–0) |
| 46 | R 10041 R | (–5015950) | Plug, Drill, No. 10-32 (Sub. S736) (Not Furnished) |
| 47 | R 10056 R | (–5015950) | Plug, Economizer (Sub. for S2151H) |
| 48 | R 10045 R | (–5015950) | Plug, Drill, 7/32″–32 (Sub. for S1506) |
| 49 | R 10142 R | (–5015950) | Pin, Stop (Sub. for 62–246) |
| 50 | R 10148 R | (–5015950) | Plug (Sub. for 80–160) |
| 51 | R 10090 R | (–5015950) | Gasket, Choke Lever (Sub. for 16-A-115) |
| 52 | R 10106 R | (–5015950) | Lever, Choke and Pin (Sub. for 25–635) |
| 53 | R 10091 R | (–5015950) | Gasket, Dust Cover (Packed 2 in a Pkg.) (Sub. for 16-A-116) |
| 54 | R 10095 R | (–5015950) | Spring, Choke (Sub. for 24A51) |
| 55 | AR 10063 R | (–5015950) | Shaft, Choke, with Pin (Sub. for 26–721) |
| 56 | 21H 962 R | (–5015950) | Screw (2 used) |
| | A 765 R | (–5015950) | Washer, Lock (2 used) |

(Parts listed below are assemblies of parts in this grouping )

| | | |
|---|---|---|
| AB 3740 R | (–5015950) | Carburetor, DLTX–73) |
| AB 3966 R | (–5015950) | Kit, Carburetor Parts |
| AA 4991 R | (–5015950) | Gasket Set, Carburetor Service (See page 70-4 for illustrations and contents |

*Furnished by John Deere Dubuque Tractor Works.

## DUAL INDUCTION CARBURETOR (PARTS) (LP-GAS)
(Serial No. 5024000- )

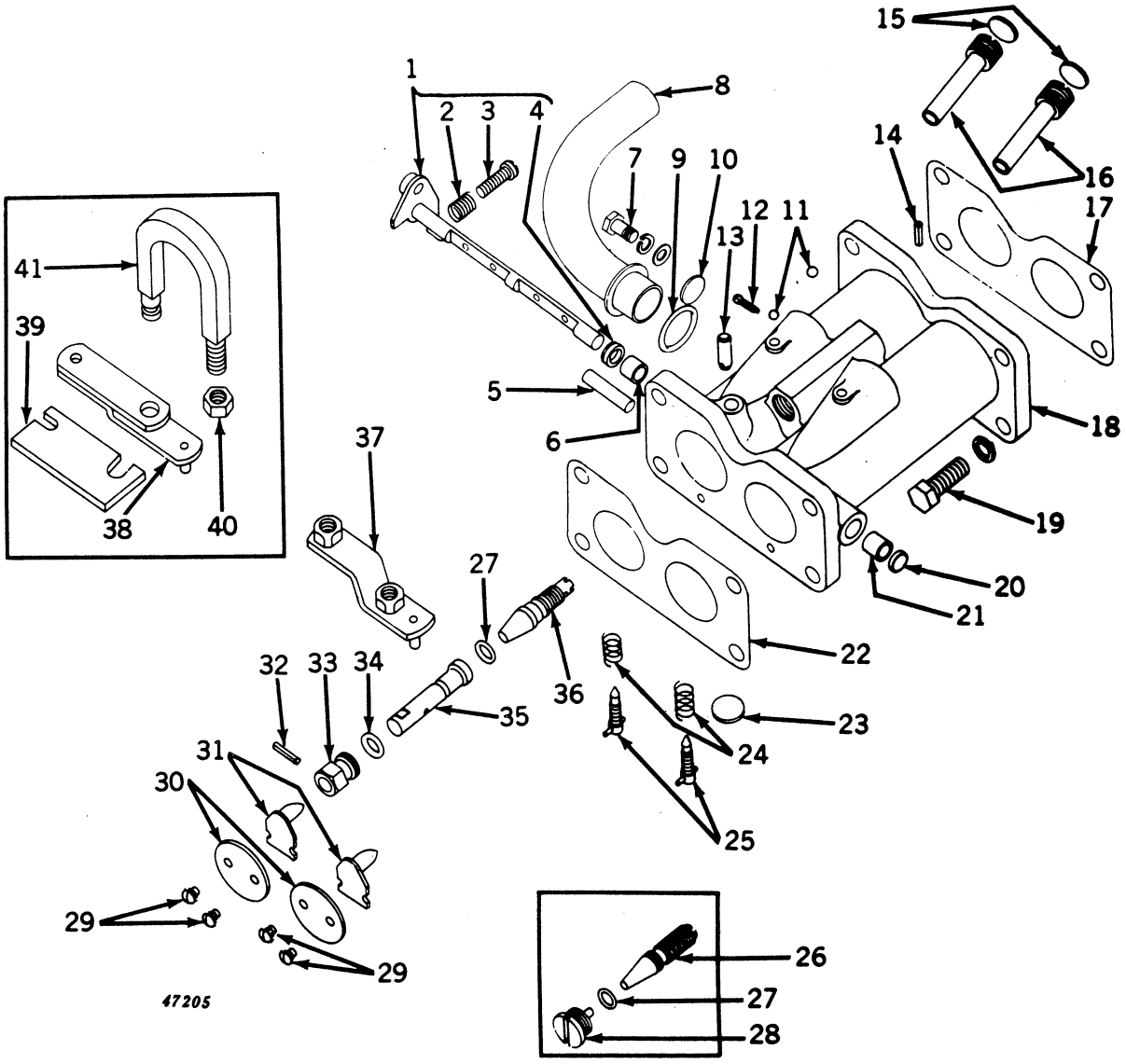

## †DUAL INDUCTION CARBURETOR (PARTS) (LP-GAS)—Continued
(Serial No. 5024000- )

| Key | Part No. | Serial No. | Description |
|---|---|---|---|
| 1 | AR 10059 R | (5024000– ) | Shaft, Throttle, with Adjusting Screw, Spring, and Packing (Sub. for 13–1030) |
| 2 | R 10104 R | (5024000– ) | Spring (Sub. for 24–262) |
| 3 | 21H 977 R | (5024000– ) | Screw, Mach. (Sub. for 15–42) |
| 4 | R 10115 R | (5024000– ) | Packing, Throttle Shaft (Sub. for 44–65) |
| 5 | H 826 R | (5024000– ) | Pin, Throttle Stop |
| 6 | R 10135 R | (5024000– ) | Bushing, Throttle Shaft (Sub. for 60–A13) |
| 7 | 19H 13 R | (5024000– ) | Screw, Cap, 1/4" x 1/2" |
| | 12H 9 R | (5024000– ) | Washer, Lock, 1/4" |
| | 24H 132 R | (5024000– ) | Washer, 9/32" x 1/2" x 16 Gauge |
| 8 | AB 4874 R | (5024000– ) | Inlet, Carburetor, Fuel |
| 9 | R 495 R | (5024000– ) | Packing, "O" Ring, Fuel Inlet (Packed 5 in a Pkg.) |
| 10 | 30H 6 T | (5024000– ) | Plug, Expansion |
| 11 | A 5196 R | (5024000– ) | Ball, Lead (4 used) (Packed 2 in a Pkg.) |
| 12 | 11H 22 R | (5030600– ) | Pin, Cotter, 3/32" x 1" (Sub. for 11H18R) |
| 13 | A 5376 R | (5030600– ) | Pin, Fuel Control Lever Choke |
| 14 | 34H 7 R* | (5030600– ) | Pin, Roll, Carburetor Fuel Adjusting Screw |
| 15 | 30H 9 R | (5024000– ) | Plug (2 used) |
| 16 | A 5195 R | (5024000– ) | Nozzle (2 used) (Packed 2 in a Pkg.) |
| 17 | A 4634 R | (5024000– ) | Gasket, Carburetor to Intake (Packed 5 in a Pkg.) |
| 18 | AB 4873 R | (5024000–5030599) | Body, with Bushings and Stop Pin (Sub. AB4954R) |
| | AB 4954 R | (5030600– ) | Body, with Bushings and Pins |
| 19 | 19H 218 D | (5024000– ) | Screw, Cap, 3/8" x 1" (8 used) (Sub. for 19H211R) |
| | 12H 11 R | (5024000– ) | Washer, Lock, 3/8" (8 used) |
| 20 | R 10133 R | (5024000– ) | Cup, Throttle Shaft (Sub. for 55–214) |
| 21 | R 10135 R | (5024000– ) | Bushing, Throttle Shaft (Sub. for 60–A13) |
| 22 | A 4631 R | (5024000– ) | Gasket, Carburetor to Manifold (Packed 5 in a Pkg.) |
| 23 | 30H 6 T | (5024000– ) | Plug, Expansion |
| 24 | R 10098 R | (5024000– ) | Spring, Idle Adjustment (2 used) (Sub. for 24A–136) |
| 25 | AR 10073 R | (5024000– ) | Needle, Idle Adjustment (2 used) (Sub. for 43–665) |
| 26 | A 5377 R | (5024000–5030599) | Screw, Fuel Adjustment (Sub. for A5197R) |
| 27 | A 3917 R | (5024000– ) | Packing, "O" Ring, Fuel Adjusting Screw (Packed 2 in a Pkg.) |
| 28 | A 5198 R | (5024000–5030599) | Plug, Fuel Adjusting Screw Stop |
| 29 | AA 6086 R | (5024000– ) | Screw, Mach., with Lock Washer (4 used) (Packed 2 in a Pkg.) |
| 30 | B 3403 R | (5024000– ) | Disk, Throttle (2 used) |
| 31 | B 3404 R | (5024000– ) | Valve, Nozzle (2 used) |
| 32 | 34H 7 R* | (5030600– ) | Pin, Roll, Choke Valve |
| 33 | A 5379 R* | (5030600– ) | Bushing, Choke Valve |
| 34 | A 4365 R* | (5030600– ) | Packing, "O" Ring, Choke Valve (Packed 2 in a Pkg.) |
| 35 | A 5378 R* | (5030600– ) | Valve, Choke |
| 36 | A 5377 R* | (5030600– ) | Screw, Fuel Adjusting |
| 37 | AA 6270 R | (5030600– ) | Lever, Fuel Control Choke, with Pin |
| 38 | AA 6275 R* | (5024000–5030599) | Lever, Fuel Control Choke, with Pin |
| 39 | A 5388 R* | (5024000–5030599) | Plate, Clamp |
| 40 | 14H 255 R* | (5024000–5030599) | Nut, on Clamp |
| 41 | A 5387 R* | (5024000–5030599) | Clamp, on Fan Bearing Housing Tube |

(Parts listed below are an assembly of most of the parts in this grouping.)

| | | |
|---|---|---|
| AB 4872 R | (5024000–5030599) | Carburetor, LP-Gas Dual Induction (Sub. One AB4953R Carburetor, One B3486R Rod, One 24H132R Washer, and One B1951R Knob) |
| AB 4953 R | (5030600– ) | Carburetor, LP-Gas Dual Induction |
| AA 6267 R | (5024000–5030599) | Lever, Fuel Choke Control Assembly—Consisting of Parts Marked (*) and One B1951R Knob, One 24H132R Washer, and Two 11H22R Cotter Pins. Also Furnish One B3486R Fuel Choke Control Rod. |

*See AA6267R.

†All Model "50" LP-Gas Tractors with Serial No. 5000001 to 5023999 which had single induction carburetors were changed to duplex carburetion as shown on this page. It will therefore be necessary to order above parts for all "50" LP-Gas Tractors.

## FUEL SYSTEM (LP-GAS)
(Serial No. 5024000- )

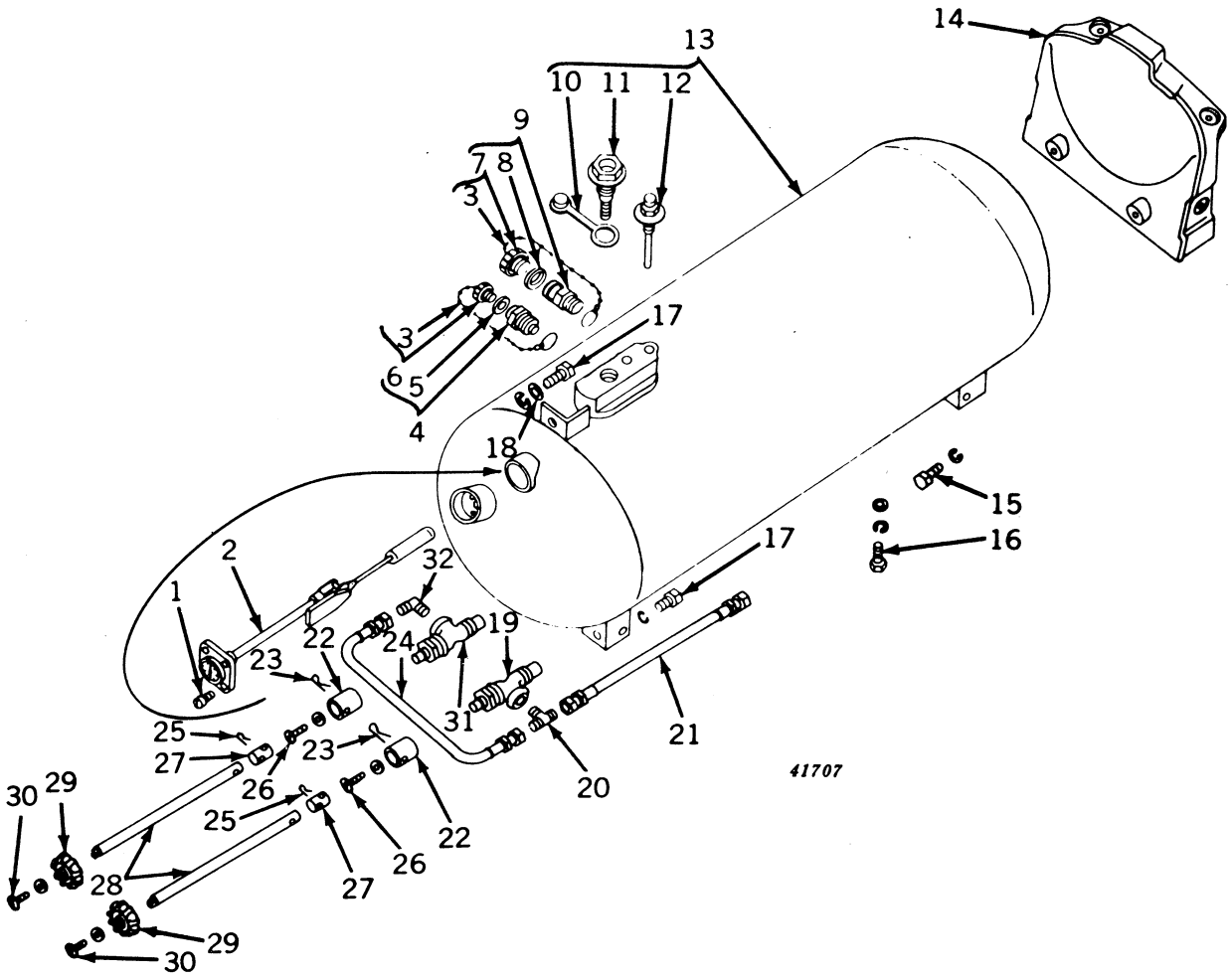

## FUEL SYSTEM (LP-GAS)—Continued
(Serial No. 5024000- )

| Key | Part No. | Serial No. | Description |
|---|---|---|---|
| 1 | 21H 1074 R | (5024000- ) | Screw, Mach., 5/16" x 1" (4 used) (Squibb-Taylor Fuel Gauge) (Packed 4 in a Pkg.) |
| | AB 4848 R | (5024000- ) | Gauge, Fuel |
| 2 | A 5141 R | (5024000- ) | Gasket (Squibb-Taylor Fuel Gauge) (Packed 2 in a Pkg.) |
| | AB 4880 R | (5024000- ) | Float Assembly (Squibb-Taylor Fuel Gauge) |
| | A 5140 R | (5024000- ) | Pin, Pivot (Squibb-Taylor Fuel Gauge) (Packed 2 in a Pkg.) |
| 3 | AA 6058 R | (5024000- ) | Chain and Ring Assembly (2 used) |
| 4 | AA 6002 R | (5024000- ) | Valve, Excess Vapor Flow, with Cap and Chain |
| 5 | A 4998 R | (5024000- ) | Seal, Body |
| 6 | AA 6060 R | (5024000- ) | Cap, Chain and Ring |
| | A 4997 R | (5024000- ) | Screw, Self Tapping |
| 7 | AA 6059 R | (5024000- ) | Cap, Chain and Ring |
| | A 4997 R | (5024000- ) | Screw, Self Tapping |
| 8 | A 4996 R | (5024000- ) | Seal, Body |
| 9 | AA 6001 R | (5024000- ) | Valve, Double Check Filler, with Cap and Chain |
| | A 5297 R | (5024000- ) | Plate, Filler Valve Warning |
| 10 | A 4900 R | (5024000- ) | Cap, Rain |
| 11 | AA 6004 R | (5024000- ) | Valve, Safety Relief, with Rain Cap (Sub. AR21690R and R21560R) |
| 12 | AB 4847 R | (5024000- ) | Gauge, Fixed Liquid Level |
| | AA 6057 R | (5024000- ) | Valve Vent |
| | A 4993 R | (5024000- ) | Plate, Instruction |
| | A 4995 R | (5024000- ) | Ring, Retaining |
| 13 | AB 4846 R | (5024000- ) | Tank, Fuel, with Valves (Do Not Stock) |
| 14 | B 3960 R | (5024000- ) | Support, Hood Rear (Sub. for B3396R) |
| 15 | 19H 337 N | (5024000- ) | Screw, Cap, 7/16" x 1-1/4" (2 used) |
| | 12H 12 R | (5024000- ) | Washer, Lock, 7/16" (2 used) |
| 16 | 19H 462 N | (5024000- ) | Screw, Cap, 1/2" x 1-1/2" (2 used) (Sub. for 19H457R) |
| | 24H 892 R | (5024000- ) | Washer (2 used) |
| | 12H 13 R | (5024000- ) | Washer, Lock, 1/2" (2 used) |
| 17 | 19H 1335 R | (5024000- ) | Screw, Cap, 5/8" x 1-1/2" (3 used) (Sub. for 19H1325R) |
| | 12H 15 R | (5204000- ) | Washer, Lock, 5/8" (3 used) |
| 18 | 24H 993 R | (5024000- ) | Washer |
| 19 | AA 6005 R | (5024000- ) | Valve, Vapor Outlet, with Handle |
| 20 | A 4932 R | (5024000- ) | Tee, 45° Flare Type, Vapor Outlet Valve |
| 21 | AF 1384 R | (5024000- ) | Line, Flexible Fuel |
| 22 | B 3400 R | (5024000- ) | Adapter, Fuel Control Valve (2 used) |
| 23 | 11H 88 R | (5024000- ) | Pin, Cotter, 3/16" x 2" (2 used) |
| 24 | AF 1384 R | (5024000- ) | Line, Flexible Fuel, Vapor to Liquid Outlet Valve |
| 25 | 11H 88 R | (5024000- ) | Pin, Cotter, 3/16" x 2" (2 used) (Sub. for 11H82R) |
| 26 | AA 6061 R | (5024000- ) | Screw, Mach., with Washer (2 used) |
| 27 | B 3399 R | (5024000- ) | Coupling, Fuel Control Rod (2 used) |
| 28 | B 3398 R | (5024000- ) | Rod, Fuel Control (2 used) |
| 29 | A 4999 R | (5024000- ) | Handle (2 used) |
| 30 | AA 6061 R | (5024000- ) | Screw, Mach., with Washer (2 used) |
| 31 | AA 6005 R | (5024000- ) | Valve, Liquid Outlet, with Handle |
| 32 | A 4928 R | (5024000- ) | Elbow, 45° Flare Type Liquid Outlet Valve |
| (Parts listed below are not illustrated.) | | | |
| | AB 4853 R | (5024000–5030599) | Shield, Fuel Tank, with Clips, L.H. (Sub. AB4957R) |
| | AB 4957 R | (5030600- ) | Shield, Fuel Tank, with Clip, L.H. |

## FUEL STRAINER AND FUEL CONVERTOR (LP-GAS)
(Serial No. 5024000- )

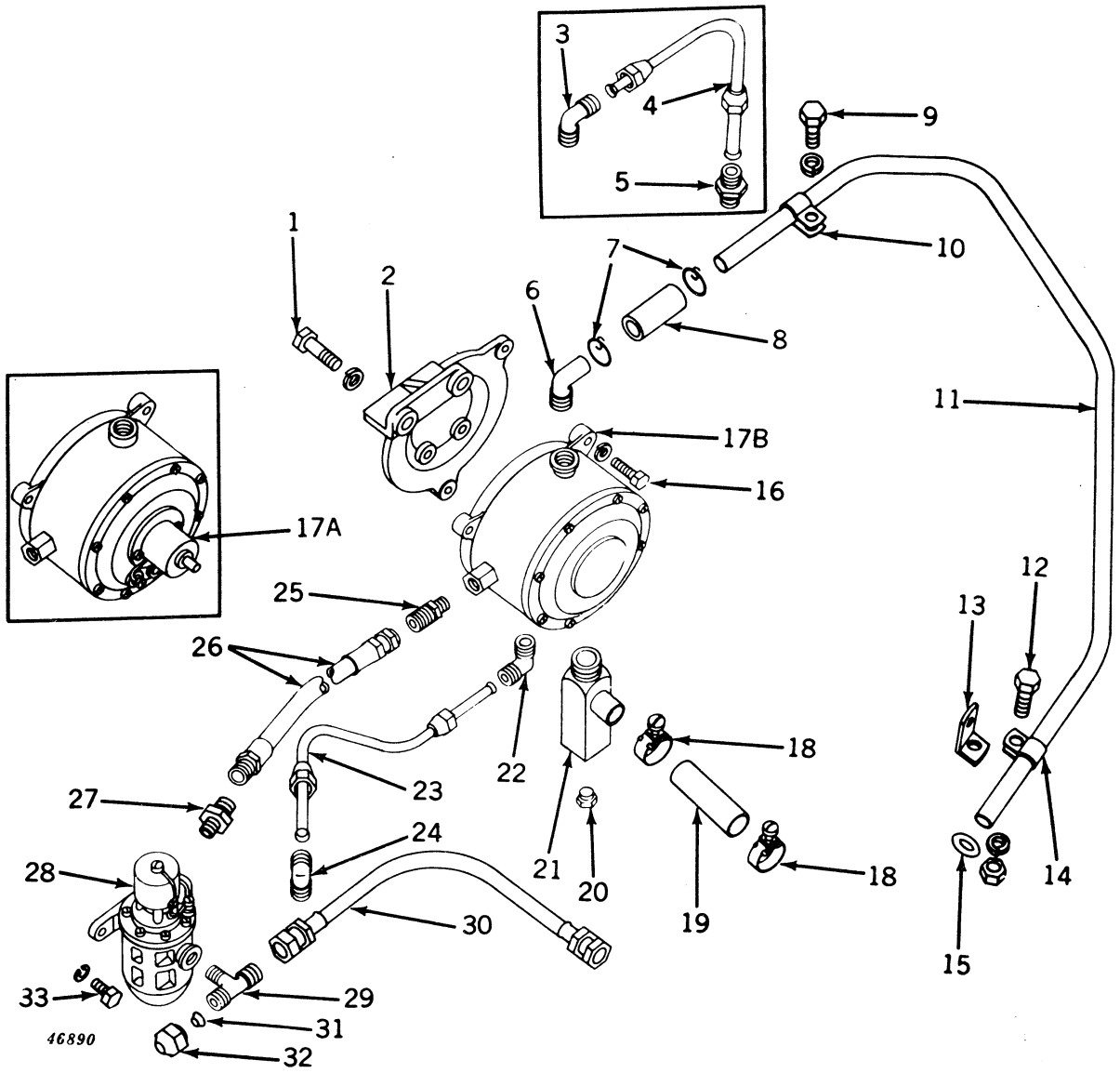

## FUEL STRAINER AND FUEL CONVERTOR (LP-GAS)—Continued
(Serial No. 5024000- )

| Key | Part No. | Serial No. | Description |
|---|---|---|---|
| 1 | 19H 1166 H | (5024000- ) | Screw, Cap, 7/16" x 1-1/2" (2 used) |
| | 12H 12 R | (5024000- ) | Washer, Lock, 7/16" (2 used) |
| 2 | B 3388 R | (5024000- ) | Bracket |
| 3 | A 4927 R | (5024000-5029199) | Elbow, 45° Flare-Type |
| 4 | AB 4863 R | (5024000-5029199) | Line, Fuel Convertor Water Outlet |
| 5 | A 4925 R | (5024000-5029199) | Connector |
| 6 | A 5333 R | (5029200- ) | Elbow, By-Pass Pipe to Convertor |
| 7 | A 5335 R | (5029200- ) | Clamp, By-Pass Pipe to Convertor Hose (2 used) |
| 8 | A 5334 R | (5029200- ) | Hose, By-Pass Pipe to Convertor |
| 9 | 19H 1140 N | (5029200- ) | Screw, Cap, 5/16" x 1/2" (Sub. for 19H96R) |
| | 12H 10 R | (5029200- ) | Washer, Lock, 5/16" |
| 10 | A 5339 R | (5029200- ) | Clamp, By-Pass Pipe to Upper Water Pipe |
| 11 | B 3463 R | (5029200- ) | Pipe, Water By-Pass |
| 12 | 19H 103 H | (5029200- ) | Screw, Cap, 5/16" x 5/8" (Sub. for 19H100T) |
| | 12H 10 R | (5029200- ) | Washer, Lock, 5/16" |
| | 14H 785 R | (5029200- ) | Nut, 5/16" (Sub. for 14H253R) |
| 13 | B 3469 R | (5029200- ) | Bracket, By-Pass Pipe Clamp |
| 14 | A 5339 R | (5029200- ) | Clamp, By-Pass Pipe |
| 15 | R 375 R | (5029200- ) | Packing, "O" Ring (Packed 2 in a Pkg.) |
| 16 | 19H 1170 N | (5024000- ) | Screw, Cap, 1/4" x 1" (3 used) (Sub. for 19H27T) |
| | 12H 9 R | (5024000- ) | Washer, Lock, 1/4" (3 used) |
| 17A | AA 6222 R | (5024000-5030599) | Convertor (Sub. for AA6019R) (Sub. AA6272R) |
| 17B | AA 6272 R | (5030600- ) | Convertor |
| 18 | A 4934 R | (5024000- ) | Clamp, Hose (2 used) |
| 19 | A 5203 R | (5024000- ) | Hose, Convertor to Carburetor |
| 20 | R 10160 R | (5024000- ) | Plug, Pipe (Sub. for S98) |
| 21 | AA 6088 R | (5024000- ) | Elbow, Special |
| 22 | A 4927 R | (5024000- ) | Elbow, 45° Flare-Type (Sub. One A4928R and One AB5223R) |
| 23 | AB 4862 R | (5024000- ) | Line, Fuel Convertor Water Inlet |
| 24 | A 4928 R | (5024000- ) | Elbow, 45° Flare-Type |
| 25 | A 4925 R | (5024000- ) | Connector, 45° Flare-Type, Fuel Convertor Inlet |
| 26 | AF 1384 R | (5024000- ) | Pipe, Flexible Fuel, Strainer to Convertor |
| 27 | A 4925 R | (5024000- ) | Connector, 45° Flare-Type Fuel Strainer Outlet |
| 28 | AF 3700 R | (5024000- ) | Strainer, Fuel (Sub. for AF1383R and AB4866R) |
| 29 | A 4932 R | (5024000- ) | Tee, 45° Flare-Type, Fuel Strainer Inlet |
| 30 | AF 1384 R | (5024000- ) | Line, Flexible Fuel, Fuel Strainer to Vapor Outlet Valve |
| 31 | A 4931 R | (5024000- ) | Gasket, Copper, 45° Flare-Type |
| 32 | A 4930 R | (5024000- ) | Cap, 45° Flare-Type |
| 33 | 19H 24 N | (5024000- ) | Screw, Cap, 1/4" x 3/4" (2 used) (Sub. for 19H18H) |
| | 12H 9 R | (5024000- ) | Washer, Lock, 1/4" (2 used) |

**FUEL STRAINER (PARTS) (LP-GAS)**
**(Serial No. 5024000- )**

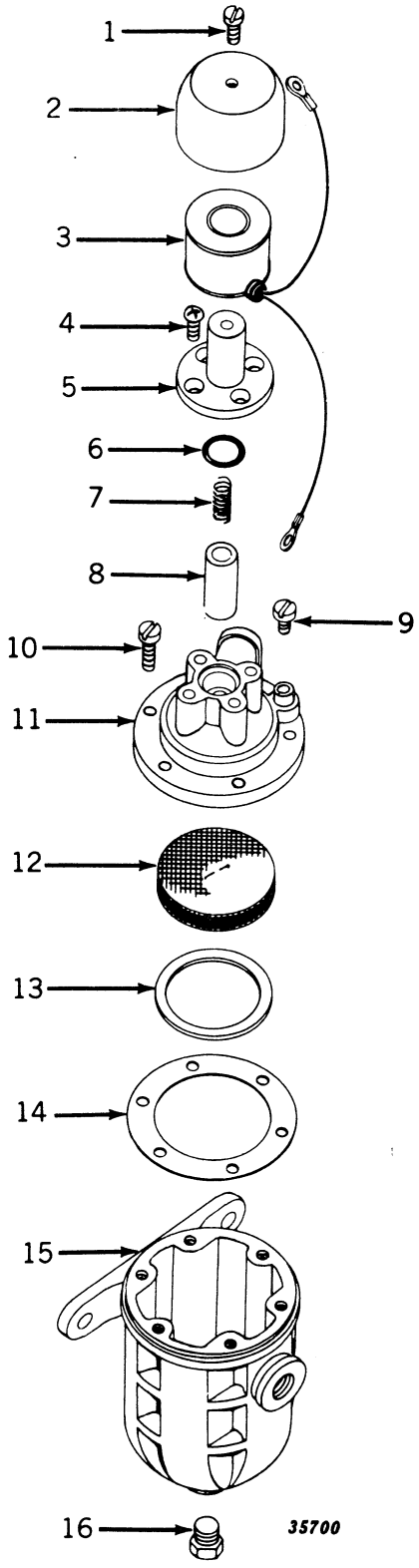

## FUEL STRAINER (PARTS) (LP-GAS)—Continued
(Serial No. 5024000- )

| Key | Part No. | Serial No. | Description |
|---|---|---|---|
| 1 | 21H 1072 R | (5024000- ) | Screw, Special Mach. (Packed 15 in a Pkg.) |
| 2 | F 1125 R | (5024000- ) | Case, Fuelock |
| 3 | AF 1395 R | (5024000- ) | Coil, Fuelock, with Leads and Grommet |
| 4 | 21H 1073 R | (5024000- ) | Screw, Special Mach. (4 used) (Packed 20 in a Pkg.) |
| 5 | AF 1396 R | (5024000- ) | Housing, Fuelock Plunger |
| 6 | F 1127 R | (5024000- ) | Packing, "O" Ring |
| 7 | F 1126 R | (5024000- ) | Spring, Fuelock Plunger |
| 8 | AF 1397 R | (5024000- ) | Plunger, Fuelock |
| 9 | 21H 969 R | (5024000- ) | Screw, Special Mach. |
| 10 | 21H 981 R | (5024000- ) | Screw, Special Mach. (6 used) |
| 11 | AF 1398 R | (5024000- ) | Cover, Strainer, with Terminal Post and Valve Jet |
| 12 | AF 1399 R | (5024000- ) | Pack, Filter |
| 13 | F 1129 R | (5024000- ) | Ring, Filter Pack Retaining |
| 14 | F 1130 R | (5024000- ) | Gasket (Packed 5 in a Pkg.) |
| 15 | F 3500 R | (5024000- ) | Body, Strainer (Sub. for F1131R) |
| 16 | R 10160 R | (5024000- ) | Plug (Sub. for S98) |

(Part listed below is an assembly of parts in this grouping.)

| | | | |
|---|---|---|---|
| | AF 3700 R | (5024000- ) | Strainer, Fuel (Sub. for AB4866R and AF1383R) |

## FUEL CONVERTOR (PARTS) (LP-GAS)
(Serial No. 5024000- )

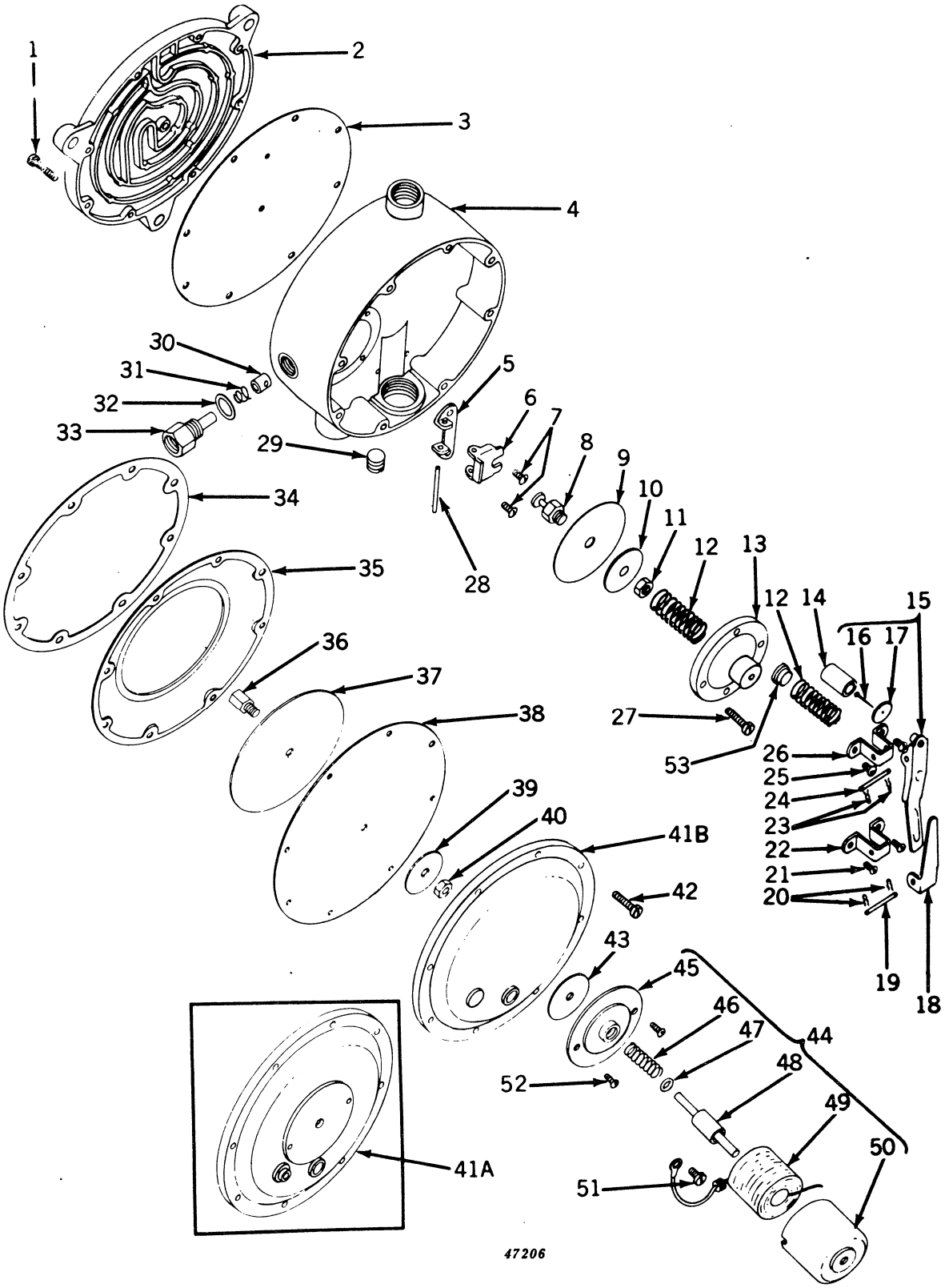

## FUEL CONVERTOR (PARTS) (LP-GAS)—Continued
(Serial No. 5024000- )

| Key | Part No. | Serial No. | Description |
|---|---|---|---|
| 1 | 21H 984 R | (5024000- ) | Screw, Special Mach. (9 used) |
| 2 | A 5115 R | (5024000- ) | Back, Convertor |
| 3 | A 5116 R | (5024000- ) | Gasket, Back to Body (Packed 2 in a Pkg.) |
| 4 | AA 6047 R | (5024000- ) | Body, Convertor, with Low Pressure Valve |
| 5 | A 5096 R | (5024000- ) | Bracket, High Pressure Valve Operating |
| 6 | A 5095 R | (5024000- ) | Lever, High Pressure Valve Operating |
| 7 | 21H 969 R | (5024000- ) | Screw, Special Mach. (2 used) |
| 8 | A 5100 R | (5024000- ) | Link, High Pressure Diaphragm (Packed 2 in a Pkg.) |
| 9 | A 5098 R | (5024000- ) | Diaphragm, High Pressure (Packed 2 in a Pkg.) |
| 10 | A 5099 R | (5024000- ) | Plate, Diaphragm, High Pressure (Packed 2 in a Pkg.) |
| 11 | A 5101 R | (5024000- ) | Nut, High Pressure Diaghragm Link (Packed 5 in a Pkg.) |
| 12 | A 5102 R | (5024000- ) | Spring, High and Low Pressure Diaphragm (2 used) (Packed 2 in a Pkg.) |
| 13 | A 5103 R | (5024000- ) | Cover, High Pressure Diaphragm |
| 14 | A 5104 R | (5024000- ) | Valve, Low Pressure (Packed 2 in a Pkg.) |
| 15 | AA 6050 R | (5024000- ) | Lever, Low Pressure Valve, Seat and Pin |
| 16 | A 5105 R | (5024000- ) | Pin, Low Pressure Valve Seat (Packed 2 in a Pkg.) |
| 17 | AA 6049 R | (5024000- ) | Seat, Low Pressure Valve, with Pin (Packed 5 in a Pkg.) |
| 18 | A 5109 R | (5024000- ) | Lever, Compound (Packed 5 in a Pkg.) |
| 19 | A 5107 R | (5024000- ) | Pin, Pivot, Low Pressure Valve Lever (Packed 2 in a Pkg.) |
| 20 | A 5108 R | (5024000- ) | Lock, Spring (2 used) (Packed 2 in a Pkg.) |
| 21 | 21H 969 R | (5024000- ) | Screw, Special Mach. (2 used) |
| 22 | A 5106 R | (5024000- ) | Bracket, Low Pressure Valve Lever |
| 23 | A 5108 R | (5024000- ) | Lock, Spring (2 used) (Packed 2 in a Pkg.) |
| 24 | A 5107 R | (5024000- ) | Pin, Pivot, Compound Lever (Packed 2 in a Pkg.) |
| 25 | 21H 969 R | (5024000- ) | Screw, Special Mach. (2 used) |
| 26 | A 5106 R | (5024000- ) | Bracket, Compound Lever |
| 27 | 21H 981 R | (5024000- ) | Screw, Special Mach. (4 used) |
| 28 | A 5097 R | (5024000- ) | Pin, Pivot, High Pressure Valve Lever (Packed 2 in a Pkg.) |
| 29 | R 11085 R | (5024000- ) | Plug, Pipe (Sub. for 125947) |
| 30 | AA 6048 R | (5024000- ) | Valve, High Pressure (Packed 5 in a Pkg.) |
| 31 | A 5092 R | (5024000- ) | Spring, High Pressure Valve (Packed 2 in a Pkg.) |
| 32 | A 5094 R | (5024000- ) | Gasket, High Pressure Jet (Packed 2 in a Pkg.) |
| 33 | A 5093 R | (5024000- ) | Jet, High Pressure |
| 34 | A 5111 R | (5024000- ) | Gasket, Diaphragm Backing Plate (Packed 2 in a Pkg.) |
| 35 | A 5110 R | (5024000- ) | Plate, Low Pressure Diaphragm Backing (Packed 2 in a Pkg.) |
| 36 | A 5114 R | (5024000- ) | Button, Low, Pressure Diaphragm (Packed 2 in a Pkg.) |
| 37 | A 5113 R | (5024000- ) | Plate, Low Pressure Diaphragm (Packed 2 in a Pkg.) |
| 38 | A 5112 R | (5024000- ) | Diaphragm, Low Pressure (Packed 2 in a Pkg.) |
| 39 | A 5099 R | (5024000- ) | Plate, Diaphragm, Low Pressure, Small (Packed 2 in a Pkg.) |
| 40 | 14H 649 R | (5024000- ) | Nut, Jam |
| 41A | AA 6051 R | (5024000-5030599) | Cover, Convertor, with Terminal Post |
| 41B | A 5397 R | (5030600- ) | Cover, Convertor |
| 42 | 21H 981 R | (5024000- ) | Screw, Special Mach. (8 used) |
| 43 | A 5118 R | (5024000-5030599) | Gasket, Primer Base to Convertor Cover (Packed 2 in a Pkg.) |
| 44 | AA 6052 R | (5024000-5030599) | Primer, Complete |
| 45 | AA 6056 R | (5024000-5030599) | Base, Primer |
| 46 | A 5117 R | (5024000-5030599) | Spring, Primer Plunger |
| 47 | A 4365 R | (5024000-5030599) | Packing, "O" Ring, Plunger to Case (Packed 2 in a Pkg.) |
| 48 | AA 6055 R | (5024000-5030599) | Plunger, Primer |
| 49 | AA 6054 R | (5024000-5030599) | Coil, Primer, with Leads and Grommets |
| 50 | AA 6053 R | (5024000-5030599) | Case, Primer |
| 51 | 21H 969 R | (5024000-5030599) | Screw, Special Mach. |
| 52 | 21H 1072 R | (5024000-5030599) | Screw, Special Mach. (2 used) (Packed 15 in a Pkg.) |
| 53 | A 5285 R | (5027000- ) | Spacer on Low Pressure Diaphragm Spring (Packed 2 in a Pkg.) |

(Parts listed below are an assembly of parts in this grouping.)

| | | | |
|---|---|---|---|
| | AA 6222 R | (5024000-5030599) | Convertor, Fuel, Complete, with Spacer (Sub. for AA6019R) (Sub. AA6272R) |
| | AA 6272 R | (5030600- ) | Convertor, Fuel, Complete, with Spacer |

## GENERATOR AND MOUNTING BRACKET
(Serial No. 5000001- )

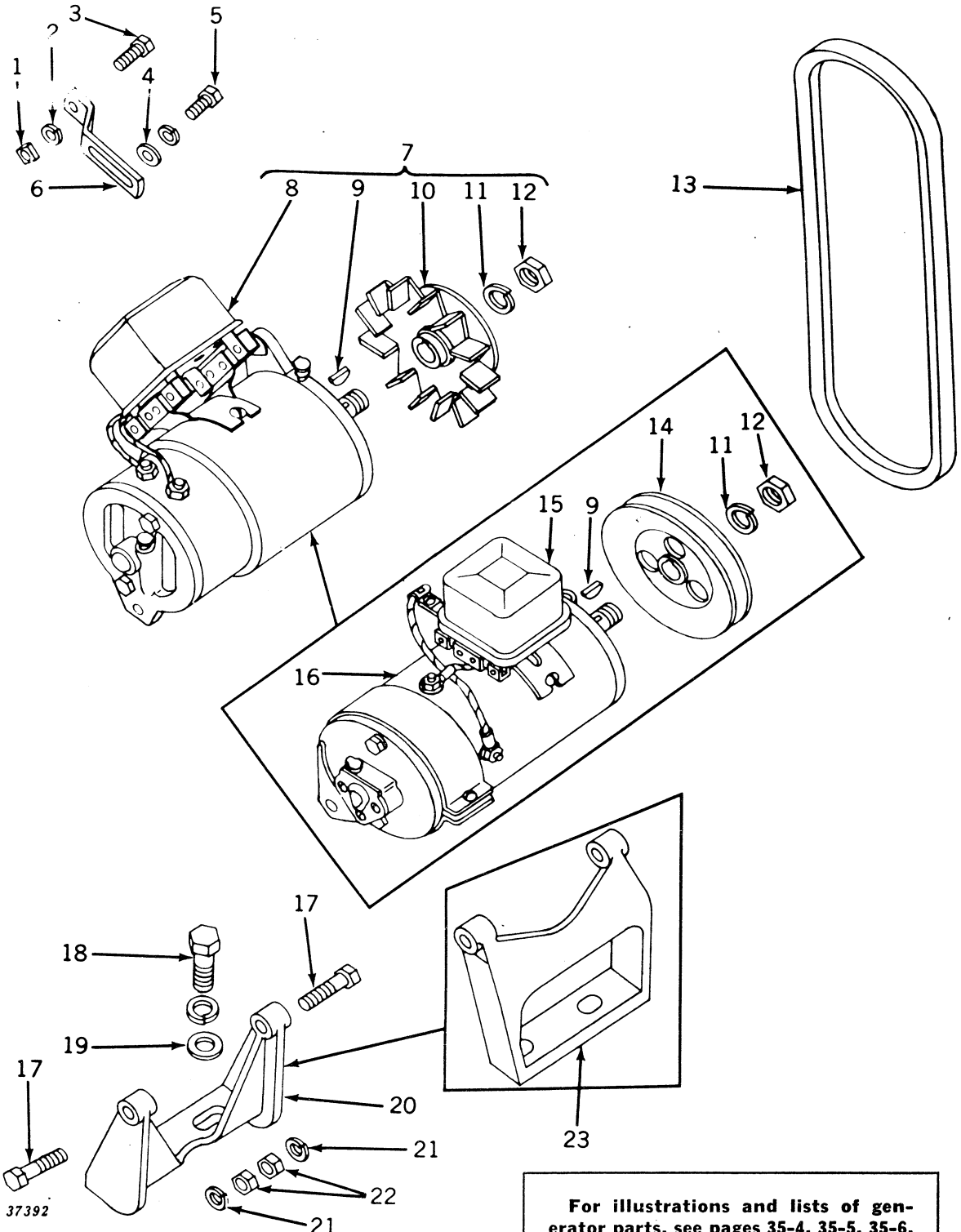


For illustrations and lists of generator parts, see pages 35-4, 35-5, 35-6, and 35-7.

For illustration and list of regulator parts, see pages 35-8 and 35-9.

## GENERATOR AND MOUNTING BRACKET—Continued
(Serial No. 5000001- )

| Key | Part No. | Serial No. | Description |
|---|---|---|---|
| 1 | 14H 785 R | ( – ) | Nut, 5/16" |
| 2 | 12H 10 R | ( – ) | Washer, Lock, 5/16" |
| 3 | 19H 1118 N | ( – ) | Bolt, Mach., 5/16" x 7/8" (Sub. for 19H110R) |
| 4 | 24H 39 R | ( – ) | Washer, 21/64" x 3/4" x 20 Gauge |
| 5 | 19H 1112 H | ( – ) | Screw, Cap, 5/16" x 3/4" (Sub. for 19H105R) |
| | 12H 10 R | ( – ) | Washer, Lock, 5/16" |
| 6 | F 893 R | ( – ) | Strap, Adjusting |
| 7 | AA 5737 R | (5016058– ) | Generator, with Fan and Pulley (12-Volt) (Delco-Remy No. 1100309) (See Page 35-7 for List of Parts) (Sub. AR21906R) (See Pages 35-34 and 35-35 for List of Parts) |
| 8 | 1118783 | (5016058–5018178) | Regulator, Voltage (See Page 35-9 for List of Parts) (Sub. 1118792) |
| | 1118792 | (5018179– ) | Regulator, Voltage (See Pages 35-8 and 35-9 for List of Parts) |
| 9 | 26H 72 R | ( – ) | Key, Woodruff, 1/8" x 5/8" |
| 10 | AR 11097 R | (5016058– ) | Fan and Pulley (Sub. for 1921939 and 1924689) |
| 11 | 804000 | ( – ) | Washer, Lock |
| 12 | 806915 | ( – ) | Nut |
| 13 | B 2893 R | ( –5016057) | Belt |
| | B 3288 R | (5016058– ) | Belt |
| 14 | B 1030 R | ( –5016057) | Pulley |
| 15 | 1118306 | (5016058–5018178) | Regulator, Current-Voltage (See Page 35-9 for List of Parts) (Sub. 1118792) |
| | 1118792 | (5018179– ) | Regulator, Voltage (See Pages 35-8 and 35-9 for List Parts) |
| 16 | AA 4921 R | ( –5016057) | Generator (Delco-Remy No. 1100955) (See Page 35-5 for List of Parts) (Sub. AR21906R) (See Pages 35-34 and 35-35 for List of Parts) |
| 17 | 7H 1091 R | ( –5032349) | Bolt, Mach., with Nut, 3/8" x 1-3/4" (2 used) (Packed 50 in a Pkg.) |
| | 19H 1116 N | (5032350– ) | Screw, Cap, 3/8" x 1-1/2" (2 used) (Sub. for 19H230H) |
| 18 | 19H 1131 N | (5032350– ) | Screw, Cap, 1/2" x 1-1/4" (2 used) (Sub. for 19H448R) |
| | 19H 462 N | ( –5032349) | Screw, Cap, 1/2" x 1-1/2" (2 used) (Sub. for 19H457R) |
| | 12H 13 R | ( – ) | Washer, Lock, 1/2" |
| 19 | D 2865 R | ( – ) | Washer (2 used) |
| 20 | A 4347 R | (5016058–5032349) | Bracket, Mounting |
| | AA 6497 R | (5032350– ) | Bracket, Mounting (Sub. AA6497R) |
| 21 | 12H 11 R | ( – ) | Washer, Lock, 3/8" (2 used) |
| 22 | 14H 255 R | ( – ) | Nut, 3/8" (2 used) |
| 23 | B 3090 R | ( –5016057) | Bracket, Mounting |

## AA4921R GENERATOR PARTS (12-VOLT) (DELCO-REMY)
(Serial No. 5000001-5016057)

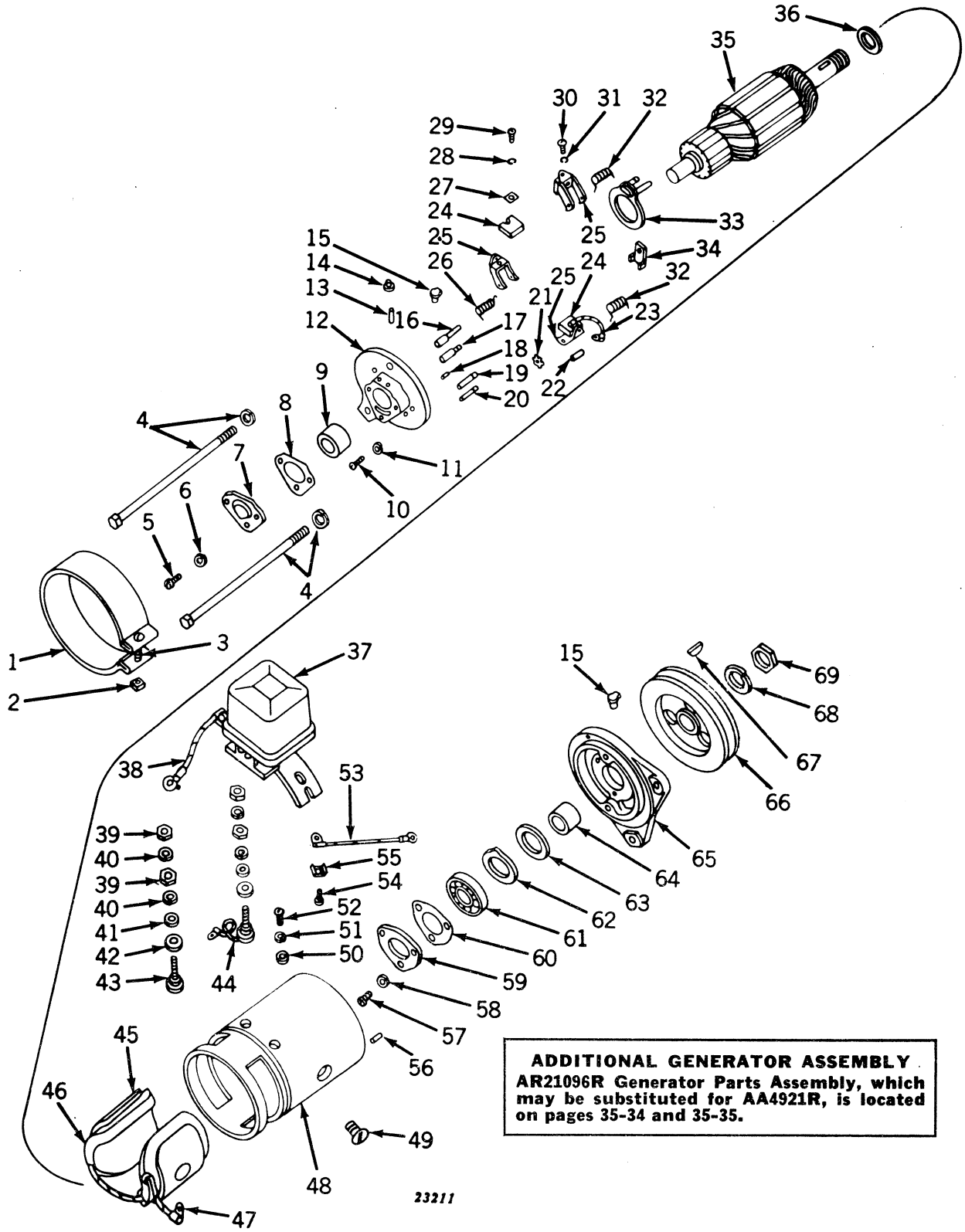


**ADDITIONAL GENERATOR ASSEMBLY**
**AR21096R Generator Parts Assembly, which may be substituted for AA4921R, is located on pages 35-34 and 35-35.**

## AA4921R GENERATOR PARTS (12-VOLT) (DELCO-REMY)—Continued
(Serial No. 5000001-5016057)

| Key | Part No. | Serial No. | Description |
|---|---|---|---|
| 1 | 1872638 | (–5016057) | Band, Cover |
| 2 | 14H 631 R | (–5016057) | Nut, No. 10 |
| 3 | 21H 986 R | (–5016057) | Screw, Mach., Rd. Hd., No. 10 x 1-1/4" |
| 4 | R 11158 R | (–5016057) | Bolt, Thru (2 used) (Sub. for 815018) |
| | 12H 10 R | (–5016057) | Washer, Lock, 5/16" (2 used) (Sub. for 12H68R) |
| 5 | 1886496 | (–5016057) | Screw (3 used) |
| 6 | A 766 R | (–5016057) | Washer, Lock (3 used) |
| 7 | 820524 | (–5016057) | Plate, Cover |
| 8 | 817220 | (–5016057) | Gasket |
| 9 | AA 3497 R | (–5016057) | Bushing |
| 10 | 21H 983 R | (–5016057) | Screw, Mach., Rd. Hd., No. 10 x 5/8" (2 used) |
| 11 | A 767 R | (–5016057) | Washer, Lock (2 used) (Packed 50 in a Pkg.) |
| 12 | 1882356 | (–5016057) | Frame, Commutator End |
| 13 | 804076 | (–5016057) | Wick, Oil |
| 14 | 1911097 | (–5016057) | Plug, Oil Hole |
| 15 | E 2302 RT | (–5016057) | Cup, Oil (2 used) |
| 16 | AR 11063 R | (–5016057) | Pin and Insulation, Brush Holder Hinge (Sub. for 812016) |
| 17 | AR 11062 R | (–5016057) | Pin and Insulation, Brush Holder Stop (Sub. for 812015) |
| 18 | R 11086 R | (–5016057) | Pin, Dowel (Sub. for 809062) |
| 19 | R 11093 R | (–5016057) | Pin, Stop, Brush Holder (Sub. for 817314) |
| 20 | R 11092 R | (–5016057) | Pin, Hinge, Brush Holder (Sub. for 817313) |
| 21 | 809824 | (–5016057) | Washer, Third Brush Plate Spring |
| 22 | 809614 | (–5016057) | Pin, Third Brush Plate Spring Washer |
| 23 | 809688 | (–5016057) | Lead, Ground Brush |
| 24 | 809637 | (–5016057) | Brush (3 used) |
| 25 | 809642 | (–5016057) | Holder, Brush (3 used) |
| 26 | 809658 | (–5016057) | Spring, Main Brush |
| 27 | 809551 | (–5016057) | Washer, Rectangular (3 used) |
| 28 | A 765 R | (–5016057) | Washer, Lock (3 used) |
| 29 | 451608 | (–5016057) | Screw (3 used) |
| 30 | 21H 961 R | (–5016057) | Screw, Mach., Rd. Hd., No. 6 x 3/16" (2 used) |
| 31 | R 11106 R | (–5016057) | Washer, Lock (2 used) (Sub. for 802730 and 1904377) |
| 32 | 809644 | (–5016057) | Spring, Third or Ground Brush (2 used) |
| 33 | 809698 | (–5016057) | Plate, Third Brush |
| 34 | 817532 | (–5016057) | Clamp, Third Brush Plate |
| 35 | AR 11030 R | (–5016057) | Armature (Sub. for 1872608) |
| 36 | R 11088 R | (–5016057) | Washer (Sub. for 809945) |
| 37 | 1118792 | (–5016057) | Regulator, Voltage (Sub. for 1118306) |
| 38 | 1911485 | (–5016057) | Lead, "F" Terminal to Regulator (Sub. for 1911481) |
| 39 | 14H 608 R | (–5016057) | Nut, No. 12 (4 used) |
| 40 | A 3011 R | (–5016057) | Washer, Lock (4 used) |
| 41 | A 3031 R | (–5016057) | Washer (2 used) |
| 42 | R 11098 R | (–5016057) | Washer, Insulating (2 used) (Sub. for 1858753) |
| 43 | 1858749 | (–5016057) | Stud, Terminal |
| 44 | 1858754 | (–5016057) | Stud, Terminal, with Lead |
| 45 | R 11161 R | (–5016057) | Shoe, Pole (2 used) (Sub. for 1914618) |
| 46 | 1922700 | (–5016057) | Coil, Field (Sub. for 1913732) |
| | R 11160 R | (–5016057) | Insulator, Field Coil (2 used) (Sub. for 1914491) |
| 47 | 200362 | (–5016057) | Clip, Brush Lead Terminal (2 used) (Sub. for 200182) |
| 48 | ..... | (–5016057) | Frame, Main |
| 49 | R 11097 R | (–5016057) | Screw (2 used) (Sub. for 1843646) |
| 50 | 24H 91 R | (–5016057) | Washer, 13/64" x 1/2" x 18 Gauge (2 used) |
| 51 | 12H 251 R | (–5016057) | Washer, Lock (2 used) (Sub. for A3010R) |
| 52 | 21H 995 R | (–5016057) | Screw, Mach., Rd. Hd., No. 10 x 3/8" (2 used) |
| 53 | 1911485 | (–5016057) | Lead, "A" Terminal to Regulator (Sub. for 1911480) |
| 54 | R 11100 R | (–5016057) | Screw (4 used) (Sub. for 1864099) |
| 55 | R 11084 R | (–5016057) | Clip, Terminal Screw, Lock (4 used) (Sub. for 1868137) |
| 56 | R 11087 R | (–5016057) | Pin, Dowel (Sub. for 809593) |
| 57 | R 11105 R | (–5016057) | Screw (3 used) (Sub. for 1904370) |
| 58 | A 3009 R | (–5016057) | Washer, Lock (3 used) |
| 59 | R 11109 R | (–5016057) | Retainer, Bearing (Sub. for 1911263) |
| 60 | R 11110 R | (–5016057) | Gasket (Sub. for 1912008) |
| 61 | JD 7180 R | (–5016057) | Bearing |
| 62 | R 11094 R | (–5016057) | Retainer (Sub. for 819104) |
| 63 | R 11089 R | (–5016057) | Washer (Felt) (Sub. for 809961) |
| 64 | 817224 | (–5016057) | Collar (Outside) |
| 65 | 1882358 | (–5016057) | Frame, Drive End |
| 66 | B 1030 R | (–5016057) | Pulley |
| 67 | 26H 72 R | (–5016057) | Key, Woodruff, 1/8" x 5/8" |
| 68 | 804000 | (–5016057) | Washer, Lock |
| 69 | 806915 | (–5016057) | Nut |

(Part listed below is an assembly of parts in this grouping.)

AA 4921 R ( –5016057) Generator, Complete (Delco-Remy No. 1100955) (Sub. AR21906R) (See Pages 35-34 and 35-35 for List of Parts)

## AA5737R GENERATOR PARTS (12-VOLT) (DELCO-REMY)
(Serial No. 5016058- )

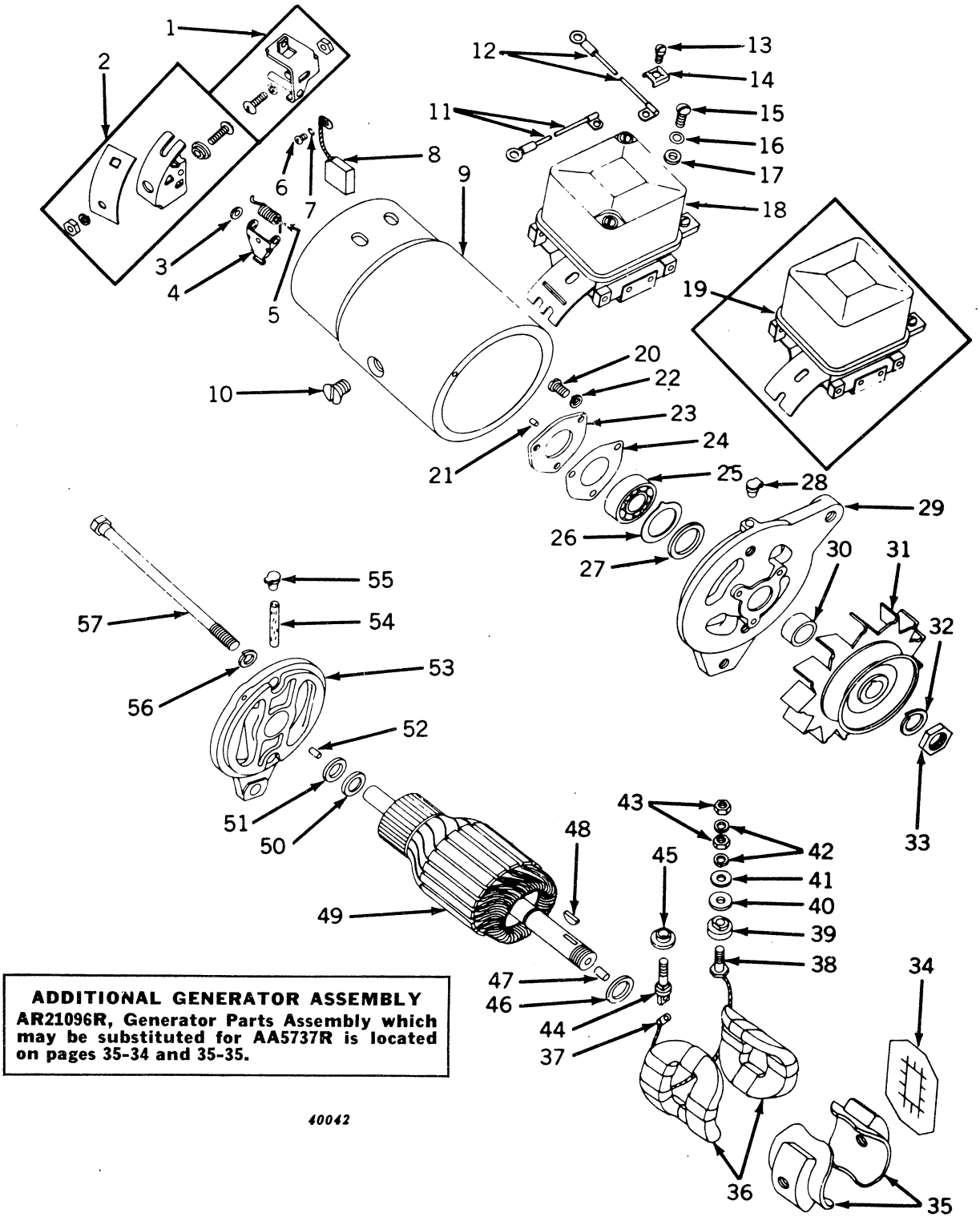


**ADDITIONAL GENERATOR ASSEMBLY**
**AR21096R, Generator Parts Assembly which may be substituted for AA5737R is located on pages 35-34 and 35-35.**

*40042*

## AA5737R GENERATOR PARTS (12-VOLT) (DELCO-REMY)—Continued
(Serial No. 5016058- )

| Key | Part No. | Serial No. | Description |
|---|---|---|---|
| 1 | AR 11100 R | (5016058- ) | Holder, Ground Brush (Set) (Sub. for 1922288) |
| 2 | AR 11068 R | (5016058- ) | Holder, Insulated Brush (Set) (Sub. for 1922289) |
| 3 | 1857412* | (5016058- ) | Washer, Brush Arm Spacer (2 used) |
| 4 | 1878183* | (5016058- ) | Arm, Main Brush (2 used) |
| 5 | T 11652 T | (5016058- ) | Spring, Brush (2 used) (Sub. for 1908829) |
| 6 | 132688* | (5016058- ) | Screw, Special Mach., Brush Lead Attaching (2 used) |
| 7 | R 11106 R | (5016058- ) | Washer, Lock, Brush Lead Attaching (2 used) (Sub. for 1904377) |
| 8 | AR 11074 R | (5016058- ) | Brush (2 used) (Packed 2 in a Pkg.) (Sub. for 1923295) |
| 9 | ..... | (5016058- ) | Frame, Main |
| 10 | R 11097 R | (5016058- ) | Screw, Pole Shoe (2 used) (Sub. for 1843646) |
| 11 | 1911485 | (5016058- ) | Lead, Regulator to "F" Terminal |
| 12 | 1917571 | (5016058- ) | Lead, Regulator to "A" Terminal |
| 13 | R 11100 R | (5016058- ) | Screw, Mach., Terminal (3 used) (Sub. for 1864099) |
| 14 | R 11084 R | (5016058- ) | Clip, Terminal Screw Lock (3 used) (Sub. for 1868137) |
| 15 | 21H 995 R | (5016058- ) | Screw, Regulator Attaching (2 used) |
| 16 | 24H 91 R | (5016058- ) | Washer, Regulator Attaching Screw (2 used) |
| 17 | 12H 251 R | (5016058- ) | Washer, Lock, Regulator Attaching Screw (2 used) (Sub. for A3010R) |
| 18 | 1118792 | (5018179- ) | Regulator |
| 19 | 1118783 | (5016058-5018178) | Regulator (Sub. 1118792) |
| 20 | R 11105 R | (5016058- ) | Screw, Plate Attaching (3 used) (Sub. for 1904370) |
| 21 | R 11086 R | (5016058- ) | Pin, Dowel (Sub. for 809062) |
| 22 | A 3009 R | (5016058- ) | Washer, Lock, Plate Attaching Screw (3 used) |
| 23 | R 11109 R | (5016058- ) | Plate, Bearing Retainer (Sub. for 1911263) |
| 24 | R 11110 R | (5016058- ) | Gasket, Bearing Retainer Plate (Sub. for 1912008) |
| 25 | JD 7695 R | (5016058- ) | Bearing |
| 26 | R 11094 R | (5016058- ) | Plate, Felt Washer Retaining (Sub. for 819104) |
| 27 | R 11089 R | (5016058- ) | Washer, Felt (Sub. for 809961) |
| 28 | 1880641* | (5016058- ) | Cup, Oil |
| 29 | 1925097* | (5016058- ) | Frame, Drive End |
| 30 | 1858603* | (5016058- ) | Collar Shaft |
| 31 | AR 11097 R | (5016058- ) | Pulley and Fan (Sub. for 1921939 and 1924689) |
| 32 | 804000 | (5016058- ) | Washer, Lock |
| 34 | R 11160 R | (5016058- ) | Insulator, Field Coil (2 used) (Sub. for 1914491) |
| 35 | R 11161 R | (5016058- ) | Shoe, Pole (2 used) (Sub. for 1914618) |
| 36 | AR 11101 R | (5016058- ) | Coil, Field (Sub. for 1923625) |
| 37 | 200362 | (5016058- ) | Terminal (Sub. for 200182) |
| 38 | R 11163 R | (5016058- ) | Stud, Field Terminal (Sub. for 1921860) |
| 39 | 1885090 | (5016058- ) | Insulator, Terminal Stud |
| 40 | R 11098 R | (5016058- ) | Washer, Insulating (Sub. for 1858753) |
| 41 | A 3031 R | (5016058- ) | Washer, Special, Terminal Stud (2 used) |
| 42 | A 3011 R | (5016058- ) | Washer, Lock, Terminal Stud (4 used) |
| 43 | 14H 608 R | (5016058- ) | Nut, Hex., Terminal Stud (4 used) |
| 44 | R 11162 R | (5016058- ) | Stud, Armature Terminal (Sub. for 1921369) |
| 45 | R 11113 R | (5016058- ) | Bushing, Insulating (Sub. for 1921362) |
| 46 | R 11088 R | (5016058- ) | Washer, Inside Spacing (Sub. for 809945) |
| 47 | R 11159 R | (5016058- ) | Plug, Felt (Sub. for 823551) |
| 48 | 26H 72 R | (5016058- ) | Key, Woodruff |
| 49 | AR 11099 R | (5016058- ) | Armature (Sub. for 817807) |
| 50 | R 11165 R | (5016058- ) | Cup, Washer Retainer (Sub. for 1927448) |
| 51 | R 11164 R | (5016058- ) | Washer, Felt (Sub. for 1927447) |
| 52 | R 11086 R | (5016058- ) | Pin, Dowel (Sub. for 809062) |
| 53 | AR 11102 R | (5016058- ) | Frame, Commutator End (Sub. for 1928061) |
| 54 | 804080* | (5016058- ) | Wick, Commutator End |
| 55 | E 2302 RT | (5016058- ) | Cup, Oil |
| 56 | 12H 10 R | (5016058- ) | Washer, Lock (2 used) |
| 57 | R 11158 R | (5016058- ) | Bolt, Thru (2 used) (Sub. for 815018) |

(Part listed below is an assembly of the parts in this grouping.)

AA 5737 R (5016058- ) Generator (Delco-Remy No. 1100309) (Sub. AR21906R) (See Pages 35-3 and 35-35 for List of Parts)

*Furnished by John Deere Dubuque Tractor Works.

## VOLTAGE REGULATORS
(Serial No. 5000001- )

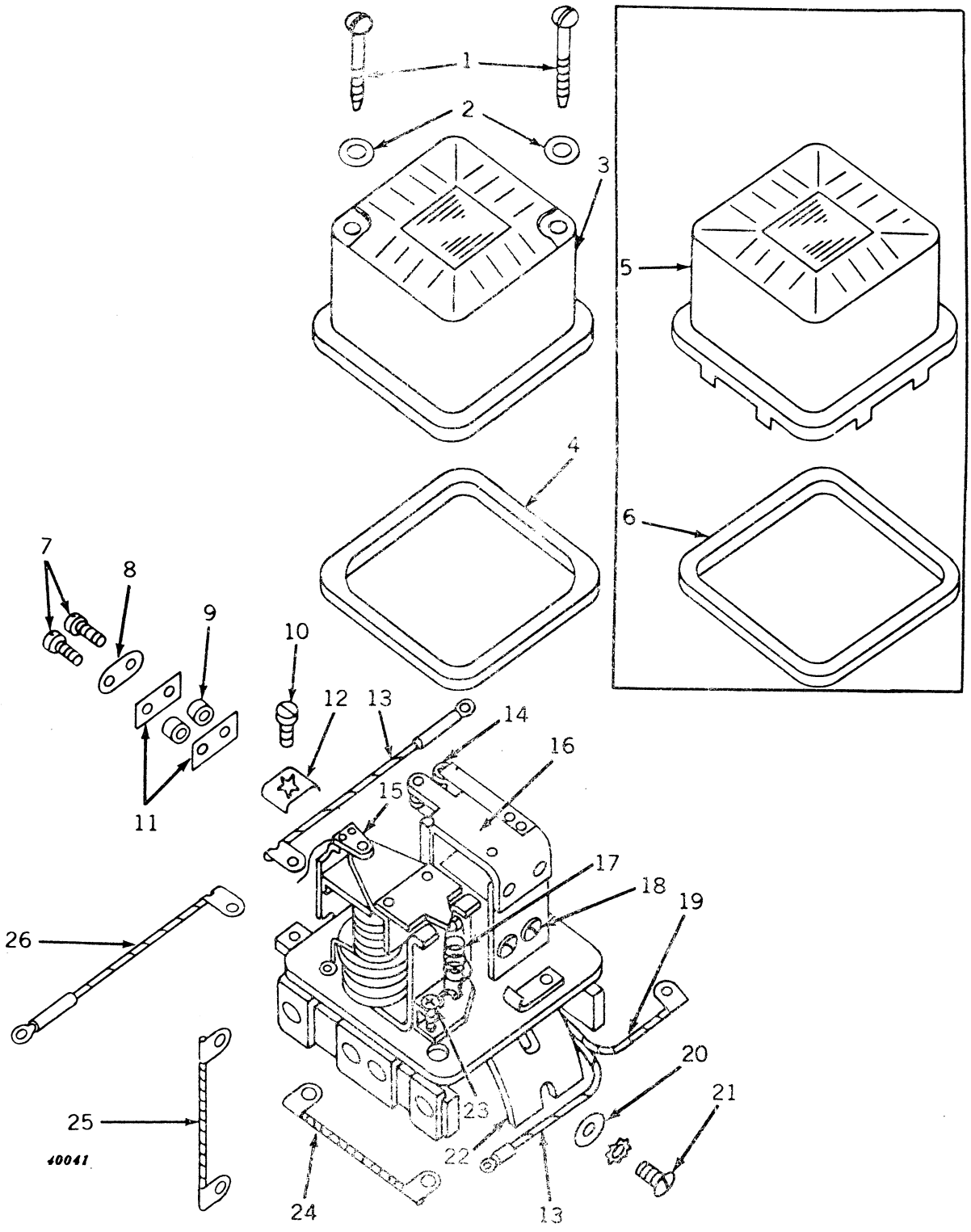

## VOLTAGE REGULATORS—Continued
(Serial No. 5000001- )

| Key | Part No. | Serial No. | Description |
|---|---|---|---|
| 1 | R 11170 R | (5018179– ) | Screw, Special Mach. (2 used) (Sub. for 1927982) |
| 2 | R 11156 R | (5018179– ) | Washer, Special (2 used) (Sub. for 1922996 or R11115R) |
| 3 | R 11168 R | (5018179– ) | Cover (Sub. for 1927980) |
| 4 | R 11169 R | (5018179– ) | Gasket (Sub. for 1927981) |
| 5 | 1909034 | ( –5018178) | Cover |
| 6 | 1909035 | ( –5018178) | Gasket |
| 7 | R 11103 R | ( – ) | Screw, Contact Attaching (2 used) (Sub. for 1878516) |
| 8 | R 11101 R | ( – ) | Plate, Lock, Contact Attaching Screw (2 used) (Sub. for 1878505) |
| 9 | R 11167 R | ( – ) | Bushing, Insulation (2 used) (Sub. for 1878506) |
| 10 | R 11100 R | ( – ) | Screw, Terminal (4 used) (Sub. for 1864099) |
| 11 | R 11102 R | ( – ) | Insulator (2 used) (Sub. for 1878507) |
| 12 | R 11084 R | ( – ) | Clip, Terminal (4 used) (Sub. for 1868137) |
| 13 | 1911485 | ( –5016057) | Lead, Regulator to "F" Terminal on Generator (1118306 only) |
| | 1911485 | ( –5016057) | Lead, Regulator to "A" Terminal on Generator (1118306 only) |
| 14 | R 11111 R | ( – ) | Screw, Adjusting (Sub. for 1912159) |
| 15 | AR 11103 R | ( – ) | Support, Contact (Sub. for 1878517) |
| 16 | 1878780 | ( – ) | Armature (Order From John Deere Harvester Works) |
| 17 | R 11112 R | ( – ) | Spring (Sub. for 1912176) |
| 18 | 1904817 | ( – ) | Screw, Relay Armature Attaching (2 used) |
| | R 11106 R | ( – ) | Washer, Lock, Armature, Relay Screw (2 used) (Sub. for 1904377) |
| 19 | 1909041 | ( –5018178) | Lead, Ground |
| 20 | 24H 91 R | ( – ) | Washer, Mounting Screw, 13/64" x 1/2" x 18 Gauge (2 used) |
| 21 | 21H 995 R | ( – ) | Screw, Mounting, Rd. Hd., No. 10 x 3/8" (2 used) |
| | 12H 251 R | ( – ) | Washer, Lock, Mounting Screw (2 used) (Sub. for A3010R) |
| 22 | 1913063 | ( –5018178) | Base, Mounting |
| 23 | 1922408 | ( – ) | Screw, Adjusting (Sub. for 1912365) |
| 24 | AR 11067 R | ( –5018178) | Resistor (Sub. for 1910174) |
| 25 | 1911485 | (5016058– ) | Lead, Regulator to "F" Terminal on Generator (1118783 and 1118792 only) |
| 26 | 1917571 | (5016058– ) | Lead, Regulator to "A" Terminal on Generator (1118783 and 1118792 only) |

(Parts listed below are an assembly of parts in this grouping.)

| | | |
|---|---|---|
| 1118306 | ( –5016057) | Regulator, Current and Voltage, with Cover, less Lead Assemblies (12-Volt (Sub. 1118792) |
| 1118792 | (5016058– ) | Regulator, Voltage, with Cover, less Lead Assemblies (12-Volt) (Sub. fo 1118783 or 1118306) |

## STARTING MOTOR AND CONTROLS
(Serial No. 5000001- )

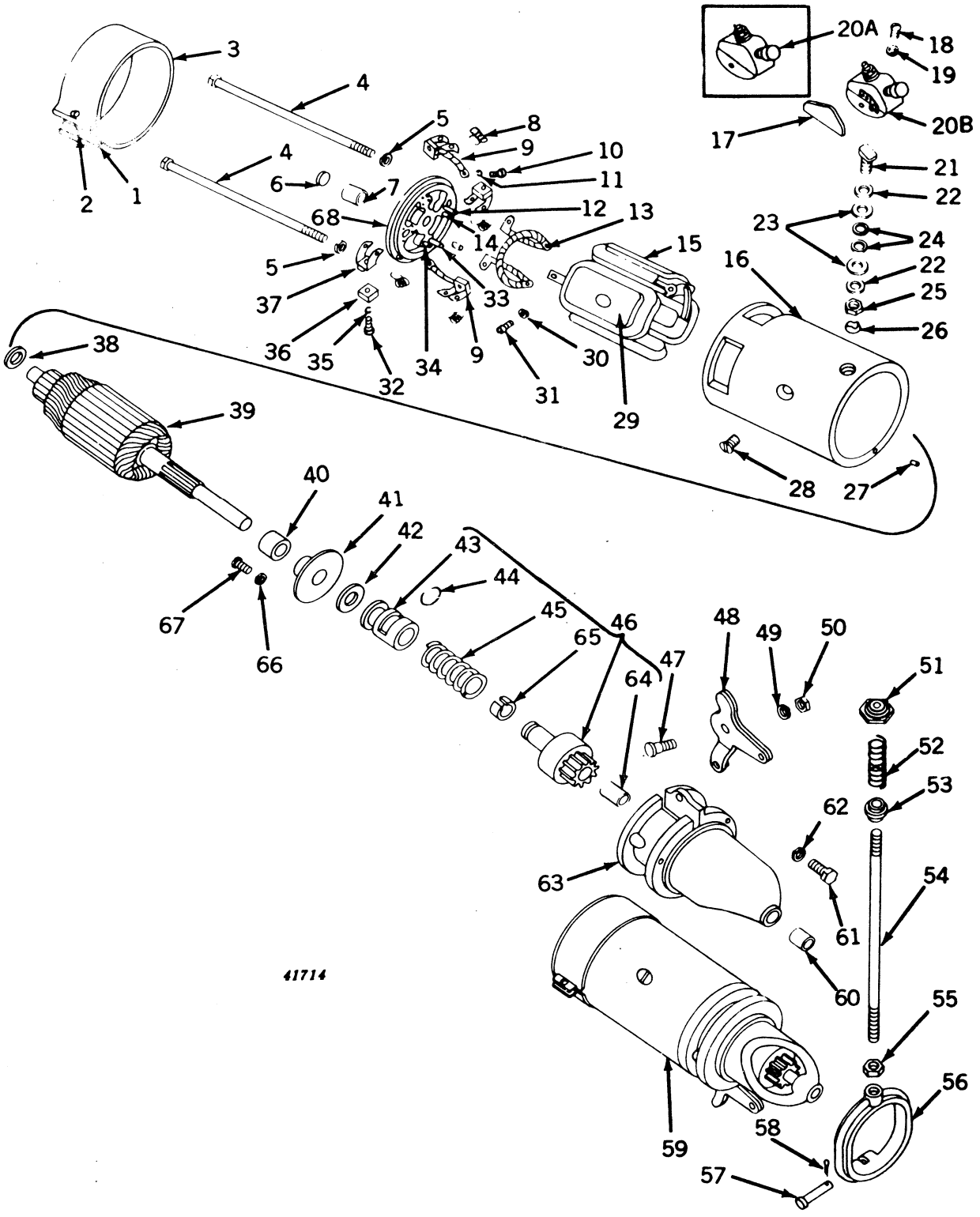

## STARTING MOTOR AND CONTROLS—Continued
(Serial No. 5000001- )

| Key | Part No. | | Description |
|---|---|---|---|
| 1 | 14H 631 R | ( ) | Nut |
| 2 | 21H 986 R | ( ) | Screw, Machine |
| 3 | 1886923 | ( ) | Band, Cover |
| 4 | 809053 | ( ) | Bolt, Thru (2 used) |
| 5 | 12H 9 R | ( ) | Washer, Lock (2 used) |
| 6 | ..... | ( ) | Plug, Welch (Not Sold) |
| 7 | ..... | ( ) | Bushing (Not Sold) |
| 8 | R 11091 R | ( – ) | Spring, Brush (4 used) (Sub. for 813521) |
| 9 | AR 11064 R | ( – ) | Lead, Ground Brush (2 used) (Sub. for 813554) |
| 10 | 21H 969 R | ( – ) | Screw, Mach. (2 used) |
| 11 | A 766 R | ( – ) | Washer, Lock (2 used) |
| 12 | AR 11063 R | ( – ) | Pin, Brush Holder Hinge (Insulated) (2 used) (Sub. for 812016) |
| 13 | AR 11000 R | ( – ) | Lead, Brush Connector (Sub. for 813523) |
| 14 | AR 11062 R | ( – ) | Pin, Brush Holder Stop (Insulated) (2 used) (Sub. for 812015) |
| 15 | 1838324 | ( – ) | Coil, Field |
| 16 | ..... | ( – ) | Frame, Main |
| 17 | 816911 | ( – ) | Insulation, Switch Side (2 used) |
| 18 | 21H 395 R | ( – ) | Screw, Mach. (2 used) |
| 19 | A 767 R | ( – ) | Washer, Lock (2 used) (Packed 50 in a Pkg.) (Sub. for A767R) |
| 20A | 820052 | ( –5021479) | Switch (Use with AB4649R) |
| 20B | AR 11006 R | (5021480– ) | Switch (Use with AB4860R) (Sub. for 1928209) |
| 21 | 821524* | ( – ) | Stud, Terminal |
| 22 | 24H 156 R | ( – ) | Washer (2 used) |
| 23 | R 11099 R | ( – ) | Washer (Insulated) (2 used) (Sub. for 1861076) |
| 24 | R 11107 R | ( – ) | Washer (Insulated) (3 used) (Sub. for 1904669) |
| 25 | 14H 732 R | ( – ) | Nut, 3/8" |
| 26 | 1837885 | ( – ) | Washer, Kling-Tite |
| 27 | R 11087 R | ( – ) | Pin, Dowel (Sub. for 809593) |
| 28 | R 11104 R | ( – ) | Screw, Pole Shoe (4 used) (Sub. for 1881869) |
| 29 | 810601 | ( – ) | Shoe, Pole (4 used) |
| 30 | A 767 R | ( – ) | Washer, Lock (4 used) (Packed 50 in a Pkg.) (Sub. for A767R) |
| 31 | 21H 395 R | ( – ) | Screw, Mach. (4 used) |
| 32 | 21H 964 R | ( – ) | Screw, Mach. (4 used) |
| 33 | R 11092 R | ( – ) | Pin, Brush Holder Hinge (2 used) (Sub. for 817313) |
| 34 | R 11093 R | ( – ) | Pin, Brush Holder Stop (2 used) (Sub. for 817314) |
| 35 | A 765 R | ( – ) | Washer, Lock (4 used) |
| 36 | 828448 | ( – ) | Brush (4 used) |
| 37 | R 11090 R | ( – ) | Holder, Brush (4 used) (Sub. for 810226) |
| 38 | R 11096 R | ( – ) | Washer, Spacing (Sub. for 833602) |
| 39 | 822187 | ( – ) | Armature |
| 40 | 820148 | ( – ) | Bushing, Center Bearing |
| 41 | 820149 | ( – ) | Plate, Center Bearing, with Bushing |
| 42 | 822190 | ( – ) | Washer, Leather |
| 43 | 037554 | ( – ) | Collar, Clutch |
| 44 | R 11118 R | ( – ) | Wire, Lock (Sub. for 37521) |
| 45 | 37517 | ( – ) | Spring |
| 46 | 1909771 | ( – ) | Clutch Assembly |
| 47 | 1885817 | ( – ) | Shaft, Shift Lever |
| 48 | 1909772 | ( – ) | Lever, Shift |
| 49 | 12H 11 R | ( – ) | Washer, Lock, 3/8" |
| 50 | 14H 732 R | ( – ) | Nut, 3/8" |
| 51 | AB 4951 R | ( – ) | Button, Starter (Sub. for B2286R) |
| 52 | B 207 R | ( – ) | Spring |
| 53 | B 2287 R | ( – ) | Bushing (Fiber) |
| 54 | B 2291 R | ( – ) | Rod |
| 55 | 14H 732 R | ( – ) | Nut, 3/8" |
| 56 | B 2289 R | ( – ) | Yoke |
| 57 | B 2290 R | ( – ) | Pin |
| 58 | 11H 22 R | ( – ) | Pin, Cotter, 3/32" x 1" (Sub. for 11H19R) |
| 59 | AB 4649 R | ( –5021479) | Starting Motor (Delco-Remy No. 1108144) (Sub. AB4860R) |
| | AB 4860 R | (5021480– ) | Starting Motor (Delco-Remy No. 1108155) (Sub. for AB4649R) |
| 60 | 810620 | ( – ) | Bushing (Sub. for 35058) |
| 61 | 19H 218 D | ( – ) | Screw, Cap, 3/8" x 1" (3 used) (Sub. for 19H211R) |
| 62 | 12H 11 R | ( – ) | Washer, Lock, 3/8" (3 used) |
| 63 | 1909770 | ( – ) | Housing, Drive End, and Bushing |
| 64 | 1873796 | ( – ) | Bushing (2 used) |
| 65 | 810620 | ( – ) | Bushing |
| 66 | A 3009 R | ( – ) | Washer, Lock (2 used) |
| 67 | 21H 979 R | ( – ) | Screw, Mach. (2 used) |
| 68 | 1908580 | ( – ) | Frame, Commutator End, with Pins |

*Furnished by John Deere Dubuque Tractor Works.

## DISTRIBUTOR, 12-VOLT (WICO)
(Tractor Serial No. 5000001-5016499)
(Wico Distributor Serial No. 64425- )

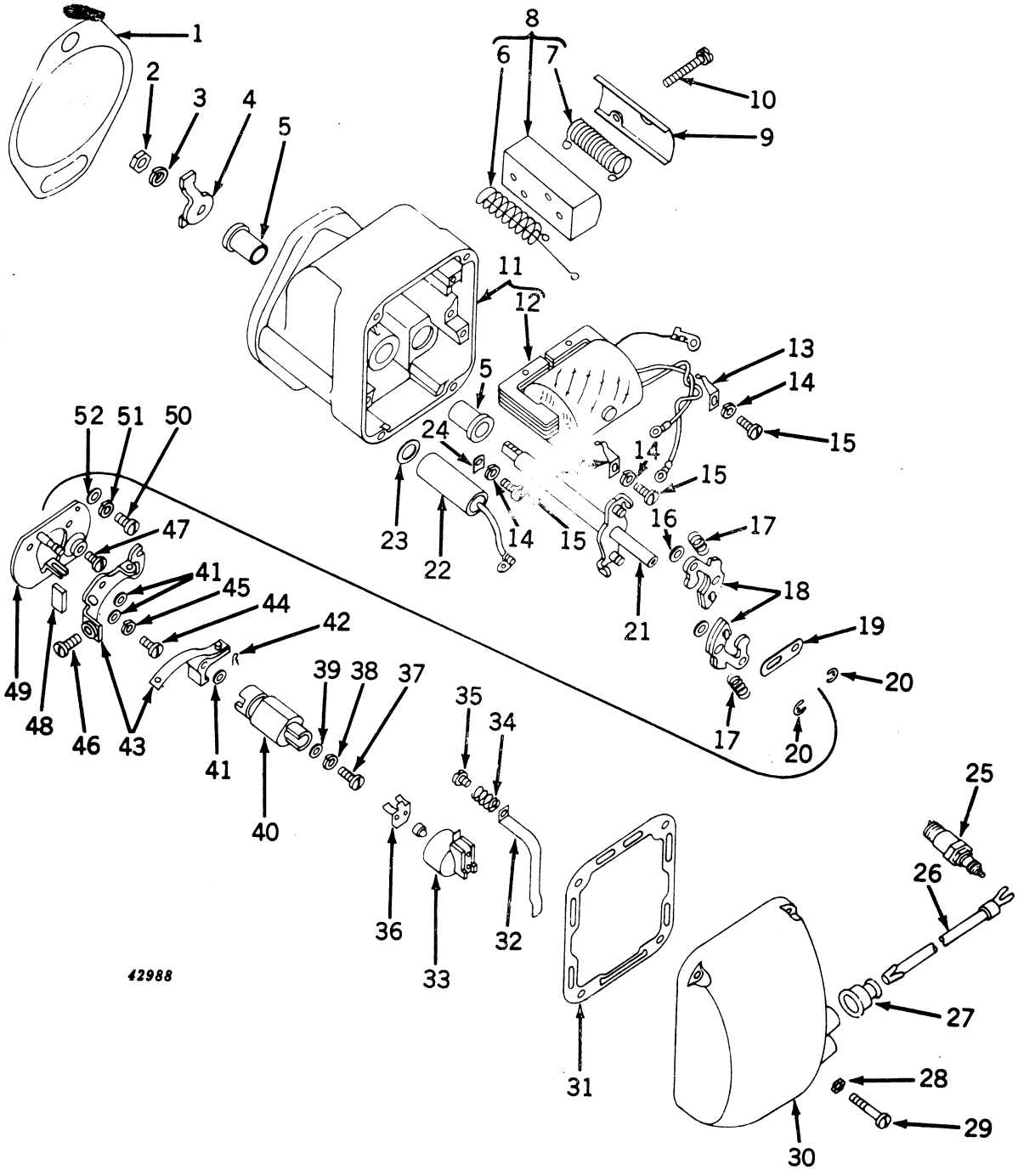

## DISTRIBUTOR, 12-VOLT (WICO)—Continued

**(Tractor Serial No. 5000001-5016499)**

**Wico Distributor Serial No. 64425- )**

| Key | Part No. | Wico Serial No. | Description |
|---|---|---|---|
| 1 | A 5272 R | ( 64425- ) | Gasket (Packed 5 in a Pkg.) (Sub. for A500R) |
| 2 | 14H 649 R | ( 64425- ) | Nut, Jam, 1/4" |
| 3 | 12H 9 R | ( 64425- ) | Washer, Lock, 1/4" |
| 4 | 6900D | ( 64425- ) | Lug, Drive |
| 5 | 6791 | ( 64425- ) | Bushing, Drive Shaft (2 used) |
| 6 | 8616 | ( 64425- ) | Resistor, Ballast (Sub. for X8616) |
| 7 | 8618 | ( 64425- ) | Resistor, Line (Sub. for X8618) |
| 8 | X 8623 | ( 64425- ) | Plate, Mounting, with Resistors |
| 9 | 8621 | ( 64425- ) | Cover, Resistor |
| 10 | 8622 | ( 64425- ) | Screw (Special) Mach., with Lock Washer (2 used) |
| 11 | X 7139 | ( 64425- ) | Housing |
| 12 | X 6976 | ( 64425- ) | Coil, with Core and Wedge |
| 13 | 6845 | ( 64425- ) | Clamp, Coil Core (2 used) |
| 14 | 12H 35 R | ( 64425- ) | Washer, Lock (3 used) |
| 15 | 21H 973 R | ( 64425- ) | Screw (Special) Mach. (3 used) |
| 16 | 3219 | ( 64425- ) | Washer, Breaker Arm Pivot (2 used) |
| 17 | 6839 | ( 64425- ) | Spring, Advance Weight (2 used) |
| 18 | X 6857 | ( 64425- ) | Weight, Advance (2 used) |
| 19 | 6795 | ( 64425- ) | Stop, Advance Weight |
| 20 | 6388 | ( 64425- ) | Snap Ring, Advance Weight (2 used) |
| 21 | X 6837 | ( 64425- ) | Shaft, Drive |
| 22 | K 6977 | ( 64425- ) | Condenser |
| 23 | 6875 | ( 64425- ) | Spring, Flat, Condenser Contact |
| 24 | 6843 | ( 64425- ) | Clamp, Condenser |
| 25 | AH 830 R | ( 64425- ) | Spark Plug (Champion) (No. 8 Comm. C) (2 used) (All-Fuel) (Sub. AA4369R) |
| | AA 3846 R | ( 64425- ) | Spark Plug (Champion) (Hot Type No. 10 Comm.) (For Light Service) (2 used) (All-Fuel and Gasoline) (Sub. AA5593R) |
| | AA 4053 R | ( 64425- ) | Spark Plug (Champion) (No. 6 Comm.) (2 used) (Gasoline) (Heavy-Duty) |
| | AA 4369 R | ( 64425- ) | Spark Plug (Champion) (No. 8 Comm.) (2 used) (For Light Service when Burning Gasoline) |
| | AA 4660 R | ( 64425- ) | Spark Plug (AC88L Comm.) (2 used) (Hot Type when Burning Gasoline) |
| | AA 5593 R | ( 64425- ) | Spark Plug (Champion) (No. 10 Comm. 64) (2 used) (Hot Type when Burning Gasoline) |
| | AA 5594 R | ( 64425- ) | Spark Plug (AC86 Comm.) (2 used) (All-Fuel) |
| | AA 5818 R | ( 64425- ) | Spark Plug (Auto-Lite) (Type BD9) (2 used) (All-Fuel) (Sub. AA6331R) |
| | AA 5972 R | ( 64425- ) | Spark Plug (AC85 Comm.) (2 used) (Gas) |
| | AA 6330 R | ( 64425- ) | Spark Plug (Auto-Lite) (Type BT-10F) (2 used) (Gas and All-Fuel, Hot Type) |
| | AA 6331 R | ( 64425- ) | Spark Plug (Auto-Lite) (Type BT-8J) (2 used) (Gas and All-Fuel, Medium Type) |
| | AA 6332 R | ( 64425- ) | Spark Plug (Auto-Lite) (Type BT-4G) (2 used) (Gas and All-Fuel, Cold Type and LP-Gas) |
| 26 | AA 6141 R | ( 64425- ) | Cable, Spark Plug (Pkg. of One Cable, One Cable Terminal, and One Terminal Nut) (2 Cables, Terminals and Nuts used) (Sub. for AB3480R and AA5976R) |
| | A 3692 R | ( 64425- ) | Nut, Spark Plug Terminal (2 used) |
| | A 5188 R | ( 64425- ) | Terminal, Spark Plug (2 used) |
| 27 | A 3539 R | ( 64425- ) | Nipple (2 used) (Packed 10 in a Pkg.) |
| 28 | IXA 256 | ( 64425- ) | Washer (4 used) |
| 29 | 5622 | ( 64425- ) | Screw (Special), Mach. (4 used) |
| 30 | X 7845 | ( 64425- ) | Cap, Distributor, with Screws and Lock Washers |
| 31 | 5618 | ( 64425- ) | Gasket |
| 32 | X 6000 | ( 64425- ) | Interlead, Secondary |
| 33 | X 5531 | ( 64425- ) | Arm, Distributor (Furnished by John Deere Dubuque Tractor Works) |
| 34 | 5620 | ( 64425- ) | Spring, Coil Contact |
| 35 | 5536 | ( 64425- ) | Screw, Coil Contact |
| 36 | 10461 | ( 64425- ) | Lock, Distributor Arm |
| 37 | 21H 971 R | ( 64425- ) | Screw (Special) Mach. |
| 38 | 12H 35 R | ( 64425- ) | Washer, Lock |
| 39 | 6831 | ( 64425- ) | Washer, Cam to Drive Shaft Screw |
| 40 | X 6832 | ( 64425- ) | Cam, with Bushing |
| 41 | 10407 | ( 64425- ) | Washer, Breaker Point Aligning |
| 42 | 4210 | ( 64425- ) | Pin, Spring Locking |
| 43 | X 5996 | ( 64425- ) | Point, Breaker Arm (Set of 2) |
| 44 | 21H 973 R | ( 64425- ) | Screw (Special) Mach. |
| 45 | 12H 35 R | ( 64425- ) | Washer, Lock |
| 46 | 21H 964 R | ( 64425- ) | Screw (Special) Mach. |
| 47 | 21H 964 R | ( 64425- ) | Screw (Special) Mach. |
| 48 | 5077 | ( 64425- ) | Felt, Cam Wiper |
| 49 | X 6829 | ( 64425- ) | Plate, Breaker |
| 50 | 21H 973 R | ( 64425- ) | Screw (Special) Mach. (2 used) |
| 51 | 12H 35 R | ( 64425- ) | Washer, Lock (2 used) |
| 52 | B 1085 R | ( 64425- ) | Washer (2 used) |

(Part listed below is an assembly of parts in this grouping.)

**AB 4647 R** ( 64425- ) **Distributor, Complete, Wico (12-Volt) (Sub. AA4871R Delco-Remy, Distributor, with AA4983R Coil) (12-Volt) (ATTACHMENT)**

## DISTRIBUTOR (DELCO-REMY) (EXCEPT LP-GAS)
(Serial No. 5016500- )

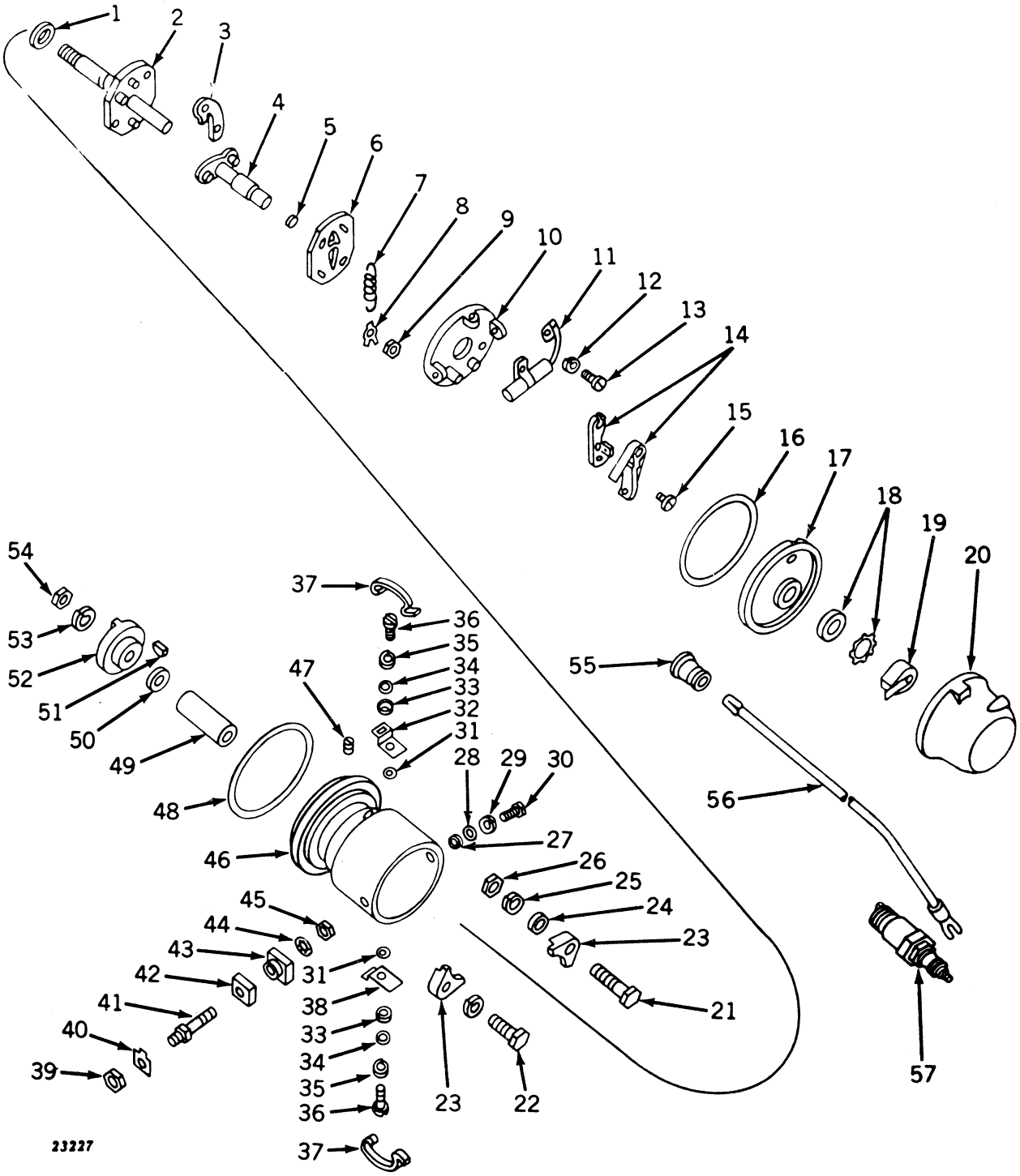


| Key | Part No. | Serial No. | Description |
|---|---|---|---|
| 1 | 811912* | (5016500– ) | Washer, Weight Plate Spacing (2 used) |
| 2 | 1917211 | (5016500– ) | Plate, Weight, and Shaft |
| 3 | 1873697 | (5016500– ) | Weight, Advance (4 used) |
| 4 | 1917209 | (5016500– ) | Cam |
| 5 | 819639 | (5016500– ) | Wick, Oil |
| 6 | 1885557 | (5016500– ) | Plate, Weight Hold-Down |
| 7 | 1912765 | (5016500– ) | Spring, Advance Weight (2 used) |
| 8 | 1885558 | (5016500– ) | Washer, Lock (Special) (2 used) |

## DISTRIBUTOR (DELCO-REMY) (EXCEPT LP-GAS)—Continued
(Serial No. 5016500- )

| Key | Part No. | Serial No. | Description |
|---|---|---|---|
| 9 | 14H 631 R | (5016500- ) | Nut, Weight Plate Stud, No. 10 (2 used) |
| 10 | 1847643* | (5016500- ) | Plate, Breaker |
| 11 | 1869704* | (5016500- ) | Condenser (Sub. for 1900272) |
| 12 | A 766 R | (5016500- ) | Washer, Lock |
| 13 | 21H 968 R | (5016500- ) | Screw, Condenser to Breaker Plate, Fillister Hd., No. 8 x 3/16" |
| 14 | 1911119* | (5016500- ) | Point, Contact (Set of 2) |
| 15 | 816784* | (5016500- ) | Screw, Contact Support to Breaker Plate |
| 16 | 1889966* | (5016500- ) | Gasket, Cover |
| 17 | 1900119* | (5016500- ) | Cover, Housing (Sub. for 1921312) |
| 18 | 1914309* | (5016500- ) | Seal, Housing Cover |
| 19 | 1905590* | (5016500- ) | Rotor |
| 20 | 1913739 | (5016500- ) | Cap, Distributor |
| 21 | 7H 1091 R | (5016500- ) | Bolt, Mach., 3/8" x 1-3/4" |
| 22 | F 2273 R | (5016500- ) | Screw, Cap, 3/8" x 1-1/4" (Sub. for 19H221R) |
| | 12H 11 R | (5016500- ) | Washer, Lock, 3/8" |
| 23 | A 4157 R | (5016500- ) | Clamp, Distributor (2 used) |
| 24 | 24H 154 R | (5016500- ) | Washer, 25/64" x 7/8" x 16 Gauge |
| 25 | 12H 11 R | (5016500- ) | Washer, Lock, 3/8" |
| 26 | 14H 255 T | (5016500- ) | Nut, 3/8" |
| 27 | 1919246 | (5016500- ) | Retainer, Breaker Plate to Housing Screw |
| 28 | 1919247 | (5016500- ) | Gasket, Breaker Plate to Housing Screw |
| 29 | A 766 R | (5016500- ) | Washer, Lock |
| 30 | 21H 972 R | (5016500- ) | Screw, Breaker Plate to Housing, Rd. Hd., No. 8 x 5/16" |
| 31 | 1918319 | (5016500- ) | Gasket, Clamp Support to Housing Screw, 1/64" (2 used) |
| 32 | 1889999* | (5016500- ) | Support, Upper Clamp |
| 33 | 1919246 | (5016500- ) | Retainer, Clamp Support to Housing Screw (2 used) |
| 34 | 1919247 | (5016500- ) | Gasket, Clamp Support to Housing Screw, 1/16" (2 used) |
| 35 | A 766 R | (5016500- ) | Washer, Lock (2 used) |
| 36 | 21H 975 R | (5016500- ) | Screw, Clamp Support to Housing, Fillister Hd., No. 8 x 1/2" (2 used) |
| 37 | 1889967* | (5016500- ) | Clamp (2 used) |
| 38 | 1847289* | (5016500- ) | Support, Lower Clamp |
| 39 | 14H 605 R | (5016500- ) | Nut, Primary Terminal Stud, Outside No. 8 |
| 40 | 1909206* | (5016500- ) | Clip, Lock, Terminal Stud |
| 41 | 1916806 | (5016500- ) | Stud, Primary Terminal |
| 42 | 1914142 | (5016500- ) | Bushing, Outside |
| 43 | 1916805 | (5016500- ) | Bushing, Inside |
| 44 | 12H 290 R | (5016500- ) | Washer, Lock, Inside (Sub. for A2734R) |
| 45 | 817363* | (5016500- ) | Nut, Inside |
| 46 | 1917205 | (5016500- ) | Housing, Distributor |
| 47 | R 11085 R | (5016500- ) | Plug, Pipe (Sub. for 125947) |
| 48 | A 4158 R | (5016500- ) | Gasket (Packed 2 in a Pkg.) |
| 49 | 1917207 | (5016500- ) | Bushing, Distributor Housing |
| 50 | 811912* | (5016500- ) | Washer, Drive Lug Spacing |
| 51 | 26H 3 R | (5016500- ) | Key, Woodruff, 3/32" x 3/8" |
| 52 | 1885376 | (5016500- ) | Lug, Drive |
| 53 | 12H 40 C | (5016500- ) | Washer, Lock, 3/8" |
| 54 | 14H 774 R | (5016500- ) | Nut, Jam, 3/8" |
| 55 | A 3539 R | (5016500- ) | Nipple (2 used) (Packed 10 in a Pkg.) |
| 56 | AA 6141 R | (5016500- ) | Cable, Spark Plug (Pkg. of One Cable, One Cable Terminal and One Terminal Nut) (2 Cables, 2 Terminals and 2 Nuts used) (Sub. for AA1890R and AA5976R) |
| | A 3692 R | (5016500- ) | Nut, Terminal, Spark Plug (2 used) |
| | A 5188 R | (5016500- ) | Terminal, Spark Plug (2 used) |
| 57 | AH 830 R | (5016500- ) | Spark Plug (Champion) (No. 8 Comm. C) (2 used) (All-Fuel) (Sub. AA4369R) |
| | AA 3846 R | (5016500- ) | Spark Plug (Champion) (Hot Type No. 10 Comm.) (For Light Service) (2 used) (All-Fuel and Gasoline) (Sub. AA5593R) |
| | AA 4053 R | (5016500- ) | Spark Plug (Champion) (No. 6 Comm.) (2 used) (Gasoline) (Heavy-Duty) |
| | AA 4369 R | (5016500- ) | Spark Plug (Champion) (No. 8 Comm.) (2 used) (For Light Service when Burning Gasoline) |
| | AA 4660 R | (5016500- ) | Spark Plug (AC88L Comm.) (2 used) (Hot Type when Burning Gasoline) |
| | AA 5593 R | (5016500- ) | Spark Plug (Champion) (No. 10 Comm. 64) (2 used) (Hot Type when Burning Gasoline) |
| | AA 5594 R | (5016500- ) | Spark Plug (AC86 Comm.) (2 used) (All-Fuel) |
| | AA 5818 R | (5016500- ) | Spark Plug (Auto-Lite) (BD9) (2 used) (All-Fuel) (Sub. AA6331R) |
| | AA 5972 R | (5016500- ) | Spark Plug (AC85 Comm.) (2 used) (Gas) |
| | AA 6330 R | (5016500- ) | Spark Plug (Auto-Lite) (Type BT-10F) (2 used) (Gas and All-Fuel, Hot Type) |
| | AA 6331 R | (5016500- ) | Spark Plug (Auto-Lite) (TypeBT-8J) (2 used) (Gas and All-Fuel, Medium Type) |
| | AA 6332 R | (5016500- ) | Spark Plug (Auto-Lite) (Type BT-4G) (2 used) (Gas and All-Fuel, Cold Type and LP-Gas) |

(Part listed below is an assembly of parts in this grouping)

| | | | |
|---|---|---|---|
| | AA 4877 R | (5016500- ) | Distributor, Complete, less Coil (Delco Remy) |

*Furnished by John Deere Dubuque Tractor Works.

## IGNITION COIL (DELCO-REMY) (EXCEPT LP-GAS)
(Serial No. 5016500- )

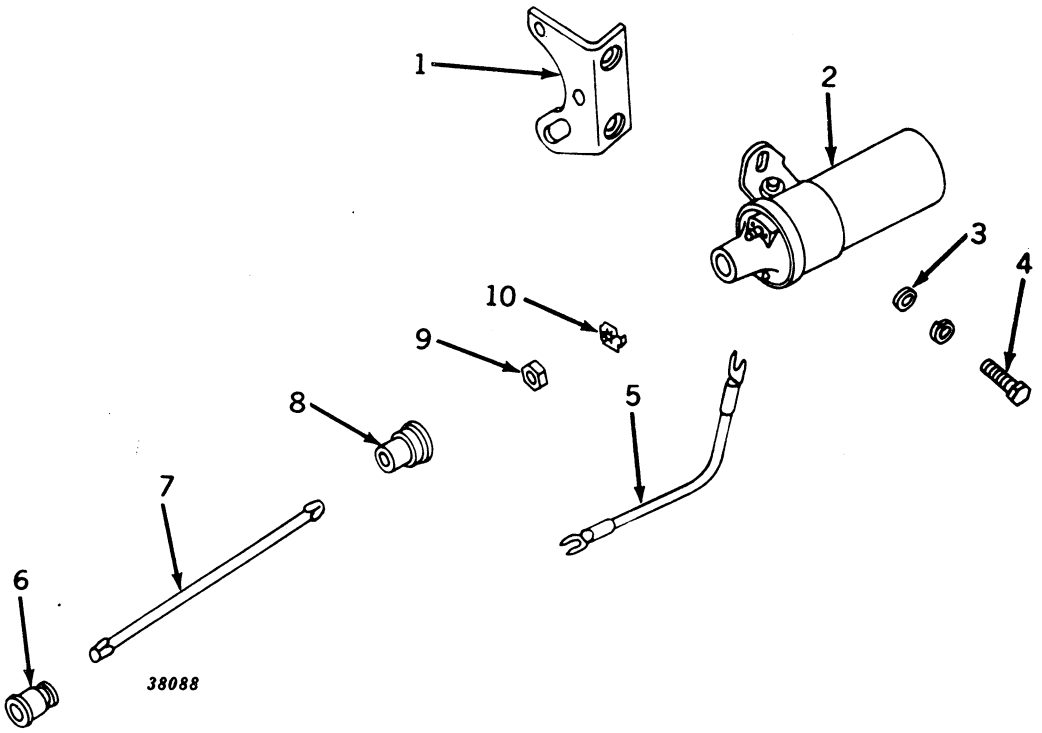


| Key | Part No. | Serial No. | Description |
|---|---|---|---|
| 1 | AA 4883 R | (5016500– ) | Bracket, with Nuts |
| 2 | AA 4983 R | (5016500–5021479) | Coil, with Clamp |
| | AM 791 T | (5021480– ) | Coil, with Clamp |
| 3 | 24H 143 R | (5016500– ) | Washer, 21/64" x 3/4" x 16 Gauge (2 used) |
| 4 | 19H 99 R | (5016500– ) | Screw, Cap, 5/16" x 9/16" (2 used) |
| | 12H 10 R | (5016500– ) | Washer, Lock, 5/16" (2 used) |
| 5 | AA 4881 R | (5016500– ) | Lead, Wiring, Coil to Distributor |
| 6 | A 3539 R | (5016500– ) | Nipple (Packed 10 in a Pkg.) |
| 7 | AA 4882 R | (5016500– ) | Cable, Secondary, Coil to Distributor |
| 8 | A 4159 R | (5016500– ) | Nipple |
| 9 | 14H 631 R | (5016500– ) | Nut, Hex., No. 10 (2 used) |
| 10 | 1909206* | (5016500– ) | Clip (2 used) |

*Furnished by John Deere Dubuque Tractor Works.

## IGNITION COIL (DELCO-REMY) (LP-GAS)
(Serial No. 5024000- )

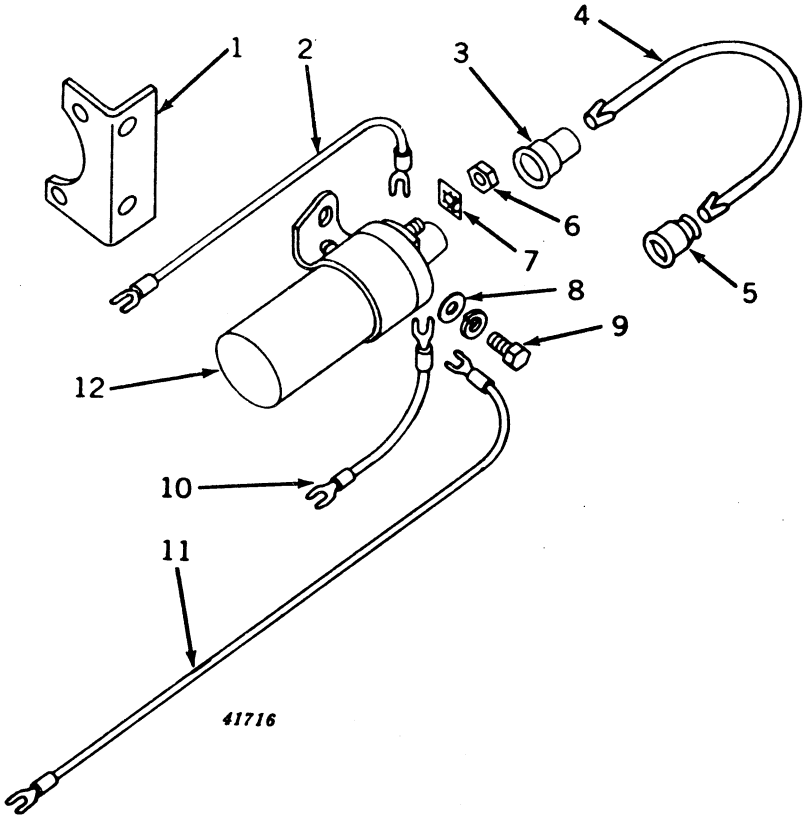


| Key | Part No. | Serial No. | Description |
|---|---|---|---|
| 1 | AB 4871 R | (5024000– ) | Bracket, with Nuts |
| 2 | ..... | (5024000– ) | Lead, Wiring (Part of AA5738R) |
| 3 | A 4159 R | (5024000– ) | Nipple |
| 4 | AA 4882 R | (5024000– ) | Cable, Secondary, Coil to Distributor |
| 5 | A 3539 R | (5024000– ) | Nipple |
| 6 | 14H 631 R | (5024000– ) | Nut, Hex., No. 10 (2 used) |
| 7 | 1909206* | (5024000– ) | Clip (2 used) |
| 8 | 24H 143 R | (5024000– ) | Washer, 21/64" x 3/4" x 16 Gauge (2 used) |
| 9 | 19H 99 R | (5024000– ) | Screw, Cap, 5/16" x 9/16" (2 used) |
| | 12H 10 R | (5024000– ) | Washer, Lock, 5/16" (2 used) |
| 10 | AA 4881 R | (5024000– ) | Lead, Wiring, Coil to Distributor |
| 11 | AA 5064 R | (5024000– ) | Lead, Wiring, Coil to Switch Terminal Marked "Mag" |
| 12 | AM 791 T | (5024000– ) | Coil, with Clamp |

*Furnished by John Deere Dubuque Tractor Works.

## DISTRIBUTOR DRIVE (LP-GAS)
(Serial No. 5024000- )

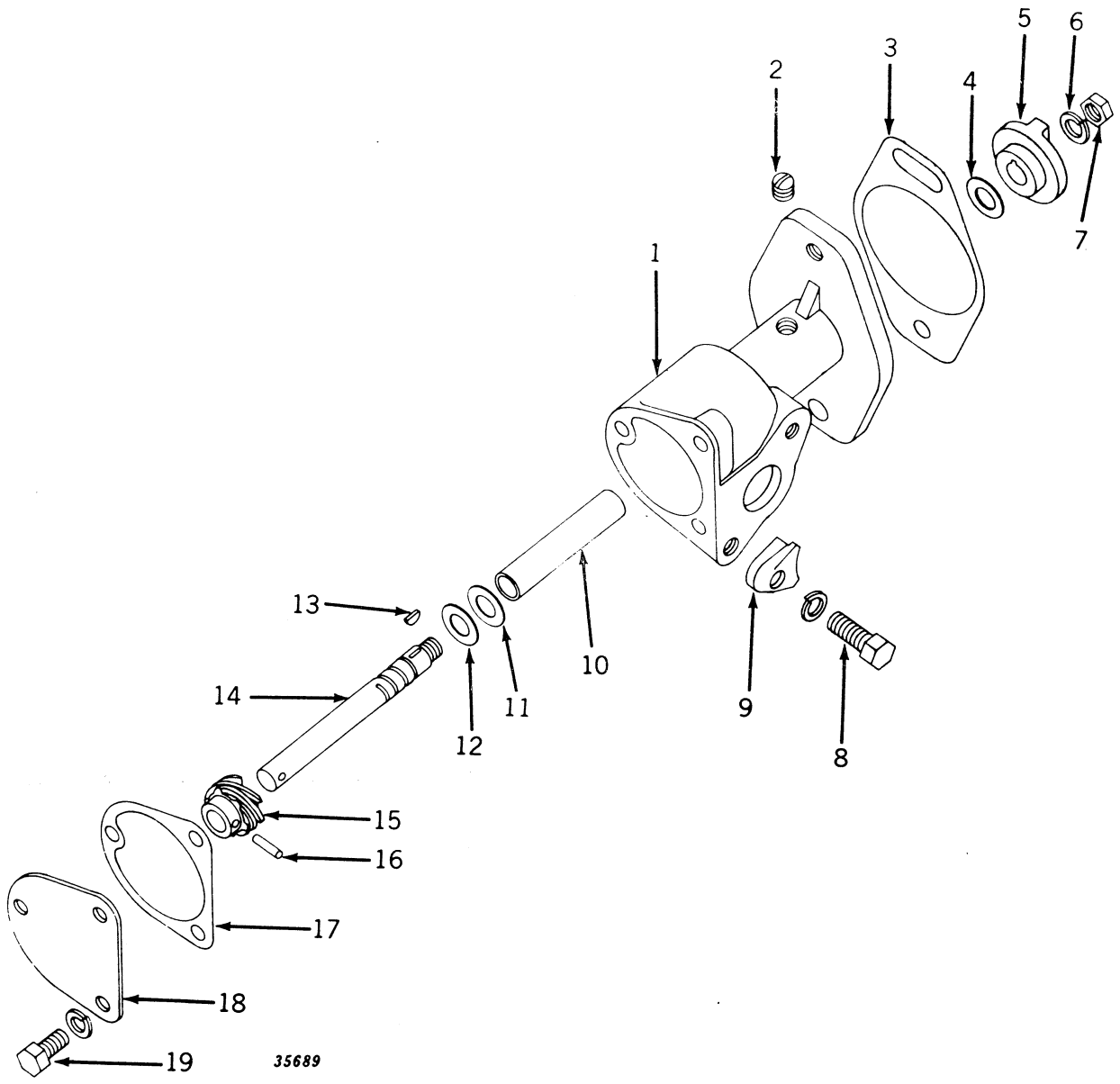

## DISTRIBUTOR DRIVE (LP-GAS)—Continued
(Serial No. 5024000- )

| Key | Part No. | Serial No. | Description |
|---|---|---|---|
| 1 | 1928261 | (5024000- ) | Housing |
| 2 | R 11085 R | (5024000- ) | Plug, Pipe (Sub. for 125947) |
| 3 | A 5272 R | (5024000- ) | Gasket (Packed 5 in a Pkg.) (Sub. for A500R) |
| 4 | 811912* | (5024000- ) | Washer, Gear Spacing |
| 5 | 1885376 | (5024000- ) | Lug, Drive |
| 6 | 12H 40 C | (5024000- ) | Washer, Lock, 3/8" |
| 7 | 14H 774 R | (5024000- ) | Nut, Jam, Lug to Shaft |
| 8 | 19H 218 D | (5024000- ) | Screw, Cap, 3/8" x 1" (2 used) (Sub. for 19H211R) |
| | 12H 11 R | (5024000- ) | Washer, Lock, 3/8" (2 used) |
| 9 | A 4157 R | (5024000- ) | Clamp, Distributor (2 used) |
| 10 | 1909003 | (5024000- ) | Bushing, Distributor Housing |
| 11 | 810074* | (5024000- ) | Washer, Special Gear Spacing |
| 12 | 811912* | (5024000- ) | Washer, Special Gear Spacing |
| 13 | 26H 3 R | (5024000- ) | Key, Woodruff |
| 14 | 1885372 | (5024000- ) | Shaft, Distributor Drive |
| 15 | 1885373 | (5024000- ) | Gear, Distributor Drive |
| 16 | 1857502 | (5024000- ) | Pin, Drive Gear to Shaft |
| 17 | 1885377 | (5024000- ) | Gasket, Drive Housing Plate |
| 18 | 1885378 | (5024000- ) | Plate, Drive Housing |
| 19 | 21H 684 H | (5024000- ) | Screw, Cap, 5/16" x 5/8" (3 used) (Sub. for 19H102R) |
| | 12H 10 R | (5024000- ) | Washer, Lock, 5/16" (3 used) |

*Furnished by John Deere Dubuque Tractor Works.

## DISTRIBUTOR LESS DRIVE (DELCO-REMY) (LP-GAS)
(Serial No. 5024000- )

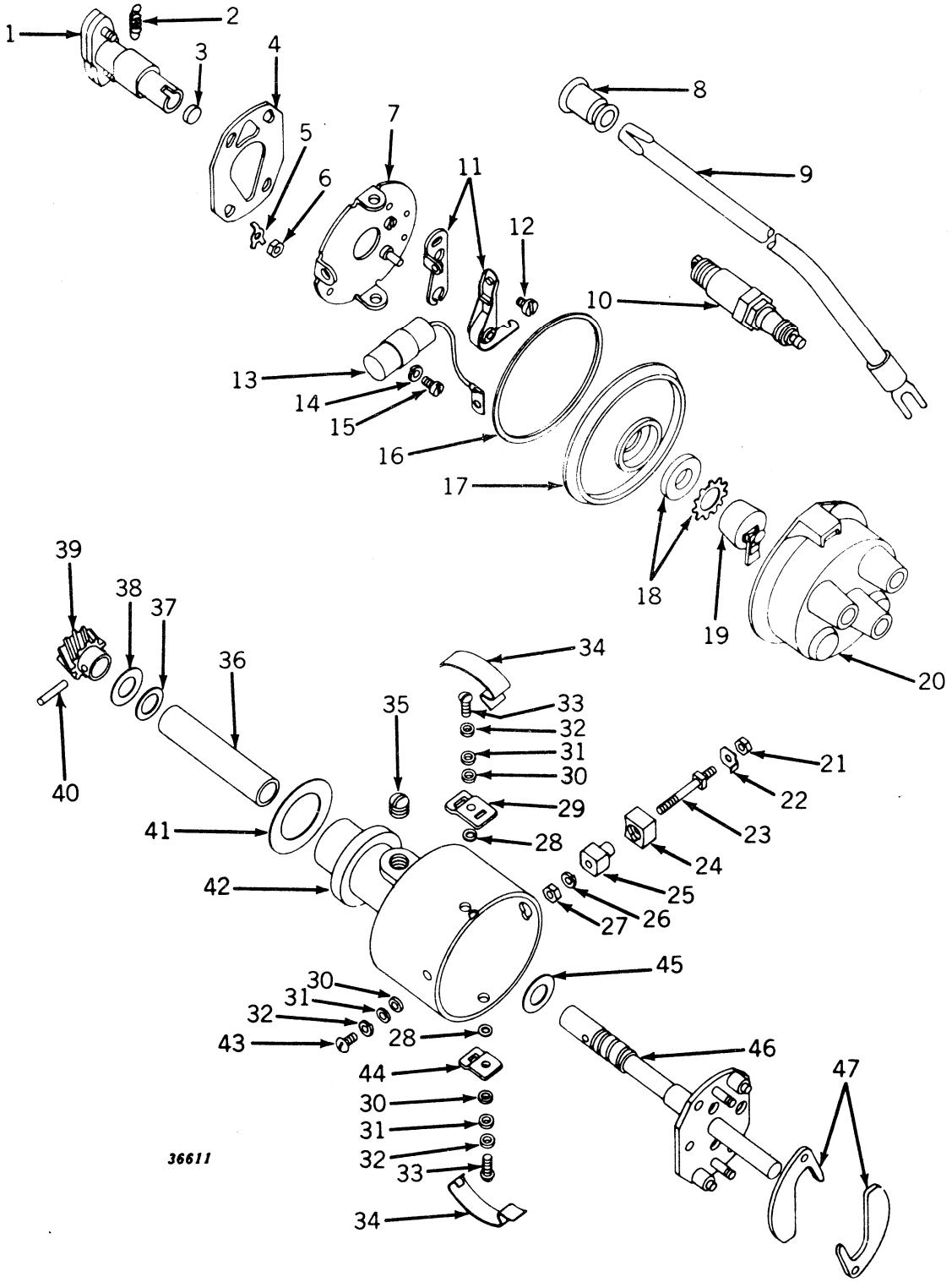

## DISTRIBUTOR LESS DRIVE (DELCO-REMY) (LP-GAS)—Continued
(Serial No. 5024000- )

| Key | Part No. | Serial No. | Description |
|---|---|---|---|
| 1 | 1928260 | (5024000- ) | Cam, Distributor |
| 2 | 1883899 | (5024000- ) | Spring, Advance Weight (2 used) |
| 3 | 819639 | (5024000- ) | Wick, Distributor Cam |
| 4 | 1885557 | (5024000- ) | Plate, Weight Hold-Down |
| 5 | 1885558 | (5024000- ) | Washer, Special Lock (2 used) |
| 6 | 14H 631 R | (5024000- ) | Nut (2 used) |
| 7 | 1847643* | (5024000- ) | Plate, Breaker |
| 8 | A 3539 R | (5024000- ) | Nipple (2 used) (Packed 10 in a Pkg.) |
| 9 | AA 6141 R | (5024000- ) | Cable, Spark Plug (Pkg. of One Cable, One Cable Terminal, and One Terminal Nut (2 Cables, 2 Terminals, and 2 Nuts used) |
| | A 3692 R | (5024000- ) | Nut, Terminal, Spark Plug (2 used) |
| | A 5188 R | (5024000- ) | Terminal, Spark Plug (2 used) |
| 10 | AA 4053 R | (5024000- ) | Spark Plug (No. 6 Comm.) (2 used) |
| | AA 5972 R | (5024000- ) | Spark Plug (AC85 Comm.) (2 used) |
| | AA 6332 R | (5024000- ) | Spark Plug (Auto-Lite) (Type BT-4G) (2 used) |
| 11 | 1911119* | (5024000- ) | Point, Distributor (Set of 2) |
| 12 | 816784* | (5024000- ) | Screw, Special Mach. |
| 13 | 1869704* | (5024000- ) | Condenser |
| 14 | A 766 R | (5024000- ) | Washer, Lock (2 used) |
| 15 | 21H 968 R | (5024000- ) | Screw, Mach. |
| 16 | 1889966* | (5024000- ) | Gasket, Housing Cover |
| 17 | 1900119* | (5024000- ) | Cover, Housing |
| 18 | 1914309* | (5024000- ) | Seal, Housing Cover |
| 19 | 1905590* | (5024000- ) | Rotor |
| 20 | 1928514 | (5024000- ) | Cap, Distributor (Outside) |
| 21 | 14H 605 R | (5024000- ) | Nut, Hex., Primary Terminal Stud |
| 22 | 1909206* | (5024000- ) | Clip, Lock on Primary Terminal Stud |
| 23 | 1916806 | (5024000- ) | Stud, Primary Terminal |
| 24 | 1914142 | (5024000- ) | Bushing, Insulating, Stud to Housing (Outside) |
| 25 | 1916805 | (5024000- ) | Bushing, Insulating, Stud to Housing (Inside) |
| 26 | 12H 290 R | (5024000- ) | Washer, Lock, Primary Terminal Stud (Inside) (Sub. for A2734R) |
| 27 | 817363* | (5024000- ) | Nut, Hex., Breaker Lever to Terminal Stud |
| 28 | 1918319 | (5024000- ) | Gasket, Cap Clamp Support to Housing (2 used) |
| 29 | 1889999* | (5024000- ) | Support, Upper Clamp |
| 30 | 1919246 | (5024000- ) | Retainer, Gasket |
| 31 | 1919247 | (5024000- ) | Gasket (3 used) |
| 32 | A 766 R | (5024000- ) | Washer, Lock (2 used) |
| 33 | 21H 975 R | (5024000- ) | Screw, Special Mach. (2 used) |
| 34 | 1889967* | (5024000- ) | Clamp, Cap (2 used) |
| 35 | R 11085 R | (5024000- ) | Plug, Pipe (Sub. for 125947) |
| 36 | 1909003 | (5024000- ) | Bushing, Drive Housing |
| 37 | 810074* | (5024000- ) | Washer, Special, Drive Gear Spacing |
| 38 | 811912* | (5024000- ) | Washer, Special, Drive Gear Spacing |
| 39 | 1860628 | (5024000- ) | Gear, Distributor |
| 40 | 25H 43 R | (5024000- ) | Pin, Groove, Gear to Shaft |
| 41 | M 414 T | (5024000- ) | Gasket, Mounting |
| 42 | 1928290 | (5024000- ) | Housing, Distributor |
| 43 | 21H 972 R | (5024000- ) | Screw, Special Mach. |
| 44 | 1847289* | (5024000- ) | Support, Lower Cap Clamp |
| 45 | 811912* | (5024000- ) | Washer, Spacing |
| 46 | 1928258 | (5024000- ) | Shaft, and Weight Plate |
| 47 | 1873697 | (5024000- ) | Weight, Advance (2 used) |

(Parts listed below are an assembly of most of the parts in this grouping.)

| | | |
|---|---|---|
| AA 6041 R | (5024000- ) | Distributor with Drive, Delco-Remy No. 1111418 |
| 1928263 | (5024000- ) | Distributor less Drive Housing |

*Furnished by John Deere Dubuque Tractor Works.

## FRONT AND REAR LAMP PARTS
(Serial No. 5000001- )

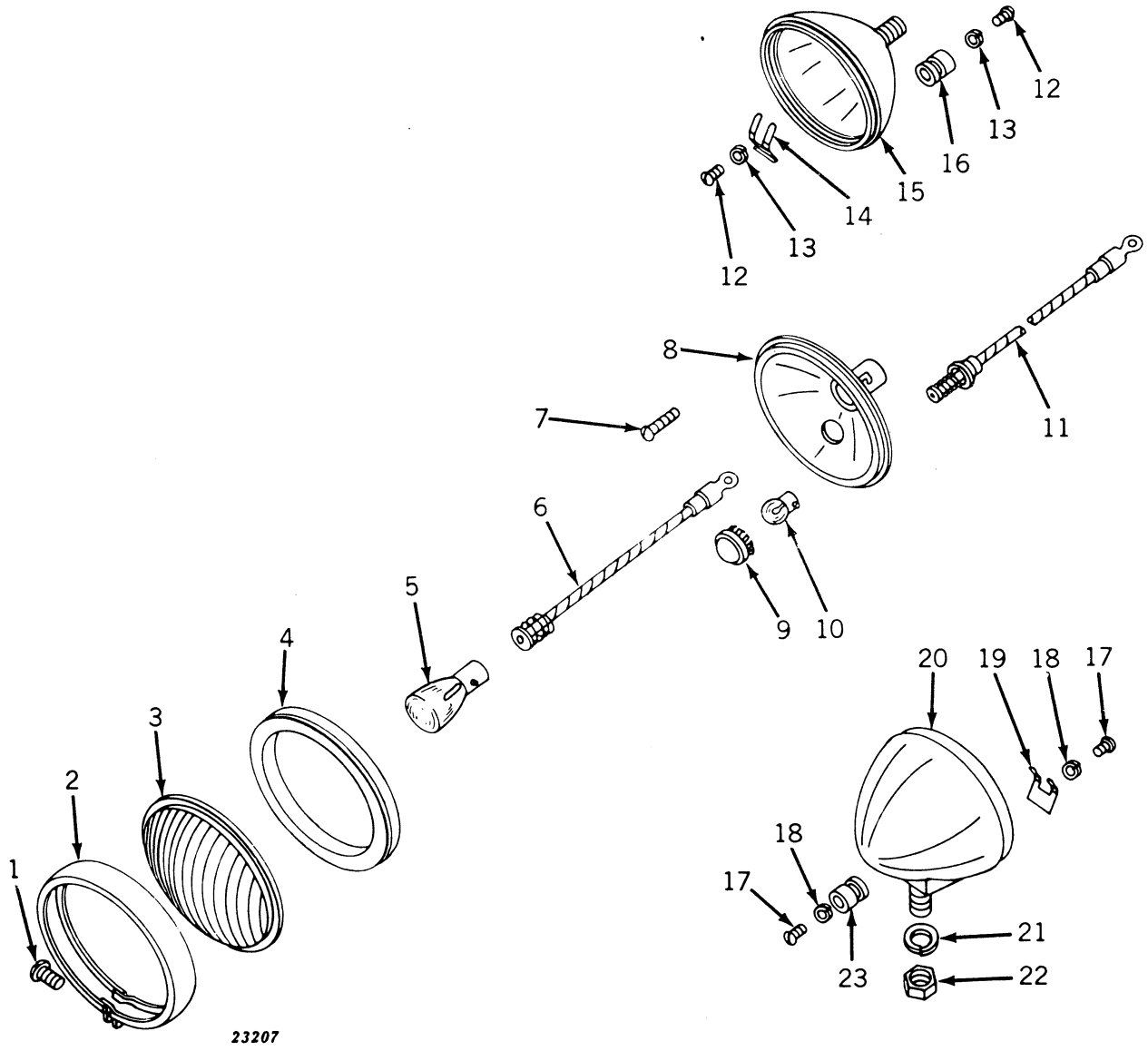

## FRONT AND REAR LAMP PARTS—Continued
(Serial No. 5000001- )

| Key | Part No. | AF710R (Front) | AA5199R (Rear) | AA6733R (Rear) | Description |
|---|---|---|---|---|---|
| 1 | A 2729 R | X | X | X | Screw |
| 2 | AA 3241 R | X | X | X | Molding |
| 3 | A 2731 R | X | X | X | Lens |
| 4 | AA 3239 R | X | X | X | Gasket, Lens (Rubber) |
| 5 | AD 2062 R | X | X | X | Bulb (12-16-Volt) (Packed 10 in a Pkg.) |
| 6 | AA 3240 R | X | .. | .. | Wiring |
| | AA 4666 R | .. | X | X | Wiring, Switch to Large Bulb |
| 7 | A 2883 R | X | .. | .. | Screw |
| 8 | AA 3238 R | X | .. | .. | Reflector |
| | AA 4924 R | .. | X | .. | Reflector |
| | AA 6734 R | .. | .. | X | Reflector, Rear Lamp |
| 9 | AA 4925 R | .. | X | .. | Jewel, Red |
| 10 | AA 4927 R | .. | X | .. | Bulb, Warning (12-16-Volt) 1 C.P. |
| | AR 21739 R | .. | .. | X | Bulb (12-Volt) 15 C.P. (Packed 10 in a Pkg.) (Sub. for AA6735R) |
| 11 | AA 4926 R | .. | X | .. | Socket and Wire (Warning Lamp) |
| 12 | 21H 972 R | .. | X | X | Screw (4 used) |
| 13 | 12H 290 R | .. | X | X | Washer (4 used) (Sub. for A2734R) |
| 14 | A 2899 R | .. | X | X | Spring, Terminal Plate (2 used) |
| 15 | AA 5199 R | .. | X | .. | Lamp, Combination Rear and Warning (12-Volt) (Sub. AR21735R) |
| | AA 6733 R | .. | .. | X | Lamp, Combination Rear and Warning (12-Volt) (Sub. AR21735R) |
| 16 | AA 3495 R | .. | X | X | Plate, Terminal, with Screws, Spring and Lock Washers (Bakelite (2 used) (Sub. for AB3739R) |
| 17 | 21H 972 R | X | .. | .. | Screw (2 used) |
| 18 | 12H 290 R | X | .. | .. | Washer, Lock (2 used) (Sub. for A2734R) |
| 19 | A 2899 R | X | .. | .. | Spring, Terminal |
| 20 | AA 3243 R | X | .. | .. | Body only (Sub. AF3816R) |
| | AF 3816 R | X | .. | .. | Lamp, Front (12-Volt) (Sub. for AF710R) |
| 21 | 12H 13 R | X | .. | .. | Washer, Lock, 1/2" |
| 22 | 14H 392 R | X | .. | .. | Nut, 1/2" |
| 23 | AA 3495 R | X | .. | .. | Plate, Terminal, with Spring, Screws, and Lock Washers (Bakelite |

## AR21735R COMBINATION REAR AND WARNING LAMP

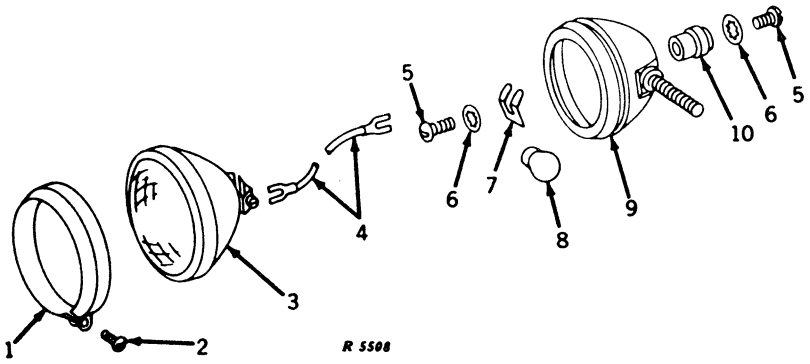


| Key | Part No. | Serial No. | Description |
|---|---|---|---|
| 1 | AF 3891 R | ( – ) | Molding |
| 2 | A 2729 R | ( – ) | Screw, Special Mach. |
| 3 | AR 21737 R | ( – ) | Unit, Sealed Beam, with Screw (12-Volt) |
| 4 | AA 4881 R | ( – ) | Lead, Wiring, Sealed Unit to Terminal Plate |
| 5 | 21H 972 R | ( – ) | Screw, Mach. Rd. Hd., No. 8 x 5/16" (4 used) |
| 6 | 12H 290 R | ( – ) | Washer, Lock, Internal Tooth, No. 8 (4 used) |
| 7 | A 2899 R | ( – ) | Spring, Terminal Plate (2 used) |
| 8 | AR 21739 R | ( – ) | Bulb, 15 C.P., 12-Volt (Packed 10 in a Pkg.) |
| 9 | AR 21735 R | ( – ) | Lamp, Combination Rear and Warning (12-Volt) |
| 10 | AA 3495 R | ( – ) | Plate, Terminal, with Spring, Screw, and Lock Washers (2 used) |

## IMPLEMENT WARNING LAMP
(Serial No. 5000001- )

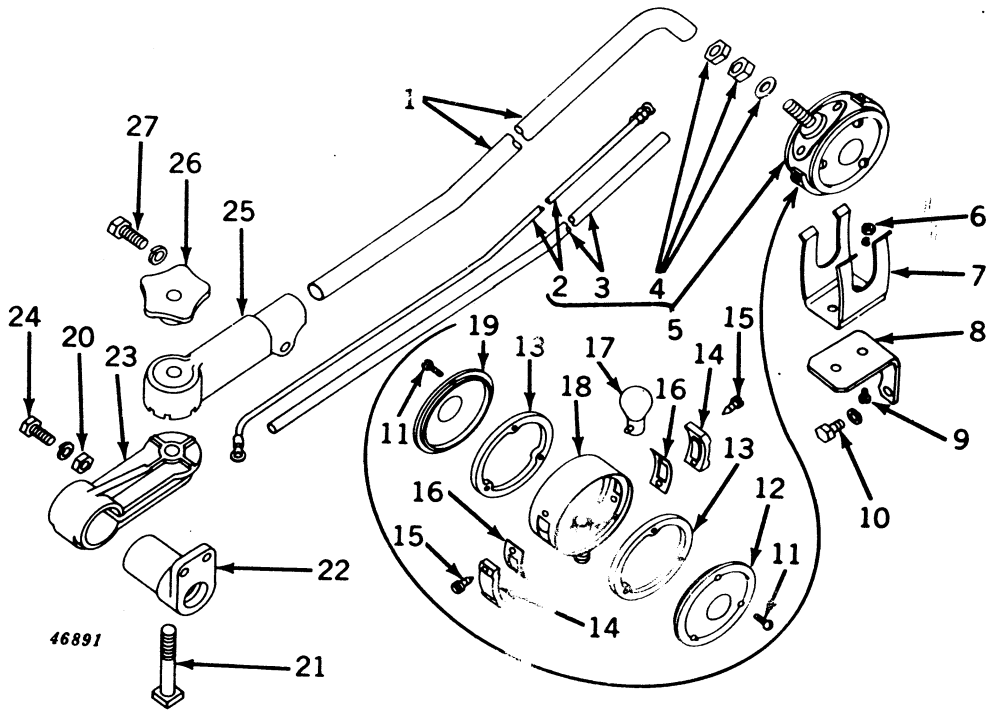


| Key | Part No. | Serial No. | Description |
|---|---|---|---|
| 1 | **AA 6132 R** | – | **Mast, Warning Lamp (All-Fuel, Gas) (ATTACHMENT)** |
| | **AA 6162 R** | – | **Mast, Warning Lamp (LP-Gas) (ATTACHMENT)** |
| 2 | AA 6219 R | – | Lead, Wiring, Warning Lamp |
| 3 | A 5281 R | – | Tubing, on Lead |
| 4 | 14H 344 R | – | Nut, Jam (2 used) |
| | 24H 892 R | – | Washer |
| 5 | AA 6134 R | – | Lamp, with Lead, Tubing, Washer and Nuts |
| 6 | 14H 631 R | – | Nut, Hex., No. 10 (2 used) |
| | A 767 R | – | Washer, Lock (2 used) (Packed 50 in a Pkg.) |
| 7 | AA 6135 R | – | Hanger, Warning Lamp |
| 8 | R 21021 R | – | Bracket, Hanger (Sub. for B3342R) (All-Fuel, Gas) |
| | R 21024 R | – | Bracket, Hanger (LP-Gas) |
| 9 | 21H 415 R | – | Screw, Mach. (2 used) |
| 10 | 19H 1112 H | – | Screw, Cap, 5/16" x 3/4" (2 used) |
| | 12H 10 R | – | Washer, Lock, 5/16" (2 used) |
| 11 | 21H 964 R | – | Screw, Special Mach. (6 used) |
| 12 | A 5275 R | – | Lens, Amber |
| 13 | A 5277 R | – | Gasket, Lens (2 used) (Packed 5 in a Pkg.) |
| 14 | A 5278 R | – | Lens, Outlook (2 used) |
| 15 | M 2207 T | – | Screw, Self-Tapping (4 used) |
| 16 | A 5279 R | – | Gasket, Outlook Lens (Packed 5 in a Pkg.) |
| 17 | AA 6218 R | – | Bulb, 21 C.P. (12-14-Volt) S.C. (Packed 10 in a Pkg.) |
| 18 | ..... | – | Not Furnished (Order AA6134R) |
| 19 | A 5276 R | – | Lens, Red |
| 20 | 14H 785 R | – | Nut, Hex., 5/16" (2 used) |
| | 12H 10 R | – | Washer, Lock, 5/16" (2 used) |
| 21 | 7H 910 R | – | Bolt, Sq. Hd. Mach., 1/2" x 3-3/4" (Sub. for 7H911R) |
| 22 | A 5228 R | – | Pivot |
| 23 | A 5227 R | – | Clamp |
| 24 | A 4125 R | – | Screw, Mach., 5/16" x 1" (2 used) (Packed 50 in a Pkg.) |
| 25 | A 5226 R | – | Bracket |
| 26 | D 1748 R | – | Wheel, Hand |
| 27 | 19H 1116 N | – | Screw, Cap, 3/8" x 1-1/2" (Sub. for 19H230H) |
| | 12H 11 R | – | Washer, Lock, 3/8" |

(Parts listed below are an assembly of parts in this grouping.)

| | | |
|---|---|---|
| **AR 21153 R*** | – | **Lamp, Warning, and Misc. Parts (All-Fuel and Gas) (ATTACHMENT) (Sub. for AA6133R)** |
| **AR 21154 R** | – | **Lamp, Warning, and Misc. Parts (LP-Gas) (ATTACHMENT) (Sub. for AA6163R)** |

*Also Furnish One B3343R Carburetor Intake on 5000001–5029199.

## WARNING LAMP FOR TOWED IMPLEMENTS

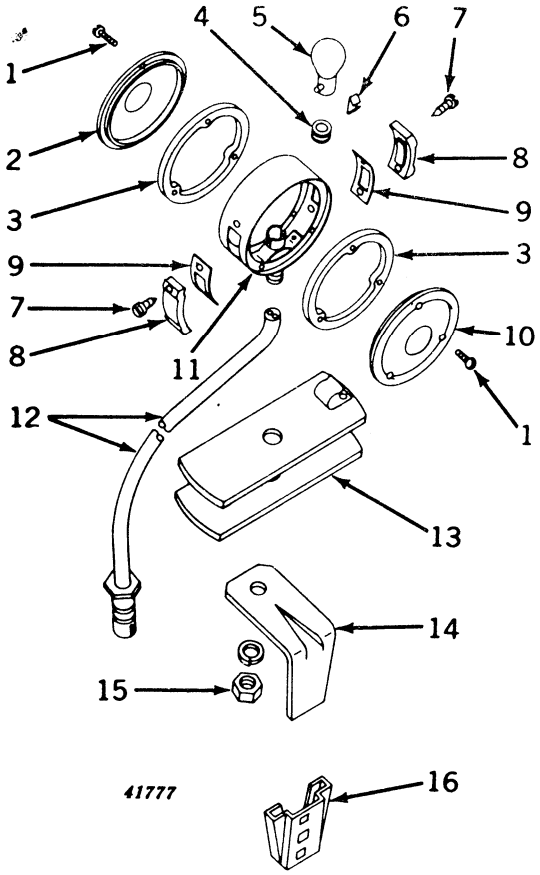


| Key | Part No. | Serial No. | Description |
|---|---|---|---|
| 1 | 21H 964 R | ( – ) | Screw, Special Mach. (6 used) |
| 2 | A 5276 R | ( – ) | Lens, Red |
| 3 | A 5277 R | ( – ) | Gasket, Lens (2 used) (Packed 2 in a Pkg.) |
| 4 | R 2579 R | ( – ) | Grommet (Packed 2 in a Pkg.) (Sub. for B1580R) |
| 5 | AA 6218 R | ( – ) | Bulb, 21 C.P., 12-14-Volt, S.C. (Packed 10 in a Pkg.) |
| 6 | A 5280 R | ( – ) | Clip |
| 7 | M 2207 T | ( – ) | Screw, Self-Tapping (4 used) |
| 8 | A 5278 R | ( – ) | Lens, Outlook (2 used) |
| 9 | A 5279 R | ( – ) | Gasket, Outlook Lens (5 used) (Packed 2 in a Pkg.) |
| 10 | A 5275 R | ( – ) | Lens, Amber |
| 11 | ..... | ( – ) | Not Furnished (Order AA6145R) |
| 12 | **AA 5691 R** | ( – ) | **Plug, Electrical Outlet, with Cable (ATTACHMENT)** |
| | AA 5692 R | ( – ) | Plug, Electrical Outlet, less Cable |
| 13 | AA 6217 R | ( – ) | Reel |
| 14 | A 5273 R | ( – ) | Bracket |
| 15 | 14H 257 R | ( – ) | Nut, Hex., 7/16" |
| | 12H 12 R | ( – ) | Washer, Lock, 7/16" |
| 16 | JD 126 B | ( – ) | Socket, Lamp Bracket |

(Part listed below is an assembly of parts in this grouping.)

**AA 6145 R** ( – ) **Lamp, Warning, with Cable and Reel, for Towed Implements (ATTACHMENT)**

## LAMPS AND WIRING
(Serial No. 5000001-5006850)

For illustration and list of lamp parts, see pages 35-22 and 35-23.

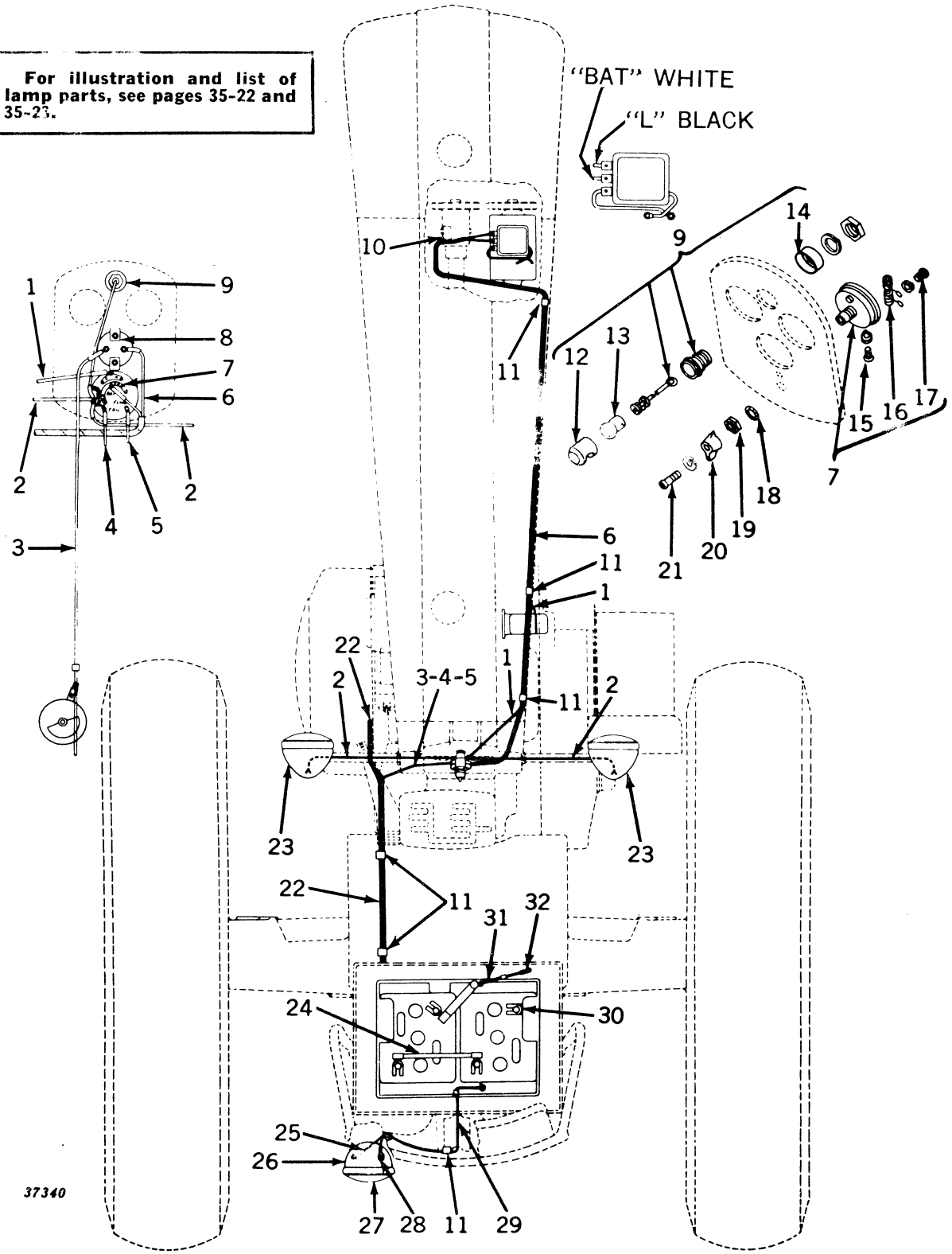

## LAMPS AND WIRING—Continued
(Serial No. 5000001-5006850)

| Key | Part No. | Serial No. | Description |
|---|---|---|---|
| 1 | AA 4845 R | ( – ) | Lead, Switch to Distributor (Black) (Sub. for AA4884R) |
| 2 | AF 2639 R | ( – ) | Lead, Switch to R.H. or L.H. Lamp (2 used) (Black) (Sub. for Two AA5160R or One AF2169R) |
| 3 | AB 3547 R | ( – ) | Lead, Ammeter to Starting Motor (White) (Sub. for AB4517R) |
| | B 2474 R | ( – ) | Clip on Ammeter to Starting Motor Lead |
| 4 | AA 5358 R | ( –5006850) | Lead, Rear Warning Lamp, with Plug, Switch End (Black) (Sub. for AA5360R) |
| 5 | AA 5358 R | ( –5006850) | Lead, Rear Lamp, with Plug, Switch End (Black) |
| 6 | AB 4484 R | ( – ) | Harness, Generator Wiring |
| 7 | AA 5071 R | ( – ) | Switch, less Lever (12-Volt) |
| 8 | AF 2749 R | ( – ) | Ammeter (Sub. for AB2568R) |
| 9 | AD 2835 R | ( – ) | Lamp, Dash |
| 10 | B 1986 R | ( – ) | Clip |
| 11 | B 2571 R | ( – ) | Clip (5 used) |
| 12 | A 3032 R | ( – ) | Hood |
| 13 | AB 2599 R | ( – ) | Bulb (12-16 Volt) |
| 14 | A 285 R | ( – ) | Retainer |
| 15 | R 11100 R | ( – ) | Screw, Mach., Switch to Terminal (4 used) (Sub. for 1864099) |
| | 12H 290 R | ( – ) | Washer, Lock (4 used) (Sub. for A2734R) |
| 16 | X 7350 | ( – ) | Resistor (12-Volt) (Sub. for 1877830 and AA4842R) |
| 17 | 1886496 | ( – ) | Screw, Mach., Switch to Resistor Terminal (2 used) |
| | A 766 R | ( – ) | Washer, Lock (2 used) |
| 18 | 138549* | ( – ) | Washer, Lock, 1/2" |
| 19 | 1902692* | ( – ) | Nut, 1/2", Switch to Panel |
| 20 | 1902694* | ( – ) | Lever, Switch |
| 21 | 21H 973 R | ( – ) | Screw, Mach., Lever to Switch |
| | A 766 R | ( – ) | Washer, Lock |
| 22 | AB 3546 R | ( – ) | Cable, Battery to Starting Motor |
| 23 | AF 710 R | ( – ) | Lamp, R.H. and L.H. (12-Volt) (For List of Parts, see Page 35-23) (Sub. AF3816R) |
| | 14H 392 R | ( – ) | Nut, 1/2" (2 used) |
| 24 | AA 4309 R | ( – ) | Cable, Battery Connector (Sub. for AD2091R) |
| 25 | R 2579 R | ( –5006850) | Grommet (Packed 5 in a Pkg.) (Sub. for B1580R) |
| 26 | AA 5359 R | ( –5006850) | Lead, Rear Warning Lamp, with Socket, Lamp End (Sub. for AA5361R) |
| 27 | AA 6733 R | ( – ) | Lamp, Rear and Warning (12-Volt) (Sub. for AA5199R) (For List of Parts see Page 35-19) (Sub. AR21735R) |
| | B 2295 R | ( – ) | Washer, Outside |
| | B 2477 R | ( – ) | Washer, Inside |
| | 14H 473 R | ( – ) | Nut, 1/2" |
| | 12H 13 R | ( – ) | Washer, Lock, 1/2" |
| 28 | AA 5359 R | ( –5006850) | Lead, Rear Lamp, with Socket, Lamp End |
| 29 | A 3411 R | ( –5006850) | Grommet (Packed 5 in a Pkg.) |
| 30 | AB 4100 R | ( – ) | Cable, Battery Ground (Sub. for AB3449R) |
| | 19H 1936 A | ( – ) | Screw, Cap, 3/8" x 3/4" (Sub. for 7H301R or F2272R) |
| | 12H 11 R | ( – ) | Washer, Lock, 3/8" |
| 31 | AA 5362 R | ( –5001252) | Lead, Rear Lamp Ground, with Plug, Battery Box End (No Longer Required) |
| | 21H 979 R | ( –5001252) | Screw, Mach., Ground Wire to Battery Box (No Longer Required) |
| | 14H 631 R | ( –5001252) | Nut (No Longer Required) |
| | 12H 251 R | ( –5001252) | Washer (No Longer Required) |
| 32 | AA 5363 R | ( –5001252) | Lead, Rear Lamp Ground, with Socket, Seat Frame End (No Longer Required) |
| | 21H 979 R | ( –5001252) | Screw, Mach., Ground Wire to Seat Frame (No Longer Required) |
| | 14H 631 R | ( –5001252) | Nut (No Longer Required) |
| | 12H 251 R | ( –5001252) | Washer (No Longer Required) |

(Part listed below is not illustrated.)

| | | | |
|---|---|---|---|
| | AB 4726 R | ( –5006850) | Wiring Replacement Set Consisting of: One AA4845R, One AF2169R, Two AA5358R, Two AA5359R, One AB3547R, and One AB4484R |

*Furnished by John Deere Dubuque Tractor Works.

## LAMPS AND WIRING (EXCEPT LP-GAS)
(Serial No. 5006851- )

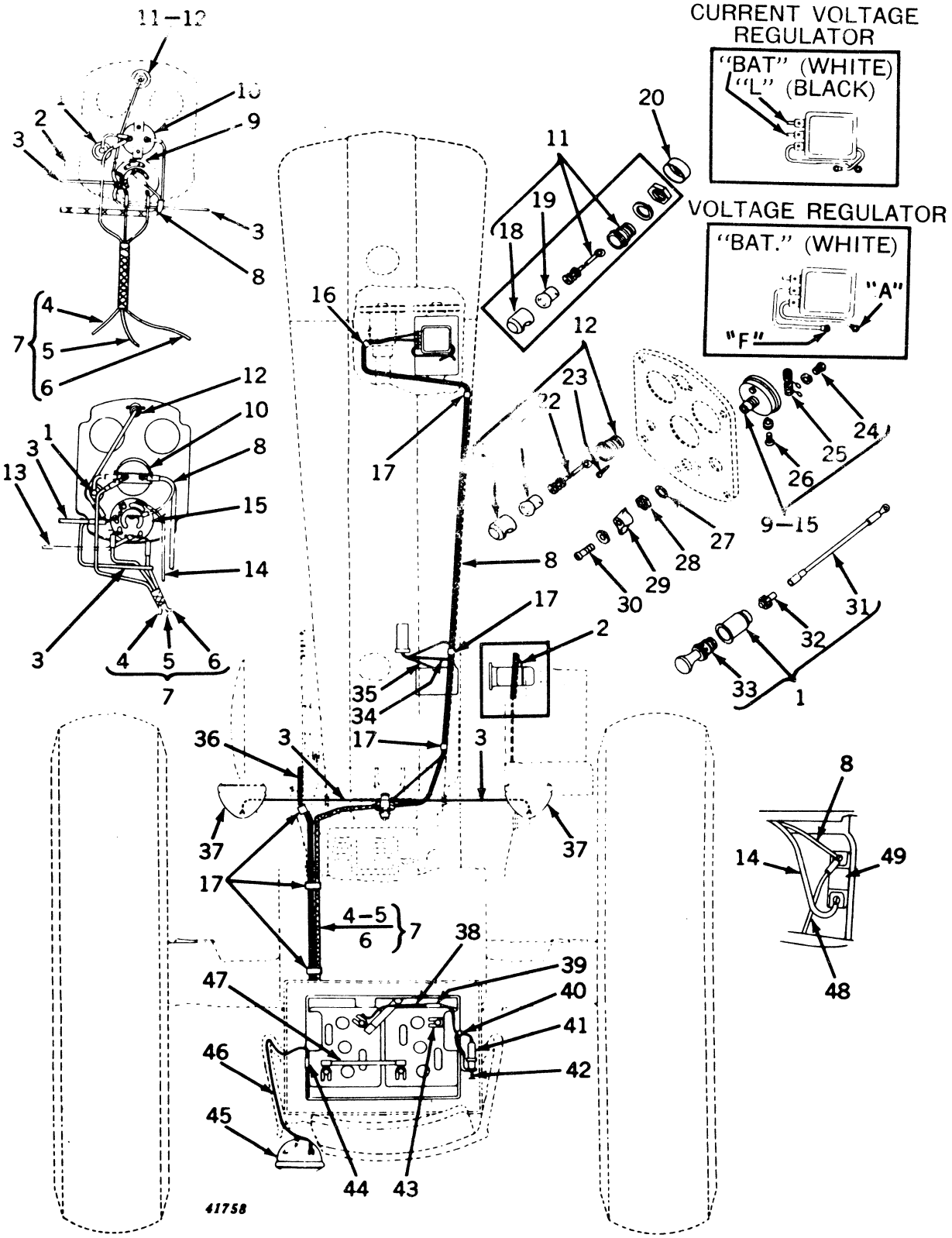

## LAMPS AND WIRING (EXCEPT LP-GAS)—Continued
(Serial No. 5006851– )

| Key | Part No. | Serial No. | Description |
|---|---|---|---|
| 1 | **AR 20438 R** | ( – ) | **Lighter, Cigarette (12-Volt) (ATTACHMENT) (Sub. for AA5734R)** |
| 2 | AA 4845 R | ( –5016499) | Lead, Switch to Distributor (Black) (Wico) (Sub. for AA4884R) |
| 3 | AF 2639 R | ( – ) | Lead, Switch to R.H. or L.H. Lamp (2 used) (Black) (Sub. for Two AA5160R or One AF2169R) |
| 4 | AB 3547 R | ( –5014647) | Lead, Ammeter to Starting Motor (White) (Sub. for AB4517R) |
| | B 2474 R | ( –5014647) | Clip on Ammeter to Starting Motor Lead |
| | ..... | (5014648– ) | Wiring, Ammeter to Battery (Not Sold Separately) (Part of AA6503R) |
| 5 | AA 5655 R | (5006851–5014647) | Lead, Rear Warning Lamp, with Plug, Switch End (Red) (Sub. AA6503R) |
| | ..... | (5014648– ) | Wiring, Switch to Rear Warning Lamp (Red) (Not Sold Separately) |
| 6 | AA 5654 R | (5006851–5014647) | Lead, Rear Lamp, with Plug, Switch End (Black) (Sub. AA6503R) |
| | ..... | (5014648– ) | Wiring, Switch to Rear Lamp (Black) (Not Sold Separately) (Part of AA6503R) |
| 7 | AA 6503 R | (5014648– ) | Harness, Wiring, Ammeter, and Rear Lamp (Sub. for AA5730R) |
| 8 | AB 4484 R | ( –5016057) | Harness, Generator, Wiring |
| | AA 6491 R | (5016058– ) | Harness, Generator, Wiring (Sub. for AA5755R) |
| 9 | AA 5071 R | ( –5021479) | Switch, less Lever (12-Volt) |
| 10 | AF 2749 R | ( – ) | Ammeter (Sub. for AB2568R) |
| 11 | AD 2835 R | ( –5016122) | Lamp, Dash (Sub. AR20447R) |
| 12 | AB 4723 R | (5016123– ) | Lamp, Dash, with Screws (Sub. AR4032R) |
| 13 | AA 5064 R | (5021480– ) | Lead, Wiring, Switch to Positive Terminal of Coil (Green) |
| 14 | AA 6037 R | (5021480– ) | Lead, Wiring, Switch to Ignition Resistor (Black) |
| 15 | AA 5397 R | (5021480– ) | Switch, less Lever (12-Volt) |
| 16 | B 1986 R | ( – ) | Clip |
| 17 | B 2571 R | ( – ) | Clip (6 used) |
| 18 | A 3032 R | ( –5016122) | Hood |
| 19 | AB 2599 R | ( – ) | Bulb (12-16 Volt) (Packed 10 in a Pkg.) |
| 20 | A 285 R | ( –5016122) | Retainer |
| 21 | B 3267 R | (5016123– ) | Hood |
| 22 | AB 4725 R | (5016123– ) | Wire Assembly (Part for AB4723R) |
| 23 | M 2207 T | (5016123– ) | Screw, Self Tapping (2 used) |
| 24 | 1886496 | ( – ) | Screw, Mach., Switch to Resistor Terminal (2 used) |
| | A 766 R | ( – ) | Washer, Lock (2 used) |
| 25 | X 7350 | ( – ) | Resistor (12-Volt) (Sub. for 1877830 and AA4842R) |
| 26 | R 11100 R | ( – ) | Screw, Mach., Switch to Terminal (4 used) (Sub. for 1864099) |
| | 12H 290 R | ( – ) | Washer, Lock (4 used) (Sub. for A2734R) |
| 27 | 138549* | ( – ) | Washer, Lock, 1/2″ |
| 28 | 1902692* | ( – ) | Nut, 1/2″, Switch to Panel |
| 29 | 1902694* | ( – ) | Lever, Switch |
| 30 | 21H 973 R | ( – ) | Screw, Mach., Lever to Switch |
| | A 766 R | ( – ) | Washer, Lock |
| 31 | AR 21164 R | ( – ) | Wire (Sub. for AM2152T) |
| 32 | AM 2151 T | ( – ) | Fuse (12-Volt) (Sub. for AA5788R) |
| 33 | AA 5787 R | ( – ) | Element, Cigarette Lighter (12-Volt) |
| 34 | AA 4882 R | (5016500– ) | Cable, Secondary, Coil to Distributor (Delco-Remy) |
| 35 | AA 4881 R | (5016500– ) | Lead, Coil to Distributor |
| 36 | AB 3546 R | ( – ) | Cable, Battery to Starting Motor |
| 37 | AF 710 R | ( – ) | Lamp, R.H. and L.H. (12-Volt) (For List of Parts see Page 35-23) (Sub. AF3816R) |
| | 14H 392 R | ( – ) | Nut, 1/2″ (2 used) |
| 38 | AA 5673 R | (5014274–5014647) | Lead, Wiring, Electrical Outlet Socket, Battery End |
| 39 | AL 2976 T | (5014274– ) | Connector, Two Wire Socket Wiring Lead |
| 40 | R 2579 R | (5014274– ) | Grommet (Packed 5 in a Pkg.) (Sub. for B1580R) |
| 41 | AM 2049 T | (5014274– ) | Socket, Electrical Outlet |
| | 21H 1042 C | (5014274– ) | Screw, Mach., Socket to Battery Box (2 used) (Sub. for 21H404R) |
| | 12H 251 R | (5014274– ) | Washer on Socket to Battery Box Screw (2 used) (Sub. for A3010R) |
| | 14H 606 R | (5014274– ) | Nut on Socket to Battery Box Screw (2 used) |
| 42 | AA 5692 R | (5014274– ) | Plug, Electrical Outlet, less Cable (Part of AA5691R Electrical Outlet Plug) |
| | **AA 5691 R** | (5014274– ) | **Plug, Electrical Outlet, with Cable (ATTACHMENT)** |
| 43 | AB 4100 R | ( – ) | Cable, Battery Ground (Sub. for AB3449R) |
| | F 2272 R | ( – ) | Screw, Cap, 3/8″ x 3/4″ (Sub. for 7H301R) |
| | 12H 11 R | ( – ) | Washer, Lock, 3/8″ |
| | 14H 190 R | ( – ) | Nut, Square, 3/8″ |
| 44 | AL 2976 T | (5006851– ) | Connector, Two Wire Socket Wiring Lead |
| 45 | AA 6733 R | ( – ) | Lamp, Rear and Warning (12-Volt) (Sub. for AA5199R) (For List of Parts see Page 35-23) (Sub. AR21735R) |
| | B 2295 R | ( – ) | Washer, Outside |
| | B 2477 R | ( – ) | Washer, Inside |
| | 14H 473 R | ( – ) | Nut, 1/2″ |
| | 12H 13 R | ( – ) | Washer, Lock, 1/2″ |
| 46 | AA 5652 R | (5006851– ) | Harness, Wiring, Rear Warning Lamp (Red) and Rear Lamp (Black) |
| 47 | AA 4039 R | ( – ) | Cable, Battery Connection (Sub. for AD2091R) |
| 48 | AB 4795 R | (5021480– ) | Lead, Wiring, Starting Motor to Resistor |
| 49 | AA 5791 R | (5021480– ) | Resistor, Ignition |
| | 19H 24 N | (5021480– ) | Screw, Cap, 1/4″ x 3/4″, Resistor to Quadrant (Sub. for 19H18H) |
| | 12H 9 R | (5021480– ) | Washer, Lock, 1/4″ |
| (Parts listed below are not illustrated.) | | | |
| | AB 4727 R | (5006851–5016057) | Wiring Replacement Set, Consisting of: One AA4845R, One AF2639R, One AA5652R, One AA6503R, and One AB4484R |
| | AA 6068 R | (5016500– ) | Wiring Replacement Set, Consisting of: One AA4881R, One AA4882R, One AF2639R, One AA5652R, One AA6503R, and One AA6491R (On 5016058–5016499 Also Furnish One AA4845R) |

*Furnished by John Deere Dubuque Tractor Works.

## LAMPS AND WIRING (LP-GAS)
(Serial No. 5024000- )

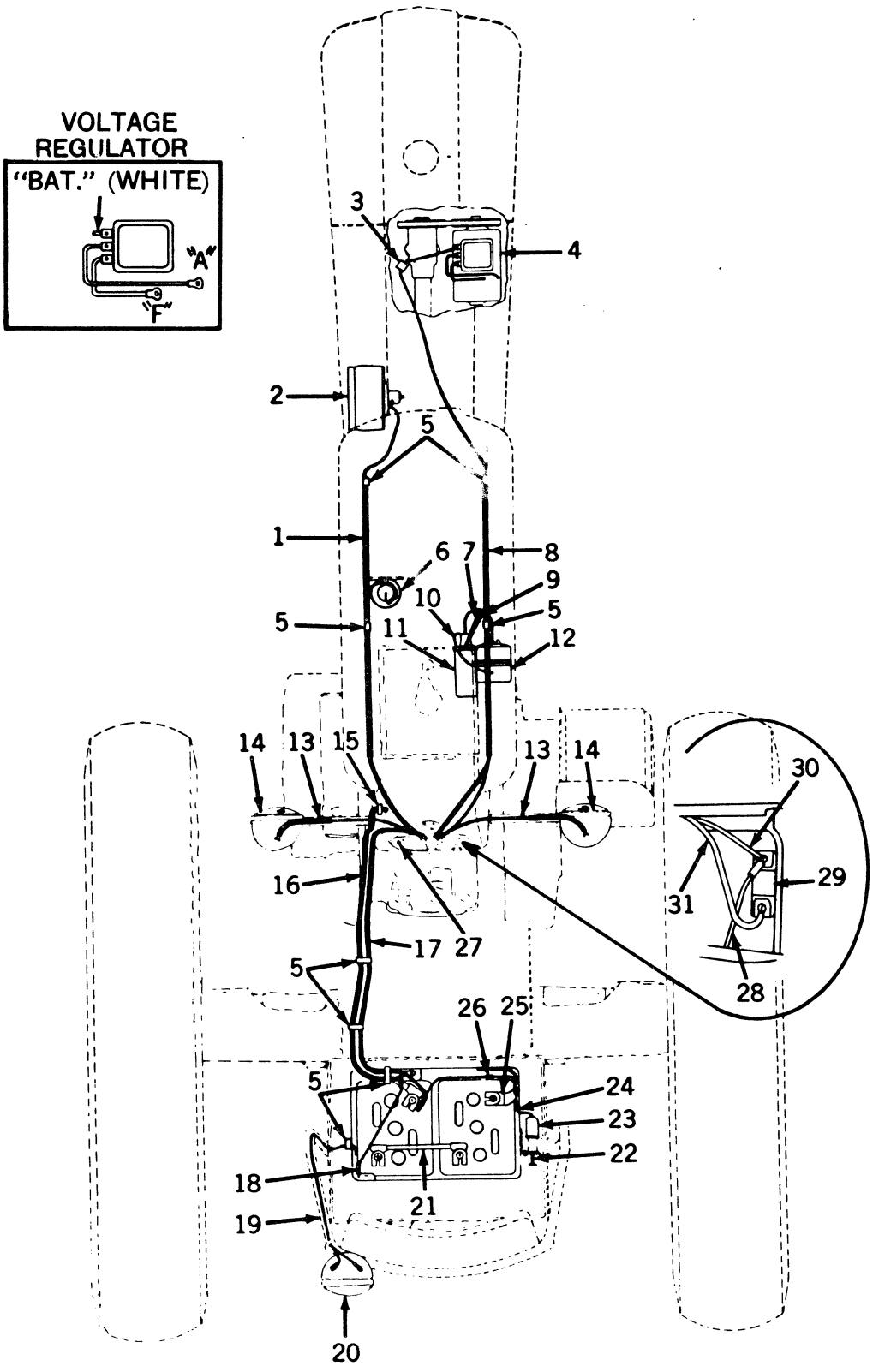

## LAMPS AND WIRING (LP-GAS)—Continued
(Serial No. 5024000- )

| Key | Part No. | Serial No. | Description |
|---|---|---|---|
| 1 | AB 4858 R | ( -5030599) | Harness, Wiring, Switch, Primer Switch, Fuel Strainer, and Convertor |
| | AB 4795 R | (5030600- ) | Lead, Wiring, Fuel Strainer to Switch |
| 2 | AA 6222 R | ( -5030599) | Convertor (Sub. for AA6019R) (Sub. AA6272R) |
| | AA 6272 R | (5030600- ) | Convertor |
| 3 | B 1986 R | ( - ) | Clip |
| 4 | AA 5737 R | ( - ) | Generator (Delco-Remy No. 1100309) (Sub. AR21906R) (See Pages 35-34 and 35-35 for List of Parts) |
| 5 | B 2571 R | ( - ) | Clip (8 used) |
| 6 | AR 26437 R | ( - ) | Strainer, Fuel (Sub. for AF1383R or AF3700R) |
| 7 | AA 5064 R | ( - ) | Lead, Switch to Coil (Green) |
| 8 | AA 5738 R | ( - ) | Harness, Wiring, Generator |
| 9 | AA 4882 R | ( - ) | Cable, Secondary Coil to Distributor |
| 10 | AA 4881 R | ( - ) | Lead, Wiring, Coil to Distributor |
| 11 | AM 791 T | ( - ) | Coil, with Clamp (6-Volt) |
| 12 | AA 6041 R | ( - ) | Distributor, with Drive (Delco-Remy No. 1111418) |
| | 1928263 | ( - ) | Distributor, less Drive Housing |
| 13 | AF 2639 R | ( - ) | Lead, Wiring, Switch to R.H. and L.H. Lamps (Black) (Sub. for AF2169R) |
| 14 | AF 710 R | ( - ) | Lamp, R.H. and L.H. (12-Volt) (2 used) (For List of Parts see Page 35-23) (Sub. AF3816R) |
| | 14H 392 R | ( - ) | Nut, 1/2" (2 used) |
| 15 | B 2474 R | ( - ) | Clip (2 used) |
| 16 | AB 3546 R | ( - ) | Cable, Battery to Starting Motor |
| 17 | AA 6503 R | ( - ) | Harness, Wiring Ammeter, and Rear Lamp (Sub. for AA5730R) |
| 18 | AL 2976 T | ( - ) | Connector, Two-Wire (2 used) |
| 19 | AA 5652 R | ( - ) | Harness, Wiring, Rear Lamp Warning Lamp (Red) and Rear Lamp (Black) |
| 20 | AA 6733 R | ( - ) | Lamp, Rear and Warning (Sub. for AA5199R) (For List of Parts see Page 35-23) (Sub. AR21735R) |
| | B 2295 R | ( - ) | Washer, Outside |
| | B 2477 R | ( - ) | Washer, Inside |
| | 14H 473 R | ( - ) | Nut, 1/2" |
| | 12H 13 R | ( - ) | Washer, Lock, 1/2" |
| 21 | AA 4039 R | ( - ) | Cable, Battery Connector (Sub. for AD2091R) |
| 22 | **AA 5691 R** | ( - ) | **Plug, Electrical Outlet, with Cable (ATTACHMENT)** |
| | AA 5692 R | ( - ) | Plug, Electrical Outlet, less Cable |
| 23 | AM 2049 T | ( - ) | Socket, Electrical Outlet |
| | 21H 1042 C | ( - ) | Screw, Mach., Socket to Battery Box (2 used) (Sub. for 21H404R) |
| | 12H 251 R | ( - ) | Washer on Socket to Battery Box Screw (2 used) (Sub. for A3010R) |
| | 14H 606 R | ( - ) | Nut, Hex., on Socket to Battery Box Screw |
| 24 | R 2579 R | ( - ) | Grommet (Packed 2 in a Pkg.) (Sub. for B1580R) |
| 25 | AB 4100 R | ( - ) | Cable, Battery Ground |
| | 19H 1936 A | ( - ) | Screw, Cap, 3/8" x 3/4" (Sub. for F2272R) |
| | 12H 11 R | ( - ) | Washer, Lock, 3/8" |
| | 14H 190 R | ( - ) | Nut, Sq., 3/8" |
| 26 | AA 5989 R | ( - ) | Holder, Fuse, with Fuse |
| 27 | AR 20711 R | ( - ) | Holder, Fuse, with Fuse (Sub. for AA5988R) |
| | AA 5994 R | ( - ) | Cap, Fuse Holder |
| | ..... | ( - ) | Nut, Locking (Not Furnished) |
| 28 | AF 1393 R | ( - ) | Lead, Wiring, Ignition Resistor to Starting Motor |
| | A 2610 R | ( - ) | Clip (2 used) |
| 29 | AA 5791 R | ( - ) | Resistor, Ignition |
| | 19H 24 N | ( - ) | Screw, Cap, 1/4" x 3/4" (Sub. for 19H18H) |
| | 12H 9 R | ( - ) | Washer, Lock, 1/4" |
| | 14H 251 R | ( - ) | Nut, 1/4" |
| 30 | AA 5738 R | ( - ) | Harness, Wiring, Generator |
| 31 | AA 6037 R | ( - ) | Lead, Wiring, Ignition Resistor to Switch |

(Parts listed below are assemblies of parts in this grouping.)

| | | |
|---|---|---|
| AB 4877 R | ( -5030599) | Wiring Replacement Set, Consisting of—One AA4881R, One AA4882R, One AA5064R, One AA5652R, One AA5738R, One AA6037R, One AB4858R, One AA6503R, One AF1393R, and One AF2639R |
| AB 4955 R | (5030600- ) | Wiring Replacement Set, Consisting of—One AA4881R, One AA4882R, One AA5064R, One AA5652R, One AA5738R, One AA6037R, One AB4795R, One AA6503R, One AF1393R, and One AF2639R |

## DASH LAMP, SWITCH, AND CIGARETTE LIGHTER (LP-GAS)
(Serial No. 5024000- )

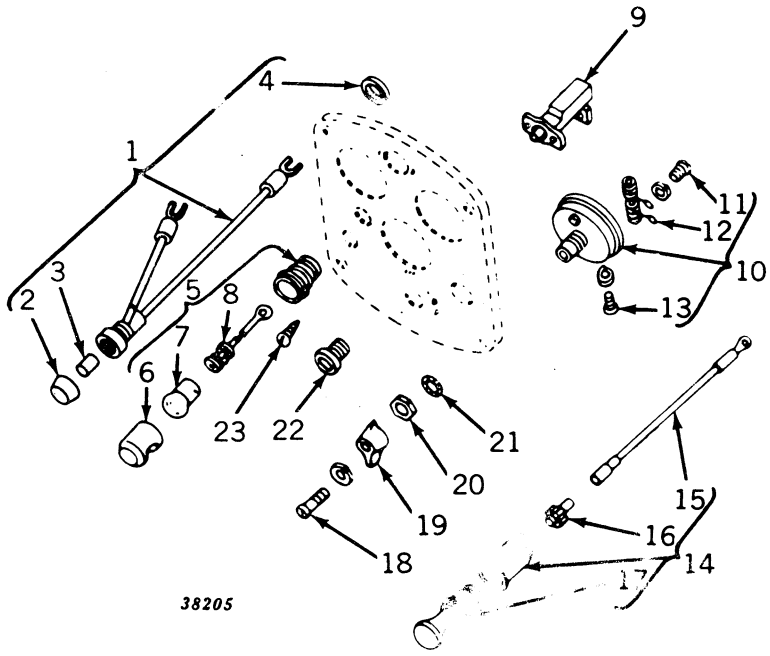


| Key | Part No. | Serial No. | Description |
|---|---|---|---|
| 1 | AR 20711 R | (5024000– ) | Holder, Fuse, with Wiring Leads (Sub. for AA5988R) |
| 2 | AA 5994 R | (5024000– ) | Cap, Fuse Holder |
| 3 | ..... | (5024000– ) | Fuse (Not Furnished) |
| 4 | ..... | (5024000– ) | Nut, Locking (Not Furnished) |
| 5 | AB 4723 R | (5024000– ) | Lamp, Dash (Sub. AR20432R) |
| 6 | B 3267 R | (5024000– ) | Hood |
| 7 | AB 2599 R | (5024000– ) | Bulb (12-16-Volt) (Packed 10 in a Pkg.) |
| 8 | AB 4725 R | (5024000– ) | Wire Assembly (Part for AB4723R) |
| 9 | AP 21353 H | (5024000–5030599) | Switch, Primer (Sub. for 1996053) |
| 10 | AA 5397 R | (5024000– ) | Switch, less Lever (12-Volt) |
| 11 | 1886496 | (5024000– ) | Screw, Mach. (2 used) |
| | A 766 R | (5024000– ) | Washer, Lock (2 used) |
| 12 | X 7350 | (5024000– ) | Resistor (12-Volt) (Sub. for 1877830 and AA4842R) |
| 13 | R 11100 R | (5024000– ) | Screw, Mach., Switch to Terminal (4 used) (Sub. for 1864099) |
| | 12H 290 R | (5024000– ) | Washer, Lock (4 used) (Sub. for A2734R) |
| 14 | **AA 5734 R** | (5024000– ) | **Lighter, Cigarette (12-Volt) (ATTACHMENT) (Sub. AR20438R)** |
| 15 | AM 2152 T | (5024000– ) | Wire Assembly, Cigarette Lighter (Sub. AR21164R) |
| 16 | AM 2151 T | (5024000– ) | Fuse, Cigarette Lighter (Sub. for AA5788R) |
| 17 | AA 5787 R | (5024000– ) | Element, Lighter |
| 18 | 21H 973 R | (5024000– ) | Screw, Mach. |
| | A 766 R | (5024000– ) | Washer, Lock |
| 19 | 1902694* | (5024000– ) | Lever, Switch |
| 20 | 1902692* | (5024000– ) | Nut, 1/2", Switch to Panel |
| 21 | 138549* | (5024000– ) | Washer, Lock, 1/2" |
| 22 | AP 21354 H | (5024000–5030599) | Bushing, Primer Switch (Sub. for 1911548) |
| 23 | M 2207 T | (5024000– ) | Screw, Self-Tapping (2 used) |

*Furnished by John Deere Dubuque Tractor Works.

## INSTRUMENT PANEL AND WIRING (LP-GAS)
(Serial No. 5024000- )

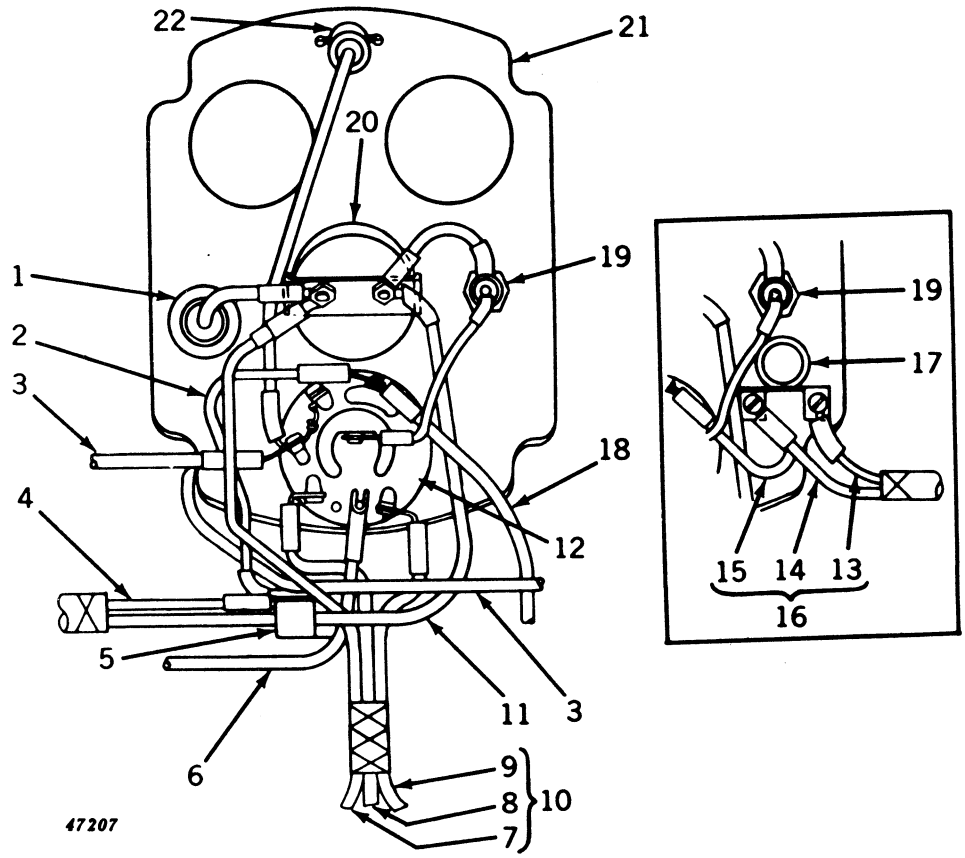


| Key | Part No. | Serial No. | Description |
|---|---|---|---|
| 1 | **AA 5734 R** | (5024000– ) | **Lighter, Cigarette (12-Volt) (ATTACHMENT)** |
| 2 | AA 6037 R | (5024000– ) | Lead, Wiring, Switch to Resistor (Black) |
| 3 | AF 2639 R | (5024000– ) | Lead, Wiring, Switch to R.H. and L.H. Lamps (Black) (Sub. for AF2169R) |
| 4 | ..... | (5024000– ) | Lead, Resistor to Negative Terminal of Coil (Green) (Not Sold Separately) (Part of AA5738R) |
| 5 | AA 5791 R | (5024000– ) | Resistor |
| 6 | ..... | (5024000– ) | Lead, Switch to Positive Terminal of Coil |
| 7 | ..... | (5024000– ) | Wiring, Ammeter to Battery (White) (Not Sold Separately) (Part of AA5730R) |
| 8 | ..... | (5024000– ) | Wiring, Switch to Rear Warning Lamp (Red) (Not Sold Separately) (Part of AA5730R) |
| 9 | ..... | (5024000– ) | Wiring, Switch to Rear Lamp (Black) (Not Sold Separately) (Part of AA5730R) |
| 10 | AA 5730 R | (5024000– ) | Harness, Wiring, Ammeter and Rear Lamp |
| 11 | ..... | (5024000– ) | Wiring, Ammeter to Generator (White) (Not Sold Separately) (Part of AB5738R) |
| 12 | AA 5397 R | (5024000– ) | Switch, less Lever (12-Volt) |
| 13 | ..... | (5024000–5030599) | Wire, Primer Switch to Convertor (Black) (Not Sold Separately) (Part of AB4858R) |
| 14 | ..... | (5024000–5030599) | Wire, Primer Switch to Strainer (Green) (Not Sold Separately) (Part of AB4858R) |
| 15 | ..... | (5024000–5030599) | Wire, Primer Switch to Switch (Green) (Not Sold Separately) (Part of AAB4858R) |
| 16 | AB 4858 R | (5024000–5030599) | Harness, Wiring, Fuel Strainer and Convertor |
| 17 | 1996053 | (5024000–5030599) | Switch, Primer |
| 18 | AB 4795 R | (5030600– ) | Lead, Wiring, Fuel Strainer to Switch |
| 19 | AR 20711 R | (5024000– ) | Holder, Fuse, with Leads (Sub. for AA5988R) |
| 20 | AF 2749 R | (5024000– ) | Ammeter (Sub. for AB2568R) |
| 21 | A 4917 R | (5024000–5030599) | Panel, Instrument |
| | AB 4956 R | (5030600– ) | Panel, Instrument, with Nut |
| 22 | AB 4723 R | (5024000– ) | Lamp, Dash |

## AR21906R GENERATOR PARTS *(12-VOLT) (DELCO-REMY)
(Serial No. 5000001- )

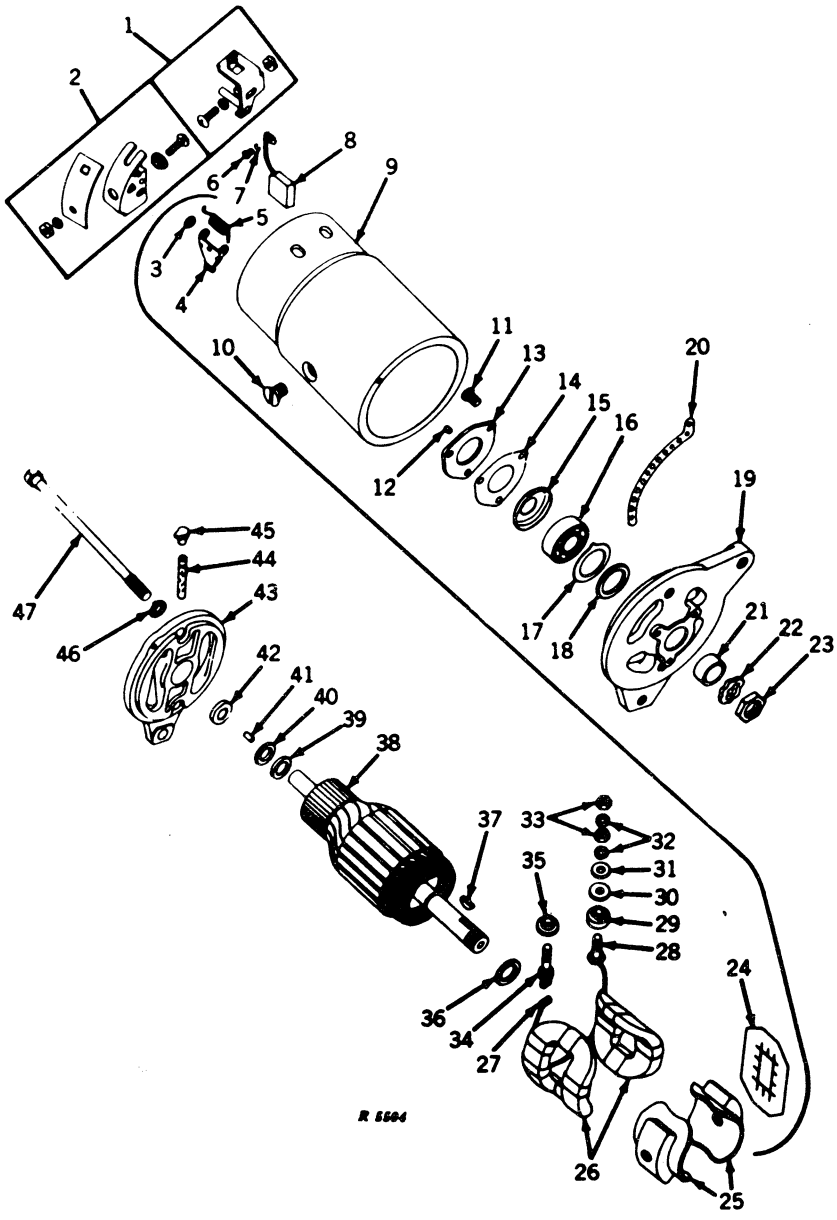


**ADDITIONAL GENERATOR ASSEMBLY**
**AA4921R and AA5737R, Generator Parts Assemblies may be found on pages 35-4 through 35-7.**

## AR21906R GENERATOR PARTS *(12-VOLT) (DELCO-REMY)—Continued
(Serial No. 5000001- )

| Key | Part No. | Serial No. | Description |
|---|---|---|---|
| 1 | AR 11100 R | ( – ) | Holder, Ground Brush (Set) |
| 2 | AR 11068 R | ( – ) | Holder, Insulated Brush (Set) |
| 3 | T 11651 T | ( – ) | Washer, Brush Arm Spacer (2 used) |
| 4 | T 11649 T | ( – ) | Arm, Main Brush (2 used) |
| 5 | T 11652 T | ( – ) | Spring, Brush (2 used) |
| 6 | 21H 1114 T | ( – ) | Screw, Special Mach., Brush Lead Attaching (2 used) |
| 7 | R 11106 R | ( – ) | Washer, Lock, Brush Lead Attaching Screw (2 used) |
| 8 | AR 11074 R | ( – ) | Brush (2 used) |
| 9 | ..... | ( – ) | Frame, Main |
| 10 | R 11097 R | ( – ) | Screw, Pole Shoe (2 used) |
| 11 | R 11105 R | ( – ) | Screw, Plate Attaching (3 used) |
| 12 | R 11087 R | ( – ) | Pin, Dowel |
| 13 | R 11109 R | ( – ) | Plate, Bearing Retainer |
| 14 | R 11110 R | ( – ) | Gasket, Bearing Retainer Plate |
| 15 | R 11205 R | ( – ) | Slinger, Oil |
| 16 | JD 7695 R | ( – ) | Bearing |
| 17 | R 11204 R | ( – ) | Plate, Felt Washer Retaining |
| 18 | R 11089 R | ( – ) | Washer, Felt |
| 19 | R 11203 R | ( – ) | Frame, Drive End |
| 20 | R 11200 R | ( – ) | Bracket, Adjusting |
| 21 | T 11648 T | ( – ) | Collar, Shaft |
| 22 | T 10745 T | ( – ) | Washer, Spring |
| 23 | R 11049 R | ( – ) | Nut |
| 24 | R 11160 R | ( – ) | Insulator, Field Coil (2 used) |
| 25 | R 11161 R | ( – ) | Shoe, Pole (2 used) |
| 26 | AR 11101 R | ( – ) | Coil, Field |
| 27 | R 11043 R | ( – ) | Terminal, Screw Lock Clip |
| 28 | R 11163 R | ( – ) | Stud, Field Terminal |
| 29 | T 11650 T | ( – ) | Insulator, Terminal Stud |
| 30 | R 11098 R | ( – ) | Washer, Insulating |
| 31 | A 3031 R | ( – ) | Washer, Special, Terminal Stud (2 used) |
| 32 | A 3011 R | ( – ) | Washer, Lock, Terminal Stud (4 used) |
| 33 | 14H 608 R | ( – ) | Nut, Hex., Terminal Stud (4 used) |
| 34 | R 11162 R | ( – ) | Stud, Armature Terminal |
| 35 | R 11113 R | ( – ) | Bushing, Insulating |
| 36 | R 11088 R | ( – ) | Washer, Inside Spacing |
| 37 | 26H 72 R | ( – ) | Key, Woodruff, 1/8" x 5/8" |
| 38 | AR 11118 R | ( – ) | Armature |
| 39 | R 11165 R | ( – ) | Cup, Washer Retainer |
| 40 | R 11164 R | ( – ) | Washer, Felt |
| 41 | R 11086 R | ( – ) | Pin, Dowel |
| 42 | R 11202 R | ( – ) | Retainer, Wick |
| 43 | AR 11117 R | ( – ) | Frame, Commutator End |
| 44 | R 11201 R | ( – ) | Wick, Commutator End |
| 45 | E 2302 RT | ( – ) | Cup, Oil |
| 46 | 12H 10 R | ( – ) | Washer, Lock, 5/16" (2 used) |
| 47 | R 11158 R | ( – ) | Bolt, Thru (2 used) |

(Part listed below is an assembly of parts in this grouping.
AR 21906 R ( – ) Generator (12-Volt) (Delco-Remy No. 1947579) (Sub. for AA4921R or AA5737R)

*For regulator, fan or pulley, see original equipment generator.

## TRANSMISSION CASE COVER AND GEAR SHIFT
(Serial No. 5000001- )

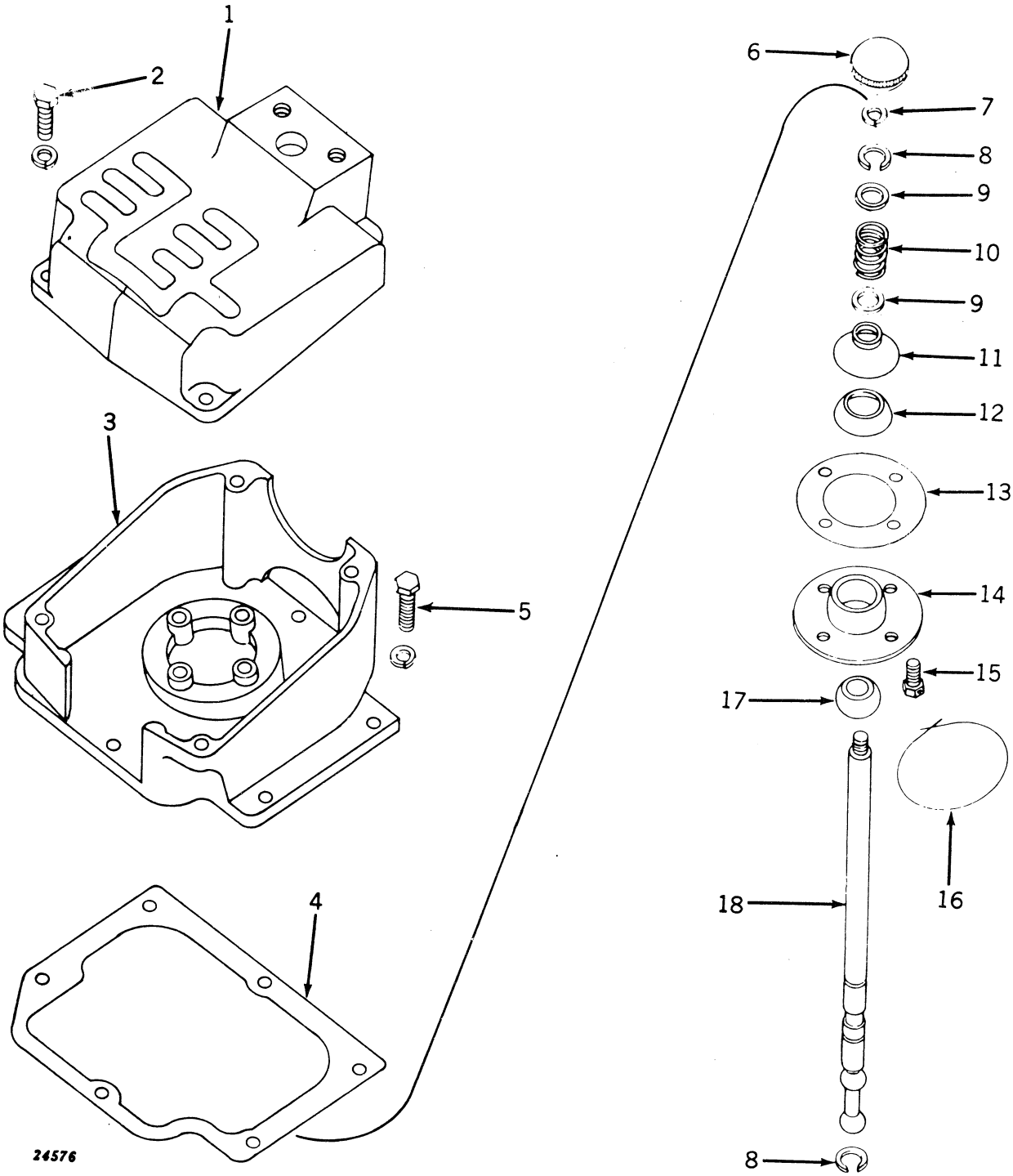

## TRANSMISSION CASE COVER AND GEAR SHIFT—Continued
(Serial No. 5000001- )

| Key | Part No. | Serial No. | Description |
|---|---|---|---|
| 1 | B 3158 R | ( -5031224) | Quadrant, Gear Shift (Sub. B3480R) |
| | B 3480 R | (5031225- ) | Quadrant, Gear Shift |
| 2 | 19H 218 D | ( - ) | Screw, Cap, 3/8" x 1" (4 used) (Sub. for 19H211R) |
| | 12H 11 R | ( - ) | Washer, Lock, 3/8" (4 used) |
| 3 | B 3670 R | ( - ) | Cover, Transmission Case (Sub. for B2824R) |
| 4 | B 2581 R | ( - ) | Gasket (Packed 5 in a Pkg.) |
| 5 | F 2273 R | ( - ) | Screw, Cap, 3/8" x 1-1/4" (6 used) |
| | 12H 11 R | ( - ) | Washer, Lock, 3/8" (6 used) |
| 6 | R 283 R | ( - ) | Ball, Gear Shift Lever (Sub. AP17808H) |
| 7 | 12H 11 R | ( - ) | Washer, Lock, 3/8" |
| 8 | B 387 R | ( - ) | Snap Ring (2 used (Packed 5 in a Pkg.) |
| 9 | 24H 204 R | ( - ) | Washer, 21/32" x 1" x 16 Gauge (2 used) |
| 10 | D 377 R | ( - ) | Spring |
| 11 | F 290 R | ( - ) | Cover, Ball Socket |
| 12 | B 2583 R | ( - ) | Seal, Fulcrum |
| 13 | A 2629 R | ( - ) | Gasket (Packed 2 in a Pkg.) |
| 14 | B 2584 R | ( - ) | Socket, Ball |
| 15 | H 313 R | ( -5029199) | Screw, Cap, 5/16" x 3/4" (Drilled) (4 used) |
| | 19H 1112 H | (5029200- ) | Screw, Cap, 5/16" x 3/4" |
| 16 | ..... | ( -5029199) | Wire, 16 Gauge x 12" Long |
| | B 3468 R | (5029200- ) | Plate, Lock (4 used) |
| 17 | H 717 R | ( - ) | Ball, Fulcrum |
| 18 | B 3159 R | ( - ) | Lever, Gear Shift |

## GEAR SHIFT FORKS AND SHIFTER SHAFTS
(Serial No. 5000001- )

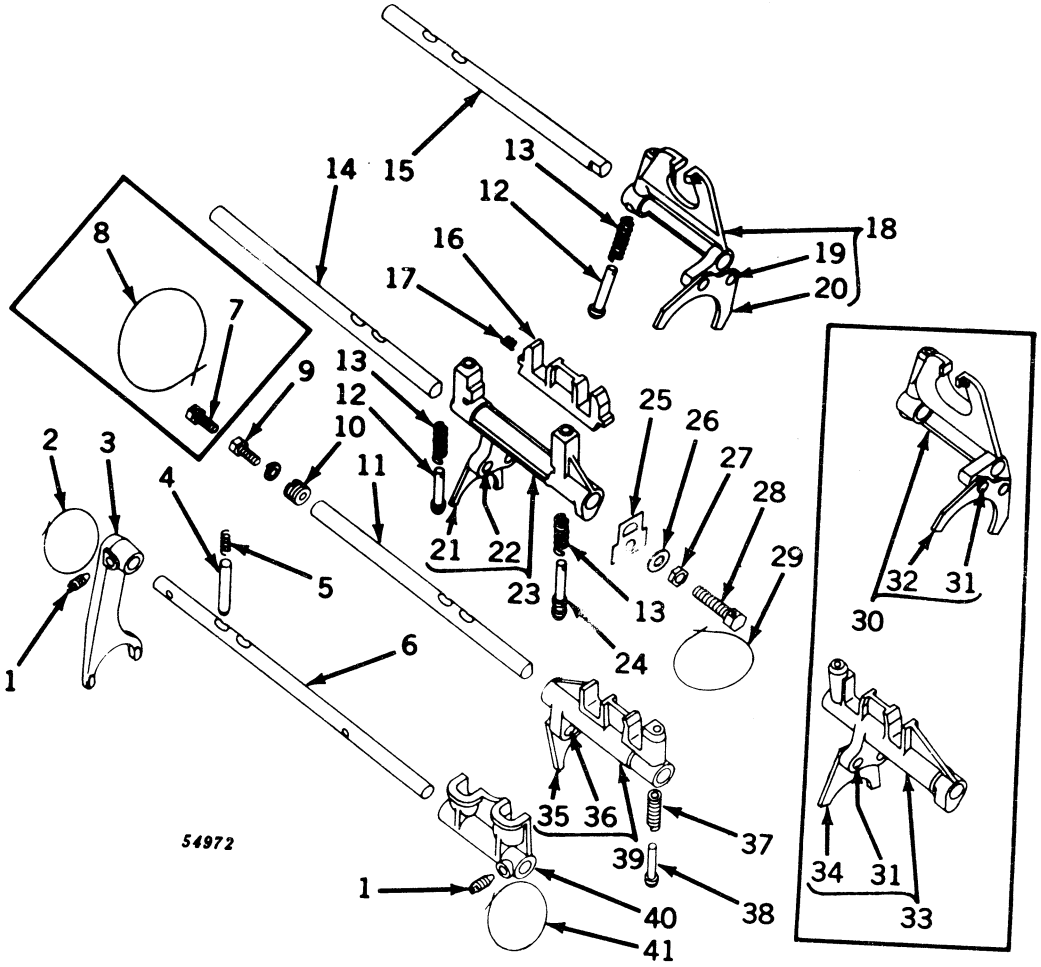

## GEAR SHIFT FORKS AND SHIFTER SHAFTS—Continued
(Serial No. 5000001- )

| Key | Part No. | Serial No. | Description |
|---|---|---|---|
| 1 | B 1914 R | ( – ) | Screw, Set (Drilled) (2 used) |
| 2 | ..... | ( – ) | Wire, 16 Gauge x 9" Long (2 used) |
| 3 | B 2600 R | ( – ) | Fork, Fourth and Sixth Shifter |
| 4 | B 2707 R | ( – ) | Pawl |
| 5 | D 993 R | ( – ) | Spring |
| 6 | B 2599 R | ( – ) | Shaft, Fourth and Sixth Shifter |
| 7 | D 1843 R | ( –5015639) | Screw, Cap, 5/16" x 1" (Drilled) (3 used) |
| 8 | ..... | ( –5015639) | Wire, 16 Gauge x 9" Long |
| 9 | 19H 118 T | (5015640-5019651) | Screw, Cap, 5/16" x 1" (3 used) (Sub. for 19H112R) |
| | 12H 10 R | (5015640-5019651) | Washer, Lock, 5/16" (3 used) |
| | 19H 218 D | (5019652- ) | Screw, Cap, 3/8" x 1" (3 used) (Sub. for 19H211R) |
| | 12H 11 R | (5019652- ) | Washer, Lock, 3/8" (3 used) |
| 10 | B 380 R | ( –5019651) | Screw, Adjusting (3 used) |
| | B 3330 R | (5019652- ) | Screw, Adjusting (3 used) |
| 11 | B 3618 R | (5020164- ) | Shaft, Second and Fifth Shifter (Sub. for B3328R) |
| | B 2591 R | ( –5020163) | Shaft, Second and Fifth Shifter (Sub. One B3618R, One B3330R, One 19H218D, and One 12H11R) |
| 12 | B 2593 R | (5031225- ) | Pawl, Shifter (2 used) |
| 13 | B 2597 R | (5031225- ) | Spring, Pawl (3 used) |
| 14 | B 3327 R | (5019652-5031224) | Shaft, First, Third, and Reverse Shifter |
| | B 3481 R | (5031225- ) | Shaft, First, Third, and Reverse Shifter |
| | B 2590 R | ( –5019651) | Shaft, First, Third, and Reverse Shifter (Sub. One B3327R, One B3330R, One 19H218D, and One 12H11R) |
| 15 | B 3329 R | (5019972- ) | Shaft, Underdrive Shifter |
| | B 2592 R | ( –5019971) | Shaft, Underdrive Shifter (Sub. One B3329R, One B3330R, One 19H218D, and One 12H11R) |
| 16 | B 3482 R | (5031225- ) | Gate, First, Third, and Reverse Gear Shifter |
| 17 | A 4741 R | (5031225- ) | Spring |
| 18 | AB 4947 R | (5031225- ) | Shifter, B3476R, Underdrive, with Yoke and Rivets |
| 19 | 16H 1111 A | (5031225- ) | Rivet, Ctsk. Hd., 5/16" x 1" (2 used) |
| 20 | B 3479 R | (5031225- ) | Yoke, Underdrive Shifter |
| 21 | B 2586 R | (5031225- ) | Yoke, Shifter |
| 22 | 16H 1114 A | (5031225- ) | Rivet, R.I.O.H., 5/16" x 1" (2 used) |
| 23 | AB 4950 R | (5031225- ) | Shifter, B3477R, First, Third, and Reverse Gear, with Yoke and Rivets |
| 24 | B 3483 R | (5031225- ) | Pawl, First, Third, and Reverse Shifter Lock |
| 25 | B 2594 R | ( – ) | Plate, Lock |
| 26 | 24H 169 R | ( – ) | Washer, 15/32" x 15/16" x 16 Gauge |
| 27 | 14H 257 R | ( – ) | Nut, 7/16" |
| 28 | B 2595 R | ( – ) | Screw, Cap, 7/16" x 2" (Drilled) |
| 29 | ..... | ( – ) | Wire, 16 Gauge x 14" Long |
| 30 | AB 3597 R | ( –5031224) | Shifter, B2588R, Underdrive, with Yoke and Rivets (Sub. AB4947R) |
| 31 | 16H 1114 A | ( –5031224) | Rivet, 5/16" x 1" (4 used) |
| 32 | B 2589 R | ( –5031224) | Yoke, Underdrive Shifter |
| 33 | AB 3595 R | ( –5031224) | Shifter, B2585R, First, Third, and Reverse Gear, with Yoke and Rivets |
| 34 | B 2586 R | ( –5031224) | Yoke, Shifter |
| 35 | B 2586 R | ( – ) | Yoke, Shifter |
| 36 | 16H 1114 A | ( – ) | Rivets, 5/16" x 1" (2 used) |
| 37 | B 2597 R | ( – ) | Spring, Pawl |
| 38 | B 2593 R | ( – ) | Pawl, Shifter |
| 39 | AB 3596 R | ( –5031224) | Shifter, B2587R, Second and Fifth Speed Gear, with Yoke and Rivets (Sub. AB4949R) |
| | AB 4949 R | (5031225- ) | Shifter, B3478R, Second and Fifth Speed Gear, with Yoke and Rivets |
| 40 | B 2598 R | ( – ) | Shifter, Fourth and Sixth Speed |
| 41 | ..... | ( – ) | Wire, 16 Gauge x 6" Long |

(Part listed below is an assembly of most of the parts in this grouping.)

| | | |
|---|---|---|
| AB 4964 R | ( –5031224) | Gear Shifter Lock Assembly, First, Third, and Reverse Gear, with Shifters and Lock, Consisting of—One A4741R, AB4947R, AB4949R, AB4950R, B2593R, B3481R, B3482R, and B3483R and Two B2597R |

## TRANSMISSION
(Serial No. 5000001- )

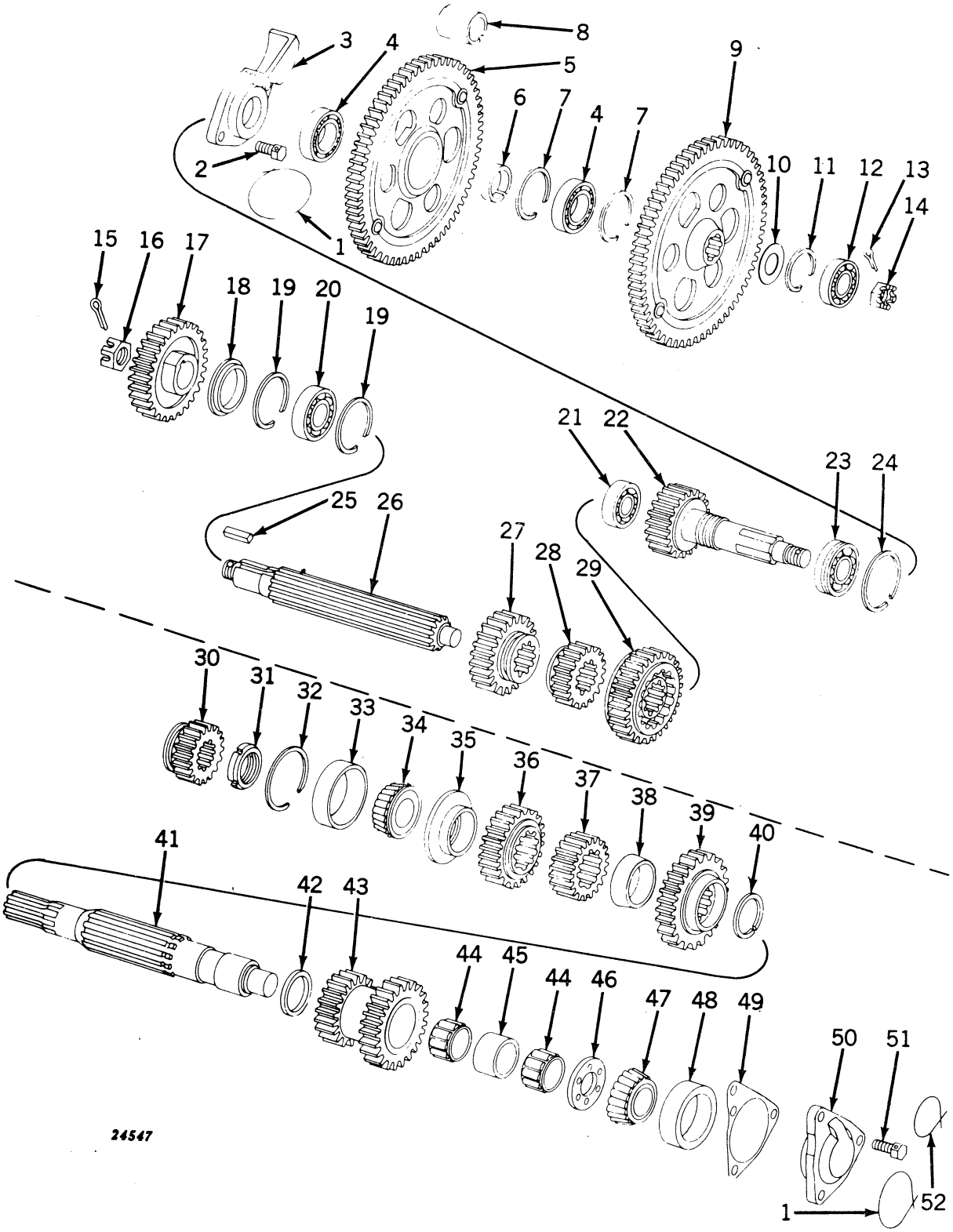

**TRANSMISSION—Continued**
**(Serial No. 5000001- )**

| Key | Part No. | Serial No. | Description |
|---|---|---|---|
| 1 | ..... | ( – ) | Wire, 16 Gauge x 9" Long (2 used) |
| 2 | B 1879 R | ( – ) | Screw, Cap, 7/16" x 1" (Drilled) (2 used) (Sub. B3307R) |
| 3 | B 3010 R | ( – ) | Cover |
| 4 | JD 8514 R | ( – ) | Bearing, Power Shaft Idler Gear (2 used) (Tractors equipped with Engine-Driven Power Shaft) |
| 5 | AB 4602 R | ( – ) | Gear, Power Shaft Idler, with B3168R Spider (Tractors equipped with Engine-Driven Power Shaft) |
| 6 | B 3170 R | ( – ) | Spacer (Tractors equipped with Engine-Driven Power Shaft) |
| 7 | B 3169 R | ( – ) | Snap Ring (2 used) Tractors equipped with Engine-Driven Power Shaft) |
| 8 | B 3147 R | ( – ) | Spacer, Inner, First Reduction Gear (Tractors without Engine-Driven Power Shaft) |
| 9 | AB 5060 R | ( – ) | Gear, First Reduction, with B3011R Spider (Sub. for AB4447R) |
| 10 | B 3114 R | ( – ) | Washer |
| 11 | A 1401 R | ( – ) | Snap Ring |
| 12 | JD 7664 R | ( – ) | Bearing |
| 13 | 11H 88 R | ( – ) | Pin, Cotter, 3/16" x 2" (Sub. for 11H84R) |
| 14 | C 535 R | ( – ) | Nut, Slotted, 1" (Packed 25 in a Pkg.) |
| 15 | 11H 88 R | ( – ) | Pin, Cotter, 3/16" x 2" (Sub. for 11H84R) |
| 16 | B 1916 R | ( – ) | Nut, Slotted, 1" |
| 17 | B 3603 R | ( – ) | Gear, B2443R, Fourth and Sixth Speed Drive (32 Teeth) (Sub. for AB5144R) |
| 18 | B 2434 R | ( – ) | Retainer, Oil, Sliding Gear Shaft, L.H. Bearing |
| 19 | F 216 R | ( – ) | Snap Ring (2 used) |
| 20 | JD 7159 C | ( – ) | Bearing |
| 21 | JD 7660 R | ( – ) | earing |
| 22 | AB 4445 R | ( – ) | Gear, B3009R, Transmission Drive, and Shaft, with Nut (20 Teeth) |
| 23 | JD 7973 R | ( – ) | Learing |
| 24 | B 2437 R | ( – ) | Snap Ring |
| 25 | B 2445 R | ( –5029199) | Key, Fourth and Sixth Speed Drive Gear (Sub. A5344R) |
| | A 5344 R | (5029200– ) | Key, Fourth and Sixth Speed Drive Gear |
| 26 | AB 3502 R | ( – ) | Shaft, Sliding Gear, with Nut (16 Splines) |
| 27 | B 3604 R | ( – ) | Pinion, B2432R, Second and Fifth Speed Sliding (25 Teeth) (Sub. for AB4187R) |
| 28 | B 2431 R | ( – ) | Pinion, First and Third Speed Sliding (19 Teeth) (Sub. for AB4184R) |
| 29 | B 3613 R | ( – ) | Gear, B2433R, Sliding Gear Shaft Drive (30 Teeth) (Sub. for AB4193R) |
| 30 | B 3605 R | ( – ) | Pinion, B2444R, Fourth and Sixth Speed Sliding (18Teeth) (Sub. for AB4191R) |
| 31 | B 2414 R | ( – ) | Nut, Lock |
| 32 | H 444 R | ( – ) | Snap Ring |
| 33 | JD 7418 R | ( – ) | Cup |
| 34 | JD 7395 R | ( – ) | Cone, with Rollers |
| 35 | B 2420 R | ( – ) | Spacer |
| 36 | B 2416 R | ( – ) | Gear, Countershaft Second and Fifth Speed (25 Teeth) (Sub. for AB4122R) |
| 37 | B 2418 R | ( – ) | Pinion, Differential Drive (20 Teeth) (Sub. for AB4182R) |
| 38 | B 2419 R | ( – ) | Spacer |
| 39 | B 2415 R | ( – ) | Gear, Countershaft First and Third Speed (31 Teeth) (Sub. for AB4119R) |
| 40 | B 2421 R | ( – ) | Snap Ring |
| 41 | AB 3499 R | ( – ) | Countershaft, with Lock Nut and Snap Ring (10 and 16 Splines) |
| 42 | B 2423 R | ( – ) | Collar, Locating |
| 43 | B 2417 R | ( – ) | Gear, Countershaft Idler (20 Teeth and 30 Teeth) (Sub. for AB4128R) |
| 44 | JD 7937 R | ( – ) | Bearing (2 used) |
| 45 | F 206 R | ( – ) | Spacer |
| 46 | B 2424 R | ( – ) | Washer, Thrust |
| 47 | JD 8100 R | ( – ) | Cone, with Rollers |
| 48 | JD 7424 R | ( – ) | Cup |
| 49 | B 3006 R | ( – ) | Gasket (Thin) (4 used) (Packed 10 in a Pkg.) |
| | B 3007 R | ( – ) | Gasket (Thick) (2 used) (Sub. B3006R) |
| | B 3008 R | ( – ) | Shim (Steel) (4 used) |
| 50 | B 3005 R | ( – ) | Housing, Bearing |
| 51 | B 2827 R | ( – ) | Screw, Cap, 7/16" x 1-1/8" (Drilled) (3 used) |
| 52 | ..... | ( – ) | Wire, 16 Gauge x 6" Long |

## DIFFERENTIAL
(Serial No. 5000001- )

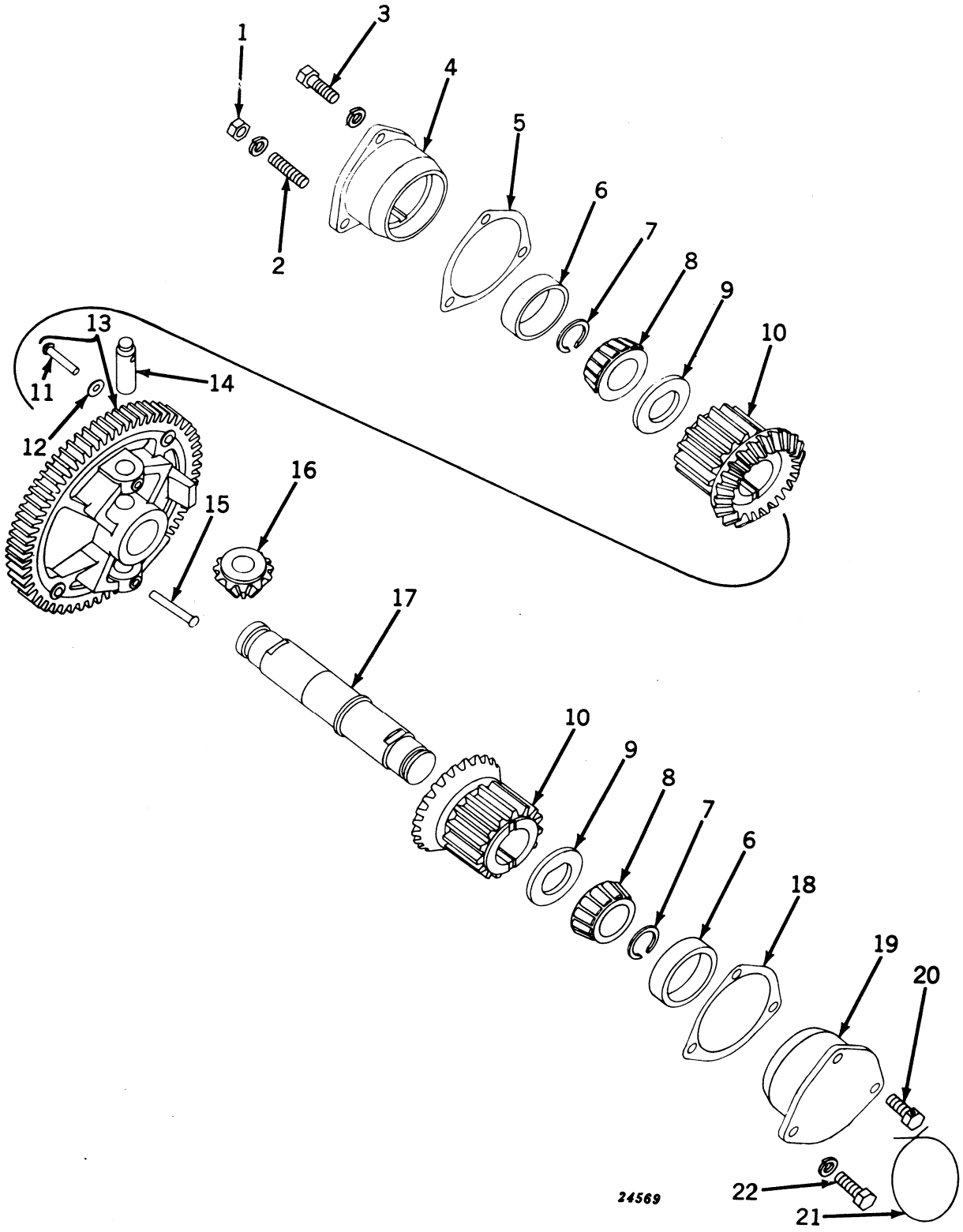

**DIFFERENTIAL—Continued**
**(Serial No. 5000001- )**

| Key | Part No. | Serial No. | Description |
|---|---|---|---|
| 1 | 14H 392 R<br>12H 13 R | ( – ) | Nut, 1/2" (Packed 50 in a Pkg.)<br>Washer, Lock, 1/2" |
| 2 | D 488 R | ( – ) | Stud, 1/2" x 2" |
| 3 | 19H 462 N<br>12H 13 R | ( – )<br>( – ) | Screw, Cap, 1/2" x 1-1/2" (2 used) (Sub. for 19H457R)<br>Washer, Lock, 1/2" |
| 4 | B 2332 R | ( – ) | Quill, L.H. Bearing |
| 5 | B 2333 R<br>B 2334 R<br>B 2335 R | ( – )<br>( – )<br>( – ) | Gasket (Thin) (4 used) (Packed 10 in a Pkg.)<br>Gasket (Thick) (2 used) (Sub. B2333R)<br>Shim (Steel) |
| 6 | JD 7430 R | ( – ) | Cup (2 used) |
| 7 | A 2597 R | ( – ) | Snap Ring (2 used) (Sub. for A2595R) |
| 8 | JD 8113 R | ( – ) | Cone, with Rollers (2 used) |
| 9 | B 2331 R | ( – ) | Washer, Thrust (2 used) |
| 10 | B 2327 R | ( – ) | Gear, Bevel and Spur Pinion (2 used) (Sub. for AB4137R) |
| 11 | 16H 1119 A | ( – ) | Rivet, 5/16" x 1-1/8" (2 used) |
| 12 | D 2350 R | ( – ) | Washer (4 used) |
| 13 | AB 4135 R | ( – ) | Gear and B2325R Spider |
| 14 | B 2329 R | ( – ) | Shaft, Bevel Pinion (2 used) (Sub. for AB4229R) |
| 15 | 16H 790 A | ( – ) | Rivet, 1/4" x 2-1/2" (2 used) |
| 16 | B 2328 R | ( – ) | Pinion, Bevel (2 used) (Sub. for AB4179R) |
| 17 | B 2330 R | ( – ) | Shaft, Differential |
| 18 | B 3086 R | ( – ) | Gasket (Packed 2 in a Pkg.) |
| 19 | B 3085 R | ( – ) | Quill, R.H. Bearing |
| 20 | C 1096 R | ( – ) | Screw, Cap, 1/2" x 1-1/4" (Drilled) (2 used) |
| 21 | ..... | ( – ) | Wire, 16 Gauge x 14" |
| 22 | 19H 462 N<br>12H 13 R | ( – )<br>( – ) | Screw, Cap, 1/2" x 1-1/2" (Sub. for 19H457R)<br>Washer, Lock, 1/2" |

## FINAL DRIVE, HOUSING, AND REAR AXLE SHAFTS
(Serial No. 5000001- )

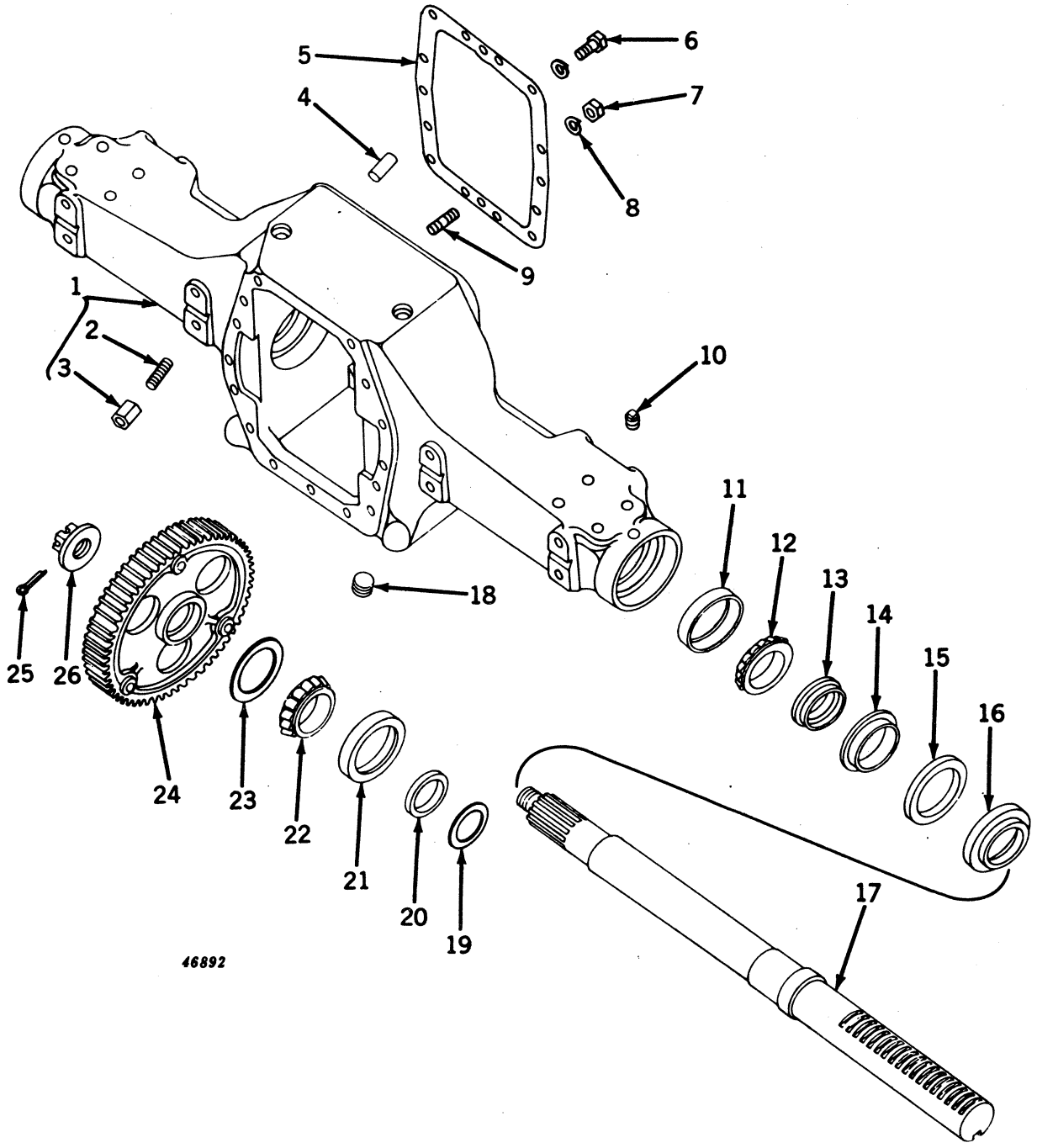

## FINAL DRIVE, HOUSING, AND REAR AXLE SHAFTS—Continued
**(Serial No. 5000001- )**

| Key | Part No. | Serial No. | Description |
|---|---|---|---|
| 1 | AB 4659 R | ( -- ) | Housing, B3108R, Rear Axle, with Studs and Nuts (88" Tread) |
| | AB 4660 R | ( – ) | Housing, B3140R, Rear Axle, with Studs and Nuts (97-3/4" or 104" Tre |
| 2 | A 5292 R | ( – ) | Stud, 5/8" x 2-1/4" (12 used) (Sub. for C1479R) (Packed 25 in a Pkg.) |
| 3 | A 1892 R | ( – ) | Nut, Special Hex. (12 used) (Packed 25 in a Pkg.) (Sub. for AA4963R) |
| 4 | C 1220 R | ( – ) | Pin, Dowel (2 used) |
| 5 | B 3622 R | ( – ) | Gasket (Packed 2 in a Pkg.) (Sub. for B351R) |
| 6 | 19H 462 N | ( – ) | Screw, Cap, 1/2" x 1-1/2" (12 used) (Sub. for 19H457R) |
| | 12H 13 R | ( – ) | Washer, Lock, 1/2" (12 used) |
| 7 | 14H 392 R | ( – ) | Nut, 1/2" (2 used) (Packed 50 in a Pkg.) |
| 8 | 12H 13 R | ( – ) | Washer, Lock, 1/2" (2 used) |
| 9 | D 488 R | ( – ) | Stud, 1/2" x 2" (2 used) |
| 10 | 15H 556 R | ( – ) | Plug, Pipe (Special) (2 used) |
| 11 | JD 8216 R | ( – ) | Cup (2 used) (88" Tread) |
| | JD 8326 R | (5029200– ) | Race, Roller Bearing (2 used) (88" Tread) |
| | JD 8213 R | ( – ) | Cup (2 used) (97-3/4" or 104" Tread) |
| 12 | JD 8169 R | ( – ) | Cone, with Rollers (2 used) (88" Tread) |
| | JD 8609 R | (5029200– ) | Race, and Roller Bearing (2 used) (88" Tread) |
| | JD 8165 R | ( – ) | Cone, with Rollers (2 used) (97-3/4" or 104" Tread) |
| 13 | A 3040 R | ( – ) | Spacer, Bearing (2 used) (88" Tread) |
| | A 4345 R | ( – ) | Spacer, Bearing (2 used) (97-3/4" or 104" Tread) |
| 14 | A 3042 R | ( – ) | Retainer, Felt, Inner (2 used) (88" Tread) |
| | F 787 R | ( – ) | Retainer, Felt, Inner (2 used) (97-3/4" or 104" Tread) |
| 15 | A 3043 R | ( – ) | Washer, Felt (2 used) (88" Tread) (Sub. for AA3657R) |
| | AD 1275 R | ( – ) | Washer, Felt (2 used) (97-3/4" or 104" Tread) |
| 16 | A 3041 R | ( – ) | Retainer, Felt, Outer (2 used) (88" Tread) |
| | F 786 R | ( – ) | Retainer, Felt, Outer (2 used) (97-3/4" or 104" Tread) |
| 17 | AB 4532 R | ( – ) | Shaft, Rear Axle, with Nut (2 used) (88" Tread) |
| | AB 4577 R | ( – ) | Shaft, Rear Axle, with Nut (2 used) (97-3/4" or 104" Tread) |
| 18 | 15H 280 R | ( – ) | Plug, Pipe, 1-1/4" |
| 19 | B 1183 R | ( – ) | Washer (2 used) |
| 20 | AB 1326 R | ( – ) | Seal, Oil (2 used) (Sub. for AB1325R) |
| 21 | JD 7272 R | ( – ) | Cup (2 used) (88" Tread) |
| | JD 8325 R | (5029200– ) | Race, Roller Bearing (2 used) (88" Tread) |
| | JD 7417 R | ( – ) | Cup (2 used) (97-3/4" or 104" Tread) |
| 22 | JD 7366 R | ( – ) | Cone, with Rollers (2 used) (88" Tread) |
| | JD 8608 R | (5029200– ) | Race and Roller Bearing (2 used) (88" Tread) |
| | JD 7393 R | ( – ) | Cone, with Rollers (2 used) (97-3/4" or 104" Tread) |
| 23 | B 3415 R | ( – ) | Washer Thrust, Bronze (2 used) |
| 24 | AB 4533 R | ( – ) | Gear, Final Drive, with B3110R Spider (2 used) |
| 25 | 11H 88 R | ( – ) | Pin, Cotter, 3/16" x 2" (2 used) |
| 26 | B 350 R | ( – ) | Nut (2 used) |

## BRAKES
(Serial No. 5000001- )

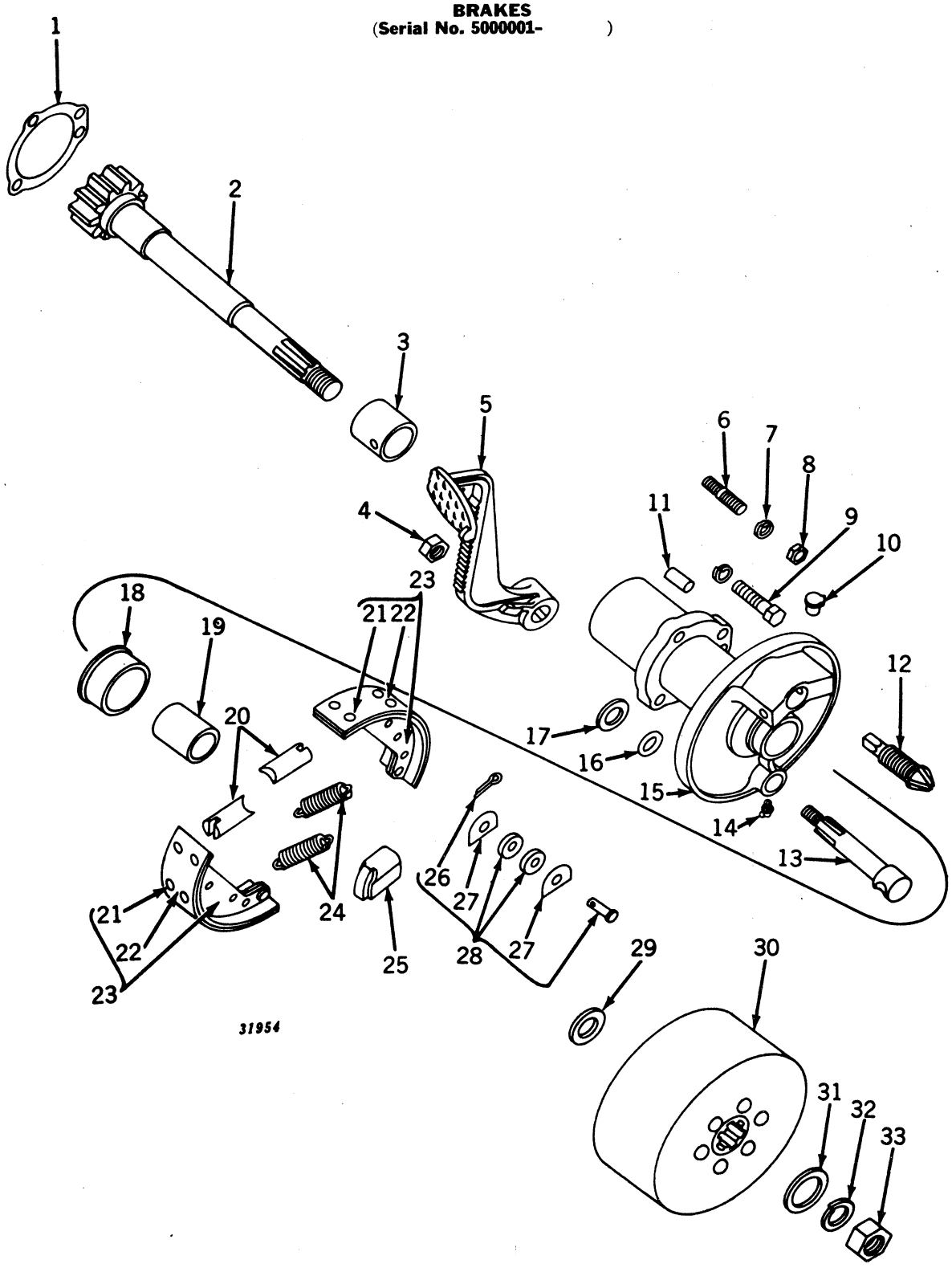

**BRAKES—Continued**
**(Serial No. 5000001- )**

| Key | Part No. | Serial No. | Description |
|---|---|---|---|
| 1 | B 2743 R | ( – ) | Gasket (Packed 5 in a Pkg.) |
| 2 | AB 4442 R | ( – ) | Shaft, Brake, with Nut |
| 3 | B 2741 R | ( –5018079) | Bushing, Inner |
| | B 3287 R | (5018080– ) | Bushing, Inner |
| 4 | 14H 392 R | ( – ) | Nut, 1/2" (Packed 50 in a Pkg.) (Sub. for 14H260R) |
| 5 | B 236 R | ( – ) | Pedal, R.H. |
| | B 237 R | ( – ) | Pedal, L.H. |
| 6 | K 2019 R | ( – ) | Stud, 1/2" x 2-1/4" (R.H. Side only) |
| 7 | 12H 13 R | ( – ) | Washer, Lock, 1/2" |
| 8 | 14H 392 R | ( – ) | Nut, 1/2" (Packed 50 in a Pkg.) (Sub. for 14H260R) |
| 9 | 19H 472 N | ( – ) | Screw, Cap, 1/2" x 1-3/4" (3 used L.H., 2 used R.H.) (Sub. for 19H467R) |
| | 12H 13 R | ( – ) | Washer, Lock, 1/2" (5 used) |
| 10 | AA 811 R | ( – ) | Oiler |
| 11 | A 120 R | ( – ) | Pin, Dowel |
| 12 | A 151 R | ( – ) | Screw, Adjusting |
| 13 | B 3004 R | ( – ) | Shaft, Lever |
| 14 | JD 7760 | (5001748– ) | Fitting, Grease |
| 15 | AB 4440 R | ( – ) | Housing, B3002R, with Bushing and Oiler |
| 16 | B 2762 R | ( – ) | Packing, "O" Ring (Packed 2 in a Pkg.) |
| 17 | 24H 52 R | ( – ) | Washer (2 used) |
| 18 | B 2742 R | ( – ) | Guard, Dust, Inner |
| 19 | B 638 R | ( – ) | Bushing, Outer |
| 20 | B 227 R | ( – ) | Pin, Adjusting (2 used) |
| 21 | D 2309 R | ( – ) | Rivet, Brass (16 used) (Packed 100 in a Pkg.) |
| 22 | AB 3849 R | ( – ) | Lining (Set of Four B2723R Linings and Thirty-Two Rivets) |
| 23 | AB 3833 R | ( – ) | Shoe, with Lining (2 used) |
| 24 | B 228 R | ( – ) | Spring (2 used) (Packed 10 in a Pkg.) |
| 25 | B 2110 R | ( –5029199) | Cam (Sub. B3366R) |
| | B 3366 R | (5029200– ) | Cam |
| 26 | 11H 41 R | ( – ) | Pin, Cotter, 1/8" x 1" (2 used) (Sub. for 11H38R) |
| 27 | A 2299 R | ( – ) | Washer (4 used) |
| 28 | AB 4057 R | ( – ) | Pins, with Rollers and Washers (2 used) |
| 29 | B 233 R | ( – ) | Washer (2 used) |
| 30 | AB 3867 R | ( – ) | Drum, Brake, with Hub |
| | B 2739 R | ( – ) | Hub, B2739R, Brake Drum |
| | 16H 1114 A | ( – ) | Rivet, 5/16" x 1" (6 used) |
| 31 | 24H 995 R | ( – ) | Washer, 29/32" x 1-17/32" x 11 Gauge |
| 32 | 12H 19 R | ( – ) | Washer, Lock, 7/8" (Packed 25 in a Pkg.) |
| 33 | 14H 781 R | ( – ) | Nut, Jam, 7/8" (Packed 25 in a Pkg.) |

## VENTILATOR PUMP AND FAN DRIVE
(POWER STEERING)
(Serial No. 5020400- )

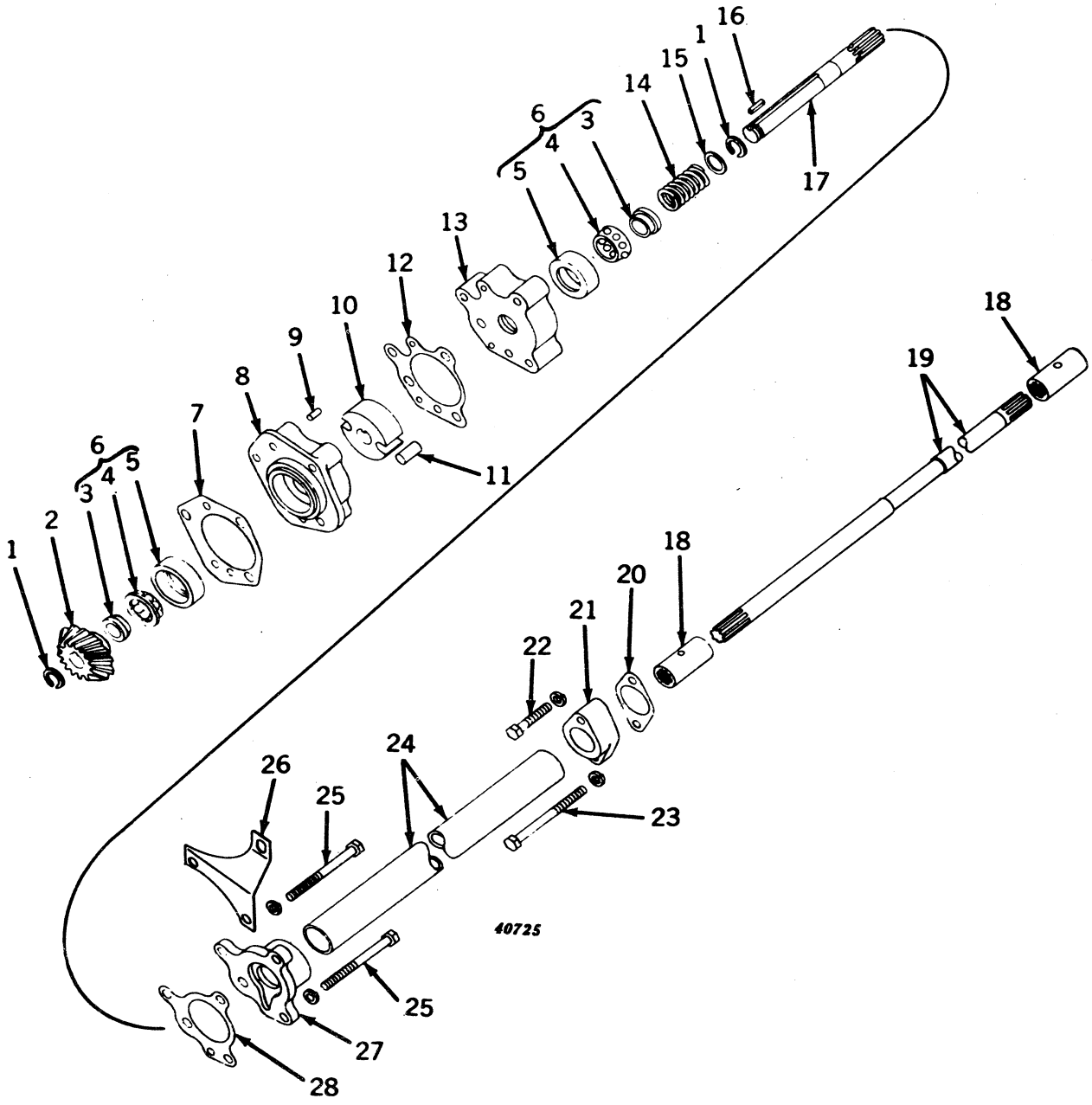

## VENTILATOR PUMP AND FAN DRIVE—Continued
## (POWER STEERING)
## (Serial No. 5020400- )

| Key | Part No. | Serial No. | Description |
|---|---|---|---|
| 1 | A 369 R | (5020400- ) | Snap Ring (2 used) (Packed 5 in a Pkg.) |
| 2 | AB 3706 R | (5020400- ) | Gear and Pinion (One B289R and One B2637R) |
| 3 | JD 7656 R | (5020400- ) | Cone, Bearing (2 used) |
| 4 | JD 7657 R | (5020400- ) | Retainer, with Balls (2 used) |
| 5 | JD 7655 R | (5020400- ) | Cup, Bearing (2 used) |
| 6 | JD 7654 R | (5020400- ) | Bearing, Complete (2 used) (Composed of JD7655R, JD7656R, and JD7657F |
| 7 | B 2642 R | (5020400- ) | Gasket (Thin) (Packed 5 in a Pkg.) |
| | B 2643 R | (5020400- ) | Gasket (Thick) (Sub. B2642R) |
| 8 | F 1657 R | (5020400-5032539) | Housing, Fan Drive Shaft Bearing (Sub. AF3603R) |
| | F 2425 R | (5032540- ) | Housing, Fan Drive Shaft Bearing (Sub. AF3603R) |
| 9 | B 2641 R | (5020400- ) | Pin, Dowel (2 used) |
| 10 | A 4191 R | (5020400- ) | Rotor, Ventilator Pump |
| 11 | R 820 R | (5020400- ) | Roller, Ventilator Pump Rotor (2 used) (Packed 2 in a Pkg.) |
| 12 | F 1659 R | (5020400-5032539) | Gasket (Packed 2 in a Pkg.) |
| | F 2427 R | (5032540- ) | Gasket (Packed 2 in a Pkg.) |
| 13 | F 1658 R | (5020400-5032539) | Quill, Fan Drive Shaft Bearing (Sub. AF3603R) |
| | F 2426 R | (5032540- ) | Quill, Fan Drive Shaft Bearing (Sub. AF3603R) |
| 14 | F 1660 R | (5020400- ) | Spring |
| 15 | 24H 448 R | (5020400- ) | Washer, 25/32" x 1-1/8" x 13 Gauge |
| 16 | D 403 R | (5020400- ) | Key |
| 17 | F 1656 R | (5020400- ) | Shaft, Fan Drive |
| 18 | AF 1902 R | (5020400- ) | Coupling (2 used) |
| 19 | B 3353 R | (5020400- ) | Shaft, Fan Drive Coupling |
| 20 | F 1667 R | (5020400- ) | Gasket (Packed 2 in a Pkg.) |
| 21 | F 1666 R | (5020400- ) | Flange, Steering Pump |
| 22 | F 2274 R | (5020400- ) | Screw, Special Cap, 3/8" x 1-3/4" |
| | 12H 11 R | (5020400- ) | Washer, Lock, 3/8" |
| 23 | 19H 1697 R | (5020400- ) | Screw, Cap, 3/8" x 4" (Sub. for 19H292T) |
| | 12H 11 R | (5020400- ) | Washer, Lock, 3/8" |
| 24 | B 3354 R | (5020400- ) | Tube, Fan Drive |
| 25 | 19H 1296 H | (5020400- ) | Screw, Cap, 3/8" x 3-3/4" (3 used) (Sub. for 19H288R) |
| | 12H 11 R | (5020400- ) | Washer, Lock, 3/8" (3 used) |
| 26 | B 3384 R | (5020400- ) | Bracket, Fuel Tank Rear Support |
| 27 | F 1664 R | (5020400- ) | Cover, Fan Drive Shaft Bearing |
| 28 | F 1665 R | (5020400- ) | Gasket (Packed 2 in a Pkg.) |

## FAN AND POWER STEERING PUMP
(POWER STEERING)
(Serial No. 5020400- )

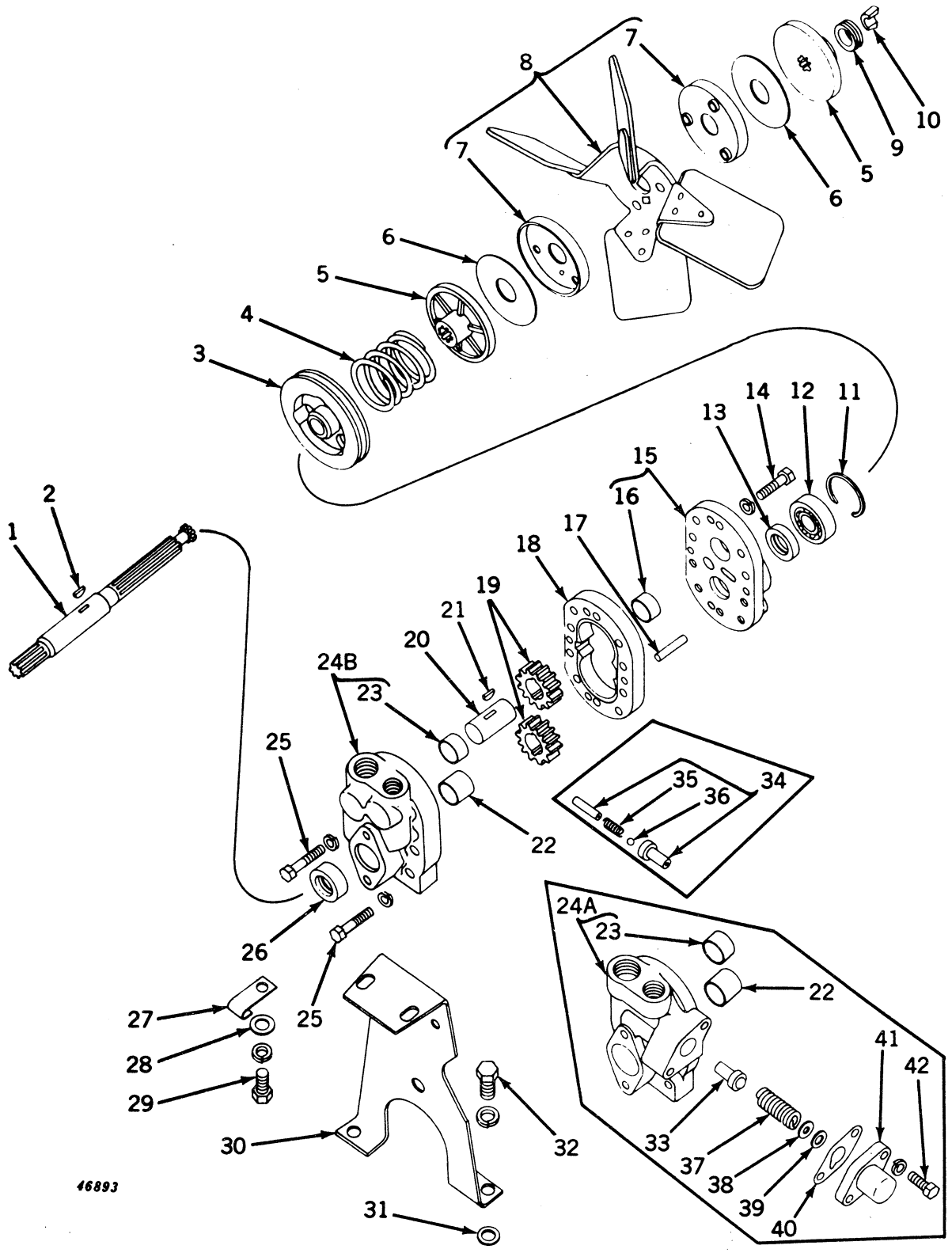

## FAN AND POWER STEERING PUMP—Continued
(POWER STEERING)
(Serial No. 5020400-

| Key | Part No. | Serial No. | Description |
|---|---|---|---|
| 1 | F 1687 R | (5020400– ) | Shaft, Fan |
| 2 | 26H 70 R | (5020400– ) | Key, Woodruff, 1/8" x 1/2" |
| 3 | F 1668 R | (5020400– ) | Pulley, Generator Drive |
| 4 | F 808 R | (5020400– ) | Spring |
| 5 | AB 3314 R | (5020400– ) | Disk, Friction (2 used) (Pkg. of 2) |
| 6 | D 399 R | (5020400– ) | Washer, Friction (2 used) (Packed 5 in a Pkg.) |
| 7 | A 4059 R | (5020400– ) | Cup, Fan Drive (2 used) |
| 8 | AB 3315 R | (5020400– ) | Fan, with Two A4059R Cups |
| 9 | A 3645 R | (5020400– ) | Keeper, Fan |
| 10 | D 1720 R | (5020400– ) | Lock (Half) (2 used) (Packed 2 in a Pkg.) |
| 11 | D 398 R | (5020400– ) | Snap Ring |
| 12 | JD 7142 R | (5020400– ) | Bearing |
| 13 | AF 1925 R | (5020400– ) | Seal, Oil |
| 14 | F 2274 R | (5020400– ) | Screw, Special Cap, 3/8" x 1-3/4" (5 used) |
| | 12H 11 R | (5020400– ) | Washer, Lock, 3/8" (5 used) |
| 15 | AF 2338 R | (5020400– ) | Cover, F1655R and F2313R, Steering Pump, with Bushing (Sub. for AF1924 |
| 16 | F 1747 R | (5020400– ) | Bushing |
| 17 | D 2478 R | (5020400–5029199) | Pin, Dowel (2 used) |
| | R 1800 R | (5029200– ) | Pin, Dowel (2 used) |
| 18 | F 2324 R | (5020400– ) | Body, Steering Pump (Sub. for F1654R) |
| 19 | AF 1329 R | (5020400– ) | Gear, Steering Pump (2 used) (Set of Two F1684R) |
| 20 | F 1685 R | (5020400– ) | Shaft, Steering Pump Gear |
| 21 | 26H 70 R | (5020400– ) | Key, Woodruff, 1/8" x 1/2" |
| 22 | A 4130 R | (5020400– ) | Bushing (Sub. for AA4794R) |
| 23 | F 1747 R | (5020400– ) | Bushing |
| 24A | AF 1923 R | (5020400–5029199) | Housing, F1653R, Steering Pump, with Bushings |
| 24B | AF 2339 R | (5029200– ) | Housing, F2311R, Steering Pump, with Bushings |
| 25 | 19H 1164 R | (5020400– ) | Screw, Cap, 3/8" x 2-1/4" (4 used) (Sub. for 19H257H) |
| | 12H 11 R | (5020400– ) | Washer, Lock, 3/8" (4 used) |
| 26 | AF 1925 R | (5020400– ) | Seal, Oil |
| 27 | B 1986 R | (5020400– ) | Clip |
| 28 | 24H 43 R | (5020400– ) | Washer, 7/16" x 1" x 20 Gauge (2 used) |
| 29 | 19H 218 D | (5020400– ) | Screw, Cap, 3/8" x 1" (2 used) (Sub. for 19H211R) |
| | 12H 11 R | (5020400– ) | Washer, Lock, 3/8" (2 used) |
| 30 | B 3357 R | (5020400– ) | Support, Fan |
| 31 | 24H 2 R | (5020400– ) | Washer, 29/64" x 13/16" x 26 Gauge (8 used) |
| 32 | 19H 337 N | (5020400– ) | Screw, Cap, 7/16" x 1-1/4" (2 used) |
| | 12H 12 R | (5020400– ) | Washer, Lock, 7/16" (2 used) |
| 33 | AF 1926 R | (5021200–5025032) | Valve, Steering Pump, without Ball and Spring (Sub. One F2232R and T 24H143R) |
| | F 2232 R | (5025033– ) | Valve, Steering Pump (See Page 41-9, Key 22) |
| 34 | AF 1926 R | (5020400–5021199) | Valve, Steering Pump (See Key 33) (Sub. One F2232R and Two 24H14 |
| 35 | R 801 R | (5020400–5021199) | Spring |
| 36 | 400 R | (5020400–5021199) | Ball, Steel |
| 37 | A 4546 R | (5020400– ) | Spring (See Page 41-9, Key 21) |
| 38 | 24H 143 R | (5020400–5025032) | Washer, 21/64" x 3/4" x 16 Gauge (2 used) |
| | 24H 143 R | (5025033–5029199) | Washer, 21/64" x 3/4" x 16 Gauge (4 used) |
| 39 | A 4256 R | (5020400–5025032) | Washer (6 used) |
| | A 4256 R | (5029200–5029199) | Washer (3 used) |
| 40 | F 2249 R | (5020400–5029199) | Gasket (Packed 5 in a Pkg.) (Sub. for F1691R) |
| 41 | F 1690 R | (5020400–5029199) | Cover, Steering Pump Valve |
| 42 | 19H 218 D | (5020400–5029199) | Screw, Cap, 3/8" x 1" (2 used) (Sub. for 19H211R) |
| | 12H 11 R | (5020400–5029199) | Washer, Lock, 3/8" (2 used) |

## STEERING SHAFT, WORM, AND HOUSING ASSEMBLY
(POWER STEERING)
(Serial No. 5020400- )

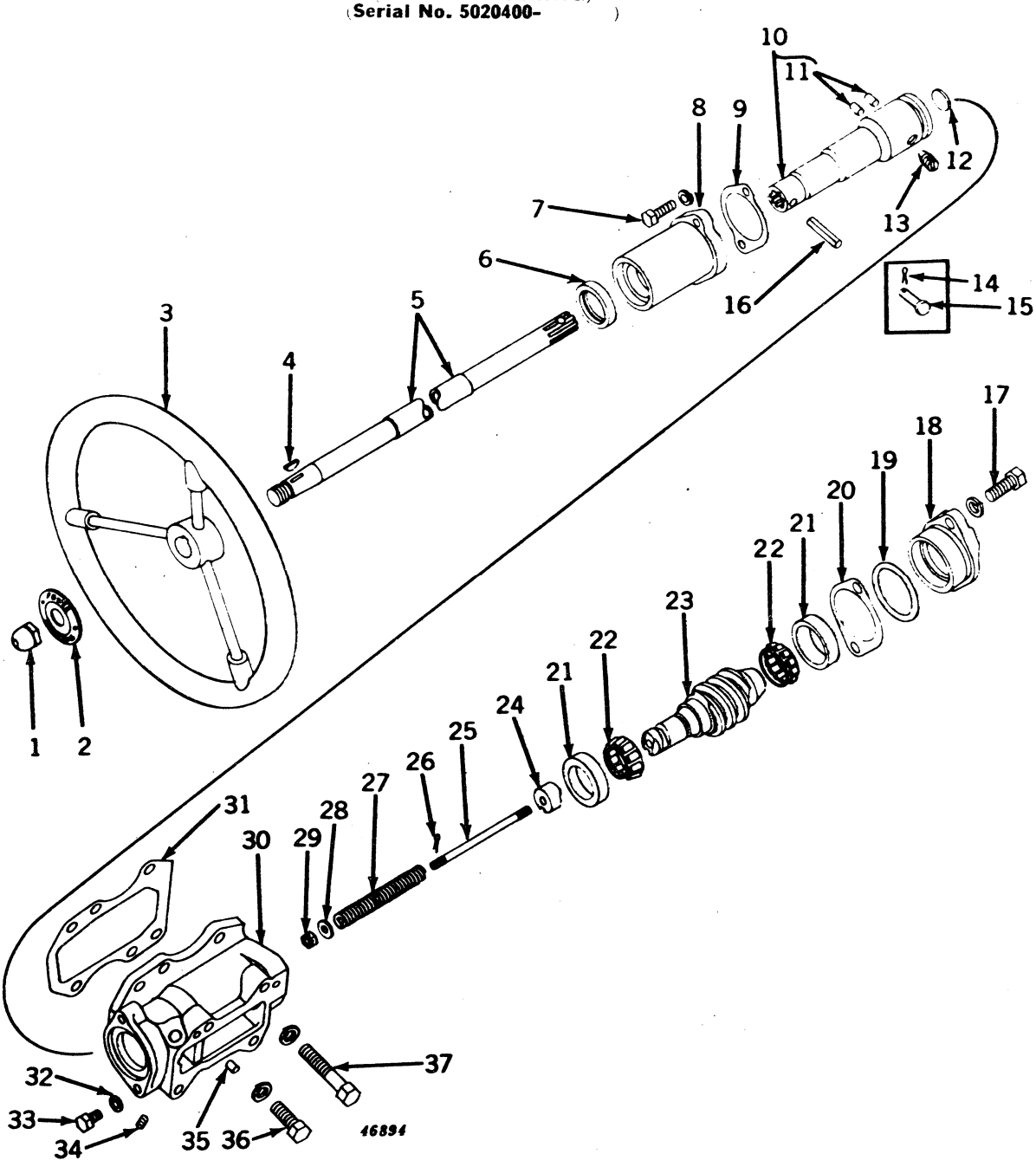

## STEERING SHAFT, WORM, AND HOUSING ASSEMBLY—Continued
(POWER STEERING)
(Serial No. 5020400- )

| Key | Part No. | Serial No. | Description |
|---|---|---|---|
| 1 | F 1745 R | (5020400- ) | Nut |
| 2 | F 1744 R | (5020400- ) | Emblem, Power Steering |
| 3 | AA 380 R | (5020400- ) | Wheel, Steering |
| 4 | 26H 17 R | (5020400- ) | Key, Woodruff, 3/16" x 7/8" |
| 5 | AB 4827 R | (5020400- ) | Shaft, Steering, with Nut |
| 6 | AF 1934 R | (5020400- ) | Seal, Oil |
| 7 | 19H 1139 N | (5020400- ) | Screw, Special Cap, 3/8" x 1-1/8" (2 used) |
| | 12H 11 R | (5020400- ) | Washer, Lock, 3/8" |
| 8 | F 1722 R | (5020400- ) | Housing, Steering Shaft Oil Seal |
| 9 | R 21062 R | (5020400- ) | Gasket (Packed 2 in a Pkg.) (Sub. for F1723R) |
| 10 | AF 1938 R | (5020400- ) | Sleeve, Steering Valve Actuating, with Pins |
| 11 | F 1743 R | (5020400- ) | Pin (2 used) |
| 12 | 30H 13 R | (5020400- ) | Plug, Expansion, 1" |
| 13 | R 20913 R | (5020400- ) | Screw, Set (Special) (Sub. for F1717R) |
| 14 | 11H 22 R | (5020400-5029199) | Pin, Cotter, 3/32" x 1" (Sub. for 11H18R) |
| 15 | F 1673 R | (5020400-5029199) | Pin |
| 16 | 34H 103 H | (5029200-5032447) | Pin, Roll |
| | ..... | (5032447- ) | Wire, 16 Gauge x 5" |
| 17 | 19H 1131 N | (5020400- ) | Screw, Cap, 1/2" x 1-1/4" (2 used) (Sub. for 19H448R) |
| | 12H 13 R | (5020400- ) | Washer, Lock, 1/2" (2 used) |
| 18 | AR 20170 R | (5020400- ) | Housing, Bearing (Sub. for F1724R) |
| 19 | F 1649 R | (5020400- ) | Packing, "O" Ring (Packed 5 in a Pkg.) |
| 20 | F 1648 R | (5020400- ) | Shim, Steel (0.0025") (Packed 5 in a Pkg.) |
| | F 2155 R | (5020400- ) | Shim, Steel (0.010") |
| | F 2156 R | (5020400- ) | Shim, Steel (0.018") (Not Furnished) |
| 21 | JD 7253 R | (5020400- ) | Cup, Bearing (2 used) |
| 22 | JD 8172 R | (5020400- ) | Cone, with Rollers (2 used) |
| 23 | F 1715 R | (5020400-5027078) | Worm, Steering (Sub. F2333R) |
| | F 2252 R | (5027079-5029199) | Worm, Steering (Sub. F2333R) |
| | AF 2432 R | (5029200- ) | Worm, Steering, with Washers and Gaskets (Sub. F2333R) |
| 24 | F 1719 R | (5020400- ) | Cam, Steering Worm |
| 25 | F 1718 R | (5020400-5029199) | Rod, Steering Worm Cam |
| | F 2334 R | (5029200- ) | Rod, Steering Worm Cam |
| 26 | 11H 3 R | (5020400- ) | Pin, Cotter, 1/16" x 1/2" |
| 27 | A 659 R | (5020400-5029199) | Spring (Sub. for H840R) |
| | F 2335 R | (5029200- ) | Spring |
| 28 | 24H 154 R | (5020400-5029199) | Washer, 21/64" x 3/4" x 16 Gauge (3 used) |
| | 24H 39 R | (5029200- ) | Washer, 21/64" x 3/4" x 20 Gauge (2 used) |
| | 24H 143 R | (5029200- ) | Washer, 21/64" x 3/4" x 16 Gauge (2 used) |
| 29 | 14H 511 H | (5020400- ) | Nut, Slotted, 5/16" |
| 30 | F 1714 R | (5020400-5029199) | Housing, Steering Worm (Sub. AR20169R) (On 5000001-5026643 Also Furnis One A3098R and One 19H196H) |
| | AR 20169 R | (5029200- ) | Housing, Steering Worm (Sub. for F2332R) |
| 31 | F 1706 R | (5020400- ) | Shim, .005" (Paper) (Packed 10 in a Pkg.) (Use as Required) |
| | F 2346 R | (5029200- ) | Shim, .007" (Rubber) (Packed 10 in a Pkg.) (Use as Required) |
| 32 | A 3098 R | (5026644- ) | Washer, Housing Drain Plug (Aluminum) (Packed 5 in a Pkg.) |
| 33 | 19H 1710 T | (5026644- ) | Screw, Cap, 3/8" x 1/2" (Sub. for 19H196H) |
| 34 | 15H 559 R | (5020400- ) | Plug, Pipe, 1/4", Countersunk Headless |
| 35 | D 186 R | (5020400-5029199) | Pin, Dowel (2 used) (Sub. F1743R) |
| | F 1743 R | (5029200- ) | Pin, Dowel (2 used) |
| 36 | 19H 456 R | (5020400- ) | Screw, Special Cap, 1/2" x 1-3/8" (3 used) (Sub. for 19H455R) |
| | 12H 13 R | (5020400- ) | Washer, Lock, 1/2" (3 used) |
| 37 | 19H 506 H | (5020400- ) | Screw, Cap, 1/2" x 2-3/4" (Sub. for 19H500R) |
| | 12H 13 R | (5020400- ) | Washer, Lock, 1/2" |

## STEERING VALVE ASSEMBLY
(POWER STEERING)
(Serial No. 5000001- )

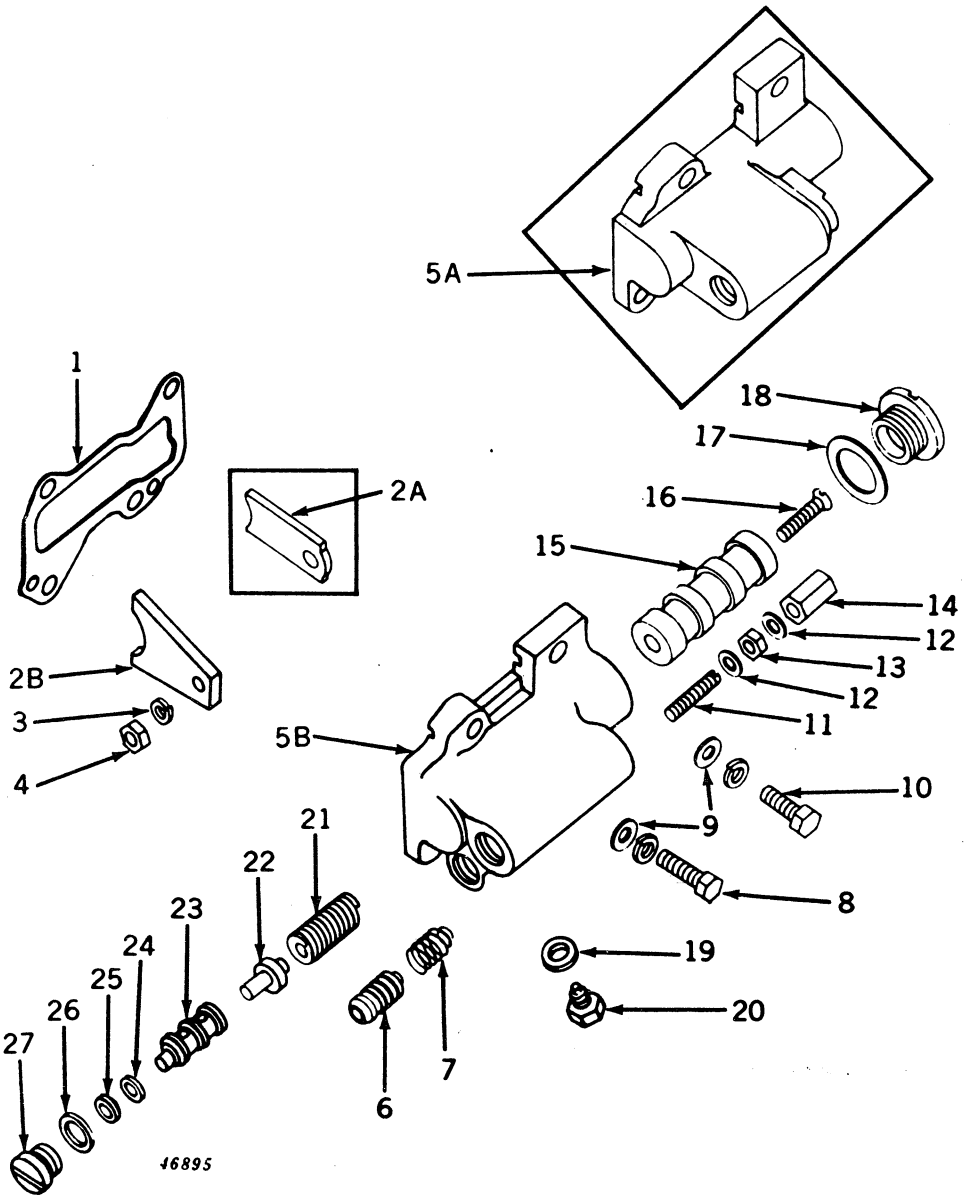

## STEERING VALVE ASSEMBLY—Continued
## (POWER STEERING)
## (Serial No. 5000001- )

| Key | Part No. | Serial No. | Description |
|---|---|---|---|
| 1 | F 1735 R | (5020400-5029199) | Gasket (Sub. F2321R) |
| | F 2321 R | (5029200- ) | Gasket (Packed 5 in a Pkg.) |
| 2A | F 1731 R | (5020400-5029199) | Arm, Steering Valve |
| 2B | F 2323 R | (5029200- ) | Arm, Steering Valve |
| 3 | 12H 10 R | (5020400- ) | Washer, Lock, 5/16" |
| 4 | 14H 785 R | (5020400- ) | Nut, 5/16" |
| 5A | F 1728 R | (5020400-5029199) | Housing, Steering Valve |
| 5B | F 2320 R | (5029200- ) | Housing, Steering Valve |
| 6 | F 1739 R | (5020400- ) | Valve, Flow Control |
| 7 | F 1740 R | (5020400- ) | Spring |
| 8 | F 2273 R | (5020400-5029199) | Screw, Special Cap, 3/8" x 1-1/4" |
| | 19H 218 D | (5029200- ) | Screw, Cap, 3/8" x 1" (Sub. for 19H211R) |
| | F 2274 R | (5020400- ) | Screw, Cap, 3/8" x 1-3/4", in Lower R.H. Front Hole |
| | 12H 11 R | (5020400- ) | Washer, Lock, 3/8" (2 used) |
| 9 | 24H 454 R | (5020400- ) | Washer, 13/32" x 11/16" x 12 Gauge (4 used) |
| 10 | 19H 1116 N | (5020400- ) | Screw, Special Cap, 3/8" x 1-1/2" (2 used) (Sub. for 19H230H) |
| | 12H 11 R | (5020400- ) | Washer, Lock, 3/8" (2 used) |
| 11 | F 1741 R | (5020400- ) | Screw, Adjusting |
| 12 | A 5364 R | (5020400- ) | Washer (2 used) (Aluminum) (Packed 5 in a Pkg.) |
| 13 | 14H 732 R | (5020400- ) | Nut, Jam, 3/8" (Sub. for 14H342A) |
| 14 | B 427 R | (5020400- ) | Nut, Cap |
| 15 | F 1729 R | (5020400- ) | Valve, Steering |
| 16 | 21H 706 H | (5020400- ) | Screw, Mach., 5/16" x 1-1/4" |
| 17 | F 1734 R | (5020400- ) | Gasket (Packed 5 in a Pkg.) |
| 18 | R 20214 R | (5020400- ) | Plug (Sub. for F1733R) |
| 19 | R 463 R | (5029200- ) | Washer, Steering Flow Control Valve Stop Screw (Copper) (Packed 5 in a Pkg.) |
| 20 | F 2372 R | (5029200- ) | Screw, Special Cap, Steering Flow Control Valve Stop |
| 21 | A 4546 R | (5020400- ) | Spring |
| 22 | F 2232 R | (5025033- ) | Valve, Steering Pump |
| 23 | F 2371 R | (5029200- ) | Sleeve, Relief Valve (On 5029200-5030179, Also Furnish Two 24H156R) |
| 24 | R 1820 R | (5029200- ) | Washer, Relief Valve Adjusting (6 used) |
| 25 | 24H 156 R | (5029200- ) | Washer, Relief Valve Adjusting, 13/32" x 11/16" x 6 Gauge (2 used) |
| 26 | H 294 R | (5029200- ) | Gasket |
| 27 | F 2317 R | (5029200- ) | Plug, Relief Valve |

## PEDESTAL AND STEERING SPINDLE
## (POWER STEERING)
(Serial No. 5020400- )

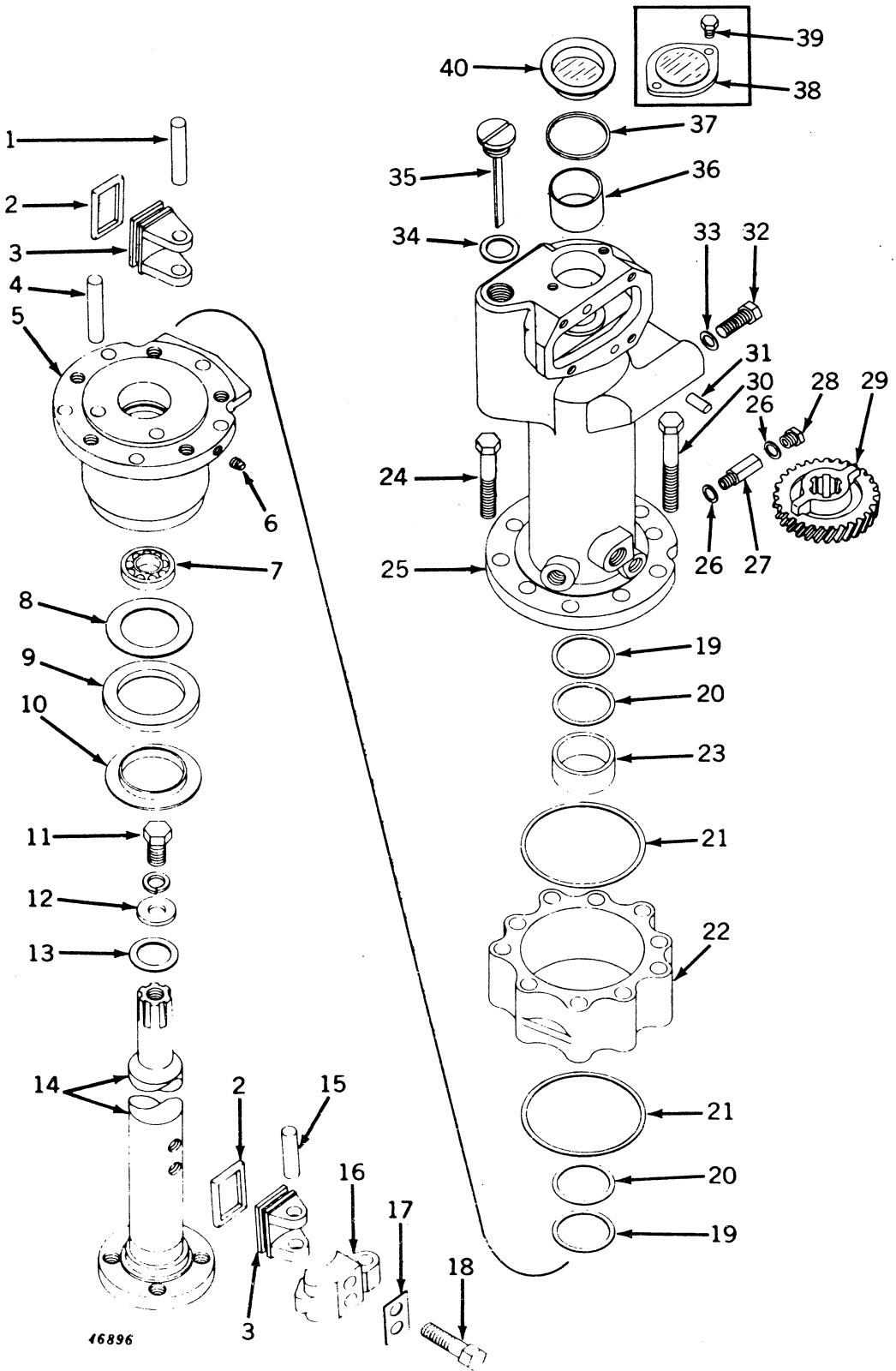

## PEDESTAL AND STEERING SPINDLE—Continued
(POWER STEERING)
(Serial No. 5020400- )

| Key | Part No. | Serial No. | Description |
|---|---|---|---|
| 1 | R 21129 R | (5020400- ) | Pin, Steering Vane (Sub. for F1701R) |
| 2 | F 1697 R | (5020400- ) | Packing, Steering Vane (2 used) (Packed 10 in a Pkg.) |
| 3 | F 1696 R | (5020400- ) | Vane, Steering (2 used) |
| 4 | R 21129 R | (5020400- ) | Pin, Steering Spindle Stop (Sub. for F1701R) |
| 5 | B 3351 R | (5020400- ) | Quill, Steering Spindle |
| 6 | 15H 253 R | (5020400- ) | Plug, Pipe, 1/4" |
| 7 | JD 7679 R | (5020400- ) | Bearing |
| 8 | A 1129 R | (5020400- ) | Washer |
| 9 | A 1131 R | (5020400- ) | Washer (Cork) (Packed 5 in a Pkg.) |
| 10 | A 1130 R | (5020400- ) | Retainer |
| 11 | 19H 1357 R | (5020400- ) | Screw, Cap, 3/4" x 1-3/4" (Sub. for 19H1350R) |
| | 12H 17 R | (5020400- ) | Washer, Lock, 3/4" |
| 12 | 24H 1022 R | (5020400- ) | Washer |
| 13 | D 467 R | (5020400- ) | Washer (3 used) |
| | 24H 1013 R | (5020400- ) | Washer, 1-1/2" x 2-1/4" x 26 Gauge |
| 14 | AB 4966 R | (5020400- ) | Spindle, Steering (Sub. for B3352R) |
| 15 | F 1700 R | (5020400- ) | Pin, Steering Vane |
| 16 | F 1698 R | (5020400- ) | Bracket, Steering Vane |
| 17 | F 1699 R | (5020400- ) | Plate, Lock |
| 18 | A 5165 R | (5020400- ) | Screw (Special) (2 used) |
| 19 | F 1695 R | (5020400- ) | Gasket (2 used) (Packed 5 in a Pkg.) |
| 20 | F 3450 R | (5020400- ) | Packing, "O" Ring (2 used) (Packed 2 in a Pkg.) (Sub. for F1319R) |
| 21 | F 1694 R | (5020400- ) | Gasket (Rubber) (2 used) (Packed 5 in a Pkg.) |
| 22 | F 1693 R | (5020400- ) | Cylinder, Steering |
| 23 | F 2278 R | (5020400- ) | Bushing (Sub. for F1692R) |
| 24 | 19H 1569 R | (5020400- ) | Screw, Cap, 5/8" x 5-1/2" (5 used) |
| 25 | AB 4824 R | (5020400-5029199) | Pedestal, B3350R, with Bushings and Dowel Pins (Sub. One AB4930R Center Plate, One AB4932R Pedestal, One A4962R Cover, and Two 24H961R Washers) |
| | AB 4932 R | (5029200- ) | Pedestal, B3455R, with Bushings and Dowel Pins |
| 26 | R 229 R | (5020400- ) | Washer (Copper) (2 used) |
| 27 | F 2213 R | (5020400- ) | Connector, Reservoir Drain |
| 28 | R 228 R | (5020400- ) | Plug, Reservoir Drain |
| 29 | B 3102 R | (5020400-5029199) | Gear, Steering (Sub. One B3458R and One AF2432R on Power Steering Tractors only) |
| | B 3458 R | (5029200- ) | Gear |
| 30 | F 2234 R | (5020400- ) | Screw, Cap, 5/8" x 6-1/2" (5 used) |
| 31 | A 120 R | (5020400- ) | Pin, Dowel (2 used) |
| 32 | 19H 1335 R | (5020400- ) | Screw, Special Cap, 5/8" x 1-1/2" (2 used) |
| 33 | B 2274 R | (5020400- ) | Washer (2 used) |
| 34 | F 1705 R | (5020400- ) | Gasket (Packed 5 in a Pkg.) |
| 35 | AF 3746 R | (5020400- ) | Plug, Reservoir Filler, with Rod (Sub. for AF1928R) |
| 36 | F 340 R | (5020400- ) | Bushing |
| 37 | A 4722 R | (5020400- ) | Gasket (Packed 5 in a Pkg.) |
| 38 | F 1708 R | (5020400-5029199) | Cover |
| 39 | F 2272 R | (5020400-5029199) | Screw, Special Cap, 3/8" x 3/4" (2 used) |
| 40 | A 4962 R | (5029200- ) | Cover, Steering Gear |

(Parts listed below are not illustrated.)

| | | |
|---|---|---|
| AF 2235 R | (5020400- ) | Oil, Power Steering (1 Qt.) (Sub. for AF2186R) |
| AF 3290 R | (5020400- ) | Oil, Power Steering (5 Gals.) |

## OIL TUBES
## (POWER STEERING)
(Serial No. 5020400- )

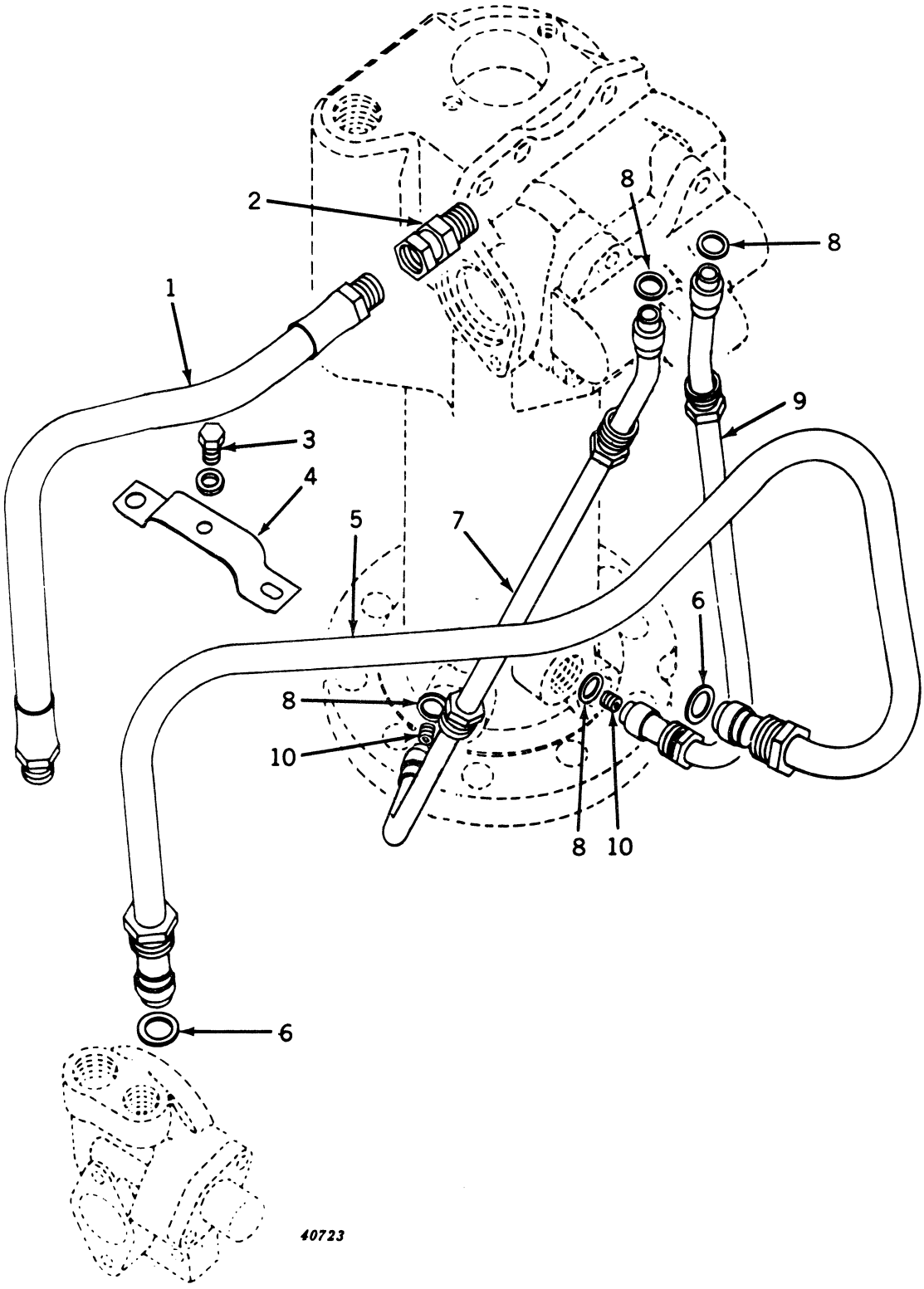

## OIL TUBES—Continued
## (POWER STEERING)
## (Serial No. 5020400- )

| Key | Part No. | Serial No. | Description |
|---|---|---|---|
| 1 | JD 154 A | (5020400-5029199) | Line, Flexible Oil, Steering Pump to Control Valve (Sub. AA6294R) |
| | AA 6294 R | (5029200- ) | Line, Flexible Oil, Steering Pump to Control Valve |
| 2 | JD 151 A | (5020400- ) | Union, Adapter |
| 3 | 19H 99 R | (5020400- ) | Screw, Special Cap, 5/16" x 9/16" |
| | 24H 39 R | (5020400- ) | Washer, 21/64" x 3/4" x 20 Gauge |
| 4 | B 3356 R | (5020400- ) | Clamp |
| 5 | AB 4820 R | (5020400- ) | Tube, Oil, Steering Pump to Reservoir |
| 6 | F 2222 R | (5020400- ) | Washer, Aluminum (2 used) (Packed 5 in a Pkg.) |
| 7 | AB 4826 R | (5020400-5029199) | Tube, Oil, Steering Valve to Pedestal, Rear (Sub. AB4935R) |
| | AB 4935 R | (5029200- ) | Tube, Oil, Steering Valve to Pedestal, Rear |
| 8 | F 2223 R | (5020400- ) | Washer, Aluminum (4 used) (Packed 5 in a Pkg.) |
| 9 | AB 4825 R | (5020400-5029199) | Tube, Oil, Steering Valve to Pedestal, Front (Sub. AB4934R) |
| | AB 4934 R | (5029200- ) | Tube, Oil, Steering Valve to Pedestal, Front |
| 10 | F 1748 R | (5020400-5029199) | Plug, Pipe, 3/8", Special, with Orifice (2 used) |

## STEERING WHEEL, SHAFT, AND SUPPORT
(Serial No. 5000001- )

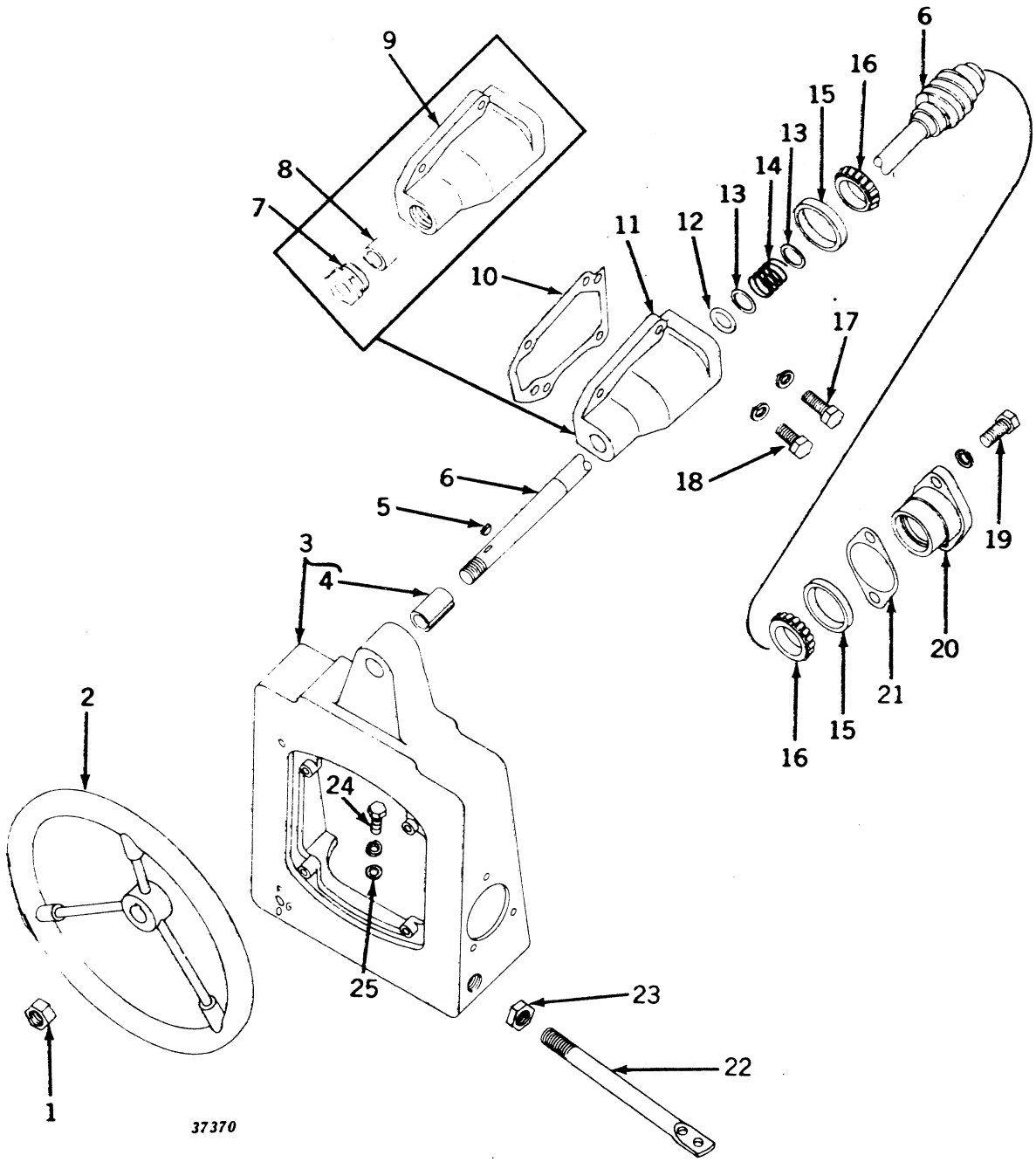

## STEERING WHEEL, SHAFT, AND SUPPORT—Continued
(Serial No. 5000001- )

| Key | Part No. | | Description |
|---|---|---|---|
| 1 | 14H 402 R | ( – ) | Nut, 3/4" (Sub. for 14H403R) |
| 2 | AA 380 R | ( – ) | Wheel, Steering |
| 3 | AB 4584 R | ( – ) | Support, B3152R and B3460R, Steering Shaft and Hood End, with Bushing |
| 4 | B 37 R | ( – ) | Bushing |
| 5 | 26H 17 R | ( – ) | Key, Woodruff, 3/16" x 7/8" |
| 6 | AB 4580 R | ( – ) | Shaft and Worm |
| 7 | B 33 R | ( –5015815) | Nut, Packing |
| 8 | B 1564 R | ( –5015815) | Packing (Packed 2 in a Pkg.) |
| 9 | B 3148 R | ( –5015815) | Housing, Steering Worm |
| 10 | B 3150 R | ( – ) | Shim, .005" Thick (Packed 2 in a Pkg.) |
| | B 3151 R | ( – ) | Shim, .015" (Sub. B3151R) |
| 11 | B 3273 R | (5015816– ) | Housing, Steering Worm |
| 12 | R 495 R | (5015816– ) | Packing, "O" Ring (Packed 10 in a Pkg.) |
| 13 | 24H 247 H | (5015816– ) | Washer, 31/32" x 1-3/8" x 16 Gauge (2 used) |
| 14 | A 4813 R | (5015816– ) | Spring |
| 15 | JD 7419 R | ( – ) | Cup (2 used) |
| 16 | JD 7396 R | ( – ) | Cone, with Rollers (2 used) |
| 17 | 19H 1006 R | ( – ) | Screw, Cap, 7/16" x 3" Sub. for (19H381R) |
| | 12H 12 R | ( – ) | Washer, Lock, 7/16" |
| 18 | 19H 337 N | ( – ) | Screw, Cap, 7/16" x 1-1/4" (3 used) (Sub. for 19H332R) |
| | 12H 12 R | ( – ) | Washer, Lock, 7/16" (3 used) |
| 19 | 19H 337 N | ( – ) | Screw, Cap, 7/16" x 1-1/4" (2 used) (Sub. for 19H332R) |
| | 12H 12 R | ( – ) | Washer, Lock, 7/16" (2 used) |
| 20 | B 3149 R | ( – ) | Housing, Bearing |
| 21 | B 1390 R | ( – ) | Shim (Thin) (Packed 5 in a Pkg.) |
| | B 1391 R | ( – ) | Shim (Medium) (Sub. B1390R) |
| | B 1392 R | ( – ) | Shim (Thick) (Sub. B1390R) |
| 22 | B 3157 R | ( –5002930) | Support, Lamp (2 used) (Sub. A4465R) |
| | A 4465 R | (5002931– ) | Support, Lamp (2 used) |
| 23 | C 985 R | ( – ) | Nut, Jam, 7/8" (2 used) (Packed 10 in a Pkg.) |
| 24 | 19H 1166 H | ( – ) | Screw, Cap, 7/16" x 1-1/2" (2 used) |
| | 12H 12 R | ( – ) | Washer, Lock, 7/16" (2 used) |
| 25 | 24H 464 E | ( – ) | Washer, 15/32" x 1-3/8" x 12 Gauge |

## STEERING SHAFT SUPPORT (LP-GAS)
(Serial No. 5024000- )

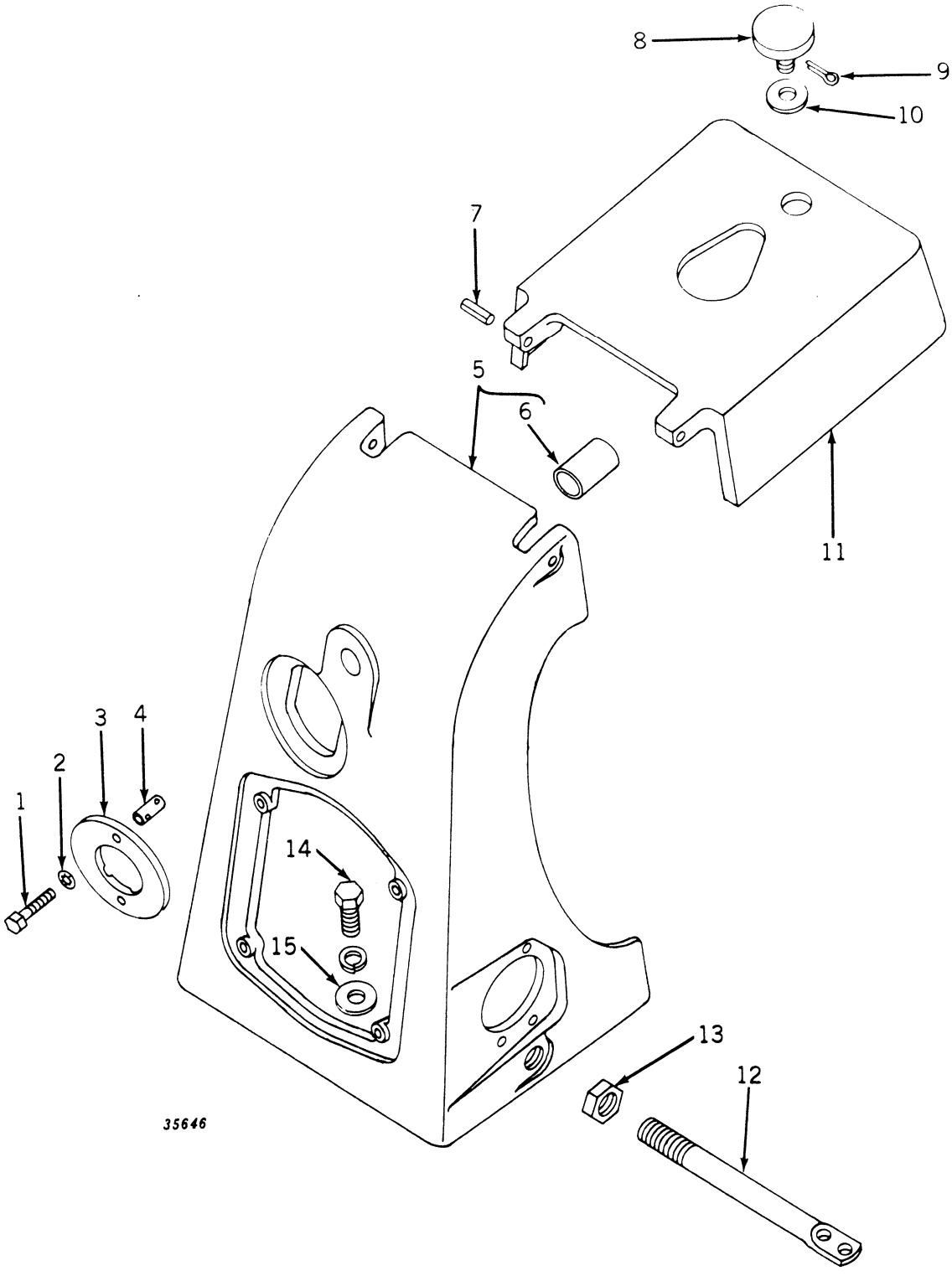

## STEERING SHAFT SUPPORT (LP-GAS)—Continued
(Serial No. 5024000- )

| Key | Part No. | Serial No. | Description |
|---|---|---|---|
| 1 | 19H 1191 E | (5024000- ) | Screw, Cap, 1/4" x 1-1/2" (2 used) (Sub. for 19H37T) |
| 2 | 12H 271 R | (5024000- ) | Washer, Lock (Shake-Proof) (2 used) (Sub. for B1091R) |
| 3 | A 4905 R | (5024000- ) | Cover, Fuel Gauge |
| 4 | R 1132 R | (5024000- ) | Spacer (2 used) |
| 5 | AB 4868 R | (5024000- ) | Support, B3395R, Steering Shaft and Fuel Tank, with Bushing |
| 6 | B 37 R | (5024000- ) | Bushing, Steering Shaft |
| 7 | 34H 131 C | (5024000- ) | Pin, Roll (2 used) |
| 8 | AA 6008 R | (5024000- ) | Cap, with Screw |
| 9 | 11H 41 R | (5024000- ) | Pin, Cotter, 1/8" x 1" |
| 10 | 24H 197 R | (5024000- ) | Washer, 37/64" x 1-3/8" x 16 Gauge |
| 11 | B 3397 R | (5024000- ) | Cover, Fuel Filler Valve |
| 12 | A 4465 R | (5024000- ) | Support, Lamp (2 used) |
| 13 | C 985 R | (5024000- ) | Nut, Jam, 7/8" (2 used) (Packed 10 in a Pkg.) |
| 14 | 19H 1166 H | (5024000- ) | Screw, Cap, 7/16" x 1-1/2" (2 used) (Sub. for 19H340R) |
| | 12H 12 R | (5024000- ) | Washer, Lock, 7/16" (2 used) |
| 15 | 24H 464 E | (5024000- ) | Washer, 15/32" x 1-3/8" x 12 Gauge (2 used) |

## PEDESTAL AND STEERING SPINDLE (EXCEPT CONVERTIBLE FRONT END)
(Serial No. 5000001-5014632)

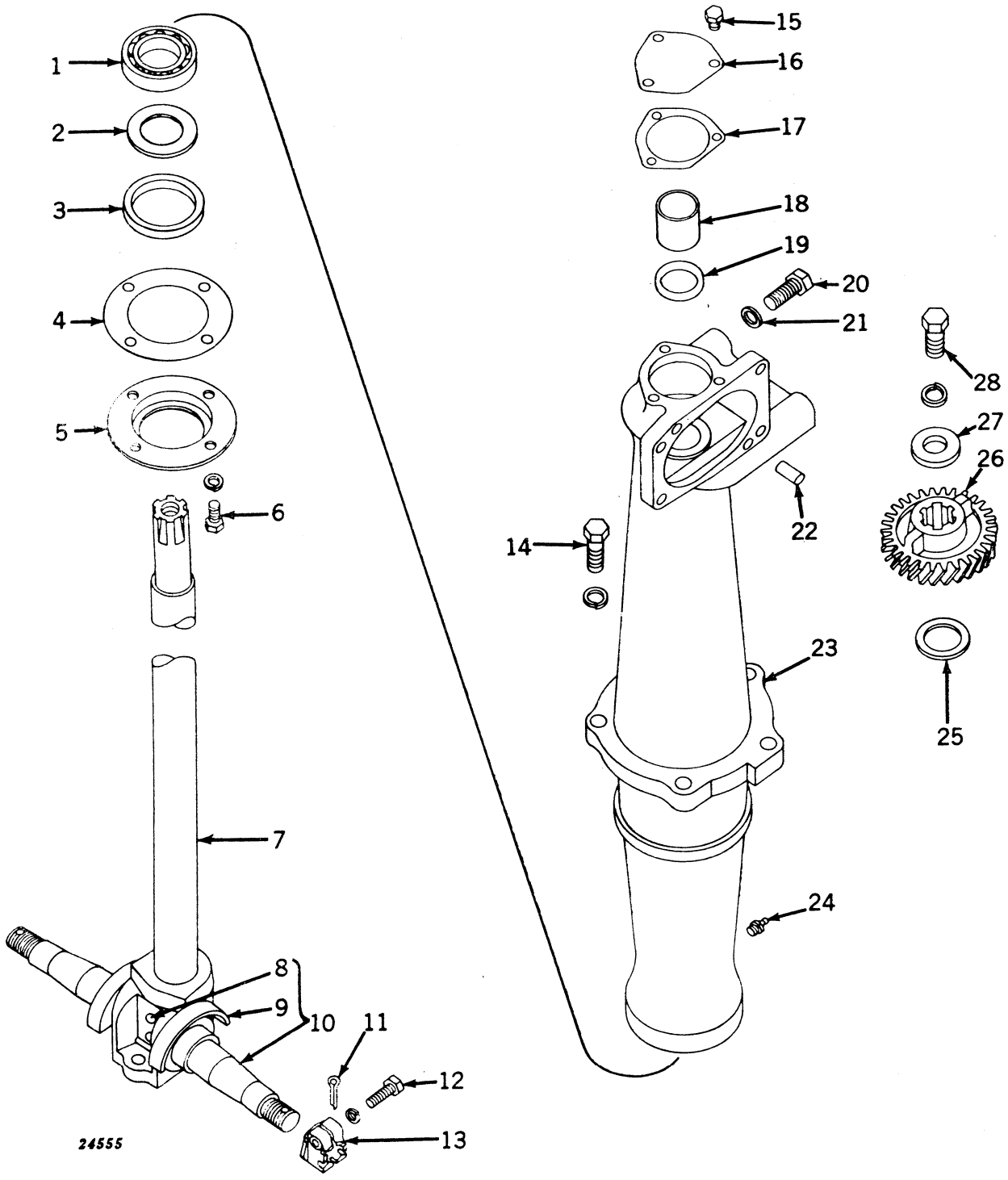

## PEDESTAL AND STEERING SPINDLE (EXCEPT CONVERTIBLE FRONT END)—Continued
(Serial No. 5000001-5014632)

| Key | Part No. | | Description |
|---|---|---|---|
| 1 | JD 7663 R | (–5014632) | Bearing |
| 2 | 24H 953 R | (–5014632) | Washer, 1-13/16" x 3" x 20 Gauge |
| 3 | A 1422 R | (–5014632) | Washer (Cork) |
| 4 | C 2327 R | (–5014632) | Gasket (Packed 5 in a Pkg.) |
| 5 | A 1423 R | (–5014632) | Cap |
| 6 | F 2272 R | (–5014632) | Screw, Cap, 3/8" x 3/4" (4 used) (Sub. for 19H203R) |
| | 12H 11 R | (–5014632) | Washer, Lock, 3/8" (4 used) |
| 7 | B 3101 R | (–5014632) | Spindle Only |
| 8 | 17H 192 A | (–5014632) | Rivet, 1/2" x 3-3/4" |
| 9 | B 888 R | (–5014632) | Excluder, Dust (2 used) |
| 10 | AB 4658 R | (–5014632) | Knuckle, Double, with Spindle and Dust Excluders |
| 11 | 11H 49 R | (– ) | Pin, Cotter, 1/8" x 2" (2 used) (Sub. for 11H45R) |
| 12 | 19H 118 T | (– ) | Screw, Cap, 5/16" x 1" (2 used) (Sub. for 19H112R) |
| | 12H 10 R | (– ) | Washer, Lock, 5/16" (2 used) |
| 13 | AB 1032 R | (– ) | Nut, B921R, with Cap Screw |
| 14 | 19H 1373 R | (– ) | Screw, Cap, 5/8" x 2" (5 used) (Sub. for 19H676R) |
| | 12H 15 R | (– ) | Washer, Lock, 5/8" (5 used) |
| 15 | 19H 1140 N | (– ) | Screw, Cap, 5/16" x 1/2" (3 used) (Sub. for 19H96R) |
| 16 | A 4414 R | (– ) | Cover |
| 17 | A 4651 R | (– ) | Gasket (Packed 2 in a Pkg.) |
| 18 | A 4539 R | (– ) | Bushing, Steering Spindle, Upper |
| 19 | A 4540 R | (– ) | Packing, "O" Ring (Packed 2 in a Pkg.) |
| 20 | 19H 1335 R | (– ) | Screw, Cap, 5/8" x 1-1/2" (2 used) (Sub. for 19H975R) |
| 21 | B 2274 R | (– ) | Washer (2 used) |
| 22 | A 120 R | (– ) | Pin, Dowel (2 used) |
| 23 | AB 4521 R | (–5014632) | Pedestal, B3098R, with Dowel Pins and Bushing |
| 24 | JD 7759 | (–5014632) | Fitting, Grease, Straight, 1/8" |
| 25 | D 467 R | (– ) | Washer |
| | 24H 1013 R | (– ) | Washer |
| 26 | B 3102 R | (– ) | Gear, Steering |
| 27 | B 3310 R | (– ) | Washer (Sub. for B111R) |
| 28 | 19H 1347 R | (– ) | Screw, Cap, 3/4" x 1-5/8" (Sub. for 19H976R) |
| | 12H 17 R | (– ) | Washer, Lock, 3/4" |

## ROLL-O-MATIC FRONT END ASSEMBLY (EXCEPT CONVERTIBLE FRONT END)
(Serial No. 5000001-5014632)

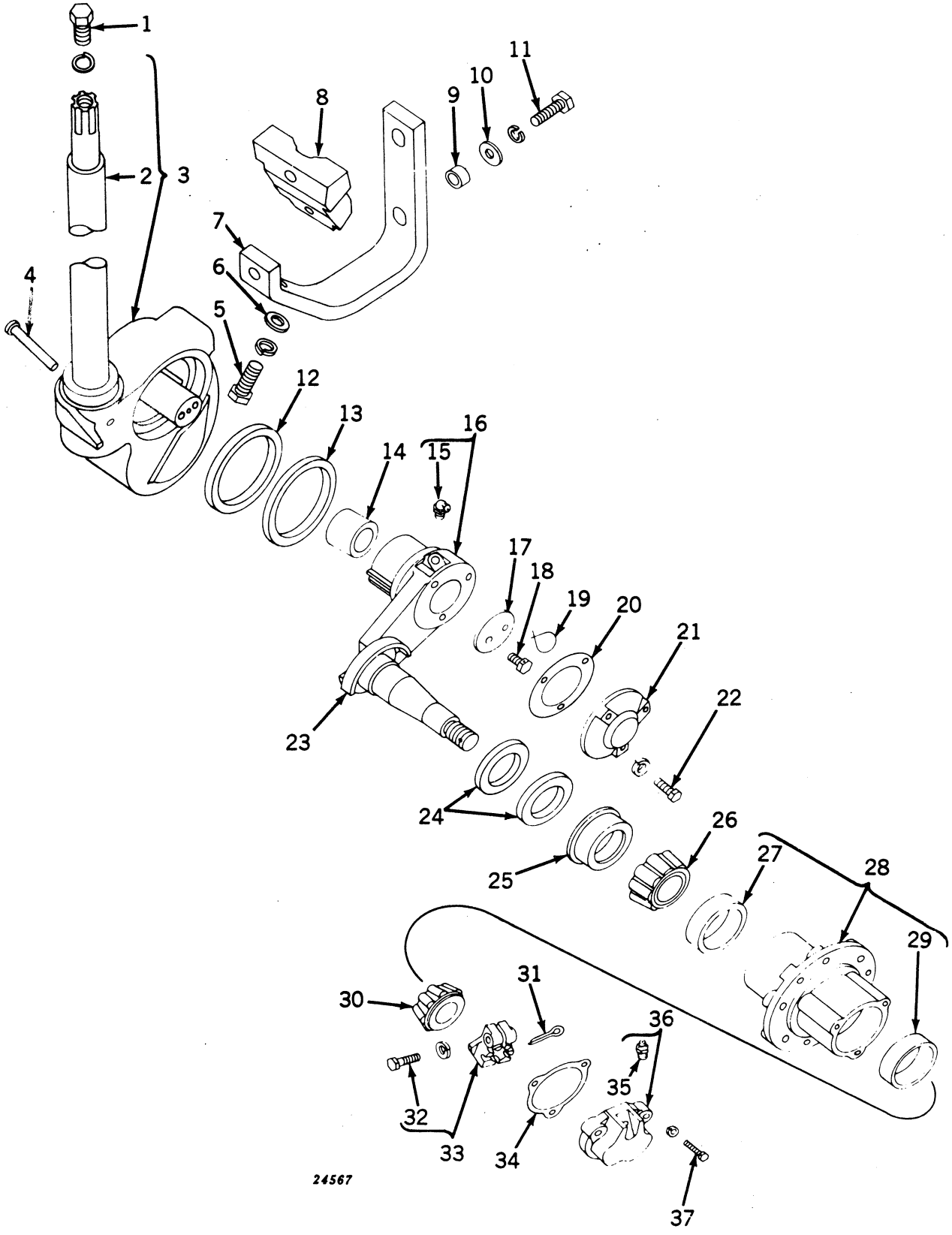

## ROLL-O-MATIC FRONT END ASSEMBLY (EXCEPT CONVERTIBLE FRONT END)—Continued
(Serial No. 5000001-5014632)

| Key | Part No. | Serial No. | Description |
|---|---|---|---|
| 1 | 19H 1347 R | -5014632) | Screw, Cap, 3/4" x 1-5/8" (Sub. for 19H976R) |
| | 12H 17 R | -5014632) | Washer, Lock, 3/4" |
| 2 | B 3101 R | -5014632) | Spindle, Steering |
| 3 | AB 4559 R | -5014632) | Housing, B3075R, Knuckle, with Steering Spindle |
| 4 | 17H 170 R | -5014632) | Rivet, 1/2" x 3-3/8" |
| 5 | 19H 1356 R | – ) | Screw, Cap, 5/8" x 1-3/4" (2 used) |
| | 12H 15 R | – ) | Washer, Lock, 5/8" (2 used) |
| 6 | 24H 961 R | – ) | Washer |
| 7 | A 4118 R | – ) | Support |
| 8 | B 2847 R | – ) | Lock |
| 9 | A 4119 R | – ) | Spacer (2 used) |
| 10 | 24H 554 F | – ) | Washer, 17/32" x 1-3/8" x 11 Gauge (2 used) |
| 11 | 19H 472 N | – ) | Screw, Cap, 1/2" x 1-3/4" (2 used) (Sub. for 19H467R) |
| | 12H 13 R | – ) | Washer, Lock, 1/2" (2 used) |
| 12 | AB 3774 R | – ) | Washer, Felt (2 used) |
| 13 | B 2715 R | – ) | Retainer, Felt (2 used) |
| 14 | AB 3761 R | – ) | Bushing (Set of 4) (4 used) |
| 15 | JD 7778 | – ) | Fitting, Grease, 30°, 1/8" (2 used) |
| 16 | AB 3771 R | – ) | Knuckle, B2711R, with Dust Excluder and Nut, R.H. |
| | AB 3772 R | – ) | Knuckle, B2712R, with Dust excluder and Nut, L.H. |
| 17 | B 2716 R | – ) | Washer, Thrust (2 used) |
| 18 | D 916 R | – ) | Screw, Cap, 3/8" x 3/4" (Drilled) (4 used) |
| 19 | ..... | – ) | Wire, 16 Gauge x 6" Long (2 used) |
| 20 | B 2718 R | – ) | Gasket (2 used) (Packed 2 in a Pkg.) |
| 21 | B 2717 R | – ) | Cap, Knuckle (2 used) |
| 22 | 19H 118 T | – ) | Screw, Cap, 5/16" x 1" (6 used) (Sub. for 19H112R) |
| | 12H 10 R | – ) | Washer, Lock, 5/16" (6 used) |
| 23 | B 888 R | – ) | Excluder, Dust (2 used) |
| 24 | B 90 R | – ) | Washer, Felt (2 used) (Sub. for AB474R) |
| 25 | B 89 R | – ) | Retainer (2 used) |
| 26 | JD 7222 R | – ) | Cone, with Rollers (2 used) |
| 27 | JD 7266 R | – ) | Cup (2 used) |
| 28 | AB 3773 R | – ) | Hub, B2719R, with Cups (2 used) |
| 29 | JD 7259 R | – ) | Cup (2 used) |
| 30 | JD 7209 R | – ) | Cone, with Rollers (2 used) |
| 31 | 11H 49 R | – ) | Pin, Cotter, 1/8" x 2" (2 used) (Sub. for 11H45R) |
| 32 | 19H 118 T | – ) | Screw, Cap, 5/16" x 1" (2 used) (Sub. for 19H112R) |
| | 12H 10 R | – ) | Washer, Lock, 5/16" (2 used) |
| 33 | AB 1032 R | – ) | Nut, B921R, with Cap Screw (2 used) |
| 34 | B 102 R | – ) | Gasket (2 used) (Packed 5 in a Pkg.) |
| 35 | JD 7759 | – ) | Fitting, Grease (2 used) |
| 36 | AB 867 R | – ) | Cap, B920R, Hub, with Fitting (2 used) |
| 37 | 19H 1096 H | – ) | Screw, Cap, 5/16" x 1-1/2" (6 used) (Sub. for 19H130R) |
| | 12H 10 R | – ) | Washer, Lock, 5/16" (6 used) |

## PEDESTAL AND STEERING SPINDLE (CONVERTIBLE FRONT END)
(Serial No. 5000001- )

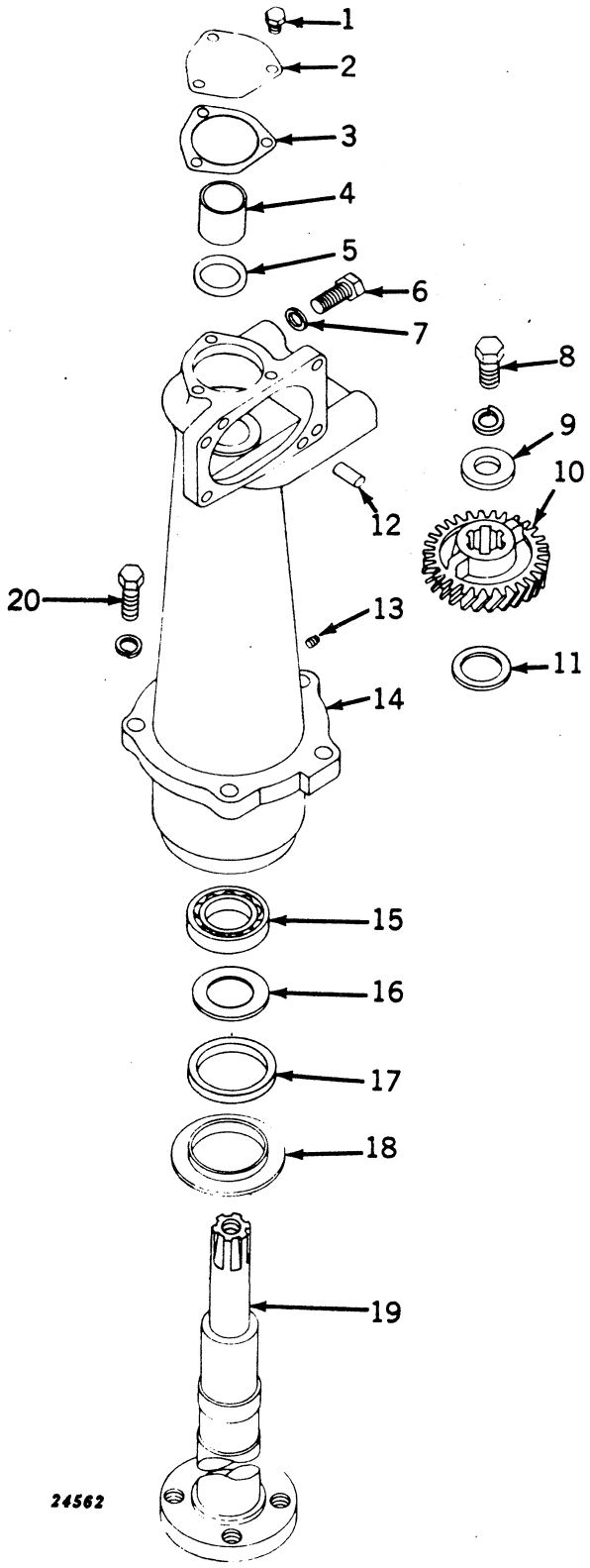

## PEDESTAL AND STEERING SPINDLE (CONVERTIBLE FRONT END)—Continued
(Serial No. 5000001- )

| Key | Part No. | Serial No. | Description |
|---|---|---|---|
| 1 | 19H 1140 N | ( -5017155) | Screw, Cap, 5/16" x 1/2" (3 used) (Sub. for 19H96R) |
| 2 | A 4414 R | ( -5017155) | Cover |
| | A 4962 R | (5017156- ) | Cover |
| 3 | A 4651 R | ( -5017155) | Gasket (Packed 2 in a Pkg.) |
| 4 | A 4539 R | ( - ) | Bushing, Steering Spindle, Upper |
| 5 | A 4540 R | ( - ) | Packing, "O" Ring (Packed 2 in a Pkg.) |
| 6 | 19H 1335 R | ( - ) | Screw, Cap, 5/8" x 1-1/2" (2 used) (Sub. for 19H975R) |
| 7 | B 2274 R | ( - ) | Washer (2 used) |
| 8 | 19H 1347 R | ( - ) | Screw, Cap, 3/4" x 1-5/8" (Sub. for 19H976R) |
| | 12H 17 R | ( - ) | Washer, Lock, 3/4" |
| 9 | B 3310 R | ( - ) | Washer (Sub. for B111R) |
| 10 | B 3102 R | ( - ) | Gear, Steering |
| 11 | D 467 R | ( - ) | Washer (3 used) |
| | 24H 1013 R | ( - ) | Washer |
| 12 | A 120 R | ( - ) | Pin, Dowel (2 used) |
| 13 | 15H 253 R | ( - ) | Plug, Pipe |
| 14 | AB 4528 R | ( -5029199) | Pedestal, B3140R, Convertible, with Dowel Pins and Bushing (On ( - 5017155) Also Furnish One A4962R Cover) (Sub. One AB4930R Center Plate, One AB5325R Pedestal, and Two 24H961R Washers) |
| | AB 5325 R | (5029200- ) | Pedestal, B3454R and B3820R, Convertible, with Dowel Pins and Bushing (Sub. for AB4931R) |
| 15 | JD 7679 R | ( - ) | Bearing |
| 16 | A 1129 R | ( - ) | Washer |
| 17 | A 1131 R | ( - ) | Washer (Cork) (Packed 5 in a Pkg.) |
| 18 | A 1130 R | ( - ) | Retainer |
| 19 | B 3105 R | ( - ) | Spindle, Steering |
| 20 | 19H 1373 R | ( - ) | Screw, Cap, 5/8" x 2" (5 used) (Sub. for 19H676R) |
| | 12H 15 R | ( - ) | Washer, Lock, 5/8" (5 used) |

## SPINDLE EXTENSION AND HUBS FOR DOUBLE FRONT WHEELS
(CONVERTIBLE FRONT END)
(Serial No. 5000001- )

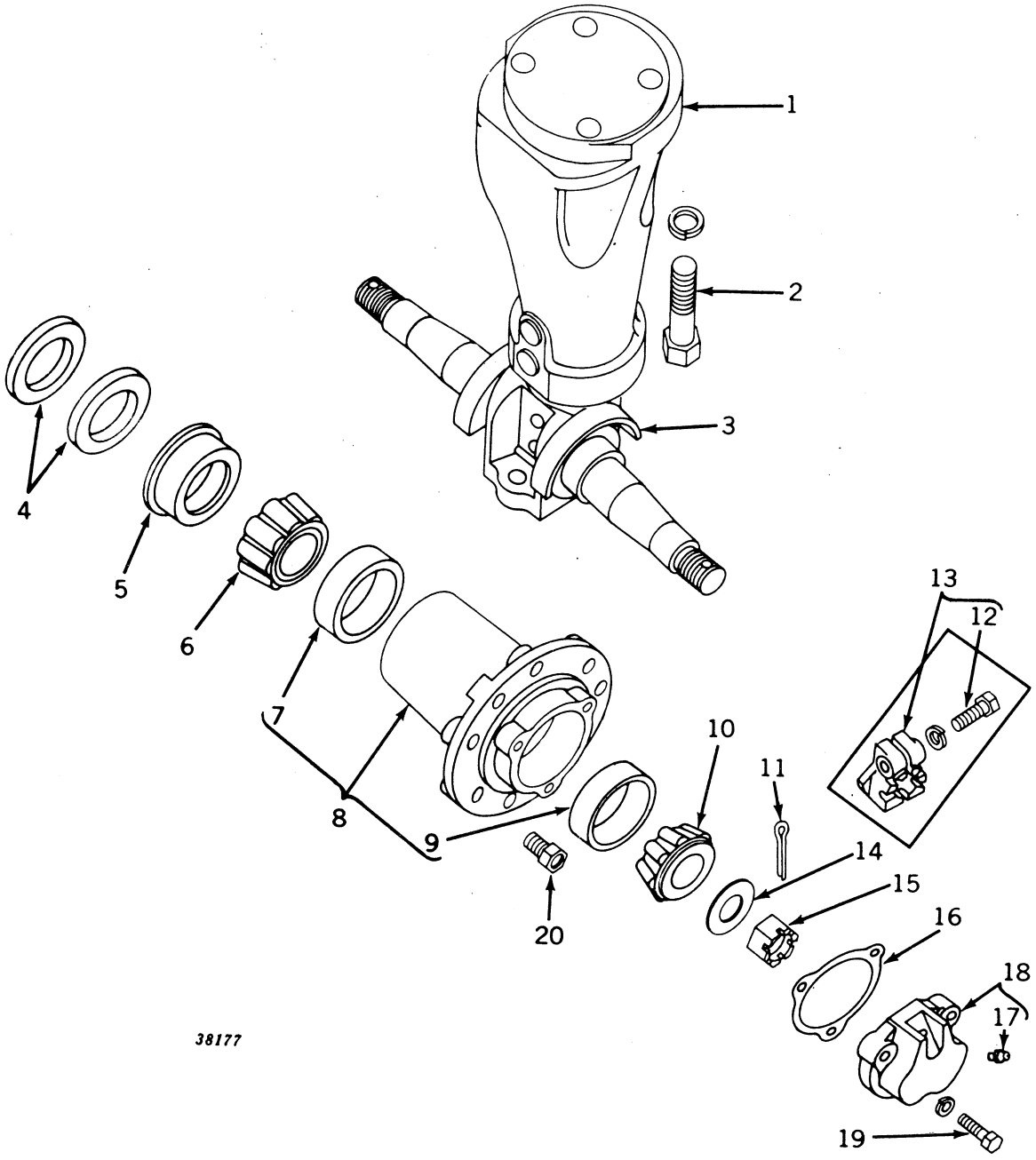

## SPINDLE EXTENSION AND HUBS FOR DOUBLE FRONT WHEELS (CONVERTIBLE FRONT END) (Serial No. 5000001- )

| Key | Part No. | Serial No. | Description |
|---|---|---|---|
| 1 | AB 4703 R | ( – ) | Extension, A4342R, Spindle, with Double Knuckle and Dust Excluders and Nuts (Sub. for AB4541R) |
| 2 | 19H 1405 R | ( – ) | Screw, Cap, 3/4" x 2-1/2" (4 used) (Sub. for 19H792R) |
| | 12H 17 R | ( – ) | Washer, Lock, 3/4" (4 used) |
| 3 | B 888 R | ( – ) | Excluder, Dust (2 used) |
| 4 | B 90 R | ( – ) | Washer, Felt (Packed 2 in a Pkg.) (2 used) (Sub. for AB474R) (Pkg. of 2) |
| 5 | B 89 R | ( – ) | Retainer, Felt (2 used) |
| 6 | JD 7222 R | ( – ) | Cone, with Rollers (2 used) |
| 7 | JD 7266 R | ( – ) | Cup (2 used) |
| 8 | AB 3080 R | ( – ) | Hub, B2015R, with Cups (2 used) |
| 9 | JD 7259 R | ( – ) | Cup (2 used) |
| 10 | JD 7209 R | ( –5019164) | Cone, with Rollers (2 used) |
| | JD 8101 N | (5019165– ) | Cone, with Rollers (2 used) |
| 11 | 11H 49 R | ( – ) | Pin, Cotter, 1/8" x 2" (Sub. for 11H45R) |
| 12 | 19H 118 T | ( –5019164) | Screw, Cap, 5/16" x 1" (2 used) (Sub. for 19H112R) |
| | 12H 10 R | ( –5019164) | Washer, Lock, 5/16" (2 used) |
| 13 | AB 1032 R | ( –5019164) | Nut, B921R, with Cap Screw (2 used) |
| 14 | B 3310 R | (5019165– ) | Washer, Special |
| 15 | 14H 727 R | (5019165– ) | Nut, Slotted, 3/4" |
| 16 | B 102 R | ( – ) | Gasket (2 used) (Packed 5 in a Pkg.) |
| 17 | JD 7759 | ( – ) | Fitting, Grease (2 used) |
| 18 | AB 867 R | ( – ) | Cap, B920R, with Grease Fitting (2 used) |
| 19 | 19H 1096 H | ( – ) | Screw, Cap, 5/16" x 1-1/2" (6 used) (Sub. for 19H130R) |
| | 12H 10 R | ( – ) | Washer, Lock, 5/16" (6 used) |
| 20 | JD 19 R | ( – ) | Bolt (12 used) (Packed 10 in a Pkg.) |

(Parts listed below are not illustrated.)

| | | |
|---|---|---|
| R 20118 R | ( G13000– ) | Pin, Steering Spindle Extension (Sub. for A4040R) |
| 17H 192 A | ( G13000– ) | Rivet in Double Knuckle, 1/2" x 3-3/4" |
| 17H 1490 R | ( G13000– ) | Rivet in Steering Spindle Extension, 1/2" x 5" (2 used) |

## ROLL-O-MATIC FRONT END ASSEMBLY (CONVERTIBLE FRONT END)
(Serial No. 5000001- )

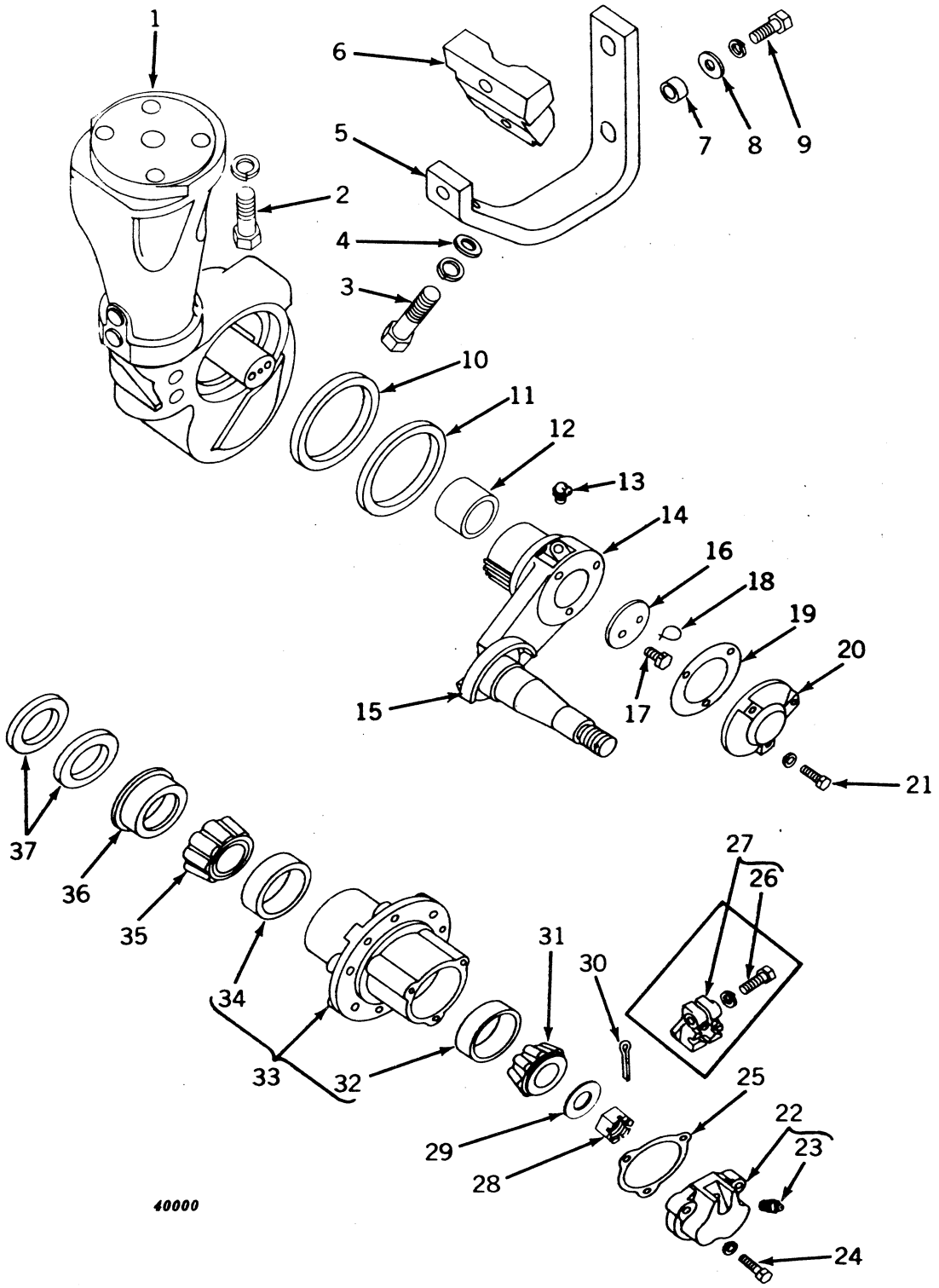

## ROLL-O-MATIC FRONT END ASSEMBLY (CONVERTIBLE FRONT END)—Continued
(Serial No. 5000001- )

| Key | Part No. | Serial No. | Description |
|---|---|---|---|
| 1 | AB 4563 R | ( – ) | Extension, A4201R, Spindle, with B3075R Knuckle Housing |
| 2 | 19H 1405 R | ( – ) | Screw, Cap, 3/4" x 2-1/2" (4 used) (Sub. for 19H792R) |
| | 12H 17 R | ( – ) | Washer, Lock, 3/4" (4 used) |
| 3 | 19H 1356 R | ( – ) | Screw, Cap, 5/8" x 1-3/4" (2 used) |
| | 12H 15 R | ( – ) | Washer, Lock, 5/8" (2 used) |
| 4 | 24H 961 R | ( – ) | Washer, 11/16" x 1-3/4" x 11 Gauge (2 used) |
| 5 | A 4118 R | ( – ) | Support |
| 6 | B 2847 R | ( – ) | Lock |
| 7 | A 4119 R | ( – ) | Spacer (2 used) |
| 8 | 24H 554 F | ( – ) | Washer (2 used) |
| 9 | 19H 472 N | ( – ) | Screw, Cap, 1/2" x 1-3/4" (2 used) (Sub. for 19H467R) |
| | 12H 13 R | ( – ) | Washer, Lock, 1/2" (2 used) |
| 10 | AB 3774 R | ( – ) | Washer, Felt (2 used) |
| 11 | B 2715 R | ( – ) | Retainer, Felt (2 used) |
| 12 | AB 3761 R | ( – ) | Bushing (Set of 4) (4 used) |
| 13 | JD 7778 | ( – ) | Fitting, Grease (2 used) |
| 14 | AB 3771 R | ( – ) | Knuckle, B2711R, with Dust Excluder and Nut, R.H. |
| | AB 3772 R | ( – ) | Knuckle, B2712R, with Dust Excluder and Nut, L.H. |
| 15 | B 888 R | ( – ) | Excluder, Dust (2 used) |
| 16 | B 2716 R | ( – ) | Washer, Thrust (2 used) |
| 17 | D 916 R | ( – ) | Screw, Cap, 3/8" x 3/4" (8 used) |
| 18 | ..... | ( – ) | Wire, 16 Gauge x 6" Long (2 used) |
| 19 | B 2718 R | ( – ) | Gasket (2 used) (Packed 2 in a Pkg.) |
| 20 | B 2717 R | ( – ) | Cap (2 used) |
| 21 | 19H 118 T | ( – ) | Screw, Cap, 5/8" x 1" (6 used) (Sub. for 19H112R) |
| | 12H 10 R | ( – ) | Washer, Lock, 5/16" (6 used) |
| 22 | AB 867 R | ( – ) | Cap, B902R, Hub, with Fitting (2 used) |
| 23 | JD 7759 | ( – ) | Fitting, Grease (2 used) |
| 24 | 19H 1096 H | ( – ) | Screw, Cap, 5/16" x 1-1/2" (6 used) (Sub. for 19H130R) |
| | 12H 10 R | ( – ) | Washer, Lock, 5/16" (6 used) |
| 25 | B 102 R | ( – ) | Gasket (2 used) (Packed 5 in a Pkg.) |
| 26 | 19H 118 T | ( –5019164) | Screw, Cap, 5/16" x 1" (2 used) (Sub. for 19H112R) |
| | 12H 10 R | ( –5019164) | Washer, Lock, 5/16" (2 used) |
| 27 | AB 1032 R | ( –5019164) | Nut, B921R, with Cap Screw (2 used) |
| 28 | F 2664 R | (5019165– ) | Nut, Slotted (Sub. for 14H727R) |
| 29 | B 3310 R | (5019165– ) | Washer |
| 30 | 11H 49 R | ( – ) | Pin, Cotter, 1/8" x 2" (2 used) (Sub. for 11H45R) |
| 31 | JD 7209 R | ( –5019164) | Cone, with Rollers (2 used) |
| | JD 8101 N | (5019165– ) | Cone, with Rollers (2 used) |
| 32 | JD 7259 R | ( – ) | Cup (2 used) |
| 33 | AB 3773 R | ( – ) | Hub, B2719R, with Cups (2 used) |
| 34 | JD 7266 R | ( – ) | Cup (2 used) |
| 35 | JD 7222 R | ( – ) | Cone, with Rollers (2 used) |
| 36 | B 89 R | ( – ) | Retainer (2 used) |
| 37 | B 90 R | ( – ) | Washer, Felt (2 used) (Packed 2 in a Pkg.) (Sub. for AB474R, Pkg. of 2) |

(Parts listed below are not illustrated.)

| | | |
|---|---|---|
| R 20118 R | ( G13000– ) | Pin, Steering Spindle Extension (Sub. for A4040R) |
| 17H 170 R | ( G13000– ) | Rivet in Roll-o-matic Housing, 1/2" x 3-3/8" |
| 17H 1490 R | ( G13000– ) | Rivet in Steering Spindle Extension, 1/2" x 5" (2 used) |

## SINGLE FRONT WHEEL (CONVERTIBLE FRONT END)
(Serial No. 5000001- )

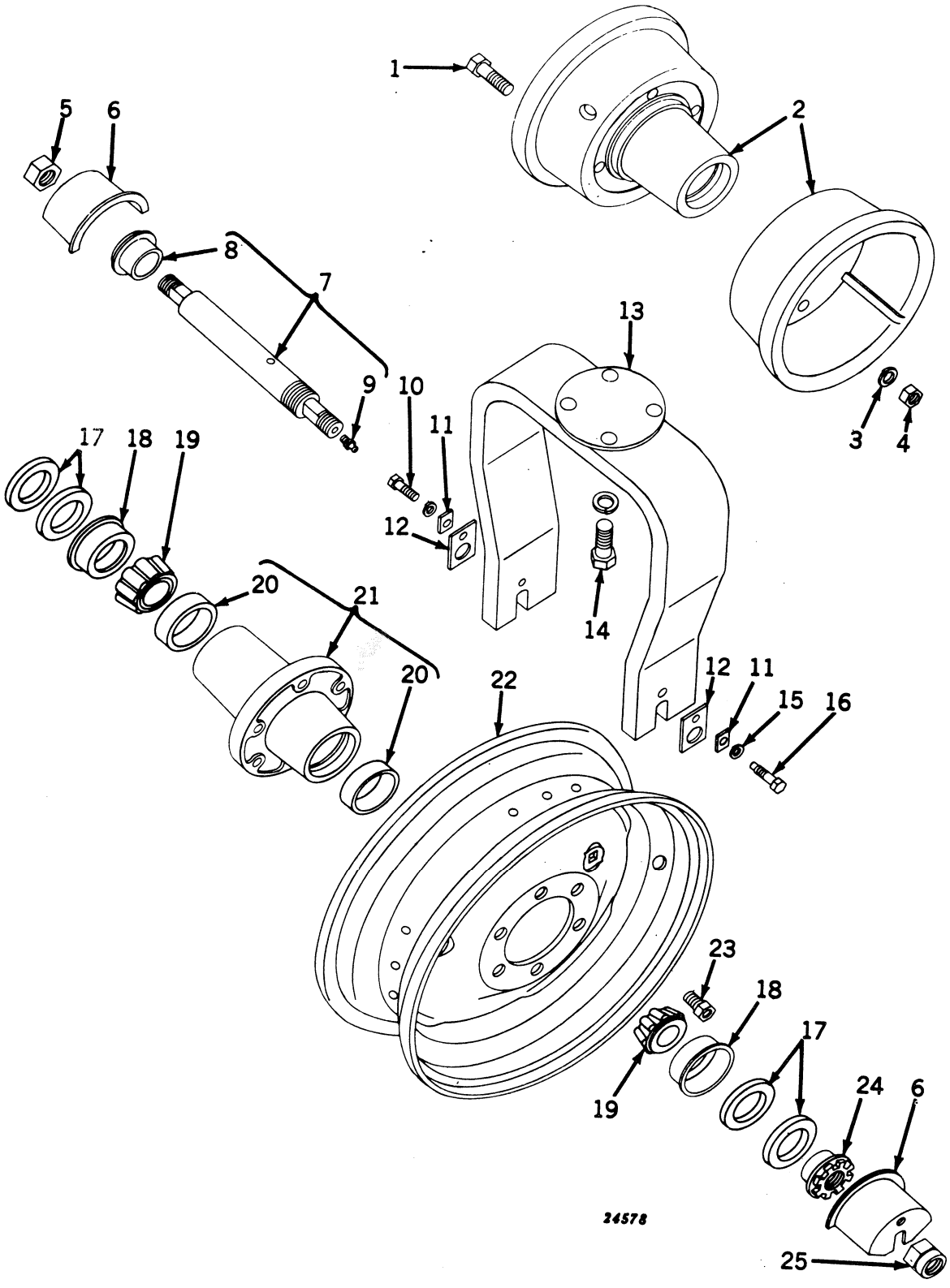

## SINGLE FRONT WHEEL (CONVERTIBLE FRONT END)—Continued
(Serial No. 5000001- )

| Key | Part No. | Serial No. | Description |
|---|---|---|---|
| 1 | 19H 1373 R | ( – ) | Screw, Cap, 5/8" x 2" (4 used) (Sub. for 19H676R) |
| 2 | AA 847 R | ( – ) | Wheel, A1235R and A1236R, with Hub (9.00 x 10" Tire) |
| 3 | 12H 15 R | ( – ) | Washer, Lock, 5/8" (4 used) |
| 4 | 14H 399 R | ( – ) | Nut, 5/8" (4 used) |
| 5 | 14H 655 R | ( – ) | Nut, Jam, 1" |
| 6 | H 773 R | ( – ) | Shield, Dust (2 used) |
| 7 | AB 4259 R | ( – ) | Axle, with Bearing Spacer and Nuts |
| 8 | B 2683 R | ( – ) | Spacer, Bearing |
| 9 | JD 7759 | ( – ) | Fitting, Grease |
| 10 | F 2273 R | ( – ) | Screw, Cap, 3/8" x 1-1/4" (Sub. for 19H221R) (Packed 10 in a Pkg.) |
| | 12H 11 R | ( – ) | Washer, Lock, 3/8" |
| 11 | B 549 R | ( – ) | Plate, Lock, Front Axle Nut (2 used) |
| 12 | H 771 R | ( – ) | Plate, Lock, Front Axle (2 used) |
| 13 | AB 5304 R | ( – ) | Yoke, with Cap Screws (Use with Wheel for 6.50 x 16" Tire) (Sub. fo AB3851R) |
| | AA 6713 R | ( – ) | Yoke (Use with Wheel for 9.00 x 10" 8-Ply Tire) (Sub. for AA5150R) |
| 14 | 19H 1391 R | ( – ) | Screw, Cap, 3/4" x 2-1/4" (4 used) (Sub. for 19H786R) |
| | 12H 17 R | ( – ) | Washer, Lock, 3/4" (4 used) |
| 15 | 12H 11 R | ( – ) | Washer, Lock, 3/8" |
| 16 | B 2680 R | ( – ) | Screw, Cap, 3/8" x 1-5/8" (Special) |
| 17 | B 90 R | ( – ) | Washer, Felt (Packed 2 in a Pkg.) (2 used) (Sub. for AB474R, Pkg. of 2) |
| 18 | B 89 R | ( – ) | Retainer, Felt (2 used) |
| 19 | JD 7222 R | ( – ) | Cone, with Rollers (2 used) |
| 20 | JD 7266 R | ( – ) | Cup (2 used) |
| 21 | AA 5303 R | ( – ) | Hub, A4599R, with Cups |
| 22 | JD 639 R | ( – ) | Wheel, Steel Disk (6.50 x 16" Tire) (Sub. for JD639D) |
| 23 | JD 17 R | ( – ) | Bolt (6 used) (Packed 20 in a Pkg.) |
| 24 | B 548 R | ( – ) | Nut, Bearing Adjusting |
| 25 | B 551 R | ( – ) | Nut, Front Axle |

## FRONT WHEELS (EXCEPT SINGLE FRONT WHEEL)
(Serial No. 5000001- )

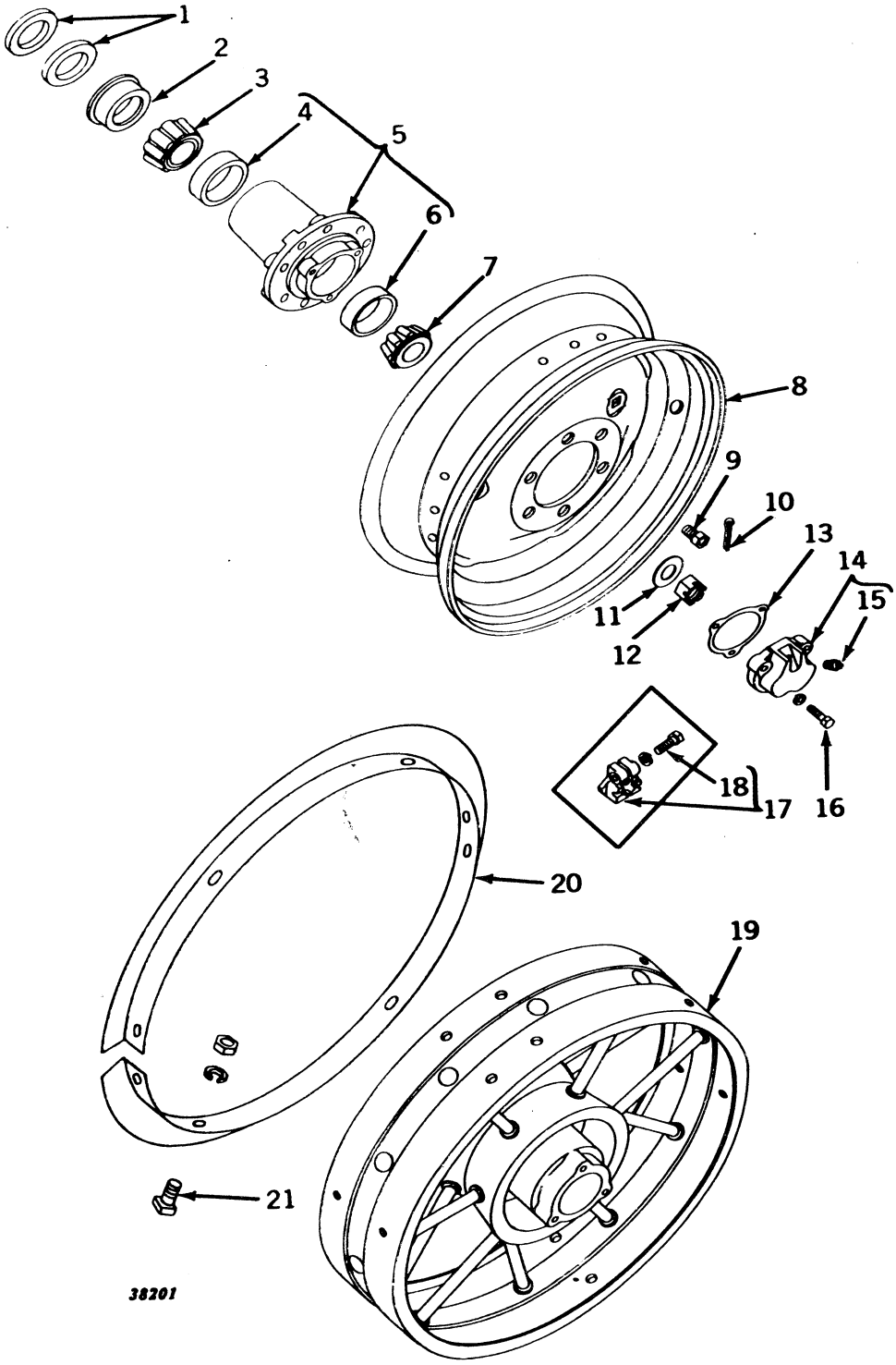

## FRONT WHEELS (EXCEPT SINGLE FRONT WHEEL)—Continued
(Serial No. 5000001- )

| Key | Part No. | Serial No. | Description |
|---|---|---|---|
| 1 | D 636 R | ( – ) | Washer, Felt (2 used) (For Adjustable Front Axle) (Sub. for AA663R) |
| | B 90 R | ( – ) | Washer, Felt (Packed 2 in a Pkg.) (2 used) (Except Adjustable Front Axle) (Sub. for AB474R) |
| 2 | D 635 R | ( – ) | Retainer, Felt (For Adjustable Front Axle) |
| | B 89 R | ( – ) | Retainer, Felt (Except Adjustable Front Axle) |
| 3 | JD 7224 R | ( – ) | Cone, with Rollers (For Adjustable Front Axle) |
| | JD 7222 R | ( – ) | Cone, with Rollers (Except Adjustable Front Axle) |
| 4 | JD 7270 R | ( – ) | Cup (For Adjustable Front Axle) |
| | JD 7266 R | ( – ) | Cup (Except Adjustable Front Axle) |
| 5 | AB 3080 R | ( – ) | Hub, B2015R, with Cups (Except Roll-O-Matic and Adjustable Front Axle) |
| | AB 3905 R | ( – ) | Hub, B2764R, with Cups (Limited Use) (Except Roll-O-Matic and Adjustable Front Axle) |
| | AB 3773 R | ( – ) | Hub, B2719R, with Cups (For Roll-O-Matic) |
| | AF 912 R | ( – ) | Hub, F843R, with Cups (For Adjustable Front Axle Except 48" to 80" Tread) |
| | AA 4099 R | ( – ) | Hub, A3479R, with Cups (48" to 80" Tread) |
| 6 | JD 7266 R | ( – ) | Cup (For Adjustable Front Axle) |
| | JD 7259 R | ( – ) | Cup (Except Adjustable Front Axle) |
| 7 | JD 7216 R | ( –5019164) | Cone, with Rollers (For Adjustable Front Axle) |
| | JD 8186 R | (5019165– ) | Cone, with Rollers (For Adjustable Front Axle) |
| | JD 7209 R | ( –5019164) | Cone, with Rollers (Except Adjustable Front Axle) |
| | JD 8101 N | (5019165– ) | Cone, with Rollers (2 used) (Except Adjustable Front Axle) |
| 8 | JD 1268 R | ( – ) | Wheel, Disk, and Rim, less Hub (For 5.50x16", 4-Ply Rubber Tire) |
| 9 | JD 19 R | ( – ) | Bolt (6 used) |
| 10 | 11H 88 R | ( – ) | Pin, Cotter, 3/16" x 2" (For Adjustable Front Axle) (Sub. for 11H84R) |
| | 11H 49 R | ( – ) | Pin, Cotter, 1/8" x 2" (Except Adjustable Front Axle) (Sub. for 11H45R) |
| 11 | 14H 540 R | (5019165– ) | Nut, Special Slotted, 1" (For Adjustable Front Axle) (Sub. for 14H745R) |
| | F 2664 R | (5019165– ) | Nut, Special Slotted, 3/4" (Except Adjustable Front Axle) (Sub. for 14H727R) |
| 12 | A 5146 R | (5019165– ) | Washer (For Adjustable Front Axle) |
| | B 3310 R | (5019165– ) | Washer (Except Adjustable Front Axle) |
| 13 | A 1556 R | ( – ) | Gasket (For Adjustable Front Axle) (Packed 5 in a Pkg.) |
| | B 102 R | ( – ) | Gasket (Except Adjustable Front Axle) (Packed 5 in a Pkg.) |
| 14 | AA 1407 R | ( – ) | Cap, A1555R, Hub, with Grease Fitting (For Adjustable Front Axle) |
| | AB 867 R | ( – ) | Cap, B920R, Hub, with Grease Fitting (Except Adjustable Front Axle) |
| 15 | JD 7759 | ( – ) | Fitting, Grease |
| 16 | F 2270 R | ( – ) | Screw, Cap, 5/16" x 1-1/4" (3 used) (For Adjustable Front Axle) (Sub. for 19H124R) |
| | 19H 1096 H | ( – ) | Screw, Cap, 5/16" x 1-1/2" (3 used) (Except Adjustable Front Axle) (Sub. for 19H130R) |
| | 12H 10 R | ( – ) | Washer, Lock, 5/16" (3 used) |
| 17 | AD 452 R | ( –5019164) | Nut, D1082R, with Cap Screw (For Adjustable Front Axle) |
| | AB 1032 R | ( –5019164) | Nut, B921R, with Cap Screw (Except Adjustable Front Axle) |
| 18 | F 2273 R | ( –5019164) | Screw, Cap, 3/8" x 1-1/4" (For Adjustable Front Axle) |
| | 12H 11 R | ( –5019164) | Washer, Lock, 3/8" |
| | 19H 118 T | ( –5019164) | Screw, Cap, 5/16" x 1" (Except Adjustable Front Axle) (Sub. for 19H112R) |
| | 12H 10 R | ( –5019164) | Washer, Lock, 5/16" |
| 19 | AB 2708 R | ( – ) | Wheel, Front, with Bearing Cups (Steel Spoke Type) (For use on Double Knuckle) |
| 20 | AB 203 R | ( – ) | Band, Front Wheel Guide (Set of 2) |
| 21 | AB 353 R | ( – ) | Bolt, Guide Band, with Nuts and Lock Washer (Set of Fourteen 7H556B, 12H12R and 14H193B) |

(Parts listed below are not illustrated.)

| | | |
|---|---|---|
| **B 2016 R** | ( – ) | **Weight, Front Wheel (100 Lbs.) (2 used) (ATTACHMENT)** |
| **AB 4265 R** | ( – ) | **Bolts for Attaching Two B2016R, Consisting of: Six 7H894H, Six 12H13R, Six 14H259R, and Six 24H991R (ATTACHMENT)** |
| **A 1826 R** | ( – ) | **Weight, Front Wheel (100 Lbs.) (2 used) (Use with AB2708R Front Wheel (ATTACHMENT)** |
| **AA 5590 R** | ( – ) | **Bolts for Attaching Two A1826R, Consisting of: Six A1828R, 14H264R, 12H15R, and 24H993R (ATTACHMENT)** |

## FRONT AXLE HOUSING ASSEMBLY (ADJUSTABLE AND 38" FIXED TREAD)
(Serial No. 5000001- )

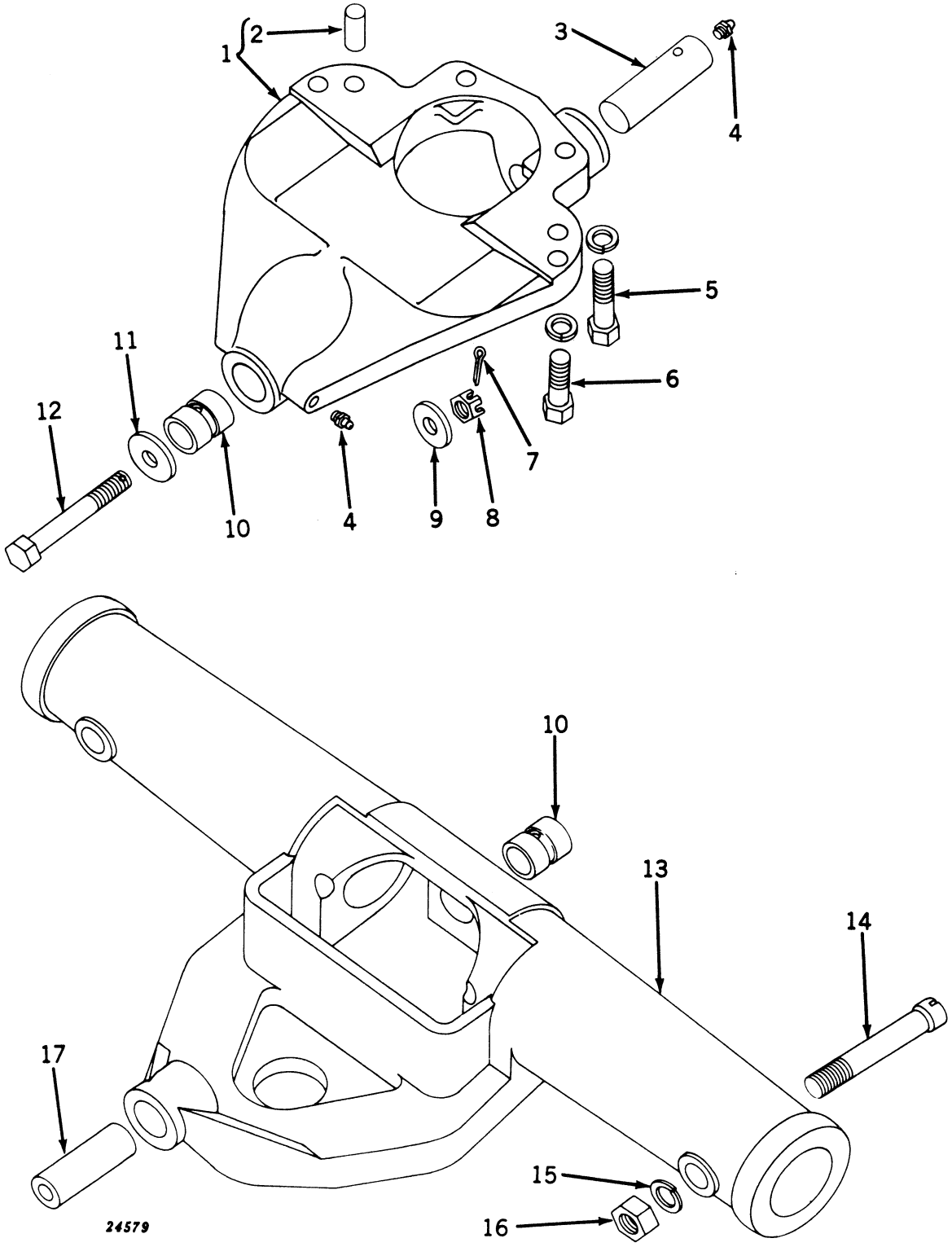

## FRONT AXLE HOUSING ASSEMBLY (ADJUSTABLE AND 38" FIXED TREAD)—Continued
(Serial No. 5000001- )

| Key | Part No. | | Description |
|---|---|---|---|
| 1 | AB 3627 R | ( - ) | Bracket, B2687R, Pivot, with Pin and Bushing |
| 2 | A 776 R | ( - ) | Pin, Dowel (2 used) |
| 3 | B 2688 R | ( - ) | Pin, Pivot, Front |
| 4 | JD 7759 | ( - ) | Fitting, Grease (2 used) |
| 5 | 19H 1455 R | ( - ) | Screw, Cap, 3/4" x 3-3/4" (2 used) (Sub. for 19H984R) |
| | 12H 17 R | ( - ) | Washer, Lock, 3/4" (2 used) |
| 6 | 19H 1405 R | ( - ) | Screw, Cap, 3/4" x 2-1/2" (2 used) (Sub. for 19H792R) |
| | 12H 17 R | ( - ) | Washer, Lock, 3/4" (2 used) |
| 7 | 11H 49 R | ( - ) | Pin, Cotter, 1/8" x 2" (Sub. for 11H43R) |
| 8 | F 2664 R | ( - ) | Nut, Slotted, 3/4" (Sub. for 14H534R) |
| 9 | D 139 R | ( - ) | Washer |
| 10 | A 877 R | ( - ) | Bushing (2 used) (Sub. for AA5539R) |
| 11 | R 20136 R | ( - ) | Washer (Sub. for D141R) |
| 12 | F 2663 R | ( - ) | Screw, Cap, 3/4" x 5-1/2" (Special) (Sub. for B2694R) |
| 13 | AF 1182 R | ( - ) | Housing, B2690R or F1018R, with Pin and Bushing (Adjustable Tread) |
| | AB 4045 R | ( - ) | Housing, B2840R, with Pin and Bushing (38" Fixed Tread) |
| 14 | B 2694 R | ( - ) | Bolt, Lock (2 used) |
| 15 | 12H 21 R | ( - ) | Washer, Lock, 1" (2 used) |
| 16 | 14H 411 R | ( - ) | Nut, 1" (2 used) (Sub. for 14H272R) |
| 17 | B 2700 R | ( - ) | Pin, Pivot, Rear |

## FRONT AXLE KNEE (ADJUSTABLE AND 38" FIXED TREAD)
(Serial No. 5000001- )

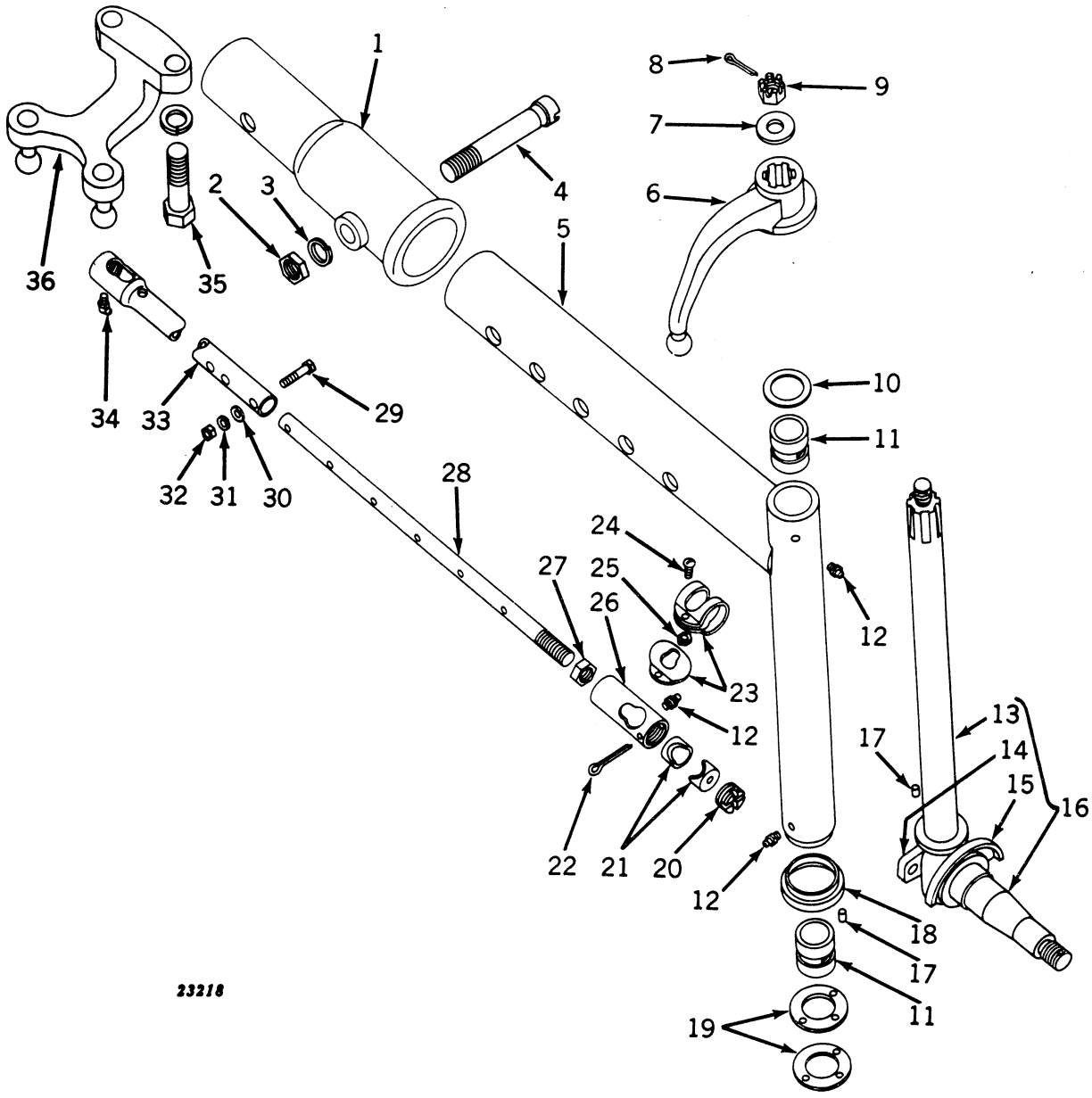

## FRONT AXLE KNEE (ADJUSTABLE AND 38" FIXED TREAD)—Continued
(Serial No. 5000001- )

| Key | Part No. | Serial No. | Description |
|---|---|---|---|
| 1 | B 2728 R | ( – ) | Extension, Knee (Tractors with 42" Rear Tires) |
| 2 | 14H 411 R | ( – ) | Nut, 1" (Tractors with 42" Rear Tires) (Sub. for 14H272R) |
| 3 | 12H 21 R | ( – ) | Washer, Lock, 1" (Tractors with 42" Rear Tires) |
| 4 | B 2694 R | ( – ) | Bolt, Lock (Tractors with 42" Rear Tires) |
| 5 | AA 5166 R | ( – ) | Knee, with Bushings and Dust Shield (2 used) (Tractors with 38" Rear Tires) |
| | AB 3630 R | ( – ) | Knee, with Bushings and Dust Shield (2 used) (Tractors with 42" Rear Tires) |
| | AB 4046 R | ( – ) | Knee, with Bushings and Dust Shield (2 used) (38" Fixed Tread) |
| 6 | AB 4686 R | ( – ) | Arm, Steering, L.H. (Sub. for B1204R) |
| | AB 4685 R | ( – ) | Arm, Steering, R.H. (Sub. for B1236R) |
| 7 | B 3310 R | ( – ) | Washer (2 used) (Sub. for B111R) |
| 8 | 11H 49 R | ( – ) | Pin, Cotter, 1/8" x 2" (2 used) (Sub. for 11H45R) |
| 9 | F 2664 R | ( – ) | Nut, Slotted, 3/4" (2 used) (Sub. for 14H534R) |
| 10 | D 467 R | ( – ) | Washer (2 used) |
| 11 | A 877 R | ( – ) | Bushing (4 used) (Sub. for AA5539R) |
| 12 | JD 7759 | ( – ) | Fitting, Grease (6 used) |
| 13 | AB 3134 R | ( – ) | Spindle, with Nut (Tractors with 42" Rear Tires) |
| 14 | 17H 138 A | ( – ) | Rivet, 1/2" x 2-3/4" (2 used) |
| 15 | A 1424 R | ( – ) | Excluder, Dust (2 used) |
| 16 | AA 5267 R | ( – ) | Knuckle, with 18-1/2" Spindle and Dust Excluder (2 used) (Tractors with 38" Rear Tires) |
| | AB 1396 R | ( – ) | Knuckle, with 19-3/4" Spindle and Dust Excluder (2 used) (Tractors with 42" Rear Tires) |
| | AB 4013 R | ( – ) | Knuckle, with 17-3/4" Spindle and Dust Excluder (2 used) (38" Fixed Tread) |
| 17 | F 1743 R | ( – ) | Pin, Dowel (4 used) (Sub. for D186R) |
| 18 | B 2693 R | ( – ) | Shield, Dust (2 used) |
| 19 | A 890 R | ( – ) | Washer, Thrust (4 used) |
| 20 | C 840 R | ( – ) | Screw, Plug (4 used) |
| 21 | C 838 R | ( – ) | Bearing, Ball Stud (8 used) (Packed 5 in a Pkg.) |
| 22 | 11H 49 R | ( – ) | Pin, Cotter, 1/8" x 2" (4 used) |
| 23 | AC 352 R | ( – ) | Cover, Drag Link (2 used) |
| 24 | 21H 425 R | ( – ) | Screw, Mach. (2 used) |
| 25 | 14H 606 R | ( – ) | Nut, Square (2 used) (Sub. for 14H619R) |
| 26 | H 982 R | ( – ) | End, Drag Link (2 used) |
| 27 | C 985 R | ( – ) | Nut, Jam, 7/8" (2 used) |
| 28 | B 2696 R | ( – ) | Rod, Drag Link (2 used) (Tractors with 38" or 42" Rear Tires) |
| | B 2729 R | ( – ) | Rod, Drag Link (Used with Knee Extension) |
| | B 2842 R | ( – ) | Rod, Drag Link (2 used) (38" Fixed Tread) |
| 29 | 19H 134 R | ( – ) | Screw, Cap, 5/16" x 1-1/2" (4 used) (Except 38" Fixed Tread) (Sub. 21H715R |
| 30 | 24H 143 R | ( – ) | Washer (4 used) (Except 38" Fixed Tread) |
| 31 | 12H 10 R | ( – ) | Washer, Lock, 5/16" (4 used) (Except 38" Fixed Tread) |
| 32 | 14H 285 R | ( – ) | Nut, 5/16" (4 used) (Except 38" Fixed Tread) |
| 33 | AF 1187 R | ( – ) | Sleeve, Drag Link (2 used) (Except 38" Fixed Tread) |
| 34 | JD 7760 | ( – ) | Fitting, Grease (2 used) |
| 35 | 19H 1374 R | ( – ) | Screw, Cap, 3/4" x 2" (2 used) (Sub. for 19H774R) |
| | 12H 17 R | ( – ) | Washer, Lock, 3/4" (2 used) |
| 36 | AB 3633 R | ( – ) | Arm, Steering, with Balls |

## FRONT AXLE HOUSING ASSEMBLY (48- TO 80-INCH TREAD)
(Serial No. 5000001- )

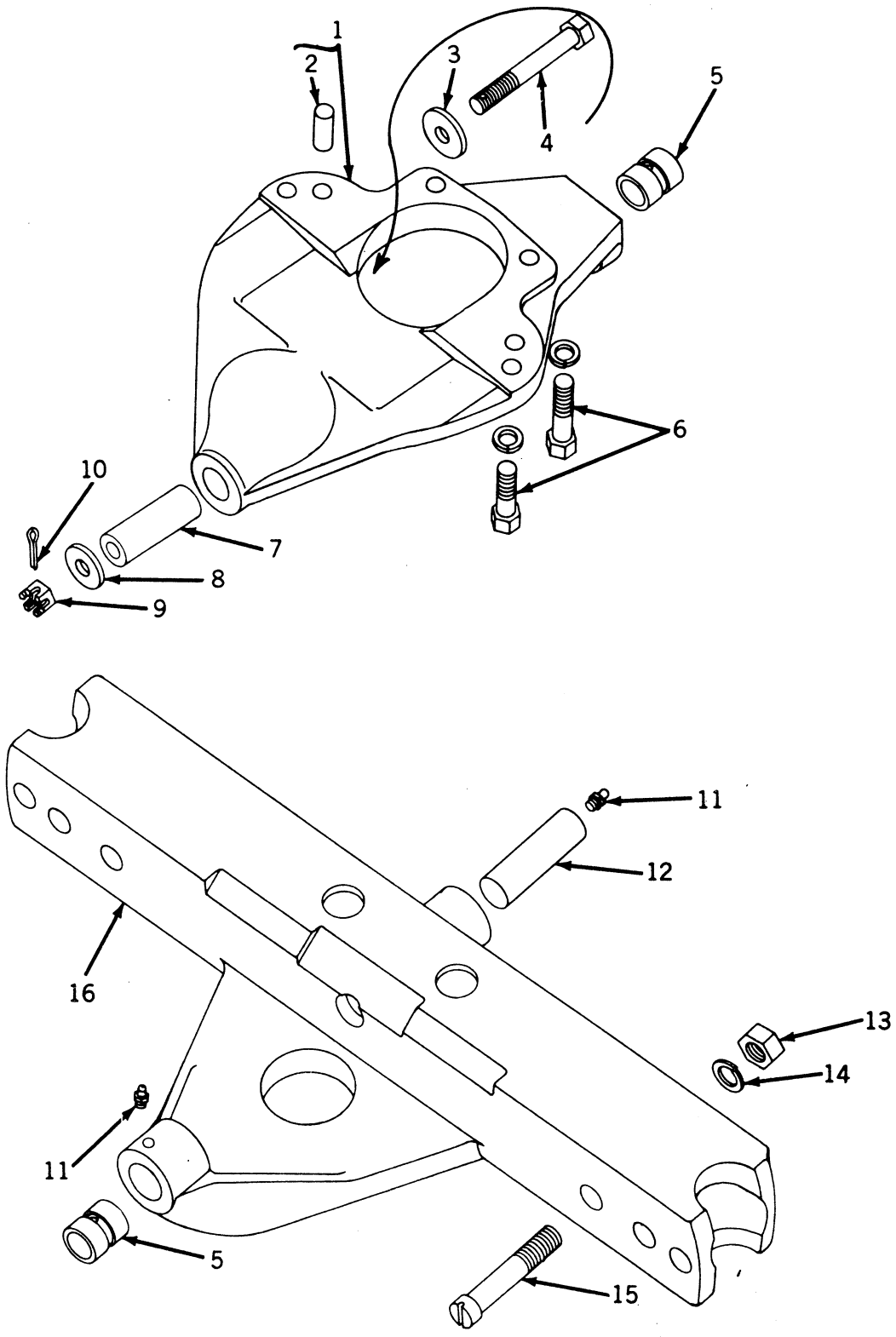

## FRONT AXLE HOUSING ASSEMBLY (48- TO 80-INCH TREAD)—Continued
(Serial No. 5000001- )

| Key | Part No. | | | Description |
|---|---|---|---|---|
| 1 | AA 5765 R | ( | – ) | Bracket, A4963R, Pivot, with Pin and Bushing |
| 2 | A 776 R | ( | – ) | Pin, Dowel (2 used) |
| 3 | D 139 R | ( | – ) | Washer |
| 4 | F 2663 R | ( | – ) | Screw, Cap (Sub. for B2697R) |
| 5 | A 877 R | ( | – ) | Bushing (2 used) |
| 6 | 19H 1405 R | ( | – ) | Screw, Cap, 3/4" x 2-1/2" (4 used) |
| | 12H 11 R | ( | – ) | Washer, Lock, 3/8" (4 used) |
| 7 | B 2700 R | ( | – ) | Pin, Pivot |
| 8 | F 3607 R | ( | – ) | Washer (Sub. for A4975R) |
| 9 | F 2664 R | ( | – ) | Nut, Slotted, 3/4" (Sub. for 14H534R) |
| 10 | 11H 49 R | ( | – ) | Pin, Cotter, 1/8" x 2" (Sub. for 11H43R) |
| 11 | JD 7759 | ( | – ) | Fitting, Grease (2 used) |
| 12 | B 2688 R | ( | – ) | Pin, Pivot, Front |
| 13 | 14H 411 R | ( | – ) | Nut, 1" (2 used) (Packed 25 in a Pkg.) (Sub. for 14H272R) |
| 14 | 12H 21 R | ( | – ) | Washer, Lock, 1" (2 used) |
| 15 | B 2694 R | ( | – ) | Bolt, Lock (2 used) (Sub. for B2846R) |
| 16 | AA 5766 R | ( | – ) | Housing, A4964R, with Pin and Bushing |

## FRONT AXLE KNEE (48- TO 80-INCH TREAD)
(Serial No. 5000001- )

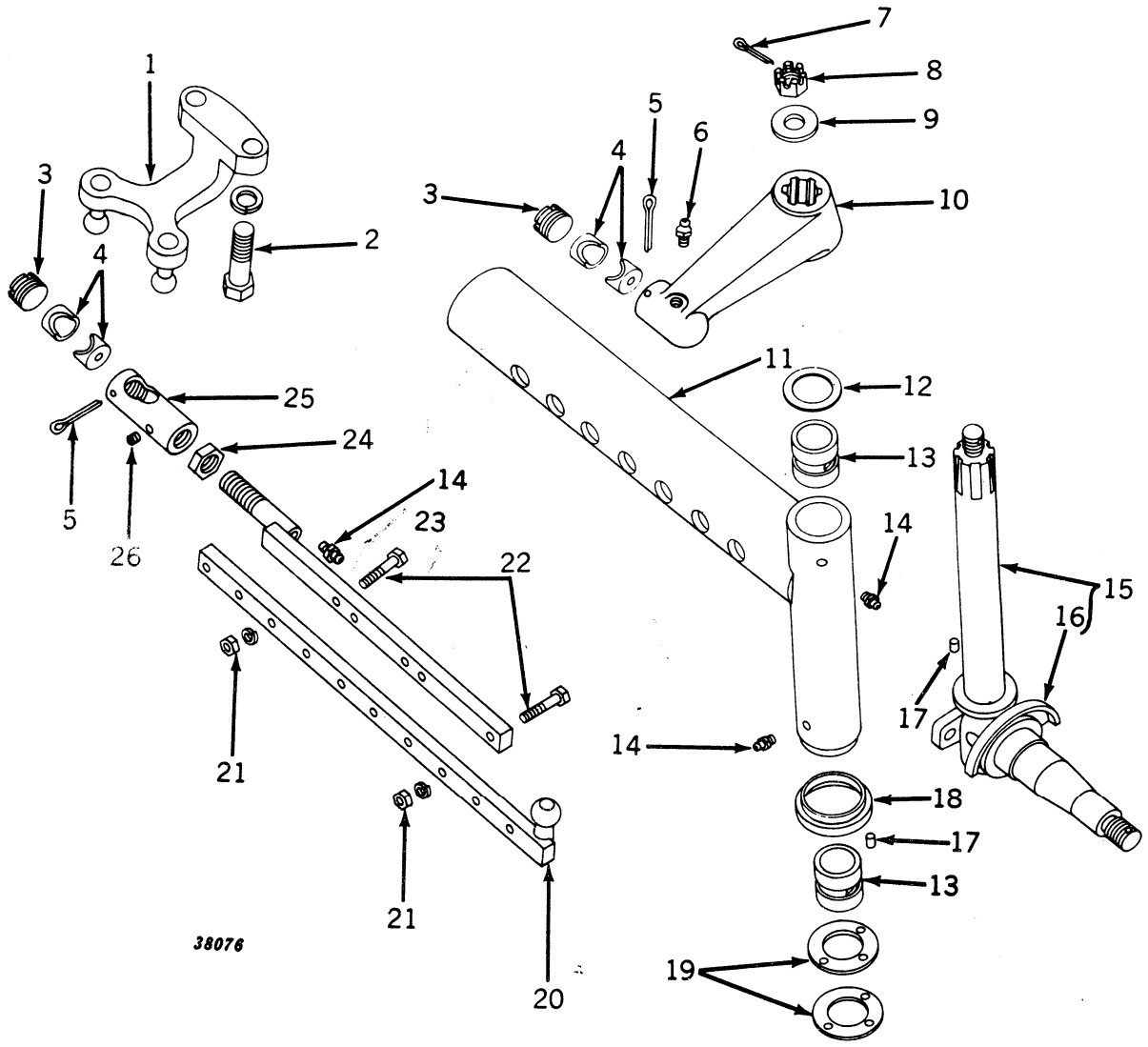

## FRONT AXLE KNEE (48- TO 80-INCH TREAD)—Continued
(Serial No. 5000001- )

| Key | Part No. | Serial No. | Description |
|---|---|---|---|
| 1 | AB 3633 R | ( – ) | Arm, Steering, with Balls |
| 2 | 19H 1374 R | ( – ) | Screw, Cap, 3/4" x 2" (2 used) |
| | 12H 17 R | ( – ) | Washer, Lock, 3/4" (2 used) |
| 3 | C 840 R | ( – ) | Screw, Plug (4 used) |
| 4 | C 838 R | ( – ) | Bearing, Ball Stud (8 used) (Packed 5 in a Pkg.) |
| 5 | 11H 49 R | ( – ) | Pin, Cotter, 1/8" x 2" (4 used) |
| 6 | JD 7778 | ( – ) | Fitting, Grease, 67-1/2° (2 used) |
| 7 | 11H 49 R | ( – ) | Pin, Cotter, 1/8" x 2" (4 used) (Sub. for 11H45R) |
| 8 | F 2664 R | ( – ) | Nut, Slotted, 3/4" (2 used) (Sub. for 14H534R) |
| 9 | B 3310 R | ( – ) | Washer (Sub. for B111R) |
| 10 | A 4968 R | ( – ) | Arm, Steering, R.H. |
| | A 4969 R | ( – ) | Arm, Steering, L.H. |
| 11 | AA 5767 R | ( – ) | Knee, with Bushing and Dust Shield (2 used) |
| 12 | D 467 R | ( – ) | Washer (2 used) |
| 13 | A 877 R | ( – ) | Bushing (4 used) (Sub. for AA5539R) |
| 14 | JD 7759 | ( – ) | Fitting, Grease, Straight (4 used) |
| 15 | AA 5789 R | ( – ) | Knuckle, with Spindle, Dust Excluder, and Nut (2 used) (Sub. for AA5769R) |
| 16 | A 1424 R | ( – ) | Excluder, Dust (2 used) |
| 17 | D 1743 R | ( – ) | Pin, Dowel (4 used) (Sub. for D186R) |
| 18 | B 2693 R | ( – ) | Shield, Dust (2 used) |
| 19 | A 890 R | ( – ) | Washer, Thrust (4 used) |
| 20 | AA 5771 R | ( – ) | Bar, Drag Link, Outer, with Ball, R.H. |
| | AA 5772 R | ( – ) | Bar, Drag Link, Outer, with Ball, L.H. |
| 21 | 14H 255 R | ( – ) | Nut, 3/8" (4 used) |
| | 12H 10 R | ( – ) | Washer, Lock, 5/8" (4 used) |
| 22 | 19H 246 T | ( – ) | Screw, Cap, 3/8" x 1-3/4" (4 used) |
| 23 | AA 5773 R | ( – ) | Bar, Drag Link, Inner, with End (2 used) |
| 24 | C 985 R | ( – ) | Nut, Jam, 7/8" (2 used) (Packed 5 in a Pkg.) |
| 25 | H 982 R | ( – ) | End, Drag Link (2 used) |
| 26 | 15H 558 R | ( – ) | Pipe, Plug, 1/8" Headless |

## REAR WHEELS
(Serial No. 5000001- )

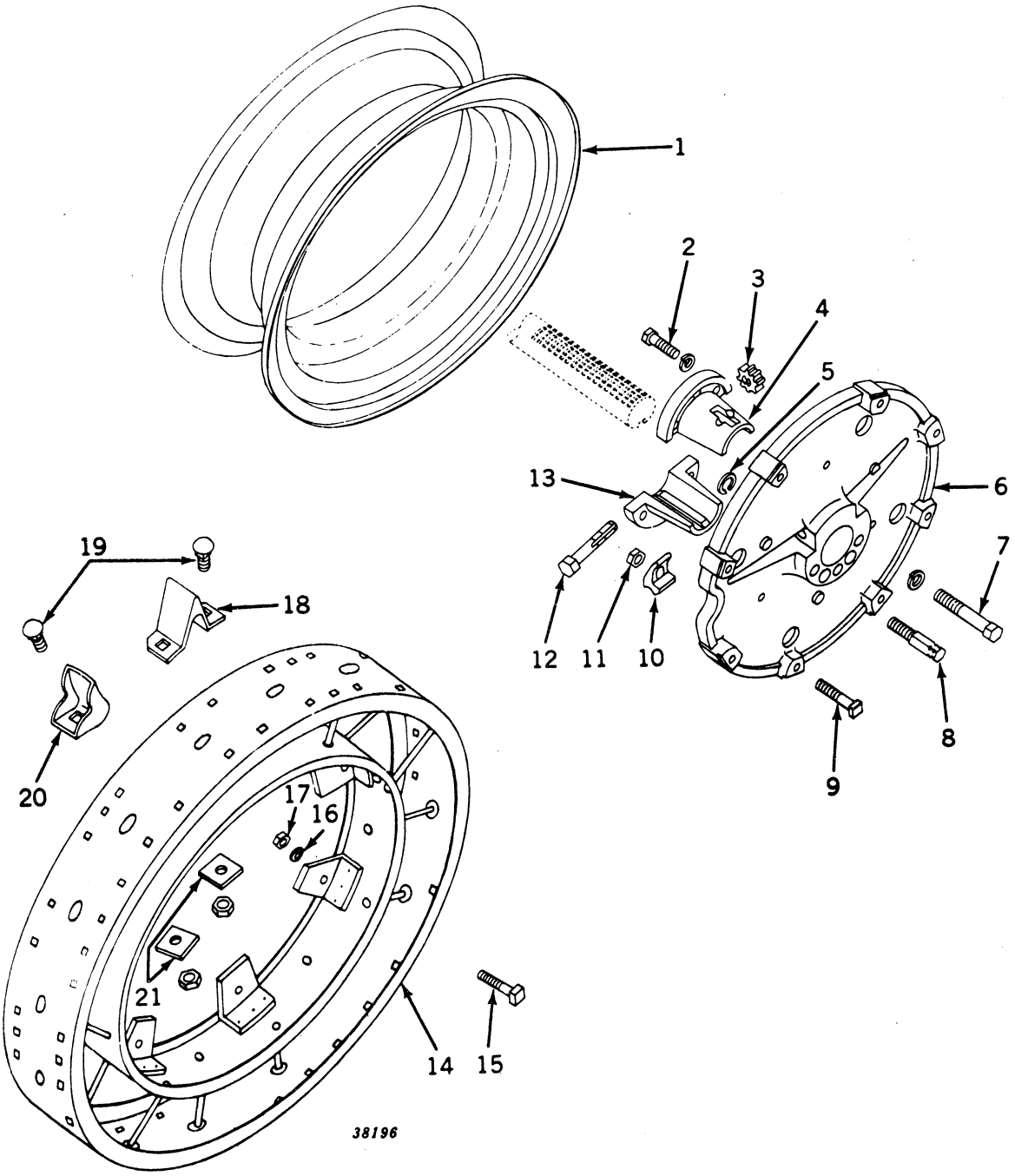

**REAR WHEELS—Continued**
**(Serial No. 5000001- )**

| Key | Part No. | Serial No. | Description |
|---|---|---|---|
| 1 | B 3261 R | ( – ) | Rim, Demountable (For 10-38 Tire) (Sub. for AB4457R) |
| | B 3261 R | ( – ) | Rim, Demountable (For F1478R Offset Wheel and 10-38 Tire) (Sub. AB4457R) |
| | A 4819 R | ( – ) | Rim, Demountable (For 11-38 Tire) (Sub. for AA5110R) |
| | A 4819 R | ( – ) | Rim, Demountable (For F1478R Offset Wheel and 11-38 Tire) |
| | A 4818 R | ( – ) | Rim, Demountable (For 9-42 or 11-42 Tire) (Sub. for AA5261R) |
| 2 | 19H 1412 R | ( – ) | Screw, Cap, 3/4" x 2-5/8", Pinion Half to Wheel (3 used) (Sub. for 19H793R) |
| | 12H 17 R | ( – ) | Washer, Lock, 3/4" (3 used) |
| 3 | B 3014 R | ( – ) | Pinion (88" Tread) |
| | A 4379 R | ( – ) | Pinion (97-3/4" or 104" Tread) |
| 4 | B 3016 R | ( – ) | Sleeve, Pinion Half (88" Tread) |
| | A 4384 R | ( – ) | Sleeve, Pinion Half (97-3/4" or 104" Tread) |
| 5 | A 369 R | ( –5016076) | Snap Ring, Screw, Jack (2 used) (Packed 5 in a Pkg.) |
| | A 4883 R | (5016077– ) | Ring, Retaining (2 used) |
| 6 | F 1500 R | ( – ) | Wheel, Cast Disk, Rear (For 10-38 or 11-38 Tire and Rim) (Sub. for A4378R) |
| | A 4517 R | ( – ) | Wheel, Cast Disk, Rear (For 9-42 or 11-42 Tire and Rim) |
| | F 1478 R | ( – ) | Wheel, Cast Disk, Rear (Offset) |
| 7 | A 4387 R | ( – ) | Bolt, Special, Plated, 7/8" x 6", Key Half to Wheel (3 used) |
| | 12H 19 R | ( – ) | Washer, Lock, 7/8" (3 used) |
| 8 | A 4382 R | ( –5016076) | Screw, Jack (2 used) (Sub. One A4882R and One A4883R) |
| | A 4882 R | (5016077– ) | Screw, Jack (2 used) |
| 9 | A 4389 R | ( – ) | Bolt, Mach., with Nut, 5/8" x 3-3/4" (8 used) |
| 10 | A 4388 R | ( – ) | Clamp, Rim (8 used) |
| 11 | 14H 399 R | ( – ) | Nut, 5/8" (8 used) |
| 12 | A 4380 R | ( – ) | Shaft, Pinion |
| 13 | B 3018 R | ( – ) | Sleeve, Key Half (88" Tread) |
| | A 4386 R | ( – ) | Sleeve, Key Half (97-3/4" or 104" Tread) |
| 14 | AF 1713 R | ( – ) | Rim, Steel Wheel |
| 15 | A 4389 R | ( – ) | Bolt, Mach., with Nut, Rim to Wheel (8 used) |
| 16 | 12H 15 R | ( – ) | Washer, Lock, 5/8" on A4389R (8 used) |
| 17 | 14H 760 R | ( – ) | Nut, Hex., 5/8" Rim to Wheel Bolt (8 used) |
| 18 | AD 2857 R | ( – ) | Lug, 5" "A" Shape (Set of 8, D1283R) |
| 19 | AD 2803 R | ( – ) | Bolt, Lug, with Nut (Sub. D411R and 14H404R) |
| 20 | AD 2854 R | ( – ) | Lug, 5" Spade (Set of 8, D1078R) |
| 21 | AD 2856 R | ( – ) | Washer, Spade Lug (Pkg. of 8, D938R) |

(Parts listed below are not illustrated.)

| | | |
|---|---|---|
| **A 3404 R** | ( – ) | **Weight, Rear Wheel (150 Lbs.) (2 used) (ATTACHMENT)** |
| **AA 4029 R** | ( – ) | **Bolts for Attaching Two A3404R, Consisting of: Six 12H15R, Six 14H760R, and Six A4064R (ATTACHMENT)** |
| F 336 R | ( – ) | Rim, Extension |
| AC 453 R | ( – ) | Clip, Six C1030R, Extension Rim |
| AD 2803 R | ( – ) | Bolt, Twenty-Five D411R with Twenty-Five 14H404R |

## TOOLS
(Serial No. 5000001- )

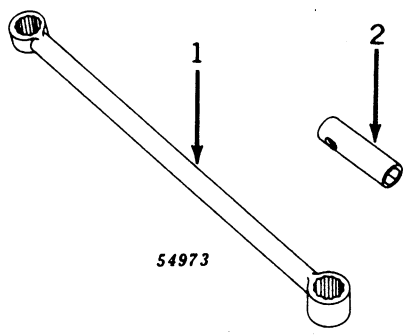


| Key | Part No. | Serial No. | Description |
|---|---|---|---|
| 1 | B 353 R | ( – ) | Wrench, Lug and Flywheel |
| 2 | F 3338 R | ( – ) | Wrench, Spark Plug |

## TRACTOR STEP
(Serial No. 5000001- )

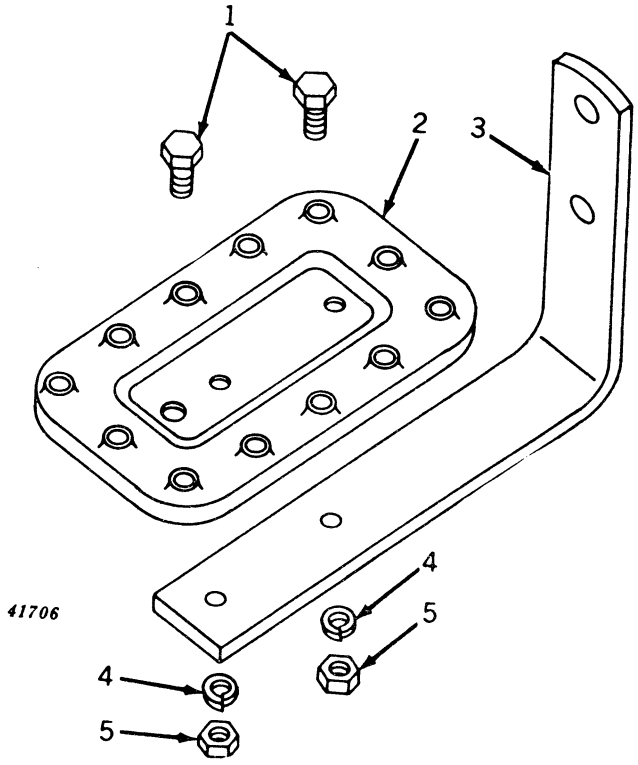


| Key | Part No. | Serial No. | Description |
|---|---|---|---|
| 1 | 19H 1139 N | ( – ) | Screw, Cap, Step to Support, 3/8" x 1-1/8" (2 used) |
| | 12H 11 R | ( – ) | Washer, Lock, 3/8" (2 used) |
| 2 | A 5233 R | ( – ) | Step, Tractor |
| 3 | A 5234 R | ( – ) | Support, Tractor Step |
| 4 | 14H 255 R | ( – ) | Nut, 3/8" (2 used) |

(Part listed below is an assembly of parts listed in this grouping.)

**AA 6092 R** ( – ) **Step, Tractor, with Support and Hardware (ATTACHMENT)**

## SPEED-HOUR METER
(Serial No. 5000001- )

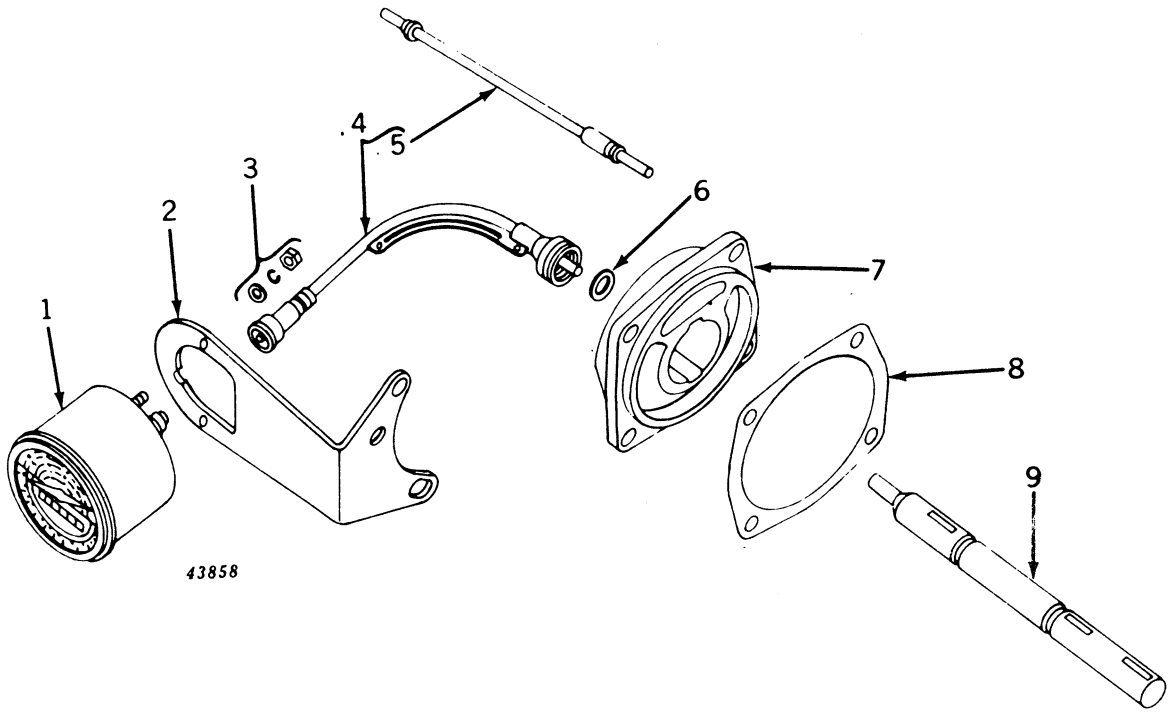


| Key | Part No. | Serial No. | Description |
|---|---|---|---|
| 1 | AB 4736 R | ( – ) | Meter, Speed-Hour |
| | **AB 4732 R** | ( – ) | **Meter, Speed-Hour, with Attaching Parts (ATTACHMENT) (On 5000001-5020399 Sub. AB4784R and AB4785R, on 5020400- Sub. AB4784R)** |
| | **AB 4784 R** | ( – ) | **Meter, Speed-Hour, with Flexible Shaft, Bracket, Nut and Washers (ATTACHMENT)** |
| 2 | A 4875 R | ( – ) | Bracket |
| 3 | 14H 631 R | ( – ) | Nut, Special Hex. (2 used) (Packed 25 in a Pkg.) |
| | A 767 R | ( – ) | Washer, Lock (Special) (2 used) (Packed 50 in a Pkg.) |
| | 24H 91 R | ( – ) | Washer (2 used) |
| 4 | AB 4737 R | ( – ) | Shaft, Flexible, with Cable |
| 5 | AB 4765 R | ( – ) | Cable, Flexible Shaft, with Rivet (For "AC" Shaft only) |
| | AB 4776 R | ( – ) | Cable, Flexible Shaft, with Rivet (For Stewart-Warner Shaft only) |
| 6 | B 3285 R | ( – ) | Washer, Copper |
| 7 | B 3283 R | ( – ) | Housing |
| 8 | B 284 R | ( – ) | Gasket (Thick) (Packed 5 in a Pkg.) |
| | B 569 R | ( – ) | Gasket (Thin) (Packed 5 in a Pkg.) |
| 9 | B 3284 R | ( – ) | Shaft, Governor |

(Part listed below is an assembly of some of the parts in this grouping.)

| | | | |
|---|---|---|---|
| | **AB 4785 R** | ( - 5020399) | **Housing, Governor, L.H. Bearing Shaft and Gasket (ATTACHMEN** |

## INSTRUMENT PANEL AND GAUGES
(Serial No. 5000001- )

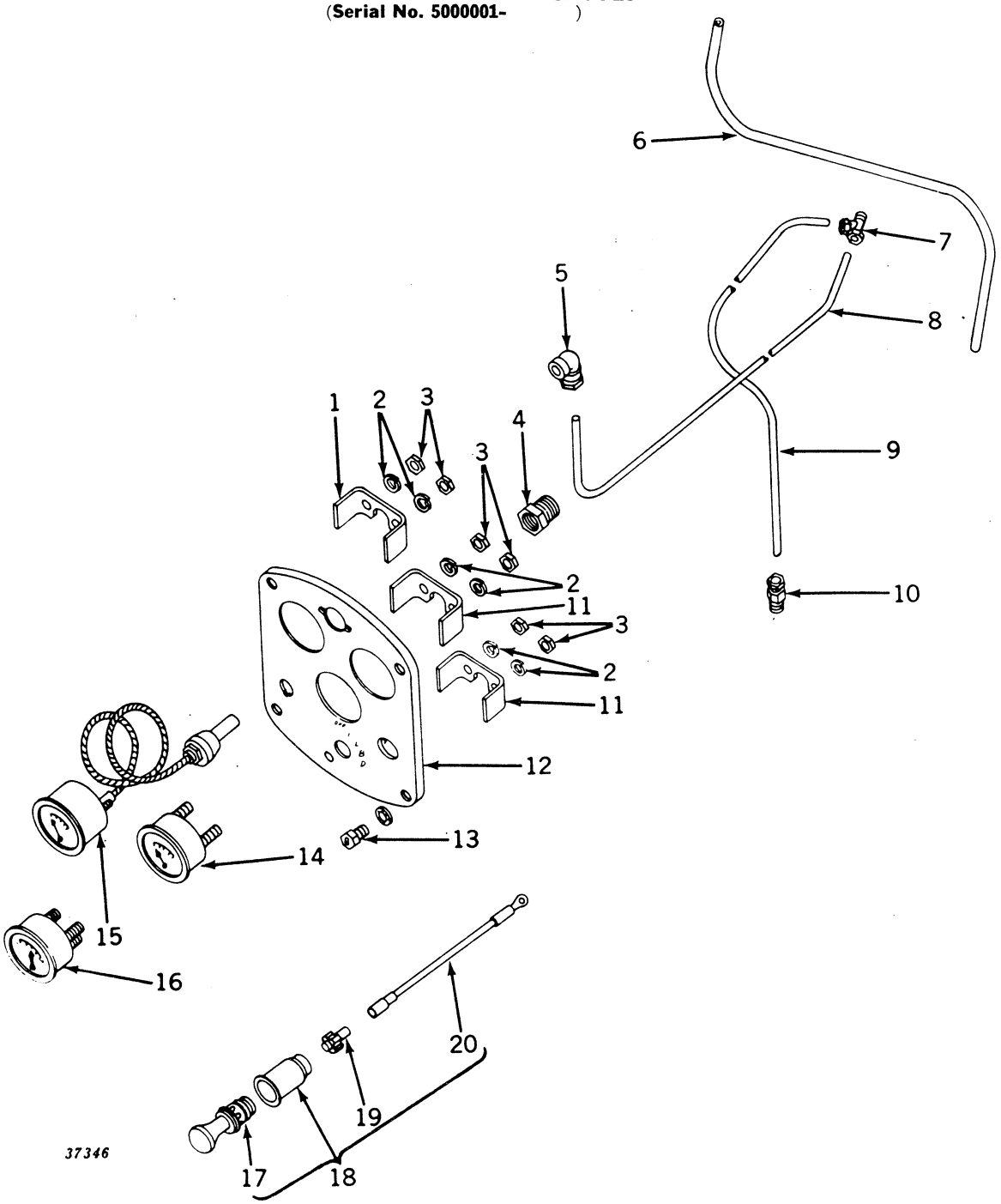

## INSTRUMENT PANEL AND GAUGES—Continued
**(Serial No. 5000001- )**

| Key | Part No. | | Description |
|---|---|---|---|
| 1 | A 1712 R | ( – ) | Clamp |
| 2 | ..... | ( – ) | Washer, Lock (6 used) (Not Furnished) |
| 3 | ..... | ( – ) | Nut (6 used) (Not Furnished) |
| 4 | A 1248 R | ( – ) | Bushing, Heat Indicator Tube |
| 5 | AA 4936 R | ( – ) | Elbow |
| 6 | B 3759 R | ( –5016132) | Pipe, Oil Pressure Gauge (Gasoline) (Sub. for B3050R) |
| | B 3759 R | ( – ) | Pipe, Oil Pressure Gauge (All-Fuel) (Sub. for B3050R) |
| | B 3759 R | (5024000– ) | Pipe, Oil Pressure Gauge (LP-Gas) (Sub. for B3050R) |
| 7 | AA 5778 R | (5016133– ) | Tee |
| 8 | B 3305 R | (5016133–5019425) | Pipe, Oil Pressure Gauge (Gasoline) (Sub. B3475R and AR1312R) |
| | B 3326 R | (5019426– ) | Pipe, Oil Pressure Gauge (Gasoline) (Sub. B3475R and AR1312R) |
| 9 | B 3306 R | (5016133– ) | Pipe, Fuel Filter Oil |
| 10 | AA 4937 R | ( – ) | Connector |
| 11 | ..... | ( – ) | Clamp (2 used) (Not Furnished) |
| 12 | A 4340 R | ( –5016122) | Panel, Instrument (Sub. One A4826R Panel and One AB4723R Dash Lamp) (Except LP-Gas) |
| | A 4826 R | (5016123– ) | Panel, Instrument |
| | A 4917 R | (5024000–5030599) | Panel, Instrument (LP-Gas) (Sub. A5384R Panel) |
| | AB 4956 R | (5030600– ) | Panel, Instrument (LP-Gas) |
| 13 | A 3232 R | ( – ) | Screw, Mach., 5/16" x 1/2" (4 used) (Packed 50 in a Pkg.) |
| | 12H 291 R | ( – ) | Washer, Lock (Shake-Proof) (4 used) (Packed 25 in a Pkg.) |
| 14 | AF 2749 R | ( – ) | Ammeter, with Clamp, Nuts, and Lock Washers (Sub. for AB2568R) |
| 15 | AA 6295 R | ( – ) | Heat, Indicator, with Bushing, Clamp, Nuts, and Lock Washers (On 5000000–5020561 Also Furnish One A1712R Clamp) (Sub. for AA1342R) |
| 16 | AF 2775 R | ( – ) | Gauge, Oil Pressure, with Clamp, Nuts, and Lock Washers (Sub. for AB1549R) |
| 17 | AA 5787 R | (5016123– ) | Element, Lighter (12-Volt) |
| 18 | **AA 5734 R** | (5016123– ) | **Lighter, Cigarette (12-Volt) (ATTACHMENT)** |
| 19 | AM 2151 T | (5016123– ) | Fuse (12-Volt) (Sub. for AA5788R) |
| 20 | AM 2152 T | (5016123– ) | Wire |

(Part listed below is not illustrated.)

| | | | |
|---|---|---|---|
| | **AA 5338 R** | ( – ) | **Meter, Hour (ATTACHMENT) (For Service, send to John W. Hobbs Corp., Springfield, Ill.)** |

## HOOD (EXCEPT LP-GAS)
(Serial No. 5000001- )

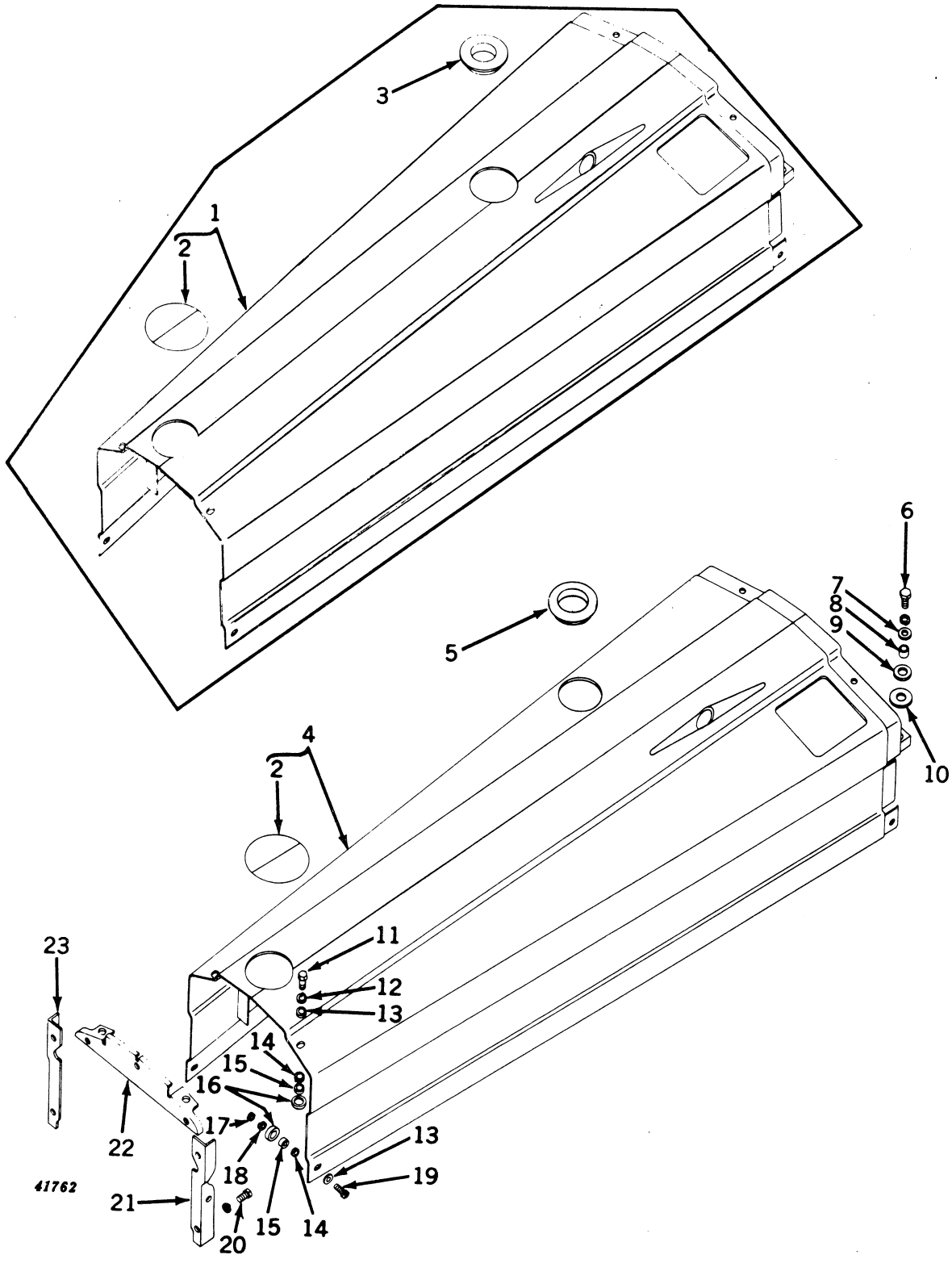

## HOOD (EXCEPT LP-GAS)—Continued
(Serial No. 5000001- )

| Key | Part No. | Serial No. | Description |
|---|---|---|---|
| 1 | AB 4480 R | ( 5018449) | Hood, with Fuel Filler Opening Cover |
| 2 | AB 4713 R | ( - ) | Cover, Gasoline Filler Opening |
| 3 | A 4873 R | (5015357-5018449) | Grommet, Rubber (Gasoline and All-Fuel) |
| | B 3311 R | (5015607- ) | Grommet, Rubber (Gasoline Tank on All-Fuel Tractor) (Sub. for B2910R) |
| 4 | AB 5035 R | (5018450- ) | Hood, with Fuel Filler Opening Cover (All-Fuel) (Sub. for AB4767R) |
| | AB 5036 R | (5018450- ) | Hood, with Fuel Filler Opening Cover (Gas) (Sub. for AB4767R) |
| 5 | B 3317 R | (5018450- ) | Grommet (Rubber) (Gasoline and All-Fuel) |
| 6 | 19H 1166 H | ( - ) | Screw, Cap, 7/16" x 1-1/2" (2 used) (Sub. for 19H340R) |
| | 12H 12 R | ( - ) | Washer, Lock, 7/16" (2 used) |
| 7 | 24H 464 E | ( - ) | Washer, 15/32" x 1-3/8" x 12 Gauge (2 used) |
| 8 | A 4669 R | ( - ) | Spacer (2 used) |
| 9 | A 4668 R | ( - ) | Washer (Rubber) (2 used) (Packed 5 in a Pkg.) |
| 10 | 24H 106 R | ( - ) | Washer (2 used) |
| 11 | H 1085 R | ( - ) | Screw, Mach., 5/16" x 3/4" (2 used) (Packed 50 in a Pkg.) |
| 12 | 12H 291 R | ( - ) | Washer, Lock (Shake-Proof) (2 used) (Packed 25 in a Pkg.) (Sub. for A3546R) |
| 13 | A 5659 R | ( - ) | Washer, 11/32" x 1-1/8" x 16 Gauge (4 used) (Sub. for 24H1009R) |
| 14 | 24H 889 R | ( - ) | Washer, 21/32" x 1-1/8" x 20 Gauge (4 used) |
| 15 | B 1839 R | ( - ) | Spacer (4 used) (Packed 5 in a Pkg.) |
| 16 | A 4666 R | ( - ) | Washer (Rubber) (4 used) (Packed 5 in a Pkg.) |
| 17 | 14H 785 R | ( - ) | Nut, 5/16" (2 used) (Packed 50 in a Pkg.) (Sub. for 14H253R) |
| 18 | 12H 10 R | ( - ) | Washer, Lock, 5/16" (2 used) |
| 19 | A 4125 R | ( - ) | Screw, Mach., 5/16" x 1" (2 used) (Packed 50 in a Pkg.) |
| 20 | F 2272 R | ( - ) | Screw, Cap, 3/8" x 3/4" (7 used) |
| | 12H 11 R | ( - ) | Washer, Lock, 3/8" (7 used) |
| 21 | B 3155 R | ( - ) | Support, Rear, R.H. |
| 22 | AB 4585 R | ( - ) | Support, Rear, Top, with Nuts |
| 23 | B 3156 R | ( - ) | Support, Rear, L.H. |

## HOOD (LP-GAS)
(Serial No. 5024000- )

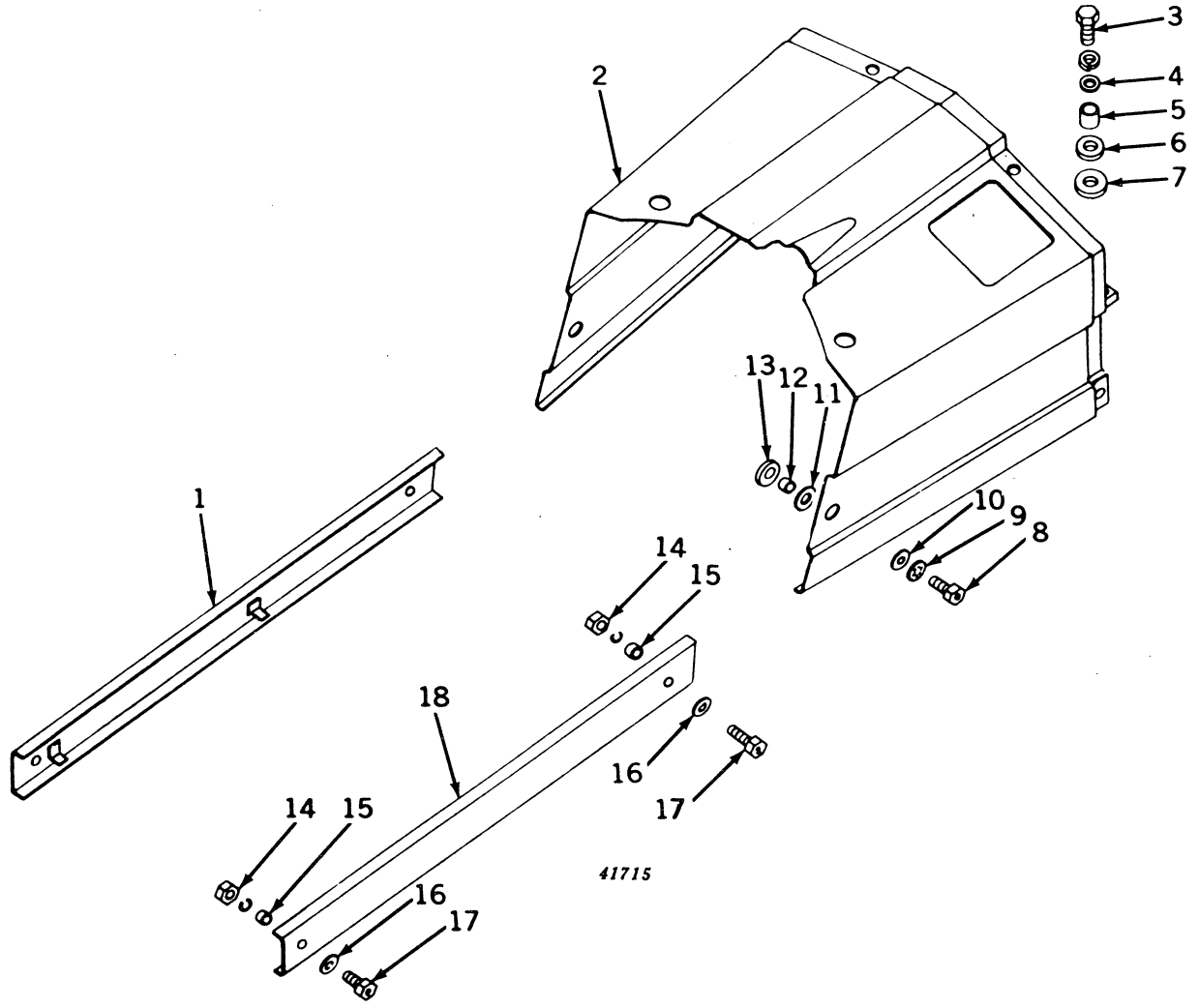

## HOOD (LP-GAS)—Continued
(Serial No. 5024000- )

| Key | Part No. | Serial No. | Description |
|---|---|---|---|
| 1 | AB 4957 R | (5024000–5030599) | Shield, Fuel Tank, with Clips, L.H. (Sub. for AB4853R) |
| | AB 4957 R | (5030600- ) | Shield, Fuel Tank, with Clips, L.H. |
| | B 2571 R | (5024000- ) | Clip (2 used) |
| 2 | AB 5037 R | (5024000- ) | Hood (Sub. for AB4851R) |
| 3 | 19H 1166 H | (5024000- ) | Screw, Cap, 7/16" x 1-1/2" (2 used) (Sub. for 19H340R) |
| | 12H 12 R | (5024000- ) | Washer, Lock, 7/16" (2 used) |
| 4 | 24H 464 E | (5024000- ) | Washer, 15/32" x 1-3/8" x 12 Gauge (2 used) |
| 5 | A 4669 R | (5024000- ) | Spacer (2 used) |
| 6 | A 4668 R | (5024000- ) | Washer, Rubber (2 used) |
| 7 | 24H 106 R | (5024000- ) | Washer, 21/32" x 1-1/2" x 18 Gauge (2 used) |
| 8 | A 4125 R | (5024000- ) | Screw, Mach., 5/16" x 1" (4 used) (Packed 50 in a Pkg.) |
| 9 | 12H 291 R | (5024000- ) | Washer, Lock (Shake-Proof) (4 used) (Packed 25 in a Pkg.) (Sub. for A3546R) |
| 10 | A 5659 R | (5024000- ) | Washer, 11/32" x 1-1/8" x 16 Gauge (4 used) (Sub. for 24H1009R) |
| 11 | 24H 889 R | (5024000- ) | Washer, 21/32" x 1-1/8" x 20 Gauge (4 used) |
| 12 | B 1839 R | (5024000- ) | Spacer (4 used) (Packed 5 in a Pkg.) |
| 13 | A 4666 R | (5024000- ) | Washer, Rubber (4 used) (Packed 5 in a Pkg.) |
| 14 | 14H 785 R | (5024000- ) | Nut, 5/16" (4 used) (Sub. for 14H253R) |
| | 12H 10 R | (5024000- ) | Washer, Lock, 5/16" (4 used) |
| 15 | B 1828 R | (5024000- ) | Spacer (4 used) |
| 16 | 24H 143 R | (5024000- ) | Washer, 21/64" x 3/4" x 16 Gauge (4 used) |
| 17 | H 1109 R | (5024000- ) | Screw, Mach., 5/16" x 1-3/8" (4 used) (Packed 50 in a Pkg.) |
| 18 | AB 4852 R | (5024000- ) | Shield, Fuel Tank, with Clips, R.H. |
| | B 2571 R | (5024000- ) | Clip (2 used) |

## GRILLE
(Serial No. 5000001- )

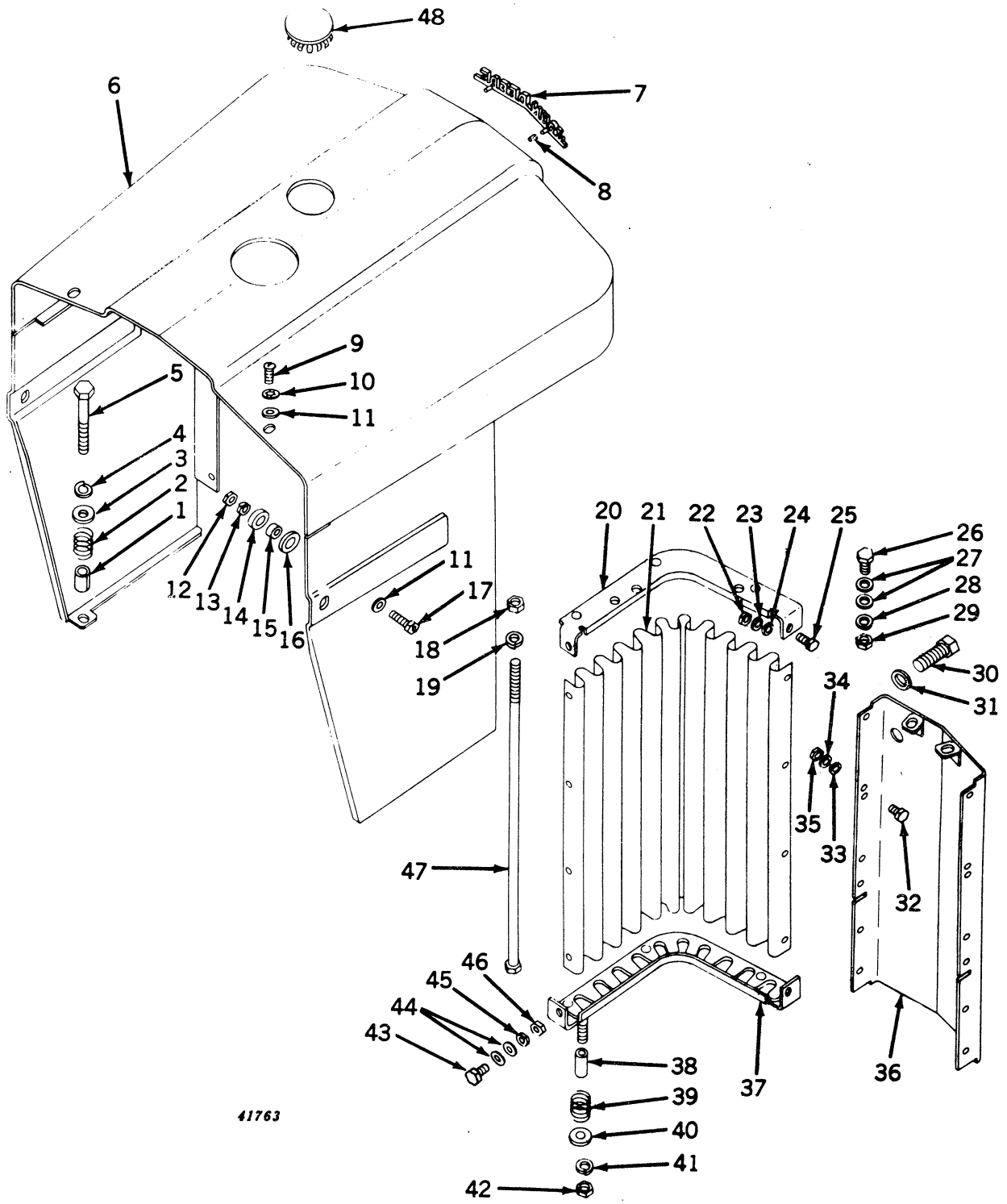

## GRILLE—Continued
(Serial No. 5000001- )

| Key | Part No. | Serial No. | Description |
|---|---|---|---|
| 1 | B 2804 R | ( – ) | Spacer (2 used) |
| 2 | A 350 R | ( – ) | Spring (2 used) |
| 3 | 24H 550 R | ( – ) | Washer, 13/32" x 1-1/16" x 11 Gauge (2 used) |
| 4 | 12H 11 R | ( – ) | Washer, Lock, 3/8" (2 used) |
| 5 | 19H 1050 R | ( – ) | Screw, Cap, 3/8" x 2-1/2" (Special) (2 used) |
| 6 | AB 4501 R | ( –5029199) | Top, Grille, and Sides (On 5000001–5020399 Also Furnish One F1676R) (Sub AB4934R) |
| | AB 4934 R | (5029200– ) | Top, Grille, and Sides (Sub. for AB4925R) |
| 7 | AA 5383 R | ( – ) | Plate, Name |
| 8 | A 4679 R | ( – ) | Clip, Speed (2 used) |
| 9 | H 1085 R | ( – ) | Screw, Mach., 5/16" x 3/4" (2 used) (Packed 50 in a Pkg.) |
| 10 | 12H 291 R | ( – ) | Washer, Lock (Shake-Proof) (2 used) (Packed 25 in a Pkg.) |
| 11 | 24H 145 A | ( – ) | Washer, 11/32" x 1" x 16 Gauge (4 used) |
| 12 | 14H 785 R | ( – ) | Nut, 5/16" (2 used) |
| 13 | 12H 10 R | ( – ) | Washer, Lock, 5/16" (2 used) |
| 14 | A 4666 R | ( – ) | Washer, Rubber (2 used) |
| 15 | R 20912 R | ( – ) | Spacer (2 used) (Sub. for A4667R) |
| 16 | 24H 889 R | ( – ) | Washer, 21/32" x 1-1/8" x 20 Gauge (2 used) |
| 17 | A 4125 R | ( – ) | Screw, Mach., 5/16" x 1" (2 used) (Packed 50 in a Pkg.) |
| 18 | 14H 785 R | ( – ) | Nut, 5/16" (4 used) |
| 19 | 12H 10 R | ( – ) | Washer, Lock, 5/16" (4 used) |
| 20 | AB 4502 R | ( –5029199) | Frame, Upper, R.H. (Sub. AB4926R) |
| | AB 4935 R | (5029200– ) | Frame, Upper Grille, R.H. (Sub. for AB4926R) |
| | AB 4503 R | ( –5029199) | Frame, Upper, L.H. (Sub. AB4928R) |
| | AB 4928 R | (5029200– ) | Frame, Upper Grille, L.H. |
| 21 | B 3069 R | ( – ) | Screen, Grille (2 used) |
| 22 | 14H 338 R | ( – ) | Nut, Jam, 1/4" (4 used) |
| 23 | 24H 846 R | ( – ) | Washer, 17/64" x 3/4" x 20 Gauge (8 used) |
| 24 | 12H 9 R | ( – ) | Washer, Lock, 1/4" (4 used) |
| 25 | 19H 24 N | ( – ) | Screw, Cap, 1/4" x 3/4" (4 used) (Sub. for 19H18H) |
| 26 | 19H 99 R | ( – ) | Screw, Cap, 5/16" x 9/16" (2 used) |
| 27 | 24H 39 R | ( – ) | Washer (4 used) |
| 28 | 12H 10 R | ( – ) | Washer, Lock, 5/16" (2 used) |
| 29 | 14H 785 R | ( – ) | Nut, 5/16" (2 used) |
| 30 | 19H 1335 R | ( – ) | Screw, Cap, 5/8" x 1-1/2" (2 used) (Sub. for 19H975R) |
| 31 | B 2274 R | ( – ) | Washer (2 used) |
| 32 | 19H 13 R | ( – ) | Screw, Cap, 1/4" x 1-1/2" (8 used) |
| 33 | 12H 9 R | ( – ) | Washer, Lock, 1/4" (8 used) |
| 34 | 24H 846 R | ( – ) | Washer, 17/64" x 3/4" x 20 Gauge (8 used) |
| 35 | 14H 338 R | ( – ) | Nut, Jam, 1/4" (8 used) |
| 36 | AB 4566 R | ( –5029199) | Plate, Center, with Clips |
| | AB 4930 R | (5029200– ) | Plate, Center, with Clips |
| 37 | AB 4504 R | ( –5029199) | Frame, Lower, R.H. (Sub. AB4927R) |
| | AB 4927 R | (5029200– ) | Frame, Lower Grille, R.H. |
| | AB 4505 R | ( –5029199) | Frame, Lower, L.H. (Sub. AB4929R) |
| | AB 4929 R | (5029200– ) | Frame, Lower Grille, L.H. |
| 38 | 28H 1497 R | ( – ) | Spacer (2 used) |
| 39 | A 350 R | ( – ) | Spring (2 used) |
| 40 | 24H 550 R | ( – ) | Washer, 13/32" x 1-1/16" x 11 Gauge (2 used) |
| 41 | 12H 11 R | ( – ) | Washer, Lock, 3/8" (2 used) |
| 42 | 14H 255 R | ( – ) | Nut, 3/8" (2 used) |
| 43 | 19H 24 N | ( – ) | Screw, Cap, 1/4" x 3/4" (4 used) (Sub. for 19H18H) |
| 44 | 24H 846 R | ( – ) | Washer, 17/64" x 3/4" x 20 Gauge (8 used) |
| 45 | 12H 9 R | ( – ) | Washer, Lock, 1/4" (4 used) |
| 46 | 14H 338 R | ( – ) | Nut, Jam, 1/4" (4 used) |
| 47 | B 3070 R | ( – ) | Rod, Grille (4 used) |
| 48 | F 1676 R | (5020400– ) | Plug, Button |

## FENDERS
**(Serial No. 5000001- )**

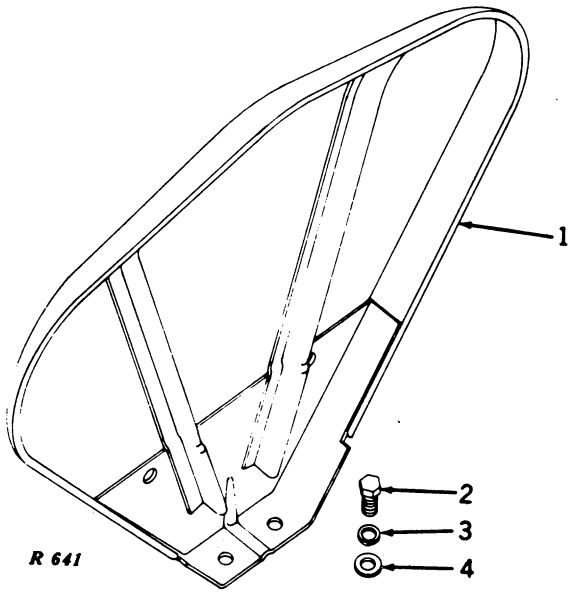


| Key | Part No. | Serial No. | Description |
|---|---|---|---|
| 1 | AA 4655 R | ( – ) | Fender, R.H. and L.H. |
| 2 | 19H 1320 R | ( – ) | Screw, Cap, 5/8" x 1-1/4" (2 used per Fender) (Sub. for 19H657R) |
| 3 | 12H 15 R | ( – ) | Washer, Lock, 5/8" (2 used per Fender) |
| 4 | 24H 993 R | ( – ) | Washer, 11/16" x 1-17/32" x 11 Gauge (2 used per Fender) |

## PARTS FOR WEATHERBRAKE CAB (ALL-FUEL AND GASOLINE)
**(Serial No. 5000001- )**

| Key | Part No. | Serial No. | Description |
|---|---|---|---|
| .. | AR 20144 R | ( – ) | Panel, Engine, L.H. |
| .. | AR 20145 R | ( – ) | Panel, Engine, R.H. |
| .. | AR 20146 R | ( – ) | Window, Cab Side, with Frame (4 used) |
| .. | R 20127 R | ( – ) | Windshield, Cab, Front |
| .. | R 20128 R | ( – ) | Windshield, Cab, Side (2 used) |
| .. | R 21229 R | ( – ) | Brace, Cab (2 used) |
| .. | R 21230 R | ( – ) | Bolt, "U," Brace (2 used) |
| .. | 14H 251 R | ( – ) | Nut, 1/4" (4 used) |

## PARTS FOR WEATHERBRAKE (ALL-FUEL AND GASOLINE)
**(Serial No. 5000001- )**

| Key | Part No. | Serial No. | Description |
|---|---|---|---|
| .. | AR 20143 R | ( – ) | Windshield, Side (2 used) |
| .. | AR 20144 R | ( – ) | Panel, Engine, L.H. |
| .. | AR 20144 R | ( – ) | Panel, Engine, R.H. |
| .. | R 20123 R | ( – ) | Windshield, Front |
| .. | R 20124 R | ( – ) | Frame, Windshield, Front |

## PARTS FOR WEATHERBRAKE (LP-GAS)
**(Serial No. 5024000- )**

| Key | Part No. | Serial No. | Description |
|---|---|---|---|
| .. | AR 20143 R | (5024000– ) | Windshield, Side (2 used) |
| .. | R 20123 R | (5024000– ) | Windshield, Front |
| .. | R 20124 R | (5024000– ) | Frame, Windshield, Front |

## DRAWBAR
**(Serial No. 5000001- )**

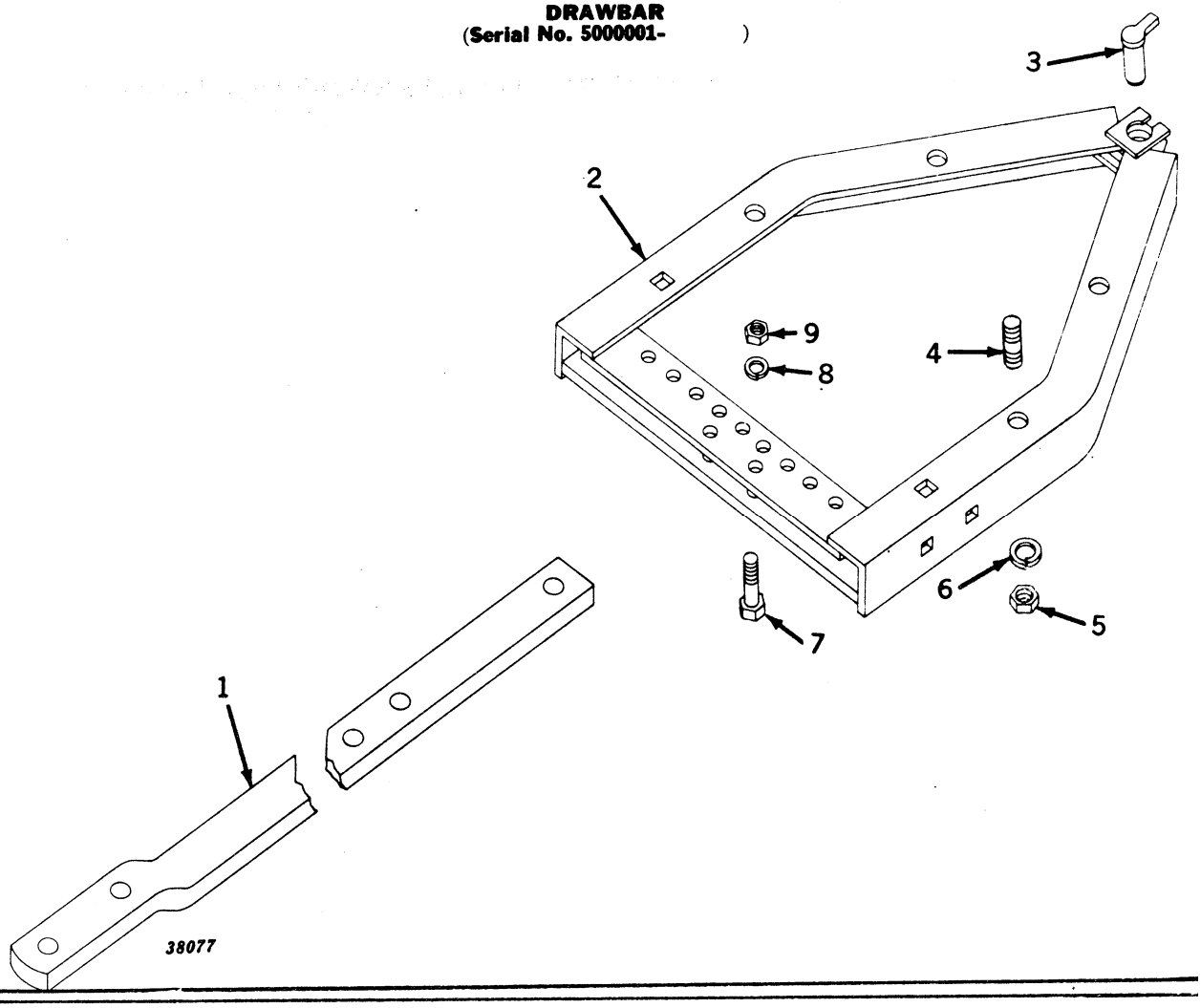


| Key | Part No. | Serial No. | Description |
|---|---|---|---|
| 1 | B 2450 R | ( – ) | Drawbar, Swinging (42-5/8" Long) (Sub. B3262R) |
| | B 3262 R | ( – ) | Drawbar, Swinging (44-5/8" Long) (Tractors with Engine-Driven Power Shaft) (Sub. for B3186R and B2450R) |
| 2 | AB 4607 R | ( – ) | Support, Drawbar |
| 3 | AA 5365 R | ( – ) | Pin, Drawbar, with Handle |
| 4 | A 5292 R | ( – ) | Stud, 5/8" x 2-1/4" (4 used) (Packed 25 in a Pkg.) (Sub. for C1479R) |
| 5 | 14H 399 R | ( – ) | Nut, 5/8" (4 used) |
| 6 | 12H 15 R | ( – ) | Washer, Lock, 5/8" (4 used) |
| 7 | 7H 1092 R | ( – ) | Bolt, Mach., 1/2" x 2-3/4" (2 used) (Packed 25 in a Pkg.) (Sub. for 7H1022R |
| 8 | 12H 13 R | ( – ) | Washer, Lock, 1/2" (2 used) |
| 9 | 14H 259 R | ( – ) | Nut, 1/2" (2 used) |

(Part listed below is not illustrated.)

| | | | |
|---|---|---|---|
| | **AF 3147 R** | ( – ) | **Bar, Implement Hitch, with Guide, for No. 800 Four Link Hitch (ATTACHMENT) (Sub. for AA5732R)** |

## SEAT, BATTERY BOX, AND PLATFORM
(Serial No. 5000001- )

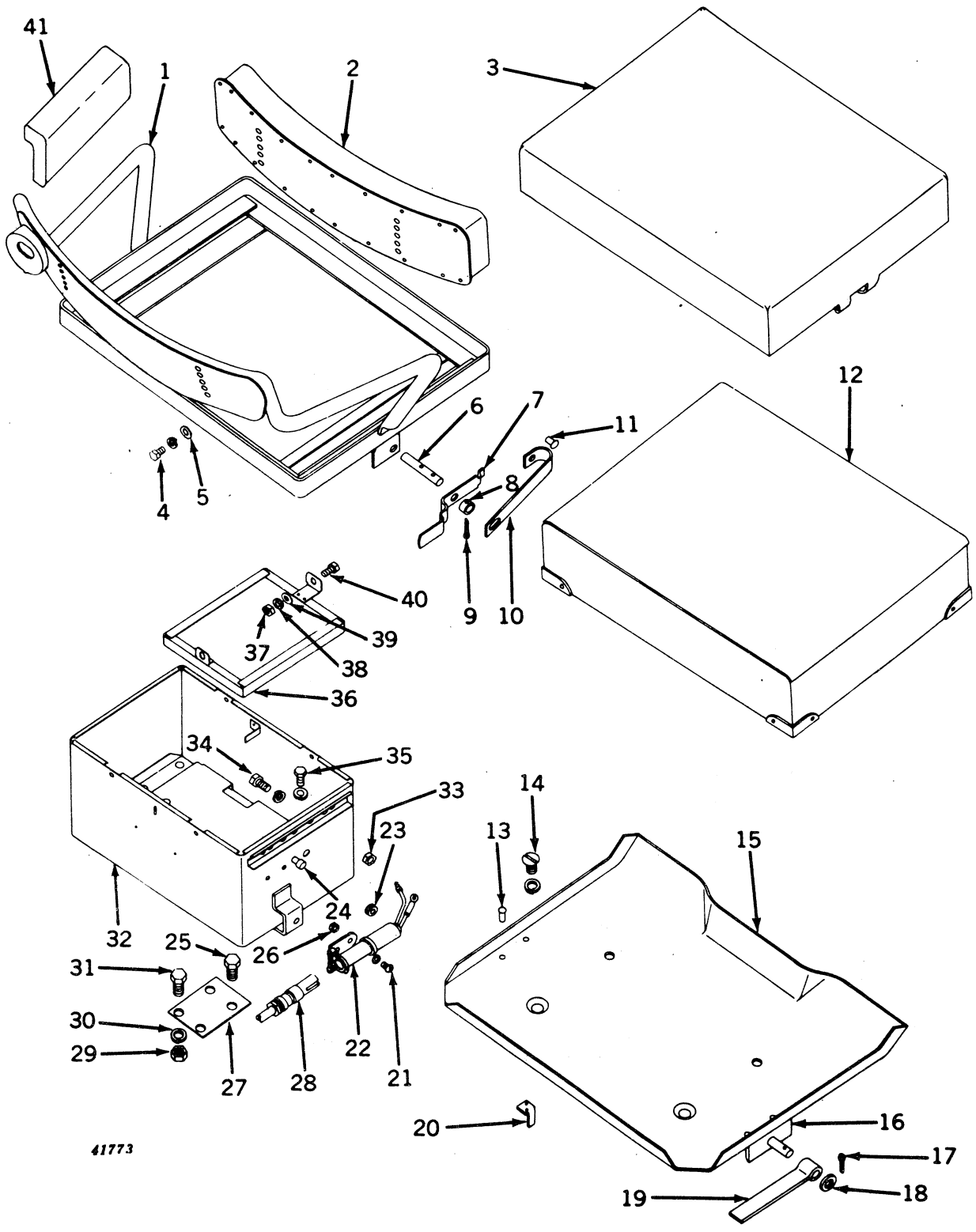

## SEAT, BATTERY BOX, AND PLATFORM—Continued
(Serial No. 5000001- )

| Key | Part No. | Serial No. | Description |
|---|---|---|---|
| 1 | AA 5356 R | ( -5006850) | Frame, Seat (Sub. AR20084R Frame and One AA5665R Wiring Harnes Assembly) |
| | AR 20084 R | (5006851- ) | Frame, Seat (Sub. for AA5651R) |
| 2 | AA 5357 R | ( - ) | Cushion, Seat, Back |
| 3 | **AB 3984 R** | ( - ) | **Cover, Seat (White Canvas) (ATTACHMENT)** |
| 4 | 19H 1115 N | ( - ) | Screw, Mach., (4 used) (Packed 50 in a Pkg.) (Sub. for A4192R) |
| | 12H 253 R | ( - ) | Washer, Lock (4 used) (Sub. for A3012R) |
| 5 | 24H 132 R | ( - ) | Washer, 9/32" x 1/2" x 16 Gauge (4 used) |
| 6 | A 3335 R | ( - ) | Pin, Seat Adjusting |
| 7 | A 3334 R | ( - ) | Lever, Seat Adjusting |
| 8 | B 2671 R | ( - ) | Spacer, Seat Adjusting Pin |
| 9 | 11H 41 R | ( - ) | Pin, Cotter, 1/8" x 1" |
| 10 | A 3332 R | ( - ) | Spring, Seat Adjusting |
| 11 | 16H 1075 A | ( - ) | Rivet, 5/16" x 1/2" |
| 12 | AB 4035 R | ( - ) | Cushion, Seat |
| | **AA 4847 R** | ( - ) | **Cushion, Seat (Special All-Rubber) (ATTACHMENT)** |
| 13 | 16H 677 A | ( - ) | Rivet, 1/4" x 3/4" (4 used) |
| 14 | 21H 1083 R | ( - ) | Screw, Mach. (2 used) |
| | 12H 284 R | ( - ) | Washer, Lock, Internal Tooth (2 used) (Sub. for B2573R) |
| 15 | AB 5096 R | ( - ) | Platform, with Brake Latch Support (Sub. for AB3592R) |
| 16 | AB 330 R | ( - ) | Support, Brake Latch, with Pivot (2 used) |
| 17 | 11H 41 R | ( - ) | Pin, Cotter, 1/8" x 1" (2 used) |
| 18 | 24H 991 R | ( - ) | Washer, 37/64" x 1-1/8" x 11 Gauge (2 used) |
| 19 | B 2149 R | ( - ) | Latch, Brake (2 used) |
| 20 | B 2571 R | ( - ) | Clip (2 used) |
| 21 | 21H 1042 C | ( - ) | Screw, Mach., (2 used) (Sub. for 21H404R) |
| | 12H 251 R | ( - ) | Washer, Lock (2 used) (Sub. for A3010R) |
| 22 | AM 2049 T | ( - ) | Socket, Electrical Outlet |
| 23 | R 2579 R | ( - ) | Grommet (Packed 5 in a Pkg.) (Sub. for B1580R) |
| 24 | F 2272 R | (5016164- ) | Rivet (Sub. for B2579R) |
| 25 | 19H 438 R | ( - ) | Screw, Cap, 1/2" x 1" (Special) (4 used) (Used with Transmission-Drive Power Shaft, less Powr-Trol) |
| 26 | 14H 606 R | ( - ) | Nut (2 used) |
| 27 | B 3231 R | ( - ) | Support, Battery Box (2 used) (Used with Transmission-Driven Power Shaf less Powr-Trol) |
| 28 | **AA 5691 R** | ( - ) | **Plug, Electrical Outlet, with Cable (ATTACHMENT)** |
| | AA 5692 R | ( - ) | Plug, Electrical Outlet, less Cable |
| 29 | 14H 259 R | ( - ) | Nut, 1/2" (4 used) (Used with Transmission-Driven Power Shaft, less Powı Trol) |
| 30 | 12H 13 R | ( - ) | Washer, Lock, 1/2" (4 used) (Used with Transmission-Driven Power Shaf less Powr-Trol) |
| 31 | 19H 1131 N | ( - ) | Screw, Cap, 1/2" x 1-1/4" (4 used) (Used with Transmission-Driven Powei shaft, less Powr-Trol) (Sub. for 19H448R) |
| 32 | AA 7337 R | ( - ) | Box, Battery, with Two AA7338R Clamps (Sub. for AA5290R) |
| 33 | 14H 190 R | ( -5016163) | Nut, 3/8" |
| 34 | F 2272 R | ( -5016163) | Screw, Cap, 3/8" x 3/4" |
| | 12H 11 R | ( -5016163) | Washer, Lock, 3/8" |
| 35 | F 2275 R | ( - ) | Screw, Cap, 1/2" x 3/4" (Special) (4 used) (Sub. for 19H428R) |
| | 12H 13 R | ( - ) | Washer, Lock, 1/2" (4 used) |
| 36 | AA 7338 R | ( - ) | Clamp, Battery, with Clips (2 used) (Sub. for AB4650R) |
| 37 | 14H 611 R | ( - ) | Nut, 5/16" (4 used) |
| 38 | 12H 10 R | ( - ) | Washer, Lock, 5/16" (4 used) |
| 39 | 24H 143 R | ( - ) | Washer, 21/64" x 3/4" x 16 Gauge (4 used) |
| 40 | H 1085 R | ( - ) | Screw, Mach., 5/16" x 3/4" (4 used) (Packed 50 in a Pkg.) |
| 41 | **AA 6022 R** | ( - ) | **Cushion, Seat Arm (Set of 2) (ATTACHMENT)** |

(Parts listed below are not illustrated.)

| | | | |
|---|---|---|---|
| | AA 4932 R | ( - ) | Kit, Seat Cushion Parts, Consisting of Cover Assembly, Corner Brackets, an Nails for Attaching Corner Brackets (For AA4847R and AB4035R Sea Cushions) |
| | AB 4095 R | ( - ) | Kit, Seat Cushion Parts, Consisting of Cover Assembly, Molded Foam Rubbe Topper, Corner Brackets, and Nails for Attaching Corner Brackets (Fo AB4035R Seat Cushions) |
| | **AF 3458 R** | ( - ) | **Pad, Ventilated Seat (Coil Spring) (ATTACHMENT)** |
| | **AF 3459 R** | ( - ) | **Pad, Ventilated Seat Back (Coil Spring) (ATTACHMENT)** |

## FLOAT RIDE SEAT
(Serial No. 5000001- )

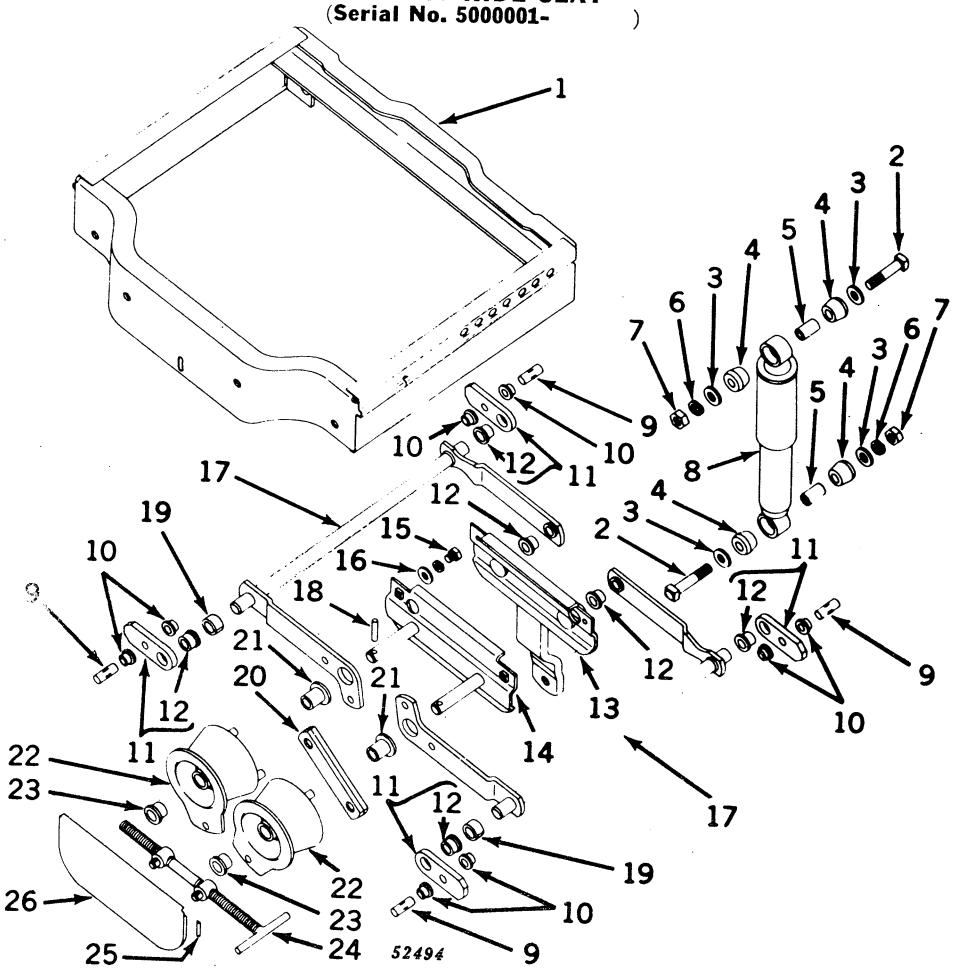


| Key | Part No. | Serial No. | Description |
|---|---|---|---|
| 1 | ..... | ( – ) | Skirt, Float Ride Seat (Furnished only as a Part of AA6807R Float Ride Seat) |
| 2 | 19H 1004 T | ( – ) | Bolt, Sq. Hd., 1/2" x 2-1/4" (2 used) (Sub. for 7H813A) |
| 3 | 24H 184 R | ( – ) | Washer, 17/32" x 15/16" x 16 Gauge (4 used) |
| 4 | F 3296 R | ( – ) | Bushing, Rubber, Shock Absorber (4 used) (Packed 2 in a Pkg.) |
| 5 | F 3297 R | ( – ) | Spacer, Shock Absorber (2 used) |
| 6 | 12H 13 R | ( – ) | Washer, Lock (2 used) |
| 7 | 14H [illegible]9 R | ( – ) | Nut, 1/2" (2 used) |
| 8 | AF 3426 R | ( – ) | Shock Absorber |
| 9 | F 3302 R | ( – ) | Pin, Drive, Short Link to Skirt (4 used) |
| 10 | F 3298 R | ( – ) | Bearing, Flanged, Skirt Short Link Support (8 used) (Packed 2 in a Pkg.) |
| 11 | AF 3421 R | ( – ) | Link, Short, with Bearing (4 used) |
| 12 | F 3293 R | ( – ) | Bearing, Flanged (6 used) (Packed 2 in a Pkg.) |
| 13 | AF 3419 R | ( – ) | Bulkhead, Front |
| 14 | AR 20355 R | ( – ) | Bulkhead, Rear (Sub. for AF3420R) |
| 15 | 19H 103 H | ( – ) | Screw, Cap, High-Strength, 5/16" x 5/8" (3 used) |
| | 19H 1112 H | ( – ) | Screw, Cap, High-Strength, 5/16" x 3/4", in R.H. Front |
| | 12H 10 R | ( – ) | Washer, Lock, 5/16" (4 used) |
| 16 | 24H 39 R | ( – ) | Washer, 21/64" x 3/4" x 20 Gauge (4 used) |
| 17 | AA 6799 R | ( – ) | Shaft, Cross, with Lever Arms (2 used) |
| 18 | 34H 81 N | ( – ) | Pin, Roll, 3/16" x 1-1/2" (2 used) |
| 19 | F 3299 R | ( – ) | Spacer (2 used) |
| 20 | AP 3425 R | ( – ) | Link, Stabilizing |
| 21 | F 3295 R | ( – ) | Bearing, Flanged, Rubber Torsion Spring, Inner (2 used) (Packed 2 in a Pkg.) (Sub. for F3451R and F3452R) |
| 22 | AF 3422 R | ( – ) | Springs, Torsion, Rubber |
| 23 | R 20937 R | ( – ) | Bearing, Flanged, Rubber Torsion Spring, Outer (2 used) (Packed 2 in a Pkg.) (Sub. for F3294R) |
| 24 | AF 3427 R | ( – ) | Handle, Adjusting |
| 25 | 34H 41 H | ( – ) | Pin, Roll, 1/8" x 3/4" (2 used) |
| 26 | AF 3428 R | ( – ) | Bar, Tie, with Seat Adjustment Instructions |

(Part listed below is an assembly of parts in this grouping.)

**AR 20346 R** ( – ) **Seat, Float Ride (ATTACHMENT)* (Sub. for AA6807R)**

*On 5000001–5000850 Also Furnish One AA5665R Rear Lamp Wiring Kit.

## FLOAT RIDE SEAT FRAME AND CUSHIONS
(Serial No. 5000001- )

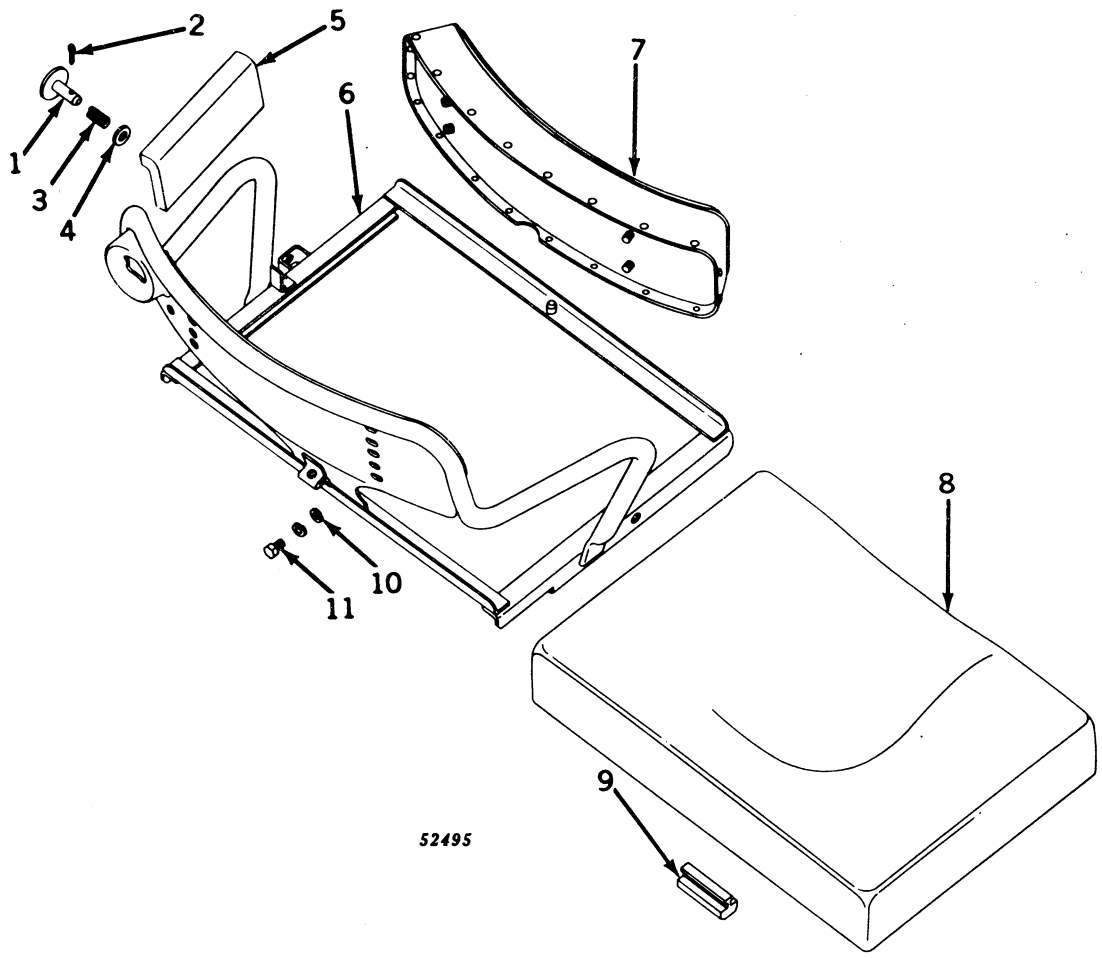


| Key | Part No. | Serial No. | Description |
|---|---|---|---|
| 1 | AF 3097 R | ( – ) | Pin, with Washer, Seat Lock |
| 2 | 11H 22 R | ( – ) | Pin, Cotter, 3/32″ x 1″ (Sub. for 11H19R) |
| 3 | H 312 R | ( – ) | Spring, Seat Lock Pin |
| 4 | 24H 154 R | ( – ) | Washer, 25/64″ x 7/8″ x 16 Gauge |
| **5** | **AA 6022 R** | ( – ) | **Cushion, Seat Arm (Black) (Set of 2) (ATTACHMENT)** |
| | **AF 3272 R** | ( – ) | **Cushion, Seat Arm (Yellow) (Set of 2) (ATTACHMENT)** |
| 6 | AF 3094 R | ( – ) | Frame, Float Ride Seat, with Adjusting Pin |
| **7** | **AA 5357 R** | ( – ) | **Cushion Seat Back (Black) (ATTACHMENT)** |
| | **AF 3271 R** | ( – ) | **Cushion, Seat Back (Yellow) (ATTACHMENT)** |
| **8** | **AF 3096 R** | ( – ) | **Cushion, Seat (Black) (ATTACHMENT)** |
| | **AF 3270 R** | ( – ) | **Cushion, Seat (Yellow) (ATTACHMENT)** |
| 9 | AF 3859 R | ( – ) | Kit, Bumper Service (Sub. for Two F3303R) |
| 10 | 24H 132 R | ( – ) | Washer, 9/32″ x 1/2″ x 16 Gauge (4 used) |
| 11 | 19H 1115 N | ( – ) | Screw, Special Mach. (4 used) (Sub. for A4192R) |
| | 12H 253 R | ( – ) | Washer, Lock (Shakeproof) 1/4″ (4 used) |

(Part listed below is not illustrated.)

| | | |
|---|---|---|
| AR 20134 R | ( – ) | Kit, Seat Cushion Parts, Consisting of Cover Assembly, Corner Brackets and Nails for Attaching Corner Brackets |

## POWER SHAFT (TRANSMISSION-DRIVEN)
(Serial No. 5000001- )

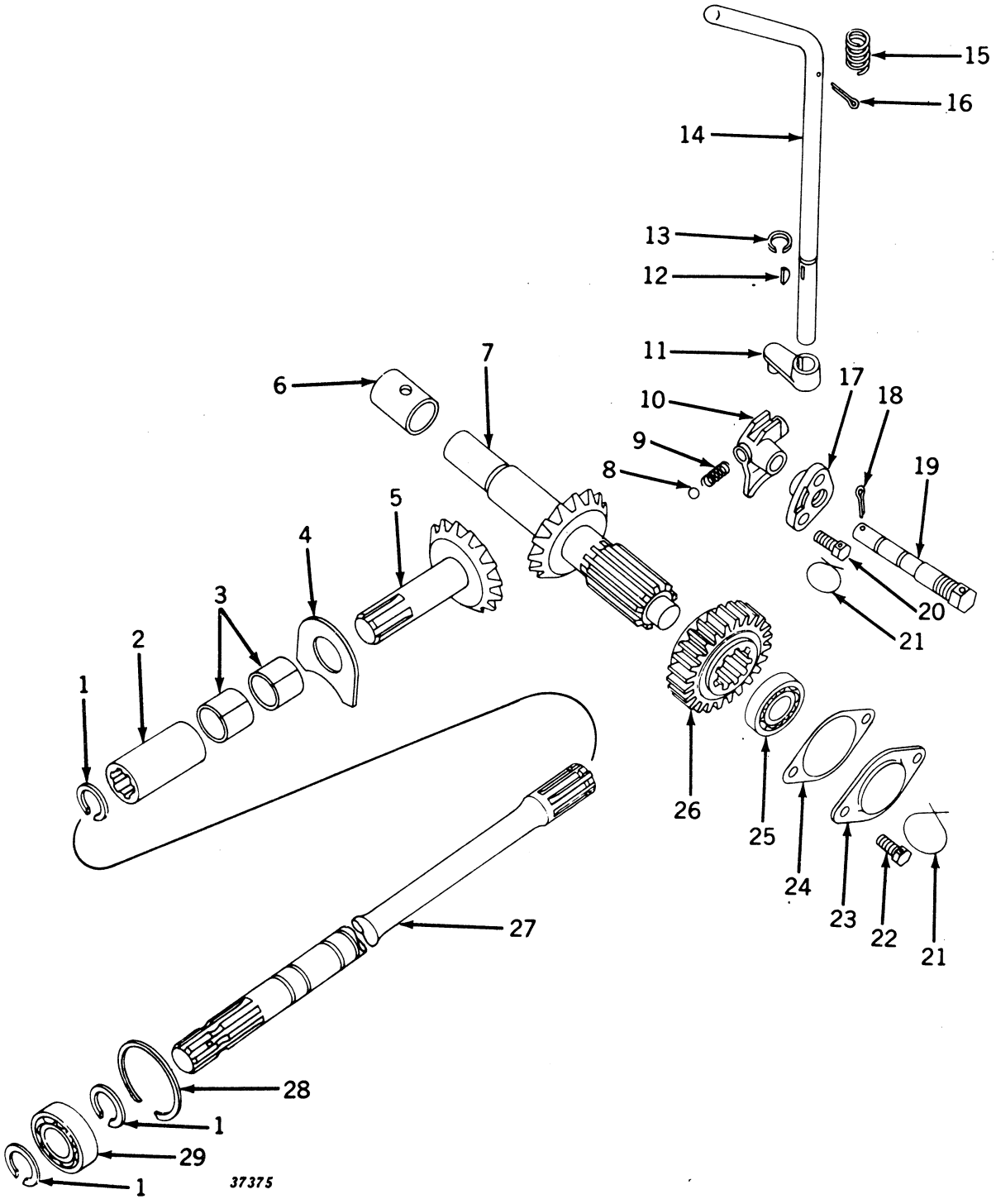

## POWER SHAFT (TRANSMISSION-DRIVEN)—Continued
(Serial No. 5000001- )

| Key | Part No. | Serial No. | Description |
|---|---|---|---|
| 1 | F 215 R | ( – ) | Snap Ring (3 used) (Packed 2 in a Pkg.) |
| 2 | A 2428 R | ( – ) | Coupling |
| 3 | AA 5663 R | ( – ) | Bushing (Pkg. of 2) (2 used) (Sub. for B2499R) |
| | AA 5664 R | ( – ) | Bushing, .005" Oversize (Pkg. of 2) (2 used) |
| 4 | B 2320 R | ( – ) | Washer, Thrust |
| 5 | B 2319 R | ( – ) | Gear, Bevel (14 Teeth) (Sub. for AB4150R) |
| 6 | B 2498 R | ( – ) | Bushing |
| 7 | B 3142 R | ( – ) | Shaft, Drive and Bevel Pinion (15 Teeth) |
| 8 | 405 R | ( – ) | Ball |
| 9 | D 993 R | ( – ) | Spring |
| 10 | B 2322 R | ( – ) | Shifter |
| 11 | A 552 R | ( – ) | Arm, Shifter |
| 12 | 26H 14 R | ( – ) | Key, Woodruff, 3/16" x 3/4" |
| 13 | B 387 R | ( – ) | Snap Ring (Packed 5 in a Pkg.) |
| 14 | B 2324 R | ( – ) | Lever, Shifter |
| 15 | D 377 R | ( – ) | Spring |
| 16 | 11H 80 R | ( – ) | Pin, Cotter, 3/16" x 1" |
| 17 | B 3146 R | ( – ) | Adapter, Shifter Shaft |
| 18 | 11H 41 R | ( – ) | Pin, Cotter, 1/8" x 1" |
| 19 | B 3145 R | ( – ) | Shaft, Shifter |
| 20 | D 328 R | ( – ) | Screw, Cap, 1/2" x 1" (Drilled) (2 used) |
| 21 | ..... | ( – ) | Wire, 16 Gauge x 9" (2 used) |
| 22 | D 459 R | ( – ) | Screw, Cap, 3/8" x 1" (Drilled) (2 used) |
| 23 | B 3144 R | ( – ) | Cover |
| 24 | A 4420 R | ( – ) | Shim (Thin) |
| | A 4837 R | ( – ) | Shim (Thick) (Sub. for A4421R) |
| 25 | JD 7665 R | ( – ) | Bearing |
| 26 | B 3143 R | ( – ) | Gear, Sliding (21 Teeth) |
| 27 | B 3234 R | ( – ) | Shaft, Power |
| 28 | A 365 R | ( – ) | Snap Ring (Tractors equipped with Powr-Trol) |
| 29 | JD 7190 R | ( – ) | Bearing |

## POWER SHAFT AND POWR-TROL HOUSING (TRANSMISSION-DRIVEN POWER SHAFT)
(Serial No. 5000001- )

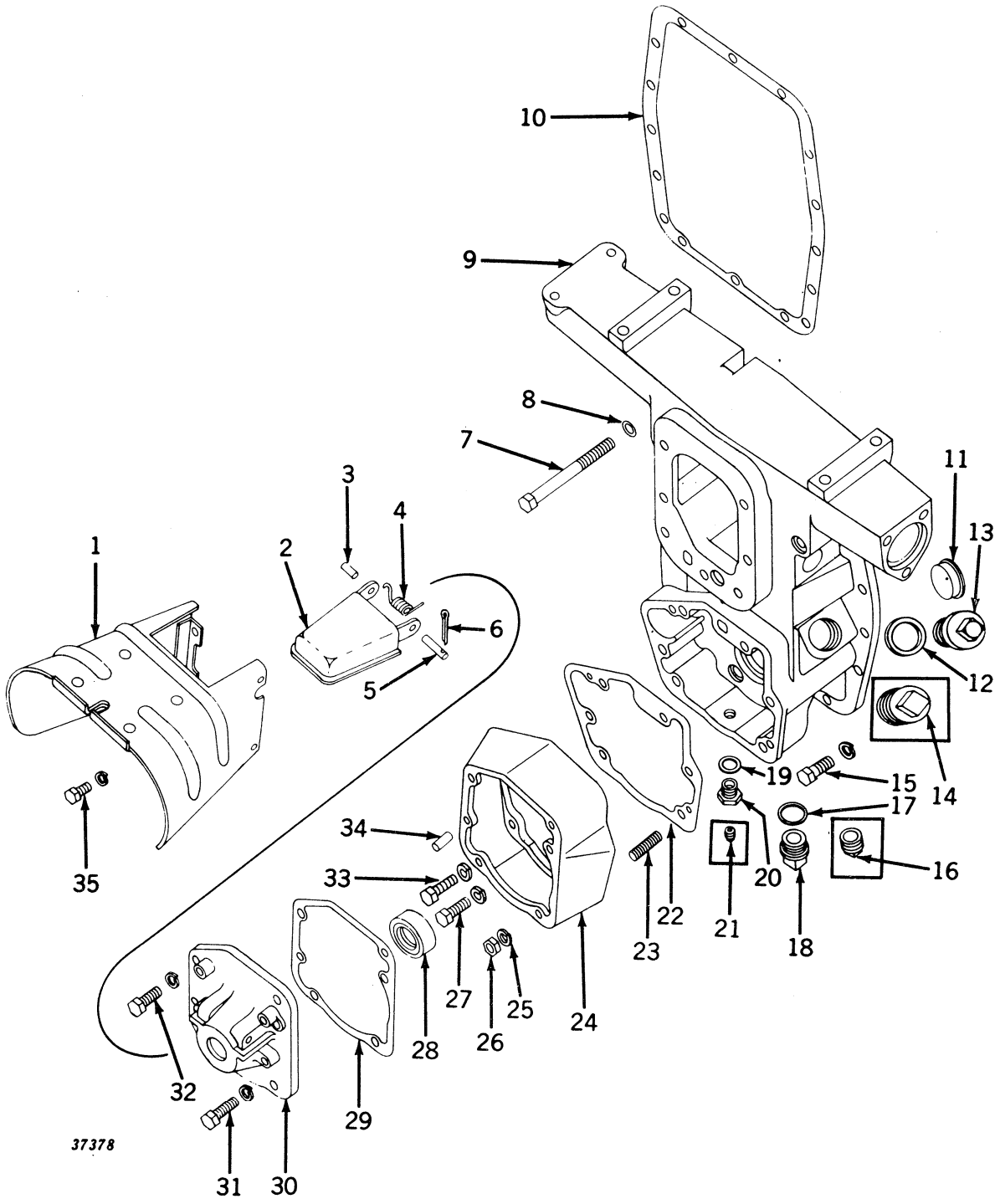

## POWER SHAFT AND POWR-TROL HOUSING (TRANSMISSION-DRIVEN POWER SHAFT)—Continued
(Serial No. 5000001- )

| Key | Part No. | | Description |
|---|---|---|---|
| 1 | AA 5243 R | ( – ) | Shield, Safety (Sub. for AA5323R) |
| 2 | AA 5288 R | ( – ) | Guard, Flipper, with Hinges |
| 3 | A 3959 R | ( – ) | Pin, L.H. |
| 4 | F 711 R | ( – ) | Spring |
| 5 | A 4583 R | ( – ) | Pin, R.H. |
| 6 | 11H 22 R | ( – ) | Pin, Cotter, 3/32" x 1" (Sub. for 11H18R) |
| 7 | 19H 1182 R | ( – ) | Screw, Cap, 1/2" x 5" (2 used) |
| 8 | A 3105 R | ( – ) | Washer (Copper) (2 used) (Packed 5 in a Pkg.) |
| 9 | AB 4673 R | ( – ) | Housing, B3188R, with Bushing (On 5000001-5012232 Also Furnish On A4806R, One A4808R, One A4805R, One H851R, One R228R, and On R229R) (On 5000001-5020399 Also Furnish One F1545R, Two 19H337N and Two 12H12R) |
| 10 | B 3346 R | ( – ) | Gasket (Packed 5 in a Pkg.) (Sub. for B308R) |
| 11 | A 3256 R | ( – ) | Plug |
| 12 | A 4808 R | (5012233– ) | Washer |
| 13 | A 4806 R | (5012233– ) | Plug |
| 14 | 15H 240 R | ( –5012232) | Plug, Pipe, 1-1/4" |
| 15 | 19H 218 D | ( – ) | Screw, Cap, 3/8" x 1" (11 used) (Sub. for 19H211R) |
| | 12H 11 R | ( – ) | Washer, Lock, 3/8" (11 used) |
| 16 | 15H 239 R | ( –5012232) | Plug, Pipe, 1" |
| 17 | H 851 R | (5012233– ) | Washer |
| 18 | A 4805 R | (5012233– ) | Plug |
| 19 | R 229 R | (5012233– ) | Washer |
| 20 | R 228 R | (5012233– ) | Plug |
| 21 | 15H 255 R | ( –5012232) | Plug, Pipe, 3/8" |
| 22 | B 3190 R | ( – ) | Gasket (Packed 2 in a Pkg.) |
| 23 | K 3083 R | (5008494– ) | Stud, 7/16" x 1-13/16" (2 used) |
| 24 | B 3189 R | ( – ) | Housing, Coupling (On 5000001-5008493 Also Order Two K3083R and Tv 14H257R) |
| 25 | 12H 12 R | (5008494– ) | Washer, Lock, 7/16" (2 used) |
| 26 | 14H 257 R | (5008494– ) | Nut, 7/16" (2 used) |
| 27 | 19H 337 N | ( –5008493) | Screw, Cap, 7/16" x 1-1/4" (3 used) (Sub. for 19H233R) |
| | 12H 12 R | ( –5008493) | Washer, Lock, 7/16" (3 used) |
| | 19H 337 N | (5008494– ) | Screw, Cap, 7/16" x 1-1/4" (Sub. for 19H332R) |
| | 12H 12 R | (5008494– ) | Washer, Lock, 7/16" |
| 28 | AA 2296 R | ( – ) | Seal, Oil |
| 29 | A 4616 R | ( – ) | Gasket (Packed 2 in a Pkg.) |
| 30 | A 4620 R | ( – ) | Housing, Bearing |
| 31 | 19H 337 N | ( – ) | Screw, Cap, 7/16" x 1-1/4" (3 used) (Sub. for 19H332R) |
| | 12H 12 R | ( – ) | Washer, Lock, 7/16" (3 used) |
| 32 | 19H 1166 H | ( – ) | Screw, Cap, 7/16" x 1-1/2" (Sub. for 19H340R) |
| | 12H 12 R | ( – ) | Washer, Lock, 7/16" |
| 33 | 19H 1166 H | ( – ) | Screw, Cap, 7/16" x 1-1/2" (Sub. for 19H340R) |
| | 12H 12 R | ( – ) | Washer, Lock, 7/16" |
| 34 | A 4879 R | ( – ) | Pin, Dowel (4 used) (Sub. for B153R) |
| 35 | F 2272 R | ( – ) | Screw, Cap, 3/8" x 3/4" (4 used) |
| | 12H 11 R | ( – ) | Washer, Lock, 3/8" (4 used) |

## POWER SHAFT HOUSING LESS POWR-TROL (TRANSMISSION-DRIVEN POWER SHAFT)
(Serial No. 5000001- )

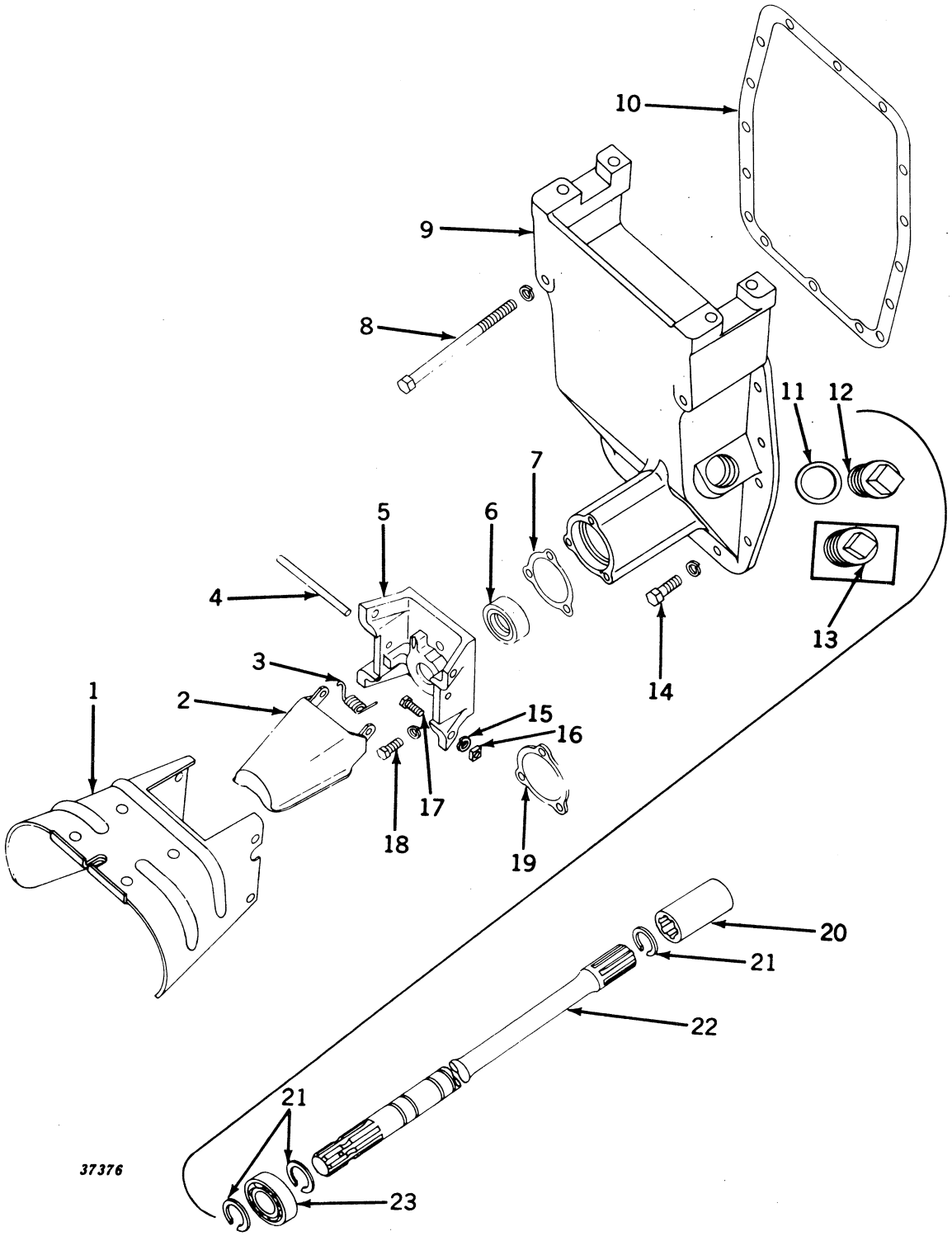

**POWER SHAFT HOUSING LESS POWR-TROL (TRANSMISSION-DRIVEN POWER SHAFT)—Continued**
**(Serial No. 5000001- )**

| Key | Part No. | | Description |
|---|---|---|---|
| 1 | AA 2297 R | ( – ) | Shield, Safety |
| 2 | AA 3522 R | ( – ) | Guard, Flipper, with Hinge |
| 3 | F 711 R | ( – ) | Spring |
| 4 | F 710 R | ( – ) | Pin |
| 5 | A 2930 R | ( – ) | Housing, Oil Seal |
| 6 | AA 2296 R | ( – ) | Seal, Oil |
| 7 | A 2396 R | ( – ) | Gasket (Packed 5 in a Pkg.) |
| 8 | 19H 1184 R | ( – ) | Screw, Cap, 1/2" x 5-3/4" (2 used) |
| | 12H 13 R | ( – ) | Washer, Lock, 1/2" (2 used) |
| 9 | B 2834 R | ( – ) | Cover, Rear Axle Housing (On 5000001–5012232 also furnish One A4806R and One A4808R) |
| 10 | B 3346 R | ( – ) | Gasket (Packed 5 in a Pkg.) (Sub. for B308R) |
| 11 | A 4808 R | (5012233– ) | Washer |
| 12 | A 4806 R | (5012233– ) | Plug |
| 13 | 15H 240 R | ( –5012232) | Plug, Pipe, 1-1/4" |
| 14 | 19H 218 D | ( – ) | Screw, Cap, 3/8" x 1" (11 used) (Sub. for 19H211R) |
| | 12H 11 R | ( – ) | Washer, Lock, 3/8" (11 used) |
| 15 | 12H 10 R | ( – ) | Washer, Lock, 5/16" (4 used) |
| 16 | A 4126 R | ( – ) | Nut, Square, 5/16" (4 used) (Sub. for AA4958R) |
| 17 | A 4125 R | ( – ) | Screw, Mach., 5/16" x 1" (4 used) (Packed 50 in a Pkg.) |
| 18 | 19H 218 D | ( – ) | Screw, Cap, 3/8" x 1" (3 used) (Sub. for 19H211R) |
| | 12H 11 R | ( – ) | Washer, Lock, 3/8" (3 used) |
| 19 | A 2395 R | ( – ) | Cover (Used only when Powershaft is Removed) |
| 20 | A 2428 R | ( – ) | Coupling |
| 21 | F 215 R | ( – ) | Snap Ring (3 used) (Packed 2 in a Pkg.) |
| 22 | B 3234 R | ( – ) | Shaft, Power |
| 23 | JD 7190 R | ( – ) | Bearing |

## POWER SHAFT (ENGINE-DRIVEN)
(Serial No. 5000001- )

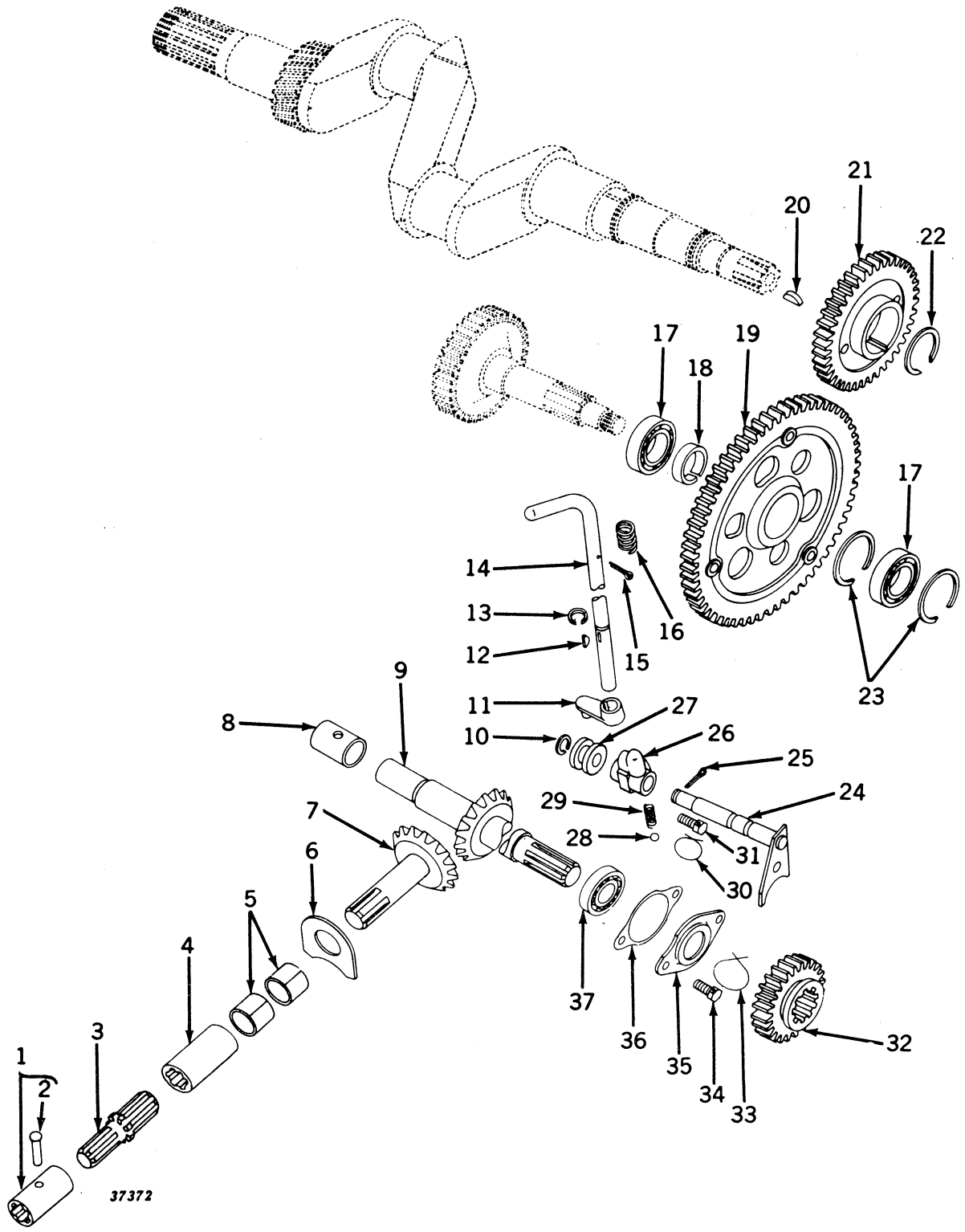

## POWER SHAFT (ENGINE-DRIVEN)—Continued
(Serial No. 5000001- )

| Key | Part No. | | Description |
|---|---|---|---|
| 1 | AR 935 R | ( – ) | Coupling, with Rivet |
| 2 | 16H 752 R | ( – ) | Rivet, 1/4" x 1-3/4" |
| 3 | B 3163 R | ( – ) | Shaft, Coupling |
| 4 | A 2428 R | ( – ) | Coupling |
| 5 | AA 5663 R | ( – ) | Bushing (Pkg. of 2) (2 used) (Sub. for B2499R) |
| | AA 5664 R | ( – ) | Bushing, .005" Oversize (Pkg. of 2) (2 used) |
| 6 | B 2320 R | ( – ) | Washer, Thrust |
| 7 | B 3171 R | ( – ) | Gear, Bevel (15 Teeth) |
| 8 | B 2498 R | ( – ) | Bushing |
| 9 | B 3172 R | ( – ) | Shaft, Drive, and Bevel Pinion (14 Teeth) |
| 10 | B 387 R | ( –5006288) | Snap Ring (Packed 5 in a Pkg.) |
| 11 | A 3757 R | ( – ) | Arm, Shifter |
| 12 | 26H 14 R | ( – ) | Key, Woodruff, 3/16" x 3/4" |
| 13 | B 387 R | ( – ) | Snap Ring (Packed 5 in a Pkg.) |
| 14 | B 2324 R | ( – ) | Lever, Shifter |
| 15 | 11H 80 R | ( – ) | Pin, Cotter, 3/16" x 1" |
| 16 | D 377 R | ( – ) | Spring |
| 17 | JD 8514 R | ( – ) | Bearing (2 used) |
| 18 | B 3170 R | ( – ) | Spacer |
| 19 | AB 4602 R | ( – ) | Gear, Idler, with B3168R Spider |
| 20 | 26H 19 R | ( – ) | Key, Woodruff, 1/4" x 7/8" |
| 21 | B 3164 R | ( – ) | Gear, Drive |
| 22 | B 3166 R | ( – ) | Snap Ring |
| 23 | B 3169 R | ( – ) | Snap Ring (2 used) |
| 24 | AB 4603 R | ( – ) | Shaft, Shifter, with Yoke (On 5000001–5006288 also furnish One 11H80R) |
| 25 | 11H 80 R | (5006289– ) | Pin, Cotter, 3/16" x 1" |
| 26 | B 3174 R | ( – ) | Bearing, Shifter Shaft |
| 27 | A 4523 R | ( – ) | Spool, Shifter Shaft |
| 28 | 405 R | ( – ) | Ball |
| 29 | D 993 R | ( – ) | Spring |
| 30 | ..... | ( – ) | Wire, 16 Gauge x 14" Long |
| 31 | D 459 R | ( – ) | Screw, Cap, 3/8" x 1" (Drilled) (2 used) |
| 32 | B 3173 R | ( – ) | Gear, Sliding (24 Teeth) |
| 33 | ..... | ( – ) | Wire, 16 Gauge x 14" Long |
| 34 | D 459 R | ( – ) | Screw, Cap, 3/8" x 1" (Drilled) (2 used) |
| 35 | A 4518 R | ( – ) | Cover |
| 36 | A 4420 R | ( – ) | Shim (Thin) |
| | A 4837 R | ( – ) | Shim (Thick) (Sub. for A4421R) |
| 37 | JD 7694 R | ( – ) | Bearing |

## POWER SHAFT AND POWR-TROL HOUSING (ENGINE-DRIVEN POWER SHAFT)
(Serial No. 5000001- )

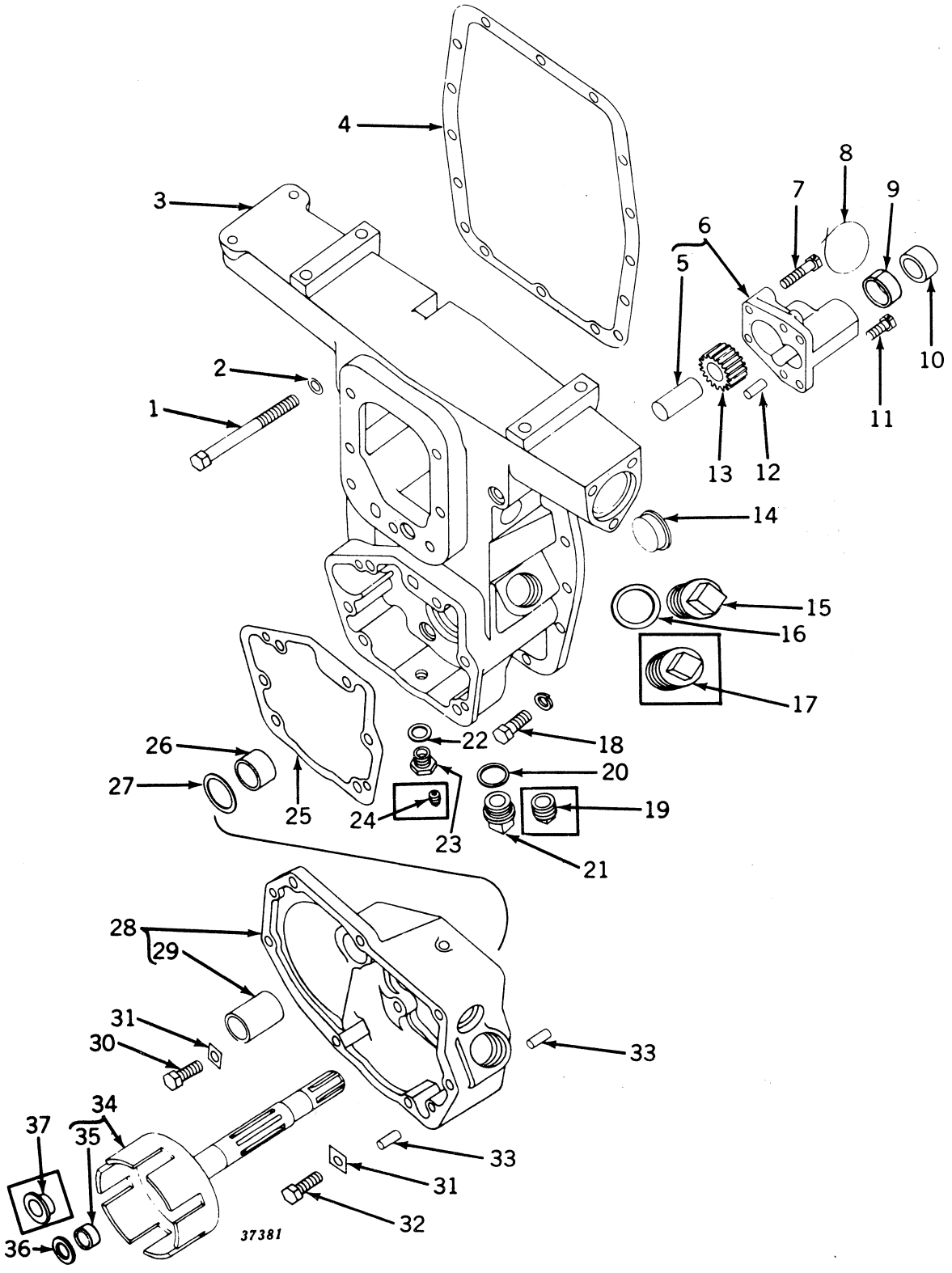

## POWER SHAFT AND POWR-TROL HOUSING (ENGINE-DRIVEN POWER SHAFT)—Continued
(Serial No. 5000001- )

| Key | Part No. | Serial No. | Description |
|---|---|---|---|
| 1 | 19H 1182 R | ( – ) | Screw, Cap, 1/2" x 5" (2 used) |
| 2 | A 3105 R | ( – ) | Washer (Copper) (2 used) (Packed 5 in a Pkg.) |
| 3 | AB 4673 R | ( – ) | Housing, B3188R, with Bushing (On 5000001–5005402 Also Furnish One F1329R) (On 5000001–5012232 Also Furnish One A4806R, One A4808R, One A4805R, One H851R, One R228R, and One R229R) (On 5000001–5020399 Also Furnish One F1545R, Two 19H337N, and Two 12H12R) |
| 4 | B 3346 R | ( – ) | Gasket (Packed 5 in a Pkg.) (Sub. for B308R) |
| 5 | A 3909 R | ( – ) | Shaft, Idler Gear |
| 6 | AA 5282 R | ( –5012232) | Housing, A4568R, Pump, with Shaft (Sub. One AA5666R, One A4798R, and One AB4709R) |
| | AA 5666 R | (5012233– ) | Housing, A4793R, Pump, with Shaft and Bushing (Also Parts from 5000001–5012232 when AB4709R and A4798R Have Been Installed) |
| 7 | A 4569 R | ( – ) | Screw, Cap, 3/8" x 1-3/4" (Drilled) (2 used) |
| 8 | ..... | ( – ) | Wire, 16 Gauge x 9" Long (2 used) |
| 9 | A 4795 R | (5012233– ) | Bushing (Also Parts from 5000001–5012232 when AA5666R has Been Installed) |
| 10 | AA 5247 R | ( – ) | Seal, Oil |
| 11 | D 459 R | ( – ) | Screw, Cap, 3/8" x 1" (Drilled) (2 used) |
| 12 | A 4879 R | ( – ) | Pin, Dowel (2 used) (Sub. for B153R) |
| 13 | AA 5281 R | ( – ) | Gear, Pump Idler, with Bushing |
| 14 | A 3256 R | ( – ) | Plug |
| 15 | A 4806 R | (5012233– ) | Plug |
| 16 | A 4808 R | (5012233– ) | Washer |
| 17 | 15H 240 R | ( –5012232) | Plug, Pipe, 1-1/4" |
| 18 | 19H 218 D | ( – ) | Screw, Cap, 3/8" x 1" (11 used) (Sub. for 19H211R) |
| | 12H 11 R | – ) | Washer, Lock, 3/8" (11 used) |
| 19 | 15H 239 R | ( –5012232) | Plug, Pipe, 1" |
| 20 | H 851 R | (5012233– ) | Washer |
| 21 | A 4805 R | (5012233– ) | Plug |
| 22 | R 229 R | (5012233– ) | Washer |
| 23 | R 228 R | (5012233– ) | Plug |
| 24 | 15H 255 R | ( –5012232) | Plug, Pipe, 3/8" |
| 25 | B 3190 R | ( – ) | Gasket (Packed 2 in a Pkg.) |
| 26 | F 1442 R | ( – ) | Bushing |
| 27 | F 1329 R | ( – ) | Washer, Thrust |
| 28 | AB 4620 R | ( – ) | Housing, B3193R and B3456R Clutch, with Bushing (On 5000001–501223 Also Furnish One A4807R and One A4809R) (Or 5029200– Als Furnish One 19H196H Cap Screw and One A3098R Washer) |
| 29 | B 2626 R | ( – ) | Bushing |
| 30 | 19H 1166 H | ( – ) | Screw, Cap, 7/16" x 1-1/2" (2 used) (Sub. for 19H340R) |
| 31 | A 4605 R | ( – ) | Plate, Lock (6 used) |
| 32 | 19H 337 N | ( – ) | Screw, Cap, 7/16" x 1-1/4" (4 used) (Sub. for 19H332R) |
| 33 | A 4879 R | ( – ) | Pin, Dowel (4 used) (Sub. for B153R) |
| 34 | AB 4618 R | ( –5012232) | Drum, Clutch, with Shaft and Bushing (Sub. One AB4709R, One A4798F and One AA5666R) |
| | AB 4709 R | (5012233– ) | Drum, Clutch, with Shaft and Bushing (Also Parts from 5000001–501223 when AA5666R and One A4798R Have Been Installed) |
| 35 | A 4797 R | (5012233– ) | Bushing |
| 36 | A 4798 R | (5012233– ) | Washer, Thrust |
| 37 | A 3907 R | ( –5012232) | Bushing (Sub. One A4797R and One A4798R) |

## POWER SHAFT HOUSING LESS POWR-TROL (ENGINE-DRIVEN POWER SHAFT)
(Serial No. 5000001- )

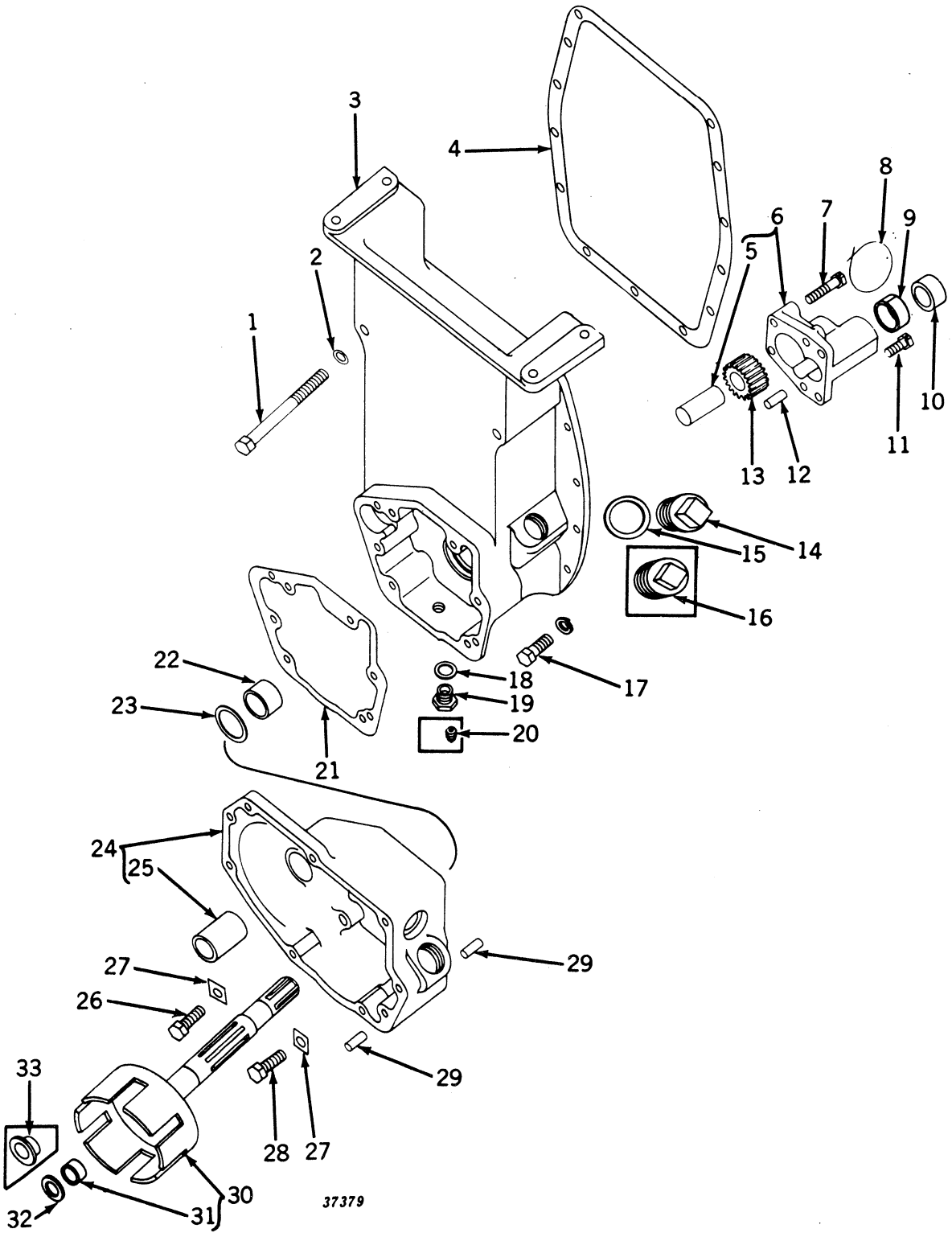

## POWER SHAFT HOUSING LESS POWR-TROL (ENGINE-DRIVEN POWER SHAFT)—Continued
(Serial No. 5000001- )

| Key | Part No. | Serial No. | Description |
|---|---|---|---|
| 1 | 19H 1182 R | ( – ) | Screw, Cap, 1/2" x 5" (2 used) |
| 2 | A 3105 R | ( – ) | Washer (Copper) (2 used) (Packed 5 in a Pkg.) |
| 3 | AB 4674 R | ( – ) | Housing, B3197R, with Bushing (On 5000001-5005402 Also Furnish On F1329R) (On 5000001-5012232 Also Furnish One A4806R, One A4808R One R228R, and One R229R) |
| 4 | B 3346 R | ( – ) | Gasket (Packed 5 in a Pkg.) (Sub. for B308R) |
| 5 | A 3909 R | ( – ) | Shaft, Idler Gear |
| 6 | AA 5282 R | ( -5012232) | Housing, A4568R, Pump, with Shaft (Sub. One AA5666R, One A4798R, and One AB4709R) |
| | AA 5666 R | (5012233- ) | Housing, A4793R, Pump, with Shaft and Bushing (Also parts from 5000001-5012232 when AB4709R and A4798R have been installed) |
| 7 | A 4569 R | ( – ) | Screw, Cap, 3/8" x 1-3/4" (Drilled) (2 used) |
| 8 | ..... | ( – ) | Wire, 16 Gauge x 9" Long (2 used) |
| 9 | A 4795 R | (5012233- ) | Bushing (Also parts from 5000001-5012232 when AA5666R has been installed) |
| 10 | AA 5247 R | ( – ) | Seal, Oil |
| 11 | D 459 R | ( – ) | Screw, Cap, 3/8" x 1" (Drilled) (2 used) |
| 12 | A 4879 R | ( – ) | Pin, Dowel (2 used) (Sub. for B153R) |
| 13 | AA 5281 R | ( – ) | Gear, Pump Idler, with Bushing |
| 14 | A 4806 R | (5012233- ) | Plug |
| 15 | A 4808 R | (5012233- ) | Washer |
| 16 | 15H 240 R | ( -5012232) | Plug, Pipe, 1-1/4" |
| 17 | 19H 218 D | ( – ) | Screw, Cap, 3/8" x 1" (11 used) (Sub. for 19H211R) |
| | 12H 11 R | ( – ) | Washer, Lock, 3/8" (11 used) |
| 18 | R 229 R | (5012233- ) | Washer |
| 19 | R 228 R | (5012233- ) | Plug |
| 20 | 15H 255 R | ( -5012232) | Plug, Pipe, 3/8" |
| 21 | B 3190 R | ( – ) | Gasket (Packed 2 in a Pkg.) |
| 22 | F 1442 R | ( – ) | Bushing |
| 23 | F 1329 R | ( – ) | Washer, Thrust |
| 24 | AB 4620 R | ( – ) | Housing, B3193R and B3456R Clutch, with Bushing (On 5000001-501223 Also Furnish One A4807R and One A4809R) (On 5029200- Als Furnish One 19H196H Cap Screw and One A3098R Washer) |
| 25 | B 2626 R | ( - ) | Bushing |
| 26 | 19H 1166 H | ( – ) | Screw, Cap, 7/16" x 1-1/2" (2 used) (Sub. for 19H340R) |
| 27 | A 4605 R | ( – ) | Plate, Lock (6 used) |
| 28 | 19H 337 N | ( – ) | Screw, Cap, 7/16" x 1-1/4" (4 used) (Sub. for 19H332R) |
| 29 | A 4879 R | ( – ) | Pin, Dowel (4 used) (Sub. for B153R) |
| 30 | AB 4618 R | ( -5012232) | Drum, Clutch, with Shaft and Bushing (Sub. One AB4709R, One A4798F and One AA5666R) |
| | AB 4709 R | (5012233- ) | Drum, Clutch, with Shaft and Bushing (Also Parts from 5000001-501223 When AA5666R and One A4798R Have Been Installed) |
| 31 | A 4797 R | (5012233- ) | Bushing |
| 32 | A 4798 R | (5012233- ) | Washer, Thrust |
| 33 | A 3907 R | ( -5012232) | Bushing (Sub. One A4797R and One A4798R) |

## POWER SHAFT CLUTCH CONTROL (ENGINE-DRIVEN POWER SHAFT)
(Serial No. 5000001- )

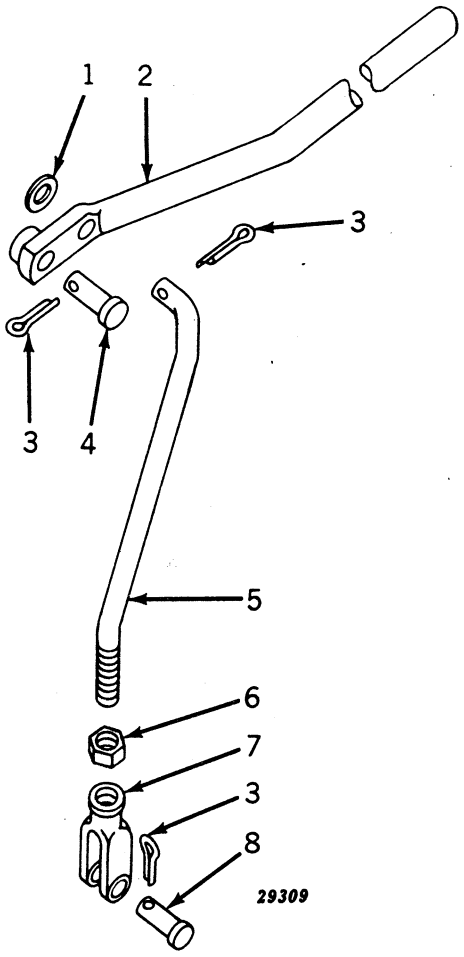

## POWER SHAFT CLUTCH CONTROL (ENGINE-DRIVEN POWER SHAFT)—Continued
(Serial No. 5000001- )

| Key | Part No. | | Description |
|---|---|---|---|
| 1 | 24H 184 R | ( – ) | Washer, 17/32" x 15/16" x 16 Gauge |
| 2 | AA 5324 R | ( – ) | Lever, Clutch Operating, with Bearing |
| 3 | 11H 41 R | ( – ) | Pin, Cotter, 1/8" x 1" (3 used) |
| 4 | D 1994 R | ( – ) | Pin (Packed 5 in a Pkg.) |
| 5 | B 3177 R | ( – ) | Rod, Clutch Operating |
| 6 | 14H 473 R | ( – ) | Nut, Jam, 1/2" (Sub. for 14H347R) |
| 7 | B 175 R | ( – ) | Yoke, Clutch Operating Rod |
| 8 | B 178 R | ( – ) | Pin, (Packed 5 in a Pkg.) |

## POWER SHAFT CLUTCH HOUSING (ENGINE-DRIVEN POWER SHAFT)
(Serial No. 5000001- )

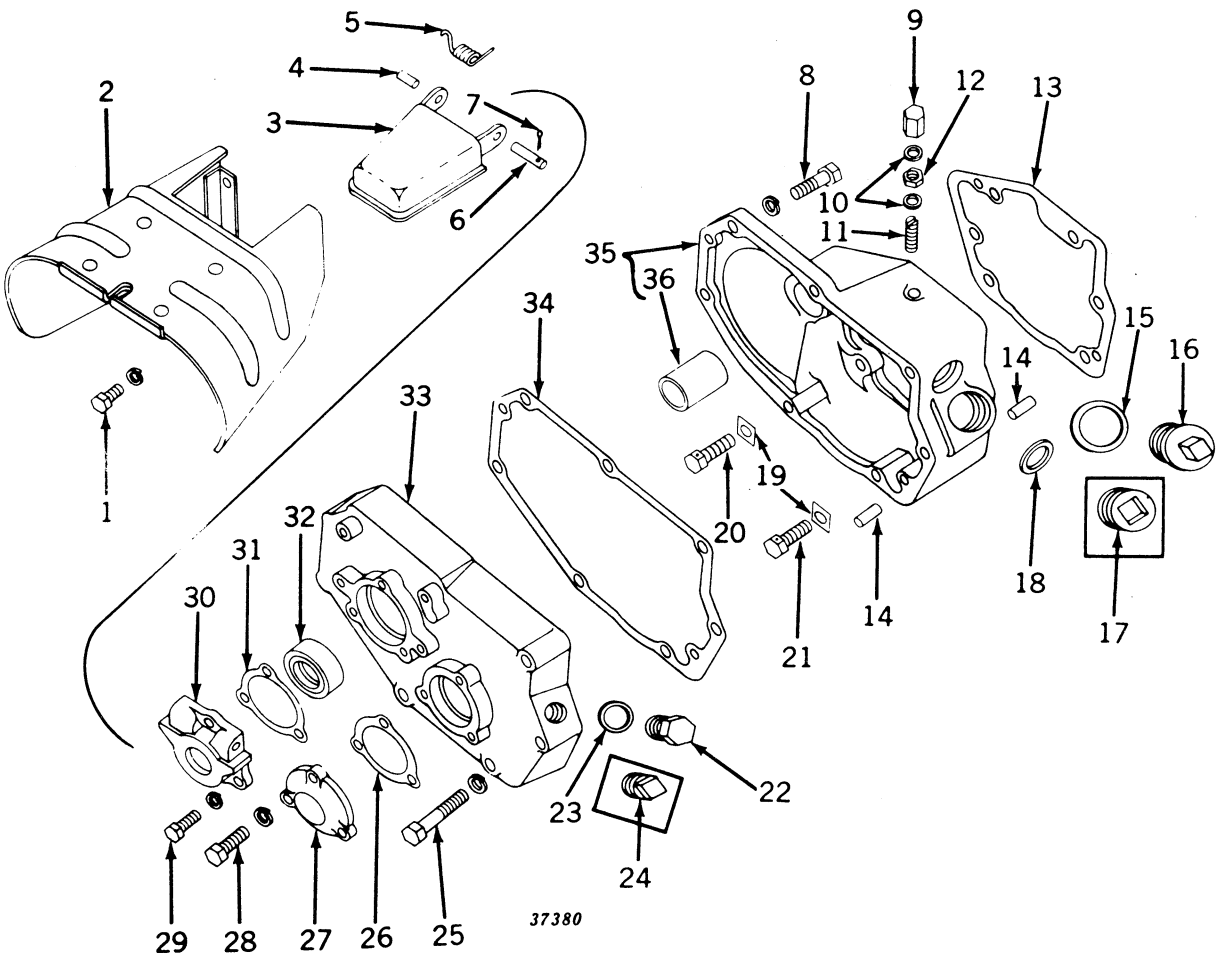

## POWER SHAFT CLUTCH HOUSING (ENGINE-DRIVEN POWER SHAFT)—Continued
(Serial No. 5000001- )

| Key | Part No. | Serial No. | Description |
|---|---|---|---|
| 1 | 19H 1255 T | ( – ) | Screw, Cap, 3/8" x 5/8" (4 used) (Sub. for 19H199R) |
| | 12H 11 R | ( – ) | Washer, Lock, 3/8" (4 used) |
| 2 | AA 5243 R | ( – ) | Shield, Safety |
| 3 | AA 5288 R | ( – ) | Guard, Flipper, with Hinge |
| 4 | A 3959 R | ( – ) | Pin, L.H. |
| 5 | F 711 R | ( – ) | Spring |
| 6 | A 4583 R | ( – ) | Pin, R.H. |
| 7 | 11H 22 R | ( – ) | Pin, Cotter, 3/32" x 1" (Packed 100 in a Pkg.) (Sub. for 11H18R) |
| 8 | 19H 1166 H | ( – ) | Screw, Cap, 7/16" x 1-1/2" (3 used) (Sub. for 19H340R) |
| | 12H 12 R | ( – ) | Washer, Lock, 7/16" (3 used) |
| 9 | B 427 R | ( –5029199) | Nut, Cap |
| 10 | A 3098 R | ( –5029199) | Washer (Copper) (2 used) (Packed 5 in a Pkg.) |
| 11 | A 1449 R | ( –5029199) | Screw, Adjusting |
| 12 | 14H 732 R | ( –5029199) | Nut, Jam, 3/8" (Packed 50 in a Pkg.) |
| 13 | B 3190 R | ( – ) | Gasket (Packed 2 in a Pkg.) |
| 14 | A 4879 R | ( – ) | Pin, Dowel (4 used) (Sub. for B153R) |
| 15 | A 4809 R | (5012233– ) | Washer |
| 16 | A 4807 R | (5012233– ) | Plug |
| 17 | 15H 281 R | ( –5012232) | Plug, Pipe, 1-1/2" |
| 18 | AR 613 R | ( – ) | Seal, Oil |
| 19 | A 4605 R | ( – ) | Plate, Lock (6 used) |
| 20 | 19H 1166 H | ( – ) | Screw, Cap, 7/16" x 1-1/2" (2 used) (Sub. for 19H340R) |
| 21 | 19H 337 N | ( – ) | Screw, Cap, 7/16" x 1-1/4" (4 used) (Sub. for 19H332R) |
| 22 | H 945 R | (5012233– ) | Plug |
| 23 | D 465 R | (5012233– ) | Washer (Packed 2 in a Pkg.) |
| 24 | 15H 237 R | ( –5012232) | Plug, Pipe, 1/2" |
| 25 | 19H 1146 M | ( – ) | Screw, Cap, 7/16" x 2-1/2" (4 used) (Sub. for 19H973R) |
| | 12H 12 R | ( – ) | Washer, Lock, 7/16" (4 used) |
| 26 | A 4553 R | ( – ) | Gasket (Packed 2 in a Pkg.) |
| 27 | A 4552 R | ( – ) | Cover, Bearing |
| 28 | 19H 1118 N | ( – ) | Screw, Cap, 5/16" x 7/8" (3 used) (Sub. for 19H110R) |
| | 12H 10 R | ( – ) | Washer, Lock, 5/16" (3 used) |
| 29 | 19H 218 D | ( – ) | Screw, Cap, 3/8" x 1" (3 used) (Sub. for 19H211R) |
| | 12H 11 R | ( – ) | Washer, Lock, 3/8" (3 used) |
| 30 | A 4581 R | ( – ) | Housing, Oil Seal |
| 31 | A 2396 R | ( – ) | Gasket (Packed 5 in a Pkg.) |
| 32 | AA 2296 R | ( – ) | Seal, Oil |
| 33 | B 3195 R | ( – ) | Cover, Clutch Housing (On 5000001–5012232 also furnish One H945R and One D465R) |
| 34 | B 3196 R | ( – ) | Gasket (Packed 5 in a Pkg.) |
| 35 | AB 4620 R | ( – ) | Housing, B3193R or B3456R, Clutch, with Bushing (On 5000001–50122 Also Furnish One A4807R and One A4809R) (On 5029200 Also Furni One 19H186H Cap Screw and One A3098R Washer) |
| 36 | B 2626 R | ( – ) | Bushing |

## POWER SHAFT CLUTCH ASSEMBLY (ENGINE-DRIVEN POWER SHAFT)
(Serial No. 5000001- )

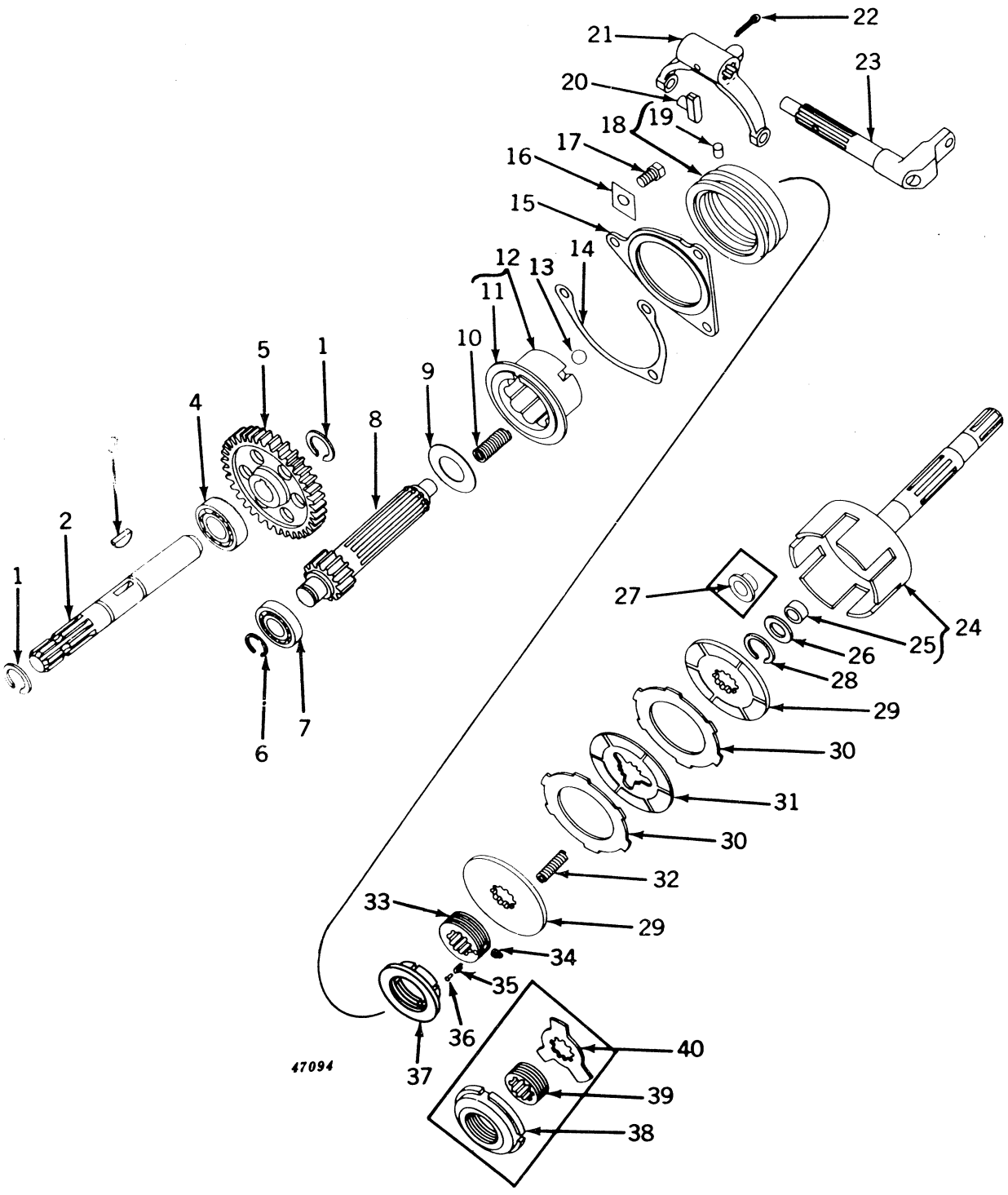

## POWER SHAFT CLUTCH ASSEMBLY (ENGINE-DRIVEN POWER SHAFT)—Continued
(Serial No. 5000001- )

| Key | Part No. | Serial No. | Description |
|---|---|---|---|
| 1 | F 215 R | ( – ) | Snap Ring (2 used) (Packed 2 in a Pkg.) |
| 2 | A 5249 R | ( – ) | Shaft, Power (Sub. for A4560R) |
| 3 | 26H 98 R | ( – ) | Key, Woodruff, 3/8" x 1-3/8" |
| 4 | JD 7190 R | ( – ) | Bearing |
| 5 | A 4561 R | ( – ) | Gear, Power Shaft |
| 6 | A 378 R | ( – ) | Snap Ring |
| 7 | JD 7664 R | ( – ) | Bearing |
| 8 | A 4544 R | ( – ) | Shaft, Clutch, and Gear |
| 9 | A 4705 R | ( – ) | Washer |
| 10 | A 4546 R | ( –5018679) | Spring (8 used) |
| | A 4546 R | (5018680– ) | Spring (9 used) |
| 11 | A 4574 R | ( – ) | Disk, Clutch Cam |
| 12 | AA 5283 R | ( –5018679) | Cam, Clutch, with Disk (Sub. One AA5958R and One A4546R) |
| | AA 5958 R | (5018680– ) | Cam, Clutch, with Disk |
| 13 | A 174 R | ( – ) | Ball (3 used) |
| 14 | A 4680 R | ( – ) | Shim, Brake Plate (4 used) |
| 15 | AA 5284 R | ( – ) | Plate, Brake, with Facing |
| 16 | A 4605 R | ( – ) | Plate, Lock (3 used) |
| 17 | 19H 218 D | ( – ) | Screw, Cap, 3/8" x 1" (3 used) (Sub. for 19H211R) |
| 18 | AB 5418 R | ( – ) | Collar, Clutch, with Pin (Sub. for AA5249R) |
| 19 | A 4621 R | ( – ) | Pin, Clutch Collar |
| 20 | A 4570 R | ( – ) | Shoe, Clutch Fork (2 used) |
| 21 | A 4557 R | ( – ) | Fork, Clutch |
| 22 | 11H 88 R | ( – ) | Pin, Cotter, 3/16" x 2" |
| 23 | A 4558 R | ( – ) | Shaft, Clutch Fork |
| 24 | AB 4618 R | ( –5012232) | Drum, Clutch, with Shaft and Bushing (Sub. One AB4709R, One A4798R, and One AA5666R) |
| | AB 4709 R | (5012233– ) | Drum, Clutch, with Shaft and Bushing (Also Parts from 5000001–5012232 when AA5666R and One A4798R Have Been Installed) |
| 25 | A 4797 R | (5012233– ) | Bushing |
| 26 | A 4798 R | (5012233– ) | Washer, Thrust |
| 27 | A 3907 R | ( –5012232) | Bushing (Sub. One A4797R and One A4798R) |
| 28 | A 562 R | ( – ) | Snap Ring |
| 29 | AA 5285 R | ( –5032349) | Plate, Clutch, with Facing (2 used) (On 5000001–5016358, Sub. One AB4962R* On 5016359–5032349, Sub. One AB4963R**) |
| | AR 1293 R | (5032350– ) | Plate, Clutch, with Facing (Packed 2 in a Pkg.) (One Pkg. used) |
| 30 | A 5145 R | ( –5016358) | Disk, Clutch Drive (6 used) (Sub. for A4551R) |
| | A 5145 R | (5016359– ) | Disk, Clutch Drive (**Wave Type**) (7 used) |
| 31 | AA 5286 R | ( –5016358) | Disk, Clutch, with Facings (5 used) (Sub. One AB4962R*) |
| | AA 5286 R | (5016359–5032349) | Disk, Clutch, with Facings (6 used) (Sub. One AB4963R**) |
| | AR 1294 R | (5032350– ) | Disk, Clutch, with Facings (6 used) |
| 32 | A 4580 R | ( – ) | Spring (3 used) |
| 33 | A 4814 R | (5017822– ) | Hub, Clutch Adjusting Cam |
| 34 | A 4817 R | (5017822– ) | Screw, Set (Special) |
| 35 | A 4816 R | (5017822– ) | Spring |
| 36 | 16H 90 H | (5017822– ) | Rivet, 1/8" x 1/4" |
| 37 | A 4815 R | (5017822–5029199) | Cam, Clutch Adjusting (Sub. A5313R) |
| | A 5313 R | (5029200– ) | Cam, Clutch Adjusting |
| 38 | A 4549 R | ( –5017821) | Cam, Clutch Adjusting |
| 39 | A 4548 R | ( –5017821) | Hub, Clutch Adjusting Cam |
| 40 | A 4577 R | ( –5017821) | Washer, Locking |

*AB4962R Consists of Seven A5145R, Two R1901R, Two AR1293R, and Six AR1294R.
**AB4963R Consists of Two AR1293R and Six AR1294R.

**POWR-TROL PUMP**
**(Serial No. 5000001- )**

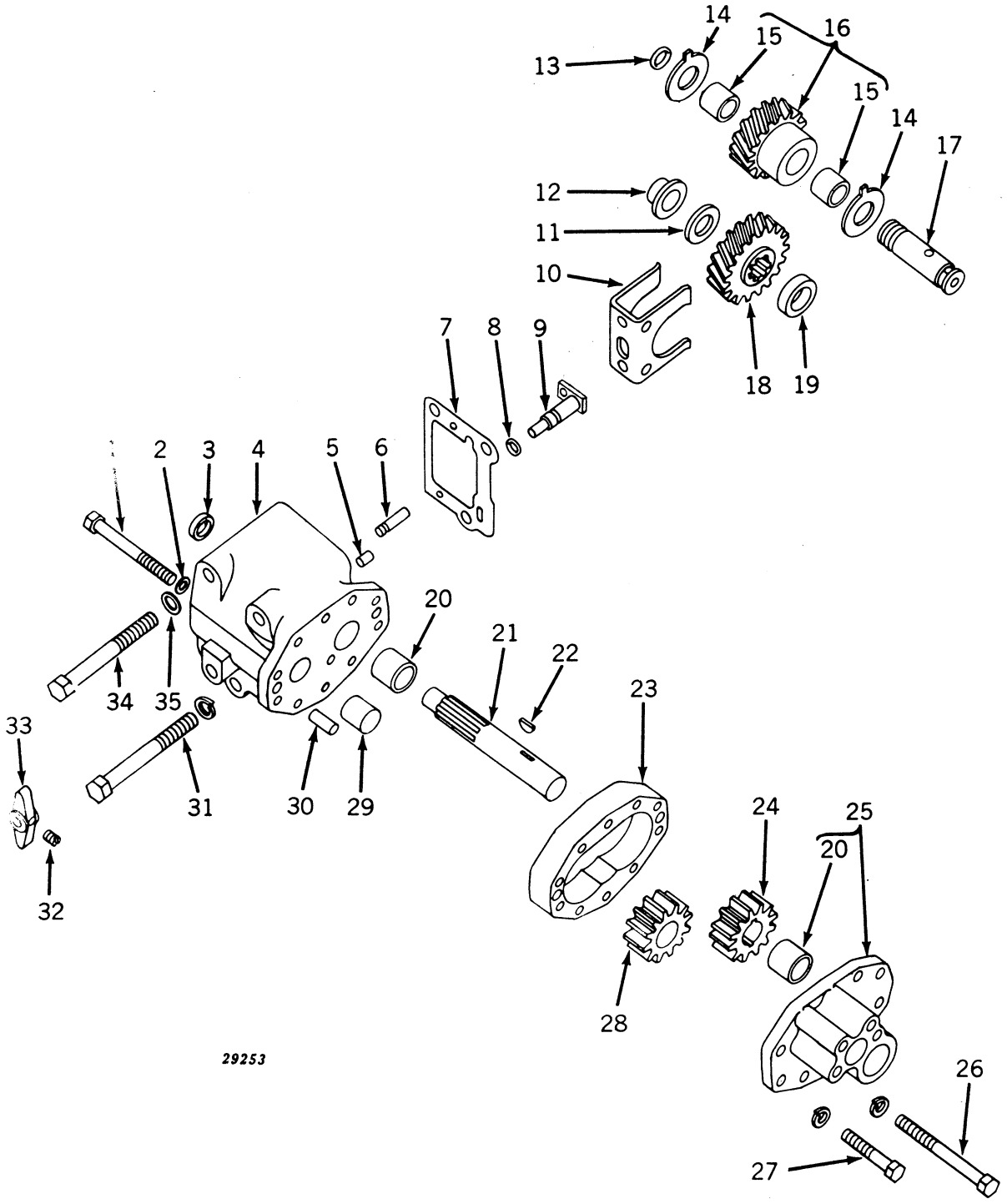

## POWR-TROL PUMP—Continued
**(Serial No. 5000001- )**

| Key | Part No. | Serial No. | Description |
|---|---|---|---|
| 1 | A 3689 R | ( – ) | Screw, Cap, 3/8" x 3-3/4" (Special) (2 used) |
| 2 | A 3098 R | ( – ) | Washer (Copper) (2 used) (Packed 5 in a Pkg.) |
| 3 | A 3910 R | ( – ) | Plug |
| 4 | AA 4475 R | ( – ) | Housing, A3906R or A4478R, with Bushings and Shaft |
| 5 | F 1743 R | ( – ) | Pin, Dowel (2 used) (Sub. for D186R) |
| 6 | B 3178 R | ( – ) | Pin, Retaining, Pump Idler Gear Shaft |
| 7 | A 4479 R | ( – ) | Gasket (Packed 5 in a Pkg.) |
| 8 | A 3917 R | ( – ) | Packing, "O" Ring (Packed 2 in a Pkg.) |
| 9 | AA 4476 R | ( – ) | Shifter |
| 10 | A 3916 R | ( – ) | Yoke |
| 11 | C 951 R | ( – ) | Washer, Drive Shaft |
| 12 | A 3907 R | ( – ) | Bushing, Drive Shaft, Outer |
| 13 | B 2762 R | ( – ) | Packing, "O" Ring (Packed 2 in a Pkg.) |
| 14 | A 4475 R | ( – ) | Washer, Thrust (2 used) |
| 15 | ..... | ( – ) | Bushing (2 used) (Not Sold, Furnish AA5192R Idler Gear with Bushings) |
| 16 | AA 5192 R | ( – ) | Gear, Idler, with Bushings |
| 17 | A 4476 R | ( – ) | Shaft, Idler Gear |
| 18 | B 3191 R | ( – ) | Gear, Drive |
| 19 | AR 613 R | ( – ) | Seal, Oil |
| 20 | A 4130 R | ( – ) | Bushing (2 used) (Sub. for AA4794R) |
| 21 | A 4485 R | ( – ) | Shaft, Drive |
| 22 | 26H 8 T | ( – ) | Key, Woodruff, 3/32" x 5/8" |
| 23 | A 3918 R | ( – ) | Body, Pump (Sub. for AA5559R) |
| 24 | A 4486 R | ( – ) | Gear, Driver |
| 25 | AA 4478 R | ( – ) | Cover, A3921R, Pump, with Bushing (On 5000001-5020399 Also Furnish One F1545R, Two 19H337N and Two 12H12R) |
| 26 | 19H 1219 R | ( – ) | Screw, Cap, 3/8" x 4-1/4" (2 used) (Sub. for 19H294R) |
| | 12H 11 R | ( – ) | Washer, Lock, 3/8" (2 used) |
| 27 | 19H 1164 R | ( – ) | Screw, Cap, 3/8" x 2-1/4" (8 used) (Sub. for 19H257H) |
| | 12H 11 R | ( – ) | Washer, Lock, 3/8" (8 used) |
| 28 | AA 5486 R | ( – ) | Gear, Pump Follower, with Bushing (Bushing Not Sold) |
| 29 | A 3909 R | ( – ) | Shaft, Pump Follower Gear |
| 30 | A 4879 R | ( – ) | Pin, Dowel (2 used) (Sub. for B153R) |
| 31 | 19H 1258 T | ( – ) | Screw, Cap, 1/2" x 4-3/4" (Sub. for 19H537R) |
| | 12H 13 R | ( – ) | Washer, Lock, 1/2" |
| 32 | 22H 695 R | ( – ) | Screw, Set, 5/16" x 3/8" |
| 33 | A 4503 R | ( – ) | Handle, Shifter |
| 34 | 19H 1258 T | ( – ) | Screw, Cap, 1/2" x 4-3/4" (2 used) (Sub. for 19H537R) |
| 35 | A 3105 R | ( – ) | Washer (Copper) (2 used) (Packed 5 in a Pkg.) |

## POWR-TROL OIL TUBES
(Serial No. 5000001- )

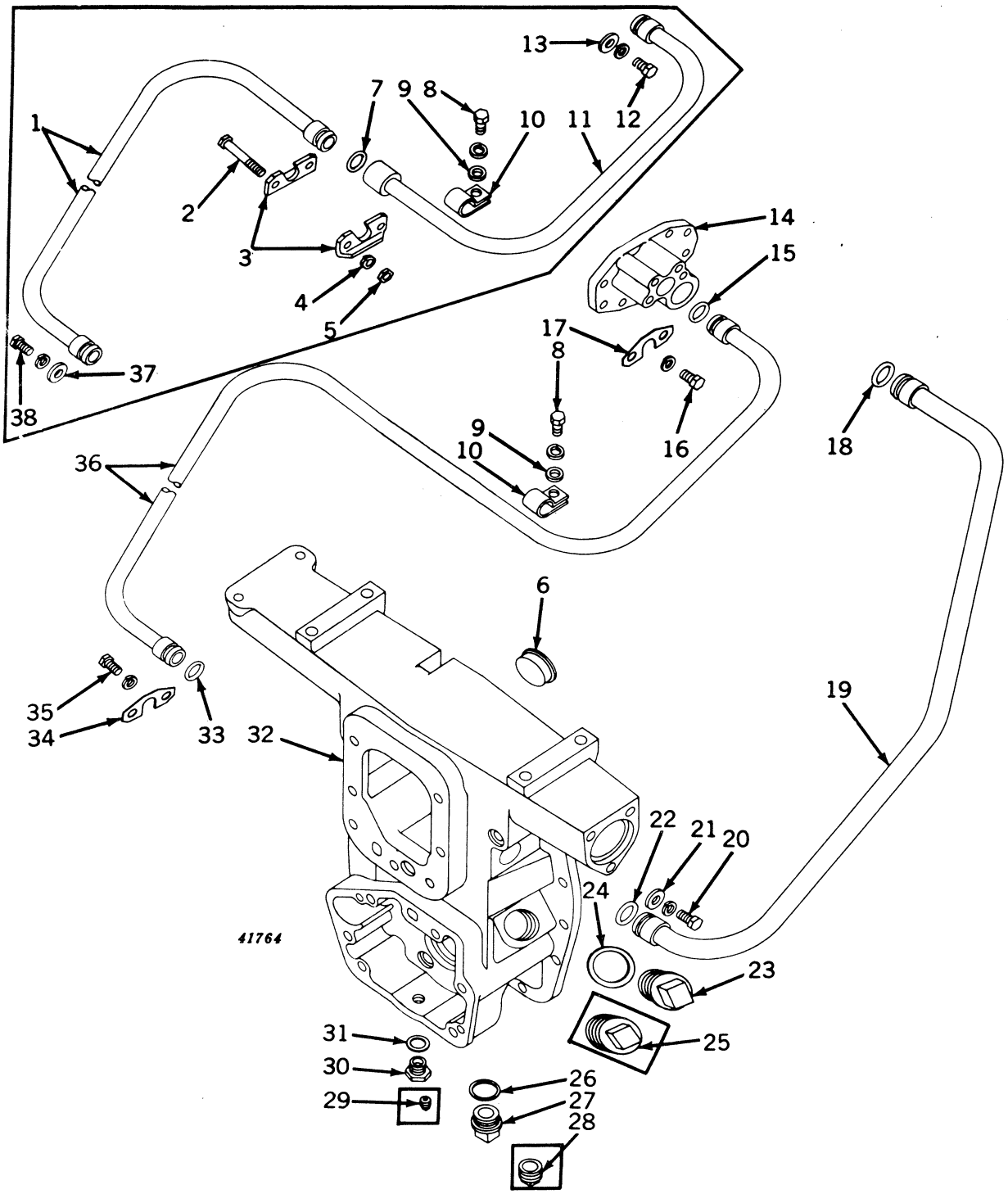

## POWR-TROL OIL TUBES—Continued
(Serial No. 5000001- )

| Key | Part No. | Serial No. | Description |
|---|---|---|---|
| 1 | AB 4605 R | ( –5020399) | Tube, Rear Pressure (Sub. AB4793R Front and Rear Tube) |
| 2 | 19H 1050 R | ( –5020399) | Screw, Cap, 3/8" x 2-1/2" (2 used) |
| 3 | A 4507 R | ( –5020399) | Clamp, Half (2 used) |
| 4 | 12H 11 R | ( –5020399) | Washer, Lock, 3/8" (2 used) |
| 5 | 14H 255 R | ( –5020399) | Nut, 3/8" (2 used) |
| 6 | A 3256 R | ( – ) | Plug |
| 7 | R 495 R | ( –5020399) | Packing, "O" Ring (Packed 5 in a Pkg.) |
| 8 | F 2272 R | ( – ) | Screw, Cap, 3/8" x 3/4" (2 used) (Packed 10 in a Pkg.) |
| | 12H 11 R | ( – ) | Washer, Lock, 3/8" (2 used) |
| 9 | 24H 154 R | ( – ) | Washer, 25/64" x 7/8" x 10 Gauge (2 used) |
| 10 | B 1588 R | ( – ) | Clip (2 used) |
| 11 | AB 4606 R | ( –5020399) | Tube, Front Pressure (Sub. AB4793R Front and Rear Tube) |
| 12 | F 2272 R | ( –5020399) | Screw, Cap, 3/8" x 3/4" (Packed 10 in a Pkg.) |
| | 12H 11 R | ( –5020399) | Washer, Lock, 3/8" |
| 13 | A 4231 R | ( –5020399) | Washer |
| 14 | AA 4478 R | ( – ) | Cover, A3921R, Powr-Trol Pump, with Bushing (On 5000001–5020399 Also Furnish One F1545R, Two 19H337N, and Two 12H12R) |
| 15 | R 495 R | ( – ) | Packing, "O" Ring (Packed 5 in a Pkg.) |
| 16 | 19H 337 N | (5020400– ) | Screw, Cap, 7/16" x 1-1/4" (2 used) |
| | 12H 12 R | (5020400– ) | Washer, Lock, 7/16" (2 used) |
| 17 | F 3329 R | (5020400– ) | Retainer (Sub. for F1545R) |
| 18 | A 3606 R | ( – ) | Packing, "O" Ring (Packed 5 in a Pkg.) |
| 19 | AB 4604 R | ( –5020399) | Tube, Suction |
| | AB 4791 R | (5020400– ) | Tube, Suction |
| 20 | F 2272 R | ( – ) | Screw, Cap, 3/8" x 3/4" |
| | 12H 11 R | ( – ) | Washer, Lock, 3/8" |
| 21 | A 4231 R | ( – ) | Washer |
| 22 | A 3606 R | ( – ) | Packing, "O" Ring (Packed 5 in a Pkg.) |
| 23 | A 4806 R | (5012233– ) | Plug |
| 24 | A 4808 R | (5012233– ) | Washer |
| 25 | 15H 240 R | ( –5012232) | Plug, Pipe, 1-1/4" |
| 26 | H 851 R | (5012233– ) | Washer |
| 27 | A 4805 R | (5012233– ) | Plug |
| 28 | 15H 239 R | ( –5012232) | Plug, Pipe, 1" |
| 29 | 15H 255 R | ( –5012232) | Plug, Pipe, 3/8" |
| 30 | R 228 R | (5012233– ) | Plug |
| 31 | R 229 R | (5012233– ) | Washer |
| 32 | AB 4673 R | ( – ) | Housing, B3188R, with Bushing (On 5000001–5005402 Also Furnish One F1329R) (On 5000001–5012232 Also Furnish One A4806R, One A4808R, One A4805R, One H851R, One R228R, and One R229R) |
| 33 | R 495 R | ( – ) | Packing, "O" Ring (Packed 5 in a Pkg.) |
| 34 | F 3329 R | (5020400– ) | Retainer (Sub. for 1545R) |
| 35 | 19H 337 N | (5020400– ) | Screw, Cap, 7/16" x 1-1/4" (2 used) |
| | 12H 12 R | (5020400– ) | Washer, Lock, 7/16" (2 used) |
| 36 | AB 4792 R | (5020400– ) | Tube, Pressure (One-Piece) |
| 37 | A 4231 R | ( –5020399) | Washer (2 used) |
| 38 | F 2272 R | ( –5020399) | Screw, Cap, 3/8" x 3/4" (2 used) |
| | 12H 11 R | ( –5020399) | Washer, Lock, 3/8" (2 used) |

## ROCKSHAFT ASSEMBLY
(Serial No. 5000001- )

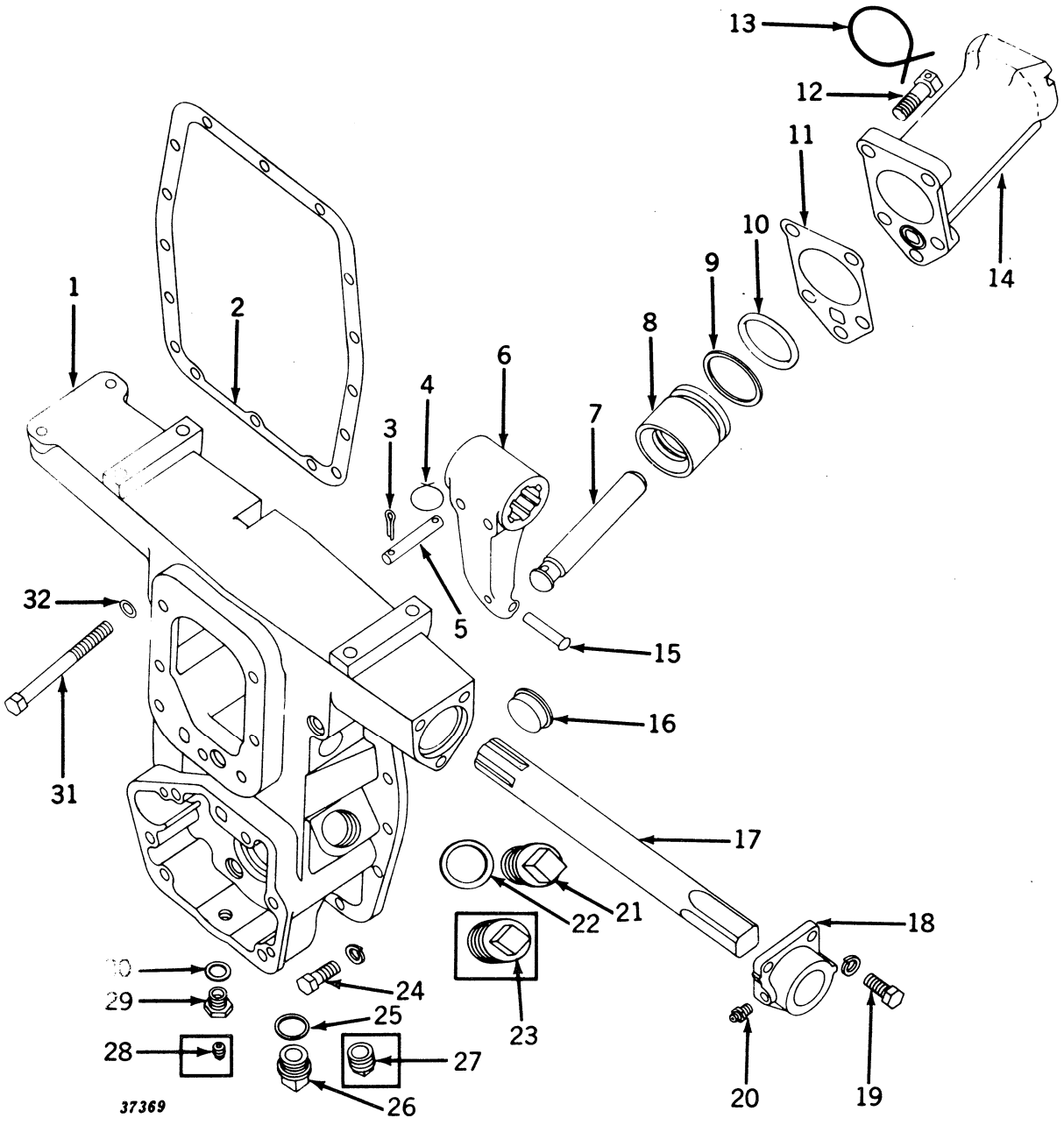

## ROCKSHAFT ASSEMBLY—Continued
**(Serial No. 5000001- )**

| Key | Part No. | Serial No. | Description |
|---|---|---|---|
| 1 | AB 4673 R | ( – ) | Housing, B3188R, with Bushing (On 5000001-5005402 Also Furnish One F1329R) (On 5000001-5012232 Also Furnish One A4806R, One A4808R, One A4805R, One H851R, One R228R, and One R229R) (On 5000001-5020399 Also Furnish One F1545R, Two 19H337N, and Two 12H12R) |
| 2 | B 3346 R | ( – ) | Gasket (Packed 5 in a Pkg.) (Sub. for B308R) |
| 3 | 11H 41 R | ( – ) | Pin, Cotter, 1/8" x 1" (2 used) (Sub. for 11H38R) |
| 4 | ..... | ( – ) | Wire, 16 Gauge x 6" Long |
| 5 | F 957 R | ( – ) | Pin, Crank Arm (2 used) |
| 6 | A 4448 R | ( – ) | Arm, Crank |
| 7 | A 4495 R | ( – ) | Rod, Piston |
| 8 | A 4493 R | ( – ) | Piston |
| 9 | A 4496 R | ( – ) | Washer, Piston Backing (Paper) (Packed 5 in a Pkg.) |
| 10 | A 4494 R | ( – ) | Packing, "O" Ring |
| 11 | A 5394 R | ( – ) | Gasket (Packed 2 in a Pkg.) (Sub. for A4492R and A5287R) |
| 12 | A 624 R | ( –5030599) | Screw, Cap, 5/8" x 1-3/4" (Drilled) (5 used) |
| | 19H 1356 R | (5030600– ) | Screw, Cap, 5/8" x 1-3/4" (5 used) |
| 13 | ..... | ( –5030599) | Wire, 16 Gauge x 14" Long (2 used) |
| | A 5361 R | (5030600– ) | Plate, Lock (5 used) (Packed 2 in a Pkg.) |
| 14 | A 4491 R | ( – ) | Cylinder |
| 15 | 16H 345 R | ( – ) | Rivet, 3/16" x 2-1/8" |
| 16 | A 3256 R | ( – ) | Plug |
| 17 | AF 368 R | ( – ) | Shaft, Rock (2 used) |
| 18 | B 2620 R | ( – ) | Bearing, Rockshaft |
| 19 | 19H 337 N | ( – ) | Screw, Cap, 7/16" x 1-1/4" (3 used) (Sub. for 19H332R) |
| | 12H 12 R | ( – ) | Washer, Lock, 7/16" (3 used) |
| 20 | JD 7759 | ( – ) | Fitting, Grease (2 used) |
| 21 | A 4806 R | (5012233– ) | Plug |
| 22 | A 4808 R | (5012233– ) | Washer |
| 23 | 15H 240 R | ( –5012232) | Plug, Pipe, 1-1/4" |
| 24 | 19H 218 D | ( – ) | Screw, Cap, 3/8" x 1" (11 used) (Sub. for 19H211R) |
| | 12H 11 R | ( – ) | Washer, Lock, 3/8" (11 used) |
| 25 | H 851 R | (5012233– ) | Washer |
| 26 | A 4805 R | (5012233– ) | Plug |
| 27 | 15H 239 R | ( –5012232) | Plug, Pipe, 1" |
| 28 | 15H 255 R | ( –5012232) | Plug, Pipe, 3/8" |
| 29 | R 228 R | (5012233– ) | Plug |
| 30 | R 229 R | (5012233– ) | Washer |
| 31 | 19H 1182 R | ( – ) | Screw, Cap, 1/2" x 5" (2 used) |
| 32 | A 3105 R | ( – ) | Washer (Copper) (2 used) (Packed 5 in a Pkg.) |

## POWR-TROL VALVE HOUSING
(Serial No. 5000001- )

See Pages 65-10 and 65-11 for Balance of Powr-Trol Valve Housing.

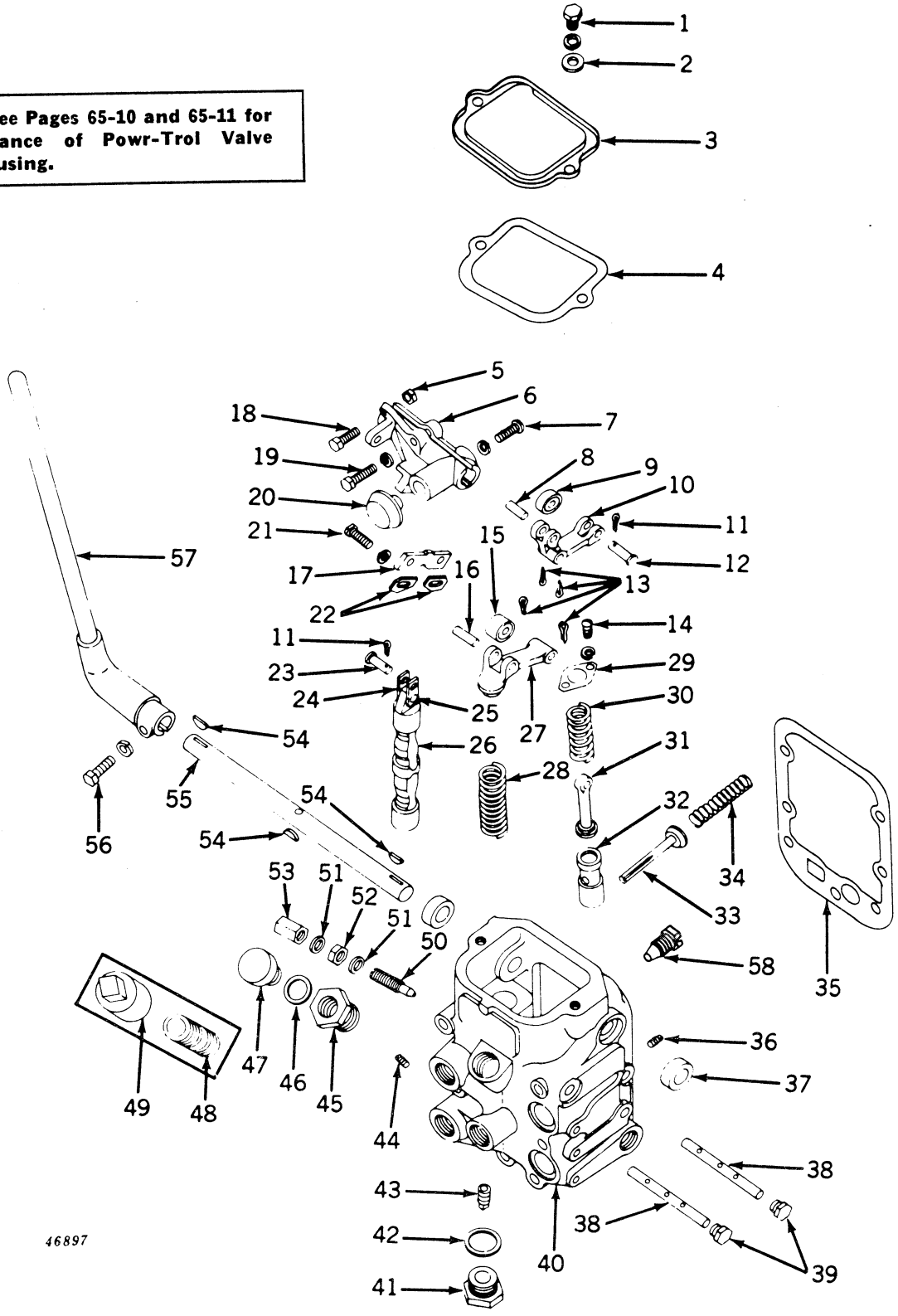

## POWR-TROL VALVE HOUSING—Continued
(Serial No. 5000001- )

| Key | Part No. | Valve Housing Serial No. | Description |
|---|---|---|---|
| 1 | 19H 1255 T | (PCV179065- ) | Screw, Cap, 3/8" x 5/8" (2 used) (Sub. for 19H199R) |
| | 12H 11 R | (PCV179065- ) | Washer, Lock, 3/8" (2 used) |
| 2 | 24H 154 R | (PCV179065- ) | **Washer, 25/64" x 7/8" x 16 Gauge (2 used)** |
| 3 | A 4248 R | (PCV179065- ) | Cover |
| 4 | A 3103 R | (PCV100 - ) | Gasket (Packed 5 in a Pkg.) |
| 5 | 14H 785 R | (PCV100 - ) | Nut, 5/16" (Packed 50 in a Pkg.) |
| 6 | A 4170 R | (PCV148972- ) | Holder, Cam |
| 7 | 21H 701 R | (PCV148972- ) | Screw, Mach., 5/16" x 1" |
| | 12H 10 R | (PCV148972- ) | Washer, Lock, 5/16" |
| 8 | A 3257 R | (PCV133 - ) | Pin, Cam Latch |
| 9 | A 3108 R | (PCV100 - ) | Roller, Cam Latch |
| 10 | AA 3736 R | (PCV100 - ) | Arm, Cam Latch, with Roller |
| 11 | 11H 22 R | (PCV100 - ) | Pin, Cotter, 3/32" x 1" (2 used) (Sub. for 11H18R) |
| 12 | A 3114 R | (PCV100 - ) | Pin |
| 13 | 11H 22 R | (PCV5111 - ) | Pin, Cotter, 3/32" x 5/8" (4 used) (Sub. for 11H19R) |
| 14 | 21H 597 R | (PCV100 - ) | Screw, Mach., 1/4" x 1" (2 used) |
| | 12H 9 R | (PCV100 - ) | Washer, Lock, 1/4" (2 used) |
| 15 | A 1433 R | (PCV100 - ) | Roller |
| 16 | A 3258 R | (PCV133 - ) | Pin |
| 17 | A 4172 R | (PCV148972- ) | Cam, Centering |
| 18 | 19H 118 T | (PCV100 - ) | Screw, Cap, 5/16" x 1" (Sub. for 19H112R) |
| 19 | F 2273 R | (PCV100 - ) | Screw, Cap, 3/8" x 1-1/4" (Sub. for 19H221R) (Packed 10 in a Pkg.) |
| | 12H 11 R | (PCV100 - ) | Washer, Lock, 3/8" |
| 20 | A 4169 R | (PCV148972- ) | Cam |
| 21 | 19H 118 T | (PCV100 - ) | Screw, Cap, 5/16" x 1" (2 used) (Sub. for 19H112R) |
| | 12H 10 R | (PCV100 - ) | Washer, Lock, 5/16" (2 used) |
| 22 | A 3145 R | (PCV100 - ) | Blade, Cam (2 used) |
| 23 | A 3126 R | (PCV100 - ) | Pin |
| 24 | A 3123 R | (PCV100 - ) | Link (2 used) |
| 25 | A 3124 R | (PCV100 - ) | Rivet |
| 26 | AA 3734 R | (PCV100 - ) | Valve, Operating, with Links |
| 27 | AA 3735 R | (PCV100 - ) | Arm, Cam Follower, with Roller |
| 28 | A 3106 R | (PCV100 - ) | Spring |
| 29 | A 3113 R | (PCV100 - ) | Retainer |
| 30 | A 3110 R | (PCV100 - ) | Spring |
| 31 | A 3234 R | (PCV100 - ) | Rod, Latch |
| 32 | A 3115 R | (PCV100 - ) | Valve, Release |
| 33 | AA 4101 R | (PCV100 - ) | Valve, Throttle |
| 34 | B 268 R | (PCV100 - ) | Spring |
| 35 | A 1447 R | (PCV100 - ) | Gasket, Valve Housing (Packed 5 in a Pkg.) |
| 36 | 15H 253 R | (PCV100 - ) | Plug, Pipe, 1/8" |
| 37 | AA 3738 R | (PCV100 - ) | Seal, Oil (2 used) |
| 38 | A 3437 R | (PCV5111 - ) | Pivot (2 used) |
| 39 | A 3438 R | (PCV5111 - ) | Screw, Cap (Special) (2 used) |
| 40 | AA 6312 R | (PCV67905 - ) | Housing only, A5349R, Valve, with Thermal Relief Valves (Sub. f A3604R) |
| | **AA 4316 R** | (PCV67905 - ) | **Housing, A5349R, Valve, with Thermal Relief Valves, Comple (ATTACHMENT)** |
| 41 | A 1441 R | (PCV100 - ) | Plug |
| 42 | A 3136 R | (PCV100 - ) | Washer, .020", Copper |
| | A 3137 R | (PCV100 - ) | Washer, .032", Copper |
| 43 | 15H 237 R | (PCV100 - ) | Plug, Pipe, 1/2" |
| 44 | 15H 254 R | (PCV100 - ) | Plug, Pipe, 1/4" |
| 45 | A 4702 R | (PCV243917- ) | Bushing |
| 46 | A 4703 R | (PCV243917- ) | Gasket (Packed 5 in a Pkg.) |
| 47 | A 4701 R | (PCV243917- ) | Plug, Oil Filler |
| 48 | 29H 488 T | (PCV100 -243916) | Nipple, 1" x 1-1/2" |
| 49 | A 3131 R | (PCV100 -243916) | Cap |
| 50 | A 3097 R | (PCV100 - ) | Screw |
| 51 | A 3098 R | (PCV100 -343373) | Washer (2 used) (Packed 5 in a Pkg.) |
| | A 5364 R | (PCV343374- ) | Washer (2 used) (Packed 5 in a Pkg.) |
| 52 | 14H 732 R | (PCV100 - ) | Nut, 3/8" (Packed 50 in a Pkg.) |
| 53 | B 427 R | (PCV100 - ) | Nut, Cap |
| 54 | 26H 14 R | (PCV100 - ) | Key, Woodruff, 3/16" x 3/4" (3 used) |
| 55 | A 4489 R | (PCV223549- ) | Shaft, Control |
| 56 | F 2273 R | (PCV223549- ) | Screw, Cap, 3/8" x 1-1/4" (Sub. for 19H221R) |
| | 12H 11 R | (PCV223549- ) | Washer, Lock, 3/8" |
| 57 | AA 5211 R | (PCV223549- ) | Arm, with Lever |
| | A 4497 R | (PCV223549- ) | Lever |
| 58 | AA 6314 R | (PCV338332- ) | Valve, Thermal Relief (2 used) |

POWR-TROL VALVE HOUSING—Continued
(Serial No. 5000001- )

See Pages 65-8, 65-9 for Balance of Powr-Trol Valve Housing.

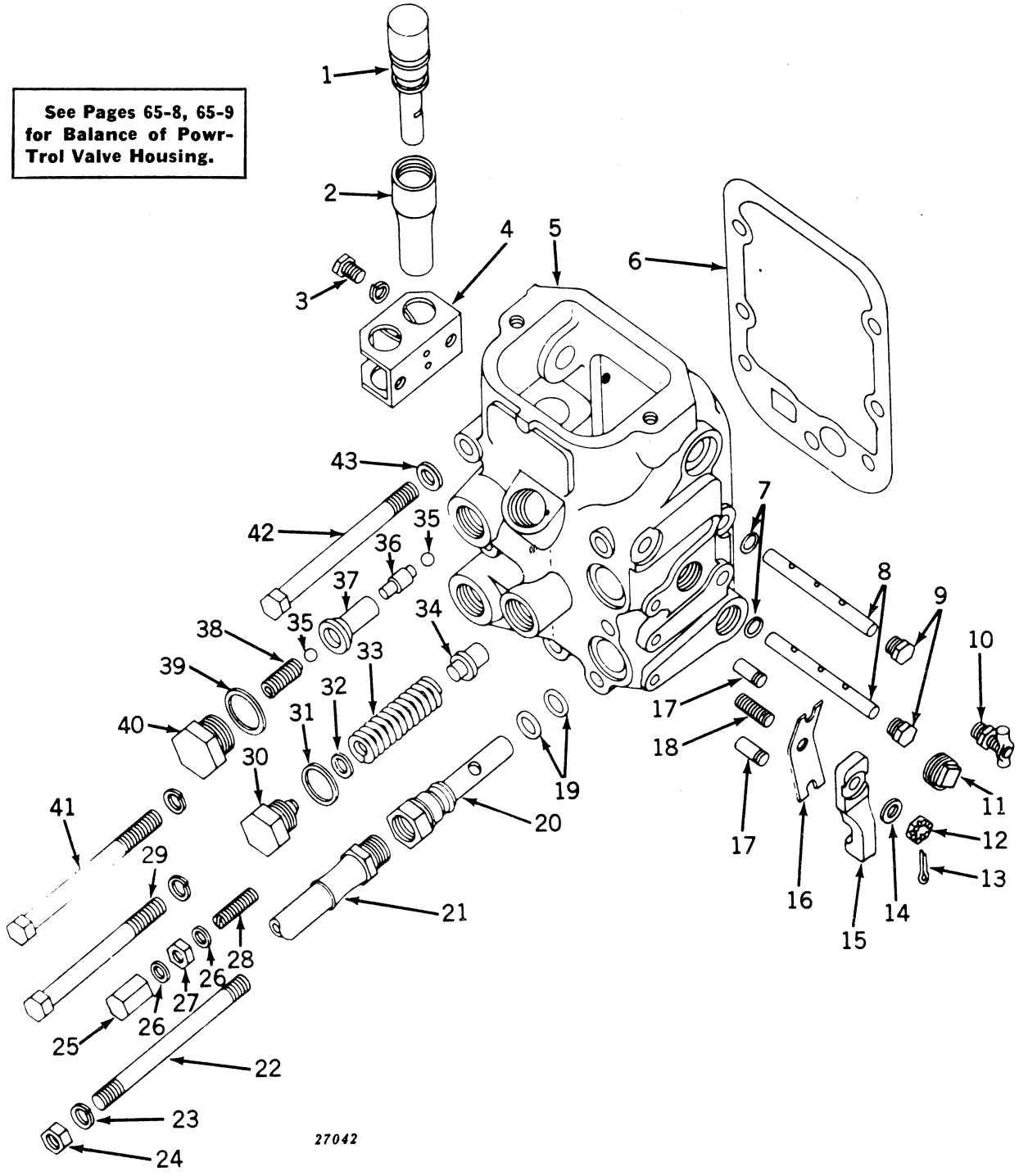

## POWR-TROL VALVE HOUSING—Continued
**(Serial No. 5000001- )**

| Key | Part No. | Valve Housing Serial No. | Description |
|---|---|---|---|
| 1 | AA 4981 R | (PCV67905 - ) | Plug (2 used) |
| 2 | A 3614 R | (PCV67905 - ) | Cap (2 used) (Packed 5 in a Pkg.) |
| 3 | 19H 1140 N | (PCV67905 -235522) | Screw, Cap, 5/16" x 1/2" (2 used) (Sub. for 19H96R) |
| | 12H 10 R | (PCV67905 -235522) | Washer, Lock, 5/16" (2 used) |
| | 19H 1710 T | (PCV235523- ) | Screw, Cap, 3/8" x 1/2" (2 used) (Sub. for 19H196H) |
| | 12H 11 R | (PCV235523- ) | Washer, Lock, 3/8" (2 used) |
| 4 | AA 3754 R | (PCV100 - ) | Bracket, Plug |
| 5 | AA 6312 R | (PCV67905 - ) | Housing only, A5349R, Valve, with Thermal Relief Valves (Sub. for A3604R) |
| | **AA 4316** R | (PCV67905 - ) | **Housing, A5349R, Valve, with Thermal Relief Valves, Complete (ATTACHMENT)** |
| 6 | A 1447 R | (PCV100 - ) | Gasket (Packed 5 in a Pkg.) |
| 7 | A 3439 R | (PCV5111 - ) | Washer (2 used) |
| 8 | A 3437 R | (PCV5111 - ) | Pivot (2 used) |
| 9 | A 3438 R | (PCV5111 - ) | Screw, Cap (Special) (2 used) |
| 10 | AM 292 T | (PCV100 - ) | Cock, Oil Level (Sub. for AA3739R) |
| 11 | 15H 238 R | (PCV67905 - ) | Plug, Pipe, 3/4" (2 used) |
| 12 | 14H 511 H | (PCV67905 - ) | Nut, 5/16" |
| 13 | 11H 3 R | (PCV67905 - ) | Pin, Cotter, 1/16" x 1/2" |
| 14 | 24H 39 R | (PCV67905 - ) | Washer, 21/64" x 3/4" x 20 Gauge (2 used) |
| 15 | A 3611 R | (PCV67905 - ) | Cam |
| 16 | A 3610 R | (PCV67905 - ) | Spring (Packed 5 in a Pkg.) |
| 17 | A 3609 R | (PCV67905 - ) | Pawl (2 used) |
| 18 | A 3612 R | (PCV67905 - ) | Stud, 5/16" x 1-1/4" |
| 19 | A 3190 R | (PCV67905 - ) | Packing, "O" Ring (4 used) (Packed 5 in a Pkg.) |
| 20 | A 3613 R | (PCV67905 - ) | Coupling (2 used) (Sub. for AA5535R) |
| | F 2250 R | (PCV67905 - ) | Coupling, Special Oil Line (For Parallel Operation of Remote Cylinder) |
| 21 | AA 4542 R | (PCV100 - ) | Line, Oil Flexible (88" Long) (2 used) (Sub. for AA4279R) |
| 22 | A 4490 R | (PCV223549- ) | Stud, 1/2" x 6-7/16" |
| 23 | 12H 13 R | (PCV67905 - ) | Washer, Lock, 1/2" |
| 24 | 14H 392 R | (PCV67905 - ) | Nut, 1/2" |
| 25 | B 427 R | (PCV100 - ) | Nut, Cap (Packed 10 in a Pkg.) |
| 26 | A 3098 R | (PCV100 -343373) | Washer (2 used) (Packed 5 in a Pkg.) |
| | A 5364 R | (PCV343374- ) | Washer (2 used) (Packed 5 in a Pkg.) |
| 27 | 14H 732 R | (PCV100 - ) | Nut, 3/8" |
| 28 | A 1449 R | (PCV100 - ) | Screw, Throttle Valve Adjusting |
| 29 | 19H 1182 R | (PCV223549- ) | Screw, Cap, 1/2" x 5" (3 used) |
| | 12H 13 R | (PCV100 - ) | Washer, Lock, 1/2" (3 used) |
| 30 | R 756 R | (PCV223549- ) | Plug, Relief Valve Spring |
| 31 | R 757 R | (PCV67905 - ) | Washer |
| 32 | A 4256 R | (PCV223549- ) | Washer (6 used) |
| 33 | R 755 R | (PCV223549- ) | Spring, Relief Valve |
| 34 | R 754 R | (PCV223549- ) | Valve, Relief |
| 35 | D 2361 R | (PCV136346- ) | Ball, Check Valve (4 used) |
| 36 | A 4133 R | (PCV136346- ) | Shaft, Metering, Check Valve (2 used) |
| 37 | R 1811 R | (PCV136346- ) | Valve, Check (2 used) (Sub. for A4132R) |
| 38 | D 1995 R | (PCV136346- ) | Spring (2 used) |
| 39 | A 3137 R | (PCV100 - ) | Washer, Check Valve Plug (2 used) |
| 40 | A 1441 R | (PCV100 - ) | Plug (2 used) |
| 41 | 19H 1184 R | (PCV223549- ) | Screw, Cap, 1/2" x 5-3/4" (2 used) |
| | 12H 13 R | (PCV223549- ) | Washer, Lock, 1/2" (2 used) |
| 42 | 19H 1184 R | (PCV223549- ) | Screw, Cap, 1/2" x 5-3/4" |
| 43 | A 3105 R | (PCV100 - ) | Washer (Copper) (Packed 5 in a Pkg.) |

## REMOTE CONTROL CYLINDER, FIXED-STOP TYPE
Remote Cylinder Serial No. 3RC100-3RC146999

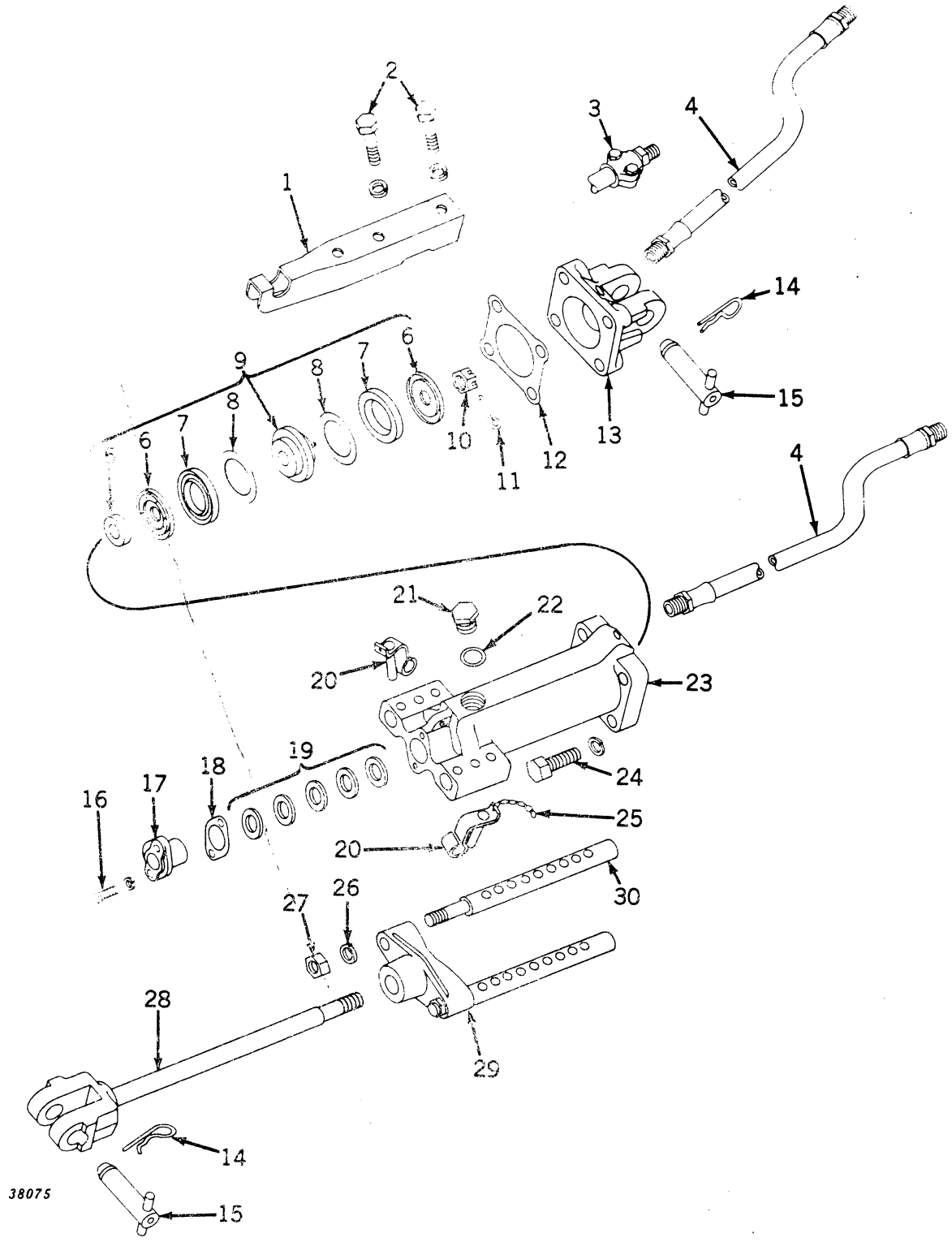

## REMOTE CONTROL CYLINDER (FIXED-STOP TYPE)—Continued
(Remote Cylinder Serial No. 3RC100-3RC146999)

| Key | Part No. | Cylinder Serial No. | Description |
|---|---|---|---|
| 1 | A 4452 R | (3RC100 – ) | Arm, Cylinder Transport |
| 2 | 19H 1242 M | (3RC100 – ) | Screw, Cap, 7/16" x 2-3/4" (2 used) (Sub. for 19H376R) |
| | 12H 12 R | (3RC100 – ) | Washer, Lock, 7/16" (2 used) |
| 3 | AA 4864 R | (3RC100 – ) | Coupling for Flexible Oil Line |
| 4 | AA 4542 R | (3RC100 – ) | Line, Flexible Oil (88" Long) (2 used) (Sub. for AA4279R) |
| 5 | A 4230 R | (3RC86799–146999) | Spacer, Piston |
| 6 | A 4229 R | (3RC86799–146999) | Retainer, Piston Packing (2 used) |
| 7 | A 3169 R | (3RC44351–146999) | Packing, "U" Cup (2 used) (Packed 2 in a Pkg.) |
| 8 | A 3952 R | (3RC44351–146999) | Washer, Piston Ring Backing (2 used) (Packed 5 in a Pkg.) |
| 9 | AA 4493 R | (3RC44351–146999) | Piston, A3951R, with Rings, Retainers, Washers, and Spacer |
| 10 | F 2664 R | (3RC100 –146999) | Nut, Slotted, 3/4" (Sub. for 14H534R) |
| 11 | 11H 49 R | (3RC100 –146999) | Pin, Cotter, 1/8" x 1-1/4" (Sub. for 11H43R) |
| 12 | A 3164 R | (3RC100 –146999) | Gasket (Packed 5 in a Pkg.) |
| 13 | A 3578 R | (3RC26259–146999) | Cap, Remote Cylinder |
| 14 | A 3581 R | (3RC26259– ) | Pin, Spring Locking (2 used) (Packed 25 in a Pkg.) |
| 15 | AR 1362 R | (3RC26259–146999) | Pin, Attaching (2 used) (Sub. for AA4282R) |
| 16 | 19H 218 D | (3RC100 –146999) | Screw, Cap, 3/8" x 1" (2 used) (Sub. for 19H211R) |
| | 12H 11 R | (3RC100 –146999) | Washer, Lock, 3/8" (2 used) |
| 17 | A 3172 R | (3RC100 –146999) | Retainer, Piston, Rod Oil Seal |
| 18 | A 3173 R | (3RC100 –146999) | Shim, .010" Thick (4 used) (Packed 5 in a Pkg.) |
| | A 3174 R | (3RC100 –146999) | Shim, 1/32" Thick (2 used) (Packed 10 in a Pkg.) (Sub. A3172R) |
| 19 | AA 3741 R | (3RC100 –146999) | V-Seal Assembly |
| 20 | AA 3749 R | (3RC100 –146999) | Pin, Stop, with Spring (2 used) |
| 21 | H 945 R | (3RC100 –146999) | Plug, Remote Cylinder Inspection |
| 22 | D 465 R | (3RC100 –146999) | Gasket (Packed 2 in a Pkg.) |
| 23 | A 3162 R | (3RC100 –146999) | Cylinder, Remote |
| 24 | 19H 1373 R | (3RC100 –146999) | Screw, Cap, 5/8" x 2" (4 used) (Sub. for 19H676R) |
| | 12H 15 R | (3RC100 –146999) | Washer, Lock, 5/8" (4 used) |
| 25 | D 2913 R | (3RC100 –146999) | Link, Chain End (2 used) |
| | A 3184 R | (3RC100 –146999) | Chain |
| 26 | 12H 15 R | (3RC100 –146999) | Washer, Lock, 5/8" (2 used) |
| 27 | 14H 480 R | (3RC100 –146999) | Nut, 5/8" (2 used) (Sub. for 14H352R) |
| 28 | AA 4281 R | (3RC26259–146999) | Rod, Piston, with A3579R Yoke |
| 29 | A 3175 R | (3RC100 –146999) | Stop, Piston Rod |
| 30 | A 3176 R | (3RC100 –146999) | Rod, Piston Stop (2 used) |

(Part listed below is an assembly of most of the parts in this grouping.)

**AA 5380 R** (3RC100 –146999) **Cylinder, Remote (3" x 8") (Sub. AA5603R, ATTACHMENT)**

## REMOTE CONTROL CYLINDER (HYDRAULIC-STOP TYPE)
Remote Cylinder Serial No. 3RC147000- ) and (3RC182927- )

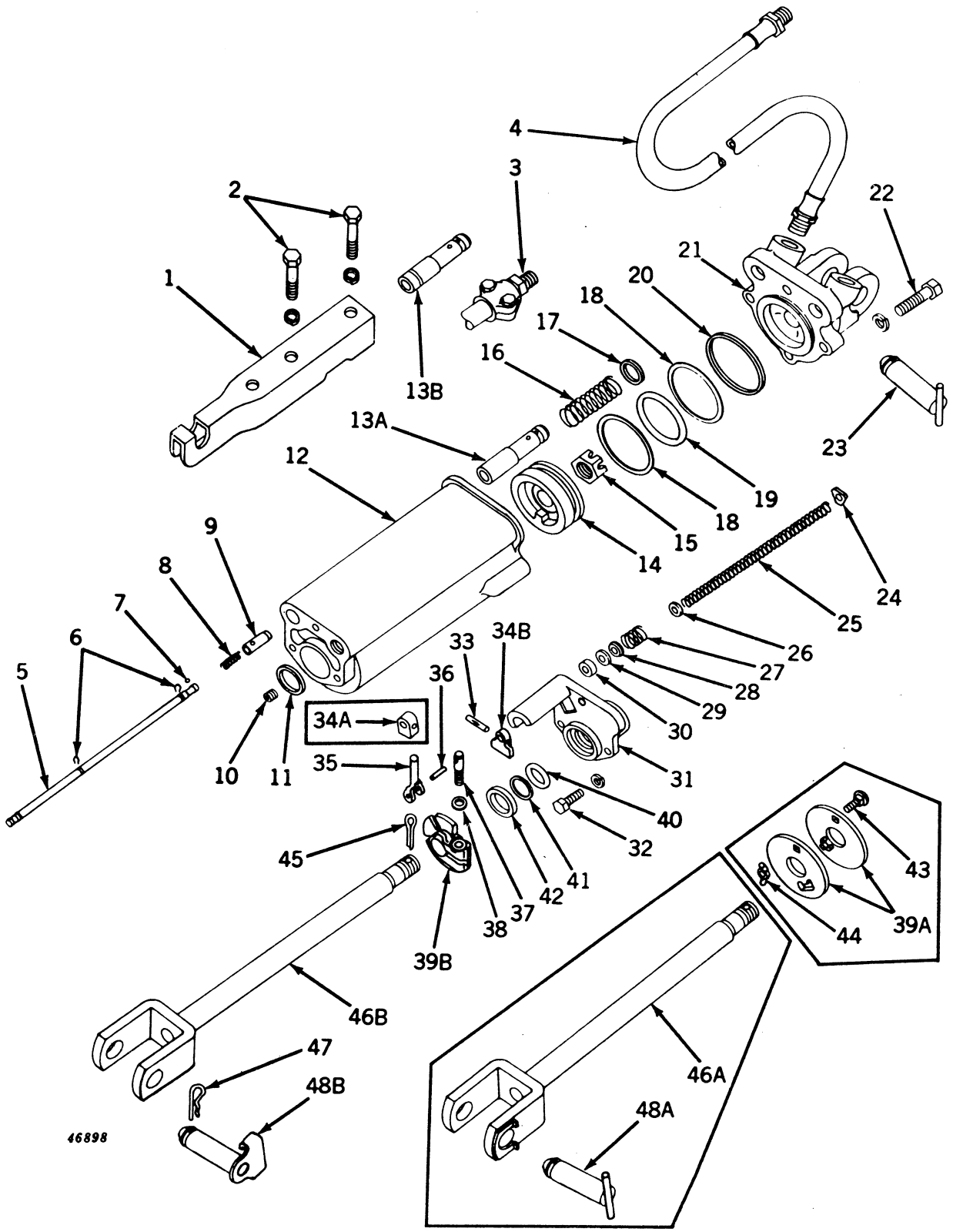

## REMOTE CONTROL CYLINDER (HYDRAULIC-STOP TYPE)—Continued
(Remote Cylinder Serial Nos. 3RC147000- ) and (3RCS182927- )

| Key | Part No. | Cylinder Serial No. | Cylinder with Special Stop Serial No. | Description |
|---|---|---|---|---|
| 1 | A 4452 R | (3RC100 - ) | (3RCS182927- ) | Arm, Cylinder Transport |
| 2 | 19H 1242 M | (3RC100 - ) | (3RCS182927- ) | Screw, Cap, 7/16" x 2-3/4" (2 used) |
| | 12H 12 R | (3RC100 - ) | (3RCS182927- ) | Washer, Lock, 7/16" (2 used) |
| 3 | AA 4864 R | (3RC100 - ) | (3RCS182927- ) | Coupling for Flexible Oil Line |
| 4 | AA 4542 R | (3RC100 - ) | (3RCS182927- ) | Line, Flexible Oil, 88" Long (2 used) (Sub. fo AA4279R) |
| 5 | A 4736 R | (3RC147000- ) | (3RCS182927- ) | Rod, Stop |
| 6 | A 4739 R | (3RC147000- ) | (3RCS182927- ) | Snap Ring (2 used) |
| 7 | A 4742 R | (3RC147000- ) | (3RCS182927- ) | Ball, Bleed Valve |
| 8 | A 4741 R | (3RC147000- ) | (3RCS182927- ) | Spring, Bleed Valve |
| 9 | A 4740 R | (3RC147000- ) | (.....) | Valve, Bleed (Sub. AA5731R on Regular Cylinde only) |
| | A 4740 R | (.....) | (3RCS182927- ) | Valve, Bleed |
| 10 | A 3125 R | (3RC147000- ) | (3RCS182927- ) | Plug, Pipe |
| 11 | A 4733 R | (3RC147000- ) | (3RCS182927- ) | Gasket, Piston Rod Guide (Packed 5 in a Pkg.) |
| 12 | A 4720 R | (3RC147000- ) | (3RCS182927- ) | Cylinder, Remote |
| 13A | A 4743 R | (3RC147000- ) | (.....) | Valve, Stop (Sub. AA5731R) |
| 13B | A 5295 R | (.....) | (3RCS182927- ) | Valve, Stop |
| 14 | A 4727 R | (3RC147000- ) | (3RCS182927- ) | Piston |
| 15 | A 5401 R | (3RC147000- ) | (3RCS182927- ) | Nut, Special Lock (Packed 10 in a Pkg.) |
| 16 | A 4744 R | (3RC147000- ) | (3RCS182927- ) | Spring, Stop Valve |
| 17 | A 4723 R | (3RC147000- ) | (3RCS182927- ) | Gasket, Oil Passage (2 used) (Packed 5 in a Pkg. |
| 18 | A 4729 R | (3RC147000- ) | (3RCS182927- ) | Washer, Piston Packing (2 used) (Packed 5 in Pkg.) |
| 19 | A 4728 R | (3RC147000- ) | (3RCS182927- ) | Packing, "O" Ring |
| 20 | A 4722 R | (3RC147000- ) | (3RCS182927- ) | Gasket (Packed 5 in a Pkg.) |
| 21 | A 4721 R | (3RC147000- ) | (3RCS182927- ) | Cap, Remote Cylinder |
| 22 | 19H 474 R | (3RC147000- ) | (3RCS182927- ) | Screw, Cap, 1/2" x 1-7/8" (4 used) |
| | 12H 13 R | (3RC147000- ) | (3RCS182927- ) | Washer, Lock, 1/2" (4 used) |
| 23 | AA 6309 R | (3RC147000- ) | (3RCS182927- ) | Pin, Attaching (Sub. for AA5605R) |
| 24 | A 4738 R | (3RC147000- ) | (3RCS182927- ) | Washer, Stop Rod |
| 25 | A 4737 R | (3RC147000- ) | (3RCS182927- ) | Spring, Stop Rod |
| 26 | 24H 1017 R | (3RC147000- ) | (3RCS182927- ) | Washer, Stop Rod |
| 27 | A 4748 R | (3RC147000- ) | (3RCS182927- ) | Spring, Stop Rod Packing |
| 28 | A 4747 R | (3RC147000- ) | (3RCS182927- ) | Adapter, Stop Rod Packing, Male (Packed 2 in Pkg.) |
| 29 | A 4745 R | (3RC147000- ) | (3RCS182927- ) | "V" Packing, Stop Rod (3 used) (Packed 5 in Pkg.) |
| 30 | A 4746 R | (3RC147000- ) | (3RCS182927- ) | Adapter, Stop Rod Packing, Female |
| 31 | A 4732 R | (3RC147000- ) | (3RCS182927- ) | Guide, Piston Rod |
| 32 | 19H 218 D | (3RC147000- ) | (3RCS182927- ) | Screw, Cap, 3/8" x 1" (3 used) (Sub. for 19H211F |
| | 12H 11 R | (3RC147000- ) | (3RCS182927- ) | Washer, Lock, 3/8" (3 used) |
| 33 | 25H 760 R | (3RC147000- ) | (3RCS182927- ) | Pin, Groove, Stop Rod Arm |
| 34A | A 4749 R | (3RC147000-186063) | (3RCS182927-186063) | Arm, Stop Rod (Sub. One A5304R) |
| 34B | A 5304 R | (3RC186064- ) | (3RCS186064- ) | Arm, Stop Rod |
| 35 | A 5302 R | (3RC186064- ) | (3RCS186064- ) | Lever, Stop |
| 36 | 34H 58 R | (3RC186064- ) | (3RCS186064- ) | Pin, Roll, in Stop Lever |
| 37 | A 5301 R | (3RC186064- ) | (3RCS186064- ) | Screw, Stop |
| 38 | R 1870 R | (3RC186064- ) | (3RCS186064- ) | Washer, on Stop Screw |
| 39A | A 4734 R | (3RC147000-186063) | (3RCS182927-186063) | Stop, Piston Rod (2 used) (Sub. One A5300F A5301R, A5302R, A5304R, R1870R, and 34H58F |
| 39B | A 5300 R | (3RC186064- ) | (3RCS186064- ) | Stop, Piston Rod |
| 40 | A 4730 R | (3RC147000- ) | (3RCS182927- ) | Packing, "O" Ring, Piston Rod (Packed 5 in Pkg.) |
| 41 | A 4731 R | (3RC147000- ) | (3RCS182927- ) | Washer, Piston Rod Packing (Packed 5 in a Pkg |
| 42 | AA 5607 R | (3RC147000- ) | (3RCS182927- ) | Seal, Oil, Piston Rod Wiper |
| 43 | 2H 957 R | (3RC147000-186063) | (3RCS182927-186063) | Bolt, Cge., 5/16" x 1" |
| 44 | A 4735 R | (3RC147000-186063) | (3RCS192927-186063) | Nut, Wing (Packed 10 in a Pkg.) |
| 45 | 11H 49 R | (3RC147000- ) | (3RCS182927- ) | Pin, Cotter, 1/8" x 2" |
| 46A | AA 5606 R | (3RC147000-186063) | (3RCS182927-186063) | Rod, Piston, with Yoke and Clip (Sub. On AA6307R and AA6308R) |
| 46B | AA 6308 R | (3RC186064- ) | (3RCS186064- ) | Rod, Piston, with Yoke |
| 47 | A 3581 R | (3RC26259 - ) | (3RCS182927- ) | Pin, Spring Locking (2 used) (Packed 25 in a Pkg |
| 48A | AA 6309 R | (3RC147000-186063) | (3RCS182927-186063) | Pin, Attaching (Sub. for AA5605R) |
| 48B | AA 6307 R | (3RC186064- ) | (3RCS186064- ) | Pin, Attaching, with Clip |

(Parts listed below are an assembly of most of the parts in this grouping.)

| | | | |
|---|---|---|---|
| **AA 5603 R** | (3RC147000- ) | (.....) | **Cylinder, Remote, 3" x 8" (ATTACHMENT)** |
| **AA 6256 R** | (.....) | (3RCS182927- ) | **Cylinder, Remote, with Special Stop Valve 3" x 8" (ATTACHMENT)** |

## OIL LINE BREAKAWAY COUPLING AND SELECTOR VALVE
(Powr-Trol Valve Housing Serial No. PCV67905- )

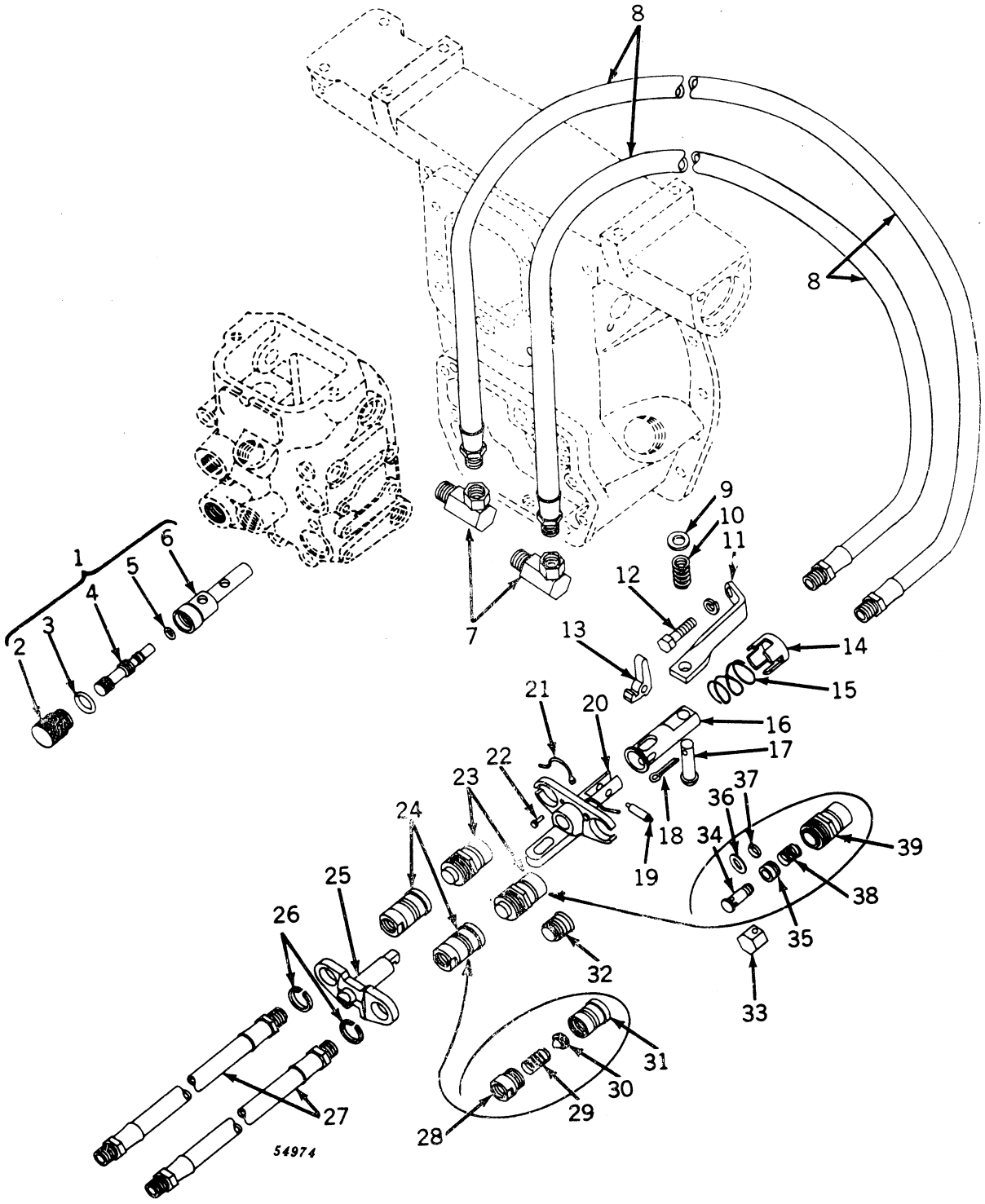

## OIL LINE BREAKAWAY COUPLING AND SELECTOR VALVE—Continued
**(Powr-Trol Valve Housing Serial No. PCV67905- )**

| Key | Part No. | Valve Housing Serial No. | Description |
|---|---|---|---|
| 1 | AA 5724 R | ( – ) | Valve, Selector, Assembly |
| 2 | A 4850 R | ( – ) | Plug |
| 3 | R 495 R | ( – ) | Packing, "O" Ring (Packed 5 in a Pkg.) |
| 4 | A 4848 R | ( – ) | Valve |
| 5 | A 3917 R | ( – ) | Packing, "O" Ring (Packed 2 in a Pkg.) |
| 6 | A 4849 R | ( – ) | Body |
| 7 | AA 5723 R | ( – ) | Union, Adapter (2 used) |
| 8 | AA 5722 R | ( – ) | Line, Flexible Oil, Breakaway Coupling (2 used) |
| 9 | 24H 184 R | ( – ) | Washer, 17/32" x 15/16" x 16 Gauge |
| 10 | A 1785 R | ( – ) | Spring |
| 11 | A 4851 R | ( – ) | Bracket, Breakaway Coupling |
| 12 | 19H 1166 H | ( – ) | Screw, Cap, 7/16" x 1-1/2" |
| | 12H 12 R | ( – ) | Washer, Lock, 7/16" |
| 13 | A 4859 R* | ( – ) | Latch (Packed 3 in a Pkg.) |
| 14 | A 4858 R | ( –353299) | Cover, Spring (Sub. AA6337R Cover and Spring) |
| | A 5396 R | (PCV353300– ) | Cover, Spring (Sub. AA6337R Cover and Spring) |
| 15 | A 4857 R | ( –353299) | Spring (Sub. AA6337R Cover and Spring) |
| | A 5395 R* | (PCV353300– ) | Spring (Sub. AA6337R Cover and Spring) |
| 16 | A 4856 R* | ( – ) | Drawbar |
| 17 | B 146 R | ( – ) | Pin, Headed |
| 18 | 11H 80 R | ( – ) | Pin, Cotter, 3/16" x 1" |
| 19 | A 4860 R* | ( – ) | Pin, Latch (Packed 3 in a Pkg.) |
| 20 | AA 5727 R* | ( – ) | Frame, Breakaway, Tractor Half |
| 21 | A 4861 R* | ( – ) | Snap, Ring (2 used) (Packed 3 in a Pkg.) |
| 22 | A 4862 R* | ( – ) | Rivet (2 used) (Packed 3 in a Pkg.) |
| 23 | AA 5728 R* | ( – ) | Coupling, Oil Line, Tractor Half (2 used) |
| 24 | AA 5729 R* | ( – ) | Coupling, Oil Line, Implement Half (2 used) |
| 25 | A 4863 R* | ( – ) | Frame, Breakaway, Implement Half |
| 26 | A 4864 R* | ( – ) | Snap Ring (2 used) (Packed 3 in a Pkg.) |
| 27 | AA 4542 R | ( – ) | Line, Flexible Oil, 88" Long (2 used) (Sub. for AA4279R) |
| 28 | A 4866 R* | ( – ) | Adapter, Coupling (2 used) |
| 29 | A 4867 R* | ( – ) | Spring (2 used) (Packed 3 in a Pkg.) |
| 30 | A 4871 R* | ( – ) | Valve, Poppet (2 used) (Packed 3 in a Pkg.) |
| 31 | A 4865 R* | ( – ) | Body, Coupling, Breakaway Oil Line (2 used) |
| 32 | A 4868 R* | ( – ) | Cap, Dust (2 used) (Packed 6 in a Pkg.) |
| 33 | A 4869 R* | ( – ) | Extractor, Tubular Valve (Packed 6 in a Pkg.) |
| 34 | A 4855 R* | ( – ) | Valve, Tubular (2 used) (Packed 3 in a Pkg.) |
| 35 | AA 6179 R* | ( – ) | Sleeve, with Washer (2 used) (Packed 3 in a Pkg.) (Sub. for A4854R an A4870R) |
| 36 | A 5829 R* | ( – ) | Washer, "O" Ring Back-Up (Packed 2 in a Pkg.) |
| 37 | R 459 R* | ( – ) | Packing, "O" Ring (2 used) (Packed 5 in a Pkg.) |
| 38 | A 4853 R* | ( – ) | Spring (2 used) (Packed 3 in a Pkg.) |
| 39 | A 4852 R* | ( – ) | Body, Coupling, Breakaway Frame (2 used) |

(Parts listed below are assemblies of parts in this grouping.)

| | | |
|---|---|---|
| **AA 5720 R** | ( – ) | **Oil Line Breakaway Coupling, Complete, and Selector Valve (ATTACHMENT)** |
| AA 5721 R | ( – ) | Coupling, Breakaway, Assembly |
| AA 5726 R | ( – ) | Assortment, Breakaway Coupling Replacement Parts. Assortment of Part Packaged for Counter Display and to Sell Out of. The Assortment Contains Parts Marked (*) in Quantities Shown. Stock in Counter Display can be Replenished by Ordering any of the Parts Marked (*). These Parts can also be Stocked in the Regular Way. |
| AA 6341 R | ( – ) | Coupling, Breakaway, Tractor Half |
| AA 6342 R | ( – ) | Coupling, Breakaway, Implement Half |

*See AA5726R, Above.

### REUSABLE COUPLINGS (USE WITH SINGLE-WIRE BRAID FLEXIBLE OIL LINE)

| Coupling No. | I.D. | Thread |
|---|---|---|
| AF 3585 R | 3/8" | 3/8"—18 NPTF (Packed 2 in a Pkg.) |
| AF 3586 R | 1/2" | 1/2"—14 NPTF (Packed 2 in a Pkg.) |
| AF 3587 R | 5/8" | 3/4"—14 NPTF (Packed 2 in a Pkg.) |
| AF 3588 R | 3/4" | 3/4"—14 NPTF (Packed 2 in a Pkg.) |

### REUSABLE COUPLINGS (USE WITH DOUBLE-WIRE BRAID FLEXIBLE OIL LINE)

| Coupling No. | I.D. | Thread |
|---|---|---|
| AR 21629 R | 3/8" | 3/8"—18 NPTF (Packed 2 in a Pkg.) |
| AR 21630 R | 1/2" | 1/2"—14 NPTF (Packed 2 in a Pkg.) |
| AR 21631 R | 5/8" | 3/4"— 4 NPTF (Packed 2 in a Pkg.) |
| AR 21632 R | 3/4" | 3/4"— 1 NPTF (Packed 2 in a Pkg.) |
| AR 21634 R | 1" | 1" —1-1/2" NPTF (Packed 2 in a Pkg.) |

### BULK SINGLE-WIRE BRAID FLEXIBLE OIL LINE (USE WITH REUSABLE COUPLING FOR SINGLE-WIRE BRAID FLEXIBLE OIL LINE)

| Part No. | I.D. | O.D. | Length |
|---|---|---|---|
| A 5775 R | 3/8" | 25/32" | Approx. 50 Ft. |
| A 5776 R | 1/2" | 29/32" | Approx. 50 Ft. |
| A 5777 R | 5/8" | 1-1/32" | Approx. 50 Ft. |
| A 5778 R | 3/4" | 1-3/16" | Approx. 50 Ft. |

### BULK DOUBLE-WIRE BRAID FLEXIBLE OIL LINE (USE WITH REUSABLE COUPLING FOR DOUBLE-WIRE BRAID FLEXIBLE OIL LINE)

| Part No. | I.D. | O.D. | Length |
|---|---|---|---|
| R 21531 R | 3/8" | 29/32" | Approx. 50 Ft. |
| R 21532 R | 1/2" | 31/32" | Approx. 50 Ft. |
| R 21533 R | 5/8" | 1-3/32" | Approx. 50 Ft. |
| R 21534 R | 3/4" | 1-1/4" | Approx. 50 Ft. |
| R 21535 R | 1" | 1-9/16" | Approx. 50 Ft. |

## UMBRELLA HOLDER
(Serial No. 5000001- )

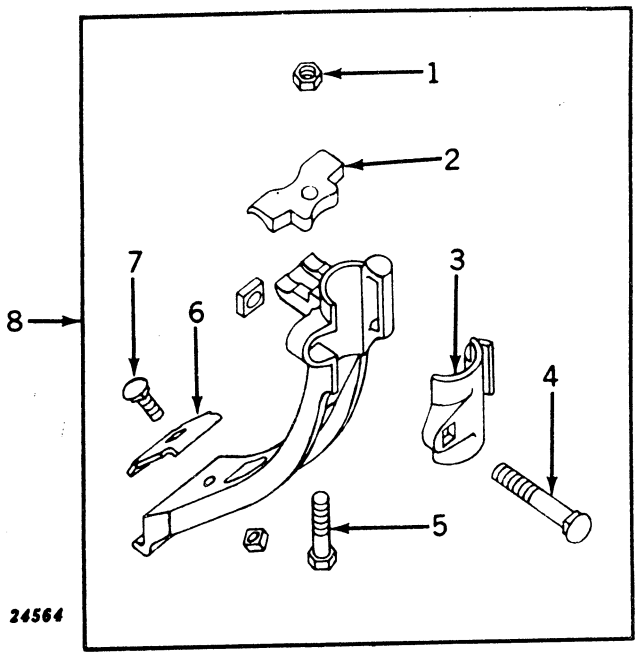


| Key | Part No. | Serial No. | Description |
|---|---|---|---|
| 1 | 14H 785 R | ( – ) | Nut, 5/16" (Sub. for 14H253R) |
| 2 | A 3487 R | ( – ) | Clamp |
| 3 | F 518 A | ( – ) | Cap |
| 4 | 2H 549 R | ( – ) | Bolt, Cge., 7/16" x 2-3/4", with Nut (Sub. for 2H547A) |
| 5 | 19H 1286 H | ( – ) | Screw, Cap, 5/16" x 2" (Sub. for 19H143R) |
| 6 | A 3486 R | ( – ) | Clip |
| 7 | 2H 272 R | ( – ) | Bolt, Cge., 5/16" x 1", with Nut (Sub. for 2H170R) |
| 8 | ..... | ( – ) | **Holder, Umbrella, Complete (Not Furnished)** |

## ADDITIONAL DECALCOMANIAS

The following Decalcomanias are also available in packages of 5 each:




| Part No. | Size |
|---|---|
| JD 110 R | 3/4" x 6" |
| JD 111 R | 1" x 8" |
| JD 112 R | 1-1/4" x 10" |
| JD 113 R | 1-1/2" x 12" |
| JD 114 R | 2-1/2" x 20" |
| JD 115 R | 2" x 16" |




| | |
|---|---|
| JD 250 R | 1/2" x 7-1/8" |
| JD 251 R | 11/16" x 10" |
| JD 235 R* | 11/16" x 10" |
| JD 252 R | 1" x 14-1/4" |
| JD 236 R* | 1" x 14-1/4" |
| JD 253 R | 1-1/4" x 17-3/4" |
| JD 237 R* | 1-1/4" x 17-3/4" |
| JD 267 R | 1-1/2" x 21-3/8" |
| JD 238 R* | 1-1/2" x 21-3/8" |
| JD 254 R | 1-3/4" x 25" |
| JD 239 R* | 1-3/4" x 25" |
| JD 255 R | 2-1/4" x 32" |



| | |
|---|---|
| JD 116 R | 1" x 10-3/4" |
| JD 118 R | 1/2" x 5-3/8" |
| JD 119 R | 3/4" x 8-1/16" |



| | |
|---|---|
| JD 257 R | 1/2" x 6" |
| JD 258 R | 3/4" x 9" |
| JD 243 R* | 3/4" x 9" |
| JD 259 R | 1" x 12" |




58724

| | | |
|---|---|---|
| JD 260 R | (Sub. for JD120R) | 1-7/16" x 2" |
| JD 5260 R** | | 1-7/16" x 2" |
| JD 261 R | (Sub. for JD121R) | 2-1/8" x 3" |
| JD 245 R* | | 2-1/8" x 3" |
| JD 5261 R** | | 2-1/8" x 3" |
| JD 262 R | (Sub. for JD122R) | 2-7/8" x 4" |
| JD 246 R* | | 2-7/8" x 4" |
| JD 5262 R** | | 2-7/8" x 4" |
| JD 263 R | (Sub. for JD123R) | 3-9/16" x 5" |
| JD 247 R* | | 3-9/16" x 5" |
| JD 5263 R** | | 3-9/16" x 5" |
| JD 264 R | (Sub. for JD124R) | 4-1/4" x 6" |
| JD 248 R* | | 4-1/4" x 6" |
| JD 5264 R** | | 4-1/4" x 6" |
| JD 265 R | | 6-3/8" x 9" |
| JD 5265 R** | | 6-3/8" x 9" |

*Black Decals for Machines Painted other than John Deere Green.

**Leaping Deer Decals for South and Central America.

## DECALCOMANIA SET FOR MODEL "50" TRACTOR
(Serial No. 5000001- )

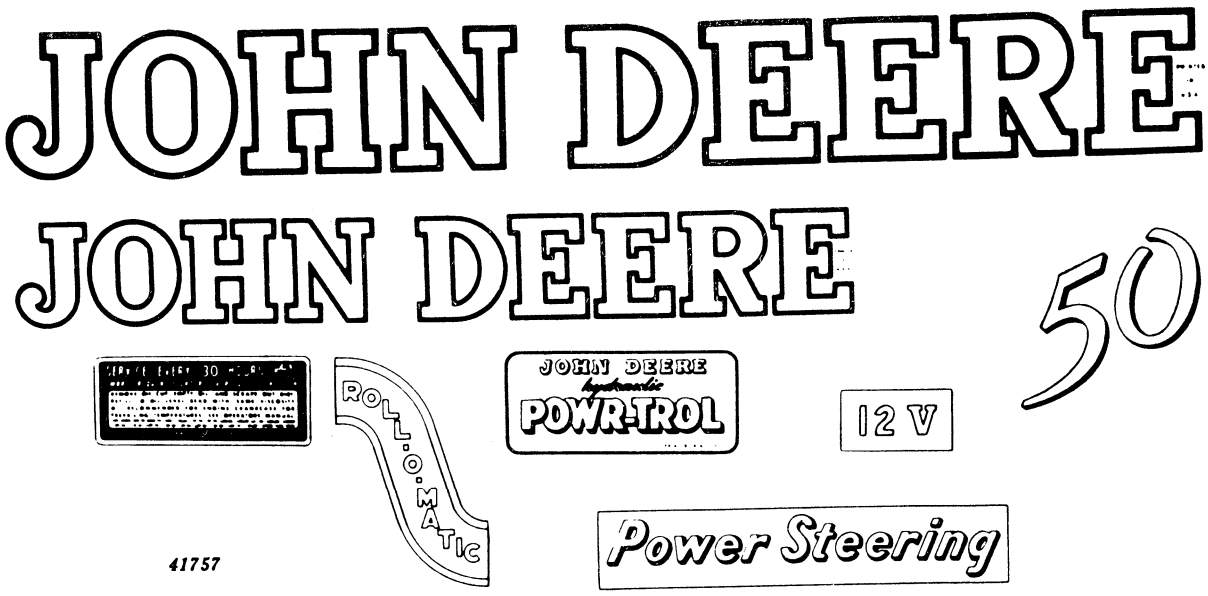


| Part No. | Description |
|---|---|
| AB 4661 R | Decalcomania Set (Water-Applied Type) Consisting of: |

"John Deere" for Sides of Hood (2 used)
"John Deere" for Seat
"Donaldson Air Cleaner Instructions"
"Powr-Trol"
"Model Designation" (2 used)
"12-Volt" for Battery Box
"Roll-O-Matic"
"Power Steering" (2 used)
(Decalcomanias are furnished in sets only as listed.)

AA 5398 R Kit, Solvent, for Applying Kwik-Strip Decals (No Longer Furnished)

## OPERATOR'S MANUAL

| Part No. | Serial No. | Description |
|---|---|---|
| R2033 R | ( – ) | Manual, Operator's, Model "50" Series |
| R2048 R | (5024000– ) | Manual, Operator's, Model "50" LP-Gas |

## GASKET SET FOR ALL-FUEL CARBURETORS
(Serial No. 5000001-5015950)

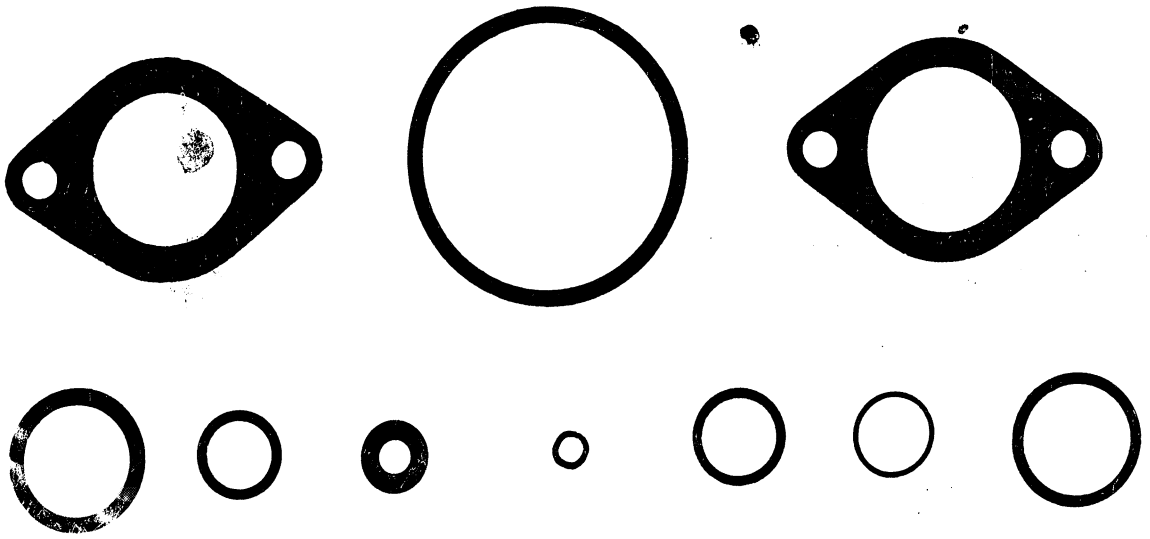

23252

| Part No. | | | Serial No. | Description |
|---|---|---|---|---|
| AA 4991 R | | | | Service Gasket Set for All-Fuel Carburetor Consisting of: |
| One | R 10089 R | ( | -5015950) | Gasket, Bowl Nut |
| One | R 10090 R | ( | -5015950) | Gasket, Choke Lever |
| One | R 10091 R | ( | -5015950) | Gasket, Choke Dust Cover |
| One | R 10114 R | ( | -5015950) | Packing, Felt, Throttle Shaft Bushing (Sub. for 44-62) |
| One | R 10175 R | ( | -5015950) | Gasket, Carburetor to Manifold |
| One | R 10014 R | ( | -5015950) | Gasket, Bowl Nut |
| One | R 10015 R | ( | -5015950) | Gasket, Bowl Nut |
| One | R 10025 R | ( | -5015950) | Gasket, Strainer |
| One | R 10026 R | ( | -5015950) | Gasket, Bowl |
| One | R 10176 R | ( | -5015950) | Gasket, Carburetor to Air Intake Elbow |

## CARBURETOR CHOKE LEVER KITS

| Part No. | Serial No. | Description |
|---|---|---|
| AR 21655 R | ( -5015950) | Kit, Carburetor Choke Lever (Use with AB3740R All-Fuel Carburetor) |
| AR 26156 R | ( - ) | Kit, Carburetor Choke Lever (Use with AB4635R, AB4794R Gasoline and AB4738R All-Fuel Carburetor) |

## GASKET SET FOR VALVE REPLACEMENT

| Part No. | | Serial No. | Description |
|---|---|---|---|
| AR 21784 R | | | Set, Gasket, Consisting of: |
| Two | A 4444 R | ( - ) | Packing, "O" Ring, Upper Water Pipe |
| One | A 4631 R | ( - ) | Gasket, Carburetor to Manifold |
| One | A 4634 R | ( - ) | Gasket, Carburetor to Intake |
| Two | A 4642 R | ( - ) | Gasket, Intake Manifold to Exhaust Manifold |
| One | AB 4728 R | ( - ) | Gasket, Manifold |
| Two | B 60 R | ( - ) | Washer, Packing, Vent Pipe Packing |
| Ten | B 369 R | ( - ) | Washer, Lead, Cylinder Head Studs |
| Two | B 425 R | ( - ) | Washer, Copper, Tappet Lever Cover to Special Nut Screw |
| One | B 1799 R | ( - ) | Gasket, Lower Water Pipe |
| One | B 3205 R | ( - ) | Gasket, Cylinder Head |
| One | B 3221 R | ( - ) | Gasket, Tappet Lever Cover |
| One | R 495 R | ( - ) | Packing, "O" Ring, Ventilator, with Tube |
| One | R 20029 R | ( - ) | Gasket, Air Cleaner |

## GASKET SET FOR VALVE, RING, AND CYLINDER REPLACEMENT
(All-Fuel) (Serial No. 5000001-5015950)

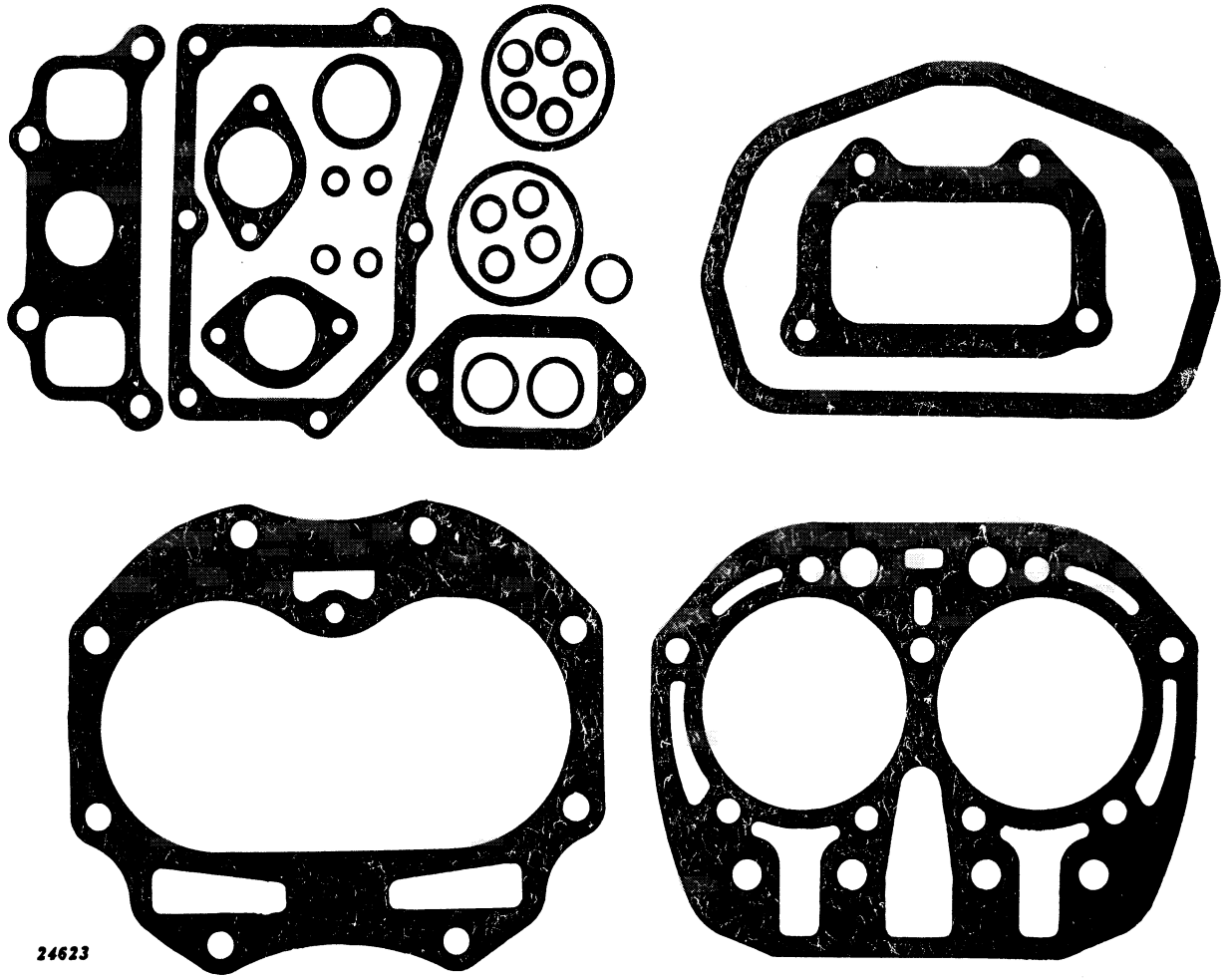


| Part No. | | | | | Description |
|---|---|---|---|---|---|
| AB 4676 R Gasket Set Consisting of: | | | | | |
| One | | 321 R | ( | – ) | Gasket, Carburetor to Manifold |
| Two | A | 4444 R | ( | – ) | Packing, "O" Ring, Upper Water Pipe |
| Two | B | 60 R | ( | – ) | Packing, Ventilator Pipe |
| Two | B | 425 R | ( | – ) | Gasket, Tappet Lever Cover Stud (Copper) |
| Nine | B | 369 R | ( | – ) | Washer, Lead, Cylinder Head Studs |
| One | B | 1787 R | ( | – ) | Gasket, Manifold |
| One | B | 1799 R | ( | – ) | Gasket, Lower Water Pipe |
| One | B | 2662 R | ( | – ) | Gasket, Crankcase Cover |
| One | B | 3089 R | ( | – ) | Gasket, Cylinder Head |
| One | B | 3221 R | ( | – ) | Gasket, Tappet Lever Cover |
| One | B | 3224 R | ( | – ) | Gasket, Cylinder Water Outlet |
| One | B | 3742 R | ( | – ) | Gasket, Cylinder to Case (Sub. for B3088R) |
| One | C | 1778 R | ( | – ) | Gasket, Filter Bowl |
| One | D | 1034 R | ( | – ) | Gasket, Carburetor Intake Elbow to Carburetor |
| One | R | 495 R | ( | – ) | Packing, "O" Ring, Ventilator Outlet Pipe |
| One | R | 20029 R | ( | – ) | Gasket, Air Cleaner |

## GASKET SET FOR VALVE, RING, AND CYLINDER REPLACEMENT

(Gasoline) (Serial No. 5000001- )
(All-Fuel) (Serial No. 5015951- )
(LP-Gas) (Serial No. 5024000- )

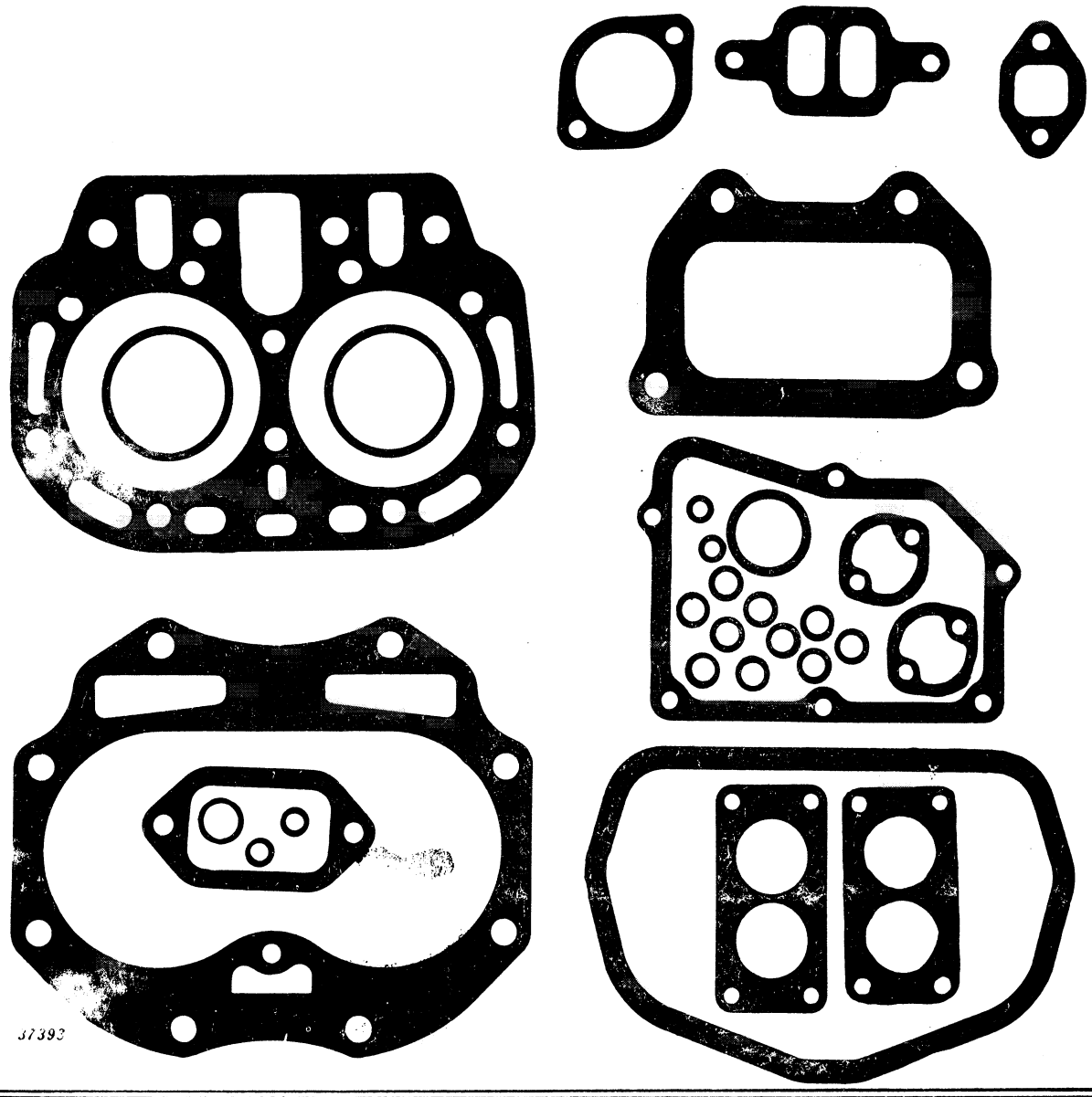


| Part No. | | | | | Description |
|---|---|---|---|---|---|
| AB 4677 R | | Gasket Set Consisting of: | | | |
| Two | A | 4444 R | ( | – ) | Backing, "O" Ring, Upper Water Pipe |
| One | A | 4631 R | ( | – ) | Gasket, Carburetor to Manifold |
| One | A | 4634 R | ( | – ) | Gasket, Carburetor to Intake |
| Two | A | 4642 R | ( | – ) | Gasket, Intake Manifold |
| One | AB | 4728 R | ( | – ) | Gasket, Manifold (Set of 3) |
| Two | B | 60 R | ( | – ) | Packing, Ventilator Pipe |
| Ten | B | 369 R | ( | – ) | Washer, Lead, Cylinder Head Studs |
| Two | B | 425 R | ( | – ) | Gasket, Tappet Lever Cover Stud (Copper) |
| One | B | 1799 R | ( | – ) | Gasket, Lower Water Pipe |
| One | B | 2662 R | ( | – ) | Gasket, Crankcase Cover |
| One | B | 3205 R | ( | – ) | Gasket, Cylinder Head |
| One | B | 3221 R | ( | – ) | Gasket, Tappet Lever Cover |
| One | B | 3224 R | ( | – ) | Gasket, Cylinder Water Outlet |
| One | B | 3742 R | ( | – ) | Gasket, Cylinder to Case (Sub. for B3088R) |
| One | C | 1778 R | ( | – ) | Gasket, Filter Bowl |
| One | R | 495 R | ( | – ) | Packing, "O" Ring, Ventilator Outlet Pipe |
| One | R | 20029 R | ( | – ) | Gasket, Air Cleaner |

## GASKET SET FOR CRANKSHAFT AND BEARING REPLACEMENT
(Serial No. 5000001- )

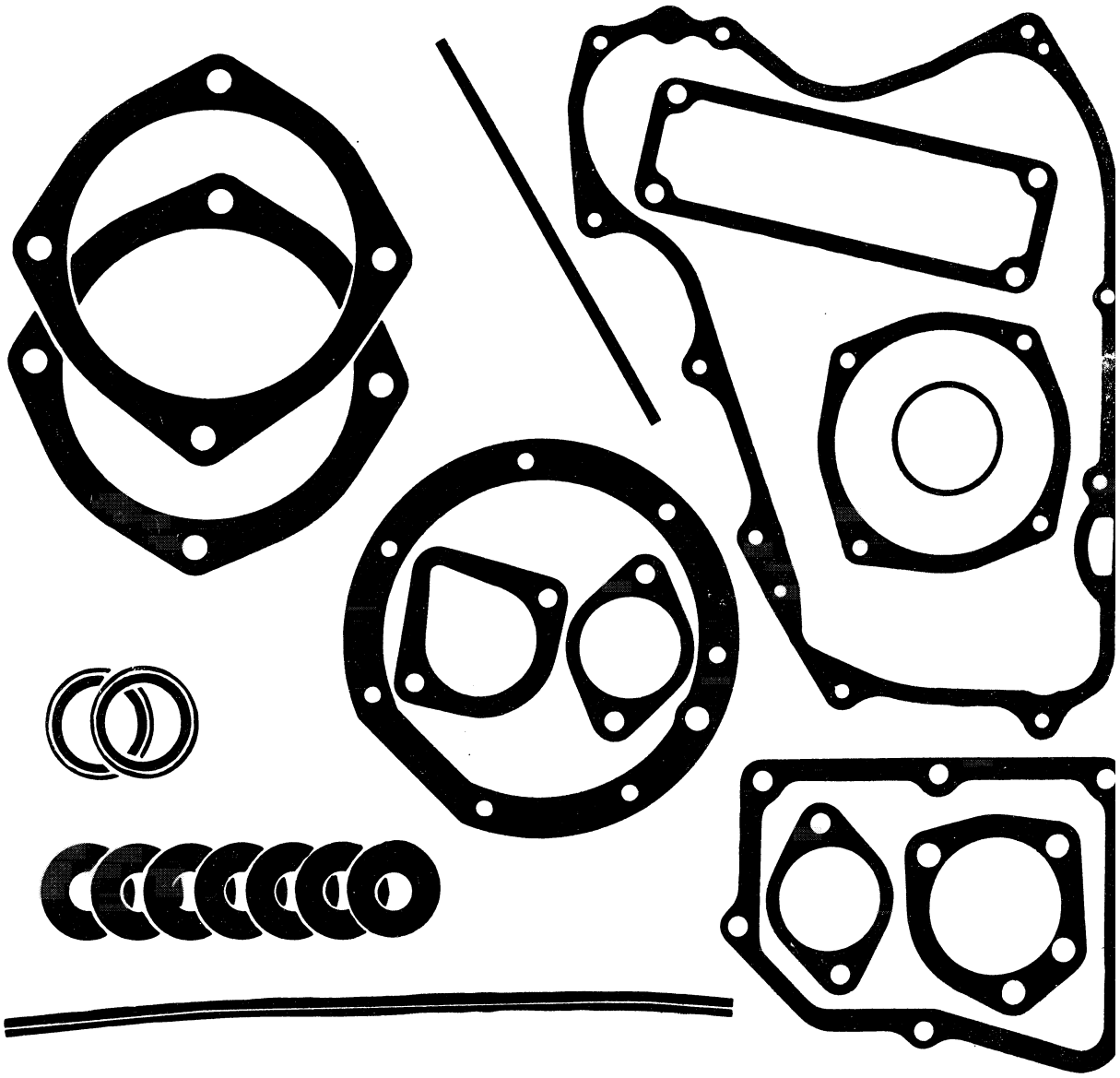

24619

| Part No. | | | | Description |
|---|---|---|---|---|
| AB 4675 R Gasket Set Consisting of: | | | | |
| One | A | 3311 R | ( – ) | Felt, Flywheel Cover (Sub. for B2549R) |
| One | A | 3817 R | ( – ) | Gasket, Transmission Drive Shaft Outer Bearing Cover |
| Two | AB | 4462 R | ( – ) | Seal, Oil, R.H. Main Bearing |
| One | B | 2550 R | ( – ) | Packing, Strip, Flywheel Cover |
| One | B | 2662 R | ( – ) | Gasket, Crankcase Cover |
| One | B | 2743 R | ( – ) | Gasket, R.H. Brake |
| One | B | 3025 R | ( – ) | Gasket, R.H. Main Bearing Housing |
| One | B | 3026 R | ( – ) | Gasket, L.H. Main Bearing Housing |
| One | B | 3028 R | ( – ) | Packing, Flywheel Spacer |
| One | B | 3030 R | ( – ) | Gasket, Left Main Bearing Cover |
| One | B | 3084 R | ( – ) | Gasket, First Reduction Gear Cover |
| One | B | 3122 R | ( – ) | Gasket, Pulley Dust Shield |
| One | B | 3467 R | ( – ) | Gasket, Clutch Fork Bearing |
| Two | B | 3982 R | ( – ) | Shim, Camshaft Left Bearing (Sub. for B2469R) |
| Seven | C | 932 R | ( – ) | Washer, Lead, Pulley Dust Shield |

## GASKET SET FOR GOVERNOR OVERHAUL
(Serial No. 5000001- )

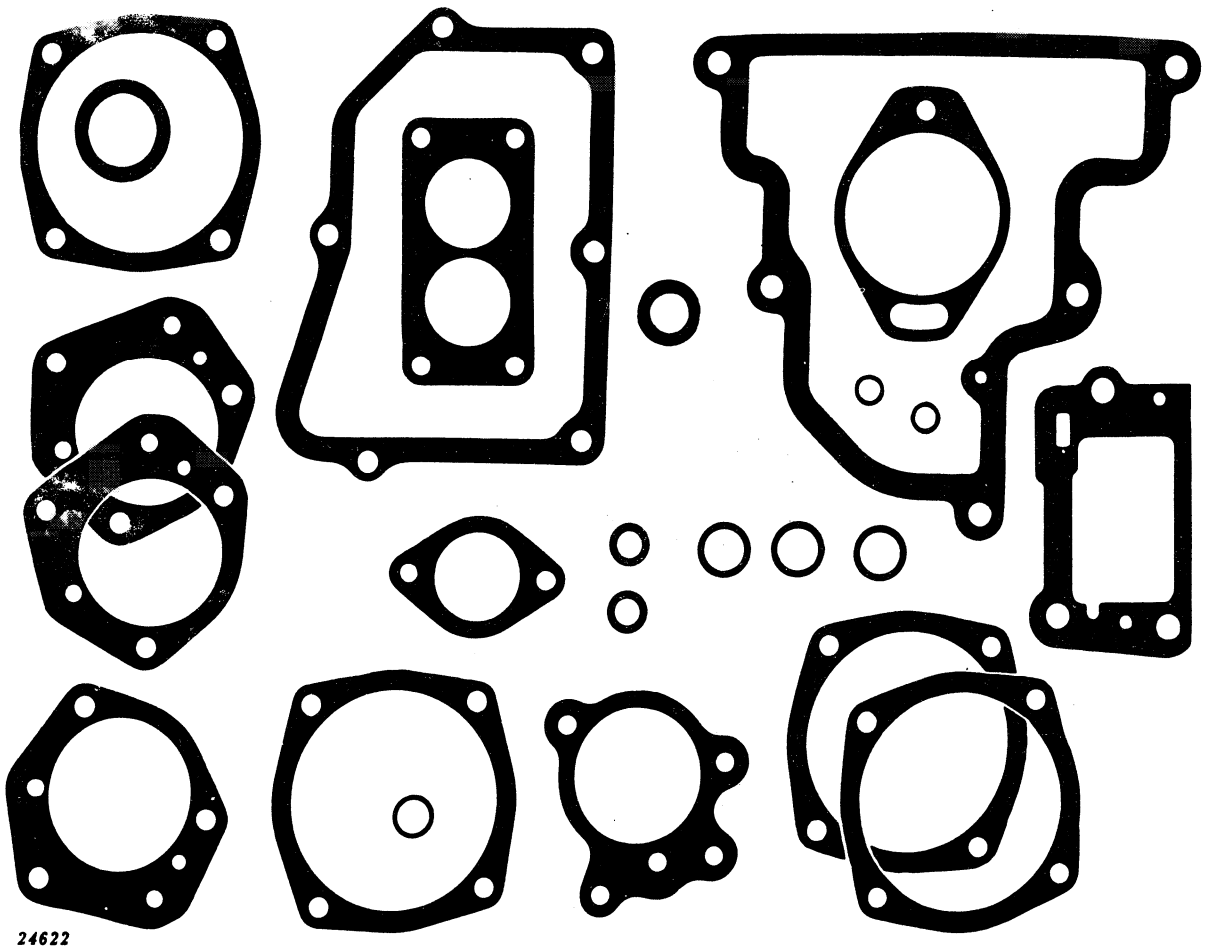


| | | Part No. | | | Description |
|---|---|---|---|---|---|
| AB 4678 R Gasket Set Consisting of: | | | | | |
| One | A | 3190 R | ( | – ) | Packing, "O" Ring, Generator Drive Pulley |
| Two | A | 3606 R | ( | – ) | Packing, "O" Ring, Powr-Trol Suction Line |
| One | A | 4190 R | ( | – ) | Gasket, Ventilator Pump Cover |
| One | A | 4479 R | ( | – ) | Gasket, Powr-Trol Pump Housing |
| One | A | 4634 R | ( | – ) | Gasket, Carburetor to Intake (Gasoline) |
| One | A | 5272 R | ( | – ) | Gasket, Magneto |
| Two | B | 60 R | ( | ) | Washer, Packing, Ventilator Pipe |
| One | B | 284 R | ( | ) | Gasket, Governor Left Bearing Housing |
| One | B | 285 R | ( | ) | |
| One | B | 293 R | ( | ) | Packing, "O" Ring, Fan Shaft Support Tube |
| Two | B | 569 R | ( | ) | Shim, Governor Left Bearing Housing |
| One | B | 2127 R | ( | ) | Packing, Fan Bearing, Rear |
| Three | B | 2642 R | ( | – ) | Shim, Fan Shaft Rear Bearing Housing |
| Two | B | 2642 R | ( | – ) | Shim, Fan Shaft Rear Bearing Housing |
| One | B | 2643 R | ( | – ) | |
| One | B | 2655 R | ( | – ) | Gasket, Governor Case |
| One | B | 2662 R | ( | – ) | Gasket, Crankcase Cover |
| One | D | 1034 R | ( | ) | Gasket, Carburetor Intake Elbow to Carburetor (All-Fuel) |
| Three | R | 495 R | ( | ) | Packing, "O" Ring, Powr-Trol Pressure Line |

## GASKET SET FOR TRANSMISSION AND REAR END OVERHAUL
(Serial No. 5000001- )

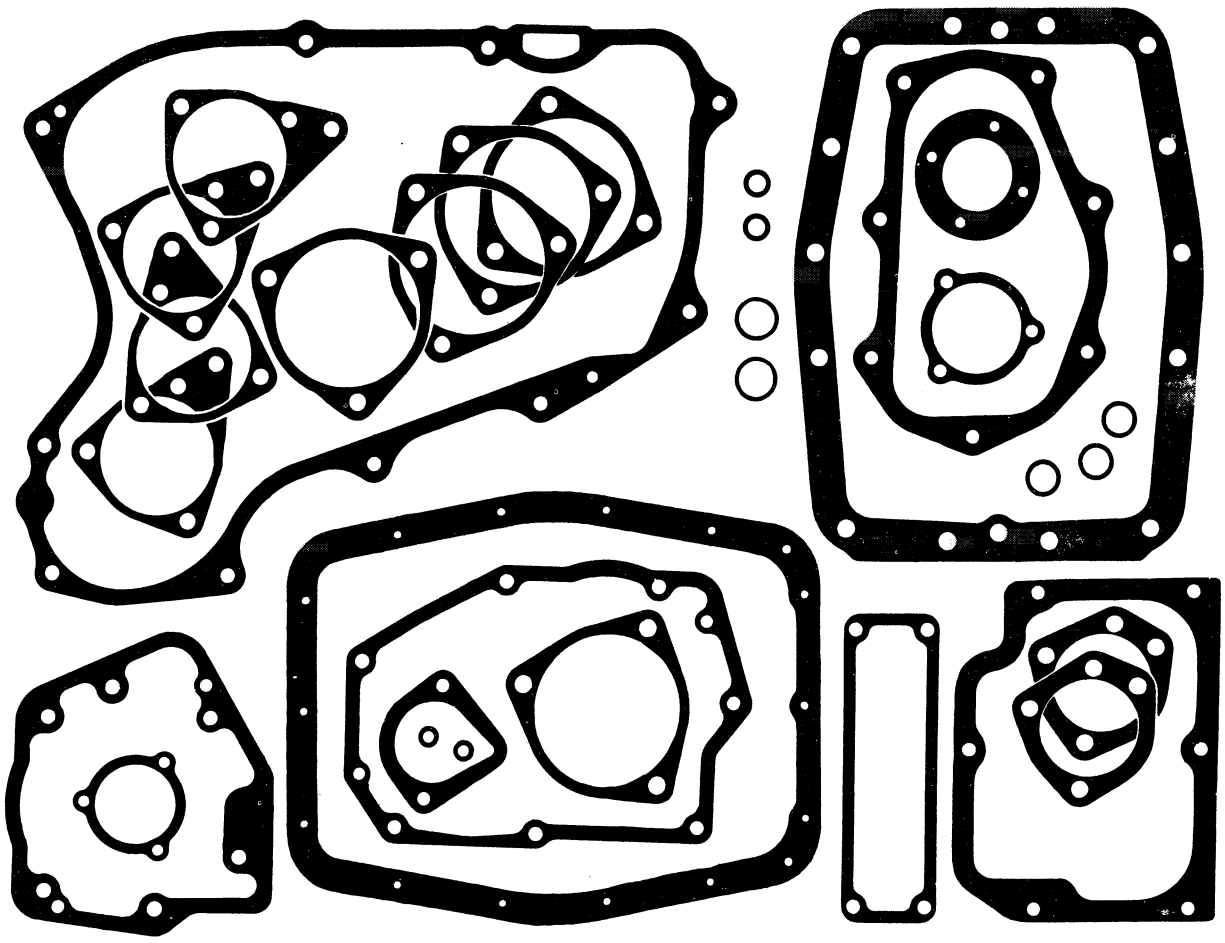

24621

| Part No. | | | | | Description |
|---|---|---|---|---|---|
| AB 4679 R | Gasket Set Consisting of: | | | | |
| One | A | 2396 R | ( | - ) | Gasket, Power Shaft Oil Seal Housing |
| One | A | 2629 R | ( | - ) | Gasket, Fulcrum Ball Socket |
| Two | A | 3105 R | ( | - ) | Washer, Powr-Trol and Powr Shaft Housing to Rear Axle Housing Screw (Copper) |
| Two | A | 3606 R | ( | - ) | Packing, "O" Ring, Powr-Trol Suction Line |
| One | A | 3817 R | ( | - ) | Gasket, Transmission Drive Shaft Outer Bearing Cover |
| One | A | 4553 R | ( | - ) | Gasket, Power Shaft Clutch Shaft Bearing Cover |
| Four | B | 2333 R | ( | - ) | Shim, Differential Left Bearing Quill |
| One | B | 2447 R | ( | - ) | Gasket, Fourth and Sixth Speed Gear Cover |
| One | B | 2581 R | ( | - ) | Gasket, Transmission Case Cover |
| Two | B | 2743 R | ( | - ) | Gasket, Brake Housing |
| Four | B | 3006 R | ( | - ) | Shim, Countershaft Right Bearing Housing |
| One | B | 3084 R | ( | - ) | Gasket, First Reduction Gear Cover |
| One | B | 3086 R | ( | - ) | Gasket, Differential Right Bearing Quill |
| One | B | 3190 R | ( | - ) | Gasket, Powershaft Clutch |
| One | B | 3196 R | ( | - ) | Gasket, Powershaft Clutch Housing Cover |
| One | B | 3346 R | ( | - ) | Gasket, Rear Axle Housing Cover |
| One | B | 3467 R | ( | - ) | Gasket, Clutch Fork Bearing |
| One | B | 3622 R | ( | - ) | Gasket, Rear Axle Housing to Case (Sub. for B351R) |
| Two | K | 2052 R | ( | - ) | Washer, Powershaft Drive Shaft Bearing Cover to Case Screws (Lead) |
| Three | R | 495 R | ( | - ) | Packing, "O" Ring, Powr-Trol Pressure Line |

| Part No. | Page | Key |
|---|---|---|
| 2H 170 R | 70-1 | 7 |
| 2H 272 R | 70-1 | 7 |
| 2H 321 D | 30-13 | 15 |
| 2H 337 R | 30-7 | 17 |
| 2H 547 A | 70-1 | 4 |
| 2H 549 R | 70-1 | 4 |
| 2H 957 R | 65-15 | 43 |
| 3H 736 H | 10-3 | 7 |
| 7H 301 R | 35-27 | 30 |
| 7H 328 R | 25-3 | 19 |
| 7H 460 R | 15-19 | 9 |
| 7H 556 B | 45-19 | 21 |
| 7H 784 R | 15-19 | 18 |
| 7H 813 A | 55-4 | 2 |
| 7H 894 H | 45-19 | .. |
| 7H 910 R | 35-24 | 21 |
| 7H 911 R | 35-24 | 21 |
| 7H 1022 R | 55-1 | 7 |
| 7H 1091 R | 35-3 | 17 |
| 7H 1092 R | 55-1 | 7 |
| 8H 1103 R | 15-7 | 4 |
| 11H 3 R | 25-9 | 4 |
| 11H 18 R | 25-9 | 10 |
| 11H 19 R | 35-11 | 58 |
| 11H 22 R | 15-9 | 30 |
| 11H 38 R | 20-5 | 14 |
| 11H 39 R | 20-3 | 19 |
| 11H 41 R | 20-5 | 5 |
| 11H 43 R | 45-21 | 7 |
| 11H 45 R | 45-7 | 11 |
| 11H 49 R | 45-23 | 22 |
| 11H 80 R | 15-13 | 1 |
| 11H 82 R | 30-25 | 25 |
| 11H 84 R | 40-7 | 13 |
| 11H 88 R | 30-25 | 23 |
| 12H 9 R | 10-5 | 7 |
| 12H 10 R | 10-5 | 10 |
| 12H 11 R | 10-5 | 14 |
| 12H 12 R | 10-3 | 1 |
| 12H 13 R | 15-9 | 12 |
| 12H 14 R | 15-7 | 20 |
| 12H 15 R | 10-3 | 11 |
| 12H 17 R | 10-3 | 14 |
| 12H 19 R | 45-29 | 7 |
| 12H 21 R | 45-21 | 15 |
| 12H 35 R | 35-13 | 14 |
| 12H 40 C | 35-15 | 53 |
| 12H 64 R | 30-19 | 49 |
| 12H 68 R | 35-5 | 4 |
| 12H 251 R | 35-27 | 31 |
| 12H 253 R | 55-3 | 4 |
| 12H 271 R | 45-5 | 2 |
| 12H 284 R | 55-3 | 14 |
| 12H 290 R | 35-23 | 13 |
| 12H 291 R | 10-5 | 5 |
| 14H 49 R | 45-23 | 8 |
| 14H 190 R | 35-29 | 43 |
| 14H 193 R | 45-19 | 21 |
| 14H 251 R | 15-9 | 4 |
| 14H 253 R | 10-5 | 9 |
| 14H 255 R | 20-7 | 21 |
| 14H 257 R | 15-21 | 9 |
| 14H 259 R | 15-19 | 17 |
| 14H 260 R | 15-5 | 18 |
| 14H 261 R | 20-5 | 6 |
| 14H 264 R | 10-3 | 4 |
| 14H 266 R | 10-3 | 17 |
| 14H 267 R | 10-3 | 17 |
| 14H 272 R | 45-21 | 16 |
| 14H 338 R | 30-5 | 6 |
| 14H 342 A | 41-9 | 13 |
| 14H 344 R | 35-24 | 4 |
| 14H 347 R | 20-5 | 16 |
| 14H 352 R | 65-13 | 27 |
| 14H 382 T | 15-13 | 15 |
| 14H 383 R | 15-13 | 19 |
| 14H 392 R | 35-23 | 22 |
| 14H 393 T | 15-13 | 32 |
| 14H 397 T | 15-9 | 18 |
| 14H 399 R | 10-3 | 4 |
| 14H 400 R | 10-3 | 17 |
| 14H 402 R | 45-3 | 1 |
| 14H 403 R | 45-3 | 1 |
| 14H 404 R | 45-29 | 19 |
| 14H 411 R | 45-21 | 16 |
| 14H 460 R | 30-31 | 40 |
| 14H 472 N | 15-19 | 18 |
| 14H 473 R | 35-27 | 27 |
| 14H 480 R | 65-13 | 27 |
| 14H 511 H | 41-7 | 29 |
| 14H 534 R | 45-25 | 9 |
| 14H 540 R | 45-19 | 11 |
| 14H 605 R | 35-15 | 39 |
| 14H 606 R | 35-29 | 41 |
| 14H 608 R | 35-5 | 39 |
| 14H 611 R | 55-3 | 37 |
| 14H 619 R | 45-23 | 25 |
| 14H 631 R | 35-5 | 2 |
| 14H 649 R | 35-13 | 2 |
| 14H 655 R | 45-17 | 5 |
| 14H 732 R | 15-3 | 26 |
| 14H 745 R | 45-19 | 11 |
| 14H 760 R | 45-29 | 17 |
| 14H 774 R | 35-15 | 54 |
| 14H 781 R | 40-13 | 33 |
| 14H 785 R | 10-5 | 9 |
| 14H 800 R | 15-9 | 18 |
| 15H 237 R | 60-17 | 24 |
| 15H 238 R | 10-5 | 27 |
| 15H 239 R | 60-5 | 16 |
| 15H 240 R | 60-5 | 14 |
| 15H 253 R | 15-5 | 13 |
| 15H 254 R | 20-7 | 29 |
| 15H 255 R | 10-5 | 21 |
| 15H 280 R | 40-11 | 18 |
| 15H 556 R | 40-11 | 10 |
| 15H 558 R | 45-27 | 26 |
| 15H 559 R | 41-7 | 34 |
| 16H 90 H | 60-19 | 36 |
| 16H 345 R | 65-7 | 15 |
| 16H 648 A | 20-3 | 9 |
| 16H 663 A | 15-3 | 29 |
| 16H 677 A | 55-3 | 13 |
| 16H 752 R | 60-9 | 2 |
| 16H 790 A | 40-9 | 15 |
| 16H 1075 A | 55-3 | 11 |
| 16H 1111 A | 40-5 | 19 |
| 16H 1114 A | 40-5 | 22 |
| 16H 1119 A | 40-9 | 11 |
| 17H 138 A | 45-23 | 14 |
| 17H 170 R | 45-9 | 4 |
| 17H 192 A | 45-7 | 8 |
| 17H 1490 R | 45-13 | .. |
| 19H 11 R | 10-5 | 7 |
| 19H 13 R | 30-23 | 7 |
| 19H 18 H | 30-27 | 33 |
| 19H 24 N | 30-27 | 33 |
| 19H 27 T | 30-27 | 16 |
| 19H 37 T | 45-5 | 1 |
| 19H 96 R | 25-3 | 6 |
| 19H 99 R | 10-5 | 26 |
| 19H 100 T | 30-27 | 12 |
| 19H 102 R | 35-19 | 19 |
| 19H 103 H | 55-4 | 15 |
| 19H 105 R | 15-19 | 13 |
| 19H 110 R | 25-3 | 23 |
| 19H 112 R | 15-7 | 7 |
| 19H 118 T | 15-7 | 7 |
| 19H 124 R | 45-19 | 16 |
| 19H 130 R | 45-9 | 37 |
| 19H 134 B | 45-23 | 29 |
| 19H 139 R | 15-3 | 38 |
| 19H 196 H | 41-7 | 30 |
| 19H 199 R | 15-9 | 9 |
| 19H 203 R | 10-5 | 14 |
| 19H 211 R | 15-5 | 25 |
| 19H 218 D | 30-19 | 21 |
| 19H 221 R | 45-17 | 10 |
| 19H 230 H | 35-24 | 27 |
| 19H 246 T | 45-27 | 22 |
| 19H 257 H | 41-5 | 25 |
| 19H 269 R | 30-15 | 10 |
| 19H 272 R | 25-13 | 31 |
| 19H 288 R | 41-3 | 25 |
| 19H 292 T | 41-3 | 23 |
| 19H 294 R | 65-3 | 26 |
| 19H 314 R | 15-13 | 11 |
| 19H 325 R | 10-3 | 1 |
| 19H 332 R | 15-3 | 27 |
| 19H 337 N | 15-3 | 27 |
| 19H 340 R | 25-3 | 14 |
| 19H 376 R | 65-13 | 2 |
| 19H 381 R | 45-3 | 17 |
| 19H 395 T | 15-13 | 30 |
| 19H 405 R | 20-7 | 26 |
| 19H 410 R | 20-7 | 30 |
| 19H 438 R | 55-3 | 25 |
| 19H 442 R | 55-3 | 14 |
| 19H 448 R | 41-7 | 16 |
| 19H 455 R | 41-7 | 36 |
| 19H 456 R | 41-7 | 36 |
| 19H 457 R | 15-9 | 12 |
| 19H 462 N | 15-9 | 12 |
| 19H 467 R | 15-17 | 8 |
| 19H 472 N | 15-21 | 7 |
| 19H 474 R | 65-15 | 22 |
| 19H 475 R | 15-25 | 4 |
| 19H 482 B | 15-25 | 4 |
| 19H 500 R | 41-7 | 37 |
| 19H 506 H | 41-7 | 37 |
| 19H 537 R | 65-3 | 31 |
| 19H 564 R | 15-7 | 20 |
| 19H 657 R | 50-12 | 2 |
| 19H 670 R | 10-3 | 12 |
| 19H 704 R | 10-3 | 13 |
| 19H 742 N | 15-17 | 8 |
| 19H 774 R | 45-23 | 35 |
| 19H 786 R | 45-17 | 14 |
| 19H 792 R | 45-13 | 2 |
| 19H 793 R | 45-29 | 2 |
| 19H 800 R | 10-3 | 14 |
| 19H 976 R | 45-7 | 28 |
| 19H 984 R | 45-21 | 5 |
| 19H 1004 T | 55-4 | 2 |
| 19H 1006 R | 45-3 | 17 |
| 19H 1050 R | 50-11 | 5 |
| 19H 1056 H | 10-3 | 1 |
| 19H 1090 T | 15-13 | 30 |
| 19H 1096 H | 45-9 | 37 |
| 19H 1099 R | 15-13 | 17 |
| 19H 1112 H | 15-19 | 13 |
| 19H 1115 N | 55-3 | 4 |
| 19H 1116 N | 35-3 | 17 |
| 19H 1118 N | 25-3 | 23 |
| 19H 1131 N | 35-3 | 18 |
| 19H 1139 N | 41-7 | 7 |
| 19H 1140 N | 25-3 | 6 |
| 19H 1146 M | 60-17 | 25 |
| 19H 1152 H | 25-13 | 31 |
| 19H 1164 R | 41-5 | 25 |
| 19H 1166 H | 15-19 | 15 |
| 19H 1170 N | 30-27 | 16 |
| 19H 1182 R | 60-5 | 7 |
| 19H 1184 R | 60-7 | 8 |
| 19H 1191 R | 45-5 | 1 |
| 19H 1211 N | 15-19 | 9 |
| 19H 1219 R | 65-3 | 26 |
| 19H 1242 M | 15-19 | 3 |
| 19H 1253 R | 15-13 | 30 |
| 19H 1254 R | 15-7 | 20 |
| 19H 1255 T | 15-9 | 9 |
| 19H 1258 T | 65-3 | 31 |
| 19H 1281 R | 30-5 | 32 |
| 19H 1286 H | 70-1 | 5 |
| 19H 1296 H | 41-3 | 25 |
| 19H 1320 R | 50-12 | 2 |
| 19H 1325 R | 30-25 | 17 |
| 19H 1335 R | 15-7 | 29 |
| 19H 1347 R | 45-7 | 28 |
| 19H 1350 R | 41-11 | 11 |
| 19H 1356 R | 10-3 | 12 |
| 19H 1357 R | 41-11 | 11 |
| 19H 1373 R | 45-7 | 14 |
| 19H 1374 R | 45-23 | 35 |
| 19H 1391 R | 45-17 | 14 |
| 19H 1394 R | 10-3 | 11 |
| 19H 1404 R | 10-3 | 11 |
| 19H 1405 R | 45-13 | 2 |
| 19H 1412 R | 45-29 | 2 |
| 19H 1425 R | 10-3 | 14 |
| 19H 1430 R | 10-3 | 13 |
| 19H 1439 N | 10-3 | 13 |
| 19H 1455 R | 45-21 | 5 |
| 19H 1569 R | 41-11 | 24 |
| 19H 1687 R | 20-7 | 26 |
| 19H 1688 R | 20-7 | 30 |
| 19H 1697 R | 41-3 | 23 |
| 19H 1710 T | 20-7 | 28 |
| 19H 1936 A | 35-27 | 30 |
| 21H 395 R | 35-11 | 18 |
| 21H 404 R | 35-29 | 41 |
| 21H 415 R | 35-24 | 9 |
| 21H 425 R | 45-23 | 24 |
| 21H 597 R | 15-3 | 7 |
| 21H 684 H | 35-19 | 19 |
| 21H 701 R | 65-9 | 7 |
| 21H 706 H | 41-9 | 16 |
| 21H 715 R | 45-23 | 29 |
| 21H 961 R | 35-5 | 30 |
| 21H 962 R | 30-19 | 15 |
| 21H 964 R | 35-11 | 32 |
| 21H 968 R | 35-15 | 13 |
| 21H 969 R | 30-29 | 9 |
| 21H 971 R | 30-19 | 48 |
| 21H 972 R | 35-15 | 30 |
| 21H 973 R | 35-13 | 15 |

| Part No. | Page | Key |
|---|---|---|
| 21H 975 R | 35-15 | 36 |
| 21H 976 R | 30-11 | 2 |
| 21H 977 R | 30-19 | 54 |
| 21H 979 R | 35-11 | 67 |
| 21H 981 R | 30-29 | 10 |
| 21H 983 R | 35-5 | 10 |
| 21H 984 R | 30-31 | 1 |
| 21H 986 R | 35-5 | 3 |
| 21H 994 R | 30-21 | 10 |
| 21H 995 R | 35-5 | 52 |
| 21H 1042 C | 35-29 | 41 |
| 21H 1072 R | 30-29 | 1 |
| 21H 1073 R | 30-29 | 4 |
| 21H 1074 R | 30-25 | 1 |
| 21H 1083 R | 55-3 | 14 |
| 22H 87 R | 30-5 | 27 |
| 22H 172 R | 20-5 | 15 |
| 22H 695 R | 65-3 | 32 |
| 24H 1 R | 20-5 | 30 |
| 24H 2 R | 25-13 | 30 |
| 24H 39 R | 35-3 | 4 |
| 24H 41 R | 20-5 | 30 |
| 24H 43 R | 25-13 | 25 |
| 24H 52 R | 40-13 | 17 |
| 24H 91 R | 35-5 | 50 |
| 24H 106 R | 50-7 | 10 |
| 24H 132 R | 25-9 | 7 |
| 24H 143 R | 15-25 | 13 |
| 24H 145 A | 50-11 | 11 |
| 24H 154 R | 15-25 | 9 |
| 24H 156 R | 20-5 | 30 |
| 24H 169 R | 10-3 | 2 |
| 24H 184 R | 55-4 | 3 |
| 24H 197 R | 45-5 | 10 |
| 24H 200 R | 15-13 | 3 |
| 24H 204 R | 40-3 | 9 |
| 24H 234 R | 15-3 | 43 |
| 24H 247 H | 45-3 | 13 |
| 24H 448 R | 41-3 | 15 |
| 24H 454 R | 20-7 | 19 |
| 24H 464 E | 45-3 | 25 |
| 24H 550 R | 10-5 | 31 |
| 24H 554 F | 45-9 | 10 |
| 24H 846 R | 50-11 | 23 |
| 24H 847 R | 25-13 | 9 |
| 24H 889 R | 50-7 | 14 |
| 24H 892 R | 30-25 | 16 |
| 24H 930 R | 20-7 | 12 |
| 24H 953 R | 45-7 | 2 |
| 24H 961 R | 45-9 | 6 |
| 24H 991 R | 45-19 | .. |
| 24H 993 R | 30-25 | 18 |
| 24H 995 R | 40-13 | 31 |
| 24H 996 R | 20-3 | 13 |
| 24H 1009 R | 50-7 | 13 |
| 24H 1013 R | 41-11 | 13 |
| 24H 1017 R | 65-15 | 26 |
| 24H 1022 R | 41-11 | 12 |
| 25H 43 R | 35-21 | 40 |
| 25H 125 T | 15-7 | 22 |
| 25H 760 R | 65-15 | 33 |
| 26H 3 R | 35-15 | 51 |
| 26H 8 T | 65-3 | 22 |
| 26H 10 R | 15-5 | 21 |
| 26H 14 R | 60-3 | 12 |
| 26H 17 R | 15-7 | 2 |
| 26H 19 R | 15-7 | 13 |
| 26H 70 R | 41-5 | 2 |
| 26H 72 R | 35-3 | 9 |
| 26H 98 R | 60-19 | 3 |
| 28H 1497 R | 50-11 | 38 |
| 29H 488 T | 65-9 | 48 |
| 30H 6 T | 30-23 | 23 |
| 30H 9 R | 30-23 | 15 |
| 30H 11 R | 10-5 | 28 |
| 30H 13 R | 41-7 | 12 |
| 34H 7 R | 30-23 | 14 |
| 34H 41 H | 55-4 | 25 |
| 34H 58 R | 65-15 | 36 |
| 34H 81 N | 55-4 | 18 |
| 34H 91 R | 50-3 | 3 |
| 34H 103 H | 41-7 | 16 |
| 34H 119 C | 15-7 | 22 |
| 34H 131 C | 45-5 | 7 |
| 1 K | 30-21 | 12 |
| 10-3114 | 30-21 | 21 |
| 10-3520 | 30-19 | 12 |
| 10-3605 | 30-19 | 12 |
| 10-3833 | 30-19 | 12 |
| | 30-19 | 19 |
| 13-939 | 30-21 | 8 |
| 13-1030 | 30-19 | 52 |
| | 30-23 | 1 |
| 14-183 | 30-21 | 43 |
| 14-243 | 30-19 | 50 |
| 15-42 | 30-19 | 54 |
| | 30-23 | 3 |
| 15-343 | 30-19 | 36 |
| 15-A109 | 30-19 | 8 |
| 16-671 | 30-19 | .. |
| 16A-115 | 30-21 | 51 |
| 16A-116 | 30-21 | 53 |
| 18-0 | 30-21 | 45 |
| 24-262 | 30-19 | 55 |
| | 30-21 | 9 |
| | 30-23 | 2 |
| 24-A 51 | 30-21 | 54 |
| 24-A 58 | 30-21 | 2 |
| 24-A 136 | 30-19 | 47 |
| | 30-23 | 24 |
| 24-A 140 | 30-19 | 2 |
| 24-A 165 | 30-19 | 10 |
| 25-275 | 30-19 | 1 |
| 25-635 | 30-21 | 52 |
| 25 J | 30-21 | 32 |
| 25 V | 30-21 | 4 |
| 26-721 | 30-21 | 55 |
| 26-775 | 30-19 | 4 |
| 27-181 | 30-21 | 19 |
| 27-223 | 30-19 | 18 |
| 30-700 | 30-21 | 28 |
| 30-713 | 30-19 | 30 |
| 32-25 | 30-19 | 38 |
| 43-661 | 30-19 | 43 |
| 43-665 | 30-19 | 46 |
| | 30-23 | 25 |
| 44-62 | 30-21 | 14 |
| 44-65 | 30-19 | 53 |
| | 30-23 | 4 |
| 47-314 | 30-21 | 35 |
| 47-362 | 30-19 | 26 |
| 47-412 | 30-19 | 26 |
| 49-192 | 30-19 | 45 |
| 49-196 | 30-19 | 45 |
| . | 30-19 | .. |
| 55-214 | 30-19 | 24 |
| | 30-23 | 20 |
| 55-358 | 30-19 | 20 |
| 60-A13 | 30-19 | 23 |
| | 30-23 | 6 |
| | 30-23 | 21 |
| 60-A17 | 30-19 | 44 |
| 60-251 | 30-19 | 19 |
| 60-477 | 30-21 | 15 |
| 62-238 | 30-19 | 3 |
| 62-246 | 30-21 | 49 |
| 62-254 | 30-19 | 51 |
| 65-703 | 30-19 | 32 |
| 78-433 | 30-19 | 9 |
| 78-434 | 30-19 | 11 |
| | 30-21 | 5 |
| 80-160 | 30-21 | 50 |
| 80-167 | 30-21 | 24 |
| 80-169 | 30-19 | 57 |
| | 30-21 | 22 |
| 80-171 | 30-19 | 57 |
| 80-175 | 30-21 | 25 |
| 80-217 | 30-19 | 29 |
| 81-166 | 30-19 | 35 |
| 87-3 | 30-19 | 33 |
| | 30-21 | 31 |
| 91-178 | 30-21 | 3 |
| 95-520 | 30-19 | 5 |
| 136-54 | 30-19 | 37 |
| 178-33 | 30-21 | 23 |
| 179-15 | 30-19 | 13 |
| 179-39 | 30-19 | 7 |
| 179-40 | 30-19 | .. |
| 206-59 | 30-19 | 28 |
| 229-199 | 30-19 | 14 |
| 229-209 | 30-19 | 22 |
| 233-543 | 30-19 | 40 |
| 233-576 | 30-21 | 27 |
| 233-584 | 30-21 | 27 |
| 321 R | 30-21 | 44 |
| 400 R | 41-5 | 36 |
| 405 R | 60-3 | 8 |
| | 60-9 | 28 |
| 3219 | 35-13 | 16 |
| 4210 | 35-13 | 42 |
| 5077 | 35-13 | 48 |
| 5536 | 35-13 | 35 |
| 5618 | 35-13 | 31 |
| 5620 | 35-13 | 34 |
| 5622 | 35-13 | 29 |
| 6388 | 35-13 | 20 |
| 6791 | 35-13 | 5 |
| 6795 | 35-13 | 19 |
| 6831 | 35-13 | 39 |
| 6839 | 35-13 | 17 |
| 6843 | 35-13 | 24 |
| 6845 | 35-13 | 13 |
| 6875 | 35-13 | 23 |
| 6900D | 35-13 | 4 |
| 8616 | 35-13 | 6 |
| 8618 | 35-13 | 7 |
| 8621 | 35-13 | 9 |
| 8622 | 35-13 | 10 |
| 10407 | 35-13 | 41 |
| 10461 | 35-13 | 36 |
| 35058 | 35-11 | 60 |
| 37517 | 35-11 | 45 |
| 37521 | 35-11 | 44 |
| 37554 | 35-11 | 43 |
| 125947 | 30-31 | 29 |
| | 35-15 | 47 |
| | 35-19 | 2 |
| | 35-21 | 35 |
| 132688 | 35-7 | 6 |
| 138549 | 35-27 | 18 |
| | 35-29 | 27 |
| | 35-32 | 21 |
| 200182 | 35-5 | 47 |
| | 35-7 | 37 |
| 200362 | 35-3 | 47 |
| 451608 | 35-5 | 29 |
| 802730 | 35-5 | 31 |
| 804000 | 35-3 | 11 |
| | 35-5 | 68 |
| | 35-7 | 32 |
| 804076 | 35-5 | 13 |
| 804080 | 35-7 | 54 |
| 806915 | 35-3 | 12 |
| | 35-5 | 69 |
| | 35-7 | 33 |
| 809053 | 35-11 | 4 |
| 809062 | 35-5 | 18 |
| | 35-7 | 21 |
| | 35-7 | 52 |
| 809551 | 35-5 | 27 |
| 809593 | 35-5 | 56 |
| | 35-11 | 27 |
| 809614 | 35-5 | 22 |
| 809637 | 35-5 | 24 |
| 809642 | 35-5 | 25 |
| 809644 | 35-5 | 32 |
| 809658 | 35-5 | 26 |
| 809688 | 35-5 | 23 |
| 809698 | 35-5 | 33 |
| 809824 | 35-5 | 21 |
| 809945 | 35-5 | 36 |
| | 35-7 | 46 |
| 809961 | 35-5 | 63 |
| | 35-7 | 27 |
| 810074 | 35-19 | 11 |
| | 35-21 | 37 |
| 810226 | 35-11 | 37 |
| 810601 | 35-11 | 29 |
| 810620 | 35-11 | 60 |
| | 35-11 | 65 |
| 811912 | 35-14 | 1 |
| | 35-15 | 50 |
| | 35-19 | 4 |
| | 35-19 | 12 |
| | 35-21 | 38 |
| | 35-21 | 45 |
| 812015 | 35-5 | 17 |
| | 35-11 | 14 |
| 812016 | 35-5 | 16 |
| | 35-11 | 12 |
| 813521 | 35-11 | 8 |
| 813523 | 35-11 | 13 |
| 813554 | 35-11 | 9 |
| 815018 | 35-5 | 4 |
| | 35-7 | 57 |
| 816784 | 35-15 | 15 |
| | 35-21 | 12 |
| 816911 | 35-11 | 17 |
| 817220 | 35-5 | 8 |
| 817224 | 35-5 | 64 |
| 817313 | 35-5 | 20 |
| | 35-11 | 33 |
| 817314 | 35-5 | 19 |
| | 35-11 | 34 |
| 817363 | 35-15 | 45 |
| | 35-21 | 27 |

| Part No. | Page | Key |
|---|---|---|
| 817532 | 35-5 | 34 |
| 817807 | 35-7 | 49 |
| 819104 | 35-5 | 62 |
| | 35-7 | 26 |
| 819639 | 35-14 | 5 |
| | 35-21 | 3 |
| 820052 | 35-11 | 20 |
| 820148 | 35-11 | 40 |
| 820149 | 35-11 | 41 |
| 820524 | 35-5 | 7 |
| 821524 | 35-11 | 21 |
| 822187 | 35-11 | 39 |
| 822190 | 35-11 | 42 |
| 823551 | 35-7 | 47 |
| 828448 | 35-11 | 36 |
| 833602 | 35-11 | 38 |
| 1100309 | 35-3 | 7 |
| | 35-7 | .. |
| | 35-31 | 4 |
| 1100955 | 35-3 | 16 |
| | 35-5 | .. |
| 1108144 | 35-11 | 59 |
| 1108155 | 35-11 | 59 |
| 1111418 | 35-21 | .. |
| | 35-31 | 12 |
| 1118306 | 35-3 | 15 |
| | 35-5 | 37 |
| | 35-9 | 13 |
| | 35-9 | .. |
| 1118783 | 35-3 | 8 |
| | 35-7 | 19 |
| | 35-9 | 25 |
| | 35-9 | 26 |
| | 35-9 | .. |
| 1118792 | 35-3 | 8 |
| | 35-3 | 15 |
| | 35-5 | 37 |
| | 35-7 | 18 |
| | 35-7 | 19 |
| | 35-9 | 25 |
| | 35-9 | 26 |
| | 35-9 | .. |
| 1837885 | 35-11 | 26 |
| 1838324 | 35-11 | 15 |
| 1843646 | 35-5 | 49 |
| | 35-7 | 10 |
| 1847289 | 35-15 | 38 |
| | 35-21 | 44 |
| 1847643 | 35-15 | 10 |
| | 35-21 | 7 |
| 1857412 | 35-7 | 3 |
| 1857502 | 35-19 | 16 |
| 1858603 | 35-7 | 30 |
| 1858749 | 35-5 | 43 |
| 1858753 | 35-5 | 42 |
| | 35-7 | 40 |
| 1858754 | 35-5 | 44 |
| 1860628 | 35-21 | 39 |
| 1861076 | 35-11 | 23 |
| 1864099 | 35-5 | 54 |
| | 35-7 | 13 |
| | 35-9 | 10 |
| | 35-27 | 15 |
| | 35-29 | 26 |
| | 35-32 | 13 |
| 1868137 | 35-5 | 55 |
| | 35-7 | 14 |
| | 35-9 | 12 |
| 1869704 | 35-15 | 11 |
| | 35-21 | 13 |
| 1872608 | 35-5 | 35 |
| 1872638 | 35-5 | 1 |
| 1873697 | 35-14 | 3 |
| | 35-21 | 47 |
| 1873796 | 35-11 | 64 |
| 1877830 | 35-27 | 16 |
| | 35-29 | 25 |
| | 35-32 | 12 |
| 1878183 | 35-7 | 4 |
| 1878505 | 35-9 | 8 |
| 1878506 | 35-9 | 9 |
| 1878507 | 35-9 | 11 |
| 1878516 | 35-9 | 7 |
| 1878517 | 35-9 | 15 |
| 1878780 | 35-9 | 16 |
| 1880641 | 35-7 | 28 |
| 1881869 | 35-11 | 28 |
| 1882356 | 35-5 | 12 |
| 1882358 | 35-5 | 65 |
| 1883899 | 35-21 | 2 |
| 1885090 | 35-7 | 39 |
| 1885372 | 35-19 | 14 |
| 1885373 | 35-19 | 15 |
| 1885376 | 35-15 | 52 |
| | 35-19 | 5 |
| 1885377 | 35-19 | 17 |
| 1885378 | 35-19 | 18 |
| 1885557 | 35-14 | 6 |
| | 35-21 | 4 |
| 1885558 | 35-14 | 8 |
| | 35-21 | 5 |
| 1885817 | 35-11 | 47 |
| 1886496 | 35-5 | 5 |
| | 35-27 | 17 |
| | 35-29 | 24 |
| | 35-32 | 11 |
| 1886923 | 35-11 | 3 |
| 1889966 | 35-15 | 16 |
| | 35-21 | 16 |
| 1889967 | 35-15 | 37 |
| | 35-21 | 34 |
| 1889999 | 35-15 | 32 |
| | 35-21 | 29 |
| 1900119 | 35-15 | 17 |
| | 35-21 | 17 |
| 1900272 | 35-15 | 11 |
| | 35-21 | 13 |
| 1902692 | 35-27 | 19 |
| | 35-29 | 28 |
| | 35-32 | 20 |
| 1902694 | 35-27 | 20 |
| | 35-29 | 29 |
| | 35-32 | 19 |
| 1904370 | 35-5 | 57 |
| | 35-7 | 20 |
| 1904377 | 35-5 | 31 |
| | 35-7 | 7 |
| | 35-9 | 18 |
| 1904669 | 35-11 | 24 |
| 1904817 | 35-9 | 18 |
| 1905590 | 35-15 | 19 |
| | 35-21 | 19 |
| 1908580 | 35-11 | 68 |
| 1908829 | 35-7 | 5 |
| 1909003 | 35-19 | 10 |
| | 35-21 | 36 |
| 1909034 | 35-9 | 5 |
| 1909035 | 35-9 | 6 |
| 1909041 | 35-9 | 19 |
| 1909206 | 35-15 | 40 |
| | 35-16 | 10 |
| | 35-17 | 7 |
| | 35-21 | 22 |
| 1909770 | 35-11 | 63 |
| 1909771 | 35-11 | 46 |
| 1909772 | 35-11 | 48 |
| 1910174 | 35-9 | 24 |
| 1911097 | 35-5 | 14 |
| 1911119 | 35-15 | 14 |
| | 35-21 | 11 |
| 1911263 | 35-5 | 59 |
| | 35-7 | 23 |
| 1911480 | 35-5 | 53 |
| 1911481 | 35-5 | 38 |
| 1911485 | 35-5 | 38 |
| | 35-5 | 53 |
| | 35-7 | 11 |
| | 35-9 | 13 |
| | 35-9 | 13 |
| | 35-9 | 25 |
| 1911548 | 35-32 | 22 |
| 1912008 | 35-5 | 60 |
| | 35-7 | 24 |
| 1912159 | 35-9 | 14 |
| 1912176 | 35-9 | 17 |
| 1912365 | 35-9 | 23 |
| 1912765 | 35-14 | 7 |
| 1913063 | 35-9 | 22 |
| 1913732 | 35-5 | 46 |
| 1913739 | 35-15 | 20 |
| 1914142 | 35-15 | 42 |
| | 35-21 | 24 |
| 1914309 | 35-15 | 18 |
| | 35-21 | 18 |
| 1914491 | 35-5 | 46 |
| | 35-7 | 34 |
| 1914618 | 35-5 | 45 |
| | 35-7 | 35 |
| 1916805 | 35-15 | 43 |
| | 35-21 | 25 |
| 1916806 | 35-15 | 41 |
| | 35-21 | 23 |
| 1917205 | 35-15 | 46 |
| 1917207 | 35-15 | 49 |
| 1917209 | 35-14 | 4 |
| 1917211 | 35-14 | 2 |
| 1917571 | 35-7 | 12 |
| | 35-9 | 26 |
| 1918319 | 35-15 | 31 |
| | 35-21 | 28 |
| 1919246 | 35-15 | 27 |
| | 35-15 | 33 |
| | 35-21 | 30 |
| 1919247 | 35-15 | 28 |
| | 35-15 | 34 |
| | 35-21 | 31 |
| 1921312 | 35-15 | 17 |
| 1921362 | 35-7 | 45 |
| 1921369 | 35-7 | 44 |
| 1921860 | 35-7 | 38 |
| 1921939 | 35-3 | 10 |
| | 35-7 | 31 |
| 1922288 | 35-7 | 1 |
| 1922289 | 35-7 | 2 |
| 1922408 | 35-9 | 23 |
| 1922700 | 35-5 | 46 |
| 1922996 | 35-9 | 2 |
| 1923295 | 35-7 | 8 |
| 1923625 | 35-7 | 36 |
| 1924689 | 35-7 | 31 |
| 1925097 | 35-7 | 29 |
| 1927447 | 35-7 | 51 |
| 1927448 | 35-7 | 50 |
| 1927980 | 35-9 | 3 |
| 1927981 | 35-9 | 4 |
| 1927982 | 35-9 | 1 |
| 1928061 | 35-7 | 53 |
| 1928209 | 35-11 | 20 |
| 1928258 | 35-21 | 46 |
| 1928260 | 35-21 | 1 |
| 1928261 | 35-19 | 1 |
| 1928263 | 35-21 | .. |
| | 35-31 | 12 |
| 1928290 | 35-21 | 42 |
| 1928514 | 35-21 | 20 |
| 1924689 | 35-3 | 10 |
| 1947579 | 35-35 | .. |
| 1996053 | 35-32 | 9 |
| | 35-33 | 17 |

A

| | | |
|---|---|---|
| A 119 R | 15-19 | 26 |
| | 15-23 | 16 |
| | 20-7 | 18 |
| | 25-3 | 16 |
| | 25-5 | 16 |
| | 30-3 | 4 |
| A 120 R | 40-13 | 11 |
| | 41-11 | 31 |
| | 45-7 | 22 |
| | 45-11 | 12 |
| A 126 R | 15-15 | 29 |
| | 15-21 | 5 |
| A 151 R | 40-13 | 12 |
| A 174 R | 60-19 | 13 |
| A 178 R | 15-17 | 7 |
| A 198 R | 15-7 | 28 |
| | 20-3 | 23 |
| A 258 R | 15-3 | 2 |
| | 30-8 | 9 |
| | 30-11 | 12 |
| | 30-19 | 56 |
| | 30-21 | 37 |
| A 285 R | 35-27 | 14 |
| | 35-29 | 20 |
| A 350 R | 50-11 | 2 |
| | 50-11 | 39 |
| A 351 R | 20-3 | 8 |
| A 365 R | 60-3 | 28 |
| A 369 R | 25-13 | 40 |
| | 30-3 | 18 |
| | 41-3 | 1 |
| | 45-29 | 5 |
| A 378 R | 60-19 | 6 |
| A 444 R | 70-3 | .. |
| A 470 R | 15-9 | 5 |
| A 487 R | 15-17 | 25 |
| A 500 R | 35-19 | 3 |
| A 519 R | 15-3 | 42 |
| A 521 R | 15-3 | 40 |
| A 522 R | 15-3 | 41 |
| A 552 R | 60-3 | 11 |
| A 562 R | 60-19 | 28 |
| A 584 R | 30-3 | 29 |
| A 624 R | 65-7 | 12 |
| A 659 R | 41-7 | 27 |
| A 674 R | 15-15 | 28 |
| | 15-21 | 8 |
| A 765 R | 30-19 | 17 |
| | 30-21 | 56 |
| | 35-5 | 28 |
| | 35-11 | 35 |
| A 766 R | 30-11 | 2 |
| | 35-5 | 6 |
| | 35-11 | 11 |
| | 35-15 | 12 |

| Part No. | Page | Key |
|---|---|---|
| Continued | | |
| | 35-15 | 29 |
| | 35-15 | 35 |
| | 35-21 | 14 |
| | 35-21 | 32 |
| | 35-27 | 17 |
| | 35-27 | 21 |
| | 35-29 | 24 |
| | 35-29 | 30 |
| | 35-32 | 11 |
| | 35-32 | 18 |
| A 767 R | 35-5 | 11 |
| | 35-11 | 19 |
| | 35-11 | 30 |
| | 35-24 | 6 |
| | 50-3 | 3 |
| A 776 R | 45-21 | 2 |
| | 45-25 | 2 |
| A 877 R | 45-21 | 10 |
| | 45-23 | 11 |
| | 45-25 | 5 |
| | 45-27 | 13 |
| A 890 R | 45-23 | 19 |
| | 45-27 | 19 |
| A 1129 R | 41-11 | 8 |
| | 45-11 | 16 |
| A 1130 R | 41-11 | 10 |
| | 45-11 | 18 |
| A 1131 R | 41-11 | 9 |
| | 45-11 | 17 |
| A 1149 R | 15-3 | 36 |
| A 1152 R | 15-3 | 37 |
| A 1235 R | 45-17 | 2 |
| A 1236 R | 45-17 | 2 |
| A 1248 R | 50-5 | 4 |
| A 1280 R | 15-3 | 20 |
| A 1401 R | 40-7 | 11 |
| A 1422 R | 45-7 | 3 |
| A 1423 R | 45-7 | 5 |
| A 1424 R | 45-23 | 15 |
| | 45-27 | 16 |
| A 1433 R | 65-9 | 15 |
| A 1441 R | 65-9 | 41 |
| | 65-11 | 40 |
| A 1447 R | 65-9 | 35 |
| | 65-11 | 6 |
| A 1449 R | 60-17 | 11 |
| | 65-11 | 28 |
| A 1555 R | 45-19 | 14 |
| A 1556 R | 45-19 | 13 |
| A 1597 R | 15-17 | 12 |
| A 1598 R | 15-17 | 11 |
| A 1712 R | 50-5 | 1 |
| | 50-5 | 15 |
| A 1785 R | 65-17 | 10 |
| A 1826 R | 45-19 | .. |
| A 1855 R | 25-9 | 6 |
| A 1892 R | 10-3 | 9 |
| | 40-11 | 3 |
| A 2093 R | 15-13 | 36 |
| | 15-15 | 34 |
| A 2230 R | 30-9 | 2 |
| A 2299 R | 40-13 | 27 |
| A 2303 R | 30-3 | 31 |
| A 2395 R | 60-7 | 19 |
| A 2396 R | 60-7 | 7 |
| | 60-17 | 31 |
| A 2406 R | 30-7 | 15 |
| | 30-13 | 14 |
| A 2421 R | 15-5 | 2 |
| | 15-13 | 6 |
| | 15-15 | 6 |
| A 2428 R | 60-3 | 2 |
| | 60-7 | 20 |
| | 60-9 | 4 |
| A 2441 R | 15-3 | 44 |
| A 2444 R | 15-3 | 47 |
| A 2454 R | 20-5 | 26 |
| A 2499 R | 30-7 | 9 |
| | 30-13 | 7 |
| A 2500 R | 30-7 | 10 |
| | 30-13 | 8 |
| A 2502 R | 30-7 | 8 |
| | 30-13 | 6 |
| A 2530 R | 15-3 | 46 |
| A 2575 R | 15-3 | 39 |
| A 2595 R | 40-9 | 7 |
| A 2597 R | 40-9 | 7 |
| A 2610 R | 35-31 | 28 |
| A 2629 R | 40-3 | 13 |
| A 2729 R | 35-23 | 1 |
| | 35-23 | 2 |
| A 2731 R | 35-23 | 3 |
| A 2734 R | 35-15 | 44 |
| | 35-21 | 26 |
| | 35-23 | 13 |
| | 35-23 | 18 |
| | 35-27 | 15 |
| | 35-29 | 26 |
| | 35-32 | 13 |
| A 2880 R | 15-3 | 16 |
| A 2883 R | 35-23 | 7 |
| A 2899 R | 35-23 | 7 |
| | 35-23 | 14 |
| | 35-23 | 19 |
| A 2930 R | 60-7 | 5 |
| A 2956 R | 30-13 | 31 |
| A 3009 R | 35-5 | 58 |
| | 35-7 | 22 |
| | 35-11 | 66 |
| A 3010 R | 35-5 | 51 |
| | 35-7 | 17 |
| | 35-9 | 21 |
| | 35-29 | 41 |
| | 35-31 | 23 |
| | 55-3 | 21 |
| A 3011 R | 35-5 | 40 |
| | 35-7 | 42 |
| | 35-35 | 32 |
| A 3012 R | 55-3 | 4 |
| A 3031 R | 35-5 | 41 |
| | 35-7 | 41 |
| | 35-35 | 31 |
| A 3032 R | 35-27 | 12 |
| | 35-29 | 18 |
| A 3040 R | 40-11 | 13 |
| A 3041 R | 40-11 | 16 |
| A 3042 R | 40-11 | 14 |
| A 3043 R | 40-11 | 15 |
| A 3068 R | 30-13 | 32 |
| A 3097 R | 65-9 | 50 |
| A 3098 R | 15-3 | 24 |
| | 20-7 | 27 |
| | 41-7 | 30 |
| | 41-7 | 32 |
| | 60-11 | 28 |
| | 60-13 | 24 |
| | 60-17 | 10 |
| | 60-17 | 35 |
| | 65-3 | 2 |
| | 65-9 | 51 |
| | 65-11 | 26 |
| A 3103 R | 65-9 | 4 |
| A 3105 R | 30-3 | 44 |
| | 60-5 | 8 |
| | 60-11 | 2 |
| | 60-13 | 2 |
| | 65-3 | 35 |
| | 65-7 | 32 |
| | 65-11 | 43 |
| A 3106 R | 65-9 | 28 |
| A 3108 R | 65-9 | 9 |
| A 3110 R | 65-9 | 30 |
| A 3113 R | 65-9 | 29 |
| A 3114 R | 65-9 | 12 |
| A 3123 R | 65-9 | 24 |
| A 3124 R | 65-9 | 25 |
| A 3125 R | 65-15 | 10 |
| A 3126 R | 65-9 | 23 |
| A 3131 R | 65-9 | 49 |
| A 3136 R | 65-9 | 42 |
| A 3137 R | 65-9 | 42 |
| | 65-11 | 39 |
| A 3145 R | 65-9 | 22 |
| A 3162 R | 65-13 | 23 |
| A 3164 R | 65-13 | 12 |
| A 3169 R | 65-13 | 7 |
| A 3172 R | 65-13 | 17 |
| A 3173 R | 65-13 | 18 |
| A 3174 R | 65-13 | 18 |
| A 3175 R | 65-13 | 29 |
| A 3176 R | 65-13 | 30 |
| A 3184 R | 65-13 | 25 |
| A 3190 R | 25-13 | 12 |
| | 65-11 | 19 |
| A 3232 R | 10-5 | 4 |
| | 25-9 | 1 |
| | 30-7 | 21 |
| | 30-7 | 25 |
| | 50-5 | 13 |
| A 3234 R | 65-9 | 31 |
| A 3256 R | 60-5 | 11 |
| | 60-11 | 14 |
| | 65-5 | 6 |
| | 65-7 | 16 |
| A 3257 R | 65-9 | 8 |
| A 3258 R | 65-9 | 16 |
| A 3311 R | 10-5 | 12 |
| A 3332 R | 55-3 | 10 |
| A 3334 R | 55-3 | 7 |
| A 3335 R | 55-3 | 6 |
| A 3404 R | 45-29 | .. |
| A 3411 R | 35-27 | 29 |
| A 3437 R | 65-9 | 38 |
| | 65-11 | 8 |
| A 3438 R | 65-9 | 39 |
| | 65-11 | 9 |
| A 3439 R | 65-11 | 7 |
| A 3479 R | 45-19 | 5 |
| A 3486 R | 70-1 | 6 |
| A 3487 R | 70-1 | 2 |
| A 3539 R | 35-13 | 27 |
| | 35-15 | 55 |
| | 35-16 | 6 |
| | 35-17 | 5 |
| | 35-21 | 8 |
| A 3546 R | 10-5 | 5 |
| | 30-7 | 22 |
| | 30-7 | 24 |
| | 50-5 | 13 |
| | 50-7 | 12 |
| | 50-9 | 9 |
| | 50-11 | 10 |
| A 3578 R | 65-13 | 13 |
| A 3579 R | 65-13 | 28 |
| A 3581 R | 65-13 | 14 |
| | 65-15 | 47 |
| A 3604 R | 65-9 | 40 |
| | 65-11 | 5 |
| A 3606 R | 65-5 | 18 |
| | 65-5 | 22 |
| A 3609 R | 65-11 | 17 |
| A 3610 R | 65-11 | 16 |
| A 3611 R | 65-11 | 15 |
| A 3612 R | 65-11 | 18 |
| A 3613 R | 65-11 | 20 |
| A 3614 R | 65-11 | 2 |
| A 3645 R | 25-13 | 19 |
| | 41-5 | 9 |
| A 3689 R | 65-3 | 1 |
| A 3692 R | 35-13 | 26 |
| | 35-15 | 56 |
| | 35-21 | 9 |
| A 3699 R | 30-5 | 23 |
| A 3757 R | 60-9 | 11 |
| A 3816 R | 20-7 | 23 |
| A 3817 R | 20-7 | 24 |
| A 3906 R | 65-3 | 4 |
| A 3907 R | 60-11 | 37 |
| | 60-13 | 33 |
| | 60-19 | 27 |
| | 65-3 | 12 |
| A 3909 R | 60-11 | 5 |
| | 60-13 | 5 |
| | 65-3 | 29 |
| A 3910 R | 30-3 | 38 |
| | 65-3 | 3 |
| A 3916 R | 65-3 | 10 |
| A 3917 R | 20-5 | 24 |
| | 30-23 | 27 |
| | 65-3 | 8 |
| | 65-17 | 5 |
| A 3918 R | 65-3 | 23 |
| A 3921 R | 65-3 | 25 |
| | 65-5 | 14 |
| A 3951 R | 65-13 | 9 |
| A 3952 R | 65-13 | 8 |
| A 3959 R | 15-7 | 21 |
| | 60-5 | 3 |
| | 60-17 | 4 |
| A 4053 R | 30-3 | 43 |
| A 4059 R | 25-13 | 17 |
| | 25-13 | 18 |
| | 41-5 | 7 |
| A 4064 R | 45-29 | .. |
| A 4118 R | 45-9 | 7 |
| | 45-15 | 5 |
| A 4119 R | 45-9 | 9 |
| | 45-15 | 7 |
| A 4123 R | 15-25 | 8 |
| A 4125 R | 35-24 | 24 |
| | 50-7 | 19 |
| | 50-9 | 8 |
| | 50-11 | 17 |
| | 60-7 | 17 |
| A 4126 R | 60-7 | 16 |
| A 4130 R | 41-5 | 22 |
| | 65-3 | 20 |
| A 4132 R | 65-11 | 37 |
| A 4133 R | 65-11 | 36 |
| A 4157 R | 35-15 | 23 |
| | 35-19 | 9 |
| A 4158 R | 35-15 | 48 |
| A 4159 R | 35-16 | 8 |
| | 35-17 | 3 |
| A 4165 R | 15-9 | 2 |
| A 4166 R | 15-9 | 1 |

| Part No. | Page | Key |
|---|---|---|
| A 4169 R | 65-9 | 20 |
| A 4170 R | 65-9 | 6 |
| A 4172 R | 65-9 | 17 |
| A 4188 R | 25-13 | 34 |
| | 30-15 | 29 |
| | 30-17 | 21 |
| A 4189 R | 25-13 | 37 |
| A 4190 R | 25-13 | 35 |
| A 4191 R | 25-13 | 36 |
| | 41-3 | 10 |
| A 4192 R | 55-3 | 4 |
| | 55-5 | 11 |
| A 4227 R | 15-5 | 5 |
| A 4229 R | 65-13 | 6 |
| A 4230 R | 65-13 | 5 |
| A 4231 R | 65-5 | 13 |
| | 65-5 | 21 |
| | 65-5 | 37 |
| A 4233 R | 20-7 | 7 |
| A 4234 R | 20-7 | 5 |
| A 4235 R | 20-7 | 6 |
| A 4242 R | 15-9 | 17 |
| A 4248 R | 65-9 | 3 |
| A 4256 R | 41-5 | 39 |
| | 65-11 | 32 |
| A 4272 R | 10-5 | 8 |
| A 4275 R | 25-11 | 2 |
| A 4283 R | 25-11 | 17 |
| | 25-11 | .. |
| A 4322 R | 10-3 | 20 |
| A 4340 R | 50-5 | 12 |
| A 4342 R | 45-13 | 1 |
| A 4345 R | 40-11 | 13 |
| A 4347 R | 35-3 | 20 |
| A 4363 R | 20-5 | 19 |
| A 4364 R | 20-5 | 22 |
| A 4365 R | 20-5 | 21 |
| | 30-23 | 34 |
| | 30-31 | 47 |
| A 4366 R | 20-5 | 13 |
| A 4371 R | 30-15 | 13 |
| | 30-17 | 5 |
| A 4376 R | 15-25 | 11 |
| A 4378 R | 45-29 | 6 |
| A 4379 R | 45-29 | 3 |
| A 4380 R | 45-29 | 12 |
| A 4382 R | 45-29 | 8 |
| A 4384 R | 45-29 | 4 |
| A 4386 R | 45-29 | 13 |
| A 4387 R | 45-29 | 7 |
| A 4388 R | 45-29 | 10 |
| A 4389 R | 45-29 | 9 |
| | 45-29 | 15 |
| | 45-29 | 16 |
| A 4414 R | 45-7 | 16 |
| | 45-11 | 2 |
| A 4420 R | 60-3 | 24 |
| | 60-9 | 36 |
| A 4421 R | 60-3 | 24 |
| | 60-9 | 36 |
| A 4432 R | 25-9 | 15 |
| A 4433 R | 25-5 | 28 |
| | 25-5 | 30 |
| | 25-9 | 18 |
| | 25-11 | 7 |
| | 25-11 | 8 |
| A 4434 R | 25-7 | 8 |
| | 25-9 | 8 |
| A 4435 R | 25-9 | 9 |
| A 4436 R | 25-9 | 16 |
| A 4437 R | 25-7 | 12 |
| | 25-9 | 12 |

| Part No. | Page | Key |
|---|---|---|
| A 4438 R | 25-9 | 5 |
| A 4440 R | 25-3 | 18 |
| A 4443 R | 25-3 | 38 |
| A 4444 R | 25-3 | 37 |
| A 4448 R | 65-7 | 6 |
| A 4452 R | 65-13 | 1 |
| | 65-15 | 1 |
| A 4465 R | 45-3 | 22 |
| | 45-5 | 12 |
| A 4475 R | 65-3 | 14 |
| A 4476 R | 65-3 | 17 |
| A 4478 R | 65-3 | 4 |
| A 4479 R | 30-3 | 42 |
| | 65-3 | 7 |
| A 4485 R | 65-3 | 21 |
| A 4486 R | 65-3 | 24 |
| A 4489 R | 65-9 | 55 |
| A 4490 R | 65-11 | 22 |
| A 4491 R | 65-7 | 14 |
| A 4492 R | 65-7 | 11 |
| A 4493 R | 65-7 | 8 |
| A 4494 R | 65-7 | 10 |
| A 4495 R | 65-7 | 7 |
| A 4496 R | 65-7 | 9 |
| A 4497 R | 65-9 | 57 |
| A 4503 R | 65-3 | 33 |
| A 4507 R | 65-5 | 3 |
| A 4517 R | 45-29 | 6 |
| A 4518 R | 60-9 | 35 |
| A 4523 R | 60-9 | 27 |
| A 4539 R | 45-7 | 18 |
| | 45-11 | 4 |
| A 4540 R | 45-7 | 19 |
| | 45-11 | 5 |
| A 4544 R | 60-19 | 8 |
| A 4546 R | 41-5 | 37 |
| | 41-9 | 21 |
| | 60-19 | 10 |
| | 60-19 | 12 |
| A 4548 R | 60-19 | 39 |
| A 4549 R | 60-19 | 38 |
| A 4551 R | 60-19 | 30 |
| A 4552 R | 60-17 | 27 |
| A 4553 R | 60-17 | 26 |
| A 4557 R | 60-19 | 21 |
| A 4558 R | 60-19 | 23 |
| A 4560 R | 60-19 | 2 |
| A 4561 R | 60-19 | 5 |
| A 4568 R | 60-11 | 6 |
| | 60-13 | 6 |
| A 4569 R | 60-11 | 7 |
| | 60-13 | 7 |
| A 4570 R | 60-19 | 20 |
| A 4574 R | 60-19 | 11 |
| A 4577 R | 60-19 | 40 |
| A 4580 R | 60-19 | 32 |
| A 4581 R | 60-17 | 30 |
| A 4583 R | 60-5 | 5 |
| | 60-17 | 6 |
| A 4588 R | 15-9 | 11 |
| A 4589 R | 15-9 | 10 |
| A 4599 R | 45-17 | 21 |
| A 4601 R | 30-5 | 10 |
| A 4603 R | 30-5 | 22 |
| A 4605 R | 60-11 | 31 |
| | 60-13 | 27 |
| | 60-17 | 19 |
| | 60-19 | 16 |
| A 4616 R | 60-5 | 29 |
| | 60-5 | 29 |
| A 4620 R | 60-5 | 30 |
| A 4621 R | 60-19 | 19 |

| Part No. | Page | Key |
|---|---|---|
| A 4624 R | 10-5 | 15 |
| A 4631 R | 15-19 | 11 |
| | 15-23 | 5 |
| | 30-19 | 39 |
| | 30-23 | 22 |
| | 70-3 | .. |
| A 4634 R | 30-15 | 21 |
| | 30-19 | 16 |
| | 30-23 | 17 |
| | 70-3 | .. |
| A 4642 R | 15-19 | 19 |
| | 70-3 | .. |
| A 4645 R | 15-19 | 24 |
| | 15-23 | 1 |
| A 4646 R | 15-19 | 23 |
| | 15-23 | 2 |
| A 4651 R | 45-7 | 17 |
| | 45-11 | 3 |
| A 4656 R | 15-13 | 14 |
| | 15-15 | 14 |
| A 4666 R | 50-7 | 16 |
| | 50-9 | 13 |
| | 50-11 | 14 |
| A 4667 R | 50-11 | 15 |
| A 4668 R | 50-7 | 9 |
| | 50-9 | 6 |
| A 4669 R | 50-7 | 8 |
| | 50-9 | 5 |
| A 4679 R | 50-11 | 8 |
| A 4680 R | 60-19 | 14 |
| A 4681 R | 30-5 | 9 |
| A 4701 R | 65-9 | 47 |
| A 4702 R | 65-9 | 45 |
| A 4703 R | 65-9 | 46 |
| A 4705 R | 60-19 | 9 |
| A 4720 R | 65-15 | 12 |
| A 4721 R | 65-15 | 21 |
| A 4722 R | 41-11 | 37 |
| | 65-15 | 20 |
| A 4723 R | 65-15 | 17 |
| A 4727 R | 65-15 | 14 |
| A 4728 R | 65-15 | 19 |
| | 70-3 | .. |
| A 4729 R | 65-15 | 18 |
| A 4730 R | 65-15 | 40 |
| A 4731 R | 65-15 | 41 |
| A 4732 R | 65-15 | 31 |
| A 4733 R | 65-15 | 11 |
| A 4734 R | 65-15 | 39A |
| A 4735 R | 65-15 | 44 |
| A 4736 R | 65-15 | 5 |
| A 4737 R | 65-15 | 25 |
| A 4738 R | 65-15 | 24 |
| A 4739 R | 65-15 | 6 |
| A 4740 R | 65-15 | 9 |
| A 4741 R | 40-5 | 17 |
| | 40-5 | .. |
| | 65-15 | 8 |
| A 4742 R | 65-15 | 7 |
| A 4743 R | 65-15 | 13A |
| A 4744 R | 65-15 | 16 |
| A 4745 R | 65-15 | 29 |
| A 4746 R | 65-15 | 30 |
| A 4747 R | 65-15 | 28 |
| A 4748 R | 65-15 | 27 |
| A 4749 R | 65-15 | 34A |
| A 4780 R | 25-3 | 18 |
| A 4793 R | 60-11 | 6 |
| | 60-13 | 6 |
| A 4795 R | 60-11 | 9 |
| | 60-13 | 9 |

| Part No. | Page | Ke |
|---|---|---|
| A 4797 R | 60-11 | 35 |
| | 60-13 | 31 |
| | 60-19 | 25 |
| A 4798 R | 60-11 | 36 |
| | 60-13 | 32 |
| | 60-19 | 26 |
| A 4805 R | 60-5 | 18 |
| | 60-11 | 21 |
| | 65-5 | 27 |
| | 65-5 | 32 |
| | 65-7 | 26 |
| A 4806 R | 60-5 | 13 |
| | 60-7 | 12 |
| | 60-11 | 15 |
| | 60-13 | 14 |
| | 65-5 | 23 |
| | 65-5 | 32 |
| | 65-7 | 21 |
| A 4807 R | 60-17 | 16 |
| A 4808 R | 60-5 | 12 |
| | 60-7 | 1 |
| | 60-11 | 1 |
| | 60-13 | 1 |
| | 65-5 | 2 |
| | 65-5 | 3 |
| | 65-7 | 2 |
| A 4809 R | 60-17 | 1 |
| A 4813 R | 45-3 | 1 |
| A 4814 R | 60-19 | 3 |
| A 4815 R | 60-19 | 3 |
| A 4816 R | 60-19 | 3 |
| A 4817 R | 60-19 | 3 |
| A 4818 R | 45-29 | |
| A 4819 R | 45-29 | |
| A 4826 R | 50-5 | 1 |
| A 4827 R | 10-5 | 2 |
| | 20-7 | |
| A 4837 R | 60-3 | 2 |
| | 60-9 | 3 |
| A 4848 R | 65-17 | |
| A 4849 R | 65-17 | |
| A 4850 R | 65-17 | |
| A 4851 R | 65-17 | 1 |
| A 4852 R | 65-17 | 3 |
| A 4853 R | 65-17 | 3 |
| A 4854 R | 65-17 | 3 |
| A 4855 R | 65-17 | 3 |
| A 4856 R | 65-17 | 1 |
| A 4857 R | 65-17 | 1 |
| A 4858 R | 65-17 | 1 |
| A 4859 R | 65-17 | 1 |
| A 4860 R | 65-17 | 1 |
| A 4861 R | 65-17 | 2 |
| A 4862 R | 65-17 | 2 |
| A 4863 R | 65-17 | 2 |
| A 4864 R | 65-17 | 2 |
| A 4865 R | 65-17 | 3 |
| A 4866 R | 65-17 | 2 |
| A 4867 R | 65-17 | 2 |
| A 4868 R | 65-17 | 3 |
| A 4869 R | 65-17 | 3 |
| A 4870 R | 65-17 | 3 |
| A 4871 R | 65-17 | 3 |
| A 4872 R | 30-7 | |
| | 30-13 | |
| A 4873 R | 50-7 | |
| A 4875 R | 50-3 | |
| A 4878 R | 30-5 | 1 |
| A 4879 R | 20-7 | |
| | 30-5 | |
| | 60-5 | 1 |
| | 60-11 | |

| Part No. | Page | Key |
|---|---|---|
| Continued | | |
| | 60-11 | 33 |
| | 60-13 | 12 |
| | 60-13 | 29 |
| | 60-17 | 14 |
| | 65-3 | 30 |
| A 4880 R | 30-5 | 13 |
| A 4882 R | 45-29 | 8 |
| A 4883 R | 45-29 | 5 |
| | 45-29 | 8 |
| A 4895 R | 25-13 | 13 |
| A 4898 R | 25-11 | 17 |
| | 25-11 | 18 |
| | 25-11 | .. |
| A 4900 R | 30-25 | 10 |
| A 4905 R | 45-5 | 3 |
| A 4916 R | 60-5 | 29 |
| A 4917 R | 35-33 | 21 |
| | 50-5 | 12 |
| A 4925 R | 30-27 | 5 |
| | 30-27 | 5 |
| | 30-27 | 15 |
| | 30-27 | 25 |
| | 30-27 | 27 |
| A 4927 R | 30-27 | 3 |
| | 30-27 | 22 |
| A 4928 R | 30-25 | 32 |
| | 30-27 | 22 |
| | 30-27 | 24 |
| A 4930 R | 30-27 | 32 |
| A 4931 R | 30-27 | 31 |
| A 4932 R | 30-25 | 20 |
| | 30-27 | 29 |
| A 4934 R | 30-27 | 18 |
| A 4948 R | 30-5 | 7 |
| A 4961 R | 25-5 | 10 |
| A 4962 R | 41-11 | 40 |
| | 45-11 | 2 |
| | 45-11 | 14 |
| A 4963 R | 45-25 | 1 |
| A 4964 R | 45-25 | 16 |
| A 4968 R | 45-27 | 10 |
| A 4969 R | 45-27 | 10 |
| A 4975 R | 45-25 | 8 |
| A 4976 R | 30-11 | 14 |
| A 4977 R | 30-11 | 17 |
| A 4978 R | 30-11 | 16 |
| A 4979 R | 30-11 | 11 |
| A 4980 R | 30-11 | 10 |
| A 4981 R | 30-11 | 9 |
| A 4982 R | 30-11 | 8 |
| A 4983 R | 30-11 | 5 |
| A 4984 R | 30-11 | 7 |
| A 4985 R | 30-11 | 3 |
| A 4986 R | 30-11 | 4 |
| A 4987 R | 30-11 | 1 |
| A 4988 R | 30-11 | 6 |
| | 30-11 | 7 |
| A 4992 R | 20-7 | 3 |
| A 4993 R | 30-25 | 12 |
| A 4995 R | 30-25 | 12 |
| A 4996 R | 30-25 | 8 |
| A 4997 R | 30-25 | 6 |
| | 30-25 | 7 |
| A 4998 R | 30-25 | 5 |
| A 4999 R | 30-25 | 29 |
| A 5092 R | 30-31 | 31 |
| A 5093 R | 30-31 | 33 |
| A 5094 R | 30-31 | 32 |
| A 5095 R | 30-31 | 6 |
| A 5096 R | 30-31 | 5 |
| A 5097 R | 30-31 | 28 |
| A 5098 R | 30-31 | 9 |
| A 5099 R | 30-31 | 10 |
| | 30-31 | 39 |
| A 5100 R | 30-31 | 8 |
| A 5101 R | 30-31 | 11 |
| A 5102 R | 30-31 | 12 |
| A 5103 R | 30-31 | 13 |
| A 5104 R | 30-31 | 14 |
| A 5105 R | 30-31 | 16 |
| A 5106 R | 30-31 | 22 |
| | 30-31 | 26 |
| A 5107 R | 30-31 | 19 |
| | 30-31 | 24 |
| A 5108 R | 30-31 | 20 |
| A 5109 R | 30-31 | 18 |
| A 5110 R | 30-31 | 35 |
| A 5111 R | 30-31 | 34 |
| A 5112 R | 30-31 | 38 |
| A 5113 R | 30-31 | 37 |
| A 5114 R | 30-31 | 36 |
| A 5115 R | 30-31 | 2 |
| A 5116 R | 30-31 | 3 |
| A 5117 R | 30-31 | 46 |
| A 5118 R | 30-31 | 43 |
| A 5140 R | 30-25 | 2 |
| A 5141 R | 30-25 | 2 |
| A 5145 R | 60-19 | 30 |
| A 5146 R | 45-19 | 12 |
| A 5161 R | 30-7 | 11 |
| | 30-13 | 9 |
| A 5162 R | 30-11 | .. |
| A 5163 R | 30-11 | .. |
| A 5165 R | 41-11 | 18 |
| A 5166 R | 15-9 | 7 |
| A 5167 R | 15-9 | 11 |
| A 5168 R | 15-9 | 10 |
| A 5172 R | 30-7 | 13 |
| | 30-13 | 11 |
| A 5182 R | 35-21 | 9 |
| A 5188 R | 35-13 | 26 |
| | 35-15 | 56 |
| A 5195 R | 30-23 | 16 |
| A 5196 R | 30-23 | 11 |
| A 5197 R | 30-23 | 26 |
| A 5198 R | 30-23 | 28 |
| A 5203 R | 30-27 | 19 |
| A 5221 R | 30-7 | 2 |
| | 30-13 | 3 |
| A 5226 R | 35-24 | 25 |
| A 5227 R | 35-24 | 23 |
| A 5228 R | 35-24 | 22 |
| A 5233 R | 50-2 | 2 |
| A 5234 R | 50-2 | 3 |
| A 5237 R | 15-9 | 18 |
| A 5246 R | 10-3 | 10 |
| A 5249 R | 60-19 | 2 |
| A 5272 R | 35-13 | 1 |
| | 35-19 | 3 |
| A 5273 R | 35-25 | 14 |
| A 5275 R | 35-24 | 12 |
| | 35-25 | 10 |
| A 5276 R | 35-24 | 19 |
| | 35-25 | 2 |
| A 5277 R | 35-24 | 13 |
| | 35-25 | 3 |
| A 5278 R | 35-24 | 14 |
| | 35-25 | 8 |
| A 5279 R | 35-24 | 16 |
| | 35-25 | 9 |
| A 5280 R | 35-25 | 6 |
| A 5281 R | 35-24 | 3 |
| A 5285 R | 30-31 | 53 |
| A 5287 R | 65-7 | 11 |
| A 5292 R | 10-3 | 8 |
| | 40-11 | 2 |
| | 55-1 | 4 |
| A 5295 R | 65-15 | 13B |
| A 5297 R | 30-25 | 9 |
| A 5300 R | 65-15 | 39A |
| | 65-15 | 39B |
| A 5301 R | 65-15 | 37 |
| | 65-15 | 39A |
| A 5302 R | 65-15 | 35 |
| | 65-15 | 39A |
| A 5304 R | 65-15 | 34B |
| | 65-15 | 39A |
| A 5313 R | 60-19 | 37 |
| A 5322 R | 25-7 | 16 |
| A 5323 R | 25-7 | 17 |
| A 5333 R | 30-27 | 6 |
| A 5334 R | 30-27 | 8 |
| A 5335 R | 30-27 | 7 |
| A 5339 R | 30-27 | 10 |
| | 30-27 | 14 |
| A 5344 R | 40-7 | 25 |
| A 5345 R | 10-3 | 17 |
| A 5347 R | 10-3 | 6 |
| A 5349 R | 65-9 | 40 |
| | 65-11 | 5 |
| A 5351 R | 10-3 | 17 |
| A 5352 R | 10-3 | 17 |
| A 5353 R | 10-3 | 17 |
| A 5361 R | 65-7 | 13 |
| A 5364 R | 15-3 | 24 |
| | 41-9 | 12 |
| | 65-9 | 51 |
| | 65-11 | 26 |
| A 5376 R | 30-23 | 13 |
| A 5377 R | 30-23 | 26 |
| | 30-23 | 36 |
| A 5378 R | 30-23 | 35 |
| A 5379 R | 30-23 | 33 |
| A 5384 R | 30-5 | 12 |
| A 5387 R | 30-23 | 41 |
| A 5388 R | 30-23 | 39 |
| A 5394 R | 65-7 | 11 |
| A 5395 R | 65-17 | 15 |
| A 5396 R | 65-17 | 14 |
| A 5397 R | 30-31 | 41B |
| A 5401 R | 65-15 | 15 |
| A 5659 R | 50-7 | 13 |
| | 50-9 | 10 |
| A 5775 R | 65-18 | .. |
| A 5776 R | 65-18 | .. |
| A 5777 R | 65-18 | .. |
| A 5778 R | 65-18 | .. |
| A 5866 R | 20-3 | 4 |
| A 6112 R | 20-5 | 28 |
| A 6121 R | 20-3 | 8 |
| AA | | |
| AA 380 R | 41-7 | 3 |
| | 45-3 | 2 |
| AA 517 R | 30-8 | 7 |
| | 30-9 | 15 |
| | 30-11 | 22 |
| AA 518 R | 30-8 | 6 |
| | 30-9 | 14 |
| | 30-11 | 21 |
| AA 663 R | 45-19 | 1 |
| AA 811 R | 40-13 | 10 |
| AA 847 R | 45-17 | 2 |
| AA 1342 R | 50-5 | 15 |
| AA 1407 R | 45-19 | 14 |
| AA 1890 R | 35-15 | 56 |
| AA 2095 R | 15-3 | 45 |
| AA 2096 R | 15-3 | 49 |
| AA 2296 R | 60-5 | 28 |
| | 60-7 | 6 |
| | 60-17 | 32 |
| AA 2297 R | 60-7 | 1 |
| AA 3238 R | 35-23 | 8 |
| AA 3239 R | 35-23 | 4 |
| AA 3240 R | 35-23 | 6 |
| AA 3241 R | 35-23 | 2 |
| AA 3243 R | 35-23 | 20 |
| AA 3495 R | 35-23 | 10 |
| | 35-23 | 16 |
| | 35-23 | 23 |
| AA 3497 R | 35-5 | 9 |
| AA 3522 R | 60-7 | 2 |
| AA 3657 R | 40-11 | 15 |
| AA 3680 R | 15-3 | 48 |
| AA 3734 R | 65-9 | 26 |
| AA 3735 R | 65-9 | 27 |
| AA 3736 R | 65-9 | 10 |
| AA 3738 R | 65-9 | 37 |
| AA 3739 R | 65-11 | 10 |
| AA 3741 R | 65-13 | 19 |
| AA 3749 R | 65-13 | 20 |
| AA 3754 R | 65-11 | 4 |
| AA 3836 R | 15-9 | 16 |
| AA 3846 R | 15-9 | 16 |
| | 35-13 | 25 |
| | 35-15 | 57 |
| AA 4029 R | 45-29 | .. |
| AA 4039 R | 35-29 | 47 |
| | 35-31 | 21 |
| AA 4053 R | 15-9 | 16 |
| | 35-13 | 25 |
| | 35-15 | 57 |
| | 35-21 | 10 |
| AA 4099 R | 45-19 | 5 |
| AA 4101 R | 65-9 | 33 |
| AA 4279 R | 65-11 | 21 |
| | 65-13 | 4 |
| | 65-15 | 4 |
| | 65-17 | 27 |
| AA 4281 R | 65-13 | 28 |
| AA 4282 R | 65-13 | 15 |
| AA 4296 R | 30-8 | 1 |
| AA 4297 R | 30-8 | 2 |
| | 30-9 | 11 |
| | 30-11 | 18 |
| AA 4298 R | 30-8 | 3 |
| | 30-9 | 10 |
| AA 4309 R | 35-27 | 24 |
| AA 4316 R | 65-9 | 40 |
| | 65-11 | 5 |
| AA 4331 R | 30-8 | 10 |
| AA 4342 R | 65-15 | 4 |
| AA 4369 R | 15-9 | 16 |
| | 35-13 | 25 |
| | 35-15 | 57 |
| AA 4475 R | 65-3 | 4 |
| AA 4476 R | 65-3 | 9 |
| AA 4478 R | 65-3 | 25 |
| | 65-5 | 14 |
| AA 4493 R | 65-13 | 9 |
| AA 4507 R | 30-8 | 5 |
| | 30-9 | 12 |
| | 30-11 | 20 |
| AA 4542 R | 65-11 | 21 |
| | 65-13 | 4 |
| | 65-17 | 27 |

| Part No. | Page | Key |
|---|---|---|
| AA 4655 R | 50-12 | 1 |
| AA 4660 R | 15-9 | 16 |
| | 35-13 | 25 |
| | 35-15 | 57 |
| AA 4666 R | 35-23 | 6 |
| AA 4794 R | 41-5 | 22 |
| | 65-3 | 20 |
| AA 4842 R | 35-27 | 16 |
| | 35-29 | 25 |
| | 35-32 | 12 |
| AA 4845 R | 35-27 | 1 |
| | 35-27 | .. |
| | 35-29 | 2 |
| | 35-29 | .. |
| AA 4847 R | 55-3 | 12 |
| AA 4864 R | 65-13 | 3 |
| | 65-15 | 3 |
| AA 4871 R | 35-13 | .. |
| AA 4877 R | 35-15 | .. |
| AA 4881 R | 35-16 | 5 |
| | 35-17 | 10 |
| | 35-23 | 4 |
| | 35-29 | 35 |
| | 35-31 | 10 |
| | 35-31 | .. |
| AA 4882 R | 35-16 | 7 |
| | 35-17 | 4 |
| | 35-29 | 34 |
| | 35-31 | 9 |
| | 35-31 | .. |
| AA 4883 R | 35-16 | 1 |
| AA 4884 R | 35-27 | 1 |
| | 35-29 | 2 |
| AA 4921 R | 35-3 | 16 |
| | 35-5 | .. |
| | 35-35 | .. |
| AA 4924 R | 35-23 | 8 |
| AA 4925 R | 35-23 | 9 |
| AA 4926 R | 35-23 | 11 |
| AA 4927 R | 35-23 | 10 |
| AA 4932 R | 55-3 | .. |
| AA 4936 R | 30-11 | .. |
| | 50-5 | 5 |
| AA 4937 R | 30-11 | .. |
| | 50-5 | 10 |
| AA 4955 R | 10-5 | 4 |
| | 30-7 | 21 |
| | 30-7 | 25 |
| | 50-5 | 13 |
| AA 4956 R | 35-24 | 24 |
| | 50-11 | 17 |
| AA 4958 R | 60-7 | 16 |
| AA 4960 R | 55-3 | 4 |
| AA 4963 R | 10-3 | 9 |
| | 40-11 | 3 |
| AA 4979 R | 45-29 | 9 |
| | 45-29 | 15 |
| AA 4981 R | 65-11 | 1 |
| AA 4983 R | 35-13 | .. |
| | 35-16 | 2 |
| AA 4991 R | 30-21 | .. |
| AA 5064 R | 35-17 | 11 |
| | 35-29 | 13 |
| | 35-31 | 7 |
| | 35-31 | .. |
| AA 5071 R | 35-27 | 7 |
| | 35-29 | 9 |
| AA 5110 R | 45-29 | 1 |
| AA 5150 R | 45-17 | 13 |
| AA 5153 R | 25-3 | 2 |
| AA 5155 R | 25-9 | 17 |
| AA 5158 R | 25-3 | 3 |
| AA 5160 R | 35-27 | 2 |
| | 35-27 | .. |
| | 35-29 | 3 |
| AA 5166 R | 45-23 | 5 |
| AA 5192 R | 65-3 | 16 |
| AA 5199 R | 35-23 | 15 |
| | 35-27 | 27 |
| | 35-29 | 45 |
| | 35-31 | 20 |
| AA 5211 R | 65-9 | 57 |
| AA 5243 R | 60-5 | 1 |
| | 60-17 | 2 |
| AA 5247 R | 60-11 | 10 |
| | 60-13 | 10 |
| AA 5249 R | 60-19 | 18 |
| AA 5261 R | 45-29 | 1 |
| AA 5267 R | 45-23 | 16 |
| AA 5281 R | 60-11 | 13 |
| | 60-13 | 13 |
| AA 5282 R | 60-11 | 6 |
| | 60-13 | 6 |
| AA 5283 R | 60-19 | 12 |
| AA 5284 R | 60-19 | 15 |
| AA 5285 R | 60-19 | 29 |
| AA 5286 R | 60-19 | 31 |
| AA 5288 R | 60-5 | 2 |
| | 60-17 | 3 |
| AA 5290 R | 55-3 | 32 |
| AA 5301 R | 30-5 | 8 |
| AA 5302 R | 30-5 | 18 |
| AA 5303 R | 45-17 | 21 |
| AA 5309 R | 30-9 | 9 |
| AA 5323 R | 60-5 | 1 |
| AA 5324 R | 60-15 | 2 |
| AA 5333 R | 30-9 | 4 |
| AA 5334 R | 30-9 | 8 |
| AA 5338 R | 50-5 | .. |
| AA 5356 R | 55-3 | 1 |
| AA 5357 R | 55-3 | 2 |
| | 55-5 | 7 |
| AA 5358 R | 35-27 | 4 |
| | 35-27 | 5 |
| | 35-27 | .. |
| AA 5359 R | 35-27 | 26 |
| | 35-27 | 28 |
| | 35-27 | .. |
| AA 5360 R | 35-27 | 4 |
| AA 5361 R | 35-27 | 26 |
| AA 5362 R | 35-27 | 31 |
| AA 5363 R | 35-27 | 32 |
| AA 5365 R | 55-1 | 3 |
| AA 5380 R | 65-13 | .. |
| AA 5383 R | 50-11 | 7 |
| AA 5385 R | 25-9 | 17 |
| AA 5386 R | 25-9 | 17 |
| AA 5397 R | 35-29 | 15 |
| | 35-32 | 10 |
| | 35-33 | 12 |
| AA 5398 R | 70-3 | .. |
| AA 5486 R | 65-3 | 28 |
| AA 5535 R | 65-11 | 20 |
| AA 5539 R | 45-21 | 10 |
| | 45-23 | 11 |
| | 45-27 | 13 |
| AA 5546 R | 30-3 | 31 |
| AA 5559 R | 65-3 | 23 |
| AA 5574 R | 35-11 | 19 |
| | 50-3 | 3 |
| AA 5577 R | 20-5 | 19 |
| AA 5579 R | 25-11 | 3 |
| AA 5580 R | 25-11 | 4 |
| AA 5590 R | 45-19 | .. |
| AA 5593 R | 15-9 | 16 |
| | 35-13 | 25 |
| | 35-15 | 57 |
| AA 5594 R | 15-9 | 16 |
| | 35-13 | 25 |
| | 35-15 | 57 |
| AA 5603 R | 65-13 | .. |
| | 65-15 | .. |
| AA 5605 R | 65-15 | 48A |
| AA 5606 R | 65-15 | 46A |
| AA 5607 R | 65-15 | 42 |
| AA 5651 R | 55-3 | 1 |
| AA 5652 R | 35-29 | 46 |
| | 35-29 | .. |
| | 35-31 | 19 |
| | 35-31 | .. |
| AA 5654 R | 35-29 | 6 |
| AA 5655 R | 35-29 | 5 |
| AA 5663 R | 60-3 | 3 |
| | 60-9 | 5 |
| AA 5664 R | 60-3 | 3 |
| | 60-9 | 5 |
| AA 5665 R | 55-3 | 1 |
| AA 5666 R | 60-11 | 6 |
| | 60-13 | 6 |
| AA 5673 R | 35-29 | 38 |
| AA 5691 R | 35-25 | 12 |
| | 35-29 | 42 |
| | 35-31 | 22 |
| | 55-3 | 28 |
| AA 5692 R | 35-25 | 12 |
| | 35-29 | 42 |
| | 35-31 | 22 |
| | 55-3 | 28 |
| AA 5700 R | 10-3 | .. |
| AA 5720 R | 65-17 | .. |
| AA 5721 R | 65-17 | .. |
| AA 5722 R | 65-17 | 8 |
| AA 5723 R | 65-17 | 7 |
| AA 5724 R | 65-17 | 1 |
| AA 5726 R | 65-17 | .. |
| AA 5727 R | 65-17 | 20 |
| AA 5728 R | 65-17 | 23 |
| AA 5729 R | 65-17 | 24 |
| AA 5730 R | 35-29 | 4 |
| | 35-29 | 5 |
| | 35-29 | 6 |
| | 35-29 | 7 |
| | 35-29 | .. |
| | 35-31 | 17 |
| | 35-31 | .. |
| | 35-33 | 7 |
| | 35-33 | 8 |
| | 35-33 | 9 |
| | 35-33 | 10 |
| AA 5731 R | 65-15 | 9 |
| | 65-15 | 13A |
| AA 5732 R | 55-1 | .. |
| AA 5734 R | 35-29 | 1 |
| | 35-32 | 14 |
| | 35-33 | 1 |
| | 50-5 | 18 |
| AA 5737 R | 35-3 | 7 |
| | 35-7 | .. |
| | 35-31 | 4 |
| | 35-35 | .. |
| AA 5738 R | 35-17 | 2 |
| | 35-31 | 8 |
| | 35-31 | 30 |
| | 35-31 | .. |
| | 35-33 | 4 |
| AA 5755 R | 35-29 | 8 |
| | 35-29 | .. |
| AA 5756 R | 25-5 | 2 |
| AA 5757 R | 25-5 | 3 |
| AA 5765 R | 45-25 | 1 |
| AA 5766 R | 45-25 | 16 |
| AA 5767 R | 45-27 | 11 |
| AA 5769 R | 45-27 | 15 |
| AA 5771 R | 45-27 | 20 |
| AA 5772 R | 45-27 | 20 |
| AA 5773 R | 45-27 | 23 |
| AA 5776 R | 30-11 | .. |
| AA 5777 R | 30-11 | .. |
| AA 5778 R | 30-11 | .. |
| | 50-5 | 7 |
| AA 5787 R | 35-29 | 33 |
| | 35-32 | 17 |
| | 50-5 | 17 |
| AA 5788 R | 35-29 | 32 |
| | 35-32 | 16 |
| | 50-5 | 10 |
| AA 5789 R | 45-27 | 15 |
| AA 5791 R | 35-29 | 49 |
| | 35-31 | 29 |
| | 35-33 | 5 |
| AA 5795 R | 30-7 | 1 |
| | 30-13 | 4 |
| AA 5818 R | 15-9 | 16 |
| | 35-13 | 25 |
| | 35-15 | 57 |
| AA 5819 R | 15-9 | 16 |
| AA 5829 R | 65-17 | 36 |
| AA 5958 R | 60-19 | 12 |
| AA 5972 R | 15-9 | 16 |
| | 35-13 | 25 |
| | 35-15 | 57 |
| | 35-21 | 10 |
| AA 5976 R | 35-13 | 26 |
| | 35-15 | 56 |
| AA 5988 R | 35-31 | 27 |
| | 35-32 | 1 |
| | 35-33 | 19 |
| AA 5989 R | 35-31 | 26 |
| AA 5994 R | 35-31 | 27 |
| | 35-32 | 2 |
| AA 6001 R | 30-25 | 9 |
| AA 6002 R | 30-25 | 4 |
| AA 6004 R | 30-25 | 11 |
| AA 6005 R | 30-25 | 19 |
| | 30-25 | 31 |
| AA 6008 R | 45-5 | 8 |
| AA 6019 R | 30-31 | .. |
| | 35-31 | 2 |
| AA 6022 R | 55-3 | 41 |
| | 55-5 | 5 |
| AA 6037 R | 35-29 | 14 |
| | 35-31 | 31 |
| | 35-31 | .. |
| | 35-33 | 2 |
| AA 6041 R | 35-21 | .. |
| | 35-31 | 12 |
| AA 6047 R | 30-31 | 4 |
| AA 6048 R | 30-31 | 30 |
| AA 6049 R | 30-31 | 17 |
| AA 6050 R | 30-31 | 15 |
| AA 6051 R | 30-31 | 41A |
| AA 6052 R | 30-31 | 44 |
| AA 6053 R | 30-31 | 50 |
| AA 6054 R | 30-31 | 49 |
| AA 6055 R | 30-31 | 48 |
| AA 6056 R | 30-31 | 45 |
| AA 6057 R | 30-25 | 12 |
| AA 6058 R | 30-25 | 3 |
| AA 6059 R | 30-25 | 7 |

| Part No. | Page | Key |
|---|---|---|
| AA 6060 R | 30-25 | 6 |
| AA 6061 R | 30-25 | 26 |
| | 30-25 | 30 |
| AA 6068 R | 35-29 | .. |
| AA 6077 R | 30-5 | 13 |
| AA 6086 R | 30-23 | 29 |
| AA 6088 R | 30-27 | 21 |
| AA 6092 R | 50-2 | .. |
| AA 6131 R | 35-24 | .. |
| AA 6132 R | 35-24 | 1 |
| AA 6133 R | 35-24 | .. |
| AA 6134 R | 35-24 | 5 |
| | 35-24 | 18 |
| AA 6135 R | 35-24 | 7 |
| AA 6141 R | 35-13 | 25 |
| | 35-15 | 56 |
| | 35-21 | 9 |
| AA 6145 R | 35-25 | 11 |
| | 35-25 | .. |
| AA 6162 R | 35-24 | 1 |
| AA 6163 R | 35-24 | .. |
| AA 6179 R | 65-17 | 35 |
| | 65-17 | 37 |
| AA 6217 R | 35-25 | 13 |
| AA 6218 R | 35-24 | 17 |
| | 35-25 | 5 |
| AA 6219 R | 35-24 | 2 |
| AA 6222 R | 30-27 | 17A |
| | 30-31 | .. |
| | 35-31 | 2 |
| AA 6223 R | 30-11 | 14 |
| AA 6240 R | 25-13 | .. |
| AA 6256 R | 65-15 | .. |
| AA 6267 R | 30-23 | .. |
| AA 6270 R | 30-23 | 37 |
| AA 6272 R | 30-27 | 17B |
| | 30-31 | .. |
| | 35-31 | 2 |
| AA 6275 R | 30-23 | 38 |
| AA 6292 R | 25-7 | 2 |
| AA 6293 R | 25-7 | 2 |
| AA 6294 R | 41-13 | 1 |
| AA 6295 R | 50-5 | 15 |
| AA 6307 R | 65-15 | 46A |
| | 65-15 | 48B |
| AA 6308 R | 65-15 | 46A |
| | 65-15 | 46B |
| AA 6309 R | 65-15 | 23 |
| | 65-15 | 48A |
| AA 6312 R | 65-9 | 40 |
| | 65-11 | 5 |
| AA 6314 R | 65-9 | 58 |
| AA 6315 R | 10-3 | 17 |
| AA 6330 R | 15-9 | 16 |
| | 35-13 | 25 |
| AA 6331 R | 15-9 | 16 |
| | 35-13 | 25 |
| | 35-15 | 57 |
| AA 6332 R | 15-9 | 16 |
| | 35-21 | 10 |
| | 35-13 | 25 |
| | 35-15 | 57 |
| AA 6337 R | 65-17 | 14 |
| | 65-17 | 14 |
| | 65-17 | 15 |
| AA 6341 R | 65-17 | .. |
| AA 6342 R | 65-17 | .. |
| AA 6343 R | 30-19 | .. |
| AA 6491 R | 35-29 | 8 |
| | 35-29 | .. |
| AA 6497 R | 35-3 | 20 |
| AA 6503 R | 35-29 | 4 |
| | 35-29 | 5 |
| | 35-29 | 6 |
| | 35-29 | 7 |
| | 35-29 | .. |
| | 35-31 | 17 |
| | 35-31 | .. |
| AA 6505 R | 65-15 | 23 |
| AA 6530 R | 35-15 | 57 |
| AA 6713 R | 45-17 | 13 |
| AA 6733 R | 35-21 | 20 |
| | 35-23 | 15 |
| | 35-27 | 27 |
| AA 6734 R | 35-23 | 8 |
| AA 6735 R | 35-23 | 10 |
| AA 6799 R | 55-4 | 14 |
| AA 6807 R | 55-4 | .. |
| AA 7337 R | 55-3 | 32 |
| AA 7338 R | 55-3 | 36 |

AB

| | | |
|---|---|---|
| AB 203 R | 45-19 | 20 |
| AB 271 R | 15-17 | 5 |
| AB 295 R | 30-3 | 17 |
| AB 326 R | 15-3 | 5 |
| AB 330 R | 55-3 | 16 |
| AB 353 R | 45-19 | 21 |
| AB 474 R | 45-9 | 24 |
| | 45-13 | 4 |
| | 45-15 | 37 |
| | 45-17 | 17 |
| | 45-19 | 1 |
| AB 518 R | 25-13 | 10 |
| AB 867 R | 45-9 | 36 |
| | 45-13 | 18 |
| | 45-15 | 22 |
| | 45-19 | 14 |
| AB 1032 R | 45-7 | 13 |
| | 45-9 | 33 |
| | 45-13 | 13 |
| | 45-15 | 27 |
| | 45-19 | 17 |
| AB 1325 R | 40-11 | 20 |
| AB 1326 R | 40-11 | 20 |
| AB 1396 R | 45-23 | 16 |
| AB 1549 R | 50-5 | 16 |
| AB 1629 R | 30-15 | 16 |
| | 30-17 | 8 |
| AB 2567 R | 15-13 | 4 |
| | 15-15 | 4 |
| AB 2568 R | 35-27 | 8 |
| | 35-29 | 10 |
| | 35-33 | 20 |
| | 50-5 | 14 |
| AB 2599 R | 35-27 | 13 |
| | 35-29 | 19 |
| | 35-32 | 7 |
| AB 2708 R | 45-19 | 19 |
| | 45-19 | .. |
| AB 2716 R | 15-9 | 31 |
| AB 2722 R | 15-9 | 26 |
| AB 2859 R | 15-13 | 34 |
| | 15-15 | 32 |
| AB 2873 R | 30-13 | 33 |
| AB 3080 R | 45-13 | 8 |
| | 45-19 | 5 |
| AB 3134 R | 45-23 | 13 |
| AB 3314 R | 25-13 | 15 |
| | 41-5 | 5 |
| AB 3315 R | 25-13 | 18 |
| | 41-5 | 8 |
| AB 3445 R | 15-9 | 24 |
| AB 3449 R | 35-27 | 30 |
| | 35-29 | 43 |
| AB 3450 R | 15-5 | 11 |
| AB 3452 R | 15-3 | 23 |
| AB 3453 R | 15-3 | 28 |
| AB 3456 R | 15-3 | 11 |
| AB 3457 R | 15-3 | 30 |
| AB 3458 R | 15-5 | 6 |
| AB 3459 R | 15-5 | 7 |
| AB 3460 R | 15-5 | 9 |
| AB 3461 R | 15-3 | 15 |
| AB 3477 R | 30-15 | 18 |
| | 30-17 | 10 |
| AB 3480 R | 35-13 | 26 |
| AB 3492 R | 15-9 | 24 |
| AB 3493 R | 15-9 | 24 |
| AB 3499 R | 40-7 | 41 |
| AB 3502 R | 40-7 | 26 |
| AB 3545 R | 15-13 | 39 |
| | 15-15 | 36 |
| AB 3546 R | 35-27 | 22 |
| | 35-29 | 36 |
| | 35-31 | 16 |
| AB 3547 R | 35-27 | 3 |
| | 35-27 | .. |
| | 35-29 | 4 |
| AB 3559 R | 30-13 | 30 |
| AB 3578 R | 10-5 | 6 |
| AB 3579 R | 10-5 | 1 |
| AB 3580 R | 15-7 | 1 |
| AB 3592 R | 55-3 | 15 |
| AB 3595 R | 40-5 | 33 |
| AB 3596 R | 40-5 | 39 |
| AB 3597 R | 40-5 | 30 |
| AB 3599 R | 25-3 | 17 |
| | 25-5 | 17 |
| AB 3627 R | 45-21 | 1 |
| AB 3630 R | 45-23 | 5 |
| AB 3633 R | 45-23 | 36 |
| | 45-27 | 1 |
| AB 3672 R | 15-10 | 32 |
| AB 3673 R | 15-10 | 32 |
| AB 3706 R | 25-13 | 39 |
| | 30-3 | 28 |
| | 41-3 | 2 |
| AB 3739 R | 35-23 | 16 |
| AB 3740 R | 30-21 | .. |
| | 70-4 | .. |
| AB 3761 R | 45-9 | 14 |
| | 45-15 | 12 |
| AB 3771 R | 45-9 | 16 |
| | 45-15 | 14 |
| AB 3772 R | 45-9 | 16 |
| | 45-15 | 14 |
| AB 3773 R | 45-9 | 28 |
| | 45-15 | 33 |
| | 45-19 | 5 |
| AB 3774 R | 45-9 | 12 |
| | 45-15 | 10 |
| AB 3833 R | 40-13 | 23 |
| AB 3844 R | 15-7 | 5 |
| AB 3849 R | 40-13 | 22 |
| AB 3851 R | 45-17 | 13 |
| AB 3867 R | 40-13 | 30 |
| AB 3905 R | 45-19 | 5 |
| AB 3919 R | 10-1 | .. |
| | 15-9 | 23 |
| AB 3921 R | 15-9 | 23 |
| AB 3961 R | 25-13 | 21 |
| AB 3966 R | 30-21 | .. |
| AB 3984 R | 55-3 | 3 |
| AB 3988 R | 25-13 | 23 |
| | 30-15 | 26 |
| | 30-17 | 18 |
| AB 4013 R | 45-23 | 16 |
| AB 4035 R | 55-3 | 12 |
| AB 4039 R | 15-10 | 32 |
| AB 4040 R | 15-10 | 32 |
| AB 4045 R | 45-21 | 13 |
| AB 4046 R | 45-23 | 5 |
| AB 4057 R | 40-13 | 28 |
| AB 4091 R | 15-13 | 39 |
| | 15-15 | 36 |
| AB 4095 R | 55-3 | .. |
| AB 4100 R | 35-27 | 30 |
| | 35-29 | 43 |
| | 35-31 | 25 |
| AB 4116 R | 15-17 | 4 |
| AB 4117 R | 15-7 | 15 |
| AB 4119 R | 40-7 | 39 |
| AB 4122 R | 40-7 | 36 |
| AB 4128 R | 40-7 | 43 |
| AB 4135 R | 40-9 | 13 |
| AB 4137 R | 40-9 | 10 |
| AB 4144 R | 40-7 | 17 |
| AB 4146 R | 30-3 | 14 |
| AB 4150 R | 60-3 | 5 |
| AB 4168 R | 15-5 | 22 |
| AB 4170 R | 15-17 | 10 |
| AB 4179 R | 40-9 | 16 |
| AB 4182 R | 40-7 | 37 |
| AB 4184 R | 40-7 | 28 |
| AB 4187 R | 40-7 | 27 |
| AB 4191 R | 40-7 | 30 |
| AB 4193 R | 40-7 | 29 |
| AB 4204 R | 15-15 | 33 |
| AB 4210 R | 15-3 | 3 |
| AB 4219 R | 15-5 | 14 |
| AB 4229 R | 40-9 | 14 |
| AB 4233 R | 30-15 | 19 |
| | 30-17 | 11 |
| AB 4235 R | 30-3 | 19 |
| AB 4236 R | 30-3 | 5 |
| AB 4238 R | 15-17 | 2 |
| AB 4243 R | 40-13 | 30 |
| AB 4249 R | 15-3 | 25 |
| | 60-17 | 8 |
| | 65-9 | 53 |
| | 65-11 | 25 |
| AB 4255 R | 15-9 | 29 |
| AB 4259 R | 45-17 | 7 |
| AB 4262 R | 25-11 | .. |
| AB 4265 R | 45-19 | .. |
| AB 4277 R | 15-13 | 33 |
| | 15-15 | 29 |
| AB 4440 R | 40-13 | 15 |
| AB 4442 R | 40-13 | 2 |
| AB 4445 R | 40-7 | 22 |
| AB 4447 R | 40-7 | 9 |
| AB 4457 R | 45-29 | 1 |
| AB 4461 R | 15-7 | 19 |
| AB 4462 R | 15-7 | 24 |
| AB 4463 R | 15-7 | 10 |
| AB 4464 R | 15-3 | 31 |
| AB 4465 R | 15-3 | 1 |
| AB 4475 R | 30-7 | 4 |
| | 30-13 | 1 |
| AB 4476 R | 30-7 | 16 |
| | 30-13 | 12 |
| AB 4477 R | 30-13 | 21 |
| AB 4478 R | 30-7 | 34 |

| Part No. | Page | Key |
|---|---|---|
| AB 4480 R | 50-7 | 1 |
| AB 4484 R | 35-27 | 6 |
| | 35-27 | .. |
| | 35-29 | 8 |
| | 35-29 | .. |
| AB 4485 R | 30-7 | 27 |
| AB 4486 R | 15-19 | 12 |
| | 15-21 | 1 |
| | 15-23 | 6 |
| AB 4488 R | 30-9 | 6 |
| AB 4489 R | 30-9 | 5 |
| AB 4490 R | 30-8 | 8 |
| AB 4497 R | 15-13 | 9 |
| AB 4499 R | 15-21 | 3 |
| AB 4501 R | 50-11 | 6 |
| AB 4502 R | 50-11 | 20 |
| AB 4503 R | 50-11 | 20 |
| AB 4504 R | 50-11 | 37 |
| AB 4505 R | 50-11 | 37 |
| AB 4508 R | 25-9 | 2 |
| AB 4509 R | 10-5 | 17 |
| AB 4513 R | 10-1 | .. |
| | 15-9 | 15 |
| AB 4517 R | 35-27 | 3 |
| | 35-29 | 4 |
| AB 4518 R | 10-3 | 3 |
| AB 4521 R | 45-7 | 23 |
| AB 4528 R | 45-11 | 14 |
| AB 4529 R | 10-3 | 18 |
| AB 4532 R | 40-11 | 17 |
| AB 4533 R | 40-11 | 24 |
| AB 4541 R | 45-13 | 1 |
| AB 4559 R | 45-9 | 3 |
| AB 4563 R | 45-15 | 1 |
| AB 4566 R | 50-11 | 36 |
| AB 4568 R | 20-7 | 11 |
| AB 4569 R | 20-3 | 26 |
| AB 4571 R | 20-5 | 17 |
| AB 4572 R | 20-5 | 3 |
| AB 4574 R | 20-3 | 7 |
| AB 4577 R | 40-11 | 17 |
| AB 4580 R | 45-3 | 6 |
| AB 4584 R | 45-3 | 3 |
| AB 4585 R | 50-7 | 22 |
| AB 4602 R | 40-7 | 5 |
| | 60-9 | 19 |
| AB 4603 R | 60-9 | 24 |
| AB 4604 R | 65-5 | 19 |
| AB 4605 R | 65-5 | 1 |
| AB 4606 R | 65-5 | 11 |
| AB 4607 R | 55-1 | 2 |
| AB 4618 R | 60-11 | 34 |
| | 60-13 | 30 |
| | 60-19 | 24 |
| AB 4620 R | 60-11 | 28 |
| | 60-13 | 24 |
| | 60-17 | 35 |
| AB 4623 R | 15-7 | 23 |
| AB 4624 R | 15-15 | 9 |
| AB 4625 R | 25-9 | 2 |
| AB 4626 R | 15-9 | 27 |
| AB 4627 R | 15-9 | 28 |
| AB 4630 R | 10-1 | .. |
| | 15-9 | 15 |
| AB 4634 R | 15-13 | 35 |
| AB 4635 R | 30-19 | 12 |
| | 30-19 | 26 |
| | 30-19 | 45 |
| | 30-19 | .. |
| AB 4638 R | 15-19 | 16 |
| | 15-23 | 10 |
| AB 4639 R | 15-5 | 3 |
| AB 4640 R | 30-8 | 8 |
| AB 4641 R | 10-1 | .. |
| | 15-9 | 23 |
| AB 4642 R | 15-10 | 32 |
| | 15-10 | 32 |
| AB 4643 R | 15-9 | 28 |
| AB 4644 R | 15-9 | 28 |
| AB 4647 R | 35-13 | .. |
| AB 4649 R | 35-11 | 20 |
| | 35-11 | 59 |
| AB 4650 R | 55-3 | 32 |
| | 55-3 | 36 |
| AB 4652 R | 25-3 | 1 |
| AB 4657 R | 20-7 | 8 |
| AB 4658 R | 45-7 | 10 |
| AB 4659 R | 40-11 | 1 |
| AB 4660 R | 40-11 | 1 |
| AB 4662 R | 20-5 | 28 |
| AB 4666 R | 25-3 | 17 |
| AB 4670 R | 15-25 | 5 |
| AB 4671 R | 15-25 | 7 |
| AB 4673 R | 60-5 | 9 |
| | 60-11 | 3 |
| | 65-5 | 32 |
| | 65-7 | 1 |
| AB 4674 R | 60-13 | 3 |
| AB 4675 R | 10-1 | .. |
| | 15-7 | .. |
| AB 4676 R | 10-1 | .. |
| | 15-10 | .. |
| AB 4677 R | 10-1 | .. |
| | 15-10 | .. |
| AB 4678 R | 30-3 | .. |
| AB 4680 R | 10-1 | .. |
| AB 4681 R | 15-7 | 32 |
| AB 4684 R | 10-1 | .. |
| | 15-7 | 14 |
| AB 4685 R | 45-23 | 6 |
| AB 4686 R | 45-23 | 6 |
| AB 4687 R | 15-9 | 23 |
| AB 4688 R | 15-10 | 32 |
| AB 4703 R | 45-13 | 1 |
| AB 4709 R | 60-11 | 34 |
| | 60-13 | 30 |
| | 60-19 | 24 |
| AB 4713 R | 50-7 | 2 |
| AB 4715 R | 20-5 | 17 |
| AB 4717 R | 15-9 | 23 |
| AB 4718 R | 15-9 | 23 |
| AB 4723 R | 35-29 | 12 |
| | 35-29 | 22 |
| | 35-32 | 5 |
| | 35-32 | 8 |
| | 35-33 | 22 |
| | 50-5 | 12 |
| AB 4725 R | 35-29 | 22 |
| | 35-32 | 8 |
| AB 4726 R | 35-27 | .. |
| AB 4727 R | 35-29 | .. |
| AB 4728 R | 15-13 | 29 |
| | 15-19 | 28 |
| | 15-23 | 14 |
| AB 4732 R | 50-3 | 1 |
| AB 4736 R | 50-3 | 1 |
| AB 4737 R | 50-3 | 4 |
| AB 4738 R | 30-19 | 45 |
| | 30-19 | .. |
| | 70-4 | .. |
| AB 4742 R | 10-1 | .. |
| | 15-9 | 23 |
| AB 4743 R | 15-25 | 2 |
| AB 4744 R | 25-5 | 39 |
| | 25-7 | 2 |
| AB 4745 R | 25-7 | 2 |
| AB 4747 R | 30-11 | 13 |
| AB 4748 R | 20-5 | 20 |
| AB 4754 R | 15-10 | 32 |
| AB 4755 R | 15-10 | 32 |
| AB 4756 R | 15-10 | 32 |
| AB 4757 R | 15-10 | 32 |
| AB 4760 R | 25-5 | 1 |
| AB 4761 R | 25-11 | .. |
| AB 4765 R | 50-3 | 5 |
| AB 4766 R | 15-9 | 23 |
| AB 4767 R | 50-7 | 4 |
| AB 4771 R | 30-7 | 4 |
| | 30-13 | 1 |
| AB 4772 R | 30-7 | 7 |
| | 30-13 | 5 |
| AB 4775 R | 25-3 | 30 |
| | 25-5 | 32 |
| AB 4776 R | 50-3 | 5 |
| AB 4777 R | 15-13 | 24 |
| | 15-13 | 25 |
| | 15-15 | 30 |
| | 15-15 | .. |
| AB 4778 R | 30-7 | 34 |
| | 30-13 | 21 |
| | 30-13 | 27 |
| AB 4784 R | 50-3 | 1 |
| AB 4785 R | 50-3 | 1 |
| | 50-3 | .. |
| AB 4789 R | 15-9 | 28 |
| AB 4790 R | 15-9 | 28 |
| AB 4791 R | 65-5 | 19 |
| AB 4792 R | 65-5 | 36 |
| AB 4793 R | 65-5 | 1 |
| | 65-5 | 11 |
| AB 4794 R | 30-19 | 12 |
| | 30-19 | .. |
| | 70-4 | .. |
| AB 4795 R | 35-29 | 48 |
| | 35-31 | 1 |
| | 35-31 | .. |
| | 35-33 | 18 |
| AB 4820 R | 41-13 | 5 |
| AB 4824 R | 41-11 | 25 |
| AB 4825 R | 41-13 | 9 |
| AB 4826 R | 41-13 | 7 |
| AB 4827 R | 41-7 | 5 |
| AB 4828 R | 20-3 | 26 |
| AB 4830 R | 30-15 | 8 |
| AB 4846 R | 30-25 | 13 |
| AB 4847 R | 30-25 | 12 |
| AB 4848 R | 30-25 | 1 |
| AB 4850 R | 15-13 | 35 |
| AB 4851 R | 50-9 | 2 |
| AB 4852 R | 50-9 | 18 |
| AB 4853 R | 30-25 | .. |
| | 50-9 | 1 |
| AB 4855 R | 15-9 | 23 |
| AB 4856 R | 15-9 | 23 |
| AB 4858 R | 35-31 | 1 |
| | 35-31 | .. |
| | 35-33 | 13 |
| | 35-33 | 14 |
| | 35-33 | 15 |
| | 35-33 | 16 |
| AB 4860 R | 35-11 | 59 |
| AB 4862 R | 30-27 | 23 |
| AB 4863 R | 30-27 | 4 |
| AB 4866 R | 30-29 | .. |
| AB 4868 R | 45-5 | 5 |
| AB 4871 R | 35-17 | 1 |
| AB 4872 R | 30-23 | .. |
| AB 4873 R | 30-23 | 18 |
| AB 4874 R | 30-23 | 8 |
| AB 4877 R | 35-31 | .. |
| AB 4880 R | 30-25 | 2 |
| AB 4881 R | 25-11 | .. |
| AB 4888 R | 30-19 | .. |
| AB 4890 R | 15-7 | 32 |
| AB 4891 R | 15-7 | 19 |
| AB 4892 R | 15-7 | 32 |
| AB 4893 R | 15-7 | 19 |
| AB 4894 R | 25-7 | .. |
| AB 4925 R | 50-11 | 6 |
| AB 4926 R | 50-11 | 20 |
| AB 4927 R | 50-11 | 37 |
| AB 4928 R | 50-11 | 20 |
| AB 4929 R | 50-11 | 37 |
| AB 4930 R | 41-11 | 25 |
| | 45-11 | 14 |
| | 50-11 | 36 |
| AB 4931 R | 45-11 | 14 |
| AB 4932 R | 41-11 | 25 |
| AB 4934 R | 41-13 | 9 |
| | 50-11 | 6 |
| AB 4935 R | 41-13 | 7 |
| | 50-11 | 20 |
| AB 4938 R | 20-7 | 8 |
| AB 4941 R | 15-9 | 28 |
| AB 4942 R | 15-9 | 28 |
| AB 4943 R | 15-9 | 28 |
| AB 4944 R | 15-9 | 13 |
| | 15-9 | 28 |
| AB 4945 R | 15-9 | 28 |
| AB 4946 R | 25-7 | 24 |
| AB 4947 R | 40-5 | 18 |
| | 40-5 | .. |
| AB 4949 R | 40-5 | 39 |
| | 40-5 | .. |
| AB 4950 R | 40-5 | 23 |
| | 40-5 | .. |
| AB 4951 R | 25-11 | 5 |
| | 25-11 | 18 |
| | 35-11 | 51 |
| | 25-11 | .. |
| AB 4953 R | 30-23 | .. |
| AB 4954 R | 30-13 | 33 |
| | 30-23 | 18 |
| AB 4955 R | 35-31 | .. |
| AB 4956 R | 35-33 | 21 |
| | 50-5 | 12 |
| AB 4957 R | 30-25 | .. |
| | 50-9 | 1 |
| AB 4958 R | 15-10 | 32 |
| AB 4959 R | 15-10 | 32 |
| AB 4962 R | 60-19 | 29 |
| AB 4963 R | 60-19 | 29 |
| AB 4964 R | 40-5 | .. |
| AB 4966 R | 41-11 | 14 |
| AB 4970 R | 15-9 | 23 |
| AB 4971 R | 15-9 | 23 |
| AB 5030 R | 30-7 | 4 |
| | 30-13 | 1 |
| AB 5035 R | 50-7 | 4 |
| AB 5036 R | 50-7 | 4 |
| AB 5037 R | 50-9 | 2 |
| AB 5060 R | 40-7 | 9 |
| AB 5096 R | 55-3 | 15 |
| AB 5198 R | 15-25 | 7 |
| AB 5223 R | 30-27 | 22 |
| AB 5304 R | 45-17 | 13 |
| AB 5325 R | 45-11 | 14 |

| Part No. | Page | Key |
|---|---|---|
| AB 5418 R | 60-19 | 18 |
| AB 5548 R | 20-5 | 28 |
| AB 5549 R | 20-5 | 28 |
| AB 5738 R | 35-33 | 11 |
| **AC** | | |
| AC 352 R | 45-23 | 23 |
| AC 453 R | 45-29 | .. |
| AC 1318 R | 45-3 | 23 |
| | 45-5 | 13 |
| | 45-23 | 27 |
| | 45-27 | 24 |
| AC 1326 R | 40-7 | 14 |
| **AD** | | |
| AD 452 R | 45-19 | 17 |
| AD 709 R | 30-7 | 1 |
| | 30-13 | 4 |
| | 30-13 | 36 |
| AD 1275 R | 40-11 | 15 |
| AD 2062 R | 35-23 | 5 |
| AD 2091 R | 35-27 | 24 |
| | 35-29 | 47 |
| | 35-31 | 21 |
| AD 2803 R | 45-29 | 19 |
| | 45-29 | .. |
| AD 2835 R | 35-27 | 9 |
| | 35-29 | 11 |
| AD 2854 R | 45-29 | 20 |
| AD 2856 R | 45-29 | 21 |
| AD 2857 R | 45-29 | 18 |
| **AF** | | |
| AF 368 R | 65-7 | 17 |
| AF 710 R | 35-23 | 20 |
| | 35-27 | 23 |
| | 35-29 | 37 |
| | 35-31 | 14 |
| AF 912 R | 45-19 | 5 |
| AF 1182 R | 45-21 | 13 |
| AF 1187 R | 45-23 | 33 |
| AF 1329 R | 41-5 | 19 |
| AF 1383 R | 30-27 | 28 |
| | 30-29 | .. |
| | 35-31 | 6 |
| AF 1384 R | 30-25 | 21 |
| | 30-25 | 24 |
| | 30-27 | 26 |
| | 30-27 | 30 |
| AF 1393 R | 35-31 | 28 |
| | 35-31 | .. |
| AF 1395 R | 30-29 | 3 |
| AF 1396 R | 30-29 | 5 |
| AF 1397 R | 30-29 | 8 |
| AF 1398 R | 30-29 | 11 |
| AF 1399 R | 30-29 | 12 |
| AF 1713 R | 45-29 | 14 |
| AF 1902 R | 41-3 | 18 |
| AF 1923 R | 41-5 | 24A |
| AF 1924 R | 41-5 | 15 |
| AF 1925 R | 41-5 | 13 |
| | 41-5 | 26 |
| AF 1926 R | 41-5 | 33 |
| | 41-5 | 34 |
| AF 1928 R | 41-11 | 35 |
| AF 1934 R | 41-7 | 6 |
| AF 1938 R | 41-7 | 10 |
| AF 2057 R | 25-11 | 12 |
| AF 2169 R | 35-27 | 2 |
| | 35-31 | 13 |
| | 35-31 | .. |
| | 35-33 | 3 |
| AF 2186 R | 41-11 | .. |
| AF 2235 R | 41-11 | .. |
| AF 2247 R | 30-5 | 8 |
| AF 2281 R | 30-15 | 2 |
| AF 2338 R | 41-5 | 15 |
| AF 2339 R | 41-5 | 24B |
| AF 2432 R | 41-7 | 23 |
| AF 2639 R | 35-27 | 2 |
| | 35-29 | 3 |
| | 35-31 | 13 |
| | 35-31 | .. |
| | 35-33 | 3 |
| AF 2749 R | 35-27 | 8 |
| | 35-29 | 10 |
| | 35-33 | 20 |
| | 50-5 | 14 |
| AF 2775 R | 50-5 | 16 |
| AF 2889 R | 15-3 | 39 |
| AF 2914 R | 30-7 | 1 |
| | 30-13 | 4 |
| AF 3094 R | 55-5 | 6 |
| AF 3096 R | 55-5 | 8 |
| AF 3097 R | 55-5 | 1 |
| AF 3147 R | 55-1 | .. |
| AF 3270 R | 55-5 | 8 |
| AF 3271 R | 55-5 | 7 |
| AF 3272 R | 55-5 | 5 |
| AF 3290 R | 41-11 | 14 |
| AF 3291 R | 41-11 | 14 |
| AF 3419 R | 55-4 | 13 |
| AF 3421 R | 55-4 | 11 |
| AF 3422 R | 55-4 | 22 |
| AF 3425 R | 55-4 | 20 |
| AF 3426 R | 55-4 | 8 |
| AF 3427 R | 55-4 | 24 |
| AF 3428 R | 55-4 | 26 |
| AF 3430 R | 55-4 | 17 |
| AF 3458 R | 55-3 | .. |
| AF 3459 R | 55-3 | .. |
| AF 3585 R | 65-18 | .. |
| AF 3586 R | 65-18 | .. |
| AF 3587 R | 65-18 | .. |
| AF 3588 R | 65-18 | .. |
| AF 3603 R | 41-3 | 8 |
| | 41-3 | 13 |
| AF 3700 R | 30-27 | 28 |
| | 30-29 | .. |
| | 35-31 | 6 |
| AF 3746 R | 41-11 | 35 |
| AF 3816 R | 35-23 | 20 |
| | 35-29 | 37 |
| AF 3859 R | 55-5 | 9 |
| AF 3891 R | 35-23 | 1 |
| **AH** | | |
| AH 830 R | 15-9 | 16 |
| | 35-13 | 25 |
| | 35-15 | 57 |
| AH 1212 R | 30-5 | 11 |
| AH 1230 R | 50-11 | 9 |
| **AL** | | |
| AL 2976 T | 35-29 | 39 |
| | 35-29 | 44 |
| | 35-31 | 18 |
| **AM-AP** | | |
| AM 292 T | 65-11 | 10 |
| AM 791 T | 35-16 | 2 |
| | 35-17 | 12 |
| | 35-31 | 11 |
| AM 2049 T | 35-29 | 41 |
| | 35-31 | 23 |
| | 55-3 | 22 |
| AM 2151 T | 35-22 | 16 |
| | 50-5 | 19 |
| AM 2152 T | 35-29 | 31 |
| | 35-32 | 15 |
| | 50-5 | 20 |
| AP 17808 H | 40-3 | 6 |
| AP 21353 H | 35-32 | 9 |
| AP 21354 H | 35-22 | 22 |
| **AR** | | |
| AR 613 R | 60-17 | 18 |
| | 65-3 | 19 |
| AR 935 R | 60-9 | 1 |
| AR 1293 R | 60-19 | 29 |
| AR 1294 R | 60-19 | 31 |
| AR 1312 R | 50-5 | 8 |
| AR 1362 R | 65-13 | 15 |
| AR 4032 R | 35-29 | 12 |
| AR 10018 R | 30-21 | 11 |
| AR 10020 R | 30-21 | 6 |
| AR 10021 R | 30-21 | 41 |
| AR 10039 R | 30-21 | 21 |
| AR 10048 R | 30-19 | 12 |
| AR 10053 R | 30-19 | 12 |
| AR 10058 R | 30-21 | 8 |
| AR 10059 R | 30-19 | 52 |
| | 30-23 | 1 |
| AR 10063 R | 30-21 | 55 |
| AR 10064 R | 30-19 | 4 |
| AR 10068 R | 30-21 | 28 |
| AR 10069 R | 30-19 | 30 |
| AR 10072 R | 30-19 | 43 |
| AR 10073 R | 30-19 | 46 |
| | 30-23 | 25 |
| AR 10074 R | 30-19 | 32 |
| AR 10075 R | 30-19 | 33 |
| | 30-21 | 31 |
| AR 10077 R | 30-21 | 27 |
| AR 11000 R | 35-11 | 13 |
| AR 11006 R | 35-11 | 20B |
| AR 11062 R | 35-3 | 17 |
| | 35-11 | 14 |
| AR 11063 R | 35-3 | 16 |
| | 35-11 | 12 |
| AR 11064 R | 35-11 | 9 |
| AR 11067 R | 55-9 | 24 |
| AR 11068 R | 35-7 | 2 |
| | 35-35 | 2 |
| AR 11074 R | 35-7 | 8 |
| | 35-35 | 8 |
| AR 11097 R | 35-7 | 31 |
| AR 11099 R | 35-3 | 10 |
| | 35-7 | 49 |
| AR 11100 R | 35-7 | 1 |
| | 35-35 | 1 |
| AR 11101 R | 35-7 | 36 |
| | 35-35 | 26 |
| AR 11102 R | 35-7 | 53 |
| AR 11103 R | 55-9 | 15 |
| AR 11117 R | 35-35 | 43 |
| AR 11118 R | 35-35 | 38 |
| AR 20036 R | 10-5 | 6 |
| AR 20084 R | 55-3 | 1 |
| AR 20123 R | 50-12 | .. |
| AR 20124 R | 50-12 | .. |
| AR 20134 R | 55-5 | .. |
| AR 20143 R | 50-12 | .. |
| AR 20144 R | 50-12 | .. |
| AR 20145 R | 50-12 | .. |
| AR 20146 R | 50-12 | .. |
| AR 20169 R | 41-7 | 30 |
| AR 20170 R | 41-7 | 18 |
| AR 20346 R | 55-4 | .. |
| AR 20355 R | 55-4 | 14 |
| AR 20432 R | 35-32 | 5 |
| AR 20438 R | 35-29 | 1 |
| | 35-32 | 14 |
| AR 20447 R | 35-29 | 11 |
| AR 20524 R | 30-15 | 11 |
| | 30-17 | 3 |
| AR 20582 R | 15-19 | 16 |
| | 15-23 | 10 |
| AR 20707 R | 15-3 | 17 |
| AR 20711 R | 35-31 | 27 |
| | 35-32 | 1 |
| | 35-33 | 19 |
| AR 21153 R | 35-24 | .. |
| AR 21154 R | 35-24 | .. |
| AR 21164 R | 35-29 | 31 |
| | 35-32 | 15 |
| AR 21629 R | 65-18 | .. |
| AR 21630 R | 65-18 | .. |
| AR 21631 R | 65-18 | .. |
| AR 21632 R | 65-18 | .. |
| AR 21634 R | 65-18 | .. |
| AR 21655 R | 70-4 | .. |
| AR 21735 R | 35-23 | 9 |
| | 35-23 | 15 |
| | 35-27 | 27 |
| | 35-29 | 45 |
| | 35-31 | 20 |
| AR 21737 R | 35-23 | 3 |
| AR 21739 R | 35-23 | 8 |
| | 35-23 | 10 |
| AR 21784 R | 70-3 | .. |
| AR 21906 R | 35-3 | 7 |
| | 35-3 | 16 |
| | 35-5 | .. |
| | 35-7 | .. |
| | 35-31 | 4 |
| | 35-35 | .. |
| AR 26156 R | 70-4 | .. |
| AR 26437 R | 35-31 | 6 |
| **B** | | |
| B 9 R | 15-9 | 29 |
| B 33 R | 45-3 | 7 |
| B 37 R | 45-3 | 4 |
| | 45-5 | 6 |
| B 60 R | 25-3 | 10 |
| | 30-15 | 30 |
| | 30-17 | 22 |
| | 70-3 | .. |

| Part No. | Page | Key |
|---|---|---|
| B 78 R | 25-11 | 19 |
| B 80 R | 30-15 | 15 |
| | 30-17 | 7 |
| B 89 R | 45-9 | 25 |
| | 45-13 | 5 |
| | 45-15 | 36 |
| | 45-17 | 18 |
| | 45-19 | 2 |
| B 90 R | 45-9 | 24 |
| | 45-13 | 4 |
| | 45-15 | 37 |
| | 45-17 | 17 |
| | 45-19 | 1 |
| B 102 R | 45-9 | 34 |
| | 45-13 | 16 |
| | 45-15 | 25 |
| | 45-19 | 13 |
| B 111 R | 45-7 | 27 |
| | 45-11 | 9 |
| | 45-23 | 7 |
| | 45-27 | 9 |
| B 115 R | 15-7 | 15 |
| B 123 R | 15-7 | 31 |
| B 129 R | 15-7 | 10 |
| B 144 R | 20-3 | 17 |
| B 146 R | 65-17 | 17 |
| B 153 R | 20-7 | 9 |
| | 60-5 | 34 |
| | 60-11 | 12 |
| | 60-11 | 33 |
| | 60-13 | 12 |
| | 60-13 | 29 |
| | 65-3 | 30 |
| B 161 R | 20-3 | 32 |
| B 166 R | 20-5 | 18 |
| B 175 R | 20-5 | 11 |
| | 60-15 | 7 |
| B 177 R | 20-5 | 2 |
| B 178 R | 20-5 | 4 |
| | 20-5 | 9 |
| | 60-15 | 8 |
| B 180 R | 20-5 | 1 |
| B 195 R | 15-17 | 4 |
| B 196 R | 15-17 | 26 |
| B 206 R | 15-13 | 2 |
| | 15-15 | 2 |
| B 207 R | 15-13 | 20 |
| | 15-15 | 22 |
| | 35-11 | 52 |
| B 227 R | 40-13 | 20 |
| B 228 R | 40-13 | 24 |
| B 233 R | 40-13 | 29 |
| B 236 R | 40-13 | 5 |
| B 237 R | 40-13 | 5 |
| B 243 R | 15-5 | 22 |
| B 244 R | 15-5 | 19 |
| B 245 R | 15-5 | 22 |
| B 246 R | 15-5 | 23 |
| B 247 R | 15-5 | 24 |
| B 250 R | 15-5 | 8 |
| B 251 R | 15-5 | 12 |
| B 268 R | 65-9 | 34 |
| B 274 R | 30-5 | 29 |
| B 276 R | 30-3 | 36 |
| B 280 R | 30-3 | 30 |
| B 283 R | 30-3 | 5 |
| B 284 R | 30-3 | 9 |
| | 50-3 | 8 |
| B 289 R | 25-13 | 39 |
| | 30-3 | 28 |
| | 41-3 | 2 |
| B 290 R | 25-13 | 23 |
| | 30-15 | 26 |
| | 30-17 | 18 |
| B 293 R | 25-13 | 32 |
| | 30-15 | 28 |
| | 30-17 | 20 |
| B 295 R | 25-13 | 4 |
| B 297 R | 25-13 | 10 |
| B 298 R | 25-11 | 11 |
| | 25-13 | 11 |
| B 308 R | 60-5 | 10 |
| | 60-7 | 10 |
| | 60-11 | 4 |
| | 60-13 | 4 |
| | 65-7 | 2 |
| B 350 R | 40-11 | 26 |
| B 351 R | 40-11 | 5 |
| B 353 R | 50-2 | 1 |
| B 359 R | 15-13 | 22 |
| | 15-15 | 21 |
| B 369 R | 15-13 | 33 |
| | 15-15 | 30 |
| | 70-3 | .. |
| B 380 R | 40-5 | 10 |
| B 387.R | 40-3 | 8 |
| | 60-3 | 13 |
| | 60-9 | 10 |
| | 60-9 | 13 |
| B 398 R | 25-3 | 21 |
| | 25-5 | 20 |
| B 425 R | 15-13 | 10 |
| | 15-15 | 10 |
| | 70-3 | .. |
| B 427 R | 15-3 | 25 |
| | 41-9 | 14 |
| | 60-17 | 9 |
| | 65-9 | 53 |
| | 65-11 | 25 |
| B 548 R | 45-17 | 24 |
| B 549 R | 45-17 | 11 |
| B 551 R | 45-17 | 25 |
| B 569 R | 30-3 | 9 |
| | 50-3 | 8 |
| B 638 R | 40-13 | 19 |
| B 888 R | 45-7 | 9 |
| | 45-9 | 23 |
| | 45-13 | 3 |
| | 45-15 | 15 |
| B 902 R | 45-15 | 22 |
| B 920 R | 45-9 | 36 |
| | 45-13 | 18 |
| | 45-19 | 14 |
| B 921 R | 45-7 | 13 |
| | 45-9 | 33 |
| | 45-13 | 13 |
| | 45-15 | 27 |
| | 45-19 | 17 |
| B 1030 R | 35-3 | 14 |
| | 35-5 | 66 |
| B 1085 R | 35-13 | 52 |
| B 1091 R | 45-5 | 2 |
| B 1103 R | 15-17 | 6 |
| B 1183 R | 40-11 | 19 |
| B 1204 R | 45-23 | 6 |
| B 1236 R | 45-23 | 6 |
| B 1333 R | 10-5 | 18 |
| | 15-9 | 22 |
| B 1353 R | 15-5 | 16 |
| B 1390 R | 45-3 | 21 |
| B 1391 R | 45-3 | 21 |
| B 1392 R | 45-3 | 21 |
| B 1441 R | 30-7 | 18 |
| | 30-13 | 16 |
| B 1454 R | 15-17 | 9 |
| B 1504 R | 10-5 | 11 |
| | 25-3 | 11 |
| | 25-5 | 11 |
| B 1507 R | 25-3 | 20 |
| | 25-5 | 19 |
| B 1512 R | 25-3 | 30 |
| | 25-5 | 32 |
| B 1539 R | 30-13 | 34 |
| B 1564 R | 45-3 | 8 |
| B 1569 R | 30-15 | 17 |
| | 30-17 | 9 |
| B 1580 R | 35-25 | 4 |
| | 35-27 | 25 |
| | 35-29 | 40 |
| | 35-31 | 24 |
| | 55-3 | 23 |
| B 1588 R | 65-5 | 10 |
| B 1693 R | 30-3 | 34 |
| B 1711 R | 15-13 | 7 |
| | 15-15 | 7 |
| B 1744 R | 15-3 | 6 |
| B 1745 R | 15-3 | 35 |
| B 1775 R | 15-9 | 25 |
| B 1777 R | 15-9 | 26 |
| B 1787 R | 15-15 | 27 |
| | 15-21 | 6 |
| B 1788 R | 15-9 | 14 |
| B 1789 R | 15-9 | 13 |
| B 1794 R | 15-13 | 28 |
| | 15-15 | 25 |
| B 1795 R | 15-13 | 27 |
| | 15-15 | 24 |
| B 1796 R | 15-13 | 26 |
| | 15-15 | 26 |
| B 1797 R | 15-13 | 23 |
| | 15-15 | 23 |
| B 1799 R | 25-11 | 23 |
| | 70-3 | .. |
| B 1804 R | 25-3 | 13 |
| | 25-5 | 13 |
| B 1820 R | 30-7 | 32 |
| | 30-13 | 20 |
| | 30-13 | 28 |
| B 1828 R | 50-9 | 15 |
| B 1839 R | 50-7 | 15 |
| | 50-9 | 12 |
| B 1859 R | 15-13 | 21 |
| | 15-15 | 20 |
| B 1879 R | 40-7 | 2 |
| B 1914 R | 40-5 | 1 |
| B 1916 R | 40-7 | 16 |
| B 1927 R | 15-13 | 34 |
| | 15-15 | 32 |
| B 1951 R | 30-5 | 1 |
| | 30-23 | .. |
| B 1986 R | 25-13 | 27 |
| | 30-7 | 26 |
| | 30-13 | 22 |
| | 35-27 | 10 |
| | 35-29 | 16 |
| | 35-31 | 3 |
| | 41-5 | 27 |
| B 2015 R | 45-13 | 8 |
| | 45-19 | 5 |
| B 2016 R | 45-19 | .. |
| B 2110 R | 40-13 | 25 |
| B 2121 R | 25-13 | 3 |
| B 2127 R | 25-13 | 2 |
| B 2149 R | 55-3 | 19 |
| B 2218 R | 15-9 | 24 |
| B 2274 R | 41-11 | 33 |
| | 45-7 | 21 |
| | 45-11 | 7 |
| | 50-11 | 31 |
| B 2279 R | 15-17 | 21 |
| B 2282 R | 15-21 | 10 |
| B 2284 R | 15-17 | 24 |
| B 2286 R | 35-11 | 51 |
| B 2287 R | 35-11 | 53 |
| B 2289 R | 35-11 | 56 |
| B 2290 R | 35-11 | 57 |
| B 2291 R | 35-11 | 54 |
| B 2295 R | 35-27 | 27 |
| | 35-29 | 45 |
| | 35-31 | 20 |
| B 2300 R | 15-5 | 14 |
| B 2302 R | 15-5 | 20 |
| B 2303 R | 15-3 | 3 |
| B 2304 R | 15-3 | 9 |
| B 2305 R | 15-3 | 23 |
| B 2307 R | 15-3 | 21 |
| B 2308 R | 15-3 | 22 |
| B 2319 R | 60-3 | 5 |
| B 2320 R | 60-3 | 4 |
| | 60-9 | 6 |
| B 2322 R | 60-3 | 10 |
| B 2324 R | 60-3 | 14 |
| | 60-9 | 14 |
| B 2325 R | 40-9 | 13 |
| B 2327 R | 40-9 | 10 |
| B 2328 R | 40-9 | 16 |
| B 2330 R | 40-9 | 17 |
| B 2331 R | 40-9 | 9 |
| B 2332 R | 40-9 | 4 |
| B 2333 R | 40-9 | 5 |
| B 2334 R | 40-9 | 5 |
| B 2335 R | 40-9 | 5 |
| B 2346 R | 20-3 | 4 |
| B 2349 R | 20-3 | 14 |
| B 2350 R | 20-3 | 11 |
| B 2351 R | 20-3 | 16 |
| B 2352 R | 20-3 | 18 |
| B 2354 R | 20-3 | 10 |
| B 2357 R | 20-3 | 27 |
| B 2360 R | 15-7 | 29 |
| | 20-3 | 25 |
| B 2361 R | 20-3 | 31 |
| B 2372 R | 30-15 | 24 |
| | 30-17 | 16 |
| B 2373 R | 30-15 | 23 |
| | 30-17 | 15 |
| B 2380 R | 15-9 | 23 |
| B 2382 R | 15-9 | 23 |
| B 2392 R | 15-9 | 24 |
| B 2393 R | 15-9 | 24 |
| B 2414 R | 40-7 | 31 |
| B 2415 R | 40-7 | 39 |
| B 2416 R | 40-7 | 36 |
| B 2417 R | 40-7 | 43 |
| B 2418 R | 40-7 | 37 |
| B 2419 R | 40-7 | 38 |
| B 2420 R | 40-7 | 35 |
| B 2421 R | 40-7 | 40 |
| B 2423 R | 40-7 | 42 |
| B 2424 R | 40-7 | 46 |
| B 2431 R | 40-7 | 28 |
| B 2432 R | 40-7 | 27 |
| B 2433 R | 40-7 | 29 |
| B 2434 R | 40-7 | 18 |
| B 2437 R | 40-7 | 24 |
| B 2443 R | 40-7 | 17 |

| Part No. | Page | Key |
|---|---|---|
| B 2444 R | 40-7 | 30 |
| B 2445 R | 40-7 | 25 |
| B 2446 R | 10-5 | 30 |
| B 2447 R | 10-5 | 29 |
| B 2449 R | 15-3 | 17 |
| B 2450 R | 55-1 | 1 |
| B 2461 R | 15-7 | 5 |
| B 2462 R | 15-7 | 6 |
| B 2464 R | 15-7 | 3 |
| B 2468 R | 15-17 | 2 |
| B 2469 R | 15-17 | 3 |
| B 2470 R | 15-17 | 3 |
| B 2474 R | 35-27 | 3 |
| | 35-29 | 4 |
| | 35-31 | 15 |
| B 2477 R | 35-27 | 27 |
| | 35-29 | 45 |
| | 35-31 | 20 |
| B 2483 R | 10-5 | 25 |
| B 2484 R | 10-5 | 19 |
| | 15-9 | 21 |
| B 2498 R | 60-3 | 6 |
| | 60-9 | 8 |
| B 2499 R | 60-3 | 3 |
| | 60-9 | 5 |
| B 2503 R | 15-13 | 39 |
| | 15-15 | 36 |
| B 2509 R | 30-7 | 5 |
| | 30-13 | 18 |
| B 2544 R | 30-5 | 5 |
| B 2549 R | 10-5 | 12 |
| B 2550 R | 10-5 | 33 |
| B 2552 R | 10-5 | 3 |
| B 2553 R | 10-5 | 2 |
| B 2568 R | 15-3 | 18 |
| B 2571 R | 35-27 | 11 |
| | 35-29 | 17 |
| | 35-31 | 5 |
| | 50-9 | 1 |
| | 50-9 | 18 |
| | 55-3 | 20 |
| B 2573 R | 55-3 | 14 |
| B 2579 R | 55-3 | 24 |
| B 2581 R | 40-3 | 4 |
| B 2583 R | 40-3 | 12 |
| B 2584 R | 40-3 | 14 |
| B 2585 R | 40-5 | 33 |
| B 2586 R | 40-5 | 34 |
| | 40-5 | 35 |
| B 2587 R | 40-5 | 39 |
| B 2588 R | 40-5 | 30 |
| B 2589 R | 40-5 | 32 |
| B 2590 R | 40-5 | 14 |
| B 2591 R | 40-5 | 11 |
| B 2592 R | 40-5 | 15 |
| B 2593 R | 40-5 | 12 |
| | 40-5 | 23 |
| | 40-5 | 38 |
| | 40-5 | .. |
| B 2594 R | 40-5 | 25 |
| B 2595 R | 40-5 | 28 |
| B 2597 R | 40-5 | 13 |
| | 40-5 | 37 |
| | 40-5 | .. |
| B 2598 R | 40-5 | 40 |
| B 2599 R | 40-5 | 6 |
| B 2600 R | 40-5 | 3 |
| B 2620 R | 65-7 | 18 |
| B 2626 R | 60-11 | 29 |
| | 60-13 | 25 |
| | 60-17 | 36 |
| B 2631 R | 30-3 | 27 |
| B 2632 R | 30-3 | 14 |
| B 2633 R | 30-3 | 19 |
| B 2634 R | 30-3 | 24 |
| B 2635 R | 30-5 | 31A |
| B 2636 R | 30-5 | 30 |
| B 2637 R | 25-13 | 39 |
| | 30-3 | 28 |
| | 41-3 | 2 |
| B 2641 R | 41-3 | 9 |
| B 2642 R | 25-13 | 38 |
| | 41-3 | 7 |
| B 2643 R | 25-13 | 38 |
| | 41-3 | 7 |
| B 2655 R | 30-3 | 37 |
| B 2662 R | 10-5 | 16 |
| B 2671 R | 55-3 | 8 |
| B 2680 R | 45-17 | 16 |
| B 2683 R | 45-17 | 8 |
| B 2687 R | 45-21 | 1 |
| B 2688 R | 45-21 | 3 |
| | 45-25 | 12 |
| B 2690 R | 45-21 | 13 |
| B 2693 R | 45-23 | 18 |
| | 45-27 | 18 |
| B 2694 R | 45-21 | 12 |
| | 45-21 | 14 |
| | 45-23 | 4 |
| | 45-25 | 15 |
| B 2696 R | 45-23 | 28 |
| B 2697 R | 45-21 | 12 |
| | 45-25 | 4 |
| B 2700 R | 45-21 | 17 |
| | 45-25 | 7 |
| B 2703 R | 10-3 | 15 |
| | 10-5 | 20 |
| B 2707 R | 40-5 | 4 |
| B 2711 R | 45-9 | 16 |
| | 45-15 | 14 |
| B 2712 R | 45-9 | 16 |
| | 45-15 | 14 |
| B 2715 R | 45-9 | 13 |
| | 45-15 | 11 |
| B 2716 R | 45-9 | 17 |
| | 45-15 | 16 |
| B 2717 R | 45-9 | 21 |
| | 45-15 | 20 |
| B 2718 R | 45-9 | 20 |
| | 45-15 | 19 |
| B 2719 R | 45-9 | 28 |
| | 45-15 | 33 |
| | 45-19 | 5 |
| B 2723 R | 40-13 | 22 |
| B 2728 R | 45-23 | 1 |
| B 2729 R | 45-23 | 28 |
| B 2739 R | 40-13 | 30 |
| B 2741 R | 40-13 | 3 |
| B 2742 R | 40-13 | 18 |
| B 2743 R | 40-13 | 1 |
| B 2762 R | 40-13 | 16 |
| | 65-3 | 13 |
| B 2764 R | 45-19 | 5 |
| B 2783 R | 15-13 | 18 |
| | 15-15 | 18 |
| B 2804 R | 50-11 | 1 |
| B 2824 R | 40-3 | 3 |
| B 2827 R | 40-7 | 51 |
| B 2834 R | 60-7 | 9 |
| B 2840 R | 45-21 | 13 |
| B 2842 R | 45-23 | 28 |
| B 2846 R | 45-25 | 15 |
| B 2847 R | 45-9 | 8 |
| | 45-15 | 6 |
| B 2863 R | 15-13 | 39 |
| | 15-13 | 39 |
| | 15-15 | 36 |
| B 2871 R | 15-15 | 33 |
| B 2873 R | 35-3 | 13 |
| B 2874 R | 25-13 | 13 |
| B 2886 R | 25-11 | 5 |
| B 2887 R | 25-11 | 13 |
| B 2889 R | 25-11 | 22 |
| B 2890 R | 25-11 | 21 |
| B 2891 R | 25-11 | 20 |
| B 2893 R | 25-11 | 1 |
| B 2897 R | 25-11 | 6 |
| B 2910 R | 50-7 | 3 |
| B 3000 R | 30-3 | 33 |
| B 3001 R | 25-13 | 28 |
| B 3002 R | 40-13 | 16 |
| B 3004 R | 40-13 | 13 |
| B 3005 R | 40-7 | 50 |
| B 3006 R | 40-7 | 49 |
| B 3007 R | 40-7 | 49 |
| B 3008 R | 40-7 | 49 |
| B 3009 R | 40-7 | 22 |
| B 3010 R | 40-7 | 3 |
| B 3011 R | 40-7 | 9 |
| B 3014 R | 45-29 | 3 |
| B 3016 R | 45-29 | 4 |
| B 3018 R | 45-29 | 13 |
| B 3019 R | 15-7 | 14 |
| B 3020 R | 15-7 | 27 |
| | 20-3 | 22 |
| B 3021 R | 15-7 | 32 |
| B 3022 R | 15-7 | 19 |
| B 3023 R | 15-7 | 32 |
| B 3024 R | 15-7 | 19 |
| B 3025 R | 15-7 | 33 |
| B 3026 R | 15-7 | 17 |
| B 3027 R | 15-7 | 18 |
| B 3028 R | 15-7 | 11 |
| B 3029 R | 15-7 | 8 |
| B 3030 R | 15-7 | 9 |
| B 3043 R | 30-7 | 23 |
| B 3049 R | 30-9 | 1 |
| B 3050 R | 50-5 | 6 |
| B 3051 R | 30-15 | 11 |
| | 30-17 | 3 |
| B 3052 R | 30-15 | 14 |
| | 30-17 | 6 |
| B 3054 R | 30-15 | 32A |
| | 30-17 | 24 |
| B 3055 R | 15-15 | 13 |
| B 3056 R | 30-17 | 14 |
| B 3069 R | 50-11 | 21 |
| B 3070 R | 50-11 | 47 |
| B 3071 R | 25-3 | 1 |
| B 3072 R | 25-3 | 28 |
| | 25-5 | 30 |
| | 25-9 | 19 |
| | 25-11 | 7 |
| B 3073 R | 25-3 | 4 |
| | 25-5 | 4 |
| B 3075 R | 45-9 | 3 |
| | 45-15 | 1 |
| B 3076 R | 25-3 | 7 |
| B 3078 R | 25-3 | 36 |
| B 3079 R | 25-3 | 39 |
| B 3080 R | 25-3 | 41 |
| B 3081 R | 25-3 | 26 |
| | 25-3 | 27 |
| | 25-5 | 25 |
| B 3082 R | 10-5 | 17 |
| B 3083 R | 20-7 | 8 |
| B 3084 R | 20-7 | 1 |
| B 3085 R | 40-9 | 19 |
| B 3086 R | 40-9 | 18 |
| B 3087 R | 15-9 | 15 |
| B 3088 R | 15-9 | 20 |
| B 3089 R | 15-15 | 35 |
| B 3090 R | 35-3 | 23 |
| B 3091 R | 15-9 | 6 |
| B 3097 R | 10-3 | 18 |
| B 3098 R | 45-7 | 23 |
| B 3101 R | 45-7 | 7 |
| | 45-9 | 2 |
| B 3102 R | 41-11 | 29 |
| | 45-7 | 26 |
| | 45-11 | 10 |
| B 3103 R | 10-3 | 18 |
| B 3104 R | 45-11 | 14 |
| B 3105 R | 45-11 | 19 |
| B 3108 R | 40-11 | 1 |
| B 3110 R | 40-11 | 24 |
| B 3114 R | 40-7 | 10 |
| B 3115 R | 20-3 | 7 |
| B 3116 R | 20-3 | 1 |
| B 3117 R | 20-3 | 5 |
| B 3118 R | 20-3 | 6 |
| B 3119 R | 20-3 | 3 |
| B 3120 R | 20-3 | 20 |
| B 3122 R | 20-7 | 10 |
| B 3124 R | 20-7 | 17 |
| B 3127 R | 20-3 | 29 |
| B 3128 R | 20-3 | 30 |
| B 3129 R | 20-3 | 21 |
| B 3132 R | 20-5 | 38 |
| B 3133 R | 20-5 | 36 |
| B 3134 R | 20-5 | 12 |
| B 3135 R | 20-5 | 17 |
| B 3136 R | 20-5 | 3 |
| B 3137 R | 20-5 | 7 |
| B 3138 R | 25-9 | 3 |
| B 3140 R | 40-11 | 1 |
| B 3142 R | 60-3 | 7 |
| B 3143 R | 60-3 | 26 |
| B 3144 R | 60-3 | 23 |
| B 3145 R | 60-3 | 19 |
| B 3146 R | 60-3 | 17 |
| B 3147 R | 40-7 | 8 |
| B 3148 R | 45-3 | 9 |
| B 3149 R | 45-3 | 20 |
| B 3150 R | 45-3 | 10 |
| B 3151 R | 45-3 | 10 |
| B 3152 R | 45-3 | 3 |
| B 3153 R | 30-5 | 13 |
| B 3155 R | 50-7 | 21 |
| B 3156 R | 50-7 | 23 |
| B 3157 R | 45-3 | 22 |
| B 3158 R | 40-3 | 1 |
| B 3159 R | 40-3 | 18 |
| B 3160 R | 30-5 | 16 |
| B 3161 R | 30-5 | 2 |
| B 3162 R | 10-5 | 13 |
| B 3163 R | 60-9 | 3 |
| B 3164 R | 15-7 | 25 |
| | 60-9 | 21 |
| B 3166 R | 15-7 | 26 |
| | 60-9 | 22 |
| B 3168 R | 40-7 | 5 |
| | 60-9 | 19 |
| B 3169 R | 40-7 | 7 |
| | 60-9 | 23 |
| B 3170 R | 40-7 | 6 |
| | 60-9 | 18 |
| B 3171 R | 60-9 | 7 |

| Part No. | Page | Key |
|---|---|---|
| B 3172 R | 60-9 | 9 |
| B 3173 R | 60-9 | 32 |
| B 3174 R | 60-9 | 26 |
| B 3177 R | 60-15 | 5 |
| B 3178 R | 65-3 | 6 |
| B 3186 R | 55-1 | 1 |
| B 3188 R | 60-5 | 9 |
| | 60-11 | 3 |
| | 65-5 | 32 |
| | 65-7 | 1 |
| B 3189 R | 60-5 | 24 |
| B 3190 R | 60-5 | 22 |
| | 60-11 | 25 |
| | 60-13 | 21 |
| | 60-17 | 13 |
| B 3191 R | 65-3 | 18 |
| B 3193 R | 60-11 | 28 |
| | 60-13 | 24 |
| | 60-17 | 35 |
| B 3195 R | 60-17 | 33 |
| B 3196 R | 60-17 | 34 |
| B 3197 R | 60-13 | 3 |
| B 3203 R | 15-9 | 15 |
| B 3204 R | 15-13 | 35 |
| B 3205 R | 15-13 | 38 |
| | 70-3 | .. |
| B 3206 R | 15-9 | 23 |
| B 3210 R | 30-15 | 22 |
| B 3211 R | 15-19 | 10 |
| B 3212 R | 15-19 | 25 |
| B 3213 R | 15-19 | 27 |
| B 3214 R | 15-13 | 29 |
| | 15-19 | 28 |
| B 3217 R | 30-5 | 5 |
| B 3218 R | 30-5 | 2 |
| B 3221 R | 15-13 | 8 |
| | 15-15 | 8 |
| | 70-3 | .. |
| B 3222 R | 15-13 | 13 |
| B 3224 R | 25-3 | 34 |
| | 25-5 | 36 |
| | 25-7 | 30 |
| B 3228 R | 10-3 | 19 |
| B 3231 R | 55-3 | 27 |
| B 3234 R | 60-3 | 27 |
| | 60-7 | 22 |
| B 3241 R | 15-25 | 12 |
| B 3242 R | 15-25 | 1 |
| B 3247 R | 15-9 | 23 |
| B 3251 R | 25-3 | 8 |
| B 3252 R | 25-3 | 27 |
| | 25-5 | 29 |
| B 3261 R | 45-29 | 1 |
| B 3262 R | 55-1 | 1 |
| B 3263 R | 20-5 | 28 |
| B 3264 R | 20-5 | 17 |
| B 3265 R | 15-9 | 23 |
| B 3266 R | 15-9 | 23 |
| B 3267 R | 35-29 | 21 |
| | 35-32 | 6 |
| B 3271 R | 30-8 | 12 |
| B 3272 R | 30-8 | 11 |
| B 3273 R | 45-3 | 11 |
| B 3277 R | 20-3 | 30 |
| B 3278 R | 20-3 | 20 |
| B 3279 R | 20-3 | 21 |
| B 3280 R | 10-3 | 10 |
| B 3281 R | 10-3 | 6 |
| B 3283 R | 30-3 | 5 |
| | 30-3 | 8 |
| | 50-3 | 7 |
| B 3284 R | 30-3 | 25 |
| | 30-3 | 27 |
| | 50-3 | 9 |
| B 3285 R | 30-3 | 5 |
| | 30-3 | 6 |
| | 50-3 | 6 |
| B 3287 R | 40-13 | 3 |
| B 3288 R | 25-11 | 1 |
| | 35-3 | 13 |
| B 3290 R | 15-9 | 23 |
| B 3291 R | 15-23 | 13 |
| B 3292 R | 15-23 | 15 |
| B 3293 R | 25-5 | 37 |
| | 25-7 | 1 |
| B 3294 R | 25-5 | 42 |
| | 25-7 | 5 |
| B 3295 R | 25-5 | 40 |
| | 25-7 | 3 |
| | 25-7 | 15 |
| | 25-7 | 26 |
| B 3296 R | 25-5 | 45 |
| | 25-7 | 10 |
| B 3297 R | 25-5 | 46 |
| | 25-7 | 21 |
| B 3298 R | 25-5 | 48 |
| | 25-7 | 13 |
| B 3299 R | 15-19 | 14 |
| | 15-23 | 8 |
| B 3300 R | 25-5 | 30 |
| | 25-11 | 7 |
| B 3302 R | 25-5 | 1 |
| B 3303 R | 25-5 | 9 |
| B 3305 R | 50-5 | 8 |
| B 3306 R | 50-5 | 9 |
| B 3307 R | 40-7 | 2 |
| | 40-7 | 2 |
| B 3309 R | 60-19 | 8 |
| B 3310 R | 45-7 | 27 |
| | 45-11 | 9 |
| | 45-13 | 14 |
| | 45-15 | 29 |
| | 45-19 | 12 |
| | 45-23 | 7 |
| | 45-27 | 9 |
| B 3311 R | 50-7 | 3 |
| B 3312 R | 15-9 | 23 |
| B 3315 R | 30-7 | 3 |
| | 30-13 | 2 |
| B 3317 R | 50-7 | 5 |
| B 3321 R | 30-5 | 5 |
| B 3322 R | 30-7 | 12 |
| | 30-13 | 10 |
| B 3325 R | 30-7 | 29 |
| | 30-7 | 34 |
| | 30-13 | 21 |
| | 30-13 | 23 |
| | 30-13 | 27 |
| B 3326 R | 50-5 | 8 |
| B 3327 R | 40-5 | 14 |
| B 3328 R | 40-5 | 11 |
| B 3329 R | 40-5 | 15 |
| B 3331 R | 15-13 | 24 |
| | 15-13 | 25 |
| | 15-15 | .. |
| B 3337 R | 15-17 | 23 |
| B 3342 R | 35-24 | 8 |
| B 3343 R | 30-15 | 22 |
| | 35-24 | .. |
| B 3346 R | 60-5 | 10 |
| | 60-7 | 10 |
| | 60-11 | 4 |
| | 60-13 | 4 |
| Part No. Continued | 65-7 | 2 |
| | 70-9 | .. |
| B 3350 R | 41-11 | 25 |
| B 3351 R | 41-11 | 5 |
| B 3352 R | 41-11 | 14 |
| B 3353 R | 41-3 | 19 |
| B 3354 R | 41-3 | 24 |
| B 3356 R | 41-13 | 4 |
| B 3357 R | 41-5 | 30 |
| B 3359 R | 25-5 | 1 |
| | 25-5 | 4 |
| B 3362 R | 30-3 | 1 |
| | 30-3 | 5 |
| B 3363 R | 30-15 | 1 |
| B 3364 R | 30-15 | 6 |
| B 3365 R | 30-15 | 7 |
| B 3366 R | 40-13 | 25 |
| B 3380 R | 15-13 | 37 |
| B 3384 R | 30-7 | 30 |
| | 30-13 | 24 |
| | 41-3 | 26 |
| B 3385 R | 15-9 | 23 |
| B 3386 R | 15-9 | 23 |
| B 3388 R | 30-27 | 2 |
| B 3390 R | 15-19 | 8 |
| B 3391 R | 15-19 | 1 |
| B 3392 R | 25-5 | 49 |
| | 25-7 | 29 |
| B 3393 R | 25-5 | 50 |
| | 25-7 | 28 |
| B 3394 R | 25-5 | 45 |
| | 25-7 | 24 |
| B 3395 R | 45-5 | 5 |
| B 3396 R | 30-25 | 14 |
| B 3397 R | 45-5 | 11 |
| B 3398 R | 30-25 | 28 |
| B 3399 R | 30-25 | 27 |
| B 3400 R | 30-25 | 22 |
| B 3403 R | 30-23 | 30 |
| B 3404 R | 30-23 | 31 |
| B 3406 R | 30-5 | 31B |
| B 3407 R | 25-11 | 14 |
| B 3408 R | 25-11 | 11 |
| B 3409 R | 25-7 | 8 |
| B 3410 R | 25-7 | 19 |
| B 3411 R | 25-11 | 7 |
| B 3412 R | 25-5 | 13 |
| B 3413 R | 25-7 | 14 |
| B 3414 R | 25-7 | 11 |
| B 3415 R | 40-11 | 23 |
| B 3454 R | 45-11 | 14 |
| B 3455 R | 45-11 | 25 |
| B 3456 R | 60-11 | 28 |
| | 60-13 | 24 |
| | 60-17 | 35 |
| B 3458 R | 41-7 | 23 |
| | 41-11 | 29 |
| B 3460 R | 45-3 | 3 |
| B 3461 R | 30-5 | 16 |
| B 3463 R | 30-27 | 11 |
| B 3465 R | 20-7 | 8 |
| B 3466 R | 20-5 | 28 |
| B 3467 R | 20-5 | 32 |
| | 70-7 | .. |
| | 70-9 | .. |
| B 3468 R | 40-3 | 16 |
| B 3469 R | 30-27 | 13 |
| B 3475 R | 50-5 | 8 |
| B 3476 R | 40-5 | 18 |
| B 3477 R | 40-5 | 23 |
| B 3478 R | 40-5 | .. |
| B 3479 R | 40-5 | 20 |
| B 3480 R | 40-3 | 1 |
| B 3481 R | 40-5 | 14 |
| | 40-5 | .. |
| B 3482 R | 40-5 | 16 |
| | 40-5 | .. |
| B 3483 R | 40-5 | 24 |
| | 40-5 | .. |
| B 3486 R | 30-5 | 2 |
| | 30-23 | .. |
| B 3493 R | 30-15 | 32B |
| B 3592 R | 10-5 | 13 |
| B 3603 R | 40-7 | 17 |
| B 3604 R | 40-7 | 27 |
| B 3605 R | 40-7 | 30 |
| B 3613 R | 40-7 | 29 |
| B 3618 R | 40-5 | 11 |
| B 3622 R | 40-11 | 5 |
| B 3639 R | 15-25 | 12 |
| B 3670 R | 40-3 | 3 |
| B 3711 R | 15-17 | 4 |
| B 3742 R | 15-9 | 20 |
| B 3759 R | 50-5 | 6 |
| B 3764 R | 20-3 | 31 |
| B 3820 R | 45-11 | 14 |
| B 3953 R | 30-5 | 2 |
| B 3960 R | 30-25 | 14 |
| B 3979 R | 20-5 | 28 |
| B 3980 R | 20-5 | 28 |
| B 3982 R | 15-17 | 3 |
| B 3984 R | 30-5 | 16 |

C

| | | |
|---|---|---|
| C 535 R | 40-7 | 14 |
| C 838 R | 45-23 | 21 |
| | 45-27 | 4 |
| C 840 R | 45-23 | 20 |
| | 45-27 | 3 |
| C 902 R | 30-3 | 16 |
| C 932 R | 20-7 | 13 |
| C 951 R | 65-3 | 11 |
| C 985 R | 45-3 | 23 |
| | 45-3 | 13 |
| | 45-23 | 27 |
| | 45-27 | 24 |
| C 998 R | 30-3 | 20 |
| C 1030 R | 45-29 | .. |
| C 1096 R | 40-9 | 20 |
| C 1220 R | 40-11 | 4 |
| C 1479 R | 10-3 | 8 |
| | 40-11 | 2 |
| | 55-1 | 4 |
| C 1705 R | 25-3 | 9 |
| | 30-15 | 31 |
| | 30-17 | 23 |
| C 1778 R | 30-8 | 4 |
| | 30-9 | 13 |
| | 30-11 | 19 |
| C 2327 R | 45-7 | 4 |

D-DLTX

| | | |
|---|---|---|
| D 139 R | 45-21 | 9 |
| | 45-25 | 3 |
| D 141 R | 45-21 | 11 |
| D 178 R | 20-5 | 34 |

| Part No. | Page | Key |
|---|---|---|
| D 186 R | 15-3 | 4 |
| | 41-7 | 35 |
| | 45-23 | 17 |
| | 45-27 | 17 |
| | 65-3 | 5 |
| D 328 R | 60-3 | 20 |
| D 377 R | 40-3 | 10 |
| | 60-3 | 15 |
| | 60-9 | 16 |
| D 398 R | 41-5 | 11 |
| D 399 R | 25-13 | 16 |
| | 41-5 | 6 |
| D 403 R | 20-3 | 2 |
| | 25-13 | 22 |
| | 41-3 | 16 |
| D 411 R | 45-29 | 19 |
| | 45-29 | .. |
| D 459 R | 15-17 | 19 |
| | 60-3 | 22 |
| | 60-9 | 31 |
| | 60-9 | 34 |
| | 60-11 | 11 |
| | 60-13 | 11 |
| D 465 R | 60-17 | 23 |
| | 65-13 | 22 |
| D 467 R | 41-11 | 13 |
| | 45-7 | 25 |
| | 45-11 | 11 |
| | 45-23 | 10 |
| | 45-27 | 12 |
| D 488 R | 40-9 | 2 |
| | 40-11 | 9 |
| D 635 R | 45-19 | 2 |
| D 636 R | 45-19 | 1 |
| D 793 R | 10-5 | 21 |
| D 794 R | 10-5 | 22 |
| D 916 R | 15-17 | 16 |
| | 45-9 | 18 |
| | 45-15 | 17 |
| D 938 R | 45-29 | 21 |
| D 993 R | 40-5 | 5 |
| | 60-3 | 9 |
| | 60-9 | 29 |
| D 996 R | 30-7 | 6 |
| D 1034 R | 30-17 | 13 |
| | 30-21 | 20 |
| D 1078 R | 45-29 | 20 |
| D 1082 R | 45-19 | 17 |
| D 1283 R | 45-29 | 18 |
| D 1520 R | 30-7 | 14 |
| | 30-7 | 33 |
| | 30-13 | 13 |
| | 30-13 | 19 |
| | 30-13 | 29 |
| D 1720 R | 25-13 | 20 |
| | 41-5 | 10 |
| D 1736 R | 25-13 | 1 |
| D 1743 R | 45-27 | 17 |
| D 1748 R | 35-24 | 26 |
| D 1837 R | 30-7 | 3 |
| | 30-13 | 2 |
| D 1843 R | 40-5 | 7 |
| D 1851 R | 30-7 | 2 |
| | 30-13 | 3 |
| | 30-13 | 35 |
| D 1994 R | 60-15 | 4 |
| D 1995 R | 65-11 | 38 |
| D 2009 R | 15-7 | 12 |
| D 2122 R | 30-9 | 3 |
| D 2309 R | 40-13 | 4 |
| D 2350 R | 40-9 | 12 |
| D 2361 R | 65-11 | 35 |
| D 2425 R | 15-3 | 19 |
| D 2438 R | 15-3 | 14 |
| D 2439 R | 15-3 | 13 |
| D 2440 R | 15-3 | 12 |
| | 15-3 | 32 |
| | 15-5 | 10 |
| D 2478 R | 41-5 | 17 |
| D 2865 R | 35-3 | 19 |
| D 2887 R | 30-5 | 7 |
| D 2913 R | 65-13 | 25 |
| D 3043 R | 30-13 | 34 |
| DL 7 X86 | 30-19 | .. |
| DLT 13 | 30-21 | 30 |
| DLTX 73 | 30-21 | .. |
| **E** | | |
| E 1994 R | 15-3 | 10 |
| | 15-3 | 33 |
| | 15-3 | 34 |
| | 15-5 | 4 |
| | 15-17 | 22 |
| E 2302 RT | 35-5 | 15 |
| | 35-7 | 55 |
| | 35-35 | 45 |
| **F** | | |
| F 98 R | 15-3 | 8 |
| F 206 R | 40-7 | 45 |
| F 215 R | 60-3 | 1 |
| | 60-7 | 21 |
| | 60-19 | 1 |
| F 216 R | 40-7 | 19 |
| F 290 R | 40-3 | 11 |
| F 336 R | 45-29 | .. |
| F 340 R | 41-11 | 36 |
| F 393 R | 30-3 | 39 |
| F 518 A | 70-1 | 3 |
| F 710 R | 60-7 | 4 |
| F 711 R | 60-5 | 4 |
| | 60-7 | 3 |
| | 60-17 | 5 |
| F 786 R | 40-11 | 16 |
| F 787 R | 40-11 | 14 |
| F 808 R | 41-5 | 4 |
| F 843 R | 45-19 | 5 |
| F 893 R | 35-3 | 6 |
| F 957 R | 65-7 | 5 |
| F 1018 R | 45-21 | 13 |
| F 1056 R | 25-5 | 44 |
| | 25-7 | 9 |
| | 25-7 | 22 |
| F 1125 R | 30-29 | 2 |
| F 1126 R | 30-29 | 7 |
| F 1127 R | 30-29 | 6 |
| F 1129 R | 30-29 | 13 |
| F 1130 R | 30-29 | 14 |
| F 1131 R | 30-29 | 15 |
| F 1250 R | 10-5 | 24 |
| | 20-7 | 3 |
| F 1318 R | 25-5 | 27 |
| | 25-5 | 30 |
| | 25-11 | 7 |
| | 25-11 | 9 |
| F 1319 R | 41-11 | 20 |
| F 1329 R | 60-11 | 27 |
| | 60-13 | 23 |
| | 65-5 | 32 |
| F 1442 R | 60-11 | 26 |
| | 60-13 | 22 |
| F 1446 R | 20-5 | 13 |
| F 1474 R | 15-9 | 29 |
| F 1478 R | 45-29 | 1 |
| | 45-29 | 1 |
| | 45-29 | 6 |
| F 1500 R | 45-29 | 6 |
| F 1545 R | 60-5 | 9 |
| | 60-11 | 3 |
| | 65-3 | 25 |
| | 65-5 | 14 |
| | 65-5 | 17 |
| | 65-5 | 34 |
| | 65-7 | 1 |
| F 1648 R | 41-7 | 20 |
| F 1649 R | 41-7 | 19 |
| F 1653 R | 41-5 | 24A |
| F 1655 R | 41-5 | 15 |
| F 1656 R | 41-3 | 17 |
| F 1657 R | 41-3 | 8 |
| F 1658 R | 41-3 | 13 |
| F 1659 R | 41-3 | 12 |
| F 1660 R | 41-3 | 14 |
| F 1664 R | 41-3 | 27 |
| F 1665 R | 41-3 | 28 |
| F 1666 R | 41-3 | 21 |
| F 1667 R | 41-3 | 20 |
| F 1668 R | 41-5 | 3 |
| F 1673 R | 41-7 | 15 |
| F 1676 R | 50-11 | 6 |
| | 50-11 | 48 |
| F 1684 R | 41-5 | 19 |
| F 1685 R | 41-5 | 20 |
| F 1687 R | 41-5 | 1 |
| F 1690 R | 41-5 | 41 |
| F 1692 R | 41-11 | 23 |
| F 1693 R | 41-11 | 22 |
| F 1694 R | 41-11 | 21 |
| F 1695 R | 41-11 | 19 |
| F 1696 R | 41-11 | 3 |
| F 1697 R | 41-11 | 2 |
| F 1698 R | 41-11 | 16 |
| F 1699 R | 41-11 | 17 |
| F 1700 R | 41-11 | 15 |
| F 1701 R | 41-11 | 1 |
| | 41-11 | 4 |
| F 1705 R | 41-11 | 34 |
| F 1706 R | 41-7 | 31 |
| F 1708 R | 41-11 | 38 |
| F 1714 R | 41-7 | 30 |
| F 1715 R | 41-7 | 23 |
| F 1717 R | 41-7 | 13 |
| F 1718 R | 41-7 | 25 |
| F 1719 R | 41-7 | 24 |
| F 1722 R | 41-7 | 8 |
| F 1723 R | 41-7 | 9 |
| | 41-7 | 35 |
| F 1724 R | 41-7 | 18 |
| F 1728 R | 41-9 | 5A |
| F 1729 R | 41-9 | 15 |
| F 1731 R | 41-9 | 2A |
| F 1733 R | 41-9 | 18 |
| F 1734 R | 41-9 | 17 |
| F 1735 R | 41-9 | 1 |
| F 1739 R | 41-9 | 6 |
| F 1740 R | 41-9 | 7 |
| F 1741 R | 41-9 | 11 |
| F 1743 R | 15-3 | 4 |
| | 41-7 | 11 |
| | 45-23 | 17 |
| | 65-3 | 5 |
| F 1744 R | 41-7 | 2 |
| F 1745 R | 41-7 | 1 |
| F 1747 R | 41-5 | 16 |
| | 41-5 | 23 |
| F 1748 R | 41-13 | 10 |
| F 2155 R | 41-7 | 20 |
| F 2156 R | 41-7 | 20 |
| F 2213 R | 41-11 | 27 |
| F 2222 R | 41-13 | 6 |
| F 2223 R | 41-13 | 8 |
| F 2232 R | 41-5 | 33 |
| | 41-5 | 34 |
| | 41-9 | 22 |
| F 2234 R | 41-11 | 31 |
| F 2249 R | 41-5 | 40 |
| F 2250 R | 65-11 | 20 |
| F 2252 R | 41-7 | 23 |
| F 2269 R | 30-5 | 31A |
| | 30-5 | 33 |
| F 2270 R | 45-19 | 16 |
| F 2271 R | 15-3 | 38 |
| F 2272 R | 10-5 | 14 |
| | 10-5 | 32 |
| | 15-17 | 14 |
| | 25-3 | 31 |
| | 25-5 | 33 |
| | 25-13 | 26 |
| | 35-27 | 30 |
| | 35-31 | 25 |
| | 41-11 | 39 |
| | 45-7 | 6 |
| | 50-7 | 20 |
| | 55-3 | 24 |
| | 55-3 | 34 |
| | 60-5 | 35 |
| | 65-5 | 8 |
| F 2273 R | 15-13 | 17 |
| | 15-15 | 17 |
| | 15-25 | 10 |
| | 25-7 | 27 |
| | 35-15 | 22 |
| | 40-3 | 5 |
| | 41-9 | 8 |
| | 45-17 | 10 |
| | 45-19 | 18 |
| F 2274 R | 20-5 | 27 |
| | 41-3 | 22 |
| | 41-5 | 14 |
| | 41-9 | 8 |
| F 2275 R | 30-3 | 45 |
| | 55-3 | 35 |
| F 2278 R | 41-11 | 23 |
| F 2311 R | 41-5 | 24B |
| F 2313 R | 41-5 | 15 |
| F 2317 R | 41-9 | 27 |
| F 2320 R | 41-9 | 5B |
| F 2321 R | 41-9 | 1 |
| F 2323 R | 41-9 | 2B |
| F 2324 R | 41-5 | 18 |
| F 2332 R | 41-7 | 30 |
| F 2333 R | 41-7 | 23 |
| F 2334 R | 41-7 | 25 |
| F 2335 R | 41-7 | 27 |
| F 2346 R | 41-7 | 31 |
| F 2371 R | 41-9 | 23 |
| F 2372 R | 41-9 | 20 |
| F 2425 R | 41-3 | 8 |
| F 2426 R | 41-3 | 13 |
| F 2427 R | 41-3 | 12 |
| F 2663 R | 45-21 | 14 |
| | 45-23 | 4 |

| Part No. | Page | Key |
|---|---|---|
| F 2664 R | 45-15 | 28 |
| | 45-19 | 11 |
| | 45-21 | 8 |
| | 45-23 | 9 |
| | 45-27 | 8 |
| | 65-13 | 10 |
| F 3083 R | 30-7 | 2 |
| F 3128 R | 10-5 | 24 |
| | 20-7 | 3 |
| F 3293 R | 55-4 | 12 |
| F 3294 R | 55-4 | 23 |
| F 3296 R | 55-4 | 4 |
| F 3297 R | 55-4 | 5 |
| F 3298 R | 55-4 | 10 |
| F 3299 R | 55-4 | 19 |
| F 3302 R | 55-4 | 9 |
| F 3303 R | 55-5 | 9 |
| F 3326 R | 30-3 | 16 |
| F 3329 R | 65-5 | 17 |
| | 65-5 | 34 |
| F 3338 R | 50-2 | 2 |
| F 3384 R | 15-3 | 13 |
| F 3450 R | 41-11 | 20 |
| F 3451 R | 55-4 | 21 |
| F 3452 R | 55-4 | 21 |
| F 3468 R | 15-3 | 18 |
| F 3500 R | 30-29 | 15 |
| F 3586 R | 20-5 | 28 |
| F 3587 R | 20-5 | 28 |
| F 3590 R | 20-5 | 28 |
| F 3607 R | 45-23 | 8 |
| **H** | | |
| H 246 R | 15-17 | 13 |
| | 15-17 | 18 |
| H 294 R | 41-9 | 26 |
| H 312 R | 55-5 | 3 |
| H 313 R | 20-7 | 14 |
| | 40-3 | 15 |
| H 401 R | 30-3 | 23 |
| H 444 R | 40-7 | 32 |
| H 717 R | 40-3 | 17 |
| H 771 R | 45-17 | 12 |
| H 773 R | 45-17 | 6 |
| H 826 R | 30-23 | 5 |
| H 840 R | 41-7 | 27 |
| H 851 R | 60-5 | 17 |
| | 60-11 | 20 |
| | 65-5 | 26 |
| | 65-5 | 32 |
| | 65-7 | 25 |
| H 945 R | 60-17 | 22 |
| | 65-13 | 21 |
| H 982 R | 45-23 | 26 |
| | 45-27 | 25 |
| H 987 R | 15-9 | 8 |
| H 1039 R | 25-13 | 14 |
| H 1085 R | 50-7 | 11 |
| | 50-11 | 9 |
| | 55-3 | 40 |
| H 1109 R | 30-5 | 11 |
| | 50-9 | 17 |
| **IXA** | | |
| IXA 256 | 35-13 | 28 |
| **JD** | | |
| JD 17 R | 45-17 | 23 |
| JD 19 R | 45-13 | 20 |
| | 45-19 | 9 |
| JD 110 R | 70-2 | .. |
| JD 111 R | 70-2 | .. |
| JD 112 R | 70-2 | .. |
| JD 113 R | 70-2 | .. |
| JD 114 R | 70-2 | .. |
| JD 115 R | 70-2 | .. |
| JD 116 R | 70-2 | .. |
| JD 118 R | 70-2 | .. |
| JD 119 R | 70-2 | .. |
| JD 126 B | 35-25 | 16 |
| JD 151 A | 41-13 | 2 |
| JD 154 A | 41-13 | 1 |
| JD 235 R | 70-2 | .. |
| JD 236 R | 70-2 | .. |
| JD 237 R | 70-2 | .. |
| JD 238 R | 70-2 | .. |
| JD 239 R | 70-2 | .. |
| JD 243 R | 70-2 | .. |
| JD 245 R | 70-2 | .. |
| JD 246 R | 70-2 | .. |
| JD 247 R | 70-2 | .. |
| JD 248 R | 70-2 | .. |
| JD 250 R | 70-2 | .. |
| JD 251 R | 70-2 | .. |
| JD 252 R | 70-2 | .. |
| JD 253 R | 70-2 | .. |
| JD 254 R | 70-2 | .. |
| JD 255 R | 70-2 | .. |
| JD 257 R | 70-2 | .. |
| JD 258 R | 70-2 | .. |
| JD 259 R | 70-2 | .. |
| JD 260 R | 70-2 | .. |
| JD 261 R | 70-2 | .. |
| JD 262 R | 70-2 | .. |
| JD 263 R | 70-2 | .. |
| JD 264 R | 70-2 | .. |
| JD 265 R | 70-2 | .. |
| JD 267 R | 70-2 | .. |
| JD 639 D | 45-17 | 22 |
| JD 1268 R | 45-19 | 8 |
| JD 5260 R | 70-2 | .. |
| JD 5261 R | 70-2 | .. |
| JD 5262 R | 70-2 | .. |
| JD 5263 R | 70-2 | .. |
| JD 5264 R | 70-2 | .. |
| JD 5265 R | 70-2 | .. |
| JD 7142 R | 41-5 | 12 |
| JD 7180 R | 35-5 | 61 |
| JD 7190 R | 60-3 | 29 |
| | 60-7 | 23 |
| | 60-19 | 4 |
| JD 7209 R | 45-9 | 30 |
| | 45-13 | 10 |
| | 45-15 | 31 |
| | 45-19 | 7 |
| JD 7216 R | 45-19 | 7 |
| JD 7222 R | 45-9 | 26 |
| | 45-13 | 6 |
| | 45-15 | 35 |
| | 45-17 | 19 |
| | 45-19 | 3 |
| JD 7224 R | 45-19 | 3 |
| JD 7253 R | 41-7 | 21 |
| JD 7259 R | 45-9 | 29 |
| | 45-13 | 9 |
| | 45-15 | 32 |
| | 45-19 | 6 |
| JD 7266 R | 45-9 | 27 |
| | 45-13 | 7 |
| | 45-15 | 34 |
| | 45-17 | 20 |
| | 45-19 | 4 |
| | 45-19 | 6 |
| JD 7270 R | 45-19 | 4 |
| JD 7272 R | 40-11 | 21 |
| JD 7366 R | 40-11 | 22 |
| JD 7393 R | 40-11 | 22 |
| JD 7395 R | 40-7 | 34 |
| JD 7396 R | 45-3 | 16 |
| JD 7417 R | 40-11 | 21 |
| JD 7418 R | 40-7 | 33 |
| JD 7419 R | 45-3 | 15 |
| JD 7424 R | 40-7 | 48 |
| JD 7430 R | 40-9 | 6 |
| JD 7502 R | 20-3 | 12 |
| JD 7654 R | 25-13 | 8 |
| | 30-3 | 13 |
| | 41-3 | 6 |
| JD 7655 R | 25-13 | 5 |
| | 30-3 | 10 |
| | 41-3 | 5 |
| | 41-3 | 6 |
| JD 7656 R | 25-13 | 7 |
| | 30-3 | 12 |
| | 41-3 | 3 |
| | 41-3 | 6 |
| JD 7657 R | 25-13 | 6 |
| | 30-3 | 11 |
| | 41-3 | 4 |
| | 41-3 | 6 |
| JD 7663 R | 45-7 | 1 |
| JD 7664 R | 40-7 | 12 |
| | 60-19 | 7 |
| JD 7665 R | 60-3 | 25 |
| JD 7679 R | 41-11 | 7 |
| | 45-11 | 15 |
| JD 7694 R | 60-9 | 37 |
| JD 7695 R | 35-7 | 25 |
| | 35-35 | 16 |
| JD 7759 | 45-7 | 24 |
| | 45-9 | 35 |
| | 45-13 | 17 |
| | 45-15 | 23 |
| | 45-17 | 9 |
| | 45-19 | 15 |
| | 45-21 | 4 |
| | 45-23 | 12 |
| | 45-25 | 11 |
| | 45-27 | 14 |
| | 65-7 | 20 |
| JD 7760 | 40-13 | 14 |
| | 45-23 | 34 |
| JD 7778 | 45-9 | 15 |
| | 45-15 | 13 |
| | 45-27 | 6 |
| JD 7937 R | 40-7 | 44 |
| JD 7973 R | 40-7 | 23 |
| JD 8100 R | 40-7 | 47 |
| JD 8101 N | 45-13 | 10 |
| | 45-15 | 31 |
| | 45-19 | 7 |
| JD 8113 R | 40-9 | 8 |
| JD 8165 R | 40-11 | 12 |
| JD 8169 R | 40-11 | 12 |
| JD 8172 R | 41-7 | 22 |
| JD 8186 R | 45-19 | 7 |
| JD 8213 R | 40-11 | 11 |
| JD 8216 R | 40-11 | 11 |
| JD 8325 R | 40-11 | 21 |
| JD 8326 R | 40-11 | 11 |
| JD 8514 R | 40-7 | 4 |
| | 60-9 | 17 |
| JD 8515 R | 25-11 | 15 |
| JD 8608 R | 40-11 | 22 |
| JD 8609 R | 40-11 | 12 |
| **K** | | |
| K 2019 R | 40-13 | 6 |
| K 2172 R | 30-5 | 25 |
| K 3083 R | 60-5 | 23 |
| | 60-5 | 24 |
| K 6977 | 35-13 | 22 |
| **M** | | |
| M 414 T | 35-31 | 41 |
| M 2207 T | 35-24 | 15 |
| | 35-25 | 7 |
| | 35-29 | 23 |
| | 35-32 | 23 |
| **P** | | |
| P 710 | 30-21 | 33 |
| P 850 | 30-21 | 5 |
| P 950 | 30-21 | 40 |
| P 951 | 30-21 | 26 |
| P 1209 | 30-21 | 39 |
| **R** | | |
| R 183 R | 25-5 | 7 |
| R 228 R | 41-11 | 28 |
| | 60-5 | 20 |
| | 60-11 | 23 |
| | 60-13 | 19 |
| | 65-5 | 30 |
| | 65-5 | 32 |
| | 65-7 | 29 |
| R 229 R | 41-11 | 26 |
| | 60-5 | 19 |
| | 60-11 | 22 |
| | 60-13 | 18 |
| | 65-5 | 31 |
| | 65-5 | 32 |
| | 65-7 | 30 |
| R 271 R | 20-5 | 33 |
| R 273 R | 20-5 | 37 |
| R 283 R | 40-3 | 6 |
| R 375 R | 25-7 | 20 |
| | 30-27 | 15 |
| R 459 R | 20-5 | 28 |
| | 65-17 | 36 |
| | 65-17 | 37 |
| R 463 R | 41-9 | 19 |
| R 495 R | 15-13 | 12 |
| | 15-15 | 12 |
| | 30-23 | 9 |
| | 45-3 | 12 |
| | 65-5 | 7 |
| | 65-5 | 15 |
| | 65-5 | 33 |
| | 65-17 | 3 |
| | 70-3 | .. |
| R 673 R | 20-5 | 25 |
| R 754 R | 65-11 | 34 |

| Part No. | Page | Key |
|---|---|---|
| R 755 R | 65-11 | 33 |
| R 756 R | 65-11 | 30 |
| R 757 R | 65-11 | 31 |
| R 801 R | 41-5 | 35 |
| R 820 R | 25-13 | 33 |
| | 41-3 | 11 |
| R 1132 R | 45-5 | 4 |
| R 1471 R | 20-5 | 31 |
| R 1472 R | 20-5 | 23 |
| R 1529 R | 25-11 | 16 |
| R 1548 R | 10-3 | 15 |
| | 10-5 | 20 |
| R 1800 R | 30-5 | 9 |
| | 41-5 | 17 |
| R 1811 R | 65-11 | 37 |
| R 1820 R | 20-5 | 30 |
| | 41-9 | 24 |
| R 1870 R | 65-15 | 38 |
| | 65-15 | 39A |
| R 1901 R | 60-19 | .. |
| R 2033 R | 70-3 | .. |
| R 2048 R | 70-3 | .. |
| R 2579 R | 35-25 | 4 |
| | 35-27 | 25 |
| | 35-29 | 40 |
| | 35-21 | 24 |
| | 55-3 | 23 |
| R 2622 R | 15-15 | 29 |
| | 15-21 | 5 |
| R 10009 R | 30-21 | 30 |
| R 10010 R | 30-19 | 9 |
| R 10014 R | 30-21 | 33 |
| | 70-4 | .. |
| R 10018 R | 70-4 | .. |
| R 10025 R | 30-21 | 40 |
| | 70-4 | .. |
| R 10026 R | 30-21 | 26 |
| | 70-4 | .. |
| R 10038 R | 30-21 | 13 |
| R 10041 R | 30-21 | 46 |
| R 10045 R | 30-21 | 48 |
| R 10050 R | 30-21 | 29 |
| R 10056 R | 30-21 | 47 |
| R 10057 R | 30-21 | 1 |
| R 10063 R | 30-21 | 34 |
| R 10067 R | 30-21 | 42 |
| R 10075 R | 30-21 | 12 |
| R 10076 R | 30-21 | 45 |
| R 10078 R | 30-21 | 32 |
| R 10079 R | 30-19 | 10 |
| | 30-21 | 4 |
| R 10080 R | 30-21 | 43 |
| R 10082 R | 30-19 | 50 |
| R 10085 R | 30-19 | 8 |
| R 10087 R | 30-19 | 36 |
| R 10089 R | 70-4 | .. |
| R 10090 R | 30-21 | 51 |
| | 70-4 | .. |
| R 10091 R | 30-21 | 53 |
| | 70-4 | .. |
| R 10093 R | 30-19 | 42 |
| R 10095 R | 30-21 | 54 |
| R 10096 R | 30-21 | 2 |
| R 10098 R | 30-19 | 47 |
| | 30-23 | 24 |
| R 10099 R | 30-19 | 2 |
| R 10104 R | 30-19 | 55 |
| | 30-21 | 9 |
| | 30-23 | 2 |
| R 10105 R | 30-19 | 1 |
| R 10106 R | 30-21 | 52 |
| R 10108 R | 30-21 | 19 |
| R 10112 R | 30-19 | 18 |
| R 10113 R | 30-19 | 38 |
| R 10114 R | 30-21 | 14 |
| | 70-4 | .. |
| R 10115 R | 30-19 | 53 |
| | 30-23 | 4 |
| R 10119 R | 30-21 | 35 |
| R 10125 R | 30-19 | 26 |
| R 10129 R | 30-19 | 45 |
| R 10133 R | 30-19 | 24 |
| | 30-23 | 20 |
| R 10134 R | 30-19 | 20 |
| R 10135 R | 30-19 | 23 |
| | 30-23 | 6 |
| | 30-23 | 21 |
| R 10136 R | 30-19 | 44 |
| R 10140 R | 30-21 | 15 |
| R 10142 R | 30-21 | 49 |
| R 10143 R | 30-19 | 51 |
| R 10147 R | 30-19 | 11 |
| | 30-21 | 5 |
| R 10148 R | 30-21 | 50 |
| R 10149 R | 30-21 | 24 |
| R 10150 R | 30-21 | 22 |
| R 10151 R | 30-21 | 25 |
| R 10153 R | 30-19 | 29 |
| R 10156 R | 30-19 | 35 |
| R 10157 R | 30-21 | 3 |
| R 10159 R | 30-19 | 5 |
| R 10160 R | 25-7 | 4 |
| | 25-7 | 25 |
| | 30-19 | 34 |
| | 30-19 | 58 |
| | 30-21 | 16 |
| | 30-21 | 38 |
| | 30-27 | 20 |
| | 30-29 | 16 |
| R 10162 R | 30-19 | 37 |
| R 10163 R | 30-21 | 23 |
| R 10164 R | 30-19 | 13 |
| R 10165 R | 30-19 | 7 |
| R 10166 R | 30-19 | .. |
| R 10167 R | 30-19 | 28 |
| R 10169 R | 30-19 | 14 |
| | 30-19 | 22 |
| R 10172 R | 30-21 | 39 |
| R 10175 R | 70-4 | .. |
| R 10176 R | 70-4 | .. |
| R 11030 R | 35-3 | 35 |
| R 11043 R | 35-35 | 27 |
| R 11049 R | 35-35 | 23 |
| R 11084 R | 35-3 | 55 |
| | 35-7 | 14 |
| | 35-9 | 12 |
| R 11085 R | 30-31 | 29 |
| | 35-15 | 47 |
| | 35-19 | 2 |
| | 35-21 | 35 |
| R 11086 R | 35-3 | 18 |
| | 35-7 | 21 |
| | 35-7 | 52 |
| | 35-35 | 41 |
| R 11087 R | 35-3 | 56 |
| | 35-11 | 27 |
| | 35-35 | 12 |
| R 11088 R | 35-3 | 36 |
| | 35-7 | 46 |
| | 35-35 | 36 |
| R 11089 R | 35-3 | 63 |
| | 35-7 | 27 |
| | 35-35 | 18 |
| R 11090 R | 35-11 | 37 |
| R 11091 R | 35-11 | 8 |
| R 11092 R | 35-3 | 20 |
| | 35-11 | 33 |
| R 11093 R | 35-3 | 19 |
| | 35-11 | 34 |
| R 11094 R | 35-3 | 62 |
| | 35-7 | 26 |
| R 11096 R | 35-11 | 38 |
| R 11097 R | 35-3 | 49 |
| | 35-7 | 10 |
| | 35-35 | 10 |
| R 11098 R | 35-3 | 42 |
| | 35-7 | 40 |
| | 35-35 | 30 |
| R 11099 R | 35-11 | 23 |
| R 11100 R | 35-3 | 54 |
| | 35-7 | 13 |
| | 35-9 | 10 |
| | 35-27 | 15 |
| | 35-29 | 26 |
| | 35-32 | 13 |
| R 11101 R | 35-9 | 8 |
| R 11102 R | 35-9 | 11 |
| R 11103 R | 35-9 | 7 |
| R 11104 R | 35-11 | 28 |
| R 11105 R | 35-3 | 57 |
| | 35-7 | 20 |
| | 35-35 | 11 |
| R 11106 R | 35-3 | 31 |
| | 35-7 | 7 |
| | 35-9 | 18 |
| | 35-35 | 7 |
| R 11107 R | 35-11 | 24 |
| R 11109 R | 35-3 | 59 |
| | 35-7 | 23 |
| | 35-35 | 13 |
| R 11110 R | 35-3 | 60 |
| | 35-7 | 24 |
| | 35-35 | 14 |
| R 11111 R | 35-9 | 14 |
| R 11112 R | 35-9 | 17 |
| R 11113 R | 35-7 | 45 |
| | 35-35 | 35 |
| R 11115 R | 35-9 | 2 |
| R 11118 R | 35-11 | 44 |
| R 11156 R | 55-9 | 2 |
| R 11158 R | 35-5 | 4 |
| | 35-7 | 57 |
| | 35-35 | 47 |
| R 11159 R | 35-7 | 47 |
| R 11160 R | 35-5 | 46 |
| | 35-7 | 34 |
| | 35-35 | 24 |
| R 11161 R | 35-5 | 45 |
| | 35-7 | 35 |
| | 35-35 | 25 |
| R 11162 R | 35-7 | 44 |
| | 35-35 | 34 |
| R 11163 R | 35-7 | 38 |
| | 35-35 | 28 |
| R 11164 R | 35-7 | 51 |
| | 35-35 | 40 |
| R 11165 R | 35-7 | 50 |
| | 35-35 | 39 |
| R 11167 R | 55-9 | 9 |
| R 11168 R | 55-9 | 3 |
| R 11169 R | 55-9 | 4 |
| R 11170 R | 35-9 | 1 |
| R 11200 R | 35-35 | 20 |
| R 11201 R | 35-35 | 44 |
| R 11202 R | 35-35 | 42 |
| R 11203 R | 35-35 | 19 |
| R 11204 R | 35-35 | 17 |
| R 11205 R | 35-35 | 15 |
| R 20029 R | 30-15 | 15 |
| | 30-17 | 7 |
| | 70-3 | .. |
| R 20118 R | 45-13 | .. |
| | 45-15 | .. |
| R 20127 R | 50-12 | .. |
| R 20128 R | 50-12 | .. |
| R 20135 R | 15-7 | 28 |
| | 20-3 | 23 |
| R 20136 R | 45-21 | 11 |
| R 20214 R | 41-9 | 18 |
| R 20248 R | 15-3 | 37 |
| R 20249 R | 15-3 | 36 |
| R 20912 R | 50-11 | 15 |
| R 20913 R | 41-7 | 13 |
| R 20937 R | 55-4 | 23 |
| R 21021 R | 35-24 | 8 |
| R 21024 R | 35-24 | 8 |
| R 21062 R | 41-7 | 9 |
| R 21129 R | 41-11 | 1 |
| | 41-11 | 4 |
| R 21229 R | 50-12 | .. |
| R 21230 R | 50-12 | .. |
| R 21531 R | 65-18 | .. |
| R 21532 R | 65-18 | .. |
| R 21533 R | 65-18 | .. |
| R 21534 R | 65-18 | .. |
| R 21535 R | 65-18 | .. |

S

| | | |
|---|---|---|
| S 98 | 25-5 | 41 |
| | 25-7 | 4 |
| | 25-7 | 25 |
| | 30-19 | 34 |
| | 30-19 | 58 |
| | 30-21 | 16 |
| | 30-21 | 38 |
| | 30-27 | 20 |
| | 30-29 | 16 |
| S 251 A | 30-21 | 13 |
| S 763 | 30-21 | 46 |
| S 1506 | 30-21 | 48 |
| S 2041 | 30-21 | 17 |
| S 2146 | 30-21 | 36 |
| S 2147 | 30-21 | 29 |
| S 2151 H | 30-21 | 47 |
| S 2154 | 30-21 | 1 |
| S 2424 | 30-21 | 34 |
| S 2502 | 30-21 | 42 |

T

| | | |
|---|---|---|
| T 10745 T | 35-35 | 22 |
| T 11648 T | 35-35 | 21 |
| T 11649 T | 35-35 | 4 |
| T 11650 T | 35-35 | 29 |
| T 11651 T | 35-35 | 3 |
| T 11652 T | 35-7 | 5 |
| | 35-35 | 5 |

X

| | | |
|---|---|---|
| X 2462 | 30-21 | 41 |
| X 2653 | 30-21 | 27 |
| X 5531 | 35-13 | 33 |
| X 5996 | 35-13 | 43 |

| Part No. | Page | Key |
|---|---|---|
| X 6000 | 35-13 | 32 |
| X 6829 | 35-13 | 49 |
| X 6832 | 35-13 | 40 |
| X 6837 | 35-13 | 21 |
| X 6857 | 35-13 | 18 |
| X 6976 | 35-13 | 12 |
| X 7139 | 35-13 | 11 |
| X 7350 R | 35-27 | 16 |
| X 7350 | 35-29 | 25 |
| | 35-32 | 12 |
| X 7845 | 35-13 | 30 |
| X 8616 | 35-13 | 6 |
| X 8618 | 35-13 | 7 |
| X 8623 | 35-13 | 8 |
| X 2458NO1 | 30-21 | 11 |
| X 2461NO2 | 30-21 | 6 |