5000 5100 5100-0 5190 5200 7100 7200

FORD TRACTOR PARTS CATALOG

RUTHZIL TRATOR COMERCIAL DE PEÇAS LTDA 11 97083-6812 ROLANDO CITRANGULO

JANEIRO 1965

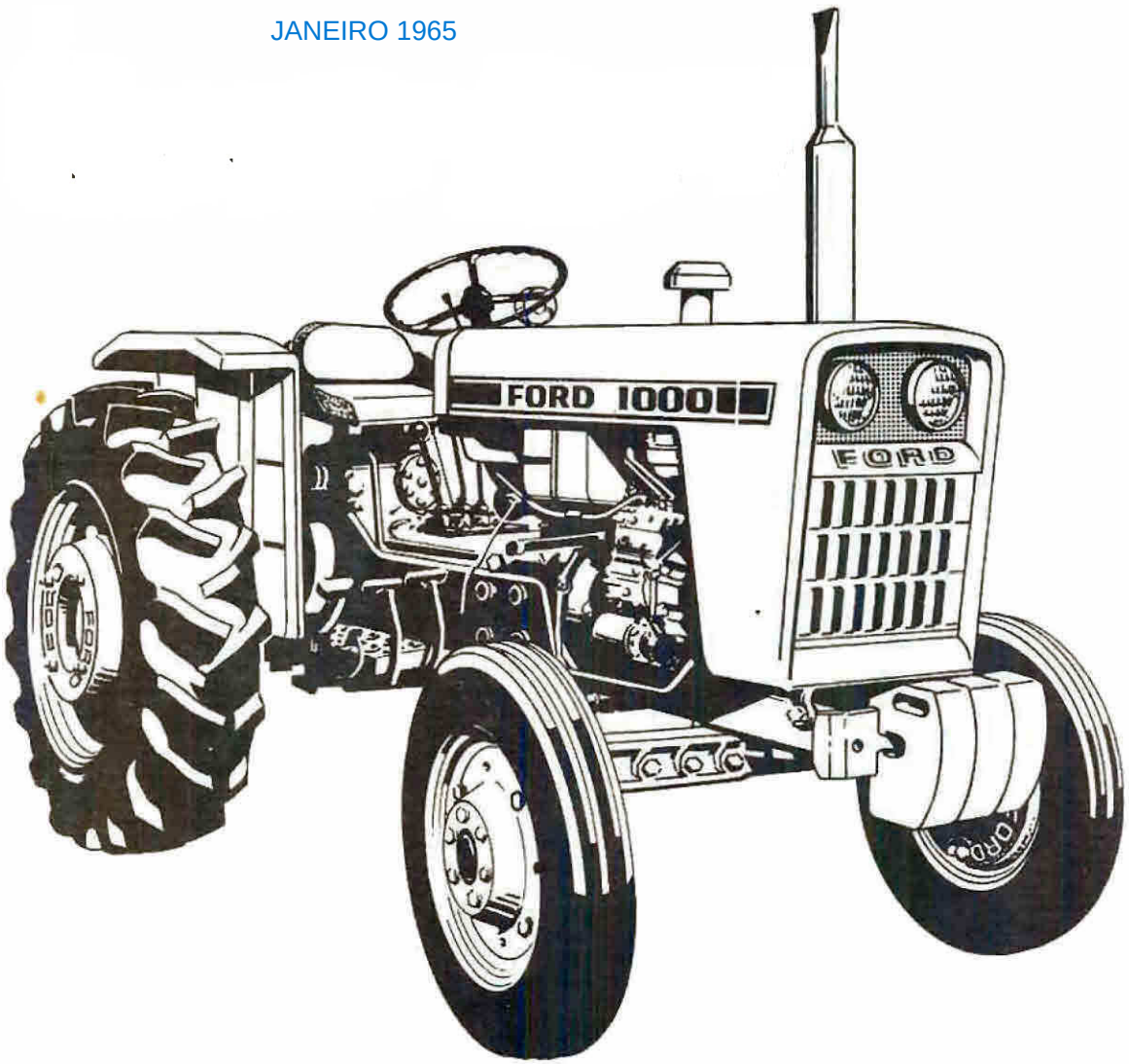

Ford Tractor Operations
Troy, Michigan 48084

01A01[B] FRONT WHEEL ASSEMBLY - 5100, 5100-O, 5200, 5190, 7100, 7200

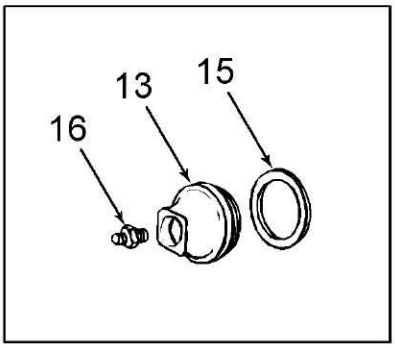

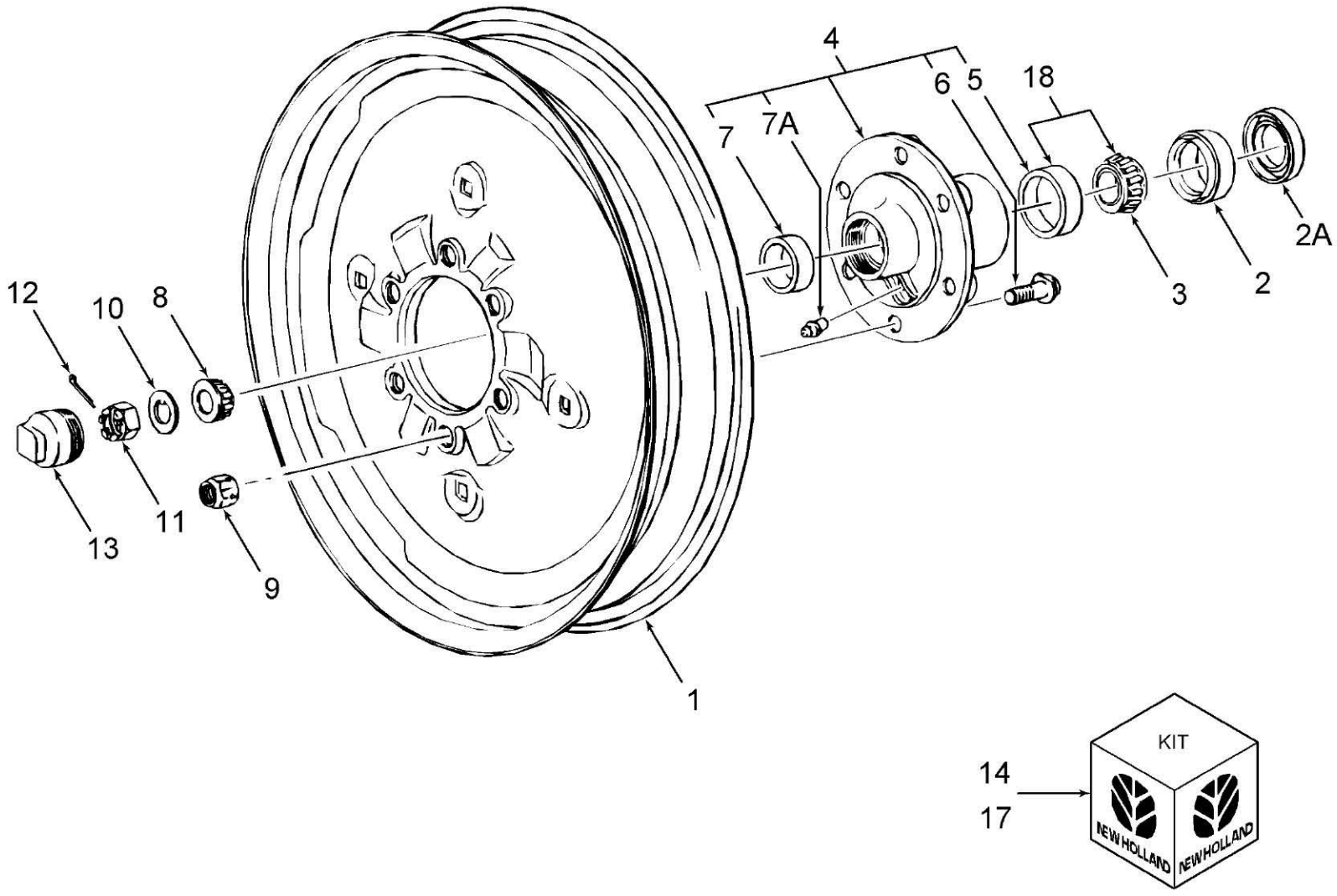

5000-SERIES 4 CYL TRACTOR (1/65-1/75)

01A01[B] FRONT WHEEL ASSEMBLY - 5100, 5100-O, 5200, 5190, 7100, 7200

Ref	Part Number	Qty	Description
1	82006575	2	Wheel Assy., 4.00 x 16, Start Year: 01/01/1965
1	82005056	2	Wheel Assy., 5.50 x 16, Start Year: 01/01/1965
1	D4NN1007N	2	Wheel Assy., 5.50 x 18, 5100, 7100, 7200, Start Year: 01/01/1971
1	82006576	2	Wheel Assy., 6 x 15, 5200, 7200, Start Year: 01/01/1967
1	76NY1007A	2	Wheel Assy., 6.00 x 16, Mexico Only, Start Year: 01/01/1968
2	D8NN1190CA	2	Retainer Assy., Grease, Start Year: 01/01/1965
2	NCA1190A	2	Retainer Assy., Grease, Hi-Clearance, Dual, 5200, 7200, Hi-Clearance 1967 only. Hi-Clearance 68/ uses regular 5000 parts., Start Year: 01/01/1967
3	86516468	2	, Hi-Clearance 1967 only. Hi-Clearance 68/ uses regular 5000 parts., NHNA Only, Start Year: 01/01/1965
4	NS	2	Bolt & Hub Assy., Includes: Hub plus Ref. 5 thru 7A {71NY1104A}, Mexico Only, Start Year: 01/01/1969
4	C9NN1104D	2	Bolt & Hub Assy., Includes: Hub plus Ref. 5 thru 7A, Start Year: 01/01/1965
4	C9NN1104D	2	Bolt & Hub Assy., W/Wide Adjust, 5200, 7100, 7200, Includes: Hub plus Ref. 5 thru 7A, Start Year: 01/01/1967
4	C0NN1104D	2	Bolt & Hub Assy., Hi-Clearance, Dual, 5200, 7100, 7200, Includes: Hub plus Ref. 5 thru 7A, Hi-Clearance 1967 only. Hi-Clearance 68/ uses regular 5000 parts., Start Year: 01/01/1967
5	86516467	2	Bearing, Cup, NHNA Only, Start Year: 01/01/1965
6	C5NN1107E	12	Bolt, Hi-Clearance, 5100, 5200, Years: 01/01/1965-09/30/1970
6	81816580	12	Bolt, 1/2"-20 x 1-3/4", Front Wheel Hub, Start Year: 10/01/1970
6	NS	12	Bolt, 5100 {72NY1107A}, Mexico Only, Start Year: 01/01/1969
7	C1VV1217A	2	Cup, Outer, Start Year: 01/01/1965
7	D5NN1217A	2	Cup, Outer, Hi-Clearance, Dual, 5200, 7200, Hi-Clearance 1967 only. Hi-Clearance 68/ uses regular 5000 parts., Start Year: 01/01/1967
7A	277393	2	Fitting, Lube, Straight, 5/16", Start Year: 01/01/1965
7A	NS	2	Fitting, Lube, Straight, 1/8"-27 NPT {71NY1N016A}, Mexico Only, Start Year: 01/01/1969
8	C1VV1216A	2	Cone & Roller Assy., Outer, Start Year: 01/01/1965
8	D5NN1216A	2	Cone & Roller Assy., Outer, Hi-Clearance, Hi-Clearance 1967 only. Hi-Clearance 68/ uses regular 5000 parts., Start Year: 01/01/1967
8	D5NN1216A	2	Cone & Roller Assy., Outer, Dual, 5200, 7200, Start Year: 01/01/1967
9	81815739	12	Nut, 1/2"-20, Front Wheel Bolt, 5100, 5200, 5100 Hi-Clearance, Start Year: 01/01/1965
9	81815739	12	Nut, 1/2"-20, Front Wheel Bolt, 7100, 7200, Start Year: 01/01/1971
9	388928S36	12	Nut, Hex Flange, 1/2"-20, Use W/D8NN-1007-BA, No Longer Serviced (NHNA), Start Year: 01/01/1965
10	C5NN1N195A	2	Washer, Retainer, Start Year: 01/01/1965
11	387930S36	2	Nut, Hex Slotted, 3/4"-16, Start Year: 01/01/1965
12	86523851	2	Pin, Split Cotter, 5/32" x 1-1/4", Start Year: 01/01/1965
13	C5NN1130A	2	Hubcap, Start Year: 01/01/1965
13	2N1139B	2	Hubcap, Hi-Clearance, Hi-Clearance 1967 only. Hi-Clearance 68/ uses regular 5000 parts., Start Year: 01/01/1967
13	2N1139B	2	Hubcab, Dual, 5200, 7200, Start Year: 01/01/1967
14	CFPN1130A	2	Kit, Hubcap, Accessory, Includes: Ref. 15,16 & Cap, NH-E Only, Start Year: 01/01/1965
15	C5NN1N135B	2	Seal, Grease, Except U.S., NH-E Only, Start Year: 01/01/1965
16	87414	2	Nipple, Lube, Straight, 1/4"-28, Start Year: 01/01/1965

5000-SERIES 4 CYL TRACTOR (1/65-1/75)

01A01[B] FRONT WHEEL ASSEMBLY - 5100, 5100-O, 5200, 5190, 7100, 7200

Ref	Part Number	Qty	Description
17	E2156T9	2	Kit, Wheel Bearing, 5100, Includes: (1) P/N C5NN-1190-E, (1) P/N C1VV-1216-A, (1) P/N C1VV-1217-A, (1) P/N WAA-4221-A, (1) P/N WAA-4222-A, (1) P/N 72054-S8, Start Year: 01/01/1965
18	86512015	2	Bearing Set, Cup & Cone, Inner, NHNA Only, Start Year: 01/01/1965
18	C1VV1200A	2	Cup & Cone Assy., Inner, Hi-Clearance, Dual, 5200, 7200, Gear Assemblies F1NN-6B302-AA(81873999) & F1NN-6B303-AA(81874001) must be used W/F0NN-6300-FB(81873978)., NH-E Only, Start Year: 01/01/1967

01A01[C] FRONT WHEEL ASSEMBLY, W/16" WHEELS - 3400, 3500, 3550, 4400, 4500, 4410, 5100, 5200, 5190, 7100, 7200

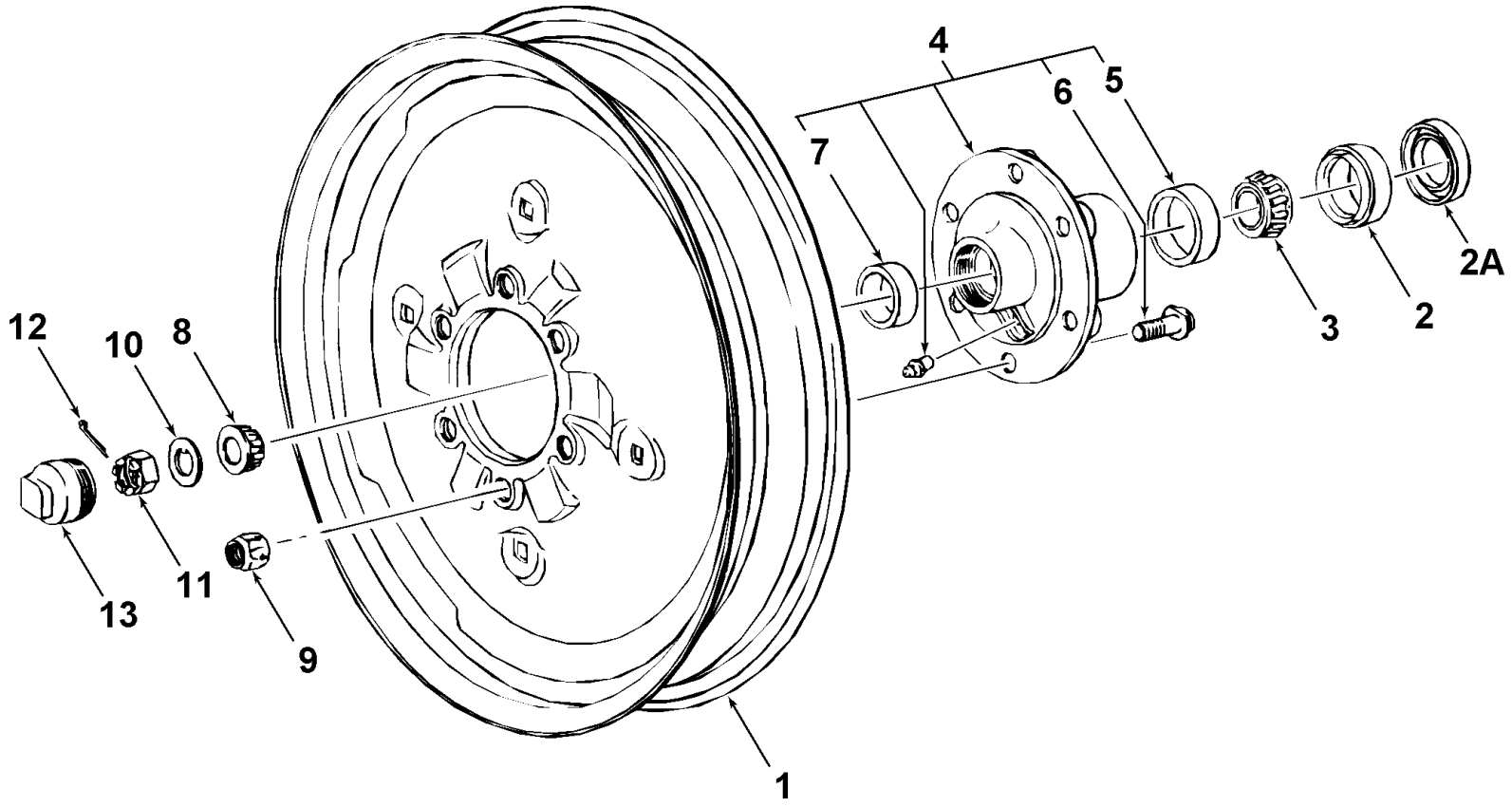

5000-SERIES 4 CYL TRACTOR (1/65-1/75)

01A01[C] FRONT WHEEL ASSEMBLY, W/16" WHEELS - 3400, 3500, 3550, 4400, 4500, 4410, 5100, 5200, 5190, 7100, 7200

Ref	Part Number	Qty	Description
1	82006575	2	Wheel Assy., 4.00 x 16, 3400, 4400, Start Year: 01/01/1965
1	82005056	2	Wheel Assy., 5.50 x 16, use w/7.50 x 16" Tire, 3400, 3500, 4500, Start Year: 01/01/1965
1	E0NN1007LA	2	Wheel Assy., 8.00 x 16, 3550, 4500, Start Year: 04/01/1968
1	E0NN1007NA	2	Wheel Assy., 8.00 x 16, 5100, 5200, 5190, 7100, 7200, Start Year: 01/01/1972
2	83948358	2	Retainer Assy., Hub, Start Year: 01/01/1965
2A	81812306	2	Shield, Front Wheel, Hub Mud, I.D. 2.25 O.D. 3.7, Start Year: 01/01/1965
3	512725	2	Cone & Roller Assy., Inner, Start Year: 01/01/1965
4	313020	2	Hub & Bolt Assy., Includes: Ref. 5, 6, 7 & Hub, Start Year: 01/01/1965
5	81812302	2	Cup, Bearing, Inner, Start Year: 01/01/1965
6	81816580	12	Bolt, 1/2"-20 x 1-3/4", Front Wheel Hub, Replaces PN 313022, Start Year: 01/01/1965
7	273610	2	Cup, Bearing, Outer, Start Year: 01/01/1965
8	81812303	2	Cone & Roller Assy., Outer, Start Year: 01/01/1965
9	81815739	12	Nut, 1/2"-20, Front Wheel Bolt, Start Year: 01/01/1965
9	D2AA1012AA	12	Nut, Use W/Wheel P/N C9NN-1007-E, W/60 Chamfer, 5100, 5200, 5190, 7100, 7200, Years: 01/01/1972-12/31/1975
9	388928S36	12	Nut, Hex Flange, 1/2"-20, Use W/D8NN-1007-BA, No Longer Serviced (NHNA), Start Year: 01/01/1965
10	81735236	2	Washer, Grease, Retainer, NHNA Only, Start Year: 01/01/1965
11	280172	2	Nut, Slotted, G2, 7/8"-14, Start Year: 01/01/1965
12	72072S8	2	Pin, Cotter, 5/32" x 1-1/2", No Longer Serviced (NHNA), Start Year: 01/01/1965
13	249127	2	Cap, Dust, Start Year: 01/01/1965

01A03 FRONT WHEEL, 2-PIECE RIM - 2110, 4110, 4100-O, 5100-O

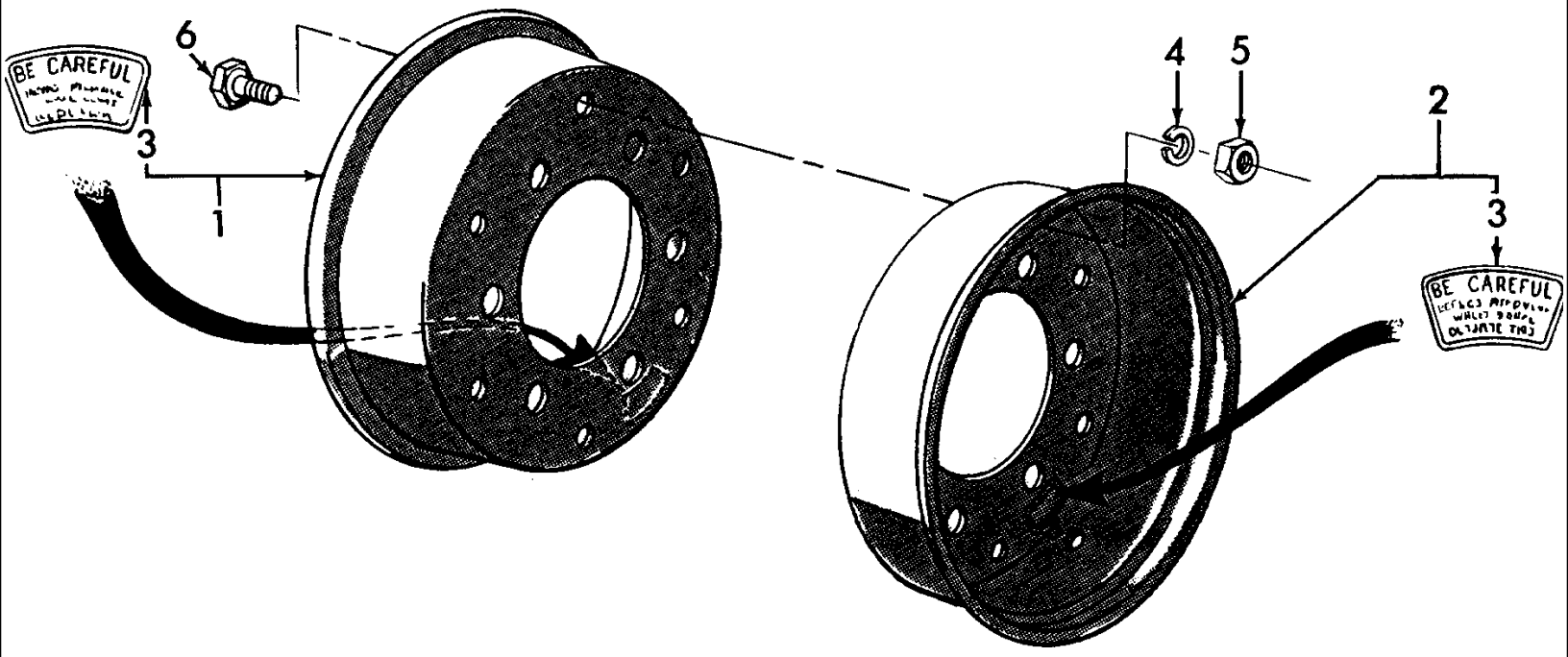

5000-SERIES 4 CYL TRACTOR (1/65-1/75)

01A03 FRONT WHEEL, 2-PIECE RIM - 2110, 4110, 4100-O, 5100-O

Ref	Part Number	Qty	Description
1	82005077	2	Rim, Inner, 6:00 x 10, Includes: Ref. 3, NHNA Only, Start Year: 01/01/1965
2	C5NN1221B	2	Rim, Outer, 6:00 x 10, Includes: Ref. 3, NHNA Only, Start Year: 01/01/1965
3	310021	4	Decal, Warning, Start Year: 01/01/1965
4	80679	12	Washer, Lock, 1/2", Start Year: 01/01/1965
5	33846S8	12	Nut, Hex, 1/2"-20, NHNA Only, No Longer Serviced, Start Year: 01/01/1965
6	D2NN1N022A	12	Bolt, Hex, Modified, 1/2"-20 x 1.0, NHNA Only, Start Year: 01/01/1965

01A04 SINGLE FRONT WHEEL - 4200 & 5200 ROWCROP (66/70)

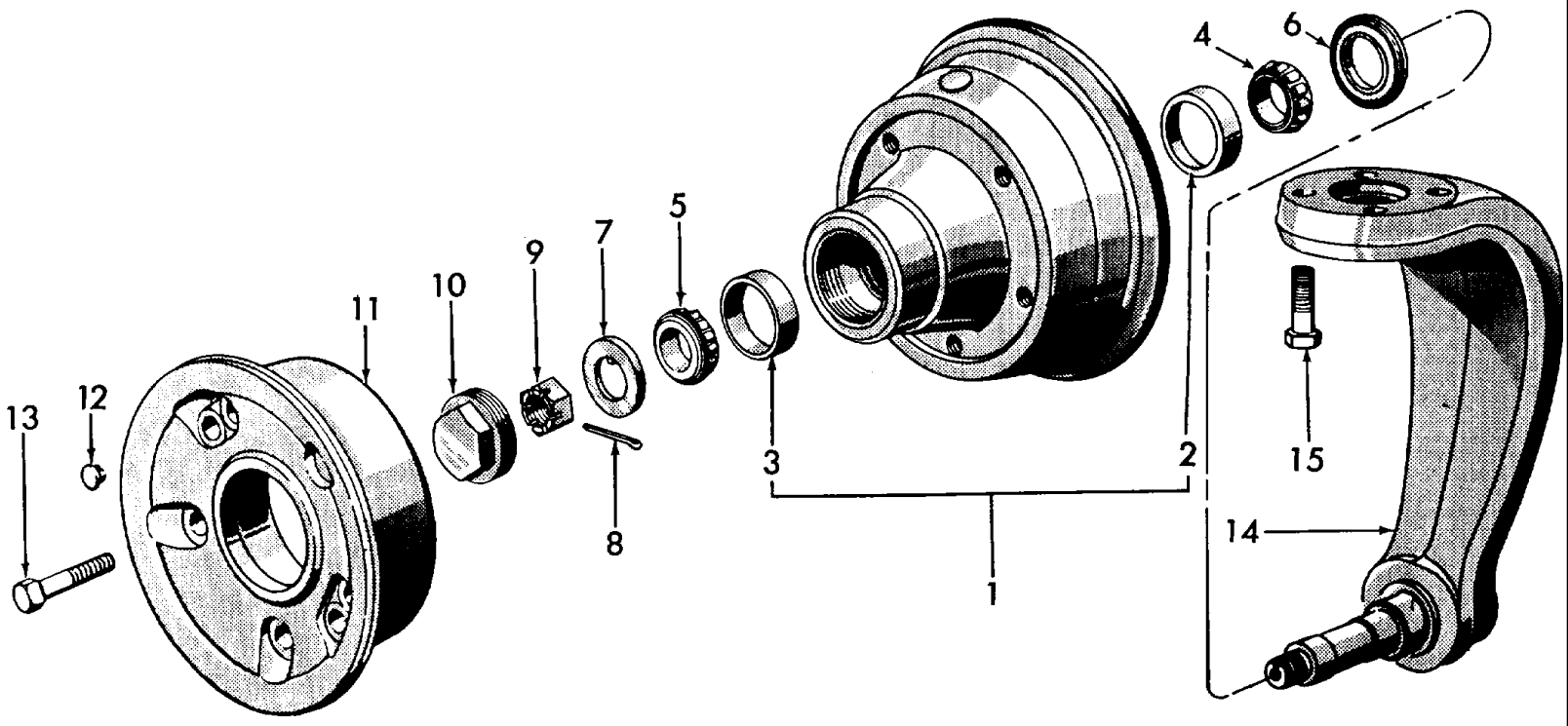

5000-SERIES 4 CYL TRACTOR (1/65-1/75)

01A04 SINGLE FRONT WHEEL - 4200 & 5200 ROWCROP (66/70)

Ref	Part Number	Qty	Description
1	C0NN1032A	1	Disc Assy., Includes: Ref. 2 & 3, NHNA Only, No Longer Serviced, Years: 01/01/1966-12/31/1970
2	NS	1	Cup, Inner, Not Replaced, Years: 01/01/1966-12/31/1970
3	517512	1	Bearing, Cup, 2-7/8" OD, Years: 01/01/1966-12/31/1970
4	512725	1	Cone & Roller Assy., Inner, Years: 01/01/1966-12/31/1970
5	86516471	1	Cone, Bearing, Inner, 1-3/8" ID x 31/32" Wide, Outer, Years: 01/01/1966-12/31/1970
6	C0NN1190C	1	Retainer Assy., Hub, NHNA Only, No Longer Serviced, Years: 01/01/1966-12/31/1970
7	310874	1	Washer, Retainer, NHNA Only, No Longer Serviced, Years: 01/01/1966-12/31/1970
8	72108S8	1	Pin, Split Cotter, 5/32" x 2", NHNA Only, No Longer Serviced, Years: 01/01/1966-12/31/1970
9	87449	1	Nut, Hex, Slotted, 1-14, No Longer Serviced, Years: 01/01/1966-12/31/1970
10	NCB1131A	1	Cap, Hub, NHNA Only, No Longer Serviced, Years: 01/01/1966-12/31/1970
11	310160	1	Flange, NHNA Only, No Longer Serviced, Years: 01/01/1966-12/31/1970
12	74217S7	2	Plug, Button, 9/16", NHNA Only, No Longer Serviced, Years: 01/01/1966-12/31/1970
13	359383S8B	5	Bolt, Hex, 1/2"-13 x 3.25, NHNA Only, No Longer Serviced, Years: 01/01/1966-12/31/1970
14	C0NN3105R	1	Spindle Assy., Single Wheel, NHNA Only, No Longer Serviced, Years: 01/01/1966-12/31/1970
15	359545S8	4	Bolt, 5/8"-18 x 2-1/4", NHNA Only, No Longer Serviced, Years: 01/01/1966-12/31/1970

01B01[A] STANDARD REAR WHEELS - 3500, 3550, 5000, 7000, 4000 EXCEPT 4110

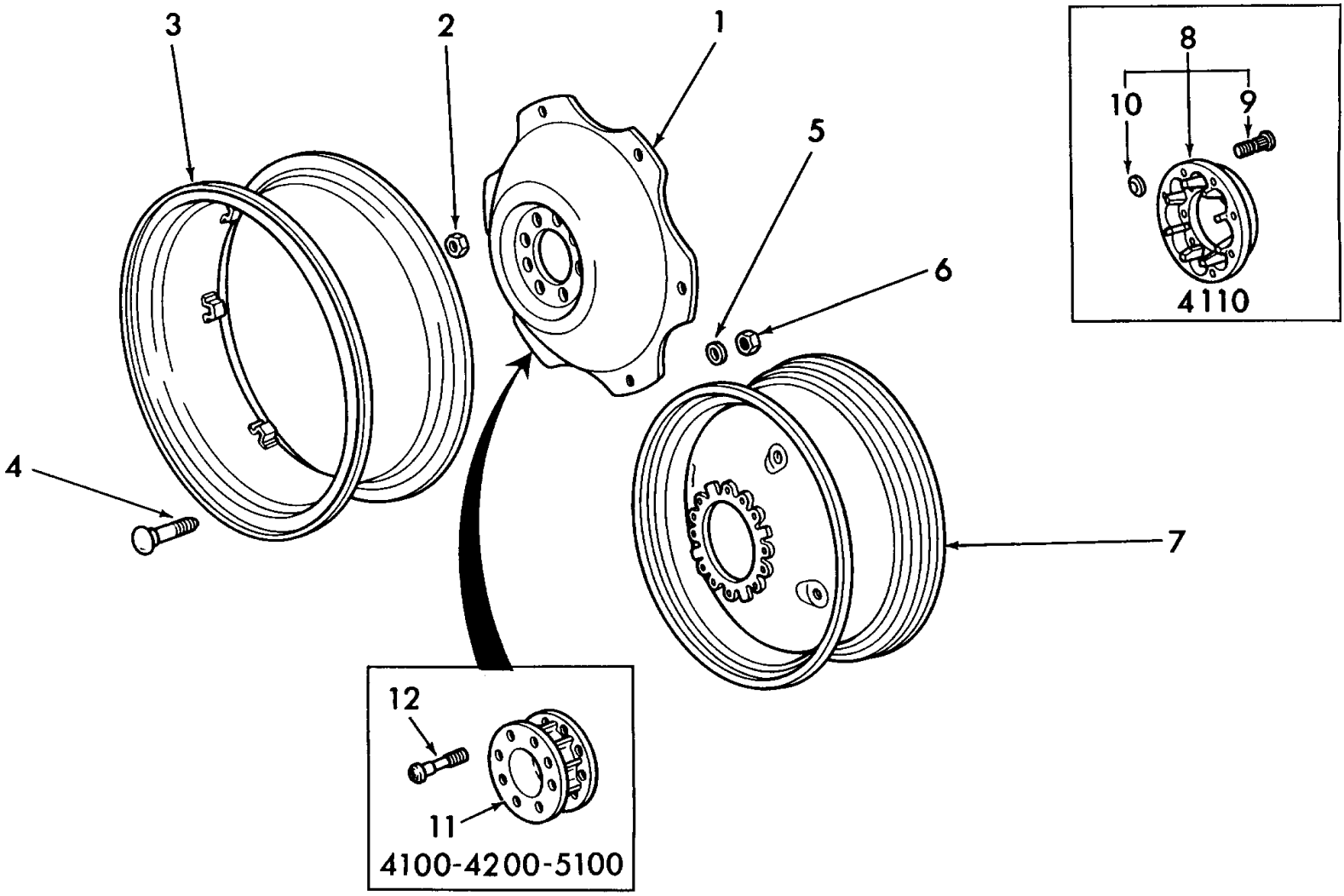

5000-SERIES 4 CYL TRACTOR (1/65-1/75)

01B01[A] STANDARD REAR WHEELS - 3500, 3550, 5000, 7000, 4000 EXCEPT 4110

Ref	Part Number	Qty	Description
1	C5NN1036G	2	Disc, 24" & 26" (60.96 & 66.04cm), Cast (For 8 Bolt Hub), Start Year: 01/01/1965
1	F1NN1036AA	2	Disc, 30" (76.20cm), 8 Bolt Hub, 8 Bolt Rim, Start Year: 01/01/1965
1	F2NN1036AA11G	2	Disc, 34" (86.36cm), Replaces P/N C7NN-1036-M, 5100, 5200, Start Year: 01/01/1967
1	F2NN1036AA11G	2	Disc, 34" (86.36cm), 7100, 7200, Start Year: 01/01/1971
1	F1NN1036GA	2	Disc, 36" & 38" (91.44cm & 96.52cm) For 6 Bolt Hub, U.K., Except 5000-7000, Start Year: 01/01/1965
1	F1NN1036BA	2	Disc, 36" & 38" (91.44cm & 96.52cm), 8 Bolt Hub, 7100, 7200, Start Year: 01/01/1965
2	D3NN1120B	12/16	Nut, Hex, 3/4", Replaces P/N C5NN-1120-E, Start Year: 01/01/1965
2	143517	16	Nut, Wheel, 3/4"-16, 4140, Years: 01/01/1969-03/31/1970
3	83932593	2	Rim Assy., W/12 x 24 Heavy Duty, 3550, 4140, 4400, 4410, 4500, Start Year: 01/01/1965
3	83932593	2	Rim Assy., 12 x 24 Heavy Duty, 3550, 4400, 4500, U.K. (Not Shown), Start Year: 01/01/1965
3	C5NN1050R	2	Rim Assy., DW14-26 (Not Shown), Start Year: 01/01/1965
3	D3NN1050E12G	2	Rim Assy., DW16 x 26, 4100, 5100, 7100 (Not Shown), NHNA Only, Start Year: 01/01/1965
3	C5NN1050L	2	Rim Assy., W13 x 30 (Not Shown), NHNA Only, Start Year: 01/01/1965
3	D9NN1050JA	2	Rim Assy., W14 x 34, Replaces P/N C9NN-1050-S, 5000, 7000 (Not Shown), Start Year: 01/01/1967
3	D9NN1050LA	2	Rim Assy., W11 x 36, Except 5200, 7200 (Not Shown), Start Year: 01/01/1965
3	C5NN1050D	2	Rim Assy., W12 x 36, Except 5200, 7200 (Not Shown), No Longer Serviced (NHNA), Start Year: 01/01/196
3	C5NN1050A	2	Rim Assy., DW11 x 38 (Not Shown), No Longer Serviced, Start Year: 01/01/1965
3	C9NN1050R	2	Rim Assy., w/14 x 38, 5000-7000 (Not Shown), Start Year: 01/01/1965
3	D9NN1050KA	2	Rim Assy., DW16 x 34, 5100, 7100, U.K. - Antwerp (Not Shown), No Longer Serviced, Start Year: 06/01/1973
3	E0NN1050DA	2	Rim Assy., DW16 x 34, Replaces P/N D2NN-1050-E, 5000-7000 (Not Shown), NHNA Only, Start Year: 06/01/1973
3	D9NN1050JA	2	Rim Assy., W14 x 34, 5100, 7100 (Not Shown), Start Year: 01/01/1965
3	D9NN1050GA	2	Rim Assy., 15 x 30, 4100, 5100, 7100 (Not Shown), Start Year: 01/01/1965
3	D9NN1050LA	2	Rim Assy., 11 x 36 (Not Shown), Start Year: 01/01/1965
3	D9NN1050MA	2	Rim Assy., 12 x 36 (Not Shown), NH-E Only, Start Year: 01/01/1965
3	D9NN1050NB	2	Rim Assy., 12 x 38, 4100, 5100, 7100 (Not Shown), Start Year: 01/01/1965
4	370938S36	12/16	Bolt, Carriage, 5/8" x 2.82, Except 4400, 4500, No Longer Serviced (NH-E), Start Year: 01/01/1965
4	374713S36	12	Bolt, Carriage, 5/8"-18 x 3.40, 4400, Start Year: 01/01/1965
4	374713S36	12	Bolt, Carriage, 5/8"-18 x 3.40, 4500, Years: 01/01/1965-07/31/1969
4	115824ES	16	Bolt, Hex, Special, 5/8"-18 x 2.88, W/34", 5100, 5200, 5190, Years: 01/01/1967-10/31/1969
5	370692S36	12/16	Washer, Flat, 5/8", Except 4400, 4500, Start Year: 01/01/1965
6	408	12/16	Nut, G5, 5/8"-18, Start Year: 01/01/1965
6	408	12	Nut, G5, 5/8"-18, 4400, 4410, 4140, Start Year: 01/01/1965
7	C7NN1100D12Z	2	Wheel Assy., W15L x 28, Replaces P/N C5NN-1100-AS, 4500, NHNA Only, Start Year: 01/01/1965
7	E6NN1100BA12Z	2	Wheel Assy., W/14 x 28, Replaces P/N C7NN-1100-M, 3550, 4500 (Not Shown), NH-E Only, Start Year: 01/01/1965
7	D4NN1100G	2	Wheel Assy., W/12 x 24, Replaces P/N C7NN-1100-Y, 3550, 4400, 4410, 4500 (Not Shown), Start Year: 08/01/1969
7	E6NN1100AA12G	2	Wheel Assy., 14 x 30 (Not Shown), NH-E Only, No Longer Serviced, Years: 01/01/1965-03/31/1968
7	82005078	2	Wheel Assy., 16 x 16, Orchard, Special Order Only (Not Shown), NHNA Only, Start Year: 01/01/1967

5000-SERIES 4 CYL TRACTOR (1/65-1/75)

01B01[A] STANDARD REAR WHEELS - 3500, 3550, 5000, 7000, 4000 EXCEPT 4110

Ref	Part Number	Qty	Description
	D0NN1160A	1	Rim, 12 x 28, Manual Adjust, 4140, NHNA Only, No Longer Serviced, Start Year: 01/01/1970
8	C9NN1036M	1	Disc, 12 x 28, Manual Adjust, 4140, Start Year: 01/01/1970
	D0NN1043A	1	Clamp, Rim, Manual Adjust, 4140, NHNA Only, Start Year: 01/01/1970
	87381	8	Washer, SAE, 3/4", 4140, Start Year: 01/01/1970
9	C7NN1053A	8	Bolt, Sq Hd, 3/4"-10 x 2-1/4", 4140, Start Year: 01/01/1970
10	280954	8	Nut, G5, 3/4"-10, 4140, Start Year: 01/01/1970
11	C5NN1223B	2	Extension, Axle Shaft, 4" (10.16cm), NHNA Only, Start Year: 01/01/1965
12	9809140	16	Bolt, 3/4"-16 x 6, NHNA Only, Start Year: 01/01/1965

01B03 POWER ADJUSTABLE REAR WHEELS - 5000, 7000, 4000 EXCEPT 4140

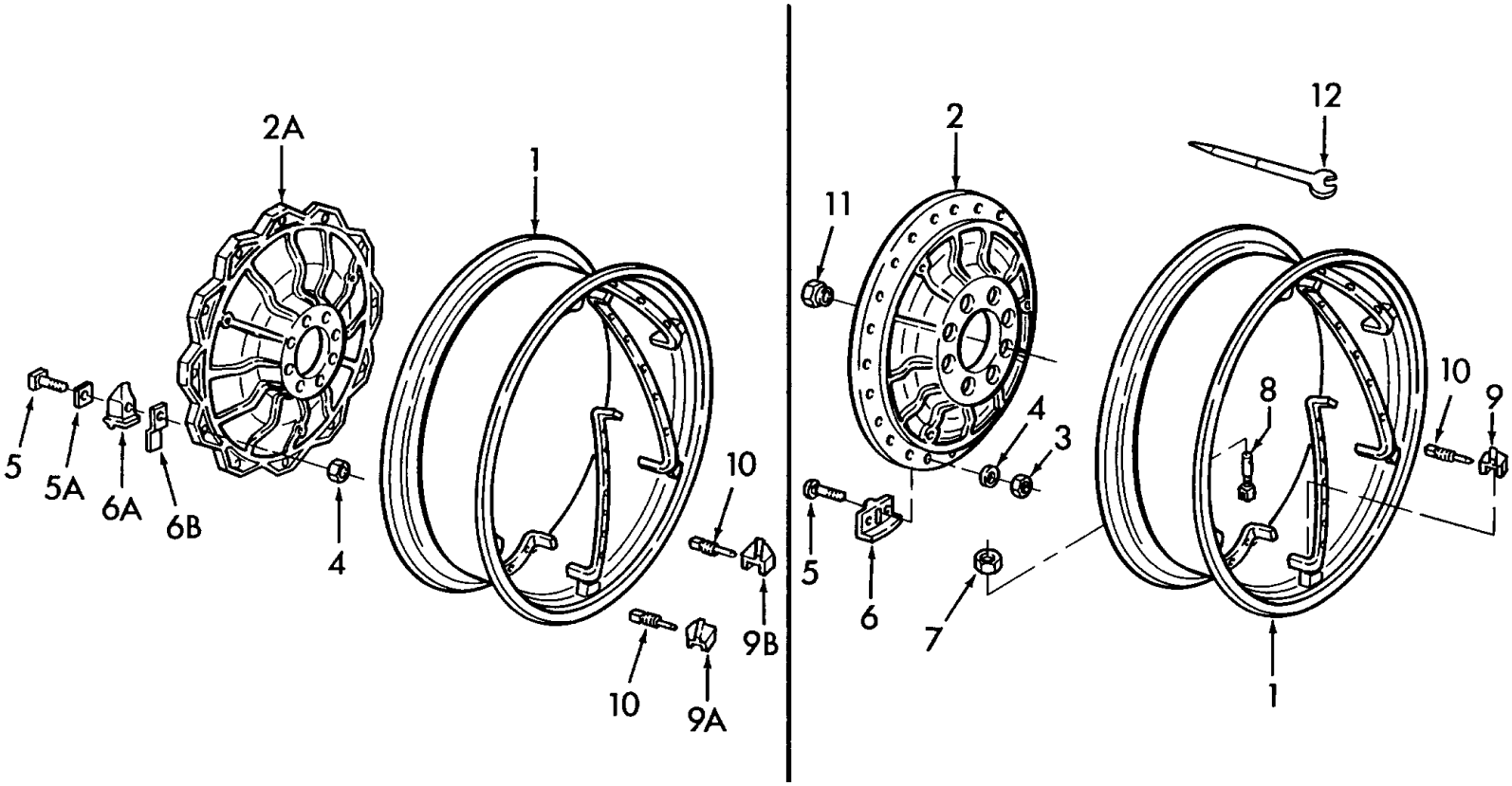

Refer to Series Option Accessory Data Sheets for Dual Wheel Installations.

5000-SERIES 4 CYL TRACTOR (1/65-1/75)

01B03 POWER ADJUSTABLE REAR WHEELS - 5000, 7000, 4000 EXCEPT 4140

Ref	Part Number	Qty	Description
1	C5NN1050Z	2	Rim Assy., 14 x 30, U.S., 4100, 5100, 5200, NHNA Only, No Longer Serviced, Years: 01/01/1967-12/31/1968
1	C7NN1050S	2	Rim Assy., 14 x 30, U.S., 4100, 5100, 7100 (Not Shown), NHNA Only, Start Year: 01/01/1969
1	C7NN1050U	2	Rim Assy., 15 x 30, U.S., 5100, 5200, 7100, 7200 (Not Shown), NHNA Only, Start Year: 01/01/1969
1	C0NN1050A	2	Rim Assy., 12 x 38 (Not Shown), Start Year: 01/01/1965
1	C0NN1050D	2	Rim Assy., 14 x 38 & 15.50-38, 5100, 5190, 5200, 7100, 7200 (Not Shown), Start Year: 01/01/1965
1	C7NN1050E	2	Rim Assy.,W/15 x 34, Power Adjusting, 5100, 5190, 5200, 7100, 7200, U.S. (Not Shown), Start Year: 01/01/1973
2	C5NN1036N	2	Disc, 30" (76.20cm), 4100, 5100, 5200, U.S., NHNA Only, No Longer Serviced, Years: 01/01/1967-12/31/1968
2	C5NN1036N	2	Disc, 30" (76.20cm), 5100, 5200, U.S., NHNA Only, No Longer Serviced, Years: 01/01/1969-06/30/1974
2A	82009050	2	Disc, Nut, 30" U.S., W/D2NN-1120-B, Replaces D0NN-1036-C, 5000-7000, U.S., Start Year: 01/01/1969
2A	82008993	2	Disc, 34", 5100, 5190, 5200, 7100, 7200, U.S., Start Year: 01/01/1973
2A	82009077	2	Disc, 38", W/D2NN-1120-B Nut; When replacing C5NN-1036-C also Use (6) C9NN-1043-F, (1) C7NN-1057-B, (1) C7NN-1057-C, Start Year: 01/01/1965
3	80299	24/20	Washer, 5/8", Years: 01/01/1965-12/31/1968
4	408	24/20	Nut, G5, 5/8"-18, Years: 01/01/1965-12/31/1968
4	280375	12/10	Nut, Lock, GC, 3/4"-10, Start Year: 01/01/1969
5	370938S8	24/20	Bolt, Carriage, 5/8"-18 x 2-53/64", NHNA Only, No Longer Serviced, Years: 01/01/1965-12/31/1968
5	385674S36	12/10	Bolt, Square Hd., G8, 3/4"-10 x 3-1/4", Start Year: 01/01/1969
5A	D2NN1N023A	12/10	Spacer, Clamp, Start Year: 01/01/1969
6	C3NN1085A	12/10	Retainer, Adjusting Screw, U.S., No Longer Serviced (NHNA), Years: 01/01/1965-12/31/1968
6A	C9NN1043F	12/10	Clamp, Rim to Disc, Start Year: 01/01/1969
6B	D2NN1N024A	12/10	Shim, Clamp, Start Year: 01/01/1969
7	C0NN1059A	12/10	Nut, Lock, Adjusting Screw, No Longer Serviced (NH-E), Years: 01/01/1965-12/31/1968
8	C0NN1056A	12/10	Screw, Adjusting, No Longer Serviced (NH-E), Years: 01/01/1965-12/31/1968
9	C5NN1057A	4	Stop, Use w/30" Wheel, 4000 & 5200, U.S., NHNA Only, No Longer Serviced, Years: 01/01/1967-12/31/1968
9	C0NN1057A	4	Stop, Use w/38" Wheel, Years: 01/01/1965-12/31/1968
9A	E5NN1057AA	2	Stop, L.H., Start Year: 01/01/1969
9B	E5NN1057BA	2	Stop, R.H., Start Year: 01/01/1969
10	C0NN1058A	4	Screw, Adjusting Stop, Start Year: 01/01/1965
11	C5NN1120G	16	Nut, 3/4"-16, Replaces P/N C5NN-1120-C, No Longer Serviced (NH-E), Years: 01/01/1965-10/31/1970
11	143517	16	Nut, Wheel, 3/4"-16, Start Year: 11/01/1970
12	C5NN17038A	1	Wrench, Rim Adjusting Nut, Years: 01/01/1965-12/31/1968

Refer to Series Option Accessory Data Sheets for Dual Wheel Installations.

01B04 DUAL POWER ADJUSTABLE REAR WHEELS - 5100, 5200, 7100, 7200 NHNA (73/)

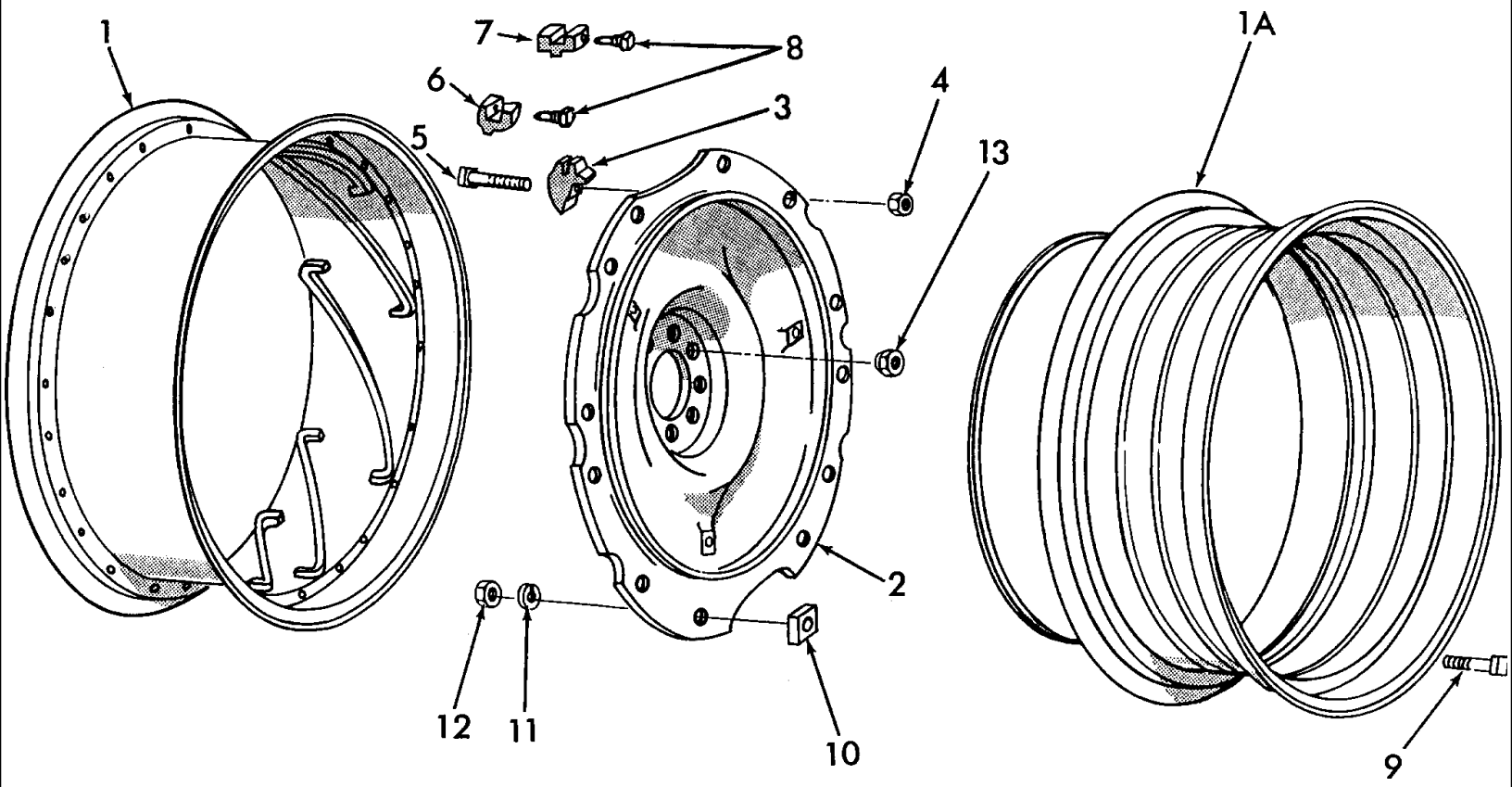

5000-SERIES 4 CYL TRACTOR (1/65-1/75)

01B04 DUAL POWER ADJUSTABLE REAR WHEELS - 5100, 5200, 7100, 7200 NHNA (73/)

Ref	Part Number	Qty	Description
1	C0NN1050D	2	Rim Assy., 14 x 38 & 15.50-38, Start Year: 01/01/1973
1	C7NN1050E	2	Rim Assy., Inner, W/15 x 34 (Not Shown), Start Year: 01/01/1973
1A	D2NN1050C	2	Rim Assy., W/14 x 38 (Not Shown), NHNA Only, Start Year: 01/01/1973
1A	D1NN1050B	2	Rim Assy., Outer, W/15 x 34 (Not Shown), NHNA Only, Start Year: 01/01/1973
2	82009077	2	Disc, 38", Start Year: 01/01/1973
2	82008993	2	Disc, 34", Start Year: 01/01/1973
3	C9NN1043F	12	Clamp, 34" & 38", Start Year: 01/01/1973
4	280375	12	Nut, Lock, GC, 3/4"-10, Start Year: 01/01/1973
5	385674S36	12	Bolt, Square Hd., 3/4"-10 x 3.25, Start Year: 01/01/1973
6	E5NN1057AA	4	Stop, Rim Adjusting, Start Year: 01/01/1973
7	E5NN1057BA	4	Stop, Rim Adjusting, Start Year: 01/01/1973
8	C0NN1058A	8	Screw, Adjusting Stop, Start Year: 01/01/1973
9	382056S36	12	Bolt, 3/4"-16 x 3, W/14 x 38, Start Year: 01/01/1973
9	D1NN1N018A	12	Bolt, 3/4"-16 x 2.75, W/15 x 34, Start Year: 01/01/1973
10	D2NN1044B	12	Spacer, Rim, NHNA Only, Start Year: 01/01/1973
11	87340	12	Washer, Lock, 3/4", Start Year: 01/01/1973
12	83927122	12	Nut, Hex, 3/4"-16, Start Year: 01/01/1973
13	143517	16	Nut, Wheel, 3/4"-16, Wheel Disc, Start Year: 01/01/1973

01C01 FRONT END WEIGHTS ACCESSORY - 3550, 4100, 5100, 7100

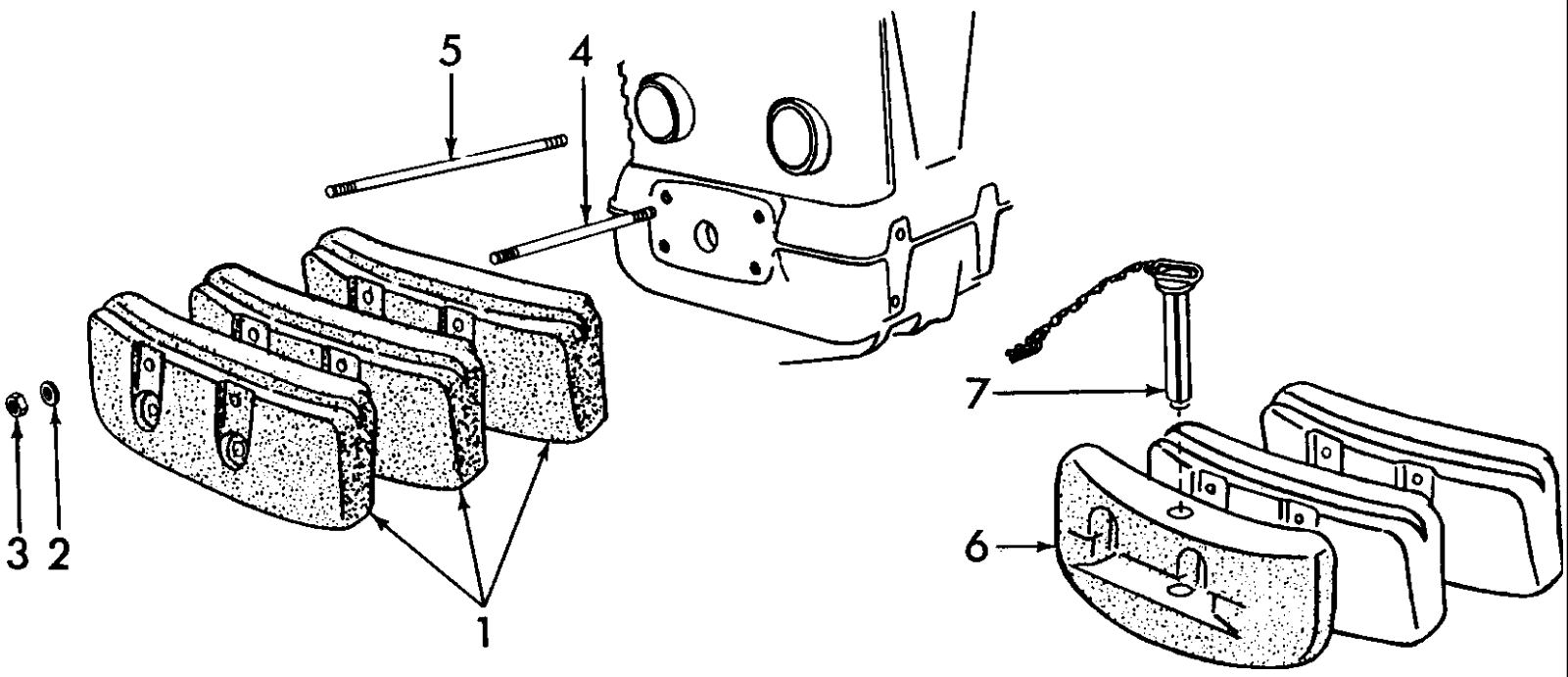

5000-SERIES 4 CYL TRACTOR (1/65-1/75)

01C01 FRONT END WEIGHTS ACCESSORY - 3550, 4100, 5100, 7100

Ref	Part Number	Qty	Description
1	C5NN3A370B	2	Weight, Slab, Approximately 80 Lbs., 3550, Use 2 Weights, No Longer Serviced (NHNA), Start Year: 01/01/1965
1	C5NN3A370B	3/5	Weight, Slab, Approximately 80 Lbs. each, Except 3550, No Longer Serviced (NHNA), Start Year: 01/01/1965
2	86511191	4	Washer, 3/4", Start Year: 01/01/1965
3	280954	4	Nut, G5, 3/4"-10, Start Year: 01/01/1965
4	C5NN3N301A	4	Stud, 3/4"-10 x 8.25, Use W/3 Weights, No Longer Serviced, Start Year: 01/01/1965
4	C7NN3N301A	4	Stud, 3/4"-10 x 10.50, W/Tow Hook, Germany W/3 Weights, NH-E Only, No Longer Serviced, Start Year: 01/01/1965
4	C7NN3N301A	4	Stud, w/Tow Hook, 3/4"-10 x 10-50, NH-E Only, Used on Front End Weight (Front Tow Type) Accessory, Germany., No Longer Serviced, Start Year: 01/01/1965
4	D1NN3N301A	1	Stud, Front End Weight w/Tow Hook, 3/4"-10 x 6-35/64", Used on Front End Weight (Front Tow Type) Accessory, Germany., No Longer Serviced, Start Year: 01/01/1972
5	C5NN3N301B	4	Stud, 3/4"-10 x 13.00, Use W/5 Weights, No Longer Serviced (NHNA), Start Year: 01/01/1965
5	C7NN3N301B	4	Stud, 3/4"-10 x 15.25, W/Tow Hook, Germany W/5 Weights, NH-E Only, Start Year: 01/01/1965
5	D1NN3N301A	4	Stud, 3/4"-10 x 6.54, Used W/2 Weights, No Longer Serviced, Start Year: 01/01/1972
	C5NN3A370B	1	Weight Kit, Slab, Basildon Only, Consists of: (3) C5NN-3A370-B, (4) C5NN-3N301-A, (4) 44748-S36 AND (4) 34674-S8, No Longer Serviced (NHNA), Start Year: 01/01/1965
	CFPN3200B	1	Weight Kit, Slab, Basildon Only, Consists of: (5) C5NN-3A370-B, (4) C5NN-3N302-B, (4) 44748-S36 & (4) 34674-S8, NH-E Only, No Longer Serviced, Start Year: 01/01/1965
	D1NN1N019A	2	Plate, Use w/2 Weights, No Longer Serviced, Start Year: 01/01/1972
5	C7NN3N301B	4	Stud w/Tow Hook, 3/4"-10 x 15-1/4", 5100, 7100 Germany, NH-E Only, Used on Front End Weight (Front Tow Type) Accessory, Germany., Start Year: 01/01/1965
	NLS	1	Weight, Rear, 4100, Germany {C7NN3N064A}, Used on Front End Weight (Front Tow Type) Accessory, Germany., No Longer Serviced, Start Year: 01/01/1965
	NLS	2	Weight, Rear, 5100, 7100, Germany {C7NN3N064A}, Used on Front End Weight (Front Tow Type) Accessory, Germany., No Longer Serviced, Start Year: 01/01/1965
	C5NN3A370B	1	Weight, Front End Slab, Approx. 80 lbs., 3550 Germany, Used on Front End Weight (Front Tow Type) Accessory, Germany., No Longer Serviced (NHNA), Start Year: 01/01/1972
6	C5NN17A954A	1	Weight & Tow Hook, (Use as Outer Weight, Same Attach. Parts as Standard Weight), Basildon & Antwerp, NH-E Only, No Longer Serviced, Start Year: 01/01/1965
6	C5NN17A954A	1	Weight & Tow Hook, Combination, Germany, NH-E Only, Used on Front End Weight (Front Tow Type) Accessory, Germany., No Longer Serviced, Start Year: 01/01/1965
	86511191	4	Washer, 3/4", Used on Front End Weight (Front Tow Type) Accessory, Germany., Start Year: 01/01/1972
	280954	4	Nut, G5, 3/4"-10, Germany, Used on Front End Weight (Front Tow Type) Accessory, Germany., Start Year: 01/01/1965
7	C5NN17N749A	1	Pin Assy., (For Use w/Combo Weight & Hook), Basildon & Antwerp, NH-E Only, Start Year: 01/01/1965
7	C5NN17N749A	1	Pin & Clip Assy., Replaces P/N C7NN-3N062-A, Germany, NH-E Only, Used on Front End Weight (Front Tow Type) Accessory, Germany., Start Year: 01/01/1965
	C7NN3N065A12Z	1	Weight, Front End Side, 3550, Used with the Front End Side Weight kit (Accessory), 3550-4500, U.K.; 3550 Germany., No Longer Serviced (NH-E), Start Year: 01/01/1972

5000-SERIES 4 CYL TRACTOR (1/65-1/75)

01C01 FRONT END WEIGHTS ACCESSORY - 3550, 4100, 5100, 7100

Ref	Part Number	Qty	Description
	C7NN3N065A12Z	2	Weight, Front End Side, 4550, Used with the Front End Side Weight kit (Accessory), 3550-4500, U.K.; 3550 Germany., No Longer Serviced (NH-E), Start Year: 01/01/1965
	D1NN3N065A12Z	1	Weight, Front End Side, 3550, Used with the Front End Side Weight kit (Accessory), 3550-4500, U.K.; 3550 Germany., No Longer Serviced (NH-E), Start Year: 01/01/1972
	86511191	4	Washer, 3/4", Used with the Front End Side Weight kit (Accessory), 3550-4500, U.K.; 3550 Germany., Start Year: 01/01/1965
	304957S36	4	Bolt, Hex, 3/4"-10 x 3-3/4", Used with the Front End Side Weight kit (Accessory), 3550-4500, U.K.; 3550 Germany., Start Year: 01/01/1965

01C01[A] FRONT END WAFER WEIGHTS - 2100, 3100, 4100, 4140, 4200, 4400, 5100, 5200, 7100, 7200

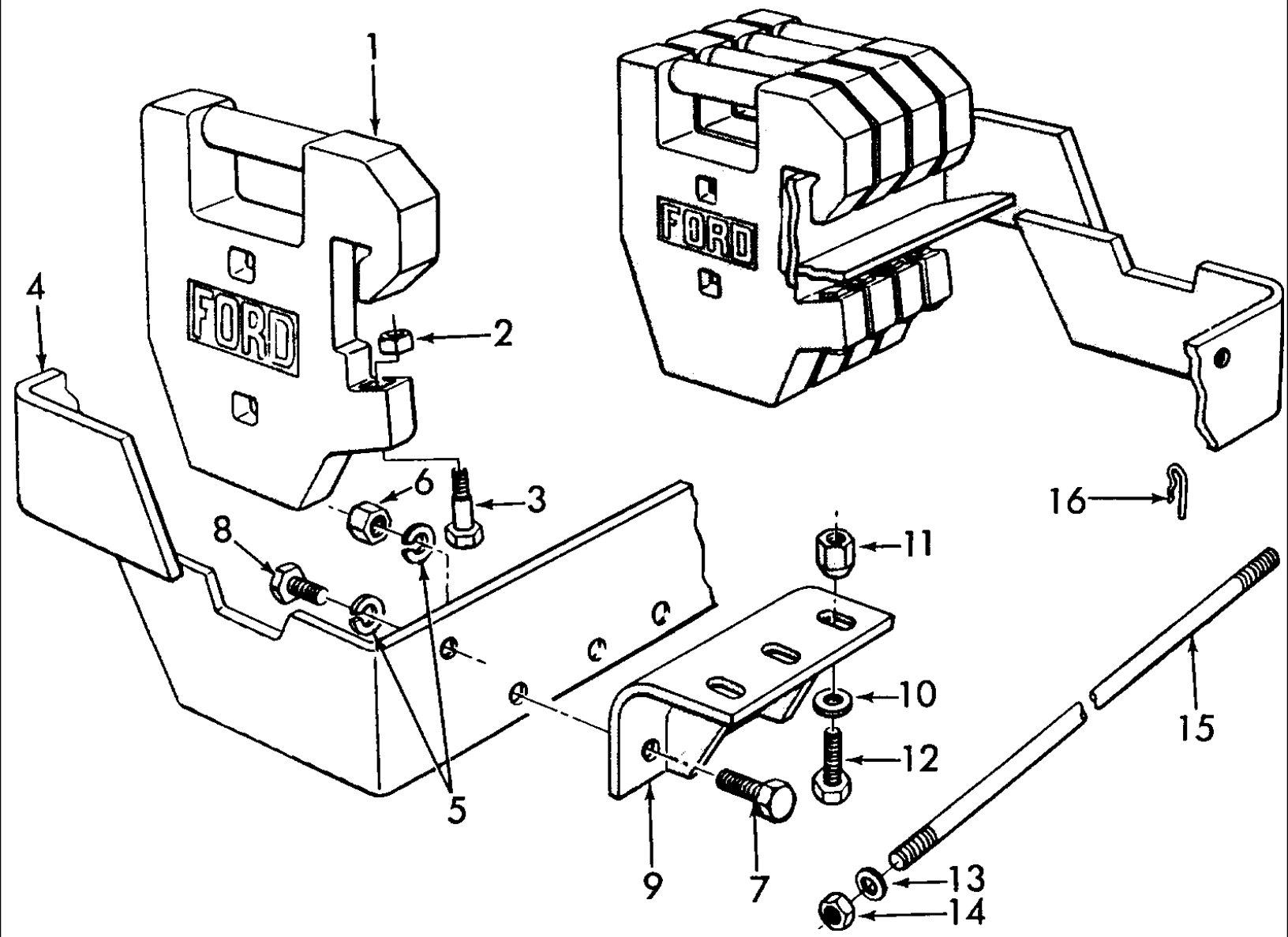

5000-SERIES 4 CYL TRACTOR (1/65-1/75)

01C01[A] FRONT END WAFER WEIGHTS - 2100, 3100, 4100, 4140, 4200, 4400, 5100, 5200, 7100, 7200

Ref	Part Number	Qty	Description
1	D0NN3A370B	5	Weight, Wafer, 60 Lbs., 2100, 3100, 4100, 4140, Start Year: 01/01/1965
1	D0NN3A370B	8	Weight, Wafer, 60 Lbs., 4200, 4400, 5200, Start Year: 01/01/1965
1	D0NN3A370A	9	Weight, Wafer, 75 Lbs., 5100, When adding 3 extra weights on each side it will be necessary to cut the hook off each inner weight so it will fit tight to weight hanging on the support., Start Year: 01/01/1965
1	D0NN3A370A	15	Weight, Wafer, 75 Lbs., 7100, When adding 3 extra weights on each side it will be necessary to cut the hook off each inner weight so it will fit tight to weight hanging on the support., Start Year: 01/01/1965
1	D0NN3A370A	8	Weight, Wafer, 75 Lbs., 7200, Start Year: 01/01/1971
2	280975	AR	Nut, Square, G5, 5/8"-11, Start Year: 01/01/1965
3	304933S100	AR	Screw, Cap, HH, Lock, G5, 5/8"-11 x 3-1/4", Start Year: 01/01/1965
4	D6NN3N058D	1	Support Assy., Replaces D0NN3N058C, 2100, 3100, 4140, Start Year: 01/01/1965
4	86542616	1	Support Assy., 4100, 4200, 4400, 5200 (Not Shown), NHNA Only, Start Year: 01/01/1965
4	D6NN3N058C	1	Support Assy., 5100, 7100 (Not Shown), Start Year: 01/01/1965
4	D2NN3N058A	1	Support Assy., 7200 (Not Shown), No Longer Serviced, Start Year: 01/01/1971
5	34811S36	4	Washer, Lock, 5/8", 2100, 3100, 4140, Start Year: 01/01/1965
5	87340	4	Washer, Lock, 3/4", Excluding 2100, 3100, 4140, Start Year: 01/01/1965
6	280374	2	Nut, G5, 5/8"-11, 2100, 3100, 4140, Start Year: 01/01/1965
7	86505999	2	Screw, Cap, HH, G5, 5/8"-11 x 2", 2100, 3100, 4140, Start Year: 01/01/1965
8	375893S36	2	Bolt, HH, 5/8"-11 x 1-7/8, 2100, 3100, 4140, Start Year: 01/01/1965
8	88725	4	Screw, Cap, HH, G5, 3/4"-10 x 1-3/4", Excluding 2100, 3100, 4140, Start Year: 01/01/1965
9	D0NN3N084A	1	Bracket Assy., Weight Support, 2100, 3100, 4140, Start Year: 01/01/1965
10	376541S36	2	Washer, Flat, 5/8", 2100, 3100, 4140, Start Year: 01/01/1965
11	C5NN1120F	2	Nut, Hex, 5/8"-18, 2100, 3100, 4140, Start Year: 01/01/1965
12	88114	2	Screw, Cap, HH, G5, 5/8"-18 x 2-1/4", 2100, 3100, 4140, Start Year: 01/01/1965
13	44751S36	4	Washer, 7/8", 5100, 7100, 7200, NHNA Only, No Longer Serviced, Start Year: 01/01/1971
14	9849647	4	Nut, G5, 7/8"-9, 5100, 7100, 7200, Start Year: 01/01/1971
15	D1NN3N079B	2	Bolt, 7/8"-9 x 35.5, Threads, Both Ends, 5100, 7100, No Longer Serviced, Start Year: 01/01/1971
15	D2NN3N079A	2	Bolt, 7/8"-9 x 29", Threads Both Ends, 7200, No Longer Serviced, Start Year: 01/01/1971
16	358813S36	2	Spring, 1.00 Retainer (Use W/D1NN-3N079-B), 5100, 7100, No Longer Serviced, Start Year: 01/01/1971

01C02 FRONT WHEEL WEIGHTS - 2100, 3100, 3400, 4100, 4200, 4410, 5100, 5200, 7100, 7200

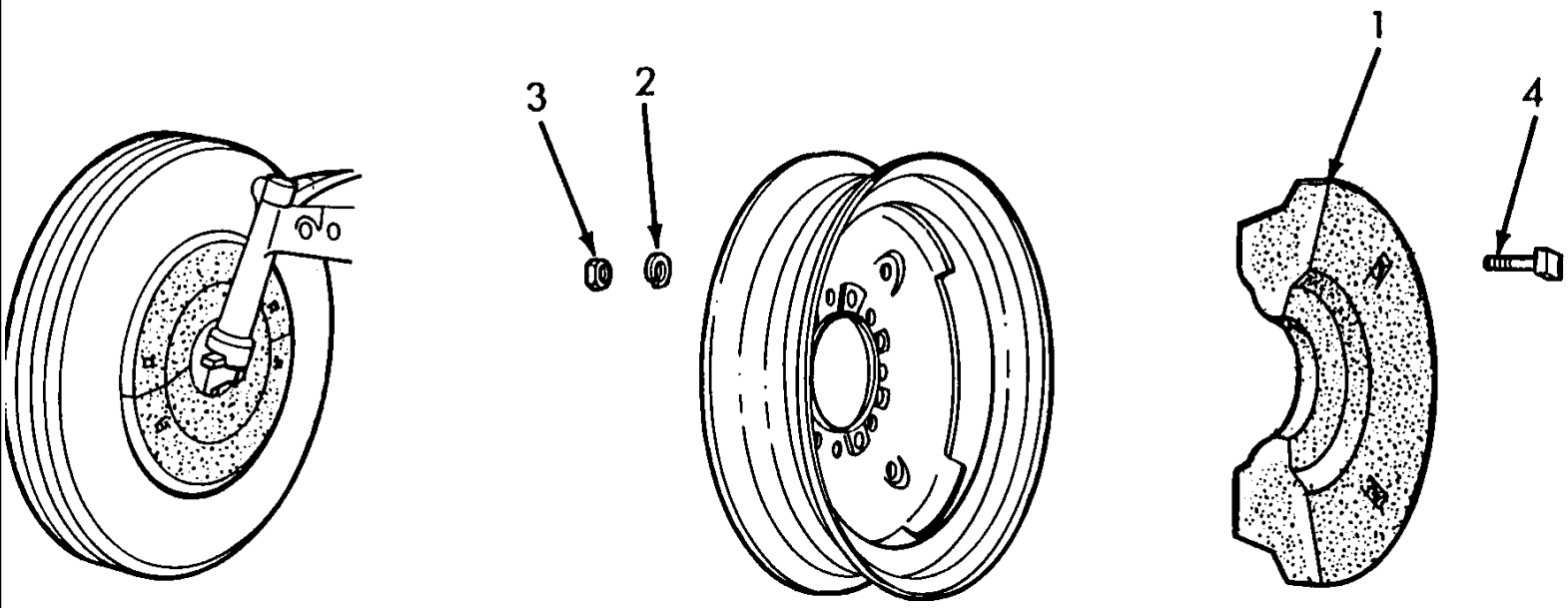

5000-SERIES 4 CYL TRACTOR (1/65-1/75)

01C02 FRONT WHEEL WEIGHTS - 2100, 3100, 3400, 4100, 4200, 4410, 5100, 5200, 7100, 7200

Ref	Part Number	Qty	Description
1	81802263	4	Weight Segment, Approximately 43 Lbs. Each, Start Year: 01/01/1965
2	80679	8	Washer, Lock, 1/2", Start Year: 01/01/1965
3	280431	8	Nut, G5, 1/2"-13, Start Year: 01/01/1965
4	23108S43	8	Screw, Cap, Sq Hd, G2, 1/2"-13 x 3-3/4", Start Year: 01/01/1965
	CFPN1000A	1	Weight Kit, Basildon only, Includes: Ref. 1 thru 4, Order Components, NH-E Only, Start Year: 01/01/1965

01C03 24" REAR WHEEL WEIGHTS

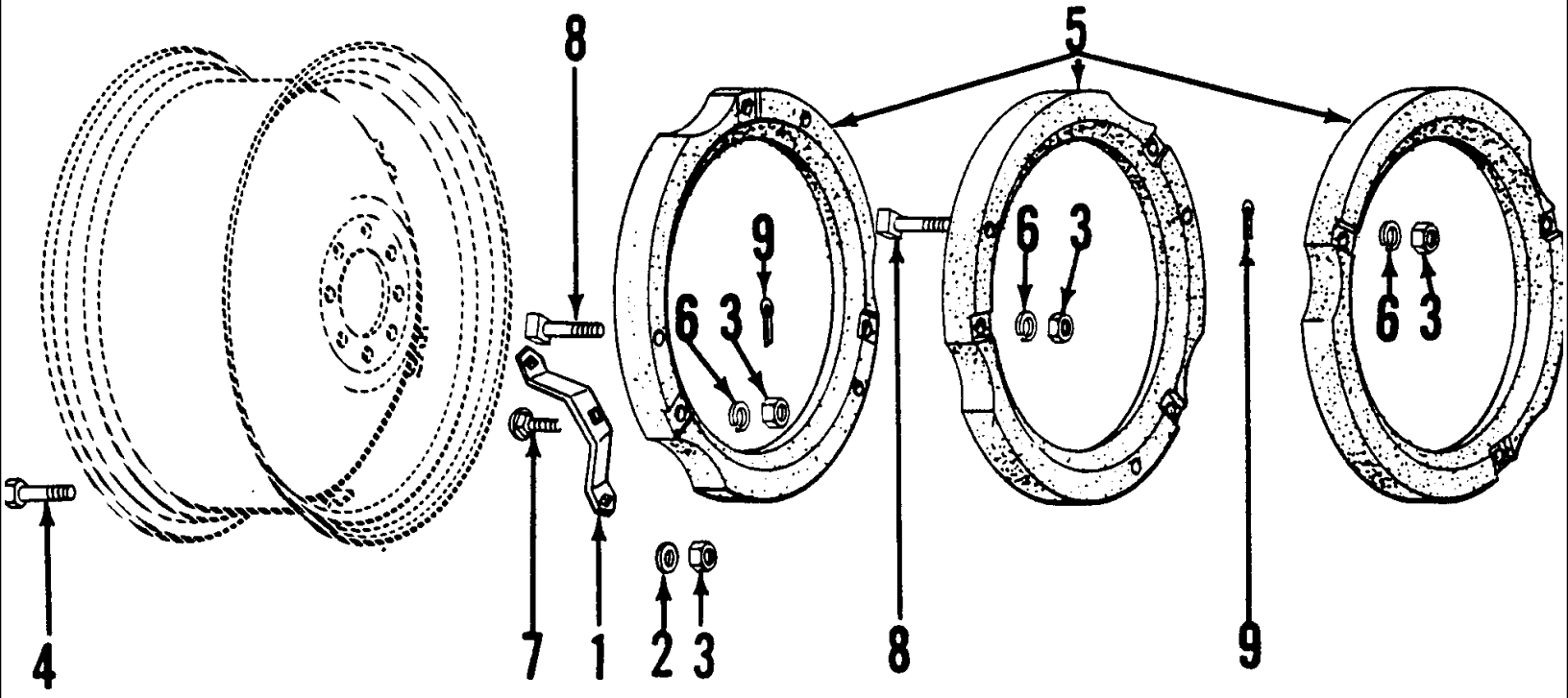

5000-SERIES 4 CYL TRACTOR (1/65-1/75)

01C03 24" REAR WHEEL WEIGHTS

Ref	Part Number	Qty	Description
1	C5NN1N004A	6	Bracket, Mounting, For 140 lbs., 280 lbs. and 420 lbs., Start Year: 01/01/1965
2	370692S36	12	Washer, Flat, 5/8", For 140 lbs., 280 lbs. and 420 lbs., Start Year: 01/01/1965
3	408	18	Nut, G5, 5/8"-18, For 140 Lb Wheel, Start Year: 01/01/1965
3	408	24	Nut, G5, 5/8"-18, For 280 Lb Wheel, Start Year: 01/01/1965
3	408	30	Nut, G5, 5/8"-18, For 420 Lb Wheel, Start Year: 01/01/1965
4	C5NN1046B	12	Bolt, Special, 5/8"-18 x 3.25, For 140 lbs., 280 lbs. and 420 lbs., Start Year: 01/01/1965
5	960E1076	2	Weight, Auxiliary, For 140 lbs. Wheel, No Longer Serviced (NH-E), Start Year: 01/01/1965
5	960E1076	4	Weight, Auxiliary, For 280 lbs. Wheel, No Longer Serviced (NH-E), Start Year: 01/01/1965
5	960E1076	6	Weight, Auxiliary, For 420 lbs. Wheel, No Longer Serviced (NH-E), Start Year: 01/01/1965
6	34811S36	6	Washer, Lock, 5/8", For 140 lbs. Wheel, Start Year: 01/01/1965
6	34811S36	12	Washer, Lock, 5/8", For 280 lbs. Wheel, Start Year: 01/01/1965
6	34811S36	18	Washer, Lock, 5/8", For 420 lbs. Wheel, Start Year: 01/01/1965
7	370938S8	6	Bolt, Carriage, 5/8"-18 x 2.82, 1st. Weight, NHNA Only, No Longer Serviced, Start Year: 01/01/1965
8	C5NN1046A	6	Bolt, Square Hd., 5/8"-18 x 3.0, For 280 lbs. Wheel, Start Year: 01/01/1965
8	C5NN1046A	12	Bolt, Square Hd., 5/8"-18 x 3.0, For 420 lbs. Wheel, Start Year: 01/01/1965
9	280251	6	Pin, Split Cotter, 3/32" x 1", For 280 lbs. Wheel, Start Year: 01/01/1965
9	280251	12	Pin, Split Cotter, 3/32" x 1", For 420 lbs. Wheel, Start Year: 01/01/1965
	EBPN1042A	1	Bolt Set, 24", For 140 lbs., 280 lbs. and 420 lbs., Consists of all parts depicted L/Weights - Highland Park; (6) C5NN-1N004-A, (18) 34811-S36, (12) 370692-S34, (6) 370938-S8, (30) 379223-S36, (12) C5NN-1046-A, (12) C5NN-1046-B, (12) 72034-S8, Start Year: 01/01/1965

01C04[B] 30" & 40" REAR WHEEL WEIGHTS FOR POWER ADJUSTABLE WHEELS - 4100, 5000, 7000 (NHNA)

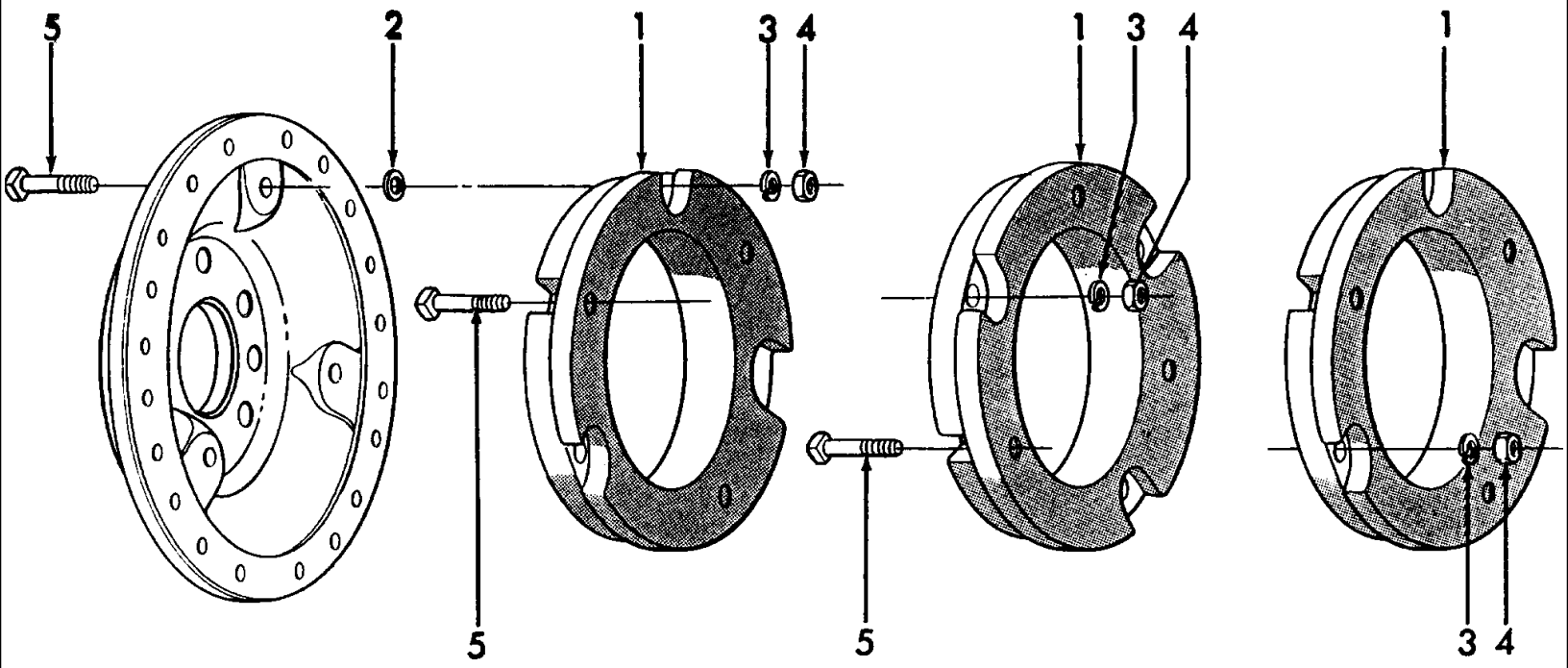

5000-SERIES 4 CYL TRACTOR (1/65-1/75)

01C04[B] 30" & 40" REAR WHEEL WEIGHTS FOR POWER ADJUSTABLE WHEELS - 4100, 5000, 7000 (NHNA)

Ref	Part Number	Qty	Description
1	C5NN1A002M	6	Weight, 30" & 40", Approximately 100 Lbs., NHNA Only, Start Year: 01/01/1965
2	230888	6	Washer, Retainer, Start Year: 01/01/1965
3	370692S36	18	Washer, Flat, 5/8", Start Year: 01/01/1965
4	280374	18	Nut, G5, 5/8"-11, Start Year: 01/01/1965
5	381914S36	18	Bolt, Square Hd., 5/8"-11 x 4.50, Start Year: 01/01/1965
	0C	1	Bolt Set, 30" - 40", (3) Weights per Wheel, Order as Component; Includes: Ref. 2 through 5., NHNA Only, Start Year: 01/01/1965

01C04[D] 30" REAR WHEEL WEIGHTS FOR MANUAL ADJUST WHEELS - 4000, 5000, 7000

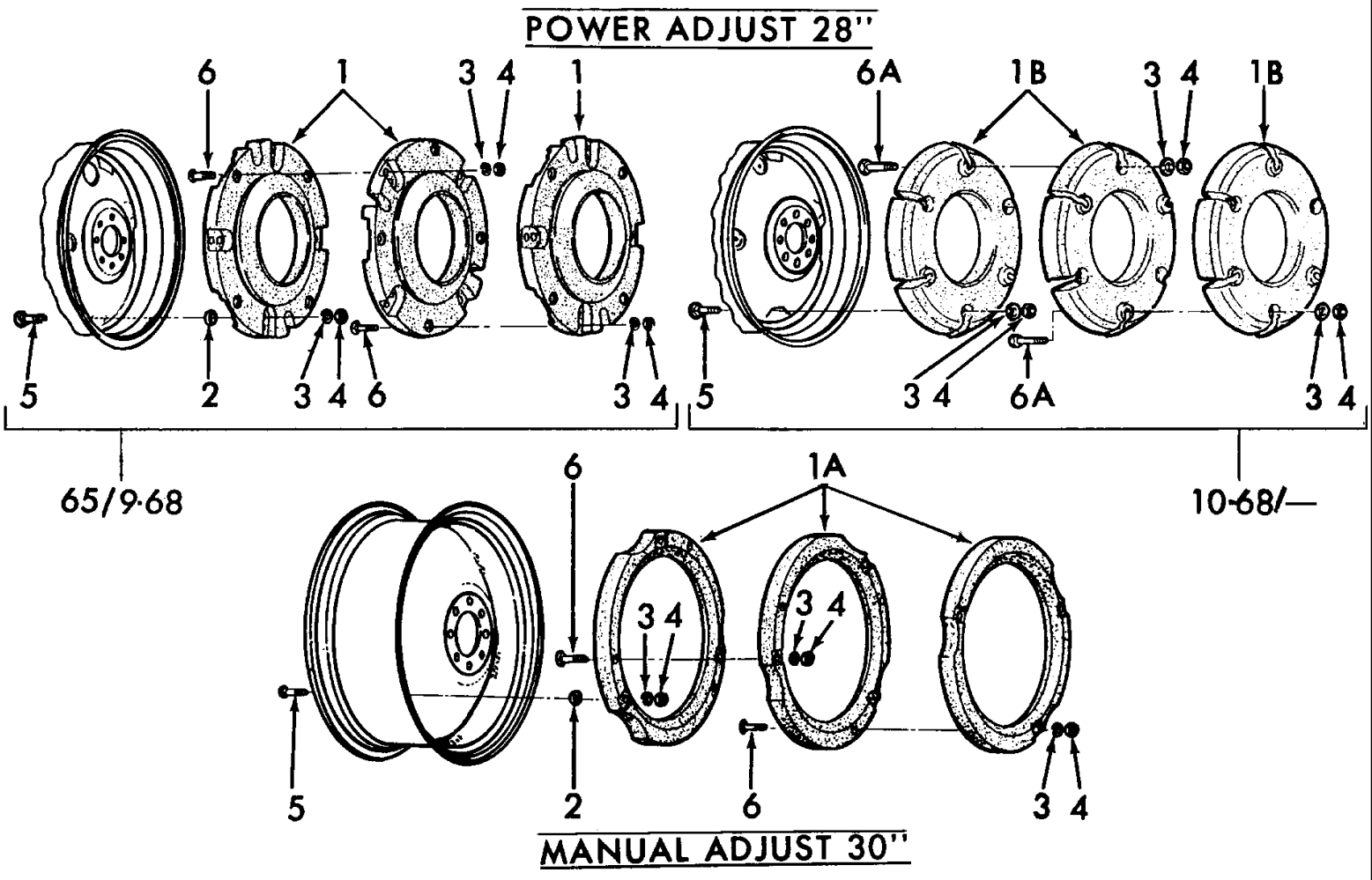

5000-SERIES 4 CYL TRACTOR (1/65-1/75)

01C04[D] 30" REAR WHEEL WEIGHTS FOR MANUAL ADJUST WHEELS - 4000, 5000, 7000

Ref	Part Number	Qty	Description
1A	960E1076	6	Weight, 70 Lbs. Each, 30" Rear Wheel Weights (For Manual Adjustable Wheels, Accessory), 4000, 5000, 7000 Series Tractors., No Longer Serviced (NH-E), Start Year: 01/01/1965
2	230888	18	Washer, Retainer, Years: 01/01/1965-09/30/1968
3	370692S36	18	Washer, Flat, 5/8", Years: 01/01/1965-09/30/1968
4	280374	18	Nut, G5, 5/8"-11, Years: 01/01/1965-09/30/1968
5	380482S36	6	Bolt, Carriage, 5/8"-11 x 2-3/4, Start Year: 01/01/1965
6	380304S36	12	Bolt, Square Hd., 5/8"-11 x 3, Start Year: 01/01/1965
	CFPN1047A	1	Bolt Set, 30", Includes: Hardware Listed Below, No Longer Serviced (NH-E), Start Year: 01/01/1965
	280374	18	Nut, G5, 5/8"-11, Ref 4
	370692S36	18	Washer, Flat, 5/8" (Ref. 3)
	230888	18	Washer, Retainer (Ref. 2)
	380304S36	12	Bolt, Square Hd., 5/8"-11 x 3 (Ref. 6)
	380482S36	6	Bolt, Carriage, 5/8"-11 x 2-3/4" (Ref. 5)

01C05 30" REAR WHEEL WEIGHTS NON-ADJUSTABLE WHEELS - 4000, 5000, 7000

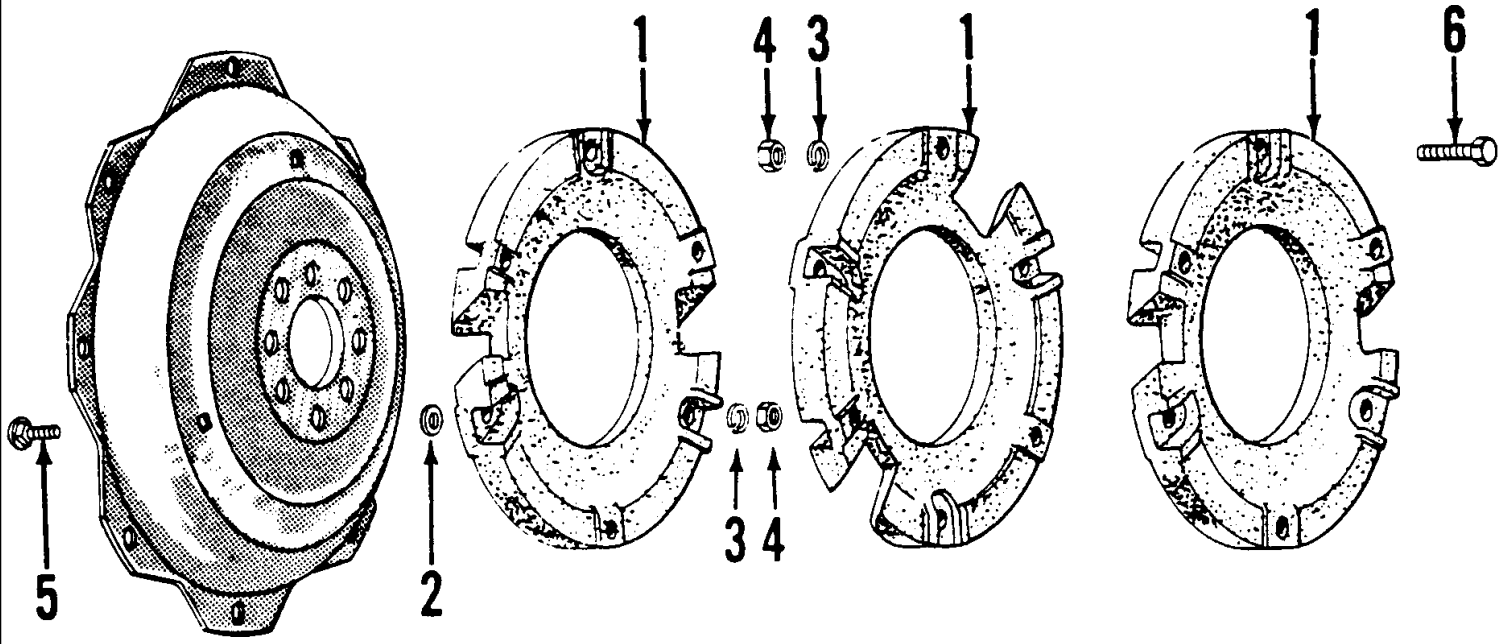

5000-SERIES 4 CYL TRACTOR (1/65-1/75)

01C05 30" REAR WHEEL WEIGHTS NON-ADJUSTABLE WHEELS - 4000, 5000, 7000

Ref	Part Number	Qty	Description
1	C7NN1A002B	2	Weight, 200 Lbs., Start Year: 01/01/1965
1	C7NN1A002B	4	Weight, 400 Lbs., Start Year: 01/01/1965
1	C7NN1A002B	6	Weight, 600 Lbs., Start Year: 01/01/1965
1	C7NN1A002B	2	Weight, 200 Lbs., Start Year: 01/01/1965
1	C7NN1A002B	4	Weight, 400 Lbs., Start Year: 01/01/1965
1	C7NN1A002B	6	Weight, 600 Lbs., Start Year: 01/01/1965
2	230888	6	Washer, Bolt Retainer, Start Year: 01/01/1965
3	370692S36	6	Washer, Flat, 5/8", 200 Lbs., Start Year: 01/01/1965
3	370692S36	12	Washer, Flat, 5/8", 400 Lbs., Start Year: 01/01/1965
3	370692S36	18	Washer, Flat, 5/8", 600 Lbs., Start Year: 01/01/1965
4	280374	6	Nut, G5, 5/8"-11, 200 Lb, Start Year: 01/01/1965
4	280374	12	Nut, G5, 5/8"-11, 400 Lb, Start Year: 01/01/1965
4	280374	18	Nut, G5, 5/8"-11, 600 Lb, Start Year: 01/01/1965
6	380303S36	6	Bolt, Square Hd., 5/8"-11 x 2-1/2", 400 Lbs., Start Year: 01/01/1965
6	380303S36	12	Bolt, Square Hd., 5/8"-11 x 2-1/2", 600 Lbs, Start Year: 01/01/1965
6	371720S36	6	Bolt, 5/8"-11 x 2-1/4", 400 Lbs., Mexico Only, Start Year: 01/01/1968
6	371720S36	12	Bolt, 5/8"-11 x 2-1/4", 600 Lbs., Mexico Only, Start Year: 01/01/1968

01C05[A] 34", 36" & 38" REAR WHEEL WEIGHTS FOR MANUAL ADJUSTABLE WHEELS - 4000, 5000, 7000

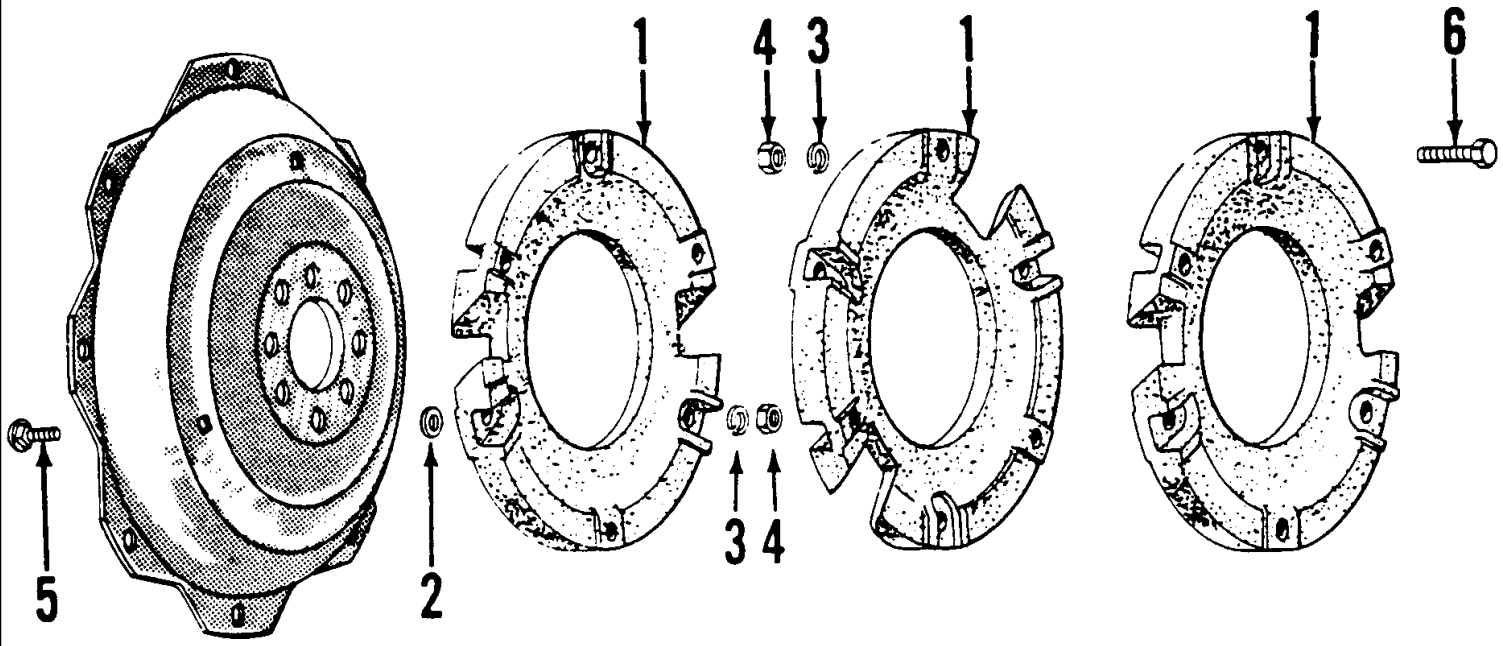

5000-SERIES 4 CYL TRACTOR (1/65-1/75)

01C05[A] 34", 36" & 38" REAR WHEEL WEIGHTS FOR MANUAL ADJUSTABLE WHEELS - 4000, 5000, 7000

Ref	Part Number	Qty	Description
1	C7NN1A002B	2	Weight, 200 Lbs., Start Year: 01/01/1965
1	C7NN1A002B	4	Weight, 400 Lbs., Start Year: 01/01/1965
1	C7NN1A002B	6	Weight, 600 Lbs., Start Year: 01/01/1965
1	C7NN1A002B	2	Weight, 200 Lbs., Start Year: 01/01/1965
1	C7NN1A002B	4	Weight, 400 Lbs., Start Year: 01/01/1965
1	C7NN1A002B	6	Weight, 600 Lbs., Start Year: 01/01/1965
2	230888	6	Washer, Bolt Retainer, Start Year: 01/01/1965
3	370692S36	6	Washer, Flat, 5/8", 200 Lbs., Start Year: 01/01/1965
3	370692S36	12	Washer, Flat, 5/8", 400 Lbs., Start Year: 01/01/1965
3	370692S36	18	Washer, Flat, 5/8", 600 Lbs., Start Year: 01/01/1965
4	280374	6	Nut, G5, 5/8"-11, 200 Lb, Start Year: 01/01/1965
4	280374	12	Nut, G5, 5/8"-11, 400 Lb, Start Year: 01/01/1965
4	280374	18	Nut, G5, 5/8"-11, 600 Lb, Start Year: 01/01/1965
5	280742	6	Bolt, Carriage, G5, 5/8"-11 x 2", Start Year: 01/01/1965
5	380304S36	6	Bolt, Square Hd., Power, 5/8"-11 x 3", Start Year: 01/01/1965
6	380303S36	6	Bolt, Square Hd., 5/8"-11 x 2-1/2", 400 Lbs., Start Year: 01/01/1965
6	380303S36	12	Bolt, Square Hd., 5/8"-11 x 2-1/2", 600 Lbs, Start Year: 01/01/1965
6	371720S36	6	Bolt, 5/8"-11 x 2-1/4", 400 Lbs., Mexico Only, Start Year: 01/01/1968
6	371720S36	12	Bolt, 5/8"-11 x 2-1/4", 600 Lbs., Mexico Only, Start Year: 01/01/1968
	CFPN1044A	1	Set, Bolt, (Manual), Includes: Ref. 2, 3, 4, 5 & 6, Start Year: 01/01/1965
	CFPN1175B	1	Weight Kit, Includes: Ref. 1 & 6, NH-E Only, No Longer Serviced, Start Year: 01/01/1965
	CFPN1045B	1	Set, Bolt, 38", Power, Includes: Ref. 2, 3, 4, 5 & 6, Start Year: 01/01/1965

01C05[B] 38" REAR WHEEL WEIGHTS FOR POWER ADJUSTABLE WHEELS - 4000, 5000, 7000

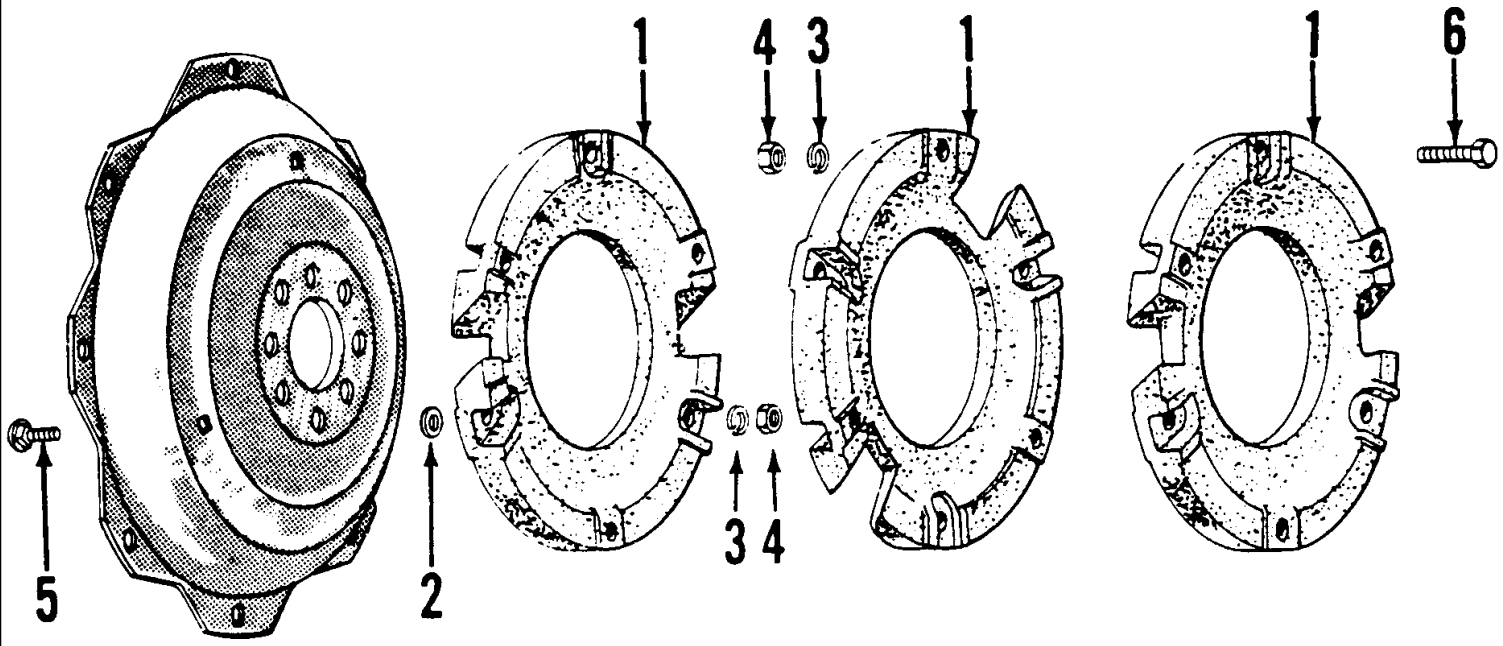

5000-SERIES 4 CYL TRACTOR (1/65-1/75)

01C05[B] 38" REAR WHEEL WEIGHTS FOR POWER ADJUSTABLE WHEELS - 4000, 5000, 7000

Ref	Part Number	Qty	Description
1	C7NN1A002B	2	Weight, 200 Lbs., Start Year: 01/01/1965
1	C7NN1A002B	4	Weight, 400 Lbs., Start Year: 01/01/1965
1	C7NN1A002B	6	Weight, 600 Lbs., Start Year: 01/01/1965
1	C7NN1A002B	2	Weight, 200 Lbs., Start Year: 01/01/1965
1	C7NN1A002B	4	Weight, 400 Lbs., Start Year: 01/01/1965
1	C7NN1A002B	6	Weight, 600 Lbs., Start Year: 01/01/1965
2	230888	6	Washer, Bolt Retainer, Start Year: 01/01/1965
3	370692S36	6	Washer, Flat, 5/8", 200 Lbs., Start Year: 01/01/1965
3	370692S36	12	Washer, Flat, 5/8", 400 Lbs., Start Year: 01/01/1965
3	370692S36	18	Washer, Flat, 5/8", 600 Lbs., Start Year: 01/01/1965
4	280374	6	Nut, G5, 5/8"-11, 200 Lb, Start Year: 01/01/1965
4	280374	12	Nut, G5, 5/8"-11, 400 Lb, Start Year: 01/01/1965
4	280374	18	Nut, G5, 5/8"-11, 600 Lb, Start Year: 01/01/1965
5	380304S36	6	Bolt, Square Hd., Power, 5/8"-11 x 3", Start Year: 01/01/1965
6	380303S36	6	Bolt, Square Hd., 5/8"-11 x 2-1/2", 400 Lbs., Start Year: 01/01/1965
6	380303S36	12	Bolt, Square Hd., 5/8"-11 x 2-1/2", 600 Lbs, Start Year: 01/01/1965
6	NS	6	Bolt, 5/8"-11 x 2-1/4", 400 Lbs., Mexico Only, Start Year: 01/01/1968
6	NS	12	Bolt, 5/8"-11 x 2-1/4", 600 Lbs., Mexico Only, Start Year: 01/01/1968
	CFPN1044A	1	Set, Bolt, Manual, Includes: Ref. 2, 3, 4, 5 & 6, Start Year: 01/01/1965
	CFPN1175B	1	Weight Kit, Includes: (6) C5NN1A002J and (1) CFPN1044A., NH-E Only, No Longer Serviced, Start Year: 01/01/1965
	CFPN1045B	1	Set, Bolt, 38" (Power), Includes: Ref. 2, 3, 4, 5 & 6, Start Year: 01/01/1965

01C06 FRONT BUMPER, WEIGHTS & MOUNTING KITS

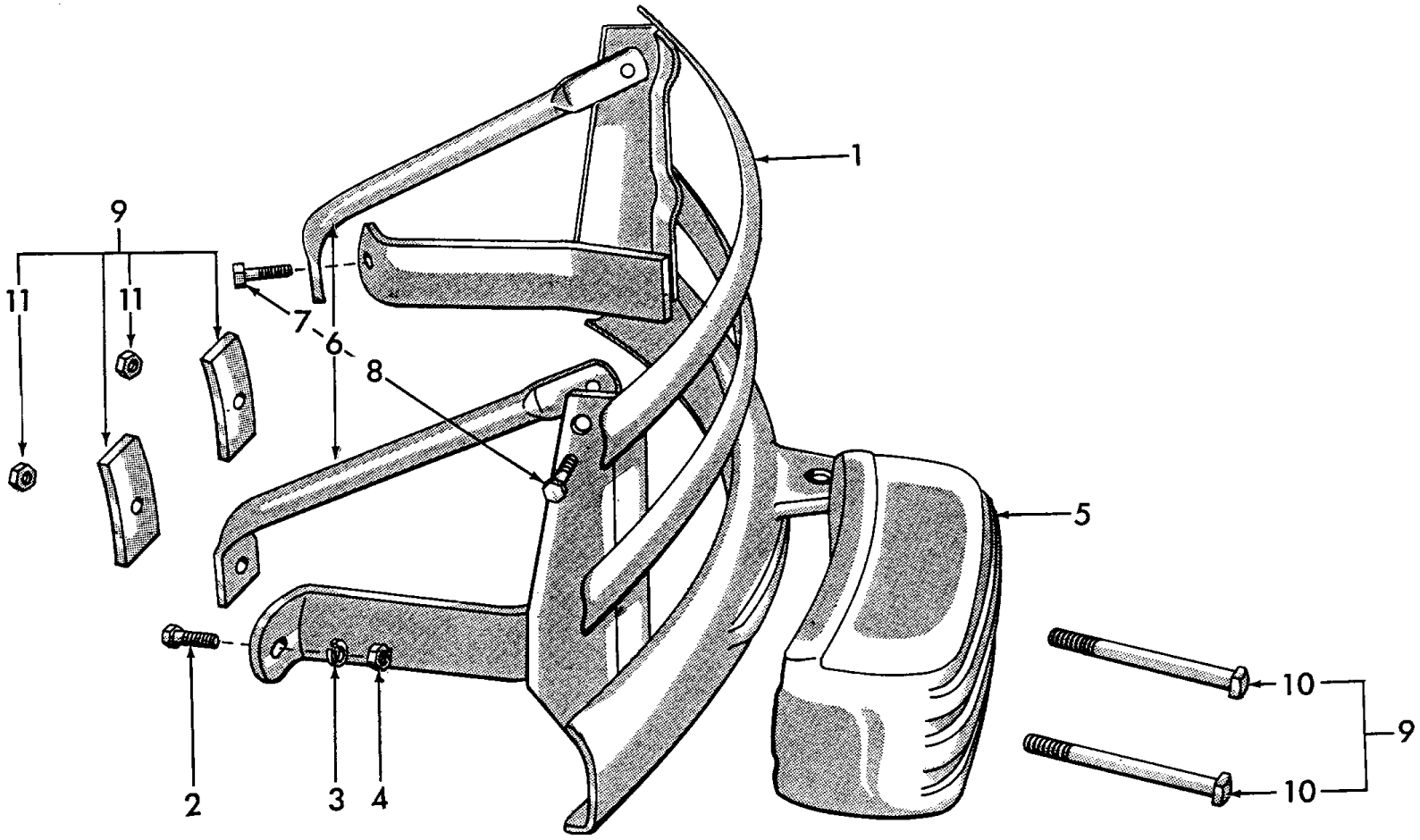

5000-SERIES 4 CYL TRACTOR (1/65-1/75)

01C06 FRONT BUMPER, WEIGHTS & MOUNTING KITS

Ref	Part Number	Qty	Description
1	ECPN17750A	AR	Bumper, Front, Replaces P/N D1NN-17750-A, Includes: Ref. 2 thru 4, Start Year: 01/01/1965
2	382044S36	AR	Bolt, Hex, 5/8"-18 x 4-1/2, No Longer Serviced (NH-E), Start Year: 01/01/1965
3	351505S8	AR	Washer, Flat, 5/8", Start Year: 01/01/1965
4	408	2	Nut, G5, 5/8"-18, Start Year: 01/01/1965
5	312585	AR	Weight, 100 Lb., Max. Two per Bumper, No Longer Serviced, Start Year: 01/01/1965
6	C5NN17N755B	1	Kit, Weight Brace, Replaces P/N C5NN-17N755-A, Includes: Parts listed below through Ref. 8, No Longer Serviced, Start Year: 01/01/1965
	C5NNN826A	4	Washer, Flat, 5/8", Start Year: 01/01/1965
	408	2	Nut, G5, 5/8"-18, Start Year: 01/01/1965
7	382044S36	2	Bolt, Hex, 5/8"-18 x 4-1/2, No Longer Serviced (NH-E), Start Year: 01/01/1965
	80679	2	Washer, Lock, 1/2", Start Year: 01/01/1965
	280431	2	Nut, G5, 1/2"-13, Start Year: 01/01/1965
7	354369S8	2	Bolt, Hex, 5/8"-18 x 4, Use W/C5NN-17N755-A Kit, No Longer Serviced, Start Year: 01/01/1965
8	304745S36	2	Screw, Cap, HH, G5, 1/2"-13 x 1-3/8", No Longer Serviced (NHNA), Start Year: 01/01/1965
9	309571	AR	Kit, Clamp, One for each Weight, Includes: Ref. 10 & 11, No Longer Serviced (NHNA), Start Year: 01/01/1965
10	23150S8	2	Screw, Cap, Sq Hd, G2, 5/8"-11 x 6", NHNA Only, Start Year: 01/01/1965
11	356085S8	2	Nut, Hex, 5/8"-11, Weight to Clamp, No Longer Serviced, Start Year: 01/01/1965

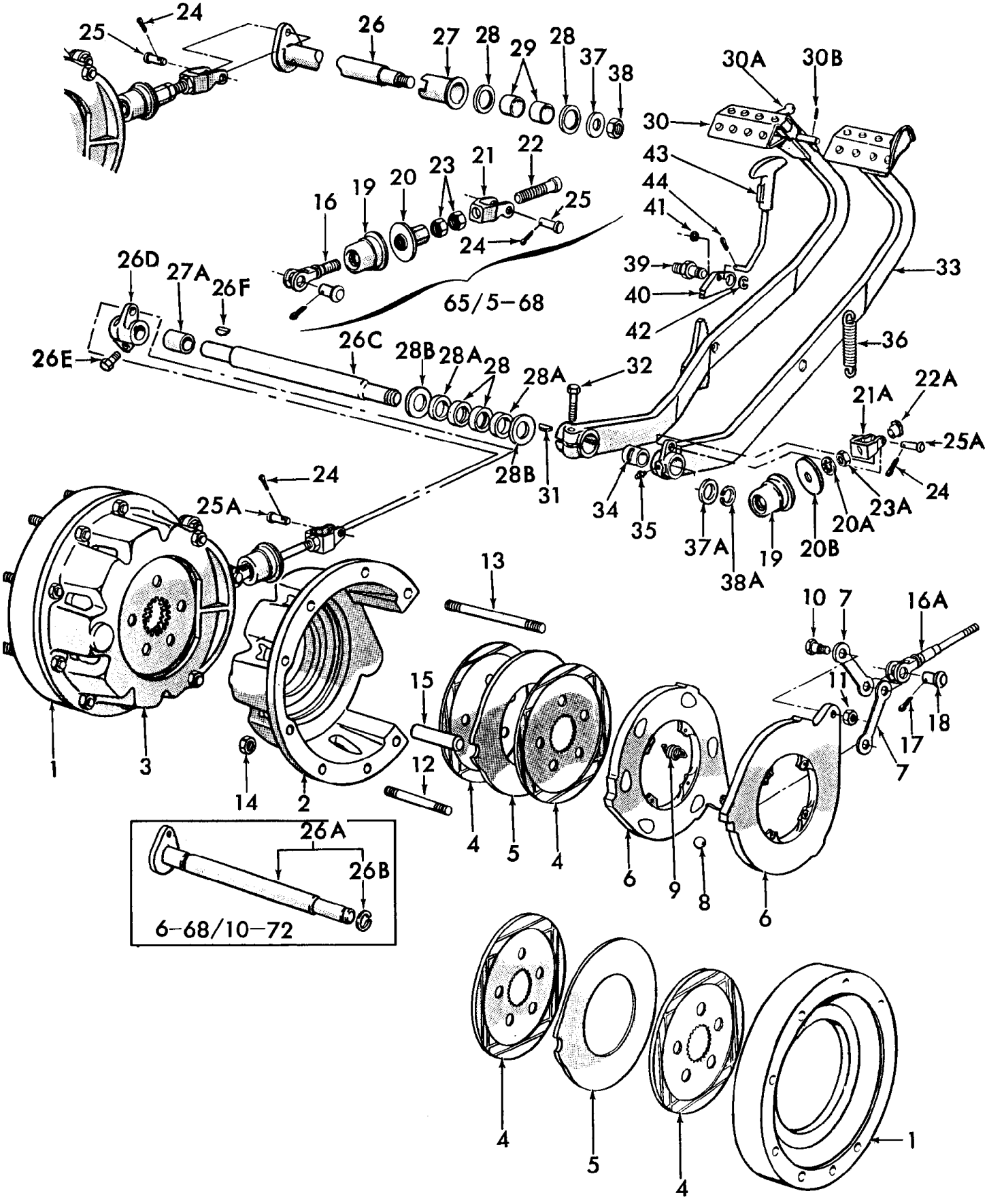
24
25
26
27
28
29
28
37
38
30A
30B
30
43
44
41
39
40
42
33
36
22
21
23
20
19
16
25
24
65/5–68
26D
27A
26F
26E
26C
28B
28A
28
28A
32
28B
31
34
35
37A
38A
19
20B
20A
23A
24
21A
22A
25A
24
25A
13
15
12
4
5
4
6
9
8
6
10
7
16A
11
17
18
7
1
3
14
2
26A
26B
6–68/10–72
4
5
4
1

5000-SERIES 4 CYL TRACTOR (1/65-1/75)

02A03 BRAKES & BRAKE CONTROLS - 5100, 7100

Ref	Part Number	Qty	Description
1	E4NN2A098CA	2	Housing, Outer, 1.85" (47mm) Thick, 5100,7100, Use with 3 brake discs, Start Year: 01/01/1969
1	E8NN2A098AA	2	Housing, Outer, 1.56" (39.624mm) Thick, 5100,7100, Use with 4 brake disc, Years: 01/01/1965-12/31/1968
1	NLS	2	Housing, Outer, 5100 {70NY2N098A}, Mexico Only, Start Year: 01/01/1968
2	E4NN2N099AA	1	Housing, Inner, R.H., Start Year: 01/01/1965
3	E4NN2N100CA	1	Housing, Inner, L.H., Start Year: 01/01/1965
4	E9NN2A097BA	8	Disc Assy., Years: 01/01/1965-12/31/1968
4	E9NN2A097BA	6	Disc Assy., 5100, Start Year: 01/01/1969
4	E9NN2A097BA	8	Disc Assy., 7100, Start Year: 01/01/1971
5	E6NN2N315AA	4	Disc, Intermediate, Years: 01/01/1965-12/31/1968
5	E6NN2N315AA	2	Disc, Intermediate, 5100, Start Year: 01/01/1969
5	E6NN2N315AA	4	Disc, Intermediate, 7100, Start Year: 01/01/1971
6	C5NN2N317A	2	Disc Assy., Actuating, Includes: Ref. 7 thru 11, Years: 01/01/1965-12/31/1968
6	C7NN2N317A	2	Disc Assy., Actuating, Includes: Ref. 7 thru 11, Start Year: 01/01/1969
7	C5NN2N325A	4	Link, Actuating Disc, Years: 01/01/1965-12/31/1968
7	C7NN2N325A	4	Link, Adjusting Disc, Start Year: 01/01/1969
8	82979987	12	Ball, Actuating Disc, Start Year: 01/01/1965
9	180001	8	Spring, Disc, Return, Start Year: 01/01/1965
10	C5NN2N332A	4	Pin, Pivot, Years: 01/01/1965-12/31/1968
10	C7NN2N332A	4	Pin, Pivot, Start Year: 01/01/1969
11	87891	4	Nut, Jam, G2, 7/16"-20, Years: 01/01/1965-12/31/1968
11	87309	4	Nut, Jam, G2, 1/2"-20, Start Year: 01/01/1969
12	382414S	12	Stud, Screw, 1/2"-13-20 x 5.25, Start Year: 01/01/1965
13	83417087	4	Stud, Screw, 1/2"-13-20 x 7.75, Start Year: 01/01/1965
14	280963	16	Nut, G5, 1/2"-20, Start Year: 01/01/1965
15	C5NN2N333A	4	Pin, Torque, Start Year: 01/01/1965
16	C5NN2N342A	2	Clevis, Actuating, 1/2"-13 x 4-1/2", Years: 01/01/1965-05/31/1968
16A	C7NN2466B	2	Rod, Clevis, 1/2"-20 x 7.25, Start Year: 06/01/1968
17	80755	AR	Pin, Split Cotter, 1/8" x 1", Start Year: 01/01/1965
18	76260S36	2	Pin, Clevis, 5/8" x 1-3/8", Start Year: 01/01/1965
19	86576339	2	Seal Assy., Rod, Start Year: 01/01/1965
20	C5NN2N220A	2	Connector Assy., Rod, Years: 01/01/1965-05/31/1968
20A	C5NN2N467B	2	Fastener, Rod, Start Year: 06/01/1968
20B	C5NN2N468B	2	Washer, Rod, .575" (14.605mm) I.D., Start Year: 06/01/1968
21	C5NN2N343B	2	Clevis, Pedal, Years: 01/01/1965-05/31/1968
21A	C5NN2N710C	2	Clevis, Rod, Start Year: 06/01/1968
22	C5NN2N334A	2	Rod, Actuating, Years: 01/01/1965-05/31/1968
22A	D2NN2N520B	2	Nut, Pull Rod, 1/2"-20, Start Year: 06/01/1968
23	280431	4	Nut, G5, 1/2"-13, Years: 01/01/1965-05/31/1968
23A	33846S8	2	Nut,Hex, 1/2"-20, NHNA Only, Start Year: 06/01/1968
24	80755	AR	Pin, Split Cotter, 1/8" x 1", Start Year: 01/01/1965
25	76289S36	2	Pin, Clevis, 7/16" x 1-33/64", Years: 01/01/1965-05/31/1968

5000-SERIES 4 CYL TRACTOR (1/65-1/75)

02A03 BRAKES & BRAKE CONTROLS - 5100, 7100

Ref	Part Number	Qty	Description
25A	76240S36	2	Pin, Clevis, 7/16" x 1-17/64", Start Year: 06/01/1968
26	C5NN2473A	1	Shaft Assy., Threaded End, Years: 01/01/1965-05/31/1968
26A	86528829	1	Shaft Assy., Snap Ring Type, Includes: Ref. 26B, NHNA Only, Years: 06/01/1968-10/31/1972
26B	E27N7547	1	Ring, Snap, Shaft, Years: 06/01/1968-10/31/1972
26C	D9NN2N337EA	1	Shaft, Pedal, Start Year: 11/01/1972
26D	C7NN2N511A	1	Lever, Operating, LH, Start Year: 11/01/1972
26E	9637916	1	Screw, Cap, HH, G5, 7/16"-14 x 1-1/2", Start Year: 11/01/1972
26F	280262	1	Key, Woodruff # A, Hardened, 1/4" x 7/8", Start Year: 11/01/1972
26E	9637916	1	Screw, Cap, HH, G5, 7/16"-14 x 1-1/2", Start Year: 11/01/1972
27	C5NN2N188A	1	Spacer, Shaft, Years: 01/01/1965-05/31/1968
27A	D1NN2N155A	1	Sleeve, 2.50" (63.5mm) Lg., Start Year: 11/01/1972
28	D9NN2N289AA	2	Seal Assy., Shaft, Start Year: 01/01/1965
28	D2NN2N171A	2	Seal, Shaft Dust, Felt, W/D2NN2N258A, Start Year: 11/01/1972
28B	C5NN2N547B	2	Washer, Cross Shaft, Start Year: 06/01/1968
29	C5NN2N477A	2	Bush/Bushing, 1/-1/8" I.D. x 1-1/4" O.D. x 1, Start Year: 01/01/1965
30	E0NN2A186BA	1	Pedal Assy., L.H., When replacing C5NN2A186F the R.H. Pedal must be replaces by C7NN2455E, Includes: Pedal plus Ref. 30A & 30B, Start Year: 01/01/1965
30A	C5NN2N785A	1	Handle & Interlock Assy., Years: 01/01/1965-03/31/1968
30A	C7NN2N145A	1	Handle, Interlock, Start Year: 04/01/1968
30B	305029S	1	Pin, Roll, 3/16" x 1/2", Years: 01/01/1965-03/31/1968
30B	88107	1	Pin, Roll, 1/8" x 7/16", Start Year: 04/01/1968
31	280262	1	Key, Woodruff # A, Hardened, 1/4" x 7/8", Start Year: 01/01/1965
32	280747	1	Screw, Cap, HH, G5, 7/16"-14 x 1-3/4", Start Year: 01/01/1965
33	C7NN2455E	1	Pedal Assy., R.H., Includes: Ref. 34 & 35, Start Year: 01/01/1965
34	C5NN2461D	1	Bush/Bushing, Pedal, Start Year: 01/01/1965
35	80710	1	Fitting, Nipple, Lube, 1/8", Years: 01/01/1965-03/31/1968
35	87414	1	Nipple, Lube, Straight, 1/4"-28, Start Year: 04/01/1968
36	C5NN2472H	2	Spring, Retracting, Start Year: 01/01/1965
37	356466S43	1	Washer, Flat, 1.50 O.D. x .66 I.D., Years: 01/01/1965-05/31/1968
37A	C5NN2N547E	1	Washer, Shaft Thrust, .094 Thick, Years: 06/01/1968-06/30/1971
37A	354639S36	1	Washer, 1.015 x 1.37 x .048 Thick, Start Year: 07/01/1971
38	9602227	1	Nut, Lock, G8, 5/8"-18, Years: 01/01/1965-05/31/1968
38A	25121	1	Ring, Snap, Ext, 1.000", Start Year: 06/01/1968
39	D2NN2N870A	1	Shaft, Brake, Pawl, Start Year: 01/01/1965
40	C5NN2786A	1	Pawl, Brake, Start Year: 01/01/1965
41	351502S36	AR	Washer, Flat, 5/8", Start Year: 01/01/1965
42	515259	1	Ring, Snap, Ext, .625", Start Year: 01/01/1965
43	C5NN2824D	1	Rod Assy., Control, Start Year: 01/01/1965
44	280236	1	Pin, Split (Cotter), 1/16" x 1/2", Start Year: 01/01/1965

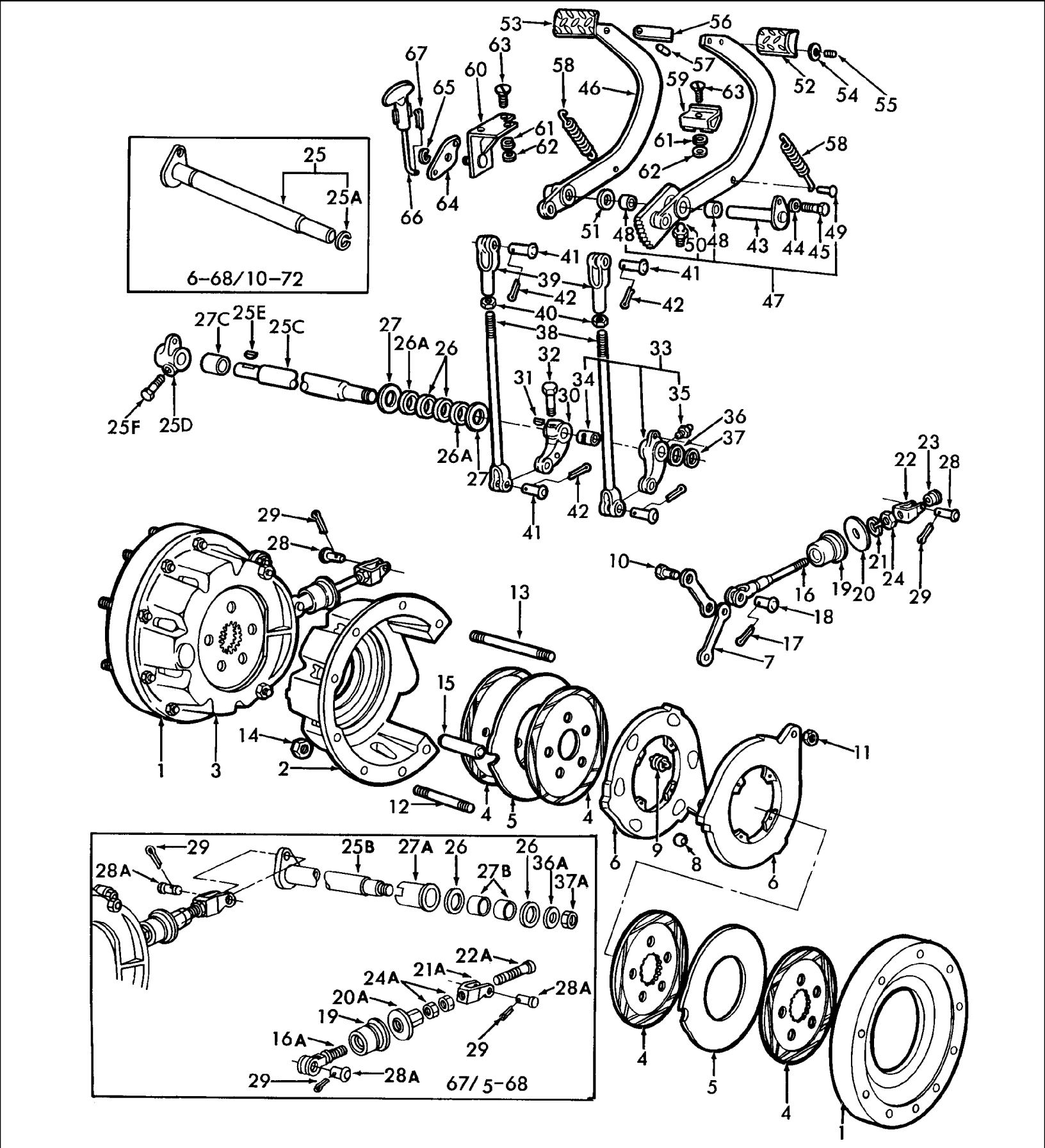
6-68/10-72
67/5-68

5000-SERIES 4 CYL TRACTOR (1/65-1/75)

02A04 BRAKES & BRAKE CONTROLS - 5200, 7200

Ref	Part Number	Qty	Description
1	E4NN2A098CA	2	Housing, Outer, 1.85" (47mm) Thick, 5200, Replaces P/N C7NN2A098B, Start Year: 01/01/1969
1	E8NN2A098AA	2	Housing, Outer, 7200, Replaces P/N C5NN2A098A, Start Year: 01/01/1971
1	E8NN2A098AA	2	Housing, Outer, 5200, Years: 01/01/1967-12/31/1968
2	E4NN2N099AA	1	Housing, Inner, R.H., Start Year: 01/01/1967
3	E4NN2N100CA	1	Housing, Inner, L.H., Start Year: 01/01/1967
4	E9NN2A097BA	6	Disc Assy., 5200, Start Year: 01/01/1967
4	E9NN2A097BA	8	Disc Assy., 7200, Start Year: 01/01/1971
5	E6NN2N315AA	4	Disc, Intermediate, Years: 01/01/1967-12/31/1968
5	E6NN2N315AA	2	Disc, Intermediate, 5200, Start Year: 01/01/1969
5	E6NN2N315AA	4	Disc, Intermediate, 7200, Start Year: 01/01/1971
6	C5NN2N317A	4	Disc Assy., Actuating, Replaces P/N C5NN2N316A, Includes: Ref. 7 thru 11, Start Year: 01/01/1967
6	C7NN2N317A	4	Disc Assy., Actuating, Replaces P/N C7NN2N316A, Includes: Ref. 7 thru 11, Start Year: 01/01/1969
7	C5NN2N325A	4	Link, Actuating Disc, Years: 01/01/1967-12/31/1968
7	C7NN2N325A	4	Link, Adjusting Disc, Start Year: 01/01/1969
8	82979987	12	Ball, Actuating Disc, Start Year: 01/01/1967
9	180001	8	Spring, Disc, Return, Start Year: 01/01/1967
10	C5NN2N332A	4	Pin, Disc Pivot, Years: 01/01/1967-12/31/1968
10	C7NN2N332A	4	Pin, Disc Pivot, Start Year: 01/01/1969
11	87891	4	Nut, Jam, G2, 7/16"-20, Years: 01/01/1967-12/31/1968
11	87309	4	Nut, Jam, G2, 1/2"-20, Start Year: 01/01/1969
12	382414S	12	Stud, Screw, 1/2"-13-20 x 5.25, Start Year: 01/01/1967
13	83417087	4	Stud, Screw, 1/2"-13-20 x 7.75, Start Year: 01/01/1967
14	280963	16	Nut, G5, 1/2"-20, Start Year: 01/01/1967
15	C5NN2N333A	2	Pin, Torque, Start Year: 01/01/1967
16	C7NN2466B	2	Rod, Control, 1/2"-20 x 7.25, Replaces P/N C5NN2466D, Start Year: 06/01/1968
16A	C5NN2N342A	2	Clevis, Actuating, 1/2"-13 x 4-1/2", Years: 01/01/1967-05/31/1968
17	80755	AR	Pin, Split Cotter, 1/8" x 1", Start Year: 01/01/1967
18	76260S36	2	Pin, Clevis, 5/8" x 1-3/8", Start Year: 01/01/1967
19	86576339	2	Rod Seal Assy., Start Year: 01/01/1967
20	C5NN2N468B	2	Washer, Control Rod, Start Year: 06/01/1968
20A	C5NN2N220A	2	Rod Connector Assy., Years: 01/01/1967-05/31/1968
21	C5NN2N467B	2	Fastener, Rod, Start Year: 06/01/1968
21A	C5NN2N343B	2	Clevis, Pedal, Years: 01/01/1967-05/31/1968
22	C5NN2N710C	2	Clevis, Rod, Start Year: 06/01/1968
22A	C5NN2N334A	2	Rod, Actuating, Years: 01/01/1967-05/31/1968
23	D2NN2N520B	2	Nut, Pull Rod, Start Year: 06/01/1968
24	33846S8	2	Nut, Hex, Rod, 1/2"-20, NHNA Only, No Longer Serviced, Start Year: 06/01/1968
24A	280431	4	Nut, G5, 1/2"-13, Clevis, Years: 01/01/1967-05/31/1968
25	86528829	1	Shaft Assy., Pedal, Includes: Shaft plus Ref. 25A, NHNA Only, Start Year: 06/01/1968
25A	E27N7547	1	Ring, Lock, Shaft, Start Year: 06/01/1968
25B	C5NN2473A	1	Shaft Assy., Threaded End, No Longer Serviced, Years: 01/01/1967-05/31/1968

5000-SERIES 4 CYL TRACTOR (1/65-1/75)

02A04 BRAKES & BRAKE CONTROLS - 5200, 7200

Ref	Part Number	Qty	Description
25C	D9NN2N337EA	1	Shaft, Pedal, Start Year: 11/01/1972
25D	C7NN2N511A	1	Lever, Operating, Start Year: 11/01/1972
25E	280262	1	Key, Woodruff # A, Hardened, 1/4" x 7/8", Start Year: 11/01/1972
25F	9637916	1	Screw, Cap, HH, G5, 7/16"-14 x 1-1/2", Start Year: 11/01/1972
26	D9NN2N289AA	2	Seal Assy., Shift, Start Year: 01/01/1967
26A	D2NN2N171A	2	Seal, Dust, Felt, W/D2NN2N258A, No Longer Serviced, Start Year: 01/01/1967
27	C5NN2N547B	2	Washer, Thrust, Start Year: 06/01/1968
27A	C5NN2N188A	1	Spacer, Shaft, No Longer Serviced (NHNA), Years: 01/01/1967-05/31/1968
27B	C5NN2N477A	2	Bush/Bushing, Shaft, Years: 01/01/1967-05/31/1968
27C	D1NN2N155A	1	Sleeve, Shaft, 2.50" (63.5mm) Long, Start Year: 11/01/1972
28	76240S36	2	Pin, Clevis, 7/16" x 1-17/64", Start Year: 06/01/1968
28A	76289S36	2	Pin, Clevis, 7/16" x 1-33/64", Years: 01/01/1967-05/31/1968
29	80755	2	Pin, Split Cotter, 1/8" x 1", Start Year: 01/01/1967
30	C5NN2N511A	1	Arm, NHNA Only, No Longer Serviced, Start Year: 01/01/1967
31	280262	1	Key, Woodruff # A, Hardened, 1/4" x 7/8", Start Year: 01/01/1967
32	304781S36	1	Screw, Cap, HH, G5, 7/16"-14 x 1-5/8", NHNA Only, No Longer Serviced, Start Year: 01/01/1967
33	C5NN2N510A	1	Lever Assy. R.H., Includes: Ref. 34 & 35, NHNA Only, No Longer Serviced, Start Year: 01/01/1967
34	C5NN2461D	1	Bushing, Lever, Start Year: 01/01/1967
35	87414	1	Nipple, Lube, Straight, 1/4"-28, Start Year: 01/01/1967
36	C5NN2N547E	1	Washer, Thrust, .094, Years: 06/01/1968-03/31/1971
36	354639S36	1	Washer, .048" (1.219mm) Thick, Start Year: 04/01/1971
36A	356466S43	1	Washer, Flat, 1.50 O.D. x .66 I.D., No Longer Serviced, Years: 01/01/1967-05/31/1968
37	25121	1	Ring, Snap, Ext, 1.000", Start Year: 06/01/1968
37A	9602227	1	Nut, Lock, G8, 5/8"-18, Years: 01/01/1967-05/31/1968
38	C5NN2465B	2	Control Rod Assy., NHNA Only, No Longer Serviced, Start Year: 01/01/1967
39	12539	2	Clevis, Rod, 1/2"-20 x 3, Start Year: 01/01/1967
40	87309	2	Nut, Jam, G2, 1/2"-20, Start Year: 01/01/1967
41	76265S36	4	Pin, Clevis, 1/2" x 1-13/32", NHNA Only, No Longer Serviced, Start Year: 01/01/1967
42	80755	4	Pin, Split Cotter, 1/8" x 1", Start Year: 01/01/1967
43	C5NN2N513A	1	Pin Assy., Pedal Pivot, NHNA Only, No Longer Serviced, Start Year: 01/01/1967
44	80679	1	Washer, Lock, 1/2", Start Year: 01/01/1967
45	304670S36	1	Screw, Cap, HH, G5, 1/2"-13 x 7/8", Start Year: 01/01/1967
46	C5NN2N003D	1	Shank Assy., Pedal, L.H., Includes: Ref. 48 thru 50, NHNA Only, No Longer Serviced, Start Year: 01/01/1967
47	C5NN2N002D	1	Shank Assy., Pedal, R.H., Includes: Ref. 48 thru 50, NHNA Only, No Longer Serviced, Start Year: 01/01/1967
48	C5NN7A578A	4	Bushing, Shank, Start Year: 01/01/1967
49	C5NN2N535A	2	Pin, Spring, Anchor, Start Year: 01/01/1967
50	80710	2	Fitting, Nipple, Lube, 1/8", Start Year: 01/01/1967
51	C5NN2N547E	1	Washer, Thrust, Replaces P/N C5NN2N547A, Years: 01/01/1967-03/31/1971
51	354639S36	1	Washer, .048" (1.219mm) Thick, Start Year: 04/01/1971

02A04 BRAKES & BRAKE CONTROLS - 5200, 7200

Ref	Part Number	Qty	Description
52	C5NN2453D	1	Pedal, R.H., No Longer Serviced (NH-E), Start Year: 01/01/1967
53	C5NN2456D	1	Pedal, L.H., No Longer Serviced (NH-E), Start Year: 01/01/1967
54	81821693	4	Washer, Lock, 3/8", Start Year: 01/01/1967
55	280206	4	Screw, Cap, HH, G5, 3/8"-16 x 1-3/8", Start Year: 01/01/1967
56	C5NN2N007A	1	Bar, Interlock, Start Year: 01/01/1967
57	87538	1	Pin, Roll, 1/4" x 1", Start Year: 01/01/1967
58	E1ADDN2456	2	Spring, Retracting, Start Year: 01/01/1967
59	C5NN2N006A	1	Stop, Return, NHNA Only, No Longer Serviced, Start Year: 01/01/1967
60	C5NN2N655A	1	Bracket & Shaft Assy., Pawl, NHNA Only, No Longer Serviced, Start Year: 01/01/1967
61	80681	4	Washer, Lock, 5/16", Start Year: 01/01/1967
62	9635082	4	Nut, G5, 5/16"-18, Start Year: 01/01/1967
63	50046S43	4	Screw, Flat Hd, 5/16"-18 x 7/8", NHNA Only, No Longer Serviced, Start Year: 01/01/1967
64	86509340	1	Pawl, Lever, NHNA Only, Start Year: 01/01/1967
65	515259	1	Ring, Snap, Ext, .625", Shaft, Start Year: 01/01/1967
66	C5NN2824L	1	Rod Assy., Control, Start Year: 01/01/1967
67	280236	1	Pin, Split (Cotter), 1/16" x 1/2", Start Year: 01/01/1967

02B01 TRANSMISSION HANDBRAKE, ALL TRACTORS, L/LOAD MONITOR

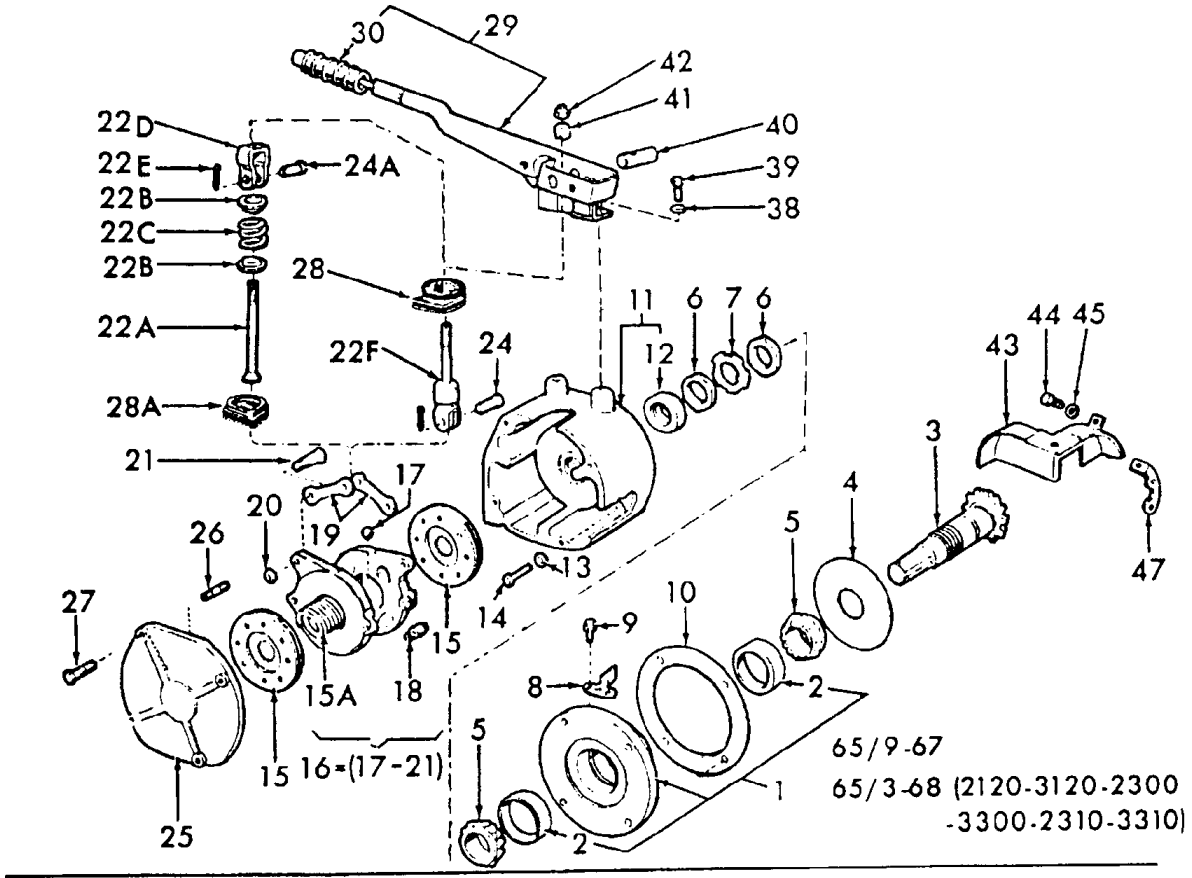

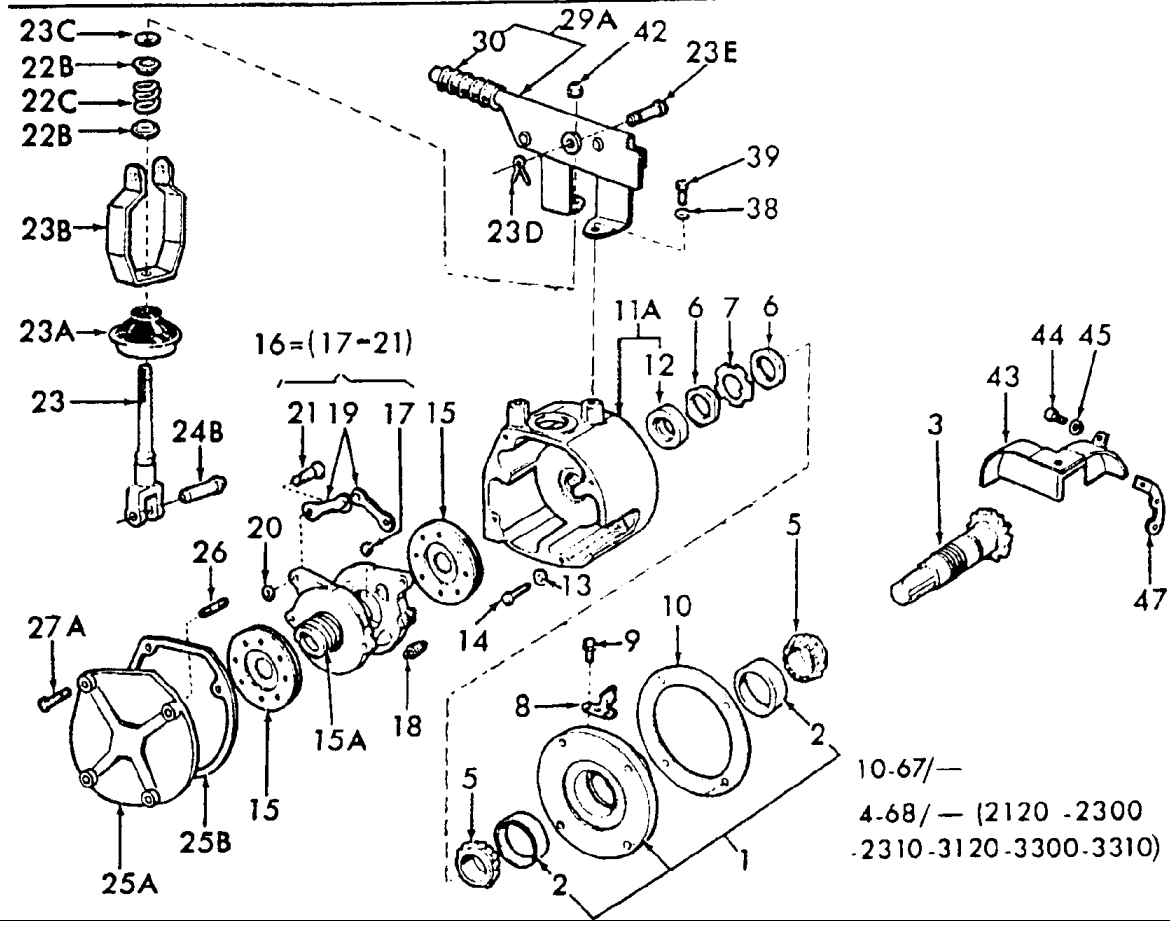

5000-SERIES 4 CYL TRACTOR (1/65-1/75)

02B01 TRANSMISSION HANDBRAKE, ALL TRACTORS, L/LOAD MONITOR

Ref	Part Number	Qty	Description
1	E3NN2N595BA	1	Pinion Retainer Assy., Except 5000, Includes: Ref. 2, Start Year: 01/01/1965
1	E3NN2N595AA	1	Pinion Retainer Assy., 5000, Includes: Ref. 2 (Not Shown), Start Year: 01/01/1965
2	C0DW4628A	2	Cup, Bearing, Start Year: 01/01/1965
3	C5NN2N601J	1	Shaft (Use W/C5NN2N600A Gear, Refer to Fig. 4A1), 2100, 2120, 3120, 3300, 3310, 3100, 3400, Start Year: 01/01/1965
3	C5NN2N601K	1	Shaft (Use W/C5NN2N600C, Refer to Fig. 4A1), 3500, No Longer Serviced (NHNA), Years: 01/01/1965-12/31/1972
3	C5NN2N601H	1	Shaft (Use W/C5NN2N600B, Refer to Fig. 4A3), 5100, Start Year: 01/01/1965
3	C7NN2N601A	1	Shaft, 4500 W/Speedometer, 3055, 3550, 3000, 4100, 4110, 4400, Start Year: 01/01/1965
4	C5NN2N598A	1	Disc, Lubricating, No Longer Serviced (NHNA), Years: 01/01/1965-03/31/1968
5	517167	2	Cone & Roller Assy., Shaft, Start Year: 01/01/1965
6	C5NN2N603A	2	Nut, Bearing Lock, Start Year: 01/01/1965
7	C5NN2N604A	1	Washer, Bearing Nut Lock, Start Year: 01/01/1965
8	C5NN2N597A	1	Scoop, Lubricating, No Longer Serviced (NHNA), Years: 01/01/1965-03/31/1968
9	43486S	2	Screw, HH, W/Washer, #12-24 x 3/8", No Longer Serviced (NHNA), Years: 01/01/1965-03/31/1968
10	C5NN2N702B	AR	Shim, Housing, .005 (.127mm) Thick, Replaces P/N C5NN2N702A, Start Year: 01/01/1965
10	C5NN2N702C	AR	Shim, Housing, .020 (.508mm) Thick, Replaces P/N C5NN2N702A, Start Year: 01/01/1965
11	C5NN2N621A	1	Housing Assy., 1.75" (44.45mm) Slot Width, First 1800 Units, NH-E Only, No Longer Serviced, Start Year: 01/01/1965
11	C5NN2N621B	1	Transmission Disc Brake Housing Assy., 2.12" (53.85mm) Slot Width, After 1800 Units, NH-E Only, No Longer Serviced, Years: 01/01/1965-09/30/1967
11A	C5NN2N621C	1	Disc Brake Housing Assy., Includes: Ref. 12, Used W/All Tractors with Year Range 10-67/ & 2120, 2300, 2310, 3120, 3300, 3310 with Year Range 4-68/, Start Year: 10/01/1967
12	C5NN2N602A	1	Seal Assy., Oil, Shaft, Start Year: 01/01/1965
13	81547	4	Washer, Lock, 7/16", Start Year: 01/01/1965
14	280117	4	Cap, HH, G5, 7/16"-14 x 2", Start Year: 01/01/1965
15	E9NN2N625AB	1	Disc Brake Assy., 2000, 3000, 4000, Start Year: 01/01/1972
15	E9NN2N625AB	2	Disc Brake Assy. (Not Shown), Years: 01/01/1965-01/31/1974
15	E9NN2N625AB	1	Disc Brake Assy., Except 5100 & Except Germany 3550, 4500 (Not Shown), Start Year: 02/01/1974
15	E9NN2N625AB	2	Disc Brake Assy., 5100 (Not Shown), Start Year: 01/01/1965
15	E9NN2N625AB	2	Disc Brake Assy., Germany, 3550, 4500 (Not Shown), Start Year: 02/01/1974
15A	D2NN2N707A	1	Spring, Handbrake Disc, Start Year: 01/01/1965
15A	D2NN2N707A	1	Spring, Handbrake Disc, 5000, Start Year: 01/01/1965
15A	D1NN2604A	1	Spacer, Disc, Except 5000, NHNA Only, Start Year: 01/01/1972
16	C5NN2N623B	1	Transmission Brake Actuator Assy., Includes: Ref. 17 thru 21, Start Year: 01/01/1965
17	C5NN2N624A	4	Ball, Disc, Start Year: 01/01/1965
18	C5NN2N627A	2	Spring, Return, Start Year: 01/01/1965
19	C5NN2630A	2	Link, Brake, Start Year: 01/01/1965
20	87307	2	Nut, Jam, G2, 5/16"-24, Start Year: 01/01/1965
21	C5NN2N629A	2	Bolt, 5/16"-24, Start Year: 01/01/1965

5000-SERIES 4 CYL TRACTOR (1/65-1/75)

02B01 TRANSMISSION HANDBRAKE, ALL TRACTORS, L/LOAD MONITOR

Ref	Part Number	Qty	Description
22A	C5NN2841B	1	Rod, Center, After 1800 Units, Used W/All Tractors with Year Range 65/9-67 & 2120, 2300, 3120, 3300, 3310 with Year Range 65/3-68, No Longer Serviced, Years: 01/01/1965-09/30/1967
22B	C5NN2N891A	2	Collar, Center Rod, After 1800 Units, Start Year: 01/01/1965
22C	C5NN2635B	1	Spring, Compression, After 1800 Units, Start Year: 01/01/1965
22C	D1NN2635A	1	Spring, Compression, 3400, 3500, 3550, No Longer Serviced, Start Year: 01/01/1972
22D	C5NN2N890A	1	Clevis Rod Assy., After 1800 Units, No Longer Serviced (NHNA), Years: 01/01/1965-09/30/1967
22E	280250	1	Pin, Split Cotter, 3/32" x 3/4", Used W/All Tractors with Year Range 65/9-67 & 2120, 2300, 3120, 3300, 3310 with Year Range 65/3-68, Years: 01/01/1965-09/30/1967
22F	C7NN2466A	1	Rod, Brake Control, Years: 01/01/1965-09/30/1967
23	C5NN2466C	1	Rod, Control, Used W/All Tractors with Year Range 10-67/ & 2120, 2300, 2310, 3120, 3300, 3310 with Year Range 4-68/, Start Year: 10/01/1967
23A	C5NN2N336B	1	Rod Seal Assy., Used W/All Tractors with Year Range 10-67/ & 2120, 2300, 2310, 3120, 3300, 3310 with Year Range 4-68/, Start Year: 10/01/1967
23B	C5NN2N890B	1	Rod, Clevis, Used W/All Tractors with Year Range 10-67/ & 2120, 2300, 2310, 3120, 3300, 3310 with Year Range 4-68/, Start Year: 10/01/1967
23C	80702	1	Washer, 3/8", No Longer Serviced, Start Year: 10/01/1967
23D	280250	1	Pin, Split Cotter, 3/32" x 3/4", Used W/All Tractors with Year Range 10-67/ & 2120, 2300, 2310, 3120, 3300, 3310 with Year Range 4-68/, Start Year: 10/01/1967
23E	9673076	1	Pin, Clevis, 3/8" x 1-1/4", Used W/All Tractors with Year Range 10-67/ & 2120, 2300, 2310, 3120, 3300, 3310 with Year Range 4-68/, Start Year: 10/01/1967
24	NLS	1	Pin, Clevis, Rod, Clevis to Actuator, First 1800 Units, U.S. {C5NN2N858A}, No Longer Serviced, Start Year: 01/01/1965
24A	C5NN2N858B	1	Pin Rod Assy., After 1800 Units, U.S., Used W/All Tractors with Year Range 65/9-67 & 2120, 2300, 3120, 3300, 3310 with Year Range 65/3-68, No Longer Serviced (NHNA), Years: 01/01/1965-09/30/1967
24B	C5NN2N858C	1	Pin Rod Assy., Used W/All Tractors with Year Range 10-67/ & 2120, 2300, 2310, 3120, 3300, 3310 with Year Range 4-68/, Start Year: 10/01/1967
25	C5NN2N630A	1	Plate, Cover, Used W/All Tractors with Year Range 65/9-67 & 2120, 2300, 3120, 3300, 3310 with Year Range 65/3-68, Years: 01/01/1965-09/30/1967
25	C5NN2N630B	1	Plate, Cover, 2120, 3120, NH-E Only, Years: 01/01/1965-03/31/1968
25	C5NN2N630D	1	Plate, Cover, 2120, 3120, NH-E Only, Start Year: 04/01/1968
25A	C5NN2N630C	1	Plate, Cover, Except 2120,3120, Used W/All Tractors with Year Range 10-67/ & 2120, 2300, 2310, 3120, 3300, 3310 with Year Range 4-68/, Start Year: 10/01/1967
25B	E7NN4N021AA	1	Plate, Gasket, Used W/All Tractors with Year Range 10-67/ & 2120, 2300, 2310, 3120, 3300, 3310 with Year Range 4-68/, Start Year: 10/01/1967
26	88366S36	3	Screw, Stud, 1/4"-28-20 x 1-3/16, Start Year: 01/01/1965
27	88011	4	Screw, Cap, HH, G5, 3/8"-16 x 1-1/4", Used W/All Tractors with Year Range 65/9-67 & 2120, 2300, 3120, 3300, 3310 with Year Range 65/3-68, Years: 01/01/1965-09/30/1967
27A	304703S36	4	Screw, Cap, HH, G5, 3/8"-16 x 1-1/8", Used W/All Tractors with Year Range 10-67/ & 2120, 2300, 2310, 3120, 3300, 3310 with Year Range 4-68/, Start Year: 10/01/1967
28	C5NN2404A	1	Boot, Lever, One Center Hole, First 1800 Units, NH-E Only, Start Year: 01/01/1965

02B01 TRANSMISSION HANDBRAKE, ALL TRACTORS, L/LOAD MONITOR

Ref	Part Number	Qty	Description
28A	C5NN2404C	1	Boot, Lever, 2 Slots, After 1800 Units, Used W/All Tractors with Year Range 65/9-67 & 2120, 2300, 3120, 3300, 3310 with Year Range 65/3-68, No Longer Serviced (NHNA), Years: 01/01/1965-09/30/1967
29	C5NN2779B	1	Lever & Sector Assy., Except 2300, 2310, 3300, 3310, Used W/All Tractors with Year Range 65/9-67 & 2120, 2300, 3120, 3300, 3310 with Year Range 65/3-68, No Longer Serviced, Years: 01/01/1965-09/30/1967
29	C5NN2779C	1	Lever & Sector Assy., U.S.,2300, 2310, 3300, 3310, Includes: Ref. 30 (Not Shown), No Longer Serviced (NHNA), Years: 01/01/1965-03/31/1968
29A	C5NN2779D	1	Lever & Sector Assy., Except 2300, 2310, 3300, 3310, Includes: Ref. 30, Used W/All Tractors with Year Range 10-67/ & 2120, 2300, 2310, 3120, 3300, 3310 with Year Range 4-68/, Start Year: 10/01/1967
29A	D1NN2779C12Z	1	Lever & Sector Assy., U.S., 3400, 3500, 3550, Includes: Ref. 30 (Not Shown), Start Year: 01/01/1972
29A	C5NN2779E	1	Lever & Sector Assy., 2300, 2310, 3300, 3310, Includes: Ref. 30 (Not Shown), Start Year: 04/01/1968
30	E1ADDN2777	1	Grip, Lever, Start Year: 01/01/1965
38	81821693	2	Washer, Lock, 3/8", Start Year: 01/01/1965
39	88434	2	Screw, Cap, HH, G5, 3/8"-16 x 3/4", Start Year: 01/01/1965
40	C5NN2N844A	1	Pin, Rod, Used W/All Tractors with Year Range 65/9-67 & 2120, 2300, 3120, 3300, 3310 with Year Range 65/3-68, No Longer Serviced (NHNA), Years: 01/01/1965-09/30/1967
41	NLS	1	Seat, Lever {C5NN2N708A}, No Longer Serviced, Start Year: 01/01/1965
41	C5NN2N708B	1	Seat, Lever, Used W/All Tractors with Year Range 65/9-67 & 2120, 2300, 3120, 3300, 3310 with Year Range 65/3-68, Years: 01/01/1965-09/30/1967
42	377360S36	1	Nut, Lock, 3/8", Start Year: 01/01/1965
43	C5NN2N856A	1	Shroud Assy., Gears, W/Independent PTO, 3550, 4100, 4400, 4500, Start Year: 01/01/1965
43	D2NN2N856A	1	Shroud Assy., Gears, 2000, 3000 (Not Shown), Start Year: 01/01/1965
43	D2NN2N856A	1	Shroud Assy., Gears, L/Independent PTO, 3500, 4100, 4400, 4500 (Not Shown), Start Year: 01/01/1965
44	80681	1	Washer, Lock, 5/16", Start Year: 01/01/1965
45	280683	2	Screw, Cap, HH, G5, 5/16"-24 x 1/2", Start Year: 01/01/1965
47	C5NN2N853A	1	Support Assy., Shroud, R.H., 3500, 3000, Excludes 10 Speed, Start Year: 01/01/1965
	DAPN2N690A	1	Kit, Emergency Handbrake, U.S., Includes: parts listed below, Order separately the appropriate Driven Shaft, C5NN2N601F(81818390) (3400), C5NN2N601K (3500), C5NN2N601G(81818391) (4400-4500), When ordering for 5100 substitute C5NN2N595A for C5NN2N595B(81812886) and add additional C5NN2N625B(81812886), NHNA Only, No Longer Serviced, Start Year: 01/01/1972
	C5NN2N858C	1	Pin Rod Assy. (Ref. 24)
	D1NN2779C12Z	1	Lever & Sector Assy. (Ref. 29A)
	C5NN2N891A	2	Collar, Center Rod (Ref. 22B)
	C5NN2N890B	1	Clevis Rod (Ref. 23B)
	C5NN2N858C	1	Pin Rod Assy. (Ref. 24B)
	C5NN2N336B	1	Rod Seal Assy. (Ref. 23A)
	517167	2	Cone & Roller Assy. (Ref. 5)
	C5NN2466C	1	Control Rod (Ref. 23)
	C5NN16N475G	1	Support Assy.
	E3NN2N595BA	1	Pinion Retainer Assy. (Ref. 1)
	C5NN16N475H	1	Support Assy., No Longer Serviced

02B01 TRANSMISSION HANDBRAKE, ALL TRACTORS, L/LOAD MONITOR

Ref	Part Number	Qty	Description
	C5NN2N603A	2	Bearing Lock Nut (Ref. 6)
	80680	4	Washer, Lock, 3/8", Ref 38
	D1NN2604A	1	Spacer, NHNA Only
	81547	4	Washer, Lock, 7/16"
	C5NN2N604A	1	Bearing Nut Lock Washer (Ref. 7)
	80702	1	Washer, 3/8", Ref 23C
	C5NN2N621C	1	Disc Brake Housing Assy. (Ref. 11A)
	280250	1	Pin, Split Cotter, 3/32" x 3/4", Ref. 22E
	C5NN2N623B	1	Thrust Plate
	9673076	1	Pin, Clevis, 3/8" x 1-1/4"
	E9NN2N625AB	1	Disc Assy.
	88434	2	Screw, Cap, HH, G5, 3/8"-16 x 3/4" (Ref. 39)
	C5NN2N630C	1	Cover Plate (Ref. 25)
	304666S36	2	Screw, Cap, HH, G5, 3/8"-16 x 7/8"
	D1NN2635A	1	Compression Spring (Ref. 22C)
	304703S36	4	Screw, Cap, HH, G5, 3/8"-16 x 1-1/8", Ref 27A
	C5NN2N702B	3	Housing Shim, .005 (Ref. 10)
	280117	4	Cap, HH, G5, 7/16"-14 x 2", Ref 14
	C5NN2N702C	2	Housing Shim, .020
	377360S36	1	Lock Nut, 3/8" (Ref. 42)

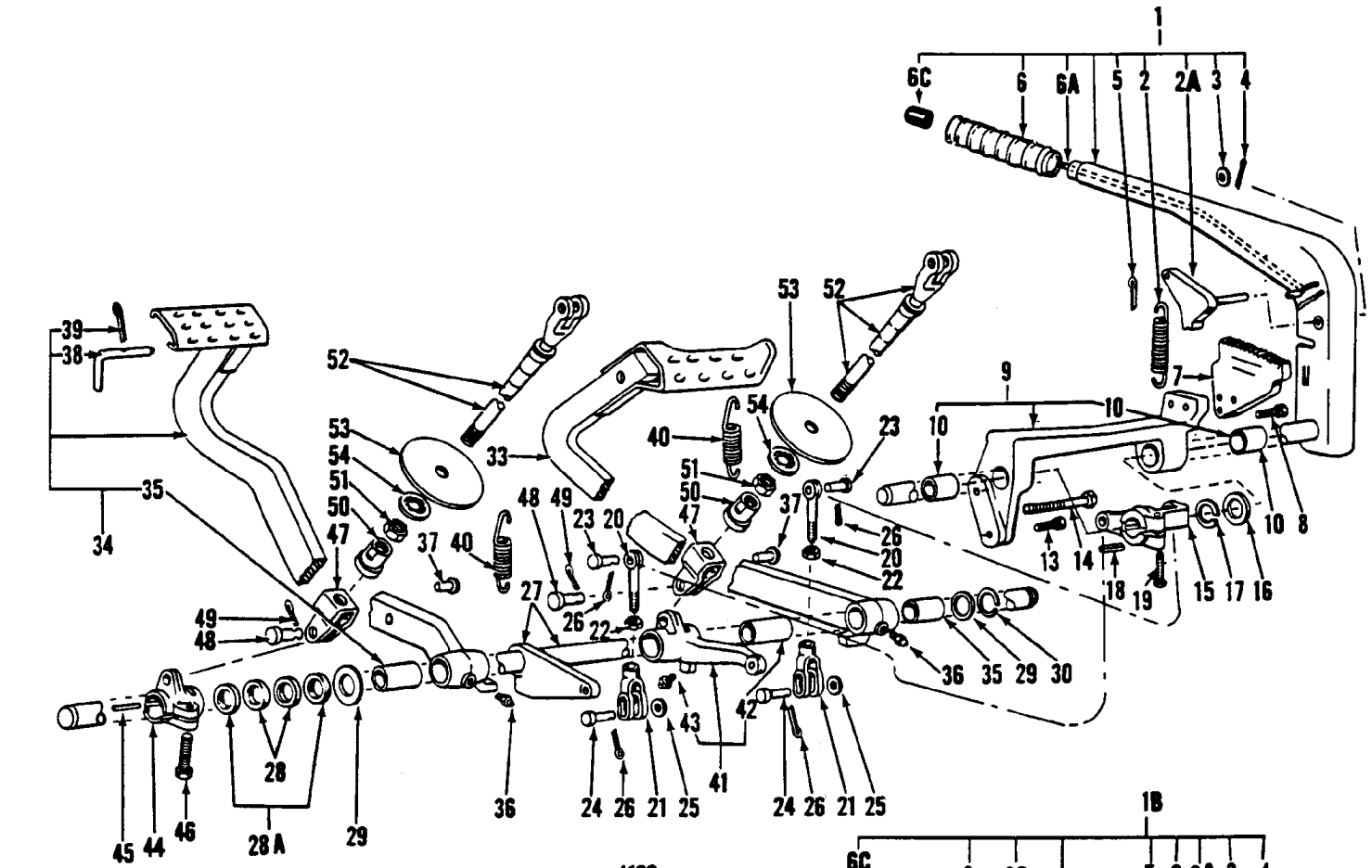
1
6C
6
6A
5
2
2A
3
4
39
38
34
35
52
53
54
51
50
47
33
40
37
48
49
23
20
27
26
22
10
9
7
8
13
14
18
19
15
17
16
36
35
29
30
43
42
41
24
21
25
45
44
46
28
28A
29

4100

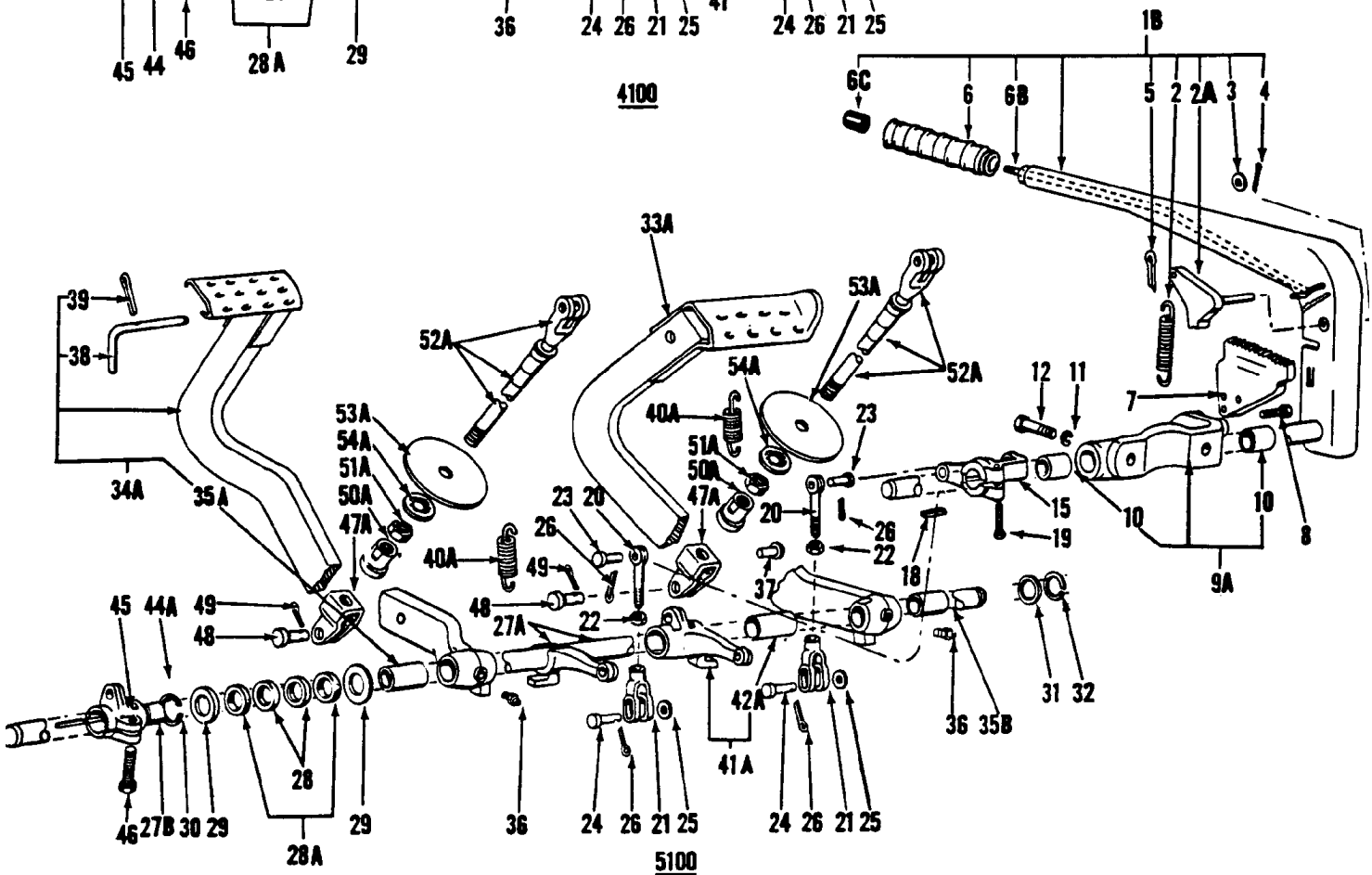
1B
6C
6
6B
5
2
2A
3
4
39
38
34A
35A
33A
52A
53A
54A
51A
50A
47A
40A
23
20
26
22
49
48
27A
45
44A
46
27B
30
29
28
28A
36
24
21
25
41A
42A
12
11
7
15
19
10
9A
8
18
37
31
32
36
35B

5100

5000-SERIES 4 CYL TRACTOR (1/65-1/75)

02B03 HANDBRAKE (NH-E) - 3055, 4100, 5100, 7100

Ref	Part Number	Qty	Description
1	C7NN2779B	1	Lever & Shaft Assy., 3055, 4100, Includes: Ref. 2 thru 6C, Start Year: 06/01/1968
1B	C7NN2779A	1	Lever & Shaft Assy., 5100, 7100, Includes: Ref. 2 thru 6C, Start Year: 06/01/1968
2	C7NN2744A	1	Spring, Lever, Retracting, Start Year: 06/01/1968
2A	C5NN2N615B	1	Pawl & Spindle Assy., Start Year: 06/01/1968
3	80702	1	Washer, 3/8", Start Year: 06/01/1968
4	80756	1	Pin, Split Cotter, 1/8" x 3/4", Start Year: 06/01/1968
5	72000S7	1	Pin, Split, Cotter, 1/16" x 3/8", No Longer Serviced (NHNA), Start Year: 06/01/1968
6	C7NN2N672A	1	Grip, Lever, Start Year: 06/01/1968
6A	C7NN2N616E	1	Rod, Release, 12" (30.48cm) Lg., 3055, 4100, Start Year: 06/01/1968
6B	C7NN2N616D	1	Rod, Release, 5100, 7100, Start Year: 06/01/1968
6C	C7NN2N606B	1	Button, Release, Start Year: 01/01/1968
7	C7NN2N617A	1	Sector Assy., Start Year: 06/01/1968
8	88434	2	Screw, Cap, HH, G5, 3/8"-16 x 3/4", Start Year: 06/01/1968
9	C7NN2N670B	1	Support Assy., 3055, 4100, Includes: Ref. 10, Start Year: 06/01/1968
9A	C7NN2N670C	1	Support Assy., Replaces C7NN2N670A, 5100, 7100, Includes: Ref. 10, Start Year: 06/01/1968
10	782477	2	Bushing, Support, Start Year: 06/01/1968
11	80679	2	Washer, Lock, 1/2", Start Year: 06/01/1968
12	304745S36	2	Screw, Cap, HH, G5, 1/2"-13 x 1-3/8", 5100, 7100, No Longer Serviced (NHNA), Start Year: 06/01/1968
13	88206	1	Screw, Cap, HH, G5, 3/8"-16 x 1", 3055, 4100, Start Year: 06/01/1968
14	304813S36	1	Screw, Cap, HH, G5, 3/8"-1 x 1-7/8", Start Year: 06/01/1968
15	C7NN2798B	1	Lever, Release, Start Year: 06/01/1968
16		1	Washer, Flat, 1.02", 3055, 4100, NH-E Only, Start Year: 06/01/1968
17	97480S36	1	Ring, Circlip, Ext, 1.000", Start Year: 06/01/1968
18	280262	1	Key, Woodruff # A, Hardened, 1/4" x 7/8", Start Year: 06/01/1968
19	88044	1	Screw, Cap, HH, G5, 3/8"-16 x 1-1/2", Start Year: 06/01/1968
20	C9NN2825A	2	Rod, Replaces C7NN2825A, Start Year: 06/01/1968
21	C9NN2855A	2	Clevis, Start Year: 06/01/1968
22	87308	2	Nut, Jam, G2, 3/8"-24, Start Year: 06/01/1968
23	76204S36	2	Pin, Clevis, 3/8" x 1-3/32", Start Year: 06/01/1968
24	73933S36	2	Pin, Clevis, 5/16" x 17/64", Start Year: 06/01/1968
25	80664	2	Washer, 5/16", Start Year: 06/01/1968
26	80756	4	Pin, Split Cotter, 1/8" x 3/4", Start Year: 06/01/1968
27	D9NN2458BA	1	Pedal Shaft Assy., Replaces C7NN2473B, 3055, 4100, When replacing C7NN2473B(81818093) also use (1) D2NN2N511A(81826049), (1) 74181S(83416021), (1) 304762S36(81821264), (2) D2NN2N258A(81826046) & (2) D2NN2N171A(81826045)., Start Year: 06/01/1968
27A	D9NN2458AA	1	Pedal Shaft Assy., Replaces C7NN2473A, 5100, 7100, When replacing C7NN-2473-A, also use Sleeve D1NN-2N155-A(81825094)., Start Year: 06/01/1968
27B	D1NN2N155A	1	Sleeve, Cross Shaft, 5100, 7100, When replacing C7NN-2473-A, also use Sleeve D1NN-2N155-A(81825094)., Start Year: 12/01/1971
28	D9NN2N289AA	2	Shaft Seal Assy., Start Year: 06/01/1968

5000-SERIES 4 CYL TRACTOR (1/65-1/75)

02B03 HANDBRAKE (NH-E) - 3055, 4100, 5100, 7100

Ref	Part Number	Qty	Description
28A	D2NN2N171A	2	Seal, Dust, Felt, D2NN-2N258-A(81826046) & D2NN-2N171-A(81826045) replace C5NN-2N258-C(81814441), Start Year: 06/01/1968
29	C5NN2N547B	2	Washer, Thrust, Start Year: 06/01/1968
30	E27N7547	1	Ring, Lock, Shaft, 3055, 4100, Start Year: 06/01/1968
30	E27N7547	1	Ring, Lock, Shaft, 5100, Years: 06/01/1968-11/30/1971
31	C5NN2N547E	1	Washer, Thrust, .094" Thick, 5100, Years: 06/01/1968-03/31/1971
31	354639S36	1	Washer, Thrust, 48" (1.219mm), 5100, 7100, Start Year: 04/01/1971
32	25121	1	Ring, Snap, Ext, 1.000", 5100, 7100, Start Year: 06/01/1968
33	C7NN2455G	1	Pedal Assy., R.H., 3055, 4100, Include: Ref. 35 thru 39, NH-E Only, Start Year: 06/01/1968
33A	C7NN2455H	1	Pedal Assy., R.H., 5100, 7100, Includes: Ref. 35 thru 39, Start Year: 06/01/1968
34	D1NN2A186A	1	Pedal Assy., L.H., Replaces C7NN2A186H, 3055, 4100, Includes: Ref. 35 thru 39, Start Year: 06/01/1968
34A	E0NN2A186CA	1	Pedal Assy., L.H., 5100, 7100, Includes: Ref. 35 thru 39, NH-E Only, Start Year: 06/01/1968
35	C7NN2461C	2	Bushing, 1.50" Lg., 3055, 4100, Start Year: 06/01/1968
35A	C7NN2461B	1	Bushing, 1.25" Lg., L.H., 5100, 7100, Start Year: 06/01/1968
35B	C5NN2461D	1	Bushing, 1.58" Lg., R.H., 5100, 7100, Start Year: 06/01/1968
36	87414	2	Nipple, Lube, Straight, 1/4"-28, Start Year: 06/01/1968
36	87414	1	Nipple, Lube, Straight, 1/4"-28, Start Year: 06/01/1968
36	87415	1	Nipple, Lube, 1/4"-28 x 90°,, LH, 5100, 7100, Start Year: 06/01/1968
37	C5NN2N535A	2	Pin, Anchor, 4100, Start Year: 06/01/1968
38	C7NN2N145A	1	Handle, Interlock, L.H., Start Year: 06/01/1968
39	88107	1	Pin, Roll, 1/8" x 7/16", Start Year: 06/01/1968
40	E1NN2472AA	2	Spring, Retracting, 3055, 4100, Start Year: 06/01/1968
40A	C5NN2472H	2	Spring, Retracting, 5100, 7100, Start Year: 06/01/1968
41	C7NN2N510B	1	Lever Assy., R.H., 3055, 4100, Includes: Ref. 42 & 43, Start Year: 06/01/1968
41A	C7NN2N510A	1	Lever Assy., R.H., 5100, 7100, Includes: Ref. 42A & 43, Start Year: 06/01/1968
42	C7NN2461C	1	Bushing, Lever, R.H., 3055, 4100, Start Year: 06/01/1968
42A	782477	1	Bushing, Lever, R.H., 5100, 7100, Start Year: 06/01/1968
43	87414	1	Nipple, Lube, Straight, 1/4"-28, Start Year: 06/01/1968
44	D2NN2N511A	1	Lever, Operating, L.H., Replaces C7NN2N511B, 3055, 4100, Start Year: 06/01/1968
44A	C7NN2N511A	1	Lever, Operating, LH, 5100, 7100, Start Year: 06/01/1968
45	280262	1	Key, Woodruff # A, Hardened, 1/4" x 7/8", Start Year: 06/01/1968
46	9637916	1	Screw, Cap, HH, G5, 7/16"-14 x 1-1/2", Start Year: 06/01/1968
47	C5NN2N710A	2	Rod, Clevis, 3055, 4100, Start Year: 06/01/1968
47A	C5NN2N710C	2	Rod, Clevis, 5100, 7100, Start Year: 06/01/1968
48	76240S36	2	Pin, Clevis, 7/16" x 1-17/64", Start Year: 06/01/1968
49	80755	2	Pin, Split Cotter, 1/8" x 1", Start Year: 06/01/1968
50	C5NN2N520A	2	Nut, Rod, 3055, 4100, Start Year: 06/01/1968
50A	D2NN2N520B	2	Nut, Rod, 5100, 7100, Start Year: 06/01/1968
51	50456	2	Nut, G5, 7/16"-20, 3055, 4100, Start Year: 06/01/1968
51A	280963	2	Nut, G5, 1/2"-20, 5100, 7100, Start Year: 06/01/1968
52	C5NN2466B	2	Rod, Control, 3055, 4100, Start Year: 06/01/1968

5000-SERIES 4 CYL TRACTOR (1/65-1/75)

02B03 HANDBRAKE (NH-E) - 3055, 4100, 5100, 7100

Ref	Part Number	Qty	Description
52A	C7NN2466B	2	Rod, Control, 5100, 7100, Start Year: 06/01/1968
53	C5NN2N468A	2	Washer, Rod, .50" (12.7mm) I.D., 3055, 4100, Start Year: 06/01/1968
53A	C5NN2N468B	2	Washer, Rod, .575" (14.605mm) I.D., 5100,7100, Start Year: 06/01/1968
54	C5NN2N467A	2	Fastener, Rod, 3055, 4100, Start Year: 06/01/1968
54A	C5NN2N467B	2	Fastener, Rod, 5100, 7100, Start Year: 06/01/1968

02C01 POWER TRAILER BRAKE KIT (NH-E)

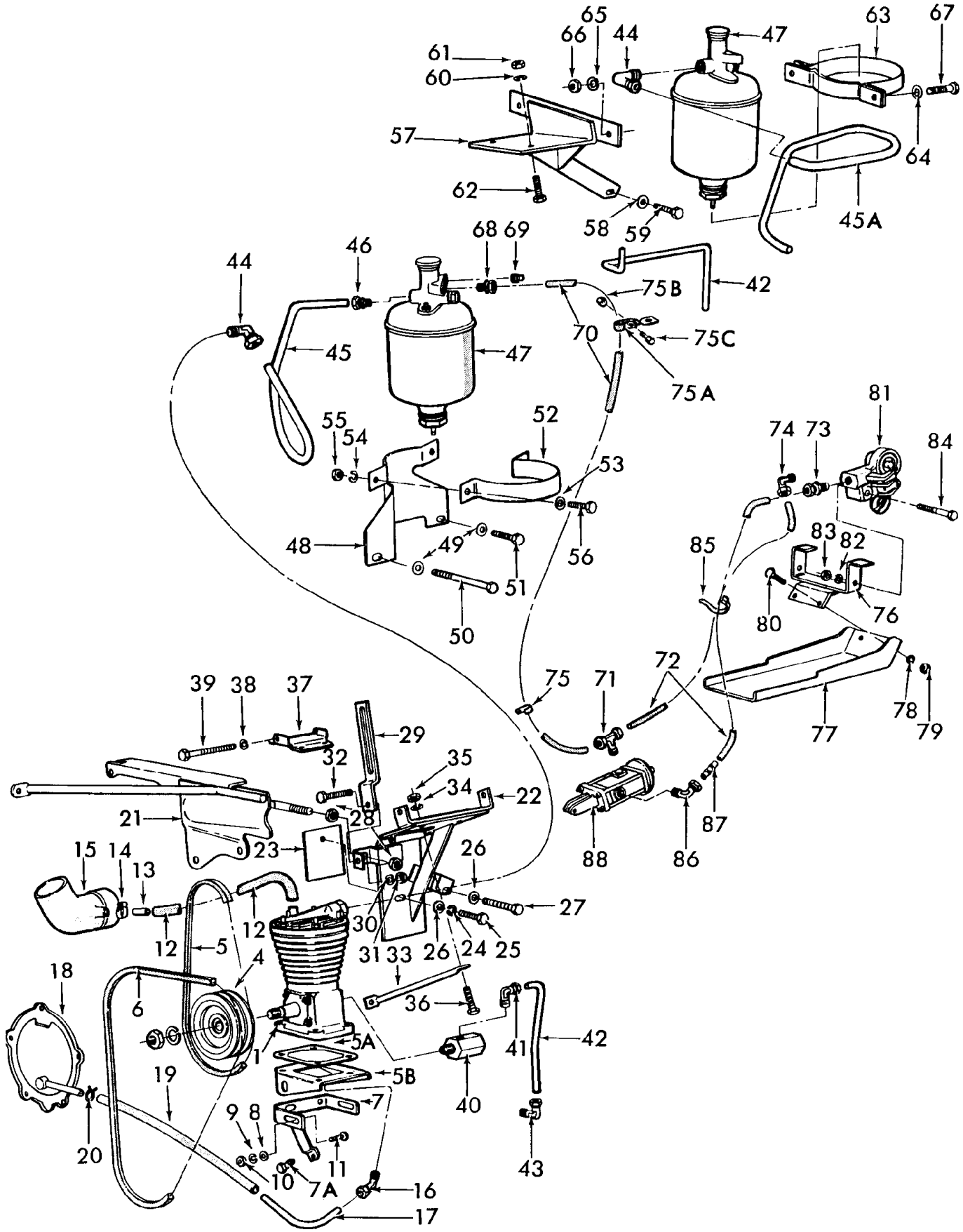

5000-SERIES 4 CYL TRACTOR (1/65-1/75)

02C01 POWER TRAILER BRAKE KIT (NH-E)

Ref	Part Number	Qty	Description
	NS	1	Kit, Trailer Brake, W/Vertical Exhaust, 2100, 3100, Includes: Ref. 1, NHNA Only, No Longer Serviced
	DAPN2000B	1	Kit, Trailer Brake, W/Horizontal Exhaust, 4100, Includes: Ref. 1, NH-E Only, No Longer Serviced, Start Year: 01/01/1970
	NS	1	Kit, Trailer Brake, 5100, Includes: Ref. 1, NHNA Only, No Longer Serviced
1	NS	1	Compressor Assy., L/Base Plate, Includes parts listed below, NHNA Only, No Longer Serviced
1	WABC015586000	1	Ring, Piston Oil Control, NH-E Only, No Longer Serviced, Start Year: 01/01/1970
1	WABC015585900	2	Ring, Piston, Compression, NH-E Only, No Longer Serviced, Start Year: 01/01/1970
1	WABC070476200	1	Gasket, Cylinder Hd. to Outlet Adapter, NH-E Only, No Longer Serviced, Start Year: 01/01/1970
1	WABC015252500	1	Adaptor, Cylinder Head Outlet, NH-E Only, No Longer Serviced, Start Year: 01/01/1970
1	WABC015335200	1	Gasket, Cylinder Hd., Lower, Used between Cylinder & Spacer, NH-E Only, No Longer Serviced, Start Year: 01/01/1970
1	WABC015585000	1	Gasket, Cylinder Hd., Lower, Used W/WABCO15335200 for head height, NH-E Only, No Longer Serviced, Start Year: 01/01/1970
1	WABC015335300	1	Valve, Inlet, NH-E Only, No Longer Serviced, Start Year: 01/01/1970
1	WABC015335600	1	Valve, Exhaust, NH-E Only, No Longer Serviced, Start Year: 01/01/1970
1	WABC071500500	4	Dowel, Valve, Retaining,, NH-E Only, No Longer Serviced, Start Year: 01/01/1970
1	WABC015333800	1	Cylinder Head, NH-E Only, No Longer Serviced, Start Year: 01/01/1970
1	WABC015584000	1	Stud, Cylinder Head, Short, NH-E Only, No Longer Serviced, Start Year: 01/01/1970
1	WABC015333500	7	Stud, Cylinder Head, Long, NH-E Only, No Longer Serviced, Start Year: 01/01/1970
1	WABC070956800	13	Washer, Cylinder Hd., to Cylinder Stud,, NH-E Only, No Longer Serviced, Start Year: 01/01/1970
1	WABC070214100	13	Nut, Cylinder Hd., to Cylinder Stud, NH-E Only, No Longer Serviced, Start Year: 01/01/1970
1	WABC015335400	1	Spacer Assy., Cylinder Head to Cylinder, NH-E Only, No Longer Serviced, Start Year: 01/01/1970
1	WABC015335700	1	Gasket, Cylinder Hd., Upper, NH-E Only, No Longer Serviced, Start Year: 01/01/1970
1	WABC015333200	1	Housing Assy., Cylinder & Sump, Includes: (2) Crankshaft Bushes & (2) Valve Dowels, NH-E Only, No Longer Serviced, Start Year: 01/01/1970
1	WABC015730100	2	Bush, Cylinder & Sump Housing, NH-E Only, No Longer Serviced, Start Year: 01/01/1970
1	WABC015863400	1	Crankshaft, NH-E Only, No Longer Serviced, Start Year: 01/01/1970
1	WABC070475200	1	Gasket, Oil Feed to Crankshaft Adaptor, NH-E Only, No Longer Serviced, Start Year: 01/01/1970
1	WABC016391400	1	Adaptor, Oil Feed to Crankshaft, NH-E Only, No Longer Serviced, Start Year: 01/01/1970
1	WABC015336200	8	Stud, Front & Rear Chankshaft Housing, NH-E Only, No Longer Serviced, Start Year: 01/01/1970
1	WABC015334300	1	Housing, Crankshaft, Rear, NH-E Only, No Longer Serviced, Start Year: 01/01/1970
1	WABC015334200	1	O-Ring, Crankshaft Housing, Rear, NH-E Only, No Longer Serviced, Start Year: 01/01/1970
1	WABC015730200	1	Gasket, Crankshaft Housing, Front, NH-E Only, No Longer Serviced, Start Year: 01/01/1970
1	WABC015730000	1	Housing & Seal Assy., Crankshaft, Front, NH-E Only, No Longer Serviced, Start Year: 01/01/1970
1	WABC070575700	1	Seal Assy., Crankshaft Housing, Front, NH-E Only, No Longer Serviced, Start Year: 01/01/1970
1	WABC071040400	1	Washer, Lock, Pulley to Crankshaft, NH-E Only, No Longer Serviced, Start Year: 01/01/1970
1	WABC015586300	1	Nut, Pulley to Crankshaft, NH-E Only, No Longer Serviced, Start Year: 01/01/1970
1	WABC070156400	1	Key, Pulley to Crankshaft, NH-E Only, No Longer Serviced, Start Year: 01/01/1970
1	WABC015857900	1	Piston Pin & Connecting Rod Assy., NH-E Only, No Longer Serviced, Start Year: 01/01/1970
1	WABC015335100	2	Washer, Connecting Rod Bolt Lock, NH-E Only, No Longer Serviced, Start Year: 01/01/1970
1	WABC015335000	2	Bolt, Connecting Rod, NH-E Only, No Longer Serviced, Start Year: 01/01/1970

5000-SERIES 4 CYL TRACTOR (1/65-1/75)

02C01 POWER TRAILER BRAKE KIT (NH-E)

Ref	Part Number	Qty	Description
1	WABC070955800	9	Washer, Inlet Chamber & Housing, NH-E Only, No Longer Serviced, Start Year: 01/01/1970
1	WABC070210500	9	Nut, Inlet Chamber & Housings, NH-E Only, No Longer Serviced, Start Year: 01/01/1970
1	WABC015732000	1	Stud, Inlet Chamber Cover, NH-E Only, No Longer Serviced, Start Year: 01/01/1970
1	WABC015728200	1	Gasket, Inlet Chamber Cover,, NH-E Only, No Longer Serviced, Start Year: 01/01/1970
1	WABC016071300	1	Cover & Tube Assy., Inlet Chamber, NH-E Only, No Longer Serviced, Start Year: 01/01/1970
4	C9NN2N083A	1	Pulley, Drive, NH-E Only, No Longer Serviced, Start Year: 01/01/1970
5	C9NN10N003A	1	Bolt, Compressor to Generator, NH-E Only, No Longer Serviced, Start Year: 01/01/1970
5A	C9NN2N077A	1	Gasket, Compressor, NH-E Only, No Longer Serviced, Start Year: 01/01/1970
5B	NS	1	Base Plate Assy., NHNA Only, No Longer Serviced, Start Year: 01/01/1970
6	C9NN2N089A	1	Belt, Crankshaft, NH-E Only, No Longer Serviced, Start Year: 01/01/1970
7	C9NN2N081A	1	Bracket, Mounting, NH-E Only, No Longer Serviced, Start Year: 01/01/1970
7A	88346	1	Screw, Cap, HH, G5, 5/16"-18 x 2-1/2", Start Year: 01/01/1970
8	80702	2	Washer, 3/8", Start Year: 01/01/1970
9	81821693	2	Washer, Lock, 3/8", Start Year: 01/01/1970
10	9628503	2	Nut, G5, 3/8"-16, Start Year: 01/01/1970
11	88206	2	Screw, Cap, HH, G5, 3/8"-16 x 1", Start Year: 01/01/1970
12	C9NN2N095A	1	Hose, Intake, NH-E Only, No Longer Serviced, Start Year: 01/01/1970
13	NS	1	Connector, Hose to Manifold, Start Year: 01/01/1970
14	C9NN2N094A	3	Hose Clamp Assy., No Longer Serviced (NH-E), Start Year: 01/01/1970
15	C9NN9B640B	1	Hose, Cleaner Outlet, 2100, 3100, No Longer Serviced (NH-E), Start Year: 01/01/1970
15	D1NN9B640A	1	Hose, Cleaner Outlet, 4100, 5100, No Longer Serviced (NH-E), Start Year: 01/01/1970
16	C9NN2N114A	1	Fitting Assy., Return Pipe, NH-E Only, No Longer Serviced, Start Year: 01/01/1970
17	C9NN2N097D	1	Pipe, Oil Return, NH-E Only, No Longer Serviced, Start Year: 01/01/1970
18	C9NN9N597A	1	Timing Cover Assy., NH-E Only, No Longer Serviced, Start Year: 01/01/1970
19	D1NN3A005A	1	Hose, Compressor Oil Return, 12-1/8" (30.80cm) Lg. , Cut to fit, No Longer Serviced (NH-E), Start Year: 01/01/1970
20	97328S36	2	Clamp, Spring, Wire, Start Year: 01/01/1970
21	D0NN8N096B	1	Shell Support Assy., R.H., Replaces C9NN-8N096-B, 2100,3100,4100, NH-E Only, No Longer Serviced, Start Year: 01/01/1970
21	D0NN8N096D	1	Shell Support Assy., R.H., Replaces C9NN-8N096-A, 5100, NH-E Only, No Longer Serviced, Start Year: 01/01/1970
22	C9NN2N082A	1	Mounting Bracket Assy., NH-E Only, No Longer Serviced, Start Year: 01/01/1970
23	C9NN2N108A	1	Spacer, Mounting Bracket, NH-E Only, No Longer Serviced, Start Year: 01/01/1970
24	81821693	1	Washer, Lock, 3/8", Start Year: 01/01/1970
25	88206	1	Screw, Cap, HH, G5, 3/8"-16 x 1", Start Year: 01/01/1970
26	80702	1	Washer, 3/8", Start Year: 01/01/1970
27	9706689	1	Screw, Cap, HH, G5, 3/8"-16 x 1-3/4", Start Year: 01/01/1970
28	9638005	2	Nut, Jam, G2, 1/2"-13, Start Year: 01/01/1970
29	C9NN10145A	1	Arm, Adjusting, NH-E Only, No Longer Serviced, Start Year: 01/01/1970
30	80681	1	Washer, Lock, 5/16", Start Year: 01/01/1970
31	9635082	1	Nut, G5, 5/16"-18, Start Year: 01/01/1970

5000-SERIES 4 CYL TRACTOR (1/65-1/75)

02C01 POWER TRAILER BRAKE KIT (NH-E)

Ref	Part Number	Qty	Description
32	9635884	1	Screw, Cap, HH, G5, 5/16"-18 x 1", Start Year: 01/01/1970
33	C9NN8B270A	1	Bracket, Support, L.H., NH-E Only, No Longer Serviced, Start Year: 01/01/1970
34	80681	1	Washer, Lock, 5/16", Start Year: 01/01/1970
35	9635082	1	Nut, G5, 5/16"-18, Start Year: 01/01/1970
36	87657	1	Screw, Cap, HH, G5, 5/16"-18 x 1-1/4", Start Year: 01/01/1970
37	C9NN2N079A	1	Top Support Assy., NH-E Only, No Longer Serviced, Start Year: 01/01/1970
38	81821693	1	Washer, Lock, 3/8", Start Year: 01/01/1970
39	300904S36	1	Screw, Cap, HH, G5, 3/8"-16 x 3-1/2", Start Year: 01/01/1970
40	C9NN2N087A	1	Adaptor, Switch, NH-E Only, No Longer Serviced, Start Year: 01/01/1970
41	C9NN2N111B	1	Oil Inlet Fitting Assy., NH-E Only, No Longer Serviced, Start Year: 01/01/1970
42	C9NN2N098A	1	Pipe, Inlet, 5100, NH-E Only, No Longer Serviced, Start Year: 01/01/1970
42	C9NN2N098B	1	Pipe, Inlet, 2100, 3100, 4100, NH-E Only, No Longer Serviced, Start Year: 01/01/1970
43	C9NN2N111D	1	Inlet Pipe Fitting Assy., NH-E Only, No Longer Serviced, Start Year: 01/01/1970
44	C9NN2N113A	1	Pipe Fitting Assy., Elbow, W/Vertical Exhaust, 21,31,4100, NH-E Only, No Longer Serviced, Start Year: 01/01/1970
44	C9NN2N113A	2	Pipe Fitting Assy., Elbow, W/Horizontal Exhaust, 21,31,4100, NH-E Only, No Longer Serviced, Start Year: 01/01/1970
44	C9NN2N113A	2	Pipe Fitting Assy., Elbow, 5100, NH-E Only, No Longer Serviced, Start Year: 01/01/1970
45	C9NN2N096A	1	Pipe, Compressor to Reservoir, W/Vertical Exhaust, 2100, 3100, 4100, NH-E Only, No Longer Serviced, Start Year: 01/01/1970
45A	C9NN2N096B	1	Pipe, Compressor to Reservoir, 2100, 3100, 4100 W/Horizontal Exhaust & 5100, NH-E Only, No Longer Serviced, Start Year: 01/01/1970
46	C9NN2N103A	1	Pipe Fitting Assy., Straight, W/Vertical Exhaust, 2100, 3100, 4100, NH-E Only, No Longer Serviced, Start Year: 01/01/1970
47	C9NN2N074A	1	Reservoir & Valve Assy., NH-E Only, No Longer Serviced, Start Year: 01/01/1970
48	C9NN2N085A	1	Bracket, Mounting, W/Vertical Exhaust, 2100, 3100, 4100, NH-E Only, No Longer Serviced, Start Year: 01/01/1970
49	80702	2	Washer, 3/8", W/Vertical Exhaust, 2100, 3100, 4100, Start Year: 01/01/1970
50	280219	1	Screw, Cap, HH, G5, 3/8"-16 x 5-1/4", W/Vertical Exhaust, 2100, 3100, 4100, Start Year: 01/01/1970
51	9706689	1	Screw, Cap, HH, G5, 3/8"-16 x 1-3/4", W/Vertical Exhaust, 2100, 3100, 4100, Start Year: 01/01/1970
52	C9NN2N090A	1	Strap, Mounting Bracket, W/Vertical Exhaust, 2100, 3100, 4100, NH-E Only, No Longer Serviced, Start Year: 01/01/1970
53	80702	2	Washer, 3/8", Start Year: 01/01/1970
54	81821693	2	Washer, Lock, 3/8", Start Year: 01/01/1970
55	9628503	2	Nut, G5, 3/8"-16, Start Year: 01/01/1970
56	88206	2	Screw, Cap, HH, G5, 3/8"-16 x 1", W/Vertical Exhaust, 2100,3100,4100, Start Year: 01/01/1970
57	C9NN2N084A	1	Mounting Bracket Assy., 2100, 3100, 4100 W/Horizontal Exhaust, & 5100, NH-E Only, No Longer Serviced, Start Year: 01/01/1970
58	80702	1	Washer, 3/8", Start Year: 01/01/1970
59	9706689	1	Screw, Cap, HH, G5, 3/8"-16 x 1-3/4", 2100, 3100, 4100 W/Horizontal Exhaust, & 5100, Start Year: 01/01/1970

5000-SERIES 4 CYL TRACTOR (1/65-1/75)

02C01 POWER TRAILER BRAKE KIT (NH-E)

Ref	Part Number	Qty	Description
60	80681	2	Washer, Lock, 5/16", Start Year: 01/01/1970
61	9635082	2	Nut, G5, 5/16"-18, Start Year: 01/01/1970
62	9635884	2	Screw, Cap, HH, G5, 5/16"-18 x 1", 2100, 3100, 4100 W/Horizontal Exhaust & 5100, Start Year: 01/01/1970
63	C9NN2N107A	1	Bracket Strap Assy., 2100, 3100, 4100 W/Horizontal Exhaust & 5100, NH-E Only, No Longer Serviced, Start Year: 01/01/1970
64	80702	2	Washer, 3/8", Start Year: 01/01/1970
65	81821693	2	Washer, Lock, 3/8", Start Year: 01/01/1970
66	9628503	2	Nut, G5, 3/8"-16, Start Year: 01/01/1970
67	88011	2	Screw, Cap, HH, G5, 3/8"-16 x 1-1/4", 2100, 3100, 4100 W/Horizontal Exhaust & 5100, Start Year: 01/01/1970
68	C9NN2N102A	1	Tube Fitting Assy., Reservoir End, NH-E Only, No Longer Serviced, Start Year: 01/01/1970
69	C9NN2N106A	1	Plug, Taper Thread, 3/8", NH-E Only, No Longer Serviced, Start Year: 01/01/1970
70	PL	1	Tube, 94.50" (2400.0mm) Lg., Cut to Length, NHNA Only, Start Year: 01/01/1970
71	C9NN2N104A	1	Inlet Fitting Assy., NH-E Only, No Longer Serviced, Start Year: 01/01/1970
72	C9NN2N093A	2	Tube, 48.13" (1225.0mm)Lg., Cut to Length required, NH-E Only, No Longer Serviced, Start Year: 01/01/1970
73	C9NN2N102A	1	Fitting, Elbow, NH-E Only, No Longer Serviced, Start Year: 01/01/1970
74	C9NN2N112A	1	Fitting, Straight, NH-E Only, No Longer Serviced, Start Year: 01/01/1970
75	C7NN14N199J	1	Clip, Reservoir, 2100, 3100, 4100, NH-E Only, No Longer Serviced, Start Year: 01/01/1970
75A	D0NN2N109A	1	Clip, Tube Support, NH-E Only, No Longer Serviced, Start Year: 01/01/1970
75B	7770	1	Nut, Hex, 1/4"-20, Start Year: 01/01/1970
75C	304624S36	1	Screw, Cap, HH, G5, 1/4"-20 x 1/2", Start Year: 01/01/1970
76	C9NN2N086B	1	Mounting Bracket Assy., NH-E Only, No Longer Serviced, Start Year: 01/01/1970
77	C9NNN923C	1	Bracket, Used W/Less Remote Cylinder Pipework, NH-E Only, No Longer Serviced, Start Year: 01/01/1970
77	C5NNN915A	1	Bracket, Used W/Remote Cylinder Pipework, NH-E Only, No Longer Serviced, Start Year: 01/01/1970
78	80681	2	Washer, Lock, 5/16", Start Year: 01/01/1970
79	9635082	2	Nut, G5, 5/16"-18, Start Year: 01/01/1970
80	9635884	2	Screw, Cap, HH, G5, 5/16"-18 x 1", Start Year: 01/01/1970
81	C9NN2N070A	2	Connection Coupling Assy., NH-E Only, No Longer Serviced, Start Year: 01/01/1970
82	81547	2	Washer, Lock, 7/16", Start Year: 01/01/1970
83	280717	2	Nut, G5, 7/16"-14, Start Year: 01/01/1970
84	86505984	2	Screw, Cap, HH, G5, 7/16"-14 x 2-1/4", Start Year: 01/01/1970
85	C9NN2N109A	2	Clip, Retaining, 2100, 3100, 4100, 5100, NH-E Only, No Longer Serviced, Start Year: 01/01/1970
86	C9NN2N114A	1	Fitting Assy., Elbow, NH-E Only, No Longer Serviced, Start Year: 01/01/1970
87	C9NN2N101A	6	Support, Tubes at Fitting, NH-E Only, No Longer Serviced, Start Year: 01/01/1970
87	C9NN2N073C	1	Actuating Valve Assy., 2100, 3100, NH-E Only, No Longer Serviced, Start Year: 01/01/1970
88	C9NN2N073A	1	Actuating Valve Assy., 4100, NH-E Only, No Longer Serviced, Start Year: 01/01/1970
88	C9NN2N073B	1	Actuating Valve Assy., 5100, NH-E Only, No Longer Serviced, Start Year: 01/01/1970
88	C9NN17365B	1	Cable Assy., 32.70" (830.58mm) Length, 2100, 3100, 4100, NH-E Only, No Longer Serviced, Start Year: 01/01/1970
88	C9NN17365A	1	Cable Assy., 42.70" (1084.58mm) Length, 5100, NH-E Only, No Longer Serviced, Start Year: 01/01/1970

5000-SERIES 4 CYL TRACTOR (1/65-1/75)

02C01 POWER TRAILER BRAKE KIT (NH-E)

Ref	Part Number	Qty	Description
88	C9NN2N710A	1	Clevis, Rod, 2100, 3100, NH-E Only, No Longer Serviced, Start Year: 01/01/1970
88	C9NN2N091A	1	Rod, Pull, L.H., 2100, 3100, NH-E Only, No Longer Serviced, Start Year: 01/01/1970
88	C9NN2466A	1	Rod, Control, L.H., 4100, NH-E Only, No Longer Serviced, Start Year: 01/01/1970
88	C9NN2466B	1	Rod, Control, L.H., 5100, NH-E Only, No Longer Serviced, Start Year: 01/01/1970
88	C5NN2N468B	2	Washer, Control Rod, .575" (14.605mm) I.D., 4100, Start Year: 01/01/1970
88	C5NN2N467B	2	Fastener, Control Rod, 4100, Start Year: 01/01/1970

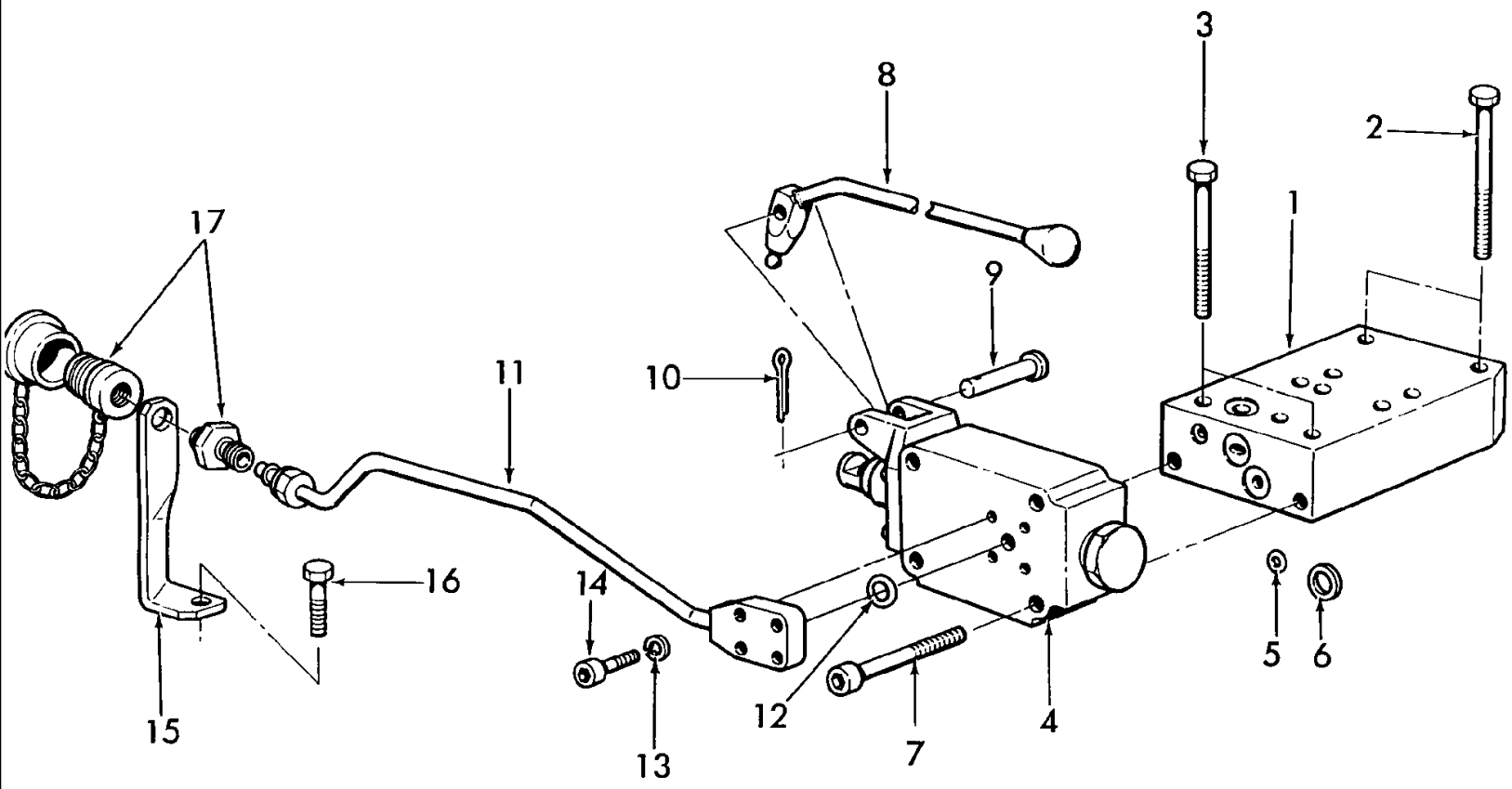
3
8
2
17
1
9
10
11
16
14
5
6
15
12
7
4
13

5000-SERIES 4 CYL TRACTOR (1/65-1/75)

02C02 HYDRAULIC TRAILER BRAKES (NH-E)

Ref	Part Number	Qty	Description
1	D5NN2N170A	1	Adaptor, Brake Valve to over, W/Load Monitor, 5100 Replaces D2NN2N170A, NH-E Only, No Longer Serviced, Start Year: 01/01/1973
1	D5NN2N170A	1	Adaptor, Brake Valve to Cover, L/Load Monitor, 5100, Replaces D2NN2N160A, NH-E Only, No Longer Serviced, Start Year: 01/01/1973
	358086S	1	Ball, Steel, 7/16", Part of D2NN2N170A, NH-E Only, No Longer Serviced, Start Year: 01/01/1973
	87034S94	3	O-Ring, .562" ID x .103" Thk, 5100, 7100, Start Year: 01/01/1973
	87034S94	5	O-Ring, .562" ID x .103" Thk, 3055, 3100, 4100, Start Year: 01/01/1973
	129270	1	O-Ring, 90 Duro, .414" ID x .072" Thk, Start Year: 01/01/1973
	87037S94	1	O-Ring, .750" ID x .103" Thk, Start Year: 01/01/1973
	130282	1	O-Ring, .489" ID x .070" Thk, 3055, 3100, 4100, Start Year: 01/01/1973
	70923568	1	O-Ring, 1.168" ID x .103" Thk, 3055, 3100, 4100, Start Year: 01/01/1973
2		2	Bolt, 7/16"-14 x 5.20", w/Remote Valve, 3055, 3100, 4100, NH-E Only, Years: 01/01/1973-09/30/1975
2		2	Bolt, 7/16"-14 x 4.38", w/A.S.C. Valve, 3055, 3100, 4100, NH-E Only, No Longer Serviced, Start Year: 01/01/1973
2		2	Bolt, 7/16"-14 x 4.85", w/Accessory Cover, 3055, 3100, 4100, NH-E Only, No Longer Serviced, Start Year: 01/01/1973
2	12934	2	Screw, Cap, HH, G5, 7/16"-14 x 3", W/Accessory Cover, 5100, 7100, Start Year: 01/01/1973
2		2	Bolt, 7/16"-14 x 3.83", w/Remote Valve, 5100, 7100, NH-E Only, Start Year: 01/01/1973
3		2	Bolt, 7/16"-14 x 2.57", w/Remote Valve, NH-E Only, No Longer Serviced, Start Year: 01/01/1973
3	12934	2	Screw, Cap, HH, G5, 7/16"-14 x 3", W/A.S.C. Valve, 3055, 3100, 4100, Start Year: 01/01/1973
3	12934	2	Screw, Cap, HH, G5, 7/16"-14 x 3", W/Accessory Cover, 5100, 7100, Start Year: 01/01/1973
3		2	Bolt, 7/16"-14 x 3.08", w/Accessory Cover, 3055, 3100, 4100, NH-E Only, No Longer Serviced, Start Year: 01/01/1973
4	D1NN2N073B	1	Valve Assy., Brake Actuating, NH-E Only, Start Year: 01/01/1973
5	87037S94	1	O-Ring, .750" ID x .103" Thk, Valve to Adaptor, 3055, 3100, 4100, 7100, Start Year: 01/01/1973
5	87037S94	1	O-Ring, .750" ID x .103" Thk, Valve to Adaptor, 5100 less Load Monitor, Start Year: 01/01/1973
5	129270	1	O-Ring, 90 Duro, .414" ID x .072" Thk, Valve to Adaptor, 5100 W/Load Monitor, Start Year: 01/01/1973
6	D2NNB997A	2	Seal, Oil, Valve to Adaptor, Start Year: 01/01/1973
7	D1NN2N162A	2	Bolt, Round HSH, Valve to Adaptor, NH-E Only, No Longer Serviced, Start Year: 01/01/1973
8	D6NN2N165B	1	Lever Assy., Actuating Valve, NH-E Only, Start Year: 01/01/1973
9	D1NN2N164A	1	Pin, Brake Valve Lever Pivot, NH-E Only, Start Year: 01/01/1973
10	80756	1	Pin, Split Cotter, 1/8" x 3/4", Lever Pivot Pin Retaining, Split, Start Year: 01/01/1973
11	D1NN2N156B	1	Tube Assy., Brake Valve to Coupling, 3055, 3100, 4100, NH-E Only, No Longer Serviced, Start Year: 01/01/1973
11	D6NN2N156C	1	Tube Assy., Brake Valve to Coupling, 5100, 7100, NH-E Only, No Longer Serviced, Start Year: 01/01/1973
12	274330	1	O-Ring, 90 Duro, .438" ID x .094" Thk, Tube to Valve, Start Year: 01/01/1973
13	D2NN2N173A	4	Washer, Lock, Tube to Valve, NH-E Only, Start Year: 01/01/1973
14	D1NN2N157A	4	Screw, HSH, Tube to Valve, NH-E Only, No Longer Serviced, Years: 01/01/1973-12/31/1976
15	D1NN2N159B	1	Bracket, Brake Coupling, 3055, 3100, 4100, NH-E Only, No Longer Serviced, Start Year: 01/01/1973
15	D2NN2N159A	1	Bracket, Brake Coupling, 5100, 7100, NH-E Only, No Longer Serviced, Start Year: 01/01/1973
16	58664S36	1	Bolt, 7/16"-14 x 3-3/4", Bracket to Cover, 3055, 3100, 4100, No Longer Serviced, Start Year: 01/01/1973

02C02 HYDRAULIC TRAILER BRAKES (NH-E)

Ref	Part Number	Qty	Description
16	43095S36	1	Screw, Cap, HH, G8, Self-Locking, 1/2"-13 x 1-3/4", Bracket to Cover, 5100, 7100, Start Year: 01/01/1973
17	E5NN2N158BA	1	Coupling Assy., Brake, Tractor Half, Start Year: 01/01/1973
17	D8NN2N158AA	1	Coupling Assy., Brake, Trailer Half, Start Year: 01/01/1973

03A05 FRONT AXLE, MANUAL STEERING & RELATED PARTS - 5100, 7100

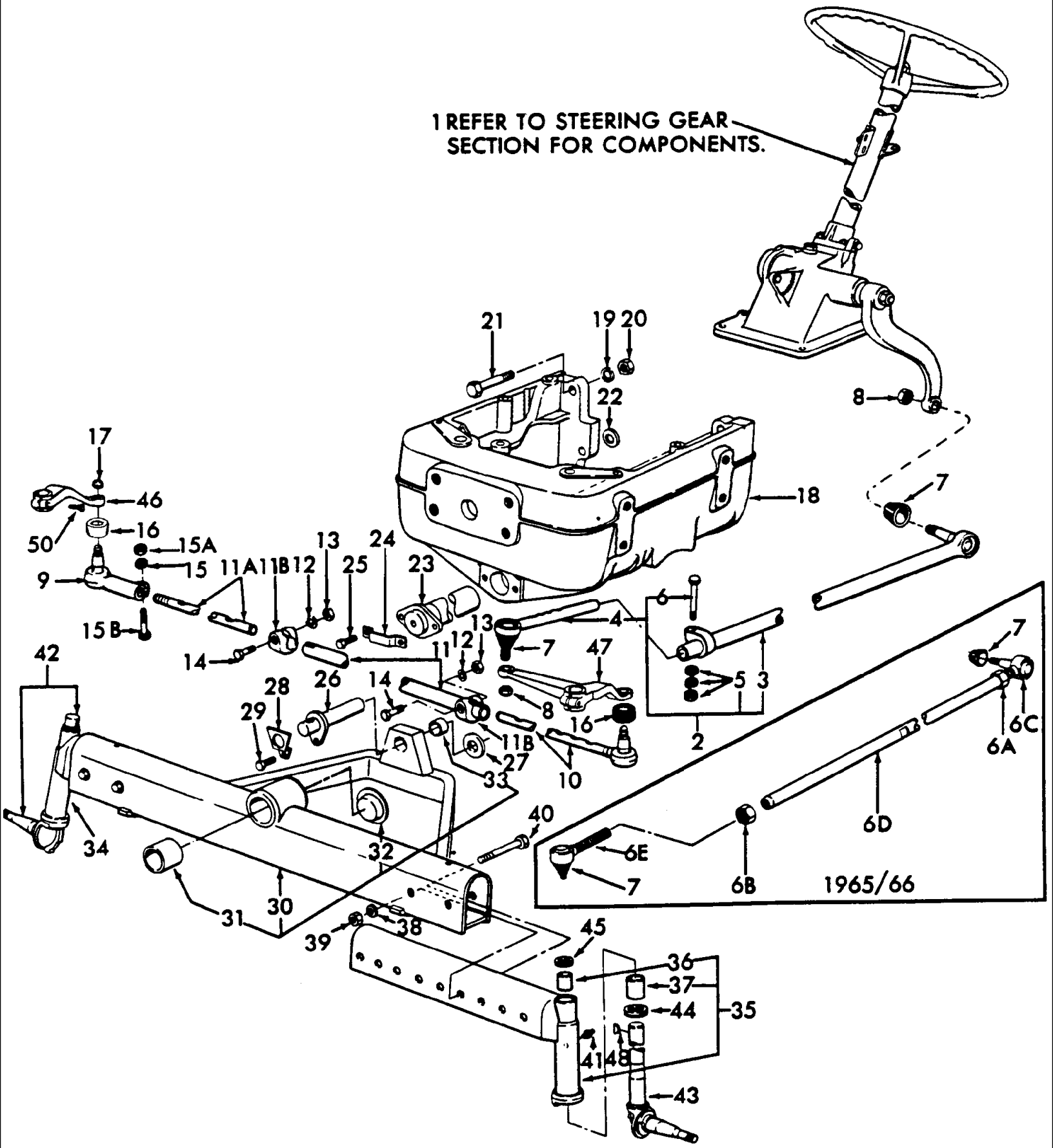

5000-SERIES 4 CYL TRACTOR (1/65-1/75)

03A05 FRONT AXLE, MANUAL STEERING & RELATED PARTS - 5100, 7100

Ref	Part Number	Qty	Description
1	REFERENCE	1	Gear Assy., See Steering Gear Section, Start Year: 01/01/1965
2	C7NN3304C	1	Link Assy., Drag, Includes: Ref. 3 thru 6, C7NN-3304-C Link Assy., replaces C5NN-3307-E End Assy., C5NN-3308-C End Assy & C5NN-3314-D Sleeve on 1965 & 1966 Tractors., Start Year: 01/01/1968
3	C7NN3307B	1	End Assy., Link, Rear, Start Year: 01/01/1968
4	C7NN3A300A	1	End Assy., Link, Front, Start Year: 01/01/1968
5	44734S8	1	Washer, 1/2", NHNA Only, No Longer Serviced, Years: 01/01/1968-08/31/1971
5	80679	1	Washer, Lock, 1/2", Start Year: 01/01/1968
5	280431	1	Nut, G5, 1/2"-13, Start Year: 01/01/1968
6	87972	1	Screw, Cap, HH, G5, 1/2"-13 x 2-1/2", Years: 01/01/1968-08/31/1971
6	87975	1	Screw, Cap, HH, G5, 1/2"-13 x 2-1/4", Start Year: 09/01/1971
6A	E3NN3C739AA	1	Nut, Connecting, Rod R.H., Years: 01/01/1965-12/31/1967
6B	E3NN3C739AA	1	Nut, Connecting Rod L.H., Years: 01/01/1965-12/31/1967
6C	C5NN3307E	1	End Assy., Link R.H., C7NN-3304-C Link Assy., replaces C5NN-3307-E End Assy., C5NN-3308-C End Assy & C5NN-3314-D Sleeve on 1965 & 1966 Tractors., No Longer Serviced (NHNA), Years: 01/01/1965-12/31/1967
6D	C5NN3314D	1	Sleeve, Link Adjusting, U.S. Only, C7NN-3304-C Link Assy., replaces C5NN-3307-E End Assy., C5NN-3308-C End Assy & C5NN-3314-D Sleeve on 1965 & 1966 Tractors., No Longer Serviced (NHNA), Years: 01/01/1965-12/31/1967
6E	C5NN3308C	1	End Assy., Link L.H., C7NN-3304-C Link Assy., replaces C5NN-3307-E End Assy., C5NN-3308-C End Assy & C5NN-3314-D Sleeve on 1965 & 1966 Tractors., Years: 01/01/1965-12/31/1967
7	C5NN3N634A	2	Cover, Link Dust, Start Year: 01/01/1965
8	380038S36	2	Nut, Hex, 5/8"-18, Start Year: 01/01/1965
	NS	1	Rod & Sleeve, Connecting, Adjustable Toe-In Type, Includes: Ref. 9 thru 15B, NHNA Only, Start Year: 06/01/1967
9	C5NN3280F	1	Rod Assy., Connecting, RH, Years: 01/01/1965-05/31/1967
9	C7NN3289E	1	End Assy., Connecting RH, Start Year: 06/01/1967
10	C5NN3281C	1	Rod Assy., Connecting LH, Years: 01/01/1965-05/31/1967
10	C7NN3280F	1	Rod Assy., Connecting LH, Start Year: 06/01/1967
11	C5NN3A449D	1	Sleeve Assy., Connecting, No Longer Serviced, Years: 01/01/1965-05/31/1967
11	C7NN3283A	1	Sleeve, Connecting, Part of C5NN-3B623-G, Start Year: 06/01/1967
11A	C5NN3282F	1	Rod, Connecting R.H., Part of C5NN-2B623-G, Start Year: 06/01/1967
11B	C5NN3287C	2	Clamp, Connecting Rod, Start Year: 06/01/1967
12	80679	AR	Washer, Lock, 1/2"
13	280431	AR	Nut, G5, 1/2"-13
14	87975	2	Screw, Cap, HH, G5, 1/2"-13 x 2-1/4", Start Year: 01/01/1965
15	80680	AR	Washer, Lock, 3/8"
15A	9628503	AR	Nut, G5, 3/8"-16
15B	88011	1	Screw, Cap, HH, G5, 3/8"-16 x 1-1/4", Part of C5NN-3B623-G, Start Year: 06/01/1967
16	C5NN3N634A	2	Seal, Dust, Start Year: 01/01/1965
17	380038S36	2	Nut, 5/8"-18, Start Year: 01/01/1965
18	NLS	1	Support, Less Bushings, Replaces C7MN3A042A {67NY3A042A}, Mexico Only, Start Year: 01/01/1968

03A05 FRONT AXLE, MANUAL STEERING & RELATED PARTS - 5100, 7100

Ref	Part Number	Qty	Description
18	C7NN3029E	1	Support Assy., No Longer Serviced, Years: 01/01/1965-08/31/1970
18	E5NN3029BA	1	Support Assy., Axle, Includes: Support &, Start Year: 09/01/1970
	C5NN3179A	2	Bushing, Lower, 1", 25.4mm Long, Except Mexico, Support Assy. is the same as with Power Steering. Bushings are required only if Power Steering is installed., Years: 10/01/1965-01/31/1966
	C5NN3179A	1	Bushing, Lower 1", 25.4mm Long, Except Mexico, Start Year: 02/01/1966
	C5NN3179B	1	Bushing, Upper, 1.38", (35.05mm) Long, Support Assy. is the same as with Power Steering. Bushings are required only if Power Steering is installed., Start Year: 02/01/1966
19	87340	AR	Washer, Lock, 3/4", US, Years: 01/01/1965-05/31/1966
20	83927122	AR	Nut, Hex, 3/4"-16
21	50159	6	Screw, Cap, HH, G5, 3/4"-10 x 3-3/4", US, No Longer Serviced (NHNA), Years: 01/01/1965-05/31/1966
22	C5NN3N150A	AR	Shim, Support, (.014/.015) (.356/.381mm), Start Year: 01/01/1965
22	C5NN3N150B	AR	Shim, Support, (.017/.018) (.432/.457mm), Start Year: 01/01/1965
22	C5NN3N150C	AR	Shim, Support, (.020/.022) (.508/.566mm), Start Year: 01/01/1965
22	C5NN3N150D	AR	Shim, Support, (.023/.025) (.584/.635mm), Start Year: 01/01/1965
22	C5NN3N150E	AR	Shim, Support, (.035/.038) (.660/.711mm), Start Year: 01/01/1965
23	C5NN3N159A	1	Pin Assy., Axle Front, Start Year: 01/01/1965
24	E2NN3N165AA	1	Anchor, Front Pin, Start Year: 01/01/1965
25	304668S36	2	Screw, Cap, HH, G5, 7/16"-14 x 7/8", Start Year: 01/01/1965
25	86977759	6	Screw, Cap, HH, G5, 3/4"-16 x 3-1/2", UK, Antwerp, No Longer Serviced (NHNA), Start Year: 01/01/1965
25	86977759	6	Screw, Cap, HH, G5, 3/4"-16 x 3-1/2", US, No Longer Serviced (NHNA), Start Year: 06/01/1966
26	C5NN3N160A	1	Pin Assy., Axle Rear, Start Year: 01/01/1965
27	C5NN3N450A	1	Washer, Rod Thrust, Start Year: 01/01/1965
28	E2NN3N169AB	1	Anchor, Rear Pin, Start Year: 01/01/1965
29	304668S36	1	Screw, Cap, HH, G5, 7/16"-14 x 7/8", Start Year: 01/01/1965
30	NLS	1	Axle & Bushing Assy., Includes: Axle & Ref. 31 thru 33 {67NY3A041A}, Mexico Only, Start Year: 01/01/196
30	D8NN3A041DA	1	Axle & Bushing Assy., Center, Replaces C5NN3A041J, Includes: Axle & Ref. 31 thru 33, Start Year: 01/01/1965
31	C5NN3153A	1	Bushing, Front Center Axle, Start Year: 01/01/1965
32	C5NN3N400A	1	Plug, Center Axle, Start Year: 01/01/1965
33	C5NN3446A	1	Bush/Bushing, Radius Rod, Start Year: 01/01/1965
34	NLS	1	Axle Assy., RH {67NY3006A}, Mexico Only, Start Year: 01/01/1965
34	C5NN3006A	1	Axle Assy., R.H., Start Year: 01/01/1965
35	NLS	1	Axle Assy., LH, Includes: Axle & Ref. 36 & 37 {67NY3007A}, Mexico Only, Start Year: 01/01/1968
35	C5NN3007A	1	Axle Assy., L.H., Includes: Axle & Ref. 36 & 37
36	C5NN3109A	2	Bush/Bushing, Spindle Upper, Start Year: 01/01/1965
37	C5NN3110A	2	Bush/Bushing, Spindle Lower, Start Year: 01/01/1965
38	C5NN3N030G	4	Spacer, Axle, Start Year: 01/01/1965
	34811S36	4	Washer, Lock, 5/8", Start Year: 01/01/1965
39	280374	AR	Nut, G5, 5/8"-11
40	302589S36	4	Screw, Cap, HH, G5, 5/8"-11 x 4-1/2", Start Year: 01/01/1965
41	80710	2	Fitting, Nipple, Lube, 1/8", Start Year: 01/01/1965

03A05 FRONT AXLE, MANUAL STEERING & RELATED PARTS - 5100, 7100

Ref	Part Number	Qty	Description
42	D2NN3105C	1	Spindle Assy., Front Wheel R.H., Use w/10 x 16 Front Tires, Start Year: 06/01/1973
42	C5NN3105M	1	Spindle Assy., RH, Start Year: 01/01/1965
43	C5NN3106J	1	Spindle Assy., L.H., Replaces C5NN3106A, Start Year: 01/01/1965
43	D2NN3106C	1	Spindle Assy., Front Wheel L.H., Use w/10 x 16 Front Tires, Start Year: 06/01/1973
44	C0NN3A299A	2	Bearing Assy., Spindle Thrust, Start Year: 01/01/1965
45	C0NN3A208A	2	Seal, Arm, Start Year: 01/01/1965
46	C5NN3130J	1	Arm, Spindle RH, Start Year: 01/01/1965
47	C5NN3131J	1	Arm, Spindle LH, Start Year: 01/01/1965
48	74195S	2	Key, Woodruff, 5/16" x 1-1/2", Start Year: 01/01/1965
50	304897S36	2	Screw, Cap, HH, G5, 5/8"-18 x 2-1/2", Start Year: 01/01/1965

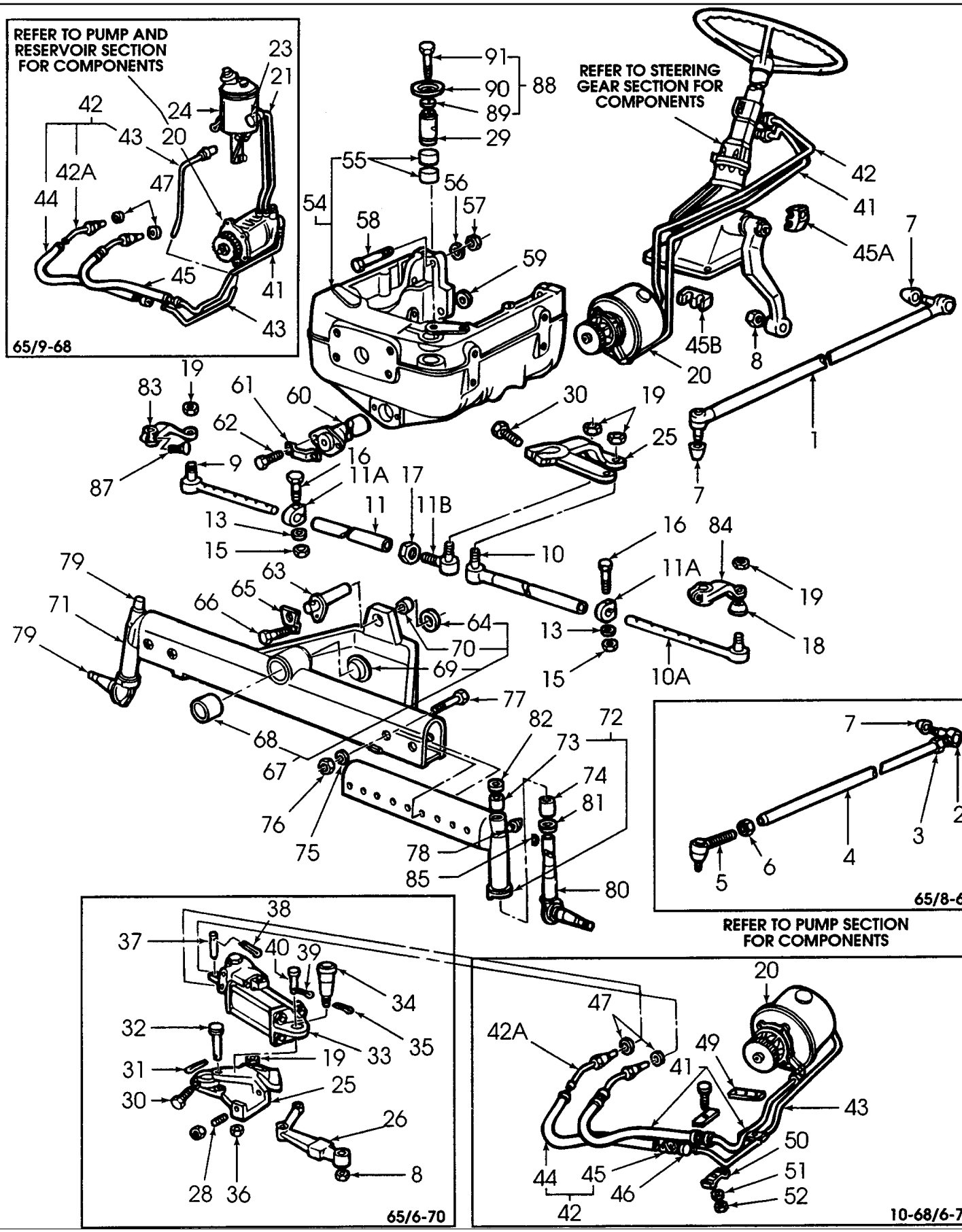
REFER TO PUMP AND RESERVOIR SECTION FOR COMPONENTS
65/9-68
REFER TO STEERING GEAR SECTION FOR COMPONENTS
REFER TO PUMP SECTION FOR COMPONENTS
65/8-67
65/6-70
10-68/6-70

5000-SERIES 4 CYL TRACTOR (1/65-1/75)

03A06 FRONT AXLE, POWER STEERING & RELATED PARTS - 5100, 7100

Ref	Part Number	Qty	Description
	REFERENCE	1	Gear Assy., See Steering Gear Section, Start Year: 01/01/1965
1	C5NN3304U	1	Link Assy., Drag, Years: 09/01/1967-08/31/1970
1	E0NN3304CA	1	Link Assy., Drag, Start Year: 09/01/1970
2	E3NN3307AA	1	End Assy., Drag Link Rear, Years: 01/01/1965-08/31/1967
3	E3NN3C739AA	1	Nut, Link End Rear, Years: 01/01/1965-08/31/1967
4	86550651	1	Sleeve, Link Adjusting, Years: 01/01/1965-08/31/1967
5	E3NN3308BA	1	End Assy., Link Front, Years: 01/01/1965-08/31/1967
6	E3NN3C740AA	1	Nut, Link End Front, Years: 01/01/1965-08/31/1967
7	C5NN3N634A	2	Cover, Link Dust, Start Year: 01/01/1965
7	C5NN3N634A	4	Cover, Link Dust, Hi-Clearance, Start Year: 01/01/1967
8	380038S36	2	Nut, HH, 5/8"-18, Start Year: 01/01/1965
9	C7NN3280E	1	Rod Assy., Connecting RH, L/FWD, Start Year: 01/01/1965
10	C7NN3B161A	1	Sleeve & End Assy., Arm L.H., Start Year: 09/01/1970
10A	C7NN3281A	1	Rod Assy., Arm LH, L/FWD, Start Year: 01/01/1965
11	C5NN3A449B	2	Sleeve Assy., Connecting, Years: 01/01/1965-08/31/1970
11	C7NN3B624B	1	Sleeve Assy., Connecting, Start Year: 09/01/1970
11	C5NN3A449G	2	Sleeve Assy., Connecting, Hi-Clearance, NHNA Only, No Longer Serviced, Start Year: 01/01/1967
11	C7NN3A449A	2	Sleeve Assy., Connecting, Hi-Clearance, NHNA Only, No Longer Serviced, Start Year: 01/01/1968
11A	C5NN3287C	2	Clamp, Sleeve, Start Year: 09/01/1970
11B	C7NN3289D	1	End Assy., Connecting, Center R.H., Start Year: 09/01/1970
11B	E3NN3307AA	2	End Assy., Connecting, Center R.H. & L.H., Years: 01/01/1965-08/31/1970
13	80679	2	Washer, Lock, 1/2", Start Year: 01/01/1965
14	44734S8	2	Washer, 1/2", NHNA Only, No Longer Serviced, Start Year: 01/01/1965
15	280431	2	Nut, G5, 1/2"-13, Start Year: 01/01/1965
16	87972	2	Screw, Cap, HH, G5, 1/2"-13 x 2-1/2", Years: 01/01/1965-08/31/1970
16	87975	2	Screw, Cap, HH, G5, 1/2"-13 x 2-1/4", Start Year: 09/01/1970
17	E3NN3C739AA	2	Nut, Connecting, End, Years: 01/01/1965-08/31/1970
17	E3NN3C739AA	1	Nut, Connecting End, Start Year: 09/01/1970
18	C5NN3N634A	4	Cover, Connecting Rod, Start Year: 01/01/1965
19	380038S36	4	Nut, 5/8"-18, Years: 01/01/1965-08/31/1970
19	55757S7	4	Nut, Lock, Hex, 5/8"-18, Start Year: 09/01/1970
20	E6NN3K514FA	1	Pump Assy., See Power Steering Pump Section, Start Year: 01/01/1965
20	E6NN3K514EA99M	1	Pump Assy., See Power Steering Pump Section, Start Year: 01/01/1965
21	C7NN3C633C	1	Tube Assy., Reservoir, Nut size 3/4"-18, No Longer Serviced (NH-E), Years: 01/01/1965-09/30/1968
22	C7NN3A563B	1	Tube Assy., Reservoir, Nut size 5/8"-18, No Longer Serviced (NH-E), Years: 01/01/1965-09/30/1968
23	82012719	2	Clamp, .50-.91 (12.7-23.11mm), Years: 01/01/1965-09/30/1968
24	D7NN3R700A	1	Reservoir Assy., See Pump Section, Start Year: 01/01/1965
24	D4NN3R700A	1	Reservoir Assy., See Pump Section, Start Year: 01/01/1965
24	E6NN3531FA	1	Reservoir Assy., See Pump Section, Start Year: 01/01/1965
25	C5NN3N670B	1	Arm, Center, Years: 01/01/1965-08/31/1970
25	D6NN3N670A	1	Arm, Center, Start Year: 09/01/1970

03A06 FRONT AXLE, POWER STEERING & RELATED PARTS - 5100, 7100

Ref	Part Number	Qty	Description
26	C5NN3N700B	1	Arm, Valve Actuating, No Longer Serviced (NH-E), Years: 01/01/1965-08/31/1970
28	301967S36	2	Screw, Set, HS, Oval Point, 1/2"-20 x 1-1/2", No Longer Serviced (NH-E), Years: 01/01/1965-08/31/1970
28	87309	2	Nut, Jam, G2, 1/2"-20, Use W/301967-S36, Years: 01/01/1965-08/31/1970
29	D1NN3N703A	1	Shaft, Center Arm, 3.90" Long, (9.96cm), Years: 01/01/1965-05/31/1966
29	C5NN3N703C	1	Shaft, Center Arm, 4.28" Long, (10.87cm), Start Year: 06/01/1966
29	304896S36	1	Screw, Cap, HH, G5, 5/8"-11 x 2-1/2", Start Year: 01/01/1965
31	80755	AR	Pin, Split Cotter, 1/8" x 1"
32	379662S36	1	Pin, 5/8" x 3-5/32" (15.88 x 80.17mm), Years: 01/01/1965-08/31/1970
33	C5NN3N500D	1	Cylinder & Valve Assy., See Cylinder Section, Years: 01/01/1965-08/31/1970
34	C5NN3N706A	1	Pin, Cylinder Anchor, Years: 01/01/1965-08/31/1970
35	72062S8	AR	Pin, Split Cotter, 1/8" x 1-3/8"
36	87446	1	Nut, Slotted, G2, 5/8"-18, Start Year: 01/01/1965
37	C5NN3N705C	1	Pin, Cylinder, .55" x 3.89" (13.97 x 100.58mm) Replaces C5NN-3N705-A, Years: 01/01/1965-08/31/1970
38	72037S8	2	Pin, Split Cotter, 3/16" x 1", No Longer Serviced (NHNA), Start Year: 01/01/1965
39	280251	1	Pin, Split Cotter, 3/32" x 1", Start Year: 01/01/1965
40	379661S43	1	Pin, Clevis, 5/16" x 1-3/16" (7.94 x 30.16mm) Use w/C5NN-3N500-A, NHNA Only, No Longer Serviced, Years: 01/01/1965-06/30/1965
40	380177S36	1	Pin, Clevis, 1/2" x 1-3/16" (12.7mm x 30.16mm) Use w/C5NN-3N500-D, Start Year: 07/01/1965
		1	Washer, Flat, 9/16", (14.29mm), Rod to Front Support, NH-E Only, No Longer Serviced, Start Year: 01/01/1965
41	D0NN3A562F	1	Tube Assy., Cylinder Pressure, Years: 01/01/1965-09/30/1968
41	D0NN3A562E	1	Tube Assy., Pump Pressure, Years: 10/01/1968-08/31/1970
41	D8NN3A562AA	1	Tube Assy., Pressure, Replaces C7NN3A562E, Start Year: 09/01/1970
42	C7NN3B569B	1	Tube Assy., Pump Return, Complete, Replaces C5NN3B569B, Includes: Ref. 42A thru 45, No Longer Serviced (NH-E), Years: 01/01/1965-09/30/1968
42	C7NN3B569D	1	Tube Assy., Cylinder Return, Complete, Includes: Ref. 42A thru 45, Years: 10/01/1968-08/31/1970
42	D8NN3B569BA	1	Tube Assy., Cylinder Return, Start Year: 09/01/1970
42A	C5NN3C566A	1	Tube Assy., Pump Return, Lower, Years: 01/01/1965-08/31/1970
43	C7NN3A563A	1	Tube Assy., Pump Return, Upper, Years: 01/01/1966-09/30/1968
43	C7NN3A563C	1	Tube Assy., Pump Return, Upper, No Longer Serviced, Years: 10/01/1968-08/31/1970
44	D1NN3A005A	1	Hose, Pump Return, No Longer Serviced (NH-E), Years: 01/01/1965-08/31/1970
45	D3NN3N671A	1	Guard, Hose Spring, No Longer Serviced (NH-E), Years: 01/01/1965-08/31/1970
45A	C7NN3E506B	1	Clamp, Retaining, Rear, Start Year: 09/01/1970
45B	C7NN3N573B	1	Clamp, Retaining, Front, Start Year: 09/01/1970
46	82012719	3	Clamp, 1/2" x .91" (12.7-23.11mm), Years: 01/01/1965-08/31/1970
47	87008S94	2	O-Ring, .375" ID x .070" Thk, Tubes to Cylinder, Start Year: 01/01/1965
48	C5NN3C510A	1	Bracket, Tube, Front, No Longer Serviced, Years: 01/01/1965-08/31/1970
49	C5NN3N562A	1	Bracket, Tube, Rear, No Longer Serviced (NH-E), Years: 01/01/1965-08/31/1970
50	C5NN3800A	2	Clamp, Tube, No Longer Serviced (NH-E), Years: 01/01/1965-08/31/1970
51	80682	2	Washer, Lock, 1/4", Years: 01/01/1965-08/31/1970
52	7770	2	Nut, Hex, 1/4"-20, Years: 01/01/1965-08/31/1970

03A06 FRONT AXLE, POWER STEERING & RELATED PARTS - 5100, 7100

Ref	Part Number	Qty	Description
53	9707580	2	Screw, Cap, HH, G5, 1/4"-20 x 3/4", Years: 01/01/1965-08/31/1970
54	C7NN3029E	1	Support Assy., Axle, Includes: Support & Ref. 55, No Longer Serviced, Years: 01/01/1965-08/31/1970
54	E5NN3029BA	1	Support Assy., Axle, Includes: Support & Ref. 55, Start Year: 09/01/1970
55	C5NN3179A	2	Bushing, Shaft, 1" Long, (25.4mm), Except Mexico, Years: 01/01/1965-01/31/1966
55	C5NN3179A	1	Bushing, Shaft, 1" Long, (25.4mm), Except Mexico, Start Year: 02/01/1966
55	C5NN3179B	1	Bushing, Shaft, Upper, 1.38" Long (35.05mm), Except Mexico, Start Year: 02/01/1966
56	87340	4	Washer, Lock, 3/4", US, Years: 01/01/1965-05/31/1966
57	34675S8	6	Nut, Hex, 3/4"-16, No Longer Serviced (NHNA), Years: 01/01/1965-08/31/1970
57	280954	6	Nut, G5, 3/4"-10, Start Year: 09/01/1970
58	SS55613ZDS	6	Screw, Cap, HH, G5, 3/4"-10 x 3-3/4", US, NHNA Only, Years: 01/01/1965-05/31/1966
58	SS31453ZDS	6	Bolt, Hex, 3/4"-16 x 3-1/2", U.S., NHNA Only, Years: 06/01/1966-08/31/1970
58	SS31453ZDS	6	Bolt, Hex, 3/4"-16 x 3-1/2", U.K. - Antwerp, Years: 01/01/1965-08/31/1970
58	304946S36	6	Screw, Cap, HH, G5, 3/4"-10 x 3-1/2", Start Year: 09/01/1970
59	C5NN3N150A	AR	Shim, Support, (.014/.015) (.356/.381mm), Start Year: 01/01/1965
59	C5NN3N150B	AR	Shim, Support, (.017/.018) (.432/.457 mm), Start Year: 01/01/1965
59	C5NN3N150C	AR	Shim, Support, (.020/.022) (.508/.559mm), Start Year: 01/01/1965
59	C5NN3N150D	AR	Shim, Support, (.023/.025) (.584/.635mm), No Longer Serviced, Start Year: 01/01/1965
59	C5NN3N150E	AR	Shim, Support, (.026/.028) (.660/.711mm), Start Year: 01/01/1965
60	C5NN3N159A	1	Axle Front Pin Assy., Start Year: 01/01/1965
61	E2NN3N165AA	1	Anchor, Front Pin, Start Year: 01/01/1965
62	304668S36	2	Screw, Cap, HH, G5, 7/16"-14 x 7/8", Start Year: 01/01/1965
63	C5NN3N160A	1	Rear Axle Pin Assy., Start Year: 01/01/1965
64	C5NN3N450A	1	Washer, Rod Thrust, Start Year: 01/01/1965
65	E2NN3N169AB	1	Anchor, Axle Rear Pin, Start Year: 01/01/1965
66	304668S36	1	Screw, Cap, HH, G5, 7/16"-14 x 7/8", Start Year: 01/01/1965
67	D8NN3A041DA	1	Center Axle & Bushing Assy., Replaces P/N C5NN3A041J, Includes: Axle & Ref. 68, Start Year: 01/01/1965
67	D8NN3A041DA	1	Center Axle & Bushing Assy., Hi-Clearance, Includes: Axle & Ref. 68, Start Year: 01/01/1968
67	C5NN3A041V	1	Center Axle & Bushing Assy., Hi Clearance, Includes: Axle & Ref. 68, NHNA Only, No Longer Serviced, Years: 01/01/1967-12/31/1967
68	C5NN3153A	1	Bushing, Center Axle, Start Year: 01/01/1965
69	C5NN3N400A	1	Plug, Center Axle, Start Year: 01/01/1965
70	C5NN3446A	1	Bush/Bushing, Radius Rod, Start Year: 01/01/1965
71	C5NN3006A	1	Axle Assy., R.H., Start Year: 01/01/1965
71	C7NN3006C	1	Axle Assy., R.H., Short, Orchard, Start Year: 06/01/1968
71	C5NN3006K	1	Axle Assy., R.H., Hi Clearance, NHNA Only, No Longer Serviced, Years: 01/01/1967-12/31/1967
71	C7NN3006E	1	Axle Assy., R.H., Hi Clearance, Start Year: 01/01/1968
72	C5NN3007A	1	Axle Assy., L.H., Includes: Axle and Ref. 73 & 74, Start Year: 01/01/1965
72	C5NN3007K	1	Axle Assy., L.H., Hi Clearance, Includes: Axle and Ref. 73 & 74, NHNA Only, No Longer Serviced, Years: 01/01/1967-12/31/1967
72	C7NN3007C	1	Axle Assy., L.H., Short, Orchard, Includes: Axle and Ref. 73 & 74, Start Year: 06/01/1968
72	C7NN3007E	1	Axle Assy., L.H., Hi Clearance, Includes: Axle and Ref. 73 & 74, Start Year: 01/01/1968

03A06 FRONT AXLE, POWER STEERING & RELATED PARTS - 5100, 7100

Ref	Part Number	Qty	Description
73	C5NN3109A	2	Bush/Bushing, Spindle, Upper, Start Year: 01/01/1965
73	C5NN3109A	2	Bush/Bushing, Spindle, Upper, Hi Clearance, Start Year: 01/01/1968
73	86531710	2	Bushing, Spindle, Upper, Hi Clearance, NHNA Only, Years: 01/01/1967-12/31/1967
74	C5NN3110A	2	Bush/Bushing, Spindle, Lower, Start Year: 01/01/1965
74	C5NN3110A	2	Bush/Bushing, Spindle, Lower, Hi Clearance, Start Year: 01/01/1968
74	312662	2	Bushing, Spindle, Lower, Hi Clearance, NHNA Only, Years: 01/01/1967-12/31/1967
75	C5NN3N030G	4	Spacer, Axle, Start Year: 01/01/1965
75	34811S36	4	Washer, Lock, 5/8", Start Year: 01/01/1965
76	280374	4	Nut, G5, 5/8"-11, Start Year: 01/01/1965
77	302589S36	4	Screw, Cap, HH, G5, 5/8"-11 x 4-1/2", Start Year: 01/01/1965
78	80710	2	Fitting, Nipple, Lube, 1/8", Start Year: 01/01/1965
79	C5NN3105M	1	Spindle Assy., R.H., Start Year: 01/01/1965
79	C5NN3105R	1	Spindle Assy., R.H., Hi Clearance, NHNA Only, No Longer Serviced, Years: 01/01/1967-12/31/1967
79	C5NN3105N	1	Spindle Assy., Front Wheel, R.H., Hi Clearance, Start Year: 01/01/1968
79	D2NN3105C	1	Spindle Assy., Front Wheel, R.H., 7/8"-14 Nut, Use W/10 x 16 Front Tires, Start Year: 06/01/1973
79	C7NN3105D	1	Spindle Assy., R.H., Short, Orchard, Start Year: 06/01/1968
80	C5NN3106J	1	Spindle Assy., L.H., Replaces P/N C5NN3106A, Start Year: 01/01/1965
80	C5NN3106L	1	Spindle Assy., L.H., Hi Clearance, NHNA Only, No Longer Serviced, Years: 01/01/1967-12/31/1967
80	C5NN3106K	1	Spindle Assy., L.H., Hi Clearance, Start Year: 01/01/1968
80	C7NN3106B	1	Spindle Assy., L.H., Short, Orchard, Start Year: 06/01/1968
80	D2NN3106C	1	Spindle Assy., Front Wheel, L.H., 7/8"-14 Nut, Use W/ 10 x 16 Front Tires, Start Year: 06/01/1973
81	C0NN3A299A	2	Spindle Thrust Bearing Assy., 2" I.D., Start Year: 01/01/1965
81	C0NN3A299A	2	Spindle Thrust Bearing Assy., 2" I.D., Hi Clearance, Start Year: 01/01/1968
81	C5NN3A299A	2	Spindle Thrust Bearing Assy., 1.48" I.D., Hi Clearance, Years: 01/01/1967-12/31/1967
82	C0NN3A208A	2	Seal, Arm, Start Year: 01/01/1965
83	C5NN3130A	1	Arm, Spindle, R.H., Start Year: 01/01/1965
83	C5NN3130K	1	Arm, Spindle, R.H., Hi Clearance, NHNA Only, No Longer Serviced, Years: 01/01/1967-12/31/1967
83	C5NN3130T	1	Arm, Spindle, R.H., Hi Clearance, No Longer Serviced, Start Year: 01/01/1968
84	C5NN3131A	1	Arm, Spindle, L.H., Start Year: 01/01/1965
84	C5NN3131K	1	Arm, Spindle, L.H., Hi Clearance, NHNA Only, No Longer Serviced, Years: 01/01/1967-12/31/1967
84	C5NN3131T	1	Arm, Spindle, L.H., Hi Clearance, No Longer Serviced, Start Year: 01/01/1968
85	74195S	2	Key, Woodruff, 5/16" x 1-1/2", Start Year: 01/01/1965
85	74195S	2	Key, Woodruff, 5/16" x 1-1/2", Hi-Clearance, Start Year: 01/01/1968
85	74189S	2	Key, Woodruff, 5/16" x 1-1/4", Hi-Clearance, NHNA Only, Years: 01/01/1967-12/31/1967
85	80679	2	Washer, Lock, 1/2", Hi-Clearance, Years: 01/01/1967-12/31/1967
85	280431	2	Nut, G5, 1/2"-13, Hi-Clearance, Years: 01/01/1967-12/31/1967
87		2	Screw, Cap, HH, G5, 5/8"-18 x 3", NH-E Only, Start Year: 01/01/1965
87		2	Screw, Cap, HH, G5, 5/8"-18 x 3", Hi Clearance, NH-E Only, Start Year: 01/01/1968
87	9637417	2	Screw, Cap, HH, G5, 1/2"-13 x 3-1/2", Hi-Clearance, Years: 01/01/1967-12/31/1967
88	0C	1	Kit, Center Arm Shaft Washer, Includes: Ref. 89 & 90, Years: 01/01/1965-05/31/1966
89	80702	1	Washer, 3/8", Years: 01/01/1965-05/31/1966

03A06 FRONT AXLE, POWER STEERING & RELATED PARTS - 5100, 7100

Ref	Part Number	Qty	Description
90	C5NN3N490A	1	Washer, Arm Shaft, No Longer Serviced, Years: 01/01/1965-05/31/1966
90	C5NN3N490B	1	Washer, Arm Shaft, Start Year: 06/01/1966
91	304629S36	1	Screw, Cap, HH, G5, 3/8"-24 x 1/2", Years: 01/01/1965-05/31/1966

03B03[A] POWER STEERING GEAR ASSEMBLY - 4100 (8-70/) 5100, 7100 (9-70/)

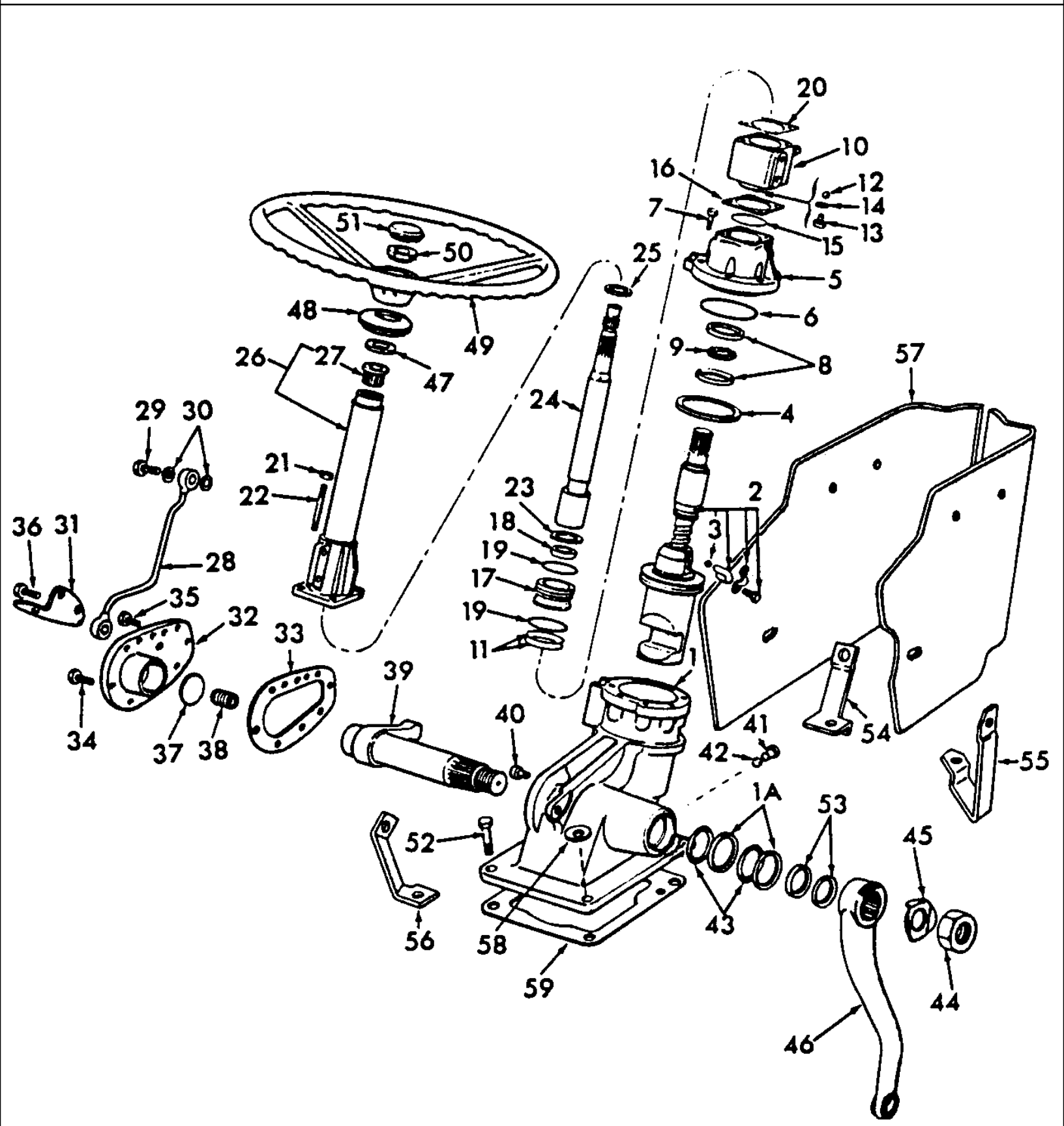

5000-SERIES 4 CYL TRACTOR (1/65-1/75)

03B03[A] POWER STEERING GEAR ASSEMBLY - 4100 (8-70/) 5100, 7100 (9-70/)

Ref	Part Number	Qty	Description
	E1NN3N503AC	1	Steering Gear Assy., 4100, Includes: Ref. 1 thru 44, Start Year: 08/01/1970
	E1NN3N503BC	1	Steering Gear Assy., 5100, 7100, Includes: Ref. 1 thru 44 (Not Shown), Start Year: 09/01/1970
	E1NN3N503BC	1	Steering Gear Assy., 5100, 7100, U.K.-Antwerp, Includes: Ref. 1 thru 44 (Not Shown), Start Year: 09/01/1970
1	E0NN3548BA	1	Housing Assy., Steering Gear, 4100, Includes: Housing & Ref. 1A (Not Shown), Start Year: 08/01/1970
1	E0NN3548AB	1	Housing Assy., Steering Gear, 5100, 7100, Includes: Housing & Ref. 1A (Not Shown), Start Year: 09/01/1970
1A	C9NN3R657A	2	Sleeve, Shaft Extension, 4100, NHNA Only, Start Year: 08/01/1970
1A	C9NN3R657B	2	Sleeve, Shaft Extension, 5100, 7100, U.S. (Not Shown), NHNA Only, Start Year: 09/01/1970
2	E1NN3N966AA	1	Nut & Shaft Assy., Steering Gear, 4100, U.S., Includes: Shaft & Nut Assy. plus Ref. 3, NHNA Only, Start Year: 08/01/1970
2	E1NN3N966AA	1	Nut & Shaft Assy., 4100, U.K.-Antwerp, Includes: Shaft & Nut Assy. plus Ref. 3, NH-E Only, When Replacing C9NN-3A710-A(81822014)w/D5NN-3A710-B(87765886) Supply (1) D5NN-3A526-E(83907569) Start Year: 08/01/1970
2	E1NN3N966BA	1	Nut & Shaft Assy., 5100, 7100, Includes: Shaft & Nut Assy. plus Ref. 3, Start Year: 09/01/1970
3	C9NN3647A	28	Ball, Steering Gear Worm, 5/16" Dia., Start Year: 08/01/1970
4	C9NN3B541A	2	Ring, Cylinder Piston, Start Year: 08/01/1970
5	D8NN3C737BA	1	Adaptor, Valve, Start Year: 08/01/1970
6	EGPN3N503AA	1	Seal, Adaptor, Included in EGPN-3N503-AA(83957121) Steering Gear Seal Kit., Start Year: 08/01/1970
7	E0NN3R673AA	7	Bolt, HH, 5/16"-24 x 1-1/8", Start Year: 08/01/1970
8	C9NN3E612A	2	Bearing, Worm Gear, Start Year: 08/01/1970
9	C9NN3647A	15	Ball, Worm Gear Bearing, 5/16" Dia., Start Year: 08/01/1970
10	C9NN3C516A	1	Housing Assy., Hydraulic Control Valve, 4100, Start Year: 08/01/1970
10	C9NN3C516B	1	Housing Assy., Hydraulic Control Valve, 5100, 7100, Start Year: 09/01/1970
11	EGPN3N503AA	2	Seal, Control Valve, Lower, Included in EGPN-3N503-AA(83957121) Steering Gear Seal Kit., Start Year: 08/01/1970
12	145222	1	Ball, Valve Housing, 3/8" Dia., Start Year: 08/01/1970
13	C9NN3C546A	1	Plug, Valve Port, Start Year: 08/01/1970
14	C9NN3R668A	1	Seal, Valve Plug, Start Year: 08/01/1970
15	EGPN3N503AA	1	Seal, Adaptor, Included in EGPN-3N503-AA(83957121) Steering Gear Seal Kit., Start Year: 08/01/1970
16	NS	AR	Shim, Gear Housing End Cover, .004", Start Year: 08/01/1970
16	C9NN3595B	AR	Shim, Gear Housing End Cover, .005", Start Year: 08/01/1970
16	C9NN3595C	AR	Shim, Gear Housing End Cover, .010", Start Year: 08/01/1970
16	C9NN3595A	AR	Shim, Housing End Cover, .025", Start Year: 08/01/1970
17	D6NN3R662A	1	Housing, Oil Seal, When replacing C9NN-3R662-A(81822006), also use (1) D2NN-3N632-A Seal(81826780), Start Year: 08/01/1970
18	E1NN3N632AA	1	Seal, Housing, Replaces D2NN-3N6321-A/B, Included in EGPN-3N503-AA(83957121) Steering Gear Seal Kit., Start Year: 08/01/1970
19	EGPN3N503AA	2	Seal, Control Valve, Upper, Included in EGPN-3N503-AA(83957121) Steering Gear Seal Kit., Start Year: 08/01/1970
20	C9NN3R665A	AR	Shim, Column, .005", Start Year: 08/01/1970

5000-SERIES 4 CYL TRACTOR (1/65-1/75)

03B03[A] POWER STEERING GEAR ASSEMBLY - 4100 (8-70/) 5100, 7100 (9-70/)

Ref	Part Number	Qty	Description
21	86509310	4	Nut, G5, 3/8"-24, Start Year: 08/01/1970
22	E0NN3R663AA	4	Stud, 3/8"-24 x 4", Start Year: 08/01/1970
23	C9NN3K570A	1	Bearing, Column, Lower, Start Year: 08/01/1970
24	D5NN3A526C	1	Shaft Assy., Use W/D5NN-3A710-C, Service Only, 5100,7100, When replacing D5NN-3A526-C(83907560) W/D8NN-3A526-DB(83946153) also use E0NN-3C529-GA(83928284) & D8NN-3N917-AA(83917395), Start Year: 09/01/1970
24	D8NN3A526DB	1	Shaft Assy., Start Year: 09/01/1970
24	D5NN3A526E	1	Shaft Assy., Use W/D5NN-3A710-B, Service Only, 4100, Start Year: 08/01/1970
25	C9NN3K538B	1	Bearing, Column, Upper, Start Year: 08/01/1970
26	E0NN3C529FA	1	Column Assy., Steering, 4100, Includes: Column & Ref. 27, Start Year: 08/01/1970
26	E0NN3C529GA	1	Column Assy., Steering, 5100, 7100, Includes: Column & Ref. 27, Start Year: 09/01/1970
27	C5NN3517A	1	Bushing Assy., Column, Start Year: 08/01/1970
28	C9NN3A536A	1	Tube Assy., Oil Return, Start Year: 08/01/1970
29	C9NN3N623A	2	Bolt, Tube, Start Year: 08/01/1970
30	E63GF9	4	Seal, Bolt, Start Year: 08/01/1970
31	C9NN3N516A	1	Bracket, Throttle Control, 4100, Start Year: 08/01/1970
31	C9NN3N516B	1	Bracket, Throttle Control, 5100, 7100, Start Year: 09/01/1970
32	C9NN3N583A	1	Cover Assy., Housing, Side, 4100, Start Year: 08/01/1970
32	C9NN3N583B	1	Cover Assy., Housing, Side, 5100, 7100, Start Year: 09/01/1970
33	C9NN3N598A	1	Gasket, Side Cover, Start Year: 08/01/1970
34	42997S100	7	Screw, Cap, HH, G5, Self-Locking, 3/8"-16 x 7/8", Start Year: 08/01/1970
35	42996S100	1	Screw, Cap, HH, G8, Self-Locking, 3/8"-16 x 3/4", Start Year: 08/01/1970
36	707851	2	Screw, Cap, HH, Self-Locking, G5, 3/8"-16 x 1", Start Year: 08/01/1970
37	C9NN3C629D	AR	Shim, Pitman Arm Shaft, .050", Start Year: 08/01/1970
37	C9NN3C629C	AR	Shim, Pitman Arm Shaft, .060", Start Year: 08/01/1970
37	C9NN3C629B	AR	Shim, Pitman Arm Shaft, .070", Start Year: 08/01/1970
38	C9NN3K676A	1	Spring, Rocker Shaft Location, Start Year: 08/01/1970
39	C9NN3575A	1	Shaft, Steering Gear Rocker, 4100, Start Year: 08/01/1970
39	C9NN3575B	1	Shaft, Steering Gear Rocker, 5100, 7100, Start Year: 09/01/1970
40	C9NN3A614A	1	Pin, Sector Roller, Start Year: 08/01/1970
41	C9NN3R661A	1	Guide, Piston, Start Year: 08/01/1970
42	C9NN3R669A	1	Seal, Piston Guide, Start Year: 08/01/1970
43	C9NN3C615A	2	Seal, Pitman Shaft, 4100, Start Year: 08/01/1970
43	C9NN3C615B	2	Seal, Pitman Shaft, 5100, 7100, Start Year: 09/01/1970
44	C7NN3N069A	1	Nut, Arm Retaining, 4100, Start Year: 08/01/1970
44	C7NN3N069B	1	Nut, Arm Retaining, 5100, 7100, Start Year: 09/01/1970
45	C7NN3N070A	1	Anchor, Steering Arm Nut, 4100, Start Year: 08/01/1970
45	C7NN3N070B	1	Anchor, Steering Arm Nut, 5100, 7100, Start Year: 09/01/1970
46	C7NN3590A	1	Arm, Steering Gear, 4100, Start Year: 08/01/1970
46	C7NN3590B	1	Arm, Steering Gear, 5100, 7100, Start Year: 09/01/1970
47	8N3570	1	Seal, Steering Column Dust, Start Year: 08/01/1970

03B03[A] POWER STEERING GEAR ASSEMBLY - 4100 (8-70/) 5100, 7100 (9-70/)

Ref	Part Number	Qty	Description
48	D2NN3A566B	1	Grommet, Steering Column Shroud, Replaces P/N C5NN-3A566-B, Start Year: 08/01/1970
49	D6NN3600B	1	Steering Wheel Assy., 18" (460.0mm) Dia., Replaces P/N D2NN-3600-B, Start Year: 08/01/1970
50	D5NN3N602A	1	Nut, Steering Wheel Retaining, Start Year: 08/01/1970
51	82002600	1	Cap, Hub, Start Year: 08/01/1970
52	87670	3/4	Screw, Cap, HH, G5, 1/2"-13 x 1-1/4", 4100, Start Year: 08/01/1970
52	C9NN3C765B	1	Bolt, HH, 1/2"-13 x 1-5/8", 4100 Germany, Start Year: 08/01/1970
52	C7NN3C765B	3/4	Bolt, HH, 9/16"-12 x 1-3/8", 5100, 7100, Start Year: 09/01/1970
53	C5NN3528A	2	Seal, Steering Arm Dust, Start Year: 08/01/1970
54	C7NN3R652A	1	Bracket, Gear Cover, R.H. Rear, 5100, Except Dual Power, Start Year: 09/01/1970
54	D2NN3R652A	1	Bracket, Cover, R.H. Rear, W/Dual Power, 5100, 7100, Start Year: 06/01/1973
55	C7NN3R653A	1	Bracket, Gear Cover, L.H. Rear, 5100, Except Dual Power, Start Year: 09/01/1970
55	D2NN3R653A	1	Bracket, Cover, L.H. Rear, W/Dual Power, 5100, 7100, Start Year: 06/01/1973
56	C7NN16N566A	1	Bracket, Gear Cover, R.H. Front, 5100, Except Dual Power, Start Year: 09/01/1970
56	D2NN16N566A	1	Bracket, Cover, R.H. Front, W/Dual Power, 5100, 7100, Start Year: 06/01/1973
57	C7NN3R654A	1	Cover, Gear, 5100, Start Year: 09/01/1970
58	44738S43	1	Washer, 9/16", 5100, Start Year: 09/01/1970
59	82845217	1	Gasket, Cover Mounting, 10 Speed, 5100, Start Year: 09/01/1970
	C5NN16N485A	3	Nut, Captive, Attach Cover to Brackets, Start Year: 08/01/1970
	50517S36	3	Screw, 1/4"-20 x 1-1/2", Cover to Brackets, Start Year: 08/01/1970
	D3NN3R733A	2	Ring, .8115"-.8120" (20.6525-20.612mm) O.D., Power Steering Dual, Service Only, 10 Speed, 5100, Start Year: 09/01/1970
	D3NN3A572A	2	Spacer, .37" - .39" (9.4 - 9.9mm) Thick, Power Steering Mounting, Service Only, 10 Speed, 5100, Start Year: 09/01/1970
	9849940	2	Screw, Cap, HH, G5, 9/16"-12 x 1-3/4" , Gear Assy. Mounting, Service Only, 5100, Start Year: 09/01/1970
	387025S	2	Washer, Flat, 9/16", Use W/Existing Mounting Bolts, Service Only, 10 Speed, Model 5100, Start Year: 09/01/1970
	D6NN3N531A	1	Plug, Steering Gear Oil Level, Part of #D5NN Gear Assys.
	D6NN3N858A	1	Washer, Oil Level Plug, Part of #D5NN Gear Assys.
	EDPN3500A	1	Kit, Seal Power Steering Gear, Includes: Ref. 14, 33, 42, 43, 53, P/N 87010S94 & Seal Kit EGPN3N503AA, Start Year: 08/01/1970
	EGPN3N503AA	1	Kit, Seal, part of Kit EDPN3500A, Includes: Ref. 6, 11, 15, 18 & 19
	129270	2	O-Ring, 90 Duro, .414" ID x .072" Thk, Included in Kit EDPN3500A

03B04 STEERING GEAR ASSEMBLY - 5100, 7100 POWER STEERING (65/8-70), MANUAL STEERING (65/)

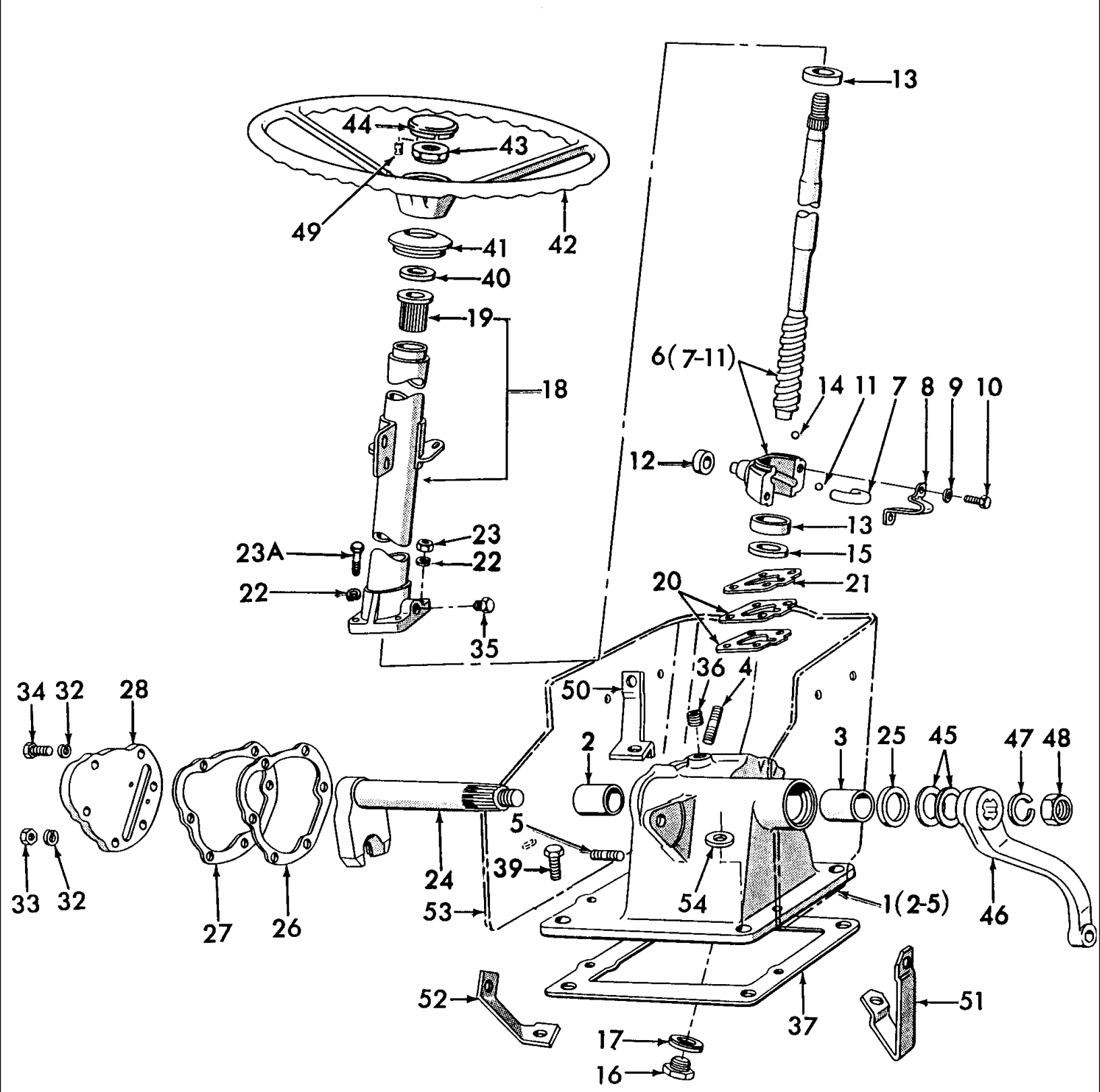

5000-SERIES 4 CYL TRACTOR (1/65-1/75)

03B04 STEERING GEAR ASSEMBLY - 5100, 7100 POWER STEERING (65/8-70), MANUAL STEERING (65/)

Ref	Part Number	Qty	Description
	C5NN3503E	1	Steering Gear Assy., Power Steering, Includes: Ref. 1 thru 36, No Longer Serviced, Years: 01/01/1965-08/31/1970
	D7NN3503A	1	Steering Gear Assy., Reverse Worm, Manual Steering, Includes: Ref. 1 thru 36, Start Year: 01/01/1965
1	C5NN3548F	1	Steering Gear Housing Assy., Replaces P/N C5NN-3548-A, Includes: Ref. 2 thru 5, No Longer Serviced (NHNA), Start Year: 01/01/1965
2	C5NN3N654B	1	Bush/Bushing, Sector, Inner, Start Year: 01/01/1965
3	C5NN3N654B	1	Bush/Bushing, Sector, Outer, Start Year: 01/01/1965
4	C5NN3N526A	4	Stud, Screw, 3/8"-16 x 1.44, NHNA Only, No Longer Serviced, Years: 01/01/1965-05/31/1968
4	88206	4	Screw, Cap, HH, G5, 3/8"-16 x 1", Housing to Column, UK, Antwerp, Years: 01/01/1965-05/31/1968
5	88376S8	2	Screw, 5/16"-24-18 x 1-5/16", Start Year: 01/01/1965
6	C5NN3A710A	1	Nut & Shaft Assy., 28.65" Long, Includes: Ref. 7 thru 11, Upon Installation, Threaded End Will Spiral Counterclockwise Away from the Steering Wheel, Years: 01/01/1965-08/31/1970
6	D2NN3A710A	1	Nut & Shaft Assy., 28.65" Long, Replaces C5NN-3A710-B, Includes: Ref. 7 thru 11, Upon Installation, Threaded End Will Spiral Clockwise Away from the Steering Wheel (Reverse Worm), Start Year: 01/01/1965
7	NS	1	Tube, Main Nut Transfer, NHNA Only, Start Year: 01/01/1965
8	NS	1	Retainer, Transfer Tube, NHNA Only, Start Year: 01/01/1965
9	80682	2	Washer, Lock, 1/4", Start Year: 01/01/1965
10	C5NN3N541C	2	Bolt, HH, 1/4"-26 x 1/2", Replaces C5NN-3N541-B, Start Year: 01/01/1965
11	145222	14	Ball, 3/8" Diameter, Gear Worm, Start Year: 01/01/1965
12	E1ADKN3572	1	Roller, Gear Main Nut, Start Year: 01/01/1965
13	E1ADKN3556	2	Race, Ball Shaft, Start Year: 01/01/1965
14	145222	20	Ball, Bearing, 3/8" Diameter, Start Year: 01/01/1965
15	C5NN3N551B	1	Spacer, Race Packing, Start Year: 01/01/1965
16	E1ADKN3554	1	Plug, Housing Oil, HH, 1-1/8"-26, NH-E Only, Years: 01/01/1965-08/31/1966
17	E1ADKN33557	1	Washer, Housing Oil Plug, NH-E Only, No Longer Serviced, Years: 01/01/1965-08/31/1966
18	D7NN3N884D	1	Steering Column Assy., Includes: Ref. 19, NHNA Only, Years: 01/01/1965-08/31/1966
18	D7NN3N884D	1	Steering Column Assy., Includes: Ref. 19, NHNA Only, Start Year: 09/01/1966
18	D7NN3N884D	1	Steering Column Assy., Includes: Ref. 19, NH-E Only, Start Year: 01/01/1965
19	C5NN3517A	1	Bush/Bushing Assy., Column, Upper, Start Year: 01/01/1965
20	C5NN3595G	2	Gasket, Housing End Cover, .010, Paper, Years: 01/01/1965-08/31/1966
20	CJPN3593A	1	Gasket Set, Housing End Cover (Consists of (2) .005" Thick Gaskets) for Columns, L/Oil Plug Hole, Start Year: 09/01/1966
21	C5NN3595E	AR	Shim, Housing Cover, .003, Steel, No Longer Serviced, Years: 01/01/1965-08/31/1966
21	C5NN3595J	AR	Shim, Housing Cover, .003, Steel, Start Year: 09/01/1966
21	C5NN3595F	AR	Shim, Housing Cover, .010, Steel, No Longer Serviced (NHNA), Years: 01/01/1965-08/31/1966
21	C5NN3595H	AR	Shim, Housing Cover, .010, Steel, Start Year: 09/01/1966
22	80680	AR	Washer, Lock, 3/8", Years: 01/01/1965-05/31/1968
23	9628503	4	Nut, G5, 3/8"-16, Years: 01/01/1965-05/31/1968
23A	87975	4	Screw, Cap, HH, G5, 1/2"-13 x 2-1/4", Start Year: 06/01/1968
24	C5NN3575A	1	Shaft, Sector, Start Year: 01/01/1965

5000-SERIES 4 CYL TRACTOR (1/65-1/75)

03B04 STEERING GEAR ASSEMBLY - 5100, 7100 POWER STEERING (65/8-70), MANUAL STEERING (65/)

Ref	Part Number	Qty	Description
25	C5NN3C615B	1	Seal, Shaft, 1-1/2" I.D. x 2 O.D. x 1/4", Start Year: 01/01/1965
26	C5NN3N598A	2	Gasket, Housing Side Cover, .010, Paper, Start Year: 01/01/1965
27	C5NN3N597A	AR	Shim, Housing Side Cover, .005, Steel, Start Year: 01/01/1965
27	C5NN3N597B	AR	Shim, Housing Side Cover, .010, Steel, Start Year: 01/01/1965
28	D5NN3N583D	1	Side Cover Assy, Start Year: 01/01/1965
32	80681	6	Washer, Lock, 5/16", Start Year: 01/01/1965
33	86629539	2	Nut, G5, 5/16"-24, Start Year: 01/01/1965
34	9635884	4	Screw, Cap, HH, G5, 5/16"-18 x 1", Start Year: 01/01/1965
35	E493A3538	1	Plug, Oil Filler, 1/4"-18, No Longer Serviced, Years: 01/01/1965-08/31/1966
36	C5NN3538A	1	Plug, Headless, 1/2"-14 x 9/16", No Longer Serviced (NHNA), Years: 01/01/1965-08/31/1966
36	D6NN3N531A	1	Plug, Housing Oil Level, Replaces C5NN-3N531-B, Used w/Ref. 28, Start Year: 09/01/1966
36	D6NN3N858A	1	Washer, Oil Level Plug, Use W/D6NN-3N531-A, Used w/Ref. 28
37	C5NN3C715C	1	Gasket, Transmission Case, 10 Speed, Power Steering, Years: 01/01/1965-08/31/1970
39	C7NN3C765B	4	Bolt, HH, 9/16"-12 x 1-3/8", Start Year: 01/01/1965
40	8N3570	1	Seal, Column Dust, Years: 01/01/1965-09/30/1977
40	D8NN3N898AA	1	Seal, Column Dust, Start Year: 10/01/1970
41	D2NN3A566B	1	Grommet, Column Shroud, Replaces C5NN-3A566-B, Start Year: 01/01/1965
42	D6NN3600B	1	Steering Wheel Assy., 18" (460mm) Diameter, Replaces C5NN-C & D2NN-B, Start Year: 01/01/1965
42	D6NN3600B	1	Steering Wheel Assy., Orchard, Start Year: 06/01/1968
43	D5NN3N602A	1	Nut, Wheel Retaining, Start Year: 01/01/1965
44	82002600	1	Cap, Wheel Hub, Start Year: 01/01/1965
45	C5NN3528A	2	Seal, Arm Dust, Start Year: 01/01/1965
46	C5NN3590A	1	Arm, Gear Pitman, Start Year: 01/01/1965
47	88695	AR	Washer, Lock, 1-1/8"
48	34698S36	1	Nut, Hex, 1-1/8"-12, Start Year: 01/01/1965
49	C5NN3N649A	3	Clip, Hub Cab, Retaining, Start Year: 01/01/1965
50	C7NN3R652A	1	Bracket, Cover, L.H., Rear, Start Year: 09/01/1970
51	C7NN3R653A	1	Bracket, Cover, L.H., Rear, Start Year: 09/01/1970
52	C7NN16N566A	1	Bracket, Cover, R.H., Front, Start Year: 09/01/1970
53	C7NN3R654A	1	Cover, Start Year: 09/01/1970
54	44738S43	1	Washer, 9/16", No Longer Serviced (NHNA), Start Year: 09/01/1970

03C01[B] POWER STEERING PUMP, RESERVOIR & RELATED PARTS, 4200 (66/73), 5200 & 7200 (67/3-73)

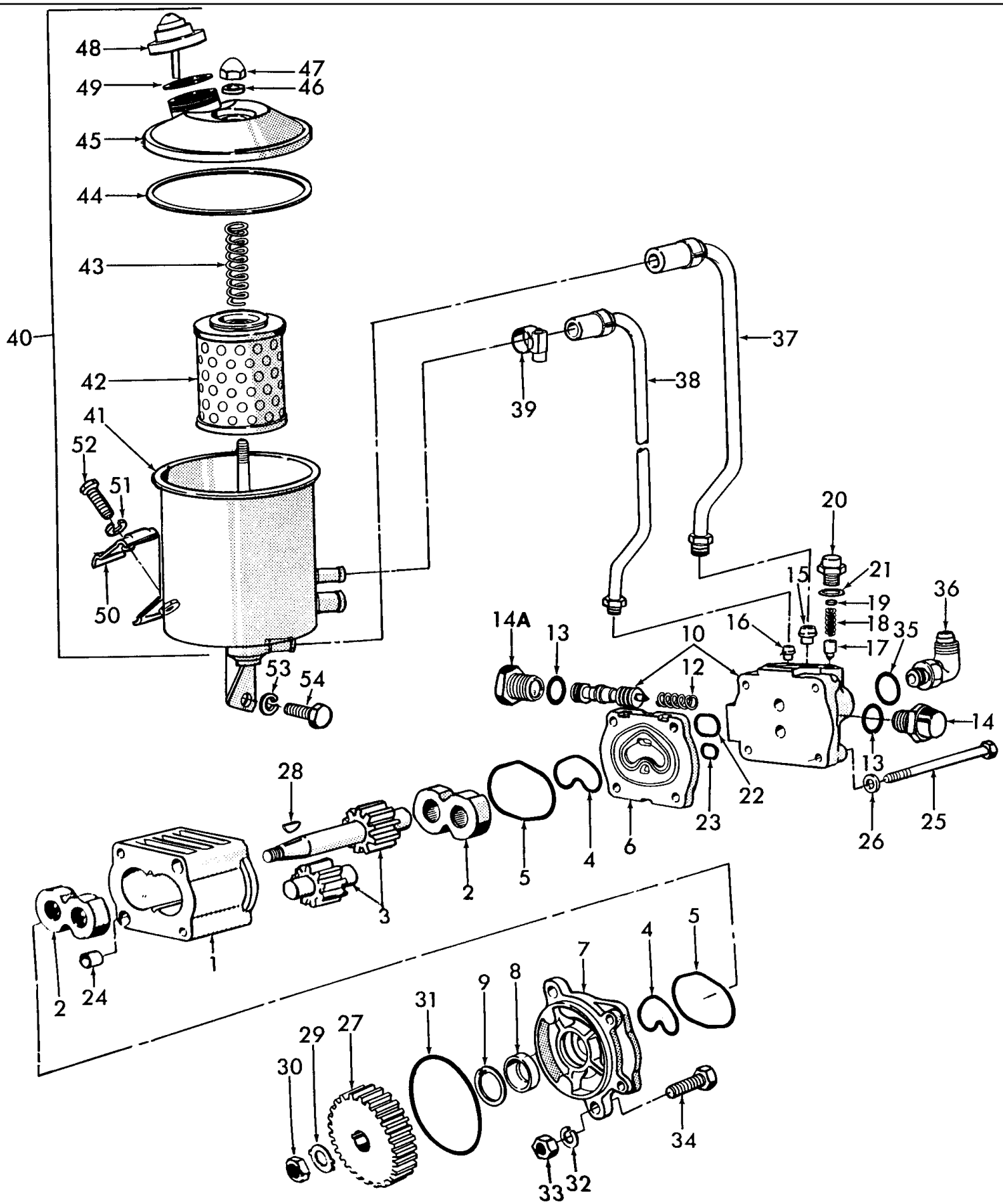

5000-SERIES 4 CYL TRACTOR (1/65-1/75)

03C01[B] POWER STEERING PUMP, RESERVOIR & RELATED PARTS, 4200 (66/73), 5200 & 7200 (67/3-73)

Ref	Part Number	Qty	Description
	C7NN3A674G	1	Power Steering Pump Assy., 1100 PSI, 3.5 U.S. Gallon at 1000 RPM, 4200, Includes: Ref. 1 thru 26, Years: 01/01/1966-12/31/1973
	C7NN3A674G	1	Power Steering Pump Assy., 1100 PSI, 3.5 U.S. Gallon at 1000 RPM, 5200, 7200, Includes: Ref. 1 thru 26, Years: 01/01/1967-03/31/1973
1	NSS	1	Body, Pump, NHNA Only, Start Year: 01/01/1965
2	C5NN3N560A	2	Pump Bearing & Bushing Assy., No Longer Serviced, Must Order Pump Assy., Start Year: 01/01/1965
3	CEPN3650A	1	Gear Set, Pump, Drive & Driven Gear, No Longer Serviced (NHNA), Start Year: 01/01/1965
4	D2NN3R543A	2	Seal, Pump, Inner, Start Year: 01/01/1965
5	83925949	2	O-Ring, M65 ID x 2.03 Thk, Pump, Outer, NH-E Only, Start Year: 01/01/1965
6	C7NN3N592A	1	Plate, Pump, No Longer Serviced (NHNA), Start Year: 01/01/1965
7	C7NN3C535B	1	Flange, Pump, 4200, Start Year: 01/01/1966
7	C7NN3C535B	1	Flange, Pump, 5200, 7200, Years: 01/01/1967-03/31/1973
8	83925002	3	Seal, Pump Drive Gear, Years: 01/01/1966-03/31/1973
9	CAR40181	1	Ring, Pump Drive Gear Seal, Start Year: 01/01/1965
10	D0NN3N695A	1	Valve Seat Cover & Spool Assy., Start Year: 01/01/1965
12	C5NN3N741A	1	Spring, Pump Spool, Start Year: 01/01/1965
13	372838S	2	O-Ring, 90 Duro, .687" ID x .070" Thk, Spool Return Plug, Start Year: 01/01/1965
14	C5NN3N537B	1	Plug, Pump Spool Retaining, No Longer Serviced, Start Year: 01/01/1965
14A	C9NN3N537A	1	Plug, Pump Spool Retaining, Start Year: 01/01/1965
15	C5NN3N717A	1	Ferrule, Pump Inlet, No Longer Serviced, Start Year: 01/01/1965
16	C5NN3N718A	1	Ferrule, Pump Exhaust, No Longer Serviced (NH-E), Start Year: 01/01/1965
17	C5NN3B694A	1	Valve, Pump, Start Year: 01/01/1965
18	C5NN3N740B	1	Spring, Pump Valve, Start Year: 01/01/1965
19	C5NN3N530A	AR	Shim, Pump Valve, Start Year: 01/01/1965
20	C7NN3N534A	1	Plug, Pump Valve Retaining, Start Year: 01/01/1965
21	E1ADKN994567	1	Seal, Pump Valve Retaining Plug, Start Year: 01/01/1965
22	87026S94	1	O-Ring, 1.125" ID x .070" Thk, Cover to Plate, Large, Start Year: 01/01/1965
23	9991976	1	O-Ring, 90 Duro, .739" ID x .070" Thk, Cover to Plate, Small, Start Year: 01/01/1965
24	81803045	2	Sleeve, Pump Bolt, Start Year: 01/01/1965
25	C5NN3N533C	4	Bolt, Pump, No Longer Serviced, Start Year: 01/01/1965
26	80680	4	Washer, Lock, 3/8", Pump Bolt, Start Year: 01/01/1965
27	81803249	1	Gear, Pump Drive, No Longer Serviced (NH-E), Start Year: 01/01/1965
28	84071	1	Key, Woodruff #5, 1/8" x 5/8", Start Year: 01/01/1965
29	81810159	1	Washer, Lock, 7/16", Retaining Tab, Start Year: 01/01/1965
30	87891	1	Nut, Jam, G2, 7/16"-20, Gear to Shaft, Start Year: 01/01/1965
31	379275S94	1	O-Ring, 3.23 I.D., Start Year: 01/01/1965
32	80680	1	Washer, Lock, 3/8", Start Year: 01/01/1965
33	9628503	1	Nut, G5, 3/8"-16, Start Year: 01/01/1965
34	280161	2	Screw, Cap, HH, G5, 3/8"-16 x 3", Start Year: 01/01/1965
35	9617873	1	O-Ring, 90 Duro, .468" ID x .078" Thk, Pump Elbow, 4200, Start Year: 01/01/1965
35	9617873	1	O-Ring, 90 Duro, .468" ID x .078" Thk, Pump Elbow, 5200, 7200, Years: 01/01/1967-03/31/1973

03C01[B] POWER STEERING PUMP, RESERVOIR & RELATED PARTS, 4200 (66/73), 5200 & 7200 (67/3-73)

Ref	Part Number	Qty	Description
36	C5NN3N668C	1	Pump Outlet Adapter Assy., 4200, NHNA Only, No Longer Serviced, Start Year: 01/01/1966
37	C7NN3C633D	1	Tube, Pump to Reservoir, 5200, 7200, Replaces P/N C5NN3C633G, NHNA Only, No Longer Serviced, Years: 01/01/1967-03/31/1973
38	C7NN3A563B	1	Tube Assy., Pump to Reservoir, 5/8"-18, 4200, No Longer Serviced (NH-E), Start Year: 01/01/1965
38	C7NN3B714C	1	Tube Assy., Pump to Reservoir, 5200, 7200, Years: 01/01/1967-03/31/1973
39	82012719	2/3	Clamp, Tube to Reservoir,(.50 - .91), Start Year: 01/01/1965
40	D2NN3531B	1	Pump Reservoir Assy., 4200, Includes: Ref. 41 thru 49, No Longer Serviced, Years: 01/01/1965-12/31/1973
40	D1NN3531A	1	Pump Reservoir Assy., 5200, 7200, Includes: Ref. 41 thru 49, NHNA Only, No Longer Serviced, Years: 01/01/1966-03/31/1973
41	NSS	1	Reservoir, NHNA Only, Start Year: 01/01/1965
42	C7NN3N538A	1	Element, Oil Reservoir Filter, Start Year: 01/01/1965
43	C5NN3N585B	1	Spring, Reservoir Element, Start Year: 01/01/1965
44	C5NN3D587B	1	Seal, Reservoir Cover, Start Year: 01/01/1965
45	C5NN3A582B	1	Oil Reservoir Cover Assy., No Longer Serviced, Start Year: 01/01/1965
46	C5NN3N446A	1	Seal, Reservoir Cover Nut, Start Year: 01/01/1965
47	C5NN3N495A	1	Nut, Reservoir Cover, No Longer Serviced, Start Year: 01/01/1965
48	D2NN3A006A	1	Reservoir Cap Assy., Start Year: 01/01/1965
49	C5NN3N445A	2	Seal, Reservoir Cap, Start Year: 01/01/1965
50	C5NN3N656A	1	Clamp, Reservoir Mounting Bracket, 4200, No Longer Serviced, Start Year: 01/01/1965
51	80681	1	Washer, Lock, 5/16", 4200, Start Year: 01/01/1965
52	9635884	1	Screw, Cap, HH, G5, 5/16"-18 x 1", 4200, Start Year: 01/01/1965
53	80680	1	Washer, Lock, 3/8", 4200, Start Year: 01/01/1965
54	88434	1	Screw, Cap, HH, G5, 3/8"-16 x 3/4", Reservoir to Cylinder Head, 4200, Start Year: 01/01/1965
	80681	3	Washer, Lock, 5/16", 5200, 7200, Years: 01/01/1967-03/31/1973
	80664	1	Washer, 5/16", 5200, 7200, Years: 01/01/1967-03/31/1973
	9635082	3	Nut, G5, 5/16"-18, Models 5200, 7200, Years: 01/01/1967-03/31/1973
	87872	3	Screw, Cap, HH, G5, 5/16"-18 x 3/4", Reservoir Attaching, 5200, 7200, Years: 01/01/1967-03/31/1973
	DHPN3A674A	1	Kit, Power Steering Pump Seal, Includes: Parts Listed Below, Start Year: 01/01/1965
	D2NN3R542A	2	Seal
	D2NN3R543A	2	Seal
	83925002	1	Seal
	83925002	3	Seal
	E1ADKN994567	1	Seal
	372838S	2	O-Ring, 90 Duro, .687" ID x .070" Thk
	87026S94	1	O-Ring, 1.125" ID x .070" Thk
	9991976	1	O-Ring, 90 Duro, .739" ID x .070" Thk
	379275S94	1	O-Ring, 3.23" ID x .103" Thk
	9617873	1	O-Ring, 90 Duro, .468" ID x .078" Thk

03C02 POWER STEERING PUMP & RESERVOIR, 2100, 2110, 3100, 4100, 4110, 5100 & 7100 (10-68/)

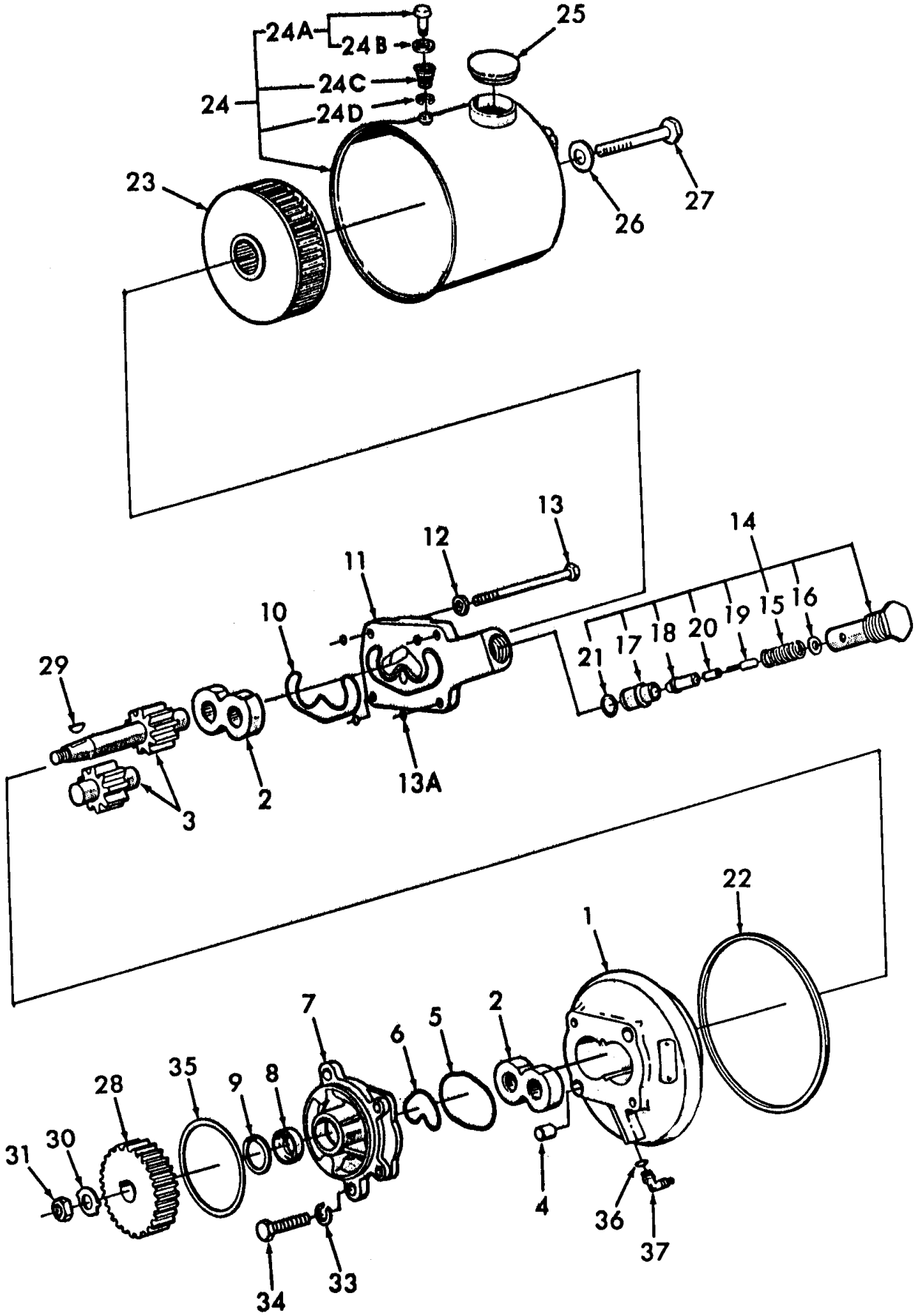

5000-SERIES 4 CYL TRACTOR (1/65-1/75)

03C02 POWER STEERING PUMP & RESERVOIR, 2100, 2110, 3100, 4100, 4110, 5100 & 7100 (10-68/)

Ref	Part Number	Qty	Description
1	E6NN3K514DA	1	Pump & Reservoir Assy., 650 PSI, 2.74 U.S. Gal at 1000 RPM, 2100, 2110, 3100, 4110, Includes: Ref. 1 thru 27, Start Year: 10/01/1968
1	E6NN3K514FA	1	Pump & Reservoir Assy., 1100 PSI, 2.74 U.S. Gal at 1000 RPM, 5100, (Replaces C9NN-3A674-E), Includes: Ref. 1 thru 27, Years: 10/01/1968-06/30/1970
1	E6NN3K514CA	1	Pump & Reservoir Assy., 850 PSI, 2.74 U.S. Gal at 1000 RPM, Red, 4100, Includes: Ref. 1 thru 27, Years: 04/01/1973-09/30/1976
1	E6NN3K514EA99M	1	Pump & Reservoir Assy., 1100 PSI, 2.74 U.S. Gal at 1000 RPM, 4100 (Replaces C9NN-3A674-D), Includes: Ref. 1 thru 27, Start Year: 04/01/1970
1	E6NN3K514EA99M	1	Pump & Reservoir Assy., 1100 PSI, 2.74 U.S. Gal at 1000 RPM, 5100, 7100, Includes: Ref. 1 thru 27, Start Year: 07/01/1970
1A	NSS	1	Body, Pump, NHNA Only, Start Year: 10/01/1968
2	C5NN3N560A	2	Bearing & Bushing Assy., Pump, No Longer Serviced, Start Year: 10/01/1968
3	NSS	1	Gear Set, Pump, Includes: (1) Drive & (1) Drive Gear, NHNA Only, Start Year: 10/01/1968
4	81803045	2	Sleeve, Drive Gear Seal, Start Year: 10/01/1968
5	D2NN3R542A	1	Seal, Pump Outer, 2.55", 64.77mm Dia., Replaces C7NN-3R542-A, Start Year: 10/01/1968
6	D2NN3R543A	1	Ring, Seal, Pump, Inner, Replaces C7NN-3R543-A, Start Year: 10/01/1968
7	E0NN3C535AA	1	Flange, Pump, Excludes 5200, 7200, Start Year: 10/01/1968
7	E0NN3C535AA	1	Flange, Pump, Start Year: 04/01/1973
8	83925002	1	Seal, See Service Bulletin 3/84-T4, Start Year: 10/01/1968
9	CAR40181	1	Ring, Pump Drive Gear Seal, Snap, Start Year: 10/01/1968
10	D2NN3R656A	1	Seal, Pump Cover, Start Year: 10/01/1968
11	E6NN3B681AA	1	Cover, Pump, Start Year: 10/01/1968
12	81821693	4	Washer, Lock, 3/8", Start Year: 10/01/1968
13	9637240	4	Screw, Cap, HH, G5, 3/8"-16 x 3-1/4", Pump, Start Year: 10/01/1968
13A	49861	4	O-Ring, .362" ID x .103" Thk, Body Thru Bolt Hole, Start Year: 07/01/1969
13A	49861	1	.362" ID x .103" Thk, Pump Body Cover, 5200, 7200, Start Year: 04/01/1973
14	C7NN3B604C	1	Valve Assy., P.S. Pump Relief, 650 PSI, 2100, 2110, 3100, 4110, Includes: Ref. 15 thru 22, Start Year: 10/01/1968
14	C7NN3B604C	1	Valve Assy., P.S. Pump Relief, 850 PSI, 4100, Includes: Ref. 15 thru 22, Years: 10/01/1968-09/30/1969
14	C7NN3B604B	1	Valve Assy., P.S. Pump Relief, 1100 PSI, Includes Hi-Clear, 5100, 7100, Includes: Ref. 15 thru 22, Start Year: 10/01/1968
14	C7NN3B604B	1	Valve Assy., P.S. Pump Relief, 1250 PSI, Includes Hi-Clear, 4100, Includes: Ref. 15 thru 22, Start Year: 10/01/1969
14	C7NN3B604B	1	Valve Assy., P.S. Pump Relief, 1250 PSI, Includes Hi-Clear, 3500, 3550, 4400, Includes: Ref. 15 thru 22, Start Year: 05/01/1970
14	C9NN3B604A	1	Valve Assy., P.S. Pump Relief, 1250 PSI, 4500, Includes: Ref. 15 thru 22, Start Year: 11/01/1970
14	D2NN3B604C	1	Valve Assy., P.S. Pump Relief, 1100 PSI, 5200, 7200, Includes: Ref. 15 thru 22, Start Year: 04/01/1973
15	C7NN3B608A	1	Spring, Relief Valve, 5100, 7100, & Hi-Clearance, Start Year: 10/01/1968
15	C7NN3B608A	1	Spring, Relief Valve, 4100, 4500, Start Year: 10/01/1969
15	C7NN3B608A	1	Spring, Relief Valve, 5200, 7200, Start Year: 04/01/1973
15	C7NN3B608A	1	Spring, Relief Valve, 3500,3550,4400, Start Year: 05/01/1970

5000-SERIES 4 CYL TRACTOR (1/65-1/75)

03C02 POWER STEERING PUMP & RESERVOIR, 2100, 2110, 3100, 4100, 4110, 5100 & 7100 (10-68/)

Ref	Part Number	Qty	Description
15	C7NN3B608B	1	Spring, Relief Valve, 2100, 2110, 3100, 4110, No Longer Serviced (NH-E), Start Year: 10/01/1968
15	C7NN3B608B	1	Spring, Relief Valve, 4100, Years: 10/01/1968-09/30/1969
15	C7NN3B608B	1	Spring, Relief Valve, 3400, 4140, 4410, Start Year: 05/01/1970
16	C7NNN627A	AR	Shim, .010" Thick, Start Year: 10/01/1968
16	C7NNN627B	AR	Shim, .015" Thick, Start Year: 10/01/1968
17	C7NN3D721A	1	Seat, Relief Valve, Start Year: 10/01/1968
18	C7NNN626A	1	Head, Relief Valve, Start Year: 10/01/1968
19	C7NNG963A	1	Guide, Relief Valve Spring, Start Year: 10/01/1968
20	C7NNG964A	1	Seal, Relief Valve, Start Year: 10/01/1968
21	87035S95	1	O-Ring, 90 Duro, .625" ID x .103" Thk, Relief Valve, Excludes: 5200, 7200, Start Year: 10/01/1968
21	D2NN3R723A	1	O-Ring, Relief Valve, 5200, 7200, Start Year: 04/01/1973
22	D7NN3D587A	1	O-Ring, Reservoir Seal 2000, 3000, Start Year: 10/01/1968
23	EDPN3K758A	1	Filter Assy., Pump Reservoir, Start Year: 10/01/1968
24	D7NN3R700A	1	Reservoir & Cap Assy., 2100, 2110, 3100, 4100, 4110, U.K.- Antwerp, Includes: Reservoir & Ref. 24A thru 24D, Use P/N E6NN-3531-DA(83959539), Reservoir, P/N EDPN-3K758-A(83936985) & P/N D2NN-3A006-B(81827222), Cap Assy., Start Year: 10/01/1968
24	D7NN3R700A	1	Reservoir & Cap Assy., Replaces C9NN-3531-C, 3400, 3500, 3550, 4140, 4410, Includes: Reservoir & Ref. 24A thru 24D, Use P/N E6NN-3531-DA(83959539), Reservoir, P/N EDPN-3K758-A(83936985) & P/N D2NN-3A006-B(81827222), Cap Assy., Start Year: 05/01/1970
24	D7NN3R700A	1	Reservoir & Cap Assy., 4500, 5100, 7100, Includes: Reservoir & Ref. 24A thru 24D, Use P/N E6NN-3531-DA(83959539), Reservoir, P/N EDPN-3K758-A(83936985) & P/N D2NN-3A006-B(81827222), Cap Assy., Start Year: 07/01/1970
24	D7NN3R700A	1	Reservoir & Cap Assy., 4500, U.K.-Antwerp, Includes: Reservoir & Ref. 24A thru 24D, Use P/N E6NN-3531-DA(83959539), Reservoir, P/N EDPN-3K758-A(83936985) & P/N D2NN-3A006-B(81827222), Cap Assy., Start Year: 11/01/1970
24	D7NN3R700A	1	Reservoir & Cap Assy., 4500, U.S., Includes: Reservoir & Ref. 24A thru 24D, Use P/N E6NN-3531-DA(83959539), Reservoir, P/N EDPN-3K758-A(83936985) & P/N D2NN-3A006-B(81827222), Cap Assy., Years: 11/01/1970-03/31/1975
24	D7NN3R700A	1	Reservoir & Cap Assy., 4400, Includes: Reservoir & Ref. 24A thru 24D, Use P/N E6NN-3531-DA(83959539), Reservoir, P/N EDPN-3K758-A(83936985) & P/N D2NN-3A006-B(81827222), Cap Assy., Start Year: 05/01/1970
24	D4NN3R700A	1	Reservoir & Cap Assy., 5100, Replaces D2NN-3R700-B, Includes: Reservoir & Ref. 24A thru 24D, Use P/N E6NN-3531-DA(83959539), Reservoir, P/N EDPN-3K758-A(83936985) & P/N D2NN-3A006-B(81827222), Cap Assy., Years: 10/01/1968-06/30/1970
24	D4NN3R700A	1	Reservoir & Cap Assy., 4400, Replaces D2NN-3R700-B, Includes: Reservoir & Ref. 24A thru 24D, Use P/N E6NN-3531-DA(83959539), Reservoir, P/N EDPN-3K758-A(83936985) & P/N D2NN-3A006-B(81827222), Cap Assy., Start Year: 05/01/1970
24	E6NN3531FA	1	Reservoir Assy., 5200, 7200, Includes: Filter & Filler Cap, Start Year: 04/01/1973
24	E6NN3531GA	1	Reservoir Assy., Use W/E6NN-3K514-CA, Includes: Reservoir & Ref. 24A thru 24D, Start Year: 04/01/1970
24A	D0NN3R680A	1	Reservoir Vent Valve Assy., Includes: Valve & Ref. 24B, Start Year: 10/01/1968
24B	D2NN3R677A	1	Seal, Vent Valve, Start Year: 10/01/1968

5000-SERIES 4 CYL TRACTOR (1/65-1/75)

03C02 POWER STEERING PUMP & RESERVOIR, 2100, 2110, 3100, 4100, 4110, 5100 & 7100 (10-68/)

Ref	Part Number	Qty	Description
24C	D0NN3R678A	1	Spring, Reservoir Vent, Start Year: 10/01/1968
24D	97407S	1	Ring, Snap, Ext, .1875", Start Year: 10/01/1968
25	C7NN3D588A	1	Cap, Filler, Vented, Excludes 5200, 7200, Years: 10/01/1968-09/30/1969
25	D2NN3A006B	1	Cap, Filler, Replaces C9NN-3D588-A, Start Year: 10/01/1968
26	E84GF9	1	Ring, Drive Gear Seal, Replaces D2NN-3R721-A, Start Year: 10/01/1968
27	E6NN3R655CA	1	Bolt, Reservoir, 5/16"-18 x 2.650, Replaces C7NN-3R655-AB, Start Year: 04/01/1987
28	81803249	1	Gear, Power Steering, Main Drive, No Longer Serviced (NH-E), Start Year: 10/01/1968
29	84071	1	Key, Woodruff #5, 1/8" x 5/8", Drive Gear, Excludes 5200, 7200, Start Year: 10/01/1968
29	84071	1	Key, Woodruff #5, 1/8" x 5/8", Drive Gear, 5200, 7200, Start Year: 04/01/1973
30	81810159	1	Washer, Lock, 7/16", Retaining Tab, Start Year: 10/01/1968
31	87891	1	Nut, Jam, G2, 7/16"-20, Start Year: 10/01/1968
33	81821693	2	Washer, Lock, 3/8", Start Year: 10/01/1968
33	380844S36	2	Bolt, HH, G8, 3/8"-16 x 2-1/2", Reservoir & Gear to Engine, Excludes 5200, 7200, Start Year: 10/01/1968
34	P0301634	1	Screw, Cap, Flg Hd, G5, 3/8"-16 x 2-1/2", 5200, 7200, Start Year: 04/01/1973
35	379275S94	1	O-Ring, Pump to Engine, Start Year: 10/01/1968
36	9617873	1	O-Ring, 90 Duro, .468" ID x .078" Thk, Pump Elbow, Excludes 5200, 7200, Start Year: 10/01/1968
37	C5NN3N676A	1	Elbow Assy., Pump Outlet, Start Year: 10/01/1968
37	76344	1	Elbow, 90°, Male 37° FL - Male, W/O-Ring, 3/8" Tube, Pump, U.S., 5200, 7200, Start Year: 04/01/1973
37	382342S7	1	Elbow Assy., 3/8"- 18, U.S. 5200, 7200, Start Year: 04/01/1973
	D3NN3C618A	1	Kit, Pump Conversion, Integral Pump & Reservoir Assy. to Separate Pump & Reservoir, Service Only, Order Components, 4500, Includes: Parts Listed Below, No Longer Serviced, Start Year: 11/01/1970
	C5NN3531C	1	Reservoir Assy.
	D3NN3A562G	1	Tube, Pressure
	C7NN3A563B	1	Tube, Leak-off
	D3NN3A563D	1	Tube, Return
	D3NN3R563A	1	Rod
	C7NN3N573A	1	Clamp
	C7NN3C633C	1	Tube, Inlet
	C5NN3N656A	1	Clamp
	C7NN3A674F	1	Pump Assy.
	80681	1	Washer, Lock, 5/16"
	80680	3	Washer, Lock, 3/8"
	9628503	2	Nut, G5, 3/8"-16
	76344	1	Elbow, 90°, Male 37° FL - Male, W/O-Ring, 3/8" Tube
	280161	2	Screw, Cap, HH, G5, 3/8"-16 x 3"
	88434	1	Screw, Cap, HH, G5, 3/8"-16 x 3/4"
	9635884	1	Screw, Cap, HH, G5, 5/16"-18 x 1"
	9617873	1	O-Ring, 90 Duro, .468" ID x .078" Thk
	82012719	4	Clamp
	379275S94	1	Seal, 3-237 I.D.
	DHPN3A674B	1	Kit, Power Steering Pump Seal, Includes: Parts Listed Below, Start Year: 10/01/1968

5000-SERIES 4 CYL TRACTOR (1/65-1/75)

03C02 POWER STEERING PUMP & RESERVOIR, 2100, 2110, 3100, 4100, 4110, 5100 & 7100 (10-68/)

Ref	Part Number	Qty	Description
	D2NN3R542A	1	Seal
	D2NN3R543A	1	Seal
	83925002	1	Seal
	83925002	3	Seal, Row Crop Only, No Longer Serviced
	379275S94	1	O-Ring
	9617873	1	O-Ring, 90 Duro, .468" ID x .078" Thk
	D2NN3R656A	1	Seal
	49861	4	.362" ID x .103" Thk
	D2NN3R723A	1	O-Ring
	D7NN3D587A	1	O-Ring

03C02[C] POWER STEERING PUMP & RESERVOIR, 5200 & 7200 (4-73/)

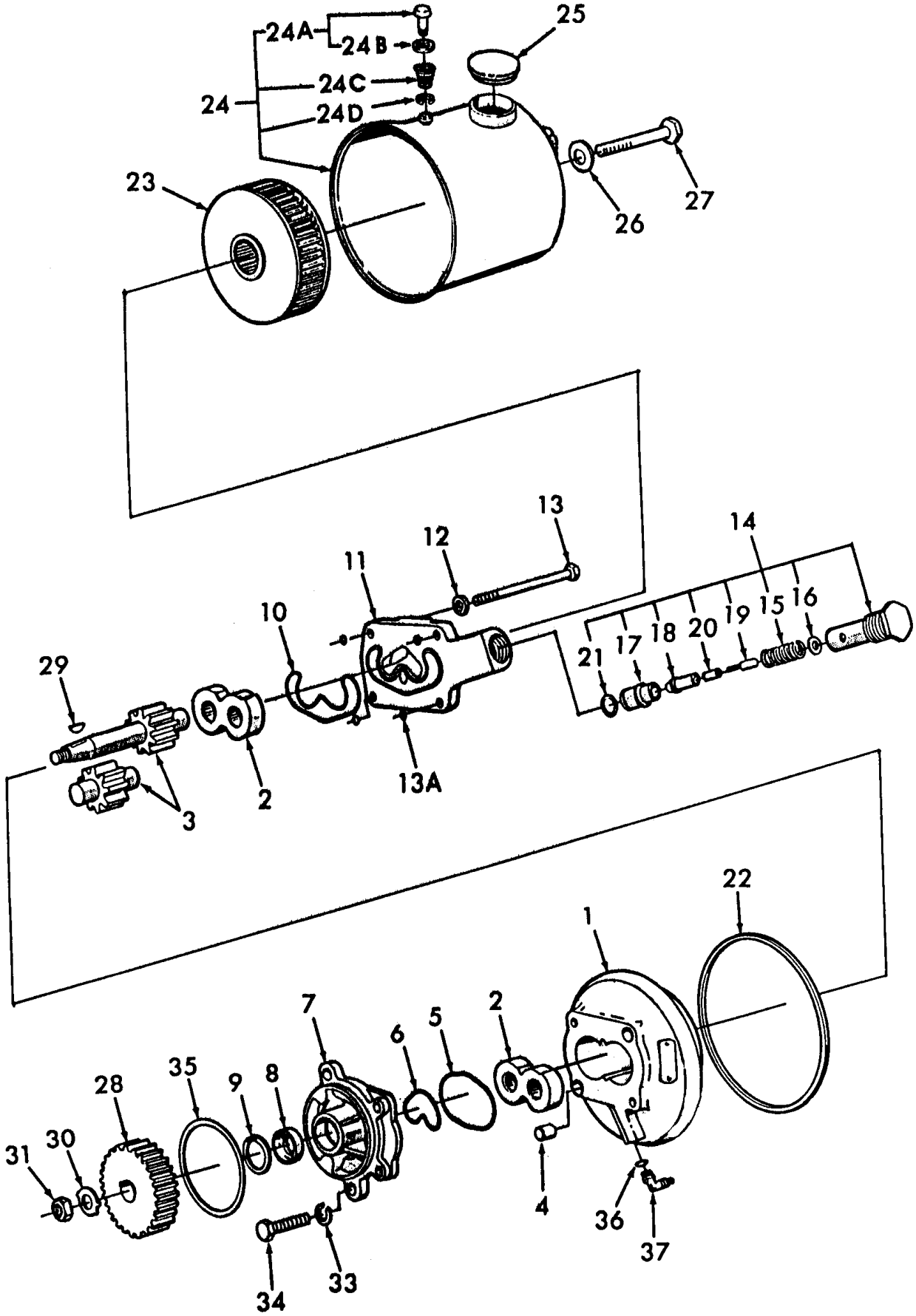

5000-SERIES 4 CYL TRACTOR (1/65-1/75)

03C02[C] POWER STEERING PUMP & RESERVOIR, 5200 & 7200 (4-73/)

Ref	Part Number	Qty	Description
1	D6NN3K514A	1	Pump & Reservoir Assy., 1100 PSI, 3.5 U.S. Gal at 1000 RPM, 5200, 7200, Includes: Ref. 1 thru 27, Years: 04/01/1973-09/30/1976
1A	NSS	1	Body, Pump, NHNA Only, Start Year: 10/01/1968
2	C5NN3N560A	2	Bearing & Bushing Assy., Pump, No Longer Serviced, Must Order Pump Assy., Start Year: 10/01/1968
3	NSS	1	Gear Set, Pump Includes: (1) Drive & (1) Drive Gear, NHNA Only, Start Year: 10/01/1968
4	81803045	2	Sleeve, Drive Gear Seal, Start Year: 10/01/1968
5	D2NN3R542A	1	Seal, Pump Outer, 2.55", 64.77mm Dia., Replaces C7NN-3R542-A, Start Year: 10/01/1968
6	D2NN3R543A	1	Ring, Seal, Pump, Inner, Replaces C7NN-3R543-A, Start Year: 10/01/1968
7	E0NN3C535AA	1	Flange, Pump, Start Year: 04/01/1973
8	83925002	1	Seal, See Service Bulletin 3/84-T4, Start Year: 10/01/1968
9	CAR40181	1	Ring, Pump Drive Gear Seal, Snap, Start Year: 10/01/1968
10	D2NN3R656A	1	Seal, Pump Cover, Start Year: 10/01/1968
11	E6NN3B681AA	1	Cover, Pump, Start Year: 10/01/1968
12	80680	4	Washer, Lock, 3/8", Start Year: 10/01/1968
13	9637240	4	Screw, Cap, HH, G5, 3/8"-16 x 3-1/4", Pump, Start Year: 10/01/1968
13A	49861	1	.362" ID x .103" Thk, Pump Body Cover, Start Year: 04/01/1973
14	D2NN3B604C	1	Valve Assy., P.S. Pump Relief, 1100 PSI, 5200, 7200, Includes: Ref. 15 thru 22, No Longer Serviced, Start Year: 04/01/1973
15	C7NN3B608A	1	Spring, Relief Valve, Start Year: 04/01/1973
16	C7NNN627A	AR	Shim, .010" Thick, Start Year: 10/01/1968
16	C7NNN627B	AR	Shim, .015" Thick, Start Year: 10/01/1968
17	C7NN3D721A	1	Seat, Relief Valve, Start Year: 10/01/1968
18	C7NNN626A	1	Head, Relief Valve, Start Year: 10/01/1968
19	C7NNG963A	1	Guide, Relief Valve Spring, Start Year: 10/01/1968
20	C7NNG964A	1	Seal, Relief Valve, Start Year: 10/01/1968
21	D2NN3R723A	1	O-Ring, Relief Valve, Start Year: 04/01/1973
22	D7NN3D587A	1	O-Ring, Reservoir Seal 2000, 3000, Except 3550, Start Year: 10/01/1968
23	EDPN3K758A	1	Pump Reservoir Filter Assy., Start Year: 10/01/1968
24	E6NN3531FA	1	Reservoir Assy., 5200,7200 w/ Filter & Filler Cap, Includes: Reservoir & Ref. 24A thru 24D, Start Year: 04/01/1973
24	E6NN3531GA	1	Reservoir Assy., Use W/E6NN-3K514-CA, Includes: Reservoir & Ref. 24A thru 24D, Start Year: 04/01/1970
24A	D0NN3R680A	1	Reservoir Vent Valve Assy., Includes: Valve & Ref. 24B, Start Year: 10/01/1968
24B	D2NN3R677A	1	Seal, Vent Valve, Start Year: 10/01/1968
24C	D0NN3R678A	1	Spring, Reservoir Vent, Start Year: 10/01/1968
24D	97407S	1	Ring, Snap, Ext, .1875", Start Year: 10/01/1968
25	D2NN3A006B	1	Cap, Filler, Replaces C9NN-3D588-A, Start Year: 10/01/1968
26	E84GF9	1	Ring, Drive Gear Seal, Replaces D2NN-3R721-A, Start Year: 10/01/1968
27	E6NN3R655CA	1	Bolt, Reservoir, 5/16"-18 x 2.650, Replaces C7NN-3R655-AB, Start Year: 04/01/1987
28	81803249	1	Gear, Power Steering, Main Drive, No Longer Serviced (NH-E), Start Year: 10/01/1968
29	84071	1	Key, Woodruff #5, 1/8" x 5/8", Drive Gear, Start Year: 04/01/1973
30	81810159	1	Washer, Lock, 7/16", Retaining Tab, Start Year: 10/01/1968

5000-SERIES 4 CYL TRACTOR (1/65-1/75)

03C02[C] POWER STEERING PUMP & RESERVOIR, 5200 & 7200 (4-73/)

Ref	Part Number	Qty	Description
31	87891	1	Nut, Jam, G2, 7/16"-20, Start Year: 10/01/1968
33	80680	2	Washer, Lock, 3/8", Start Year: 10/01/1968
34	P0301634	1	Bolt, 3/8"-16 x 2-1/2", NHNA Only, Start Year: 04/01/1973
35	379275S94	1	O-Ring, Pump to Engine, Start Year: 10/01/1968
36	9617873	1	O-Ring, 90 Duro, .468" ID x .078" Thk, Pump Elbow, Except 5200, 7200, Start Year: 10/01/1968
37	C5NN3N676A	1	Pump Outlet Elbow Assy., Start Year: 10/01/1968
	76344	1	Elbow, 90°, Male 37° FL - Male, W/O-Ring, 3/8" Tube, 5200, 7200, NHNA Only, Start Year: 04/01/1973
	382342S7	1	Elbow Assy., 3/8"-18, 5200, 7200, NHNA Only, Start Year: 04/01/1973
	DHPN3A674B	1	Kit, Power Steering Pump Seal, Includes: Parts Listed Below, Start Year: 10/01/1968
	D2NN3R542A	1	Seal
	D2NN3R543A	1	Seal
	83925002	1	Seal
	83925002	3	Seal, Row Crop Only
	379275S94	1	O-Ring
	9617873	1	O-Ring, 90 Duro, .468" ID x .078" Thk
	D2NN3R656A	1	Seal
	49861	4	.362" ID x .103" Thk
	D2NN3R723A	1	O-Ring
	D7NN3D587A	1	O-Ring
	80681	1	Washer, Lock, 5/16"

03D03 POWER STEERING CYLINDER, 4400 & 4500 (65/); 5100 (65/8-70)

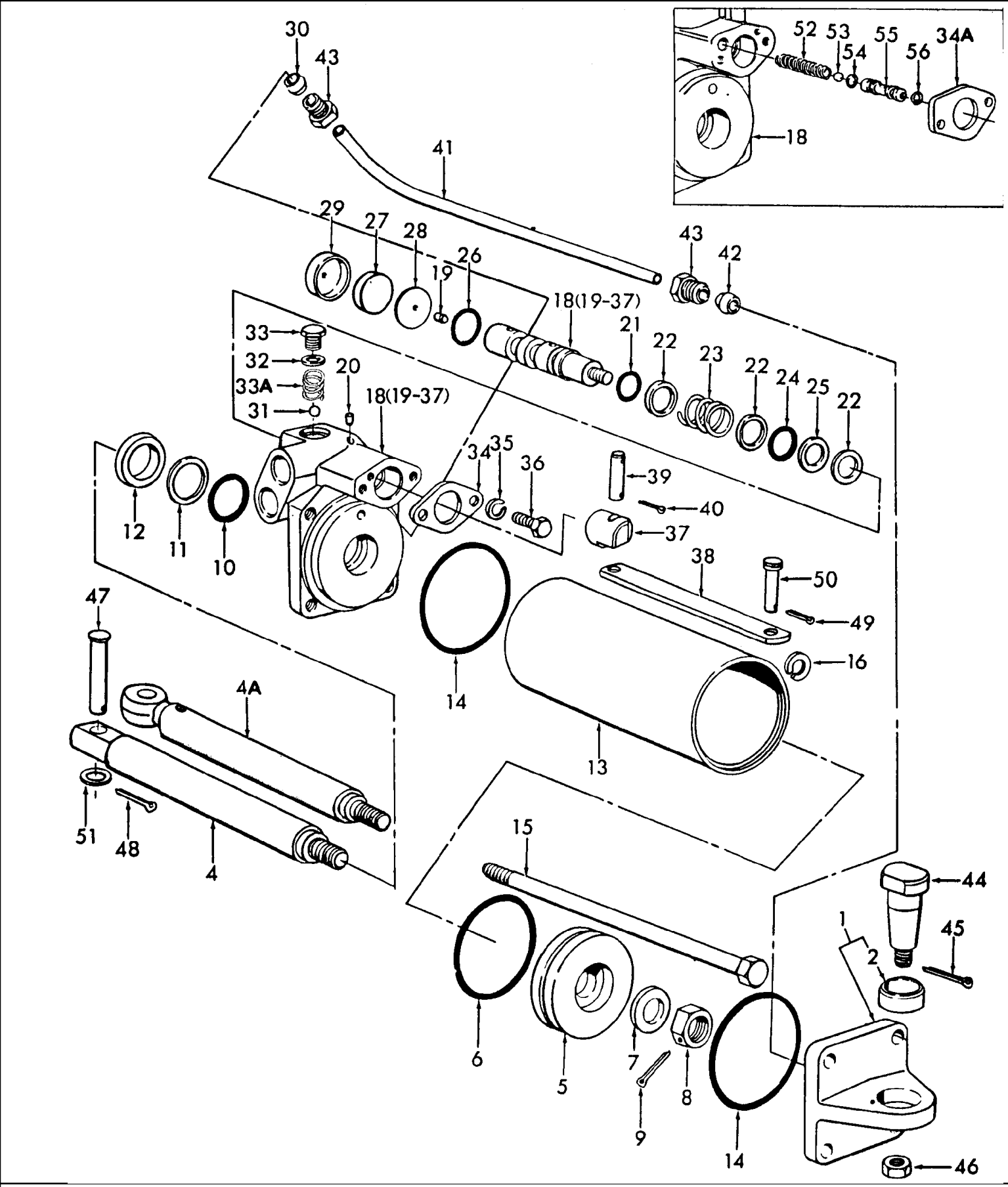

5000-SERIES 4 CYL TRACTOR (1/65-1/75)

03D03 POWER STEERING CYLINDER, 4400 & 4500 (65/); 5100 (65/8-70)

Ref	Part Number	Qty	Description
	C5NN3N500D	1	Cylinder & Valve Assy., 4400 W/Differential Lock, Includes: Ref. 1 thru 43, No Longer Serviced (NHNA), Start Year: 01/01/1965
	C5NN3N500D	1	Cylinder & Valve Assy., 5100 W/O Differential Lock, Includes: Ref. 1 thru 43, No Longer Serviced (NHNA), Years: 01/01/1965-08/31/1970
	C5NN3N500C	1	Cylinder & Valve Assy., 4500, Includes: Ref. 1 thru 43, Start Year: 01/01/1965
1	C5NN3N513B	1	Retainer Assy., Cylinder Tube Rear, Replaces C5NN-3N513-B, Start Year: 01/01/1965
2	C5NN3N506A	1	Bush/Bushing, Tube Retainer, Start Year: 01/01/1965
4	C5NN3B542B	1	Rod, Cylinder Piston W/Differential Lock, Start Year: 01/01/1965
4A	C5NN3A747A	1	Rod Assy., Cylinder Piston, Part of P/N C5NN-3N500-C W/Differential Lock, Start Year: 01/01/1965
5	C5NN3A544A	1	Piston, Cylinder, Start Year: 01/01/1965
6	C5NN3B541A	1	Ring, Cylinder Piston, Outer, Start Year: 01/01/1965
7	C5NN3N517A	1	Washer, Piston, 5/8" I.D. x 1-1/4" O.D. x .116", No Longer Serviced (NH-E), Start Year: 01/01/1965
8	87446	1	Nut, Slotted, G2, 5/8"-18, Start Year: 01/01/1965
9	80755	1	Pin, Split Cotter, 1/8" x 1", Piston to Rod, Start Year: 01/01/1965
10	86629540	1	O-Ring, .984" ID x .139" Thk, Cylinder Piston Rod, Start Year: 01/01/1965
11	C5NN3N509A	1	Ring, Cylinder Piston Rod Seal Back-Up, Start Year: 01/01/1965
12	C5NN3B543A	1	Wiper, Cylinder Piston Rod Oil, Start Year: 01/01/1965
13	C5NN3A542A	1	Tube, Cylinder, 5.81" Lg., Part of P/N C5NN-3N500-A & D, No Longer Serviced, Start Year: 01/01/1965
13	C5NN3A542B	1	Tube, Cylinder, 6.72" Lg., Part of P/N C5NN-3N500-C, No Longer Serviced, Start Year: 01/01/1965
14	87149S94	2	O-Ring, 2.750" ID x .103" Thk, Tube to Retainers, Start Year: 01/01/1965
15	C5NN3N640B	4	Bolt, HH, 3/8"-24 x 7, 4400, No Longer Serviced, Start Year: 01/01/1965
15	C5NN3N640B	4	Bolt, HH, 3/8"-24 x 7, 5100, No Longer Serviced, Years: 01/01/1965-08/31/1970
15	C5NN3N640A	4	Bolt, HH, 3/8"-16 x 7-7/8", Part of P/N C5NN-3N500-C, No Longer Serviced, Start Year: 01/01/1965
16	81821693	4	Washer, Lock, 3/8", Start Year: 01/01/1965
18	C5NN3N489C	1	Valve & Spool Assy., Cylinder, Part of P/N C5NN-3N500-C, Includes: Retainer & Spool & (1) P/N C5NN-3N543-A & (1) P/N C5NN-3N544-A, No Longer Serviced (NHNA), Start Year: 01/01/1965
18	C5NN3N489B	1	Valve & Spool Assy., Cylinder, Part of P/N C5NN-3N500-A & D, Includes: Retainer & Spool & Ref. 19 thru 37, No Longer Serviced, Start Year: 01/01/1965
19	C5NN3N544A	1	Plug, Cylinder Valve Spool, No Longer Serviced (NHNA), Start Year: 01/01/1965
20	C5NN3N543A	2	Plug, Cylinder Tube Front Retainer, No Longer Serviced, Start Year: 01/01/1965
21	9672929	1	O-Ring, .989" ID x .070" Thk, Cylinder Reaction Chamber, Part of P/N C5NN-3N500-D, Start Year: 01/01/1965
21	C5NN3N557A	1	Seal, Cylinder Valve Spool, Part of P/N C5NN-3N500-A & C, Start Year: 01/01/1965
22	C5NN3N565A	3	Washer, Cylinder Valve Centering Spring, Part of P/N C5NN-3N500-A & C, No Longer Serviced (NH-E), Start Year: 01/01/1965
22	C5NN3N565B	3	Washer, Cylinder Valve Centering Spring, Part of P/N C5NN-3N500-D, No Longer Serviced (NH-E), Start Year: 01/01/1965
23	C5NN3N570A	1	Spring, Cylinder Valve Control, Part of P/N C5NN-3N500-A & C, Start Year: 01/01/1965
23	C5NN3N570B	1	Spring, Cylinder Valve Control, Part of P/N C5NN-3N500-D, No Longer Serviced (NH-E), Start Year: 01/01/1965
24	C5NN3N548A	1	Seal, Cylinder Valve, Start Year: 01/01/1965

5000-SERIES 4 CYL TRACTOR (1/65-1/75)

03D03 POWER STEERING CYLINDER, 4400 & 4500 (65/); 5100 (65/8-70)

Ref	Part Number	Qty	Description
25	C5NN3N549A	1	Ring, Cylinder Valve Seal Back-Up, Part of P/N C5NN-3N500-A & C, Start Year: 01/01/1965
25	C5NN3N549B	1	Ring, Cylinder Valve Seal Back-Up, Part of P/N C5NN-3N500-D, Start Year: 01/01/1965
26	87037S94	1	O-Ring, .750" ID x .103" Thk, Cylinder Valve Seal, Replaces P/N C5NN-3N558-A, Start Year: 01/01/1965
27	C5NN3N574A	1	Washer, Front Retainer, Outer, Felt, Start Year: 01/01/1965
28	C5NN3N564A	1	Washer, Cylinder Valve Retainer, Inner, Start Year: 01/01/1965
29	C5NN3N504A	1	Cover, Cylinder Valve, End, Start Year: 01/01/1965
30	236682	1	Ferrule, Cylinder Oil Transfer Tube, Start Year: 01/01/1965
31	86628554	1/2	Ball, Steel, 1/4" Dia., Cylinder By-Pass, Start Year: 01/01/1965
32	C5NN3N523A	1/2	Washer, Cylinder By-Pass, No Longer Serviced (NH-E), Start Year: 01/01/1965
33	C5NN3N508B	1/2	Plug, Cylinder By-Pass, No Longer Serviced, Start Year: 01/01/1965
33A	NS	AR	Spring, (Used on Some Early Versions of This Cylinder), NHNA Only, Start Year: 01/01/1965
34	C5NN3N507A	1	Plate, Cylinder Valve Spool Retainer, Part of C5NN-3N500-A & D, No Longer Serviced, Start Year: 01/01/1965
34A	C5NN3N507B	1	Plate, Cylinder Valve Retaining, Part of P/N C5NN-3N500-C, No Longer Serviced, Start Year: 01/01/1965
35	80682	2	Washer, Lock, 1/4", Start Year: 01/01/1965
36	280640	2	Screw, Cap, HH, G5, 1/4"-28 x 1/2", Start Year: 01/01/1965
37	C5NN3N515A	1	Yoke, Cylinder Valve, Part of P/N C5NN-3N500-A, No Longer Serviced, Years: 01/01/1965-05/31/1965
37	C5NN3N515C	1	Yoke, Cylinder Valve, Part of P/N C5NN-3N500-D w/Handbrake, Replaces C5NN-2N600-A, Start Year: 07/01/1965
37	C5NN3N515D	1	Yoke, Cylinder Valve, 4500, Part of P/N C5NN-3N500-C, No Longer Serviced, Start Year: 01/01/1965
38	C5NN3N571A	1	Link, Cylinder Valve Actuating, 5-3/4", Part of P/N C5NN-3N500-A, No Longer Serviced, Years: 01/01/1965-06/30/1965
38	C5NN3N571C	1	Link, Cylinder Valve Actuating, 5-7/16", Part of P/N C5NN-3N500-D, No Longer Serviced (NH-E), Start Year: 07/01/1965
39	C5NN3N567A	1	Pin, Valve Actuating Link, .31" x 1-3/16", Start Year: 01/01/1965
40	280224	2	Pin, Split, Cotter, 1/16" x 5/8", Link to Yoke, Start Year: 01/01/1965
41	C5NN3N546A	1	Tube, Cylinder Oil Transfer, Part of P/N C5NN-3N500-A, No Longer Serviced (NHNA), Start Year: 01/01/1965
41	C5NN3N546B	1	Tube, Cylinder Oil Transfer, Part of P/N C5NN-3N500-D, No Longer Serviced (NH-E), Start Year: 01/01/1965
41	C5NN3N546C	1	Tube, Cylinder Oil Transfer, Part of P/N C5NN-3N500-C, Start Year: 01/01/1965
42	236682	1	Ferrule, Cylinder Oil Transfer Tube, Start Year: 01/01/1965
43	C5NN3N502A	2	Nut, Cylinder Oil Transfer Tube, Start Year: 01/01/1965
44	C5NN3N706A	1	Pin, Cylinder Anchor, 4400, Start Year: 01/01/1965
44	C5NN3N706A	1	Pin, Cylinder Anchor, 5100, Years: 01/01/1965-08/31/1970
44	C5NN3A556A	1	Pin, 4500, Start Year: 01/01/1965
45	72062S8	1	Pin, Split Cotter, 1/8" x 1-3/8", Start Year: 01/01/1965
46	87446	1	Nut, Slotted, G2, 5/8"-18, Cylinder Assy. to Center Arm, Except 4500, Start Year: 01/01/1965
47	C5NN3N705C	1	Pin, Cylinder Clevis, .55 x 3.89, Replaces P/N C5NN-3N705-A, Start Year: 01/01/1965
48	72037S8	1	Pin, Split Cotter, 3/16" x 1", No Longer Serviced (NHNA), Start Year: 01/01/1965
49	280251	1	Pin, Split Cotter, 3/32" x 1", Start Year: 01/01/1965

5000-SERIES 4 CYL TRACTOR (1/65-1/75)

03D03 POWER STEERING CYLINDER, 4400 & 4500 (65/); 5100 (65/8-70)

Ref	Part Number	Qty	Description
50	379661S43	1	Pin, Clevis, 5/16" x 1-3/16", Use W/#C5NN-3N500-A, NHNA Only, No Longer Serviced, Years: 01/01/1965-06/30/1965
50	380177S36	1	Pin, Clevis, 1/2" x 1-3/16", Use W/#C5NN-3N500-D, Start Year: 07/01/1965
51		1	Washer, Flat, 9/16", Rod to Front Support Attaching Parts for 4500 Cylinder (C5NN-3N500-C) refer to Figure 3E5, NH-E Only, No Longer Serviced, Start Year: 01/01/1965
52	C5NN3N641A	1	Spring, Cylinder Relief Valve, Part of P/N C5NN-3N500-C, No Longer Serviced, Start Year: 01/01/1965
53	86628554	1	Ball, Steel, 1/4" Dia., Relief Valve, Start Year: 01/01/1965
54	511836	1	O-Ring, .219" ID x .070" Thk, Relief Valve, Part of PN C5NN-3N500-C, Start Year: 01/01/1965
55	C5NN3N639A	1	Plug, Relief Valve, Part of P/N C5NN-3N500-C, No Longer Serviced, Start Year: 01/01/1965
56	9849109	1	O-Ring, .250" ID x .070" Thk, Relief Valve, Part of P/N C5NN-3N500-C, Start Year: 01/01/1965
	CFPN3301C	1	Kit, Power Steering Cylinder Repair, Includes: Ref. 6, 10, 11, 14, 20, 24, 26, 27, 54 & 56, Start Year: 01/01/1965

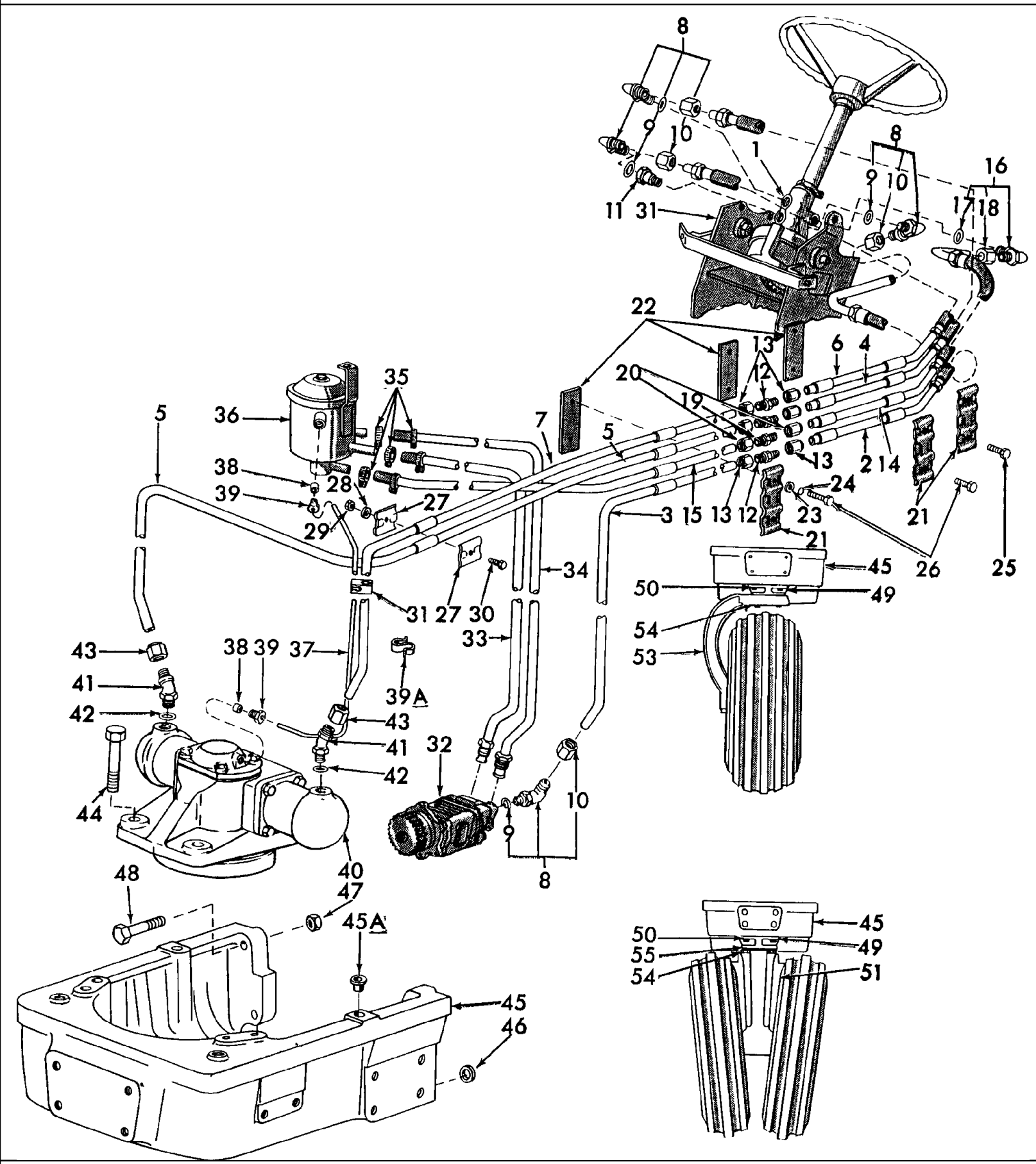
8
9
10
1
11
31
8
9
10
16
17
18
22
13
12
6
4
20
19
5
36
35
7
5
38
39
28
27
29
3
15
13
12
23
24
21
21
2
14
26
25
34
45
50
49
54
53
31
27
30
33
43
38
39
37
39A
41
42
43
41
42
32
10
9
8
44
40
48
47
45A
45
46
50
55
54
45
49
51

5000-SERIES 4 CYL TRACTOR (1/65-1/75)

03G01 STEERING SYSTEM - 5200, 7200 (67/3-73)

Ref	Part Number	Qty	Description
1	E3NN3A244BA	1	Motor, Gear & Tilt Mechanism, Refer to Fig. 3G3A for Illustration & Parts, Years: 01/01/1967-03/31/1973
2	C5NN3A562N	1	Tube Assy., Pump Pressure, Upper, NHNA Only, Years: 01/01/1967-03/31/1973
3	C5NN3R623A	1	Tube Assy., Pump Pressure, Lower, 5200, NHNA Only, Years: 01/01/1967-03/31/1973
3	D0NN3R623A	1	Tube Assy., Pump Pressure, Lower, 7200, (Not Shown), NHNA Only, No Longer Serviced, Years: 01/01/1971-03/31/1973
4	C5NN3R555C	1	Tube Assy., Right Turn, Upper, NHNA Only, Years: 01/01/1967-03/31/1973
5	C7NN3R625B	1	Tube Assy., Right Turn, Lower, Replaces P/N 3R625-A, 5200, NHNA Only, No Longer Serviced, Years: 01/01/1967-03/31/1973
5	D0NN3R625A	1	Tube Assy., Right Turn, Lower, 7200, (Not Shown), NHNA Only, No Longer Serviced, Years: 01/01/1967-03/31/1973
6	C5NN3R556C	1	Tube Assy., Left Turn, Upper, NHNA Only, Years: 01/01/1967-03/31/1973
7	C5NN3R624A	1	Tube Assy., Left Turn, Lower, 5200, NHNA Only, No Longer Serviced, Years: 01/01/1967-03/31/1973
7	D0NN3R624A	1	Tube Assy., Left Turn, Lower, 7200, (Not Shown), NHNA Only, No Longer Serviced, Years: 01/01/1971-03/31/1973
8	382327S7	4	Elbow Assy., Tubes to Motor, Includes: Elbow & Ref. 9 & 10, Years: 01/01/1967-03/31/1973
9	9617873	4	O-Ring, 90 Duro, .468" ID x .078" Thk, Years: 01/01/1967-03/31/1973
10	380960S7	4	Nut Assy., Tube to Elbow, 11/16"-20, Years: 01/01/1967-03/31/1973
11	C5NN3C737B	1	Adapter, Left Turn Tube, 9/16"-18, No Longer Serviced (NHNA), Years: 01/01/1967-03/31/1973
12	382424S7	3	Connector, Tubes, 11/16"-20, NHNA Only, Years: 01/01/1967-03/31/1973
13	380960S7	6	Nut Assy., Connector, 11/16"-20, Years: 01/01/1967-03/31/1973
14	C5NN3A713C	1	Tube Assy., Pump Return, Upper, NHNA Only, Years: 01/01/1967-03/31/1973
15	C7NN3C566B	1	Tube Assy., Lower, Replaces P/N C7NN-3C566-A, 5200, NHNA Only, No Longer Serviced, Years: 01/01/1967-03/31/1973
15	D0NN3C566A	1	Tube Assy., Return, Lower, 7200, (Not Shown), NHNA Only, Years: 01/01/1971-03/31/1973
16	382342S7	1	Elbow Assy., Return Tube, Includes: Elbow & Ref. 17 & 18, Years: 01/01/1967-03/31/1973
17	9617873	1	O-Ring, 90 Duro, .468" ID x .078" Thk, Years: 01/01/1967-03/31/1973
18	380961S7	1	Nut Assy., Elbow, 7/8"-18, Years: 01/01/1967-03/31/1973
19	382425S7	1	Connector, Upper to Lower Tubes, 7/8"-18, NHNA Only, No Longer Serviced, Years: 01/01/1967-03/31/1973
20	380961S7	2	Nut Assy., Connector, 7/8"-18, Years: 01/01/1967-03/31/1973
21	C5NN3N573E	3	Clamp, Tube Mounting, NHNA Only, No Longer Serviced, Years: 01/01/1967-03/31/1973
22	C5NN3C768A	2	Bracket, Tube, NHNA Only, No Longer Serviced, Years: 01/01/1967-03/31/1973
23	44718S43	2	Washer, 1/4", No Longer Serviced (NHNA), Years: 01/01/1967-03/31/1973
24	80682	6	Washer, Lock, 1/4", Years: 01/01/1967-03/31/1973
25	304662S36	2	Screw, Cap, HH, G5, 1/4"-20 x 7/8", No Longer Serviced (NH-E), Years: 01/01/1967-03/31/1973
26	88146	4	Screw, Cap, HH, G5, 1/4"-20 x 1", Years: 01/01/1967-03/31/1973
27	C5NN3N573A	2	Clamp, Left & Right Turn Tube Mounting, Years: 01/01/1967-03/31/1973
28	80682	1	Washer, Lock, 1/4", Years: 01/01/1967-03/31/1973
29	7770	1	Nut, Hex, 1/4"-20, Years: 01/01/1967-03/31/1973
30	280727	1	Screw, Cap, HH, G5, 1/4"-20 x 1-1/8", Years: 01/01/1967-03/31/1973
31	C5NN3N625C	1	Clamp, Lower Tube, Nylon, NHNA Only, No Longer Serviced, Years: 01/01/1967-03/31/1973

Ref	Part Number	Qty	Description
32	REFERENCE	1	Pump & Gear Assy., Power Steering, Refer to Pump Section for Assy. for Components, No Longer Serviced, Years: 01/01/1967-03/31/1973
33	C7NN3C633D	1	Tube Assy., Pump Inlet, 5200, NHNA Only, No Longer Serviced, Years: 01/01/1967-03/31/1973
33	D0NN3C633B	1	Tube Assy., Pump Inlet, 7200, (Not Shown), NHNA Only, No Longer Serviced, Years: 01/01/1971-03/31/1973
34	C7NN3B714C	1	Tube Assy., Pump to Reservoir, Leak-Off, 5200, NHNA Only, No Longer Serviced, Years: 01/01/1967-03/31/1973
34	D0NN3B714A	1	Tube Assy., Pump to Reservoir, Leak-Off, 7200, (Not Shown), NHNA Only, No Longer Serviced, Years: 01/01/1971-03/31/1973
35	82012719	3	Clamp, Tubes to Reservoir, .50-.91, Years: 01/01/1967-03/31/1973
36	REFERENCE	1	Reservoir Assy., Refer to Pump & Reservoir Section for Assy. & Components, No Longer Serviced, Years: 01/01/1967-03/31/1973
37	C7NN3R610D	1	Tube, Motor to Reservoir, 1/4", Replaces P/N C7NN-3R610-B, 5200, NHNA Only, No Longer Serviced, Years: 01/01/1967-03/31/1973
37	D0NN3R610A	1	Tube, Motor to Reservoir, 7200, NHNA Only, No Longer Serviced, Years: 01/01/1971-03/31/1973
38	382358S	2	Seal, Tube to Motor & Reservoir, 1/4", NHNA Only, Years: 01/01/1967-03/31/1973
39	382357S7	2	Nut, Tube to Motor & Reservoir, 1/4", No Longer Serviced (NH-E), Years: 01/01/1967-03/31/1973
39A	359882S7	2	Clip, Tube, No Longer Serviced, Years: 01/01/1967-03/31/1973
40	REFERENCE	1	Motor Assy., Front, Refer to Motor Section, No Longer Serviced, Years: 01/01/1967-03/31/1973
41	382426S7	2	Elbow Assy., 45°, 3/8", Right & Left Turn Tubes to Front Motor, NHNA Only, Years: 01/01/1967-03/31/1973
42	9617873	2	O-Ring, 90 Duro, .468" ID x .078" Thk, Years: 01/01/1967-03/31/1973
43	380960S7	2	Nut Assy., Elbow, 11/16"-20, Years: 01/01/1967-03/31/1973
44	9706701	4	Screw, Cap, HH, G5, 3/4"-10 x 2-1/2", Years: 01/01/1967-03/31/1973
45	C5NN3A042AD	1	Support, Front Axle, No Longer Serviced, Years: 01/01/1967-03/31/1973
45A	381627S	2	Cover, Dust Plug, NHNA Only, No Longer Serviced, Years: 01/01/1967-03/31/1973
46	C5NN3N150A	AR	Shim, Support, .014/.015 (.356/.381mm), Years: 01/01/1967-03/31/1973
46	C5NN3N150B	AR	Shim, Support, .017/.018 (.432/.457mm) (Not Shown), Years: 01/01/1967-03/31/1973
46	C5NN3N150C	AR	Shim, Support, .020/.022 (.508/.559mm) (Not Shown), Years: 01/01/1967-03/31/1973
46	C5NN3N150D	AR	Shim, Support, .023/.025 (.584/.635mm) (Not Shown), Years: 01/01/1967-03/31/1973
46	C5NN3N150E	AR	Shim, Support, .026/.028 (.660/.711mm) (Not Shown), Years: 01/01/1967-03/31/1973
47	280954	AR	Nut, G5, 3/4"-10
48	304946S36	6	Screw, Cap, HH, G5, 3/4"-10 x 3-1/2", No Longer Serviced (NHNA), Years: 01/01/1967-03/31/1973
49	C7NN3N057A	1	Spacer, Spindle, Replaces P/N C5NN-3N507-A, Single & Dual Wheel, NHNA Only, No Longer Serviced, Years: 01/01/1967-03/31/1973
50	88557	4	Screw, Cap, HH, G5, 3/4"-10 x 2", Single & Dual Wheel, Years: 01/01/1967-03/31/1973
51	C5NN3105L	1	Spindle Assy., Dual Wheel, NHNA Only, No Longer Serviced, Years: 01/01/1967-03/31/1973
53	C0NN3105R	1	Spindle Assy., Single Wheel, NHNA Only, No Longer Serviced, Years: 01/01/1967-12/31/1970
54	88556	4	Screw, Cap, HH, G5, 5/8"-11 x 2-1/4", Single Wheel, Years: 01/01/1967-02/28/1969
54	86505999	4	Screw, Cap, HH, G5, 5/8"-11 x 2", Dual Wheel, Years: 01/01/1967-02/28/1969
54	382044S36	4	Bolt, HH, G8, Dual Wheels, 5/8"-18 x 4-1/2", No Longer Serviced (NH-E), Years: 03/01/1969-03/31/1973
54	382044S36	4	Bolt, HH, G8, Single Wheel, 5/8"-18 x 4-1/2", No Longer Serviced (NH-E), Years: 03/01/1969-12/31/1970

Ref	Part Number	Qty	Description
55	34811S36	4	Washer, Lock, 5/8", Dual Wheels, Refer to Separate Illustration for All Purpose & Wide Adjustable Front Axles, Years: 03/01/1969-03/31/1973
	309966	1	Kit, Conversion, 5200, 7200, Includes: Parts Listed Below, NHNA Only, No Longer Serviced, Years: 01/01/1967-03/31/1973
	D2NN3R552G	1	Motor & Column Assy., NHNA Only
	D2NN3R616A	1	Pawl, NHNA Only, No Longer Serviced
	D2NN3R726A	1	Plate, No Longer Serviced
	D2NN3R728A	1	Bolt, 7/16"-14 x 1, No Longer Serviced (NHNA)
	304631S36	1	Screw, Cap, HH, G5, 7/16"-20 x 1/2", No Longer Serviced (NH-E)
	81821693	2	Washer, Lock, 3/8"
	88011	2	Screw, Cap, HH, G5, 3/8"-16 x 1-1/4"
	380961S7	1	Nut Assy.
	382426S7	1	Elbow Assy., NHNA Only
	9617873	1	O-Ring, 90 Duro, .468" ID x .078" Thk

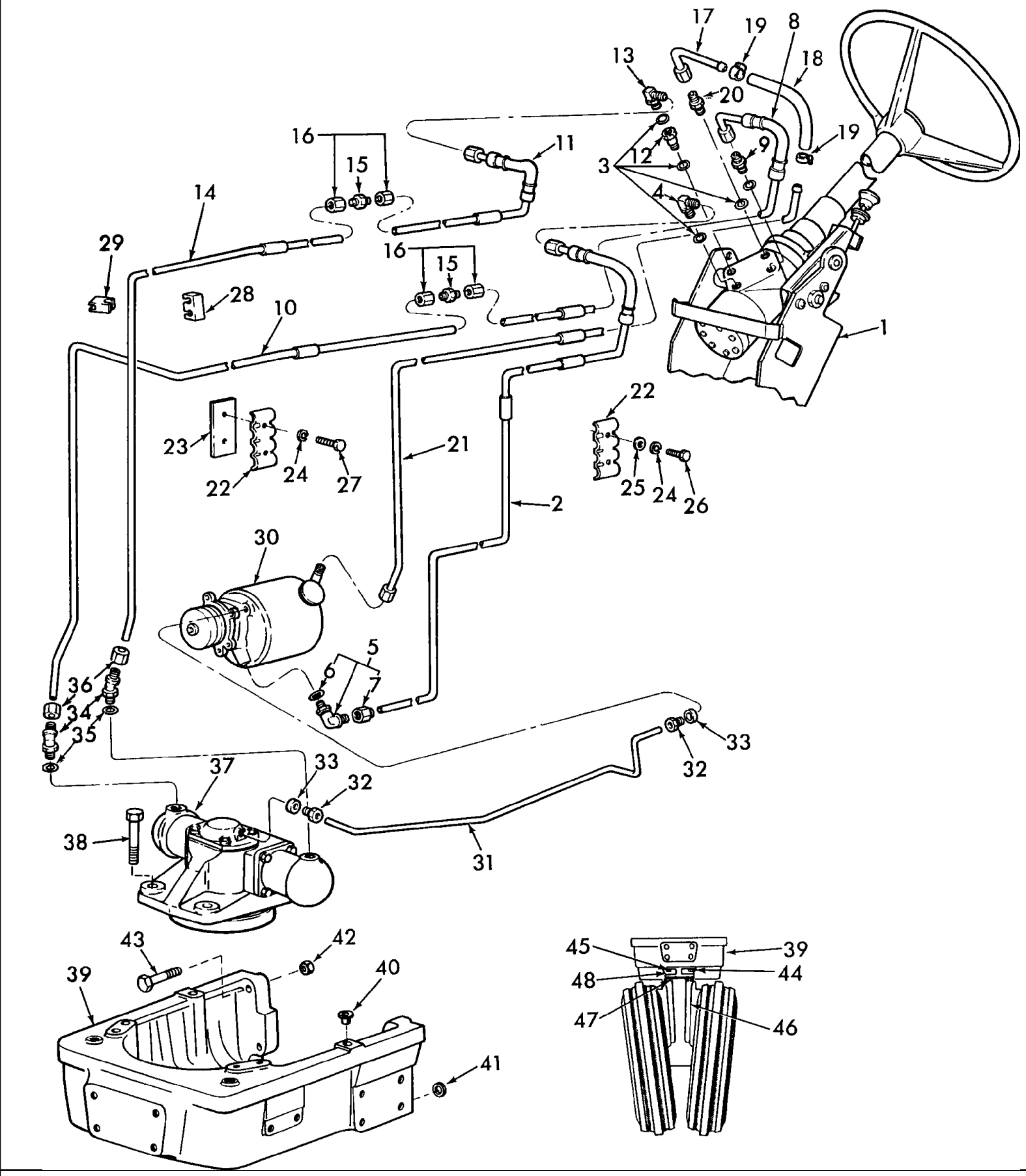
17
19
8
18
13
20
19
16
15
11
12
9
3
4
14
29
16
15
28
10
1
22
23
21
24
27
22
25
24
26
2
30
5
6
7
36
34
35
33
32
37
33
32
38
31
43
42
40
39
41
45
39
48
44
47
46

5000-SERIES 4 CYL TRACTOR (1/65-1/75)

03G01[A] STEERING SYSTEM, 5200 & 7200 (4-73/)

Ref	Part Number	Qty	Description
1	REFERENCE	1	Steering Motor, Wheel & Tilt Mechanism, Refer to Fig. 3G3A for Illustration & Parts, No Longer Serviced, Start Year: 04/01/1973
2	D2NN3A562D	1	Tube Assy., Pump Pressure, NHNA Only, Start Year: 04/01/1973
3	9617873	5	O-Ring, 90 Duro, .468" ID x .078" Thk, Start Year: 04/01/1973
4	86512938	1	Elbow Assy., Pressure Tube to Motor, Start Year: 04/01/1973
5	382342S7	1	Elbow Assy., Pressure Tube to Pump & Reservoir, Includes: Elbow & Ref. 6 & 7, Start Year: 04/01/1973
6	9617873	1	O-Ring, 90 Duro, .468" ID x .078" Thk, Start Year: 04/01/1973
7	380961S7	1	Nut Assy., Elbow to Tube, 7/8"-18, Start Year: 04/01/1973
8	D2NN3R555C	1	Tube Assy., Right Turn, Upper, NHNA Only, Start Year: 04/01/1973
9	76350	1	Connector, 37° Flare, 3/8" Tube, Tube to Motor, Start Year: 04/01/1973
10	D3NN3R625A	1	Tube Assy., Right Turn, Lower, NHNA Only, Start Year: 04/01/1973
11	D2NN3R556D	1	Tube Assy., Left Turn, Upper, NHNA Only, Start Year: 04/01/1973
12	C5NN3C737B	1	Adapter, Left Turn Tube, 9/16"-18, No Longer Serviced (NHNA), Start Year: 04/01/1973
13	76344	1	Elbow, 90°, Male 37° FL - Male, W/O-Ring, 3/8" Tube, Start Year: 04/01/1973
14	D2NN3R624B	1	Tube Assy., Left Turn, Lower, NHNA Only, Start Year: 04/01/1973
15	382424S7	2	Connector, Upper to Lower, 3/8" Flareless Tube, NHNA Only, Start Year: 04/01/1973
16	380960S7	4	Nut Assy., Flareless Tube, Start Year: 04/01/1973
17	D2NN3R712A	1	Tube Assy., Return, Upper, NHNA Only, No Longer Serviced, Start Year: 04/01/1973
18	D3NN3R611A	1	Tube, Hose Return, 29" Lg., Cut to Length, Start Year: 04/01/1973
19	82012719	2	Clamp Assy., Hose to Tube, Start Year: 04/01/1973
20	390585S36	1	Connector, 1/2" Tube, 37° Flare, Start Year: 04/01/1973
21	D2NN3C566B	1	Tube Assy., Return, Lower, NHNA Only, No Longer Serviced, Start Year: 04/01/1973
22	D2NN3N573A	2	Clamp, Tube Mounting, NHNA Only, No Longer Serviced, Start Year: 04/01/1973
23	C5NN3C768A	1	Bracket, Tube, NHNA Only, No Longer Serviced, Start Year: 04/01/1973
24	80682	4	Washer, Lock, 1/4", Start Year: 04/01/1973
25	PL	2	Washer, Flat, #14, NHNA Only, Start Year: 04/01/1973
26	304662S36	2	Screw, Cap, HH, G5, 1/4"-20 x 7/8", No Longer Serviced (NH-E), Start Year: 04/01/1973
27	88146	2	Screw, Cap, HH, G5, 1/4"-20 x 1", Start Year: 04/01/1973
28	C7NN3N573A	1	Clamp, Tube, Start Year: 04/01/1973
29	C5NN3N625C	1	Clamp, Tube, Nylon, NHNA Only, No Longer Serviced, Start Year: 04/01/1973
30	REFERENCE	1	Pump & Reservoir Assy., Refer to Pump & Reservoir Section for Assy. & Components, No Longer Serviced, Start Year: 04/01/1973
31	D2NN3R610B	1	Tube, Power Steering Motor Leak-Off, NHNA Only, No Longer Serviced, Start Year: 04/01/1973
32	382357S7	2	Nut, Tube, 9/16"-20, No Longer Serviced (NH-E), Start Year: 04/01/1973
33	C7NN3R627A	2	Seal, Leak Off Tube, No Longer Serviced (NH-E), Start Year: 04/01/1973
34	382426S7	2	Elbow, Assy., Turn Tubes to Motor, 45°, 3/8", NHNA Only, Start Year: 04/01/1973
35	9617873	2	O-Ring, 90 Duro, .468" ID x .078" Thk, Start Year: 04/01/1973
36	380960S7	2	Nut Assy., Elbow, 11/16"-20, Start Year: 04/01/1973
37	REFERENCE	1	Motor Assy., Power Steering Front, Refer to Motor Section for Assy. & Components, No Longer Serviced, Start Year: 04/01/1973
38	9706701	4	Screw, Cap, HH, G5, 3/4"-10 x 2-1/2", Start Year: 04/01/1973

Ref	Part Number	Qty	Description
39	C5NN3A042AD	1	Support, Front Axle, No Longer Serviced, Start Year: 01/01/1967
41	C5NN3N150A	AR	Shim, Support, .014/.015 (.356/.381mm), Start Year: 01/01/1967
41	C5NN3N150B	AR	Shim, Support, .017/.018 (.432/457mm), (Not Shown), Start Year: 01/01/1967
41	C5NN3N150C	AR	Shim, Support, .020/.022 (.508/.559mm), (Not Shown), Start Year: 01/01/1967
41	C5NN3N150D	AR	Shim, Support, .023/.025 (.584/.635mm), (Not Shown), Start Year: 01/01/1967
41	C5NN3N150E	AR	Shim, Support, .026/.028 (.660/.711mm), (Not Shown), Start Year: 01/01/1967
42	280954	6	Nut, G5, 3/4"-10, Start Year: 01/01/1967
43	304946S36	6	Screw, Cap, HH, G5, 3/4"-10 x 3-1/2", Start Year: 01/01/1967
44	C7NN3N057A	1	Spacer, Motor to Spindle, Dual Wheel, NHNA Only, No Longer Serviced, Start Year: 01/01/1967
45	88557	4	Screw, Cap, HH, G5, 3/4"-10 x 2", Dual Wheel, Start Year: 01/01/1967
46	C5NN3105L	1	Spindle Assy., Dual Wheel, NHNA Only, No Longer Serviced, Start Year: 01/01/1967
47	382044S36	4	Bolt, HH, Dual Wheel, G8, 5/8"-18 x 4-1/2", No Longer Serviced (NH-E), Start Year: 03/01/1969
48	34811S36	4	Washer, Lock, 5/8", Dual Wheels, Start Year: 03/01/1969

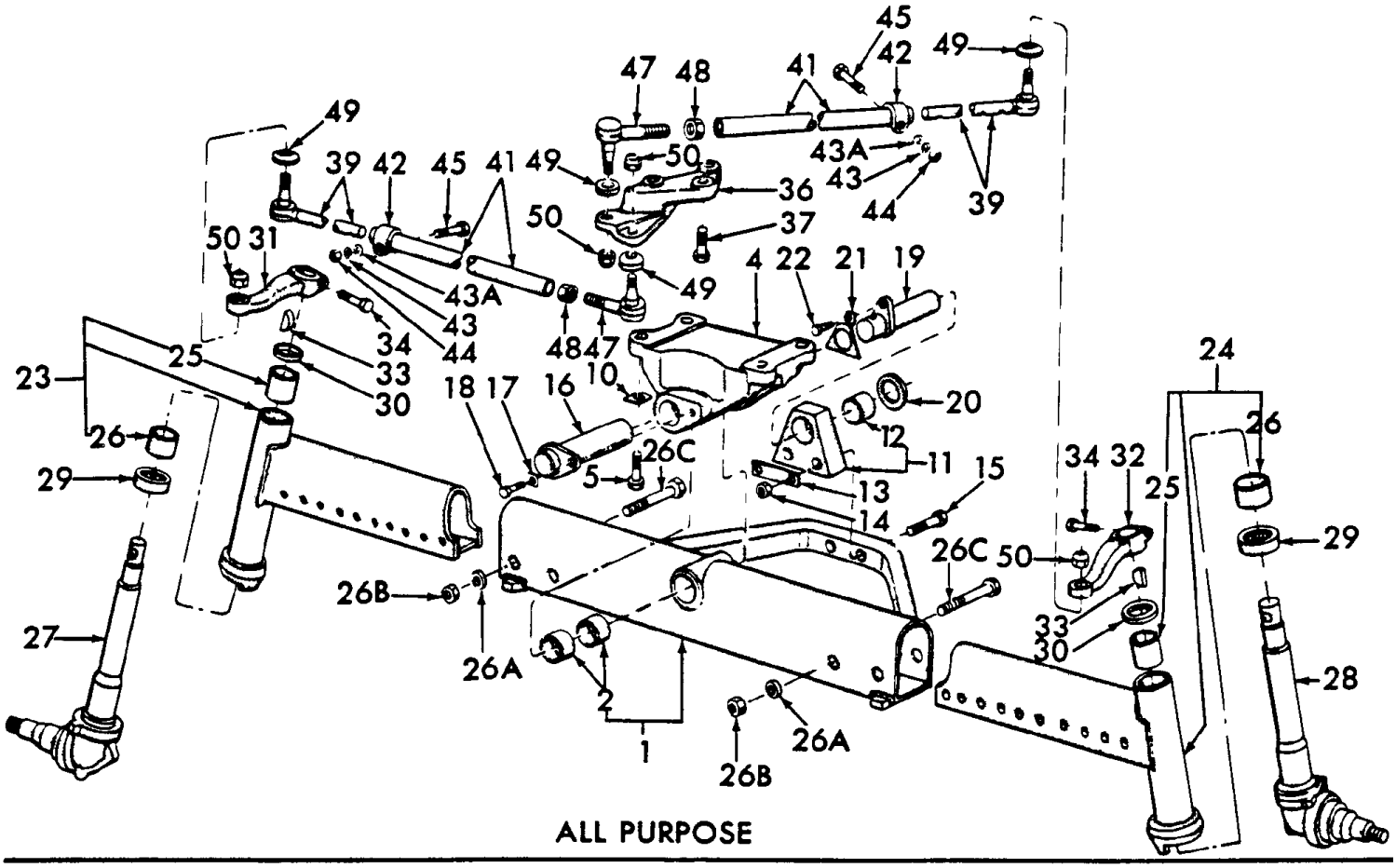
ALL PURPOSE

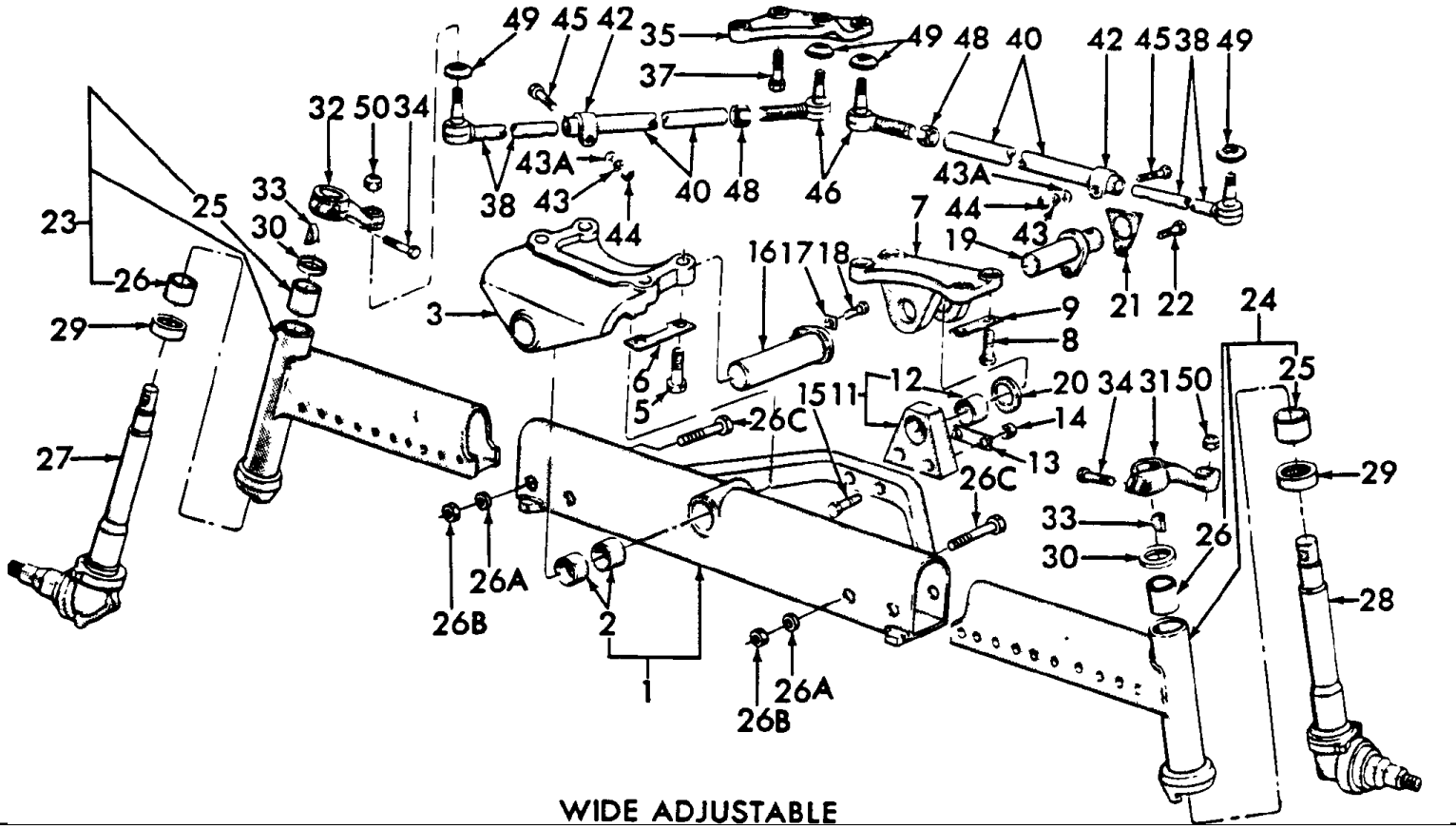
WIDE ADJUSTABLE

5000-SERIES 4 CYL TRACTOR (1/65-1/75)

03G02 FRONT AXLE, SPINDLES & RELATED PARTS - 5200, 7200

Ref	Part Number	Qty	Description
1	C5NN3A041Y	1	Axle & Bushing Assy., Center, Includes: Center Axle & Ref. 2, NHNA Only, No Longer Serviced, Start Year: 01/01/1967
2	C5NN3153F	2	Bushing, Center Axle, NHNA Only, Start Year: 01/01/1967
3	86514363	1	Bracket, Axle Trunnion, Wide Adjustable, NHNA Only, Start Year: 01/01/1967
4	86513805	1	Bracket, Axle Trunnion, All Purpose, NHNA Only, Start Year: 01/01/1967
5	9706701	4	Screw, Cap, HH, G5, 3/4"-10 x 2-1/2", Trunnion Bracket to Support, Start Year: 01/01/1967
6	C7NN3N043A	2	Anchor, Trunnion Bracket, Wide Adjustable, Replaces P/N C5NN-3N043-A, NHNA Only, No Longer Serviced, Start Year: 01/01/1967
7	C5NN3N056A	1	Bracket, Radius Rod Support, Wide Adjustable, NHNA Only, No Longer Serviced, Start Year: 01/01/1967
8	87403	4	Screw, Cap, HH, G5, 3/4"-10 x 2-1/4", Wide Adjustable, Start Year: 01/01/1967
9	C7NN3N042A	2	Anchor, Support Bracket, Wide Adjustable, Replaces P/N C5NN-3N042-A, NHNA Only, No Longer Serviced, Start Year: 01/01/1967
10	C5NN3N043B	4	Anchor, Axle Trunnion Bracket, All Purpose, NHNA Only, No Longer Serviced, Start Year: 01/01/1967
11	C5NN3N044A	1	Trunnion Assy., Center Axle Radius Rod, Includes: Trunnion & Ref. 12, NHNA Only, No Longer Serviced, Start Year: 01/01/1967
12	C5NN3446A	1	Bushing, Radius Rod Trunnion, Start Year: 01/01/1967
13	C7NN3N046A	2	Anchor, Axle Trunnion, Replaces P/N C5NN-3N046-A, NHNA Only, No Longer Serviced, Start Year: 01/01/1967
14	34675S8	2	Nut, Hex, 3/4"-16, No Longer Serviced (NHNA), Years: 01/01/1967-06/30/1972
14	280954	2	Nut, G5, 3/4"-10, (Not Shown), Start Year: 07/01/1972
15	SS55613ZDS	2	Screw, Cap, HH, G5, 3/4"-10 x 3-3/4", NHNA Only, Years: 01/01/1967-06/30/1972
15	304957S36	2	Bolt, HH, Trunnion Center Axles, 3/4"-10 x 3-3/4", Start Year: 07/01/1972
16	C5NN3N159C	1	Pin Assy., Axle Front, NHNA Only, Start Year: 01/01/1967
17	C5NN3N165B	1	Anchor, Axle Front Pin, NHNA Only, No Longer Serviced, Start Year: 01/01/1967
18	87909	1	Screw, Cap, HH, G5, 1/2"-13 x 1", Start Year: 01/01/1967
19	C5NN3N160A	1	Pin Assy., Axle Rear, Start Year: 01/01/1967
20	C5NN3N450A	1	Washer, Rear Pin Thrust, Start Year: 01/01/1967
21	E2NN3N169AB	1	Anchor, Axle Rear Pin, Start Year: 01/01/1967
22	304668S36	1	Screw, Cap, HH, G5, 7/16"-14 x 7/8", Start Year: 01/01/1967
23	C7NN3006E	1	Axle Assy., R.H., Replaces P/N C5NN-3006-J, Includes: Axle Ref. 25 & 26, Start Year: 01/01/1967
24	C7NN3007E	1	Axle Assy., L.H., Replaces P/N C5NN-3007-J, Includes: Axle Ref. 25 & 26, Start Year: 01/01/1967
25	C5NN3109A	2	Bushing, Wheel Spindle Pin, Upper, Start Year: 01/01/1967
26	C5NN3110A	2	Bushing, Wheel Spindle Pin, Lower, Start Year: 01/01/1967
26A	C5NN3N030G	4	Spacer, Axle, Start Year: 01/01/1967
26B	280374	4	Nut, G5, 5/8"-11, Start Year: 01/01/1967
26C	304969S8	4	Screw, Cap, HH, G5, 5/8"-11 x 4-1/4", Start Year: 01/01/1967
27	C5NN3105N	1	Spindle Assy., Wheel, R.H., Start Year: 01/01/1967
27	D2NN3105B	1	Spindle Assy., Front Axle, R.H., (Not Shown), No Longer Serviced (NH-E), Use With 7.50 x 18 x 16 Front Tires, Start Year: 06/01/1973
28	C5NN3106K	1	Spindle Assy., Wheel, L.H., Start Year: 01/01/1967
28	D2NN3106B	1	Spindle Assy., Front Axle, L.H., (Not Shown), No Longer Serviced (NH-E), Start Year: 06/01/1973

03G02 FRONT AXLE, SPINDLES & RELATED PARTS - 5200, 7200

Ref	Part Number	Qty	Description
29	C0NN3A299A	2	Bearing Assy., Wheel Spindle Thrust, Start Year: 01/01/1967
30	C0NN3A208A	2	Seal, Steering Arm, Start Year: 01/01/1967
31	C5NN3131T	1	Arm, Spindle, L.H., Wide Adjustable, No Longer Serviced, Start Year: 01/01/1967
31	C5NN3131T	1	Arm, Spindle, R.H., All Purpose, (Not Shown), No Longer Serviced, Start Year: 01/01/1967
32	C5NN3130T	1	Arm, Spindle, R.H., Wide Adjustable, No Longer Serviced, Start Year: 01/01/1967
32	C5NN3130T	1	Arm, Spindle, L.H., All Purpose, (Not Shown), No Longer Serviced, Start Year: 01/01/1967
33	74195S	2	Key, Woodruff, 5/16"-1-1/2", Start Year: 01/01/1967
34		2	Screw, Cap, HH, G5, 5/8"-18 x 3", NH-E Only, Start Year: 01/01/1967
35	C5NN3N670C	1	Arm, Steering Center, Wide Adjustable, NHNA Only, No Longer Serviced, Start Year: 01/01/1967
36	C7NN3N670B	1	Arm, Steering Center, All Purpose, Replaces P/N C7NN-3N670-A, NHNA Only, Start Year: 01/01/1967
37	88557	3	Screw, Cap, HH, G5, 3/4"-10 x 2", Start Year: 01/01/1967
38	C5NN3280R	2	Rod Assy., Spindle Arm Connecting, Wide Adjustable, 18.75", NHNA Only, Start Year: 01/01/1967
39	C5NN3280S	2	Rod Assy., Spindle Arm Connecting, All Purpose, 19.75", NHNA Only, Start Year: 01/01/1967
40	86547157	2	Sleeve, Spindle Arm Connecting Rod, Wide Adjustable, 19.15" (486.41mm) Lg., NHNA Only, Start Year: 01/01/1967
41	86598107	2	Sleeve, Spindle Arm Connecting Rod, All Purpose, 20.68" (525.27mm) Lg., NHNA Only, Start Year: 01/01/1967
42	C5NN3287C	2	Clamp, Spindle Connecting Rod, Start Year: 01/01/1967
43	80679	2	Washer, Lock, 1/2", Start Year: 01/01/1967
43A	44734S8	2	Washer, 1/2", NHNA Only, No Longer Serviced, Start Year: 01/01/1967
44	280431	2	Nut, G5, 1/2"-13, Start Year: 01/01/1967
45	87972	2	Screw, Cap, HH, G5, 1/2"-13 x 2-1/2", Start Year: 01/01/1967
46	E3NN3307AA	2	End Assy., Rod Arm, Wide Adjustable, 3.81" (96.77mm) Lg. For Cover l/Hydraulics & w/Pump, Refer to Figure 5A2 Replaces P/N C5NN-3289-E, Start Year: 01/01/1967
47	C7NN3289C	2	End Assy., Rod Arm, All Purpose, 6.38" (162.05mm) Lg., Housing Only, 10 Speed w/ or l/Load Monitor, Start Year: 01/01/1967
48	E3NN3C739AA	2	Nut, Rod Arm, End Assy. to Sleeve, Start Year: 01/01/1967
49	C5NN3N634A	4	Seal, Spindle Arm Dust, Start Year: 01/01/1967
50	380038S36	4	Nut, Lock, Hex, 5/8"-18 (Rods), Start Year: 01/01/1967

03G03 STEERING GEAR MOTOR, SHAFT & TILT MECHANISM - 5200, 7200 (67/3-73)

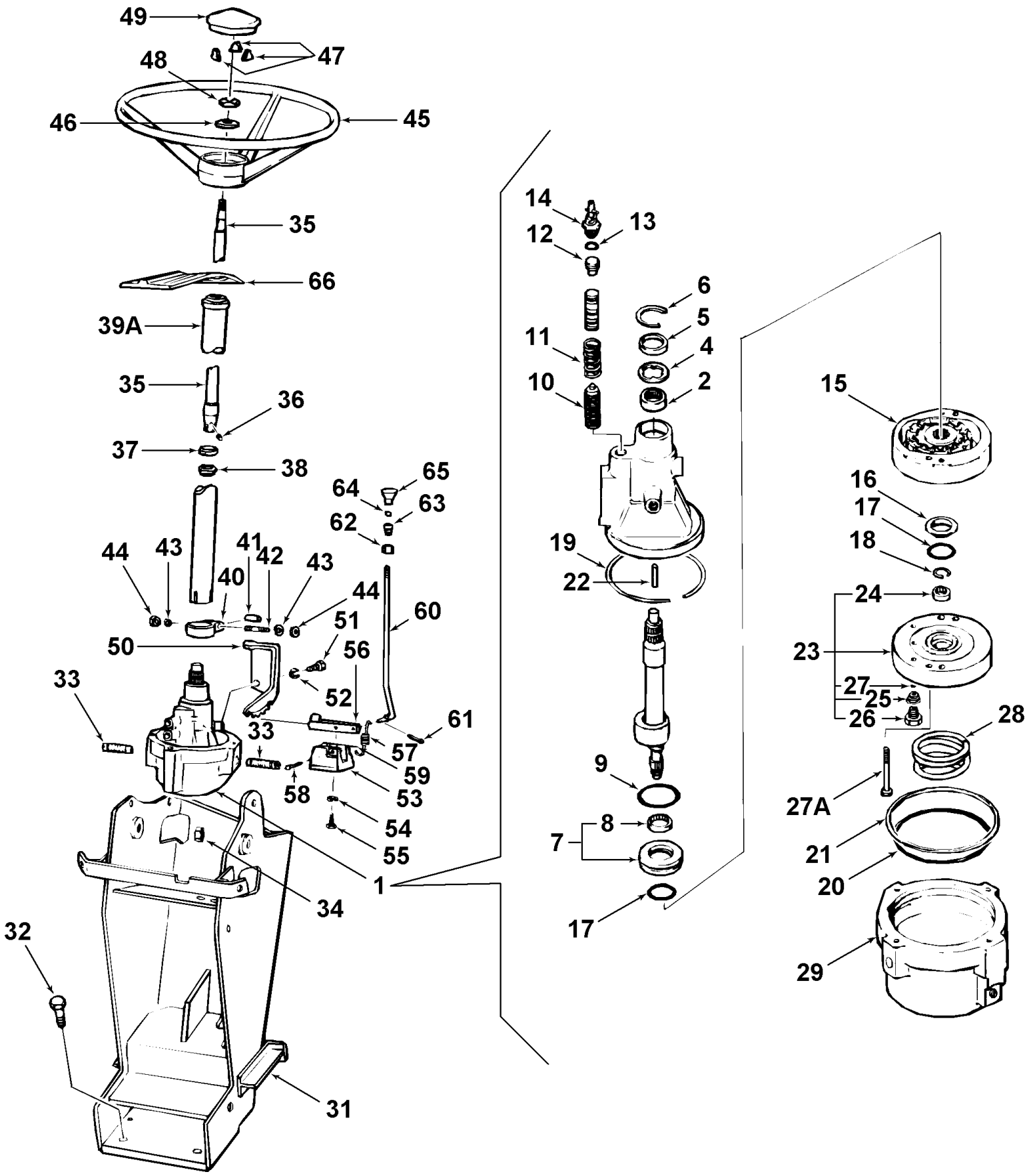

5000-SERIES 4 CYL TRACTOR (1/65-1/75)

03G03 STEERING GEAR MOTOR, SHAFT & TILT MECHANISM - 5200, 7200 (67/3-73)

Ref	Part Number	Qty	Description
1	NS	1	Motor Assy., Steering Gear, Includes: Housing, Spools & Ref. 2 thru 29, No Longer Serviced, Use Conversion Kit, P/N 309966., See Fig. 3G1 for Conversion Kit, NHNA Only, Years: 01/01/1968-03/31/1973
2	C5NN3N768A	1	Bearing, Motor Drive Shaft, No Longer Serviced (NH-E), Years: 01/01/1968-03/31/1973
4	C5NN3R515A	1	Seal, Outer Shaft, Years: 01/01/1968-03/31/1973
5	C5AZ3D733A	1	Seal, Outer Shaft Dust, No Longer Serviced (NH-E), Years: 01/01/1968-03/31/1973
6	34163	1	Ring, Snap, Int, 1.375", Seal Dust, Service Only, Years: 01/01/1968-03/31/1973
7	C5NN3R529A	1	Support Assy., Motor Shaft Bearing, U.S., Includes: Ref. 8, No Longer Serviced (NHNA), Years: 01/01/1968-03/31/1973
8	C5NN3N768A	1	Bearing Assy., Shaft, No Longer Serviced (NH-E), Years: 01/01/1968-03/31/1973
9	9820460	1	O-Ring, 1.799" ID x .070" Thk, Support, U.S., Years: 01/01/1968-03/31/1973
10	C5NN3N772A	1	Guide Assy., Reaction Control, No Longer Serviced, Years: 01/01/1968-03/31/1973
11	C5NN3E548A	1	Spring, Reaction Control Guide, No Longer Serviced, Years: 01/01/1968-03/31/1973
12	C9NN3R675A	1	Plug, Reaction Control Spool, No Longer Serviced (NHNA), Years: 01/01/1968-03/31/1973
13	86629543	1	O-Ring, .364" ID x .070" Thk, Reaction Spool Plug, Years: 01/01/1968-03/31/1973
14	C5NN3N765A	1	Adjuster Assy., Reaction Control, No Longer Serviced (NHNA), Years: 01/01/1968-03/31/1973
15	C5NN3C504B	1	Rotary & Ring Assy., Motor, Includes: Vanes, No Longer Serviced (NHNA), Years: 01/01/1968-03/31/1973
16	C5NN3R513A	2	Seal, Rotor, Years: 01/01/1968-03/31/1973
17	C5NN3R517A	2	Ring, Rotor Seal Back-Up, Years: 01/01/1968-03/31/1973
18	C5NN3R507A	1	Ring, Rotor Retaining, No Longer Serviced (NHNA), Years: 01/01/1968-03/31/1973
19	C5NN3R505A	1	Ring, Base Retainer, No Longer Serviced (NHNA), Years: 01/01/1968-03/31/1973
20	87091S95	1	O-Ring, 90 Duro, 4.750" ID x .139" Thk, Motor Cover, Replaces P/N C5NN-3R512-A, Years: 01/01/1968-03/31/1973
21	C5NN3R506A	1	Ring, Cover Seal Back-Up, Years: 01/01/1968-03/31/1973
22	C5NN3R501A	2	Pin, Cover to Housing Dowel, 1/4" x 2-1/2", No Longer Serviced, Years: 01/01/1968-03/31/1973
23	C5NN3N771B	1	Cover Assy., Housing, Includes: Cover & Ref. 24 thru 27, No Longer Serviced (NHNA), Years: 01/01/1968-03/31/1973
24	C7NN3R646A	1	Bushing, Cover, Replaces P/N C5NN-3748-A, No Longer Serviced (NHNA), Years: 01/01/1968-03/31/1973
25	C5NN3R524A	2	Spring, Ball Check, No Longer Serviced (NHNA), Years: 01/01/1968-03/31/1973
26	C5NN3R503A	2	Plug, Cover Ball Check Spring, No Longer Serviced (NHNA), Years: 01/01/1968-03/31/1973
27	C5NNC820A	2	Ball, 7/32" Dia., Years: 01/01/1968-03/31/1973
27A	C7NN3R645A	2	Bolt, Hex, Cover, Rotor & Ring, 1/4"-20 x 2-1/4", No Longer Serviced, Years: 01/01/1968-03/31/1973
28	C5NN3R525A	1	Spring, Motor Housing Cover, No Longer Serviced (NHNA), Years: 01/01/1968-03/31/1973
29	C7NN3A250A	1	Base, Motor, Replaces P/N C7NN-3A250-B, No Longer Serviced (NH-E), Years: 01/01/1968-03/31/1973
31	D3NN3N693A	1	Support Assy., Power Steering Motor, No Longer Serviced (NHNA)
32	C7NN3C765B	4	Bolt, HH, 9/16"-12 x 1-3/8", Years: 01/01/1967-03/31/1973
33	C7NN3R634A	2	Pin, Support to Motor, Pivot, No Longer Serviced (NHNA), Years: 01/01/1967-03/31/1973
34	87313	2	Nut, Jam, G2, 3/4"-16, Years: 01/01/1967-03/31/1973
35	C7NN3C500E	1	Shaft Assy., Column, 11-1/2" Lg. (29.21cm), NHNA Only, Years: 01/01/1967-03/31/1973
36	D0NN3R682A	1	Pin, Steering Motor Shaft, Replaces P/N C5NN-3R578-A, No Longer Serviced (NH-E), Years: 01/01/1967-03/31/1973
37	C5NN3R565A	1	Ring, Shaft Taper, Years: 01/01/1967-03/31/1973

03G03 STEERING GEAR MOTOR, SHAFT & TILT MECHANISM - 5200, 7200 (67/3-73)

Ref	Part Number	Qty	Description
38	C5NN3R576A	1	Nut, Shaft Connecting, Years: 01/01/1967-03/31/1973
39A	C7NN3R604A	1	Kit, Tube Scraper & Dust Cover, No Longer Serviced (NHNA), Years: 01/01/1967-03/31/1973
40	C5NN3R577A	1	Clamp, Column Tube to Motor, No Longer Serviced, Use Conversion Kit, P/N 309966., Years: 01/01/1967-03/31/1973
41	C5NN3R574A	1	Spacer, Column Tube Clamp, No Longer Serviced, Use Conversion Kit, P/N 309966., Years: 01/01/1967-03/31/1973
42	C5NN3R573A	1	Stud, Column Tube Clamp, No Longer Serviced, Years: 01/01/1967-03/31/1973
43	80681	2	Washer, Lock, 5/16", Years: 01/01/1967-03/31/1973
44	9635082	2	Nut, G5, 5/16"-18, Years: 01/01/1967-03/31/1973
45	E0NN3600BA	1	Wheel Assy., Steering, NHNA Only, Years: 01/01/1967-03/31/1973
46	356515S36	1	Washer, Wheel, Flat, Years: 01/01/1967-03/31/1973
47	C5NN3N649A	3	Clip, Wheel Hub Cap Retaining, Years: 01/01/1967-03/31/1973
48	D5NN3N602A	1	Nut, Wheel Retaining, Years: 01/01/1967-03/31/1973
49	C5NN3623A	1	Cap Assy., Wheel Hub, 3-5/8", NHNA Only, Years: 01/01/1967-03/31/1973
49	EBPN3655AA	1	Cap Assy., Wheel Hub, 2-1/2", Use W/E0NN-3600-BA, No Longer Serviced (NH-E), Years: 01/01/1967-03/31/1973
50	C7NN3R614A	1	Sector, Power Steering Motor, Replaces P/N C5NN-3R614-B, NHNA Only, No Longer Serviced, Years: 01/01/1967-03/31/1973
51	81821693	1	Washer, Lock, 3/8", Years: 01/01/1967-03/31/1973
52	86631589	2	Screw, Cap, HH, G5, 3/8"-24 x 1-1/4", Years: 01/01/1967-03/31/1973
53	C5NN3R615A	1	Pivot, Steering Motor Pawl, NHNA Only, No Longer Serviced, Years: 01/01/1967-03/31/1973
54	81821693	4	Washer, Lock, 3/8", Years: 01/01/1967-03/31/1973
55	88206	4	Screw, Cap, HH, G5, 3/8"-16 x 1", Years: 01/01/1967-03/31/1973
56	C5NN3R616A	1	Pawl, Steering Motor, NHNA Only, No Longer Serviced, Years: 01/01/1967-03/31/1973
57	280250	1	Pin, Split Cotter, 3/32" x 3/4", Years: 01/01/1967-03/31/1973
58	76031S36	1	Pin, Clevis, 3/8"x 1-5/16", Years: 01/01/1967-03/31/1973
59	C5NN7A337A	1	Spring, Motor Pawl, NHNA Only, Years: 01/01/1967-03/31/1973
60	C7NN3R620A	1	Rod, Pawl Operating, NHNA Only, No Longer Serviced, Years: 01/01/1967-03/31/1973
61	280250	1	Pin, Split Cotter, 3/32" x 3/4", Rod to Pawl, Years: 01/01/1967-03/31/1973
62	C5NN3R622A	1	Nut, Pawl Operating Rod Guide, NHNA Only, No Longer Serviced, Years: 01/01/1967-03/31/1973
63	C7NN3R612B	1	Guide, Pawl Operating Guide, NHNA Only, No Longer Serviced, Years: 01/01/1967-03/31/1973
64	87305	1	Nut, Jam, G2, 1/4"-20, Years: 01/01/1967-03/31/1973
65	C7NN3R632A	1	Knob, Power Steering Tilt Control Rod, Years: 01/01/1967-03/31/1973
66	C5NN3D677A	1	Seal Assy., Column Opening, NHNA Only, No Longer Serviced, Years: 01/01/1967-03/31/1973

03G03[A] STEERING MOTOR, COLUMN & TILT MECHANISM, 5200 & 7200 (4-73/)

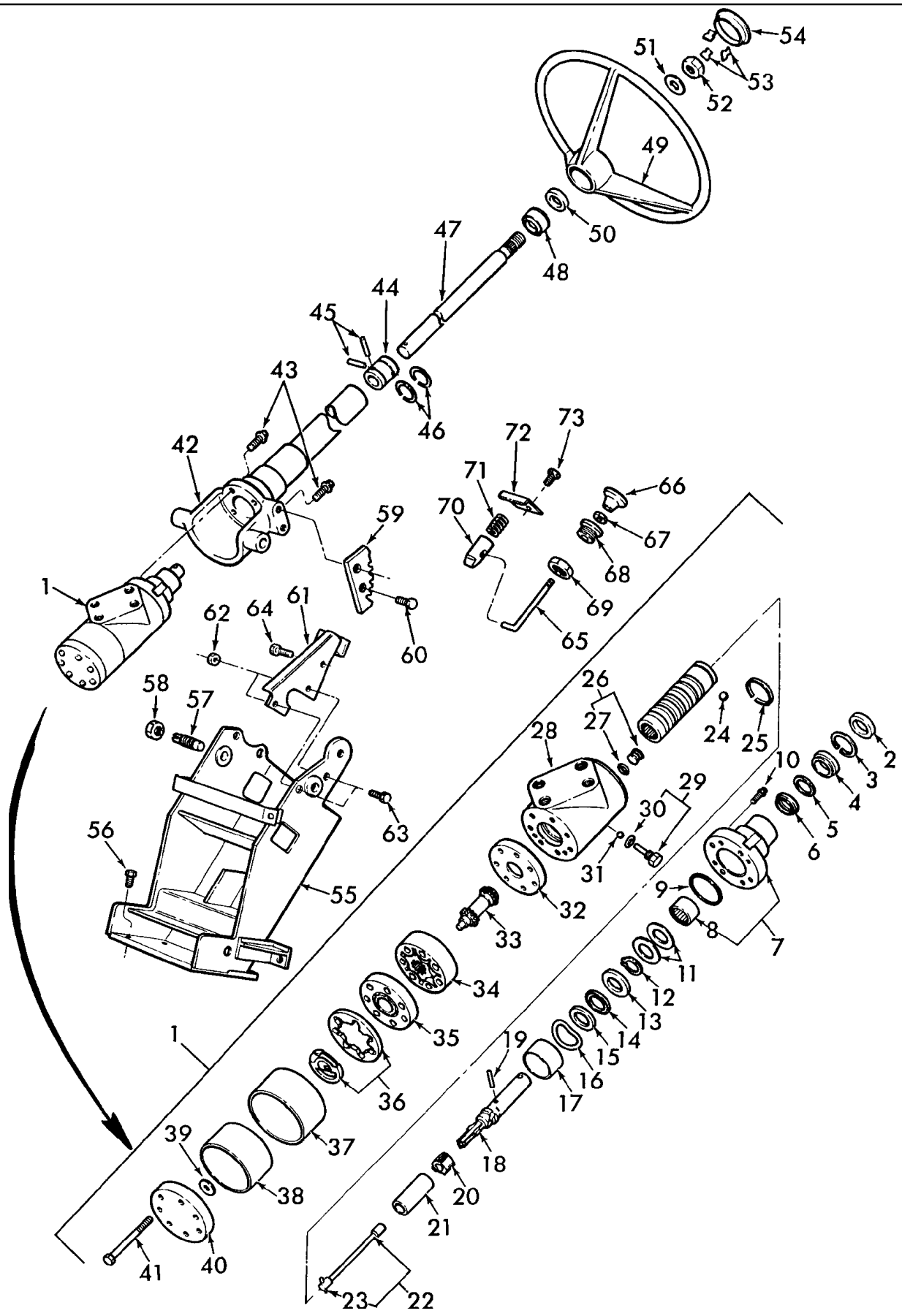

5000-SERIES 4 CYL TRACTOR (1/65-1/75)

03G03[A] STEERING MOTOR, COLUMN & TILT MECHANISM, 5200 & 7200 (4-73/)

Ref	Part Number	Qty	Description
1	E3NN3A244BA	1	Motor Assy., Steering, Includes: Valve Spool & Ref. 2 thru 41, Start Year: 04/01/1973
2	NSS	1	Seal, Motor Shaft Dust, Start Year: 04/01/1973
3	214542	1	Ring, Snap, Int, 1.250", Start Year: 04/01/1973
4	NSS	1	Ring, Hub Seal, Start Year: 04/01/1973
5	D1NN3R692A	1	Washer, Hub Ring, Back-Up, Start Year: 04/01/1973
6	NSS	1	Packing, Housing End Cover, Start Year: 04/01/1973
7	D5NN3N771A	1	Cover Assy., Housing, Upper, Includes: Cover & Ref. 8, Start Year: 04/01/1973
8	D1NN3R688A	1	Bearing, Housing Cover Needle, No Longer Serviced, Start Year: 04/01/1973
9	279167	1	O-Ring, 1.864" ID x .066" Thk, Housing End Cover, Start Year: 04/01/1973
10	517454	4	Screw, Cap, 12 Pt Hd, 5/16"-18 x 3/4", Housing Cover, Upper, Start Year: 04/01/1973
11	86585543	AR	Kit, Shim, Thickness Included: 1- .030, 1- .0025, 4- .005, 4- .010, Total Ten Pieces, Start Year: 04/01/1973
12	279237	1	Ring, Snap, Ext, .875", Spool Retaining, Start Year: 04/01/1973
13	E3NN3E575AA	1	Washer, Actuating Thrust Bearing, Start Year: 04/01/1973
14	130306	1	Bearing, Motor Control Valve, Start Year: 04/01/1973
15	279238	1	Washer, Gear Actuating Thrust Bearing, Start Year: 04/01/1973
16	279240	1	Washer, Housing Spacer Spring, Start Year: 04/01/1973
17	279242	1	Spacer, Gear Housing, Start Year: 04/01/1973
18	E3NN3B668AA	1	Shaft, Gear Input, Start Year: 04/01/1973
19	279165	1	Pin, Bar & Inner Shaft, Start Year: 04/01/1973
20	279236	1	Ring, Spool Drive, Start Year: 04/01/1973
21	D1NN3A572B	1	Spacer, Gear Housing, No Longer Serviced (NHNA), Start Year: 04/01/1973
22	D2NN3R686A	1	Bar Assy., Gear Torsion, Includes: Bar & Ref. 23, Start Year: 04/01/1973
23	279165	1	Pin, Bar & Inner Shaft, Start Year: 04/01/1973
24	72387	1	Ball, Steel, 5/16", Start Year: 04/01/1973
25	279241	1	Spring, Motor Housing Spool, No Longer Serviced (NH-E), Start Year: 04/01/1973
26	D1NN3R684A	1	Plug & Seal Assy., Housing, Includes: Plug & Ref. 27, Start Year: 04/01/1973
27	272429	1	O-Ring, 90 Duro, .208" ID x .070" Thk, Start Year: 04/01/1973
28	NSS	1	Housing Assy., Power Steering Motor, NHNA Only, Start Year: 04/01/1973
29	D1NN3R694A	1	Plug Assy., Motor Housing, Includes: Plug & Ref. 30, No Longer Serviced, Start Year: 04/01/1973
30	86513328	1	O-Ring, 90 Duro, .301" ID x .064" Thk, Start Year: 04/01/1973
31	86628554	1	Ball, Steel, 1/4" Dia., Start Year: 04/01/1973
32	279171	1	Spacer, Motor Rotor, Start Year: 04/01/1973
33	86585567	1	Link, Valve Actuating, Start Year: 04/01/1973
34	E3NN3R508AA	1	Rotor & Stator Assy., Motor Hub, Start Year: 04/01/1973
35	279173	1	Manifold, Gear Motor, Start Year: 04/01/1973
36	279174	1	Commutator & Ring Assy., Motor Oil, Start Year: 04/01/1973
37	D5NN3D708B	1	Retainer, Rotor Shaft Bearing, Replaces D6NN3D708A, Start Year: 04/01/1973
38	86585592	1	Seal, Motor Rotor, Start Year: 04/01/1973
39	594158	1	Washer, Motor Rotor Pin, Start Year: 04/01/1973
40	279177	1	Cover Assy., Gear Housing End, Start Year: 04/01/1973
41	86598492	7	Screw, Cap, HH, Special, G2, 5/16"-18 x 2-3/4", Start Year: 04/01/1973

5000-SERIES 4 CYL TRACTOR (1/65-1/75)

03G03[A] STEERING MOTOR, COLUMN & TILT MECHANISM, 5200 & 7200 (4-73/)

Ref	Part Number	Qty	Description
42	D2NN3C529B	1	Column Assy., Gear Motor, NHNA Only, No Longer Serviced, Start Year: 04/01/1973
43	D2NN3R720A	4	Bolt, Motor Mounting Bracket, No Longer Serviced (NHNA), Start Year: 04/01/1973
44	D5NN3A593A	1	Coupling, Gear Control Motor, Start Year: 04/01/1973
45	D1NN3R500B	2	Pin, Motor Inner Shaft, Start Year: 04/01/1973
46	279241	2	Ring, Column Dowel, No Longer Serviced (NH-E), Start Year: 04/01/1973
47	D2NN3R603B	1	Shaft, Motor, Inner, No Longer Serviced (NH-E), Start Year: 04/01/1973
48	D2NN3D650A	1	Bearing & Retainer, Column, Upper, Start Year: 04/01/1973
49	E0NN3600BA	1	Wheel Assy., Steering, NHNA Only, Start Year: 04/01/1973
50	8N3570	1	Seal, Steering Column Dust, Start Year: 04/01/1973
51	356515S36	1	Washer, Flat, Wheel, Start Year: 04/01/1973
52	D5NN3N602A	1	Nut, Wheel Retaining, Start Year: 04/01/1973
53	C5NN3N649A	3	Clip, Hub Cap Retaining, Start Year: 04/01/1973
54	C5NN3623A	1	Cap Assy., Wheel Hub, 3 5/8", NHNA Only, Start Year: 04/01/1973
54	EBPN3655AA	1	Cap Assy., Wheel Hub, 2 1/2", Use With E0NN3600BA, No Longer Serviced (NH-E), Start Year: 04/01/197
55	D3NN3N693A	1	Support Assy., Power Steering Motor, NHNA Only, No Longer Serviced, Start Year: 04/01/1973
56	PL	4	Bolt, HH, Support Attaching, 9/16"-12 x 1-3/8", NHNA Only, No Longer Serviced, Start Year: 04/01/1973
57	C7NN3R634A	2	Pin, Support to Column Assy., No Longer Serviced (NHNA), Start Year: 04/01/1973
58	87313	2	Nut, Jam, G2, 3/4"-16, Support & Column, Start Year: 04/01/1973
59	D2NN3R707B	1	Quadrant, Tilt Control, NHNA Only, No Longer Serviced, Start Year: 04/01/1973
60	9706729	2	Screw, Cap, HH, G5, 7/16"-14 x 1", No Longer Serviced (NHNA), Start Year: 04/01/1973
61	D3NN3R702A	1	Bracket & Guide Assy., Power Steering Tilt Control, NHNA Only, No Longer Serviced, Start Year: 04/01/1973
62	34978S2	2	Nut, Lock, GC, 7/16"-14, Start Year: 04/01/1973
63	9706729	2	Screw, Cap, HH, G5, 7/16"-14 x 1", No Longer Serviced (NHNA), Start Year: 04/01/1973
64	PL	1	Bolt, HH, 3/8"-24 x 1-3/4", NHNA Only, Start Year: 04/01/1973
65	D2NN3R708A	1	Rod, Power Steering Tilt Control, 2.75" Lg., No Longer Serviced, Start Year: 04/01/1973
66	C7NN3R632A	1	Knob, Tilt Control Rod, Start Year: 04/01/1973
67	87305	1	Nut, Jam, G2, 1/4"-20, Start Year: 04/01/1973
68	D3NN3R705A	1	Guide, Tilt Control Rod, No Longer Serviced (NHNA), Start Year: 04/01/1973
69	D2NN3R711A	1	Nut, Tilt Control Rod, No Longer Serviced (NHNA), Start Year: 04/01/1973
70	D2NN3R706A	1	Latch, Tilt Control, No Longer Serviced (NHNA), Start Year: 04/01/1973
71	D2NN3R710A	1	Spring, Tilt Control, No Longer Serviced (NHNA), Start Year: 04/01/1973
72	D2NN3R709B	1	Retainer, Tilt Control Spring, NHNA Only, No Longer Serviced, Start Year: 04/01/1973
73	304626S36	1	Screw, Cap, HH, G5, 5/16"-18 x 1/2", Start Year: 04/01/1973
	EBPN3655AA	1	Cap, Wheel Hub, Use W/# E0NN-3600-AA, No Longer Serviced (NH-E), Years: 04/01/1973-12/31/1976
	86585473	1	Kit, Seal, Incl. Ref. 2, 4 & 6, Start Year: 04/01/1973

03G04 POWER STEERING FRONT MOTOR ASSEMBLY - 5200, 7200

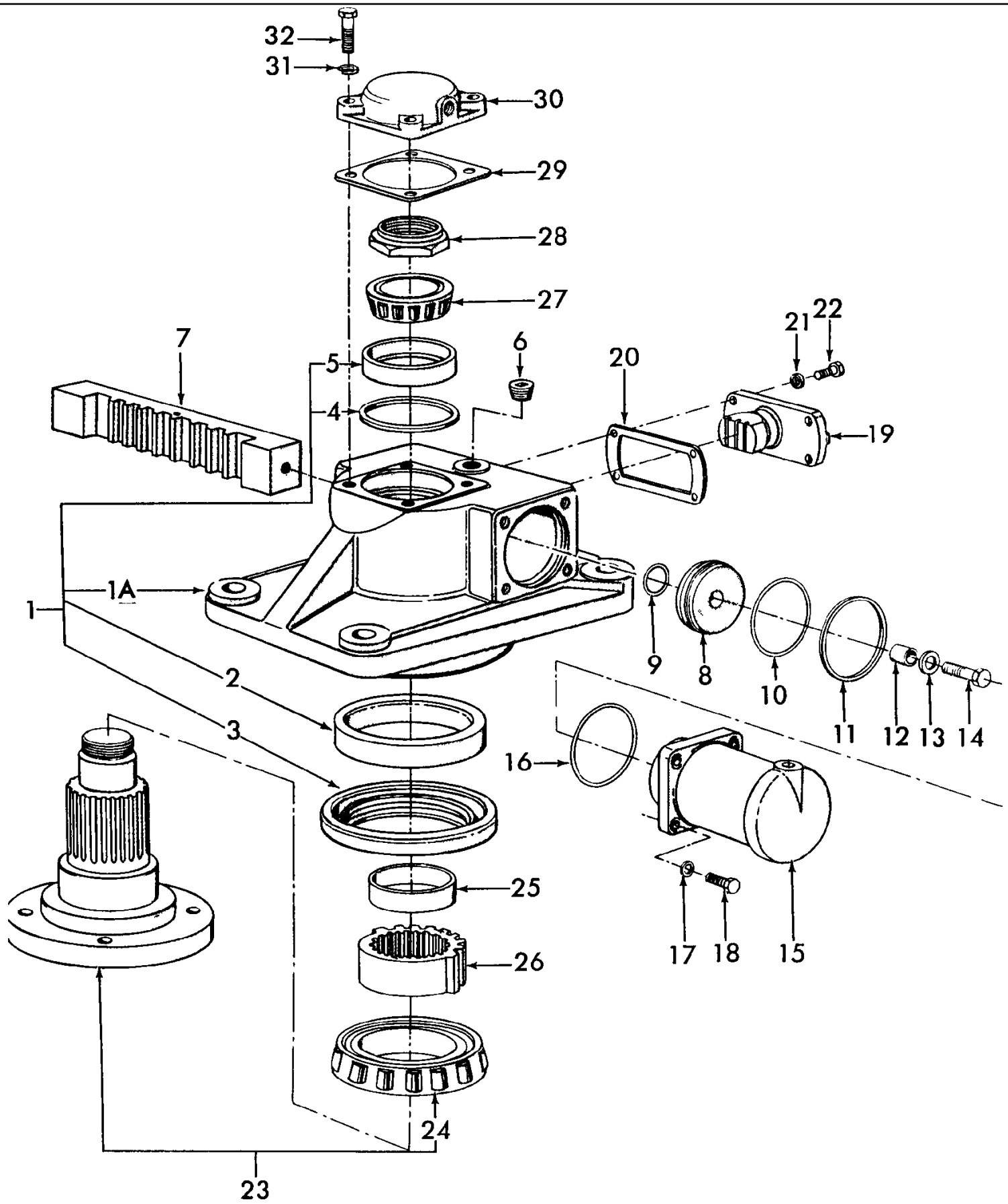

5000-SERIES 4 CYL TRACTOR (1/65-1/75)

03G04 POWER STEERING FRONT MOTOR ASSEMBLY - 5200, 7200

Ref	Part Number	Qty	Description
1	C7NN3A244B	1	Motor Assy., Steering, Front, Includes: Ref. 1 thru 32, No Longer Serviced, Start Year: 01/01/1968
1	C7NN3R597B	1	Housing Assy., Motor, Includes: Ref. 1A thru 5, No Longer Serviced, Start Year: 01/01/1968
1A	NS	1	Housing Motor, NHNA Only, Start Year: 01/01/1968
2	598415	1	Bearing Cup, Large, Start Year: 01/01/1968
3	D8NN1187CA	1	Motor Spindle Seal Assy, No Longer Serviced (NH-E), Start Year: 01/01/1968
4	97802S	1	Ring, Snap, Int, 3.6875", No Longer Serviced, Start Year: 01/01/1968
5	86516473	1	Bearing Cup, Small, No Longer Serviced (NH-E), Start Year: 01/01/1968
6	87711S36	1	Plug, Socket Headless, Housing, 1/2"-14, Start Year: 01/01/1968
7	C7NN3R585B	1	Rack, Motor Gear, No Longer Serviced (NHNA), Start Year: 01/01/1968
8	C7NN3R584A	2	Piston, Motor, No Longer Serviced, Start Year: 01/01/1968
9	372560S	2	O-Ring, Piston to Rack, Start Year: 01/01/1968
10	87146S94	2	O-Ring, 2.563" ID x .103" Thk, Piston Outer, Start Year: 01/01/1968
11	C7NN3R596A	2	Ring, Piston Outer, Teflon, No Longer Serviced (NH-E), Start Year: 01/01/1968
12	C7NN3R601A	2	Spacer, Motor Piston Bolt, .322 I.D. x .438 O.D. x .637, No Longer Serviced, Start Year: 01/01/1968
13	44722S8	2	Washer, 5/16", NHNA Only, No Longer Serviced, Start Year: 01/01/1968
14	382187S36	2	Bolt, HH, Piston to Rack, 5/16"-18 x 1.38, No Longer Serviced (NHNA), Start Year: 01/01/1968
15	C7NN3R599B	2	Cylinder, Motor, Replaces P/N C7NN-3R599-A, No Longer Serviced, Start Year: 01/01/1968
16	373407S	2	O-Ring, 1.062" ID x .139" Thk, Cylinder to Housing, No Longer Serviced (NH-E), Start Year: 01/01/1968
17	81547	8	Washer, Lock, 7/16", Start Year: 01/01/1968
18	9627887	8	Screw, Cap, HH, G5, 7/16"-14 x 1-1/4", Start Year: 01/01/1968
19	C7NN3R600B	1	Slipper, Motor Rack, No Longer Serviced (NHNA), Start Year: 01/01/1968
20	C7NN3R591M	AR	Shim, Motor Slipper, .007, No Longer Serviced (NHNA), Start Year: 01/01/1968
20	C7NN3R591L	AR	Shim, Motor Slipper, .009, U.S. Only, (Not Shown), No Longer Serviced (NHNA), Start Year: 01/01/1968
20	C7NN3R591K	AR	Shim, Motor Slipper, .010, U.S. Only, (Not Shown), No Longer Serviced (NHNA), Start Year: 01/01/1968
20	C7NN3R591J	AR	Shim, Motor Slipper, .012, U.S. Only, (Not Shown), No Longer Serviced (NHNA), Start Year: 01/01/1968
20	C7NN3R591H	AR	Shim, Motor Slipper, .015, U.S. Only, (Not Shown), No Longer Serviced (NHNA), Start Year: 01/01/1968
20	C7NN3R591G	AR	Shim, Motor Slipper, .020, U.S. Only, (Not Shown), No Longer Serviced (NHNA), Start Year: 01/01/1968
21	81821693	4	Washer, Lock, 3/8", Start Year: 01/01/1968
22	88011	4	Screw, Cap, HH, G5, 3/8"-16 x 1-1/4", Start Year: 01/01/1968
23	C7NN3R598A	1	Spindle & Bearing Assy., Motor, Includes: Spindle & Ref. 24, No Longer Serviced (NH-E), Start Year: 01/01/1968
24	598416	1	Cone & Roller Assy., Spindle, No Longer Serviced (NH-E), Start Year: 01/01/1968
25	C7NN3R594A	1	Spacer, Motor Pinion, No Longer Serviced, Start Year: 01/01/1968
26	C7NN3R592A	1	Pinion, Motor, No Longer Serviced (NHNA), Start Year: 01/01/1968
27	C7NN3R587A	1	Cone & Roller Assy., Motor Spindle, No Longer Serviced (NHNA), Start Year: 01/01/1968
28	C7NN3R593A	1	Nut, Motor Bearing, 1-3/4"-12, No Longer Serviced (NHNA), Start Year: 01/01/1968
29	C7NN3R595A	1	Gasket, Motor Cover, No Longer Serviced, Start Year: 01/01/1968
30	C7NN3N691A	1	Cover, Motor, No Longer Serviced, Start Year: 01/01/1968
31	81821693	4	Washer, Lock, 3/8", Start Year: 01/01/1968
32	88011	4	Screw, Cap, HH, G5, 3/8"-16 x 1-1/4", Start Year: 01/01/1968

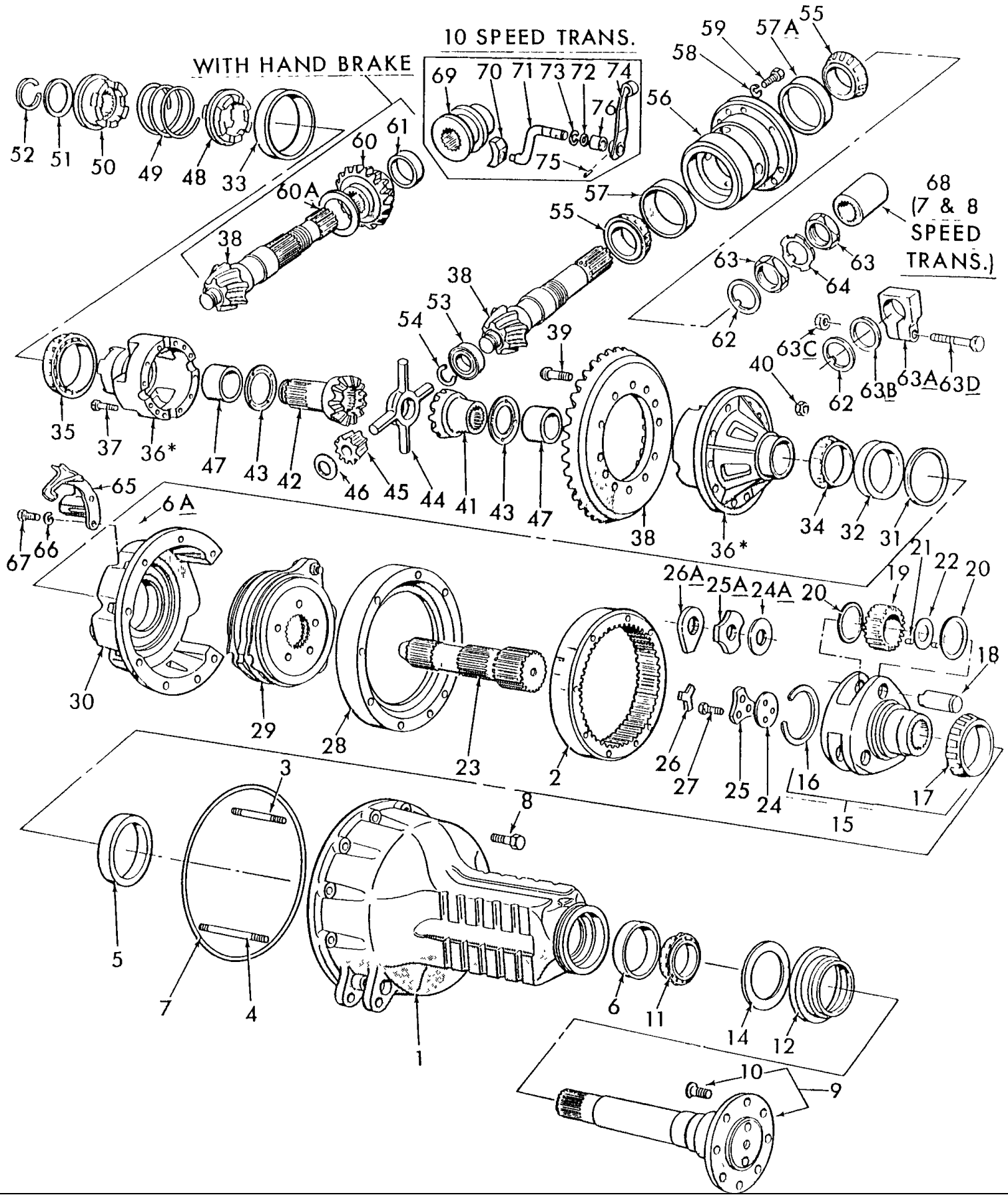

When using C5NN-4614-E to replace C5NN-4614-A you must also use NCA-4621-A.

5000-SERIES 4 CYL TRACTOR (1/65-1/75)

04A03 REAR AXLE, DIFFERENTIAL & RELATED PARTS - 5000, 7000

Ref	Part Number	Qty	Description
1	D8NN4010JA	1	Housing Assy., R.H., Replaces D0NN-4010-A & C5NN-4010-S 5000, 7000, Includes: Ref. 2 thru 6, Start Year: 01/01/1965
1	D8NN4011GA	1	Housing Assy., L.H., Replaces C5NN-4011-A, 5000, 7000, Includes: Ref. 2 thru 6, Start Year: 01/01/1965
1	D8NN4011GA	1	Housing, Assy., L.H., 7000, Includes: Ref. 2 thru 6, No Longer Serviced (NH-E), Start Year: 01/01/1971
2	C5NN4075A	2	Gear, Rear Axle Planet Ring, 12-1/2" O.D. x 1-5/8" (31.75 x 4.13cm), Start Year: 01/01/1965
3	382414S	12	Stud, 1/2"-13-20 x 5.25, Start Year: 01/01/1965
4	83417087	4	Stud, 1/2"-13-20 x 7.75, Start Year: 01/01/1965
5	TUAA1243A	2	Cup, Inner Bearing, 6" (15.24cm) O.D., Start Year: 01/01/1965
6	81803416	2	Cup, Outer Bearing, 4-7/16" (11.27cm) O.D., Start Year: 01/01/1965
6A	280963	16	Nut, G5, 1/2"-20, Start Year: 01/01/1965
7	83417133	2	O-Ring, 13.50" ID x .139" Thk, Axle to Center Housing, Start Year: 01/01/1965
8	86505999	40	Screw, Cap, HH, G5, 5/8"-11 x 2", Start Year: 01/01/1965
8	304955S36	12	Screw, Cap, HH, G5, 5/8"-11 x 3-3/4", Start Year: 01/01/1965
9	C5NN4244N	2	Shaft & Bolt Assy., Axle, 2-3/4" (6.98cm) Diameter, 5000, Includes: Ref. 10, Start Year: 01/01/1965
9	C5NN4244N	2	Shaft & Bolt Assy., Axle, 5000, Includes: Ref. 10, Start Year: 01/01/1965
9	E4NN4244GA	2	Shaft & Bolt Assy., Axle, 2-3/4" (13.34cm) Diameter, 7000, Includes: Ref. 10, Start Year: 01/01/1971
10	C5NN1N118J	16	Bolt, Shaft to Disc, Start Year: 01/01/1965
11	81803410	2	Cone & Roller Assy., Outer Bearing, Start Year: 01/01/1965
12	C5NN4969E	2	Retainer & Seal Assy., Shaft Oil Seal, Start Year: 01/01/1965
14	C5NN4180A	2	Gasket, Retainer, 5-1/4" (13.34cm) O.D., Use w/C5NN-4969-C, Years: 01/01/1965-12/31/1967
15	D9NN4N029AA	2	Carrier Assy., Planet Gear, Replaces C7NN4N029F, 5000, Includes: Ref. 16 thru 21, Start Year: 01/01/196
15	D9NN4N029AA	2	Carrier Assy., Planet Gear, Replaces D0NN4N029A, 7000, Includes: Ref. 16 thru 21, Start Year: 01/01/1971
16	C5NN4N031A	2	Retainer, Planet Gear Shaft, No Longer Serviced, Years: 01/01/1965-09/30/1969
16	C7NN4N031C	2	Retainer, Planet Gear Shaft, Start Year: 10/01/1969
17	81802412	2	Cone & Roller Assy., Inner Bearing, Start Year: 01/01/1965
18	C5NN4048A	6	Shaft, Planet Gear, 3-1/4" x 1.80, 5000, No Longer Serviced, Years: 01/01/1965-09/30/1969
18	C7NN4048D	6	Shaft, Planet Gear, 5000, Start Year: 10/01/1969
18	D0NN4048A	6	Shaft, Planet Gear, 7000, Start Year: 01/01/1971
19	C5NN4044A	6	Gear, Planet, 5000, Start Year: 01/01/1965
19	D0NN4044A	6	Gear, Planet, 7000, Start Year: 01/01/1971
20	C5NN4A007A	12	Washer, Thrust, 2.66 (6.76cm) O.D., Start Year: 01/01/1965
21	CFPN4013A	6	Kit, Needle Bearing, Consists of 58 Needles, .218 Diameter x 3/4" (5.54 x 19.05mm), 5000, Start Year: 01/01/1965
21	DAPN4013A	6	Kit, Needle Bearing, Consists of 58 Needles, .218 x .995 (5.56 x 25.26mm), 7000, Start Year: 01/01/1971
22	C5NN4A008A	6	Spacer, Needle Bearing, 2.23 (5.66cm) O.D., Start Year: 01/01/1965
23	C5NN4049A	2	Gear, Planet Sun, 5000, Start Year: 01/01/1965
23	D0NN4049A	2	Gear, Planet Sun, 7000, Start Year: 01/01/1971
24	C5NN4374AC	2	Spacer, Bearing, .049/.050 (1.245/1.27mm), 5000, Start Year: 01/01/1965
24	C5NN4374A	2	Spacer, Bearing, .053/.054 (1.35/1.37mm), 5000, Start Year: 01/01/1965
24	C5NN4374B	2	Spacer, Bearing, .057/.058 (1.45/1.48mm), 5000, Start Year: 01/01/1965

When using C5NN-4614-E to replace C5NN-4614-A you must also use NCA-4621-A.

04A03 REAR AXLE, DIFFERENTIAL & RELATED PARTS - 5000, 7000

Ref	Part Number	Qty	Description
24	C5NN4374C	2	Spacer, Bearing, .061/.062 (1.55/1.57mm), 5000, Start Year: 01/01/1965
24	C5NN4374D	2	Spacer, Bearing, .065/.066 (1.65/1.68mm), 5000, Start Year: 01/01/1965
24	C5NN4374E	2	Spacer, Bearing, .069/.070 (1.75/1.78mm), 5000, Start Year: 01/01/1965
24	C5NN4374F	2	Spacer, Bearing, .073/.074 (1.85/1.88mm), 5000, Start Year: 01/01/1965
24	C5NN4374G	2	Spacer, Bearing, .077/.078 (1.96/1.98mm), 5000, Start Year: 01/01/1965
24	C5NN4374H	2	Spacer, Bearing, .081/.082 (2.06/2.08mm), 5000, Start Year: 01/01/1965
24	C5NN4374J	2	Spacer, Bearing, .085/.086 (2.16/2.18mm), 5000, Start Year: 01/01/1965
24	C5NN4374K	2	Spacer, Bearing, .089/.090 (2.26/2.29mm), 5000, Start Year: 01/01/1965
24A	D0NN4374A	2	Spacer, Bearing, .049/.050 (1.245/1.270mm), 7000, Start Year: 01/01/1971
24A	D0NN4374B	2	Spacer, Bearing, .054/.055 (1.346/1.372mm), 7000, Start Year: 01/01/1971
24A	81803503	2	Spacer, Bearing, .057"/.058" (1.448/1.473mm), 7000, Start Year: 01/01/1971
24A	81803504	2	Spacer, Bearing, .061/.062 (1.549/1.575mm), 7000, Start Year: 01/01/1971
24A	81803505	2	Spacer, Bearing, .065"/.066" (1.651/1.676mm), 7000, Start Year: 01/01/1971
24A	81803506	2	Spacer, Bearing, .069"/.070 "(1.753/1.778mm), 7000, Start Year: 01/01/1971
24A	81803507	2	Spacer, Bearing, .073"/.074" (1.854/1.880mm), 7000, Start Year: 01/01/1971
24A	81803508	2	Spacer, Bearing, .077"/.078" (1.956/1.981mm), 7000, Start Year: 01/01/1971
24A	81803509	2	Spacer, Bearing, .081"/.082"(2.057/2.083mm), 7000, Start Year: 01/01/1971
24A	81803510	2	Spacer, Bearing, .085"/.086" (2.159/2.184mm), 7000, Start Year: 01/01/1971
24A	81803511	2	Spacer, Bearing, .089"/.090 "(2.261/2.286mm), 7000, Start Year: 01/01/1971
25	C5NN4N237A	2	Washer, Shaft Retaining, 3 Holes, 5000, Start Year: 01/01/1965
25A	D0NN4N237A	2	Washer, Shaft Retaining, 7000, Start Year: 01/01/1971
26	C5NN4N240B	2	Lock, Shaft Bolt, 5000, Start Year: 01/01/1965
26A	D0NN4N240A	2	Lock, Shaft Bolt, 7000, Start Year: 01/01/1971
27	88969	6	Screw, Cap, HH, G5, 9/16"-18 x 1-1/2", 5000, Start Year: 01/01/1965
27	304842S36	6	Screw, Cap, HH, G5, 7/8"-9 x 2", 7000, Start Year: 01/01/1971
28	REFERENCE	2	Housing, Brake, Outer, Refer to Section 2, Start Year: 01/01/1965
29	REFERENCE	2	Brake Assy., Rear Wheel, Refer to Section 2, Start Year: 01/01/1965
30	E4NN2N099AA	1	Housing, Brake Inner, R.H., Start Year: 01/01/1965
30	E4NN2N100CA	1	Housing, Brake Inner, L.H., Not Shown, Start Year: 01/01/1965
31	81803515	1	Shim, Differential Driven Gear Bearing, .038/.040" (.965/1.016mm), Start Year: 01/01/1965
31	81803516	1	Shim, Differential Driven Gear Bearing, .044/.046" (1.118/1.168mm), Start Year: 01/01/1965
31	81803517	1	Shim, Differential Driven Gear Bearing .050/.052" (1.27/1.321mm), Start Year: 01/01/1965
31	81803518	1	Shim, Differential Driven Gear Bearing, .056/.058" (1.422/1.473mm), Start Year: 01/01/1965
31	81803519	1	Shim, Differential Driven Gear Bearing, .062/.064" (1.575/1.626mm), Start Year: 01/01/1965
31	81803520	1	Shim, DIfferential Driven Gear Bearing, .068/.070" (1.727/1.778mm), Start Year: 01/01/1965
31	81803521	1	Shim, Differential Driven Gear Bearing, .074/.076" (1.88/1.93mm), Start Year: 01/01/1965
31	81803522	1	Shim, Differential Driven Gear Bearing, .80/.082" (2.0032/2/083mm), Start Year: 01/01/1965
32	510892	1	Cup, Differential Bearing, R.H., Start Year: 01/01/1965
33	81803420	1	Cup, Differential Bearing, L.H., Start Year: 01/01/1965
34	510884	1	Cone & Roller Assy., Differential Bearing, R.H., Start Year: 01/01/1965
35	81803413	1	Bearing Assy, Cone & Roller, Rear Axel, Differential, LH, Start Year: 01/01/1965

When using C5NN-4614-E to replace C5NN-4614-A you must also use NCA-4621-A.

04A03 REAR AXLE, DIFFERENTIAL & RELATED PARTS - 5000, 7000

Ref	Part Number	Qty	Description
36	C5NN4204R	1	Case Assy., Differential Gear, Start Year: 01/01/1965
37	83994579	8	Bolt, Locking, 1/2"-13 x 2.88, Replaces E1ADKN-4216, Start Year: 01/01/1965
38	D2NN4209A	1	Gear Set, Matched, 5.28:1 w/Handbrake & L/Load Monitor, 8 Speed Standard Transmission, 5000, Start Year: 01/01/1965
38	D2NN4209C	1	Gear Set, Matched, 5.70:1, Used w/Special Ratio 8 Speed Transmission, L/Load Monitor, 5000, Start Year: 01/01/1965
38	C7NN4209B	1	Gear Set, Matched, 5.71:1, Used w/Special Ratio 8 Speed Transmission, L/Handbrake & L/Load Monitor, 5000, NH-E Only, No Longer Serviced, Start Year: 04/01/1968
38	C5NN4209C	1	Gear Set, Matched, 5.28:1, Used w/8 Speed Standard Trans. L/Handbrake & Load Monitor, 5000, Start Year: 01/01/1965
38	C5NN4209V	1	Gear Set, Matched, I.67:1, w/10 Speed Transmission, L/Load Monitor Select-O-Speed, 5000, No Longer Serviced, Start Year: 01/01/1965
38	D0NN4209A	1	Gear Set, Matched, 6.166:1, 25 K.P.H. 8 Speed Transmission L/Handbrake, L/Load Monitor, 5100, NH-E Only, No Longer Serviced, Start Year: 08/01/1970
38	D0NN4209C	1	Gear Set, Matched, 6.166:1, 25 K.P.H. 8 Speed Transmission w/Handbrake, w/Load Monitor, 5100, No Longer Serviced (NHNA), Start Year: 08/01/1970
38	D0NN4209B	1	Gear Set, Matched, 6.166:1, 25 K.P.H. 9 Speed Transmission, 5100 L/Handbrake, NH-E Only, No Longer Serviced, Start Year: 08/01/1970
38	E0NN4209CA	1	Gear Set, Matched, 5.28:1, L/Handbrake, 7000 Used w/8 Speed Standard Transmission, Start Year: 01/01/1971
38	D2NN4209C	1	Gear Set, Matched, 5.28:1, w/Transmission Handbrake, 7000 Used w/8 Speed Standard Transmission, U.K. Antwerp, Start Year: 01/01/1973
38	D1NN4209G	1	Gear Set, Matched, 5.28:1, w/Load Monitor, Used w/8 Speed Standard Transmission, 5000, No Longer Serviced (NHNA), Start Year: 01/01/1971
38	D0NN4209J	1	Gear Set, Matched, 6.166:1, L/Handbrake, Used w/25 KPH 8 Speed Transmission, 7000, U.K. Antwerp, NH-E Only, Start Year: 01/01/1971
38	D2NN4209B	1	Gear Set, Matched, 6.166:1, w/Transmission Handbrake, Used w/25 KPH, 8 Speed Transmission, 7000, U.K. Antwerp, NH-E Only, Start Year: 01/01/1973
38	D1NN4209F	1	Gear Set, Matched 6.16:1, w/Load Monitor, Used w/25 KPH, 8 Speed Transmission, 5000, U.K. Antwerp, NH-E Only, No Longer Serviced, Start Year: 01/01/1971
38	D1NN4209H	1	Gear Set, Matched, 6.67:1, w/Load Monitor, w/10 Speed Transmission, 5000, U.S., No Longer Serviced, Start Year: 01/01/1971
39	83957533	12	Bolt, Gear to Differential Case, Except Mexico, Start Year: 01/01/1965
39	NLS	12	Bolt, Gear to Differential Case {C7MN4N088A}, Mexico Only, Start Year: 01/01/1968
40	83417169	12	Nut, Lock, G2, 1/2"-20, Except Mexico, Start Year: 01/01/1965
40	NLS	12	Nut, Lock, Hex, 1/2"-20 {34449S2}, Mexico Only, Start Year: 01/01/1968
41	81803445	1	Gear, Differential Side R.H., Start Year: 01/01/1965
42	81803451	1	Gear, Differential Side L.H., Start Year: 01/01/1965
43	81803424	2	Washer, Differential Side Gear, Start Year: 01/01/1965
44	81876885	1	Spider, Differential, Start Year: 01/01/1965
45	81728114	4	Pinion & Bushing Assy., Differential, Start Year: 01/01/1965

When using C5NN-4614-E to replace C5NN-4614-A you must also use NCA-4621-A.

04A03 REAR AXLE, DIFFERENTIAL & RELATED PARTS - 5000, 7000

Ref	Part Number	Qty	Description
46	508E4230A	4	Washer, Differential Pinion Thrust, Start Year: 01/01/1965
47	81800471	2	Bushing, Gear Case R.H., Differential, Start Year: 01/01/1965
48	81800472	1	Adapter, Differential Lock Gear Case, Start Year: 01/01/1965
49	81800474	1	Spring, Differential Lock Coupler, Start Year: 01/01/1965
50	81812261	1	Coupling, Differential Lock, Start Year: 01/01/1965
51	81800475	1	Washer, Differential Lock, Coupler Stop, Start Year: 01/01/1965
52	81803474	1	Ring, Differential Lock Locking, Start Year: 01/01/1965
53	37437	1	Bearing Assy., Drive Pinion Pilot, W/10 Speed Transmission Only, Start Year: 01/01/1965
53	81824478	1	Bearing Assy, Drive Pinion Pilot, Start Year: 01/01/1965
54	81803542	1	Ring, Lock, Drive Pinion Pilot Bearing, 8 Speed Transmission Only, Start Year: 01/01/1965
54	BB4627	1	Ring, Lock, Drive Pinion Pilot Bearing, 10 Speed Transmission Only, Start Year: 01/01/1965
55	513368	2	Cone & Roller Assy., Drive Pinion, Rear, Years: 01/01/1965-10/31/1966
55	513368	1	Cone & Roller Assy., Drive Pinion, Rear, 5000, Start Year: 11/01/1966
55	D3NN4615A	1	Cone & Roller Assy., Drive Pinion, Rear, 7000, Start Year: 01/01/1971
55	81845711	1	Cone & Roller Assy, Drive Pinion, Front, Start Year: 11/01/1966
56	C5NN4614F	1	Retainer Assy., Drive Pinion Gear Bearing, 5000, When using C5NN-4614-F(81815356) to Replace C5NN-4614-A you must also use NCA-4621-A(81812386)., Start Year: 01/01/1965
56	D5NN4614A	1	Retainer Assy., Drive Pinion Gear Bearing, 7000, Includes Retainer Plus:, Start Year: 01/01/1971
57	513369	2	Bearing, Cup, Front & Rear, Years: 01/01/1965-10/31/1966
57	513369	1	Bearing, Cup, Rear, 5000, Start Year: 11/01/1966
57	D3NN4615A	1	Cup, Bearing, Rear, 7000, Start Year: 01/01/1971
57A	81812385	1	Cup, Bearing, Front, Start Year: 11/01/1966
58	280248	AR	Washer, Lock, 9/16"
59	304728S36	6	Screw, Cap, HH, G5, 9/16"-12 x 1-1/4", Start Year: 01/01/1965
60	D1NN2N600B	1	Gear, Use w/C5NN-2N601-H, w/Handbrake, 5100, Start Year: 01/01/1965
60A	82008736	1	Shim, Brake Drive Gear, w/Handbrake, .003", 5100, Start Year: 01/01/1972
60A	82008735	1	Shim, Brake Drive Gear, w/Handbrake, .005", 5100, Start Year: 01/01/1972
60A	82008734	1	Shim, Brake Drive Gear, w/Handbrake, .012", 5100, Start Year: 01/01/1972
61	C5NN2N596A	1	Spacer, Handbrake, w/Handbrake, Start Year: 01/01/1965
62	C5NN4667B	1	Washer, Thrust, L/Handbrake & Load Monitor, 5000, Start Year: 01/01/1965
62	E6NN4667AA	1	Washer, Thrust, w/Load Monitor, Start Year: 01/01/1971
63	960E4634	2	Nut, Bearing Lock, L/Load Monitor, 5000, Start Year: 01/01/1965
63A	C5NN4A053B	1	Clamp, Drive Pinion w/Load Monitor, Start Year: 01/01/1971
63B	E6NN4A056AA	1	Washer, Drive Pinion Thrust, w/Load Monitor, Start Year: 01/01/1971
63C	34976S7	1	Nut, Hex, 5/16"-18 Pump Assy. & Components, Start Year: 01/01/1971
63D	376415S36	1	Bolt, Clamp, w/Load Monitor, 5/16"-18 x 1-3/4", No Longer Serviced (NH-E), Start Year: 01/01/1971
64	960E4636	1	Washer, Drive Pinion Bearing Nut Lock, Start Year: 01/01/1965
65	C5NN4194B	1	Block, Driven Gear Thrust, 5100, Years: 01/01/1965-12/31/1967
65	C5NN4194B	1	Block, Driven Gear Thrust, 5190, Start Year: 01/01/1965
65	C5NN4194B	1	Block, Driven Gear Thrust, 7100, 7200, Start Year: 01/01/1971
66	81821693	2	Washer, Lock, 3/8", 5100, Years: 01/01/1965-12/31/1967

When using C5NN-4614-E to replace C5NN-4614-A you must also use NCA-4621-A.

04A03 REAR AXLE, DIFFERENTIAL & RELATED PARTS - 5000, 7000

Ref	Part Number	Qty	Description
66	81821693	2	Washer, Lock, 3/8", 5190, Start Year: 01/01/1965
67	88206	2	Screw, Cap, HH, G5, 3/8"-16 x 1", 5100, Years: 01/01/1965-12/31/1967
67	88206	2	Screw, Cap, HH, G5, 3/8"-16 x 1", 5190, Start Year: 01/01/1965
68	C5NN4684A	1	Coupling, Drive Shaft 4.37" Long, (111.1mm), w/ 8 Speed Transmission, L/Load Monitor, Start Year: 01/01/1965
68	D1NN4684B	1	Coupling, Drive Shaft, w/7 & 8 Speed, 5-1/2" Long, 7100, L/Load Monitor and Handbrake, Start Year: 01/01/1971
69	C5NN4777B	1	Coupler, Traction Clutch .76" (19.4mm) Groove, 10 Speed Transmission Only, L/Load Monitor, No Longer Serviced (NHNA), Start Year: 01/01/1965
69	D1NN4777A	1	Coupler, Traction Clutch, w/10 Speed Transmission & L/Load Monitor, 5000, No Longer Serviced, Start Year: 10/01/1971
70	C0NN4A014B	1	Block, Traction Clutch Coupler Bearing, L/Load Monitor, 10 Speed Transmission Only, No Longer Serviced, Start Year: 01/01/1965
70	D1NN4A014A	1	Block, Traction Clutch Coupler Bearing, w/10 Speed Transmission & Load Monitor, 5000, No Longer Serviced, Start Year: 10/01/1971
71	C5NN4698C	1	Arm, Traction Clutch Shifter, 10 Speed Transmission Only, No Longer Serviced (NHNA), Start Year: 01/01/1965
71	D1NN4N114B	1	Arm Assy., Traction Clutch Shifter, w/10 Speed Transmission & L/Load Monitor, 5000, No Longer Serviced (NHNA), Start Year: 10/01/1971
72	130282	1	O-Ring, .489" ID x .070" Thk, Shifter Arm, 10 Speed Transmission Only, Start Year: 01/01/1965
73	515259	1	Ring, Snap, Ext, .625", 10 Speed Transmission L/Load Monitor, Start Year: 01/01/1965
74	C5NN4772A	1	Handle Assy., Traction Clutch Shifter, 10 Speed Transmission L/Load Monitor, Includes: Handle, Plate & Hardware Listed Below, No Longer Serviced, Start Year: 01/01/1965
74	D1NN4N119A	1	Handle Assy., Traction Clutch Shifter w/ 10 Speed Transmission and Load Monitor, 5000, Includes: Handle Plate & Hardware Listed Below, No Longer Serviced (NHNA), Start Year: 10/01/1971
	80681	1	Washer, Lock, 5/16", Start Year: 10/01/1971
	9635082	1	Nut, G5, 5/16"-18, Start Year: 10/01/1971
	280497	1	Bolt, Carriage, Short Neck, G5, 5/16"-18 x 3/4", Carrier, w/10 Speed Transmission & Load Monitor, 5000, Start Year: 10/01/1971
75	118827	1	Pin, Roll, 3/16" x 1", W/10 Speed Transmission & L/Load Monitor, 3/16" x 1", Start Year: 01/01/1965
75	87336	1	Pin, Roll, 3/16" x 7/8", W/10 Speed Transmission & Load Monitor, 5000, Start Year: 10/01/1971
76	C5NN4949A	1	Bush/Bushing, Traction Clutch Shifter Arm, 10 Speed Transmission Only, No Longer Serviced (NHNA), Start Year: 01/01/1965

When using C5NN-4614-E to replace C5NN-4614-A you must also use NCA-4621-A.

04B03 DIFFERENTIAL LOCK CONTROLS - 5000, 7000

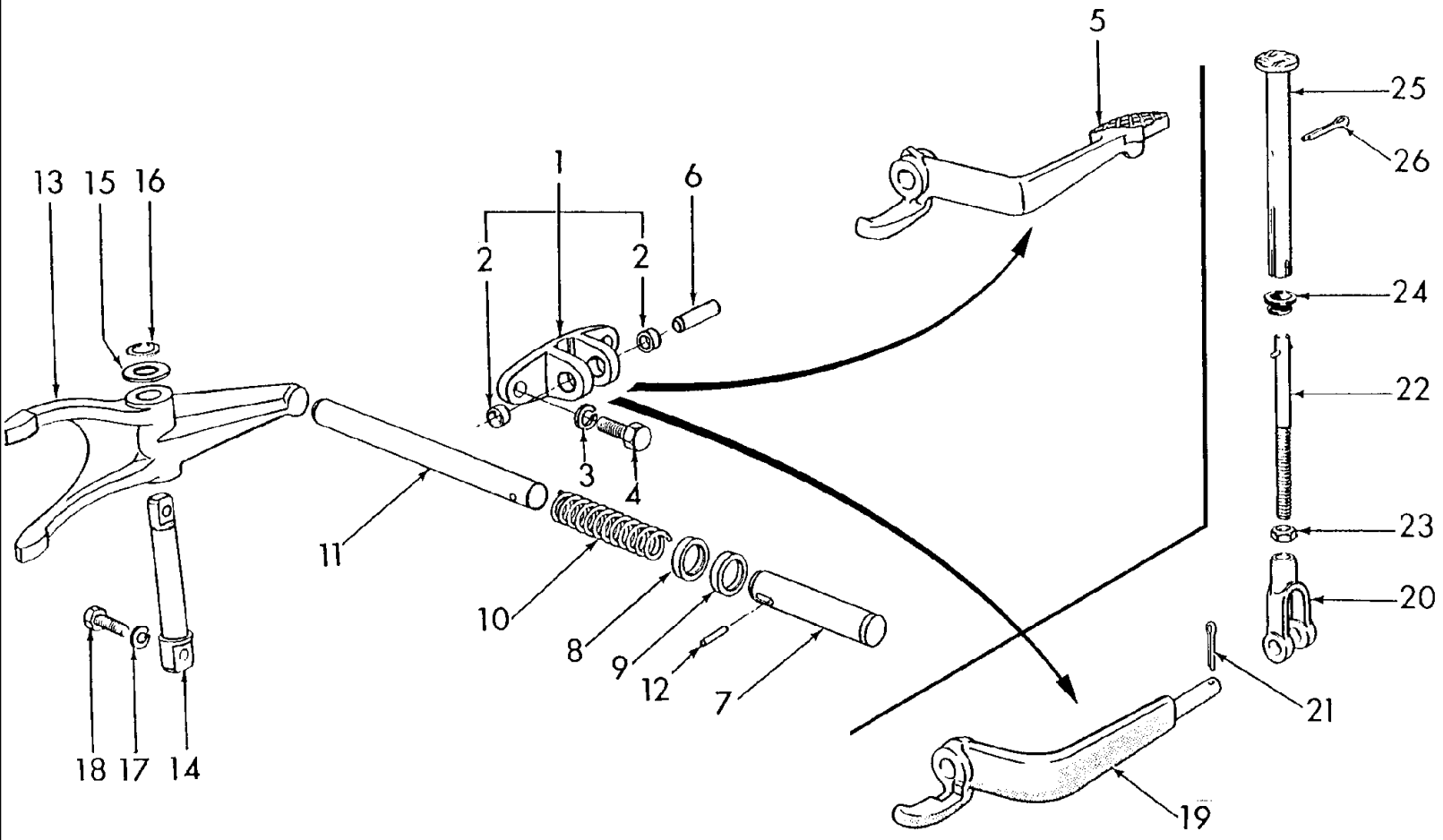

5000-SERIES 4 CYL TRACTOR (1/65-1/75)

04B03 DIFFERENTIAL LOCK CONTROLS - 5000, 7000

Ref	Part Number	Qty	Description
1	D9NN4N060AA	1	Hanger Assy., Differential Lock Pedal, Includes Hanger Plus:, Start Year: 01/01/1965
2	C5NN4N062A	2	Bush/Bushing, Pedal Hanger, No Longer Serviced (NH-E), Start Year: 01/01/1965
3	81547	1	Washer, Lock, 7/16", Start Year: 01/01/1965
4	9627887	2	Screw, Cap, HH, G5, 7/16"-14 x 1-1/4", Start Year: 01/01/1965
5	82980499	1	Pedal, Differential Lock, 5100, 7100, Start Year: 01/01/1965
6	C5NN4N075A	1	Shaft, Differential Lock Pedal, Start Year: 01/01/1965
7	C5NN4N085A	1	Sleeve Assy., Differential Lock, Start Year: 01/01/1965
8	C5NN4N095A	1	Oil Seal Assy., Lock Spring Sleeve, Start Year: 01/01/1965
9	C5NN4N090A	1	Shield, Lock Spring Sleeve Oil Seal, Start Year: 01/01/1965
10	81800486	1	Spring, Lock Sleeve, Start Year: 01/01/1965
11	C5NN4N081A	1	Shaft, Lock Actuator, Start Year: 01/01/1965
12	71764S	1	Pin, Grooved, Type E, 3/16" x 7/8", No Longer Serviced (NHNA), Start Year: 01/01/1965
13	C5NN4N050A	1	Fork, Differential Lock, No Longer Serviced (NH-E), Years: 01/01/1965-04/30/1975
13	D4NN4N050A	1	Fork R.A. Differential Lock, Start Year: 05/01/1975
14	C5NN4N070A	1	Shaft, Differential Lock Fork Pivot, Start Year: 01/01/1965
15	372639S36	1	Washer, Flat, 3/4", Start Year: 01/01/1965
16	129164	1	Ring, Snap, Ext, .750", Start Year: 01/01/1965
17	81547	AR	Washer, Lock, 7/16"
18	9627887	2	Screw, Cap, HH, G5, 7/16"-14 x 1-1/4", Start Year: 01/01/1965
19	C5NN2N021C	1	Arm, Differential Lock, 5200, 7200, No Longer Serviced, Start Year: 01/01/1967
20	12539	1	Clevis, Adjusting, Pedal, 1/2"-12 x 3", 5200, 7200, Start Year: 01/01/1967
21	80755	1	Pin, Split Cotter, 1/8" x 1", 5200, 7200, Start Year: 01/01/1967
22	C5NN2N013C	1	Rod Assy., Differential Lock Operating, 5200, 7200, NHNA Only, No Longer Serviced, Start Year: 01/01/1967
23	87309	1	Nut, Jam, G2, 1/2"-20, 5200, 7200, Start Year: 01/01/1967
24	C5NN2N461B	1	Bushing, Differential Lock Pedal, 5200. 7200, NHNA Only, No Longer Serviced, Start Year: 01/01/1967
25	86550295	1	Pedal Assy, Differential Lock, 5200, 7200, See Service Bulletin No. 2563, 12/15/80, No Longer Serviced (NH-E), Start Year: 01/01/1967
26	72055S8	1	Pin, Split Cotter, 3/16" x 1-1/4", 5200, 7200, No Longer Serviced (NHNA), Start Year: 01/01/1967

04C03 CENTER HOUSING & RELATED PARTS - 5000, 7000

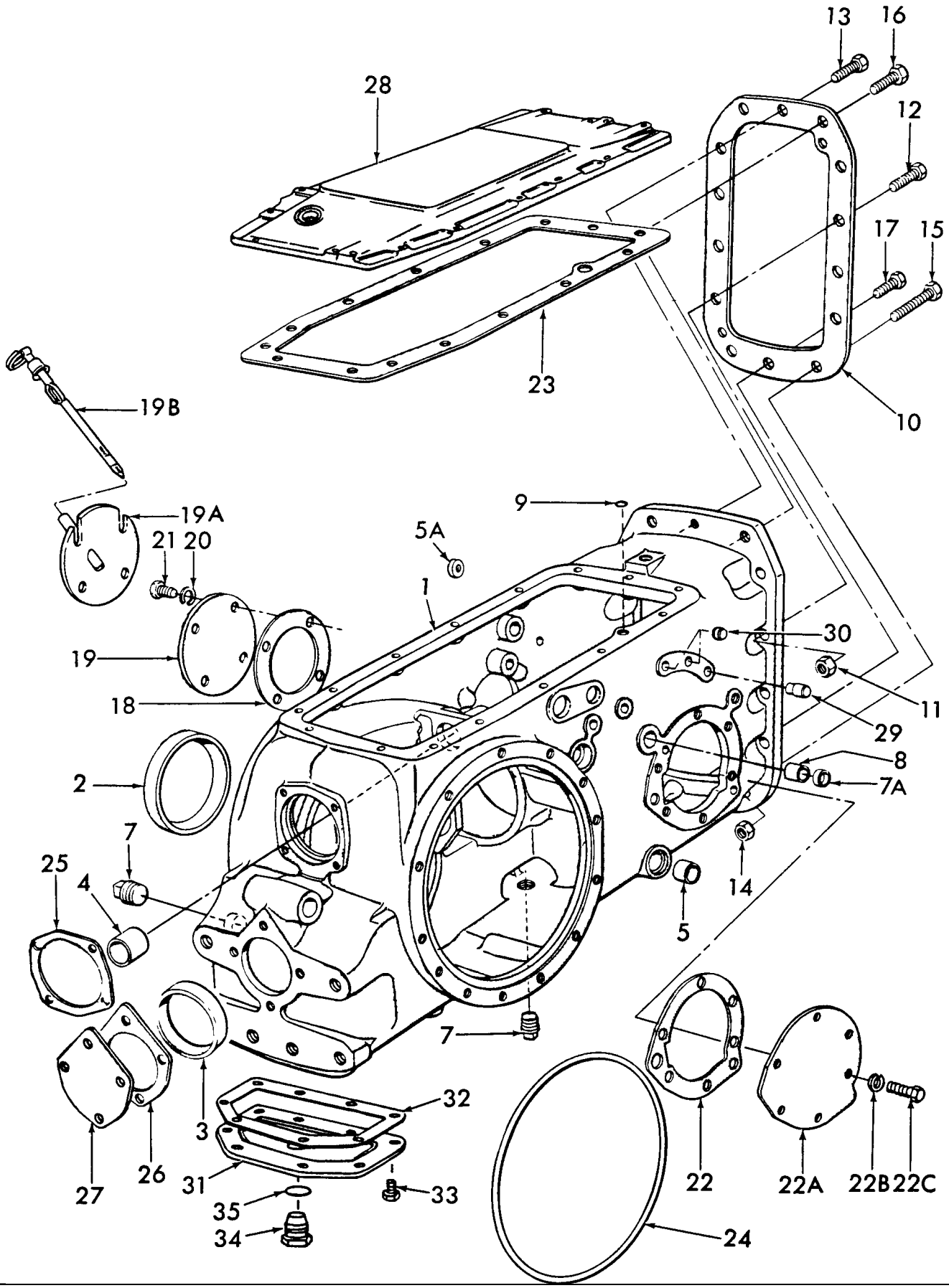

5000-SERIES 4 CYL TRACTOR (1/65-1/75)

04C03 CENTER HOUSING & RELATED PARTS - 5000, 7000

Ref	Part Number	Qty	Description
1	D3NN4025G	1	Housing Assy., Differential Center, 5000, L/Load Monitor, No Longer Serviced, Years: 01/01/1965-05/31/1973
1	D3NN4025G	1	Housing Assy., Differential Center, 7000 w/or L/Load Monitor, FTO-E, No Longer Serviced, Years: 10/01/1971-05/31/1973
1	D2NN4025L	1	Housing Assy., Differential Center, Single Speed PTO 8 Speed w/Handbrake & Dual, Power L/Load Monitor, No Longer Serviced, Start Year: 06/01/1973
1	D2NN4025G	1	Housing Assy., Differential Center, Single Speed PTO w/Load Monitor and/or Dual Power L/Handbrake, 5000, 7100, When using w/10 Speed Transmission replace 376636-S(83417054) Plug w/C5NN-4949-A Bushing, No Longer Serviced, Start Year: 06/01/1973
1	D2NN4025K	1	Housing Assy., Differential Center, Single Speed PTO L/Load Monitor and with or L/Handbrake or Dual Power, 5000, When using w/10 Speed Transmission replace 376636-S(83417054) Plug w/C5NN-4949-A Bushing, No Longer Serviced (NHNA), Start Year: 01/01/1973
1	D2NN4025F	1	Housing Assy., Differential Center, 2nd Speed PTO 8 Speed w/Handbrake & Dual Power L/Load Monitor, 5100, No Longer Serviced, Start Year: 06/01/1973
1	D2NN4025F	1	Housing Assy., Differential Center, 2nd Speed PTO 8 Speed w/Handbrake & Dual Power L/Load Monitor, 7100 U.K. Antwerp, Special Order Only
1	D2NN4025B	1	Housing Assy., Differential Center, 2nd Speed PTO w/Load Monitor and/or Dual Power L/Handbrake, When using w/10 Speed Transmission replace 376636-S(83417054) Plug w/C5NN-4949-A Bushing, No Longer Serviced, Start Year: 06/01/1973
1	D2NN4025E	1	Housing Assy., Differential Center, 2nd Speed PTO, w/Load Monitor and/or Dual Power L/Handrake, 5000, When using w/10 Speed Transmission replace 376636-S(83417054) Plug w/C5NN-4949-A Bushing, No Longer Serviced, Start Year: 06/01/1973
1	NS	1	Housing Assy., Differential Center, Major Mexico, 5000 Major, {71NY4025A}, Mexico Only, Years: 03/01/1973-08/31/1973
1	NS	1	Housing Assy., Differential Center, Mexico, 5100, {72NY4025A}, Mexico Only, Years: 01/01/1968-08/31/1973
1	NS	1	Housing Assy., Differential Center, w/PTO, 5100, {73NY4025A}, Mexico Only, Start Year: 09/01/1973
1	NLS	1	Housing Assy., Differential Center, L/PTO, 5000 Major, {73NY4025B} Includes the following:, Mexico Only, Start Year: 09/01/1973
2	81803420	1	Cup, Differential R.H., Start Year: 01/01/1965
3	44676	1	Cup, PTO Lower Shaft Front Bearing, (C), NHNA Only, Start Year: 01/01/1965
3		1	Bearing Set, NH-E Only, Start Year: 01/01/1965
4	C5NN798A	1	Bush/Bushing, PTO Shaft Front, Start Year: 01/01/1965
5	C5NN2N477A	2	Bush/Bushing, Brake Pedal Shaft, Start Year: 01/01/1965
5A	D2NNB799A	1	Bushing, PTO Clutch Valve Retaining, Start Year: 09/01/1973
7	263136	2	Plug, Pipe, Magnetic, Sq Socket, 3/4"-14, Start Year: 01/01/1965
7	82926938	1	Plug, Socket Head Pipe, w/Automatic Hitch, 3/4"-14, Start Year: 01/01/1965
7A	376636S	1	Plug, Cup, .885/.887, Except 10 Speed Transmission, Start Year: 01/01/1965
8	C5NN4949A	1	Bush/Bushing, R.A. Traction Clutch Shifter Arm, w/10 Speed Transmission, No Longer Serviced (NHNA), Start Year: 01/01/1965
9	87034S94	1	O-Ring, .562" ID x .103" Thk, Housing to Cover, Start Year: 01/01/1965

04C03 CENTER HOUSING & RELATED PARTS - 5000, 7000

Ref	Part Number	Qty	Description
10	C5NN4885B	1	Gasket, Differential Center Housing, Start Year: 01/01/1965
11	280963	8	Nut, G5, 1/2"-20, Except 10 Speed Transmission, Start Year: 01/01/1965
11	33882S43	9	Nut, Hex, 1/2"-20, w/10 Speed Transmission, NH-E Only, No Longer Serviced, Start Year: 01/01/1965
12	88848	7	Screw, Cap, HH, G5, 1/2"-20 x 2", Start Year: 01/01/1965
12	304801S36	1	Screw, Cap, HH, G5, 1/2"-20 x 1-3/4", Start Year: 01/01/1965
13	304880S36	1	Screw, Cap, HH, G5, 1/2"-20 x 2-3/8", W/10 Speed Transmission, No Longer Serviced (NHNA), Start Year: 01/01/1965
13	280524	1	Screw, Cap, HH, G5, 1/2"-13 x 1-5/8", Except 10 Speed Transmission, Start Year: 01/01/1965
14	408	2	Nut, G5, 5/8"-18, Except 10 Speed Transmission, Start Year: 01/01/1965
14	408	4	Nut, G5, 5/8"-18, W/10 Speed Transmission, Start Year: 01/01/1965
15	304854S36	2	Screw, Cap, HH, G5, 5/8"-18 x 2-1/8", Except 10 Speed Transmission, Start Year: 01/01/1965
16	304787S36	2	Screw, Cap, HH, G5, 5/8"-11 x 1-5/8", Except 10 Speed Transmission, No Longer Serviced, Start Year: 01/01/1965
17	82001789	1	Screw, Cap, HH, G5, 5/8"-11 x 1-7/8", Start Year: 01/01/1965
	C5NN4N052B	2	Stud & Nut Assy., 5/8"-11-18 x 2-29/32", 8 Speed 5200, 7200, NHNA Only, No Longer Serviced, Start Year: 01/01/1967
	C5NN4N052A	2	Stud & Nut Assy., 5/8"-18-18 x 3.35", 10 Speed, 5200, NHNA Only, No Longer Serviced, Start Year: 01/01/1967
18	E5NN4N021BB	1	Gasket, Hand Brake Opening Cover, Start Year: 01/01/1965
19	C5NN4N020A	1	Cover, Hand Brake Opening, L/Load Monitor, 5000, Start Year: 01/01/1965
19A	D2NN4N112B	1	Cover Assy., Hand Brake Opening, w/Load Monitor, Start Year: 10/01/1971
19B	D2NN4N124A	1	Indicator Assy., Hydraulic Lift Oil Level, 5-5/16", w/Load Monitor, Start Year: 10/01/1971
19B	D4NN4N124A	1	Indicator Assy., Hydraulic Lift Oil Level, 13"
19B	82005156	1	Indicator Assy., Hydraulic Lift Oil Level, 9.70"
20	80681	4	Washer, Lock, 5/16", Start Year: 01/01/1965
21	88434	4	Screw, Cap, HH, G5, 3/8"-16 x 3/4", Start Year: 01/01/1965
22	E7NN915BA	1	Gasket, Hydraulic Pump, Start Year: 01/01/1965
22A	C5NND918A	1	Cover, Hydraulic Pump Mounting Hole, L/Hydraulics, No Longer Serviced (NH-E), Start Year: 01/01/1965
22B	81547	AR	Washer, Lock, 7/16"
22C	304668S36	6	Screw, Cap, HH, G5, 7/16"-14 x 7/8", Start Year: 01/01/1965
23	C5NNA967B	1	Gasket, Hydraulic Lift Cover, Start Year: 01/01/1965
24	83417133	2	O-Ring, 13.50" ID x .139" Thk, Housing to Center Housing, Start Year: 01/01/1965
25	F0NNB732AA	1	Gasket, PTO Upper Shaft Bearing Retainer, Replaces C5NNN762A, Start Year: 01/01/1965
26	C5NNN780A	AR	Shim, Shaft Bearing Retainer, (.002), (.051mm), w/PTO, Start Year: 01/01/1965
26	C5NNN780B	AR	Shim, Shaft Bearing Retainer, .003 (.076mm), w/PTO, Start Year: 01/01/1965
26	C5NNN780C	AR	Shim, Shaft Bearing Retainer, .010, (.254mm), w/PTO, Start Year: 01/01/1965
26	C5NNB732A	1	Gasket, PTO Rear Lower Shaft Cover Plate, L/PTO, Start Year: 01/01/1965
27	83983596	1	Plate, PTO Rear Lower Shaft Cover, Start Year: 01/01/1965
28	C5NN4033A	1	Cover, Center Housing, w/o Hydraulics & Pump, Basildon Only, For Cover Less Hydraulics & With Pump Refer to Fig. 5A2, Start Year: 01/01/1965
29	E107GF9	2	Pin, Dowel, Start Year: 01/01/1965

04C03 CENTER HOUSING & RELATED PARTS - 5000, 7000

Ref	Part Number	Qty	Description
30	D3NN4N206A	1	Plug, Differential Center Housing, Used w/D3NN-4025-G, 10 Speed, w/ or L/Load Monitor, No Longer Serviced, Years: 01/01/1965-05/31/1973
31	E0NNB786AA	1	Cover, Center Housing PTO Sump, Start Year: 06/01/1973
32	82002546	1	Gasket, PTO Sump Cover, Start Year: 06/01/1973
33	88434	8	Screw, Cap, HH, G5, 3/8"-16 x 3/4", Cover to Housing, Start Year: 06/01/1973
34	C3AE6730A	1	Plug, Cover Drain, 1/2"-20 (C), Start Year: 06/01/1973
35	C20Z6734A	1	Gasket, Plug, Start Year: 06/01/1973

05A02 HYDRAULIC LIFT COVER & RELATED PARTS - 5000, 7000

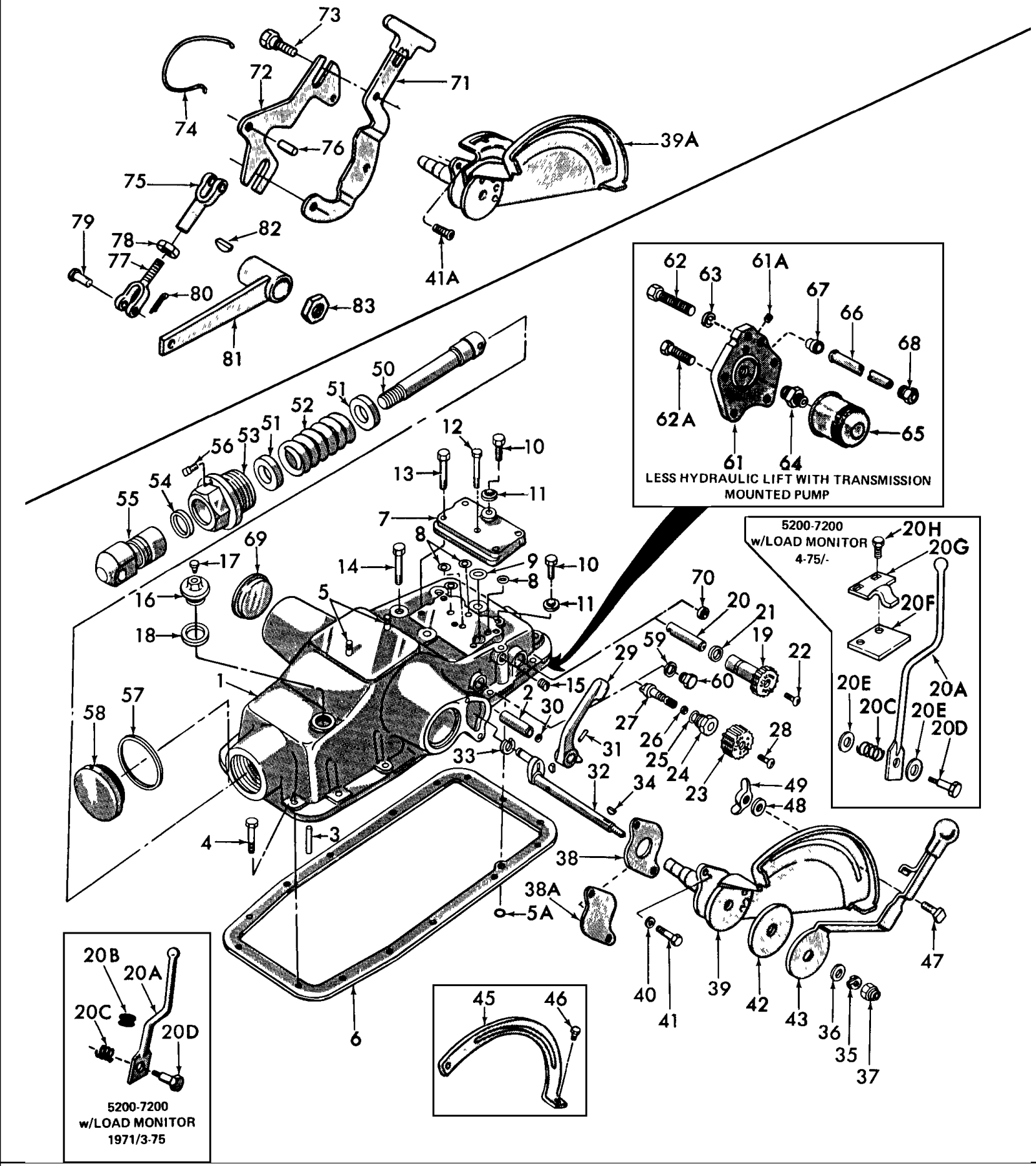

5000-SERIES 4 CYL TRACTOR (1/65-1/75)

05A02 HYDRAULIC LIFT COVER & RELATED PARTS - 5000, 7000

Ref	Part Number	Qty	Description
1	D1NN537A	1	Cover Assy., W/Load Monitor & Remote Cylinder, Includes: Ref. 2 & 3, No Longer Serviced (NHNA), Start Year: 01/01/1971
1	C5NN537C	1	Cover Assy., L/Load Monitor, 5000, Includes: Ref. 2 & 3, NHNA Only, Years: 01/01/1965-12/31/1969
1	D3NN537D	1	Cover Assy., L/Load Monitor, 5000, Includes: Ref. 2 & 3, No Longer Serviced, Start Year: 01/01/1970
1	D3NN537D	1	Cover Assy., L/Load Monitor, 5000, Includes: Ref. 2 & 3, (Not Shown), No Longer Serviced, Start Year: 01/01/1965
2	D0NNN687A	1	Sleeve, Position Control Selector Shaft, W/Load Monitor, Start Year: 01/01/1971
2	C5NNN687A	1	Sleeve, Position Control Selector Shift, L/Load Monitor, 5000, (Not Shown), Start Year: 01/01/1965
2	380391S	1	Plug, .875 to .877, L/Hydraulic, W/Dual Power, Start Year: 06/01/1973
3	300386S2	1	Pin, Roll, 3/8" x 1", L/Load Monitor, 5000, Start Year: 01/01/1965
4	43093S36	15	Screw, Cap, HH, G8, Self-Locking, 1/2"-13 x 1-1/2", Start Year: 01/01/1965
5	380313S36	2	Stud, 7/16"-14-20 x 1.75, 5100, Start Year: 01/01/1965
5A	D2NNB997A	1	O-Ring, Replaces C5NNB997A, Start Year: 01/01/1965
6	C5NNA967B	1	Gasket, Housing Cover, Start Year: 01/01/1965
7	C5NN476B	1	Cover, Accessory, No Longer Serviced, Start Year: 01/01/1965
8	229317	4	O-Ring, 90 Duro, .549" ID x .103" Thk, Start Year: 01/01/1965
9	14457081	1	O Ring, M12.37 ID x 2.4 Thk, Start Year: 01/01/1965
10	371433S36	2	Bolt, Hex, 9/16"-18 x .62, Start Year: 01/01/1965
11	C5NNN991B	2	Seal, Remote Cylinder Control Valve Manifold, Start Year: 01/01/1965
12	304701S36	1	Screw, Cap, HH, G5, 5/16"-18 x 1-1/8", Start Year: 01/01/1965
13	9627887	4	Screw, Cap, HH, G5, 7/16"-14 x 1-1/4", Start Year: 01/01/1965
14	88114	2	Screw, Cap, HH, G5, 5/8"-18 x 2-1/4", Left Front & Rear, Start Year: 01/01/1965
14	86509456	1	Screw, Cap, HH, G5, 5/8"-18 x 1-3/4", Right Front, Not Shown, Start Year: 01/01/1965
14	304910S36	1	Screw, Cap, HH, G5, 5/8"-18 x 2-3/4", Right Rear, Not Shown, No Longer Serviced, Start Year: 01/01/1965
15	87709S2	1	Plug, 1/4"-18, Start Year: 01/01/1965
16	C5NNN901A	1	Filler Plug & Vent Assy., Includes: Ref. 17, Start Year: 01/01/1965
17	01A7034	1	Vent, Filler, Start Year: 01/01/1965
18	81872311	1	Gasket, Copper, 1-3/8" ID x 1-7/8" OD, Filler Plug, Start Year: 01/01/1965
19	C5NNN856A	1	Knob, Selector Valve Stem, Start Year: 01/01/1965
20	C5NNN857A	1	Stem, Selector Valve, Start Year: 01/01/1965
20A	D2NNJ917A	1	Lever, Auxiliary Service Control Shifting, W/Load Monitor, 5200, 7200, NHNA Only, No Longer Serviced, Years: 01/01/1971-03/31/1975
20A	D4NNK948A	1	Lever, Auxiliary Service Control Shifting, W/Load Monitor, 5200, 7200, NHNA Only, No Longer Serviced, Start Year: 04/01/1975
20B	D2NNJ915A	1	Grommet, Shifting Level at Platform W/Load Monitor, 5200, 7200, NHNA Only, No Longer Serviced, Years: 01/01/1971-03/31/1975
20C	D2NNJ918A	1	Spring, Shifting Lever Tension, W/Load Monitor, 5200, 7200, NHNA Only, No Longer Serviced, Start Year: 01/01/1971
20D	D2NNJ920A	1	Bolt, Shifting Lever & Spring to Knob, 5200, 7200, NHNA Only, No Longer Serviced, Years: 01/01/1971-03/31/1975

05A02 HYDRAULIC LIFT COVER & RELATED PARTS - 5000, 7000

Ref	Part Number	Qty	Description
20D	D4NNJ920A	1	Bolt, Shifting Lever & Spring to Knob, W/Load Monitor, 5200, 7200 W/Load Monitor, 5200, 7200, NHNA Only, No Longer Serviced, Start Year: 04/01/1975
20E	80702	2	Washer, 3/8", Lever to Knob W/Load Monitor, 5200, 7200, Start Year: 04/01/1975
20F	D4NNK949A	1	Plate, Shifting Lever Retainer Support, W/Load Monitor, 5200, 7200, NHNA Only, No Longer Serviced, Start Year: 04/01/1975
20G	D4NNK950A	1	Retainer, Shifting Lever, W/Load Monitor, 5200, 7200, NHNA Only, No Longer Serviced, Start Year: 04/01/1975
20G	80682	2	Washer, Lock, 1/4", Start Year: 04/01/1975
20G	7770	2	Nut, Hex, 1/4"-20, Start Year: 04/01/1975
20H	280826	2	Bolt, Carriage, Short Neck, G5, 1/4"-20 x 1", Lever Retainer & Plate, W/Load Monitor, 5200, 7200, Start Year: 04/01/1975
21	514098	1	O-Ring, .864" ID x .070" Thk, Start Year: 01/01/1965
22	57449S100	1	Screw, Pan Hd, G5, 1/4"-20 x 5/8", Start Year: 01/01/1965
23	D0NNN952A	1	Knob, Flow Control Valve Stem, L/Load Monitor, 5100, Start Year: 01/01/1965
23	D0NNN952A	1	Knob, Flow Control Valve Stem, W/Load Monitor, 5100, 7100, (Not Shown), Start Year: 01/01/1971
24	C5NNN963A	1	Retainer, Flow Control Valve Stem, 5100, 7100, Start Year: 01/01/1965
24	C5NNN963B	1	Retainer, Flow Control Valve Stem, 5200, (Not Shown), No Longer Serviced, Start Year: 01/01/1967
25	167269	1	O-Ring, 90 Duro, .755" ID x .097" Thk, Control Valve Retainer, Start Year: 01/01/1965
26	129270	1	O-Ring, 90 Duro, .414" ID x .072" Thk, Control Valve Stem, Start Year: 01/01/1965
27	C5NNN957A	1	Stem, Flow Control Valve, 5100, 7100, Start Year: 01/01/1965
27	C5NNN957B	1	Stem, Flow Control Valve, 5200, (Not Shown), Start Year: 01/01/1967
28	57449S100	1	Screw, Pan Hd, G5, 1/4"-20 x 5/8", Start Year: 01/01/1965
29	C5NN686B	1	Lever, Position Control Selector, L/Load Monitor, 5100, No Longer Serviced, Start Year: 01/01/1965
29	C5NNF986A	1	Actuator Assy., Position Control Selector, L/Load Monitor, 5200, No Longer Serviced, Start Year: 01/01/1967
30	130282	1	O-Ring, .489" ID x .070" Thk, Start Year: 01/01/1965
31	88171	1	Pin, Roll, 3/16" x 1-1/8", 5100, Start Year: 01/01/1965
31	87336	1	Pin, Roll, 3/16" x 7/8", 5200, Not Shown, Start Year: 01/01/1967
32	C7NN517D	1	Shaft, Control Lever, L/Load Monitor, 5100, Start Year: 01/01/1965
32	C5NN517G	1	Shaft, Control Lever, L/Load Monitor, 5200, (Not Shown), No Longer Serviced, Start Year: 01/01/1967
32	D0NN517A	1	Shaft, Control Lever, W/Load Monitor, 5100, 7100, (Not Shown), No Longer Serviced, Start Year: 01/01/1971
32	D0NN517B	1	Shaft, Control Lever, W/Load Monitor, 5200, 7200, (Not Shown), No Longer Serviced, Start Year: 01/01/1971
32	D2NND950A	1	Decal, Flow Control, 5200, 7200, NHNA Only, No Longer Serviced, Start Year: 01/01/1972
33	9635806	1	Ring, Snap, Ext, .500", Control Lever, Start Year: 01/01/1965
34	74175S	1	Key, Woodruff, 5/8" x 5/32", 5100, Start Year: 01/01/1965
34	74179S	1	Key, Woodruff, 7/8" x 5/32", 5200, (Not Shown), NHNA Only, No Longer Serviced, Start Year: 01/01/1967
35	E1ADDN522B	1	Washer, Control Shaft, Start Year: 01/01/1965
36	81541	1	Washer, 7/16", Years: 01/01/1965-05/31/1969
36	C7NNA611A	1	Washer, Control Shaft, Cup, (Not Shown), Start Year: 06/01/1969

05A02 HYDRAULIC LIFT COVER & RELATED PARTS - 5000, 7000

Ref	Part Number	Qty	Description
37	55716S7	1	Nut, Lock, 7/16"-20, Start Year: 01/01/1965
38	C5NNN518A	1	Gasket, Control Quadrant Flange, Start Year: 01/01/1965
38A	C5NND919A	1	Cover, Quadrant Opening, L/Hydraulic Lift, Start Year: 01/01/1965
39	C7NN515B	1	Control Quadrant Assy., L/Load Monitor, Replaces C5NN5515C, 5100, Start Year: 01/01/1965
39	D1NNF981B	1	Control Quadrant Assy., 5200, 7200, (Not Shown), No Longer Serviced (NHNA), Start Year: 01/01/1967
39A	D1NNN625C	1	Control Quadrant Assy., W/Load Monitor, 5100, 7100, Start Year: 01/01/1971
40	81547	2	Washer, Lock, 7/16", Start Year: 01/01/1965
41	9706729	2	Screw, Cap, HH, G5, 7/16"-14 x 1", Start Year: 01/01/1965
41	9706729	1	Screw, Cap, HH, G5, 7/16"-14 x 1", W/Load Monitor, (Not Shown), Start Year: 01/01/1971
41A	D1NNA677A	1	Screw, Actuator Retention, W/Load Monitor, 5100,7100, No Longer Serviced, Start Year: 01/01/1971
42	E9N518	1	Disc, Control Friction, Except U.S., 5100, NH-E Only, Start Year: 01/01/1965
42	C5NN518B	1	Disc, Control Friction, 5100, (Not Shown), Start Year: 01/01/1965
43	86523013	1	Control Lever Assy., 5100, No Longer Serviced (NH-E), Years: 01/01/1965-05/31/1969
43	C7NN512B	1	Control Lever Assy., 5100, (Not Shown), No Longer Serviced, Start Year: 06/01/1969
45	C5NN520A	1	Retainer, Control Lever, L/Load Monitor, 5100, No Longer Serviced, Years: 01/01/1965-05/31/1969
46	304623S36	2	Screw, Cap, HH, G5, 5/16"-24 x 3/8", L/Load Monitor, 5100, No Longer Serviced (NHNA), Years: 01/01/1965-05/31/1969
47	C7NNA953C	1	Control Lever Stop Assy., Replaces P/N 957E521A, 5100, Start Year: 01/01/1965
48	80701	1	Washer, 1/4", Start Year: 01/01/1965
49	350890S36	1	Nut, Wing, 1/4"-28, 5100, Start Year: 01/01/1965
50	C5NN541B	1	Plunger, Draft Control, L/Load Monitor, No Longer Serviced, Years: 01/01/1965-12/31/1968
50	C7NN541A	1	Plunger, Draft Control, L/Load Monitor, (Not Shown), No Longer Serviced, Years: 01/01/1969-12/31/1969
50	C9NN541A	1	Plunger, Draft Control, L/Load Monitor, (Not Shown), Start Year: 01/01/1970
50	D0NN541A	1	Plunger, Draft Control, W/Load Monitor, (Not Shown), Start Year: 01/01/1971
51	C7NNA965A	2	Seat, Draft Control Spring, Replaces C5NNA965A, Start Year: 01/01/1965
52	C5NN547C	1	Spring, Draft Control, Start Year: 01/01/1965
53	C7NNN550A	1	Nut, Draft Control Spring Retainer, Replaces C5NNN550C, Start Year: 01/01/1965
53	301517S36	1	Screw, Set, HS, Cup Point, 3/8"-24 x 7/8", Use W/C7NNN550A, Start Year: 01/01/1965
54	C5NNN529A	1	Seal, Yoke Dust, Start Year: 01/01/1965
55	C5NN546B	1	Yoke, Control Plunger, No Longer Serviced, Years: 01/01/1965-12/31/1968
55	D2NN546A	1	Yoke, Hydraulic Lift Control Plunger, Start Year: 01/01/1969
56	91377S43	1	Screw, Set, Sq Hd, Cup Point, 3/8"-16 x 9/16", NHNA Only, No Longer Serviced, Years: 01/01/1965-06/30/1966
56	376513S2	1	Screw, Set, 3/8"-24 x .69, No Longer Serviced (NHNA), Start Year: 07/01/1966
57	E5NND924AA	1	Gasket, Draft Control Spring Hole, L/Hydraulic Lift, W/Transmission Mounted Pump, Start Year: 01/01/1965
58	C5NND921A	1	Plug, Draft Control Spring Hole, L/Hydraulic Lift, W/Transmission Mounted Pump, Start Year: 01/01/1965
59	167269	1	O-Ring, 90 Duro, .755" ID x .097" Thk, L/Hydraulic Lift, W/Transmission Mounted Pump, Start Year: 01/01/1965
60	379643S36	1	Plug, HH, 7/8"-14, L/Hydraulic Lift, W/Transmission Mounted Pump, Start Year: 01/01/1965
61	C5NND923B	1	Plate, Cover Oil Manifold, L/Hydraulic Lift, W/Transmission Mounted Pump, No Longer Serviced (NHNA), Start Year: 01/01/1965

5000-SERIES 4 CYL TRACTOR (1/65-1/75)

05A02 HYDRAULIC LIFT COVER & RELATED PARTS - 5000, 7000

Ref	Part Number	Qty	Description
61A	87709S2	1	Plug, Socket Headless, 1/4"-18, Start Year: 01/01/1965
62	88114	1	Screw, Cap, HH, G5, 5/8"-18 x 2-1/4", L/Hydraulic Lift, W/Transmission Mounted Pump, Start Year: 01/01/1965
62A	304822S2	3	Screw, Cap, HH, G5, 5/8"-18 x 1-7/8", L/Hydraulic Lift,, No Longer Serviced (NHNA), Start Year: 01/01/196
63	272344	2	O-Ring, 90 Duro, .487" ID x .103" Thk, Manifold Plate, L/Hydraulic Lift, W/Transmission Mounted Pump, Start Year: 01/01/1965
64	ECG6890A	1	Insert, Oil Filter Mounting Bolt, L/Hydraulic Lift, W/Transmission Mounted Pump, Start Year: 01/01/1965
65	86546606	1	Oil Filter Assy., Throw Away, L/Hydraulic Lift, W/Transmission Mounted Pump, Start Year: 01/01/1965
66	C5NND920A	1	Tube, Cover Oil Return, 1/2" x 16, L/Hydraulic Lift, W/Transmission Mounted Pump, No Longer Serviced (NH-E), Start Year: 01/01/1965
67	380386S	1	Seat, Tube, 1/2", L/Hydraulic Lift, W/Transmission Mounted Pump, No Longer Serviced (NH-E), Start Year: 01/01/1965
68	356105S8	1	Nut, Flared Tube, 3/4"-18 x .91, L/Hydraulic Lift, W/Transmission Mounted Pump, No Longer Serviced (NH-E), Start Year: 01/01/1965
69	C5NND922A	2	Plug, Cover Shaft Hole, L/Hydraulic Lift, W/Transmission Mounted Pump, Start Year: 01/01/1965
70	377121S	1	Plug, 1.002/1.004, L/Hydraulic Lift W/Transmission Mounted Pump, Start Year: 01/01/1965
71	D1NNJ848E	1	Handle Assy., Hydraulic Lift Selector, Replaces D1NNJ84-D, W/Load Monitor, 5100, 7100, No Longer Serviced, Start Year: 01/01/1971
71	D2NNJ919A	1	Decal, Auxiliary Service Control Valve, W/Load Monitor, 5200, 7200, NHNA Only, Start Year: 01/01/1971
72	D1NNG831B	1	Lever, Selector, W/Load Monitor, 5100, 7100, No Longer Serviced, Start Year: 01/01/1971
73	D1NNJ852A	2	Bolt, Selector, 1/4"-28 x .43, W/Load Monitor, 5100, 7100, No Longer Serviced, Start Year: 01/01/1971
74	D1NNG916D	1	Spring, Detent, Replaces D1NNG916B, W/Load Monitor, 5100, 7100, No Longer Serviced, Start Year: 01/01/1971
75	97011S36	1	Clevis, W/Load Monitor, 5100, 7100, Start Year: 01/01/1971
76	305042S36	1	Pin, Roll, 1/4" x 5/8", W/Load Monitor, 5100, 7100, No Longer Serviced, Start Year: 01/01/1971
77	D0NNB865A	1	Clevis, W/Load Monitor, 5100, 7100, Start Year: 01/01/1971
78	88098	1	Nut, Jam, G2, 1/4"-28, W/Load Monitor, 5100, 7100, Start Year: 01/01/1971
79	D2NNF905A	1	Pin, Clevis, W/Load Monitor, 5100, 7100, Start Year: 01/01/1971
80	280236	1	Pin, Split (Cotter), 1/16" x 1/2", W/Load Monitor, 5100, 7100, Start Year: 01/01/1971
81	D1NNF975D	1	Shaft Actuator Assy., W/Load Monitor, 5100, 7100, No Longer Serviced, Start Year: 01/01/1971
82	84071	1	Key, Woodruff #5, 1/8" x 5/8", W/Load Monitor, 5100, 7100, Start Year: 01/01/1971
83	382400S2	1	Nut, Hex, 7/16"-14, W/Load Monitor, 5100, 7100, Start Year: 01/01/1971
83	D5NNN857A	1	Stem, Hydraulic Selector Valve, Service Only, Service Repair Parts for Hydraulic Filter Leakage, Refer to Fig. 5B6, Start Year: 01/01/1971
83	D5NNM857A	1	Coupler, Hydraulic Oil Filter, Service Only, Service Repair Parts for Hydraulic Filter Leakage, No Longer Serviced (NHNA), Start Year: 01/01/1971
83	D5NNH865B	1	Nippler, Hydraulic Oil Filter, Service Only, Service Repair Parts for Hydraulic Filter Leakage, No Longer Serviced (NHNA), Start Year: 01/01/1971
83	D5NNC868A	1	Manifold, Hydraulic Oil Filter, Service Only, Service Repair Parts for Hydraulic Filter Leakage, No Longer Serviced (NHNA), Start Year: 01/01/1971

05A02 HYDRAULIC LIFT COVER & RELATED PARTS - 5000, 7000

Ref	Part Number	Qty	Description
83	D0NNH973A	1	Bolt, Hydraulic Oil Filter Valve, Service Only, Service Repair Parts for Hydraulic Filter Leakage, No Longer Serviced (NHNA), Start Year: 01/01/1971
83	D5NNH979A	1	Spool, Hydraulic Oil Filter Valve, Service Only, Service Repair Parts for Hydraulic Filter Leakage, No Longer Serviced (NHNA), Start Year: 01/01/1971
83	EDPN500A	1	Kit, Hydraulic Power Lift Overhaul, Service Only, NH-E Only, Years: 01/01/1965-12/31/1974

05B03 HYDRAULIC LIFT SHAFT & RELATED PARTS - 5000 L/LOAD MONITOR

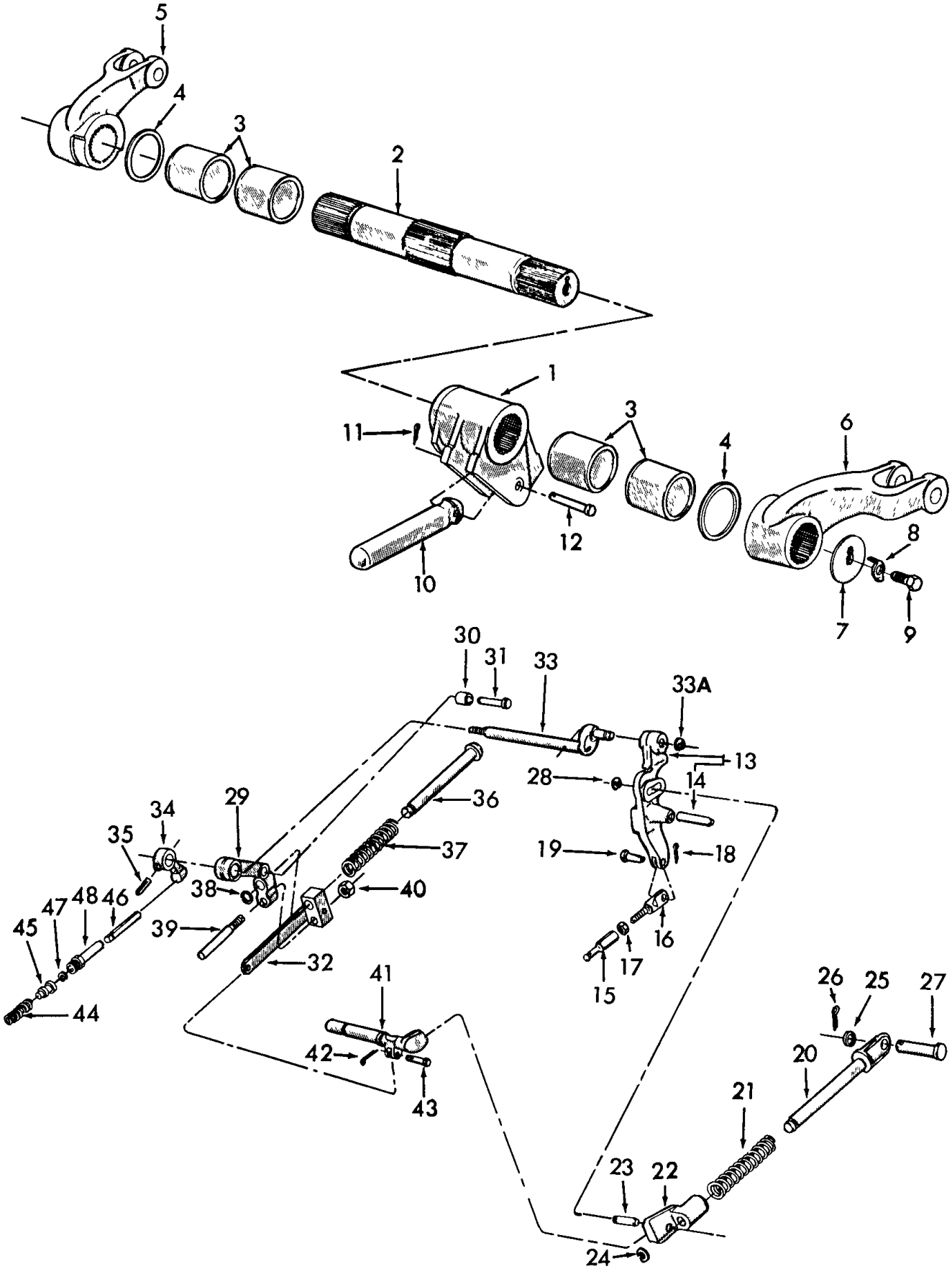

5000-SERIES 4 CYL TRACTOR (1/65-1/75)

05B03 HYDRAULIC LIFT SHAFT & RELATED PARTS - 5000 L/LOAD MONITOR

Ref	Part Number	Qty	Description
1	C5NN545D	1	Arm, Ram, Replaces C5NN545C, No Longer Serviced (NHNA), Years: 12/01/1965-03/31/1968
1	C7NN545C	1	Arm, Ram, Replaces C7NN545B, (Not Shown), When Replacing C5NN545C W/C5NN545D for Tractors prior to 11-65, also order (1) C5NN526D (1) 76645S (1) 87394(80087394), Start Year: 04/01/1968
2	C5NN544B	1	Shaft, Start Year: 01/01/1965
3	E2NN531AA	4	Bush/Bushing, Shaft, Start Year: 01/01/1965
4	C5NNC944A	2	Seal, Shaft Dust, Start Year: 01/01/1965
5	C5NN838F	1	Arm, Lift, R.H., Start Year: 01/01/1965
6	E3NN839AA	1	Arm, L.H., Start Year: 01/01/1965
6	390634S	AR	Washer, Start Year: 01/01/1965
7	E1ADDN994607	2	Washer, Shaft, Start Year: 01/01/1965
8	957E550	2	Washer, Lock, Start Year: 01/01/1965
9	87848	2	Screw, Cap, HH, G5, 1/2"-20 x 1", Start Year: 01/01/1965
10	C5NN526D	1	Rod, Piston Connecting, .473 Dia. Hole, Prior to 12-65, Supply (1) C5NN-545-D Arm & (1) 382439-S(81816569) Pin, Also., No Longer Serviced (NHNA), Years: 01/01/1965-03/31/1968
10	C7NN526D	1	Rod, Piston Connecting, L/Hole, (Not Shown), Start Year: 04/01/1968
11	280236	1	Pin, Split (Cotter), 1/16" x 1/2", Years: 01/01/1965-04/30/1966
11	87394	1	Pin, Split (Cotter), 1/8" x 1/2", Not Shown, Years: 05/01/1966-03/31/1968
12	76585S	1	Pin, Clevis, 1/4" x 2-27/32", No Longer Serviced (NHNA), Years: 01/01/1965-11/30/1965
12	382439S	1	Pin, Clevis, 5/16" x 2.59, (Not Shown), No Longer Serviced, Years: 12/01/1965-03/31/1968
12	C9NNA622A	2	Pin, RDH, 5/16" x .795, Groove, Replaces 380045S, (Not Shown), Start Year: 04/01/1968
13	C5NN504C	1	Lever Assy., Control Valve Actuating, Includes: Ref. 14, Start Year: 01/01/1965
14	73399S18	1	Pin, Dowel, 3/8" x 2-1/2", No Longer Serviced (NH-E), Start Year: 01/01/1965
15	E6NN914AA	1	Turnbuckle, Control Valve, Start Year: 01/01/1965
16	F2NN912AA	1	Link, Control Valve, Start Year: 01/01/1965
17	34081S36	1	Nut, 1/4"-28, Start Year: 01/01/1965
18	280236	1	Pin, Split (Cotter), 1/16" x 1/2", Start Year: 01/01/1965
19	73870S36	1	Pin, Clevis, 1/4" x 3/4", Start Year: 01/01/1965
20	C5NNA966A	1	Rod, Draft Control Plunger, Start Year: 01/01/1965
21	D6NNN546A	1	Spring, Draft Control Override, Replaces C5NNN546B, Start Year: 01/01/1965
22	C9NNN548A	1	Connector Assy., Draft Control Plunger Rod, Replaces C5NNN548B, Includes: Ref. 23, Start Year: 01/01/1965
23	C5NNN667A	1	Pin, No Longer Serviced (NH-E), Start Year: 01/01/1965
24	E141GF9	1	Ring, Snap, Draft Control Rod, Start Year: 01/01/1965
25	370064S8	1	Washer, Flat, 1/2", No Longer Serviced, Start Year: 01/01/1965
26	80755	1	Pin, Split Cotter, 1/8" x 1", Start Year: 01/01/1965
27	74058S36	1	Pin, Clevis, 1/2" x 2-5/16", Start Year: 01/01/1965
28	97411S36	1	Ring, Retaining, 3/8", Start Year: 01/01/1965
29	D6NN680A	1	Arm Assy., Position Control, Includes: Ref. 30 & 31, No Longer Serviced, Start Year: 01/01/1965
30	C5NNN694A	1	Roller, Replaces C5NNN548B, No Longer Serviced (NH-E), Start Year: 01/01/1965
31	C5NNN665A	1	Pin, No Longer Serviced (NHNA), Start Year: 01/01/1965
32	C5NNK839A	1	Link Assy., Position Control, No Longer Serviced (NH-E), Start Year: 01/01/1965

5000-SERIES 4 CYL TRACTOR (1/65-1/75)

05B03 HYDRAULIC LIFT SHAFT & RELATED PARTS - 5000 L/LOAD MONITOR

Ref	Part Number	Qty	Description
33	C5NN517G	1	Shaft, Control Lever, 5200, No Longer Serviced, Start Year: 01/01/1967
33	C7NN517D	1	Shaft, Control Lever, 5100, Replaces C5NN517C, (Not Shown), Start Year: 01/01/1965
33A	9635806	1	Ring, Snap, Ext, .500", W/Independent PTO, Start Year: 01/01/1965
34	C7NNN954A	1	Actuator, Flow Control Override Valve, Replaces C5NNN954B, Start Year: 01/01/1965
35	84924	1	Pin, Roll, 5/32" x 1-1/4", Years: 01/01/1965-05/31/1968
35	305085S	1	Pin, Roll, 5/32" x 1-1/8", Use W/C7NNN954A, No Longer Serviced, Start Year: 06/01/1968
36	C5NN683B	1	Rod, Position Control, No Longer Serviced (NH-E), Start Year: 01/01/1965
37	C5NN684B	1	Spring, Position Control, No Longer Serviced (NH-E), Start Year: 01/01/1965
38	E141GF9	1	Ring, Snap, Position Control Rod, Start Year: 01/01/1965
39	C5NNN683A	1	Screw, Position Control Adjusting, No Longer Serviced (NH-E), Start Year: 01/01/1965
40	87308	1	Nut, Jam, G2, 3/8"-24, Start Year: 01/01/1965
41	C5NN699C	1	Arm, Position Control Selector, No Longer Serviced, Start Year: 01/01/1967
42	280236	AR	Pin, Split (Cotter), 1/16" x 1/2"
43	9672307	1	Pin, Clevis, 1/4" x 3/4", Start Year: 01/01/1965
44	C5NNN959A	1	Spring, Flow Control Override Valve, Start Year: 01/01/1965
45	D0NNN956A	1	Valve, .4995/.4998, Flow Control Override, Blue/White, No Longer Serviced (NH-E), Start Year: 01/01/1965
45	D0NNN956B	AR	Valve, .4998/.5001, Flow Control Override, White, (Not Shown), No Longer Serviced (NH-E), Start Year: 01/01/1965
45	D0NNN956C	AR	Valve, .5001/.5004, Flow Control Override, Blue, (Not Shown), Start Year: 01/01/1965
45	D0NNN956D	AR	Valve, .5004/.5007, Flow Control Override, Yellow, (Not Shown), No Longer Serviced (NH-E), Start Year: 01/01/1965
45	D0NNN956E	AR	Valve, .5007/.5040, Flow Control Override, Green, (Not Shown), No Longer Serviced (NH-E), Start Year: 01/01/1965
46	C5NNN962A	1	Plunger, Flow Control Override Valve, No Longer Serviced, Start Year: 01/01/1965
47	97407S	1	Ring, Snap, Ext, .1875", Start Year: 01/01/1965
48	C5NNN961A	1	Guide, Plunger, Start Year: 01/01/1965

05B03[A] HYDRAULIC LIFT SHAFT & RELATED PARTS - 5000, 7000 W/LOAD MONITOR

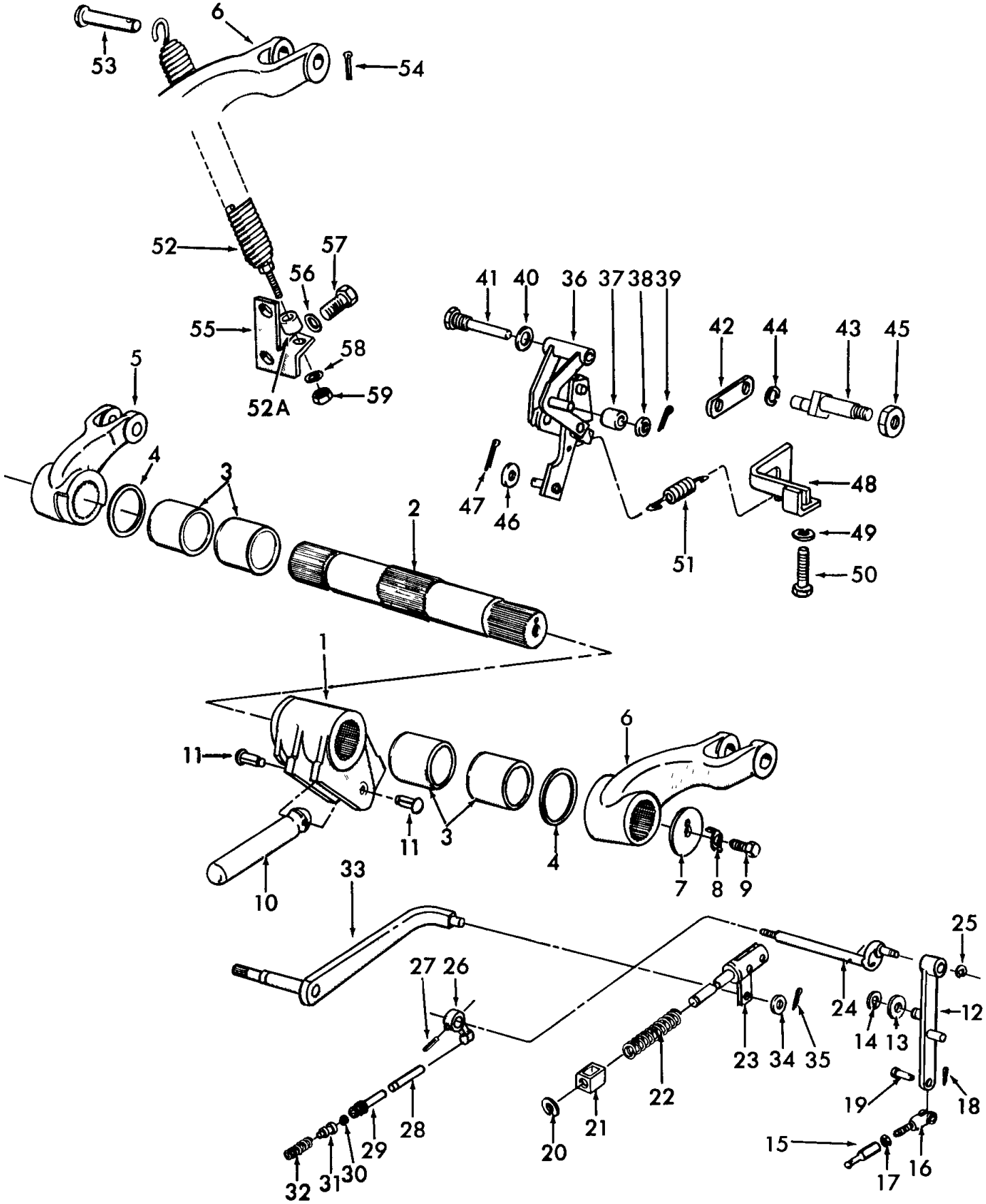

5000-SERIES 4 CYL TRACTOR (1/65-1/75)

05B03[A] HYDRAULIC LIFT SHAFT & RELATED PARTS - 5000, 7000 W/LOAD MONITOR

Ref	Part Number	Qty	Description
1	E4NNF955AA	1	Arm, Ram, Start Year: 01/01/1971
2	C5NN544B	1	Shaft, Start Year: 01/01/1971
3	E2NN531AA	4	Bush,Bushing, Shaft, Start Year: 01/01/1971
4	C5NNC944A	2	Seal, Dust Shaft, Start Year: 01/01/1971
5	C5NN838F	1	Arm, R.H., No Longer Available - Order Item 6 & Washer 390634-S(3955354)., Start Year: 01/01/1971
6	E3NN839AA	AR	Arm, L.H. or R.H., Start Year: 01/01/1971
6	390634S	AR	Washer, Start Year: 01/01/1971
7	E1ADDN994607	2	Washer, Shaft, Start Year: 01/01/1971
8	957E550	2	Washer, Lock, Start Year: 01/01/1971
9	87848	2	Screw, Cap, HH, G5, 1/2"-20 x 1", Start Year: 01/01/1971
10	C7NN526D	1	Rod, Piston Connection, Start Year: 01/01/1971
11	C9NNA622A	2	Pin, Connecting Rod Retaining, Start Year: 01/01/1971
12	D1NN504A	1	Lever Assy., Connecting Valve Actuator, No Longer Serviced, Start Year: 01/01/1971
13	D0NNH998A	1	Spacer, Rod Connector, No Longer Serviced, Start Year: 01/01/1971
14	272464	1	Ring, Snap, Ext, .375", Draft Control, Swivel, Start Year: 01/01/1971
15	E6NN914AA	1	Turnbuckle, Control Valve, Start Year: 01/01/1971
16	D0NNB865A	1	Clevis, Link Rod, Start Year: 01/01/1971
17	34081S36	1	Nut, 1/4"-28, Start Year: 01/01/1971
18	280236	1	Pin, Split (Cotter), 1/16" x 1/2", Start Year: 01/01/1971
19	D2NNF905A	1	Pin, Clevis, Start Year: 01/01/1971
20	E141GF9	1	Ring, Snap, Draft Control Rod, Start Year: 01/01/1971
21	D0NNJ838A	1	Connector, Rod, No Longer Serviced, Start Year: 01/01/1971
22	D6NNN546A	1	Spring, Draft Control Override, Start Year: 01/01/1971
23	E5NNJ831AA	1	Rod & Roller Assy., System Selector, Start Year: 01/01/1971
24	D0NN517A	1	Shaft, Control Lever, 5100, 7100, No Longer Serviced, Start Year: 01/01/1971
24	D0NN517B	1	Shaft, Control Lever, 5200, 7200, (Not Shown), No Longer Serviced, Start Year: 01/01/1971
25	9635806	1	Ring, Snap, Ext, .500", Start Year: 01/01/1971
26	C7NNN954A	1	Actuator, Flow Control Override Valve, Start Year: 01/01/1971
27	305085S	1	Pin, Roll, 5/32" x 1-1/8", No Longer Serviced, Start Year: 01/01/1971
28	D5NNN962A	1	Plunger, Flow Control Override Valve, Start Year: 01/01/1971
29	C5NNN961A	1	Guide, Control Valve Override, Start Year: 01/01/1971
30	97407S	1	Ring, Snap, Ext, .1875", Plunger, Start Year: 01/01/1971
31	D0NNN956A	AR	Valve, Flow Control Override, .4995/.4998, Blue/White, No Longer Serviced (NH-E), Start Year: 01/01/1971
31	D0NNN956B	AR	Valve, Flow Control Override, .4998/.5001, White, (Not Shown), No Longer Serviced (NH-E), Start Year: 01/01/1971
31	D0NNN956C	AR	Valve, Flow Control Override, .5001/.5004, Blue, (Not Shown), Start Year: 01/01/1971
31	D0NNN956D	AR	Valve, Flow Control Override, .5004/.5007, Yellow, (Not Shown), No Longer Serviced (NH-E), Start Year: 01/01/1971
31	D0NNN956E	AR	Valve, Flow Control Override, .5007/.5010, Green, (Not Shown), No Longer Serviced (NH-E), Start Year: 01/01/1971
32	C5NNN959A	1	Spring, Flow Control Override Valve, Start Year: 01/01/1971

05B03[A] HYDRAULIC LIFT SHAFT & RELATED PARTS - 5000, 7000 W/LOAD MONITOR

Ref	Part Number	Qty	Description
33	D0NNJ840A	1	Arm Assy., Selector, No Longer Serviced (NH-E), Start Year: 01/01/1971
34	D0NNH994B	3	Spacer, .030" (.765mm) Thick, Start Year: 01/01/1971
35	280224	1	Pin, Split, Cotter, 1/16" x 5/8", Start Year: 01/01/1971
36	E3NNJ842AA	1	Linkage Assy., Selector, Start Year: 01/01/1971
37	D0NNJ835A	1	Roller, Position Cam Follower, No Longer Serviced, Start Year: 01/01/1971
38	D0NNH994A	1	Spacer, .060" (1.52mm), Start Year: 01/01/1971
39	280224	1	Pin, Split, Cotter, 1/16" x 5/8", Start Year: 01/01/1971
40	D0NNH996A	1	Seal, Position Pivot Pin, No Longer Serviced, Start Year: 01/01/1971
41	D2NNH997A	1	Shaft, Position Control Pivot, Start Year: 01/01/1971
42	D0NNH995A	1	Link, Draft Control Connector, Start Year: 01/01/1971
43	D1NNJ830B	1	Screw, Draft Control Adjustment, No Longer Serviced (NHNA), Start Year: 01/01/1971
44	97411S36	1	Ring, Retaining, 3/8", Start Year: 01/01/1971
45	382400S2	1	Nut, Hex, 7/16"-14, Start Year: 01/01/1971
46	NLS	1	Washer {44772S}, Start Year: 01/01/1971
47	80756	1	Pin, Split Cotter, 1/8" x 3/4", Start Year: 01/01/1971
48	D0NNH989A	1	Spring, Retainer Assy., No Longer Serviced (NH-E), Start Year: 01/01/1971
49	81547	1	Washer, Lock, 7/16", Start Year: 01/01/1971
50	D0NNH987A	1	Bolt, Plunger Guide, Start Year: 01/01/1971
51	D0NNJ837A	1	Spring, Tension, Start Year: 01/01/1971
52	D5NNJ888A	1	Spring, Arm Return, No Longer Serviced (NH-E), Start Year: 01/01/1971
52A	D5NNM840A	1	Spacer, Arm Return Spring, No Longer Serviced (NH-E), Start Year: 01/01/1971
53	D2NNN932B	1	Pin, Clevis, .86 x 5", Start Year: 01/01/1971
53	PL	AR	Spacer, .957" (24.3mm) I.D. x 1.14" (29.0mm) Long, NHNA Only
54	72073S36	1	Pin,Split (Cotter), 3/16" x 1-1/2", No Longer Serviced (NHNA), Start Year: 01/01/1971
55	D5NNJ887A	1	Bracker, Return Spring, No Longer Serviced, Start Year: 01/01/1971
56	87340	2	Washer, Lock, 3/4", Start Year: 01/01/1971
57	88692	2	Screw, Cap, HH, G5, 3/4"-10 x 1-1/2", Start Year: 01/01/1971
58	80702	1	Washer, 3/8", Start Year: 01/01/1971
59	88902	1	Nut, Lock, GC, 3/8"-16, Start Year: 01/01/1971

05B04 HYDRAULIC LIFT CYLINDER & RELATED PARTS, 5000 & 7000

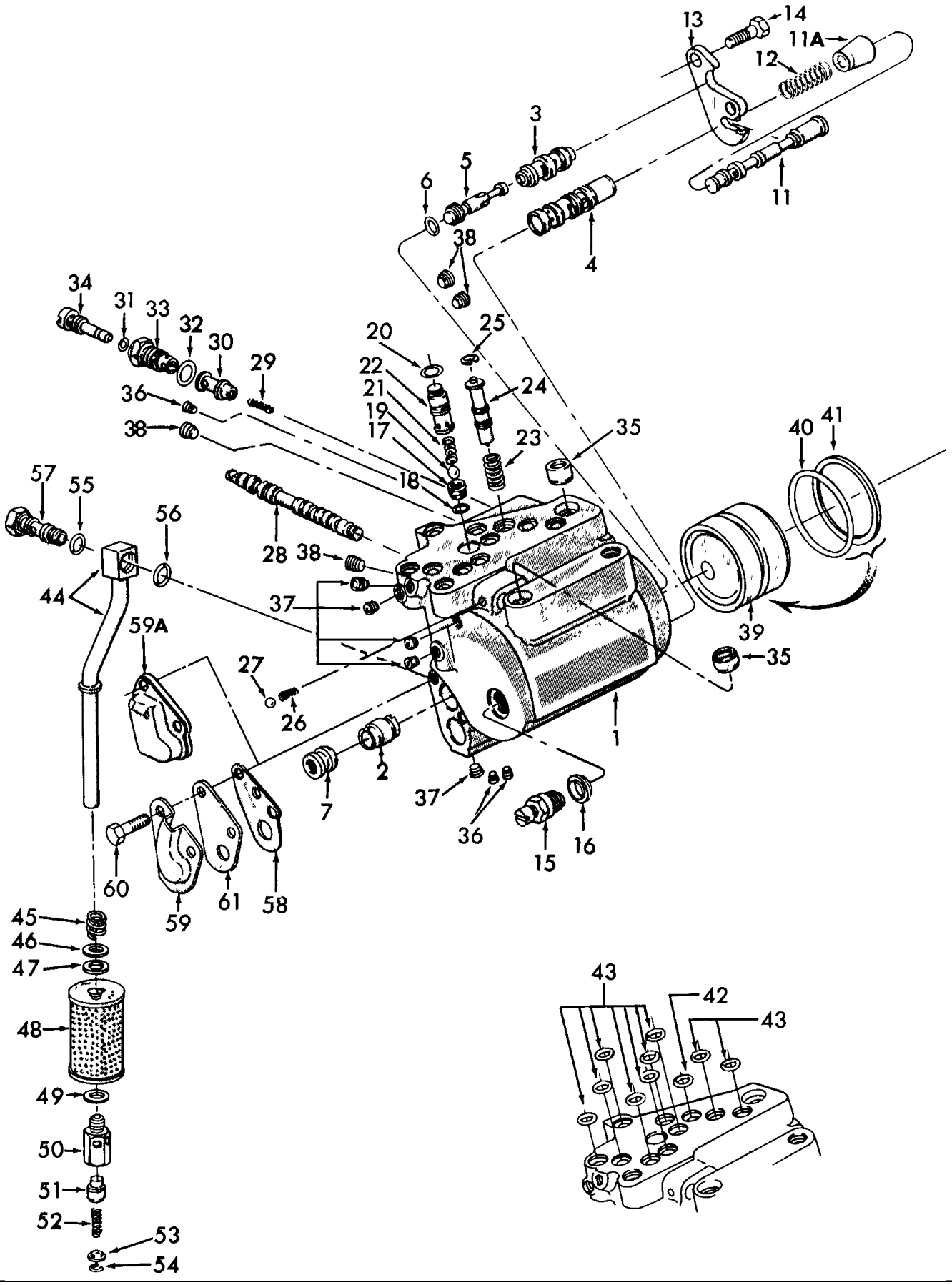

5000-SERIES 4 CYL TRACTOR (1/65-1/75)

05B04 HYDRAULIC LIFT CYLINDER & RELATED PARTS, 5000 & 7000

Ref	Part Number	Qty	Description
	F0NN477BA	1	Cylinder & Valve Assy., 3.750" Bore, Replaces D1NN477C, Includes: Ref. 1 thru 38, When Replacing D1NN477C (81826698) W/D6NN477A (83909113) Supply (1) D3NNJ973A (81838676)Spacer., May be replaced by F0NN477AA(81863390) w/4.125" Bore - See Fig. 5B4A, Start Year: 01/01/1965
	F0NN477AA	1	Cylinder & Valve Assy., 3.750" Bore, W/L Monitor, Replaces D1NN477D, Includes: Ref. 1 thru 38, (Not Shown), When Replacing D1NN477D (81826699) W/D6NN477B (83909114) Supply (1) D3NNJ973A(81838676) Spacer and Replace D0NNH978A (87764015) Sleeve W/D4NNH978B(83902244)., May be replaced by F0NN477AA(81863390) w/4.125" Bore - See Fig. 5B4A, Start Year: 01/01/1971
1	F0NN478AA	1	Cylinder Assy., W/3.750" Bore, L/Load Monitor, Includes: Ref. 2, May be replaced by F0NN477AA(81863390) w/4.125" Bore - See Fig. 5B4A, Start Year: 01/01/1965
1	F0NN478AA	1	Cylinder Assy., W/3.750" Bore, W/Load Monitor, Includes: Ref. 2, (Not Shown), Replaced By F0NN478AA(81863393) - See Fig. 5B4A, Start Year: 01/01/1971
2	C7NN440F	AR	Bush/Bushing, Unload Valve Front, Blue/White 1.0000/1.0002 (25.400/25.405mm), Replaces 957E440F, No Longer Serviced, Start Year: 01/01/1965
2	C7NN440A	AR	White, 1.0002/1.0004 (25.405/25.410mm), (Not Shown), Start Year: 01/01/1965
2	C7NN440B	AR	Blue, 1.0004/1.0006 (25.410/25.415mm), (Not Shown), Start Year: 01/01/1965
2	C7NN440C	AR	Yellow, 1.0006/1.0008 (25.415/25.420mm), Replaces 957E440C, (Not Shown), Start Year: 01/01/1965
2	C7NN440D	AR	Green, 1.0008/1.0010 (25.420/25.425mm), Replaces 857E440D, (Not Shown), Start Year: 01/01/1965
2	C7NN440E	AR	Orange, 1.0010/1.0012 (25.425/25.430mm), Replaces 957E440E, (Not Shown), No Longer Serviced, Start Year: 01/01/1965
2	C7NN440G	AR	Green/White, 1.0012/1.0014 (25.432/25.435mm), Replaces 957E440G, (Not Shown), No Longer Serviced (NH-E), Start Year: 01/01/1965
2	C7NN440H	AR	Red/White, 1.0014/1.0016 (25.435/25.440mm), Replaces 957E440H, (Not Shown), No Longer Serviced, Start Year: 01/01/1965
3	C5NN482A	AR	Blue/White, 1.0000/1.0002 (25.400/25.405mm), No Longer Serviced, Start Year: 01/01/1965
3	C5NN482B	AR	White, 1.0002/1.0004 (25.405/25.410mm), (Not Shown), No Longer Serviced, Start Year: 01/01/1965
3	C5NN482C	AR	Blue, 1.0004/1.0006 (25.410/25.415mm), (Not Shown), No Longer Serviced, Start Year: 01/01/1965
3	C5NN482D	AR	Yellow, 1.0006/1.0008 (25.415/25.420mm), (Not Shown), No Longer Serviced, Start Year: 01/01/1965
3	C5NN482E	AR	Green, 1.0008/1.0010 (25.420/25.425mm), (Not Shown), No Longer Serviced, Start Year: 01/01/1965
3	C5NN482F	AR	Orange, 1.0010/1.0012 (25.425/25.430mm), (Not Shown), No Longer Serviced, Start Year: 01/01/1965
3	C5NN482F	AR	Green/White, 1.0012/1.0014 (25.430/25.435mm), (Not Shown), No Longer Serviced, Start Year: 01/01/1965
3	C5NN482H	AR	Red/White, 1.0014/1.0016 (25.435/25.440mm), (Not Shown), No Longer Serviced, Start Year: 01/01/1965
4	C7NN481C	AR	Blue/White, 1.0000/1.0002 (25.400/25.405mm), NHNA Only, Start Year: 01/01/1965
4	C7NN481C	AR	Blue/White, 1.0000/1.0002 (25.400/25.405mm), (Not Shown), NH-E Only, Start Year: 01/01/1965
4	C7NN481D	AR	White, 1.0002/1.0004 (25.405/25.410mm), (Not Shown), NHNA Only, Start Year: 01/01/1965
4	C7NN481D	AR	White, 1.0002/1.0004 (25.405/25.410mm), (Not Shown), NH-E Only, Start Year: 01/01/1965
4	C7NN481E	AR	Blue, 1.0004/1.0006 (25.410/25.415mm), Replaces DDN481C, (Not Shown), Start Year: 01/01/1965
4	C7NN481F	AR	Yellow, 1.0006/1.0008 (25.415/25.420mm), Replaces DDN481D, (Not Shown), Start Year: 01/01/1965
4	C7NN481G	AR	Green, 1.0008/1.0010 (25.420/25.425mm),Replaces DDN481E, (Not Shown), Start Year: 01/01/1965
4	C7NN481H	AR	Orange, 1.0010/1.0012 (25.425/25.430mm), (Not Shown), Start Year: 01/01/1965

5000-SERIES 4 CYL TRACTOR (1/65-1/75)

05B04 HYDRAULIC LIFT CYLINDER & RELATED PARTS, 5000 & 7000

Ref	Part Number	Qty	Description
4	C7NN481J	AR	Green/White, 1.0012/1.0014 (25.430/25.435mm) Replaces DDN481G, (Not Shown), No Longer Serviced (NH-E), Start Year: 01/01/1965
4	C7NN481K	AR	Red/White, 1.0014/1.0016 (25.435/25.440mm) Replaces E1ADDN481H, (Not Shown), No Longer Serviced (NH-E), Start Year: 01/01/1965
4	D3NNJ973A	AR	Spacer, Unload Valve, (Not Shown), Start Year: 01/01/1965
5	C9NN925A	1	Valve, Unload, Replaces C5NN-925-A, Start Year: 01/01/1965
6	C9NNH893A	1	Seal, Unload Valve, Start Year: 01/01/1965
6	C9NNH893A	1	Seal, Unload Valve, (Not Shown), Start Year: 11/01/1971
6	87035S95	1	O-Ring, 90 Duro, .625" ID x .103" Thk, Years: 01/01/1965-10/31/1971
7	C5NN916A	1	Plug, Hydraulic Lift Unload Valve, White 1.0002/1.0004 (25.405/25.410mm), Start Year: 01/01/1965
7	C5NN916B	AR	Blue, 1.0004/1.0006 (25.410/25.415mm), (Not Shown), Start Year: 01/01/1965
7	C5NN916C	AR	Yellow, 1.0006/1.0008 (25.415/25.420mm), (Not Shown), Start Year: 01/01/1965
7	C5NN916D	AR	Green, 1.0008/1.0010 (25.420/25.425mm), (Not Shown), Start Year: 01/01/1965
7	C5NN916E	AR	Orange, 1.0010/1.0012 (25.425/25.430mm), (Not Shown), Start Year: 01/01/1965
7	C5NN916F	AR	Blue/White, 1.0000/1.0002 (25.400/25.405mm), (Not Shown), No Longer Serviced, Start Year: 01/01/1965
7	C5NN916G	AR	Green/White, 1.0012/1.0014 (25.430/25.435mm), (Not Shown), Start Year: 01/01/1965
7	C5NN916H	AR	Red/White, 1.0014/1.0015 (25.435/25.435mm), (Not Shown), Start Year: 01/01/1965
11	C7NN488G	1	Control Valve & Sleeve Assy., Replaces C5NN488L, White, .5917/.5919 (15.029/15.034mm), Start Year: 01/01/1965
11	82847532	AR	Blue, .5919/.5921 (15.034/15.039mm), (Not Shown), Start Year: 01/01/1965
11	C7NN488L	AR	Yellow, .5921/.5923 (15.039/15.044mm), (Not Shown), Start Year: 01/01/1965
11	C7NN488S	AR	Orange, .5927/.5928 (15.055/15.057mm), (Not Shown), No Longer Serviced (NHNA), Start Year: 01/01/1965
11A	C5NNB875D	1	Sleeve, Control Valve, Start Year: 01/01/1965
12	E4NN924BA	1	Spring, Control Valve, Start Year: 01/01/1965
13	C5NN921A	1	Plate, Valve Retainer Rear, No Longer Serviced, Start Year: 01/01/1965
14	88434	2	Screw, Cap, HH, G5, 3/8"-16 x 3/4", Start Year: 01/01/1965
15	E1ADDN984	1	Safety Valve Assy., Start Year: 01/01/1965
15	E1ADDN984	1	Safety Valve Assy., (Not Shown), Start Year: 01/01/1965
16	C5NNN917A	1	Seal, Safety Valve, Start Year: 01/01/1965
17	D8NNN895AA	1	Seat, Check Valve, Start Year: 01/01/1965
18	229317	1	O-Ring, 90 Duro, .549" ID x .103" Thk, Start Year: 01/01/1965
19	379441S	1	Ball, .50 Dia., Start Year: 01/01/1965
20	87035S95	1	O-Ring, 90 Duro, .625" ID x .103" Thk, Start Year: 01/01/1965
21	C5NN645A	1	Spring, Check Valve, Start Year: 01/01/1965
22	C5NNN482A	1	Retainer, Check Valve, No Longer Serviced, Start Year: 01/01/1965
23	E69WP9	1	Spring, Flow Control Valve Plunger, Start Year: 01/01/1965
24	D1NNN846A	1	Value, By-Pass, Blue/White, .6670/.6672 (16.942/16.947mm), No Longer Serviced, Start Year: 01/01/1965
24	D1NNN846B	AR	Valve, By-Pass, White, .6672/.6674 (16.947/16.952mm), (Not Shown), No Longer Serviced, Start Year: 01/01/1965
24	D1NNN846C	AR	Valve, By-Pass, Blue, .6674/.6676 (16.952/16.957mm), (Not Shown), No Longer Serviced

05B04 HYDRAULIC LIFT CYLINDER & RELATED PARTS, 5000 & 7000

Ref	Part Number	Qty	Description
24	D1NNN846D	AR	Valve, By-Pass, Yellow, .6676/.6678 (16.957/16.962mm), (Not Shown), No Longer Serviced (NHNA), Start Year: 01/01/1965
24	D1NNN846E	AR	Valve, By-Pass, Green, .6678/.6680 (16.962/16.967mm), (Not Shown), No Longer Serviced (NHNA), Start Year: 01/01/1965
25	507084	1	Ring, Snap, Int, .688", Start Year: 01/01/1965
26	C5NNN855A	1	Spring, Selector Valve Detent, Start Year: 01/01/1965
27	86628554	1	Ball, Steel, 1/4" Dia., Start Year: 01/01/1965
28	C5NNN858A	1	Valve, Selector, Blue/White .6232/.6235 (15.829/15.837mm), Start Year: 01/01/1965
28	C5NNN858B	AR	Valve, Selector, White, .6235/.6238 (15.837/15.845mm), (Not Shown), Start Year: 01/01/1965
28	C5NNN858C	AR	Valve, Selector, Blue, .6238/.6241 (15.845/15.852mm), (Not Shown), Start Year: 01/01/1965
28	C5NNN858D	AR	Valve, Selector, Yellow, .6241/.6244 (15.852/15.860mm), (Not Shown), Start Year: 01/01/1965
28	C5NNN858E	AR	Valve, Selector, Green, .6244/.6247 (15.860/15.867mm), (Not Shown), Start Year: 01/01/1965
29	C5NNN958B	1	Spring, Flow Control Valve, No Longer Serviced, Start Year: 01/01/1965
30	D5NNN960A	1	Seat, Flow Control Valve, Blue/White .7482/.7485 (19.004/19.012mm), Start Year: 01/01/1965
30	D5NNN960B	AR	Seat, Flow Control Valve, White .7485/.7488 (19.012/19.019mm), (Not Shown), Start Year: 01/01/1965
30	D5NNN960C	AR	Seat, Flow Control Valve, Blue .7488/.7491 (19.019/19.027mm), (Not Shown), Start Year: 01/01/1965
30	D5NNN960D	AR	Seat, Flow Control Valve, Yellow .7491/.7494 (19.027/19.035mm), (Not Shown), Start Year: 01/01/1965
30	D5NNN960E	AR	Seat, Flow Control Valve, Green .7494/.7497 (19.035/19.042mm), (Not Shown), No Longer Serviced, Start Year: 01/01/1965
31	C7NNG997A	1	Seal, Flow Control Valve, .30" (7.62mm) I.D., Start Year: 01/01/1965
32	167269	1	O-Ring, 90 Duro, .755" ID x .097" Thk, Start Year: 01/01/1965
32	D1NNJ911B	1	Shim, Flow Control Valve W/Renault Brake, NH-E Only, Start Year: 01/01/1972
33	C5NNN964C	1	Retainer, Flow Control Valve, Start Year: 01/01/1965
34	C7NNN955B	1	Valve, Flow Control, L/Load Monitor, No Longer Serviced, Start Year: 01/01/1965
34	D0NNN955A	1	Valve, Flow Control, W/Load Monitor, No Longer Serviced, Start Year: 01/01/1971
35	C5NN837A	2	Ring, Cylinder Dowel, No Longer Serviced, Start Year: 01/01/1965
36	82926929	3	Plug, Pipe, Dry Seal Taper, 1/16" - 27, Start Year: 01/01/1965
37	502046	5	Plug, Pipe, 1/8"-27, Start Year: 01/01/1965
38	87709S2	4	Plug, Pipe Hd., 1/4" - 18, L/Socket, Start Year: 01/01/1965
39	D3NN530D	1	Piston, No Longer Serviced, Start Year: 01/01/1965
40	373408S	1	O-Ring, Piston, Start Year: 01/01/1965
41	D1NN473B	1	Ring, Piston Seal Back-up, Start Year: 01/01/1965
42	272142	1	O-Ring, 90 Duro, .674" ID x .103" Thk, Cylinder to Cover, Start Year: 01/01/1965
42	272142	1	O-Ring, 90 Duro, .674" ID x .103" Thk, Cylinder to Cover, (Not Shown), Start Year: 01/01/1965
43	272344	9	O-Ring, 90 Duro, .487" ID x .103" Thk, Cylinder to Cover, Start Year: 01/01/1965
44	C5NNN853H	1	Tube Assy., Oil Return, L/Load Monitor, Start Year: 01/01/1965
45	C5NNN831A	1	Spring, Sump Return Pipe, L/Load Monitor, Start Year: 01/01/1965
46	E83GF9	1	Washer, Sump Return Pipe Seal, L/Load Monitor, Start Year: 01/01/1965
47	E82GF9	1	Seal, Sump Return Pipe, L/Load Monitor, Start Year: 01/01/1965
48	C5NNN832C	1	Element, Filter, L/Load Monitor, Start Year: 01/01/1965
49	E82GF9	1	Seal, Sump Return Pipe, L/Load Monitor, Start Year: 01/01/1965

05B04 HYDRAULIC LIFT CYLINDER & RELATED PARTS, 5000 & 7000

Ref	Part Number	Qty	Description
50	C9NN960A	1	Body, Back Pressure Valve, Replaces E230GF9, L/Load Monitor, Start Year: 01/01/1965
51	957E982	1	Valve, Back Pressure, L/Load Monitor, Start Year: 01/01/1965
52	NCA962B	1	Spring, Back Pressure Valve, L/Load Monitor, Start Year: 01/01/1965
53	E73GF9	1	Plate, Back Pressure Valve, L/Load Monitor, Start Year: 01/01/1965
54	49894	1	Int, .625", Back Pressure Valve, L/Load Monitor, Start Year: 01/01/1965
55	14457281	1	O-Ring, M15.54 ID x 2.62 Thk, L/Load Monitor, Start Year: 01/01/1965
56	87037S94	1	O-Ring, .750" ID x .103" Thk, L/Load Monitor, Start Year: 01/01/1965
57	C5NNN843A	1	Bolt, Oil Return Tube Adapter, Start Year: 01/01/1965
58	C5NN900A	1	Gasket, Cylinder Oil Baffle Plate, Use D3NN920A, No Longer Serviced, Start Year: 01/01/1965
59	D3NN920A	1	Baffle, Cylinder Oil, Use D3NN920A, No Longer Serviced, Start Year: 01/01/1965
59A	D3NN920A	1	Cylinder Baffle & Plate Assy., No Longer Serviced, Start Year: 01/01/1965
60	88434	2	Screw, Cap, HH, G5, 3/8"-16 x 3/4", Start Year: 01/01/1965
61	D3NN920A	1	Plate, Valve Retaining, Front, Start Year: 01/01/1965

05B04[A] HYDRAULIC LIFT CYLINDER, 4.125" BORE, 5000 & 7000

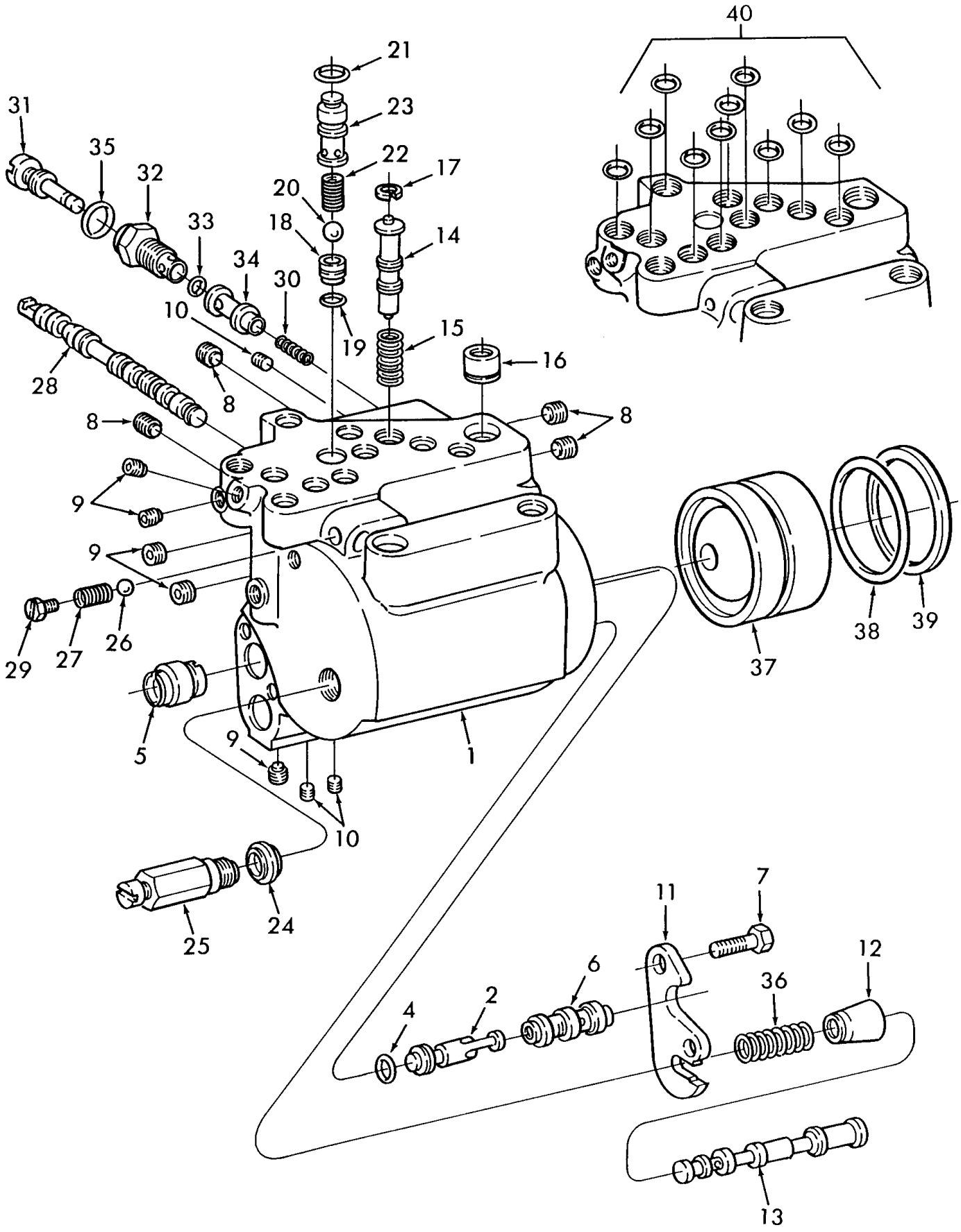

5000-SERIES 4 CYL TRACTOR (1/65-1/75)

05B04[A] HYDRAULIC LIFT CYLINDER, 4.125" BORE, 5000 & 7000

Ref	Part Number	Qty	Description
	F0NN477BA	1	Cylinder & Valve Assy., L/Load Monitor, Includes: 1 thru 34, Check Bore Dimension Before Ordering, Also See 5B4, Start Year: 01/01/1965
	F0NN477AA	1	Cylinder & Valve Assy., W/Load Monitor, Includes: 1 thru 34, (Not Shown), Check Bore Dimension Before Ordering, Also See 5B4, Start Year: 01/01/1965
1	F0NN478AA	1	Cylinder Assy., Includes: 2 thru 6, Check Bore Dimension Before Ordering, Also See 5B4, Start Year: 01/01/1965
2	D7NN925B	1	Valve, Start Year: 01/01/1965
3	NSS	1	Body, NHNA Only, Start Year: 01/01/1965
4	C9NNH893A	1	Seal, Start Year: 01/01/1965
5	C7NN440A	AR	Bushing, White, Start Year: 01/01/1965
5	C7NN440B	AR	Bushing, Blue, (Not Shown), Start Year: 01/01/1965
5	C7NN440C	AR	Bushing, Yellow, (Not Shown), Start Year: 01/01/1965
5	C7NN440D	AR	Bushing, Green, (Not Shown), Start Year: 01/01/1965
5	C7NN440E	AR	Bushing, Orange, (Not Shown), No Longer Serviced, Start Year: 01/01/1965
5	C7NN440F	AR	Bushing, Blue/White, (Not Shown), No Longer Serviced, Start Year: 01/01/1965
5	C7NN440G	AR	Bushing, Green/White, (Not Shown), No Longer Serviced (NH-E), Start Year: 01/01/1965
6	D3NN482J	AR	Bushing, Blue/White, No Longer Serviced (NH-E), Start Year: 01/01/1965
6	D3NN482H	AR	Bushing, White, (Not Shown), Start Year: 01/01/1965
6	D3NN482G	AR	Bushing, Blue, (Not Shown), Start Year: 01/01/1965
6	D3NN482F	AR	Bushing, Yellow, (Not Shown), Start Year: 01/01/1965
6	D3NN482E	AR	Bushing, Green, (Not Shown), No Longer Serviced (NH-E), Start Year: 01/01/1965
6	D3NN482D	AR	Bushing, Orange, (Not Shown), No Longer Serviced (NH-E), Start Year: 01/01/1965
6	D3NN482C	AR	Bushing, Green/White, (Not Shown), No Longer Serviced (NH-E), Start Year: 01/01/1965
7	88434	2	Screw, Cap, HH, G5, 3/8"-16 x 3/4", Start Year: 01/01/1965
8	87709S2	AR	Plug, 1/4" Pipe Thread, Socket, Start Year: 01/01/1965
9	502046	AR	Plug, Pipe, 1/8"-27, Start Year: 01/01/1965
10	82926929	AR	Plug, 1/16", Start Year: 01/01/1965
11	D3NN921A	1	Plate, Start Year: 01/01/1965
12	C5NNB875D	1	Sleeve, Start Year: 01/01/1965
13	C7NN488G	AR	Valve Assy., White, Start Year: 01/01/1965
13	82847532	AR	Valve Assy., Blue, (Not Shown), Start Year: 01/01/1965
13	C7NN488L	AR	Valve Assy., Yellow, (Not Shown), Start Year: 01/01/1965
13	C7NN488M	AR	Valve Assy., Green, (Not Shown), No Longer Serviced (NHNA), Start Year: 01/01/1965
13	C7NN488S	AR	Valve Assy., Orange, (Not Shown), No Longer Serviced (NHNA), Start Year: 01/01/1965
14	D6NNN846E	AR	Valve, Blue/White, Start Year: 01/01/1965
14	D6NNN846A	AR	Valve, White, (Not Shown), Start Year: 01/01/1965
14	D6NNN846B	AR	Valve, Blue, (Not Shown), No Longer Serviced (NH-E), Start Year: 01/01/1965
14	D6NNN846C	AR	Valve, Yellow, (Not Shown), No Longer Serviced (NH-E), Start Year: 01/01/1965
14	D6NNN846D	AR	Valve, Green, (Not Shown), Start Year: 01/01/1965
15	D3NNJ974A	1	Spring, Start Year: 01/01/1965
16	D3NN837A	2	Ring, Start Year: 01/01/1965

5000-SERIES 4 CYL TRACTOR (1/65-1/75)

05B04[A] HYDRAULIC LIFT CYLINDER, 4.125" BORE, 5000 & 7000

Ref	Part Number	Qty	Description
17	507084	1	Ring, Snap, Int, .688", Start Year: 01/01/1965
18	D8NNN895AA	1	Seat, Start Year: 01/01/1965
19	229317	1	O-Ring, 90 Duro, .549" ID x .103" Thk, Start Year: 01/01/1965
20	379441S	1	Ball, Start Year: 01/01/1965
21	D5NNL973A	1	Seal, Start Year: 01/01/1965
22	C5NN645A	1	Spring, Start Year: 01/01/1965
23	D3NNN482A	1	Retainer, Start Year: 01/01/1965
24	C5NNN917A	1	Seal, Start Year: 01/01/1965
25	D5NN984A	1	Valve Assy., Start Year: 01/01/1965
26	86628554	1	Ball, Steel, 1/4" Dia., Start Year: 01/01/1965
27	C5NNN855A	1	Spring, Start Year: 01/01/1965
28	C5NNN858A	AR	Valve, Blue/White, Start Year: 01/01/1965
28	C5NNN858B	AR	Valve, White, (Not Shown), Start Year: 01/01/1965
28	C5NNN858C	AR	Valve, Blue, (Not Shown), Start Year: 01/01/1965
28	C5NNN858D	AR	Valve, Yellow, (Not Shown), Start Year: 01/01/1965
28	C5NNN858E	AR	Valve, Green, (Not Shown), Start Year: 01/01/1965
29	C5NHD959A	1	Screw, Start Year: 01/01/1965
30	D3NNN958A	1	Spring, Start Year: 01/01/1965
31	D6NNN955A	1	Valve, Start Year: 01/01/1965
32	C5NNN964C	1	Retainer, Start Year: 01/01/1965
33	C7NNG997A	1	Seal, Start Year: 01/01/1965
34	D5NNN960A	AR	Seal, Blue/White, Start Year: 01/01/1965
34	D5NNN960B	AR	Seal, White, (Not Shown), Start Year: 01/01/1965
34	D5NNN960C	AR	Seal, Blue, (Not Shown), Start Year: 01/01/1965
34	D5NNN960D	AR	Seal, Yellow, (Not Shown), Start Year: 01/01/1965
34	D5NNN960E	AR	Seal, Green, (Not Shown), No Longer Serviced, Start Year: 01/01/1965
35	C7NNG997A	1	Seal, Start Year: 01/01/1965
36	E4NN924BA	1	Spring, Start Year: 01/01/1965
37	D5NN530A	1	Piston, Lift, 4.12" Dia., Start Year: 01/01/1965
38	83904858	1	O-Ring, 90 Duro, 3.750" ID x .210" Thk, Start Year: 01/01/1965
39	D3NN473A	1	Ring, Back-Up, Start Year: 01/01/1965
40	87039S95	AR	O-Ring, 90 Duro, .875" ID x .103" Thk, Start Year: 01/01/1965
40	272142	AR	O-Ring, 90 Duro, .674" ID x .103" Thk, Not Shown, Start Year: 01/01/1965
40	272344	AR	O-Ring, 90 Duro, .487" ID x .103" Thk, Not Shown, Start Year: 01/01/1965

05B05 HYDRAULIC LIFT LOAD MONITOR & RELATED PARTS, 5000 & 7000

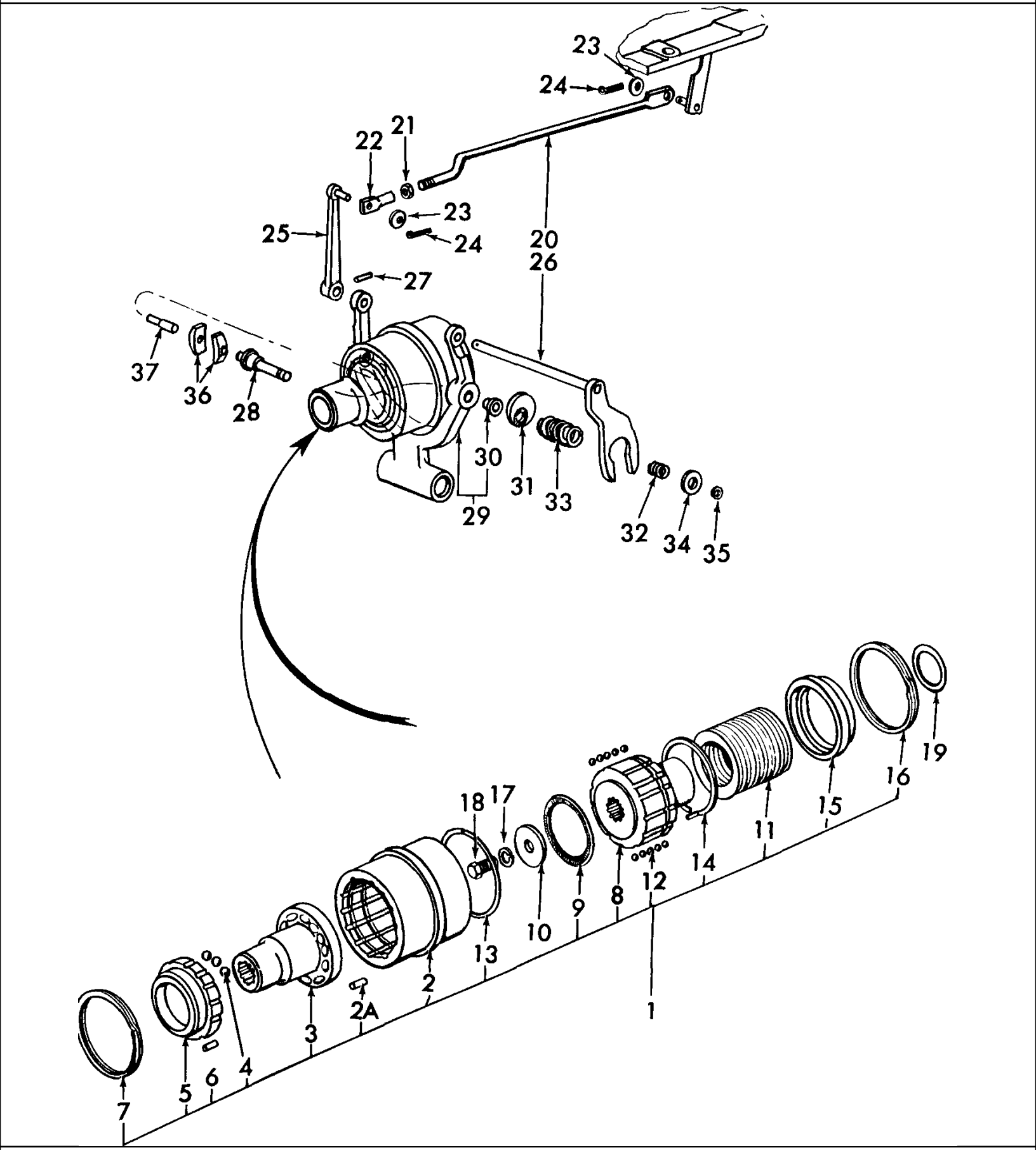

5000-SERIES 4 CYL TRACTOR (1/65-1/75)

05B05 HYDRAULIC LIFT LOAD MONITOR & RELATED PARTS, 5000 & 7000

Ref	Part Number	Qty	Description
1	D2NNA626B	1	Monitor Assy., Load, W/8 Speed Transmission Replaces D1NNA626H, Includes: Ref. 2 thru 16, Start Year: 01/01/1971
1	D2NNA626A	1	Monitor Assy., Load, W/10 Speed Transmission, 5000, Includes: Ref. 2 thru 16, (Not Shown), Start Year: 01/01/1971
2	D1NNA642B	1	Coupling, Hydraulic Lift, Start Year: 01/01/1971
2A	D1NNA685A	2	Pin, Stop, .250 Dia. - .740 Long, Start Year: 01/01/1971
3	D3NNA639B	1	Hub, Input, 8 Speed Transmission, 5000, 7000, Start Year: 01/01/1971
4	D0NNA630A	10	Ball, .625" Dia., Start Year: 01/01/1971
5	D1NNA641B	1	Plate, Hydraulic Lift, Start Year: 01/01/1971
6	D0NNA631A	12	Pin, Coupling Drive, .250 Dia. - .400 Long, Start Year: 01/01/1971
7	D0NNA632A	1	Ring, Retaining, Spring, 4.768" O.D., Start Year: 01/01/1971
8	D1NNA640A	1	Hub, Output, Start Year: 01/01/1971
9	D0NNA636C	1	Thrust Bearing Assy., Start Year: 01/01/1971
10	D0NNA633A	1	Washer, Retaining, 2.18" O.D., No Longer Serviced (NH-E), Start Year: 01/01/1971
11	D2NNA637A	9	Spring, Tension, Replace in Sets of 9, Start Year: 01/01/1971
12	86628554	60	Ball, Steel, 1/4" Dia., Start Year: 01/01/1971
13	D0NNA634A	2	Ring, Retaining, Internal Ball, 4.80" O.D., Start Year: 01/01/1971
14	D1NNA635A	1	Ring, Retaining, External Ball, 4.20" I.D., Start Year: 01/01/1971
15	D3NNA638A	1	Seat, Retaining, Spring, Replaces D2NNA638A, Start Year: 01/01/1971
16	D0NNA632A	1	Ring, Retaining, Seat Spring, Start Year: 01/01/1971
17	80679	1	Washer, Lock, 1/2", Start Year: 01/01/1971
18	304726S100	1	Bolt, 1/2" - 13 x 1.25, Monitor to Pinion, Start Year: 01/01/1971
19	D1NNA676A	AR	Shim, W/10 Speed Transmission, .0025" - .0035" (.064-.089mm), 5000, No Longer Serviced, Start Year: 01/01/1971
19	D1NNA676B	AR	Shim, W/10 Speed Transmission, .0035"-.0045" (.089-.114mm), 5000, (Not Shown), No Longer Serviced, Start Year: 01/01/1971
19	D1NNA676C	AR	Shim,W/10 Speed Transmision, .01125"-.01275" (.2858-.3239mm), 5000, (Not Shown), No Longer Serviced, Start Year: 01/01/1971
19	D1NNA676D	AR	Shim, W/10 Speed Transmission, .0305"-.0335" (.775-.851mm), 5100, (Not Shown), No Longer Serviced, Start Year: 01/01/1971
19	D1NNA676E	AR	Shim, W/10 Speed Transmission, .051"-.053" (1.30-1.35mm), 5000, (Not Shown), No Longer Serviced, Start Year: 01/01/1971
19	D1NNA676F	AR	Shim, W/10 Speed Transmission, .088"-.090" (2.24-2.29mm), 5100, (Not Shown), No Longer Serviced, Start Year: 01/01/1971
20	D1NNJ839B	1	Strut, Coupler to Lift Linkage, Replaces D1NNJ839A, No Longer Serviced, Start Year: 01/01/1971
21	87307	1	Nut, Jam, G2, 5/16"-24, Start Year: 01/01/1971
22	D1NNJ861B	1	End, Coupler to Lift Linkage, NHNA Only, Start Year: 01/01/1971
22	D1NNJ861B	1	End, Coupler to Lift Linkage, (Not Shown), NH-E Only, Start Year: 01/01/1971
23	80664	2	Washer, 5/16", Start Year: 01/01/1971
24	80756	2	Pin, Split Cotter, 1/8" x 3/4", Start Year: 01/01/1971
25	D0NNA652A	1	Lever Assy., Linkage Adjustment, No Longer Serviced, Start Year: 01/01/1971

05B05 HYDRAULIC LIFT LOAD MONITOR & RELATED PARTS, 5000 & 7000

Ref	Part Number	Qty	Description
26	D5NNA655A	1	Fork Assy., Linkage Adjustment, Start Year: 01/01/1971
27	118827	1	Pin, Roll, 3/16" x 1", Start Year: 01/01/1971
28	D0NNA649A	1	Shaft, Fork Adjustment, Start Year: 01/01/1971
29	D1NNA658A	1	Fork & Seat Assy., Load Monitor, Replaces D0NNA658A, No Longer Serviced (Basildon), Start Year: 01/01/1971
30	D2NNA646A	1	Seat, Replaces D0NNA646A, Includes: Ref. 31, No Longer Serviced (NH-E), Start Year: 01/01/1971
31	E1NNA644AA	1	Cam, Fork Adjust, Start Year: 01/01/1971
32	D2NNA651A	1	Spring, Inner Cam, Replaces D0NNA651A, No Longer Serviced (NH-E), Start Year: 01/01/1971
33	D2NNA650A	1	Spring, Outer Cam, Replaces D0NNA650A, No Longer Serviced (NH-E), Start Year: 01/01/1971
34	D0NNA648A	1	Seat, Cam Spring, No Longer Serviced (NH-E), Start Year: 01/01/1971
35	D0NNA643A	1	Ring, Retaining, Cam Spring, .583" I.D., No Longer Serviced (NH-E), Start Year: 01/01/1971
36	D0NNA645A	2	Block, Thrust, Start Year: 01/01/1971
37	D0NNA647A	1	Pin, Thrust Block, Start Year: 01/01/1971

05B06 HYDRAULIC OIL FILTER & MANIFOLD ASSEMBLY - 5000, 7000 W/L COOLER

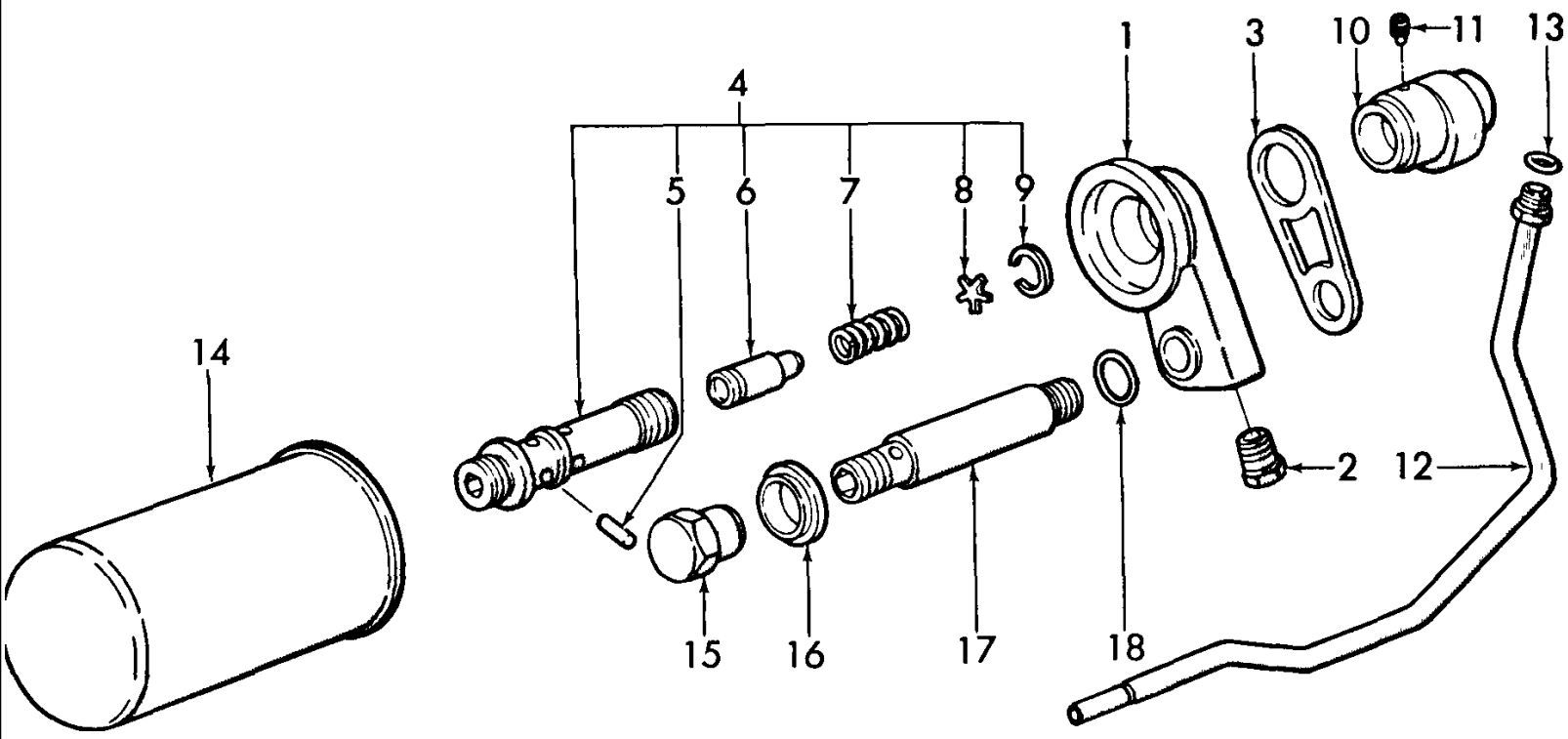

Refer to Figure 5D4 for Filter Leakage Problem.

5000-SERIES 4 CYL TRACTOR (1/65-1/75)

05B06 HYDRAULIC OIL FILTER & MANIFOLD ASSEMBLY - 5000, 7000 W/L COOLER

Ref	Part Number	Qty	Description
1	D2NNC868B	1	Manifold, Hydraulic Oil Filter, Replaces D0NNC868A, No Longer Serviced (NH-E), Start Year: 01/01/1971
2	353810S36	1	Plug, Oil Filter Manifold, Years: 01/01/1971-05/31/1973
2	353810S36	1	Plug, Oil Filter Manifold, W/Dual Power, (Not Shown), Start Year: 06/01/1973
2	353810S36	1	Plug, Oil Filter Manifold, W/Dual Power, (Not Shown), Start Year: 01/01/1971
3	D0NND833A	1	Gasket, Oil Filter Manifold, No Longer Serviced (NH-E), Start Year: 01/01/1971
4	D0NNH983A	1	Oil Filter Back Pressure Valve Assy., Includes: Ref. 5 thru 9, No Longer Serviced (NHNA), Start Year: 01/01/1971
5	354547S	1	Pin, Roll, 1/8" x 1", Start Year: 01/01/1971
6	D5NNH979A	1	Spool, No Longer Serviced (NHNA), Start Year: 01/01/1971
7	D0NNH982A	1	Spring, Start Year: 01/01/1971
8	D0NNH974A	1	Guide, No Longer Serviced (NHNA), Start Year: 01/01/1971
9	292966	1	Retainer, 13/16", No Longer Serviced (NHNA), Start Year: 01/01/1971
10	D0NNH972A	1	Adapter, Oil Filter, No Longer Serviced (NHNA), Start Year: 01/01/1971
11	301787S2	1	Screw, Set, HS, Dog Point, 3/8"-16 x 1-1/4", No Longer Serviced (NHNA), Start Year: 01/01/1971
12	D0NNN844A	1	Oil Return Tube Assy., L/Dual Power, 7000, No Longer Serviced, Start Year: 01/01/1971
12	D0NNN844B	1	Hydraulic Oil Return Tube Assy., W/L Dual Power, 5000, (Not Shown), No Longer Serviced (NHNA), Start Year: 01/01/1971
12	D0NNN844B	1	Hydraulic Oil Return Tube Assy., W/Dual Power, 7000, (Not Shown), No Longer Serviced (NHNA), Start Year: 01/01/1971
13	14457281	1	O-Ring, M15.54 ID x 2.62 Thk, Start Year: 01/01/1971
14	86546610	1	Oil Filter Assy., Start Year: 01/01/1971
15	D5NNH975A	1	Nut, Hydraulic Oil Filter, Replaces D0NNH975A, Also Use (1) 87653S36 Plug, Start Year: 01/01/1971
16	E105GF9	1	Seal, Oil Filter Nut, Start Year: 01/01/1971
17	D4NNH978B	1	Sleeve, Oil Filter, Start Year: 01/01/1971
18	87016S95	1	O-Ring, 90 Duro, .625" ID x .070" Thk, Start Year: 01/01/1971

Refer to Figure 5D4 for Filter Leakage Problem.

05D04 HYDRAULIC LIFT LINKAGE - 5000, 7000

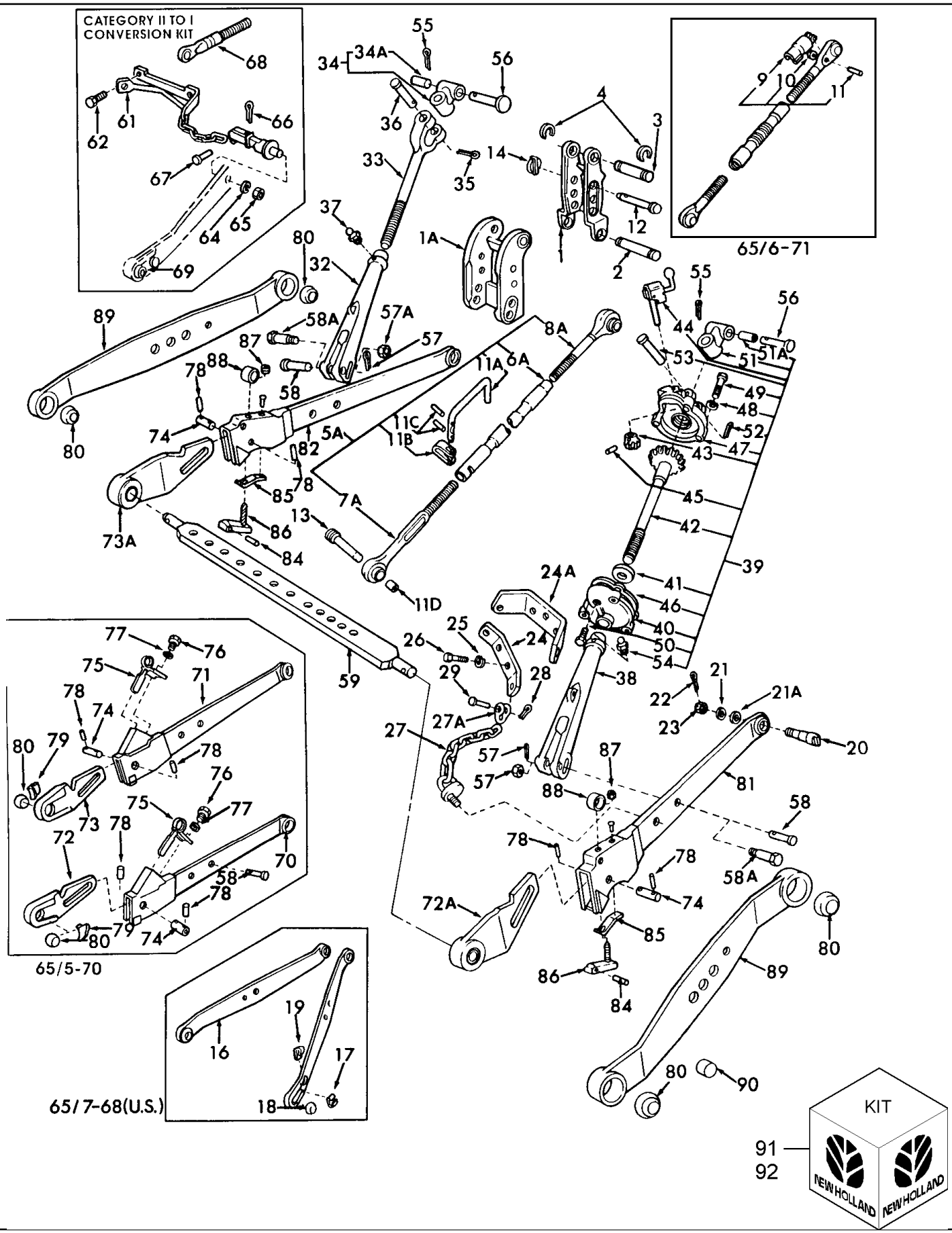

5000-SERIES 4 CYL TRACTOR (1/65-1/75)

05D04 HYDRAULIC LIFT LINKAGE - 5000, 7000

Ref	Part Number	Qty	Description
1	C5NN535A	1	Rocker, No Longer Serviced, Years: 01/01/1965-12/31/1968
1	E0NN535CA	1	Rocker, Start Year: 01/01/1969
1A	E0NN535DA	1	Rocker, Hydraulic Lift, W/2 Speed P.T.O, Start Year: 06/01/1973
2	D8NN486AB	1	Pin, Rocker Pivot, Start Year: 01/01/1965
2	NLS	1	Pin, Rocker Pivot, Mexico, 5100 {71NY486A}, Mexico Only, Start Year: 01/01/1969
3	D8NN486BA	1	Pin, Yoke, Start Year: 01/01/1965
3	NLS	1	Pin, Yoke, Mexico, 5100 {71NYJ868A}, Mexico Only, Start Year: 01/01/1969
4	V36698	4	Ring, External Retaining, Use W/Groove type Pins, 1.0", Start Year: 01/01/1965
4	72062S8	4	Pin, Split Cotter, 1/8" x 1-3/8", Use W/Pins with Holes, Start Year: 01/01/1965
5	D0NN576A	1	Linkage Parts, Top Link Assembly, Upper Lift, L/Pin & Chain, Use 5A, Not labeld on Art, No Longer Serviced, Years: 01/01/1965-07/31/1968
5A	D0NN576A	1	Linkage Parts, Top Link Assembly, Upper Lift, L/Pin & Chain, Includes Ref 6A thru 11, Start Year: 08/01/1968
5A	EC0N576AA	1	Link Assy., Upper Lift, Cat. II, Includes: Ref. 6A thru 11, NHNA Only, Start Year: 01/01/1965
6	D0NN576A	1	Housing, Use 6A, Not labeld on Art, No Longer Serviced, Years: 01/01/1965-06/30/1971
6A	82001379	1	Housing, Start Year: 07/01/1971
7	NS	1	Socket Assy., Rear, Standard Cat. II, Use 5A, Not shown on Art, NHNA Only, Years: 01/01/1965-07/31/1968
7	82001389	1	Socket Assy., Rear, Standard Cat. II, Not shown on Art, No Longer Serviced, Years: 08/01/1968-06/30/197
7	D0NN576A	AR	Socket Assy., Accessory, Cat. I, Not shown on Art, No Longer Serviced, Years: 01/01/1965-06/30/1971
7A	82001389	1	Socket Assy., Rear, Cat. II, Start Year: 07/01/1971
7A	EC0NA914AA	1	Socket Assy., Rear, Cat. II, NHNA Only, Start Year: 01/01/1965
8A	E8NNA911AA	1	Socket Assy., Front, Replaces C5NNA909A, Includes: Ref. 9 thru 11, Start Year: 01/01/1965
8A	EC0NA911AA	1	Socket Assy., Front, Cat. II, Includes: Ref. 9 thru 11, NHNA Only, Start Year: 01/01/1965
9	NS	1	Latch, Includes: Ref. 9 thru 11, NHNA Only, Years: 01/01/1965-06/30/1971
10	44708S43	1	Washer, #7, No Longer Serviced (NHNA), Years: 01/01/1965-06/30/1971
11	PL	1	Rivet, Button Hd. Shoulder, NHNA Only, Years: 01/01/1965-06/30/1971
11A	86534765	1	Latch, Start Year: 07/01/1971
11B	D0NNF992A	1	Clamp, Start Year: 07/01/1971
11C	118827	2	Pin, Roll, 3/16" x 1", Start Year: 07/01/1971
11D	C7NNG993A	1	Bushing, Ball, .77/.76 (19.56/19.30mm) Used to change Ball in Socket Assy. from Cat. II to I, Start Year: 01/01/1965
12	957E560	1	Pin, Rocker, Head to Hole Center, 3" (76.20mm), Cat. I, NHNA Only, Start Year: 01/01/1965
13	C5NNF847A	1	Pin, Link Rear, 3.65" (92.71mm) Head to Hole Center Cat. II, Start Year: 01/01/1965
13	C9NNB927A	1	Pin, Link Rear, 4" (101.6mm) Head to Hole Center, Cat. II, Start Year: 01/01/1965
13	NS	1	Pin, Link Rear, Head to Hole Center, 3.81", Mexico, 5100 {71NYF847A}, Mexico Only, Start Year: 01/01/1969
14	E27N995216	2	Pin & Ring Assy., Start Year: 01/01/1965
16	C5NN556AB	1	Link Assy., Lower, L.H., Includes: Ref. 17, NHNA Only, No Longer Serviced, Years: 01/01/1965-07/31/1968
17	81814226	2	Retainer & Spring Assy., Years: 01/01/1965-07/31/1968
18	E1ADDN995233	2	Ball, Lower Link, Cat. I, Years: 01/01/1965-07/31/1968

5000-SERIES 4 CYL TRACTOR (1/65-1/75)

05D04 HYDRAULIC LIFT LINKAGE - 5000, 7000

Ref	Part Number	Qty	Description
18	C5NN557A	2	Ball, Lower Link, Cat. II, 1-3/4" (44.449mm) Wide, Years: 01/01/1965-07/31/1968
18	C5NN557B	2	Ball, Lower Link, Cat. II, 1-3/8" (34.924mm) Wide, Years: 01/01/1965-07/31/1968
19	E27N995216	2	Pin & Ring Assy., Start Year: 01/01/1965
20	C5NN563B	2	Shaft, Lower Link Support, W/Solid Ends, Start Year: 01/01/1965
20	C5NN563B	2	Shaft, Lower Link Support, W/Flexible Ends, Start Year: 01/01/1965
20	C5NN563B	2	Shaft, Lower Link Support, W/Flexible Ends, Years: 01/01/1965-01/31/1972
20	D0NN563B	2	Shaft, Lower Link Support, W/Flexible Ends, Start Year: 02/01/1972
21	390403S36	2	Spacer, Lower Link Support, Outer, Start Year: 01/01/1965
21A	D0NND849B	1	Spacer, Lower Link Support Shaft, Inner, 5000-7000, Start Year: 01/01/1965
22	72109S8	2	Pin, Split Cotter, 3/16" x 2", No Longer Serviced (NHNA), Start Year: 01/01/1965
23	55708S36	2	Nut, Slotted Hex, 1/2", Start Year: 01/01/1965
24	D2NN581A	1	Anchor, Lower Lift Link Check Chain, No Longer Serviced, Start Year: 01/01/1965
24A	D2NN581B	1	Anchor, Lower Lift Link Check Chain, W/Large Tires, Start Year: 06/01/1973
25	87340	2	Washer, Lock, 3/4", Start Year: 01/01/1965
26	381824S2	2	Bolt, Hex, 3/4"-10 x 2.62, No Longer Serviced (NHNA), Years: 01/01/1965-04/30/1973
26	58741S36	2	Screw, Cap, HH, G8, 3/4"-10 x 2", Start Year: 05/01/1973
27	C5NN591F	2	Chain Assy., Check, L/Clevis, Start Year: 01/01/1965
27	NLS	2	Chain Assy., Check, Replaces C9NNA946A, Mexico {69NYA946A}, Mexico Only, Start Year: 01/01/1969
27A	D0NN582A	2	Clevis, Chain, Start Year: 01/01/1965
28	80755	2	Pin, Split Cotter, 1/8" x 1", Start Year: 01/01/1965
29	379379S36	2	Pin, Clevis, .62 x 1.59, Start Year: 01/01/1965
30	87340	2	Washer, Lock, 3/4", Not Shown on Art, Start Year: 01/01/1965
31	280954	2	Nut, G5, 3/4"-10, Not shown on Art, Start Year: 01/01/1965
32	C7NNA935C	1	Fork, Link, When replacing C5NN-A935-D, also supply D2NN-N939-A(81826837) Pint 385432 (80385432) S-Ring, Start Year: 01/01/1965
32	D2NNA935A	1	Fork, Hydraulic Lift Link, W/36" Rigid & Flex Links, Start Year: 06/01/1973
33	C5NNB863C	1	Rod Assy., Link, Start Year: 01/01/1965
34	C5NNP929A	1	Knuckle Assy., Link, Includes: Ref. 34A, Start Year: 01/01/1965
34A	C5NNN935A	1	Bush/Bushing, Not labeled on Art, Start Year: 01/01/1965
35	72091S	1	Pin, Split Cotter, 3/16" x 1-3/4", No Longer Serviced (NHNA), Start Year: 01/01/1965
36	E6NNN936AA	1	Pin, Upper, 5000, Start Year: 01/01/1965
36	D0NNN932A	1	Pin, Upper, 7000, No Longer Serviced (NHNA), Years: 01/01/1971-09/30/1972
36	NLS	1	Pin, Upper Fork, Mexico, 5100 {71NYN936A}, Mexico Only, Start Year: 01/01/1969
37	80710	1	Fitting, Nipple, Lube, 1/8", Start Year: 01/01/1965
38	C7NNA935C	1	Fork, Hydraulic Lift Link, Start Year: 01/01/1965
38	D2NNA935A	1	Fork, Hydraulic Lift Link, W/36" Rigid & Flex Links, Start Year: 06/01/1973
39	NLS	1	Link Assy., Leveling, R.H., Mexico, 5100, Includes: Ref. 40 thru 54 {71NYN983A}, Mexico Only, Start Year: 01/01/1969
39	D2NNN983A	1	Link Assy., Leveling, R.H., 5000, 7000, Includes: Ref. 40 thru 54, Start Year: 01/01/1965
40	C7NNA927B	1	Housing, Start Year: 01/01/1965
41	C5NN3A299A	1	Bearing, Assy., Start Year: 01/01/1965

5000-SERIES 4 CYL TRACTOR (1/65-1/75)

05D04 HYDRAULIC LIFT LINKAGE - 5000, 7000

Ref	Part Number	Qty	Description
42	C5NNN579C	1	Shaft Assy., Start Year: 01/01/1965
43	C7NN568B	1	Gear, Start Year: 01/01/1965
43	C7NNH859A	1	Shim, .019/.023 Thick, Start Year: 01/01/1965
44	C5NNC999A	1	Lever Assy., Start Year: 01/01/1965
45	118827	1	Pin, Roll, 3/16" x 1", Start Year: 01/01/1965
46	C5NNN868A	1	Gasket, Start Year: 01/01/1965
47	C7NNA928B	1	Cover, Start Year: 01/01/1965
48	81547	3	Washer, Lock, 7/16", Start Year: 01/01/1965
49	86505984	3	Screw, Cap, HH, G5, 7/16"-14 x 2-1/4", Start Year: 01/01/1965
50	88071	1	Plug, Pipe, HH, 1/8"-27, Start Year: 01/01/1965
51	C5NNP929A	1	Knuckle Assy., Includes: Ref. 51A, Start Year: 01/01/1965
51A	C5NNN935A	1	Bushing, Start Year: 01/01/1965
52	72090S	AR	Pin, Split Cotter, 5/32" x 1-3/4", NH-E Only
53	NLS	1	Pin,, .85" x 3.56", Mexico, 5100 {71NYN932B}, Mexico Only, Start Year: 01/01/1969
53	E6NNN936AA	1	Pin, 3.79" (96.26mm), 5000, Years: 01/01/1965-06/30/1971
53	E6NNN936AA	AR	Pin, 3.79" (96.26mm), 5000, Start Year: 01/01/1973
53	E6NNN936AA	AR	Pin, W/D2NN-N983-A, 7100, Start Year: 10/01/1971
53	D0NNN932A	1	Pin, 3.99" (101.34mm), 5000, No Longer Serviced (NHNA), Years: 07/01/1971-12/31/1972
53	D0NNN932A	1	Pin, W/C7NNN983A, 7000, No Longer Serviced (NHNA), Years: 10/01/1971-09/30/1972
54	80710	1	Fitting, Nipple, Lube, 1/8", Start Year: 01/01/1965
55	80754	AR	Pin,Split (Cotter), 3/16" x 1-1/2"
56	NLS	1	Pin, Knuckle, .85" x 3.90", Mexico, 5100 {71NYN932A}, Mexico Only, Start Year: 01/01/1969
56	C5NNN932A	2	Pin, Knuckle, 4.33" (110.58mm), Start Year: 01/01/1965
57		2	Pin, Split Cotter, 1/4" x 1-5/8", NH-E Only, Years: 01/01/1965-12/31/1969
57A	280375	2	Nut, Lock, GC, 3/4"-10, Not labeled on Art, Start Year: 01/01/1970
57A	86511191	2	Washer, 3/4", Use W/34982S4, Start Year: 01/01/1970
57A	V36698	2	Ring, External Retaining, Fork Pin, 1.0" W/34" & 36" Rigid & All Flexible Link, Start Year: 06/01/1973
58	C5NNN939A	2	Pin, Lower Fork, No Longer Serviced (NH-E), Years: 01/01/1965-12/31/1969
58	D5NNN939A	2	Pin, Hydraulic Lift Link Lower Fork, W/34" & 36" Rigid W/All Flexible Links, D5NN-N939-A(83904859) & E27N-995216(81810390) together replaces D2NN-N939-A(81826837), Start Year: 06/01/1973
58	E27N995216	2	Ring & Pin Assy., D5NN-N939-A(83904859) & E27N-995216(81810390) together replaces D2NN-N939-A(81826837), Start Year: 06/01/1973
58A	C5NNN939A	2	Bolt, Lower Fork, No Longer Serviced (NH-E), Start Year: 01/01/1970
59	NLS	1	Drawbar, Cat. II W/Stay, Major Mexico, 5000 {71NY805A}, Mexico Only, Start Year: 03/01/1973
59	201834	1	Drawbar, Accessory, No Longer Serviced (NHNA), Start Year: 01/01/1965
60	CFPN923A	AR	Kit, Hydraulic Lift Conversion, Cat. II to I, Accessory, Includes: Ref. 61 thru 69, Not labeled on Art, NHNA Only, No Longer Serviced, Start Year: 01/01/1965
61	C5NNN582B	1	Anchor Assy., NHNA Only, No Longer Serviced, Start Year: 01/01/1965
62	380137S43	2	Bolt, HH, 3/4"-10 x 1.62", NHNA Only, No Longer Serviced, Start Year: 01/01/1965
64	87340	AR	Washer, Lock, 3/4"
65	280954	2	Nut, G5, 3/4"-10, Start Year: 01/01/1965

5000-SERIES 4 CYL TRACTOR (1/65-1/75)

05D04 HYDRAULIC LIFT LINKAGE - 5000, 7000

Ref	Part Number	Qty	Description
66	80755	AR	Pin, Split Cotter, 1/8" x 1"
67	379379S36	2	Pin, Clevis, 5/8" x 1.59, Start Year: 01/01/1965
68	NS	1	Socket Assy., NHNA Only, Start Year: 01/01/1965
69	E1ADDN995233	2	Ball, Cat. I, Start Year: 01/01/1965
70	E0NNC872DA	1	Housing Assy., Link, RH, Years: 01/01/1965-05/31/1970
71	E0NNC873CA	1	Housing Assy., Link, LH, Years: 01/01/1965-05/31/1970
72	C5NN559S	1	End, Lower Link, R.H., No Longer Serviced (NHNA), Years: 01/01/1965-07/31/1968
72	C7NNC877B	1	End Assy., Lower Link, R.H., No Longer Serviced, Years: 08/01/1968-05/31/1970
72A	E0NNC877AA	1	End Assy., Lower Link, R.H., Cat. II, Start Year: 06/01/1970
73	C5NNC879H	1	End, Lower Link, L.H., No Longer Serviced, Years: 01/01/1965-05/31/1970
73A	E0NNC878AA	1	End Assy., Lower Link, L.H., Cat. II, Start Year: 06/01/1970
74	C0NNC893A	2	Pin, Lower Link End, Start Year: 01/01/1965
75	C7NNC882B	2	Pin Assy., Lower Lock, Years: 01/01/1965-05/31/1970
76	9627879	2	Screw, Cap, HH, G5, 1/2"-13 x 3/4", Years: 01/01/1965-05/31/1970
77	80679	2	Washer, Lock, 1/2", Years: 01/01/1965-05/31/1970
78	352506S	4	Pin, Spring, 1/4" x 1-1/2", Start Year: 01/01/1965
79	81814226	2	Retainer & Spring Assy., Years: 01/01/1965-05/31/1970
80	E1ADDN995233	2	Ball, Lower Link, Cat. I, Years: 01/01/1965-05/31/1970
80	C5NN557A	2	Ball, Lower Link, Cat. II, 1-3/4" Wide, Years: 01/01/1965-05/31/1970
80	C5NN557A	2	Ball, Lower Link, Cat. II, W/36" Rigid Links, Start Year: 06/01/1973
80	C5NN557B	2	Ball, Lower Link, Cat. II, 1-3/8" Wide, Years: 01/01/1965-05/31/1970
80	C5NN557B	AR	Ball, Lower Link, Cat. II, W/36" Rigid Links, Start Year: 06/01/1973
81	E0NNC872DA	1	Housing Assy., Lower Link, R.H., Includes: Ref. 84 thru 88, Start Year: 06/01/1970
81	E0NNC872DA	1	Housing Assy., Lower Link, R.H., Includes: Ref. 84 thru 88, Start Year: 06/01/1970
81	82002027	1	Housing Assy., Lower Link, R.H., W/36" Flex Links, Includes: Ref. 84 thru 88, Start Year: 06/01/1973
82	E0NNC873CA	1	Housing Assy., Lower Link, L.H., 5000, Includes: Ref. 84 thru 88, Years: 06/01/1970-10/31/1971
82	E0NNC873CA	1	Housing Assy., Lower Link, L.H., Includes: Ref. 84 thru 88, Start Year: 10/01/1971
82	E0NNC873CA	1	Housing Assy., Lower Link, L.H., Includes: Ref. 84 thru 88, Start Year: 01/01/1965
82	E0NNC873BC	1	Housing Assy., Lower Link, L.H., W/36" Flex Links, Includes: Ref. 84 thru 88, Start Year: 06/01/1973
82	82002026	1	Housing Assy., Lower Lift Link, L.H., W/36" Flex Links, Includes: Ref. 84 thru 88, Start Year: 06/01/1973
84	352506S	2	Pin, Spring, 1/4" x 1-1/2", Start Year: 06/01/1970
84	88078	2	Pin, Roll, 1/4" x 2-1/4", Start Year: 06/01/1970
84	88078	2	Pin, Roll, 1/4" x 2-1/4", W/36" Links, Start Year: 06/01/1973
85	C7NNC889A	2	Spring, Start Year: 06/01/1970
86	C9NNH913A	2	Pin & Cable Assy., Start Year: 06/01/1970
86	D2NNH913A	2	Pin & Cable Assy., Start Year: 06/01/1970
87	C0NNC968A	2	Anchor, Start Year: 06/01/1970
88	C0NNC886A	2	Handle, Years: 06/01/1970-05/31/1973
88	D2NNJ940A	2	Handle Assy., W/36" Flex Links, Start Year: 06/01/1973
88	C7NNG925C	1	Drawbar, Linkage, Cat. II, Germany, Accessory, Includes: Pins & Linch Pins, NH-E Only, No Longer Serviced, Start Year: 01/01/1965

05D04 HYDRAULIC LIFT LINKAGE - 5000, 7000

Ref	Part Number	Qty	Description
88	E1NNG926AB	1	Bracket, Stabilizer Chain, R.H., Germany, Accessory, Start Year: 01/01/1965
88	E1NNG927AB	1	Bracket, Stabilizer Chain, L.H., Germany, Accessory, Start Year: 01/01/1965
88	C7NNG930C	2	Chain Assy., Stabilizer, Outside, Germany, Accessory, NH-E Only, No Longer Serviced, Start Year: 01/01/1965
89	D2NN555E	2	Link Assy., Lower R.H. & L.H., Cat. II W/34" Rigid Links, Start Year: 01/01/1965
89	82023435	2	Link Assy., Lower Lift, Rigid, W/36" Rigid Links, Start Year: 06/01/1973
90	C7NNG992A	2	Bushing, Ball, .88/.89 (22.35/22.51mm) I.D. Used to change D1NN555B to Cat. I, Start Year: 01/01/1965
91	DCPN873A	AR	Kit, Release, Lower Link, W/Flexible Ends, Includes: Parts listed below, Start Year: 06/01/1970
	D2NNH913A	1	Pin & Cable Assy.
	88078	1	Pin, Roll, 1/4" x 2-1/4"
	D2NNJ940A	1	Handle, Release
	352506S	1	Pin
92	0C	1	Kit, Chain, Hydraulic Lift Stabilizer, Italy W/Wide Fenders, Order Components, Includes: Parts listed below, NHNA Only, Start Year: 01/01/1974
	E1NNG926AB	1	Bracket, R.H., Start Year: 01/01/1974
	E1NNG927AB	1	Bracket, L.H., Start Year: 01/01/1974
	C7NNG930C	2	Chain Assy., NH-E Only, No Longer Serviced, Start Year: 01/01/1974

05D04[B] EXTERNAL LIFT LINK CHECK CHAINS, ACCESSORY - 4100, 5100, 7100 (NH-E)

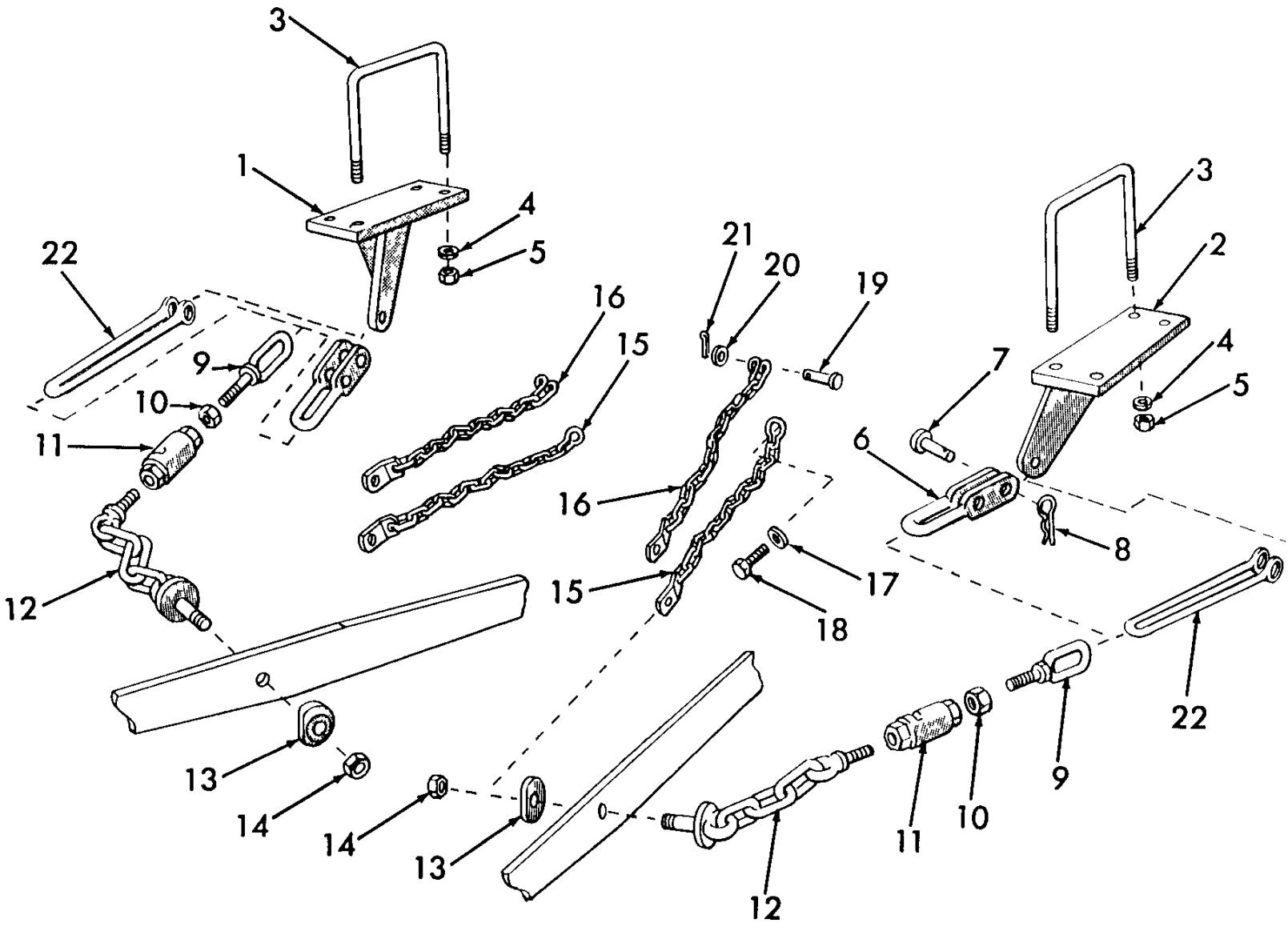

5000-SERIES 4 CYL TRACTOR (1/65-1/75)

05D04[B] EXTERNAL LIFT LINK CHECK CHAINS, ACCESSORY - 4100, 5100, 7100 (NH-E)

Ref	Part Number	Qty	Description
	CFPND936A	1	Kit, Chain, 4000, Includes: Ref. 1 thru 16, Start Year: 01/01/1965
	CFPND936B	1	Kit, Chain, 5000, Includes: Ref. 1 thru 16, Start Year: 01/01/1965
1	C7NND932A	1	Hanger, L.H., Replaces C5NN-D932-A, 5000, Start Year: 01/01/1965
1	C7NND932B	1	Hanger, L.H., Replaces C5NN-D932-B, 4000, Start Year: 01/01/1965
2	C7NND933A	1	Hanger, R.H., Replaces C5NN-D933-A, 5000, Start Year: 01/01/1965
2	C7NND933B	1	Hanger, R.H., Replaces C5NN-D933-B, 4000, Start Year: 01/01/1965
3	388838S36	4	U-Bolt, 5/8"-18, L/Safety Frame, 5000, 4000, Start Year: 01/01/1965
3	D3NN16N321A	4	U-Bolt, w/Safety Frame, L/Check Chains, 5000, Start Year: 08/01/1970
3	D3NN16N321A	2	U-Bolt, w/Safety Frame, w/Check Chains, 5000, Start Year: 08/01/1970
3	C5NN16N321A	4	U-Bolt, 5/8"-18, 4000, Start Year: 01/01/1965
4	34811S36	8	Washer, Lock, 5/8", Start Year: 01/01/1965
5	408	8	Nut, G5, 5/8"-18, Start Year: 01/01/1965
6	D0NNH846A	2	Shackle, Replaces E1ADDN-995299-B, Start Year: 01/01/1965
7	116359ES8	2	Pin, Clevis, Except Mexico, NHNA Only, Years: 01/01/1965-08/31/1971
7	NLS	2	Pin, Clevis, Mexico, Mexico Only, Start Year: 01/01/1965
7	355278S36	2	Pin, Clevis, 5/8"-2.38, Start Year: 09/01/1971
8	119933ES	2	Clip, No Longer Serviced (NHNA), Start Year: 01/01/1965
9	C5NNA867B	2	Eyebolt, Start Year: 01/01/1965
10	84972	2	Nut, Jam, G2, 3/4"-10, Start Year: 01/01/1965
11	82005860	2	Turnbuckle, Start Year: 01/01/1965
12	E2NNA946AA	2	Chain Assy., 5000, Start Year: 01/01/1965
12	D3NNA946A	2	Chain Assy., Replaces C5NN-A946-N, 3055, 4000, Start Year: 01/01/1965
13	C5NND853B	2	Washer, 5000, Start Year: 01/01/1965
14	34379S36	2	Nut, Lock, 3/4"-10, 5000, Start Year: 01/01/1965
15	D3NNN848A	2	Chain Assy., Safety, 5000, Start Year: 01/01/1965
16	D3NNN848A	2	Chain Assy., Safety, 4000, Start Year: 01/01/1965
16	70NYN848A	2	Chain Assy., Safety, Replaces C9NN-N848-A, 5100 Mexico, NHNA Only, Start Year: 01/01/1969
17	44746S8	2	Washer, 3/4", 5000, NHNA Only, No Longer Serviced, Start Year: 01/01/1965
18	304751S36	2	Screw, Cap, HH, G5, 3/4"-10 x 1-3/8", 5000, NHNA Only, No Longer Serviced, Start Year: 01/01/1965
19	73963S43	2	Pin, Clevis, 5/16" x 1-33/64", 4000, No Longer Serviced, Start Year: 01/01/1965
20	87362	2	Washer, SAE, 5/16", 4000, Start Year: 01/01/1965
21	80756	2	Pin, Split Cotter, 1/8" x 3/4", 4000, Start Year: 01/01/1965
22	D2NNH846B	2	Shackle, Check Chain to Hanger, w/Large Tires, 5100, 7100, Start Year: 01/01/1973

05D07 STABILIZER KIT, ACCESSORY - 5000, 7000

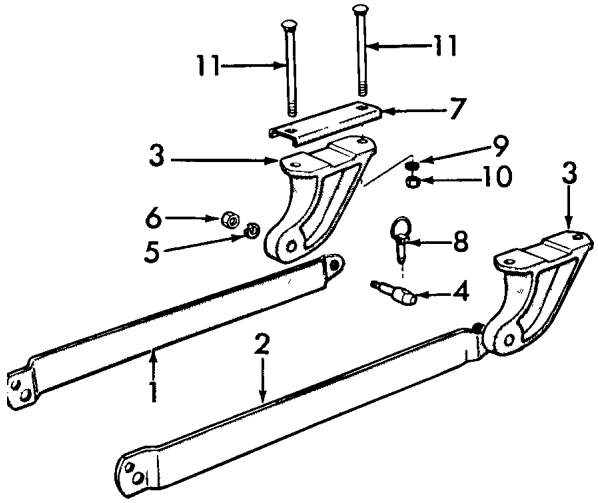

RIGID

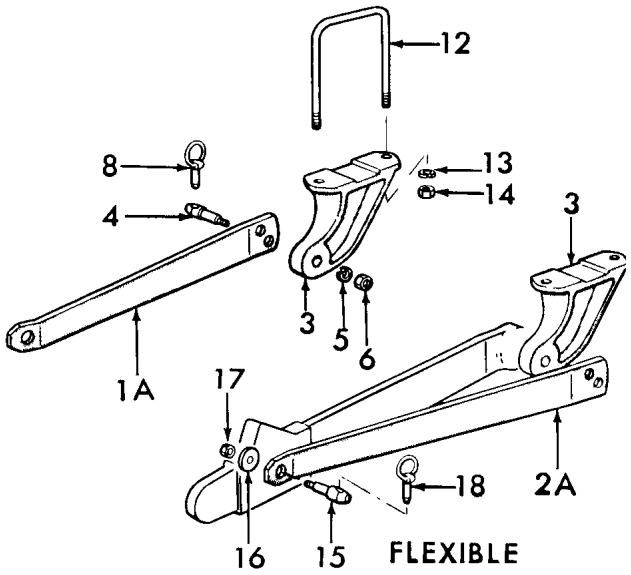

FLEXIBLE

5000-SERIES 4 CYL TRACTOR (1/65-1/75)

05D07 STABILIZER KIT, ACCESSORY - 5000, 7000

Ref	Part Number	Qty	Description
	C5NNN869A	1	Kit, Stabilizer, Rigid, W/Rigid Links, Includes: Ref. 1 thru 11, No Longer Serviced, Start Year: 01/01/1965
	CFPND936D	1	Kit, Stabilizer, Flexible Links, Includes: Ref. 1A, 2A thru 6, 8, & 12 thru 18, Start Year: 01/01/1965
	D2NNN869B	1	Kit, Stabilizer, Flexible, Use W/Flexible Lower Lift, Includes: Ref. 1A, 2A thru 6, & 12 thru 18, Start Year: 01/01/1973
1	C5NNB858A	1	Link, LH, Rigid, 34" from center of hole to larger hole, 36.62" overall length, Included in Kit C5NN-N869-A(81802081)., Start Year: 01/01/1965
1A	81813604	1	Link, Flexible, LH, Included in Kit CFPND936D(81813585)., Start Year: 01/01/1965
1A	D2NNB858B	1	Link, Drawbar Stabilizer, Flexible, LH, Included in Kit D2NNN869B(81826792)., Start Year: 01/01/1973
2	81810557	1	Link, Rigid, RH, Included in Kit C5NN-N869-A(81802081)., Start Year: 01/01/1965
2A	C5NNA933B	1	Link, Flexible, RH, Included in Kit CFPND936D(81813585)., Start Year: 01/01/1965
2A	D2NNA933B	1	Link, Drawbar Stabilize, Flexible, RH, Included in Kit D2NNN869B(81826792)., Start Year: 01/01/1973
3	C5NNN876A	2	Hanger, Included in All Kits, Start Year: 01/01/1965
4	C5NNN873A	2	Pin, Included in All Kits, Start Year: 01/01/1965
5	34811S36	2	Washer, Lock, 5/8", Included in All Kits, Start Year: 01/01/1965
5	80299	2	Washer, 5/8", W/Rollbar Bracket Only, Included in All Kits, Start Year: 01/01/1965
6	33849S8	2	Nut, Hex, 5/8"-11, Included in All Kits, Start Year: 01/01/1965
7	C5NNN877A	2	Strap, Included in Kit C5NN-N869-A(81802081)., Start Year: 01/01/1965
8	2N609	2	Linch Pin & Locking Ring Assy., Included in Kit C5NN-N869-A(81802081)., Included in Kit CFPND936D(81813585)., Start Year: 01/01/1965
9	34811S36	4	Washer, Lock, 5/8", Included in Kit C5NN-N869-A(81802081)., Start Year: 01/01/1965
10	33849S8	4	Nut, Hex, 5/8"-11, Included in Kit C5NN-N869-A(81802081)., Start Year: 01/01/1965
11	280743	4	Screw, Cap, HH, G5, 5/8"-11 x 8", Included in Kit C5NN-N869-A(81802081)., Start Year: 01/01/1965
11	D1NN16N432A	4	Bolt, HH, 5/8"-11 x 8-1/4", Used W/Wide Fenders, Not Part of Kits, U.K.-Antwerp, Start Year: 10/01/1971
11	D3NN16N432A	4	Bolt, 5/8"-11 x 11-1/4", Use W/Wide Fenders & Risers, Not Part of Kit, U.K. Antwerp, Start Year: 11/01/197
12	388838S36	2	U-Bolt, Included in Kit CFPND936D(81813585)., Included in Kit D2NNN869B(81826792)., Start Year: 01/01/1965
13	34811S36	4	Washer, Lock, 5/8", Included in Kit CFPND936D(81813585)., Included in Kit D2NNN869B(81826792)., Start Year: 01/01/1965
14	408	4	Nut, G5, 5/8"-18, Included in Kit CFPND936D(81813585)., Included in Kit D2NNN869B(81826792)., Start Year: 01/01/1965
15	C5NNN873B	2	Pin, Included in Kit CFPND936D(81813585)., Included in Kit D2NNN869B(81826792)., Start Year: 01/01/1965
16	C5NNA931A	2	Spacer, Included in Kit CFPND936D(81813585)., Included in Kit D2NNN869B(81826792)., Start Year: 01/01/1965
17	230521	2	Nut, Lock, Hex, 1/2"-20, Included in Kit CFPND936D(81813585)., Included in Kit D2NNN869B(81826792)., Start Year: 01/01/1965
18	2N609	AR	Linch Pin & Locking Ring Assy., Included in Kit CFPND936D(81813585)., Included in Kit D2NNN869B(81826792)., Start Year: 01/01/1965

05E03 SWINGING DRAWBAR, HANGER & RELATED PARTS - 5000, 7000

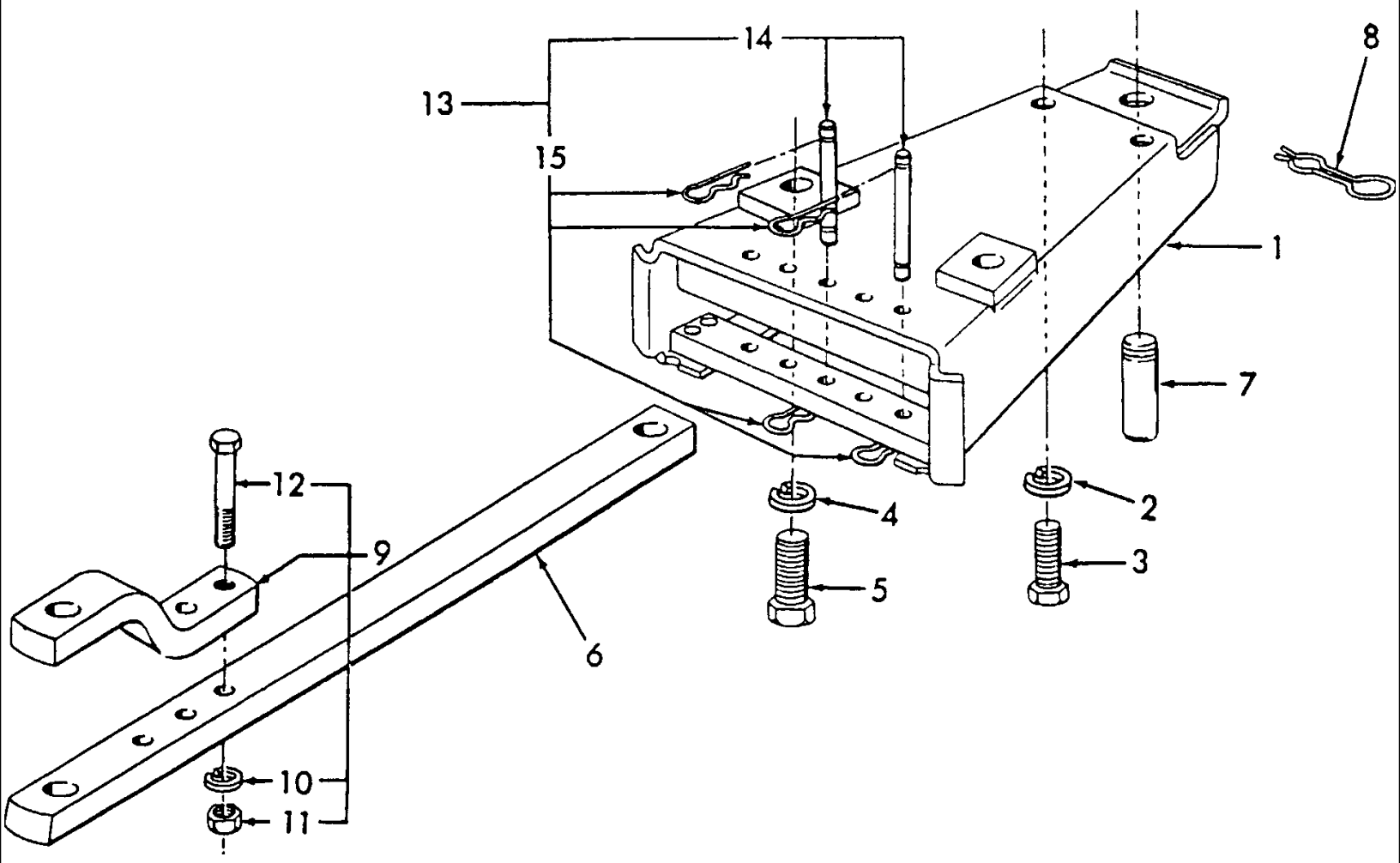

5000-SERIES 4 CYL TRACTOR (1/65-1/75)

05E03 SWINGING DRAWBAR, HANGER & RELATED PARTS - 5000, 7000

Ref	Part Number	Qty	Description
1	C7NN809D	1	Hanger Assy., No Longer Serviced (NH-E), Start Year: 01/01/1965
1	NLS	1	Hanger Assy., Mexico, (Not Shown) {C5NN809G}, Mexico Only, Start Year: 01/01/1969
1	D2NN809A	1	Hanger Assy., Used W/Large Tires, U.K. - Antwerp, (Not Shown), Start Year: 07/01/1973
1	D6NN809A	1	Hanger Assy., U.S., (Not Shown), Start Year: 07/01/1973
2	34811S36	2	Washer, Lock, 5/8", Start Year: 01/01/1965
3	9627896	2	Screw, Cap, HH, G5, 5/8"-11 x 1-3/4", Years: 01/01/1965-06/30/1973
3	86508732	2	Screw, Cap, HH, G8, 5/8"-11 x 2", Not Shown, Start Year: 07/01/1973
4	87341	2	Washer, Lock, 7/8", Start Year: 01/01/1965
5	304887S36	2	Screw, Cap, HH, G5, 7/8"-9 x 2-3/8", Years: 01/01/1965-06/30/1973
5	280488	2	Screw, Cap, HH, G5, 7/8"-9 x 2-1/2", Not Shown, Start Year: 07/01/1973
6	C5NN805A	1	Drawbar, 33.75 (857.25mm), Years: 01/01/1965-06/30/1973
6	C5NN805A	1	Drawbar, 33.75" (857.25mm), Mexico, (Not Shown), Mexico Only, Start Year: 01/01/1965
6	D2NN805A	1	Drawbar, 34.90 (886.46mm), Except Mexico W/Single Speed PTO, (Not Shown), Start Year: 07/01/1973
6	E0NN805AC	1	Drawbar, Swinging 36.90" (947.26mm), W/Large Tires & 2 Speed PTO, Except Mexico, (Not Shown), Start Year: 07/01/1973
7	C7NN807C	1	Pin, Clevis, 3.54" (89.92mm), Start Year: 01/01/1965
7	71NY807A	1	Pin, Clevis, 5100 Mexico, (Not Shown), NHNA Only, Start Year: 01/01/1969
8	311920	1	Pin, Spring, Start Year: 01/01/1965
9	DJPN825A	AR	Kit, Drawbar Clevis Strap, Accessory, Includes: Strap Plus Ref. 10 thru 12, Start Year: 01/01/1965
10	34811S36	2	Washer, Lock, 5/8", Start Year: 01/01/1965
11	55722S2	2	Nut, Hex, 5/8"-11, Start Year: 01/01/1965
12	304934S36DS	2	Screw, Cap, HH, G5, 5/8"-18 x 3-1/4", Start Year: 01/01/1965
13	CFPN815C	AR	Kit, Swinging Drawbar Pin & Clip, Accessory, 1400 w/Automatic Hitch & All 5000-7000 NH-E, Includes: Ref. 14 & 15, Start Year: 01/01/1965
14	C5NNN823D	2	Pin, Start Year: 01/01/1965
15	377361S36	4	Pin, Start Year: 01/01/1965

05F01 DRAWBAR STAY KITS, ACCESSORY - 2000, 3000, 4000, 5000, MEXICO 5000 MAJOR

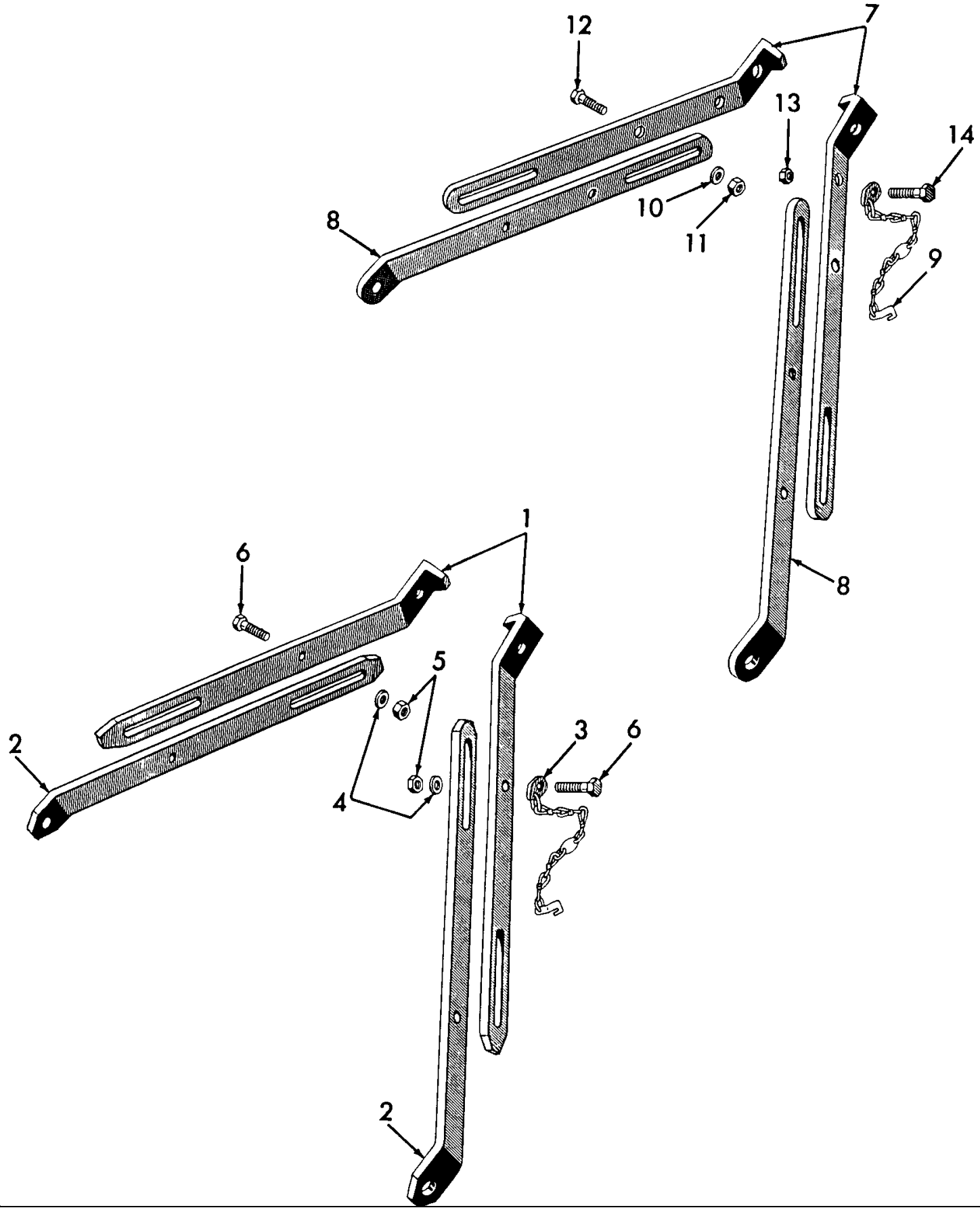

5000-SERIES 4 CYL TRACTOR (1/65-1/75)

05F01 DRAWBAR STAY KITS, ACCESSORY - 2000, 3000, 4000, 5000, MEXICO 5000 MAJOR

Ref	Part Number	Qty	Description
1	C5NNC831A	2	Stay, Upper, 2000 & 3000, Start Year: 01/01/1965
2	C5NNC832A	2	Stay, Lower, 2000 & 3000, Start Year: 01/01/1965
3	NCA5370A	2	Chain & Wedge Assy., Safety, 2000 & 3000, No Longer Serviced (NH-E), Start Year: 01/01/1965
4	351428S8	AR	Washer, Flat, 7/16" x .90, 2000 & 3000
5	50456	AR	Nut, G5, 7/16"-20, 2000 & 3000
6	304706S36	4	Screw, Cap, HH, G5, 7/16"-20 x 1-1/8", 2000 & 3000, Start Year: 01/01/1965
	C5NNC830B	AR	Kit, Drawbar Stay, Cat. II, 4000 & 5000, Includes: Ref. 7 thru 14, Start Year: 01/01/1965
7	C5NNC831B	2	Stay, Upper, 4000 & 5000, No Longer Serviced (NH-E), Start Year: 01/01/1965
8	C5NNC832B	2	Stay, Lower, 4000 & 5000, No Longer Serviced (NH-E), Start Year: 01/01/1965
9	NCA5370A	1	Chain & Wedge Assy., Safety, 4000 & 5000, No Longer Serviced (NH-E), Start Year: 01/01/1965
10	86511191	AR	Washer, 3/4", 4000 & 5000
11	280954	AR	Nut, G5, 3/4"-10, 4000 & 5000
12	88692	6	Screw, Cap, HH, G5, 3/4"-10 x 1-1/2", 4000 & 5000, Start Year: 01/01/1965
13	50456	AR	Nut, G5, 7/16"-20, 4000 & 5000
14	304706S36	1	Screw, Cap, HH, G5, 7/16"-20 x 1-1/8", 4000 & 5000, Start Year: 01/01/1965
	NLS	2	Stay, Upper, Cat. II, Mexico 5000 Major {72NYC831A}, Mexico Only, Start Year: 03/01/1973
	NLS	2	Stay, Lower, Cat. II, Mexico 5000 Major {72NYC832A}, Mexico Only, Start Year: 03/01/1973
	NLS	1	Chain & Wedge Assy., Safety, Cat. II, Mexico 5000 Major {72NY5370A}, Mexico Only, Start Year: 03/01/1973
	NLS	1	Decal, Safety Chain, Cat. II, Mexico 5000 Major {72NYE802A}, Mexico Only, Start Year: 03/01/1973

05G01 SELECTOR VALVE, ACCESSORY, ALL TRACTORS

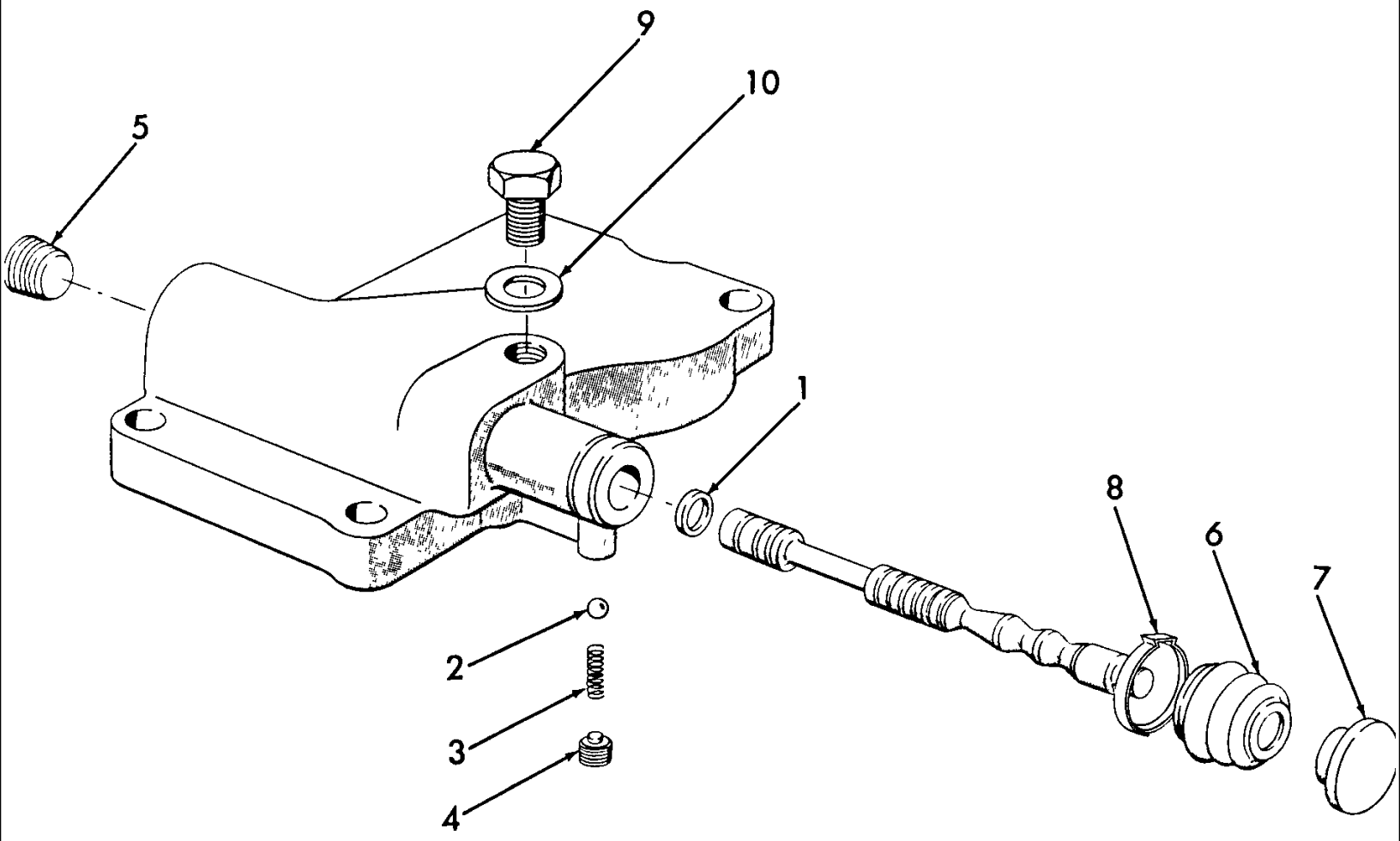

5000-SERIES 4 CYL TRACTOR (1/65-1/75)

05G01 SELECTOR VALVE, ACCESSORY, ALL TRACTORS

Ref	Part Number	Qty	Description
	E0NND960AA	1	Valve Assy., Includes: Valve Body & Spool plus Ref. 1 thru 10, Start Year: 01/01/1965
1	129270	1	O-Ring, 90 Duro, .414" ID x .072" Thk, Start Year: 01/01/1965
2	86628554	1	Ball, Steel, 1/4" Dia., Start Year: 01/01/1965
3	87790444	1	Spring, Start Year: 01/01/1965
4	C5NHD959A	1	Screw, Set, Headless Socket Hd., 5/16"-18, Start Year: 01/01/1965
5	87711S36	1	Plug, Socket Headless, 1/2"-14, Start Year: 01/01/1965
6	C5NHD961A	1	Cover, Start Year: 01/01/1965
7	C5NHN513A	1	Knob, U.S., Start Year: 01/01/1965
7	C5NHN513A	1	Knob Assy., U.K. - Antwerp, Start Year: 01/01/1965
8	381707S36	1	Clamp, Start Year: 01/01/1965
9	371433S36	AR	Bolt, HH, 9/16"-18 x .62, Start Year: 01/01/1965
10	C5NNN991B	AR	Seal, Bolt, Start Year: 01/01/1965
10	380590S36	2	Bolt, HH, 5/16"-18 x 2-3/4", Start Year: 01/01/1965

05G02 SINGLE & DOUBLE SPOOL HYDRAULIC REMOTE CONTROL VALVE - 2100, 3100, 4100, 5100

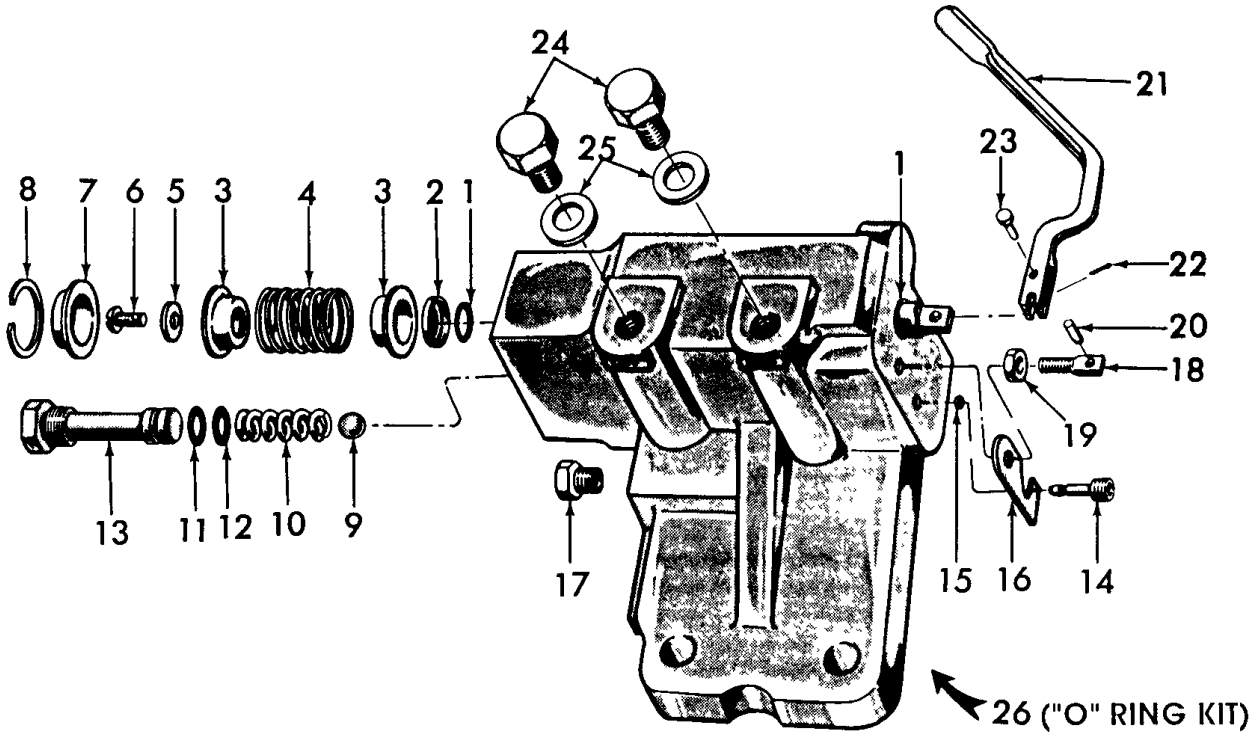

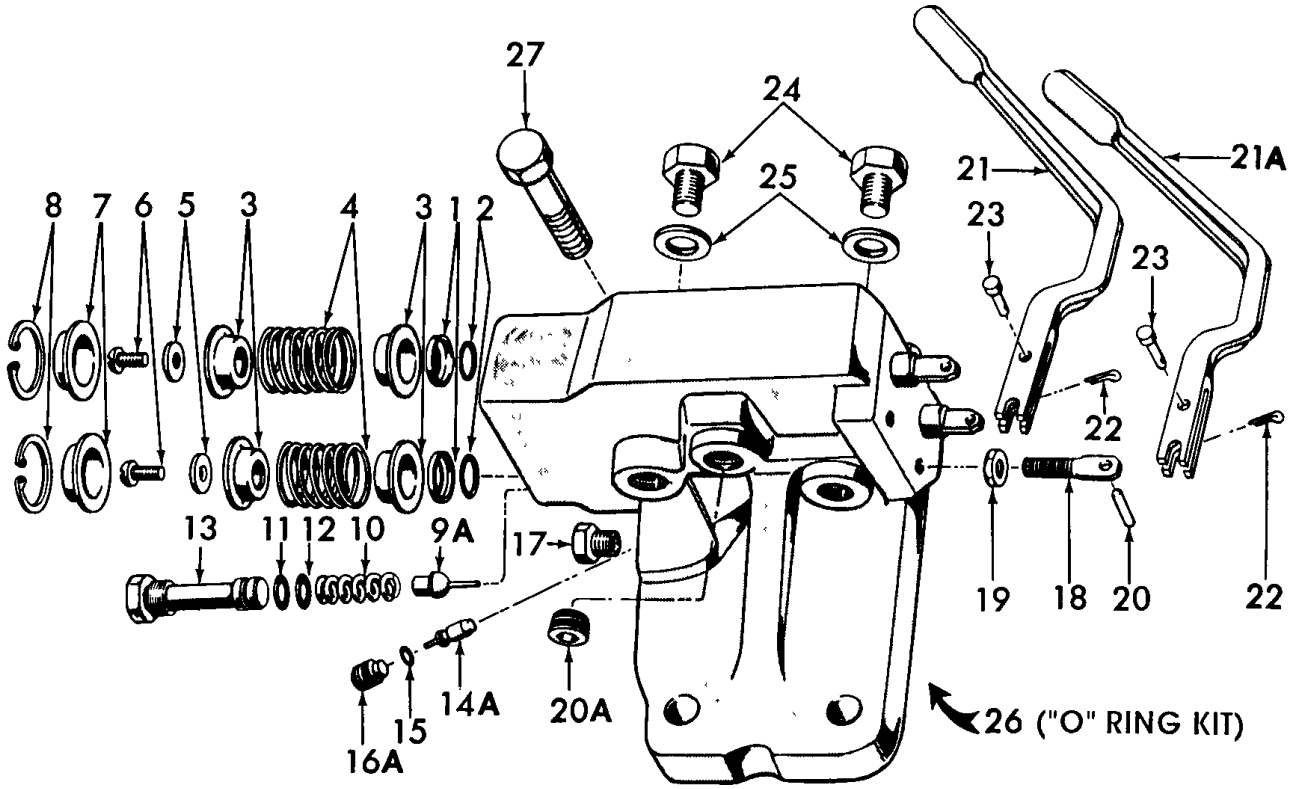

5000-SERIES 4 CYL TRACTOR (1/65-1/75)

05G02 SINGLE & DOUBLE SPOOL HYDRAULIC REMOTE CONTROL VALVE - 2100, 3100, 4100, 5100

Ref	Part Number	Qty	Description
	NLS	AR	Valve Assy., w/Handles, Remote Control, Single Spool Non Detent, Includes: Ref. 1 thru 20A, No Longer Serviced, When requiring complete Valve Assy. Use E1NN-B950-AB(83944764) Valves & 309972 Mounting Kit, Years: 01/01/1965-04/30/1970
	NLS	AR	Valve Assy., w/Handles, Remote Control, Double Spool Non Detent, Includes: Ref. 1 thru 20A, No Longer Serviced, When requiring complete Valve Assy. Use E1NN-B950-BA(83928704) Valve & 309973(80309973) Mounting Kit, Years: 01/01/1965-07/31/1970
1	87034S94	AR	O-Ring, .562" ID x .103" Thk, Years: 01/01/1965-07/31/1970
2	198651	AR	Retainer, No Longer Serviced (NH-E), Years: 01/01/1965-07/31/1970
3	198650	AR	Retainer, No Longer Serviced, Years: 01/01/1965-07/31/1970
4	198642	AR	Spring, No Longer Serviced, Years: 01/01/1965-07/31/1970
5	88612	AR	Washer, #10, Years: 01/01/1965-07/31/1970
6	380285S	AR	Screw, RDH, #10-24 x 1/2", No Longer Serviced, Years: 01/01/1965-07/31/1970
7	198649	AR	Cap, No Longer Serviced, Years: 01/01/1965-07/31/1970
8	358782S	AR	Ring, Snap, 1-3/16", No Longer Serviced, Years: 01/01/1965-07/31/1970
9	290467	1	Ball, Chrome, 11/32" Dia., No Longer Serviced, Years: 01/01/1965-04/30/1970
9A	198640	1	Poppet Assy., NHNA Only, No Longer Serviced, Years: 01/01/1965-07/31/1970
10	198641	1	Spring, No Longer Serviced (NHNA), Years: 01/01/1965-07/31/1970
11	9617873	1	O-Ring, 90 Duro, .468" ID x .078" Thk, Years: 01/01/1965-07/31/1970
12	87008S94	1	O-Ring, .375" ID x .070" Thk, Years: 01/01/1965-07/31/1970
13	C5NND907C	1	Plug, 9/16"-18, No Longer Serviced, Years: 01/01/1965-07/31/1970
14	C5NND910B	1	Valve, By Pass Replaces C5NN-C804-A, No Longer Serviced, Years: 01/01/1965-04/30/1970
14A	198648	1	Valve, By Pass, NHNA Only, No Longer Serviced, Years: 01/01/1965-07/31/1970
15	86500548	1	O-Ring, .114" ID x .070" Thk, Years: 01/01/1965-07/31/1970
16	C5NND914A	1	Stop, No Longer Serviced, Years: 01/01/1965-04/30/1970
16A	291179	1	Screw, Dog Point Set, 3/8"-24 x 3/8", NHNA Only, No Longer Serviced, Years: 01/01/1965-07/31/1970
17	87709S2	1	Plug, Pipe, 1/4"-18 NPT, Plug Hole in Directional Control Valve, Years: 01/01/1965-07/31/1970
18	C5NND912B	1	Pivot, Years: 01/01/1965-07/31/1970
19	86509499	1	Nut, Jam, G2, 3/8"-16, Years: 01/01/1965-07/31/1970
20	88487	1	Pin, Roll, 1/4" x 3/4", Years: 01/01/1965-07/31/1970
20A	87709S2	2	Plug, Socket Headless, 1/4"-18, Years: 01/01/1965-07/31/1970
21	C5NNB936C	1	Handle, Valve, #1, Years: 01/01/1965-07/31/1970
21A	C5NNB936B	1	Handle, Valve, Short, No Longer Serviced (NHNA), Years: 01/01/1965-07/31/1970
22	280236	1	Pin, Split (Cotter), 1/16" x 1/2", Years: 01/01/1965-07/31/1970
23	76212S36	1	Pin, Clevis, 1/8" x 1-3/32", No Longer Serviced (NHNA), Years: 01/01/1965-07/31/1970
24	371433S36	AR	Bolt, HH, 9/16"-18 x .62, Years: 01/01/1965-07/31/1970
25	C5NNN991B	AR	Seal, Plug, Years: 01/01/1965-07/31/1970
26	CFPN485B	1	Kit, O-Ring, See Fig. 5G1 for Components & Illustration, Years: 01/01/1965-07/31/1970
27	380590S36	2	Bolt, HH, 7/16"-14 x 2-3/4", Years: 01/01/1965-07/31/1970
	80442	1	Screw, Set, HS, Cup Pt, 5/16"-18 x 1/2", 5000, Years: 01/01/1965-07/31/1970

05G03 SINGLE & DOUBLE SPOOL HYDRAULIC REMOTE CONTROL VALVES (65/11-70) -2100, 3110, 4110, 4200, 5100, 5200

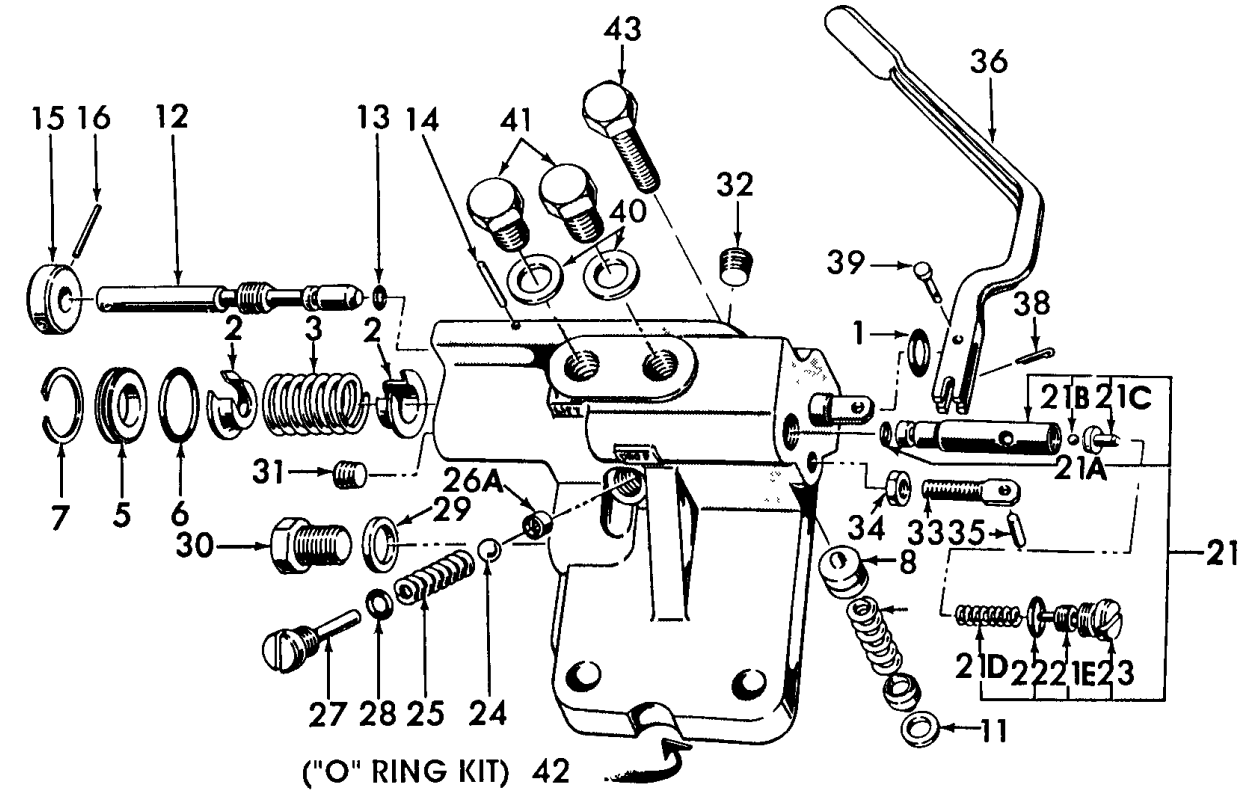

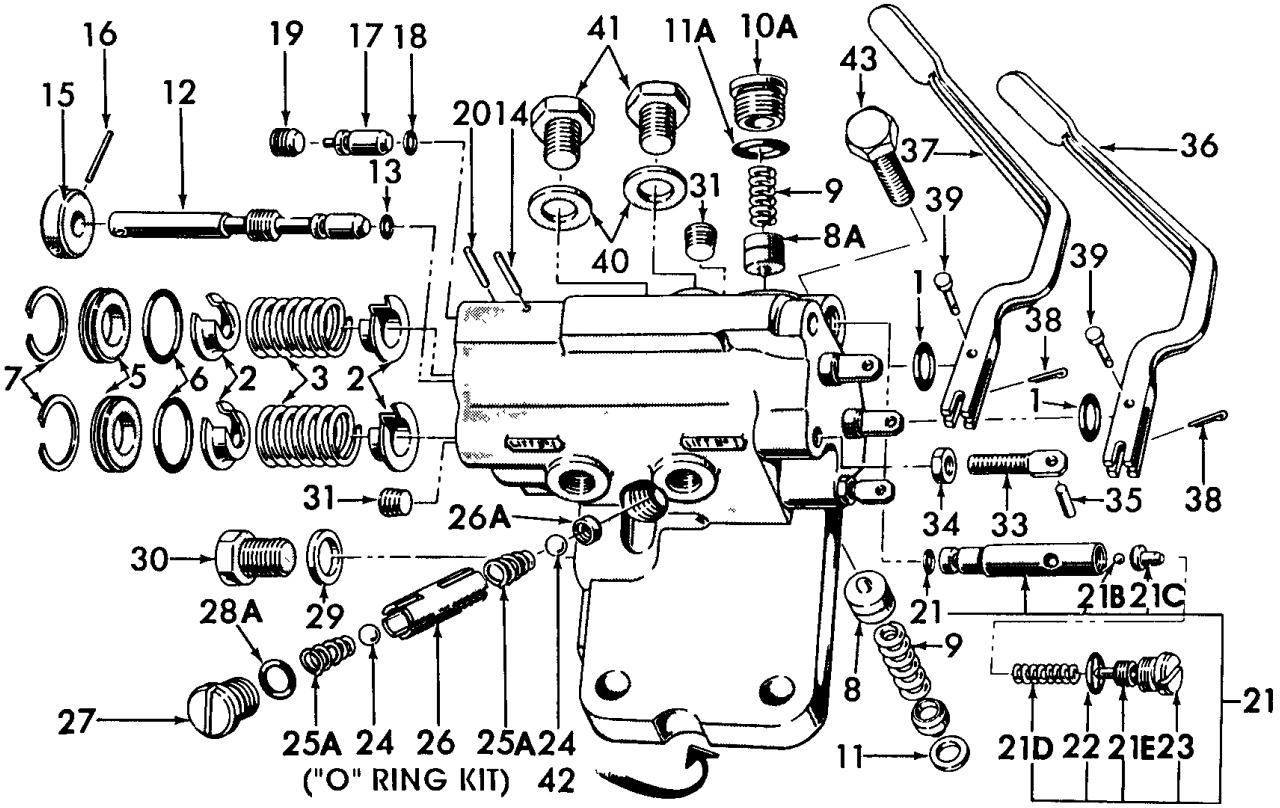

5000-SERIES 4 CYL TRACTOR (1/65-1/75)

05G03 SINGLE & DOUBLE SPOOL HYDRAULIC REMOTE CONTROL VALVES (65/11-70) -2100, 3110, 4110, 4200, 5100, 5200

Ref	Part Number	Qty	Description
	NLS	AR	Valve Assy., Remote Control, Single Spool, Detent, w/Handles, Except 4200 & 5200, Includes: Ref. 1 thru 22, No Longer Serviced, When complete Valve Assy. is needed Use D9NN-B950-BB (83944760) Valve & 309972F (81829135)Mounting Kit, Years: 01/01/1965-11/30/1970
	NLS	AR	Valve Assy., Remote Control, Double Spool, Detent, w/Handles, Except 4200 & 5200, Includes: Valve Body & Spool Plus Ref. 1 thru 22, NHNA Only, No Longer Serviced, Years: 01/01/1965-11/30/1970
1	87034S94	AR	O-Ring, .562" ID x .103" Thk, Years: 01/01/1965-11/30/1970
2	C5NND953B	AR	Retainer, No Longer Serviced, Years: 01/01/1965-11/30/1970
3	198642	AR	Spring, No Longer Serviced (NHNA), Years: 01/01/1965-11/30/1970
5	C5NND954B	AR	Cap, No Longer Serviced, Years: 01/01/1965-11/30/1970
6	9672929	AR	O-Ring, M25.4x1.8, Years: 01/01/1965-11/30/1970
7	358782S	AR	Ring, Retaining, Internal, 1-3/16", No Longer Serviced, Years: 01/01/1965-11/30/1970
8A	C5NND900D	1	Piston, No Longer Serviced, Years: 01/01/1965-11/30/1970
9	C5NNB932B	AR	Spring, No Longer Serviced, Years: 01/01/1965-11/30/1970
10A	C5NND937A	1	Plug, Years: 01/01/1965-11/30/1970
11	97608S	1	Ring, Snap, Int, .5625", Years: 01/01/1965-11/30/1970
11A	128825	1	O-Ring, 90 Duro, .644" ID x .087" Thk, Years: 01/01/1965-11/30/1970
12	C5NND956B	1	Stem, No Longer Serviced, Years: 01/01/1965-11/30/1970
13	86500548	1	O-Ring, .114" ID x .070" Thk, Years: 01/01/1965-11/30/1970
14	305019S	1	Pin, Spring, 1/8" x 3/8", No Longer Serviced, Years: 01/01/1965-11/30/1970
15	C5NND955B	1	Knob, U.K.-Antwerp, No Longer Serviced, Years: 01/01/1965-11/30/1970
16	305063S	1	Pin, Roll, 3/32" x 7/8", No Longer Serviced, Years: 01/01/1965-11/30/1970
17	C5NND910C	1	Valve, By Pass, No Longer Serviced, Years: 01/01/1965-11/30/1970
18	86500548	1	O-Ring, .114" ID x .070" Thk, Years: 01/01/1965-11/30/1970
19	C5NND911A	1	Plug, Years: 01/01/1965-11/30/1970
20	305019S	1	Pin, 1/8" x 3/8", No Longer Serviced, Years: 01/01/1965-11/30/1970
21	C5NND902C	1	Valve Assy., Detent Regulating, Includes: Valve Body Plus: Ref. 21A thru 22, No Longer Serviced, Years: 01/01/1965-11/30/1970
21A	86512844	1	O-Ring, 90 Duro, .239" ID x .070" Thk, Years: 01/01/1965-11/30/1970
21B	380240S	1	Ball, No Longer Serviced (NH-E), Years: 01/01/1965-11/30/1970
21C	C5NND905B	1	Seat, w/Prior Valves, Spring Inside, No Longer Serviced, Years: 01/01/1965-12/31/1966
21C	C5NND968A	1	Retainer, Spring Outside, No Longer Serviced, Years: 01/01/1965-11/30/1970
21D	C5NND904A	1	Spring, Years: 01/01/1965-11/30/1970
21E	C5NND911B	1	Plug, No Longer Serviced (NHNA), Years: 01/01/1965-11/30/1970
22	129270	1	O-Ring, 90 Duro, .414" ID x .072" Thk, Years: 01/01/1965-11/30/1970
23	C5NND907D	1	Plug, No Longer Serviced, Years: 01/01/1965-11/30/1970
24	380241S	AR	Ball, 5/16", No Longer Serviced, Years: 01/01/1965-11/30/1970
25	C5NND908E	1	Spring, Years: 01/01/1965-11/30/1970
25	C5NND908E	1	Spring, NHNA Only, No Longer Serviced, Years: 01/01/1965-11/30/1970
25A	C5NND908D	2	Spring, No Longer Serviced (NHNA), Years: 01/01/1965-11/30/1970
26	C5NND909B	1	Seat, No Longer Serviced, Years: 01/01/1965-11/30/1970
26A	C5NND909C	1	Seat, No Longer Serviced, Years: 01/01/1965-11/30/1970

05G03 SINGLE & DOUBLE SPOOL HYDRAULIC REMOTE CONTROL VALVES (65/11-70) -2100, 3110, 4110, 4200, 5100, 5200

Ref	Part Number	Qty	Description
27	C5NND906B	1	Plug Assy., No Longer Serviced, Years: 01/01/1965-11/30/1970
27A	C5NND907E	1	Plug, Check Valve, NHNA Only, No Longer Serviced, Years: 01/01/1965-11/30/1970
28	129270	1	O-Ring, 90 Duro, .414" ID x .072" Thk, Years: 01/01/1965-11/30/1970
28A	128825	1	O-Ring, 90 Duro, .644" ID x .087" Thk, Years: 01/01/1965-11/30/1970
29	C5NNN991B	1	Seal, Years: 01/01/1965-11/30/1970
30	371433S36	1	Bolt, HH, 9/16"-18 x .62, Years: 01/01/1965-11/30/1970
31	502046	AR	Plug, Pipe, 1/8"-27, Years: 01/01/1965-11/30/1970
32	87709S2	1	Plug, Socket Headless, 1/4"-18, Years: 01/01/1965-11/30/1970
33	C5NND912B	AR	Pivot, Years: 01/01/1965-11/30/1970
34	86509499	AR	Nut, Jam, G2, 3/8"-16, Years: 01/01/1965-11/30/1970
35	88487	AR	Pin, Roll, 1/4" x 3/4", Years: 01/01/1965-11/30/1970
36	C5NNB936C	1	Handle, Valve, Years: 01/01/1965-11/30/1970
37	C5NNB936B	1	Handle, Valve, No Longer Serviced (NHNA), Years: 01/01/1965-11/30/1970
38	280236	AR	Pin, Split (Cotter), 1/16" x 1/2", Years: 01/01/1965-11/30/1970
39	76212S36	AR	Pin, Clevis, 1/4" x 1-3/32", No Longer Serviced (NHNA), Years: 01/01/1965-11/30/1970
40	C5NNN991B	AR	Seal, Port Plug, Years: 01/01/1965-11/30/1970
41	371433S36	AR	Bolt, 9/16"-18 x .62, Years: 01/01/1965-11/30/1970
42	CFPN485B	1	Kit, O-Ring, See Fig 5G1 for Components & Illustrations, Years: 01/01/1965-11/30/1970
43	280747	2	Screw, Cap, HH, G5, 7/16"-14 x 1-3/4", 5000, Years: 01/01/1965-11/30/1970
	80442	1	Screw, Set, HS, Cup Pt, 5/16"-18 x 1/2", 5000, Years: 01/01/1965-11/30/1970

05G04 SINGLE & DOUBLE HYDRAULIC REMOTE CONTROL VALVES

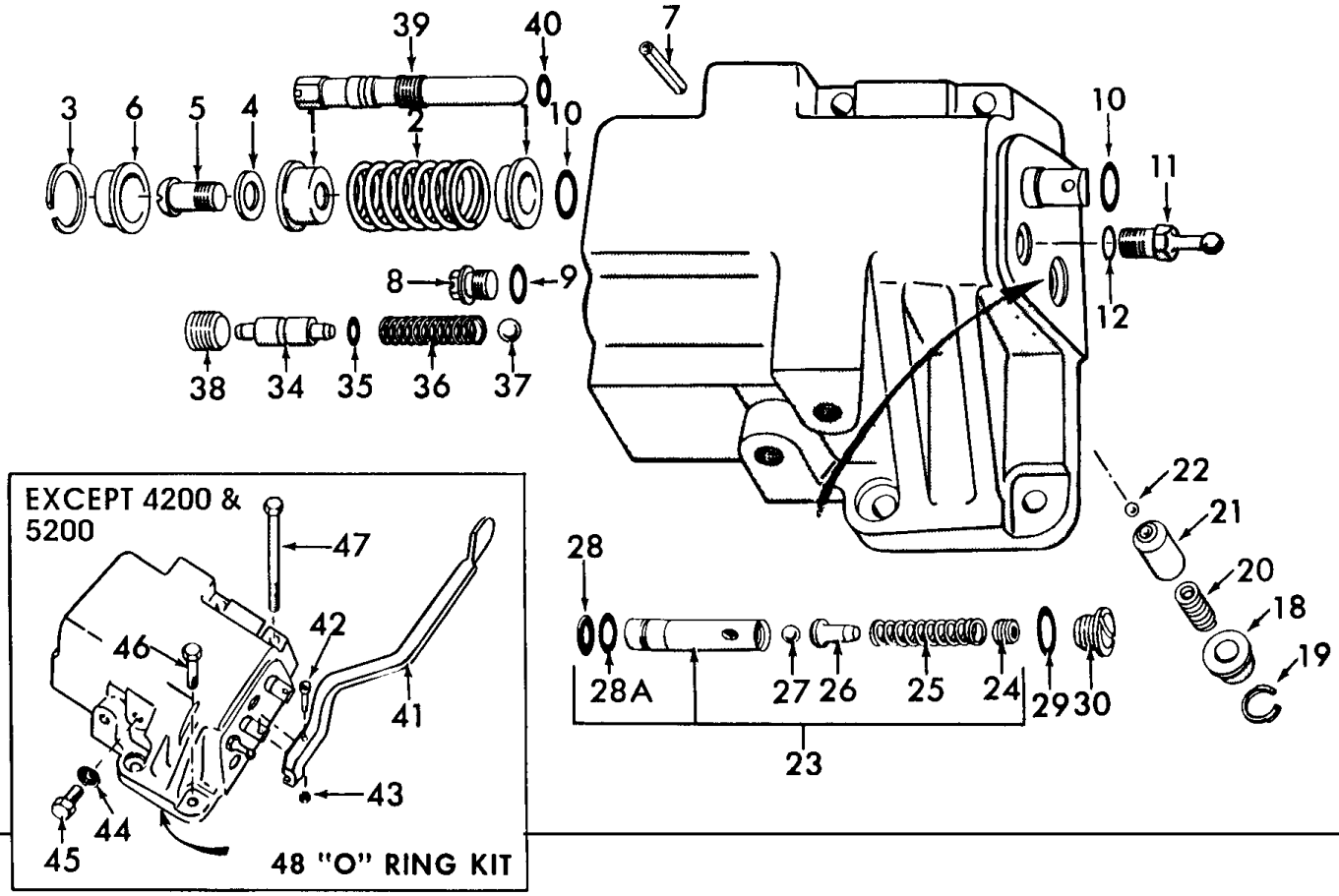

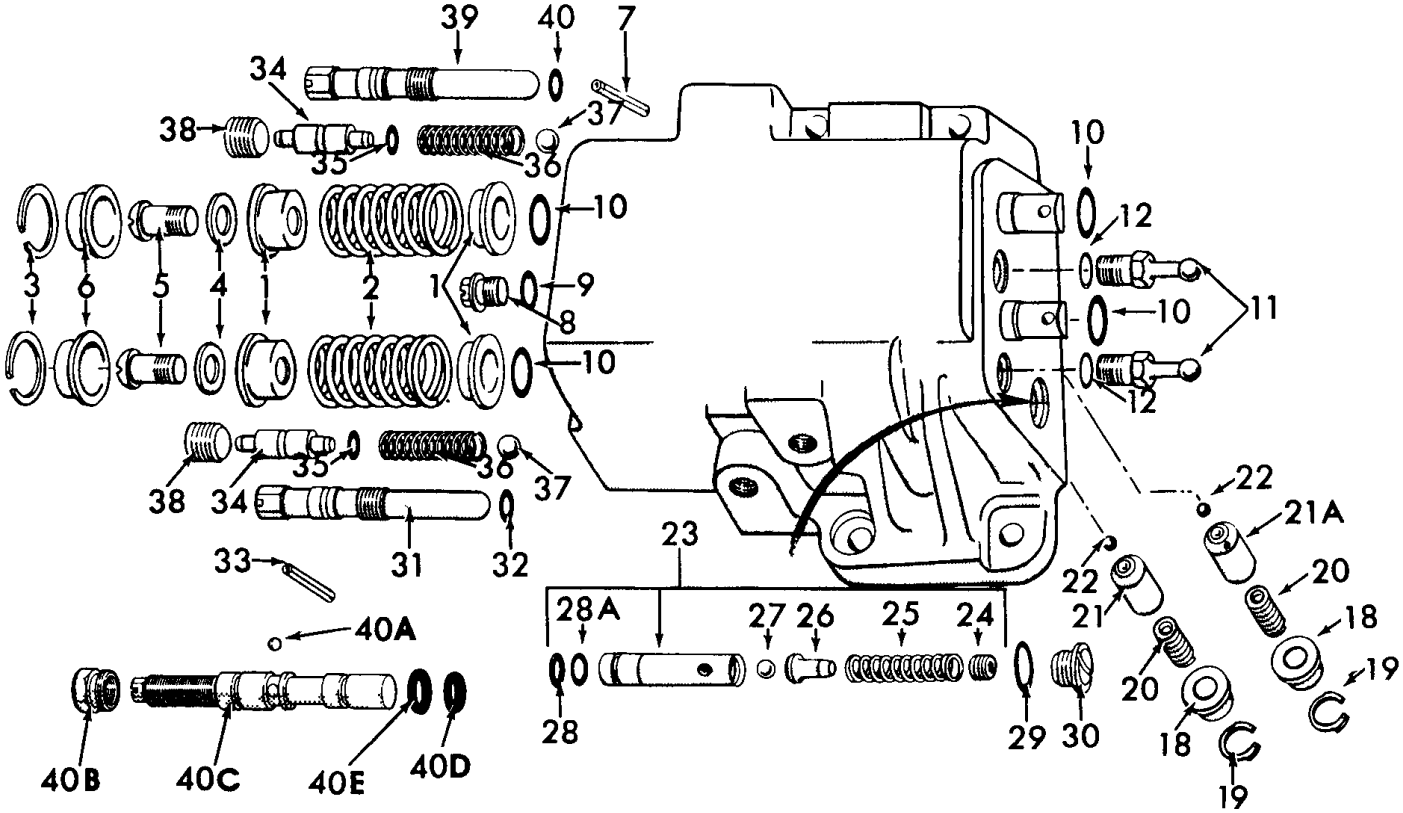

Refer to 5H4 for Hoses and Couplings

5000-SERIES 4 CYL TRACTOR (1/65-1/75)

05G04 SINGLE & DOUBLE HYDRAULIC REMOTE CONTROL VALVES

Ref	Part Number	Qty	Description
	E1NNB950AB	AR	Valve Assy., Single Spool, Non-Detent, Includes: Ref. 1 thru 40E, Start Year: 05/01/1970
	E1NNB950BB	AR	Valve Assy., Double Spool, Non-Detent, Includes: Ref. 1 thru 40E, Start Year: 08/01/1970
	E2NNB950CA	AR	Valve Assy., Double Spool, Detent, Includes: Ref. 1 thru 40E, Start Year: 12/01/1970
	D9NNB950BB	AR	Valve Assy., Single Spool, Quick Drop, Includes: Ref. 1 thru 40E, Start Year: 01/01/1965
	E2NNB950CA	AR	Valve Assy., Double Spool, Quick Drop, Includes: Ref. 1 thru 40E, Start Year: 01/01/1965
	E2NNB950DA	AR	Valve Assy., Double Spool, Trailer Brake, Includes: Ref. 1 thru 40E, NH-E Only, Start Year: 01/01/1965
1	C9NND953A	AR	Retainer, Start Year: 05/01/1970
2	D0NND952A	AR	Spring, Free Length, 2.157" (54.79mm), Start Year: 05/01/1970
3	C9NNH910A	AR	Ring, Start Year: 05/01/1970
4	87361	AR	Washer, SAE, 1/4", Start Year: 05/01/1970
5	D4NNH951A	AR	Screw, RDH, 1/4"-20 x 1/2", Start Year: 05/01/1970
6	C9NND954A	AR	Cap, Start Year: 05/01/1970
7	305039S7	1	Pin, Roll, 1/8" x 5/8", Start Year: 05/01/1970
8	C9NNH908A	AR	Plug, Start Year: 05/01/1970
9	9993141	AR	O-Ring, 90 Duro, .364" ID x .070" Thk, Start Year: 05/01/1970
9	165202	AR	O-Ring, 90 Duro, .351" ID x .072" Thk, Start Year: 05/01/1970
10	14457281	AR	O-Ring, M15.54 ID x 2.62 Thk, Start Year: 05/01/1970
11	C9NND912A	AR	Pivot, Start Year: 05/01/1970
12	86513328	AR	O-Ring, 90 Duro, .301" ID x .064" Thk, Start Year: 05/01/1970
18	C9NND901A	AR	Retainer, Start Year: 12/01/1970
19	97419S	AR	Ring, Snap, Int, .750", Start Year: 12/01/1970
20	C9NNB932A	AR	Spring, Start Year: 12/01/1970
21	D8NNG952AA	1	Poppet, Start Year: 12/01/1970
21A	D8NNG952BA	1	Poppet, Start Year: 12/01/1970
22	9672608	AR	Ball, Steel, 3/16", When C9NNG952-A (87763766) & -B(81821951) are Replaced by D8NNG952-AA(83918444) & -BA(83918445), Ball 354516S (81821961) is not required, Start Year: 12/01/1970
23	C9NND902A	1	Valve Assy., Detent Regulating, Includes: Ref. 24 thru 28A, Start Year: 12/01/1970
24	C9NNH907A	1	Screw, NH-E, Start Year: 12/01/1970
25	C9NND904A	1	Spring, Start Year: 12/01/1970
26	C9NND968A	1	Retainer, Start Year: 12/01/1970
27	380240S	1	Ball, Steel, 1/8", Start Year: 12/01/1970
28	86513328	1	O-Ring, 90 Duro, .301" ID x .064" Thk, Start Year: 12/01/1970
28	C9NNH912A	1	Seal, A-Ring, Use w/D7NN-M952, Use these Parts if Valve C9NN-D902-A(81821937) is fitted With a Back-Up Ring
28A	D7NNM952A	1	Ring, Seal, Back Up, Use w/C9NN-H912-A, Use these Parts if Valve C9NN-D902-A(81821937) is fitted With a Back-Up Ring
29	9617873	1	O-Ring, 90 Duro, .468" ID x .078" Thk, Start Year: 12/01/1970
30	C9NNH909A	1	Plug, Start Year: 12/01/1970
31	C9NND956A	1	Stem, Start Year: 12/01/1970
32	C9NNH912A	1	Seal, Start Year: 12/01/1970

Refer to 5H4 for Hoses and Couplings

05G04 SINGLE & DOUBLE HYDRAULIC REMOTE CONTROL VALVES

Ref	Part Number	Qty	Description
33	305036S2	1	Pin, Roll, 1/8" x 5/8", Start Year: 12/01/1970
34	C9NND907A	AR	Plug, Start Year: 05/01/1970
35	C9NNH912A	AR	Seal, Start Year: 05/01/1970
36	C9NND908A	AR	Spring, Start Year: 05/01/1970
37	354872S	AR	Ball, Steel, 3/8", Start Year: 05/01/1970
38	PL	AR	Screw, Socket Hd., 5/8"-11 x 5/8", Start Year: 05/01/1970
39	C9NND956A	1	Stem, Start Year: 05/01/1970
40	C9NNH912A	1	Seal, Start Year: 05/01/1970
	80442	1	Screw, Set, HS, Cup Pt, 5/16"-18 x 1/2", 5000-7000, Start Year: 05/01/1970
40A	353081S	1	Ball, 5/16" Dia., Part of Quick Drop Only, Start Year: 01/01/1965
40B	D4NNL854A	1	Plug, By Pass, Part of Quick Drop Only, Start Year: 01/01/1965
40C	D4NNL853A	1	Cartridge, Part of Quick Drop Only, Start Year: 01/01/1965
40D	9993141	1	O-Ring, 90 Duro, .364" ID x .070" Thk, Part of Quick Drop Only, Start Year: 01/01/1965
40E	272217	1	O-Ring, 90 Duro, .426" ID x .070" Thk, Part of Quick Drop Only, Start Year: 01/01/1965
	309972F	AR	Kit, Valve Mounting, Single Spool, Except 4200, 5200, 7200, Includes: Ref. 41 thru 48, Start Year: 01/01/1965
	309973F	AR	Kit, Valve Mounting, Double Spool, Except 4200, 5200, 7200, Includes: Ref. 41 thru 48, Start Year: 01/01/1965
41	D3NNB936A	AR	Handle Assy., Start Year: 01/01/1965
42	D2NNH889A	AR	Pin, Start Year: 01/01/1965
43	C9NNH891A	AR	Nut, Pin, Start Year: 01/01/1965
44	C5NNN991B	AR	Seal, Start Year: 01/01/1965
45	371433S36	AR	Bolt, 9/16-18 x .69, Start Year: 01/01/1965
46	9706729	2	Screw, Cap, HH, G5, 7/16"-14 x 1", Start Year: 01/01/1965
47	9627866	2	Screw, Cap, HH, G5, 7/16"-14 x 3-1/2", Except 5000, Start Year: 01/01/1965
47	86505984	2	Screw, Cap, HH, G5, 7/16"-14 x 2-1/4", 5000, Start Year: 01/01/1965
48	DEPN485A	1	Kit, O-Ring, See Fig 5G5 for Components, Start Year: 01/01/1965

Refer to 5H4 for Hoses and Couplings

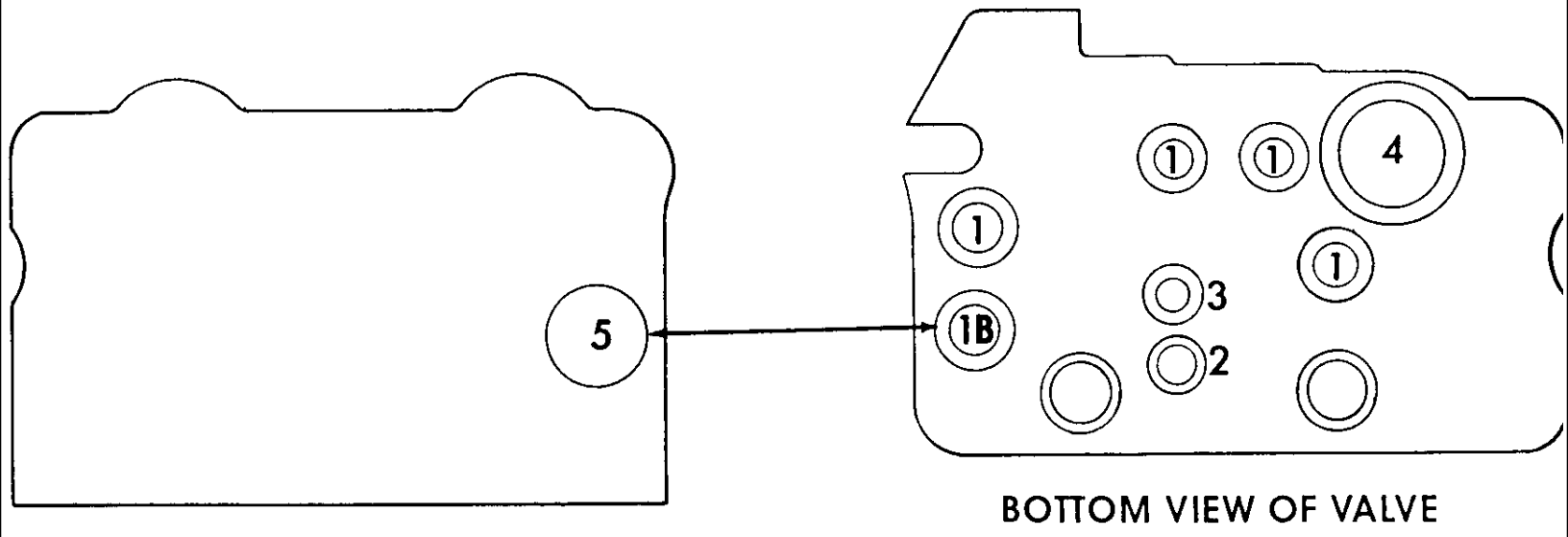

TOP VIEW OF HYDRAULIC LIFT COVER
5000

BOTTOM VIEW OF VALVE

5000-SERIES 4 CYL TRACTOR (1/65-1/75)

05G05 REMOTE CONTROL VALVE O-RING KIT

Ref	Part Number	Qty	Description
	CFPN485B	1	Kit, O-Ring, Remote Control Valve, Includes: Ref. 1 thru 5, Years: 01/01/1965-04/30/1970
1	229317	4	O-Ring, 90 Duro, .549" ID x .103" Thk, 5000, 7000, Start Year: 05/01/1970
1	229317	5	O-Ring, 90 Duro, .549" ID x .103" Thk, 2000, 3000, 4000, Start Year: 05/01/1970
1	D2NNB997A	4	O-Ring, .562 I.D. x .103 W, Replaces C0NN-B994-A, Years: 01/01/1965-04/30/1970
1A	D2NNB997A	1	O-Ring, .562 I.D. x .103 W, Use only on Valves w/Detent, Replaces C0NN-B994-A, Years: 01/01/1965-04/30/1970
1B	D2NNB997A	1	O-Ring, .562 I.D. x .103 W, Except 5000-7000, When installing a Remote Control Valve, use (1) D2NN-B997-A(81829207) in Location 1B (In Bottom of Valve) on 2000,3000 & 4000 Tractors. Use (1) C0NN-B999-A (81817211) in Hydraulic Lift cover of 5000 & 7000 Tractors. DO, Years: 01/01/1965-04/30/1970
2	C5NNN475B	1	O-Ring, .500 I.D. x .070 W, Years: 01/01/1965-04/30/1970
3	C0NNB993A	2	O-Ring, .437 I.D. x .070 W, Years: 01/01/1965-04/30/1970
4	C5NNN475A	1	O-Ring, 1.187 I.D. x .103 W, Years: 01/01/1965-04/30/1970
5	C0NNB999A	1	O-Ring, .799 I.D. x .103 W, 5000-7000, When installing a Remote Control Valve, use (1) D2NN-B997-A(81829207) in Location 1B (In Bottom of Valve) on 2000,3000 & 4000 Tractors. Use (1) C0NN-B999-A (81817211) in Hydraulic Lift cover of 5000 & 7000 Tractors. DO, Years: 01/01/1965-04/30/1970
	DHPN485A	1	Kit, O-Ring, Remote Control Valve, Includes: Ref. 1 thru 5, DHPN-485-A(83912473) Kit to service Valves D7NN-B950-A,B,C,D,E,F, & G, Start Year: 05/01/1970
	DEPN485A	1	Kit, O-Ring, Remote Control Valve, Replaces CKPN-485-A, Includes: Ref. 1 thru 5, Start Year: 05/01/1970
1A	122057	1	O-Ring, 90 Duro, .737" ID x .103" Thk, Single Spool, Use Only on Valves W/Detent, Single Spool, Start Year: 05/01/1970
1A	122057	2	O-Ring, 90 Duro, .737" ID x .103" Thk, Double Spool, Use Only on Valves W/Detent, Double Spool, Start Year: 05/01/1970
2	9992298	1	O-Ring, 90 Duro, .489" ID x .070" Thk, Start Year: 05/01/1970
3	272217	1	O-Ring, 90 Duro, .426" ID x .070" Thk, Start Year: 05/01/1970
4	218774	1	O-Ring, 90 Duro, 1.174" ID x .103" Thk, Not W/DHPN-485-A, (29.82), Start Year: 05/01/1970
5	C0NNB999A	1	O-Ring, .799 I.D. (20.29mm), 5000-7000, When installing a Remote Control Valve, use (1) C0NN-B999-A (81817211) in Location 5 in Hydraulic Lift Cover of 5000 & 7000 Tractors. DO NOT USE both O-Rings in one installation., Start Year: 05/01/1970
	87035S95	3	O-Ring, 90 Duro, .625" ID x .103" Thk, W/Quick Drop Valve, Start Year: 05/01/1970
	273211	1	O-Ring, 90 Duro, 1.125" ID x .103" Thk, W/Quick Drop Valve, Start Year: 05/01/1970
	D7NNB999A	1	O-Ring, w/Kit DHPN-485-A Only, 13/16" I.D. x .103 Wide, Start Year: 05/01/1970

05H03 SINGLE & DOUBLE ACTING PIPE & COUPLING KITS, ACCESSORY (U.K.) - 5000

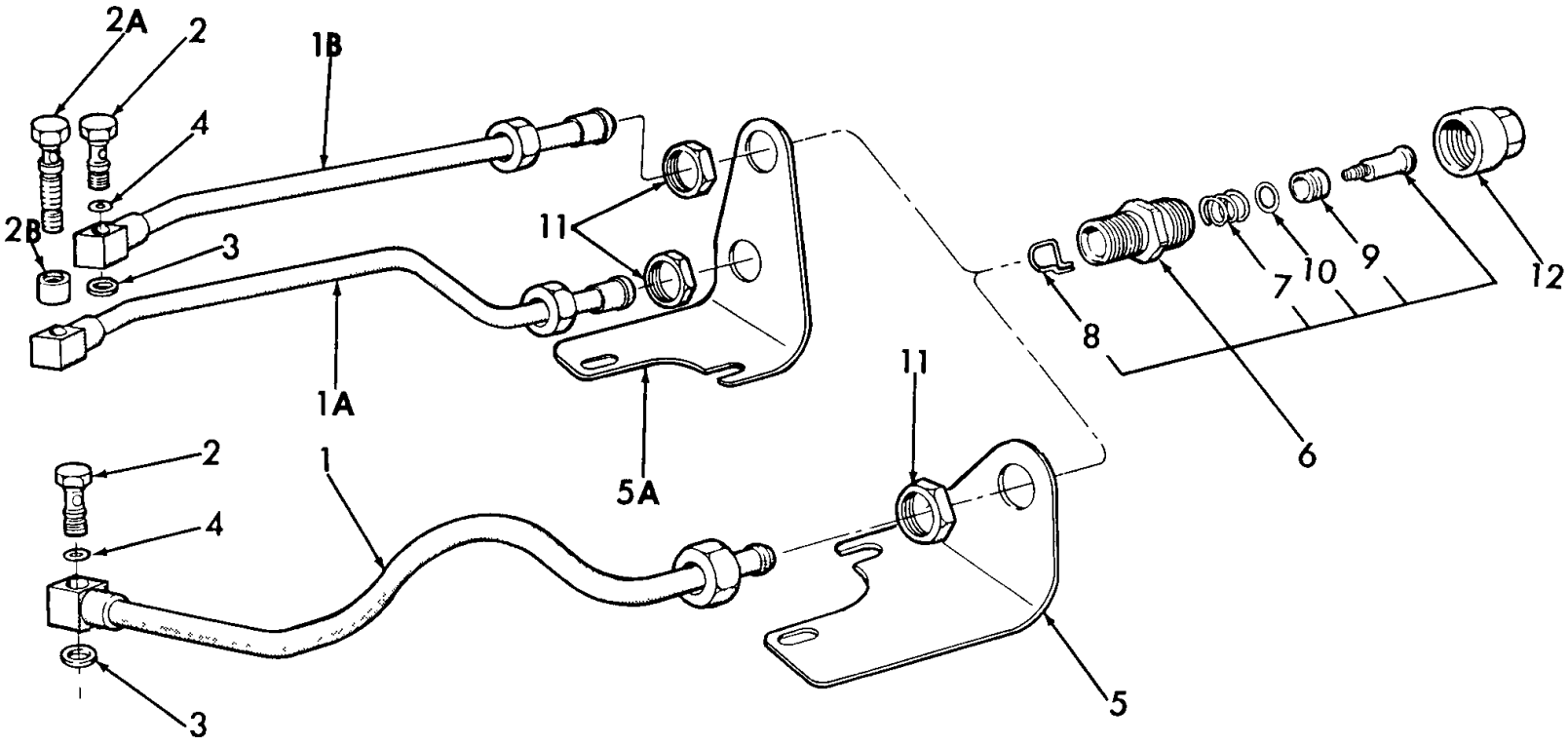

5000-SERIES 4 CYL TRACTOR (1/65-1/75)

05H03 SINGLE & DOUBLE ACTING PIPE & COUPLING KITS, ACCESSORY (U.K.) - 5000

Ref	Part Number	Qty	Description
	C5NNN902K	AR	Kit, Single Acting, Replaces C5NNN902A, Includes: Ref. 1 thru 12, NH-E Only, No Longer Serviced, Start Year: 01/01/1965
	0C	AR	Kit, Double Acting, Service Components, Includes: Ref. 1 thru 12, Order Components, Years: 01/01/1965-01/31/1970
	C9NNN909A	AR	Kit, Double Acting, Includes: Ref. 1 thru 12, NH-E Only, No Longer Serviced, Start Year: 02/01/1970
	CFPNP937B	AR	Kit, Auxiliary Service, Replaces C5NNP937A, Includes: Ref. 1 thru 12, NH-E Only, No Longer Serviced, Years: 01/01/1965-12/31/1971
	D2NNP937A	AR	Kit, Auxiliary Service, Includes: Ref. 1 thru 12, NH-E Only, No Longer Serviced, Start Year: 01/01/1972
	D0NNN909A	AR	Kit, Double Acting, Use w/Lo-Profile Valve, Includes: Ref. 1 thru 12, NH-E Only, No Longer Serviced, Start Year: 11/01/1970
1	C5NNP927B	1	Pipe Assy., Auxiliary Service, Single Acting, Replaces C5NN-P927A, NH-E Only, No Longer Serviced, Years: 01/01/1965-12/31/1971
1	D2NNP927A	1	Pipe Assy., Auxiliary Service, Single Acting, NH-E Only, Start Year: 01/01/1972
	D2NNJ916A	1	Spacer, Auxiliary Service Pipe, NH-E Only, Start Year: 01/01/1972
1	C5NNN922B	1	Pipe Assy., Remote Cylinder, Single Acting, Replaces C5NNN922A, NH-E Only, No Longer Serviced, Start Year: 01/01/1965
1A	D0NNN911C	1	Pipe Assy., Double Acting, Lower, Replaces C9NN-N911-A, NH-E Only, No Longer Serviced, Start Year: 01/01/1965
1A	D0NNN911A	1	Pipe Assy., Double Acting, Lower, NH-E Only, No Longer Serviced, Start Year: 01/01/1965
1B	C9NNN911B	1	Pipe Assy., Double Acting, Upper, NH-E Only, No Longer Serviced, Start Year: 01/01/1965
1B	D0NNN911B	1	Pipe Assy., Double Acting, Upper, NH-E Only, No Longer Serviced, Start Year: 01/01/1965
2	311113	AR	Bolt, Remote Control Tube Fitting, Start Year: 01/01/1965
2	C5NN3N614B	1	Bolt, Remote Control Tube Fitting, No Longer Serviced, Start Year: 01/01/1972
2A	D0NNH923A	1	Bolt, Remote Control Hose, NH-E Only, No Longer Serviced, Start Year: 01/01/1965
2B	D0NNN914A	1	Adapter, Remote Control Hose, NH-E Only, No Longer Serviced, Start Year: 01/01/1965
3	D2NNB997A	AR	Seal, Remote Control Tube Fitting, Bolt, Start Year: 01/01/1965
4	274330	AR	O-Ring, 90 Duro, .438" ID x .094" Thk, Tube Fitting, Bolt, Start Year: 01/01/1965
5	C5NNN923C	1	Bracket, Single Action Pipe, Replaces C5NN-N923-A, NH-E Only, Start Year: 01/01/1965
5A	C5NNN913B	1	Bracket, Double Acting Pipe, Replaces C5NN-N913-A, NH-E Only, No Longer Serviced, Start Year: 01/01/1965
6	E90WP9	AR	Coupling Assy., Hydraulic, Male Half, Includes: Body, Valve & Sleeve Plus: Ref. 7 thru 10, Start Year: 01/01/1965
7	E90WP9	AR	Spring, Start Year: 01/01/1965
8	E90WP9	AR	Spring, Start Year: 01/01/1965
9	E90WP9	AR	Sleeve Assy., Start Year: 01/01/1965
10	229317	AR	O-Ring, 90 Duro, .549" ID x .103" Thk, Start Year: 01/01/1965
11	D8NNN908AA	AR	Nut, Self-Sealing Connector, 1/2", Start Year: 01/01/1965
12	E97WP9	AR	Cap, Dust, Start Year: 01/01/1965

05H04 SINGLE & DOUBLE ACTING REMOTE CYLINDER COUPLING KITS (65/5-73)

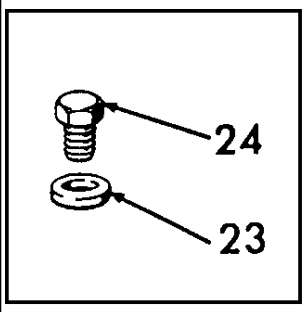

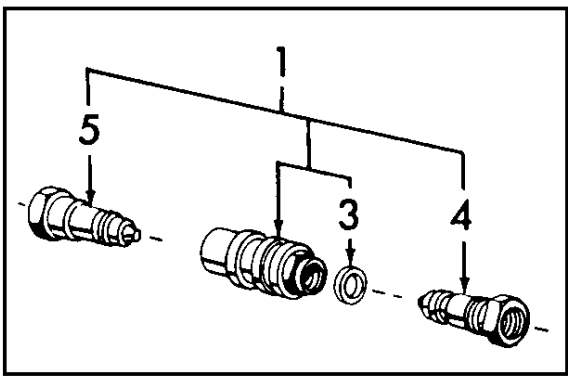

65/1-69

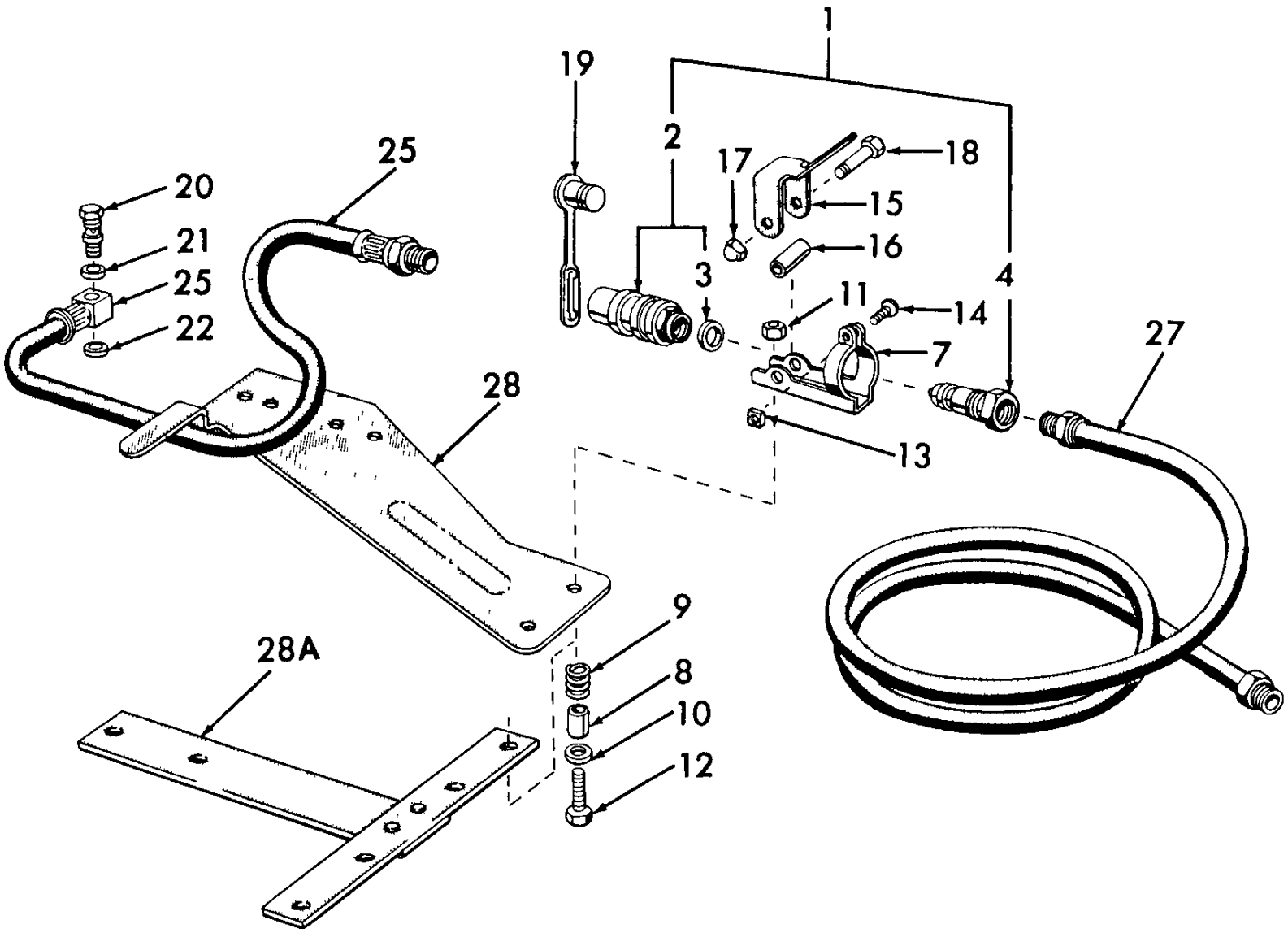

Order Hoses & Coupling Brackets Separately.

5000-SERIES 4 CYL TRACTOR (1/65-1/75)

05H04 SINGLE & DOUBLE ACTING REMOTE CYLINDER COUPLING KITS (65/5-73)

Ref	Part Number	Qty	Description
	CKPNN937A	1	Coupling Kit, Single Action, Includes: Ref. 1 thru 22, No Longer Serviced (NHNA), Years: 01/01/1965-05/31/1973
	9842367	1	Coupling Kit, Double Acting, Includes: Ref. 1 thru 22, Use (2) Single Acting Kits for Double Acting Coupling Kit or New Kit DDPN-N937-A(81827510) plus proper Hose., Years: 01/01/1965-05/31/1973
1	FP505	1/2	Coupling Assy., Hose, Replaces C7NNB960C, Except 7100, Includes: Ref. 2, Years: 01/01/1965-05/31/1973
2	D1NNB961C	AR	Housing Assy., 7100, Includes: Housing plus Ref. 3, No Longer Serviced (NHNA), Years: 01/01/1971-05/31/1973
3	250241	2/4	Seal, Years: 01/01/1965-01/31/1969
3	277634	4/8	O-Ring, 90 Duro, .799" ID x .103" Thk, Years: 02/01/1969-05/31/1973
4	9801618	1/2	Valve Assy., Implement Half, Except 7100, Years: 01/01/1965-05/31/1973
4	D1NNB964B	AR	Valve Assy., 7100, No Longer Serviced, Years: 01/01/1971-05/31/1973
5	C0NNB963A	1/2	Valve Assy., Tractor Half, No Longer Serviced, Years: 01/01/1965-01/31/1969
7	C5NNN984A	1/2	Clamp, Except 7100, No Longer Serviced (NH-E), Years: 01/01/1965-05/31/1973
8	C5NNN985A	1/2	Spacer, .40 I.D. x .50 O.D. x .84, Not Part of Kit, Except 7100, No Longer Serviced (NHNA), Years: 01/01/1965-03/31/1971
	81821693	1/2	Washer, Lock, 3/8", Except 7100, Years: 04/01/1971-05/31/1973
10	87016	1/2	Washer, SAE, 3/8", Not Part of Kit, Except 7100, Years: 01/01/1965-03/31/1971
11	34097S8	1/2	Nut, Square, 3/8"-16, Except 7100, Years: 01/01/1965-05/31/1973
12	304666S36	1/2	Screw, Cap, HH, G5, 3/8"-16 x 7/8", Except 7100, Years: 01/01/1965-05/31/1973
13	34096S8	AR	Nut, Square, 5/16"-18
14	35078S8	1/2	Screw, Truss Hd, G2, 5/16"-18 x 1", Except 7100, Years: 01/01/1965-05/31/1973
15	C5NNN987A	1/2	Lever, Except 7100, No Longer Serviced. FTO-E, Years: 01/01/1965-05/31/1973
16	C5NNN997A	1/2	Spacer, .40 I.D. x .50 O.D. x 1, Except 7100, No Longer Serviced (NHNA), Years: 01/01/1965-05/31/1973
17	88902	1/2	Nut, Lock, GC, 3/8"-16, Except Model 7100, Years: 01/01/1965-05/31/1973
18	304813S36	1/2	Screw, Cap, HH, G5, 3/8"-1 x 1-7/8", Except 7100, Years: 01/01/1965-05/31/1973
19	C7NNN999A	1/2	Plug, Except 7100, No Longer Serviced (NH-E), Years: 01/01/1965-05/31/1973
19	D1NNN999A	2/4	Plug, Dust, Hydraulic Remote Cylinder Hose Coupling, 7100, No Longer Serviced (NHNA), Years: 01/01/1971-05/31/1973
20	311113	1/2	Bolt, 9/16"-18, Years: 01/01/1965-05/31/1973
21	128999	1/2	O-Ring, .424" ID x .103" Thk, Years: 01/01/1965-05/31/1973
22	D2NNB997A	1/2	O-Ring, .549" ID x .104" Thk, Years: 01/01/1965-05/31/1973
23	C5NNN991B	1/AR	Seal, Port, Years: 01/01/1965-05/31/1973
24	371433S36	1/AR	Bolt, HH, 9/16"-18 x .62, Years: 01/01/1965-05/31/1973
	NLS	1/2	Bracket, Clamp Mounting, 7100 {D1NNN984A}, No Longer Serviced, Years: 01/01/1971-05/31/1973
	NLS	1/2	Spacer, Clamp, 7100 {D1NNN985A}, No Longer Serviced, Years: 01/01/1971-05/31/1973
	D1NNN984C	1/2	Clamp Assy., 7100, No Longer Serviced (NHNA), Years: 01/01/1971-05/31/1973
25	231446	1/1	Hose Assy., Fitting, 28-1/4"-1/2", All Valves, Used W/C5NN-D916-A Coupling Bracket Assy., Years: 01/01/1965-05/31/1973
25	C7NNB968H	1	Hose Assy., 22-1/4" (56.52 cm), 5100, Used W/C9NN-D916-A Coupling Bracket Assy., Years: 05/01/1969-05/31/1973

Order Hoses & Coupling Brackets Separately.

5000-SERIES 4 CYL TRACTOR (1/65-1/75)

05H04 SINGLE & DOUBLE ACTING REMOTE CYLINDER COUPLING KITS (65/5-73)

Ref	Part Number	Qty	Description
25	D0NNB968L	1	Hose Assy., 24-1/2" (62.23 cm), Used W/C9NN-D916-A Coupling Bracket Assy., Years: 05/01/1969-05/31/1973
27	7101010	1/2	Hose Assy., Fittings, 101"-1/2", No Longer Serviced (NH-E), Start Year: 01/01/1965
27	C0NNB968C	AR	Hose Assy., Fittings, 118"-1/2", No Longer Serviced, Start Year: 01/01/1965
28	C5NND916A	1/1	Bracket Assy., Coupling, No Longer Serviced (NHNA), Years: 01/01/1965-05/31/1973
28A	C9NND916A	1	Bracket Assy., Coupling, Replaces C7NND916A, No Longer Serviced (NHNA), Years: 05/01/1969-05/31/1973

Order Hoses & Coupling Brackets Separately.

05H04[A] DOUBLE ACTING REMOTE CYLINDER COUPLING KITS (6-73/)

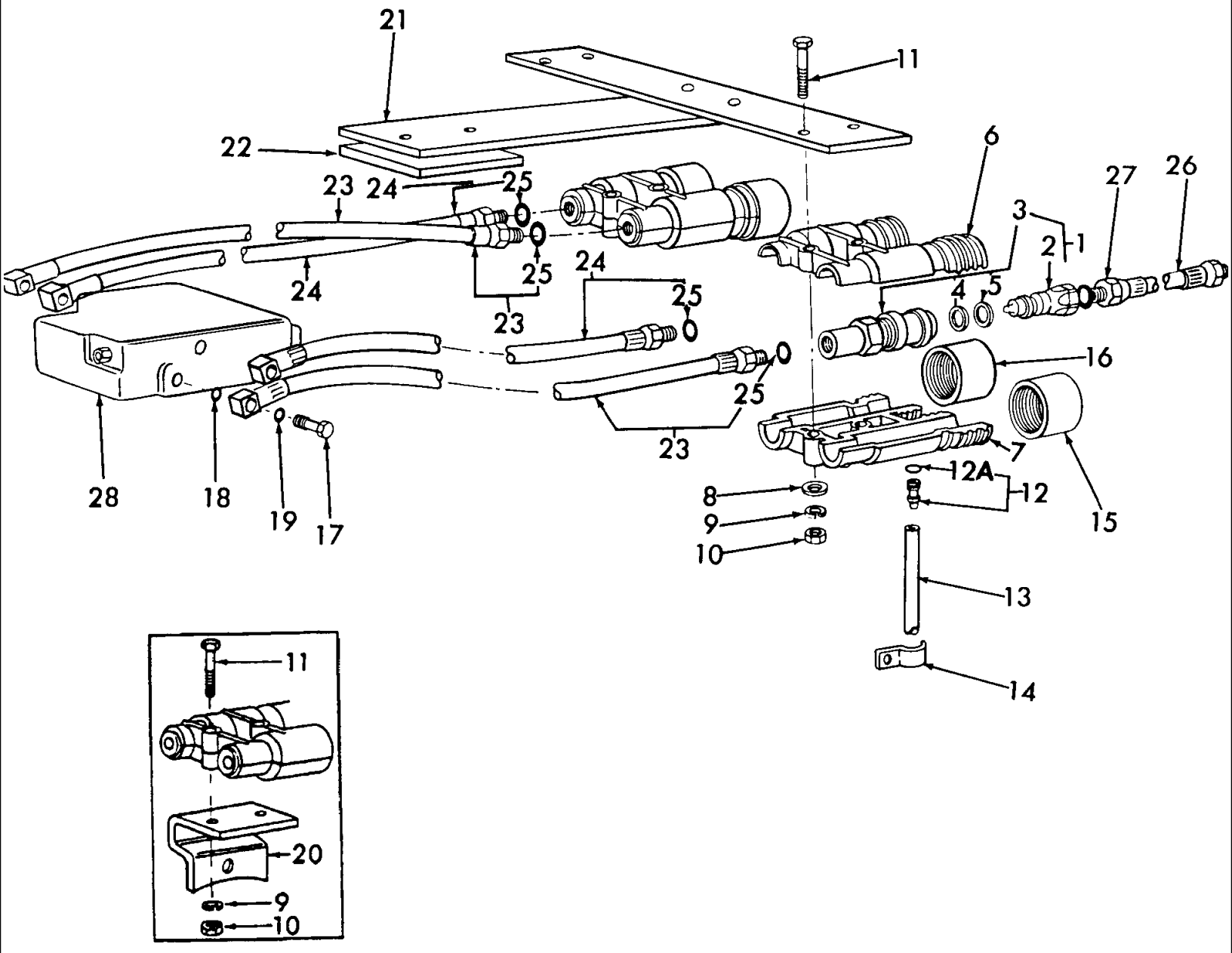

Order Hoses & Coupling Brackets Separately.

5000-SERIES 4 CYL TRACTOR (1/65-1/75)

05H04[A] DOUBLE ACTING REMOTE CYLINDER COUPLING KITS (6-73/)

Ref	Part Number	Qty	Description
	9842367	1	Coupling Kit, Double Acting, (1) Required for Single Spool Valve, Includes: Ref. 1 thru 13, Start Year: 06/01/1973
	9842367	2	Coupling Kit, Double Acting, (2) Required for Double Spool Valve, Includes: Ref. 1 thru 13
1	FP505	2	Coupling Assy., Hose, Includes: Ref. 2 & 3, Start Year: 06/01/1973
2	9801618	AR	Valve Assy., Implement Half, Start Year: 06/01/1973
2	E8NNB964BA	2	Valve Assy., Implement Half, Start Year: 06/01/1973
3	772731	2	Housing Assy., Coupling, Includes: Ref. 4 & 5, Start Year: 06/01/1973
4	277634	2	O-Ring, 90 Duro, .799" ID x .103" Thk, Start Year: 06/01/1973
5	FP506	2	Ring, Start Year: 06/01/1973
6	FP493	1	Bracket, Upper, Plastic, Start Year: 06/01/1973
7	FP493	1	Bracket, Lower, Plastic, Start Year: 06/01/1973
8	80702	2	Washer, 3/8", Except 2000, 3000, Start Year: 06/01/1973
9	81821693	2	Washer, Lock, 3/8", Start Year: 06/01/1973
10	9628503	2	Nut, G5, 3/8"-16, Start Year: 06/01/1973
11	300886S36	2	Screw, Cap, HH, G5, 3/8"-16 x 2-3/4", 2000, 3000, Start Year: 06/01/1973
11	280161	2	Screw, Cap, HH, G5, 3/8"-16 x 3", 4000, 5100, 7100, Start Year: 06/01/1973
11	280177	2	Screw, Cap, HH, G5, 3/8"-16 x 5", Use W/Stocked Coupling, 2100, 3100, 3055, 4100, Start Year: 06/01/1973
12	D5NNJ976A	1/2	Fitting Assy., Drip, Plastic, Includes: Fitting & Ref. 12A, Start Year: 06/01/1973
12A	511836	1/2	O-Ring, .219" ID x .070" Thk, Drip Fitting, Start Year: 06/01/1973
13	NSS	1	Hose, Drip Drain, 24" (609.6mm), Use D2NNJ908A, Not Serviced Separately, Start Year: 06/01/1973
14	85700737	2	Clip, Start Year: 06/01/1973
15	FP492	1	Cap, Coupling, Dust, Drop, Replaces D3NNJ906A, Start Year: 06/01/1973
16	FP492	1	Cap, Coupling, Dust, Lift, Replaces D3NNJ906B, Start Year: 06/01/1973
17	311113	2	Bolt, Special, 9/16"-18, Start Year: 06/01/1973
18	D2NNB997A	2	O-Ring, Bolt Seal, Start Year: 06/01/1973
19	128999	2	O-Ring, .424" ID x .103" Thk, L/Knuckle & Clevis Pin, Start Year: 06/01/1973
20	D2NNN975C	1	Bracket, Mounting, Single Spool, 2000-3000, Start Year: 06/01/1973
20	D2NNN975C	2	Bracket, Mounting, Double Spool, 2000-3000, Start Year: 06/01/1973
20	D3NNN975B	1	Bracket, Mtg., RH, w/Grammer Seat, Dbl. Spl., 2100, 3100, NH-E Only, No Longer Serviced, Start Year: 06/01/1973
20	D3NNJ994A	1	Bracket, Mounting, L.H., W/Grammer Seat, 2100, 3100, NH-E Only, No Longer Serviced, Start Year: 06/01/1973
20	D3NNN975C	1	Bracket, Mounting, L/Grammer Seat, 2100, 3100, NH-E Only, No Longer Serviced, Start Year: 06/01/1973
20	E5NNN975AA	1	Bracket, Mounting, 3055, 4100, NH-E Only, Start Year: 06/01/1973
21	D2NND916C	1	Bracket Assy., Mounting, 4000 Except 4200, No Longer Serviced, Start Year: 06/01/1973
21	D2NND916A	1	Bracket Assy., Mounting, 5100, 7100, No Longer Serviced (NHNA), Start Year: 06/01/1973
21	D6NND916B	1	Bracket Assy., Coupling Mtg., 5100, 7100, NH-E Only, Start Year: 06/01/1973
22	D2NNJ956A	1	Spacer, Mtg. Bracket Assy., w/Grammer Seat, 5100, 7100, Start Year: 06/01/1973
23	E4NNB968BC	2	Hose Assy., 25" Lift-Drop, L/Grammer Seat, 2100, 3100 Single Spool, Includes: Hose & Ref. 25, Start Year: 06/01/1973

Order Hoses & Coupling Brackets Separately.

5000-SERIES 4 CYL TRACTOR (1/65-1/75)

05H04[A] DOUBLE ACTING REMOTE CYLINDER COUPLING KITS (6-73/)

Ref	Part Number	Qty	Description
23	E4NNB968BC	1	Hose Assy., 25" Lift-Drop, w/ or L/Grammer Seat, 3055, 4100 Single Spool, Includes: Hose & Ref. 25, Start Year: 06/01/1973
23	E4NNB968AC	2	Hose Assy., 30-1/4" (768.35mm) Lift-Drop, L/Grammer Seat, Replaces D3NNB968D, 2100, 3100, Double Spool, Includes: Hose & Ref. 25, Start Year: 06/01/1973
23	E4NNB968AC	1	Hose Assy., 30-1/4" (768.35mm) Lift-Drop, w/or L/Grammer St., Double Spool, 3055, 4100, Includes: Strap Plus Ref. 15 thru 17 Double Spool, 3055, 4100, Includes: Hose & Ref. 25, Start Year: 06/01/1973
23	D3NNB968H	1	Hose Assy., Lift, w/Grammer St., 17-1/4" (438.15mm), Single Spool, 2100,3100, Includes: Hose & Ref. 25, NH-E Only, No Longer Serviced, Start Year: 06/01/1973
23	D3NNB968J	2	Hose Assy., Lift-Drop, 16-1/2" (419.1mm), w/Grammer Seat, Double Spool, Includes: Hose & Ref. 25, NH-E Only, No Longer Serviced, Start Year: 06/01/1973
24	D1NNB968R	1	Hose Assy., Drop & Lift, 20-1/2" (520.7mm), Single Spool, Includes: Hose & Ref. 25, Start Year: 06/01/1973
24	D1NNB968R	2	Hose Assy., Drop & Lift, 20-1/2" (520.7mm), Double Spool, 2000, 3000, 4000, Includes: Hose & Ref. 25, Start Year: 06/01/1973
24	E4NNB968EA	1/2	Hose Assy., Drop, LH or RH, 18.12" (460.25mm), 2100, 3100, 2100, 4110, 3400, 3550, Single or Double Spool, Includes: Hose & Ref. 25, Start Year: 06/01/1973
24	E4NNB968EA	1	Hose Assy., Lift, RH, 18.92" (480.57mm), 2100, 3100, 2110, 4110, 3400, 3550, Double Spool, Includes: Hose & Ref. 25, Start Year: 06/01/1973
24	E4NNB968EA	1	Hose Assy., Lift, LH, 19.52" (495.81mm), 2100, 3100, 2110, 4110, 3400, 3550, Includes: Hose & Ref. 25, Start Year: 06/01/1973
24	D1NNB968T	2	Hose Assy., Lift & Drop, 22-1/2" (571.5mm), 4000, 5100, 7100, Single Spool, Includes: Hose & Ref. 25, Start Year: 06/01/1973
24	D1NNB968T	4	Hose Assy., Lift & Drop, 22-1/2" (571.5mm), L/Load Monitor, U.S., 4000, 5100, 7100, Double Spool, Includes: Hose & Ref. 25, Start Year: 06/01/1973
24	D9NNB968GA	2	Hose Assy., Lift & Drop, 23" (584.2mm) 5100, 7100 Single Spool, Includes: Hose & Ref. 25, Start Year: 06/01/1973
24	D9NNB968GA	2	Hose Assy., Lift & Drop, 23" (584.2mm), 5100, 7100, Double Spool, Includes: Hose & Ref. 25, Start Year: 06/01/1973
25	128825	2/4	O-Ring, 90 Duro, .644" ID x .087" Thk, Start Year: 06/01/1973
26	7101010	1/2	Hose Assy., 101" (2565.4mm), 1/2" Fittings, No Longer Serviced (NH-E), Start Year: 06/01/1973
26	C0NNB968C	1/2	Hose Assy., 118" (2997.2mm), 1/2" Fittings, No Longer Serviced, Start Year: 06/01/1973
	D6NNE953B	1	Bracket, Release Rod, w/Auto. Htch., 5100, 7100, Includes: Valve Body & Spool Plus Ref. 1 thru 10, NH-E Only, No Longer Serviced, Start Year: 06/01/1973
27	NLS	1	Washer, Blue, Life Hose Identification, Not Part of Kit, No Longer Serviced, Start Year: 06/01/1973
28	REFERENCE	AR	Valve Assy., Remote, Start Year: 06/01/1973

Order Hoses & Coupling Brackets Separately.

05H05 SINGLE & DOUBLE ACTING REMOTE CYLINDER COUPLING & MOUNTING KIT - 4200, 5200, 7200

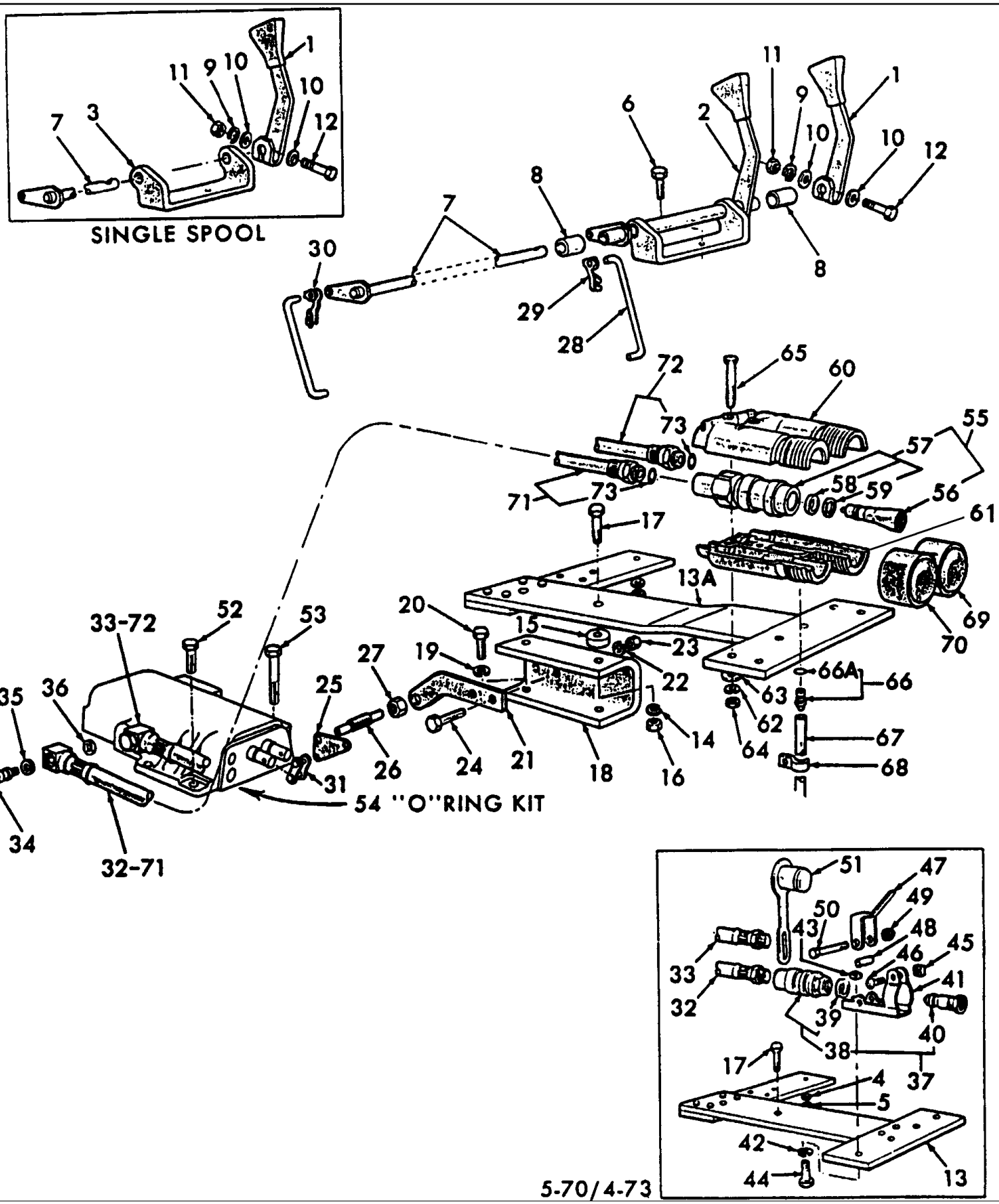

5000-SERIES 4 CYL TRACTOR (1/65-1/75)

05H05 SINGLE & DOUBLE ACTING REMOTE CYLINDER COUPLING & MOUNTING KIT - 4200, 5200, 7200

Ref	Part Number	Qty	Description
1	C7NNC927B	1	Handle Assy., NHNA Only, No Longer Serviced, Start Year: 05/01/1970
2	C9NND941A	1	Handle, Shaft & Support Assy., Double Spool, NHNA Only, No Longer Serviced, Start Year: 08/01/1970
3	C9NND870A	1	Support, Handle Shaft, NHNA Only, No Longer Serviced, Start Year: 05/01/1970
4	80681	2	Washer, Lock, 5/16", Start Year: 05/01/1970
5	9635082	2	Nut, G5, 5/16"-18, Start Year: 05/01/1970
6	9635884	2	Screw, Cap, HH, G5, 5/16"-18 x 1", Start Year: 05/01/1970
7	C9NND938A	1	Shaft Assy., Single Spool, NHNA Only, No Longer Serviced, Start Year: 05/01/1970
7	C9NND938B	1	Shaft Assy., Double Spool, NHNA Only, No Longer Serviced, Start Year: 08/01/1970
8	C9NNH892A	2	Bushing, Handle Shaft, NHNA Only, No Longer Serviced, Start Year: 08/01/1970
9	80682	1	Washer, Lock, 1/4", Start Year: 05/01/1970
10	80701	2	Washer, 1/4", Start Year: 05/01/1970
11	7770	1	Nut, Hex, 1/4"-20, Start Year: 05/01/1970
12	381858S36	1	Bolt, HH, 1/4"-20 x 1-1/2", No Longer Serviced (NH-E), Start Year: 05/01/1970
13	D0NND946A	1	Plate Assy., Mounting, NHNA Only, No Longer Serviced, Years: 05/01/1970-05/31/1973
13A	D1NND946A	1	Plate Assy., Mounting, NHNA Only, No Longer Serviced, Start Year: 06/01/1973
14	81547	2	Washer, Lock, 7/16", 5200, 7200, Start Year: 05/01/1970
15	PL	1	Washer, Flat, 1.18 x .54 x .25, 5200, 7200, Procure Locally, Start Year: 05/01/1970
16	280717	2	Nut, G5, 7/16"-14, Start Year: 05/01/1970
17	9627887	2	Screw, Cap, HH, G5, 7/16"-14 x 1-1/4", Start Year: 05/01/1970
18	C9NNF985A	1	Support, Plate 5200, 7200, NHNA Only, No Longer Serviced, Start Year: 05/01/1970
19	81547	2	Washer, Lock, 7/16", 5200, 7200, Start Year: 05/01/1970
20	304668S36	2	Screw, Cap, HH, G5, 7/16"-14 x 7/8", 5200, 7200, Start Year: 05/01/1970
21	D2NNH888A	1	Bracket Assy., Pivot Support, Replaces C9NNH888A, 4200, NHNA Only, No Longer Serviced, Start Year: 05/01/1970
21	D4NNH888A	1	Bracket Assy., Pivot Support, 5200, 7200, NHNA Only, No Longer Serviced, Start Year: 05/01/1970
22	80681	2	Washer, Lock, 5/16", Start Year: 05/01/1970
23	9635082	2	Nut, G5, 5/16"-18, Start Year: 05/01/1970
24	9635884	2	Screw, Cap, HH, G5, 5/16"-18 x 1", Start Year: 05/01/1970
25	C9NND865A	1	Pivot, Handle Link, NHNA Only, Start Year: 05/01/1970
26	D0NNB944A	1	Shaft, Valve Linkage, NHNA Only, Start Year: 05/01/1970
27	87309	2	Nut, Jam, G2, 1/2"-20, Start Year: 05/01/1970
28	D1NND867A	AR	Link, Handle, 1.83" Lg., 4200, NHNA Only, No Longer Serviced, Start Year: 05/01/1970
28	D4NND867A	AR	Link, Handle, 4.50" Lg., 5200, 7200, NHNA Only, Start Year: 05/01/1970
29	1M9825	2	Clip, Link Connecting, R.H., No Longer Serviced (NH-E), Start Year: 05/01/1970
30	174273	1	Clip, Link Connecting, L.H., Start Year: 05/01/1970
31	86537460	1	Link, Connecting, Roller, RC 50, Spring Style, Start Year: 05/01/1970
32	D0NNB968L	1	Hose Assy., 1/2" Fitting, 24-1/2", Years: 05/01/1970-05/31/1973
33	D0NNB968H	1	Hose Assy., 25" Lg., 1/2" Fitting, NHNA Only, No Longer Serviced, Years: 05/01/1970-05/31/1973
34	311113	2	Bolt, 9/16"-18 x 1.34, Start Year: 05/01/1970
34	C5NN3N614B	2	Bolt, 9/16"-18 x 1.62, No Longer Serviced (NH-E), Start Year: 05/01/1970
35	128999	2	O-Ring, .424" ID x .103" Thk, Start Year: 05/01/1970

5000-SERIES 4 CYL TRACTOR (1/65-1/75)

05H05 SINGLE & DOUBLE ACTING REMOTE CYLINDER COUPLING & MOUNTING KIT - 4200, 5200, 7200

Ref	Part Number	Qty	Description
36	D2NNB997A	2	O-Ring, Bolt & Hose to Valve, Start Year: 05/01/1970
37	FP505	2	Coupling Assy., Hose, 4200, 5200, Includes: Ref. 38 thru 40, Years: 05/01/1970-05/31/1973
38	772731	2	Housing Assy., 4200, 5200, Includes: Housing and Ref. 39, Cat. II, Years: 05/01/1970-05/31/1973
39	277634	8	O-Ring, 90 Duro, .799" ID x .103" Thk, Years: 05/01/1970-05/31/1973
40	9801618	2	Valve Assy., Tractor Half, 4200, 5200, Years: 05/01/1970-05/31/1973
41	C5NNN984A	2	Clamp, Hose Coupling, 4200, 5200, No Longer Serviced (NH-E), Years: 05/01/1970-05/31/1973
42	81821693	2	Washer, Lock, 3/8", 4200, 5200, Years: 05/01/1970-05/31/1973
43	84899	2	Nut, Square, G2, 3/8"-16, 4200, 5200, Years: 05/01/1970-05/31/1973
44	304666S36	2	Screw, Cap, HH, G5, 3/8"-16 x 7/8", 4200, 5200, Years: 05/01/1970-05/31/1973
45	9635082	2	Nut, G5, 5/16"-18, 4200, 5200, Years: 05/01/1970-05/31/1973
46	9635884	2	Screw, Cap, HH, G5, 5/16"-18 x 1", 4200, 5200, Years: 05/01/1970-05/31/1973
47	C5NNN987A	2	Lever, Hose Coupling, 4200, 5200, No Longer Serviced, Years: 05/01/1970-05/31/1973
48	C5NNN997A	2	Spacer, Hose Coupling Lever, .40 x 50 x 1, 4200, 5200, No Longer Serviced, Years: 05/01/1970-05/31/197
49	88902	2	Nut, Lock, GC, 3/8"-16, Model 4200, 5200, Years: 05/01/1970-05/31/1973
50	304813S36	2	Screw, Cap, HH, G5, 3/8"-1 x 1-7/8", 4200, 5200, Years: 05/01/1970-05/31/1973
51	C7NNN999A	2	Plug, Hose Coupling Dust, 4200, 5200, No Longer Serviced (NH-E), Years: 05/01/1970-05/31/1973
52	9706729	2	Screw, Cap, HH, G5, 7/16"-14 x 1", Start Year: 05/01/1970
53	9627866	2	Screw, Cap, HH, G5, 7/16"-14 x 3-1/2", 4200 Cat. II, 1-3/4" Wide Cat. II, 1-3/8" Wide, Start Year: 05/01/1970
53	86505984	2	Screw, Cap, HH, G5, 7/16"-14 x 2-1/4", Models 5200 & 7200, Start Year: 05/01/1970
54	DEPN485A	1	Kit, O-Ring, See Fig. 5G for Components & Illustration, Start Year: 05/01/1970
	NLS	1	Bracket, 7200 {D1NNB984C}, No Longer Serviced, Years: 01/01/1971-05/31/1973
	NLS	AR	Spacer, 7200 {D1NNN985A}, No Longer Serviced, Years: 01/01/1971-05/31/1973
	D1NNN984C	AR	Clamp Assy., 7200, No Longer Serviced, Years: 01/01/1971-05/31/1973
	81821693	2	Washer, Lock, 3/8", 7200, Years: 01/01/1971-05/31/1973
	9628503	2	Nut, G5, 3/8"-16, 7200, Years: 01/01/1971-05/31/1973
	88011	2	Screw, Cap, HH, G5, 3/8"-16 x 1-1/4", 7200, Years: 01/01/1971-05/31/1973
	9636711	AR	Screw, Cap, HH, G5, 5/16"-18 x 2", 7200, Years: 01/01/1971-05/31/1973
	D1NNB961C	2/4	Housing Assy., Coupling, 7200, No Longer Serviced (NHNA), Years: 01/01/1971-05/31/1973
	D1NNB964B	2/4	Valve Assy., Hose Rear, 7200, No Longer Serviced (NHNA), Years: 01/01/1971-05/31/1973
	D1NNN999A	2/4	Plug, Dust, 7200, No Longer Serviced (NHNA), Years: 01/01/1971-05/31/1973
55	FP505	2/4	Coupling Assy., Hose, Includes: Ref. 56 & 57, Start Year: 06/01/1973
56	9801618	AR	Valve Assy., Implement Half, Start Year: 06/01/1973
57	772731	2/4	Housing Assy., Coupling, Includes: Housing plus Ref. 58 & 59, Start Year: 06/01/1973
58	277634	2/4	O-Ring, 90 Duro, .799" ID x .103" Thk, Start Year: 06/01/1973
59	FP506	2/4	Ring, Start Year: 06/01/1973
60	D5NNN915A	1/2	Bracket, Upper, Start Year: 06/01/1973
60	FP493	2/4	Bracket, Upper, Don't mix new & old, Start Year: 06/01/1973
61	D5NNJ853A	1/2	Bracket, Lower, Start Year: 06/01/1973
61	FP493	2/4	Bracket, Lower, Don't mix new & old, Start Year: 06/01/1973
62	80702	2/4	Washer, 3/8", Start Year: 06/01/1973

5000-SERIES 4 CYL TRACTOR (1/65-1/75)

05H05 SINGLE & DOUBLE ACTING REMOTE CYLINDER COUPLING & MOUNTING KIT - 4200, 5200, 7200

Ref	Part Number	Qty	Description
63	81821693	2/4	Washer, Lock, 3/8", Start Year: 06/01/1973
64	9628503	2/4	Nut, G5, 3/8"-16, Start Year: 06/01/1973
65	300886S36	2/4	Screw, Cap, HH, G5, 3/8"-16 x 2-3/4", Start Year: 06/01/1973
66	D5NNJ976A	1/2	Fitting Assy., Drip, Plastic, Includes: Fitting & Ref. 66A, Start Year: 06/01/1973
66A	511836	1/2	O-Ring, .219" ID x .070" Thk, Drip Fitting, Start Year: 06/01/1973
67	D2NNJ908A	1/2	Hose, Drip Drain, 24" (609.6mm), Use D2NN-J908-A & Cut to Proper Length, Not Serviced, Start Year: 06/01/1973
68	85700737	2/4	Clip, Start Year: 06/01/1973
69	FP492	1/2	Cap, Cooling, Dust, Black, Drop, Start Year: 06/01/1973
70	FP492	1/2	Cap, Cooling, Dust, Blue, Lift, Start Year: 06/01/1973
71	D3NNB968B	1	Hose Assy., 23" Lift, L.H., U.S., Includes: Hose & Ref. 73, NHNA Only, Start Year: 06/01/1973
71	D1NNB968T	1	Hose Assy., 22-1/2" Lift, R.H., U.S., Includes: Hose & Ref. 73, Start Year: 06/01/1973
72	D1NNB968T	1/2	Hose Assy., 22" Drop Includes: Hose & Ref. 73, Start Year: 06/01/1973
73	128825	2/4	O-Ring, 90 Duro, .644" ID x .087" Thk, Start Year: 06/01/1973
	D2NNJ908A	AR	Hose, Drain, .250" I.D. x 50" Lg., Start Year: 06/01/1973

05H06 HYDRAULIC REMOTE CONTROL CYLINDER ASSEMBLY - 5000, 7000

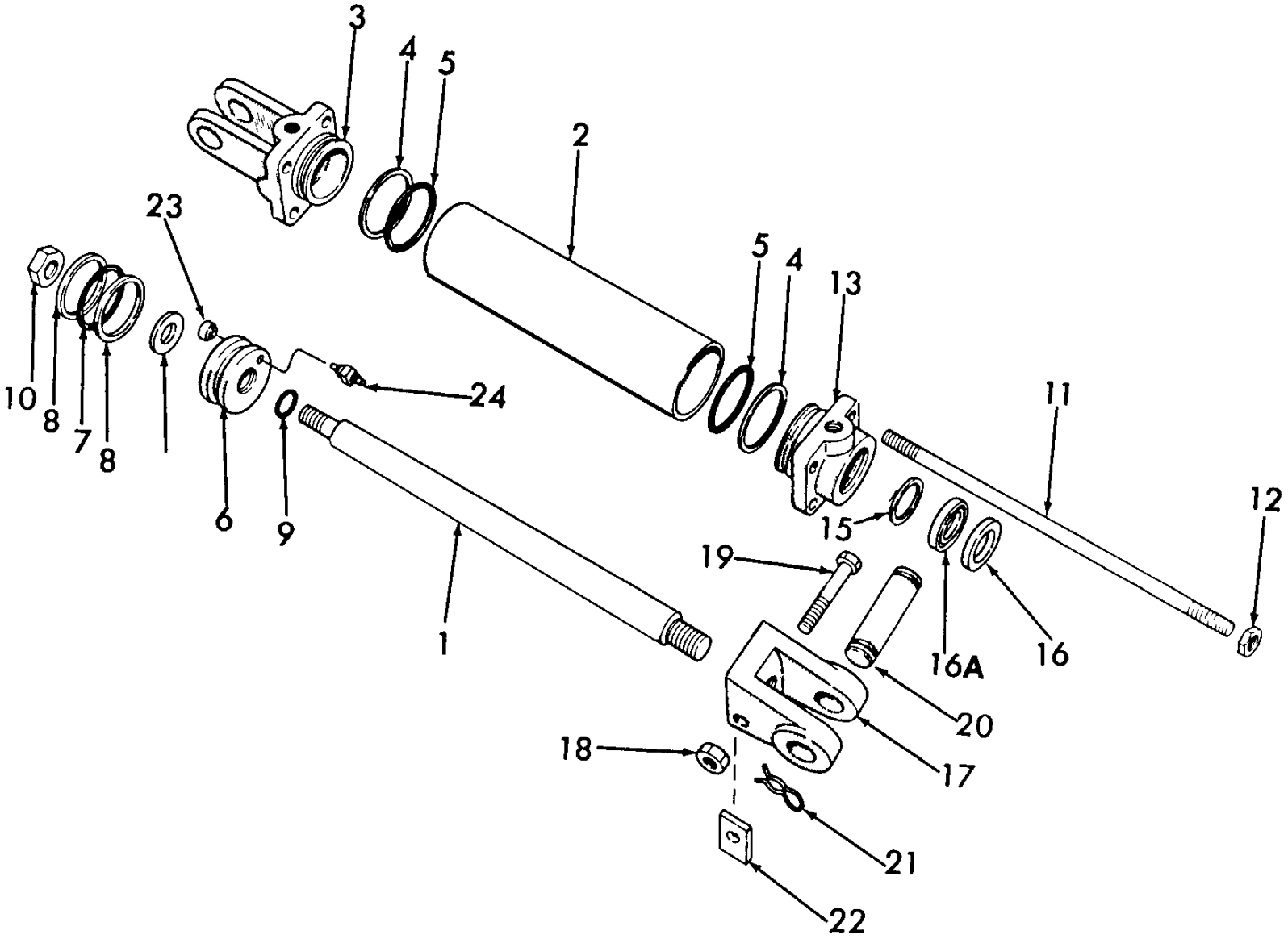

5000-SERIES 4 CYL TRACTOR (1/65-1/75)

05H06 HYDRAULIC REMOTE CONTROL CYLINDER ASSEMBLY - 5000, 7000

Ref	Part Number	Qty	Description
	D8NNC846AA	1	Cylinder Assy., 3" (76.199mm) Bore, Includes: Ref. 1 thru 25, No Longer Serviced (NH-E), Years: 01/01/1971-05/31/1973
	D8NNC846AA	1	Cylinder Assy., 3" (76mm) Bore, Includes: Ref. 1 thru 25, No Longer Serviced (NH-E), Start Year: 06/01/1973
	D8NNC846AA	1	Cylinder Assy., 3-1/2" (88.898mm) Bore, Includes: Ref. 1 thru 25, No Longer Serviced (NH-E), Start Year: 06/01/1973
1	D1NNC857B	1	Rod, No Longer Serviced (NH-E), Start Year: 01/01/1971
2	D0NNH921A	1	Tube, 3", Start Year: 01/01/1971
2	D0NNH921B	1	Tube, 3.5", Start Year: 01/01/1971
3	D1NNH896A	1	Clevis, For 3" Tube, No Longer Serviced, Start Year: 01/01/1971
3	D8NNH896AA	1	Clevis, For 3.5" Tube, No Longer Serviced (NH-E), Start Year: 01/01/1971
4	D0NNH900D	2	Ring, For 3" Tube, No Longer Serviced (NH-E), Start Year: 01/01/1971
5	86900100	1	O-Ring, 2.600" ID x .210" Thk, For 3" Tube, Start Year: 01/01/1971
5	E5NNH900AA	2	O-Ring, For 3.5" Tube, Start Year: 01/01/1971
6	D1NNC854A	1	Piston, For 3" Tube, No Longer Serviced, Start Year: 01/01/1971
6	D8NNC854AA	1	Piston, For 3.5" Tube, No Longer Serviced (NH-E), Start Year: 01/01/1971
7	86900100	1	O-Ring, 2.600" ID x .210" Thk, Start Year: 01/01/1971
8	NCA473A	2	Ring, For 3" Tube, Start Year: 01/01/1971
8	D3NNH900A	2	Ring, For 3.5" Tube, U.S., NHNA Only, Start Year: 01/01/1971
9	87020S92	1	O-Ring, .750" ID x .070" Thk, Start Year: 01/01/1971
10	87313	1	Nut, Jam, G2, 3/4"-16, Start Year: 01/01/1971
11	D0NNC847B	4	Rod, Tie, 1/2"-13 x 12-1/8", No Longer Serviced (NH-E), Start Year: 01/01/1971
12	280431	8	Nut, G5, 1/2"-13, Start Year: 01/01/1971
13	D2NNH898A	1	Gland, For 3" Tube, Replaces D1NN-H898-C, No Longer Serviced, Start Year: 01/01/1971
13	D8NNH898AA	1	Gland, For 3.5" Tube, No Longer Serviced (NH-E), Start Year: 01/01/1971
15	D2NNJ914A	1	Seal, Start Year: 01/01/1971
16	D0NNH901B	1	Wiper, No Longer Serviced (NH-E), Start Year: 01/01/1971
16A	D1NNH901A	1	Wiper, Start Year: 01/01/1971
17	D0NNH895B	1	Clevis, Start Year: 01/01/1971
18	9635082	1	Nut, G5, 5/16"-18, Start Year: 01/01/1971
19	86505972	1	Screw, Cap, HH, G5, 5/16"-18 x 2-1/4", NHNA Only, No Longer Serviced, Start Year: 01/01/1971
20	D0NNH899A	2	Pin, Start Year: 01/01/1971
21	311920	4	Pin, Start Year: 01/01/1971
22	D1NNJ903B	1	Key, Replaces D1NN-J903-A, No Longer Serviced (NH-E), Start Year: 01/01/1971
23	D2NNJ901A	1	Washer, Replaces D1NN-J901-A, No Longer Serviced (NH-E), Start Year: 01/01/1971
24	D1NNJ902A	1	Seat, Start Year: 01/01/1971
25	D1NNJ899A	1	Poppet, No Longer Serviced (NH-E), Start Year: 01/01/1971
	WH9315X8X8DS	AR	Adaptor, Swivel, 3/4"-16 Male, 1/2" NPT Female, When using Cylinder on 140 & 142 Plows, Adapter can be used to connect Rear Hose to Cylinder., No Longer Serviced (NH-E), Start Year: 01/01/1971

05H07 LOAD MONITOR CYLINDER HOSE & COUPLING MOUNTING - 5100, 5200, 7100, 7200 (71/5-73)

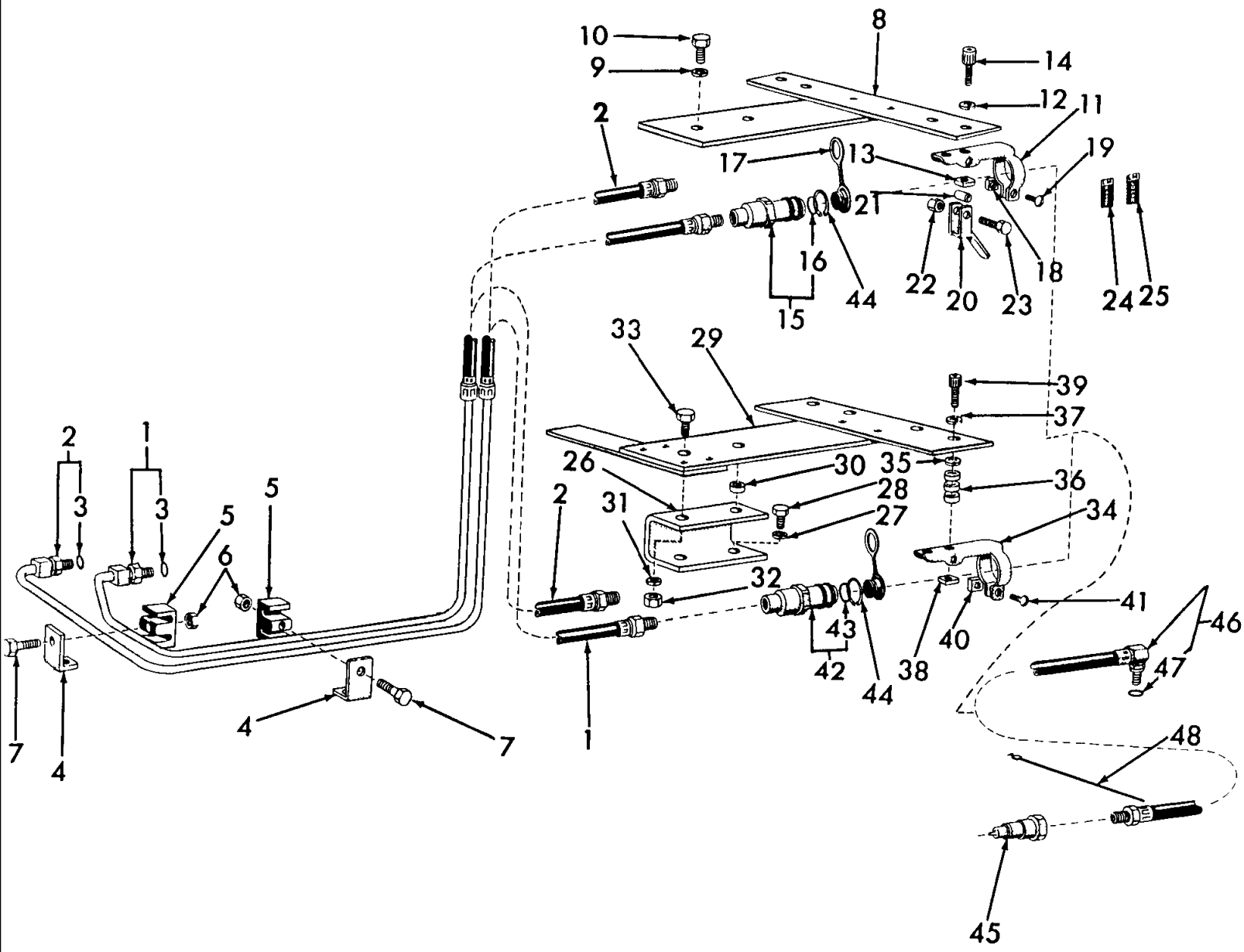

5000-SERIES 4 CYL TRACTOR (1/65-1/75)

05H07 LOAD MONITOR CYLINDER HOSE & COUPLING MOUNTING - 5100, 5200, 7100, 7200 (71/5-73)

Ref	Part Number	Qty	Description
1	D1NNB968D	1	Hose & Tube Assy., Lowering, 19.25" (489.0mm), Rubber Hose End, Includes: Hose & Ref. 3, No Longer Serviced, Years: 01/01/1971-05/31/1973
2	D1NNB968C	1	Hose & Tube Assy., Raising, 17.5" (444.5mm), Rubber Hose End Kit, Pipework & Coupling, w/Pan Seat, Includes: Hose & Ref. 3, No Longer Serviced, Years: 01/01/1971-05/31/1973
3	9617873	2	O-Ring, 90 Duro, .468" ID x .078" Thk, Years: 01/01/1971-05/31/1973
4	D1NNJ963A	2	Bracket, Tube Retaining, No Longer Serviced, Years: 01/01/1971-05/31/1973
5	D1NNJ964A	2	Clamp, Tube Retaining, No Longer Serviced (NH-E), Years: 01/01/1971-05/31/1973
6	7770	2	Nut, Hex, 1/4"-20, Years: 01/01/1971-05/31/1973
7	87716	2	Cap, HH, G5, 1/4"-20 x 1-1/4", Years: 01/01/1971-05/31/1973
8	C9NND916A	1	Bracket Assy., Hose Mounting, 5100, 7100, No Longer Serviced (NHNA), Years: 01/01/1971-05/31/1973
9	81547	2	Washer, Lock, 7/16", Years: 01/01/1971-05/31/1973
10	304668S36	2	Screw, Cap, HH, G5, 7/16"-14 x 7/8", Years: 01/01/1971-05/31/1973
11	C5NNN984A	2	Clamp, Hose Coupling, 5100, No Longer Serviced (NH-E), Years: 01/01/1971-05/31/1973
12	81821693	2	Washer, Lock, 3/8", Years: 01/01/1971-05/31/1973
13	84899	2	Nut, Square, G2, 3/8"-16, 5100, Years: 01/01/1971-05/31/1973
14	82039	2	Screw, Cap, HS, G8, 3/8"-16 x 1-1/4" , 5100, Years: 01/01/1971-05/31/1973
15	772731	2	Housing Assy., Coupling, 5100, Includes: Housing & Ref. 16, Years: 01/01/1971-05/31/1973
16	277634	2	O-Ring, 90 Duro, .799" ID x .103" Thk, Years: 01/01/1971-05/31/1973
17	C7NNN999A	2	Plug, Dust, 5100, 5200, No Longer Serviced (NH-E), Years: 01/01/1971-05/31/1973
18	9635082	2	Nut, G5, 5/16"-18, Years: 01/01/1971-05/31/1973
19	9635884	2	Screw, Cap, HH, G5, 5/16"-18 x 1", Years: 01/01/1971-05/31/1973
20	C5NNN987A	2	Lever, Hose Coupling, 5100, No Longer Serviced. FTO-E, Years: 01/01/1971-05/31/1973
21	C5NNN997A	2	Spacer, Lever, 5100, No Longer Serviced, Years: 01/01/1971-05/31/1973
22	88902	2	Nut, Lock, GC, 3/8"-16, Model 5100, Years: 01/01/1971-05/31/1973
23	304813S36	2	Screw, Cap, HH, G5, 3/8"-1 x 1-7/8", 5100, Years: 01/01/1971-05/31/1973
24	D1NNJ882B	1	Decal, Hose Coupling, RAISE, 5100, Years: 01/01/1971-05/31/1973
25	D1NNJ882C	1	Decal, Lower Hose Coupling, 5100, Years: 01/01/1971-05/31/1973
26	C9NNF985A	1	Support, Plate, 5200, 7200, NHNA Only, No Longer Serviced, Years: 01/01/1971-05/31/1973
27	81547	2	Washer, Lock, 7/16", Years: 01/01/1971-05/31/1973
28	304668S36	2	Screw, Cap, HH, G5, 7/16"-14 x 7/8", Years: 01/01/1971-05/31/1973
29	D0NND946A	1	Mounting Plate Assy., 5200, 7200, NHNA Only, No Longer Serviced, Years: 01/01/1971-05/31/1973
30	356447S2	1	Washer, 1.18 x .54 x 25, NHNA Only, No Longer Serviced, Years: 01/01/1971-05/31/1973
31	81547	2	Washer, Lock, 7/16", Years: 01/01/1971-05/31/1973
32	280717	2	Nut, G5, 7/16"-14, Years: 01/01/1971-05/31/1973
33	9627887	2	Screw, Cap, HH, G5, 7/16"-14 x 1-1/4", 5200, 7200, Years: 01/01/1971-05/31/1973
34	C5NNN984A	2	Clamp, Hose Coupling, 5200, No Longer Serviced (NH-E), Years: 01/01/1971-05/31/1973
35	87016	AR	Washer, SAE, 3/8", 5200, Years: 01/01/1971-05/31/1973
36	356447S2	6	Washer, 1.18 x .54 x .25, 5200, NHNA Only, No Longer Serviced, Years: 01/01/1971-05/31/1973
37	81821693	2	Washer, Lock, 3/8", Years: 01/01/1971-05/31/1973
38	84899	2	Nut, Square, G2, 3/8"-16, 5200, Years: 01/01/1971-05/31/1973
39	302265S8	2	Screw, Socket Hd., 3/8"-16 x 1.75, 5200, NHNA Only, No Longer Serviced, Years: 01/01/1971-05/31/1973

5000-SERIES 4 CYL TRACTOR (1/65-1/75)

05H07 LOAD MONITOR CYLINDER HOSE & COUPLING MOUNTING - 5100, 5200, 7100, 7200 (71/5-73)

Ref	Part Number	Qty	Description
40	280967	2	Nut, Square, G2, 5/16"-18, 5200, No Longer Serviced (NH-E), Years: 01/01/1971-05/31/1973
41	9635884	2	Screw, Cap, HH, G5, 5/16"-18 x 1", 5200, Years: 01/01/1971-05/31/1973
42	D1NNB961A	2	Hose Coupling Housing Assy., 5200, Includes: Housing plus Ref. 43, NHNA Only, No Longer Serviced, Years: 01/01/1971-05/31/1973
43	277634	2	O-Ring, 90 Duro, .799" ID x .103" Thk, 5200, Years: 01/01/1971-05/31/1973
44	86503781	2	Ring, Snap, Ext, 1.56", 5000, Years: 01/01/1971-05/31/1973
45	9801618	2	Hose to Coupling Housing Valve Assy., 5000, Years: 01/01/1971-05/31/1973
45	E8NNB964BA	2	Coupling Valve Assy., Accessory, 5000, Years: 01/01/1971-05/31/1973
46	D1NNB968Y	2	Hose Assy., 125.0" (317.5cm), Replaces D1NN-B968-Z, Includes: Hose plus Ref. 47, No Longer Serviced (NH-E), Years: 01/01/1971-05/31/1973
47	128825	2	O-Ring, 90 Duro, .644" ID x .087" Thk, Years: 01/01/1971-05/31/1973
48	529070	2	Strap, Securing, 5/16" x 14-1/2", Years: 01/01/1971-05/31/1973

05H08 LOAD MONITOR CYLINDER HOSE & COUPLING MOUNTING - 5100, 5200, 7100, 7200 (6-73/)

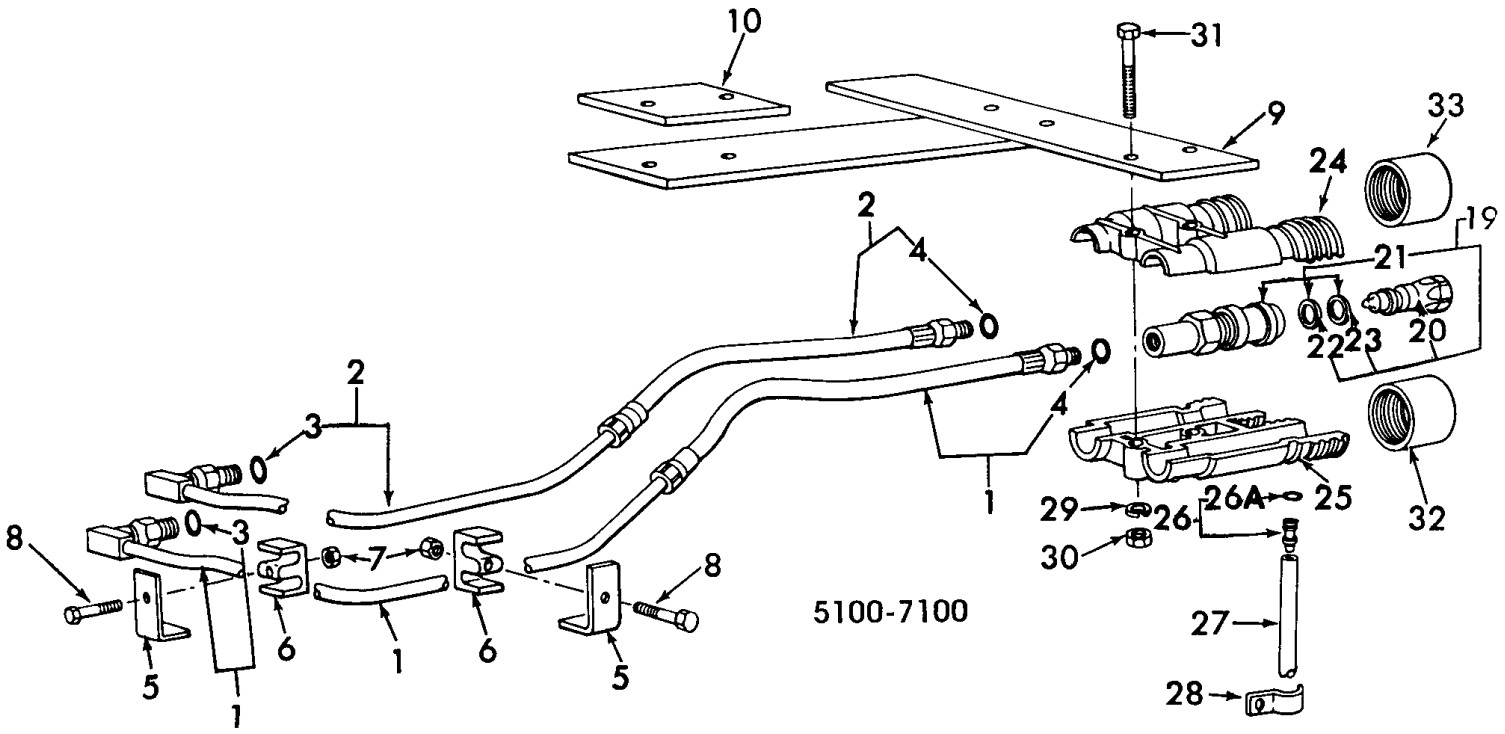

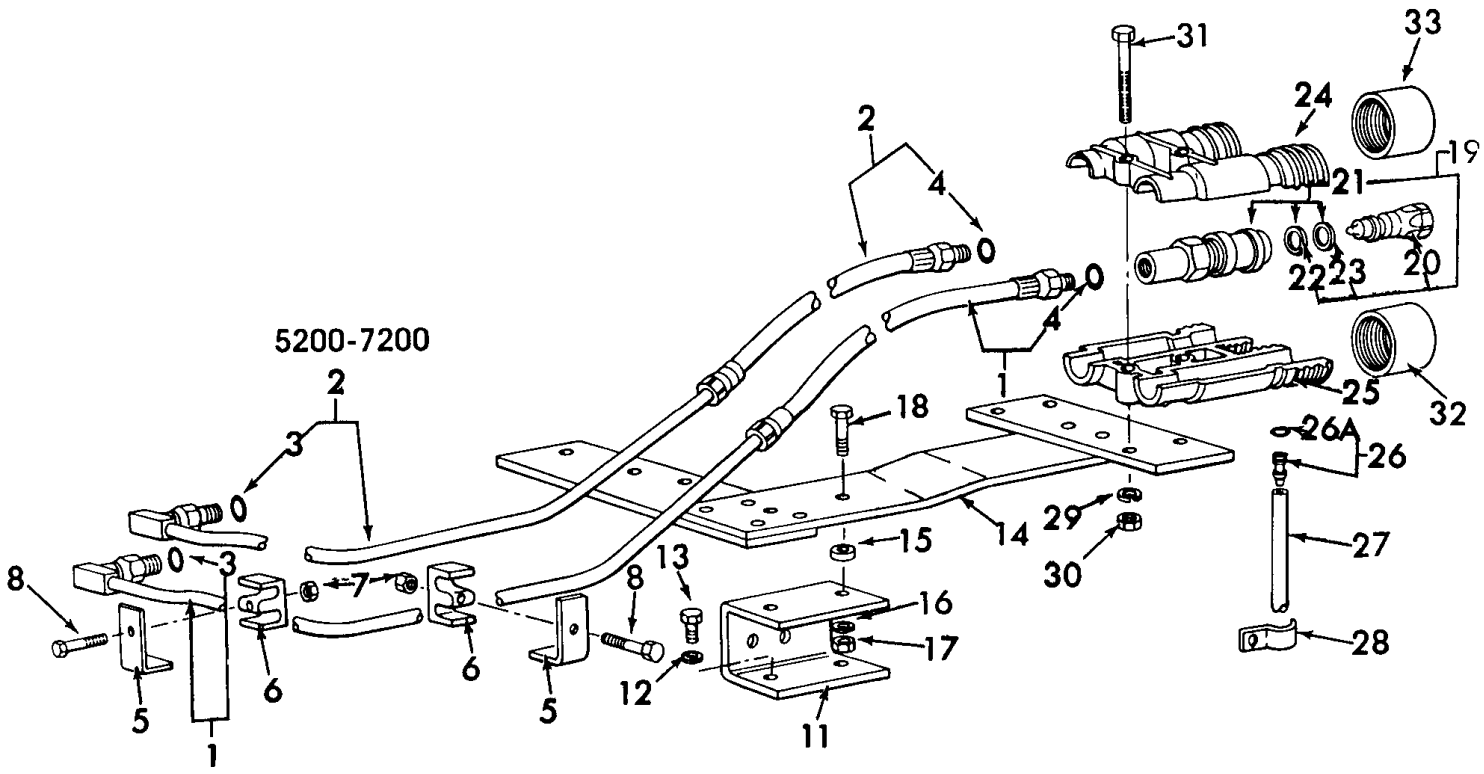

5000-SERIES 4 CYL TRACTOR (1/65-1/75)

05H08 LOAD MONITOR CYLINDER HOSE & COUPLING MOUNTING - 5100, 5200, 7100, 7200 (6-73/)

Ref	Part Number	Qty	Description
1	D2NNB968D	1	Lift Hose & Tube Assy., 5100, 7100, Includes: Hose plus Ref. 3 & 4, No Longer Serviced, Start Year: 06/01/1973
1	D2NNB968E	1	Lift Hose & Tube Assy., 5200, 7200, Includes: Hose plus Ref. 3 & 4, NHNA Only, No Longer Serviced, Start Year: 06/01/1973
2	D2NNB968C	1	Drop Hose & Tube Assy., 5100, 7100, Includes: Hose plus Ref. 3 & 4, No Longer Serviced, Start Year: 06/01/1973
2	D2NNB968F	1	Drop Hose & Tube Assy., 5200, 7200, Includes: Hose plus Ref. 3 & 4, NHNA Only, No Longer Serviced, Start Year: 06/01/1973
3	9617873	2	O-Ring, 90 Duro, .468" ID x .078" Thk, Start Year: 06/01/1973
4	128825	2	O-Ring, 90 Duro, .644" ID x .087" Thk, Start Year: 06/01/1973
5	D1NNJ963A	2	Bracket, Tube Retaining, No Longer Serviced, Start Year: 06/01/1973
6	D1NNJ964A	2	Clamp, Tube Retaining, No Longer Serviced (NH-E), Start Year: 06/01/1973
7	7770	2	Nut, Hex, 1/4" - 20, Start Year: 06/01/1973
8	87716	2	Cap, HH, G5, 1/4"-20 x 1-1/4", Start Year: 06/01/1973
9	D2NND916A	1	Hose Mounting Bracket Assy., 5100, 7100, No Longer Serviced (NHNA), Start Year: 06/01/1973
10	D2NNJ956A	1	Spacer, Mounting Bracket to Seat Mounting, 5100, 7100, Start Year: 06/01/1973
11	C9NNF985A	1	Support, Mounting Bracket, 5200, 7200, NHNA Only, No Longer Serviced, Start Year: 06/01/1973
12	81547	2	Washer, Lock, 7/16", 5200, 7200, Start Year: 06/01/1973
13	304668S36	2	Screw, Cap, HH, G5, 7/16"-14 x 7/8", 5200, 7200, Start Year: 06/01/1973
14	D1NND946A	1	Hose Mounting Bracket Assy., 5200, 7200, Order Components, NHNA Only, No Longer Serviced, Start Year: 06/01/1973
15	356447S2	1	Spacer, 1.18 x .54 x .25, 5200, 7200, NHNA Only, No Longer Serviced, Start Year: 06/01/1973
16	81547	2	Washer, Lock, 7/16", 5200,7200, Start Year: 06/01/1973
17	280717	2	Nut, G5, 7/16"-14, 5200,7200, Start Year: 06/01/1973
18	9627887	2	Screw, Cap, HH, G5, 7/16"-14 x 1-1/4", 5200, 7200, Start Year: 06/01/1973
19	FP505	2	Coupling Hose Assy., Includes: Ref. 20 & 21, Start Year: 06/01/1973
20	9801618	2	Implement End Valve Assy., Start Year: 06/01/1973
20	E8NNB964BA	2	Implement End Valve Assy., Accessory, Start Year: 06/01/1973
21	772731	2	Housing Assy., Includes: Ref. 22 & 23, Start Year: 06/01/1973
22	277634	2	O-Ring, 90 Duro, .799" ID x .103" Thk, Start Year: 06/01/1973
23	FP506	2	Ring, Start Year: 06/01/1973
24	FP493	1	Bracket, Upper Plastic, If Original Bracket is Medal Both Must Be Replaced., Start Year: 06/01/1973
25	FP493	1	Bracket, Lower Plastic, If Original Bracket is Medal Both Must Be Replaced., Start Year: 06/01/1973
26	D5NNJ976A	1	Drip Plastic Fitting Assy., Replaces D1NN-J907-A, Includes: Fitting plus Ref. 26A, Start Year: 06/01/1976
26A	511836	1	O-Ring, .219" ID x .070" Thk, Drip Fitting, Start Year: 06/01/1973
27	D2NNJ908A	1	Hose, Drip Drain, Order D2NN-J908-A and Cut to Proper Length, Start Year: 06/01/1973
28	85700737	2	Clip, Start Year: 06/01/1973
29	81821693	2	Washer, Lock, 3/8", Start Year: 06/01/1973
30	9628503	2	Nut, G5, 3/8"-16, Start Year: 06/01/1973
31	300886S36	2	Screw, Cap, HH, G5, 3/8"-16 x 2-3/4", Start Year: 06/01/1973

5000-SERIES 4 CYL TRACTOR (1/65-1/75)

05H08 LOAD MONITOR CYLINDER HOSE & COUPLING MOUNTING - 5100, 5200, 7100, 7200 (6-73/)

Ref	Part Number	Qty	Description
31	86505980	2	Screw, Cap, HH, G5, 3/8"-16 x 4-1/2", Use When 2 Couplings are Stacked, No Longer Serviced (NH-E), Start Year: 06/01/1973
32	FP492	1	Cap, Blue Lift Coupling Dust, Replaces D3NN-J906-B, Start Year: 06/01/1973
33	FP492	1	Cap, Black Drop Coupling Dust, Replaces D3NN-J906-A, Start Year: 06/01/1973
	D1NNB968Y	2	Hydraulic Cylinder Hose Assy., 125" (317.5cm), Replaces D1NN-B968-Z, Includes Hose plus Seal, No Longer Serviced (NH-E), Start Year: 06/01/1973
	128825	2	O-Ring, 90 Duro, .644" ID x .087" Thk, Start Year: 06/01/1973

05J03 AUTOMATIC PICK-UP HITCH W/ SWINGING DRAWBAR - 5000, 7100

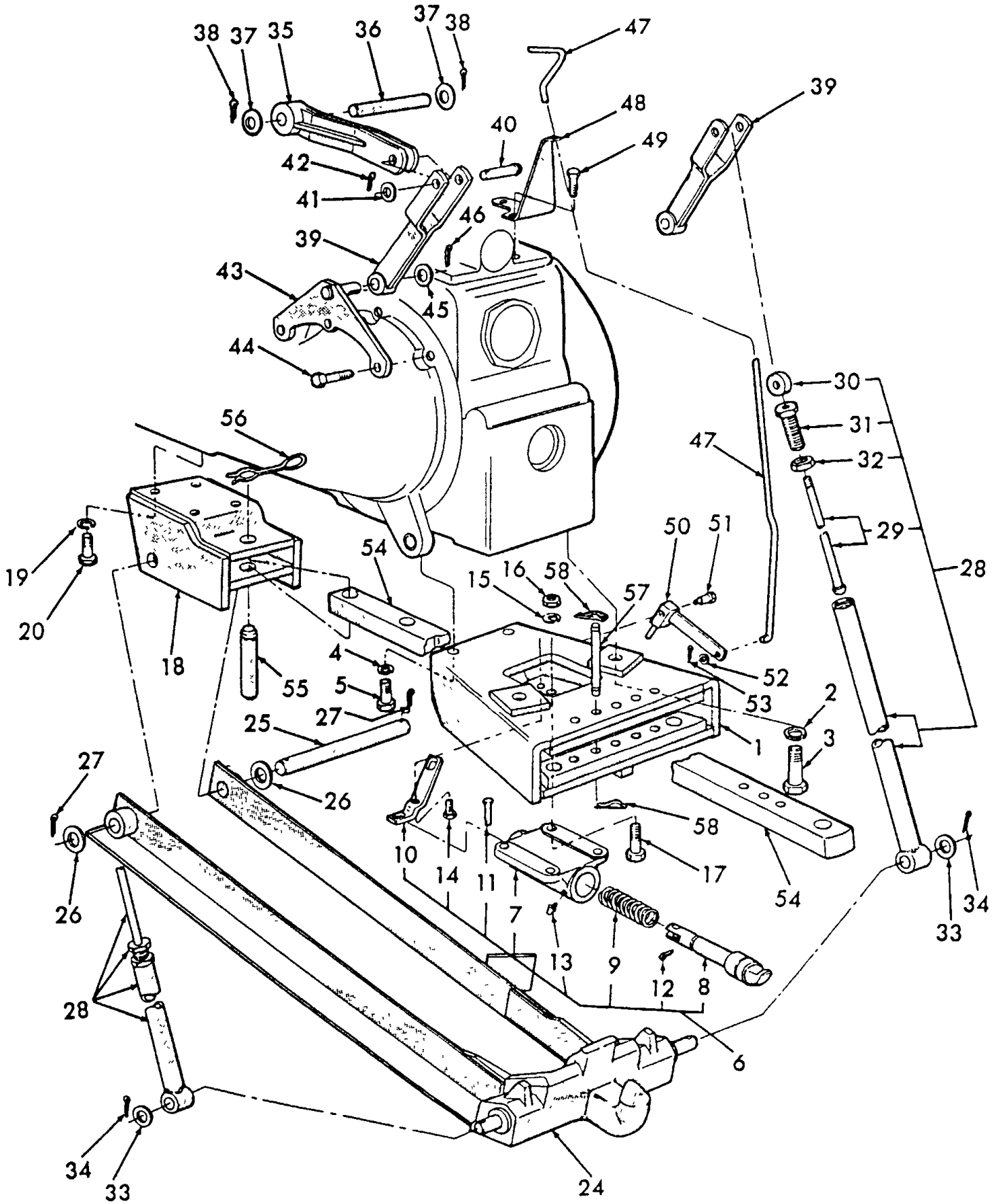

5000-SERIES 4 CYL TRACTOR (1/65-1/75)

05J03 AUTOMATIC PICK-UP HITCH W/ SWINGING DRAWBAR - 5000, 7100

Ref	Part Number	Qty	Description
	CFPNE967M	AR	Kit, Automatic Pickup Hitch, Use w/Pan Seat, Accessory, Replaces CFPN-B967-K, Includes: Ref. 1 thru 53, NH-E Only, No Longer Serviced, Start Year: 01/01/1965
	D6NNE967H	AR	Kit, Automatic Pickup Hitch, L/Drawbar, w/Pan, Seat & 2 Speed PTO, Accessory, Includes: Ref. 1 thru 53, NH-E Only, No Longer Serviced, Start Year: 07/01/1973
	CKPNE967A	AR	Kit, Automatic Pickup Hitch, Use w/Deluxe Seat, Accessory, Includes: Ref. 1 thru 53, NH-E Only, No Longer Serviced, Start Year: 03/01/1969
	NLS	AR	Kit, Automatic Pickup Hitch, w/Deluxe Seat or Deluxe Cab & 2 Speed PTO, Accessory, Includes: Ref. 1 thru 53 {D2NNE967A}, No Longer Serviced, Start Year: 07/01/1973
	C5NNN810C	AR	Kit, Swinging Drawbar, For Automatic Pickup Hitch, Accessory, Includes: Ref. 54 thru 58, NH-E Only, No Longer Serviced, Start Year: 01/01/1965
	D2NNN810A	AR	Kit, Swinging Drawbar, For Pickup Hitch, Use w/2 Speed PTO, Accessory, Includes: Ref. 54 thru 58, NH-E Only, No Longer Serviced, Start Year: 07/01/1973
1	D2NNE901A	1	Hanger Assy., Automatic Hitch & Drawbar, NH-E Only, No Longer Serviced, Start Year: 01/01/1965
2	87341	2	Washer, Lock, 7/8", Start Year: 01/01/1965
3	304887S36	2	Screw, Cap, HH, G5, 7/8"-9 x 2-3/8", Start Year: 01/01/1965
4	34811S36	2	Washer, Lock, 5/8", Start Year: 01/01/1965
5	304768S36	2	Screw, Cap, HH, G5, 5/8"-11 x 1-1/2", Start Year: 01/01/1965
6	C9NNE909A	1	Latch Assy., Hitch, Replaces C5NNE909A, Includes: Ref. 7 thru 13, NH-E Only, Start Year: 01/01/1965
7	C9NNE910A	1	Housing, Replaces C5NNE910A, NH-E Only, No Longer Serviced, Start Year: 01/01/1965
8	C5NNE911A	1	Latch, NH-E Only, Start Year: 01/01/1965
9	E58QF9	1	Spring, No Longer Serviced, Start Year: 01/01/1965
10	C5NNE913A	1	Lever, NH-E Only, Start Year: 01/01/1965
11		1	Pin, Clevis, 3/8" x 1-13/64", NH-E Only, Start Year: 01/01/1965
12	80756	1	Pin, Split Cotter, 1/8" x 3/4", Start Year: 01/01/1965
13		1	Fitting, Lube, 1/4" x 9/16", NH-E Only, Start Year: 01/01/1965
14		1	Bolt, HH, 3/8"-16 x .96, NH-E Only, Start Year: 01/01/1965
15	34811S36	4	Washer, Lock, 5/8", Start Year: 01/01/1965
16	280374	4	Nut, G5, 5/8"-11, Start Year: 01/01/1965
17	82001789	4	Screw, Cap, HH, G5, 5/8"-11 x 1-7/8", Start Year: 01/01/1965
18	C5NNE914A	1	Clevis Assy., Drawbar, No Longer Serviced, Start Year: 01/01/1965
19	34811S36	4	Washer, Lock, 5/8", Start Year: 01/01/1965
20	304768S36	4	Screw, Cap, HH, G5, 5/8"-11 x 1-1/2", Start Year: 01/01/1965
24	C5NNE917B	1	Hook Assy., Hitch, NH-E Only, No Longer Serviced, Start Year: 01/01/1965
25	C5NNE923A	1	Pin, Clevis, 11.84" Lg. (30.07cm), NH-E Only, Start Year: 01/01/1965
26	C0NN3027A	2	Spacer, Clevis, No Longer Serviced (NH-E), Start Year: 01/01/1965
27	72073S36	2	Pin,Split (Cotter), 3/16" x 1-1/2", No Longer Serviced (NHNA), Start Year: 01/01/1965
28	C5NNE924E	2	Rod Assy., Lift, Includes: Sleeve & Ref. 29 thru 32, NH-E Only, Start Year: 01/01/1965
29	C5NNE928A	2	Rod, NH-E Only, Start Year: 01/01/1965
30	C5NNE929A	2	End, NH-E Only, Start Year: 01/01/1965
31	C5NNE930A	2	Guide, NH-E Only, Start Year: 01/01/1965
32		2	Nut, Hex, 15/16"-16, NH-E Only, Start Year: 01/01/1965

05J03 AUTOMATIC PICK-UP HITCH W/ SWINGING DRAWBAR - 5000, 7100

Ref	Part Number	Qty	Description
33	352619S36	2	Washer, Flat, .890 I.D. x 1.50, Start Year: 01/01/1965
34	72073S36	2	Pin,Split (Cotter), 3/16" x 1-1/2", No Longer Serviced (NHNA), Start Year: 01/01/1965
35	D6NNE931A	2	Arm Assy., Lift, NH-E Only, No Longer Serviced, Start Year: 01/01/1965
36	C5NNE935A	2	Pin, 6.68 Lg. (16.97cm), Use w/C5NN-E931-B, NH-E Only, Start Year: 01/01/1965
36	D6NNE935A	2	Pin, Lift Arm, Use w/D6NN-E931-A, NH-E Only, Start Year: 01/01/1965
37	352619S36	4	Washer, Flat, .890 I.D. x 1.50, Start Year: 01/01/1965
38	72073S36	4	Pin,Split (Cotter), 3/16" x 1-1/2", No Longer Serviced (NHNA), Start Year: 01/01/1965
39	C5NNE936A	2	Arm Assy., Idler, NH-E Only, Start Year: 01/01/1965
40		2	Pin, Clevis, 5/8" x 2-13/16", NH-E Only, Start Year: 01/01/1965
41	87365	2	Washer, SAE, 5/8", Start Year: 01/01/1965
42	80755	2	Pin, Split Cotter, 1/8" x 1", Start Year: 01/01/1965
43	C5NNE940A	2	Bracket Assy., Idler Arm Mounting, NH-E Only, No Longer Serviced, Start Year: 01/01/1965
44	304896S36	6	Screw, Cap, HH, G5, 5/8"-11 x 2-1/2", Start Year: 01/01/1965
45	351531S36	2	Washer, Flat, 3/4" x 1.50, Start Year: 01/01/1965
46	72037S8	2	Pin, Split Cotter, 3/16" x 1", No Longer Serviced (NHNA), Start Year: 01/01/1965
47	D3NNE952D	1	Rod, Latch Release, w/Kit CFPN-E967-M, NH-E Only, No Longer Serviced, Start Year: 01/01/1965
47	D3NNE952D	1	Rod, Latch Release, w/Kit D2NN-E967-B, NH-E Only, No Longer Serviced, Start Year: 07/01/1973
47	C7NNE952B	1	Rod, Latch Release, w/Kit CKPN-E967-A, NH-E Only, No Longer Serviced, Years: 03/01/1969-08/31/1969
47	D6NNE952A	1	Rod, Latch Release,, NH-E Only, No Longer Serviced, Start Year: 09/01/1969
47	D6NNE952A	1	Rod, Latch Release, w/Kit CKPN-E967-A, NH-E Only, No Longer Serviced, Start Year: 07/01/1973
47	D3NNE952A	1	Rod, Latch Release, w/Deluxe Cab, Replaces D0NNE952A, NH-E Only, Start Year: 01/01/1965
48	C5NNE953B	1	Bracket, Latch Release Rod, NH-E Only, Years: 01/01/1965-05/31/1968
48	C9NNE953A	1	Bracket, Latch Release Rod, NH-E Only, Start Year: 06/01/1968
49	9707516	2	Screw, Cap, HH, G5, 1/2"-13 x 1-3/4", Start Year: 01/01/1965
50	C5NNE968A	1	Bellcrank Assy., Latch Lever, NH-E Only, No Longer Serviced, Years: 01/01/1965-05/31/1968
50	C9NNE968A	1	Bellcrank Assy., Latch Lever, NH-E Only, Start Year: 06/01/1968
51		1	Bolt, 5/16"-24 x 1.22, NH-E Only, Start Year: 01/01/1965
52	83933065	1	Washer, Flat, 3/8", Start Year: 01/01/1965
53	280250	1	Pin, Split Cotter, 3/32" x 3/4", Start Year: 01/01/1965
54	C5NNE915A	1	Drawbar, Swinging, NH-E Only, No Longer Serviced, Start Year: 01/01/1965
54	D3NNE915A	1	Drawbar, Automatic Pickup Hitch, Swinging, Used w/Large Tires, 44.83" Lg. (1138.7mm), w/2 Speed PTO, No Longer Serviced, Start Year: 07/01/1973
55	C7NN807B	1	Pin, Clevis, 4.26" Lg. (108.20mm), Replaces C5NN807E, NH-E Only, Start Year: 01/01/1965
56	311920	1	Spring, Clevis Pin, Start Year: 01/01/1965
57	C5NNN823D	2	Pin, Adjusting, Start Year: 01/01/1965
58	377361S36	4	Pin, 1/8" x 2-5/16", Start Year: 01/01/1965

05L01 ROWCROP REMOTE CONTROL VALVE KITS - 4200, 5200

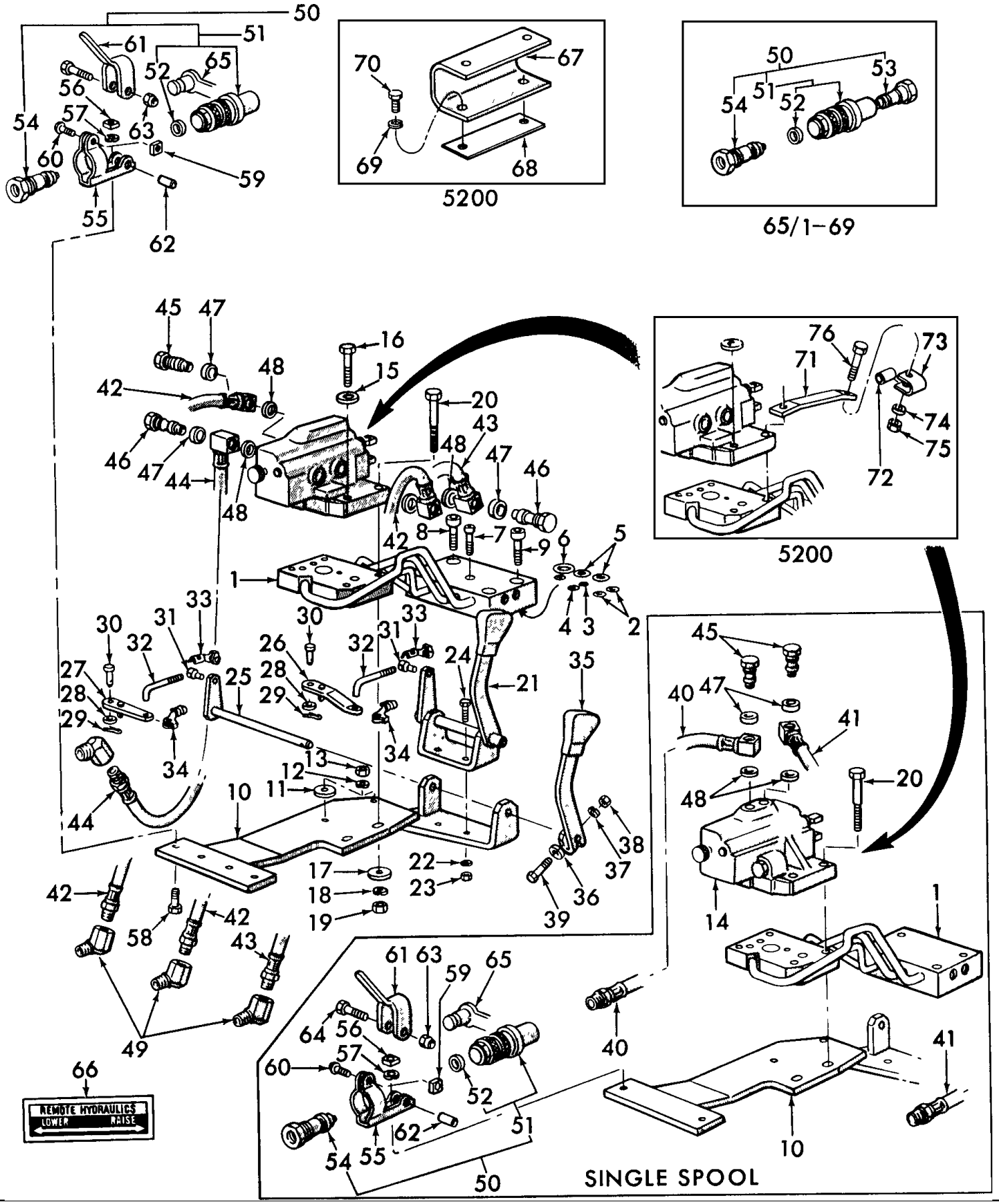

5000-SERIES 4 CYL TRACTOR (1/65-1/75)

05L01 ROWCROP REMOTE CONTROL VALVE KITS - 4200, 5200

Ref	Part Number	Qty	Description
	309723	1	Kit, Remote Control Valve, Single Spool, 4200, Includes: Ref. 1 thru 39, NHNA Only, No Longer Serviced, Years: 01/01/1966-04/30/1970
	309724	1	Kit, Remote Control Valve, Double Spool, 4200, Includes: Ref. 1 thru 39, NHNA Only, No Longer Serviced, Years: 01/01/1966-04/30/1970
	309756	1	Kit, Remote Control Valve, Double Spool, 5200, Includes: Ref. 1 thru 39, NHNA Only, No Longer Serviced, Years: 01/01/1967-07/31/1970
1	C7NND873C	1	Manifold Assy., 4200, NHNA Only, No Longer Serviced, Years: 01/01/1966-04/30/1970
1	C7NND873D	1	Manifold Assy., 5200, NHNA Only, No Longer Serviced, Years: 01/01/1967-07/31/1970
2	229317	6	O-Ring, 90 Duro, .549" ID x .103" Thk, 4200, Years: 01/01/1966-04/30/1970
2	229317	8	O-Ring, 90 Duro, .549" ID x .103" Thk, 5200, Years: 01/01/1967-07/31/1970
3	272217	2	O-Ring, 90 Duro, .426" ID x .070" Thk, 4200, Years: 01/01/1966-04/30/1970
3	272217	1	O-Ring, 90 Duro, .426" ID x .070" Thk, 5200, Years: 01/01/1967-07/31/1970
4	9992298	2	O-Ring, 90 Duro, .489" ID x .070" Thk, 4200, Years: 01/01/1966-04/30/1970
4	9992298	1	O-Ring, 90 Duro, .489" ID x .070" Thk, 5200, Years: 01/01/1967-07/31/1970
5	87035S95	2/6	O-Ring, 90 Duro, .625" ID x .103" Thk, 4200, Years: 01/01/1966-04/30/1970
6	218774	1	O-Ring, 90 Duro, 1.174" ID x .103" Thk, 4200, Years: 01/01/1966-04/30/1970
6	14457581	1	O Ring, .799" ID x .103" Thk , Model 5200, Start Year: 01/01/1967
7	280702	1	Screw, Cap, HS, 5/16"-18 x 1-1/2", 4200, Years: 01/01/1966-04/30/1970
7	302258S2	1	Screw, Socket Hd., 5/16"-18 x 2.0, 5200, NHNA Only, No Longer Serviced, Years: 01/01/1967-07/31/1970
8	302227S	2	Screw, Cap, HS, G8, 7/16"-14 x 1-1/4", 4200, NHNA Only, No Longer Serviced, Years: 01/01/1966-04/30/1970
8	302274S2	4	Screw, Socket Hd., 7/16"-14 x 2", 5200, NHNA Only, No Longer Serviced, Years: 01/01/1967-07/31/1970
9	88079	2	Screw, Cap, HS, 7/16"-14 x 2-3/4", 4200, No Longer Serviced (NH-E), Years: 01/01/1966-04/30/1970
10	C5NND946A	1	Plate Assy., Valve Mounting, NHNA Only, No Longer Serviced, Years: 01/01/1966-04/30/1970
11	44730S8	1	Washer, 7/16", 4200, NHNA Only, No Longer Serviced, Years: 01/01/1966-04/30/1970
12	81547	2	Washer, Lock, 7/16", 4200, Years: 01/01/1966-04/30/1970
13	357905S	2	Nut, Hex, 7/16"-20, 4200, NHNA Only, No Longer Serviced, Years: 01/01/1966-04/30/1970
14	REFERENCE	1	Valve Assy., Single Spool, Refer to Fig. 5G3, Years: 01/01/1966-04/30/1970
15	44730S8	2	Washer, 7/16", NHNA Only, No Longer Serviced, Years: 01/01/1966-04/30/1970
16	304781S36	2	Screw, Cap, HH, G5, 7/16"-14 x 1-5/8", No Longer Serviced (NHNA), Years: 01/01/1966-04/30/1970
17	44731S43	2	Washer, 7/16", NHNA Only, No Longer Serviced, Years: 01/01/1966-04/30/1970
18	81547	2	Washer, Lock, 7/16", Years: 01/01/1966-04/30/1970
19	280717	2	Nut, G5, 7/16"-14, Years: 01/01/1966-04/30/1970
20	88870	2	Screw, Cap, HH, G5, 7/16"-14 x 2-3/4", Years: 01/01/1966-04/30/1970
21	C5NND941A	1	Handle & Shaft Assy., Remote Valve, NHNA Only, No Longer Serviced, Years: 01/01/1966-07/31/1970
22	80681	2	Washer, Lock, 5/16", Years: 01/01/1966-07/31/1970
23	9635082	2	Nut, G5, 5/16"-18, Years: 01/01/1966-07/31/1970
24	280345	2	Screw, Cap, HH, G5, 5/16"-18 x 7/8", Years: 01/01/1966-07/31/1970
25	C5NND938A	1	Shaft Assy., Valve, NHNA Only, No Longer Serviced, Years: 01/01/1966-04/30/1970
26	C5NNE848A	1	Lever Assy., Actuating, Upper, NHNA Only, No Longer Serviced, Years: 01/01/1966-07/31/1970

05L01 ROWCROP REMOTE CONTROL VALVE KITS - 4200, 5200

Ref	Part Number	Qty	Description
27	C5NNE849A	1	Lever Assy., Actuating, Lower, Replaces C5NND866A, NHNA Only, No Longer Serviced, Years: 01/01/1966-04/30/1970
28	87361	2/4	Washer, SAE, 1/4", Years: 01/01/1966-04/30/1970
29	280236	2/4	Pin, Split (Cotter), 1/16" x 1/2", Years: 01/01/1966-04/30/1970
30	73860S36	1/2	Pin, Clevis, 1/4" x 5/8", Years: 01/01/1966-04/30/1970
32	C5NND867A	1/2	Link, Valve Acuating, NHNA Only, No Longer Serviced, Years: 01/01/1966-04/30/1970
33	D9NN9825AB	1/2	Clip, Rod End Clevis, RH, Replaces 1M9825, Years: 01/01/1966-04/30/1970
34	174273	1/2	Clip, Rod End Clevis, LH, Years: 01/01/1966-04/30/1970
35	C7NNC927B	1	Handle Assy., Valve, Lower, Replaces C5NNC927A, NHNA Only, No Longer Serviced, Years: 01/01/1967-04/30/1970
36	87361	2	Washer, SAE, 1/4", Years: 01/01/1966-04/30/1970
37	80682	1	Washer, Lock, 1/4", Years: 01/01/1966-04/30/1970
38	7770	1	Nut, Hex, 1/4"-20, Years: 01/01/1966-04/30/1970
39	381858S36	1	Bolt, 1/4"-20 x 1-1/2", No Longer Serviced (NH-E), Years: 01/01/1966-04/30/1970
40	NSS	1	Hose Assy., 10-3/4" (27.205 cm) Long, No Longer Available, Fabricate Locally, Not Serviced Separately, Years: 01/01/1966-04/30/1970
41	C5NNB968F	1	Hose Assy., 11-1/2" (29.21 cm) Long, No Longer Available, Fabricate Locally, NHNA Only, No Longer Serviced, Years: 01/01/1966-04/30/1970
42	C5NNB968F	2	Hose Assy., 9-3/4" (24.765cm) Long, No Longer Available, Fabricate Locally, NHNA Only, No Longer Serviced, Years: 01/01/1966-07/31/1970
43	C5NNB968D	1	Hose Assy., 11-1/4" (28.575 cm) Long, No Longer Available, Fabricate Locally, NHNA Only, No Longer Serviced, Years: 01/01/1966-07/31/1970
44	C5NNB968D	1	Hose Assy., Valve 13-3/4" (34.925 cm) Long, No Longer Available, Fabricate Locally, NHNA Only, No Longer Serviced, Years: 01/01/1966-07/31/1970
45	311113	2	Bolt, 9/16"-18 x 1.34, Years: 01/01/1966-04/30/1970
46	C5NN3N614B	2	Bolt, 9/16"-18 x 1.62, No Longer Serviced (NH-E), Years: 01/01/1966-07/31/1970
47	128999	2/4	O-Ring, .424" ID x .103" Thk, Years: 01/01/1966-04/30/1970
48	D2NNB997A	2/4	O-Ring .554 I.D. x .099, Years: 01/01/1966-04/30/1970
49	C5NND940A	4	Elbow, Hose to Coupling, NHNA Only, No Longer Serviced, Years: 01/01/1966-07/31/1970
50	FP505	2/4	Coupling Assy., Hose, Includes: Ref. 51, 53 & 54, Years: 01/01/1966-04/30/1970
51	772731	2/4	Housing Assy., Replaces C7NNB961B, Includes: Ref. 52, Years: 01/01/1966-04/30/1970
52	250241	4/8	Seal, Years: 01/01/1966-01/31/1969
52	277634	4/8	O-Ring, 90 Duro, .799" ID x .103" Thk, Years: 02/01/1969-04/30/1970
53	C0NNB963A	2/4	Valve Assy., Tractor Half, No Longer Serviced, Years: 01/01/1966-01/31/1969
54	9801618	2/4	Valve Assy., Implement Half, Years: 01/01/1966-04/30/1970
55	C5NNN984B	2/4	Clamp, Coupling, NHNA Only, No Longer Serviced, Years: 01/01/1966-04/30/1970
56	81821693	2/4	Washer, Lock, 3/8", Years: 01/01/1966-04/30/1970
57	84899	2/4	Nut, Square, G2, 3/8"-16, Years: 01/01/1966-04/30/1970
58	88206	2/4	Screw, Cap, HH, G5, 3/8"-16 x 1", 4200, Years: 01/01/1966-04/30/1970
58	304666S36	4	Screw, Cap, HH, G5, 3/8"-16 x 7/8", 5200, Years: 01/01/1967-07/31/1970
59	9635082	2/4	Nut, G5, 5/16"-18, Years: 01/01/1966-04/30/1970

05L01 ROWCROP REMOTE CONTROL VALVE KITS - 4200, 5200

Ref	Part Number	Qty	Description
60	9635884	2/4	Screw, Cap, HH, G5, 5/16"-18 x 1", Years: 01/01/1966-04/30/1970
61	C5NNN987A	2/4	Lever, Coupling, No Longer Serviced, Years: 01/01/1966-04/30/1970
62	C5NNN997A	2/4	Spacer, Lever, .40 I.D. x .50 O.D. x 1, No Longer Serviced, Years: 01/01/1966-04/30/1970
63	55713S8	2/4	Nut, Hex, 3/8"-16, No Longer Serviced (NH-E), Years: 01/01/1966-04/30/1970
64	304813S36	2/4	Screw, Cap, HH, G5, 3/8"-1 x 1-7/8", Years: 01/01/1966-04/30/1970
65	C7NNN999A	2/4	Plug, Dust, Rubber, No Longer Serviced (NH-E), Years: 01/01/1966-04/30/1970
66	D0NND948A	1	Decal, Remote Hydraulics "Lower-Raise", NHNA Only, No Longer Serviced, Years: 01/01/1966-04/30/1970
67	C9NNF985A	1	Support, Valve, 5200, NHNA Only, No Longer Serviced, Years: 01/01/1967-07/31/1970
68	C5NNF984A	AR	Shim, Support to Cover, 5200, NHNA Only, No Longer Serviced, Years: 01/01/1967-07/31/1970
	44730S8	1	Washer, 7/16", 5200, NHNA Only, No Longer Serviced, Years: 01/01/1967-07/31/1970
69	81547	4	Washer, Lock, 7/16", 5200, Years: 01/01/1967-07/31/1970
	280717	2	Nut, G5, 7/16"-14, 5200, Years: 01/01/1967-07/31/1970
	9637916	1	Screw, Cap, HH, G5, 7/16"-14 x 1-1/2", 5200, Years: 01/01/1967-07/31/1970
	304705S36	1	Screw, Cap, HH, G5, 7/16"-14 x 1-1/8", 5200, Years: 01/01/1967-07/31/1970
70	304668S36	2	Screw, Cap, HH, G5, 7/16"-14 x 7/8", 5200, Years: 01/01/1967-07/31/1970
71	C9NNH886A	1	Arm, Tube Support, NHNA Only, No Longer Serviced, Years: 01/01/1967-04/30/1970
72	C9NNH887A	1	Grommet, Tube Support, NHNA Only, No Longer Serviced, Years: 01/01/1967-04/30/1970
73	C9NNC912A	1	Clamp, Tube, NHNA Only, No Longer Serviced, Years: 01/01/1967-04/30/1970
74	80682	1	Washer, Lock, 1/4", Years: 01/01/1967-04/30/1970
75	7770	1	Nut, Hex, 1/4"-20, Years: 01/01/1967-04/30/1970
76	304737S36	1	Screw, Cap, HH, G5, 1/4"-20 x 1-3/8", No Longer Serviced, Years: 01/01/1967-04/30/1970

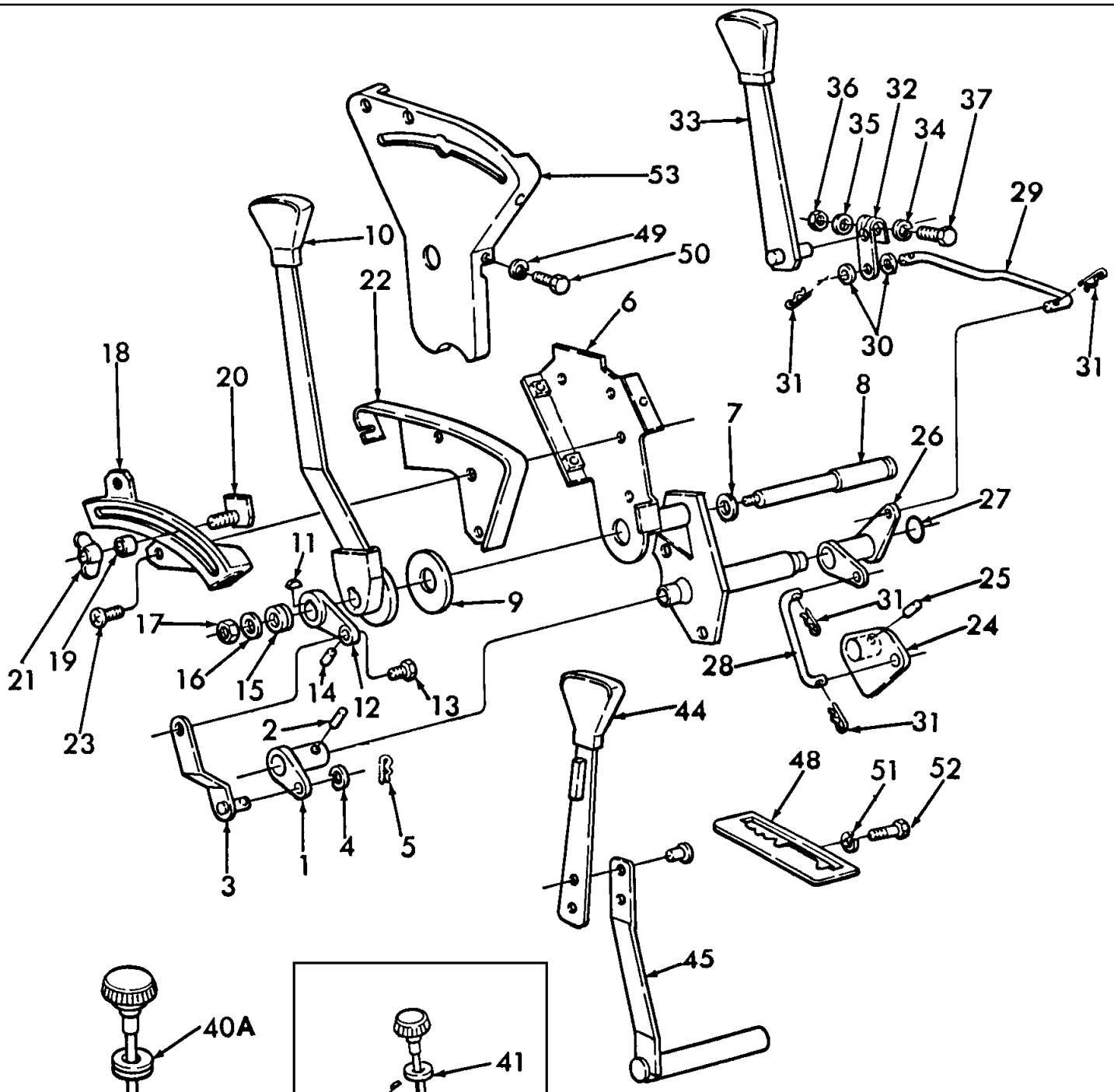
1
2
3
4
5
6
7
8
9
10
11
12
13
14
15
16
17
18
19
20
21
22
23
24
25
26
27
28
29
30
31
31
31
31
32
33
34
35
36
37
44
45
48
49
50
51
52
53

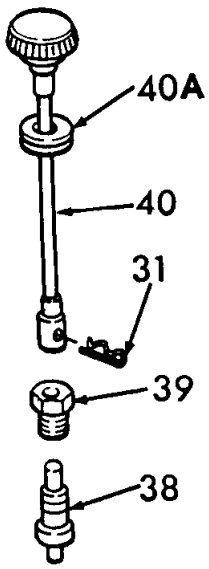
40A
40
31
39
38

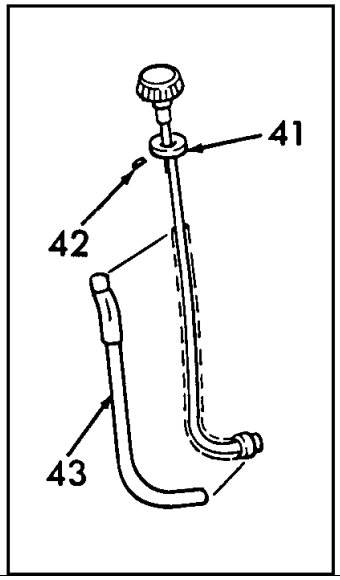
41
42
43

5000-SERIES 4 CYL TRACTOR (1/65-1/75)

05M01 HYDRAULIC CONTROLS - 5200, 7200

Ref	Part Number	Qty	Description
1	C5NNF975A	1	Actuator Assy., Lift Control Shaft, No Longer Serviced, Start Year: 01/01/1967
2	118827	1	Pin, Roll, 3/16" x 1", Start Year: 01/01/1967
3	C5NNG856A	1	Link Assy., Lift Control, NHNA Only, No Longer Serviced, Start Year: 01/01/1967
4	44722S8	1	Washer, 5/16", NHNA Only, No Longer Serviced, Start Year: 01/01/1967
5	352358S36	1	Pin, No Longer Serviced, Start Year: 01/01/1967
6	D1NNF981B	1	Quadrant & Support Assy., Lift Control, No Longer Serviced, Start Year: 01/01/1967
7	C5NNN533B	1	Washer, Lift Shaft Thrust, No Longer Serviced, Start Year: 01/01/1967
8	C5NNF983A	1	Shaft, Lift Operating, No Longer Serviced, Start Year: 01/01/1967
9	C5NN518C	1	Disc, Lift Control Friction, Start Year: 01/01/1967
10	C5NN512B	1	Lever Assy., Lift Control, NHNA Only, No Longer Serviced, Start Year: 01/01/1967
11	74179S	1	Woodruff, 7/8" x 5/32", NHNA Only, No Longer Serviced, Start Year: 01/01/1967
12	C7NNF979A	1	Lever, Lift Operating, No Longer Serviced, Start Year: 01/01/1967
13	382415S36	1	Pin, Clevis, .310 x .63, No Longer Serviced, Start Year: 01/01/1967
14	72209S	1	Pin, Groove, Type A, 3/32" x 11/16", NHNA Only, No Longer Serviced, Start Year: 01/01/1967
15	E1ADDN522B	1	Washer, Control Shaft, Start Year: 01/01/1967
16	44730S8	1	Washer, 7/16", NHNA Only, No Longer Serviced, Start Year: 01/01/1967
17	55716S7	1	Nut, Lock, 7/16"-20, Start Year: 01/01/1967
18	D1NND947B	1	Retainer Assy., Lift Control Lever, No Longer Serviced, Start Year: 01/01/1967
19	PL	1	Spacer, Lift Control Lever Retainer, Procure Locally, Start Year: 01/01/1967
20	C5NNA953D	1	Stop Assy., Control Lever, Start Year: 01/01/1967
21	350890S36	1	Nut, Wing, Stop, 1/4"-28, Start Year: 01/01/1967
22	C5NND864A	1	Cover, Lift Control Quadrant Inner, NHNA Only, No Longer Serviced, Start Year: 01/01/1967
23	51010S7	4	Screw, Pan Hd, W/Washer, 5/16"-18 x 3/4", NHNA Only, No Longer Serviced, Start Year: 01/01/1967
24	C5NNF986A	1	Actuator Assy., Lift Position Control, L/Load Monitor, 5200, No Longer Serviced, Start Year: 01/01/1967
25	87336	1	Pin, Roll, 3/16" x 7/8", L/Load Monitor, 5200, Start Year: 01/01/1967
26	C5NNB903B	1	Lever Assy., Position Control, L/Load Monitor, 5200, NHNA Only, No Longer Serviced, Start Year: 01/01/1967
27	129164	1	Ring, Snap, Ext, .750", L/Load Monitor, 5200, Start Year: 01/01/1967
28	C5NN683E	1	Rod, Position Control, 5-7/8" Long Straight L/Load Monitor, 5200, NHNA Only, No Longer Serviced, Start Year: 01/01/1967
29	C5NN683F	1	Rod, Position Control, 6-3/4" Long Bent, L/Load Monitor, 5200, NHNA Only, No Longer Serviced, Start Year: 01/01/1967
30	44722S8	2	Washer, 5/16", L/Load Monitor, 5200, NHNA Only, No Longer Serviced, Start Year: 01/01/1967
31	352358S36	5	Pin, Self-Locking, No Longer Serviced, Start Year: 01/01/1967
32	C7NNB918D	1	Arm, Position Control, Replaces C5NN-B918-D, L/Load Monitor, 5200, NHNA Only, No Longer Serviced, Start Year: 01/01/1967
33	C7NND943A	1	Handle Assy., Position Control, L/Load Monitor, 5200 Replaces C5NN-D943-B, NHNA Only, No Longer Serviced, Start Year: 01/01/1967
34	87016	1	Washer, SAE, 3/8", L/Load Monitor, 5200, Start Year: 01/01/1967
35	81821693	1	Washer, Lock, 3/8", L/Load Monitor, 5200, Start Year: 01/01/1967
36	9628503	1	Nut, G5, 3/8"-16, L/Load Monitor, 5200, Start Year: 01/01/1967

Ref	Part Number	Qty	Description
37	354452S36	1	Bolt, HH, 3/8"-16 x 1-5/8", L/Load Monitor, 5200, Start Year: 01/01/1967
38	C5NNN957B	1	Stem, Flow Control Valve, Start Year: 01/01/1967
39	C5NNN963B	1	Retainer, Flow Control Valve Stem, No Longer Serviced, Start Year: 01/01/1967
40	D0NND862A	1	Cable & Knob Assy., Flow Control, 9-5/16", Replaces C7NN-D862-A, When Replacing C7NN-D862-A also use D0NN-H925-A, No Longer Serviced, Start Year: 01/01/1967
40A	D0NNH925A	1	Grommet, Cable & Knob Assy, NHNA Only, No Longer Serviced, Start Year: 01/01/1967
41	C5NND857A	1	Collar, Flow Control Cable, L/Load Monitor, 5200, NHNA Only, No Longer Serviced, Years: 01/01/1967-09/30/1970
42	305075S8	1	Pin, Roll, 3/32" x 1", L/Load Monitor, 5200, NHNA Only, No Longer Serviced, Years: 01/01/1967-09/30/197
43	C7NNG970B	1	Conduit Assy., Flow Control Cable, L/Load Monitor, 5200, NHNA Only, No Longer Serviced, Years: 01/01/1967-09/30/1970
44	D1NNA679B	1	Lever & Key Assy., Load Monitor Actuating Upper, w/Load Monitor, NHNA Only, No Longer Serviced, Start Year: 01/01/1971
45	D1NNA678A	1	Lever & Tube Assy., Load Monitor Actuating, Lower, w/Load Monitor, No Longer Serviced, Start Year: 01/01/1971
	NSS	2	Rivet, RDH, 5/16" x 1", Upper, Lever to Lower, w/Load Monitor, Not Serviced Separately, Start Year: 01/01/1971
48	D1NNA666F	1	Quadrant, Load Monitor, w/Load Monitor, No Longer Serviced, Start Year: 01/01/1971
49	87362	4	Washer, SAE, 5/16", W/Load Monitor, Start Year: 01/01/1971
50	50830S36	4	Screw, Pan Hd, W/Washer, 5/16"-18 x 3/4", W/Load Monitor, NHNA Only, No Longer Serviced, Start Year: 01/01/1971
51	81821693	2	Washer, Lock, 3/8", Start Year: 01/01/1971
52	88814	2	Screw, Cap, HH, G5, 3/8"-16 x 1/2", W/Load Monitor, 5200, Start Year: 01/01/1971
53	D1NNJ878A	1	Cover Assy., Quadrant, w/Load Monitor, Replaces D1NN-J881-A, NHNA Only, No Longer Serviced, Start Year: 01/01/1971
	E2151T9	1	Kit, Hudraulic, O-Ring, 2100, 3100, 4100, Includes Parts listed below, NH-E Only, Start Year: 01/01/1965
	D1NN473A	1	O-Ring
	D1NN473C	1	O-Ring
	86900100	1	O-Ring, 2.600" ID x .210" Thk
	C5NN533A	1	O-Ring
	C9NNH893A	2	Seal
	C5NNN917A	2	Seal
	129270	5	O-Ring, 90 Duro, .414" ID x .072" Thk
	9992298	1	O-Ring, 90 Duro, .489" ID x .070" Thk
	87016S95	1	O-Ring, 90 Duro, .625" ID x .070" Thk
	229317	5	O-Ring, 90 Duro, .549" ID x .103" Thk
	87035S95	3	O-Ring, 90 Duro, .625" ID x .103" Thk, Not Serviced Separately
	218774	1	O-Ring, 90 Duro, 1.174" ID x .103" Thk
	9825770	6	O-Ring, 90 Duro, .301" ID x .070" Thk
	E2152T9	1	Kit, Hydraulic O-Ring, 5100, Includes parts listed below, NH-E Only, Start Year: 01/01/1965
	E82GF9	2	Seal

Ref	Part Number	Qty	Description
	C9NNH893A	1	Seal
	D1NNJ912A	1	Seal, No Longer Serviced (NHNA)
	C5NNN917A	1	Seal
	9823669	1	O-Ring, M13.46 ID x 2.08 Thk
	C7NNG997A	1	Seal
	272344	9	O-Ring, 90 Duro, .487" ID x .103" Thk
	14457281	1	O-Ring, M15.54 ID x 2.62 Thk
	272142	1	O-Ring, 90 Duro, .674" ID x .103" Thk
	87037S94	1	O-Ring, .750" ID x .103" Thk
	14457581	1	O-Ring, .799" ID x .103" Thk
	167269	1	O-Ring, 90 Duro, .755" ID x .097" Thk
	229317	5	O-Ring, 90 Duro, .549" ID x .103" Thk
	87035S95	1	O-Ring, 90 Duro, .625" ID x .103" Thk

05N01 QUICK ATTACH HITCH, SERIES 796

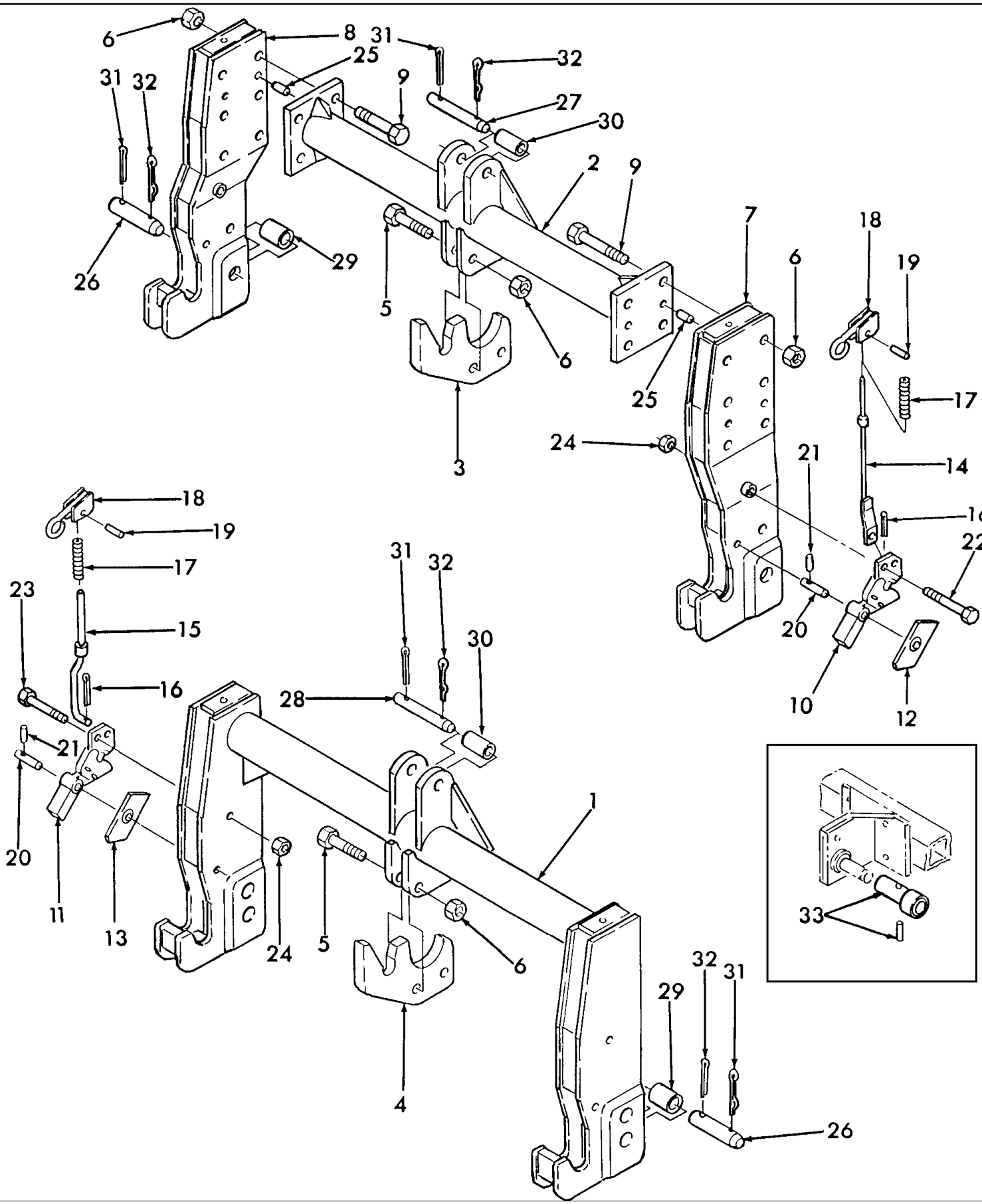

5000-SERIES 4 CYL TRACTOR (1/65-1/75)

05N01 QUICK ATTACH HITCH, SERIES 796

Ref	Part Number	Qty	Description
	NLS	1	Quick Hitch, Cat. II & III, Series 796-3, Includes: Ref. 1 thru 32 {19PE4610}, No Longer Serviced, Start Year: 01/01/1975
	NLS	1	Quick Hitch, Cat. II, Series 796-2, Includes: Ref. 1 thru 32 {19PE4950}, No Longer Serviced, Start Year: 01/01/1975
1	NLS	1	Hitch Assy., Cat. II, No Longer Serviced, Start Year: 01/01/1975
2	PECPA64919	1	Tube, Cat. II & III, NHNA Only, No Longer Serviced, Start Year: 01/01/1975
3	PEC64953	1	Lug, NHNA Only, Start Year: 01/01/1975
4	PEC64724	1	Lug, NHNA Only, Start Year: 01/01/1975
5	PL	2	Bolt, HH, 3/4" x 3", Procure Locally, Start Year: 01/01/1975
6	PL	10/2	Nut, Lock, Hex, 3/4", Procure Locally, Start Year: 01/01/1975
7	PECPA64927	1	Bracket, Hitch, R.H., NHNA Only, No Longer Serviced, Start Year: 01/01/1975
8	PECPA64941	1	Bracket, Hitch, L.H., NHNA Only, Start Year: 01/01/1975
9	PL	8	Bolt, HH, 3/4" x 4-1/4", Procure Locally, Start Year: 01/01/1975
10	PECUA67148	1	Lever & Lock Assy., R.H., NHNA Only, Start Year: 01/01/1975
10	PECUA67147	1	Lever & Lock Assy., L.H., NHNA Only, No Longer Serviced, Start Year: 01/01/1975
11	PECUA64687	1	Lever & Lock Assy., L.H., NHNA Only, No Longer Serviced, Start Year: 01/01/1975
11	PECUA64686	1	Lever & Lock Assy., R.H., NHNA Only, Start Year: 01/01/1975
12	PECPA64696	1	Lever, R.H., NHNA Only, No Longer Serviced, Start Year: 01/01/1975
13	PECPA64697	1	Lever, L.H., NHNA Only, Start Year: 01/01/1975
14	PECPA64948	2	Rod, Lock, NHNA Only, No Longer Serviced, Start Year: 01/01/1975
15	PECPA67174	2	Rod, Lock, NHNA Only, No Longer Serviced, Start Year: 01/01/1975
16	PL	2	Pin, Cotter, 3/16" x 1-1/4", Procure Locally, Start Year: 01/01/1975
17	NS	2	Spring, Not Serviced, Start Year: 01/01/1975
18	PECPA64704	2	Handle, Lock Rod, NHNA Only, No Longer Serviced, Start Year: 01/01/1975
19	PL	2	Pin, Drive, 3/16" x 1 H.D. Drive, Procure Locally, Start Year: 01/01/1975
20	PEC64708	2	Pin, 2-5/8" Lg., NHNA Only, No Longer Serviced, Start Year: 01/01/1975
21	PL	2	Pin, Drive, 3/16" x 7/8", Procure Locally, Start Year: 01/01/1975
22	PL	2	Bolt, HH, 1/2" x 4", Procure Locally, Start Year: 01/01/1975
23	PL	2	Bolt, HH, 1/2" x 3-1/2", Procure Locally, Start Year: 01/01/1975
24	PL	2	Nut, Lock, Hex, 1/2", Procure Locally, Start Year: 01/01/1975
25	PL	4	Pin, Dowel, 1/2" x 1-1/4", Procure Locally, Start Year: 01/01/1975
26	PEC64282	2	Pin, 4-3/4" Lg., NHNA Only, Start Year: 01/01/1975
27	PEC64952	1	Pin, 5-1/2" Lg., NHNA Only, No Longer Serviced, Start Year: 01/01/1975
28	PEC64283	2	Pin, NHNA Only, Start Year: 01/01/1975
29	PEC64284	2	Sleeve, 1-49/64" Lg., NHNA Only, Start Year: 01/01/1975
30	PEC64709	1	Sleeve, 2" Lg., NHNA Only, No Longer Serviced, Start Year: 01/01/1975
31	PL	3	Pin, Cotter, 3/8" x 2-1/2", Procure Locally, Start Year: 01/01/1975
32	PL	3	Pin, Clutch, 3/8" x 1-1/2", Procure Locally, Start Year: 01/01/1975
33	NSS	1	Kit, Sleeve, Cat. II to III, P/N 19PE4520, Includes: (2) Sleeves & (2) Pins, Not Serviced Separately, No Longer Serviced, Start Year: 01/01/1975

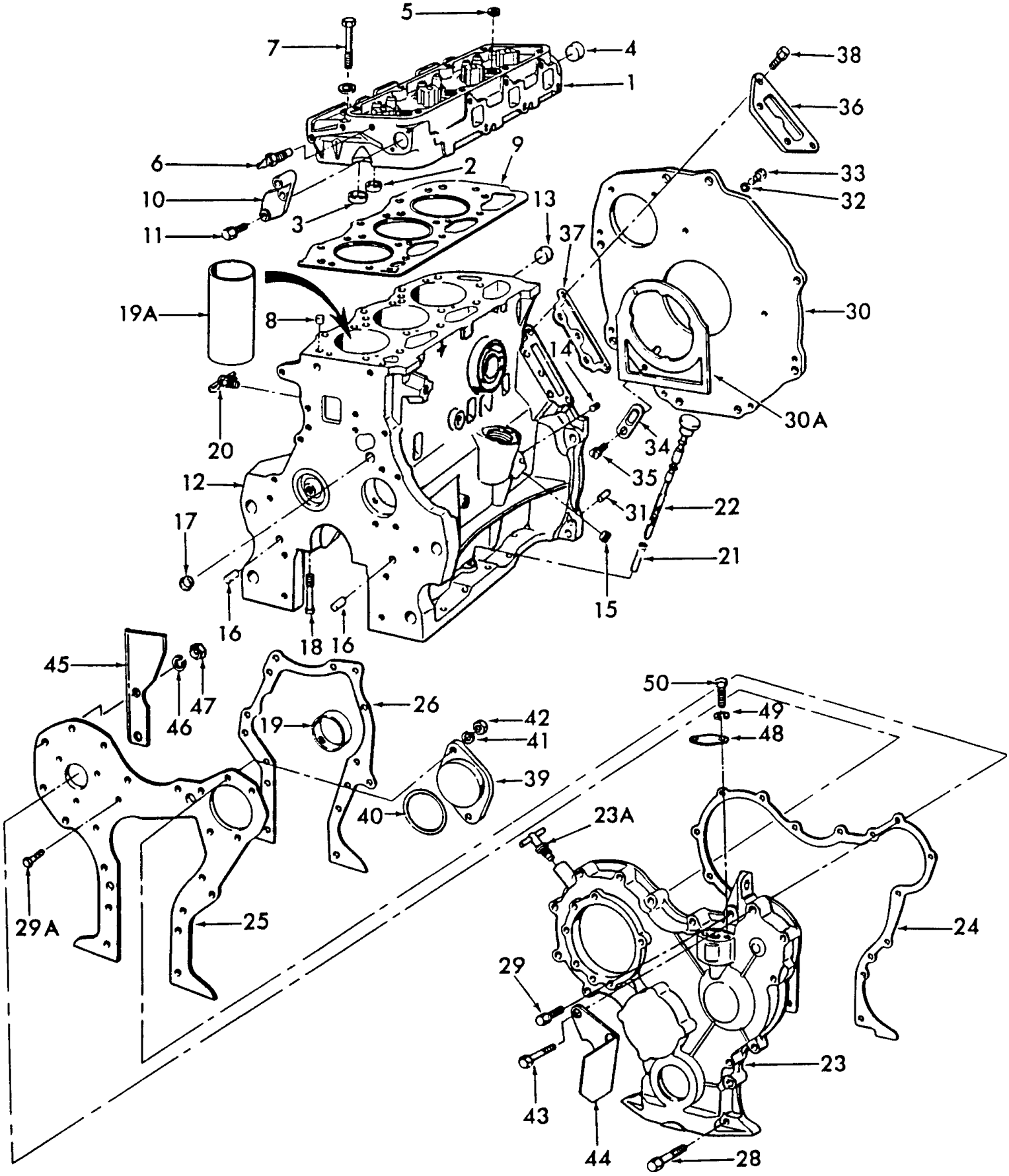
5
7
4
1
38
36
6
9
2
33
32
10
3
13
37
11
19A
8
30
14
30A
20
34
35
12
31
22
17
21
15
16
18
16
45
47
46
26
19
42
41
39
40
23A
50
49
48
29A
25
24
29
23
43
44
28

5000-SERIES 4 CYL TRACTOR (1/65-1/75)

06A01 CYLINDER HEAD, BLOCK & RELATED PARTS, GASOLINE (PETROL) & LPG

Ref	Part Number	Qty	Description
	E6NN6009AXA	1	Short Block Assy., 2000, When Replacing Prior Level Blocks W/E6NN- Level Blocks, also order: (1) E5HN-6N306-AC(81868536), (1) E9NN-6N305-AA(81864356), (1) E5NN-6701-BA, (1) E5HN-6269-AA, (2) D5NN-6A008-A(83905798), (1) FP-576(81869944), (1) FP-115(83956698), (8) 34791-S36, (2) 34792-S36, (8) 304682-S36(81821203), (1) E2NN-6N071-AA(83932724), (1) 87708s36(83902337), (1) 87840404, (1) 43191S2(83948594), (2) 58633S2, (1) FP575(81869941), and (1) 87840406., No Longer Serviced, Start Year: 01/01/1965
	D5NN6009R	1	Short Block Assy., 3000, Includes Ref. 2 thru 6, Start Year: 01/01/1965
	D5NN6009A	1	Short Block Assy., 4000, Start Year: 04/01/1968
	D3NN6009J	1	Short Block Assy., 5000, Replaces C9NN6009F, Order Components, No Longer Serviced (NH-E), Start Year: 04/01/1968
	C5NN6009H	1	Short Block Assy., 5000, Order Components, No Longer Serviced, Years: 01/01/1966-03/31/1968
1	D5NN6049K	1	Head Assy., Cylinder, 2000, Includes: Ref. 2 thru 6, No Longer Serviced (NHNA), Start Year: 01/01/1965
1	E4NN6049CC	1	Head Assy., Cylinder, 3000, 4000, Includes: Ref. 2 thru 6, No Longer Serviced (NHNA), Start Year: 01/01/1965
1	D3NN6049J	1	Head Assy., Cylinder, 5000, Includes: Ref. 2 thru 6, No Longer Serviced, Start Year: 01/01/1966
2	C5NE6056A	3/4	Insert, Intake Valve Seat, Standard, Start Year: 01/01/1965
2	C5NE6056C	AR	Insert, Intake Valve Seat, .010 (.254mm) O/S, Start Year: 01/01/1965
2	C5NE6056B	AR	Insert, Intake Valve Seat, .020 (.508mm) O/S, No Longer Serviced (NHNA), Start Year: 01/01/1965
2	C5NN6056A	AR	Insert, Intake Valve Seat, .030 (.762mm) O/S, Start Year: 01/01/1965
3	C5NE6057A	3/4	Insert, Exhaust Valve Seat, Standard, Start Year: 01/01/1965
3	C5NE6057C	AR	Insert, Exhaust Valve Seat, .010 (.254mm) O/S, Start Year: 01/01/1965
3	C5NE6057B	AR	Insert, Exhaust Valve Seat, .020 (.508mm) O/S, Start Year: 01/01/1965
3	C5NN6057A	AR	Insert, Exhaust Valve Seat, .030 (.762mm) O/S, Start Year: 01/01/1966
4	378862S	1	Plug, Pipe, Threaded, 1-1/2" - 11 x 1/2", Years: 01/01/1965-02/28/1969
4	83957025	1	Plug, 1.75" (44.5mm), Start Year: 03/01/1969
5	370731S	3/4	Plug, Pipe, 3/4", Years: 01/01/1965-03/31/1968
5	380391S	3/4	Plug, Cup, .875 to .877 O.D., Start Year: 04/01/1968
5	81825520	1	Plug, 1/8"-27 NPT, Years: 01/01/1965-03/31/1968
6	C4AH10884A	1	Sender Assy., Water Temperature Indicator, Start Year: 04/01/1968
	D5NN10911A	1	Adapter, Water Temperature Indicator, 1/8"-27 I.D. x 3/8" O.D., Start Year: 01/01/1965
	383442S	AR	Plug, Cup, .931 O.D., Used for O/S Hole in Head, Service Only, Years: 03/01/1969-05/31/1975
	83957026	AR	Plug, 1.81" (46.05mm), Service Only, Start Year: 03/01/1969
	83957022	AR	Plug, 1.18" (30.0mm), Service Only, Start Year: 06/01/1975
7	D5NN6065C	10/13	Bolt, HH, 1/2"-13 x 4-3/4", Start Year: 01/01/1965
	377490S	10/13	Washer, Flat, 1/2", Start Year: 01/01/1965
8	83960218	2	Dowel, Split, .676 x .44, NHNA Only, Start Year: 01/01/1965
9	82845200	1	Gasket, Head, .037" (.940mm) Thick, 2000, 3000, Years: 01/01/1965-10/31/1974
9	C7NN6051S	1	Gasket, Head, .037" (.940mm) Thick, 4100, 4110, Start Year: 01/01/1965
9	87801653	1	Gasket, 3000, 4000, When Replacing D5NN-6049-L(87762760) W/E4NN-6049-CC(83955326), Gasket E4NN-6051-AC must also be used., Start Year: 01/01/1965
9	82845203	1	Gasket, Head, .029" (.737mm) Thick, 5000, Years: 01/01/1966-03/31/1968

5000-SERIES 4 CYL TRACTOR (1/65-1/75)

06A01 CYLINDER HEAD, BLOCK & RELATED PARTS, GASOLINE (PETROL) & LPG

Ref	Part Number	Qty	Description
9	82845202	1	Gasket, Head, .037" (.940mm) Thick, 5000, Years: 04/01/1968-05/31/1976
10	D3NN6C052A	1	Cover, Water Outlet, Start Year: 01/01/1965
	80681	2	Washer, Lock, 5/16", Start Year: 01/01/1965
11	304701S36	2	Screw, Cap, HH, G5, 5/16"-18 x 1-1/8", Start Year: 01/01/1965
12	E2NN6010AC	1	Block Assy., 2000, 3000, Includes: Ref. 13 Thru 19, When Replacing Prior Level Blocks W/E6NN- Level Blocks, also order: (1) E5HN-6N306-AC(81868536), (1) E9NN-6N305-AA(81864356), (1) E5NN-6701-BA, (1) E5HN-6269-AA, (2) D5NN-6A008-A(83905798), (1) FP-576(81869944), (1) FP-115(83956698), (8) 34791-S36, (2) 34792-S36, (8) 304682-S36(81821203), (1) E2NN-6N071-AA(83932724), (1) 87708s36(83902337), (1) 87840404, (1) 43191S2(83948594), (2) 58633S2, (1) FP575(81869941), and (1) 87840406., Start Year: 01/01/1965
12	E2NN6010BA	1	Block Assy., Cylinder, 4000, Includes: Ref. 13 Thru 19, When Replacing Prior Level Blocks W/E6NN- Level Blocks, also order: (1) E5HN-6N306-AC(81868536), (1) E9NN-6N305-AA(81864356), (1) E5NN-6701-BA, (1) E5HN-6269-AA, (2) D5NN-6A008-A(83905798), (1) FP-576(81869944), (1) FP-115(83956698), (8) 34791-S36, (2) 34792-S36, (8) 304682-S36(81821203), (1) E2NN-6N071-AA(83932724), (1) 87708s36(83902337), (1) 87840404, (1) 43191S2(83948594), (2) 58633S2, (1) FP575(81869941), and (1) 87840406., Start Year: 01/01/1965
12	E2NN6010CC	1	Block Assy., Replaces C5NN6010M, 5000, Includes: Ref. 13 Thru 19, When Replacing Prior Level Blocks W/E6NN- Level Blocks, also order: (1) E5HN-6N306-AC(81868536), (1) E9NN-6N305-AA(81864356), (1) E5NN-6701-BA, (1) E5HN-6269-AA, (2) D5NN-6A008-A(83905798), (1) FP-576(81869944), (1) FP-115(83956698), (8) 34791-S36, (2) 34792-S36, (8) 304682-S36(81821203), (1) E2NN-6N071-AA(83932724), (1) 87708s36(83902337), (1) 87840404, (1) 43191S2(83948594), (2) 58633S2, (1) FP575(81869941), and (1) 87840406., Start Year: 01/01/1966
13	378862S	4/5	Plug, Pipe, Threaded, 1-1/2" - 11 x 1/2", Years: 01/01/1965-06/30/1968
13	83957025	4/5	Plug, 1.75" (44.5mm), Years: 07/01/1968-10/31/1970
13	83957023	4/5	Plug, 1.50" (38.0mm), Start Year: 11/01/1970
13	83957024	AR	Plug, 1.56" (39.6mm), Service Only, Start Year: 11/01/1970
13	9617020	1	Plug, Pipe, HS, 1/4"-18, NPTF, Start Year: 01/01/1965
13	PL	1	Plug, 3/8"-18 x .42, Start Year: 01/01/1965
14	502046	1	Plug, Pipe, 1/8"-27, Start Year: 01/01/1965
15	80781	2	Plug, Pipe, Sq Hd, 3/8"-18, Start Year: 01/01/1965
16	81808472	2	Pin, Dowel, 3/8" x 1-1/8", Start Year: 01/01/1965
17	378336S36	2	Plug, Cup, Start Year: 01/01/1965
18	379548S	8/10	Bolt, HH, 9/16"-12 x 4.45, Replaces C1VE6065C, Start Year: 01/01/1965
	352532S	1	Plug, Cup, 5000, Start Year: 01/01/1966
19	87800499	4/5	Bearing, Camshaft, Front, Start Year: 01/01/1965
19A	C5NN6055A	3	Sleeve, Block, 4.1 I.D. x 4.32 O.D., Service Only, 2000, 3000, Start Year: 01/01/1965
19A	C5NN6055A	4	Sleeve, Block, 4.1 I.D. x 4.32 O.D., Service Only, 5000, Years: 01/01/1966-03/31/1968
19A	D7NN6055A	3	Sleeve, Block, 4.3 I.D. x 4.5 O.D., Service Only, 4000, Start Year: 01/01/1965
19A	D7NN6055A	4	Sleeve, Block, 4.3 I.D. x 4.5 O.D., Replaces C9NN6055A, Service Only, 5000, Start Year: 04/01/1968
19A	D0NN6055A	AR	Sleeve, Block, 4.19 I.D. x 4.4 O.D., Service Only Use W/Blocks Rebored to 4.4"-111.76mm, 2000, 3000, Start Year: 01/01/1965

5000-SERIES 4 CYL TRACTOR (1/65-1/75)

06A01 CYLINDER HEAD, BLOCK & RELATED PARTS, GASOLINE (PETROL) & LPG

Ref	Part Number	Qty	Description
20	81465471	1	Cock Assy., Drain, Start Year: 01/01/1965
21	D3NN6784A	1	Tube, Oil Level Indicator, 2.46" Lg. (62.5mm), Start Year: 01/01/1973
21	C5NE6784B	1	Tube, Oil Level Indicator, 1.96" Lg., Years: 01/01/1965-12/31/1972
22	C5NE6750D	1	Indicator, Oil Level, Start Year: 01/01/1965
23	D9NN6059BA	1	Cover, Cylinder Front, Start Year: 01/01/1965
23A	83907851	1	Cap Assy., Oil Fill, Start Year: 01/01/1965
24	83959876	1	Gasket, Front Cover, Start Year: 01/01/1965
25	E5NN6C044BA	1	Plate, Front Cover, Start Year: 01/01/1965
26	83959396	1	Gasket, Front Plate, Start Year: 01/01/1965
28	88346	2	Screw, Cap, HH, G5, 5/16"-18 x 2-1/2", W/Washer, Start Year: 01/01/1965
28	378339S36	12	Screw & Washer Assy., 5/16"-18 x 2.12, Start Year: 01/01/1965
29	88346	1	Screw, Cap, HH, G5, 5/16"-18 x 2-1/2", W/Washer, Start Year: 01/01/1965
29A	45964S36	4	Screw, Cap, HH, G5, Self-Locking, 5/16"-18 x 3/4", Start Year: 01/01/1965
30	E5NN6A373AB	1	Plate, Rear Cover, Start Year: 01/01/1965
30A	C7NN6N008B	1	Gasket, Block to Rear Engine Plate, Start Year: 01/01/1965
31	86505157	2	Dowel, 1/2" x 1", Block to Fly Wheel Housing, Start Year: 01/01/1965
32	80680	3	Washer, Lock, 3/8", Start Year: 01/01/1965
33	88434	3	Screw, Cap, HH, G5, 3/8"-16 x 3/4", Start Year: 01/01/1965
34	81804217	1	Cover, Flywheel Access, Start Year: 01/01/1965
35	83905519	1	Screw & Washer Assy., Filister Hd., 5/16"-18 x 5/8", Start Year: 01/01/1965
36	C7NND852A	1	Cover, Hydraulic Pump Flange, L/Hydraulic Pump, Start Year: 01/01/1965
37	E4NN911AA	1	Gasket, Hydraulic Pump Flange Cover, W/Engine Mounted Pump, Start Year: 01/01/1965
37	81822547	1	Gasket, Hydraulic Pump Flange Cover, L/Engine Mounted Pump, Start Year: 01/01/1965
38	280206	4	Screw, Cap, HH, G5, 3/8"-16 x 1-3/8", Years: 01/01/1965-02/28/1969
38	NLS	4	Screw & Washer Assy., 3/8"-16 x .87 {45306S36}, Not Recommended for new design, No Longer Serviced, Start Year: 03/01/1969
39	81803219	1	Cover, Power Steering Pump, L/Power Steering, Start Year: 01/01/1965
40	379275S94	1	O-Ring, 3.237 I.D. x .103 Width, Start Year: 01/01/1965
41	80680	2	Washer, Lock, 3/8", Start Year: 01/01/1965
42	9628503	2	Nut, G5, 3/8"-16, Start Year: 01/01/1965
43	P0301634	2	Screw, Cap, Flg Hd, G5, 3/8"-16 x 2-1/2", Start Year: 01/01/1965
44	C5NN8N631A	1	Deflector, Fan Air, L.H., Not used in U.K. or Germany, w/Tractor with Pulley Guard, Start Year: 01/01/1965
45	E8NN8N630AA	1	Deflector, Fan Air, LH & RH, L/Cab, Start Year: 01/01/1965
46	80681	2	Washer, Lock, 5/16", Start Year: 01/01/1965
47	9635082	2	Nut, G5, 5/16"-18, Start Year: 01/01/1965
48	C5NN6095A	1	Cover, Fuel Pump Opening, L.P.G., NH-E, 4000, No Longer Serviced, Years: 01/01/1966-12/31/1968
49	80681	2	Washer, Lock, 5/16", 4000 L.P.G., Years: 01/01/1966-12/31/1968
50	280345	2	Screw, Cap, HH, G5, 5/16"-18 x 7/8", 4000 L.P.G., Years: 01/01/1966-12/31/1968

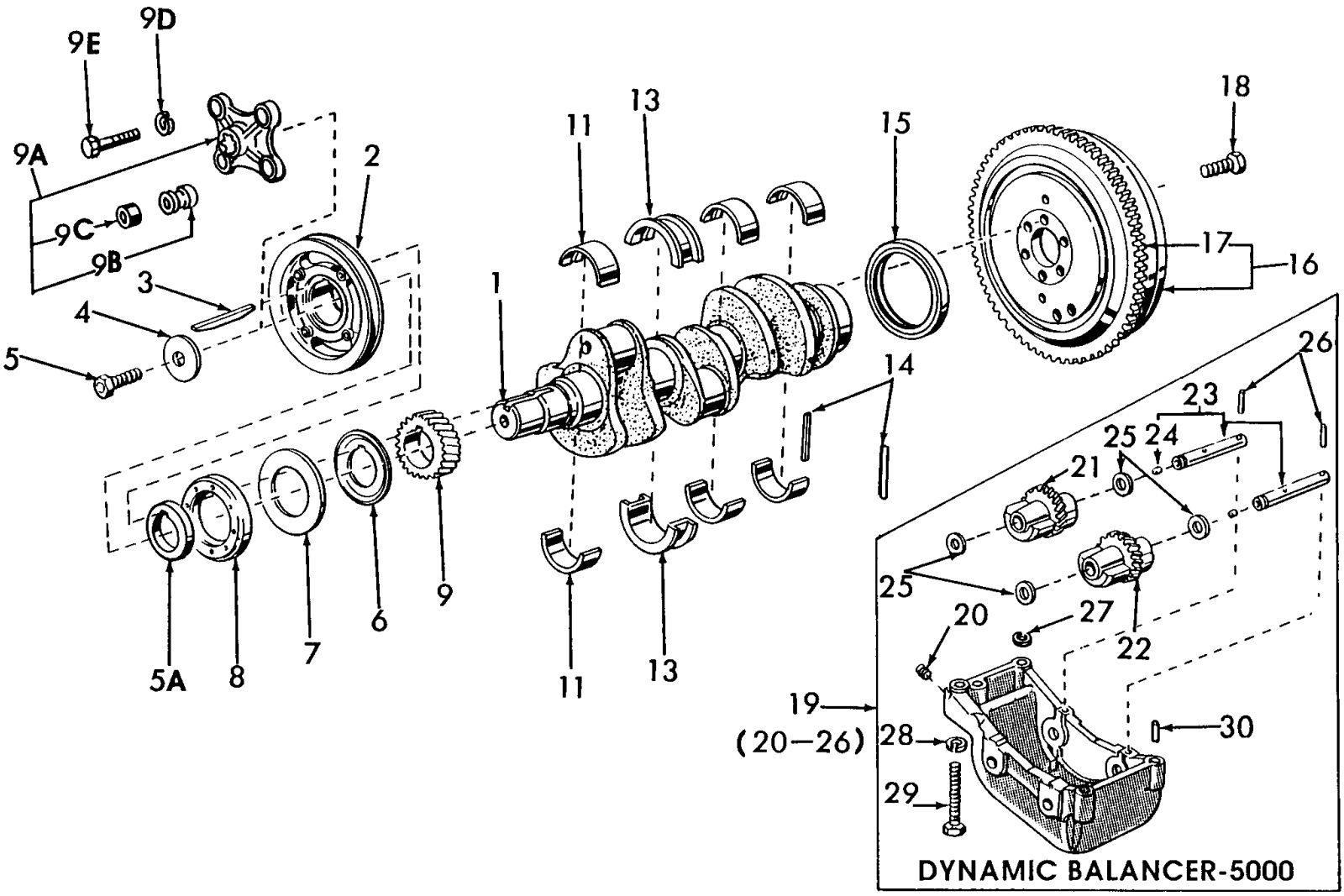
9E
9D
9A
9C
9B
2
3
4
5
5A
8
7
6
9
1
11
13
11
13
15
18
17
16
14
26
23
25
24
21
25
20
27
22
19
(20—26)
28
29
30
DYNAMIC BALANCER-5000

5000-SERIES 4 CYL TRACTOR (1/65-1/75)

06B01 CRANKSHAFT, FLYWHEELS & RELATED PARTS, GASOLINE (PETROL) & L.P.G.

Ref	Part Number	Qty	Description
1	F0NN6300PA	1	Crankshaft, 3.8 Stroke, 2000, 3000, When Replacing With a 4.2 Stroke Crankshaft Use D8NN6108SA(83918840) for Gas Engines or E1NN6108FA(83928616) for Diesel Engines, Start Year: 01/01/1965
1	F0NN6300NA	1	Crankshaft, 4.2 Stroke, 4000, When Using to Replace a 3.8 Stroke Crankshaft Use D8NN6108SA(83918840) for Gas Engines or E1NN6108FA(83928616) for Diesel Engines, Years: 01/01/1965-03/31/1968
1	F0NN6300MA	1	Crankshaft, 4000, Start Year: 04/01/1968
1	F0NN6300FB	1	Crankshaft, Replaces C5NE-6303-K, 5000, Gear Assemblies F1NN-6B302-AA(81873999) & F1NN-6B303-AA(81874001) must be used W/F0NN-6300-FB(81873978)., Start Year: 01/01/1966
2	D5NN6A312B	1	Pulley, Replaces C5NE-6312-F, 2000, 3000, 4000, Start Year: 01/01/1965
2	83903583	1	Pulley, Replaces C5NE-6312-E, 5000, Start Year: 01/01/1966
3	C9NN6N250A	1	Key, Replaces 377483-S, 5/16" x 3/8" x 2.86, Start Year: 01/01/1965
4	83990589	1	Washer, Flat, 3/4", Start Year: 01/01/1965
5	82895561	1	Screw, Cap, HH, G5, 3/4"-16 x 1-3/4", Start Year: 01/01/1965
5A	C5NE6B306A	1	Spacer, Pulley, Start Year: 01/01/1965
6	C5NE6310B	1	Slinger, Oil, Start Year: 01/01/1965
7	C5NE6B309A	1	Seal, Front Dust, Start Year: 01/01/1965
8	87800696	1	Seal Assy., Front Oil, Replaces C5NN-6700-A, NHNA Only, Start Year: 01/01/1965
9	E3NN6306BA	1	Gear, Start Year: 01/01/1965
9A	86509731	1	Hub Assy., Coupling, 3400, 4400, Includes: Ref. 9B & 9C, Start Year: 01/01/1965
9B	86509732	4	Bushing, 3400, 4400, Start Year: 01/01/1965
9C	86509732	4	Block, 3400, 4400, Start Year: 01/01/1965
9D	81547	AR	Washer, Lock, 7/16"
9E	9637916	4	Screw, Cap, HH, G5, 7/16"-14 x 1-1/2", 3400, 4400, Start Year: 01/01/1965
11	87790355	3/4	Kit, Liner, Main Bearing, Standard, Red, Start Year: 01/01/1965
11	87790356	3/4	Kit, Liner, Main Bearing, Standard, Blue, Start Year: 01/01/1965
11	CFPN6333C	3/4	Kit, Liner, Main Bearing, .002 (.508mm) U/S, Start Year: 01/01/1965
11	87790358	3/4	Kit, Liner, Main Bearing, .010" (.254mm) U/S, Start Year: 01/01/1965
11	87790359	3/4	Kit, Liner, Main Bearing, .020" (.508mm) U/S, Start Year: 01/01/1965
11	87790360	3/4	Kit, Liner, Main Bearing, .030" (.762mm) U/S, Start Year: 01/01/1965
11	87790361	3/4	Kit, Liner, Main Bearing, .040" (1.016mm) U/S, Start Year: 01/01/1965
11	87790260	3	Kit, Liner, Main Bearing, Standard, Start Year: 09/01/1992
11	87790261	AR	Kit, Liner, Main Bearing, .002" (.0508mm) U/S, Green, Use if Engine Build Code is 2J01 & later., Start Year: 09/01/1992
11	87790262	AR	Kit, Liner, Main Bearing, .010" (.254mm) U/S, White, Use if Engine Build Code is 2J01 & later., Start Year: 09/01/1992
11	87790263	AR	Kit, Liner, Main Bearing, .020" (.508mm) U/S, Use if Engine Build Code is 2J01 & later., Start Year: 09/01/1992
11	87790264	AR	Kit, Liner, Main Bearing, .030" (.762mm) U/S, Use if Engine Build Code is 2J01 & later., Start Year: 09/01/1992

Ref	Part Number	Qty	Description
11	87790265	AR	Kit, Liner, Main Bearing, .040" (1.016mm) U/S, Use if Engine Build Code is 2J01 & later., Start Year: 09/01/1992
13	87790488	1	Kit, Liner, Thrust Bearing, Standard, Red, Start Year: 01/01/1965
13	87790489	1	Kit, Liner, Thrust Bearing, Standard, Blue, Start Year: 01/01/1965
13	FAPN6337J	1	Kit, Thrust Bearing, .002" (.051mm) U/S, Start Year: 01/01/1965
13	87790491	1	Kit, Liner, Thrust Bearing, .010" (.254mm) U/S, Start Year: 01/01/1965
13	87790492	1	Kit, Liner, Thrust Bearing, .020" (.508mm) U/S, Start Year: 01/01/1965
13	87790493	1	Kit, Liner, Thrust Bearing, .030" (.762mm) U/S, Start Year: 01/01/1965
13	87790494	1	Kit, Liner, Thrust Bearing, .040" (1.02mm) U/S, Start Year: 01/01/1965
13	87790266	1	Kit, Liner, Thrust Bearing, Standard, Use if Engine Build Code is 2J01 & later., Start Year: 09/01/1992
13	87790267	1	Kit, Liner, Thrust Bearing, .002" (.0508mm) U/S, Green, Use if Engine Build Code is 2J01 & later., Start Year: 09/01/1992
13	87790268	1	Kit, Liner, Thrust Bearing, .010" (.254mm) U/S, White, Use if Engine Build Code is 2J01 & later., Start Year: 09/01/1992
13	87790269	1	Kit, Liner, Thrust Bearing, .020" (.508mm) U/S, Use if Engine Build Code is 2J01 & later., Start Year: 09/01/1992
13	87790270	1	Kit, Liner, Thrust Bearing, .030" (.762mm) U/S, Use if Engine Build Code is 2J01 & later., Start Year: 09/01/1992
13	87790271	1	Kit, Liner, Thrust Bearing, .040" (1.016mm) U/S, Use if Engine Build Code is 2J01 & later., Start Year: 09/01/1992
14	E4NN6336AB	2	Seal, Rear Main Bearing Cap, Replaces C1TE-6336-A Includes: Ref. 2, Start Year: 01/01/1965
15	83955247	1	Seal Assy., Rear Oil, Start Year: 01/01/1965
16	C5NE6375BA	1	Flywheel Assy., 10 Speed Transmission, 2000, 3000, 4000, No Longer Serviced (NHNA), Start Year: 01/01/1965
16	C6NE6375B	1	Flywheel Assy., 10 Speed Transmission, 5000, No Longer Serviced, Years: 01/01/1966-05/31/1971
16	D1NN6375B	1	Flywheel Assy., 10 Speed Transmission, No Longer Serviced, Start Year: 06/01/1971
16	C5NE6375AT	1	Flywheel Assy., Single Clutch, 11", 27.94cm, 2100, 2110, 3100, Years: 01/01/1965-09/30/1969
16	C5NE6375AT	1	Flywheel Assy., W/Torque Converter Transmission, 3500, 4500, Start Year: 04/01/1968
16	C5NE6375AT	1	Flywheel Assy., W/Torque Converter, 3550, Start Year: 01/01/1972
16	C7NN6375R	1	Flywheel Assy., Single Clutch, 11" (927.94cm), 2100, 2110, 3100, 3500, No Longer Serviced, Start Year: 10/01/1969
16	C7NN6375R	1	Flywheel Assy., 3400, No Longer Serviced, Years: 10/01/1969-06/30/1974
16	D3NN6375B	1	Flywheel Assy., Use W/13" Single Clutch, 3400, Start Year: 07/01/1974
16	C5NE6375AU	1	Flywheel Assy., Single Clutch, 11" (27.94cm), 4100, 4200, 4400, Years: 01/01/1965-09/30/1969
16	C5NE6375AU	1	Flywheel Assy., 4100, Years: 05/01/1971-12/31/1975
16	C7NN6375L	1	Flywheel Assy., Single Clutch, 11", NH-E, 4200, No Longer Serviced, Start Year: 10/01/1969
16	C7NN6375L	1	Flywheel Assy., Single Clutch, 11", 4100, 4410, 4500, No Longer Serviced, Years: 10/01/1969-09/30/1971
16	C7NN6375L	1	Flywheel Assy., Single Clutch, 11", 4100, No Longer Serviced, Years: 10/01/1969-05/01/1971
16	C5NE6375AZ	1	Flywheel Assy., Double Clutch, 11" x 8-1/2" (27.94 x 21.59) 2100, 2110, 3100, 3400, 4110, Start Year: 01/01/1965

06B01 CRANKSHAFT, FLYWHEELS & RELATED PARTS, GASOLINE (PETROL) & L.P.G.

Ref	Part Number	Qty	Description
16	C5NE6375AV	1	Flywheel Assy., Single Clutch, 12" (30.48cm), 3400, 3500, No Longer Serviced, Years: 01/01/1965-09/30/1969
16	C6NE6375A	1	Flywheel Assy., Single Clutch, 12" (30.48cm), 5100, 5200, No Longer Serviced, Years: 01/01/1966-09/30/1969
16	D1NN6375C	1	Flywheel Assy., Single Clutch, 12" (30.48cm), 5100, 5200, No Longer Serviced (NHNA), Start Year: 06/01/1971
16	C7NN6375J	1	Flywheel Assy., Single Clutch, 11" (27.94cm), 5100, 5200, No Longer Serviced, Years: 10/01/1969-05/31/1971
16	C5NE6375BB	1	Flywheel Assy., Single Clutch, 13" (33.02cm), 4400, 4410, 4500, Years: 01/01/1965-09/30/1969
16	C5NE6375BB	1	Flywheel Assy., 3550, 4400, 4410, 4500, Start Year: 10/01/1971
16	C5NN6375A	1	Flywheel Assy., 13" Single Clutch, 5100, Includes Ref. 17, Start Year: 01/01/1966
17	C5NE6384B	1	Gear, Ring, 162 Teeth, Start Year: 01/01/1965
17	C5NE6384B	1	Gear, Ring, 5000, Years: 01/01/1966-05/31/1971
17	83949153	1	Gear, Ring, 128 Teeth, 5000, Start Year: 06/01/1971
18	83909956	6	Screw, Cap, HH, G8, Self-Locking, 9/16"-18 x 1-5/8", Start Year: 01/01/1965
19	D9NN6A311AD	1	Balancer Assy., Dynamic, Replaces C5NE-6A307-B, Includes: Ref. 20 thru 26, Start Year: 01/01/1966
20	82926929	1	Plug, Pipe, Socket, 1/16"-27, Start Year: 01/01/1966
21	D9NN6B302AB	1	Gear Assy., Replaces C5NN-6B302-A, 5000, Start Year: 01/01/1966
21	F1NN6B302AA	1	Gear Assy., Use W/E5NN-6303-EA, Start Year: 01/01/1966
22	D9NN6B303AB	1	Gear Assy., Replaces C5NN-6B303-A, Start Year: 01/01/1966
22	F1NN6B303AA	1	Gear Assy., Use W/E5NN-6303-EA, Start Year: 01/01/1966
23	C5NN6A305A	2	Shaft Assy., Balancer, Includes Ref. 24, Start Year: 01/01/1966
24	EAF66025A	2	Plug, Tapered, Years: 01/01/1966-06/30/1967
24	81825520	2	Plug, Socket, 1/8"-27 NPT, Start Year: 07/01/1967
25	87802137	4	Washer, Balancer Thrust, 1" , 5000, Start Year: 01/01/1966
26	87681	2	Pin, Roll, 5/16" x 1-3/4", 5000, Start Year: 01/01/1966
27	C5NE6B305A	1	Gasket, Dynamic Balancer, 5000, Start Year: 01/01/1966
28	80679	4	Washer, Lock, 1/2", 5000, Start Year: 01/01/1966
29	87972	4	Screw, Cap, HH, G5, 1/2"-13 x 2-1/2", 5000, Start Year: 01/01/1966
30	83960218	2	Dowel, Balancer to Cylinder Block, Replaces C20Z-6A008-A, NHNA Only, Start Year: 01/01/1966

06C01 CAMSHAFT, ROCKER ARM & RELATED PARTS, GASOLINE (PETROL) & L.P.G.

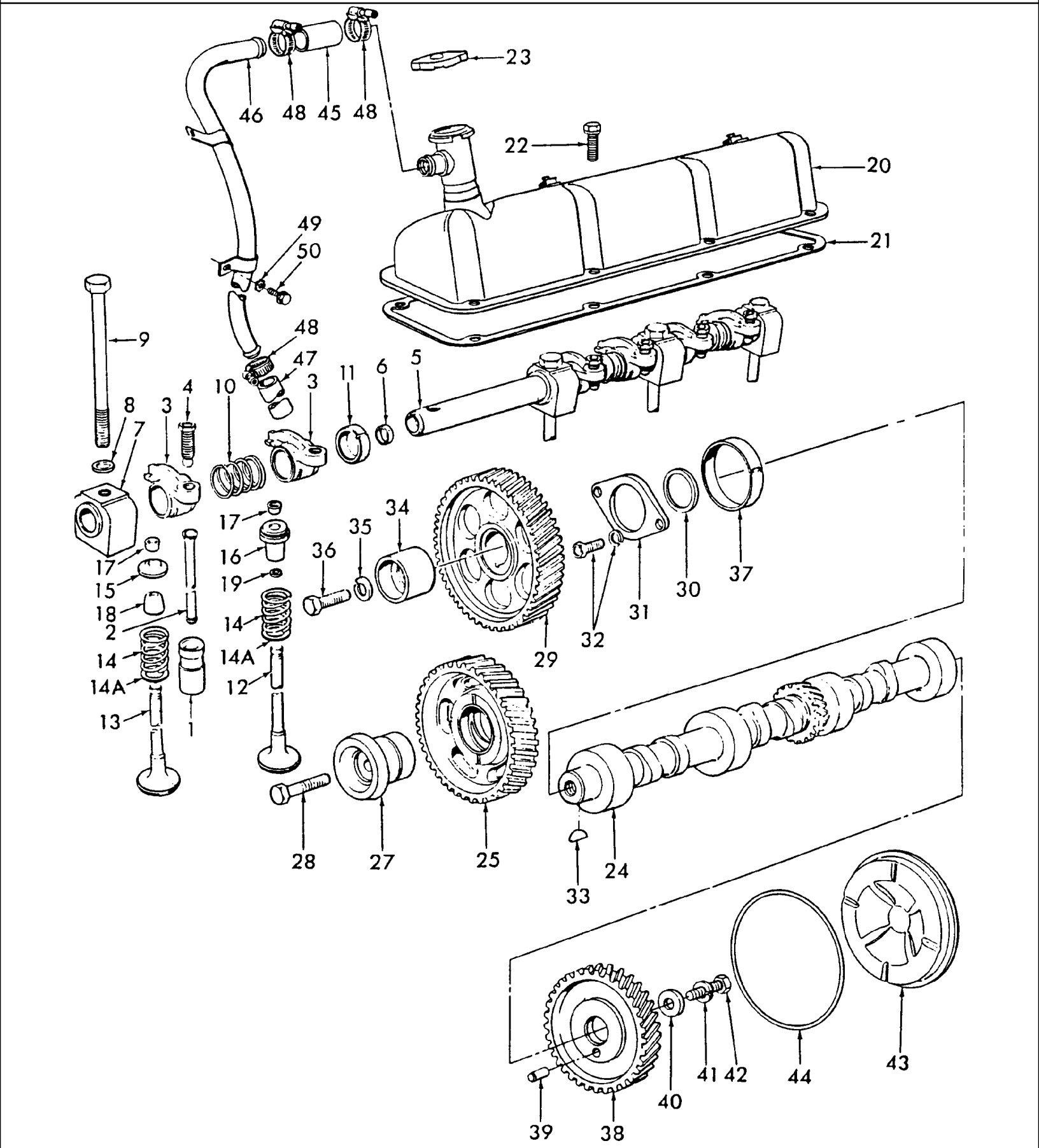

5000-SERIES 4 CYL TRACTOR (1/65-1/75)

06C01 CAMSHAFT, ROCKER ARM & RELATED PARTS, GASOLINE (PETROL) & L.P.G.

Ref	Part Number	Qty	Description
1	C7NN6500A	6/8	Tappet, Valve, Replaces C5NE-6500-A, Start Year: 01/01/1965
2	C5NE6567A	6/8	Rod, Valve Push, Start Year: 01/01/1965
3	83956710	3/4	Arm Assy., Rocker Intake, Start Year: 01/01/1965
3	81804316	3/4	Arm Assy., Rocker, Exhaust, Includes Ref 4, Start Year: 01/01/1965
4	87801302	3/4	Screw, Rocker Arm Adjusting, Start Year: 01/01/1965
5	C5NE6563A	1	Shaft, Rocker Arm, 2000, 3000, 4000, Start Year: 01/01/1965
5	C5NE6563B	1	Shaft, Rocker Arm, 5000, Start Year: 01/01/1966
6	83417040	2	Plug, Cup, Start Year: 01/01/1965
7	E4NN6531AA	4/5	Support, Rocker Arm Shaft, Start Year: 01/01/1965
8	377490S	AR	Washer, Flat, 1/2"
9	D5NN6065D	4/5	Bolt, HH, 1/2"-13 x 7.80, Replaces C9NN-6065-B, Start Year: 01/01/1965
10	81804341	3/4	Spring, Rocker Arm Locating, Start Year: 01/01/1965
11	81818731	3/4	Spacer, Rocker Arm, Start Year: 01/01/1965
12	C7NN6505E	3/4	Valve, Exhaust, Standard, Start Year: 01/01/1965
12	C7NN6505F	AR	Valve, Exhaust, .003 O/S, Start Year: 01/01/1965
12	C7NN6505G	AR	Valve, Exhaust, .015 O/S, Start Year: 01/01/1965
12	C7NN6505H	AR	Valve, Exhaust, .030 O/S, Replaces C5NE-6505-A, Start Year: 01/01/1965
13	C5NN6507B	3/4	Valve, Intake, Standard, Start Year: 01/01/1965
13	C5NN6507C	AR	Valve, Intake, .003 O/S, Replaces C5NE-6507-B, Start Year: 01/01/1965
13	C5NN6507D	AR	Valve, Intake, Replaces C5NE-6507-C, Start Year: 01/01/1965
13	C5NN6507E	AR	Valve, Intake, .030 O/S, Replaces C5NE-6507-D, Start Year: 01/01/1965
14	D6NN6513A	6/8	Spring, Valve, Replaces C7NN-6513-A, Start Year: 01/01/1965
14	83999742	6/8	Spring, Valve, Check Engine Build Code. Use if after 1J20, Start Year: 10/01/1991
14A	C5NE6A526A	AR	Spacer, Valve Spring, .030, Start Year: 01/01/1965
15	D0NN6514A	3/4	Retainer, Valve Spring, Intake, Start Year: 01/01/1965
15	83958102	3/4	Retainer, Intake, Check Engine Build Code. Use if after 1J20, Start Year: 10/01/1991
16	C5NE6A516A	3/4	Retainer Assy., Valve Spring, Exhaust, Start Year: 01/01/1965
16	83952336	3/4	Retainer, Exhaust, Check Engine Build Code. Use if after 1J20, Start Year: 10/01/1991
17	81876796	12/16	Key, Valve Spring Retainer, Start Year: 01/01/1965
18	C5NE6571A	3/4	Seal, Valve Stem, Intake, Start Year: 01/01/1965
19	C5NE6571B	3/4	Seal, Valve Stem, Exhaust, Start Year: 01/01/1965
19	87840154	6/8	Seal, Valve Stem, Check Engine Build Code. Use if after 1J20, Start Year: 10/01/1991
20	D3NN6582A	1	Cover Assy., Rocker Arm, 5000, Start Year: 01/01/1966
20	D3NN6582B	1	Cover Assy., Valve Rocker Arm, Replaces D1NN-6582-C, 2000, 3000, 4000, Start Year: 01/01/1965
21	C7NN6584B	1	Gasket, Rocker Arm Cover, 2000, 3000, 4000, Start Year: 01/01/1965
21	C7NN6584C	1	Gasket, Rocker Arm Cover, 5000, Start Year: 01/01/1966
22	83949109	8/10	Bolt, Cap, Flg Hd, G5, 5/16"-18 x .62", Start Year: 01/01/1965
23	D0NN6766A	1	Cap Assy., Oil Filler, Replaces C5NE-6766-C, Start Year: 01/01/1965
24	87800323	1	Camshaft, 2000,3000,4000, Start Year: 01/01/1965
24	87800353	1	Camshaft, 5000, Start Year: 01/01/1966
25	83963174	1	Gear Assy., Camshaft Drive, Start Year: 01/01/1965

06C01 CAMSHAFT, ROCKER ARM & RELATED PARTS, GASOLINE (PETROL) & L.P.G.

Ref	Part Number	Qty	Description
27	C5NE6A255A	1	Adapter, Camshaft Drive Gear, Start Year: 01/01/1965
27	87840404	1	Adapter, Camshaft Drive Gear, Use with new cylinder block, Start Year: 06/01/1994
28	43122S	1	Screw, Cap, HH, G8, Self-Locking, 1/2"-20 x 2-1/8", Start Year: 01/01/1965
28	82852337	1	Screw, Cap, HH, G8, Self-Locking, 5/8"-11 x 2-1/4", Start Year: 01/01/1965
29	C5NE6256A	1	Gear, Camshaft, Start Year: 01/01/1965
30	81804020	1	Spacer, Camshaft Gear, Start Year: 01/01/1965
31	D8NN6269AA	1	Plate, Camshaft Thrust, Replaces P/N C7NN-6269-A, Start Year: 01/01/1965
32	372287S36	2	Screw & Lockwasher Assy., 5/16"-18 x .75, Start Year: 01/01/1965
33	80810	1	Key, Woodruff, # 9, 3/16" x 3/4", Start Year: 01/01/1965
34	C5NE6287A	1	Eccentric, Camshaft Fuel Pump Drive, Start Year: 01/01/1965
35	81547	1	Washer, Lock, 7/16", Start Year: 01/01/1965
36	83909101	1	Bolt, Cap, Flg Hd., G5, 7/16"-14 x 1-1/4", Start Year: 01/01/1965
37	87800499	4/5	Bearing, Camshaft, Start Year: 01/01/1965
38	83937074	1	Gear Assy., Camshaft Hydraulic Pump Drive, Includes: Gear & Ref. 39, Start Year: 01/01/1965
39	382015S	1	Pin, Dowel, 5/16" x .625", Start Year: 01/01/1965
40	81804024	1	Washer, Camshaft Gear, Start Year: 01/01/1965
41	81547	1	Washer, Lock, 7/16", Start Year: 01/01/1965
42	83909101	1	Bolt, Cap, Flg Hd., G5, 7/16"-14 x 1-1/4", Start Year: 01/01/1965
43	C5NND851B	1	Cover, Camshaft Hydraulic Pump Drive Gear, Replaces P/N C5NN-D851-A, Start Year: 01/01/1965
44	87095S94	1	O-Ring, 5.250" ID x .139" Thk, Cover Seal, Years: 01/01/1965-08/31/1967
45	C5NE6853A	1	Hose, Crankcase Ventilation Tube to Cover, Start Year: 01/01/1965
46	C5NN6758F	1	Tube Assy., Crankcase Ventilation, Replaces P/N C5NN-6758-A, 3500, 3550, 4100, 4400, Start Year: 01/01/1965
46	C5NN6758F	1	Tube Assy., Crankcase Ventilation, Replaces P/N C5NN-6758-A, 2100, 2110, 3100, 3400, 4110, 4140, Years: 01/01/1965-07/31/1970
46	D6NN6758D	1	Tube Assy., Crankcase Ventilation, 2100, 2110, 3100, 3400, 4110, 4140, Start Year: 08/01/1970
46	C5NN6758E	1	Tube Assy., Crankcase Ventilation, 4200, NHNA Only, No Longer Serviced, Start Year: 01/01/1966
46	C5NN6758G	1	Tube Assy., Crankcase Ventilation, 4500, 5100, NHNA Only, No Longer Serviced, Start Year: 01/01/1965
46	C5NN6758J	1	Tube Assy., Crankcase Ventilation, 5200, NHNA Only, No Longer Serviced, Start Year: 01/01/1967
47	C5NN6N664A	1	Hose, Crankcase Ventilation Tube Extension, Excludes 4500, 5000, No Longer Serviced, Years: 01/01/1965-04/30/1969
48	82012722	3	Clamp, Hose, M19-28, Years: 01/01/1965-04/30/1969
48	82012722	2	Clamp, Hose, M19-28, Start Year: 05/01/1969
49	85700573	2	Washer, Lock, Ext T, 1/4", Start Year: 01/01/1965
50	31527S43	2	Screw, Self-Tapping, HWH, 1/4"-14 x 1/2", U.K.-Antwerp Only, 2000, No Longer Serviced, Start Year: 01/01/1965

06D01 PISTONS & CONNECTING RODS, GASOLINE (PETROL) & L.P.G.

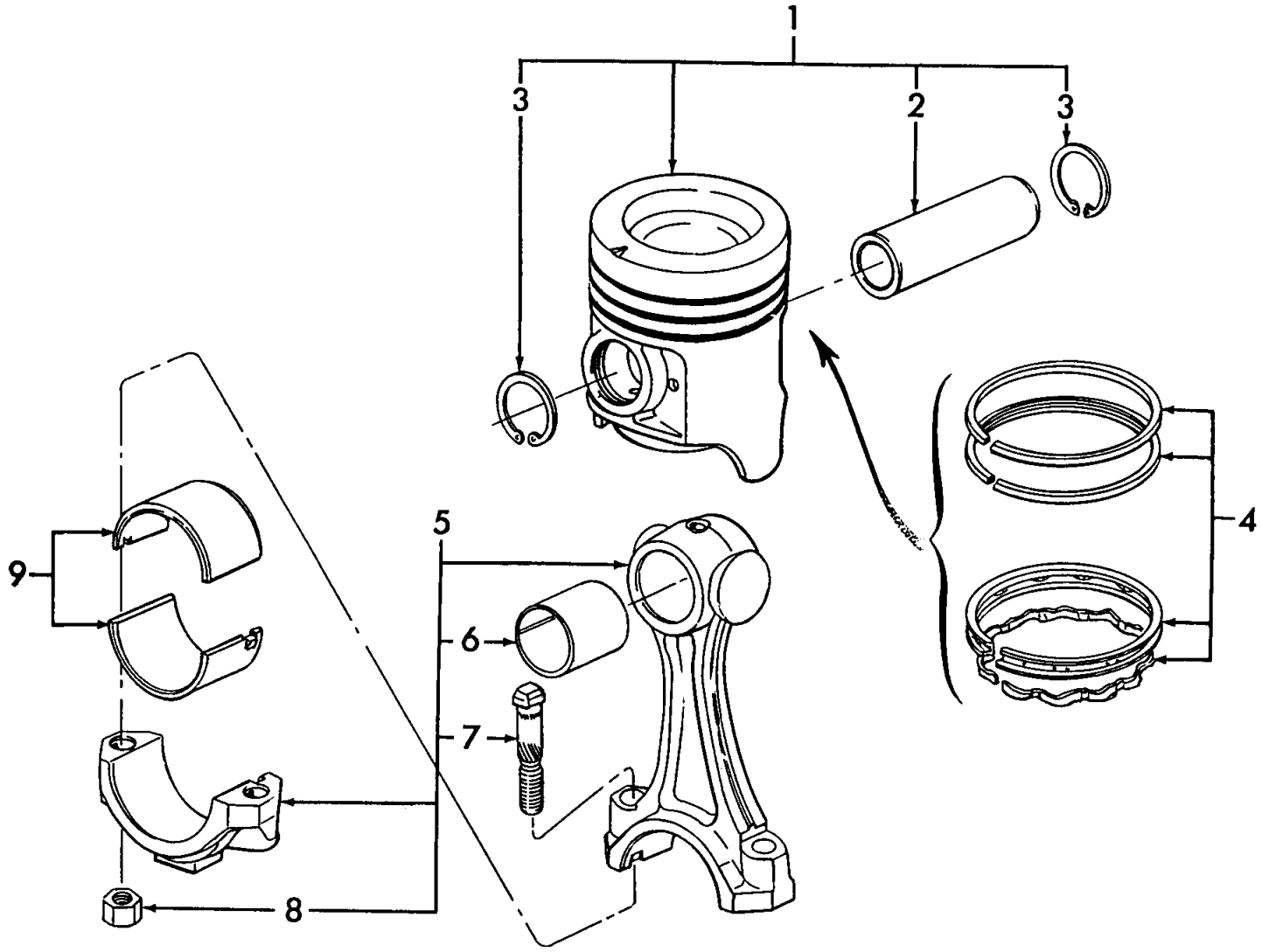

SOME SERIES 2000 & 3000 GASOLINE ENGINES HAVE BEEN PRODUCED WITH A CRANKSHAFT HAVING A 4.2" STROKE INSTEAD OF THE STANDARD 3.8" STROKE. WHEN REPLACING PISTONS IN THESE ENGINES USE PISTONS FOR THE SERIES 5000 GASOLINE ENGINE.

5000-SERIES 4 CYL TRACTOR (1/65-1/75)

06D01 PISTONS & CONNECTING RODS, GASOLINE (PETROL) & L.P.G.

Ref	Part Number	Qty	Description
1	D8NN6108AA	3	Piston, Pin & Retainer Set, Standard, 2000, 3000, Includes Ref. 2 & 3, Start Year: 01/01/1965
1	D8NN6108BA	3	Piston, Pin & Retainer Set, .004" O/S (.102mm), 2000, 3000, Includes Ref. 2 & 3, Start Year: 01/01/1965
1	D8NN6108CA	3	Piston, Pin & Retainer Set, .020" O/S (.51mm), 2000, 3000, Includes Ref. 2 & 3, Start Year: 01/01/1965
1	D8NN6108DA	3	Piston, Pin & Retainer Set, .030" O/S (.762mm), 2000, 3000, Includes Ref. 2 & 3, Start Year: 01/01/1965
1	D8NN6108EA	3	Piston, Pin & Retainer Set, .040" O/S (1.02mm), 2000, 3000, Includes Ref. 2 & 3, Start Year: 01/01/1965
1	C7NN6108N	3	Piston, Pin & Retainer Set, Standard, Replaces C5NN6108AT & AU, 4000, Includes Ref. 2 & 3, Years: 01/01/1965-03/31/1968
1	D8NN6108FA	3	Piston, Pin & Retainer Set, Standard, No Color Code, 4000, Includes Ref. 2 & 3, Start Year: 04/01/1968
1	C5NN6108AV	3	Piston, Pin & Retainer Set, .004" O/S (.102mm), 4000, Includes Ref. 2 & 3, Years: 01/01/1965-03/31/1968
1	D8NN6108GA	3	Piston, Pin & Retainer Set, .004" O/S (.102mm), 4000, Includes Ref. 2 & 3, Start Year: 04/01/1968
1	C5NN6108AY	3	Piston, Pin & Retainer Set, .020" O/S (.51mm), 4000, Includes Ref. 2 & 3, Years: 01/01/1965-03/31/1968
1	D8NN6108HA	3	Piston, Pin & Retainer Set, .020" O/S (.51mm), 4000, Includes Ref. 2 & 3, Start Year: 04/01/1968
1	C5NN6108AZ	3	Piston, Pin & Retainer Set, .030" O/S (.762mm), 4000, Includes Ref. 2 & 3, Years: 01/01/1965-03/31/1968
1	D8NN6108JA	3	Piston, Pin & Retainer Set, .030" O/S (.762mm), 4000, Includes Ref. 2 & 3, Start Year: 04/01/1968
1	C5NN6108BA	3	Piston, Pin & Retainer Set, .040" O/S (1.02mm), 4000, Includes Ref. 2 & 3, Years: 01/01/1965-03/31/1968
1	D8NN6108KA	3	Piston, Pin & Retainer Set, .040" O/S (1.02mm), 4000, Includes Ref. 2 & 3, Start Year: 04/01/1968
1	EAE6108K	1	Piston, Pin & Retainer Set, 134 Gas Engine, Includes Ref. 2 & 3, Years: 01/01/1960-12/31/1964
1	D8NN6108SA	4	Piston, Pin & Retainer Set, Standard, Blue, GD Piston, 4.2 Stoke, 5000, Includes Ref. 2 & 3, Years: 01/01/1966-05/31/1968
1	D4NN6108AL	4	Piston, Pin & Retainer Set, Standard, 4.4 Bore, No Color Code, Includes Ref. 2 & 3, Start Year: 06/01/1968
1	D8NN6108LA	4	Piston, Pin & Retainer Set, .004" O/S (.102mm), Includes Ref. 2 & 3, Years: 01/01/1966-05/31/1968
1	D4NN6108AM	4	Piston, Pin & Retainer Set, .004 O/S (.102mm) NH-E, Includes Ref. 2 & 3, NH-E Only, Start Year: 06/01/1968
1	D4NN6108AM	4	Piston, Pin & Retainer Set, .004" O/S (.102mm), 5000, Includes Ref. 2 & 3, Start Year: 06/01/1968
1	D8NN6108SA	4	Piston, Pin & Retainer Set, Standard, 5000, Includes Ref. 2 & 3, Years: 01/01/1966-05/31/1968
1	D4NN6108AN	4	Piston, Pin & Retainer Set, .020" O/S (.51mm), 5000, Includes Ref. 2 & 3, Start Year: 06/01/1968
1	D8NN6108NA	4	Piston, Pin & Retainer Set, .030" O/S (.762mm), 5000, Includes Ref. 2 & 3, Years: 01/01/1966-05/31/1968
1	D4NN6108AP	4	Piston, Pin & Retainer Set, .030" O/S (.762mm), Includes Ref. 2 & 3, Start Year: 06/01/1968
1	D8NN6108SA	4	Piston, Pin & Retainer Set, Standard, 5000, Includes Ref. 2 & 3, Years: 01/01/1966-05/31/1968
1	D4NN6108AR	4	Piston, Pin & Retainer Set, .040" O/S (1.02mm), 5000, Includes Ref. 2 & 3, NH-E Only, Start Year: 06/01/1968
1	D4NN6108AR	4	Piston, Pin & Retainer Set, .040" O/S (1.02mm), 5000, Includes Ref. 2 & 3, NHNA Only, Start Year: 06/01/1968
2	87801744	3	Pin, Piston, Start Year: 01/01/1965
3	167111	6	Ring, Snap, Int, 1.500", Start Year: 01/01/1965
4	CFPN6149AY	3	Kit, Piston Ring, Standard, 4.2 Bore, 2000, 3000, Start Year: 01/01/1965
4	CFPN6149AY	4	Kit, Piston Ring, Standard, 5000, Years: 01/01/1965-05/31/1968
4	CFPN6149AZ	3	Kit, Piston Ring, .020" (.51mm) O/S, 2000, 3000, Start Year: 01/01/1965
4	CFPN6149AZ	4	Kit, Piston Ring, .020" (.51mm) O/S, Replaces CFPN6149AE, 5000, Years: 01/01/1965-05/31/1968
4	CFPN6149BA	3	Kit, Piston Ring, .030" (.76mm) O/S, 2000, 3000, Start Year: 01/01/1965
4	CFPN6149BA	4	Kit, Piston Ring, .030" (.76mm) O/S, Replaces CFPN6149AF, 5000, Years: 01/01/1965-05/31/1968

SOME SERIES 2000 & 3000 GASOLINE ENGINES HAVE BEEN PRODUCED WITH A CRANKSHAFT HAVING A 4.2" STROKE INSTEAD OF THE STANDARD 3.8" STROKE. WHEN REPLACING PISTONS IN THESE ENGINES USE PISTONS FOR THE SERIES 5000 GASOLINE ENGINE.

5000-SERIES 4 CYL TRACTOR (1/65-1/75)

06D01 PISTONS & CONNECTING RODS, GASOLINE (PETROL) & L.P.G.

Ref	Part Number	Qty	Description
4	CFPN6149BB	3	Kit, Piston Ring, .040" (1.02mm) O/S, 2000, 3000, Start Year: 01/01/1965
4	CFPN6149BB	4	Kit, Piston Ring, .040" (1.02mm) O/S, Replaces CFPN6149AG, 5000, Years: 01/01/1965-05/31/1968
4	CFPN6149BG	3	Kit, Piston Ring, Standard, Replaces CFPN6149AM, 4000, Start Year: 01/01/1965
4	CFPN6149BG	4	Kit, Piston Ring, 5000, Start Year: 06/01/1968
4	CFPN6149BH	3	Kit, Piston Ring, .020 O/S (.508mm), 4000, Start Year: 01/01/1965
4	CFPN6149BH	4	Kit, Piston Ring, Replaces CFPN6149AN, 5000, Start Year: 06/01/1968
4	CFPN6149BJ	3	Kit, Piston Ring, .030 O/S (.762mm), 4000, Start Year: 01/01/1965
4	CFPN6149BJ	4	Kit, Piston Ring, Replaces CFPN6149AP, 5000, Start Year: 06/01/1968
4	CFPN6149BK	3	Kit, Piston Ring, ..040" (1.02mm) O/S, 4000, Start Year: 01/01/1965
4	CFPN6149BK	4	Kit, Piston Ring, .040" (1.02mm) O/S, Replaces CFPN6149AR, 5000, Start Year: 06/01/1968
5	E9NN6200CA	3/4	Rod Assy., Connecting, 4.4 Bore, When C7NN6200A Rod replaces C5NE6200A 65/3-68, replace complete set, Start Year: 01/01/1965
5	E3HN6200AC42	3/4	Rod Assy., Connecting, 4.2 Bore, Includes Ref. 6 Thru 8, Start Year: 01/01/1965
6	C5NE6207A	3/4	Bush/Bushing, Connecting Rod, Start Year: 01/01/1965
7	E9NN6214BA	6/8	Bolt, Connecting Rod, 7/16"-20, Start Year: 01/01/1965
8	390655S2	6/8	Nut, Connecting Rod, 7/16"-20, Start Year: 01/01/1965
9	DFPN6211A	3/4	Kit, Connecting Rod Bearing, Standard, Red, Replaces C5NE6211A1, Start Year: 01/01/1965
9	DFPN6211B	3/4	Kit, Connecting Rod Bearing, Standard, Blue, Start Year: 01/01/1965
9	DFPN6211C	3/4	Kit, Connecting Rod Bearing, .002"(.051mm) U/S, Start Year: 01/01/1965
9	DFPN6211D	3/4	Kit, Connecting Rod Bearing, .010"(.25mm) U/S, Start Year: 01/01/1965
9	DFPN6211E	3/4	Kit, Connecting Rod Bearing, .020"(.51mm) U/S, Start Year: 01/01/1965
9	DFPN6211F	3/4	Kit, Connecting Rod Bearing, .030"(.76mm) U/S, Start Year: 01/01/1965
9	DFPN6211G	3/4	Kit, Connecting Rod Bearing, .040"(1.02mm) U/S, Start Year: 01/01/1965
9	DFPN6211G	3/4	Liner, .040 U/S (1.016mm), Start Year: 01/01/1965

SOME SERIES 2000 & 3000 GASOLINE ENGINES HAVE BEEN PRODUCED WITH A CRANKSHAFT HAVING A 4.2" STROKE INSTEAD OF THE STANDARD 3.8" STROKE. WHEN REPLACING PISTONS IN THESE ENGINES USE PISTONS FOR THE SERIES 5000 GASOLINE ENGINE.

06E01 OIL PUMP & OIL PAN, GASOLINE (PETROL) & L.P.G.

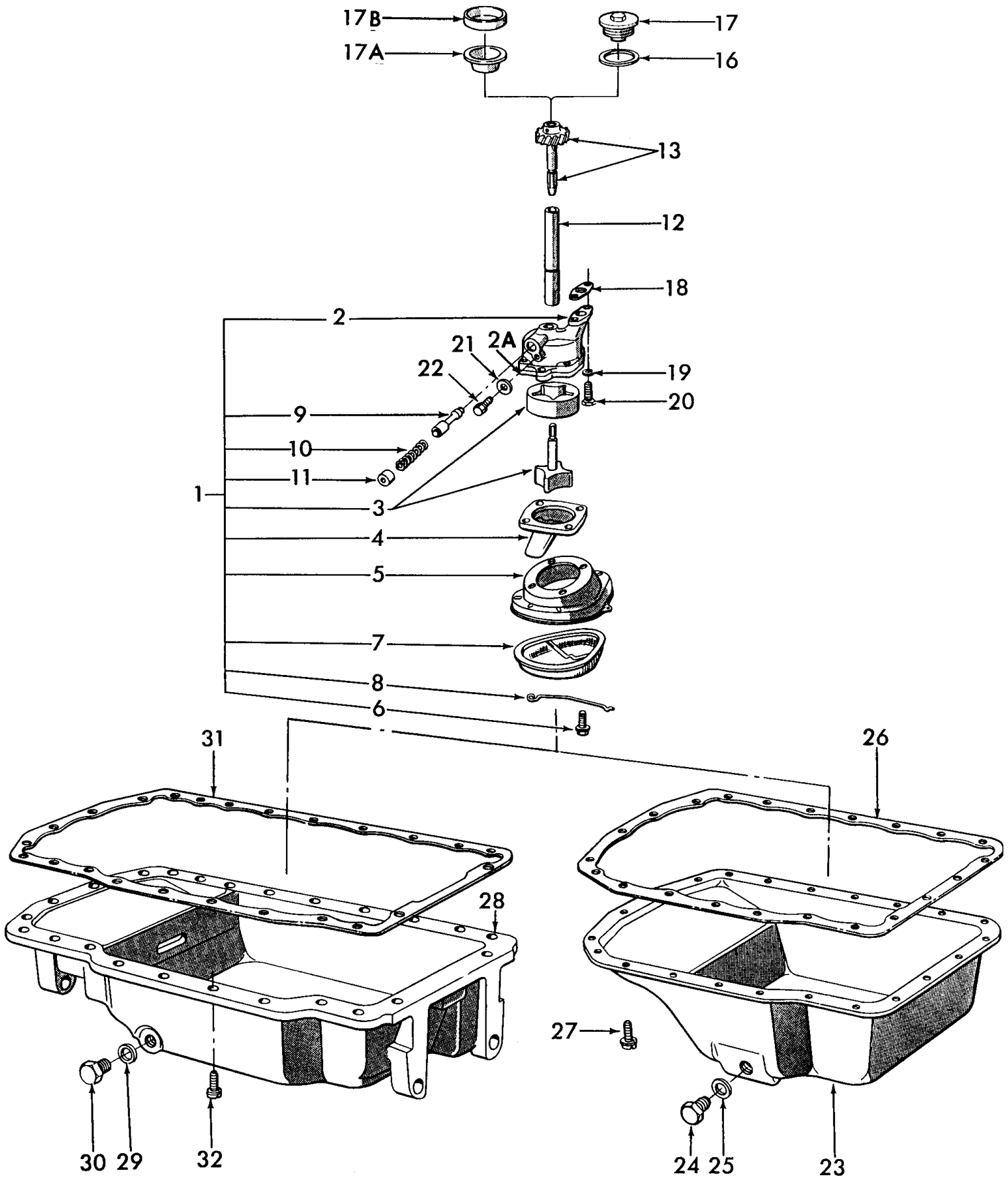

5000-SERIES 4 CYL TRACTOR (1/65-1/75)

06E01 OIL PUMP & OIL PAN, GASOLINE (PETROL) & L.P.G.

Ref	Part Number	Qty	Description
1	E1NN6600DD	1	Pump Assy., Engine Oil, 6 Fluted, Includes Ref. 2 & 3, Use W/Pump having a 6 Fluted Rotor & Shaft Assy., Start Year: 01/01/1965
2	D1NN6604B	1	Body, No Longer Serviced, Start Year: 01/01/1965
2A	F1NN6B637AA	1	Plate, Cover Thrust, Start Year: 04/01/1992
3	E1NN6600DD	1	Rotor & Shaft Assy., 4 Fluted, Start Year: 01/01/1965
3	D5NN6608C	1	Rotor & Shaft Assy., 6 Fluted, Use W/Pump having a 6 Fluted Rotor & Shaft Assy., Start Year: 01/01/1965
4	F1NN6616AA	1	Cover, W/6 Fluted Pump, Start Year: 01/01/1965
4	C5NE6616A	1	Cover, No Longer Serviced, Start Year: 01/01/1965
4	F1NN6616AA	1	Cover, Use W/Pump having a 6 Fluted Rotor & Shaft Assy., Start Year: 01/01/1965
5	C5NE6611B	1	Cover, Start Year: 01/01/1965
5	D5NN6611B	1	Cover, Use W/Pump having a 6 Fluted Rotor & Shaft Assy., Start Year: 01/01/1965
5	F1NN6611AA	1	Cover, Start Year: 04/01/1992
6	373742S	4	Screw & Washer Assy., HH, 1/4"-20 x .88, Start Year: 01/01/1965
	E1NN6K632AA	4	Washer Assy., W/6 Fluted Pump, Start Year: 01/01/1965
7	D5NN6623A	1	Screen Assy., Use W/Pump having a 6 Fluted Rotor & Shaft Assy., Start Year: 01/01/1965
8	C5NE6628A	1	Spring, Start Year: 01/01/1965
8	F1NN6628AA	1	Spring, Start Year: 04/01/1992
9	D8NN6A809AB	1	Valve, Use W/Pump having a 6 Fluted Rotor & Shaft Assy., Start Year: 01/01/1974
9	C5NE6A809A	1	Valve, Years: 01/01/1965-01/31/1972
9	D1NN6A809A	1	Valve, Start Year: 02/01/1972
10	E4NN6670AA	1	Spring, 2.261 .34 Dia., Use W/Pump having a 6 Fluted Rotor & Shaft Assy., Start Year: 01/01/1974
10	C5NE6670A	1	Spring, 1.64 .475 Dia., Years: 01/01/1965-01/31/1972
10	D8NN6670AA	1	Spring, 2.33 .400 Dia., Start Year: 02/01/1972
11	C5NE6A616A	1	Plug, Years: 01/01/1965-01/31/1972
11	D1NN6674A	1	Plug, Start Year: 02/01/1972
11	E4NN6A616AB	1	Plug, Use W/Pump having a 6 Fluted Rotor & Shaft Assy., Start Year: 01/01/1974
12	C7NN6A605A	1	Shaft, Intermediate, Replaces C5NN-6A605-B, Start Year: 01/01/1965
13	87800008	1	Shaft & Gear Assy., Drive, Start Year: 01/01/1965
	87663	1	Pin, Roll, 1/8" x 3/4", Use W/C5NE-6A820-A, Years: 01/01/1965-03/31/1968
16	82845244	1	Gasket, Gear Stop, Years: 01/01/1965-03/31/1971
17	C5NE6A798A	1	Stop, Gear, Thread Length .64" (16.26mm), No Longer Serviced, Years: 01/01/1965-07/31/1965
17	C5NE6A798B	1	Stop, Gear, Thread Length .52" (13.21mm), No Longer Serviced, Years: 08/01/1965-03/31/1971
17A	D0NN6A798A	1	Stop, Gear, Start Year: 04/01/1971
17B	E9NN6L692AA	1	Plug, Cup 2.197" to 2.200" (55.803-55.879mm), Start Year: 04/01/1971
17B	E9NN6L692BA	1	Plug, Cup 2.217" to 2.220" (56.311-56.387mm) For o/size hole, Start Year: 04/01/1971
18	C7NN6659A	1	Gasket, Oil Pump to Engine Block, Replaces C3TE-6659-A, Start Year: 01/01/1965
19	380515S	2	Washer, Lock, 3/8", Start Year: 01/01/1965
20	378310S36	2	Bolt, 3/8"-16 x 1.38, Start Year: 01/01/1965
21	359840S8	1	Washer, Flat, 5/16", Except 5000, Start Year: 01/01/1965
22	372287S36	1	Screw & Washer Assy., 5/16"-18 x 3/4", Except 5000, Start Year: 01/01/1965
23	C9NN6675A	1	Pan Assy., Oil, U.S., Except 3400, 3500, 3550, 4400, 4500 & 5000, NHNA Only, Start Year: 01/01/1965

06E01 OIL PUMP & OIL PAN, GASOLINE (PETROL) & L.P.G.

Ref	Part Number	Qty	Description
23	C9NN6675A	1	Pan Assy., Oil, Sheet Metal, U.K., Antwerp, Except 3400, 3500, 3550, 4400, 4500 & 5000, NHNA Only, Start Year: 01/01/1965
23	C9NN6676C	1	Pan, Oil, Repl. C5NE-6676-J, 3400, 3500, 3550, 4200, 4400, 4500, Start Year: 01/01/1965
24	EBU6734A	1	Gasket, Drain Plug, 7/8" (22.225mm) I.D., Years: 01/01/1965-12/31/1969
24	C9NN6734A	1	Gasket, 3/4" ID x .06" Thk, Drain Plug, Start Year: 01/01/1970
25	C5NE6730B	1	Plug, Drain, 7/8"-16 Thread, Years: 01/01/1965-12/31/1969
25	C9NN6730B	1	Plug, Drain, 3/4"-16 Thread, Start Year: 01/01/1970
26	F0NN6710AA	1	Gasket, Replaces C5NE-6710-C, Except 5000, 3400, 3500, 3550, 4200, 4400 & 4500, Start Year: 01/01/1965
26	87840325	1	Gasket, .028/.035 (.711/.889mm), Replaces C5NE-6710-B, 3400, 3500, 3550, 4200, 4400 & 4500, Start Year: 01/01/1965
	80680	20	Washer, Lock, 3/8", Start Year: 01/01/1965
27	304666S36	22	Screw, Cap, HH, G5, 3/8"-16 x 7/8", Pan to Block, Start Year: 01/01/1965
27	88011	20	Screw, Cap, HH, G5, 3/8"-16 x 1-1/4", 3400,3500,3550,4200,4400,4500 & 5000, Start Year: 01/01/1965
28	87800105	1	Pan, Replaces C9NN-6676-E, 5000, Start Year: 01/01/1966
29	EBU6734A	1	Gasket, Drain Plug, 7/8" (22.225mm) I.D., Years: 01/01/1966-12/31/1969
29	C9NN6734A	1	Gasket, 3/4" ID x .06" Thk, Drain Plug, Start Year: 01/01/1970
30	C5NE6730B	1	Plug, Drain, 7/8"-16, Years: 01/01/1966-12/31/1969
30	C9NN6730B	1	Plug, Drain, 3/4"-16, Start Year: 01/01/1970
31	87802061	1	Gasket, Replaces C5NE-6710-A & C9NN-6710-D, 5000, Start Year: 01/01/1966
	80680	24	Washer, Lock, 3/8", Start Year: 01/01/1966
32	88011	24	Screw, Cap, HH, G5, 3/8"-16 x 1-1/4", Pan to Block, 5000, U.S., Start Year: 01/01/1966

06F01 OIL FILTER & RELATED PARTS, GASOLINE (PETROL) & L.P.G.

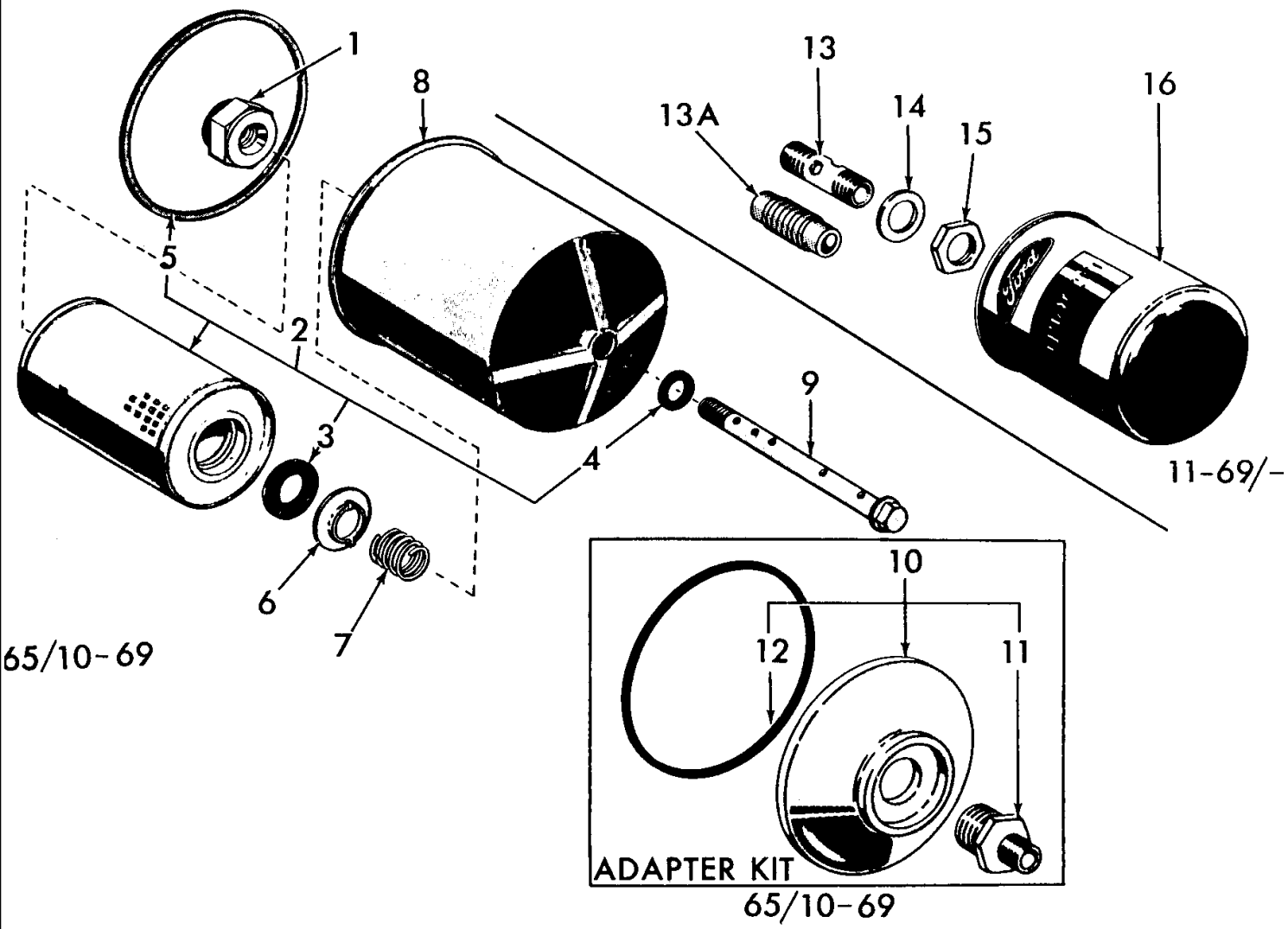

5000-SERIES 4 CYL TRACTOR (1/65-1/75)

06F01 OIL FILTER & RELATED PARTS, GASOLINE (PETROL) & L.P.G.

Ref	Part Number	Qty	Description
1	C5NE6890B	1	Insert, Mounting Bolt, Years: 01/01/1965-10/31/1969
2	DDPN6731A	1	Kit, Element & Gasket, 2 Qt., U.K.- Antwerp, Replaces CFPN6731A, Includes Ref. 3 Thru 5, Years: 01/01/1965-10/31/1969
2	86546611	1	Kit, Oil Filter Element & Gasket, 2 Quart, 4.87L, .75 pilot hole Includes: Ref. 3 thru 5, NHNA Only, Years: 01/01/1965-10/31/1969
3	EAA6746A	1	Gasket, Years: 01/01/1965-10/31/1969
4	EAA6749A	1	Gasket, Years: 01/01/1965-10/31/1969
5	D8NN6N818AA	1	Gasket, Start Year: 01/01/1965
6	EAA6898B	1	Retainer, Element, Years: 01/01/1965-10/31/1969
7	EAA6889B	1	Spring, Element Retaining, Years: 01/01/1965-10/31/1969
8	C5NE6737B	1	Cover Assy. Replaces C5NE66714A, Years: 01/01/1965-10/31/1969
9	D3NN6A732B	1	Bolt & Valve Assy., Center, Years: 01/01/1965-10/31/1969
10	309825F	1	Kit, Oil Filter Converter, 2 Qt. to 1 Qt. Spin-on, Includes Ref. 11 & 12, Years: 01/01/1965-10/31/1969
11	C5NE6890D	1	Insert, Mounting, Bolt Serviced Separately U.S. only, NHNA Only, Years: 01/01/1965-10/31/1969
	NSS	1	Adaptor, Years: 01/01/1965-10/31/1969
12	D8NN6N818AA	1	Gasket, Years: 01/01/1965-10/31/1969
13	C7NN6890A	1	Insert, Mounting, Years: 11/01/1969-01/31/1972
13A	D0NN6890A	1	Insert, Mounting, Start Year: 02/01/1972
14	44746S8	1	Washer, 3/4", NHNA Only, No Longer Serviced, Years: 11/01/1969-01/31/1972
15	370260S	1	Nut, Jam, 3/4"-16, Years: 11/01/1969-01/31/1972
16	87800068	1	Filter Assy., Spin-on, 1 Qt., U.K.-Antwerp, Start Year: 11/01/1969
16	86546614	1	Filter, Engine Oil, Spin-on, 1 Qt., Except 5200, U.S., NHNA Only, Start Year: 11/01/1969
16	86546614	1	Filter, Engine Oil, Except 5200, U.S., NHNA Only, Start Year: 11/01/1969
16	86546617	1	Filter Assy., Spin-on, 1 Qt., 5200, U.S., Start Year: 11/01/1969

06G01 MANIFOLD, MUFFLER & RELATED PARTS, GASOLINE (PETROL) & L.P.G.

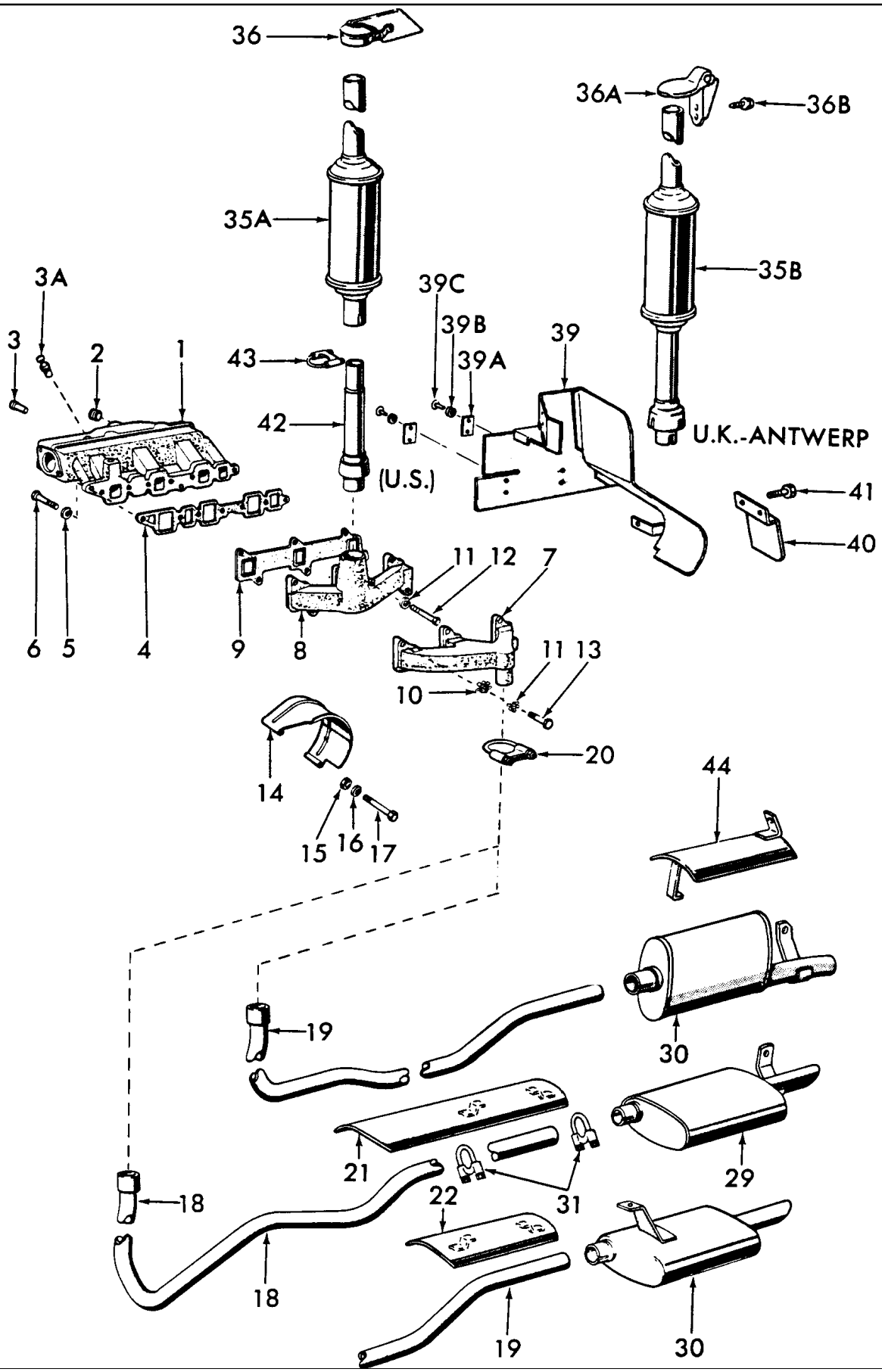

5000-SERIES 4 CYL TRACTOR (1/65-1/75)

06G01 MANIFOLD, MUFFLER & RELATED PARTS, GASOLINE (PETROL) & L.P.G.

Ref	Part Number	Qty	Description
1	C7NN9424A	1	Manifold Assy., Intake, Replaces P/N C7NN-9424-D, 2000, 3000 & 4000, Includes Ref. 2 & 3, Start Year: 01/01/1965
1	C7NN9424A	1	Manifold Assy., Intake, Replaces P/N C7NN-9424-D, U.K.- Antwerp, 2000, Includes Ref. 2 & 3, Start Year: 01/01/1965
1	C9NN9424H	1	Manifold Assy., Intake, Replaces C6NE-9424-A, 5100, 5200, Includes Ref. 2 & 3, Start Year: 01/01/1966
2	370731S	4/5	Plug, Pipe, 3/4", Start Year: 01/01/1965
3	379776S43	1	Pin, 1/4" x .88, 2000, 3000 & 4000, No Longer Serviced, Start Year: 01/01/1965
3A	EDL99456A	1	Vent Assy., Air, 5100,5200, Start Year: 01/01/1965
4	82845235	1	Gasket, Manifold to Cylinder Head, 2000,3000,4000, Start Year: 01/01/1965
4	82845236	1	Gasket, Manifold to Cylinder Head, 5100, 5190, 5200, Start Year: 01/01/1966
4	C5NN9439C	1	Gasket, Manifold to Cylinder Head, 4000 L.P.G., NHNA Only, No Longer Serviced, Years: 01/01/1966-12/31/1968
5	81821693	7/9	Washer, Lock, 3/8", Start Year: 01/01/1965
6	88011	7/9	Screw, Cap, HH, G5, 3/8"-16 x 1-1/4", Start Year: 01/01/1965
7	C5NE9430A	1	Manifold, Exhaust, Horizontal Exhaust, 2000, 3000 & 4000, Start Year: 01/01/1965
7	C5NE9430B	1	Manifold, Exhaust, Horizontal Exhaust, 5100, 5200, Start Year: 01/01/1965
8	C5NE9430E	1	Manifold, Exhaust, Vertical Exhaust, 2000, 3000 & 4000, Start Year: 01/01/1965
8	C5NE9430D	1	Manifold, Exhaust, Vertical Exhaust, 5100, 5200, Start Year: 01/01/1966
9	C5NE9448A	1	Gasket, Manifold, 2000, 3000 & 4000, Start Year: 01/01/1965
9	C5NE9448B	1	Gasket, Manifold, 5100, 5200, Start Year: 01/01/1966
10	378881S	2	Washer, Lock, 3/8", Was PN C5NE9A447A, Start Year: 01/01/1965
11	378881S	AR	Washer, Lock, 3/8", Start Year: 01/01/1965
12	280177	1	Screw, Cap, HH, G5, 3/8"-16 x 5", Start Year: 01/01/1965
13	88044	5/8	Screw, Cap, HH, G5, 3/8"-16 x 1-1/2", Start Year: 01/01/1965
14	C5NE9A462B	1	Shield, Manifold Heat, Horizontal Exhaust Only, Years: 01/01/1965-06/30/1969
15	44722S8	2	Washer, 5/16", Horizontal Exhaust Only, NHNA Only, No Longer Serviced, Start Year: 01/01/1965
16	80681	2	Washer, Lock, 5/16", Horizontal Exhaust Only, Start Year: 01/01/1965
17	88731	2	Screw, Cap, HH, G5, 5/16"-18 x 3", Horizontal Exhaust, U.K., Start Year: 01/01/1965
17	88731	2	Screw, Cap, HH, G5, 5/16"-18 x 3", U.S., Start Year: 01/01/1965
18	C7NN5245B	1	Pipe, Inlet, Replaces P/N C5NN-5245-F, 2000 & 3000, Start Year: 01/01/1965
19	C7NN5245A	1	Pipe, Inlet, Horizontal Exhaust, 5100 & 5200, W/& L/10 Speed Transmission, Start Year: 04/01/1968
19	NSS	1	Pipe, Inlet, Horizontal Exhaust, L/10 Speed Transmission, Years: 01/01/1966-03/31/1968
19	C5NN5245D	1	Pipe, Inlet, Horizontal Exhaust, 5000 W/Speed, Years: 01/01/1966-03/31/1968
19	82009286	1	Pipe, Inlet, Horizontal Exhaust, 4000, Start Year: 01/01/1965
19	86570884	1	Pipe, Muffler Inlet, Horizontal, Narrow Orchard, U.S., Start Year: 01/01/1971
20	83910871	1	Clamp Assy., Pipe to Manf. Outlet, Horizontal Exhaust, 2.12 I.D., Replaces P/N C5NN-5A281-B, Start Year: 01/01/1965
20	D6NN5252E	2	Clamp Assy., Inlet Pipe, 1-3/4" I.D., Replaces C5N-5A281-A, Start Year: 01/01/1966
21	D3NN5N207A	1	Shield Assy., Muffler Inlet Pipe Heat, Replaces P/N C7NN-5N207-A, 2000, 3000, Start Year: 04/01/1969
22	C7NN5N207B	1	Shield Assy., Inlet Pipe Heat, 4000 & Narrow Orchard, Start Year: 04/01/1969
29	C7NN5230G	1	Muffler Assy., Horizontal Exhaust, 2000, 3000, Start Year: 01/01/1965

5000-SERIES 4 CYL TRACTOR (1/65-1/75)

06G01 MANIFOLD, MUFFLER & RELATED PARTS, GASOLINE (PETROL) & L.P.G.

Ref	Part Number	Qty	Description
30	C7NN5230H	1	Muffler Assy., Horizontal Exhaust, 4000, Start Year: 01/01/1965
30	C5NN5230AD	1	Muffler Assy., Horizontal Exhaust, Replaces P/N C5NN-5230-F, 5100, 5200, Start Year: 01/01/1966
30	310079	1	Muffler Assy., Horizonta, Narrow Orchard, U.S., Start Year: 01/01/1971
31	D6NN5252E	2	Clamp Assy., Shield & Muffler to Inlet Pipe, 1.75" I.D., Replaces P/N C5NN-5A28-1-A, Start Year: 01/01/1965
35A	E4NN5230FA17M	1	Muffler Assy., Vertical Exhaust, U.S., 2000 & 3000, Start Year: 01/01/1965
35A	E4NN5230GB	1	Muffler Assy., Vertical Exhaust, 4000 & 5000, Start Year: 01/01/1966
35B	C7NN5230R	1	Muffler Assy., Vertical Exhaust, Round, U.K. - Antwerp, When Replacing P/N C5NN-5230-BC, Enlarge holes in hood, Start Year: 01/01/1965
35B	DHPN5230A	1	Muffler Assy., Vertical, Economy, Service Only, U.S., NHNA Only, Start Year: 01/01/1965
36	E0NN5N206DA17M	1	Rain Cap Assy., Vertical Exhaust, U.S, Replaces P/N C7NN-5C208-E, Start Year: 01/01/1965
36	E0NN5N206DA17M		Rain Cap Assy., Vertical Exhaust, U.K - Antwerp, Replaces P/N C7NN-5C208-E, Years: 01/01/1965-03/31/1968
36A	D6NN5C208B	1	Rain Cap Assy., Vertical Exhaust, U.K.- Antwerp, Replaces P/N C7NN-5C208-B, Start Year: 04/01/1968
36B	40923S8	2	Screw, Self-Tapping, HWH, 5/16"-18 x 1/2", Start Year: 04/01/1968
36B	372287S36	2	Screw & Washer Assy., HH, W/Vertical Exhaust, 5/16"-18 x .75
36B	372287S36	1	Screw & Washer Assy., HH, W/Horizontal Exhaust, 5/16"-18 x .75, Start Year: 01/01/1965
39	86546403	1	Deflector Assy., Heat, 3500, 4100, 4400, 4500, Start Year: 01/01/1965
39	86546403	1	Deflector Assy., Heat, 2100, 2110, 3100, 4110, 4140, Start Year: 07/01/1968
39	C5NN6A683K	1	Deflector Assy., Heat, L/Torque Coverter, 3400, 4200, NHNA Only, Start Year: 01/01/1965
39	C5NN6A683M	1	Deflector Assy., Heat, Replaces P/N C5NN-6A683-A, U.K.- Antwerp, 2100, 3100, No Longer Serviced, Years: 01/01/1965-06/30/1968
39	C7NN6A622A	1	Deflector, Heat, 5100, 5200, Includes: Ref. 39A Thru 39C, Start Year: 01/01/1966
39A	C5NN7N033A	2	Anti-Rattle, Tranmisson Oil Cooler Tube, 2000, 3000 & 4000, Start Year: 01/01/1965
39B	80707	4	Washer, #12, Start Year: 01/01/1965
39C	33178S43	4	Screw, Pan Hd., #12-14 x 3/8", 2000, 3000 & 4000, No Longer Serviced, Start Year: 01/01/1965
40	C5NN9A032C	1	Shield, Fuel Tank Heat, U.S., 2000, 3000 & 4000, Start Year: 01/01/1965
41	304624S36	2	Screw, Cap, HH, G5, 1/4"-20 x 1/2", 2000, 3000 & 4000, Start Year: 01/01/1965
42	EC0ND0NN5B255E	1	Adapter Assy., Inlet Pipe, 17.50" (44.45cm), 5200, Start Year: 01/01/1965
42	D0NN5B255D	1	Adapter Assy., Inlet Pipe, 15.5", (39.37cm), 3400, 4200, Start Year: 01/01/1965
42	D0NN5B255C	1	Adapter Assy., Inlet Pipe, 13.50" (34.29cm), 2000, 3100, 3500, 5100, Replaces P/N C5NN-5B255-A, Start Year: 01/01/1965
42	NSS	1	Adapter Assy., Inlet Pipe, 13.50" (34.29cm), 4000 Except 4200, Replaces P/N C5NN-5B255-A, Start Year: 01/01/1965
42	NSS	1	Adapter Assy., Inlet Pipe, 13.50" (34.29cm), 3400, Replaces P/N C5NN-5B255-A, Years: 01/01/1965-09/30/1966
43	83910871	1	Clamp Assy., Inlet Pipe, 2" I.D., Start Year: 01/01/1965
44	C7NN5A273A	1	Shield Assy., Heat, 5100, 5200 Gasoline, NHNA Only, Start Year: 04/01/1968
	C0NN5B299A	AR	Pipe, Outlet, 18-3/4" Lg., Accessory, U.S., Used W/Mufflers W/2" Outlet, NHNA Only, Start Year: 01/01/1965

5000-SERIES 4 CYL TRACTOR (1/65-1/75)

06G01 MANIFOLD, MUFFLER & RELATED PARTS, GASOLINE (PETROL) & L.P.G.

Ref	Part Number	Qty	Description
	D3NN5255A	1	Pipe, Vertical Muffler Outlet, W/4 Post Rollbar, U.S., 3400, 3550, 4400, 4500, NHNA Only, No Longer Serviced, Start Year: 05/01/1974
	D6NN5D219A	1	Support Assy., Muffler, Narrow Orchard, NHNA Only, Start Year: 01/01/1971
	C7NN5255D	1	Pipe, Muffler Outlet, Narrow Orchard, NHNA Only, Start Year: 01/01/1971
	D6NN5252E	1	Clamp, Muffler to Pipe to Support, Narrow Orchard, Start Year: 01/01/1971
	80681	1	Washer, Lock, 5/16", Narrow Orchard, Start Year: 01/01/1971
	9635082	1	Nut, G5, 5/16"-18, Narrow Orchard, Start Year: 01/01/1971
	280827	1	Bolt, Carriage, Short Neck, G5, 5/16"-18 x 1-1/4", Start Year: 01/01/1971

06H01 GOVERNOR, DISTRIBUTOR DRIVE & RELATED PARTS, GASOLINE (PETROL) & L.P.G.

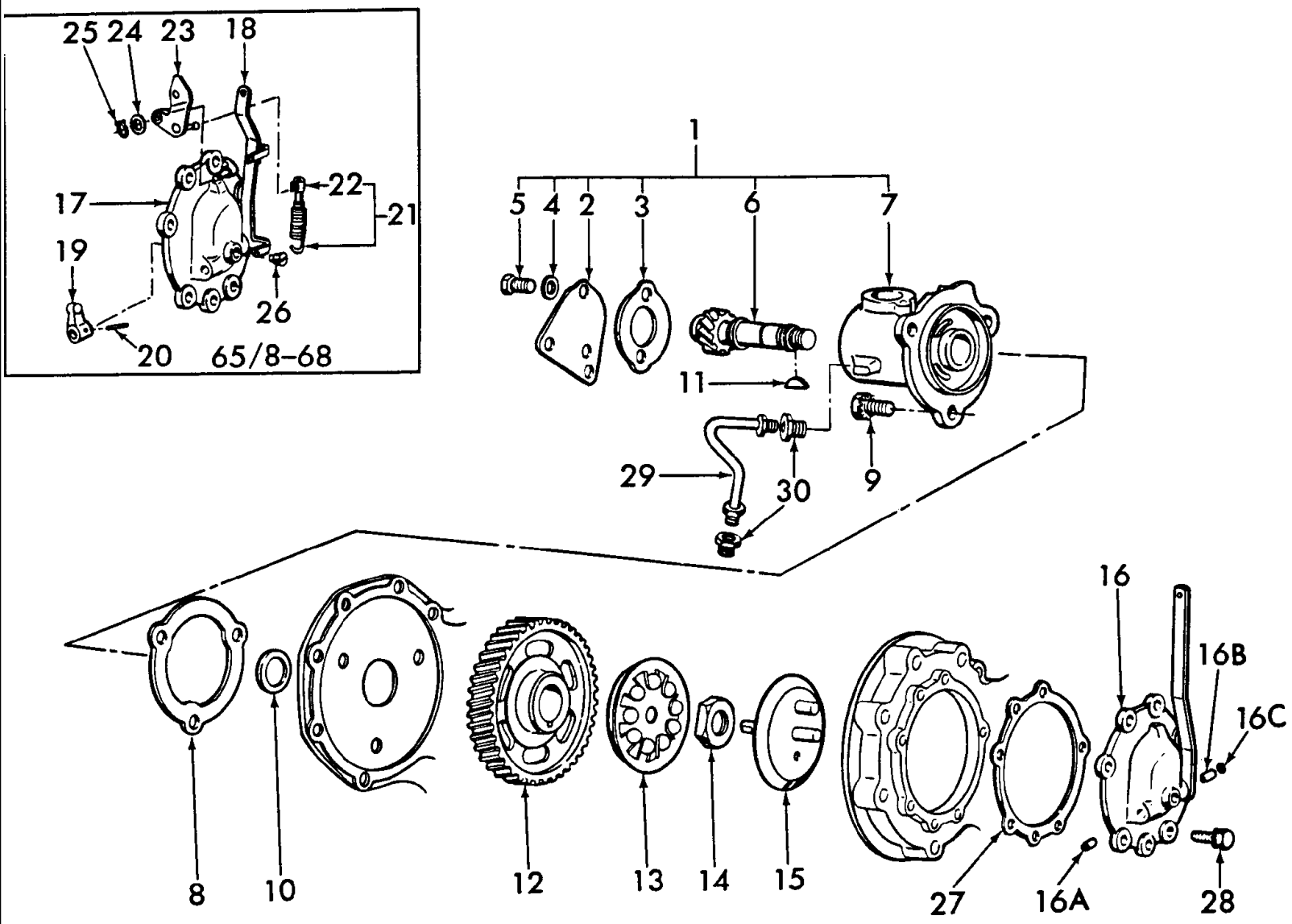

Carburetors stamped prefix C5NE or C5NN use Throttle, Governor Linkage dated 65/8-68. Carburetors stamped with prefix C7NN use Throttle, Governor Linkage dated 9/68.

5000-SERIES 4 CYL TRACTOR (1/65-1/75)

06H01 GOVERNOR, DISTRIBUTOR DRIVE & RELATED PARTS, GASOLINE (PETROL) & L.P.G.

Ref	Part Number	Qty	Description
1	C7NN12051A	1	Drive Assy., Distributor & Governor, Includes Ref. 2 Thru 7, Start Year: 01/01/1965
2	C5NE12080A	1	Cover, Start Year: 01/01/1965
3	C5NE12098A	1	Gasket, Start Year: 01/01/1965
4	80681	AR	Washer, Lock, 5/16"
5	280345	2	Screw, Cap, HH, G5, 5/16"-18 x 7/8", Start Year: 01/01/1965
6	C7NN12094A	1	Shaft Assy., Start Year: 01/01/1965
7	NSS	1	Housing Assy., Includes: Bushing, Start Year: 01/01/1965
8	E6NN9F585AA	1	Gasket, Housing, Start Year: 01/01/1965
9	379339S36	3	Bolt, HH, Self-Locking, 5/16"-24 x .80, Start Year: 01/01/1965
10	C5NE12484A	1	Washer, Gear Thrust, Start Year: 01/01/1965
11	84071	1	Key, Woodruff #5, 1/8" x 5/8", Start Year: 01/01/1965
12	C7NN18222C	1	Gear, Drive, Start Year: 01/01/1965
13	C5NE12B462A	1	Driver Assy., Governor, Start Year: 01/01/1965
14	377509S	1	Nut, Hex, 7/8"-20, Start Year: 01/01/1965
15	C7NN12471A	1	Race Assy., Upper, Start Year: 01/01/1965
16	D0NN12452A	1	Housing & Lever Assy., Governor, Replaces C6NE-12452-A, 5000, Includes: Housing, 5000, Includes Ref. 16A, 16B & 16C, Start Year: 01/01/1966
16	D0NN12452A	1	Housing & Lever Assy., Governor, 2000, 3000 & 4000, Includes: Ref. 16A, 16B & 16C, Start Year: 09/01/1968
16A	D1NN12N455A	1	Bearing Assy., End, Start Year: 09/01/1968
16B	D1NN12A478A	1	Bearing Assy., Shaft, Start Year: 09/01/1968
16C	D1NN12N454A	1	Seal Assy., Oil, Start Year: 09/01/1968
17	C5NE12095A	1	Housing & Bearing Assy., Governor, 2000, 3000 & 4000, No Longer Serviced, Years: 01/01/1965-08/31/1968
18	C5NE12A473A	1	Lever Assy., Speed Control, 2000, 3000 & 4000, No Longer Serviced, Years: 01/01/1965-08/31/1968
19	C5NE12A471B	1	Arm, Control Lever, 2000, 3000 & 4000, No Longer Serviced, Years: 01/01/1965-08/31/1968
20	305039S7	1	Pin, Roll, 1/8" x 5/8", 2000, 3000 & 4000, No Longer Serviced, Years: 01/01/1965-08/31/1968
21	C5NE12B463A	1	Spring Assy., Control, 2000, 3000 & 4000, Includes: Ref. 22, Years: 01/01/1965-08/31/1968
22	C0NN9A793A	1	Clip, 2000,3000 & 4000, Years: 01/01/1965-08/31/1968
23	C5NE12A490A	1	Bellcrank Assy., Throttle, 2000, 3000 & 4000, Years: 01/01/1965-08/31/1968
24	374833S8	1	Washer, Flat, .32 I.D. x .56 O.D. x .035, 2000, 3000 & 4000, Years: 01/01/1965-08/31/1968
25	188954	1	Ring, Snap, Ext, .312", 2000, 3000 & 4000, Years: 01/01/1965-08/31/1968
26	353052S5	1	Plug, Pipe, 1/8", 2000, 3000 & 4000, Years: 01/01/1965-08/31/1968
27	83959395	1	Gasket, Housing Assy. to Front Engine Cover, Start Year: 01/01/1965
28	379055S36	5	Bolt, HH, Self-Locking, 5/16"-18 x .98, 2000, 3000 & 4000, Years: 01/01/1965-08/31/1968
28	379055S36	4	Bolt, HH, Self-Locking, 5/16"-18 x .98, 5000, Start Year: 01/01/1966
28	379055S36	4	Bolt, HH, Self-Locking, 5/16"-18 x .98, 2000, 3000 & 4000, Start Year: 09/01/1968
28	379862S36	1	Bolt, HH, Lock, 5/16"-18 x 2.0, 2000, 3000 & 4000, Start Year: 09/01/1968
28	379862S36	1	Bolt, HH, Lock, 5/16"-18 x 2.0, 5000, Start Year: 01/01/1966
	356313S2	1	Washer, Flat, 11/32, 5000, No Longer Serviced (NHNA), Start Year: 01/01/1966
29	C5NE12076B	1	Tube Assy., Distributor Drive Oil, Start Year: 01/01/1965

Carburetors stamped prefix C5NE or C5NN use Throttle, Governor Linkage dated 65/8-68. Carburetors stamped with prefix C7NN use Throttle, Governor Linkage dated 9/68.

5000-SERIES 4 CYL TRACTOR (1/65-1/75)

06H01 GOVERNOR, DISTRIBUTOR DRIVE & RELATED PARTS, GASOLINE (PETROL) & L.P.G.

Ref	Part Number	Qty	Description
30	87532S	2	Fitting, Tube, 1/4"-24 x .734", Start Year: 01/01/1965

Carburetors stamped prefix C5NE or C5NN use Throttle, Governor Linkage dated 65/8-68. Carburetors stamped with prefix C7NN use Throttle, Governor Linkage dated 9/68.

06J02 CYLINDER HEAD, BLOCK & RELATED PARTS, DIESEL, 5000 & 7000

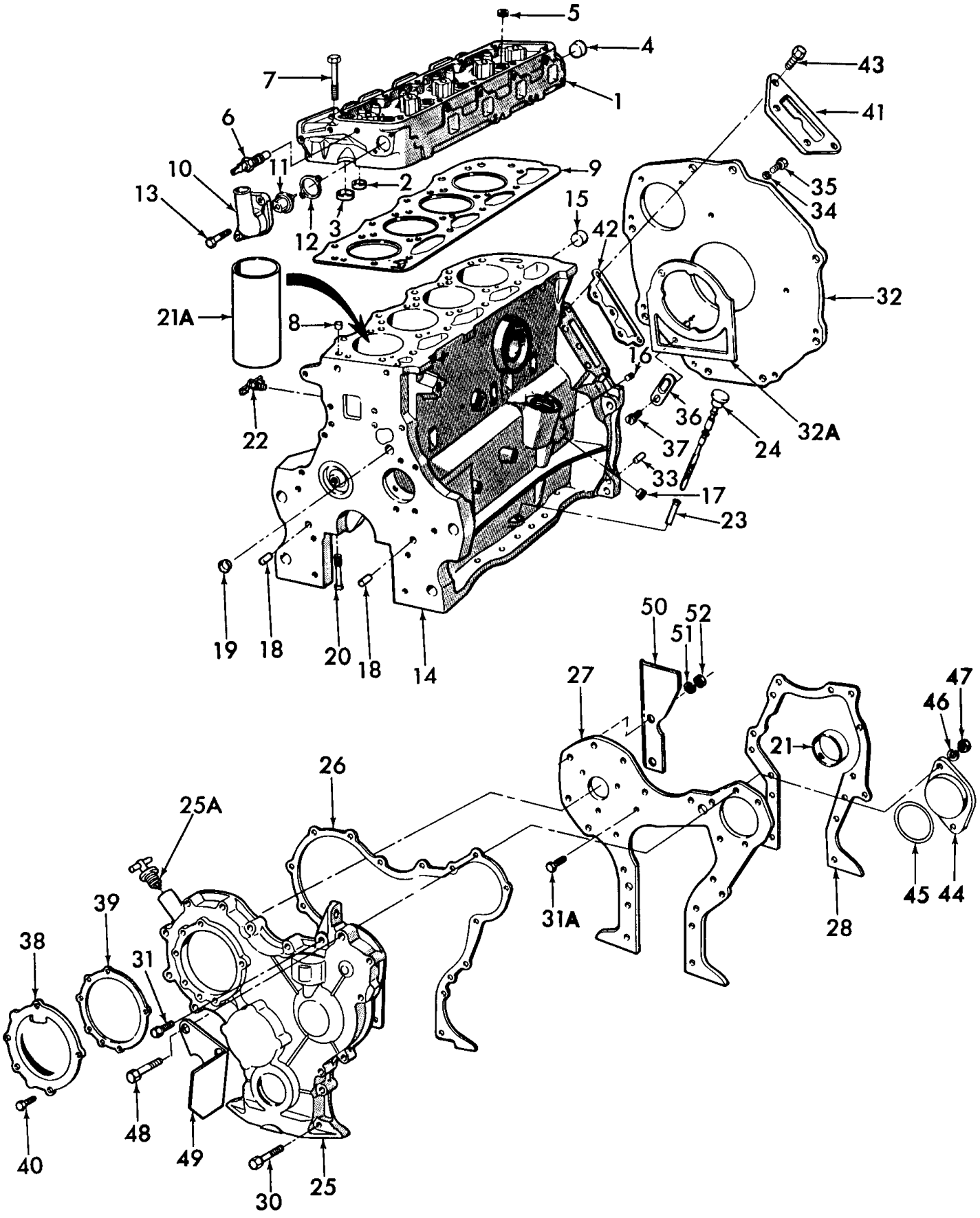

5000-SERIES 4 CYL TRACTOR (1/65-1/75)

06J02 CYLINDER HEAD, BLOCK & RELATED PARTS, DIESEL, 5000 & 7000

Ref	Part Number	Qty	Description
	E6NN6009BCA	1	Engine Assy., Cylinder Block & Crankshaft, 5000, When replacing D5NN-6009 level with E6NN-6009 level also order; (1) FP-115(83956698), (1) F1NN-6B302-AA (81873999), (1) E5NN-6B303-AA(83955920), (1) E5HN-6N306-AC (81868536), (1) E5HN-6N305-AC(83959128), (1) E5NN-6701-BA, (1) E6NN-6269-AA(83956691), (8) 34791-S36, (2) 34792-S36, (8) 304682-S36(81821203)., Engine Assemblies include: Pistons & Rods, Camshaft & Gears, Hydraulic Pump Drive Gear & Crankshaft Gear., Years: 01/01/1965-03/31/1968
	E6NN6009EA	1	Engine Assy., Cylinder Block & Crankshaft, 5000, When replacing D5NN-6009 level with E6NN-6009 level also order; (1) FP-115(83956698), (1) F1NN-6B302-AA (81873999), (1) E5NN-6B303-AA(83955920), (1) E5HN-6N306-AC (81868536), (1) E5HN-6N305-AC(83959128), (1) E5NN-6701-BA, (1) E6NN-6269-AA(83956691), (8) 34791-S36, (2) 34792-S36, (8) 304682-S36(81821203)., Engine Assemblies include: Pistons & Rods, Camshaft & Gears, Hydraulic Pump Drive Gear & Crankshaft Gear., Start Year: 04/01/1968
	E6NN6009AGC	1	Engine Assy., Cylinder Block & Crankshaft, 7000, When replacing D5NN-6009 level with E6NN-6009 level also order; (1) FP-115(83956698), (1) F1NN-6B302-AA (81873999), (1) E5NN-6B303-AA(83955920), (1) E5HN-6N306-AC (81868536), (1) E5HN-6N305-AC(83959128), (1) E5NN-6701-BA, (1) E6NN-6269-AA(83956691), (8) 34791-S36, (2) 34792-S36, (8) 304682-S36(81821203)., Engine Assemblies include: Pistons & Rods, Camshaft & Gears, Hydraulic Pump Drive Gear & Crankshaft Gear., Start Year: 10/01/1971
	NLS	1	Engine Assy., Cylinder Block & Crankshaft, Mexico, 5000 {73NY6009A}, Engine Assemblies include: Pistons & Rods, Camshaft & Gears, Hydraulic Pump Drive Gear & Crankshaft Gear., Mexico Only, Start Year: 01/01/1968
1	EGPN6049A	1	Head Assy., Cylinder, 5000, Includes: Ref. 2 thru 6, No Longer Serviced (NH-E), Start Year: 01/01/1965
1	D0NN6049A	1	Head Assy., Cylinder, 7000, Includes: Ref. 2 thru 6, No Longer Serviced, Start Year: 10/01/1971
2	C5NE6056A	4	Insert, Intake Valve Seat, Standard, 5000, Start Year: 01/01/1965
2	C5NE6056C	AR	Insert, Intake Valve Seat, .010" (.254mm) O/S, 5000, Start Year: 01/01/1965
2	C5NE6056B	AR	Insert, Intake Valve Seat, .020" (.508mm) O/S, 5000, No Longer Serviced (NHNA), Start Year: 01/01/1965
2	C5NN6056A	AR	Insert, Intake Valve Seat, .030" (.762mm) O/S, 5000, Start Year: 01/01/1965
2	D0NN6056A	4	Insert, Intake Valve Seat, Standard, 7000, No Longer Serviced (NH-E), Start Year: 10/01/1971
2	D0NN6056B	AR	Insert, Intake Valve Seat, .010" (.254mm) O/S, 7000, No Longer Serviced (NHNA), Start Year: 10/01/1971
2	D0NN6056C	AR	Insert, Intake Valve Seat, .020" (.508mm) O/S, 7000 U.S., Start Year: 10/01/1971
2	D0NN6056D	AR	Insert, Intake Valve Seat, .030" (.762mm) O/S, 7000 U.S., No Longer Serviced (NHNA), Start Year: 10/01/1971
3	C5NE6057A	4	Insert, Exhaust Valve Seat, Standard, 5000, Start Year: 01/01/1965
3	C5NE6057C	AR	Insert, Exhaust Valve Seat, .010" (.254mm) O/S, 5000, Start Year: 01/01/1965
3	C5NE6057B	AR	Insert, Exhaust Valve Seat, .020" (.508mm) O/S, 5000, Start Year: 01/01/1965
3	C5NN6057A	AR	Insert, Exhaust Valve Seat, .030" (.762mm) O/S, 5000, Start Year: 01/01/1965
3	E9NN6057DA	4	Insert, Exhaust Valve Seat, Standard, 7000, Start Year: 10/01/1971
3	E9NN6057EA	AR	Insert, Exhaust Valve Seat, .010" (.254mm) O/S, 7000, Start Year: 10/01/1971
3	C9NN6057L	AR	Insert, Exhaust Valve Seat, .020" (.508mm) O/S, 7000, Start Year: 10/01/1971
3	87800557	AR	Insert, Exhaust Valve Seat, .030" (.762mm) O/S, 7000, Start Year: 10/01/1971
4	378862S	1	Plug, Pipe, Threaded, 1-1/2" - 11 x 1/2", Years: 01/01/1965-02/28/1969

06J02 CYLINDER HEAD, BLOCK & RELATED PARTS, DIESEL, 5000 & 7000

Ref	Part Number	Qty	Description
4	83957025	1	Plug, 1.75" (44.5mm), Start Year: 03/01/1969
5	370731S	4	Plug, Pipe, 3/4", Years: 01/01/1965-03/31/1968
5	380391S	3	Plug, .875, .877 O.D. Cup, Start Year: 04/01/1968
6	502046	1	Plug, Pipe, 1/8"-27, Years: 01/01/1965-03/31/1968
6	C4AH10884A	1	Sender Assy., Water Temperature Indicator, Start Year: 04/01/1968
	83957026	AR	Plug, 1.81" (46.0mm), Service Only, Start Year: 03/01/1969
	383442S	AR	Plug, .931 O.D. Cup, Service Only, Years: 03/01/1969-05/31/1975
7	D5NN6065C	13	Bolt, HH, 1/2"-13 x 4.75, Start Year: 01/01/1965
	377490S	13	Washer, Flat, 1/2", 5000, Start Year: 01/01/1965
8	83960218	2	Dowel, Split, .676 x .44, Start Year: 01/01/1965
9	82845203	1	Gasket, Head, Years: 01/01/1965-03/31/1968
9	87800517	1	Gasket, Head, Start Year: 04/01/1968
10	C7NN8594B	1	Connection, Water Outlet, Start Year: 01/01/1965
10	C7NN8594A	1	Connection, Water Outlet, Mexico, 5100, Mexico Only, Start Year: 01/01/1968
11	D8NN8575AA	AR	Water Thermostat Assy., 168°, Standard, Start Year: 01/01/1965
11	D8NN8575CA	AR	Water Thermostat Assy., 172°, Start Year: 01/01/1965
11	D8NN8575BA	AR	Water Thermostat Assy., 188°, Start Year: 01/01/1965
12	E9NN8255AA	1	Gasket, Water Outlet Connection, Start Year: 01/01/1965
13	42967S36	2	Screw, Cap, HH, G8, Self-Locking, 5/16"-18 x 2-3/8", Use W/C5NE-8594-A, Years: 01/01/1965-09/30/1969
	80681	2	Washer, Lock, 5/16", Start Year: 10/01/1969
	304701S36	2	Screw, Cap, HH, G5, 5/16"-18 x 1-1/8", Use W/C7NN-8594-B, Start Year: 10/01/1969
	83957022	AR	Plug, 1.18" (30.0mm), Service Only, Start Year: 06/01/1975
14	E2NN6010CC	1	Cylinder Block Assy., Replaces C7NN6010AA, Includes: Block & Ref. 15 thru 21, Years: 01/01/1965-03/31/1968
14	NLS	1	Cylinder Block Assy., Mexico, 5000, Includes: Block & Ref. 15 thru 21 {73NY6010C}, Mexico Only, Start Year: 01/01/1968
14	E1NN6010GC	1	Cylinder Block Assy., 7000, Includes: Block & Ref. 15 thru 21, Includes: Block & Ref. 15 thru 21, When replacing D4NN-6010-J(81845816), D5NN-6010-K (83905306) or D1NN-6010-B (81825188) also use (1) 87710-S Plug & (1) 87712-S(81545101) Plug., Start Year: 10/01/1971
14	87840642	1	Cylinder Block Assy., 5000, Includes: Block & Ref. 15 thru 21, When Replacing Prior Level Blocks W/E6NN- Level Blocks, also order: (1) E5HN-6N306-AC(81868536), (1) E9NN-6N305-AA(81864356), (1) E5NN-6701-BA, (1) E5HN-6269-AA, (2) D5NN-6A008-A(83905798), (1) FP-576(81869944), (1) FP-115(83956698), (8) 34791-S36, (2) 34792-S36, (8) 304682-S36(81821203), (1) E2NN-6N071-AA(83932724), (1) 87708s36(83902337), (1) 87840404, (1) 43191S2(83948594), (2) 58633S2, (1) FP575(81869941), and (1) 87840406., Start Year: 04/01/1968
15	378862S	5	Plug, Pipe, Threaded, 1-1/2" - 11 x 1/2", Years: 01/01/1965-02/28/1969
15	83957025	5	Plug, 1.75" (44.5mm), Years: 03/01/1969-10/31/1970
15	83957023	5	Plug, 1.50" (38.0mm), Start Year: 11/01/1970
15	83957024	AR	Plug, 1.56" (39.6mm), Service Only, Start Year: 11/01/1970
	383442S	AR	Plug, Cup, .931 O.D., Service Only, Years: 01/01/1965-05/31/1975
	83957022	AR	Plug, 1.18" (30.0mm), Service Only, Start Year: 06/01/1975

06J02 CYLINDER HEAD, BLOCK & RELATED PARTS, DIESEL, 5000 & 7000

Ref	Part Number	Qty	Description
16	502046	1	Plug, Pipe, 1/8"-27, Start Year: 01/01/1965
17	87710S	1	Plug, Drain, 3/8"-18, No Longer Serviced (NHNA), Start Year: 01/01/1965
18	81808472	2	Dowel, Pin, 3/8" x 1-1/8", Start Year: 01/01/1965
19	378336S36	2	Plug, Cup, Start Year: 01/01/1965
20	379548S	10	Bolt, Self-Locking, 9/16"-12 x 4.56, Replaces C1VE6065C, Start Year: 01/01/1965
21	87800499	5	Bearing, Camshaft, Front, Start Year: 01/01/1965
21A	C5NN6055A	4	Sleeve, Block, 4.2" Bore, Service Only, Years: 01/01/1965-03/31/1968
21A	D7NN6055A	4	Sleeve, Block, 4.4" Bore, Service Only, 5000 Replaces C9NN6055A, Start Year: 04/01/1968
21A	NLS	4	Sleeve, Block, 5100, Mexico {72NY6055A}, Mexico Only, Start Year: 01/01/1968
22	81465471	1	Drain Cock Assy., Start Year: 01/01/1965
23	C5NE6784B	1	Tube, Oil Level Indicator, 1.96" Long, Years: 01/01/1965-12/31/1972
23	D3NN6784A	1	Tube, Oil Level Indicator, 2.46" (62.5mm) Long, Start Year: 01/01/1973
24	C5NE6750D	1	Indicator, Oil Level, Start Year: 01/01/1965
25	D9NN6059AA	1	Cover, Cylinder, Front, Start Year: 01/01/1965
25	75NY6059A	1	Cover, Cylinder, Front, Mexico, NHNA Only, Start Year: 01/01/1968
25A	83907851	1	Oil Filler Tube Cap Assy., Start Year: 01/01/1965
26	83959876	1	Gasket, Cylinder Front Cover, Start Year: 01/01/1965
27	E5NN6C044BA	1	Plate, Engine Front Cover, w/SIMMS Injection Pump, Start Year: 01/01/1965
27	83956700	1	Plate, Engine Front Cover, w/CAV Injection Pump, Start Year: 11/01/1972
28	83959396	1	Gasket, Engine Front Plate, Start Year: 01/01/1965
30	378339S36	12	Screw & Washer Assy., HH, 5/16"-18 x 2.12, Start Year: 01/01/1965
30	88346	2	Screw, Cap, HH, G5, 5/16"-18 x 2-1/2", W/Washer, Start Year: 01/01/1965
31	88346	1	Screw, Cap, HH, G5, 5/16"-18 x 2-1/2", W/Washer, Start Year: 01/01/1965
31A	45964S36	4	Screw, Cap, HH, G5, Self-Locking, 5/16"-18 x 3/4", U.S., NHNA Only, Start Year: 01/01/1965
32	E5NN6A373AB	1	Plate, Engine Rear Cover, Start Year: 01/01/1965
32A	C7NN6N008B	1	Gasket, Block to Engine Rear Plate, Start Year: 01/01/1965
33	86505157	2	Dowel, Block to Fly Wheel Housing, Replaces EAD6497A, Start Year: 01/01/1965
34	81821693	3	Washer, Lock, 3/8", Start Year: 01/01/1965
35	88434	3	Screw, Cap, HH, G5, 3/8"-16 x 3/4", Start Year: 01/01/1965
36	81804217	1	Cover, Flywheel Access, Start Year: 01/01/1965
37	83905519	1	Screw & Washer Assy., Filister Hd., 5/16"-18 x 5/8", Start Year: 01/01/1965
38	C7NN9G524A	1	Cover, Fuel Injection Pump Timing, Start Year: 01/01/1965
39	83959395	1	Gasket, Timing Cover, Start Year: 01/01/1965
40	379034S36	5	Bolt, HH, Self-Locking, 5/16"-18 x .68, Start Year: 01/01/1965
41	C7NND852A	1	Cover, Hydraulic Pump Flange, Tractors L/Hydraulic, 5000, Start Year: 01/01/1965
42	81822547	1	Gasket, Hydraulic Pump Flange Cover, L/Engine Mounted Pump 5000, Start Year: 01/01/1965
42	E4NN911AA	1	Gasket, Hydraulic Pump Flange Cover, w/Engine Mounted Pump Replaces C5NED853A, 5000, Start Year: 01/01/1965
43	NS	4	Screw & Washer Assy., HH, 3/8"-16 x 1.37, 5000, Years: 01/01/1965-02/28/1969
43A		4	Screw, HH, W/Washer, 3/8"-16 x 7/8", 5000, NH-E Only, Start Year: 03/01/1969
44	81803219	1	Cover, Power Steering Pump, Tractors L/Power Steering, Start Year: 01/01/1965

Ref	Part Number	Qty	Description
45	379275S94	1	O-Ring, 3.237 I.D. x .103 Width, Start Year: 01/01/1965
46	81821693	2	Washer, Lock, 3/8", Start Year: 01/01/1965
47	9628503	2	Nut, G5, 3/8"-16, Start Year: 01/01/1965
48	P0301634	2	Screw, Cap, Flg Hd, G5, 3/8"-16 x 2-1/2", Start Year: 01/01/1965
49	C5NN8N631A	1	Deflector, Air, L.H., Replaces C5NE8N631A, Start Year: 01/01/1965
50	E8NN8N630AA	1	Deflector, Air, RH, Start Year: 01/01/1965
51	80681	2	Washer, Lock, 5/16", Start Year: 01/01/1965
52	9635082	2	Nut, G5, 5/16"-18, Start Year: 01/01/1965

06K02 CRANKSHAFT, FLYWHEELS & RELATED PARTS, DIESEL - 5000, 7000

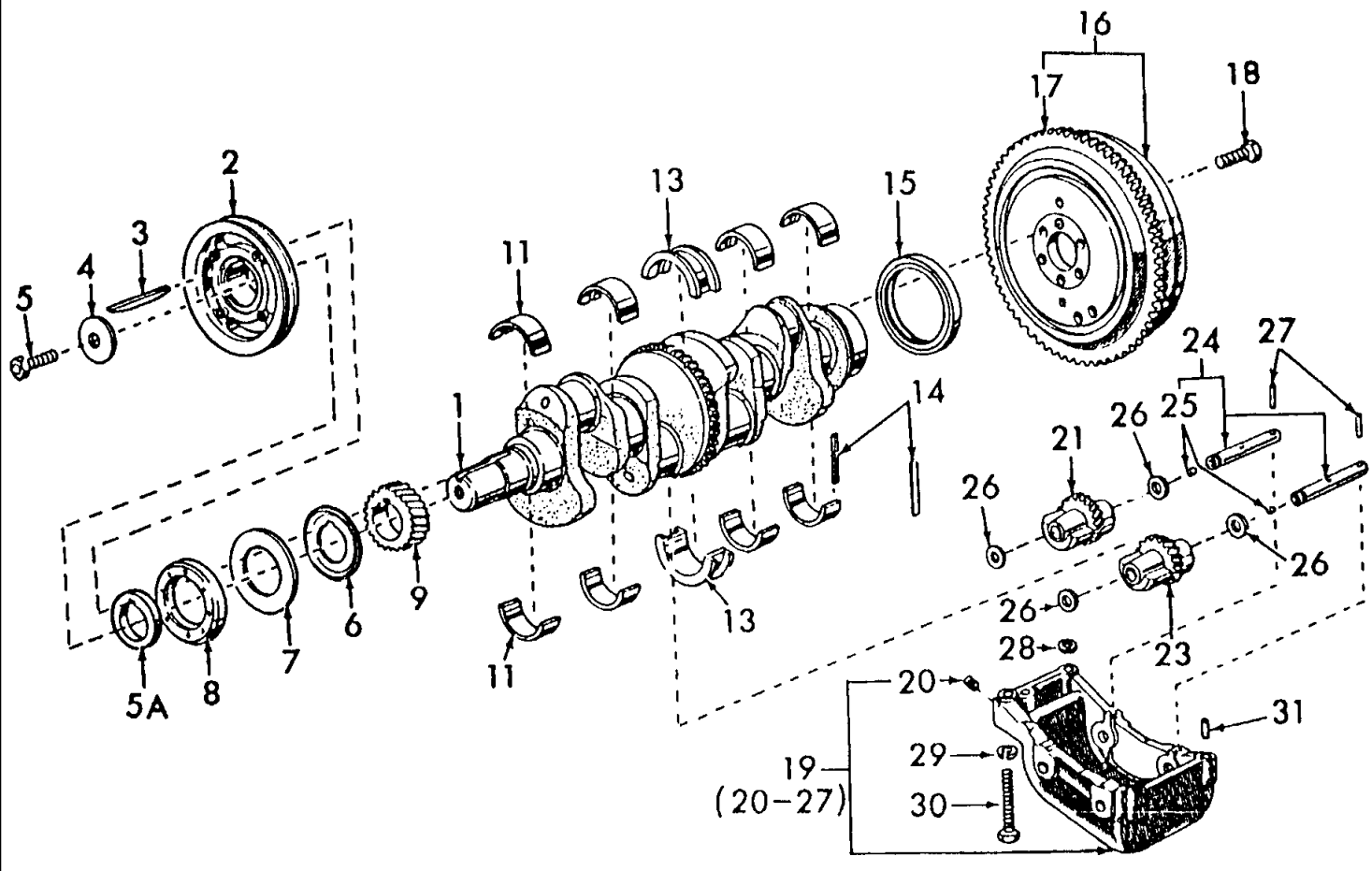

5000-SERIES 4 CYL TRACTOR (1/65-1/75)

06K02 CRANKSHAFT, FLYWHEELS & RELATED PARTS, DIESEL - 5000, 7000

Ref	Part Number	Qty	Description
1	F0NN6300FB	1	Crankshaft Assy., Includes: Ref. 9, Gear Assemblies F1NN-6B302-AA(81873999) & F1NN-6B303-AA(81874001) must be used W/F0NN-6300-FB(81873978)., Start Year: 01/01/1965
2	83903583	1	Pulley, Crankshaft, Start Year: 01/01/1965
3	C9NN6N250A	1	Key, 5/16" (7.94mm) x 3/8" (9.53mm) x 2.86 (72.64mm), Start Year: 01/01/1965
4	83990589	1	Washer, Flat, 3/4", Start Year: 01/01/1965
5	82895561	1	Screw, Cap, HH, G5, 3/4"-16 x 1-3/4", No Longer Serviced, Start Year: 01/01/1965
5A	C5NE6B306A	1	Spacer, Pulley, Start Year: 01/01/1965
6	C5NE6310B	1	Slinger, Oil, Start Year: 01/01/1965
7	C5NE6B309A	1	Seal, Dust, Front, Start Year: 01/01/1965
8	87800696	1	Oil Seal Assy., Front, Start Year: 01/01/1965
9	E3NN6306BA	1	Gear, Crankshaft, Years: 01/01/1965-09/30/1991
9	83998053	1	Gear, Start Year: 10/01/1991
11	87790355	4	Kit, Liner, Main Bearing, Standard, Red, Gear Assemblies F1NN-6B302-AA(81873999) & F1NN-6B303-AA(81874001) must be used W/F0NN-6300-FB(81873978)., Start Year: 01/01/1965
11	87790356	4	Kit, Liner, Main Bearing, Standard, Blue, Gear Assemblies F1NN-6B302-AA(81873999) & F1NN-6B303-AA(81874001) must be used W/F0NN-6300-FB(81873978)., Start Year: 01/01/1965
11	CFPN6333C	AR	Kit, Liner, Main Bearing, .002" (.0508mm) U/S, Gear Assemblies F1NN-6B302-AA(81873999) & F1NN-6B303-AA(81874001) must be used W/F0NN-6300-FB(81873978)., Start Year: 01/01/1965
11	87790358	AR	Kit, Liner, Main Bearing, .010" (.254mm) U/S, Gear Assemblies F1NN-6B302-AA(81873999) & F1NN-6B303-AA(81874001) must be used W/F0NN-6300-FB(81873978)., Start Year: 01/01/1965
11	87790359	AR	Kit, Liner, Main Bearing, .020" (.508mm) U/S, Gear Assemblies F1NN-6B302-AA(81873999) & F1NN-6B303-AA(81874001) must be used W/F0NN-6300-FB(81873978)., Start Year: 01/01/1965
11	87790360	AR	Kit, Liner, Main Bearing, .030" (.762mm) U/S, Gear Assemblies F1NN-6B302-AA(81873999) & F1NN-6B303-AA(81874001) must be used W/F0NN-6300-FB(81873978)., Start Year: 01/01/1965
11	87790361	AR	Kit, Liner, Main Bearing, .040" (1.016mm) U/S, Gear Assemblies F1NN-6B302-AA(81873999) & F1NN-6B303-AA(81874001) must be used W/F0NN-6300-FB(81873978)., Start Year: 01/01/1965
11	87790260	4	Kit, Liner, Main Bearing, Standard, All Flywheel Assemblies Includes: Flywheel & Ring Gear, P/N E2NN-6384-AA, Start Year: 09/01/1992
11	87790261	AR	Kit, Liner, Main Bearing, .002" (.0508mm) U/S, Green, All Flywheel Assemblies Includes: Flywheel & Ring Gear, P/N E2NN-6384-AA, Start Year: 09/01/1992
11	87790262	AR	Kit, Liner, Main Bearing, .010" (.254mm) U/S, White, All Flywheel Assemblies Includes: Flywheel & Ring Gear, P/N E2NN-6384-AA, Start Year: 09/01/1992
11	87790263	AR	Kit, Liner, Main Bearing, .020" (.508mm) U/S, All Flywheel Assemblies Includes: Flywheel & Ring Gear, P/N E2NN-6384-AA, Start Year: 09/01/1992
11	87790264	AR	Kit, Liner, Main Bearing, .030" (.762mm) U/S, All Flywheel Assemblies Includes: Flywheel & Ring Gear, P/N E2NN-6384-AA, Start Year: 09/01/1992
11	87790265	AR	Kit, Liner, Main Bearing, .040" (1.016mm) U/S, Each Kit Includes: (1) Upper & (1) Lower Main Thrust Bearing Liner, Start Year: 09/01/1992
13	87790488	1	Kit, Liner, Thrust Bearing, Standard, Red, Each Kit Includes: (1) Upper & (1) Lower Main Thrust Bearing Liner, Start Year: 01/01/1965

5000-SERIES 4 CYL TRACTOR (1/65-1/75)

06K02 CRANKSHAFT, FLYWHEELS & RELATED PARTS, DIESEL - 5000, 7000

Ref	Part Number	Qty	Description
13	87790489	1	Kit, Liner, Thrust Bearing, Standard, Blue, Each Kit Includes: (1) Upper & (1) Lower Main Thrust Bearing Liner, Start Year: 01/01/1965
13	FAPN6337J	1	Kit, Thrust Bearing, .002" (.051mm) U/S, Each Kit Includes: (1) Upper & (1) Lower Main Thrust Bearing Liner, Start Year: 01/01/1965
13	87790491	1	Kit, Liner, Thrust Bearing, .010" (.254mm) U/S, Each Kit Includes: (1) Upper & (1) Lower Main Thrust Bearing Liner, Start Year: 01/01/1965
13	87790492	1	Kit, Liner, Thrust Bearing, .020" (.508mm) U/S, Each Kit Includes: (1) Upper & (1) Lower Main Thrust Bearing Liner, Start Year: 01/01/1965
13	87790493	1	Kit, Liner, Thrust Bearing, .030" (.762mm) U/S, Each Kit Includes: (1) Upper & (1) Lower Main Thrust Bearing Liner, Start Year: 01/01/1965
13	87790494	1	Kit, Liner, Thrust Bearing, .040" (1.02mm) U/S, Each Kit Includes: (1) Upper & (1) Lower Main Thrust Bearing Liner, Start Year: 01/01/1965
13	87790266	1	Kit, Liner, Thrust Bearing, Standard, Red, All Flywheel Assemblies Includes: Flywheel & Ring Gear, P/N E2NN-6384-AA, Start Year: 09/01/1992
13	87790267	1	Kit, Liner, Thrust Bearing, .002" (.0508mm) U/S, Green, All Flywheel Assemblies Includes: Flywheel & Ring Gear, P/N E2NN-6384-AA, Start Year: 09/01/1992
13	87790268	1	Kit, Liner, Thrust Bearing, .010" (.254mm) U/S, White, All Flywheel Assemblies Includes: Flywheel & Ring Gear, P/N E2NN-6384-AA, Start Year: 09/01/1992
13	87790269	1	Kit, Liner, Thrust Bearing, .020" (.508mm) U/S, All Flywheel Assemblies Includes: Flywheel & Ring Gear, P/N E2NN-6384-AA, Start Year: 09/01/1992
13	87790270	1	Kit, Liner, Thrust Bearing, .030" (.762mm) U/S, All Flywheel Assemblies Includes: Flywheel & Ring Gear, P/N E2NN-6384-AA, Start Year: 09/01/1992
13	87790271	1	Kit, Liner, Thrust Bearing, .040" (1.016mm) U/S, All Flywheel Assemblies Includes: Flywheel & Ring Gear, P/N E2NN-6384-AA, Start Year: 09/01/1992
14	E4NN6336AB	2	Seal, Rear Main Bearing Cap, Each Kit Includes: (1) Upper & (1) Lower Main Thrust Bearing Liner, Start Year: 01/01/1965
15	83955247	1	Oil Seal Assy., Rear, Each Kit Includes: (1) Upper & (1) Lower Main Thrust Bearing Liner, Start Year: 01/01/1965
16	E0NN6375HA	1	Flywheel Assy., 12" (30.48cm) Single Clutch, 5000, Each Kit Includes: (1) Upper & (1) Lower Main Thrust Bearing Liner, Years: 01/01/1965-09/30/1969
16	E0NN6375HA	1	Flywheel Assy., 12" (30.48cm) Single Clutch, 5000, Each Kit Includes: (1) Upper & (1) Lower Main Thrust Bearing Liner, Start Year: 06/01/1971
16	E0NN6375LA	1	Flywheel Assy., 11" (27.94cm) Single Clutch, 5000, Each Kit Includes: (1) Upper & (1) Lower Main Thrust Bearing Liner, Years: 10/01/1969-05/31/1971
16	C5NE6375V	1	Flywheel Assy., 10 Speed Transmission, 5000, Each Kit Includes: (1) Upper & (1) Lower Main Thrust Bearing Liner, No Longer Serviced (NHNA), Start Year: 01/01/1965
16	F1NN6375AA	1	Flywheel Assy., 13" (33.02cm) Single Clutch, Skidded Units Only, Each Kit Includes: (1) Upper & (1) Lower Main Thrust Bearing Liner, Start Year: 01/01/1965
16	F1NN6375AA	1	Flywheel Assy., 13" (33.02cm) Single Clutch, 7000, Each Kit Includes: (1) Upper & (1) Lower Main Thrust Bearing Liner, Start Year: 10/01/1971
17	83949153	1	Gear, Ring, 128T, Start Year: 01/01/1965

Ref	Part Number	Qty	Description
18	83909956	6	Screw, Cap, HH, G8, Self-Locking, 9/16"-18 x 1-5/8", Start Year: 01/01/1965
19	D9NN6A311AD	1	Dynamic Balancer Assy., Includes: Ref. 20 thru 27, Start Year: 01/01/1965
19	NLS	1	Dynamic Balancer Support Assy., Mexico, 5000, Includes: Ref. 20 thru 27 {71NY6A307A}, Mexico Only, Start Year: 01/01/1968
21	D9NN6B302AB	1	Gear Assy., Start Year: 01/01/1965
21	F1NN6B302AA	1	Gear Assy., Use w/F0NN-6300-FB, Start Year: 01/01/1965
23	D9NN6B303AB	1	Gear Assy., Start Year: 01/01/1965
23	F1NN6B303AA	1	Gear Assy., Use w/F0NN-6300-FB, Start Year: 01/01/1965
24	C5NN6A305A	2	Shaft Assy., Dynamic Balancer, Includes: Ref. 25, Start Year: 01/01/1965
25	EAF66025A	2	Plug, Tapered, Years: 01/01/1965-06/30/1967
25	81825520	2	Plug, Socket, 1/8"-27 NPT, Start Year: 07/01/1967
26	87802137	4	Washer, Balancer Thrust, 1", Start Year: 01/01/1965
27	83998857	2	Pin, Coiled Spring, 5/16" x 2", Start Year: 01/01/1965
28	C5NE6B305A	1	Gasket, Dynamic Balancer, Start Year: 01/01/1965
29	80679	4	Washer, Lock, 1/2", Start Year: 01/01/1965
30	87972	4	Screw, Cap, HH, G5, 1/2"-13 x 2-1/2", No Longer Serviced, Start Year: 01/01/1965
31	83960218	2	Dowel, Balancer to Cylinder Block, Start Year: 01/01/1965

06L02 CAMSHAFT, ROCKER ARM, VALVES & RELATED PARTS, 4-CYLINDER DIESEL

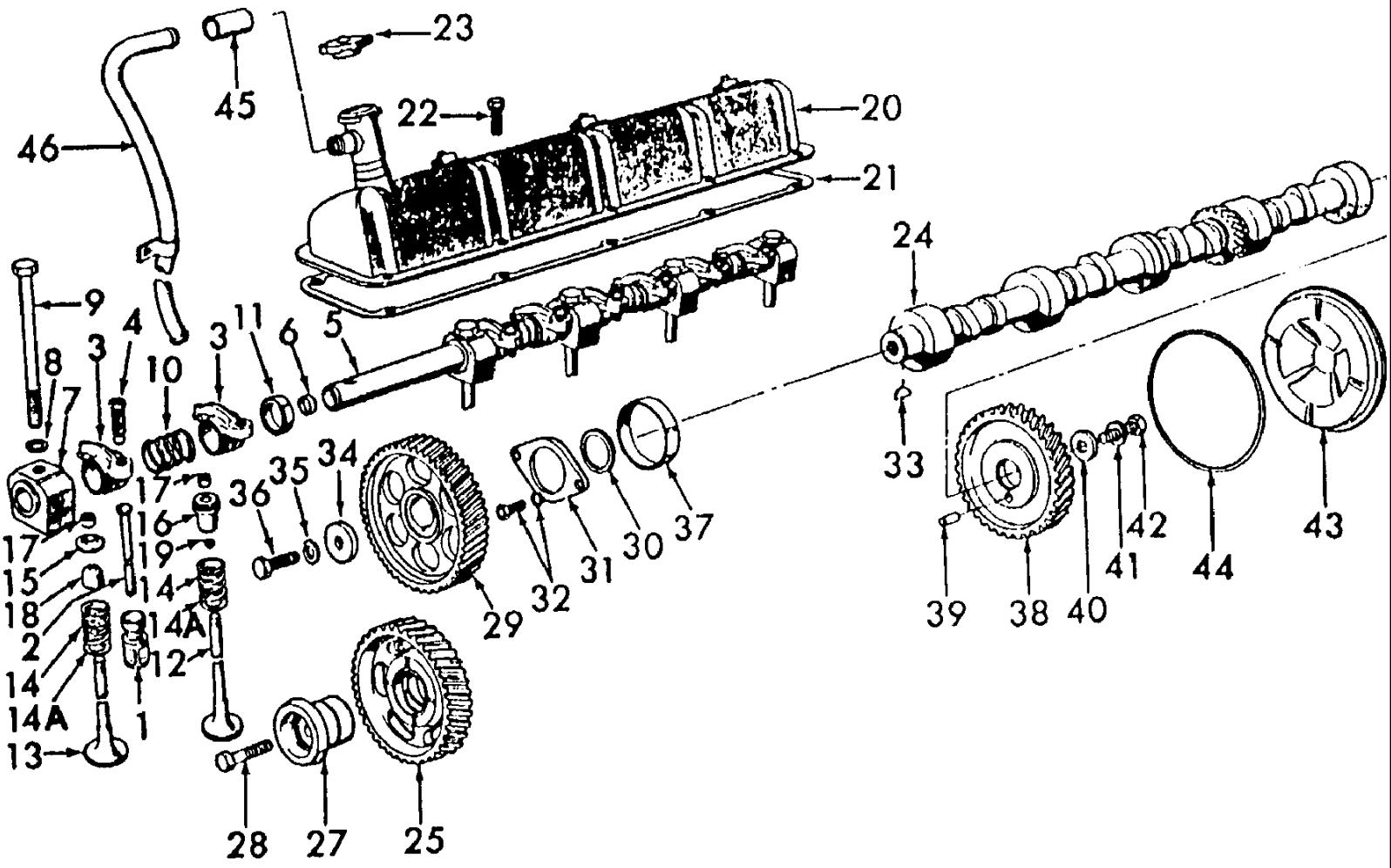

5000-SERIES 4 CYL TRACTOR (1/65-1/75)

06L02 CAMSHAFT, ROCKER ARM, VALVES & RELATED PARTS, 4-CYLINDER DIESEL

Ref	Part Number	Qty	Description
1	C5NE6500B	8	Tappet, Valve, 2.25" (57.15mm) Use w/10.675" (27.114cm) Push Rod, Years: 01/01/1965-08/31/1965
1	E4HN6500AA	8	Tappet, Valve, 2.06" (52.32mm), Replaces C5NE6500C Use w/12 17" (30.912cm) Push Rod, Start Year: 08/01/1965
2	C5NE6567A	8	Rod, Push, 10.675" (27.14cm), Years: 01/01/1965-08/31/1965
2	C5NE6567B	8	Rod, Push, 12.17" (30.912cm), Start Year: 08/01/1965
3	83956710	4	Rocker Arm Assy., Intake, 5000, Start Year: 01/01/1965
3	C7NN6529A	4	Rocker Arm Assy., Exhaust, 7000, Start Year: 10/01/1971
3	81804316	4	Rocker Arm Assy., Exhaust, 5000, Start Year: 01/01/1965
3	E5NN6529AA	4	Rocker Arm Assy., Intake, 7000, Includes: Arm Plus Ref. 4, Start Year: 01/01/1971
4	87801302	8	Screw, Start Year: 01/01/1965
5	C5NE6563B	1	Shaft, Rocker Arm, Start Year: 01/01/1965
6	83417040	2	Plug, Cup, Start Year: 01/01/1965
7	E4NN6531AA	5	Support, Rocker Arm Shaft, Start Year: 01/01/1965
8	377490S	AR	Washer, Flat, 1/2"
9	D5NN6065D	5	Bolt, HH, 1/2"-13 x 7.80, Start Year: 01/01/1965
10	81804341	4	Spring, Rocker Arm Locating, Start Year: 01/01/1965
11	81818731	4	Spacer, Rocker Arm, Start Year: 01/01/1965
12	C7NN6505E	4	Valve, Exhaust, Standard, Replaces C5NE6505A, 5000, Start Year: 01/01/1965
12	C7NN6505F	AR	Valve, Exhaust, .003" (.0762mm) O/S, Replaces C5NE6505B, 5000, Start Year: 01/01/1965
12	C7NN6505G	AR	Valve, Exhaust, .015" (.381mm) O/S, 5000, Start Year: 01/01/1965
12	C7NN6505H	AR	Valve, Exhaust, .030" (.762mm) O/S, 5000, Start Year: 01/01/1965
12	87802143	4	Valve, Exhaust, Standard, 7000, Start Year: 10/01/1971
12	87800341	AR	Valve, Exhaust, .003 O/S (.0762mm), 7000, Start Year: 10/01/1971
12	87800342	AR	Valve, Exhaust, .015 O/S (.381mm), 7000, Start Year: 10/01/1971
12	D8NN6505DA	AR	Valve, Exhaust, .030" O/S. 7000, Start Year: 10/01/1971
12	NLS	4	Valve, Exhaust, Standard {67NY6505A}, Mexico Only, Start Year: 01/01/1968
12	NLS	4	Valve, Exhaust, .003 O/S (.0762mm) {67NY6505B}, Mexico Only, Start Year: 01/01/1968
12	NLS	4	Valve, Exhaust, .015 O/S (.381mm) {67NY6505C}, Mexico Only, Start Year: 01/01/1968
12	NLS	4	Valve, Exhaust, .030 O/S (.762mm) {67NY6505D}, Mexico Only, Start Year: 01/01/1968
13	C5NN6507B	4	Valve, Intake, Standard, 5000, Start Year: 01/01/1965
13	C5NN6507C	AR	Valve, Intake, .003 O/S, 5000, Start Year: 01/01/1965
13	C5NN6507D	AR	Valve, Intake, .015 O/S (.38mm), 5000, Start Year: 01/01/1965
13	C5NN6507E	AR	Valve, Intake, .030 O/S (.762mm),5000, Start Year: 01/01/1965
13	87800386	4	Valve, Intake, Standard, 7000, Start Year: 10/01/1971
13	87800387	AR	Valve, Intake, .003 O/S (.0762mm), 7000, Start Year: 10/01/1971
13	D8NN6507CB	AR	Valve, Intake, .015 O/S (.381mm), Start Year: 10/01/1971
13	87800389	AR	Valve, Intake, .030 O/S (.762mm), 7000, Start Year: 10/01/1971
14	D6NN6513A	8	Spring, Valve, Replaces C5NE-6513-A, Start Year: 01/01/1965
14	83999742	8	Spring, Valve, Check Engine Build Code. Use if after 1J20, Start Year: 10/01/1991
14A	C5NE6A526A	AR	Spacer, Spring, Start Year: 01/01/1965
15	D0NN6514A	4	Retainer, Spring, Intake, Start Year: 01/01/1965

5000-SERIES 4 CYL TRACTOR (1/65-1/75)

06L02 CAMSHAFT, ROCKER ARM, VALVES & RELATED PARTS, 4-CYLINDER DIESEL

Ref	Part Number	Qty	Description
15	83958102	4	Retainer, Intake, Check Engine Build Code. Use if after 1J20, Start Year: 10/01/1991
16	C5NE6A516A	4	Retainer Assy., Spring Exhaust, Start Year: 01/01/1965
16	83952336	4	Retainer, Exhaust, Check Engine Build Code. Use if after 1J20, Start Year: 10/01/1991
17	81876796	16	Key, Spring Retainer, Start Year: 01/01/1965
18	C5NE6571A	4	Seal, Stem, Intake, Except 7000, Start Year: 01/01/1965
19	C5NE6571B	4	Seal, Stem, Exhaust, Start Year: 01/01/1965
19	87840154	8	Seal, Valve Stem, Check Engine Build Code. Use if after 1J20, Start Year: 10/01/1991
20	D3NN6582A	1	Cover Assy., Valve Rocker Arm, 5000, 7000, Start Year: 01/01/1965
21	C7NN6584C	1	Gasket, Rocker Arm Cover, Start Year: 01/01/1965
22	83949109	10	Bolt, Cap, Flg Hd, G5, 5/16"-18 x .62", Start Year: 01/01/1965
23	D0NN6766A	1	Cap Assy., Oil Filler, Start Year: 01/01/1965
24A	87800353	1	Camshaft, Cam Lobes, .855/.825 (21.71/20.955mm) Wide, Start Year: 01/01/1965
25	83963174	1	Gear Assy., Camshaft Drive, Start Year: 01/01/1965
27	C5NE6A255A	1	Adapter, Camshaft Drive Gear, Start Year: 01/01/1965
27	87840404	1	Adapter, Camshaft Drive Gear, Use with new cylinder block, Start Year: 06/01/1994
27	NLS	1	Adapter, Camshaft Drive Gear, 5000 {71NY6A255A}, Mexico Only, Start Year: 01/01/1968
28	43122S	1	Screw, Cap, HH, G8, Self-Locking, 1/2"-20 x 2-1/8", Start Year: 01/01/1965
28	82852337	1	Screw, Cap, HH, G8, Self-Locking, 5/8"-11 x 2-1/4", Use with new cylinder block, Start Year: 06/01/1994
29	83963173	1	Gear, Camshaft, Start Year: 01/01/1965
30	81804020	1	Spacer, Camshaft Gear, Start Year: 01/01/1965
31	D8NN6269AA	1	Plate, Camshaft Thrust, Start Year: 01/01/1965
32	372287S36	2	Screw & Washer Assy., HH, 5/16"-18 x .75, Start Year: 01/01/1965
33	80810	1	Key, Woodruff, # 9, 3/16" x 3/4", Start Year: 01/01/1965
34	81804024	1	Washer, Camshaft Gear, Start Year: 01/01/1965
35	81547	AR	Washer, Lock, 7/16", Start Year: 01/01/1965
36	83909101	1	Bolt, Cap, Flg Hd., G5, 7/16"-14 x 1-1/4", Start Year: 01/01/1965
37	87800499	5	Bearing, Camshaft, Start Year: 01/01/1965
38	83937074	1	Gear, Hydraulic Pump Drive, Except 7000, Includes: Ref. 39, Start Year: 01/01/1965
39	382015S	1	Pin, Dowel, 5/16" x 5/8", Except 7000, Start Year: 01/01/1965
40	81804024	1	Washer, Camshaft Gear, Except 7000, Start Year: 01/01/1965
41	81547	AR	Washer, Lock, 7/16", Except 7000, Start Year: 01/01/1965
42	83909101	1	Bolt, Cap, Flg Hd., G5, 7/16"-14 x 1-1/4", Except 7000, Start Year: 01/01/1965
43	C5NND851B	1	Cover, Hydraulic Pump Drive Gear, Start Year: 01/01/1965
43	NLS	1	Cover, Hydraulic Pump Drive Gear {73NYD851A}, Mexico Only, Start Year: 01/01/1968
44	70923824	1	O-Ring, 5.339 x .139, Years: 01/01/1965-08/31/1967
45	C5NE6853A	1	Hose, Crankcase Ventilation Tube To Cover, Start Year: 01/01/1965
46	C5NE6758A	1	Tube Assy., Crankcase Ventilation, Start Year: 01/01/1965

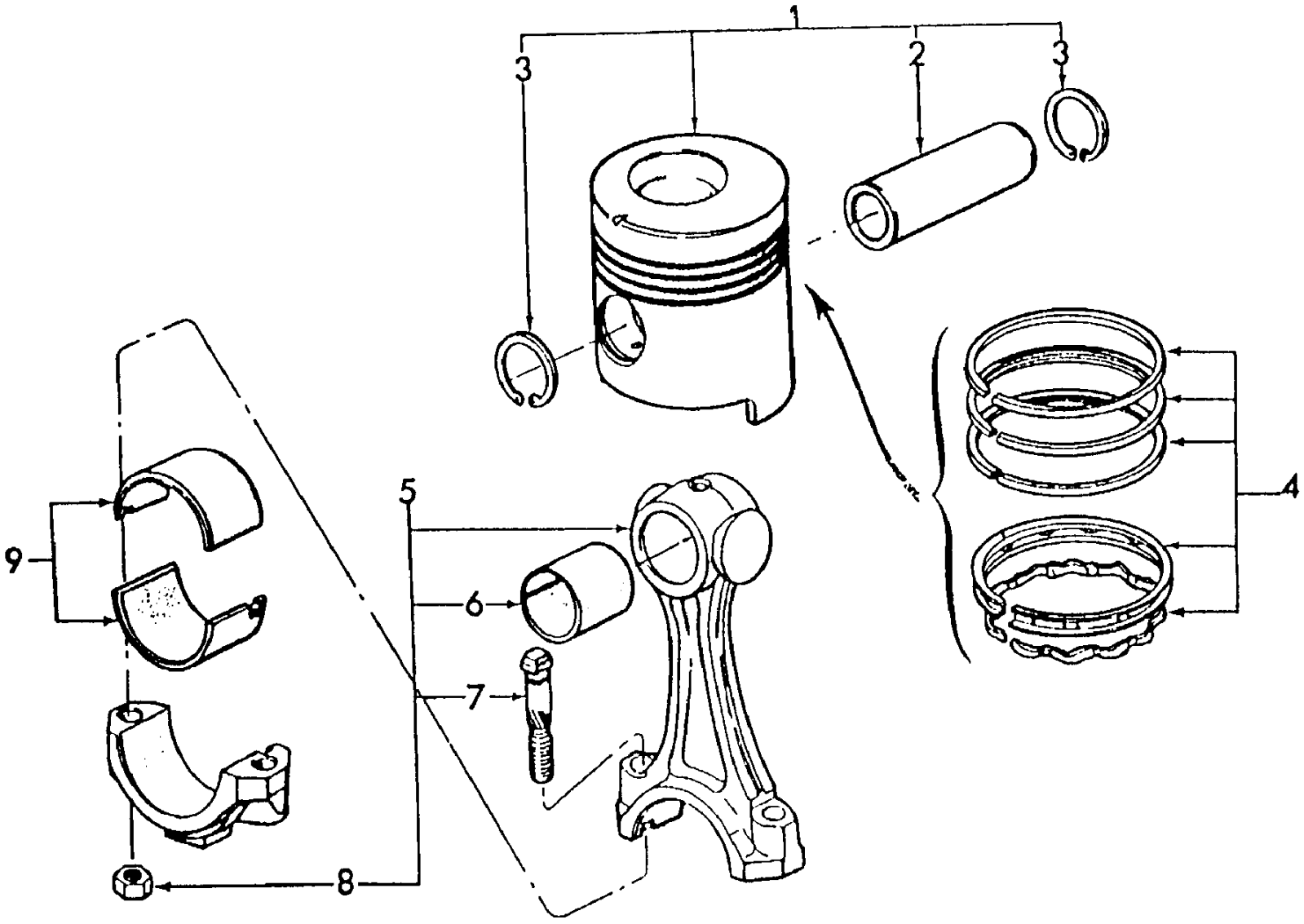
1
2
3
3
4
5
6
7
8
9

5000-SERIES 4 CYL TRACTOR (1/65-1/75)

06M01 PISTONS & CONNECTING RODS, DIESEL

Ref	Part Number	Qty	Description
1	D6NN6108F	3	Piston, Pin & Retainer Set, Standard, 2000, Start Year: 01/01/1965
1	D6NN6108F	3	Piston, Pin & Retainer Set, Standard, 2000, No Longer Serviced (NHNA), Start Year: 01/01/1965
1	D6NN6108G	3	Piston, Pin & Retainer Set, .004" (.1016mm) O/S, 2000, Start Year: 01/01/1965
1	D6NN6108G	3	Piston, Pin & Retainer Set, .004" (.1016mm) O/S, 2000, NH-E Only, Start Year: 01/01/1965
1	D6NN6108F	3	Piston, Pin & Retainer Set, .020" (.508mm) O/S, 2000, Start Year: 01/01/1965
1	C5NN6108R	3	Piston, Pin & Retainer Set, .020" (.508mm) O/S, 2000, NH-E Only, Start Year: 01/01/1965
1	D6NN6108F	3	Piston, Pin & Retainer Set, .030" (.762mm) O/S, 2000, NO LONGER SERVICED, USE EITHER .040 O/S OR SUPERSESSION TO STD. PISTON - WILL NEED A SLEEVE, Start Year: 01/01/1965
1	D6NN6108K	3	Piston, Pin & Retainer Set, .040" (1.016mm) O/S, 2000, Start Year: 01/01/1965
1	D6NN6108K	3	Piston, Pin & Retainer Set, .040" (1.016mm) O/S, 2000, NH-E Only, Start Year: 01/01/1965
1	F2NN6K100DA	3	Kit, Piston, Pin, Retainer & Piston Rings(Std.), 4000, When replacing prior level piston W/E0NN level, must replace complete set, Start Year: 01/01/1965
1	E0NN6108BA	3	Piston, Pin & Retainer Set, .004" (.1016mm) O/S, 4000, Start Year: 01/01/1965
1	NLS	3	Piston, Pin & Retainer, .020", O/S, 4000, Start Year: 01/01/1965
1	E0NN6108DA	3	Piston, Pin & Retainer Set, .030" (.762mm) O/S, 4000, Start Year: 01/01/1965
1	E0NN6108DA	3	Piston, Pin & Retainer Set, .030" (.762mm) O/S, 4000, NH-E Only, Start Year: 01/01/1965
1	E0NN6108EA	3	Piston, Pin & Retainer Set, .040" (1.02mm) O/S, 4000, Start Year: 01/01/1965
1	D6NN6108L	3	Piston, Pin & Retainer Set, Standard, 3000 Except 3055,3550, When replacing D4NN-6108-L(81845870), must replace the complete set., Start Year: 01/01/1965
1	D6NN6108M	3	Piston, Pin & Retainer Set, .004" O/S (.1016mm), 3000, Except 3055,3550, Start Year: 01/01/1965
1	D6NN6108N	3	Piston, Pin & Retainer Set, .020" O/S (.508mm), 3000, Except 3055,3550, NO LONGER SERVICED, USE EITHER .040 O/S OR SUPERSESSION TO STD. PISTON - WILL NEED A SLEEVE, Start Year: 01/01/1965
1	D6NN6108L	3	Piston, Pin & Retainer Set, .030" O/S (.762mm), 3000, Except 3055,3550, NO LONGER SERVICED, USE EITHER .040 O/S OR SUPERSESSION TO STD. PISTON - WILL NEED A SLEEVE, Start Year: 01/01/1965
1	D6NN6108L	3	Piston, Pin & Retainer Set, .040" O/S (1.016mm) 3000, Except 3055,3550, Start Year: 01/01/1965
1	D6NN6108L	4	Piston, Pin & Retainer Set, 5000, Years: 01/01/1965-03/31/1968
1	F2NN6K100EA	4	Kit, Piston, Pin, Retainer & Piston Rings(Std.), 5000, Start Year: 04/01/1968
1	D6NN6108M	4	Piston, Pin & Retainer Set, .004" O/S (.1016mm), 5000, Years: 01/01/1965-03/31/1968
1	D4NN6108AB	4	Piston, Pin & Retainer Set, .004" O/S (.1016mm), 5000, Start Year: 04/01/1968
1	D6NN6108N	4	Piston, Pin & Retainer Set, .020" O/S (.508mm), 5000, NO LONGER SERVICED, USE EITHER .040 O/S OR SUPERSESSION TO STD. PISTON - WILL NEED A SLEEVE, Years: 01/01/1965-03/31/1968
1	D4NN6108AC	4	Piston, Pin & Retainer Set, .020" O/S (.508mm), 5000, Start Year: 04/01/1968
1	D6NN6108L	4	Piston, Pin & Retainer Set, .030" O/S (.762mm), 5000, NO LONGER SERVICED, USE EITHER .040 O/S OR SUPERSESSION TO STD. PISTON - WILL NEED A SLEEVE, Years: 01/01/1965-03/31/1968
1	D6NN6108L	4	Piston, Pin & Retainer Set, .040" O/S (1.016mm), 5000, Years: 01/01/1965-03/31/1968
1	D4NN6108AD	4	Piston, Pin & Retainer Set, .030" O/S (.762mm), 5000, Start Year: 04/01/1968
1	D4NN6108AE	4	Piston, Pin & Retainer Set, .040" O/S (1.016mm), 5000, Start Year: 04/01/1968
1	D6NN6108S	3	Piston, Pin & Retainer Set, Standard, 3055,3550, Start Year: 01/01/1970
1	D6NN6108T	3	Piston, Pin & Retainer Set, .004" O/S (.1016mm), 4.2 Bore, 3055,3550, Start Year: 01/01/1970

5000-SERIES 4 CYL TRACTOR (1/65-1/75)

06M01 PISTONS & CONNECTING RODS, DIESEL

Ref	Part Number	Qty	Description
1	D6NN6108U	3	Piston, Pin & Retainer Set, .020" O/S (.508mm), 3055,3550, Start Year: 01/01/1970
1	D6NN6108S	3	Piston, Pin & Retainer Set, .030" O/S (.762mm), 3055,3550, Start Year: 01/01/1970
1	D6NN6108X	3	Piston, Pin & Retainer Set, .040" O/S (1.016mm), 3055,3550, Start Year: 01/01/1970
1	F2NN6K100GA	4	Kit, Piston, Pin, Retainer & Piston Rings(Std.), 7000, Use W/DFPN-6149-E(83905823), DFPN-6149-B(83904263),DFPN-6149-C(83904264),DFPN-6149-D(83904265) - Rings only., Start Year: 01/01/1971
1	D6NN6108Z	4	Piston, Pin & Retainer Set, .004" O/S (.102mm), 7000, Use W/DFPN-6149-E(83905823), DFPN-6149-B(83904263),DFPN-6149-C(83904264),DFPN-6149-D(83904265) - Rings only., Start Year: 01/01/1971
1	D6NN6108AA	4	Piston, Pin & Retainer Set, .020" O/S (.51mm), 7000, Use W/DFPN-6149-E(83905823), DFPN-6149-B(83904263),DFPN-6149-C(83904264),DFPN-6149-D(83904265) - Rings only., Start Year: 01/01/1971
1	D6NN6108AB	4	Piston, Pin & Retainer Set, .030" O/S (.76mm), 7000, Use W/DFPN-6149-E(83905823), DFPN-6149-B(83904263),DFPN-6149-C(83904264),DFPN-6149-D(83904265) - Rings only., Start Year: 01/01/1971
1	D6NN6108AC	4	Piston, Pin & Retainer Set, .040" O/S (1.02mm), 7000 Includes: Ref. 2 thru 3, Use W/DFPN-6149-E(83905823),DFPN-6149-B(83904263),DFPN-6149-C(83904264), DFPN-6149-D(83904265) - Rings only., Start Year: 01/01/1971
2	87801744	3/4	Pin, Piston, Except 7000, Start Year: 01/01/1965
2	87801742	4	Pin, Piston, 7000, Start Year: 01/01/1971
3	167111	6/8	Ring, Snap, Int, 1.500", Except 7000, Start Year: 01/01/1965
3	97625S	8	Ring, Snap, Int, 1.625", Piston Pin, 7000, No Longer Serviced, Start Year: 01/01/1971
4	DFPN6149E	4	Kit, Piston Ring, Standard, 7000, When replacing D4NN-6108-L(81845870), must replace the complete set., Start Year: 01/01/1971
4	DFPN6149B	4	Kit, Piston Ring, .020" O/S (.51mm), 7000, When replacing D4NN-6108-L(81845870), must replace the complete set., Start Year: 01/01/1971
4	DFPN6149C	4	Kit, Piston Ring, .030" O/S (.76mm), 7000, When replacing D4NN-6108-L(81845870), must replace the complete set., Start Year: 01/01/1971
4	DFPN6149D	4	Kit, Piston Ring, .040" O/S (1.02mm), 7000, When replacing D4NN-6108-L(81845870), must replace the complete set., Start Year: 01/01/1971
4	DJPN6149S	3	Kit, Piston Ring, Standard, 2000,3000, Start Year: 01/01/1965
4	DJPN6149S	4	Kit, Piston Ring, Standard, 5000, Years: 01/01/1965-03/31/1968
4	DJPN6149T	3	Kit, Piston Ring, .020" (.51mm) O/S, 2000,3000, Start Year: 01/01/1965
4	DJPN6149T	4	Kit, Piston Ring, .020" (.51mm) O/S, 5000, Years: 01/01/1965-03/31/1968
4	DJPN6149U	3	Kit, Piston Ring, .030" (.76mm) O/S, 2000,3000, Start Year: 01/01/1965
4	DJPN6149U	4	Kit, Piston Ring, .030" (.76mm) O/S, 5000, Years: 01/01/1965-03/31/1968
4	DJPN6149V	3	Kit, Piston Ring, .040" (1.02mm) O/S, 2000,3000, Start Year: 01/01/1965
4	DJPN6149V	4	Kit, Piston Ring, .040" (1.02mm) O/S, 5000, Years: 01/01/1965-03/31/1968
4	DJPN6149W	3	Kit, Piston Ring, Standard, 4000, Start Year: 01/01/1965
4	DJPN6149W	4	Kit, Piston Ring, Standard, 5000, Start Year: 04/01/1968
4	DJPN6149X	3	Kit, Piston Ring, .020" (.51mm) O/S, 4000, Start Year: 01/01/1965

5000-SERIES 4 CYL TRACTOR (1/65-1/75)

06M01 PISTONS & CONNECTING RODS, DIESEL

Ref	Part Number	Qty	Description
4	DJPN6149X	4	Kit, Piston Ring, .020" (.51mm) O/S, 5000, Start Year: 04/01/1968
4	DJPN6149Y	3	Kit, Piston Ring, .030" (.76mm) O/S, 4000, Start Year: 01/01/1965
4	DJPN6149Y	4	Kit, Piston Ring, .030 (.762mm) O/S, 5000, Start Year: 04/01/1968
4	DJPN6149Z	3	Kit, Piston Ring, .040" (1.02mm) O/S, 4000, Start Year: 01/01/1965
4	DJPN6149Z	4	Kit, Piston Ring, .040" (1.02mm) O/S, 5000, Start Year: 04/01/1968
4	DFPN6149E	4	Kit, Piston Ring, Standard, 7000, Start Year: 10/01/1971
4	DFPN6149B	4	Kit, Piston Ring, .020" (.51mm) O/S, 7000, Start Year: 10/01/1971
4	DFPN6149C	4	Kit, Piston Ring, .030" (.76mm) O/S, 7000, Start Year: 10/01/1971
4	DFPN6149D	4	Kit, Piston Ring, .040" (1.02mm) O/S, 7000, Start Year: 10/01/1971
5	E3HN6200AC42	3/4	Rod Assy., Connecting, Except 7000, Includes: Ref. 6 thru 8, Start Year: 01/01/1965
5	87801218	3/4	Rod Assy., Connecting, 4.4 Bore, Except 7000, Includes: Ref. 6 thru 8, Start Year: 01/01/1965
5	87801220	4	Rod Assy., Connecting, 7000, Includes: Ref. 6 thru 8, Start Year: 10/01/1971
6	C5NE6207A	3/4	Bushing, Except 7000, Start Year: 01/01/1965
6	C9NN6207C	4	Bushing, Start Year: 10/01/1971
7	E9NN6214BA	6/8	Bolt, 7/16"-20, Start Year: 01/01/1965
8	390655S2	6/8	Nut, 7/16"-20, Start Year: 01/01/1965
9	DFPN6211A	3/4	Kit, Connecting Rod Bearing, Standard, Red, Except 7000, Start Year: 01/01/1965
9	DFPN6211B	3/4	Kit, Connecting Rod Bearing, Standard, Blue, Except 7000, Start Year: 01/01/1965
9	DFPN6211C	3/4	Kit, Connecting Rod Bearing, .002" (.051mm) U/S, Except 7000, Start Year: 01/01/1965
9	DFPN6211D	3/4	Kit, Connecting Rod Bearing, .010" (.25mm) U/S, Except 7000, Start Year: 01/01/1965
9	DFPN6211E	3/4	Kit, Connecting Rod Bearing, .020"(.51mm) U/S, Except 7000, Start Year: 01/01/1965
9	DFPN6211F	3/4	Kit, Connecting Rod Bearing, .030"(.76mm) U/S, Except 7000, Start Year: 01/01/1965
9	DFPN6211G	3/4	Kit, Connecting Rod Bearing, .040"(1.02mm) U/S, Except 7000, Start Year: 01/01/1965
9	DGPN6211A	4	Kit, Connecting Rod Bearing, Standard, 7000, Years: 10/01/1971-08/31/1990
9	DGPN6211B	AR	Kit, Connecting Rod Bearing, .002" (.051mm) U/S, 7000, Years: 10/01/1971-08/31/1990
9	DGPN6211C	AR	Kit, Connecting Rod Bearing, .010" (.25mm) U/S, 7000, Years: 10/01/1971-08/31/1990
9	DGPN6211D	AR	Kit, Connecting Rod Bearing, .020"(.51mm) U/S, 7000, Years: 10/01/1971-08/31/1990
9	DGPN6211E	AR	Kit, Connecting Rod Bearing, .030"(.76mm) U/S, 7000, Years: 10/01/1971-08/31/1990
9	DGPN6211F	AR	Kit, Connecting Rod Bearing, .040"(1.02mm) U/S, 7000, Years: 10/01/1971-08/31/1990
9	87790304	4	Kit, Connecting Rod Bearing, Standard, Purple, Start Year: 09/01/1990
9	87790305	AR	Kit, Connecting Rod Bearing, .002" (.051mm) U/S, Green, Start Year: 09/01/1990
9	87790306	AR	Kit, Connecting Rod Bearing, .010" (.25mm) U/S, White, Start Year: 09/01/1990
9	87790307	AR	Kit, Connecting Rod Bearing, .020"(.51mm) U/S, Start Year: 09/01/1990
9	87790308	AR	Kit, Connecting Rod Bearing, .030"(.76mm) U/S, Start Year: 09/01/1990
9	87790309	AR	Kit, Connecting Rod Bearing, .040"(1.02mm) U/S, Start Year: 09/01/1990
9	FCPN6211AA	4	Kit, Connecting Rod Bearing, Standard, Use W/new Crankshaft (6300) & old Connecting Rod., Start Year: 01/01/1965
9	FCPN6211BA	AR	Kit, Connecting Rod Bearing, .002 (.0508mm) U/S, Use W/new Crankshaft (6300) & old Connecting Rod., Start Year: 01/01/1965
9	FCPN6211CA	AR	Kit, Connecting Rod Bearing, .010 (.254mm) U/S, Use W/new Crankshaft (6300) & old Connecting Rod., Start Year: 01/01/1965

Ref	Part Number	Qty	Description
9	FCPN6211DA	AR	Kit, Connecting Rod Bearing, .020 (.508mm) U/S, Use W/new Crankshaft (6300) & old Connecting Rod., Start Year: 01/01/1965
9	FCPN6211EA	AR	Kit, Connecting Rod Bearing, .030 (.762mm) U/S, Use W/new Crankshaft (6300) & old Connecting Rod., Start Year: 01/01/1965
9	FCPN6211FA	AR	Kit, Connecting Rod Bearing, .040 (1.02mm) U/S, Use W/new Crankshaft (6300) & old Connecting Rod., Start Year: 01/01/1965
9	FCPN6211GA	4	Kit, Connecting Rod Bearing, Turbo, Standard, Red, Use W/new Crankshaft (6300) & old Connecting Rod., Start Year: 01/01/1965
9	FCPN6211HA	AR	Kit, Connecting Rod Bearing, Turbo, Standard, Blue, Use W/new Crankshaft (6300) & old Connecting Rod., Start Year: 01/01/1965
9	FCPN6211JA	AR	Kit, Connecting Rod Bearing, Turbo, .002 (.508mm) U/S, Use W/new Crankshaft (6300) & old Connecting Rod., Start Year: 01/01/1965
9	FCPN6211KA	AR	Kit, Connecting Rod Bearing, Turbo, .010 (.254mm) U/S, Use W/new Crankshaft (6300) & old Connecting Rod., Start Year: 01/01/1965
9	FCPN6211LA	AR	Kit, Connecting Rod Bearing, Turbo, .020 (.508mm) U/S, Use W/new Crankshaft (6300) & old Connecting Rod., Start Year: 01/01/1965
9	FCPN6211MA	AR	Kit, Connecting Rod Bearing, Turbo, .030 (.762mm) U/S, Use W/new Crankshaft (6300) & old Connecting Rod., Start Year: 01/01/1965
9	FCPN6211NA	AR	Kit, Connecting Rod Bearing, Turbo, .040 (1.02mm) U/S, Use W/new Crankshaft (6300) & old Connecting Rod., Start Year: 01/01/1965
	NLS	4	Ring, Upper Compression, Standard, 1st Groove, 5100 {69NY6150A}, No Longer Serviced, Start Year: 01/01/1968
	NLS	4	Ring, Compression, Standard, 2nd Groove, 5100 {69NY6152A}, No Longer Serviced, Start Year: 01/01/1968
	NLS	4	Ring, Compression, Standard, 3rd. Groove, 5100 {69NY6152E}, No Longer Serviced, Start Year: 01/01/1968
	NLS	4	Ring, Oil Lower, Standard, 4th Groove, 5100 {69NY6153A}, No Longer Serviced, Start Year: 01/01/1968
	NLS	4	Expander, Lower, Oil Ring, Standard, 4th Groove, 5100 {69NY6154A}, No Longer Serviced, Start Year: 01/01/1968
	NLS	4	Ring, Upper Compression, .020 O/S, 1st Groove, 5100 {69NY6150B}, No Longer Serviced, Start Year: 01/01/1968
	NLS	4	Ring, Compression, .020 O/S, 2nd Groove, 5100 {69NY6152B}, No Longer Serviced, Start Year: 01/01/1968
	NLS	4	Ring, Compression, .020 O/S, 3rd Groove, 5100 {69NY6152F}, No Longer Serviced, Start Year: 01/01/1968
	NLS	4	Ring, Oil Lower, .020 O/S, 4th Groove, 5100 {69NY6153B}, No Longer Serviced, Start Year: 01/01/1968
	NLS	4	Expander, Lower, Oil Ring, .020 O/S, 4th Groove, 5100 {70NY6154C}, No Longer Serviced, Start Year: 01/01/1968
	NLS	4	Ring, Upper Compression, .030 O/S, 1st Groove, 5100 {70NY6154C}, No Longer Serviced, Start Year: 01/01/1968
	NLS	4	Ring, Compression, .030 O/S, 2nd Groove, 5100 {69NY6152C}, No Longer Serviced, Start Year: 01/01/1968

Ref	Part Number	Qty	Description
	NLS	4	Ring, Compression, .030 O/S, 3rd Groove, 5100 {69NY6152G}, No Longer Serviced, Start Year: 01/01/196
	NLS	4	Ring, Oil Lower, .030 O/S, 4th Groove, 5100 {69NY6153C}, No Longer Serviced, Start Year: 01/01/1968
	NLS	4	Expander, Lower, Oil Ring, .020 O/S, 4th Groove, 5100 {70NY6154B}, No Longer Serviced, Start Year: 01/01/1968
	NLS	4	Ring, Upper Compression, .040 O/S, 1st Groove, 5100 {69NY6150D}, No Longer Serviced, Start Year: 01/01/1968
	NLS	4	Ring, Compression, .040 O/S, 2nd Groove, 5100 {69NY6152D}, No Longer Serviced, Start Year: 01/01/1968
	NLS	4	Ring, Compression, .040 O/S, 3rd Groove, 5100 {69NY6152H}, No Longer Serviced, Start Year: 01/01/196
	NLS	4	Ring, Oil Lower, .040 O/S, 4th Groove, 5100 {69NY6153D}, No Longer Serviced, Start Year: 01/01/1968
	NLS	4	Expander, Lower, Oil Ring, .040 O/S, 4th Groove, 5100 {70NY6154A}, No Longer Serviced, Start Year: 01/01/1968

06N01 OIL PUMP & OIL PAN, DIESEL

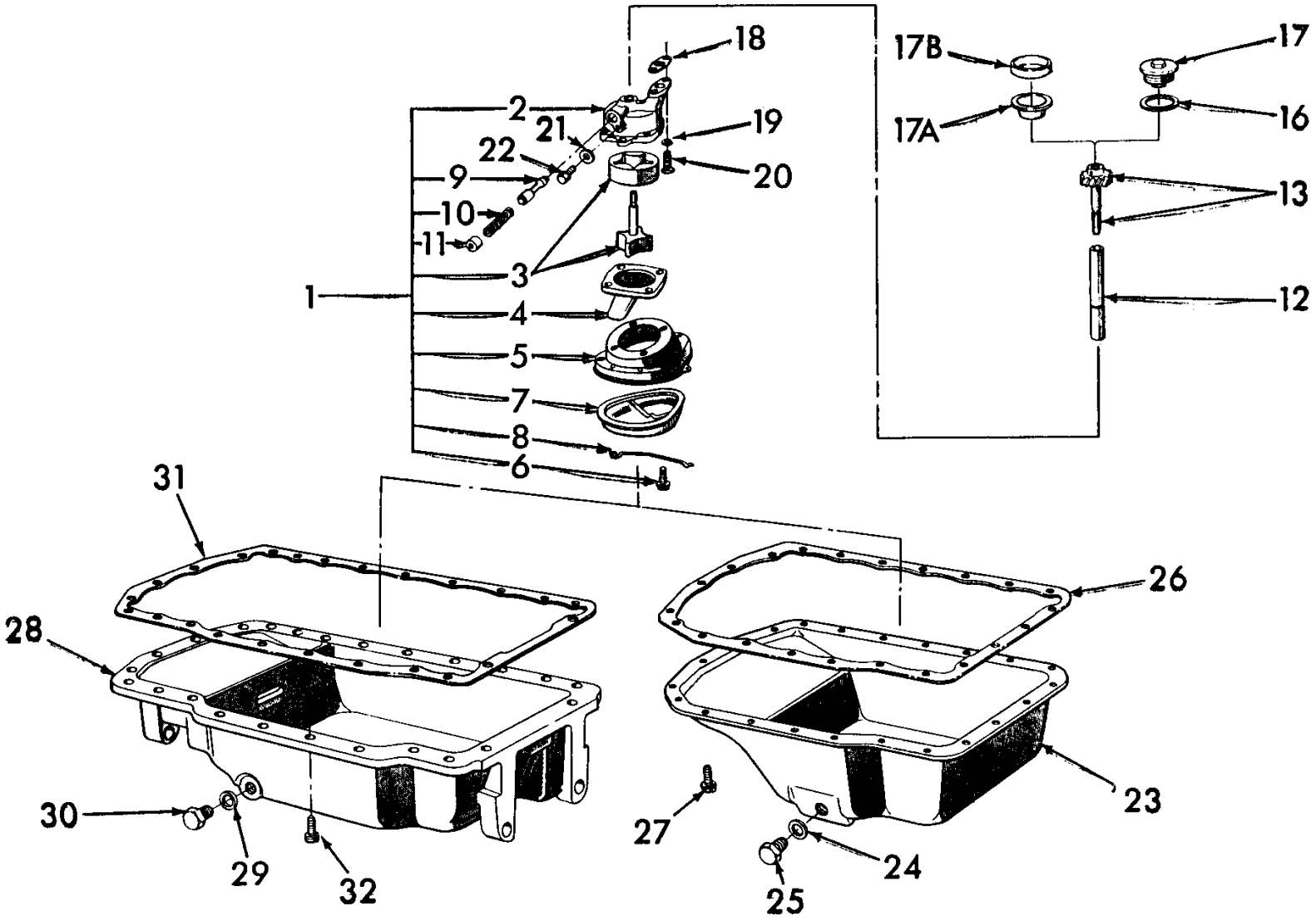

5000-SERIES 4 CYL TRACTOR (1/65-1/75)

06N01 OIL PUMP & OIL PAN, DIESEL

Ref	Part Number	Qty	Description
1	E1NN6600DD	1	Oil Pump Assy., 6 Fluted, Except 7000, Includes: Ref. 2 thru 4, Start Year: 01/01/1965
1	E1NN6600CC	1	Oil Pump Assy., 6 Fluted, 7000, Includes: Ref. 2 thru 4, Start Year: 10/01/1971
1	E1NN6600CC	1	Oil Pump Assy., 6 Fluted, NH-E, 7000, Includes: Ref. 2 thru 4, Start Year: 10/01/1971
2	NSS	1	Body, Except 7000
2	NSS	1	Body, 7000
3	E1NN6600DD	1	Rotor & Shaft Assy., Except 7000, Start Year: 01/01/1965
3	D0NN6608A	1	Rotor & Shaft Assy., 7000, No Longer Serviced (NHNA), Start Year: 10/01/1971
3	D5NN6608A	1	Rotor & Shaft Assy., 7000, Start Year: 01/01/1974
3	D5NN6608C	1	Rotor & Shaft Assy., Except 7000, Start Year: 01/01/1974
4	C5NE6616A	1	Cover, Except 7000, No Longer Serviced (NHNA), Start Year: 01/01/1965
4	F1NN6616AA	1	Cover, Except 7000, Start Year: 01/01/1965
4	D0NN6616A	1	Cover, 7000, Start Year: 10/01/1971
4	E1NN6616BA	1	Cover, 7000, No Longer Serviced (NH-E), Start Year: 10/01/1971
4	E1NN6616BA	1	Cover, w/E1NN-6600-CA, 7000, No Longer Serviced (NH-E), Start Year: 10/01/1971
5	C5NE6611B	1	Cover, Except 7000, Start Year: 01/01/1965
5	D5NN6611B	1	Cover, Except 7000, Use W/6 Fluted Rotor & Shaft Pump Assy., Start Year: 01/01/1965
5	D0NN6611A	1	Cover, 7000, Start Year: 10/01/1971
5	D5NN6611A	1	Cover, 7000, Use W/6 Fluted Rotor & Shaft Pump Assy., Start Year: 10/01/1971
5	F1NN6611AA	1	Cover, Start Year: 04/01/1992
6	373742S	4	Screw & Washer Assy., HH, 1/4"-20 x .88, Start Year: 01/01/1965
	E1NN6K632AA	4	Washer, Wave, w/E1NN-6600-CA, Start Year: 10/01/1971
	72829S2	2	Pin, Dowel, 3/16" x 5/8", 7000, Start Year: 10/01/1971
7	D5NN6623A	1	Screen Assy., Start Year: 01/01/1965
7	D5NN6623A	1	Screen Assy., Use W/6 Fluted Rotor & Shaft Pump Assy., Start Year: 01/01/1974
8	C5NE6628A	1	Spring, Start Year: 01/01/1965
8	F1NN6628AA	1	Spring, Start Year: 04/01/1992
9	C5NE6A809A	1	Valve, Years: 01/01/1965-01/31/1972
9	D1NN6A809A	1	Valve, Start Year: 02/01/1972
9	D8NN6A809AB	1	Valve, Use W/6 Fluted Rotor & Shaft Pump Assy., Start Year: 01/01/1974
10	C5NE6670A	1	Spring, 1.64 .475 Dia., No Longer Serviced (NH-E), Years: 01/01/1965-01/31/1972
10	D8NN6670AA	1	Spring, 2.28 L., .400 Dia., Start Year: 02/01/1972
10	E4NN6670AA	1	Spring, 2.28 .400 Dia., Use W/6 Fluted Rotor & Shaft Pump Assy., Start Year: 01/01/1974
11	C5NE6A616A	1	Plug, No Longer Serviced (NH-E), Years: 01/01/1965-01/31/1972
11	D1NN6674A	1	Plug, Start Year: 02/01/1972
11	E4NN6A616AB	1	Plug, Start Year: 01/01/1974
12	C7NN6A605A	1	Shaft, Intermediate, Replaces C5NE6A605A, When replacing either Item 3 or 13 on Engines W/year range prior to April, 1968, Item 12 is also required., Start Year: 01/01/1965
13	87800008	1	Shaft & Gear Assy., Drive, When replacing either Item 3 or 13 on Engines W/year range prior to April, 1968, Item 12 is also required., Start Year: 01/01/1965
	87663	1	Pin, Roll, 1/8" x 3/4", Use W/C5NE-6A820-A Only, Years: 01/01/1965-03/31/1968
16	82845244	1	Gasket, Gear Stop, Except Mexico, Years: 01/01/1965-03/31/1971

5000-SERIES 4 CYL TRACTOR (1/65-1/75)

06N01 OIL PUMP & OIL PAN, DIESEL

Ref	Part Number	Qty	Description
17	C5NE6A798B	1	Stop, Gear, Except Mexico, No Longer Serviced (NHNA), Years: 08/01/1965-03/31/1971
17	C5NE6A798B	1	Stop, Gear, Mexico Only, Start Year: 01/01/1967
17	C5NE6A798A	1	Stop, Gear, No Longer Serviced (NHNA), Years: 01/01/1965-07/31/1965
17A	D0NN6A798A	1	Stop, Gear, 2.14", Except Mexico, Start Year: 04/01/1971
17B	E9NN6L692AA	1	Plug, Cup 2.197"-2.200" (55.803-55.879mm), Except Mexico, Start Year: 04/01/1971
17B	E9NN6L692BA	1	Plug, Cup, 2.217"-2.220" (56.311-56.387mm), For O/S Hole, Except Mexico, Start Year: 04/01/1971
18	C7NN6659A	1	Gasket, Pump to Engine Block, Start Year: 01/01/1965
19	380515S	2	Washer, Lock, 3/8", Start Year: 01/01/1965
20	378310S36	2	Bolt, 3/8"-16 x 1.38, Start Year: 01/01/1965
21	359840S8	1	Washer, Flat, 5/16", 2000, 3000, 4000, Start Year: 01/01/1965
22	372287S36	1	Screw & Washer Assy., 5/16"-18 x 3/4", 2000, 3000, 4000, Start Year: 01/01/1965
23	C9NN6675A	1	Pan, Oil, Assy., Except 5000, 3400, 3500, 3550, 4400, 4500, 4200, Start Year: 01/01/1965
24	EBU6734A	1	Gasket, Drain Plug, 7/8" (22.225mm) I.D., Years: 01/01/1965-12/31/1969
24	C9NN6734A	1	Gasket, 3/4" ID x .06" Thk, Drain Plug, Start Year: 01/01/1970
25	C5NE6730B	1	Plug, Drain, 7/8"-16 Thread, Years: 01/01/1965-12/31/1969
25	C9NN6730B	1	Plug, Drain, 3/4"-16 Thread, Start Year: 01/01/1970
26	F0NN6710AA	1	Gasket, Oil Pan, Except 5000, 7000, 3400, 3500, 3550, 4200, 4400, 4500, Start Year: 01/01/1965
26	87840325	1	Gasket, Oil Pan, .028/.035" (.711/.889mm), 3400, 3500, 3550, 4200, 4400, 4500, Start Year: 01/01/1965
27	304666S36	22	Screw, Cap, HH, G5, 3/8"-16 x 7/8", Pan to Block, Use W/Sheet Metal Pan, Start Year: 01/01/1965
28	87800105	1	Pan, Oil, 5000, 7000, Start Year: 01/01/1965
28	C9NN6676C	1	Pan, Oil, 4400, 3500, Start Year: 01/01/1965
28	E2NN6676BC	1	Pan Assy., Oil, 4100, Has pivot hole., Years: 01/01/1965-12/31/1974
28	87800101	1	Pan Assy., Oil, Cast, 3400, 4410, 3550, 4500, Years: 01/01/1965-12/31/1974
29	EBU6734A	1	Gasket, Drain Plug, 7/8" (22.225mm) I.D., Years: 01/01/1965-12/31/1969
29	C9NN6734A	1	Gasket, 3/4" ID x .06" Thk, Drain Plug, Start Year: 01/01/1970
30	C5NE6730B	1	Plug, Drain, 7/8"-16, Years: 01/01/1965-12/31/1969
30	C9NN6730B	1	Plug, Drain, 3/4"-16, Start Year: 01/01/1970
31	87802061	1	Gasket, Oil Pan, 5000, 7000, Start Year: 01/01/1965
	81821693	20/24	Washer, Lock, 3/8", Start Year: 01/01/1965
32	88011	20/24	Screw, Cap, HH, G5, 3/8"-16 x 1-1/4", Start Year: 01/01/1965
32	380027S43	24	Screw & Washer Assy., HH, 3/8"-16 x 1.25, 5000, 7000, NHNA Only, No Longer Serviced, Start Year: 01/01/1965
32	380027S43	20	Screw & Washer Assy., 3400, 3500, 3550, 4200, 4400, 4500, NHNA Only, No Longer Serviced

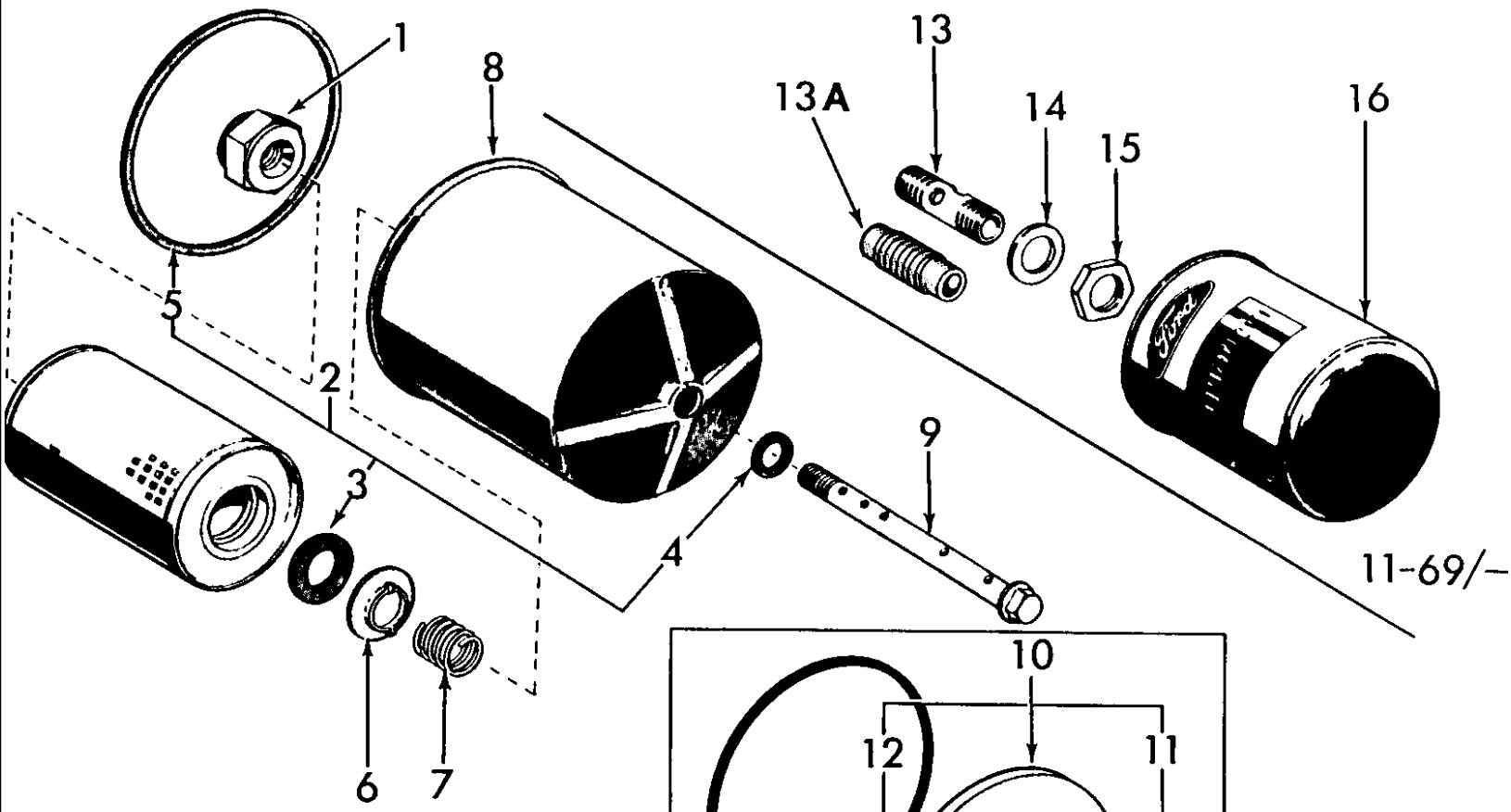

65/10-69

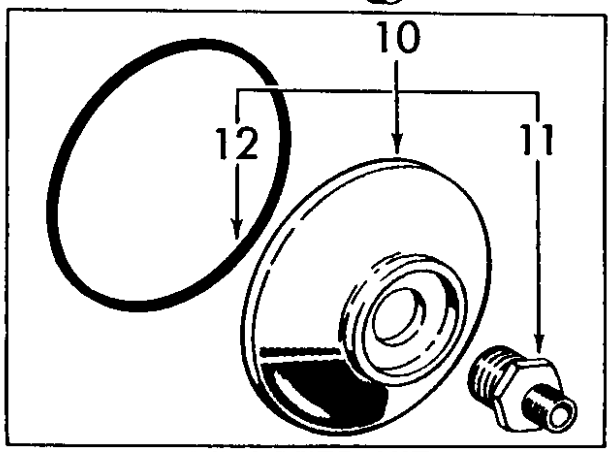

ADAPTER KIT

65/10-69

5000-SERIES 4 CYL TRACTOR (1/65-1/75)

06O01 OIL FILTER & RELATED PARTS, DIESEL

Ref	Part Number	Qty	Description
1	C5NE6890B	1	Insert, Mounting Bolt, No Longer Serviced, Years: 01/01/1965-10/31/1969
2	DDPN6731A	1	Kit, Element & Gasket, 2 Quart, Mexico & U.K., 5100, Includes: Ref. 3 thru 5, Start Year: 01/01/1968
2	86546611	1	Kit, Oil Filter Element & Gasket, 2 Quart, 4.87L,.75 pilot hole Includes: Ref. 3 thru 5, NHNA Only, Years: 01/01/1965-10/31/1969
3	EAA6746A	1	Gasket, No Longer Serviced, Years: 01/01/1965-10/31/1969
4	EAA6749A	1	Gasket, Years: 01/01/1965-10/31/1969
5	D8NN6N818AA	1	Gasket, Years: 01/01/1965-10/31/1969
6	EAA6898B	1	Retainer, Element, No Longer Serviced (NH-E), Years: 01/01/1965-10/31/1969
7	EAA6889B	1	Spring, Element Retaining, Years: 01/01/1965-10/31/1969
8	C5NE6737B	1	Cover Assy., Years: 01/01/1965-10/31/1969
9	D3NN6A732B	1	Bolt & Valve Assy., Center, No Longer Serviced, Years: 01/01/1965-10/31/1969
10	309825F	1	Kit, Conversion, 2 Quart to 1 Quart Spin-On, Includes: Ref. 11 & 12, Years: 01/01/1965-10/31/1969
11	C5NE6890D	1	Insert, Serviced Separately U.S. Only, NHNA Only, Years: 01/01/1965-10/31/1969
	NSS	1	Adaptor, Years: 01/01/1965-10/31/1969
12	D8NN6N818AA	1	Gasket, Replaces EDL-6838-A, Years: 01/01/1965-10/31/1969
13	C7NN6890A	1	Insert, Mounting, No Longer Serviced, Years: 11/01/1969-01/31/1972
13A	D0NN6890A	1	Insert, Mounting, Nut not required, Start Year: 02/01/1972
14	44746S8	1	Washer, 3/4", No Longer Serviced (NHNA), Years: 11/01/1969-01/31/1972
15	370260S	1	Nut, Jam, 3/4"-16, No Longer Serviced, Years: 11/01/1969-01/31/1972
16	86546614	1	Filter Assy, Oil, Spin-On, 1 Quart, Except 7000, NHNA Only, Start Year: 11/01/1969
16	87800068	1	Filter Assy., Oil, Spin-On, 1 Quart. Except 7000, NHNA Only, Start Year: 11/01/1969
16	87800083	1	Filter, Engine Oil, Spin-On 1 Quart, 7000, Start Year: 10/01/1971
16	86546617	1	Filter, Assy., Engine, Spin-On 1 Quart, 3400, 3500, 3550, 5200, Start Year: 11/01/1969
16	86546609	1	Filter Assy., Engine, Spin-On, 2 Quart, 7000, Start Year: 10/01/1971

06P02 MANIFOLD, MUFFLER & RELATED PARTS, DIESEL - 5000

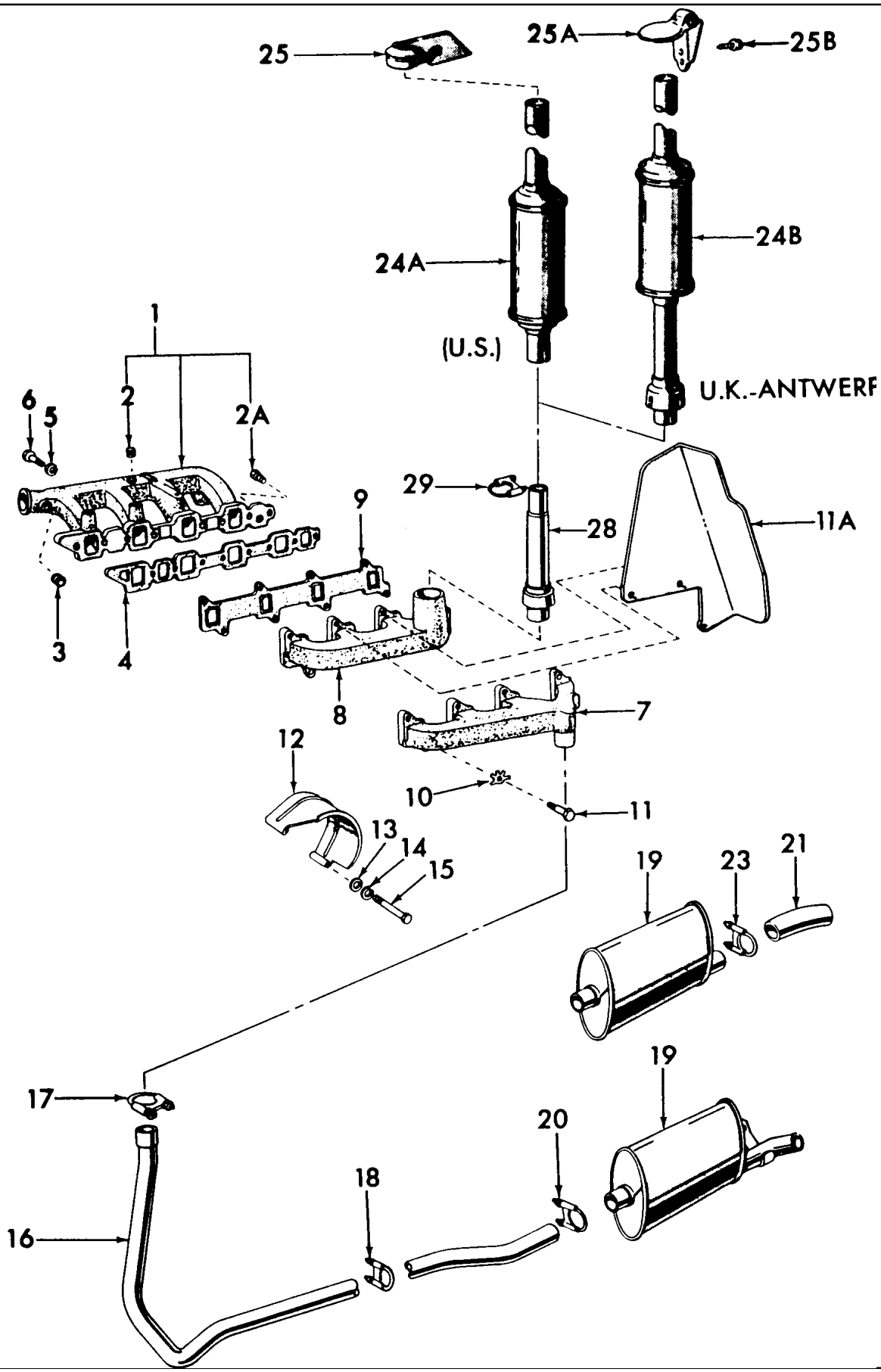

5000-SERIES 4 CYL TRACTOR (1/65-1/75)

06P02 MANIFOLD, MUFFLER & RELATED PARTS, DIESEL - 5000

Ref	Part Number	Qty	Description
1	C9NN9424G	1	Manifold Assy., Intake, Includes: Ref. 2 & 3, No Longer Serviced (NHNA), Start Year: 01/01/1965
1	70NY9425A	1	Manifold Assy., Intake, Includes: Ref. 2 & 3, NHNA Only, Start Year: 01/01/1968
2	502046	AR	Plug, Pipe, 1/8"-27
2A	80781	1	Plug, Pipe, Sq Hd, 3/8"-18, Hot Water Feed Hole to Cab Heater, Start Year: 10/01/1969
3	379643S36	1	Plug, HH, 7/8"-14 Thread, Start Year: 01/01/1965
4	82845236	1	Gasket, Intake Manifold to Cylinder Head, Replaces C6NE9439A, Start Year: 01/01/1965
5	81821693	9	Washer, Lock, 3/8", Start Year: 01/01/1965
6	88011	9	Screw, Cap, HH, G5, 3/8"-16 x 1-1/4", Start Year: 01/01/1965
7	C5NE9430B	1	Manifold, Exhaust, Horizontal Exhaust, Start Year: 01/01/1965
8	C5NE9430D	1	Manifold, Exhaust, Vertical Exhaust, Start Year: 01/01/1965
9	C5NE9448B	1	Gasket, Exhaust Manifold, Start Year: 01/01/1965
10	378881S	8	Washer, Lock, Tab, 3/8", Start Year: 01/01/1965
11	88044	8	Screw, Cap, HH, G5, 3/8"-16 x 1-1/2", Start Year: 01/01/1965
11A	C7NN6A622A	1	Deflector, Engine Head, 5200, NHNA Only, No Longer Serviced, Start Year: 01/01/1967
12	C5NE9A462B	1	Shield, Exhaust Manifold Heat, Horizontal Exhaust Only, Years: 01/01/1965-06/30/1969
13	44722S8	2	Washer, 5/16", Horizontal Exhaust Only, NHNA Only, No Longer Serviced, Start Year: 01/01/1965
14	80681	2	Washer, Lock, 5/16", Horizontal Exhaust Only, Start Year: 01/01/1965
15	88731	2	Screw, Cap, HH, G5, 5/16"-18 x 3", Horizontal Exhaust Only, NH-E Only, Start Year: 01/01/1965
15	88731	2	Screw, Cap, HH, G5, 5/16"-18 x 3", Horizontal Exhaust Only, No Longer Serviced (NHNA), Start Year: 01/01/1965
16	C5NN5245D	1	Pipe, Muffler Inlet, Horizontal Exhaust, w/10 Speed Transmission, No Longer Serviced (NHNA), Years: 01/01/1965-03/31/1968
16	C7NN5245A	1	Pipe, Muffler Inlet, Horizontal Exhaust, w/o 10 Speed Transmission, Start Year: 01/01/1965
16	C7NN5245A	1	Pipe, Muffler Inlet, Horizontal Exhaust, w/10 Speed Transmission, Start Year: 04/01/1968
17	83910871	1	Clamp Assy., 2" (5.08cm) I.D., Horizontal Exhaust, Start Year: 01/01/1965
18	D6NN5252E	1	Clamp Assy., 1-3/4" (4.45cm) I.D., Horizontal Exhaust, Start Year: 01/01/1965
19	C5NN5230AD	1	Horizontal Exhaust Muffler Assy., Replaces C5NN5230F, Start Year: 01/01/1965
	EC0N5230BA	1	Muffler, Horizontal, L/Pipe, Economy W/2" Outlet, Clamp not required., Accessory, NHNA Only, Start Year: 01/01/1965
	EC0N5B255AA	1	Adapter, Inlet Pipe, NHNA Only, Start Year: 01/01/1965
20	D6NN5252E	1	Clamp Assy., Muffler to Muffler Inlet Pipe, Horizontal Exhaust, Start Year: 01/01/1965
21	C5NN5255A	1	Pipe, Muffler Outlet, Horizontal Exhaust, Use w/C5NN5230F, No Longer Serviced (NHNA), Years: 01/01/1965-12/31/1966
23	D6NN5252E	1	Clamp Assy., 1-3/4" (4.45cm) I.D., Horizontal Exhaust, Years: 01/01/1965-12/31/1966
24A	E4NN5230GB	1	Vertical Exhaust Muffler Assy., Start Year: 01/01/1965
24A	DHPN5230A	1	Vertical Muffler Assy., Economy, Service Only, NHNA Only, Start Year: 01/01/1965
24B	C7NN5230R	1	Vertical Exhaust Muffler Assy., Round, When replacing C5NN-5C208-BC enlarge hole in hood * No Longer Serviced, Start Year: 01/01/1965
24B	NLS	1	Vertical Exhaust Muffler Assy., Round {67NY5230A}, Start Year: 01/01/1968
25	E0NN5N206DA17M	1	Vertical Exhaust Rain Cap Assy., Start Year: 01/01/1965
25A	D6NN5C208B	1	Vertical Exhaust Rain Cap Assy., Start Year: 04/01/1968

5000-SERIES 4 CYL TRACTOR (1/65-1/75)

06P02 MANIFOLD, MUFFLER & RELATED PARTS, DIESEL - 5000

Ref	Part Number	Qty	Description
25B	40923S8	2	Screw, Self-Tapping, HWH, 5/16"-18 x 1/2", Start Year: 04/01/1968
25B	372287S36	2	Screw & Washer Assy., HH, 5/16"-18 x .75, Vertical Exhaust, Start Year: 01/01/1965
25B	372287S36	1	Screw & Washer Assy., HH, 5/16"-18 x .75, Horizontal Exhaust
28	EC0ND0NN5B255E	1	Adapter Assy., Muffler Inlet Pipe, 17.50" (44.45cm) 5200, NHNA Only, Start Year: 01/01/1965
28	D0NN5B255C	1	Adapter Assy., Muffler Inlet Pipe, Years: 01/01/1965-03/31/1968
28	D0NN5B255C	1	Adapter Assy., Muffler Inlet Pipe, 5100, Start Year: 01/01/1965
29	83910871	1	Clamp Assy., Muffler Inlet Pipe, 2" I.D., Start Year: 01/01/1965
	NLS	AR	Pipe, Muffler Outlet Extension 18-3/4" Long, Use w/Mufflers w/2" Outllet, Clamp not required. Accessory {C0NN5N299A}, Start Year: 01/01/1965



1

2

5000-SERIES 4 CYL TRACTOR (1/65-1/75)

06Z01 ENGINE GASKET KITS, DIESEL (NHNA)

Ref	Part Number	Qty	Description
1	82845204	1	Kit, Diesel Engine Gasket, Upper Service, 2000-3000-4000, Includes: Parts Listed Below, Start Year: 01/01/1965
	C5NE6571A	3	Seal
	378881S	6	Lock
	C5NE6571B	3	Seal
	C5NE9448A	1	Gasket
	C7NN6584B	1	Gasket
	C5NE9E529A	3	Washer
	E9NN8255AA	1	Gasket
	82845235	1	Gasket, Years: 01/01/1965-09/30/1975
	E8NN9439AA	1	Gasket, Start Year: 10/01/1975
	81806277	3	Seal
	380428S	6	Gasket
2	82845207	1	Kit, Diesel Engine Gasket, Lower Service, 2000, 3000, 4000, Includes: Parts Listed Below, Start Year: 01/01/1965
	E4NN911AA	1	Gasket
	EBU6734A	1	Gasket
	C7NN6N008B	1	Gasket
	C9NN6734A	1	Gasket, 3/4" ID x .06" Thk, Drain Plug
	83959876	1	Gasket
	82845244	1	Gasket
	83959396	1	Gasket
	E5NN8507AB	1	Gasket
	C5NE6B309A	1	Seal
	E6NN9F585AA	1	Gasket
	E4NN6336AB	2	Seal
	83959395	1	Gasket
	C7NN6659A	1	Gasket
	87800696	1	Seal Assy.
	70923824	1	O-Ring
	83955247	1	Seal Assy., NHNA Only
	83955247	1	Seal Assy., NH-E Only
	379275S94	1	O-Ring
	F0NN6710AA	1	Gasket
1	FBPN6008A	1	Kit, Diesel Engine Gasket, Upper Service, 5000 - 7000, Includes: Parts Listed Below
	C5NE6571A	4	Seal
	378881S	6	Lock
	C5NE6571B	4	Seal
	C5NE9448B	1	Gasket, Europe
	C7NN6584C	1	Gasket
	C5NE9E529A	4	Washer

5000-SERIES 4 CYL TRACTOR (1/65-1/75)

06Z01 ENGINE GASKET KITS, DIESEL (NHNA)

Ref	Part Number	Qty	Description
	E9NN8255AA	1	Gasket
	82845236	1	Gasket, Start Year: 01/01/1965
	E8NN9439BA	1	Gasket, Years: 10/01/1975-12/31/1980
	81806277	4	Seal
	380428S	8	Gasket
	E8NN9448BA	1	Gasket
2	CFPN6A008C	1	Kit, Diesel Engine Gasket, Lower Service, 5000-7000, Includes: Parts Listed Below, Years: 01/01/1965-12/31/1974
	81822547	1	Gasket
	87802061	1	Gasket
	C7NN6N008B	1	Gasket
	C9NN6734A	1	Gasket, 3/4" ID x .06" Thk, Drain Plug, Years: 01/01/1970-12/31/1988
	83959876	1	Gasket
	EBU6734A	1	Gasket, Years: 01/01/1965-12/31/1969
	83959396	1	Gasket
	82845244	1	Gasket
	C5NE6B305A	1	Gasket
	E5NN8507AB	1	Gasket
	C5NE6B309A	1	Seal
	E6NN9F585AA	1	Gasket
	E4NN6336AB	2	Seal
	83959395	1	Gasket
	C7NN6659A	1	Gasket
	70923824	1	O-Ring, Years: 01/01/1965-08/31/1967
	87800696	1	Seal Assy.
	379275S94	1	O-Ring
	83955247	1	Seal Assy. .080/.082 (2.032/2.083mm)



1
2
3
4
5
6
7

5000-SERIES 4 CYL TRACTOR (1/65-1/75)

06Z01[A] ENGINE OVERHAUL KITS, DIESEL (NHNA)

Ref	Part Number	Qty	Description
1	DJPN6002D	1	Kit, Engine Overhaul, Standard, Includes: Parts Listed Below, NHNA Only, Start Year: 01/01/1965
	D6NN6108F	3	Piston Assy., Standard, 2000
	DJPN6149W	3	Kit, Piston Rings, Standard, 2000-3000
	C5NE6207A	3	Bushing, Connecting Rod
	C5NN6055A	3	Sleeve, Piston, 2000-3000
	D0NN6514A	3	Retainer, Intake Valve Spring
	C5NE6A516A	3	Retainer, Exhaust Valve Spring, 2000-3000-4000
	81876796	12	Key, Valve Spring Retainer, 2000-3000-4000
	82845200	1	Gasket, Head, 2000-3000
	82845204	1	Kit, Gasket, Upper, 2000-3000-4000
	82845207	1	Kit, Gasket, Lower, 2000-3000-4000
	D0NN6608A	1	Rotor & Shaft, Oil Pump
	C5NE6A809A	1	Valve, Oil Pump, No Longer Serviced (NH-E), Years: 01/01/1965-01/31/1972
	D1NN6A809A	1	Valve, Oil Pump, Years: 02/01/1972-12/31/1975
	87800008	1	Shaft & Gear, Oil Pump
2	DJPN6002E	1	Kit, Engine Overhaul, Standard, 3000, Includes: Parts Listed Below, No Longer Serviced (NHNA), Start Year: 01/01/1965
	D6NN6108L	3	Piston Assy., Standard, 3000
	DJPN6149W	3	Kit, Piston Rings, Standard, 2000-3000
	C5NN6055A	3	Sleeve, Piston, 2000-3000
	C5NE6A516A	3	Retainer, Exhaust Valve Spring, 2000-3000-4000
	81876796	12	Key, Valve Spring Retainer, 2000-3000-4000
	82845200	1	Gasket, Head, 2000-3000
	82845204	1	Kit, Gasket, Upper, 2000-3000-4000
	82845207	1	Kit, Gasket, Lower, 2000-3000-4000
	D0NN6608A	1	Rotor & Shaft, Oil Pump
	C5NE6A809A	1	Valve, Oil Pump, No Longer Serviced (NH-E), Years: 01/01/1965-01/31/1972
	D1NN6A809A	1	Valve, Oil Pump, Years: 02/01/1972-12/31/1975
	87800008	1	Shaft & Gear, Oil Pump
3	DJPN6002F	1	Kit, Engine Overhaul, Standard, 4000, Includes: Parts Listed Below, No Longer Serviced (NHNA), Start Year: 01/01/1965
	510185	1	O-Ring, 2.234" ID x .139" Thk
	F2NN6K100DA	3	KIT, Piston, Pin, Retainer & Piston Rings(Std.), 4000
	DJPN6149W	3	Kit, Piston Rings, Standard, 4000
	D7NN6055A	3	Sleeve, Piston, 4000
	C7NN6051S	1	Gasket, Head, 4000, Years: 01/01/1965-05/31/1969
	87801653	1	Gasket, Head, 4000, Years: 06/01/1969-12/31/1975
	C5NE6A516A	3	Retainer, Exhaust Valve Spring, 2000-3000-4000
	81876796	12	Key, Valve Spring Retainer, 2000-3000-4000
	82845204	1	Kit, Gasket, Upper, 2000-3000-4000
	82845207	1	Kit, Gasket, Lower, 2000-3000-4000

5000-SERIES 4 CYL TRACTOR (1/65-1/75)

06Z01[A] ENGINE OVERHAUL KITS, DIESEL (NHNA)

Ref	Part Number	Qty	Description
	D0NN6608A	1	Rotor & Shaft, Oil Pump
	C5NE6A809A	1	Valve, Oil Pump, No Longer Serviced (NH-E), Years: 01/01/1965-01/31/1972
	D1NN6A809A	1	Valve, Oil Pump, Years: 02/01/1972-12/31/1975
	87800008	1	Shaft & Gear, Oil Pump
4	DJPN6002G	1	Kit, Engine Overhaul, Standard, 5000, Includes: Parts Listed Below, No Longer Serviced (NHNA), Years: 01/01/1965-03/31/1968
	510185	1	O-Ring, 2.234" ID x .139" Thk
	D6NN6108L	4	Piston Assy., Standard, 5000
	DJPN6149W	4	Kit, Piston Rings, Standard, 5000
	C5NE6207A	4	Bushing, Connecting Rod
	C5NN6055A	4	Sleeve, Piston, 5000
	D0NN6514A	4	Retainer, Intake Valve Spring, 5000-7000
	C5NE6A516A	4	Retainer, Exhaust Valve Spring, 5000-7000
	81876796	16	Key, Valve Spring Retainer, 5000-7000
	82845203	1	Gasket, Head, 5000
	82845206	1	Kit, Gasket, Upper, 5000-7000
	CFPN6A008C	1	Kit, Gasket, Lower, 5000-7000
	D0NN6608A	1	Rotor & Shaft, Oil Pump, No Longer Serviced (NHNA)
	C5NE6A809A	1	Valve, Oil Pump, No Longer Serviced (NH-E), Years: 01/01/1965-01/31/1972
	D1NN6A809A	1	Valve, Oil Pump, Years: 02/01/1972-12/31/1975
	87800008	1	Shaft & Gear, Oil Pump
4	DJPN6002H	1	Kit, Engine Overhaul, Standard, 5000, Includes: Parts Listed Below, No Longer Serviced (NHNA), Start Year: 04/01/1968
	F2NN6K100EA	4	Piston Assy., Standard, 5000
	DJPN6149W	4	Kit, Piston Rings, Standard, 5000
	D7NN6055A	4	Sleeve, Piston, 5000
	D0NN6514A	4	Retainer, Intake Valve Spring, 5000-7000
	C5NE6A516A	4	Retainer, Exhaust Valve Spring, 5000-7000
	81876796	16	Key, Valve Spring Retainer, 5000-7000
	82845206	1	Kit, Gasket, Upper, 5000-7000
	CFPN6A008C	1	Kit, Gasket, Lower, 5000-7000
	D0NN6608A	1	Rotor & Shaft, Oil Pump, No Longer Serviced (NHNA)
	C5NE6A809A	1	Valve, Oil Pump, No Longer Serviced (NH-E), Years: 01/01/1965-01/31/1972
	D1NN6A809A	1	Valve, Oil Pump, Years: 02/01/1972-12/31/1975
	87800008	1	Shaft & Gear, Oil Pump
5	DJPN6002J	1	Kit, Engine Overhaul, Standard, 7000, Includes: Parts Listed Below, NHNA Only, Start Year: 01/01/1971
	F2NN6K100GA	4	Piston Assy., Standard, 7000
	DFPN6149E	4	Kit, Piston Rings, Standard, 7000
	C9NN6207C	4	Bushing, Connecting Rod, 7000
	87800517	1	Gasket, Head, 5000-7000
	D0NN6514A	4	Retainer, Intake Valve Spring, 5000-7000

5000-SERIES 4 CYL TRACTOR (1/65-1/75)

06Z01[A] ENGINE OVERHAUL KITS, DIESEL (NHNA)

Ref	Part Number	Qty	Description
	C5NE6A516A	4	Retainer, Exhaust Valve Spring, 5000-7000
	81876796	16	Key, Valve Spring Retainer, 5000-7000
	82845206	1	Kit, Gasket, Upper, 5000-7000
	CFPN6A008C	1	Kit, Gasket, Lower, 5000-7000
	D0NN6608A	1	Rotor & Shaft, Oil Pump, No Longer Serviced (NHNA)
	C5NE6A809A	1	Valve, Oil Pump, No Longer Serviced (NH-E), Years: 01/01/1965-01/31/1972
	D1NN6A809A	1	Valve, Oil Pump, Years: 02/01/1972-12/31/1975
	87800008	1	Shaft & Gear, Oil Pump
6	ECPN6002AA	AR	Kit, Engine Overhaul, .020 O/S, 2000, Includes: Parts Listed Below, Order Components, NHNA Only, Years: 01/01/1965-12/31/1975
	D6NN6108F	3	Piston Assy., .020 O/S, 2000
	DJPN6149T	3	Kit, Piston Ring, .020 O/S, 2000,3000
	C5NE6207A	3	Bushing, 2000,3000,4000
	D0NN6514A	3	Retainer, Intake, 2000,3000,4000
	C5NE6A516A	3	Retainer, Exhaust, 2000,3000,4000
	81876796	12	Key, 2000,3000,4000
	82845200	1	Gasket, 2000,3000
	E1NN6600DD	1	Rotor & Shaft, 2000,3000,4000
	C5NE6A809A	1	Valve, 2000,3000,4000, No Longer Serviced (NH-E), Years: 01/01/1965-01/31/1972
	D1NN6A809A	1	Valve, 2000,3000,4000, Years: 02/01/1972-12/31/1975
	87800008	1	Shaft & Gear, 2000,3000,4000
	82845204	1	Kit, Gasket, Upper, 2000,3000,4000
	82845207	1	Kit, Gasket, Lower, 2000,3000,4000
7	ECPN6002BA	AR	Kit, Engine Overhaul, .020 O/S, 3000, Includes: Parts Listed Below, NHNA Only, No Longer Serviced, Years: 01/01/1965-12/31/1975
	D6NN6108L	3	Piston Assy., .020 O/S, 3000
	DJPN6149T	3	Kit, Piston Ring, .020 O/S, 2000,3000
	C5NE6207A	3	Bushing, 2000,3000,4000
	D0NN6514A	3	Retainer, Intake, 2000,3000,4000
	C5NE6A516A	3	Retainer, Exhaust, 2000,3000,4000
	81876796	12	Key, 2000,3000,4000
	82845200	1	Gasket, 2000,3000
	E1NN6600DD	1	Rotor & Shaft, 2000,3000,4000
	C5NE6A809A	1	Valve, 2000,3000,4000, No Longer Serviced (NH-E), Years: 01/01/1965-01/31/1972
	D1NN6A809A	1	Valve, 2000,3000,4000, Years: 02/01/1972-12/31/1975
	87800008	1	Shaft & Gear, 2000,3000,4000
	82845204	1	Kit, Gasket, Upper, 2000,3000,4000
	82845207	1	Kit, Gasket, Lower, 2000,3000,4000
8	ECPN6002CA	AR	Kit, Engine Overhaul, .020 O/S, 4000, Includes: Parts Listed Below, NHNA Only, No Longer Serviced, Years: 01/01/1965-12/31/1975
	NLS	3	Piston, Pin & Retainer, .020", O/S, 4000

5000-SERIES 4 CYL TRACTOR (1/65-1/75)

06Z01[A] ENGINE OVERHAUL KITS, DIESEL (NHNA)

Ref	Part Number	Qty	Description
	DJPN6149X	3	Kit, Piston Ring, .020 O/S, 4000
	C5NE6207A	3	Bushing, 2000,3000,4000
	D0NN6514A	3	Retainer, Intake, 2000,3000,4000
	C5NE6A516A	3	Retainer, Exhaust, 2000,3000,4000
	C7NN6051S	1	Gasket, 4000, Years: 01/01/1965-05/31/1969
	87801653	1	Gasket, 4000, Years: 06/01/1969-12/31/1975
	81876796	12	Key, 2000,3000,4000
	E1NN6600DD	1	Rotor & Shaft, 2000,3000,4000
	C5NE6A809A	1	Valve, 2000,3000,4000, No Longer Serviced (NH-E), Years: 01/01/1965-01/31/1972
	D1NN6A809A	1	Valve, 2000,3000,4000, Years: 02/01/1972-12/31/1975
	87800008	1	Shaft & Gear, 2000,3000,4000
	82845204	1	Kit, Gasket, Upper, 2000,3000,4000
	82845207	1	Kit, Gasket, Lower, 2000,3000,4000
9	ECPN6002DA	AR	Kit, Engine Overhaul, .020 O/S, 5000, Includes: Parts Listed Below, NHNA Only, Years: 01/01/1965-03/31/1968
	D6NN6108L	4	Piston Assy., .020 O/S, 5000
	DJPN6149T	4	Kit, Piston Ring, .020 O/S, 5000
	C5NE6207A	4	Bushing, 5000
	D0NN6514A	4	Retainer, Intake, 5000,7000
	C5NE6A516A	4	Retainer, Exhaust, 5000,7000
	81876796	16	Key, 5000,7000
	82845203	1	Gasket, 5000
	E1NN6600DD	1	Rotor & Shaft, 5000
	C5NE6A809A	1	Valve, 5000,7000, No Longer Serviced (NH-E)
	D1NN6A809A	1	Valve, 5000,7000, Years: 02/01/1972-12/31/1975
	87800008	1	Shaft & Gear, 5000,7000
	82845206	1	Kit, Gasket, Upper, 5000,7000
	CFPN6A008C	1	Kit, Gasket, Lower, 5000,7000
10	ECPN6002EA	AR	Kit, Engine Overhaul, .020 O/S, 5000, Includes: Parts Listed Below, NHNA Only, Years: 04/01/1968-12/31/1975
	D4NN6108AC	4	Piston Assy., .020 O/S, 5000
	DJPN6149X	4	Kit, Piston Ring, .020 O/S, 5000
	C5NE6207A	4	Bushing, 5000
	D0NN6514A	4	Retainer, Intake, 5000,7000
	C5NE6A516A	4	Retainer, Exhaust, 5000,7000
	81876796	16	Key, 5000,7000
	87800517	1	Gasket, 5000,7000
	E1NN6600DD	1	Rotor & Shaft, 5000
	C5NE6A809A	1	Valve, 5000,7000, No Longer Serviced (NH-E)
	D1NN6A809A	1	Valve, 5000,7000, Years: 02/01/1972-12/31/1975
	87800008	1	Shaft & Gear, 5000,7000

5000-SERIES 4 CYL TRACTOR (1/65-1/75)

06Z01[A] ENGINE OVERHAUL KITS, DIESEL (NHNA)

Ref	Part Number	Qty	Description
	82845206	1	Kit, Gasket, Upper, 5000,7000
	CFPN6A008C	1	Kit, Gasket, Lower, 5000,7000
11	ECPN6002FA	AR	Kit, Engine Overhaul, .020 O/S, 7000, Includes: Parts Listed Below, NHNA Only, Years: 01/01/1971-12/31/1975
	D6NN6108AA	4	Piston Assy., .020 O/S, 7000
	DFPN6149B	4	Kit, Piston Ring, .020 O/S, 7000
	C9NN6207C	4	Bushing, 7000
	D0NN6514A	4	Retainer, Intake, 5000,7000
	C5NE6A516A	4	Retainer, Exhaust, 5000,7000
	81876796	16	Key, 5000,7000
	87800517	1	Gasket, 5000,7000
	D0NN6608A	1	Rotor & Shaft, 7000, No Longer Serviced (NHNA)
	C5NE6A809A	1	Valve, 5000,7000, No Longer Serviced (NH-E)
	D1NN6A809A	1	Valve, 5000,7000, Years: 02/01/1972-12/31/1975
	87800008	1	Shaft & Gear, 5000,7000
	82845206	1	Kit, Gasket, Upper, 5000,7000
	CFPN6A008C	1	Kit, Gasket, Lower, 5000,7000

07C02 DUAL RANGE 7 SPEED (GERMANY) & 8 SPEED TRANS. CASE, SHIFT LEVERS & RELATED PARTS - 5000, 7000

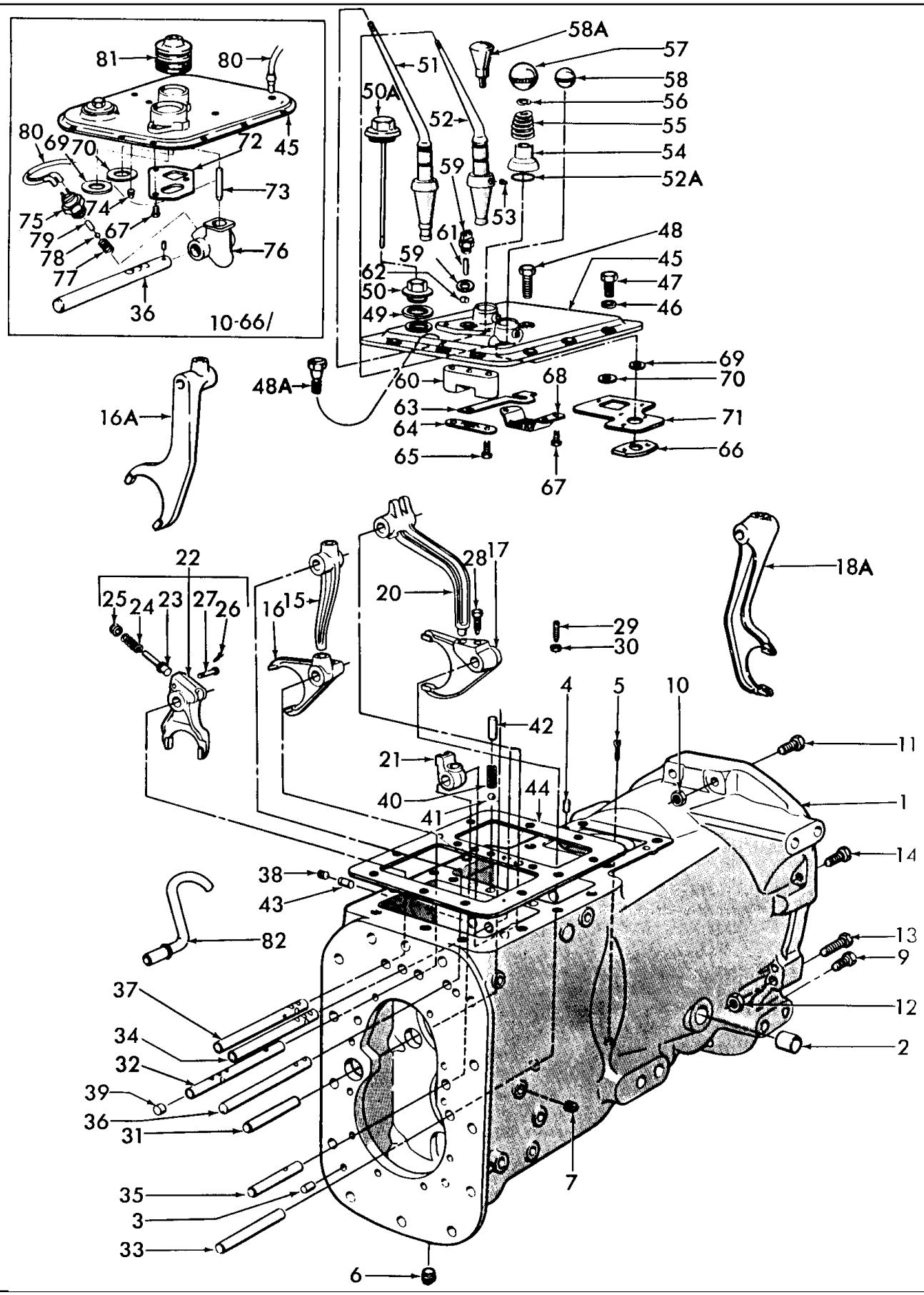

5000-SERIES 4 CYL TRACTOR (1/65-1/75)

07C02 DUAL RANGE 7 SPEED (GERMANY) & 8 SPEED TRANS. CASE, SHIFT LEVERS & RELATED PARTS - 5000, 7000

Ref	Part Number	Qty	Description
	0C	1	Trans. Assy., L/Cltch. Rel. Brg. Grsr. (W/Ind. PTO), 5000, Order Components, No Longer Serviced, Start Year: 01/01/1965
	0C	1	Trans. Assy., (L/PTO), 5100 U.K.-Antwerp, No Longer Serviced, Start Year: 01/01/1965
	NLS	1	Trans. Assy., W/Clutch Rel. Brg. Greaser (W/PTO) (30 K.M.H.), 5000 U.K. & Antwerp {D1NN7003L}, Special Order Only, Start Year: 01/01/1965
	NLS	1	Trans. Assy., (W/Clth. Rel. Brg. Grsr. (L/PTO), 5000 United Kingdom {C5NN7N005AS}, Special Order Only, Years: 01/01/1965-03/31/1968
	C7NN7N005AY	1	Trans. Assy., W/Clth. Rel. Brg. Grsr. (L/PTO) 5000 United Kingdom, Special Order Only, Start Year: 04/01/1968
	0C	1	Trans. Assy., Less Gr. Shft. Cvr. (N/Ind. PTO) 7100 Germany, Order Components, No Longer Serviced, Years: 10/01/1971-10/31/1970
	0C	1	Trans. Assy., (W/Dual Power), 5000, Order Components, No Longer Serviced, Start Year: 01/01/1973
	D2NN7001A	1	Trans. Assy., (W/Dual Power), 7000, Special Order Only, No Longer Serviced, Start Year: 01/01/1973
	C7NN7003AE	1	Trans. Assy., (W/Clth. Rel. Brg. Grsr.) (W/PTO), Germany (Skidded Unit), Order Components, No Longer Serviced, Start Year: 01/01/1965
	NLS	1	Trans. Assy., (W/Clth. Rel. Brg. Grsr.) (L/PTO), Germany (Skidded Unit) {C7NN7N005AH}, Special Order Only, Start Year: 01/01/1965
	0C	1	Trans. Assy., W/Indep. PTO (L/Gear Shift Cover) 5100 Germany, Repl. C5NN7003CB (7 Speed Trans., Special Ratio), Order Components, No Longer Serviced, Years: 01/01/1965-10/31/1972
	NLS	1	Trans. Assy., (Less Gear Shift Cover) 5000 Major-Mexico {71NY7001A}, Special Order Only, Mexico Only, Start Year: 03/01/1973
	0C	1	Trans. Assy., L/Gr. Shft. Cvr. (W/Ind. PTO) 7000 Except Germany, Order Components, No Longer Serviced, Start Year: 10/01/1971
	D9NN7005BA	1	Case Assy., Transmission, 5000 U.K.-Antwerp, No Longer Serviced, Years: 01/01/1965-03/31/1968
1	D9NN7005BA	1	Case Assy., Trans., (Repl. C7NN-7005-V) 5000 U.K.-Antwerp, No Longer Serviced, Start Year: 04/01/1968
	D9NN7005BA	1	Case Assy., Trans., (5000 (U.S.), Start Year: 01/01/1965
1	D2NN7005E	1	Case Assy., Transmission (Repl. D0NN-7005-L) 7000 (W/Indep. PTO), No Longer Serviced, Start Year: 01/01/1971
1	D9NN7005AA	1	Case Assy., Trans. (W/Dual Power), 5000, 7000, Start Year: 01/01/1973
1	D7NN7005D	1	Case Assy., (7 Speed Trans., 25 KMH Limit) (W/Dual Power), 7100, Germany, Belgium, France, Italy. Switzerland, Includes: Case Plus: Ref. 2-4, No Longer Serviced, Start Year: 09/01/1973
	0C	1	Trans. Assy., L/Shift Cvr (W/Single or 2 Spd PTO), (7 Spd Trans., 25 KMH Limit) (W/Dual Power), 7100 Germany, Belgium, France, Italy, Switzerland, Order Components, No Longer Serviced, Start Year: 09/01/1973
2	C5NN7A615A	2	Bush/Bushing, Clutch Release Cross Shaft, Start Year: 01/01/1965
3	379304S2	2	Pin, 1/2" x 13/16" Dowel, Start Year: 01/01/1965
4	73269S	2	Pin, 3/8" x 11/16" Dowel, Start Year: 01/01/1965
5	72036S36	1	Pin, Split Cotter, 5/32" x 1", Start Year: 01/01/1965
6	263136	1	Plug, Pipe, Magnetic, Sq Socket, 3/4"-14, Years: 01/01/1965-10/31/1967
6	513364	1	Plug, Pipe, HS, 1/2"-14, Except W/Auto. Hitch, Years: 11/01/1967-12/31/1960
6	370731S	1	Plug, 3/4"-14 NPT Soc. Hd., With Auto. Hitch, Years: 11/01/1967-12/31/1960

5000-SERIES 4 CYL TRACTOR (1/65-1/75)

07C02 DUAL RANGE 7 SPEED (GERMANY) & 8 SPEED TRANS. CASE, SHIFT LEVERS & RELATED PARTS - 5000, 7000

Ref	Part Number	Qty	Description
6	82926938	1	Plug, 3/4"-14 Headless, Start Year: 01/01/1970
7	9617020	1	Plug, Pipe, HS, 1/4"-18, NPTF, Years: 01/01/1965-10/31/1967
7	87709S2	1	Plug, 1/4"-18 NPTF Soc. Hd., Start Year: 11/01/1967
9	301027S36	2	Screw, Cap, HH, G5, 3/4"-16 x 6", Start Year: 01/01/1965
10	34683S36	2	Nut, 3/4"-16 Hex., Start Year: 01/01/1965
11	P0401846	2	Screw, Cap, HH, G5, 3/4"-16 x 2-3/4", Start Year: 01/01/1965
12	408	2	Nut, G5, 5/8"-18, Start Year: 01/01/1965
13	304956S36	2	Screw, Cap, HH, G5, 5/8"-18 x 3-3/4", Start Year: 01/01/1965
14	304883S36	2	Screw, Cap, HH, G5, 5/8"-11 x 2-3/8", Start Year: 01/01/1965
	138188	1	Plug, Button, 13/32", Start Year: 01/01/1965
15	C7NN7231B	1	Arm, Gear Shift Rocker, (U.K.-Antwerp), Years: 01/01/1965-03/31/1968
16	NLS		Use 16A, No Longer Serviced
16A	C7NN7231B	1	Fork, Gear Shift (High-Low), (U.K.-Antwerp), See Service Bulletin 8/69-T3, Start Year: 01/01/1965
16A	C7NN7231B	1	Fork, Gear Shift (High-Low), (U.S.), See Service Bulletin 8/69-T3, Start Year: 01/01/1965
17	E8NN7231AA	1	Fork, Gear Shift (2 & 6, Reverse), Start Year: 01/01/1965
18A	C7NN7231A	1	Fork, Gear Shift (First & Third, Fifth, Seventh), See Service Bulletin 8/69-T3, Start Year: 01/01/1965
19	C7NN7231A	1	Arm, Gear Shift, (U.S.), Years: 01/01/1965-03/31/1968
20	E5NN7346AA	1	Arm, Gear Shift Selector, Start Year: 01/01/1965
21	E5NN7N103AA	1	Gate, Gear Shift Shaft, Start Year: 01/01/1965
22	E5NN7230AA	1	Fork Assy., Gear Shift (Fourth & Eighth), Includes: Fork Plus: 23, Start Year: 01/01/1965
23	D7NN7R427A	1	Plunger, Selector Stop, Start Year: 01/01/1965
24	C7NN7N458A	1	Spring, Selector Stop Plunger, Start Year: 01/01/1965
25	C5NN7N456A	1	Retainer, Selector Stop Plunger Spring, Start Year: 01/01/1965
26	280236	1	Pin, Split (Cotter), 1/16" x 1/2"
27	76249S	1	Pin, Clevis, 3/16" x 9/32", Use W/# C5NN-7230-B, Start Year: 01/01/1965
28	C5NN7B360A	2	Screw, Set, Shift Fork, Start Year: 01/01/1965
	D0NN7N619A	1	Plug, Clutch Housing Drain Hole, 2150-3150 Only, Start Year: 01/01/1971
29	81804978	6	Screw, Set, 3/8"-24 x 7/16", Gear Shift Fork Lock, Start Year: 01/01/1965
30	87308	8	Nut, Jam, G2, 3/8"-24, Start Year: 01/01/1965
31	C5NN7240M	1	Rail, Gear Shift, 1st & 5th - 3rd & 7th, No Longer Serviced, Years: 01/01/1965-03/31/1968
32	E5NN7240EA	1	Rail, Gear Shift, 1st & 5th - 3rd & 7th, Start Year: 01/01/1965
33	C5NN7240E	1	Rail, Gear Shift, 2nd & 6th Reverse, Start Year: 01/01/1965
	D0NN7N619A	1	Plug, Clutch Housing Drain Hole, 2150-3150, Start Year: 01/01/1971
34	C7NN7240B	1	Rail, Gear Shift, 2nd & 6th Reverse Upper, Plain End, Start Year: 01/01/1965
34	C7NN7240C	1	Rail, Gear Shift, 2nd & 6th Reverse Upper, Slotted End, Germany, NH-E Only, Years: 01/01/1965-10/31/1972
34	C7NN7240C	1	Rail, Gear Shift, 2nd & 6th Reverse Upper, Slotted End, W/Dual Power, 7100, Used in Germany, Belgium, France, Italy & Switzerland, NH-E Only, Start Year: 09/01/1973
35	C5NN7240F	1	Rail, Gear Shift, High - Low, Lower, No Longer Serviced, Years: 01/01/1965-03/31/1968
36	C5NN7240AA	1	Rail, Gear Shift, High - Low, Upper, L/Cotter Pin Hole, Except Germany, No Longer Serviced, Years: 01/01/1965-09/30/1966

5000-SERIES 4 CYL TRACTOR (1/65-1/75)

07C02 DUAL RANGE 7 SPEED (GERMANY) & 8 SPEED TRANS. CASE, SHIFT LEVERS & RELATED PARTS - 5000, 7000

Ref	Part Number	Qty	Description
36	C5NN7240AF	1	Rail, Gear Shift, High - Low, Upper, W/Cotter Pin Hole End, Except Germany, Start Year: 10/01/1966
36	C5NN7240AB	1	Rail, Gear Shift, High - Low, Upper, L/Cotter Pin Hole, Germany W/Dual Power, Years: 01/01/1965-09/30/1966
36	C5NN7240AG	1	Rail, Gear Shift, High - Low, Upper, W/Cotter Pin Hole End, Germany, Years: 10/01/1966-12/31/1970
36	C5NN7240AG	1	Rail, Gear Shift, High - Low, Upper, W/Cotter Pin Hole End, 7100 W/Dual Power, Used in Germany, Belgium, France, Italy & Switzerland, Start Year: 09/01/1973
	72024S	1	Pin, Split, Cotter, 1/16" x 7/8", No Longer Serviced, Start Year: 10/01/1966
37	C5NN7240K	1	Rail, Gear Shift, 4th & 8th, Keyed End, Except Germany, Start Year: 01/01/1965
37	C5NN7240U	1	Rail, Gear Shift, 4th & 8th, Keyed & Notched End, Germany, Years: 01/01/1965-12/31/1972
37	C5NN7240U	1	Rail, Gear Shift, 4th & 8th, Keyed & Notched End, W/Dual Power, 7100, Used in Germany, Belgium, France, Italy & Switzerland, Start Year: 09/01/1973
38	9617020	2	Plug, Pipe, HS, 1/4"-18, NPTF, Start Year: 01/01/1965
39	C5NN7N052A	6	Plug, Case Gear Shift Rail, Start Year: 01/01/1965
40	797234	4	Spring, Gear Shift Rail, Start Year: 01/01/1965
41	145222	4	Ball, Steel, Rail Detent, 3/8", Start Year: 01/01/1965
42	352662S	1	Pin, Straight, 3/8" x 1.035, Years: 01/01/1965-09/30/1966
42	81817971	1	Pin, 3/8" x 31/32", Start Year: 10/01/1966
42	379678S	3	Pin, Straight, 3/8" x 1.265, Start Year: 10/01/1966
43	C5NN7229B	2	Interlock, Gear Shift, 3/4" Lg. (19.05mm), Start Year: 01/01/1965
43	C5NN7229C	1	Interlock, Gear Shift, 3-3/4" Lg. (95.25mm), Germany, Years: 01/01/1965-12/31/1970
43	C5NN7229C	1	Interlock, Gear Shift, W/Dual Power, 3-3/4" Lg. (95.25mm), 7100, Used in Germany, Belgium, France, Italy & Switzerland, NH-E Only, Start Year: 09/01/1973
	C5NN7N099A	1	Pin, Gear Shift Interlock Retaining, W/Dual Power, 7100, Used in Germany, Belgium, France, Italy & Switzerland, NH-E Only, Start Year: 09/01/1973
44	E5NN7223AA	1	Gasket, Case Gear Shift Cover, shown in artwork, Start Year: 01/01/1965
45	C5NN7222D	1	Cover, Case Gear Shift, 5100, No Longer Serviced, Years: 01/01/1965-09/30/1966
45	E4NN7222AA20M	1	Cover, Case Gear Shift, 5100-7100, Start Year: 10/01/1966
45	C5NN7222S	1	Cover, Case Gear Shift, 5200-7200, Start Year: 01/01/1967
46	81547	12	Washer, Lock, 7/16", Start Year: 01/01/1965
47	304705S36	10	Screw, Cap, HH, G5, 7/16"-14 x 1-1/8", Start Year: 01/01/1965
48	9637916	2	Screw, Cap, HH, G5, 7/16"-14 x 1-1/2", Start Year: 01/01/1965
48A	C5NN7N176B	1	Bolt, Dowel, Safety Starter Switch Plunger, No Longer Serviced, Years: 01/01/1965-09/30/1966
49	D9NN7037AA	1	Gasket, Filler Plug, Start Year: 01/01/1965
50	957E7010	1	Plug, Case Filler, Years: 01/01/1965-03/31/1968
50A	C7NN7N255A	1	Plug & Indicator Assy., Oil Level, 5000, Start Year: 04/01/1968
51	C5NN7210G	1	Lever, Main Gear Change, 5/16"-24 Ball Threads, 5100, Years: 01/01/1965-03/31/1968
51	C7NN7210AE	1	Lever, Transmission Gear Shift, Replaces C7NN7210G, 5100, 7100, Start Year: 04/01/1968
51	C7NN7210AA	1	Lever, Main Gear Change, 3/8"-24 Ball Threads, 5200, 7200, No Longer Serviced, Start Year: 01/01/1967
52	C7NN7210AB	1	Lever, High/Low Gear Shift, 5/16"-24 Ball Threads,5100, 7100, See Service Bulletin No.9, Article 2T, 1969, Start Year: 01/01/1965

07C02 DUAL RANGE 7 SPEED (GERMANY) & 8 SPEED TRANS. CASE, SHIFT LEVERS & RELATED PARTS - 5000, 7000

Ref	Part Number	Qty	Description
52	C7NN7210Y	1	Lever, High/Low Gear Shift, 3/8"-24 Ball Threads, 5200, 7200, See Service Bulletin No.9, Article 2T, 1969, NHNA Only, No Longer Serviced, Start Year: 01/01/1967
52A	128359	2	O-Ring, .614" ID x .070" Thk, Start Year: 01/01/1965
53	D7NN7C402A	1	Pin, Gear Shift, High/Low Lever Locating, See Service Bulletin No.9, Article 2T, 1969, Start Year: 01/01/1965
53	D7NN7C402A	1	Pin, Gear Shift, High/Low Lever Locating, W/Transmission Breather Tube, Start Year: 04/01/1969
53	C7NN7N441B	1	Pin, Gear Shift Main Lever Locating, Service Only L/Transmission Breather Tube, Years: 01/01/1965-03/31/1969
54	82007346	2	Retainer, Gear Shift Lever Ball, Start Year: 01/01/1965
55	C7NN7227A	2	Spring, Gear Shift Lever, Replaces N7227, Start Year: 01/01/1965
56	N7228	2	Ring, Snap, Gear Shift Lever Spring, Start Year: 01/01/1965
57	C5NN7213A	1	Ball, Main Gear Change Lever, 1-5/8" Diameter, 5/16"-24 Threads, 5100, 7100, Start Year: 01/01/1965
58	E440GB9	1	Ball, High/Low Gear Shift, 1-1/4" Diameter, 5/16"-24 Threads, 5100, 7100, Start Year: 01/01/1965
58A	C5NN7C305B	2	Gear Shift Extension Assy., 3/8"-24 Threads, 5200, 7200, NHNA Only, No Longer Serviced, Start Year: 01/01/1967
59	C5NN11N500A	1	Switch, Starter Safety, Years: 01/01/1965-09/30/1966
59A	C5NN11N005A	1	Shim Pack, Switch to Shift Cover, No Longer Serviced, Years: 01/01/1965-09/30/1966
60	C5NN11N523B	1	Retainer, Starter Safety Switch Plunger, No Longer Serviced, Years: 01/01/1965-09/30/1966
61	C5NN11467T	1	Plunger, Starter Safety Switch, Blue, 1.275/1.280 (32.385/32.512mm), No Longer Serviced, Years: 01/01/1965-09/30/1966
62	C5NN11N520A	1	Roller, Starter Safety Switch, No Longer Serviced, Years: 01/01/1965-09/30/1966
63	C5NN11N519B	1	Connector, Starter Safety Switch, No Longer Serviced, Years: 01/01/1965-09/30/1966
64	C5NN11N499A	1	Plate, Starter Switch Support, No Longer Serviced, Years: 01/01/1965-09/30/1966
65	C7NN7N450A	2	Bolt, Hex Drilled Hd., 5/16"-18 x 1-5/8", No Longer Serviced, Years: 01/01/1965-09/30/1966
66	C5NN7N224A	1	Plate, Gear Shift Lever Stop, No Longer Serviced, Years: 01/01/1965-09/30/1966
67	355431S	5	Bolt, Hex Drilled Hd., 5/16"-18 x 1/2", No Longer Serviced, Years: 01/01/1965-09/30/1966
67	355431S	3	Bolt, Hex Drilled Hd., 5/16"-18 x 1/2", No Longer Serviced, Start Year: 10/01/1966
68	C5NN7N227C	1	Plate, Gear Shift Main Lever, No Longer Serviced, Years: 01/01/1965-09/30/1966
69	EDC6590A	1	Washer, Flat, .86 I.D. x 1.32, No Longer Serviced, Years: 01/01/1965-09/30/1966
69	376479S36	1	Washer, Flat, .78 I.D. x 1.42, Start Year: 10/01/1966
70	80299	1	Washer, 5/8", Start Year: 01/01/1965
71	C5NN7N178D	1	Plate, Gear Shift Oil Baffle, NH-E, Years: 01/01/1965-09/30/1966
72	C5NN7B226N	1	Stop, Gear Shift Lever, Replaces C5NN7B226F, 5100, 7100, Start Year: 10/01/1966
72	C5NN7B226M	1	Stop, Gear Shift Lever, 5200, 7200, Start Year: 01/01/1967
73	C5NN11N001A	1	Pin, Safety Starter Switch Locating, Start Year: 10/01/1966
74	C5NN7N181A	1	Dowel, Case Cover, Start Year: 10/01/1966
75	C7NN7A247A	1	Switch Assy., Safety Starter, Replaces C5NN7A247C, Start Year: 10/01/1966
76	E1NN11N002AA	1	Retainer, Safety Starter Switch, Start Year: 10/01/1966
77	C5NN11N003B	1	Spring, Safety Starter Switch, Start Year: 10/01/1966
78	145222	1	Bolt, Steel, 3/8" Diameter, Start Year: 10/01/1966
79	C5NN11467R	1	Plunger, Safety Starter Switch, Start Year: 10/01/1966

07C02 DUAL RANGE 7 SPEED (GERMANY) & 8 SPEED TRANS. CASE, SHIFT LEVERS & RELATED PARTS - 5000, 7000

Ref	Part Number	Qty	Description
80	E4NN7A488CA	1	Safety Starter Switch Wire Assy., Start Year: 10/01/1966
81	C5NN7277D	2	Seal, Gear Shift Lever, 5200, 7200, No Longer Serviced, Start Year: 01/01/1967
82	C7NN7A245A	1	Breather Tube Assy., W/Independent & L/P.T.O. Except Germany, 5000, Start Year: 01/01/1965
82	NLS	1	Breather Tube Assy., W/Independent P.T.O, Germany, 5000, No Longer Serviced, Years: 01/01/1965-10/31/1972
82A	D1NN7R069A	1	Tube Assy., Lube Oil Outlet, 7000, Not Shown, No Longer Serviced, Start Year: 10/01/1971
	375394S	1	Grommet, .34 I.D. x .961 Groove x .31 Thick Switch Wire at Steering Gear Cover, Basildon-Antwerp, No Longer Serviced, Years: 10/01/1966-06/30/1971
	353873S	1	Grommet, .37 I.D. x .12 Groove x .50 Thick Switch Wire at Steering Gear Cover, Basildon-Antwerp, NH-E Only, Start Year: 07/01/1971
	353873S	1	Grommet, .37 I.D. x .12 Groove x .50 Thick, Swirch Wire at Steering Gear Cover, U.S., NHNA Only, Start Year: 10/01/1966

07C05 DUAL RANGE 7 SPEED (GERMANY) & 8 SPEED TRANS. GEARS & RELATED PARTS - 5000, 7000

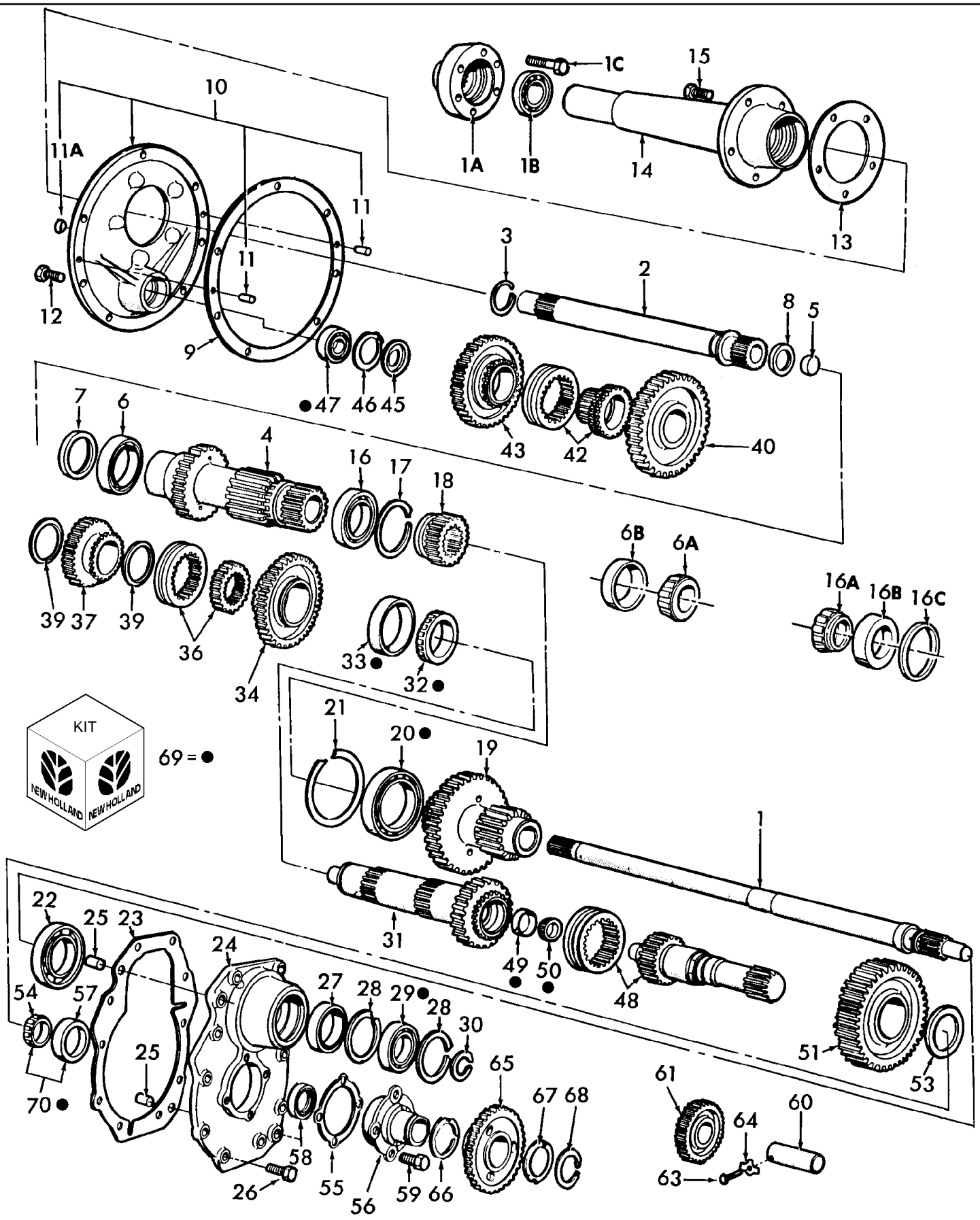

5000-SERIES 4 CYL TRACTOR (1/65-1/75)

07C05 DUAL RANGE 7 SPEED (GERMANY) & 8 SPEED TRANS. GEARS & RELATED PARTS - 5000, 7000

Ref	Part Number	Qty	Description
1	E4NN7A684AA	1	Shaft, PTO Drive, 20 Spline Front, 25 Spline Rear, 40", When replacing C5NN-7A684-A (81805444) W/E4NN-7A684-AA (83948847) also use E1NN-N777-AB (83936827)., Start Year: 01/01/1965
1A	E1NNN777AB	1	Plate, PTO Drive, Start Year: 01/01/1965
1B	F0NNN779AA	1	Bearing, PTO Drive Plate, Replace C5NN-N779-A, Start Year: 01/01/1965
1C	43172S36	6	Screw, Cap, HH, G8, Self-Locking, 9/16"-18 x 2-5/8", Plate to Crankshaft, Start Year: 01/01/1965
2	C5NN7017A	1	Shaft, Input, Start Year: 01/01/1965
2	D2NN7017A	1	Shaft, Transmission Input, W/Dual Power, Start Year: 01/01/1973
3	C5NN7N064C	1	Ring, Snap, Main Drive, Start Year: 01/01/1965
4	C5NN7C094A	1	Shaft Assy., Main, 30 & 16 Teeth, 8 Speed, No Longer Serviced, Years: 01/01/1965-09/30/1965
4	C5NN7C094A	1	Shaft Assy., Main, 30 & 16 Teeth, 7 Speed, No Longer Serviced, Years: 01/01/1965-03/31/1968
4	C9NN7C094B	1	Shaft Assy., Main, 30 & 18 Teeth, W/PTO, 5000, U.S., When replacing C5NN-7C094-C &/or C5NN-7N339-D(81805076), both parts must be replaced W/C9NN-7C094-B(81822959) & E9NN-7N315-AA(83990392), OR E6NN-7N315-AA(83960029)(Depending on year), as a Set. See Service Bulletin 8-74/, 3T., Start Year: 03/01/1971
4	C9NN7C094B	1	Shaft Assy., Main, 30 & 18 Teeth, W/PTO, 5000, U.K., When used on Tractors prior to 10-70/, also use C9NN-7N315-B(81822962), 8 Speed, U.K., Start Year: 09/01/1965
4	C9NN7C094B	1	Shaft Assy., Main, 30 & 18 Teeth, W/PTO, 7 Speed, U.K., Start Year: 04/01/1968
4	E7NN7C094AA	1	Shaft Assy., Transmission Main, 30 & 18 Teeth, W/Independent PTO, W/Dual Power, 5000, When replacing D2NN-7C094-B(81826585) W/E2NN-7C094-DA(83946977) also use C5NN-7N064-C(81813761)., Start Year: 06/01/1973
4	D0NN7R057A	1	Shaft Assy., Main, 30 & 18 Teeth, L/PTO, 5000, Start Year: 04/01/1971
4	E2NN7C094AA	1	Shaft Assy., Transmission Main, 29 & 18 Teeth, W/Independent PTO, W/Dual Power, 7000, When replacing D0NN-7C094-A (81823632) the Coupling D2NN-7106-B (81826589) must also be used., Start Year: 06/01/1973
4	E2NN7C094BA	1	Shaft Assy., Transmission Main, 29 & 18 Teeth, W/Independent PTO, L/Dual Power, 7000, When replacing D0NN-7C094-A (81823632) the Coupling D2NN-7106-B (81826589) must also be used., Start Year: 10/01/1971
5	83957024	1	Plug, Main Shaft, 1.56", Skidded Units, U.K., Start Year: 01/01/1965
6	C5NN7N046A	1	Bearing, Main Shaft, 5000, When replacing D2NN-7C094-B(81826585) W/E2NN-7C094-DA(83946977) also use C5NN-7N064-C(81813761)., Start Year: 01/01/1965
6A	81823621	1	Bearing, Cone & Roller Assy., Main Shaft Front, 7000, Start Year: 10/01/1971
6B	81823626	1	Cup, Main Shaft Front Bearing, 7000, Start Year: 10/01/1971
7	D9NN7048BA	1	Seal Assy., Input Shaft, Replaces C5NN-77047-A, Start Year: 01/01/1965
8	C5NN799A	1	Oil Seal Assy., PTO Drive Shaft, Start Year: 01/01/1965
9	E6NN7N057AA	1	Gasket, Clutch Release Bearing Plate, Start Year: 01/01/1965
10	C5NN7N054B	1	Plate Assy., Clutch Release Bearing Support, W/Hole for Lift Fork, No Longer Serviced, Years: 01/01/1965-03/31/1968
10	C7NN7N054A	1	Plate Assy., Bearing Support, L/Common Sump, Start Year: 04/01/1968
10	D8NN7N054BA	1	Plate Assy., Replaces D2NN-7N054-A, Includes: Ref. 11 & 11A, Start Year: 06/01/1973
11	73269S	2	Pin, Dowel, 3/8" x 1-11/16", Start Year: 01/01/1965
11A	C5NN7N052A	1	Plug, Clutch Release Bearing Support Plate, Start Year: 01/01/1965

07C05 DUAL RANGE 7 SPEED (GERMANY) & 8 SPEED TRANS. GEARS & RELATED PARTS - 5000, 7000

Ref	Part Number	Qty	Description
12	46009S36	7	Screw, Cap, HH, G5, Self-Locking, 3/8"-16 x 1-1/8", Start Year: 01/01/1965
12	9846677	7	Screw, Cap, HH, CL 10.9, M10 x 1.5 x 25, Plate Assy to Case, W/Dual Power, Start Year: 06/01/1973
	81827354	1	O-Ring, 4.625" x .139", Use W/D2NN-7N054-A, Start Year: 04/01/1968
13	E7NN7N051AA	1	Gasket, Clutch Bearing Hub Support, 5000, Start Year: 01/01/1965
13	D0NN7R064A	AR	Shim, .0030"-.0765mm, 7000, Start Year: 10/01/1971
13	D0NN7R064B	AR	Shim, Bearing Hub, .0050"-.127mm, 7000, Start Year: 10/01/1971
13	D0NN7R064C	AR	Shim, Bearing Hub, .0120"-.3048mm, 7000, Start Year: 10/01/1971
14	C5NN7N541B	1	Support, Clutch Release Bearing Hub, 5000, Start Year: 01/01/1965
14	D0NN7N541A	1	Support, Clutch Release Bearing Hub, 7000, Start Year: 10/01/1971
15	46051S36	5	Screw, Cap, HH, G5, Self-Locking, 7/16"-14 x 1-1/8", Start Year: 01/01/1965
16	C7NN7118B	1	Bearing Assy., Main Shaft, 5000, When replacing D2NN-7C094-B(81826585) W/E2NN-7C094-DA(83946977) also use C5NN-7N064-C(81813761)., Start Year: 01/01/1965
16A	81823622	1	Bearing, Cone & Roller Assy., Main Shaft Rear, 7000, Start Year: 10/01/1971
16B	81823627	1	Bearing, Cup, Main Shaft Rear, 7000, Start Year: 10/01/1971
16C	D0NN7K281A	1	Ring, Main Shaft Bearing Retaining, 7000, Start Year: 10/01/1971
17	E1ADKN77014	1	Lock Ring, Main Shaft Bearing, Start Year: 01/01/1965
18	E0NN7106BA	1	Coupling, Countershaft Sliding Gear, 21 Teeth, 5000, Start Year: 01/01/1965
18	6F7055B	1	5-6 County Commercial, NHNA Only, No Longer Serviced, Years: 01/01/1968-12/31/1978
18	E0NN7106BA	1	Coupling, Transmission Countershaft, 21 Teeth, Replaces C7NN-7106-E, 7000, When replacing C7NN-7016-E also use D2NN-7C094-D (81827385) Shaft, W/Dual Power or D2NN-7C094-E Shaft,L/Dual Power, Start Year: 10/01/1971
19	C5NN7113B	1	Gear, Countershaft Secondary, 5000, Years: 01/01/1965-09/30/1970
19	C9NN7113B	1	Gear, Countershaft Secondary, 5000, Start Year: 10/01/1970
19	D0NN7113C	1	Gear, Countershaft Secondary, 7000, Start Year: 10/01/1971
20	C5NN7127B	1	Countershaft Bearing Assy., Front, Included in EDPN-7118-A (83936974) Kit., Start Year: 01/01/1965
21	C5NN7N160A	1	Ring, Lock, Countershaft Front, Start Year: 01/01/1965
22	C5NN7127A	1	Countershaft Bearing Assy., Rear, 5000, Start Year: 01/01/1965
22	D0NN7127A	1	Countershaft Bearing Assy., Rear, 7000, Start Year: 10/01/1971
23	C5NN7086A	1	Gasket, Output Shaft Bearing Retainer, Replaces C5NN-7N086-A, Start Year: 01/01/1965
24	C5NN7049E	1	Retainer, Output Shaft, Replaces C5NN-7049-C, L/Dual Power, 5000, Start Year: 01/01/1965
24	F0NN7049AA	1	Retainer, Output Shaft, W/Dual Power, 5000, Start Year: 01/01/1973
24	D3NN7049A	1	Retainer, Output Shaft, W/Dual Power, 7000, Start Year: 01/01/1973
25	379304S2	2	Pin, Dowel, 1/2" x 13/16", Start Year: 01/01/1965
26	304703S36	10	Screw, Cap, HH, G5, 3/8"-16 x 1-1/8", Start Year: 01/01/1965
27	E62GE9	1	Seal Assy., PTO Countershaft, 5000, Start Year: 01/01/1965
28	957E790	2	Ring, Snap, PTO Countershaft Bearing, Start Year: 01/01/1965
29	E75GE9	1	Bearing, PTO Drive Shaft Front, Included in EDPN-7118-A (83936974) Kit., Start Year: 01/01/1965
30	C5NN7261A	1	Ring, Lock, PTO Drive Shaft, Start Year: 01/01/1965
31	E6NN7111AA	1	Countershaft, Transmission, 5000, When used to replace C9NN7111B(81822960), must also order D0NN7N048A, D0NN7N047A, & E6NN7N071BA(83959999), Start Year: 01/01/1965
31	D2NN7111B	1	Countershaft, Transmission, Replaces D0NN-7111-A W/ or L/Dual Power, 7000, Start Year: 01/01/1971

07C05 DUAL RANGE 7 SPEED (GERMANY) & 8 SPEED TRANS. GEARS & RELATED PARTS - 5000, 7000

Ref	Part Number	Qty	Description
	306326S2	1	Pin, Roll, 3/8" x 1-1/8", Countershaft, W/Dual Power, Start Year: 06/01/1973
32	81829466	1	Bearing, Cone & Roller Assy., Transmission Countershaft Replaces C7NN-7N431-A, Included in EDPN-7118-A (83936974) Kit., Start Year: 01/01/1965
33	86691	1	Cup, Countershaft, Replaces C7NN-7N432-A, Included in EDPN-7118-A (83936974) Kit., Start Year: 01/01/1965
34	E6NN7N101AA	1	Gear Assy., 2nd Speed, 43 & 28 Teeth, L/Dual Power, Start Year: 01/01/1965
34	E6NN7N101BA	1	Gear Assy., 2nd. Speed, W/Independent PTO, W/Dual Power, Start Year: 01/01/1973
36	E6NN7N072BA	1	Connector & Coupling, Gear Shift Sliding, Matched Replaces C5NN-7N072-C, Start Year: 01/01/1965
37	C5NN7N012A	1	Gear Assy., Reverse, 30 & 28 Teeth, 8 Speed, Years: 01/01/1965-09/30/1965
37	C5NN7N012A	1	Gear Assy., Reverse, 30 & 28 Teeth, 7 Speed, Years: 01/01/1965-03/31/1968
37	E6NN7N012AA	1	Gear Assy., Reverse, 32 & 28 Teeth, 8 Speed, Start Year: 09/01/1965
37	E6NN7N012AA	1	Gear Assy., Reverse, 32 & 28 Teeth, 7 Speed, Start Year: 04/01/1968
37	E6NN7N012BA	1	Gear Assy., Reverse, 32 & 28 Teeth, W/Dual Power, Start Year: 01/01/1973
39	C5NN7033A	2	Washer, Main Shaft, Start Year: 01/01/1965
40	C5NN7N100A	1	Gear Assy., 1st. Speed, 49 & 28 Teeth, 8 Speed, No Longer Serviced, Years: 01/01/1965-09/30/1965
40	C5NN7N100A	1	Gear Assy., 1st Speed, 49 & 28 Teeth, 7 Speed, No Longer Serviced, Years: 01/01/1965-03/31/1968
40	E6NN7N100AA	1	Gear Assy., 1st Speed, 46 & 28 Teeth, 8 Speed, Start Year: 09/01/1965
40	E6NN7N100AA	1	Gear Assy., 1st Speed, 46 & 28 Teeth, 7 Speed, Start Year: 04/01/1968
40	E6NN7N100BA	1	Gear Assy., 1st Speed, 46 & 28 Teeth, W/Dual Power, Start Year: 01/01/1973
42	E6NN7N072AA	1	Connector & Coupling, Gear Shift Sliding, 5000, Start Year: 01/01/1965
42	D2NN7N072A	1	Connector & Coupling, Gear Shift Sliding Replaces D0NN-7N072-B, 7000, Start Year: 10/01/1971
43	E6NN7N315AA	1	Gear Assy., Main, 3rd. Speed, 35 Teeth, When replacing C5NN-7C094-C and/or C5NN-7N339-D(81805076), both must be replaced W/C9NN-7C094-B(81822959) & C9NN-7N315-B (81822962)as a set. See Service Bulletin 4T, 8-71, Years: 01/01/1965-09/30/1970
43	E6NN7N315AA	1	Gear Assy., Main, 3rd. Speed, 35 Teeth, 5000, When replacing C5NN-7C094-C and/or C5NN-7N339-D(81805076), both must be replaced W/C9NN-7C094-B(81822959) & C9NN-7N315-B (81822962)as a set. See Service Bulletin 4T, 8-71, Start Year: 10/01/1970
43	D0NN7N315A	1	Gear Assy., Main, 3rd. Speed, 7000, No Longer Serviced, Start Year: 10/01/1971
43	E6NN7N315BA	1	Gear Assy., Transmission, Main, 3rd. Speed, W/DP, 5000, Start Year: 06/01/1973
43	D2NN7N315A	1	Gear Assy., Transmission, Main, 3rd. Speed, W/DP, 7000, Start Year: 06/01/1973
45	C5NN7N034B	1	Washer, Main Drive Shaft Thrust, 5000, Start Year: 01/01/1965
45	D0NN7N034C	1	Washer, Main Countershaft Thrust, 7000, Start Year: 10/01/1971
46	86503781	1	Ring, Snap, Ext, 1.56", Main Shaft, 5000, Start Year: 01/01/1965
46	167080	1	Ring, Snap, Ext, 1.188", 7000, Start Year: 10/01/1971
47	D0NNN755B	1	Bearing Assy., PTO Rear, Upper Shaft, 5000 Replaces C5NN-N755-A, Included in EDPN-7118-A (83936974) Kit., Start Year: 01/01/1965
47	D0NN7118C	1	Bearing Assy., Countershaft Front, 7000, Start Year: 10/01/1971
48	C7NN7N071D	1	Coupling & Shaft Assy., Gear Shift Sliding, Replaces C5NN-7N071-B, No Longer Serviced, Years: 01/01/1965-04/30/1971
48	C9NN7N071B	1	Coupling & Shaft Assy., Gear Shift Sliding, 5000, Start Year: 05/01/1971
48	E6NN7N071BA	1	Coupling & Shaft Assy., Gear Shift Sliding, 7000, Start Year: 10/01/1971

07C05 DUAL RANGE 7 SPEED (GERMANY) & 8 SPEED TRANS. GEARS & RELATED PARTS - 5000, 7000

Ref	Part Number	Qty	Description
48	E6NN7N071BA	1	Coupling & Shaft Assy., Gear Shift Sliding, W/Dual Power, Start Year: 06/01/1973
49	83990517	AR	Cup, Secondary Output Shaft, 2.047 O.D., 5000, Parts included in EDPN-7118-A(83936974) Kit., Start Year: 01/01/1965
49	81823620	1	Bearing, Cup, Secondary Output Shaft, 7000, Required W/ Ref. 31, E6NN7111AA(83960001)., Start Year: 10/01/1971
49	81823620	AR	Bearing, Cup, Secondary Output Shaft, W/Dual Power, 5000-7000
50	83990517	1	Bearing, Cone & Roller Assy., Output Shaft, 1.00 I.D., 5000, Parts included in EDPN-7118-A(83936974) Kit., Start Year: 01/01/1965
50	81823619	1	Bearing, Cone & Roller Assy., Output Shaft, .75 I.D., 7000, Required W/ Ref. 31, E6NN7111AA(83960001)., Start Year: 10/01/1971
50	81823619	AR	Bearing, Cone & Roller Assy., Output Shaft, W/Dual Power, 5000-7000
51	E6NN7145AA	1	Gear Assy., Output Shaft, Start Year: 01/01/1965
51	E6NN7145AA	1	Gear Assy., Output Shaft, W/Dual Power, Start Year: 01/01/1973
53	C5NN7A385A	1	Washer, Output Shaft Thrust, 1.688" (42.88mm) I.D., Years: 01/01/1965-04/30/1971
53	C9NN7A385A	1	Washer, Output Shaft Thrust, 1.755" (44.577mm) I.D., Start Year: 05/01/1971
54	81804632	1	Bearing, Cone & Roller Assy., Output Shaft, Years: 01/01/1965-04/30/1971
55	C5NN7N135A	AR	Shim, Output Shaft, .003 (.0762mm), Start Year: 01/01/1965
55	C5NN7N135B	AR	Shim, Output Shaft, .005 (.127mm), Start Year: 01/01/1965
55	C5NN7N135C	AR	Shim, Output Shaft, .012 (.3048mm), Start Year: 01/01/1965
56	C7NN7049D	1	Retainer, Transmission Output Shaft Bearing, 5000 Replaces C7NN-7N085-B, No Longer Serviced, Years: 01/01/1965-04/30/1971
56	C9NN7049C	1	Retainer, Output Shaft Bearing, 5000-7000, Start Year: 05/01/1971
57	81804630	1	Cup, Years: 01/01/1965-04/30/1971
58	C5NN77086A	1	Seal Assy., Start Year: 01/01/1965
59	46008S36	4	Screw, Cap, HH, G5, Self-Locking, 3/8"-16 x 1", Start Year: 01/01/1965
60	C5NN7140A	1	Shaft, Reverse Idler Gear, 3.88" Long, Hollow, No Longer Serviced, Years: 01/01/1965-03/31/1968
60	C7NN7140C	1	Shaft, Reverse Idler Gear, 3.50" Long, Start Year: 04/01/1968
61	C5NN7141A	1	Gear Assy., Reverse Idler, 33 Teeth, 8 Speed, 5000, Years: 01/01/1965-09/30/1965
61	C5NN7141A	1	Gear Assy., Reverse Idler, 33 Teeth, 7 Speed, 5000, Years: 01/01/1965-03/31/1968
61	C5NN7141B	1	Gear Assy., Reverse Idler, 31 Teeth, 8 Speed, 5000, Start Year: 09/01/1965
61	C5NN7141B	1	Gear Assy., Reverse Idler, 31 Teeth, 7 Speed, 5000, Start Year: 04/01/1968
61	D2NN7141A	1	Gear Assy., Transmission Reverse Idler Shaft, W/Dual Power, Replaces D0NN-7141-A, 5000-7000, Start Year: 06/01/1973
61	D2NN7141A	1	Gear Assy., Transmission Reverse Idler Shaft, 7000, Start Year: 10/01/1971
63	C5NN7N011A	1	Bolt, Reverse Idler Shaft, Years: 01/01/1965-03/31/1968
63	C5NN7N011B	1	Bolt, Reverse Idler Shaft, Start Year: 04/01/1968
64	C5NN7N010A	1	Tab, Reverse Idler Shaft Bolt, Start Year: 01/01/1965
65	D9NNN883AA	1	Gear & Bushing Assy., Pump Idler Gear, Replaces C7NN-N883-A, Tractors prior to 5-71/ also supply (1) each C9NN-7N085-A(81822276), C9NN-7N071-B(81824350) & WAA-4221-A(81854761)., Start Year: 01/01/1965
66	C5NNN635A	1	Washer, Hydraulic Pump Idler Gear Thrust, 5000, Years: 01/01/1965-12/31/1968

Ref	Part Number	Qty	Description
67	D9NNN637AA	1	Washer, Hydraulic Pump Drive Idler Retainer, Years: 01/01/1965-12/31/1968
67	D9NNN637AA	1	Washer, Hydraulic Pump Drive Idler Gear, Start Year: 01/01/1969
67	D9NNN637AA	1	Washer, Hydraulic Pump Drive Idler Gear, W/Flat, Start Year: 01/01/1965
68	97720S36	1	Ring, Snap, Ext, 2.250", Start Year: 01/01/1965
69	EDPN7118A	1	Kit, Bearing Transmission Overhaul, Includes Ref. 20, 29, 32, 33, 47, 49, 50, & 70, Start Year: 01/01/1965
70	86512015	1	Bearing Set, Cup & Cone, Output Shaft, Parts included in EDPN-7118-A(83936974) Kit., Start Year: 05/01/1971

07C06 TRANSMISSION DUAL POWER ASSEMBLY - 5000, 7000

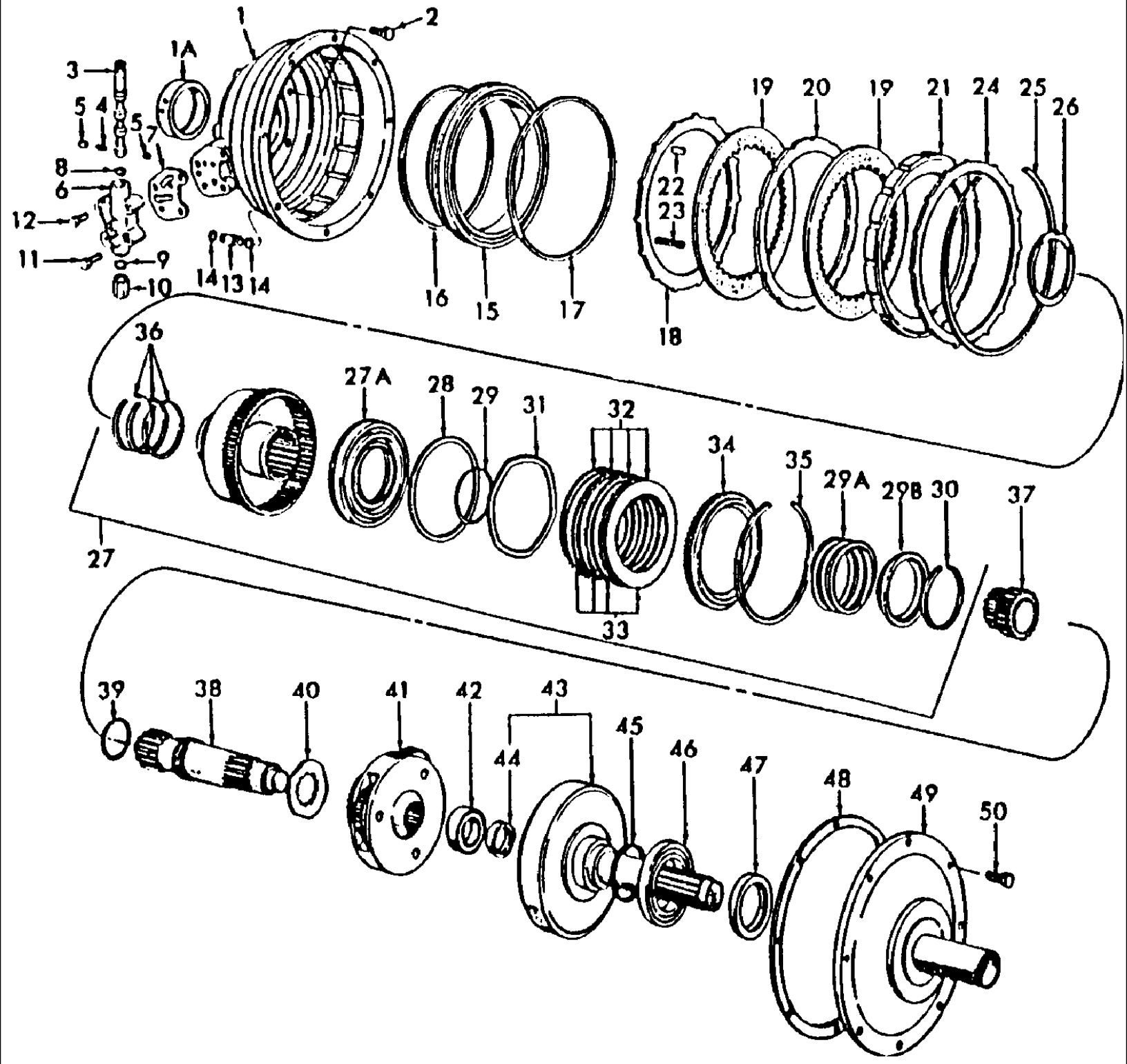

5000-SERIES 4 CYL TRACTOR (1/65-1/75)

07C06 TRANSMISSION DUAL POWER ASSEMBLY - 5000, 7000

Ref	Part Number	Qty	Description
1	D8NN7N477BA	1	Housing, 5000, No Longer Serviced, Start Year: 06/01/1973
1	D8NN7N477AA	1	Housing, 7000, No Longer Serviced, Start Year: 06/01/1973
1A	D6NN7N848A	1	Sleeve, Housing, Start Year: 06/01/1973
2	81821380	5	Bolt, HH, Lock, Housing to Transmission, 7/16"-14 x 1-1/2", Start Year: 06/01/1973
3	D8NN7N488AA	1	Valve, Control, Start Year: 06/01/1973
4	C9NN7D318A	1	Spring, Valve, No Longer Serviced, Start Year: 06/01/1973
5	C9NN7N145A	2	Cup, Valve Detent, Start Year: 06/01/1973
6	D7NN7R030A	1	Body Assy., Valve, Start Year: 06/01/1973
7	D6NN7R032A	1	Gasket, Body to Housing, Start Year: 06/01/1973
8	9827059	1	O-Ring, .551" ID x .070" Thk, Upper, Start Year: 06/01/1973
9	87039S94	1	O-Ring, .875" ID x .103" Thk, Lower, Start Year: 06/01/1973
10	D7NN7N164A	1	Sleeve, Valve Detent, Start Year: 06/01/1973
11	88206	1	Screw, Cap, HH, G5, 3/8"-16 x 1", Body to Housing, Start Year: 06/01/1973
12	88044	2	Screw, Cap, HH, G5, 3/8"-16 x 1-1/2", Body to Housing, Start Year: 06/01/1973
	81823626	1	Cap, Transmission Main Shaft, Front Bearing, 7000, Start Year: 06/01/1973
13	D6NN7A208B	1	Tube, Transmission Lubricating Oil, Start Year: 06/01/1973
14	14457281	1	O-Ring, M15.54 ID x 2.62 Thk, Use W/#D6NN-Oil Tube, Start Year: 06/01/1973
14	122056	2	O-Ring, .676" ID x .070" Thk, Start Year: 06/01/1973
15	C9NN7R029A	1	Piston, Underdrive Clutch, Start Year: 06/01/1973
16	C9NN7N948A	1	Seal, Piston, Rear, Start Year: 06/01/1973
17	C9NN7N947A	1	Seal, Piston, Front, Start Year: 06/01/1973
18	C9NN7R025A	1	Plate, Underdrive Clutch, Start Year: 06/01/1973
19	D2NN7R000A	2	Plate Assy., Underdrive Clutch, Start Year: 06/01/1973
20	C9NN7R004A	1	Plate, Clutch Separating, Start Year: 06/01/1973
21	C9NN7R003A	1	Plate, Clutch Pressure, Start Year: 06/01/1973
22	D8NN7R006AA	3	Pin, Clutch Drive, Start Year: 06/01/1973
23	C9NN7R008A	12	Spring, Underdrive Clutch Piston, Start Year: 06/01/1973
24	C9NN7R024B	1	Plate, Clutch Front, Start Year: 06/01/1973
25	C9NN7N496A	1	Ring, Clutch Retaining Snap, Start Year: 06/01/1973
26	C9NN7R005A	1	Washer, Direct Drive Housing, Start Year: 06/01/1973
27	E0NN7R036AB	1	Clutch Assy., Direct Drive, Replaces P/N D5NN-7R036-,B Includes: Housing & Ref. 27A thru 35, Start Year: 06/01/1973
27A	D6NN7R014A	1	Piston, Drive Clutch, Start Year: 06/01/1973
28	C0NN7A548A	1	Seal, Piston, Outer, Start Year: 06/01/1973
29	372261S	1	O-Ring, 2.875" ID x .103" Thk, Piston, Inner, Start Year: 06/01/1973
29A	D2NN7R060A	1	Spring, Direct Drive Clutch, Start Year: 06/01/1973
29B	D2NN7R061A	1	Seat, Piston Spring, Start Year: 06/01/1973
30	312204	1	Ring, Seat Retaining, Snap, Start Year: 06/01/1973
31	D3NNP733A	1	Spring, PTO Feathering, Use W/#D2NN-7R014-A, Years: 06/01/1973-10/31/1977
32	PBB77573A	4	Plate, Front Clutch, External Spline, Start Year: 06/01/1973
33	D8NNP743JA	4	Plate Assy., PTO Clutch, Internal Spline, Start Year: 06/01/1973

07C06 TRANSMISSION DUAL POWER ASSEMBLY - 5000, 7000

Ref	Part Number	Qty	Description
34	C9NN7R007A	1	Plate, Direct Drive Housing, Years: 06/01/1973-07/31/1975
34	9824099	1	Plate, Direct Drive Housing, Start Year: 08/01/1975
35	9823829	1	Ring, Snap, Int, 5.918", Clutch Pressure Plate Retaining, Start Year: 06/01/1973
36	83911795	3	Seal, Direct Drive Housing, Replaces P/N C9NN-7N499-A, See Service Bulletin 8/78 -T4, Start Year: 06/01/1973
37	C9NN7R010A	1	Gear, Planet Sun, Start Year: 06/01/1973
38	D2NN7017A	1	Shaft, Transmission Input, Start Year: 06/01/1973
39	14459080	1	O-Ring, M2.62 x 44.12, Input Shaft, Start Year: 06/01/1973
40	C9NN7R002B	1	Washer, Planet Carriage, Start Year: 06/01/1973
41	C9NN7R035A	1	Carrier Assy., Planet, Start Year: 06/01/1973
42	C9NN7R023A	1	Bearing Assy., Input Shaft, Inner, Start Year: 06/01/1973
43	D2NN7R042A	1	Shaft & Gear Assy., Input Includes: Shaft, Gear & Ref. 44, Start Year: 06/01/1973
44	D6NN7N839A	1	Seal Assy., Input Shaft, Replaces P/N C9NN-8N839-A, Start Year: 06/01/1973
45	C9NN7R013A	AR	Shim, Input Shaft, .013" (33mm), Start Year: 06/01/1973
45	C9NN7R013B	AR	Shim, Input Shaft, .032" (.8128mm), Start Year: 06/01/1973
46	C9NN7R022A	1	Bearing Assy., Input Shaft, Outer, Start Year: 06/01/1973
47	D6NN7N838A	1	Seal Assy., Input Shaft, Outer, Replaces P/N D6NN-7N838-A, Start Year: 06/01/1973
48	E6NN7R019AA	1	Gasket, Cover, Replaces C9NN7R019A, Start Year: 06/01/1973
49	D2NN7N481A	1	Cover, Housing, Start Year: 06/01/1973
50	46008S36	8	Screw, Cap, HH, G5, Self-Locking, 3/8"-16 x 1", Cover to Housing, Start Year: 06/01/1973
	DFPN7153A	1	Kit, Transmission Gasket & Seal, Includes: Ref. 7 thru 9, 16, 17, 28, 29, 36, 44, 47 & 48, Start Year: 06/01/1973

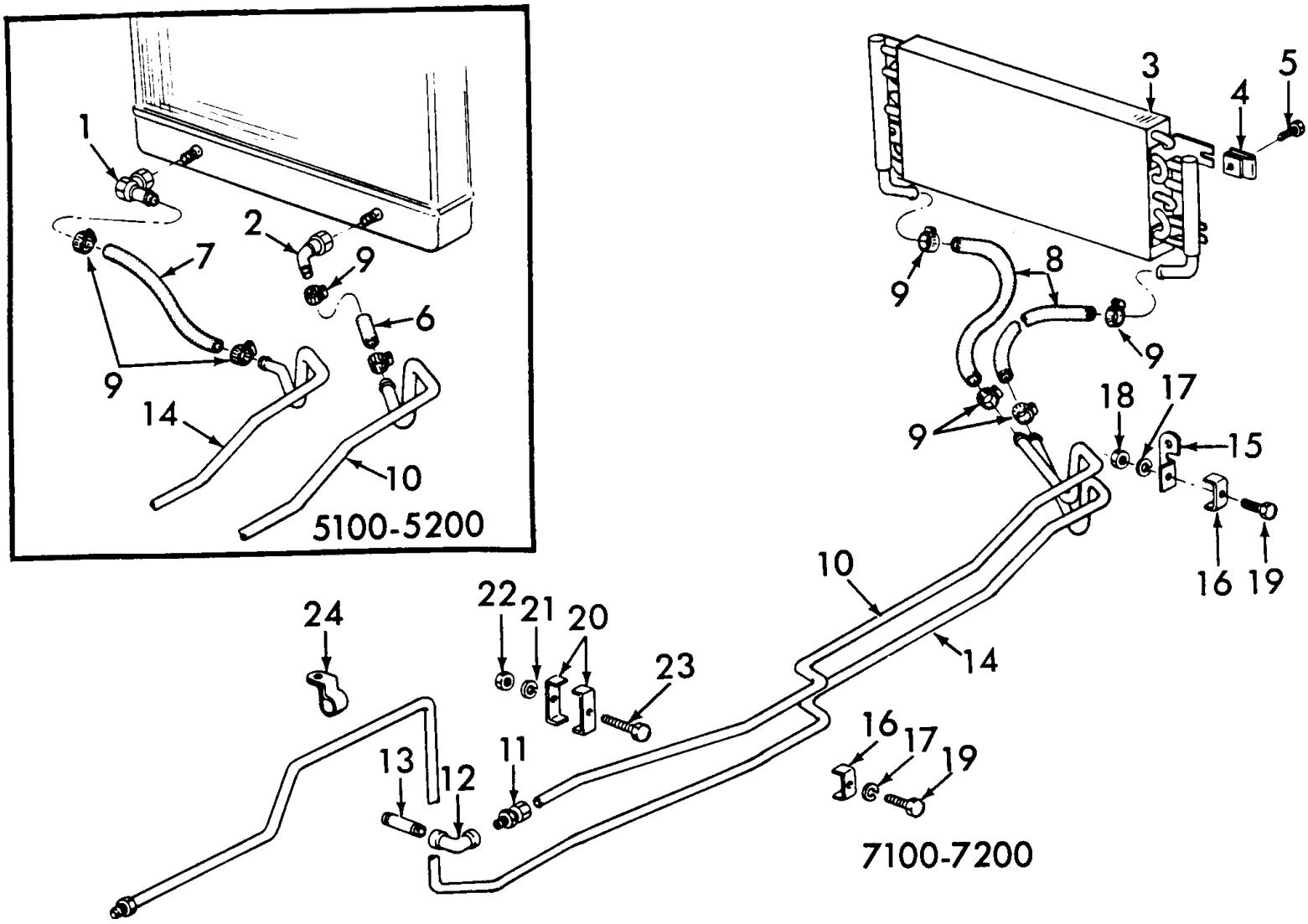
1
2
7
9
6
9
14
10
5100-5200
3
4
5
9
8
9
9
18
17
15
16
19
10
14
24
22
21
20
23
16
17
19
13
12
11
7100-7200

5000-SERIES 4 CYL TRACTOR (1/65-1/75)

07C07 DUAL POWER OIL COOLING SYSTEM - 5000, 7000

Ref	Part Number	Qty	Description
1	D2NN7R206A	1	Adapter Assy., Hose to Radiator, Inlet, L.H. Side, 5100, Start Year: 06/01/1973
1	D2NN7R206A	2	Adapter Assy., Hose to Radiator, Inlet & Outlet, L.H. & R.H. Side, 5200, Start Year: 06/01/1973
2	D2NN7A030E	1	Tube Assy., Outlet Hose to Tube, R.H. Side, 5100, Start Year: 06/01/1973
3	D3NNH860A	1	Cooler Assy., Hydraulic Oil, 7100 & 7200, Start Year: 06/01/1973
4	86529493	4	Nut, Speed, 5/16"-18, 7100 & 7200, Start Year: 06/01/1973
5	56718S2	4	Screw, Cap, Flg Hd, Pilot Pt, G5, 5/16"-18 x 1/2", Cooler to Bracket, 7100 & 7200, Start Year: 06/01/1973
6	D3NNH863E	1	Hose, Outlet Tube to Radiator, 2"-50.8mm Lg., 5100, Use D3NN-H863-E(81844873) and Cut to Required Length, Start Year: 06/01/1973
6	D3NNH863E	1	Hose, Outlet Tube to Radiator, 14"-355.8mm Lg., 5200, Use D3NN-H863-E(81844873) and Cut to Required Length, Start Year: 06/01/1973
7	D3NNH863E	1	Hose, Inlet Tube to Radiator, 7-3/4"-196.85mm Lg., 5100, Use D3NN-H863-E(81844873) and Cut to Required Length, Start Year: 06/01/1973
7	D3NNH863E	1	Hose, Inlet Tube to Radiator, 10"-254.0mm Lg., 5200, Use D3NN-H863-E(81844873) and Cut to Required Length, Start Year: 06/01/1973
8	D3NNH863E	2	Hose, Cooler to Tubes, 16-1/2"-412.0mm Lg., 7100, Use D3NN-H863-E(81844873) and Cut to Required Length, Start Year: 06/01/1973
8	D3NNH863E	2	Hose, Cooler to Tubes, 28-1/2"-723.5mm Lg., 7200, Start Year: 06/01/1973
9	82012719	4	Clamp Assy., Hose to Tubes, Start Year: 06/01/1973
10	D2NN7K378A	1	Tube, Radiator Cooler to Valve, Outlet, 5100-5200, Start Year: 06/01/1973
14	D5NN7A031B	1	Tube, Oil Cooler to Valve, Inlet, 7100, Start Year: 06/01/1973
10	D2NN7A031C	1	Tube, Oil Cooler to Valve, Outlet, 7200, NHNA Only, Start Year: 06/01/1973
11	385375S36	1	Connector Assy., Tube to Elbow, Start Year: 06/01/1973
12	385374S	1	Elbow, Connector to Nipple, Start Year: 06/01/1973
13	304230	1	Nipple, 1/4" NPT x 2.0", Elbow to Valve, Start Year: 06/01/1973
14	D2NN7A031H	1	Tube Assy., Radiator Cooler to Filter Manifold, Inlet, 5100-5200, Start Year: 06/01/1973
14	D2NN7A030B	1	Tube Assy., Oil Cooler to Filter Manifold, Inlet, 7100, Start Year: 06/01/1973
14	NLS	1	Tube Assy., Oil Cooler to Filter Manifold, Inlet, 7200, Start Year: 06/01/1973
15	D2NN7B147A	1	Bracket, Tube Clamp to Cover, Start Year: 06/01/1973
16	D2NN7N486A	2	Clamp, Tubes to Bracket & Transmission Case, FTO-E, Start Year: 06/01/1973
17	80682	2	Washer, Lock, 1/4", Start Year: 06/01/1973
18	7770	1	Nut, Hex, 1/4"-20, Start Year: 06/01/1973
19	87716	2	Cap, HH, G5, 1/4"-20 x 1-1/4", Clamp to Transmission Case & Mounting Bracket, Start Year: 06/01/1973
20	C5NN3N573B	AR	Clamp, Tube to Anchor, at Valve Body, Start Year: 06/01/1973
21	80682	1	Washer, Lock, 1/4", Start Year: 06/01/1973
22	7770	1	Nut, Hex, 1/4"-20, Start Year: 06/01/1973
23	88146	1	Screw, Cap, HH, G5, 1/4"-20 x 1", Tube Clamp, Start Year: 06/01/1973
24	385381S2	1	Clamp, Single Tube to Tranmission Cover, Start Year: 06/01/1973

07D04[A] INDEPENDENT PTO CLUTCH LINKAGE, 1 OR 2 SPEED PTO - 4200, 5200 & 7200 W/8 SPEED TRANSMISSION

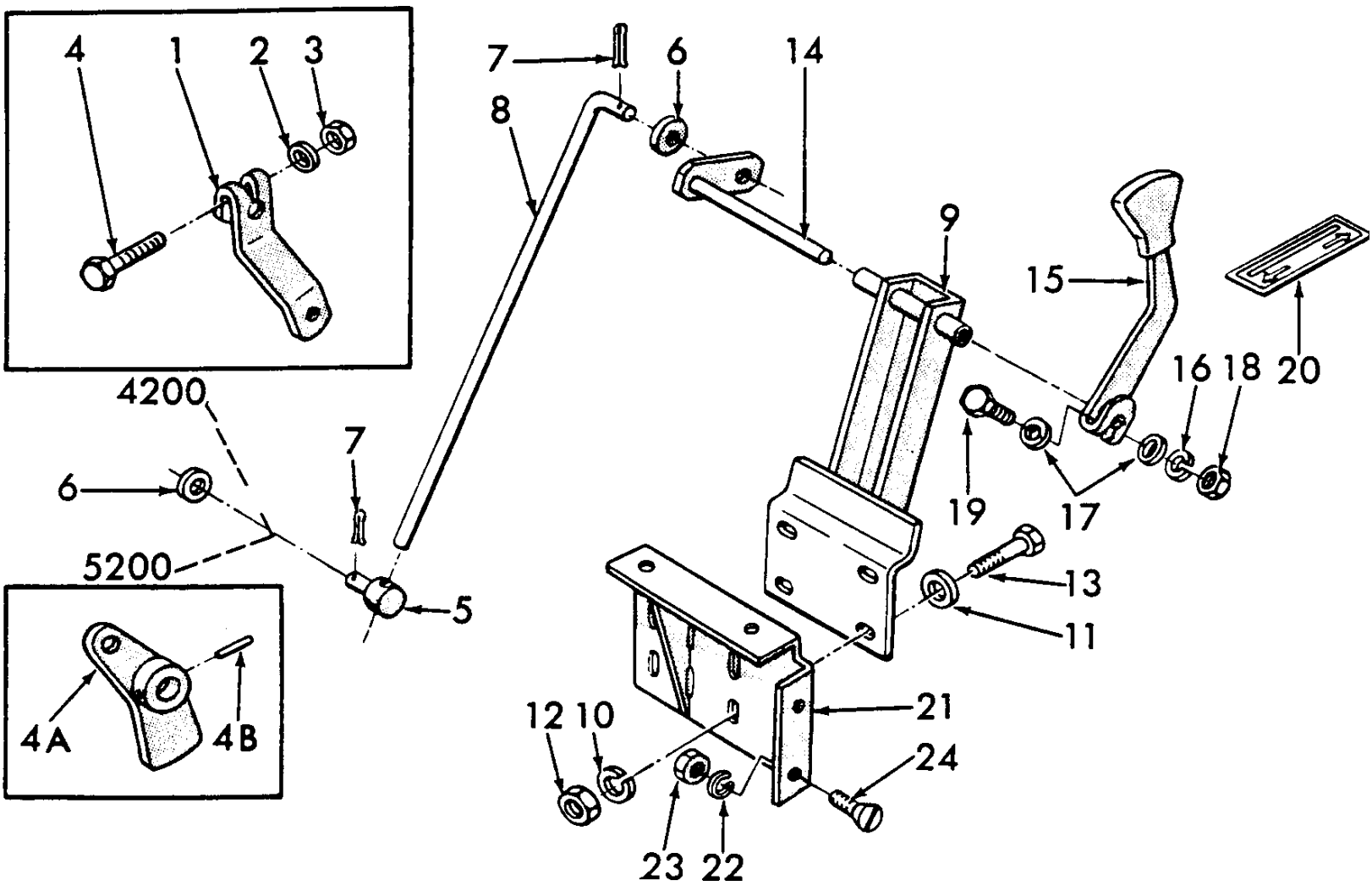

5000-SERIES 4 CYL TRACTOR (1/65-1/75)

07D04[A] INDEPENDENT PTO CLUTCH LINKAGE, 1 OR 2 SPEED PTO - 4200, 5200 & 7200 W/8 SPEED TRANSMISSION

Ref	Part Number	Qty	Description
1	C5NNB708A	1	Arm, Clutch Valve, 4200, NHNA Only, No Longer Serviced, Start Year: 01/01/1966
2	87016	1	Washer, SAE, 3/8", 4200, Start Year: 01/01/1966
3	9628503	1	Nut, G5, 3/8"-16, 4200, Start Year: 01/01/1966
4	9706689	1	Screw, Cap, HH, G5, 3/8"-16 x 1-3/4", 4200, Start Year: 01/01/1966
4A	C5NNN745D	1	Arm, Clutch Valve Actuating, 1 Speed PTO, 5200-7200, NHNA Only, No Longer Serviced, Start Year: 01/01/1967
4A	D2NNN745A	1	Arm, PTO Drive Clutch Actuating, 2 Speed PTO, 5200-7200, NHNA Only, No Longer Serviced, Start Year: 06/01/1973
4B	88171	1	Pin, Roll, 3/16" x 1-1/8", 5200-7200, Start Year: 01/01/1967
5	C5NNB706A	1	Trunnion, Shift Link, NHNA Only, No Longer Serviced, Start Year: 01/01/1966
6	44722S8	2	Washer, 5/16", NHNA Only, No Longer Serviced, Start Year: 01/01/1966
7	280250	2	Pin, Split Cotter, 3/32" x 3/4", Start Year: 01/01/1966
8	C5NNB709B	1	Rod, Shift Link, 17.50 Straight, 4200, NHNA Only, No Longer Serviced, Start Year: 01/01/1966
8	C5NNB709C	1	Rod, Shift Link, 16.45 Bent, 5200-7200, NHNA Only, No Longer Serviced, Start Year: 01/01/1967
9	C5NNB707A	1	Bracket Assy., Lever Mounting, NHNA Only, No Longer Serviced, Start Year: 01/01/1966
10	80681	4	Washer, Lock, 5/16", Start Year: 01/01/1966
11	44722S8	4	Washer, 5/16", NHNA Only, No Longer Serviced, Start Year: 01/01/1966
12	9635082	4	Nut, G5, 5/16"-18, Start Year: 01/01/1966
13	9635884	4	Screw, Cap, HH, G5, 5/16"-18 x 1", Start Year: 01/01/1966
14	D2NNB704A	1	Shaft & Arm Assy., PTO Upper, Use W/#D2NN-C927-A, NHNA Only, No Longer Serviced, Start Year: 06/01/1973
14	D2NNB704A	1	Shaft & Arm Assy., Upper, Use W/#C7NN-C927-A, NHNA Only, No Longer Serviced, Years: 01/01/1966-05/31/1973
15	C7NNC927B	1	Handle Assy., Clutch, 7200, Use W/#C5NN-B704-A, NHNA Only, No Longer Serviced, Years: 01/01/1966-05/31/1973
15	D2NNC927A	1	Handle Assy., PTO Clutch, Use W/#D2NN-B704-A, NHNA Only, No Longer Serviced, Start Year: 06/01/1973
16	80682	1	Washer, Lock, 1/4", Start Year: 01/01/1966
17	87361	1	Washer, SAE, 1/4", Start Year: 01/01/1966
18	7770	1	Nut, Hex, 1/4"-20, Start Year: 01/01/1966
19	381858S36	1	Bolt, HH, 1/4-20 x 1-1/2, No Longer Serviced (NH-E), Start Year: 01/01/1966
20	C5NNB710A	1	Decal, Control, 4200, NHNA Only, No Longer Serviced, Start Year: 01/01/1966
21	D2NNB754B	1	Support, Bracket Mounting, Replaces P/N C5NN-B754-A, 5200-7200, NHNA Only, No Longer Serviced, Start Year: 01/01/1967
22	80681	4	Washer, Lock, 5/16", 5200-7200, Start Year: 01/01/1967
23	9635082	4	Nut, G5, 5/16"-18, 5200-7200, Start Year: 01/01/1967
24	50046S43	4	Screw, Flat Hd, 5/16"-18 x 7/8", 5200-7200, NHNA Only, No Longer Serviced, Start Year: 01/01/1967

07D05 POWER TAKE OFF ASSEMBLY, SINGLE SPEED - 5000, 7000

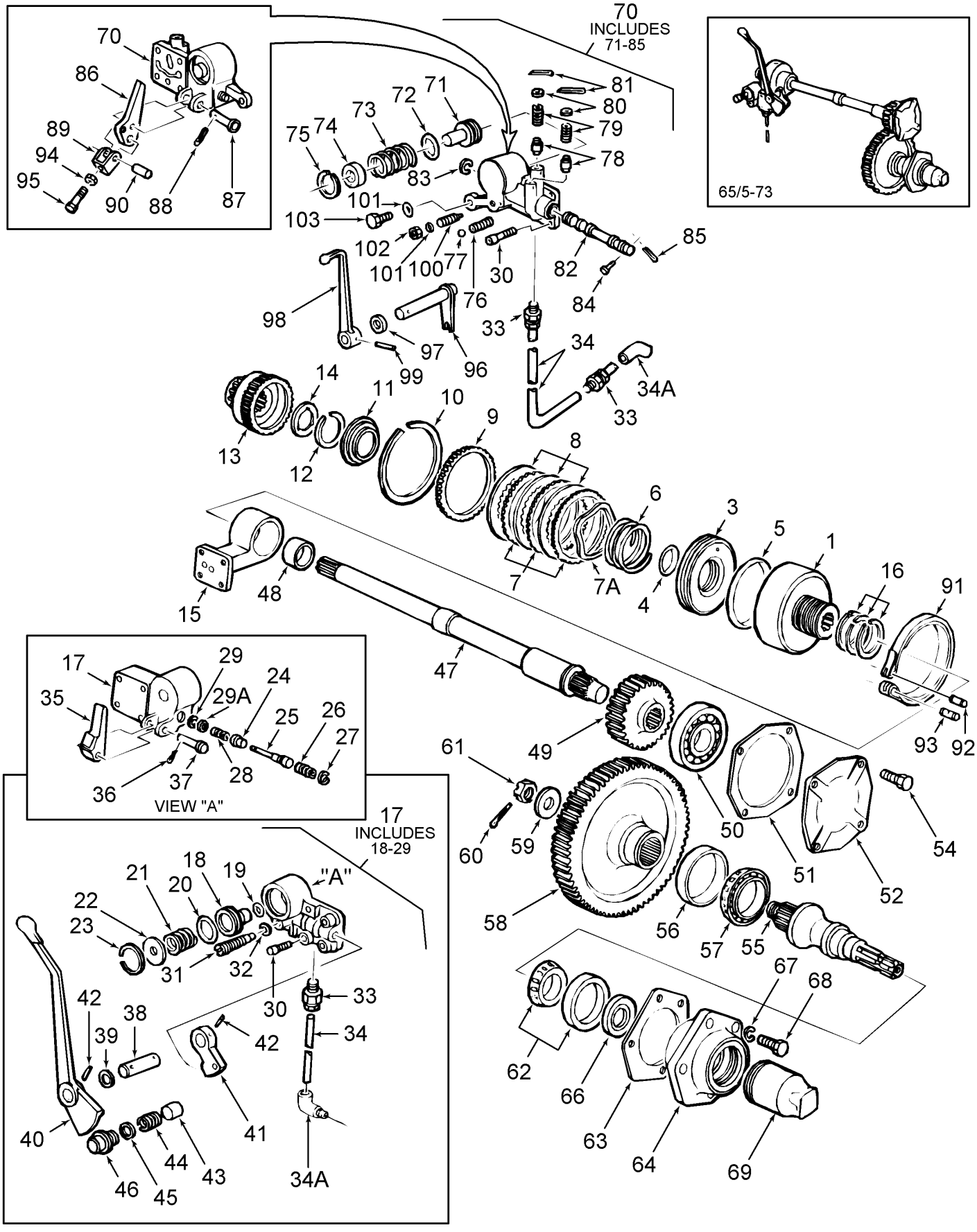

5000-SERIES 4 CYL TRACTOR (1/65-1/75)

07D05 POWER TAKE OFF ASSEMBLY, SINGLE SPEED - 5000, 7000

Ref	Part Number	Qty	Description
	D5NNN751A	1	Clutch Assy., PTO Drive, Heavy Duty, D2NN-N750-A, Hub must be used with this Clutch, Includes: Ref. 1 thru 12, Start Year: 01/01/1965
1	D5NNN707A	1	Housing & Bushing Assy., PTO Drive Clutch, Also replace C9NN-7R007-A(81824515) W/D5NN-7R007-A(83903938), Start Year: 01/01/1965
3	F1NNN786AA	1	Piston, Drive Clutch, Start Year: 01/01/1965
4	373227S	1	O-Ring, 2.12" ID x .139" Thk, Piston Inner, Start Year: 01/01/1965
5	C0NN7A548A	1	Seal, Clutch Piston Outer, Start Year: 01/01/1965
6	D7NNC732A	1	Spring, Drive Clutch Piston, Start Year: 01/01/1965
7	PBB77573A	3	Plate, Drive Clutch, External Spline, Start Year: 01/01/1965
7A	D3NNP733A	1	Spring, Drive Clutch Feathering, Standard Clutch 0.165" Thick, Start Year: 01/01/1965
7A	C9NNP733A	1	Spring, Drive Clutch Feathering, Heavy Duty Clutch, 0.243" Thick, Start Year: 01/01/1969
8	D8NNP743JA	3	Plate Assy., Drive Clutch, Internal Spline, U.S., Start Year: 01/01/1965
8	C9NNP743D	4	Plate Assy., Drive Clutch, Internal Spline, U.K. Antwerp, Start Year: 01/01/1965
9	9824099	1	Plate, Drive Clutch Pressure, w/4 Plate Clutch Assy., Start Year: 01/01/1965
9	C0NN7B455A	AR	Plate Drive Clutch Pressure, w/3 Plate Clutch Assy., See Service Bulletins 5/75-T5 & 10/82-T7, Years: 01/01/1965-05/31/1973
10	9823829	1	Ring, Snap, Int, 5.918", Retaining Snap, Drive Clutch Pressure Plate, Start Year: 01/01/1965
11	C3NN7D211A	1	Seat, Drive Clutch Piston Spring, Start Year: 01/01/1965
12	PBB77517A	1	Ring, Drive Clutch Piston Spring Retainer, Start Year: 01/01/1965
13	F1NNN750AA	1	Hub, PTO Drive Clutch, P/N D2NN-N750-A(81839615) Hub must be used W/D5NN-N751-A(83908229) & P/N D3NN-N751-D(81827443), Clutch, Start Year: 01/01/1965
14	C5NNN783A	1	Washer, Thrust, Drive Clutch, Start Year: 01/01/1965
15	C7NNN776C	1	Support, Drive Clutch Valve, w/Relief Hole, Years: 01/01/1965-05/31/1973
15	D2NNN776A	1	Support, Drive Clutch Valve, Start Year: 06/01/1973
16	313283	3	Seal, Drive Clutch Support, Start Year: 01/01/1965
17	D2NNN700B	1	Valve Assy., PTO Drive Clutch, Years: 01/01/1965-05/31/1973
18	C5NNN787A	1	Piston, Brake, No Longer Serviced, Start Year: 01/01/1965
19	9849109	1	O-Ring, .250" ID x .070" Thk, Piston, Small, Start Year: 01/01/1965
20	87026S94	1	O-Ring, 1.125" ID x .070" Thk, Piston, Large, Start Year: 01/01/1965
21	C5NNN785C	1	Spring, Brake, Start Year: 01/01/1965
22	C5NNN784A	1	Washer, Brake Spring, No Longer Serviced (NH-E), Start Year: 01/01/1965
23	351228S2	1	Ring, Retaining, 1-5/16", Start Year: 01/01/1965
24	C5NNN756B	1	Valve, Pressure Regulating, No Longer Serviced, Start Year: 01/01/1965
25	C7NNN720C	1	Valve, Control, Start Year: 01/01/1965
26	C5NNN703B	1	Spring, Valve Return, No Longer Serviced (NH-E), Start Year: 01/01/1965
27	97607S	1	Ring, Snap, Int, .500", No Longer Serviced, Start Year: 01/01/1965
28	C5NNN721B	1	Spring, Pressure Regulating Valve, 50 lb., No Longer Serviced (NHNA), Years: 01/01/1965-03/31/1968
28	C7NNN721A	1	Spring, 60 lb., No Longer Serviced, Start Year: 04/01/1968
29	97465S	1	Ring, Circlip, Ext, .250", Start Year: 01/01/1965
29A	374784S	1	Washer, Flat, 1/4", No Longer Serviced (NH-E), Start Year: 01/01/1965
30	302210S36	4	Screw, Cap, HS, G8, 5/16"-18 x 1", Start Year: 01/01/1965

5000-SERIES 4 CYL TRACTOR (1/65-1/75)

07D05 POWER TAKE OFF ASSEMBLY, SINGLE SPEED - 5000, 7000

Ref	Part Number	Qty	Description
31	C5NNN772A	1	Pin, HH, Drive Clutch Valve Locating, Years: 01/01/1965-04/30/1968
31	C7NNN772B	1	Pin, Headless, Drive Clutch Valve Locating, 65/4-68 also order (1) C7NN-N732-A(81817883) Seal & (1) 33799-S36 Nut., Start Year: 05/01/1968
32	C5NNN732A	1	Seal, Drive Clutch Valve Locking Pin, Years: 01/01/1965-04/30/1968
32	C7NNN732A	1	Seal, Drive Clutch Valve Locking Pin, Start Year: 05/01/1968
33	C5NNN731A	2	Connector, Drive Clutch, Start Year: 01/01/1965
34	D1NNN714A	1	Tube, Drive Clutch, 5000,7000, Start Year: 01/01/1965
34A	354205S	1	Elbow, No Longer Serviced (NH-E), Start Year: 01/01/1965
35	C9NNN747B	1	Arm Assy., Drive Clutch Brake, Start Year: 01/01/1965
36	280236	1	Pin, Split (Cotter), 1/16" x 1/2", Start Year: 01/01/1965
37	76262S	1	Pin, Clevis, 1/4" x 1-11/32", No Longer Serviced, Start Year: 01/01/1965
38	C5NNN749A	1	Shaft, Drive Clutch Handle, No Longer Serviced (NHNA), Start Year: 01/01/1965
39	C5NNN715A	1	Seal, Drive Clutch Handle Shaft, Start Year: 01/01/1965
40	C7NNN748A	1	Handle, Drive Clutch, 5100-7100, No Longer Serviced, Start Year: 01/01/1965
41	C5NNN745C	1	Arm, Drive Clutch Actuating, Start Year: 01/01/1965
42	88171	2	Pin, Roll, 3/16" x 1-1/8", Start Year: 01/01/1965
43	C5NNN753C	1	Detent, Drive Clutch Handle, Start Year: 01/01/1965
44	C5NNN713C	1	Spring, Drive Clutch Handle Detent, Start Year: 01/01/1965
45	C5NNN712A	1	Seal, Drive Clutch Handle Detent, Start Year: 01/01/1965
46	C5NNN711A	1	Stop, Drive Clutch Handle, Start Year: 01/01/1965
47	C5NNA701A	1	Shaft, 25.40" Lg., Start Year: 01/01/1965
47	NS	1	Shaft, Drive, 5000 Major Mexico, {7N1Y7A684A}, Mexico Only, Start Year: 03/01/1973
47	NS	1	Spacer, Drive Clutch Hub, 5000 Major Mexico, {71NYC706A}, Mexico Only, Start Year: 03/01/1973
48	C5NN798A	1	Bush/Bushing, Shaft Front, .94" (23.88mm) Lg., Start Year: 01/01/1965
49	D1NN745B	1	Gear, Drive, w/540 RPM IPTO, 23T, 3.12" (79.3mm) O.D., Start Year: 01/01/1965
49	D1NN745C	1	Gear, Drive, w/650 RPM IPTO, 25T, 3.37" (85.6mm) O.D., 7100, Start Year: 10/01/1971
49	D1NN745C	1	Gear, Drive, 25T, 3.37" (85.6mm) O.D., U.K.-Antwerp, 5000, Start Year: 04/01/1968
50	D0NNN755B	1	Bearing Assy., Rear Upper Shaft, 1.18 I.D. x 2.83 O.D. x .748, Replaces P/N C5NN-N755-A, Start Year: 01/01/1965
51	F0NNB732AA	1	Gasket, Rear Upper Shaft, Start Year: 01/01/1965
52	NS	1	Plate, Upper Cover, 5000 Major Mexico, {71NYB774A}, Mexico Only, Start Year: 03/01/1973
52	C5NNN760A	1	Retainer, Rear Upper Shaft Bearing, Start Year: 01/01/1965
54	304668S36	4	Screw, Cap, HH, G5, 7/16"-14 x 7/8", Start Year: 01/01/1965
55	D2NNN752C	1	Shaft, Rear Lower, 10.88" (276.35mm) Lg., Years: 01/01/1965-05/31/1973
55	E4NNN752AA	1	Shaft, PTO Rear Lower, 12.03" (305.56mm) Lg., 5000-7000, Start Year: 06/01/1973
56	44676	1	Cup, Lower Shaft Front Bearing, NHNA Only, Start Year: 01/01/1965
56		1	Bearing Set, NH-E Only, Start Year: 01/01/1965
57	44419	1	Cone & Roller, Lower Shaft Front Bearing, NHNA Only, Start Year: 01/01/1965
57		1	Bearing Set, NH-E Only, Start Year: 01/01/1965
58	C5NNA726A	1	Gear, Driven, 81 Outer Teeth, 13.34 O.D., U.S.- Antwerp, Start Year: 01/01/1965
58	C5NNA726A	1	Gear, Driven, 81 Outer Teeth, 13.34 O.D., United Kingdom, Years: 01/01/1965-03/31/1968

07D05 POWER TAKE OFF ASSEMBLY, SINGLE SPEED - 5000, 7000

Ref	Part Number	Qty	Description
58	C7NNA726C	1	Gear, Driven, 79 Outer Teeth, 10.12 O.D., United Kingdom, No Longer Serviced (NHNA), Start Year: 04/01/1968
59	C5NNN730A	1	Washer, Driven Gear Retaining, Start Year: 01/01/1965
60	V12820	AR	Pin, Cotter, 1/8" x 1-3/4"
61	351159S36	1	Nut, Hex Slotted, 7/8"-20, Start Year: 01/01/1965
62	86512015	1	Bearing Set, Cup & Cone, Lower Shaft Rear Bearing, Start Year: 01/01/1965
63	C5NNN780A	AR	Shim, Rear Lower Shaft Bearing Retainer, .002, Start Year: 01/01/1965
63	C5NNN780B	AR	Shim, Rear Lower Shaft Bearing Retainer, .003, Start Year: 01/01/1965
63	C5NNN780C	AR	Shim, Rear Lower Shaft Bearing Retainer, .010, Start Year: 01/01/1965
64	C5NNN765A	1	Retainer Assy., Lower Shaft Bearing, No Longer Serviced, Years: 01/01/1965-12/31/1973
64	D2NNN765A	1	Retainer Assy., Lower Shaft Bearing Includes: Retainer, Ref. 65 & 66, Does not interchange w/ P/N C5NN-N765-AA, Start Year: 01/01/1973
66	C5NNN710B	1	Seal, Replaces P/N C5NN-N710-A, Start Year: 01/01/1965
67	81547	AR	Washer, Lock, 7/16"
68	304705S36	4	Screw, Cap, HH, G5, 7/16"-14 x 1-1/8", Start Year: 01/01/1965
69	C5NN726A	1	Cap, Start Year: 01/01/1965
70	D5NNN700A	1	Valve Assy., PTO Drive Clutch, Replaces D3NN-N700-A Includes: Valve Body & Ref. 71 thru 85, Start Year: 06/01/1973
71	D2NNN787A	1	Piston, Drive Clutch Brake, Start Year: 06/01/1973
72	514098	1	O-Ring, .864" ID x .070" Thk, Piston, Start Year: 06/01/1973
73	C7NNN785A	1	Spring, Valve Piston, Start Year: 06/01/1973
74	C7NNB747A	1	Guide, Valve Piston, Start Year: 06/01/1973
75	97616S2	1	Ring, Snap, Int, 1.313", Valve Guide, Start Year: 06/01/1973
76	D2NNN713A	1	Spring, Clutch Valve Detent, Start Year: 06/01/1973
77	72387	1	Ball, Detent, .311" Dia., Start Year: 06/01/1973
78	D2NN7N488A	2	Valve, Pressure Regulating, Start Year: 06/01/1973
79	C9NNN721A	2	Spring, Pressure Regulating Valve, Start Year: 06/01/1973
80	80702	2	Washer, 3/8", Start Year: 06/01/1973
81	80755	2	Pin, Split Cotter, 1/8" x 1", Start Year: 06/01/1973
82	D2NNN720A	1	Valve, PTO Drive Clutch Control, Start Year: 06/01/1973
83	9635806	1	Ring, Snap, Ext, .500", Valve Retaining, Start Year: 06/01/1973
84	PL	1	Pin, Clevis, 1/4" x 3/4" Lg., Procure Locally, Start Year: 06/01/1973
85	280236	1	Pin, Split (Cotter), 1/16" x 1/2", Start Year: 06/01/1973
86	C7NNN745B	1	Arm, Drive Clutch Actuating, Start Year: 06/01/1973
87	76250S36	1	Pin, Clevis, Arm to Valve, 1/4" x 1.19, Start Year: 06/01/1973
88	280236	1	Pin, Split (Cotter), 1/16" x 1/2", Start Year: 06/01/1973
89	E5NNB753AA	1	Clevis, Clutch Brake Band Adjusting, Start Year: 06/01/1973
90	280651	1	Pin, Dowel, 5/16" x 5/8", Clevis to Arm, Start Year: 06/01/1973
91	E0NNB726AB	1	Band Assy., PTO Drive Clutch Brake, Start Year: 06/01/1973
92	72829S2	1	Pin, Dowel, 3/16" x 5/8", Band to Arm, Start Year: 06/01/1973
93	C7NNB752A	1	Anchor, Band Adjusting Screw, Start Year: 06/01/1973

07D05 POWER TAKE OFF ASSEMBLY, SINGLE SPEED - 5000, 7000

Ref	Part Number	Qty	Description
94	87825	1	Nut, G2, #10-32, Start Year: 06/01/1973
95	50186S36	1	Screw, Fillister Hd, W/Washer, #10-32 x 1", Brake Band Adjusting, Start Year: 06/01/1973
96	D2NNB742A	1	Arm Assy., PTO Drive Clutch Actuating, Start Year: 06/01/1973
97	C5NNN715A	1	Seal, Actuating Arm, Start Year: 06/01/1973
98	D3NNN748A	1	Handle, PTO Drive Clutch, Replaces D2NN-N748-A, Start Year: 06/01/1973
99	353647S	1	Pin, Roll, Handle Retaining, 1/4" x 1.25", No Longer Serviced (NH-E), Start Year: 06/01/1973
100	D5NNN772B	2	Pin, PTO Drive Clutch Valve Location, Start Year: 06/01/1973
101	C7NNN732A	2	Seal, Locating Pin, Start Year: 06/01/1973
102	86509499	2	Nut, Jam, G2, 3/8"-16, Start Year: 06/01/1973
103	D5NNN772A	1	Pin, PTO Clutch Valve Locating, Start Year: 06/01/1973

07D05[A] 2 SPEED POWER TAKE OFF ASSEMBLY - 5100, 5200, 7100, 7200

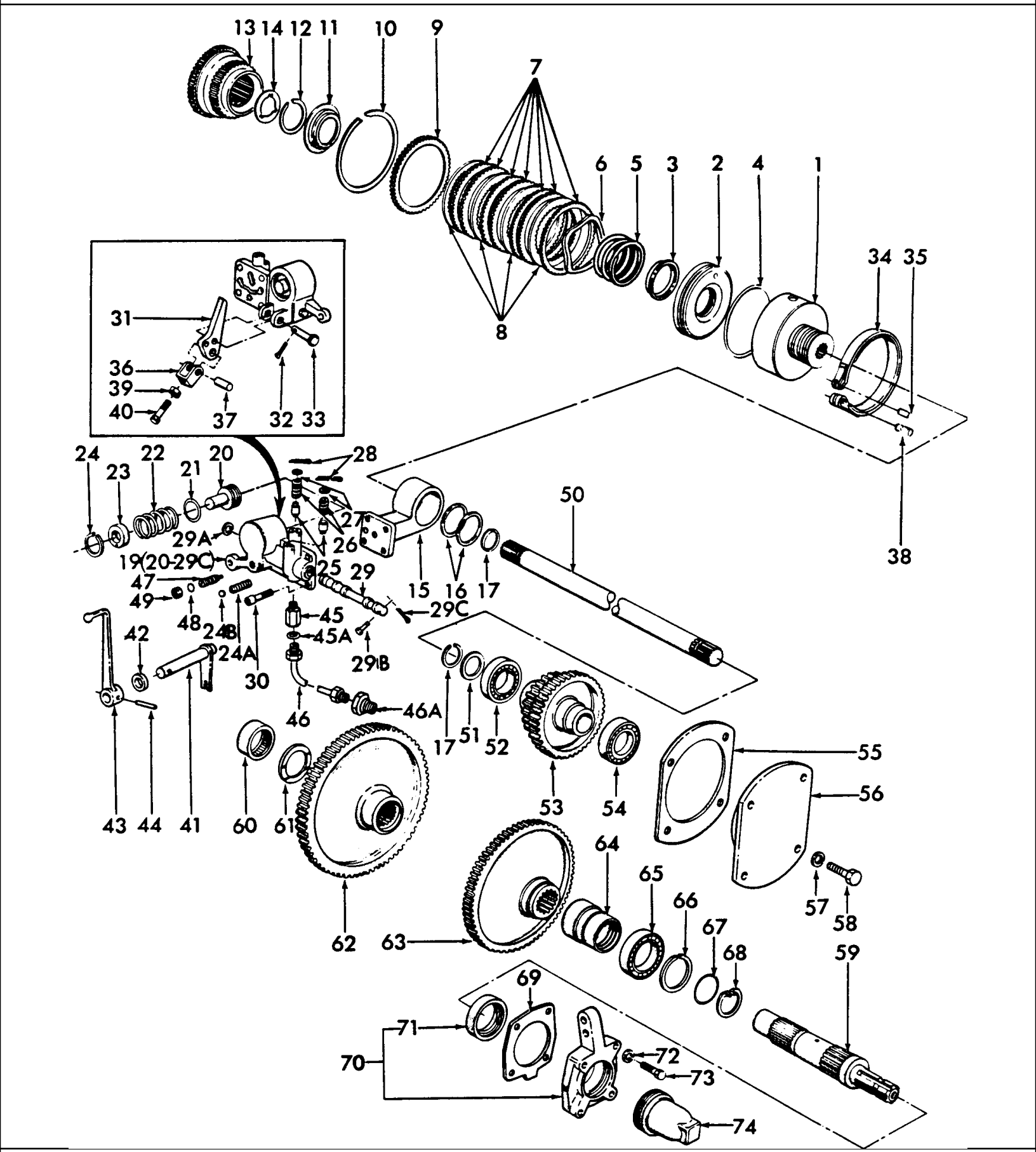

5000-SERIES 4 CYL TRACTOR (1/65-1/75)

07D05[A] 2 SPEED POWER TAKE OFF ASSEMBLY - 5100, 5200, 7100, 7200

Ref	Part Number	Qty	Description
	D5NNN751A	1	Clutch Assy., Heavy Duty, Replaces P/N D3NN-N751-B Includes: Ref. 1 thru 12, Start Year: 06/01/1973
1	D5NNN707A	1	Housing & Bushing Assy., Replaces P/N D3NN-N707-A, C9NN-7R007-A w/ D5NN-7R0007-A, Start Year: 06/01/1973
2	F1NNN786AA	1	Piston, Drive Clutch, Start Year: 06/01/1973
3	373227S	1	O-Ring, 2.12" ID x .139" Thk, Piston Inner, Start Year: 06/01/1973
4	C0NN7A548A	1	Seal, Piston Outer, Start Year: 06/01/1973
5	D7NNC732A	1	Spring, Drive Clutch Piston, Start Year: 06/01/1973
6	C9NNP733A	1	Spring, Drive Clutch Feathering, 0.243" Thick, Years: 06/01/1973-07/31/1975
6	D3NNP733A	1	Spring, Clutch Drive Feathering, .165 Thick, Start Year: 08/01/1975
7	PBB77573A	4	Plate, Drive Clutch, External Spline, Start Year: 06/01/1973
8	C9NNP743D	4	Plate Assy., Drive Clutch, Internal Spline, Start Year: 06/01/1973
9	C9NN7R007A	1	Plate, Drive Clutch Pressure, .20 Wide Teeth, Years: 06/01/1973-07/31/1975
9	9824099	1	Plate, Drive Clutch Pressure, .170 Wide Teeth, Start Year: 08/01/1975
10	9823829	1	Ring, Snap, Int, 5.918", Drive Clutch Pressure Plate Retaining, Start Year: 06/01/1973
11	C3NN7D211A	1	Seal, Drive Clutch Piston Spring, Start Year: 06/01/1973
12	PBB77517A	1	Ring, Drive Clutch Piston Spring Retainer, Start Year: 06/01/1973
13	F1NNN750AA	1	Hub, Drive Clutch, Start Year: 06/01/1973
14	C5NNN783A	1	Washer, Thrust, Drive Clutch Thrust, Start Year: 06/01/1973
15	D2NNN776A	1	Support, Drive Clutch Valve, Start Year: 06/01/1973
16	313283	3	Seal, Valve Support to Housing, Start Year: 06/01/1973
17	97701S2	2	Ring, Snap, Ext, 1.0625", Shaft Shoulder, Start Year: 06/01/1973
19	D5NNN700A	1	Valve Assy., PTO Drive Clutch, Replaces P/N D3NN-N700-A, Includes: Valve Body & Ref. 20 thru 29C, Start Year: 06/01/1973
20	D2NNN787A	1	Piston, Drive Clutch Brake, Start Year: 06/01/1973
21	514098	1	O-Ring, .864" ID x .070" Thk, Piston, Start Year: 06/01/1973
22	C7NNN785A	1	Spring, Valve Piston, Start Year: 06/01/1973
23	C7NNB747A	1	Guide, Valve Piston, Start Year: 06/01/1973
24	97616S2	1	Ring, Snap, Int, 1.313", Valve Guide, Start Year: 06/01/1973
24A	D2NNN713A	1	Spring, Clutch Valve Detent, Start Year: 06/01/1973
24B	72387	1	Ball, Detent, .311" Dia., Start Year: 06/01/1973
25	D2NN7N488A	2	Valve, Pressure Regulating, Start Year: 06/01/1973
26	C9NNN721A	2	Spring, Pressure Regulating Valve, Start Year: 06/01/1973
27	80702	2	Washer, 3/8", Start Year: 06/01/1973
28	80755	2	Pin, Split Cotter, 1/8" x 1", Start Year: 06/01/1973
29	D2NNN720A	1	Valve, Drive Clutch Control, Start Year: 06/01/1973
29A	9635806	1	Ring, Snap, Ext, .500", Valve Retaining, Start Year: 06/01/1973
29B	PL	1	Pin, Clevis, 1/4" x 3/4" Lg., Procure Locally, Start Year: 06/01/1973
29C	280236	1	Pin, Split (Cotter), 1/16" x 1/2", Start Year: 06/01/1973
30	302210S36	4	Screw, Cap, HS, G8, 5/16"-18 x 1", Start Year: 06/01/1973
31	C7NNN745B	1	Arm, Drive Clutch Actuating, 5100-7100, Start Year: 06/01/1973
32	280236	1	Pin, Split (Cotter), 1/16" x 1/2", Start Year: 06/01/1973

07D05[A] 2 SPEED POWER TAKE OFF ASSEMBLY - 5100, 5200, 7100, 7200

Ref	Part Number	Qty	Description
33	76250S36	1	Pin, 1/4" x 1.19, Start Year: 06/01/1973
34	E0NNB726AB	1	Band Assy., Drive Clutch Brake, Start Year: 06/01/1973
35	72829S2	1	Pin, Dowel, 3/16" x 5/8", Start Year: 06/01/1973
36	E5NNB753AA	1	Clevis, Clutch Brake Band Adjusting, Start Year: 06/01/1973
37	280651	1	Pin, Dowel, 5/16" x 5/8", Start Year: 06/01/1973
38	C7NNB752A	1	Anchor, Band Adjusting Screw, Start Year: 06/01/1973
39	87825	1	Nut, G2, #10-32, Start Year: 06/01/1973
40	50186S36	1	Screw, Fillister Hd, W/Washer, #10-32 x 1", Start Year: 06/01/1973
41	D2NNB742A	1	Arm Assy., Drive Clutch Actuating, Start Year: 06/01/1973
42	C5NNN715A	1	Seal, Actuating Arm, Start Year: 06/01/1973
43	D3NNN748A	1	Handle, Drive Clutch, Replaces P/N D2NN-N748-A, Start Year: 06/01/1973
44	353647S	1	Pin, Roll, 1/4" x 1.25, No Longer Serviced (NH-E), Start Year: 06/01/1973
45	D4NNK952A	1	Connector, PTO Clutch Valve, Start Year: 06/01/1973
45A	9672548	1	O-Ring, .301" ID x .070" Thk, Start Year: 06/01/1973
46	D4NNC710B	1	Tube Assy., PTO Drive Clutch, Start Year: 06/01/1973
46A	D3NNN731A	1	Connector, Start Year: 06/01/1973
47	D5NNN772B	2	Pin, Drive Clutch Valve Locating, Replaces P/N D2NN-N772-A, Start Year: 06/01/1973
48	C7NNN732A	2	Seal, Locating Pin, Start Year: 06/01/1973
49	86509499	2	Nut, Jam, G2, 3/8"-16, Start Year: 06/01/1973
50	D2NNA701A	1	Shaft, Rear, No Longer Serviced (NH-E), Start Year: 06/01/1973
51	C7NNB749A	AR	Shim, Rear Shaft Adjusting, Start Year: 06/01/1973
52	114085	1	Bearing Assy., Drive Gear, Front, Start Year: 06/01/1973
53	D8NN745AA	1	Gear, Drive, Double Gear, Replaces P/N D6NN-C727-A, Start Year: 06/01/1973
54	D2NNA765A	1	Bearing Assy., Drive Gear, Rear, Start Year: 06/01/1973
55	D2NNN762A	1	Gasket, Upper Shaft Bearing Retainer, Start Year: 06/01/1973
56	D2NNN760A	1	Retainer, Upper Shaft Bearing, Start Year: 06/01/1973
57	81547	4	Washer, Lock, 7/16", Start Year: 06/01/1973
58	9706729	4	Screw, Cap, HH, G5, 7/16"-14 x 1", Start Year: 06/01/1973
59	D2NNB728A	1	Shaft, Drive Output, 540 RPM, 11.47" Lg., Start Year: 06/01/1973
59	D2NNB728B	1	Shaft, Drive Output, 1000 RPM, 11.47" Lg., Start Year: 06/01/1973
60	D2NNB734A	1	Bearing Assy., Start Year: 06/01/1973
61	E0NNB730CA	3	Washer, Drive Gear Thrust, Start Year: 06/01/1973
62	D2NNA726B	1	Gear, Drive, Start Year: 06/01/1973
63	D2NNA726A	41	Gear, Driven, Start Year: 06/01/1973
64	D2NNB733A	1	Sleeve, Drive Output Shaft, Start Year: 06/01/1973
65	D2NNB745A	1	Bearing Assy., Drive Output Shaft Rear, Start Year: 06/01/1973
66	C7NNB748A	1	Ring, Output Shaft Bearing Retainer, Start Year: 06/01/1973
67	9823571	1	O-Ring, 2.237" ID x .103" Thk, Sleeve to Shaft, Start Year: 06/01/1973
68	E1NNB737AB	1	Ring, Output Shaft Retaining, Start Year: 06/01/1973
69	F0NNB732AA	1	Gasket, Output Shaft Bearing Retainer, Start Year: 06/01/1973

07D05[A] 2 SPEED POWER TAKE OFF ASSEMBLY - 5100, 5200, 7100, 7200

Ref	Part Number	Qty	Description
70	E5NNN765BA	1	Retainer Assy., Output Shaft Bearing, Replaces D2NN-N765-C Includes: Retainer & Ref. 71, Start Year: 06/01/1973
71	D9NNN710BB	1	Seal Assy., Rear Shaft, Start Year: 06/01/1973
72	80679	4	Washer, Lock, 1/2", Start Year: 06/01/1973
73	87974	4	Screw, Cap, HH, G5, 1/2"-13 x 2-3/4", Start Year: 06/01/1973
74	C0NNA760A	1	Cap, Start Year: 06/01/1973


KIT
NEW HOLLAND
NEW HOLLAND

5000-SERIES 4 CYL TRACTOR (1/65-1/75)

07D06 PTO GUARD KITS (ACCESSORY) - NO ART

Ref	Part Number	Qty	Description
1	DCPN7490A	AR	Kit, PTO Guard, Replaces P/N CFPN-7490-A Includes: Ref. 2 thru 4, 2000-3000-4110, Except 3055-3550, Start Year: 01/01/1965
2	NSS	1	Guard Assy., 2000-3000-4110, Except 3055-3550, Not Serviced Separately, Start Year: 01/01/1965
3	D1NNP780A	1	Support, 2000-3000-4110, Except 3055-3550, Start Year: 01/01/1965
4	2N609	1	Pin & Ring Assy., Optional w/#E27N-995216, 2000-3000-4110, Except 3055-3550, No Longer Serviced (NH-E), Start Year: 01/01/1965
4	E27N995216	1	Pin & Ring Assy., Optional w/#2N-608, 2000-3000-4110, Except 3055-3550, Start Year: 01/01/1965
5	C5NNP760A	1	Bracket Assy., Guard, Used w/#C5NN-P792-A, U.S., 2000-3000, Except 3055-3550, No Longer Serviced (NHNA), Start Year: 01/01/1965
5A	E148GE9	1	Decal, Removal of PTO Guard, Water, U.S., 2100-3100, No Longer Serviced (NHNA), Start Year: 01/01/1965
6	DCPN7470A	AR	Kit, PTO Guard Includes: Ref. 7 thru 9, 3055-3550-4000, Except 4110-5000-7000, Start Year: 01/01/1965
7	NSS	1	Guard, PTO, 3055-3550-4000, Except 4110-5000-7000, Not Serviced Separately, Start Year: 01/01/1965
8	D1NNP780B	1	Support, PTO Guard, 3055-3550-4000, Except 4110-5000-7000, Start Year: 01/01/1965
9	2N609	1	Pin & Ring Assy., 3055-3550-4000, Except 4110-5000-7000, No Longer Serviced (NH-E), Start Year: 01/01/1965
10	C7NNB784A	2	Spacer, Guard Bracket, Use w/Tractor L/Check Chain Bracket, U.K.-Antwerp, 3055-3550-4000, Except 4110-5000-7000, No Longer Serviced (NH-E), Start Year: 01/01/1965
10A	34811S36	2	Washer, Lock, 5/8", UK, Antwerp, 3055-3550-4000, Except 4110-5000-7000, Start Year: 01/01/1965
10B	375893S36	2	Bolt, HH, 5/8"-11 x 1.88, U.K.-Antwerp, Use w/#C7NN-B784-A Spacer, 3055-3550-4000, Except 4110-5000-7000, Start Year: 01/01/1965
	C5NNP782B	1	Bracket, Upper, U.S., 4000, Used to service Kit, P/N CFPN-7480-B which is No Longer Serviced, No Longer Serviced (NHNA), Start Year: 01/01/1965
	NLS	1	Bracket, Lower, No Longer Serviced, Start Year: 01/01/1965
11	NLS	AR	Kit, PTO Guard Includes: Ref. 12 thru 15, 5000-7000, Order Components or P/N DCPN-7470-A(81825829), Kit, Start Year: 01/01/1965
12	NLS	1	Guard, 5000-7000, No Longer Serviced, Start Year: 01/01/1965
13	D1NNP780B	1	Support, Replaces P/N C5NN-P780-A, 5000-7000, Start Year: 01/01/1965
14	2N609	1	Pin & Ring Assy., Optional w/#E27N-995216, 5000-7000, No Longer Serviced (NH-E), Start Year: 01/01/1965
14	E27N995216	1	Pin & Ring Assy., Optional w/#2N-608, 5000-7000, Start Year: 01/01/1965
15	9627887	3	Screw, Cap, HH, G5, 7/16"-14 x 1-1/4", 5000-7000, Start Year: 01/01/1965
15	88604	3	Screw, Cap, HH, G5, 7/16"-14 x 2-1/2", 5000-7000, Start Year: 01/01/1973
16	D2NNA788A	1	Guard, PTO, 5100-5200-7100-7200, Start Year: 01/01/1973
17	D3NNC708A	1	Support, PTO Guard, L.H., 5100-5200-7100-7200, Start Year: 01/01/1973
18	D3NNP780A	1	Support, PTO Guard, R.H., 5100-5200-7100-7200, Start Year: 01/01/1973
19	E27N995216	2	Pin & Ring Assy., Linch, 5100-5200-7100-7200, Start Year: 01/01/1973

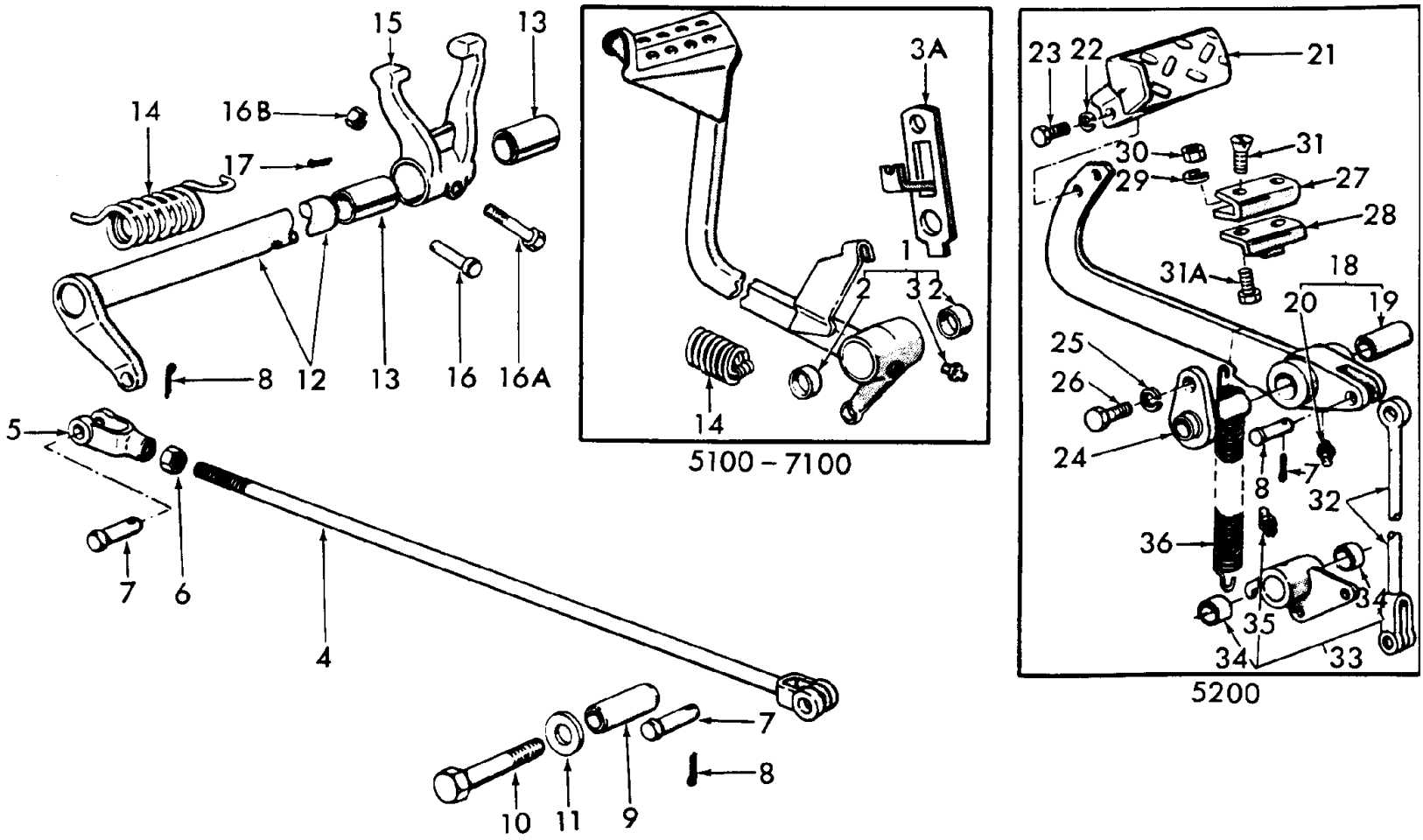
15
13
14
16B
17
8
12
13
16
16A
5
7
6
4
10
11
9
7
8
3A
1
2
3
2
14
5100 – 7100
23
22
21
30
31
29
27
28
31A
18
20
19
25
26
24
8
7
32
36
35
34
34
33
5200

5000-SERIES 4 CYL TRACTOR (1/65-1/75)

07E03 CLUTCH CONTROLS - 5000, 7000

Ref	Part Number	Qty	Description
1	C5NN7519N	1	Pedal Assy., 5100, No Longer Serviced, Years: 01/01/1965-03/31/1968
1	C7NN7519E	1	Pedal Assy., 5100, No Longer Serviced, Years: 04/01/1968-09/30/1969
1	C9NN7519A	1	Pedal Assy., Replaces C7NN7519G, 5100-7100, Includes: Pedal, Ref. 2 & 3, Start Year: 10/01/1969
2	C0NN2477A	2	Bush/Bushing, 5100, Years: 01/01/1965-09/30/1969
2	C5NN7A578A	2	Bush/Bushing, 5100-7100, Start Year: 10/01/1969
3	80710	1	Fitting, Nipple, Lube, 1/8", Years: 01/01/1965-12/31/1967
3	87414	1	Nipple, Lube, Straight, 1/4"-28, Start Year: 01/01/1968
3A	D1NN7N593A	1	Bracket, Pedal Spring Rear Pivot, Start Year: 10/01/1969
4	C5NN7521F	1	Rod Assy., Release, 5100, No Longer Serviced, Years: 01/01/1965-03/31/1965
4	C5NN7521F	1	Rod Assy., Release, 5200, No Longer Serviced, Years: 01/01/1965-09/30/1969
4	C7NN7521B	1	Rod Assy., Release, 5100, No Longer Serviced (NHNA), Years: 04/01/1968-09/30/1969
4	D8NN7D081FB	1	Rod Assy., Start Year: 10/01/1969
4	NLS	1	Rod Assy., Clutch Release, 26.15", Mexico, 5100 {72NY7D082A}, Mexico Only, Start Year: 10/01/1969
5	12539	1	Clevis, Adjustable, 1/2"-20 x 3.00, Start Year: 01/01/1965
5	388614S36	1	Clevis, Adjustable, Rod to Lever, 3/8"-24 x 3, Mexico, 5100, Mexico Only, Start Year: 10/01/1969
6	87309	1	Nut, Jam, G2, 1/2"-20, Start Year: 01/01/1965
6	87308	1	Nut, Jam, G2, 3/8"-24, Release Rod, Mexico, 5100, Mexico Only, Start Year: 10/01/1969
7	73958S8	2/4	Pin, Clevis, 1/2" x 1.36, Start Year: 01/01/1965
8	80756	2/4	Pin, Split Cotter, 1/8" x 3/4", Start Year: 01/01/1965
9	C5NN7506A	1	Shaft, Pedal, FTO-E, No Longer Serviced (NHNA), Years: 01/01/1965-09/30/1969
9	C7NN7506D	1	Shaft, Pedal, Start Year: 10/01/1969
10	E0NN7N500AA	1	Bolt, Pedal Shaft, Start Year: 01/01/1965
11	351539S36	1	Washer, Flat, .78 I.D. x .10 Wide, Start Year: 01/01/1965
12	C5NN7503E	1	Shaft Assy., Release, No Longer Serviced, Years: 01/01/1965-09/30/1969
12	E1NN7503BB	1	Shaft Assy., Release, Start Year: 10/01/1969
13	C5NN7A615A	2	Bush/Bushing, Release Cross Shaft, Start Year: 01/01/1965
14	C5NN7A600C	1	Spring, Release, Years: 01/01/1965-09/30/1969
14	C7NN7N598A	1	Spring Assy., Release, 5100-7100, Start Year: 10/01/1969
15	C7NN7N515G	1	Fork, Release Shaft, Years: 01/01/1965-09/30/1969
15	E5NN7N515AA	1	Fork, Release Shaft, Start Year: 10/01/1969
16	74021S8	2	Pin, Clevis, 3/8" x 2-1/64", Years: 01/01/1965-09/30/1969
16A	F0NN7N539AA	1	Bolt, HH, 3/8"-10 x 2", Start Year: 10/01/1969
16B	88902	1	Nut, Lock, GC, 3/8"-16, Start Year: 10/01/1969
17	80756	2	Pin, Split Cotter, 1/8" x 3/4", Years: 01/01/1965-09/30/1969
18	C5NN7N516E	1	Shank Assy., Pedal, 5200-7200, Includes: Shank, Ref. 19 & 20, NHNA Only, No Longer Serviced, Start Year: 01/01/1967
19	C5NN2461B	1	Bushing, 5200-7200, Start Year: 01/01/1967
20	80710	1	Fitting, Nipple, Lube, 1/8", 5200-7200, Start Year: 01/01/1967
21	C5NN7520E	41	Pedal, 5200-7200, NHNA Only, No Longer Serviced, Start Year: 01/01/1967
22	81821693	2	Washer, Lock, 3/8", 5200-7200, Start Year: 01/01/1967
23	88011	2	Screw, Cap, HH, G5, 3/8"-16 x 1-1/4", 5200-7200, Start Year: 01/01/1967

Ref	Part Number	Qty	Description
24	C5NN7B534A	1	Shaft Assy., Pedal, 5200-7200, NHNA Only, No Longer Serviced, Start Year: 01/01/1967
25	80679	AR	Washer, Lock, 1/2"
26	87909	1	Screw, Cap, HH, G5, 1/2"-13 x 1", 5200-7200, Start Year: 01/01/1967
27	C7NN7K607B	1	Bracket, Pedal Stop, 5200-7200, NHNA Only, No Longer Serviced, Start Year: 01/01/1967
28	C5NN7B520F	1	Stop, Pedal, 5200-7200, NHNA Only, No Longer Serviced, Start Year: 01/01/1967
29	80681	4	Washer, Lock, 5/16", 5200-7200, Start Year: 01/01/1967
30	9635082	4	Nut, G5, 5/16"-18, 5200-7200, Start Year: 01/01/1967
31	88854	2	Screw, Cap, HS, Flat Hd, 5/16"-18 x 7/8", 5200-7200, Start Year: 01/01/1967
31A	304626S36	2	Screw, Cap, HH, G5, 5/16"-18 x 1/2", 5200-7200, Start Year: 01/01/1967
32	C5NN7N555A	1	Rod, Pedal Adapter, 5200, NHNA Only, No Longer Serviced, Years: 01/01/1967-09/30/1969
32	C7NN7N595A	1	Rod Assy., Pedal Adapter, 5200-7200, NHNA Only, No Longer Serviced, Start Year: 10/01/1969
33	C5NN7N544A	1	Adapter Assy., Pedal Rod, 5200, NHNA Only, No Longer Serviced, Years: 01/01/1967-09/30/1969
33	C7NN7N544A	1	Adapter Assy., Pedal Rod, 5200-7200, Includes: Adapter, Ref. 34 thru 35, NHNA Only, Start Year: 10/01/1969
34	C0NN2477A	2	Bushing, 5200-7200, Start Year: 01/01/1967
35	80710	1	Fitting, Nipple, Lube, 1/8", 5200, Years: 01/01/1967-09/30/1969
35	87414	1	Nipple, Lube, Straight, 1/4"-28, Start Year: 10/01/1969
36	D1NN7N549A	1	Spring, Pedal Return, 5200-7200, No Longer Serviced (NH-E), Start Year: 10/01/1969

07E06 SINGLE CLUTCH ASSY., W/GREASER - 5000 12" CLUTCH (65/9-69) & (6-71/) 5000 13" CLUTCH (65/9-69) 7000 13" CLUTCH (10

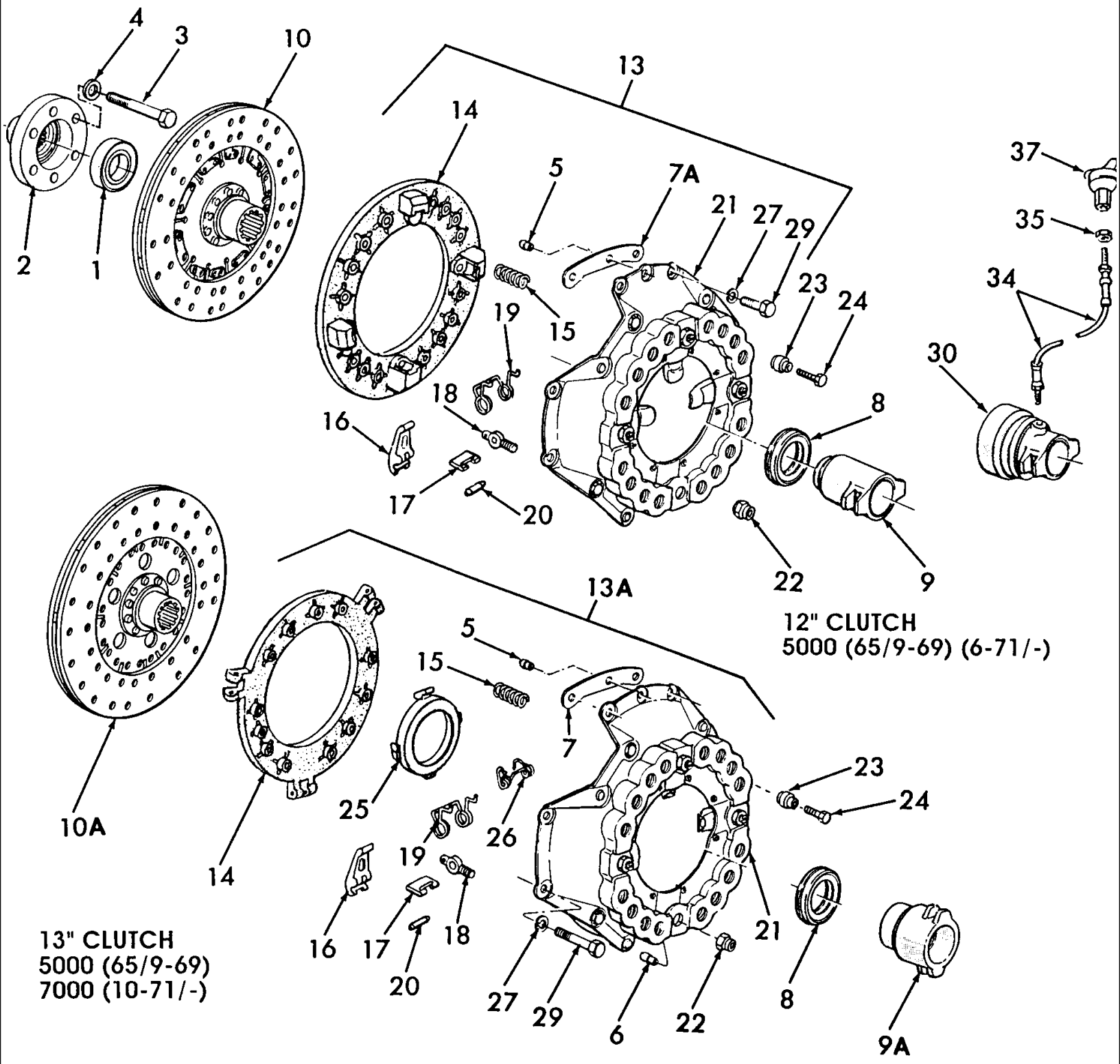

5000-SERIES 4 CYL TRACTOR (1/65-1/75)

07E06 SINGLE CLUTCH ASSY., W/GREASER - 5000 12" CLUTCH (65/9-69) & (6-71/) 5000 13" CLUTCH (65/9-69) 7000 13" CLUTCH (10

Ref	Part Number	Qty	Description
1	F0NNN779AA	1	Bearing, PTO Drive Plate, Years: 01/01/1965-09/30/1969
1	F0NNN779AA	1	Bearing, PTO Drive Plate, 12" Clutch Only, Start Year: 06/01/1971
1	F0NNN779AA	1	Bearing, PTO Drive Plate, 7000, Start Year: 10/01/1971
2	E2NNN777AA	1	Plate, PTO Drive, 15 Teeth, Years: 01/01/1965-09/30/1969
2	E2NNN777AA	1	Plate, PTO Drive, 15 Teeth, 12" Clutch Only, Start Year: 06/01/1971
2	E2NNN777AA	1	Plate, PTO Drive, 15 Teeth, 7000, Start Year: 10/01/1971
3	43172S36	6	Screw, Cap, HH, G8, Self-Locking, 9/16"-18 x 2-5/8", Years: 01/01/1965-09/30/1969
3	43172S36	6	Screw, Cap, HH, G8, Self-Locking, 9/16"-18 x 2-5/8", 12" Clutch Only, Start Year: 06/01/1971
3	43172S36	6	Screw, Cap, HH, G8, Self-Locking, 9/16"-18 x 2-5/8", 7000, Start Year: 10/01/1971
4	C7NN7N424A	2	Washer, Flat, .625 I.D. x 1.32 O.D. x .04, (15.88 I.D. x 33.53 O.D. x 10.16mm) Opposite each other, Years: 01/01/1965-09/30/1969
4	C7NN7N424A	2	Washer, Flat, .625 I.D. x 1.32 O.D. x .04 (15.88 I.D. x 33.53 O.D. x 10.16mm), 12" Clutch Only, Start Year: 06/01/1971
4	C7NN7N424A	2	Washer, Flat, .625 I.D. x 1.32 O.D. x .04 (15.88 I.D. x 33.53 O.D. x 10.16mm), 13" Clutch Only, 7000, Start Year: 10/01/1971
5	E116GC9	1	Dowel, Flywheel, .4050 O.D. x .3110 O.D. x .80 (10.287 O.D. x 7.899 x 20.32mm) 12" & 13" Clutch, (33.02cm), Years: 01/01/1965-09/30/1969
5	E116GC9	1	Dowel, Flywheel, .4050 O.D. x .3110 O.D. x 80 (10.287 O.D. x 7.899 x 20.32mm) 12" Clutch Only, Start Year: 06/01/1971
5	E116GC9	1	Dowel, Flywheel, .4050 O.D. x .3110 O.D. x .80 (10.287 O.D. x 7.899 x 2.32mm) 13" Clutch, 7000, Start Year: 10/01/1971
6	E115GC9	1	Dowel, Flywheel, .4050 O.,D. x .3740 O.D. x .80 (10.287 O.D. x 9.50 O.D. x 20.32mm) 13" Clutch, 5000, Years: 01/01/1965-09/30/1969
6	E115GC9	1	Dowel, Flywheel, .4050 O.D. x .3740 O.D. x .80 (10.287 O.D. x 7.899 x 20.32mm) 13" Clutch, 7000, Start Year: 10/01/1971
7	E117GC9	4	Spacer, .184"-200" (4.674-5.080mm) Thk, 13" Clutch,(33.02cm), Years: 01/01/1965-12/31/1967
7	C5NN7N596B	4	Spacer, .09"-.10" (2.286-2.54mm) Thick, 13" Clutch, 5000, Years: 01/01/1968-09/30/1969
7	C5NN7N596B	4	Spacer, .09"-.10" (2.286-2.54mm) Thick, 7000, Start Year: 10/01/1971
7A	C7NN7N596A	4	Spacer, .07"-.08" (1.778-2.032mm) Thick, 12" Clutch, Years: 01/01/1968-09/30/1969
7A	D1NN7N596A	4	Spacer, .035"-.030" (.89-.76mm) Thick, 12" Clutch, Start Year: 06/01/1971
8	82010859	1	Bearing Assy., Release, Years: 01/01/1965-09/30/1969
8	82010859	1	Bearing Assy., Release, 12" Clutch Only, 5000, Start Year: 06/01/1971
8	82010859	1	Bearing Assy., Release, 13" Clutch, 7000, Start Year: 10/01/1971
9	E1NN7571BA	1	Hub, Clutch Release Bearing W/Dual Power, 12" Clutch, 5000, Start Year: 01/01/1973
9	C5NN7571H	1	Hub, Release Bearing, 5000, Years: 01/01/1965-03/31/1968
9	C7NN7571S	1	Hub, Release Bearing, No Longer Serviced, Years: 04/01/1968-06/30/1974
9	C7NN7571A	1	Hub, Release Bearing, 12" Clutch Only, 5000, Start Year: 06/01/1971
9A	E1NN7571CB	1	Hub, Clutch Release Bearing, W/Dual Power, 13" Clutch, 7000, Start Year: 01/01/1973
9A	D1NN7571A	1	Hub, Release Bearing, 13" Clutch, 7000, Start Year: 10/01/1971
10	E7NN7550DA	1	Disc Assy., 12" Clutch, (30.48cm) w/DP, 10 Spline, 5000, 1.75" Bore, Start Year: 01/01/1973
10	82006021	1	Disc Assy., 12" Clutch, 25 Spline, Years: 01/01/1965-09/30/1969

5000-SERIES 4 CYL TRACTOR (1/65-1/75)

07E06 SINGLE CLUTCH ASSY., W/GREASER - 5000 12" CLUTCH (65/9-69) & (6-71/) 5000 13" CLUTCH (65/9-69) 7000 13" CLUTCH (10

Ref	Part Number	Qty	Description
10	82006021	1	Disc Assy., 12" Clutch, 25 Spline, Start Year: 06/01/1971
10A	D2NN7550A	1	Disc Assy., 13" Clutch (33.02cm), 5000, Replaces C5NN-7550-M, Years: 01/01/1965-09/30/1969
10A	D2NN7550A	1	Disc Assy., 13" Clutch (33.02cm), 7000, 25 Spline, Start Year: 10/01/1971
10A	82011593	1	Disc Assy., 13" Clutch (33.02cm) W/Dual Power, 7000, 10 Spline, Start Year: 01/01/1973
10A	86634432	1	Disc Assy., 13" Clutch (33.02cm) W/Dual Power, 7000, 10 Spline, Remanufactured, Start Year: 01/01/1973
13	E0NN7563CA	1	Plate & Cover Assy., Pressure, 12" Clutch (30.48cm), 5000, Includes: Ref. 14 thru 24, Years: 01/01/1965-09/30/1969
13	86634458	1	Plate & Cover Assy., Pressure, 12" Clutch (30.48cm), 5000, Includes: Ref. 14 thru 24, Remanufactured, Years: 01/01/1965-09/30/1969
13	E0NN7563CA	1	Plate & Cover Assy.,Pressure, 12" Clutch (30.48cm), Start Year: 06/01/1971
13	86634458	1	Plate & Cover Assy.,Pressure, 12" Clutch (30.48cm), Remanufactured, Start Year: 06/01/1971
14	C5NN7566A	1	Plate, Pressure, 12" Clutch (30.48cm), Years: 01/01/1965-09/30/1969
14	C5NN7566A	1	Plate, Pressure, 12" Clutch (30.48 cm), Start Year: 06/01/1971
15	C7NN7572B	16	Spring, Pressure Release, Yellow, Replaces C5NN-7572-B, Years: 01/01/1965-09/30/1969
15	C7NN7572B	16	Spring Pressure Release, Yellow, Start Year: 06/01/1971
16	C5NN7541D	4	Lever, Release, Years: 01/01/1965-09/30/1969
16	C5NN7541D	4	Lever, Release, Start Year: 06/01/1971
17	E329GD9	4	Strut, Release Lever, Years: 01/01/1965-09/30/1969
17	E329GD9	4	Strut, Release Lever, Start Year: 06/01/1971
18	C5NN7N611D	4	Eyebolt, Release Lever, Years: 01/01/1965-09/30/1969
18	C5NN7N611D	4	Eyebolt, Release Lever, Start Year: 06/01/1971
19	E1ADDN7562B	4	Spring, Release Lever, Years: 01/01/1965-09/30/1969
19	E1ADDN7562B	4	Spring, Release Lever, Start Year: 06/01/1971
20	E1ADDN7565	4	Pin, Release Lever, Years: 01/01/1965-09/30/1969
20	E1ADDN7565	4	Pin, Release Lever, Start Year: 06/01/1971
21	C5NN7N506A	1	Cover Assy., Pressure, 12" Clutch, (30.48cm), Years: 01/01/1965-09/30/1969
21	C5NN7N506A	1	Cover Assy., Pressure, 12" Clutch. (30.48cm), Start Year: 06/01/1971
22	E326GD9	4	Nut, Release Lever Eyebolt, Years: 01/01/1965-09/30/1969
22	E326GD9	4	Nut, Release Lever Eyebolt, Start Year: 06/01/1971
23	E94GC9	4	Ferrule, Plate Cover, Years: 01/01/1965-09/30/1969
23	E94GC9	4	Ferrule, Plate Cover, Start Year: 06/01/1971
24	C5NN7N613A	4	Bolt, Pressure Plate, Years: 01/01/1965-09/30/1969
13A	82006046	1	Plate & Cover Assy., Pressure, 13" Clutch (33.02cm), 7000, Includes: Ref. 14 thru 26, Start Year: 10/01/1971
13A	86634445	1	Plate & Cover Assy., Pressure, 13" Clutch (33.02cm), 7000, Includes: Ref. 14 thru 26, Remanufactured, Start Year: 10/01/1971
13A	82006046	1	Plate & Cover Assy., Pressure, 13" Clutch (33.20cm), 5000, Includes: Ref. 14 thru 26, Years: 01/01/1965-09/30/1969
13A	86634445	1	Plate & Cover Assy., Pressure, 13" Clutch (33.02cm), 7000, Includes: Ref. 14 thru 26, Remanufactured, Years: 01/01/1965-09/30/1969
14	E1ADDN7566B	1	Plate, Pressure, 13" Clutch (33.02cm), 5000, Years: 01/01/1965-09/30/1969

07E06 SINGLE CLUTCH ASSY., W/GREASER - 5000 12" CLUTCH (65/9-69) & (6-71/) 5000 13" CLUTCH (65/9-69) 7000 13" CLUTCH (10

Ref	Part Number	Qty	Description
14	E1ADDN7566B	1	Plate, Pressure, 13" Clutch (33.02cm), 7000, Start Year: 10/01/1971
15	E1ADDN7572B	16	Spring, Pressure, 5000, No Longer Serviced (NH-E), Years: 01/01/1965-09/30/1969
15	D1NN7572A	16	Spring, Pressure, 7000, Start Year: 10/01/1971
16	EDPN7591B	4	Lever, Release, 5000, Years: 01/01/1965-09/30/1969
16	EDPN7591B	4	Lever, Release, 7000, Start Year: 10/01/1971
17	E329GD9	4	Strut, Release Lever, 5000, Years: 01/01/1965-09/30/1969
17	E329GD9	4	Strut, Release Lever, 7000, Start Year: 10/01/1971
18	C5NN7N611E	4	Eyebolt, Release Lever, 5000, Years: 01/01/1965-09/30/1969
18	C5NN7N611E	4	Eyebolt, Release Lever, 7000, Start Year: 10/01/1971
19	E1ADDN7562B	4	Spring, Release Lever, 5000, Years: 01/01/1965-09/30/1969
19	E1ADDN7562B	4	Spring, Release Lever, 7000, Start Year: 10/01/1971
20	E1ADDN7565	4	Pin, Release Lever, 5000, Years: 01/01/1965-09/30/1969
20	E1ADDN7565	4	Pin, Release Lever, 7000, Start Year: 10/01/1971
21	E1ADDN7569B	1	Cover Assy., Pressure, 13" (33.02cm), 5000, Years: 01/01/1965-09/30/1969
21	E1ADDN7569B	1	Cover Assy., Pressure, 13" (33.02cm), 5000, Start Year: 10/01/1971
22	E326GD9	4	Nut, Release Lever Eyebolt, 5000, Years: 01/01/1965-09/30/1969
22	E326GD9	4	Nut, Release Lever Eyebolt, 7000, Start Year: 10/01/1971
23	E94GC9	4	Ferrule, Plate Cover, 5000, Years: 01/01/1965-09/30/1969
23	E94GC9	4	Ferrule, Plate Cover, 7000, Start Year: 10/01/1971
24	C5NN7N613A	4	Bolt, Pressure Plate, 5000, Years: 01/01/1965-09/30/1969
24	C5NN7N613A	4	Bolt, Pressure Plate, 7000, Start Year: 10/01/1971
25	E328GD9	1	Plate, Release Lever, 5000, Years: 01/01/1965-09/30/1969
25	E328GD9	1	Plate, Release Lever, 7000, Start Year: 10/01/1971
26	C5NN7N536A	4	Spring, Release Plate Retainer, 5000, Years: 01/01/1965-09/30/1969
26	C5NN7N536A	4	Spring, Release Plate Retainer, 7000, Start Year: 10/01/1971
27	81821693	8	Washer, Lock, 3/8", 12" & 13" Clutch, Years: 01/01/1965-09/30/1969
27	81821693	8	Washer, Lock, 3/8", 13" Clutch, Start Year: 10/01/1971
27	81821693	8	Washer, Lock, 3/8", 12" Clutch, Start Year: 06/01/1971
29	88206	8	Screw, Cap, HH, G5, 3/8"-16 x 1", 12 & 13" Clutch, Years: 01/01/1965-09/30/1969
29	88206	8	Screw, Cap, HH, G5, 3/8"-16 x 1", 12" Clutch, 5000, Start Year: 06/01/1971
29	88206	8	Screw, Cap, HH, G5, 3/8"-16 x 1", 13" Clutch, 7000, Start Year: 10/01/1971
30	C5NN7548AA	1	Hub & Bearing Assy., W/Greaser, (U.K. Skidded Units), NH-E Only, No Longer Serviced, Years: 01/01/1965-03/31/1968
30	C7NN7548AB	1	Hub & Bearing Assy., Start Year: 01/01/1965
30	C7NN7548AB	1	Hub & Bearing Assy., Start Year: 04/01/1968
34	82847534	1	Connector Assy., Release Bearing Grease w/Greaser Skidded Units, Years: 01/01/1965-09/30/1969
35	87308	1	Nut, Jam, G2, 3/8"-24, W/Greaser, UK Skidded Units, Years: 01/01/1965-09/30/1969
37	NSS	1	Greaser, Release Bearing w/Greaser, (U.K. Skidded Units), Replaced by (1) D4NN-7N635-A(83909109) Lubricator & (1) D4NN-7N632-B(83909108) Adaptor, Years: 01/01/1965-09/30/1969

07E06[A] SINGLE CLUTCH ASSY. - 2000, 3000, 4110, 4200 (10-69/) 5000 (10-69/5-71) 4100 (10-69/9-71) EXCEPT 3400, 3500, 3550

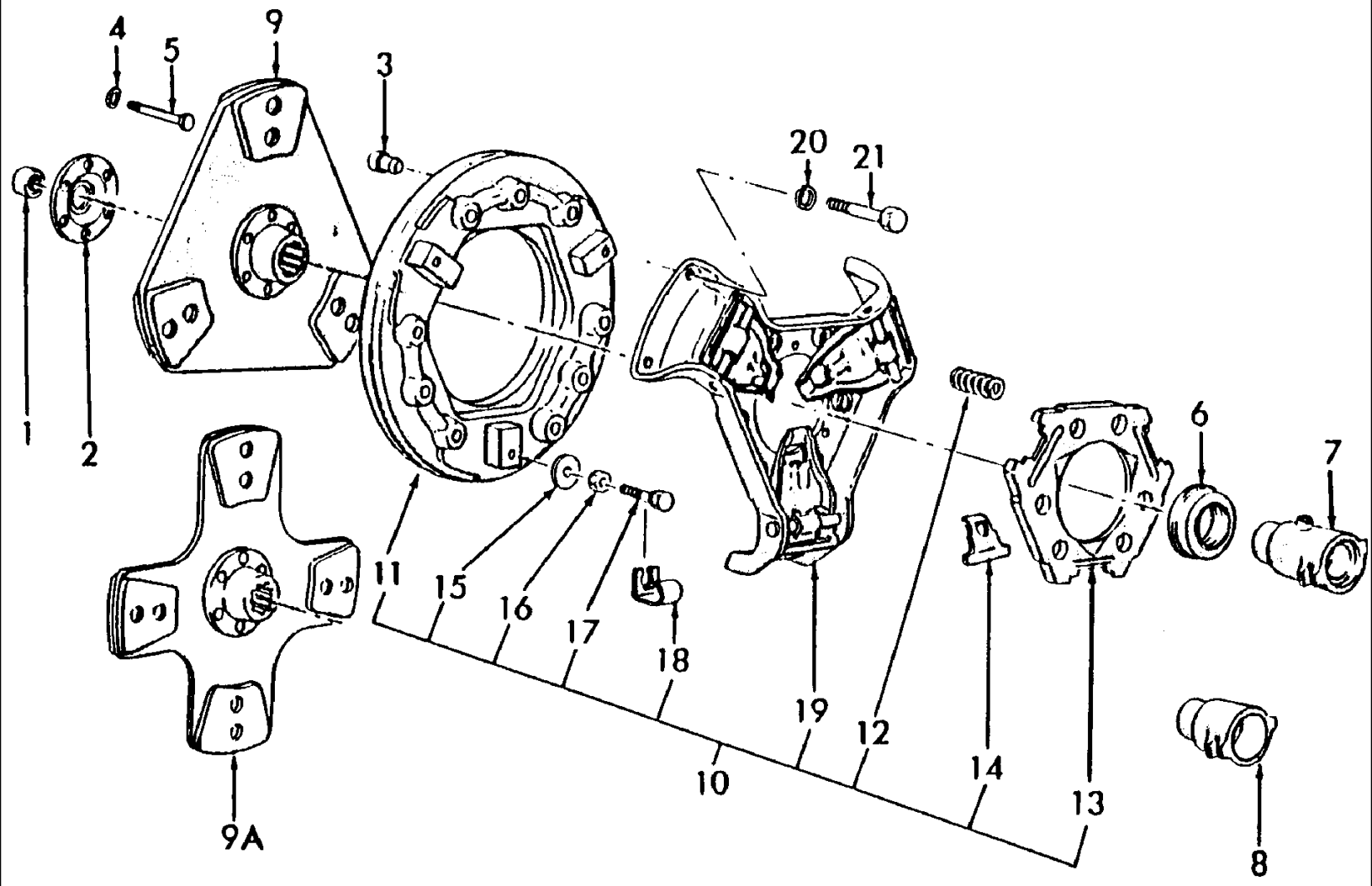

5000-SERIES 4 CYL TRACTOR (1/65-1/75)

07E06[A] SINGLE CLUTCH ASSY. - 2000, 3000, 4110, 4200 (10-69/) 5000 (10-69/5-71) 4100 (10-69/9-71) EXCEPT 3400, 3500, 3550

Ref	Part Number	Qty	Description
1	C5NN7600A	1	Bearing, Pilot, 2000, 3000, 4110, 4200, Start Year: 10/01/1969
1	C5NN7600A	1	Bearing, Pilot, 4100, Years: 10/01/1969-09/30/1971
1	F0NNN779AA	1	Bearing, PTO Drive Plate, 5000, Years: 10/01/1969-05/31/1971
2	E1NNN777AB	1	Retainer, Pilot Bearing, 2000, 3000, 4110, 4200, Start Year: 10/01/1969
2	E1NNN777AB	1	Retainer, Pilot Bearing, 4100, Years: 10/01/1969-09/30/1971
2	E2NNN777AA	1	Plate, PTO Drive, 5000, Years: 10/01/1969-05/31/1971
3	E87GC9	2	Dowel, Flywheel, .4050 O.D. x .3110 O.D. x .60, 2000, 3000, 4110, 4200, Start Year: 10/01/1969
3	E87GC9	2	Dowel, Flywheel, .4050 O.D. x .3110 O.D. x .60, 4100, Years: 10/01/1969-09/30/1971
4	C7NN7N424A	2	Washer, Flat, .625 I.D. x 1.32 O.D. x .04, 5000, Years: 10/01/1969-05/31/1971
5	43172S36	6	Screw, Cap, HH, G8, Self-Locking, 9/16"-18 x 2-5/8", 5000, Years: 10/01/1969-05/31/1971
6	787580A8	1	Bearing Assy., Release, 2000, 3000, 4110, 4200, Start Year: 10/01/1969
6	787580A8	1	Bearing Assy., Release, 4100 Except Independent PTO, Years: 10/01/1969-09/30/1971
6	82010859	1	Bearing Assy., Release, 5000, Years: 10/01/1969-09/30/1971
6	82010859	1	Bearing Assy., Release, 4100 W/Independent PTO, Years: 10/01/1969-09/30/1971
7	C7NN7571Y	1	Hub, Release Bearing, 2000-3000, Start Year: 10/01/1969
7	C7NN7571Y	1	Hub, Release Bearing 4100, 4200, Except W/Independent PTO, Years: 10/01/1969-09/30/1971
7	D2NN7571B	1	Hub, Release Bearing, 4100, 4200, W/Independent PTO, Years: 10/01/1969-09/30/1971
7	D2NN7571B	1	Hub, Release Bearing, 3055-4140, Years: 01/01/1970-05/31/1971
8	C5NN7571H	1	Hub, Release Bearing, 5000, Years: 10/01/1969-05/31/1971
9	C7NN7550AC	1	Disc Assy., 11", 10 Spline Hub, 2000-3000-4110-4200, Start Year: 10/01/1969
9	C7NN7550AC	1	Disc Assy., 11", 10 Spline Hub, 4100, Years: 10/01/1969-09/30/1971
9A	C7NN7550AB	1	Disc Assy., 11" (27.94cm), Triangle Pressure Plate Type, 5000, Years: 10/01/1969-05/31/1971
9B	82006626	1	Disc Assy., 11", 10 Spline Hub, Round Type, 3000, Start Year: 06/01/1971
9B	86634449	1	Disc Assy., 11", 10 Spline Hub, Round Type, 3000, Remanufactured, Start Year: 06/01/1971
10	C9NN7563D	AR	Plate & Cover Assy., Pressure, 2000-3000, Years: 10/01/1969-05/31/1971
10	C9NN7563E	1	Plate & Cover Assy., Pressure W/Transmission, L/PTO, 4110-4200, Start Year: 10/01/1969
10	C9NN7563E	1	Plate & Cover Assy., Pressure W/Transmission, L/PTO, 4100, Years: 10/01/1969-09/30/1971
10	D8NN7563DB	1	Plate & Cover Assy., Pressure W/Independent PTO, 11" (27.94cm), 4110-4200, Start Year: 10/01/1969
10	86634454	1	Plate & Cover Assy., Pressure W/Independent PTO, 11" (27.94cm), 4110-4200, Remanufactured, Start Year: 10/01/1969
10	D8NN7563DB	1	Plate & Cover Assy., Pressure W/Independent PTO, 11" (27.94cm), 4100, Years: 10/01/1969-09/30/1971
10	86634454	1	Plate & Cover Assy., Pressure W/Independent PTO, 11" (27.94cm), 4100, Remanufactured, Years: 10/01/1969-09/30/1971
10	D0NN7563A	1	Plate & Cover Assy., Pressure, 11" (27.94cm), 5000, Years: 10/01/1969-05/31/1971
10	D0NN7563A	1	Plate & Cover Assy., Pressure, 11" (27.94cm), 2000-3000, Includes; Ref. 11, Start Year: 06/01/1971
11	C9NN7566B	1	Plate, Pressure, Start Year: 10/01/1969
11	C9NN7566B	1	Plate, Pressure, 4100, Years: 10/01/1969-09/30/1971
12	C9NN7572A	6	Spring, Pressure Plate, Double Strip, Light Blue, 2000-3000, No Longer Serviced, Start Year: 10/01/1969
12	C9NN7572B	6	Spring, Pressure Plate, Double Stripe, White, 4110-4200, No Longer Serviced (NHNA), Start Year: 10/01/1969
12	C9NN7572B	6	Spring, Pressure Plate, Double Stripe, White, 4100, Years: 10/01/1969-09/30/1971

5000-SERIES 4 CYL TRACTOR (1/65-1/75)

07E06[A] SINGLE CLUTCH ASSY. - 2000, 3000, 4110, 4200 (10-69/) 5000 (10-69/5-71) 4100 (10-69/9-71) EXCEPT 3400, 3500, 3550

Ref	Part Number	Qty	Description
12	D0NN7572A	6	Spring, Pressure Plate, Replaces P/N C9NN-7522-C, 5000, Years: 10/01/1969-05/31/1971
13	C9NN7N609B	1	Retainer, Spring, Replaces P/N C9NN-7N609-A, Except 4100-5000, No Longer Serviced, Start Year: 10/01/1969
13	C9NN7N609B	1	Retainer, Spring, Replaces P/N C9NN-7N609-A, 5000, Years: 10/01/1969-05/31/1971
13	C9NN7N609B	1	Retainer, Spring, Replaces P/N C9NN-7N609-A, 4100, Years: 10/01/1969-09/30/1971
14	C9NN7K533A	3	Link, Release Lever, Except 4100-5100, No Longer Serviced (NHNA), Start Year: 10/01/1969
14	C9NN7K533A	3	Link, Release Lever, 5000, No Longer Serviced (NHNA), Years: 10/01/1969-05/30/1971
14	C9NN7K533A	3	Link, Release Lever, 4100, Years: 10/01/1969-09/30/1971
15	C9NN7539A	3	Washer, Release Equalizing Shaft, Except 4100-5000, FTO-E, No Longer Serviced (NHNA), Start Year: 10/01/1969
15	C9NN7539A	3	Washer, Release Equalizing Shaft, 5000, No Longer Serviced (NHNA), Years: 10/01/1969-05/30/1971
15	C9NN7539A	3	Washer, Release Equalizing Shaft, 4100, No Longer Serviced (NHNA), Years: 10/01/1969-09/30/1971
16	87307	3	Nut, Jam, G2, 5/16"-24, Except 4100-5100, Start Year: 10/01/1969
16	87307	3	Nut, Jam, G2, 5/16"-24, 5000, Years: 10/01/1969-05/30/1971
16	87307	3	Nut, Jam, G2, 5/16"-24, 4100, Years: 10/01/1969-09/30/1971
17	C9NN7N613A	3	Bolt, Release Plate, Except 4100-5000, Start Year: 10/01/1969
18	C9NN7N614A	3	Clip, Release Lever Retainer, Except 4100-5000, Start Year: 10/01/1969
18	C9NN7N614A	3	Clip, Release Lever Retainer, 5000, Years: 10/01/1969-12/31/1971
18	C9NN7N614A	3	Clip, Release Lever Retainer, 4100, Years: 10/01/1969-09/30/1971
19	D0NN7N600B	1	Cover & Lever Assy., 2000-3000, No Longer Serviced (NH-E), Start Year: 10/01/1969
19	D0NN7N600B	1	Cover & Lever Assy., 4110-4200 Except W/Independent PTO, No Longer Serviced (NH-E), Start Year: 10/01/1969
19	D0NN7N600B	1	Cover & Lever Assy., 4100 Except W/Independent PTO, No Longer Serviced (NH-E), Years: 10/01/1969-09/30/1971
19	D0NN7N600B	1	Cover & Lever Assy., 5000 Except W/Independent PTO, No Longer Serviced (NH-E), Years: 10/01/1969-05/31/1971
19	D8NN7563DB	1	Cover & Lever Assy., 4200 W/Independent PTO, Start Year: 10/01/1969
19	86634454	1	Cover & Lever Assy., 4200 W/Independent PTO, Remanufactured, Start Year: 10/01/1969
19	D8NN7563DB	1	Cover & Lever Assy., 4100 W/Independent PTO, Years: 10/01/1969-09/30/1971
19	86634454	1	Cover & Lever Assy., 4100 W/Independent PTO, Remanufactured, Years: 10/01/1969-09/30/1971
20	81821693	6	Washer, Lock, 3/8", Start Year: 10/01/1969
20	81821693	6	Washer, Lock, 3/8", Years: 10/01/1969-05/30/1971
20	81821693	6	Washer, Lock, 3/8", Years: 10/01/1969-09/30/1971
21	355705S2	6	Bolt, HH, 3/8"-16 x .96, 5000, Years: 10/01/1969-05/31/1971
21	355705S2	6	Bolt, HH, 3/8"-16 x .96, Except 4100-5000, Start Year: 10/01/1969
21	355705S2	6	Bolt, HH, 3/8"-16 x .96, 4100, Years: 10/01/1969-09/30/1971
	C7NN7548AB	1	Hub & Bearing Assy., Release, Skidded Unit, 5190 Double Clutch, Start Year: 01/01/1965

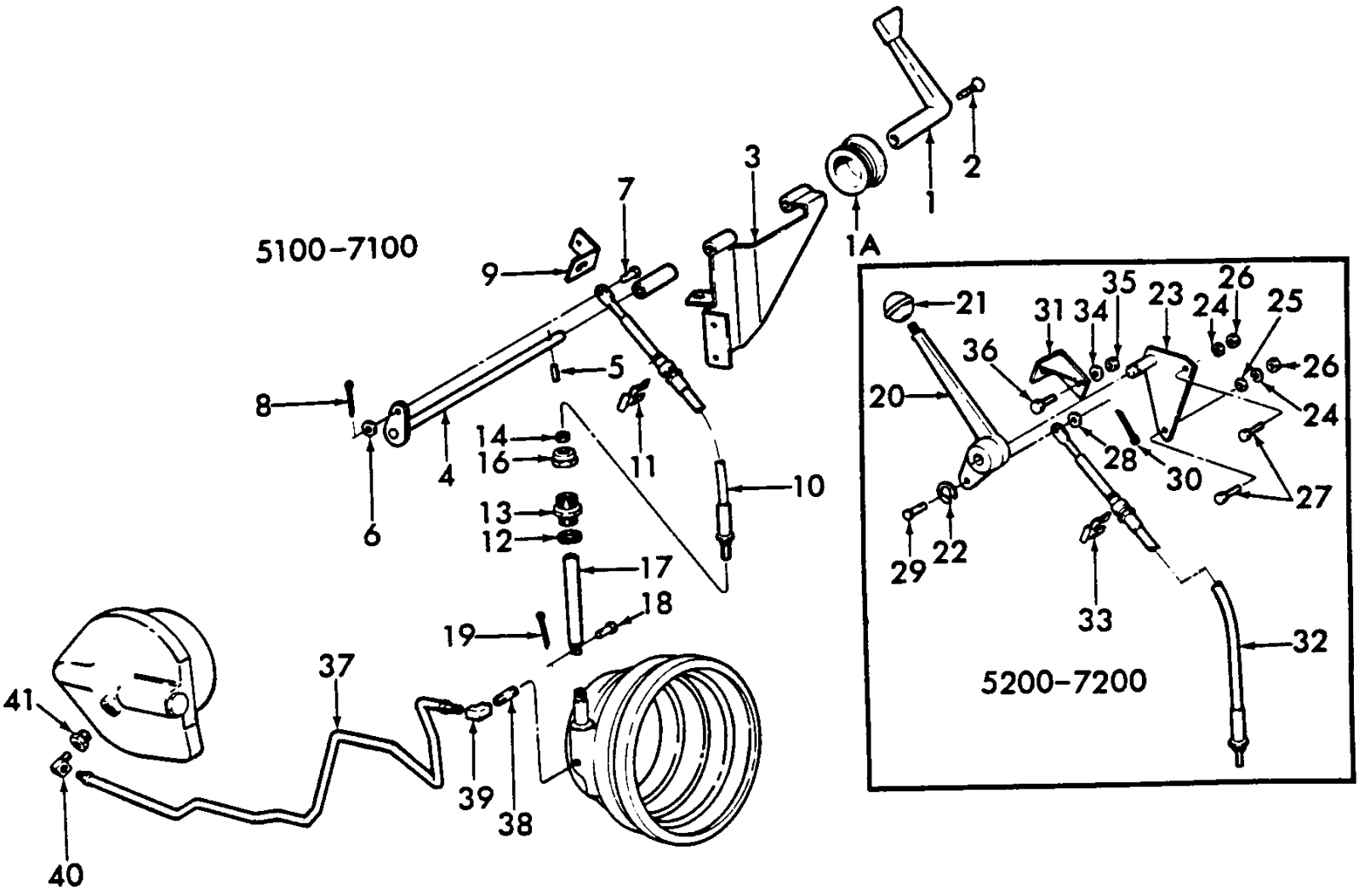
5100–7100
1
1A
2
3
4
5
6
7
8
9
10
11
12
13
14
16
17
18
19
37
38
39
40
41
5200–7200
20
21
22
23
24
25
26
27
28
29
30
31
32
33
34
35
36

5000-SERIES 4 CYL TRACTOR (1/65-1/75)

07E09 DUAL POWER CONTROLS - 5000, 7000

Ref	Part Number	Qty	Description
1	D3NN7R228A18B	1	Handle, Dual Power Control, 5100, 7100, Start Year: 11/01/1974
1	D2NN7R228A	1	Handle, Dual Power Control, 5100, 7100, Years: 06/01/1973-10/31/1974
1A	D2NN7R229A	1	Cover, Control Handle, 5100, 7100, Start Year: 06/01/1973
2	57362S100	1	Screw, Oval Hd, G5, #8-32 x 1-1/4", Handle to Shaft, Start Year: 06/01/1973
3	D2NN7R230A	1	Bracket & Strap Assy., Control, 5100,7100, Start Year: 06/01/1973
4	D3NN7R200B	1	Shaft Assy., Control, Replaces P/N D2NN-7R200-C, 5100, 7100, Years: 06/01/1973-10/31/1974
4	81844897	1	Shaft Assy., Control, 5100, 7100, Start Year: 11/01/1974
	PL	1	Spacer, .385" mm I.D. x 1.82"-46.2 mm Lg., 5100, 7100, Start Year: 06/01/1973
5	V12247	1	Pin, Roll, 3/16" x 3/4", Shaft to Bracket, 5100, 7100, Start Year: 06/01/1973
6	44716S8	1	Washer, #10, 5100, 7100, Start Year: 06/01/1973
7	76107S36	1	Pin, Clevis, 3/16" x 15/32", Cable to Shaft, 5100, 7100, Start Year: 06/01/1973
8	280236	1	Pin, Split (Cotter), 1/16" x 1/2", Clevis Pin to Shaft, 5100, 7100, Start Year: 06/01/1973
9	D2NN7R017B	1	Bracket, Control Cable Support, 5100, 7100, Years: 06/01/1973-10/31/1974
9	D3NN7R017B	1	Bracket, Control Cable Support, 5100, 7100, Start Year: 11/01/1974
10	D2NN7R227D	1	Cable Assy., Dual Power Control, 5100, 7100, Years: 06/01/1973-10/31/1974
10	D3NN7R227A	1	Cable Assy., Dual Power Control, 5100, 7100, Start Year: 11/01/1974
11	C9AA2814A	1	Clip, Cable to Bracket Lock, 5100, 7100, Start Year: 06/01/1973
12	87341	1	Washer, Lock, 7/8", Connecting to Case Assy., Start Year: 06/01/1973
13	385440S36	1	Connector, Reducing, 1-1/8"-12 to 7/8"-14, No Longer Serviced (NHNA), Start Year: 06/01/1973
14	86509309	1	Nut, G5, 1/4"-28, Cable to Extension, Start Year: 06/01/1973
16	D2NN7R202A	1	Nut, Retaining, Cable to Connector, No Longer Serviced, Start Year: 06/01/1973
17	D2NN7N849A	1	Rod, Control Valve Extension, No Longer Serviced, Start Year: 06/01/1973
18	73858S36	1	Pin, Clevis, 3/16" x 31/64", Extension Rod to Valve, Start Year: 06/01/1973
19	280236	1	Pin, Split (Cotter), 1/16" x 1/2", Start Year: 06/01/1973
20	D2NN7R226A	1	Handle, Dual Power Control, 5200, 7200, NHNA Only, No Longer Serviced, Start Year: 06/01/1973
21	C5NN7213A	1	Knob Assy., Control Handle, 5200, 7200, Start Year: 06/01/1973
22	97502S36	1	Ring, Snap, Ext, .625", Handle to Bracket, Retaining, 5200, 7200, NHNA Only, No Longer Serviced, Start Year: 06/01/1973
23	D2NN7R016B	1	Bracket Assy., Control Handle Mounting, 5200,7200, No Longer Serviced (NHNA), Start Year: 06/01/1973
24	81821693	2	Washer, Lock, 3/8", 5200, 7200, Start Year: 06/01/1973
25	80702	1	Washer, 3/8", 5200, 7200, Start Year: 06/01/1973
26	9628503	2	Nut, G5, 3/8"-16, 5200, 7200, Start Year: 06/01/1973
27	88206	2	Screw, Cap, HH, G5, 3/8"-16 x 1", Bracket to Support, 5200, 7200, Start Year: 06/01/1973
28	44716S8	1	Washer, #10, 5200, 7200, Start Year: 06/01/1973
29	76107S36	1	Pin, Clevis, 3/16" x 15/32", Cable to Handle, 5200, 7200, No Longer Serviced (NH-E), Start Year: 06/01/1973
30	280236	1	Pin, Split (Cotter), 1/16" x 1/2", Pin to Handle, 5200, 7200, Start Year: 06/01/1973
31	D2NN7R016A	1	Bracket Assy., Control Cable Support, 5200, 7200, NHNA Only, No Longer Serviced, Start Year: 06/01/197
32	86539040	1	Cable Assy., Dual Power Control, 22.46" (672.08mm), 5200,7200, NHNA Only, Start Year: 06/01/1973
33	C9AA2814A	1	Clip, Cable to Bracket, Lock, 5200, 7200, Start Year: 06/01/1973
34	80681	2	Washer, Lock, 5/16", 5200, 7200, Start Year: 06/01/1973

Ref	Part Number	Qty	Description
35	9635082	2	Nut, G5, 5/16"-18, 5200, 7200, Start Year: 06/01/1973
36	87872	2	Screw, Cap, HH, G5, 5/16"-18 x 3/4", Bracket to Support, 5200, 7200, Start Year: 06/01/1973
37	D2NN7N837A	1	Tube Assy., Dual Power Housing to Hydraulic Pump, No Longer Serviced (NH-E), Start Year: 06/01/1973
38	304218	1	Nipple, 1-1/2" Lg., U.K.-Antwerp, Start Year: 06/01/1973
39	377656S	1	Elbow, Tube to Dual Power Housing, Start Year: 06/01/1973
40	87515S	1	Elbow, Tube to Hydraulic Pump w/Independent PTO & Grease, Start Year: 06/01/1973
41	D2NN7N490A	1	Connector, Elbow to Hydraulic Pump, Start Year: 06/01/1973

07F02 SELECT-O-SPEED - TRANSMISSION CASE & RELATED PARTS - 5000

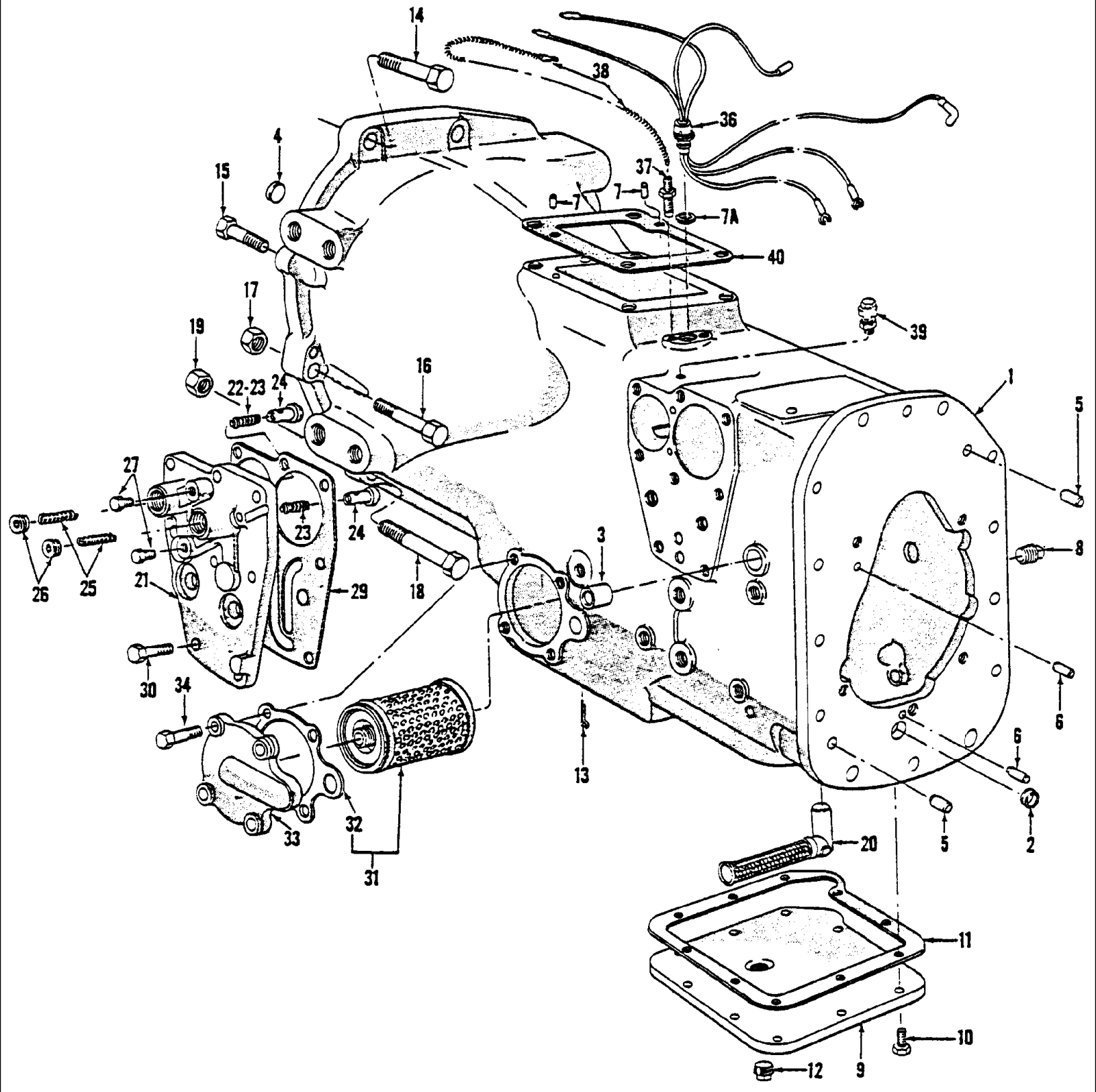

07F02 SELECT-O-SPEED - TRANSMISSION CASE & RELATED PARTS - 5000

Ref	Part Number	Qty	Description
	0C	1	Transmission Assy., 9 Speed, Germany Only, 5100, Order Components, No Longer Serviced, Years: 01/01/1965-03/31/1968
	0C	1	Transmission Assy., 9 Speed, Germany Only, Replaces P/N C7NN-7003-R, 5100, Order Components, No Longer Serviced, Years: 04/01/1968-12/31/1974
	0C	1	Transmission Assy., 10 Speed, Except Germany, 5100, Order Components, No Longer Serviced, Start Year: 01/01/1965
	0C	1	Transmission Assy., 10 Speed, 5200, Order Components, No Longer Serviced, Years: 01/01/1967-05/31/1968
	0C	1	Transmission Assy., 10 Speed, 5200, Order Components, No Longer Serviced, Years: 06/01/1968-12/31/1974
1	C5NN7005AY	1	Case Assy., No Longer Serviced (NHNA), Years: 01/01/1965-03/31/1968
1	C7NN7005BG	1	Case Assy., Includes: Case & Ref. 2 thru 7A, No Longer Serviced (NHNA), Start Year: 04/01/1968
2	83417040	1	Plug, Cup Expansion, .760/.762, Start Year: 01/01/1965
3	313044	1	Bush/Bushing, Control Feathering Pedal Shaft, No Longer Serviced (NHNA), Start Year: 01/01/1965
4	376999S	1	Plug, Cup Expansion, 1.070/1.068, Start Year: 01/01/1965
4	83957021	1	Plug, Cup Expansion, 1.135/1.137, Start Year: 01/01/1965
5	379304S2	2	Pin, Dowel, 1/2" x 12/16", Start Year: 01/01/1965
6	73299S	2	Pin, 3/8" x 7/8", No Longer Serviced, Start Year: 01/01/1965
7	73269S	2	Pin, Dowel, 3/8" x 11/16", Start Year: 01/01/1965
7A	C5NN7N435B	1	Plug, Grommet Retainer, No Longer Serviced (NHNA), Start Year: 01/01/1965
8	263136	1	Plug, Pipe, Magnetic, Sq Socket, 3/4"-14, Years: 01/01/1965-10/31/1967
8	263136	1	Plug, Pipe, Magnetic, Sq Socket, 3/4"-14, Start Year: 11/01/1967
9	D1NN7222D	1	Cover, Transmission Case, No Longer Serviced (NHNA), Start Year: 01/01/1965
10	88434	10	Screw, Cap, HH, G5, 3/8"-16 x 3/4", Start Year: 01/01/1965
11	C5NN7223C	1	Gasket, Case Cover, Start Year: 01/01/1965
12	87618S2	1	Plug, Pipe, 1/2"-14, No Longer Serviced (NHNA), Start Year: 01/01/1965
13	72036S36	1	Pin, Split Cotter, 5/32" x 1", Start Year: 01/01/1965
14	304912S36	2	Screw, Cap, HH, G5, 3/4"-16 x 2-3/4", Start Year: 01/01/1965
15	88556	2	Screw, Cap, HH, G5, 5/8"-11 x 2-1/4", Start Year: 01/01/1965
16	304956S36	2	Screw, Cap, HH, G5, 5/8"-18 x 3-3/4", Start Year: 01/01/1965
17	408	2	Nut, G5, 5/8"-18, Start Year: 01/01/1965
18	300997S36	2	Screw, Cap, HH, G5, 3/4"-16 x 5 1/2", Start Year: 01/01/1965
19	34683S36	2	Nut, 3/4"-16, No Longer Serviced (NHNA), Start Year: 01/01/1965
20	C5NN7N395A	1	Screen Assy., Oil Inlet, No Longer Serviced (NHNA), Start Year: 01/01/1965
21	C5NN7D200B	1	Cover & Ball Assy., #2 & #3 Brake Servo, No Longer Serviced (NHNA), Start Year: 01/01/1965
22	C5NN7N215B	1	Valve Assy., Band Servo Timing, Red Spring, No Longer Serviced (NHNA), Prior to Serial No. 5H18C, Years: 01/01/1965-08/31/1965
23	C5NN7N215C	1	Valve Assy., Band Servo Timing, Green Spring, Prior to Serial No. 5H18C, Years: 01/01/1965-08/31/1965
23	C5NN7N215C	2	Valve Assy., Band Servo Timing, Green Spring, After Serial No. 5H17C, Start Year: 08/01/1965
24	C5NN7N218A	1	Seat, Timing Valve, No Longer Serviced (NHNA), Start Year: 01/01/1965
25	C5NN7N219A	2	Spring, #2 & #3 Brake Band Servo Valve Spring, Start Year: 01/01/1965

07F02 SELECT-O-SPEED - TRANSMISSION CASE & RELATED PARTS - 5000

Ref	Part Number	Qty	Description
26	352997S100	2	Plug, Socket Hd., 3/8"-18, No Longer Serviced, Start Year: 01/01/1965
27	88071	2	Plug, 1/8"-27, Start Year: 01/01/1965
29	C5NN7C346B	1	Gasket, #2 & #3 Brake Servo Cover, Start Year: 01/01/1965
30	9627887	7	Screw, Cap, HH, G5, 7/16"-14 x 1-1/4", Start Year: 01/01/1965
31	309735	1	Filter Assy., Oil Includes: Filter & Ref. 32, Start Year: 01/01/1965
32	C5NN7N306B	1	Gasket, Cover, Start Year: 01/01/1965
33	C5NN7C013A	1	Cover Assy., Oil Filter, No Longer Serviced (NHNA), Start Year: 01/01/1965
34	304705S36	4	Screw, Cap, HH, G5, 7/16"-14 x 1-1/8", Start Year: 01/01/1965
36	D7NN7A488B	1	Harness Assy., Years: 01/01/1965-03/31/1968
36	C7NN7A488B	1	Harness Assy., Start Year: 04/01/1968
	356640S2	1	Clip, Harness to Distributor, Start Year: 04/01/1968
	304620S36	1	Screw, Cap, HH, G5, 1/4"-20 x 3/8", Start Year: 04/01/1968
37	C5NN7N480A	1	Adapter, Control Selector Cable Conduit, Start Year: 01/01/1965
38	C5NN7A482A	1	Cable Assy., Control Valve, 5100,5200, Start Year: 01/01/1965
39	21T4022	1	Plug, Case Vent, Start Year: 01/01/1965
40	C5NN3C715C	1	Gasket, Steering Gear Mounting C5NN-7B292-BL, Years: 01/01/1965-08/31/1970
40	82845217	1	Gasket, Steering Gear Mounting, Start Year: 09/01/1970
	CFPN7153E	1	Kit, Transmission Gasket & Seal Includes:, Start Year: 01/01/1965
	C5NNP709B	1	Seal Assy.
	C5NN3C715C	1	Gasket
	82845217	1	Gasket
	C5NN7C000A	1	Seal
	C0NN7C081A	2	Seal
	C5NN7A136A	1	Gasket
	C5NN7C155A	1	Gasket
	C5NN7223C	1	Gasket
	C5NN7N306B		Gasket
	C5NN7C346B	1	Gasket
	C5NN7A388A	1	Gasket
	C5NN7B475A	1	Gasket
	C0NN7B497A	2	Seal
	C7NN7C457B	1	Gasket
	C0NN7A548A	3	Seal, Years: 01/01/1965-03/31/1968
	C7NN7A548A	3	Seal, Start Year: 04/01/1968
	9672548	5	O-Ring, .301" ID x .070" Thk
	87008S94	1	O-Ring, .375" ID x .070" Thk
	50458	2	O-Ring, .437" ID x .070" Thk
	14457281	2	O-Ring, M15.54 ID x 2.62 Thk
	129979	2	O-Ring, .674" ID x .103" Thk
	87037S94	2	O-Ring, .750" ID x .103" Thk
	87046S94	2	O-Ring, 1.312" ID x .103" Thk

Ref	Part Number	Qty	Description
	87082S94	1	O-Ring, 3.625" ID x .139" Thk
	312202	6	Seal
	312213	4	Seal
	312239	3	Seal
	313739	1	Seal
	313864	2	Seal
	B9NN7048A	1	Seal Assy.
	372039S	1	O-Ring, 1.875" ID x .139" Thk, Years: 01/01/1965-03/31/1968
	382739S	1	O-Ring, 2" ID x .139" Thk, Start Year: 04/01/1968
	372261S	1	O-Ring, 2.875" ID x .103" Thk
	87016S95	1	O-Ring, 90 Duro, .625" ID x .070" Thk
	373227S	2	O-Ring, 2.12" ID x .139" Thk
	374715S	1	O-Ring, 1.799" ID x .103" Thk
	511284	1	O-Ring, 2.750" ID x .139" Thk
	374841S	1	O-Ring, 2.425" ID x .103" Thk
	9992298	4	O-Ring, 90 Duro, .489" ID x .070" Thk

07G02 SELECT-O-SPEED - INPUT SHAFT TORQUE LIMITER CLUTCH - 5000

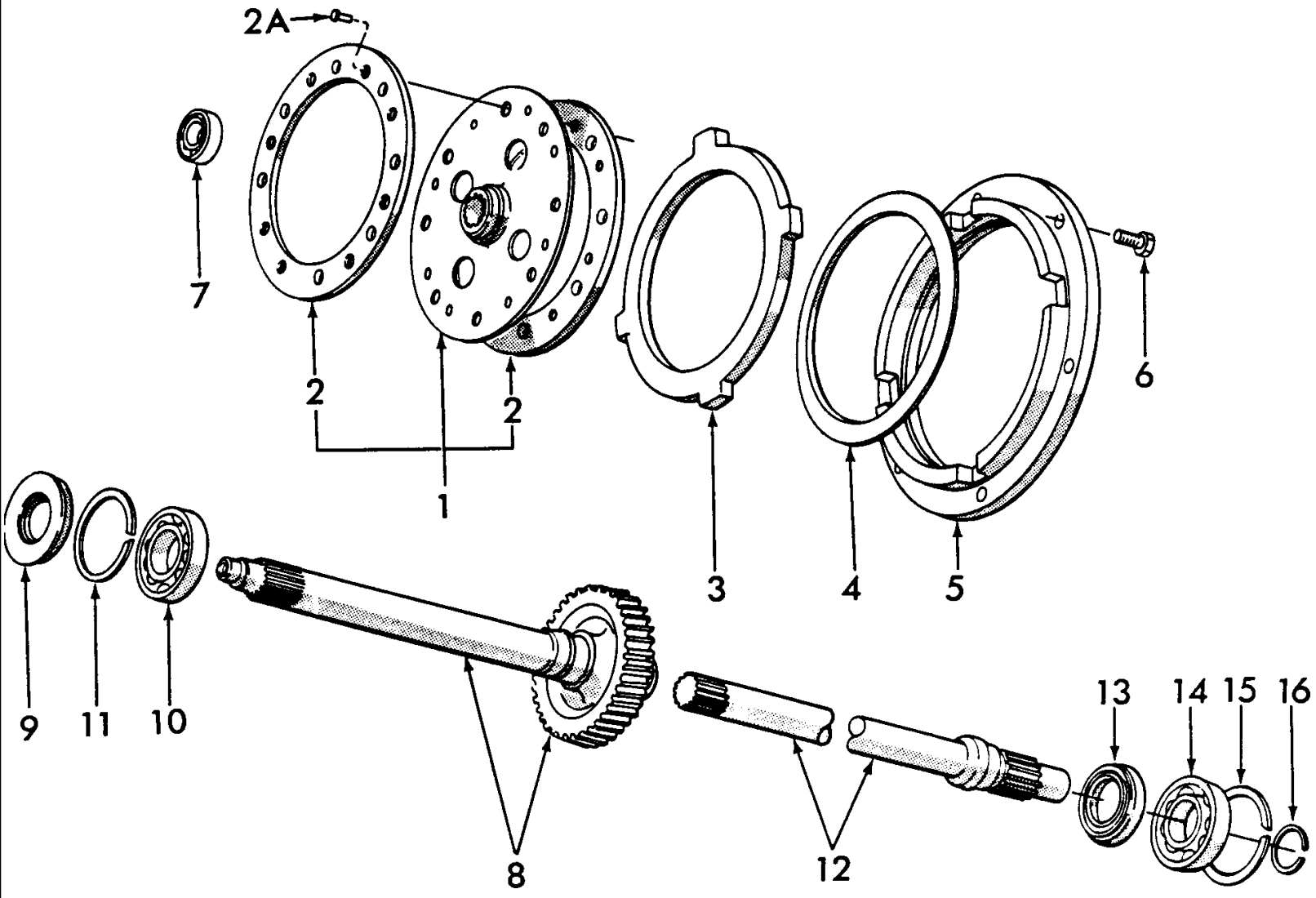

5000-SERIES 4 CYL TRACTOR (1/65-1/75)

07G02 SELECT-O-SPEED - INPUT SHAFT TORQUE LIMITER CLUTCH - 5000

Ref	Part Number	Qty	Description
1	D0NN7A539A	1	Disc Assy., Clutch, Replaces P/N C7NN-7A539-B Includes: Disc, Ref. 2 & 2A, Start Year: 01/01/1965
2	C5NN7N551A	2	Facing, Clutch, No Longer Serviced (NHNA), Start Year: 01/01/1965
2A	C5NN7N568A	16	Rivet, Start Year: 01/01/1965
3	C5NN7N525A	1	Plate, Drive, No Longer Serviced (NHNA), Start Year: 01/01/1965
4	C5NN7A643C	1	Spring, Drive, No Longer Serviced (NHNA), Start Year: 01/01/1965
5	C5NN7N528A	1	Housing, No Longer Serviced, Start Year: 01/01/1965
6	304666S36	6	Screw, Cap, HH, G5, 3/8"-16 x 7/8", Start Year: 01/01/1965
7	C5NN7600A	1	Bearing, Main Drive Gear Front, Start Year: 01/01/1965
8	C5NN7017M	1	Shaft, Main Drive w/Gear, No Longer Serviced (NHNA), Start Year: 01/01/1965
9	313739	1	Seal, Oil, Main Drive Gear, Start Year: 01/01/1965
10	E75GE9	1	Bearing Assy., Main Drive Gear, Rear, Start Year: 01/01/1965
11	314267	1	Ring, Snap, Main Drive Gear Bearing, Rear, Start Year: 01/01/1965
12	C5NNA723B	1	Shaft, PTO Front, No Longer Serviced, Start Year: 01/01/1965
13	C5NNP709B	1	Seal Assy., PTO Front Shaft, Start Year: 01/01/1965
14	E75GE9	1	Bearing Assy., PTO Front Shaft, Start Year: 01/01/1965
15	314267	1	Ring, PTO Front Shaft Bearing Retainer, Start Year: 01/01/1965
16	C5NN7261A	1	Ring, PTO Front Shaft Bearing Retainer, Start Year: 01/01/1965

07G03 SELECT-O-SPEED - PUMP, "A" CARRIER, NO.1 BRAKE BAND - 5000

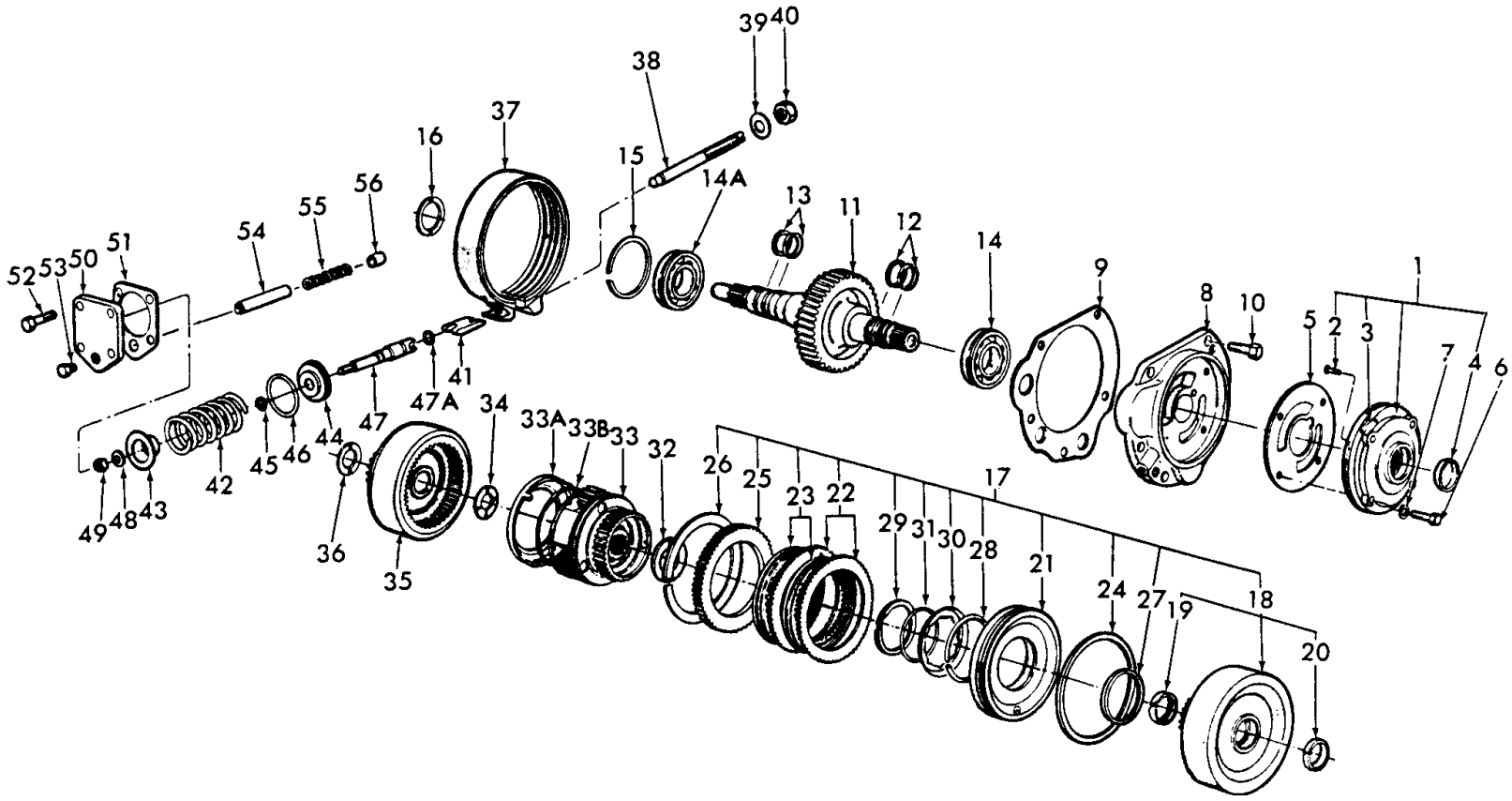

5000-SERIES 4 CYL TRACTOR (1/65-1/75)

07G03 SELECT-O-SPEED - PUMP, "A" CARRIER, NO.1 BRAKE BAND - 5000

Ref	Part Number	Qty	Description
1	C7NN7A103B	1	Pump Assy., Oil, Replaces P/N C5NN-7A103-D Includes: Pump, Ref. 2, 3 & 4, No Longer Serviced, Start Year: 01/01/1965
2	54455S8	1	Screw, Flat Hd, #10-24 x 5/8", No Longer Serviced, Start Year: 01/01/1965
3	87082S94	1	O-Ring, 3.625" ID x .139" Thk, Start Year: 01/01/1965
4	379126S	1	Plug, Cup, No Longer Serviced, Start Year: 01/01/1965
5	C5NN7A136A	1	Gasket, Oil Pump, Start Year: 01/01/1965
6	375693S8	4	Bolt, HH, 5/16"-18 x 1.88, No Longer Serviced (NHNA), Start Year: 01/01/1965
7	80681	4	Washer, Lock, 5/16", Start Year: 01/01/1965
8	C7NN7B471A	1	Plate Assy., Oil Pump Adapter, No Longer Serviced, When Replacing P/N C5NN-7B741-C (prior to 4-68) also use P/N D0NN-7118-A(81822439) Bearing, Start Year: 01/01/1965
9	C5NN7B475A	1	Gasket, Oil Pump Adapter Plate, Start Year: 01/01/1965
10	88206	5	Screw, Cap, HH, G5, 3/8"-16 x 1", Start Year: 01/01/1965
11	C7NN7N128A	1	Countershaft & Ball Assy., Replaces P/N C5NN-7N128-A, No Longer Serviced, Start Year: 01/01/1965
12	C0NN7C081A	2	Seal, Countershaft Front, Start Year: 01/01/1965
13	C0NN7B497A	2	Seal, Countershaft Rear, Start Year: 01/01/1965
14	C7NN7118E	2	Bearing Assy., Countershaft Front, 2.83 O.D., Alternate w/#C7NN-7118-C, No Longer Serviced (NH-E), Years: 01/01/1965-03/31/1968
14	D0NN7118A	1	Bearing Assy., Countershaft Front, 3.14 O.D., Use w/#C7NN-7B471-A, No Longer Serviced (NH-E), Start Year: 04/01/1968
15	8A7026	1	Ring, Snap, Countershaft Rear Bearing, No Longer Serviced (NH-E), Start Year: 01/01/1965
16	86529768	1	Washer, Thrust, 1-3/8", A-Sun Gear, No Longer Serviced (NH-E), Start Year: 01/01/1965
17	C7NN7C108L	1	Clutch Assy., Direct Drive, Replaces P/N C7NN-7C108-N Includes: Ref. 18 thru 20, No Longer Serviced (NH-E), Start Year: 01/01/1965
18	C7NN7B478C	1	Housing Assy., Clutch, No Longer Serviced, When Replacing, Use C7NN-7B477B also., Start Year: 01/01/1965
19	C0NN7B479A	1	Bush/Bushing, Housing Front, No Longer Serviced, Start Year: 01/01/1965
20	C0NN7B480B	1	Bush/Bushing, Housing Rear, No Longer Serviced (NHNA), Start Year: 01/01/1965
21	C7NN7C117D	1	Piston, Clutch, Replaces P/N C7NN-7C117-C, Start Year: 01/01/1965
22	C8AP7B442A	2	Plate, Clutch External Plate, Start Year: 01/01/1965
23	C5NNP743B	2	Plate Assy., Clutch Internal Spline, Replaces P/N C5NN-7B164-A, Start Year: 01/01/1965
24	C5NN7C000A	1	Seal, Clutch, Outer, Start Year: 01/01/1965
25	C7NN7B477C	1	Plate, Clutch Pressure Plate, Years: 01/01/1965-03/31/1968
25	C7NN7B477B	1	Plate, Clutch Pressure Plate, Start Year: 04/01/1968
26	1P77523A	1	Ring, Snap, Rear Clutch Plate Retainer, Start Year: 01/01/1965
27	374841S	1	O-Ring, 2.425" ID x .103" Thk, Start Year: 01/01/1965
28	C0NN7B490A	1	Ring, Clutch Piston Pressure, Start Year: 01/01/1965
29	C0NN7B492A	1	Spring, Clutch Piston Spring Retainer, Start Year: 01/01/1965
30	C0NN7B488C	1	Spring, Clutch Piston, Prior to Serial No. 5H10C, Start Year: 01/01/1965
30	C0NN7B488C	2	Spring, Clutch Piston, After Serial No. 5H10C, Start Year: 01/01/1965
31	C0NN7B491A	1	Ring, Clutch Piston Spring Pivot, No Longer Serviced (NH-E), Start Year: 01/01/1965
32	86537552	1	Washer, Sun Gear Thrust, Rear, Start Year: 01/01/1965

5000-SERIES 4 CYL TRACTOR (1/65-1/75)

07G03 SELECT-O-SPEED - PUMP, "A" CARRIER, NO.1 BRAKE BAND - 5000

Ref	Part Number	Qty	Description
33	C5NN7B446A	1	Carrier Assy., Planet Gear, No Longer Serviced, Start Year: 01/01/1965
33A	C3NN7C075A	1	Ring, Planet Carrier Oil Collector, No Longer Serviced, Start Year: 01/01/1965
33B	379133S94	1	Seal, 4.487" x .103 Wide, No Longer Serviced (NH-E), Start Year: 01/01/1965
34	C0NN7C159A	1	Washer, Ring & Sun Gear Thrust, No Longer Serviced (NH-E), Start Year: 01/01/1965
35	C5NN7C076B	1	Gear, Ring & Sun, No Longer Serviced (NHNA), Start Year: 01/01/1965
36	312179	1	Washer, Ring & Sun Gear Thrust, No Longer Serviced (NH-E), Start Year: 01/01/1965
37	C0NN7A162A	1	Band Assy., Front, No Longer Serviced (NH-E), Start Year: 01/01/1965
38	C5NN2N650A	1	Screw, #1 Brake Band Adjusting, U.S., No Longer Serviced (NHNA), Start Year: 01/01/1965
39	351502S36	1	Washer, Flat, 5/8", Start Year: 01/01/1965
40	280374	1	Nut, G5, 5/8"-11, Start Year: 01/01/1965
41	C5NN7N158A	1	Strut, Front Band Adjusting, No Longer Serviced, Start Year: 01/01/1965
42	C5NN7N274B	1	Spring, #1 Brake Band Servo, No Longer Serviced (NHNA), Years: 01/01/1965-03/31/1968
42	C7NN7N274A	1	Spring, #1 Brake Band Servo, No Longer Serviced (NHNA), Start Year: 04/01/1968
43	C5NN7N275A	1	Retainer, #1 Brake Band Servo Spring, No Longer Serviced (NHNA), Start Year: 01/01/1965
44	C5NN7N272B	1	Piston, #1 Brake Band Servo, No Longer Serviced (NHNA), Years: 01/01/1965-03/31/1968
44	C7NN7N272A	1	Piston, #1 Brake Band Servo, U.S., No Longer Serviced (NHNA), Start Year: 04/01/1968
45	375858S	1	Ring, Snap, 1/2", No Longer Serviced (NH-E), Start Year: 01/01/1965
46	374715S	1	O-Ring, 1.799" ID x .103" Thk, Years: 01/01/1965-03/31/1968
46	382738S	1	O-Ring, 2.063 I.D. x .103 Wide, Start Year: 04/01/1968
47	C5NN7N273B	1	Rod, #1 Brake Band Servo Piston, U.S., No Longer Serviced (NHNA), Years: 01/01/1965-03/31/1968
47	C7NN7N273A	1	Rod, #1 Brake Band Servo Piston, U.S., No Longer Serviced (NHNA), Start Year: 04/01/1968
47A	87016S95	1	O-Ring, 90 Duro, .625" ID x .070" Thk, Start Year: 01/01/1965
48	87362	1	Washer, SAE, 5/16", Start Year: 01/01/1965
49	87307	1	Nut, Jam, G2, 5/16"-24, Start Year: 01/01/1965
50	C5NN7N030A	1	Cover, #1 Brake Band Servo, No Longer Serviced (NHNA), Years: 01/01/1965-03/31/1968
50	C7NN7N030A	1	Cover, #1 Brake Band Servo, No Longer Serviced (NHNA), Start Year: 04/01/1968
51	C7NN7C457B	1	Gasket, #1 Brake Band Servo Cover, Replaces P/N C5NN-7C457-A, Years: 01/01/1965-03/31/1968
51	C7NN7C457A	1	Gasket, #1 Brake Band Servo, No Longer Serviced, Start Year: 04/01/1968
52	304666S36	4	Screw, Cap, HH, G5, 3/8"-16 x 7/8", Start Year: 01/01/1965
53	88071	1	Plug, Pipe, 1/8"-27, Start Year: 01/01/1965
54	C7NN7N434C	1	Pin, Servo Check Valve, Replaces P/N C7NN-7N434-A, No Longer Serviced (NHNA), Start Year: 04/01/1968
55	C5NN7N219A	1	Spring, Servo Check Valve, Replaces P/N 9N-645, Start Year: 04/01/1968
56	C7NN7N436A	1	Valve, Servo Check, No Longer Serviced (NHNA), Start Year: 04/01/1968

07H02 SELECT-O-SPEED - "B" CARRIER, NO. 1 CLUTCH, NO. 2 BRAKE BAND & RELATED PARTS - 5000

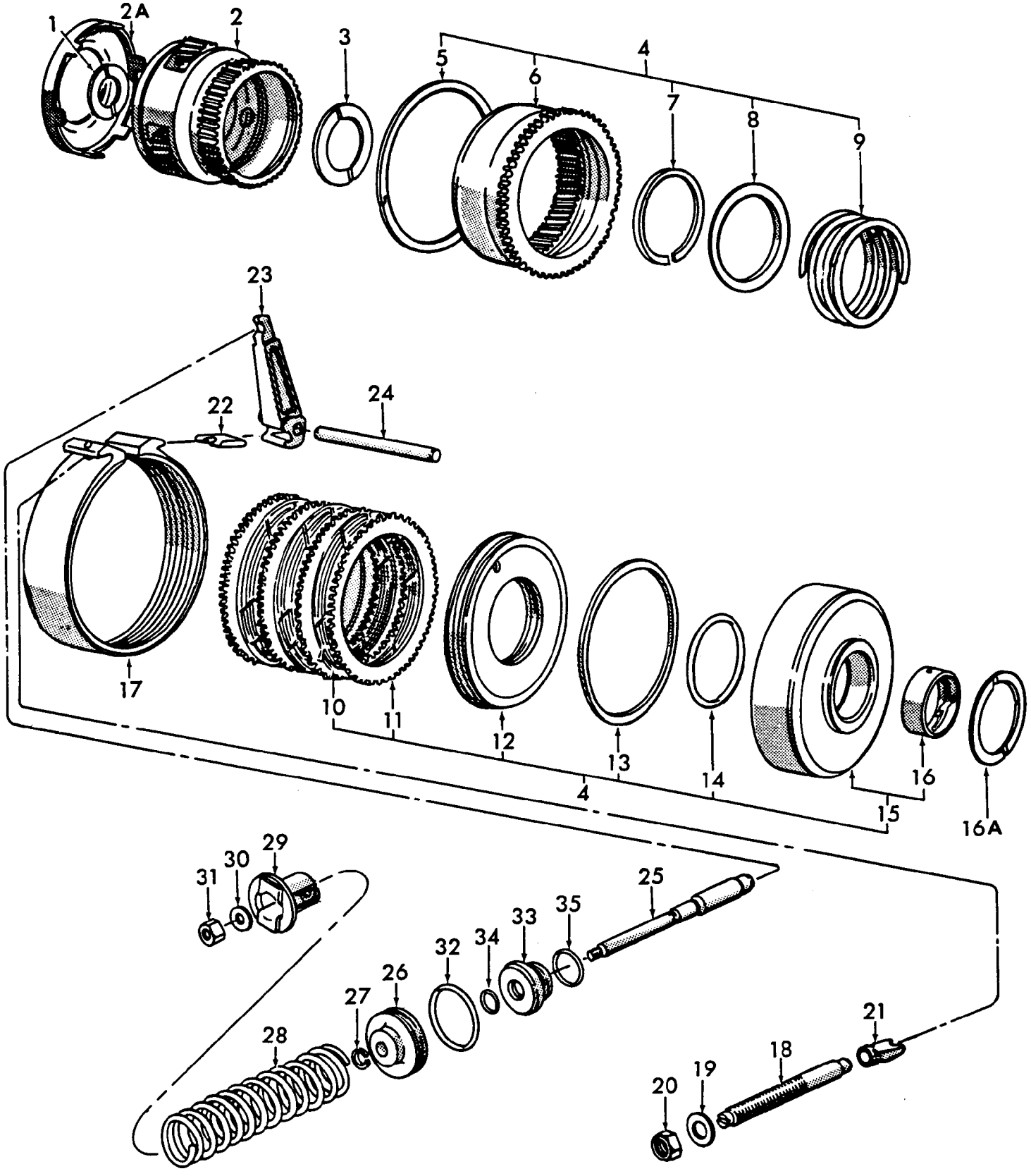

5000-SERIES 4 CYL TRACTOR (1/65-1/75)

07H02 SELECT-O-SPEED - "B" CARRIER, NO. 1 CLUTCH, NO. 2 BRAKE BAND & RELATED PARTS - 5000

Ref	Part Number	Qty	Description
1	312179	1	Washer, Ring & Sun Gear Thrust, No Longer Serviced (NH-E), Start Year: 01/01/1965
2	C5NN7797B	1	Carrier Assy., Planet Gear, No Longer Serviced, Start Year: 01/01/1965
2A	C5NN7N419A	1	Ring, Planet Carrier Oil Collector, No Longer Serviced (NHNA), Start Year: 01/01/1965
3	312195	1	Washer, #1 Clutch Housing, Front, No Longer Serviced (NH-E), Start Year: 01/01/1965
4	C5NN7A511A	1	Clutch Assy., #1, No Longer Serviced (NHNA), Years: 01/01/1965-03/31/1968
4	C7NN7A511A	1	Clutch Assy., #1 Includes: Ref. 5 thru 16, No Longer Serviced (NHNA), Start Year: 04/01/1968
5	9823829	1	Ring, Snap, Int, 5.918", Gear Retainer, Years: 01/01/1965-03/31/1968
5	9823829	1	Ring, Snap, Int, 5.918", Start Year: 04/01/1968
6	C5NN7N467A	1	Gear, No Longer Serviced, Years: 01/01/1965-03/31/1968
6	C7NN7N467A	1	Gear, No Longer Serviced (NHNA), Start Year: 04/01/1968
7	312204	1	Ring, Piston Spring Seat, Start Year: 01/01/1965
8	C3NN7D210A	1	Seat, Piston Spring, U.S., No Longer Serviced (NHNA), Start Year: 01/01/1965
9	D7NNC732A	1	Spring, Piston, Start Year: 01/01/1965
10	C0NN7B164B	5	Plate Assy., Internal Spline, Start Year: 01/01/1965
11	PBB77573A	5	Plate, External Spline, Start Year: 01/01/1965
12	C0NN7A258D	1	Piston, No Longer Serviced (NHNA), Years: 01/01/1965-03/31/1968
12	C7NN7A258A	1	Piston, No Longer Serviced (NHNA), Start Year: 04/01/1968
13	C0NN7A548A	1	Seal, Piston, Outer, 5.22/5.32 I.D., Years: 01/01/1965-03/31/1968
13	C7NN7A548A	1	Seal, Piston, Outer, 5.38/5.45 I.D., Start Year: 04/01/1968
14	372261S	1	O-Ring, 2.875" ID x .103" Thk, Start Year: 01/01/1965
15	C7NN7B451A	1	Housing Assy., Replaces P/N C0NN-7B451-C Includes: Housing & Ref. 16, No Longer Serviced (NHNA), Start Year: 01/01/1965
16	314299	1	Bush/Bushing, Start Year: 01/01/1965
16A	313974	AR	Washer, Housing, Rear, .062, Start Year: 01/01/1965
16A	313975	AR	Washer, Housing, Rear, .072, No Longer Serviced (NHNA), Start Year: 01/01/1965
16A	313976	AR	Washer, Housing, Rear, .082, No Longer Serviced (NHNA), Start Year: 01/01/1965
16A	313977	AR	Washer, Housing, Rear, .092, Start Year: 01/01/1965
16A	313978	AR	Washer, Housing, Rear, .102, Start Year: 01/01/1965
16A	314019	AR	Washer, Housing, Rear, .112, No Longer Serviced (NHNA), Start Year: 01/01/1965
16A	314020	AR	Washer, Housing, Rear, .122, Start Year: 01/01/1965
17	C0NN7B462C	1	Band Assy., #2 Brake, No Longer Serviced (NH-E), Start Year: 01/01/1965
18	C5NN2N651A	1	Screw, #2 Brake Band Adjusting, No Longer Serviced (NHNA), Start Year: 01/01/1965
19	351502S36	1	Washer, Flat, 5/8", Start Year: 01/01/1965
20	280374	1	Nut, G5, 5/8"-11, Start Year: 01/01/1965
21	PBB77422B	1	Strut, #2 Brake Band Adjusting, No Longer Serviced (NHNA), Start Year: 01/01/1965
22	1P77421A	1	Strut, #2 Brake Band Actuator, U.S., No Longer Serviced (NHNA), Start Year: 01/01/1965
23	C5NN7N422A	1	Lever, #2 Brake Band, No Longer Serviced, Start Year: 01/01/1965
24	379807S	1	Pin, .50 Dia. x 5.46 Groove, U.S., No Longer Serviced (NHNA), Start Year: 01/01/1965
25	C5NN7C200A	1	Rod, #2 Brake Band, No Longer Serviced (NHNA), Start Year: 01/01/1965
26	C0NN7B465B	1	Piston, #2 Brake Band Servo, No Longer Serviced (NHNA), Years: 01/01/1965-03/31/1968
26	C7NN7B465A	1	Piston, #2 Brake Band Servo, No Longer Serviced (NHNA), Start Year: 04/01/1968

07H02 SELECT-O-SPEED - "B" CARRIER, NO. 1 CLUTCH, NO. 2 BRAKE BAND & RELATED PARTS - 5000

Ref	Part Number	Qty	Description
27	375858S	1	Ring, Snap, 1/2", No Longer Serviced (NH-E), Start Year: 01/01/1965
28	C0NN7B463A	1	Spring, #2 Brake Band Servo, No Longer Serviced (NHNA), Years: 01/01/1965-03/31/1968
28	C7NN7B463A	1	Spring, #2 Brake Band Servo, U.S., No Longer Serviced (NHNA), Start Year: 04/01/1968
29	312232	1	Retainer Assy., #2 Brake Band Servo Spring, U.S., No Longer Serviced (NHNA), Start Year: 01/01/1965
30	80664	1	Washer, 5/16", Start Year: 01/01/1965
31	87305	1	Nut, Jam, G2, 1/4"-20, Start Year: 01/01/1965
32	372039S	1	O-Ring, 1.875" ID x .139" Thk, Piston, Years: 01/01/1965-03/31/1968
32	382739S	1	O-Ring, 2" ID x .139" Thk, Piston, Start Year: 04/01/1968
33	C5NN7N401A	1	Gudie, #2 Brake Band Servo Rod, U.S., No Longer Serviced (NHNA), Start Year: 01/01/1965
34	129979	1	O-Ring, .674" ID x .103" Thk, Start Year: 01/01/1965
35	87046S94	1	O-Ring, 1.312" ID x .103" Thk, Start Year: 01/01/1965

07J02 SELECT-O-SPEED - DISTRIBUTOR, "C" CARRIER, NO. 3 BRAKE BAND & RELATED PARTS - 5000

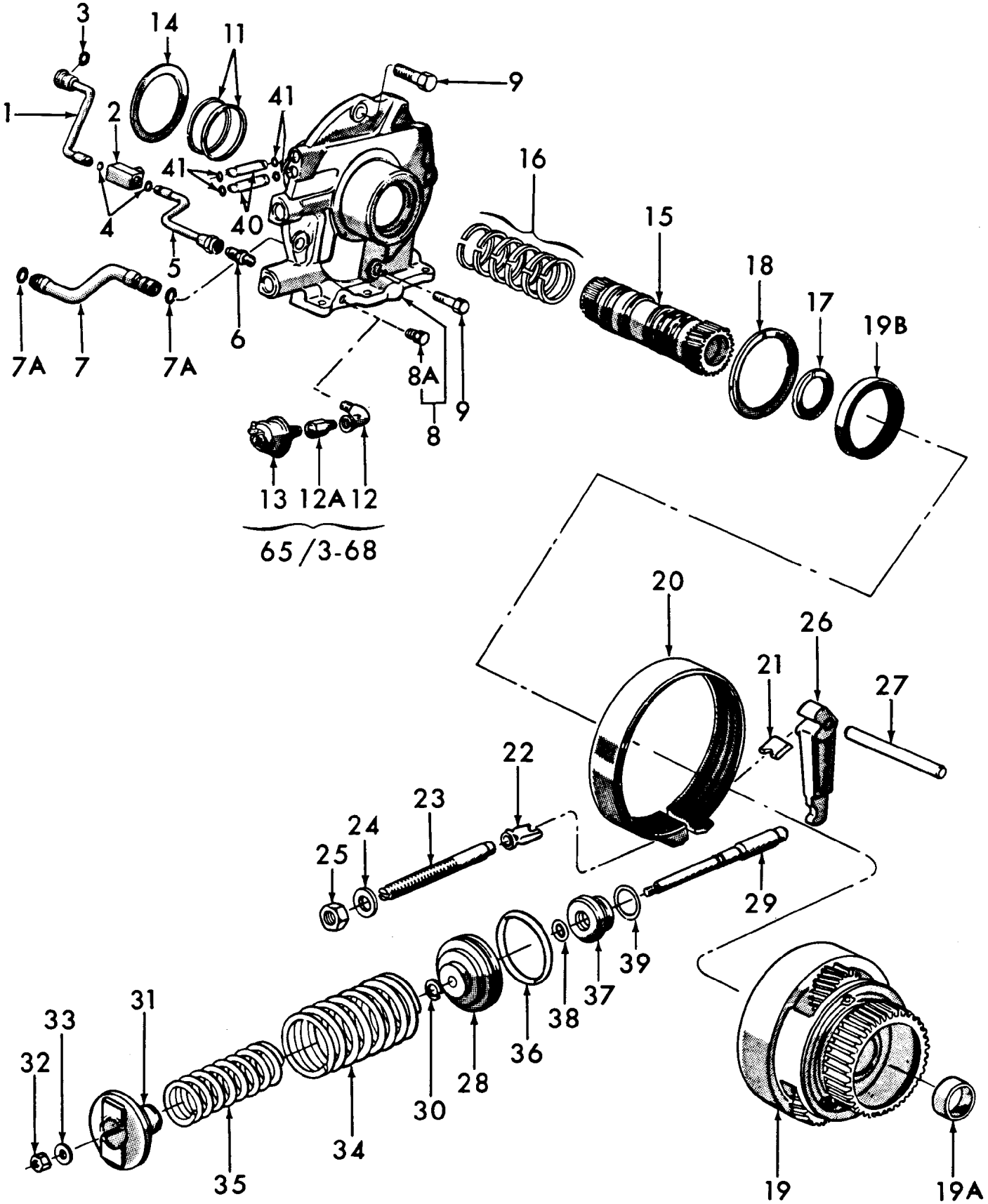

5000-SERIES 4 CYL TRACTOR (1/65-1/75)

07J02 SELECT-O-SPEED - DISTRIBUTOR, "C" CARRIER, NO. 3 BRAKE BAND & RELATED PARTS - 5000

Ref	Part Number	Qty	Description
1	C5NN7B481D	1	Tube Assy., Direct Drive Clutch Oil, No Longer Serviced, Start Year: 01/01/1965
2	C5NN7N494A	1	Tee, Direct Drive Clutch & #1 Brake Band, No Longer Serviced (NHNA), Start Year: 01/01/1965
3	129270	1	O-Ring, 90 Duro, .414" ID x .072" Thk, Start Year: 01/01/1965
4	9672548	1	O-Ring, .301" ID x .070" Thk, Start Year: 01/01/1965
5	C5NN7B493E	1	Tube Assy., #1 Brake Servo Oil, Replaces P/N C5NN-7B493-B, No Longer Serviced, Start Year: 01/01/196
6	87232S	1	Connector, 5/16"-20, Start Year: 01/01/1965
7A	130282	2	O-Ring, .489" ID x .070" Thk, Start Year: 01/01/1965
7	C5NN7B476A	1	Tube Assy., Oil Pump Pressure, No Longer Serviced (NHNA), Start Year: 01/01/1965
8	C7NN7B005A	1	Distributor Assy., Oil, Replaces P/N C5NN-D & C7NN-B Includes: Distributor & Ref. 8A, No Longer Serviced, Start Year: 01/01/1965
8A	88071	1	Plug, HH, 1/8"27 NPT, Basildon-Antwerp, Start Year: 01/01/1965
9	88206	4	Screw, Cap, HH, G5, 3/8"-16 x 1", Start Year: 01/01/1965
11	313864	2	Seal, Oil Distributor Sleeve, Start Year: 01/01/1965
12	357466S	1	Elbow, 1/8"-90°, No Longer Serviced (NHNA), Years: 01/01/1965-03/31/1968
12A	378298S	1	Adapter, 1/8"-27 Pipe, No Longer Serviced, Years: 01/01/1965-03/31/1968
13	C5NN10N847A	1	Switch Assy., Oil Pressure Warning Lamp, w/Cooler, No Longer Serviced (NHNA), Years: 01/01/1965-03/31/1968
13	C0NN7A475D	1	Switch Assy., Oil Pressure Warning Lamp, w/o Cooler, No Longer Serviced (NHNA), Years: 01/01/1965-03/31/1968
14	313974	AR	Washer, Housing, Rear, .062, Start Year: 01/01/1965
14	313975	AR	Washer, Housing, Rear, .072, No Longer Serviced (NHNA), Start Year: 01/01/1965
14	313976	AR	Washer, Housing, Rear, .082, No Longer Serviced (NHNA), Start Year: 01/01/1965
14	313977	AR	Washer, Housing, Rear, .092, Start Year: 01/01/1965
14	313978	AR	Washer, Housing, Rear, .102, Start Year: 01/01/1965
14	314019	AR	Washer, Housing, Rear, .112, No Longer Serviced (NHNA), Start Year: 01/01/1965
14	314020	AR	Washer, Housing, Rear, .122, Start Year: 01/01/1965
15	C5NN7D159B	1	Shaft, Sun Gear, No Longer Serviced (NHNA), Start Year: 01/01/1965
16	312202	6	Seal, Sun Gear Shaft Oil, Start Year: 01/01/1965
17	312020	1	Washer, Sun Gear Shaft Thrust, No Longer Serviced (NH-E), Start Year: 01/01/1965
18	312197	1	Washer, Gear Carrier Thrust, No Longer Serviced, Start Year: 01/01/1965
19	C5NN7B449E	1	Carrier Assy., Planet Gear Includes: Ref. 19A & 19B, No Longer Serviced, Start Year: 01/01/1965
19A	NS	AR	Bush/Bushing, Carrier, Front, Not Serviced
19B	NS	AR	Bush/Bushing, Carrier, Rear, Not Serviced
20	C0NN7B462C	1	Band Assy., #3 Brake, No Longer Serviced (NH-E), Start Year: 01/01/1965
21	1P77421A	1	Strut, #3 Brake Band Actuating, U.S., No Longer Serviced (NHNA), Start Year: 01/01/1965
22	PBB77422B	1	Strut, #3 Brake Band Adjusting, No Longer Serviced (NHNA), Start Year: 01/01/1965
23	C5NN2N651A	1	Screw, #3 Brake Band Adjusting, No Longer Serviced (NHNA), Start Year: 01/01/1965
24	351502S36	1	Washer, Flat, 5/8", Start Year: 01/01/1965
25	280374	1	Nut, G5, 5/8"-11, Start Year: 01/01/1965
26	C5NN7N421A	1	Lever, #3 Brake Band, No Longer Serviced (NHNA), Start Year: 01/01/1965
27	379807S	1	Pin, Groove, 1/2" x 5.46, No Longer Serviced (NHNA), Start Year: 01/01/1965

07J02 SELECT-O-SPEED - DISTRIBUTOR, "C" CARRIER, NO. 3 BRAKE BAND & RELATED PARTS - 5000

Ref	Part Number	Qty	Description
28	C5NN7A266B	1	Piston, #3 Brake Band Servo, U.S., No Longer Serviced (NHNA), Prior to Serial No. 5H18C, Start Year: 08/01/1965
28	C5NN7A266B	1	Piston, #3 Brake Band Servo, U.S., No Longer Serviced (NHNA), After Serial No. 5H17C, Start Year: 08/01/1965
29	C5NN7N276A	1	Rod, #3 Brake Band Servo Piston, U.S., No Longer Serviced (NHNA), Start Year: 01/01/1965
30	375858S	1	Ring, Snap, 1/2", No Longer Serviced (NH-E), Start Year: 01/01/1965
31	C5NN7N715A	1	Retainer Assy., #3 Brake Servo Spring, No Longer Serviced (NHNA), Start Year: 01/01/1965
32	86509310	1	Nut, G5, 3/8"-24, Start Year: 01/01/1965
33	87016	1	Washer, SAE, 3/8", Start Year: 01/01/1965
34	C5NN7B466A	1	Spring, #3 Brake Band Servo Outer, U.S., No Longer Serviced (NHNA), Start Year: 01/01/1965
35	C0NN7B463A	1	Spring, #3 Brake Band Servo Inner, No Longer Serviced (NHNA), Start Year: 01/01/1965
36	378031S	1	Seal, 2.984 I.D. x .139 Wide, Prior to Serial No. 5H18C, Years: 01/01/1965-08/31/1965
36	511284	1	O-Ring, 2.750" ID x .139" Thk, After Serial No. 5H17C, Start Year: 08/01/1965
37	312177	1	Guide, #3 Brake Band Piston Rod, No Longer Serviced (NHNA), Start Year: 01/01/1965
38	129979	1	O-Ring, .674" ID x .103" Thk, Start Year: 01/01/1965
39	87046S94	1	O-Ring, 1.312" ID x .103" Thk, Start Year: 01/01/1965
40	313325	2	Tube, #3 Brake Band Servo Oil Tube, No Longer Serviced, Start Year: 01/01/1965
41	9672548	4	O-Ring, .301" ID x .070" Thk, Start Year: 01/01/1965

07K03 SELECT-O-SPEED - MAINSHAFT, NO. 2 & NO. 3 CLUTCH & RELATED PARTS - 5000

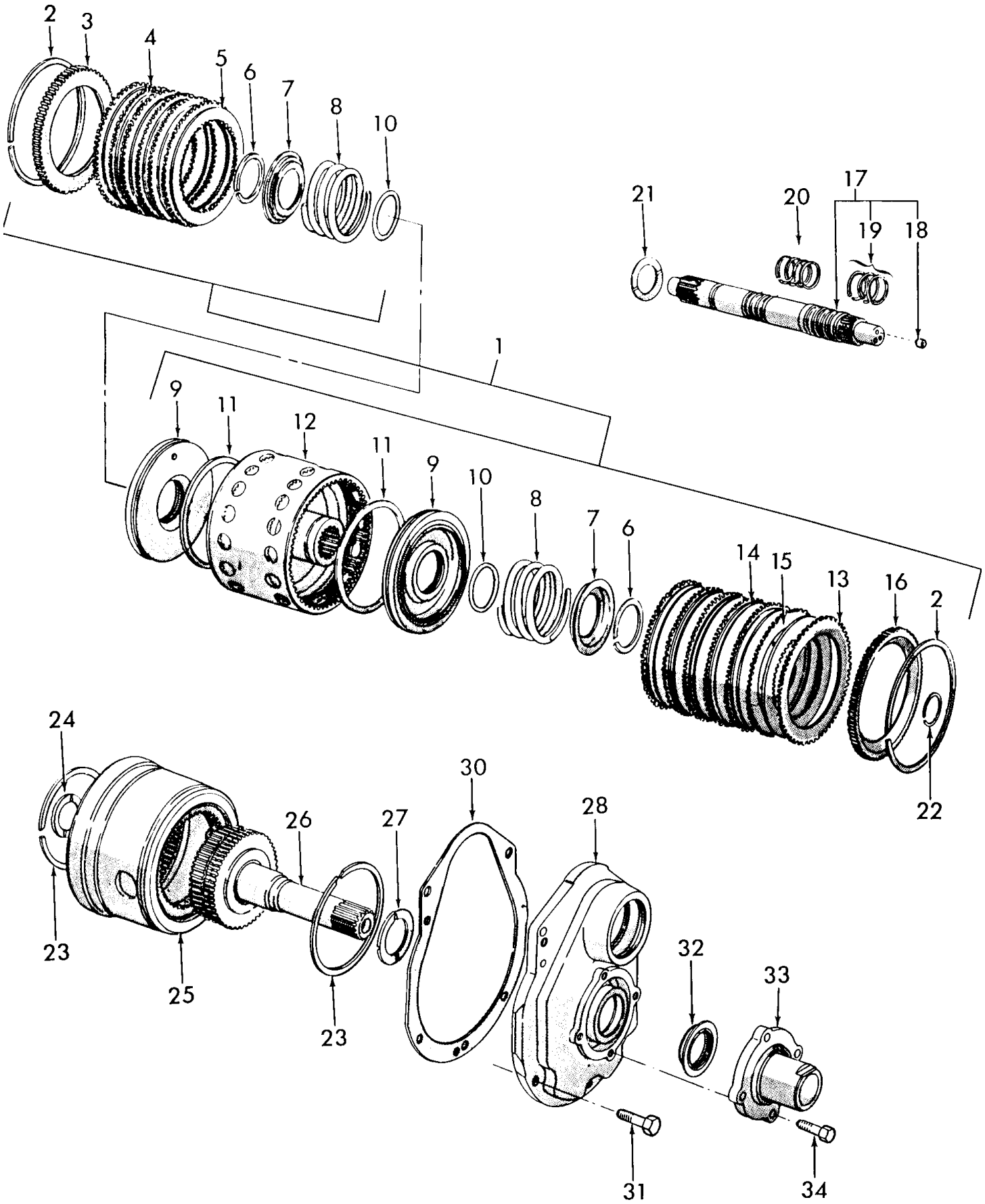

5000-SERIES 4 CYL TRACTOR (1/65-1/75)

07K03 SELECT-O-SPEED - MAINSHAFT, NO. 2 & NO. 3 CLUTCH & RELATED PARTS - 5000

Ref	Part Number	Qty	Description
1	C5NN7B453A	1	Clutch Assy., #2 & #3, No Longer Serviced (NHNA), Years: 01/01/1965-03/31/1968
1	C7NN7B453A	1	Clutch Assy., #2 & #3 Includes: Ref. 2 thru 16, No Longer Serviced (NHNA), Start Year: 04/01/1968
2	9823829	2	Ring, Snap, Int, 5.918", Pressure Plate, Years: 01/01/1965-03/31/1968
2	9823829	2	Ring, Snap, Int, 5.918", Pressure Plate, Start Year: 04/01/1968
3	C0NN7B455A	1	Plate, Clutch Pressure, Start Year: 01/01/1965
4	C0NN7B442A	6	Plate, External Spline, Start Year: 01/01/1965
5	C0NN7B164B	6	Plate Assy., Internal Spline, Start Year: 01/01/1965
6	PBB77517A	2	Ring, Piston Spring Retainer, Start Year: 01/01/1965
7	C3NN7D211A	2	Seat, Piston Spring, Start Year: 01/01/1965
8	D7NNC732A	2	Spring, Piston, Start Year: 01/01/1965
9	C0NN7B454C	2	Piston, Years: 01/01/1965-03/31/1968
9	C7NN7B454A	2	Piston, No Longer Serviced (NHNA), Start Year: 04/01/1968
10	373227S	2	O-Ring, 2.12" ID x .139" Thk, Start Year: 01/01/1965
11	C0NN7A548A	2	Seal, Piston Center, Years: 01/01/1965-03/31/1968
11	C7NN7A548A	2	Seal, Piston Center, Start Year: 04/01/1968
12	C5NN7A598B	1	Housing Assy., No Longer Serviced (NHNA), Start Year: 01/01/1965
13	C3NN7D196B	2	Plate Assy., External Spline, Start Year: 01/01/1965
14	C3NN7D196A	5	Plate Assy., External Spline, Start Year: 01/01/1965
15	C3NN7A405A	6	Plate, Internal Spline, Start Year: 01/01/1965
16	C3NN7D194B	1	Plate, Pressure, No Longer Serviced (NHNA), Start Year: 01/01/1965
17	C5NN7C094B	1	Shaft Assy., Main Includes: Shaft, Ref. 18 & 19, No Longer Serviced (NHNA), Start Year: 01/01/1965
18	375463S	1	Plug, Cup, No Longer Serviced (NHNA), Start Year: 01/01/1965
19	312239	3	Seal, Transmission Main Shaft Oil, Start Year: 01/01/1965
20	312213	4	Seal, Main Shaft Oil Front, Start Year: 01/01/1965
21	312020	1	Washer, Clutch Housing Thrust, #2 & #3, No Longer Serviced (NH-E), Start Year: 01/01/1965
22	312206	1	Ring, Clutch Housing Retainer Snap, #2 & #3, Start Year: 01/01/1965
23	86531359	2	Ring, Snap, Ext, 4.236", Transmission Gear Retainer, Start Year: 01/01/1965
24	312099	1	Washer, Sun Gear Thrust Front, No Longer Serviced, Start Year: 01/01/1965
25	C5NN7B468C	1	Gear, Ring, No Longer Serviced (NHNA), Start Year: 01/01/1965
26	C5NN7060G	1	Shaft Assy., Output, No Longer Serviced (NHNA), Start Year: 01/01/1965
27	C5NN7A385B	AR	Washer, Thrust, .102 (2.591mm), No Longer Serviced (NHNA), Start Year: 01/01/1965
27	C5NN7A385C	AR	Washer, Thrust, .112 (2.845mm), No Longer Serviced (NHNA), Start Year: 01/01/1965
27	C5NN7A385D	AR	Washer, Thrust, .121 (3.073mm), Start Year: 01/01/1965
27	C5NN7A385E	AR	Washer, Thrust, .132 (3.353mm), No Longer Serviced (NHNA), Start Year: 01/01/1965
27	C5NN7A385F	AR	Washer, Thrust, .142 (3.607mm), No Longer Serviced (NHNA), Start Year: 01/01/1965
28	C5NN7A383G	1	Support Assy., Rear, U.S., No Longer Serviced (NHNA), Start Year: 01/01/1965
	D8NN7N382AA	2	Bushing, Transmission Rear Support, No Longer Serviced (NHNA), Start Year: 01/01/1965
30	C5NN7A388A	1	Gasket, Rear Support, Start Year: 01/01/1965
31	304705S36	5	Screw, Cap, HH, G5, 7/16"-14 x 1-1/8", Start Year: 01/01/1965
32	B9NN7048A	1	Oil Seal Assy., Output Shaft, Start Year: 01/01/1965
33	NLS	1	Support, Hydraulic Pump Idler Gear, No Longer Serviced, Years: 01/01/1965-12/31/1968

07K03 SELECT-O-SPEED - MAINSHAFT, NO. 2 & NO. 3 CLUTCH & RELATED PARTS - 5000

Ref	Part Number	Qty	Description
33	C7NNN634B	1	Support, Hydraulic Pump Idler Gear, No Longer Serviced, Start Year: 01/01/1969
34	304666S36	4	Screw, Cap, HH, G5, 3/8"-16 x 7/8", Start Year: 01/01/1965

07M02 SLEECT-O-SPEED - CONTROL FEATHERING PEDAL & RELATED PARTS - 5000

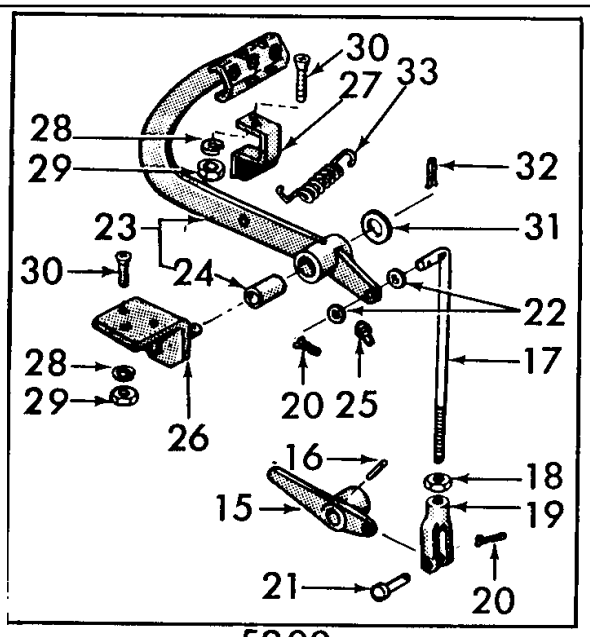

5200

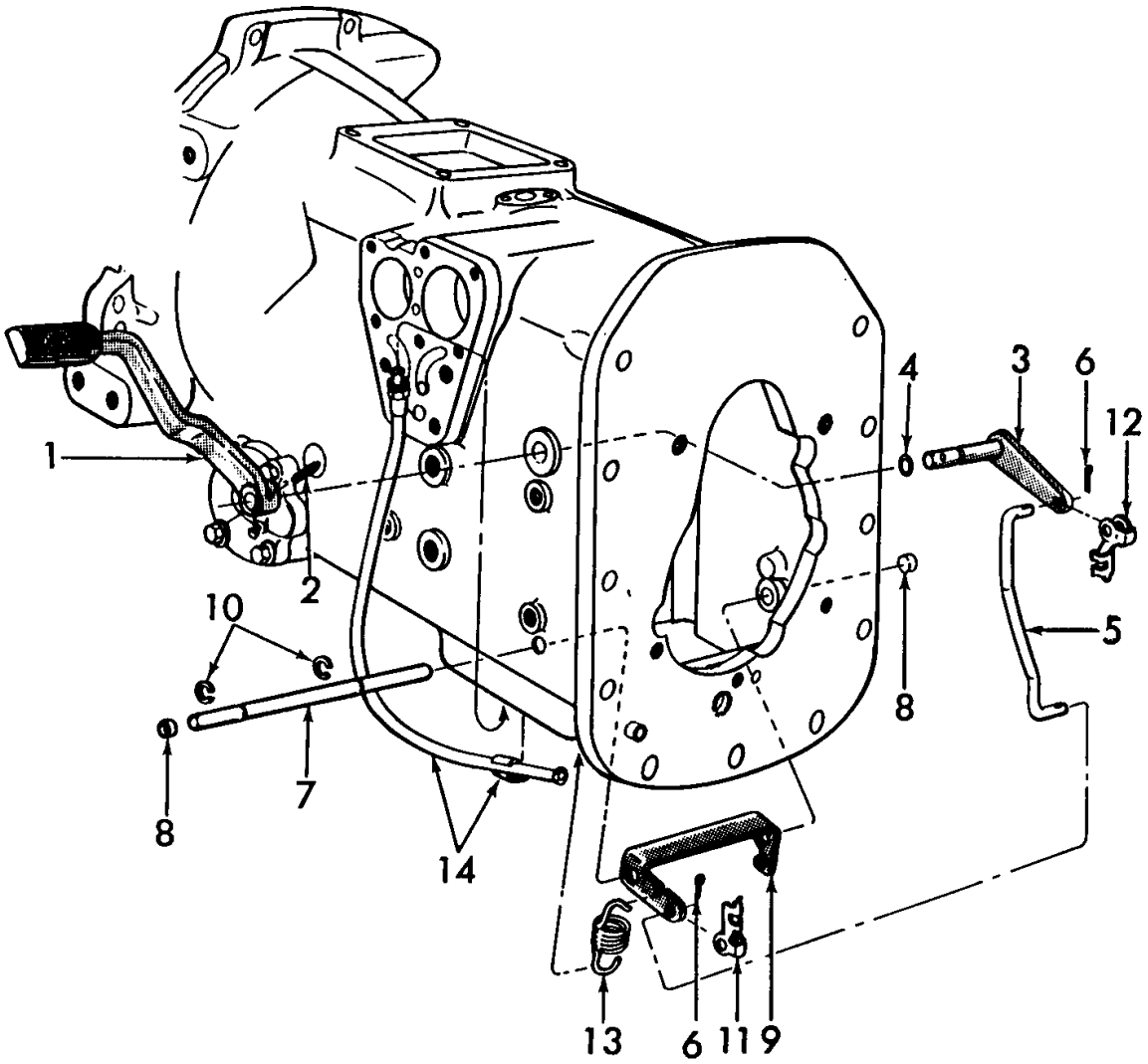

5000-SERIES 4 CYL TRACTOR (1/65-1/75)

07M02 SLEECT-O-SPEED - CONTROL FEATHERING PEDAL & RELATED PARTS - 5000

Ref	Part Number	Qty	Description
1	C5NN7A336C	1	Pedal, Feathering, 5100, No Longer Serviced, Start Year: 01/01/1965
2	118827	1	Pin, Roll, 3/16" x 1", Start Year: 01/01/1965
3	C5NN7N337A	1	Shaft Assy., Feathering Pedal, Years: 01/01/1965-12/31/1967
3	C5NN7N337B	1	Shaft Assy., Feathering Pedal, No Longer Serviced (NHNA), Start Year: 01/01/1968
4	87008S94	1	O-Ring, .375" ID x .070" Thk, Start Year: 01/01/1965
5	C5NN7N344A	1	Rod, Feathering Pedal, No Longer Serviced (NHNA), Start Year: 01/01/1965
6	280250	2	Pin, Split Cotter, 3/32" x 3/4", Start Year: 01/01/1965
7	C5NN7N184A	1	Shaft, Feathering Valve Rocker, No Longer Serviced (NHNA), Start Year: 01/01/1965
8	376635S	2	Plug, Cup, .447/.449 Dia., Start Year: 01/01/1965
9	C5NN7N206D	1	Rocker, Feathering Valve, When replacing P/N C5NN-7N206-A (87763042) also use (1) P/N C5NN-7N337-B, Shaft, No Longer Serviced (NHNA), Start Year: 01/01/1965
10	97470S	2	Ring, Circlip, Ext, .4375", Start Year: 01/01/1965
11	D9NN9825AB	1	Clip, Rod End Clevis, R.H., Start Year: 01/01/1965
12	174273	1	Clip, Rod End Clevis, L.H., Start Year: 01/01/1965
13	C5NN7N205A	1	Spring, Pedal Return, No Longer Serviced, Start Year: 01/01/1965
14	C5NN7A484A	1	Conduit Assy., Control Valve Cable, No Longer Serviced (NHNA), Start Year: 01/01/1965
15	C5NN7N557A	1	Adapter, Feathering, Replaces C5NN7N557B, 5200, NHNA Only, No Longer Serviced, Start Year: 01/01/1967
16	118827	1	Pin, Roll, 3/16" x 1", 5200, Start Year: 01/01/1967
17	C5NN7N344D	1	Rod, Feathering Pedal, 5200, NHNA Only, No Longer Serviced, Start Year: 01/01/1967
18	87307	1	Nut, Jam, G2, 5/16"-24, 5200, No Longer Serviced, Start Year: 01/01/1967
19	97012S36	1	Clevis, Adjustable, 5/16"-24 x 2-1/4", 5200, Start Year: 01/01/1967
20	280250	2	Pin, Split Cotter, 3/32" x 3/4", 5200, Start Year: 01/01/1967
21	73904S8	1	Pin, Clevis, 5/16" x 1, 5200, Start Year: 01/01/1967
22	44722S8	2	Washer, 5/16", 5200, NHNA Only, No Longer Serviced, Start Year: 01/01/1967
23	C5NN7A335C	1	Pedal Assy., Feathering, 5200 Includes: Pedal & Ref. 24, NHNA Only, No Longer Serviced, Start Year: 01/01/1967
24	C5NN7A338A	1	Bushing, Pedal, 5200, NHNA Only, No Longer Serviced, Start Year: 01/01/1967
25	87934S8	1	Fitting, Drive, 5/16" x 19/32", 5200, NHNA Only, No Longer Serviced, Start Year: 01/01/1967
26	C5NN7A344B	1	Bracket Assy., Feathering Pedal, 5200, NHNA Only, No Longer Serviced, Start Year: 01/01/1967
27	C5NN7B520G	1	Stop, Clutch Pedal, 5200, NHNA Only, No Longer Serviced, Start Year: 01/01/1967
28	80681	5	Washer, Lock, 5/16", 5200, Start Year: 01/01/1967
29	9635082	5	Nut, G5, 5/16"-18, 5200, Start Year: 01/01/1967
30	50046S43	5	Screw, Flat Hd, 5/16"-18 x 7/8", 5200, NHNA Only, No Longer Serviced, Start Year: 01/01/1967
31	44734S8	1	Washer, 1/2", 5200, NHNA Only, No Longer Serviced, Start Year: 01/01/1967
32	280251	1	Pin, Split Cotter, 3/32" x 1", 5200, Start Year: 01/01/1967
33	C5NN7A337A	1	Spring, Pedal Return, 5200, NHNA Only, Start Year: 01/01/1967

07N02 SELECT-O-SPEED - TRANSMISSION CONTROL VALVE & RELATED PARTS - 5000

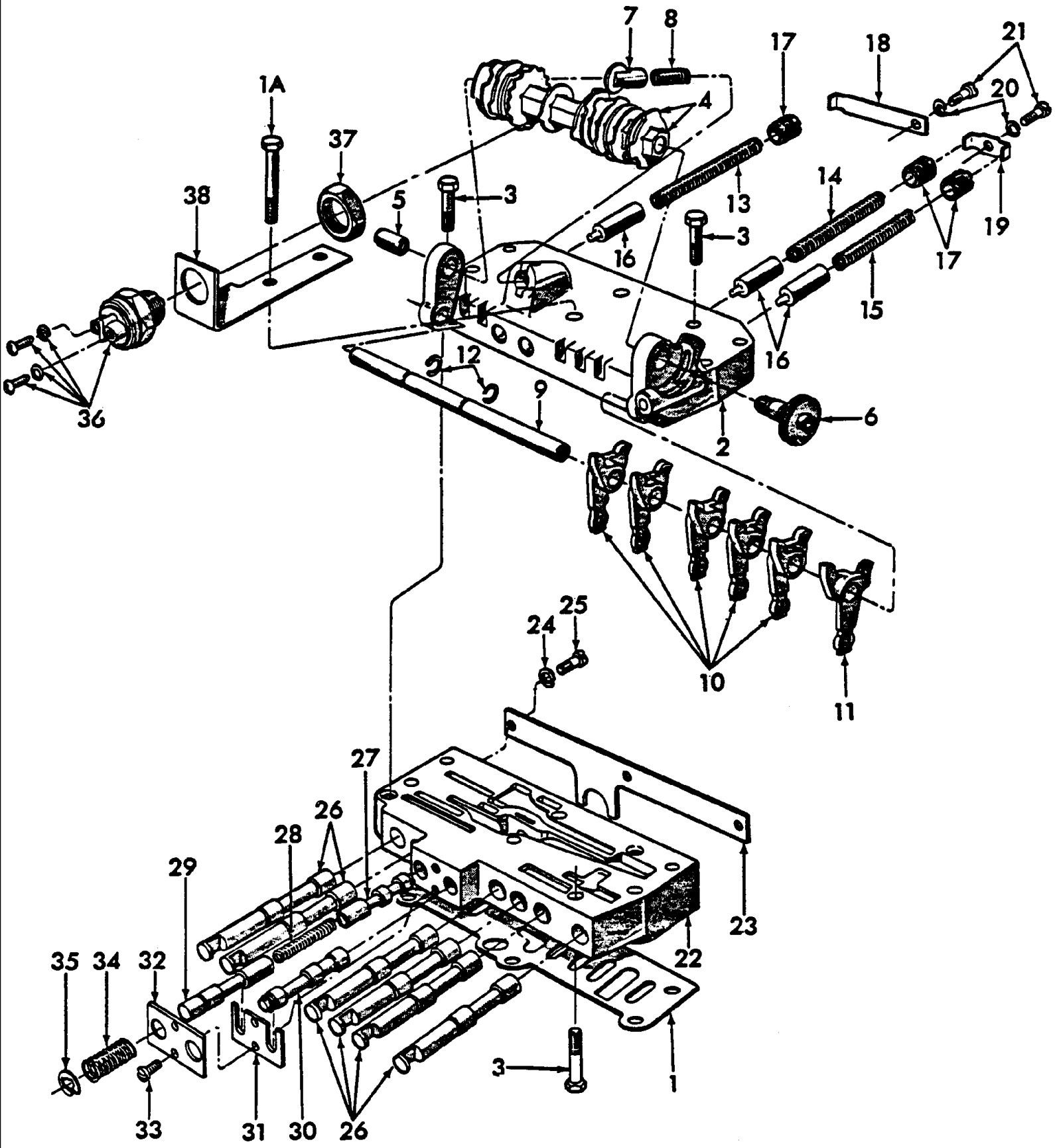

5000-SERIES 4 CYL TRACTOR (1/65-1/75)

07N02 SELECT-O-SPEED - TRANSMISSION CONTROL VALVE & RELATED PARTS - 5000

Ref	Part Number	Qty	Description
1	C5NN7C155A	1	Gasket, Body, Start Year: 01/01/1965
1A	87405	6	Screw, Cap, HH, G5, 1/4"-20 x 2-1/4", No Longer Serviced (NH-E), Start Year: 01/01/1965
	C5NN7A091S	1	Body Assy., Except Germany, No Longer Serviced, Start Year: 01/01/1965
	NLS	AR	Body Assy., Germany Only Includes: Ref. 2 thru 35, No Longer Serviced
2	C5NN7C149D	1	Housing Assy., Upper, No Longer Serviced (NHNA), Start Year: 01/01/1965
3	87716	3	Cap, HH, G5, 1/4"-20 x 1-1/4", Start Year: 01/01/1965
4	C5NN7B234F	1	Cam & Shaft Assy., Except Germany, No Longer Serviced, Start Year: 01/01/1965
4	C5NN7B234H	1	Cam & Shaft Assy., Germany, No Longer Serviced, Start Year: 01/01/1965
5	312338	1	Trunnion, Camshaft, No Longer Serviced (NHNA), Start Year: 01/01/1965
6	C5NN7N350A	1	Wheel & Trunnion Assy., Camshaft, No Longer Serviced (NHNA), Start Year: 01/01/1965
7	C5NN7C205A	1	Follower Assy., Detent, Replaces C0NN-7C205-A, No Longer Serviced (NHNA), Start Year: 01/01/1965
8	C5NN7C204A	1	Spring, Detent Follower, No Longer Serviced, Start Year: 01/01/1965
9	C5NN7A402A	1	Shaft, Shaft Rocker Arm, No Longer Serviced (NHNA), Start Year: 01/01/1965
10	C5NN7N412B	5	Arm, Cam Rocker, No Longer Serviced, Start Year: 01/01/1965
11	C5NN7N412A	1	Arm, Cam Rocker, U.S., No Longer Serviced (NHNA), Start Year: 01/01/1965
12	ECR99987A	2	Retainer, Cam Rocker Arm to Shaft, No Longer Serviced (NHNA), Start Year: 01/01/1965
13	C5NN7N250A	1	Spring, Sequencing Valve, No Longer Serviced, Start Year: 01/01/1965
14	C5NN7B201B	1	Spring, Pressure Regulator Valve, No Longer Serviced (NHNA), Start Year: 01/01/1965
15	C0NN7B201A	1	Spring, Pressure Regulator Valve, No Longer Serviced (NHNA), Start Year: 01/01/1965
16	C5NN7B200B	3	Valve, Pressure Regulator, No Longer Serviced (NHNA), Start Year: 01/01/1965
17	C5NN7B203A	3	Screw, Spring Adjusting, Replaces C0NN-7B203-A, No Longer Serviced, Start Year: 01/01/1965
18	C5NN7N091A	1	Retainer, Screw, Valve Spring, Long, No Longer Serviced (NHNA), Start Year: 01/01/1965
19	314000	1	Retainer, Screw, Valve Spring, Short, No Longer Serviced (NHNA), Start Year: 01/01/1965
20	80684	AR	Washer, Lock, #10
21	54040S8	2	Screw, Fillister Hd, #10-24 x 3/8", No Longer Serviced, Start Year: 01/01/1965
22	C5NN7C152B	1	Housing, Lower, No Longer Serviced (NHNA), Start Year: 01/01/1965
23	C5NN7N343A	1	Retainer, Spring, Gear Shift Valve, U.S., No Longer Serviced (NHNA), Start Year: 01/01/1965
24	80684	3	Washer, Lock, #10, Start Year: 01/01/1965
25	54040S8	3	Screw, Fillister Hd, #10-24 x 3/8", No Longer Serviced, Start Year: 01/01/1965
26	C5NN7N235A	6	Valve, Gear Shift, No Longer Serviced, Start Year: 01/01/1965
27	C5NN7N416B	1	Valve, Feathering, No Longer Serviced (NHNA), Start Year: 01/01/1965
28	C5NN7N418A	1	Spring, Valve, Feathering, No Longer Serviced (NHNA), Start Year: 01/01/1965
29	C5NN7N391B	1	Plunger, Valve, Feathering, No Longer Serviced (NHNA), Start Year: 01/01/1965
30	313696	1	Valve, Gear Shift, No Longer Serviced (NHNA), Start Year: 01/01/1965
31	312284	1	Plate, Retainer, Feathering Valve Plunger, No Longer Serviced, Start Year: 01/01/1965
32	313795	1	Plate, Spring, Feathering Valve Plunger, U.S., No Longer Serviced (NHNA), Start Year: 01/01/1965
33	54040S8	2	Screw, Fillister Hd, #10-24 x 3/8", No Longer Serviced, Start Year: 01/01/1965
34	312255	1	Spring, Feathering Valve Plunger, No Longer Serviced (NHNA), Start Year: 01/01/1965
35	358675S2	1	Ring, Snap, .296-.302, Circlip, Start Year: 01/01/1965
36	C7NN7A247B	1	Switch Assy., Safety Starting, Start Year: 01/01/1965

07N02 SELECT-O-SPEED - TRANSMISSION CONTROL VALVE & RELATED PARTS - 5000

Ref	Part Number	Qty	Description
37	C7NN11N007B	1	Bracket, Safety Starting Switch, Replaces C7NN-11N007-A, No Longer Serviced (NHNA), Start Year: 01/01/1965
38	359041S2	1	Nut, Hex, 3/4"-16, Start Year: 01/01/1965
39	314124	1	Clip, Safety Switch Ground, Not Shown, NHNA Only, No Longer Serviced, Start Year: 01/01/1965

07P02 SELECT-O-SPEED - CONTROL SELECTOR ASSEMBLY & RELATED PARTS - 5000

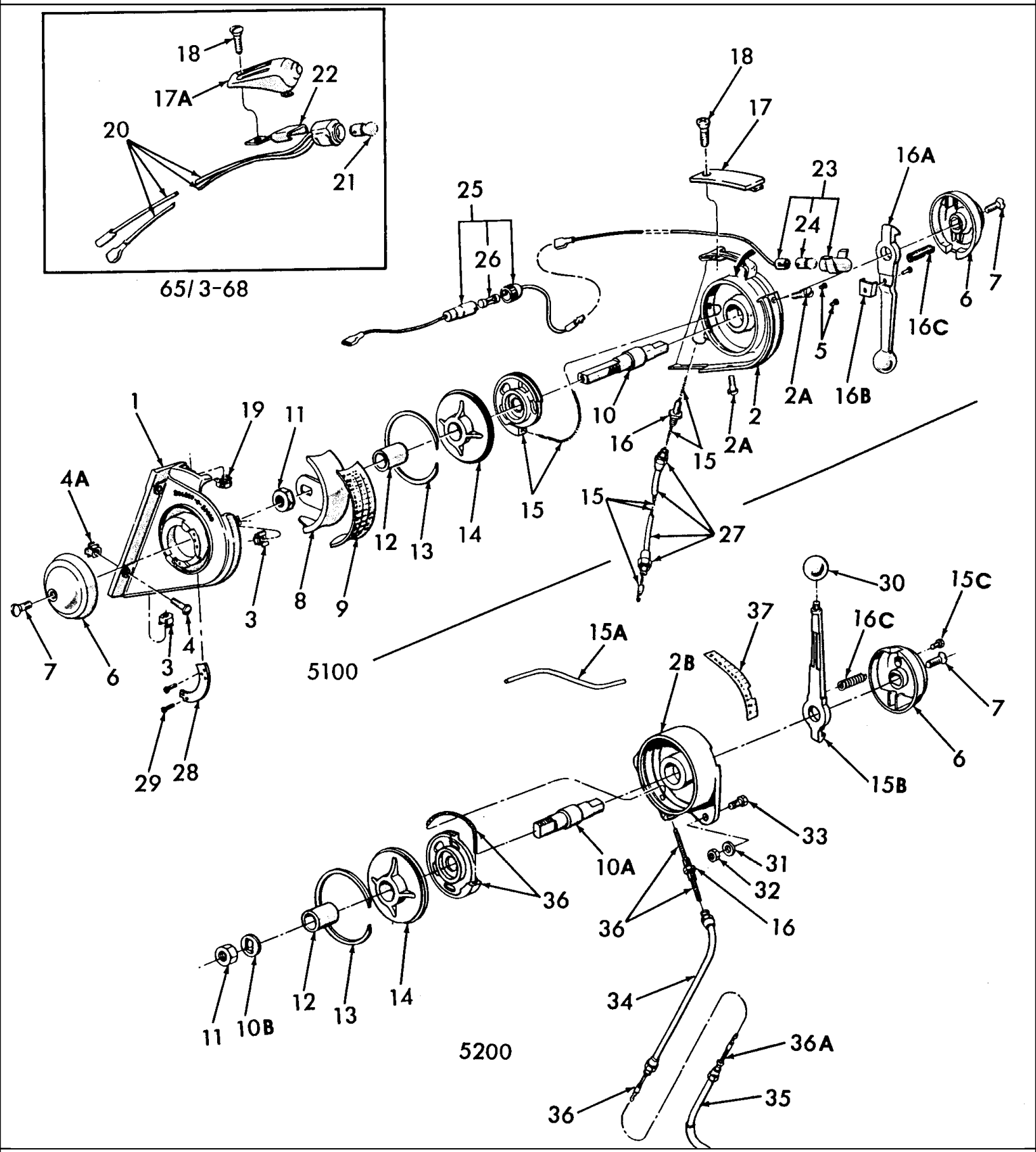

5000-SERIES 4 CYL TRACTOR (1/65-1/75)

07P02 SELECT-O-SPEED - CONTROL SELECTOR ASSEMBLY & RELATED PARTS - 5000

Ref	Part Number	Qty	Description
	C7NN7200B	1	Selector Assy., 5100, No Longer Serviced, Start Year: 01/01/1965
	C5NN7200N	1	Selector Assy., 5200, Includes: Ref. 1 thru 24, Start Year: 01/01/1967
1	C5NN7N308B	1	Housing, LH, 5100, No Longer Serviced, Start Year: 01/01/1965
2	C5NN7A306B	1	Housing, RH, 5100, No Longer Serviced, Start Year: 01/01/1965
2A	382036S100	2	Screw, Pan Hd., 1/4"-28 x .50, 5100, No Longer Serviced, Start Year: 01/01/1965
2B	C5NN7A307C	1	Housing, 5200, NHNA Only, No Longer Serviced, Start Year: 01/01/1967
3	357253S2	2	Nut Assy., Caged, 1/4"-28, 5100, No Longer Serviced (NHNA), Start Year: 01/01/1965
4	86511932	4	Screw, Pan Hd, G5, 1/4"-20 x 3/4", 5100, Start Year: 01/01/1965
4A	358816S2	4	Nut Assy., Caged, 1/4"-20, 5100, Start Year: 01/01/1965
5	372839S8	2	Screw, #10-24 x .25 (Not Serviced in U.S.), 5100, No Longer Serviced (NHNA), Start Year: 01/01/1965
6	C5NN7N013A	2	Cover Assy., RH & LH, 5100, Start Year: 01/01/1965
6	C5NN7N013A	1	Cover Assy., RH & LH, 5200, Start Year: 01/01/1967
7	382035S100	1/2	Screw, Cross Recessed Hd., 5/16"-18 x 3/4", No Longer Serviced, Start Year: 01/01/1965
8	312211	1	Indicator, L/Label, Start Year: 01/01/1965
9	C5NN7B168F	1	Indicator, Label, 5100, Start Year: 01/01/1965
10	86531358	1	Shaft, 5.12" (130.05mm), 5100, No Longer Serviced (NH-E), Start Year: 01/01/1965
10A	C5NN7A308A	1	Shaft, 3.72" (94.49mm), 5200, No Longer Serviced
10B	C5NN7E132A	1	Washer, Shaft, 5200, NHNA Only, No Longer Serviced, Start Year: 01/01/1967
11	87313	1	Nut, Jam, G2, 3/4"-16, Start Year: 01/01/1965
12	313940	1	Spacer, Indicator, Start Year: 01/01/1965
13	140753	1	Ring, Snap, Wheel Retaining Plate, No Longer Serviced (NHNA), Start Year: 01/01/1965
14	312379	1	Plate , Wheel Retaining, No Longer Serviced (NHNA), Start Year: 01/01/1965
15	C5NN7A487B	1	Wheel & Cable Assy., Upper, 22-1/2", 5100, Start Year: 01/01/1965
15A	C5NN7A482A	1	Cable Assy., Lower, 26", 5100, No Longer Serviced (NH-E), Start Year: 01/01/1967
15B	C5NN7200N	1	Lever, Lower, 5200, No Longer Serviced, Start Year: 01/01/1967
15C	C5NN7B226J	2	Stop, Lever, 5200, NHNA Only, No Longer Serviced, Start Year: 01/01/1967
16	373321S8B	1	Connector, No Longer Serviced (NHNA), Start Year: 01/01/1965
16A	C5NN7202E	1	Lever Assy., 5100, Start Year: 01/01/1965
16B	C0NN7C170A	1	Plate, Lever Wear, 5100, Start Year: 01/01/1965
16C	312308	1	Spring, Lever, Start Year: 01/01/1965
17	312245	1	Cover, Lamp, 5100, No Longer Serviced (NHNA), Start Year: 04/01/1968
17A	NLS	1	Lens, Transmission Oil Pressure Warning Lamp, No Longer Serviced, Years: 01/01/1965-03/31/1968
18	382037S100	1	Screw, Pan Hd., 1/4"-28 x .88, 5100, No Longer Serviced (NH-E), Years: 01/01/1965-03/31/1968
18	50412S13	1	Screw, Oval Hd., 1/4"-28 x .62, 5100, No Longer Serviced, Start Year: 04/01/1968
19	357253S2	1	Nut Assy., Caged, 1/4"-28, 5100, No Longer Serviced (NHNA), Start Year: 01/01/1965
20	C5NN10N850A	1	Socket & Wiring Assy., Oil Pressure Warning Lamp, 5100, No Longer Serviced (NHNA), Years: 01/01/1965-03/31/1968
21	214045	1	Bulb, Warning Lamp, 5100, Years: 01/01/1965-03/31/1968
22	C5NN10N841A	1	Clip, Oil Pressure Warning Lamp, 5100, No Longer Serviced (NHNA), Years: 01/01/1965-03/31/1968
23	C5NN15A801A	1	Lamp Assy., Indicator, Includes Bulb, 5100, No Longer Serviced (NHNA), Start Year: 01/01/1965
24	8MB15021	1	Bulb, Control Selector Lamp, 5100, Start Year: 01/01/1965

07P02 SELECT-O-SPEED - CONTROL SELECTOR ASSEMBLY & RELATED PARTS - 5000

Ref	Part Number	Qty	Description
25	C5NN10N860A	1	Harness Assy., Oil Pressure Warning Lamp, FTO-E, 5100, Includes: Ref. 26, No Longer Serviced (NHNA), Start Year: 01/01/1965
26	51A14526B	1	Fuse, 5100, Start Year: 01/01/1965
27	C5NN7A486C	1	Conduit Assy., Cable, 5100, Start Year: 01/01/1965
28	B9NN7A463A	1	Plate, Neutral By-Pass, 5100, No Longer Serviced (NHNA), Start Year: 01/01/1965
29	372839S8	2	Screw, #10-24 x .25, 5100, No Longer Serviced (NHNA), Start Year: 01/01/1965
30	C5NN7213A	1	Ball Assy., Lever, 5200, Start Year: 01/01/1967
31	80702	2	Washer, 3/8", 5200, Start Year: 01/01/1967
32	86509310	2	Nut, G5, 3/8"-24, 5200, Start Year: 01/01/1967
33	280372	2	Screw, Cap, HH, G5, 3/8"-24 x 1-1/8", 5200, Start Year: 01/01/1967
34	C5NN7A486F	1	Conduit Assy., Cable, Upper, 5200, NHNA Only, No Longer Serviced, Start Year: 01/01/1967
35	C5NN7N396A	1	Conduit Assy., Cable, Lower, 5200, NHNA Only, No Longer Serviced, Start Year: 01/01/1967
36	313563	1	Wheel & Cable Assy., Upper, 19", 5200, NHNA Only, Start Year: 01/01/1967
36A	C5NN7N402A	1	Cable Assy., Lower, 13" (33.02cm), 5200, NHNA Only, Start Year: 01/01/1967
37	C7NN7B168A	1	Indicator, Label, Replaces C5NN7B168G, 5200, NHNA Only, No Longer Serviced, Start Year: 01/01/1967

07Q02 SELECT-O-SPEED - TRANSMISSION OIL COOLER TUBES - 5000

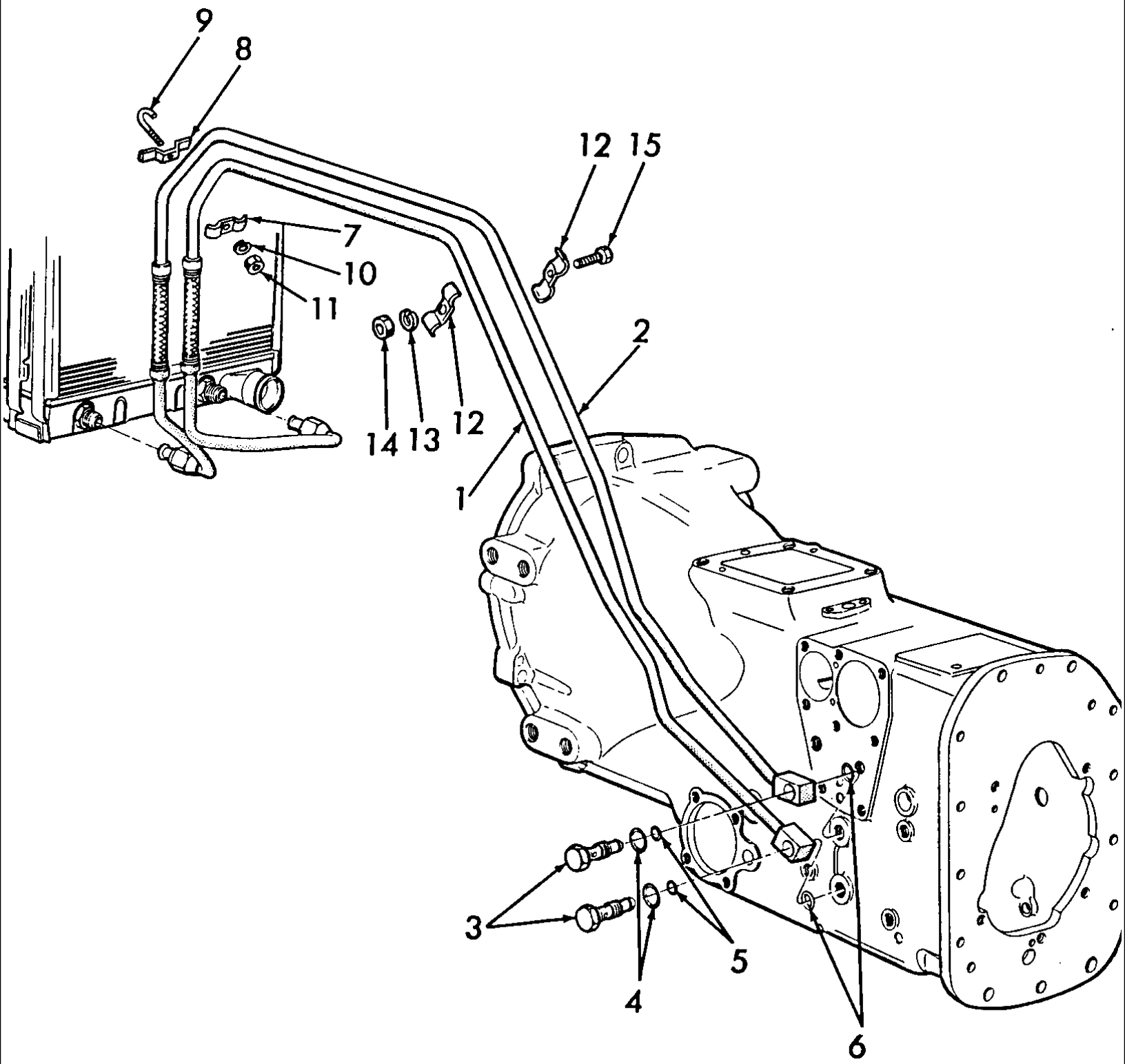

5000-SERIES 4 CYL TRACTOR (1/65-1/75)

07Q02 SELECT-O-SPEED - TRANSMISSION OIL COOLER TUBES - 5000

Ref	Part Number	Qty	Description
1	C5NN7A030N	1	Tube Assy., Inlet, Replaces C5NN-7A030-D, 5100, Start Year: 01/01/1965
	C5NN7A030Y	1	Tube Assy., Inlet, Front, 5200, NHNA Only, No Longer Serviced, Start Year: 01/01/1967
	C5NN7A030Z	1	Tube Assy., Inlet, Rear, 5200, NHNA Only, No Longer Serviced, Start Year: 01/01/1967
2	C5NN7A031S	1	Tube Assy., Outlet, Replaces C5NN-7A031-D, 5100, No Longer Serviced (NHNA), Start Year: 01/01/1966
	C5NN7A031AC	1	Tube Assy., Outlet, Front, 5200, NHNA Only, No Longer Serviced, Start Year: 01/01/1967
	C5NN7A031AD	1	Tube Assy., Outlet, Rear, 5200, NHNA Only, No Longer Serviced, Start Year: 01/01/1967
3	C5NN7D192B	2	Bolt, Oil Tube Adapter, No Longer Serviced (NHNA), Start Year: 01/01/1965
4	14457281	2	O-Ring, M15.54 ID x 2.62 Thk, Start Year: 01/01/1965
5	130282	2	O-Ring, .489" ID x .070" Thk, Start Year: 01/01/1965
6	87037S94	2	O-Ring, .750" ID x .103" Thk, Start Year: 01/01/1965
7	C5NN7C008A	1	Clip, Oil Tube, No Longer Serviced (NH-E), Start Year: 01/01/1965
8	C5NN7N110A	1	Retainer, Tube, 5100, No Longer Serviced (NHNA), Start Year: 01/01/1965
9	C5NN7C107A	1	Clamp, Tube, 5100, No Longer Serviced (NHNA), Start Year: 01/01/1965
10	80682	1	Washer, Lock, 1/4", 5100, Start Year: 01/01/1965
11	7770	1	Nut, Hex, 1/4"-20, 5100, Start Year: 01/01/1965
12	C5NN7C008A	2	Clip, Oil Tube, No Longer Serviced (NHNA), Start Year: 01/01/1965
13	80682	1/2	Washer, Lock, 1/4", Start Year: 01/01/1965
14	7770	1/2	Nut, Hex, 1/4"-20, Start Year: 01/01/1965
15	88146	1/2	Screw, Cap, HH, G5, 1/4"-20 x 1", Start Year: 01/01/1965
	C5NN7C107C	1	Clamp, Oil Cooler Tube, Front, 5200, NHNA Only, No Longer Serviced, Start Year: 01/01/1967
	80681	1	Washer, Lock, 5/16", 5200, Start Year: 01/01/1967
	87362	2	Washer, SAE, 5/16", 5200, Start Year: 01/01/1967
	9635082	1	Nut, G5, 5/16"-18, 5200, Start Year: 01/01/1967
	9707515	1	Screw, Cap, HH, G5, 5/16"-18 x 1-3/4", 5200, Start Year: 01/01/1967

07R02 GEAR HOUSING & PULLEY W/GUARD (ACCESSORY) - 4000, 5000, 7000

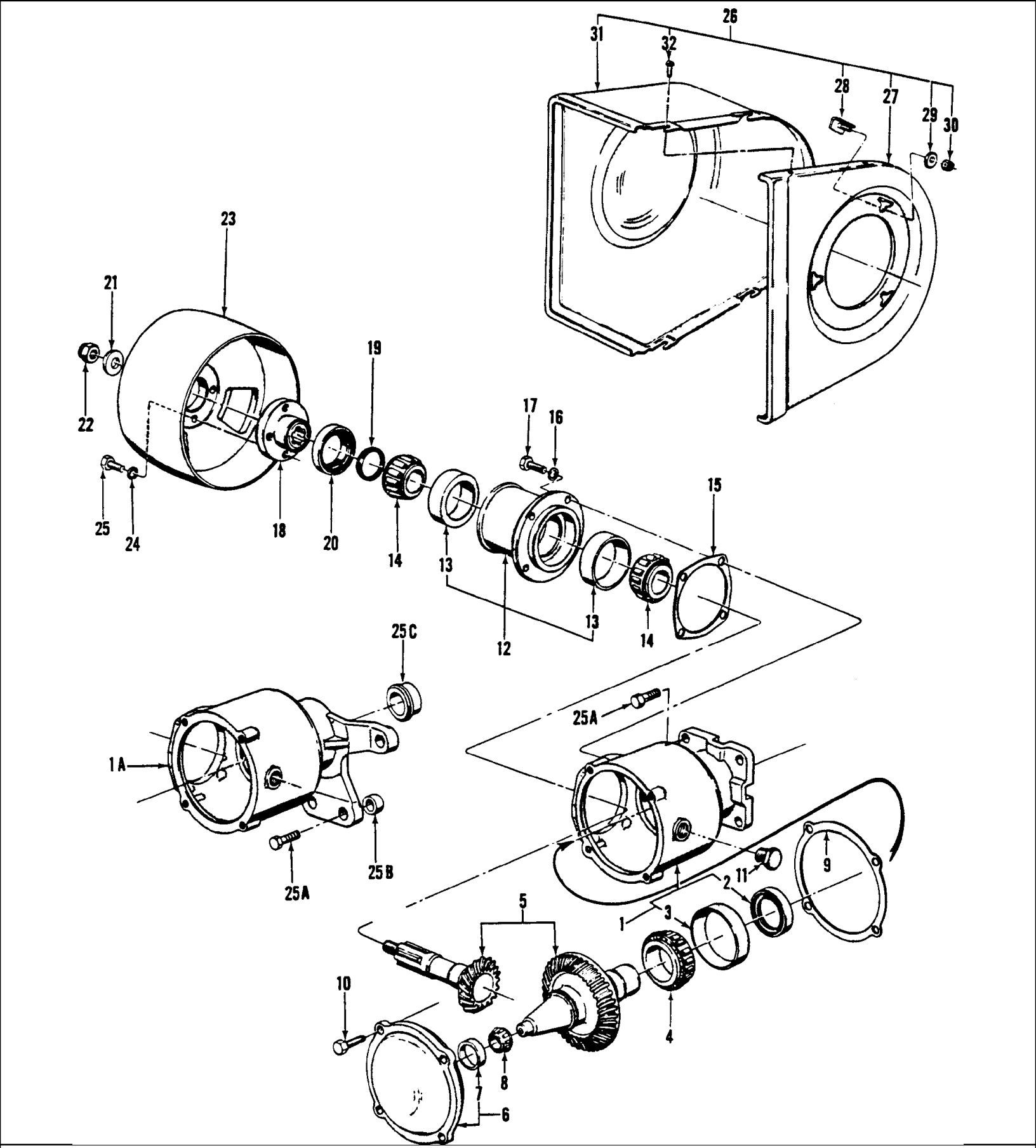

07R02 GEAR HOUSING & PULLEY W/GUARD (ACCESSORY) - 4000, 5000, 7000

Ref	Part Number	Qty	Description
	C5NNP748E	1	Pulley & Drive Gear Assy., 10.25" Pulley, 4000, No Longer Serviced, Start Year: 01/01/1965
	C5NNP748G	1	Pulley & Drive Gear Assy., 11" Pulley, 5000, 7000 Includes: Ref. 1 thru 25, No Longer Serviced, Start Year: 01/01/1965
1	C5NNP755B	1	Housing Assy., 4000, Start Year: 01/01/1965
1A	C5NNP755A	1	Housing Assy., 5000, 7000 Includes: Housing, Ref. 2 & 3, Start Year: 01/01/1965
2	C5NNP788A	1	Oil Seal Assy., Start Year: 01/01/1965
3	49029	1	Bearing, Cup, 3-13/16" OD, Start Year: 01/01/1965
4	81716984	1	Cone & Roller Assy., Start Year: 01/01/1965
5	CFPN751B	1	Gear, Set, Drive & Driven Gear, Matched Set, U.S. Special Order, 4000, NH-E Only, No Longer Serviced, Start Year: 01/01/1965
5	CFPN751C	1	Gear, Set, Drive & Driven Gear, Matched Set, 5000, 7000, No Longer Serviced, Start Year: 01/01/1965
6	C5NNP781A	1	Cover Assy., Drive Gear Housing Includes: Cover & Ref. 7, Start Year: 01/01/1965
7	D5NN1217A	1	Cup, Bearing, Replaces P/N 204E-1217-A, Start Year: 01/01/1965
8	D5NN1216A	1	Cone & Roller Assy., Drive Gear, U.K.-Antwerp, Start Year: 01/01/1965
8	D5NN1216A	1	Cone & Roller Assy., Drive Gear, U.S., Start Year: 01/01/1965
9	C5NNP768B	AR	Gasket, Housing Cover, .010, Start Year: 01/01/1965
9	C5NNP768B	AR	Gasket, Housing Cover, .005, Start Year: 01/01/1965
9	C5NNP768B	AR	Gasket, Housing Cover, .020" (.508mm), Replaces P/N C5NN-P768-A, Start Year: 01/01/1965
10	304705S36	4	Screw, Cap, HH, G5, 7/16"-14 x 1-1/8", Start Year: 01/01/1965
11	87782S8	1	Plug, Pipe, HH, 3/4"-14, No Longer Serviced, Start Year: 01/01/1965
12	C5NNP757B	1	Housing Assy., Driven Gear Includes: Housing & Ref. 13, Start Year: 01/01/1965
13	81812224	2	Cup, Start Year: 01/01/1965
14	81812223	2	Cone & Roller Assy., Driven Gear, Start Year: 01/01/1965
15	C5NNP769B	AR	Gasket, Housing, .005 Thick, Use to Replaces P/N C5NN-P769-A, C, D, No Longer Serviced (NHNA), Start Year: 01/01/1965
15	NLS	AR	Gasket, Housing, .010 Thick, No Longer Serviced, Start Year: 01/01/1965
15	NLS	AR	Gasket, Housing, .020, Replaces P/N C5NN-P769-A, No Longer Serviced, Start Year: 01/01/1965
16	81547	4	Washer, Lock, 7/16", Start Year: 01/01/1965
17	9627887	4	Screw, Cap, HH, G5, 7/16"-14 x 1-1/4", Start Year: 01/01/1965
18	C5NNP779A	1	Retainer, Drive, Start Year: 01/01/1965
19	C5NNP799A	1	Ring, Retainer, Sealing, Start Year: 01/01/1965
20	C5NNP785A	1	Oil Seal Assy., Retainer, Start Year: 01/01/1965
21	C5NNP784A	1	Washer, Retainer, NH-E Only, No Longer Serviced, Start Year: 01/01/1965
22	C5NNP741A	1	Nut, Bearing, Retaining, 3/4"-16, Start Year: 01/01/1965
23	957E740B	1	Pulley, Belt Drive, 10.25", 4000, Start Year: 01/01/1965
23	C5NNP766A	1	Pulley, Belt Drive, 11", 5000, 7000, No Longer Serviced (NH-E), Start Year: 01/01/1965
24	81547	4	Washer, Lock, 7/16", Start Year: 01/01/1965
25	9706729	4	Screw, Cap, HH, G5, 7/16"-14 x 1", Start Year: 01/01/1965
25A	86505999	4	Screw, Cap, HH, G5, 5/8"-11 x 2", 4000, Start Year: 01/01/1965
25A	304789S36	4	Screw, Cap, HH, G5, 3/4"-10 x 1-5/8", 5000, 7000, Start Year: 01/01/1965
25A	280173	4	Screw, Cap, HH, G5, 3/4"-10 x 2-3/4", 5000, 7000 w/(1) or (2) Speed PTO, Start Year: 01/01/1973

5000-SERIES 4 CYL TRACTOR (1/65-1/75)

07R02 GEAR HOUSING & PULLEY W/GUARD (ACCESSORY) - 4000, 5000, 7000

Ref	Part Number	Qty	Description
25B	D3NNC712B	4	Spacer, Belt Pulley Housing, 5000, 7000 w/(1) or (2) Speed PTO, Start Year: 01/01/1973
25C	D3NNA797A	1	Adaptor, PTO Pulley Drive, 5000, 7000 w/(1) or (2) Speed PTO, No Longer Serviced (NHNA), Start Year: 01/01/1973
26	CFPN8N620A	1	Kit, Belt Drive Pulley Guard Includes: Ref. 27 thru 32, No Longer Serviced, Start Year: 01/01/1965
27	C5NNP730A	1	Panel, Assy., Guard, Inner, No Longer Serviced, Start Year: 01/01/1965
28	C5NNP735C	3	Bolt, Clamp, 5/16"-24 x 1.13, No Longer Serviced, Start Year: 01/01/1965
29	C5NNP734A	3	Washer, Guard Clamp Bolt, 5/16", No Longer Serviced, Start Year: 01/01/1965
30	55803S8	3	Nut, Guard Clamp Bolt, 5/16"-24, No Longer Serviced, Start Year: 01/01/1965
31	C5NNP731A	1	Panel Assy., Guard, Outer, U.K.- Antwerp, No Longer Serviced (NHNA), Start Year: 01/01/1965
32	39062S8	4	Screw, Pan Hd., 1/4"-28 x 9/16", U.S. Service in Kit Only, No Longer Serviced, Start Year: 06/01/1965

07T01 AUXILIARY TRANSMISSION, OVER & UNDER (ACCESSORY)

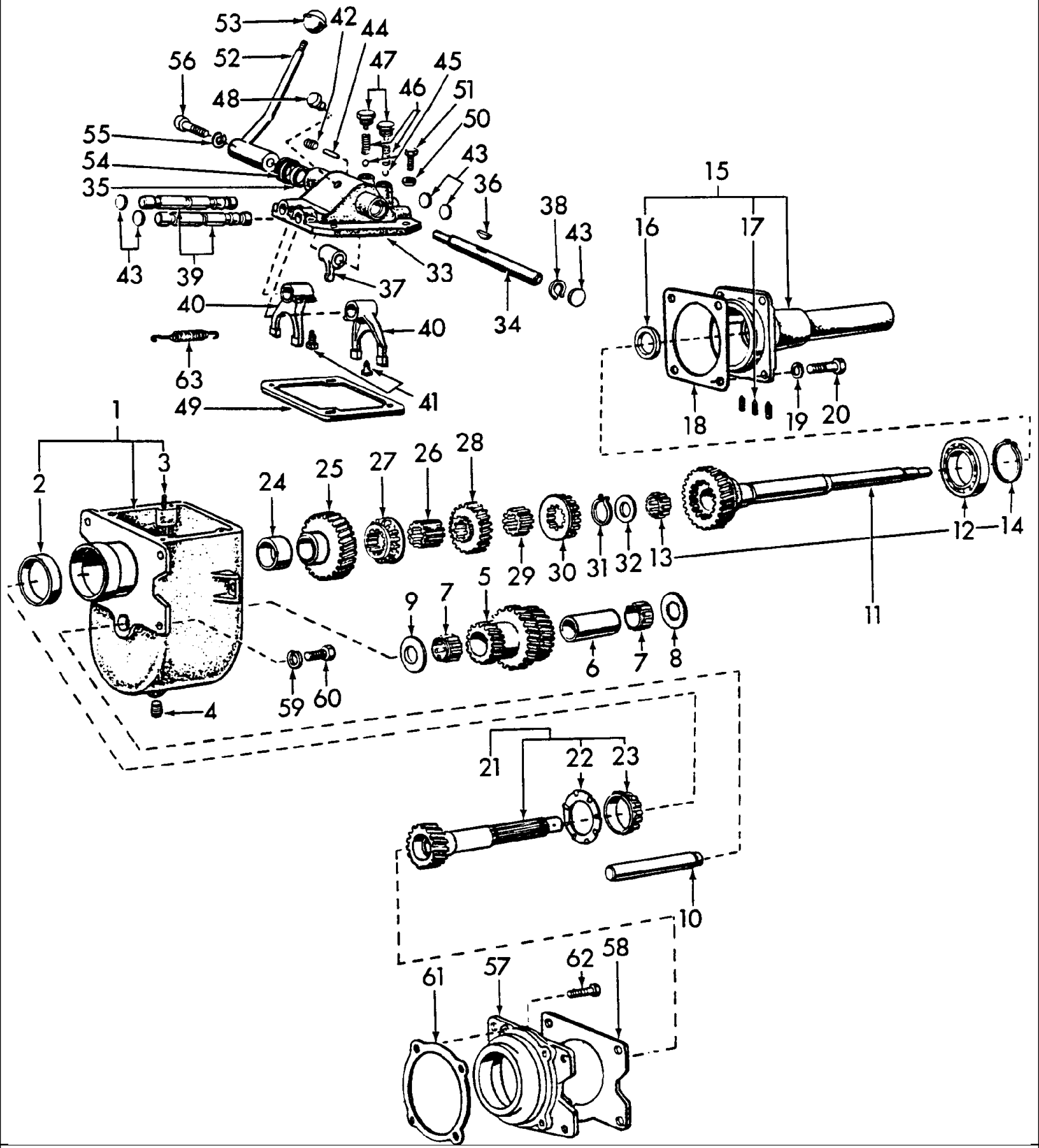

5000-SERIES 4 CYL TRACTOR (1/65-1/75)

07T01 AUXILIARY TRANSMISSION, OVER & UNDER (ACCESSORY)

Ref	Part Number	Qty	Description
	NLS	AR	Kit, Transmission Auxiliary, Over & Under, Includes: Ref. 1 thru 63, Order Components, No Longer Service
1	NLS	1	Case Assy. Includes: Case, Ref. 2 & 3, No Longer Serviced, Years: 01/01/1965-12/31/1970
2	517512	1	Bearing, Cup, 2-7/8" OD, Input Shaft, Years: 01/01/1965-12/31/1970
3	88487	2	Pin, Roll, 1/4" x 3/4", Years: 01/01/1965-12/31/1970
4	358039S	1	Plug, Pipe, 3/8", NHNA Only, No Longer Serviced, Years: 01/01/1965-12/31/1970
5	C0NN7113B	1	Gear, Countershaft, NHNA Only, Years: 01/01/1965-12/31/1970
6	C0NN7115B	1	Spacer, Countershaft Gear Bearing, NHNA Only, No Longer Serviced, Years: 01/01/1965-12/31/1970
7	C0NN7118A	2	Bearing Assy., Countershaft Gear, NHNA Only, Years: 01/01/1965-12/31/1970
8	C0NN7119A	1	Washer, Thrust, Front, 61/64" I.D., NHNA Only, Years: 01/01/1965-12/31/1970
9	C0NN7C340A	1	Washer, Thrust, Rear, 1-1/32" I.D., NHNA Only, No Longer Serviced, Years: 01/01/1965-12/31/1970
10	C0NN7111B	1	Countershaft, NHNA Only, No Longer Serviced, Years: 01/01/1965-12/31/1970
11	C5NN7C244A	1	Shaft Assy., Clutch Includes: Shaft & Ref. 12 thru 14, NHNA Only, No Longer Serviced, Years: 01/01/1965-12/31/1970
12	83908455	1	Bearing Assy., Front, Years: 01/01/1965-12/31/1970
13	C0NN7C247A	1	Bearing Assy., Rear, NHNA Only, Years: 01/01/1965-12/31/1970
14	9671310	1	Ring, Snap, Ext, 1.969", Years: 01/01/1965-12/31/1970
15	NLS	1	Support Assy., Clutch Shaft, Replaces P/N C5NN-7C249-A Includes: Shaft, Ref. 16 & 17, No Longer Serviced, Years: 01/01/1965-12/31/1970
16	8N7052A2	1	Seal Assy., Years: 01/01/1965-12/31/1970
17	376119S	3	Screw, Set, Socket Hd., 1/4"-20 x 1/2", NHNA Only, No Longer Serviced, Years: 01/01/1965-12/31/1970
18	C0NN7C251B	1	Gasket, Clutch Shaft Support, NHNA Only, Years: 01/01/1965-12/31/1970
19	81547	4	Washer, Lock, 7/16", Years: 01/01/1965-12/31/1970
20	9706729	4	Screw, Cap, HH, G5, 7/16"-14 x 1", Years: 01/01/1965-12/31/1970
21	C5NN7015T	1	Shaft Assy., Input Includes: Shaft, Ref. 22 & 23, NHNA Only, No Longer Serviced, Years: 01/01/1965-12/31/1970
22	C0NN7C237B	1	Slinger, Oil, NHNA Only, No Longer Serviced, Years: 01/01/1965-12/31/1970
23	86516471	1	Cone, Bearing, Inner, 1-3/8" ID x 31/32" Wide, Years: 01/01/1965-12/31/1970
24	C5NN7N019A	1	Spacer, Low Range Gear, NHNA Only, No Longer Serviced, Years: 01/01/1965-12/31/1970
25	C5NN7B207A	1	Gear, Low Range, 32T, NHNA Only, Years: 01/01/1965-12/31/1970
26	C5NN7C287A	1	Hub, Low Range Gear Sliding Clutch, NHNA Only, No Longer Serviced, Years: 01/01/1965-12/31/1970
27	C0NN7A063A	1	Sleeve, Low Range Sliding Clutch, NHNA Only, No Longer Serviced, Years: 01/01/1965-12/31/1970
28	C0NN7A062A	1	Gear, High Range, 22T, NHNA Only, Years: 01/01/1965-12/31/1970
29	C0NN7A060A	1	Hub, High Range Gear Sliding Clutch, NHNA Only, No Longer Serviced, Years: 01/01/1965-12/31/1970
30	C0NN7A061A	1	Sleeve, High Range Sliding Clutch, NHNA Only, Years: 01/01/1965-12/31/1970
31	38785	1	Ring, Snap, Ext, 1.1250", Years: 01/01/1967-12/31/1970
32	C0NN7C343B	1	Washer, Thrust, Clutch Shaft, 13/16", NHNA Only, No Longer Serviced, Years: 01/01/1965-12/31/1970
33	C0NN7222F	1	Cover, Case, NHNA Only, No Longer Serviced, Years: 01/01/1965-12/31/1970
34	C0NN7358B	1	Shaft, Shifter, NHNA Only, No Longer Serviced, Years: 01/01/1965-12/31/1970
35	D6NN7207A	1	Seal, Shift Shaft Cover, NHNA Only, Years: 01/01/1965-12/31/1970
36	84071	1	Key, Woodruff #5, 1/8" x 5/8", Years: 01/01/1965-12/31/1970
37	C0NN7B109B	1	Finger, Shift Control, NHNA Only, No Longer Serviced, Years: 01/01/1965-12/31/1970

07T01 AUXILIARY TRANSMISSION, OVER & UNDER (ACCESSORY)

Ref	Part Number	Qty	Description
38	515259	1	Ring, Snap, Ext, .625", Finger Retaining, Years: 01/01/1965-12/31/1970
39	C3NN7240A	2	Rail, Gear Shift, NHNA Only, No Longer Serviced, Years: 01/01/1965-12/31/1970
40	C0NN7231B	2	Fork, Gear Shift, NHNA Only, Years: 01/01/1965-12/31/1970
41	C0NN7B360A	2	Screw, Set, Shift Fork, NHNA Only, Years: 01/01/1965-12/31/1970
42	376300S	1	Screw, Socket Hd., 3/8"-16, NHNA Only, No Longer Serviced, Years: 01/01/1965-12/31/1970
43	373605S	5	Plug, Expansion, 3/4", NHNA Only, Years: 01/01/1965-12/31/1970
44	C0NN7C348A	1	Pin, Retaining, Shifter Rail, NHNA Only, No Longer Serviced, Years: 01/01/1965-12/31/1970
45	72387	2	Ball, Shift Rail Detent, 5/16" Dia., Years: 01/01/1965-12/31/1970
46	C0NN7C349A	2	Spring, Gear Shift Rail Detent, NHNA Only, Years: 01/01/1965-12/31/1970
47	C0NN7B293A	2	Cap, Shift Rail Detent Spring Retainer, NHNA Only, No Longer Serviced, Years: 01/01/1965-12/31/1970
48	01A7034	1	Vent, Case, Years: 01/01/1965-12/31/1970
49	C0NN7223D	1	Gasket, Case Cover, NHNA Only, Years: 01/01/1965-12/31/1970
50	80681	4	Washer, Lock, 5/16", Years: 01/01/1965-12/31/1970
51	280345	4	Screw, Cap, HH, G5, 5/16"-18 x 7/8", Years: 01/01/1965-12/31/1970
52	C5NN7202D	1	Lever Assy., Gear Shift, NHNA Only, No Longer Serviced, Years: 01/01/1965-12/31/1970
53	E440GB9	1	Ball, Gear Shift Lever, Years: 01/01/1965-12/31/1970
54	C5NN7N020A	1	Grommet, Gear Shift Lever, NHNA Only, No Longer Serviced, Years: 01/01/1965-12/31/1970
55	81821693	1	Washer, Lock, 3/8", Years: 01/01/1965-12/31/1970
56	81993	1	Screw, Cap, HS, G8, 3/8"-16 x 1", Years: 01/01/1965-12/31/1970
57	C5NN7C286A	1	Spacer, Mounting, NHNA Only, No Longer Serviced, Years: 01/01/1965-12/31/1970
58	C5NN7051A	1	Gasket, Mounting Flange, NHNA Only, No Longer Serviced, Years: 01/01/1965-12/31/1970
59	81547	4	Washer, Lock, 7/16", Years: 01/01/1965-12/31/1970
60	304705S36	4	Screw, Cap, HH, G5, 7/16"-14 x 1-1/8", Years: 01/01/1965-12/31/1970
61	C5NN7135A	1	Shim, Bearing Retainer, .003, NHNA Only, No Longer Serviced, Years: 01/01/1965-12/31/1970
61	C5NN7135B	1	Shim, Bearing Retainer, .005, NHNA Only, Years: 01/01/1965-12/31/1970
61	C5NN7135C	2	Shim, Bearing Retainer, .012, NHNA Only, No Longer Serviced, Years: 01/01/1965-12/31/1970
62	88714	4	Screw, Cap, HH, G5, 7/16"-14 x 1-3/8", Years: 01/01/1965-12/31/1970
63	C5NN7523A	2	Spring, Clutch Release Retracting, No Longer Serviced, Years: 01/01/1965-09/30/1969
	C5NN7B292JY	1	Decal, Shift Pattern, NHNA Only, No Longer Serviced, Years: 01/01/1965-12/31/1970

07Z02 REDUCTION GEAR BOX, SELECT-O-SPEED - 5000, 7000

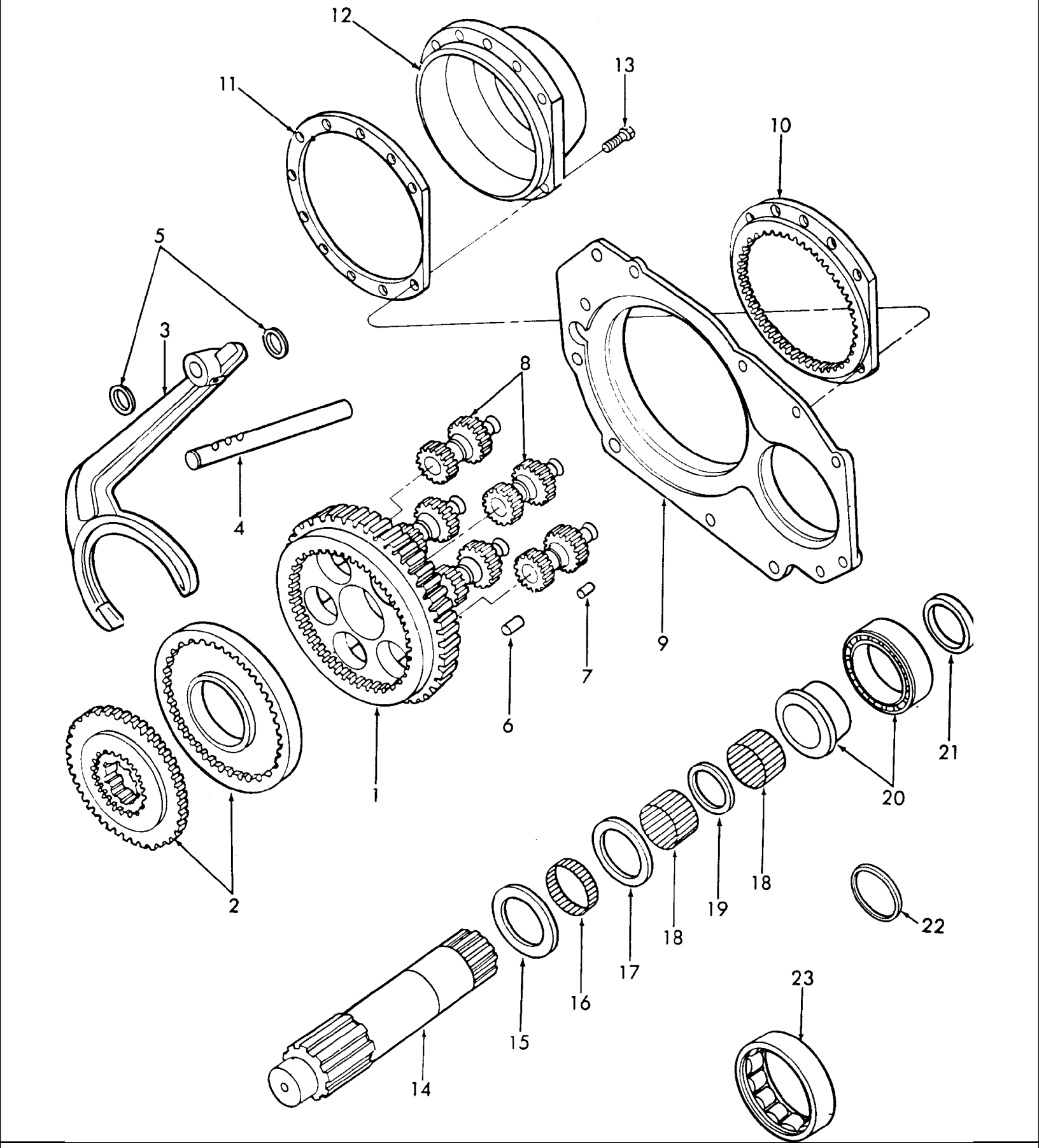

5000-SERIES 4 CYL TRACTOR (1/65-1/75)

07Z02 REDUCTION GEAR BOX, SELECT-O-SPEED - 5000, 7000

Ref	Part Number	Qty	Description
	FT0707C373B	1	Kit, Reduction Gear Box, L/Dual Power, Separate Sump, 5.7:1 Ratio, 5000, Start Year: 01/01/1965
	FT0707C373D	1	Kit, Reduction Gear Box, w/Dual Power, 5:7:1 Ratio, 7000, Start Year: 01/01/1965
	FT0707C373E	1	Kit, Reduction Gear Box, L/Dual Power, 5.7:1 Ratio, Start Year: 01/01/1965
	FT0727E373B	1	Kit, Reduction Gear Box, L/Dual Power, Separate Sump, 10:1 Ratio, 5000, Start Year: 01/01/1965
	FT0727E373D	1	Kit, Reduction Gear Box, w/Dual Power, Common Sump, 10:1 Ratio, 5000, 7000, Start Year: 01/01/1965
	FT0727E373E	1	Kit, Reduction Gear Box, L/Dual Power, Common Sump, 10:1 Ratio, 5000, 7000 Includes: Ref. 1, Start Year: 01/01/1965
1	D9NN7D055AA	1	Carrier, Reduction Gear Box, Start Year: 01/01/1965
2	D9NN7106AA	1	Coupling & Intermediate Ring Gear Assy., Start Year: 01/01/1965
3	D9NN7231BA	1	Fork, Reduction Gear Box Selector, Start Year: 01/01/1965
4	D9NN7240BA	1	Pail, Reduction Gear Box Shift, Start Year: 01/01/1965
5	D9NN7R460AA	2	Washer, Reduction Gear Box Shift Rail, Start Year: 01/01/1965
5	D9NN7R460BA	2	Washer, Reduction Gear Box Shift Rail, Start Year: 01/01/1965
6	D9NN7C366BA	57	Roller, Reduction Gear Box, 9 x 14mm, Start Year: 01/01/1965
7	D9NN7C366AA	65	Roller, Reduction Gear Box, 5 x 10mm, Start Year: 01/01/1965
8	D9NN7A183AA	5	Gear, Reduction Gear Box Planetary, w/5.7:1 Ratio Only, Start Year: 01/01/1965
8	E7NN7A183AA	5	Gear, Reduction Gear Box Planetary, w/10:1 Ratio Only, No Longer Serviced (NHNA), Start Year: 01/01/1965
9	D9NN7049BA	1	Plate, Reduction Gear Box Cover, Start Year: 01/01/1965
9	D9NN7049CA	1	Plate, Reduction Gear Box Cover, w/Dual Power, IPTO, 7000, No Longer Serviced (NH-E), Start Year: 01/01/1971
10	D9NN7A153AA	1	Gear, Reduction Gear Box Outer Ring, Start Year: 01/01/1965
11	D9NN7N135AA	3/4	Shim, Reduction Gear Box, Start Year: 01/01/1965
12	D9NN7049EA	1	Retainer, Reduction Gear Box Bearing, Start Year: 01/01/1965
13	D9NN7R459AA	11	Screw, Reduction Gear Box Socket Hd., Start Year: 01/01/1965
14	D9NN7061BA	1	Shaft, Reduction Gear Box Output, L/Dual Power, w/IPTO, 5000, Start Year: 01/01/1965
14	D9NN7061CA	1	Shaft, Reduction Gear Box Output, w/Dual Power, Start Year: 01/01/1965
15	D9NN7A385AA	1	Washer, Reduction Gear Box Thrust, Start Year: 01/01/1965
16	D9NN7N430AA	1	Bearing, Needle Roller, 40 x 45 x 13, Start Year: 01/01/1965
17	D9NN7A385BA	1	Washer, Reduction Gear Box Thrust, Start Year: 01/01/1965
18	D9NN7N430BA	1	Bearing, Needle Roller, 40 x 45 x 27, Start Year: 01/01/1965
19	D9NN7D233AA	1	Ring, Reduction Gear Box Spacer, w/Dual Power, IPTO, Start Year: 01/01/1965
20	81840434	1	Bearing, Reduction Gear Box, 38.1 x 76.2 x 20.6, Start Year: 01/01/1965
21	D9NN7A385CA	1	Washer, Reduction Gear Box Thrust w/Dual Power, IPTO, 7000, No Longer Serviced (NH-E), Start Year: 01/01/1971
22	AF3857STD	1	Oil Seal Assy., 38 x 50 x 7, Start Year: 01/01/1965
23	D9NN7118AA	1	Bearing, Reduction Gear Box Roller, NJ210, Except 7000, 7600, Start Year: 01/01/1965
23	D9NN7118BA	1	Bearing, Reduction Gear Box Roller, NJ2209, 7000, 7600 only, No Longer Serviced (NH-E), Start Year: 01/01/1971
24	D9NN7B292AA	1	Decal, Shift, Start Year: 01/01/1965
25	D9NN16A901MA	1	Decal, English, Start Year: 01/01/1965

Ref	Part Number	Qty	Description
26	D9NN16A901NA	1	Decal, French, NH-E Only, Start Year: 01/01/1965

08A02 RADIATOR & RELATED PARTS - 4000, 5000, 7000

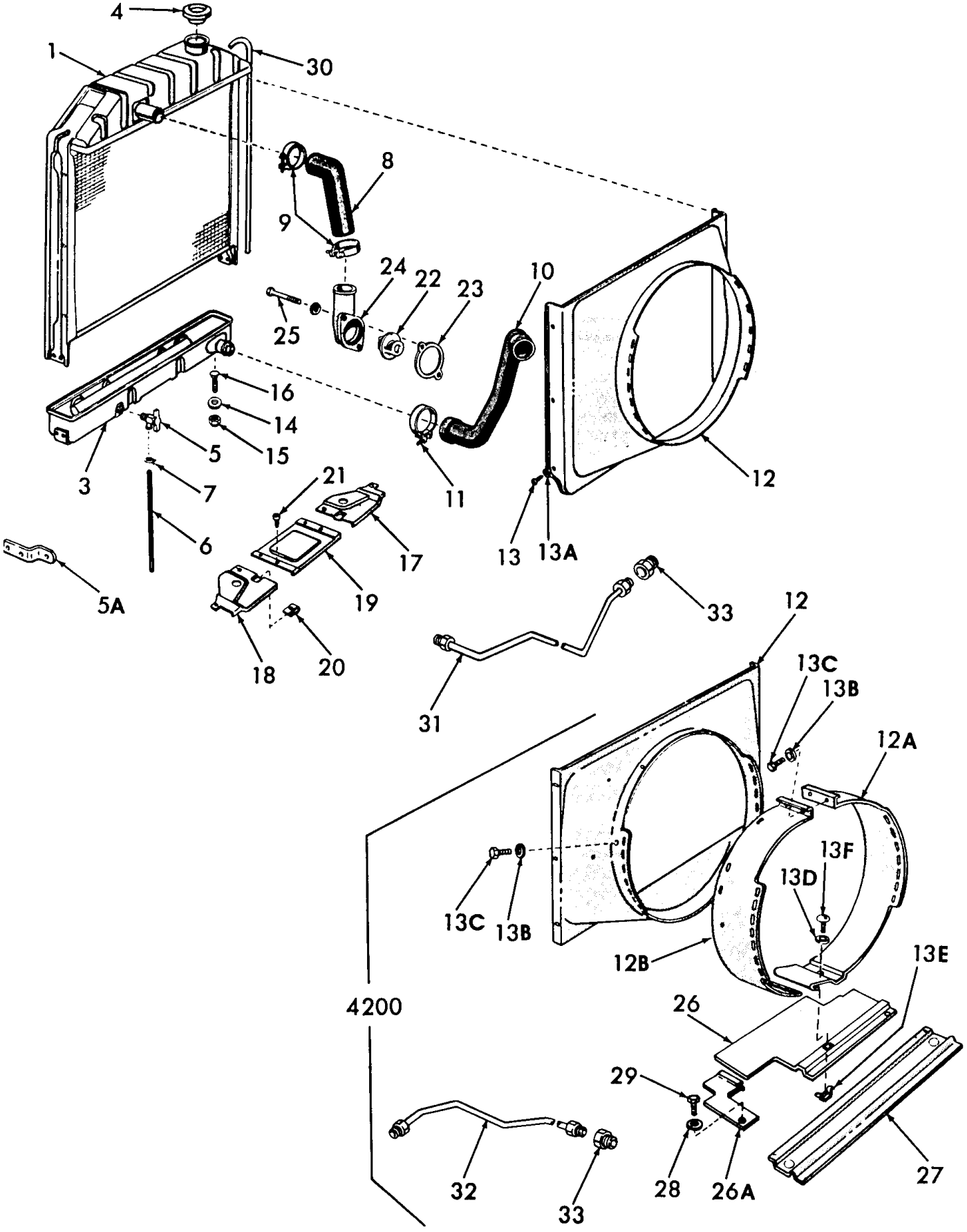

5000-SERIES 4 CYL TRACTOR (1/65-1/75)

08A02 RADIATOR & RELATED PARTS - 4000, 5000, 7000

Ref	Part Number	Qty	Description
1	E0NN8005MD15M	1	Radiator Assy., 7 Fin, 4000, 4100, 4400, Includes: Radiator & Ref: 3, L/Cooler, Start Year: 01/01/1965
1	E0NN8005MD15M	1	Radiator Assy., 5 Fin, Replaces C5NN8005Z, Except 4000, 4500, Includes: Radiator & Ref: 3, L/Cooler, Years: 01/01/1965-05/31/1968
1	86531508	1	Radiator Assy., 7 Fin, 5000, Includes: Radiator & Ref: 3, L/Cooler, Years: 01/01/1965-05/31/1968
1	86531508	1	Radiator Assy., 4500, Includes: Radiator & Ref: 3, L/Cooler, Start Year: 01/01/1965
1	C5NN8005M	1	Radiator Assy., 5 Fin, Diesel, 5100, Includes: Radiator & Ref: 3, L/Cooler, No Longer Serviced, Years: 01/01/1965-05/31/1968
1	86531508	1	Radiator Assy., 5000, Includes: Radiator & Ref: 3, L/Cooler, Start Year: 06/01/1968
1	C7NN8005L	1	Radiator Assy., Diesel, Tropical, 5100, Includes: Radiator & Ref: 3, L/Cooler, NH-E Only, Start Year: 01/01/1965
1	C7NN8005V	1	Radiator Assy., Diesel, 4500, 5100, Includes: Radiator & Ref: 3, L/Cooler, NH-E Only, Start Year: 01/01/1965
1	NLS	1	Radiator Assy., 5100, Includes: Radiator & Ref: 3 {67NY8005A}, L/Cooler, Mexico Only, Start Year: 01/01/1968
1	D3NN8005B	1	Radiator Assy., 9 Fins, Diesel, 7100, 7200, Includes: Radiator & Ref: 3, W/Cooler, No Longer Serviced, Start Year: 01/01/1971
1	D8NN8005SB	1	Radiator Assy., 4500, 5100, 5200, Includes: Radiator & Ref: 3, W/Cooler, Ports on same side., Start Year: 01/01/1965
1	C7NN8005K	1	Radiator Assy., Gasoline/Petrol, 4100, Includes: Radiator & Ref: 3, W/Cooler, NH-E Only, Start Year: 01/01/1965
1	82847505	1	Radiator Assy., 4100, 4400, Includes: Radiator & Ref: 3, W/Cooler, Oil ports on opposite side as water ports., Start Year: 01/01/1965
3	D8NN8079FA	1	Tank Assy., Lower, Start Year: 01/01/1965
3	D4NN8079A	1	Tank Assy., Lower, 7000, Start Year: 01/01/1971
3	C5NN8079F	1	Tank Assy., Lower, 4500-5100 U.S., 5200, Years: 01/01/1965-03/31/1970
3	C5NN8079F	1	Tank Assy., Lower, 4500-5100 U.K. Antwerp, 5200, NH-E Only, Years: 01/01/1965-03/31/1968
3	D8NN8079EA	1	Tank Assy., Lower, 4500-5100 U.S., 5200, Start Year: 04/01/1970
3	D8NN8079EA	1	Tank Assy., Lower, 4500-5100 U.K. Antwerp, 5200, Start Year: 04/01/1968
4	E5TH8100AA	1	Cap Assy., Radiator Pressure, 13 lb., Diesel & Gas/Petrol, 4100, Start Year: 01/01/1965
4	E5TH8100AA	1	Cap Assy., Radiator Pressure, 13 lb., Tropical, Basildon, Antwerp, Mexico, Diesel, 5100-7100, Start Year: 01/01/1965
4	76896	1	Cap, Radiator, 7 lbs., U.S., Start Year: 01/01/1965
4		1	Cap Assy., Radiator, U.K.-Antwerp, NH-E Only, Start Year: 01/01/1965
4		1	Cap Assy., Radiator, U.K.-Antwerp, 4400, NH-E Only, Years: 01/01/1965-12/31/1972
5	81465471	1	Cock Assy., Radiator Drain, 90°, Replaces 9N8115A, Start Year: 01/01/1965
5A	C5NN8083C	2	Bracket, Radiator Mounting, 5200-7200, NHNA Only, No Longer Serviced, Start Year: 01/01/1967
6	E6NN8K147AA	1	Hose, Radiator Drain, .30 I.D. x 45", Cut to Length, Start Year: 01/01/1965
7	82012719	1	Clamp, Hose, .50, Start Year: 01/01/1965
8	C5NN8260D	1	Hose, Radiator, Upper, Gas & LP, 4000 Except 4200, Start Year: 01/01/1965
8	D5NN8260D	1	Hose, Radiator, Upper, Diesel, 4000 Except 4200, Start Year: 01/01/1965
8	D5NN8260D	1	Hose, Radiator, Upper, 5100-7100, Start Year: 01/01/1965

08A02 RADIATOR & RELATED PARTS - 4000, 5000, 7000

Ref	Part Number	Qty	Description
8	C5NN8260M	1	Hose, Radiator, Upper, 5200-7200, NHNA Only, Start Year: 01/01/1967
8	C5NN8260E	1	Hose, Radiator, Upper, 4200, NHNA Only, Start Year: 01/01/1966
8	C5NN8260F	1	Hose, Radiator, Upper Gasoline, 4200, NHNA Only, No Longer Serviced, Start Year: 01/01/1966
9	82012728	2	Clamp Assy., Hose, 1-7/8", U.S. Only, Start Year: 01/01/1965
9	82012728	2	Clamp Assy., Hose, 1-7/8", Except U.S., Start Year: 01/01/1965
10	C5NN8286B	1	Hose, Radiator, Lower, 4000 Except 4200 & 4500, Start Year: 01/01/1965
10	C5NN8286C	1	Hose, Radiator, Lower, 4500-5100-7100, Start Year: 01/01/1965
10	C5NN8286D	1	Hose, Radiator, Lower, 4200, NHNA Only, Start Year: 01/01/1966
10	D0NN8286A	1	Hose, Radiator, Lower, 5200, 7200, NHNA Only, Start Year: 01/01/1967
10	NLS	1	Hose, Radiator, Lower, Mexico, 5100 {67NY8286A}, Mexico Only, Start Year: 01/01/1968
11	82012728	2	Clamp Assy., 2-1/8", Start Year: 01/01/1965
	C9NN18N243A	1	Hose Assy., Heater, w/Cab Heater, 4500, Includes: Hose & Tap Assy., U.S. usage removed N/R (1975) per FTO-17240, NH-E Only, Start Year: 10/01/1969
	D0NN18N242A	1	Tap Assy., w/Cab Heater, U.K.-Antwerp, 4500, No Longer Serviced (NH-E), Start Year: 10/01/1969
12	D6NN8146H	1	Shroud, Fan, 4100-4200-4400, Start Year: 01/01/1965
12	E5NN8146EA	1	Shroud, Fan, U.K.-Antwerp, 4500 & 5100, Start Year: 01/01/1965
12	E5NN8146EA	1	Shroud, Fan, 4500 & 5100, Start Year: 01/01/1965
12	D3NN8146D	1	Shroud, Fan, 7100, Start Year: 01/01/1971
12	D3NN8146A	1	Shroud, Fan, 7200, NHNA Only, Start Year: 01/01/1971
12	D3NN8146A	1	Shroud, Fan, 5200, NHNA Only, Start Year: 01/01/1967
	C9NN94044N45A	AR	Seal, Radiator Air, Front & Sides, U.S., 7.19" Lg., 7000, No Longer Serviced (NHNA), Start Year: 01/01/1971
12A	NLS	1	Extension, Fan Shroud, RH, 4200, No Longer Serviced, Start Year: 01/01/1966
12B	C5NN8N600B	1	Extension, Fan Shroud, LH, 4200, NHNA Only, No Longer Serviced, Start Year: 01/01/1966
13	357622S36	6	Screw, Cap, HH, Self-Tapping, W/Lock Washer, #8-32 x 3/8", 4000, Start Year: 01/01/1965
13	357622S36	6	Screw, Cap, HH, Self-Tapping, W/Lock Washer, #8-32 x 3/8", 5200, Years: 01/01/1967-05/31/1973
13	40917S36	6	Screw, Self-Tapping, HWH, #8-32 x 1/2", 7000, Start Year: 10/01/1971
13	40917S36	6	Screw, Self-Tapping, HWH, #8-32 x 1/2", 5200, Start Year: 06/01/1973
13	40917S36	6	Screw, Self-Tapping, HWH, #8-32 x 1/2", Mexico, 5000, Start Year: 01/01/1968
13A	280299	6	Washer, #8, 4000-7000, Start Year: 01/01/1965
13B	85700573	9	Washer, Lock, Ext T, 1/4", 4200, Start Year: 01/01/1966
13C	31527S43	9	Screw, Self-Tapping, HWH, 1/4"-14 x 1/2", 4200, No Longer Serviced, Start Year: 01/01/1966
13D	34940S	1	Washer, Lock, Ext T, 1/4", 4200, NHNA Only, No Longer Serviced, Start Year: 01/01/1966
13E	358816S2	1	Nut Assy., 1/4"-20, 4200, Start Year: 01/01/1966
13F	38206S36	1	Screw, Pan Hd, 1/4"-20 x 1/2", 4200, No Longer Serviced (NH-E), Start Year: 01/01/1966
14	C5NN8125A	2	Pad, Radiator Mounting, U.K., 5100-7100 UK, Start Year: 01/01/1965
14	C0NN8125A	2	Insulator, Radiator Support, U.S., 5000-7000, 4000 Except 4200, Start Year: 01/01/1965
15	34978S2	2	Nut, Lock, GC, 7/16"-14, Start Year: 01/01/1965
16	86508754	2	Bolt, Carriage, Short Neck, G5, 7/16"-14 x 1-3/4", 4200-5000, Start Year: 01/01/1965
16	86508754	2	Bolt, Carriage, Short Neck, G5, 7/16"-14 x 1-3/4", U.K.-Antwerp, 7100, Start Year: 10/01/1971
16	302431S36	2	Bolt, Carriage, Short Neck, G5, 7/16"-14 x 3-1/2", 4000, Start Year: 01/01/1965

08A02 RADIATOR & RELATED PARTS - 4000, 5000, 7000

Ref	Part Number	Qty	Description
16	86508753	2	Bolt, Carriage, Short Neck, G5, 7/16"-14 x 1-1/2", US, 7100, Start Year: 01/01/1965
16	86508752	2	Bolt, Carriage, Short Neck, G5, 7/16"-14 x 1-1/4", 7200, Start Year: 10/01/1971
	C5NN8A045A	2	Spacer, Radiator, .48 I.D. x 1.50 O.D. x 2, 4400, Start Year: 01/01/1965
17	C5NN8N097A	1	Baffle, Front Axle Support, RH, U.S., Except 4200, No Longer Serviced (NHNA), Years: 01/01/1965-03/31/1968
17	C5NN8N097B	1	Baffle, Front Axle Support, RH, NH-E Only, Years: 01/01/1965-03/31/1968
17	D4NN8N097C	1	Baffle, Front Axle Support, RH, 4100-4110-4400-5100, Start Year: 04/01/1968
17	D0NN8N097B	1	Baffle, Front Axle Support, w/Fender Lights, U.S., 7000, NHNA Only, No Longer Serviced, Start Year: 01/01/1971
17	D4NN8N097D	1	Baffle, Front Axle Support, RH, 7100, Start Year: 01/01/1971
18	C5NN8N098A	1	Baffle, Front Axle Support, LH, U.S., Except 4200, NHNA Only, No Longer Serviced, Years: 01/01/1965-03/31/1968
18	C5NN8N098B	1	Baffle, Front Axle Support, LH, NH-E Only, No Longer Serviced, Years: 01/01/1965-03/31/1968
18	D4NN8N098C	1	Baffle, Front Axle Support, LH, 4100-4110-4400-5100, No Longer Serviced, Start Year: 04/01/1968
18	D4NN8N098D	1	Baffle, Front Axle Support, LH, 7100, No Longer Serviced (NH-E), Start Year: 01/01/1971
19	C5NN8N099B	1	Cover, Front Axle Support Baffle Accessory, 10 Speed, Except 4400-4200, No Longer Serviced (NHNA), Years: 01/01/1965-03/31/1968
19	C5NN8N099D	1	Cover, Front Axle Support Baffle Accessory, 10 Speed, U.S., 4400, No Longer Serviced (NHNA), Start Year: 01/01/1965
19	C7NN8N099D	1	Cover, Front Axle Support Baffle Accessory, 10 Speed, 4100-4110-5100, No Longer Serviced, Start Year: 04/01/1968
19	C5NN8N099C	1	Cover, Front Axle Support Baffle Accessory, U.S., Except 10 Speed & 4200, No Longer Serviced, Years: 01/01/1965-03/31/1968
19	D4NN8N099B	1	Cover, Front Axle Support Baffle Accessory, 8 Speed, 4100-4400-5100, No Longer Serviced (NH-E), Start Year: 04/01/1968
19	D4NN8N099A	1	Cover, Front Axle Support Baffle Accessory, 7100, No Longer Serviced, Start Year: 10/01/1971
20	C5NN8N212B	2	Nut, U-Type, Grille Mounting, Start Year: 01/01/1965
21	52353S37	2	Screw, Self-Tapping, Oval Hd, #10-12 x 5/8", Except 4200, Start Year: 01/01/1965
22	D8NN8575AA	AR	Thermostat Assy., Water, 168°, Standard, Start Year: 01/01/1965
22	D8NN8575CA	AR	Thermostat Assy., Water, 172°, Start Year: 01/01/1965
22	D8NN8575BA	AR	Thermostat Assy., Water, Gasoline/Petrol, 188°, Start Year: 01/01/1965
23	E9NN8255AA	2	Gasket, Water Outlet Connection, Gasoline, Diesel, Start Year: 01/01/1965
24	C7NN8594B	1	Connection, Water Outlet, 4000-5000, Start Year: 01/01/1965
24	C7NN8594B	1	Connection, Water Outlet, U.K.-Antwerp, 7100, Start Year: 10/01/1971
24	C7NN8594A	1	Connection, Water Outlet, Mexico, 5100, Start Year: 01/01/1968
24	C7NN8594A	1	Connection, Water Outlet, U.S., 7000, Start Year: 10/01/1971
25E	42967S36	2	Screw, Cap, HH, G8, Self-Locking, 5/16"-18 x 2-3/8", Use W/#C5NE-8594-A & P/N C7NN-8594-A, Years: 01/01/1965-09/30/1969
25E	42967S36	2	Screw, Cap, HH, G8, Self-Locking, 5/16"-18 x 2-3/8", Mexico, Start Year: 01/01/1968
	80681	2	Washer, Lock, 5/16", Start Year: 10/01/1969
25	304701S36	2	Screw, Cap, HH, G5, 5/16"-18 x 1-1/8", Use W/C7NN-8594-B, Start Year: 10/01/1969

08A02 RADIATOR & RELATED PARTS - 4000, 5000, 7000

Ref	Part Number	Qty	Description
26	C5NN3N401C	1	Cover, Front Axle Support, Front R.H., 4200, NHNA Only, No Longer Serviced, Start Year: 01/01/1966
26A	C5NN3N023A	1	Cover Assy., Front Axle Support, Front L.H., 4200, NHNA Only, No Longer Serviced, Start Year: 01/01/196
27	C5NN3N402B	1	Cover, Front Axle Support, Rear, 4200, NHNA Only, No Longer Serviced, Start Year: 01/01/1966
28	80681	2	Washer, Lock, 5/16", Start Year: 01/01/1966
29	9627874	2	Screw, Cap, HH, G5, 5/16"-18 x 5/8", 4200, Start Year: 01/01/1966
30	E6NN8K147AA	1	Hose, Radiator Overflow, Start Year: 01/01/1965
31	D8NN6N601AA	1	Tube Assy., Engine Oil Cooler, Inlet, 7100, Start Year: 10/01/1971
31	D0NN6N601B	1	Tube Assy., Engine Oil Cooler, Inlet, 7200, NHNA Only, No Longer Serviced, Years: 10/01/1971-02/28/197
31	D3NN6N601D	1	Tube Assy., Ingine Oil Cooler, Inlet, 5200-7200, NHNA Only, No Longer Serviced, Start Year: 03/01/1973
32	D0NN6N600A	1	Tube Assy., Engine Oil Cooler, Outlet, L/Dual Power, 7100, No Longer Serviced, Start Year: 10/01/1971
32	D0NN6N600B	1	Tube Assy., Engine Oil Cooler, Outlet, L/Dual Power, 7200, FTO-E, NHNA Only, No Longer Serviced, Start Year: 10/01/1971
32	D4NN6N600A	1	Tube Assy., Engine Oil Cooler, Outlet, w/Dual Power, 7100, No Longer Serviced, Start Year: 06/01/1973
32	D3NN6N600A	1	Tube Assy., Engine Oil Cooler, Outlet, w/Dual Power, 7200, NHNA Only, No Longer Serviced, Start Year: 06/01/1973
33	87534S	2	Connector, Tubes to Engine, 7000, Start Year: 10/01/1971

08B01 WATER PUMP & RELATED PARTS

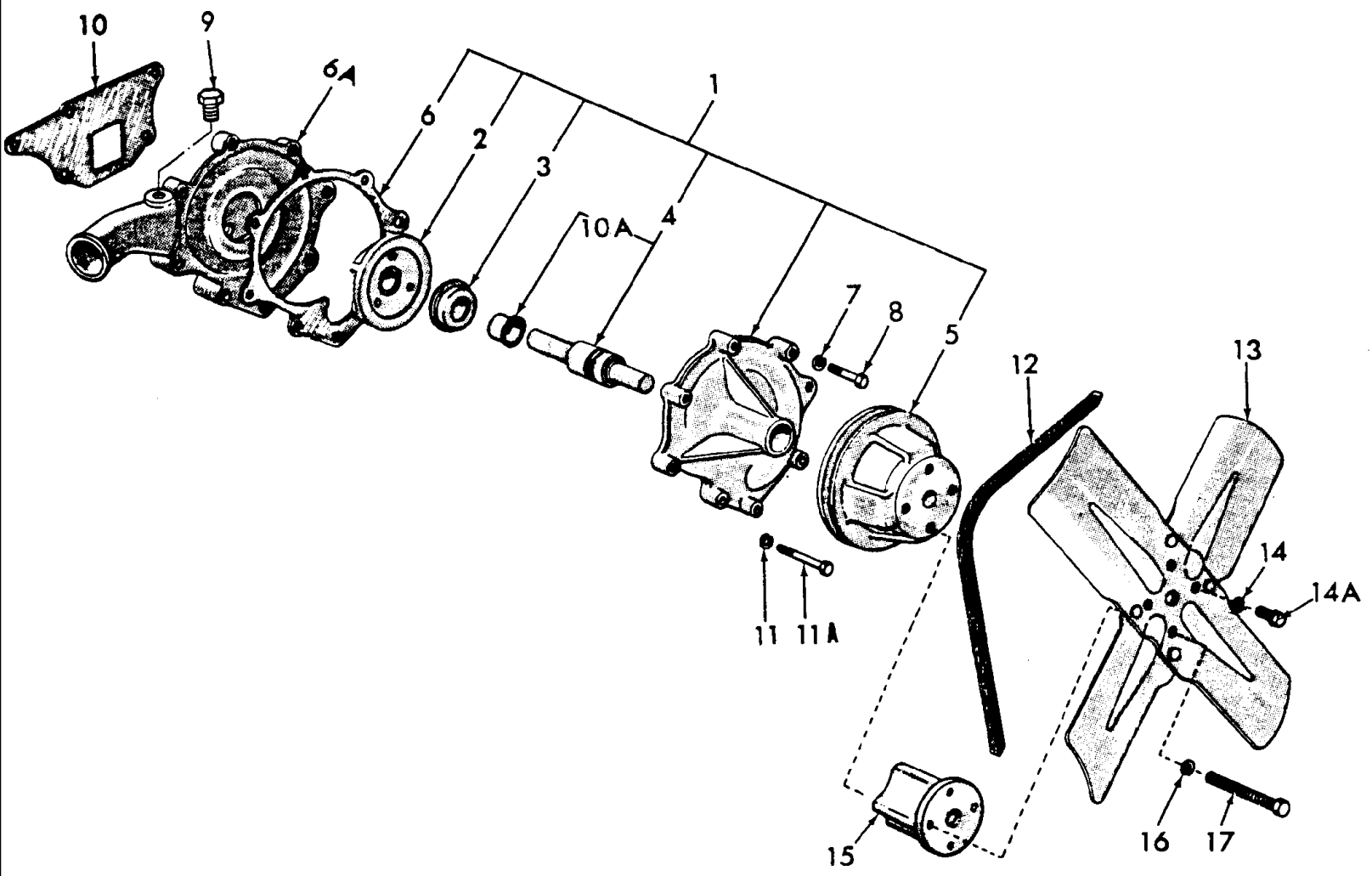

5000-SERIES 4 CYL TRACTOR (1/65-1/75)

08B01 WATER PUMP & RELATED PARTS

Ref	Part Number	Qty	Description
	EC0N8501ADS	1	Pump Assy., Water, Single Pulley, 4 Cylinder, L/Air, 5000,7000, NHNA Only, Start Year: 01/01/1965
	87800115	1	Pump Assy., Water, 2000,3000,4000, Also order FP-592(81872637)., Start Year: 01/01/1965
1	82845215DS	1	Kit, Pump Cover, 5000,7000, Includes: Ref. 2 thru 6, NHNA Only, Start Year: 01/01/1965
1	82845215	1	Kit, Pump Cover, 2000,3000,4000, Includes: Ref. 2 thru 6, Start Year: 01/01/1965
2	83926005	1	Impeller, Use w/D8NN-8501-UC, Start Year: 01/01/1965
3	F1NN8A559CA	1	Seal & Seat Assy., Start Year: 01/01/1965
4	C5NE8530B	1	Bearing Assy., Start Year: 01/01/1965
5	C5NE8509A	1	Pulley, Start Year: 01/01/1965
6	83959398	1	Gasket, 5000,7000, Start Year: 01/01/1965
6	83959398	1	Gasket, 2000,3000,4000, Start Year: 01/01/1965
6A	D5NN8505A	1	Housing, 5000,7000, Start Year: 01/01/1965
6A	E6NN8505BA	1	Housing, 2000,3000,4000, Start Year: 01/01/1965
7	80681	4	Washer, Lock, 5/16", Start Year: 01/01/1965
8	88275	4	Screw, Cap, HH, G5, 5/16"-18 x 1-1/2", Start Year: 01/01/1965
9	80781	1	Plug, Pipe, Sq Hd, 3/8"-18, Start Year: 01/01/1965
10	E5NN8507AB	1	Gasket, Start Year: 01/01/1965
10A	100E8550	1	Slinger, Years: 01/01/1965-12/31/1980
	C5NE8A514A	1	Impeller Assy., Use prior to D8NN-8501-UC, Years: 01/01/1965-12/31/1974
11	81821693	4	Washer, Lock, 3/8", Start Year: 01/01/1965
11A	280161	4	Screw, Cap, HH, G5, 3/8"-16 x 3", Start Year: 01/01/1965
	DJPN8591A	AR	Kit, Water Pump Repair, Use Prior to D8NN-8501-UC, Includes:, Years: 01/01/1965-12/31/1974
	C5NE8A514A	1	Impeller Assy.
	F1NN8A559CA	1	Seal Assy.
	C5NE8530B	1	Bearing
	83959398	1	Gasket
	E5NN8507AB	1	Gasket
	EGPN8591DA	AR	Kit, Water Pump Repair, Use w/# D8NN-8501-UC Includes:, Start Year: 01/01/1965
	83926005	1	Impeller
	F1NN8A559CA	1	Seal & Seat
	C5NE8530B	1	Bearing
	83959398	1	Gasket
	E5NN8507AB	1	Gasket
12	577240	1	Belt, Drive, 1/2" x 54.50, U.K.-Antwerp, Except 7000, Start Year: 01/01/1965
12	86514618	1	Belt, Drive, 1/2" x 54.00, U.S., Except 7000, Start Year: 01/01/1965
12	D4NN10C318A	1	Belt, Drive, 1/2" x 54.00, U.K.-Antwerp, 7000, Start Year: 10/01/1971
12	D3NN10C318C	1	Belt, Drive, 1/2" x 55.00, U.S., 7000, Start Year: 10/01/1971
13	C5NN8600A	1	Fan Assy., 4 Blade, 2000, Start Year: 01/01/1965
13	C5NN8600A	1	Fan Assy., 4 Blade, w/Cooler, Gas, 3000 Except 3500, Start Year: 01/01/1965
13	C5NN8600A	1	Fan Assy., 4 Blade, 4500 Gas, 4000-5100 & Diesel Except Tropical, Start Year: 01/01/1965
13	C5NN8600A	1	Fan Assy., 4 Blade, 4400, Years: 01/01/1965-07/31/1970
13	D9NN8600AA	1	Fan Assy., 6 Blade, 2000 Diesel Tropical, Start Year: 01/01/1965

5000-SERIES 4 CYL TRACTOR (1/65-1/75)

08B01 WATER PUMP & RELATED PARTS

Ref	Part Number	Qty	Description
13	D9NN8600AA	1	Fan Assy., 6 Blade, w/Cooler, 3550 Gas, Start Year: 01/01/1972
13	D9NN8600AA	1	Fan Assy., 6 Blade, w/Cooler, 3500 Gas, Years: 01/01/1965-12/31/1972
13	D9NN8600AA	1	Fan Assy., 6 Blade, 4000 Gas & LPG Except 4500, Years: 01/01/1965-12/31/1972
13	D9NN8600AA	1	Fan Assy., 6 Blade, 5100 Gas, Start Year: 01/01/1965
13	D9NN8600AA	1	Fan Assy., 6 Blade, 4400, Start Year: 08/01/1970
13	D9NN8600AA	1	Fan Assy., 6 Blade, 5200, Years: 01/01/1967-05/31/1973
13	69NY8600A	1	Fan Assy., 6 Blade, Mexico Only, Start Year: 01/01/1968
13	D3NN8600A	1	Fan Assy., 7 Blade, 17" Dia., 5200-7000, Start Year: 06/01/1973
	C5NN8607A	1	Blade, Fan, 2 Blade, 2000 Diesel, No Longer Serviced (NH-E), Start Year: 01/01/1965
14	80681	4	Washer, Lock, 5/16", Start Year: 01/01/1965
14A	280559	4	Screw, Cap, HH, G5, 5/16"-24 x 3/4", Except 4200-5200-7200, Start Year: 01/01/1965
15	D5NN8546F	1	Spacer, Water Pump Pulley to Fan, 4200, Years: 01/01/1966-12/31/1973
15	D5NN8546F	1	Spacer, Water Pump Pulley to Fan, 5200, Years: 01/01/1967-05/31/1973
15	C7NN8546A	1	Spacer, Water Pump Pulley to Fan, 7200, NHNA Only, Start Year: 01/01/1971
15	C7NN8546A	1	Spacer, Water Pump Pulley to Fan, 5200, Start Year: 06/01/1973
16	80681	4	Washer, Lock, 5/16", 4200-5200-7200, Start Year: 01/01/1966
17	300909S36	4	Screw, Cap, Flg Hd, G5, 5/16"-24 x 3-3/4", 4200-7200, Start Year: 01/01/1966
17	300909S36	4	Screw, Cap, Flg Hd, G5, 5/16"-24 x 3-3/4", 5200, Years: 01/01/1967-05/31/1973
17	60451	4	Screw, Cap, HH, G5, 5/16"-24 x 2", 5200, Start Year: 06/01/1973
	E2149T9	1	Kit, Hose & Fan Belt, U.K. & Antwerp, 2100-3100-4100, Includes: Parts Listed Below, NH-E Only, Start Year: 01/01/1965
	D5NN8260D	1	Hose
	82012728	2	Clamp Assy.
	C5NN8286B	1	Hose
	82012728	2	Clamp Assy.
	577240	1	Belt
	E2150T9	1	Kit, Hose & Fan Belt, U.K. & Antwerp, 5100-4500, Includes: Parts Listed Below, NH-E Only, Start Year: 01/01/1965
	D5NN8260D	1	Hose
	82012728	2	Clamp Assy.
	C5NN8286C	1	Hose
	82012728	2	Clamp Assy.
	577240	1	Belt

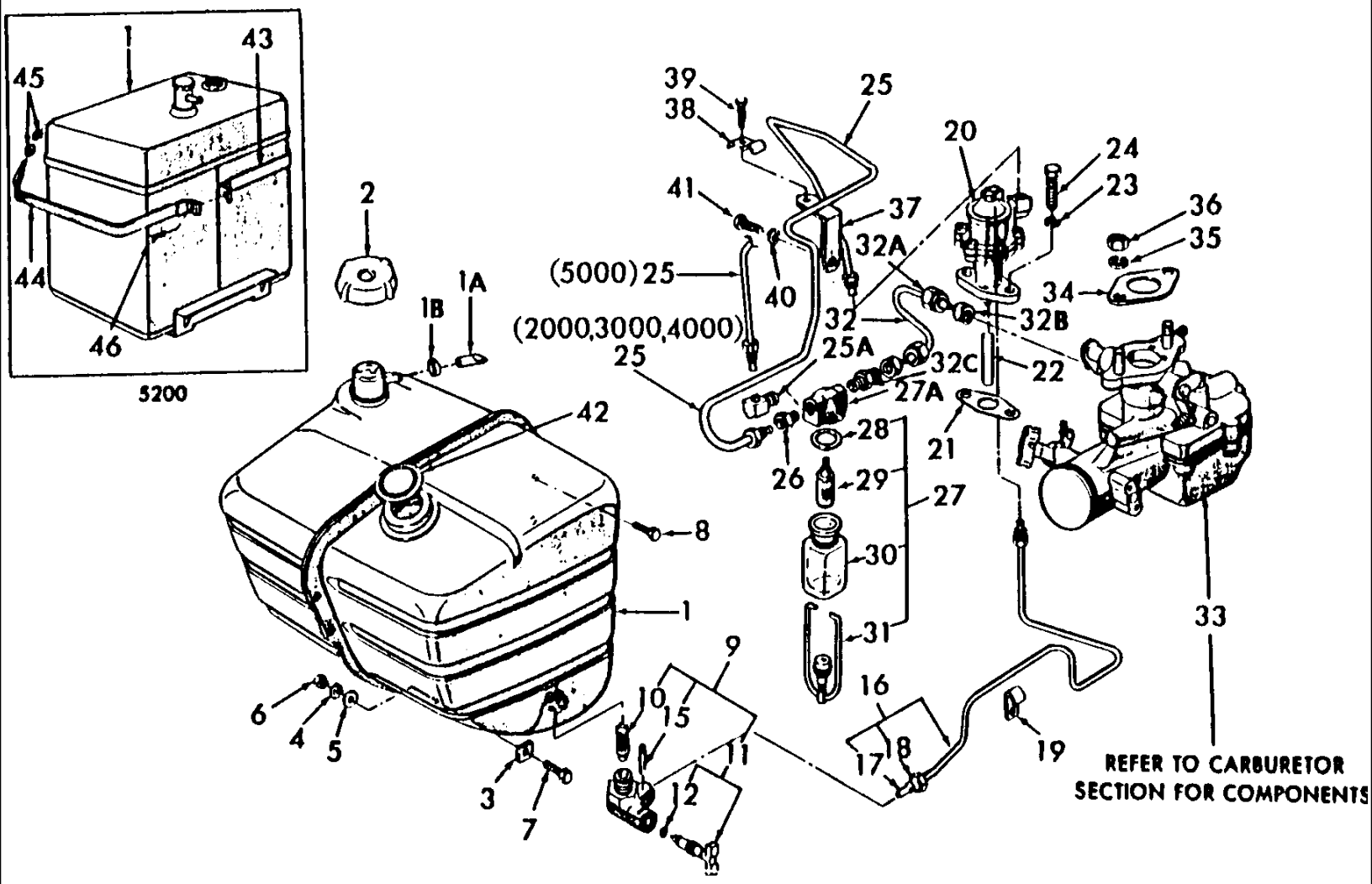
1
43
45
44
46
5200
2
1A
1B
42
8
1
6
4
5
3
7
9
10
15
11
12
39
38
25
41
40
(5000) 25
(2000,3000,4000)
25
25A
26
28
29
27
30
31
27A
20
24
23
37
32A
32
32B
32C
22
21
36
35
34
16
17
18
19
33
REFER TO CARBURETOR SECTION FOR COMPONENTS

5000-SERIES 4 CYL TRACTOR (1/65-1/75)

09A01 FUEL SYSTEM - GASOLINE (PETROL)

Ref	Part Number	Qty	Description
1	E3NN9002AB	1	Tank Assy., Fuel, 1.97" Neck, 2000, 4110, 4140, 3000 Except 3400, 3500, When replacing prior level tank, also order (1) E3NN-9A316-CA(83943961), (1) E3NN-13N850-AA(83943965), (1) D5NN-14N031-B(83918682) & (5) 54677-S100(83918056), Start Year: 01/01/1965
1	C5NN9002AD	1	Tank Assy., Fuel, 3-1/4" Neck, 3400, 4410, No Longer Serviced, Start Year: 01/01/1965
1	E2NN9002BA	1	Tank Assy., Fuel, 3500, 3550, 4100, 4200, 4400, 4500, Start Year: 01/01/1965
1	D8NN9002HA	1	Tank Assy., Fuel, 5100, Start Year: 01/01/1965
1	C5NN9002AM	1	Tank Assy., Fuel, 5200, NHNA Only, No Longer Serviced, Start Year: 01/01/1965
1A	C5NN9N322A	1	Sleeve, Leak Off Tube Sealing, Service Only, No Longer Serviced (NH-E), Start Year: 01/01/1965
1B	82012717	1	Clamp, Hose, 3/8", U.S., Service Only, Start Year: 01/01/1965
1B	82012717	1	Clamp, Hose, 3/8", U.K.-Antwerp, Service Only, Start Year: 01/01/1965
2	E5NN9N208DA	1	Kit, Fuel Tank Cap, U.S., Includes Decal, NHNA Only, Start Year: 01/01/1965
	E1NN9A095AA	1	Decal, Start Year: 01/01/1965
3	C5NN9N071A	1	Spacer, Lower Mounting, .06 x 1 x 1, Start Year: 01/01/1965
4	280278	5	Washer, Lock, Ext T, 5/16", Except Model 5000, Start Year: 01/01/1965
4	34807S36	5	Washer, Lock, 3/8", 5000, No Longer Serviced (NH-E), Start Year: 01/01/1966
5	80664	5	Washer, 5/16", Except 5000, Start Year: 01/01/1965
5	80702	10	Washer, 3/8", 5000, Start Year: 01/01/1966
6	86629539	5	Nut, G5, 5/16"-24, Except 4200 & 5000, Start Year: 01/01/1965
6	9635082	5	Nut, G5, 5/16"-18, 4200, Start Year: 01/01/1966
6	9628503	5	Nut, G5, 3/8"-16, 5000, Start Year: 01/01/1966
7	280483	3	Screw, Cap, HH, G5, 5/16"-24 x 1", Start Year: 01/01/1965
7	280483	1	Screw, Cap, HH, G5, 5/16"-24 x 1", Start Year: 01/01/1965
7	88011	1	Screw, Cap, HH, G5, 3/8"-16 x 1-1/4", 5000, Start Year: 01/01/1966
8	20677	4	Screw, Cap, HH, G5, 5/16"-24 x 5/8", 4000 Except 4200, Start Year: 01/01/1965
8	20677	2	Screw, Cap, HH, G5, 5/16"-24 x 5/8", 2000, 3000, Start Year: 01/01/1965
8	87872	5	Screw, Cap, HH, G5, 5/16"-18 x 3/4", 4200, Start Year: 01/01/1966
8	88206	4	Screw, Cap, HH, G5, 3/8"-16 x 1", Start Year: 01/01/1966
9	E2NN9N024AA	1	Tap & Screw Assy., Fuel Control, Includes: Body, Ref. 10 & 11, Start Year: 01/01/1965
10	D9NN9N187AA	1	Filter, Tap, Start Year: 01/01/1965
11	E2NN9N200AA	1	Valve & Seal Assy., Includes: Valve & Ref. 12, Start Year: 01/01/1965
12	49886	1	O-Ring, .239" ID x .070" Thk, Valve Seal, Start Year: 01/01/1965
15	D1NN9N084A	1	Retainer, Hair Pin Type, Start Year: 01/01/1965
16	D1NN9282A	1	Tube Assy., Tank to Pump, 5200, NHNA Only, No Longer Serviced, Start Year: 01/01/1967
16	C5NN9282J	1	Tube Assy., Tank to Pump, 4200, Does not include P/N 376016-S(83417038), Sleeve or P/N 87944-S36(81822627), Nut, NHNA Only, No Longer Serviced, Start Year: 01/01/1966
16	C5NN9282S	1	Tube Assy., Tank to Pump, Replaces C5NN9282A, 2000, 3000, 4000, Does not include P/N 376016-S(83417038), Sleeve or P/N 87944-S36(81822627), Nut, No Longer Serviced (NH-E), Start Year: 01/01/1965
16	D0NN9282B	1	Tube Assy., Tank to Pump, 5100, Includes: Tube, Ref. 17 & 18, NHNA Only, Start Year: 01/01/1966
17	376016S	1	Sleeve, Tube Assy. to Tap, Start Year: 01/01/1965
18	87944S36	1	Nut, Inverted Flared Tube, 5/16"-20, Start Year: 01/01/1965

Ref	Part Number	Qty	Description
19	NLS	1	Clip, Tube to Engine Assy., Except 5000 {379953S36}, Start Year: 01/01/1965
19	375647S43	1	Clip, Tube to Front Cover, 5000, NHNA Only, No Longer Serviced, Start Year: 01/01/1966
	80681	1	Washer, Lock, 5/16", 5000, Start Year: 01/01/1966
	9635082	1	Nut, G5, 5/16"-18, 5000, Start Year: 01/01/1966
20	F2NN9350AA	1	Pump Assy., Refer to Fuel Pump Section, NHNA Only, Start Year: 01/01/1965
21	C5NE9417A	1	Gasket, Fuel Pump Mounting, Start Year: 01/01/1965
22	C5NE9400A	1	Rod, Fuel Pump Push, Start Year: 01/01/1965
23	80681	2	Washer, Lock, 5/16", Start Year: 01/01/1965
24	9635884	2	Screw, Cap, HH, G5, 5/16"-18 x 1", Start Year: 01/01/1965
25	86584395	1	Tube Assy., Pump to Filter, Except 5000, Start Year: 01/01/1965
25	C6NE9B273A	1	Tube Assy., Pump to Filter, 5000, NHNA Only, No Longer Serviced, Years: 01/01/1966-05/31/1971
25	D0NN9B273B	1	Tube Assy., Pump to Filter, 5000, NHNA Only, No Longer Serviced, Start Year: 06/01/1971
25A	377196S	1	Elbow, 90°, Tube to Filter, 5000, No Longer Serviced (NHNA), Start Year: 01/01/1966
26	87972S	1/2	Connector, 5/6", 2000, 3000, 4000, 5000, Start Year: 01/01/1965
27	D4NN9155A	1	Filter Assy., Fuel, Includes: Ref. 27A thru 31, Start Year: 01/01/1965
27A	C5NE9165D	1	Cover, Fuel Filter, NHNA Only, Start Year: 01/01/1965
28	C5NN9160A	1	Gasket, Fuel Filter Bowl, Start Year: 01/01/1965
29	C5NN9176A	1	Element, Fuel Filter, No Longer Serviced (NH-E), Start Year: 01/01/1965
30	86508531	1	Bowl, Fuel Filter, Start Year: 01/01/1965
31	D4NN9C297A	1	Ball Assy., Fuel Filter, Must use W/# D4NN9162A, No Longer Serviced (NH-E), Start Year: 01/01/1965
32	D0NN9R510A	1	Tube Assy., Fitler to Carburetor, W/5" Starter, 5000, NHNA Only, Start Year: 06/01/1971
	377656S	1	Elbow, 5/16" Tube 1/8" Pipe, 5000, Start Year: 06/01/1971
32	E2NN9N275AA	1	Tube Assy., Fuel Filter to Carburetor, 2000, 3000, 4000, When replacing prior Tube Assy. (65/1-66) W/C5NN-9N275-A(81814164) also use (1) 377731-S(81814188), (2) 377732-S(81814189), (2) 377733-S43(87768464), (1)C5NN-9E588-A(81814173)., Years: 01/01/1965-01/31/1966
32	E2NN9N275AA	1	Tube, Fuel Filter to Carburetor, 2000, 3000, 4000, Start Year: 02/01/1966
32A	377733S36	2	Nut, Tube, 5/16", 2000, 3000, 4000, No Longer Serviced (NH-E), Start Year: 02/01/1966
32B	377732S	2	Seal Assy., 5/16" Tube, 2000, 3000, 4000, No Longer Serviced (NH-E), Start Year: 02/01/1966
32C	377731S	1	Connector, 5/16" Tube, 2000, 3000, 4000, No Longer Serviced (NH-E), Start Year: 02/01/1966
33	REFERENCE	1	Carburetor Assy., Refer to Fig. 9D1, Start Year: 01/01/1965
34	82845220	1	Gasket, Carburetor to Intake Manifold, Start Year: 01/01/1965
35	80680	2	Washer, Lock, 3/8", Start Year: 01/01/1965
36	86509310	2	Nut, G5, 3/8"-24, Start Year: 01/01/1965
37	C5NE9B325B	1	Bracket Assy., Fuel Tube Support, No Longer Serviced (NH-E), Start Year: 01/01/1965
38	378691S100	1	Clip, Tube to Support Bracket, U.K.-Antwerp, Start Year: 01/01/1965
39	379753S36	1	Screw, Lock, HH, #10-32 x .69, No Longer Serviced (NH-E), Start Year: 01/01/1965
40	80680	1	Washer, Lock, 3/8", Start Year: 01/01/1965
41	88011	1	Screw, Cap, HH, G5, 3/8"-16 x 1-1/4", Start Year: 01/01/1965
42	C5NN9N321B	1	Plate, Sender Gauge Hole, U.K. Only, 2000, NH-E Only, No Longer Serviced, Start Year: 01/01/1965
43	C5NN9N030B	1	Strap & Pad Assy., Tank Support, RH, 5200, NHNA Only, No Longer Serviced, Start Year: 01/01/1967
44	C5NN9N043B	1	Strap & Pad Assy., Tank Support, LH, 5200, NHNA Only, No Longer Serviced, Start Year: 01/01/1967

Ref	Part Number	Qty	Description
45	280717	4	Nut, G5, 7/16"-14, 5200, Start Year: 01/01/1967
46	304701S36	1	Screw, Cap, HH, G5, 5/16"-18 x 1-1/8", 5200, Start Year: 01/01/1967

09A02 FUEL SYSTEM, DIESEL, W/CAV INJECTION PUMP - 2000,4000 (65/) 3000 (65/12-65 & 9-69 & 1-71/) 5000 (11-72/)

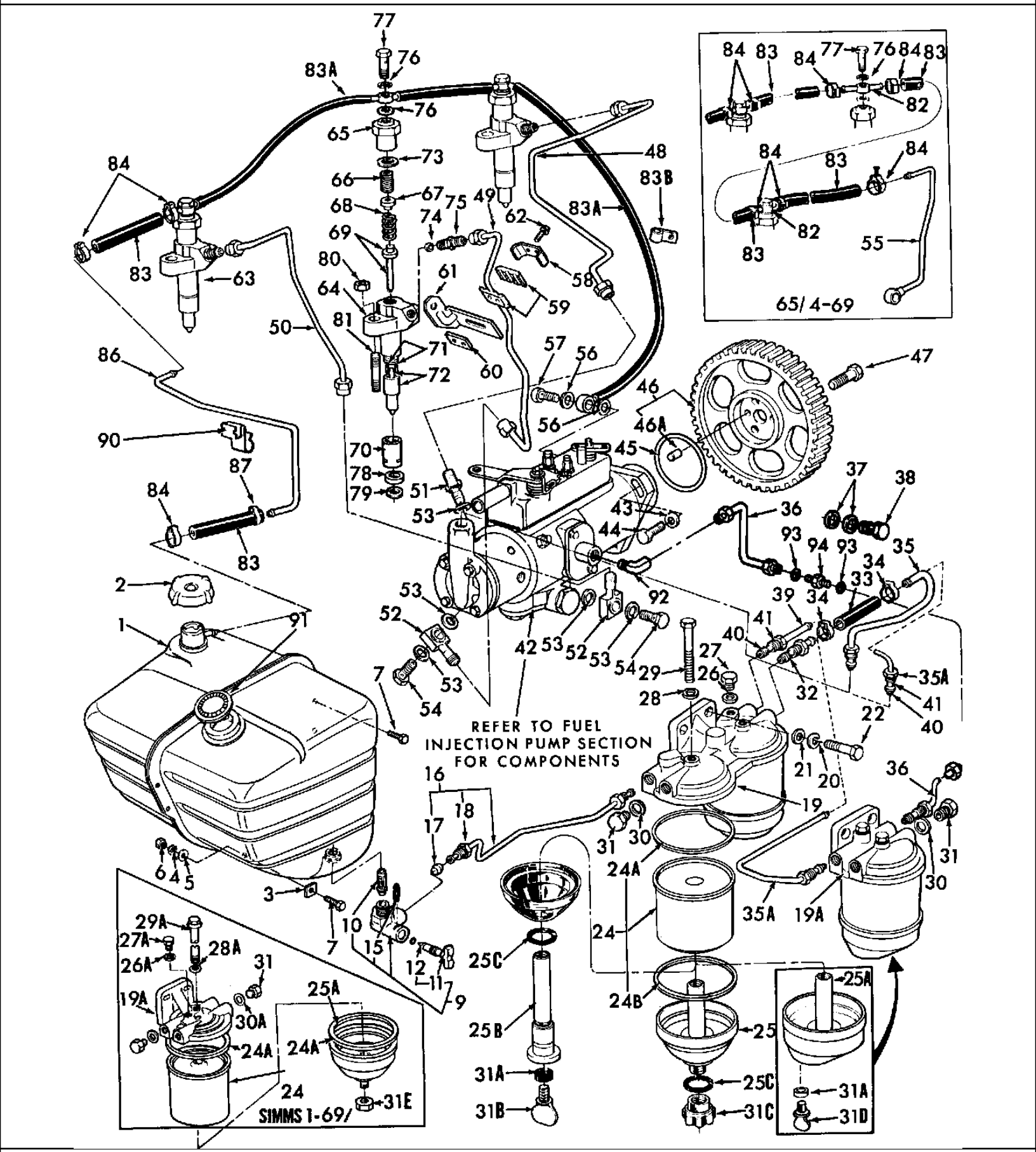

5000-SERIES 4 CYL TRACTOR (1/65-1/75)

09A02 FUEL SYSTEM, DIESEL, W/CAV INJECTION PUMP - 2000,4000 (65/) 3000 (65/12-65 & 9-69 & 1-71/) 5000 (11-72/)

Ref	Part Number	Qty	Description
1	E3NN9002AB	1	Tank Assy., Fuel, 1.97" Neck Replaces P/N C5NN-9002-H, Except 3400, 3500, When replacing prior level 9002 Tank Assy., W/E3NN-9002 Level, also order: (1)E3NN-9A316-CA(83943961), (1)E3NN-13N850-AA(83943965), (1)D5NN-14N031-B(83918682), (5)54677-S100(83918056)., Start Year: 01/01/1965
1	E3NN9002DA	1	Tank Assy., Fuel, W/Cab, 3055, Years: 01/01/1970-12/31/1974
1	C5NN9002AD	1	Tank Assy., Fuel, 3-1/4" Neck, 3400, 4410, No Longer Serviced, Start Year: 01/01/1965
1	E3NN9002KB	1	Tank Assy., Fuel, 3500, 3550, 4100, 4400, 4500, When replacing prior level 9002 Tank Assy., W/E3NN-9002 Level, also order: (1)E3NN-9A316-CA(83943961), (1)E3NN-13N850-AA(83943965), (1)D5NN-14N031-B(83918682), (5)54677-S100(83918056)., Start Year: 01/01/1965
1	C5NN9002AL	1	Tank Assy., Fuel, 4200, NHNA Only, No Longer Serviced, Start Year: 01/01/1966
1	D8NN9002HA	1	Tank Assy., Fuel, 5000, Start Year: 11/01/1972
2	E7NN9030AA	1	Cap Assy., Fuel Tank Filler, Start Year: 01/01/1965
3	C5NN9N071A	1	Spacer, Mounting, .06 x 1 x 1 (1.524 x 25.4 x 25.4mm), Start Year: 01/01/1965
4	280278	AR	Washer, Lock, Ext T, 5/16", Start Year: 01/01/1965
5	87362	AR	Washer, SAE, 5/16", Start Year: 01/01/1965
6	9635082	AR	Nut, G5, 5/16"-18, Start Year: 01/01/1966
7	9635884	AR	Screw, Cap, HH, G5, 5/16"-18 x 1", Start Year: 01/01/1965
9	E2NN9N024AA	1	Tap & Screen Assy., Fuel Control, Includes: Ref. 10 thru 15, Start Year: 01/01/1965
10	D9NN9N187AA	1	Filter, Fuel Control Tap, Start Year: 01/01/1965
11	E2NN9N200AA	1	Valve & Seal Assy., Tap, 1/2"-20, Includes: Ref. 12, Start Year: 01/01/1965
12	49886	1	O-Ring, .239" ID x .070" Thk, Valve Seal, Start Year: 01/01/1965
15	D1NN9N084A	1	Retainer, Tap Valve, Start Year: 01/01/1965
16	D0NN9323A	1	Tube Assy., Tank to Filter, Single Filter, Except 3500, 3550, Start Year: 01/01/1965
16	D0NN9323A	1	Tube Assy., Tank to Filter, Single Filter, 4110, 4410, Start Year: 05/01/1968
16	C5NN9323D	1	Tube Assy., Tank to Filter, Dual Filter, Except 3500 & 3550, Start Year: 01/01/1965
16	C5NN9323D	1	Tube Assy., Tank to Filter, Dual Filter, 2000, NH-E Only, Start Year: 05/01/1973
16	C5NN9323D	1	Tube Assy., Tank to Filter, Dual Filter, 4110, Years: 01/01/1965-04/30/1968
16	C5NN9323F	1	Tube Assy., Tank to Filter, Except 4110 & 4200, Years: 01/01/1965-04/30/1968
16	C5NN9323F	1	Tube Assy., Tank to Filter, 3500, Years: 01/01/1965-12/31/1972
16	D9NN9323AA	1	Tube Assy., Tank to Filter, Except 4110, 4200, 3550, 4100, 4400, Start Year: 05/01/1968
16	C5NN9323K	1	Tube Assy., Tank to Filter, 4200, NHNA Only, No Longer Serviced, Years: 01/01/1966-04/30/1968
16	C7NN9323C	1	Tube Assy., Tank to Filter, 4200, NHNA Only, No Longer Serviced, Years: 05/01/1968-12/31/1973
16	D2NN9323A	1	Tube Assy., Tank to Filter, Single Filter, 5100, Start Year: 11/01/1972
16	D2NN9323A	1	Tube Assy., Tank to Filter, Dual Filter
16	D4NN9323A	1	Tube Assy., Tank to Filter, 5200, NHNA Only, No Longer Serviced, Start Year: 11/01/1972
16	D2NN9323B	1	Tube Assy., Tank to Filter, Dual Filter, 5100, Includes: Ref. 17 & 18, Start Year: 11/01/1972
17	119987ES	1	Ferrule, Tubing, 1/4", Tube to Filter, Replaces P/N EB-9242-A, Start Year: 01/01/1965
18	117757S36	1	Nut, Tubing, 1/4", Replaces P/N EB-9243-A, Start Year: 01/01/1965
19	C5NE9165B	1	Head, Dual Fuel Filter, Years: 01/01/1965-12/31/1968
19A	C5NE9165C	1	Head, Single Fuel Filter, Start Year: 01/01/1965
20	80680	2	Washer, Lock, 3/8", Start Year: 01/01/1965

5000-SERIES 4 CYL TRACTOR (1/65-1/75)

09A02 FUEL SYSTEM, DIESEL, W/CAV INJECTION PUMP - 2000,4000 (65/) 3000 (65/12-65 & 9-69 & 1-71/) 5000 (11-72/)

Ref	Part Number	Qty	Description
21	87016	2	Washer, SAE, 3/8", Start Year: 01/01/1965
22	354452S36	2	Bolt, HH, 3/8"-16 x 1-5/8", Start Year: 01/01/1965
24	83937061	AR	Kit, Fuel Filter Element, Includes: Ref. 24A & 24B, Start Year: 01/01/1965
24A	D8NN9D325BA	1	Gasket, Fuel Filter Element, Upper, Start Year: 01/01/1965
24B	83914036	1	Gasket, Fuel Filter Element, Lower, Start Year: 01/01/1965
	81811884	1	O-Ring, .312" ID x .070" Thk, Start Year: 01/01/1965
	87014S92	1	O-Ring, .562" ID x .070" Thk, Start Year: 01/01/1965
25	C7NN9162B	1	Bowl, Fuel Filter Sediment, W/Single Filter, Start Year: 01/01/1965
25A	C7NN9N044A	1	Bowl, Fuel Filter Sediment, W/Single Filter (SIMMS), Start Year: 01/01/1969
25B	C5NN9N023A	1/2	Retainer & Stud Assy., Filter Bowl, Glass, No Longer Serviced (NHNA), Years: 01/01/1965-12/31/1968
25C	C5NE9D315A	1/2	Seal, Filter Center Bolt, Use W/CFPN-9162-A, Years: 01/01/1965-12/31/1968
26	D1NN9N025A	1	Washer, M10.1 Flat (CAV), With Single Filter, Start Year: 01/01/1965
26	D1NN9N025A	2	Washer, M10.1 Flat (CAV), With Dual Filter, Years: 01/01/1965-12/31/1968
26A	380428S	1	Washer, Filter Air Vent Screw, W/Single Filter, Start Year: 01/01/1969
27	D1NN9N026A	1/2	Plug, M10 x 1.5 Hex Hd. (CAV), Start Year: 01/01/1965
27	D1NN9N026A	1	Screw, Fuel Filter Air Vent, Start Year: 01/01/1965
27A	C5NN9N026A	1	Plug, 5/16" - 24 (Filter Air Bleed Hole) Hex Hd. (SIMMS), With Single Filter, Start Year: 01/01/1969
28	C5NE9F278A	1	Washer M6.5 Flat Aluminum (CAV), With Single Filter, Years: 01/01/1965-12/31/1972
28	C5NE9F278A	2	Washer M6.5 Flat Aluminum (CAV), With Dual Filter, Years: 01/01/1965-12/31/1968
28	81833781	1	Washer (Bolt Seal) (CAV), With Single Filter, Start Year: 01/01/1973
28A	81811884	1	O-Ring, .312" ID x .070" Thk, (SIMMS), With Single Filter, Start Year: 01/01/1969
28A	49886	1	O-Ring, .239" ID x .070" Thk, (CAV), With Single Filter, Start Year: 01/01/1973
29	337505	1	Bolt, 1/4" - 20 x 2-1/8" Hex Hd. (CAV) With Single Filter, Years: 01/01/1965-12/31/1972
29	337505	2	Bolt, 1/4" - 20 x 2-1/8" Hex Hd. (CAV) With Dual Filter, Years: 01/01/1965-12/31/1968
29	337505	1	Bolt, 1/4" - 20 x 2-1/8" (Element Retaining) (CAV), With Single Filter, Start Year: 01/01/1973
29A	D2NN9N090A	1	Bolt, Fuel Filter Center (SIMMS), W/Single Filter, Start Year: 01/01/1969
29B	D2NN9D317A	1	Washer, Filter Center Bolt (SIMMS) With Single Filter, Start Year: 01/01/1969
30	D2NN9N083A	1	Washer 1/2" (CAV), Start Year: 01/01/1965
30A	D2NN9N083A	1	Washer 1/2" (SIMMS), With Single Filter, Start Year: 01/01/1969
31	D1NN9N086A	1	Plug, 1/2" - 20 Hex Hd., (U.S.), NHNA Only, Start Year: 01/01/1965
31	D1NN9N086A	1	Plug, 1/2" - 20 Hex Hd., (U.K.-Antwerp), NH-E Only, Start Year: 01/01/1965
31A	81825363	1/2	Washer 11/32" I.D. Flat, Start Year: 01/01/1965
31B	81825360	1/2	Screw, Tumb, 5/16"-18 x 1/2", (W/Glass Bowl), Years: 01/01/1965-12/31/1968
31C	C5NE9K024A	1	Plug, Filter (Bowl Drain), With Single Filter, Years: 01/01/1965-12/31/1968
31C	C5NE9K024A	2	Plug, Filter (Bowl Drain), (Use with CFPN-9162-A Bowl & Stud Assy.) With Dual Filter, Years: 01/01/1965-12/31/1968
31D	81825360	1	Plug, Fuel Filter Drain, With Single Filter, Start Year: 01/01/1969
31E	C5NE9E334A	1	Cap, (Bowl Drain) (SIMMS), With Single Filter, Start Year: 01/01/1969
32	C5NE9A274C	1	Tube Assy., Fuel Filter Outlet, W/Dual Filter, Years: 01/01/1965-12/31/1968
32	C5NE9A274C	1	Tube Assy., Fuel Filter Outlet, 5000, Start Year: 11/01/1972
33	E3NN9288AA	2	Hose, Fuel Tube, 2" (6.35cm) Long, Years: 01/01/1965-04/30/1971

5000-SERIES 4 CYL TRACTOR (1/65-1/75)

09A02 FUEL SYSTEM, DIESEL, W/CAV INJECTION PUMP - 2000,4000 (65/) 3000 (65/12-65 & 9-69 & 1-71/) 5000 (11-72/)

Ref	Part Number	Qty	Description
33	E3NN9288AA	1	Hose, Fuel Tube, 2" (6.35cm) Long, 5000, Start Year: 11/01/1972
34	82012717	4	Clamp, Hose, Years: 01/01/1965-04/30/1971
34	82012717	2	Clamp, Hose, 5000, Start Year: 11/01/1972
35	C5NE9C520F	1	Tube Assy., Pump Inlet, (W/Dual Filter), No Longer Serviced (NH-E), Years: 01/01/1965-12/31/1968
35A	D5NN9C330A	1	Tube Assy, Filter to Pump (Single Filter) Except 5000, Start Year: 01/01/1965
35A	D2NN9N575B	1	Tube Assy, Filter to Pump (Single Filter), 5000, Start Year: 11/01/1972
35A	E3NN9C330CB	1	Tube, Start Year: 01/01/1965
36	C5NE9D546A	1	Tube Assy., Pump Outlet (W/Dual Filters), Years: 01/01/1965-12/31/1968
36	E3NN9B273DB	1	Tube Assy, Pump Outlet (W/Single Filter) Except 5000 (Repl. D0NN-9C330-A), Start Year: 01/01/1965
36	129270	2	O-Ring, 90 Duro, .414" ID x .072" Thk, Start Year: 01/01/1965
36	D2NN9B273A	1	Tube Assy, Pump to Dual Filter (1 Piece), 5000, Start Year: 05/01/1973
36	D2NN9D546B	1	Tube Assy, Pump Outlet (W/Single Filter) Banjo, 5000, Start Year: 11/01/1972
36	D2NN9B273B	1	Tube Assy, Pump to Dual Filter (1 Piece) Except 5000 (U.K.-Ant.), Start Year: 05/01/1973
37	D2NN9N083A	2	Washer 1/2" (CAV), Start Year: 01/01/1965
38	377503S43	1	Bolt, 1/2" - 20 x 23.5mm Fluid Type (Banjo), Start Year: 01/01/1965
39	C5NE9A274C	1	Tube Assy, Fuel Filter Inlet, (W/Dual Filter), Years: 01/01/1965-12/31/1968
40	96H9242	3	Sleeve, 5/16" Ball (Ferrule), Years: 01/01/1965-12/31/1968
41	379440S43	1	Nut (5/8") Tubing (Sleeve & Nut are part of Tube Assemblies 9A274, 9C520, 9A322), Years: 01/01/1965-12/31/1968
42	REFERENCE	1	Pump Assy, Fuel Injection, Refer to Fig. 9E1, Start Year: 01/01/1965
43	83925582	3	Washer, 11/32", Start Year: 01/01/1965
45	510185	1	O-Ring, 2.234" ID x .139" Thk
44	82855493	3	Bolt, HH, 5/16"-24 x .96, Start Year: 01/01/1965
46	E3NN9F588AA	1	Gear Assy., Fuel Injection Pump, Includes: Gear & Ref. 46A, Start Year: 01/01/1965
46A	387349S	1	Pin, Dowel, 1/4" x 5/16", No Longer Serviced (NH-E), Start Year: 01/01/1965
47	42974S36	3	Screw, Cap, HH, G8, Self-Locking, 5/16"-24 x 5/8", Start Year: 01/01/1965
48	C5NE9A555D	1	Tube Assy., #1 Cylinder, Replaces P/N C5NE-9A555-A, 2000, Start Year: 01/01/1965
48	C5NE9A555D	1	Tube Assy., #1 Cylinder, Replaces P/N C5NE-9A555-A, 3000, Years: 01/01/1965-12/31/1965
48	C5NE9A555D	1	Tube Assy., #1 Cylinder, Replaces P/N C5NE-9A555-A, 4000, Years: 01/01/1965-03/31/1968
48	C7NN9A555G	1	Tube Assy., #1 Cylinder, Replaces P/N C7NN-9A555-F, 4000, Start Year: 04/01/1968
48	C7NN9A555G	1	Tube Assy., #1 Cylinder, Replaces P/N C7NN-9A555-F, 3000, Start Year: 01/01/1971
48	D2NN9A555A	1	Tube Assy., #1 Cylinder, 5000 2000-3000-4000, Start Year: 11/01/1972
49	C5NE9A556D	1	Tube Assy., #2 Cylinder, Start Year: 01/01/1965
49	D2NN9A556A	1	Tube Assy., #2 Cylinder, 5000, Start Year: 11/01/1972
50	C5NE9A557E	1	Tube Assy., #3 Cylinder, 2000-3000-4000, Start Year: 01/01/1965
50	D2NN9A557A	1	Tube Assy., #3 Cylinder, 5000, Start Year: 11/01/1972
50	D2NN9A558A	1	Tube Assy., #4 Cylinder, 5000, Start Year: 11/01/1972
51	C5NN9N022A	1	Valve Assy., Fuel Pump Injector, P/N C5NN-9N022-A(81815263) & D4NN-9N022-A(83903040) must be used together. May be used when fluctuating RPM's are encountered under light Engine load conditions., No Longer Serviced (NH-E), Start Year: 01/01/1965
51	C7NN9N282A	1	Connector, #1 Injector Tube, No Longer Serviced, Start Year: 01/01/1965

5000-SERIES 4 CYL TRACTOR (1/65-1/75)

09A02 FUEL SYSTEM, DIESEL, W/CAV INJECTION PUMP - 2000,4000 (65/) 3000 (65/12-65 & 9-69 & 1-71/) 5000 (11-72/)

Ref	Part Number	Qty	Description
52	377517S15	2	Connector, #2 & #3 Injector, Banjo, Start Year: 01/01/1965
53	81820799	8	Washer, 3/8" (9.65mm) I.D., 1/2" (12.7mm) O.D., Start Year: 01/01/1965
54	D4NN9N022A	2	Valve Assy., Fuel Pump Injector, P/N C5NN-9N022-A(81815263) & D4NN-9N022-A(83903040) must be used together. May be used when fluctuating RPM's are encountered under light Engine load conditions., Start Year: 01/01/1965
55	C5NE9A593A	1	Tube Assy., Pump Leak-Off, Years: 01/01/1965-04/30/1969
56	D1NN9N025A	2	Washer, Flat, M10.1, Start Year: 01/01/1965
57	377502S43	1	Bolt, M10 x 1.5 x 19mm Fluid Type, Start Year: 01/01/1965
58	C5NE9C344D	1	Clamp, Fuel Tube, Upper, 2000-3000-4000, Start Year: 01/01/1965
58	D2NN9C334A	1	Clamp, Fuel Tube, Upper, 5000, No Longer Serviced, Start Year: 11/01/1972
59	C5NE9E320B	1	Insert, Fuel Tube Clamp, Rubber, 2000-3000-4000, Start Year: 01/01/1965
59	D2NN9E320A	1	Insert, Fuel Tube Clamp, Rubber, 5000, No Longer Serviced (NH-E), Start Year: 11/01/1972
60	C5NE9C333A	1	Plate, Fuel Tube Clamp, 2000-3000-4000, Start Year: 01/01/1965
60	D2NN9C333A	1	Plate, Fuel Tube Clamp, 5000, No Longer Serviced, Start Year: 11/01/1972
61	C5NE9E299D	1	Clamp, Fuel Tube, Lower, No Longer Serviced, Start Year: 01/01/1965
62	355122S36	2	Screw & Washer Assy., #10-32 x 1-1/8", Use W/SIMMS Injector 65/9-71, Start Year: 01/01/1965
63	D0NN9F593A	3	Injector Assy., Fuel, U.K.-Antwerp, 2000, Includes: Ref. 64 thru 77, Start Year: 01/01/1965
63	C5NE9F593C	3	Injector Assy., Fuel, Replaces P/N C7NN-9F593-BB, 4000, Includes: Ref. 64 thru 77, No Longer Serviced (NH-E), Start Year: 01/01/1965
63	D0NN9F593A	4	Injector Assy., Fuel, U.S., 2000, 3000, 5000, Includes: Ref. 64 thru 77, Years: 01/01/1965-10/31/1974
63	D0NN9F593A	3	Injector Assy., Fuel, 3000, Includes: Ref. 64 thru 77, Start Year: 01/01/1965
64	C5NE9F595A	3	Holder Assy., Injector Nozzle, Includes: Ref. 65 thru 71, No Longer Serviced (NH-E), Start Year: 01/01/1965
65	C5NE9H510A	3/4	Nut, Holder Cap, Use with CAV Injector, 65/, No Longer Serviced (NHNA), Start Year: 01/01/1965
65	E1ADDN993196B	3	Nut, Injector Cap, Use W/SIMMS Injector 65/9-71, Years: 01/01/1965-09/30/1971
66	C5NE9F540A	3/4	Nut, Injector Spring Cap, Start Year: 01/01/1965
67	C5NN9N519A	3	Plate, Injector Spring, Use W/CAV Injector 65/, No Longer Serviced, Years: 01/01/1965-09/30/1971
67	D1NN9N519A	3/4	Plate, Injector Spring, Use W/CAV Injector 65/, Start Year: 01/01/1965
67	C5NE9H511A	3/4	Shim, Injector, Use W/CAV Injector 65/, No Longer Serviced (NHNA), Start Year: 01/01/1965
68	E1ADDN993193	3	Spring, Injector, U.S., Use W/CAV Injector 65/, NH-E Only, Years: 01/01/1965-09/30/1971
68	C5NE9F537A	3/4	Spring, Injector, Use W/CAV Injector 65/, Start Year: 01/01/1965
69	C5NE9G508B	3	Spindle Assy., Fuel Filter, No Longer Serviced (NHNA), Years: 01/01/1965-09/30/1971
69	E0NN9G508AA	3/4	Spindle Assy., Injector, Use W/SIMMS Injector 65/9-71, No Longer Serviced (NHNA), Start Year: 01/01/1965
70	D1NN9K549A	3/4	Nut, Injector Nozzle, Start Year: 01/01/1965
71	380409S	AR	Pin, Dowel, .116 x .394, Use W/SIMMS Injector 65/9-71, No Longer Serviced, Start Year: 01/01/1965
71	E174CL9	3	Pin, Body Locating, Use W/CAV Injector 65/, No Longer Serviced, Years: 01/01/1965-09/30/1971
71	380410S	AR	Pin, Dowel, .115 x .394, Use W/CAV Injector 65/, No Longer Serviced, Start Year: 01/01/1965
71	380419S	AR	Pin, Dowel, .114 x .394, No Longer Serviced, Start Year: 01/01/1965
	2701E9K548	3	Shim, Nozzle, 3/8" Flat, Use W/Simms Injector, Years: 01/01/1965-09/30/1971
72	D0NN9E527A	3	Nozzle Assy., Fuel Injector, 2000-3000-5000, Start Year: 01/01/1965
72	C5NE9E527C	3/4	Nozzle Assy., Fuel Injector, 4000, Start Year: 01/01/1965

09A02 FUEL SYSTEM, DIESEL, W/CAV INJECTION PUMP - 2000,4000 (65/) 3000 (65/12-65 & 9-69 & 1-71/) 5000 (11-72/)

Ref	Part Number	Qty	Description
73	D1NN9R524A	3/4	Washer, Flat, 13/16", Start Year: 01/01/1965
74	C5NE9G547A	3/4	Washer, Injector Adaptor Seal, Start Year: 01/01/1965
75	379764S	3	Connector, Use W/Simms Injector, No Longer Serviced (NH-E), Years: 01/01/1965-09/30/1971
76	380428S	6/8	Washer, Flat, Leak-Off Fitting, Replaces P/N C5NE-9G546-A, Start Year: 01/01/1965
77	D1NN9R523A	3/4	Bolt, Leak-Off Tube, Start Year: 01/01/1965
78	81806277	3/4	Seal, Injector, Start Year: 01/01/1965
79	C5NE9E529A	3/4	Washer, Injector Sealing, Start Year: 01/01/1965
	83947824	2	Connector, 5/16" Flare x 1/2"-20 O-Ring, Start Year: 01/01/1965
80	86629539	6/8	Nut, G5, 5/16"-24, Start Year: 01/01/1965
	83947824	2	Connector, 5/16" Flare x 1/2"-20 O-Ring, Start Year: 01/01/1965
81	380583S36	6/8	Stud, Screw, 5/16"-18-24 x 1.88, Start Year: 01/01/1965
82	NS	3	Fitting, Banjo, 3/16", Not Serviced, Years: 01/01/1965-04/30/1969
83	E3NN9G577AA	4	Hose, Injector Leak-Off, 4-7/8" Lg., Cut to 3" Tank Return & 1st Banjo Fitting, Years: 01/01/1965-04/30/196
83	E3NN9G577AA	11	Hose, Injector Leak-Off, 4-7/8" Lg., Leak-Off tube Assy. to Fuel Return Tube, Start Year: 05/01/1969
83A	D9NN9A564GB	1	Tube Assy., Leak-Off, Complete, U.K.-Antwerp, 2000-3000-4000, Start Year: 05/01/1969
83A	D9NN9A564GB	1	Tube Assy., Leak-Off, Complete, U.S., 2000-3000-4000, Start Year: 01/01/1965
83A	D9NN9A564EB	1	Tube Assy., Fuel Injection Leak-Off, Complete, Replaces P/N D2NN-9A564-G, 5000, Start Year: 11/01/197
83B	C7NN9F524A	1	Clip, Leak-Off Tube to Pump, U.K.-Antwerp, NH-E Only, No Longer Serviced, Start Year: 05/01/1969
84	82012717	7	Clamp, Hose, Replaces P/N 377931-S43, Years: 01/01/1965-04/30/1969
84	82012717	2	Clamp, Hose, Replaces P/N 377931-S43, Start Year: 05/01/1969
86	C5NN9A337H	1	Tube Assy., Return to Tank, Except 4200, Start Year: 01/01/1965
86	C7NN9A337B	1	Tube Assy., Return to Tank, 4200, NHNA Only, No Longer Serviced, Start Year: 01/01/1966
87	82012717	2	Clamp, Hose, Start Year: 01/01/1965
90	C5NN9N340C	1	Clip, Fuel Return Tube, Start Year: 01/01/1965
91	C5NN9N321B	1	Plate, Sender Gauge Hole, L/Fuel Gauge, U.K., 2000, NH-E Only, No Longer Serviced, Start Year: 01/01/1965
92	83951858	1	Elbow, 90°, 5/16", Flareless, 1/2"-20, Start Year: 01/01/1965
93	129270	2	O-Ring, 90 Duro, .414" ID x .072" Thk, Start Year: 01/01/1965
94	83947824	2	Connector, 5/16" Flare x 1/2"-20 O-Ring, Start Year: 01/01/1965
	309801	1	Kit, Third Pressurizing Valve, U.S., 4000, Includes, Parts Listed Below, Order Components, NHNA Only, Start Year: 04/01/1968
	C7NN9A555G	1	Tube
	D4NN9N022A	1	Valve
	C5NE9A556D	1	Tube
	377517S15	1	Fitting
	C5NE9A557E	1	Tube
	81820799	1	Washer

09A03 FUEL SYSTEM, DIESEL, W/ SIMMS INJECTION PUMP - 3000 (1-66/8-69 & 1-70/12-70) 5000, 7000

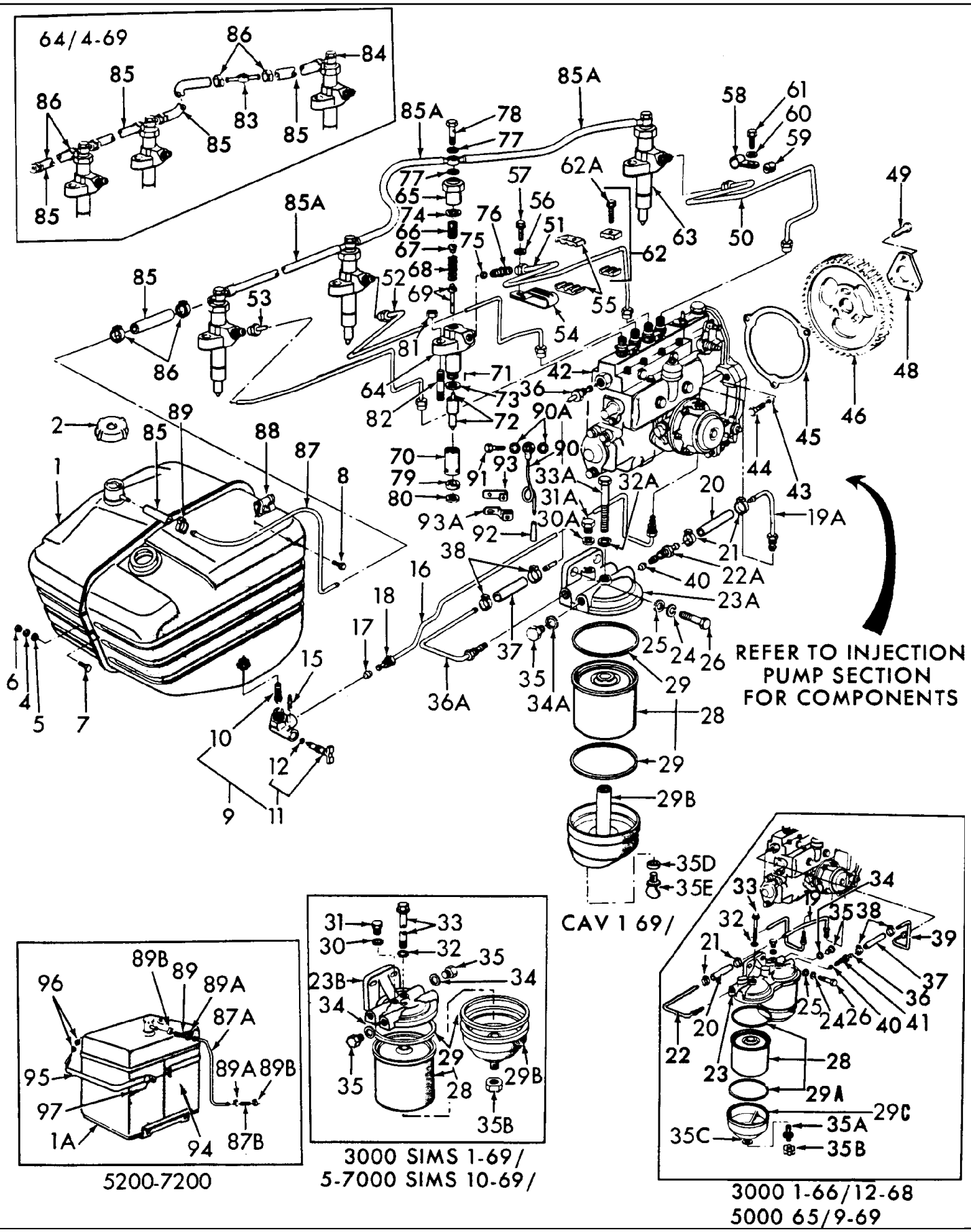

5000-SERIES 4 CYL TRACTOR (1/65-1/75)

09A03 FUEL SYSTEM, DIESEL, W/ SIMMS INJECTION PUMP - 3000 (1-66/8-69 & 1-70/12-70) 5000, 7000

Ref	Part Number	Qty	Description
1	C5NN9002AD	1	Tank Assy, Fuel (3-1/8" Neck), No Longer Serviced, Start Year: 01/01/1966
1	E3NN9002AB	1	Tank Assy, Fuel (1-1/2" Neck) (Repl. C5NN-9002-H), 3100-3120-3300- 3310-3150, Start Year: 01/01/1966
1	E3NN9002KB	1	Tank Assy, Fuel, 3500, Start Year: 01/01/1966
1	NS	1	Tank Assy, Fuel, 5100, {73NY9002A}, Mexico Only, Start Year: 01/01/1968
1	C7NN9002G	1	Tank Assy, Fuel , 5100-7100, 5100 U.K.-Antwerp, Start Year: 01/01/1965
1A	C5NN9002AM	1	Tank Assy, Fuel, 5200-7200, NHNA Only, No Longer Serviced, Start Year: 01/01/1967
2	E7NN9030AA	1	Cap Assy, Tank Filler, No Longer Serviced, Start Year: 01/01/1965
4	80680	5	Washer, Lock, 3/8", Start Year: 01/01/1965
5	80702	5	Washer, 3/8", Start Year: 01/01/1965
6	9628503	5	Nut, G5, 3/8"-16, Start Year: 01/01/1965
7	88011	1	Screw, Cap, HH, G5, 3/8"-16 x 1-1/4", 3000-5100-7100, Start Year: 01/01/1965
8	88206	3/4	Screw, Cap, HH, G5, 3/8"-16 x 1", Start Year: 01/01/1965
9	E2NN9N024AA	1	Tap & Screen Assy, Fuel Control, Includes: Body & Ref. 10 thru 15, Start Year: 01/01/1965
10	D9NN9N187AA	1	Filter, Control Tap, Start Year: 01/01/1965
11	E2NN9N200AA	1	Valve & Seal Assy (1/2"-20), Includes: Valve & Ref. 12, Start Year: 01/01/1965
12	49886	1	O-Ring, .239" ID x .070" Thk, Valve Seal, Start Year: 01/01/1965
15	D1NN9N084A	1	Retainer, Fuel Control Tap Valve, Start Year: 01/01/1965
16	C5NN9282N	1	Tube Assy, Tank to Pump, .252" O.D. (6.40mm), 3000 Except 3500 (U.S.), Years: 01/01/1966-08/31/1967
16	C5NN9282N	1	Tube Assy, Tank to Pump, .252" O.D. (6.40mm), 3000 Except 3500 (U.K.-Ant), Years: 01/01/1966-12/31/1970
16	C5NN9291G	1	Tube, Tank to Pump, 1/4" OD, 3500, NHNA Only, Years: 01/01/1966-12/31/1970
16	C5NN9291G	1	Tube, Tank to Pump, 1/4" OD (6.350mm), 3000 (U.S.) Note: When replacing prior 5/16" O.D. Fuel Tubing also use (2) 117757-S36 Nut & (2) 119987-ES Ferrule, NHNA Only, Years: 09/01/1967-12/31/1970
16	C5NN9282T	1	Tube Assy, Tank to Pump, 3500 U.K. & Antwerp, NH-E Only, No Longer Serviced, Years: 01/01/1966-12/31/1970
16	D8NN9282BA	1	Tube Assy., Tank to Pump, 5100, 7100, Start Year: 01/01/1965
16	D1NN9282B	1	Tube Assy, Tank to Pump, 5200-7200, NHNA Only, Start Year: 01/01/1967
17	376016S	2	Sleeve 5/16", W/5/16" Tubing, Years: 01/01/1965-08/31/1967
18	87944S36	2	Nut 5/16", 20 Inverted Flared Tube W/5/16" Tubing, Years: 01/01/1965-08/31/1967
18	117757S36	2	Nut 1/4", Tube, With 1/4" Tubing, Start Year: 09/01/1967
19	C5NE9369B	1	Tube Assy, Pump Outlet, 5000, Years: 01/01/1965-09/01/1969
18	119987ES	2	Ferrule 1/4", Tube, W/1/4" Tubing, Start Year: 09/01/1967
19	C5NE9B273C	1	Tube Assy, Pump to Filter (Double Filters) 3000, No Longer Serviced, Years: 01/01/1966-12/31/1968
19A	D0NN9B273A	1	Tube Assy, Pump to Single Filter (1 Pc.) 3000, No Longer Serviced (NH-E), Years: 01/01/1969-12/31/1970
19A	C7NN9369A	1	Tube Assy, Pump to Filter (Single, SIMMS) 5000-7000, Start Year: 10/01/1969
	83947824	1	Connector, 5/16" Flare x 1/2"-20 O-Ring, 5000-7000, Start Year: 04/01/1983
	129270	1	O-Ring, 90 Duro, .414" ID x .072" Thk, 5000-7000, Start Year: 04/01/1983
19A	D2NN9B273A	1	Tube Assy, Fuel Pump to Dual Filter (1 Pc.) 5000 U.K.-Antwerp, Start Year: 05/01/1973
20	E3NN9288AA	1	Hose, Fuel Tube 2-1/2" (6.35cm) Long, 3000, Years: 01/01/1965-04/30/1971
20	E3NN9288AA	1	Hose, Fuel Tube 2-1/2" (6.35cm) Long, 5000-7000, Years: 01/01/1965-03/31/1983
21	82012717	2	Clamp, Hose, 3000, Years: 01/01/1965-04/30/1971

09A03 FUEL SYSTEM, DIESEL, W/ SIMMS INJECTION PUMP - 3000 (1-66/8-69 & 1-70/12-70) 5000, 7000

Ref	Part Number	Qty	Description
21	82012717	2	Clamp, Hose, 5000-7000, Years: 01/01/1965-03/31/1983
22	C5NE9A322D	1	Tube Assy, Filter Inlet (Dual Filter), 3000, No Longer Serviced (NHNA), Years: 01/01/1965-12/31/1968
22	C5NE9A322D	1	Tube Assy, Filter Inlet (Dual Filter), 5000, No Longer Serviced (NHNA), Years: 01/01/1965-09/30/1969
22A	C5NE9A274C	1	Tube Assy, Filter Inlet (Single Filter), 3000, Years: 01/01/1969-12/31/1970
22A	C5NE9A274C	1	Tube Assy, Filter Inlet (Single Filter), 5000-7000, Years: 10/01/1969-03/31/1983
23	C5NE9165A	1	Head, Dual Fuel Filter, 3000, No Longer Serviced, Years: 01/01/1965-12/31/1968
23	C5NE9165A	1	Head, Dual Fuel Filter, 5000, No Longer Serviced, Years: 01/01/1965-09/30/1969
23A	C5NE9165C	1	Head, Single Fuel Filter (CAV), 3000, Years: 01/01/1969-12/31/1970
23B	C7NN9165C	1	Head, Single Fuel Filter (SIMMS), 3000, Years: 01/01/1969-12/31/1970
23B	C7NN9165C	1	Head, Single Fuel Filter (SIMMS), 5000-7000, Start Year: 10/01/1969
24	80680	AR	Washer, Lock, 3/8"
25	87016	AR	Washer, SAE, 3/8"
26	354452S36	2	Bolt 3/8", 16 x 1-5/8" Hex Hd., 3000, Start Year: 01/01/1965
26	88011	2	Screw, Cap, HH, G5, 3/8"-16 x 1-1/4", 7000, Start Year: 10/01/1971
28	83937061	AR	Kit, Fuel Filter Element, Includes: Element, Ref. 29A & 29B, Start Year: 01/01/1965
29	D8NN9D325BA	1	Gasket, Fuel Filter Element, Upper, Start Year: 01/01/1965
29A	83914036	1	Gasket, Fuel Filter Element, Lower, Start Year: 01/01/1965
	81811884	1	O-Ring, .312" ID x .070" Thk, Start Year: 01/01/1965
	87014S92	1	O-Ring, .562" ID x .070" Thk, Start Year: 01/01/1965
29B	C7NN9162B	1	Bowl, Filter Sediment, Single Filter Cav, 3000, Years: 01/01/1969-12/31/1970
29C	C7NN9N044A	2	Bowl, Filter Sediment, Dual, Simms, 3000, Years: 01/01/1965-12/31/1968
29C	C7NN9N044A	1	Bowl, Filter Sediment, Single, SIMMS, 3000, Years: 01/01/1969-12/31/1970
29C	C7NN9N044A	2	Bowl, Filter Sediment, Dual, SIMMS, 5000, Years: 07/01/1968-09/30/1969
29C	C7NN9N044A	1	Bowl, Filter Sediment, Single, SIMMS, 5000,7000, Start Year: 10/01/1969
30	380428S	2	Washer, Filter Air Plug, 5000, W/Dual SIMMS, Years: 01/01/1965-04/30/1969
30	380428S	1	Washer, Filter Air Plug, 5000,7000 W/Single SIMMS, Start Year: 10/01/1969
30	380428S	2	Washer, Filter Air Plug, 3000 W/Dual SIMMS, Years: 01/01/1965-12/31/1968
30	380428S	1	Washer, Filter Air Plug, 3000 W/Single SIMMS, Years: 01/01/1968-12/31/1970
30A	D1NN9N025A	1	Washer, Flat, M10.1, Single CAV, Years: 01/01/1969-12/31/1970
31	C5NN9N026A	2	Plug, 5/16"- 24 HH, Dual SIMMS, 5000, Years: 01/01/1965-09/30/1969
31	C5NN9N026A	1	Plug, 5/16"-24, Single SIMMS, 5000, 7000, Start Year: 10/01/1969
31	C5NN9N026A	2	Plug, 5/16"-24, Dual SIMMS, 3000, Years: 01/01/1965-12/31/1968
31	C5NN9N026A	1	Plug, 5/16"-24, Single SIMMS, 3000, Years: 01/01/1969-12/31/1970
31A	D1NN9N026A	1	Screw, Filter Air Vent, Single CAV, Years: 01/01/1969-12/31/1970
32	81811884	2	O-Ring, .312" ID x .070" Thk, Dual SIMMS, 5000, Years: 01/01/1965-09/30/1969
32	81811884	1	O-Ring, .312" ID x .070" Thk, Single SIMMS, 5000, 7000, Start Year: 10/01/1969
32	81811884	2	O-Ring, .312" ID x .070" Thk, Dual SIMMS, 3000, Years: 01/01/1965-12/31/1968
32	81811884	1	O-Ring, .312" ID x .070" Thk, Single SIMMS, 3000, Years: 01/01/1969-12/31/1970
32A	C5NE9F278A	1	Washer, Fuel Filter, Single CAV, Years: 01/01/1969-12/31/1970
33	D2NN9N090A	2	Bolt, HH, 5/16"-18 x 4.31, Dual SIMMS, 3000, Years: 01/01/1965-12/31/1968
33	D2NN9N090A	2	Bolt, HH, 5/16" x 4.31, Dual SIMMS, 5000, Years: 01/01/1965-09/30/1969

5000-SERIES 4 CYL TRACTOR (1/65-1/75)

09A03 FUEL SYSTEM, DIESEL, W/ SIMMS INJECTION PUMP - 3000 (1-66/8-69 & 1-70/12-70) 5000, 7000

Ref	Part Number	Qty	Description
33	D2NN9N090A	1	Bolt, HH, 5/16"-18 x 4.31, Single SIMMS, 3000, Years: 01/01/1969-12/31/1970
33	D2NN9N090A	1	Bolt, HH, 5/16"-18 x 4.31, Single SIMMS, 5000, 7000, Start Year: 10/01/1969
33A	337505	1	Bolt, HH, 1/4"-20 x 2.124, Single CAV, 3000, Years: 01/01/1969-12/31/1970
34	D2NN9N083A	1	Washer, 1/2", , Copper, Dual SIMMS, 3000, Years: 01/01/1965-12/31/1968
34	D2NN9N083A	2	Washer, 1/2", Copper, Single SIMMS, 3000, Years: 01/01/1969-12/31/1970
34	D2NN9N083A	1	Washer, 1/2", Copper, Dual SIMMS, 1/2", 5000, Years: 01/01/1965-03/31/1968
34	D2NN9N083A	2	Washer, 1/2", Copper, Single SIMMS, 1/2", 5000, 7000, Start Year: 10/01/1969
34	381775S	1	Washer, Flat, 3/8", 5000, No Longer Serviced (NH-E), Years: 04/01/1968-09/30/1969
34A	D2NN9N083A	1	Washer, 1/2", CAV Single, 3000, Years: 01/01/1969-12/31/1970
35	C7NN9N057A	1	Plug, HH, Dual Filter, 1/2"-20, 3000, No Longer Serviced (NHNA), Years: 01/01/1965-12/31/1970
35	C7NN9N057A	1	Plug, HH, Dual Filter, HH, 1/2"-20, 5000, No Longer Serviced (NHNA), Years: 01/01/1965-03/31/1968
35	D1NN9N086A	2	Plug, HH, Single Filter, 1/2", 3000, Years: 01/01/1969-12/31/1970
35	D1NN9N086A	2	Plug, HH, Single Filter, 1/2"-20, 5000, 7000, Start Year: 10/01/1969
35	D2NN9K024A	1	Plug, HH, Dual Filter, 3/8"-24, 5000, Years: 04/01/1968-09/30/1969
35A	C5NE9K274B	2	Plug, Filter Drain, Dual SIMMS, 3000, No Longer Serviced (NH-E), Years: 01/01/1965-12/31/1968
35A	C5NE9K274B	2	Plug, Filter Drain, Dual SIMMS, 5000, No Longer Serviced (NH-E), Years: 01/01/1965-09/30/1969
35B	C5NE9E334A	2	Cap, Drain, Plug, Dual SIMMS, 5000, Years: 01/01/1965-09/30/1969
35B	C5NE9E334A	1	Cap, Drain Plug, Single SIMMS, 5000, 7000, Start Year: 10/01/1969
35B	C5NE9E334A	2	Cap, Drain Plug, Dual SIMMS, 3000, Years: 01/01/1965-12/31/1970
35B	C5NE9E334A	1	Cap, Drain, Plug, Single SIMMS, 3000, Start Year: 01/01/1969
35C	C7NN9D315B	2	Seal, Drain Plug, Dual SIMMS, 5000, Years: 01/01/1965-09/30/1969
35C	C7NN9D315B	2	Seal, Drain Plug, Dual SIMMS, 3000, Years: 01/01/1965-12/31/1968
35D	81825363	1	Washer, Flat, Bowl Drain Screw, 11/32", 3000, Years: 01/01/1969-12/31/1970
35E	81825360	1	Plug, Filter Drain, 3000, Years: 01/01/1969-12/31/1970
36	C5NE9A274C	1	Tube Assy., Filter Outlet, Dual Filter, SIMMS, 5000, Years: 01/01/1965-09/30/1969
36	C5NE9A274C	1	Tube Assy., Dual Filter, SIMMS, 3000, Years: 01/01/1965-12/31/1968
36A	D0NN9C330C	1	Tube Assy., Single Filter to Pump, 3000, No Longer Serviced (NHNA), Years: 01/01/1969-12/31/1970
36A	E0NN9C330FA	1	Tube Assy., Single Filter to Pump, 5000, 7000, No Longer Serviced (NHNA), Start Year: 10/01/1969
36A	E3NN9C330CB	1	Tube Assy., Dual Filter to Pump, (1) Piece, UK & Antwerp, 5100, 7100, NH-E Only, Start Year: 05/01/1973
	129270	2	O-Ring, 90 Duro, .414" ID x .072" Thk
	83947824	2	Connector, 5/16" Flare x 1/2"-20 O-Ring
37	E3NN9288AA	1	Hose, 2-1/2" (63.50mm) Lg., 3000, 5000, Years: 01/01/1965-04/30/1971
38	82012717	2	Clamp, Hose, Years: 01/01/1965-04/30/1971
39	C5NE9C520E	1	Tube Assy., Pump Inlet, Dual Filter, 5000, No Longer Serviced, Years: 01/01/1965-09/30/1969
39	C5NE9C520G	1	Tube Assy., Inlet, Dual Filter, 3000, No Longer Serviced, Years: 01/01/1966-12/31/1968
40	96H9242	4	Sleeve, 5/16" Ball, Ferrule, Sleeve & Nut are part of 9369,9A274,9C520 & 9A322, Start Year: 01/01/1965
41	379440S43	4	Nut, 5/8" Tubing, Sleeve & Nut are part of 9369,9A274,9C520 & 9A322, Start Year: 01/01/1965
42	REFERENCE	1	Pump Assy., Fuel Injection, Refer to Fig. 9E2, Start Year: 01/01/1965
43	83925582	3	Washer, 11/32", Start Year: 01/01/1965
44	380204S36	3	Bolt, 5/16"-24 x 1.46", Start Year: 01/01/1965
45	E6NN9F585AA	1	Gasket, Fuel Injection Pump, Start Year: 01/01/1965

5000-SERIES 4 CYL TRACTOR (1/65-1/75)

09A03 FUEL SYSTEM, DIESEL, W/ SIMMS INJECTION PUMP - 3000 (1-66/8-69 & 1-70/12-70) 5000, 7000

Ref	Part Number	Qty	Description
46	E3NN9F589CA	1	Gear, Fuel Injection Pump, Start Year: 01/01/1965
48	C5NE9F586A	1	Plate, Injection Pump Gear, Start Year: 01/01/1965
49	82935696	3	Bolt, 5/16"-24 x 1", Start Year: 01/01/1965
50	C5NE9A555E	1	Tube Assy., #1 Cylinder, 3000, Years: 01/01/1966-12/31/1970
50	C7NN9A555G	1	Tube Assy., #1 Cylinder, 3000, Years: 01/01/1971-09/30/1975
50	C5NE9A555F	1	Tube Assy., #1 Cylinder, 5000, 7000, Start Year: 01/01/1965
51	C5NE9A556E	1	Tube Assy., #2 Cylinder, 3000, Years: 01/01/1966-12/31/1970
51	C5NE9A556D	1	Tube Assy., #2 Cylinder, 3000, Years: 01/01/1971-09/30/1975
51	C5NE9A556F	1	Tube Assy., #2 Cylinder, 5000, 7000, Start Year: 01/01/1965
52	C5NE9A557F	1	Tube Assy., #3 Cylinder, 3000, Years: 01/01/1966-12/31/1970
52	C5NE9A557E	1	Tube Assy., #3 Cylinder, 3000, Years: 01/01/1971-09/30/1975
52	C5NE9A557G	1	Tube Assy., #3 Cylinder, 5000, 7000, Start Year: 01/01/1965
53	C5NE9A558B	1	Tube Assy., #4 Cylinder, 5000, 7000, Start Year: 01/01/1965
54	377486S36	1	Clip, Tube to Manifold, Start Year: 01/01/1965
55	C5NE9E320B	1	Insert, Fuel Tube Clip, Start Year: 01/01/1965
56	351370S43	1	Washer, Flat, 5/16", Start Year: 01/01/1965
57	372287S36	1	Screw & Lockwasher Assy., 5/16"-18 x 3/4", Start Year: 01/01/1965
58	377487S36	1	Clip, Tube to Manifold, Start Year: 01/01/1965
59	C5NE9E322A	1	Insert, Rear, Fuel Tube Clamp, Start Year: 01/01/1965
60	351365S43	1	Washer, .34" I.D. x .75" O.D. x .06", No Longer Serviced (NH-E), Start Year: 01/01/1965
61	372287S36	1	Screw & Lockwasher Assy., 5/16"-18 x 3/4", Start Year: 01/01/1965
62	377485S36	2	Clamp Assy., Injector Tubes, Includes: Clamps & Ref. 62A, Start Year: 01/01/1965
62A	43495S36	1	Screw, HH, W/Washer, #12-24 x 5/8", No Longer Serviced (NHNA), Start Year: 01/01/1965
63	D0NN9F593ARDS	4	Fuel Injector Assy., Rebuilt, 5000, NHNA Only, Years: 01/01/1965-03/31/1968
63	D0NN9F593ARDS	3	Fuel Injector Assy., Rebuilt, 3000, NHNA Only, Years: 01/01/1965-12/31/1970
63	C5NE9F593CRDS	4	Fuel Injector Assy., Rebuilt, 5000, NHNA Only, Start Year: 04/01/1968
63	C9NN9F593BRDS	4	Fuel Injector Assy., Rebuilt, 7000, NHNA Only, Start Year: 10/01/1971
63	D0NN9F593A	4	Fuel Injector Assy., 5000, Years: 01/01/1965-03/31/1968
63	D0NN9F593A	3	Fuel Injector Assy., 3000, Years: 01/01/1966-12/31/1970
63	C9NN9F593B	4	Fuel Injector Assy., 7000, No Longer Serviced (NH-E), Start Year: 10/01/1971
63	C7NN9F593B	4	Fuel Injector Assy., Replaces C7NN9F593D, 5000, Includes: Ref. 64 thru 78, NHNA Only, Start Year: 04/01/1968
64	C5NE9F595A	3/4	Holder Assy., Fuel Injeciton Nozzle, No Longer Serviced (NH-E), Start Year: 01/01/1965
64	C9NN9F595A	4	Holder Assy., Fuel Injection Nozzle, 7000, Includes: Ref. 65 thru 71, No Longer Serviced, Start Year: 10/01/1971
65	E1ADDN993196B	3/4	Nut, Injector Cap, Use W/SIMMS Injector 65/9-71, Years: 01/01/1965-09/30/1971
65	C5NE9H510A	3/4	Nut, Injector Cap, Use W/CAV Injector 65/, No Longer Serviced (NHNA), Start Year: 01/01/1965
66	C5NE9F540A	3/4	Nut, Injection Spring Cap, Start Year: 01/01/1965
65	D1NN9H510A	4	Nut, Injector Cap, 7100,7200, Use W/CAV Injector 65/, No Longer Serviced (NHNA), Start Year: 10/01/197
66	D1NN9F540A	4	Nut, Injector Spring Cap, Use W/CAV Injector 65/, No Longer Serviced, Start Year: 10/01/1971

5000-SERIES 4 CYL TRACTOR (1/65-1/75)

09A03 FUEL SYSTEM, DIESEL, W/ SIMMS INJECTION PUMP - 3000 (1-66/8-69 & 1-70/12-70) 5000, 7000

Ref	Part Number	Qty	Description
67	C5NN9N519A	3/4	Plate, Injector Spring, Replaces DDN993194, Use W/SIMMS Injector 65/9-71, No Longer Serviced, Years: 01/01/1965-09/30/1971
67	D1NN9N519A	3/4	Plate, Injector Spring, Use W/CAV Injector 65/, Start Year: 01/01/1965
68	NSS	3/4	Spring, Injector, {E1ADDN993293}, Use W/SIMMS Injector 65/9-71, No Longer Serviced, Years: 01/01/1965-09/30/1971
68	C5NE9F537A	3/4	Spring, Injector, Use W/CAV Injector 65/, Start Year: 01/01/1965
68	D1NN9F537A	4	Spring, Injector, Use W/CAV Injector 65/, No Longer Serviced, Start Year: 01/01/1965
69	C5NE9G508B	3/4	Spindle Assy., Injector, Use W/SIMMS Injector 65/9-71, No Longer Serviced (NHNA), Years: 01/01/1965-09/30/1971
69	E0NN9G508AA	3/4	Spindle Assy., Injector, Use W/CAV Injector 65/, No Longer Serviced (NHNA), Start Year: 01/01/1965
70	D1NN9K549A	3/4	Nut, Injector Nozzle, Start Year: 01/01/1965
71	E174CL9	3/4	Dowel, Nozzle Body Locating, Use W/SIMMS Injector 65/9-71, No Longer Serviced, Years: 01/01/1965-09/30/1971
71	380409S	AR	Pin, Dowel, .116 x .394, Use W/CAV Injector 65/, No Longer Serviced, Start Year: 01/01/1965
71	380410S	AR	Pin, Dowel, .115 x .394, Use W/CAV Injector 65/, No Longer Serviced, Start Year: 01/01/1965
71	380419S	AR	Pin, Dowel, .114 x .394, Use W/CAV Injector 65/, No Longer Serviced, Start Year: 01/01/1965
72	C5NE9E527C	4	Nozzle Assy., Injector, Replaces C7NN9E527C, 5000, NHNA Only, Start Year: 04/01/1968
72	C9NN9E527B	4	Nozzle Assy., Injector, 7000, Start Year: 10/01/1971
72	D0NN9E527A	3	Nozzle Assy., Fuel Injector, 3000, Years: 01/01/1965-12/31/1970
72	D0NN9E527A	4	Nozzle Assy., Fuel Injector, 5000, Years: 01/01/1963-03/31/1968
72	C7NN9E527B	4	Nozzle Assy., Fuel Injector, 5000, NH-E Only, Start Year: 04/01/1968
73	2701E9K548	3/4	Shim, Nozzle, 3/8", Years: 01/01/1965-09/30/1971
74	D1NN9R524A	3/4	Washer, Flat, Cap to Holder Seal, Start Year: 01/01/1965
75	C5NE9G547A	3/4	Washer, Injector Adaptor Seal, Start Year: 01/01/1965
76	379764S	3/4	Connector, Tubes to Injector, No Longer Serviced (NH-E), Years: 01/01/1965-09/30/1971
77	380428S	6/8	Washer, Leak-Off Fitting, 5/16", Replaces C5NE9G546A, Start Year: 01/01/1965
78	D1NN9R523A	3/4	Bolt, Leak-off Tube, 5/16"-24 x .57, Start Year: 01/01/1965
79	81806277	3/4	Seal, Injector, Start Year: 01/01/1965
80	C5NE9E529A	3/4	Washer, Injector Sealing, Start Year: 01/01/1965
81	86629539	3/4	Nut, G5, 5/16"-24, Start Year: 01/01/1965
82	380583S36	6/8	Stud, Screw, 5/16"-18, 24 x 1.88, Start Year: 01/01/1965
83	NLS	2/3	Fitting, Double, Banjo Type Hose, 3/16", No Longer Serviced, Years: 01/01/1965-04/30/1969
84	NLS	1	Fitting, Banjo Type, 3/16", Includes: Ref. 64 thru 71, No Longer Serviced, Years: 01/01/1965-04/30/1969
85	E3NN9G577AA	3/4	Hose, Leak-Off, 4-7/8" (12.38cm) Lg., Cut to 3" (7.62cm) for Return to Tank Leak-Off Tube Assy. to Return Tube, Years: 01/01/1965-04/30/1969
85	E3NN9G577AA	1	Hose, Leak-Off, 4-7/8" (12.38cm) Lg., Cut to 3" (7.62cm) for Return to Tank Leak-Off Tube Assy. to Return Tube, Start Year: 05/01/1969
85A	C7NN9A564G	1	Tube Assy., Injection Leak-Off, Complete, 3000, Years: 05/01/1969-08/31/1969
85A	C7NN9A564G	1	Tube Assy., Injection Leak-Off, Complete, 3000, Years: 05/01/1969-08/31/1969
85A	D9NN9A564FA	1	Tube Assy., Injection Leak-Off, Complete, Start Year: 01/01/1965
86	82012717	6/8	Clamp, Hose, Hose to Banjo Fitting, Years: 01/01/1965-04/30/1969

09A03 FUEL SYSTEM, DIESEL, W/ SIMMS INJECTION PUMP - 3000 (1-66/8-69 & 1-70/12-70) 5000, 7000

Ref	Part Number	Qty	Description
86	82012717	2	Clamp, Hose, Hose to Banjo Fitting, Start Year: 05/01/1969
87	C7NN9A337C	1	Tube, Fuel Return to Tank, 5100, Start Year: 01/01/1965
87	C7NN9A337C	1	Tube, Fuel Return to Tank, 7100, Start Year: 10/01/1971
87	C5NN9A337H	1	Tube Assy., Return to Tank, 3000, Years: 01/01/2030-12/31/2000
87A	C5NN9A337L	1	Tube, Return to Tank, 5200-7200, NHNA Only, No Longer Serviced, Start Year: 01/01/1967
87B	D2NN9N035C	1	Connector, Return to Tank Tube, 5100, 5200, No Longer Serviced, Start Year: 11/01/1972
87B	E3NN9G577AA	1	Connector, Return to Tank Tube, U.S., 7200, Start Year: 10/01/1971
88	112738ES	1	Clip, Wiring Return Tube, 3/16", 3300-5100-7100
89A	82012717	2	Clamp, Hose, Start Year: 01/01/1965
89B	82012717	1	Clamp, Hose, 7200, Start Year: 10/01/1971
	129270	1	O-Ring, 90 Duro, .414" ID x .072" Thk, 5000-7000, Start Year: 04/01/1983
90	D0NN9D546A	1	Tube Assy., Pump Outlet, Start Year: 01/01/1965
	129270	2	O-Ring, 90 Duro, .414" ID x .072" Thk, Start Year: 01/01/1965
90A	380428S	2	Washer, 5/16", Start Year: 01/01/1965
91	380266S	1	Bolt, 5/16"-24 x .58, Start Year: 01/01/1965
92	C5NE9F527A	1	Extension, Pump Outlet Tube, Except 7000, No Longer Serviced (NH-E), Years: 01/01/1965-12/31/1970
93	390051S36	1	Clip, Pump Tube, 5000-7000, Start Year: 01/01/1965
93A	C5NE9E526B	1	Clip, Pump Tube, 3000, No Longer Serviced (NHNA), Years: 09/01/1965-12/31/1970
94	C5NN9N030B	1	Strap Assy., Tank Support, RH, 5200-7200, No Longer Serviced, Start Year: 01/01/1967
95	C5NN9N043B	1	Strap Assy., Tank Support, LH, 5200-7200, No Longer Serviced, Start Year: 01/01/1967
96	280717	4	Nut, G5, 7/16"-14, 5200, Start Year: 01/01/1967
97	87657	1	Bolt, HH, 5/16"-18 x 1-1/8", 5200, Start Year: 01/01/1967
	72NY9176B	1	Element Assy., Fuel Filter, 5100 Mexico, Mexico Only, Start Year: 01/01/1968
	87014S92	1	O-Ring, .562" ID x .070" Thk, 5100 Mexico, Start Year: 01/01/1968
	C5NE9D325A	2	Gasket, Element Seal, 5100 Mexico, Start Year: 01/01/1968
	NS	1	Bowel, Filter, 5100 Mexico, {70NY9162A}, Start Year: 01/01/1968
	C5NN9N023A	1	Stud & Retainer Assy., Filter, 5100 Mexico, No Longer Serviced (NHNA), Start Year: 01/01/1968
	C5NE9D315A	1	Seal, Stud & Retainer Assy. to Bowl, 5100 Mexico, Start Year: 01/01/1968
	NS	1	Screw, Filter Bowl Drain, 5100 Mexico, {70NY9199A}, Start Year: 01/01/1968
	81825363	1	Washer, Bowl Drain Screw, 5100 Mexico, Start Year: 01/01/1968
	C5NE9165C	1	Head Assy., Filter, Single, 5100 Mexico, Start Year: 01/01/1968
	D1NN9N026A	1	Plug, Head Air Vent, 5100 Mexico, Start Year: 01/01/1968
	D1NN9N025A	1	Washer, Air Vent Plug, 5100 Mexico, Start Year: 01/01/1968
	C5NE9F278A	1	Washer, Head Bolt, 5100 Mexico, Start Year: 01/01/1968
	337505	1	Bolt, 1/4"-20 x 2-12, 5100 Mexico, Start Year: 01/01/1968
	D1NN9N086A	2	Plug, #2 & #4 Ports, 1/2"-20, 5100 Mexico, Start Year: 01/01/1968
	D2NN9N083A	2	Washer, 1/2", Head Ports Plugs, 5100 Mexico, Start Year: 01/01/1968

09A03[A] DUAL FUEL FILTER ASSEMBLY (5-73/) (NH-E)

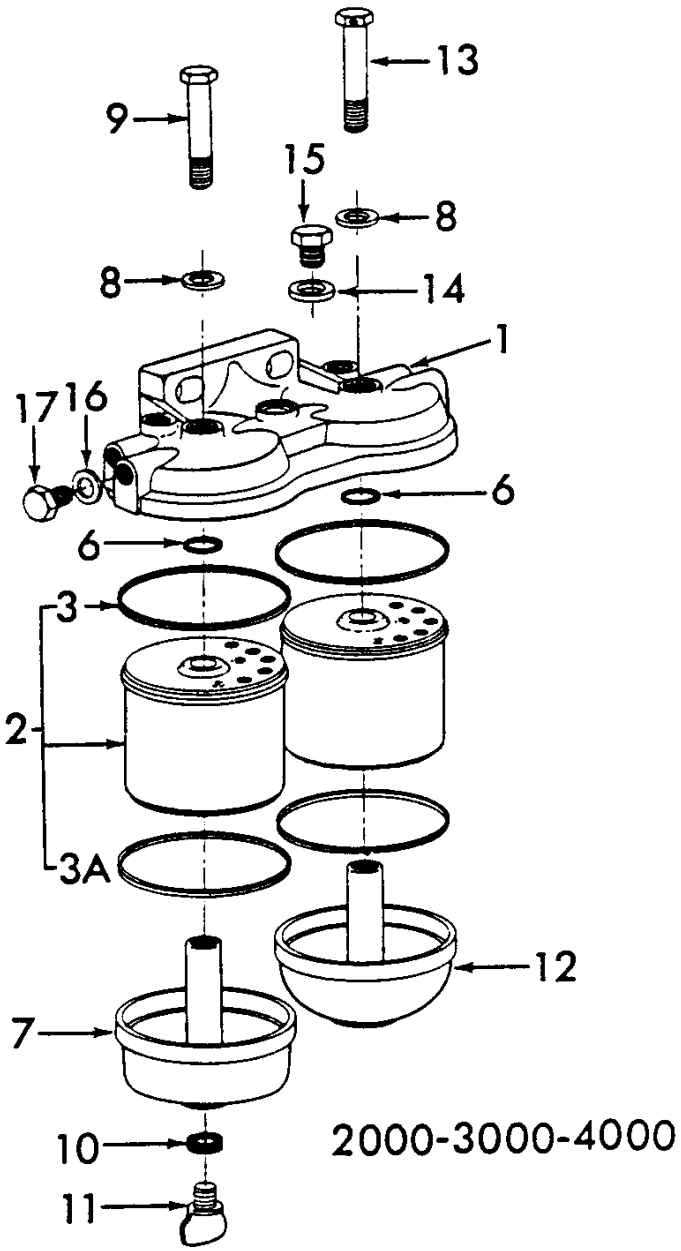

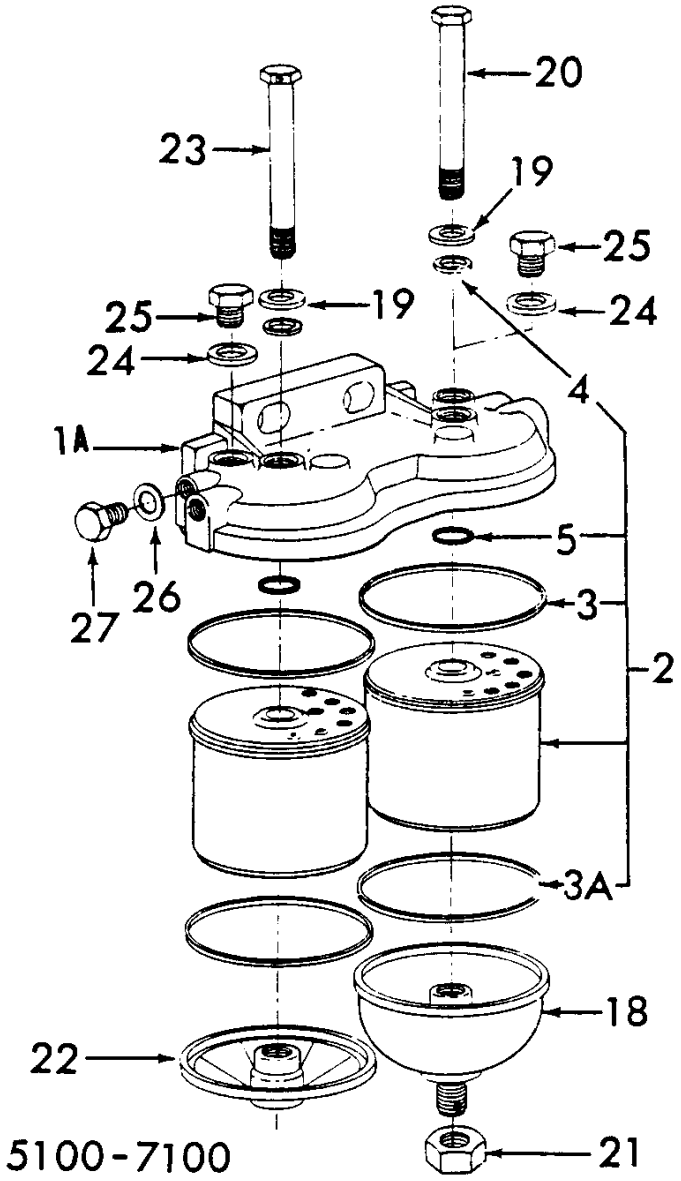

5000-SERIES 4 CYL TRACTOR (1/65-1/75)

09A03[A] DUAL FUEL FILTER ASSEMBLY (5-73/) (NH-E)

Ref	Part Number	Qty	Description
1	E5NN9165BA	1	Cover, Fuel Filter, Dual, 2000-3000-4000, Start Year: 05/01/1973
1A	D2NN9165B	1	Cover, Fuel Filter, Dual, 5100-7100, Start Year: 05/01/1973
2	83937061	AR	Kit, Fuel Filter Element, Includes: Element & Ref. 3 thru 5, Start Year: 05/01/1973
3	D8NN9D325BA	2	Gasket, Fuel Filter Element, Upper, Start Year: 05/01/1973
3A	83914036	2	Gasket, Fuel Filter Element, Lower, Start Year: 05/01/1973
4	81811884	2	O-Ring, .312" ID x .070" Thk, Start Year: 05/01/1973
5	87014S92	2	O-Ring, .562" ID x .070" Thk, 5100-7100, Start Year: 05/01/1973
6	229317	2	O-Ring, 90 Duro, .549" ID x .103" Thk, 2000, 3000, 4000, Start Year: 05/01/1973
7	C7NN9162B	1	Bowl, Fuel Filter Sediment, W/Drain, 2000-3000-4000, Start Year: 05/01/1973
8	81833781	2	Washer, Flat, Center Bolt, 1/4", 2000-3000-4000, Start Year: 05/01/1973
9	337505	1	Bolt, HH, Bowl & Element to Cover, 1/4"-20 x 2-1/2", 2000-3000-4000, Start Year: 05/01/1973
10	81825363	1	Washer, Fuel Filter Drain Plug, 2000-3000-4000, Start Year: 05/01/1973
11	81825360	1	Plug, Fuel Filter Drain, 2000-3000-4000, Start Year: 05/01/1973
12	D3NN9162A	1	Bowl, Fuel Filter Sediment, W/O Drain, 2000-3000-4000, Start Year: 05/01/1973
13	D3NN9N090B	1	Bolt, Hex W/Hole Hd., Bowl & Element to Cover, 2000-3000- 4000, Start Year: 05/01/1973
14	D1NN9N025A	1	Washer, Filter Air Vent Hole, Start Year: 05/01/1973
15	D1NN9N026A	1	Screw, Filter Air Vent Hole, 2000-3000-4000, Start Year: 05/01/1973
16	D2NN9N083A	1	Washer, 1/2", Filter Head Plug, 2000-3000-4000, Start Year: 05/01/1973
17	D1NN9N086A	1	Plug, HH, Filter Hd., 1/2"-20, 2000-3000-4000, Start Year: 05/01/1973
18	C7NN9N044A	1	Bowl, Fuel Filter Sediment, W/Drain, 5100-7100, Start Year: 05/01/1973
19	D2NN9D317A	1	Washer, Flat, Center Bolt, 5/16", 5100-7100, Start Year: 05/01/1973
20	D2NN9N090A	1	Bolt, HH, Bowl & Element to Cover, 5/16"-18 x 4.31, 5100- 7100, Start Year: 05/01/1973
21	C5NE9E334A	1	Cap, Sediment Bowl Drain, 5100-7100, Start Year: 05/01/1973
22	D2NN9N044A	1	Bowl, Fuel Filter Sediment, W/O Drain, 5100-7100, No Longer Serviced, Start Year: 05/01/1973
23	D2NN9N090B	1	Bolt, Hex W/Hole Hd., Bowl to Element to Cover, 5/16"-18 x 4.31, 5100-7100, No Longer Serviced, Start Year: 05/01/1973
24	380428S	2	Washer, Flat, Filter Air Vent Hole, 5/16", 5100-7100, Start Year: 05/01/1973
25	C5NN9N026A	2	Screw, HH, Filter Air Vent Hole, 5/16"-24 x 3/8", 5100-7100, Start Year: 05/01/1973
26	D2NN9N083A	1	Washer, 1/2", Filter Head Plug, 5100-7100, Start Year: 05/01/1973
27	D1NN9N086A	1	Plug, HH, Filter Hd., 1/2"-20, 5100-7100, Start Year: 05/01/1973

09B02 AIR CLEANER ASSEMBLY, OIL BATH TYPE, DIESEL - EXCEPT 3500, 3550, 4500

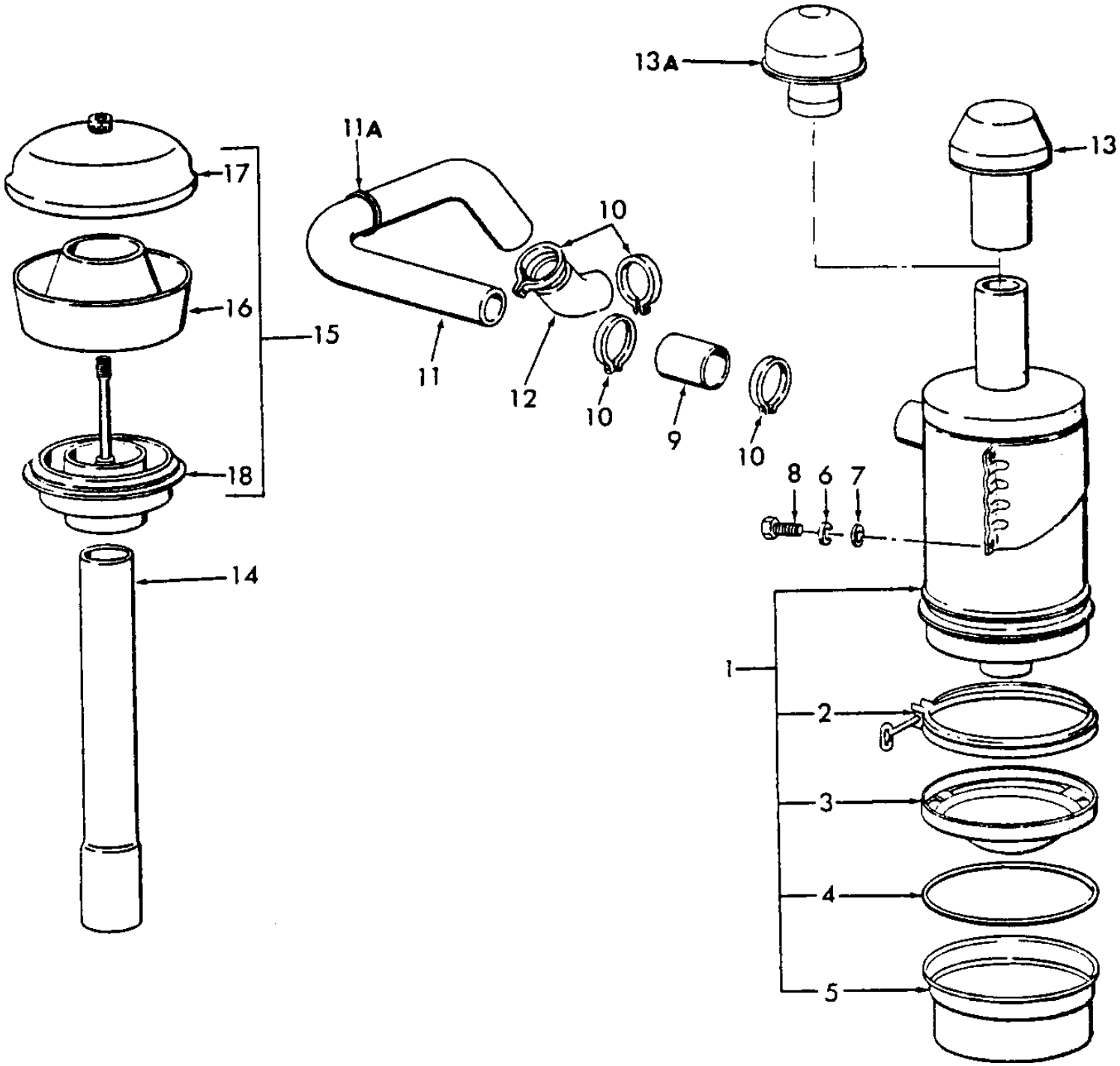

5000-SERIES 4 CYL TRACTOR (1/65-1/75)

09B02 AIR CLEANER ASSEMBLY, OIL BATH TYPE, DIESEL - EXCEPT 3500, 3550, 4500

Ref	Part Number	Qty	Description
1	C5NE9600F	1	Air Cleaner Assy., 6" (152.4mm), Replaces P/N C5NE-9600-A, 2000, 3000, Includes: Body & Ref. 2, Start Year: 01/01/1965
1	C5NE9600E	1	Air Cleaner Assy., 7" (177.8mm) 2-1/4" (57.15mm) Outlet Connection, 4000, 5000, Includes: Body & Ref. 2, Start Year: 01/01/1965
2	C5NE9628A	1	Clamp Assy., 6", Part of P/N C5NE-9600-F, U.S., 2000, NHNA Only, Years: 01/01/1965-05/31/1971
2	C5NE9628A	1	Clamp Assy., 6", Part of C5NE-9600-F, U.S., 3000, NHNA Only, Years: 12/01/1968-05/31/1971
2	C5NE9628B	1	Clamp Assy., 6-1/2", U.S., 3000, 4000, NHNA Only, No Longer Serviced, Years: 01/01/1965-11/30/1968
2	C5NE9628B	1	Clamp Assy., 6-1/2", Part of C5NE-9600-B, U.S., Gas, 5000, NHNA Only, No Longer Serviced, Years: 01/01/1965-05/31/1968
2	C5NE9628C	1	Clamp Assy., 7", Part of C5NE-9600-C, U.S., Diesel, 5000, NHNA Only, No Longer Serviced, Years: 01/01/1965-05/31/1971
2	C5NE9628C	1	Clamp Assy., 7", Part of C5NE-9600-C, U.S., Gas, 5000, NHNA Only, No Longer Serviced, Years: 06/01/1968-05/31/1971
2	C5NE9628C	1	Clamp Assy., 7", Part of P/N C5NE-9600-C, U.S., 4000, NHNA Only, No Longer Serviced, Years: 12/01/1968-05/31/1971
2	C5NE9628E	1	Clamp Assy., 6", Part of P/N C5NE-9600-F, U.K., 2000, Start Year: 01/01/1965
2	C5NE9628E	1	Clamp Assy., 6", Part of C5NE-9600-F, U.K., 3000, Start Year: 12/01/1968
2	C5NE9628E	1	Clamp Assy., 6", Part of P/N C5NE-9600-F, U.S., 2000-3000, Start Year: 06/01/1971
2	C5NE9628D	1	Clamp Assy., 7", Part of P/N C5NE-9600-E & H, U.K., Diesel, 4000-5000, Start Year: 01/01/1965
2	C5NE9628D	1	Clamp Assy., 7", Part of P/N C5NE-9600-E & H, U.K., 3000, Years: 01/01/1965-11/30/1968
2	C5NE9628D	1	Clamp Assy., 7", Part of P/N C5NE-9600-E & H, U.S., 4000-5000, Start Year: 06/01/1971
3	C5NE9A638B	1	Cup, Oil Inner 6-1/2", Highland Park 3000-4000, NHNA Only, No Longer Serviced, Years: 01/01/1965-11/30/1968
3	C5NE9A638B	1	Cup, Oil Inner 6-1/2", (Part of C5NE-9600-B), Highland Park 5000 Gas, NHNA Only, No Longer Serviced, Years: 01/01/1965-05/31/1968
3	C5NE9A638A	1	Cup, Oil Inner 6", Highland Park 2000, NHNA Only, No Longer Serviced, Years: 01/01/1965-05/31/1971
3	C5NE9A638A	1	Cup, Oil Inner 6", (Part of C5NE-9600-A), Highland Park 3000, NHNA Only, No Longer Serviced, Years: 12/01/1968-05/31/1971
3	C5NE9A638C	1	Cup, Oil Inner 7", Highland Park 5000 Diesel, NHNA Only, No Longer Serviced, Years: 01/01/1965-05/31/1971
3	C5NE9A638C	1	Cup, Oil Inner 7", (Part of C5NE-9600-C), Highland Park 5000 Gas, NHNA Only, No Longer Serviced, Years: 06/01/1968-05/31/1971
3	C5NE9A638C	1	Cup, Oil Inner 7", Highland Park 4000, NHNA Only, No Longer Serviced, Years: 12/01/1968-05/31/1971
3	C5NE9A638E	1	Cup, Oil Inner 6", Basildon 2000, No Longer Serviced (NHNA), Start Year: 01/01/1965
3	C5NE9A638E	1	Cup, Oil Inner 6", (Part of C5NE-9600-F), Basildon 3000, No Longer Serviced (NHNA), Start Year: 12/01/1968
3	C5NE9A638E	1	Cup, Oil Inner 6", Highland Park 2000-3000, No Longer Serviced (NHNA), Start Year: 06/01/1971
3	C5NE9A638D	1	Cup, Oil Inner 7", Basildon 5000,4000, Start Year: 01/01/1965
3	C5NE9A638D	1	Cup, Oil Inner 7", (Part of C5NE-9600-E & H), Basildon 3000, Years: 01/01/1965-11/30/1968
3	C5NE9A638D	1	Cup, Oil Inner 7", Highland Park 4000-5000, Start Year: 06/01/1971

5000-SERIES 4 CYL TRACTOR (1/65-1/75)

09B02 AIR CLEANER ASSEMBLY, OIL BATH TYPE, DIESEL - EXCEPT 3500, 3550, 4500

Ref	Part Number	Qty	Description
4	C7NN9673A	1	Gasket, Internal 6-1/2", (Part of C5NE-9600-B) Highland Park 3000-4000, NHNA Only, No Longer Serviced, Years: 01/01/1965-11/30/1968
4	C7NN9673A	1	Gasket, Internal 6-1/2" , (Repl. C5NE-9673-B), Highland Park 5000 Gas, NHNA Only, No Longer Serviced, Years: 01/01/1966-05/31/1968
4	FP102	1	Gasket, Internal 7", Highland Park 5000 Diesel, Years: 01/01/1965-05/31/1971
4	FP102	1	Gasket, Internal 7", (Part of C5NE-9600-C), Highland Park 5000 Gas, Years: 06/01/1968-05/31/1971
4	FP102	1	Gasket, Internal 7", Highland Park 4000, Years: 12/01/1968-05/31/1971
4	C5NE9673A	1	Gasket, Internal 6", 2000 Highland Park, NHNA Only, No Longer Serviced, Years: 01/01/1965-05/31/1971
4	C5NE9673A	1	Gasket, Internal 6", (Part of C5NE-9600-A), 3000 Highland Park, NHNA Only, No Longer Serviced, Years: 12/01/1968-05/31/1971
4	D1NN9673B	1	Gasket, Internal 6", 2000-3000 Bas.-Antwerp, Start Year: 01/01/1965
4	D1NN9673B	1	Gasket, Internal 6", (Service C5NE-9600-F), 2000-3000 Highland Park, Start Year: 06/01/1971
4	D1NN9673A	1	Gasket, Internal 7", 4000-5000 Bas.-Antwerp, Start Year: 01/01/1965
4	D1NN9673A	1	Gasket, Internal 7", (Service C5NE-9600-E), 4000-5000 Highland Pk, Start Year: 06/01/1971
5	C5NE9658A	1	Cup, Oil Inner 6", 2000 Highland Park, NHNA Only, No Longer Serviced, Years: 01/01/1965-05/31/1971
5	C5NE9658A	1	Cup, Oil Inner 6", (Part of C5NE-9600-A), 3000 Highland Park, NHNA Only, No Longer Serviced, Years: 12/01/1968-05/31/1971
5	C5NE9658B	1	Cup, Oil Outer 6-1/2", Highland Park 3000-4000, NHNA Only, No Longer Serviced, Years: 01/01/1965-11/30/1968
5	C5NE9658B	1	Cup, Oil Outer 6-1/2", (Part of C5NE-9600-B), Highland Park 5000 Gas, NHNA Only, No Longer Serviced, Years: 01/01/1966-05/31/1968
5	C5NE9658C	1	Cup, Oil Inner 7", Highland Park 5000 Diesel, NHNA Only, No Longer Serviced, Years: 01/01/1965-05/31/1971
5	C5NE9658C	1	Cup, Oil Inner 7", (Part of C5NE-9600-C), Highland Park 5000 Gas, NHNA Only, No Longer Serviced, Years: 06/01/1968-05/31/1971
5	C5NE9658C	1	Cup, Oil Inner 7", Highland Park 400, NHNA Only, No Longer Serviced, Years: 12/01/1968-05/31/1971
5	C7NN9658A	1	Cup, Oil Outer 6", (Part of C5NE-9600-F), 2000, Start Year: 01/01/1965
5	C7NN9658A	1	Cup, Oil Outer 6", (Replaces C5NE-9A633-B), 3000, Start Year: 12/01/1968
5	C7NN9658B	1	Cup, Oil Outer 7", (Part of C5NE-9600-E&H) Basildon 5000,4000, Start Year: 01/01/1965
5	C7NN9658B	1	Cup, Oil Outer 7", (Replaces C5NE-9A633-A), Basildon 3000, Years: 01/01/1965-11/30/1968
5	C7NN9658B	1	Cup, Oil Outer 7", Highland Park 4000-5000, Start Year: 06/01/1971
6	80681	AR	Washer, Lock, 5/16"
7	44711S36	AR	Washer, #9
8	280559	4	Screw, Cap, HH, G5, 5/16"-24 x 3/4", Start Year: 01/01/1965
9	311107	1	Hose, Air Cleaner Tube Connector, 2000 3000 & 4000 Diesel, Start Year: 01/01/1965
9	311107	1	Hose, Air Cleaner Tube Connector, 5000 Gasoline, Years: 01/01/1966-03/31/1968
9	C7NN9N623A	1	Hose, Air Cleaner Tube (2" ID one End 2-1/4" ID other End, 2-3/8" Long), 5100 Gasoline, NHNA Only, No Longer Serviced, Start Year: 04/01/1968
9	C0NN9B641A	1	Hose, Air Cleaner Tube Connector, 5000 Diesel, No Longer Serviced (NH-E), Start Year: 01/01/1965
10	82012730	4	Clamp, Hose, M68-85 (C), Start Year: 01/01/1965
11	C5NN9B642F	1	Tube, Air Cleaner Outlet, 3000, No Longer Serviced (NHNA), Years: 01/01/1965-03/31/1968

5000-SERIES 4 CYL TRACTOR (1/65-1/75)

09B02 AIR CLEANER ASSEMBLY, OIL BATH TYPE, DIESEL - EXCEPT 3500, 3550, 4500

Ref	Part Number	Qty	Description
11	C5NN9B642G	1	Tube, Air Cleaner Outlet, 2000, Start Year: 01/01/1965
11	C5NN9B642G	1	Tube, Air Cleaner Outlet, 3000, Start Year: 04/01/1968
11	C5NN9B642G	1	Tube, Air Cleaner Outlet, 4100 & 4110, Years: 01/01/1965-03/31/1968
11	C5NN9B642G	1	Tube, Air Cleaner Outlet, 2150, 3150, Start Year: 01/01/1970
11	C5NN9B642K	1	Tube, Outlet, 5100 Diesel, No Longer Serviced (NHNA), Years: 01/01/1965-03/31/1968
11	C7NN9B642B	1	Tube, Outlet (Diesel), 3055-4100-4110-4140- 5100, No Longer Serviced, Start Year: 04/01/1968
11	C5NN9B642L	1	Tube, Outlet, 4200, NHNA Only, No Longer Serviced, Years: 01/01/1966-05/31/1968
11	C7NN9B642C	1	Tube, Outlet, 4200, NHNA Only, No Longer Serviced, Start Year: 06/01/1968
11	C5NN9B642M	1	Tube, Outlet, 5100 Gasoline, NHNA Only, No Longer Serviced, Start Year: 01/01/1966
11	C5NN9B642BD	1	Tube, Outlet, 5200 Diesel, NHNA Only, No Longer Serviced, Start Year: 01/01/1967
11	C5NN9B642Z	1	Tube, Outlet, 5200 Gasoline, NHNA Only, No Longer Serviced, Start Year: 01/01/1967
11A	375075S	1	Grommet, Outlet Tube, 5000 Gasoline, Start Year: 01/01/1966
11A	375075S	1	Grommet, Outlet Tube, Diesel, Start Year: 12/01/1971
11A	375075S	1	Grommet, Outlet Tube, Diesel 3055, 4140, Start Year: 01/01/1970
12	C5NN9B640B	1	Hose, Outlet, Lower, 2000-3000, Start Year: 01/01/1965
12	C5NN9B640B	1	Hose, Outlet, Lower, 4100-4110-4200, Years: 01/01/1965-03/31/1968
12	C7NN9B640A	1	Hose, Outlet, Lower, 4100-4110-4200-5100 Diesel, Start Year: 04/01/1968
12	C5NN9B640C	1	Hose, Outlet, Lower, 5100-5190-5200 Gasoline, NHNA Only, No Longer Serviced, Start Year: 01/01/1966
12	C5NN9B640A	1	Hose, Outlet, Lower, 5100 Diesel, Years: 01/01/1965-03/31/1968
12	C5NN9B640A	1	Hose, Outlet, Lower, 5200 Diesel, Start Year: 01/01/1965
13	C5NN9A660A	1	Pre-Cleaner Assy., Air, 2-1/4" (57.15mm), Start Year: 01/01/1965
13	C5NN9A660B	1	Pre-Cleaner Assy., Air, 2" (50.8mm), Start Year: 01/01/1965
13	313536	1	Cap Assy., Air Cleaner, for 2" Pipe, 5000 Gasoline, Years: 01/01/1966-03/31/1968
13A	C7NN9B646C	1	Cap Assy., Air Cleaner, for 2-1/4" Pipe, Replaces P/N C7NN-9B691-A & P/N C7NN-9B646-D for 2" Pipe, 5000 Gasonline/Petrol, Start Year: 04/01/1968
14	C5NN9B691B	1	Extension, Inlet Tube, 2" x 16" (5.08 x 40.64cm), Start Year: 01/01/1965
14	C5NN9B691A	1	Extension, Inlet Tube, 2-1/4" x 16" (5.72 x 40.64cm), Start Year: 01/01/1965
15	86555327	1	Pre-Cleaner Assy., Air, for 2" (5.08cm) Inlet Pipe, NHNA Only, Start Year: 01/01/1965
15	C0NN9A660A	1	Pre-Cleaner Assy., Air, for 2-1/4" (5.72cm) Inlet Pipe Includes: Ref. 16 thru 18, Start Year: 01/01/1965
16	B9NN9A663A	1	Body, for 2", Part of P/N B9NN-9A660-A, Start Year: 01/01/1965
16	73533	1	Body, for 2-1/4", Part of P/N C0NN-9A660-A, Start Year: 01/01/1965
17	73223	1	Cover Assy., Body, Part of P/N B9NN-9A660-A, No Longer Serviced (NH-E), Start Year: 01/01/1965
17	73534	1	Cover Assy., Body, Part of P/N C0NN-9A660-A, Start Year: 01/01/1965
18	86555327	1	Base Assy., Part of P/N B9NN-9A660-A, No Longer Serviced (NH-E), Start Year: 01/01/1965
18	C0NN9A660A	1	Base Assy., Part of P/N C0NN-9A660-A, U.S., Start Year: 01/01/1965

09B02[A] AIR CLEANER ASSEMBLY, OIL BATH TYPE - 5000 GASOLINE (PETROL)

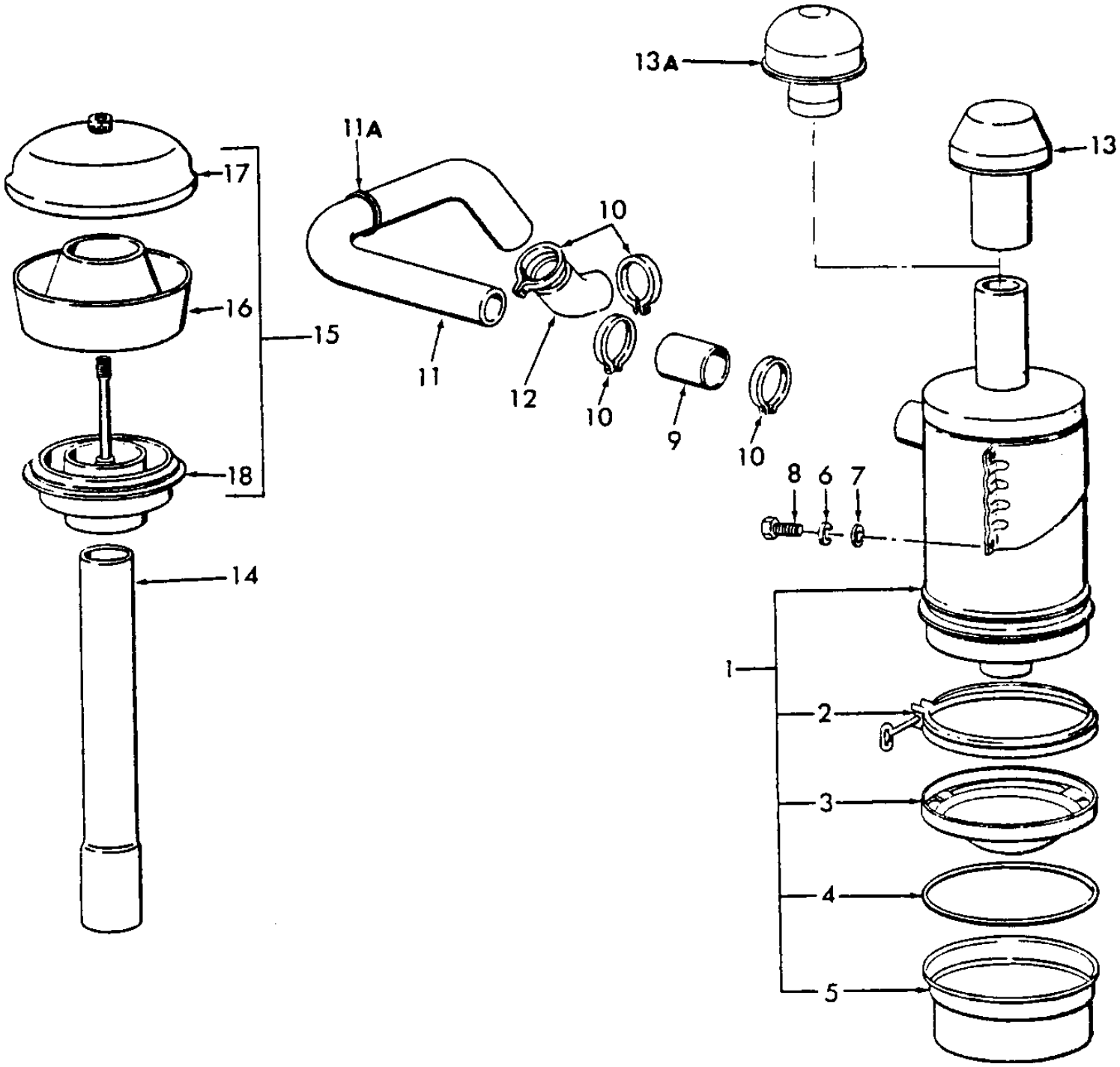

5000-SERIES 4 CYL TRACTOR (1/65-1/75)

09B02[A] AIR CLEANER ASSEMBLY, OIL BATH TYPE - 5000 GASOLINE (PETROL)

Ref	Part Number	Qty	Description
1	C5NE9600C	1	Air Cleaner Assy., 7" (177.8mm) 2-1/4" (57.15mm), Includes: Body & Ref. 2, NHNA Only, No Longer Serviced, Years: 06/01/1968-05/31/1971
2	C5NE9628C	1	Clamp Assy., 7", NHNA Only, No Longer Serviced, Years: 06/01/1968-05/31/1971
3	C5NE9A638C	1	Cup, Oil Inner 7", NHNA Only, No Longer Serviced, Years: 06/01/1968-05/31/1971
4	FP102	1	Gasket, Internal 7", Years: 06/01/1968-05/31/1971
5	C5NE9658C	1	Cup, Oil Inner 7", NHNA Only, No Longer Serviced, Years: 06/01/1968-05/31/1971
6	80681	AR	Washer, Lock, 5/16"
7	44711S36	AR	Washer, #9
8	280559	4	Screw, Cap, HH, G5, 5/16"-24 x 3/4", Start Year: 01/01/1965
9	311107	1	Hose, Air Cleaner Tube Connector, 5000 Gasoline, Years: 01/01/1966-03/31/1968
9	C7NN9N623A	1	Hose, Air Cleaner Tube (2" ID one End 2-1/4" ID other End, 2-3/8" Long), 5100 Gasoline, NHNA Only, No Longer Serviced, Start Year: 04/01/1968
10	82012730	4	Clamp, Hose, M68-85 (C), Start Year: 01/01/1965
11	C5NN9B642M	1	Tube, Outlet, 5100 Gasoline, NHNA Only, No Longer Serviced, Start Year: 01/01/1966
11	C5NN9B642Z	1	Tube, Outlet, 5200 Gasoline, NHNA Only, No Longer Serviced, Start Year: 01/01/1967
11A	375075S	1	Grommet, Outlet Tube, 5000 Gasoline, Start Year: 01/01/1966
12	C5NN9B640C	1	Hose, Outlet, Lower, 5100-5190-5200 Gasoline, NHNA Only, No Longer Serviced, Start Year: 01/01/1966
13	313536	1	Cap Assy., Air Cleaner, for 2" Pipe, Years: 01/01/1966-03/31/1968
13A	C7NN9B646C	1	Cap Assy., Air Cleaner, for 2-1/4" Pipe, Start Year: 04/01/1968
14	C5NN9B691B	1	Extension, Inlet Tube, 2" x 16" (5.08 x 40.64cm), Start Year: 01/01/1965
14	C5NN9B691A	1	Extension, Inlet Tube, 2-1/4" x 16" (5.72 x 40.64cm), Start Year: 01/01/1965
15	86555327	1	Pre-Cleaner Assy., Air, for 2" (5.08cm) Inlet Pipe, Includes: Ref. 16 thru 18, NHNA Only, Start Year: 01/01/1965
15	C0NN9A660A	1	Pre-Cleaner Assy., Air, for 2-1/4" (5.72cm) Inlet Pipe, Includes: Ref. 16 thru 18, Start Year: 01/01/1965
16	B9NN9A663A	1	Body, for 2", Part of P/N 86555327, Start Year: 01/01/1965
16	73533	1	Body, for 2-1/4", Part of P/N C0NN-9A660-A, Start Year: 01/01/1965
17	B9NN9A664A	1	Cover Assy., Body, Part of P/N 86555327, Start Year: 01/01/1965
17	73534	1	Cover Assy., Body, Part of P/N C0NN-9A660-A, No Longer Serviced (NH-E), Start Year: 01/01/1965
18	86555327	1	Base Assy., Part of P/N 86555327, No Longer Serviced (NH-E), Start Year: 01/01/1965
18	C0NN9A660A	1	Base Assy., Part of P/N C0NN-9A660-A, Start Year: 01/01/1965

09C01 THROTTLE CONTROLS & RELATED PARTS, GASOLINE (PETROL)

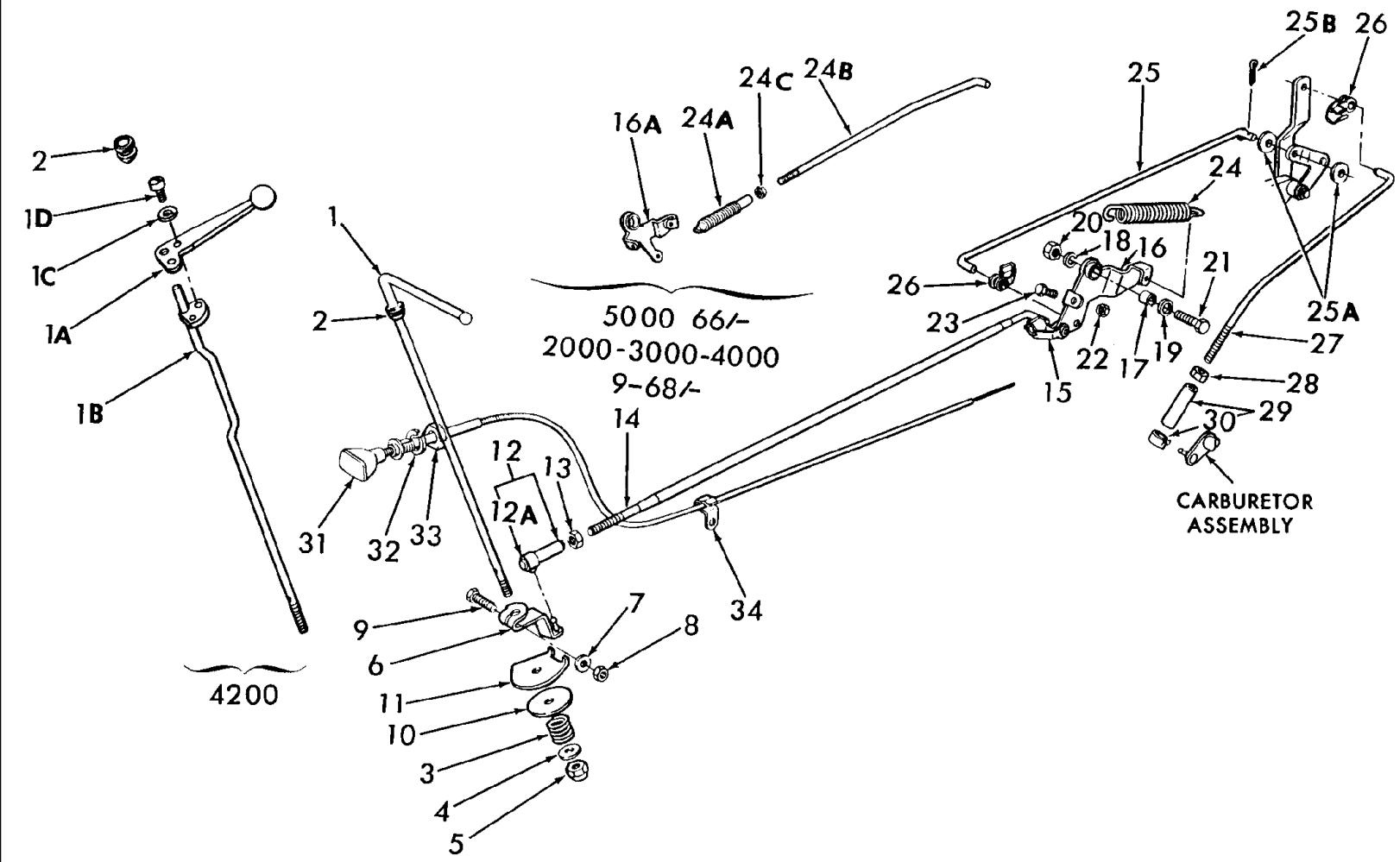

5000-SERIES 4 CYL TRACTOR (1/65-1/75)

09C01 THROTTLE CONTROLS & RELATED PARTS, GASOLINE (PETROL)

Ref	Part Number	Qty	Description
1	86531510	1	Lever, Throttle Control, 2000-3000, No Longer Serviced (NH-E), Start Year: 01/01/1965
1	86551808	1	Lever, Throttle Control, 4000 Except 4200, No Longer Serviced (NH-E), Start Year: 01/01/1965
1	C5NN9A794A	1	Lever, Throttle Control, 5100, No Longer Serviced, Start Year: 01/01/1966
1A	C5NN9805D	1	Lever Assy., Hand Throttle, 4200, NHNA Only, No Longer Serviced, Start Year: 01/01/1966
1B	C5NN9779Z	1	Rod Assy., Throttle Control, 4200, NHNA Only, No Longer Serviced, Start Year: 01/01/1966
1C	80681	2	Washer, Lock, 5/16", 4200, Start Year: 01/01/1966
1D	50161S36	2	Screw, Fillister Hd, W/Washer, 5/16"-24 x 5/8", 4200, NHNA Only, No Longer Serviced, Start Year: 01/01/1966
2	353873S	1	Grommet, Control Lever, Start Year: 01/01/1965
3	E1ADKN19243	1	Spring, Control Lever, Start Year: 01/01/1965
4	80702	AR	Washer, 3/8"
5	377360S36	1	Nut, 3/8"-24, Start Year: 01/01/1965
6	C5NN9807C	1	Arm Assy., Control Lever, 2000-3000-4200, Start Year: 01/01/1965
6	C5NN9807B	1	Arm Assy., Control Lever, 4100-4400-4500-5100, Start Year: 01/01/1965
7	352321S36	AR	Washer, Flat, 5/16"
8	86629539	AR	Nut, G5, 5/16"-24
9	379586S36	1	Bolt, Square Hd., 5/16"-24 x 1-1/4", Start Year: 01/01/1965
10	E0NN9B746BA	1	Disc, Throttle Control Fiction, Replaces P/N C5NN9B746B, Start Year: 01/01/1966
11	C5NN9B737Z	1	Plate, Friction Disc, 2000-3000, Start Year: 01/01/1965
11	C5NN9B737E	1	Plate, Friction Disc, 4000, No Longer Serviced (NH-E), Start Year: 01/01/1965
11	C5NN9B737R	1	Plate, Friction Disc, 5100, NHNA Only, No Longer Serviced, Start Year: 01/01/1966
12	311924	1	Connector Assy., 1-3/4" (44.45mm) Lg., 2000-3000-4000, Includes: Connector, Ref. 12A & Ref. 13, No Longer Serviced (NH-E), Years: 01/01/1965-12/31/1970
12	C5NN9740A	1	Connector Assy., 2-1/4" (57.15mm) Lg., 5100, Includes: Connector, Ref. 12A & Ref. 13, Start Year: 01/01/1966
12	C5NN9740A	1	Connector Assy., 2-1/4" (57.15mm) Lg., 2000-3000-4000, Includes: Connector, Ref. 12A & Ref. 13, Start Year: 01/01/1971
12A	B9NN9A791A	1	Clip, Throttle Control Rod, Start Year: 01/01/1965
13	34081S36	1	Nut, 1/4"-28, Start Year: 01/01/1965
14	C5NN9A722D	1	Rod, Throttle Control, 20.25" (51.44cm) Lg., 2000-3000, No Longer Serviced (NHNA), Years: 01/01/1965-08/31/1968
14	C7NN9A722C	1	Rod, Throttle Control, 22.23" (55.46cm) Lg., U.K.-Antwerp, 2000-3000, No Longer Serviced (NHNA), Years: 09/01/1968-10/31/1968
14	C7NN9A722V	1	Rod, Throttle Control, 22.23" (55.46cm) Lg., 2000-3000, No Longer Serviced (NHNA), Start Year: 11/01/1968
14	C5NN9A722E	1	Rod, Throttle Control, 19.07" (48.44cm) Lg., 4000 Except 4200, No Longer Serviced (NHNA), Years: 01/01/1965-08/31/1968
14	C7NN9A722E	1	Rod, Throttle Control, 20.98" (53.29cm) Lg. 4000 Except 4200, No Longer Serviced (NHNA), Years: 09/01/1968-10/31/1968
14	C7NN9A722U	1	Rod, Throttle Control, 4000 Except 4200, Start Year: 11/01/1968

5000-SERIES 4 CYL TRACTOR (1/65-1/75)

09C01 THROTTLE CONTROLS & RELATED PARTS, GASOLINE (PETROL)

Ref	Part Number	Qty	Description
14	C5NN9A722T	1	Rod, Throttle Control, 17.0" (43.28cm) Lg., 4200, NHNA Only, No Longer Serviced, Years: 01/01/1966-08/31/1968
14	C7NN9A722Y	1	Rod, Throttle Control, 18.78" (47.7cm) Lg., NHNA Only, No Longer Serviced, Years: 09/01/1968-10/31/196
14	C7NN9A722Y	1	Rod, Throttle Control, 4200, NHNA Only, No Longer Serviced, Start Year: 11/01/1968
14	NLS	1	Rod, Throttle Control, 5100 {C5NN9A722R}, Years: 01/01/1966-03/31/1967
14	D4NN9A722F	1	Rod, Throttle Control (When replacing C5NN-9A722-R use (1) of C5NN-12N451-A Lever & 8M-9826 Clip.), 5100, NHNA Only, No Longer Serviced, Start Year: 04/01/1967
	390050S36	1	Washer, Friction Disc Spring, 5100, Start Year: 01/01/1966
15	F1NN9A792AA	1	Clip, Linkage, Years: 01/01/1966-03/31/1967
15	F1NN9A792AA	1	Clip, Linkage, Start Year: 09/01/1968
15	174273	1	Clip, Linkage, 5000, Years: 04/01/1967-08/31/1968
16	C5NE12A471A	1	Arm, Governor Control Lever, 2000-3000-4000, No Longer Serviced (NHNA), Years: 01/01/1965-08/31/1968
16A	C7NN12N451A	1	Arm Assy, Governor Control Lever, 2000-3000-4000, No Longer Serviced (NHNA), Years: 09/01/1968-10/31/1968
16A	C5NN12N451A	1	Arm Assy, Governor Control Lever, 5000, No Longer Serviced (NH-E), Start Year: 01/01/1966
16A	C5NN12N451A	1	Arm, Governor Control Lever, 2000-3000-4000, No Longer Serviced (NH-E), Start Year: 11/01/1968
17	C5NN12B460A	1	Spacer, Governor Control, Start Year: 01/01/1965
18	80679	1	Washer, Lock, 1/2", Start Year: 01/01/1965
19	377488S43	3	Washer, 1/2" Flat, No Longer Serviced (NHNA), Start Year: 01/01/1965
20	280431	1	Nut, G5, 1/2"-13, Start Year: 01/01/1965
21	9706716	1	Screw, Cap, HH, G5, 1/2"-13 x 2", Start Year: 01/01/1965
22	87305	AR	Nut, Jam, G2, 1/4"-20
23	377491S43	1	Bolt, 1/4" - 20 x 1-1/8" Hex Hd., No Longer Serviced, Start Year: 01/01/1965
24	C5NEB464B	1	Spring, Governor Override (Less Foot Accel.) 2000-3000-4000, Years: 01/01/1965-08/31/1968
24	C5NN2472C	1	Spring, Governor Override (With Foot Accel.) 2000-3000-4000, Years: 01/01/1965-08/31/1968
24A	C7NN12B463A	1	Spring Assy, Governor Control, 5000, Start Year: 01/01/1966
24A	C7NN12B463A	1	Spring Assy, Governor Control, (Repl. C6NE12B463A & C5NN12B463B), 2000-3000-4000, Start Year: 09/01/1968
24B	C7NN12A455B	1	Rod, Governor Control, 2000-3000-4000, No Longer Serviced (NHNA), Years: 09/01/1968-10/31/1968
24B	C7NN12A455C	1	Rod, Governor Control, 2000-3000-4000, No Longer Serviced, Start Year: 11/01/1968
24B	C7NN12A455A	1	Rod, Governor Control, 5000 (Repl. C5NN12A455A), NHNA Only, No Longer Serviced, Start Year: 01/01/1966
24	34081S36	1	Nut, 1/4"-28, 5000, Start Year: 01/01/1966
25	C5NE12A455D	1	Rod, Governor Control, 2000, 3000 & 4000, When replacing P/N C5NE-12A457-B(81806921) use (1) P/N C5NN-9740-A(81811646) Connector. Note: Carburetors stamped W/Prefix C5NE or C5NN use Linkage dated 65/8-68. Carburetors stamped W/Prefix C7NN use Linkage dated 9-68/, No Longer Serviced (NHNA), Years: 01/01/1965-08/31/1968
25A	44718S43	2	Washer, 1/4", 2000, 3000 & 4000, No Longer Serviced (NHNA), Years: 01/01/1965-08/31/1968
25B	280236	1	Pin, Split (Cotter), 1/16" x 1/2", 2000, 3000 & 4000, Years: 01/01/1965-08/31/1968
26	F1NN9A792AA	2	Clip, Governor Control Rod, Start Year: 01/01/1965

09C01 THROTTLE CONTROLS & RELATED PARTS, GASOLINE (PETROL)

Ref	Part Number	Qty	Description
27	D0NN12A457A	1	Rod, Governor to Carb., 2000, 3000, 4000, When replacing P/N C5NE-12A457-B(81806921) use (1) P/N C5NN-9740-A(81811646) Connector. Note: Carburetors stamped W/Prefix C5NE or C5NN use Linkage dated 65/8-68. Carburetors stamped W/Prefix C7NN use Linkage dated 9-68/, Start Year: 01/01/1965
27	C7NN12A457A	1	Rod, Governor to Carb. (12.10"(30.73cm), 5000, NHNA Only, Years: 01/01/1966-12/31/1970
27	D0NN12A457B	1	Rod, Governor to Carb., 5000, No Longer Serviced, Start Year: 01/01/1971
28	34801S36	1	Nut, 1/4" - 28 Hex, No Longer Serviced (NH-E), Start Year: 01/01/1965
29	311924	1	Connector, Control Rod to Carburetor, No Longer Serviced (NH-E), Years: 01/01/1965-12/31/1970
29	C5NN9740A	1	Connector, Control Rod to Carburetor, Includes: Connector Plus Ref. 30, Start Year: 01/01/1971
30	B9NN9A791A	1	Clip, Start Year: 01/01/1965
31	C5NN9700C	1	Control Assy, Carburetor Choke, 2000, 3000 & 4000, Start Year: 01/01/1965
31	C5NN9700E	1	Control Assy, Carburetor Choke, 5000, Start Year: 01/01/1966
32	351452S36	AR	Washer, 1/2" Lock
33	87309	1	Nut, Jam, G2, 1/2"-20, Start Year: 01/01/1965
34	C5NN9D270B	1	Clamp, Choke Control Cable, Except 4200, Years: 01/01/1965-12/31/1973
34	C5NN9D270B	1	Clamp, Choke Control Cable, 5100 W/Power Steering, Years: 01/01/1965-06/30/1970
34	D1NN14N204A	1	Clip, Choke Control Cable, Start Year: 01/01/1974
34	354905S100	1	Clip, Choke Control Cable, 4200, NHNA Only, No Longer Serviced, Start Year: 01/01/1966
	80682	1	Washer, Lock, 1/4", Start Year: 01/01/1966
	87305	1	Nut, Jam, G2, 1/4"-20, Start Year: 01/01/1966
	84467	1	Screw, Truss Hd, G2, 1/4"-20 x 1/2", 4200, Start Year: 01/01/1966
	309803	1	Kit, Governor Linkage Conversion, 2000, 3000, Order Components, NHNA Only, Years: 01/01/1965-10/31/1968
	309806	1	Kit, Governor Linkage Conversion, 4000 Except 4200, NHNA Only, Years: 01/01/1965-10/31/1968
	309805	1	Kit, Governor Linkage Conversion, 4200 Includes: (1) C9NN-9581-A Shaft Assy (1) C7NN-9A722-Y Rod (W/Kit 309805) (1) C7NN-9A722-U Rod (W/Kit 309804) (1) C7NN-9A722-V Rod (W/Kit 309803) (1) C5NN-12N451-A Arm Assy (1) C6NE-12452-A Hsg. &, Order Components, NHNA Only, Years: 01/01/1966-10/31/1968

09C03 THROTTLE CONTROLS & RELATED PARTS, 4-CYLINDER DIESEL - 5100, 7100

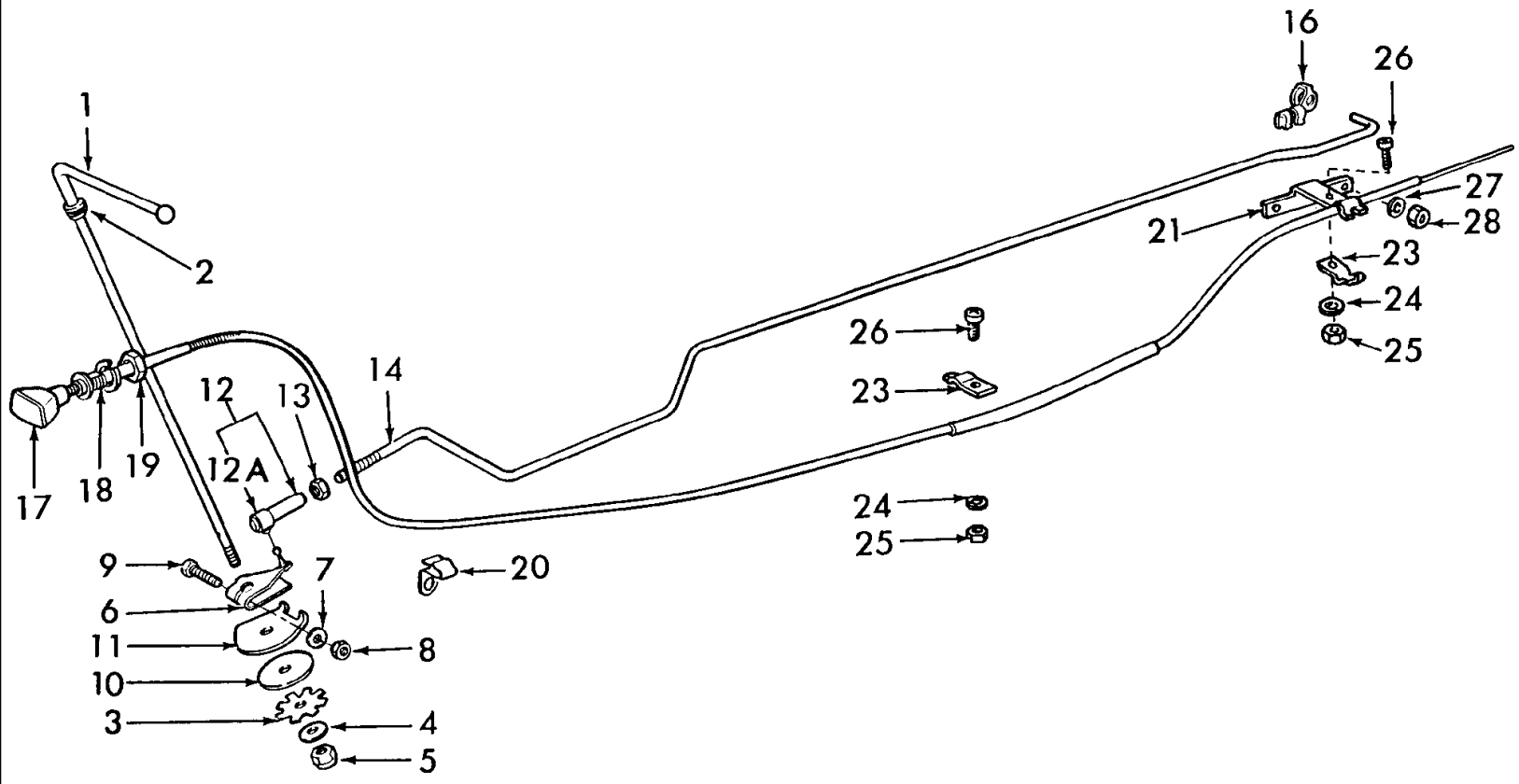

5000-SERIES 4 CYL TRACTOR (1/65-1/75)

09C03 THROTTLE CONTROLS & RELATED PARTS, 4-CYLINDER DIESEL - 5100, 7100

Ref	Part Number	Qty	Description
1	C5NN9A794A	1	Lever, Throttle, No Longer Serviced, Start Year: 01/01/1965
2	353873S	1	Grommet, Lever, Start Year: 01/01/1965
3	390050S36	1	Washer, Friction Disc Spring, Start Year: 01/01/1965
4	80702	1	Washer, 3/8", Start Year: 01/01/1965
5	377360S36	1	Nut, 3/8"-24 Hex, Start Year: 01/01/1965
6	C5NN9807A	1	Arm Assy., Throttle Control Lever, Start Year: 01/01/1965
7	352321S36	1	Washer, 5/16" Flat, Start Year: 01/01/1965
8	86629539	1	Nut, G5, 5/16"-24, Start Year: 01/01/1965
9	379586S36	1	Bolt, Square Hd., 5/16"-24 x 1-1/4", Start Year: 01/01/1965
10	E0NN9B746BA	1	Disc, Throttle Control Friction, Start Year: 01/01/1965
11	C5NN9B737K	1	Plate, Throttle Control Friction, No Longer Serviced (NHNA), Start Year: 01/01/1965
12	C5NN9740A	1	Connector Assy., Throttle Control Friction, Includes: Connector Plus: 12A, Start Year: 01/01/1965
12A	B9NN9A791A	1	Clip, Rod Connector, Start Year: 01/01/1965
13	34081S36	1	Nut, 1/4"-28, Start Year: 01/01/1965
14	C7NN9A722S	1	Rod, Throttle Control (Less Foot Accel.) Repl. C5NN9A722Z, No Longer Serviced (NHNA), Start Year: 01/01/1965
14	C7NN9A722S	1	Rod, Throttle Control (With Foot Accel.), U.K.-Antwerp, No Longer Serviced (NHNA), Years: 01/01/1965-12/31/1971
14	D2NN9A722D	1	Rod, Throttle Control (With Foot Accel. & SIMMS Pump) (Less Dual Power), U.K.-Antwerp, No Longer Serviced (NH-E), Start Year: 01/01/1972
14	D2NN9A722L	1	Rod, Throttle Control (With Foot Accel. & SIMMS Pump) (With Dual Power), U.K.-Antwerp, No Longer Serviced, Start Year: 01/01/1973
14	D2NN9A722E	1	Rod, Throttle Control (W/CAV Pump), No Longer Serviced, Start Year: 11/01/1972
16	174273	1	Clip, Throttle Control Rod, 5000-7000, Except 5200, 7200, Start Year: 01/01/1965
16	174273	1	Clip, Throttle Control Rod, 5200, Years: 01/01/1967-05/31/1968
16	D9NN9825AB	1	Clip, Throttle Control Rod, 5200-7200, Start Year: 06/01/1968
17	E5NN9C331EA	1	Control Assy, Fuel Shut-Off (Repl. C5NN9C331C), Except Germany, 5000-7000, Start Year: 01/01/1965
17	82013717	1	Control Assy, Fuel Shut-Off, Germany, 5000-7000, Start Year: 01/01/1965
18	351452S36	AR	Washer, 1/2" Lock, 5000-7000
19	87309	1	Nut, Jam, G2, 1/2"-20, Spring Assy., 5000-7000, Start Year: 01/01/1965
20	C5NN9D270B	1	Clamp, Fuel Shut-Off Cable, Rear, 5000-7000, Years: 01/01/1965-12/31/1973
21	C5NN9A760D	1	Bracket, Shut-Off Control Cable, Front, W/SIMMS Pump, 5000, Start Year: 01/01/1965
21	D4NN9A760A	1	Bracket, Shut-Off Control Cable, Front, 7000, Order Components, No Longer Serviced, Start Year: 01/01/1971
23	E7NN9D270AA	2	Clamp, Shut-Off Control Cable Bracket, W/SIMMS Pump, 5000-7000, Start Year: 01/01/1965
24	87812	AR	Washer, Lock, #8, 5000-7000
25	87653	AR	Nut, #8-32, 5000-7000
26	88985	2	Screw, Fillister Hd, #8-32 x 1/2", W/SIMMS Pump, 5000-7000, Start Year: 01/01/1965
27	80684	AR	Washer, Lock, #10, 5000-7000
28	87304	2	Nut, #10-24, W/SIMMS Pump, #10-24, 5000-7000, No Longer Serviced, Start Year: 01/01/1965
	D0NN9C320A	1	Swivel, Fuel Shut-Off Cable, W/CAV Pump, 5000, Start Year: 11/01/1972

09C03 THROTTLE CONTROLS & RELATED PARTS, 4-CYLINDER DIESEL - 5100, 7100

Ref	Part Number	Qty	Description
	74272S36	1	Retainer, Spring, 1/8", W/CAV Pump, 5000, Start Year: 11/01/1972
	350028S36	1	Screw, Oval Hd, #5-40 x 5/16", W/CAV Pump, 5000, Start Year: 11/01/1972
	C5NN9A760B	1	Bracket, Fuel Shut-Off Control Cable, W/CAV Pump, 5000, Start Year: 11/01/1972
	E0TA9792	1	Clamp, Shut-Off Control Cable to Bracket, W/CAV Pump, 5000, Start Year: 11/01/1972
	80684	1	Washer, Lock, #10, Start Year: 11/01/1972
	54652S36	1	Screw, HH, #10-24 x 1/2", W/CAV Pump, 5000, No Longer Serviced (NHNA), Start Year: 11/01/1972

09C03[A] THROTTLE CONTROLS & RELATED PARTS - 5200, 7200 GASOLINE & DIESEL

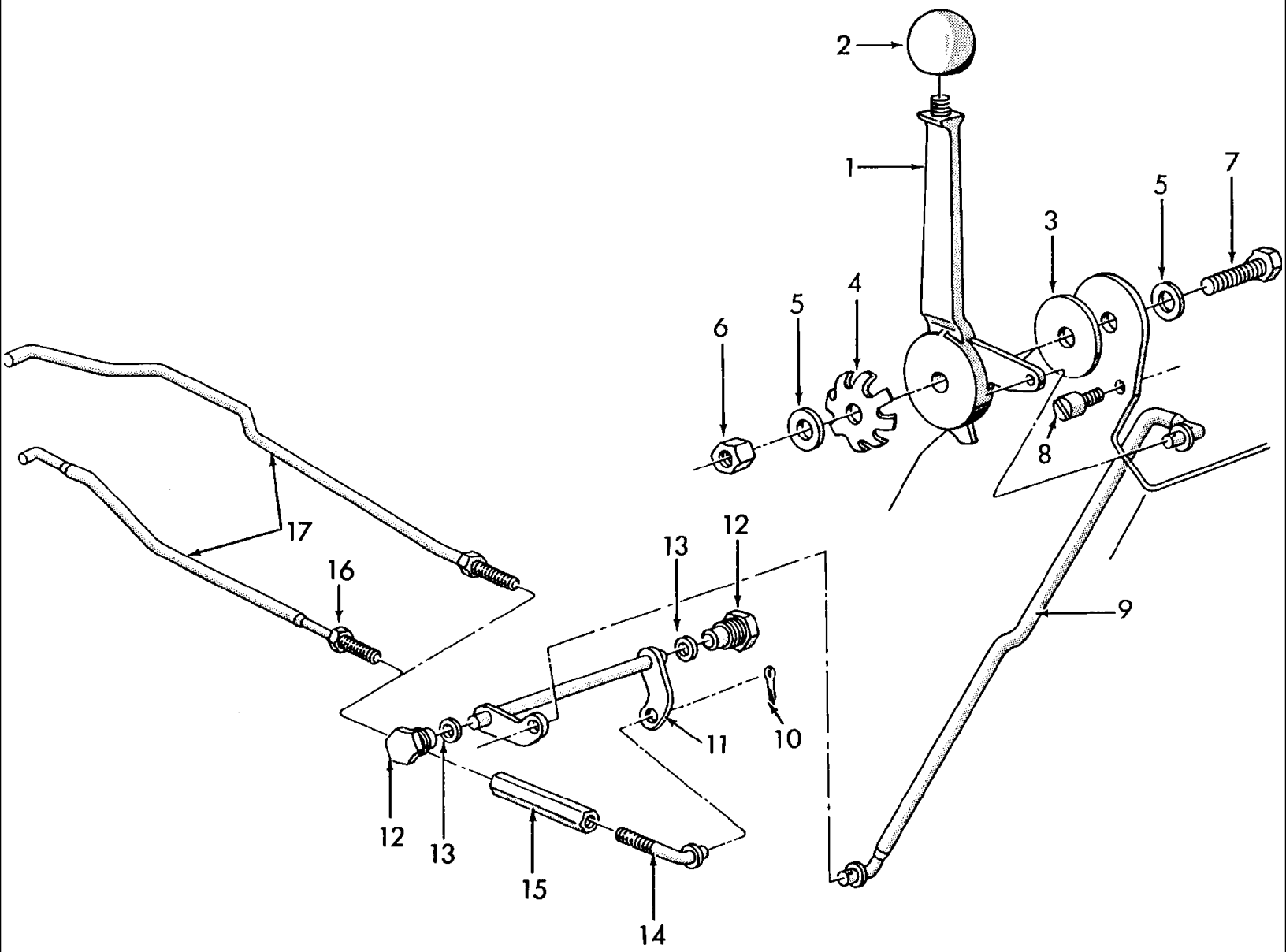

5000-SERIES 4 CYL TRACTOR (1/65-1/75)

09C03[A] THROTTLE CONTROLS & RELATED PARTS - 5200, 7200 GASOLINE & DIESEL

Ref	Part Number	Qty	Description
1	C5NN9805J	1	Lever, Hand Throttle Control, NHNA Only, No Longer Serviced, Start Year: 01/01/1967
2	C5NN7213A	1	Knob, Throttle Control Lever, Start Year: 01/01/1967
3	E0NN9B746BA	1	Disc, Friction, Start Year: 01/01/1967
4	390050S36	1	Washer, Spring, Start Year: 01/01/1967
5	C5NN9N744A	1	Washer, NHNA Only, No Longer Serviced, Start Year: 01/01/1967
6	377360S36	1	Nut, 3/8-24, Start Year: 01/01/1967
7	88117	1	Cap, HH, G5, 3/8"-24 x 1-3/4", Start Year: 01/01/1967
8	C5NN7B226J	1	Stop, Throttle Lever, NHNA Only, No Longer Serviced, Start Year: 01/01/1967
9	D2NN9A722F	1	Rod Assy., Throttle Control, Replaces C5NN9779AG, NHNA Only, No Longer Serviced, Start Year: 01/01/1967
10	280250	3	Pin, Split Cotter, 3/32" x 3/4", Start Year: 01/01/1967
11	C5NN9B778A	1	Shaft Assy., Cross, NHNA Only, No Longer Serviced, Start Year: 01/01/1967
12	C5NN9N739A	2	Retainer, Cross Shaft., NHNA Only, No Longer Serviced, Start Year: 01/01/1967
13	372264S36	2	Washer, Flat, 3/4", NHNA Only, No Longer Serviced, Start Year: 01/01/1967
14	C5NN9779AH	1	Rod Assy., NHNA Only, No Longer Serviced, Start Year: 01/01/1967
15	C5NN9N740A	1	Adjuster, 1/4-28, NHNA Only, No Longer Serviced, Start Year: 01/01/1967
16	34081S36	1	Nut, 1/4"-28, Start Year: 01/01/1967
17	C7NN9A722H	1	Rod, W/Gasoline Engine, For Additional Linkage See Fig. 9C1, NHNA Only, No Longer Serviced, Start Year: 01/01/1967
17	C5NN9A722AB	1	Rod, Diesel, W/ SIMMS Pump, For Additional Linkage See Fig. 9C3, NHNA Only, No Longer Serviced, Years: 01/01/1967-10/31/1972
17	D3NN9A722B	1	Rod, Diesel, W/CAV Pump, For Additional Linkage See Fig. 9C3, NHNA Only, No Longer Serviced, Start Year: 11/01/1972

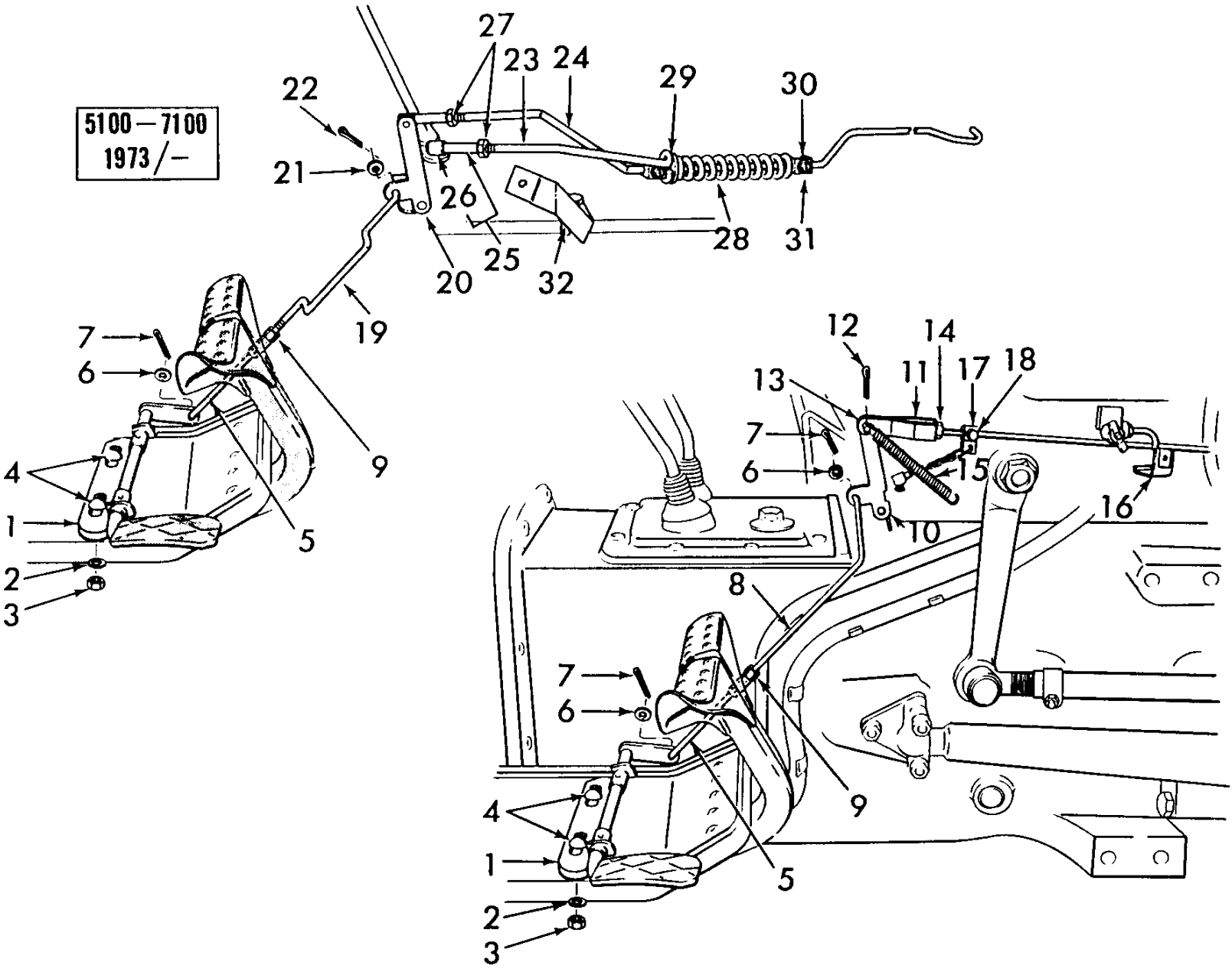
5100—7100
1973/—
27
23
24
29
30
22
21
26
28
31
25
20
32
19
7
6
4
1
2
3
5
9
12
14
11
17
18
13
7
6
15
16
10
8
7
6
4
1
2
3
5
9

5000-SERIES 4 CYL TRACTOR (1/65-1/75)

09C05 FOOT ACCELERATOR CONTROLS, DIESEL

Ref	Part Number	Qty	Description
	NS	AR	Kit, Foot Throttle, 2100-3100, Includes: Ref. 1 thru 8, Not Serviced, Order Components
	FT089N713H	1	Kit, Foot Throttle, 4100, Includes: Ref. 1 thru 8, Order Components, No Longer Serviced (NH-E), Start Year: 04/01/1970
	FT089N713G	1	Kit, Foot Throttle, 5100, Includes: Ref. 1 thru 8, Order Components, No Longer Serviced (NH-E), Start Year: 01/01/1973
	FT089N713Z	1	Kit, Foot Throttle, 7100, Includes: Ref. 1 thru 8, Order Components, NHNA Only, Start Year: 01/01/1973
1	D2NN9735A	1	Pedal Assy., Accelerator, 2100-3100, Start Year: 01/01/1965
1	D2NN9735B	1	Pedal Assy., Accelerator, 4100, Start Year: 01/01/1965
1	D2NN9735C	1	Pedal Assy., Accelerator, 5100-7100, Start Year: 01/01/1965
2	80681	2	Washer, Lock, 5/16", 2100-3100-4100-5100-7100, Start Year: 01/01/1965
3	86629539	2	Nut, G5, 5/16"-24, 2100, 3100, 4100, 5100, 7100, Start Year: 01/01/1965
4	350476S36	2	Bolt, Carriage, 5/16"-24 x 7/8", 2100-3100-4100-5100-7100, Start Year: 01/01/1965
5	C5NN9N766A	1	Rod, Accelerator Pedal Adjuster, 2100-3100-4100-5100-7100, Start Year: 01/01/1965
6	80707	2	Washer, #10, 2100-3100-4100-5100-7100, Start Year: 01/01/1965
7	280236	2	Pin, Split (Cotter), 1/16" x 1/2", 2100-3100-4100-5100-7100, Start Year: 01/01/1965
8	D5NN9N713B	1	Rod, Pedal, 2100-3100, No Longer Serviced, Start Year: 01/01/1965
8	C9NN9N713A	1	Rod, Pedal, 4100, No Longer Serviced (NH-E), Start Year: 01/01/1965
8	D2NN9N713A	1	Rod, Pedal (9-1/2" Bent), 2120-3120, NH-E Only, No Longer Serviced, Start Year: 05/01/1971
8	C5NN9N713J	1	Rod, Pedal (9-1/4") (7 & 8 Spd. Trans) 2100-3100, No Longer Serviced (NHNA), Start Year: 01/01/1965
8	C5NN9N713H	1	Rod, Pedal (10-5/8" Bent) (7 & 8 Spd. Trans) 4100, NH-E Only, No Longer Serviced, Years: 01/01/1965-03/31/1970
8	C5NN9N713K	1	Rod, Pedal (11-1/4" Bent) (7 & 8 Spd. Trans) 4100, NH-E Only, No Longer Serviced, Years: 01/01/1965-03/31/1970
9	88098	1	Nut, Jam, G2, 1/4"-28, 21/31-41-51-71
10	C7NN9A709A	1	Lever Assy., Pedal, 21/31, Start Year: 01/01/1965
10	C9NN9A709A	1	Lever Assy., Pedal, 41, Start Year: 01/01/1965
11	C5NN9B846B	1	Link, Pedal Lever, 21/31, No Longer Serviced (NHNA), Start Year: 01/01/1965
11	C9NN9B846A	1	Link, Pedal Lever, 41, Start Year: 01/01/1965
12	280236	1	Pin, Split (Cotter), 1/16" x 1/2", 21/31-41-51, Start Year: 01/01/1965
13	73870S36	1	Pin, Clevis, 1/4" x 3/4", 21/31-41-51, Start Year: 01/01/1965
14	88098	1	Nut, Jam, G2, 1/4"-28, 21/31-41-51, Start Year: 01/01/1965
15	E2NN9737AB	1	Spring, Pedal Return, 21/31-41-51, Start Year: 01/01/1965
16	D8NN9N767AA	1	Clip, Pedal Return Spring, 21/31, No Longer Serviced, Start Year: 01/01/1965
17	C7NN9N764A	1	Chain Assy., Hand Throttle Conn., 21/31, Start Year: 01/01/1965
17	D0NN9N764A	1	Chain Assy., Hand Throttle Conn., 41, Start Year: 01/01/1965
18	304620S36	1	Screw, Cap, HH, G5, 1/4"-20 x 3/8", 21/31-41-51, No Longer Serviced (NHNA), Start Year: 01/01/1965
19	D6NN9N713B	1	Rod, Pedal, 51-71, Start Year: 01/01/1973
19	C5NN9N713G	1	Rod, Pedal (8-3/4"), 5100-7100, 71, No Longer Serviced (NHNA), Years: 01/01/1965-12/31/1973
19	D0NN9N713A	1	Rod, Pedal (10" Bent) (W/Deluxe Cab), 5100, 71, NH-E Only, No Longer Serviced, Start Year: 08/01/1970
20	D6NN9A709B	1	Lever Assy., Pedal, 51-71, Start Year: 01/01/1965
21	80707	1	Washer, #10, 51-71

09C05 FOOT ACCELERATOR CONTROLS, DIESEL

Ref	Part Number	Qty	Description
22	280236	1	Pin, Split (Cotter), 1/16" x 1/2", 51-71, Following are not part of Kits, Start Year: 01/01/1965
23	D2NN9B813A	1	Rod, Accelerator Control (Lower) (8.0"-203.2mm) 5100-7100, Start Year: 01/01/1973
24	D2NN9A722L	1	Rod, Throttle Control (37.71"-957.8mm) 5100-7100, No Longer Serviced, Start Year: 01/01/1973
25	C5NN9740A	2	Connector Assy., Throttle Control Rods 5100-7100 Includes: Connector Plus: 26 & 27, Start Year: 01/01/1973
26	B9NN9A791A	2	Clip, Control Rod Connector, Start Year: 01/01/1973
27	34081S36	2	Nut, 1/4"-28 (Rods to Connector) Hex, Start Year: 01/01/1973
28	C7NN9737C	1	Spring, Accelerator Pedal Return, 5100-7100, No Longer Serviced (NH-E), Start Year: 01/01/1973
29	80701	1	Washer, 1/4", Start Year: 01/01/1973
30	372118S2	2	Clip, Accelerator Rod, Start Year: 01/01/1973
31	42360S36	2	Screw, Self-Tapping, HWH, #10-16 x 3/8", Start Year: 01/01/1973
32	C7NN16N566A	1	Bracket, Steering Gear Cover Mounting, Start Year: 01/01/1973

09D01 CARBURETOR ASSEMBLY, HOLLEY

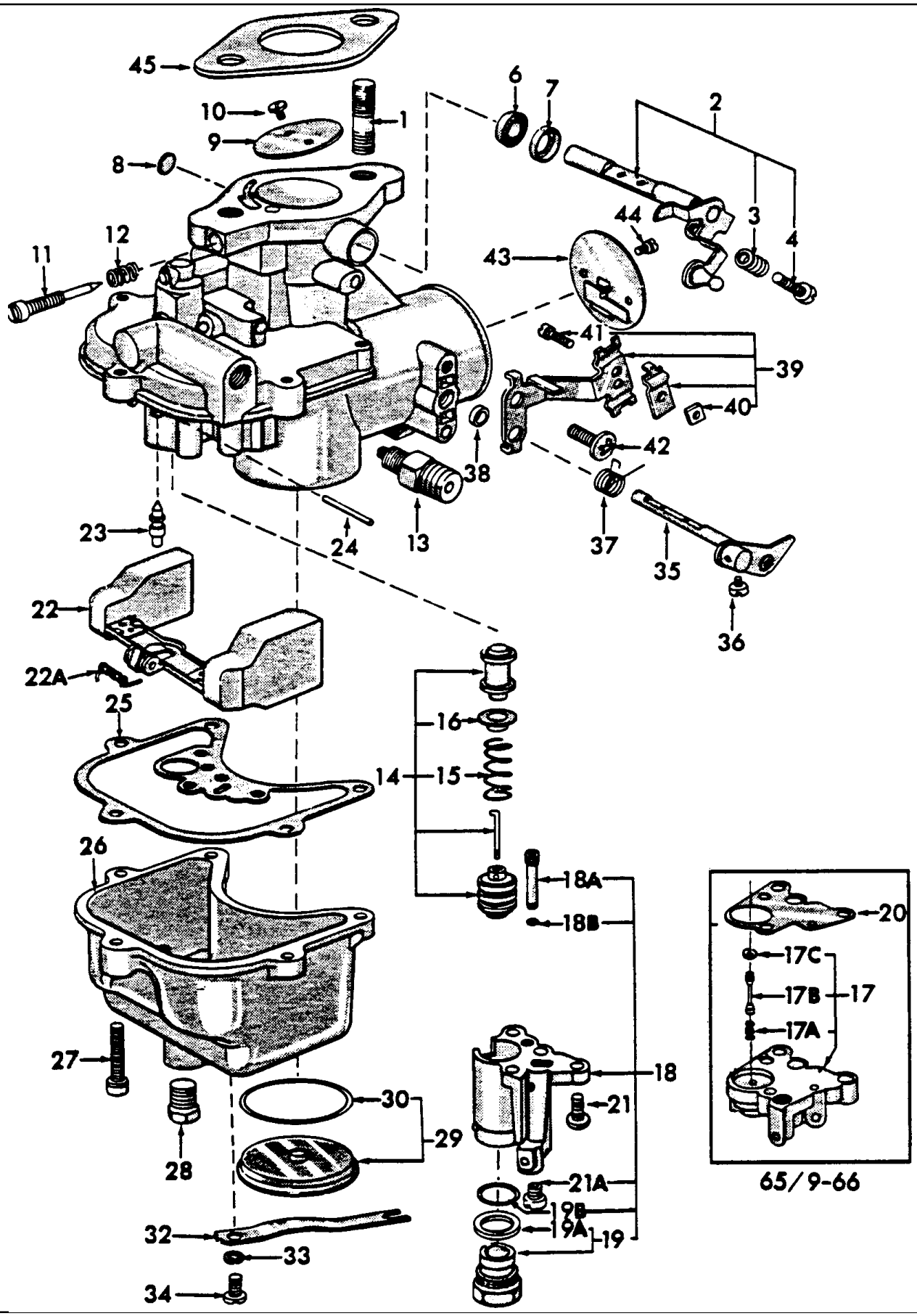

5000-SERIES 4 CYL TRACTOR (1/65-1/75)

09D01 CARBURETOR ASSEMBLY, HOLLEY

Ref	Part Number	Qty	Description
1	88382S8	2	Stud, 3/8"-16-24 x 1.38, No Longer Serviced (NH-E), Start Year: 01/01/1965
2	C5NE9581A	1	Lever & Shaft Assy., Throttle, 2000-3000-4000, Years: 01/01/1965-02/28/1968
2	C9NN9581A	1	Lever & Shaft Assy., Throttle, 2000-3000-4000, No Longer Serviced (NH-E), Start Year: 03/01/1968
2	C9NN9581B	1	Lever & Shaft Assy., Throttle, 5000, Includes: Ref. 3 & 4, NHNA Only, Start Year: 01/01/1966
3	C5NE9589A	1	Spring, Lever Adjusting Screw, Start Year: 01/01/1965
4	352986S8	1	Screw, Lever Adjusting, Start Year: 01/01/1965
6	C5NE9622A	1	Seal, Lever & Shaft, No Longer Serviced (NH-E), Start Year: 01/01/1965
7	C5NE9C501A	1	Retainer, Lever & Shaft Seal, Start Year: 01/01/1965
8	74109S	1	Plug, Expansion, 1/2", Throttle Shaft, No Longer Serviced (NH-E), Start Year: 01/01/1965
9	86514364	1	Plate, Throttle, NHNA Only, Start Year: 01/01/1965
10	EDB99598D	2	Screw, Throttle Plate,, No Longer Serviced (NHNA), Years: 01/01/1965-09/30/1969
10	353851S36	2	Screw & Washer Assy., No Longer Serviced (NH-E), Start Year: 10/01/1969
11	D0NN9541A	1	Needle, Idle Adjusting, No Longer Serviced (NH-E), Start Year: 01/01/1965
11	D0NN9541A	1	Needle, Idle Adjusting, No Longer Serviced (NH-E), Start Year: 01/01/1965
12	409578	1	Spring, Idle Adjusting Needle, No Longer Serviced (NH-E), Start Year: 01/01/1965
13	C5NE9E588A	1	Fitting, Fuel Inlet, Use Without Sealastic Fittings, No Longer Serviced (NHNA), Years: 01/01/1965-01/31/1966
13	E1NN9E588AA	1	Fitting Assy., Fuel Inlet, 2000-3000-4000, Use W/Sealastic Fittings, Start Year: 01/01/1966
13	C5NN9E588B	1	Fitting Assy., Fuel Inlet, 5000, NHNA Only, No Longer Serviced, Start Year: 01/01/1966
14	C5NN9G544B	1	Piston Assy., Acceleration Pump, 2000 & 3000, Years: 01/01/1965-09/30/1966
14	C5NN9B544B	1	Piston Assy., Accelerator Pump, 2000 & 3000, Start Year: 10/01/1966
14	C5NN9G544B	1	Piston Assy., Acceleration, 2000-3000-4000, No Longer Serviced (NHNA), Years: 01/01/1965-09/30/1966
14	C5NN9B544C	1	Piston Assy., Accelerator Pump, 4000, NHNA Only, Start Year: 10/01/1966
14	C5NN9G544A	1	Piston Assy., Acceleration Pump, 5000, NHNA Only, No Longer Serviced, Years: 01/01/1966-09/30/1966
14	NLS	1	Piston Assy, Accelerator Pump, 5000, Includes Ref 15 & 16, NHNA Only, Start Year: 10/01/1966
15	C5NE9B564A	1	Spring, Accelerator Pump Post, 2000 & 3000, No Longer Serviced (NHNA), Years: 01/01/1965-09/30/1966
15	C5NE9B564A	1	Spring, Accelerator Pump Post, 4000, No Longer Serviced (NHNA), Years: 01/01/1965-09/30/1965
15	C5NN9B564B	1	Spring, Accelerator Pump Piston, 4000, NHNA Only, Start Year: 10/01/1965
15	C5NN9B564A	1	Spring, Accelerator Pump Piston, 5000, No Longer Serviced (NH-E), Start Year: 01/01/1966
15	C5NN9B564A	1	Spring, Accelerator Pump Piston, 2000 & 3000, No Longer Serviced (NH-E), Start Year: 10/01/1966
16	C5NE9688A	1	Retainer, Accelerator Pump Spring, No Longer Serviced, Start Year: 01/01/1965
17	C5NN9A511A	1	Body & Plugs Assy., Metering, 3000 & 4000, No Longer Serviced (NHNA), Years: 01/01/1965-09/30/1966
17	C5NN9A511B	1	Body & Plugs Assy., Metering, 2000, No Longer Serviced (NHNA), Years: 01/01/1965-09/30/1966
17	C5NN9A511C	1	Includes: Ref. 17A-17C, NHNA Only, No Longer Serviced, Years: 03/01/1966-09/30/1966
17A	C5NN9E525A	1	Spring, Carburetor Power Valve, 5000, NHNA Only, No Longer Serviced, Years: 01/01/1966-09/30/1966
17B	C5NN9H547A	1	Valve, Carburetor Power, 5000, NHNA Only, No Longer Serviced, Years: 01/01/1966-09/30/1966
17C	C5NN9G557A	1	Retainer, Power Valve Closing Spring, 5000, NHNA Only, No Longer Serviced, Years: 01/01/1966-09/30/1966
18	E1NN9510DA	1	Body & Plugs Assy., Metering, 2000, No Longer Serviced (NH-E), Start Year: 10/01/1966
18	D8NN9A511AA	1	Body & Plugs Assy., Metering, 3000 & 4000, No Longer Serviced (NH-E), Start Year: 10/01/1966

5000-SERIES 4 CYL TRACTOR (1/65-1/75)

09D01 CARBURETOR ASSEMBLY, HOLLEY

Ref	Part Number	Qty	Description
18	C5NN9A511D	1	Body & Plugs Assy., Metering, 5000, Includes: Ref. 18A, 18B, 19, 19B & 21A, NHNA Only, No Longer Serviced, Start Year: 10/01/1966
18A	C5NN9N521A	1	Valve Assy., Accelerator Pump Discharge, No Longer Serviced (NH-E), Start Year: 10/01/1966
18B	C5NN9N522A	1	Gasket, Valve, No Longer Serviced (NH-E), Start Year: 10/01/1966
19	D0NN9G551A	1	Valve Assy., Pump Power, Replaces C5NN9G551A, 5000, Includes: Valve & Ref. 19A, NHNA Only, Start Year: 10/01/1966
19A	C5NN9N523A	1	Gasket, Power Valve, Rubber, 5000, NHNA Only, Start Year: 10/01/1966
19B	CKPN9591B	1	Kit, Gasket, Carburetor Repair, Power Valve, 5000, NHNA Only, Start Year: 10/01/1966
20	C5NE9A518A	1	Gasket, Main Metering Body, 2000-3000-4000, Years: 01/01/1965-09/30/1966
20	C5NN9B559A	1	Diaphragm Assy., Accelerator Pump, 5000, NHNA Only, No Longer Serviced, Years: 01/01/1966-09/30/1966
21	PL	3	Screw & Lockwasher Assy., Fillister Hd., #10-32 x 3/4, Procure Locally, Years: 01/01/1965-09/30/1966
21	43256S8	3	Screw, Fillister Hd, W/Washer, #10-32 x 5/8", No Longer Serviced, Start Year: 10/01/1966
21A	D6NN9533A	1	Jet, Main, Stamped #43, 2000, No Longer Serviced, Start Year: 01/01/1965
21A	NLS	1	Jet, Main, Stamped #51, 3000, No Longer Serviced, Years: 01/01/1965-09/30/1965
21A	D3NN9533A	1	Jet, Main, Stamped #53, 3000, No Longer Serviced (NH-E), Start Year: 09/01/1965
21A	1GA9533C	1	Jet, Main, Stamped #60, 4000, NHNA Only, No Longer Serviced, Start Year: 09/01/1965
21A	789533F	1	Jet, Main, Stamped #57, U.S., 5000, NHNA Only, No Longer Serviced, Start Year: 01/01/1966
22	C5NE9550A	1	Float & Lever Assy., Carburetor, No Longer Serviced (NH-E), Start Year: 01/01/1965
22A	C5NN9A519A	1	Spring, Float, No Longer Serviced (NH-E), Start Year: 01/01/1965
23	D8NN9566AA	1	Needle, Fuel Inlet, Start Year: 01/01/1965
24	C5NE9558A	1	Shaft, Float Lever, Start Year: 01/01/1965
25	C5NN9561A	1	Gasket, Float Bowl, Refer to "Note" on Pg. 9-23, Years: 01/01/1965-08/31/1968
25	C5NN9561B	1	Gasket, Float Bowl, Refer to "Note" on Pg. 9-23, Start Year: 09/01/1968
26	C5NE9B573A	1	Bowl, Float, No Longer Serviced, Start Year: 01/01/1965
27	43401S36	5	Screw, Fillister Hd, W/Washer, #10-32 x 7/8", No Longer Serviced (NH-E), Start Year: 01/01/1965
28	88071	1	Plug, Drain, 1/8"-27, Start Year: 01/01/1965
29	C5NN9C279A	1	Plug Assy., Air Horn, Includes: Plug & ref. 30, Start Year: 01/01/1965
30	C5NE9H519A	1	Gasket, Air Horn Plug, Start Year: 01/01/1965
32	C5NE9H518A	1	Spring, Horn Plug, No Longer Serviced (NH-E), Start Year: 01/01/1965
33	80684	1	Washer, Lock, #10, Start Year: 01/01/1965
34	33177S	1	Screw, Pan Hd., Self-Tapping, #10-16 x 3/8", No Longer Serviced (NHNA), Start Year: 01/01/1965
35	C5NN9546B	1	Shaft & Lever Assy., Choke, 2000-3000-4000, Start Year: 01/01/1965
35	C5NN9546A	1	Shaft & Lever Assy., Choke, 5000, NHNA Only, No Longer Serviced, Start Year: 01/01/1966
36	31032S8	1	Screw, Fillister Hd, #8-32 x 1/4", No Longer Serviced, Start Year: 01/01/1965
37	C5NE9587A	1	Spring, Choke Lever Plunger, 2000-3000-4000, No Longer Serviced (NH-E), Start Year: 01/01/1965
37	C5NN9587A	1	Spring, Choke Lever Plunger, 5000, NHNA Only, No Longer Serviced, Start Year: 01/01/1966
38	C5NE9D538A	1	Packing, Choke Shaft, No Longer Serviced (NH-E), Start Year: 01/01/1965
39	C5NN9H516B	1	Bracket Assy., Choke Control Wire, 2000-3000-4000, No Longer Serviced (NHNA), Years: 01/01/1965-08/31/1968
39	C7NN9H516A	1	Bracket Assy., Choke Control Wire, 2000-3000-4000, No Longer Serviced, Start Year: 09/01/1968

09D01 CARBURETOR ASSEMBLY, HOLLEY

Ref	Part Number	Qty	Description
39	NLS	1	Bracket Assy., Choke Control Wire, 5000, Includes: Bracket, Ref. 40 & 41, No Longer Serviced, Start Year: 01/01/1966
40	34126S8	1	Nut, Square, #8-32, No Longer Serviced (NHNA), Start Year: 01/01/1965
41	88985	1	Screw, Fillister Hd, #8-32 x 1/2", Start Year: 01/01/1965
42	50517S36	1	Screw, Pan Hd, 1/4"-20 x 1/2", Start Year: 01/01/1965
43	C5NN9549A	1	Plate Assy., Choke, Replaces C5NE9549A, Start Year: 01/01/1965
44	42790S8	2	Screw, Pan Hd, W/Washer, #6-32 x 1/2", No Longer Serviced, Start Year: 01/01/1965
45	82845220	1	Gasket, Carburetor to Intake Manifold, Start Year: 01/01/1965
	CFPN9501A	1	Kit, Carburetor Modification, 2000, Includes:, NHNA Only, No Longer Serviced, Years: 01/01/1965-01/31/1966
	C5NN9A511B	1	Body & Plugs Assy., Metering, No Longer Serviced (NHNA)
	C5NE9A518A	1	Gasket
	C5NN9A519A	1	Spring, No Longer Serviced (NH-E)
	C5NE9561A	1	Gasket, NH-E Only
	CFPN9501B	1	Kit, Carburetor Modification, 3000-4000, Includes:, NHNA Only, No Longer Serviced, Years: 01/01/1965-01/31/1966
	C5NN9A511A	1	Body & Plugs Assy., Metering, No Longer Serviced (NHNA)
	C5NE9A518A	1	Gasket, No Longer Serviced (NH-E)
	C5NN9A519A	1	Spring, No Longer Serviced (NH-E)
	C5NE9561A	1	Gasket, NH-E Only

NO ART REQUIRED

5000-SERIES 4 CYL TRACTOR (1/65-1/75)

09D01[A] CARBURETOR REPAIR KITS (NHNA)

Ref	Part Number	Qty	Description
	CKPN9590A	AR	Kit, Major Carburetor Repair, 2000, 3000, 4000, Includes: parts listed below., NHNA Only, Years: 01/01/1965-09/30/1966
	CKPN9590B	AR	Kit, Major Carburetor Repair, 2000, 3000, Includes: parts listed below., NHNA Only, Start Year: 10/01/1966
	CKPN9590C	AR	Kit, Major Carburetor Repair, 4000, Includes: parts listed below., NHNA Only, Can be used on 5000, but needs item 21A Main Jet and if 66/9-66 model must also order #20. , Start Year: 10/01/1966
	42790S8	2	Screw, Pan Hd, W/Washer, #6-32 x 1/2", No Longer Serviced
	EDB99598D	2	Screw, Throttle, No Longer Serviced (NHNA)
	74109S	1	Plug, Expansion, 1/2", Throttle, No Longer Serviced (NH-E)
	C5NN9C279A	1	Air Horn Assy.
	D0NN9541A	1	Needle, Idle, No Longer Serviced (NH-E)
	D8NN9566AA	1	Needle, Inlet
	C5NN9G544B	1	Piston Pump, No Longer Serviced (NHNA)
	42790S8	2	Screw, Pan Hd, W/Washer, #6-32 x 1/2", No Longer Serviced
	EDB99598D	2	Screw, Throttle, No Longer Serviced (NHNA), Years: 01/01/1965-09/30/1969
	74109S	1	Plug, Expansion, 1/2", Throttle, No Longer Serviced (NH-E)
	C5NN9C279A	1	Air Horn Assy.
	D0NN9541A	1	Needle, Idle, No Longer Serviced (NH-E)
	D8NN9566AA	1	Needle, Inlet
	C5NN9B544B	1	Piston Pump
	CKPN9591B	1	Kit, Gasket, Carburetor Repair, NHNA Only
	353851S36	2	Screw & Washer, No Longer Serviced (NH-E), Start Year: 10/01/1969
	42790S8	2	Screw, Pan Hd, W/Washer, #6-32 x 1/2", No Longer Serviced
	EDB99598D	2	Screw, Throttle, No Longer Serviced (NHNA), Years: 01/01/1965-09/30/1969
	74109S	1	Plug, Expansion, 1/2", Throttle, No Longer Serviced (NH-E)
	C5NN9C279A	1	Air Horn Assy.
	D0NN9541A	1	Needle, Idle, No Longer Serviced (NH-E)
	D8NN9566AA	1	Needle, Inlet
	C5NN9B544C	1	Piston Pump, NHNA Only
	CKPN9591B	1	Kit, Gasket, Carburetor Repair, NHNA Only
	353851S36	2	Screw & Washer, No Longer Serviced (NH-E), Start Year: 10/01/1969
	CKPN9591A	AR	Kit, Carburetor Repair Gasket, 2000, 3000, 4000, Includes: parts listed below., NHNA Only, Years: 01/01/1965-09/30/1966
	C5NE9C501A	1	Seal, Throttle
	C5NN9N522A	1	Gasket, Pump, No Longer Serviced (NH-E)
	C5NE9D538A	1	Seal, Choke, No Longer Serviced (NH-E)
	C5NE9A518A	1	Gasket, Meter
	C5NE9622A	1	Seal, Throttle, No Longer Serviced (NH-E)
	82845220	1	Gasket, Carburetor
	CKPN9591B	AR	Kit, Gasket, Carburetor Repair, 2000, 3000, 4000, 5000, Includes: parts listed below., NHNA Only, Start Year: 10/01/1966
	C5NN9N522A	1	Gasket, Pump, No Longer Serviced (NH-E)

09D01[A] CARBURETOR REPAIR KITS (NHNA)

Ref	Part Number	Qty	Description
	C5NN9561A	1	Gasket, Fuel Bowl
	C5NN9561B	1	Gasket, Fuel Bowl
	C5NE9D538A	1	Seal, Choke, No Longer Serviced (NH-E)
	C5NE9622A	1	Seal, Throttle, No Longer Serviced (NH-E)
	82845220	1	Gasket, Carburetor
	C5NN9N523A	1	Gasket, Power, 5000 only, NHNA Only
	CKPN9591B	1	Kit, Gasket, Carburetor Repair, Plug, 5000 only, NHNA Only

09D03 CARBURETOR ASSEMBLY, ZENITH

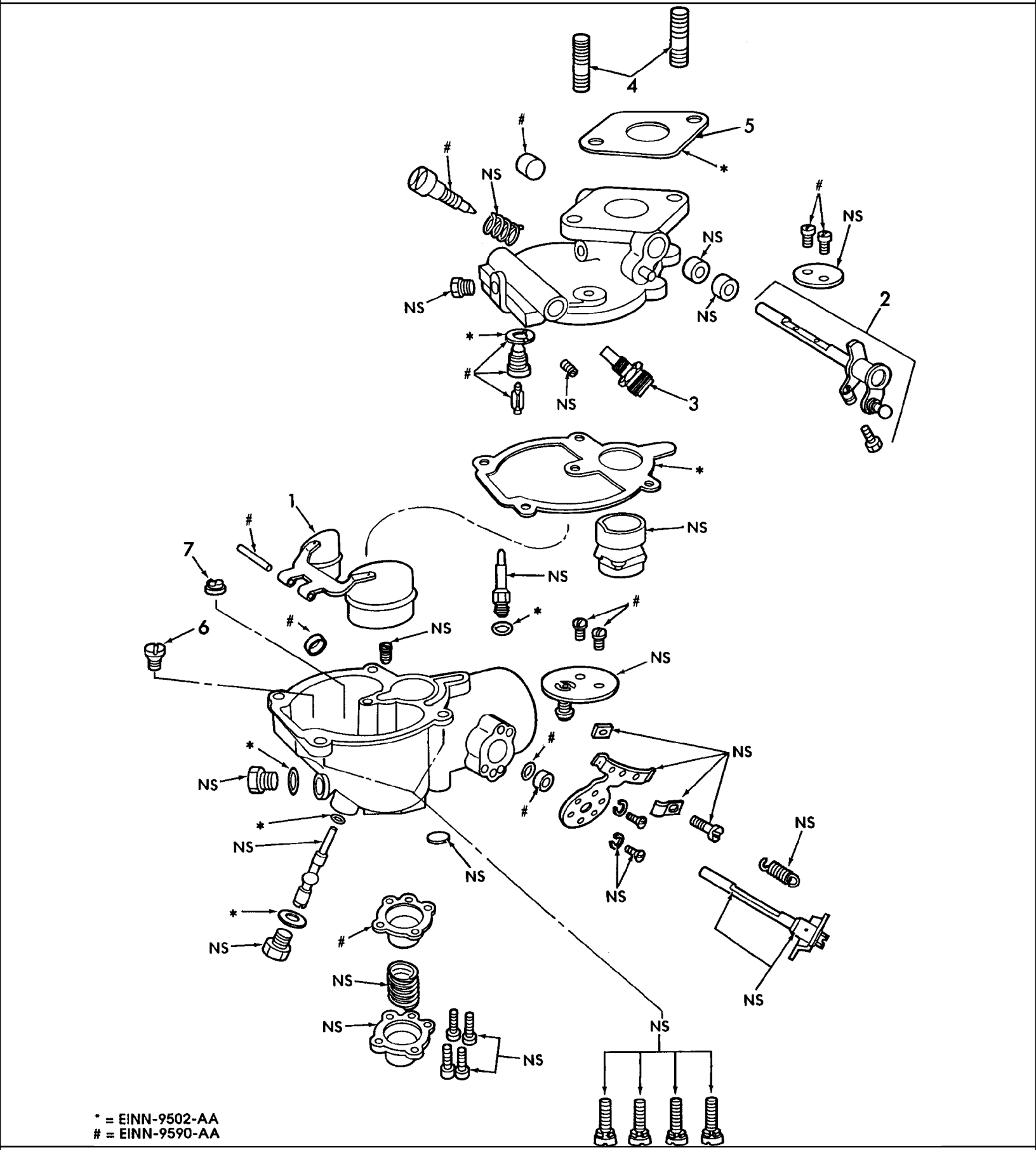

5000-SERIES 4 CYL TRACTOR (1/65-1/75)

09D03 CARBURETOR ASSEMBLY, ZENITH

Ref	Part Number	Qty	Description
	E1NN9510DA	1	Carburetor Assy., 2000, Component parts Not Serviced Separately., Years: 01/01/1965-08/31/1968
	E1NN9510EA	1	Carburetor Assy., 3000, Component parts Not Serviced Separately., Years: 01/01/1965-08/31/1968
	E1NN9510FA	1	Carburetor Assy., 4000, Component parts Not Serviced Separately., Years: 01/01/1965-08/31/1968
	E1NN9510AA	1	Carburetor Assy., 2000, Years: 09/01/1968-12/31/1974
	E1NN9510BA	1	Carburetor Assy., 3000, Years: 09/01/1968-12/31/1974
	E1NN9510CA	1	Carburetor Assy., 4000, Years: 09/01/1968-12/31/1974
	E1NN9510GA	1	Carburetor Assy., 5000 Includes: Ref. 1 thru 5, Component parts Not Serviced Separately., Start Year: 01/01/1966
1	E1NN9550AA	1	Float Assy., Years: 09/01/1968-12/31/1974
2	E1NN9581AA	1	Shaft & Lever Assy., Throttle, Years: 09/01/1968-12/31/1974
3	E1NN9E588AA	1	Fitting, Fuel Inlet, Years: 09/01/1968-12/31/1974
4	88382S8	2	Stud, 3/8"-16-24 x 1.38, Years: 09/01/1968-12/31/1974
5	E1NN9447AA	1	Gasket, Years: 09/01/1968-12/31/1974
5	E1NN9502AA	AR	Kit, Gasket (Refer to Art for contents), Years: 09/01/1968-12/31/1974
5	E1NN9590AA	AR	Kit, Repair (Refer to Art for contents), Years: 09/01/1968-12/31/1974
6	E1NN9533AA	1	Jet Main, 2000, Years: 09/01/1968-12/31/1974
6	E1NN9533BA	1	Jet Main, 3000, Years: 09/01/1968-12/31/1974
6	E1NN9533CA	1	Jet Main, 4000, Years: 09/01/1968-12/31/1974
7	E1NN9576AA	1	Valve, Check, Years: 09/01/1968-12/31/1974

09E01 CAV FUEL INJECTION PUMP, DIESEL - 2000, 3000, 4000 (65/) 5000 (11-72/)

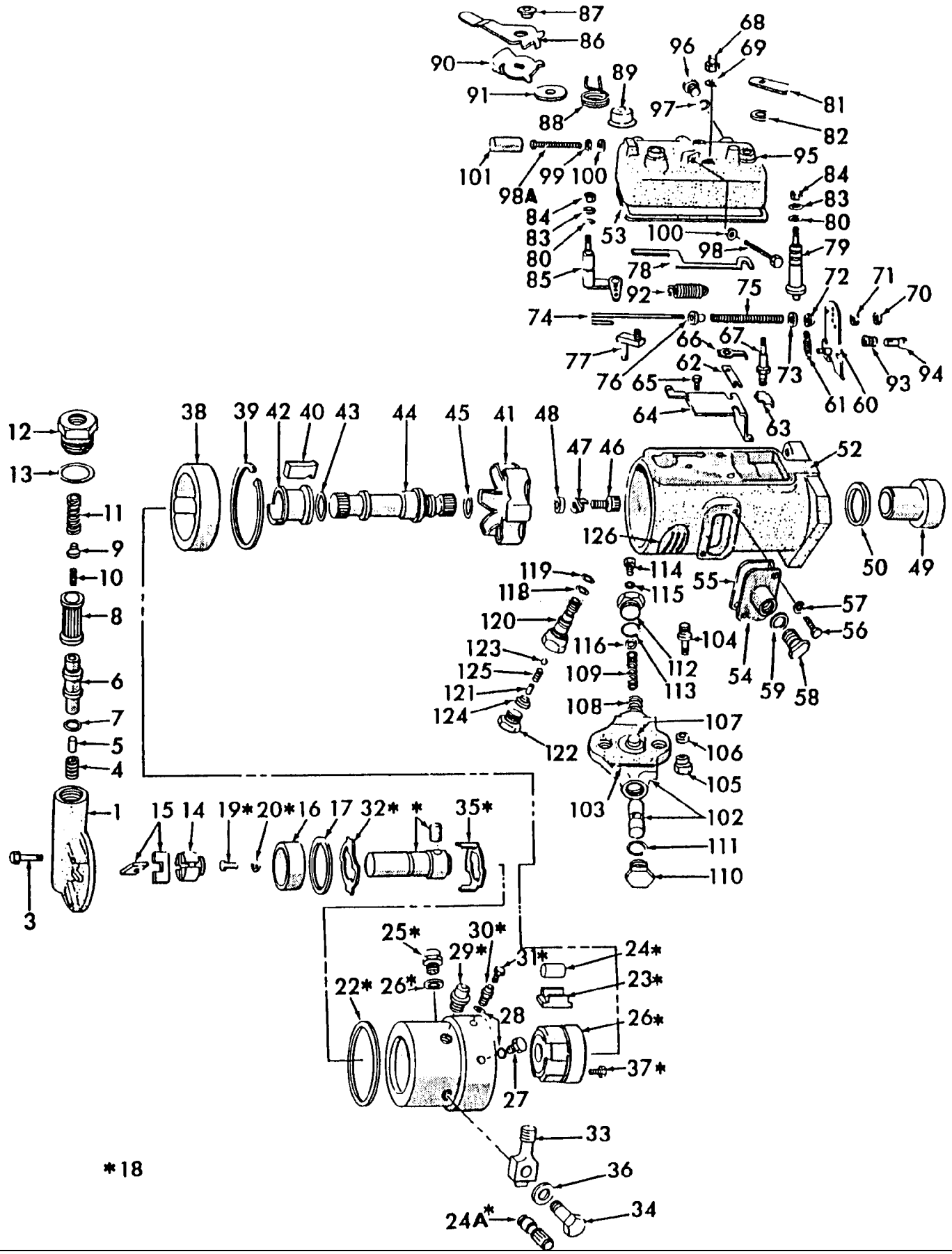

5000-SERIES 4 CYL TRACTOR (1/65-1/75)

09E01 CAV FUEL INJECTION PUMP, DIESEL - 2000, 3000, 4000 (65/) 5000 (11-72/)

Ref	Part Number	Qty	Description
	E2NN9A543TB	1	Injection Pump Assy., U.K.-Antwerp,, Start Year: 01/01/1965
	E2NN9A543TB	1	Injection Pump Assy., U.S., 2000, Start Year: 01/01/1965
	D6NN9A543J	1	Injection Pump Assy., 3000 Except 3055-3550, Start Year: 01/01/1965
	D6NN9A543K	1	Injection Pump Assy., U.K.-Antwerp, 3055-3550, Start Year: 01/01/1970
	D6NN9A543G	1	Injection Pump Assy., Replaces P/N D0NN-9A543-K, 4000, Start Year: 01/01/1965
	D6NN9A543K	1	Injection Pump Assy., U.S., Replaces P/N D0NN-9A543-LR, 3550, Start Year: 01/01/1972
	D4NN9A543F	1	Injection Pump Assy., U.K.-Antwerp, Replaces P/N D2NN-9A543-F, 5000, Start Year: 11/01/1972
	D4NN9A543F	1	Injection Pump Asy., Rebuilt, U.S.,, Start Year: 11/01/1972
1	C5NE9H522A	1	Cover & Dowel Assy., Pump End, Replaces P/N C9NN-9H522-B, No Longer Serviced (NHNA), Start Year: 01/01/1965
3	380401S15	4	Screw, HH, #10-32 x .846, Start Year: 01/01/1965
4	81811018	1	Spring, Regulating Pluner Retainer, Start Year: 01/01/1965
5	C5NE9D525A	1	Plunger, Pump Regulating, No Longer Serviced, Start Year: 01/01/1965
6	C7NN9A573A	1	Sleeve, Regulator Plunger, 2000-3000-4000, No Longer Serviced (NHNA), Start Year: 01/01/1965
6	D2NN9A573A	1	Sleeve, Regulator Plunger, U.K., 5000, No Longer Serviced, Start Year: 11/01/1972
7	81812929	1	Washer, Sleeve, Start Year: 01/01/1965
8	81811019	1	Filter, Pump End Cover, Start Year: 01/01/1965
9	C5NE9D540A	1	Plug, Pump End Cover, 2000-3000-4000, No Longer Serviced (NHNA), Start Year: 01/01/1965
9	D4NN9D540B	1	Plug, Pump End Cover, 5000, No Longer Serviced (NHNA), Start Year: 11/01/1972
10	C5NE9K570A	1	Spring, Pump Regulating Plunger, No Longer Serviced, Start Year: 01/01/1965
11	81810928	1	Spring, Regulator Plunger Sleeve, Start Year: 01/01/1965
12	C7NN9F508B	1	Connector, Pump End Cover Inlet, Replaces P/N C5NE-9F508-A, No Longer Serviced (NHNA), Start Year: 01/01/1965
13	C5NE9G544A	1	Washer, End Cover Inlet Connector, Start Year: 01/01/1965
14	C5NE9G581A	1	Liner, Pump Transfer Pump, Replaces P/N C5NE-9G582-A, No Longer Serviced (NHNA), Start Year: 01/01/1965
15	C5NE9G583A	2	Liner, Pump Transfer Pump, Replaces P/N C5NE-9G582-A, Start Year: 01/01/1965
16	D4NN9G582A	1	Liner, Pump Transfer Pump, Replaces P/N C5NE-9G582-A, No Longer Serviced (NHNA), Start Year: 01/01/1965
17	C5NE9G580A	1	Seal, Pump Transfer Pump Replaces P/N D2NN-9A543-FR, 5000, Start Year: 01/01/1965
18	C5NN9A579C	1	Head & Rotor Assy., Replaces P/N C5NE-9A579-A, 2000-3000-4000, No Longer Serviced (NHNA), Start Year: 01/01/1965
18	D4NN9A579A	1	Head & Motor Assy., Replaces P/N D2NN-9A579-A, 5000, No Longer Serviced (NHNA), Start Year: 11/01/1972
19	380405S15	1	Screw, Socket Hd., #6-32 x .252, No Longer Serviced (NHNA), Start Year: 01/01/1965
20	380424S	1	Washer, Flat, 1/8", No Longer Serviced (NHNA), Start Year: 01/01/1965
22	380595S92	1	Seal, Head, Start Year: 01/01/1965
24	251144	2	Roller, Pump Cam, U.S., No Longer Serviced (NHNA), Start Year: 01/01/1965
24	251145	1	Kit, Pump Adjusting Rollers, FTO-E, No Longer Serviced (NHNA), Start Year: 01/01/1965

5000-SERIES 4 CYL TRACTOR (1/65-1/75)

09E01 CAV FUEL INJECTION PUMP, DIESEL - 2000, 3000, 4000 (65/) 5000 (11-72/)

Ref	Part Number	Qty	Description
24A	D4NN9N022A	2	Valve Assy., Pump Injector, P/N C5NN-9N022-A(81815263) & D4NN-9N022-A(83903040) must be used together. May be used when fluctuating RPM's are encountered under light Engine load conditions., Start Year: 01/01/1965
25	C7NN9N282A	1	Connector, #1 Tube, No Longer Serviced, Start Year: 01/01/1965
25	C5NN9N022A	1	Valve Assy., Fuel Pump Injector, Service Only 2000-3000-4000, No Longer Serviced (NH-E), Start Year: 01/01/1965
26	C5NE9G590A	1	Plate, Pump Drive, Start Year: 01/01/1965
27	81811687	1	Bolt, HH, 5/16"-24 x .50, Start Year: 01/01/1965
28	81811703	2	Wahser, Flat, 5/16" Includes: Head, Motor & Ref. 19 thru 32, Start Year: 01/01/1965
29	C5NE9H525A	3	Plug, Pump Hd., No Longer Serviced (NHNA), Years: 01/01/1965-02/28/1967
30	C5NE9C541A	1	Screw, Pump Air Vent, Start Year: 01/01/1965
31	C5NE9G585A	1	Plug, Pump Air Vent Screw, Start Year: 01/01/1965
32	251144	2	Kit, Pump Shoe & Roller, No Longer Serviced (NHNA), Start Year: 01/01/1965
33	377517S15	2	Connector, Banjo, #2 & #3, Start Year: 01/01/1965
33	377517S15	4	Connector, 5000, Start Year: 11/01/1972
34	PL	2	Bolt, 3/8"-24 x .909, Use Ref. 24A, NHNA Only, Start Year: 01/01/1965
36	81820799	8	Washer, Flat 5100, Start Year: 01/01/1965
37	380404S15	2	Bolt, 12 Point Hd., 5/16"-24-1.00, No Longer Serviced (NHNA), Start Year: 01/01/1965
38	C7NN9A578A	1	Cam, Pump, Replaces P/N C5NN-9A578-A, 2000-3000-4000, No Longer Serviced, Start Year: 01/01/1965
38	D2NN9A578A	1	Cam, Pump, U.K., 5000, No Longer Serviced, Start Year: 11/01/1972
39	380421S100	1	Ring, Snap, Int, 2.625", Cam, No Longer Serviced (NHNA), Start Year: 01/01/1965
40	C7NN9D517A	6	Weight, Pump Governor, Replaces P/N C5NE-9D517-D, No Longer Serviced (NHNA), Start Year: 01/01/1965
41	C5NE9G592A	1	Retainer, Pump Governor Weight, No Longer Serviced (NHNA), Start Year: 01/01/1965
42	D1NN9C575A	1	Sleeve, Pump Governor Thrust, No Longer Serviced (NHNA), Start Year: 01/01/1965
43	D4NN9G591A	1	Washer, Pump Drive Sleeve Thrust, Replaces P/N C5NE-9G591-A, No Longer Serviced (NHNA), Start Year: 01/01/1965
44	D4NN9A577A	1	Shaft, Fuel Pump Drive, When replacing P/N D1NN-9A577-A(81844503) or P/N C5NE-9A577-A(81810985) also use (1) P/N D4NN-9G594-A(87765638), Arm & prior to 8-71 (1) P/N D1NN-9C575-A(81844502), Sleeve, No Longer Serviced (NHNA), Start Year: 01/01/1965
44	D4NN9A577A	1	Shaft, Pump Drive, U.K.-Antwerp, When replacing P/N D1NN-9A577-A(81844503) or P/N C5NE-9A577-A(81810985) also use (1) P/N D4NN-9G594-A(87765638), Arm & prior to 8-71 (1) P/N D1NN-9C575-A(81844502), Sleeve, No Longer Serviced (NHNA), Start Year: 01/01/1965
45	380563S92	1	Seal, Pump Drive Shaft, Start Year: 01/01/1965
46	302216S36	1	Screw, Cap, HS, G8, 3/8"-16 x 3/4", Pump Drive Shaft, Start Year: 01/01/1965
47	D4NN9G593A	1	Washer, Pump Drive Shaft Spring, No Longer Serviced (NHNA), Start Year: 01/01/1965
48	C5NE9K591A	1	Washer, Pump Drive Shaft Support, No Longer Serviced (NHNA), Start Year: 01/01/1965
49	C5NE9K589A	1	Hub, Pump Drive, No Longer Serviced (NHNA), Start Year: 01/01/1965
50	E2NN9G501AA	1	Seal, Pump Drive Hub, Start Year: 01/01/1965
52	C5NE9C538A	1	Housing, Pump, No Longer Serviced (NHNA), Start Year: 01/01/1965
53	C5NE9C568A	1	Gasket, Governor Cover to Housing, Start Year: 01/01/1965

5000-SERIES 4 CYL TRACTOR (1/65-1/75)

09E01 CAV FUEL INJECTION PUMP, DIESEL - 2000, 3000, 4000 (65/) 5000 (11-72/)

Ref	Part Number	Qty	Description
54	E0NN9G578AA	1	Plate Assy., Pump Cover, Years: 01/01/1965-01/31/1973
54	E0NN9G578AA	1	Plate Assy., Pump Cover, Start Year: 01/01/1965
55	C5NE9G579A	1	Gasket, Pump Cover Plate, Years: 01/01/1965-03/31/1968
55	E0NN9G579AA	1	Gasket, Pump Cover Plate, Start Year: 04/01/1968
56	380400S15	2	Screw, HH, #10-32 x .433, No Longer Serviced (NHNA), Years: 01/01/1965-03/31/1968
56	D4NN9N577A	2	Screw, #10-32 x .562, No Longer Serviced (NHNA), Start Year: 04/01/1968
57	9672521	2	Washer, Lock, Ext T, #10, Start Year: 01/01/1965
58	377503S43	1	Bolt, Fluid Type, 1/2"-20 x 2.93mm, Start Year: 01/01/1965
59	D2NN9N083A	2	Washer, 1/2", Start Year: 01/01/1965
60	D1NN9G594A	1	Arm Assy., Pump Governor, U.K.-Antwerp, When replacing P/N C5NE-9G594-A(81811012) also use (1) P/N D4NN-9A577-A(83903021), Shaft & prior to 8-71 (1) P/N D1NN-9C575-A(81844502), Sleeve, Start Year: 01/01/1965
60	E1NN9N850AA	1	Kit, Pump Governor Control, Start Year: 01/01/1965
61	C5NE9C549A	1	Spring, Pump Link, No Longer Serviced (NHNA), Start Year: 01/01/1965
62	C5NE9G596A	1	Plate, Pump Control Bracket, No Longer Serviced, Start Year: 01/01/1965
63	C5NE9C554A	2	Washer, Pump Tab, No Longer Serviced (NHNA), Start Year: 01/01/1965
64	E1NN9N850AA	1	Bracket Assy., Pump Control, Start Year: 01/01/1965
65	54619S8	1	Screw, HH, #8-32 x 1/4", Start Year: 01/01/1965
66	C5NE9C554B	1	Washer, Control Bracket Screw, Tab, No Longer Serviced, Years: 01/01/1965-01/31/1975
66	D8NN9K578AA	1	Plate, Pump Governor Lock, Start Year: 02/01/1975
67	C5NE9G597A	2	Stud, Governor Lock, Start Year: 01/01/1965
68	380415S15	2	Nut, Hex Cap, #10-32, No Longer Serviced (NHNA), Start Year: 01/01/1965
69	380426S	2	Washer, Flat, 3/16", Start Year: 01/01/1965
73	251149	1	Washer, Flat, Governor Linkage, 7/64", Start Year: 01/01/1965
74	251149	1	Hook, Pump Governor Linkage, Start Year: 01/01/1965
77	C5NE9G586A	1	Valve Assy., Pump Metering, Standard, No Longer Serviced (NHNA), Start Year: 01/01/1965
77	C5NN9G586A	1	Valve Assy., Pump Metering, Oversized marked "BY", No Longer Serviced (NHNA), Start Year: 01/01/1965
77	251149	1	Kit, Injector Pump Governor Linkage, Start Year: 01/01/1965
78	D4NN9D502A	1	Lever, Pump Stop, No Longer Serviced (NHNA), Start Year: 01/01/1965
79	C5NE9D505A	1	Shaft, Pump Stop Control, No Longer Serviced (NHNA), Start Year: 01/01/1965
80	49886	4	O-Ring, .239" ID x .070" Thk, Start Year: 01/01/1965
81	C5NE9D504A	1	Lever, Pump Stop Control, Start Year: 01/01/1965
82	81811013	1	Cap, Dust, Start Year: 01/01/1965
83	356201S34	1	Washer, .20 I.D. x .38 O.D., No Longer Serviced (NH-E), Start Year: 01/01/1965
84	373235S7	2	Nut, Start Year: 01/01/1965
85	C5NE9F557A	1	Shaft Assy., Control Lever, No Longer Serviced (NHNA), Start Year: 01/01/1965
86	251148	1	Kit, Pump Control Lever, Start Year: 01/01/1965
87	C5NE9C598A	1	Bush/Bushing, Pump Control Shaft, Start Year: 01/01/1965
88	C5NE9H507A	1	Spring, Pump Control Lever, Start Year: 01/01/1965
89	C5NE9H506A	1	Guide, Control Lever Spring, Component of P/N 241148, No Longer Serviced, Start Year: 01/01/1965
90	251148	1	Stop, Pump Control Lever, Start Year: 01/01/1965

5000-SERIES 4 CYL TRACTOR (1/65-1/75)

09E01 CAV FUEL INJECTION PUMP, DIESEL - 2000, 3000, 4000 (65/) 5000 (11-72/)

Ref	Part Number	Qty	Description
91	380429S15	1	Washer, Flat, Stop Arm, 5/16", Start Year: 01/01/1965
92	D6NN9C555A	1	Spring, Pump Governor, No Longer Serviced (NHNA), Start Year: 01/01/1965
93	C5NE9K585A	1	Spring, Pump Idling, No Longer Serviced (NHNA), Start Year: 01/01/1965
94	C5NE9K579A	1	Guide, Pump Idling Spring, No Longer Serviced (NHNA), Start Year: 01/01/1965
95	C5NE9C535A	1	Cover, Pump Governor, No Longer Serviced (NHNA), Start Year: 01/01/1965
96	377502S43	1	Bolt, Hex Fluid Type, M10 x 1.5 x 19mm, Start Year: 01/01/1965
97	D1NN9N025A	2	Washer, Flat, M10-1, Start Year: 01/01/1965
98	380407S15	1	Screw, HH, #10-32 x 1.00, No Longer Serviced, Start Year: 01/01/1965
98A	380402S15	1	Screw, HH, #10-32 x 1.50, No Longer Serviced, Start Year: 01/01/1965
99	380412S15	2	Nut, Hex, #10-32, Start Year: 01/01/1965
100	380425S43	2	Washer, .194 I.D. x .312 O.D. x .056, Start Year: 01/01/1965
101	C5NE12B466A	1	Sleeve, Pump Locking, No Longer Serviced (NHNA), Start Year: 01/01/1965
102	C7NN9H501A	1	Housing & Piston Assy., Automatic Advance, Replaces P/N C5NE-9H501-A, 2000-3000-4000, No Longer Serviced, Start Year: 01/01/1965
102	D2NN9H501A	1	Housing & Piston Assy., Automatic Advance, 5000, No Longer Serviced, Start Year: 11/01/1971
103	81810932	1	Gasket, Autmatic Advance Housing, Start Year: 01/01/1965
104	D1NN9G597A	1	Stud, Housing to Body, 5/16"24, 7/16"-20 x .905, Use W/# D1NN-9G593-A, Washer, Replaces P/N 380408-S15, No Longer Serviced (NHNA), Start Year: 01/01/1965
105	81811694	1	Nut, Hex Cap, 5/16"-24, Start Year: 01/01/1965
106	81811703	1	Washer, Automatic Advance Cap Nut, U.K.-Antwerp, Years: 01/01/1965-07/31/1971
106	81811703	1	Washer, Automatic Advance Cap Nut, Must Use W/# 380427-S, Start Year: 08/01/1971
106	81811703	1	Washer, Automatic Advance Cap Nut, Must Use W/# 380427-S, Start Year: 01/01/1965
107	81810977	1	Screw, Fuel Injection Pump Cam Advance, Start Year: 01/01/1965
108	C7NN9K525A	1	Spring, Autmatic Advance Piston, Outer, Replaces P/N C5NE-9K525-A, No Longer Serviced, Start Year: 01/01/1965
109	C5NE9H503A	1	Spring, Automatic Advance Piston, Inner, 2000, No Longer Serviced (NHNA), Start Year: 01/01/1965
109	C5NE9H503A	1	Spring, Automatic Advance Piston, Inner, 3000, No Longer Serviced (NHNA), Start Year: 01/01/1965
109	C5NE9H503A	1	Spring, Automatic Advance Piston, Inner, No Longer Serviced (NHNA), Years: 01/01/1965-03/31/1968
110	D8NN9N696AA	1	Plug, Hex, 13/16"-20, No Longer Serviced (NHNA), Start Year: 01/01/1965
111	81812975	1	Seal, Piston Plug, Start Year: 01/01/1965
112	C5NE9K596A	1	Cap, Automatic Advance Piston Spring, 2000-3000-4000, No Longer Serviced (NHNA), Years: 01/01/1965-01/31/1973
112	D2NN9K596A	1	Cap, Automatic Advance Piston Spring, FTO-E, 2000-3000-4000, No Longer Serviced (NHNA), Start Year: 02/01/1973
112	D2NN9K596B	1	Cap, Automatic Advance Piston Spring, 5000, No Longer Serviced (NHNA), Start Year: 11/01/1972
113	81812975	1	Seal, Spring Cap, Start Year: 01/01/1965
114	C5NE9H549A	1	Screw, Piston Spring Cap, No Longer Serviced (NHNA), Years: 01/01/1965-01/31/1973
114	D2NN9H549A	1	Screw, #10-32UNF, Piston Spring Cap, No Longer Serviced (NH-E), Start Year: 02/01/1973
115	380561S	1	Washer, Piston Spring Cap Screw, Years: 01/01/1965-01/31/1973
115	D2NN9N640A	1	O-Ring, Piston Spring Cap Screw, No Longer Serviced, Start Year: 02/01/1973
116	380431S2	AR	Shim, .004 Thick, No Longer Serviced, Start Year: 01/01/1965

5000-SERIES 4 CYL TRACTOR (1/65-1/75)

09E01 CAV FUEL INJECTION PUMP, DIESEL - 2000, 3000, 4000 (65/) 5000 (11-72/)

Ref	Part Number	Qty	Description
116	380432S2	AR	Shim, .008 Thick, No Longer Serviced, Start Year: 01/01/1965
116	83903046	AR	Shim, M.5, Start Year: 01/01/1965
116	83903047	AR	Shim, M1, Start Year: 01/01/1965
116	D4NN9K530D	AR	Shim, .080 (2.032mm) Thick, Replaces P/N 380435, No Longer Serviced (NHNA), Start Year: 01/01/1965
118	81813686	2	O-Ring, .437" ID x .070" Thk, Head Locator Fitting, Start Year: 01/01/1965
119	380430S	1	Washer, Flat, 7/16", Start Year: 01/01/1965
122	NS	1	Plug, Hex, Fitting Check Valve, 1/2"-20, NHNA Only, Start Year: 01/01/1965
123	380422S	1	Ball, Locating Fitting, .197 Dia., Not Required when P/N C5NN-9H527-A is Replaced by P/N C7NN-9H527-A(81818183), Ref. 120, No Longer Serviced (NHNA), Start Year: 01/01/1965
124	NS	1	Seal, Ball Valve Stop, NHNA Only, Start Year: 01/01/1965
125	251150F	1	Spring, Head Locating Fitting, 2000,3000, Not Required when P/N C5NN-9H527-A is Replaced by P/N C7NN-9H527-A(81818183), Ref. 120, No Longer Serviced (NHNA), Start Year: 01/01/1965
125	251150F	1	Spring, Head Locator Fitting, U.K., 3000, No Longer Serviced (NHNA), Years: 01/01/1965-12/31/1965
126	C5NE9B540A	1	Plate, Pump Name, No Longer Serviced (NHNA), Start Year: 01/01/1965
	251247	AR	Kit, Rotary Pump Seal Includes:, Start Year: 04/01/1968
	E2NN9G501AA	1	Seal, Drive Hub, Start Year: 04/01/1968
	81810932	1	Gasket, Auto Advance, Start Year: 04/01/1968
	C5NE9C568A	1	Gasket, Governor Cover, Start Year: 04/01/1968
	E0NN9G579AA	1	Gasket, Cover Plate, Start Year: 04/01/1968
	C5NE9G580A	1	Seal, Transfer Pump, Start Year: 04/01/1968
	D8NN9N854AA	1	Seal, Drive Shaft, No Longer Serviced (NHNA), Start Year: 04/01/1968
	49886	4	O-Ring, .239" ID x .070" Thk, Shut-Off Shaft, Start Year: 04/01/1968
	81813686	2	O-Ring, .437" ID x .070" Thk, Head Locator Fitting, Start Year: 04/01/1968
	81833911	1	Washer, Piston Cap, Start Year: 04/01/1968
	81812975	3	O-Ring, Head, Start Year: 04/01/1968
	380563S92	1	O-Ring, Drive Shaft, Start Year: 04/01/1968
	380595S92	1	O-Ring, Head, Start Year: 04/01/1968
	81820799	6	Washer, Valve, 3 Cylinder, Start Year: 04/01/1968
	81820799	8	Washer, Valve, 4 Cylinder, Start Year: 04/01/1968
	C5NE9G544A	1	Washer, Cover Inlet Connector
	C5NE9C554A	1	Washer, Tab, FTO-E, No Longer Serviced (NHNA)
	D8NN9K578AA	1	Washer, Tab
	251149	1	Washer, Governor Linkage
	380424S	1	Washer, Head & Rotor, No Longer Serviced (NHNA)
	380425S	2	Washer, Adjusting Screw
	380426S	2	Washer, Cover
	81811703	2	Washer, Vent Screw

09E02 FUEL INJECTION PUMP, DIESEL, SIMMS - 3000, 5000, 7000

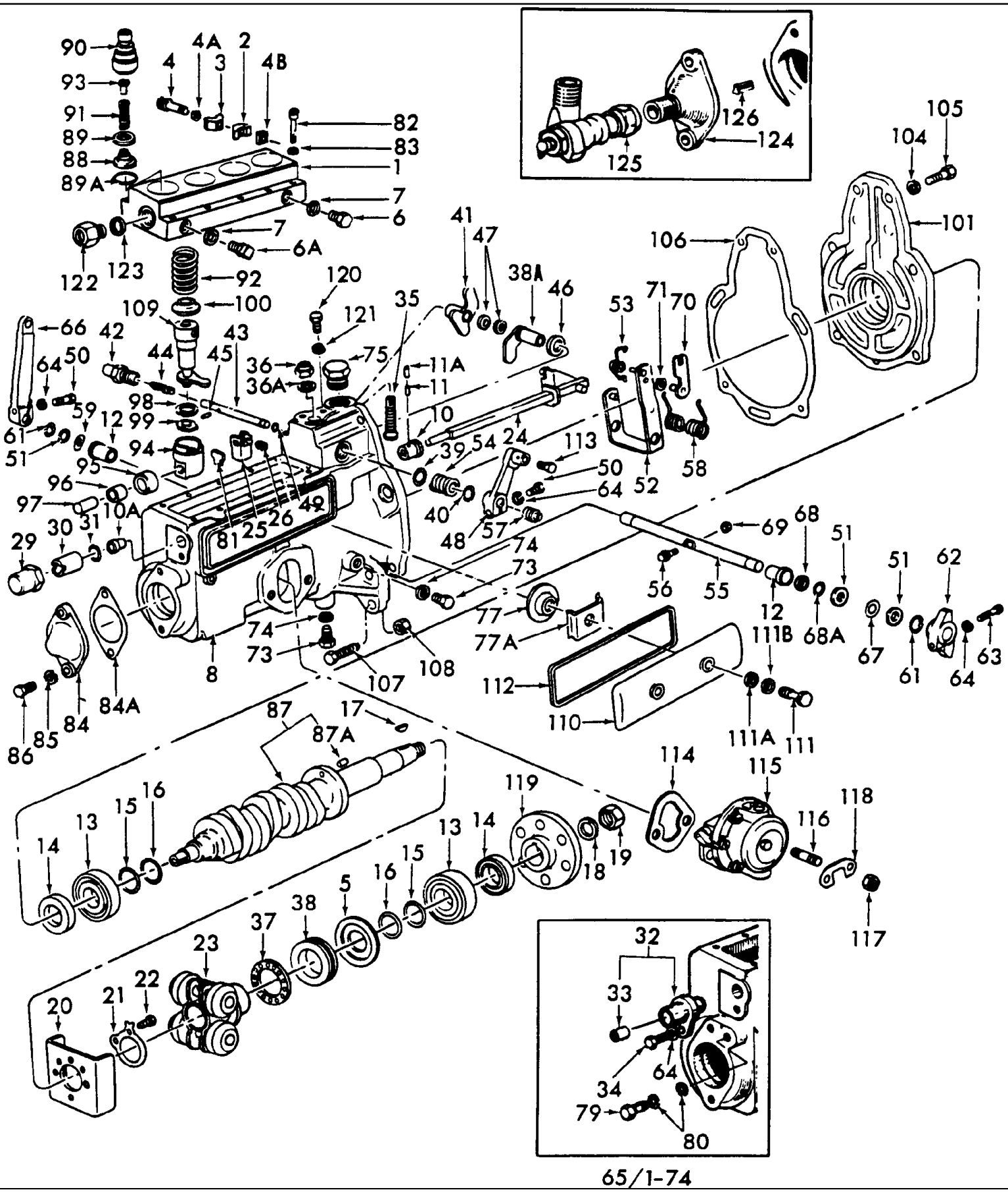

65/1-74

5000-SERIES 4 CYL TRACTOR (1/65-1/75)

09E02 FUEL INJECTION PUMP, DIESEL, SIMMS - 3000, 5000, 7000

Ref	Part Number	Qty	Description
	D3NN9A543K	1	Pump Assy., Fuel Injection, U.K.-Antwerp, 3000, NH-E Only, Start Year: 02/01/1974
	D3NN9A543K	1	Pump Assy., Fuel Injection, U.K.-Antwerp, 3000, NH-E Only, Years: 01/01/1966-12/31/1970
	D3NN9A543KR	1	Pump Assy., Fuel Injection, U.S., 3000, NHNA Only, No Longer Serviced, Start Year: 01/01/1966
	D9NN9A543LA	1	Pump Assy., Fuel Injection, 5100, NLS-Repair Via Lucas Authorized Dealer, No Longer Serviced (NH-E), Years: 01/01/1965-10/31/1972
	D2NN9A543C	1	Pump Assy., Fuel Injection, 7000, No Longer Serviced, Start Year: 10/01/1971
	D2NN9A543D	1	Pump Assy., Fuel Injection, U.K.-Antwerp, 7100, NH-E Only, No Longer Serviced, Start Year: 10/01/1971
	NLS	1	Pump Assy., Fuel Injection, Mexico, 5100, Includes: Ref. 1 thru 126 {75NY9A543A}, No Longer Serviced, Start Year: 01/01/1968
1	C5NE9C567B	1	Body, Pump, 3000, No Longer Serviced (NHNA), Years: 01/01/1966-12/31/1970
1	C5NE9C567A	1	Body, Pump, 5000-7000, Start Year: 01/01/1965
2	251151F	4	Clamp, Delivery Valve Retainer, Use Ref. 3, No Longer Serviced (NHNA), Start Year: 02/01/1974
3	251151F	2	Kit, Delivery Valve Retainer, No Longer Serviced (NHNA), Years: 01/01/1965-01/31/1974
4	D3NN9D571A	2	Screw, Delivery Valve Clamp, Start Year: 01/01/1965
4A	C0NN9E574A	2	Washer, Pump Delivery Valve Clamp, No Longer Serviced (NHNA), Start Year: 01/01/1965
4B	D3NN9B611A	2	Nut, Square, Valve Clamp, #10-24, No Longer Serviced (NHNA), Start Year: 02/01/1974
5	C0NN9E573A	1	Washer, Pump Baffle, No Longer Serviced (NHNA), Start Year: 01/01/1965
6	C0NN9C541A	2	Screw, Air Vent, Years: 01/01/1965-01/31/1974
6	C0NN9C541A	1	Screw, Air Vent, Start Year: 02/01/1974
6A	D3NN9N679A	1	Screw, Pump Body, No Longer Serviced (NHNA), Start Year: 02/01/1974
7	380428S	2	Washer, Flat, Vent Screw, 5/16", Start Year: 01/01/1965
8	NS	1	Housing Assy., Pump, 3000, NHNA Only, Years: 01/01/1966-12/31/1970
8	NS	1	Housing Assy., Pump, 5000-7000, NHNA Only, Years: 01/01/1965-01/31/1974
8	NLS	1	Housing Assy., Fuel Injection Pump, 3000 {D3NN9C572E}, Start Year: 02/01/1974
8	D7NN9C572C	1	Housing Assy., Fuel Injection Pump, FTO-E, 5000, Start Year: 02/01/1974
8	D3NN9C572B	1	Housing Assy., Fuel Injection Pump, FTO-E, 7000, Includes: Housing & Ref. 10 thru 12, Start Year: 02/01/1974
10	C0NN9C595C	1	Bush/Bushing, Pump Control Rod, No Longer Serviced (NHNA), Start Year: 01/01/1965
10A	D3NN9C595A	1	Bush/Bushing, Pump Control Rod, No Longer Serviced (NHNA), Start Year: 02/01/1974
11	353753S	1	Pin, Rod Bushing, Start Year: 01/01/1965
11A	D2NN9E581A	1	Seal, Pump Control Rod, No Longer Serviced (NHNA), Start Year: 02/01/1974
12	D2NN9C598A	2	Bushing, Pump Control Shaft, No Longer Serviced, Start Year: 01/01/1965
13	E1ADDN993203	2	Bearing, Camshaft, Start Year: 01/01/1965
14	E1ADDN993207	2	Seal, Oil, Camshaft, Start Year: 01/01/1965
15	E1ADDN993202A	AR	Shim, Camshaft End Float, .004 (.1016mm), No Longer Serviced (NHNA), Start Year: 01/01/1965
16	E1ADDN993202B	AR	Shim, Camshaft End Float, .008 (.2032mm), No Longer Serviced (NHNA), Start Year: 01/01/1965
17	72769	1	Key, Woodruff, 5/32" x 5/8", Camshaft, NHNA Only, Start Year: 01/01/1965
18	80679	1	Washer, Lock, 1/2", Start Year: 01/01/1965
19	87309	1	Nut, Jam, G2, 1/2"-20, Key, Camshaft, Start Year: 01/01/1965
20	E1ADDN9C537	1	Plate, Backing, No Longer Serviced (NHNA), Start Year: 01/01/1965
21	E1ADDN9C554	2	Washer, Back Plate Tab, No Longer Serviced (NHNA), Start Year: 01/01/1965

5000-SERIES 4 CYL TRACTOR (1/65-1/75)

09E02 FUEL INJECTION PUMP, DIESEL, SIMMS - 3000, 5000, 7000

Ref	Part Number	Qty	Description
22	112905ES	4	Screw, HH, #10-24 x 3.75, No Longer Serviced, Start Year: 01/01/1965
23	E715CL9	1	Weight Assy., Pump Governor, Start Year: 01/01/1965
24	C5NE9C593A	1	Rod Assy., Pump Control, 5000-7000, No Longer Serviced, Years: 01/01/1965-01/31/1974
24	C5NE9C593B	1	Rod Assy., Pump Control, 3000, No Longer Serviced (NHNA), Years: 01/01/1966-12/31/1970
25	C0NN9C599A	4	Fork, Plunger Control, 5000-7000, No Longer Serviced, Start Year: 01/01/1965
25	C0NN9C599A	3	Fork, Plunger Control, 3000, No Longer Serviced, Start Year: 01/01/1965
26	C0NN9D500A	4	Screw, Plunger Control Fork, 5000-7000, No Longer Serviced, Start Year: 01/01/1965
26	C0NN9D500A	3	Screw, Plunger Control Fork, 3000, No Longer Serviced, Start Year: 01/01/1965
29	D3NN9C597A	1	Cover, Pump Control Rod End, Start Year: 02/01/1974
30	D3NN9N673A	1	Retainer, Pump Control Rod, Start Year: 02/01/1974
31	D3NN9357A	1	Washer, Control Rod Cover, Start Year: 02/01/1974
32	C5NE9E564A	1	Cover & Bushing Assy., Control Rod, Includes: Cover & Ref. 33, No Longer Serviced (NHNA), Years: 01/01/1965-01/31/1974
33	NS	1	Bushing, Pump Control Rod Cover, NHNA Only, Years: 01/01/1965-01/31/1974
34	54664S2	1	Screw, Rod Cover, Years: 01/01/1965-01/31/1974
35	C5NE9C542A	1	Screw, Pump Stop, No Longer Serviced (NHNA), Start Year: 01/01/1965
36	86629539	1	Nut, G5, 5/16"-24, Pump Stop Screw, Start Year: 01/01/1965
36	D8NN9P629AA	1	Nut, Hex, Pump Stop Screw, Use W/# D9NN9M562A, 5100, No Longer Serviced, Start Year: 01/01/1965
36A	380428S	1	Washer, Flat, Pump Stop Screw, .5906 O.D., Start Year: 01/01/1965
36A	D8NN9N846AA	1	Washer, Pump Stop Screw, .8438 O.D., Use W/# D9NN9M562AA, 5100, Start Year: 01/01/1965
36A	D9NN9M562AA	1	Cover, Maximum Fuel Stop Lock, Use W/# D9NN9A543LA Pump, No Longer Serviced (NHNA), Start Year: 01/01/1965
37	C0NN9C553A	1	Bearing, Pump Thrust, No Longer Serviced (NHNA), Start Year: 01/01/1965
38	C0NN9C550A	1	Pad, Pump Thrust, No Longer Serviced (NHNA), Start Year: 01/01/1965
38A	C5NE9D503A	1	Shaft Assy., Pump Stop, No Longer Serviced (NHNA), Start Year: 01/01/1965
39	87008S92	1	O-Ring, .375" ID x .070" Thk, Start Year: 01/01/1965
40	374866S2	1	Ring, Shaft Retaining, 3/8", No Longer Serviced, Years: 01/01/1965-01/31/1974
40	272464	1	Ring, Snap, Ext, .375", Control Shaft, Start Year: 02/01/1974
41	C0NN9D501A	1	Lever Assy., Pump Stop, No Longer Serviced (NHNA), Start Year: 01/01/1965
42	C0NN9C590A	1	Bearing, Pump Excess Shaft, No Longer Serviced (NHNA), Start Year: 01/01/1965
43	C3NN9C589A	1	Shaft, Pump Excess, No Longer Serviced (NHNA), Start Year: 01/01/1965
44	D6NN9C591A	1	Spring, Pump Excess, Replaces P/N C0NN9C591A, No Longer Serviced (NHNA), Start Year: 01/01/1965
45	88148	1	Pin, Roll, 3/32" x 1/2", Start Year: 01/01/1965
46	C3NN9F599A	1	Washer, Pump Stop Shaft Thrust, No Longer Serviced (NHNA), Start Year: 01/01/1965
47	C0NN9D526A	2	Seal, Pump Excess Shaft, No Longer Serviced (NHNA), Start Year: 01/01/1965
48	D8NN9D501AB	1	Lever, Pump Stop Control, Start Year: 01/01/1965
49	87000S92	1	O-Ring, .125" ID x .070" Thk, Stop Control Shaft, Start Year: 01/01/1965
50	54676S2	2	Screw, #10-24 x 5/8", Start Year: 01/01/1965
51	112258ES	3	Washer, Pump Control Shaft, No Longer Serviced (NHNA), Start Year: 01/01/1965
52	C0NN9C548C	1	Lever Assy., Pump Rocking, No Longer Serviced (NHNA), Start Year: 01/01/1965
53	C0NN9C549B	1	Spring, Pump Link, Start Year: 01/01/1965

5000-SERIES 4 CYL TRACTOR (1/65-1/75)

09E02 FUEL INJECTION PUMP, DIESEL, SIMMS - 3000, 5000, 7000

Ref	Part Number	Qty	Description
54	C5NE9H514A	AR	Shim, Pump Excess Shaft, .004 (.1016mm), No Longer Serviced (NHNA), Start Year: 01/01/1965
54	C5NE9H514B	AR	Shim, Pump Excess Shaft, .008 (.2032mm), No Longer Serviced (NHNA), Start Year: 01/01/1965
55	C5NE9C570A	1	Shaft, Pump Control, No Longer Serviced (NHNA), Start Year: 01/01/1965
56	C0NN9E580A	1	Pin, Pump Governor Spring, No Longer Serviced, Start Year: 01/01/1965
57	C3NN9E571A	1	Shroud, Pump Excess Shaft, Start Year: 01/01/1965
58	C5NE9C555B	1	Spring, Pump Governor, No Longer Serviced (NHNA), Start Year: 01/01/1965
59	87008S92	2	O-Ring, .375" ID x .070" Thk, Pump Control Shaft, Start Year: 01/01/1965
61	358675S2	2	Ring, Snap, Control Shaft, Years: 01/01/1965-01/31/1974
61	272464	2	Ring, Snap, Ext, .375", Control Shaft, Start Year: 02/01/1974
62	E780CL9	1	Quadrant, Pump Stop, Start Year: 01/01/1965
63	54712S36	1	Screw, HH, #10-24 x 7/8", Stop Quadrant, Start Year: 01/01/1965
64	80684	4	Washer, Lock, #10, Start Year: 01/01/1965
66	D6NN9C534C	1	Lever, Pump Control, Start Year: 01/01/1965
67	378296S	1	Shim, Pump Washer, No Longer Serviced (NHNA), Start Year: 01/01/1965
68	C0NN9E581A	2	Ring, Pump Control Shaft, 3/8", Start Year: 01/01/1965
68A	87008S92	2	O-Ring, .375" ID x .070" Thk, Control Shaft, Start Year: 01/01/1965
69	C0NN9E582A	1	Nut, Pump Control Shaft, No Longer Serviced (NHNA), Start Year: 01/01/1965
70	C0NN9E566A	1	Link Assy., Pump Rocking Lever, No Longer Serviced (NHNA), Start Year: 01/01/1965
71	C0NN9D570B	1	Shim, Pump Rocking Lever, No Longer Serviced (NHNA), Start Year: 01/01/1965
73	D2NN9E578A	2	Screw, Oil Level & Drain Plug, Start Year: 01/01/1965
74	380428S	2	Washer, Flat, 5/16", Start Year: 01/01/1965
75	D2NN9N639A	1	Plug, HH, Filler, 3/4"-16, No Longer Serviced (NHNA), Years: 01/01/1965-01/31/1974
75	D6NN9N639A	1	Plug, Filler LAR Pump, 5100, Start Year: 02/01/1974
75	D9NN9N639AA	1	Plug, Filler, Use W/# D9NN9M562AA, 5100, No Longer Serviced (NHNA), Start Year: 01/01/1965
76	C0NN9E567A	2	Screw, Pump Bridge Plate, 5000, No Longer Serviced, Years: 01/01/1965-01/31/1974
76	113659ES	1	Bolt, Pump Bridge Plate, 3000, No Longer Serviced (NHNA), Years: 01/01/1966-12/31/1970
77	C0NN9C540A	2	Bridge Assy., Pump Inspection, 5000-7000, No Longer Serviced (NHNA), Start Year: 01/01/1965
77	C0NN9C540A	1	Bridge Assy., Pump Inspection, 3000, No Longer Serviced (NHNA), Start Year: 01/01/1965
77A	D2NN9N638A	2	Locator, Bridge Plate, 5000-7000, No Longer Serviced (NHNA), Start Year: 02/01/1974
77A	D2NN9N638A	1	Locator, Bridge Plate, 3000, No Longer Serviced (NHNA), Start Year: 02/01/1974
77A	C0NN9E568A	2	Washer, Pump Bridge Plate, Sealing, 5000-7000, No Longer Serviced, Start Year: 01/01/1965
77A	C0NN9E568A	1	Washer, Pump Bridge Plate, Sealing, 3000, No Longer Serviced, Start Year: 01/01/1965
79	380266S	1	Bolt, 5/16"-24 x .689, Start Year: 01/01/1965
80	380428S	2	Washer, Flat, 5/16", Start Year: 01/01/1965
81	C0NN9C585A	2	Locator, Pump Tappet, 5000, No Longer Serviced (NHNA), Start Year: 01/01/1965
81	957E9C585A	2	Locator, Pump Tappet, 3000, No Longer Serviced (NHNA), Years: 01/01/1966-12/31/1970
82	D3NN9D571A	8	Screw, Body to Housing, Start Year: 01/01/1965
83	C0NN9E574A	8	Washer, Body to Housing Screw, #10, 5000-7000, No Longer Serviced (NHNA), Start Year: 01/01/1965
83	C0NN9E574A	4	Washer, Body to Housing Screw, #10, 3000, No Longer Serviced (NHNA), Start Year: 01/01/1965
84	C5NE9D522A	1	Cap, Pump Camshaft End, Except U.S. 7000, No Longer Serviced, Start Year: 01/01/1965
84A	C5NE9H512A	1	Gasket, Pump Camshaft End Cover, Start Year: 01/01/1965

5000-SERIES 4 CYL TRACTOR (1/65-1/75)

09E02 FUEL INJECTION PUMP, DIESEL, SIMMS - 3000, 5000, 7000

Ref	Part Number	Qty	Description
85	80682	2	Washer, Lock, 1/4", Start Year: 01/01/1965
86	280641	2	Screw, Cap, HH, G5, 1/4"-20 x 5/8", Cover to Body, Start Year: 01/01/1965
87	C5NE9C566B	1	Camshaft Assy., Pump, U.S., 3000, No Longer Serviced (NHNA), Years: 01/01/1966-12/31/1970
87	C5NE9C566A	1	Camshaft Assy., Pump, 5000, No Longer Serviced (NHNA), Start Year: 01/01/1965
87	C5NE9C566A	1	Camshaft Assy., Pump, Basildon-Antwerp, 7100, No Longer Serviced (NHNA), Start Year: 10/01/1971
87	73NY9C566A	1	Camshaft Assy., Pump, Mexico & U.S., 7000, Includes: Camshaft & Ref. 87A, No Longer Serviced, Start Year: 01/01/1968
87A	C0NN9E569A	1	Dowel, Pump Camshaft, No Longer Serviced, Start Year: 01/01/1965
88	C7NN9C559C	4	Valve Assy., Pump Delivery, U.S. Only, 5000, No Longer Serviced (NHNA), Years: 01/01/1965-03/31/1968
88	C7NN9C559C	3	Valve Assy., Pump Delivery, U.S. Only, 3000, No Longer Serviced (NHNA), Years: 01/01/1966-12/31/1970
88	C7NN9C559C	4	Valve Assy., Pump Delivery, Basildon-Antwerp, 5000, No Longer Serviced (NHNA), Years: 01/01/1965-03/31/1968
88	C7NN9C559C	3	Valve Assy., Pump Delivery, Basildon-Antwerp, 3000, No Longer Serviced (NHNA), Years: 01/01/1966-12/31/1970
88	D3NN9C559B	3	Valve Assy., Pump Delivery, 3000, No Longer Serviced, Start Year: 02/01/1974
88	C7NN9C559B	4	Valve Assy., Pump Delivery, 5000-7000, No Longer Serviced (NHNA), Years: 04/01/1968-01/31/1974
88	D3NN9C559A	4	Valve Assy., Pump Delivery, 5000-7000, No Longer Serviced (NHNA), Start Year: 02/01/1974
89	C0NN9C557A	4	Ring, Delivery Valve Joint, 5000-7000, No Longer Serviced (NHNA), Years: 01/01/1965-09/30/1968
89	C0NN9C557A	3	Ring, Delivery Valve Joint, 3000, No Longer Serviced (NHNA), Years: 01/01/1965-09/30/1968
89	C7NN9C557A	4	Ring, Delivery Valve Joint, 5000-7000, Years: 10/01/1968-01/31/1974
89	C7NN9C557A	3	Ring, Delivery Valve Joint, 3000, Years: 10/01/1968-01/31/1974
89	D3NN9C557A	4	Ring, Delivery Valve Joint, 5000-7000, Start Year: 02/01/1974
89	D3NN9C557A	3	Ring, Delivery Valve Joint, 3000, Start Year: 02/01/1974
89A	C7NN9H515A	4	O-Ring, Delivery Stop, 5000-7000, Start Year: 10/01/1968
89A	C7NN9H515A	3	O-Ring, Delivery Stop, 3000, Start Year: 10/01/1968
90	C0NN9D512A	4	Retainer, Delivery Valve, 5000-7000, No Longer Serviced, Years: 01/01/1965-09/30/1968
90	C0NN9D512A	3	Retainer, Delivery Valve, 3000, No Longer Serviced, Years: 01/01/1965-09/30/1968
90	C7NN9D512A	4	Retainer, Delivery Valve, 5000-7000, Start Year: 10/01/1968
90	C7NN9D512A	3	Retainer, Delivery Valve, 3000, Start Year: 10/01/1968
91	C0NN9D509A	4	Spring, Delivery Valve, 5000-7000, Start Year: 01/01/1965
91	C0NN9D509A	3	Spring, Delivery Valve, 3000, Start Year: 01/01/1965
92	C0NN9C576A	4	Spring, Plunger Return, 5000-7000, Start Year: 01/01/1965
92	C0NN9C576A	3	Spring, Plunger Return, 3000, Start Year: 01/01/1965
93	C0NN9D511B	4	Reducer, Pump Volume, 5000-7000, No Longer Serviced (NHNA), Start Year: 01/01/1965
93	C0NN9D511B	3	Reducer, Pump Volume, 3000, No Longer Serviced (NHNA), Start Year: 01/01/1965
94	D4NN9C584A	4	Body, Pump Tappet, 5000-7000, No Longer Serviced, Start Year: 01/01/1965
94	D4NN9C584A	3	Body, Pump Tappet, 3000, No Longer Serviced, Start Year: 01/01/1965
95	D4NN9C587A	4	Roller, Pump Tappet, 5000-7000, No Longer Serviced (NHNA), Start Year: 01/01/1965
95	D4NN9C587A	3	Roller, Pump Tappet, 3000, No Longer Serviced (NHNA), Start Year: 01/01/1965
96	E5NN9C588AA	4	Bushing, Pump Tappet Roller, 5000-7000, No Longer Serviced (NHNA), Start Year: 01/01/1965
96	E5NN9C588AA	3	Bushing, Pump Tappet Roller, 3000, No Longer Serviced (NHNA), Start Year: 01/01/1965

5000-SERIES 4 CYL TRACTOR (1/65-1/75)

09E02 FUEL INJECTION PUMP, DIESEL, SIMMS - 3000, 5000, 7000

Ref	Part Number	Qty	Description
97	E5NN9D520AA	4	Pin, Pump Tappet Roller, 5000-7000, No Longer Serviced (NHNA), Start Year: 01/01/1965
97	E5NN9D520AA	3	Pin, Pump Tappet Roller, 3000, No Longer Serviced (NHNA), Start Year: 01/01/1965
98	E1ADDN993239B	4	Ring, Snap, Tappet Body Retainer, 5000-7000, No Longer Serviced (NHNA), Start Year: 01/01/1965
98	E1ADDN993239B	3	Ring, Snap, Tappet Body Retainer, 3000, No Longer Serviced (NHNA), Start Year: 01/01/1965
99	C0NN9C586F	AR	Spacer, Tappet #1, No Longer Serviced, Start Year: 01/01/1965
99	C0NN9C586G	AR	Spacer, Tappet #2, No Longer Serviced, Start Year: 01/01/1965
99	C0NN9C586H	AR	Spacer, Tappet, #3, No Longer Serviced, Start Year: 01/01/1965
99	C0NN9C586J	AR	Spacer, Tappet #4, No Longer Serviced, Start Year: 01/01/1965
99	C0NN9C586K	AR	Spacer, Tappet #5, No Longer Serviced, Start Year: 01/01/1965
99	C0NN9C586A	AR	Spacer, Tappet #6, No Longer Serviced (NHNA), Start Year: 01/01/1965
99	C0NN9C586B	AR	Spacer, Tappet #7, No Longer Serviced (NHNA), Start Year: 01/01/1965
99	C0NN9C586C	AR	Spacer, Tappet #8, No Longer Serviced (NHNA), Start Year: 01/01/1965
99	C0NN9C586D	AR	Spacer, Tappet #9, No Longer Serviced, Start Year: 01/01/1965
99	C0NN9C586E	AR	Spacer, Tappet #10, No Longer Serviced, Start Year: 01/01/1965
99	C5NE9C586A	AR	Spacer, Tappet #11, No Longer Serviced, Start Year: 01/01/1965
99	C5NE9C586B	AR	Spacer, Tappet #12, No Longer Serviced, Start Year: 01/01/1965
100	C0NN9C558U	AR	Seat, Lower Spring #1B, .60/.65mm, No Longer Serviced (NHNA), Start Year: 01/01/1965
100	C0NN9C558V	AR	Seat, Lower Spring #2B, .70/.75mm, No Longer Serviced, Start Year: 01/01/1965
100	C0NN9C558Y	AR	Seat, Lower Spring #3B, .80/.85mm, No Longer Serviced, Start Year: 01/01/1965
100	C0NN9C558Z	AR	Seat, Lower Spring #4B, .90/.95mm, No Longer Serviced, Start Year: 01/01/1965
100	C0NN9C558AA	AR	Seat, Lower Spring #5B, 1.00/1.05mm, No Longer Serviced (NHNA), Start Year: 01/01/1965
100	C0NN9C558AB	AR	Seat, Lower Spring, #6B, 1.10/1.15mm, No Longer Serviced (NHNA), Start Year: 01/01/1965
100	C0NN9C558AC	AR	Seat, Lower Spring, #7B, 1.20/1.25mm, No Longer Serviced (NHNA), Start Year: 01/01/1965
100	C0NN9C558AD	AR	Seat, Lower Spring, #8B, 1.30/1.35mm, No Longer Serviced, Start Year: 01/01/1965
100	C0NN9C558AE	AR	Seat, Lower Spring, #9B, 1.40/1.45mm, No Longer Serviced, Start Year: 01/01/1965
100	C0NN9C558AF	AR	Seat, Lower Spring, #10B, 1.50/1.55mm, No Longer Serviced, Start Year: 01/01/1965
100	C0NN9C558AG	AR	Seat, Lower Spring, #11B, 1.60/1.65mm, No Longer Serviced, Start Year: 01/01/1965
100	C0NN9C558AH	AR	Seat, Lower Spring, #12B, 1.70/1.75mm, No Longer Serviced, Start Year: 01/01/1965
100	C0NN9C558AJ	AR	Seat, Lower Spring, #13B, 1.80/1.85mm, No Longer Serviced, Start Year: 01/01/1965
100	C0NN9C558AK	AR	Seat, Lower Spring, #14B, 1.90/1.95mm, No Longer Serviced, Start Year: 01/01/1965
100	C0NN9C558AL	AR	Seat, Lower Spring, #15B, 2.00/2.05mm, No Longer Serviced, Start Year: 01/01/1965
100	C0NN9E559A	1	Capsule, Pump Breather Filter, No Longer Serviced, Years: 01/01/1965-09/30/1970
100	C0NN9C558AM	AR	Seat, Lower Spring, #16B, 2.10/2.15mm, No Longer Serviced (NHNA), Start Year: 01/01/1965
101	C5NE9C535B	1	Cover, Pump Governor, No Longer Serviced (NHNA), Start Year: 01/01/1965
104	80682	4	Washer, Lock, 1/4", Start Year: 01/01/1965
105	9707580	4	Screw, Cap, HH, G5, 1/4"-20 x 3/4", Start Year: 01/01/1965
106	D6NN9C568B	1	Gasket, Governor Cover, Start Year: 01/01/1965
107	C0NN9C542A	2	Screw, Stop, 5/16"-24, No Longer Serviced (NHNA), Start Year: 01/01/1965
108	86629539	2	Nut, G5, 5/16"-24, Start Year: 01/01/1965
109	C5NE9D524A	4	Barrel & Plunger Assy., 5000, No Longer Serviced, Years: 01/01/1965-03/31/1968
109	C5NE9D524A	3	Barrel & Plunger, 3000, No Longer Serviced, Years: 01/01/1965-12/31/1970

5000-SERIES 4 CYL TRACTOR (1/65-1/75)

09E02 FUEL INJECTION PUMP, DIESEL, SIMMS - 3000, 5000, 7000

Ref	Part Number	Qty	Description
109	D6NN9D524A	4	Barrel & Plunger Assy., Plunger Bore, 8.5mm, 5000-7000, No Longer Serviced (NHNA), Start Year: 04/01/1968
110	C5NE9E553A	1	Cover Assy., Inspection, 3000, No Longer Serviced (NHNA), Years: 01/01/1966-09/30/1970
110	D3NN9C569C	1	Cover Assy., Inspection, When replacing D0NN-9C569-A(81823220) or B(81823221) also use (2) Bolt D3NN-9C579-A(81846106) and (2) O-Ring D0NN-9N677-A., No Longer Serviced, Start Year: 10/01/1970
110	C5NE9E554A	1	Cover Assy., Inspection, W/Breather, 5000, No Longer Serviced (NHNA), Years: 01/01/1965-09/30/1970
110	C0NN9E555A	1	Cap, Pump Breather, No Longer Serviced (NHNA), Years: 01/01/1965-09/30/1970
110	C0NN9E558A	1	Stud, Pump Breather, No Longer Serviced (NHNA), Years: 01/01/1965-09/30/1970
110	380428S	1	Washer, Flat, 5/16", Years: 01/01/1965-09/30/1970
110	80684	1	Washer, Lock, #10, Years: 01/01/1965-09/30/1970
110	C0NN9E557A	1	Nut, Pump Breather Cap, Start Year: 01/01/1965
110	D0NN9C569B	1	Cover Assy., Inspection, 5000-7000, Years: 10/01/1970-01/31/1974
110	D2NN9C569A	1	Cover Assy., Inspection, 5000-7000, Start Year: 10/01/1970
111A	380428S	2	Washer, Inspection Cover, Years: 01/01/1965-01/31/1974
111AD	3NN9E568A	2	Washer, Inspection Cover, Start Year: 02/01/1974
111B	49886	2	O-Ring, .239" ID x .070" Thk, Inspection Cover, Start Year: 02/01/1974
112	E1ADDN993145C	1	Seal, Inspection Cover, 5000-7000, Start Year: 01/01/1965
112	957E993145B	1	Seal, Inspection Cover, 3000, No Longer Serviced (NHNA), Years: 01/01/1966-12/31/1970
113	54664S2	1	Screw, Trunnion, #10, 24 x .56, Start Year: 01/01/1965
114	E7NN9H513AA	1	Gasket, Fuel Pump to Body, Start Year: 01/01/1965
115	D8NN9350AB	1	Fuel Pump Assy., See Fuel Pump Section, Start Year: 01/01/1965
116	117453ES	2	Stud, 5/16"-18-24 x 1-9/64", No Longer Serviced (NHNA), Start Year: 01/01/1965
117	114673ES	2	Nut, 5/16"-24, Lift Pump to Pump Housing, No Longer Serviced (NHNA), Start Year: 02/01/1974
117	86629539	2	Nut, G5, 5/16"-24, Years: 01/01/1965-01/31/1974
117	114673ES	2	Nut, 5/16"-24, Lift Pump to Pump Housing, No Longer Serviced (NHNA), Start Year: 02/01/1974
117	114673ES	2	Nut, 5/16"-24, Lift Pump to Pump Housing, No Longer Serviced (NHNA), Start Year: 02/01/1974
117	80681	2	Washer, Lock, 5/16", Years: 01/01/1965-01/31/1974
118	E7NN9K355AA	1	Plate, Pump Flange Support, Start Year: 02/01/1974
119	C5NE9F591A	1	Adapter, Drive Gear, No Longer Serviced (NHNA), Start Year: 01/01/1965
120	54652S36	1	Screw, HH, #10-24 x 1/2", No Longer Serviced (NHNA), Start Year: 02/01/1974
121	C0NN9E574A	1	Washer, Sealing, No Longer Serviced (NHNA), Start Year: 02/01/1974
123	D3NN9D537A	1	Washer, Pump Inlet Plug, Start Year: 01/01/1965
124	C0NN9C580A	1	Connector, Pump to Tachometer Adapter, 7000, No Longer Serviced, Start Year: 01/01/1968
124	C0NN9C580A	1	Connector, Pump to Tachometer Adapter, Mexico, 5100, No Longer Serviced, Start Year: 01/01/1968
125	72NY17375B	1	Adaptor Assy., Tachometer Drive Gear, W/Key, 7000, NHNA Only, Start Year: 01/01/1969
125	72NY17375B	1	Adaptor Assy., Tachometer Drive Gear, W/Key, Mexico, 5100, Replaces 67NY17375A, NHNA Only, Start Year: 01/01/1969
126	DBPN17N259A	1	Key, Tachometer Drive Gear Adaptor, 7000, NHNA Only, Start Year: 01/01/1968
126	DBPN17N259A	1	Key, Tachometer Drive Gear Adaptor Mexico, 5100, NHNA Only, Start Year: 01/01/1968

09F01 FUEL PUMP ASSEMBLY, GASOLINE (PETROL)

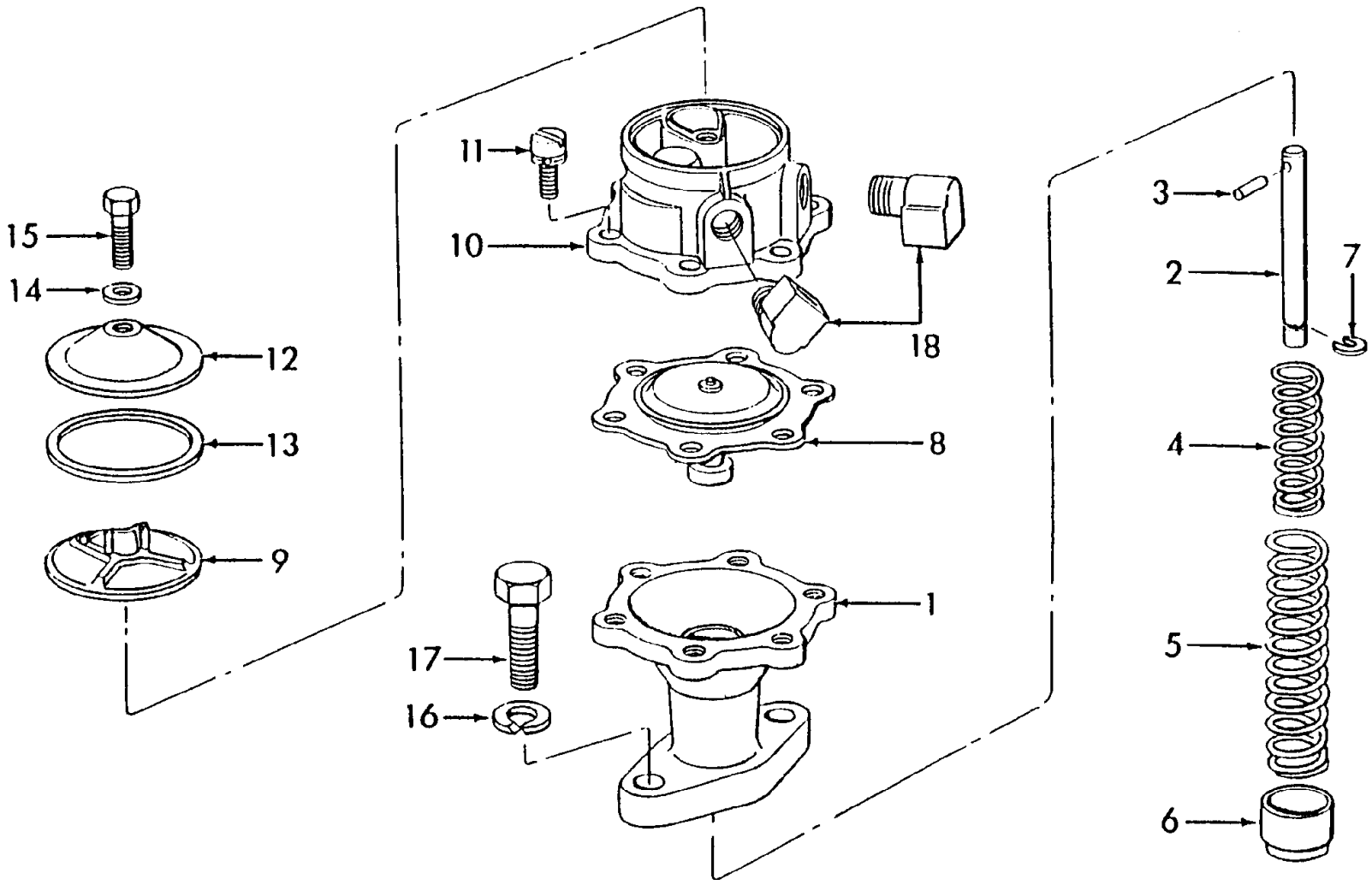

5000-SERIES 4 CYL TRACTOR (1/65-1/75)

09F01 FUEL PUMP ASSEMBLY, GASOLINE (PETROL)

Ref	Part Number	Qty	Description
	F2NN9350AA	1	Pump Assy., Fuel Includes: Ref. 1 thru 16, NHNA Only, Start Year: 01/01/1965
1	C5NE9375A	1	Body Assy., Fuel Pump Lower, Start Year: 01/01/1965
2	C5NE9400B	1	Rod, Push, Fuel Pump, No Longer Serviced, Start Year: 01/01/1965
3	PL	1	Pin, Push Rod to Diaphragm, NHNA Only, Start Year: 01/01/1965
4	C5NE9A417A	1	Spring, Fuel Pump Operating Rod, Inner, Start Year: 01/01/1965
5	C5NE9396A	1	Spring, Fuel Pump Diaphragm, No Longer Serviced (NH-E), Start Year: 01/01/1965
6	C5NE9A415A	1	Seat, Operating Rod Return Spring, No Longer Serviced, Start Year: 01/01/1965
7	C5NE9A416A	1	Retainer, Return Spring Seat, No Longer Serviced (NH-E), Start Year: 01/01/1965
8	C5NE9398A	1	Diaphram Assy., Fuel Pump, Start Year: 01/01/1965
9	C5NE9368A	1	Screen, Fuel Pump, Start Year: 01/01/1965
10	C5NE9343A	1	Body & Plugs Assy., Fuel Pump Upper, Start Year: 01/01/1965
11	PL	1	Screw & Washer Assy., Pan Hd., Upper to Lower Body, M5 x 12, NHNA Only, Start Year: 01/01/1965
12	C5NE9A359A	1	Cover, Fuel Pump, Start Year: 01/01/1965
13	C5NE9A420A	1	Gasket, Fuel Pump Cover, Start Year: 01/01/1965
14	C5NE9A419A	1	Gasket, Fuel Pump Cover Screw, Start Year: 01/01/1965
15	PL	1	Screw, HH, M5 x 18, NHNA Only, Start Year: 01/01/1965
16	80681	2	Washer, Lock, 5/16", Start Year: 01/01/1965
17	9635884	2	Screw, Cap, HH, G5, 5/16"-18 x 1", Start Year: 01/01/1965
18	377196S	2	Elbow, 90°, Inlet & Outlet Connection, U.S., No Longer Serviced (NHNA), Start Year: 01/01/1965
18	87382S	2	Elbow, 90°, U.K.-Antwerp, No Longer Serviced (NH-E), Start Year: 01/01/1965

09F02 FUEL PUMP ASSEMBLY, DIESEL - 3000, 5000, 7000

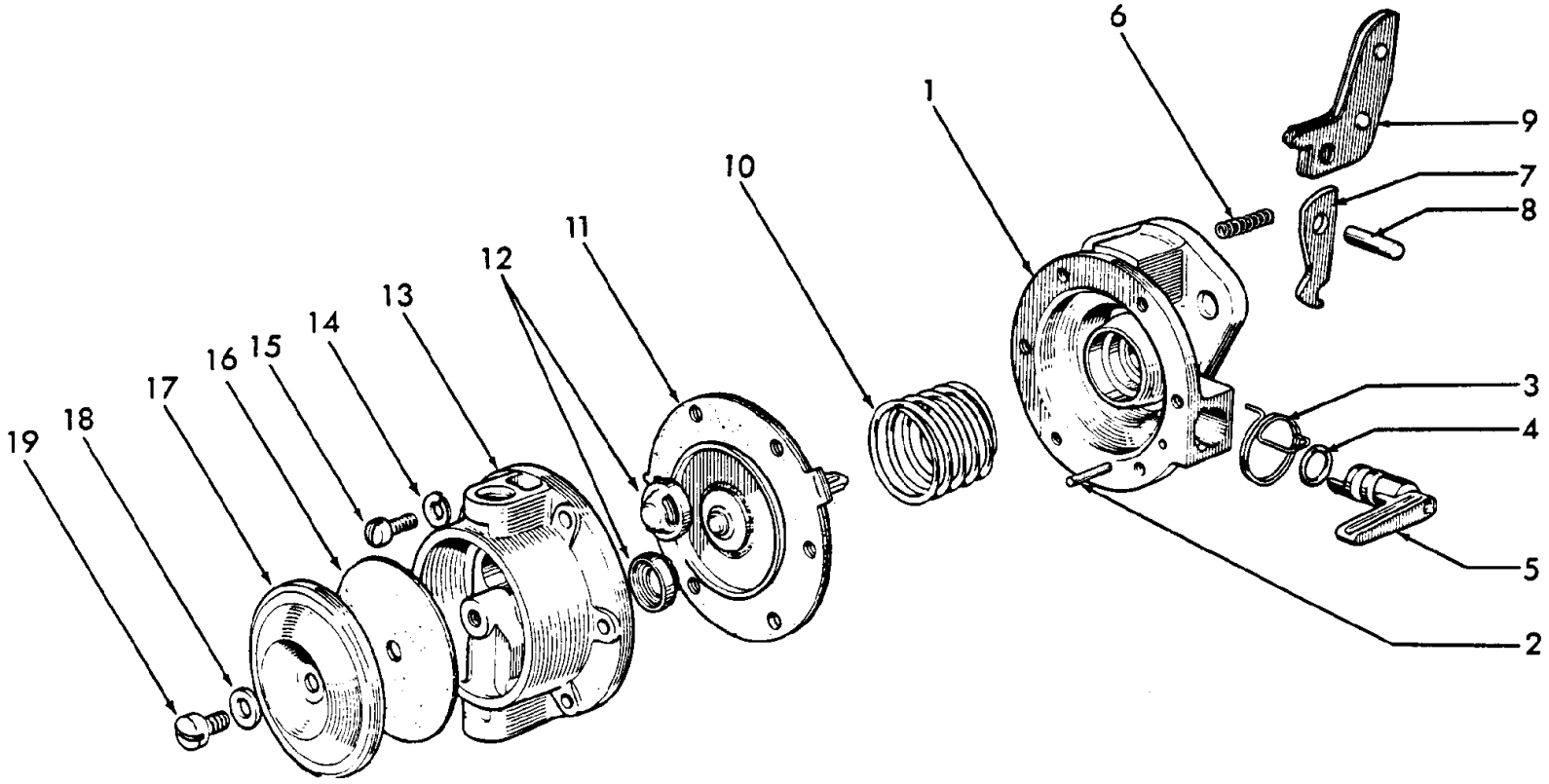

5000-SERIES 4 CYL TRACTOR (1/65-1/75)

09F02 FUEL PUMP ASSEMBLY, DIESEL - 3000, 5000, 7000

Ref	Part Number	Qty	Description
	E8NN9B357AA	1	Kit, Fuel Pump, Service Only, No Longer Serviced (NH-E), Start Year: 01/01/1965
	D8NN9350AB	1	Fuel Pump Assy., Replaces P/N 510E-9350 Includes: Ref. 1 thru 19, Start Year: 01/01/1965
1	NSS	1	Body, Fuel Pump, Inner, NHNA Only, Years: 01/01/1965-01/31/1974
2	E1ADDN9379	1	Pin, Priming Lever Retaining, No Longer Serviced (NH-E), Start Year: 01/01/1965
3	E1ADDN9345	1	Spring, Priming Lever, Start Year: 01/01/1965
4	E27N9176	1	Seal, Priming Lever, Start Year: 01/01/1965
5	E1ADDN9386	1	Lever, Priming, Start Year: 01/01/1965
6	YE9380	1	Spring, Rocker Arm, No Longer Serviced (NHNA), Start Year: 01/01/1965
7	2701E9381A	1	Link, Diaphragm Operation, Replaces P/N E1ADDN-9381, No Longer Serviced (NHNA), Start Year: 01/01/1965
8	E1ADDN9378	1	Pin, Link to Rocker Arm, No Longer Serviced (NHNA), Start Year: 01/01/1965
9	510E9376	1	Arm, Rocker, No Longer Serviced (NHNA), Start Year: 01/01/1965
10	510E9396	1	Spring, Diaphragm, No Longer Serviced (NHNA), Start Year: 01/01/1965
11	2701E9398A	1	Diaphragm & Pull Rod Assy., Plain, Use W/# D3NN-9350-A, Start Year: 01/01/1965
11	D8NN9398AA	1	Diaphragm & Pull Rod Assy., Convoluted, Use W/# D8NN-9350-AA, Start Year: 01/01/1965
12	105E9352	2	Valve Assy., Replaces P/N E11A-9352, Start Year: 01/01/1965
12	DDN9367	2	Gasket, Valve to Body, U.S., NHNA Only, No Longer Serviced, Start Year: 01/01/1965
13	NSS	1	Body Assy., Outer, NHNA Only, Years: 01/01/1965-01/31/1974
14	80684	5	Washer, Lock, #10, Start Year: 01/01/1965
15	31612S8	5	Screw, Fillister Hd., #10-32 x 1/2", Start Year: 01/01/1965
16	2701E9A358A	1	Pulsator, Fuel Pump, Start Year: 01/01/1965
17	E1ADDN9355	1	Cover, Fuel Pump, Start Year: 01/01/1965
18	BE9357	1	Washer, Fuel Pump Cover, Start Year: 01/01/1965
19	280338	1	Screw, Cap, HH, G5, 1/4"-28 x 3/8", Start Year: 01/01/1965
19	693F9K340AA	AR	Kit, Fuel Pump, Includes 11 & 16, Start Year: 01/01/1965

09G01 DIESEL FUEL PRIMER ASSEMBLY KIT

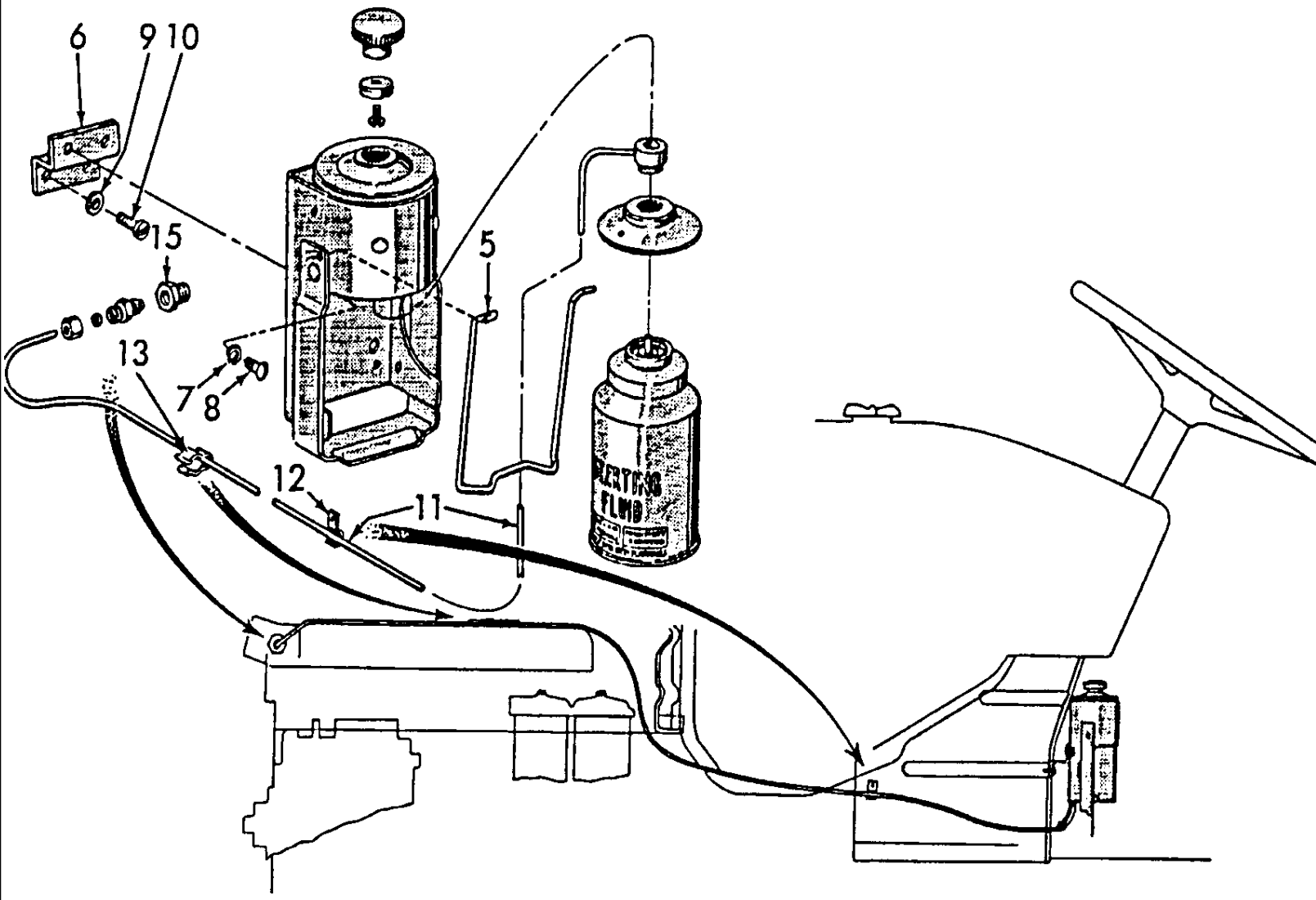

5000-SERIES 4 CYL TRACTOR (1/65-1/75)

09G01 DIESEL FUEL PRIMER ASSEMBLY KIT

Ref	Part Number	Qty	Description
	NSS	1	Kit, Engine Fuel Primer (Service Components) Includes:, NHNA Only, Start Year: 01/01/1965
	86518148	1	Primer Assy, Fuel (Special Order Only) Includes: 1-5, Start Year: 01/01/1965
1	NS	1	Bracket Assy, Tank, Not referenced, NHNA Only, Start Year: 01/01/1965
2	C3NN9C775A	1	Adapter, Primer Tank, (U.S. Only) Not referenced, No Longer Serviced (NHNA), Start Year: 01/01/1965
3	NS	1	Plunger Assy, Primer Control, Not referenced, NHNA Only, Start Year: 01/01/1965
5	C3NN9C774A	1	Bracket, Primer Tank, Start Year: 01/01/1965
6	81811290	1	Bracket, Primer Tank Bracket Mounting, Start Year: 01/01/1965
7	80682	2	Washer, Lock, 1/4", Start Year: 01/01/1965
8	84467	2	Screw, Truss Hd, G2, 1/4"-20 x 1/2", Start Year: 01/01/1965
9	80682	2	Washer, Lock, 1/4", Start Year: 01/01/1965
10	40927S36	2	Screw, 1/4"-20 x 3/4" Self Tapping, No Longer Serviced (NH-E), Start Year: 01/01/1965
11	501521	AR	Tubing, 1/8" O.D., 25 Feet Length (Service Only), 48" Included in Kit, NHNA Only, No Longer Serviced, Start Year: 01/01/1965
12	375820S43	1	Clip, No Longer Serviced, Start Year: 01/01/1965
13	372325S7	1	Clip, No Longer Serviced, Start Year: 01/01/1965
15	81811289	1	Plug, 7/8"-14 Nozzle Assy. to Manifold, Start Year: 01/01/1965

09G02 DIESEL COLD START, NHNA (65/) NH-E (65/7-74)

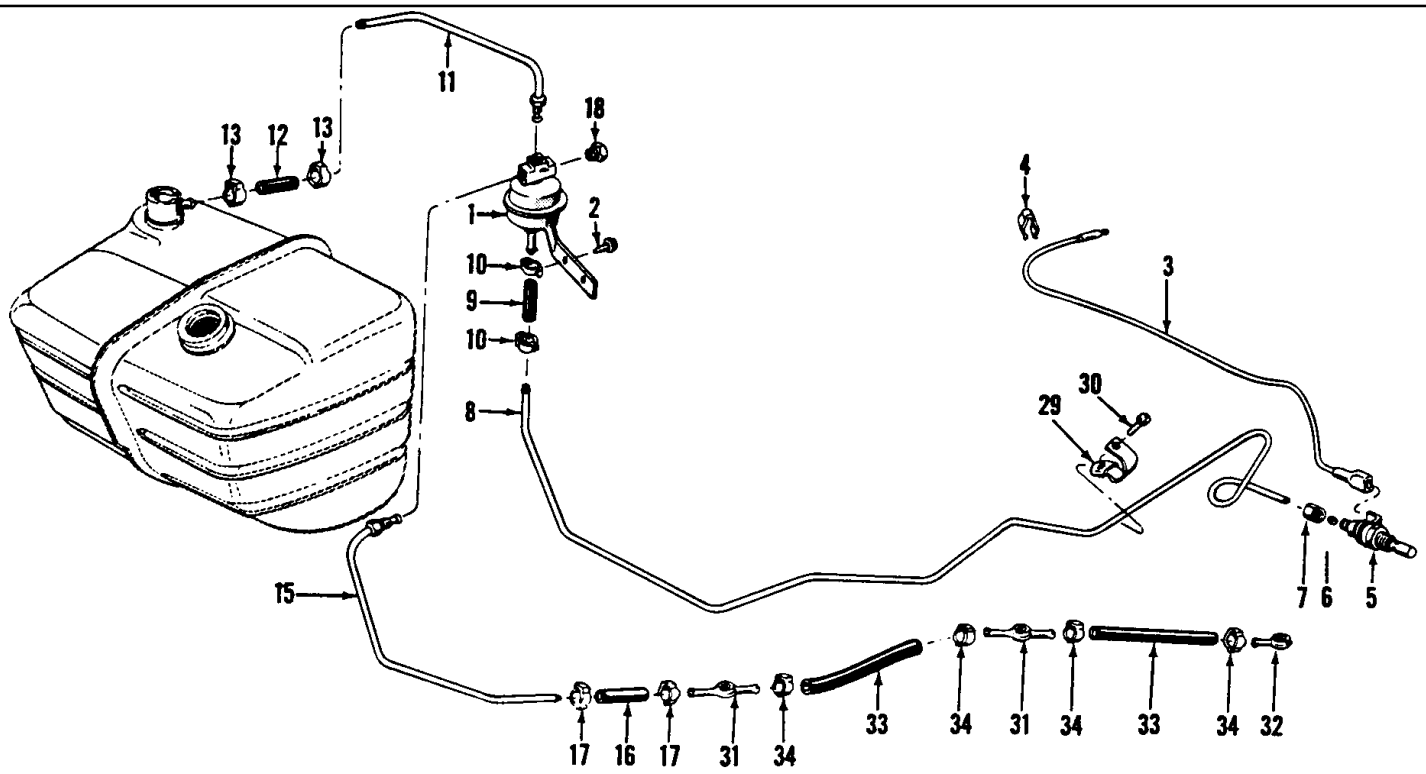

2000-4000 (65/-)

3000 (65)

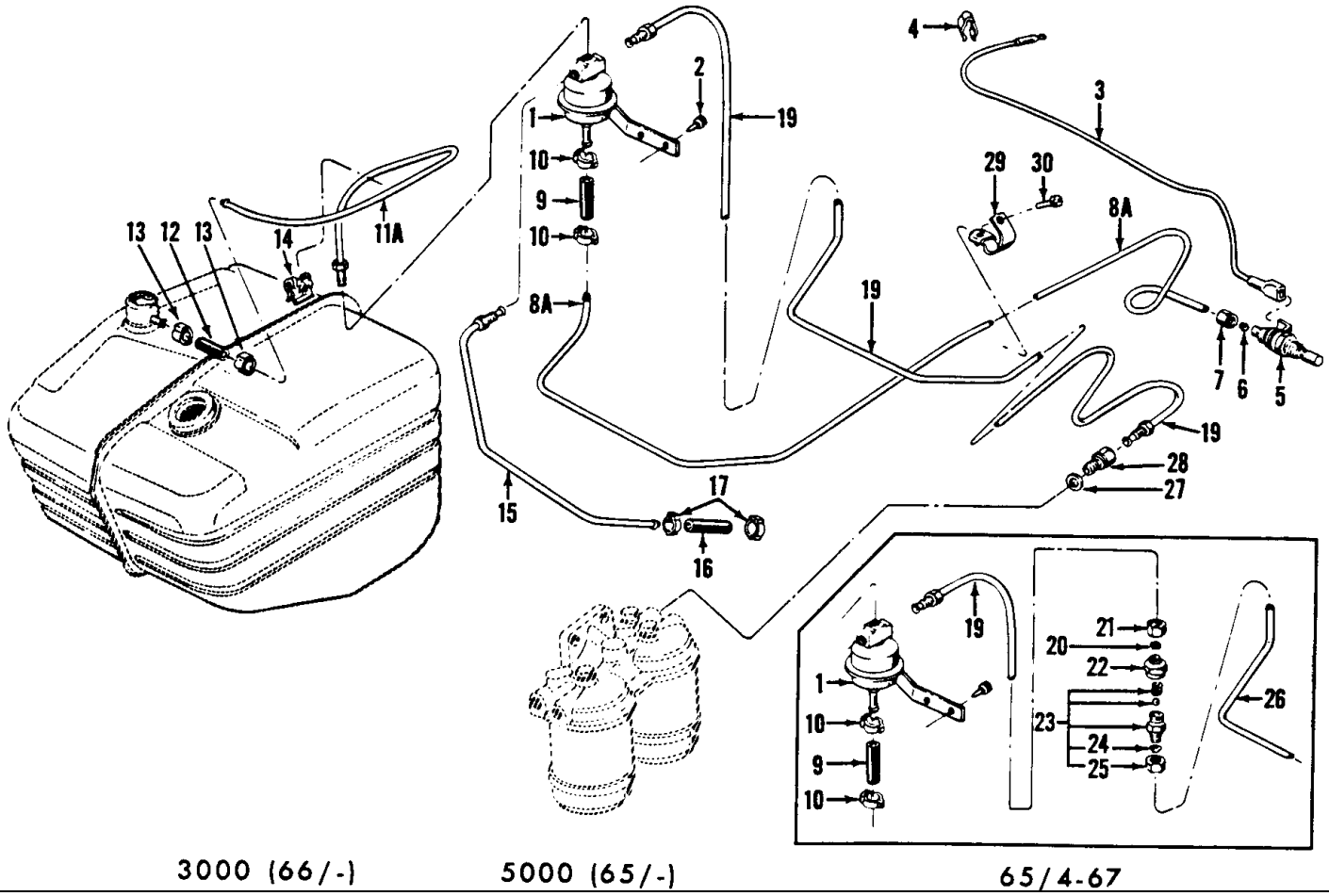

3000 (66/-)

5000 (65/-)

65/4-67

5000-SERIES 4 CYL TRACTOR (1/65-1/75)

09G02 DIESEL COLD START, NHNA (65/) NH-E (65/7-74)

Ref	Part Number	Qty	Description
1	C5NN9N425B	1	Reservoir & Fitting Assy., Intake Heater, Start Year: 01/01/1965
2	42717S36	2	Screw, HH, W/Washer, #10-32 x 1/2", Start Year: 01/01/1965
3	D8NN14N108AA	1	Wire Assy., Heater Plug, 21" (53.34cm), U.S., Start Year: 01/01/1965
3	C5NN14N000AY	1	Wire Assy., Heater Plug, U.S., 4-1/2" (11.43cm), No Longer Serviced (NHNA), Years: 01/01/1965-01/31/1968
3	C5NN14N108B	1	Wire Assy., Heater Plug, 10-1/2" (26.07cm), U.K.-Antwerp, Start Year: 02/01/1968
3	C5NN13N315D	1	Wire Assy., 12" Lg, U.S., 7000, NHNA Only, Start Year: 07/01/1973
4	370972S2	1	Clip, Start Year: 01/01/1965
4	372047S100	1	Clip, Start Year: 01/01/1965
5	C5NE9A436A	1	Plug Assy., Intake Manifold Heater, Start Year: 01/01/1965
6	81811964	1	Sleeve, Compression, 3/16", Except 5000 W/CAV Pump, Start Year: 01/01/1965
7	83422400	1	Nut, Compression, 3/8"-24, 3/16" Tube, Except 5000 W/CAV Pump, Start Year: 01/01/1965
8	C5NN9N445A	1	Tube Assy., Heater Inlet, Replaces P/N C5NN-9N438-C, 2000-3000-4000, Start Year: 01/01/1965
8A	C5NN9N438B	1	Tube, Heater Inlet, W/Simms Pump, 5000-7000, Start Year: 01/01/1965
9	E3NN9G577AA	1	Hose, Tube to Revervoir, Cut to Length, Start Year: 01/01/1965
10	82012717	2	Clamp, Hose, Connector to Reservoir & Inlet Tube, 7/16", Start Year: 01/01/1965
11	C5NN9C318A	1	Tube Assy., Fuel Return to Tank, Except 5000-7000, Start Year: 01/01/1965
11A	C5NN9A337M	1	Tube Assy., Fuel Return to Tank, W/Simms Pump, 5200-7200, NHNA Only, No Longer Serviced, Start Year: 01/01/1967
11A	C5NN9C318C	1	Tube Assy., Fuel Return to Tank, W/Simms Pump, 5100-7100, Start Year: 01/01/1965
12	E3NN9G577AA	1	Connector, Tube to Tank, Cut to Length, W/CAV Pump, Except 5000, Start Year: 01/01/1965
13	82012717	2	Clamp, Hose, Start Year: 01/01/1965
14	372047S100	1	Clip, Tube to Tank, W/Simms Pump, 5000-7000, Start Year: 01/01/1965
15	C5NN9N434A	1	Tube Assy., Reservoir to Leak-Off Line, Except 4200, Start Year: 01/01/1965
15	C5NN9N434D	1	Tube Assy., Reservoir to Leak-Off Line, 4200, NHNA Only, No Longer Serviced, Start Year: 01/01/1966
15	C5NN9N434D	1	Tube Assy., Reservoir to Leak-Off Line, 1-1/2", 4200, NHNA Only, No Longer Serviced, Start Year: 01/01/1966
16	E3NN9G577AA	1	Connector, Tube to Leak-Off Line, Cut to Length, Start Year: 01/01/1965
17	82012717	2	Clamp, Leak-Off Line to Reservoir Tube, Start Year: 01/01/1965
18	C5NN9N444A	1	Plug, Intake Manifold Heater Reservoir, Except 5000-7000, Start Year: 01/01/1965
19	C5NN9N427E	1	Tube Assy., Reservoir to Filter, 3000, No Longer Serviced (NH-E), Years: 05/01/1967-12/31/1968
19	C5NN9N427E	1	Tube Assy., Reservoir to Filter, 5000, No Longer Serviced (NH-E), Years: 05/01/1967-03/31/1968
19	C7NN9N427D	1	Tube Assy., Reservoir to Filter, Single Filter, 3000, Start Year: 01/01/1969
19	C7NN9N427D	1	Tube Assy., Reservoir to Filter, Single filter, W/Simms Pump, 5000-7000, Start Year: 10/01/1969
19	C7NN9N427A	1	Tube Assy., Reservoir to Filter, Dual Filter, 5000, No Longer Serviced (NHNA), Years: 04/01/1968-09/30/1969
19	C5NN9N427C	1	Tube Assy., Reservoir to Valve Assy., Replaces P/N C5NN-9N427-A, 5000, No Longer Serviced, Years: 01/01/1965-04/30/1967
20	81811964	1	Sleeve, Compression, 3/16", 5000, Years: 01/01/1965-04/30/1967
21	83422400	1	Nut, Compression, 3/8"-24, 3/16" Tube, 5000, Years: 01/01/1965-04/30/1967

5000-SERIES 4 CYL TRACTOR (1/65-1/75)

09G02 DIESEL COLD START, NHNA (65/) NH-E (65/7-74)

Ref	Part Number	Qty	Description
22	C5NN9N441A	1	Connector, Reservoir Tube to Valve Assy., FTO-E, 5000, No Longer Serviced (NHNA), Years: 01/01/1965-04/30/1967
23	C5NN9N430A	1	Valve Assy., Intake Manifold Heater, 5000 Includes: Body Assy., Ref. 24 & 25, No Longer Serviced (NHNA), Years: 01/01/1965-04/30/1967
24	81811964	1	Sleeve, Compression, 3/16", 5000, Years: 01/01/1965-04/30/1967
25	83422400	1	Nut, Tube, 3/8"-24, 3/16", 5000, Years: 01/01/1965-04/30/1967
26	C5NN9N428D	1	Tube Assy., Valve to Oil Filter, U.K.-Antwerp, 5000, NHNA Only, No Longer Serviced, Years: 01/01/1965-04/30/1967
26	C5NN9N428D	1	Tube Assy., Valve to Oil Filter, U.S., 3000-5000, NHNA Only, No Longer Serviced, Years: 01/01/1965-04/30/1967
26	C5NN9N428D	1	Tube Assy., Valve to Oil Filter, U.K.-Antwerp, 3000, NHNA Only, No Longer Serviced, Years: 01/01/1965-04/30/1967
27	D2NN9N083A	1	Washer, 1/2", W/Simms Pump, 5000-7000, Start Year: 01/01/1965
28	D2NN9N442A	1	Adapter, Reservoir Tube to Filter, W/Dual Filter, W/Simms Pump, Replaces P/N C5NN-9N442-A, 5000, Years: 01/01/1965-03/31/1968
28	D2NN9N442A	1	Adapter, Reservoir Tube to Filter, W/Single Filter, W/Simms Pump, Replaces P/N C5NN-9N442-A, 5000-7000, Start Year: 10/01/1969
28	D2NN9N442A	1	Adapter, Reservoir Tube to Filter, W/Simms Pump, Replaces P/N C5NN-9N442-A, 3000, Start Year: 01/01/1966
28	C7NN9N442A	1	Adapter, Reservoir Tube to Filter, W/Dual Filter, 5000, No Longer Serviced (NHNA), Years: 04/01/1968-09/30/1969
29	C5NN9N439A	1	Clip Assy., Manifold Heater Tube, No Longer Serviced (NH-E), Start Year: 01/01/1965
30	56009S36	1	Screw, Pan Hd., #8-18 x 50, Start Year: 01/01/1965
31	NS	2	Fitting, Double, Banjo Type Hose, Except 5000-7000, NHNA Only, Start Year: 01/01/1965
32	NS	1	Fitting, Single, Banjo Type Hose, 3/16", Except 5000-7000, NHNA Only, Start Year: 01/01/1965
33	E3NN9G577AA	2	Hose, Injector Leak-Off, 4-7/8" (12.38cm) Lg., Except 5000-7000, Start Year: 01/01/1965
34	82012717	4	Clamp, Hose, Except 5000-7000, Start Year: 01/01/1965
	E4NN9N461EB	1	Tube Assy., Leak-Off to Tank & Manifold, w/CAV Pump, 5000, Start Year: 11/01/1972
	D2NN9N035C	1	Connector, Tube Assy. to Leak-Off Tube Assy., w/CAV Pump, 5000, No Longer Serviced, Start Year: 11/01/1972
	D2NN9N035B	1	Connector, Tube Assy., to Fuel Tank, w/CAV Pump, 5000, No Longer Serviced, Start Year: 11/01/1972
	D3NN9N659B	2	Clip, Tube to Fuel Tank, w/CAV Pump, 5000, No Longer Serviced (NH-E), Start Year: 11/01/1972
	C5NE9A436A	1	Plug Assy., Intake Manifold Heater, Start Year: 08/01/1974
	C5NN14N108B	1	Wire Assy., Heater Plug, Start Year: 08/01/1974
	E4NN9N461BB	1	Tube & Reservoir Assy., Intake Manifold, 2000-3000-4000, Start Year: 08/01/1974
	D3NN9N461A	1	Tube & Reservoir Assy., Intake Manifold, 5100-7100, NH-E Only, Start Year: 08/01/1974
	388723S2	1	Clip, Tube, Start Year: 08/01/1974
	D3NN9N659A	1	Clip, Leak-Off Tube, 2000-3000-4000, Start Year: 08/01/1974
	D3NN9N659B	1	Clip, Leak-Off Tube, 5100-7100, No Longer Serviced (NH-E), Start Year: 08/01/1974
	82012717	AR	Clamp, Hose, Start Year: 08/01/1974

5000-SERIES 4 CYL TRACTOR (1/65-1/75)

09G02 DIESEL COLD START, NHNA (65/) NH-E (65/7-74)

Ref	Part Number	Qty	Description
	CFPN9050D	1	Kit, Diesel Cold Start, Tractors w/CAV Pumps, U.S., 2000-3000-4000, Replaces P/N CFPN-9050-A, Start Year: 01/01/1965
	CFPN9050D	1	Kit, Diesel Cold Start, Tractors w/CAV Pumps, U.K.- Antwerp, Replaces P/N CFPN-9050-A, 2000-3000-4000 Includes:, Years: 01/01/1965-07/31/1974
	C5NN9A473A	1	Wire Assy., No Longer Serviced
	E7NN11N501AC	1	Switch
	C5NN9N445A	1	Tube Assy.
	E3NN9G577AA	3	Hose
	C5NN9C318A	1	Tube Assy.
	263117	8	Cable Tie, 3/32" x 11-1/2" L
	56009S36	1	Screw, Self-Tapping, Pan Hd, #8-18 x 5/8"
	C5NN9N425B	1	Reservoir
	42717S36	1	Screw, HH, W/Washer, #10-32 x 1/2"
	C5NN9N434A	1	Tube
	C5NE9A436A	1	Plug Assy.
	370972S2	2	Clip
	C5NN9N439A	1	Clip Assy., No Longer Serviced (NH-E)
	C5NN9N444A	1	Plug
	82012717	6	Clamp, Hose
	CHPN9050A	1	Kit, Diesel Cold Start, Tractor w/Simms Pump, U.K.-Antwerp, 3000 Includes:, Years: 01/01/1969-12/31/197
	C5NN9C318A	1	Tube Assy., Order Components
	C5NN9A473A	1	Wire Assy., Order Components, No Longer Serviced
	C5NN9N425B	1	Reservoir, Order Components
	E3NN9G577AA	3	Hose, Order Components
	C7NN9N427D	1	Tube, Order Components
	E7NN11N501AC	1	Switch, Order Components
	C5NN9N434A	1	Tube Assy., Order Components
	263117	8	Cable Tie, 3/32" x 11-1/2" L, Order Components
	D8NN14N108AA	1	Wire Assy., U.S. Only, Order Components
	C5NE9A436A	1	Plug Assy., Order Components
	56009S36	1	Screw, Self-Tapping, Pan Hd, #8-18 x 5/8", Order Components
	C5NN9N439A	1	Clip Assy., Order Components, No Longer Serviced (NH-E)
	42717S36	2	Screw, HH, W/Washer, #10-32 x 1/2", Order Components
	C5NN9N445A	1	Tube Assy., Order Components
	370972S2	2	Clip, Order Components
	D2NN9N442A	1	Adapter, Order Components
	82012717	6	Clamp, Hose, Order Components
	D2NN9N083A	1	Washer, 1/2", Order Components
	D2NN9N083A	1	Washer, 1/2", Order Components
	CJPN9050A	1	Kit, Diesel Cold Start, Tractor w/Simms Pump, 5000 Includes:, Order Components, Start Year: 01/01/1965
	C5NN9C318C	1	Tube

5000-SERIES 4 CYL TRACTOR (1/65-1/75)

09G02 DIESEL COLD START, NHNA (65/) NH-E (65/7-74)

Ref	Part Number	Qty	Description
	C5NN9N439A	1	Clip, No Longer Serviced (NH-E)
	56009S36	1	Screw, Self-Tapping, Pan Hd, #8-18 x 5/8"
	C5NN9N425B	1	Reservoir
	D2NN9N442A	1	Adapter
	42717S36	2	Screw, HH, W/Washer, #10-32 x 1/2"
	83422400	1	Nut
	81811964	1	Sleeve
	C7NN9N427D	1	Tube
	E3NN9G577AA	3	Hose
	370972S2	1	Clip
	C5NN9N434A	1	Tube
	E7NN11N501AC	1	Switch
	82012717	6	Clamp, Hose
	C5NE9A436A	1	Plug
	263117	8	Cable Tie, 3/32" x 11-1/2" L
	82012717	3	Clamp, Hose
	C5NN9N438B	1	Tube Assy.
	D8NN14N108AA	1	Wire Assy.
	D2NN9N083A	1	Washer, 1/2", Includes: Ref. 11, 12 & 16
	82012717	6	Clamp, Hose

09H01 FUEL FILTER KIT, GASOLINE, ALL TRACTORS (NHNA)

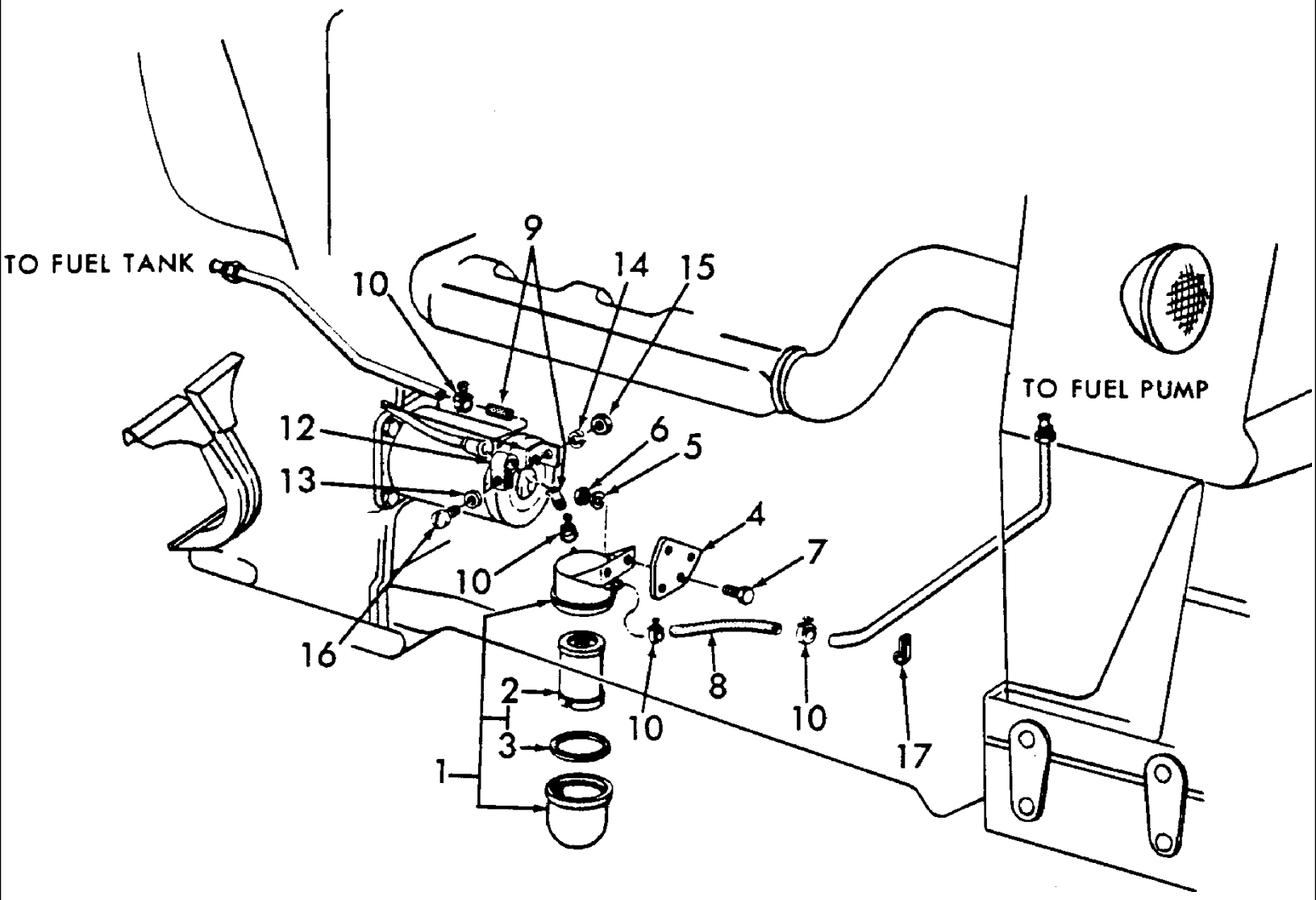

5000-SERIES 4 CYL TRACTOR (1/65-1/75)

09H01 FUEL FILTER KIT, GASOLINE, ALL TRACTORS (NHNA)

Ref	Part Number	Qty	Description
	CFPN9150B	AR	Kit, Filter, Fuel (Gasoline) Includes: Ref. 1 thru 16, NHNA Only, Start Year: 01/01/1965
1	C5NN9155A	1	Filter Assy., Fuel Includes: Body, Ref. 2 & 3, NHNA Only, Start Year: 01/01/1965
2	C4AZ9365B	1	Element Assy., NHNA Only, Start Year: 01/01/1965
3	C20E9160A	1	Gasket, Fuel Filter Element, NHNA Only, No Longer Serviced, Start Year: 01/01/1965
4	C5NN9N002A	1	Plate, Fuel Filter Mounting, NHNA Only, Start Year: 01/01/1965
5	80682	2	Washer, Lock, 1/4", Start Year: 01/01/1965
6	7770	2	Nut, Hex, 1/4"-20, Start Year: 01/01/1965
7	280641	2	Screw, Cap, HH, G5, 1/4"-20 x 5/8", Start Year: 01/01/1965
8	C20A9324A	1	Hose, Fuel Tube Connection, 8", NHNA Only, No Longer Serviced, Start Year: 01/01/1965
9	C20A9324D	1	Hose, Fuel Tube Connection, 12", NHNA Only, No Longer Serviced, Start Year: 01/01/1965
10	82012717	4	Clamp, Hose, Start Year: 01/01/1965
12	376188S	1	Clip, Fuel Line Hose, NHNA Only, No Longer Serviced, Start Year: 01/01/1965
13	80701	1	Washer, 1/4", Start Year: 01/01/1965
14	80682	1	Washer, Lock, 1/4", Start Year: 01/01/1965
15	7770	1	Nut, Hex, 1/4"-20, Start Year: 01/01/1965
16	86511932	1	Screw, Pan Hd, G5, 1/4"-20 x 3/4", Start Year: 01/01/1965
17	379943S36	AR	Clip, Start Year: 01/01/1965

10B02 HYDRAULIC PUMP ASSEMBLY, GEAR TYPE - 5000, 7000

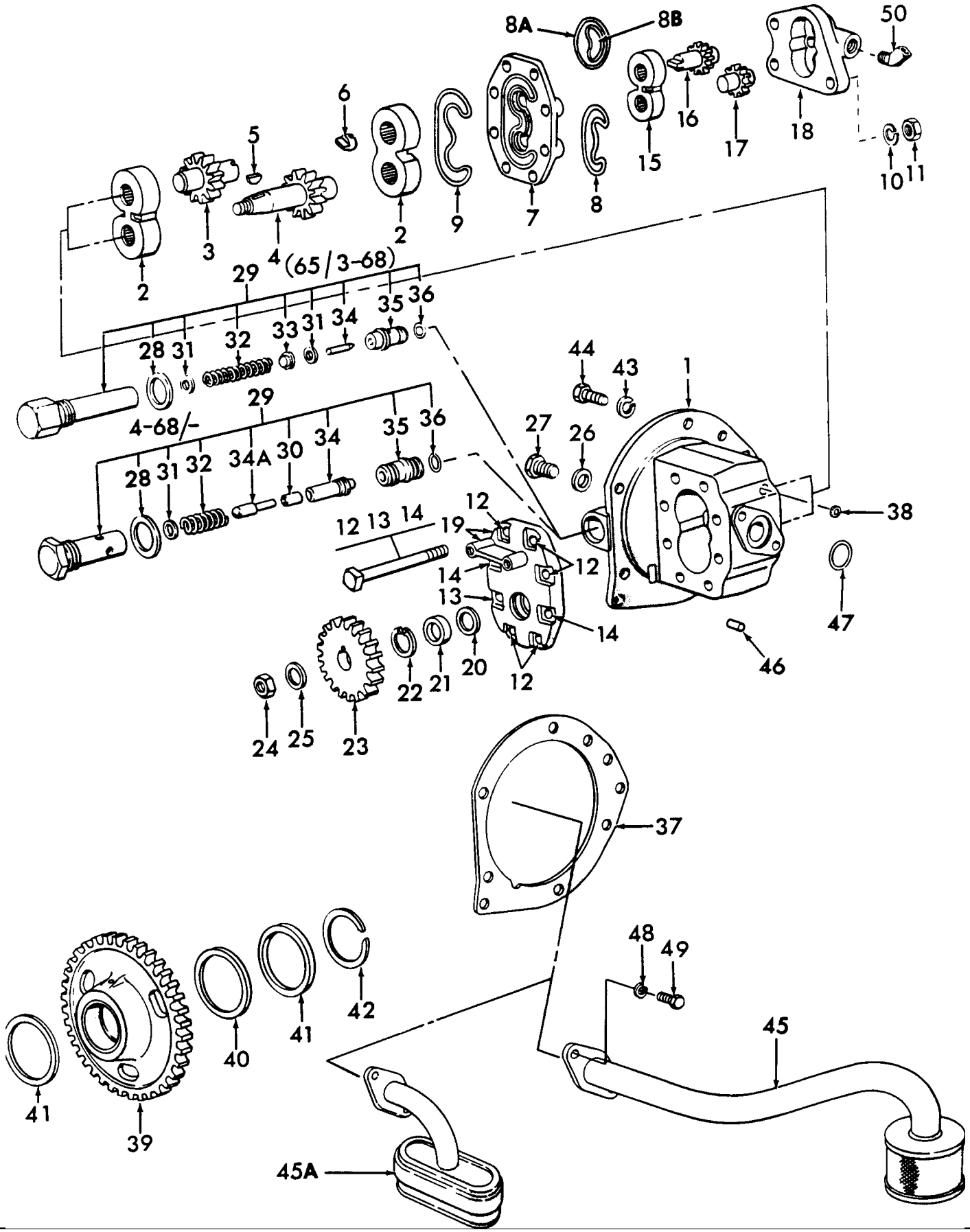

5000-SERIES 4 CYL TRACTOR (1/65-1/75)

10B02 HYDRAULIC PUMP ASSEMBLY, GEAR TYPE - 5000, 7000

Ref	Part Number	Qty	Description
	D0NN600G	1	Hydraulic Pump Assy., Includes: Ref. 1 thru 36, Start Year: 01/01/1965
	D2NN600B	1	Pump Assy., Hydraulic, W/Dual Power, Replaces P/N D0NN600E & P/N C7NN600M, Includes: Ref. 1 thru 36, Start Year: 06/01/1973
1	D0NN965B	1	Body, Front, W/ or L/Dual Power, Start Year: 01/01/1965
2	C5NNN612A	2	Bearing Assy., Front Gear, Start Year: 01/01/1965
3	C5NNN660A	1	Gear, Driven, Front, No Longer Serviced, Must Order Pump Assy., Start Year: 01/01/1965
4	C5NN866A	1	Gear, Drive Front, No Longer Serviced, Must Order Pump Assy., No Longer Serviced (NHNA), Start Year: 01/01/1965
5	84071	1	Key, Woodruff #5, 1/8" x 5/8", Start Year: 01/01/1965
6	C7NNN621A	1	Coupling, Drive Gear, Tongue & Groove, When replacing parts C5NN-N619-B, C5NN-N621-A, or C5NN-N691-A on Tractors built prior to "1-67", parts C5NN-N619-C (1815437), C7NN-N621-A (1819756) & C5NN-N691-E (1815439) must be replaced as a set., Start Year: 01/01/1965
7	C5NNN619C	1	Cover, Rear, Except w/Dual Power, When replacing parts C5NN-N619-B, C5NN-N621-A, or C5NN-N691-A on Tractors built prior to "1-67", parts C5NN-N619-C (1815437), C7NN-N621-A (1819756) & C5NN-N691-E (1815439) must be replaced as a set., Start Year: 01/01/1965
7	D2NNN619A	1	Cover, Hydraulic Pump, Rear, w/Dual Power, No Longer Serviced (NHNA), Start Year: 06/01/1973
8	377362S	1	O-Ring, Cover to Body, Use w/# C5NN-N619-A which used (1) Seal to Body, Start Year: 01/01/1965
8A	E0NNG978AA	1	Seal, 2" I.D. Cover Outer, Use w/Cover which uses (2) Seal to Body, Start Year: 01/01/1965
8B	C7NNG979A	1	Seal, 1.562 I.D. Cover Inner, Use w/Cover which uses (2) Seals to Body, Replaces 380602S, Start Year: 01/01/1965
9	C5NNF844A	2	Seal, Cover, Outer, Start Year: 01/01/1965
10	C5NNN604A	8	Washer, Cover Bolt Lock, No Longer Serviced, Start Year: 01/01/1965
11	86509310	8	Nut, G5, 3/8"-24, Start Year: 01/01/1965
12	C5NNN605B	5	Bolt, HH, 3/8"-24 x 3-5/8", Start Year: 01/01/1965
13	C5NNN608A	1	Bolt, HH, 3/8"-24 x 4-5/16", No Longer Serviced (NH-E), No Longer Serviced (NHNA), Start Year: 01/01/1965
14	C5NNN611A	2	Bolt, HH, Dowel, 3/8"-24 x 4-5/16", Start Year: 01/01/1965
15	C5NNN614A	1	Bearing Assy., Rear Gear, No Longer Serviced, Must Order Pump Assy., Start Year: 01/01/1965
16	C5NNN691E	1	Gear, Drive, Rear, Tongue, Except w/Dual Power, When replacing parts C5NN-N619-B, C5NN-N621-A, or C5NN-N691-A on Tractors built prior to "1-67", parts C5NN-N619-C (1815437), C7NN-N621-A (1819756) & C5NN-N691-E (1815439) must be replaced as a set., No Longer Serviced, Must Order Pump Assy., Start Year: 01/01/1965
16	C5NNN691F	1	Gear, Drive, Rear, Tongue, w/Dual Power, Start Year: 06/01/1973
17	C5NNN692A	1	Gear, Driven, Rear, Except w/Dual Power, No Longer Serviced, Must Order Pump Assy., No Longer Serviced, Start Year: 01/01/1965
17	C5NNN692B	1	Gear, Driven Rear, w/Dual Power, Start Year: 06/01/1973
18	D0NNN610A	1	Body Assy., Rear, Except w/Dual Power, No Longer Serviced, Must Order Pump Assy., Start Year: 01/01/1965
18	D2NNN610A	1	Body Assy., Hydraulic Pump, Rear, w/Dual Power, No Longer Serviced, Start Year: 06/01/1973
	C7NNG969A	1	Ball, Rear Cover Valve, w/Dual Power, .234 Dia., No Longer Serviced, Start Year: 06/01/1973
	C7NNN628A	1	Spring, Rear Cover Valve, w/Dual Power, Start Year: 06/01/1973

10B02 HYDRAULIC PUMP ASSEMBLY, GEAR TYPE - 5000, 7000

Ref	Part Number	Qty	Description
	C7NNA606B	1	Screw, Adjusting Cover Valve, w/Dual Power, Start Year: 06/01/1973
19	C5NN974B	1	Cover, Front, No Longer Serviced (NH-E), Start Year: 01/01/1965
20	NLS	1	Washer, Drive Gear Seal, Start Year: 01/01/1965
21	E97GF9	1	Seal, Drive Shaft, Start Year: 01/01/1965
22	CAR40181	1	Circlip, Drive Shaft, Start Year: 01/01/1965
23	C5NN908B	1	Gear, Start Year: 01/01/1965
24	87891	1	Nut, Jam, G2, 7/16"-20, Start Year: 01/01/1965
25	81810159	1	Washer, Lock, 7/16", Retaining Tab, Start Year: 01/01/1965
26	E106GF9	1	Seal, Plug, Start Year: 01/01/1965
27	E101GF9	1	Plug, Service Tapping, FTO-E, No Longer Serviced (NHNA), Start Year: 01/01/1965
28	E105GF9	1	Seal, Relief Valve, Start Year: 01/01/1965
	D2NN7N490A	1	Connector, Control Tube to Pump Assy., W/Dual Power, Start Year: 06/01/1973
29	C7NN638E	1	Valve Assy., Relief, Replaces C5NN638C, Includes: Body & Ref. 30 thru 34A, Start Year: 01/01/1965
30	C7NNG964A	1	Seal, Start Year: 04/01/1968
31	957E994613E	AR	Shim, .010, No Longer Serviced (NHNA), Years: 01/01/1965-03/31/1968
31	C7NNN627A	AR	Shim, .010 (.254mm), Start Year: 04/01/1968
31	C7NNN627B	AR	Shim, .015 (.381mm), Start Year: 04/01/1968
31	957E994613F	AR	Shim, .025 (.635mm), No Longer Serviced (NHNA), Years: 01/01/1965-03/31/1968
32	C5NNN628B	1	Spring, No Longer Serviced (NHNA), Years: 01/01/1965-03/31/1968
32	C7NNN628B	1	Spring, No Longer Serviced, Start Year: 04/01/1968
33	957E906B	1	Seat, No Longer Serviced (NHNA), Years: 01/01/1965-03/31/1968
34	957E994601C	1	Valve, U.K.-Antwerp, No Longer Serviced (NHNA), Years: 01/01/1965-03/31/1968
34	C7NNN626A	1	Valve, Start Year: 04/01/1968
34A	C7NNG963A	1	Pin, Start Year: 04/01/1968
35	C5NNB891A	1	Seat, No Longer Serviced (NHNA), Years: 01/01/1965-03/31/1968
35	C7NN651A	1	Seat, No Longer Serviced, Start Year: 04/01/1968
36	C7NNG964B	1	O-Ring, Start Year: 01/01/1965
37	E7NN915BA	1	Gasket Pump to Center Housing, Start Year: 01/01/1965
38	D2NNB997A	1	O-Ring, Pressure Port Oil Seal, Start Year: 01/01/1965
39	D9NNN883AA	1	Gear Assy., Idler, W/Creeper Gear & Hydr., When used on tractors prior to 12-68 supply one (ea.) C9NN-7N085-A (81822276), C9NN-7N071-B (81824350) & WAA-4221-A (81854761) (Refer to pg. 7C5) AARAs Required, Start Year: 01/01/1965
40	C5NNN635A	1	Washer, Idler Gear Thrust, Years: 01/01/1965-12/31/1968
41	D9NNN637AA	1	Washer, Dr. Gear Ret (With Flat), Start Year: 01/01/1965
42	97720S36	1	Ring, Snap, Ext, 2.250", Start Year: 01/01/1965
43	81547	AR	Washer, Lock, 7/16"
44	9627887	6	Screw, Cap, HH, G5, 7/16"-14 x 1-1/4", Start Year: 01/01/1965
45	C5NNN994J	1	Filter & Pipe Assy., Intake, 5000 Less Dual Power, Start Year: 01/01/1965
45A	D2NNJ981B	1	Filter & Valve Assy., Intake, 7000 U.K.-Antwerp, Start Year: 10/01/1971
45A	D2NNJ981B	1	Filter & Valve Assy., Intake, 5000 W/Dual Pwr., Start Year: 06/01/1973
45A	D2NNJ981B	1	Filter & Valve Assy., Intake, 7000 (U.S.), Start Year: 01/01/1965

10B02 HYDRAULIC PUMP ASSEMBLY, GEAR TYPE - 5000, 7000

Ref	Part Number	Qty	Description
46	E107GF9	1	Dowel, Start Year: 01/01/1965
47	87054S94	1	O-Ring, 1.062" ID x .139" Thk, Start Year: 01/01/1965
48	80681	AR	Washer, Lock, 5/16"
49	87872	2	Screw, Cap, HH, G5, 5/16"-18 x 3/4", Start Year: 01/01/1965
50	354205S	1	Elbow, 1/8"-27 x 45° (Tube to Pump), No Longer Serviced (NH-E), Start Year: 01/01/1965

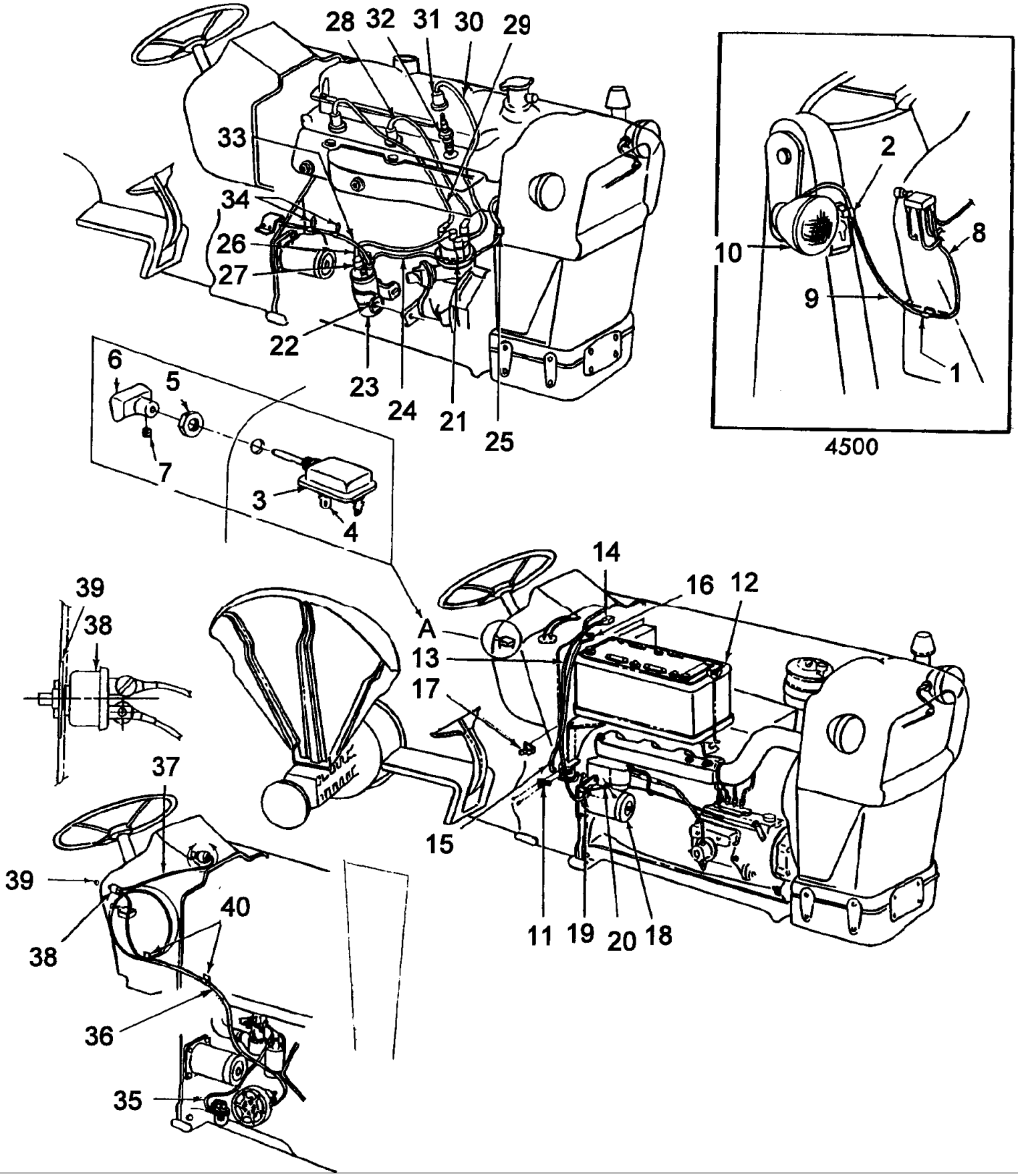
28
32
31
30
29
33
34
26
27
22
23
24
21
25
6
5
7
3
4
A
14
16
12
13
17
15
39
38
37
40
36
35
11
19
20
18
2
10
8
9
1
4500

5000-SERIES 4 CYL TRACTOR (1/65-1/75)

11A01 ELECTRICAL SYSTEM, RH, NHNA

Ref	Part Number	Qty	Description
1	372047S100	AR	Clip, Start Year: 01/01/1965
	9628503	2	Nut, G5, 3/8"-16, W/O Loader, 4500, Start Year: 01/01/1965
	88434	2	Screw, Cap, HH, G5, 3/8"-16 x 3/4", W/O Loader, 4500, Start Year: 01/01/1965
2	375911S100	2	Clip, Headlamp to Loader Post, 4500, No Longer Serviced (NH-E), Start Year: 01/01/1965
3	251405	1	Switch Assy., Lighting, Includes:, NHNA Only, Start Year: 01/01/1965
	D4AB14A094ZA	1	Fuse Assy., 25 Amp., Start Year: 01/01/1965
4	D4NN14421A	1	Terminal Assy., Light Switch, Start Year: 01/01/1965
5	C5NN11662A	1	Nut, Lighting Switch, 9/16"-28, Start Year: 01/01/1965
6	C5NN11666B	1	Knob Assy., Lighting, Includes: Knob & Ref. 16, Start Year: 01/01/1965
7	372769S36	1	Screw, Hex Headless, #8-32 x .19, Start Year: 01/01/1965
8	7000201	1	Cable Assy., Headlamp, 4500, NHNA Only, Start Year: 01/01/1965
9	C5NN13N035A	2	Conduit, Headlamp Wire, 8.75" (22.23cm), 4500, NHNA Only, No Longer Serviced, Start Year: 03/01/1966
10	310068	2	Headlamp Assy., See Fig. 11A2, Start Year: 01/01/1965
11	378173S43	1	Clip, Ground Cable to Starter Relay Bracket, NHNA Only, No Longer Serviced, Start Year: 01/01/1965
12	F120DS	1	Battery Assy., 80 Amp. Hour, Dry, Standard W/ 2000-3000, Gas & Diesel, 4000-5000, Gas, NHNA Only, Start Year: 01/01/1965
12	F150DS	1	Battery Assy., 128 Amp. Hour, Dry, Standard W/ 4000-5000, Optional W/2000-3000, NHNA Only, Start Year: 01/01/1965
12	F165DS	1	Battery Assy., 73 Amp. Hour, Dry, 5200 Standard Gas, Optional Diesel, NHNA Only, Start Year: 09/01/197
13	NLS	1	Cable Assy., Battery to Relay, 36.00" (91.4cm), 5100 {67NY14300A}, Mexico Only, Start Year: 01/01/1968
13	D8NN14N330DA	1	Cable Assy., Battery to Relay, 36.50", Diesel, NHNA Only, Start Year: 01/01/1965
13	D8NN14N330DA	1	Cable Assy., Battery to Relay, 36.50", 5200 Gasoline, NHNA Only, Years: 06/01/1971-11/30/1972
13	D1NN14300E	1	Cable Assy., Battery to Relay, 24.5" (622.3mm), Battery & 4-1/2" Starter, 3400 Gasoline, Start Year: 01/01/1965
13	D1NN14300E	1	Cable Assy., Battery to Relay, 24.5" (622.3mm), Use W/4-1/2" (11.43cm) Starter, 5000 Gasoline, Years: 01/01/1965-05/31/1971
13	D1NN14300E	1	Cable Assy., Battery to Relay, 24.5" (622.3mm), 2000-3000-4000 Gasoline, Years: 01/01/1965-10/31/1972
13	D2NN14300A	1	Cable Assy., Battery to Starter Motor, 33", Use W/73 Amp. Battery & 4-1/2" Starter, 5200 Gasoline, NHNA Only, Start Year: 12/01/1972
13	D2NN14300A	1	Cable Assy., Battery to Starter Motor, 33", Use W/73 Amp. Use W/4-1/2" (11.43cm) Starter, 3400 Gasoline, Includes: Cable & Ref. 62 & 63, NHNA Only, Start Year: 11/01/1972
14	C5NN14277B	1	Boot, Cable, Straight, Start Year: 01/01/1965
14	D5NN14277B	1	Boot, Cable, 180°, Start Year: 01/01/1965
14	NLS	1	Cover, Cable, 5100 {C5TF14277C}, Mexico Only, Start Year: 01/01/1968
14	NLS	1	Cover, Terminal, 5100 {67NY14277A}, Mexico Only, Start Year: 01/01/1968
15	C7NN14321A	1	Cover, Starter Cable Terminal, Replaces C0NN14321A, Start Year: 01/01/1965
	9635082	1	Nut, G5, 5/16"-18, Start Year: 01/01/1965
	9706690	1	Nut, CL 8, M8 x 1.25, Start Year: 01/01/1965
	E6NN10B659AB	1	Bolt, Square Hd., 5/16"-18 x 1-1/4", Start Year: 01/01/1965
	E6NN10B659AB	1	Bolt, M8 x 32, Start Year: 01/01/1965
16	D1NN14301L	1	Cable Assy., Battery to Ground, 48.5" (123.19cm), 5000 Gasoline, Years: 01/01/1965-05/31/1968

5000-SERIES 4 CYL TRACTOR (1/65-1/75)

11A01 ELECTRICAL SYSTEM, RH, NHNA

Ref	Part Number	Qty	Description
16	D1NN14301L	1	Cable Assy., Battery to Ground, 48.5" (129.19cm), Gasoline, 2000,3000,4000, Start Year: 01/01/1965
16	D1NN14301L	1	Cable Assy., Battery to Ground, 48.5" (123.19cm), 3400 Gasoline, Years: 01/01/1965-10/31/1972
16	D1NN14301K	1	Cable Assy., Battery to Ground, 26" (66.0cm), 5100 Gasoline, No Longer Serviced (NH-E), Years: 06/01/1968-05/31/1971
16	D1NN14301K	1	Cable Assy., Battery to Ground, 26" (66.0cm), 5200 Gasoline, No Longer Serviced (NH-E), Years: 06/01/1968-08/31/1971
16	D2NN14301A	1	Cable Assy., Battery to Ground, 27-1/2", Use W/73 Amp. Battery & 4-1/2" Starter, 5200 Gasoline, NHNA Only, Start Year: 09/01/1971
16	D2NN14301A	1	Cable Assy., Battery to Ground, 27-1/2", Use W/73 Amp. Battery & 4-1/2" Starter, 3400 Gasoline, NHNA Only, Start Year: 11/01/1972
16	C7NN14301C	1	Cable Assy., Battery to Ground, 35" (83.9cm), Diesel, Start Year: 01/01/1965
16	C7NN14301C	1	Cable Assy., Battery to Ground, 35" (83.9cm), 5100 Gasoline, Start Year: 06/01/1971
16	NLS	1	Cable Assy., Battery to Ground, 35.00" (88.9cm), 5100, Includes: Cable & the Following {67NY14301A}, Mexico Only, Start Year: 01/01/1968
	9635082	1	Nut, G5, 5/16"-18, Start Year: 01/01/1965
	9706690	1	Nut, CL 8, M8 x 1.25, Start Year: 01/01/1965
	23017S2	1	Screw, Cap, Sq Hd, G2, 5/16"-18 x 1-1/4", Start Year: 01/01/1965
	E6NN10B659AB	1	Bolt, M8 x 32, Start Year: 01/01/1965
	372047S100	1	Clip, Ground Cable to Battery Hold Down Clamp, Start Year: 01/01/1965
17	263117	1	Cable Tie, 3/32" x 11-1/2" L, Battery Cable, Start Year: 01/01/1965
18	REFERENCE	1	Motor, Starting, Refer to Starting Motor Section, Start Year: 01/01/1965
	D7NN14431D	1	Cable Assy., Relay to Starter, Use W/# D7NN1101A, Starter Motor, No Longer Serviced (NH-E), Start Year: 01/01/1965
	385022S100	1	Screw & Washer Assy., Cable to Starter, Use W/# D7NN14431D, Cable, No Longer Serviced (NH-E), Start Year: 01/01/1965
19	C9NN14431A	1	Cable Assy., Relay to Starter Motor, Gasoline, NHNA Only, Start Year: 01/01/1965
19	C9NN14431A	1	Cable Assy., Relay to Starter Motor, 5200 Gasoline, Includes: Ref. 68, No Longer Serviced (NH-E), Years: 01/01/1965-08/31/1971
20	C7NN14321A	1	Cover, Cable Terminal, Replaces C0NN14321A, Start Year: 01/01/1965
	80681	2	Washer, Lock, 5/16", Years: 01/01/1965-12/31/1968
	86629539	2	Nut, G5, 5/16"-24, Years: 01/01/1965-12/31/1968
	381561S36	2	Nut & Washer Assy., Hex, 5/16"-18, Start Year: 01/01/1969
21	REFERENCE	1	Distributor, Refer to Distributor Section, Gasoline, Start Year: 01/01/1965
22	86514726	1	Strap, Ignition Coil, Gasoline, Start Year: 01/01/1965
	83949109	2	Bolt, Cap, Flg Hd, G5, 5/16"-18 x .62", Gasoline, Start Year: 01/01/1965
23	D5TE12029AB	1	Coil Assy., Ignition, Gasoline, Start Year: 01/01/1965
	80684	2	Washer, Lock, #10, Gasoline, Start Year: 01/01/1965
	87825	3	Nut, G2, #10-32, Gasoline, Start Year: 01/01/1965
24	NS	1	Wire Assy., Harness to Coil, 25" (63.5cm), Gasoline, Years: 01/01/1965-08/31/1965
24	86615838	1	Wire Assy, 28", Main Harness to Coil, Gasoline, Start Year: 09/01/1965

5000-SERIES 4 CYL TRACTOR (1/65-1/75)

11A01 ELECTRICAL SYSTEM, RH, NHNA

Ref	Part Number	Qty	Description
24	C7NN14N021B	1	Wire Assy., Coil to Harness & Starter Relay, 32" (81.28cm), 5200 Gasoline, NHNA Only, No Longer Serviced, Years: 01/01/1967-02/28/1970
24	C9NN14N021A	1	Wire Assy., Coil to Harness, 18-1/2" (46.99cm), NHNA Only, Start Year: 03/01/1970
25	372047S100	1	Clip, Main Harness to Coil Wire to Radiator Shell Support, Gasoline, Start Year: 09/01/1965
	D0NN11A003A	1	Wire Assy., Relay to Starter, W/5" Starter, 5000 Gasoline, No Longer Serviced (NHNA), Start Year: 06/01/1971
	D0NN11A003A	1	Wire Assy., Relay to Starter, W/5" Starter, 7000 Diesel, No Longer Serviced (NHNA), Start Year: 06/01/1971
	D0NN11A004A	1	Wire Assy., Relay to Solenoid, W/5" Starter, 5000 Gasoline, No Longer Serviced (NHNA), Start Year: 06/01/1971
	D0NN11A004A	1	Wire Assy., Relay to Solenoid, W/5" Starter, 7000 Diesel, No Longer Serviced (NHNA), Start Year: 07/01/1973
	DHPN12259A	1	Kit, Spark Plug Wire, U.S., 2000-3000-4000, Includes: Ref. 75, NHNA Only, Start Year: 01/01/1965
26	D4NN12A012A	1	Wire Assy., Coil to Distributor, High Tension, Includes: Wire Assy. & Ref. 76 thru 80, Start Year: 01/01/1965
27	FDS12113A	1	Insulator, Coil to Distributor Wire, Gasoline, No Longer Serviced (NH-E), Start Year: 01/01/1965
28	D6NN12283A	1	Wire Assy., Distributor to Spark Plug #2, 16" (40.64cm), Gasoline, Start Year: 01/01/1965
29	D6NN12284A	1	Wire Assy., Distributor to Spark Plug #3, 21-1/2" (54.61cm), Gasoline, Start Year: 01/01/1965
30	D6NN12286A	1	Wire Assy., Distributor to Spark Plug #1, 14" (25.56cm), Replaces C5NF12286A, Gasoline Includes: Wire & Ref. 80, Start Year: 01/01/1965
31	C5NF12425A	3	Insulator, Spark Plug Wire, Gasoline, No Longer Serviced (NHNA), Start Year: 01/01/1965
	D7NN12287A	1	Wire Assy., Distributor to Spark Plug #4, 26-1/2" (67.31cm), 5000 Gasoline, NHNA Only, Start Year: 01/01/1966
	375831S7	1	Clip, #3 & #4 Wire Assy. to Battery Tray Support, 5000 Gasoline, NHNA Only, No Longer Serviced, Start Year: 01/01/1966
32	86548834	AR	Spark Plug, AG5-B, Start Year: 01/01/1965
33	C5NN14196A	1	Wire Assy., Relay to Ignition Coil, 16", No Longer Serviced (NHNA), Years: 09/01/1965-02/28/1970
33	C5NN14196B	1	Wire Assy., Relay to Igninion Coil, 24", NHNA Only, No Longer Serviced, Years: 01/01/1966-02/28/1970
33	C9NN14N021A	1	Wire Assy., Relay to Ignition Coil, 18-1/2", Gasoline, NHNA Only, Start Year: 03/01/1970
34	263117	2	Cable Tie, 3/32" x 11-1/2" L, Relay to Ignition Coil Wire, Gasoline, Start Year: 01/01/1965
35	C5NN12N000A	1	Wire Assy., Coil to Fuel Lock, 16", NHNA Only, No Longer Serviced, Years: 01/01/1966-12/31/1968
36	C5NN14N006A	1	Wire, Primer Switch to Regulator, 48 1/2", 4000LPG, NHNA Only, No Longer Serviced, Years: 01/01/1966-12/31/1968
37	C5NN14N005A	1	Wire Assy., Ignition Switch to Prime Switch, 17", NHNA Only, No Longer Serviced, Years: 01/01/1966-12/31/1968
38	C5NN9N511A	1	Switch Assy., Fuel Primer, NHNA Only, No Longer Serviced, Years: 01/01/1966-12/31/1968
39	C5NN9N513A	1	Plate, Fuel Primer Button Primer, Starting Only, 4000 LPG, NHNA Only, No Longer Serviced, Years: 01/01/1966-12/31/1968
40	263117	2	Cable Tie, 3/32" x 11-1/2" L, Wire Retaining, 4000 LPG, Years: 01/01/1966-12/31/1968
40	384118S100	3	Clip, Wire Retaining, Harness to Rear Axle Housing, Start Year: 09/01/1974

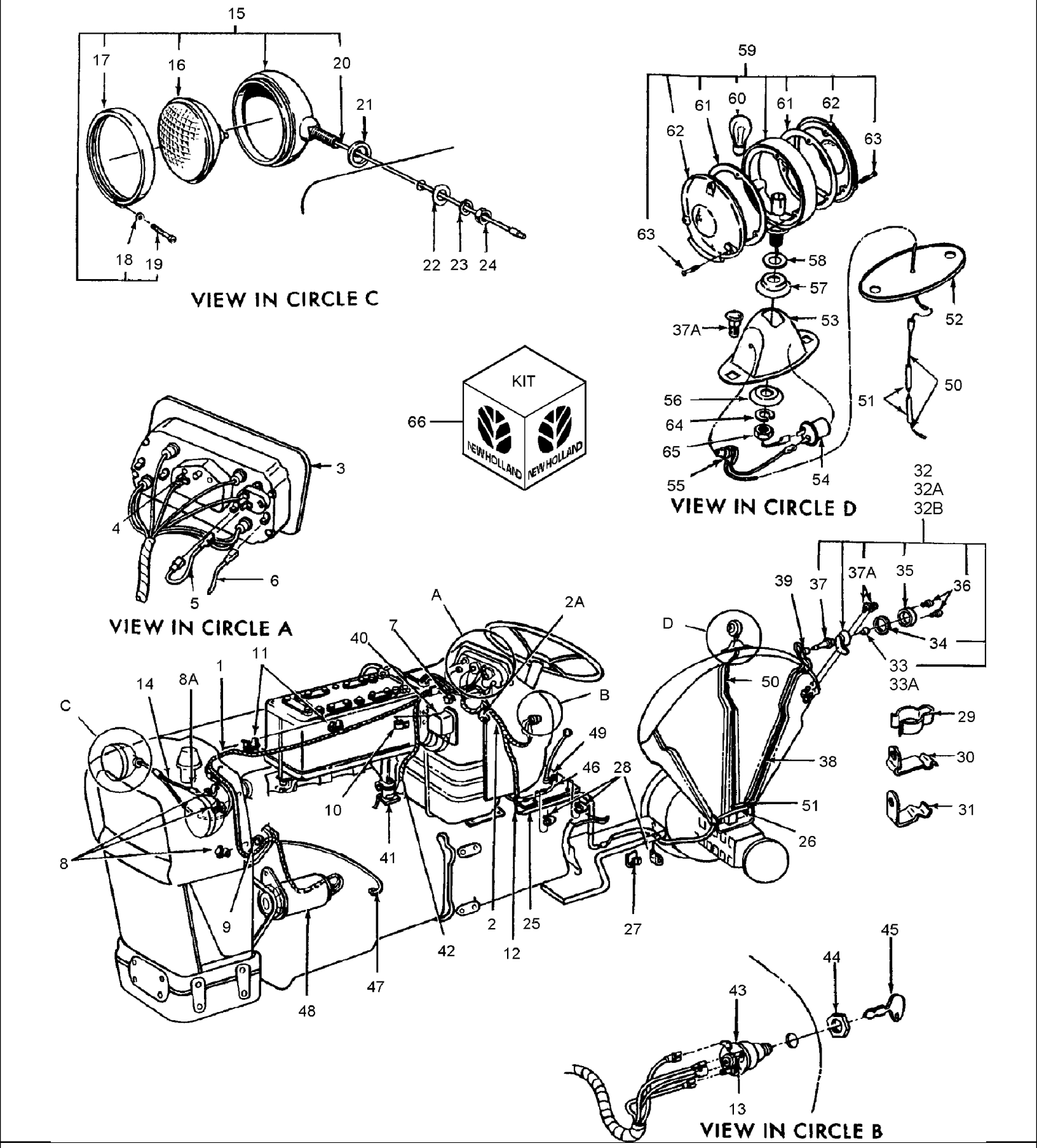
15
17
16
20
21
18
19
22
23
24
VIEW IN CIRCLE C
59
61
60
61
62
62
63
63
58
57
37A
53
52
56
64
65
55
54
51
50
KIT
66
NEW HOLLAND
NEW HOLLAND
3
4
6
5
VIEW IN CIRCLE A
VIEW IN CIRCLE D
32
32A
32B
39
37
37A
35
36
34
33
33A
29
30
31
A
2A
7
40
11
1
14
8A
C
B
49
46
28
10
41
8
9
2
25
12
27
42
47
48
D
50
38
51
26
45
44
43
13
VIEW IN CIRCLE B

5000-SERIES 4 CYL TRACTOR (1/65-1/75)

11A02 ELECTRICAL SYSTEM, LH, NHNA

Ref	Part Number	Qty	Description
1	C9NN14A103B	1	Harness Assy., Main Front, Replaces C5NN14A103AF & AJ, 2000-3000-4000, NHNA Only, Start Year: 01/01/1965
1	C9NN14A103C	1	Harness Assy., Main Front, Replaces C5NN14A103AE, 5000, Start Year: 01/01/1965
1	86531323	1	Harness Assy., Main Front, W/Alternator, 7000, NHNA Only, Start Year: 10/01/1971
1	NLS	1	Harness Assy., Main Front, 5100 {67NY14A103C}, Mexico Only, Start Year: 01/01/1968
	309842	1	Kit, Main Harness Installation, Includes:, NHNA Only, Years: 01/01/1965-02/28/1970
	263117	1	Cable Tie, 3/32" x 11-1/2" L
	D8NN14N108AA	1	Wire Assy.
	263117	5	Cable Tie, 3/32" x 11-1/2" L
	353547S100	3	Clip, No Longer Serviced (NH-E)
	C9NN14N021A	1	Wire Assy., NHNA Only
	372303S100	1	Clip, NHNA Only
	C9NN14N105A	1	Wire Assy., NHNA Only
	380896S	5	Clip, NHNA Only
2	C5NN14N104R	1	Harness Assy., Main Rear, NHNA Only, Years: 01/01/1965-10/31/1973
2	86531322	1	Harness Assy., Main Rear, 5200-7200, NHNA Only, Years: 01/01/1965-10/31/1973
2	D2NN14N104A	1	Harness Assy., Main Rear, Except Dual Power, NHNA Only, Start Year: 11/01/1973
2	D2NN14N104A	1	Harness Assy., Main Rear, W/Dual Power, 5100-7100, NHNA Only, Start Year: 06/01/1973
2	D3NN14N104C	1	Harness Assy., Main Rear, 5200-7200 Includes:, NHNA Only, Start Year: 11/01/1973
	NCA14411A	1	Holder Assy., Fuse, 5200, No Longer Serviced (NH-E), Start Year: 01/01/1967
2A	51A14526B	AR	Fuse, 3 Ampere, Start Year: 01/01/1965
	263117	1	Cable Tie, 3/32" x 11-1/2" L, Attach Main Harness to Rear Hood Support, 5000-7000, Start Year: 01/01/1965
	372047S100	AR	Clip, Main Harness to Battery Support & Radiator Shell
	380896S	AR	Clip, Main Harness Attaching Instrument Cluster Assy., NHNA Only, Start Year: 03/01/1970
3	REFERENCE	1	Instrument Cluster Assy., (Refer to Instrument Panel Section for Components), Start Year: 01/01/1965
4	73NY14N000A	1	Wire Assy., Single Rear Lights, 60" (152.4cm), Mexico, 5100, NHNA Only, Start Year: 01/01/1968
5	C5NN14N341B	1	Wire Assy., Voltage Stabilizer Fuel Gauge, Replaces C5NN14N341C, Start Year: 01/01/1965
6	C5NN14N437C	1	Wire Assy., Fuel Gauge Sender to Fuel Gauge, Green & Black, 11" (27.94cm) Lg., Start Year: 01/01/1965
7	NSS	1	Clip, Rear Harness to Fuel Tank, Except 2100-5000, Years: 01/01/1965-02/28/1970
7	372047S100	1	Clip, Rear Harness to Fuel Tank, 5000 Gasoline and 2100, Start Year: 01/01/1965
7	372047S100	2	Clip, Rear Harness to Fuel Tank, Diesel 5000 and 7000, Start Year: 01/01/1965
	9628503	2	Nut, G5, 3/8"-16, 4500 L/Loader, Start Year: 01/01/1965
	88434	2	Screw, Cap, HH, G5, 3/8"-16 x 3/4", 4500 L/Loader, Start Year: 01/01/1965
8	372303S100	3	Clip, Front Harness to Radiator Shell, 4500, NHNA Only, Start Year: 01/01/1965
8	372303S100	3	Clip, Front Harness to Radiator Shell, Except 3500-4500, NHNA Only, Years: 01/01/1965-02/28/1970
8	353547S100	2/3	Clip, Front Harness to Radiator Shell, Except 4500, No Longer Serviced (NH-E), Start Year: 03/01/1970
8	372046S100	2	Clip, Front Harness to Radiator Shell, 3500, Years: 01/01/1965-12/31/1972
8	372046S100	2	Clip, Front Harness to Radiator Shell, 3550, Start Year: 01/01/1972
8	374825S32	4	Clip, Front Harness to Radiator Shell Hood Ledge, LH, 3500-4500, NHNA Only, No Longer Serviced, Years: 01/01/1965-02/28/1970

5000-SERIES 4 CYL TRACTOR (1/65-1/75)

11A02 ELECTRICAL SYSTEM, LH, NHNA

Ref	Part Number	Qty	Description
8A	372303S100	1	Clip, Front Harness to Radiator Baffle, NHNA Only, Start Year: 01/01/1965
9	378456S7	1	Clip, Front Harness to Radiator Shell Support, 2100, No Longer Serviced (NHNA), Start Year: 01/01/1965
9	378456S7	1	Clip, Front Harness to Radiator Shell Support, Except 2100, No Longer Serviced (NHNA), Years: 01/01/1965-02/28/1970
	370972S2	2	Clip, Coil Wire to Radiator Shell Support, Start Year: 01/01/1965
10	375911S100	1	Clip, Front Harness to Fuel Tank Flange, No Longer Serviced (NH-E), Start Year: 01/01/1965
11	C5NN14N202D	2	Clip, Main Harness to Hood, Replaces C5NN14N202C, No Longer Serviced (NH-E), Years: 01/01/1965-02/28/1970
12	C5NN14N013A	1	Harness Assy., Main Extension, 4200, C5NN-14N104-R together W/C5NN-14N013-A used to replace C5NN-14N104-T on 4200 Tractors 4-66/9-66., NHNA Only, No Longer Serviced, Years: 01/01/1965-10/31/1973
12	C7NN14N013A	1	Harness Assy., Main Extension, 5200-7200, NHNA Only, No Longer Serviced, Years: 01/01/1965-10/31/1973
12	D3NN14N013B	1	Harness Assy., Main Extension, 5200-7200, NHNA Only, No Longer Serviced, Years: 11/01/1973-08/31/1974
12	D3NN14N013C	1	Harness Assy., Main Extension, 5200-7200, NHNA Only, No Longer Serviced, Start Year: 09/01/1974
	372047S100	2	Clip, Harness Extension, 5200-7200, Start Year: 09/01/1974
	D4AB14A094ZA	1	Fuse Assy, 25 Amp, Start Year: 01/01/1965
13	D4NN14421A	1	Terminal Assy., Start Year: 01/01/1965
14	C5NN14N105A	1	Wire Assy, Main Front Harness to Headlamp, Except 4200,4500,5200, NHNA Only, No Longer Serviced, Years: 01/01/1965-02/28/1970
14	C9NN14N105A	1	Wire Assy, Main Front Harness to Headlamp, Except 4200,4500,5200, NHNA Only, Start Year: 03/01/1970
14	7000201	1	Cable Assy, Headlamp, 4500, NHNA Only, Start Year: 01/01/1965
14	D0NN14N105A	1	Wire Assy, Harness to Headlamp, 7000, NHNA Only, No Longer Serviced, Start Year: 10/01/1971
15	310068	2	Headlamp Assy, Start Year: 01/01/1965
16	310062F	2	Bulb, Headlamp, No Longer Serviced (NH-E), Start Year: 01/01/1965
17	C0NN13045B	2	Door Assy., Headlamp, NHNA Only, Start Year: 01/01/1965
18	87812	2	Washer, Lock, #8
19	31458S36	2	Screw, Fillister Hd, #8-32 x 1-1/4", NHNA Only, No Longer Serviced, Start Year: 01/01/1965
20	D2NN13A006A	1	Wire Assy., Headlamp, NHNA Only, Start Year: 01/01/1965
21	E0NN13A097AA	2	Bracket, Headlamp, Round, Start Year: 01/01/1965
22	FAA13102A	2	Reinforcment, Headlamp Bracket, Except 4500, NHNA Only, Start Year: 01/01/1965
23	80679	2	Washer, Lock, 1/2", Start Year: 01/01/1965
24	280963	2	Nut, G5, 1/2"-20, Start Year: 01/01/1965
25	C5NN13N412E	1	Conduit, Rear Lamp Wire, 2000,3000,4110,4140, NHNA Only, No Longer Serviced, Start Year: 01/01/1965
25	C5NN13N412D	1	Conduit, Rear Lamp Wire, 4000 Except 4110, NHNA Only, Start Year: 01/01/1965
25	C5NN13N449J	1	Tube, Rear Lamp Wire, 5000-7000, No Longer Serviced (NHNA), Start Year: 01/01/1965
26	C5NN13N413D	1	Tubing, Rear Lamp Wire, 2000-3000, NHNA Only, Years: 01/01/1965-08/31/1974
26	C5NN13N413D	1	Tubing, Rear Lamp Wire, 4110,4140,4400,4500, NHNA Only, Years: 01/01/1965-08/31/1974
26	C5NN13N413E	1	Tubing, Rear Lamp Wire, 4100-5100-7100, Years: 01/01/1965-08/31/1974
27	354295S100	2	Clip, Rear Lamp Tubing to Platform, 4000,5000, Start Year: 01/01/1965

Ref	Part Number	Qty	Description
28	375911S100	3	Clip, Rear Tubing to Transmission Housing 2000,3000,4000, No Longer Serviced (NH-E), Start Year: 01/01/1965
29	380568S36	2	Clip, Rear Lamp Tubing to Brake Cross Shaft, 2000,3000,4110,4140, NHNA Only, Start Year: 01/01/1965
29	380568S36	4	Clip, Rear Lamp Tubing to Brake Cross Shaft, 2000,3000,4110,4140, NHNA Only, Start Year: 09/01/1974
30	380569S2	1	Clip, Rear Lamp Wire Conduit to Transmission Housing,, NHNA Only, Start Year: 01/01/1965
	81825806	1	Washer, Hardened, G8, 7/16", 2000-3000-4000, Start Year: 01/01/1965
	58656S36	1	Screw, Cap, HH, G8, 7/16"-14 x 1-3/4", Retain 380569S2 Clip to Cover,, Start Year: 01/01/1965
	383120S2	1	Clip, Harness to Hydraulic Lift Cover, 2000,3000,4000, NHNA Only, Start Year: 01/01/1965
	44730S8	1	Washer, 7/16", 2000,3000,4000, NHNA Only, No Longer Serviced, Start Year: 01/01/1965
	354295S100	3	Clip, Harness to Hydraulic Lift Cover, 5200, Start Year: 01/01/1967
31	375911S100	1	Clip, Rear Lamp Wire to Center Housing, 3500-4000 Except 4110, No Longer Serviced (NH-E), Start Year: 01/01/1965
32	D2NN13403B	1	Lamp & Bracket Assy., Rear L.H., L/Flasher, 2000,3000,4110,4400,4500, NHNA Only, Years: 01/01/1965-03/31/1967
32	D2NN13403A	1	Lamp & Bracket Assy., Rear L.H., W/Flasher, 2000-3000-4110-4400-4500, NHNA Only, Start Year: 04/01/1967
32	C5NN13403A	1	Lamp & Bracket Assy., Rear L.H., 4100,5000,7100, Includes: Body, Bracket & Ref. 47 thru 51, NHNA Only, No Longer Serviced, Start Year: 01/01/1965
32A	86639447	1	Lamp Assy., Rear, Includes: Ref. 33A
32B	86633401	1	Bracket, LH, Use W/86639447 Lamp Assy.
32B	86633402	1	Bracket, RH, Use W/86639447 Lamp Assy.
33	C6AB13465A	1	Bulb Assy., Lamp, Start Year: 01/01/1965
33A	529068	1	Bulb, #1156
34	FAD13461A	1	Gasket, Lamp Lens, NHNA Only, Start Year: 01/01/1965
35	FDV13450A	1	Lens, Lamp, Red, NHNA Only, Start Year: 01/01/1965
36	30178S13	2	Screw, Oval Hd, Brass, # 8-32 x 5/8", NHNA Only, No Longer Serviced, Start Year: 01/01/1965
37	310095	1	Wire & Socket Assy., LH, W/O Flasher, 2000,3000,4110,4400,4500, Years: 01/01/1965-03/31/1967
37	C5NN13A448A	1	Wire & Socket Assy., LH, W/Flasher, 4100,5000, NHNA Only, Start Year: 01/01/1965
37	C5NN13A448A	1	Wire & Socket Assy., LH, W/Flasher, 2000,3000, 4110,4400,4500, NHNA Only, No Longer Serviced, Start Year: 04/01/1967
	9715503	2	Washer, Lock, Ext T, 7/16", Start Year: 01/01/1965
	50456	AR	Nut, G5, 7/16"-20
37A	350804S36	2	Bolt, Carrier, 7/16"-20 x .91, No Longer Serviced (NH-E), Start Year: 01/01/1965
37A	350804S36	2	Bolt, Carrier, 7/16"-20 x .91, No Longer Serviced (NH-E), Start Year: 04/01/1967
38	C5NN13A449B	1	Wiring Assy., Lamp, 32" (81.28cm) Lg., 2000,3000,4000, NHNA Only, No Longer Serviced, Years: 01/01/1965-10/31/1973
38	C5NN13A449B	1	Wiring Assy., Lamp, 32" (81.28cm) Lg., 5100,7100, NHNA Only, No Longer Serviced, Start Year: 01/01/1965
38	NLS	1	Wiring Assy., Lamp, 57" (114.78cm) Lg., LH, 5100 {C7MN13A449A}, Mexico Only, Start Year: 01/01/1968
38	C5NN13A449C	1	Wiring Assy., Lamp, 80" (203.2cm) Lg., W/Flasher, 4100,5100,7100, NHNA Only, Start Year: 01/01/1965
38	D3NN13A449A	1	Wiring Assy., Rear Lamp, 32" (81.26cm) Lg., LH, NHNA Only, Start Year: 11/01/1973

11A02 ELECTRICAL SYSTEM, LH, NHNA

Ref	Part Number	Qty	Description
38	NLS	1	Wiring Assy., Lamp, 117" (297.19cm) Lg., RH, 5100 {C7MN13N455A}, Mexico Only, Start Year: 01/01/1968
38	67NY14A103B	1	Harness Assy., Alternator to Main Harness, Mexico, 5100, NHNA Only, Start Year: 01/01/1968
39	513917	1	Grommet, Rear Lamp Wire to Fender, 2000-3000, NHNA Only, Start Year: 01/01/1965
40	D0NN10505A	1	Regulator Assy., Generator, 12 Volt, 22 Amp., U.S., Start Year: 01/01/1965
40	D1NN10316A	1	Regulator Assy., Alternator, 7000, Start Year: 10/01/1971
	C7NN10316A	1	Regulator Assy., Alternator, 12 Volt, 35 Amp., Mexico, 5100, Start Year: 01/01/1968
	39147S36	3	Screw, Pan Hd, #10-32 x 1-1/8", Start Year: 01/01/1965
	39147S36	3	Screw, Pan Hd, #10-32 x 1-1/8", 7000, Years: 01/01/1971-05/31/1973
	51765S36	3	Screw, Self-Tapping, Regulator to Support, 7000, Start Year: 06/01/1973
	NLS	3	Screw, Alternator Regulator Rear Hood Support, 5100 {70NY10N306A}, Mexico Only, Start Year: 01/01/1968
	C5NF10A598A	3	Insulator Assy., Regulator Mounting, No Longer Serviced, Start Year: 01/01/1965
	80684	3	Washer, Lock, #10, Start Year: 01/01/1965
	88612	AR	Washer, #10
	39147S36	3	Screw, Pan Hd, #10-32 x 1-1/8", Start Year: 01/01/1965
	NLS	3	Screw, Pan Hd., #10-24 x 3/4", 5100 {C7MN10N306A}, Mexico Only, Start Year: 01/01/1968
	31476S7	1	Screw, Pan Hd., Self-Tapping, 1/4"-14 x .375, No Longer Serviced, Years: 01/01/1965-05/31/1967
	382369S100	1	Bolt, Hex, Self-Tapping, 1/4"-20 x .50, No Longer Serviced (NHNA), Start Year: 06/01/1967
	C5NF10560A	1	Cover Assy., Generator Regulator, No Longer Serviced (NHNA), Start Year: 01/01/1965
41	76919	1	Relay Assy., Use W/4-1/2" Dia. Starter, Except 7000, Start Year: 01/01/1965
41	76919	1	Relay Assy., Use W/5" Dia. Starter, 7000, Start Year: 07/01/1971
42	D5NN14N031B	1	Terminal, Male Blade, Relay, Years: 01/01/1965-07/31/1970
42	80684	1	Washer, Lock, #10, Start Year: 01/01/1965
42	87825	1	Nut, G2, #10-32, Start Year: 01/01/1965
	80682	AR	Washer, Lock, 1/4"
	86509309	AR	Nut, G5, 1/4"-28
	39051S36	2	Bolt, Pan Hd, 1/4"-28 x 1/2", Start Year: 01/01/1965
43	C5NN11N572A	1	Switch Assy., Ignition & Starter, Except Diesel W/Cold Start, Start Year: 01/01/1965
	5170782	1	Key, Except Diesel, W/Cold Start, No Longer Serviced (NH-E), Start Year: 01/01/1965
43	E7NN11N501AC	1	Switch Assy., Heater Starter, Diesel W/Cold Start, Start Year: 01/01/1965
	NLS	1	Fuse & Wire Assy., 5100, Includes: Wire, Housing & the Following {67NY14N107A}, Mexico Only, Start Year: 01/01/1968
	NLS	1	Fuse, 15 Amp., 5100 {67NY14A094A}, Mexico Only, Start Year: 01/01/1968
	NLS	1	Knob, Fuse Holder, 5100 {69NY14N016A}, Mexico Only, Start Year: 01/01/1968
44	C5NN11N496A	1	Nut, Starter Switch to Panel, Start Year: 01/01/1965
45	5170782	1	Key, Ignition Lock, Start Year: 01/01/1965
46	C5NN14N322E	1	Wire Assy., Safety Starter Switch, W/Torque Converter, 10" (25.4cm), 3500-3550-4500, No Longer Serviced (NHNA), Years: 01/01/1965-03/31/1967
46	C5NN14N322E	1	Wire Assy., Safety Starter Switch, Except 4 Speed & Torque Converter, 10" (25.4cm), 2000-3000-4000, No Longer Serviced (NHNA), Years: 01/01/1965-09/30/1966

5000-SERIES 4 CYL TRACTOR (1/65-1/75)

11A02 ELECTRICAL SYSTEM, LH, NHNA

Ref	Part Number	Qty	Description
46	C5NN14N322L	1	Wire Assy., Safety Starter Switch, W/Torque Converter, 10" (25.4cm), 3500-4500, No Longer Serviced (NH-E), Start Year: 04/01/1967
46	C5NN14N322L	1	Wire Assy., Safety Starter Switch, W/4 Speed Transmission, 10" (25.4cm), 2000-3000, No Longer Serviced (NH-E), Start Year: 01/01/1965
46	E4NN7A488CA	1	Wire Assy., Safety Starter Switch, Except 4 Speed & Torque Converter, 5000-7000, Start Year: 10/01/1966
46	C5NN14N322F	1	Wire Assy., Safety Starter Switch, 18" (45.72cm), 5000, No Longer Serviced (NHNA), Years: 01/01/1965-09/30/1966
46	E4NN7A488BB	1	Wire Assy., Safety Starter Switch, 2000-3000-4000, Start Year: 10/01/1966
	D1NN3A566A	1	Grommet, 1/2" ID x 11/32" Thk, Safety Switch Wire to Steering Gear Cover, 3500-3550-4400-4410-4500, Start Year: 10/01/1966
	353873S	1	Grommet, Safety Switch Wire, .37" I.D. x 1/2" Thick, Except 3500-3550-4400-4410-4500, Start Year: 10/01/1966
47	81873524	1	Switch Assy., Oil Pressure Sender, 3 Cylinder, Start Year: 01/01/1965
47	81873524	1	Switch Assy., Oil Pressure Sender, 4 Cylinder, Start Year: 01/01/1965
48	REFERENCE	1	Generator Assy., Refer to Generator Section for Components, Start Year: 01/01/1965
	NS	1	Alternator, 35 Amp., Mexico, See Fig. 11G2, 5100, Start Year: 01/01/1968
	67NY14A103B	1	Harness Assy., Alternator to Main Harness: Mexico 5100, NHNA Only, Start Year: 01/01/1968
49	C5NN11N505A	1	Cover, Safety Starter Switch, 2000, 3000, 4000, Start Year: 01/01/1965
50	C5NN13N315A	1	Wire Assy, Warning Lamp LH (54"or 137.16 cm Long) 2000,3000,4110,4400,4500, NHNA Only, Start Year: 04/01/1967
50	D3NN13N315A	1	Wire Assy., Flasher Warn, Start Year: 09/01/1974
50	C5NN13N315B	1	Wire Assy, Warning Lamp LH (70"or 177.8 cm Long) 4100 & 5000, NHNA Only, No Longer Serviced, Start Year: 04/01/1967
51	C5NN13N413F	1	Tubing, Rear Lamp Wire (6" or 15.24 cm Long), NHNA Only, No Longer Serviced, Years: 04/01/1967-08/31/1974
52	D6NN13N309B	1	Gasket, Warning Lamp Fender (LH) 2000,3000,4110,4400,4500, NHNA Only, Start Year: 04/01/1967
52	C5NN13N309B	1	Gasket, Warning Lamp Fender LH 4100,4200,5000, Start Year: 04/01/1967
53	D3NN13R300E30M	1	Lamp Assy, Warning LH, Years: 04/01/1967-08/31/1974
53	D3NN13R300E30M	1	Lamp Assy, LH, Start Year: 04/01/1967
53	83960958	1	Lamp Assy, RH, Start Year: 04/01/1967
54	E9NN13350AA	1	Flasher Assy, Aluminum, Years: 04/01/1967-08/31/1974
54	E9NN13350AA	1	Flasher Assy, Plastic, Years: 04/01/1967-08/31/1974
55	C5NN13N313A	1	Switch Assy, Years: 04/01/1967-08/31/1974
56	C5NN13N314B	1	Washer, No Longer Serviced (NH-E), Start Year: 04/01/1967
57	C5NN13N308B	1	Bracket, No Longer Serviced (NH-E), Start Year: 04/01/1967
58	C5NN13420C	1	Pad , Rubber, NHNA Only, No Longer Serviced, Years: 04/01/1967-08/31/1974
59	D4NN13N359A	1	Lamp Assy., Flasher, RH Fender, Includes: Body, Wire & ref. 106-109, Start Year: 09/01/1974
59	C5NN13N359E	1	Lamp Assy., LH Fender, Includes: Body, Wire & Ref. 106 thru 109, No Longer Serviced (NH-E), Start Year: 04/01/1967
60	529068	1	Bulb, Light, #1156
61	C5NN13330A	2	Gasket, Lamp Lens, No Longer Serviced (NH-E)

Ref	Part Number	Qty	Description
62	F0NN15N581AA	2	Lens, Lamp, Amber
62	C5NN13N311C	1	Lens, Lamp, Red, Used to Replace Amber where Required, Not Part of C5NN13N569D, NHNA Only
63	C5NN13N316A	6	Screw, Round Hd., Self-Tapping, #6-32 x .65, No Longer Serviced (NH-E)
64	80679	1	Washer, Lock, 1/2", Start Year: 04/01/1967
65	33846S8	1	Nut, Hex, 1/2"-20, NHNA Only, No Longer Serviced, Start Year: 04/01/1967
	138188	1	Plug, Button, 13/32", Switch Hole in Bracket, Start Year: 09/01/1974
	D3NN16N264C	1	Bracket, Reflector RH Fender, U.S., 2000-3000, NHNA Only, Years: 09/01/1974-12/31/1974
	D3NN16N264A	1	Bracket, Reflector RH Fender, 4000-5000-7000, NHNA Only, No Longer Serviced, Years: 09/01/1974-12/31/1974
	280700	1	Bolt, Carriage, Short Neck, G5, 1/4"-20 x 1/2", Bracket to Fender, Start Year: 09/01/1974
66	D6NN18887A	1	Kit, Radio Frequency Suppression, U.S., for Components Refer to FTO-17240 7A Catalog, NHNA Only, No Longer Serviced, Start Year: 01/01/1965
66	CFPN13N310A	AR	Kit, Flasher Lamp, 2000-3000-4100-4140-4400-4500, Includes:, NHNA Only, Start Year: 01/01/1965
	D6NN13N309B	1	Gasket, NHNA Only, Start Year: 01/01/1965
	D3NN13R300E30M	1	Lamp & Body Assy., LH, Years: 01/01/1965-08/31/1974
	C5NN13N315A	1	Wire Assy., NHNA Only, Start Year: 01/01/1965
	50456	2	Nut, G5, 7/16"-20, Start Year: 01/01/1965
	9715503	2	Washer, Lock, Ext T, 7/16", Start Year: 01/01/1965
	350804S36	2	Bolt, Carrier, 7/16"-20 x .91, No Longer Serviced (NH-E), Start Year: 01/01/1965
66	CFPN13N310B	AR	Kit, Flasher Lamp, 4100-5100 (Order Components), NHNA Only, No Longer Serviced, Start Year: 01/01/1965
	D6NN13N309B	1	Gasket, NHNA Only, Start Year: 01/01/1965
	D3NN13R300E30M	1	Lamp & Body Assy., Years: 01/01/1965-08/31/1974
	C5NN13N315B	1	Wire Assy., NHNA Only, No Longer Serviced, Start Year: 01/01/1965
	C5NN13N413F	1	Tubing, Wire, NHNA Only, No Longer Serviced, Years: 01/01/1965-08/31/1974
	50456	2	Nut, G5, 7/16"-20, Start Year: 01/01/1965
	9715503	2	Washer, Lock, Ext T, 7/16", Start Year: 01/01/1965
	350804S36	2	Bolt, Carrier, 7/16"-20 x .91, No Longer Serviced (NH-E), Start Year: 01/01/1965
66	NS	AR	Kit, Flasher Lamp, 4200, 5200, Order Wholegoods, Start Year: 01/01/1965
	C5NN13N309B	1	Gasket, Start Year: 01/01/1965
	D3NN13R300E30M	1	Lamp & Body Assy., Years: 01/01/1965-08/31/1974
	50456	2	Nut, G5, 7/16"-20, Start Year: 01/01/1965
	9715503	2	Washer, Lock, Ext T, 7/16", Start Year: 01/01/1965
	350804S36	2	Bolt, Carrier, 7/16"-20 x .91, No Longer Serviced (NH-E), Start Year: 01/01/1965
	375911S100	1	Clip, No Longer Serviced (NH-E), Start Year: 01/01/1965

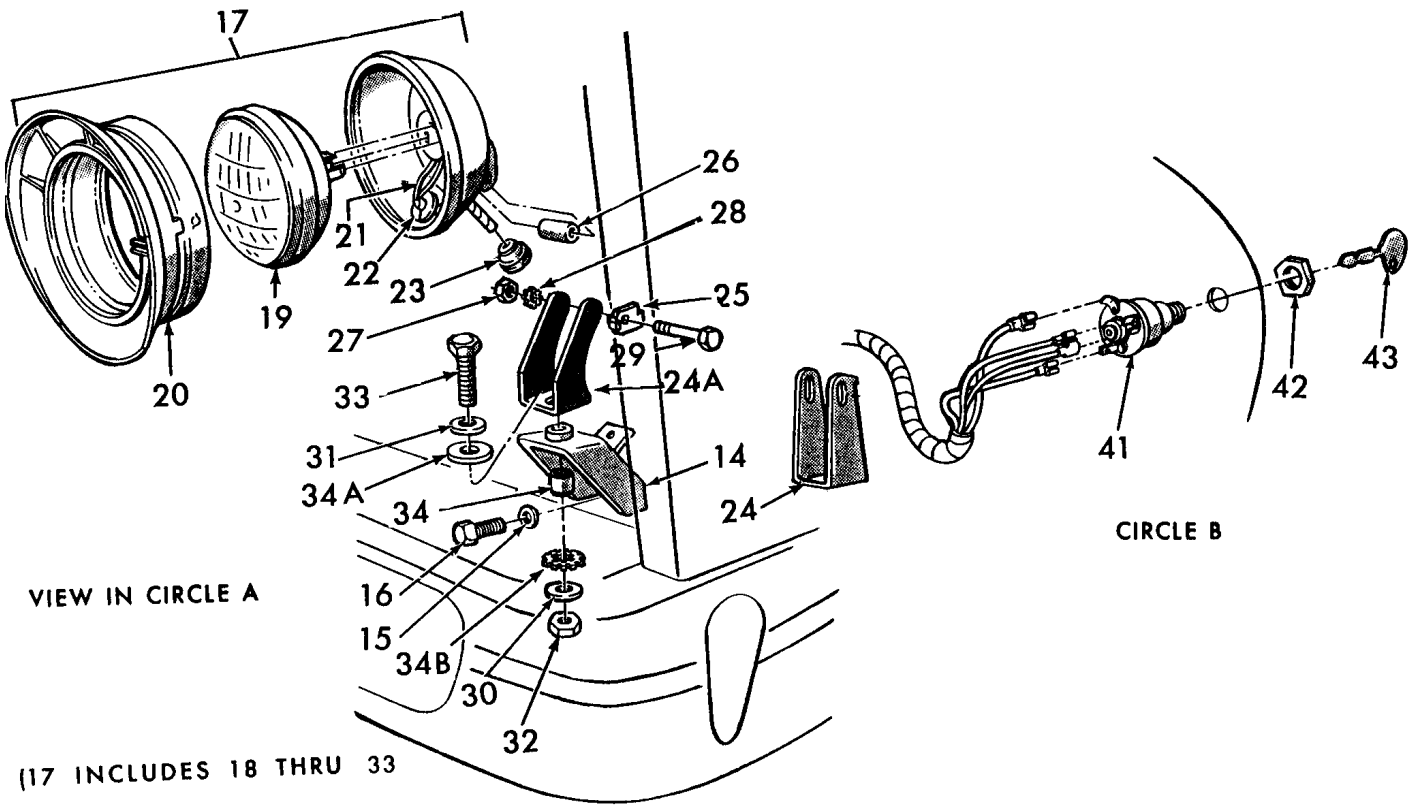
17
26
28
21
22
23
25
19
27
29
20
33
24A
31
14
34A
34
24
42
43
41
CIRCLE B
VIEW IN CIRCLE A
16
15
34B
30
32
(17 INCLUDES 18 THRU 33

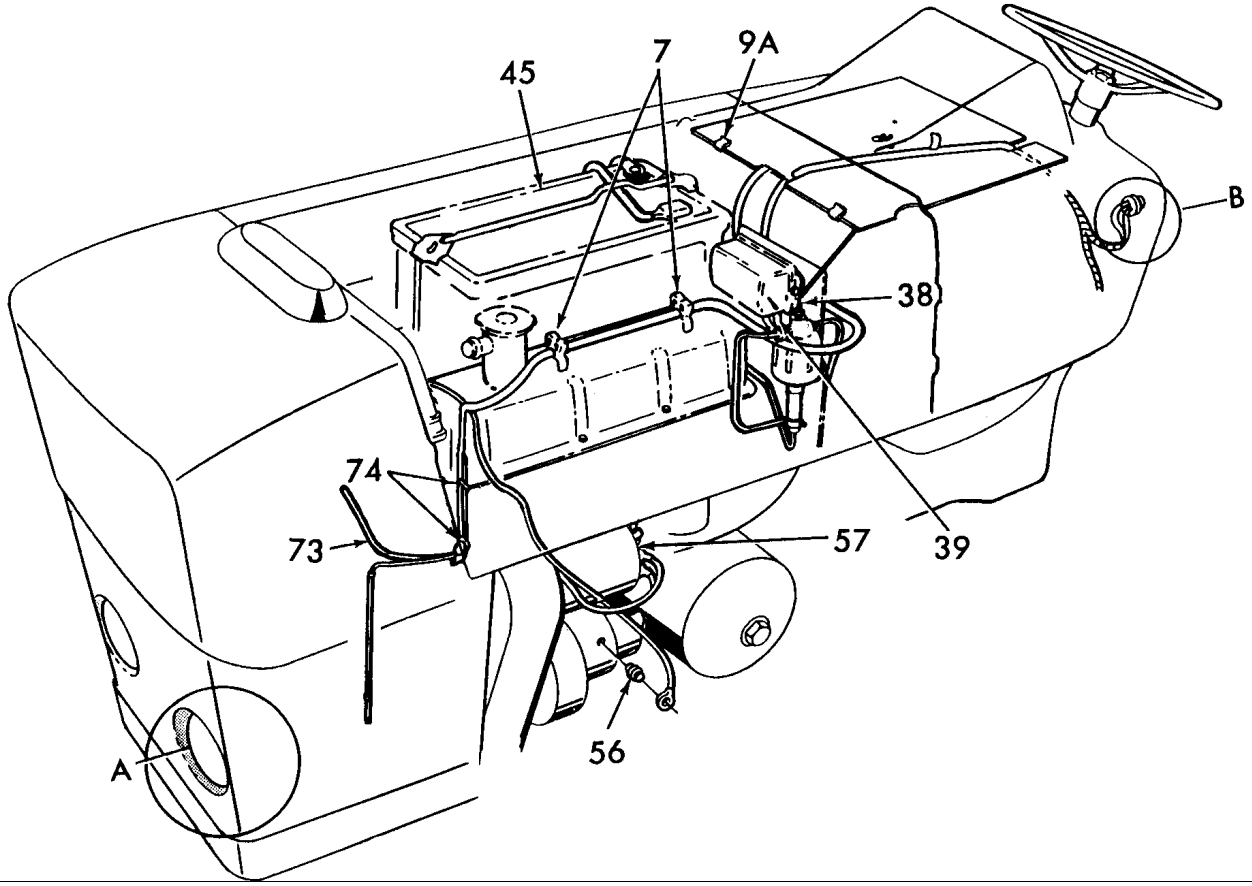
45
7
9A
B
38
74
73
57
39
56
A

5000-SERIES 4 CYL TRACTOR (1/65-1/75)

11B01[L] ELECTRICAL SYSTEM, LH (NH-E)

Ref	Part Number	Qty	Description
7	D3NN14N202D	AR	Clip, Harness to Rocker Cover, NH-E Only, Start Year: 07/01/1973
7	C5NN14N202D	2	Clip, Main Harness to Hood, Replaces C5NN14N202C, No Longer Serviced (NHNA), Years: 01/01/1965-06/30/1973
	82015330	1	Bumper, 2-1/2" Lg, Start Year: 07/01/1973
	529070	1	Strap, Cable to Oil Filter, Start Year: 07/01/1973
9A	D3NN14N061A	2	Clip, Baffle to Rear Hood Panel, Start Year: 07/01/1973
14	C5NN13070C	2	Front Headlamp Mounting Bracket Assy., 2000-3000, No Longer Serviced (NHNA), Start Year: 01/01/1965
15	280278	4	Washer, Lock, Ext T, 5/16", Start Year: 01/01/1965
16	9627874	4	Screw, Cap, HH, G5, 5/16"-18 x 5/8" 5100-7100, Start Year: 01/01/1965
	D2NN13N102A	1	Headlamp Side Mount Bracket Assy., LH, 5100-7100 L.H. Drive, NH-E Only, Start Year: 01/01/1973
	D2NN13N102B	1	Headlamp Side Mount Bracket Assy., RH, LH Drive, 5100-7100 listed below see Fig. 11H2, 11H3 & 11J1, NH-E Only, Start Year: 01/01/1973
17		AR	Headlamp Assy., For Headlamps other than listed below see Fig. 11H2, 11H3 & 11J1
17	D5NN13005B	2	Front Mounted Headlamp Assy., Replaces D4NN13005C, Includes: Body & Ref. 19 thru 33, Start Year: 01/01/1965
19	D6NN13N007A	2	Bulb Assy., Start Year: 01/01/1965
20	D6NN13048A	2	Bezel, Headlamp, Start Year: 01/01/1965
21	C5NN13076A	2	Lead Wire Assy., No Longer Serviced (NHNA), Start Year: 01/01/1965
	C5NN14A063A	1	Light Switch Wire Terminal Assy., Snap-On, W/10 Speed, NH-E Only, Start Year: 01/01/1965
22	C5NN13N069A	2	Washer, Retaining Wire Assy., Start Year: 01/01/1965
23	C5NN14615C	2	Grommet, Cable, No Longer Serviced, Start Year: 01/01/1965
24	NLS	2	Bracket, Mounting, Years: 01/01/1965-03/31/1968
24A	C7NN13N005C	2	Bracket, Mouting, Use W/# C7NN13005H, No Longer Serviced (NHNA), Start Year: 04/01/1968
24A	D4NN13N005A	2	Bracket, Mounting, Use W/# D5NN13005B, No Longer Serviced, Start Year: 04/01/1968
25	C5NN13N002A	2	Bracket, Bolt Retaining, No Longer Serviced (NHNA), Start Year: 01/01/1965
26	C5NN13N073A	2	Spacer, Mounting Bracket Pivot, No Longer Serviced (NHNA), Start Year: 01/01/1965
27	86529539	2	Washer, Lock, Int T, 1/4", Start Year: 01/01/1965
28	7770	2	Nut, Hex, 1/4"-20, Start Year: 01/01/1965
29	87404	2	Cap, HH, G5, 1/4"-20 x 2", Years: 01/01/1965-03/31/1968
29	87405	2	Screw, Cap, HH, G5, 1/4"-20 x 2-1/4", No Longer Serviced, Start Year: 04/01/1968
30	9672276	2	Washer, Lock, Int T, 3/8", Start Year: 01/01/1965
31	87016	2	Washer, SAE, 3/8", Start Year: 01/01/1965
32	9628503	2	Nut, G5, 3/8"-16, Start Year: 01/01/1965
33	88044	2	Screw, Cap, HH, G5, 3/8"-16 x 1-1/2", 2000-3000, Years: 01/01/1965-03/31/1968
33	88044	2	Screw, Cap, HH, G5, 3/8"-16 x 1-1/2", 4000,5000, Start Year: 01/01/1965
33	88434	2	Screw, Cap, HH, G5, 3/8"-16 x 3/4", 2000,3000, Start Year: 04/01/1968
34	NLS	4	Spacer, Front Mounted Headlamp Mounting, .42 I.D. x .98 O.D. W/1.33 Shoulder, 4000,5000 {C5NN13N074A}, Years: 01/01/1965-04/30/1967
34	C5NN13N074B	1	Spacer, Front Mounted Headlamp Mounting, L.H., .42 I.D. x .62 O.D. x .48, 4000,5000, NH-E Only, No Longer Serviced, Years: 05/01/1967-03/31/1968

5000-SERIES 4 CYL TRACTOR (1/65-1/75)

11B01[L] ELECTRICAL SYSTEM, LH (NH-E)

Ref	Part Number	Qty	Description
34A		2	Washer, Flat, .40 I.D. x 1.40 O.D., 4000,5000, NH-E Only, No Longer Serviced, Years: 05/01/1967-03/31/1968
34B		1	Washer, Lock, Tooth, L.H. Lamp, 3/8", 4000,5000, NH-E Only, No Longer Serviced, Years: 05/01/1967-03/31/1968
38	C7NN10505D	1	Generator Regulator Assy., 12 Volt, 11 Amp., Replaces C7NN10505A, NH-E Only, Years: 01/01/1965-03/31/1968
38	D0NN10505A	1	Generator Regulator Assy., 12 Volt, 22 Amp., Replaces C7NN10505C, Start Year: 01/01/1965
	9672521	3	Washer, Lock, Ext T, #10, Start Year: 01/01/1965
	88612	3	Washer, #10, Start Year: 01/01/1965
	39147S36	3	Screw, Pan Hd, #10-32 x 1-1/8", Start Year: 01/01/1965
	382369S100	1	Bolt, Hex, 1/4"-20 x .50, No Longer Serviced (NHNA), Start Year: 06/01/1967
	C5NF10A598A	3	Regulator Mounting Bolt Insulator Assy., No Longer Serviced, Start Year: 01/01/1965
	C5NF10560A	1	Regulator Cover Assy., No Longer Serviced (NHNA), Start Year: 01/01/1965
39	D5NN14N031B	1	Terminal, Male Blade, Regulator, Start Year: 01/01/1965
	9672521	1	Washer, Lock, Ext T, #10, Start Year: 01/01/1965
	87825	1	Nut, G2, #10-32, Terminal to Relay, Start Year: 01/01/1965
41	C5NN11N572A	1	Ignition & Starter Switch Assy., Except Diesel W/Cold Start, Start Year: 01/01/1965
41	E7NN11N501AC	1	Heater & Starter Switch Assy., Diesel W/Cold Start, Start Year: 01/01/1965
42	C5NN11N496A	1	Nut, Starter Switch to Panel, Start Year: 01/01/1965
43	E7NN11603AA	1	Key, Ignition Lock, Start Year: 01/01/1965
45		1	Dry Battery Assy., 80 Amp Hour, Standard, W/2000,3000, Optional W/4000, NH-E Only, Start Year: 01/01/1965
45		1	Dry Battery Assy., 128 Amp. Hour, Standard W/4000,5000, Optional W/2000,3000, NH-E Only, Start Year: 01/01/1965
56	81873524	1	Switch Assy, Oil Pressure Sender, Start Year: 01/01/1965
57	REFERENCE	1	Generator, Refer to Gen. Sect. for Components, Start Year: 01/01/1965
73	C5NN13N866A	1	Horn Wire Assy., 28" (71.12cm), No Longer Serviced (NHNA), Years: 01/01/1965-01/31/1968
73	C5NN13N850C	1	Horn Ground Wire Assy., 7" (17.78cm) Block, Start Year: 02/01/1968
74	379758S40	2	Clip, Wire to Brace, 1/2" (1.27cm), No Longer Serviced (NH-E), Start Year: 01/01/1965

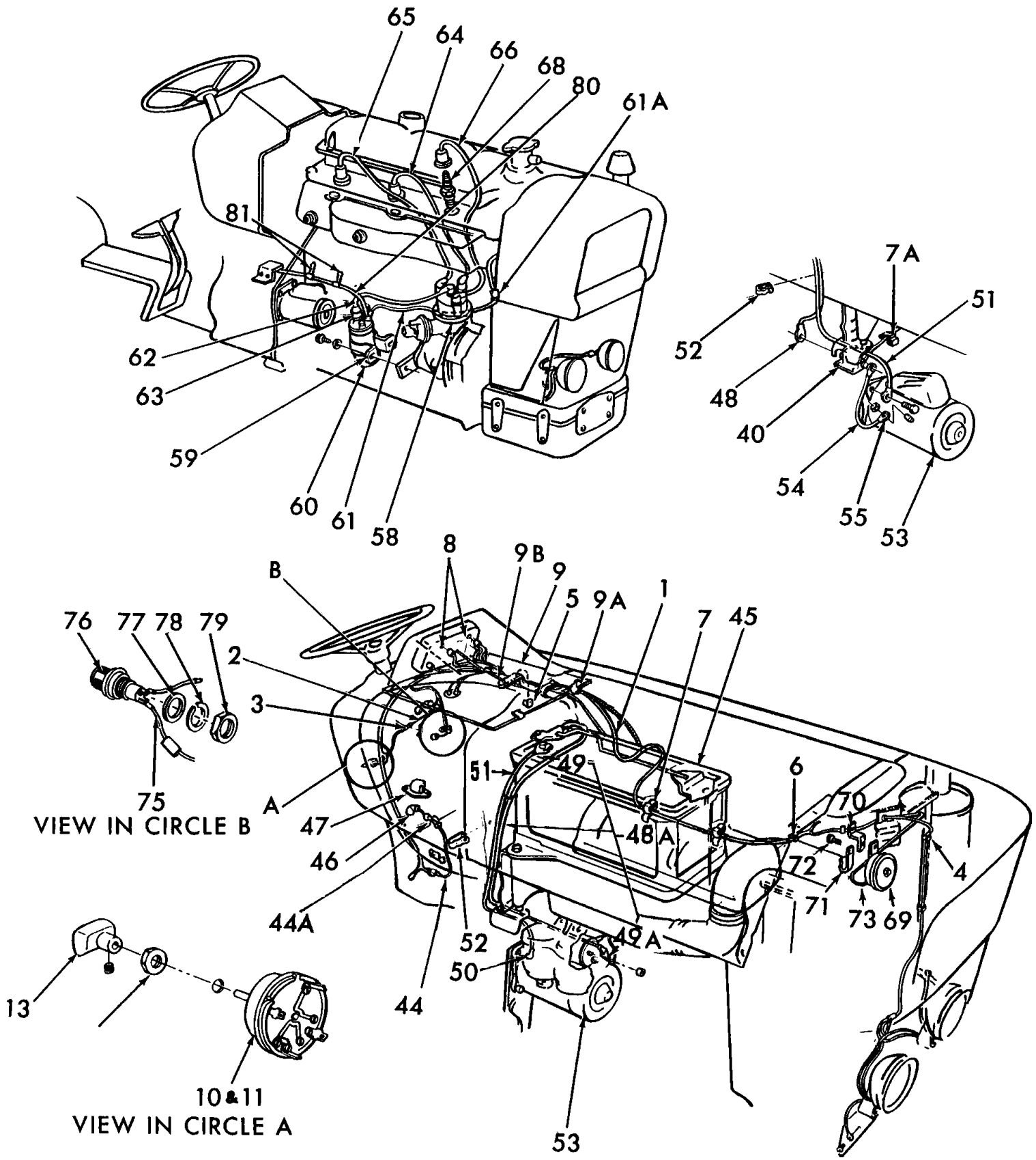
65
64
66
68
80
61A
81
62
63
59
60
61
58
7A
51
52
48
40
54
55
53
8
9B
9
5
9A
1
7
45
B
76
77
78
79
2
3
75
VIEW IN CIRCLE B
A
47
46
44A
44
51
49
48A
6
70
72
71
73
69
4
52
50
49A
53
13
10&11
VIEW IN CIRCLE A

5000-SERIES 4 CYL TRACTOR (1/65-1/75)

11B01[R] ELECTRICAL SYSTEM, RH, NH-E

Ref	Part Number	Qty	Description
1	NLS	1	Main Harness Assy., L/Lights, 2000 {C5NN14N103Z}, Years: 01/01/1965-01/31/1968
1	C5NN14A103AD	1	Main Harness Assy., L/Lights, 2000, Start Year: 02/01/1968
1	C5NN14A103AD	1	Main Harness Assy., W/Lights, 2000,3000,4000, Years: 01/01/1965-01/31/1968
1	C5NN14A103AD	1	Main Harness Assy., W/Lights, 3400,4400,4500, Years: 01/01/1965-01/31/1968
1	NLS	1	Harness Assy., Headlamp, 3400 {C5NN13N054A}, Years: 01/01/1966-10/31/1968
1	C5NN14N728B	1	Harness Assy., Main to Fuse Box, W/Lights, 4500, NH-E Only, Years: 11/01/1966-12/31/1960
1	C9NN14N728A	1	Harness Assy., Main to Fuse Box, W/Lights, 4500, NH-E Only, Years: 01/01/1970-08/31/1970
1	D0NN14N728A	1	Harness Assy., Main to Fuse Box, W/Lights, 4500, NH-E Only, Years: 09/01/1970-06/30/1973
1	D2NN14A103A	1	Main Harness Assy., W/Independent Cab, 4500, NH-E Only, Years: 01/01/1973-06/30/1973
	263117	2	Cable Tie, 3/32" x 11-1/2" L, Harness to Panel Bracket, 4500, Years: 09/01/1970-06/30/1973
1	C5NN14A103AY	1	Main Harness Assy., L/Lights, 4500, NH-E Only, Years: 01/01/1965-01/31/1968
1	D3NN14A103B	1	Main Harness Assy., W/Cab, 3550-4500, NH-E Only, Start Year: 02/01/1968
1	D2NN14A103K	1	Main Harness Assy., L/Thermostat, 5100-7100, No Longer Serviced, Start Year: 06/01/1973
1	D3NN14A103H	1	Main Harness Assy., Diesel W/Front Position Lights, 2000-3000-4000, Start Year: 11/01/1968
1	D3NN14A103H	1	Main Harness Assy., W/Lights & Instruments, 5100-7100, Start Year: 02/01/1968
1	D3NN14A103H	1	Main Harness Assy., W/Lights & Instruments, 2000-3000-4000, Start Year: 02/01/1968
1	C5NN14A103AD	1	Main Harness Assy., W/Lights & Cold Starting, 5000, W/Cold Start, P/N 309842 is needed, Refer to Pg. 11-4., Years: 01/01/1965-01/31/1968
	70AG14488AA	1	Plug, Multiway, NH-E Only, Start Year: 07/01/1973
2	C5NN14N107B	1	Fuse & Wire Assy., Includes: Wire, Holder & Ref. 3, Start Year: 01/01/1965
3	590420	1	Fuse, 15 Amp., Replaces P/N 8M-14526, Years: 01/01/1965-03/31/1968
3	FFC14599B	1	Fuse, 7 Amp., Start Year: 04/01/1968
4	117818ES2	2	Clip, Main Wiring to Radiator Support, Start Year: 01/01/1965
5	82857978	2	Clip, Cable, Snap-On, 9/16", Main Harness to Fuel Tank, 2000-3000-4000, Years: 01/01/1965-06/30/1973
5	263117	1	Cable Tie, 3/32" x 11-1/2" L, Main Harness to Hood Rear Support, 5000, Start Year: 01/01/1965
5	263117	AR	Cable Tie, 3/32" x 11-1/2" L, Harness Retaining, Start Year: 07/01/1973
6	379758S40	AR	Clip, 1/2" Harness to Front Support, No Longer Serviced (NH-E), Start Year: 01/01/1965
7	D3NN14N202D	AR	Clip, Harness to Rocker Cover, NH-E Only, Start Year: 07/01/1973
7	C5NN14N202D	2	Clip, Main Harness to Hood, Replaces C5NN14N202C, No Longer Serviced (NHNA), Years: 01/01/1965-06/30/1973
7A	C5NN14N206A	2	Clip, Main Harness to Support, Start Year: 01/01/1965
	D1NN14N204A	2	Clip, Front Harness Assy, Start Year: 02/01/1968
	D5NN14197A	1	Clip, Harness to Voltage Regulator Bracket Headlight Wire, Start Year: 01/01/1965
	D5NN14197A	1	Clip, Harness to Voltage Regulator Bracket Headlight Wire, Start Year: 04/01/1968
8	C5NN14N375A	1	Wire Assy., Connector to Instrument Illumination, Start Year: 01/01/1965
9	D3NN14N062A	1	Baffle, Main Harness, Start Year: 07/01/1973
9A	D3NN14N061A	2	Clip, Baffle to Rear Hood Panel, Start Year: 07/01/1973
9B	D3NN14N202B	1	Clip, Harness to Baffle, Start Year: 07/01/1973
	82015330	1	Bumper, 2-1/2" Lg, Use to Avoid Chafing Harness, Start Year: 07/01/1973
	529070	1	Strap, Cable to Oil Filter, Start Year: 07/01/1973
10	E7NN11654AA	1	Lighting Switch Assy., Europe, Start Year: 01/01/1965

5000-SERIES 4 CYL TRACTOR (1/65-1/75)

11B01[R] ELECTRICAL SYSTEM, RH, NH-E

Ref	Part Number	Qty	Description
11	E7NN11654AA	1	Lighting Switch Assy., U.K., No Longer Serviced, Years: 01/01/1965-02/28/1972
12	C5NN11662A	1	Nut, Lighting Switch, Start Year: 01/01/1965
13	D5NN11N647A	1	Knob, Lighting Switch, Replaces P/N C5NN-11667-A, Start Year: 01/01/1965
40	76919	1	Relay, Starting Motor, Replaces C4AF11450A, Diesel W/4" Starter, Years: 01/01/1965-07/31/1968
40	76919	1	Relay, Starting Motor, Replaces C4AF11450A, Gasoline W/4" Starter, Start Year: 01/01/1965
40	76919	1	Relay, Starting Motor, Replaces C4AF11450A, 7000 W/5" Starter, Start Year: 07/01/1973
	85700573	2	Washer, Lock, Ext T, 1/4", Start Year: 01/01/1965
	86509309	2	Nut, G5, 1/4"-28, Start Year: 01/01/1965
	39051S36	2	Bolt, Pan Hd, 1/4"-28 x 1/2", Start Year: 01/01/1965
	D4NN11A082A	1	Strap, Relay to Support, 7100 W/Safety Cab, NH-E Only, No Longer Serviced, Start Year: 10/01/1971
44	C5NN14N322E	1	Safety Switch Wire Assy., 10" (25.4cm) Lg., 2000,3000,4000, No Longer Serviced (NHNA), Years: 01/01/1965-09/30/1966
44	C5NN14N322F	1	Safety Switch Wire Assy., 18" (45.72cm) Lg., 5000, No Longer Serviced (NHNA), Years: 01/01/1965-09/30/1966
44	E4NN7A488BB	1	Safety Switch Wire Assy., Start Year: 10/01/1966
44	E4NN7A488CA	1	Safety Switch Wire Assy., 5000-7000, Start Year: 10/01/1966
44A	D1NN3A566A	1	Grommet, 1/2" ID x 11/32" Thk, 3500-3550-4400-4500, Start Year: 10/01/1966
44A	375394S	1	Grommet, .34 I.D. x .061 Groove x .31 Thick, Safety Switch Wire at Steering Gear Cover, Except 3500, 3550,4400,4500, No Longer Serviced, Years: 10/01/1966-06/30/1971
44A	353873S	1	Grommet, .37 I.D. x .12 Groove x .50 Thick, Safety Switch Wire at Steering Gear Cover, Except 3500,3550, 4400,4500, Start Year: 07/01/1971
	D1NN14N000B	1	Wire, Safety Switch to Starter Solenoid, Start Year: 01/01/1965
45		1	Dry Battery Assy., 80 Amp Hour, Standard, W/2000,3000, Optional W/4000, NH-E Only, Start Year: 01/01/1965
45	NLS	1	Dry Battery Assy., 128 Amp. Hour, Standard W/4000,5000, Optional W/2000,3000 {C5NN10657E}, Start Year: 01/01/1965
46	C5NN11N505A	1	Cover, Safety Switch, Except 10 Speed, Years: 01/01/1965-09/30/1966
47	C5NN11N504A	1	Safety Switch Cover Assy., W/10 Speed, No Longer Serviced (NHNA), Years: 01/01/1965-09/30/1966
	280278	2	Washer, Lock, Ext T, 5/16", Years: 01/01/1965-09/30/1966
	304626S36	2	Screw, Cap, HH, G5, 5/16"-18 x 1/2", Except 10 Speed, Years: 01/01/1965-09/30/1966
48	D1NN14300E	1	Battery to Relay Cable Assy., 25" (63.5cm) Lg., Gasoline/Petrol, Start Year: 01/01/1965
48	C5NN14N330F	1	Battery to Relay Cable Assy., 25" (63.5cm) Lg., Diesel W/80 Amp. Battery, Use W/4-1/2" (11.43cm) Starter, NH-E Only, Years: 01/01/1965-07/31/1968
48	C5NN14N330C	1	Battery to Relay Cable Assy., 28" (71.12cm) Lg., Diesel W/128 Amp. Battery, Use W/4-1/2" (11.43cm) Starter, NH-E Only, Years: 01/01/1965-07/31/1968
48A	D5NN14277C	1	Battery to Starter Solenoid Cable Assy., 36" (81.44cm) Lg., Diesel W/128 Amp. & W/80 Amp. Battery & Cold Start, Replaces P/N C5NN-14N330-K, Used W/5" (12.7cm) Starter Includes: Cable, Ref. 49 & 50, Start Year: 01/01/1965
49	C5NN14277B	1	Cover, Terminal Insulator, 80 Amp. Battery, Diesel, Years: 01/01/1965-09/30/1968
49	C5NN14277B	1	Cover, Terminal Insulator, 128 Amp. Battery, Diesel, Years: 01/01/1965-02/28/1969
49	F0NN14277AB	1	Cover, Terminal Insulator, 80 Amp. Battery, Diesel, Start Year: 10/01/1968

11B01[R] ELECTRICAL SYSTEM, RH, NH-E

Ref	Part Number	Qty	Description
49	F0NN14277AB	1	Cover, Terminal Insulator, 128 Amp. Battery, Start Year: 03/01/1969
49A	D5NN14277C	1	Cover, Starter Cable, Solenoid End, Diesel W/128 Amp. Battery & Cold Start, Start Year: 01/01/1965
49A	D5NN14277C	1	Cover, Starter Cable, Solenoid End, Diesel W/8 Amp. Battery, Part of C5NN14N330K, Cable Only, Years: 01/01/1965-09/30/1968
50	C7NN14321A	1	Cover, Starter Cable Terminal, Start Year: 01/01/1965
	9635082	1	Nut, G5, 5/16"-18, Start Year: 01/01/1965
	9706690	1	Nut, CL 8, M8 x 1.25, Start Year: 01/01/1965
	23017S2	1	Screw, Cap, Sq Hd, G2, 5/16"-18 x 1-1/4", Start Year: 01/01/1965
	E6NN10B659AB	1	Bolt, M8 x 32, Start Year: 01/01/1965
51	D1NN14301L	1	Battery to Ground Cable Assy., 48.5" (123.19cm), Gasoline/Petrol, Start Year: 01/01/1965
51	C5NN14301N	1	Battery to Ground Cable Assy., Diesel W/80 Amp. Battery, 27-1/2" (95.25cm), Use W/4-1/2" (11.43cm) Starter, Replaces P/N C5NN-14301-J, NH-E Only, No Longer Serviced, Years: 01/01/1965-07/31/1968
51	C5NN14301AA	1	Battery to Ground Cable Assy., Diesel W/80 Amp. Battery, 47-1/2" (120.65cm), W/5" (12.7cm) Starter, NH-E Only, Start Year: 06/01/1966
51	C5NN14301K	1	Battery to Ground Cable Assy., 24" (60.96cm), Used W/4-1/2" (11.43cm) Starter, No Longer Serviced, Years: 01/01/1965-06/30/1966
51	C7NN14301C	1	Battery to Ground Cable Assy., Diesel W/128 Amp. Battery, Use W/5" (12.7cm) Starter, Replaces C5NN14301U, Start Year: 01/01/1965
51	C7NN14301C	1	Battery to Ground Cable Assy., 35" (88.90cm), Use W/4-1/2" Diesel Starter, 2100-3000 Germany, Includes: Cable & the Following, Start Year: 01/01/1973
	9635082	1	Nut, G5, 5/16"-18, Start Year: 01/01/1965
	9706690	1	Nut, CL 8, M8 x 1.25, Start Year: 01/01/1965
	23017S2	1	Screw, Cap, Sq Hd, G2, 5/16"-18 x 1-1/4", No Longer Serviced, Start Year: 01/01/1965
	E6NN10B659AB	1	Bolt, M8 x 32, Start Year: 01/01/1965
	280717	2	Nut, G5, 7/16"-14, Start Year: 01/01/1965
	263117	AR	Cable Tie, 3/32" x 11-1/2" L, Battery Cable Retaining, Start Year: 03/01/1970
52	263117	1	Cable Tie, 3/32" x 11-1/2" L, Battery Cable, Start Year: 01/01/1965
53	REFERENCE	1	Starting Motor Assy., Refer to Starting Motor Section for Components, Start Year: 01/01/1965
54	C9NN14431A	1	Solenoid to Starter Cable Assy., 6.62" (168.14mm), W/4-1/2" (11.43cm) Starter, Start Year: 01/01/1965
55	C7NN14321A	2	Cover, Solenoid to Starter Cable, Start Year: 01/01/1965
	280278	2	Washer, Lock, Ext T, 5/16", Start Year: 01/01/1965
	80664	2	Washer, 5/16", Start Year: 01/01/1965
	86629539	2	Nut, G5, 5/16"-24, Years: 01/01/1965-12/31/1968
	381561S36	2	Nut & Washer Assy., 5/16"-18, Start Year: 01/01/1969
56	81873524	1	Switch Assy., Oil Pressure Sender - not shown, Start Year: 01/01/1965
58	REFERENCE	1	Distributor Assy., Gasoline/Petrol, Refer to Distributor Section for Components, Start Year: 01/01/1965
59	86514726	1	Strap, Ignition Coil, Gasoline/Petrol, Start Year: 01/01/1965
	280278	1	Washer, Lock, Ext T, 5/16", Start Year: 01/01/1965
	83949109	1	Bolt, Cap, Flg Hd, G5, 5/16"-18 x .62", Gasoline/Petrol, Start Year: 01/01/1965
60	D5TE12029AB	1	Ignition Coil Assy., Gasoline/Petrol, Start Year: 01/01/1965
	9672521	2	Washer, Lock, Ext T, #10, Gasoline/Petrol, No Longer Serviced (NHNA), Start Year: 01/01/1965

5000-SERIES 4 CYL TRACTOR (1/65-1/75)

11B01[R] ELECTRICAL SYSTEM, RH, NH-E

Ref	Part Number	Qty	Description
	87825	3	Nut, G2, #10-32, Gasoline/Petrol, Start Year: 01/01/1965
	27177S36	1	Screw, Rd Hd, #10-32 x 1-1/2", No Longer Serviced (NHNA), Start Year: 01/01/1965
61	NLS	1	Harness to Coil Wire Assy., 25" (63.5cm), Years: 01/01/1965-08/31/1965
61	86615838	1	Wire Assy, 28", Main Harness to Coil, Gasoline/Petrol, Years: 08/01/1965-02/28/1970
61	C9NN14N021A	1	Coil to Harness Wire Assy., 18" (46.99cm), Petrol, NHNA Only, Start Year: 03/01/1970
61A	372047S100	1	Clip, Harness to Coil Wire to Radiator Shell Support, Gasoline/Petrol, Start Year: 08/01/1965
62	D4NN12A012A	1	Coil to Distributor Wire Assy., High Tension, Gasoline/Petrol, Includes: Wire Assy. & Ref. 63, Start Year: 01/01/1965
63	FDS12113A	1	Insulator, Coil to Distributor Wire, Gasoline/Petrol, No Longer Serviced (NH-E), Start Year: 01/01/1965
64	D6NN12283A	1	Distributor to Spark Plug #2 Wire Assy., 16" (40.64cm), Petrol, Start Year: 01/01/1965
65	D6NN12284A	1	Distributor to Spark Plug #3 Wire Assy., 21-1/2" (54.61cm), Gasoline/Petrol, Start Year: 01/01/1965
66	D6NN12286A	1	Distributor to Spark Plug #1 Wire Assy., 14" (35.56cm), Petrol, Includes: Wire Assy. & Ref. 67, Start Year: 01/01/1965
68	86548834	3	Spark Plug Assy., AG5B, Gasoline/Petrol, Start Year: 01/01/1965
69	67NY13802A	1	Horn Assy., 12 Volt, Mexico, 5100, NHNA Only, Start Year: 01/01/1968
69	9821300	1	Horn & Bracket Assy, Replaces D2NN13802A, Start Year: 01/01/1965
70	C5NN13828B	1	Bracket, Horn Mounting, Except 3500-4500, No Longer Serviced (NHNA), Years: 01/01/1965-04/30/1967
70	C5NN13828B	1	Bracket, Horn Mounting, 7100, No Longer Serviced (NHNA), Start Year: 10/01/1971
	83933065	1	Washer, .390 I.D. x .75, 3500-4500, Start Year: 01/01/1965
	87362	3	Washer, SAE, 5/16", Start Year: 01/01/1965
70	C9NN13830A	1	Horn Mounting Bracket Assy., France, NH-E Only, No Longer Serviced, Start Year: 01/01/1965
70	67NY13828A	1	Bracket, Horn Mounting, Mexico, 5100, NHNA Only, Start Year: 01/01/1968
71	371992S2	1	Clip, Horn Wire, NH-E Only, No Longer Serviced (NHNA), No Longer Serviced, Start Year: 01/01/1965
73	C5NN13N866A	1	Horn Wire Assy., 28" (71.12cm), Years: 01/01/1965-01/31/1968
72	280278	1	Washer, Lock, Ext T, 5/16", Start Year: 01/01/1965
72	9635082	1	Nut, G5, 5/16"-18, Start Year: 01/01/1965
72	9635884	1	Screw, Cap, HH, G5, 5/16"-18 x 1", Start Year: 01/01/1965
73	C5NN13N850A	1	Horn Ground Wire Assy., 7" (17.78cm) Block, NH-E Only, No Longer Serviced, Start Year: 02/01/1968
73	C5NN13N850C	1	
75	C5NN13N867A	1	Connector to Horn Button Wire Assy., 6" (15.24cm), No Longer Serviced (NHNA), Start Year: 01/01/1965
76	E5NN13A805AA	1	Horn Blowing Button Assy., Start Year: 01/01/1965
77	E62A11504	1	Washer, Flat, Horn Button to Panel, Start Year: 01/01/1965
78	E62A11503	1	Washer, Lock, Horn Button to Panel, Start Year: 01/01/1965
79	E62A11502	1	Nut, Horn Button to Panel, Start Year: 01/01/1965
80	C5NN14196A	1	Relay to Coil Wire Assy., 16" (40.64cm), Gasoline/Petrol, No Longer Serviced (NHNA), Years: 08/01/1965-02/28/1970
80	NLS	1	Motor Relay to Coil Wire, 18-1/2" (46.99cm), Petrol {C9NN14021A}, Start Year: 03/01/1970
81	263117	1	Cable Tie, 3/32" x 11-1/2" L, Relay to Ignition Coil Wire, Gasoline/Petrol, Start Year: 08/01/1965
	D0NN11A003A	1	Relay to Starter Wire Assy., 5" Starter, 7100 Diesel, No Longer Serviced (NHNA), Start Year: 07/01/1973
	D0NN11A004A	1	Relay to Solenoids Wire Assy., 5" Starter, 7100 Diesel, No Longer Serviced (NHNA), Start Year: 07/01/197

11B02 POSITION LAMP ASSEMBLY, FRANCE

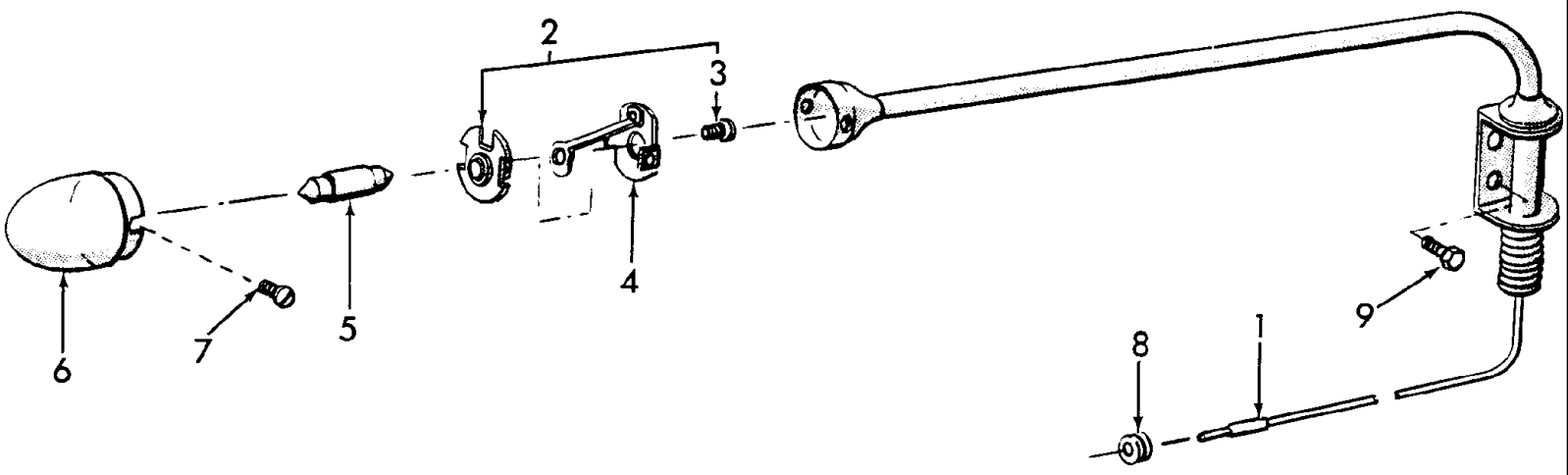

11B02 POSITION LAMP ASSEMBLY, FRANCE

Ref	Part Number	Qty	Description
	C5NN13N204A	2	Lamp Assy., Position, Includes: Arm, Bracket & Ref. 1 thru 7, No Longer Serviced, Years: 01/01/1966-11/30/1966
1	C5NN13N036A	2	Wire Assy., Lamp, Red, 42" Lg., No Longer Serviced, Years: 01/01/1966-11/30/1966
2	C5NN13N210A	2	Contact Assy., Position Lamp, Includes: Contact & Ref. 3, No Longer Serviced, Years: 01/01/1966-11/30/1966
3	C5NN13N214A	2	Screw, Wire Retaining, No Longer Serviced, Years: 01/01/1966-11/30/1966
4	NLS	2	Bracket and Contract Assembly {C5NN13N207A}, Years: 01/01/1966-11/30/1966
5	C5NN13465E	2	Bulb Assy., Position Lamp, No Longer Serviced, Years: 01/01/1966-11/30/1966
6	C5NN13N211A	2	Lens, Red & White, No Longer Serviced, Years: 01/01/1966-11/30/1966
7	C5NN13N213A	4	Screw, Lens Retaining, No Longer Serviced, Years: 01/01/1966-11/30/1966
8	E95AE2	2	Grommet, Position Lamp to Radiator Shell, No Longer Serviced, Years: 01/01/1966-11/30/1966
9	38230S7	4	Screw, Pan Hd, 5/16"-18 x 5/8", No Longer Serviced, Years: 01/01/1966-11/30/1966

NO ART REQUIRED

5000-SERIES 4 CYL TRACTOR (1/65-1/75)

11B03 SPECIAL HEADLAMPS, FRANCE - ITALY (65/), NETHERLANDS (1965)

Ref	Part Number	Qty	Description
	C5NN13N101C	1	Side Mounting Bracket Assy., RH, 2000,3000,4000, NH-E Only, No Longer Serviced, Years: 01/01/1965-12/31/1968
	C5NN13N101D	1	Side Mounting Bracket Assy., RH, 5000, NH-E Only, No Longer Serviced, Years: 01/01/1965-12/31/1968
	C5NN13N102C	1	Side Mounting Bracket Assy., LH, 2000,3000,5000, NH-E Only, No Longer Serviced, Years: 01/01/1965-12/31/1968
	C5NN13N102D	1	Side Mounting Bracket Assy., LH, 5000, NH-E Only, No Longer Serviced, Years: 01/01/1965-12/31/1968
	C5NN13N103B	1	Stiffener, Side Mounting, 1/4" x 1 x 24, NH-E Only, No Longer Serviced, Years: 01/01/1965-12/31/1968
	D8NN13N104AA	2	Stiffener, .132 x 2 x 2, Years: 01/01/1965-12/31/1968
	C5NN13N104B	2	Stiffener, Side Mounting, .075 x 2 x 3, 5000, NH-E Only, No Longer Serviced, Years: 01/01/1965-12/31/1968
	C5NN14N342A	1	Side Lights Wire Assy., 118" & 4", NH-E Only, No Longer Serviced, Years: 01/01/1965-10/31/1968
	E6NN13005BA	1	Side Mounted Headlamp Assy., R.H., France, No Longer Serviced, Start Year: 01/01/1969
	C9NN13005A	1	Side Mounted Headlamp Assy., R.H., Italy, Start Year: 01/01/1969
	E6NN13006DA	1	Side Mounted Headlamp Assy., L.H., France, No Longer Serviced, Start Year: 01/01/1969
	C9NN13006A	1	Side Mounted Headlamp Assy., L.H., Italy, Includes:, NH-E Only, Start Year: 01/01/1969
	NLS	2	Bulb Assy., Bright, #BNA576, Italy {C5NN13465F}, Start Year: 01/01/1969
	69AG13007AA	2	Bulb Assy., Dim, White, #BNA R136-33, Italy, Start Year: 01/01/1969
	69AG13007BA	2	Bulb Assy., Yellow, #BNA-576, France, Must Replace as a Set, Start Year: 01/01/1969
	D0NN13N114A	2	Reflector, NH-E Only, Start Year: 01/01/1969
	D6NN13N060A	2	Clip, Reflector to Bulb, Start Year: 01/01/1965
	C7NN13076A	2	Lead Wire Assy., 44" Lg., France, Includes: Mounting Bolt, NH-E Only, No Longer Serviced, Start Year: 01/01/1969
	D3NN13076A	2	Lead Wire Assy., Italy, Includes: Mounting Bolt, NH-E Only, No Longer Serviced, Start Year: 01/01/1969
	D9NN13060AA	2	Lens, Must Replace as a Set, Start Year: 01/01/1969
	C5NN13N040A	8	Clip, Lens Retaining, No Longer Serviced, Start Year: 01/01/1969
	E0NN13052AA	1	Door, R.H., Must Replace as a Set, NH-E Only, Start Year: 01/01/1969
	E0NN13064AA	1	Door, L.H., Must Replace as a Set, NH-E Only, Start Year: 01/01/1969
	C5NN13N042A	2	Screw, Door to Body, No Longer Serviced (NHNA), Start Year: 01/01/1969
	C5NN13N061A	2	Pedestal, Mounting, NH-E Only, No Longer Serviced, Start Year: 01/01/1969
	E4NN14615AA	2	Grommet, Wiring, Start Year: 01/01/1969
	C5NN13N062A	2	Washer, Lock, Mounting, NH-E Only, No Longer Serviced, Start Year: 01/01/1969
	C5NN13N058A	2	Nut, Mounting, NH-E Only, No Longer Serviced, Start Year: 01/01/1969
	C5NN13N101F	1	Mounting Bracket Assy., RH, 2000, 3000, NH-E Only, No Longer Serviced, Start Year: 01/01/1969
	C9NN13N101A	1	Mounting Bracket Assy., RH, 4000, 5000, NH-E Only, No Longer Serviced, Start Year: 01/01/1969
	C5NN13N102F	1	Mounting Bracket Assy., LH, 2000, 3000, NH-E Only, No Longer Serviced, Start Year: 01/01/1969
	C9NN13N102A	1	Mounting Bracket Assy., LH, 4000, 5000, NH-E Only, No Longer Serviced, Start Year: 01/01/1969
	80681	6	Washer, Lock, 5/16", Start Year: 01/01/1969
	44722S8	6	Washer, 5/16", NHNA Only, No Longer Serviced, Start Year: 01/01/1969
	9635082	6	Nut, G5, 5/16"-18, Start Year: 01/01/1969
	87872	6	Screw, Cap, HH, G5, 5/16"-18 x 3/4", Start Year: 01/01/1969
	C5NN13N103C	1	Stiffener, Mounting, NH-E Only, No Longer Serviced, Start Year: 01/01/1969

11B03 SPECIAL HEADLAMPS, FRANCE - ITALY (65/), NETHERLANDS (1965)

Ref	Part Number	Qty	Description
	C5NN14N206A	2	Clip, Lead Wires to Stiffener, Start Year: 01/01/1969
	80681	2	Washer, Lock, 5/16", Start Year: 01/01/1969
	9635082	2	Nut, G5, 5/16"-18, Start Year: 01/01/1969
	87872	2	Screw, Cap, HH, G5, 5/16"-18 x 3/4", Start Year: 01/01/1969

11C01 REAR LAMPS, FLASHER & WIRING

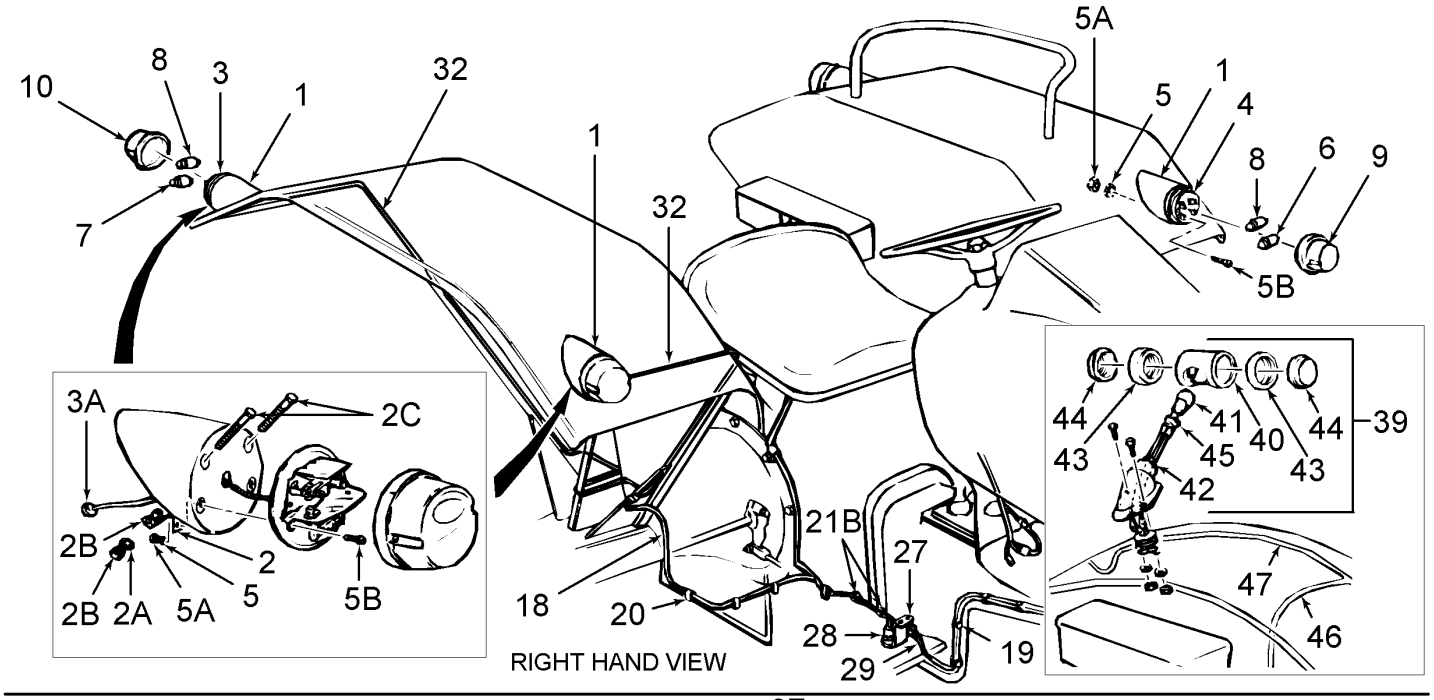

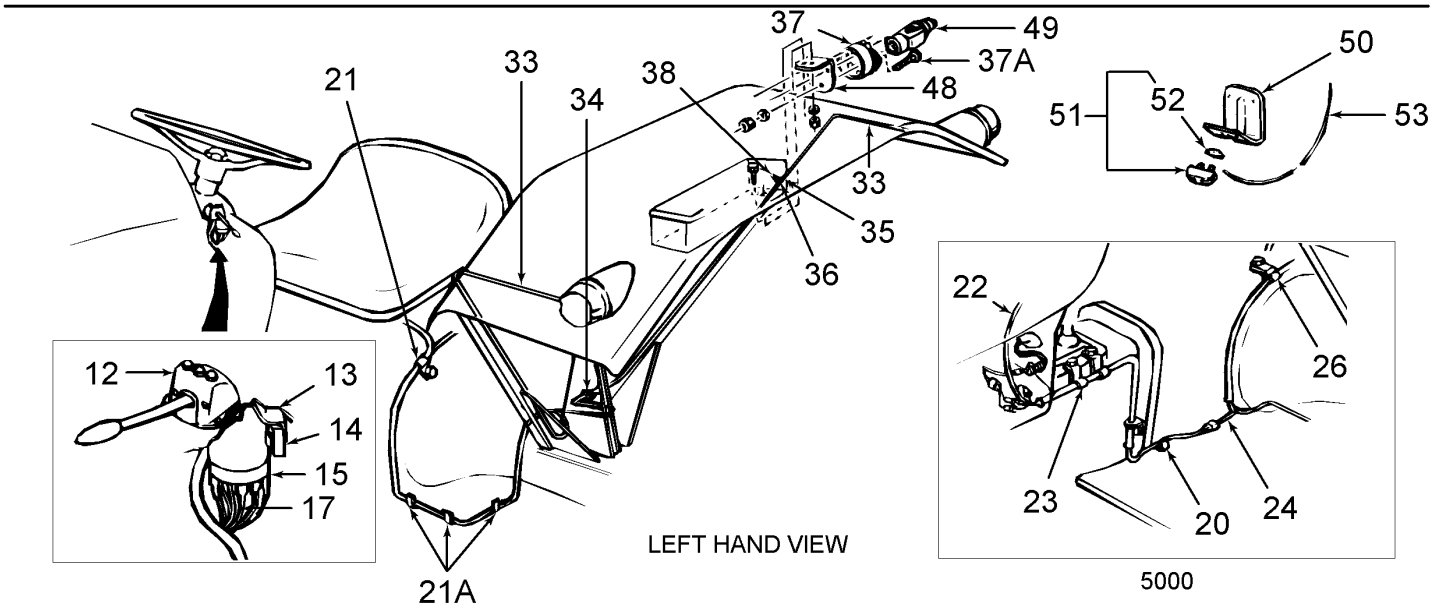

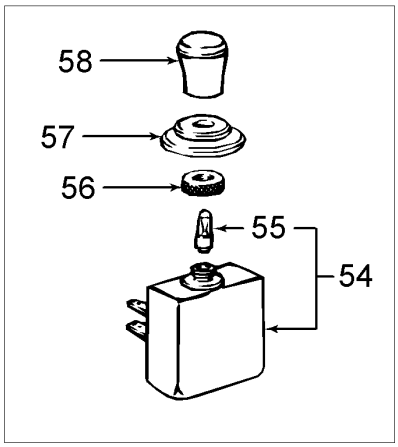

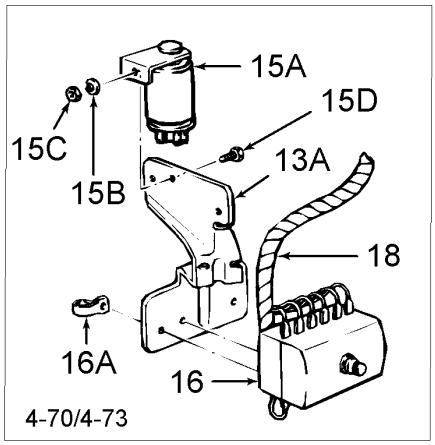

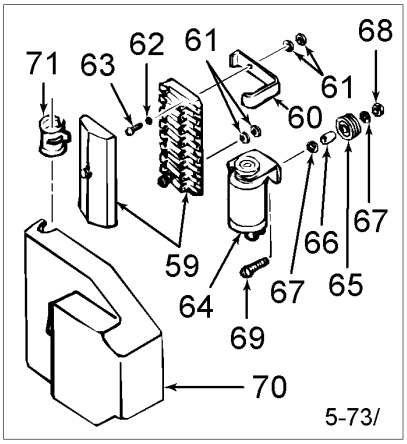

5000-SERIES 4 CYL TRACTOR (1/65-1/75)

11C01 REAR LAMPS, FLASHER & WIRING

Ref	Part Number	Qty	Description
1	C7NN13469A	4	Bracket, Side & Rear Fender Lamps, Replaces C5NN13469D, Used W/Wide Fenders, No Longer Serviced (NHNA), Years: 01/01/1965-12/31/1972
2	C7NN14N022A	4	Connector, Lamp to Fender, No Longer Serviced, Years: 01/01/1965-12/31/1972
2A	280254	8	Washer, Lock, Int T, #10, NH-E Only, Start Year: 01/01/1965
2B	87304	16	Nut, #10-24, Start Year: 01/01/1965
2C		8	Screw, #10-24 x 1.75, NH-E Only, Start Year: 01/01/1965
3	C5NN13096A	2	Rear Lamp Base Assy., Except Switzerland, Used W/Wide Fenders, No Longer Serviced, Start Year: 01/01/1965
3	C5NN13096B	2	Rear Lamp Base Assy., Switzerland, No Longer Serviced, Years: 01/01/1965-12/31/1972
3A	B16386	4	Grommet, Base Wire, Start Year: 01/01/1965
4	C5NN13N370A	2	Flasher Side Base Assy., Used W/Wide Fenders, No Longer Serviced, Start Year: 01/01/1965
5	9672521	8	Washer, Lock, Ext T, #10, Start Year: 01/01/1965
5A	87304	8	Nut, #10-24, Start Year: 01/01/1965
5B		8	Screw, Rd Hd, #10-24 x 1/2", NH-E Only, Start Year: 01/01/1965
6	C5NN13465A	2	Side Lamp Bulb Assy., 3 Watts, Used W/Wide Fenders, No Longer Serviced, Start Year: 01/01/1965
7	470016	2	Bulb, 12V, 10W, Used W/Wide Fenders, Start Year: 01/01/1965
8	C5NN13465C	4	Flasher Lamp Bulb Assy., 18 Watts, Used W/Wide Fenders, No Longer Serviced (NHNA), Years: 01/01/1965-12/31/1972
9	C5NN13N365A	2	Side Flasher Lens Assy., White & Amber, Used W/Wide Fenders, No Longer Serviced (NHNA), Start Year: 01/01/1965
10	C5NN13N366A	2	Rear Flasher Lens Assy., Red & Amber, Used W/Wide Fenders, No Longer Serviced (NHNA), Start Year: 01/01/1965
10	C5NN13N366B	2	Rear Flasher Lens Assy., Red, NH-E Only, Years: 01/01/1965-12/31/1972
12	D2NN13N362C	1	Flasher Switch Assy., No Longer Serviced, Years: 01/01/1965-12/31/1969
12	E0NN13N362AA	1	Flasher Switch Assy., w/U.K. Fenders, Start Year: 01/01/1970
12	D8NN13R331AB	1	Flasher Switch Assy., w/Wide Fenders, w/Cab, FTO-E, Includes: Flasher Switch & the Following, Start Year: 01/01/1970
	C5NN13N358A	3	Flasher Switch Bulb Assy., Start Year: 01/01/1965
	C5NN13N358A	1	Flasher Switch Bulb Assy., w/Cab, Germany, 4500, Years: 04/01/1970-08/31/1970
	C5NN13N302A	3	Lens, Turn Signal Flash Switch, Red, Start Year: 01/01/1965
	C5NN13N302A	1	Lens, Turn Signal Flash Switch, Red, w/Cab, Germany, 4500, Years: 04/01/1970-08/31/1970
	D3NN13N120A	1	Lens, Turn Signal, Blue, w/Wide Fenders, w/Cab, No Longer Serviced (NHNA), Start Year: 01/01/1970
	80684	3	Washer, Lock, #10, Start Year: 01/01/1965
	87304	3	Nut, #10-24, Start Year: 01/01/1965
13	C5NN13N364A	1	Bracket, Flasher Mounting, Europe, NH-E Only, No Longer Serviced, Years: 01/01/1965-05/31/1967
13	C5NN13N364A	1	Bracket, Flasher Mounting, U.K. Fenders, NH-E Only, No Longer Serviced, Years: 01/01/1965-03/31/1970
13	C7NN13N364E	1	Bracket, Flasher Mounting, NH-E Only, No Longer Serviced, Years: 04/01/1970-12/31/1971
13	C7NN13N364E	1	Bracket, Flasher Mounting, w/Cab, Germany, 4500, NH-E Only, No Longer Serviced, Years: 04/01/1970-08/31/1970
13A	C9NN13N096C	1	Bracket, Flasher & Fuse Box Mounting, w/Hazard Warning Indicators, No Longer Serviced (NHNA), Years: 04/01/1970-04/30/1973

5000-SERIES 4 CYL TRACTOR (1/65-1/75)

11C01 REAR LAMPS, FLASHER & WIRING

Ref	Part Number	Qty	Description
13A	C9NN13N096C	1	Bracket, Flasher & Fuse Box Mounting, W/Hazard Warning Indicators, Austria, Switzerland & O.T.O, No Longer Serviced (NHNA), Years: 04/01/1970-11/30/1971
13A	D0NN13N364C	1	Bracket, Flasher Mountingj, Used W/Wide Fenders, Japan, Morocco, La Reunion, Tunisia, NH-E Only, No Longer Serviced, Start Year: 01/01/1972
	85700573	2	Washer, Lock, Ext T, 1/4", Start Year: 01/01/1965
	7770	2	Nut, Hex, 1/4"-20, Start Year: 01/01/1965
	88146	2	Screw, Cap, HH, G5, 1/4"-20 x 1", Start Year: 01/01/1965
15	D8NN13N360AC	1	Flasher Unit Assy., 7 Terminals, 2-1/4" Dia., Europe, Replaces C5NN13N360A, Years: 01/01/1965-05/31/1967
15	D8NN13N360AC	1	Flasher Unit Assy., 7 Terminals, 2-1/4" Dia., Replaces C5NN13N360A, 4400-4500, Years: 01/01/1965-03/31/1970
15A	D8NN13N360AC	1	Flasher Unit Assy., w/Wide Fenders, Years: 04/01/1970-04/30/1973
15B	80682	1	Washer, Lock, 1/4", Years: 04/01/1970-04/30/1973
15C	7770	1	Nut, Hex, 1/4"-20, Years: 04/01/1970-04/30/1973
15D	304624S36	1	Screw, Cap, HH, G5, 1/4"-20 x 1/2", Years: 04/01/1970-04/30/1973
	C7NN13N360D	1	Flasher Unit Assy., 1-1/4" Dia., W/Wide Fenders, Includes: Holder, No Longer Serviced, Years: 06/01/1967-03/31/1970
16	D2NN14N030A	1	Fuse Box Assy., L/Warning Indicators, Years: 04/01/1970-04/30/1973
16	D2NN14N030B	1	Fuse Box Assy., w/Warning & Turn Indicators, Start Year: 04/01/1970
16	D2NN14N030C	1	Fuse Box Assy., Includes: Box, Harness, Plus, No Longer Serviced, Start Year: 06/01/1968
	C5NN14A094D	AR	Fuse Assy., 8 Amp., Start Year: 06/01/1967
	D2NN14A094A	1	Fuse Assy., 5 Amp., Start Year: 10/01/1971
	C7NN14N028A	1	Spacer, Fuse Box Mounting, Europe, 4100-5100, No Longer Serviced, Years: 06/01/1968-03/31/1970
		1	Roller, .311 O.D. x .239 I.D. x .313, Europe, 4000-5000, No Longer Serviced, Years: 06/01/1967-05/31/1968
	C7NN14N033A	2	Washer, Fuse Box Mounting, Europe, Start Year: 06/01/1967
	80684	2	Washer, Lock, #10, Europe, Start Year: 06/01/1967
	87304	2	Nut, #10-24, Europe, Start Year: 06/01/1967
	86511922	2	Screw, Pan Hd, #10-24 x 3/4", Europe, 2100-3100, Start Year: 06/01/1967
	86511922	1	Screw, Pan Hd, #10-24 x 3/4", Europe, 4100-5100-7100, Start Year: 06/01/1967
	54354S8	1	Screw, Pan Hd, # 10-24 x 7/8", Europe, 4100-5100-7100, No Longer Serviced, Start Year: 06/01/1967
16A	377766S	1	Clip, Harness to Bracket, No Longer Serviced, Years: 04/01/1970-04/30/1973
	C5NN13N850C	1	Flasher Ground Wire Assy., Black, 7" (17.78cm), U.K., 3500-4500, Start Year: 01/01/1965
	C5NN13N850B	1	Ground Wire Assy., Black, NH-E Only, Years: 01/01/1965-06/30/1967
17	C5NN13N367B	1	Flasher Relay Wire Assy., Light Green/Brown, Tractor Flasher, Except Ireland, NH-E Only, No Longer Serviced, Years: 01/01/1965-03/31/1968
17	C5NN13N367A	1	Flasher Relay Wire Assy., Ireland, NH-E Only, No Longer Serviced, Years: 01/01/1965-03/31/1968
18	C5NN14N109E	1	Switch to Fender Harness Assy., 2000-3000, NH-E Only, No Longer Serviced, Years: 07/01/1967-03/31/1968
18	C5NN14N109G	1	Switch to Fender Harness Assy., Except w/Independent PTO, 4000, NH-E Only, Years: 07/01/1967-03/31/1968

5000-SERIES 4 CYL TRACTOR (1/65-1/75)

11C01 REAR LAMPS, FLASHER & WIRING

Ref	Part Number	Qty	Description
18	C5NN14N109H	1	Switch to Fender Harness Assy., w/Independent PTO, 4000, NH-E Only, Years: 01/01/1965-03/31/1968
18	C7NN14N111B	1	Switch to Fender Harness Assy., NH-E Only, No Longer Serviced, Years: 04/01/1968-03/31/1970
18	C7NN14N111B	1	Switch to Fender Harness Assy., w/Wide Fenders, Austria, Switzerland & O.T.O., NH-E Only, No Longer Serviced, Start Year: 12/01/1971
18	C9NN14N111F	1	Switch to Fender Harness Assy., NH-E Only, Start Year: 04/01/1970
18	C9NN14N111F	1	Switch to Fender Harness Assy., w/Wide Fenders, Austria, Switzerland & O.T.O., Includes: Harness & the Following, NH-E Only, Years: 04/01/1970-11/30/1971
	86516739	2	Fuse Assy., 10 Amp., Years: 01/01/1965-03/31/1968
	590420	1	Fuse Assy., 15 Amp., Years: 01/01/1965-03/31/1968
	FFC14599B	1	Fuse Assy., 7 Amp., Start Year: 04/01/1968
	C5NN13N448G	1	Clip, Harness, 1" (25.4mm) Wide, w/Independent PTO, 4000-5100-7100, Start Year: 04/01/1968
	82857978	2	Clip, Cable, Snap-On, 9/16", Rear Harness to Platform, 5000, Years: 01/01/1965-03/31/1968
		1	Clip, Conduit to Platform, 4100, No Longer Serviced, Start Year: 04/01/1968
	NLS	1	Clip, Conduit to Platform, 4400-4500 {C7NN13N448B}, Start Year: 04/01/1968
19	C5NN14N207C	4	Clip, Harness to Hydraulic Pipe, Except w/Independent PTO, 2000,3000,4000, Replaces C5NN-14N207-E, No Longer Serviced, Start Year: 01/01/1965
19	C5NN14N207A	2	Clip, Harness to Hydraulic Pipe, 3400-3500-4400-4500, NH-E Only, Years: 01/01/1965-03/31/1968
20	C5NN14N204B	7	Clip, Harness to Platforms, 2000,3000,4000, NH-E Only, No Longer Serviced, Years: 01/01/1965-03/31/1968
20	C5NN14N204B	5	Clip, Harness to Platforms, 5000, NH-E Only, No Longer Serviced, Years: 01/01/1965-03/31/1968
20	C7NN14N204A	2	Clip, Harness to Platform, Except Ireland, No Longer Serviced (NH-E), Start Year: 01/01/1965
20	C5NN14N204A	2	Clip, Harness to Platforms, Ireland, No Longer Serviced (NHNA), Start Year: 01/01/1965
21	C5NN14N199E	2	Clip, Harness to Rear Axle Housing, 2000-3000, NH-E Only, No Longer Serviced, Years: 01/01/1965-03/31/1968
21	C5NN14N199D	2	Clip, Harness to Rear Axle Housing, 4000, NH-E Only, No Longer Serviced, Years: 01/01/1965-03/31/1968
21	C5NN14N199D	2	Clip, Harness to Rear Axle Housing, South Africa, 5000, NH-E Only, No Longer Serviced, Years: 01/01/1965-03/31/1968
21	C5NN14N199D	2	Clip, Harness to Rear Axle Housing, 2000-3000, NH-E Only, No Longer Serviced, Start Year: 04/01/1968
21	C7NN14N199E	2	Clip, Harness to Rear Axle Housing, 2000-3000, NH-E Only, Start Year: 04/01/1968
21	C7NN14N199B	3	Clip, Harness to Rear Axle Housing, 4000, Start Year: 04/01/1968
21A	C7NN14N199A	1	Clip, Harness to L.H. Platform, 2000-3000, NH-E Only, No Longer Serviced, Start Year: 04/01/1968
21A	C7NN14N199E	AR	Clip, Harness to Platform, NH-E Only, Start Year: 04/01/1968
21A	C7NN14N199G	1	Clip, Tube to Platform, 4400-4500, NH-E Only, No Longer Serviced, Start Year: 04/01/1968
21A	C5NN14N199K	1	Clip, Conduit to R.H. Platform, w/Handbrake, NH-E Only, No Longer Serviced, Start Year: 04/01/1968
21A	C5NN14N199T	1	Clip, Harness to Platform, NH-E Only, No Longer Serviced, Start Year: 04/01/1968
21A	C5NN14N199U	AR	Clip, Harness to Platform Mounting Bolts, NH-E Only, No Longer Serviced, Start Year: 04/01/1968
	C5NN16N485A	2	Nut, Clip to Fenders, w/Handbrake, Captive, 2100-3100, Start Year: 01/01/1965
	C5NN14N199S	2	Clip, Harness to Transmission Housing, Start Year: 04/01/1968
22	C5NN14N111J	1	Switch to Fender Harness Assy., Front, 4400-4500, NH-E Only, No Longer Serviced, Years: 04/01/1968-03/31/1970

5000-SERIES 4 CYL TRACTOR (1/65-1/75)

11C01 REAR LAMPS, FLASHER & WIRING

Ref	Part Number	Qty	Description
22	C5NN14N111F	1	Switch to Fender Harness Assy., Front, 5000 Except 10 Speed, NH-E Only, No Longer Serviced, Years: 01/01/1965-03/31/1968
22	C5NN14N111G	1	Switch to Fender Harness Assy., Front, 5000 w/10 Speed, NH-E Only, No Longer Serviced, Years: 01/01/1965-03/31/1968
22	C7NN14N111G	1	Switch to Fender Harness Assy., Front, w/U.K. Fenders, NH-E Only, No Longer Serviced, Years: 04/01/1970-12/31/1971
22	D2NN14N111G	1	Switch to Fender Harness Assy., Front, W/Dual Power, w/Turn Indicators, 5100,7100, NH-E Only, Start Year: 01/01/1973
22	D2NN14N111C	1	Switch to Fender Harness Assy., Front, w/Hazard Lights, Germany, NH-E Only, Start Year: 05/01/1973
22	D3NN14N111C	1	Switch to Fender Harness Assy., Front, L/Hazard Lights, NH-E Only, No Longer Serviced, Start Year: 05/01/1973
22	D0NN14N111D	1	Switch to Fender Harness Assy., Front, Japan, Morocco, La Reunion, Tunisia, NH-E Only, Start Year: 01/01/1972
22	D2NN14N111J	1	Switch to Fender Harness Assy., Front, w/Dual Power, 5100-7100, NH-E Only, No Longer Serviced, Start Year: 06/01/1973
22	D2NN14N111H	1	Switch to Fender Harness Assy., Front, L/Hazard Warning, Indicator, w/Turn Indicator, 5100-7100, NH-E Only, Start Year: 01/01/1973
22	C9NN14N111G	1	Switch to Fender Harness Assy., Front, Except Germany, NH-E Only, Years: 04/01/1970-04/30/1973
22	C9NN14N111B	1	Switch to Fender Harness Assy., Front, Germany, 4500 w/Cab, NH-E Only, No Longer Serviced, Years: 04/01/1970-08/31/1970
22	C9NN14N111E	1	Switch to Fender Harness Assy., Front, Germany, Except 4500 w/Cab, Includes: Harness & the Following, NH-E Only, No Longer Serviced, Years: 04/01/1970-04/30/1973
	86516739	1	Fuse Assy., 10 Amp., Years: 01/01/1965-03/31/1968
	279863	2	Fuse Assy., 5 Amp., Years: 01/01/1965-03/31/1968
	FFC14599B	2	Fuse Assy., 7 Amp., Start Year: 04/01/1968
	590420	1	Fuse Assy., 15 Amp., Japan, Morocco, La Reunion, Tunisia, Start Year: 01/01/1972
22	C5NN14N112D	1	Switch to Stop Light Harness Assy., 3400-3500-4400-4500, NH-E Only, Years: 01/01/1966-03/31/1968
	263117	AR	Cable Tie, 3/32" x 11-1/2" L, Harness Retaining, Start Year: 01/01/1970
23	C5NN13N448D	2	Clip, Harness to Transmission, 5000, NH-E Only, Years: 01/01/1965-03/31/1968
23	C5NN14A169A	1	Clip, Harness to Transmission Case, 4400-4500, NH-E Only, Years: 01/01/1966-03/31/1968
24	C5NN14N109E	1	Switch to Fender Harness Assy., Rear, Tractors W/Wheel Handbrake, 2100-3100, NH-E Only, No Longer Serviced, Start Year: 04/01/1968
24	C5NN14N109K	1	Switch to Fender Harness Assy., Rear, w/Turn Indicators, L/Engine Mounted Pump, 4100, NH-E Only, No Longer Serviced, Start Year: 04/01/1968
24	C5NN14N109L	1	Switch to Fender Harness Assy., Rear, W/Turn Indicators, W/Engine Mounted Pump, w/U.K. Fenders, 4100, NH-E Only, No Longer Serviced, Start Year: 04/01/1968
24	C5NN14N109L	1	Switch to Fender Harness Assy., Rear, W/Turn Indicators, W/Engine Mounted Pump, w/Wide Fenders, 4400-4500, NH-E Only, No Longer Serviced, Years: 04/01/1968-12/31/1971
24	C5NN14N109M	1	Switch to Fender Harness Assy., Rear, w/Turn Indicators, 5100-7100, No Longer Serviced, Start Year: 04/01/1968

5000-SERIES 4 CYL TRACTOR (1/65-1/75)

11C01 REAR LAMPS, FLASHER & WIRING

Ref	Part Number	Qty	Description
24	C5NN14N109F	1	Switch to Fender Harness Assy., Rear, 5000, NH-E Only, No Longer Serviced, Years: 01/01/1965-03/31/1968
24	D8NN14N109EB	1	Switch to Fender Harness Assy. Rear, w/Hazard Warning, 2000-3000, NH-E Only, Start Year: 01/01/1970
24	D8NN14N109FC	1	Switch to Fender Harness Assy., Rear, L/Engine Mounted Pump, w/Hazard Warning Indicators, 4100, Start Year: 01/01/1970
24	C9NN14N109C	1	Switch to Fender Harness Assy., Rear, w/Engine Mounted Pump, w/Hazard Warning Indicators, 4100-4400-4500, NH-E Only, No Longer Serviced, Start Year: 01/01/1970
24	C9NN14N109D	1	Switch to Fender Harness Assy., Rear, w/Hazard Warning Indicators, 5100-7100, No Longer Serviced, Start Year: 01/01/1970
24	C9NN14N109E	1	Switch to Fender Harness Assy., Rear, L/Engine Mounted Pump, w/Hazard Warning Indicators, 3055,4400, 4500, NH-E Only, No Longer Serviced, Start Year: 01/01/1970
24	D2NN14N109B	1	Switch to Fender Harness Assy., Rear, w/Dual Power, 5100-7100, NH-E Only, Start Year: 06/01/1973
26	C5NN14N201C	4	Clip, Harness to Rear Axle Housing, 5000, NH-E Only, No Longer Serviced, Years: 01/01/1965-03/31/1968
27	C5NN13A439D	1	Bracket, Stop Lamp Switch Mounting, 2000-3000, No Longer Serviced, Years: 01/01/1965-08/31/1967
27	D3NN13A439C	1	Bracket, Stop Lamp Switch Mounting, 2000-3000 Antwerp, Start Year: 09/01/1967
27	D3NN13A439C	1	Bracket, Stop Lamp Switch Mounting, Basildon, 2000-3000, Years: 09/01/1967-12/31/1972
27	C5NN13A439E	1	Bracket, Stop Lamp Switch Mounting, 4000, No Longer Serviced (NHNA), Years: 01/01/1965-08/31/1967
27	82005169	1	Bracket, Stop Lamp Switch Mounting, 3055-3550-4100-4400-4500, Start Year: 09/01/1967
27	E1NN13A439BA	1	Bracket, Switch, 5100-7100, NH-E Only, Start Year: 01/01/1965
	80664	2	Washer, 5/16", Start Year: 01/01/1965
	280278	2	Washer, Lock, Ext T, 5/16", No Longer Serviced, Start Year: 01/01/1965
	9635082	2	Nut, G5, 5/16"-18, Start Year: 01/01/1965
		2	Screw, Rd Hd, 5/16"-18 x 3/4", NH-E Only, No Longer Serviced, Start Year: 01/01/1965
28	D2NN13480A	1	Switch, Stop Lamp, Replaces C5NN13N479C, FTO-E, Years: 01/01/1965-11/30/1973
28	D3NN13480A	1	Switch, Stop Lamp, FTO-E, When using on Models W/Year Range 65/11-73, Mounting Bracket must be changed, Start Year: 12/01/1973
28	D3NN13480A	1	Switch, Stop Lamp, U.S., When using on Models W/Year Range 65/11-73, Mounting Bracket must be changed, Start Year: 01/01/1965
	81821693	1	Washer, Lock, 3/8", Start Year: 12/01/1973
29	9628503	1	Nut, G5, 3/8"-16 use W/D3NN13480A, Switch Retaining, Start Year: 12/01/1973
29	C5NN11662A	1	Nut, Stop Lamp Switch to Bracket, 9/16"-18, Use w/D2NN-13480-A Switch, Years: 01/01/1965-11/30/1973
32	C5NN13N503A	1	Connector to Side Lamp Harness Assy., RH, Standard Side Lights, 45" (114.3cm), Replaces C5NN13N503B, Used W/Wide Fenders, NH-E Only, Years: 01/01/1965-03/31/1968
32	C5NN13N503A	1	Connector to Side Lamp Harness Assy., RH, Lower Side Lights, 45" (114.3cm), Replaces C5NN13N503B, 4000-5000, Used W/Wide Fenders, NH-E Only, Years: 01/01/1965-03/31/1968
32	C5NN13N505A	1	Connector to Rear Lamp Harness Assy., RH, Standard Rear Lights, 54" (137.16cm), Replaces C5NN13N505B, Used W/Wide Fenders, NH-E Only, Years: 01/01/1965-03/31/1968
32	C5NN13N505A	1	Connector to Rear Lamp Harness Assy., RH, Lower Rear Lights, 54" (137.16cm), Replaces C5NN13N505B, 4000-5000, Used W/Wide Fenders, NH-E Only, Years: 01/01/1965-03/31/1968
32	C5NN16N406F	1	Rear Fender R.H. Side & Rear Lamps Harness Assy., Replaces C5NN16N406B, Used W/Wide Fenders, NH-E Only, No Longer Serviced, Start Year: 04/01/1968

11C01 REAR LAMPS, FLASHER & WIRING

Ref	Part Number	Qty	Description
32	C5NN16N406H	1	Rear Fender Harness Assy., RH, w/U.K. Fenders, NH-E Only, Years: 04/01/1968-12/31/1971
32	D0NN16N406T	1	Rear Fender Harness Assy., RH, W/Stop & Rear Lights, w/U.K. Fenders, NH-E Only, Start Year: 01/01/1972
33	C5NN13N502A	1	Connector to Side Lamp Harness Assy., LH, Standard Side Lights & Lower, 45" (114.3cm), Replaces C5NN13N502B, Used W/Wide Fenders, NH-E Only, Years: 01/01/1965-03/31/1968
33	C5NN13N502A	1	Connector to Side Lamp Harness Assy., LH, Side Lights, 45" (114.3cm), Replaces C5NN13N502B, 4000-5000, Used W/Wide Fenders, NH-E Only, Years: 01/01/1965-03/31/1968
33	NLS	1	Connector to Rear Lamp Harness Assy., LH, Standard Rear Lights, 54" (137.16cm) {C7NN13N504A}, Used W/Wide Fenders, Years: 01/01/1965-03/31/1968
33	NLS	1	Connector to Rear Lamp Harness Assy., LH, Lower Rear Lights, 54" (137.16cm), 4000-5000 {C7NN13N504A}, Used W/Wide Fenders, Years: 01/01/1965-03/31/1968
33	C5NN16N406C	1	Rear Fender Harness Assy., LH, NH-E Only, No Longer Serviced, Years: 04/01/1968-12/31/1971
33	D0NN16N406V	1	Rear Fender Harness Assy., LH, No Longer Serviced (NHNA), Start Year: 01/01/1972
33	D0NN16N406V	1	Rear Fender Harness Assy., LH, 3500-4500, No Longer Serviced (NHNA), Start Year: 01/01/1972
33	C5NN16N406E	1	Rear Fender LH Side & Rear Lamps Harness Assy., U.K., NH-E Only, No Longer Serviced, Start Year: 04/01/1968
34	B16386	4	Grommet, Harnesses to Fenders, Start Year: 01/01/1965
35	C5NN13N500B	1	Trailer Socket Harness Assy., 30" (76.2cm), Ireland, NH-E Only, Years: 01/01/1965-03/31/1968
35	C5NN13N500A	1	Trailer Socket Harness Assy., 38" (96.52cm), 4000-5000-7000, NH-E Only, No Longer Serviced, Start Year: 01/01/1965
35	C5NN13N500A	1	Trailer Socket Harness Assy., 38" (96.52cm), w/Wide Fenders, 2000-3000, NH-E Only, No Longer Serviced, Years: 01/01/1965-03/31/1968
36	383441S	3	Grommet, Trailer Socket Harness Assy. to Fender, w/Wide Fenders, Start Year: 01/01/1965
36	374725S	1	Grommet, Trailer Socket Harness to Fender, Ireland, 2300-3300, Start Year: 01/01/1965
37	E6NN13A450AA	1	Trailer Lamp Socket Assy., 7 Pole Plug, Replaces C5NN13A450B, Start Year: 01/01/1965
	9672521	AR	Washer, Lock, Ext T, #10
	87304	AR	Nut, #10-24
37A		3	Screw, Flat Hd, #10-24 x 1-1/4", NH-E Only, No Longer Serviced, Years: 01/01/1965-11/30/1967
37A	54049S36	3	Screw, Fillister Hd, #10-24 x 1-1/8", Start Year: 12/01/1967
	D3NN13404B	1	Rear Lamp Assy., R.H., Italy, w/Wide Fenders, NH-E Only, Start Year: 01/01/1974
	NLS	1	Rear Lamp Assy., LH, Italy, w/Wide Fenders {D3NN13405A}, Start Year: 01/01/1974
	D3NN13200A	1	Parking Lamp Assy., R.H., Italy, w/Wide Fenders, 7100, NH-E Only, No Longer Serviced, Start Year: 01/01/1974
	D3NN13201A	1	Parking Lamp Assy., L.H., Italy, w/Wide Fenders, 7100, Includes: Body & the Following, NH-E Only, No Longer Serviced, Start Year: 01/01/1974
	E2NN13465AA	2	Lamp Bulb Assy., 12 Volt, 5 Watt, Italy, w/Wide Fenders, Start Year: 01/01/1974
	D3NN13450A	2	Lens, Rear Lamp, Red, Italy, w/Wide Fenders, NH-E Only, Start Year: 01/01/1974
	D3NN13208A	2	Lens, Parking Lamp, Clear, Italy, w/Wide Fenders, 7100, Start Year: 01/01/1974
	E6NN13N416AA	4	Screw, Lamp Lens, Italy, w/Wide Fenders, Start Year: 01/01/1974
	D2NN13461A	2	Gasket, Lens, Italy, w/Wide Fenders, Start Year: 01/01/1974
	D2NN13N475A	2	Gasket, Lamp Mounting, Italy, w/Wide Fenders, NH-E Only, Start Year: 01/01/1974

5000-SERIES 4 CYL TRACTOR (1/65-1/75)

11C01 REAR LAMPS, FLASHER & WIRING

Ref	Part Number	Qty	Description
	370211S	AR	Grommet, Rear Fender Wiring, Italy, w/Wide Fenders, Start Year: 01/01/1974
		2	Clip, Wire to Fender, Italy, w/Wide Fenders, NH-E Only, Start Year: 01/01/1974
	9672276	4	Washer, Lock, Int T, 3/8", Italy, W/Wide Fenders, Start Year: 01/01/1974
	C9NN13N332A	4	Nut, Lamps to Fenders, Italy, w/Wide Fenders, Start Year: 01/01/1974
	D3NN13N490A	1	Trailer Socket & Rear Lamp Wire Assy., LH, Italy, w/Wide Fenders, 2100-3100, NH-E Only, No Longer Serviced, Start Year: 01/01/1974
	D3NN13N490B	1	Trailer Socket & Rear Lamp Wire Assy., LH, Italy, w/Wide Fenders, 3055-4100, NH-E Only, No Longer Serviced, Start Year: 01/01/1974
	D3NN13N490C	1	Trailer Socket & Rear Lamp Wire Assy., LH, Italy, w/Wide Fenders, 5100-7100, NH-E Only, No Longer Serviced, Start Year: 01/01/1974
	D3NN14N000C	1	Rear Lamp Wire Assy., RH, Single 130.0", Italy, w/Wide Fenders, NH-E Only, Start Year: 01/01/1974
	D3NN14N000D	2	Rear Lamp to Parking Lamp Wire Assy., Italy, w/Wide Fenders, 7100, NH-E Only, No Longer Serviced, Start Year: 01/01/1974
38	C5NN13N850A	1	Ground Wire Assy., Trailer Lamp Socket, Except 3400,3500,4400,4500, NH-E Only, No Longer Serviced, Start Year: 01/01/1965
38	C5NN13N850A	1	Ground Wire Assy., Trailer Lamp Socket, 3400,3500,4400,4500, NH-E Only, No Longer Serviced, Years: 01/01/1965-12/31/1970
38	D0NN13N850B	1	Ground Wire Assy., Trailer Lamp Socket, 3400,3500,4400,4500, NH-E Only, No Longer Serviced, Start Year: 01/01/1971
39	D0NN13N359B	2	Flasher Lamp Assy., NH-E Only, No Longer Serviced, Start Year: 01/01/1972
39	D0NN13N359B	2	Flasher Lamp Assy., Includes: Holder & Ref. 40 thru 45, NH-E Only, Years: 01/01/1965-12/31/1971
40	C5NN13A327A	2	Turn Signal Indicator Body Assy., NH-E Only, No Longer Serviced, Start Year: 01/01/1965
41	C9NN13465B	2	Bulb, Flasher, 21 Watt, NH-E Only, Start Year: 01/01/1972
42	C5NN13N218A	2	Mount, Bulb, NH-E Only, No Longer Serviced, Start Year: 01/01/1965
43	957E13230	2	Mount, Lens, Start Year: 01/01/1965
44	C5NN13N219A	2	Lens, Amber, No Longer Serviced (NHNA), Start Year: 01/01/1965
45	C5NN13N800B	2	Contact & Wire Holder Assy., Japan, Morocco, La Reunion, Tunisia, No Longer Serviced, Start Year: 01/01/1965
	80682	AR	Washer, Lock, 1/4"
	7770	AR	Nut, Hex, 1/4"-20
	84467	4	Screw, Truss Hd, G2, 1/4"-20 x 1/2", Years: 01/01/1965-12/31/1971
	57307S36	4	Screw, Pan Hd, W/Washer, G5, 1/4"-20 x 3/4", Lamp to Fender, Start Year: 01/01/1972
	C5NN14N000AV	1	Rear Harness to Light Switch Wire Assy., Brown, 9" (22.86cm) Lg., 4400,4500, NH-E Only, No Longer Serviced, Start Year: 01/01/1965
	C5NN14N000AV	1	Rear Harness to Light Switch Wire Assy., Brown, 9" (22.86cm) Lg., Except 4400,4500, NH-E Only, No Longer Serviced, Years: 01/01/1965-05/31/1968
46	C5NN14N000N	2	Parking Lamp Wire Assy., Red/Blue, 57" (144.78cm) Lg., Ireland & Spain, Replaces C5NN14N000AD, 2000,3000, No Longer Serviced, Start Year: 01/01/1965
46	C7NN14N000A	2	Single Wire Assy., Red/Brown, 60" (152.4cm) Lg., Ireland & Spain, 4000,5000, NH-E Only, Years: 01/01/1965-03/31/1968
47	C5NN14N000AE	2	Single Wire Assy., Green, 51" (129.54cm) Lg., Ireland, NH-E Only, Years: 01/01/1965-03/31/1968

5000-SERIES 4 CYL TRACTOR (1/65-1/75)

11C01 REAR LAMPS, FLASHER & WIRING

Ref	Part Number	Qty	Description
	374725S	2	Grommet, Wire at Fender, Ireland, 2300,3300, Start Year: 01/01/1965
	374725S	2	Grommet, Wire at Fender, Japan, Morocco, La Reunion, Tunisia, Start Year: 01/01/1972
48	C5NN13N460B	1	Bracket, Trailer Lamp Socket, Except 3500,4500, NH-E Only, No Longer Serviced, Start Year: 01/01/1965
48	C5NN13N460D	1	Bracket, Trailer Lamp Socket, 3500,4500, NH-E Only, No Longer Serviced, Start Year: 01/01/1966
	34804S36	AR	Washer, Lock, #12, No Longer Serviced (NH-E)
	86512084	AR	Nut, #12-24
		2	Screw, Rd Hd, # 12-24 x 3/8", NH-E Only, No Longer Serviced, Start Year: 01/01/1965
49	C5NN14N150F	1	Trailer Connection Plug Assy., 7 Pole, Start Year: 01/01/1965
50	NLS	1	Bracket, License Plate Mounting, Except Germany {C5NN17A385C}, No Longer Serviced, Start Year: 01/01/1965
50	C7NN17N380A	1	License Plate Mounting Bracket Assy., No Longer Serviced, Start Year: 01/01/1965
50	D0NN17A385G	1	Bracket, License Plate Mounting, Belgium, Israel, France, NH-E Only, Start Year: 01/01/1970
	85700573	5	Washer, Lock, Ext T, 1/4", Start Year: 01/01/1970
		4	Washer, 1" (25.4mm) O.D. x .26" (6.604mm) I.D., NH-E Only, No Longer Serviced, Start Year: 01/01/1970
	7770	4	Nut, Hex, 1/4"-20, Start Year: 01/01/1970
		4	Screw, Rd Hd, 1/4"-20 x 5/8", Belgium, Israel, NH-E Only, Start Year: 01/01/1970
		4	Screw, Rd Hd, 1/4"-20 x 5/8", France, NH-E Only, Start Year: 01/01/1971
51	C5NN13N775A	1	License Plate Lamp Assy., Except Belgium, Israel, France, Includes: Base & the Following, No Longer Serviced, Start Year: 01/01/1965
52	E2NN13465BA	1	Lamp Bulb Assy., Start Year: 01/01/1965
	C5NN13559A	1	Grommet, Lamp Wire, NH-E Only, No Longer Serviced, Start Year: 01/01/1965
	C5NN13N403A	1	Lamp Cover & Lens Assy., NH-E Only, No Longer Serviced, Start Year: 01/01/1965
	C5NN13N404A	1	Screw, Lamp Cover, NH-E Only, No Longer Serviced, Start Year: 01/01/1965
	86529539	2	Washer, Lock, Int T, 1/4", Start Year: 01/01/1965
	C5NN13N401A	2	Nut, License Plate Lamp, NH-E Only, No Longer Serviced, Start Year: 01/01/1965
	D0NN13N775B	1	License Plate Lamp Assy., w/Wide Fenders, Includes:, NH-E Only, No Longer Serviced, Start Year: 01/01/1970
	D0NN13N403A	1	Cover & Lens Assy., NH-E Only, Start Year: 08/01/1971
	D0NN13N456A	1	Gasket, Rear License, NH-E Only, No Longer Serviced, Start Year: 08/01/1971
	D0NN13N441A	1	Gasket, License Plate Lamp, NH-E Only, No Longer Serviced, Start Year: 08/01/1971
	NLS	1	Lamp Bulb Assy. {C5NN13N465B}, No Longer Serviced, Start Year: 08/01/1971
	D0NN13N850A	1	Ground Wire Assy., NH-E Only, No Longer Serviced, Start Year: 08/01/1971
53	C7NN13A444A	1	Wire, License Plate Lamp, Red, 30.50" (77.47cm) Lg., Replaces C5NN13A444B, NH-E Only, No Longer Serviced, Start Year: 01/01/1965
	C5NN13N025A	1	Main Beam Warning Lamp Assy., Includes: Lamp & the Following, NH-E Only, No Longer Serviced, Years: 01/01/1965-04/30/1973
	C5NN13N022A	1	Main Beam Warning Lamp Bulb Assy., 12 Volt, 2 Watts, NH-E Only, No Longer Serviced, Years: 01/01/1965-04/30/1973
	C5NN13N024A	1	Warning Light to Ground Wire Assy., Black, 12" (30.48cm), NH-E Only, Years: 01/01/1965-06/30/1967
	C5NN14N107C	1	Fuse & Wire Assy., Ignition Switch to Light Switch, L/Main Beam Warning Lamp, NH-E Only, No Longer Serviced, Years: 01/01/1965-05/31/1968

5000-SERIES 4 CYL TRACTOR (1/65-1/75)

11C01 REAR LAMPS, FLASHER & WIRING

Ref	Part Number	Qty	Description
	C5NN14N107D	1	Fuse & Wire Assy., Ignition Switch to Light Switch & Warning Light, w/Main Beam Warning Lamp, Includes: Wire & the Following, NH-E Only, No Longer Serviced, Years: 01/01/1965-05/31/1967
	279863	1	Fuse Assy., 5 Amp., NH-E Only, No Longer Serviced, Years: 01/01/1965-05/31/1968
	C7NN14N000K	1	License Plate Lamp Wire Assy., 12" (304.8mm), 2300-3300, NH-E Only, No Longer Serviced, Start Year: 06/01/1967
	D0NN14N000AC	1	Single Wire Assy., Belgium, Israel, France, NH-E Only, No Longer Serviced, Start Year: 01/01/1970
	D0NN14N000AC	1	Single Wire Assy., Germany, NH-E Only, No Longer Serviced, Years: 01/01/1970-08/31/1970
	E95AE2	2	Grommet, Wire to Fender, w/Hazard Warning Indicators, NH-E Only, Start Year: 01/01/1970
	C7NN13A444C	1	License Plate Lamp Wire Assy., 20" (508.0mm), 2300-3300, NH-E Only, No Longer Serviced, Start Year: 06/01/1967
54	D3NN13A350A	1	Hazard Warning Switch Assy., Germany, Replaces D0NN13A350A, Includes: Switch & Ref. 55, NH-E Only, Start Year: 01/01/1970
55	NLS	1	Switch Bulb Assy., 12 Volt, 2 Watt, J-3, Germany {C5NN13N368A}, Years: 01/01/1970-02/28/1971
55	72GB13464BA	1	Switch Bulb Assy., 12 Volt, 2 Watt, BL-9, Germany, Start Year: 03/01/1971
56	D0NN13N111A	1	Nut, Switch, Germany, NH-E Only, Start Year: 01/01/1970
57	D0NN13N231A	1	Switch Boot & Washer Assy., Germany, NH-E Only, Start Year: 01/01/1970
58	C9NN15B595A	1	Knob, Switch, Germany, NH-E Only, Replace w/D3NN-13A350-A(81830054) switch and D0NN-15B595-A(81824213) knob, Years: 01/01/1970-02/28/1971
58	D0NN15B595A	1	Knob, Switch, Germany, NH-E Only, Start Year: 03/01/1971
	C5NN17K386A	1	Plate, License Plate, France, NH-E Only, Start Year: 01/01/1971
	80682	2	Washer, Lock, 1/4", France, Start Year: 01/01/1971
	7770	2	Nut, Hex, 1/4"-20, France, Start Year: 01/01/1971
	38206S36	2	Screw, Pan Hd, 1/4"-20 x 1/2", France, No Longer Serviced (NHNA), Start Year: 01/01/1971
59	D2NN14N030B	1	Fuse Box Assy., w/Hazard Warning, Except 4500, Start Year: 05/01/1973
59	D2NN14N030B	1	Fuse Box Assy., w/Hazard Warning, w/Cab, 4500, Start Year: 05/01/1973
59	D2NN14N030A	1	Fuse Box Assy., L/Hazard Warning, Except 4500, Start Year: 05/01/1973
59	D2NN14N030A	1	Fuse Box Assy., L/Hazard Warning, L/Cab, 4500, Start Year: 05/01/1973
60	D2NN14N202A	1	Clip, Fuse Box Cover Retaining, No Longer Serviced, Start Year: 05/01/1973
61	44716S8	2/4	Washer, #10, Start Year: 05/01/1973
62	80684	2	Washer, Lock, #10, Start Year: 05/01/1973
63	86511922	2	Screw, Pan Hd, #10-24 x 3/4", Box to Cover, Start Year: 05/01/1973
64	D8NN13N360AC	1	Flasher Unit Assy., L/Cab, FTO-E, Start Year: 05/01/1973
65	D2NN13N395A	1	Mount, Flasher Unit, No Longer Serviced (NHNA), Start Year: 05/01/1973
66	D2NN13N396A	1	Spacer, Flasher Mount, .197" (5.0mm) I.D., No Longer Serviced (NHNA), Start Year: 05/01/1973
67	280254	2	Washer, Lock, Int T, #10, Start Year: 05/01/1973
68	87304	1	Nut, #10-24, Start Year: 05/01/1973
69	86511922	1	Screw, Pan Hd, #10-24 x 3/4", Flasher to Cover, Start Year: 05/01/1973
70	E0NN14N060AA	1	Cover, Flasher & Fuse Box, Start Year: 05/01/1973
71	ET614662	1	Clip, Harness to Cover, W/or L/Hazard Warning,, NH-E Only, Start Year: 05/01/1973

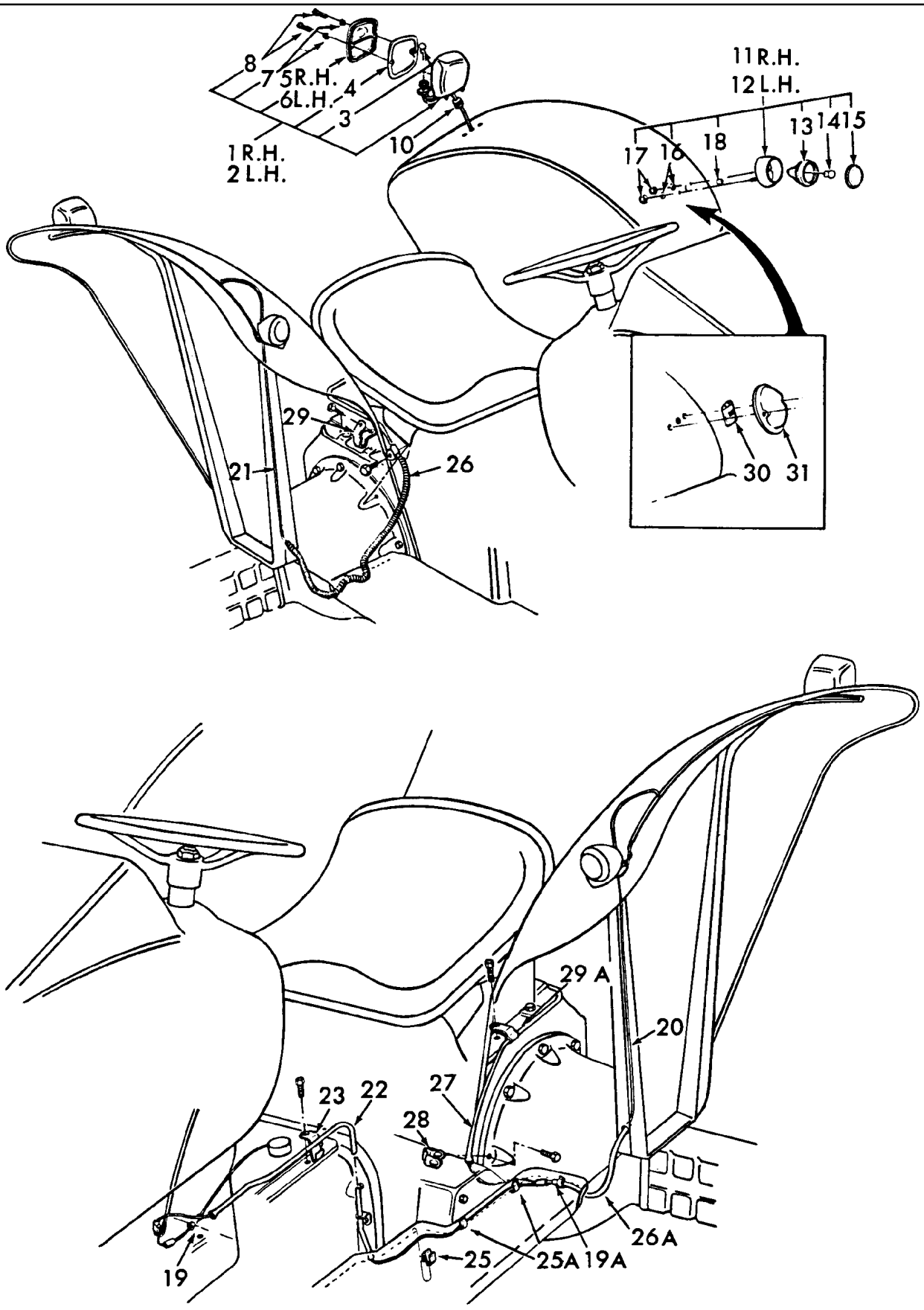
8
7
5R.H.
6L.H.
4
3
10
1R.H.
2L.H.
11R.H.
12L.H.
13
14
15
17
16
18
29
21
26
30
31
29A
20
23
22
27
28
19
25
25A
19A
26A

5000-SERIES 4 CYL TRACTOR (1/65-1/75)

11C03 REAR LAMPS & WIRING (NH-E) - 5000, 7000

Ref	Part Number	Qty	Description
1	E8NN13N407AA	1	Lamp Assy., R.H., w/Stop Lights, Except Denmark, Years: 01/01/1965-03/31/1969
1	D2NN13N408B	1	Lamp Assy., R.H., Except Denmark, Replaces P/N D0NN-13N408-A, NH-E Only, Start Year: 04/01/1969
1	D2NN13N408B	1	Lamp Assy., R.H., Except Denmark, Replaces P/N D0NN-13N408-A, Japan, Morocco, La Reunion, Tunisia, NH-E Only, Start Year: 01/01/1972
1	D2NN13N408B	1	Lamp Assy., R.H., Denmark, Replaces P/N D0NN-13N408-A, NH-E Only, Start Year: 01/01/1965
1	E8NN13N408AA	1	Lamp Assy., R.H., U.K., Replaces P/N C5NN-13404-A, No Longer Serviced (NHNA), Start Year: 01/01/196
2	E8NN13N407AA	1	Lamp Assy., L.H., w/Stop Lights, Except Denmark, Years: 01/01/1965-03/31/1969
2	E8NN13N407AA	1	Lamp Assy., w/Stop Lights, Antwerp Except Denmark, Start Year: 04/01/1969
2	E8NN13N407AA	1	Lamp Assy., L.H., w/Stop Lights, Denmark, Replaces P/N D0NN-13N407-D, Start Year: 01/01/1965
2	E8NN13N407AA	1	Lamp Assy., L.H., w/Stop Lights, Japan, Morocco, La Reunion, Tunisia, Start Year: 01/01/1972
2	E8NN13N407AA	1	Lamp Assy., L.H., U.K., Replaces P/N C5NN-13405-A Includes: Body & Ref. 2 thru 10, Start Year: 01/01/1965
3	82AG13464AA	3	Bulb, 12 Volt, 24 Watt, w/Stop Lights, Replaces P/N 211E-13465 & P/N 69AG-13464-AA, Years: 01/01/1965-12/31/1972
3	82AG13464AA	1	Bulb Assy., Great Britain & N. Ireland, Start Year: 01/01/1965
3	E2NN13465AA	1	Bulb Assy., Start Year: 01/01/1965
4	C5NN13461A	2	Gasket, Lens, No Longer Serviced (NH-E), Start Year: 01/01/1965
5	E8NN13N407AA	1	Lens Assy., R.H., U.K., Replaces P/N C5NN-13444-A, Start Year: 01/01/1965
5	D2NN13444B	1	Lens Assy., R.H., Antwerp, Replaces P/N C5NN-13444-A, No Longer Serviced (NHNA), Start Year: 01/01/1965
6	E8NN13N407AA	1	Lens Assy., L.H., U.K., Start Year: 01/01/1965
6	D2NN13445B	1	Lens Assy., L.H., Antwerp, Start Year: 01/01/1965
7	359826S	2	Washer, Lens to Body, No Longer Serviced, Start Year: 01/01/1965
8	C5NN13N416A	2	Screw, Pan Hd., #8-32 x 5/8", NH-E Only, Start Year: 01/01/1965
10	C7NN13091C	2	Grommet, Wiring, w/Stop Lights, Except Denmark, Start Year: 01/01/1965
10	C7NN13091C	2	Grommet, Wiring, w/Stop Lights, Denmark, Start Year: 01/01/1965
10	C5NN13091A	2	Grommet, Wiring, L/Stop Lights, .14 I.D. (3.56mm), NH-E Only, No Longer Serviced, Start Year: 01/01/1965
	C5NN16N342A	1	Reflector Mounting Bracket Assy., R.H., Germany, NH-E Only, Start Year: 01/01/1965
	C5NN16N343A	1	Reflector Mounting Bracket Assy., L.H., Germany, NH-E Only, Start Year: 01/01/1965
	280278	AR	Washer, Lock, Ext T, 5/16"
	9635082	AR	Nut, G5, 5/16"-18
	87872	4	Screw, Cap, HH, G5, 5/16"-18 x 3/4", Germany, Start Year: 01/01/1965
11	E8NN13200BA	1	Parking Lamp Assy., R.H., Replaces P/N C5NN-13200-A, Start Year: 01/01/1965
12	E8NN13201BA	1	Parking Lamp Assy., L.H., Replaces P/N c5nn-13201-A and D2NN-13201-A Includes: Body & Ref. 13 thru 15, No Longer Serviced, Start Year: 01/01/1965
13	E8NN13200BA	2	Bulb Mount Assy., Start Year: 01/01/1965
14	E2NN13465AA	2	Bulb, Lamp, Start Year: 01/01/1965
14	E2NN13465AA	1	Bulb, Great Britain & N. Ireland, Start Year: 01/01/1965
15	957E13208	2	Lens, Lamp, White, Start Year: 01/01/1965
16	85700573	AR	Washer, Lock, Ext T, 1/4"
17	34081S36	8	Nut, 1/4"-28, Start Year: 01/01/1965

5000-SERIES 4 CYL TRACTOR (1/65-1/75)

11C03 REAR LAMPS & WIRING (NH-E) - 5000, 7000

Ref	Part Number	Qty	Description
18	375297S	2	Grommet, Lamp Wire to Fender, Start Year: 01/01/1965
19	D0NN14N000B	1	Rear Lamp Wire Assy., Red & Blue, 53" (134.62cm), Mexico, Start Year: 01/01/1968
19	D3NN14N000E	1	Rear Harness Wire Assy., L/Stop Lights, 60" (152.4cm), NH-E Only, No Longer Serviced, Start Year: 01/01/1965
19A	C5NN14N000M	2	Rear Lamp Wire Assy., L/Stop Lights, 4" (10.16cm), No Longer Serviced, Start Year: 01/01/1965
20	C5NN14N000N	1	Wire Assy., L.H., Red/Blue, 57" (144.78cm), Except S. Africa, No Longer Serviced, Start Year: 01/01/1965
20	C5NN14N000R	1	Wire Assy., L.H., 68" (172.72cm), South Africa, No Longer Serviced, Years: 01/01/1965-03/31/1968
20	C5NN16N406C	1	Rear Fender Harness Assy., L.H., NH-E Only, Years: 04/01/1968-12/31/1971
20	D0NN16N406V	1	Rear Fender Harness Assy., L.H., No Longer Serviced (NHNA), Start Year: 01/01/1972
21	C5NN14N000S	1	Wire Assy., R.H., Red/Blue, 117" (297.18cm), NH-E Only, No Longer Serviced, Start Year: 01/01/1965
21	C7NN14N000C	2	Single Wire Assy., w/Stop Lights, Start Year: 04/01/1968
21	C5NN16N406H	1	Rear Fender Harness Assy., R.H., NH-E Only, No Longer Serviced, Years: 04/01/1968-12/31/1971
21	D0NN16N406T	1	Rear Fender Harness Assy., R.H., NH-E Only, Start Year: 01/01/1972
	C5NN14N000AG	1	Single Wire Assy., w/Stop Lights, Green/Yellow, 30" (76.2cm), Except Wide Fenders, United Kingdom & Ireland, NH-E Only, Years: 01/01/1965-03/31/1968
	D0NN14N000Z	1	Socket to Side Lights Wire Assy., w/Stop Lights, Red, 48" (121.92cm), Except Wide Fenders, United Kingdom & Ireland, No Longer Serviced, Start Year: 01/01/1965
	C5NN14N112E	1	Stop Light to Switch Harness Assy., South Africa, Except Wide Fenders, United Kingdom & Ireland, NH-E Only, Years: 01/01/1965-03/31/1968
	C5NN14N112K	1	Stop Light to Switch Harness Assy., Except Wide Fenders, United Kingdom & Ireland, No Longer Serviced (NHNA), Start Year: 04/01/1968
22	C5NN13N449J	1	Tube, Rear Wire, "L" Shaped, No Longer Serviced, Years: 01/01/1965-03/31/1969
22	C5NN13N449L	1	Tube, Rear Wire, "S" Shaped, w/10 Speed, No Longer Serviced, Start Year: 01/01/1965
22	C5NN13N449S	1	Tube, Rear Wire Assy., w/Stop Lights & Flashers, NH-E Only, Start Year: 04/01/1968
22	C5NN13N413E	1	Tubing, Rear Wire, Start Year: 04/01/1969
		1	Clip, Tubing to L.H. Platform, NH-E Only, No Longer Serviced, Start Year: 04/01/1969
	C5NN14N012C	1	Cover, Fender Wiring, R.H., w/Wheel Handbrake, Start Year: 04/01/1968
	C5NN14N012C	1	Cover, Fender Wiring, R.H., W/Wheel Handbrake, w/Hazard Warning, Germany, Start Year: 01/01/1970
	82021001	1	Cover, Fender Wiring, LH,W/Wheel Handbrake, Start Year: 04/01/1968
	82021001	1	Cover, Fender Wiring, LH,W/Wheel Handbrake, w/Hazard Warning, Germany, Start Year: 01/01/1970
23	C5NN13N448E	4	Clip, Rear Wire Retaining, Start Year: 01/01/1965
25	117818ES2	3	Clip, Wire Assy. to Platform, Start Year: 01/01/1965
25	C5NN14N204A	1/2	Clip, Wire Assy. to Platform, (1) R.H., (2) L.H., w/o Flashers & Stop Lights, No Longer Serviced (NHNA), Start Year: 01/01/1965
25	C5NN14N204A	2	Clip, Wire Assy. to Platform, L.H., w/Flashers, No Longer Serviced (NHNA), Start Year: 01/01/1965
25A	82857978	2	Clip, Cable, Snap-On, 9/16", Harness to Platform, Start Year: 01/01/1965
	375911S100	1	Clip, Wire Assy. to Steering Box, No Longer Serviced (NH-E), Years: 01/01/1965-03/31/1968
	529070	1	Strap, Wire Assy. to Steering Box, Start Year: 04/01/1968
26	C5NN14N110L	1	Conduit, Rear & Side Lamp Wire, 48" (121.92cm), South Africa, NH-E Only, Years: 01/01/1965-03/31/1968
26	C5NN14N590C	1	Conduit, R.H. Side, 16" (40.64cm), Replaces P/N C5NN-14N590-A, No Longer Serviced (NHNA), Years: 01/01/1965-12/31/1969

11C03 REAR LAMPS & WIRING (NH-E) - 5000, 7000

Ref	Part Number	Qty	Description
26	C7NN14N110L	1	Conduit, R.H. Side, 20-1/2" (52.07cm) Cut to Length, No Longer Serviced, Start Year: 01/01/1970
26A	C5NN14N589B	1	Conduit, L.H. Tube to Connector, 13" (33.02cm), NH-E Only, No Longer Serviced, Start Year: 01/01/1965
27	C5NN13N450A	1	Tube, Rear Wiring Loom, No Longer Serviced, Start Year: 01/01/1965
28	C5NN14N201A	2	Clip, Wiring Loom Conduit, No Longer Serviced (NH-E), No Longer Serviced. FTO-E, Start Year: 01/01/1965
29	C5NN14N201B	4	Clip, Wiring Loom Conduit, NH-E Only, No Longer Serviced, Start Year: 01/01/1965
29A	C7NN14N201A	1	Clip, Wiring Loom Conduit, No Longer Serviced, Start Year: 04/01/1968
	C5NN14N206A	2	Clip, Rear Lamp Wire to Fender Base, L.H. & R.H., South Africa, Years: 01/01/1965-03/31/1968
	C5NN14N199D	2	Clip, Conduit to Rear Axle Housing, L.H. & R.H., South Africa, NH-E Only, No Longer Serviced, Years: 01/01/1965-03/31/1968
	44735S36	4	Washer, 1/2", Start Year: 01/01/1965
30	C5NN14488A	1/2	Connector, Wire, 4 Way Female, France & Italy, NH-E Only, No Longer Serviced, Start Year: 01/01/1965
31	C5NN14N003A	2	Cover, Wiring Connector, France & Italy, NH-E Only, No Longer Serviced, Start Year: 01/01/1965

11C03[A] IMPLEMENT LAMP ASSEMBLY (NHNA)

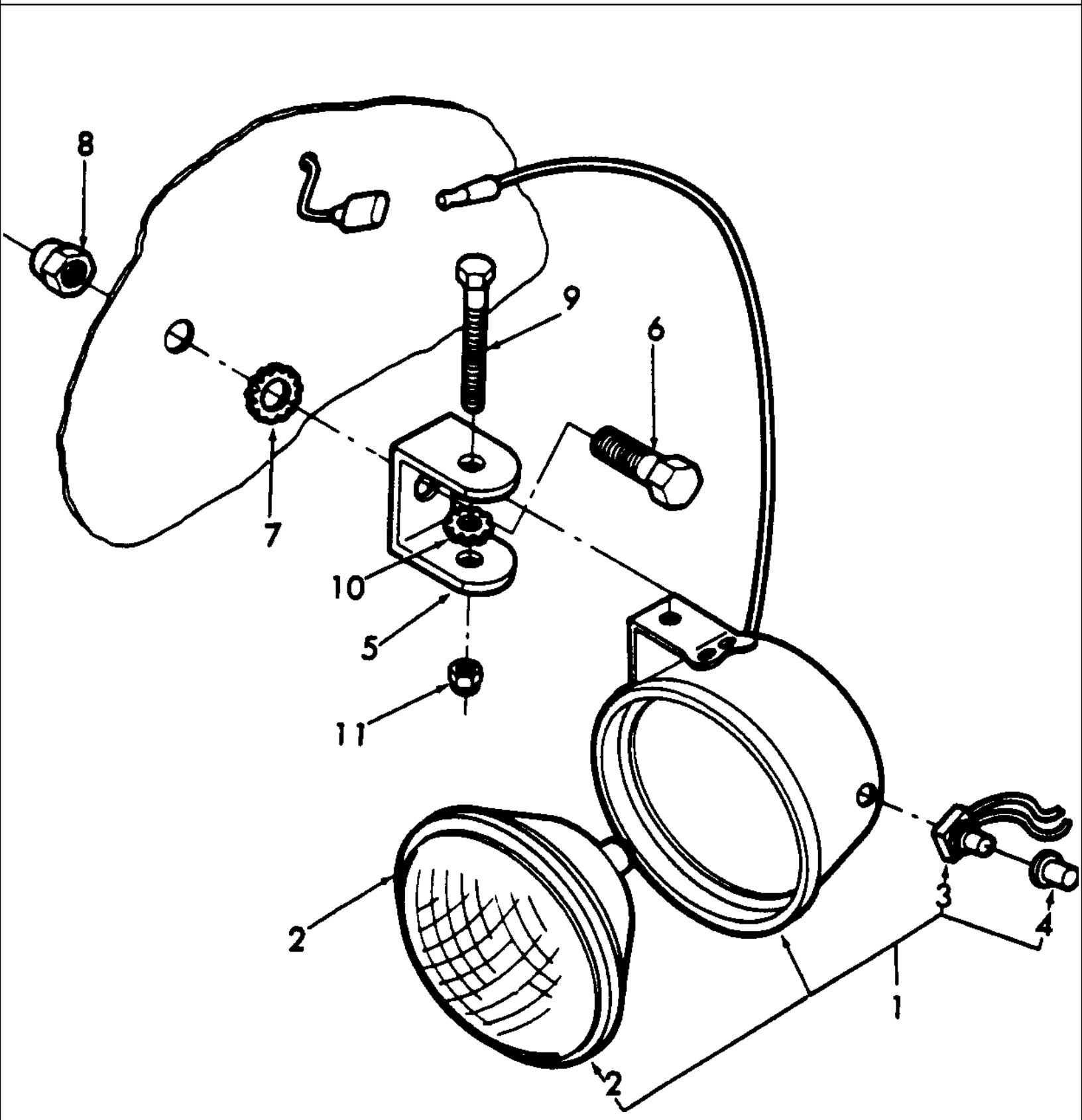

5000-SERIES 4 CYL TRACTOR (1/65-1/75)

11C03[A] IMPLEMENT LAMP ASSEMBLY (NHNA)

Ref	Part Number	Qty	Description
1	E3NN15A309AA	1	Lamp Assy., L/Switch, NHNA Only, Start Year: 01/01/1981
1	82005479	1	Lamp Assy., w/Switch Includes: Ref. 2, 3 & 4, Start Year: 01/01/1981
2	E3NN15330AA	1	Bulb, Start Year: 09/01/1984
3	E8NN15N550AA	1	Switch, Start Year: 01/01/1982
4	E1NN15N312AA	1	Boot, Start Year: 01/01/1982
5	D9NN13469AA	1	Bracket, NHNA Only, Start Year: 01/01/1982
6	87670	1	Screw, Cap, HH, G5, 1/2"-13 x 1-1/4", Start Year: 01/01/1982
7	281038	1	Washer, Lock, Ext T, 1/2", Start Year: 01/01/1982
8	88871	1	Nut, Lock, GC, 1/2"-13, No Longer Serviced, Start Year: 01/01/1982
9	9636711	1	Screw, Cap, HH, G5, 5/16"-18 x 2", Start Year: 01/01/1982
10	280278	1	Washer, Lock, Ext T, 5/16", Start Year: 01/01/1982
11	34976S7	1	Nut, Lock, G5, 5/16"-18, Start Year: 01/01/1982

11C03[B] SIDE & REAR LIGHTS, FLASHER & WIRING, WIDE FENDERS, HAZARD WARNING (1-73/)

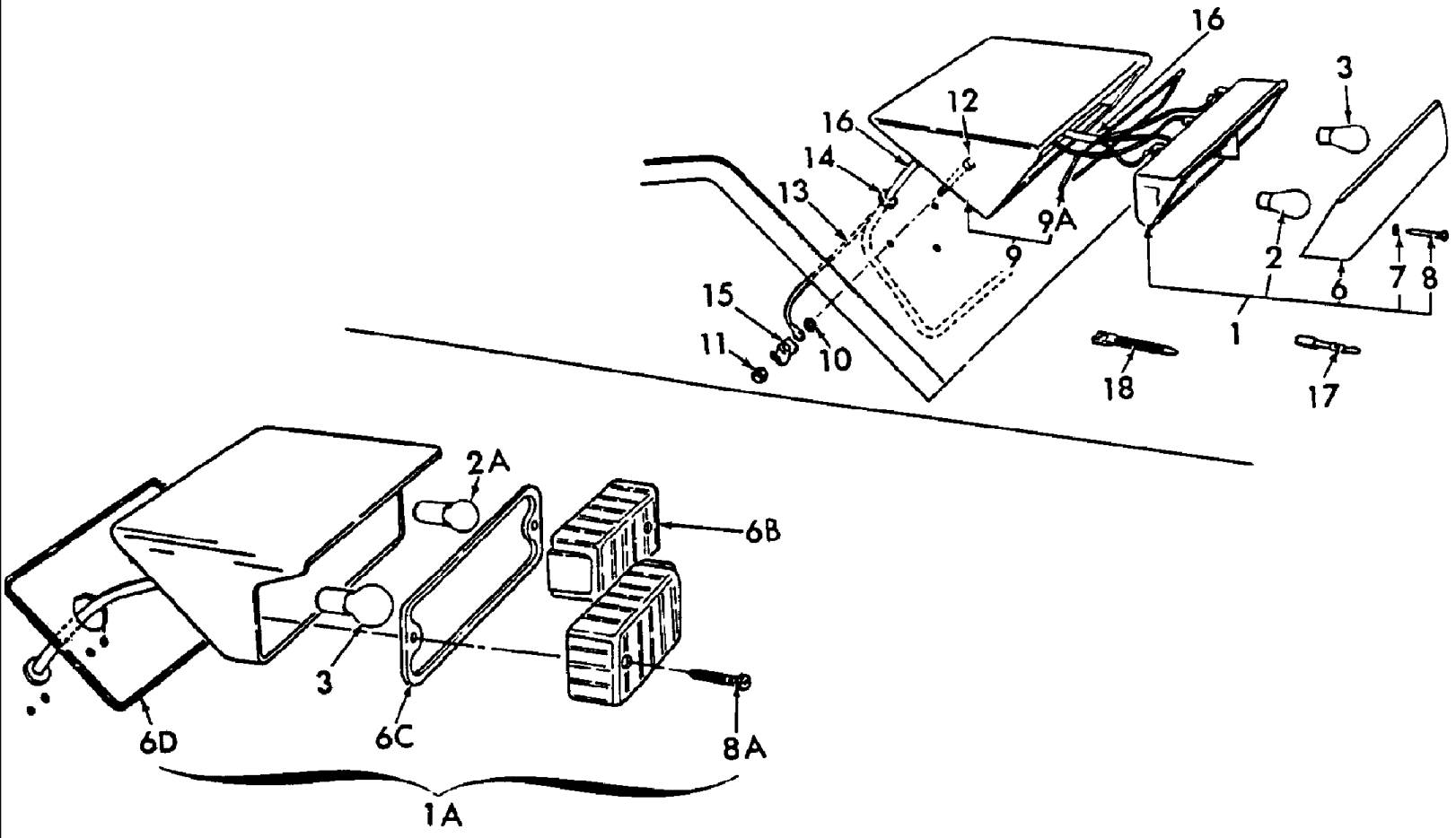

5000-SERIES 4 CYL TRACTOR (1/65-1/75)

11C03[B] SIDE & REAR LIGHTS, FLASHER & WIRING, WIDE FENDERS, HAZARD WARNING (1-73/)

Ref	Part Number	Qty	Description
1	E6NN13N465AA	1	Lamp Assy., Rear Stop & Flasher, RH, Years: 01/01/1970-12/31/1972
1	D8NN13N510AA	1	Lamp Assy., Rear Stop & Flasher, L.H., Years: 01/01/1970-12/31/1972
1	D8NN13N330AB	AR	Lamp Assy., Rear Stop & Flasher, L.H.
	15896221	2	Nut, CL 8, M6 x 1, Years: 01/01/1970-12/31/1972
1	D8NN13N330AB	1	Lamp Assy., Side & Flasher, R.H., No Longer Serviced - Need to order (1)D8NN-13N330-AB(83960367) & (1) D8NN-13N331-AB(83960368)., Years: 01/01/1970-12/31/1972
1	D8NN13N330AB	1	Lamp Assy., Side & Flasher, L.H., Years: 01/01/1970-12/31/1972
1A	D3NN13N328A	1	Lamp Assy., Rear Stop & Flasher, RH, NH-E Only, Start Year: 01/01/1973
1A	D3NN13N329A	1	Lamp Assy., Rear Stop & Flasher, LH, NH-E Only, Start Year: 01/01/1973
1A	D8NN13N330AB	1	Lamp Assy., Side & Flasher, RH, Start Year: 01/01/1973
1A	D8NN13N331AB	1	Lamp Assy., Side & Flasher, LH, Includes: Housing & Ref. 2 thru 8A, Start Year: 01/01/1973
2	529068	4	Bulb, 12 Volt, 10 Watt, Years: 01/01/1970-12/31/1972
2	81AG13466CA	4	Bulb, 12 Volt, Great Britain & N. Ireland, Years: 01/01/1970-12/31/1972
2A	E2NN13465AA	2	Bulb Assy., 12 Volt, 5 Watt, Start Year: 01/01/1973
2A	E2NN13465AA	2/4	Bulb Assy., 12 Volt, Great Britain & N. Ireland, Start Year: 01/01/1973
2A	82AG13464AA	2/4	Bulb Assy., 12 Volt, Start Year: 01/01/1973
3	529068	2/4	Bulb Assy., 12 Volt, 21 Watt, w/or L/Stop Lights, Use W/C9NN-13N328-A(81821856), C9NN-13N329-A(81821857)., Start Year: 01/01/1970
3	82AG13464AA	2/4	Bulb Assy., 12 Volt, Use W/D8NN-13N465-AA(83912170), D8NN-13N510-AA(83912151)., Years: 01/01/1970-12/31/1972
3	529068	2/4	Bulb Assy., 12 Volt, Great Britain & N. Ireland, Start Year: 01/01/1970
6	C9NN13N336A	1	Lens, Rear Lamp, R.H., Use W/C9NN-13N328-A(81821856), C9NN-13N329-A(81821857)., NH-E Only, No Longer Serviced, Years: 01/01/1970-12/31/1972
6	D8NN13444AA	2	Lens, Rear Lamp, R.H. & L.H., Use W/D8NN-13N465-AA(83912170), D8NN-13N510-AA(83912151)., NH-E Only, Years: 01/01/1970-12/31/1972
6	C9NN13N337A	1	Lens, Rear Lamp, L.H., NH-E Only, Years: 01/01/1970-12/31/1972
6	C9NN13N340A	1	Lens, Side Lamp, R.H., NH-E Only, No Longer Serviced, Years: 01/01/1970-12/31/1972
6	C9NN13N341A	1	Lens, Side Lamp, L.H., NH-E Only, No Longer Serviced, Years: 01/01/1970-12/31/1972
	E6NN13N375AA	2	Lens Assy., Germany, Use w/Side & Flash Lamp, Start Year: 01/01/1973
	D3NN13444A	2	Lens Assy., Use w/Stop & Flash Lamp, Start Year: 01/01/1973
6B	E6NN13N375AA	2	Lens, Lamp, Amber-Clear, Start Year: 01/01/1973
6C	D2NN13461A	2	Gasket, Lens, Start Year: 01/01/1973
6D	D8NN13N475AA	2	Gasket, Lamp Mounting, Use W/C9NN-13N328-A(81821856), C9NN-13N329-A(81821857)., Start Year: 01/01/1973
6D	D8NN13N475AA	2	Gasket, Lamp Mounting, Use W/D8NN-13N465-AA(83912170), D8NN-13N510-AA(83912151)., Start Year: 01/01/1973
7	C9NN13N343A	8	Washer, Screw, NH-E Only, Years: 01/01/1970-12/31/1972
8	C9NN13N342A	8	Screw, Lens to Housing, NH-E Only, Years: 01/01/1970-12/31/1972
8A	E6NN13N416AA	4	Screw, Lens to Body, Start Year: 01/01/1973
9	C9NN13N345A	4	Lamp Bracket & Gasket Assy., Includes: Bracket & Ref. 9A, NH-E Only, Years: 01/01/1970-12/31/1972
9A	C9NN13N444A	4	Gasket, Lens, NH-E Only, Years: 01/01/1970-12/31/1972

5000-SERIES 4 CYL TRACTOR (1/65-1/75)

11C03[B] SIDE & REAR LIGHTS, FLASHER & WIRING, WIDE FENDERS, HAZARD WARNING (1-73/)

Ref	Part Number	Qty	Description
10	9672276	8	Washer, Lock, Int T, 3/8", Start Year: 01/01/1970
11	C9NN13N332A	8	Nut, Lamp Mounting Bolt, Hex, 4100-5100-7100, Start Year: 01/01/1970
11	C9NN13N332A	8	Nut, Lamp Mounting Bolt, Hex, Except 4100-5100-7100, Years: 01/01/1970-12/31/1972
12	C9NN13N216A	8	Bolt, HH, Bracket to Fender, NH-E Only, Years: 01/01/1970-12/31/1972
13	C9NN14N000C	4	Ground Wire Assy., NH-E Only, Years: 01/01/1970-12/31/1972
14	383441S	4	Grommet, Rubber, 1/2" I.D. x 1" O.D. x 3/4", Start Year: 01/01/1970
15	353462S36	4	Clip, Wires to Fender, NH-E Only, Start Year: 01/01/1970
16	C9NN16N406A	1	Rear Fender Harness Assy., R.H., 2100-3100-4400-4500, NH-E Only, Start Year: 01/01/1970
16	C9NN16N406B	1	Rear Fender Harness Assy., R.H., 4100-5100, Start Year: 01/01/1970
16	C9NN16N406C	1	Rear Fender Harness Assy., L.H., 4100-5100, Start Year: 01/01/1970
16	C9NN16N406D	1	Rear Fender Harness Assy., L.H., 2100-3100-4400-4500, NH-E Only, Start Year: 01/01/1970
17	C9NN14N000A	2	Single Wire Assy., Plug Link, w/Cab, 3" (76.2mm), 4500, NH-E Only, No Longer Serviced, Start Year: 01/01/1970
18	263117	AR	Cable Tie, 3/32" x 11-1/2" L, Wire Harness Retaining, As Required, Start Year: 01/01/1970
	W0	2	Stop & Flasher Lamp Assy., Rear, Order Wholegoods, Start Year: 01/01/1973
	D2NN13N330B	2	Side & Flasher Lamp Assy., Includes: Housing & the Following, NH-E Only, No Longer Serviced, Start Year: 01/01/1973
	E6NN13N371AA	2	Lens, Side & Flasher Lamp, Start Year: 01/01/1973
	D2NN13N336A	2	Lens, Rear, Stop & Flasher Lamp, NH-E Only, Start Year: 01/01/1973
	D0NN13N373A	4	Screw, Lens Mounting, No Longer Serviced, Start Year: 01/01/1973
	529068	2/4	Lamp Bulb Assy., 12V, Start Year: 01/01/1973
	E2NN13465BA	2	Lamp Bulb Assy., Start Year: 01/01/1973
	D2NN13N374A	8	Washer, Lock, Lamp Mounting, NH-E Only, Start Year: 01/01/1973
	D0NN13N372A	8	Nut, Lamp Mounting, NH-E Only, No Longer Serviced, Start Year: 01/01/1973
	D2NN13N394A	8	Screw, Lamp Mounting, NH-E Only, No Longer Serviced, Start Year: 01/01/1973
	D0NN13N356A	4	Gasket, Lens, No Longer Serviced, Start Year: 01/01/1973
	D2NN13N357A	2	Grommet, Wire at Fender Hole, Use W/# D2NN-13N330-B, NH-E Only, No Longer Serviced, Start Year: 01/01/1973
	D2NN13N376A	2	Grommet, Wire at Fender Hole, Use W/# D2NN-13N328-B, NH-E Only, No Longer Serviced, Start Year: 01/01/1973

11C04 TRAILER LAMP SOCKET KIT, ACCESSORY

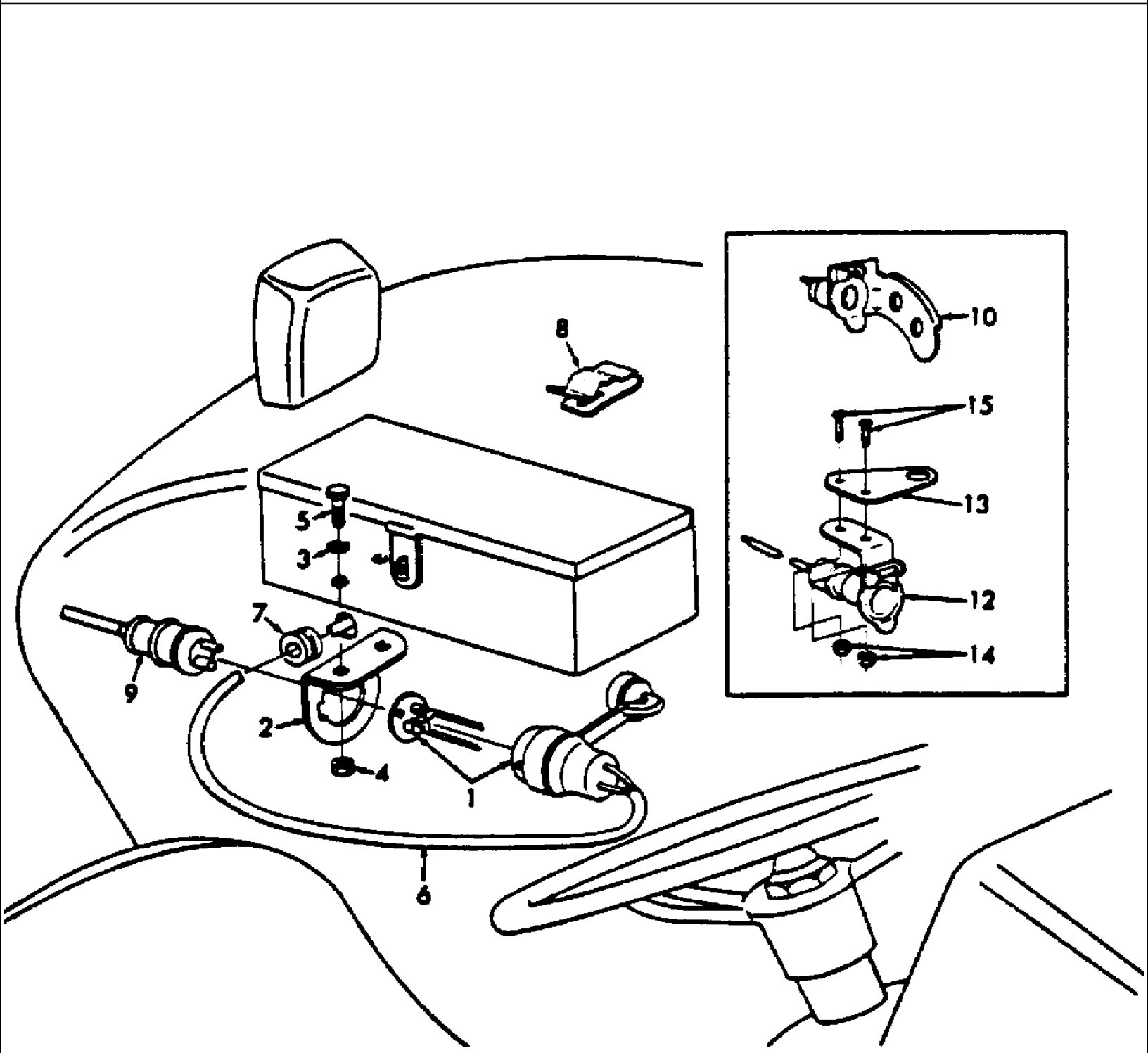

5000-SERIES 4 CYL TRACTOR (1/65-1/75)

11C04 TRAILER LAMP SOCKET KIT, ACCESSORY

Ref	Part Number	Qty	Description
	NLS	1	Kit, Trailer Lamp Socket & Plug, 2 Pole, Includes: Ref. 1 thru 9, U.K. and Antwerp {CFPN13400A}, NH-E Only, Start Year: 01/01/1965
1	C5NN13N406B	1	Socket Assy., Trailer Connection, 2 Pole, Replaces C5NN13N406A, NH-E Only, Start Year: 01/01/1965
2	C5NN13N460C	1	Bracket, Trailer Lamp Socket, Not Part of Kit CFPN13400A, 4500, No Longer Serviced, Start Year: 01/01/1966
	80681	2	Washer, Lock, 5/16", Start Year: 01/01/1966
	86629539	2	Nut, G5, 5/16"-24, Start Year: 01/01/1966
	20677	2	Screw, Cap, HH, G5, 5/16"-24 x 5/8", Not Part of Kit CFPN13400A, 4500, Start Year: 01/01/1966
2		1	Bracket, Mounting, Except 4500, NH-E Only, No Longer Serviced, Start Year: 01/01/1965
3	9672521	2	Washer, Tooth Lock, #10, NH-E Only, Start Year: 01/01/1965
4	86512084	2	Nut, #12-24, Start Year: 01/01/1965
5		2	Screw, Rd Hd, # 12-24 x 3/8", Except 4500, NH-E Only, No Longer Serviced, Start Year: 01/01/1965
6	C5NN14N000BK	1	Wire Assy., 2 Pole, 33" (83.82cm) Lg., 2100, 3100, 4400, 4500, Start Year: 01/01/1965
6	C5NN14N000U	1	Wire Assy., 2 Pole, 46" (116.84cm) Lg., Red & Blue, 4000, 5000, 7100, NH-E Only, Start Year: 01/01/1965
6	C5NN14N000U	1	Wire Assy., 2 Pole, 46" (116.84cm) Lg., Red & Blue, 2120, 3120, NH-E Only, Years: 01/01/1965-03/31/196
7	375394S	1	Grommet, No Longer Serviced, Start Year: 01/01/1965
8	E0A14659B	1	Clip, Wire to Tool Box, NH-E Only, No Longer Serviced, Start Year: 01/01/1965
9	C5NN14N150D	1	Plug Assy., 2 Pole, 160" (406.4cm) Lg., No Longer Serviced, Start Year: 01/01/1965
	E6NN13A450AA	1	Socket Assy., Trailer Lamp, 7 Pole, Replaces C5NN13A450D, Start Year: 06/01/1967
	C5NN14N000BM	1	Wire Assy., Socket to Side Lamp, 7 Pole, L/Stop Lights, 37" (93.98cm) Lg., 2300, 3300, NH-E Only, No Longer Serviced, Start Year: 06/01/1967
	C5NN14N000BR	1	Wire Assy., Socket to Side Lamp, 7 Pole, L/Stop Lights, 46" (116.84cm) Lg., 4000, 5000, 7100, NH-E Only, Start Year: 06/01/1967
	C5NN14N000BL	1	Wire Assy., Socket to Side Lamp, 7 Pole, W/Standard Seat, 26" (6.04cm) Lg., Replaces C5NN14N000N, 2300, 3300 with Standard Seat, NH-E Only, No Longer Serviced, Start Year: 06/01/1967
	C7NN14N000K	1	Wire Assy., Socket to Side Lamp, 7 Pole, w/Deluxe Seat, 2300, 3300, NH-E Only, No Longer Serviced, Start Year: 11/01/1968
	C5NN13N850A	1	Wiring Assy., Ground, 7 Pole, w/Deluxe Seat, 2300, 3300, NH-E Only, No Longer Serviced, Start Year: 11/01/1968
	C5NN13N460B	1	Bracket, 7 Pole, Socket to Deluxe Seat, 2300, 3300, NH-E Only, No Longer Serviced, Start Year: 11/01/1968
10	NLS	1	Socket Assy., Trailer Lamp Disconnect, Accessory, 2000, 3000, NHNA Only, No Longer Serviced, Start Year: 01/01/1965
12	NLS	1	Socket Assy., Trailer Lamp Disconnect, 3000, 4000, 5000, 7000, NHNA Only, No Longer Serviced, Start Year: 01/01/1965
13	C5NN13N460A	1	Bracket, Trailer Lamp Socket, 3000, 4000, 5000, 7000, NHNA Only, No Longer Serviced, Start Year: 01/01/1965
14	87825	AR	Nut, G2, #10-32
15	31596S	2	Screw, Fillister Hd, #10-32 x 3/8", Bracket to Socket, NHNA Only, No Longer Serviced, Start Year: 01/01/1965

11C05 PLOW (PLOUGH) & IMPLEMENT LAMP ASSEMBLIES, ACCESSORY

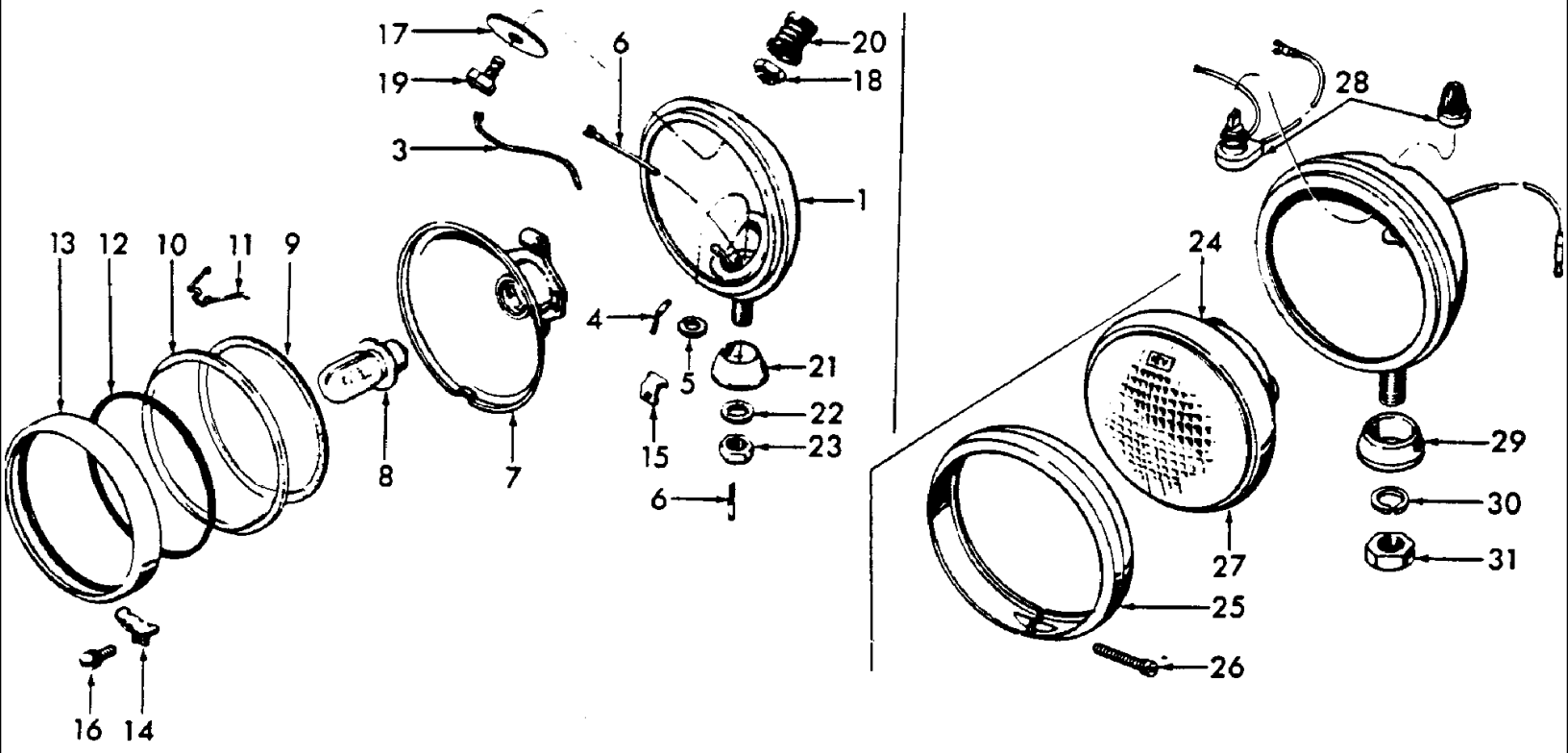

5000-SERIES 4 CYL TRACTOR (1/65-1/75)

11C05 PLOW (PLOUGH) & IMPLEMENT LAMP ASSEMBLIES, ACCESSORY

Ref	Part Number	Qty	Description
	E3NN13N000AB26M	1	Lamp Assy., Plough, Includes: Ref. 1 through 23, U.K. and Antwerp, Start Year: 01/01/1965
1	C5NN15N490A	1	Body & Stud Assy., NH-E Only, Start Year: 01/01/1965
3	C5NN13N028B	1	Wire Assy., Switch, 5" (12.7cm) Lg., NH-E Only, No Longer Serviced, Start Year: 01/01/1965
4	C5NN13N850D	1	Wire Assy., Ground, 7" (17.78cm) Lg., Start Year: 01/01/1965
5	C5NN13N069A	3	Washer, Wire Retaining, Start Year: 01/01/1965
6	C5NN13N028A	1	Wire Assy., Switch, 17" (43.18cm) Lg., NH-E Only, No Longer Serviced, Start Year: 01/01/1965
7	D2NN13N118A	1	Reflector & Contact Assy., Includes: Reflector & Contact Assy., No Longer Serviced, Start Year: 01/01/1965
	D2NN13N119A	1	Contact Assy., No Longer Serviced (NHNA), Start Year: 01/01/1965
8	C5NN13N014A	1	Bulb, Single Filament, Start Year: 01/01/1965
9	E1ADKN13068	1	Gasket, Lens to Reflector, Start Year: 01/01/1965
10	E3NN13N000AB26M	1	Lens, Start Year: 01/01/1965
11	E1ADKN13061	1	Retainer, Lens, Start Year: 01/01/1965
12	E04C13066	1	Gasket, Lens, Start Year: 01/01/1965
13	C5NN15513A	1	Door, Start Year: 01/01/1965
14	E1ADKN13016	1	Catch, Door, NH-E Only, No Longer Serviced, Start Year: 01/01/1965
15	D2NN13N015A	1	Catch, Door, No Longer Serviced (NH-E), Start Year: 01/01/1965
16	C5NN13N018A	1	Screw, Door, U.S., Start Year: 01/01/1965
16	D2NN13N018A	1	Screw, Door, U.K.-Antwerp, No Longer Serviced (NH-E), Start Year: 01/01/1965
17	C5NN13N031A	1	Insulation, Switch, NH-E Only, No Longer Serviced, Start Year: 01/01/1965
18	C5NN13N034A	1	Nut, Switch, NH-E Only, No Longer Serviced, Start Year: 01/01/1965
19	C5NN15N550B	1	Switch Assy., NH-E Only, No Longer Serviced, Start Year: 01/01/1965
20	C5NN13N011A	1	Sheath, Switch, NH-E Only, No Longer Serviced, Start Year: 01/01/1965
21	C5NN13N012A	1	Pedestal, Start Year: 01/01/1965
22	34910S	1	Washer, Lock, Int T, 9/16", NHNA Only, No Longer Serviced, Start Year: 01/01/1965
23	C5NN15N000A	1	Nut, to Fender, 9/16"-26, Start Year: 01/01/1965
	B16386	1	Grommet, Rubber, Plough Lamp Wire, .25 ID x .50 OD (6.35 x 12.7mm), Start Year: 01/01/1965
24	86545963	1	Lamp Assy., Implement Rear, 12 Volt, L/Cab, Accessory, U.S., Start Year: 01/01/1965
24	D5NN15A309A	1	Lamp, Implement Rear, 12 Volt, w/Cab, Includes: Base & Ref. 25 thru 31, NHNA Only, Start Year: 01/01/1965
25	86529682	1	Ring, Lamp, No Longer Serviced (NH-E), Start Year: 01/01/1965
26	NLS	1	Screw, Fillister Hd., #8-32 x 1-1/4" {31458S}, Start Year: 01/01/1965
27	E3NN15330AA	1	Bulb Assy., 12 Volt, Start Year: 01/01/1965
28	C5NN15N550A	1	Switch Assy., Start Year: 01/01/1965
29	C5NN13A097A	1	Adapter, Mounting, No Longer Serviced, Start Year: 01/01/1965
30	80679	1	Washer, Lock, 1/2", Start Year: 01/01/1965
31	280963	1	Nut, G5, 1/2"-20, No Longer Serviced, Start Year: 01/01/1965

11C06 REAR LICENSE LAMP & BRACKET, U.K.

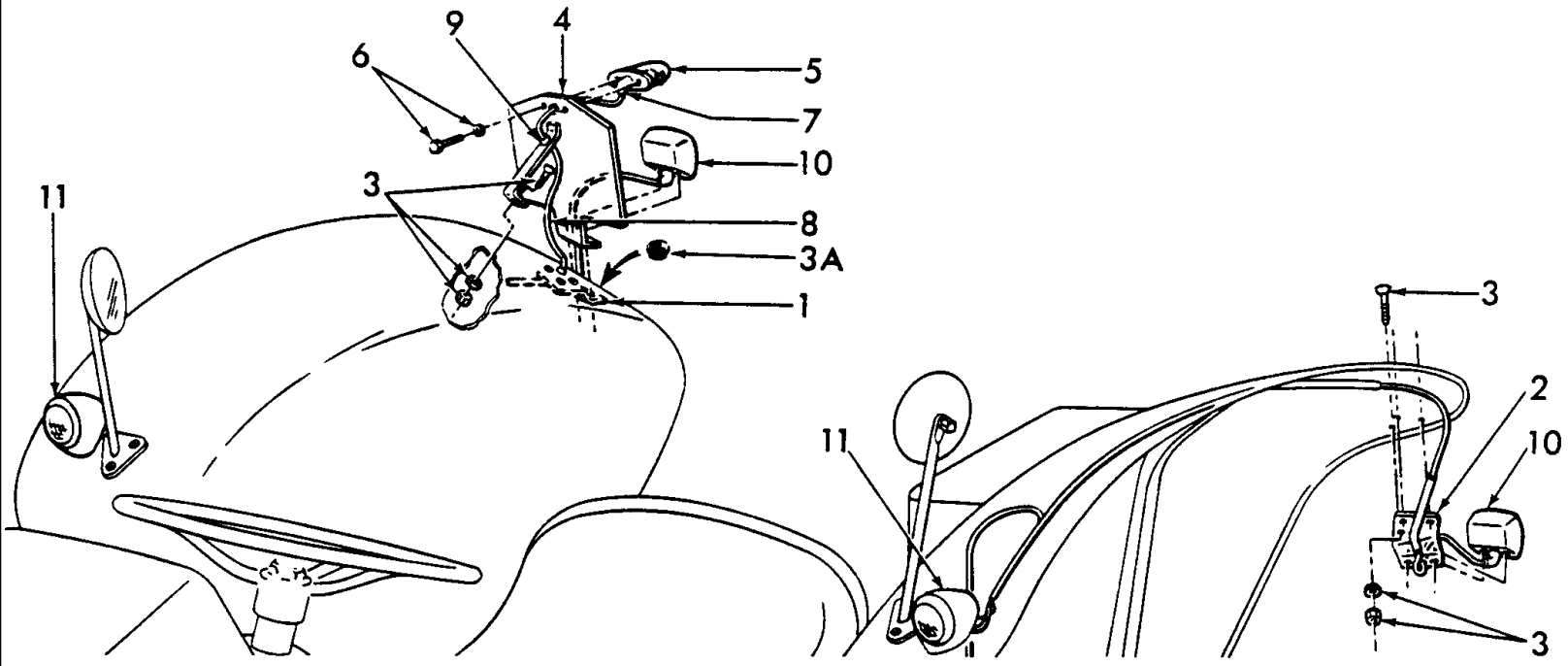

5000-SERIES 4 CYL TRACTOR (1/65-1/75)

11C06 REAR LICENSE LAMP & BRACKET, U.K.

Ref	Part Number	Qty	Description
1	C5NN13433A	1	Bracket Assy., Rear Lamp, RH, 2120-3120, NH-E Only, No Longer Serviced, Years: 01/01/1965-03/31/1969
1	C7NN13433A	1	Bracket Assy., Rear Lamp, RH, 2120-3120, NH-E Only, No Longer Serviced, Start Year: 04/01/1969
	NLS	1	Bracket Assy., Rear License Plate, RH, 3400 {C5NN17N380C}, Start Year: 01/01/1966
2	C7NN13470A	1	Bracket Assy., Rear Lamp, LH, 2120-3120, NH-E Only, No Longer Serviced, Start Year: 04/01/1969
	NLS	1	Bracket Assy., Rear License Plate, LH, 3400 {C5NN17N387A}, No Longer Serviced, Start Year: 01/01/1966
3	34927S7	8	Washer, Lock, Ext T, #12, Except 2120, NH-E Only, No Longer Serviced, Start Year: 01/01/1965
3	86509309	8	Nut, G5, 1/4"-28, Except 2120, Start Year: 01/01/1965
3		8	Screw, Pan Hd, 1/4"-28 x 5/8", Except 2120, NH-E Only, Start Year: 01/01/1965
3	86529539	7	Washer, Lock, Int T, 1/4", 2120-3120, Start Year: 04/01/1969
3	7770	7	Nut, Hex, 1/4"-20, 2120-3120, Start Year: 04/01/1969
3		7	Screw, Rd Hd, 1/4"-20 x 5/8", 2120-3120, NH-E Only, Start Year: 04/01/1969
3A	115434ES	2	Plug, Excess Fender Hole, 2120, NH-E Only, Start Year: 04/01/1969
	80701	1	Washer, 1/4", 3400, Start Year: 01/01/1966
	85700573	1	Washer, Lock, Ext T, 1/4", 3400, Start Year: 01/01/1966
	7770	1	Nut, Lock, 1/4"-20, 3400, Start Year: 01/01/1966
	NLS	1	Screw & Washer Assy., Oval Hd., 1/4"-20 x 5/8", 3400 {50820S36}, No Longer Serviced, Start Year: 01/01/1966
4	C5NN17A385E	1	Bracket, License Plate Mounting, NH-E Only, No Longer Serviced, Start Year: 01/01/1965
5		1	Lamp Assy., Rear License, NH-E Only, No Longer Serviced, Start Year: 01/01/1965
	100E13564A1	1	Lens, Lamp Assy., Start Year: 01/01/1965
	E83W13568	1	Gasket, Lens, Start Year: 01/01/1965
	81AG13466BA	1	Bulb, Rear License Lamp, Start Year: 01/01/1965
6	85700573	2	Washer, Lock, External Tooth, 1/4", Start Year: 01/01/1965
6	280640	2	Screw, Cap, HH, G5, 1/4"-28 x 1/2", Except 2120-3120, Start Year: 01/01/1965
6	280781	2	Screw, Cap, HH, G5, 1/4"-28 x 5/8", 2120-2130, Start Year: 01/01/1965
7	E166NC9	1	Shroud, License Lamp Wire, No Longer Serviced (NHNA), Start Year: 01/01/1965
8	C5NN14N000AK	1	Wire Assy., Rear License Lamp, Except 3400, NH-E Only, No Longer Serviced, Start Year: 01/01/1965
8	NLS	1	Wire Assy., Rear License Lamp, Red/Blue, 93" (236.22cm) Lg., 3400 {C5NN14N000BA}, Start Year: 01/01/1966
	376507S100	2	Clip, Wire to Seat & Platform, w/Pan Seat, 5100, Start Year: 04/01/1968
	C7NN14N199E	2	Clip, Wire to Seat & Platform, w/Deluxe Seat, 5100, NH-E Only, Start Year: 04/01/1968
9	375394S	1	Grommet, Wire, No Longer Serviced, Start Year: 01/01/1965
9	358194S	1	Grommet, Wire to Bracket, 3400, No Longer Serviced, Start Year: 01/01/1966
	E95AE2	1	Grommet, Wire to Fender, NH-E Only, Start Year: 01/01/1966
		1	Clip, Wire to Fender, 3400, NH-E Only, Start Year: 01/01/1966
10	E8NN13N408AA	1	Lamp Assy., Rear, RH, No Longer Serviced (NHNA), Start Year: 01/01/1965
10	E8NN13N407AA	1	Lamp Assy., Rear, LH, , Refer to Fig. 11C2 or 11C3 for Breakdown, Start Year: 01/01/1965
11	E8NN13200BA	1	Lamp Assy., Parking, RH, Start Year: 01/01/1965
11	E8NN13201BA	1	Lamp Assy., Parking, LH, Refer to Fig.s 11C2 or 11C3 for Components, No Longer Serviced, Start Year: 01/01/1965

11C07 REAR LICENSE PLATE LAMP & BRACKET, NH-E

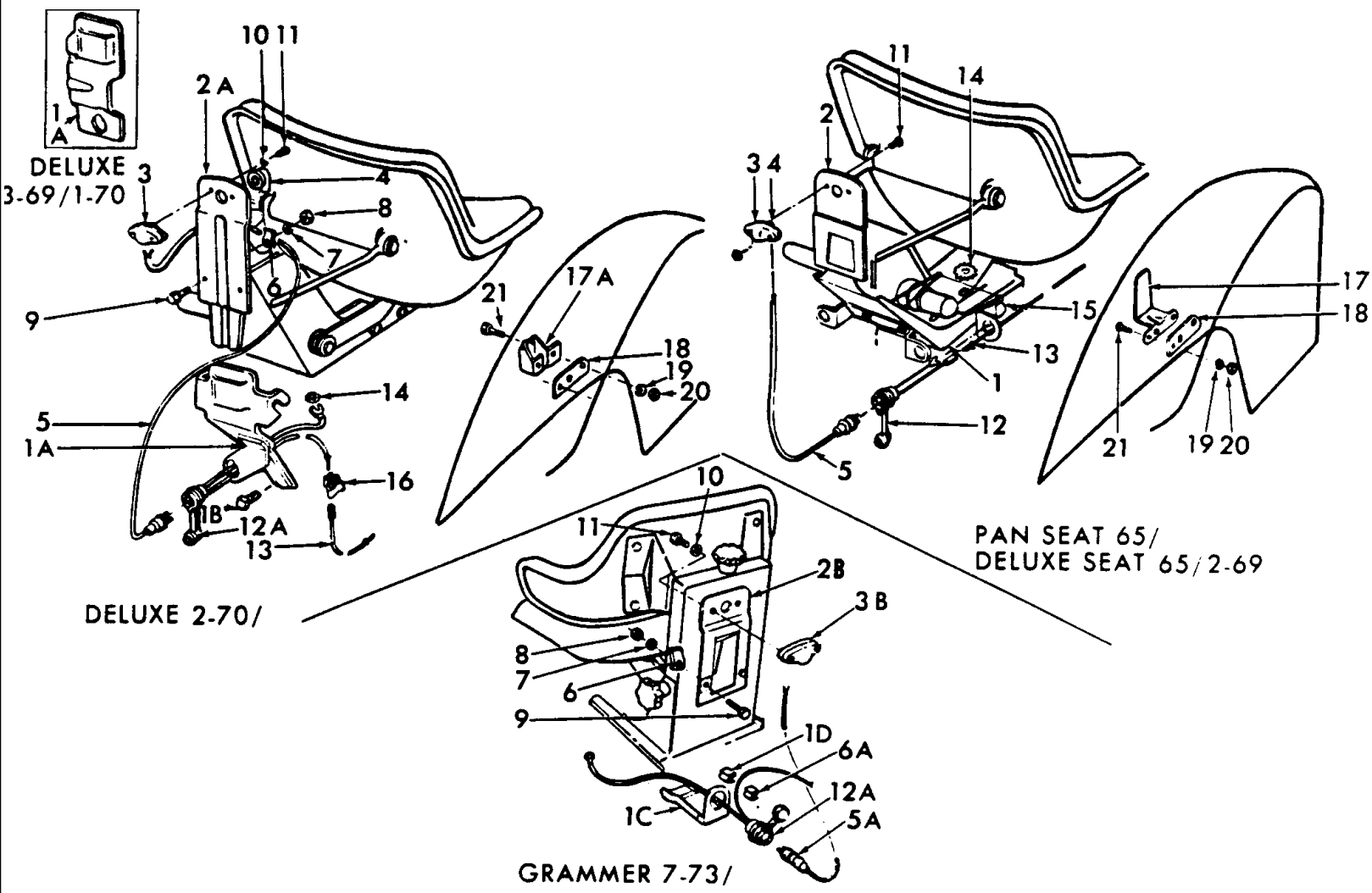

5000-SERIES 4 CYL TRACTOR (1/65-1/75)

11C07 REAR LICENSE PLATE LAMP & BRACKET, NH-E

Ref	Part Number	Qty	Description
1	C5NN17N380A	1	Bracket Assy., Mounting, w/Pan Seat, 2000-3000-4000, NH-E Only, No Longer Serviced, Start Year: 01/01/1965
1	C5NN17N380A	1	Bracket Assy., w/Deluxe Seat, 2000-3000-4000, NH-E Only, No Longer Serviced, Years: 01/01/1965-02/28/1969
1	C5NN17N380B	1	Bracket Assy., Mounting, w/Pan Seat, 5000, NH-E Only, No Longer Serviced, Start Year: 01/01/1965
1	C5NN17N380B	1	Bracket Assy., w/Deluxe Seat, 5000, NH-E Only, No Longer Serviced, Years: 01/01/1965-02/28/1969
1A	C7NN17N388A	1	Bracket, Mounting, w/Deluxe Seat, NH-E Only, No Longer Serviced, Years: 03/01/1969-01/31/1970
1A	D2NN17N391A	1	Bracket, Mounting, w/Deluxe Seat, Except Grammer Seat, No Longer Serviced (NHNA), Start Year: 02/01/1970
1B	PL	1	Screw, Set, Bracket Retaining, 1/4"-20 x 1/2", Except Grammar Seat, Start Year: 02/01/1970
1C	E9NN13N460CA	1	Bracket, Lamp Socket, w/Grammar Seat, Start Year: 07/01/1973
1D	D3NN14N204A	1	Clip, Ground Wire to Bracket, w/Grammar Seat, NH-E Only, No Longer Serviced, Start Year: 07/01/1973
2	D9NN17A385AA	1	Bracket, Mounting, w/Pan Seat, NHNA Only, Start Year: 01/01/1965
2	D9NN17A385AA	1	Bracket, Mounting, w/Deluxe Seat, NHNA Only, Years: 01/01/1965-02/28/1969
2A	C7NN17A385B	1	Bracket, Mounting, w/Deluxe Seat, Except Grammar Seat, No Longer Serviced (NHNA), Start Year: 03/01/1969
2A	C7NN17A385B	1	Bracket, Mounting, w/Deluxe Seat, 7100, No Longer Serviced (NHNA), Years: 01/01/1971-06/30/1973
2B	D9NN17A385FB	1	Bracket, License Plate Mounting, w/Grammer Seat, NH-E Only, No Longer Serviced, Start Year: 07/01/197
3	E8NN13N775AA	1	License Plate Lamp Assy., Start Year: 01/01/1965
	100E13564A1	1	Lens, Lamp Assy., Start Year: 01/01/1965
	E83W13568	1	Gasket, Lens, Start Year: 01/01/1965
4	E166NC9	1	Shroud, Lamp Connector, No Longer Serviced (NHNA), Start Year: 01/01/1965
5	C5NN14N150D	1	Plug & Wire Assy., Socket to Lamp, Except Grammer Seat, No Longer Serviced, Start Year: 01/01/1965
5	C5NN14N150D	1	Plug & Wire Assy., Socket to Lamp, 7100, No Longer Serviced, Years: 01/01/1971-06/30/1973
5A	D3NN14N150A	1	Lamp Plug & Wire Assy., w/Grammer Seat, NH-E Only, No Longer Serviced, Start Year: 07/01/1973
6		1	Clip, Plug & Wire Assy. to Plate Bracket, w/Deluxe & Grammer Seat, NH-E Only, Start Year: 03/01/1969
6A	D3NN14N204B	1	Clip, Lamp Wire to Bracket, w/Grammer Seat, NH-E Only, No Longer Serviced, Start Year: 07/01/1973
7	80682	1	Washer, Lock, 1/4", Start Year: 03/01/1969
8	7770	1	Nut, Hex, 1/4"-20, Start Year: 03/01/1969
9	38206S36	1	Screw, Pan Hd, 1/4"-20 x 1/2", W/Deluxe & Grammer Seat, No Longer Serviced, Start Year: 03/01/1969
10	85700573	1	Washer, Lock, Ext T, 1/4", Start Year: 01/01/1965
11	280781	2	Screw, Cap, HH, G5, 1/4"-28 x 5/8", Start Year: 01/01/1965
12	C5NN13N406B	1	Trailer Connection Socket Assy., w/Pan Seat, NH-E Only, Start Year: 01/01/1965
12	C5NN13N406B	1	Trailer Connection Socket Assy., w/Deluxe Seat, NH-E Only, Years: 01/01/1965-02/28/1969
12A	C9NN13N406A	1	Trailer Connection Socket Assy., w/Deluxe & Grammer Seat, Start Year: 03/01/1969
13	C5NN14N000Z	1	Wire Assy., w/Pan Seat, 22" (55.88cm), 4000 Except 4400-4500, No Longer Serviced (NHNA), Years: 01/01/1965-03/31/1968
13	C5NN14N000Z	1	Wire Assy., w/Pan & Deluxe Seat, 22" (55.88cm), 2000-3000, No Longer Serviced (NHNA), Start Year: 01/01/1965
13	C5NN14N000M	1	Wire Assy., w/Pan Seat, 4" (10.16cm), 4000 Except 4400-4500, No Longer Serviced (NHNA), Start Year: 04/01/1968

5000-SERIES 4 CYL TRACTOR (1/65-1/75)

11C07 REAR LICENSE PLATE LAMP & BRACKET, NH-E

Ref	Part Number	Qty	Description
13	C5NN14N000M	1	Wire Assy., w/Deluxe Seat, 4" (10.16cm), 4000, No Longer Serviced (NHNA), Years: 04/01/1968-02/28/1969
13	C7NN14N000R	1	Wire Assy., w/Pan Seat, 49" (124.45cm), 4400-4500, NH-E Only, No Longer Serviced, Start Year: 01/01/1965
13	C5NN14N000BK	1	Wire Assy., w/Pan Seat, 33" (83.82cm), 5100, Years: 01/01/1965-03/31/1968
13	C5NN14N000BK	1	Wire Assy., w/Deluxe Seat, 33" (83.82cm), 4000-5100-7100, Start Year: 03/01/1969
13	C7NN14N000E	1	Wire Assy., w/Pan Seat, 40" (101.6cm), 5100, NH-E Only, No Longer Serviced, Start Year: 04/01/1968
13	C7NN14N000E	1	Wire Assy., w/Deluxe Seat, 40" (101.6cm), 5100, NH-E Only, No Longer Serviced, Years: 04/01/1968-02/28/1969
13	C5NN14N000U	1	Wire Assy., w/Deluxe Seat, 46" (116.84cm), Ireland, Spain, 5000-7100, NH-E Only, Start Year: 03/01/1969
13	C5NN14N000AK	1	Wire Assy., 2120-3120, NH-E Only, No Longer Serviced, Years: 01/01/1965-03/31/1969
	C7NN14541A	1	Conduit, Bracket Socket Wire, 5100-7100, NH-E Only, No Longer Serviced, Start Year: 04/01/1968
14	356420S8	1	Washer, Flat, w/Deluxe Seat, 7/16" ID x 1" OD, Start Year: 01/01/1965
14A	9715503	1	Washer, Lock, Ext T, 7/16", W/Pan Seat, Start Year: 01/01/1965
15	40515S7	1	Screw, Pan Hd., w/Pan Seat, #10-24 x 3/8", NH-E Only, Start Year: 01/01/1965
16	C5NN9N340C	1	Clip, Wire to Seat Base, w/Deluxe Seat, Except Grammer Seat, Start Year: 01/01/1965
16	C5NN9N340C	1	Clip, Wire to Seat Base, w/Deluxe Seat, 7100, Years: 01/01/1971-06/30/1973
17	C9NN17N386C	1	Bracket, Retaining, w/Pan Seat, Replaces C5NN17N386B, NH-E Only, No Longer Serviced, Start Year: 01/01/1965
17	C9NN17N386C	1	Bracket, Retaining, w/Deluxe Seat, NH-E Only, No Longer Serviced, Years: 01/01/1965-02/28/1969
17A	C7NN17N386A	1	Bracket, Retaining, w/Deluxe Seat, NH-E Only, No Longer Serviced, Years: 03/01/1969-01/31/1970
17A	C9NN17N386B	1	Bracket, Retaining, w/Deluxe Seat, No Longer Serviced (NHNA), Start Year: 02/01/1970
17A	C9NN17N386B	1	Bracket, Retaining, w/Deluxe Seat, 7100, No Longer Serviced (NHNA), Years: 01/01/1971-06/30/1973
18	C9NN17N389A	1	Plate, Reinforcement, Retaining Bracket, Replaces C7NN17N389A, No Longer Serviced (NHNA), Start Year: 01/01/1965
18	C9NN17N389A	1	Plate, Reinforcement, Retaining Bracket, 7100, No Longer Serviced (NHNA), Years: 01/01/1971-06/30/197
19	280278	2	Washer, Lock, Ext T, 5/16", Start Year: 01/01/1965
20	9635082	2	Nut, G5, 5/16"-18, Start Year: 01/01/1965
21	87872	2	Screw, Cap, HH, G5, 5/16"-18 x 3/4", Start Year: 01/01/1965
	263117	2	Cable Tie, 3/32" x 11-1/2" L, Wire to Conduit, South Africa, 5000, Years: 01/01/1965-03/31/1968
	C5NN17K386A	1	Plate, w/Auto Hitch, w/U.K. Fenders, France, NH-E Only, Start Year: 06/01/1967
	C5NN17K386A	1	Plate, w/Automatic Hitch, w/Wide Fenders, France, NH-E Only, Start Year: 01/01/1971
	38206S36	2	Screw, Pan Hd, 1/4"-20 x 1/2", No Longer Serviced (NHNA), Start Year: 06/01/1967
	C7NN13A444C	2	Lamp Wire Assy., Black, w/Deluxe Seat, 9" Lg., 2300-3300, NH-E Only, No Longer Serviced, Start Year: 06/01/1967
	CFPN17N390A	1	Kit, Lamp, Accessory, w/Pan Type Seat, 2000, 3000, 4000, Includes: Parts Listed Below, NH-E Only, Years: 01/01/1965-03/31/1968
	CFPN17N390B	1	Kit, Lamp, Accessory, w/Pan Type Seat, 5000, Includes: Parts Listed Below, NH-E Only, Years: 01/01/1965-03/31/1968
	C5NN17N380A	1	Bracket Assy., 2000, 3000, 4000, NH-E Only, No Longer Serviced
	40515S7	1	Screw, NH-E Only

5000-SERIES 4 CYL TRACTOR (1/65-1/75)

11C07 REAR LICENSE PLATE LAMP & BRACKET, NH-E

Ref	Part Number	Qty	Description
	C5NN17N380B	1	Bracket Assy., 5000, NH-E Only, No Longer Serviced
	C5NN14N000Z	1	Wire Assy., 2000, 3000, 4000, No Longer Serviced (NHNA)
	C5NN17A385A	1	Bracket, NH-E Only
	C5NN14N000BK	1	Wire Assy., 5000
	E8NN13N775AA	1	Lamp Assy.
	C9NN17N386C	1	Bracket, NH-E Only, No Longer Serviced
	E166NC9	1	Shroud, No Longer Serviced (NHNA)
	80681	2	Washer, Lock, 5/16"
	C5NN14N150D	1	Plug Assy., No Longer Serviced
	9635082	2	Nut, G5, 5/16"-18
	80682	2	Washer, Lock, 1/4"
	87872	2	Screw, Cap, HH, G5, 5/16"-18 x 3/4"
	280781	2	Screw, Cap, HH, G5, 1/4"-28 x 5/8"
	C5NN13N406B	1	Socket Assy., No Longer Serviced

11C08 PLOW (PLOUGH) LAMP ASSY. (NH-E) - 2100, 2300, 2310, 3055, 3100, 3300, 3310, 4100, 4400, 4500, 5100

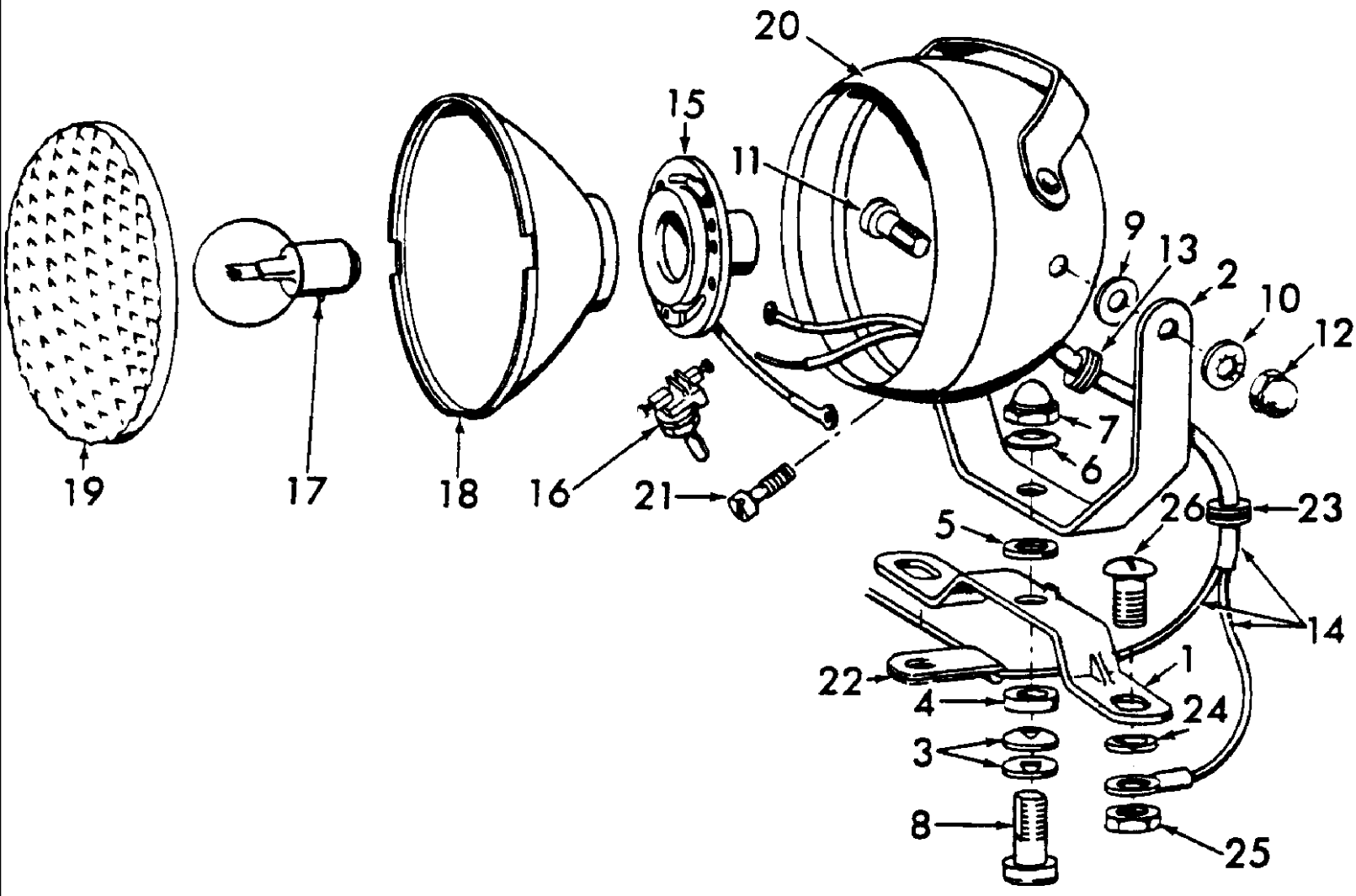

5000-SERIES 4 CYL TRACTOR (1/65-1/75)

11C08 PLOW (PLOUGH) LAMP ASSY. (NH-E) - 2100, 2300, 2310, 3055, 3100, 3300, 3310, 4100, 4400, 4500, 5100

Ref	Part Number	Qty	Description
	E2NN13N000BA	1	Lamp Assy., Plough, w/Wide Fenders, France, 2100, 3100, 3055, Includes: Body & Ref. 1 thru 21, Start Year: 01/01/1971
	D8NN13N000AB12L	1	Lamp Assy., Plough, w/U.K. Fenders, Replaces P/N C5NN-13N427-B, 2300, 2310, 3300, 3310, 4100, 4400, 4500, 5100, Includes: Body & Ref. 1 thru 21, No Longer Serviced, Start Year: 06/01/1967
	C5NN13N427A	1	Lamp Assy., Plough, w/U.K. Fenders, 4100, 5100, Includes: Body & Ref. 1 thru 21, NH-E Only, No Longer Serviced, Years: 06/01/1967-12/31/1970
1	D0NN15N569A	1	Bracket, NH-E Only, No Longer Serviced, Start Year: 01/01/1971
2	C9NN15N569A	1	Bracket, Swivel, No Longer Serviced (NHNA), Start Year: 01/01/1971
3	C9NN15N577B	2	Washer, Lower, Start Year: 01/01/1971
4	C9NN15N574A	1	Spacer, NH-E Only, No Longer Serviced, Start Year: 01/01/1971
5	C9NN15N579D	1	Washer, Nylon, 12.2mm I.D., No Longer Serviced (NHNA), Start Year: 01/01/1971
6	C9NN15N576A	1	Washer, No Longer Serviced (NHNA), Start Year: 01/01/1971
7	C9NN15N571A	1	Nut, No Longer Serviced (NHNA), Start Year: 01/01/1971
8	C9NN15N568A	1	Bolt, No Longer Serviced (NHNA), Start Year: 01/01/1971
9	C9NN15N578A	2	Washer, No Longer Serviced (NHNA), Start Year: 01/01/1971
9	C9NN15N578B	1	Washer, No Longer Serviced (NHNA), Start Year: 01/01/1971
9	C9NN15N578C	1	Washer, No Longer Serviced (NHNA), Start Year: 01/01/1971
10	C9NN15N575A	2	Washer, No Longer Serviced (NHNA), Start Year: 01/01/1971
11	C9NN15N567A	2	Bolt, No Longer Serviced (NHNA), Start Year: 01/01/1971
12	C9NN15N572A	2	Nut, Start Year: 01/01/1971
13	D6NN15N555A	1	Grommet, No Longer Serviced (NHNA), Start Year: 01/01/1971
14	D0NN15N303B	1	Wire Assy., w/Wide Fenders, NH-E Only, No Longer Serviced, Start Year: 01/01/1971
14	D1NN15N303A	1	Wire Assy., w/U.K. Fenders, 2300, 2310, 3300, 3310, NH-E Only, No Longer Serviced, Start Year: 01/01/1971
15	D5NN13N032A	1	Contact & Earth Assy., No Longer Serviced (NH-E), Start Year: 01/01/1971
16	C9NN15N550A	1	Switch Assy., Start Year: 01/01/1971
17	E2NN13465EA	1	Bulb Assy., Start Year: 01/01/1971
18	D6NN15N573A	1	Reflector, Start Year: 01/01/1971
	C9NN15N300A	4	Clip, Start Year: 01/01/1971
19	D6NN13N013A	1	Lens, Start Year: 01/01/1971
20	D6NN15328B	1	Door, No Longer Serviced (NH-E), Start Year: 01/01/1971
21	C5NN13N042A	1	Screw, No Longer Serviced (NHNA), Start Year: 01/01/1971
22		1	Clip, Lamp Wire to Fender, NH-E Only, Start Year: 01/01/1971
23	B16386	1	Grommet, Lamp Wire thru Fender, Start Year: 01/01/1971
24	34906S2	2	Washer, Lock, Int T, 5/16", Start Year: 01/01/1971
25	9635082	2	Nut, G5, 5/16"-18, Start Year: 01/01/1971
26		2	Screw, Truss Hd, G2, 5/16"-18 x 1/2", NH-E Only, No Longer Serviced, Start Year: 01/01/1971

11C09 PLOW (PLOUGH) LAMP ASSEMBLY (NH-E)

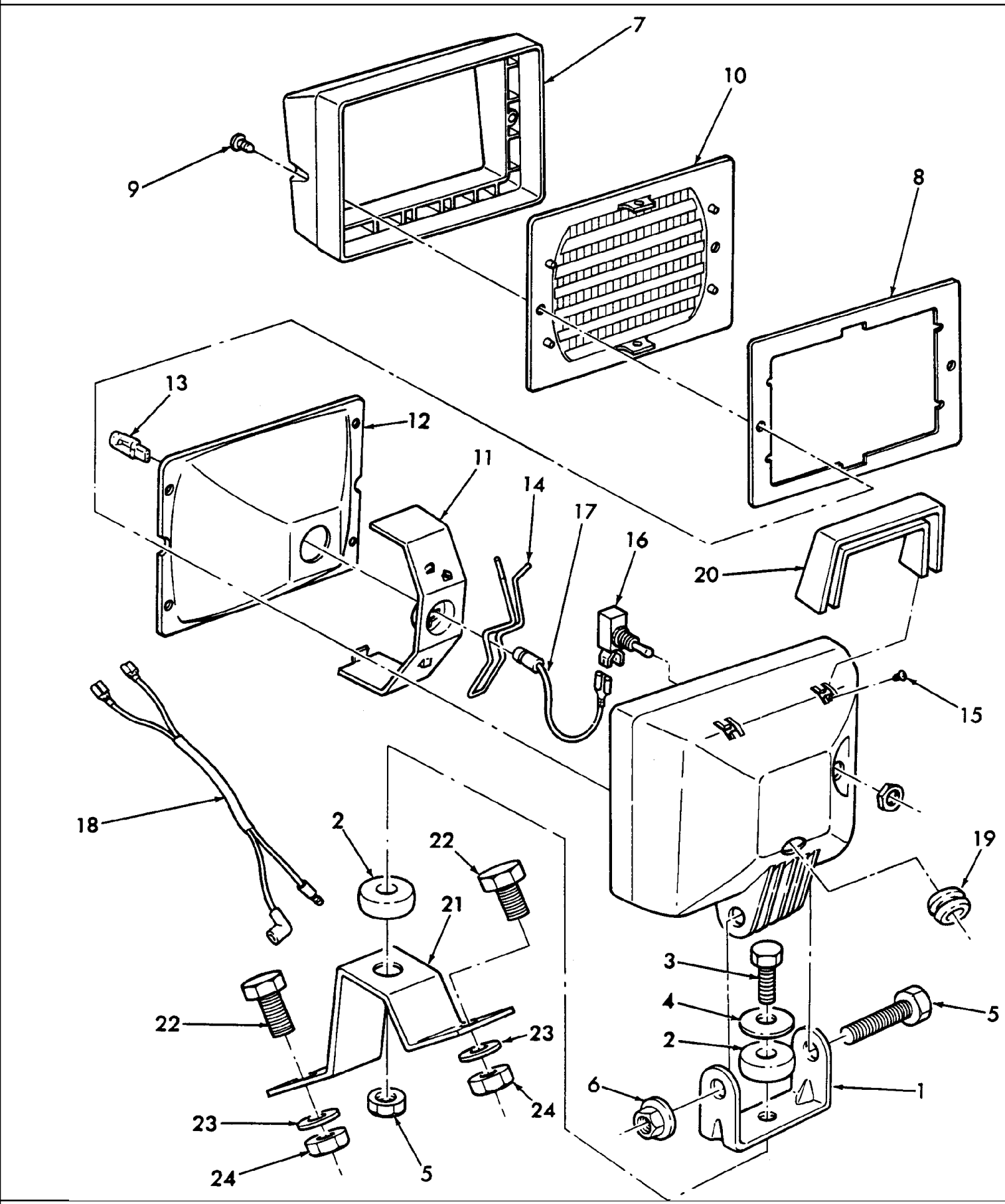

5000-SERIES 4 CYL TRACTOR (1/65-1/75)

11C09 PLOW (PLOUGH) LAMP ASSEMBLY (NH-E)

Ref	Part Number	Qty	Description
	E2NN13N000BA	1	Lamp Assy. Includes: Ref. 1 thru 21, Start Year: 01/01/1965
1	E3NN15N569AA	1	Bracket, Start Year: 01/01/1965
2	E3NN15N321AA	2	Isolator, Start Year: 01/01/1965
3	412479	1	Screw, Cap, HH, CL 8.8, M8 x 1.25 x 35, Start Year: 01/01/1965
4	359840S8	1	Washer, Start Year: 01/01/1965
5	386045	1	Screw, Cap, HH, CL 8.8, M8 x 1.25 x 45, Start Year: 01/01/1965
6	N620481S36	2	Nut, Flg, Prevailing Torque, CL 9, M8 x 1.25, Start Year: 01/01/1965
7	E1NN15N495AA	1	Bezel, Start Year: 01/01/1965
8	E1NN13N356AA	1	Gasket, Start Year: 01/01/1965
9	E610248S72	2	Screw, Self-Tapping, Pan Hd, #8 x M19, Start Year: 01/01/1965
10	E3NN13N013AA	1	Lens, Start Year: 01/01/1965
11	E1NN15N494AA	1	Holder, Start Year: 01/01/1965
12	E1NN15N573AA	1	Reflector, Start Year: 01/01/1965
13	9703399	1	Bulb, Start Year: 01/01/1965
14	E1NN15N493AA	1	Retainer, No Longer Serviced (NH-E), Start Year: 01/01/1965
15	E610247S76	1	Screw, Self-Tapping, Pan Hd, #8 x M16, Start Year: 01/01/1965
16	E3NN15N550AA	1	Switch, Start Year: 01/01/1965
17	E3NN14N000AA	1	Wire Assy., Start Year: 01/01/1965
18	E2NN15N303BA	1	Wire Assy., Start Year: 01/01/1965
19	E1NN13N357AA	1	Grommet, Start Year: 01/01/1965
20	E3NN15N322AA	1	Handle, Start Year: 01/01/1965
21	E3NN15N569BA	1	Bracket, NH-E Only, Start Year: 01/01/1965
22	87872	3	Screw, Cap, HH, G5, 5/16"-18 x 3/4", Start Year: 01/01/1965
23	80681	3	Washer, Lock, 5/16", Start Year: 01/01/1965
24	9635082	3	Nut, G5, 5/16"-18, Start Year: 01/01/1965

11D02 BATTERY & BATTERY SUPPORT - 5000 GASOLINE (PETROL) & ALL DIESEL

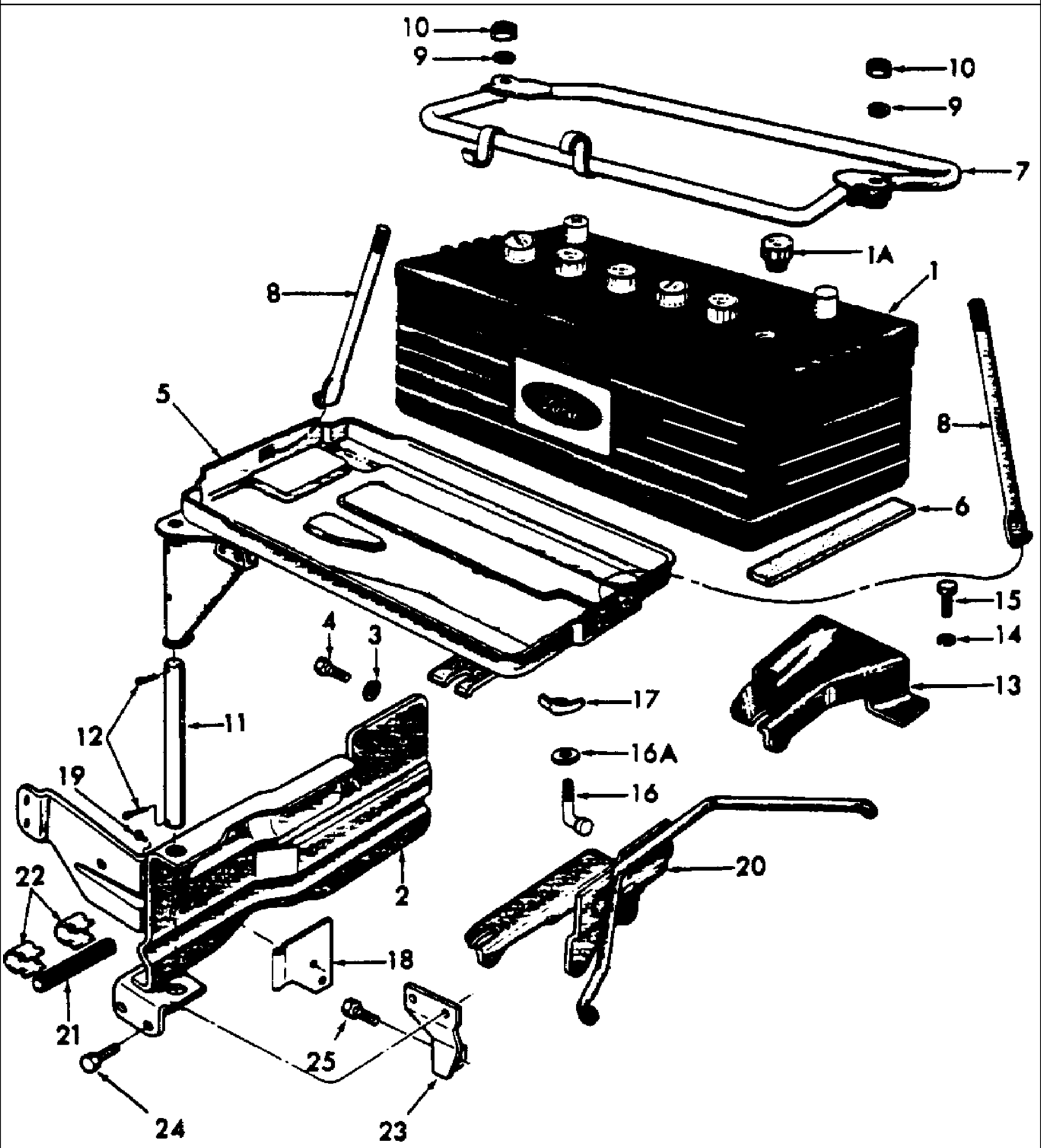

5000-SERIES 4 CYL TRACTOR (1/65-1/75)

11D02 BATTERY & BATTERY SUPPORT - 5000 GASOLINE (PETROL) & ALL DIESEL

Ref	Part Number	Qty	Description
1		1	Dry Battery Assy., 80 A.H., Except U.S., Replaces C5NN10657G, Standard w/2000 & 3000 Diesel & 5000 Gasoline, Optional w/4000, NH-E Only, Start Year: 01/01/1965
1	82995740	1	Dry Battery Assy., 128 A.H., Except U.S., Standard w/4000-5000-7000 Diesel, Optional w/2000-3000, Start Year: 01/01/1965
1	F120DS	1	Dry Battery Assy., 80 A.H., U.S., Optional 4000, Standard 2000-3000, 5000 Gasoline Except 10 Speed, Optional Diesel, NHNA Only, Start Year: 01/01/1965
1	F120DS	1	Dry Battery Assy., U.S., , 5200 Standard Gasoline, Optional Diesel, NHNA Only, Years: 01/01/1965-08/31/1971
1	F165DS	1	Dry Battery Assy., 73 A.H., U.S., 5200 Standard Gasoline, Optional Diesel, NHNA Only, Start Year: 09/01/1971
1	F150DS	1	Dry Battery Assy., 128 A.H., U.S., Optional 2000-3000, Optional 5000 Gasoline, Standard 4000-5000-7000 Diesel & 5000 Gasoline w/10 Speed, NHNA Only, Start Year: 01/01/1965
1	F100DS	1	Dry Battery Assy., Economy, NHNA Only, Start Year: 01/01/1965
1	NLS	1	Dry Battery Assy., 128 A.H., Consists of Battery Plus: {71NY10657A}, Mexico Only, Start Year: 01/01/1968
1A	D3NN10720A	6	Filler Plug Assy., Except U.S., NH-E Only, No Longer Serviced, Start Year: 01/01/1965
1A	D8PF10720DA	6	Filler Cap Assy., U.S., No Longer Serviced, Start Year: 01/01/1965
1A	C9PF10720A	6	Filler Cap Assy., Non-Spill, Start Year: 01/01/1965
2	E5NN10769BA	1	Rear Bracket Assy., 2000-3500-4000, Start Year: 01/01/1965
2	E5NN10769AA	1	Rear Bracket Assy., 5100-7100, Start Year: 01/01/1965
2	C7NN10769A	1	Bracket Assy., Replaces C5NN10769R, 5200-7200, NHNA Only, No Longer Serviced, Start Year: 01/01/1967
2	D1NN10769A	1	Rear Bracket Assy., 3000, No Longer Serviced, Start Year: 01/01/1965
3	81547	4	Washer, Lock, 7/16", Start Year: 01/01/1965
4	280244	4	Screw, Cap, HH, G5, 7/16"-14 x 3/4", Start Year: 01/01/1965
5	C5NN10723H	1	Battery Tray Assy., 128 A.H., Replaces C5NN10723G, Standard w/4000, Optional w/2000-3000-5000 Diesel, Years: 01/01/1965-01/31/1967
5	D3NN10723A	1	Battery Tray Assy., 73 & 80 A.H., 2000-3000-4000-5000 Gas, Start Year: 01/01/1966
5	E4NN10723AA	1	Battery Tray Assy., 128 A.H., Start Year: 01/01/1967
6	C5NN10N765C	2	Pad, Tray, 8" (20.32cm) Lg., U.S., No Longer Serviced, Start Year: 01/01/1965
7	D6NN10716C	1	Clamp, Hold Down, 128 A.H. Battery, Start Year: 01/01/1965
7	D6NN10716A	1	Clamp, Hold Down, 80 A.H. Battery, Except 5200 Gasoline, Replaces C5NN10716B, Start Year: 01/01/1965
7	D6NN10716A	1	Clamp, Hold Down, 80 A.H. Battery, 5200 Gasoline, Years: 01/01/1967-03/31/1971
7	D6NN10716C	1	Hold Down Clamp Assy., 128 A.H. Battery, Mexico, Mexico Only, Start Year: 01/01/1968
7	C5AB10755A	1	Bracket, Hold Down, 73 A.H. Battery, 5200 Gasoline, NHNA Only, No Longer Serviced, Start Year: 04/01/1971
8	86531712	2	Rod, Hold Down Yoke, 80 & 128 A.H. Battery, Except 5200 Gasoline, Start Year: 01/01/1965
8	86531712	2	Rod, Hold Down Yoke, 80 & 128 A.H. Battery, 5200 Gasoline, Years: 01/01/1967-03/31/1971
8	D0AB10756A	2	Rod, Clamp, 73 A.H. Battery, 5200 Gasoline, NHNA Only, No Longer Serviced, Start Year: 04/01/1971
9	87362	2	Washer, SAE, 5/16", Start Year: 01/01/1965
10	383705S36	2	Nut, Lock, Hex, 5/16"-18, Start Year: 01/01/1965
11	C5NN10N680B	1	Pin, Tray, 8" Long x .75 ID, Replaces C5NN10N680A, Start Year: 01/01/1965

5000-SERIES 4 CYL TRACTOR (1/65-1/75)

11D02 BATTERY & BATTERY SUPPORT - 5000 GASOLINE (PETROL) & ALL DIESEL

Ref	Part Number	Qty	Description
12	86523851	2	Pin, Split Cotter, 5/32" x 1-1/4", Start Year: 01/01/1965
13	C5NN10678B	1	Tray Support Bracket Assy., 5000, No Longer Serviced (NHNA), Years: 01/01/1965-01/31/1967
13	C5NN10752D	1	Support Bracket Assy., w/80 Amp. Battery, 5000 Gasoline, NHNA Only, No Longer Serviced, Start Year: 02/01/1967
13	C5NN5171E	1	Bracket, Tray Support, w/128 Amp. Battery, 5000-7000 Diesel, Start Year: 02/01/1967
14	81547	2	Washer, Lock, 7/16", Start Year: 01/01/1965
15	9706729	2	Screw, Cap, HH, G5, 7/16"-14 x 1", 5000-7000, Start Year: 01/01/1965
	87016	1	Washer, SAE, 3/8", Years: 01/01/1965-01/31/1967
	88434	1	Screw, Cap, HH, G5, 3/8"-16 x 3/4", Years: 01/01/1965-01/31/1967
16	C5NN10N768B	1	Bolt, Hold Down, Except 5000 Gasoline, Start Year: 02/01/1967
16	C5NN10N768C	1	Bolt, Hold Down, Offset, 5000 Gasoline, NHNA Only, No Longer Serviced, Start Year: 02/01/1967
16A	80664	1	Washer, 5/16", Start Year: 02/01/1967
17	388769S	1	Nut, Wing, 5/16"-18, Start Year: 02/01/1967
20	C5NN8N096A	1	Radiator Shell Support Assy., 2000-4000 Except 4110-4500, No Longer Serviced (NHNA), Years: 01/01/1965-01/31/1967
20	C5NN8N096B	1	Radiator Shell Support Assy., 3000-4110, No Longer Serviced (NHNA), Years: 01/01/1965-01/31/1967
20	C5NN8N096V	1	Radiator Shell Support Assy., Upper, 3400, Start Year: 02/01/1967
20	D0NN8N096C14M	1	Radiator Shell Support Assy., Upper, 2000-3000-4000 Except 3400-4500, Start Year: 02/01/1967
20	D0NN8N096A	1	Radiator Shell Support Assy., Upper, 5100, Start Year: 01/01/1965
20	86546702	1	Radiator Shell Support Assy., Upper, 7100, No Longer Serviced (NH-E), Start Year: 01/01/1971
20	D1NN8N096A	1	Radiator Shell Support Assy., Upper, 5200, NHNA Only, Years: 01/01/1967-05/31/1973
20	D0NN8N096F	1	Radiator Shell Support Assy., Upper, 7200, NHNA Only, No Longer Serviced, Start Year: 01/01/1971
20	D0NN8N096F	1	Radiator Shell Support Assy., Upper, 5200, Start Year: 06/01/1973
20	C5NN10752A	1	Battery Support Bracket Assy., Front, 3500-4500, No Longer Serviced, Years: 01/01/1965-01/31/1967
20	C5NN10752C	1	Battery Support Bracket Assy., Front, 3500-3550-4500, Start Year: 02/01/1967
	81547	2	Washer, Lock, 7/16", Start Year: 01/01/1965
	280244	2	Screw, Cap, HH, G5, 7/16"-14 x 3/4", Start Year: 01/01/1965
21	C7NN10N662A	1	Pad, Battery Tray Support, U.K.-Antwerp, NH-E Only, Start Year: 01/01/1967
22	C7NN10N663A	2	Clip, Battery Cable Pad, U.K.-Antwerp, NH-E Only, Start Year: 01/01/1967
23	E4NN5171AA	1	Bracket, Start Year: 01/01/1965
24	N605772S36	2	Screw, Cap, Flg Hd, CL 9.8, M6 x 1 x 16, Start Year: 01/01/1965
25	88044	1	Screw, Cap, HH, G5, 3/8"-16 x 1-1/2", Start Year: 01/01/1965

11E01 DISTRIBUTOR & RELATED PARTS, GASOLINE (PETROL)

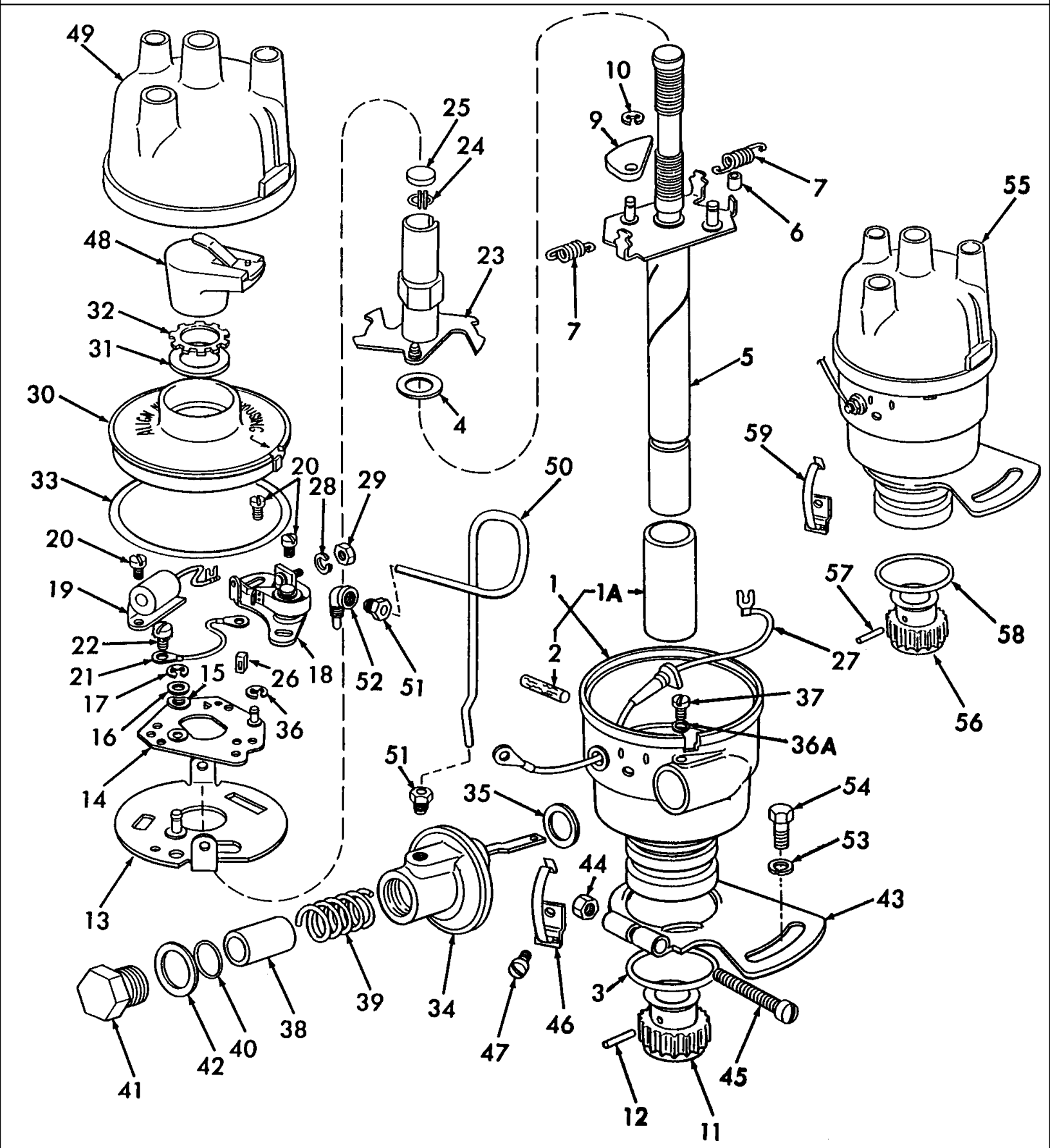

5000-SERIES 4 CYL TRACTOR (1/65-1/75)

11E01 DISTRIBUTOR & RELATED PARTS, GASOLINE (PETROL)

Ref	Part Number	Qty	Description
	C7NF12127E	1	Distributor Assy., L/Terminal Housing & Rotor, 5000, NHNA Only, No Longer Serviced, Start Year: 01/01/1966
	F0NN12100AA	1	Distributor Assy., L/Terminal Housing & Rotor, 3000-4000 Except 4200, No Longer Serviced - Use Item 55, Start Year: 01/01/1965
	F0NN12100AA	1	Distributor Assy., L/Terminal Housing & Rotor, 4200, No Longer Serviced - Use Item 55, Years: 01/01/1965-05/31/1968
	C7NF12127D	1	Distributor Assy., L/Terminal Housing & Rotor, 4200, NHNA Only, No Longer Serviced, Start Year: 06/01/1968
	F1NN12100AA	1	Distributor Assy., L/Terminal Housing & Rotor, 2000, Includes: Ref. 1 thru 47, No Longer Serviced - Use Item 55, Start Year: 01/01/1965
1	C5NF12130A	1	Base Assy. Includes: Ref. 1A & 2, No Longer Serviced, Start Year: 01/01/1965
1A	C5NF12120A	1	Bush/Bushing, Start Year: 01/01/1965
2	4012141	1	Wick, No Longer Serviced (NH-E), Start Year: 01/01/1965
3	14458081	1	O-Ring, 1.112" ID x .103" Thk, Base to Cylinder Block, U.K.-Antwerp, Start Year: 01/01/1965
3	14458081	1	O-Ring, 1.112" ID x .103" Thk, Base to Cylinder Block, U.S., Start Year: 01/01/1965
4	379039S	1	Washer, Thrust, U.K.-Antwerp, Start Year: 01/01/1965
4	379039S	1	Washer, Distributor Shaft Thrust, U.S., NHNA Only, No Longer Serviced, Start Year: 01/01/1965
5	C8NF12175A	1	Shaft Assy., No Longer Serviced (NH-E), Start Year: 01/01/1965
6	C5NF12A075A	1	Sleeve, Shaft Plate, Rubber, No Longer Serviced (NHNA), Start Year: 01/01/1965
7	C5AF12192A	2	Spring, Weight, 7-1/2 Coils, Blue, 2000, No Longer Serviced (NH-E), Start Year: 01/01/1965
7	C5AF12192B	2	Spring, Weight, 6 Coils, Purple, 3000-4000-5000, No Longer Serviced (NH-E), Start Year: 01/01/1965
9	C5NF12189A	2	Weight, No Longer Serviced (NH-E), Start Year: 01/01/1965
10	379023S36	2	Ring, Retaining, 3/16", Start Year: 01/01/1965
11	C5NF12390A	1	Gear, Driven, No Longer Serviced (NH-E), Start Year: 01/01/1965
12	67555S	1	Pin, Roll, 1/8" x 3/4", Start Year: 01/01/1965
13	C5NF12A002A	1	Breaker Plate Assy., Lower, No Longer Serviced, Start Year: 01/01/1965
14	C5NF12151A	1	Breaker Plate Assy., Upper, Start Year: 01/01/1965
15	372395S	1	Washer, Spring, 3/16", No Longer Serviced, Start Year: 01/01/1965
16	372396S8	1	Washer, Flat, 3/16", No Longer Serviced, Start Year: 01/01/1965
17	351825S	1	C-Washer, Start Year: 01/01/1965
	EBPN12000A	1	Kit, Points & Condenser, Includes: Ref. 18 & 19, NHNA Only, Start Year: 01/01/1965
18	C5AF12171C	1	Breaker Arm & Bracket Assy., Start Year: 01/01/1965
19	C5NF12300A	1	Condenser Assy., Start Year: 01/01/1965
20	0BA12230	3	Screw, Start Year: 01/01/1965
21	D2AF12264AA	1	Breaker Ground Wire Assy., 2" (5.08cm) Lg., Start Year: 01/01/1965
22	57683S36	1	Screw & Lockwasher Assy., Fillister Hd., #8-32 x 1/4", Start Year: 01/01/1965
23	C8NF12210B	1	Cam Assy., 5000, NHNA Only, No Longer Serviced, Start Year: 01/01/1966
23	C8NF12210A	1	Cam Assy., U.S., 2000-3000-4000, No Longer Serviced, Start Year: 01/01/1965
24	8EL12177	1	Retainer, Cam, No Longer Serviced (NH-E), Start Year: 01/01/1965
25	NS	1	Wick, Shaft, Procure Locally, Start Year: 01/01/1965
26	C3TF12A055A	1	Felt, Cam Lubricant, No Longer Serviced (NH-E), Start Year: 01/01/1965

5000-SERIES 4 CYL TRACTOR (1/65-1/75)

11E01 DISTRIBUTOR & RELATED PARTS, GASOLINE (PETROL)

Ref	Part Number	Qty	Description
27	C5TF12216A	1	Terminal Primary Assy., No Longer Serviced (NH-E), Start Year: 01/01/1965
28	34801S36	1	Washer, Lock, #6, No Longer Serviced (NH-E), Start Year: 01/01/1965
29	34064S	1	Nut, Lock, #6-32, No Longer Serviced (NH-E), Start Year: 01/01/1965
30	C7NF12239A	1	Breaker Cover Assy., Includes: Cover & Ref. 31 thru 33, No Longer Serviced (NH-E), Start Year: 01/01/1965
31	C5NF12267A	1	Seal, No Longer Serviced (NH-E), Start Year: 01/01/1965
32	C7NF12127A	1	Retainer, No Longer Serviced (NH-E), Start Year: 01/01/1965
33	14460580	1	O-Ring, 2.675" ID x .103" Thk, Years: 01/01/1965-08/31/1967
33	14460580	1	O-Ring, 2.675" ID x .103" Thk, Start Year: 09/01/1967
34	C5NF12370A	1	Distributor Diaphragm Assy., Includes: Housing, Diaphragm, Couplers & Ref. 35, No Longer Serviced (NH-E), Start Year: 01/01/1965
35	14457281	1	O-Ring, M15.54 ID x 2.62 Thk, Start Year: 01/01/1965
36	351826S	1	C-Washer, No Longer Serviced (NH-E), Start Year: 01/01/1965
36A	379762S40	1	Washer, Flat, #8, No Longer Serviced (NHNA), Start Year: 01/01/1965
37	43248S36	1	Screw, Fillister Hd, W/Washer, #8-32 x 3/8", No Longer Serviced (NHNA), Start Year: 01/01/1965
	381882S	1	Washer, Flat, 1/8", No Longer Serviced, Start Year: 01/01/1965
38	86518621	1	Stop, Vacuum, 1.080/1.085, 2000-3000-4000, No Longer Serviced (NH-E), Start Year: 01/01/1965
38	FEU12202B	1	Stop, Vacuum, Purple, 1.031/1.036, 5000, NHNA Only, No Longer Serviced, Years: 01/01/1966-03/31/1968
38	FEL12202A	1	Stop, Vacuum, Tan, .997/.992 Lg., 5000, NHNA Only, No Longer Serviced, Start Year: 04/01/1968
39	FEL12225A	1	Spring, Diaphragm, Yellow, Free Length 1.35, 2000-3000-4000, No Longer Serviced (NH-E), Start Year: 01/01/1965
39	C0TF12225A	1	Spring, Diaphragm, Blue, Free Length 1.24, 5000, NHNA Only, No Longer Serviced, Years: 01/01/1966-03/31/1968
39	FEH12225B	1	Spring, Diaphragm, Red, Free Length 1.44, 5000, NHNA Only, No Longer Serviced, Start Year: 04/01/1968
40	375482S8B	AR	Washer, .008/.010 Thick, No Longer Serviced (NH-E), Start Year: 01/01/1965
40	375483S8B	AR	Washer, .020/.022 Thick, No Longer Serviced (NH-E), Start Year: 01/01/1965
40	375484S8B	AR	Washer, .040/.042 Thick, Start Year: 01/01/1965
40	375484S8B	AR	Washer, .080/.082 Thick, to Suit Spark Advance, No Longer Serviced, Start Year: 01/01/1965
41	C8AF12A022A	1	Plug, Diaphragm, No Longer Serviced, Start Year: 01/01/1965
42	C8AF12320A	1	Gasket, Diaphragm Vacuum Connection, U.K.-Antwerp, No Longer Serviced (NH-E), Start Year: 01/01/196
42	C8AF12320A	1	Gasket, Diaphragm Vacuum Connection, U.S., No Longer Serviced (NH-E), Start Year: 01/01/1965
43	C5NF12273A	1	Timing Arm Assy., Includes: Arm, Ref 44 & 45, No Longer Serviced (NHNA), Start Year: 01/01/1965
44	34129S	1	Nut, Square, 1/4"-20, No Longer Serviced (NHNA), Start Year: 01/01/1965
45	31144S8	1	Screw, Fillister Hd., 1/4"-20 x 1-1/4", No Longer Serviced, Start Year: 01/01/1965
46	C5NF12358A	2	Terminal Housing Bracket & Clamp Assy., Start Year: 01/01/1965
47	43248S36	2	Screw, Fillister Hd, W/Washer, #8-32 x 3/8", No Longer Serviced (NH-E), Start Year: 01/01/1965
	381882S	2	Washer, Flat, 1/8", No Longer Serviced, Start Year: 01/01/1965
48	C5NF12200A	1	Rotor Assy., Start Year: 01/01/1965
49	C3XF12106A	1	Cap, Distributor, 5000, NHNA Only, Start Year: 01/01/1966
49	E3NN12106AA	1	Cap, Distributor, 2000-3000-4000, Start Year: 01/01/1965
50	C5NE12226C	1	Tube, Vacuum, 2000-3000-4000, Start Year: 01/01/1965

5000-SERIES 4 CYL TRACTOR (1/65-1/75)

11E01 DISTRIBUTOR & RELATED PARTS, GASOLINE (PETROL)

Ref	Part Number	Qty	Description
50	C6NE12226A	1	Tube, Vacuum, 5000, No Longer Serviced (NHNA), Start Year: 01/01/1966
51	351112S	2	Screw, Compression, Sleeve Type, 3/16" O.D. Tube, Start Year: 01/01/1965
52	C5NE12083A	1	Vacuum Tube Adapter Assy., No Longer Serviced (NH-E), Start Year: 01/01/1965
53	80681	1	Washer, Lock, 5/16", Start Year: 01/01/1965
54	87872	1	Screw, Cap, HH, G5, 5/16"-18 x 3/4", Start Year: 01/01/1965
	80664	1	Washer, 5/16", Start Year: 01/01/1965
	309788	AR	Kit, Gasoline Tune-Up, U.S., 2000-3000-4000, Includes:, NHNA Only, Start Year: 01/01/1965
	C5AF12171C	1	Points, Distributor, Start Year: 01/01/1965
	C5NF12300A	1	Condensor, Start Year: 01/01/1965
	86548834	3	Plug, Spark, Start Year: 01/01/1965
	C5NF12200A	1	Rotor, Start Year: 01/01/1965
	309789	1	Gauge, for Setting Points, Not Serviced, Start Year: 01/01/1965
	309790	1	Distributor, Cam Lubricant Capsules, Not Serviced, Start Year: 01/01/1965
55	F0NN12100AA	1	Distributor Assy., L/Terminal Housing & Rotor, Except 4200,5000,& 7000, New Style Distributor Assy., Start Year: 01/01/1965
55	F1NN12100AA	1	Distributor Assy., L/Terminal Housing & Rotor, 4200, Includes: Ref. 56 thru 59, New Style Distributor Assy., Start Year: 01/01/1965
56	C5NF12390A	1	Gear, Drive, New Style Distributor Assy., Start Year: 01/01/1965
57	67555S	1	Pin, Roll, 1/8" x 3/4", New Style Distributor Assy., Start Year: 01/01/1965
58	273211	1	O-Ring, 90 Duro, 1.125" ID x .103" Thk, New Style Distributor Assy., Start Year: 01/01/1965
59	9825043	2	Clip, Cap Short, New Style Distributor Assy., Start Year: 01/01/1965
	81825520	1	Plug, Hex Socket, 1/8"-27 x 9/32", Start Year: 01/01/1965
	9825042	1	Kit, Points/Condenser, Start Year: 01/01/1965
	9825041	1	Kit, Cap & Rotor, Start Year: 01/01/1965

11F01 STARTING MOTOR & RELATED PARTS, 4 1/2" DIA. 2000, 3000, 4000 GAS, 5000 GAS (66/5-71) W/8 SPEED TRANS

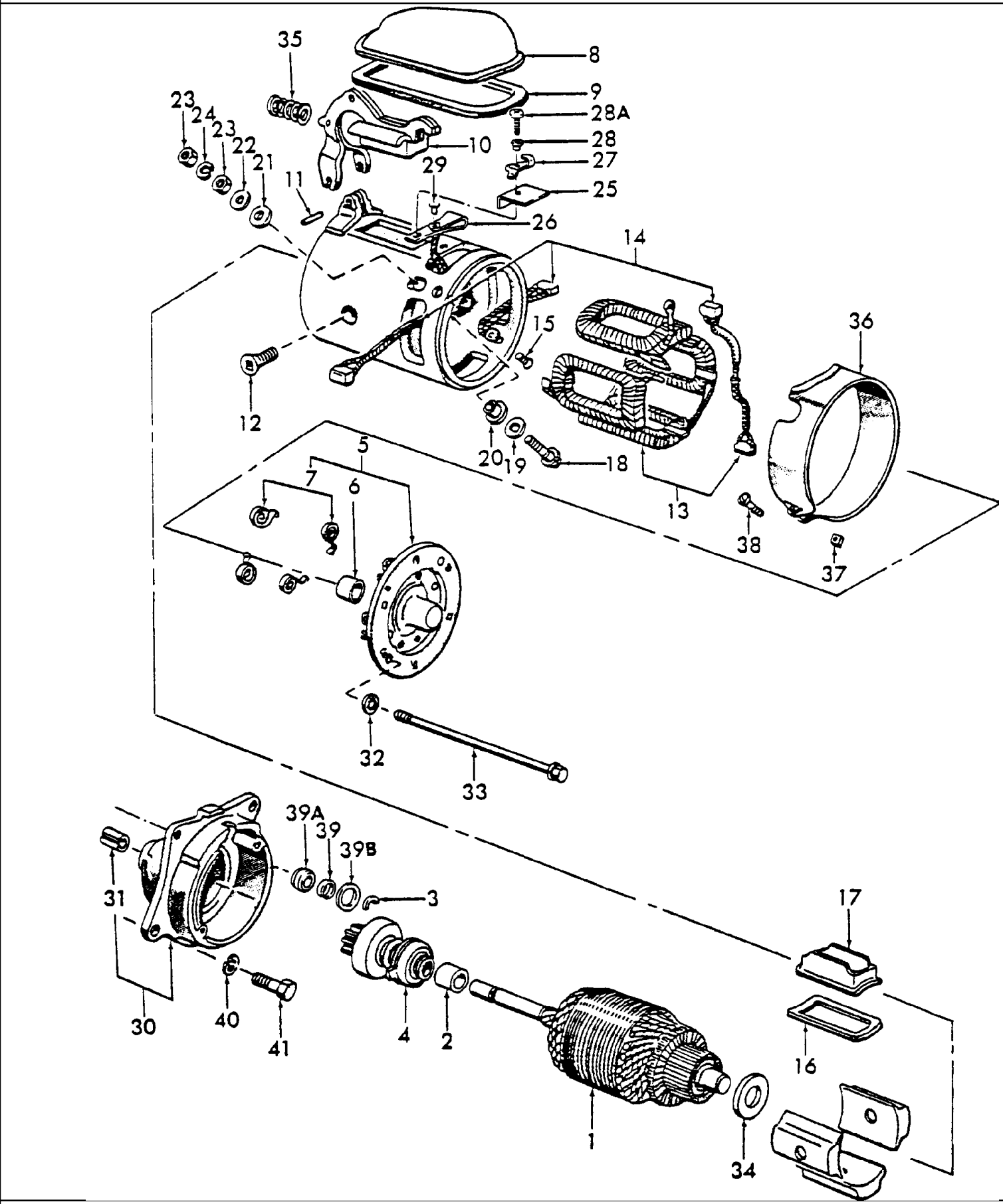

5000-SERIES 4 CYL TRACTOR (1/65-1/75)

11F01 STARTING MOTOR & RELATED PARTS, 4 1/2" DIA. 2000, 3000, 4000 GAS, 5000 GAS (66/5-71) W/8 SPEED TRANS

Ref	Part Number	Qty	Description
	D7NN11001AR	1	Starting Motor & Drive Assy., Rebuilt, U.S., NHNA Only, Start Year: 01/01/1965
1	D0NF11005B	1	Armature Assy., No Longer Serviced, Start Year: 01/01/1965
2	81823466	1	Spacer, Drive, Replaces C5NF11A101A, Start Year: 01/01/1965
3	C2DF11222A	1	Ring, Drive Stop, Start Year: 01/01/1965
4	D2NN11350B	1	Starting Motor Drive Assy., Start Year: 01/01/1965
4	D2NN11350BR	1	Starting Motor Drive Assy., U.S., Economy, NHNA Only, Start Year: 01/01/1965
5	C30F11050A	1	Plate Assy., Brush End, No Longer Serviced (NH-E), Start Year: 01/01/1965
5	D8AF11050AA	1	Plate Assy., Brush End, Use w/D7NN-11001-A, No Longer Serviced (NHNA)
6	86620203	1	Bearing, Brush End Plate, Start Year: 01/01/1965
7	D1AZ11059A	4	Spring, Brush, Start Year: 01/01/1965
8	C5AF11060A	1	Cover, Plunger Includes: Ref. 6 & 7, No Longer Serviced, Start Year: 01/01/1965
	D8AF11058AA	1	Plunger Cover & Gasket Assy., Use w/D7NN-11001-A
	388015S100	1	Bolt, Cover Hold Down, No Longer Serviced, Start Year: 01/01/1965
9	C0DF11065A	1	Gasket, Plunger Cover, U.S. Only, No Longer Serviced (NHNA), Start Year: 01/01/1965
10	C0DF11067B	1	Drive Lever Assy., No Longer Serviced, Start Year: 01/01/1965
10	E1AZ11067A	1	Drive Lever Assy., Use w/D7NN-11001-A, No Longer Serviced (NH-E)
11	73266S	1	Pin, Lever Assy. to Frame Assy., No Longer Serviced, Start Year: 01/01/1965
12	6810044	3	Screw, Pole Piece, No Longer Serviced (NH-E), Start Year: 01/01/1965
13	D1AF11082AA	1	Field Complete Coil Assy., No Longer Serviced (NH-E), Start Year: 01/01/1965
14	C5AF11057A	1	Kit, Brush, No Longer Serviced (NHNA), Start Year: 01/01/1965
15	25231S8	2	Screw, Flat Hd, #10-32 x 1/2", No Longer Serviced, Start Year: 01/01/1965
16	C0DF11106A	1	Flange, Coil Retainer, No Longer Serviced (NH-E), Start Year: 01/01/1965
17	C0DF11105A	1	Sleeve, Coil Retaining, No Longer Serviced (NH-E), Start Year: 01/01/1965
18	C7NF11102A	1	Terminal, Field, Start Year: 01/01/1965
19	86512984	1	Washer, Terminal, No Longer Serviced (NH-E), Start Year: 01/01/1965
20	1811107B	1	Insulator, Terminal, No Longer Serviced (NH-E), Start Year: 01/01/1965
21	384661	1	Washer, Field Terminal Insulator, No Longer Serviced (NH-E), Start Year: 01/01/1965
22	80664	1	Washer, 5/16", Field Terminal, Start Year: 01/01/1965
23	87307	2	Nut, Jam, G2, 5/16"-24, Years: 01/01/1965-05/31/1971
23	381561S36	2	Nut & Washer Assy., 5/16"-18, Start Year: 06/01/1971
24	80681	1	Washer, Lock, 5/16", Start Year: 01/01/1965
25	C20F11181A	1	Insulator, Switch Spring, No Longer Serviced (NHNA), Years: 01/01/1965-05/31/1970
25	D0AF11181A	1	Insulator, Switch Spring, No Longer Serviced, Start Year: 06/01/1970
26	C20F11116A	1	Contact Spring Assy., No Longer Serviced, Years: 01/01/1965-05/31/1970
26	D0AF11116A	1	Contact Spring Assy., No Longer Serviced, Start Year: 06/01/1970
27	C8AF11177A	1	Post, Contact, No Longer Serviced (NHNA), Years: 01/01/1965-05/31/1970
27	D0AF11177A	1	Post, Contact, No Longer Serviced (NH-E), Start Year: 06/01/1970
27A	C0DF11104B	1	Point, Contact, No Longer Serviced (NH-E), Start Year: 01/01/1965
28	8BA10048B	1	Insulator, Contact Spring Rivet, No Longer Serviced, Years: 01/01/1965-05/31/1970
28	C2DF11068A	1	Insulator, Contact Spring Rivet, No Longer Serviced (NH-E), Start Year: 06/01/1970
28A	383906S	1	Screw, Pan Hd., #8-32 x 1/2", Start Year: 06/01/1970

5000-SERIES 4 CYL TRACTOR (1/65-1/75)

11F01 STARTING MOTOR & RELATED PARTS, 4 1/2" DIA. 2000, 3000, 4000 GAS, 5000 GAS (66/5-71) W/8 SPEED TRANS

Ref	Part Number	Qty	Description
29	358755S8	1	Rivet, Oval Hd., 1/8" x 7/6", No Longer Serviced (NHNA), Years: 01/01/1965-05/31/1970
29	356862S7	1	Rivet, Oval Hd., 1/8" x 1/4", No Longer Serviced (NH-E), Start Year: 06/01/1970
30	D0NF11130A	1	Drive End Housing Assy., U.S., Includes: Ref. 31, Years: 01/01/1965-04/30/1970
30	D0NF11130A	1	Drive End Housing Assy., U.S., Includes: Ref. 31, Start Year: 05/01/1970
31	C0DF11448A	1	Bearing, No Longer Serviced (NH-E), Years: 01/01/1965-04/30/1970
31	D0AF11135B	1	Bearing, Replaces D0AF11135A, No Longer Serviced (NHNA), Start Year: 05/01/1970
32	80682	2	Washer, Lock, 1/4", Start Year: 01/01/1965
33	C2AF10120A	2	Bolt, Thru, 1/4"-20 x 6.56, No Longer Serviced (NH-E), Start Year: 01/01/1965
34	C20F11036A	1	Washer, Thrust, Starter Motor Armature, No Longer Serviced (NHNA), Years: 01/01/1965-04/30/1970
35	C1VF11103A	1	Spring, Plunger Return, No Longer Serviced (NH-E), Start Year: 01/01/1965
36	C0DF11126A	1	Band, Cover, No Longer Serviced (NH-E), Start Year: 01/01/1965
37	34141S36	1	Nut, Square, #10-32, Start Year: 01/01/1965
38	27177S36	1	Screw, Rd Hd, #10-32 x 1-1/2", No Longer Serviced (NHNA), Start Year: 01/01/1965
39	C2DF11223A	1	Retainer, Drive Stop Ring, No Longer Serviced (NH-E), Start Year: 01/01/1965
39	D6AF11223AA	1	Retainer, Drive Stop Ring, Use W/# D7NN-11001-A, No Longer Serviced (NH-E)
39A	D0AF11K013A	1	Seal, Drive End Housing, No Longer Serviced (NH-E), Start Year: 05/01/1970
39B	C6VF11383A	1	Washer, Drive Pinion Thrust, Start Year: 05/01/1970
40	81821693	3	Washer, Lock, 3/8", Start Year: 01/01/1965
41	88011	3	Screw, Cap, HH, G5, 3/8"-16 x 1-1/4", Start Year: 01/01/1965

11F02 STARTING MOTOR & RELATED PARTS, 4-1/2" DIA., DIESEL (NH-E) (65/7-68) 5000 GAS (4-66/5-71)

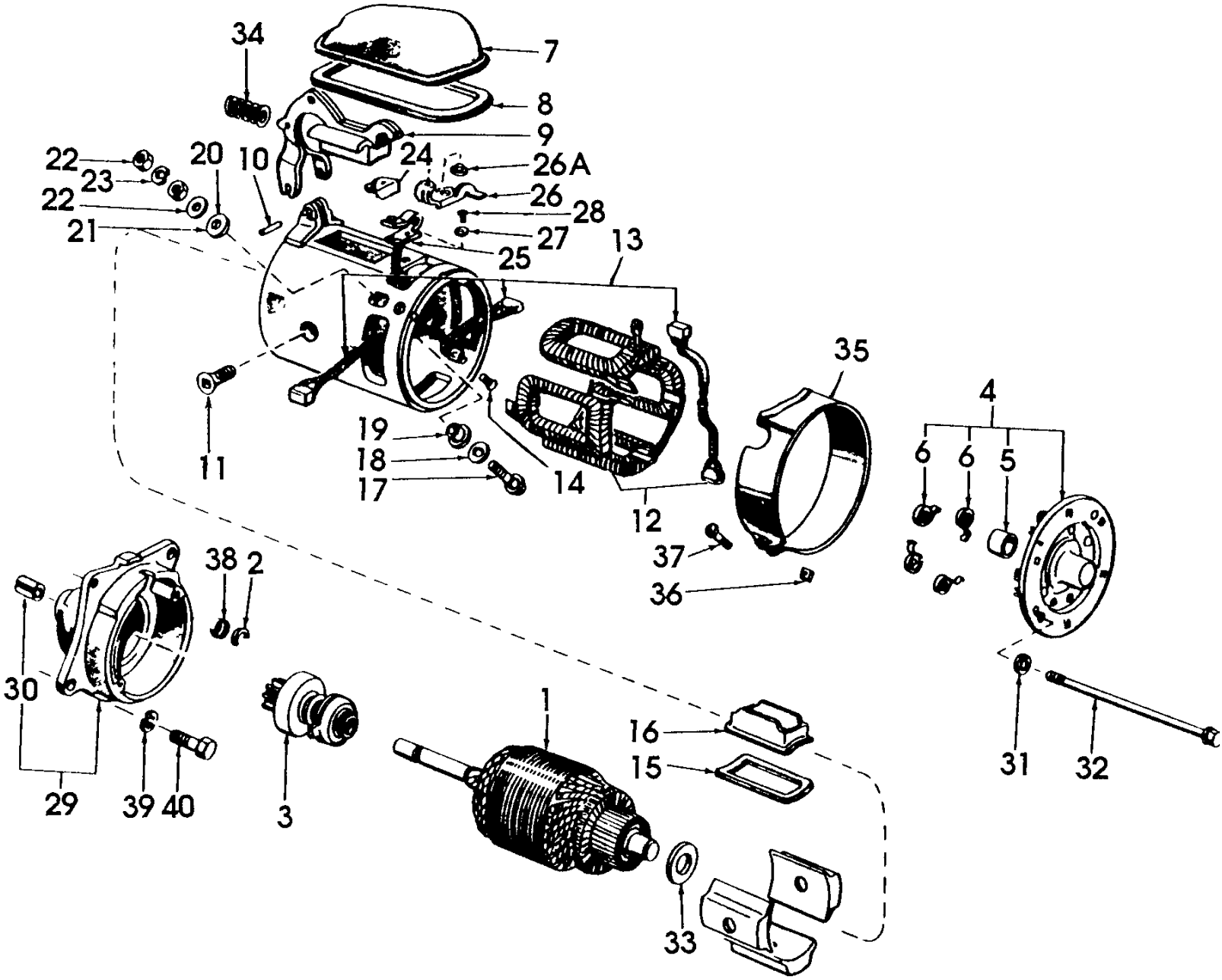

5000-SERIES 4 CYL TRACTOR (1/65-1/75)

11F02 STARTING MOTOR & RELATED PARTS, 4-1/2" DIA., DIESEL (NH-E) (65/7-68) 5000 GAS (4-66/5-71)

Ref	Part Number	Qty	Description
	NLS	1	Starting Motor & Drive Assy., 5000 Gasoline/Petrol w/10 Speed Transmission, Use 4-1/2" Starter Shown on 11F1, Includes: Ref 1 thru 38, No Longer Serviced, Years: 01/01/1965-05/31/1971
	NLS	1	Starting Motor & Drive Assy, w/8 Speed Diesel, Use 4-1/2" Starter on 11F1, Includes: Ref 1 thru 38, No Longer Serviced, Years: 04/01/1968-05/31/1971
	NLS	1	Starting Motor & Drive Assy., Diesel U.K. Antwerp, No Longer Serviced, Use 5" Starter Shown on 11F1, Includes: Ref 1 thru 38, (1) D7NN-11001-A(83910334), Starter; (1) 385022-S100(83910933), Screw & Washer; (1) D7NN-14431-C, Cable, 550 Tractor; (1) D7NN-14431-D(83948362), Cable, Except 550 Tractor, Years: 01/01/1965-07/31/1968
1	C5NF11005A	1	Armature Assy., Starting Motor, No Longer Serviced (NHNA), Years: 01/01/1965-05/31/1971
2	C5NF11222A	1	Ring, Drive Stop, No Longer Serviced (NHNA), Years: 01/01/1965-05/31/1971
3	C5NF11350A2	1	Drive Assy., Diesel, Replace P/N C5NF-11350-1, No Longer Serviced, Years: 01/01/1965-07/31/1968
3	NLS	1	Drive Assy., 5000 Gasoline/Petrol w/10 Speed, No Longer Serviced, Years: 01/01/1966-05/31/1971
4R	C4TF11050A	1	Plate Assy., Brush End, U.S., Includes: Ref. 5 & 6, No Longer Serviced, Years: 01/01/1965-05/31/1971
5	86620203	1	Bearing, Years: 01/01/1965-05/31/1971
6	D1AZ11059A	4	Spring, Starting Motor Brush, Years: 01/01/1965-05/31/1971
7	C5NF11060A	1	Cover, Starting Motor Plunger, No Longer Serviced (NHNA), Years: 01/01/1965-05/31/1971
8R	C5NF11065A	1	Gasket, Starting Motor Plunger Cover, No Longer Serviced (NHNA), Years: 01/01/1965-05/31/1971
9	C0DF11067B	1	Lever Assy., Starting Motor Drive, No Longer Serviced, Years: 01/01/1965-05/31/1971
10	73266S	1	Pin, Dowel, 1/4" x 11/16", Lever Assy to Frame Assy., No Longer Serviced, Years: 01/01/1965-05/31/1971
11	6810044	3	Screw, Pole Piece, No Longer Serviced (NH-E), Years: 01/01/1965-05/31/1971
12	D1AF11082AA	1	Coil Assy., Field Complete, Includes Brushes, No Longer Serviced, Years: 01/01/1965-05/31/1971
13	CFPN11057B	1	Kit, Starting Motor Brush, Diesel, NH-E Only, Years: 01/01/1965-07/31/1968
13	C5AF11057A	1	Kit, Starting Motor Brush, Gasoline, 5000, No Longer Serviced (NHNA), Years: 01/01/1966-05/31/1971
14	25231S8	2	Screw, Flat Hd, #10-32 x 1/2", Brush Assy. to Starter Frame, No Longer Serviced, Years: 01/01/1965-05/31/1971
15	C0DF11106A	2	Flange, Starting Motor Coil Retainer, No Longer Serviced (NH-E), Years: 01/01/1965-05/31/1971
16	C0DF11105A	1	Sleeve, Starting Motor Coil Retaining, No Longer Serviced (NH-E), Years: 01/01/1965-05/31/1971
17	C7NF11102A	1	Terminal, Starting Motor Field, Replaces P/N C5NE-11102-A, Years: 01/01/1965-05/31/1971
18	86512984	1	Washer, Starter Field Terminal, No Longer Serviced (NH-E), Years: 01/01/1965-05/31/1971
19	1811107B	1	Insulator, Starter Terminal, No Longer Serviced (NH-E), Years: 01/01/1965-05/31/1971
20	384661	1	Washer, Starter Field Terminal Insulator, Replaces P/N 18-11094-B, No Longer Serviced (NH-E), Years: 01/01/1965-05/31/1971
21	80664	1	Washer, 5/16", Starter Field Terminal, Replaces PN 7RA-11095, Years: 01/01/1965-05/31/1971
22	87307	2	Nut, Jam, G2, 5/16"-24, Years: 01/01/1965-05/31/1971
23	80681	1	Washer, Lock, 5/16", Years: 01/01/1965-05/31/1971
24R	C20F11181A	1	Insulator, Starting Motor Switch Spring, No Longer Serviced, Years: 01/01/1965-04/28/1970
24	D0AF11181A	1	Insulator, Starting Motor Switch Spring, No Longer Serviced, Years: 06/01/1970-05/31/1971
25R	C5NF11116A	1	Spring Assy., Starting Motor Contact, No Longer Serviced, Years: 01/01/1965-05/31/1971
26R	C8AF11177A	1	Post, Starting Motor Contact use Point C0DF-11104-A, Replaces C20F-11176-A, No Longer Serviced, Years: 01/01/1965-05/31/1970
26	D0AF11177A	1	Point, Starting Motor Contact, No Longer Serviced (NH-E), Years: 06/01/1970-05/31/1971

5000-SERIES 4 CYL TRACTOR (1/65-1/75)

11F02 STARTING MOTOR & RELATED PARTS, 4-1/2" DIA., DIESEL (NH-E) (65/7-68) 5000 GAS (4-66/5-71)

Ref	Part Number	Qty	Description
26A	C0DF11104B	1	Point, Starting Motor Contact, No Longer Serviced (NH-E), Years: 01/01/1965-05/31/1971
27	8BA10048B	1	Insulator, Starting Motor Contact Spring Rivet, No Longer Serviced (NHNA), Years: 01/01/1965-05/31/1970
27	C2DF11068A	1	Insulator, Starting Motor Contact Spring Rivet, No Longer Serviced (NH-E), Years: 06/01/1970-05/31/1971
27A	383906S	1	Screw, 8-32 x 1/2 Pan Head, Years: 06/01/1970-05/31/1971
28	358755S8	1	Rivet, Oval Hd., 1/8" x 7/16", Starter Contact Spring, No Longer Serviced (NHNA), Years: 01/01/1965-05/31/1970
28	356862S7	1	Rivet, Oval Hd., 1/8" x 1/4", Starter Contact Spring, No Longer Serviced (NH-E), Years: 06/01/1970-05/31/1971
29	NLS	1	Housing Assy., Starting Motor Drive End Includes: Ref. 30, No Longer Serviced, Start Year: 01/01/1965
30	C5NF11135A	1	Bearing, Starting Motor Drive End Plate, No Longer Serviced (NHNA), Years: 01/01/1965-05/31/1971
31	80682	2	Washer, Lock, 1/4", Years: 01/01/1965-05/31/1971
32	C5NF11091A	2	Bolt, Thru, 1/4"-20 x 7.165, No Longer Serviced (NHNA), Years: 01/01/1965-05/31/1971
33	C20F11036A	1	Washer, Thrust, Starting Motor Armature, No Longer Serviced (NHNA), Years: 01/01/1965-05/31/1971
34	C1VF11103A	1	Spring, Return, Starting Motor Plunger, No Longer Serviced (NH-E), Years: 01/01/1965-05/31/1971
35	C0DF11126A	1	Band, Starting Motor Cover, No Longer Serviced (NH-E), Years: 01/01/1965-05/31/1971
36	34141S36	1	Nut, Square, #10-32, Years: 01/01/1965-05/31/1971
37	27177S36	1	Screw, Rd Hd, #10-32 x 1-1/2", No Longer Serviced (NHNA), Years: 01/01/1965-05/31/1972
38	C5NF11223A	3	Retainer, Starting Motor Drive Stop Ring, No Longer Serviced (NHNA), Years: 01/01/1965-05/31/1971
39	81821693	3	Washer, Lock, 3/8", Years: 01/01/1965-05/31/1971
40	280206	3	Screw, Cap, HH, G5, 3/8"-16 x 1-3/8", Starting Motor to Cylinder Block, Years: 01/01/1965-05/31/1971

11F03[01] STARTING MOTOR, DRIVE & RELAY ASSY., 5" DIA. - 2000, 3000 DIESEL (65/12-72) 5000 GASOLINE (6-71/11-72)

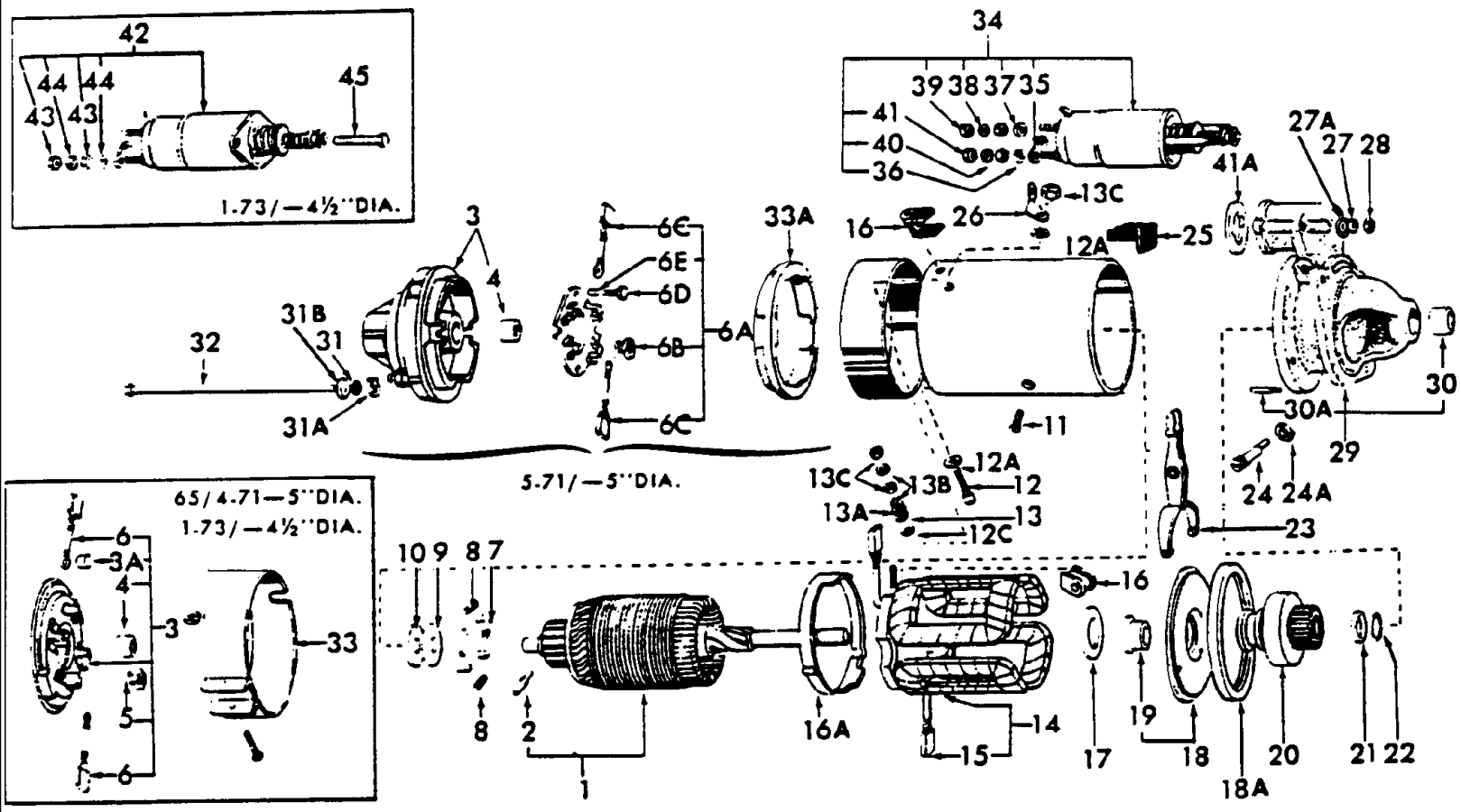

5000-SERIES 4 CYL TRACTOR (1/65-1/75)

11F03[01] STARTING MOTOR, DRIVE & RELAY ASSY., 5" DIA. - 2000, 3000 DIESEL (65/12-72) 5000 GASOLINE (6-71/11-72)

Ref	Part Number	Qty	Description
	D8NN11000CA	1	Starting Motor Drive & Relay Assy., 5" Dia., Includes: Ref. 1 & 2, Ref. to Fig. 11F3C, No Longer Serviced, Start Year: 01/01/1965
1	D0NN11005A	1	Armature Assy., Includes: Armature plus Ref. 2, Start Year: 01/01/1965
1	D0NN11005A	1	Armature Assy., Use W/Drive C5NF11350C, Includes: Armature plus Ref. 2, NHNA Only, Years: 01/01/1965-01/31/1968
2	C5NF11360A	1	Pin, Drive Shaft Drift, Start Year: 01/01/1965
3	C5NF11050A	1	Plate Assy., Brush End, 1/4" Bolt Hole, Includes: Plate & Ref. 3A thru 6, Years: 01/01/1965-01/31/1968
3	C5NN11050A	1	Plate Assy., Brush End, 5/16" Bolt Hole, Includes: Plate & Ref. 3A thru 6, No Longer Serviced, Years: 02/01/1968-04/30/1971
3	D1NN11050A	1	Plate Assy., Brush End, Includes: Plate & Ref. 3A thru 6, Start Year: 05/01/1971
3	D6NN11050A	1	Plate Assy., Brush End, Use W/D7NN-11000-B, Includes: Plate & Ref. 3A thru 6
4	E4NN11K175BA	1	Bearing, Start Year: 01/01/1965
5	2701E11059A	4	Spring, Replaces C5NF11059A, Start Year: 01/01/1965
6	C5NF11055B	1	Brush Assy., Insulated, pkg. of 4, Years: 01/01/1965-04/30/1971
6A	E4NN11434BA	1	Holder Assy., Brush, Includes: Holder & Ref. 6B & 6C, Start Year: 05/01/1971
6B	2701E11059A	4	Spring, Start Year: 05/01/1971
6C	C5NF11055B	1	Brush Assy., Insulated, pkg. of 4, Start Year: 05/01/1971
6D	D1NN11N051A	2	Screw, Brush Plate, Start Year: 05/01/1971
	D2NN11N052A	2	Seal, Brush Plate Screw, Start Year: 05/01/1971
	E4NN11A018BA	1	Kit, Drive Brake Shoe, 4-1/2" & 5" Dia., Includes: Shoe & Ref. 8 thru 14, Start Year: 01/01/1965
	NSS	2	Shoe, Drive Brake, Start Year: 01/01/1965
8	C5NF11A020A	2	Spring, Brake Shoe, Start Year: 01/01/1965
9	C5NF11036B	1	Washer, Thrust, Metal, Start Year: 01/01/1965
10	C5NF11036D	1	Washer, Thrust, Fabric, Start Year: 01/01/1965
11	C5NF11415A	4	Screw, Pole Shoe, 3/8"-16 x 1/2", Start Year: 01/01/1965
12	C9NN11N020A	1	Terminal, Field, Replaces C5NF11102C, Start Year: 01/01/1965
12A	C5NF11094B	2	Washer, Terminal Insulating, Start Year: 01/01/1965
12C	C5NF11107A	1	Insulator, Field Terminal, Start Year: 01/01/1965
13	C5NF11094A	3	Washer, Insulating, Start Year: 01/01/1965
13A	80701	3	Washer, 1/4", Start Year: 01/01/1965
13B	80682	2	Washer, Lock, 1/4", Start Year: 01/01/1965
13C	C5NF11A112A	2	Nut, Hex, 1/4"-26, Terminal, Start Year: 01/01/1965
14	D0NN11082A	1	Coil Assy., Field Complete, Includes: Coil & Ref. 15, Years: 01/01/1965-04/30/1971
14	D1NN11082A	1	Coil Assy., Field Complete, Includes: Coil & Ref. 15, Start Year: 05/01/1971
15	C5NF11055B	1	Brush Assy., Insulated, pkg. of 4, Start Year: 01/01/1965
16	C9NN11N017A	1	Grommet, Starter Index Coil Lead, Replaces C5NF11441A, No Longer Serviced, Years: 01/01/1965-04/30/1971
16	D1NN11N017A	1	Grommet, Starter Index Coil Lead, Start Year: 05/01/1971
16A	C5NF11074A	1	Insulator, Field Coil, No Longer Serviced (NHNA), Years: 01/01/1965-04/30/1971
16A	D1NN11074A	1	Insulator, Field Coil, Start Year: 05/01/1971
17	C5NF11036C	AR	Washer, Thrust, .010 (.254mm) Thick, Replaces C5NN11036A, Start Year: 01/01/1965

5000-SERIES 4 CYL TRACTOR (1/65-1/75)

11F03[01] STARTING MOTOR, DRIVE & RELAY ASSY., 5" DIA. - 2000, 3000 DIESEL (65/12-72) 5000 GASOLINE (6-71/11-72)

Ref	Part Number	Qty	Description
18	C5NF11395A	1	Plate Assy., Center Bearing, Years: 01/01/1965-04/30/1971
18	D1NN11395A	1	Plate Assy., Center Bearing, No Longer Serviced, Years: 05/01/1971-06/30/1973
18	E4NN11395BA	1	Plate Assy., Starter Motor Center Bearing, Use W/D7NN-11000-B
18A	D6NN11N074A	2	Seal, Center Bearing Plate, Use W/D7NN-11000-B, Includes: Plate & Ref. 19
19	E4NN11K175BA	1	Bearing, Rear End Plate, Start Year: 01/01/1965
20	C5NF11350C	1	Drive Assy., W/Helix Angle 3.929, W/Coarse Inside Spline, Years: 01/01/1965-01/31/1968
20	D9NN11350AA	1	Drive Assy., W/Helix Angle 7.750, W/Coarse Inside Spline, Start Year: 02/01/1968
20	D2NN11350A	1	Drive Assy., 5" Dia., Use W/D0NN-11000-A, Start Year: 09/01/1970
21	C5NF11166A	1	Collar, Drive Pinion Stop, Start Year: 01/01/1965
22	C5NF11223B	1	Retainer, Drive Stop Collar, Start Year: 01/01/1965
23	C5NF11067A	1	Lever Assy., Drive Assy. Control, Start Year: 01/01/1965
24	D8NN11139AA	1	Pin, Lever, Start Year: 01/01/1965
24A	D2NN11A115A	1	Nut, Hex, 1/2"-26, Lever Pivot, Start Year: 01/01/1965
25	D8NN11440AA	1	Grommet, Relay Housing Seal, Start Year: 01/01/1965
26	C9NN11N019A	1	Strap, Terminal, Replaces C5NF11527A, Start Year: 01/01/1965
27	80682	2	Washer, Lock, 1/4", Start Year: 01/01/1965
27A	D6NN11N075A	2	Seal, Solenoid Bolt Attach, Use W/D7NN-11000-B
28	7770	2	Nut, HH, 1/4"-20, Years: 01/01/1965-06/30/1969
28	15896221	2	Nut, CL 8, M6 x 1, Start Year: 07/01/1969
29	C5NF11130C	1	Housing Assy., Drive End, Use W/C6NF-11000-A & C5NF-11000-A, Includes: Ref. 30 thru 30A, No Longer Serviced, Years: 01/01/1965-01/31/1968
29	C5NN11130A	1	Housing Assy., Drive End, Includes: Ref. 30 thru 30A, Years: 02/01/1968-04/30/1971
29	D8NN11130AA	1	Housing Assy., Starter Motor Drive End, Includes: Ref. 30 thru 30A, Start Year: 05/01/1971
30	E4NN11K175BA	1	Bearing, Start Year: 01/01/1965
30A	C5NF10088A	1	Rivet, Locating, No Longer Serviced, Years: 01/01/1965-04/30/1971
30A	D1NN11A022A	1	Dowel,, Years: 05/01/1971-06/30/1973
31	80682	2	Washer, Lock, 1/4", Thru Bolt, Years: 01/01/1965-01/31/1968
31	80681	2	Washer, Lock, 5/16", Thru Bolt, Start Year: 02/01/1968
31A	D2NN11A114A	2	Washer, Thru Bolt Tab, Years: 01/01/1965-01/31/1968
31A	E231CL9	2	Washer, Thru Bolt Tab, Start Year: 02/01/1968
32B	D2NN11N053A	2	Seal, Thru Bolt, Start Year: 01/01/1965
31B	D6NN11N053A	2	Sea, Three, Bolt, Use W/D7NN-11000-B
32	D2NN11091A	2	Bolt, 1/4"-26 x 7-23/32", Years: 01/01/1965-01/31/1968
32		2	Bolt, 5/16", Start Year: 02/01/1968
33	C5NF11126A	1	Band, Cover, Years: 01/01/1965-04/30/1971
33A	D1NN11K150A	1	Seal, End Cover, Start Year: 05/01/1971
34	D7NN11390B	1	Solenoid Assy., Includes: Solenoid & Ref. 35 thru 41, Start Year: 01/01/1965
35	C7NN11A029A	1	Plate, Start Year: 01/01/1965
36	C5NF11A113A	3	Washer, Start Year: 01/01/1965
37	C5NF11A113B	2	Washer, Notched, Start Year: 01/01/1965
38	80681	2	Washer, Lock, 5/16", Start Year: 01/01/1965

5000-SERIES 4 CYL TRACTOR (1/65-1/75)

11F03[01] STARTING MOTOR, DRIVE & RELAY ASSY., 5" DIA. - 2000, 3000 DIESEL (65/12-72) 5000 GASOLINE (6-71/11-72)

Ref	Part Number	Qty	Description
39	PL	2	Nut, Hex, 5/16"-18, Years: 01/01/1965-06/30/1969
39	C9NN11N018B	2	Nut, Hex, 8mm, Start Year: 07/01/1969
40	80682	5	Washer, Lock, 1/4", Start Year: 01/01/1965
41	NS	5	Nut, Hex, 1/4"-20, Years: 01/01/1965-06/30/1969
41	15896221	7	Nut, CL 8, M6 x 1, Start Year: 07/01/1969
41A	C9NN11N015A	1	Gasket, Solenoid, Start Year: 01/01/1965

11F03[02] STARTING MOTOR, DRIVE & RELAY ASSY., 5" DIA. - 3550, 4000, 5000, 7000 DIESEL (65/)

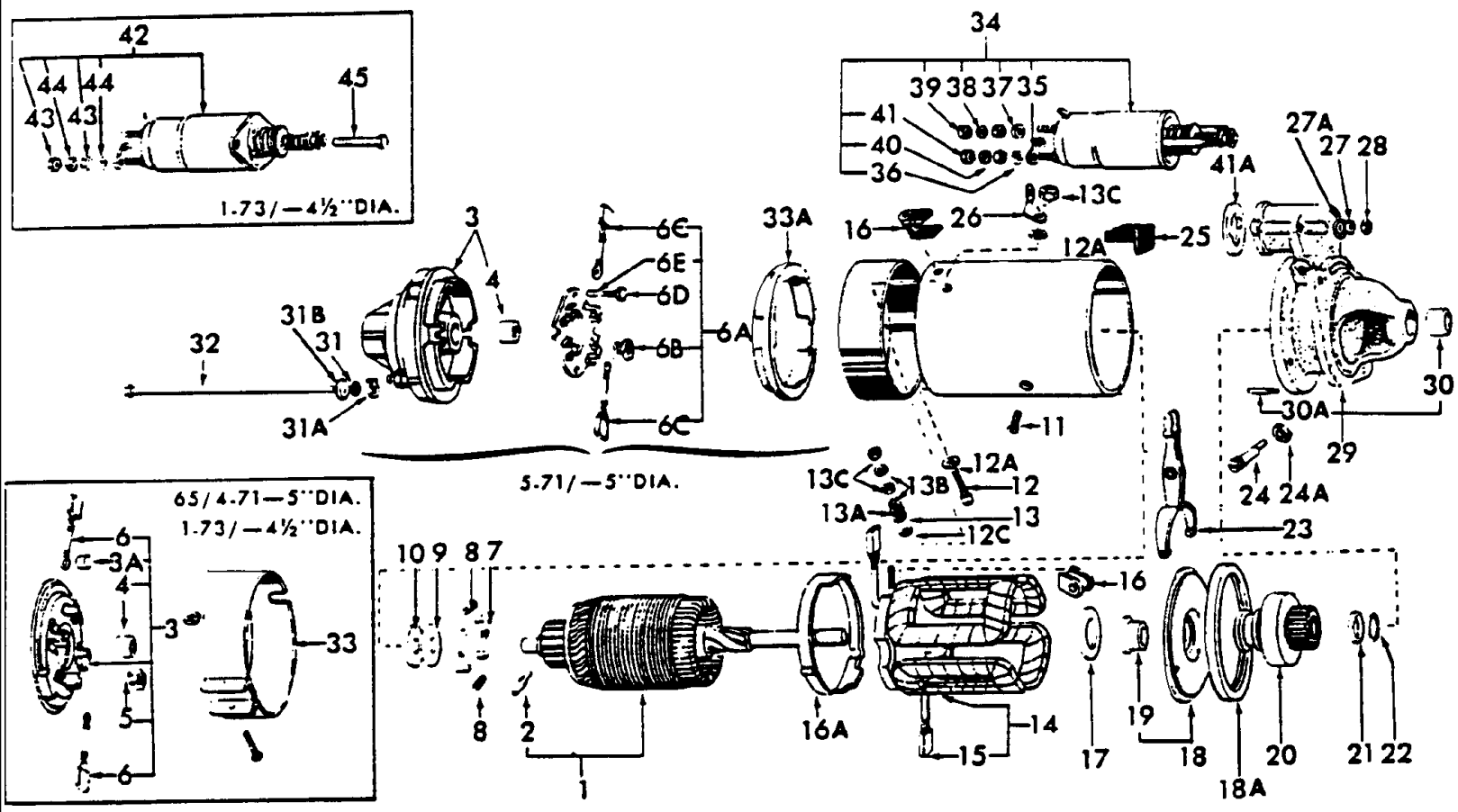

5000-SERIES 4 CYL TRACTOR (1/65-1/75)

11F03[02] STARTING MOTOR, DRIVE & RELAY ASSY., 5" DIA. - 3550, 4000, 5000, 7000 DIESEL (65/)

Ref	Part Number	Qty	Description
	D8NN11000CA	1	Starting Motor Drive & Relay Assy., 5" Dia., Includes: Ref. 1 & 2, Ref. to Fig. 11F3C, No Longer Serviced, Start Year: 01/01/1965
1	D0NN11005A	1	Armature Assy., Includes: Armature plus Ref. 2, Start Year: 01/01/1965
1	D0NN11005A	1	Armature Assy., Includes: Armature plus Ref. 2, NHNA Only, Years: 01/01/1965-01/31/1968
2	C5NF11360A	1	Pin, Drive Shaft Drift, Start Year: 01/01/1965
3	C5NF11050A	1	Plate Assy., Brush End, 1/4" Bolt Hole, Years: 01/01/1965-01/31/1968
3	C5NN11050A	1	Plate Assy., Brush End, 5/16" Bolt Hole, No Longer Serviced, Years: 02/01/1968-04/30/1971
3	D1NN11050A	1	Plate Assy., Brush End, Includes: Plate & Ref. 3A thru 6, Start Year: 05/01/1971
3	D6NN11050A	1	Plate Assy., Brush End, Use W/D7NN-11000-B, Includes: Plate & Ref. 3A thru 6
4	E4NN11K175BA	1	Bearing, Start Year: 01/01/1965
5	2701E11059A	4	Spring, Replaces C5NF-11059-A, Start Year: 01/01/1965
6	C5NF11055B	1	Brush Assy., Insulated, pkg. of 4, Years: 01/01/1965-04/30/1971
6A	E4NN11434BA	1	Holder Assy., Brush, Includes: Holder & Ref. 6B & 6C, Start Year: 05/01/1971
6B	2701E11059A	4	Spring, Start Year: 05/01/1971
6C	C5NF11055B	1	Brush Assy., Insulated, pkg. of 4, Start Year: 05/01/1971
6D	D1NN11N051A	2	Screw, Brush Plate, Start Year: 05/01/1971
	D2NN11N052A	2	Seal, Brush Plate Screw, Start Year: 05/01/1971
	E4NN11A018BA	1	Kit, Drive Brake Shoe, 4-1/2" & 5" Dia. Includes: Shoe & Ref. 8 thru 14, Start Year: 01/01/1965
	NSS	2	Shoe, Drive Brake, Start Year: 01/01/1965
8	C5NF11A020A	2	Spring, Brake Shoe, Start Year: 01/01/1965
9	C5NF11036B	1	Washer, Thrust, Metal, Start Year: 01/01/1965
10	C5NF11036D	1	Washer, Thrust, Fabric, Start Year: 01/01/1965
11	C5NF11415A	4	Screw, Pole Shoe, 3/8"-16 x 1/2", Start Year: 01/01/1965
12	C9NN11N020A	1	Terminal, Field, Replaces C5NF-11102-C, Start Year: 01/01/1965
12A	C5NF11094B	2	Washer, Terminal Insulating, Start Year: 01/01/1965
12C	C5NF11107A	1	Insulator, Field Terminal, Start Year: 01/01/1965
13	C5NF11094A	3	Washer, Insulating, Start Year: 01/01/1965
13A	80701	3	Washer, 1/4", Start Year: 01/01/1965
13B	80682	2	Washer, Lock, 1/4", Start Year: 01/01/1965
13C	C5NF11A112A	2	Nut, Hex, 1/4"-26, Terminal, Start Year: 01/01/1965
14	D0NN11082A	1	Coil Assy., Field Complete, Includes: Coil & Ref. 15 thru 18A, Years: 01/01/1965-04/30/1971
14	D1NN11082A	1	Coil Assy., Fiel Complete, Includes: Coil & Ref. 15 thru 18A, Start Year: 05/01/1971
15	C5NF11055B	1	Brush Assy., Insulated, pkg. of 4, Start Year: 01/01/1965
16	C9NN11N017A	1	Grommet, Starter Index Coil Lead, Replaces C5NF-11441-A, No Longer Serviced, Years: 01/01/1965-04/30/1971
16	D1NN11N017A	1	Grommet, Starter Index Coil Lead, Start Year: 05/01/1971
16A	C5NF11074A	1	Insulator, Field Coil, No Longer Serviced (NHNA), Years: 01/01/1965-04/30/1971
16A	D1NN11074A	1	Insulator, Field Coil, Start Year: 05/01/1971
18	C5NF11395A	1	Plate Assy., Center Bearing, Years: 01/01/1965-04/30/1971
17	C5NF11036C	AR	Washer, Thrust, .010 (.254mm) Thick, Replaces C5NN-11036-A, Start Year: 01/01/1965
18	D1NN11395A	1	Plate Assy., Center Bearing, No Longer Serviced (NH-E), Years: 05/01/1971-06/30/1973

5000-SERIES 4 CYL TRACTOR (1/65-1/75)

11F03[02] STARTING MOTOR, DRIVE & RELAY ASSY., 5" DIA. - 3550, 4000, 5000, 7000 DIESEL (65/)

Ref	Part Number	Qty	Description
18	E4NN11395BA	1	Plate Assy., Starter Motor Center Bearing, 5" Dia., Start Year: 07/01/1973
18	E4NN11395BA	1	Plate Assy., Starter Motor Center Bearing, Use W/D7NN-11000-B
18A	D6NN11N074A	2	Seal, Center Bearing Plate, Use W/D7NN-11000-B, Includes: Plate & Ref. 19
20	C5NF11350C	1	Drive Assy., W/Helix Angle 3.929, W/Coarse Inside Spline, Years: 01/01/1965-01/31/1968
19	E4NN11K175BA	1	Bearing, Rear End Plate, Start Year: 01/01/1965
20	D9NN11350AA	1	Drive Assy., W/Helix Angle 7.750, W/Coarse Inside Spline, Start Year: 02/01/1968
20	D2NN11350A	1	Drive Assy., Use W/D0NN-11000-A, Replaces D0NN-11350-A, Start Year: 09/01/1970
21	C5NF11166A	1	Collar, Drive Pinion Stop, Start Year: 01/01/1965
23	C5NF11067A	1	Lever Assy., Drive Assy. Control, Start Year: 01/01/1965
22	C5NF11223B	1	Retainer, Drive Stop Collar, Start Year: 01/01/1965
24	D8NN11139AA	1	Pin, Lever, Start Year: 01/01/1965
24A	D2NN11A115A	1	Nut, Hex, 1/2"-26, Lever Pivot, Start Year: 01/01/1965
25	D8NN11440AA	1	Grommet, Relay Housing Seal, Start Year: 01/01/1965
26	C9NN11N019A	1	Strap, Terminal, Replaces C5NF-11527-A, Start Year: 01/01/1965
27	80682	2	Washer, Lock, 1/4", Start Year: 01/01/1965
27A	D6NN11N075A	2	Seal, Solenoid Bolt Attach, Use W/D7NN-11000-B
28	15896221	2	Nut, CL 8, M6 x 1, Start Year: 07/01/1969
28	7770	2	Nut, HH, 1/4"-20, Years: 01/01/1965-06/30/1969
29	C5NN11130A	1	Housing Assy., Drive End, Years: 02/01/1968-04/30/1971
29	C5NF11130C	1	Housing Assy., Drive End, Use W/C6NF-11000-A & C5NF-11000-A, Years: 01/01/1965-01/31/1968
29	D8NN11130AA	1	Housing Assy., Starter Motor Drive End, Replaces D1NN-11130-A, Includes: Ref. 30 thru 30A, Start Year: 05/01/1971
30	E4NN11K175BA	1	Bearing, Start Year: 01/01/1965
30A	C5NF10088A	1	Rivet, Locating, No Longer Serviced, Years: 01/01/1965-04/30/1971
30A	D1NN11A022A	1	Dowel,, Years: 05/01/1971-06/30/1973
30A	D3NN11A022A	1	Dowel, Starter Motor Drive Housing, Start Year: 07/01/1973
31	80682	2	Washer, Lock, 1/4", Thru Bolt, Years: 01/01/1965-01/31/1968
31A	D2NN11A114A	2	Washer, Thru Bolt Tab, Years: 01/01/1965-01/31/1968
31	34806S36	2	Washer, Lock, 5/16", Thru Bolt, Start Year: 02/01/1968
31A	E231CL9	2	Washer, Thru Bolt Tab, Start Year: 02/01/1968
32B	D2NN11N053A	2	Seal, Thru Bolt, Start Year: 01/01/1965
31B	D6NN11N053A	2	Seal, Three, Bolt, Use W/D7NN-11000-B
32	D2NN11091A	2	Bolt, 1/4"-26 x 7-23/32", Years: 01/01/1965-01/31/1968
32		2	Bolt, 5/16", Replaces 510E-11091-A, Start Year: 02/01/1968
33	C5NF11126A	1	Band, Cover, No Longer Serviced, Years: 01/01/1965-04/30/1971
33A	D1NN11K150A	1	Seal, End Cover, Start Year: 05/01/1971
34	D7NN11390B	1	Solenoid Assy., Replaces D0NN-11K134-A Includes: Solenoid & Ref. 35 thru 41, Start Year: 01/01/1965
35	C7NN11A029A	1	Plate, Replaces C5NF-11A029-A, Start Year: 01/01/1965
36	C5NF11A113A	3	Washer, Start Year: 01/01/1965
37	C5NF11A113B	2	Washer, Notched, Start Year: 01/01/1965
38	80681	2	Washer, Lock, 5/16", Start Year: 01/01/1965

5000-SERIES 4 CYL TRACTOR (1/65-1/75)

11F03[02] STARTING MOTOR, DRIVE & RELAY ASSY., 5" DIA. - 3550, 4000, 5000, 7000 DIESEL (65/)

Ref	Part Number	Qty	Description
39	PL	2	Nut, Hex, 5/16"-18, Years: 01/01/1965-06/30/1969
39	C9NN11N018B	2	Nut, Hex, 8mm, Start Year: 07/01/1969
40	80682	5	Washer, Lock, 1/4", Start Year: 01/01/1965
41	NS	5	Nut, Hex, 1/4"-20, Years: 01/01/1965-06/30/1969
41	15896221	7	Nut, CL 8, M6 x 1, PN C9NN-11N018-A, Start Year: 07/01/1969
41A	C9NN11N015A	1	Gasket, Solenoid, Start Year: 01/01/1965

11F03[A] STARTING MOTOR, DRIVE & RELAY ASSEMBLY, DIESEL, 4-1/2" DIA. (NHNA)

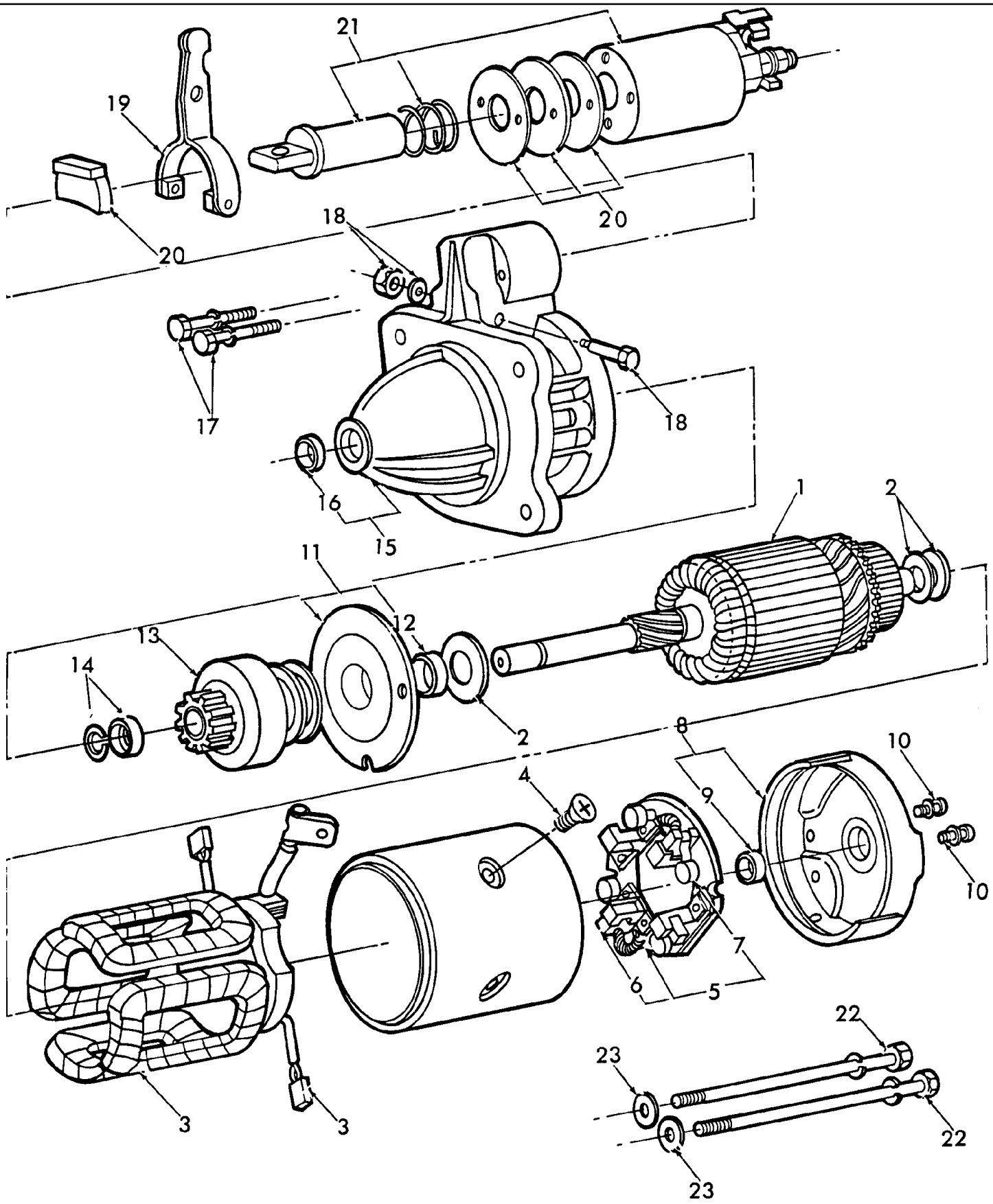

5000-SERIES 4 CYL TRACTOR (1/65-1/75)

11F03[A] STARTING MOTOR, DRIVE & RELAY ASSEMBLY, DIESEL, 4-1/2" DIA. (NHNA)

Ref	Part Number	Qty	Description
	D9NN11000AA	1	Starting Motor Assy., Refer to Fig. 11F3C, No Longer Serviced, Start Year: 01/01/1965
1	E2NN11005AA	1	Armature Assy., NHNA Only, Start Year: 01/01/1965
2	E2NN11N086AA	1	Kit, Washer, NHNA Only, Start Year: 01/01/1965
3	E2NN11082AA	1	Coil Assy. Includes: Ref. 1 thru 23, NHNA Only, Start Year: 01/01/1965
4	E2NN11415AA	1	Screw, NHNA Only, Start Year: 01/01/1965
5	E2NN11434AA	1	Holder Assy. Includes: Ref. 6 & 7, NHNA Only, Start Year: 01/01/1965
6	EDPN11055AA	1	Brushes, NHNA Only, Start Year: 01/01/1965
7	E2NN11059AA	1	Springs, NHNA Only, Start Year: 01/01/1965
8	E2NN11050AA	1	Plate Assy. Includes: Ref. 9, NHNA Only, Start Year: 01/01/1965
9	E2NN11052AA	1	Bearing, NHNA Only, Start Year: 01/01/1965
10	E2NN11N051AA	2	Screw, NHNA Only, Start Year: 01/01/1965
11	E2NN11K008AA	1	Bracket Assy. Includes: Ref. 12, NHNA Only, Start Year: 01/01/1965
12	E2NN11K009AA	1	Bushing, NHNA Only, Start Year: 01/01/1965
13	E2NN11350BA	1	Drive Assy., NHNA Only, Start Year: 01/01/1965
14	E2NN11W350AA	1	Kit, Lock, NHNA Only, Start Year: 01/01/1965
15	E2NN11130AA	1	Housing Includes: Ref. 16, NHNA Only, Start Year: 01/01/1965
16	E2NN11186AA	1	Bushing, NHNA Only, Start Year: 01/01/1965
17	E2NN11N054AA	2	Bolt, NHNA Only, Start Year: 01/01/1965
18	E2NN11K186AA	1	Kit, Pivot Pin, NHNA Only, Start Year: 01/01/1965
19	E2NN11067AA	1	Lever, NHNA Only, Start Year: 01/01/1965
20	E2NN11K183AA	1	Kit, Seal, NHNA Only, Start Year: 01/01/1965
21	E2NN11390AA	1	Solenoid, NHNA Only, Start Year: 01/01/1965
22	E2NN11091AA	2	Bolt, NHNA Only, Start Year: 01/01/1965
23	E2NN11A114AA	2	Washer, NHNA Only, Start Year: 01/01/1965

11F03[B] STARTING MOTOR ASSEMBLY, DIESEL, 4-1/2" DIA. (NH-E)

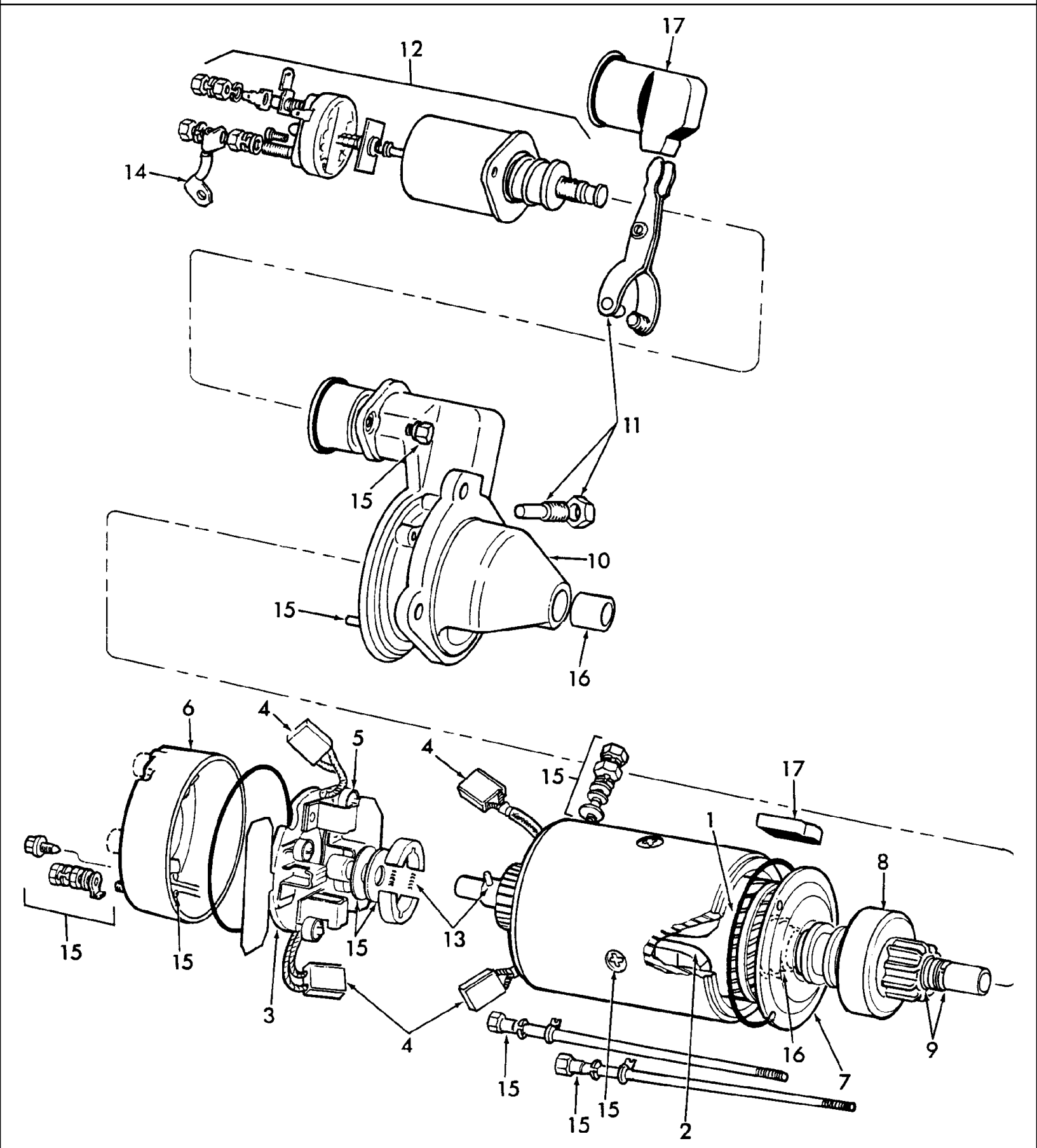

5000-SERIES 4 CYL TRACTOR (1/65-1/75)

11F03[B] STARTING MOTOR ASSEMBLY, DIESEL, 4-1/2" DIA. (NH-E)

Ref	Part Number	Qty	Description
	D8NN11000CE	1	Starting Motor Assy., Refer to Fig. 11F3C, Includes: Ref. 1 thru 17, No Longer Serviced, Start Year: 01/01/1965
1	D2NN11005A	1	Armature Assy., Start Year: 01/01/1965
2	D2NN11082A	1	Coil Assy., No Longer Serviced (NHNA), Start Year: 01/01/1965
3	D2NN11082A	1	Holder Assy. Includes: Ref. 4 & 5, No Longer Serviced (NHNA), Start Year: 01/01/1965
4	D2NN11055A	1	Kit, Brush, Start Year: 01/01/1965
5	2701E11059A	4	Spring, Start Year: 01/01/1965
6	E4NN11050AA	1	Plate, Start Year: 01/01/1965
7	E4NN11395AA	1	Bracket Assy., Start Year: 01/01/1965
8	D2NN11350C	1	Drive Assy., Start Year: 01/01/1965
9	E4NN11W350AA	1	Kit, Lock, Start Year: 01/01/1965
10	E4NN11130AA	1	Housing, No Longer Serviced (NHNA), Start Year: 01/01/1965
11	E4NN11198AA	1	Kit, Lever, Start Year: 01/01/1965
12	D7NN11390A	1	Solenoid, Start Year: 01/01/1965
13	E4NN11A018BA	1	Brake, Start Year: 01/01/1965
14	E4NN11N019AA	1	Strap, Start Year: 01/01/1965
15	E4NN11K140AA	1	Kit, Hardware, Start Year: 01/01/1965
16	E4NN11K175BA	1	Kit, Bushing, Start Year: 01/01/1965
17	E4NN11K179AA	1	Kit, Seal, Start Year: 01/01/1965

11F03[C] STARTING MOTOR ASSEMBLY, DIESEL, 5" DIA.

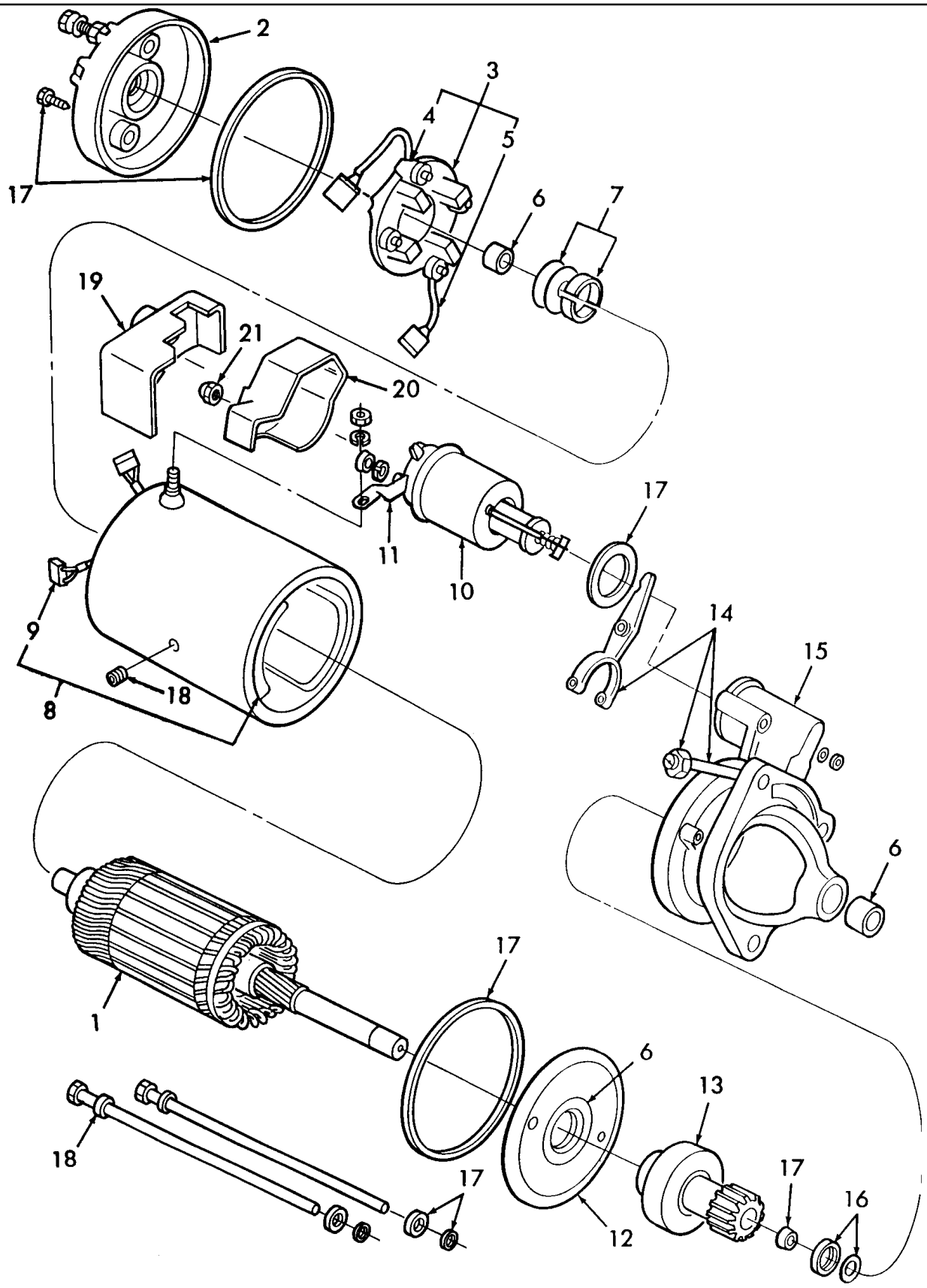

5000-SERIES 4 CYL TRACTOR (1/65-1/75)

11F03[C] STARTING MOTOR ASSEMBLY, DIESEL, 5" DIA.

Ref	Part Number	Qty	Description
	D8NN11000CE	1	Starting Motor Assy., Includes: Ref. 1 thru 18, Start Year: 01/01/1965
1	E4NN11005AB	1	Armature Assy., Use w/D8NN-11000-CB, Start Year: 01/01/1965
1	E4NN11005AB	1	Armature Assy., Use w/D8NN-11000-CD, Start Year: 01/01/1965
2	E4NN11050BA	1	Plate Assy., Start Year: 01/01/1965
3	E4NN11434BA	1	Holder Assy., Includes: Ref. 4 & 5, Start Year: 01/01/1965
4	E4NN11059BA	1	Spring, Start Year: 01/01/1965
5	E4NN11055AA	2	Brush Assy., Start Year: 01/01/1965
6	E4NN11K175BA	1	Kit, Bushing, Start Year: 01/01/1965
7	E4NN11A018BA	1	Brake, Start Year: 01/01/1965
8	E4NN11082BA	1	Coil Assy., Includes: Ref. 9, Start Year: 01/01/1965
9	E4NN11055AA	2	Brush Assy., Start Year: 01/01/1965
10	E4NN11390AC	1	Solenoid Assy., Start Year: 01/01/1965
11	E4NN11A029AA	1	Plate, Start Year: 01/01/1965
12	E4NN11395BA	1	Plate Assy., Start Year: 01/01/1965
13	E4NN11350AA	1	Drive Assy., w/Fine Inside Spline, Start Year: 01/01/1965
14	E4NN11067AA	1	Lever & Pin Assy., Start Year: 01/01/1965
15	NSS	1	Housing Assy., Not Serviced Separately, Start Year: 01/01/1965
16	E4NN11N085AA	1	Collar & Ring Assy., Start Year: 01/01/1965
17	E4NN11K179BA	1	Kit, Seal, Start Year: 01/01/1965
18	E4NN11K141AA	1	Kit, Hardware, Start Year: 01/01/1965
19	E6NN11N088AA	1	Cover Assy., Use w/D8NN-11000-CB, Start Year: 01/01/1965
20	E6NN11N087AB	1	Cover Assy., Use w/D8NN-11000-CD, Start Year: 01/01/1965
21	E6NN11N089AA	1	Nut, M8, Use w/D8NN-11000-CD, Start Year: 01/01/1965

11G01 GENERATOR & RELATED PARTS

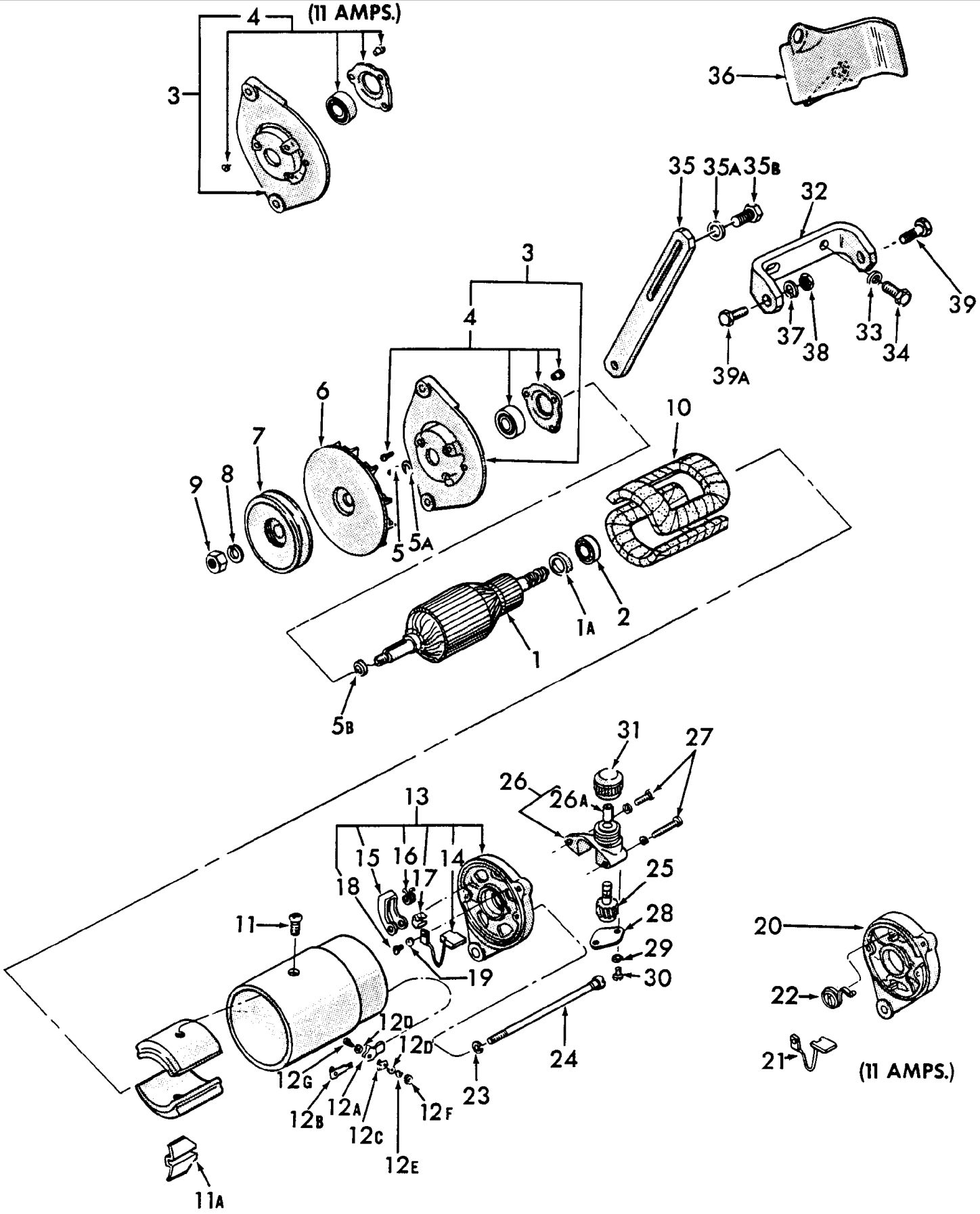

5000-SERIES 4 CYL TRACTOR (1/65-1/75)

11G01 GENERATOR & RELATED PARTS

Ref	Part Number	Qty	Description
	C7NN10000C	1	Generator Assy., 22 Ampere, Replaces C7NN10000B, Start Year: 01/01/1965
	C7NN10000CLPR	1	Generator Assy., 22 Ampere, REMANUFACTURED, NHNA Only, Proof-meter Drive Not Included, Start Year: 01/01/1965
1	C7NN10027A	1	Armature Assy., No Longer Serviced (NHNA), Start Year: 01/01/1965
1A	C7NN10097A	1	Spacer, Armature Bearing, No Longer Serviced (NHNA), Start Year: 01/01/1965
2	C5NF10094A	1	Bearing, Armature, Start Year: 01/01/1965
3	C5NF10138C	1	Plate Assy., Front, 22 Ampere, Includes: Plate & Ref. 4, Start Year: 01/01/1965
3	C5NF10138D	1	Plate Assy., Front, 11 Ampere, Except U.S., Includes: Plates & Ref. 4, NH-E Only, Years: 01/01/1965-03/31/1968
4	C5NF10045A	1	Kit, Drive End Bearing, 22 Ampere, Start Year: 01/01/1965
4	C5NF10045B	1	Kit, Drive End Bearing, 11 Ampere, Except U.S., Includes:, No Longer Serviced (NHNA), Years: 01/01/1965-03/31/1968
	NS	1	Bearing, Not Serviced
	NS	1	Retainer, Not Serviced
	27145S8	3	Screw, Round Hd., U.S., #10-32 x 1.0, No Longer Serviced (NH-E), Start Year: 01/01/1965
	373235S7	3	Nut, Lock, U.S., #10-32, Start Year: 01/01/1965
	117372ES8	3	Rivet, No Longer Serviced (NHNA), Start Year: 01/01/1965
5	80496	1	Key, Woodruff #3, 1/8" x 1/2", Start Year: 01/01/1965
5A	C5NF10097A	1	Spacer, Bearing, .59 I.D. x .81 O.D. x .19, Start Year: 01/01/1965
5B	C5NF10124B	1	Retainer, Bearing, Start Year: 01/01/1965
6	C5NF10131A	1	Fan, Pulley Flange, 22 Ampere, Not part of Assy., Start Year: 01/01/1965
7	C5NF10196B	1	Pulley, Not part of Assy., Start Year: 01/01/1965
8	34828S7	1	Washer, Lock, 7/16", Start Year: 01/01/1965
9	87891	1	Nut, Jam, G2, 7/16"-20, Start Year: 01/01/1965
10	C5NF10175A	1	Coil Assy., Field Complete, No Longer Serviced (NHNA), Start Year: 01/01/1965
11	C5NF10044A	2	Screw, Pole Piece, No Longer Serviced (NHNA), Start Year: 01/01/1965
11A	C5NF10173A	1	Insulator, Field Coil, No Longer Serviced, Start Year: 01/01/1965
12A	C5NF10202A	1	Insulator, Kit, Start Year: 01/01/1965
12B	C5NF14421B	1	Terminal, Wire Snap on Male, No Longer Serviced (NHNA), Start Year: 01/01/1965
12C	C5NF10218A	1	Terminal, Wiring Connecting, No Longer Serviced (NHNA)
12D	44705S8	2	Washer, #4, No Longer Serviced
12E	34820S8	1	Washer, Lock, #4, No Longer Serviced (NH-E)
12F	280385	1	Nut, #4-40
12G	31075S8	1	Screw, Fillister Hd., #4-40 x 5/8", No Longer Serviced (NHNA)
13	C5NF10050B	1	Plate Assy., Rear, 22 Ampere, Includes: Plate & Ref. 14 thru 19, Start Year: 01/01/1965
14	309791F	2	Brush, 22 Ampere, Start Year: 01/01/1965
	87026S94	1	O-Ring, 1.125" ID x .070" Thk, Bearing, Start Year: 01/01/1965
15	C5NF10040A	2	Holder, Brush, 22 Ampere, No Longer Serviced, Start Year: 01/01/1965
16	C5NF10057A	2	Spring, Brush, 22 Ampere, Start Year: 01/01/1965
17	C5NF10051A	2	Clip, Brush, 22 Ampere, Start Year: 01/01/1965
18	E93A10210	2	Screw, Brush Terminal, 22 Ampere, No Longer Serviced (NHNA), Start Year: 01/01/1965

5000-SERIES 4 CYL TRACTOR (1/65-1/75)

11G01 GENERATOR & RELATED PARTS

Ref	Part Number	Qty	Description
19	280254	2	Washer, Lock, Int T, #10, Brush Terminal, 22 Amp, Start Year: 01/01/1965
20	E8NN10N008BA	1	Plate Assy., Rear, 11 Amp., NH-E Only, Years: 01/01/1965-03/31/1968
21	309807F	2	Kit, Brush Assy., 11 Ampere, Except U.S., Years: 01/01/1965-03/31/1968
22	C5NF10057B	2	Spring, Brush, 11 Ampere, Except U.S., No Longer Serviced (NHNA), Years: 01/01/1965-03/31/1968
	87026S94	1	O-Ring, 1.125" ID x .070" Thk, Bearing, Years: 01/01/1965-03/31/1968
23	80682	2	Washer, Lock, 1/4", Start Year: 01/01/1965
24	C5NF10120A	2	Bolt, 1/4"-26 x 6-3/8", No Longer Serviced, Start Year: 01/01/1965
25	C5NF17373B	1	Gear Assy., Proofmeter Drive, Start Year: 01/01/1965
26	C5NF17B283B	1	Housing, Proofmeter Drive, L/Instrument Cluster, No Longer Serviced (NHNA), Start Year: 01/01/1965
26	C5NF17B282B	1	Housing Assy., Proofmeter Drive, W/Instrument Cluster Includes: Housing & Ref. 26A, Start Year: 01/01/1965
26A	C5NF17A269B	1	Bushing, Proofmeter Drive Gear, Start Year: 01/01/1965
27	27105S8	1	Screw, Round Hd., #10-32 x 11/16", No Longer Serviced (NHNA), Start Year: 01/01/1965
27	27177S36	1	Screw, Rd Hd, #10-32 x 1-1/2", No Longer Serviced (NHNA), Start Year: 01/01/1965
28	C5NF17187B	1	Plate, Drive Gear Retaining, Start Year: 01/01/1965
29	280254	2	Washer, Lock, Int T, #10, Start Year: 01/01/1965
30	52778S8	2	Screw, Self-Tapping, Pan Hd, #6, 10 x 3/8", Plate to Drive Housing, Start Year: 01/01/1965
31	C5NN17N361A	1	Cover, Proofmeter Drive, L/Proofmeter, 2000, Start Year: 01/01/1965
31	C5NN17N361A	1	Cover, Proofmeter Drive, w/Speedometer, Diesel, 2120-3120, Start Year: 01/01/1968
32	C7NN10039C	1	Bracket, Mounting, Replaces P/N C5NE-10039-A, Start Year: 01/01/1965
33	83933065	2	Washer, Flat, .39 I.D. x .75 O.D., Start Year: 01/01/1965
34	88206	2	Screw, Cap, HH, G5, 3/8"-16 x 1", Years: 01/01/1965-12/31/1968
34	304666S36	2	Screw, Cap, HH, G5, 3/8"-16 x 7/8", Start Year: 01/01/1969
35	D8NN10145AA	1	Arm, Belt Adjustment, Start Year: 01/01/1965
35A	83974432	1	Washer, Flat, .33 I.D. x .88 O.D., Start Year: 01/01/1965
35B	9635884	1	Screw, Cap, HH, G5, 5/16"-18 x 1", Start Year: 01/01/1965
36	C5NE10268A	1	Shield, Heat, No Longer Serviced, Start Year: 01/01/1965
	C7NN6N690A	1	Guard, Pulley & Belt, U.K.-Antwerp, Use existing standard parts to mount this Guard, No Longer Serviced, Start Year: 01/01/1965
	C5NN6N691A	1	Arm, Guard Adjustment, Use w/Guard P/N C5NN-6N690-A & B, NH-E Only, Years: 01/01/1965-06/30/1969
	379026S43	AR	Washer, Flat, 5/16", NH-E Only
	80681	AR	Washer, Lock, 5/16"
	9635884	1	Screw, Cap, HH, G5, 5/16"-18 x 1", Years: 01/01/1965-06/30/1969
	87362	AR	Washer, SAE, 5/16"
	80681	AR	Washer, Lock, 5/16"
	9635082	AR	Nut, G5, 5/16"-18
	9635884	1	Screw, Cap, HH, G5, 5/16"-18 x 1", Years: 01/01/1965-06/30/1969
	379026S43	1	Washer, Flat, 5/16", Use w/Guard P/N C5NN-6N690-A & B, U.K. Antwerp, NH-E Only, Years: 01/01/1965-06/30/1969
37	80681	2	Washer, Lock, 5/16", Start Year: 01/01/1965
38	9635082	2	Nut, G5, 5/16"-18, Start Year: 01/01/1965

11G01 GENERATOR & RELATED PARTS

Ref	Part Number	Qty	Description
39	304739S36	1	Screw, Cap, HH, G5, 5/16"-18 x 1-3/8", No Longer Serviced (NH-E), Start Year: 01/01/1965
39A	87657	1	Screw, Cap, HH, G5, 5/16"-18 x 1-1/4", Start Year: 01/01/1965

11G02 ALTERNATOR ASSEMBLY, 35 AMP., MEXICO

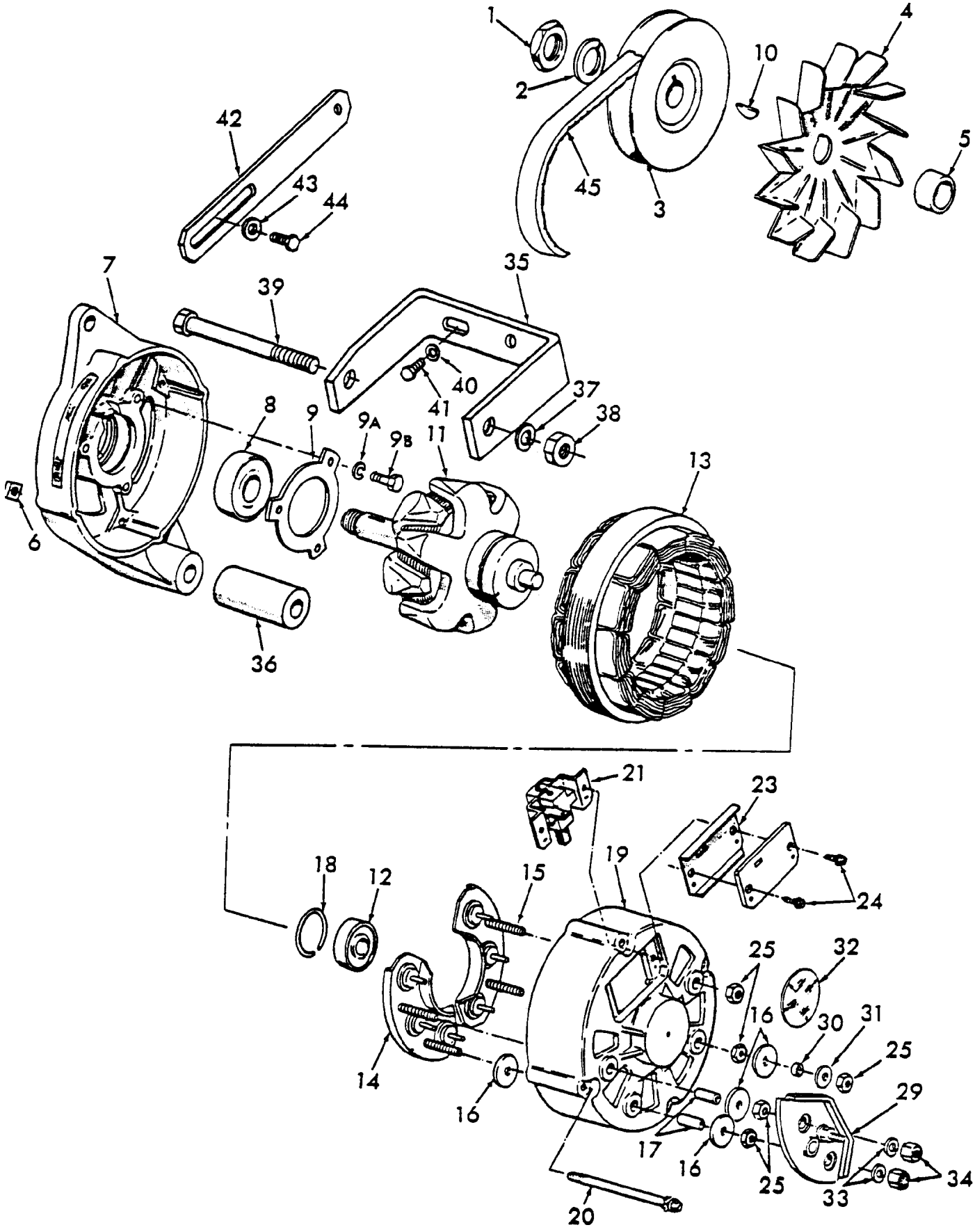

5000-SERIES 4 CYL TRACTOR (1/65-1/75)

11G02 ALTERNATOR ASSEMBLY, 35 AMP., MEXICO

Ref	Part Number	Qty	Description
	NLS	1	Alternator Assy., 35 Amp., 5100, Mexico, Includes: Ref. 1 thru 34 {67NY10300A}, Mexico Only, Start Year: 01/01/1968
1	C7NN10A333A	1	Nut, Pulley, Start Year: 01/01/1968
2	34811S36	1	Washer, Lock, 5/8", Start Year: 01/01/1968
3	NLS	1	Pulley {69NY10A352A}, Start Year: 01/01/1968
4	C7NN10380A	1	Fan, Start Year: 01/01/1968
5	NLS	1	Spacer, Pulley {69NY10343A}, Start Year: 01/01/1968
6	34141S36	4	Nut, Square, #10-32, Start Year: 01/01/1968
7	NLS	1	Housing, Front {69NY10A351A}, Start Year: 01/01/1968
	NLS	1	Decal, Belt Tension Warning {69NY10N308A}, Start Year: 01/01/1968
8	NLS	1	Bearing, Front {69NY10A303A}, Start Year: 01/01/1968
9	NLS	1	Retainer, Bearing {69NY10323A}, Start Year: 01/01/1968
9A	87812	2	Washer, Lock, #8, Start Year: 01/01/1968
9B	NLS	3	Bolt, Hex, #8-32 x .88 {55037S7}, Start Year: 01/01/1968
10	84071	1	Key, Woodruff #5, 1/8" x 5/8", Start Year: 01/01/1968
11	NLS	1	Rotor Assy. {69NY10335A}, Start Year: 01/01/1968
12	NLS	1	Bearing, Rear {69NY10A304A}, Start Year: 01/01/1968
13	NLS	1	Stator & Coil Assy. {69NY10368A}, Start Year: 01/01/1968
14	NLS	1	Diode Assy., Positive {69NY10374A}, Start Year: 01/01/1968
15	NLS	1	Diode Assy., Negative {69NY10378A}, Start Year: 01/01/1968
16	NLS	4	Washer, Diode Insulating {C7NN10N309AS}, Start Year: 01/01/1968
17	C7NN10A383A	2	Insulator, Diode Plate, Start Year: 01/01/1968
18	C7NN10323A	1	Retainer, Bearing, Start Year: 01/01/1968
19	C7NN10A349A	1	Housing, Rear, No Longer Serviced, Start Year: 01/01/1968
20	C7NN10A396A	4	Bolt & Washer Assy., Through Alternator, No Longer Serviced (NH-E), Start Year: 01/01/1968
21	D7NN10B363A	1	Cover & Brush Assy., Start Year: 01/01/1968
23	NLS	1	Gasket, Brush Cover {69NY10B368A}, Start Year: 01/01/1968
24	40917S36	2	Screw, Self-Tapping, HWH, #8-32 x 1/2", Start Year: 01/01/1968
25	87304	6	Nut, #10-24, Start Year: 01/01/1968
29	NLS	1	Plate Assy., Negative Auxiliary {69NY10A378A}, Start Year: 01/01/1968
30	C7NN10329A	1	Insulator, Terminal, Start Year: 01/01/1968
31	C7NN10310A	1	Washer, Insulator, No Longer Serviced, Start Year: 01/01/1968
32	NLS	1	Label, Terminal Identification {69NY10N305A}, Start Year: 01/01/1968
33	87304	2	Nut, #10-24, Start Year: 01/01/1968
34	9672521	1	Washer, Lock, Ext T, #10, Start Year: 01/01/1968
35	C7NN10039A	1	Bracket, Mounting, Start Year: 01/01/1968
36	C7NN10A370B	1	Spacer, Mounting Bracket, Start Year: 01/01/1968
37	80679	1	Washer, Lock, 1/2", Start Year: 01/01/1968
38	280431	1	Nut, G5, 1/2"-13, Start Year: 01/01/1968
39	86505996	1	Screw, Cap, HH, G5, 1/2"-13 x 7", Start Year: 01/01/1968
40	83933065	2	Washer, Flat, .39 I.D. x .75 O.D., Start Year: 01/01/1968

11G02 ALTERNATOR ASSEMBLY, 35 AMP., MEXICO

Ref	Part Number	Qty	Description
41	88206	2	Screw, Cap, HH, G5, 3/8"-16 x 1", Start Year: 01/01/1968
42	89NY10145AA	1	Arm, Belt Adjusting, NHNA Only, Start Year: 01/01/1968
43	83974432	1	Washer, Flat, .33 I.D. x .88 O.D., Start Year: 01/01/1968
44	9635884	1	Screw, Cap, HH, G5, 5/16"-18 x 1", Start Year: 01/01/1968
45	D3NN10C318C	1	V-Belt, Alternator to Water Pump, Start Year: 01/01/1968

11H01 FENDER MOUNTED LIGHTS - 4200 ROWCROP (EFFECTIVE W/6D25B) & 5200, 7200 (67/)

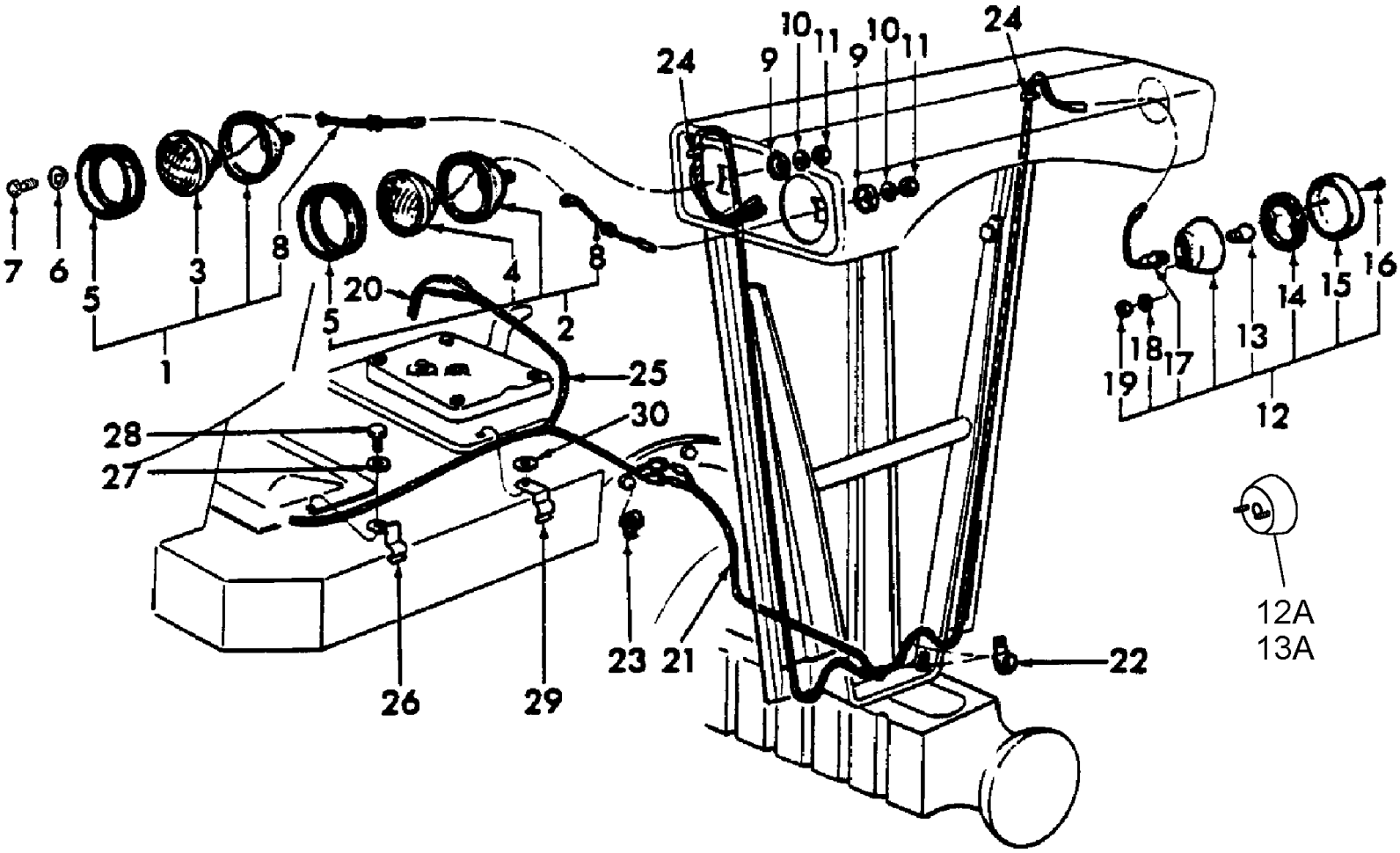

5000-SERIES 4 CYL TRACTOR (1/65-1/75)

11H01 FENDER MOUNTED LIGHTS - 4200 ROWCROP (EFFECTIVE W/6D25B) & 5200, 7200 (67/)

Ref	Part Number	Qty	Description
1	D4NN13002C	2	Headlamp Assy., 12 Volt, NHNA Only, No Longer Serviced, Start Year: 04/01/1966
2	86729707	2	Utility Lamp Assy., 12 Volt, Includes: Body & Ref. 3 thru 8, NHNA Only, Start Year: 04/01/1966
3	277073	2	Bulb Assy., 12 Volt, Start Year: 04/01/1966
4	E3NN15330AA	2	Bulb Assy., 12 Volt, Years: 04/01/1966-04/30/1967
4	C5NN13007F	2	Bulb Assy., 12 Volt, Start Year: 05/01/1967
5	86529682	4	Ring, Lamp, No Longer Serviced (NH-E), Years: 04/01/1966-04/30/1967
5	C5NN13N056A	4	Ring, Retaining, Start Year: 05/01/1967
6	87812	4	Washer, Lock, #8, Years: 04/01/1966-04/30/1967
7	31458S36	4	Screw, Fillister Hd, #8-32 x 1-1/4", No Longer Serviced (NHNA), Years: 04/01/1966-04/30/1967
8	D2NN13A006A	4	Wire Assy., NHNA Only, Years: 04/01/1966-04/30/1967
8	C5NN13A006F	2	Wire Assy., Red, No Longer Serviced, Start Year: 05/01/1967
8	C5NN13A006G	2	Wire Assy., Green, Part of P/N C5NN-13002-C, No Longer Serviced (NHNA), Start Year: 05/01/1967
8	D6NN13A006G	1	Headlamp Wire Assy., Service Only, Part of P/N D4NN-13002-C, NHNA Only, No Longer Serviced, Start Year: 05/01/1967
9	D8NN13N020AB	4	Retainer, Start Year: 04/01/1966
10	80679	4	Washer, Lock, 1/2", Start Year: 04/01/1966
11	33846S8	4	Nut, Hex, 1/2"-20, NHNA Only, No Longer Serviced, Years: 04/01/1966-03/31/1974
11	280431	4	Nut, G5, 1/2"-13, Start Year: 04/01/1974
12	86639447	1	Rear Lamp Assy., LH, Includes: Body & Ref. 13 thru 17, NHNA Only, Start Year: 04/01/1966
12A	86639447	1	Lamp Assy., Includes: Ref. 13A
13	C6AB13465A	1	Bulb Assy., 4CP, 12 Volt, Start Year: 04/01/1966
13A	529068	1	Bulb, #1156
14	FAD13461A	1	Gasket, NHNA Only, Start Year: 04/01/1966
15	FDV13450A	1	Lens, Red, NHNA Only, Start Year: 04/01/1966
16	30178S13	1	Screw, Oval Hd, Brass, # 8-32 x 5/8", NHNA Only, No Longer Serviced, Start Year: 04/01/1966
17	C5NN13A448A	1	Wiring Assy., NHNA Only, Start Year: 04/01/1966
18	80684	2	Washer, Lock, #10, Start Year: 04/01/1966
19	87304	2	Nut, #10-24, Start Year: 04/01/1966
20	C5NN14N111C	1	Switch to Fender Harness Assy., R.H., NHNA Only, No Longer Serviced, Years: 04/01/1966-08/31/1974
20	D3NN14N111D	1	Switch to Fender Harness Assy., R.H., 5200-7200, NHNA Only, No Longer Serviced, Start Year: 09/01/197
21	C5NN14N109D	1	Switch to Fender Harness Assy., L.H., NHNA Only, No Longer Serviced, Years: 04/01/1966-08/31/1974
21	D3NN14N109B	1	Switch to Fender Harness Assy., L.H., 5200-7200, NHNA Only, No Longer Serviced, Start Year: 09/01/1974
23	85700737	2	Clip, Rear Main Harness to Housing, 5200, Years: 04/01/1966-02/28/1970
22	375911S100	4	Clip, Harness to Fender, No Longer Serviced (NH-E), Start Year: 04/01/1966
23	384118S100	2	Clip, Rear Main Harness to Housing, 5200-7200, Start Year: 03/01/1970
23	372047S100	2	Clip, Rear Main Harness to Housing, 4200, Start Year: 04/01/1966
24	356687S2	2	Clip, Wire to Fender Tap, NHNA Only, No Longer Serviced, Start Year: 04/01/1966
25	C5NN14N013A	1	Main Extension Harness Assy., Rear, NHNA Only, No Longer Serviced, Start Year: 04/01/1966
27	81825806	1	Washer, Hardened, G8, 7/16", Use W/# 380569-S, 4200, Start Year: 04/01/1966
26	380569S2	1	Clip, Rear Main Harness, 4200, NHNA Only, Start Year: 04/01/1966
28	58656S36	1	Screw, Cap, HH, G8, 7/16"-14 x 1-3/4", Clip 380569-S to Cover, Start Year: 04/01/1966

11H01 FENDER MOUNTED LIGHTS - 4200 ROWCROP (EFFECTIVE W/6D25B) & 5200, 7200 (67/)

Ref	Part Number	Qty	Description
29	383120S2	1	Clip, Main Harness to Lift Cover, 4200, NHNA Only, Start Year: 04/01/1966
30	44730S8	1	Washer, 7/16", Use W/# 383120-S2, Clip, 4200, NHNA Only, No Longer Serviced, Start Year: 04/01/1966

11H02 FRONT MOUNTED HEADLAMPS (SPECIAL LENS) (NH-E) & (NHNA) VINEYARD

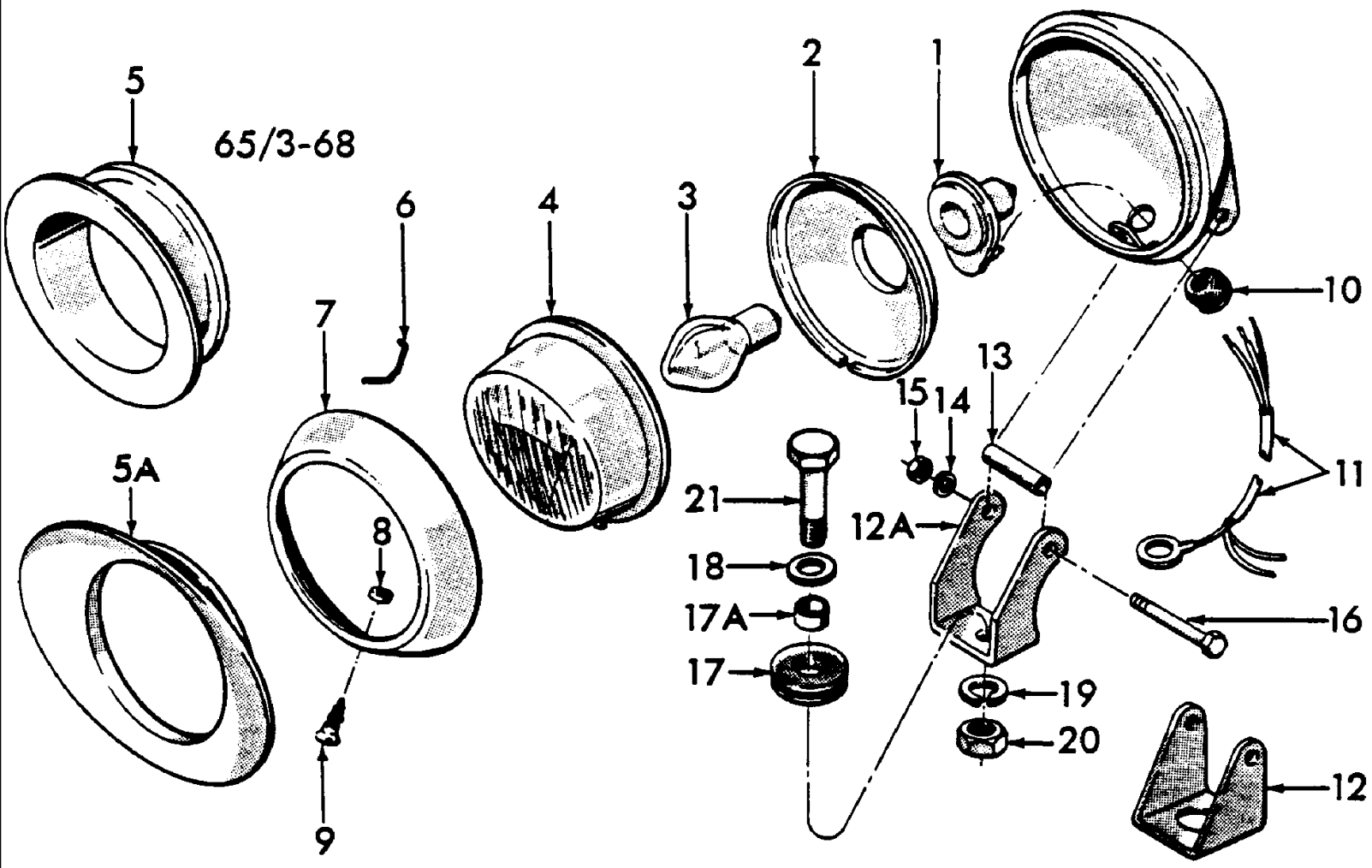

5000-SERIES 4 CYL TRACTOR (1/65-1/75)

11H02 FRONT MOUNTED HEADLAMPS (SPECIAL LENS) (NH-E) & (NHNA) VINEYARD

Ref	Part Number	Qty	Description
	D5NN13005B	2	Special Headlamp Assy., L/Bracket Mounting Parts Includes: Body & Ref. 1 thru 21, Years: 01/01/1965-02/28/1973
1	C5NN13N004A	2	Holder Assy., No Longer Serviced, Years: 01/01/1965-02/28/1973
2	C5NN13027A	1	Reflector, No Longer Serviced (NHNA), Years: 01/01/1965-02/28/1973
3	C5NN13007A	2	Bulb Assy., Years: 01/01/1965-02/28/1973
4	C5NN13060A	2	Lens, Use (2) P/N D0NN-13005-A(81824147), Headlamps, plus (1) P/N C7NN-13N005-A, Bracket, NHNA Only, No Longer Serviced, Years: 01/01/1965-02/28/1973
5	C5NN13N006A	2	Shroud, No Longer Serviced (NHNA), Years: 01/01/1965-03/31/1968
5A	NLS	2	Shroud, No Longer Serviced, Years: 04/01/1968-02/28/1973
6	C5NN13N008A	12	Clip, Reflector Retaining, Use (2) P/N D0NN-13005-A(81824147), Headlamps, plus (1) P/N C7NN-13N005-A, Bracket, No Longer Serviced (NHNA), Years: 01/01/1965-02/28/1973
7	C5NN13052A	2	Door, No Longer Serviced (NHNA), Years: 01/01/1965-02/28/1973
8	C5NN13N009A	2	Washer, Door Screw, Rubber, No Longer Serviced (NHNA), Years: 01/01/1965-02/28/1973
9	C5NN13N249B	2	Screw, Door, No Longer Serviced, Years: 01/01/1965-02/28/1973
10	C5NN14615D	2	Grommet, Wiring, No Longer Serviced (NHNA), Years: 01/01/1965-02/28/1973
11	C5NN13076B	2	Lead Wire Assy., NH-E Only, Years: 01/01/1965-02/28/1973
	C7NN13N081A	4	Clip, Wire Retaining, NH-E Only, Years: 01/01/1965-02/28/1973
12	C5NN13N005F	2	Bracket, Mounting, Use w/# C7NN-13025-H, NH-E Only, No Longer Serviced (NHNA), Years: 01/01/1965-03/31/1968
12	D4NN13N005A	2	Bracket, Mounting, Use w/# D5NN-13005-B, No Longer Serviced, Years: 01/01/1965-02/28/1973
12A	C7NN13N005B	2	Bracket, Mounting Includes:, No Longer Serviced, Years: 04/01/1968-02/28/1973
13	C5NN13N073A	2	Spacer, Mounting Bracket Pivot Kit, Tractor Cab Assy., No Longer Serviced, Years: 01/01/1965-02/28/1973
14	86529539	2	Washer, Lock, Int T, 1/4", Years: 01/01/1965-02/28/1973
15	7770	2	Nut, Hex, 1/4"-20, Years: 01/01/1965-02/28/1973
16	87404	2	Screw, Cap, HH, G5, 1/4"-20 x 2", No Longer Serviced (NHNA), Years: 01/01/1965-03/31/1968
16	87405	2	Screw, Cap, HH, G5, 1/4"-20 x 2-1/4", No Longer Serviced (NH-E), Years: 04/01/1968-02/28/1973
17	D6NN14N613A	4	Grommet, Mounting Bracket, Replaces P/N C7NN-14N613-A, No Longer Serviced, Years: 01/01/1965-02/28/1973
17A	D6NN13N066A	2	Sleeve, Mounting Bracket Grommet, Years: 01/01/1965-03/31/1968
18	87016	2	Washer, SAE, 3/8", Years: 01/01/1965-02/28/1973
19	9672276	2	Washer, Lock, Int T, 3/8", Years: 01/01/1965-02/28/1973
20	9628503	2	Nut, G5, 3/8"-16, Years: 01/01/1965-02/28/1973
21	88044	2	Screw, Cap, HH, G5, 3/8"-16 x 1-1/2", 2000-3000, Years: 01/01/1965-03/31/1968
21	88044	2	Screw, Cap, HH, G5, 3/8"-16 x 1-1/2", 4000-5000, Years: 01/01/1965-02/28/1973
21	88434	2	Screw, Cap, HH, G5, 3/8"-16 x 3/4", 2000-3000, Years: 04/01/1968-02/28/1973

11H03 FRONT MOUNTED HEADLAMPS, NETHERLANDS, FRANCE & U.S., BELGIUM, ISRAEL, SWEDEN, FINLAND & NORWAY

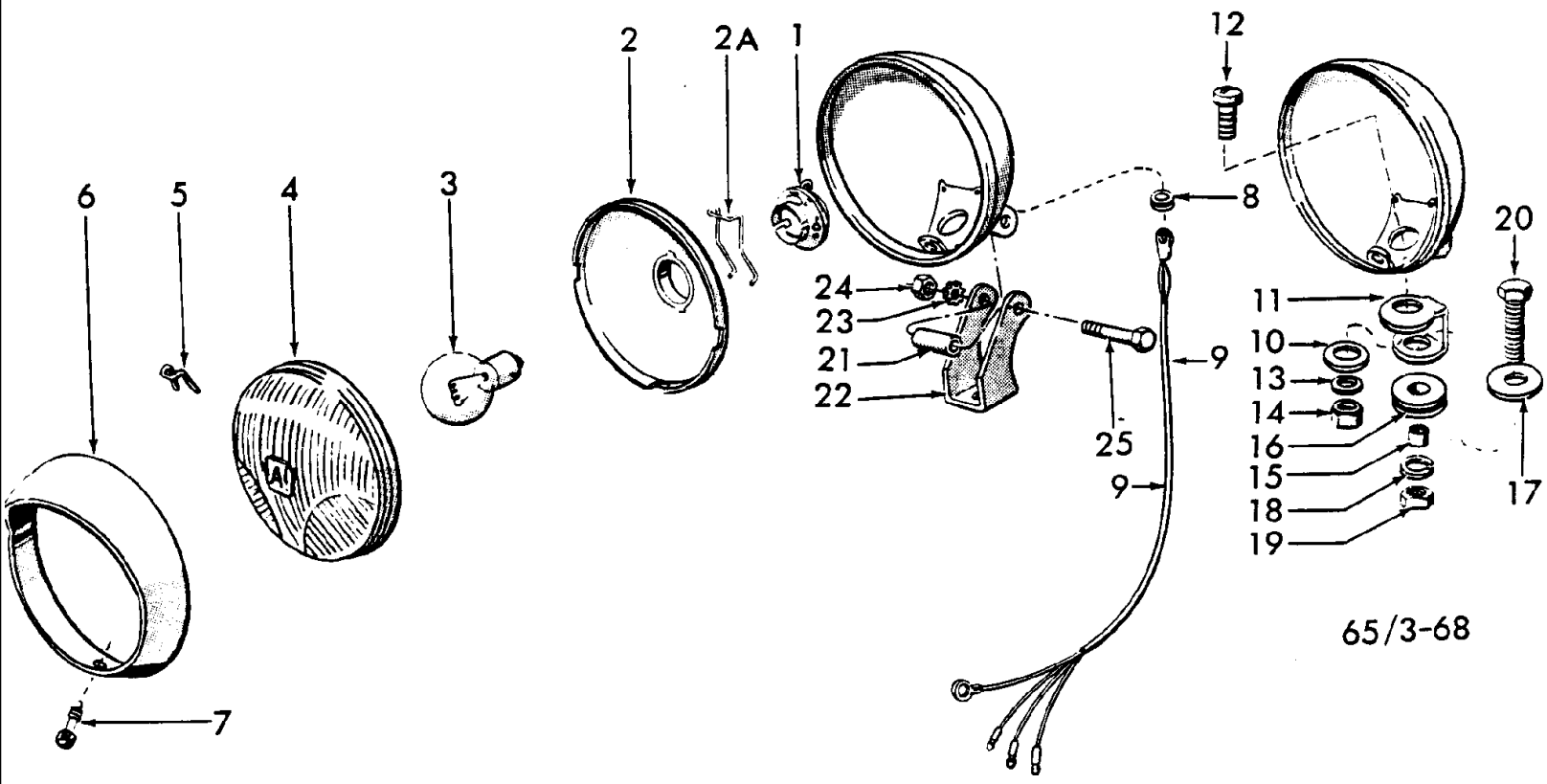

5000-SERIES 4 CYL TRACTOR (1/65-1/75)

11H03 FRONT MOUNTED HEADLAMPS, NETHERLANDS, FRANCE & U.S., BELGIUM, ISRAEL, SWEDEN, FINLAND & NORWAY

Ref	Part Number	Qty	Description
	C5NN13005Z	2	Headlamp Assy., White Bulb, w/Bracket Mounting Parts, U.S., 2310-3310, No Longer Serviced (NHNA), Years: 01/01/1966-03/31/1968
	C5NN13005Y	2	Headlamp Assy., Yellow Bulb, w/Bracket Mounting Parts, France Exc. 2300-3300, NH-E Only, Years: 01/01/1966-03/31/1968
	C5NN13005T	2	Headlamp Assy., w/Bracket Mounting Parts, France & U.S., 2300-3300, No Longer Serviced (NH-E), No Longer Serviced (NHNA), Years: 01/01/1966-03/31/1968
	E6NN13005EA	2	Headlamp Assy., L/Bracket Mounting Parts, Yellow Bulb, Except 2300-3300, No Longer Serviced, For Netherlands, Replace Yellow Bulb, C5NN-13007-C, with White Bulb, C5NN-13005-B, Start Year: 04/01/1968
	C7NN13005J	2	Headlamp Assy., L/Brkt. Mtg. Parts, France and U.S., 2300-3300, No Longer Serviced, Start Year: 04/01/1968
	E6NN13005EA	2	Headlamp Assy., Yellow Bulb, France, NH-E Only, Years: 01/01/1971-10/31/1974
	E6NN13005JA	2	Headlamp Assy., White Bulb,Replaces D4NN13005B and D4NN13005A, Use in Belgium, Israel, Sweden, Finland & Norway, Start Year: 11/01/1974
	E6NN13005JA	2	Headlamp Assy., White Bulb, Use in Belgium, Israel, Sweden, Finland & Norway, Years: 01/01/1970-10/31/1974
1	C5NN13N865H	2	Contact & Wire Assy., U.S., 2300,3300, No Longer Serviced (NHNA), Start Year: 01/01/1966
2	C5NN13027B	1	Reflector, No Longer Serviced, Start Year: 01/01/1966
2	D0NN13N114A	2	Reflector Assy., Includes Reflector and Clip, Use in Belgium, Israel, Sweden, Finland & Norway, NH-E Only, Start Year: 01/01/1970
2A	D6NN13N060A	2	Clip, Use in Belgium, Israel, Sweden, Finland & Norway, Start Year: 01/01/1970
3	C5NN13007E	2	Bulb Assy., White, 12 Volt, 36/45 Watt Includes: Ref. 15 thru 23, Netherlands, No Longer Serviced, Start Year: 01/01/1966
3	C5NN13007E	2	Bulb Assy., Yellow, 12 Volt, 36/45 Watt, France & U.S., No Longer Serviced, Start Year: 01/01/1966
3	C5NN13465E	2	Bulb Assy., France & U.S., 2310-3310, No Longer Serviced, Start Year: 01/01/1966
3	69AG13007AA	2	Bulb Assy., White, Use in Belgium, Israel, Sweden, Finland & Norway, Start Year: 01/01/1970
4	C5NN13060B	2	Lens, No Longer Serviced, Start Year: 01/01/1966
4	D9NN13060AA	2	Lens, Use in Belgium, Israel, Sweden, Finland & Norway, Start Year: 01/01/1970
5	C5NN13N040A	8	Clip, Lens Retaining, No Longer Serviced (NH-E), Start Year: 01/01/1966
5	C9NN13N040A	8	Clip, Lens Retaining, Use in Belgium, Israel, Sweden, Finland & Norway, Start Year: 01/01/1970
6	C5NN13A043A	2	Bezel Assy., Hooded, No Longer Serviced, Start Year: 01/01/1966
6	C9NN13052A	2	Doors, Use in Belgium, Israel, Sweden, Finland & Norway, NH-E Only, Start Year: 01/01/1970
7	C5NN13N042A	2	Screw, Mounting, No Longer Serviced (NHNA), Start Year: 01/01/1966
7	C9NN13N042A	2	Screw, Mounting, Use in Belgium, Israel, Sweden, Finland & Norway, NH-E Only, Start Year: 01/01/1970
8	E4NN14615AA	2	Grommet, Wiring, No Longer Serviced, Years: 01/01/1966-03/31/1968
8	C7NN14615B	2	Grommet, Wiring, No Longer Serviced (NHNA), Start Year: 04/01/1968
9	C5NN13A006E	2	Wire Assy., Except 2300-3300, No Longer Serviced, Start Year: 01/01/1966
9	C5NN13A006D	2	Wire Assy., 2300-3300, No Longer Serviced, Start Year: 01/01/1966
10	C5NN13N041A	2	Plate, Body Pedestal Fixing, No Longer Serviced (NH-E), Years: 01/01/1966-03/31/1968
11	C5NN13132G	2	Bracket, No Longer Serviced (NHNA), Years: 01/01/1966-03/31/1968
12	C5NN13N043A	2	Stud, Pedestal Fixing, No Longer Serviced, Years: 01/01/1966-03/31/1968

11H03 FRONT MOUNTED HEADLAMPS, NETHERLANDS, FRANCE & U.S., BELGIUM, ISRAEL, SWEDEN, FINLAND & NORWAY

Ref	Part Number	Qty	Description
13	81821693	2	Washer, Lock, 3/8", Years: 01/01/1966-03/31/1968
14	9628503	2	Nut, G5, 3/8"-16, Years: 01/01/1966-03/31/1968
15	C5NN13N066B	2	Sleeve, Mounting, No Longer Serviced, Years: 01/01/1966-03/31/1968
16	C5NN14N613C	2	Grommet, Mounting, Years: 01/01/1966-03/31/1968
17	87016	2	Washer, SAE, 3/8", Start Year: 01/01/1966
18	81821693	2	Washer, Lock, 3/8", Start Year: 01/01/1966
19	9628503	2	Nut, G5, 3/8"-16, Start Year: 01/01/1966
20	88044	2	Screw, Cap, HH, G5, 3/8"-16 x 1-1/2", 2000-3000, Years: 01/01/1966-03/31/1968
20	88044	2	Screw, Cap, HH, G5, 3/8"-16 x 1-1/2", 4000-5000, Start Year: 01/01/1965
20	88434	2	Screw, Cap, HH, G5, 3/8"-16 x 3/4", 2000-3000, Start Year: 04/01/1968
21	D6NN13N073A	2	Spacer, Mounting Bracket Pivot, 1.41" Lg. Replaces P/N C7NN13N073A, No Longer Serviced, Start Year: 04/01/1968
21	C5NN13N073A	2	Spacer, Mounting Bracket Pivot, 1.25" Lg., No Longer Serviced, Start Year: 04/01/1968
22	C7NN13N005B	2	Bracket, Mounting, No Longer Serviced, Start Year: 04/01/1968
22	C9NN13N005A	2	Bracket, Mounting, Use in Belgium, Israel, Sweden, Finland & Norway, No Longer Serviced (NH-E), Start Year: 01/01/1970
23	86529539	2	Washer, Lock, Int T, 1/4", Start Year: 04/01/1968
24	7770	2	Nut, Hex, 1/4"-20, Start Year: 04/01/1968
25	87405	2	Screw, Cap, HH, G5, 1/4"-20 x 2-1/4", No Longer Serviced (NHNA), Start Year: 04/01/1968

11J01 SIDE MOUNTED HEADLAMPS (NH-E)

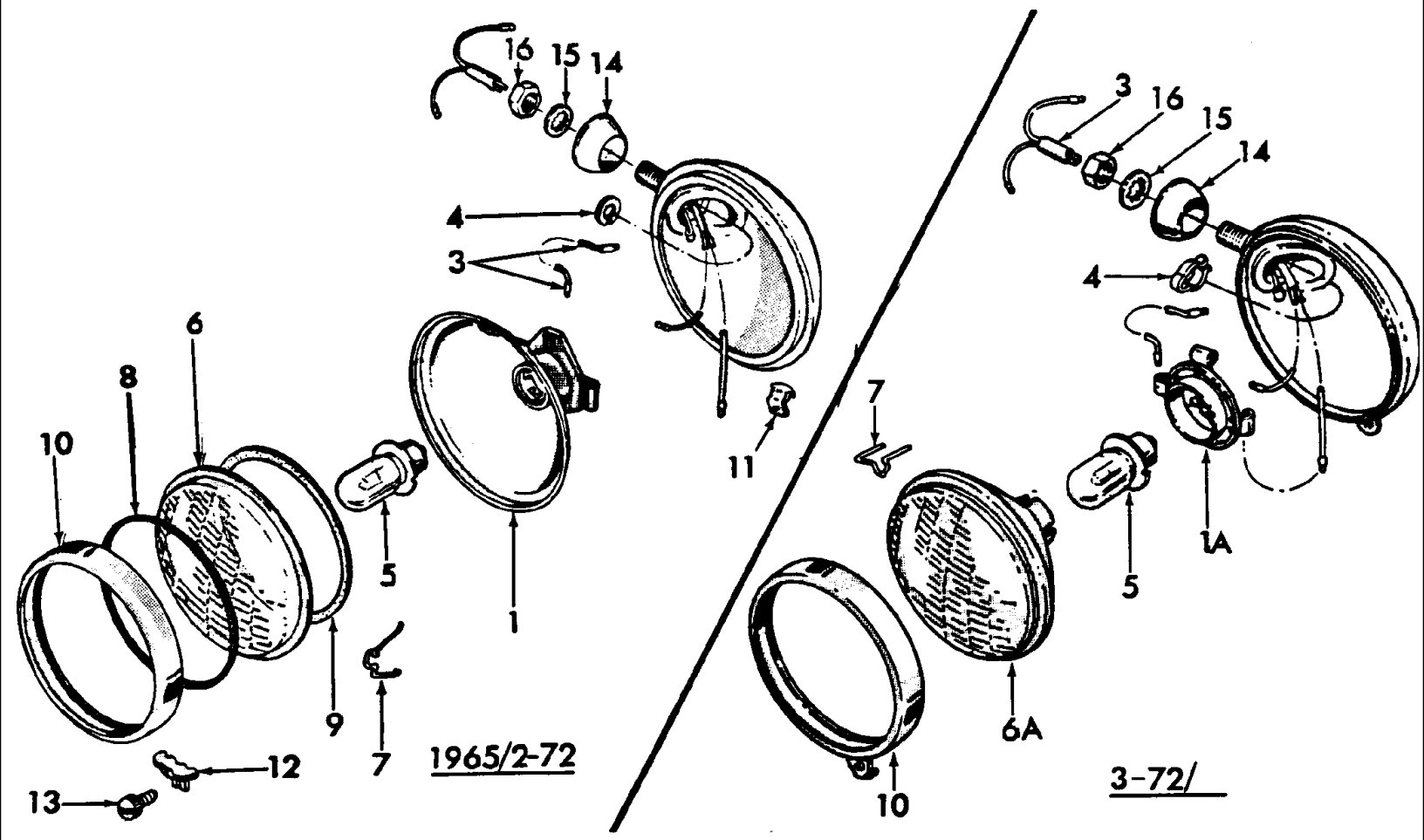

5000-SERIES 4 CYL TRACTOR (1/65-1/75)

11J01 SIDE MOUNTED HEADLAMPS (NH-E)

Ref	Part Number	Qty	Description
	E6NN13005GA	1	Headlamp Assy., R.H., Side Mounted, Replaces P/N C7NN-13005-L, Years: 01/01/1965-02/28/1972
	E6NN13006CA	1	Headlamp Assy., L.H., Side Mounted, Replaces P/N C7NN-13006-B, Years: 01/01/1965-02/28/1972
	D1NN13006D11Z	1	Headlamp Assy., L.H., Side Mounted, 3055, 3400, 3550, 4400, 4500, NH-E Only, Start Year: 03/01/1972
	D1NN13005C11Z	1	Headlamp, R.H., Side Mounted, 3055-3400-3550-4400-4500, NH-E Only, No Longer Serviced, Start Year: 03/01/1972
	E6NN13006CA		Headlamp, L.H., Side Mounted, White Bulb, 2100, 3100, 4100, 5100, 7100, Start Year: 03/01/1972
	E6NN13005GA		Headlamp, R.H., Side Mounted, White Bulb, 2100, 3100, 4100, 5100, 7100, Start Year: 03/01/1972
	E6NN13006CA		Headlamp Assy., L.H., Side Mounted, Yellow Bulb, 2100, 3100, 4100, 5100, 7100, Start Year: 10/01/1972
	E6NN13005GA		Headlamp Assy., R.H., Side Mounted, Yellow Bulb, 2100, 3100, 4100, 5100, 7100, Start Year: 10/01/1972
1	D2NN13N118A	2	Reflector & Contact Assy., Headlamp, Includes: Reflector & Contact Assy., No Longer Serviced, Years: 01/01/1965-02/28/1972
	D2NN13N119A	2	Contact Assy., No Longer Serviced (NHNA), Years: 01/01/1965-02/28/1972
1A	D2NN13N116A	2	Contact Assy., Start Year: 03/01/1972
3	C5NN13N850D	2	Wire Assy., Ground, Years: 01/01/1965-02/28/1972
3	D2NN13N850A	2	Wire Assy., Ground, No Longer Serviced (NH-E), Start Year: 03/01/1972
4	C5NN13N069A	2	Washer, Wire Assy. Retaining, Years: 01/01/1965-02/28/1972
4	D2NN13N081A	2	Clip, Wire Assy. Retaining, No Longer Serviced (NHNA), Start Year: 03/01/1972
5	C5NN13009A	2	Bulb, 12 Volt, White, Start Year: 01/01/1965
5	C5NN13009A	2	Bulb, 12 Volt, Yellow, 2100, 3100, 4100, 5100, 7100, Start Year: 10/01/1972
6	E1ADKN13060B	2	Lens, Years: 01/01/1965-02/28/1972
6A	D2NN13K005A	2	Lens & Reflector Assy., Start Year: 03/01/1972
7	E1ADKN13061	8	Retainer, Lens, Years: 01/01/1965-02/28/1972
7	D2NN13N117A	8	Retainer, Lens, Start Year: 03/01/1972
8	E04C13066	2	Gasket, Lens, Years: 01/01/1965-02/28/1972
9	E1ADKN13068	2	Gasket, Lens to Door, Years: 01/01/1965-02/28/1972
10	C5NN15513A	2	Door, Years: 01/01/1965-02/28/1972
10	D2NN13045A	2	Door Assy., Start Year: 03/01/1972
11	D2NN13N015A	2	Catch, Door, No Longer Serviced (NH-E), Years: 01/01/1965-02/28/1972
12	C5NN13A054A	2	Clip, Door, No Longer Serviced, Years: 01/01/1965-02/28/1972
13	D2NN13N018A	2	Screw, Door, No Longer Serviced (NH-E), Years: 01/01/1965-02/28/1972
14	C5NN13N012A	2	Pedestal, Years: 01/01/1965-02/28/1972
14	D2NN13N061A	2	Pedestal, No Longer Serviced (NH-E), Start Year: 03/01/1972
15	34910S	2	Washer, Lock, Int T, 9/16", Procure Locally, NHNA Only, No Longer Serviced, Years: 01/01/1965-02/28/1972
15	D2NN13N067A	2	Washer, Mounting, No Longer Serviced, Start Year: 03/01/1972
16	C5NN15N000A	2	Nut, Mounting, Years: 01/01/1965-02/28/1972
16	D2NN13N058A	2	Nut, Mounting, No Longer Serviced, Start Year: 03/01/1972
	D2NN13N118A	2	Reflector Assy., Lamp, No Longer Serviced, Years: 01/01/1965-02/28/1972
	D8NN13N104AA	2	Stiffener, External Headlamp, Except 3055-3400-3550, Start Year: 11/01/1968
	D5NN14197A	1	Clip, Wiring, External Headlamp, France, 4400-4500, Start Year: 11/01/1968
	D5NN14197A	AR	Clip, Wiring, External Headlamp, Except France & 4400-4500, Start Year: 01/01/1965

11J02 SIDE MOUNTED HEADLAMPS, MEXICO

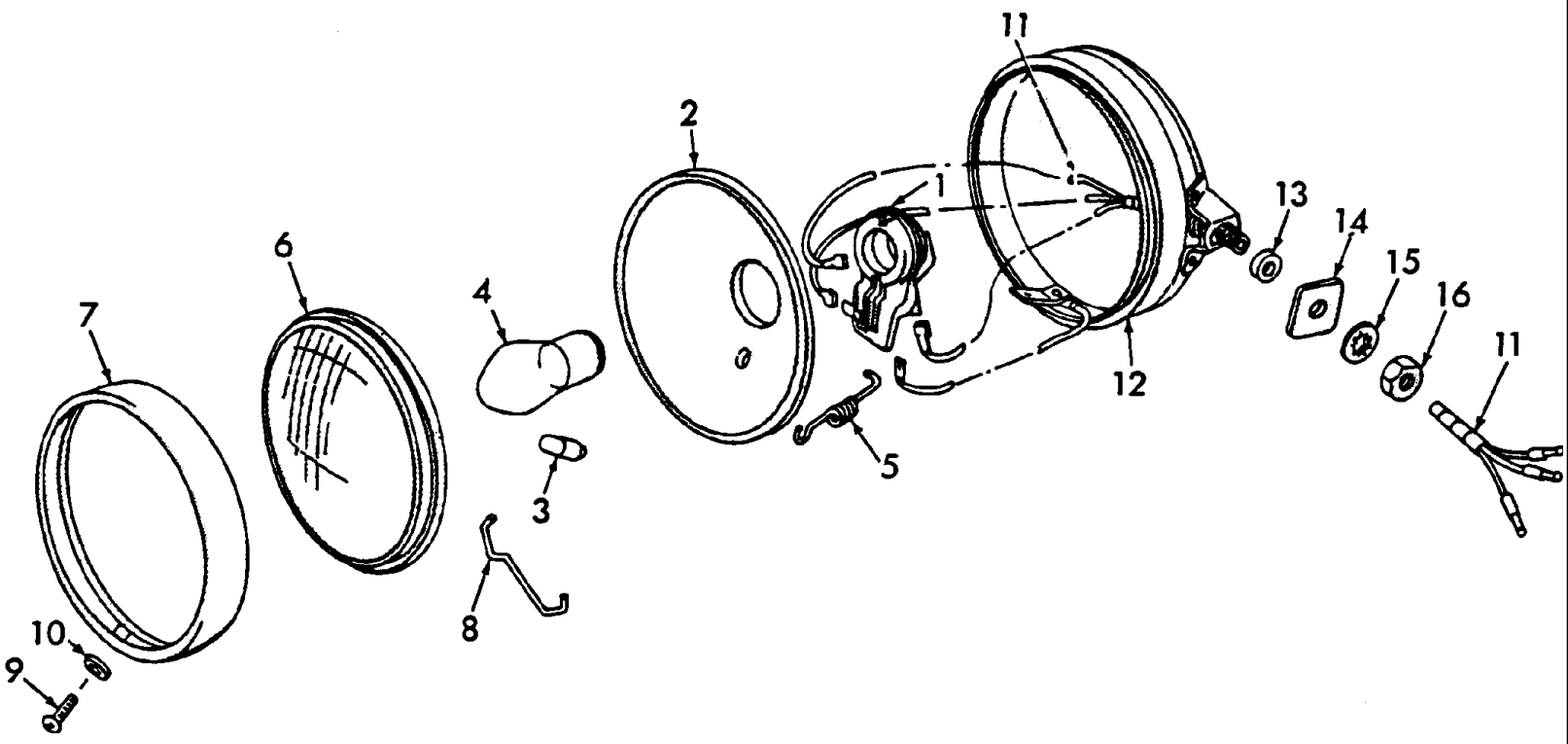

5000-SERIES 4 CYL TRACTOR (1/65-1/75)

11J02 SIDE MOUNTED HEADLAMPS, MEXICO

Ref	Part Number	Qty	Description
	70NY13005A	1	Headlamp Assy., RH, Side Mounted, NHNA Only, Start Year: 01/01/1968
	70NY13006A	1	Headlamp Assy., LH, Side Mounted, Includes: Ref. 1 thru 12, NHNA Only, Start Year: 01/01/1968
1	69NY13N004A	2	Bulb Holder Assy., NHNA Only, Start Year: 01/01/1968
2	NLS	2	Reflector {69NY13027A}, Start Year: 01/01/1968
3	NLS	2	Bulb Assy., 12 Volt, 4 Watt {69NY13007A}, Start Year: 01/01/1968
4	NLS	2	Bulb Assy., 12 Volt, 35 Watt {69NY13007B}, No Longer Serviced, Start Year: 01/01/1968
5	69NY13N093A	2	Spring, Reflector to Holder, NHNA Only, No Longer Serviced, Start Year: 01/01/1968
6	69NY13060A	2	Lens, NHNA Only, Start Year: 01/01/1968
7	69NY13052A	2	Door, NHNA Only, Start Year: 01/01/1968
8	69NY13N020A	10	Retainer, Door, NHNA Only, No Longer Serviced, Start Year: 01/01/1968
9	69NY13N249A	2	Screw, Door, NHNA Only, No Longer Serviced, Start Year: 01/01/1968
10	69NY13N009A	2	Washer, Screw, Door, NHNA Only, Start Year: 01/01/1968
11	69NY13A006A	1	Wire Assy., RH, 5.50" (139.70mm), NHNA Only, No Longer Serviced, Start Year: 01/01/1968
11	70NY13006A	1	Wire Assy., LH, 15.00" (381.00mm), NHNA Only, Start Year: 01/01/1968
12	69NY13N850A	2	Wire Assy. Ground, NHNA Only, No Longer Serviced, Start Year: 01/01/1968
13	69NY13N067A	2	Washer, Spherical, NHNA Only, Start Year: 01/01/1968
14	NLS	2	Stiffener, External {69NY13N104A}, Start Year: 01/01/1968
15	20355	2	Washer, Lock, Int T, 1/2", Start Year: 01/01/1968
16	69NY13N058A	2	Nut, Mounting, NHNA Only, Start Year: 01/01/1968

11K01 REAR LAMPS & WIRING, MEXICO

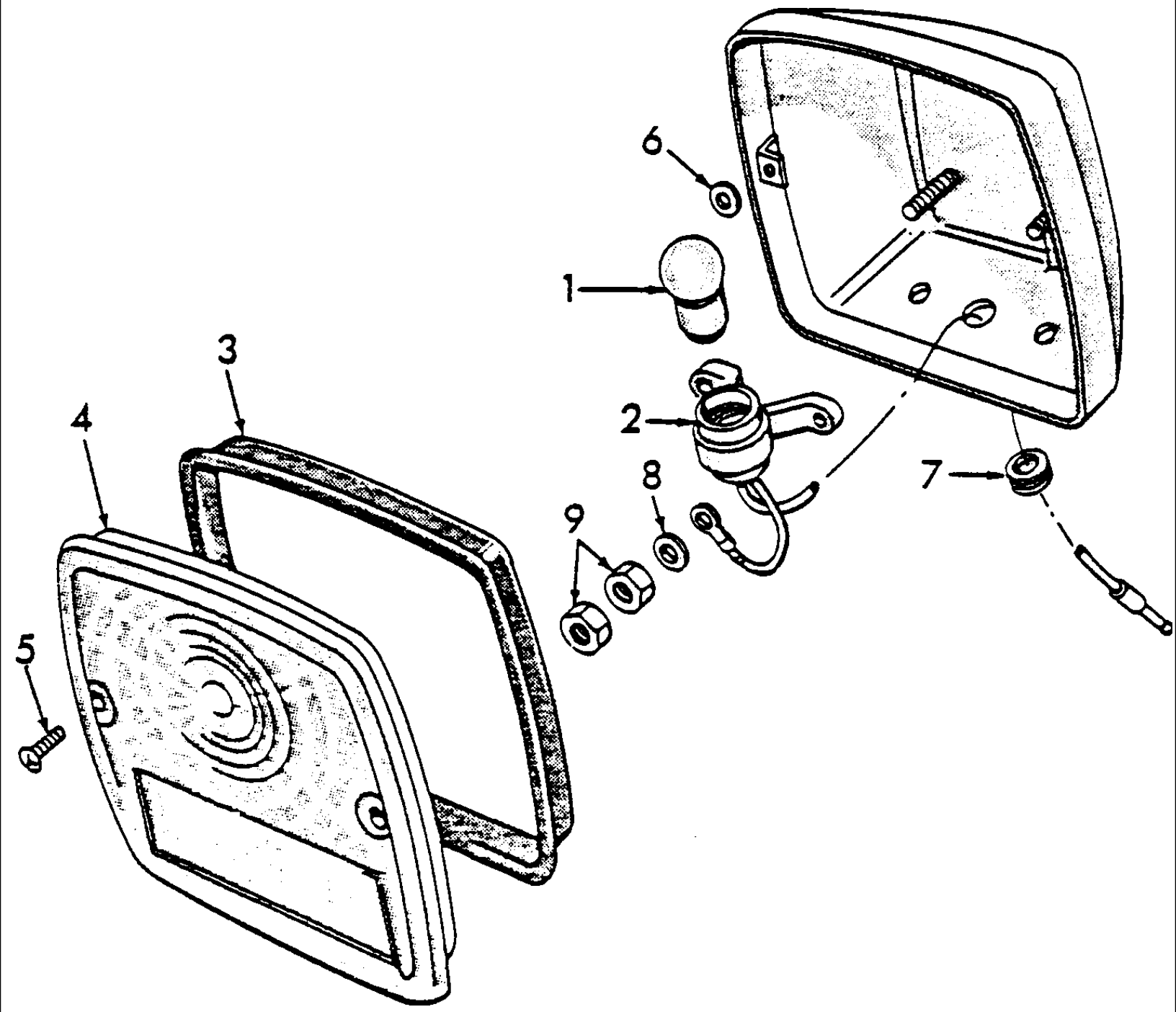

5000-SERIES 4 CYL TRACTOR (1/65-1/75)

11K01 REAR LAMPS & WIRING, MEXICO

Ref	Part Number	Qty	Description
	NLS	1	Lamp Assy., Rear, RH {72NY13404A}, Start Year: 01/01/1968
	NLS	1	Lamp Assy., Rear, LH, Includes: Ref. 1 thru 9 {72NY13405A}, Start Year: 01/01/1968
1	E2NN13465AA	2	Bulb, 12 Volt, 6 Watt, Start Year: 01/01/1968
2	NLS	1	Bulb Holder Assy., RH {72NY13N411A}, Start Year: 01/01/1968
2	NLS	1	Bulb Holder Assy., LH {72NY13N099A}, Start Year: 01/01/1968
3	70NY13461A	2	Gasket, Lens, NHNA Only, Start Year: 01/01/1968
4	NLS	2	Lens Assy. {72NY13445A}, Start Year: 01/01/1968
5	72NY13N416A	4	Screw, Lens to Body, NHNA Only, No Longer Serviced, Start Year: 01/01/1968
6	69NY13N009A	4	Washer, Screw, Lens, NHNA Only, Start Year: 01/01/1968
7	69NY13091A	2	Grommet, NHNA Only, Start Year: 01/01/1968
8	87361	2	Washer, SAE, 1/4", Start Year: 01/01/1968
9	34081S36	4	Nut, 1/4"-28, Start Year: 01/01/1968
	529070	1	Strap, Safety Strap, Start Year: 01/01/1968

12A01 INSTRUMENT CLUSTER & RELATED PARTS

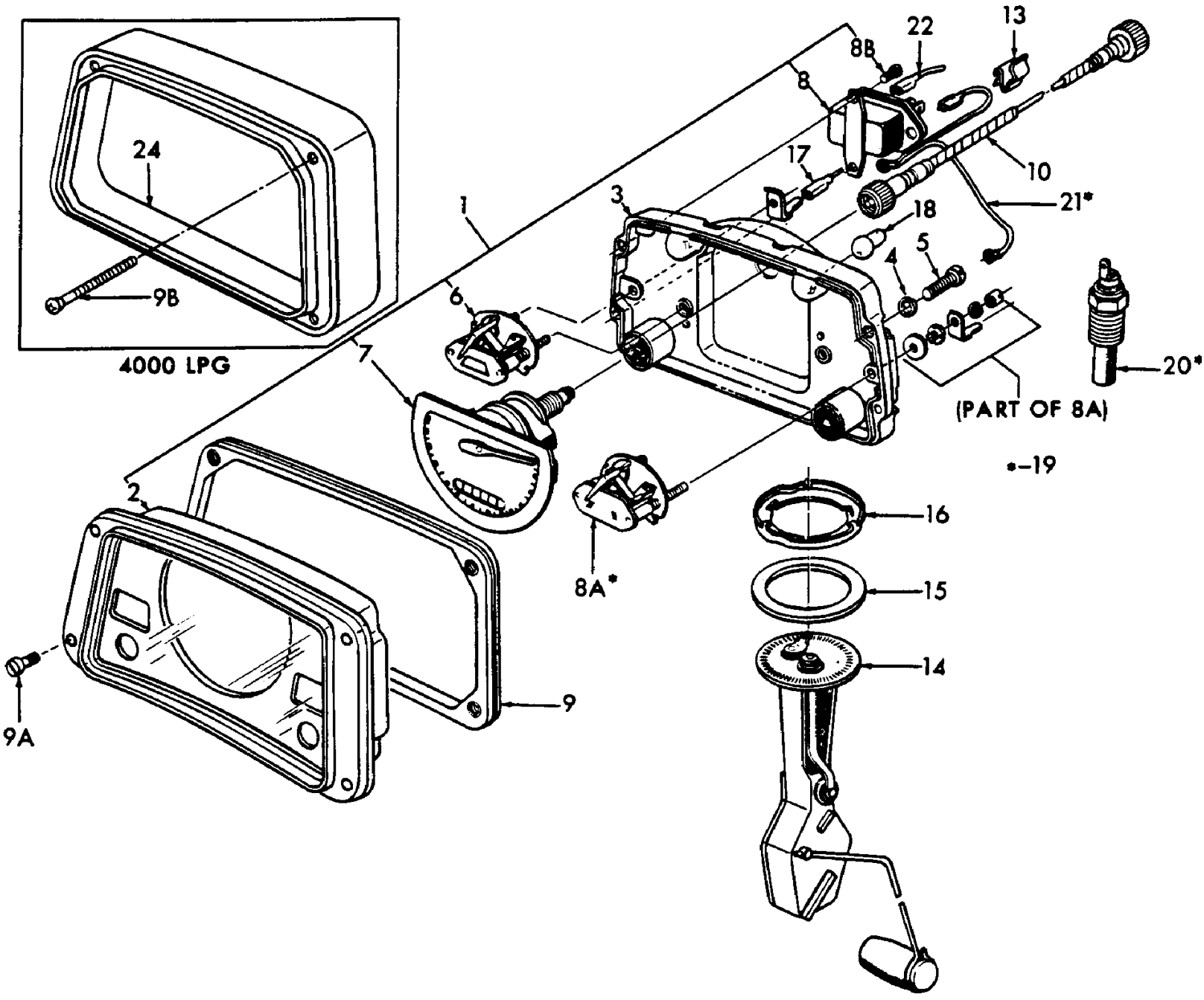

5000-SERIES 4 CYL TRACTOR (1/65-1/75)

12A01 INSTRUMENT CLUSTER & RELATED PARTS

Ref	Part Number	Qty	Description
1	EHPN10849A	1	Instrument Cluster Assy., W/or L/Temperature Indicator, Replaces C5NN10849M, Includes: Ref. 2 thru 8B & Ref. 20, Proofmeter For This Replacement Cluster is N.S.S., Please See Item #14, New Fuel Sender May Need to be Ordered as Well, Start Year: 01/01/1965
2	EHPN10849A	1	Bezel Assy., W/Temperature Gauge, Replaces C5NN10A883E & D, Start Year: 01/01/1965
3	C5NN10N846A	1	Instrument Case Assy., Rear, No Longer Serviced, Start Year: 01/01/1965
4	87812	4	Washer, Lock, #8, Years: 01/01/1965-03/31/1968
5	C7NN10N863A	4	Screw, Case to Bezel Assy., #8-32 x 5/8", Start Year: 01/01/1965
6	86548587	1	Gauge Assy, Fuel, Start Year: 01/01/1965
7	C7NN17360B	1	Proofmeter Assy., Not Used With Cluster Assy EHPN10849A(83958741)., Start Year: 01/01/1965
8	C7NN10N507A	1	Stabilizer, Voltage, Replaces C5NN10N507A, When replacing C5NN-10N507-A, also use (1) C5NN-14N341-B(81817003), Start Year: 01/01/1965
8A	86548586	1	Temperature Indicator Assy., Start Year: 01/01/1965
8B	C7NN10N864A	2	Screw, Thread Forming, #8-32 x 1/4", Start Year: 01/01/1965
9	C5NN10A949C	1	Gasket, Instrument Cluster, When replacing gasket with insert, also order 4 E6NN10N849AA(83956202) Nut and 4 53050S36(81819312) Screw, Start Year: 01/01/1965
9A	50419S36	4	Screw, Oval Hd, #10-32 x 3/4", Used L/C5NN10N849A, Start Year: 01/01/1965
9A	53050S36	4	Screw, Self-Tapping, Oval Hd, #10-12 x 7/8", Used W/C5NN10N849A, Start Year: 01/01/1967
	E6NN10N849AA	4	Nut, Instrument Cluster Retaining, Use W/Screw 53050S36, Start Year: 01/01/1967
	E6NN10N849BA	4	Nut, 4200 Row Crop Instrument Cluster Retaining, Use W/Screw 53050S36, Start Year: 01/01/1967
9B	381587S36	4	Screw, Oval Hd., #10-32 x 2.25, 4000, NHNA Only, No Longer Serviced, Years: 01/01/1966-12/31/1968
10	C7NN17365A	1	Proofmeter Cable Assy., 39-3/4" (100.97cm) Lg., 2000-3500-4000 Diesel, Start Year: 01/01/1965
10	C7NN17365A	1	Proofmeter Cable Assy., 39-3/4" (100.97cm), All 3000, Start Year: 03/01/1967
10	D1NN17365A	1	Proofmeter Cable Assy. W/Alternator, 7100-5100, Mexico, NHNA Only, Start Year: 01/01/1971
10	82847520	1	Cable, Proofmeter, 47-7/16" (120.49cm), 2000-3500-4000 Gas, 5000 Gas & Diesel. Replaces P/N C7NN17364B, If 49" Cable Needed for 5100, Use D9NN-17365-AB(83933021), Start Year: 01/01/1965
10	82847520	1	Cable, Proofmeter, 47-7/16" (120.49cm), All 3000, Years: 01/01/1965-02/28/1967
10	82847520	1	Cable, Proofmeter, 47-7/16" (120.49cm), All 5100 Gas & Diesel, If 49" Cable Needed for 5100, Use D9NN-17365-AB(83933021), Start Year: 01/01/1965
10	82847520	1	Cable, Proofmeter, 47-7/16" (120.49cm), 7100 U.K.- Antwerp, Includes: Cable & the Following, Start Year: 01/01/1971
	D9NN17366AB	1	Shaft Assy., Cable, Use W/ D9NN17365AB, Start Year: 01/01/1965
10	D1NN17365B	1	Cable Assy., Proofmeter, 53" (134.62cm), 7200, Start Year: 01/01/1971
10	D4NN17365B	1	Cable Assy., Proofmeter, 54 3/4" (139.07cm), 5200, Start Year: 01/01/1967
	C5NN17366E	1	Shaft Assy., 54/3/4" (139.07cm), 5200, Start Year: 01/01/1967
	C5NN17N364J	1	Cable, Proofmeter, 53-1/2" (135.89cm), 5200, No Longer Serviced, Start Year: 01/01/1967
	D1NN17365B	1	Shaft Assy., 53.0" (134.62cm), 7200, No Longer Serviced, Start Year: 01/01/1971
	C5NN17366E	1	Shaft Assy., 54-3/4" (139.07cm), 5200, Start Year: 01/01/1967
	C5NN17N364J	1	Cable, Proofmeter, 53-1/2" (135.89cm), 5200, No Longer Serviced, Start Year: 01/01/1967
13	C5NN14N204A	1	Clip, Edge, Cable to Fuel Tank, 3/8" Dia., No Longer Serviced, Years: 01/01/1965-03/31/1968
	263117	AR	Cable Tie, 3/32" x 11-1/2" L, Cable to Main Harness, Start Year: 01/01/1965
13	380896S	1	Clip, Cable to Fuel Tank, U.S., Diesel, 2000-3000-4000, NHNA Only, Start Year: 01/01/1971

5000-SERIES 4 CYL TRACTOR (1/65-1/75)

12A01 INSTRUMENT CLUSTER & RELATED PARTS

Ref	Part Number	Qty	Description
13	352707S36	1	Clip, Cable to Support, U.S., 5100-7100, NHNA Only, No Longer Serviced, Start Year: 01/01/1971
13	385135S32	1	Clip, Proofmeter Cable, 7200, NHNA Only, No Longer Serviced, Start Year: 01/01/1971
14	529070	1	Strap, Securing, 5/16" x 14-1/2", Proofmeter Cable to Oil Filter Tuber, U.K., Antwerp, Start Year: 07/01/197
14	E3NN9A316CA	1	Fuel Tank Sender Float Assy., 3 Cyl. 5-Screw-type, Not Illustrated, Start Year: 01/01/1967
14	E3NN9A316BA	1	Float Assy., Main Tank, 4 Cyl. 5-Screw-type, Not Illustrated, Start Year: 01/01/1967
	E3NN13N850AA	1	Wire, Fuel Tank Sender Float Assy, 3 Cyl. & 4 Cyl., Start Year: 01/01/1967
14	D8NN9A316KA	1	Fuel Tank Sender Float Assy., Except 5000, Included W/ EHPN10849A(83958741)., Start Year: 01/01/1965
14	D8NN9A316JA	1	Fuel Tank Sender Float Assy., 5100-7100, Start Year: 01/01/1965
14	D8NN9A316HB	1	Fuel Tank Sender Float Assy., 5200-7200, Start Year: 01/01/1967
15	E2NN9276AA	1	Gasket, Fuel Tank, Start Year: 01/01/1965
16	C5NN9N283A	1	Ring, Fuel Gauge Tank Unit Locking, Start Year: 01/01/1965
17	C5NN14N341B	1	Voltage Stabilizer to Fuel & Temperature Gauge Wire Assy., Replaces C5NN14N341A, Start Year: 01/01/1965
17	C5NN14N340B	1	Voltage Stabilizer to Fuel Gauge Wire Assy., L/Temperature Gauge, U.K.-Antwerp, Replaces P/N C5NN-14N340-A, NH-E Only, No Longer Serviced, Years: 01/01/1965-03/31/1968
18	81715778	1	Oil Pressure Warning Lamp Bulb Assy., 12 Volt, 2.2 Watt, Single Contact, Start Year: 01/01/1965
18	81715778	2	Generator Warning Lamp Bulb Assy., W/Lights Cluster, 12 Volt, 2.2 Watt, Single Contact, Start Year: 01/01/1965
18	214045	AR	Lamp Bulb Assy., 2 CP, 12 Volt, Start Year: 01/01/1965
19	C5NN18287C	1	Kit, Temperature Indicator, Accessory, U.K., Replaces C5NN18287A, Includes: Ref. 8A thru 24, NH-E Only No Longer Serviced, Years: 01/01/1965-03/31/1968
20	EHPN10884A	1	Temperature Indicator Assy., Included W/ EHPN10849A(83958741)., No Longer Serviced (NH-E), Start Year: 01/01/1965
20	C4AH10884A	1	Temperature Indicator Sender Assy., Years: 01/01/1965-03/31/1968
21	C5NN14N341B	1	Stabilizer to Fuel & Temperature Gauge Wire Assy., U.K.-Antwerp, Years: 01/01/1965-03/31/1968
22	C5NN10N887A	1	Stabilizer to Temperature Indicator Wire Assy., U.K.-Antwerp, NH-E Only, No Longer Serviced, Years: 01/01/1965-12/31/1967
24	C5NN94044N00A	1	Spacer, Instrument Panel, 4000, NHNA Only, No Longer Serviced, Years: 01/01/1966-12/31/1968

13A01 STANDARD SEAT & RELATED PARTS (NHNA)

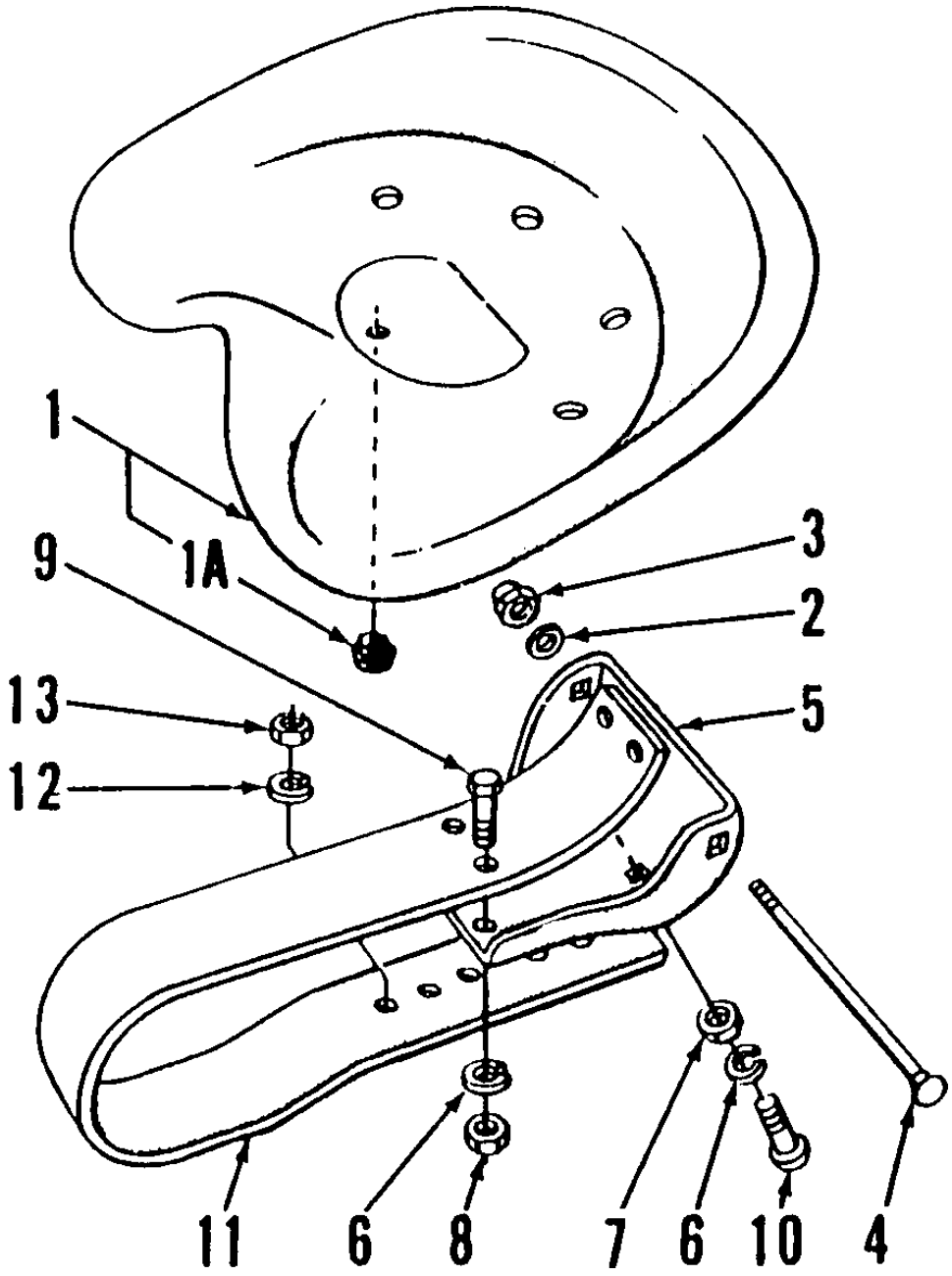

5000-SERIES 4 CYL TRACTOR (1/65-1/75)

13A01 STANDARD SEAT & RELATED PARTS (NHNA)

Ref	Part Number	Qty	Description
1	C5NN400AE	1	Seat Pan Assy., Drivers, Includes: Pan & Ref. 1A, Start Year: 01/01/1965
1A	957E434	1	Bumper, Seat to Spring, No Longer Serviced, Start Year: 01/01/1965
2	80702	AR	Washer, 3/8"
3	34420S7	AR	Nut, Lock, 3/8"-24
4	352664S36	1	Pin, Hinge, 3/8"-24 x 7-7/16", Start Year: 01/01/1965
5	86531095	1	Hinge, Drivers Seat Female, NHNA Only, Start Year: 01/01/1965
6	80681	4	Washer, Lock, 5/16", Start Year: 01/01/1965
7	86629539	2	Nut, G5, 5/16"-24, Start Year: 01/01/1965
8	87307	2	Nut, Jam, G2, 5/16"-24, Start Year: 01/01/1965
9	86977738	2	Screw, Cap, HH, G5, 5/16"-24 x 7/8", Start Year: 01/01/1965
10	350476S36	2	Bolt, Carriage, 5/16"-24 x .88, Start Year: 01/01/1965
11	NCA404B	1	Spring, Drivers Seat, Start Year: 01/01/1965
12	81547	2	Washer, Lock, 7/16", Start Year: 01/01/1965
13	50456	2	Nut, G5, 7/16"-20, Start Year: 01/01/1965

13A02 STANDARD SEAT & RELATED PARTS, U.K.

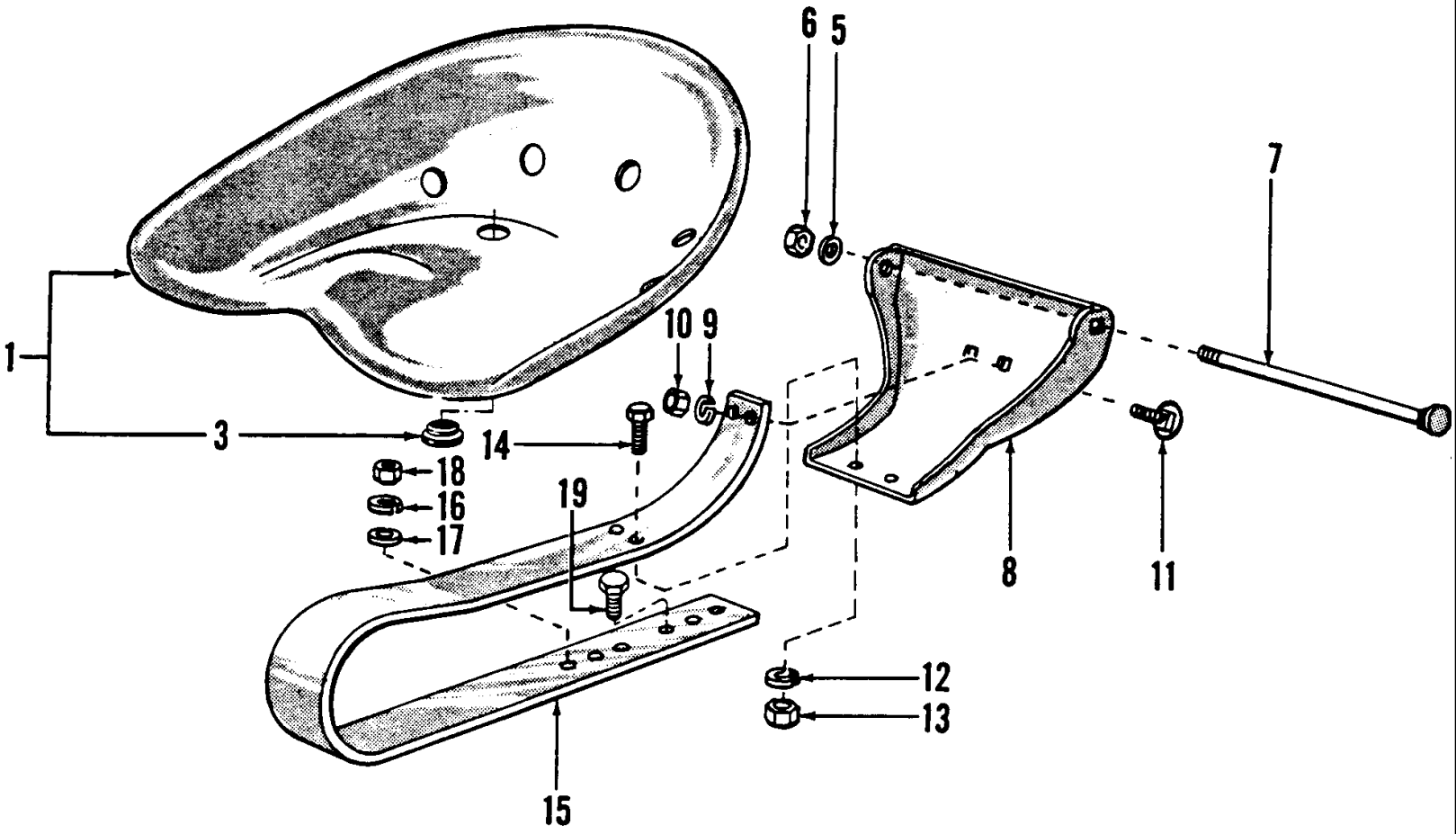

5000-SERIES 4 CYL TRACTOR (1/65-1/75)

13A02 STANDARD SEAT & RELATED PARTS, U.K.

Ref	Part Number	Qty	Description
1	C5NN400AE	1	Seat Pan Assy., Drivers, Replaces P/N 957E-400-A Includes: Pan, Hinge & Ref. 3, Start Year: 01/01/1965
3	957E434	1	Bumper, Drivers Seat, No Longer Serviced, Start Year: 01/01/1965
	957E433	1	Catch, Drivers Seat Hold Down, NH-E Only, No Longer Serviced, Start Year: 01/01/1965
5	80702	1	Washer, 3/8", Start Year: 01/01/1965
6	34420S7	1	Nut, Lock, 3/8"-24, Start Year: 01/01/1965
7	352664S36	1	Pin, Drivers Seat Hinge, 3/8"-24 x 7.46, Replaces P/N C5NN-A431-A, Start Year: 01/01/1965
8	C5NNA433A	1	Bracket, Drivers Seat Hinge, Replaces P/N 957E-436-A, Start Year: 01/01/1965
9	80680	1	Washer, Lock, 3/8", Start Year: 01/01/1965
10	9628503	1	Nut, G5, 3/8"-16, Start Year: 01/01/1965
11	9849938	2	Bolt, Carriage, Short Neck, G5, 3/8"-16 x 7/8", Start Year: 01/01/1965
12	80680	2	Washer, Lock, 3/8", Start Year: 01/01/1965
13	86509310	2	Nut, G5, 3/8"-24, Start Year: 01/01/1965
14	C5NNN448A	2	Bolt, Special, 3/8"-24 x .87, Start Year: 01/01/1965
15	NCA404B	1	Spring, Drivers Seat, Start Year: 01/01/1965
16	81547	1	Washer, Lock, 7/16", Start Year: 01/01/1965
17	81541	1	Washer, 7/16", Start Year: 01/01/1965
18	50456	1	Nut, G5, 7/16"-20, Start Year: 01/01/1965
19	9706729	1	Screw, Cap, HH, G5, 7/16"-14 x 1", Start Year: 01/01/1965
	FT070A405B	1	Seat Cover Assy., Slip-On, Use on Pans W/O Drain Holes, Start Year: 01/01/1965
	FT070A405A	1	Seat Cover Assy., Slip-On, Use on Pans W/Drain Holes, No Longer Serviced, Start Year: 01/01/1965

13B01 DELUXE SEAT (65/2-69)

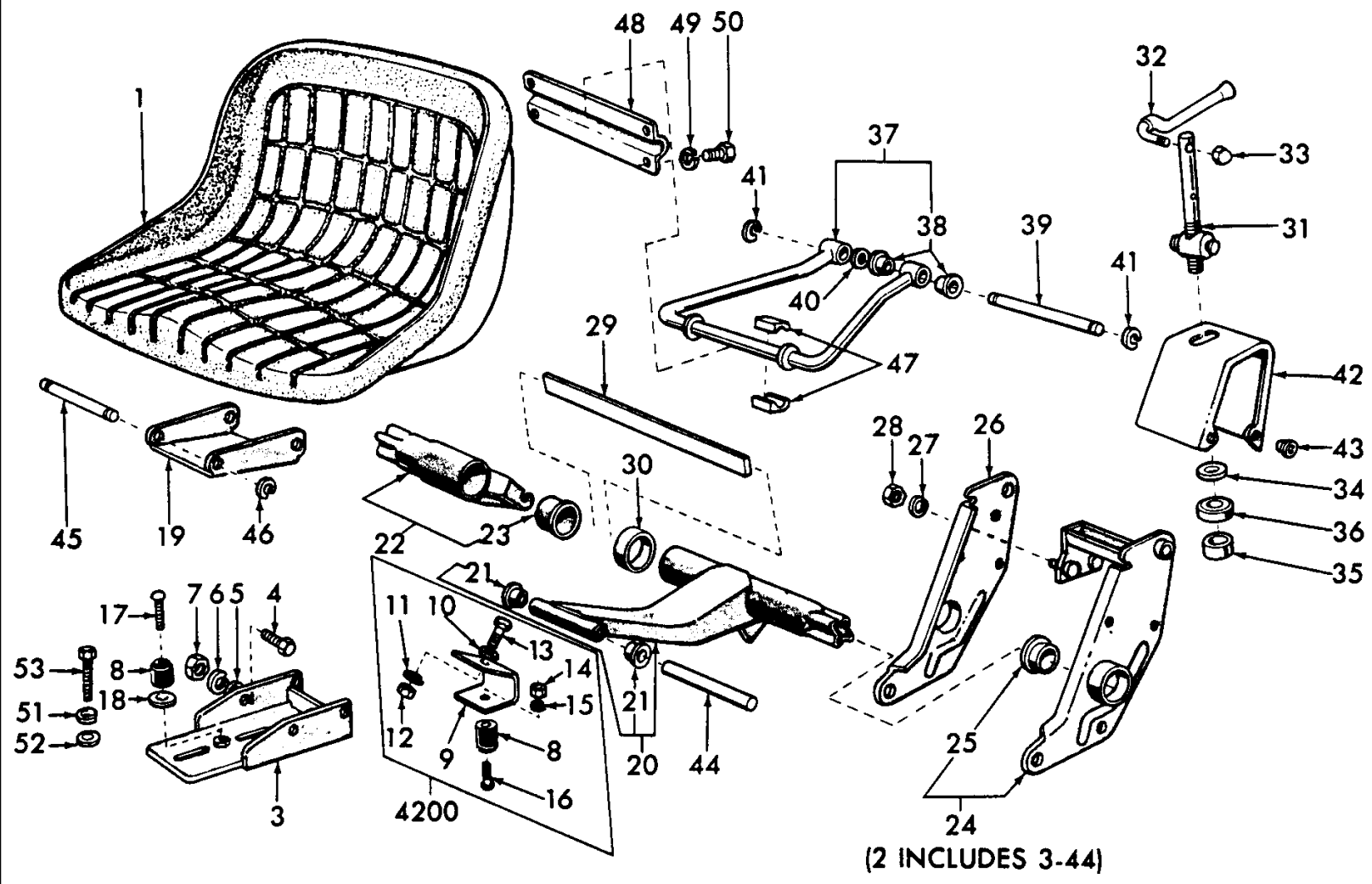

5000-SERIES 4 CYL TRACTOR (1/65-1/75)

13B01 DELUXE SEAT (65/2-69)

Ref	Part Number	Qty	Description
	NLS	1	Seat Assy., Complete, Includes: Ref. 1 thru 50, If Complete Seat Assy. is required order Seat Assy. shown on Fig. 13B3, Years: 01/01/1965-02/28/1969
1	E2NNA405AA99M	1	Pan & Cushion Assy., Drive Seat, Black, U.S., Years: 01/01/1965-02/28/1969
1	E2NNA405AA99M	1	Pan & Cushion Assy., Drive Seat, Blue, NH-E, Years: 01/01/1965-02/28/1969
2	C7NN420R	1	Support Assy., Seat, Replaces C5NN420U, 2000-3000- 4110, NHNA Only, No Longer Serviced, Years: 01/01/1965-02/28/1969
2	NLS	1	Support Assy., Seat, Replaces C5NN420V, 4100 {C7NN420S}, Years: 01/01/1965-02/28/1969
2	E7NN400GA	1	Support Assy., Seat, 4200-5200, Years: 01/01/1965-02/28/1969
2	C7NN420N	1	Support Assy., Seat, Replaces C5NN420T, 5100, Includes: Ref. 3 thru 44, NHNA Only, No Longer Serviced, Years: 01/01/1965-02/28/1969
3	C5NN421G	1	Base Assy., Seat, Replaces C5NN421C, 2000-3000-4100- 4110, No Longer Serviced, Years: 01/01/1965-02/28/1969
3	C5NN421F	1	Base Assy., Seat, 4200-5200, NHNA Only, No Longer Serviced, Years: 01/01/1966-02/28/1969
3	C7NN421C	1	Base Assy., Driver Seat, 5100, No Longer Serviced, Years: 01/01/1965-02/28/1969
5	304666S36	4	Screw, Cap, HH, G5, 3/8"-16 x 7/8", Years: 01/01/1965-02/28/1969
5	80702	4	Washer, 3/8", Years: 01/01/1965-02/28/1969
6	80680	4	Washer, Lock, 3/8", Years: 01/01/1965-02/28/1969
7	9628503	4	Nut, G5, 3/8"-16, Drivers Seat Base RH & LH Support, Years: 01/01/1965-02/28/1969
8	C5NNN409A	1	Bumper, Seat Suspension, No Longer Serviced, Years: 01/01/1965-02/28/1969
9	C5NNA434A	1	Bracket, Seat Bumper, 4200-5200, NHNA Only, No Longer Serviced, Years: 01/01/1966-02/28/1969
10	80702	1	Washer, 3/8", 4200-5200, Years: 01/01/1966-02/28/1969
11	80680	1	Washer, Lock, 3/8", 4200-5200, Years: 01/01/1966-02/28/1969
12	9628503	1	Nut, G5, 3/8"-16, 4200-5200, Years: 01/01/1966-02/28/1969
13	C5NNA436A	1	Bolt, HH, 3/8"-16 x 1.0, 4200-5200, NHNA Only, No Longer Serviced, Years: 01/01/1966-02/28/1969
14	34440S8	1	Nut, Lock, Prevailing Torque, G5, 1/4"-20, 4200-5200, No Longer Serviced, Years: 01/01/1966-02/28/1969
15	80682	1	Washer, Lock, 1/4", 4200-5200, Years: 01/01/1966-02/28/1969
16	86511894	1	Screw, Truss Hd, 1/4"-20 x 3/4", 4200-5200, Years: 01/01/1966-02/28/1969
17	86511894	1	Screw, Truss Hd, 1/4"-20 x 3/4", Except 4200-5200, Years: 01/01/1965-02/28/1969
18	C5NNN446B	1	Washer, Bumper to Support Base, Except 4200-5200, No Longer Serviced, Years: 01/01/1965-02/28/1969
19	C5NN436B	1	Hinge, Seat Suspension, U.K.-Antwerp, Replaces C5NN436A, No Longer Serviced (NH-E), Years: 01/01/1965-02/28/1969
19	C9NN436A	1	Hinge, Seat Suspension, U.S., NHNA Only, No Longer Serviced, Years: 01/01/1965-02/28/1969
20	C7NNN403C	1	Lever Assy., Seat Suspension, Except 4200-5100-5200, No Longer Serviced, Years: 01/01/1965-02/28/1969
20	C7NNN403B	1	Lever Assy., Seat Suspension, Replaces C5NNN403A, 4200-5100-5200, Includes: Lever & Ref. 21, No Longer Serviced, Years: 01/01/1965-02/28/1969
21	C7NNN435A	2	Bearing, Seat Suspension Lever, U.K.-Antwerp, Years: 01/01/1965-02/28/1969
21	C5NNN408A	2	Bearing, Seat Suspension Lever, U.S., Years: 01/01/1965-02/28/1969
22	C5NNN411A	1	Housing Assy., Seat Torsion Spring, RH, Includes: Housing & Ref. 23, No Longer Serviced, Years: 01/01/1965-02/28/1969
23	C7NNN415A	1	Bearing, Seat Support Pivot, Years: 01/01/1965-02/28/1969

5000-SERIES 4 CYL TRACTOR (1/65-1/75)

13B01 DELUXE SEAT (65/2-69)

Ref	Part Number	Qty	Description
24	C5NNN417B	1	Plate Assy., Seat Support, LH, U.K.-Antwerp, Includes: Plate & Ref. 25, No Longer Serviced, Years: 01/01/1965-02/28/1969
24	NLS	1	Plate Assy., Seat Support, LH, U.S., Includes: Plate & Ref. 25 {C5NNN417D}, Years: 01/01/1965-02/28/1969
25	C7NNN415A	1	Bearing, Seat Support Pivot, Years: 01/01/1965-02/28/1969
26	C5NNN422B	1	Plate, Drivers Seat Support, RH, U.K.-Antwerp, NH-E Only, No Longer Serviced, Years: 01/01/1965-02/28/1969
27	80681	2	Washer, Lock, 5/16", Plate, Years: 01/01/1965-02/28/1969
28	9635082	2	Nut, G5, 5/16"-18, RH Plate to LH Support Plate Assy., Years: 01/01/1965-02/28/1969
29	C5NNN410A	3	Spring, Seat Torsion, Years: 01/01/1965-02/28/1969
30	C5NNN416A	1	Spacer, Seat Suspension, No Longer Serviced, Years: 01/01/1965-02/28/1969
31	C5NN462C	1	Adjuster Assy., Seat Suspension, No Longer Serviced, Years: 01/01/1965-02/28/1969
32	C5NNN449A	1	Handle Assy., Seat Adjuster, U.S., No Longer Serviced, Years: 01/01/1965-02/28/1969
33	34163S43	1	Nut, Crown, 5/16"-18, No Longer Serviced, Years: 01/01/1965-02/28/1969
34	C5NNN425A	2	Washer, Seat Suspension Adjuster Thrust, No Longer Serviced, Years: 01/01/1965-02/28/1969
35	C5NNN451A	1	Spacer, Seat Suspension, No Longer Serviced, Years: 01/01/1965-02/28/1969
36	C5NNN426A	1	Bearing Assy., Ball, Seat Adjuster Thrust, No Longer Serviced, Years: 01/01/1965-02/28/1969
37	C5NNN431A	1	Stabilizer Assy., Seat Suspension, Includes: Stabilizer & Ref. 38, No Longer Serviced, Years: 01/01/1965-02/28/1969
38	C7NNN435A	4	Bearing, Seat Suspension Stabilizer Shaft, Replaces C5NNN435A, Years: 01/01/1965-02/28/1969
39	C5NNN436A	1	Shaft, Seat Suspension Stabilizer, Years: 01/01/1965-02/28/1969
40	C5NNN437A	2	Washer, Seat Suspension Stabilizer Shaft, No Longer Serviced, Years: 01/01/1965-02/28/1969
41	9635806	2	Ring, Snap, Ext, .500", Years: 01/01/1965-02/28/1969
42	C5NNN438B	1	Shield, Seat Suspension, No Longer Serviced, Years: 01/01/1965-02/28/1969
43	C5NNN462A	4	Rivet, Seat Suspension Shield, Years: 01/01/1965-02/28/1969
44	C5NNN429A	1	Shaft, Suspension Hinge, to Seat Pan, No Longer Serviced, Years: 01/01/1965-02/28/1969
45	C5NNN441A	1	Pin, Drivers Seat Suspension Hinge, Years: 01/01/1965-02/28/1969
46	9636620	2	Ring, Snap, Ext, .312", Years: 01/01/1965-02/28/1969
47	C5NNN439A	4	Bearing, Drivers Seat Suspension Stabilizer, Years: 01/01/1965-02/28/1969
48	82005040	1	Retainer, Drivers Seat Suspension Stabilizer, Years: 01/01/1965-02/28/1969
49	80681	4	Washer, Lock, 5/16", Years: 01/01/1965-02/28/1969
50	304626S36	4	Screw, Cap, HH, G5, 5/16"-18 x 1/2", Retainer to Pan & Cushion Assy., Years: 01/01/1965-02/28/1969
51	81547	2	Washer, Lock, 7/16", Years: 01/01/1965-02/28/1969
52	356420S8	2	Washer, Flat, 7/16", Except 4200-5200, Years: 01/01/1965-02/28/1969
52	377184S36	2	Washer, Flat, .43 I.D. x .90 O.D. x .12 Thick, 4200-5200, Years: 01/01/1966-02/28/1969
53	9706729	2	Screw, Cap, HH, G5, 7/16"-14 x 1", Except 4200-5200, Years: 01/01/1965-02/28/1969
53	9627887	2	Screw, Cap, HH, G5, 7/16"-14 x 1-1/4", 4200-5200, Years: 01/01/1966-02/28/1969
	FT070A405A	1	Seat Cover Assy., Slip On, Use W/Pans having Drain Holes, Service Only, No Longer Serviced, Years: 01/01/1966-02/28/1969

13B02 DELUXE SEAT ASSEMBLY (3-69/1-70)

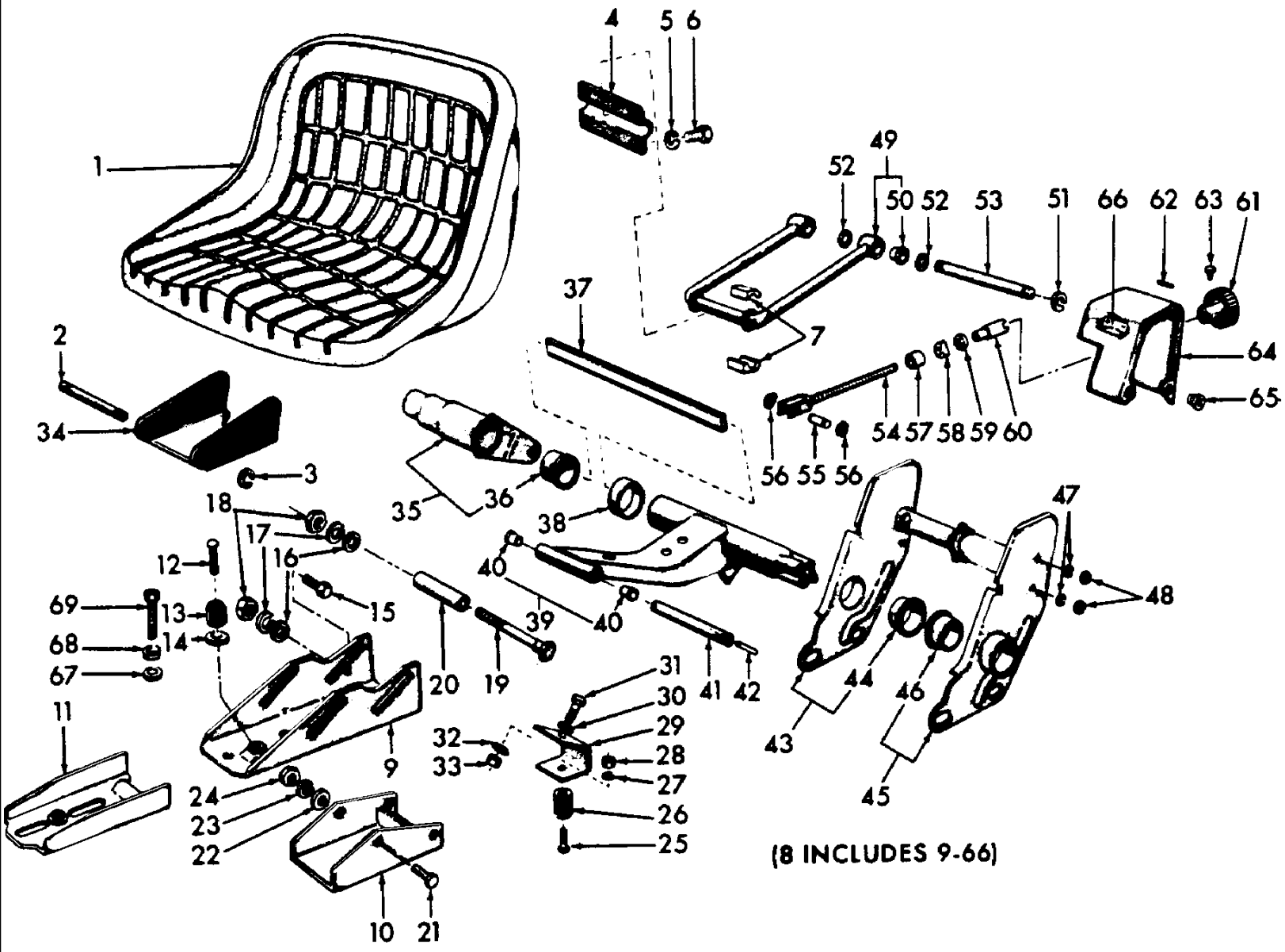

5000-SERIES 4 CYL TRACTOR (1/65-1/75)

13B02 DELUXE SEAT ASSEMBLY (3-69/1-70)

Ref	Part Number	Qty	Description
	NLS	1	Seat Assy., Complete, L/Seat Belt Bracket, 2000-3000-4110, Use Seat Assy. shown in Fig. 13B3, Years: 03/01/1969-01/31/1970
	NLS	1	Seat Assy., Complete, L/Seat Belt Bracket, 4100-4400, Use Seat Assy. shown in Fig. 13B3, Years: 03/01/1969-01/31/1970
	NLS	1	Seat Assy., Complete, L/Seat Belt Bracket, 5100, Use Seat Assy. shown in Fig. 13B3, Years: 03/01/1969-01/31/1970
	NLS	1	Seat Assy., Complete, W/Seat Belt Bracket, 2100-3100-4100, Use Seat Assy. shown in Fig. 13B3, Years: 03/01/1969-01/31/1970
	NLS	1	Seat Assy., Complete, W/Seat Belt Bracket, 5100, Includes: Ref. 1 thru 66 {C9NN400C}, Years: 03/01/1969-01/31/1970
1	C7NNA405B	1	Pan & Cushion Assy., Years: 03/01/1969-01/31/1970
2	C5NNN441A	1	Pin, Seat Suspension Hinge, L/Seat Belt, Years: 03/01/1969-01/31/1970
2	C9NNN441A	1	Pin, Seat Suspension Hinge, W/Seat Belt, U.S., Years: 03/01/1969-01/31/1970
3	9636620	2	Ring, Snap, Ext, .312", Pin Retaining, L/Seat Belt, Years: 03/01/1969-01/31/1970
3	9636620	4	Ring, Snap, Ext, .312", Pin Retaining, W/Seat Belt, Years: 03/01/1969-01/31/1970
4	C7NNN440A	1	Retainer, Seat Suspension Stabilizer, No Longer Serviced, Years: 03/01/1969-01/31/1970
5	80681	4	Washer, Lock, 5/16", Years: 03/01/1969-01/31/1970
6	304626S36	4	Screw, Cap, HH, G5, 5/16"-18 x 1/2", L/Seat Belt, Years: 03/01/1969-01/31/1970
6	304626S36	2	Screw, Cap, HH, G5, 5/16"-18 x 1/2", W/Seat Belt, Years: 03/01/1969-01/31/1970
6	87872	2	Screw, Cap, HH, G5, 5/16"-18 x 3/4", Years: 03/01/1969-01/31/1970
7	C5NNN439A	4	Bearing, Seat Suspension Stabilizer, Years: 03/01/1969-01/31/1970
8	C7NN420R	1	Support Assy., Seat, L/Seat Belt, U.S., 2000-3000-4110, Includes: Ref. 9 thru 66., NHNA Only, No Longer Serviced, Years: 03/01/1969-01/31/1970
8	NLS	1	Support Assy., Seat, L/Seat Belt, 4100-4400, Includes: Ref. 9 thru 66., Use Support Assy. Shown on 13B3. Years: 03/01/1969-01/31/1970
8	E7NN400GA	1	Support Assy., Seat, L/Seat Belt, 4200-5200, Includes: Ref. 9 thru 66, No Longer Serviced, Years: 03/01/1969-01/31/1970
8	C7NN420N	1	Support Assy., Seat, L/Seat Belt, U.K.-Antwerp, 5100, Includes: Ref. 9 thru 66., NHNA Only, No Longer Serviced, Years: 03/01/1969-01/31/1970
8	NLS	1	Support Assy., Seat, W/Seat Belt, 2100-3100-4100-4400-4410- 5100, Includes: Ref. 9 thru 66, Use Seat Assy. shown in Fig. 13B3, Years: 03/01/1969-01/31/1970
9	C5NN421G	1	Base Assy., Seat, 2000-3000-4110-4100-4400-4410, No Longer Serviced, Years: 03/01/1969-01/31/1970
10	C7NN421B	1	Base Assy., Seat, U.S., 4200-5200, NHNA Only, No Longer Serviced, Years: 03/01/1969-01/31/1970
11	C7NN421C	1	Base Assy., Seat, 5100, No Longer Serviced, Years: 03/01/1969-01/31/1970
12	86511894	1	Screw, Truss Hd, 1/4"-20 x 3/4", Except 4200-5200, Years: 03/01/1969-01/31/1970
13	C5NNN409A	1	Bumper, Seat Suspension, Except 4200-5200, No Longer Serviced, Years: 03/01/1969-01/31/1970
14	C5NNN446B	1	Washer, Bumper to Support Base, Except 4200-5200, No Longer Serviced, Years: 03/01/1969-01/31/1970
15	86508752	2	Bolt, Carriage, Short Neck, G5, 7/16"-14 x 1-1/4", Except 4200-5100-5200, Years: 03/01/1969-01/31/1970
16	81541	3	Washer, 7/16", Except 4200-5100-5200, Years: 03/01/1969-01/31/1970
17	81547	3	Washer, Lock, 7/16", Except 4200-5100-5200, Years: 03/01/1969-01/31/1970
18	280717	3	Nut, G5, 7/16"-14, Except 4200-5100-5200, Years: 03/01/1969-01/31/1970

5000-SERIES 4 CYL TRACTOR (1/65-1/75)

13B02 DELUXE SEAT ASSEMBLY (3-69/1-70)

Ref	Part Number	Qty	Description
19	302437S36	1	Bolt, Carriage, Short Neck, G5, 7/16"-14 x 5", Except 4200-5100-5200, Years: 03/01/1969-01/31/1970
20	C5NNB408A	1	Bushing, Suspension Up-Stop, Except 4200-5100-5200, No Longer Serviced, Years: 03/01/1969-01/31/1970
21	304666S36	4	Screw, Cap, HH, G5, 3/8"-16 x 7/8", 4200-5100-5200, Years: 03/01/1969-01/31/1970
22	80702	4	Washer, 3/8", 4200-5100-5200, Years: 03/01/1969-01/31/1970
23	80680	4	Washer, Lock, 3/8", 4200-5100-5200, Years: 03/01/1969-01/31/1970
24	9628503	4	Nut, G5, 3/8"-16, 4200-5100-5200, Years: 03/01/1969-01/31/1970
25	86511894	1	Screw, Truss Hd, 1/4"-20 x 3/4", 4200-5200, Years: 03/01/1969-01/31/1970
26	C5NNN409A	1	Bumper, Seat Suspension, 4200-5200, No Longer Serviced, Years: 03/01/1969-01/31/1970
27	80682	1	Washer, Lock, 1/4", 4200-5200, Years: 03/01/1969-01/31/1970
28	34440S8	1	Nut, Lock, Prevailing Torque, G5, 1/4"-20, 4200-5200, No Longer Serviced, Years: 03/01/1969-01/31/1970
29	C5NNA434A	1	Bracket, Seat Bumper, 4200-5200, NHNA Only, No Longer Serviced, Years: 03/01/1969-01/31/1970
30	80702	1	Washer, 3/8", 4200-5200, Years: 03/01/1969-01/31/1970
31	C5NNA436A	1	Bolt, Bracket to Lever, 3/8"-16 x 1", 4200-5200, NHNA Only, No Longer Serviced, Years: 03/01/1969-01/31/1970
32	81821693	1	Washer, Lock, 3/8", 4200-5200, Years: 03/01/1969-01/31/1970
33	9628503	1	Nut, G5, 3/8"-16, 4200-5200, Years: 03/01/1969-01/31/1970
34	C9NN436A	1	HInge, Suspension, W/Seat Belts, U.S., NHNA Only, No Longer Serviced, Years: 03/01/1969-01/31/1970
34	C5NN436B	1	Hinge, Suspension, U.K.-Antwerp, NH-E Only, No Longer Serviced, Years: 03/01/1969-01/31/1970
35	C7NNN411B	1	Tube, Torque Suspension, U.S., Includes: Tube & Ref. 36, No Longer Serviced, Years: 03/01/1969-01/31/1970
36	C7NNN415A	1	Bearing, Torque Tube, Years: 03/01/1969-01/31/1970
37	C5NNN410A	3	Spring, Seat Torsion, Years: 03/01/1969-01/31/1970
38	NLS	1	Spacer, Seat Suspension, Years: 03/01/1969-01/31/1970
39	C7NNN403C	1	Lever, Center Suspension, Except 4200-5100-5200, No Longer Serviced, Years: 03/01/1969-01/31/1970
39	C7NNN403B	1	Lever, Center Suspension, 4200-5100-5200, Includes: Lever & Ref. 40, No Longer Serviced, Years: 03/01/1969-01/31/1970
40	C7NNN435A	2	Bushing, Lever, Years: 03/01/1969-01/31/1970
41	C5NNN429A	1	Pin, Hinge, No Longer Serviced, Years: 03/01/1969-01/31/1970
42	88148	1	Pin, Roll, 3/32" x 1/2", Drive, Years: 03/01/1969-01/31/1970
43	C7NNB448K	1	Plate Assy., Seat Support, RH, U.S., Except 4200-5100- 5200, No Longer Serviced, Years: 03/01/1969-01/31/1970
43	C7NNB448H	1	Plate Assy., Seat Support, RH, U.S., 4200-5100-5200, Includes: Plate & Ref. 44, No Longer Serviced, Years: 03/01/1969-01/31/1970
44	C7NNN415C	1	Bearing, Side Plate, No Longer Serviced (NH-E), Years: 03/01/1969-01/31/1970
45	C7NNN417J	1	Plate Assy., Seat Support, LH, U.S., Except 4200-5100- 5200, No Longer Serviced, Years: 03/01/1969-01/31/1970
45	C7NNN417H	1	Plate Assy., Seat Support, LH, U.S., 4200-5200, No Longer Serviced (NH-E), Years: 03/01/1969-01/31/1970
45	C7NNN417K	1	Plate Assy., Seat Support, LH, U.S., 5100, Includes: Plate & Ref. 46, No Longer Serviced, Years: 03/01/1969-01/31/1970

5000-SERIES 4 CYL TRACTOR (1/65-1/75)

13B02 DELUXE SEAT ASSEMBLY (3-69/1-70)

Ref	Part Number	Qty	Description
46	C7NNN415A	1	Bearing, Side Plate, Years: 03/01/1969-01/31/1970
47	80681	2	Washer, Lock, 5/16", Years: 03/01/1969-01/31/1970
48	9635082	2	Nut, G5, 5/16"-18, Years: 03/01/1969-01/31/1970
49	C7NNN431B	1	Stabilizer Assy., Suspension, Order Components, Includes: Stabilizer & Ref. 50, Years: 03/01/1969-01/31/1970
50	C7NNN435A	2	Bearing, Stabilizer, Years: 03/01/1969-01/31/1970
51	9635806	2	Ring, Snap, Ext, .500", Years: 03/01/1969-01/31/1970
52	C5NNN437A	2	Washer, Stabilizer, No Longer Serviced, Years: 03/01/1969-01/31/1970
53	C5NNN436A	1	Shaft, Stabilizer, Years: 03/01/1969-01/31/1970
54	C7NN462F	1	Screw, Seat Adjusting, No Longer Serviced, Years: 03/01/1969-01/31/1970
55	C7NNB470B	1	Pin, Wrist, Adjustable Screw, U.S., No Longer Serviced, Years: 03/01/1969-01/31/1970
56	97411S36	2	Ring, Snap, 3/8", Years: 03/01/1969-01/31/1970
57	C7NNN451A	1	Collar, Adjustment, No Longer Serviced, Years: 03/01/1969-01/31/1970
58	C7NNB466B	1	Pad, Trunnion Seat Adjustment, No Longer Serviced, Years: 03/01/1969-01/31/1970
59	C5NNN426A	1	Bearing, Thrust, No Longer Serviced, Years: 03/01/1969-01/31/1970
60	C7NNB469B	1	Sleeve, Adjusting, No Longer Serviced, Years: 03/01/1969-01/31/1970
61	C7NNB461B	1	Knob, Adjusting Handle, No Longer Serviced, Years: 03/01/1969-01/31/1970
62	88148	1	Pin, Roll, 3/32" x 1/2", Years: 03/01/1969-01/31/1970
63	C7NNB468B	1	Screw, Knob, #10-32, No Longer Serviced, Years: 03/01/1969-01/31/1970
64	C7NNN438C	1	Cover, Support, No Longer Serviced, Years: 03/01/1969-01/31/1970
65	C5NNN462A	3	Rivet, Push, Cover, Years: 03/01/1969-01/31/1970
66	C7NN464A	1	Decal, Instruction, Cover, No Longer Serviced, Years: 03/01/1969-01/31/1970
67	81547	2	Washer, Lock, 7/16", Years: 03/01/1969-01/31/1970
68	356420S8	2	Washer, Flat, 7/16", Except 4200-5200, Years: 03/01/1969-01/31/1970
68	377184S36	2	Washer, Flat, 4200-5200, Years: 03/01/1969-01/31/1970
69	9706729	2	Screw, Cap, HH, G5, 7/16"-14 x 1", Except 4200-5200, Years: 03/01/1969-01/31/1970
69	9627887	2	Screw, Cap, HH, G5, 7/16"-14 x 1-1/4", 4200-5200, Years: 03/01/1969-01/31/1970
	C7NNB474A	1	Release, Driven Seat Suspension, W/Seat Belt, U.S., NHNA Only, No Longer Serviced, Years: 03/01/1969-01/31/1970
	C7NNB442A	1	Pin, Seat Suspension Release Lock, W/Seat Belt, U.S., Years: 03/01/1969-01/31/1970
	D3NNC400A	2	Spring, Seat Suspension Release Lock, W/Seat Belt, Years: 03/01/1969-01/31/1970
	83906668	1	Anchor Assy., Seat Belt, W/Seat Belt, Years: 03/01/1969-01/31/1970
	82014400	1	Belt & Buckle Assy., Seat,. Use W/Rollbar, Years: 03/01/1969-01/31/1970
	280580	2	Screw, Cap, HH, G5, 5/8"-11 x 1", Belt to Anchor, US, Years: 03/01/1969-01/31/1970
	80681	2	Washer, Lock, 5/16", Anchor, Years: 03/01/1969-01/31/1970
	87872	2	Screw, Cap, HH, G5, 5/16"-18 x 3/4", Anchor to Pan, Years: 03/01/1969-01/31/1970
	D9NN94610N02AA	1	Belt & Buckle Assy., Seat, U.S., 3400-3500-3550-4400-4500, Years: 03/01/1969-01/31/1970
	FT070A405B	1	Seat Cover Assy., Slip On, Use on Pans L/Drain Holes, Service Only, Years: 03/01/1969-01/31/1970

13B03 DELUXE SEAT ASSEMBLY (2-70/) - 2000, 3100, 3120, 3310, 4000, 5000, 7000, EXCEPT SWEDEN

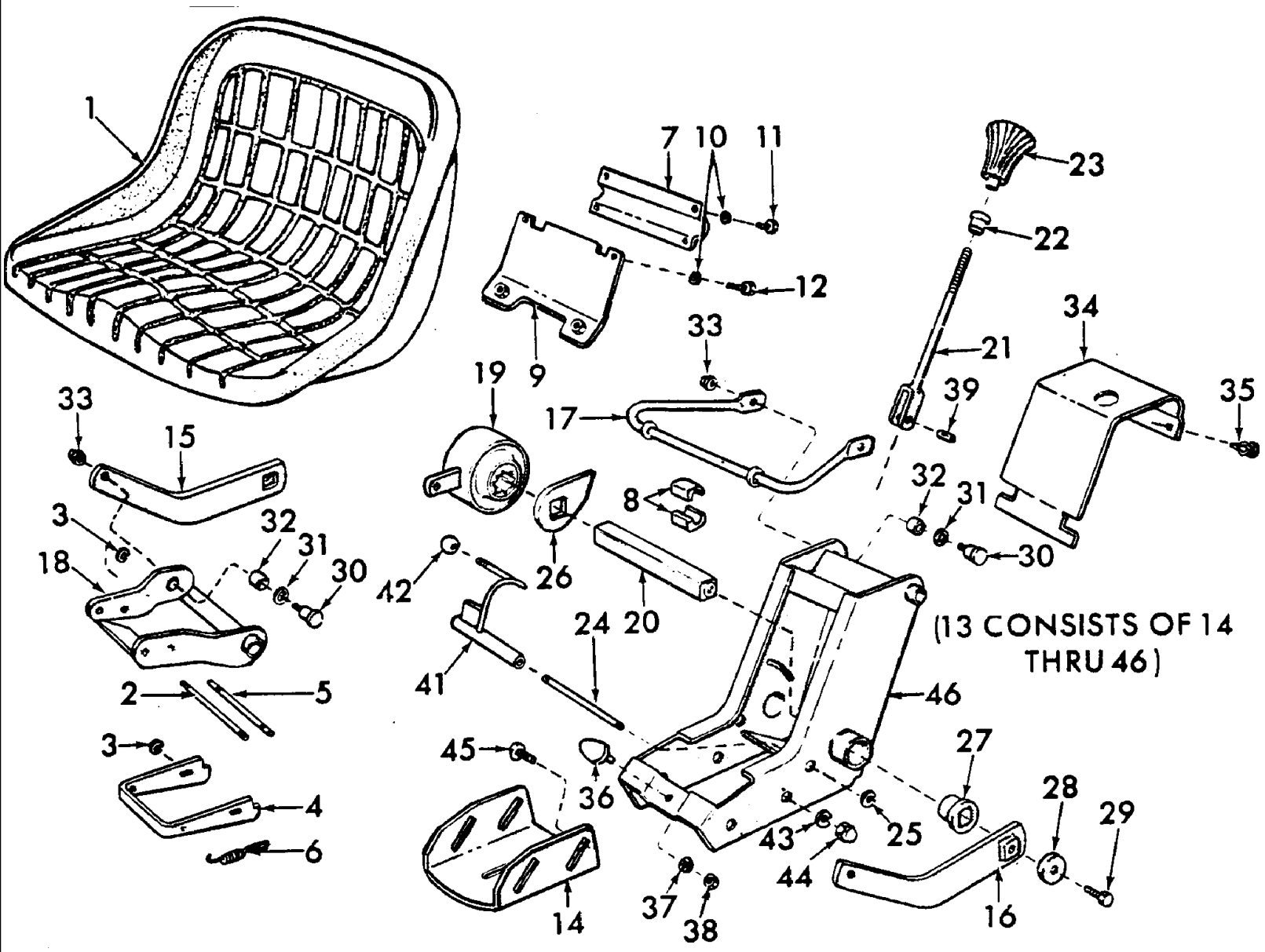

5000-SERIES 4 CYL TRACTOR (1/65-1/75)

13B03 DELUXE SEAT ASSEMBLY (2-70/) - 2000, 3100, 3120, 3310, 4000, 5000, 7000, EXCEPT SWEDEN

Ref	Part Number	Qty	Description
	E7NN400GA	1	Seat Assy., L/Seat Belt, Blue, 2100,3100,3055,4100,5100, Start Year: 02/01/1970
	D2NN400C	1	Seat Assy., L/Seat Belt Bracket, 4200-5200-7200, Replaced By Pan Assy E2NNA405AA99M(83947372) And Seat Assy. E7NN400HA(83964316)., NHNA Only, Start Year: 02/01/1970
	D5NN400F	1	Seat Assy., W/Seat Belt, W/Trailer Brakes, U.K.-Antwerp, NH-E Only, Start Year: 02/01/1970
	D8NN400LB	1	Seat Assy., L/Seat Belt, W/Trailer Brakes, U.K.-Antwerp, Includes: Ref. 1 thru 46, NH-E Only, No Longer Serviced, Start Year: 02/01/1970
1	E2NNA405AA99M	1	Pan & Cushion Assy., Blue, Start Year: 02/01/1970
2	C9NNN441A	1	Pin, Seat Suspension Hinge, W/Seat Belt, NHNA Only, Start Year: 02/01/1970
2	C5NNN441A	1	Pin, Seat Suspension Hinge, L/Seat Belts, Start Year: 02/01/1970
3	9636620	2/4	Ring, Snap, Ext, .312", Start Year: 02/01/1970
4	D2NNB474B	1	Release, Suspension, W/Seat Belt, NHNA Only, Start Year: 02/01/1970
5	C7NNB442A	1	Pin, Release Lock, W/Seat Belt, NHNA Only, Start Year: 02/01/1970
6	D2NNC400B	2	Spring, Suspension Lock, W/Seat Belt, Start Year: 02/01/1970
7	82005040	1	Retainer, Suspension Stabilizer, Start Year: 02/01/1970
8	C5NNN439A	4	Bearing Half, Seat Suspension Stabilizer, Start Year: 02/01/1970
9	83906668	1	Anchor Assy., Seat Safety Belt, Start Year: 02/01/1970
10	80681	4	Washer, Lock, 5/16", Start Year: 02/01/1970
11	304626S36	2/4	Screw, Cap, HH, G5, 5/16"-18 x 1/2", Start Year: 02/01/1970
12	87872	2	Screw, Cap, HH, G5, 5/16"-18 x 3/4", Except 4200-5200, Start Year: 02/01/1970
13	E7NN420AA	1	Support Assy., Seat, Start Year: 02/01/1970
13	E7NN400GA	1	Support Assy., 4200-5200-7200, No Longer Serviced, Start Year: 02/01/1970
13	D8NN420BA	1	Support Assy., Seat, W/Trailer Brakes, U.K.-Antwerp, Includes: Ref. 14 thru 46, NH-E Only, Start Year: 02/01/1970
14	C9NN411B	1	Base, Seat, Except 4200-5200-7200, Start Year: 02/01/1970
15	D3NNB448A	1	Plate Assy., Support, R.H., Service Only, Start Year: 02/01/1970
16	D3NNN417A	1	Plate Assy., Support, L.H., Service Only, Start Year: 02/01/1970
17	D2NNN432A	1	Stabilizer, Seat Suspension, Start Year: 02/01/1970
18	C9NN436B	1	Hinge, Seat Suspension, Start Year: 02/01/1970
19	D6NNB453B	1	Spring Assy., Seat Suspension Assist, Replaces P/N D4NNC404A (1), When replacing D2NN-C410-A(87764002) & D2NN-C404-A(81827540), Double Spring Arrangement, W/D6NN-B453-B(83909754), Single Spring Arrangement, remove & discard D0NN-438-C, C9NN-B442-A(81822122), 97411-S7(83424310). Also, see Service Bulletin 10-83., Start Year: 02/01/1970
20	C9NNN436A	1	Shaft, Seat Suspension Stabilizer, Years: 02/01/1970-10/31/1977
20	D8NNN436AA	1	Shaft, Square, Start Year: 11/01/1977
20	D8NNB451AA	1	Shaft, Round, Threaded, Start Year: 11/01/1977
20	D8NNB403AA	1	Spacer, Start Year: 11/01/1977
21	D2NN462A	1	Rod Assy., Tension Adjusting, Start Year: 02/01/1970
22	C9NNN426A	1	Bearing Assy., Tension Adjusting Rod, Start Year: 02/01/1970
23	D6NNB461A	1	Knob, Seat Tension Adjusting Rod, Start Year: 02/01/1970
24	C9NNB442A	1	Pin, Seat Suspension Stop, No Longer Serviced (NH-E), Start Year: 02/01/1970
25	97411S36	2	Ring, Retaining, Stop Pin, 3/8", Start Year: 02/01/1970

5000-SERIES 4 CYL TRACTOR (1/65-1/75)

13B03 DELUXE SEAT ASSEMBLY (2-70/) - 2000, 3100, 3120, 3310, 4000, 5000, 7000, EXCEPT SWEDEN

Ref	Part Number	Qty	Description
26	C9NN14B701A	1	Lever, Seat Regulating Limit Switch, Start Year: 02/01/1970
27	D0NNN435A	2	Bearing, Seat Suspension Stabilizer Shaft, Start Year: 02/01/1970
28	C9NNB414A	2	Cover, Seat Suspension Shaft Bearing, No Longer Serviced, Start Year: 02/01/1970
29	304687S36	2	Screw, Cap, HH, G5, 7/16"-20 x 1", Start Year: 02/01/1970
30	C9NNN421A	4	Bolt, Seat Support Hinge to L.H. & R.H. Plate & Stabilizer to Housing, 7/169"-20 Thread, Start Year: 02/01/1970
31	C9NN5A619A	4	Washer, Flat, .648 (16.5mm) I.D. - .032 (0.8mm) Thick, Start Year: 02/01/1970
32	D6NNA443A	4	Bushing, Seat Suspension Up Stop, Start Year: 02/01/1970
33	87891	2	Nut, Jam, G2, 7/16"-20, Start Year: 02/01/1970
34	C9NNN438A	1	Cover, Seat Suspension Housing, Start Year: 02/01/1970
35	C9NNN462A	2	Rivet, Seat Suspension Housing Cover, Start Year: 02/01/1970
36	C9NNN409A	1	Bumper, Seat Suspension Pan, Start Year: 02/01/1970
37	280278	1	Washer, Lock, Ext T, 5/16", Start Year: 02/01/1970
38	9635082	1	Nut, G5, 5/16"-18, Start Year: 02/01/1970
39	C9NNB470A	1	Pin, Seat Tension Adjusting Rod, .391 (10.0mm) x 1.02" (26.0mm), No Longer Serviced (NH-E), Start Year: 02/01/1970
39	PL	1	Spring Assy., Seat Suspension, NHNA Only
41	D0NNB438C	1	Lever Assy., Seat Release, Start Year: 02/01/1970
42	D2NNB422A	1	Knob, Seat Release Lever, Start Year: 02/01/1970
43	81541	4	Washer, 7/16", Start Year: 02/01/1970
44	34164S36	4	Nut, Crown, 3/8"-16, US, No Longer Serviced (NHNA), Start Year: 02/01/1970
44	86509499	4	Nut, Jam, G2, 3/8"-16, U.K.-Antwerp, Start Year: 02/01/1970
45	86508748	4	Bolt, Carriage, Short Neck, G5, 3/8"-16 x 3/4", Start Year: 02/01/1970
46	E7NNN411AA	1	Housing Assy., Driver Support, Start Year: 02/01/1970
	D5NNA434A	1	Bracket, Seat Bumper, W/Trailer Brakes, U.K.-Antwerp, NH-E Only, No Longer Serviced, Start Year: 02/01/1970
	280278	1	Washer, Lock, Ext T, 5/16" , UK, Antwerp, Start Year: 02/01/1970
	304626S36	1	Screw, Cap, HH, G5, 5/16"-18 x 1/2", Bumper Bracket to Housing HH, W/Trailer Brakes, Start Year: 02/01/1970
	82014400	1	Belt & Buckle Assy., Seat, Start Year: 02/01/1970
	83906668	1	Anchor Assy., Seat Belt, Start Year: 02/01/1970
	280580	2	Screw, Cap, HH, G5, 5/8"-11 x 1", US, Start Year: 02/01/1970
	80681	2	Washer, Lock, 5/16", Start Year: 02/01/1970
	87872	2	Screw, Cap, HH, G5, 5/16"-18 x 3/4", Start Year: 02/01/1970
	356420S36	2	Washer, Flat, Seat Mounting, 7/16", Start Year: 02/01/1970
	81547	2	Washer, Lock, 7/16", Seat Mounting, Start Year: 02/01/1970
	9627887	1	Screw, Cap, HH, G5, 7/16"-14 x 1-1/4", Seat Mounting Front, W/or L/Coupler, 2000-3000, Start Year: 02/01/1970
	PL	1	Bolt, Seat Mounting Front, L/Coupler, 7/16"-14 x 1-1/4", 4000-5000-7000, NHNA Only, Start Year: 02/01/1970

5000-SERIES 4 CYL TRACTOR (1/65-1/75)

13B03 DELUXE SEAT ASSEMBLY (2-70/) - 2000, 3100, 3120, 3310, 4000, 5000, 7000, EXCEPT SWEDEN

Ref	Part Number	Qty	Description
	9637916	1	Screw, Cap, HH, G5, 7/16"-14 x 1-1/2", Seat Mounting Front, L/Coupler, 4000-5000-7000, Start Year: 02/01/1970
	50456	1	Nut, G5, 7/16"-20 Seat Mounting Rear, 2000-3000-4000, Start Year: 02/01/1970
	9706729	1	Screw, Cap, HH, G5, 7/16"-14 x 1", Seat Mounting Rear, L/Remote Coupler, 5000-7000, Start Year: 02/01/1970
	9627887	1	Screw, Cap, HH, G5, 7/16"-14 x 1-1/4", Seat Mounting Rear, W/Remote Coupler, 5000-7000, Start Year: 02/01/1970
	FT070A405B	1	Seat Cover Assy., Slip-On, Use on Pans L/Drain Holes, Service Only, No Longer Serviced (NHNA), Start Year: 02/01/1970

13B04 DELUXE SEAT ASSEMBLY, SWEDEN & FINLAND (2-70/) - 2100, 3100, 4100, 5100, 7100

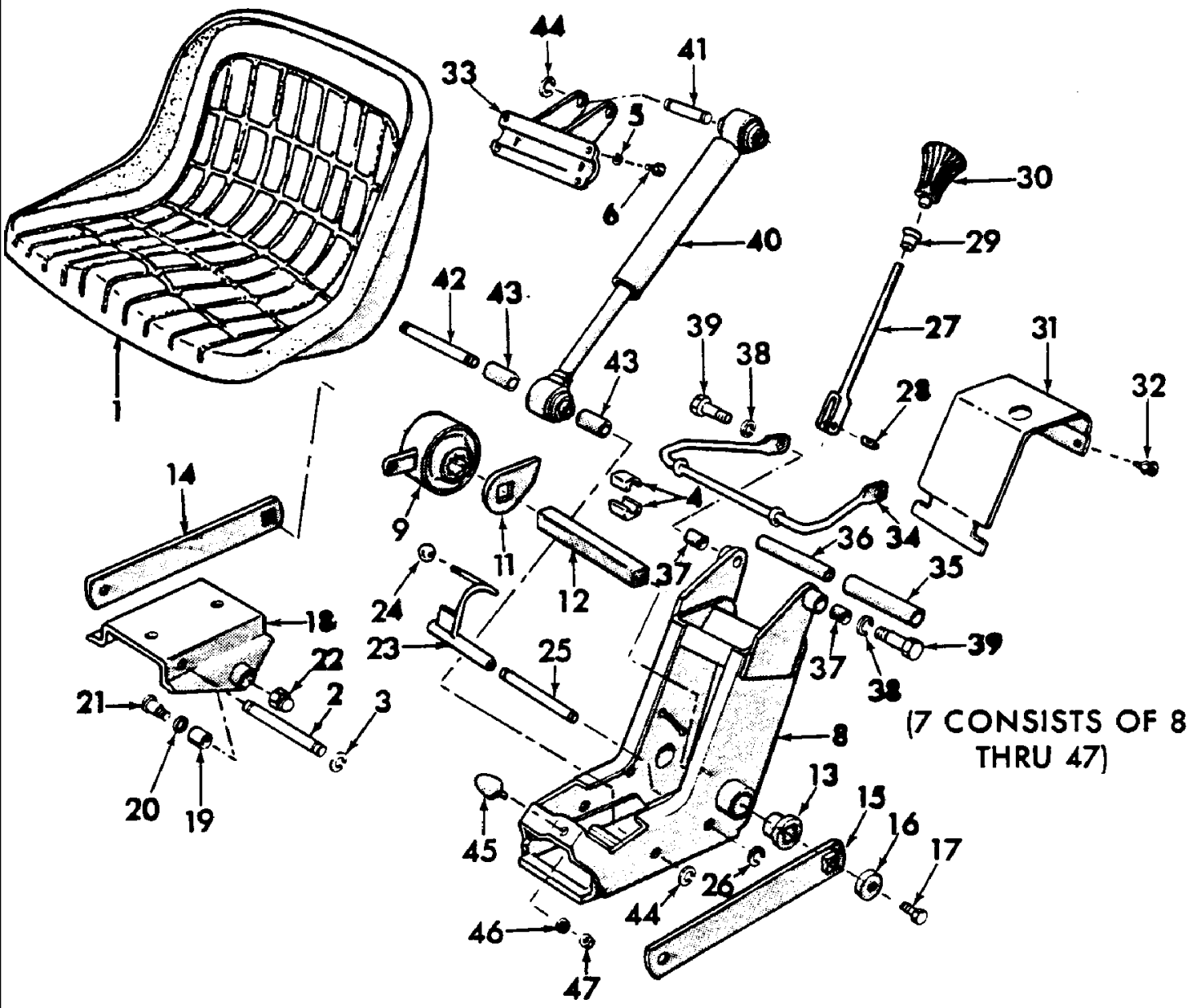

5000-SERIES 4 CYL TRACTOR (1/65-1/75)

13B04 DELUXE SEAT ASSEMBLY, SWEDEN & FINLAND (2-70/) - 2100, 3100, 4100, 5100, 7100

Ref	Part Number	Qty	Description
	NLS	1	Seat Assy., Includes: Ref. 1 thru 47 {D1NN400C}, No Longer Serviced, Start Year: 02/01/1970
1	E2NNA405AA99M	1	Pan & Cushion Assy., Seat, Replaces C9NNA405A & D0NNA405B & D, Start Year: 02/01/1970
2	C5NNN441A	1	Pin, Seat Suspension Hinge, Start Year: 02/01/1970
3	9636620	2	Ring, Snap, Ext, .312", Start Year: 02/01/1970
4	C5NNN439A	4	Bearing, Half, Seat Suspension Stabilizer, Start Year: 02/01/1970
5	80681	4	Washer, Lock, 5/16", Start Year: 02/01/1970
6	304626S36	4	Screw, Cap, HH, G5, 5/16"-18 x 1/2", Start Year: 02/01/1970
7	D2NN420E	1	Support Assy., Seat, Includes: Ref. 8 thru 46, NH-E Only, No Longer Serviced, Start Year: 02/01/1970
8	D0NNN411A	1	Housing Assy., Seat Support, NH-E Only, No Longer Serviced, Start Year: 02/01/1970
9	D6NNB453B	2	Spring Assy., Suspension, Rubber Spring, See Note on Page 13-6B, Replaces D2NNN410A, Start Year: 02/01/1970
11	C9NN14B701A	1	Lever, Limit Switch Lip Stop, Start Year: 02/01/1970
12	C9NNN436A	1	Shaft, Spring Tension, Start Year: 02/01/1970
13	D0NNN435A	2	Bearing, Spring Tension Shaft, Start Year: 02/01/1970
14	D0NNB448B	1	Plate Assy., Seat Suspension, RH, NH-E Only, No Longer Serviced, Start Year: 02/01/1970
15	D0NNN417B	1	Plate Assy., Seat Suspension, LH, NH-E Only, No Longer Serviced, Start Year: 02/01/1970
16	C9NNB414A	2	Cover, Tension Shaft Bushing, No Longer Serviced, Start Year: 02/01/1970
17	304687S36	2	Screw, Cap, HH, G5, 7/16"-20 x 1", Start Year: 02/01/1970
18	D0NN436A	1	Hinge, Seat Suspension, NH-E Only, No Longer Serviced, Start Year: 02/01/1970
19	D6NNA443A	2	Bushing, Seat Hinge Bolt, Start Year: 02/01/1970
20	C9NN5A619A	2	Washer, Seat Hinge Bolt, Start Year: 02/01/1970
21	D0NNN421A	2	Bolt, Seat Hinge to Lever Assy., NH-E Only, No Longer Serviced, Start Year: 02/01/1970
22	87891	2	Nut, Jam, G2, 7/16"-20, Start Year: 02/01/1970
23	D0NNB438C	1	Lever Assy., Tension Release, Start Year: 02/01/1970
24	D2NNB422A	1	Knob, Tension Release Lever, Start Year: 02/01/1970
25	C9NNB442A	1	Pin, Lever Assy. to Housing, No Longer Serviced (NH-E), Start Year: 02/01/1970
26	97411S36	2	Ring, Pin Retaining, 3/8", Start Year: 02/01/1970
27	D2NN462A	1	Rod Assy., Tension Adjusting, Start Year: 02/01/1970
28	C9NNB470A	1	Pin, Adjusting Rod to Rubber Spring, .391" (10.0mm) Dia. 1.02" (26.0mm) Lg., Start Year: 02/01/1970
29	C9NNN426A	1	Bearing Assy., Tension Adjusting Rod, Start Year: 02/01/1970
30	D6NNB461A	1	Knob, Tension Adjusting Rod, Start Year: 02/01/1970
31	C9NNN438A	1	Cover, Suspension Housing, Start Year: 02/01/1970
32	C9NNN462A	1	Cover, Suspension Housing, Start Year: 02/01/1970
33	D0NNN440A	1	Retainer, Stabilizer & Shock Absorber, No Longer Serviced (NH-E), Start Year: 02/01/1970
34	D0NNN431A	1	Stabilizer Assy., Suspension, NH-E Only, No Longer Serviced, Start Year: 02/01/1970
35	D0NNC403A	1	Spacer, Stabilizer Retaining Tube, NH-E Only, No Longer Serviced, Start Year: 02/01/1970
36	D0NNC406A	1	Tube, Stabilizer to Housing Retaining, NH-E Only, No Longer Serviced, Start Year: 02/01/1970
37	D6NNA443A	2	Bushing, Stabilizer Retaining Tube, Start Year: 02/01/1970
38	D0NNN433A	2	Washer, Stabilizer Retaining Bolt, NH-E Only, No Longer Serviced, Start Year: 02/01/1970
39	304687S36	2	Screw, Cap, HH, G5, 7/16"-20 x 1", Start Year: 02/01/1970
40	D0NNB425A	1	Absorber Assy., Seat Suspension Shock, NH-E Only, No Longer Serviced, Start Year: 02/01/1970

5000-SERIES 4 CYL TRACTOR (1/65-1/75)

13B04 DELUXE SEAT ASSEMBLY, SWEDEN & FINLAND (2-70/) - 2100, 3100, 4100, 5100, 7100

Ref	Part Number	Qty	Description
41	D0NNC404A	1	Pin, Retaining, Upper, 3/8" (9.525mm) Dia. x 1.984" (50.5mm) Lg., NH-E Only, No Longer Serviced, Start Year: 02/01/1970
42	C9NNB442A	1	Pin, Retaining, Lower, 3/8" (9.525mm) Dia. x 4.37" (111.0mm) Lg., No Longer Serviced (NH-E), Start Year: 02/01/1970
43	D0NNC405A	2	Spacer, Lower Retaining Pin, Absorber, NH-E Only, No Longer Serviced, Start Year: 02/01/1970
44	97411S36	4	Ring, Retaining Pins, 3/8", Start Year: 02/01/1970
45	C9NNN409A	1	Bumper, Seat Suspension Pan, Start Year: 02/01/1970
46	280278	1	Washer, Lock, Ext T, 5/16", Start Year: 02/01/1970
47	9635082	1	Nut, G5, 5/16"-18, Start Year: 02/01/1970

13B05 DELUXE SEAT ASSEMBLY (6-73/)

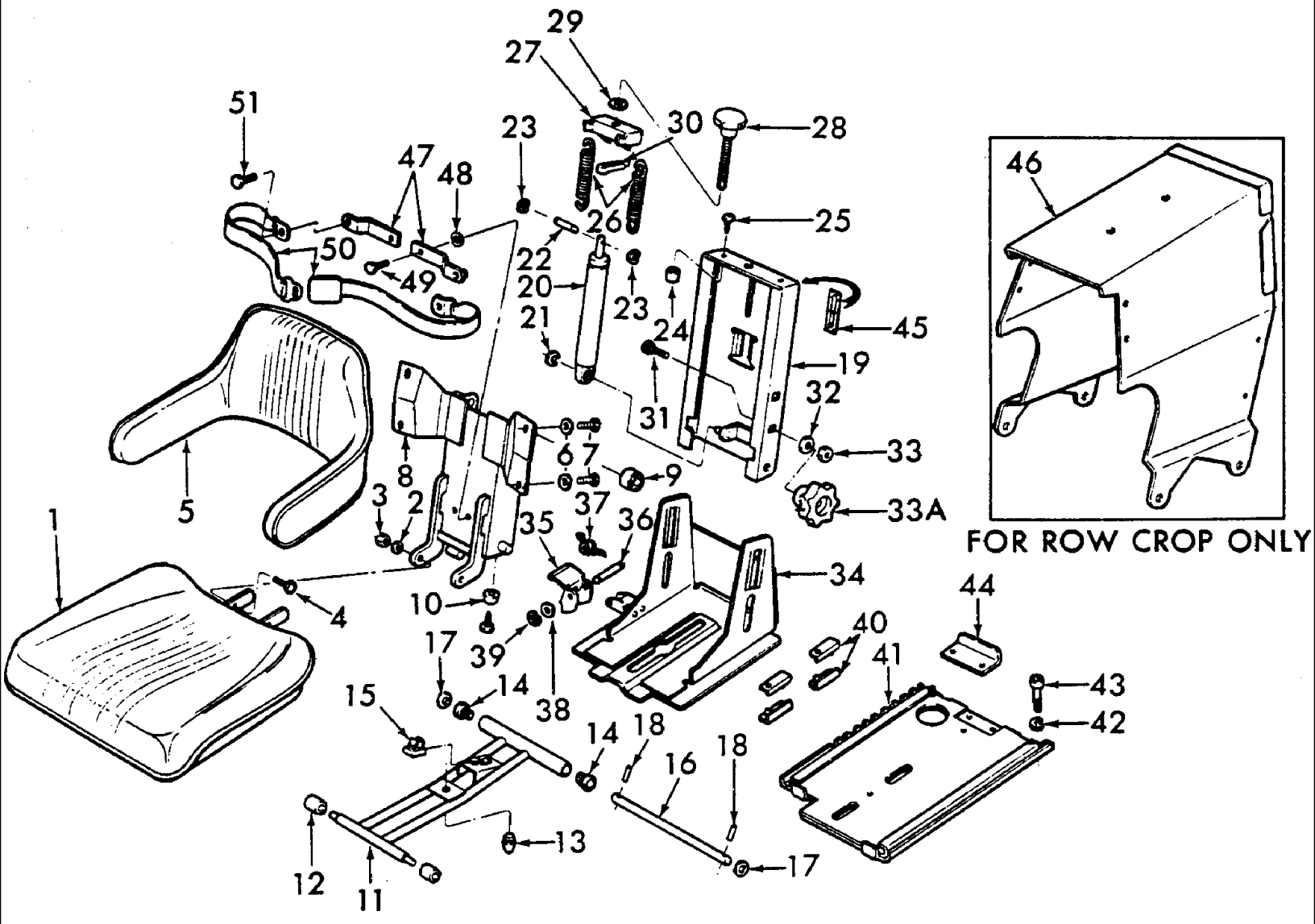

5000-SERIES 4 CYL TRACTOR (1/65-1/75)

13B05 DELUXE SEAT ASSEMBLY (6-73/)

Ref	Part Number	Qty	Description
	E7NN400GA	1	Seat Assy., 4200, 5200, 7200, Includes: Ref. 1 thru 45, Start Year: 06/01/1973
	5161727	1	Seat Assy., Black, Except 4200, 5200, 7200, Includes: Ref. 1 thru 45, Start Year: 06/01/1973
1	NLS	1	Cushion Assy., Driver Seat, Start Year: 06/01/1973
2	82879399	2	Washer, Flat, M12, Start Year: 06/01/1973
3	100038	2	Nut, Lock, Prevailing Torque, CL 8, M12 x 1.75, Start Year: 06/01/1973
4	300389	2	Screw, Cap, HH, CL 8.8, M12 x 1.75 x 35, Start Year: 06/01/1973
5	D8NNB416CB	1	Cushion Assy., Seat Back, Start Year: 06/01/1973
6	86511315	4	Washer, M8, Start Year: 06/01/1973
7	9627874	4	Screw, Cap, HH, G5, 5/16"-18 x 5/8", Start Year: 06/01/1973
8	D3NNA400A	1	Frame Assy., Drivers Seat, No Longer Serviced, Start Year: 06/01/1973
9	D2NNB426A	2	Bearing, Seat Suspension Flange, Start Year: 06/01/1973
10	D2NNN409A	2	Bumper, Seat Suspension, Start Year: 06/01/1973
11	D3NNN403A	1	Lever Assy., Drivers Seat Suspension, No Longer Serviced, Start Year: 06/01/1973
12	D2NNN408A	2	Bearing, Lever, Cushion End, Start Year: 06/01/1973
13	D2NNN409B	1	Bumper, Lever, Start Year: 06/01/1973
14	D2NNN415A	2	Bearing, Pivot, Frame End, Start Year: 06/01/1973
15	D2NN433A	1	Catch, Cushion Hold Down, Nylon, Start Year: 06/01/1973
16	D3NNB445A	1	Pin, Seat Suspension Pivot, 9.09" (231.0mm) Lg., Start Year: 06/01/1973
17	82879399	2	Washer, Flat, M12, Start Year: 06/01/1973
18	E646571S51	2	Pin, Spring, 4 x 24, Start Year: 06/01/1973
19	D4NNB429A	1	Bracket Assy., Seat Suspension, No Longer Serviced (NH-E), Start Year: 06/01/1973
20	D2NNB425A	1	Absorber Assy., Suspension Shock, Start Year: 06/01/1973
21	11065976	1	Ring, Snap, Ext, M10, Start Year: 06/01/1973
22	D3NNC404A	1	Pin, Shock Absorber Pivot, Start Year: 06/01/1973
23	E663204S51	2	Ring, Circlip, M2.3, Start Year: 06/01/1973
24	D2NNN409C	2	Bumper, Suspension Bracket, Start Year: 06/01/1973
25	E610269S51	2	Screw, Self-Tapping, Pan Hd, #10 x M22, Start Year: 06/01/1973
26	D2NNB453A	2	Spring, Seat Suspension, Start Year: 06/01/1973
27	D2NNN440A	1	Retainer, Seat Suspension Stabilizer, Start Year: 06/01/1973
28	D3NN462A	1	Adjuster Assy., Seat Suspension, Start Year: 06/01/1973
29	E630032S71	1	Washer, M10, Start Year: 06/01/1973
30	280251	1	Pin, Split Cotter, 3/32" x 1", Start Year: 06/01/1973
31	V44416	2	Bolt, Carriage, Short Neck, CL 8.8, M10 x 1.5 x 35, Start Year: 06/01/1973
32	E630032S71	2	Washer, M10, Start Year: 06/01/1973
33	100037	2	Nut, Lock, Prevailing Torque, CL 8, M10 x 1.5, L/Vertical Adjust, Except Germany, Start Year: 06/01/1973
33A	D3NNN449A	2	Handle Assy., Suspension Vertical Adjust, Germany, Start Year: 06/01/1973
34	D3NNB435B	1	Frame Assy., Seat Support, No Longer Serviced (NHNA), Start Year: 06/01/1973
34	D3NNB435A	1	Frame Assy., Seat Support, 4200-5200-7200, No Longer Serviced, Start Year: 06/01/1973
35	D3NNB474A	1	Release, Seat Parallel Slide, Start Year: 06/01/1973
36	D3NNB442A	1	Pin, Parallel Slide Release, Start Year: 06/01/1973
37	D3NNC400A	1	Spring, Parallel Slide Release, Start Year: 06/01/1973

5000-SERIES 4 CYL TRACTOR (1/65-1/75)

13B05 DELUXE SEAT ASSEMBLY (6-73/)

Ref	Part Number	Qty	Description
38	86511315	2	Washer, M8, Slide Release, Start Year: 06/01/1973
39	E663207S51	2	Ring, Circlip, M6, Start Year: 06/01/1973
40	D2NNN439A	8	Bearing, Half, Parallel Slide, Nylon, Start Year: 06/01/1973
41	D3NN421A	1	Base Assy., Seat, Start Year: 06/01/1973
42	E630153S71	1	Washer, Spring Lock, Start Year: 06/01/1973
43	D2NNA454A	1	Stop, Reversing Guide, No Longer Serviced, Start Year: 06/01/1973
44	81830119	1	Bracket, Driver Seat Bumper, Start Year: 06/01/1973
45	D2NN464A	1	Decal, Weight Adjuster, Start Year: 06/01/1973
46	D2NNA416A	1	Support & Door Assy., Seat, Replaces P/N D2NNA416B&C, 4200-5200-7200, NHNA Only, No Longer Serviced, Start Year: 06/01/1973
47	D2NN94610N00B	2	Anchor Assy., Seat Belt, Start Year: 06/01/1973
48	80680	2	Washer, Lock, 3/8", Start Year: 06/01/1973
49	88434	2	Screw, Cap, HH, G5, 3/8"-16 x 3/4", Start Year: 06/01/1973
50	82014400	1	Belt & Buckle Assy., Seat Safety, Start Year: 06/01/1973
51	280580	2	Screw, Cap, HH, G5, 5/8"-11 x 1", Start Year: 06/01/1973
	D2NNA434C	1	Bracket, Seat Bumper, U.K.-Antwerp, 3055, 3100, 4100, 5100, 7100, Use W/Hydraulic Trailer Brake (NH-E), NH-E Only, No Longer Serviced, Start Year: 06/01/1973
	304624S36	1	Screw, Cap, HH, G5, 1/4"-20 x 1/2", Use W/Hydraulic Trailer Brake (NH-E), Start Year: 06/01/1973
	7770	1	Nut, Hex, 1/4"-20, Use W/Hydraulic Trailer Brake (NH-E), Start Year: 06/01/1973
	80682	1	Washer, Lock, 1/4", Use W/Hydraulic Trailer Brake (NH-E), Start Year: 06/01/1973
	80701	1	Washer, 1/4", Use W/Hydraulic Trailer Brake (NH-E), Start Year: 06/01/1973
	356420S36	2	Washer, Flat, Seat Mounting, 7/16", Start Year: 06/01/1973
	81547	2	Washer, Lock, 7/16", Seat Mounting, Start Year: 06/01/1973
	9627887	1	Screw, Cap, HH, G5, 7/16"-14 x 1-1/4", Seat Mounting, Front, L/Remote Coupler, Start Year: 06/01/1973
	9637916	1	Screw, Cap, HH, G5, 7/16"-14 x 1-1/2", Seat Mounting, Front, 2000-3000-4000 W/Coupler, Start Year: 06/01/1973
	280747	1	Screw, Cap, HH, G5, 7/16"-14 x 1-3/4", Seat Mounting, Front, 5000-7000 W/Coupler, Start Year: 06/01/1973
	9706729	1	Screw, Cap, HH, G5, 7/16"-14 x 1", Seat Mounting, Rear, 5000-7000 L/ Coupler, Start Year: 06/01/1973
	9637916	1	Screw, Cap, HH, G5, 7/16"-14 x 1-1/2", Seat Mounting, Rear, 5000-7000 W/Coupler, Start Year: 06/01/197
	50456	1	Nut, G5, 7/16"-20, Seat Mounting, Rear, 2000-3000-4000 W/ or L/Remote Coupler, Start Year: 06/01/1973

13D03 SEAT ASSEMBLY

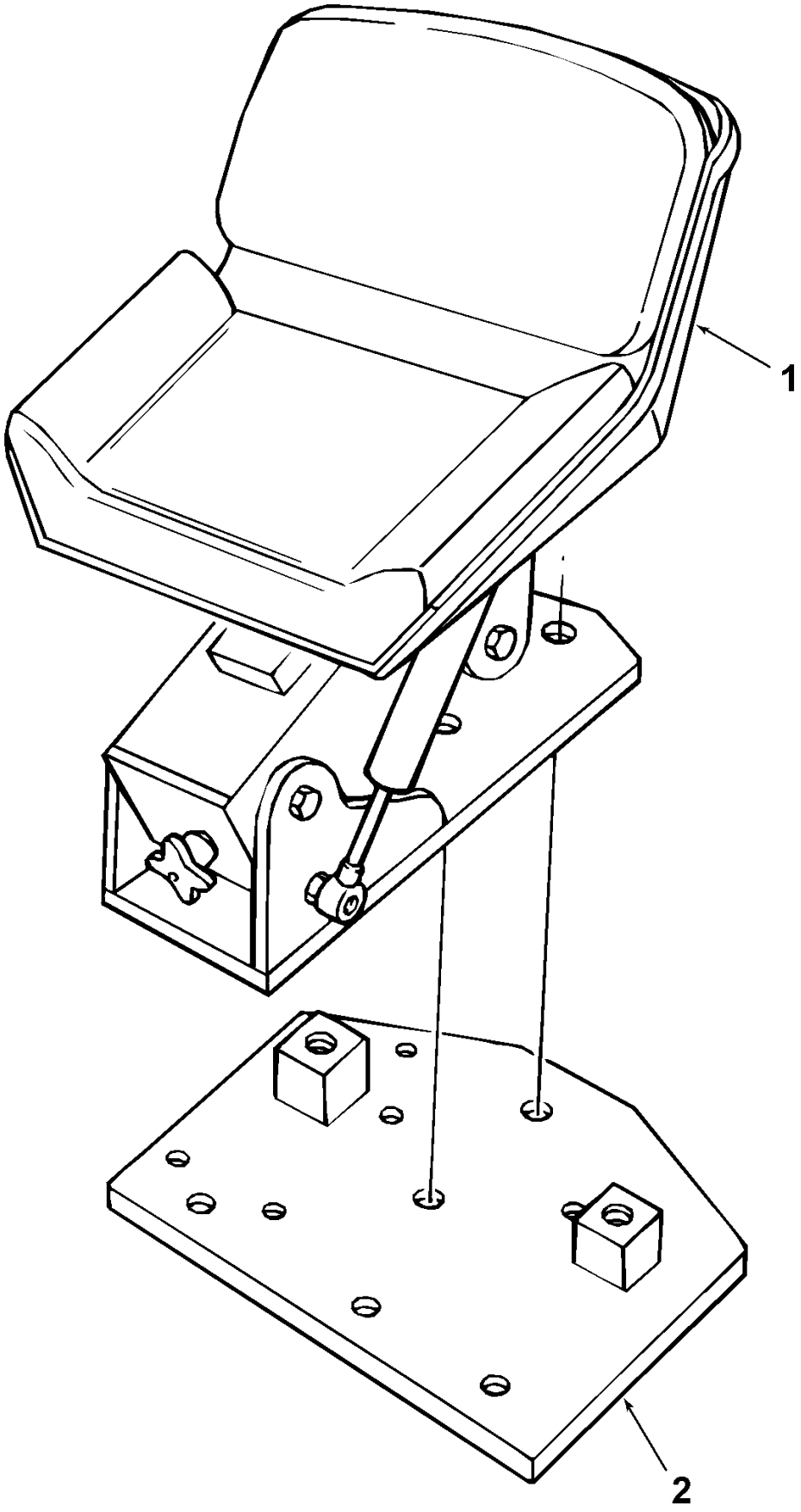

5000-SERIES 4 CYL TRACTOR (1/65-1/75)

13D03 SEAT ASSEMBLY

Ref	Part Number	Qty	Description
1	E4NN400BA	1	Seat Assy., Years: 01/01/1982-01/31/1985
1	E4NN400BA	1	Seat Assy., Start Year: 02/01/1985
1	E5NN422AA	1	Suspension Assy., No Longer Serviced (NH-E), Start Year: 02/01/1985
1	E5NNE416BA	1	Kit, Driver Seat Suspension Link Guard, No Longer Serviced (NH-E), Start Year: 02/01/1985
1	E5NNE455BA	1	Kit, Driver Seat Rail, No Longer Serviced (NH-E), Start Year: 02/01/1985
1	E5NNE411BA	1	Kit, Driver Seat Suspension, Adjustable, Start Year: 02/01/1985
1	E5NNE456BA	1	Kit, Driver Seat Roller & Bushing, No Longer Serviced (NH-E), Start Year: 02/01/1985
1	E5NNE411AA	1	Kit, Driver Seat Height Adjustable, No Longer Serviced (NH-E), Start Year: 02/01/1985
1	E5NND446AA	1	Kit, Driver Seat Suspension Shock Absorber, No Longer Serviced (NH-E), Start Year: 02/01/1985
1	E5NNN409AA	1	Kit, Driver Seat Suspension Bumper, No Longer Serviced (NH-E), Start Year: 02/01/1985
1	E5NNA405AA	1	Pan & Cushion Assy., Start Year: 02/01/1985
2	E4NN16N333AA	1	Bracket Assy., Seat & Fender Suspension, Start Year: 02/01/1985
2	9627887	1	Screw, Cap, HH, G5, 7/16"-14 x 1-1/4", Start Year: 02/01/1985
2	81547	2	Washer, Lock, 7/16", Start Year: 02/01/1985
2	87891	1	Nut, Jam, G2, 7/16"-20, Start Year: 02/01/1985
2	412479	4	Screw, Cap, HH, CL 8.8, M8 x 1.25 x 35, Start Year: 02/01/1985
2	80681	4	Washer, Lock, 5/16", Start Year: 02/01/1985
2	E1NN669AA	1	Pin, Hydraulic Lift Plunger Guide, Start Year: 02/01/1985

14A03 FENDERS, PLATFORM, TOOL BOX & RELATED PARTS - 5100, 7100

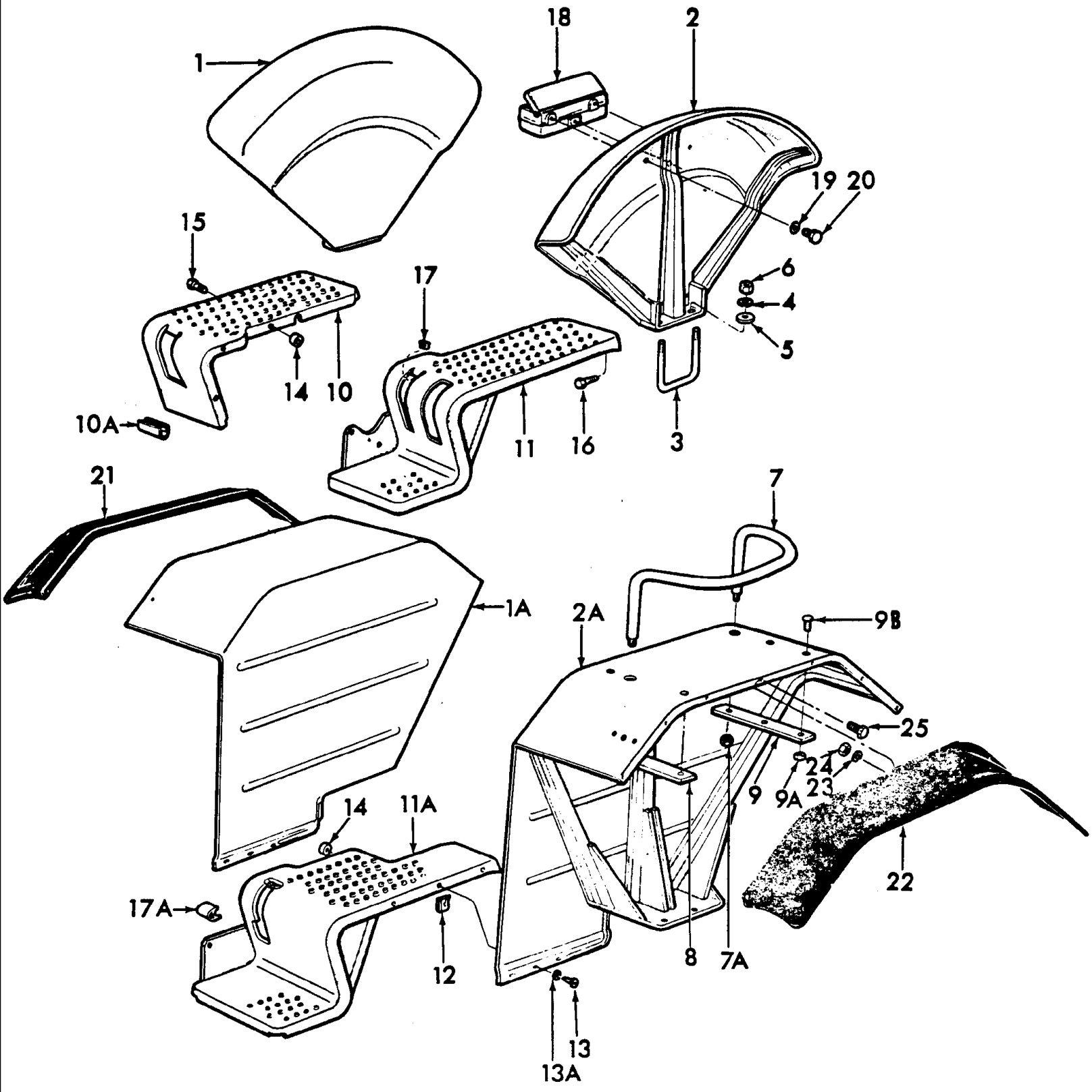

5000-SERIES 4 CYL TRACTOR (1/65-1/75)

14A03 FENDERS, PLATFORM, TOOL BOX & RELATED PARTS - 5100, 7100

Ref	Part Number	Qty	Description
1	D3NN16312Z	1	Fender Assy., Rear, RH, NHNA Only, Start Year: 01/01/1965
1	C7NN16312F	1	Fender Assy., Rear, RH, Replaces C5NN16312D, No Longer Serviced (NHNA), Start Year: 01/01/1965
1A	NLS	1	Fender Assy., Rear, RH, Standard Tire {67NY16312A}, Mexico Only, Start Year: 01/01/1968
1A	NLS	1	Fender Assy., Rear, RH {67NY16312B}, Mexico Only, Start Year: 01/01/1968
1A	82005881	1	Fender Assy., Rear, RH, Germany, Start Year: 01/01/1970
2	D2NN16313AJ	1	Fender Assy., Rear, LH, NHNA Only, Start Year: 01/01/1965
2	C5NN16313BH	1	Fender Assy., Rear, LH, Replaces C5NN16313AY, No Longer Serviced, Start Year: 01/01/1965
2A	NLS	1	Fender Assy., Rear, LH, Standard Tire {67NY16313A}, Mexico Only, Start Year: 01/01/1968
2A	NLS	1	Fender Assy., Rear, LH {67NY16313B}, Used only when using 16.9 x 38 & 18.4 x 34, Larger Size Tires, Mexico Only, Start Year: 01/01/1968
2A	D8NN16313PC	1	Fender Assy., Rear, LH, Replaces C9NN16313Z, Germany, Start Year: 01/01/1970
3	D3NN16N321A	2	U-Bolt, Fender to Rear Axle, 5/8"-18 x 9.115, Used only when using 16.9 x 38 & 18.4 x 34, Larger Size Tires, Mexico Only, Start Year: 01/01/1968
3	D3NN16N321A	4	U-Bolt, Fender to Rear Axle, 5/8"-18 x 9.115, W/Safety Frame, Germany, Start Year: 07/01/1972
3	NLS	2	U-Bolt, Fender to Rear Axle, 5/8"-18 x 8.0 {67NY16N321B}, Mexico Only, Start Year: 01/01/1968
3	C5NN16N321B	2	U-Bolt, Fender to Rear Axle, L/Cab, 5/8"-18, Start Year: 01/01/1965
3	C5NN16N321B	4	U-Bolt, Fender to Rear Axle, L/Cab, 5/8"-18, W/Wide Fenders, Start Year: 01/01/1965
3	NLS	2	Spacer, Fender to Axle, L/Safety Frame {67NY16N300A}, Used only when using 16.9 x 38 & 18.4 x 34, Larger Size Tires, Mexico Only, Start Year: 01/01/1968
3	D6NN94000N80C22B	2	U-Bolt, Fender to Rear Axle, 5/8"-18 x 11.28", U.S., NHNA Only, Start Year: 01/01/1965
3	C7NN16N300A	2	Spacer, Fender to Axle, 3 x 3 x 11.28", U.S., NHNA Only, No Longer Serviced, Start Year: 01/01/1965
4	34811S36	4	Washer, Lock, 5/8", Start Year: 01/01/1965
5	80299	4	Washer, 5/8", US Only, Start Year: 01/01/1965
6	408	4	Nut, G5, 5/8"-18, Fender to Axle, Start Year: 01/01/1965
7	C5NN16N341A	1	Rail Assy., Fender Seat, Germany, Start Year: 01/01/1965
7A	C5NN16N362A	2	Nut, Fender Seat Rail, Germany, NH-E Only, No Longer Serviced, Start Year: 01/01/1965
8	D1NN16N340A	1	Plate, Fender Rail Mounting, Front, Germany, NH-E Only, No Longer Serviced, Start Year: 01/01/1965
9	D1NN16N340A	2	Plate, Fender Rail Mounting, Rear, Germany, NH-E Only, No Longer Serviced, Start Year: 01/01/1965
9A	100016	4	Nut, CL 8, M10 x 1.5, Fender Rail Mounting Plate, Germany, Start Year: 01/01/1965
9B	C5NN16N361A	4	Bolt, Fender Rail Mounting Plate, Germany, No Longer Serviced (NH-E), Start Year: 01/01/1965
10	D4NN16472A	1	Platform, RH, U.S., NHNA Only, No Longer Serviced, Start Year: 01/01/1965
10	D5NN16472C	1	Platform, RH, Cut for Wheel Brake Handbrake, No Longer Serviced, Start Year: 01/01/1967
10A	82015330	1	Bumper, 2-1/2" Lg, Brake Pedal, 2.50" (63.5mm) Lg., U.K., Start Year: 01/01/1965
11	C7NN16451J	1	Platform, LH, Replaces C5NN16451T & BR, NHNA Only, No Longer Serviced, Years: 01/01/1965-09/30/1969
11	C7NN16451L	1	Platform Assy., LH, L/Handbrake, W/Dana Clutch, NHNA Only, No Longer Serviced, Years: 10/01/1969-09/30/1971
11	D2NN16451D	1	Platform, LH, L/Handbrake, Start Year: 10/01/1971
11	D3NN16451C	1	Platform, LH, W/10 Speed Transmission, U.K., Replaces C5NN16451AH, NH-E Only, No Longer Serviced, Start Year: 01/01/1965

5000-SERIES 4 CYL TRACTOR (1/65-1/75)

14A03 FENDERS, PLATFORM, TOOL BOX & RELATED PARTS - 5100, 7100

Ref	Part Number	Qty	Description
11	C5NN16451BH	1	Platform, LH, L/Handbrake & 10 Speed Transmission, U.K., No Longer Serviced, Years: 01/01/1965-09/30/1969
11	D3NN16473C	1	Platform, LH, W/Safety Frame, U.K. - Antwerp, Cut Corner when used with Tansmission Handbrake, Start Year: 08/01/1970
11	D1NN16A486A	1	Platform Support Assy., W/Safety Frame, U.K. - Antwerp, NH-E Only, No Longer Serviced, Start Year: 08/01/1970
11	D3NN16451D	1	Platform Assy., LH, L/Handbrake & 10 Speed Transmission, U.K., NH-E Only, Start Year: 10/01/1969
11	D3NN16451A	1	Platform, LH, W/Transmission Handbrake, U.S., NHNA Only, No Longer Serviced, Start Year: 01/01/1972
11A	C5NN16451BJ	1	Platform, LH, W/Handbrake & L/10 Speed Transmission, U.K., NH-E Only, No Longer Serviced, Years: 01/01/1965-09/30/1969
11A	E0NN16451AC	1	Platform Assy., LH, W/Handbrake, L/10 Speed,, U.K., Start Year: 10/01/1969
12	C5NN16N485A	6	Nut, Captive Fender to Platform, U.K. & Germany, Start Year: 01/01/1965
13	304624S36	6	Screw, Cap, HH, G5, 1/4"-20 x 1/2", Fender to Platform, U.K. & Germany, Start Year: 01/01/1965
13A	80701	6	Washer, 1/4", UK & Germany, Start Year: 01/01/1965
14	C5NN16N500A	2	Spacer, Platform, RH & LH Mounting, .68" Lg., No Longer Serviced (NH-E), Years: 01/01/1965-09/30/1969
14	C5NN16N500A	2	Spacer, Platform, RH & LH Mounting, .68" Lg., W/10 Speed, No Longer Serviced (NH-E), Start Year: 01/01/1965
14	C7NN16N500A	2	Spacer, Platform, RH & LH Mounting, .43" Thick, Start Year: 10/01/1969
15	87689	2	Screw, Cap, HH, G5, 1/2"-13 x 1-1/2", Platform to Center Housing, L/Handbrake, Start Year: 01/01/1965
16	304670S36	9	Screw, Cap, HH, G5, 1/2"-13 x 7/8", Platform to Rear Axle & Transmission, L/Handbrake, Start Year: 01/01/1965
16	304670S36	8	Screw, Cap, HH, G5, 1/2"-13 x 7/8", Platform to Rear Axle & Transmission, W/Handbrake, Start Year: 01/01/1965
17	C5NN7583A	3	Bumper, Clutch Pedal, Brake & Clutch Pedals, Start Year: 01/01/1965
17A	C5NN2B184B	1	Bumper, Clutch Pedal, 1.06" (26.924mm) Lg., Years: 01/01/1965-09/30/1969
18	C5NN17005F11M	1	Tool Box Assy., Replaces C5NN17005C, Start Year: 01/01/1965
18	NLS	1	Tool Box Assy. {67NY17005A}, Mexico Only, Start Year: 01/01/1968
19	80664	2	Washer, 5/16", Start Year: 01/01/1965
20	9627874	2	Screw, Cap, HH, G5, 5/16"-18 x 5/8", Start Year: 01/01/1965
20	NLS	2	Riser, Platform Foot Support, Sweden, Austria, No Longer Serviced, Start Year: 01/01/1970
20	80664	4	Washer, 5/16", Sweden, Austria, Start Year: 01/01/1970
20	80681	4	Washer, Lock, 5/16", Sweden, Austria, Start Year: 01/01/1970
20	9635082	4	Nut, G5, 5/16"-18, Sweden, Austria, Start Year: 01/01/1970
20	280497	4	Bolt, Carriage, Short Neck, G5, 5/16"-18 x 3/4", Riser to Platform, Sweden, Austria, Start Year: 01/01/1970
21	D8NN94030N85AA	1	Extension, Fender, RH, Germany, NH-E Only, Start Year: 04/01/1968
22	D8NN94030N84AA	1	Extension, Fender, LH, Germany, NH-E Only, Start Year: 04/01/1968
23	80701	14	Washer, 1/4", NH-E Only, Start Year: 04/01/1968
24	7770	14	Nut, Hex, 1/4"-20, Germany, NH-E Only, Start Year: 04/01/1968
25	9707580	14	Screw, Cap, HH, G5, 1/4"-20 x 3/4", Extension to Fender, NH-E Only, Start Year: 04/01/1968
25	C5NN16N346A	1	Extension, Rear Fender, LH, NH-E Only, No Longer Serviced, Start Year: 01/01/1965
25	C5NN16N347A	1	Extension, Rear Fender, RH, U.K., NH-E Only, No Longer Serviced, Start Year: 01/01/1965

14A03 FENDERS, PLATFORM, TOOL BOX & RELATED PARTS - 5100, 7100

Ref	Part Number	Qty	Description
25	C5NN16N347A	1	Extension, Rear Fender, RH, Basildon, U.K., NH-E Only, No Longer Serviced, Start Year: 01/01/1965
25	C5NN16N485A	2	Nut, Captive, 1/4"-20, Start Year: 01/01/1965
25	304624S36	2	Screw, Cap, HH, G5, 1/4"-20 x 1/2", Extension to Platform, U.K., Start Year: 01/01/1965
25	80684	4	Washer, Lock, #10, Start Year: 01/01/1965
25	87825	4	Nut, G2, #10-32, Start Year: 01/01/1965
25		4	Screw, Pan Hd, #10-32 x 3/8", Extension to Fender, UK, NH-E Only, Start Year: 01/01/1965
25	80701	2	Washer, 1/4", Start Year: 01/01/1965

14B02 ENGINE HOOD, GRILLE & RELATED PARTS - 5100 GASOLINE & ALL DIESEL, EXCEPT 4200, 5200 & 7200

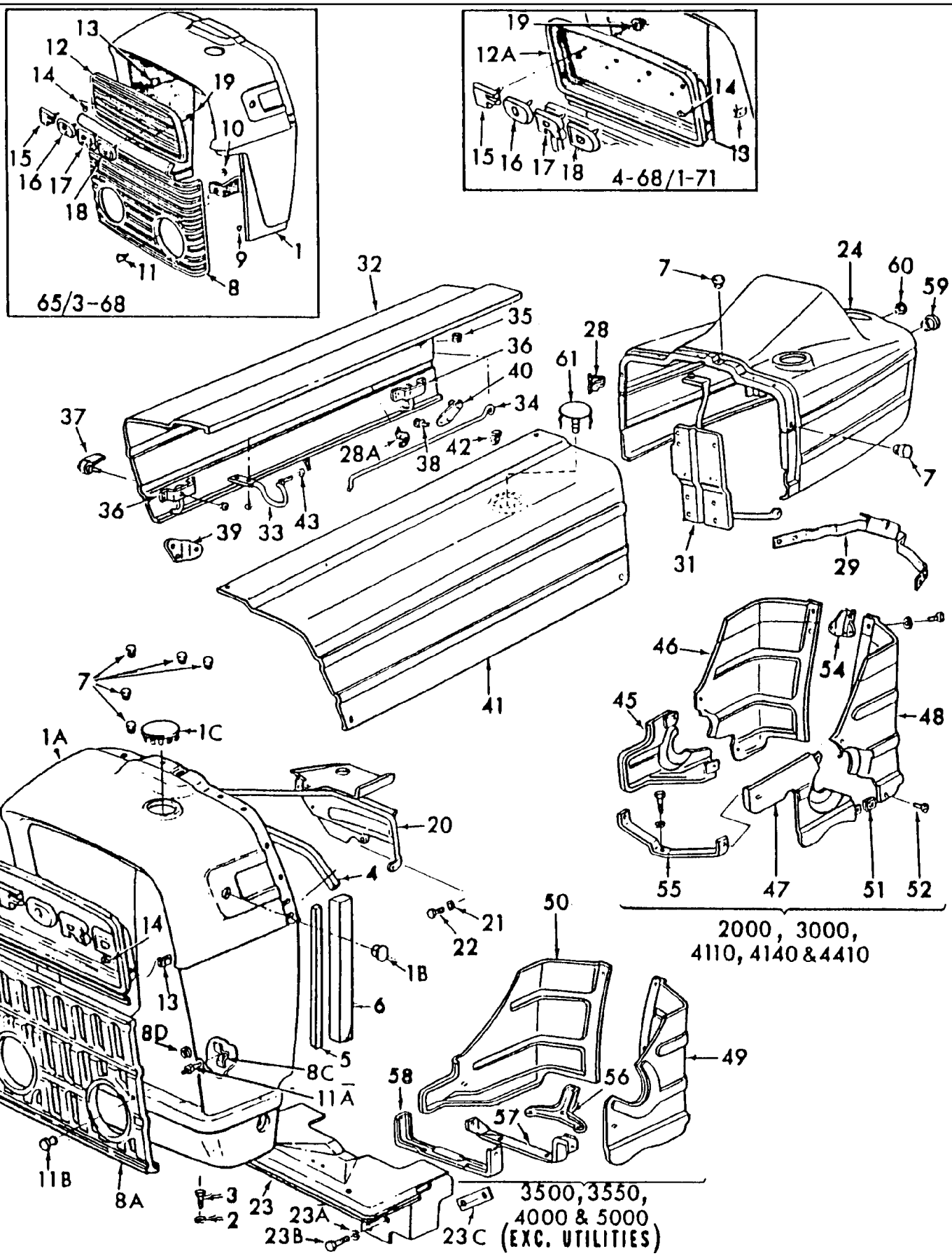

FOR 3500, 3550 & 4500 SHELL & GRILLE, SEE FIG. 14E1 OR 14E2

5000-SERIES 4 CYL TRACTOR (1/65-1/75)

14B02 ENGINE HOOD, GRILLE & RELATED PARTS - 5100 GASOLINE & ALL DIESEL, EXCEPT 4200, 5200 & 7200

Ref	Part Number	Qty	Description
1	C5NN8N202AH	1	Radiator Shell Assy., 4100 & 5100, No Longer Serviced, Years: 01/01/1965-03/31/1968
1	C5NN8N202BT	1	Radiator Shell Assy., 2000-3000-4110, No Longer Serviced (NH-E), Years: 01/01/1965-03/31/1968
1	C5NN8N202BT	1	Radiator Shell Assy., W/Wet Air Clean, 3400, No Longer Serviced (NH-E), Years: 01/01/1965-03/31/1969
1	D4NN8N202J	1	Radiator Shell Assy., W/Dry Air Clean, 3400, Also use D5NN-8200-C (83905164) Grille Assy., W/Inset Lights or D5NN-8200-A (83905165) L/Inset Lights, No Longer Serviced, Years: 01/01/1965-03/31/1968
1	C5NN8N202CS	1	Radiator Shell Assy., 4400, No Longer Serviced, Years: 01/01/1965-03/31/1968
1A	D4NN8N202D	1	Radiator Shell Assy., Dry Air Cleaner, 2000-3000-4140, Also use D5NN-8200-C (83905164) Grille Assy., W/Inset Lights or D5NN-8200-A (83905165) L/Inset Lights, Start Year: 04/01/1968
1A	D0NN8N202K	1	Radiator Shell Assy., 4100-5100, Start Year: 04/01/1968
1A	D0NN8N202K	1	Radiator Shell Assy., W/Wet Air Cleaner, 4400, Start Year: 01/01/1965
1A	D4NN8N202C	1	Radiator Shell Assy., Wet, 2000-3000-4110-4140, Also use D5NN-8200-C (83905164) Grille Assy., W/Inset Lights or D5NN-8200-A (83905165) L/Inset Lights, Start Year: 04/01/1968
1A	D4NN8N202C	1	Radiator Shell Assy., Germany, Years: 04/01/1968-12/31/1971
1A	D5NN8N202G	1	Radiator Shell Assy., Germany, 4100-5100, Also use D5NN-8200-C (83905164) Grille Assy., W/Inset Lights or D5NN-8200-A (83905165) L/Inset Lights, Start Year: 01/01/1972
1A	D4NN8N202J	1	Radiator Shell Assy., 6" Hole, L.H. Side, W/Dry Air Cleaner, 3400-4110-4410, Also use D5NN-8200-C (83905164) Grille Assy., W/Inset Lights or D5NN-8200-A (83905165) L/Inset Lights, No Longer Serviced, Start Year: 04/01/1968
1A	C7NN8N202N	1	Radiator Shell Assy., W/Dry Air Cleaner, 4400, No Longer Serviced, Start Year: 04/01/1968
1A	D0NN8N202F	1	Radiator Shell Assy., 7100, No Longer Serviced, Start Year: 01/01/1971
1A	D4NN8N202T	1	Radiator Shell Assy., W/Dual Power, 7000, Also use D5NN-8200-C (83905164) Grille Assy., W/Inset Lights or D5NN-8200-A (83905165) L/Inset Lights, Start Year: 06/01/1973
1B	C5NN8N209C	2	Plug, Radiator Shell, 1/2", L/Side Headlamps, Start Year: 01/01/1965
1C	C5NN8N209E	2	Plug, Radiator Shell Air Cleaner, 2-3/4", 3400 & 4400, No Longer Serviced, Start Year: 01/01/1965
2	81541	2	Washer, 7/16", 2000-3000, Start Year: 01/01/1965
2	80702	4	Washer, 3/8", 4000-5000-7000, Start Year: 01/01/1965
3	280244	2	Screw, Cap, HH, G5, 7/16"-14 x 3/4", Rad. Shell to Axle, 2000-3000, Start Year: 01/01/1965
3	88434	4	Screw, Cap, HH, G5, 3/8"-16 x 3/4", Radiator Shell to Axle, 4000-5000-7100, Start Year: 01/01/1965
4	D7NN8A256A	1	Seal, Air Upper, Center, .62 x .62 x 20.50, Start Year: 01/01/1965
5	D7NN8A256A	2	Seal, Air Deflector Sd., .62 x .62 x 20.50, 2000-3000-4140, Start Year: 01/01/1965
6	C5NN8348A	2	Seal, Air Deflector Side, 1-1/4" x 1-1/2" x 16-1/2" 4000-5000-7100, Start Year: 01/01/1965
7	C5NN16N655B	12	Pad, Hood to Radiator Shell, Start Year: 01/01/1965
8	C5NN8202AA	1	Radiator Grille Assy., Lower, L/Inset Lights, Years: 01/01/1965-03/31/1968
8	C5NN8202AD	1	Radiator Grille Assy., Lower, W/Inset Lights, No Longer Serviced (NHNA), Years: 01/01/1965-03/31/1968
8A	D1NN8151AY	1	Grille, Radiator, Lower, W/External Lights, 1 Piece, 3400-4400-4410, Start Year: 04/01/1968
8A	D1NN8151A	1	Grille, Radiator, Lower, W/External Lights, 1 Piece,, Start Year: 04/01/1968
8A	D1NN8151B	1	Grille, Radiator, Lower, W/Inset Lights, 1 Piece, Start Year: 04/01/1968
8C	C7NN8A067A	2	Clip, Radiator Grille, Start Year: 04/01/1968
8D	97411S36	2	Ring, Snap, 3/8", Clip, Years: 04/01/1968-04/30/1970
9	C5NN16N655B	4	Pad, Radiator Grille Mounting, Years: 01/01/1965-03/31/1968
10	C5NN8N212B	2	Nut, Lower Grille Mounting, Screw, Years: 01/01/1965-03/31/1968

FOR 3500, 3550 & 4500 SHELL & GRILLE, SEE FIG. 14E1 OR 14E2

5000-SERIES 4 CYL TRACTOR (1/65-1/75)

14B02 ENGINE HOOD, GRILLE & RELATED PARTS - 5100 GASOLINE & ALL DIESEL, EXCEPT 4200, 5200 & 7200

Ref	Part Number	Qty	Description
11	412575	2	Screw, Thumb, M8 x 16, Grille to Shell, Years: 01/01/1965-03/31/1968
11A	C9NN8B151B	2	Stud, Radiator Grille, Start Year: 04/01/1968
11B	9828014	2	Knob, Radiator Grille, Start Year: 04/01/1968
11B	351253S100	2	Washer, Flat, .195 I.D., Knob to Grille, No Longer Serviced (NH-E), Start Year: 04/01/1968
12	C5NN8A163A	1	Grille, Radiator, Upper, Years: 01/01/1965-03/31/1968
12A	C7NN8150G	1	Grille, Radiator, Upper, Years: 04/01/1968-01/31/1971
12B	C9NN8A163AG	1	Grille, Radiator Shell, Upper, Red & Gray, Start Year: 02/01/1971
12B	C9NN8A163AY	1	Grille, Radiator Shell, Upper, Yellow & Black, 3400-4400, Start Year: 02/01/1971
13	D1NN8N212A	4	Nut, Grille Mounting, Start Year: 01/01/1965
14	52353S37	4	Screw, #10-12 x .50, Upper Grille to Radiator Shell, Start Year: 01/01/1965
15	86514060	1	Letter, "F", No Longer Serviced (NH-E), Years: 01/01/1965-01/31/1971
16	86514060	1	Letter - "O", No Longer Serviced (NH-E), Years: 01/01/1965-01/31/1971
17	86514060	1	Letter - "R", No Longer Serviced (NH-E), Years: 01/01/1965-01/31/1971
18	86514060	1	Letter - "D", No Longer Serviced (NH-E), Years: 01/01/1965-01/31/1971
19	371326S36	8	Nut, Fastener, Self Thread, 1/4", Letters to Grille, Years: 01/01/1965-01/31/1971
20	C5NN8N096A	1	Radiator Shell Support Assy., Upper, Except 4110-2000-4000, No Longer Serviced, Years: 01/01/1965-01/31/1967
20	C5NN8N096B	1	Radiator Shell Support Assy., Upper, 3000 & 4110, No Longer Serviced (NHNA), Years: 01/01/1965-01/31/1967
20	D0NN8N096C14M	1	Radiator Shell Support Assy., Upper, Except 3400-5000, Start Year: 02/01/1967
20	C5NN8N096V	1	Radiator Shell Support Assy., Upper, 3400, Start Year: 02/01/1967
20	D0NN8N096A	1	Radiator Shell Support Assy., Upper, 5100, Start Year: 01/01/1965
20	86546702	1	Radiator Shell Support Assy., Upper, 7100, NHNA Only, Start Year: 01/01/1971
21	81547	2	Washer, Lock, 7/16", Start Year: 01/01/1965
22	280244	2	Screw, Cap, HH, G5, 7/16"-14 x 3/4", Support to Cylinder Head, Start Year: 01/01/1965
	86629539	3	Nut, G5, 5/16"-24, 3400, 4410, Years: 01/01/1965-09/30/1971
	9635082	3	Nut, G5, 5/16"-18, Start Year: 10/01/1971
	280559	1	Screw, Cap, HH, G5, 5/16"-24 x 3/4", Years: 01/01/1965-09/30/1971
	87872	1	Screw, Cap, HH, G5, 5/16"-18 x 3/4", Start Year: 10/01/1971
	86977738	3	Screw, Cap, HH, G5, 5/16"-24 x 7/8", Years: 01/01/1965-09/30/1971
	280345	2	Screw, Cap, HH, G5, 5/16"-18 x 7/8", RH, Start Year: 10/01/1971
23	C7NN13N063B	1	Baffle & Bracket Assy., Headlamp Mounting, 2000-3000 & 4110 US, Except 2300-3300-3400, No Longer Serviced (NHNA), Years: 04/01/1968-07/31/1970
23	C7NN13N063B	1	Baffle & Bracket Assy., Headlamp Mounting, 3400, No Longer Serviced (NHNA), Years: 04/01/1968-12/31/1970
23	D5NN8N047A	1	Baffle & Bracket Assy., Radiator & Shell Support, 2000-3000-4110, Except 2300-3300-3400, Start Year: 08/01/1970
23	D5NN8N047A	1	Baffle & Bracket Assy., Radiator & Shell Support, 3400, Start Year: 01/01/1971
23A	80681	2	Washer, Lock, 5/16", Start Year: 04/01/1968
23B	304626S36	2	Screw, Cap, HH, G5, 5/16"-18 x 1/2", W/External Headlamps, Start Year: 04/01/1968
23B	9635884	4	Screw, Cap, HH, G5, 5/16"-18 x 1", W/Inset Headlamps, Start Year: 04/01/1968

FOR 3500, 3550 & 4500 SHELL & GRILLE, SEE FIG. 14E1 OR 14E2

5000-SERIES 4 CYL TRACTOR (1/65-1/75)

14B02 ENGINE HOOD, GRILLE & RELATED PARTS - 5100 GASOLINE & ALL DIESEL, EXCEPT 4200, 5200 & 7200

Ref	Part Number	Qty	Description
23C	D0NN8N055A	1	Spacer, Baffle, 3400, No Longer Serviced (NH-E), Start Year: 01/01/1971
24	NLS	1	Panel Assy., Rear, L/Instruction, Except 10 Speed, 2000, U.K. {C5NN16N627A}, Start Year: 01/01/1965
24	NLS	1	Panel Assy., Rear, L/Instructions, 10 Speed only, 2000 {C5NN16N627AE}, Years: 01/01/1965-03/31/1969
24	C7NN16N627L	1	Panel Assy., Rear, L/Instruction, W/10 Speed, 2000, NH-E Only, No Longer Serviced, Start Year: 04/01/1969
24	D0NN16N627T	1	Panel Assy., W/Instruction, L/10 Speed, 3400-4410, No Longer Serviced (NHNA), Start Year: 01/01/1965
24	D0NN16N627S	1	Panel Assy., Rear, W/Instructions, W/10 Speed, 3400-4410, No Longer Serviced (NHNA), Start Year: 01/01/1965
24	D0NN16N627N	1	Panel Assy., Rear, W/Instructions, 10 Speed Only, Except 3400, No Longer Serviced (NHNA), Start Year: 01/01/1965
24	D8NN16948DB	1	Panel Assy., Rear, W/Instructions, L/10 Speed, Except 3400, Start Year: 01/01/1965
24	D8NN16948PA	1	Panel Assy., Rear, W/Instructions & Torque Converter 3500-4500, No Longer Serviced (NHNA), Start Year: 01/01/1965
24	D8NN16948TA	1	Panel Assy., Rear, W/Proofmeter & Speedometer, 3550-4500, NH-E Only, No Longer Serviced, Start Year: 06/01/1973
24	D8NN16948GB	1	Panel Assy., Rear, W/Dual Power, L/Turn Indicator & Flasher 5100,7100, No Longer Serviced, Start Year: 06/01/1973
24	D8NN16948HB	1	Panel Assy., Rear, W/Dual Power & Turn Indicator, NH-E Only, No Longer Serviced, Start Year: 06/01/1973
24	NLS	1	Panel Assy., Hood Rear, 5100 {73NY16N627A}, Mexico Only, Start Year: 01/01/1968
28	E1ADKN16828B	1	Clip, Hood Support Rod, Hood Open, Years: 01/01/1965-03/31/1969
28A	C7NN16N658A	1	Clip, Hood Support Rod, Hood Closed, Start Year: 01/01/1965
29	82002840	1	Bracket & Support Assy., Hood to Steering Column, Except 3400, Start Year: 01/01/1965
29	82002840	1	Bracket & Support Assy., Hood to Steering Column, W/Power Steering, 4100, Years: 01/01/1965-03/31/1970
29	82002837	1	Bracket & Support Assy., Hood to Steering, W/Power Steering Column, 3400-4100, Start Year: 01/01/1965
	80664	2	Washer, 5/16", Start Year: 01/01/1965
	9635082	2	Nut, G5, 5/16"-18, Start Year: 01/01/1965
	9635884	2	Screw, Cap, HH, G5, 5/16"-18 x 1", 2000 & 3000, Start Year: 01/01/1965
	9627874	2	Screw, Cap, HH, G5, 5/16"-18 x 5/8", 4000-5100-7100, Start Year: 01/01/1965
31	C5NN16N600M	1	Support Assy., Engine Hood, Rear, 3100-3120, No Longer Serviced, Years: 01/01/1965-01/31/1967
31	C5NN16N600M	1	Support Assy., Engine Hood, Rear, 3400-4410, No Longer Serviced, Start Year: 01/01/1965
31	C5NN16N600N	1	Support Assy., Engine Hood, Rear, 3100-3120, Start Year: 02/01/1967
31	C5NN16N600N	1	Support Assy., Engine Hood, Rear, 2000-4000-3500, Start Year: 01/01/1965
31	D1NN16B815F	1	Support Assy., Engine Hood, Rear, 5100-7100, U.K. - Antwerp, Start Year: 01/01/1965
31	D1NN16B815F	1	Support Assy., Engine Hood, Rear, 5100, U.S., Start Year: 01/01/1965
31	D2NN16B815C	1	Support Assy., Hood, Rear, 7100, NHNA Only, No Longer Serviced, Start Year: 01/01/1971
31	NLS	1	Support Assy., Engine Hood, Rear, 5100 {72NY16B815A}, Mexico Only, Start Year: 01/01/1968
	280683	1	Screw, Cap, HH, G5, 5/16"-24 x 1/2", Years: 01/01/1965-09/30/1971
	304626S36	1	Screw, Cap, HH, G5, 5/16"-18 x 1/2", Start Year: 10/01/1971
	280781	1	Screw, Cap, HH, G5, 1/4"-28 x 5/8", Rear Hood to Support Bracket, Years: 01/01/1965-09/30/1971
	280641	1	Screw, Cap, HH, G5, 1/4"-20 x 5/8", Rear Hood to Support Bracket, Start Year: 10/01/1971

FOR 3500, 3550 & 4500 SHELL & GRILLE, SEE FIG. 14E1 OR 14E2

5000-SERIES 4 CYL TRACTOR (1/65-1/75)

14B02 ENGINE HOOD, GRILLE & RELATED PARTS - 5100 GASOLINE & ALL DIESEL, EXCEPT 4200, 5200 & 7200

Ref	Part Number	Qty	Description
	86629539	1	Nut, G5, 5/16"-24, Years: 01/01/1965-09/30/1971
	9635082	1	Nut, G5, 5/16"-18, Start Year: 10/01/1971
	20677	1	Screw, Cap, HH, G5, 5/16"-24 x 5/8", Support Bracket, Years: 01/01/1965-09/30/1971
	9627874	1	Screw, Cap, HH, G5, 5/16"-18 x 5/8", Support Bracket, Start Year: 10/01/1971
32	C5NN16625G	1	Panel Assy., Engine Hood, RH, Except 5100, No Longer Serviced, When used W/Horizontal Exhaust Plug hole w/available Plug, See Ref. 61., Years: 01/01/1965-03/31/1967
32	85700572	1	Panel Assy., Engine Hood, RH, Except 5100-7100, Start Year: 04/01/1968
32	C5NN16625S	1	Panel Assy., Engine Hood, RH, 5100, No Longer Serviced, Years: 01/01/1965-03/31/1968
32	C7NN16625E	1	Panel Assy., Engine Hood, RH, 5100-7100, Start Year: 04/01/1968
32	NLS	1	Panel Assy., Engine Hood, RH, 5100 {71NY16625A}, Mexico Only, Start Year: 01/01/1968
33	C5NN16N631B	1	Hinge Rod Assy., Engine Hood, Start Year: 01/01/1965
33	42900S36	4	Screw, Rd Hd, W/Washer, 1/4"-20 x 1/2", Start Year: 01/01/1965
34	C7NN8042A	1	Rod, Support, Engine Hood Side Panel, RH, Start Year: 01/01/1965
35	E1ADKN16751	1	Grommet, Engine Hood Support, Start Year: 01/01/1965
	280250	1	Pin, Split Cotter, 3/32" x 3/4", Rod to Panel, Years: 01/01/1965-03/31/1969
36	85700110	2	Engine Hood Lock Assy., Start Year: 01/01/1965
	60311S	8	Rivet, Button Hd, 5/32" x 1/4", Lock Assy, Start Year: 01/01/1965
37	D6NN16N644A	2	Handle Assy., Engine Hood, RH, Start Year: 01/01/1965
	18650	2	Nut, Lock, GB, 1/4"-28, Handle to Lock Assy, Start Year: 01/01/1965
38	C5NN16N775A	1	Stud, Engine Hood Catch, Rear, 5100-7100, Start Year: 01/01/1965
	80664	1	Washer, 5/16", 5100-7100, Start Year: 01/01/1965
	86629539	1	Nut, G5, 5/16"-24, 5100, 7100, Start Year: 01/01/1965
39	85700201	1	Bracket Assy., Engine Hood Catch, Front, Start Year: 01/01/1965
	80664	1	Washer, 5/16", 5100-7100, Start Year: 01/01/1965
	86629539	1	Nut, G5, 5/16"-24, 5100, 7100, Start Year: 01/01/1965
	86977738	2	Screw, Cap, HH, G5, 5/16"-24 x 7/8", Bracket, Start Year: 01/01/1965
40	C5NN16N773A	1	Bracket Assy., Engine Hood Catch, Rear, 2000-4000, Start Year: 01/01/1965
40	D4NN16N773A	1	Bracket Assy., Engine Hood Catch, Rear, 3000, Start Year: 01/01/1965
	80701	4	Washer, 1/4", Start Year: 01/01/1965
	86509309	2	Nut, G5, 1/4"-28, Start Year: 01/01/1965
	355233S8	2	Bolt, HH, 1/4"-28 x 3/4", No Longer Serviced, Start Year: 01/01/1965
41	C7NN16626C	1	Panel Assy., Hood, LH, 785mm long, Vertical or Horizontal Exhaust Except 5100-7100, No Longer Serviced, Start Year: 01/01/1965
41	D0NN16626H	1	Panel Assy., Hood, LH, Vertical Exhaust, 7100, No Longer Serviced, Start Year: 01/01/1971
41	C7NN16626G	1	Panel Assy., Hood, LH, 1060mm long, Vertical & Horizontal Exhaust, 5100, No Longer Serviced, Start Year: 01/01/1965
41	NLS	1	Panel Assy., Engine Hood, LH, 5100, Includes: Panel Assy. & Ref. 42 {71NY16626A}, Mexico Only, Start Year: 01/01/1968
42	354177S	4	Bumper, Hood, Start Year: 01/01/1965
43	C5NN16N647A	2	Washer, Hinge, Start Year: 01/01/1965
	280224	2	Pin, Split, Cotter, 1/16" x 5/8", Hinge, Start Year: 01/01/1965

FOR 3500, 3550 & 4500 SHELL & GRILLE, SEE FIG. 14E1 OR 14E2

5000-SERIES 4 CYL TRACTOR (1/65-1/75)

14B02 ENGINE HOOD, GRILLE & RELATED PARTS - 5100 GASOLINE & ALL DIESEL, EXCEPT 4200, 5200 & 7200

Ref	Part Number	Qty	Description
	80702	8	Washer, Flat, 1/4", Start Year: 01/01/1965
	86509309	4	Nut, G5, 1/4"-28, Start Year: 01/01/1965
	50310S36	2	Screw, Rd Hd, 1/4"-28 x 1", Start Year: 01/01/1965
	50280S36	2	Screw, Rd Hd, 1/4"-28 x 5/8", Start Year: 01/01/1965
45	C5NN16N557A	1	Cover, Steering Gear, RH, Front, 2000-3000-4140, Start Year: 01/01/1965
46	C5NN16N558A	1	Cover, Steering Gear, RH, Rear, W/O Foot Throttle, 3400, No Longer Serviced, Start Year: 01/01/1965
46	C5NN16N558G	1	Cover, Steering Gear, RH, Rear, W/Foot Throttle, 3400-4410, No Longer Serviced, Start Year: 01/01/1965
46	C5NN16N558F	1	Cover, Steering Gear, RH, Rear, W/10 Speed Transmission 2000-3000-4110 Except 3400, Start Year: 01/01/1965
46	D2NN16N558D	1	Cover, Steering Gear, RH, Rear. L/10 Speed 2000-3000-4000 Except 3400, Start Year: 01/01/1965
47	D5NN3N785A	1	Cover, Steering Gear, LH, Front 2000-3000-4140, No Longer Serviced, Start Year: 01/01/1965
48	C5NN16N561A	1	Cover, Steering Gear, LH, Rear, 12-1/2" High, 3410-4410, No Longer Serviced (NHNA), Start Year: 01/01/1965
48	C5NN16N561B	1	Cover, Steering Gear, LH, 11" High, 2000-3000-4140 Except 3500-3550, Start Year: 01/01/1965
49	C5NN16N553C	1	Cover, Steering Gear Side, LH, 3500-3550-440-4500, Can Replace W/D0NN-3R670-A, No Longer Serviced, Start Year: 01/01/1965
49	C5NN16N553C	1	Cover, Steering Gear Side, LH, 4100, Can Replace W/D0NN-3R670-A, No Longer Serviced, Years: 01/01/1965-03/31/1970
49	C5NN16N553B	1	Cover, Steering Gear Side, LH, L/10 Speed Transmission 5100, No Longer Serviced (NHNA), Years: 01/01/1965-08/31/1970
49	C5NN16N553D	1	Cover, Steering Gear Side, LH, W/10 Speed Transmission 5100, No Longer Serviced (NHNA), Years: 01/01/1965-08/31/1970
50	D0NN3R670B	1	Cover, Steering Gear Side, RH, L/Foot Throttle, 4400, No Longer Serviced, Start Year: 01/01/1965
50	D0NN3R670B	1	Cover, Steering Gear Side, RH, L/10 Speed Transmission 4100, No Longer Serviced, Years: 01/01/1965-03/31/1970
50	D0NN3R670B	1	Cover, Steering Gear, RH, L/Foot Throttle, 4400, Can Replace W/D0NN-3R670-A, No Longer Serviced, Start Year: 01/01/1965
50	D0NN3R670B	1	Cover, Steering Gear, RH, L/10 Speed Transmission, 4100, Can Replace W/D0NN-3R670-A, No Longer Serviced, Years: 01/01/1965-03/31/1970
50	C5NN16N554B	1	Cover, Steering Gear Side, RH, 5100, No Longer Serviced, Years: 01/01/1965-08/31/1970
50	D0NN3R670A	1	Cover, Steering Gear, RH, 3500-3550-4500, No Longer Serviced (NHNA), Start Year: 01/01/1965
50	D0NN3R670A	1	Cover, Steering Gear, RH, W/Foot Throttle, 4400, No Longer Serviced (NHNA), Start Year: 01/01/1965
50	D0NN3R670A	1	Cover, Steering Gear, RH, W/10 Speed Transmission, 4100, No Longer Serviced (NHNA), Years: 01/01/1965-03/31/1970
50	C7NN16N557A	1	Cover, Steering Gear, (1) Piece, 4100, Start Year: 04/01/1970
50	C7NN3R654A	1	Cover, Steering Gear, (1) Piece, 5100-7100, Start Year: 09/01/1970
51	C5NN8N212B	4	Nut, U-Bolt Type, Front to Rear Cover, RH & LH 2000-3000-4000, Start Year: 01/01/1965
52	52353S37	5	Screw, Self-Tapping, Oval Hd, #10-12 x 5/8", 2000-3000-4000, Start Year: 01/01/1965
52	D3NN3C549A	1	Spacer, Cover to Bracket, .50"-12.7mm Lg., 4100, NH-E Only, No Longer Serviced, Start Year: 01/01/1973
	57453S36	1	Screw, Pan Hd, G5, 1/4"-20 x 1-1/4", Use W/Spacer, 4100, UK, Start Year: 01/01/1973
54	C5NN16N551C	1	Bracket, Steering Gear Cover, Rear, 2000-3000-4110-4140, Start Year: 01/01/1965

FOR 3500, 3550 & 4500 SHELL & GRILLE, SEE FIG. 14E1 OR 14E2

14B02 ENGINE HOOD, GRILLE & RELATED PARTS - 5100 GASOLINE & ALL DIESEL, EXCEPT 4200, 5200 & 7200

Ref	Part Number	Qty	Description
	80681	2	Washer, Lock, 5/16", Start Year: 01/01/1965
	20677	2	Screw, Cap, HH, G5, 5/16"-24 x 5/8", 2000-3000, Years: 01/01/1965-09/30/1971
	9627874	2	Screw, Cap, HH, G5, 5/16"-18 x 5/8", 2000-3000, Start Year: 10/01/1971
55	C5NN16N550C	1	Bracket, Steering Gear Cover, Front, 2000-3000-4110-4140, Start Year: 01/01/1965
	88814	1	Screw, Cap, HH, G5, 3/8"-16 x 1/2", 2000-3000, Start Year: 01/01/1965
56	C5NN16N552A	1	Bracket, Steering Gear Cover, Rear, 3500-3550-4400-4500, No Longer Serviced, Start Year: 01/01/1965
56	C5NN16N552A	1	Bracket, Steering Gear Cover, Rear, 4100, No Longer Serviced, Years: 01/01/1965-03/31/1970
56	C5NN16N551A	1	Bracket, Steering Gear Cover, Rear, L/10 Speed, 5100, No Longer Serviced, Years: 01/01/1965-08/31/197
56	C5NN16N551B	1	Bracket, Steering Gear Cover, Rear, W/10 Speed, 5100, No Longer Serviced, Years: 01/01/1965-08/31/1970
56	C7NN3R652A	1	Bracket, Steering Gear Cover, RH, Rear, 5100-7100, Start Year: 09/01/1970
56	C7NN3R653A	1	Bracket, Steering Gear Cover, LH, Rear, 5100-7100, Start Year: 09/01/1970
57	C5NN16N550B	1	Bracket, Steering Gear Cover, Front, 3500-4400-4500, No Longer Serviced (NHNA), Start Year: 01/01/196
57	C5NN16N550B	1	Bracket, Steering Gear Cover, Front, 4100, No Longer Serviced (NHNA), Years: 01/01/1965-03/31/1970
58	C5NN16N550A	1	Bracket, Steering Gear Cover, Front, 5100, No Longer Serviced (NHNA), Years: 01/01/1965-08/31/1970
58	C7NN16N566A	1	Bracket, Steering Gear Cover, RH, Front, 5100-7100, Start Year: 09/01/1970
	44738S43	1	Washer, 9/16", 5100-7100, No Longer Serviced (NHNA), Start Year: 09/01/1970
	20355	1	Washer, Lock, Int T, 1/2", Start Year: 01/01/1965
59	C5NN16N573B	1	Plug, PTO Control, W/10 Speed, 3/4" (19.05mm), 5100-7100, Start Year: 01/01/1965
59	PL	1	Plug, Horn Button Hole, L/Horn, U.S., NHNA Only, Start Year: 01/01/1965
59	C5NN16N573B	1	Plug, Horn Button Hole, L/Horn, 3/4" (19.05mm), U.K. - Antwerp, Start Year: 01/01/1965
60	C5NN8N209C	1	Plug, Light Switch Hole, 1/2", L/Light Switch, Start Year: 01/01/1965
61	74263S	1	Plug, 2-1/2" Button, Used to plug Hole in Hood when converting from Vertical to Horizontal Exhaust., NHNA Only, No Longer Serviced, Years: 01/01/1965-03/31/1968
61	82007906	1	Plug, 2-7/8" Button, Used to plug Hole in Hood when converting from Vertical to Horizontal Exhaust., Start Year: 04/01/1968
	C7NN16N551B	1	Bracket, Steering Gear Cover, LH, 4100, No Longer Serviced (NH-E), Start Year: 04/01/1970
	D2NN16N566A	1	Bracket, Steering Gear Cover, RH, 4100, Start Year: 04/01/1970
	C7NN16N551A	1	Bracket, Steering Gear Cover, Rear, 4100, Start Year: 04/01/1970
	C5NN16N485A	3	Nut, Captive, Attach Cover to Brackets, 4100, Start Year: 04/01/1970
	C5NN16N485A	3	Nut, Captive, Attach Cover to Brackets, 5100-7100, NHNA Only, Start Year: 09/01/1970
	50517S36	3	Screw, Pan Hd, 1/4"-20 x 1/2", 4100, Start Year: 04/01/1970
61	50517S36	3	Screw, Pan Hd., 1/4"-20 x 1/2", 5100-7100, NHNA Only, Start Year: 09/01/1970

FOR 3500, 3550 & 4500 SHELL & GRILLE, SEE FIG. 14E1 OR 14E2

14C01 REFLECTOR ASSEMBLY & RELATED PARTS (OPTIONAL), U.K.

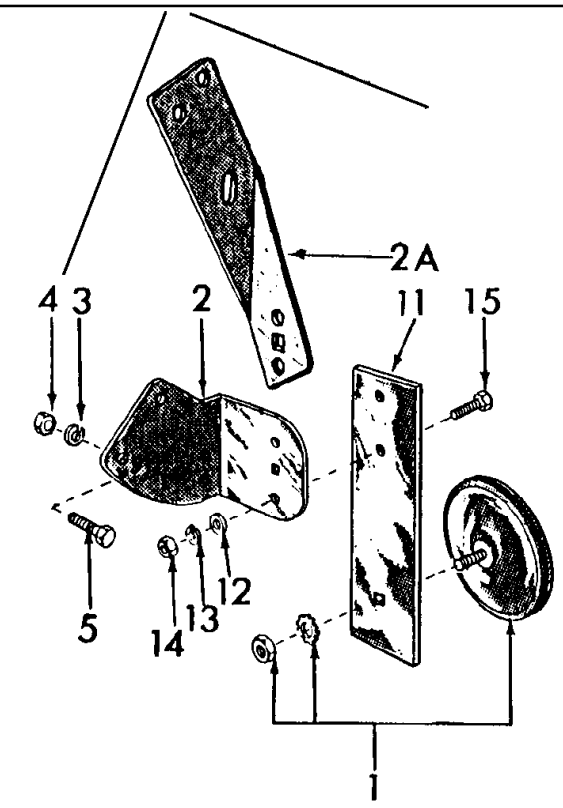

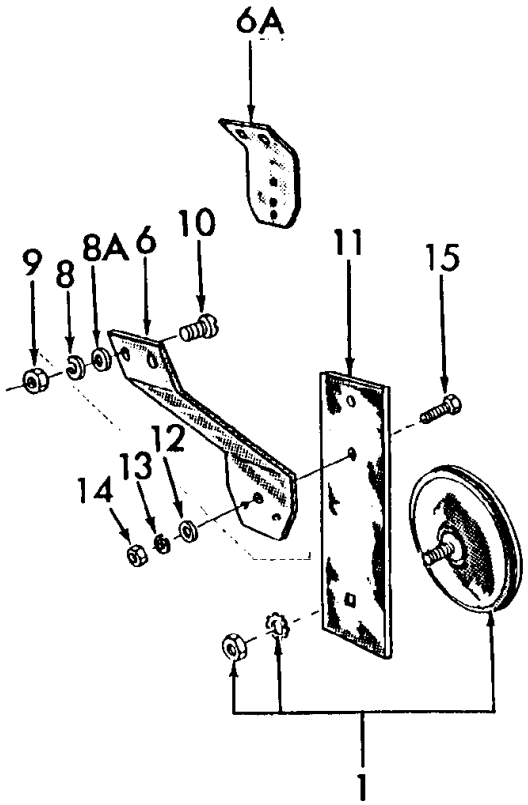

5000-SERIES 4 CYL TRACTOR (1/65-1/75)

14C01 REFLECTOR ASSEMBLY & RELATED PARTS (OPTIONAL), U.K.

Ref	Part Number	Qty	Description
1	C5NN13N077A	2	Reflector Assy., Rear, Includes: Washer & #10-32 Nut, Start Year: 01/01/1965
1	D8NN13A565BA	2	Reflector Assy., Rear, 2300,3300, Includes: Washer & #10-32 Nut, Start Year: 01/01/1966
2	D0NN16N338C	2	Bracket, Reflector Mounting, W/Raised Fenders, 2300,3300, NH-E Only, No Longer Serviced, Start Year: 01/01/1966
2	C5NN16N338H	1	Bracket, Reflector Mounting, R.H., W/U.K. Fenders, NH-E Only, No Longer Serviced, Start Year: 01/01/1965
2	C5NN16N339D	1	Bracket, Reflector Mounting, L.H., W/U.K. Fenders, NH-E Only, No Longer Serviced, Start Year: 01/01/196
2A	C5NN16N338E	1	Bracket, Reflector Mounting, R.H., France & Sweden, NH-E Only, No Longer Serviced, Start Year: 03/01/1966
2A	C5NN16N339C	1	Bracket, Reflector Mounting, L.H., France & Sweden, NH-E Only, No Longer Serviced, Start Year: 03/01/1966
2A	D0NN16N338A	1	Bracket, Reflector Mounting, R.H., W/Cab, Low Position, NH-E Only, Start Year: 08/01/1970
2A	D0NN16N339A	1	Bracket, Reflector Mounting, L.H., W/Cab, Low Position, NH-E Only, No Longer Serviced, Start Year: 08/01/1970
2A	D0NN16N338B	2	Bracket, Reflector Mounting, W/Cab, High Position, NH-E Only, No Longer Serviced, Start Year: 08/01/197
3	80681	4	Washer, Lock, 5/16", Start Year: 01/01/1965
3	80664	4	Washer, 5/16", Start Year: 01/01/1965
4	9635082	4	Nut, G5, 5/16"-18, Start Year: 01/01/1965
5	9635884	4	Screw, Cap, HH, G5, 5/16"-18 x 1", K Fenders, NH-E Only, Start Year: 01/01/1965
5	C7NN16N609A	4	Spacer, Bracket to Fender, .38 I.D. x .6200 x .30 (9.65 x 15.75 x 7.62 mm), 2310,3310, U.K. Fenders, Replaces C9NN-16N609-A, NH-E Only, No Longer Serviced, Start Year: 01/01/1965
6	C9NN16N338A	2	Bracket, Reflector Mounting, Short, Standard, W/Wide Fenders, 4100,5100, NH-E Only, Start Year: 01/01/1965
6	C7NN16N338C	2	Bracket, Reflector Mounting, Lg., W/Wide Fender, Belgium, Luxembourg & Germany, 4000,5000,4100, 5100,7100, NH-E Only, Years: 01/01/1965-05/31/1968
6	D4NN16N338A	2	Bracket, Reflector Mounting, Lg., W/Wide Fenders, Italy, 5100,7100, NH-E Only, No Longer Serviced, Start Year: 01/01/1974
6A	C5NN16N338J	2	Bracket, Reflector Mounting, Extra Short, 2000,3000, Start Year: 01/01/1965
6A	C5NN16N338J	2	Bracket, Reflector Mounting, Extra Short, 4400,4500, Start Year: 06/01/1968
8	80682	4	Washer, Lock, 1/4", Start Year: 01/01/1965
8A		4	Washer, Flat, .26 I.D. x 1" O.D., NH-E Only, No Longer Serviced, Start Year: 01/01/1965
9	7770	4	Nut, Hex, 1/4"-20, Start Year: 01/01/1965
10		4	Screw, Rd Hd, 1/4"-20 x 5/8", W/Wide Fender, W/C5NN-16N338-C & F, NH-E Only, Start Year: 01/01/196
11	C5NN13N220A	2	Extension, Reflector Mounting, 1/4" x 2" x 7", Except France & Sweden, NH-E Only, Start Year: 01/01/196
11	C7NN13N220A	2	Extension, Reflector Mounting, 5-1/2" (139.7mm) Lg., Germany, 4100,5100, NH-E Only, No Longer Serviced, Start Year: 01/01/1965
11	C7NN13N220A	2	Extension, Reflector Mounting, Standard, Italy, 5100,7100, NH-E Only, No Longer Serviced, Start Year: 01/01/1974
12	80707	4	Washer, 3/16", NHNA Only, Start Year: 01/01/1965
13	34804S36	4	Washer, Lock, #12, No Longer Serviced (NH-E), Start Year: 01/01/1965
14	86512084	4	Nut, #12-24, Start Year: 01/01/1965

14C01 REFLECTOR ASSEMBLY & RELATED PARTS (OPTIONAL), U.K.

Ref	Part Number	Qty	Description
14	34651S36	4	Nut & Washer Assy., #6-32, W/Wide Fenders, 4100,5100, No Longer Serviced (NHNA), Start Year: 01/01/1969
15	36911S8	4	Screw, Rd Hd, #12-24 x 1", NH-E Only, Start Year: 01/01/1965
15	57007S36	4	Screw, HWH, G5, #6-32 x 3/4", W/Wide Fenders, 4100, 5100, No Longer Serviced (NHNA), Start Year: 01/01/1969
15	D4NN16N342A	1	Bracket Assy., Reflector Mounting, R.H., Austria, 4100,5100,7100, NH-E Only, Start Year: 01/01/1974
15	D4NN16N343A	1	Bracket Assy., Reflector Mounting, L.H., Austria, 4100,5100,7100, NH-E Only, Start Year: 01/01/1974
15	88707	4	Bolt, Carriage, Short Neck, G5, 1/2"-13 x 1-1/4", Austria, 4100,5100,7100, Start Year: 01/01/1974

14C02 REAR VIEW MIRROR, U.K. - 2120, 3120

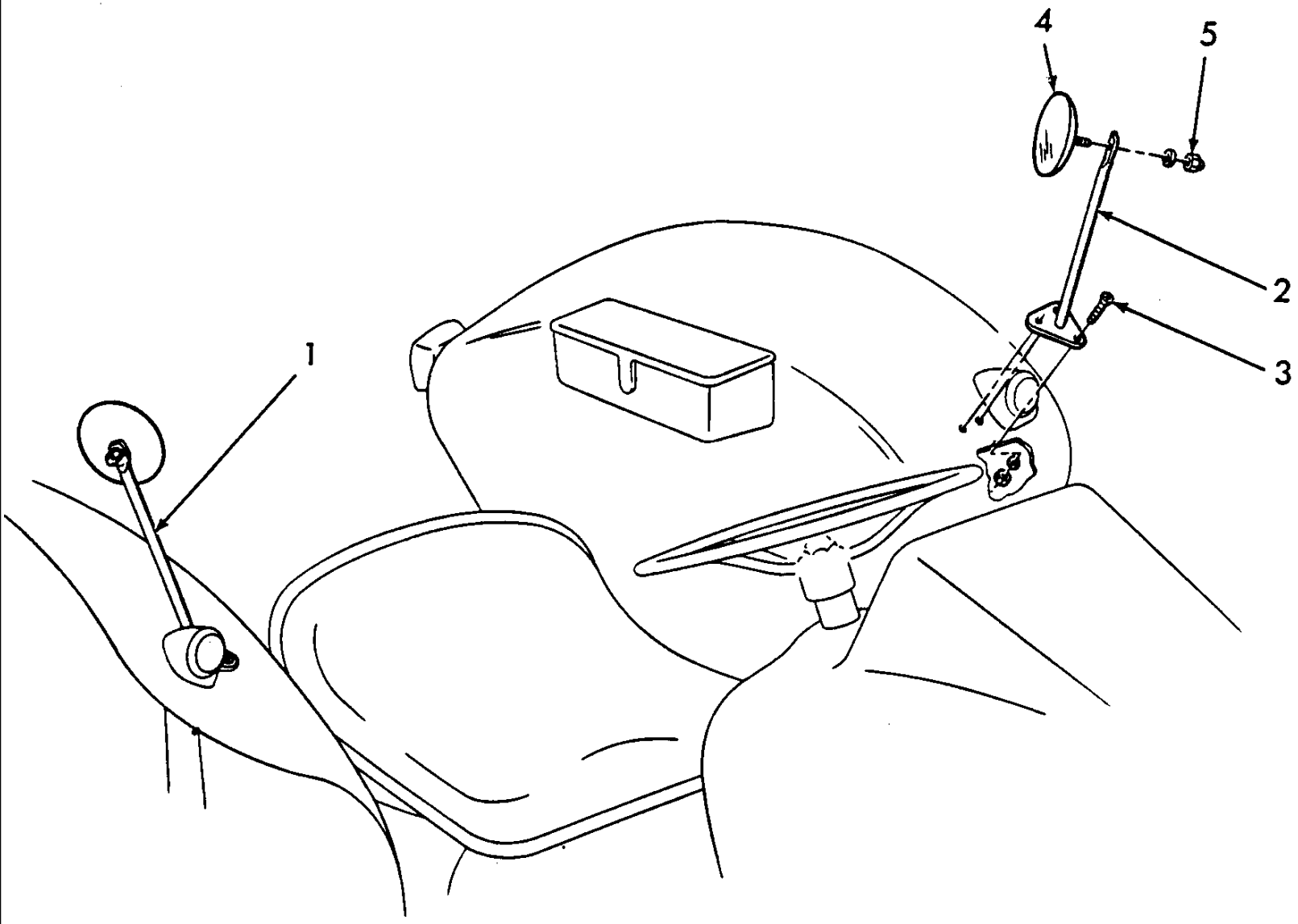

5000-SERIES 4 CYL TRACTOR (1/65-1/75)

14C02 REAR VIEW MIRROR, U.K. - 2120, 3120

Ref	Part Number	Qty	Description
1	C5NN17N675A	1	Support, Rear View Mirror, R.H., NH-E Only, Years: 01/01/1965-08/31/1970
2	C5NN17N676A	1	Support, Rear View Mirror, L.H., NH-E Only, No Longer Serviced, Years: 01/01/1965-08/31/1970
3	34927S7	6	Washer, Lock, Ext T, #12, NH-E Only, Years: 01/01/1965-08/31/1970
3	86509309	6	Nut, G5, 1/4"-28, Years: 01/01/1965-08/31/1970
3		6	Screw, Pan Hd, 1/4"-28 x 5/8", NH-E Only, Years: 01/01/1965-08/31/1970
4	BE17723A7	2	Mirror, Rear View, NH-E Only, No Longer Serviced, Years: 01/01/1965-08/31/1970
5	80682	2	Washer, Lock, 1/4", Years: 01/01/1965-08/31/1970
5	86509309	2	Nut, G5, 1/4"-28, Not Part of Kit, Years: 01/01/1965-08/31/1970
	CFPN17N679A	AR	Rear View Mirror & Arm Assy., W/Cab, Rear View Mirror Kits (Accessory), U.K., Antwerp, 2100,3100,5100, NH-E Only, Years: 01/01/1965-07/31/1970
	CFPN17N679B	AR	Rear View Mirror & Arm Assy., L/Cab Includes:, NH-E Only, No Longer Serviced, Start Year: 01/01/1965
	CFPN17N679B	1	Rear View Mirror & Arm Assy., NH-E Only, No Longer Serviced, Start Year: 01/01/1965
	80701	3	Washer, 1/4", Start Year: 01/01/1965
	7770	2	Nut, Hex, 1/4"-20, Start Year: 01/01/1965
	9707580	2	Screw, Cap, HH, G5, 1/4"-20 x 3/4", Start Year: 01/01/1965
	C5NN17N678A	1	Plate, Mirror & Arm Reinforcement, L/Cab, Part of Kit CFPN-17N679-B Only, NH-E Only, No Longer Serviced, Start Year: 01/01/1965
		1	Head Assy., Mirror, Use to Service C5NN-17N677-A, NH-E Only, No Longer Serviced, Start Year: 01/01/1965

14G01 REAR FENDERS, PLATFORM, TOOL BOX & RELATED PARTS - 5200, 7200

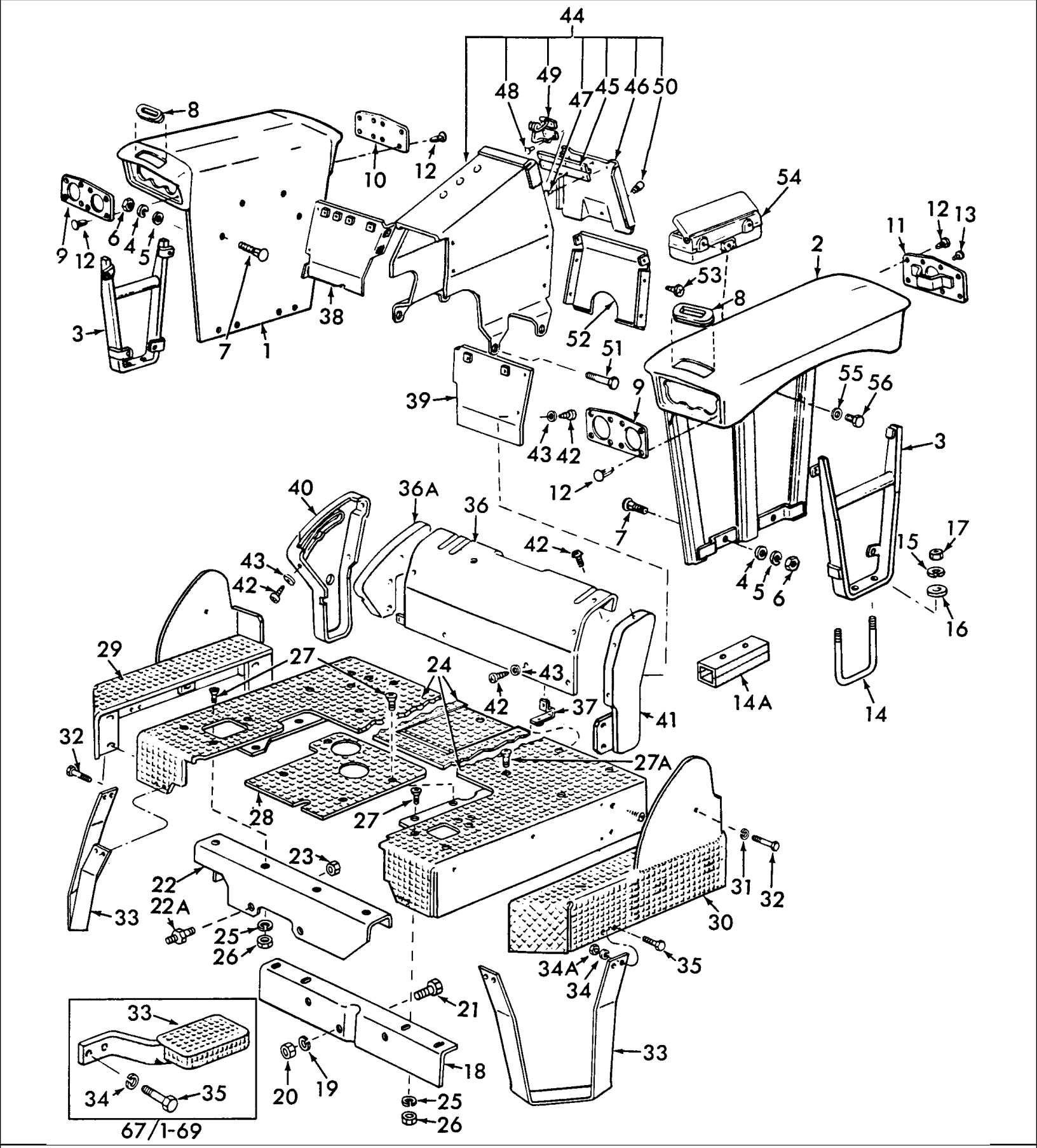

5000-SERIES 4 CYL TRACTOR (1/65-1/75)

14G01 REAR FENDERS, PLATFORM, TOOL BOX & RELATED PARTS - 5200, 7200

Ref	Part Number	Qty	Description
	C5NN16313BF	1	Fender Assy., Rear, RH, 5200, Includes: Ref. 1 & 2, Order Components, NHNA Only, Start Year: 01/01/1967
	C5NN16313BF	1	Fender Assy., Rear, LH, 5200, Includes: Ref. 1 & 2, Order Components, NHNA Only, Start Year: 01/01/1967
1	D3NN16330B	1	Fender Assy., Rear, RH, 5200, NHNA Only, No Longer Serviced, Start Year: 01/01/1967
1	D3NN16330B	1	Fender Assy., Rear, RH, 7200, NHNA Only, No Longer Serviced, Start Year: 01/01/1971
2	D0NN16331B	1	Fender Assy., Rear, LH, 5200-7200, NHNA Only, No Longer Serviced, Start Year: 01/01/1967
3	C5NN16A300E	2	Support Assy., Fender Mounting, NHNA Only, No Longer Serviced, Start Year: 01/01/1967
4	81821693	6	Washer, Lock, 3/8", Start Year: 01/01/1967
5	80702	4	Washer, 3/8", Start Year: 01/01/1967
6	9628503	6	Nut, G5, 3/8"-16, Start Year: 01/01/1967
7	86508749	6	Bolt, Carriage, Short Neck, G5, 3/8"-16 x 1-1/4", Start Year: 01/01/1967
8	C5NN16N308A	2	Grommet, Fender Hand Hold, NHNA Only, No Longer Serviced, Start Year: 01/01/1967
9	C5NN16N314A	2	Panel, Fender Light, Front, NHNA Only, No Longer Serviced, Years: 01/01/1967-08/31/1974
10	D3NN16N309A	1	Panel, Fender, R.H., Rear, Blank, NHNA Only, No Longer Serviced, Start Year: 01/01/1967
11	C5NN16N350A	1	Panel Assy., Fender, L.H., Rear, Light, NHNA Only, No Longer Serviced, Start Year: 01/01/1967
12	C5NN16N315A	28	Rivet, Fender Panel, Use Ref. 13, NHNA Only, No Longer Serviced, Start Year: 01/01/1967
13	281050	4	Screw, Self-Tapping, HWH, #10-24 x 1/2", Start Year: 01/01/1967
14	388838S36	2	U-Bolt, Fender to Axle, Start Year: 01/01/1967
14	D6NN94000N80C22B	2	U-Bolt, Fender Support Bracket, 11.28", 8 & 10 Speed, L/Handbrake, Start Year: 01/01/1967
14A	C7NN16N300A	2	Spacer, Fender to Rear Axle, 3 x 3 x 11.28", 8 & 10 Speed, L/Handbrake, NHNA Only, No Longer Serviced, Start Year: 01/01/1967
15	86729275	4	Washer, Lock, 5/8", Start Year: 01/01/1967
16	80299	4	Washer, 5/8", Start Year: 01/01/1967
17	379223S43	4	Nut, Hex, Support to Axle, 5/8"-18, No Longer Serviced (NHNA), Start Year: 01/01/1967
18	C5NN16A468A	1	Support, Platform, Front, NHNA Only, No Longer Serviced, Start Year: 01/01/1967
19	80702	3	Washer, 3/8", Start Year: 01/01/1967
20	9628503	3	Nut, G5, 3/8"-16, Start Year: 01/01/1967
21	304703S36	3	Screw, Cap, HH, G5, 3/8"-16 x 1-1/8", Start Year: 01/01/1967
22	C5NN16N476F	1	Support Assy., Platform, Rear, NHNA Only, No Longer Serviced, Years: 01/01/1967-09/30/1969
22	C7NN16N476C	1	Support Assy., Platform, Rear, NHNA Only, No Longer Serviced, Start Year: 10/01/1969
22A	C5NN4N052B	2	Stud & Nut Assy., 5/8"-11, 18 x 2.90, Housing to Case & Rear Support, 8 Speed, NHNA Only, No Longer Serviced, Start Year: 01/01/1967
22A	C5NN4N052A	2	Stud & Nut Assy., 5/8"-18, 18 x 3.35, Housing to Case & Rear Support, 10 Speed, NHNA Only, No Longer Serviced, Start Year: 01/01/1967
23	408	2	Nut, G5, 5/8"-18, Support, Start Year: 01/01/1967
24	D0NN16450C	1	Platform Assy., Main, L/Load Monitor, L/Dual Power, NHNA Only, No Longer Serviced, Start Year: 01/01/1967
24	D4NN16450C	1	Platform Assy., Main, W/Dual Power, Replaces D2NN16450B, NHNA Only, No Longer Serviced, Start Year: 01/01/1971

14G01 REAR FENDERS, PLATFORM, TOOL BOX & RELATED PARTS - 5200, 7200

Ref	Part Number	Qty	Description
	D2NNJ915A	1	Grommet, Hydraulic Lift Control Lever, W/Load Monitor, NHNA Only, No Longer Serviced, Start Year: 01/01/1971
25	80681	8	Washer, Lock, 5/16", Start Year: 01/01/1967
26	9635082	8	Nut, G5, 5/16"-18, Start Year: 01/01/1967
27	50046S43	12	Screw, Flat Hd, 5/16"-18 x 7/8", NHNA Only, No Longer Serviced, Start Year: 01/01/1967
27A	86511979	2	Screw, Flat Hd, CSK, 5/16"-18 x 1-1/4", Start Year: 01/01/1967
28	C5NN16N016A	1	Plate, Platform Transmission Cover, 8 Speed, NHNA Only, No Longer Serviced, Start Year: 01/01/1967
28	C5NN16N016B	1	Plate, Platform Transmission Cover, 10 Speed, NHNA Only, No Longer Serviced, Start Year: 01/01/1967
29	C7NN16N452A	1	Extension Assy., Platform, RH, L/Dual Power, NHNA Only, No Longer Serviced, Start Year: 01/01/1967
29	D2NN16N452A	1	Extension Assy., Platform, RH, W/Dual Power, NHNA Only, No Longer Serviced, Start Year: 06/01/1973
30	C7NN16N453A	1	Extension Assy., Platform, LH, L/Dual Power, NHNA Only, No Longer Serviced, Start Year: 01/01/1967
30	D2NN16N453A	1	Extension Assy., Platform, LH, W/Dual Power, NHNA Only, No Longer Serviced, Start Year: 06/01/1973
31	80664	10	Washer, 5/16", Start Year: 01/01/1967
32	9635884	10	Screw, Cap, HH, G5, 5/16"-18 x 1", Start Year: 01/01/1967
33	C7NN16N493B	2	Step, Platform, Replaces C5NN16A471B, NHNA Only, No Longer Serviced, Start Year: 01/01/1967
34	87340	4	Washer, Lock, 3/4", Years: 01/01/1967-01/31/1969
34	81547	8	Washer, Lock, 7/16", Start Year: 02/01/1969
34A	280717	8	Nut, G5, 7/16"-14, Start Year: 02/01/1969
35	88725	4	Screw, Cap, HH, G5, 3/4"-10 x 1-3/4", Years: 01/01/1967-01/31/1969
35	88556	8	Screw, Cap, HH, G5, 5/8"-11 x 2-1/4", Start Year: 02/01/1969
36	D0NN16N456A	1	Panel Assy., Control Console, Center, NHNA Only, No Longer Serviced, Start Year: 01/01/1967
36A	C5NND864A	1	Cover, Hydraulic Lift Quadrant, Inner, NHNA Only, No Longer Serviced, Start Year: 01/01/1967
37	C5NN94044N13A	2	Bracket Assy., Console to Platform, NHNA Only, No Longer Serviced, Start Year: 01/01/1967
38	C5NN16N458B	1	Panel Assy., Control Console, RH, Rear, NHNA Only, No Longer Serviced, Start Year: 01/01/1967
39	C5NN16N459B	1	Panel Assy., Control Console, LH, Rear, NHNA Only, No Longer Serviced, Start Year: 01/01/1967
40	C5NND963A	1	Cover, Console, RH, Quadrant, NHNA Only, No Longer Serviced, Start Year: 01/01/1967
41	C5NN16N457A	1	Panel Assy., Console, LH, NHNA Only, No Longer Serviced, Start Year: 01/01/1967
42	35048S8	17	Screw, Round Hd., 5/16", 18 x 3/4", No Longer Serviced, Start Year: 01/01/1967
43	80664	17	Washer, 5/16", Start Year: 01/01/1967
44	D1NNA416A	1	Support & Door Assy., Seat, Includes: Support & Ref. 45 thru 53, NHNA Only, No Longer Serviced, Start Year: 01/01/1967
45	C5NNA423A	1	Hinge Assy., Support Door, NHNA Only, No Longer Serviced, Start Year: 01/01/1967
46	C5NNA424B	1	Door, Seat Support, NHNA Only, No Longer Serviced, Start Year: 01/01/1967
47	60037S	4	Rivet, Flat Hd, 3/16" x 7/16", NHNA Only, No Longer Serviced, Start Year: 01/01/1967
48	60048S	4	Rivet, Flat Hd, 3/16" x 1/2", NHNA Only, No Longer Serviced, Start Year: 01/01/1967
49	C5NNA425A	1	Spring, Support Door, NHNA Only, No Longer Serviced, Start Year: 01/01/1967
50	354860S	1	Bumper, Support Door
51	304853S36	4	Screw, Cap, HH, G5, 5/8"-11 x 2-1/8", No Longer Serviced (NHNA), Start Year: 01/01/1967
52	C5NNB414A	1	Cover Assy., Seat Support, Rear, L/Holes, NHNA Only, No Longer Serviced, Start Year: 01/01/1967
53	NLS	6	Screw & Washer Assy., Pan Hd., 5/16", 18 x 5/8" {51002S36}, Start Year: 01/01/1967
54	C5NN17005F11M	1	Tool Box Assy., Start Year: 01/01/1967

14G01 REAR FENDERS, PLATFORM, TOOL BOX & RELATED PARTS - 5200, 7200

Ref	Part Number	Qty	Description
55	80664	3	Washer, 5/16", Start Year: 01/01/1967
56	304622S36	3	Screw, Cap, HH, G5, 5/16"-18 x 3/8", Start Year: 01/01/1967
	FDV13450A	1	Lens, Reflector, Fender, RH, Rear, NHNA Only, Start Year: 09/01/1974
	D3NN13N485A	1	Gasket, Reflector Lens to Panel, NHNA Only, No Longer Serviced, Start Year: 09/01/1974
	87812	2	Washer, Lock, #8, Start Year: 09/01/1974
	87653	2	Nut, #8-32, Start Year: 09/01/1974
	57358S13	2	Screw, #8-32 x 3/4", Reflector Lens to Panel, NHNA Only, No Longer Serviced, Start Year: 09/01/1974

14G02 HOOD, GRILLE & RELATED PARTS - 5200, 7200

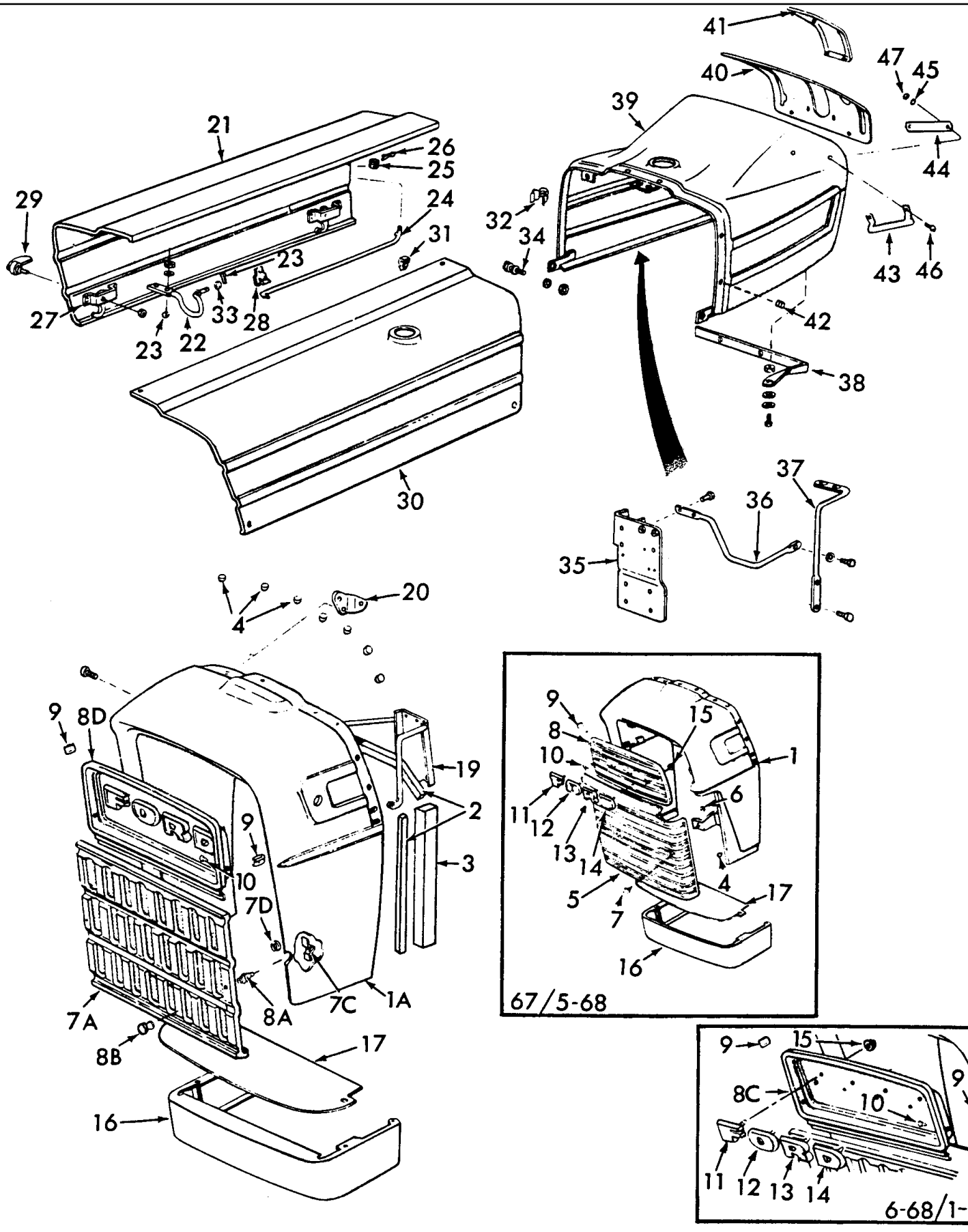

5000-SERIES 4 CYL TRACTOR (1/65-1/75)

14G02 HOOD, GRILLE & RELATED PARTS - 5200, 7200

Ref	Part Number	Qty	Description
1	C5NN8N202AH	1	Radiator Shell Assy., No Longer Serviced, Years: 01/01/1967-12/31/1968
1A	D0NN8N202K	1	Radiator Shell Assy., 5200, Start Year: 06/01/1968
1A	D0NN8N202F	1	Radiator Shell Assy., 7200, No Longer Serviced, Start Year: 01/01/1971
2	D7NN8A256A	1	Seal, Radiator Air Upper, Center, Start Year: 01/01/1967
3	C5NN8348A	2	Seal, Radiator Air Side, Start Year: 01/01/1967
4	C5NN16N655B	14	Bumper, Hood Mounting, Rubber, Start Year: 01/01/1967
4	80701	2	Washer, 1/4", Start Year: 01/01/1967
4	86509309	1	Nut, G5, 1/4"-28, Start Year: 01/01/1967
4	50280S36	1	Screw, Rd Hd, 1/4"-28 x 5/8", Start Year: 01/01/1967
5	C5NN8202AA	1	Radiator Grille Assy., Lower, Years: 01/01/1967-05/31/1968
6	374756S2	2	Nut, Lower Grille Mounting, Years: 01/01/1967-05/31/1968
7	412575	2	Screw, Thumb, M8 x 16, Years: 01/01/1967-05/31/1968
7A	D1NN8151A	1	Grille, Radiator, Lower, (1) Piece, Start Year: 06/01/1968
7C	C7NN8A067A	2	Clip, Radiator Grille, Start Year: 06/01/1968
7D	97411S36	2	Ring, Snap, 3/8" Clip, Years: 06/01/1968-04/30/1970
8	C5NN8A163A	1	Radiator Grille Assy., Upper, Years: 01/01/1967-05/31/1968
8A	C9NN8B151B	2	Stud, Radiator Grille, Start Year: 06/01/1968
8B	9828014	2	Knob, Radiator Grille, Start Year: 06/01/1968
8B	351253S100	2	Washer, Flat, .195 I.D., Knob, No Longer Serviced (NH-E), Start Year: 06/01/1968
8C	C7NN8150G	1	Grille, Radiator, Upper, Years: 06/01/1968-01/31/1971
8D	C9NN8A163AG	1	Grille, Radiator Shell, Upper, Start Year: 02/01/1971
9	D1NN8N212A	4	U-Nut, Grille Mounting, Start Year: 01/01/1967
10	52353S37	4	Screw, Self-Tapping, Oval Hd, #10-12 x 5/8", Start Year: 01/01/1967
11	86514060	1	Letter, "F", Front Grille, No Longer Serviced (NH-E), Years: 01/01/1967-01/31/1971
12	86514060	1	Letter, O, No Longer Serviced (NH-E), Years: 01/01/1967-01/31/1971
13	86514060	1	Letter, R, No Longer Serviced (NH-E), Years: 01/01/1967-01/31/1971
14	86514060	1	Letter, D, No Longer Serviced (NH-E), Years: 01/01/1967-01/31/1971
15	371326S36	8	Nut, 1/4", Letter to Grille, Years: 01/01/1967-01/31/1971
16	D0NN8N031A	1	Radiator Extension Assy., NHNA Only, No Longer Serviced, Start Year: 01/01/1967
16	80702	8	Washer, 3/8", Start Year: 01/01/1967
16	81821693	4	Washer, Lock, 3/8", Start Year: 01/01/1967
16	9628503	4	Nut, G5, 3/8"-16, Start Year: 01/01/1967
16	88703	4	Cap, HH, G5, 3/8"-16 x 5/8", Start Year: 01/01/1967
16	88434	4	Screw, Cap, HH, G5, 3/8"-16 x 3/4", Start Year: 01/01/1967
17	C5NN8N097C	1	Baffle, Front Axle Support, NHNA Only, No Longer Serviced, Years: 01/01/1967-05/31/1968
17	C7NN8N097B	1	Baffle, Front Axle Support, 5200, NHNA Only, No Longer Serviced, Start Year: 06/01/1968
17	D0NN8N097B	1	Baffle, Front Axle Support, 7200, NHNA Only, No Longer Serviced, Years: 01/01/1971-12/31/1974
19	D1NN8N096A	1	Radiator Shell Support Assy., Upper, 5200, NHNA Only, Years: 01/01/1967-06/30/1972
19	D1NN8N096A	1	Radiator Shell Support Assy., Upper, 5200, NHNA Only, Start Year: 07/01/1972
19	D0NN8N096F	1	Radiator Shell Support Assy., Upper, 7200, NHNA Only, No Longer Serviced, Start Year: 01/01/1971
20	85700201	1	Hood Catch Bracket Assy., Retainer, Front, Start Year: 01/01/1967

14G02 HOOD, GRILLE & RELATED PARTS - 5200, 7200

Ref	Part Number	Qty	Description
	80664	6	Washer, 5/16", Start Year: 01/01/1967
	86629539	3	Nut, G5, 5/16"-24, Start Year: 01/01/1967
	280559	1	Screw, Cap, HH, G5, 5/16"-24 x 3/4", LH, Start Year: 01/01/1967
	86977738	2	Screw, Cap, HH, G5, 5/16"-24 x 7/8", RH, Start Year: 01/01/1967
	81547	2	Washer, Lock, 7/16", Start Year: 01/01/1967
	9706729	2	Screw, Cap, HH, G5, 7/16"-14 x 1", Start Year: 01/01/1967
21	C7NN16625H	1	Hood Panel Assy., RH, Includes: Ref. 22 & 23, No Longer Serviced, Start Year: 01/01/1967
22	C5NN16N631B	2	Hood Hinge Rod Assy., Start Year: 01/01/1967
23	42900S36	4	Screw, Rd Hd, W/Washer, 1/4"-20 x 1/2", Start Year: 01/01/1967
24	C5NN8042G	1	Rod, Support, Hood Side Panel, No Longer Serviced, Start Year: 01/01/1967
25	E1ADKN16751	1	Grommet, Engine Hood Support, Start Year: 01/01/1967
25	80701	6	Washer, 1/4", Start Year: 01/01/1967
26	280250	1	Pin, Split Cotter, 3/32" x 3/4", Rod to Panel, Start Year: 01/01/1967
27	85700110	2	Lock Assy., Engine Hood, Start Year: 01/01/1967
28	C7NN16N658A	1	Clip, Hood Support Rod, Closed, Replaces C5NN6N658A, Start Year: 01/01/1967
29	D6NN16N644A	2	Handle Assy., Engine Hood, RH, Start Year: 01/01/1967
29	18650	2	Nut, Lock, GB, 1/4"-28, Start Year: 01/01/1967
30	C5NN16626BE	1	Panel Assy., Hood, LH, Includes: Panel & Ref. 31, NHNA Only, No Longer Serviced, Years: 01/01/1967-05/31/1968
30	D0NN16626G	1	Panel Assy., Hood, LH, Includes: Panel & Ref. 31, No Longer Serviced, Years: 06/01/1968-12/31/1974
31	354177S	4	Bumper, Hood, Start Year: 01/01/1967
	50310S36	1	Screw, Rd Hd, 1/4"-28 x 1", Start Year: 01/01/1967
	PL	1	Screw, R.H., 1/4"-28 x 1/2", NHNA Only
	50280S36	1	Screw, Rd Hd, 1/4"-28 x 5/8", Start Year: 01/01/1967
	354394S2	1	Nut & Retainer Assy., 1/4"-28, NHNA Only, No Longer Serviced, Start Year: 01/01/1967
32	E1ADKN16828B	1	Clip, Engine Hood Support Rod, Open, Start Year: 01/01/1967
33	C5NN16N647A	2	Washer, Hinge, Start Year: 01/01/1967
	280224	2	Pin, Split, Cotter, 1/16" x 5/8", Start Year: 01/01/1967
	80701	6	Washer, 1/4", Start Year: 01/01/1967
	86509309	4	Nut, G5, 1/4"-28, Start Year: 01/01/1967
34	C5NN16N775A	1	Stud, Engine Hood Catch, Rear, Start Year: 01/01/1967
	80664	1	Washer, 5/16", Start Year: 01/01/1967
	86629539	1	Nut, G5, 5/16"-24, Start Year: 01/01/1967
35	D3NN16B815F	1	Support Assy., Rear Hood, W/Course Thread, NHNA Only, No Longer Serviced, Start Year: 01/01/1967
	80664	4	Washer, 5/16", Start Year: 01/01/1967
	86629539	4	Nut, G5, 5/16"-24, Start Year: 01/01/1967
	9635082	4	Nut, G5, 5/16"-18, Start Year: 03/01/1972
	280559	4	Screw, Cap, HH, G5, 5/16"-24 x 3/4", Support, Start Year: 01/01/1967
	87872	4	Screw, Cap, HH, G5, 5/16"-18 x 3/4", Support, Start Year: 03/01/1972
36	D0NN16N669A	1	Bar Assy., Rear Hood Support, Side, NHNA Only, No Longer Serviced, Start Year: 01/01/1967
37	D0NN16N671A	1	Bar Assy., Rear Hood Support, Top, NHNA Only, No Longer Serviced, Start Year: 01/01/1967

5000-SERIES 4 CYL TRACTOR (1/65-1/75)

14G02 HOOD, GRILLE & RELATED PARTS - 5200, 7200

Ref	Part Number	Qty	Description
	80664	2	Washer, 5/16", Start Year: 01/01/1967
	20677	1	Screw, Cap, HH, G5, 5/16"-24 x 5/8", Side Baread, Start Year: 01/01/1967
	280559	4	Screw, Cap, HH, G5, 5/16"-24 x 3/4", W/Fine Thread, Start Year: 01/01/1967
	87872	5	Screw, Cap, HH, G5, 5/16"-18 x 3/4", Start Year: 03/01/1972
38	C5NN16N590D	1	Bracket, Rear Hood to Steering Column, NHNA Only, No Longer Serviced, Start Year: 01/01/1967
	80664	4	Washer, 5/16", Start Year: 01/01/1967
	80681	4	Washer, Lock, 5/16", Start Year: 01/01/1967
	373656S2	2	Retainer, Nut, 5/16"-18, NHNA Only, No Longer Serviced, Start Year: 01/01/1967
	9635884	4	Screw, Cap, HH, G5, 5/16"-18 x 1", Start Year: 01/01/1967
39	D1NN16N627A	1	Panel Assy., Hood, Rear, When using 67/9-71, order (1) D0NN-11654-A also., NHNA Only, No Longer Serviced, Start Year: 01/01/1967
40	D3NN9404326B	1	Panel, Instrument, 8 Speed, NHNA Only, No Longer Serviced, Start Year: 01/01/1967
40	D3NN9404326D	1	Panel, Instrument & Dual Power, 10 Speed, NHNA Only, No Longer Serviced, Start Year: 01/01/1967
40	86511894	6	Screw, Cross Recess Hd., 1/4"-20 x 5/8", No Longer Serviced (NH-E), Start Year: 01/01/1967
41	C5NN3D677A	1	Seal Assy., Steering Column Opening, NHNA Only, No Longer Serviced, Start Year: 01/01/1967
42	C5NN16N655B	10	Bumper, Rear Hood Mounting, Start Year: 01/01/1967
43	C0NN9340346C	2	Handle, Assist, NHNA Only, No Longer Serviced, Start Year: 01/01/1967
44	C7NN16N676A	2	Brace, Assist Handle, NHNA Only, No Longer Serviced, Start Year: 01/01/1967
45	81821693	4	Washer, Lock, 3/8", Start Year: 01/01/1967
46	9628503	4	Nut, G5, 3/8"-16, Start Year: 01/01/1967
47	86508749	4	Bolt, Carriage, Short Neck, G5, 3/8"-16 x 1-1/4", Start Year: 01/01/1967

15B01 TRACTOR CAB ASSEMBLY, ALL PURPOSE (ACCESSORY) (NH-E) (65/7-70)

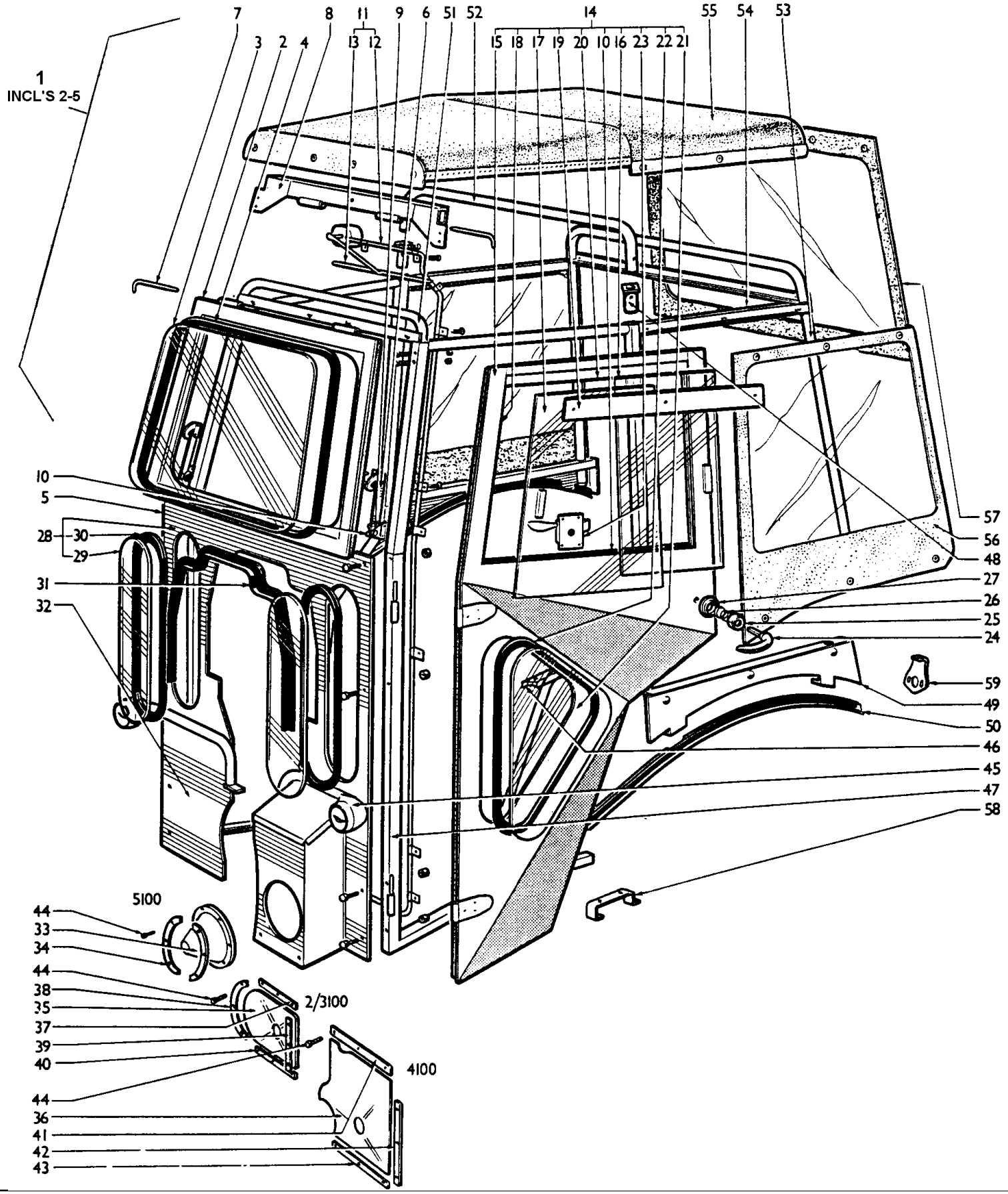

5000-SERIES 4 CYL TRACTOR (1/65-1/75)

15B01 TRACTOR CAB ASSEMBLY, ALL PURPOSE (ACCESSORY) (NH-E) (65/7-70)

Ref	Part Number	Qty	Description
		AR	Kit, Tractor Cab Assy., Includes: Ref. 1-59, Years: 01/01/1965-07/31/1970
1	NS	1	Windshield Assy., Cab, 2000,3000, Includes: Ref. 2-5, NHNA Only, No Longer Serviced, Years: 01/01/1965-07/31/1970
1	NS	1	Windshield Assy., Cab, 4000,5000,7100, Includes: Ref. 2-5, NHNA Only, No Longer Serviced, Years: 01/01/1965-07/31/1970
2	C5NN94030N18A	1	Frame, 5000,4000,7100, NH-E Only, No Longer Serviced, Years: 01/01/1965-07/31/1970
2	C5NN94030N18B	1	Frame, 2000,3000, NH-E Only, No Longer Serviced, Years: 01/01/1965-07/31/1970
3	C5NN94030N04A	1	Glass, 4000,5000,7100, NH-E Only, No Longer Serviced, Years: 01/01/1965-07/31/1970
3	C5NN94030N04B	1	Glass, 2000,3000, NH-E Only, No Longer Serviced, Years: 01/01/1965-07/31/1970
4	C5NN94030N49A	1	Molding, Glazing, 101", Cut to Length, NH-E Only, No Longer Serviced, Years: 01/01/1965-07/31/1970
5	C5NN94031N24D	AR	Strip, Sealer, 40.25" (102.24cm), RH, NH-E Only, No Longer Serviced, Years: 01/01/1965-07/31/1970
6	C5NN94030N10B	1	Fastener, Windshield, NH-E Only, No Longer Serviced, Years: 01/01/1965-07/31/1970
6	C5NN94031N79A	1	Fastener, Windshield, LH, NH-E Only, No Longer Serviced, Years: 01/01/1965-07/31/1970
7	C5NN94031N06A	2	Pin, Hinge, Cab Windshield, NH-E Only, No Longer Serviced, Years: 01/01/1965-07/31/1970
8	C5NN94030N02D	1	Rail Assy., Windshield Pivot, 4000,5000,7100, NH-E Only, No Longer Serviced, Years: 01/01/1965-07/31/1970
8	C5NN94030N02C	1	Rail Assy., Windshield Pivot, 2000,3000, NH-E Only, No Longer Serviced, Years: 01/01/1965-07/31/1970
9	C5NN94031N75A	2	Bracket Assy., Windshield Stay, NH-E Only, No Longer Serviced, Years: 01/01/1965-07/31/1970
10	86627130	2	Nut, Wing, 1/4"-20, Years: 01/01/1965-07/31/1970
10	C5NN17C504A	1	Kit, Windshield Wiper Motor, (Refer to Fig. 17G2 for contents), NH-E Only, No Longer Serviced, Years: 01/01/1965-07/31/1970
11	C5NN94031N22A	1	Wiper Assy., Cab Windshield, Includes: Rod & Ref. 12-13, NH-E Only, No Longer Serviced, Years: 01/01/1965-07/31/1970
12	C5NN17A463A	1	Arm, NH-E Only, No Longer Serviced, Years: 01/01/1965-07/31/1970
13	C5NN17K442A	1	Blade, NH-E Only, No Longer Serviced, Years: 01/01/1965-07/31/1970
14	NS	1	Door Assy., Cab, RH, Includes: Ref. 15-27, NHNA Only, No Longer Serviced, Years: 01/01/1965-07/31/1970
15	NS	1	Frame Assy., LH, NHNA Only, No Longer Serviced, Years: 01/01/1965-07/31/1970
15	NS	1	Frame Assy., RH, NHNA Only, No Longer Serviced, Years: 01/01/1965-07/31/1970
16	C5NN94030N47A	2	Glass, Rear, NH-E Only, No Longer Serviced, Years: 01/01/1965-07/31/1970
17	C5NN94030N24A	1	Glass, Front, RH, NH-E Only, No Longer Serviced, Years: 01/01/1965-07/31/1970
17	C5NN94030N61A	1	Glass, Front, LH, NH-E Only, No Longer Serviced, Years: 01/01/1965-07/31/1970
18	C5NN94030N21B	2	Moulding, Front, 18.0" (45.72cm), NH-E Only, No Longer Serviced, Years: 01/01/1965-07/31/1970
18	PL	2	Moulding, Rear, 17.5" (44.45cm), NHNA Only
19	PL	1	Plate, Top, LH, NHNA Only, No Longer Serviced, Years: 01/01/1965-07/31/1970
19	NS	1	Plate, Top, RH, NHNA Only, No Longer Serviced, Years: 01/01/1965-07/31/1970
20	C5NN94031N10B	2	Moulding, Glass Channel, Bottom 25-1/2" (64.77cm), NH-E Only, No Longer Serviced, Years: 01/01/1965-07/31/1970
20	NS	2	Moulding, Glass Channel, Top 20" (50.8cm), Not Shown, Use C5NN94031N10B & Cut to Length, NHNA Only, No Longer Serviced, Years: 01/01/1965-07/31/1970
21	C5NN94030N03A	2	Glass, Panel, NH-E Only, No Longer Serviced, Years: 01/01/1965-07/31/1970

5000-SERIES 4 CYL TRACTOR (1/65-1/75)

15B01 TRACTOR CAB ASSEMBLY, ALL PURPOSE (ACCESSORY) (NH-E) (65/7-70)

Ref	Part Number	Qty	Description
22	C5NN94030N49A	2	Moulding, Glazing, Door Panel Glass, NH-E Only, No Longer Serviced, Years: 01/01/1965-07/31/1970
23	C5NN94030N41A	1	Catch, RH, Inside, NH-E Only, No Longer Serviced, Years: 01/01/1965-07/31/1970
23	C5NN94031N13A	1	Catch, LH, Inside, NH-E Only, No Longer Serviced, Years: 01/01/1965-07/31/1970
24	BE961208F	2	Handle, Outside Door, NH-E Only, No Longer Serviced, Years: 01/01/1965-07/31/1970
25	E0TTA7322632	2	Crown, Door Handle, NH-E Only, No Longer Serviced, Years: 01/01/1965-07/31/1970
26	E0TTA7322624	2	Spring, Door Handle, NH-E Only, No Longer Serviced, Years: 01/01/1965-07/31/1970
27	400E8222630	2	Base, Door Handle, NH-E Only, No Longer Serviced, Years: 01/01/1965-07/31/1970
28	C5NN94031N37C	1	Body Assy., Cab Front, Center, 2000,3000, Includes: Body & Ref. 29 thru 45, NH-E Only, No Longer Serviced, Years: 01/01/1965-07/31/1970
28	C5NN94031N37D	1	Body Assy., Cab Front, Center, 4000, Includes: Body & Ref. 29 thru 45, NH-E Only, No Longer Serviced, Years: 01/01/1965-07/31/1970
28	C5NN94031N37A	1	Body Assy., Cab Front, Center, 5000,7100, Includes: Body & Ref. 29 thru 45, NH-E Only, No Longer Serviced, Years: 01/01/1965-07/31/1970
29	C5NN94030N46A	2	Glass, Cab Front Center, 4000,5000,7100, NH-E Only, No Longer Serviced, Years: 01/01/1965-07/31/1970
29	C5NN94030N46B	2	Glass, Cab Front Center, 2000,3000, NH-E Only, No Longer Serviced, Years: 01/01/1965-07/31/1970
30	PL	2	Moulding, Glazing, Use P/N C5NN-94030N49-A & Cut to Proper Length, NHNA Only, Years: 01/01/1965-07/31/1970
31	NLS	1	Moulding, Windshield Screen, 4000,5000,7100 {C5NN94030N23A}, Years: 01/01/1965-07/31/1970
31	PL	1	Moulding, Windshield Screen, 2000,3000, NHNA Only, No Longer Serviced, Years: 01/01/1965-07/31/1970
32	C5NN94030N19D	1	Body Assy., Cab Front, RH, 2000,3000, Includes: Body & Ref. 33 thru 44, NH-E Only, No Longer Serviced, Years: 01/01/1965-07/31/1970
32	C5NN94030N19C	1	Body Assy., Cab Front, RH, 4000, Includes: Body & Ref. 33 thru 44, NH-E Only, No Longer Serviced, Years: 01/01/1965-07/31/1970
32	C5NN94030N19A	1	Body Assy., Cab Front, RH, 5000,7100, Includes: Body & Ref. 33 thru 44, NH-E Only, No Longer Serviced, Years: 01/01/1965-07/31/1970
32	NS	1	Body Assy., Cab Front, LH, 2000,3000, Includes: Body & Ref. 33 thru 44, NHNA Only, No Longer Serviced, Years: 01/01/1965-07/31/1970
32	C5NN94030N20E	1	Body Assy., Cab Front, LH, 4000, Includes: Body & Ref. 33 thru 44, NH-E Only, No Longer Serviced, Years: 01/01/1965-07/31/1970
32	C5NN94030N20A	1	Body Assy., Cab Front, LH, 5000,7100, Includes: Body & Ref. 33 thru 44, NH-E Only, No Longer Serviced, Years: 01/01/1965-07/31/1970
32	C5NN94030N43D	1	Extension, Foot Platform, RH, 2000,3000, Includes: Body & Ref. 33 thru 44, NH-E Only, No Longer Serviced, Years: 01/01/1965-07/31/1970
32	C5NN94030N43C	1	Extension, Foot Platform, RH, 4000, Includes: Body & Ref. 33 thru 44, NH-E Only, No Longer Serviced, Years: 01/01/1965-07/31/1970
32	C5NN94030N43A	1	Extension, Foot Platform, RH, 5000,7100, Includes: Body & Ref. 33 thru 44, NH-E Only, No Longer Serviced, Years: 01/01/1965-07/31/1970
32	C5NN94030N55E	1	Extension, Foot Platform, LH, 2000,3000, Includes: Body & Ref. 33 thru 44, NH-E Only, No Longer Serviced, Years: 01/01/1965-07/31/1970
32	C5NN94030N55D	1	Extension, Foot Platform, LH, 5000,7100, Includes: Body & Ref. 33 thru 44, NH-E Only, No Longer Serviced, Years: 01/01/1965-07/31/1970

5000-SERIES 4 CYL TRACTOR (1/65-1/75)

15B01 TRACTOR CAB ASSEMBLY, ALL PURPOSE (ACCESSORY) (NH-E) (65/7-70)

Ref	Part Number	Qty	Description
32	86529539	6	Washer, Lock, Int T, 1/4", Includes: Body & Ref. 33 thru 44, Years: 01/01/1965-07/31/1970
32	87361	3	Washer, SAE, 1/4", 2000,3000, Includes: Body & Ref. 33 thru 44, Years: 01/01/1965-07/31/1970
32	7770	6	Nut, Hex, 1/4"-20, 5000,7100, Includes: Body & Ref. 33 thru 44, Years: 01/01/1965-07/31/1970
32	7770	8	Nut, Hex, 1/4"-20, 2000,3000, Includes: Body & Ref. 33 thru 44, Years: 01/01/1965-07/31/1970
32	84467	6	Screw, Truss Hd, G2, 1/4"-20 x 1/2", 5000,7100, Includes: Body & Ref. 33 thru 44, Years: 01/01/1965-07/31/1970
32	304624S36	6	Screw, Cap, HH, G5, 1/4"-20 x 1/2", 2000,3000, Includes: Body & Ref. 33 thru 44, Years: 01/01/1965-07/31/1970
33	PL	1	Gaiter, Steering Drag Link, 5000,7100, NHNA Only, No Longer Serviced
34	C5NN94031N67B	3	Retainer, Steering Drag Link Gaiter, 5000,7100, NH-E Only, No Longer Serviced, Years: 01/01/1965-07/31/1970
35	C5NN94031N68B	1	Gaiter, Steering Drag Link, 2000,3000, NH-E Only, No Longer Serviced, Years: 01/01/1965-07/31/1970
36	C5NN94031N68C	1	Gaiter, Steering Drag Link, 4000, NH-E Only, No Longer Serviced, Years: 01/01/1965-07/31/1970
37	C5NN94000N03A	1	Retainer, Drag Link Gaiter, 2000,3000, NH-E Only, No Longer Serviced, Years: 01/01/1965-07/31/1970
38	C5NN94000N03B	1	Retainer, Drag Link Gaiter, 2000,3000, NH-E Only, No Longer Serviced, Years: 01/01/1965-07/31/1970
39	C5NN94000N03C	1	Retainer, Drag Link Gaiter, Straight, 2000,3000, NH-E Only, No Longer Serviced, Years: 01/01/1965-07/31/1970
40	C5NN94000N03D	1	Retainer, Drag Link Gaiter, 2000,3000, NH-E Only, No Longer Serviced, Years: 01/01/1965-07/31/1970
41	C5NN94000N03E	1	Retainer, Drag Link Gaiter, 4000, NH-E Only, No Longer Serviced, Years: 01/01/1965-07/31/1970
42	C5NN94000N03F	1	Retainer, Drag Link Gaiter, 4000, NH-E Only, No Longer Serviced, Years: 01/01/1965-07/31/1970
43	C5NN94000N03G	1	Retainer, Drag Link Gaiter, 4000, NH-E Only, No Longer Serviced, Years: 01/01/1965-07/31/1970
44	382646S	6	Rivet, Gaiter to Body, 2000,3000,5000,7100, NH-E Only, No Longer Serviced, Years: 01/01/1965-07/31/1970
44	382646S	13	Rivet, Gaiter to Body, 4000, NH-E Only, No Longer Serviced, Years: 01/01/1965-07/31/1970
44	C5NN94031N73A	1	Extension, Foot Platform, L.H., 4000, NH-E Only, No Longer Serviced, Years: 01/01/1965-07/31/1970
45	NLS	1	Support Assy., Front Lamp, RH, 5000,7100, Includes: Buffer and Rubber {C5NN94030N06A}, Years: 01/01/1965-07/31/1970
45	NLS	1	Support Assy., Front Lamp, LH, 5000,7100, Includes: Buffer and Rubber {C5NN94030N07A}, Years: 01/01/1965-07/31/1970
45	C5NN94030N07B	2	Support Assy., Front Lamp, 4000, Includes: Buffer and Rubber, NH-E Only, No Longer Serviced, Years: 01/01/1965-07/31/1970
45	NLS	1	Buffer, Rubber, 2000,3000, Includes: Buffer and Rubber {C7NN94031N28A}, Years: 01/01/1965-07/31/197
45	C5NN94031N28A	2	Buffer, Rubber, 4000,5000,7100, Includes: Buffer and Rubber, NH-E Only, Years: 01/01/1965-07/31/1970
46	C5NN94030N40B	1	Retainer, Cab Frame, RH, 2000,3000, NH-E Only, No Longer Serviced, Years: 01/01/1965-07/31/1970
46	C5NN94030N40A	1	Retainer, Cab Frame, RH, 4000,5000,7100, NH-E Only, No Longer Serviced, Years: 01/01/1965-07/31/1970
46	C5NN94031N07B	1	Retainer, Cab Frame, LH, 2000,3000, NH-E Only, No Longer Serviced, Years: 01/01/1965-07/31/1970
46	C5NN94031N07A	1	Retainer, Cab Frame, LH, 4000,5000,7100, NH-E Only, No Longer Serviced, Years: 01/01/1965-07/31/197
46	C5NN94030N99A	2	Plate, Door Catch, NH-E Only, No Longer Serviced, Years: 01/01/1965-07/31/1970
47	C5NN94030N15B	1	Frame Assy., Cab Side, LH, 2000,3000, Includes: Frame & Ref. 48, NH-E Only, No Longer Serviced, Years: 01/01/1965-07/31/1970

5000-SERIES 4 CYL TRACTOR (1/65-1/75)

15B01 TRACTOR CAB ASSEMBLY, ALL PURPOSE (ACCESSORY) (NH-E) (65/7-70)

Ref	Part Number	Qty	Description
47	C5NN94030N15A	1	Frame Assy., Cab Side, LH, 4000,5000,7100, Includes: Frame & Ref. 48, NH-E Only, No Longer Serviced, Years: 01/01/1965-07/31/1970
47	C5NN94030N16B	1	Frame Assy., Cab Side, RH, 2000,3000, Includes: Frame & Ref. 48, NH-E Only, No Longer Serviced, Years: 01/01/1965-07/31/1970
47	C5NN94030N16A	1	Frame Assy., Cab Side, RH, 4000,5000,7100, Includes: Frame & Ref. 48, NH-E Only, No Longer Serviced, Years: 01/01/1965-07/31/1970
48	C5NN94030N98A	2	Bush/Bushing, Frame Cab Side, NH-E Only, No Longer Serviced, Years: 01/01/1965-07/31/1970
48	C5NN94030N84B	1	Extension, Fender, LH, 2000,3000, NH-E Only, No Longer Serviced, Years: 01/01/1965-07/31/1970
48	C5NN94030N84A	1	Extension, Fender, LH, 5000,7100, NH-E Only, No Longer Serviced, Years: 01/01/1965-07/31/1970
48	C5NN94030N85B	1	Extension, Fender, RH, 2000,3000, NH-E Only, No Longer Serviced, Years: 01/01/1965-07/31/1970
48	C5NN94030N85A	1	Extension, Fender, RH, 5000,7100, NH-E Only, No Longer Serviced, Years: 01/01/1965-07/31/1970
48	C5NN94030N86A	4	Clamp, Fender Extension, NH-E Only, No Longer Serviced, Years: 01/01/1965-07/31/1970
49	C5NN94031N39A	1	Support Assy., Cab to Fender, RH, 2000,3000, NH-E Only, No Longer Serviced, Years: 01/01/1965-07/31/1970
49	C5NN94031N39B	1	Support Assy., Cab to Fender, RH, 4000,5000,7100, NH-E Only, No Longer Serviced, Years: 01/01/1965-12/31/1977
49	C5NN94031N38A	1	Support Assy., Cab to Fender, LH, 2000,3000, NH-E Only, No Longer Serviced, Years: 01/01/1965-07/31/1970
49	C5NN94031N38B	1	Support Assy., Cab to Fender, LH, 4000,5000,7100, NH-E Only, No Longer Serviced, Years: 01/01/1965-07/31/1970
49	9635082	4	Nut, G5, 5/16"-18, 2000,3000, Years: 01/01/1965-07/31/1970
49	87872	4	Screw, Cap, HH, G5, 5/16"-18 x 3/4", 2000,3000
50	C5NN94031N20A	1	Seal, Fender Support, RH, NH-E Only, No Longer Serviced, Years: 01/01/1965-07/31/1970
50	PL	1	Seal, Fender Support, LH, 38.5" (977.9mm), NHNA Only, Years: 01/01/1965-07/31/1970
51	C5NN94031N56A	1	Support Assy., Cab Roof, Front, 2000,3000, NH-E Only, No Longer Serviced, Years: 01/01/1965-07/31/1970
51	C5NN94031N56B	1	Support, Cab Roof, Front, 4000,5000,7100, NH-E Only, No Longer Serviced, Years: 01/01/1965-07/31/197
52	C5NN94030N31B	1	Support, Cab Roof, Center, 2000,3000, NH-E Only, No Longer Serviced, Years: 01/01/1965-07/31/1970
52	C5NN94030N31A	1	Support, Cab Roof, Center, 4000,5000,7100, NH-E Only, No Longer Serviced, Years: 01/01/1965-07/31/1970
53	NS	1	Support Assy., Cab Roof, Rear, 2000,3000 (Not Available), NHNA Only, Years: 01/01/1965-07/31/1970
53	C5NN94031N59A	1	Support, Cab Roof, Rear, 4000,5000,7100, NH-E Only, No Longer Serviced, Years: 01/01/1965-07/31/197
54	NS	1	Support Assy., Cab Roof, Side, 2000,3000 (Not Available), NHNA Only, Years: 01/01/1965-07/31/1970
54	C5NN94031N60A	1	Support, Cab roof, Side, 4000,5000,7100, NH-E Only, No Longer Serviced, Years: 01/01/1965-07/31/1970
55	C5NN94031N15B	1	Canopy Assy., Cab Roof, 2000,3000, NH-E Only, No Longer Serviced, Years: 01/01/1965-07/31/1970
55	C5NN94031N15A	1	Canopy Assy., Cab Roof, 4000,5000,7100, NH-E Only, No Longer Serviced, Years: 01/01/1965-07/31/197
56	C5NN94031N16A	1	Curtain Assy., Cab Side, LH, NH-E Only, No Longer Serviced, Years: 01/01/1965-07/31/1970
56	C5NN94031N17A	1	Curtain Assy., Cab Side, RH, NH-E Only, No Longer Serviced, Years: 01/01/1965-07/31/1970
57	C5NN94031N18D	1	Curtain Assy., Cab Rear, 2000,3000, NH-E Only, No Longer Serviced, Years: 01/01/1965-07/31/1970
57	C5NN94031N18A	1	Curtain Assy., Cab Rear, 4000,5000,7100, NH-E Only, No Longer Serviced, Years: 01/01/1965-07/31/1970
58	C5NN94031N64A	2	Bracket, Side Frame Mounting, 4000, NH-E Only, No Longer Serviced, Years: 01/01/1965-07/31/1970

5000-SERIES 4 CYL TRACTOR (1/65-1/75)

15B01 TRACTOR CAB ASSEMBLY, ALL PURPOSE (ACCESSORY) (NH-E) (65/7-70)

Ref	Part Number	Qty	Description
58	C5NN94031N63A	1	Footstep, Mounting, 4000, NH-E Only, No Longer Serviced, Years: 01/01/1965-07/31/1970
58	34906S2	2	Washer, Lock, Int T, 5/16", 4000, Years: 01/01/1965-07/31/1970
58	9635082	2	Nut, G5, 5/16"-18, 4000, Years: 01/01/1965-07/31/1970
58	7770	1	Nut, Hex, 1/4"-20, 4000, Years: 01/01/1965-07/31/1970
58	35526S2	1	Screw, Truss Hd, G2, 1/4"-20 x 3/4", 4000, NH-E Only, No Longer Serviced, Years: 01/01/1965-07/31/1970
59	C7NN94031N43A	2	Bracket, Side Lamp, 4000,5000,7100, NH-E Only, No Longer Serviced, Years: 01/01/1967-07/31/1970

15B02 WINDSHIELD WIPER MOTOR KIT (ACCESSORY) (NH-E) (65/7-70)

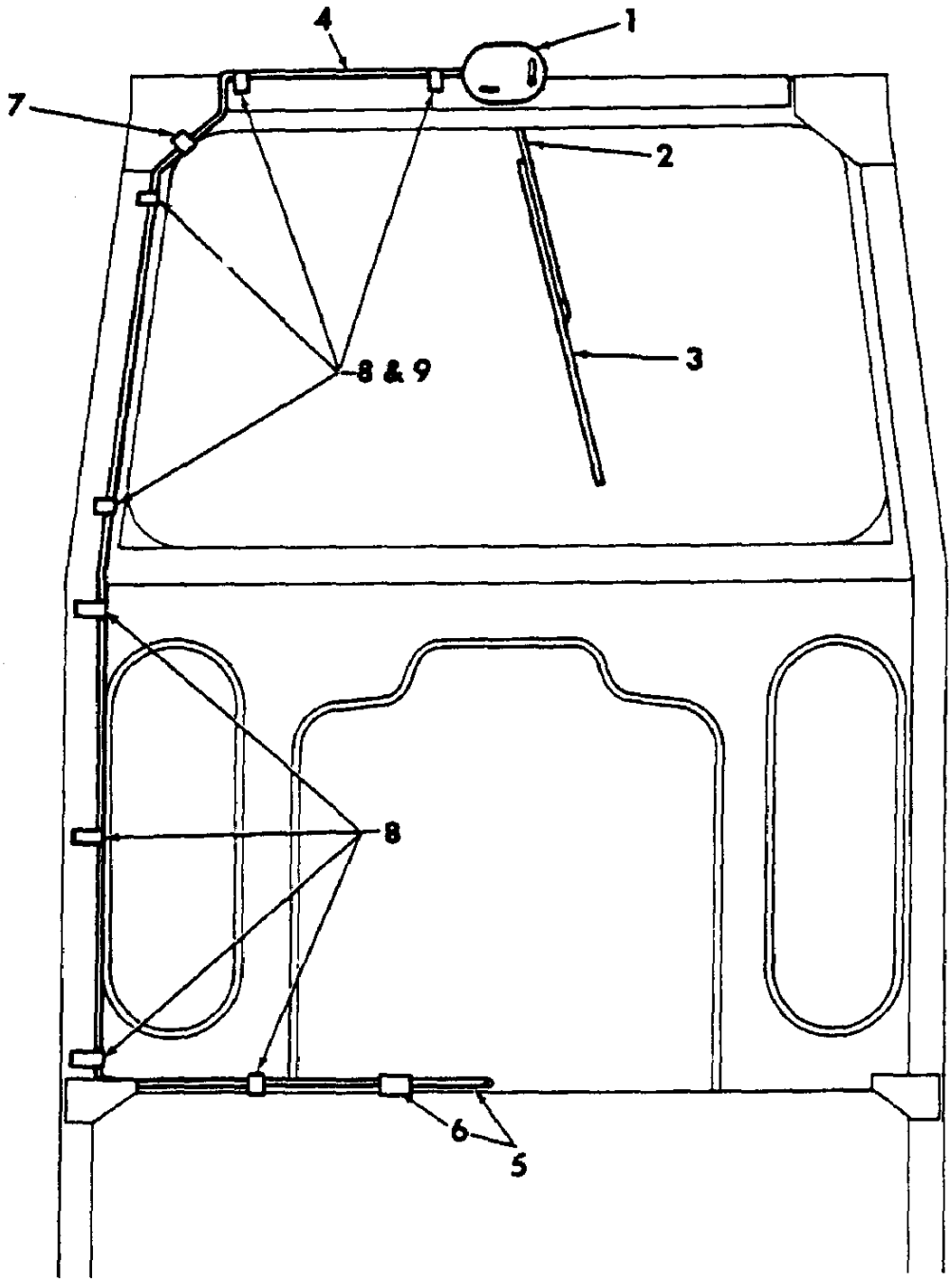

5000-SERIES 4 CYL TRACTOR (1/65-1/75)

15B02 WINDSHIELD WIPER MOTOR KIT (ACCESSORY) (NH-E) (65/7-70)

Ref	Part Number	Qty	Description
	NS	AR	Kit, Windshield Wiper Motor, Includes: Ref. 1 thru 9, NHNA Only, No Longer Serviced, Years: 01/01/1965-07/31/1970
1	C5NN17504B	1	Motor Assy., Wiper, Replaces C5NN17504A, NH-E Only, No Longer Serviced, Years: 01/01/1965-07/31/1970
2	C5NN17A463A	1	Arm, Windshield Wiper, NH-E Only, No Longer Serviced, Years: 01/01/1965-07/31/1970
3	PL	1	Blade, Windshield Wiper, NHNA Only, No Longer Serviced, Years: 01/01/1965-07/31/1970
4	C5NN14N000BD	1	Wire Assy., Single, NH-E Only, No Longer Serviced, Years: 01/01/1965-07/31/1970
5	C5NN14N107E	1	Fuse & Wire Assy., Includes: Wire & Ref. 6, NH-E Only, No Longer Serviced, Years: 01/01/1965-07/31/197
6	279863	1	Fuse, 5 Amp., Years: 01/01/1965-03/31/1968
6	FFC14599B	1	Fuse, 7 Amp., Years: 04/01/1968-07/31/1970
7	117818ES2	1	Clip, Wire to Cab Body, Years: 01/01/1965-07/31/1970
8	NLS	8	Clip, Wire to Cab Body {E42JA9}, Years: 01/01/1965-07/31/1970
9		4	Screw, Self-Tapping, Clip to Body, 1/4"-20 x 1/2", U.K., Antwerp, NH-E Only, No Longer Serviced, Years: 01/01/1965-07/31/1970
	D5NN14N031B	1	Terminal, Male Blade, Years: 01/01/1965-07/31/1970
	E0A19550	AR	Fluid, Windshield Washer, Accessory, NH-E Only, No Longer Serviced, Start Year: 01/01/1965
	E2094T9	1	Kit, Windshield Washer, Accessory, NH-E Only, No Longer Serviced, Start Year: 01/01/1970

15B03 TRACTOR CAB ASSY FOR SAFETY FRAME, STANDARD - 2000,3000,4100,5100,7100 (U.K., EIRE, & SCANDINAVIA)

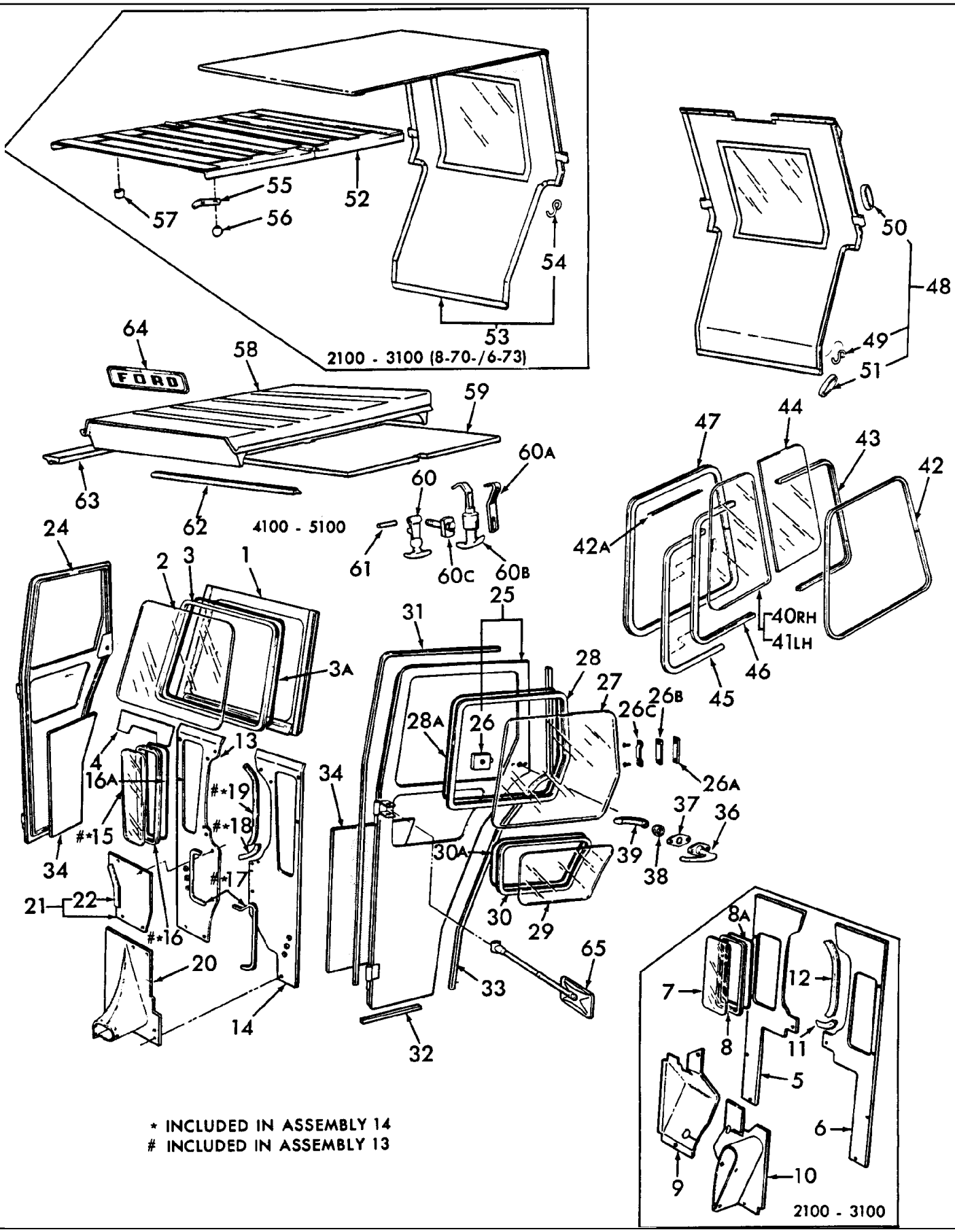

5000-SERIES 4 CYL TRACTOR (1/65-1/75)

15B03 TRACTOR CAB ASSY FOR SAFETY FRAME, STANDARD - 2000,3000,4100,5100,7100 (U.K., EIRE, & SCANDINAVIA)

Ref	Part Number	Qty	Description
1	D0NN94030N18D	1	Frame Assy., Cab Windshield, 2000-3000, NH-E Only, No Longer Serviced, Start Year: 08/01/1970
1	D0NN94030N18B	1	Frame Assy., Cab Windshield, 4100-5100-7100, NH-E Only, No Longer Serviced, Years: 08/01/1970-02/28/1973
1	D1NN94030N18A	1	Frame Assy., Cab Windshield, 4100, NH-E Only, No Longer Serviced, Start Year: 03/01/1973
1	D1NN94030N18B	1	Frame Assy., Cab Windshield, 5100-7100, NH-E Only, No Longer Serviced, Start Year: 03/01/1973
2	D0NN9403102A	1	Glass, Windshield, 2000-3000, NH-E Only, Start Year: 08/01/1970
2	D0NN9403102B	1	Glass, Windshield, 4100-5100-7100, NH-E Only, Years: 08/01/1970-02/28/1973
2	D1NN9403102A	1	Glass, Cab Windshield, 4100, NH-E Only, Start Year: 03/01/1973
2	D1NN9403102B	1	Glass, Cab Windshield, 5100-7100, NH-E Only, Start Year: 03/01/1973
3	D0NN94501N67B	1	Moulding, Windshield Glass, 2921.0mm, 2000-3000, NH-E Only, Order & Cut to Desired Length, Start Year: 08/01/1970
3	D0NN94501N67B	1	Moulding, Windshield Glass, 113.25" (3028.95mm), 4100-5100-7100, NH-E Only, Years: 08/01/1970-02/28/1973
3	D1NN94501N67B	1	Moulding, Windshield Glass, 118.25" (3003.6mm), 4100-5100-7100, NH-E Only, Start Year: 03/01/1973
3A	D1NN94504N43B	1	Strip, Windshield Moulding Seal, 118.75" (3016.3mm), NH-E Only, Start Year: 03/01/1973
3A	D3NN94506N75A	2	Clip, Windshield Glass Retaining, 2000-3000, NH-E Only, Start Year: 08/01/1970
3A	D3NN94506N75A	2	Clip, Windshield Glass Retaining, Service Only, 4100-5100-7100, NH-E Only, Years: 08/01/1970-02/28/1970
4	D0NN94502N94A	1	Seal, Cab Windshield, 2000-3000, NH-E Only, Start Year: 08/01/1970
4	D0NN94502N94B	1	Seal, Cab Windshield, 4100, NH-E Only, Years: 08/01/1970-02/28/1973
4	D0NN94502N94B	1	Seal, Cab Windshield, 5100-7100, NH-E Only, No Longer Serviced, Years: 08/01/1970-02/28/1973
4	D3NN94502N94B	1	Seal, Cab Windshield, 4100, NH-E Only, No Longer Serviced, Start Year: 03/01/1973
4	D3NN94502N94A	1	Seal, Cab Windshield, 5100-7100, NH-E Only, No Longer Serviced, Start Year: 03/01/1973
	80664	4	Washer, 5/16", Start Year: 08/01/1970
	34976S7	2	Nut, Lock, G5, 5/16"-18, Start Year: 08/01/1970
		2	Screw, Pan Hd, G5, 5/16"-18 x 3/4", NH-E Only, Start Year: 08/01/1970
	80701	2	Washer, 1/4", Start Year: 08/01/1970
	7770	2	Nut, Hex, 1/4"-20, Start Year: 08/01/1970
	57453S36	2	Screw, Pan Hd, G5, 1/4"-20 x 1-1/4", Years: 08/01/1970-02/28/1973
		2	Screw, Pan Hd, G5, 1/4"-20 x 1-1/2", Windshield to Front Panel, 4100-5100-7100, NH-E Only, No Longer Serviced, Start Year: 03/01/1973
	9849109	2	O-Ring, .250" ID x .070" Thk, Use W/# 57453-S36, Screw, Start Year: 08/01/1970
5	D0NN94500N76A	1	Panel, Cab Front, R.H., 2000-3000, NH-E Only, Start Year: 08/01/1970
6	D0NN94500N77A	1	Panel, Cab Front, L.H., 2000-3000, NH-E Only, Start Year: 08/01/1970
7	PL	2	Glass, Cab Front, 2000-3000, Order (1) P/N D1NN-94500N70-B(81827479), (1) P/N D1NN94501N67-B(81830049), Moulding & (1) P/N D1NN-94504N43-B(81830053), Strip 37-1/2" Lg., NHNA Only, Years: 08/01/1970-01/31/1973
7	D1NN94500N70B	2	Glass, Cab Front, 2000-3000, NH-E Only, No Longer Serviced, Start Year: 02/01/1973
8	D0NN94501N36A	2	Moulding, Front Panel Window, 2000-3000, NH-E Only, Years: 08/01/1970-01/31/1973
8	D1NN94501N67B	2	Moulding, Front Panel, Window, 37" (939.8mm), 2000-3000, Order P/N D1NN-94501N67-B(81830049) & Cut to Desired Length, NH-E Only, Start Year: 02/01/1973

15B03 TRACTOR CAB ASSY FOR SAFETY FRAME, STANDARD - 2000,3000,4100,5100,7100 (U.K., EIRE, & SCANDINAVIA)

Ref	Part Number	Qty	Description
8A	D1NN94504N43B	2	Strip, Cab Front Panel Window Seal, 37-1/2" (952.5mm), 2000-3000, Order P/N D1NN-94504N43-B(81830053) & Cut to Desired Length, NH-E Only, Start Year: 02/01/1973
9	PL	1	Boot, Drag Link to Panel, RH, 2100-3100, NHNA Only, Start Year: 08/01/1970
9	D0NN94502N87AY	1	Boot, Drag Link to Panel, RH, 2120-3120, NH-E Only, Start Year: 08/01/1970
10	PL	1	Boot, Drag Link to Panel, LH, 2100-3100, NHNA Only, No Longer Serviced, Start Year: 08/01/1970
10	D0NN94502N89AY	1	Boot Assy., Drag Link to Panel, LH, 2120-3120, NH-E Only, Start Year: 08/01/1970
11	D0NN94503N17A	2	Moulding, Front Panel to Tank, Lower, 2000-3000, NH-E Only, No Longer Serviced, Start Year: 08/01/1970
12	D0NN94503N17A	2	Moulding, Front Panel to Tank, Upper, 20.56" Lg., 2000-3000, NH-E Only, No Longer Serviced, Start Year: 08/01/1970
		AR	Washer, Finishing, CSK, #6, 2000-3000, NH-E Only, No Longer Serviced, Start Year: 08/01/1970
		AR	Rivet, Oval Hd., 1/8" x 19/64", 2000-3000, NH-E Only, No Longer Serviced, Start Year: 08/01/1970
		AR	Clinch, Stud, 2000-3000, NH-E Only, No Longer Serviced, Start Year: 08/01/1970
	42717S36	AR	Screw, HH, W/Washer, #10-32 x 1/2", 2000-3000, Start Year: 08/01/1970
13	C9NN94500N74B	1	Panel Assy., Cab Front, RH, 4100, Includes: Ref. 15, NH-E Only, No Longer Serviced, Years: 08/01/1970-02/28/1973
13	C9NN94500N74A	1	Panel Assy., Cab Front, RH, 5100-7100, Includes: Ref. 15, NH-E Only, No Longer Serviced, Years: 08/01/1970-02/28/1973
13	D1NN94500N74D	1	Panel Assy., Cab Front, RH, 4100, Includes: Ref. 15, NH-E Only, Start Year: 03/01/1973
13	D1NN94500N74E	1	Panel Assy., Cab Front, RH, 5100-7100, Includes: Ref. 15, NH-E Only, Start Year: 03/01/1973
14	C9NN94500N75B	1	Panel Assy., Cab Front, LH, 4100, Includes: Ref. 15, NH-E Only, No Longer Serviced, Years: 08/01/1970-02/28/1973
14	C9NN94500N75A	1	Panel Assy., Cab Front, LH, 5100-7100, Includes: Ref. 15, NH-E Only, Years: 08/01/1970-02/28/1973
14	D1NN94500N75D	1	Panel Assy., Cab Front, LH, 4100, Includes: Ref. 15, NH-E Only, No Longer Serviced, Start Year: 03/01/1973
14	D1NN94500N75E	1	Panel Assy., Cab Front, LH, 5100-7100, Includes: Ref. 15, NH-E Only, No Longer Serviced, Start Year: 03/01/1973
15	D1NN94504N30A	2	Glass, Cab Front Panel, 4100-5100-7100, NH-E Only, Start Year: 03/01/1973
16	D0NN94501N67B	2	Moulding, Cab Front Panel Window, 4100-5100-7100, NH-E Only, Years: 08/01/1970-02/28/1973
16	D1NN94501N67B	2	30 Moulding, Front Panel Window, 42.5" (1073.2mm), 4100-5100-7100, NH-E Only, Order & Cut to Desired Length, Start Year: 03/01/1973
16A	D1NN94504N43B	2	Strip, 30, Front Panel Window Seal, 42.75" (1085.85mm), 4100-5100-7100, NH-E Only, Order & Cut to Desired Length, Start Year: 03/01/1973
17	D0NN94503N05A	AR	Moulding, Front Panel, 15", Cut to Length, 4100-5100-7100, NH-E Only, No Longer Serviced, Years: 08/01/1970-02/28/1973
		AR	Washer, Finishing, CSK, #6, 4100-5100-7100, NH-E Only, No Longer Serviced, Start Year: 08/01/1970
	NLS	AR	Rivet, Oval hd., 1/8", 4100-5100-7100 {378527}, Start Year: 08/01/1970
18	D0NN94503N17A	2	Moulding, Front Panel to Tank, Lower, 4100-5100-7100, NH-E Only, No Longer Serviced, Start Year: 08/01/1970
19	D0NN94503N17A	2	Moulding, Front Panel to Tank, Upper, 20-56" Lg., Cut to Length, 4100, NH-E Only, No Longer Serviced, Start Year: 08/01/1970
20	D0NN94500N67A	1	Boot, Drag Link to Panel, 4100-5100-7100, NH-E Only, No Longer Serviced, Start Year: 08/01/1970

15B03 TRACTOR CAB ASSY FOR SAFETY FRAME, STANDARD - 2000,3000,4100,5100,7100 (U.K., EIRE, & SCANDINAVIA)

Ref	Part Number	Qty	Description
	80701	4	Washer, 1/4", 4100-5100-7100, Start Year: 08/01/1970
	7770	2	Nut, Hex, 1/4"-20, 4100-5100-7100, Start Year: 08/01/1970
	304624S36	2	Screw, Cap, HH, G5, 1/4"-20 x 1/2", 4100-5100-7100, Start Year: 08/01/1970
	42717S36	2	Screw, HH, W/Washer, #10-32 x 1/2", 4100-5100-7100, Start Year: 08/01/1970
21	NLS	1	Cover Assy., Front Panel, RH, 4100 {C7NN94500N68A}, Years: 08/01/1970-02/28/1973
21	C9NN94500N68A	1	Cover Assy., Front Panel, RH, 5100-7100, NH-E Only, Years: 08/01/1970-02/28/1973
	80701	8	Washer, 1/4", 4100-5100-7100, Start Year: 08/01/1970
	7770	2	Nut, Hex, 1/4"-20, 4100-5100-7100, Start Year: 08/01/1970
	304624S36	5	Screw, Cap, HH, G5, 1/4"-20 x 1/2", 4100-5100-7100, Start Year: 08/01/1970
22	D0NN94503N17A	AR	Moulding, Panel Cover Front, 4100-5100-7100, NH-E Only, No Longer Serviced, Start Year: 08/01/1970
		AR	Washer, Finishing, CSK, #6, 4100-5100-7100, NH-E Only, No Longer Serviced, Start Year: 08/01/1970
	NLS	AR	Rivet, Oval Hd., Moulding, 1/8" x 25/64", 4100-5100-7100 {376807S}, Start Year: 08/01/1970
	NLS	AR	Rivet, Oval Hd., Moulding, 1/8" x 19/64", 4100-5100-7100 {378527S}, Start Year: 08/01/1970
24	D0NN94501N11A	1	Panel & Frame Assy., Cab Door, RH, 2000-3000, Includes: Ref. 26, NH-E Only, No Longer Serviced, Start Year: 08/01/1970
24	D2NN94501N11A	1	Panel & Frame Assy., Cab Door, RH, 4100-5100-7100, Includes: Ref. 26, NH-E Only, No Longer Serviced, Start Year: 08/01/1970
25	D1NN94501N00B	1	Panel & Frame Assy., Cab Door, LH, 2000-3000, Includes: Ref. 26, NH-E Only, Start Year: 08/01/1970
25	D2NN94501N12A	1	Panel & Frame Assy., Cab Door, LH, 4100-5100-7100, Includes: Ref. 26, NH-E Only, No Longer Serviced, Start Year: 08/01/1970
26	C9NN94501N20A	2	Lock Assy., Cab Door, NH-E Only, Start Year: 08/01/1970
26A	D1NN94505N52A	2	Plate, Cab Door Lock, W/Two 1/2"-20 Tread Holes, NH-E Only, No Longer Serviced, Start Year: 08/01/197
26B	D1NN94505N51A	2	Spacer, Cab Door Lock, NH-E Only, No Longer Serviced, Start Year: 08/01/1970
26C	D1NN94505N50A	2	Plate, Cab Door Locking Catch, No Longer Serviced, Start Year: 08/01/1970
26C	57453S36	4	Screw, Pan Hd, G5, 1/4"-20 x 1-1/4", Start Year: 08/01/1970
27	D1NN94501N00B	2	Glass, Cab Door, Upper, 2000-3000, NH-E Only, Start Year: 08/01/1970
27	D1NN94501N00A	2	Glass, Cab Door, Upper, 4100-5100-7100, NH-E Only, Start Year: 08/01/1970
28	D0NN94501N67B	2	Moulding, Cab Door Window, Upper, 2000-3000, NH-E Only, Order & Cut to Desired Length, Years: 08/01/1970-02/28/1973
28	D0NN94501N67B	2	Moulding, Cab Door Window, Upper, NH-E Only, Order & Cut to Desired Length, Years: 08/01/1970-02/28/1973
28	D1NN94501N67B	2	Moulding, Cab Door Window, Upper, NH-E Only, Order & Cut to Desired Length, Start Year: 03/01/1973
28A	D1NN94504N43B	2	Strip, Window Upper Seal, 89.5" (2273.3mm), NH-E Only, Order & Cut to Desired Length, Start Year: 03/01/1973
28A	D3NN94506N75A	8	Clip, Cab Door Upper Glass Retaining, Service Only, NH-E Only, Years: 08/01/1970-02/28/1973
29	C9NN94501N13A	2	Glass, Cab Door, Lower, Except Scandinavia, NH-E Only, No Longer Serviced, Years: 08/01/1970-07/31/1971
29	C9NN94501N13A	2	Glass, Cab Door, Lower, Scandinavia, NH-E Only, No Longer Serviced, Years: 08/01/1970-02/28/1973
29	D1NN94501N13A	2	Glass, Cab Door, Lower, Except Scandinavia, NH-E Only, Start Year: 08/01/1971
29	D1NN94501N13A	2	Glass, Cab Door, Lower, Scandinavia, NH-E Only, Start Year: 03/01/1973
30	D0NN94501N67B	2	Moulding, Door Window, Lower, NH-E Only, Years: 08/01/1970-02/28/1973

5000-SERIES 4 CYL TRACTOR (1/65-1/75)

15B03 TRACTOR CAB ASSY FOR SAFETY FRAME, STANDARD - 2000,3000,4100,5100,7100 (U.K., EIRE, & SCANDINAVIA)

Ref	Part Number	Qty	Description
30	D1NN94501N67B	2	Moulding, Door Window, Lower, 41" (1041.4mm), NH-E Only, Order & Cut to Desired Length, Start Year: 03/01/1973
30A	D1NN94504N43B	2	Strip, Door Lower Window Seal, 41-1/2" (1054.1mm), NH-E Only, Order & Cut to Desired Length, Start Year: 03/01/1973
31	D0NN94501N37A	2	Strip, Door Sealer, Front, 81.40" (206.76cm), Replaces C9NN94501N37A, NH-E Only, No Longer Serviced Start Year: 08/01/1970
32	D0NN94501N37A	2	Strip, Door Sealer, Lower, 11.00" (27.94cm), 2000-3000, NH-E Only, Order & Cut to Desired Length, No Longer Serviced, Start Year: 08/01/1970
32	D0NN94501N37A	2	Strip, Door Sealer, Lower, 9.80" (24.89cm), 4100-5100-7100, NH-E Only, Order & Cut to Desired Length, No Longer Serviced, Start Year: 08/01/1970
33	D0NN94501N37A	2	Strip, Door Sealer, Rear, 65.80" (167.13cm), 2000-3000, NH-E Only, Order & Cut to Desired Length, No Longer Serviced, Start Year: 08/01/1970
33	D0NN94501N37A	2	Strip, Door Sealer, Rear, 66.5" (168.41cm), 4100-5100-7100, NH-E Only, Order & Cut to Desired Length, No Longer Serviced, Start Year: 08/01/1970
34	D2NN94502N58C	2	Panel, Cab Door Damping, RH & LH, Replaces D0NN94502N58B & D0NN94502N59B, 2000-3000, NH-E Only, Start Year: 08/01/1970
34	D2NN94502N58D	2	Panel, Cab Door Damping, RH & LH, 4100-5100-7100, Start Year: 08/01/1970
36	C9NN94501N22A	2	Handle Assy., Cab Door, Outer, No Longer Serviced (NHNA), Start Year: 08/01/1970
36		4	Screw, Self-Tapping, Oval Hd, #8-18 x 5/8", NH-E Only, Start Year: 08/01/1970
37	C9NN94501N14A	2	Gasket, Cab Door Handle, NH-E Only, No Longer Serviced, Start Year: 08/01/1970
38	C9NN94501N23A	2	Escutcheon Assy., Cab Door Handle, Start Year: 08/01/1970
39	C9NN94501N21A	2	Handle Assy.,Cab Door, Inner, Start Year: 08/01/1970
39		2	Pin, Straight, 1/8" x 9/16", Handle, NH-E Only, Start Year: 08/01/1970
40	D0NN94501N72B	1	Glass Assy., Cab Sliding Window, RH, 2000-3000, NH-E Only, No Longer Serviced, Start Year: 08/01/1970
40	D0NN94501N72A	1	Glass Assy., Cab Sliding Window, RH, 4100-5100-7100, NH-E Only, Start Year: 08/01/1970
41	D0NN94501N73B	1	Glass Assy., Cab Sliding Window, LH, 2000-3000, NH-E Only, No Longer Serviced, Start Year: 08/01/1970
41	D0NN94501N73A	1	Glass Assy., Cab Sliding Window, LH, 4100-5100-7100, NH-E Only, Start Year: 08/01/1970
42	D1NN94504N52A	2	Strip, Cab Side Window Glass Retaining, 88" (223.5cm), Cut to Length for 2100-3100, NH-E Only, Start Year: 08/01/1970
42A	D1NN94504N50A	2	Strip, Sliding Window Packing, 8" (203.2mm), No Longer Serviced, Start Year: 08/01/1970
43	D0NN94502N40B	2	Channel, Cab Sliding Window, 2000-3000, NH-E Only, No Longer Serviced, Start Year: 08/01/1970
43	D0NN94502N40A	2	Channel, Cab Sliding Window, 4100-5100-7100, NH-E Only, No Longer Serviced, Start Year: 08/01/1970
44	D0NN94501N75B	2	Glass, Cab Side Window, Rear, 2000-3000, NH-E Only, No Longer Serviced, Start Year: 08/01/1970
44	D0NN94501N75A	2	Glass, Cab Side Window, Rear, 4100-5100-7100, NH-E Only, Start Year: 08/01/1970
45	D0NN94502N42B	2	Strip, Side Fixed Window Glass Retaining, 43" (109.2cm), Cut to Length for 2100-3100, NH-E Only, Start Year: 08/01/1970
46	D0NN94501N74B	2	Channel, Cab Sliding Window Guide, 2000-3000, NH-E Only, No Longer Serviced, Start Year: 08/01/1970
46	D0NN94501N74A	2	Channel, Cab Sliding Window Guide, 4100-5100-7100, NH-E Only, No Longer Serviced, Start Year: 08/01/1970
47	D0NN94501N76A	2	Moulding, Cab Side Window, 88" (223.5cm), Cut to Length for 2100-3100, NH-E Only, Start Year: 08/01/1970

5000-SERIES 4 CYL TRACTOR (1/65-1/75)

15B03 TRACTOR CAB ASSY FOR SAFETY FRAME, STANDARD - 2000,3000,4100,5100,7100 (U.K., EIRE, & SCANDINAVIA)

Ref	Part Number	Qty	Description
48	D0NN94501N82B	1	Curtain Assy., Rear, 2100-3100, Includes: Ref. 49 thru 51, NH-E Only, No Longer Serviced, Years: 08/01/1970-06/30/1973
48	D1NN94501N82C	1	Curtain Assy., Cab, Rear, 2100-3100, Includes: Ref. 49 thru 51, NH-E Only, No Longer Serviced, Start Year: 07/01/1973
48	D0NN94501N82BY	1	Curtain Assy., Rear, 2120-3120, Includes: Ref. 49 thru 51, NH-E Only, No Longer Serviced, Years: 08/01/1970-06/30/1973
48	D1NN94501N82CY	1	Curtain Assy., Cab, Rear, 2120-3120, Includes: Ref. 49 thru 51, NH-E Only, Start Year: 07/01/1973
48	D1NN94501N82A	1	Curtain Assy., Rear, W/License Plate Bracket, 4100-5100-7100, Includes: Ref. 49 thru 51, NH-E Only, No Longer Serviced, Start Year: 08/01/1970
48	D1NN94501N82B	1	Curtain Assy., Rear, L/License Plate Bracket, 4100-5100-7100, Includes: Ref. 49 thru 51, NH-E Only, No Longer Serviced, Start Year: 08/01/1970
49	D0NN94501N80A	2	Hook, Rear Curtain, 2000-3000, NH-E Only, Start Year: 08/01/1970
49	D0NN94501N80A	4	Hook, Rear Curtain, 4100-5100-7100, NH-E Only, Start Year: 08/01/1970
50	D0NN94501N83A	2	Strap, Rear Curtain Hook Fixing, Upper, NH-E Only, Start Year: 08/01/1970
51	D0NN94501N84A	2	Strap, Rear Curtain Hook Fixing, Lower, NH-E Only, Start Year: 08/01/1970
51		2	Clinch, Eyelet, NH-E Only, No Longer Serviced, Start Year: 08/01/1970
51		2	Clinch, Stud, NH-E Only, No Longer Serviced, Start Year: 08/01/1970
51		2	Socket, Deluxe Cab, Scandinavia, 2100-3100, NH-E Only, No Longer Serviced, Start Year: 08/01/1970
52	D1NN94500N56C	1	Roof Assy., Cab, L/Insulation, 2000-3000, Includes: Parts Listed Below, NH-E Only, No Longer Serviced, Start Year: 08/01/1970
	PL	1	Bumper, Cab Roof, Scandinavia, 2100-3100, NHNA Only, Start Year: 08/01/1970
	PL	2	Sleeve, Lock Handle, Rubber, U.K.-Antwerp, 2000-3000, NHNA Only, No Longer Serviced, Start Year: 08/01/1970
	D2NN94500N62C	1	Insulation, Cab Roof, 2000-3000, NH-E Only, Start Year: 07/01/1973
	D0NN94503N16A	2	Moulding, Cab Roof to Frame Sides, 47.86" (12.14mm) Lg., 2000-3000, NH-E Only, No Longer Serviced, Start Year: 07/01/1973
53	NS	1	Curtain Assy., Roof & Rear, England-Ireland, 2100-3100, Includes: Ref. 54, NHNA Only, Years: 08/01/1970-06/30/1973
53	NS	1	Curtain Assy., Roof & Rear, 2120-3120, Includes: Ref. 54, NHNA Only, Start Year: 08/01/1970
54	D0NN94501N80A	2	Hook, Rear Curtain, 2000-3000, NH-E Only, Start Year: 08/01/1970
55	D0NN94502N03A	2	Clamp, Rod Assy., Front, 2000-3000, NH-E Only, No Longer Serviced, Start Year: 08/01/1970
		2	Washer, .28 ID x .75 OD x .12 Thk, 2000-3000, NH-E Only, No Longer Serviced, Start Year: 08/01/1970
	80701	2	Washer, 1/4", 2000-3000, Start Year: 08/01/1970
	86627130	2	Nut, Wing, 1/4"-20, 2000-3000, Start Year: 08/01/1970
	9707580	2	Screw, Cap, HH, G5, 1/4"-20 x 3/4", 2000-3000, Start Year: 08/01/1970
56	D0NN94502N01A	2	Knob, Roof Vent Assy., 2000-3000, NH-E Only, No Longer Serviced, Start Year: 08/01/1970
	9672521	2	Washer, Lock, Ext T, #10, 2000-3000, Start Year: 08/01/1970
	86511920	2	Screw, Pan Hd, #10-24 x 1/2", 2000-3000, Start Year: 08/01/1970
57	D0NN94503N15A	2	Stop, Roof Front, Scandinavia, 2100-3100, NH-E Only, No Longer Serviced, Start Year: 08/01/1970
		2	Washer, Finishing, CSK, #6, Scandinavia, 2100-3100, NH-E Only, No Longer Serviced, Start Year: 08/01/1970

15B03 TRACTOR CAB ASSY FOR SAFETY FRAME, STANDARD - 2000,3000,4100,5100,7100 (U.K., EIRE, & SCANDINAVIA)

Ref	Part Number	Qty	Description
	NLS	2	Rivet, Oval Hd., 1/8" x 25/64", Scandinavia, 2100-3100 {117326ES}, Start Year: 08/01/1970
58	D2NN94503N69A	1	Roof Assy., L/License Plate Bracket, 4100-5100-7100, NH-E Only, No Longer Serviced, Years: 08/01/1970-10/31/1972
58	D2NN94500N56B	1	Roof Assy., 4100-5100-7100, NH-E Only, No Longer Serviced, Start Year: 08/01/1970
59	C9NN94500N62ARR	1	Insulator, Cab Roof, Rear, 4100-5100-7100, NH-E Only, No Longer Serviced, (1) C9NN-94500N62-ARR & (1) AFRT Replace C9NN-94500N62-A, Years: 08/01/1970-10/31/1972
59	NLS	1	Insulator, Cab Roof, Front, 4100-5100-7100 (C9NN94500N62AFRT), NH-E Only, (1) C9NN-94500N62-ARR & (1) AFRT Replace C9NN-94500N62-A, Years: 08/01/1970-10/31/1972
59	D2NN94500N62B	1	Insulation, Roof, 4100-5100-7100, NH-E Only, No Longer Serviced, Start Year: 11/01/1972
60	D1NN94503N69A	2	Fastener, Roof, 4100-5100-7100, NH-E Only, No Longer Serviced, Years: 08/01/1970-10/31/1972
60A	D2NN94503N69A	2	Fastener, Roof, 4100-5100-7100, Not Replaced, NH-E Only, Start Year: 11/01/1972
60A	D2NN94503N69A	2	Fastener, Roof, Except Finland, 2000-3000, NH-E Only, No Longer Serviced, Start Year: 07/01/1973
	80664	4	Washer, 5/16", Start Year: 11/01/1972
	34976S7	2	Nut, Lock, G5, 5/16"-18, Start Year: 11/01/1972
	86505972	2	Screw, Cap, HH, G5, 5/16"-18 x 2-1/4", Modles 4100-5100-7100, Start Year: 11/01/1972
	86505972	2	Screw, Cap, HH, G5, 5/16"-18 x 2-1/4", Except Finland, Model 2000-3000, Start Year: 07/01/1973
61	E2828AA4	2	Pin, Fastener, 4100-5100-7100, NH-E Only, Years: 08/01/1970-10/31/1972
62	D0NN94503N17A	2	Moulding, Cab Roof to Front Bracket, 4100-5100-7100, NH-E Only, No Longer Serviced, Start Year: 08/01/1970
	80701	2	Washer, 1/4", 4100-5100, Start Year: 08/01/1970
	7770	2	Nut, 1/4"-20, 4100-5100, Start Year: 08/01/1970
	9707580	2	Screw, Cap, HH, G5, 1/4"-20 x 3/4", 4100-5100, Start Year: 08/01/1970
63	D0NN94503N16A	2	Moulding, Roof to Frame Side, Note: On Cab used 11-72/ a notch must be cut in Moulding for Roof Fastener clearance, 4100-5100-7100, NH-E Only, No Longer Serviced, Start Year: 08/01/1970
64	C7NN8N000C	1	Decal, Ford, Red Block Letters, 4-1/4 x 24-3/4, 4100-5100, Start Year: 08/01/1970
64	C7NN8N000C	1	Decal, Ford, Red Block Letters, 4-1/4 x 24-3/4, 2000-3000, Start Year: 07/01/1973
65	D1NN17N677A	AR	Mirror & Arm Assy., Rear View, NH-E Only, No Longer Serviced, Start Year: 08/01/1970
	D2NN17N697A	1	Plate, Rear View Outside Mirror Clamp, W/Semi Cab, Norway, NH-E Only, No Longer Serviced, Start Year: 01/01/1973
65	D1NN17N677A	AR	Mirror & Arm Assy., Rear View, 2000-3000, NH-E Only, No Longer Serviced, Start Year: 08/01/1970
65	D1NN17N677A	AR	Mirror & Arm Assy., Rear View, 4100-5100-7100, NH-E Only, No Longer Serviced, Years: 08/01/1970-12/31/1973
65	CFPN17N679B	AR	Mirror & Arm Assy., Rear View, 4100-5100-7100, NH-E Only, No Longer Serviced, Start Year: 01/01/1974
	D2NN17N697A	1	Plate, Rear View Outside Mirror Clamp, W/Semi Cab, Norway, NH-E Only, Start Year: 01/01/1973

15B04 TRACTOR CAB ASSEMBLY FOR SAFETY FRAME, DELUXE - 4100, 5100, 7100 (U.K., EIRE, & SCANDINAVIA)

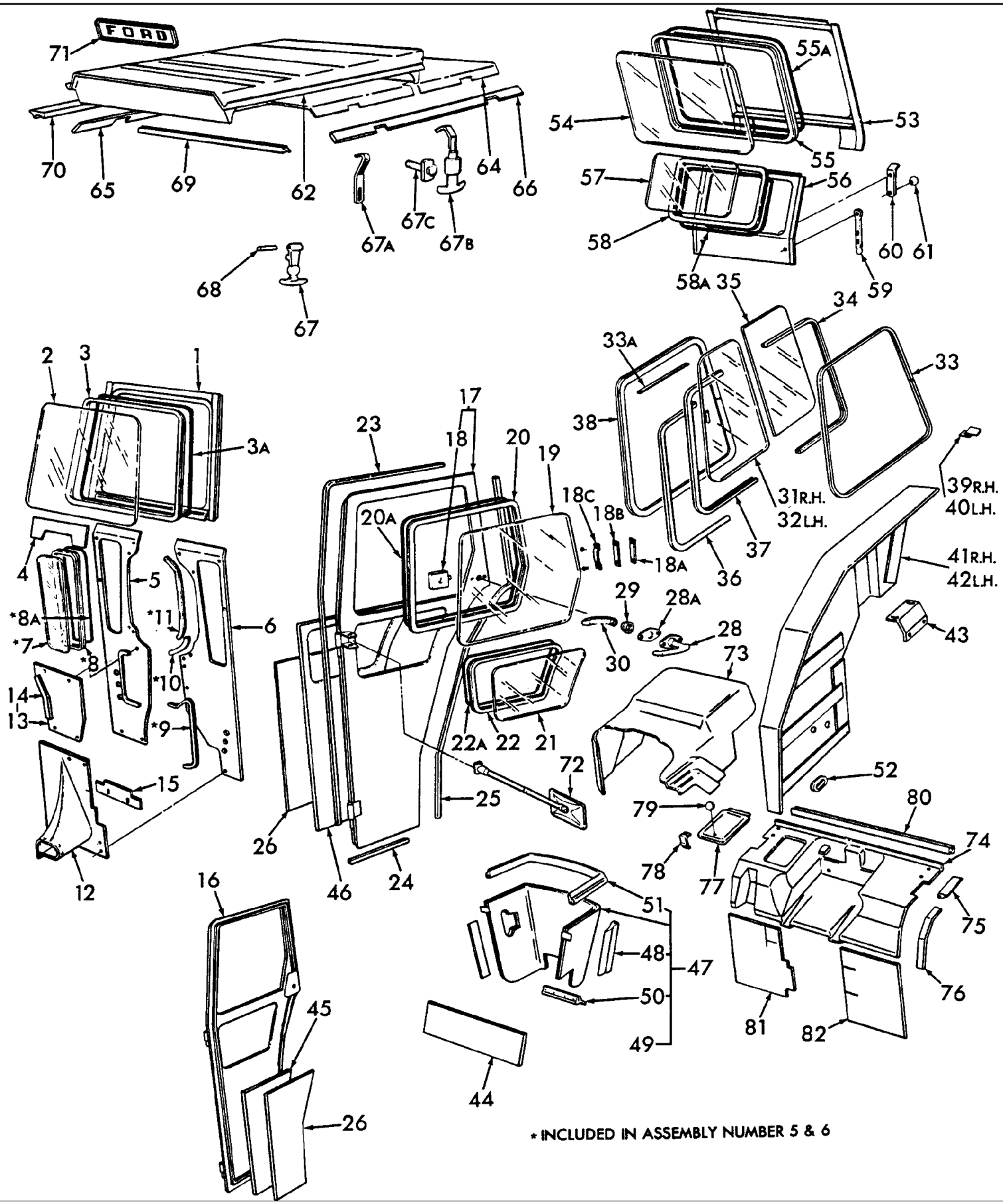

5000-SERIES 4 CYL TRACTOR (1/65-1/75)

15B04 TRACTOR CAB ASSEMBLY FOR SAFETY FRAME, DELUXE - 4100, 5100, 7100 (U.K., EIRE, & SCANDINAVIA)

Ref	Part Number	Qty	Description
1	D0NN94030N18B	1	Frame Assy., Cab Windshield, NH-E Only, No Longer Serviced, Years: 08/01/1970-02/28/1973
1	D1NN94030N18A	1	Frame Assy., Cab Windshield, 4100, NH-E Only, No Longer Serviced, Start Year: 03/01/1973
1	D1NN94030N18B	1	Frame Assy., Cab Windshield, 5100-7100, NH-E Only, No Longer Serviced, Start Year: 03/01/1973
2	D0NN9403102B	1	Glass, Windshield, NH-E Only, Years: 08/01/1970-02/28/1973
2	D1NN9403102A	1	Glass, Cab Windshield, 4100, NH-E Only, Start Year: 03/01/1973
2	D1NN9403102B	1	Glass, Cab Windshield, 5100-7100, NH-E Only, Start Year: 03/01/1973
3	D0NN94501N67B	1	Moulding, Windshield Glass, NH-E Only, Years: 08/01/1970-02/28/1973
3	D1NN94501N67B	1	Moulding, Cab Windshield, 118.5" (3003.6mm), NH-E Only, Start Year: 03/01/1973
3A	D1NN94504N43B	1	Strip, Windshield Moulding Seal, 118.75" (3016.3mm), NH-E Only, Start Year: 03/01/1973
3A	D3NN94506N75A	2	Clip, Windshield Glass Retaining, Service Only, NH-E Only, Years: 08/01/1970-02/28/1973
4	D0NN94502N94B	1	Seal, Cab Windshield, 4100, No Longer Serviced, Years: 08/01/1970-02/28/1973
4	D3NN94502N94B	1	Seal, Cab Windshield, 4100, No Longer Serviced, Start Year: 03/01/1973
4	D3NN94502N94A	1	Seal, Cab Windshield, 5100-7100, NH-E Only, No Longer Serviced, Start Year: 03/01/1973
4	80701	2	Washer, 1/4", Start Year: 08/01/1970
4	7770	2	Nut, Hex, 1/4"-20, Start Year: 08/01/1970
4	57453S36	2	Screw, Pan Hd, G5, 1/4"-20 x 1-1/4", Years: 08/01/1970-02/28/1973
4		2	Screw, Pan Hd, G5, 1/4"-20 x 1-1/2", Windshield to Front Panel, NH-E Only, No Longer Serviced, Start Year: 03/01/1973
4	9849109	2	O-Ring, .250" ID x .070" Thk, Use W/# 57453-S36, Screw, Start Year: 08/01/1970
5	C9NN94500N74B	1	Panel Assy., Cab Front, R.H., 4100, NH-E Only, No Longer Serviced, Years: 08/01/1970-02/28/1973
5	C9NN94500N74A	1	Panel Assy., Cab Front, R.H., 5100-7100, NH-E Only, No Longer Serviced, Years: 08/01/1970-02/28/1973
5	D1NN94500N74D	1	Panel Assy., Cab Front, R.H., 4100, NH-E Only, Start Year: 03/01/1973
5	D1NN94500N74E	1	Panel Assy., Cab Front, R.H., 5100-7100, NH-E Only, Start Year: 03/01/1973
5	D2NN94500N76A	1	Panel Assy., Cab Front, R.H., W/Dual Power, L/Glass, 5100-7100, NH-E Only, Start Year: 08/01/1970
6	C9NN94500N75B	1	Panel Assy., Cab Front, L.H., 4100, Includes: Panel & Ref. 7-11, NH-E Only, Start Year: 08/01/1970
6	C9NN94500N75A	1	Panel Assy., Cab Front, L.H., 5100-7100, Includes: Panel & Ref. 7-11, NH-E Only, Years: 08/01/1970-02/28/1973
6	D1NN94500N75D	1	Panel Assy., Cab Front, L.H., 4100, Includes: Panel & Ref. 7-11, NH-E Only, No Longer Serviced, Start Year: 03/01/1973
6	D1NN94500N75E	1	Panel Assy., Cab Front, L.H., 5100-7100, Includes: Panel & Ref. 7-11, NH-E Only, No Longer Serviced, Start Year: 03/01/1973
7	C9NN94500N70A	2	Glass, Cab Front Panel, NH-E Only, Years: 08/01/1970-02/28/1973
7	D1NN94504N30A	2	Glass, Cab Front Panel, NH-E Only, Start Year: 03/01/1973
8	D0NN94501N67B	2	Moulding, Cab Front Panel Window, NH-E Only, Order & Cut to Desired Length, Years: 08/01/1970-02/28/1973
8	D1NN94501N67B	2	Moulding, Front Panel Window, 42.5" (1073.2mm), Order P/N D1NN-94501N67-B(81830049) & Cut to Desired Length, NH-E Only, Start Year: 03/01/1973
8A	D1NN94504N43B	2	Strip, Front Panel Window Seal, 42.75", Order P/N D1NN-94504N43-B(81830053) & Cut to Desired Length, NH-E Only, Start Year: 03/01/1973
9	D0NN94503N05A	AR	Moulding, Front Panel, 15" (38.1cm), Cut to Length, NH-E Only, No Longer Serviced, Years: 08/01/1970-02/28/1973

15B04 TRACTOR CAB ASSEMBLY FOR SAFETY FRAME, DELUXE - 4100, 5100, 7100 (U.K., EIRE, & SCANDINAVIA)

Ref	Part Number	Qty	Description
9	80701	4	Washer, 1/4", Start Year: 08/01/1970
9	7770	2	Nut, Hex, 1/4"-20, Start Year: 08/01/1970
9	304624S36	2	Screw, Cap, HH, G5, 1/4"-20 x 1/2", Start Year: 08/01/1970
9	42717S36	2	Screw, HH, W/Washer, #10-32 x 1/2", Start Year: 08/01/1970
10	D0NN94503N17A	2	Moulding, Front Panel to Tank Lower, NH-E Only, No Longer Serviced, Start Year: 08/01/1970
11	D0NN94503N17A	2	Moulding, Front Panel to Tank, Upper, 5100-7100, NH-E Only, No Longer Serviced, Start Year: 08/01/1970
11	D0NN94503N17A	2	Moulding, Front Panel to Tank, Upper, 4100, NH-E Only, No Longer Serviced, Years: 08/01/1970-02/28/1973
11	D0NN94503N17A	2	Moulding, Front Panel to Tank, Upper, 4100, NH-E Only, No Longer Serviced, Start Year: 03/01/1973
12	D0NN94500N67A	2	Boot, Drag Link to Panel, NH-E Only, No Longer Serviced, Start Year: 08/01/1970
12		AR	Washer, Finishing, CSK, #6, NH-E Only, No Longer Serviced, Start Year: 08/01/1970
12		AR	Rivet, Oval Hd., 1/8", NH-E Only, No Longer Serviced, Start Year: 08/01/1970
13	C9NN94500N68A	1	Cover Assy., Front Panel, R.H., 5100-7100, NH-E Only, Years: 08/01/1970-02/28/1973
13	80701	8	Washer, 1/4", Start Year: 08/01/1970
13	7770	5	Nut, Hex, 1/4"-20, Start Year: 08/01/1970
13	304624S36	5	Screw, Cap, HH, G5, 1/4"-20 x 1/2", Cover, Start Year: 08/01/1970
14	D0NN94503N17A	AR	Moulding, Panel Cover Front, NH-E Only, No Longer Serviced, Start Year: 08/01/1970
14		AR	Washer, Finishing, CSK, #6, NH-E Only, No Longer Serviced, Start Year: 08/01/1970
14		AR	Rivet, Oval Hd., Moulding, 1/8" x 25/64", NH-E Only, No Longer Serviced, Start Year: 08/01/1970
14		AR	Rivet, Oval Hd., Moulding, 1/8" x 19/64", NH-E Only, No Longer Serviced, Start Year: 08/01/1970
15	D0NN94501N64B	2	Panel, Reinforcement, Front Platform, 4100, NH-E Only, Start Year: 06/01/1971
15	80701	4	Washer, 1/4", Start Year: 06/01/1971
15	C5NN16N485A	4	Nut, Captive, 1/4"-20, Start Year: 06/01/1971
15	304624S36	4	Screw, Cap, HH, G5, 1/4"-20 x 1/2", Panel, Start Year: 06/01/1971
16	D2NN94501N11A	1	Panel & Frame Assy., Cab Door, R.H., Replaces D0NN-94501N11-B, NH-E Only, No Longer Serviced, Start Year: 08/01/1970
17	D2NN94501N12A	1	Panel & Frame Assy., Cab Door, L.H., Replaces D0NN-94501N12-A, NH-E Only, No Longer Serviced, Start Year: 08/01/1970
18	C9NN94501N20A	2	Lock Assy., Cab Door, NH-E Only, Start Year: 08/01/1970
18A	D1NN94505N52A	2	Plate, Door Lock, W/(2) 1/4"-20 Holes, NH-E Only, No Longer Serviced, Start Year: 08/01/1970
18B	D1NN94505N51A	2	Spacer, Door Lock Catch, NH-E Only, No Longer Serviced, Start Year: 08/01/1970
18C	D1NN94505N50A	2	Plate, Door Locking Catch, No Longer Serviced, Start Year: 08/01/1970
18C	57453S36	4	Screw, Pan Hd, G5, 1/4"-20 x 1-1/4", Start Year: 08/01/1970
19	D1NN94501N00A	2	Glass, Door, Upper, Replaces P/N C9NN-94501N00-A, NH-E Only, Start Year: 08/01/1970
20	D0NN94501N67B	2	Moulding, Door Window, Upper, NH-E Only, Order & Cut to Desired Length, Years: 08/01/1970-02/28/1973
20	D1NN94501N67B	2	Moulding, Door Window, Upper, 89.0" (226.0mm), NH-E Only, Order & Cut to Desired Length, Start Year: 03/01/1973
20A	D1NN94504N43B	2	Strip, Door Window Upper Seal, 89.5" (2273.3mm), NH-E Only, Order & Cut to Desired Length, Start Year: 03/01/1973
20A	D3NN94506N75A	8	Clip, Cab Door Upper Glass Retaining, Service Only, NH-E Only, Years: 08/01/1970-02/28/1973
21	C9NN94501N13A	2	Glass, Door Lower, NH-E Only, No Longer Serviced, Years: 08/01/1970-02/28/1973

15B04 TRACTOR CAB ASSEMBLY FOR SAFETY FRAME, DELUXE - 4100, 5100, 7100 (U.K., EIRE, & SCANDINAVIA)

Ref	Part Number	Qty	Description
21	D1NN94501N13A	2	Glass, Door Lower, NH-E Only, Start Year: 03/01/1973
22	D0NN94501N67B	2	Moulding, Door Window Lower, NH-E Only, Years: 08/01/1970-02/28/1973
22	D1NN94501N67B	2	Moulding, Door Window Lower, 41.0" (1041.4mm), NH-E Only, Order & Cut to Desired Length, Start Year: 03/01/1973
22A	D1NN94504N43B	2	Strip, Door Window Lower Seal, 41.5" (1054.1mm), Order P/N D1NN-94504N43-B(81830053) & Cut to Desired Length, NH-E Only, Start Year: 03/01/1973
23	D0NN94501N37A	2	Strip, Door Sealer Front, 81.40" (106.76cm), Replaces P/N C9NN-94501N38-A, NH-E Only, No Longer Serviced, Start Year: 08/01/1970
24	D0NN94501N37A	2	Strip, Door Sealer Lower, 9.80" (24.89cm), NH-E Only, Order & Cut to Desired Length, No Longer Serviced, Start Year: 08/01/1970
25	D0NN94501N37A	2	Strip, Door Sealer Rear, 66.50" (168.41cm) P/N D0NN-94502N58-A & P/N D0NN-94502N59-A, NH-E Only, Order & Cut to Desired Length, No Longer Serviced, Start Year: 08/01/1970
26	D2NN94502N58D	2	Panel, Door Damping R.H. & L.H., NH-E Only, No Longer Serviced, Start Year: 08/01/1970
28	C9NN94501N22A	2	Handle Assy., Cab Door, Outer, No Longer Serviced (NHNA), Start Year: 08/01/1970
28		4	Screw, Self-Tapping, Oval Hd, #8-18 x 5/8", NH-E Only, Start Year: 08/01/1970
28A	C9NN94501N14A	2	Gasket, Door Handle, NH-E Only, No Longer Serviced, Start Year: 08/01/1970
29	C9NN94501N23A	2	Escutcheon Assy., Cab Door Handle, Start Year: 08/01/1970
30	C9NN94501N21A	2	Handle Assy., Door, Inner, Start Year: 08/01/1970
30	PL	2	Pin, Solid, Handle, .12 x .56, NHNA Only, Start Year: 08/01/1970
31	D0NN94501N72A	1	Glass Assy., Sliding Window, R.H., NH-E Only, Start Year: 08/01/1970
32	D0NN94501N73A	1	Glass Assy., Sliding Window, L.H., NH-E Only, Start Year: 08/01/1970
33	D1NN94504N52A	2	Strip, Side Window Glass Retaining, NH-E Only, Start Year: 08/01/1970
33A	D1NN94504N50A	2	Strip, Sliding Window Packing, 8" (203.2mm), No Longer Serviced, Start Year: 08/01/1970
34	D0NN94502N40A	2	Channel, Sliding Window, NH-E Only, No Longer Serviced, Start Year: 08/01/1970
35	D0NN94501N75A	2	Glass, Side Window, Rear, NH-E Only, Start Year: 08/01/1970
36	D0NN94502N42B	2	Strip, Side Fixed Window Glass Retaining, NH-E Only, Start Year: 08/01/1970
37	D0NN94501N74A	2	Channel, Sliding Window Guide, NH-E Only, No Longer Serviced, Start Year: 08/01/1970
38	D0NN94501N76A	2	Moulding, Side Window, NH-E Only, Start Year: 08/01/1970
39	D0NN94502N33A	1	Clamp, Rear Upper Window, R.H., 4100, NH-E Only, No Longer Serviced, Start Year: 08/01/1970
40	D0NN94502N34A	1	Clamp, Rear Upper Window, L.H., 4100, NH-E Only, No Longer Serviced, Start Year: 08/01/1970
40	D0NN94502N32A	2	Clamp, Rear Upper Window, 5100-7100, NH-E Only, Start Year: 08/01/1970
41	D3NN94502N53A	1	Insulator, Fender, R.H., Replaces P/N D0NN-94502N53-A, NH-E Only, Start Year: 08/01/1970
42	D3NN94502N54A	1	Insulator, Fender, L.H., Replaces P/N D0NN-94502N54-A, NH-E Only, Start Year: 08/01/1970
43	D0NN94502N61A	2	Bracket Assy., Rear Panel Moulding, 4100, NH-E Only, No Longer Serviced, Start Year: 08/01/1970
43	D0NN94502N61B	2	Bracket Assy., Rear Panel Moulding, 5100-7100, NH-E Only, No Longer Serviced, Start Year: 08/01/1970
43	80664	4	Washer, 5/16", Start Year: 08/01/1970
43	80681	8	Washer, Lock, 5/16", Start Year: 08/01/1970
43	34976S7	8	Nut, Lock, G5, 5/16"-18, Start Year: 08/01/1970
43	87872	8	Screw, Cap, HH, G5, 5/16"-18 x 3/4", Start Year: 08/01/1970
44	D0NN94503N07A	1	Baffle, Fuel Tank Shroud, 5100-7100, NH-E Only, No Longer Serviced, Start Year: 08/01/1970
45	D2NN94503N63A	1	Insulator, Door, R.H., Replaces P/N D0NN-94502N63-A, NH-E Only, Start Year: 08/01/1970

15B04 TRACTOR CAB ASSEMBLY FOR SAFETY FRAME, DELUXE - 4100, 5100, 7100 (U.K., EIRE, & SCANDINAVIA)

Ref	Part Number	Qty	Description
46	D2NN94503N64A	1	Insulator, Door, L.H., Replaces P/N D0NN-94503N64-A, NH-E Only, Start Year: 08/01/1970
46		AR	Washer & Rivet Assy., Insulator to Fender, NH-E Only, No Longer Serviced, Start Year: 08/01/1970
47	D0NN94502N77C	1	Baffle Assy., Cab Complete, W/10 Speed Transmission, 4100, NH-E Only, No Longer Serviced, Start Year: 08/01/1970
47	D0NN94502N77D	1	Baffle Assy., Cab Complete, L/10 Speed Transmission, 4100, NH-E Only, No Longer Serviced, Start Year: 08/01/1970
47	D0NN94502N77A	1	Baffle Assy., Cab Complete, W/10 Speed Transmission, 5100, NH-E Only, No Longer Serviced, Start Year: 08/01/1970
47	D0NN94502N77B	1	Baffle Assy., Cab Complete, L/10 Speed Transmission, 5100, NH-E Only, No Longer Serviced, Start Year: 08/01/1970
48	D0NN94503N17A	1	Moulding, Baffle Rear, 4100, NH-E Only, No Longer Serviced, Start Year: 08/01/1970
48	D0NN94503N17A	1	Moulding, Baffle Rear, 5100-7100, NH-E Only, No Longer Serviced, Start Year: 08/01/1970
49	D0NN94503N17A	1	Moulding, Baffle Front, 20.56" Lg., Cut to Length, NH-E Only, No Longer Serviced, Start Year: 08/01/1970
50	D0NN94503N17A	1	Moulding, Baffle Lower, 5200-7100, NH-E Only, No Longer Serviced, Start Year: 08/01/1970
51	D0NN94502N80C	1	Moulding, Baffle Upper, Replaces D0NN-94502N80-A, 4100-5100-7100, NH-E Only, No Longer Serviced, Start Year: 08/01/1970
51		AR	Washer, Finishing, CSK, #6, NH-E Only, No Longer Serviced, Start Year: 08/01/1970
51		AR	Rivet, Oval Hd., 1/8" x 25/64", NH-E Only, No Longer Serviced, Start Year: 08/01/1970
52	D0NN16N364A	8	Plug, Fender, 4100, NH-E Only, No Longer Serviced, Start Year: 08/01/1970
53	D2NN94502N20B	1	Frame Assy., Rear Window, Upper, Replaces P/N D0NN-94502N20-A, 4100, NH-E Only, No Longer Serviced, Start Year: 08/01/1970
53	D2NN94502N20A	1	Frame Assy., Rear Window, Upper, Replaces P/N D0NN-94502N20-B, 5100-7100, NH-E Only, No Longer Serviced, Start Year: 08/01/1970
54	D1NN94502N23A	1	Glass, Rear Window, Upper, Replaces P/N D0NN-94502N23-A, NH-E Only, Start Year: 08/01/1970
55	D0NN94501N67B	1	Moulding, Rear Window Upper, NH-E Only, Order & Cut to Desired Length, Years: 08/01/1970-02/28/1973
55	D1NN94501N69A	1	Moulding, Rear Window Upper, 114" (1895.6mm), NH-E Only, No Longer Serviced, Start Year: 03/01/1973
55A	D1NN94504N52A	1	Strip, Rear Window Upper Moulding Seal, 11-4-3/4" (2914.6mm), NH-E Only, Start Year: 03/01/1973
55A	80664	4	Washer, 5/16", Start Year: 08/01/1970
55A	34976S7	4	Nut, Lock, G5, 5/16"-18, Start Year: 08/01/1970
55A	304626S36	2	Screw, Cap, HH, G5, 5/16"-18 x 1/2", Start Year: 08/01/1970
55A	87872	2	Screw, Cap, HH, G5, 5/16"-18 x 3/4", Start Year: 08/01/1970
56	D0NN94502N27B	1	Frame Assy., Rear Window, Lower, 4100, NH-E Only, No Longer Serviced, Start Year: 08/01/1970
56	D0NN94502N27A	1	Frame Assy., Rear Window, Lower, 5100-7100, NH-E Only, No Longer Serviced, Start Year: 08/01/1970
57	D1NN94502N26A	1	Glass, Rear Window, Lower, Replaces P/N D0NN-94502N26-A, NH-E Only, No Longer Serviced, Start Year: 08/01/1970
58	D0NN94501N67B	1	Moulding, Rear Window Lower, NH-E Only, Order & Cut to Desired Length, Years: 08/01/1970-02/28/1973
58	D1NN94501N67B	1	Moulding, Rear Window Lower, 83" (2108.2mm), NH-E Only, Order & Cut to Desired Length, Start Year: 03/01/1973
58A	D1NN94504N43B	1	Strip, Rear Window Lower Seal, 83-1/2" (2120.9mm), Order P/N D1NN-94504N43-B(81830053) & Cut to Desired Length, NH-E Only, Start Year: 03/01/1973
59	D0NN94502N39A	2	Strap, Rear Lower Window Retainer, NH-E Only, No Longer Serviced, Start Year: 08/01/1970

15B04 TRACTOR CAB ASSEMBLY FOR SAFETY FRAME, DELUXE - 4100, 5100, 7100 (U.K., EIRE, & SCANDINAVIA)

Ref	Part Number	Qty	Description
59	80701	4	Washer, 1/4", Start Year: 08/01/1970
59	7770	2	Nut, Hex, 1/4"-20, Start Year: 08/01/1970
59	9707580	2	Screw, Cap, HH, G5, 1/4"-20 x 3/4", Start Year: 08/01/1970
60	D0NN94502N03A	1	Clamp, Rear Window Lower, NH-E Only, No Longer Serviced, Start Year: 08/01/1970
60	80701	2	Washer, 1/4", Start Year: 08/01/1970
60	304624S36	1	Screw, Cap, HH, G5, 1/4"-20 x 1/2", Start Year: 08/01/1970
61	D0NN94502N01A	1	Knob, Clamp, NH-E Only, No Longer Serviced, Start Year: 08/01/1970
61	9672521	1	Washer, Lock, Ext T, #10, Start Year: 08/01/1970
61	86511920	1	Screw, Pan Hd, #10-24 x 1/2", Start Year: 08/01/1970
62	D2NN94500N56B	1	Roof Assy., Cab, Replaces P/N D0NN-94500N56-A, NH-E Only, No Longer Serviced, Start Year: 08/01/1970
64	D2NN94503N00B	1	Insulation, Roof Center, Replaces P/N D2NN-94503N00-A, NH-E Only, No Longer Serviced, Start Year: 08/01/1970
65	D2NN94502N99A	1	Insulation, Roof R.H. Side, Replaces P/N D0NN-94502N99-A, NH-E Only, No Longer Serviced, Start Year: 08/01/1970
66	D2NN94503N01A	1	Insulation, Roof L.H. Side, Replaces P/N D0NN-94503N01-A, NH-E Only, No Longer Serviced, Start Year: 08/01/1970
67	D1NN94503N69A	2	Fastener, Roof, Replaces P/N 400E-8211458, NH-E Only, No Longer Serviced, Years: 08/01/1970-10/31/1972
67A	D2NN94503N69A	2	Fastener, Roof, Except Finland, NH-E Only, No Longer Serviced, Start Year: 11/01/1972
67B	D2NN94504N61A	2	Fastener Assy., Roof Retaining, Finland, NH-E Only, No Longer Serviced, Start Year: 11/01/1972
67B	80664	4	Washer, 5/16", Start Year: 11/01/1972
67B	34976S7	2	Nut, Lock, G5, 5/16"-18, Start Year: 11/01/1972
67B	86505972	2	Screw, Cap, HH, G5, 5/16"-18 x 2-1/4", Except Finland, Start Year: 11/01/1972
67C	D2NN94502N30A	2	Catch, Cab Roof Fastener, Finland, NH-E Only, Start Year: 11/01/1972
68	E2828AA4	2	Pin, Fastener, NH-E Only, Years: 08/01/1970-10/31/1972
69	D0NN94503N17A	2	Moulding, Roof to Front Bracket, NH-E Only, No Longer Serviced, Start Year: 08/01/1970
69	80701	2	Washer, 1/4", Start Year: 08/01/1970
69	7770	2	Nut, 1/4"-20, Start Year: 08/01/1970
69	9707580	2	Screw, Cap, HH, G5, 1/4"-20 x 3/4", Start Year: 08/01/1970
70	D0NN94503N16A	2	Moulding, Roof to Frame Side in the Moulding for Fastener Clearance, NH-E Only, No Longer Serviced, Start Year: 08/01/1970
71	C7NN8N000C	1	Decal, FORD, Red Block Letters, 4-1/4 x 24-3/4, Start Year: 08/01/1970
72	D1NN17N677A	2	Mirror & Arm Assy., Rear View, NH-E Only, No Longer Serviced, Years: 08/01/1970-12/31/1973
72	CFPN17N679B	AR	Mirror & Arm Assy., Rear View, NH-E Only, No Longer Serviced, Start Year: 01/01/1974
73	D0NN94501N98A	1	Baffle Assy., Transmission, Replaces P/N D1NN-94502N69-A, 5100-7100, NH-E Only, No Longer Serviced, Start Year: 08/01/1970
74	D0NN94502N69B	1	Panel, Rear Baffle, L/Grammar Driver Seat, 4100, NH-E Only, No Longer Serviced, Start Year: 08/01/1970
74	D0NN94502N69A	1	Panel, Rear Baffle, L/Grammar Driver Seat, 5100-7100, NH-E Only, No Longer Serviced, Start Year: 08/01/1970
74	D3NN94502N69B	1	Panel, Rear Baffle, W/Grammer Driver Seat, 4100, NH-E Only, No Longer Serviced, Start Year: 06/01/1973

15B04 TRACTOR CAB ASSEMBLY FOR SAFETY FRAME, DELUXE - 4100, 5100, 7100 (U.K., EIRE, & SCANDINAVIA)

Ref	Part Number	Qty	Description
74	D3NN94502N69A	1	Panel, Rear Baffle, W/Grammar Driver Seat, 5100-7100, NH-E Only, No Longer Serviced, Start Year: 06/01/1973
75	D0NN94503N17A	AR	Moulding, Rear Panel, NH-E Only, No Longer Serviced, Start Year: 08/01/1970
76	NLS	AR	Moulding
77	D0NN94502N66A	1	Lid & Hinge Assy., Rear Panel, NH-E Only, No Longer Serviced, Start Year: 08/01/1970
78	D0NN94503N28B	1	Cip, Panel Lid, NH-E Only, No Longer Serviced, Start Year: 08/01/1970
79	D0NN94502N01A	1	Knob, Lid, NH-E Only, No Longer Serviced, Start Year: 08/01/1970
79	9672521	2	Washer, Lock, Ext T, #10, Start Year: 08/01/1970
79	86511920	1	Screw, Pan Hd, #10-24 x 1/2", Start Year: 08/01/1970
80	D0NN94501N67B	1	Moulding, Rear Panel, NH-E Only, Order D0NN-94501N67-B (81822810) & Cut to Desired Length, Start Year: 08/01/1970
81	D0NN94502N67B	1	Mat, Panel Sealing, R.H., NH-E Only, No Longer Serviced, Start Year: 08/01/1970
82	D0NN94502N68A	1	Mat, Panel Sealing, L.H., NH-E Only, No Longer Serviced, Start Year: 08/01/1970

15B05 TRACTOR SAFETY FRAME & ELECTRICAL SYSTEM, NH-E, 2000, 3000, 4100, 5100 & 7100

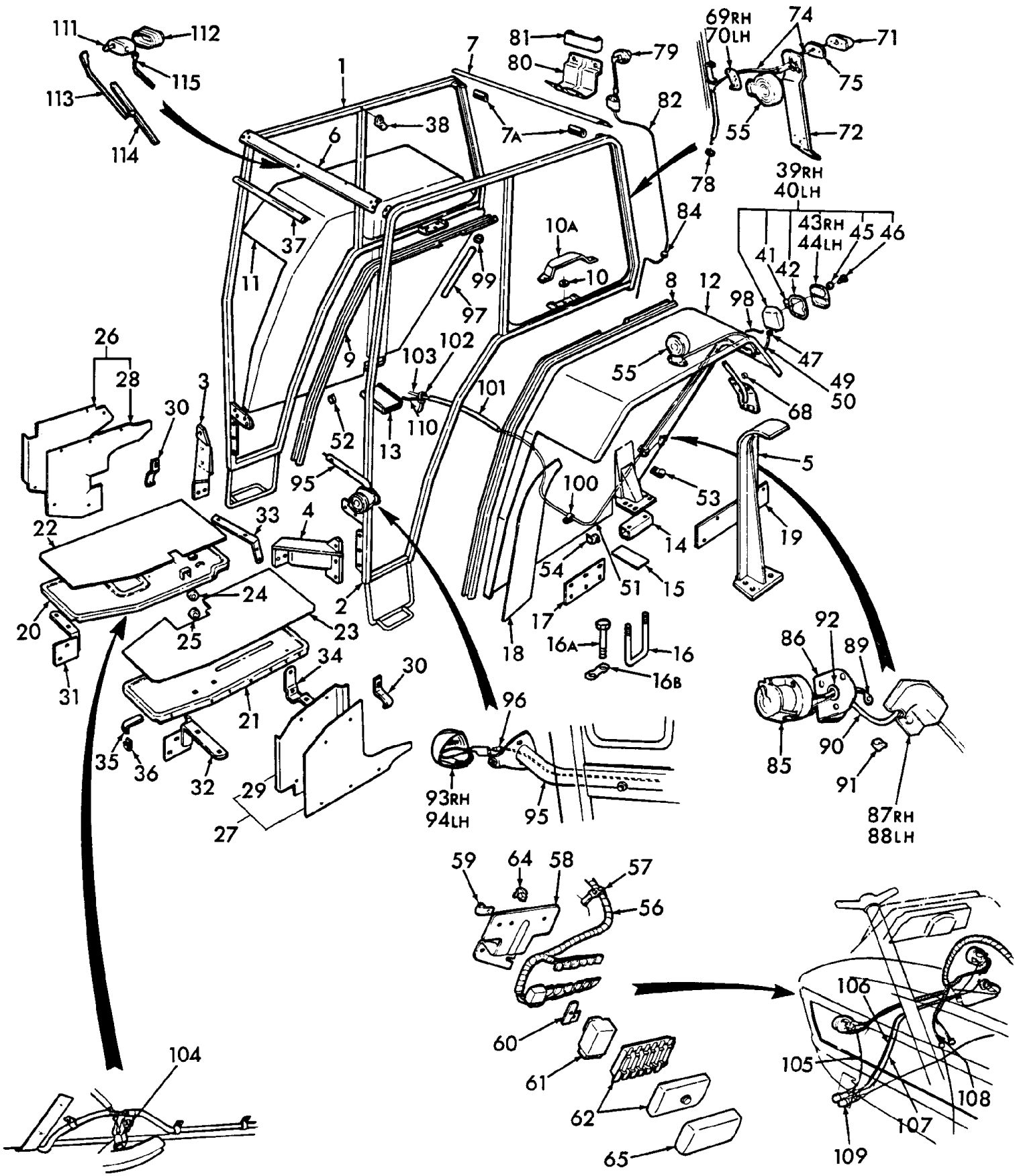

5000-SERIES 4 CYL TRACTOR (1/65-1/75)

15B05 TRACTOR SAFETY FRAME & ELECTRICAL SYSTEM, NH-E, 2000, 3000, 4100, 5100 & 7100

Ref	Part Number	Qty	Description
1	NS	1	Frame Assy., Safety, RH, 4100-5100-7100, NHNA Only, Years: 08/01/1970-10/31/1972
1	D5NN94500N27A	1	Frame Assy., Safety, RH, 4100-5100-7100, NH-E Only, No Longer Serviced, Start Year: 11/01/1972
1	D2NN94500N27C	1	Frame Assy., Complete Safety, RH, Replaces C9NN94500N27A, 2000-3000, NH-E Only, No Longer Serviced, Start Year: 08/01/1970
2	C9NN94500N28B	1	Frame Assy., Safety, LH, 4100-5100-7100, NH-E Only, No Longer Serviced, Years: 08/01/1970-10/31/1972
2	D5NN94500N28A	1	Frame Assy., Safety, LH, Replaces D1NN94500N28H, 4100-5100-7100, NH-E Only, No Longer Serviced, Start Year: 11/01/1972
2	D2NN94500N28C	1	Frame Assy., Complete Safety, LH, Replaces D0NN94500N28A, 2000-3000, NH-E Only, No Longer Serviced, Start Year: 08/01/1970
3	C9NN94500N37A	1	Support Assy., Front, RH, 2100-3100, NH-E Only, No Longer Serviced, Start Year: 08/01/1970
3	NLS	1	Support Assy., Front, RH, 4100 {D0NN94500N37A}, No Longer Serviced, Years: 08/01/1970-02/28/1973
3	D0NN94500N37B	1	Support Assy., Front, RH, 5100-7100, NH-E Only, No Longer Serviced, Years: 08/01/1970-02/28/1973
3	D2NN94500N37C	1	Support Assy., Front, RH, 4100, NH-E Only, No Longer Serviced, Start Year: 03/01/1973
3	D2NN94500N37A	1	Support Assy., Front, RH, 5100-7100, NH-E Only, No Longer Serviced, Start Year: 03/01/1973
4	C9NN94500N36A	1	Support Assy., Front, LH, 2100-3100, NH-E Only, No Longer Serviced, Start Year: 08/01/1970
4	D0NN94500N36B	1	Support Assy., Front, LH, 5100-7100, NH-E Only, Years: 08/01/1970-02/28/1973
4	D0NN94500N36B	1	Support Assy., Front, LH, 4100, NH-E Only, No Longer Serviced, Start Year: 08/01/1970
4	D2NN94500N36F	1	Support Assy., Front, LH, Replaces D3NN94500N36A, 5100-7100, NH-E Only, Start Year: 03/01/1973
5	D0NN94500N34A	2	Support Assy., Rear, 2100-3100, NH-E Only, No Longer Serviced, Start Year: 08/01/1970
6	D0NN94501N60A	1	Brace Assy., Front, 2100-3100, NH-E Only, No Longer Serviced, Start Year: 08/01/1970
6	D0NN94501N60B	1	Brace Assy., Front, 4100-5100-7100, NH-E Only, No Longer Serviced, Start Year: 08/01/1970
7	D5NN94500N50A	1	Brace Assy., Rear, NH-E Only, No Longer Serviced, Start Year: 08/01/1970
	PL	12	Nut, Hex, 9/16"-12, NHNA Only, Start Year: 08/01/1970
	281078	12	Screw, Cap, HH, G5, 9/16"-12 x 1", Brace, Start Year: 08/01/1970
	D2NN94500N17A	AR	Hinge, Door Mounting, Service Only, NH-E Only, Start Year: 08/01/1970
		AR	Screw, Self-Tapping, HWH, 1/4"-14 x 3/4", Door Hinge Attach, Service Only, NH-E Only, No Longer Serviced, Start Year: 08/01/1970
7A	D1NN94503N46A	8	Bumper, Safety Frame Upper Brace, Replaces D0NN94503N46A, NH-E Only, Start Year: 08/01/1970
8	D1NN94501N88B	1	Moulding, Frame to Fender LH, 2100-3100, NH-E Only, Start Year: 08/01/1970
8	D1NN94501N88A	1	Moulding, Frame to Fender, LH, 69.5", 4100-5100-7100, NH-E Only, No Longer Serviced, Start Year: 08/01/1970
9	D1NN94501N87A	1	Moulding, Frame to Fender, RH, 2100-3100, NH-E Only, Start Year: 08/01/1970
9	D1NN94503N48A	2	Moulding, Frame to Fender, Rear Corner, 1.50" (38.10mm), 4100-5100-7100, NH-E Only, No Longer Serviced, Start Year: 08/01/1970
10	C5NNN826A	6	Washer, Flat, 5/8", Frame Moulding, Start Year: 08/01/1970
	280374	6	Nut, G5, 5/8"-11, Start Year: 08/01/1970
	88556	6	Screw, Cap, HH, G5, 5/8"-11 x 2-1/4", Start Year: 08/01/1970
10A	D0NN94503N44A	2	Cover, Safety Frame Support, NH-E Only, No Longer Serviced, Start Year: 08/01/1970
11	C5NN16312AZ	1	Fender Assy., RH, 2100-3100, No Longer Serviced (NH-E), Start Year: 08/01/1970
11	D2NN94500N83B	1	Fender & Support Assy., RH, 4100-5100-7100, NH-E Only, No Longer Serviced, Start Year: 08/01/1970
12	C5NN16313BJ	1	Fender Assy., LH, 2100-3100, No Longer Serviced (NH-E), Start Year: 08/01/1970

15B05 TRACTOR SAFETY FRAME & ELECTRICAL SYSTEM, NH-E, 2000, 3000, 4100, 5100 & 7100

Ref	Part Number	Qty	Description
12	D2NN94500N82B	1	Fender & Support Assy., LH, 4100-5100-7100, NH-E Only, No Longer Serviced, Start Year: 08/01/1970
13	D0NN94500N81A	1	Spacer Assy., Fender Support, RH, 2100-3100, NH-E Only, No Longer Serviced, Start Year: 08/01/1970
13	D2NN94500N81A	2	Spacer Assy., Fender Support, 5100-7100, NH-E Only, Start Year: 08/01/1970
14	D1NN94503N74A	1	Spacer Assy., Fender Support, LH, Replaces D0NN94502N49A, 2100-3100, NH-E Only, No Longer Serviced, Start Year: 08/01/1970
15	D0NN94502N47A	AR	Shim, Fender Support, .059 (1.50mm) Thick, 4100-5100-7100, NH-E Only, No Longer Serviced, Start Year: 08/01/1970
	80299	8	Washer, 5/8", Start Year: 08/01/1970
	408	6/8	Nut, G5, 5/8"-18, Start Year: 08/01/1970
	280374	8	Nut, G5, 5/8"-11, W/Check Chains, 4100-5100-7100, Start Year: 08/01/1970
	280374	4	Nut, G5, 5/8"-11, W/Stabilizer, 2100-3100, Start Year: 08/01/1970
	302614S36	4	Screw, Cap, HH, G5, 5/8"-18 x 9", 2100-3100, No Longer Serviced (NH-E), Start Year: 08/01/1970
	80701	8	Washer, 1/4", Start Year: 08/01/1970
		8	Screw, 1/4"-20 x .75, 2000-3000, NH-E Only, No Longer Serviced, Start Year: 08/01/1970
		8	Screw, 1/4"-20 x .75, 4000-5000-7100, NH-E Only, No Longer Serviced, Years: 08/01/1970-02/28/1972
		8	Screw, Self-Tapping, HWH, 1/4"-14 x 3/4", 4000-5000-7100, NH-E Only, No Longer Serviced, Start Year: 03/01/1972
16	C9NN94500N01A	2	U-Bolt, Spacer & Fender to Axle Housing, 5/8"-18, 2100-3100, NH-E Only, Start Year: 08/01/1970
16	C5NN16N321C	4	U-Bolt, Spacer & Fender to Axle Housing, 5/8"-18, 4100, Start Year: 08/01/1970
16	D3NN16N321A	4	U-Bolt, Spacer & Fender to Axle Housing, L/Check Chains, 5/8"-18, 5100-7100, Start Year: 08/01/1970
16	D3NN16N321A	2	U-Bolt, Spacer & Fender to Axle Housing, W/Check Chains, 5/8"-18, 5100-7100, Start Year: 08/01/1970
16A	D0NN16N432A	8	Bolt, HH, W/Check Chains, 5/8"-11 x 10-1/4", 5100, NH-E Only, Start Year: 08/01/1970
16A	280743	8	Screw, Cap, HH, G5, 5/8"-11 x 8", W/Check Chains, 4100, Start Year: 08/01/1970
16A	86518628	4	Screw, Cap, HH, G5, 5/8"-11 x 9-1/2", W/Stabilizer, 2100-3100, No Longer Serviced (NH-E), Start Year: 08/01/1970
16B	D0NNH949A	4	Strap, Lift Link Bolt Lock, W/Stabilizer, 2100-3100, NH-E Only, No Longer Serviced, Start Year: 08/01/1970
16B	D1NNH948A	8	Strap, Lift Link Bolt Lock, W/Check Chains, Replaces D0NNH948A, 4100-5100-7100, NH-E Only, Start Year: 08/01/1970
17	D0NN94502N95A	2	Extension, Fender, 2100-3100, NH-E Only, No Longer Serviced, Start Year: 08/01/1970
	80701	12	Washer, 1/4", 2100-3100, Start Year: 08/01/1970
	C5NN16N485A	12	Nut, Captive, 2100-3100
	304624S36	12	Screw, Cap, HH, G5, 1/4"-20 x 1/2", Extension, 2100-3100, Start Year: 08/01/1970
18	PL	2	Strip, Extension, 2100-3100, NHNA Only, Start Year: 08/01/1970
19	D0NN94501N90A	2	Plate, Fender Blanking, 2100-3100, NH-E Only, No Longer Serviced, Start Year: 08/01/1970
	51765S36	8	Screw, Self-Tapping, Plate, #10-24 x 1/2", 2100-3100, Start Year: 08/01/1970
20	D0NN16450D	1	Platform, RH, 4100, NH-E Only, Start Year: 08/01/1970
20	D4NN16472C	1	Platform, RH, Replaces D2NN16472A, 5100-7100, NH-E Only, No Longer Serviced, Start Year: 08/01/1970
21	D3NN16473E	1	Platform, LH, 4100, NH-E Only, Start Year: 08/01/1970
21	D3NN16473C	1	Platform, LH, Refer to Fig. 14A1 for 2100-3100 Platforms, 5100-7100, NH-E Only, Start Year: 08/01/1970
22	D0NN94501N70A	1	Mat, Platform, RH, 4100, NH-E Only, No Longer Serviced, Start Year: 08/01/1970
22	D0NN94501N70B	1	Mat, Platform, RH, 5100-7100, NH-E Only, Start Year: 08/01/1970

15B05 TRACTOR SAFETY FRAME & ELECTRICAL SYSTEM, NH-E, 2000, 3000, 4100, 5100 & 7100

Ref	Part Number	Qty	Description
23	D2NN94501N71B	1	Mat, Platform, LH, 4100, NH-E Only, No Longer Serviced, Start Year: 08/01/1970
23	D2NN94501N71A	1	Mat, Platform, LH, 5100-7100, NH-E Only, No Longer Serviced, Start Year: 08/01/1970
	80664	8	Washer, 5/16", 4100-5100-7100, Start Year: 08/01/1970
	34976S7	4	Nut, Lock, G5, 5/16"-18, 4100-5100-7100, Start Year: 08/01/1970
		4	Screw, Pan Hd, G5, 5/16"-18 x 3/4", 4100-5100-7100, NH-E Only, Start Year: 08/01/1970
24	D0NN16N500A	1	Spacer, Platform Mounting, RH, 5100-7100, NH-E Only, Start Year: 08/01/1970
25	D0NN16N500B	1	Spacer, Platform Mounting, LH, 5100-7100, NH-E Only, Start Year: 08/01/1970
	87689	2	Screw, Cap, HH, G5, 1/2"-13 x 1-1/2", 4100-5100-7100, Start Year: 08/01/1970
26	D0NN16N524B	1	Extension Assy., Platform, RH, Replaces D0NN16N524A, 2100-2120-3100-3120, NH-E Only, No Longer Serviced, Start Year: 08/01/1970
27	D1NN16N525A	1	Extension Assy., Platform, LH, W/Manual Steering, 2100-2120-3100-3120, Includes: Extension & Ref. 28 & 29, Not shown on Art, NH-E Only, Start Year: 08/01/1970
28	D0NN94502N83A	1	Mat, Extension, RH, 2100-3100, NH-E Only, No Longer Serviced, Start Year: 08/01/1970
29	D0NN94502N84A	1	Mat, Extension, LH, 2100-3100, Not shown on Art, NH-E Only, No Longer Serviced, Start Year: 08/01/1970
		10	Washer, Finishing, CSK, #6, 2100-3100, Not shown on Art, NH-E Only, No Longer Serviced, Start Year: 08/01/1970
	PL	10	Rivet, Oval Hd., 1/8" x 19/64", 2100-3100, Not shown on Art, NHNA Only, Start Year: 08/01/1970
30	D0NN94502N82A	2	Clip, Extension Mounting, 2100-3100, NH-E Only, No Longer Serviced, Start Year: 08/01/1970
	80701	8	Washer, 1/4", 2100-3100, Start Year: 08/01/1970
	7770	8	Nut, Hex, 1/4"-20, 2100-3100, Start Year: 08/01/1970
	9707580	8	Screw, Cap, HH, G5, 1/4"-20 x 3/4", 2100-3100, Start Year: 08/01/1970
31	D1NN16458B	1	Support Assy., Platform, RH Front, 4100, NH-E Only, No Longer Serviced, Start Year: 08/01/1970
32	D0NN16N476C	1	Support Assy., Platform, LH Front, L/10 Speed Transmission, 4100, NH-E Only, Start Year: 08/01/1970
32	C5NN16N478A	1	Support Assy., Platform, LH Front, W/10 Speed Transmission & U.K. Fenders, 4100, No Longer Serviced (NHNA), Start Year: 08/01/1970
32	D0NN16458A	2	Support Assy., Platform, Front, Replaces D0NN16458C, 5100-7100, NH-E Only, Start Year: 08/01/1970
33	C5NN16486E	1	Support Assy., Platform, RH Rear, 4100, Start Year: 08/01/1970
33	D0NN16458A	1	Support Assy., Platform, RH Rear, 5100-7100, NH-E Only, Start Year: 08/01/1970
34	D0NN16474F	1	Support Assy., Platform, LH Rear, 4100, Start Year: 08/01/1970
34	D1NN16A486A	1	Support Assy., Platform, 5100-7100, NH-E Only, No Longer Serviced, Start Year: 08/01/1970
	80702	6	Washer, 3/8", 4100, Start Year: 08/01/1970
	81821693	6	Washer, Lock, 3/8", 4100, Start Year: 08/01/1970
	81547	2	Washer, Lock, 7/16", 4100, Start Year: 08/01/1970
	304666S36	6	Screw, Cap, HH, G5, 3/8"-16 x 7/8", RH Support, 4100, Start Year: 08/01/1970
	9627887	2	Screw, Cap, HH, G5, 7/16"-14 x 1-1/4", LH Support, 4100, Start Year: 08/01/1970
	88044	4	Screw, Cap, HH, G5, 3/8"-16 x 1-1/2", Supports, 5100-7100, Start Year: 08/01/1970
	87340	4	Washer, Lock, 3/4", 4100-5100-7100, Start Year: 08/01/1970
	280374	6	Nut, G5, 5/8"-11, 4100-5100-7100, Start Year: 08/01/1970
	304768S36	6	Screw, Cap, HH, G5, 5/8"-11 x 1-1/2", Support, 4100-5100-7100, Start Year: 08/01/1970
	304789S36	4	Screw, Cap, HH, G5, 3/4"-10 x 1-5/8", Support, 4100-5100-7100, Start Year: 08/01/1970
35	PL	2	Fastener, Platform Mat, Not Serviced, 4100-5100-7100, NHNA Only, Start Year: 08/01/1970

15B05 TRACTOR SAFETY FRAME & ELECTRICAL SYSTEM, NH-E, 2000, 3000, 4100, 5100 & 7100

Ref	Part Number	Qty	Description
36	C5NN16N485A	AR	Nut, Captive, 4100-5100-7100, Start Year: 08/01/1970
	80701	AR	Washer, 1/4", 4100-5100-7100, Start Year: 08/01/1970
	304624S36	AR	Screw, Cap, HH, G5, 1/4"-20 x 1/2", Fastener, 4100-5100-7100, Start Year: 08/01/1970
	80664	8	Washer, 5/16", 4100-5100-7100, Start Year: 08/01/1970
	80681	8	Washer, Lock, 5/16", 4100-5100-7100, Start Year: 08/01/1970
	86629539	8	Nut, G5, 5/16"-24, 4100, 5100, 7100, Start Year: 08/01/1970
	350476S36	8	Bolt, Carriage, Platform to Support, 5/16"-24 x 7/8", 4100-5100-7100, Start Year: 08/01/1970
37	D3NN94503N36A	2	Bumper, Front & Rear Brace, Inside, 36" (914.4mm), Replaces D0NN94503N36B, NH-E Only, No Longer Serviced, Start Year: 08/01/1970
38	D0NN94503N40A	4	Cover, Roof Catch, 4100-5100-7100, NH-E Only, Start Year: 08/01/1970
		4	Screw, Pan Hd., Cover, 1/4"-20 x 5/8", 4100-5100-7100, NH-E Only, No Longer Serviced, Start Year: 08/01/1970
39	D2NN13404A	1	Lamp Assy., Rear, RH, L/Stop Lights, 4100-5100-7100, NH-E Only, Years: 08/01/1970-12/31/1972
39	E8NN13N408AA	1	Lamp Assy., Rear, RH, L/Stop Lights, W/U.K. Fenders, 4100-5100-7100, No Longer Serviced (NHNA), Start Year: 01/01/1973
39	D2NN13404F	1	Lamp Assy., Rear, RH, L/Stop Lights, 2120-3120, NH-E Only, No Longer Serviced, Start Year: 08/01/1970
39	D2NN13404D	1	Lamp Assy., Stop & Rear, RH, Replaces D0NN13N408C, 2100-3100, NH-E Only, No Longer Serviced, Start Year: 08/01/1970
39	D2NN13404A	1	Lamp Assy., Rear, RH, W/Wide Fenders, 4100-5100-7100, NH-E Only, Start Year: 01/01/1973
39	D2NN13N408A	1	Lamp Assy., Stop & Rear, RH, W/Wide Fenders, 4100-5100-7100, NH-E Only, Start Year: 01/01/1973
39	D2NN13N408D	1	Lamp Assy., Stop & Rear, RH, 2120-3120, NH-E Only, No Longer Serviced, Start Year: 08/01/1970
40	E8NN13N407AA	1	Lamp Assy., Rear, LH, L/Stop Lights, 4100-5100-7100, Includes: Body and Ref. 41-47, NOTE: Stop & Rear Lamps not serviced in assemblies for 4100-5100. Use Lamp Components shown on Fig. 11C., Years: 08/01/1970-12/31/1972
40	E8NN13N407AA	1	Lamp Assy., Rear, LH, L/Stop Lights, W/U.K. Fenders, 4100-5100-7100, Includes: Body and Ref. 41-47, NOTE: Stop & Rear Lamps not serviced in assemblies for 4100-5100. Use Lamp Components shown on Fig. 11C., Start Year: 01/01/1973
40	D2NN13405F	1	Lamp Assy., Rear, LH, L/Stop Lights, Replaces P/N D0NN-13405-B, 2120-3120, Includes: Body and Ref. 41-47, NH-E Only, No Longer Serviced, NOTE: Stop & Rear Lamps not serviced in assemblies for 4100-5100. Use Lamp Components shown on Fig. 11C., Start Year: 08/01/1970
40	D2NN13405A	1	Lamp Assy., Rear, LH, W/Wide Fenders, 4100-5100-7100, Includes: Body and Ref. 41-47, NH-E Only, NOTE: Stop & Rear Lamps not serviced in assemblies for 4100-5100. Use Lamp Components shown on Fig. 11C., Start Year: 01/01/1973
40	D2NN13N407A	1	Lamp Assy., Stop & Rear, LH, W/Wide Fenders, 4100-5100-7100, Includes: Body and Ref. 41-47, NH-E Only, NOTE: Stop & Rear Lamps not serviced in assemblies for 4100-5100. Use Lamp Components shown on Fig. 11C., Start Year: 01/01/1973
40	D2NN13405D	1	Lamp Assy., Stop & Rear, LH, Replaces D0NN13N407C, 2100-3100, Includes: Body and Ref. 41-47, NH-E Only, NOTE: Stop & Rear Lamps not serviced in assemblies for 4100-5100. Use Lamp Components shown on Fig. 11C., Start Year: 08/01/1970

15B05 TRACTOR SAFETY FRAME & ELECTRICAL SYSTEM, NH-E, 2000, 3000, 4100, 5100 & 7100

Ref	Part Number	Qty	Description
40	D2NN13N407C	1	Lamp Assy., Stop & Rear, LH, Replaces D0NN13N407B, 2120-3120, Includes: Body and Ref. 41-47, NH-E Only, NOTE: Stop & Rear Lamps not serviced in assemblies for 4100-5100. Use Lamp Components shown on Fig. 11C., Start Year: 08/01/1970
41	E2NN13465AA	2	Bulb Assy., 12 Volt, 6 Watt, L/Stop Lights, Replaces D2NN13466A, Start Year: 08/01/1970
41	82AG13464AA	2	Bulb, 12 Volt, 24 Watt, W/Stop Lights, Years: 08/01/1970-12/31/1972
41	82AG13464AA	2	Bulb Asy., 12 Volt, 21.5 Watt, W/Stop Lights, Start Year: 01/01/1973
42	C5NN13461A	2	Gasket, Lamp Lens, No Longer Serviced (NH-E), Start Year: 08/01/1970
42	D2NN13461A	2	Gasket, Lamp Lens, W/Wide Fenders, 4100-5100-7100, Start Year: 01/01/1973
42	D8NN13N475AA	2	Gasket, Lamp Mounting, W/Wide Fenders, 4100-5100-7100, Start Year: 01/01/1973
43	E8NN13N407AA	1	Lens Assy., RH, L/Stop Lights, W/U.K. Fenders, Start Year: 08/01/1970
43	D2NN13444B	1	Lens Assy., RH, W/Stop Lights, W/U.K. Fenders, No Longer Serviced (NHNA), Start Year: 08/01/1970
44	E8NN13N407AA	1	Lens Assy., LH, L/Stop Lights, W/U.K. Fenders, Start Year: 08/01/1970
44	E8NN13N407AA	1	Lens Assy., LH, L/Stop Lights, W/U.K. Fenders, Start Year: 08/01/1970
44	D2NN13445B	1	Lens Assy., LH, W/Stop Lights, W/U.K. Fenders, Start Year: 08/01/1970
44	D2NN13444C	2	Lens Assy., LH & RH, L/Stop Light, W/Wide Fenders, 4100-5100-7100, Start Year: 01/01/1973
44	D2NN13444C	2	Lens Assy., LH & RH, W/Stop Light, W/Wide Fenders, 4100-5100-7100, Start Year: 01/01/1973
45	359826S	4	Washer, Lens to Body, No Longer Serviced, Start Year: 08/01/1970
46	C5NN13N416A	4	Screw, Pan Hd., Lens to Body, #8-32 x 5/8", NH-E Only, Start Year: 08/01/1970
46	E6NN13N416AA	4	Screw, Lens to Body, W/Wide Fenders, 4100-5100-7100, Start Year: 01/01/1973
47	C5NN13091A	2	Grommet, Lamp Wiring, L/Stop Lights, NH-E Only, No Longer Serviced, Start Year: 08/01/1970
47	C7NN13091C	2	Grommet, Lamp Wiring, W/Stop Lights, Start Year: 08/01/1970
49	D0NN14N000A	1	Wire Assy., Rear Lamp, RH, L/Turn Signals, 60" (1524.0mm), 2000-3000, NH-E Only, Start Year: 08/01/1970
49	D0NN14N000F	1	Wire Assy., Rear Lamp, L/Turn Signals, 72" (1828.3mm), 4100-5100-7100, NH-E Only, No Longer Serviced, Start Year: 08/01/1970
49	D0NN16N406M	1	Harness Assy., Rear Lamp, RH, W/Turn Signals, 2000-3000, NH-E Only, Start Year: 08/01/1970
49	D0NN16N406R	1	Harness Assy., Rear Lamp, RH, W/Turn Signals, 4100-5100-7100, NH-E Only, Start Year: 08/01/1970
	9672521	3	Washer, Lock, Ext T, #10, Deluxe Cab, Start Year: 05/01/1973
	27145S8	3	Screw, Panel to Side Cover, #10-32 x 1", Deluxe Cab, No Longer Serviced (NH-E), Start Year: 05/01/1973
50	D0NN14N000D	1	Wire Assy., Rear Lamp, LH, L/Turn Signals, 81" (2057.4mm), 2000-3000, NH-E Only, Start Year: 08/01/1970
50	D0NN14N000AB	1	Wire Assy., Rear Lamp, LH, L/Turn Signals, 115" (2921.0mm), 4100, NH-E Only, Start Year: 08/01/1970
50	D0NN14N000E	1	Wire Assy., Rear Lamp, LH, L/Turn Signals, 122" (3098.0mm), 5100-7100, NH-E Only, Start Year: 08/01/1970
50	D0NN16N406L	1	Harness Assy., Rear Lamp, W/Turn Signals, 2000-3000, NH-E Only, No Longer Serviced, Start Year: 08/01/1970
50	D0NN16N406N	1	Wire Assy., Rear Lamp, LH, W/Turn Signals, 4100-5100-7100, NH-E Only, Start Year: 08/01/1970
51	D0NN13N412B	2	Conduit, Rear Lamp Wire, 4100-5100-7100, NH-E Only, No Longer Serviced, Start Year: 08/01/1970
52	354475S36	4	Clip, Wire to Brake Cross Shaft, 2000-3000, No Longer Serviced (NH-E), Start Year: 08/01/1970
53	376507S100	4	Clip, Wire to Fender, 4100-5100-7100, Start Year: 08/01/1970
	80681	4	Washer, Lock, 5/16", 4100-5100-7100, Start Year: 08/01/1970

15B05 TRACTOR SAFETY FRAME & ELECTRICAL SYSTEM, NH-E, 2000, 3000, 4100, 5100 & 7100

Ref	Part Number	Qty	Description
	9635082	4	Nut, G5, 5/16"-18, 4100-5100-7100, Start Year: 08/01/1970
	87872	4	Screw, Cap, HH, G5, 5/16"-18 x 3/4", 4100-5100-7100, Start Year: 08/01/1970
54	C7NN14N204A	4	Clip, Wire to Platform, 4100-5100-7100, No Longer Serviced (NH-E), Start Year: 08/01/1970
55	D1NN13N359A	2	Lamp Assy., Flasher, Replaces D0NN13N359A, Includes: Lamp and 57442S36, D1NN13N386A, and D1NN13N387A, Start Year: 08/01/1970
55	86511914	2	Screw, Pan Hd, G2, #8-32 x 7/8", NHNA Only, Start Year: 08/01/1970
55	D1NN13N386A	2	Lens, Flasher Lamp, Front, Amber, NH-E Only, Start Year: 08/01/1970
55	D1NN13N387A	2	Lens, Flasher Lamp, Rear Amber, NH-E Only, Start Year: 08/01/1970
	86529539	4	Washer, Lock, Int T, 1/4", Start Year: 08/01/1970
	86509309	4	Nut, G5, 1/4"-28, Start Year: 08/01/1970
56	D0NN14N111A	1	Harness Assy., Switch to Flasher, L/Dual Power, NH-E Only, No Longer Serviced, Years: 08/01/1970-04/30/1973
56	D2NN14N111F	1	Harness Assy., Switch to Fender Front, W/Dual Power, 4100-5100-7100, NH-E Only, No Longer Serviced, Start Year: 06/01/1973
56	D2NN14N111D	1	Harness Assy., Switch to Fender Front, L/Dual Power 5100-7100, NH-E Only, Start Year: 05/01/1973
	383441S	2	Grommet, Harness at Panel, Deluxe Cab, Start Year: 08/01/1970
57	263117	AR	Cable Tie, 3/32" x 11-1/2" L, Harness Retaining, Start Year: 07/01/1973
57	263117	2	Cable Tie, 3/32" x 11-1/2" L, Harness to Hood Frame, Years: 08/01/1970-06/30/1973
58	D0NN13N096D	1	Bracket, Flasher & Fuse Box Mounting, Standard Cab, NH-E Only, Start Year: 08/01/1970
58	D0NN14N042A	1	Panel, Flasher & Fuse Box Mounting, Deluxe Cab, NH-E Only, Start Year: 08/01/1970
	44716S8	1	Washer, #10, Start Year: 08/01/1970
	80684	1	Washer, Lock, #10, Standard Cab, Start Year: 08/01/1970
	80682	2	Washer, Lock, 1/4", Standard Cab, Start Year: 08/01/1970
	44716S8	3	Washer, Flat, 1/4", Deluxe Cab, Start Year: 08/01/1970
	87304	1	Nut, #10-24, Start Year: 08/01/1970
	7770	2	Nut, Hex, 1/4-20, Start Year: 08/01/1970
	86511922	1	Screw, Pan Hd, #10-24 x 3/4", Start Year: 08/01/1970
59	D0NN14N199B	1	Clip, Wiring Conduit, NH-E Only, Start Year: 08/01/1970
60	D0NN13N364B	1	Bracket, Flasher Mounting, NH-E Only, No Longer Serviced, Start Year: 08/01/1970
61	D8NN13N360AC	1	Flasher Unit Assy., Start Year: 08/01/1970
62	D2NN14N030A	1	Fuse Box Assy., Years: 08/01/1970-04/30/1973
62	D2NN14N030A	1	Fuse Box Assy., Start Year: 05/01/1973
	80684	2/3	Washer, Lock, #10, Start Year: 08/01/1970
	87304	2/3	Nut, #10-24, Start Year: 08/01/1970
	54354S8	2	Screw, Pan Hd, # 10-24 x 7/8", Standard Cab, No Longer Serviced (NH-E), Start Year: 08/01/1970
	86511922	3	Screw, Pan Hd, #10-24 x 3/4", Deluxe Cab, Start Year: 08/01/1970
62	C7NN14411A	AR	Holder Assy., Fuse, Start Year: 08/01/1970
64	D0NN14N044A	2	Clip, Flasher Fuse Box Panel Cover, Deluxe Cab, NH-E Only, No Longer Serviced, Start Year: 08/01/1970
65	D0NN14N045A	1	Cover Assy., Flasher Fuse Boxe Panel, Deluxe Cab, NH-E Only, No Longer Serviced, Start Year: 08/01/1970
68	C7NN16N609A	6	Spacer, Bracket Mounting, 2120-3120, NH-E Only, No Longer Serviced, Start Year: 08/01/1970

15B05 TRACTOR SAFETY FRAME & ELECTRICAL SYSTEM, NH-E, 2000, 3000, 4100, 5100 & 7100

Ref	Part Number	Qty	Description
	86529539	8	Washer, Lock, Int T, 1/4", 2120-3120, Start Year: 08/01/1970
	7770	6	Nut, Hex, 1/4-20, 2120-3120, Start Year: 08/01/1970
		6	Screw, Rd Hd, 1/4"-20 x 5/8", 2120-3120, NH-E Only, Start Year: 08/01/1970
69	D1NN13A364A	1	Bracket, Turn Signal Lamp R.H., 2000-3000, NH-E Only, No Longer Serviced, Start Year: 08/01/1970
69	D1NN13A364A	1	Bracket, Turn Signal Lamp, R.H., Norway-Denmark, 2000-3000, NH-E Only, No Longer Serviced, Start Year: 08/01/1970
70	D1NN13A365A	1	Bracket, Turn Signal Lamp L.H., 2000-3000, NH-E Only, Start Year: 08/01/1970
	86529539	4	Washer, Lock, Int T, 1/4", 2000-3000, Start Year: 08/01/1970
	7770	4	Nut, Hex, 1/4-20, 2000-3000, Start Year: 08/01/1970
	9707580	4	Screw, Cap, HH, G5, 1/4"-20 x 3/4", Bracket, 2000-3000, Start Year: 08/01/1970
71	D0NN13N775B	2	Lamp Assy., License Plate, 2000-3000, NH-E Only, No Longer Serviced, Start Year: 08/01/1970
72	D3NN17N380A	1	Bracket Assy., License Plate, RH, 2000-3000, NH-E Only, Start Year: 08/01/1970
74	D0NN13N850A	2	Wire Assy., Lamp Ground, 2000-3000, NH-E Only, No Longer Serviced, Start Year: 08/01/1970
75	D0NN13N441A	2	Gasket, Lamp to Bracket, 2000-3000, NH-E Only, No Longer Serviced, Start Year: 08/01/1970
	D4NN13N507A	4	Washer, 2000-3000, NH-E Only, No Longer Serviced, Start Year: 08/01/1970
	D4NN13N501A	4	Nut, 2000-3000, NH-E Only, No Longer Serviced, Start Year: 08/01/1970
	D4NN13N506A	4	Screw, Pan Hd., Lamp to Bracket, 2000-3000, NH-E Only, No Longer Serviced, Start Year: 08/01/1970
	D0NN14N000Z	1	Wire Assy., Lamp to Fender Harness RH, 60" (152.4cm), 2000-3000, Replaces D0NN14N000R, No Longer Serviced (NHNA), Start Year: 08/01/1970
	D0NN14N000U	1	Wire Assy., Lamp to Fender Harness LH, 2000-3000, NH-E Only, Start Year: 08/01/1970
78	B16386	4	Grommet, Fender, 2000-3000, Start Year: 08/01/1970
79	D0NN13N775A	2	Lamp Assy., License Plate, 4100-5100-7100, Includes: E89NC2, NH-E Only, No Longer Serviced, Start Year: 08/01/1970
	E89NC2	2	Bulb Assy., Lamp, 12 Volt, 6 Watts, 4100-5100-7100, NH-E Only, No Longer Serviced, Start Year: 08/01/1970
80	D0NN17A385A	1	Bracket, License Plate Mounting, 4100-5100, NH-E Only, Years: 08/01/1970-07/31/1971
80	D1NN17A385B	1	Bracket, License Plate Mounting, 4100-5100-7100, NH-E Only, No Longer Serviced, Start Year: 08/01/1971
	80682	3	Washer, Lock, 1/4", 4100-5100-7100, Start Year: 08/01/1970
	7770	3	Nut, Hex, 1/4-20, 4100-5100-7100, Start Year: 08/01/1970
	9707580	3	Screw, Cap, HH, G5, 1/4"-20 x 3/4", Bracket to Brace, 4100-5100-7100, Start Year: 08/01/1970
81	D0NN94501N91A	1	Bracket, License Plate Lamp, 4100-5100, NH-E Only, Years: 08/01/1970-07/31/1971
81	D1NN94501N91A	1	Bracket, License Plate Lamp, 4100-5100-7100, NH-E Only, Start Year: 08/01/1971
82	D3NN14N000E	1	Wire Assy., Lamp to Fender, 4100-5100-7100, NH-E Only, No Longer Serviced, Start Year: 08/01/1970
83	C5NN14N000Z	1	Wire Assy., Fender to Harness, 4100-5100-7100, Not shown on Art, No Longer Serviced (NHNA), Start Year: 08/01/1971
84	E95AE2	1	Grommet, Fender, 4100-5100-7100, NH-E Only, Start Year: 08/01/1970
85	C5NN13N406B	1	Socket Assy., Trailer Connection, 2 Pole, 2000-3000, NH-E Only, Start Year: 08/01/1970
85	D0NN13N406A	1	Socket Assy., Trailer Connection, 2 Pole, 4100-5100-7100, NH-E Only, No Longer Serviced, Start Year: 08/01/1970
85	E6NN13A450AA	1	Socket Assy., Trailer Connection, 7 Pole, Start Year: 08/01/1970
	80684	3	Washer, Lock, #10, Start Year: 08/01/1970

15B05 TRACTOR SAFETY FRAME & ELECTRICAL SYSTEM, NH-E, 2000, 3000, 4100, 5100 & 7100

Ref	Part Number	Qty	Description
	87304	3	Nut, #10-24, Start Year: 08/01/1970
	54049S36	3	Screw, Fillister Hd, #10-24 x 1-1/8", Start Year: 08/01/1970
86		1	Bracket, Connection Mtg., 2 Pole W/Tool Box, 2000-3000, NH-E Only, No Longer Serviced, Start Year: 08/01/1970
86	C5NN13N460C	1	Bracket, Connection Mtg., 2 Pole L/Tool Box, 2000-3000, No Longer Serviced, Start Year: 08/01/1970
86	C5NN13N460D	1	Bracket, Connection Mtg., 7 Pole W/Tool Box, 2000-3000, NH-E Only, No Longer Serviced, Start Year: 08/01/1970
86	C5NN13N460B	1	Bracket, Connection Mtg., 7 Pole L/Tool Box, 2000-3000, NH-E Only, No Longer Serviced, Start Year: 08/01/1970
86	D0NN13N460B	1	Bracket, Connection Mtg., 2 Pole, 4100-5100-7100, NH-E Only, Start Year: 08/01/1970
86	D0NN13N460A	1	Bracket, Connection Mtg., 7 Pole, 4100-5100-7100, No Longer Serviced, Start Year: 08/01/1970
87	D0NN14N012B	1	Cover, Fender Wiring R.H., 4100-5100-7100, NH-E Only, Start Year: 08/01/1970
88	D0NN14N038A	1	Cover, Fender Wiring L.H., 4100-5100-7100, NH-E Only, No Longer Serviced, Start Year: 08/01/1970
	34804S36	2	Washer, Lock, #12, W/Tool Box, 2000-3000, No Longer Serviced (NH-E), Start Year: 08/01/1970
	280278	2	Washer, Lock, Ext T, 5/16", L/Tool Box, Models 2000 thru 3000, Start Year: 08/01/1970
	80681	2	Washer, Lock, 5/16", 4100-5100-7100, Start Year: 08/01/1970
	86512084	2	Nut, #12-24, W/Tool Box, 2000-3000, Start Year: 08/01/1970
	86629539	2	Nut, G5, 5/16"-24, L/Tool Box, 2000, 3000, Start Year: 08/01/1970
	9635082	2	Nut, G5, 5/16"-18, 4100-5100-7100, Start Year: 08/01/1970
		2	Screw, Rd Hd, # 12-24 x 3/8", Bracket to Tool Box, 2000-3000, NH-E Only, No Longer Serviced, Start Year: 08/01/1970
	20677	2	Screw, Cap, HH, G5, 5/16"-24 x 5/8", Bracket to Fender, 2000-3000, Start Year: 08/01/1970
	87872	2	Screw, Cap, HH, G5, 5/16"-18 x 3/4", Bracket to Fender, 4100-5100-7100, Start Year: 08/01/1970
89	D0NN13N850B	1	Wire Assy., Ground, NH-E Only, No Longer Serviced, Start Year: 08/01/1970
90	D0NN14N000H	1	Wire Assy., Trailer Socket 53" (134.6cm)(2 Pole), 2000-3000, NH-E Only, Start Year: 08/01/1970
90	D0NN14N000T	1	Wire Assy., Trailer Socket 57-1/2" (146.0cm)(7 Pole), 2000-3000, NH-E Only, No Longer Serviced, Start Year: 08/01/1970
90	C7NN14N000E	1	Wire Assy., Trailer Socket 40" (101.6cm)(2 Pole), 4100-5100-7100, NH-E Only, No Longer Serviced, Start Year: 08/01/1970
90	C5NN14N000BR	1	Wire Assy., Trailer Socket 46" (116.8cm)(7 Pole), 4100-5100-7100, NH-E Only, Start Year: 08/01/1970
91	E0A14659B	2	Clip, Wire to Tool Box, 2000-3000, NH-E Only, No Longer Serviced, Start Year: 08/01/1970
91	117818ES2	2	Clip, Wire to Bracket, L/Tool Box, 2000-3000, Start Year: 08/01/1970
92	375394S	1	Grommet, Fender, 2000-3000, No Longer Serviced, Start Year: 08/01/1970
92	383441S	1	Grommet, Fender, 4100-5100-7100, Start Year: 08/01/1970
93	E8NN13200BA	1	Lamp Assy., Parking, RH, Replaces C5NN13200A, Start Year: 08/01/1970
94	E8NN13201BA	1	Lamp Assy., Parking, LH, Refer to Fig. 11C2 for Components, No Longer Serviced, Start Year: 08/01/1970
	80682	4	Washer, Lock, 1/4", Start Year: 08/01/1970
	34081S36	4	Nut, 1/4"-28, Lamp to Bracket, Start Year: 08/01/1970
95	D0NN13256A	2	Bracket, Park Lamp Mounting, 2000-3000, Includes: Support and C5NN94031N28A, NH-E Only, No Longer Serviced, Start Year: 08/01/1970

15B05 TRACTOR SAFETY FRAME & ELECTRICAL SYSTEM, NH-E, 2000, 3000, 4100, 5100 & 7100

Ref	Part Number	Qty	Description
95	D6NN94501N93A	2	Support Assy., Park Lamp Mounting, 4100-5100-7100, Includes: Support and C5NN94031N28A, NH-E Only, No Longer Serviced, Start Year: 08/01/1970
95	C5NN94031N28A	2	Buffer, Rubber, 4100-5100-7100, NH-E Only, Start Year: 08/01/1970
96	D0NN14N000N	1	Wire Assy., RH, Lamp to Harness, 34" (86.36cm), 4100-5100-7100, NH-E Only, No Longer Serviced, Start Year: 08/01/1970
96	D0NN14N000AD	1	Wire Assy., LH, Lamp to Harness, 28" (71.12cm), 4100-5100-7100, NH-E Only, Start Year: 08/01/1970
	80682	4	Washer, Lock, 1/4", Start Year: 08/01/1970
	7770	4	Nut, Hex, 1/4"-20, Start Year: 08/01/1970
	9707580	4	Screw, Cap, HH, G5, 1/4"-20 x 3/4", Bracket to Fender, 2000-3000, Start Year: 08/01/1970
		4	Screw, Oval Hd, G5, 1/4"-20 x 1-3/4", Support to Frame, 4100-5100-7100, NH-E Only, Start Year: 08/01/1970
97	D0NN10986A	2	Sleeve, Lamp Wire, 2000-3000, NH-E Only, No Longer Serviced, Start Year: 08/01/1970
98	D0NN14405A	2	Wire Assy., Rear Lamp to Harness, 4100-5100-7100, NH-E Only, No Longer Serviced, Years: 08/01/1970-12/31/1972
98	D2NN14405A	2	Wire Assy., Rear Lamp to Harness, 4100-5100-7100, NH-E Only, Start Year: 01/01/1973
99	B16386	2	Grommet, Fender, 2000-3000, Start Year: 08/01/1970
	80681	AR	Washer, Lock, 5/16", Start Year: 08/01/1970
100	C7NN14N199E	AR	Clip, Harness to Platforms & Fenders, NH-E Only, Start Year: 08/01/1970
	9635082	AR	Nut, G5, 5/16"-18, Start Year: 08/01/1970
	87872	AR	Screw, Cap, HH, G5, 5/16"-18 x 3/4", Clip, Start Year: 08/01/1970
101	D0NN13N413A	1	Tubing, Lamp Wire, Rear, 5100-7100, No Longer Serviced, Start Year: 08/01/1970
102	529070	1	Strap, Tube Retaining, 5100-7100, Start Year: 08/01/1970
103	D8NN14N109EB	1	Harness Assy., Switch to Rear Fender, W/ Hazard Warning, 2000-3000, NH-E Only, Start Year: 08/01/1970
103	D0NN14N109F	1	Harness Assy., Switch to Rear Fender, 4100, NH-E Only, No Longer Serviced, Start Year: 08/01/1970
103	D0NN14N109E	1	Harness Assy., Switch to Rear Fender, 5100-7100, NH-E Only, No Longer Serviced, Start Year: 08/01/1970
104	D3NN13480A	1	Switch, Stop Light, Start Year: 12/01/1973
104	D2NN13480A	1	Switch, Stop Light, Refer to Fig. 11C for Components, Years: 08/01/1970-11/30/1973
		1	Clip, Conduit to RH Platform, 4100-5100-7100, NH-E Only, Start Year: 08/01/1970
105	D0NN14N000M	1	Wire Assy., Fuse to Switch, Purple, 12" (30.5cm), No Longer Serviced (NHNA), Start Year: 08/01/1970
106	D0NN14N000L	1	Wire Assy., Harness to Fuse, Brown, 15" (28.1cm), Start Year: 08/01/1970
107	D0NN14N000K	1	Wire Assy., Switch to Wiper, White, 20" (50.8cm), NH-E Only, Start Year: 08/01/1970
108	D0NN14N000C	1	Wire Assy., Harness to Rear Lamp, Red, 3-3/4" (9.5cm), 4100-5100-7100, NH-E Only, Start Year: 08/01/1970
109	D0NN14A254B	1	Bracket, Fuse Mounting, Standard Cab, No Longer Serviced (NH-E), Start Year: 08/01/1970
109	D0NN14N041A	1	Panel, Fuse Mounting, Deluxe Cab, 4100-5100-7100, NH-E Only, Start Year: 08/01/1970
110	D0NN14N000B	1	Wire Assy., Light, Rear, Red & Blue, 53" (134.6cm), Except 5100-7100, Start Year: 08/01/1970
111	D2NN17504A	1	Motor Assy., Windshield Wiper, Start Year: 08/01/1970
112	D2NN17N428A	1	Buffer, Wiper Motor, NH-E Only, No Longer Serviced, Start Year: 08/01/1970
113	D0NN17526B	1	Arm Assy., Wiper Motor, Replaces D0NN17256A, No Longer Serviced (NHNA), Start Year: 08/01/1970
114	D0NN17528B	1	Blade Assy., Wiper, No Longer Serviced (NHNA), Start Year: 08/01/1970
	E3NN16A901BA	1	Decal, Warning, Danish, NH-E Only, Start Year: 08/01/1970

15B05 TRACTOR SAFETY FRAME & ELECTRICAL SYSTEM, NH-E, 2000, 3000, 4100, 5100 & 7100

Ref	Part Number	Qty	Description
115	D0NN14N000AA	1	Wire Assy., Wiper, Green & Blue, 96" (243.8cm), NH-E Only, Start Year: 08/01/1970
	D0NN94503N26B	1	Decal, Warning, Swedish, NH-E Only, No Longer Serviced, Start Year: 08/01/1970
	D4NN94503N26A	1	Decal, Warning, English, NH-E Only, Start Year: 08/01/1970


KIT
NEW HOLLAND
NEW HOLLAND

5000-SERIES 4 CYL TRACTOR (1/65-1/75)

15B06 TRACTOR CAB ASSEMBLIES & KITS, ALL SEASON, (NHNA) ACCESSORY - 5000, 7000

Ref	Part Number	Qty	Description
	HMC252411	1	Cab Assy., Tractor, All Season, 5100-7100, NHNA Only, No Longer Serviced, Start Year: 01/01/1965
	HMC252611	1	Cab Assy., Tractor, All Season, 5200-7200, NHNA Only, No Longer Serviced, Start Year: 01/01/1967
	HMC2601	1	Kit, Winshield Wiper, NHNA Only, No Longer Serviced, Start Year: 01/01/1965
	HMC5163	1	Kit, Cab Assy., Vinyl, U.S., 2100-2110-3100-4110, NHNA Only, Start Year: 01/01/1965
	HMC5164	1	Kit, Cab Assy., Vinyl, U.S., 4100, NHNA Only, Start Year: 01/01/1965
	HMC5151	1	Kit, Cab Assy., Vinyl, U.S., 5100-7100, NHNA Only, Start Year: 01/01/1965
	HMC5165	1	Kit, Cab Assy., Vinyl, U.S., 5200-7200, NHNA Only, No Longer Serviced, Start Year: 01/01/1965
	HMC5135	1	Cab Assy., Vinyl, 4400-4500, NHNA Only, No Longer Serviced, Start Year: 01/01/1965
	HMC5122	1	Kit, Cab Horizontal Exhaust Guard, Vinyl, 2100-3100-5100-7100, NHNA Only, Start Year: 01/01/1965
	HMC5123	1	Kit, Cab Horizontal Exhaust Guard, Vinyl, 4100, NHNA Only, No Longer Serviced, Start Year: 01/01/1965
	HMC5141	1	Kit, Cab Top Assy., Vinyl, 2100-5200-7200, NHNA Only, Start Year: 01/01/1965
	HMC5142	1	Curtain Assy., Cab, Rear, Vinyl, 2100-5200-7200, NHNA Only, Start Year: 01/01/1965
	HMC5155	1	Curtain Assy., Cab, Rear, Vinyl, 3400-3500-3550-4400-4500, NHNA Only, No Longer Serviced, Start Year: 01/01/1965
	HMC5153	1	Half Cab, Vinyl, Use W/740 Loader, W/& L/Self Leveling Bucket, 3400-3500-3550, NHNA Only, Start Year: 01/01/1965
	HMC5154	1	Top, Cab, Vinyl, W/or W/O Self Leveling Loader, 3400-3500-3550-4400-4500, NHNA Only, No Longer Serviced, Start Year: 01/01/1965
	HMC5151	1	Cab Assy., Soft Side, Vinyl, Use W/3" Spacer Under Fender, 5100-7100, NHNA Only, Start Year: 01/01/1973
	HMC5162	1	Cab Assy., Soft Side, Vinyl, Use W/3" Spacer Under Fender, 5200-7200, NHNA Only, No Longer Serviced, Start Year: 01/01/1973
	HMC105673	1	Mat, Floor, Left Side, 5100-7100, NHNA Only, No Longer Serviced, Start Year: 01/01/1973
	HMC105674	1	Mat, Floor, Left Front, 5100-7100, NHNA Only, No Longer Serviced, Start Year: 01/01/1973
	HMC105675	1	Mat, Floor, Right Side, 5100-7100, NHNA Only, No Longer Serviced, Start Year: 01/01/1973
	HMC105676	1	Mat, Floor, Right Front, 5100-7100, NHNA Only, No Longer Serviced, Start Year: 01/01/1973
	HMC102790	1	Upholstery, Acoustical, Right Side Wheel Well, 5100-7100, NHNA Only, No Longer Serviced, Start Year: 01/01/1973
	HMC202463	1	Step Assy., L.H., 5100-7100, NHNA Only, No Longer Serviced, Start Year: 01/01/1973

NO ART REQUIRED

5000-SERIES 4 CYL TRACTOR (1/65-1/75)

15B09 SAFETY FRAME, GERMANY (70/6-72)

Ref	Part Number	Qty	Description
	NLS	4	Washer, Lock, 5/8", 2100-3100 {C9NN16N434A}, Years: 01/01/1970-06/30/1972
	NLS	4	Nut, Hex, 2100-3100 {C9NN16N433A}, Years: 01/01/1970-06/30/1972
	NLS	4	Bolt, HH, Support Assy. to Rear Axle, 180mm, 2100-3100 {C9NN16N432A}, Years: 01/01/1970-06/30/1972
	NLS	8	Washer, Flat, 9/16", 2100-3100 {C9NN16N428A}, Years: 01/01/1970-06/30/1972
	NLS	16	Washer, Flat, 9/16", 4100-5100{C9NN16N428A}, Years: 01/01/1970-06/30/1972
	C9NN16N428C	28	Washer, Brackets to Support, 13.0mm I.D., NH-E Only, Years: 01/01/1970-06/30/1972
	NLS	14	Washer, Special, 2100-3100 {C9NN16N428D}, Years: 01/01/1970-06/30/1972
	NLS	12	Washer, Special, 4100-5100 {C9NN16N428D}, Years: 01/01/1970-06/30/1972
	C9NN16N426A	28	Nut, Hex, NH-E Only, Years: 01/01/1970-06/30/1972
	NLS	8	Bolt, Carrier, Lower Bracket to Support, 50mm {C9NN16N429A}, Years: 01/01/1970-06/30/1972
	NLS	12	Bolt, Carrier, Fender to Upper Bracket, 30mm, 4100-5100 {C9NN16N430A}, Years: 01/01/1970-06/30/1972
	NLS	20	Bolt, Carrier, Fender Bracket to Lower Bracket, 40mm, 2100-3100 {C9NN16N431A}, Years: 01/01/1970-06/30/1972
	NLS	4	Bolt, Carrier, Front Support to Bracket, 45mm, 4100-5100 {C9NN16N435A}, Years: 01/01/1970-06/30/1972
	NLS	4	Bolt, Carriage, Rear Support to Lower Bracket, 60mm, 4100-5100 {C9NN16N436A}, No Longer Serviced, Years: 01/01/1970-06/30/1972
	D1NN16N340A	1	Plate, Rail Mounting Front, 4100-5100, NH-E Only, No Longer Serviced, Years: 01/01/1970-06/30/1972

ART NOT AVAILABLE

5000-SERIES 4 CYL TRACTOR (1/65-1/75)

15B09[A] SAFETY FRAME, GERMANY & AUSTRIA (7-72/)

Ref	Part Number	Qty	Description
	E4NN16312AA	1	Fender Assy., Rear, RH, 2100-3100, NH-E Only, Start Year: 07/01/1972
	D9NN16312CD	1	Fender Assy., Rear, RH, 4100, NH-E Only, Start Year: 07/01/1972
	NLS	1	Fender Assy., Rear, RH, 5100-7100 {D2NN16312F}, No Longer Serviced, Start Year: 07/01/1972
	E5NN16313CD	1	Fender Assy., Rear, LH, 2100-3100, NH-E Only, Start Year: 07/01/1972
	D8NN16313SG	1	Fender Assy., Rear, LH, 4100, NH-E Only, Start Year: 07/01/1972
	82008463	1	Fender Assy., Rear, LH, 5100-7100, Start Year: 07/01/1972
	NLS	1	Support Assy., Front, RH, 2100-3100 {D2NN16N032B}, Start Year: 07/01/1972
	NLS	1	Support Assy., Front, RH, 3055-4100-5100-7100 {D2NN16N032A}, Start Year: 07/01/1972
	NLS	1	Support Assy., Front, LH, 2100-3100 {D2NN16N033B}, Start Year: 07/01/1972
	NLS	1	Support Assy., Front, LH, 3055-4100-5100-7100 {D2NN16N033A}, Start Year: 07/01/1972
	NLS	1	Support Assy., Rear, LH, 2100-3100 {D2NN16N423B}, Start Year: 07/01/1972
	NLS	1	Support Assy., Rear, LH, 3055-4100-5100-7100 {D2NN16N423A}, Start Year: 07/01/1972
	NLS	1	Support Assy., Rear, RH, 2100-3100 {D2NN16N422B}, Start Year: 07/01/1972
	NLS	1	Support Assy., Rear, RH, 3055-4100-5100-7100 {D2NN16N422A}, Start Year: 07/01/1972
	NLS	1	Bracket Assy., Rear Upper, RH {D2NN16N412A}, Start Year: 07/01/1972
	NLS	1	Bracket Assy., Rear Upper, LH {D2NN16N413A}, Start Year: 07/01/1972
	NLS	1	Bracket Assy., Front Upper RH, 2100-3100 {D2NN16N020A}, Start Year: 07/01/1972
	NLS	2	Bracket Assy., Front Upper, LH & RH, 3055-4100-5100-7100 {D2NN16N020B}, Start Year: 07/01/1972
	NLS	1	Bracket Assy., Front Upper, LH, 2100-3100 {D2NN16N021A}, Start Year: 07/01/1972
	NLS	AR	Shim, Fender to Support Front {D2NN16N252A}, Start Year: 07/01/1972
	NLS	AR	Shim, Fender to Support Rear {D2NN16N253A}, Start Year: 07/01/1972
		16	Washer, Flat, M12-13.2mm, No Longer Serviced, Start Year: 07/01/1972
	C9NN16N428C	16	Washer, Lock, 13.0mm I.D., NH-E Only, Start Year: 07/01/1972
	C9NN16N426A	16	Nut, Hex, NH-E Only, Start Year: 07/01/1972
	NLS	16	Bolt, Carriage, Bracket to Lower Support, 40mm Lg. {C9NN16N431A}, Start Year: 07/01/1972
	NLS	8	Washer, Flat, M10 {N800043S51}, Start Year: 07/01/1972
	NLS	8	Washer, Flat, M11.50 Square {N800041S51}, Start Year: 07/01/1972
	NLS	8	Washer, Lock, 10.5mm ID {D2NN16N428A}, Start Year: 07/01/1972
	NLS	8	Nut, Hex, M10 {N800042S51}, Start Year: 07/01/1972
	N800040S51	8	Bolt, Carriage, Fender to Lower Support, M10 x 25, Start Year: 07/01/1972
	D2NN16N446A	4	Bumper, Rear Fender Front, 20-1/2" (520.7mm), Start Year: 07/01/1972
	D2NN16N447A	2	Bumper, Rear Fender Rear, 4" (101.6mm), Start Year: 07/01/1972

15B09[B] WHEEL CHOCK & RETAINER, GERMANY (10-74/) - 3550, 4500, 5100, 7100

ART

NOT

AVAILABLE

5000-SERIES 4 CYL TRACTOR (1/65-1/75)

15B09[B] WHEEL CHOCK & RETAINER, GERMANY (10-74/) - 3550, 4500, 5100, 7100

Ref	Part Number	Qty	Description
	D6NN17K038A	1	Chock, Wheel, Wheel Block, Germany, 3550-4550-5100-7100, NH-E Only, Start Year: 10/01/1974
	D2NN17N031A	1	Retainer Assy., Wheel Chock, NH-E Only, No Longer Serviced, Start Year: 10/01/1974
	NLS	1	Strap, Chock to Retainer {69GG1441AA}, Start Year: 10/01/1974

15B10 SAFETY FRAME, W/WIDE FENDERS, ITALY - 5100, 7100

NO ART REQUIRED

5000-SERIES 4 CYL TRACTOR (1/65-1/75)

15B10 SAFETY FRAME, W/WIDE FENDERS, ITALY - 5100, 7100

Ref	Part Number	Qty	Description
	82008463	1	Fender Assy., L.H., Wide Type, Start Year: 01/01/1973
	NLS	1	Fender Assy., RH, Wide Type {D2NN16312F}, Start Year: 01/01/1973
	NLS	2	Extension, Rear Fender {D3NN16N347A}, Start Year: 01/01/1973
	NLS	1	Support Assy., Fender, Front, LH {D3NN16N033A}, No Longer Serviced, Start Year: 01/01/1973
	NLS	1	Support Assy., Fender, Front, RH {D3NN16N032A}, Start Year: 01/01/1973
	NLS	1	Support Assy., Fender, Rear, LH {D2NN16N423A}, Start Year: 01/01/1973
	NLS	1	Support Assy., Fender, Rear, RH {D2NN16N422A}, Start Year: 01/01/1973
	D3NN16N321A	4	U-Bolt, Fender & Support to Axle, Start Year: 01/01/1973
	C5NNN826A	8	Washer, Flat, 5/8", Start Year: 01/01/1973
	34811S36	8	Washer, Lock, 5/8", Start Year: 01/01/1973
	408	8	Nut, G5, 5/8"-18, U-Bolt, Start Year: 01/01/1973
	NLS	8	Washer, Flat, M10 {N800043S51}, Start Year: 01/01/1973
	NLS	8	Washer, Flat, 10.50mm ID x 16.00mm OD {D2NN16N428A}, Start Year: 01/01/1973
	NLS	8	Nut, Hex, M10 {N800042S51}, Start Year: 01/01/1973
	N800040S51	8	Bolt, Carriage, Support to Fender, M10 x 25, Start Year: 01/01/1973
	NLS	2	Spacer Assy., Fender to Axle {D3NN16N304A}, Start Year: 01/01/1973
	NLS	1	Bracket Assy., Fender, Front Upper LH {D3NN16N021A}, Start Year: 01/01/1973
	NLS	1	Bracket Assy., Fender, Front Upper RH {D3NN16N020B}, Start Year: 01/01/1973
	NLS	1	Bracket Assy., Fender, Rear Upper LH {D3NN16N413A}, Start Year: 01/01/1973
	NLS	1	Bracket Assy., Fender, Rear Upper RH {D3NN16N412A}, Start Year: 01/01/1973
	NLS	AR	Shim, Fender to Support, Front {D2NN16N252A}, Start Year: 01/01/1973
	NLS	AR	Shim, Fender to Support, Rear {D2NN16N253A}, Start Year: 01/01/1973
		16	Washer, Flat, M12-13.2mm ID, Start Year: 01/01/1973
	C9NN16N428C	16	Washer, Lock, 13.0mm ID, NH-E Only, Start Year: 01/01/1973
	C9NN16N426A	16	Nut, Hex, NH-E Only, Start Year: 01/01/1973
	NLS	16	Bolt, Carriage, Bracket to Support, 40mm Lg. {C9NN16N431A}, Start Year: 01/01/1973
	D2NN16N446A	2	Bumper, Fender Front Edge, 520.7mm Lg., Start Year: 01/01/1973
	D2NN16N447A	2	Bumper, Fender Rear Edge, 101.6mm Lg., Start Year: 01/01/1973
	NLS	2	Tube, Front Support {D3NN94507N06A}, Start Year: 01/01/1973
	NLS	1	Rail Assy., Fender Seat {D3NN94506N98A}, Start Year: 01/01/1973
	NLS	2	Screw, Seat Rail to Tubes {D3NN94507N19A}, Start Year: 01/01/1973
	NLS	2	Tube, Rear Support {D3NN94507N05A}, Start Year: 01/01/1973
	NLS	1	Tube Assy., Front, Upper {D3NN94506N91A}, Start Year: 01/01/1973
	NLS	1	Tube, Rear Upper {D3NN94500N41A}, Start Year: 01/01/1973
	NLS	4	Clamp, Tube, RH {D3NN94506N96A}, Start Year: 01/01/1973
	NLS	4	Clamp, Tube, LH {D3NN94506N97A}, Start Year: 01/01/1973
	NLS	2	Bumper, Upper Tube, Sides {D3NN94506N95A}, Start Year: 01/01/1973
	NLS	AR	Nut, Lock, Clamp {D3NN94507N20A}, Start Year: 01/01/1973
	NLS	AR	Bolt, Clamp {D3NN94507N01A}, Start Year: 01/01/1973
	D3NN94507N03A	12	Cap, Nut Protection, NH-E Only, Start Year: 01/01/1973
	NLS	2	Pin, Front Tube, 6.0 x 10.0mm {D3NN94507N18A}, Start Year: 01/01/1973

5000-SERIES 4 CYL TRACTOR (1/65-1/75)

15B10 SAFETY FRAME, W/WIDE FENDERS, ITALY - 5100, 7100

Ref	Part Number	Qty	Description
	NLS	2	Cover, Front Plate {D3NN94507N04A}, Start Year: 01/01/1973
	NLS	1	Decal, Safety Frame {D3NN94507N02A}, Start Year: 01/01/1973

15C01 SEAT BELT & ROLLBAR ASSEMBLIES (NHNA)

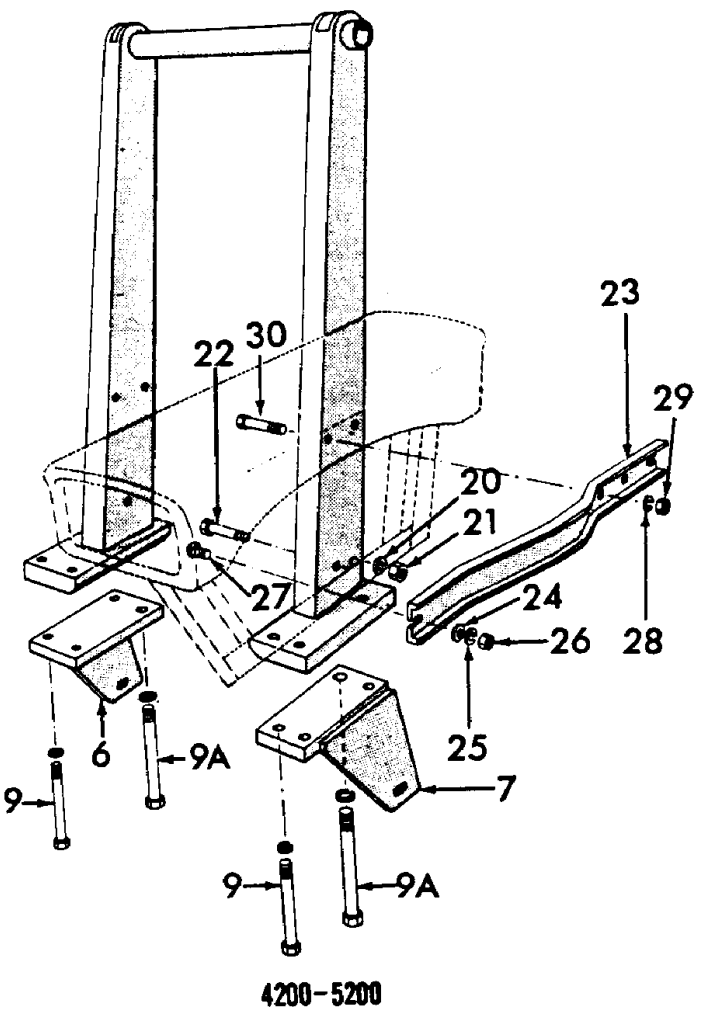

4200-5200

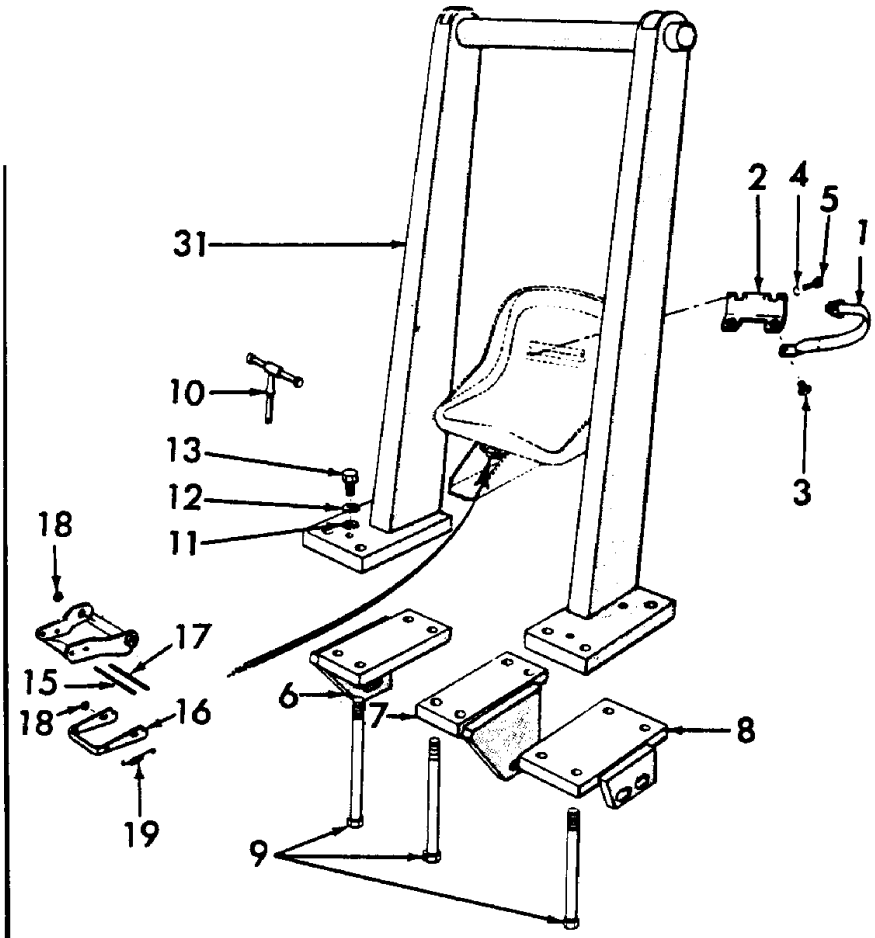

5000-SERIES 4 CYL TRACTOR (1/65-1/75)

15C01 SEAT BELT & ROLLBAR ASSEMBLIES (NHNA)

Ref	Part Number	Qty	Description
1	82014400	1	Belt & Buckle Set, Start Year: 01/01/1969
2	83906668	1	Anchor, Start Year: 01/01/1969
2	D2NN94610N01A	1	Anchor, 3400-4400-3500-3550, NHNA Only, Start Year: 01/01/1969
3	280580	2	Screw, Cap, HH, G5, 5/8"-11 x 1", Start Year: 01/01/1969
4	80681	2	Washer, Lock, 5/16", Start Year: 01/01/1969
5	87872	2	Screw, Cap, HH, G5, 5/16"-18 x 3/4", Start Year: 01/01/1969
6	C9NN94518N16F	1	Clamp, RH, 4100-4140, NHNA Only, Start Year: 01/01/1969
6	C9NN94518N16E	1	Clamp, RH, 5100, NHNA Only, Start Year: 01/01/1969
6	82868438	1	Clamp, RH, 5200-7100-7200, NHNA Only, Start Year: 01/01/1967
7	C9NN94518N17D12M	1	Clamp, LH, 4100-4140, NHNA Only, Start Year: 01/01/1969
7	C9NN94518N17C12M	1	Clamp, LH, 5100, NHNA Only, Start Year: 01/01/1969
7	82868428	1	Clamp, LH, 5200-7100-7200, NHNA Only, Start Year: 01/01/1967
8	D8NN94518N16BA	2	Clamp, 2100-2110-3100-4110, No Longer Serviced (NH-E), Start Year: 01/01/1969
8	D2NN94518N18A	2	Plate, 3400-3500, NHNA Only, Start Year: 01/01/1965
8	E4NN94518N18AA	2	Plate, 3550-4400, NHNA Only, Start Year: 01/01/1965
9	C7NN94518N15A	8	Bolt, 7", 2100-2110-3100-4110, NHNA Only, Start Year: 01/01/1969
9	D0NN94518N15A	8	Bolt, 7-1/2", 4100-4140, NHNA Only, Start Year: 01/01/1967
9	58738S36	8	Screw, Cap, HH, G8, 5/8"-11 x 8", 5000-7000, Start Year: 01/01/1965
9	D0NN94518N15B	6	Bolt, G8, 3/4"-10 x 8-1/4", Retaining Clamp, 5200-7100-7200, Start Year: 01/01/1967
9	D0NN94518N15B	8	Bolt, G8, 3/4"-10 x 8-1/4", Retaining Clamp, 5100, Start Year: 01/01/1969
9A	383444S36	2	Screw, Cap, HH, G5, 1"-8 x 9-1/2", Rollbar Retaining Clamp, 5200-7100-7200, NH-E Only, No Longer Serviced, Start Year: 01/01/1967
9A	87340	AR	Washer, Lock, 3/4", Clamp Bolt, 4200-5200, Start Year: 01/01/1967
9A	87340	6	Washer, Lock, 3/4", Clamp Bolt, 7100-7200, Start Year: 10/01/1971
9A	87342	2	Washer, Lock, 1", Clamp Bolt, 5200-7100-7200, Start Year: 01/01/1967
10	C5NNC999G	1	Lever Assy., Hydraulic Lift, 2100-2110-3100-4110, Start Year: 01/01/1969
11	87365	4	Washer, SAE, 5/8", Except 4200-5200-7200, Start Year: 01/01/1969
12	34811S36	4	Washer, Lock, 5/8", Except 4200-5200-7200, Start Year: 01/01/1969
13	304768S36	4	Screw, Cap, HH, G5, 5/8"-11 x 1-1/2", Except 4200-5200-7200, Start Year: 01/01/1969
15	C9NNN441A	1	Pin, Driver Seat Suspension Hinge, NHNA Only, Start Year: 01/01/1969
16	D2NNB474B	1	Release, Driver Seat Suspension, NHNA Only, Start Year: 01/01/1969
17	C7NNB442A	1	Pin, Driver Seat Suspension Release Lock, NHNA Only, Start Year: 01/01/1969
18	9636620	4	Ring, Snap, Ext, .312", Start Year: 01/01/1969
19	D2NNC400B	2	Spring, Driver Seat Suspension Release, Start Year: 01/01/1969
20	81821693	2	Washer, Lock, 3/8", 4200-5200-7200, Start Year: 01/01/1967
20	80702	2	Washer, 3/8", 4200-5200, Start Year: 01/01/1967
21	9628503	2	Nut, G5, 3/8"-16, 4200-5200-7200, Start Year: 01/01/1967
22	300904S36	2	Screw, Cap, HH, G5, 3/8"-16 x 3-1/2", 4200-5200-7200, Start Year: 01/01/1967
23	D0NN16390A	2	Reinforcement, Rear Fender, Upper, 4200-5200-7200, NHNA Only, No Longer Serviced, Start Year: 01/01/1967
24	87016	4	Washer, SAE, 3/8", 4200-5200, Start Year: 01/01/1967

5000-SERIES 4 CYL TRACTOR (1/65-1/75)

15C01 SEAT BELT & ROLLBAR ASSEMBLIES (NHNA)

Ref	Part Number	Qty	Description
25	81821693	4	Washer, Lock, 3/8", 4200-5200, Start Year: 01/01/1967
26	9628503	4	Nut, G5, 3/8"-16, 4200-5200, Start Year: 01/01/1967
27	80280503	2	Bolt, Carriage, Short Neck, G5, 3/8"-16 x 1", 4200-5200, Start Year: 01/01/1967
28	80679	4	Washer, Lock, 1/2", 4200-5200-7200, Start Year: 01/01/1967
28	44736S8	2	Washer, 1/2", 4200-5200, NHNA Only, Start Year: 01/01/1967
29	280431	4	Nut, G5, 1/2"-13, 4200-5200-7200, Start Year: 01/01/1967
30	86505992	4	Screw, Cap, HH, G5, 1/2"-13 x 3-3/4", 4200-5200, Start Year: 01/01/1967
	C5NN13N309B	1	Gasket, Flasher Warning Lamp, 2100-2110-3100-4110, Start Year: 01/01/1969
	81821693	2	Washer, Lock, 3/8", 2100-2110-3100-4110
	88206	2	Screw, Cap, HH, G5, 3/8"-16 x 1", 2100-2110-3100-4110, Start Year: 01/01/1969
	C9NN16408A	4	Spacer, Rear Fender Front Brace, Used W/Model 2110-4110, NHNA Only, Start Year: 01/01/1969
	88556	4	Screw, Cap, HH, G5, 5/8"-11 x 2-1/4", Start Year: 01/01/1969
	86548695	1	Bracket Assy., Tool Box, Used W/Model 2110-4110, NHNA Only, Start Year: 01/01/1969
	280278	2	Washer, Lock, Ext T, 5/16", Used W/Models 2110 thru 4110, Start Year: 01/01/1969
	NS	1	Rollbar Assy., Refer to Wholegoods #19-655, 3550-4100-4140-4400-4410, NHNA Only, Start Year: 01/01/1969
	NS	1	Rollbar Assy., Refer to Wholegoods #19-656, 5100, NHNA Only, Start Year: 01/01/1969
	C9NN16A454A	2	Extension, Platform to Fender, W/Rollbar, Canada Only, 2100-3100, NHNA Only, No Longer Serviced, Start Year: 01/01/1969
	C9NN16A454B	2	Extension, Platform to Fender, W/Rollbar, Canada Only, 4100, NHNA Only, No Longer Serviced, Start Year: 01/01/1969
	C9NN16A454C	2	Extension, Platform to Fender, W/Rollbar, Canada Only, 5100, NHNA Only, No Longer Serviced, Start Year: 01/01/1969
	80701	18	Washer, 1/4", Start Year: 01/01/1969
	80682	6	Washer, Lock, 1/4", Start Year: 01/01/1969
	7770	6	Nut, HH, Extension, 1/4"-20, Start Year: 01/01/1969
	C5NN16N485A	6	Nut, Captive, Platform to Extension, Start Year: 01/01/1969
	280641	12	Screw, Cap, HH, G5, 1/4"-20 x 5/8", Extension, Canada Only, Start Year: 01/01/1969
	NLS	1	Kit, Drawbar Stabilizer, 2100 {C9NNN904A}, Start Year: 01/01/1969
	NLS	1	Kit, Drawbar Stabilizer, 3100 {C9NNN904B}, Start Year: 01/01/1969

NO ART REQUIRED

5000-SERIES 4 CYL TRACTOR (1/65-1/75)

15C02 ROLLBARS, ANCHOR & SEAT BELT (NHNA)

Ref	Part Number	Qty	Description
	19654	AR	Rollbar Assy., L/Loader, 2100-2110-3100-3400-3500-4110, Includes: Rollbar & the Following, Order Wholegoods, NHNA Only, No Longer Serviced, Start Year: 01/01/1969
	19655	AR	Rollbar Assy., L/Loader, 3550-4100-4140-4400-4410, Includes: Rollbar & the Following, Order Wholegoods, Start Year: 01/01/1969
	19657	AR	Rollbar Assy., 4200, Includes: Rollbar & the Following, Order Wholegoods, Years: 01/01/1967-12/31/1972
	19656	AR	Rollbar Assy., 5100-7100, Includes: Rollbar & the Following, Order Wholegoods, Start Year: 01/01/1969
	19658	AR	Rollbar Assy., 5200-7200, Includes: Rollbar & the Following, Order Wholegoods, Start Year: 01/01/1967
	19659	AR	Rollbar Assy., 7100, Includes: Rollbar & the Following, Order Wholegoods, Start Year: 01/01/1971
	NLS	AR	Rollbar Assy., W/Loader, 3550-4400, Includes: Rollbar & the Following {19674}, Order Wholegoods, Start Year: 01/01/1965
	NLS	AR	Rollbar Assy., W/Loader, 3400-3500, Includes: Rollbar & the Following {19675}, Order Wholegoods, Start Year: 01/01/1965
	D8NN94518N16BA	2	Clamp Assy., L/Loader, 2100-2110-3100-3400-3500-4110, No Longer Serviced (NH-E), Start Year: 01/01/1969
	C9NN94518N17D12M	1	Clamp Assy., LH, L/Loader, 3550-4100-4140-4400-4410, NHNA Only, Start Year: 01/01/1969
	C9NN94518N17D12M	1	Clamp Assy., LH, 4200, NHNA Only, Start Year: 01/01/1969
	C9NN94518N16F	1	Clamp Assy., RH, L/Loader, 3550-4100-4140-4400-4410, NHNA Only, Start Year: 01/01/1969
	C9NN94518N16F	1	Clamp Assy., RH, 4200, NHNA Only, Start Year: 01/01/1969
	C9NN94518N16E	1	Clamp Assy., RH, 5100-7100, NHNA Only, Start Year: 01/01/1969
	C9NN94518N17C12M	1	Clamp Assy., LH, 5100-7100, NHNA Only, Start Year: 01/01/1969
	82868438	1	Clamp Assy., RH, 5200-7100-7200, NHNA Only, Start Year: 01/01/1967
	82868428	1	Clamp Assy., LH, 5200-7100-7200, NHNA Only, Start Year: 01/01/1967
	E4NN94518N18AA	2	Clamp Assy., W/Loader, 3550-4400, NHNA Only, Start Year: 01/01/1965
	D2NN94518N18A	2	Clamp Assy., W/Loader, 3400-3500, NHNA Only, Start Year: 01/01/1965
	86729275	4	Washer, Lock, 5/8", 3400-3500, Start Year: 01/01/1965
	280374	4	Nut, G5, 5/8"-11, 3400-3500, Start Year: 01/01/1965
	301208S36	4	Bolt, Plow, G5, 5/8"-11 x 2-1/4", 3400-3500, NHNA Only, Start Year: 01/01/1965
	280223	8	Screw, Cap, HH, G5, 3/4"-10 x 6-1/2", 3400-3500, Start Year: 01/01/1965
	58738S36	8	Screw, Cap, HH, G8, 5/8"-11 x 8", 3550-4400, Start Year: 01/01/1965
	C7NN94518N15A	8	Bolt, G5, 3/4"-10 x 7", 2100-2110-3100-3400-3500-4110, NHNA Only, Start Year: 01/01/1969
	D0NN94518N15A	8	Bolt, G8, 3/4"-10 x 7-1/2", 3550-4100-4140-4400-4410, NHNA Only, Start Year: 01/01/1969
	D0NN94518N15A	8	Bolt, G8, 3/4"-10 x 7-1/2", 4200, NHNA Only, Start Year: 01/01/1969
	87342	2	Washer, Lock, 1", 5200-7100-7200, Start Year: 01/01/1967
	383444S36	2	Screw, Cap, HH, G5, 1"-8 x 9-1/2", 5200-7100-7200, No Longer Serviced (NH-E), Start Year: 01/01/1967
	D0NN94518N15B	8	Bolt, G8, 3/4"-10 x 8-1/4", 5100-7100, Start Year: 01/01/1967
	D0NN94518N15B	6	Bolt, G8, 3/4"-10 x 8-1/4", 5200-7100-7200, Start Year: 01/01/1967
	19669	1	Anchor & Seat Belt Assy., Sold by Implement Sales Only, 2100-3100-4100-5100-7100, Includes parts listed below, NHNA Only, No Longer Serviced, Start Year: 01/01/1969
	82014400	1	Belt Buckle Assy., (D0NN94610N02E)
	83906668	1	Anchor Assy.
	80681	2	Washer, Lock, 5/16"

5000-SERIES 4 CYL TRACTOR (1/65-1/75)

15C02 ROLLBARS, ANCHOR & SEAT BELT (NHNA)

Ref	Part Number	Qty	Description
	87872	2	Screw, Cap, HH, G5, 5/16"-18 x 3/4", Anchor to Seat
	280580	2	Screw, Cap, HH, G5, 5/8"-11 x 1", Belt to Anchor
	C7NNB442A	1	Pin, Seat Suspension Release Lock, NHNA Only
	9636620	2	Ring, Snap, Ext, .312", Pin Retaining, Suspension
	D2NNB474B	1	Release, Seat Suspension, NHNA Only
	C9NNN441A	1	Pin, Suspension Release Hinge, NHNA Only
	9636620	2	Ring, Snap, Ext, .312", Hinge Pin Retaining Suspension
	D2NNC400B	2	Spring, Spring, Suspension Release Lock
	19788	1	Anchor & Seat Belt Assy., Sold by Implement Sales Only, 3400-3500-3550-4400-4410, Includes parts listed below, Order Wholegoods, Start Year: 01/01/1969
	82014400	1	Belt & Buckle Assy.
	D2NN94610N01A	1	Anchor Assy., Special Order Only, NHNA Only
	34976S7	4	Nut, Lock, G5, 5/16"-18
	87872	4	Screw, Cap, HH, G5, 5/16"-18 x 3/4", Anchor to Seat
	85700693	2	Nut, Lock, GC, 5/8"-11
	280580	2	Screw, Cap, HH, G5, 5/8"-11 x 1", Bolt to Anchor


KIT
NEW HOLLAND
NEW HOLLAND

5000-SERIES 4 CYL TRACTOR (1/65-1/75)

15C03[C] ROLLBAR CANOPY ASSEMBLY, ACCESSORY (NHNA)

Ref	Part Number	Qty	Description
	D1NN94518N19B	1	Canopy Assy., Rollbar, Start Year: 01/01/1967
	309912	1	Kit, Canopy Bracket, Includes: parts listed below, NHNA Only, Start Year: 01/01/1967
	D1NN94518N20A	2	Bracket (Not Serviced Separately), NHNA Only, No Longer Serviced, Start Year: 01/01/1967
	80679	12	Washer, Lock, 1/2", Start Year: 01/01/1967
	44736S8	12	Washer, 1/2", NHNA Only, No Longer Serviced, Start Year: 01/01/1967
	280431	12	Nut, G5, 1/2"-13, Start Year: 01/01/1967
	86505992	6	Screw, Cap, HH, G5, 1/2"-13 x 3-3/4", Start Year: 01/01/1967
	87974	6	Screw, Cap, HH, G5, 1/2"-13 x 2-3/4", NHNA Only, No Longer Serviced, Start Year: 01/01/1967

16A01 TRANSMISSION SHIFT PATTERN DECALS (NHNA)

NO ART AVAILABLE

5000-SERIES 4 CYL TRACTOR (1/65-1/75)

16A01 TRANSMISSION SHIFT PATTERN DECALS (NHNA)

Ref	Part Number	Qty	Description
	C5NN7B292A	1	Decal, 4 Speed W/Transmission, PTO or L/PTO, 3500-4000, NHNA Only, No Longer Serviced, Years: 01/01/1965-04/30/1970
	C5NN7B292C	1	Decal, 4 Speed W/Transmission PTO, 2000 Diesel, 3000 Gas & Diesel, NHNA Only, Years: 01/01/1965-04/30/1970
	C5NN7B292BC	1	Decal, 4 Speed W/Transmission PTO, 2000 Gasoline, NHNA Only, Years: 01/01/1965-04/30/1970
	C5NN7B292JY	1	Decal, 4 Speed W/Over & Under Auxiliary Transmission, 2000-3000, NHNA Only, No Longer Serviced, Years: 01/01/1965-04/30/1970
	C9NN7B292A	1	Decal, 6 Speed, Gas, W/Tachometer, 2100-2110, NHNA Only, Start Year: 01/01/1970
	C9NN7B292B	1	Decal, 6 Speed, Gas, W/Transmission & Live PTO 3100-3400, NHNA Only, Start Year: 01/01/1970
	D0NN7B292A	1	Decal, 6 Speed, Diesel, 2100-2110-3100-3400, NHNA Only, Start Year: 01/01/1970
	D0NN7B292B	1	Decal, 6 Speed, L/Ground Speed, 2100-3500, NHNA Only, Start Year: 01/01/1970
	C7NN7B292J	1	Decal, 6 x 4 Manual Reverse Transmission IPTO, 3400-3500-3550-4400-4500, NHNA Only, Start Year: 04/01/1968
	C5NN7B292AA	1	Decal, 8 Speed, Diesel, W/Transmission PTO or L/PTO, Prior to Transmission S/N 5J21B, 2000-3000 Except 3500, NHNA Only, Years: 01/01/1965-09/30/1965
	C5NN7B292BS	1	Decal, 8 speed, Gasoline, W/Transmission PTO or L/PTO, Prior to Transmission S/N 5J21B, 3000 Except 3500, NHNA Only, Years: 01/01/1965-09/30/1965
	C5NN7B292FT	1	Decal, 8 Speed, W/Transmission PTO or L/PTO, Effective W/Transmission S/N 5J21B, 2000-3000 Except 3500, NHNA Only, Start Year: 09/01/1965
	C5NN7B292AD	1	Decal, 8 Speed, Diesel, W/Live PTO, Prior to Transmission S/N 5J17B, 2000-3000 Except 3500, NHNA Only, Years: 01/01/1965-09/30/1965
	C5NN7B292BV	1	Decal, 8 Speed, Gasoline, W/Live PTO, Prior to Transmission S/N 5J17B, 3000, NHNA Only, No Longer Serviced, Years: 01/01/1965-09/30/1965
	C5NN7B292FY	1	Decal, 8 Speed, W/Live PTO, Effective W/Transmission S/N 5J17B, 2000-3000 Except 3500, NHNA Only, Start Year: 09/01/1965
	C5NN7B292FJ	1	Decal, 8 Speed, Gasoline, W/Live PTO, Prior to Transmission S/N 5J17B, 2110-4110, NHNA Only, No Longer Serviced, Years: 01/01/1965-09/30/1965
	C5NN7B292HB	1	Decal, 8 Speed, Gasoline, W/Live PTO, Effective W/Transmission S/N 5J17B, 2110-4110, NHNA Only, No Longer Serviced, Start Year: 09/01/1965
	C5NN7B292FH	1	Decal, 8 Speed, Gasoline, W/Transmission PTO, Prior to Transmission S/N 5K4B, 2000 LCG, NHNA Only, No Longer Serviced, Years: 01/01/1965-09/30/1965
	C5NN7B292AG	1	Decal, 8 Speed, W/Transmission or Independent PTO, Prior to Transmission S/N 5J10B, 4000 Except 4400-4500, NHNA Only, Years: 01/01/1965-09/30/1965
	C5NN7B292FN	1	Decal, 8 Speed, W/Transmission or Independent PTO, Effective W/Transmission S/N 5J10B, 4000 Except 4400-4500, NHNA Only, Start Year: 09/01/1965
	C5NN7B292Y	1	Decal, 8 Speed, W/Independent PTO or L/PTO, 3500-4400-4500, NHNA Only, Start Year: 01/01/1965
	C5NN7B292AK	1	Decal, 8 Speed, Diesel, W/Independent or L/PTO, Prior to Transmission S/N 5J6B, 5100, NHNA Only, No Longer Serviced, Years: 01/01/1965-09/30/1965
	D3NN7B292B	1	Decal, 8 Speed, Diesel, W/Independent or L/PTO, Effective W/Transmission S/N 5J6B, 5100-7000, NHNA Only, No Longer Serviced, Start Year: 09/01/1965
	C7NN7B292Z	1	Decal, 8 Speed, 5200, NHNA Only, Start Year: 01/01/1967

5000-SERIES 4 CYL TRACTOR (1/65-1/75)

16A01 TRANSMISSION SHIFT PATTERN DECALS (NHNA)

Ref	Part Number	Qty	Description
	D3NN7B292A	1	Decal, 8 Speed, W/or L/Dual Power, Single or 2 Speed Independent PTO, 5200-7200, NHNA Only, Start Year: 01/01/1973
	D3NN7B292B	1	Decal, 8 Speed, W/or L/Dual Power, Single or 2 Speed Independent, 5100-7100, NHNA Only, Start Year: 01/01/1973
	C5NN7B292HD	1	Decal, 10 Speed, Diesel, 2000-3000, NHNA Only, Start Year: 01/01/1965
	C5NN7B292HE	1	Decal, 10 Speed, Gasoline, 2000, NHNA Only, No Longer Serviced, Start Year: 01/01/1965
	C5NN7B292HD	1	Decal, 10 Speed, Gasoline, 3000, NHNA Only, Start Year: 01/01/1965
	C5NN7B292HC	1	Decal, 10 Speed, 4000-4100-4200, NHNA Only, Start Year: 01/01/1965
	C5NN7B292AY	1	Decal, 10 Speed, 5100, NHNA Only, Start Year: 01/01/1965
	C7NN7B292AA	1	Decal, 10 Speed, 5200, NHNA Only, No Longer Serviced, Start Year: 01/01/1967
	C7NN7B292AY	1	Decal, W/Torque Converter, L/PTO, 3500-4500, NHNA Only, Start Year: 01/01/1965
	C7NN7B292BA	1	Decal, Manual Reversing 6 x 4, Diesel, W/Speedometer, 4500, Start Year: 04/01/1968
	C5NN7B292JT	1	Decal, Manual Reversing, 4 x 4, 4500, NHNA Only, Years: 01/01/1965-03/31/1968

NO ART AVAILABLE

5000-SERIES 4 CYL TRACTOR (1/65-1/75)

16A01[A] TRANSMISSION SHIFT PATTERN DECALS, U.K. (NH-E)

Ref	Part Number	Qty	Description
	C5NN7B292K	1	Decal, 6 Speed, L/Proofmeter, 2000, No Longer Serviced (NHNA), Start Year: 01/01/1965
	C5NN7B292M	1	Decal, 6 Speed, Diesel, 2000, No Longer Serviced (NH-E), Start Year: 01/01/1965
	C5NN7B292BJ	1	Decal, 6 Speed, Petrol, 2000, No Longer Serviced, Start Year: 01/01/1965
	C5NN7B292AB	1	Decal, 8 Speed, Diesel, W/Transmission PTO, Prior to Transmission S/N 5J17B, 2100-3100-3400, No Longer Serviced, Years: 01/01/1965-09/30/1965
	C5NN7B292FU	1	Decal, 8 Speed, Diesel, W/Transmission PTO, Effective W/Transmission S/N 5J17B, 2100-3100-3400, No Longer Serviced, Start Year: 09/01/1965
	C5NN7B292AE	1	Decal, 8 Speed, Diesel, W/Live PTO, Prior to Transmission S/N 5J21B, 2100-3100-3120-3310, No Longer Serviced (NHNA), Years: 01/01/1965-09/30/1965
	C5NN7B292FZ	1	Decal, 8 Speed, Diesel, W/Live PTO, Effective W/Transmission S/N 5J21B, 2100-3100-3120-3310, No Longer Serviced, Start Year: 09/01/1965
	C5NN7B292GJ	1	Decal, 8 Speed, Petrol, W/Transmission PTO, 2100, NH-E Only, No Longer Serviced, Start Year: 01/01/1965
	C5NN7B292BN	1	Decal, 8 Speed, Petrol, W/Live PTO, Prior to Transmission S/N 5J17B, 2100, NH-E Only, No Longer Serviced, Years: 01/01/1965-09/30/1965
	C5NN7B292GK	1	Decal, 8 Speed, Petrol, W/Live PTO, Effective W/Transmission S/N 5J17B, 2100, No Longer Serviced (NHNA), Start Year: 09/01/1965
	C5NN7B292GC	1	Decal, 8 Speed, Petrol, W/Transmission PTO or L/PTO, 3100-3400, No Longer Serviced, Start Year: 09/01/1965
	C5NN7B292BY	1	Decal, 8 Speed, Petrol, W/Live PTO, Prior to Transmission S/N 5J17B, 3100, NH-E Only, No Longer Serviced, Years: 01/01/1965-09/30/1965
	C5NN7B292GF	1	Decal, 8 Speed, Petrol, W/Live PTO, Effective W/Transmission S/N 5J17B, 3100, NH-E Only, No Longer Serviced, Start Year: 09/01/1965
	C5NN7B292GN	1	Decal, 8 Speed, Diesel, W/Transmission PTO or L/PTO, 3500, NH-E Only, No Longer Serviced, Start Year: 01/01/1965
	C5NN7B292AH	1	Decal, 8 Speed, W/Transmission or Independent PTO, Prior to Transmission S/N 5J10B, 4000 Except 4400-4500, No Longer Serviced (NHNA), Years: 01/01/1965-09/30/1965
	C5NN7B292FR	1	Decal, 8 Speed, W/Transmission or Independent PTO, Effective W/Transmission S/N 5J10B, 4000 Except 4400-4500, Start Year: 09/01/1965
	C5NN7B292GY	1	Decal, 8 Speed, W/Transmission & Independent PTO or L/PTO, 4400-4500, NH-E Only, No Longer Serviced, Start Year: 01/01/1965
	C5NN7B292AL	1	Decal, 8 Speed, W/Independent PTO or L/PTO, Prior to Transmission S/N 5J6B, 5000, Years: 01/01/1965-09/30/1965
	C5NN7B292FL	1	Decal, 8 Speed, W/Independent PTO or L/PTO, Effective W/Transmission S/N 5J6B, MPH, 5000-7000 PTO Only, Start Year: 09/01/1965
	C7NN7B292AB	1	Decal, 8 Speed, W/Independent PTO, MPH, 5100-7100 UK Only, No Longer Serviced (NH-E), Start Year: 01/01/1967
	D3NN7B292C	1	Decal, 8 Speed, W/L Dual Power, Single or 2 Speed Independent PTO, KPH, 5100 OTO Only, Start Year: 01/01/1973
	D4NN7B292C	1	Decal, 8 Speed, W/L Dual Power, Single or 2 Speed Independent PTO, Replaces D2NN-7B292-Y, 5100-7100 UK Only, No Longer Serviced (NH-E), Start Year: 01/01/1973

16A01[A] TRANSMISSION SHIFT PATTERN DECALS, U.K. (NH-E)

Ref	Part Number	Qty	Description
	D2NN7B292Z	1	Decal, 8 Speed, W/L Dual Power, Single Speed Independent PTO, 5100 UK Only, No Longer Serviced, Start Year: 01/01/1973
	C5NN7B292AR	1	Decal, 10 Speed, Diesel, 2000-3000, Start Year: 01/01/1965
	C5NN7B292CB	1	Decal, 10 Speed, Petrol, 2000, NH-E Only, Start Year: 01/01/1965
	C5NN7B292CE	1	Decal, 10 Speed, Petrol, 3000, NH-E Only, Start Year: 01/01/1965
	C5NN7B292AU	1	Decal, 10 Speed, MPH, 4000 Except 4400-4500, No Longer Serviced (NHNA), Start Year: 01/01/1965
	C5NN7B292FE	1	Decal, 10 Speed, KPH, 4000 Except 4400-4500, No Longer Serviced (NHNA), Start Year: 01/01/1965
	C5NN7B292CR	1	Decal, 10 Speed, 4400-4500, NH-E Only, No Longer Serviced, Start Year: 01/01/1965
	C5NN7B292AZ	1	Decal, 10 Speed, 5000, NH-E Only, Start Year: 01/01/1965
	C5NN7B292KG	1	Decal, W/Torque Converter, L/PTO, 3550-4500, No Longer Serviced, Start Year: 01/01/1968

NO ART AVAILABLE

5000-SERIES 4 CYL TRACTOR (1/65-1/75)

16A01[B] TRANSMISSION SHIFT PATTERN DECALS (NH-E)

Ref	Part Number	Qty	Description
	C5NN7B292K	1	Decal, 6 Speed, L/Proofmeter, 2000, No Longer Serviced (NHNA), Start Year: 01/01/1965
	C5NN7B292FD	1	Decal, 6 Speed, Diesel, Repl. C5NN7B292N, 2000, NH-E Only, Years: 01/01/1965-12/31/1972
	C5NN7B292BK	1	Decal, 6 Speed, Petrol, 2000, NH-E Only, No Longer Serviced, Start Year: 01/01/1965
	D0NN7B292V	1	Decal, 6 Speed, Diesel, 25 KPH Speed Limit, 2000, No Longer Serviced (NHNA), Start Year: 01/01/1970
	C7NN7B292M	1	Decal, 7 Speed, 2000-3000, No Longer Serviced (NHNA), Years: 01/01/1965-01/31/1973
	C7NN7B292N	1	Decal, 7 Speed, 4000, No Longer Serviced, Start Year: 01/01/1965
	C7NN7B292R	1	Decal, 7 Speed, 5000, NH-E Only, No Longer Serviced, Start Year: 01/01/1965
	C7NN7B292S	1	Decal, 7 Speed, 3500, No Longer Serviced, Start Year: 01/01/1965
	C7NN7B292T	1	Decal, 7 Speed, 4400-4500, No Longer Serviced, Start Year: 01/01/1965
	C7NN7B292R	1	Decal, 7 Speed, 7100, NH-E Only, No Longer Serviced, Years: 01/01/1971-12/31/1972
	D3NN7B292D	1	Decal, 7 Speed, Dual Power, 1 & 2 Speed PTO, 25 KMH, 7100, No Longer Serviced, Start Year: 09/01/1973
	C5NN7B292FV	1	Decal, 8 Speed, Diesel, W/Tranmission PTO or L/PTO 2100-3100-3400, No Longer Serviced (NH-E), Start Year: 01/01/1965
	C5NN7B292FV	1	Decal, 8 Speed, Diesel, W/Transmission PTO, 3150, No Longer Serviced (NH-E), Start Year: 01/01/1971
	C5NN7B292GA	1	Decal, 8 Speed, Diesel, W/Live PTO, 2100-2300-2310-3100-3150-3300-3310, Start Year: 01/01/1965
	C5NN7B292GH	1	Decal, 8 Speed, Petrol, W/Transmission PTO, Repl. C5NN7B292BL, 2000, NH-E Only, No Longer Serviced, Start Year: 01/01/1965
	C5NN7B292GL	1	Decal, 8 speed, Petrol, W/Live PTO, 2000, NH-E Only, No Longer Serviced, Start Year: 01/01/1965
	D2NN7B292G	1	Decal, 8 Speed, 30 KPH, Transmission PTO, 2100-3100, No Longer Serviced (NHNA), Start Year: 01/01/1973
	D2NN7B292H	1	Decal, 8 Speed, 25 KPH, Germany, 2100-3100, No Longer Serviced, Start Year: 01/01/1973
	D2NN7B292E	1	Decal, 8 Speed, 30 KPH, W/Live PTO, 2100-3100, No Longer Serviced (NHNA), Start Year: 01/01/1973
	C7NN7B292AD	1	Decal, 8 Speed, W/Special Ratio, Diesel, Live PTO, 2100-2300-2310-3100-3300-3310, No Longer Serviced, Start Year: 04/01/1968
	C5NN7B292BU	1	Decal, 8 Speed, Petrol, W/Transmission PTO or L/PTO, Prior to Transmission SN 5J21B, 3100-3400, NH-E Only, No Longer Serviced, Years: 01/01/1965-09/30/1965
	C5NN7B292GD	1	Decal, 8 Speed, Petrol, W/Transmission PTO or L/PTO, Effective W/Transmission SN 5J21B, 3100-3400, NH-E Only, No Longer Serviced, Start Year: 09/01/1965
	C5NN7B292GG	1	Decal, 8 Speed, Petrol, W/Live PTO, 3000 Except 3500, NH-E Only, No Longer Serviced, Start Year: 01/01/1965
	C5NN7B292GU	1	Decal, 8 Speed, Petrol, W/Transmission PTO or L/PTO, 3500, NH-E Only, No Longer Serviced, Start Year: 01/01/1965
	D2NN7B292D	1	Decal, 8 Speed, W/Independent PTO, 30 KPH, 3055, No Longer Serviced, Start Year: 01/01/1973
	C7NN7B292AK	1	Decal, 8 Speed, W/Special Ratio, Diesel, W/Transmission or Independent PTO, France, 3055, No Longer Serviced (NHNA), Start Year: 03/01/1970
	D2NN7B292R	1	Decal, 8 Speed, Transmission, Independent or L/PTO, 3550-4550, No Longer Serviced (NH-E), Start Year: 01/01/1973
	D2NN7B292J	1	Decal, 8 Speed, W/Special Ratio, Transmission or Independent PTO, 3550-4550 UK Only, No Longer Serviced, Start Year: 01/01/1973

5000-SERIES 4 CYL TRACTOR (1/65-1/75)

16A01[B] TRANSMISSION SHIFT PATTERN DECALS (NH-E)

Ref	Part Number	Qty	Description
	C5NN7B292AJ	1	Decal, 8 Speed, W/Transmission PTO or Independent PTO, Prior to Transmission SN 5J10B, 4000 Except 4400-4500, No Longer Serviced, Years: 01/01/1965-09/30/1965
	C5NN7B292FS	1	Decal, 8 Speed, W/Transmission PTO or Independent PTO, Effective W/Transmission SN 5J10B, 4000 Except 4400-4500, Start Year: 09/01/1965
	D2NN7B292C	1	Decal, 8 Speed, 30 KPH, W/Independent & Transmission PTO, 4100, No Longer Serviced, Start Year: 01/01/1973
	D0NN7B292R	1	Decal, 8 Speed, W/Special Ratio, Diesel, W/Transmission or Independent PTO, 25 KPH Limit, 4100, Start Year: 04/01/1968
	C5NN7B292GZ	1	Decal, 8 Speed, W/Transmission, Independent or L/PTO, 4400-4500, NH-E Only, No Longer Serviced, Start Year: 01/01/1965
	C7NN7B292AT	1	Decal, 8 Speed, W/Special Ratio, Diesel, W/Transmission or Independent PTO, 4400-4500, No Longer Serviced (NHNA), Start Year: 04/01/1968
	NLS	1	Decal, 8 Speed, W/Independent PTO or L/PTO, Prior to Transmission SN 5J6B, 5000 {C5NN7B292AM}, No Longer Serviced, Years: 01/01/1965-09/30/1965
	D3NN7B292C	1	Decal, 8 Speed, W/Independent PTO or L/PTO, Effective W/Transmission SN 5J6B, KMH, 5000-7100, Start Year: 09/01/1965
	D2NN7B292B	1	Decal, 8 Speed, 30 KPH, W/Independent PTO, 5100-7100, No Longer Serviced (NHNA), Start Year: 01/01/1973
	D3NN7B292AA	1	Decal, 8 Speed, W/650 RPM PTO, For Countries using Metric System, 5100-7100, No Longer Serviced (NHNA), Start Year: 01/01/1973
	D3NN7B292C	1	Decal, 8 Speed, W/or L/Dual Power, Single or 2 Speed, 5000, Start Year: 01/01/1973
	D4NN7B292D	1	Decal, 8 Speed, W/or L/Dual Power, Single or 2 Speed Independent PTO, 25 KMH, 5100-7100, No Longer Serviced, Start Year: 01/01/1973
	D4NN7B292B	1	Decal, 8 Speed, W/or L/Dual Power, Single or 2 Speed Independent PTO, 30 KMH Limit, 5100-7100, No Longer Serviced, Start Year: 01/01/1973
	C7NN7B292AH	1	Decal, 8 Speed, W/Special Ratio, Diesel, W/Transmission or Independent PTO, 5100-7100, No Longer Serviced, Start Year: 04/01/1968
	D2NN7B292A	1	Decal, 8 Speed, Diesel, 25 KPH Speed Limit, 2000-3000, No Longer Serviced, Start Year: 01/01/1970
	D0NN7B292S	1	Decal, 8 Speed, Diesel, 25 KPH Speed Limit, 5000-7100, No Longer Serviced (NHNA), Start Year: 01/01/1970
	C5NN7B292KB	1	Decal, 9 Speed, Diesel, 2000-3000 Germany, NH-E Only, No Longer Serviced, Start Year: 01/01/1965
	D0NN7B292N	1	Decal, 9 Speed Diesel, 4000 Germany, No Longer Serviced, Start Year: 01/01/1965
	C5NN7B292KA	1	Decal, 9 Speed, Diesel, 5000 Germany, NH-E Only, No Longer Serviced, Start Year: 01/01/1965
	D0NN7B292Y	1	Decal, 9 Speed, Diesel, 25 KPH Speed Limit, 2000-3000, No Longer Serviced, Start Year: 01/01/1970
	D0NN7B292T	1	Decal, 9 Speed, Diesel, 25 KPH Speed Limit, 5000, No Longer Serviced, Start Year: 01/01/1970
	C5NN7B292AS	1	Decal, 10 Speed, Diesel, 2000-3000 Except 3500, No Longer Serviced, Start Year: 01/01/1965
	C5NN7B292CC	1	Decal, 10 Speed, Petrol, 2000, NH-E Only, No Longer Serviced, Start Year: 01/01/1965
	C5NN7B292CF	1	Decal, 10 Speed, Petrol, 3000 Except 3500, NH-E Only, No Longer Serviced, Start Year: 01/01/1965
	D2NN7B292S	1	Decal, 10 Speed, Single & 2 Speed PTO, 3550-4550, No Longer Serviced, Start Year: 01/01/1973
	C5NN7B292FE	1	Decal, 10 Speed, KPH, 4000 Except 4400-4500, No Longer Serviced, Start Year: 01/01/1965
	C5NN7B292BA	1	Decal, 10 Speed, 5000, No Longer Serviced (NHNA), Start Year: 01/01/1965

16A01[B] TRANSMISSION SHIFT PATTERN DECALS (NH-E)

Ref	Part Number	Qty	Description
	NLS	1	Decal, 10 Speed, Petrol, 3500 {C5NN7B292EE}, Start Year: 01/01/1965
	NLS	1	Decal, 10 Speed, Diesel, 3500 {C5NN7B292EH}, Start Year: 01/01/1965
	C5NN7B292CN	1	Decal, 10 Speed, 4400-4500, NH-E Only, No Longer Serviced, Start Year: 01/01/1965
	C5NN7B292KG	1	Decal, Torque Converter, L/PTO, 3550-4500, No Longer Serviced, Years: 01/01/1968-12/31/1972
	D2NN7B292T	1	Decal, Torque Converter, L/PTO, 3550-4550, No Longer Serviced (NH-E), Start Year: 01/01/1973

16A01[C] TRANSMISSION SHIFT PATTERN DECALS, MANUAL REVERSING

NO ART AVAILABLE

16A01[C] TRANSMISSION SHIFT PATTERN DECALS, MANUAL REVERSING

Ref	Part Number	Qty	Description
	C5NN7B292JT	1	Decal, Transmission Shift Pattern, Manual Reversing, Gasoline & Diesel, MPH, U.S., 3400-4000-4500-5000, NHNA Only, Years: 01/01/1965-03/31/1968
	C7NN7B292J	1	Decal, Transmission Shift Pattern, Manual Reversing, Gasoline/Petrol & Diesel, MPH, U.S., Transmission or IPTO, 3400-4000-4500-5000, NHNA Only, Start Year: 04/01/1968
	D5NN7B292B	1	Decal, Transmission Shift Pattern, Manual Reversing, Gasoline/Petrol & Diesel, Kilos, Europe, 4400-4500, NH-E Only, No Longer Serviced, Years: 01/01/1965-12/31/1972
	C7NN7B292H	1	Decal, Transmission Shift Pattern, Manual Reversing, Transmission or IPTO, MPH, U.S., 4400-4500, No Longer Serviced, Start Year: 01/01/1965
	NLS	1	Decal, Transmission Shift Pattern, Manual Reversing, Diesel, MPH, U.K., 3400 {C7NN7B292K}, No Longer Serviced, Start Year: 01/01/1965
	C7NN7B292L	1	Decal, Transmission Shift Pattern, Manual Reversing, Gasoline/Petrol, MPH, U.K., 3400, No Longer Serviced (NHNA), Start Year: 01/01/1965
	C7NN7B292E	1	Decal, Transmission Shift Pattern, Manual Reversing, Diesel, Kilos, Europe, 3400, No Longer Serviced, Years: 01/01/1965-03/31/1976
	C7NN7B292D	1	Decal, Transmission Shift Pattern, Manual Reversing, Gasoline/Petrol, Kilos, Europe, 3400, No Longer Serviced, Start Year: 01/01/1965
	C7NN7B292F	1	Decal, Transmission Shift Pattern, Manual Reversing, Diesel, MPH, U.K., 3500, No Longer Serviced, Years: 01/01/1965-12/31/1972
	C7NN7B292G	1	Decal, Transmission Shift Pattern, Manual Reversing, Gasoline/Petrol, MPH, U.K., 3500, No Longer Serviced, Years: 01/01/1965-12/31/1972
	C7NN7B292C	1	Decal, Transmission Shift Pattern, Manual Reversing, Diesel, Kilos, Europe, 3500, No Longer Serviced, Years: 01/01/1965-12/31/1972
	C7NN7B292B	1	Decal, Transmission Shift Pattern, Manual Reversing, Gasoline/Petrol, Kilos, Europe, 3500, No Longer Serviced (NHNA), Years: 01/01/1965-12/31/1972
	C7NN7B292BA	1	Decal, Transmission Shift Pattern, Manual Reversing, Diesel, W/Proofmeter, 4500, Start Year: 04/01/1968
	C7NN7B292J	1	Decal, Transmission Shift Pattern, Manual Reversing, Gas & Diesel, Transmission or IPTO or L/PTO, 3550-4400-4500, NHNA Only, Start Year: 01/01/1973

NO ART AVAILABLE

5000-SERIES 4 CYL TRACTOR (1/65-1/75)

16A01[D] INSTRUCTION DECALS

Ref	Part Number	Qty	Description
	7502573	1	Decal, PTO Shield Warning, U.S., NHNA Only, Start Year: 01/01/1965
	E148GE9	1	Decal, PTO Guard Removal, Water, U.S., No Longer Serviced (NHNA), Start Year: 01/01/1965
	C7NNB419A	1	Decal, Warning, Reversible Seat, 3400-3500-4400-4500, No Longer Serviced, Start Year: 01/01/1965
	C5NNA729A	1	Decal, PTO Speed, 2 Speed, Attach to Transmission, No Longer Serviced (NHNA), Start Year: 01/01/1965
	C5NNN515B	1	Decal, HPL Quadrant, Raise-Lower, U.K., NH-E Only, Start Year: 01/01/1965
	C5NNN517B	1	Decal, HPL Control, Position-Draft, U.K., 2000-3000-4000, NH-E Only, Start Year: 01/01/1965
	C7NNN517A	1	Decal, HPL Control, Position-Draft, 5100, No Longer Serviced (NH-E), Start Year: 01/01/1965
	E1NNN519AA	1	Decal, External Service Control, "Pull to Select External Service", W/8 Speed Independent PTO, U.K., NH-E Only, Start Year: 01/01/1965
	C5NND958A	1	Decal, Selector Valve Control, U.K., 2100-3100-4100, No Longer Serviced (NHNA), Start Year: 01/01/1965
	C9NN6813B	1	Decal, Tractor Maintenance Instruction, U.S., 2100-2110-3100-4100-4110-4200-5100, NHNA Only, Start Year: 05/01/1970
	D8NN6813MA	1	Decal, Tractor Maintenance Instruction, U.S., 3400-3500-3550-4400-4500, NHNA Only, Start Year: 01/01/1965
	D1NN6813A	1	Decal, Tractor Maintenance Instruction, U.S., 7100-7200, NHNA Only, Start Year: 01/01/1971
	EBPN16A901A	1	Decal, Operating Instruction, "Be Careful", Repl. C9NN-16A901-J, Start Year: 01/01/1965
	D1NN2K106B	1	Decal, EMERGENCY STOP BRAKE, U.S., 3400-3500-3550-4400-4500, NHNA Only, Start Year: 01/01/1965
	C5NND957B	1	Decal, Remote Control Valve "Push-Pull", Repl. C5NN-D957-A, U.K., NH-E Only, No Longer Serviced, Start Year: 01/01/1965
	D0NND948A	1	Decal, Remote Hydraulics "Lower-Raise", L/10 Speed, 4200-5200 Accessory U.S., NHNA Only, No Longer Serviced, Start Year: 01/01/1966
	310021	1	Decal, "Be Careful", Single Front Wheel Warning, W/Single Front Wheel, 4200, No Longer Serviced (NH-E), Start Year: 01/01/1966
	310021	4	Decal, "Be Careful", Single Front Wheel Warning, W/2 Piece Rim, 4110, No Longer Serviced (NH-E), Start Year: 01/01/1965
	D2NN9N637A	1	Decal, Engine Air Cleaner Restricter Indicator, 7000, No Longer Serviced, Start Year: 01/01/1971
	C5NNB710A	1	Decal, PTO Control, 4200-5200-7200, NHNA Only, No Longer Serviced, Start Year: 01/01/1967
	C5NND949A	1	Decal, Tractor Hydraulics, "Lower-Raise", W/10 Speed, 4200, NHNA Only, No Longer Serviced, Start Year: 01/01/1966
	C5NND949A	1	Decal, Tractor Hydraulics, "Lower-Raise", W/Load Monitor, 5200-7200, NHNA Only, No Longer Serviced, Start Year: 10/01/1971
	C7NNG946A	1	Decal, Hydraulic Lift "Position Control", 5200, NHNA Only, No Longer Serviced, Start Year: 01/01/1967
	C5NND950A	1	Decal, Hydraulic Lift Flow Control, "Increase", 4200, NHNA Only, No Longer Serviced, Start Year: 01/01/1966
	D2NND950A	1	Decal, Hydraulic Lift Flow Control, 5200-7200, NHNA Only, No Longer Serviced, Start Year: 01/01/1972
	C7NNG945A	1	Decal, Hydraulic Lift "Draft Control", 5200, NHNA Only, No Longer Serviced, Start Year: 01/01/1967
	D1NNJ879A	1	Decal, Hydraulic Lift System Selector, W/Load Monitor, 5100-7100, No Longer Serviced (NH-E), Start Year: 01/01/1971
	D1NNJ879B	1	Decal, Hydraulic Lift System Selector, W/Load Monitor, 5200-7200, NHNA Only, No Longer Serviced, Start Year: 01/01/1971

5000-SERIES 4 CYL TRACTOR (1/65-1/75)

16A01[D] INSTRUCTION DECALS

Ref	Part Number	Qty	Description
	D2NNJ919A	1	Decal, Auxiliary Service Control Valve, W/Load Monitor, 5200-7200, NHNA Only, Start Year: 01/01/1971
	D3NN16A901AS	1	Decal, Operating Instructions, Load Monitor Phasing, 5000-7000, NHNA Only, No Longer Serviced, Start Year: 01/01/1973
	C5NN1N007A	1	Decal, Power Adjustable Wheel, France, 2300-3300, NH-E Only, Start Year: 01/01/1965
	C5NN1N007B	1	Decal, Power Adjustable Wheel, France, 2310-3310, NH-E Only, No Longer Serviced, Start Year: 01/01/1965
	C5NN1N007C	1	Decal, Power Adjustable Wheel, English, 2310-3310, No Longer Serviced, Start Year: 01/01/1965
	D5NN9N822A	1	Decal, Injection Pump, 7000, Start Year: 01/01/1971
	C7NN7B168A	1	Decal, Label, Control Selector Indicator, 5200, NHNA Only, No Longer Serviced, Start Year: 01/01/1967
	C5NN9N453A	1	Decal, Intake Manifold Vent Warning "Important", Gasoline, 5200, NHNA Only, Start Year: 01/01/1966
	D2NN3R605A	1	Decal, Steering Gear Tilt Control, 5200-7200, Years: 01/01/1967-12/31/1972
	D2NN3R605A	1	Decal, Steering Gear Tilt Control, 5200-7200, Start Year: 01/01/1973
	D2NN16A901B	1	Decal, Select-O-Speed Transmission, Instructions, 3100-4100-4500-5100, U.K. Only, NH-E Only, No Longer Serviced, Start Year: 01/01/1965
	D2NN16A901S	1	Decal, "IMPORTANT" Valve Knob W/Load Monitor at LH Fender, 5100-5200-7000-7200, No Longer Serviced (NH-E), Start Year: 01/01/1971
	D5NNJ896A	1	Decal, "CAUTION" Hydraulic Load Monitor Control Cylinder, 5100-5200-7100-7200, No Longer Serviced (NH-E), Start Year: 01/01/1971
	82004320	1	Decal, Battery, Safety, FTO-E, Start Year: 01/01/1965
	D5NN16A901G	1	Decal, Operating Instructions, WARNING, English, Start Year: 01/01/1965
	C9NN16A901D	1	Decal, Operating Instructions, Spanish, PTO WARNING, Spain, Start Year: 01/01/1970
	C9NN16A901E	1	Decal, Operating Instructions, Thailand, PTO WARNING, Thailand, No Longer Serviced, Start Year: 01/01/1970
	C9NN16A901C	1	Decal, Operating Instructions, Turkish, PTO WARNING, Turkey, No Longer Serviced, Start Year: 01/01/1970
	C9NN16A901K	1	Decal, Operating Instructions, Japanese, PTO WARNING, Japan, NH-E Only, No Longer Serviced, Start Year: 01/01/1970
	C9NN16A901F	1	Decal, Operating Instructions, Portuguese, PTO WARNING, Portugal, NH-E Only, No Longer Serviced, Start Year: 01/01/1970
	C9NN16A901G	1	Decal, Operating Instructions, Greek, PTO WARNING, Greece, NH-E Only, No Longer Serviced, Start Year: 01/01/1970
	D2NN16A901T	1	Decal, WARNING, Ether, English, 7000, Start Year: 01/01/1971
	D2NN16A901U	1	Decal, WARNING, Ether, Denmark, 7100, No Longer Serviced, Start Year: 01/01/1971
	D2NN16A901V	1	Decal, WARNING, Ether, Norway, 7100, No Longer Serviced, Start Year: 01/01/1971
	D2NN16A901Y	1	Decal, WARNING, Ether, Portugal, 7100, No Longer Serviced, Start Year: 01/01/1971
	D2NN16A901Z	1	Decal, WARNING, Ether, Italy, 7100, No Longer Serviced, Start Year: 01/01/1971
	D2NN16A901AA	1	Decal, WARNING, Ether, Sweden, 7100, No Longer Serviced, Start Year: 01/01/1971
	D2NN16A901AB	1	Decal, WARNING, Ether, France, Switzerland & Belgium, 7100, No Longer Serviced (NH-E), Start Year: 01/01/1971
	D2NN16A901AC	1	Decal, WARNING, Ether, Germany, Switzerland & Austria, 7100, No Longer Serviced (NH-E), Start Year: 01/01/1971

5000-SERIES 4 CYL TRACTOR (1/65-1/75)

16A01[D] INSTRUCTION DECALS

Ref	Part Number	Qty	Description
	D2NN16A901AD	1	Decal, WARNING, Ether, Belgium, Netherlands, 7100, No Longer Serviced, Start Year: 01/01/1971
	D2NN16A901AE	1	Decal, WARNING, Ether, Finland, 7100, No Longer Serviced, Start Year: 01/01/1971
	D2NN16A901D	1	Decal, WARNING, Dual Power & Cold Start, English 5100-5200-7100-7200, Start Year: 06/01/1973
	D2NN16A901E	1	Decal, WARNING, Dual Power & Cold Start, Denmark, 5200-7100, No Longer Serviced, Start Year: 06/01/1973
	D2NN16A901F	1	Decal, WARNING, Dual Power & Cold Start, Austria, Germany, Switzerland, 5100-7100, Start Year: 06/01/1973
	D2NN16A901G	1	Decal, WARNING, Dual Power & Cold Start, Italy, 5100-7100, No Longer Serviced (NH-E), Start Year: 06/01/1973
	D2NN16A901H	1	Decal, WARNING, Dual Power & Cold Start, Finland, 5100-7100, No Longer Serviced, Start Year: 06/01/1973
	D2NN16A901J	1	Decal, WARNING, Dual Power & Cold Start, Norway, 5100-7100, No Longer Serviced, Start Year: 06/01/1973
	D2NN16A901K	1	Decal, WARNING, Dual Power & Cold Start, Belgium, Netherlands 5100-7100, No Longer Serviced (NH-E) Start Year: 06/01/1973
	D2NN16A901L	1	Decal, WARNING, Dual Power & Cold Start, Sweden, 5100-7100, No Longer Serviced (NHNA), Start Year: 06/01/1973
	D2NN16A901M	1	Decal, WARNING, Dual Power & Cold Start, Portugal, 5100, No Longer Serviced, Start Year: 06/01/1973
	D2NN16A901N	1	Decal, WARNING, Dual Power & Cold Start, France, 5100-7100, No Longer Serviced, Start Year: 06/01/1973
	D2NN16A901R	1	Decal, WARNING, Parking & Starting, English, 7100, No Longer Serviced (NH-E), Start Year: 06/01/1973
	NLS	1	Decal, Drawbar Safety Chain, Major Mexico, 5000 {72NYE802A}, Mexico Only, Start Year: 03/01/1973
	D4NN16A901B	1	Decal, WARNING, Engine Operation, English, 3500-3550-3400-4400-4500, Start Year: 01/01/1965
	D4NN16A901C	1	Decal, WARNING, Engine Operation, French, 3550-4400-4500, No Longer Serviced (NH-E), Start Year: 01/01/1965
	D4NN16A901D	1	Decal, WARNING, Engine Operation, Danish, 3550-4400-4500, NH-E Only, No Longer Serviced, Start Year: 01/01/1965
	D4NN16A901E	1	Decal, WARNING, Engine Operation, Italian, 3550-4400-4500, NH-E Only, No Longer Serviced, Start Year: 01/01/1965
	D4NN16A901F	1	Decal, WARNING, Engine Operation, German, 3550-4400-4500, NH-E Only, No Longer Serviced, Start Year: 01/01/1965
	D4NN16A901G	1	Decal, WARNING, Engine Operation, Spanish, 3550-4400-4500, NH-E Only, No Longer Serviced, Start Year: 01/01/1965
	EBPN16A901A	AR	Decal, Kit, Instruction & Safety, Includes: Decals Listed Below, Start Year: 01/01/1965
	EBPN16A901A	1	Decal, WARNING, , RH Fender
	85700098	1	Decal, WARNING, , Rear of Tractor on Center Housing or RH Trumpet Housing
	159507013	1	Decal, WARNING, , On or near Starting Motor
	81871830	2	Decal, WARNING, Fan, On each side of Fan Shroud or Sheet Metal Near Fan
	E0NNB710AA	1	Decal, Independent PTO Control, On LH Fender
	E1NNB710AA	1	Decal, Transmission PTO Control, On, LH Fender, NHNA Only
	E1NN9A095AA	1	Decal, Fuel Tank Cap, All Gasoline Models, Start Year: 01/01/1965

NO ART AVAILABLE

16A01[E] IDENTIFICATION DECALS

Ref	Part Number	Qty	Description
	C7NN3R647A	1	Decal, "England" Country of Origin, NH-E Only, Start Year: 01/01/1965
	C7NN8N000A	2	Decal, Identification "FORD", Engine Hoods, 2120, 3120, 3400, 3500, 4400, 4500, Start Year: 01/01/1965
	C7NN8N000C	2	Decal, Identification "FORD", Safety Frame, 4100, 5100, U.K. Only, Start Year: 08/01/1970
	C7NN16N650C	2	Decal, Identification, "3400", Radiator Shell Sides, 3400, NHNA Only, Start Year: 01/01/1965
	C7NN16N650D	1	Decal, Identification, "3500", Radiator Shell Front, Replaces C5NN16N650S, 3500, NHNA Only, Start Year: 01/01/1965
	C7NN16N650E	2	Decal, Identification, "4400", Radiator Shell Sides, Replaces C5NN16N650T, 4400, No Longer Serviced (NH-E), Start Year: 01/01/1965
	C7NN16N650F	1	Decal, Identification, "4500", Radiator Front & Shell Side, U.S. & Spain, 4500, Start Year: 01/01/1965
	C7NN16N650A	2	Decal, Identification, "2110", Radiator Shell Sides, 2110, NHNA Only, No Longer Serviced, Start Year: 01/01/1965
	D1NN16N650B	2	Decal, Identification, "3550", Radiator Shell Sides, 3550, No Longer Serviced (NH-E), Start Year: 01/01/1972
	C7NN16N650B	2	Decal, Identification, "4110", Radiator Shell Sides, 4110, NHNA Only, Start Year: 01/01/1965
	C7NN16N650H	2	Decal, Identification, "4410", LH & RH Radiator Shell, 4410, NHNA Only, Start Year: 09/01/1968
	D2NN16N650C	1	Decal, Identification, "4550", Radiator Grille, W/Cab, Antwerp, 4550, NH-E Only, Start Year: 01/01/1973
	C5NN16605Y	2	Decal, Identification, FORD 2000, LH & RH Rear Hood, 2000, Years: 01/01/1965-03/31/1968
	C5NN16605Z	1	Decal, Identification, FORD 3000, RH, Rear Hood, 3000, Years: 01/01/1965-03/31/1968
	C5NN16N607K	1	Decal, Identification, FORD 3000, LH, Rear Hood, 3000, Years: 01/01/1965-03/31/1968
	C5NN16605AA	1	Decal, Identification, FORD 4000, RH, Rear Hood, 4000, No Longer Serviced (NH-E), Years: 01/01/1965-03/31/1968
	C5NN16N607L	1	Decal, Identification, FORD 4000, LH Rear Hood, 4000, Years: 01/01/1965-03/31/1968
	C5NN16605AB	1	Decal, Identification, FORD 5000, RH, Rear Hood, 5000, No Longer Serviced (NH-E), Years: 01/01/1965-03/31/1968
	C5NN16N607M	1	Decal, Identification, FORD 5000, LH, Rear Hood, 5000, Years: 01/01/1965-03/31/1968
	C7NN16N686A	1	Decal, Plain, Blue & White, RH Front (US), NHNA Only, Start Year: 04/01/1968
	C9NN16N686A	1	Decal, Plain, Blue & White, RH, Front, 3.90" (UK-Antwerp), NH-E Only, Start Year: 06/01/1968
	C7NN16N687A	1	Decal, Plain, Blue & White, LH, Front (US), NHNA Only, Start Year: 04/01/1968
	C9NN16N687A	1	Decal, Plain, Blue & White, LH, Front (UK-Antwerp), NH-E Only, Start Year: 06/01/1968
	C7NN16N688A	1	Decal, Plain, Blue & White, RH, Rear (US), NHNA Only, Start Year: 04/01/1968
	C9NN16N688A	1	Decal, Plain, Blue & White, RH, Rear (UK-Antwerp), NH-E Only, Start Year: 06/01/1968
	C7NN16N689A	1	Decal, Plain, Blue & White, LH, Rear (US), NHNA Only, Start Year: 04/01/1968
	C9NN16N689A	1	Decal, Plain, Blue & White, LH, Rear (UK-Antwerp), NH-E Only, Start Year: 06/01/1968
	C7NN16N691A	1	Decal, Plain, Blue & White, LH., Center Rear, Gasoline, Around Air Cleaner, 2000, 3000, 4000 (US), NHNA Only, Start Year: 06/01/1968
	C9NN16N691A	1	Decal, Plain, Blue & White, LH, Center Rear, Gasoline, Around Air Cleaner, 2000, 3000, 4000 (UK-Antwerp), NH-E Only, No Longer Serviced, Start Year: 06/01/1968
	C7NN16N682F	1	Decal, "FORD 2000", RH, Center, 29.23", U.S., NHNA Only, Start Year: 04/01/1968
	C9NN16N682G	1	Decal, "FORD 2000", RH, Center, UK-Antwerp, NH-E Only, Start Year: 06/01/1968
	C7NN16N683H	1	Decal, "FORD 2000", LH, Center, 29.23", Diesel, U.S., Start Year: 04/01/1968

5000-SERIES 4 CYL TRACTOR (1/65-1/75)

16A01[E] IDENTIFICATION DECALS

Ref	Part Number	Qty	Description
	C9NN16N683G	1	Decal, "FORD 2000", LH, Center, Diesel, UK-Antwerp, NH-E Only, No Longer Serviced, Start Year: 06/01/1968
	C5NN16605AC	2	Decal, Identification, FORD 2000 SUPER, France, 2100, 2300, 2310, No Longer Serviced (NHNA), Years: 01/01/1965-03/31/1968
	C9NN16N682D	1	Decal, "FORD 2000 SUPER", RH, Center, 29.23" (742.44mm) Lg., France, No Longer Serviced, Start Year: 04/01/1968
	C9NN16N683D	1	Decal, "FORD 2000 SUPER", LH Center 29.23" (742.44mm) Lg., France, No Longer Serviced (NHNA), Start Year: 04/01/1968
	C7NN16N682A	1	Decal, "FORD 3000", RH, Center, U.S., NHNA Only, Start Year: 04/01/1968
	D2NN8N000B	2	Decal, "FORD 3550", Engine Hood Side, 3550, UK-Antwerp, NH-E Only, No Longer Serviced, Start Year: 01/01/1973
	D2NN8N000A	2	Decal, "FORD 4550", Engine Hood, Side, 4550, UK-Antwerp, NH-E Only, Start Year: 01/01/1973
	C9NN16N682F	1	Decal, "FORD 3000", RH, Center, UK-Antwerp, NH-E Only, Start Year: 06/01/1968
	C7NN16N683A	1	Decal, "FORD 3000", LH, Center, Diesel, U.S., NHNA Only, Start Year: 04/01/1968
	C9NN16N683F	1	Decal, "FORD 3000", LH, Center, UK-Antwerp, NH-E Only, Start Year: 06/01/1968
	C7NN16N682C	1	Decal, "FORD 4000", RH, Center 29.23 Lg., 4100, U.S, NHNA Only, Start Year: 04/01/1968
	C9NN16N682E	1	Decal, "FORD 4000", RH, Center, Diesel, 4100, UK-Antwerp, NH-E Only, Start Year: 04/01/1968
	C7NN16N683C	1	Decal, "FORD 4000", LH, Center, 29.23", 4100, 4140, U.S., NHNA Only, Start Year: 04/01/1968
	C9NN16N683E	1	Decal, "FORD 4000", LH, Center, Diesel, 4100, UK-Antwerp, NH-E Only, Start Year: 06/01/1968
	C7NN16N682G	1	Decal, "FORD 4000", RH, Center, 35.17", 4200, NHNA Only, No Longer Serviced, Start Year: 06/01/1968
	C7NN16N683J	1	Decal, "FORD 4000", LH, Center, 35.17", Diesel, 4200, U.S., NHNA Only, No Longer Serviced, Start Year: 06/01/1968
	C7NN16N682E	1	Decal, "FORD 5000", RH, Center, 40.02", 5100, U.S., NHNA Only, Start Year: 04/01/1968
	C9NN16N682C	1	Decal, "FORD 5000", RH, Center, 5100, UK-Antwerp, No Longer Serviced, Start Year: 06/01/1968
	C7NN16N683F	1	Decal, "FORD 5000", LH Center, 40.02", 5100, U.S., Start Year: 04/01/1968
	C9NN16N683H	1	Decal, "FORD 5000", LH, Center, 5100, UK-Antwerp, Start Year: 06/01/1968
	C7NN16N682D	1	Decal, "FORD 5000", RH, Center, 44.21", 5200, U.S., NHNA Only, Start Year: 06/01/1968
	C7NN16N683G	1	Decal, "FORD 5000", LH, Center, 44.21", 5200, U.S., NHNA Only, Start Year: 06/01/1968
	C7NN16N683D	1	Decal, "FORD", LH, Center, 22.94" (U.S.), 2100, 3100, 4100, 4140, NHNA Only, Start Year: 04/01/1968
	C9NN16N683C	1	Decal, "FORD", LH, Center (UK-Antwerp), 2100, 3100, 4100, NH-E Only, No Longer Serviced, Start Year: 06/01/1968
	C7NN16N683E	1	Decal, "FORD", LH, Center, 28.88", Gasoline, 4200, U.S., NHNA Only, No Longer Serviced, Start Year: 06/01/1968
	D0NN16N687A	1	Decal, Model Identification, Front LH, 7100, 7200, No Longer Serviced, Start Year: 01/01/1971
	D1NN16N683B	1	Decal, Model Identification, Center LH, "FORD 7000", 7100, No Longer Serviced (NH-E), Start Year: 01/01/1971
	D1NN16N689B	1	Decal, Model Identification, Rear LH, 7100, No Longer Serviced (NH-E), Start Year: 01/01/1971
	C7NN16N691A	1	Decal, Plain, Blue & White, LH Center Rear, U.S., Around Air Cleaner, 4.33", Gas, 2000, 3000, 4000, NHNA Only, Start Year: 04/01/1968
	C9NN16N691A	1	Decal, Plain, Blue & White, LH Center Rear, UK-Antwerp, Around Air Cleaner, Gasoline/Petrol, 2000, 3000, 4000, NH-E Only, No Longer Serviced, Start Year: 04/01/1968

5000-SERIES 4 CYL TRACTOR (1/65-1/75)

16A01[E] IDENTIFICATION DECALS

Ref	Part Number	Qty	Description
	D0NN16N682A	1	Decal, "FORD 3055", RH Center, Diesel, France Only, 3055, NH-E Only, Start Year: 01/01/1970
	D0NN16N683A	1	Decal, "FORD 3055", LH Center, Diesel, France Only, 3055, NH-E Only, No Longer Serviced, Start Year: 01/01/1970
	D0NN16605A	2	Decal, "SU", Located on Radiator Shell, 4140, NHNA Only, Start Year: 01/01/1970
	D0NN16605B	2	Decal, "P.S.", Located on Radiator Shell, 2150, 3150, NH-E Only, Start Year: 01/01/1970
	D0NN16N687A	1	Decal, Model Identification, Front LH, 7100, 7200, No Longer Serviced, Start Year: 01/01/1971
	D1NN16N683B	1	Decal, Model Identification, Center LH, 7100, No Longer Serviced (NH-E), Start Year: 01/01/1971
	D1NN16N689B	1	Decal, Model Identification, Rear LH, 7100, No Longer Serviced (NH-E), Start Year: 01/01/1971
	D0NN16N686A	1	Decal, Model Identification, Front RH, 7100-7200, No Longer Serviced (NHNA), Start Year: 01/01/1971
	DGPN16605G	1	Decal, Model Identification, Center RH, 7100, NHNA Only, No Longer Serviced, Start Year: 01/01/1971
	D0NN16N688A	1	Decal, Model Identification, Rear RH, 7100, No Longer Serviced (NH-E), Start Year: 01/01/1971
	D0NN16N683C	1	Decal, Model Identification, Center LH, U.S., 7200, NHNA Only, Start Year: 01/01/1971
	D0NN16N689B	1	Decal, Model Identification, Rear LH, U.S., 7200, NHNA Only, Start Year: 01/01/1971
	D0NN16N682C	1	Decal, Model Identification, Center RH, U.S., 7200, NHNA Only, Start Year: 01/01/1971
	D0NN16N688B	1	Decal, Model Identification, Rear RH, U.S., 7200, NHNA Only, No Longer Serviced, Start Year: 01/01/1971
	D1NNA686A	1	Decal, "LOAD MONITOR", 7.38" (187.45mm) Wide, 5000, 7000, No Longer Serviced (NH-E), Start Year: 01/01/1971
	D1NNA686B	1	Decal, "LOAD MONITOR", 4.40" (111.76mm) Wide, 5000, 7000, No Longer Serviced (NH-E), Start Year: 01/01/1971
	D2NNA688A	1	Decal, "LOAD MONITOR - DUAL POWER", RH, 5100, 5200, 7100, 7200, No Longer Serviced (NH-E), Start Year: 06/01/1973
	D2NNA689A	1	Decal, "LOAD MONITOR - DUAL POWER", LH, 5100, 5200, 7100, 7200, No Longer Serviced (NH-E), Start Year: 06/01/1973
	NLS	1	Decal, Model Identification, Front LH, Major Mexico, 5000 {71NY16N687B}, Mexico Only, Start Year: 03/01/1973
	NLS	1	Decal, Model Identification, Center LH, Major Mexico, 5000 {71NY16N683B}, Mexico Only, Start Year: 03/01/1973
	NLS	1	Decal, Model Identification, Rear LH, Major Mexico, 5000 {71NY16N689B}, Mexico Only, Start Year: 03/01/1973
	NLS	1	Decal, Model Identification, Front RH, Major Mexico, 5000 {71NY16N686B}, Mexico Only, Start Year: 03/01/1973
	NLS	1	Decal, Model Identification, Center RH, Major Mexico, 5000 {71NY16N682B}, Mexico Only, Start Year: 03/01/1973
	NLS	1	Decal, Model Identification, Rear RH, Major Mexico, 5000 {71NY16N688B}, Mexico Only, Start Year: 03/01/1973
	D2NN7N652A	1	Decal, 10 Speed Transmission, 2 Speed PTO, 5100, 5200, Start Year: 06/01/1973
	D2NN7N843A	1	Decal, Dual Power, Control Lower, 5100, 5200, 7100, 7200, No Longer Serviced (NH-E), Start Year: 06/01/1973
	DGPN16605A	1	Kit, Model Identification & Safety Decal, 2100, NHNA Only, Years: 04/01/1968-09/30/1975
	DGPN16605B	1	Kit, Model Identification & Safety Decal, 3100, NHNA Only, Years: 04/01/1968-09/30/1975
	DGPN16605C	1	Kit, Model Identification & Safety Decal, 4100, NHNA Only, Years: 04/01/1968-09/30/1975

16A01[E] IDENTIFICATION DECALS

Ref	Part Number	Qty	Description
	DGPN16605D	1	Kit, Model Identification & Safety Decal, 4140, NHNA Only, Years: 01/01/1970-09/30/1975
	DGPN16605E	1	Kit, Model Identification & Safety Decal, 5100, NHNA Only, Years: 04/01/1968-09/30/1975
	DGPN16605F	1	Kit, Model Identification & Safety Decal, 5200, NHNA Only, Years: 04/01/1968-09/30/1975
	DGPN16605G	1	Kit, Model Identification & Safety Decal, FORD, 7000, 7100, NHNA Only, Years: 01/01/1971-09/30/1975
	DGPN16605H	1	Kit, Model Identification & Safety Decal, 7200, NHNA Only, Years: 01/01/1971-09/30/1975
	DGPN16605J	1	Kit, Model Identification & Safety Decal, 2110, NHNA Only, Years: 01/01/1965-09/30/1975
	DGPN16605K	1	Kit, Model Identification & Safety Decal, 3400, NHNA Only, Years: 01/01/1965-09/30/1975
	DGPN16605L	1	Kit, Model Identification & Safety Decal, 3500, NHNA Only, Years: 01/01/1965-12/31/1971
	DGPN16605M	1	Kit, Model Identification & Safety Decal, 3550, NHNA Only, Years: 01/01/1972-09/30/1975
	DGPN16605N	1	Kit, Model Identification & Safety Decal, 4110, NHNA Only, Years: 01/01/1965-09/30/1975
	DGPN16605P	1	Kit, Model Identification & Safety Decal, 4400, NHNA Only, Years: 01/01/1965-09/30/1975
	DGPN16605Q	1	Kit, Model Identification & Safety Decal, 4500, NHNA Only, Years: 01/01/1965-09/30/1975


Factory Match Finish
Gray Gloss
• Matches original factory OEM finish
• Extra durable – Ford New Holland quality
• Economical to use
128 FL. OZ. (1 GALLON) 3.784 LITERS
Quality Products from Ford New Holland
WARNING! FLAMMABLE. VAPOR HARMFUL. HARMFUL OR FATAL IF SWALLOWED.
SEE OTHER CAUTIONS ON BACK PANEL.
Factory Match Finish
Gray Gloss
• Matches original factory OEM finish
• Extra durable – Ford New Holland quality
• Economical to use
32 FL. OZ. (1 QUART) .946 LITERS
Quality Products from Ford New Holland
WARNING! FLAMMABLE. VAPOR HARMFUL. HARMFUL
Factory Match Finish
Blue Acrylic
NET WT. 12.75 OZ. AVP (361 g)
Quality Products from Ford New Holland

5000-SERIES 4 CYL TRACTOR (1/65-1/75)

17A01 PAINTS (NHNA)

Ref	Part Number	Qty	Description
	M20J1750SE2DS	AR	Paint, Gray, Quart, Start Year: 01/01/1965
	M20J1750SE3DS	AR	Paint, Gray, Gallon, Start Year: 01/01/1965
	M1J1639SE2DS	AR	Paint, Blue, (1) Quart Can, Start Year: 01/01/1965
	M1J1639SE3DS	AR	Paint, Blue, Gallon, Start Year: 01/01/1965
	70106DSLF	AR	Paint, Industrial Yellow, Quart, Years: 01/01/1967-12/31/1974
	70107DSLF	AR	Paint, Industrial Yellow, Gallon, Years: 01/01/1967-12/31/1974
	M5394ASE2DSLF	AR	Paint, Industrial Yellow, Quart, Start Year: 01/01/1975
	M5394ASE3DSLF	AR	Paint, Industrial Yellow, Gallon, Start Year: 01/01/1975
	M20J1750SE5DS	AR	Paint, Spray Bomb, Gray, 12 Oz., Start Year: 01/01/1965
	9613385DS	AR	Paint, Spray Bomb, Blue, 12 Oz., Start Year: 01/01/1965
	70781DSLF	AR	Paint, Spray Bomb, Industrial Buff, 12 Oz., Years: 01/01/1965-12/31/1966
	70781DSLF	AR	Paint, Spray Bomb, Industrial Yellow, 12 Oz., Years: 01/01/1967-12/31/1974
	M5394ASE5DSLF	AR	Paint, Spray Bomb, Industrial Yellow, 16 Oz., Start Year: 01/01/1975

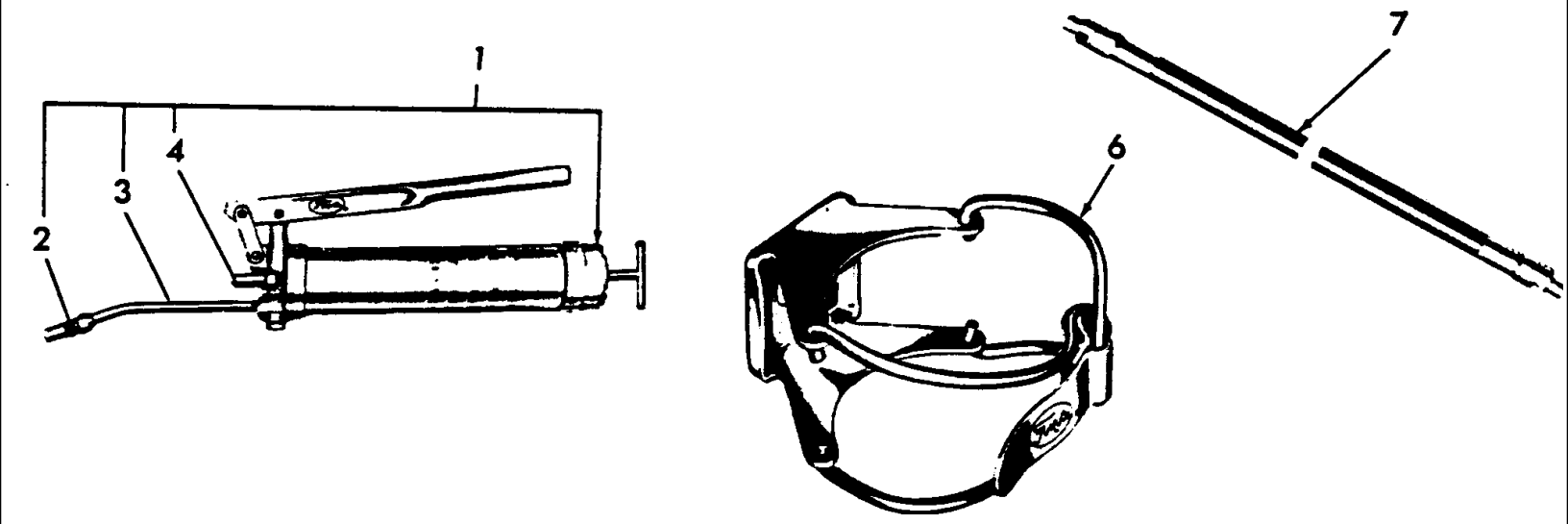
1
2
3
4
6
7

5000-SERIES 4 CYL TRACTOR (1/65-1/75)

17B01 LUBRICATION EQUIPMENT

Ref	Part Number	Qty	Description
1	EAPN17125A	AR	Gun Assy., Grease, Hand Lever Type, Heavy Duty, Includes: Body & Ref. 2 thru 4, Start Year: 01/01/1965
1	EFPN17125A	AR	Gun Assy., Standard, FTO-E, Includes: Body & Ref. 2 thru 4, NH-E Only, Start Year: 01/01/1965
2	B9NN17A020A	1	Coupler, Grease Gun, Start Year: 01/01/1965
3	B9NN17A023A	1	Extension, Pipe, 6" (15.24cm), Start Year: 01/01/1965
4	B9NN17A016A	1	Nipple, Filler, Start Year: 01/01/1965
4	C3NN17A044A	AR	Kit, Repair Grease Gun, Includes: Packings, Coupler Jaws, Gasket Spring, Ball, which are not serviced separately, No Longer Serviced (NHNA), Start Year: 01/01/1965
6	B9NN17A017A	AR	Clamp, Grease Gun Mounting, Start Year: 01/01/1965
7	B9NN17A019A	AR	Hose, Flexible, 12", Start Year: 01/01/1965
7	C0NN17A019A	AR	Hose, Flexible, 18", Start Year: 01/01/1965
7	C0NN17A019A	AR	Hose, Flexible, 20", Start Year: 01/01/1965
7		AR	Gun Assy., Lubricator, U.K., NH-E Only, Start Year: 01/01/1965
7	6PM1C137A	AR	Grease, Lubricant, 5 lb. Containers, U.S., NHNA Only, No Longer Serviced, Start Year: 01/01/1965
7	1TM1C137APK10	AR	Grease, Cartridge Tube, 14-1/2" Oz., U.S. Only, NHNA Only, No Longer Serviced, Start Year: 01/01/1965
7		AR	Cartridge, Grease Gun Loading, U.K. Only, NHNA Only, No Longer Serviced, Start Year: 01/01/1965
7	251297	AR	Gun, Suction W/Flexible Nozzle, U.S., NHNA Only, Start Year: 01/01/1965

ART
NOT
AVAILABLE

5000-SERIES 4 CYL TRACTOR (1/65-1/75)

17B01[A] RADIOS, ACCESSORY (NHNA)

Ref	Part Number	Qty	Description
	C7NN18N800A	AR	Kit, Mounting Radio Reciever & Tuner Extra Vehicle, For Use W/Bendix Radio Only, No Longer Serviced, Years: 01/01/1965-12/31/1976
	FP190	AR	Radio, AM/FM, Pushbutton, Fender or Roof Mounted, No Longer Serviced, Start Year: 01/01/1965
	B0MFT75AM	AR	Radio, AM, Pushbutton, Fender or Roof Mounted, No Longer Serviced, Start Year: 01/01/1965
	ZAE1HP	AR	Headphone Seat, Radio, Start Year: 01/01/1965
	B0MFTRM40	AR	Antenna Mast, Radio, Years: 01/01/1965-10/31/1981
	B0M63867	AR	Antenna Mast, Radio, Start Year: 11/01/1981
	B0MPS400	AR	Converter, AC to DC, Radio, Start Year: 01/01/1965

ART
NOT
AVAILABLE

5000-SERIES 4 CYL TRACTOR (1/65-1/75)

17B01[B] FIRE EXTINGUISHER KIT

Ref	Part Number	Qty	Description
	E2075T9	AR	NO DESCRIPTION, Kit, Fire Extinguisher & Bracket, U.K.-Antwerp, NH-E Only, No Longer Serviced, Start Year: 01/01/1965
	E2095T9	AR	NO DESCRIPTION, Kit, Fire Extinguisher Refill, U.K.-Antwerp, Includes: (1) Container of Refill Powder & (1) Refill Nozzle, NH-E Only, No Longer Serviced
	309990	AR	KIT, MISC, Kit, Fire Extinguisher, U.S., NHNA Only, No Longer Serviced, Start Year: 01/01/1965

ART
NOT
AVAILABLE

5000-SERIES 4 CYL TRACTOR (1/65-1/75)

17B01[C] PTO DRIVEN AIR COMPRESSOR (NH-E)

Ref	Part Number	Qty	Description
	D8NN2875AA	1	PUMP, SMALL, Compressor Assy., PTO Driven Air, NH-E Only, No Longer Serviced

NO ART REQUIRED

17B02 ENGINE, HYDRAULIC & REAR AXLE OILS, U.S. & U.K.

Ref	Part Number	Qty	Description
	2G41	AR	Oil, Hydraulic Select-O-Speed, U.S., 2 Gallon, 3 Cans to a Case, No Longer Serviced
	5G41	AR	Oil, Hydraulic Select-O-Speed, U.S., 5 Gallon Can, No Longer Serviced
	55G41	AR	Oil, Hydraulic Select-O-Speed, U.S., 55 Gallon Drum, No Longer Serviced
	2G48	AR	Oil, Hydraulic Loader - Backhoe, U.S., 2 Gallon, 3 Cans to a Case, No Longer Serviced
	5G48	AR	Oil, Hydraulic Loader - Backhoe, U.S., 5 Gallon Can, No Longer Serviced
	55G48	AR	Oil, Hydraulic Loader - Backhoe, U.S., 55 Gallon Drum, No Longer Serviced
	9624450	AR	Oil, Hydraulic, U.S., 2 Gallon, 3 Cans to a Case, No Longer Serviced (NH-E)
	9624451	AR	Oil, Hydraulic, U.S., 5 Gallon Can, No Longer Serviced (NH-E)
	9624452	AR	Oil, Hydraulic, U.S., 55 Gallon Drum, No Longer Serviced (NH-E)
	1QM2C121AMV	AR	Oil, Engine 15W40, U.S., Quart, 24 Cans to a Case, No Longer Serviced
	2GM2C121AMV	AR	Oil, Engine 15W40, U.S., Gallon, 3 x 2 Gallon Can, No Longer Serviced
	5GM2C121AMV	AR	Oil, Engine 15W40, U.S., Gallon, 5 Gallon Pail, No Longer Serviced
	86641086	AR	Oil, Engine 15W40, U.S., Gallon, 55 Gallon Drum
	1QM2C121A30	AR	Oil, Engine SAE 30W, U.S., Quart, 24 Cans to a Case, No Longer Serviced
	9613289	AR	Oil, Engine SAE 30W, U.S., Gallon, 6 Cans to a Case
	9613288	AR	Oil, Engine, SAE 30W, U.S., 55 Gallon Drum
		AR	Oil, Industrial Hydraulic, U.K., 25 Litre Drum, No Longer Serviced
	NLS	AR	Oil, Industrial Hydraulic, U.K., 205 Litre Drum {E2067T9205L}
		AR	Oil, Rear Axle, U.K., 25 Litre Drum, No Longer Serviced
		AR	Oil, Rear Axle, U.K., 208 Litre Drum, No Longer Serviced
	NLS	AR	Additive, Oil, Rear Axle, U.K., 1 Gallon Can {ESNM99C69A01}
	NLS	AR	Additive, Oil, Rear Axle, U.K., 25 Litre Drum {ESNM99C69A25L}
		AR	Oil, Engine SAE 20, U.K., 25 Litre Drum, No Longer Serviced
	NLS	AR	Oil, Engine SAE 30, U.K., 205 Litre Drum, Except 7000 {E2070T9205L}
		AR	Oil, Engine SAE 20, U.K., 205 Litre Drum, 7000, No Longer Serviced

17C01 HYDRAULIC REMOTE CONTROL CYLINDER ASSEMBLY, "S.A." OR "D.A." - 7500LB, ACCESSORY

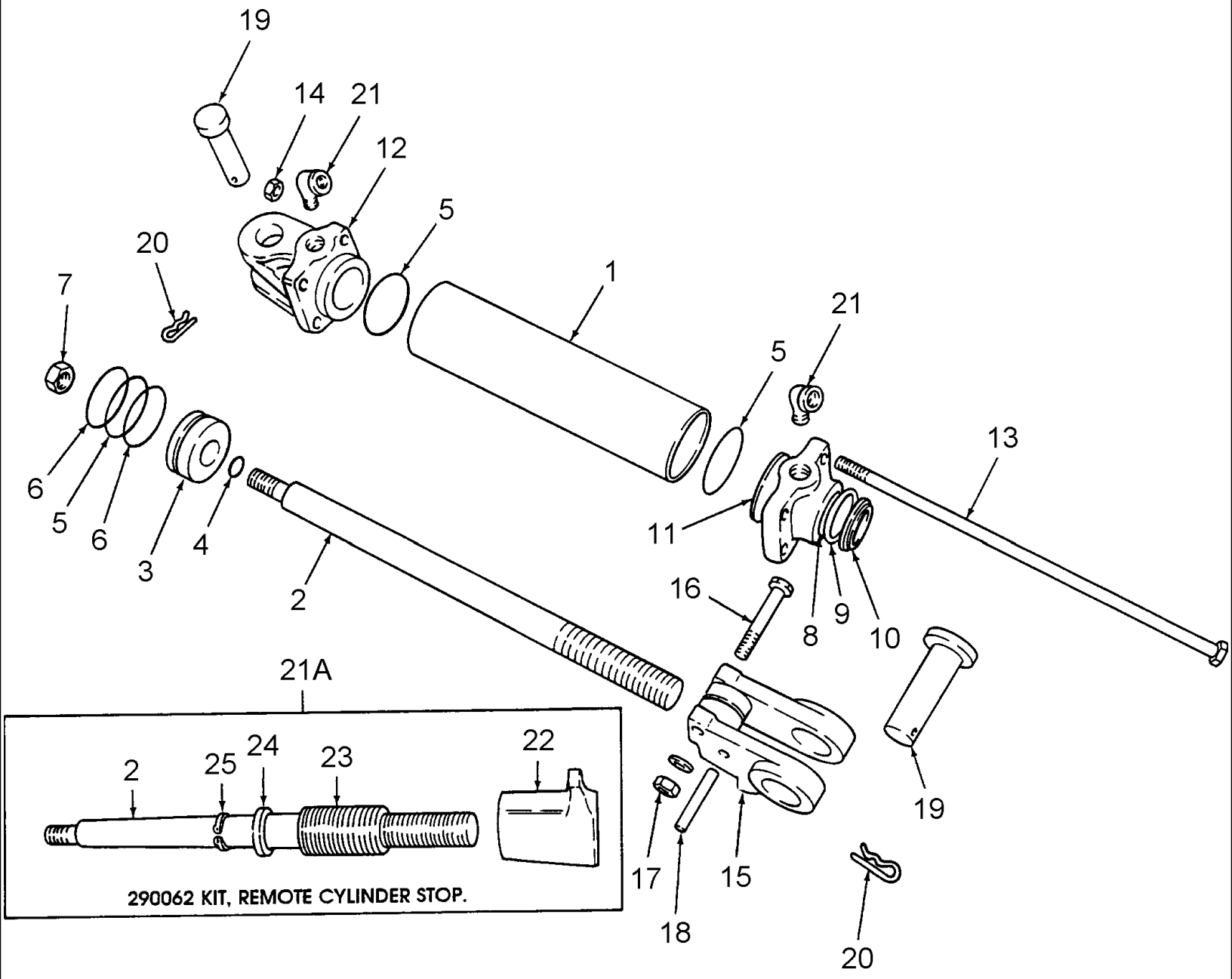

5000-SERIES 4 CYL TRACTOR (1/65-1/75)

17C01 HYDRAULIC REMOTE CONTROL CYLINDER ASSEMBLY, "S.A." OR "D.A." - 7500LB, ACCESSORY

Ref	Part Number	Qty	Description
	MPP20TB08	AR	Hydraulic Remote Control Cylinder Assy., Replaced by P/N CFPN-848-A, See Fig. 17C2, Includes: Ref. 1 thru 20, NHNA Only, No Longer Serviced
1	199142	1	Tube, Cylinder, No Longer Serviced, Start Year: 01/01/1965
2	199140	1	Rod, Hydraulic Piston, No Longer Serviced, Start Year: 01/01/1965
3	199141	1	Piston, Cylinder, No Longer Serviced, Start Year: 01/01/1965
4	128359	1	O-Ring, .614" ID x .070" Thk, Start Year: 01/01/1965
5	217408	3	O-Ring, 1.984" ID x .139" Thk, Start Year: 01/01/1965
6	114680	2	Ring, Back-Up, NHNA Only, No Longer Serviced, Start Year: 01/01/1965
7	55813S	1	Nut, Hex, Lock, 5/8"-18, No Longer Serviced, Start Year: 01/01/1965
8	86629540	1	O-Ring, .984" ID x .139" Thk, Start Year: 01/01/1965
9	677185	1	Ring, Back-Up, NHNA Only, Start Year: 01/01/1965
10	199143	1	Seal Assy., Oil, NHNA Only, No Longer Serviced, Start Year: 01/01/1965
11	199138	1	Gland, Cylinder, NHNA Only, No Longer Serviced, Start Year: 01/01/1965
12	291203	1	Anchor, Cylinder End, Replaces P/N 199139, No Longer Serviced (NHNA), Start Year: 01/01/1965
13	291072	4	Bolt, HH, 3/8"-16 x 12", Replaces P/N 199145, NHNA Only, No Longer Serviced, Start Year: 01/01/1965
14	9628503	4	Nut, G5, 3/8"-16, Start Year: 01/01/1965
15	199137	1	Anchor, Rod End, NHNA Only, No Longer Serviced, Start Year: 01/01/1965
16	88546	1	Screw, Cap, HH, G5, 3/8"-16 x 2-1/4", Start Year: 01/01/1965
17	9628503	1	Nut, G5, 3/8"-16, Start Year: 01/01/1965
18	305135S36	1	Pin, Roll, 1/4" x 1-7/8", No Longer Serviced, Start Year: 01/01/1965
189	192982	2	Pin, Clevis, No Longer Serviced (NHNA), Start Year: 01/01/1965
20	358813S36	2	Pin, Self-Locking, 1" x 1/4", No Longer Serviced, Start Year: 01/01/1965
21	195451	2	Elbow, Street, 1/2" x 3/8", No Longer Serviced (NHNA), Start Year: 01/01/1965
21A	290062	1	Kit, Remote Cylinder Stop, Used W/CBPN848B, Includes: Ref. 22 thru 25, NHNA Only, Start Year: 01/01/1965
22	290063	1	Adjuster, Cylinder Stop Stroke, Outer, No Longer Serviced (NH-E), Start Year: 01/01/1965
23	290064	1	Adjuster, Cylinder Stop Stroke, Inner, No Longer Serviced (NH-E), Start Year: 01/01/1965
24	290071	1	Seal, Oil, Cylinder Stop, No Longer Serviced, Start Year: 01/01/1965
25	97769S	1	Ring, Snap, Int, 1.625", Cylinder Stop Seal, NHNA Only, No Longer Serviced, Start Year: 01/01/1965
	309667	AR	Kit, Cylinder Seal, Use W/CBPN848B, Includes: Parts Listed Below, NHNA Only, No Longer Serviced, Start Year: 01/01/1965
	128359	1	O-Ring, .614" ID x .070" Thk
	86629540	1	O-Ring, .984" ID x .139" Thk
	217408	3	O-Ring, 1.984" ID x .139" Thk
	114680	2	Ring, NHNA Only, No Longer Serviced
	199143	1	Seal Assy., NHNA Only, No Longer Serviced
	677185	1	Ring, NHNA Only

17C02 HYDRAULIC REMOTE CONTROL CYLINDER ASSEMBLY, ACCESSORY

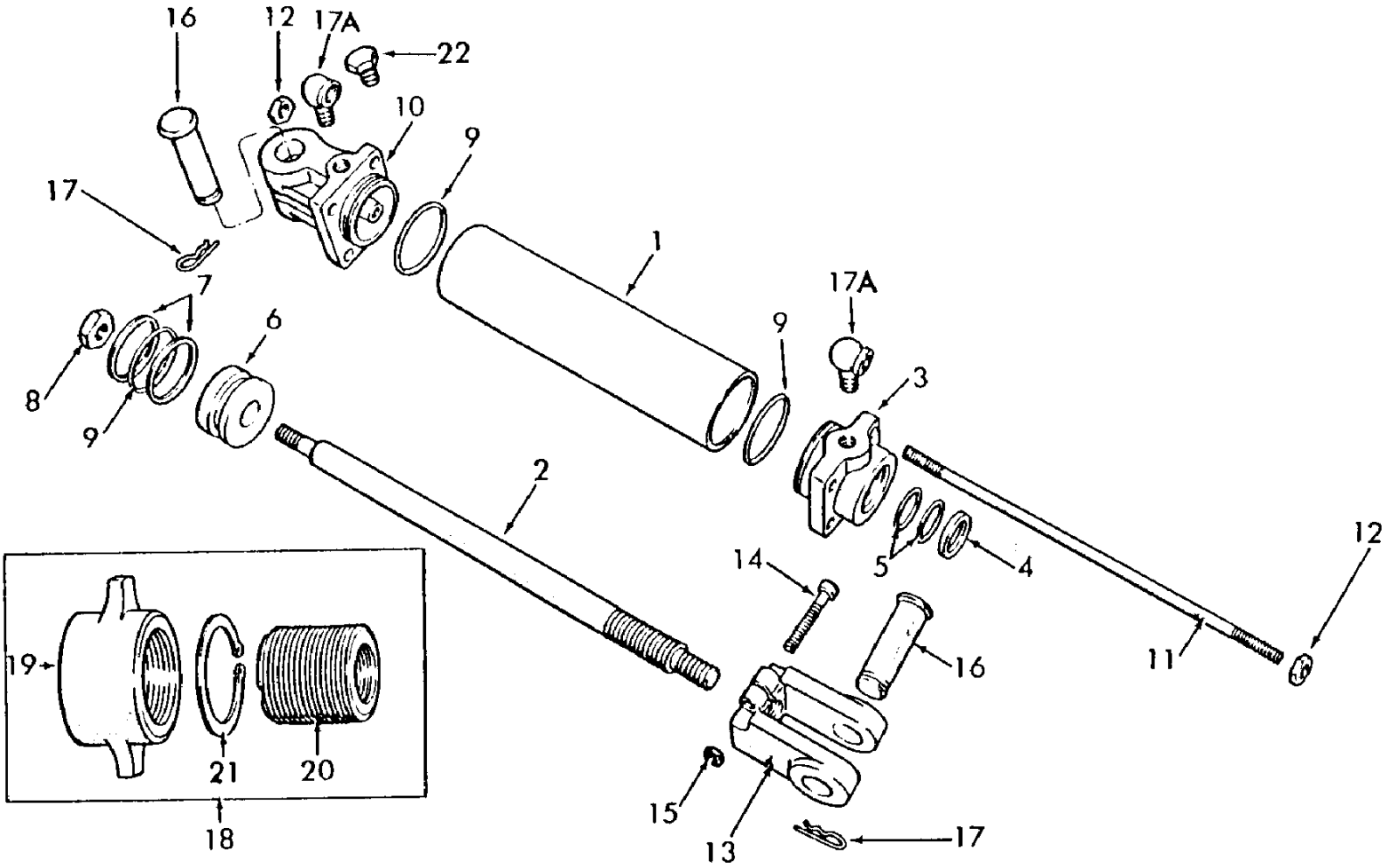

17C02 HYDRAULIC REMOTE CONTROL CYLINDER ASSEMBLY, ACCESSORY

Ref	Part Number	Qty	Description
	NS		Hydraulic Remote Control Cylinder Assy., See Fig. 17C3 for Replacement, Includes: Cylinder & Ref. 1 thru 17A, NHNA Only
1	7000552	1	Tube, Cylinder, NHNA Only, No Longer Serviced, Start Year: 01/01/1965
2	7000566	1	Rod, Cylinder Piston, NHNA Only, No Longer Serviced, Start Year: 01/01/1965
3	7000563	1	Head, Cylinder, NHNA Only, No Longer Serviced, Start Year: 01/01/1965
4	7000554	1	Seal, Wiper, 1.503 O.D. x 1.01 I.D., NHNA Only, No Longer Serviced, Start Year: 01/01/1965
5	7000553	2	O-Ring, Head Seal, 1.046 I.D. x .139 Thick, NHNA Only, No Longer Serviced, Start Year: 01/01/1965
6	7000561	1	Piston, Cylinder Rod, NHNA Only, No Longer Serviced, Start Year: 01/01/1965
7	7000558	2	Ring, Piston Back-Up, NHNA Only, No Longer Serviced, Start Year: 01/01/1965
8	7000560	1	Nut, Hex, Jam, Locking, Piston to Rod, 3/4"-16, NHNA Only, No Longer Serviced, Start Year: 01/01/1965
9	7000557	3	O-Ring, Base, Piston & Head Seal, 1.60 I.D. x .210 Thick, NHNA Only, No Longer Serviced, Start Year: 01/01/1965
10	7000565	1	Base, Cylinder, NHNA Only, No Longer Serviced, Start Year: 01/01/1965
11	7000562	4	Rod, Tie, 3/8"-16 x 12.75, NHNA Only, No Longer Serviced, Start Year: 01/01/1965
12	7000555	8	Nut, Hex, Tie Rod, 3/8"-16, NHNA Only, No Longer Serviced, Start Year: 01/01/1965
13	7000564	1	Clevis, Rod, NHNA Only, No Longer Serviced, Start Year: 01/01/1965
14	7000556	1	Screw, Cap Hd., Clevis Securing, 3/8"-16 x 1-1/2", NHNA Only, No Longer Serviced, Start Year: 01/01/1965
15	7000555	1	Nut, Hex, Clevis Screw, 3/8"-16, NHNA Only, No Longer Serviced, Start Year: 01/01/1965
16	7000567	2	Pin, Clevis, 1.0 O.D. x 3.40 Lg., NHNA Only, No Longer Serviced, Start Year: 01/01/1965
17	7000559	2	Clip, Clevis Pin, NHNA Only, No Longer Serviced, Start Year: 01/01/1965
17A	195451	2	Elbow, Strut, 1/2" x 3/8", No Longer Serviced (NHNA), Start Year: 01/01/1965
17A	293394	1	Kit, Seal, Cylinder, Service Only, for P/N CFPN-848-A, Includes: Seals & O-Rings Listed Below, No Longer Serviced (NHNA), Start Year: 01/01/1965
17A	7000553	2	O-Ring, NHNA Only, No Longer Serviced
17A	7000554	1	Seal, NHNA Only, No Longer Serviced
17A	7000557	3	O-Ring, NHNA Only, No Longer Serviced
17A	7000558	2	Ring, NHNA Only, No Longer Serviced
18	293391	1	Collar Assy., Cylinder Stop, Use W/ P/N CFPN-848-A, Includes: Ref. 19 thru 21, NHNA Only, No Longer Serviced, Start Year: 01/01/1965
19	7000570	1	Collar, Outside Stop, NHNA Only, No Longer Serviced, Start Year: 01/01/1965
20	7000571	1	Collar, Inner Stop, NHNA Only, No Longer Serviced, Start Year: 01/01/1965
21	7000569	1	Ring, Retaining, NHNA Only, No Longer Serviced, Start Year: 01/01/1965
22	293393	1	Breather Assy., Use W/P/N CFPN-848-A when Single Acting Installation is desired, NHNA Only, No Longer Serviced, Start Year: 01/01/1965

17C03 HYDRAULIC REMOTE CONTROL CYLINDER ASSEMBLY, ACCESSORY

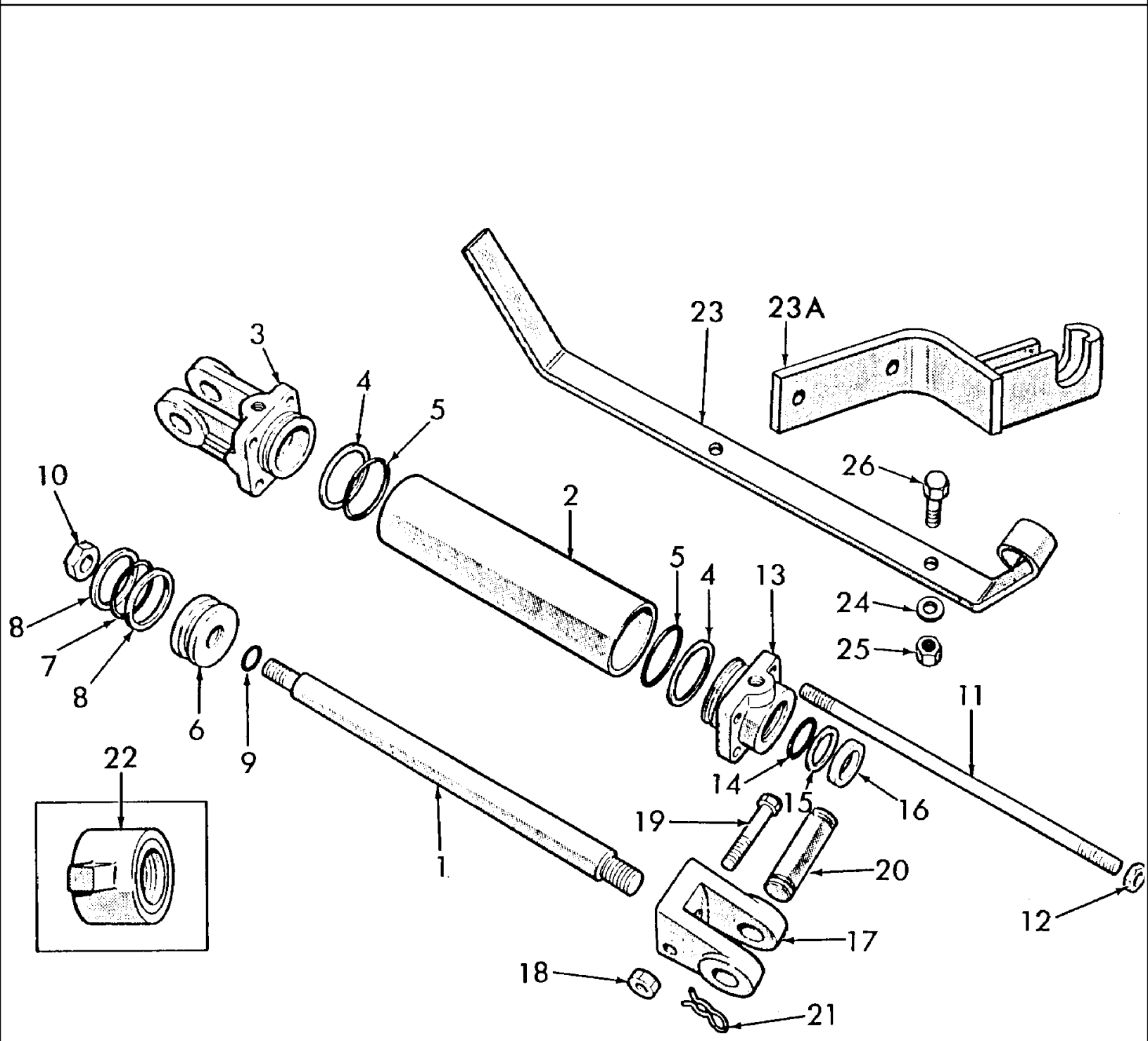

5000-SERIES 4 CYL TRACTOR (1/65-1/75)

17C03 HYDRAULIC REMOTE CONTROL CYLINDER ASSEMBLY, ACCESSORY

Ref	Part Number	Qty	Description
	MPP20TB08	AR	Cylinder Assy., U.S., 2" (50.799mm) Bore, Replaces P/N D0NN-C846-A, Includes: Ref. 1 thru 21, NHNA Only, No Longer Serviced, Start Year: 01/01/1965
	MPP30TB08	AR	Cylinder Assy., U.S., 3" (76.199mm) Bore, Includes: Ref. 1 thru 21, NHNA Only, No Longer Serviced, Start Year: 01/01/1965
	MPP35TB08	AR	Cylinder Assy., U.S., 3-1/2" (88.898mm) Bore, Includes: Ref. 1 thru 21, NHNA Only, No Longer Serviced, Start Year: 01/01/1965
1	D0NNC857A	1	Rod, Cylinder Piston, 2" Bore, Start Year: 01/01/1965
1	D0NNC857B	1	Rod, Cylinder Piston, 3" & 3-1/2" Bore, Start Year: 01/01/1965
2	D0NNH921C	1	Tube, Cylinder, 2" Bore, No Longer Serviced (NHNA), Start Year: 01/01/1965
2	D0NNH921A	1	Tube, Cylinder, 3", Start Year: 01/01/1965
2	D0NNH921B	1	Tube, Cylinder, 3-1/2" Bore, Start Year: 01/01/1965
3	D0NNH896A	1	Clevis, Cylinder, 2" Bore, Start Year: 01/01/1965
3	D0NNH896B	1	Clevis, Cylinder, 3" Bore, Start Year: 01/01/1965
3	D0NNH896C	1	Clevis, Cylinder, 3-1/2" Bore, Start Year: 01/01/1965
4	D0NNH900A	2	Ring, Clevis Seal Back-Up, 2" Bore, No Longer Serviced (NHNA), Start Year: 01/01/1965
4	D0NNH900D	2	Ring, Clevis Seal Back-Up, 3" Bore, No Longer Serviced (NH-E), Start Year: 01/01/1965
4	E5NNH900AA	2	Ring, Clevis Seal Back-Up, 3-1/2" Bore, Start Year: 01/01/1965
5	235759	2	O-Ring, 1.600" ID x .210" Thk, Outer, 2" Bore, Start Year: 01/01/1965
5	87115S95	2	O-Ring, 3.125" ID x .210" Thk, Start Year: 01/01/1965
5	87115S95	2	O-Ring, 3.125" ID x .210" Thk, Start Year: 01/01/1965
6	D0NNC854A	1	Piston, Cylinder Rod, 2" Bore, No Longer Serviced (NHNA), Start Year: 01/01/1965
6	D0NNC854B	1	Piston, Cylinder Rod, 3" Bore, Start Year: 01/01/1965
6	D0NNC854C	1	Piston, Cylinder Rod, 3-1/2" Bore, Start Year: 01/01/1965
7	87103S94	1	O-Ring, 1.625" ID x .210 Thk, 2" Bore, Start Year: 01/01/1965
7	510204	1	O-Ring, 2.625" ID x .210" Thk, 3" Bore, Start Year: 01/01/1965
7	519381	1	O-Ring, 3.125" ID x .210" Thk, 3-1/2" Bore, Start Year: 01/01/1965
8	D3NNH900B	2	Ring, Piston Seal Back-Up, 2" Bore, Replaces P/N D0NN-H900-C, NHNA Only, Start Year: 01/01/1965
8	NCA473A	2	Ring, Piston Seal Back-Up, 3" Bore, Start Year: 01/01/1965
8	D3NNH900A	2	Ring, Piston Seal Back-Up, 3-1/2" Bore, Replaces P/N D0NN-H900-G, NHNA Only, Start Year: 01/01/1965
9	87020S92	1	O-Ring, .750" ID x .070" Thk, 2", 3" & 3-1/2" Bore, Start Year: 01/01/1965
10	87313	1	Nut, Jam, G2, 3/4"-16, 2", 3" & 3-1/2" Bore, Start Year: 01/01/1965
11	D0NNC847A	4	Rod, Tie, 3/8"-16 x 12, 2" Bore, Start Year: 01/01/1965
11	D0NNC847B	4	Rod, Tie, 1/2"-13 x 12-1/8", 3" & 3-1/2", No Longer Serviced (NH-E), Start Year: 01/01/1965
12	86509499	8	Nut, Jam, G2, 3/8"-16, 2" Bore, Start Year: 01/01/1965
12	280431	8	Nut, G5, 1/2"-13, 3" & 3-1/2" Bore, Start Year: 01/01/1965
13	D2NNH898D	1	Gland, Cylinder, 2" Bore, Replaces P/N D0NN-A, Start Year: 01/01/1965
13	D2NNH898B	1	Gland, Cylinder, U.K.-Antwerp, 3" Bore, Years: 01/01/1965-04/30/1973
13	D2NNH898B	1	Gland, Cylinder, U.K-Antwerp, 3" Bore, Start Year: 05/01/1973
13	D2NNH898B	1	Gland, Cylinder, U.S., 3" Bore, Start Year: 01/01/1965
13	D2NNH898C	1	Gland, Cylinder, 3-1/2" Bore, Replaces P/N D0NN-C, Start Year: 01/01/1965
14	274754	1	O-Ring, 1.359" ID x .139" Thk, Start Year: 01/01/1965

5000-SERIES 4 CYL TRACTOR (1/65-1/75)

17C03 HYDRAULIC REMOTE CONTROL CYLINDER ASSEMBLY, ACCESSORY

Ref	Part Number	Qty	Description
15	PL	1	Ring, Gland Seal Backup, 3" & 3-1/2" Bore, NHNA Only, Years: 01/01/1965-04/30/1973
15	D2NNJ914B	1	Seal, Cylinder Gland, 2" Bore, No Longer Serviced (NH-E), Start Year: 01/01/1965
15	D2NNJ914A	1	Seal, Cylinder Gland, 3" & 3-1/2" Bore, Start Year: 05/01/1973
16	D0NNH901A	1	Wiper, Cylinder Rod, 2" Bore, Start Year: 01/01/1965
16	D0NNH901B	1	Wiper, Cylinder Rod, 3" & 3-1/2" Bore, No Longer Serviced (NH-E), Start Year: 01/01/1965
17	D0NNH895A	1	Clevis, Cylinder Rod, 2" Bore, Includes: Clevis, Ref. 18 & 19, Start Year: 01/01/1965
17	D0NNH895B	1	Clevis, Cylinder Rod, 3" & 3-1/2" Bore, Includes: Clevis, Ref. 18 & 19, Start Year: 01/01/1965
18	9635082	1	Nut, G5, 5/16"-18, 2", 3" & 3-1/2" Bore
19	86505972	1	Screw, Cap, HH, G5, 5/16"-18 x 2-1/4", 2", 3" & 3-1/2" Bore, NHNA Only, No Longer Serviced, Start Year: 01/01/1965
20	D0NNH899A	2	Pin, Clevis, 2", 3" & 3-1/2" Bore, Start Year: 01/01/1965
21	311920	4	Pin, Spring, 2", 3" & 3-1/2" Bore, Start Year: 01/01/1965
22	D0NNH917A	AR	Collar Assy., Cylinder Stop, 2" Bore, No Longer Serviced (NHNA), Start Year: 01/01/1965
22	C9NNH917A	AR	Collar Assy., Cylinder Stop, 3" & 3-1/2" Bore, Start Year: 01/01/1965
23	C9NNC838A	AR	Bracket, Cylinder Transport Mounting, U.S., 2", 3" & 3-1/2" Bore, 2100-3100, NHNA Only, No Longer Serviced, Start Year: 06/01/1968
23A	D0NNH874B	AR	Bracket, Cylinder Transport Mounting, U.S., 2", 3" & 3-1/2" Bore, 4100-4200-5100-5200, NHNA Only, No Longer Serviced, Start Year: 06/01/1968
23A	D0NNH874B	AR	Bracket, Cylinder Transport Mounting, U.S., 2", 3" & 3-1/2", 7100-7200, NHNA Only, No Longer Serviced, Start Year: 10/01/1971
24	80702	2	Washer, 3/8", 2", 3" & 3-1/2" Bore, Start Year: 06/01/1968
25	88902	2	Nut, Lock, GC, 3/8"-16, 2", 3" & 3-1/2" Bore, Start Year: 06/01/1968
26	88206	2	Screw, Cap, HH, G5, 3/8"-16 x 1", 2", 3" & 3-1/2" Bore, Start Year: 06/01/1968

17C04 HYDRAULIC REMOTE CONTROL CYLINDER ASSEMBLY, ACCESSORY (NHNA)

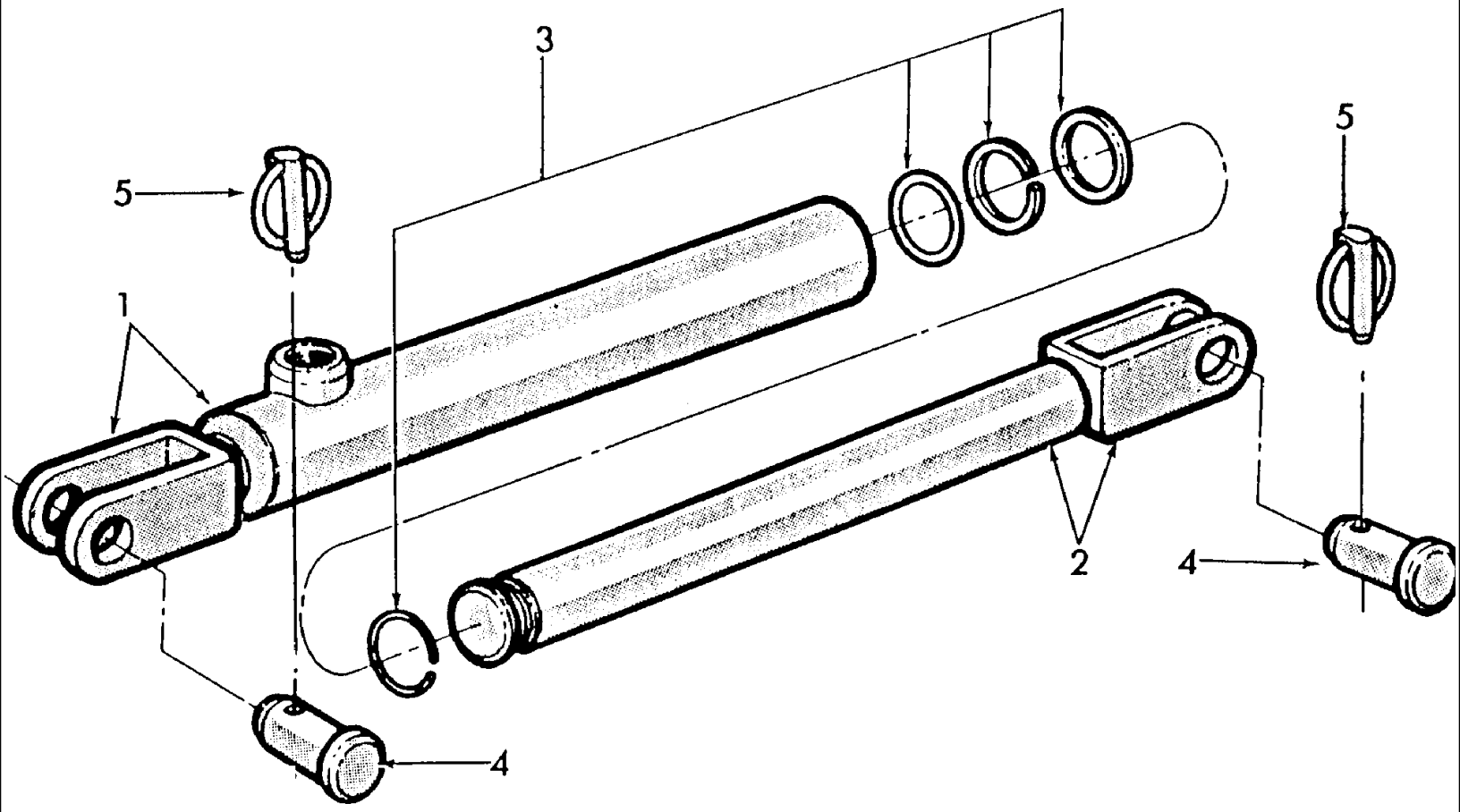

5000-SERIES 4 CYL TRACTOR (1/65-1/75)

17C04 HYDRAULIC REMOTE CONTROL CYLINDER ASSEMBLY, ACCESSORY (NHNA)

Ref	Part Number	Qty	Description
	7102266	AR	Cylinder Assy., 2500 PSI, 1-1/4" Bore, 8-1/8" Stroke, Replaces P/N 148956, Includes: Ref. 1 thru 5, NHNA Only, No Longer Serviced, Start Year: 01/01/1965
1	7102268	1	Body Assy., Hydraulic Cylinder, NHNA Only, Start Year: 01/01/1965
2	7102267	1	Rod Assy., Hydraulic Cylinder Piston, NHNA Only, Start Year: 01/01/1965
3	7102289	1	Kit, Seal Repair, NHNA Only, Start Year: 01/01/1965
4	7700628	2	Pin, Clevis, 1" x 2.69" Full Length, No Longer Serviced (NHNA), Start Year: 01/01/1965
5	DA0863043	2	Pin Assy., Linch, NHNA Only, Start Year: 01/01/1965
6	305224	1	Decal, "FORD", Not Shown on Art, NHNA Only, Start Year: 01/01/1965

17D01 KIT, TOOLS

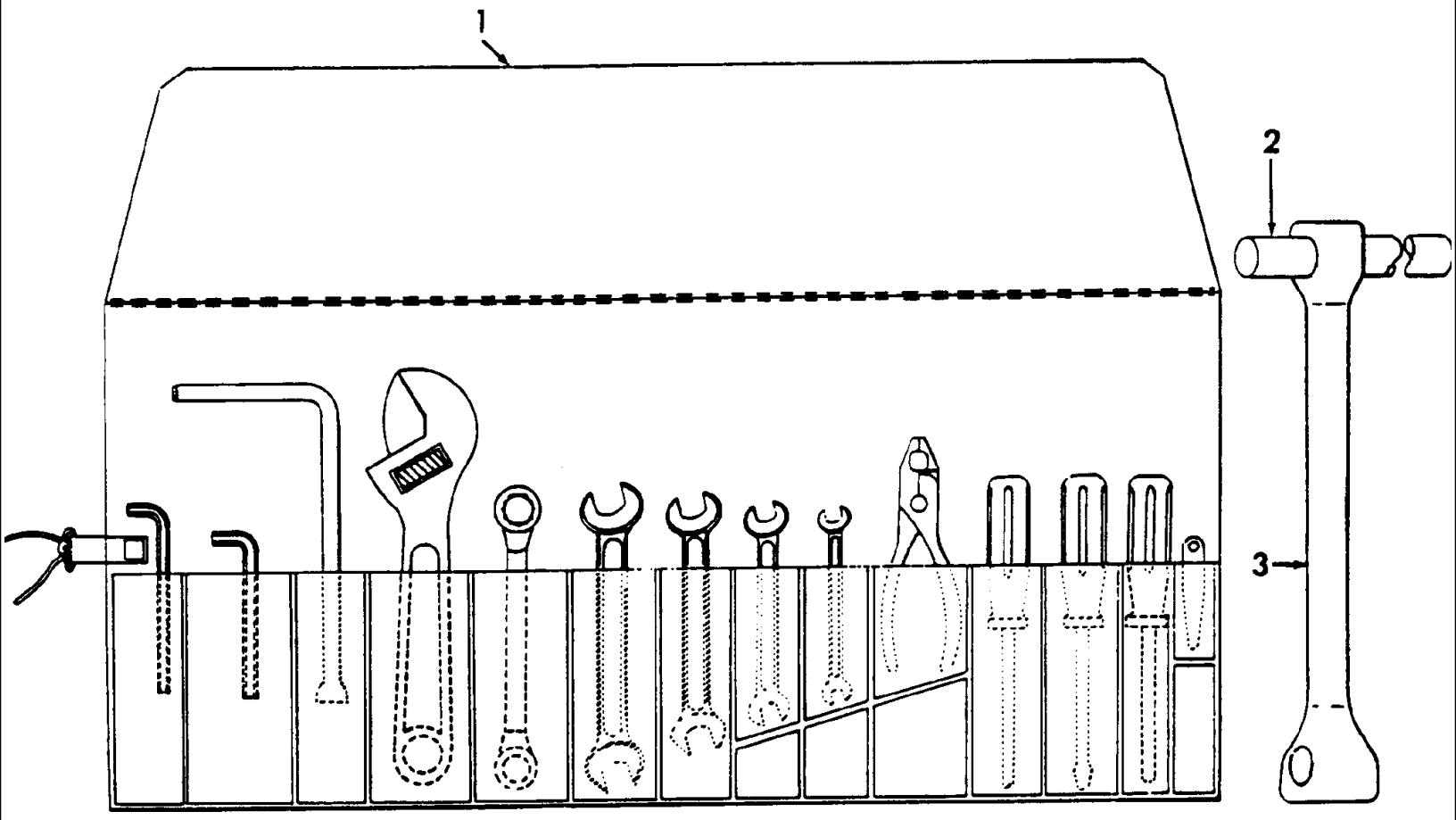

5000-SERIES 4 CYL TRACTOR (1/65-1/75)

17D01 KIT, TOOLS

Ref	Part Number	Qty	Description
1	EFPN17003AA	AR	Kit, Tools, Includes: Following Items, NH-E Only, Start Year: 01/01/1981
1	PL	1	Wrench, Allen, 1/2", NHNA Only, Start Year: 01/01/1981
1	PL	1	Wrench, Allen, 7/8", NHNA Only, Start Year: 01/01/1981
1	PL	1	Wrench, "L" Shape, 1/2", NHNA Only, Start Year: 01/01/1981
1	PL	1	Wrench, Adjustable, 8", NHNA Only, Start Year: 01/01/1981
1	PL	1	Wrench, Close End, 7/16" x 1/2", NHNA Only, Start Year: 01/01/1981
1	PL	1	Wrench, Open End, 11/16" x 3/4", NHNA Only, Start Year: 01/01/1981
1	PL	1	Wrench, Open End, 3/4" x 7/8", NHNA Only, Start Year: 01/01/1981
1	PL	1	Wrench, Open End, 9/16" x 5/8", NHNA Only, Start Year: 01/01/1981
1	PL	1	Wrench, Open End, 7/16" x 1/2", NHNA Only, Start Year: 01/01/1981
1	PL	1	Wrench, Pliers, 8", NHNA Only, Start Year: 01/01/1981
1	PL	1	Screwdriver, Phillips, #1, NHNA Only, Start Year: 01/01/1981
1	PL	1	Screwdriver, Flat, #6, NHNA Only, Start Year: 01/01/1981
1	PL	1	Screwdriver, Phillips, #3, NHNA Only, Start Year: 01/01/1981
1	PL	1	Gauge, Feeler, NHNA Only, Start Year: 01/01/1981
2	E27N17034	1	Handle, NH-E Only, Start Year: 01/01/1981
3	C5NN17035A	1	Wrench, 1.50 x 1.00, NH-E Only, Start Year: 01/01/1981
3	FP114	1	Wrench, Wheel Nut, 1" x 1.5", NH-E Only, Start Year: 01/01/1981

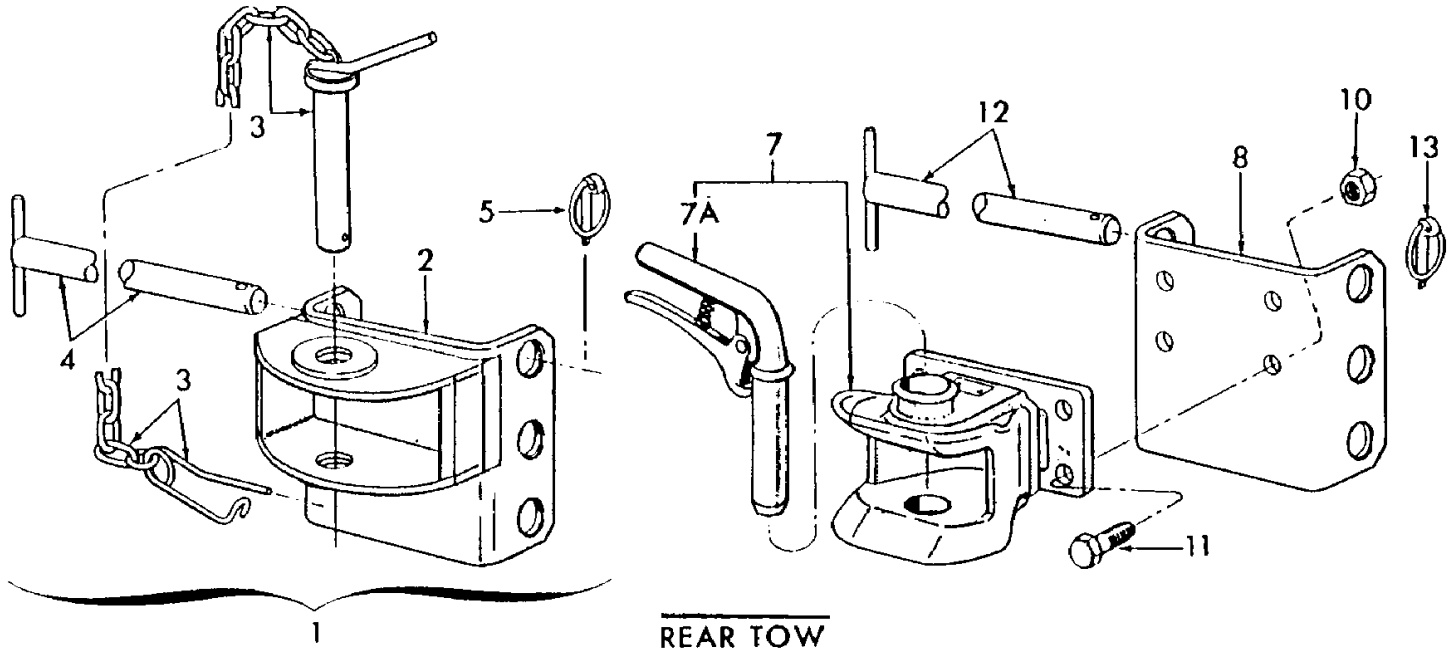
3
5
2
4
3
1
7
7A
12
10
8
13
11
REAR TOW

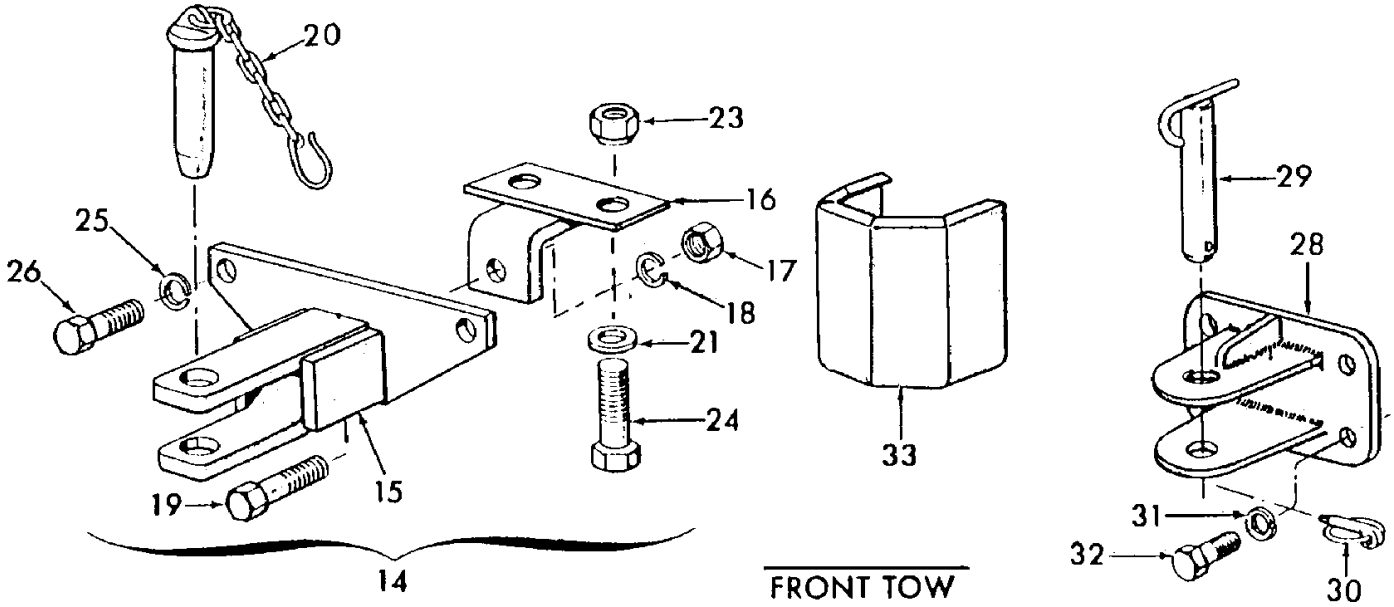
20
23
16
25
26
17
18
21
24
19
15
14
33
29
28
31
32
30
FRONT TOW

5000-SERIES 4 CYL TRACTOR (1/65-1/75)

17E01 TOW HOOKS (NH-E)

Ref	Part Number	Qty	Description
1	NS	1	Kit, Tow Hook, Rear, Italian Type, All Tractors, Includes: Ref. 2 thru 5, NHNA Only, Start Year: 01/01/1965
2	NS	1	Hook Assy., Rear, NHNA Only, Start Year: 01/01/1965
2	C7NN5N180A	1	Hook Assy., Rear, France, Not Part of Kit, NH-E Only, No Longer Serviced, Start Year: 01/01/1965
3	C7NN5N195A	1	Pin, Clip & Chain Assy., Rear, France, Not Part of Kit, NH-E Only, Start Year: 01/01/1965
4	C5NN5N184B	2	Pin, Rear, NH-E Only, Start Year: 01/01/1965
5	E27N995294	2	Pin & Ring Assy., Linch, Start Year: 01/01/1965
6	NS	1	Kit, Tow Hook, Rear, German Type, Includes: Ref. 7 thru 13, Not labeled on Art, NHNA Only
7	D3NN5N193A	1	Coupling Assy., Trailer, Rear, Includes: Coupling & Ref. 7A, NH-E Only, No Longer Serviced, Years: 01/01/1965-04/30/1979
7	D8NN19N232AA	1	Coupling Assy., Trailer, Rear, Includes: Coupling & Ref. 7A, Start Year: 05/01/1979
7A	D1NN5N198A	1	Pin Assy., Coupling, Quick Release, NH-E Only, Years: 01/01/1965-04/30/1979
8	C5NN5N181A	1	Bracket, Tow Hook Mounting, Rear, NH-E Only, No Longer Serviced, Start Year: 01/01/1965
8	C5NN5N181B	1	Bracket, Mounting, 2600-3600, NH-E Only, No Longer Serviced, Start Year: 05/01/1979
8	C7NN5N181A	1	Bracket, Mounting, 5600-5700-6600-6700-7600, NH-E Only, No Longer Serviced, With 1 & 2 Speed PTO & Check Chains, Start Year: 05/01/1979
8	C7NN5N181B	1	Bracket, Mounting, 4100-4600, NH-E Only, No Longer Serviced, Start Year: 05/01/1979
10	33847S8	4	Nut, Hex, 9/16"-12, No Longer Serviced (NHNA), Start Year: 01/01/1965
11	304785S36	4	Screw, Cap, HH, G5, 9/16"-12 x 1-5/8", No Longer Serviced (NHNA), Start Year: 01/01/1965
11	C5NNE987A	4	Bolt, No Longer Serviced (NHNA), Start Year: 05/01/1979
12	C5NN5N184B	2	Pin, Towing Hook, Rear, NH-E Only, Start Year: 01/01/1965
12	C7NN5N184B	2	Pin, Towing Hook, Rear, Germany, Not Part of Kit, NH-E Only, Start Year: 01/01/1965
13	E27N995294	2	Pin & Ring Assy., Linch, Start Year: 01/01/1965
14	NS	1	Kit, Front Tow Hook, 2000-3000, Includes: Ref. 15 thru 26, NHNA Only, Years: 01/01/1965-07/31/1970
14	NLS	1	Kit, Front Tow Hook, 2000-3000, Includes: Ref. 15 thru 26 {D1NN17N808A}, These parts service previous Front Tow Hook Kit, CFPN-17A954-A., Start Year: 08/01/1970
15	C5NN17B804C	1	Hook Assy., Front, 2000-3000, NH-E Only, These parts service previous Front Tow Hook Kit, CFPN-17A954-A., Start Year: 01/01/1965
16	D1NN17N760A	1	Bracket Assy., Support, 2000-3000, NH-E Only, No Longer Serviced, Start Year: 08/01/1970
17	280374	1	Nut, G5, 5/8"-11, 2000-3000, Start Year: 01/01/1965
18	86729275	1	Washer, Lock, 5/8", 2000-3000, Start Year: 01/01/1965
19	82001789	1	Screw, Cap, HH, G5, 5/8"-11 x 1-7/8", 2000-3000, Start Year: 01/01/1965
20	C5NN17N749B	1	Pin, Clip & Chain Assy., 2000-3000, NH-E Only, No Longer Serviced, Start Year: 01/01/1965
21	44746S8	1	Washer, 3/4", 2000-3000, NHNA Only, No Longer Serviced, Years: 01/01/1965-07/31/1970
21	376541S36	2	Washer, Flat, 5/8", 2000-3000, Start Year: 08/01/1970
21	87340	1	Washer, Lock, 3/4", 2000-3000, Years: 01/01/1965-07/31/1970
23	280954	1	Nut, G5, 3/4"-10, 2000-3000, Years: 01/01/1965-07/31/1970
23	C5NN1120F	2	Nut, Wheel, 5/8"-18, 2000-3000, Start Year: 08/01/1970
24	88557	1	Screw, Cap, HH, G5, 3/4"-10 x 2", 2000-3000, Years: 01/01/1965-07/31/1970
24	88114	2	Screw, Cap, HH, G5, 5/8"-18 x 2-1/4", 2000-3000, Start Year: 08/01/1970
25	86729275	2	Washer, Lock, 5/8", 2000-3000, Start Year: 01/01/1965
26	304768S36	2	Screw, Cap, HH, G5, 5/8"-11 x 1-1/2", 2000-3000, Start Year: 01/01/1965

5000-SERIES 4 CYL TRACTOR (1/65-1/75)

17E01 TOW HOOKS (NH-E)

Ref	Part Number	Qty	Description
	C5NN17B804A	1	Hook Assy., Towing, Front, 2000-3000, NH-E Only, No Longer Serviced, These parts service previous Front Tow Hook Kit, CFPN-17A954-A., Start Year: 01/01/1965
	87365	1	Washer, SAE, 5/8", 2000-3000, These parts service previous Front Tow Hook Kit, CFPN-17A954-A., Start Year: 01/01/1965
	86729275	1	Washer, Lock, 5/8", 2000-3000, These parts service previous Front Tow Hook Kit, CFPN-17A954-A., Start Year: 01/01/1965
	280374	1	Nut, G5, 5/8"-11, 2000-3000, These parts service previous Front Tow Hook Kit, CFPN-17A954-A., Start Year: 01/01/1965
	304853S36	1	Screw, Cap, HH, G5, 5/8"-11 x 2-1/8", 2000-3000, No Longer Serviced (NHNA), These parts service previous Front Tow Hook Kit, CFPN-17A954-A., Start Year: 01/01/1965
	C5NN17N805A	1	Pin, Front, 2000-3000, NH-E Only, These parts service previous Front Tow Hook Kit, CFPN-17A954-A., Start Year: 01/01/1965
	E27N995294	1	Pin & Ring Assy., Linch, 2000-3000, These parts service previous Front Tow Hook Kit, CFPN-17A954-A., Start Year: 01/01/1965
	87340	2	Washer, Lock, 3/4", 2000-3000, These parts service previous Front Tow Hook Kit, CFPN-17A954-A., Start Year: 01/01/1965
	34675S8	2	Nut, Hex, 3/4"-16, 2000-3000, No Longer Serviced (NHNA), These parts service previous Front Tow Hook Kit, CFPN-17A954-A., Start Year: 01/01/1965
		2	Screw, Cap, HH, G5, 3/4"-16 x 4-1/4", 2000-3000, NH-E Only, No Longer Serviced, These parts service previous Front Tow Hook Kit, CFPN-17A954-A., Start Year: 01/01/1965
	34811S36	2	Washer, Lock, 5/8", 2000-3000, These parts service previous Front Tow Hook Kit, CFPN-17A954-A., Start Year: 01/01/1965
	304768S36	2	Screw, Cap, HH, G5, 5/8"-11 x 1-1/2", 2000-3000, These parts service previous Front Tow Hook Kit, CFPN-17A954-A., Start Year: 01/01/1965
28	C5NN17B804A	1	Hook Assy., Towing, Front, 4000-5000, NH-E Only, No Longer Serviced, Start Year: 01/01/1965
29	C5NN17N805A	1	Pin, Towing Hook, Front, 4000-5000, NH-E Only, Start Year: 01/01/1965
30	E27N995294	1	Pin & Ring Assy., Linch, 4000-5000, Start Year: 01/01/1965
31	87340	4	Washer, Lock, 3/4", 4000-5000, Start Year: 01/01/1965
32	304789S36	4	Screw, Cap, HH, G5, 3/4"-10 x 1-5/8", 4000-5000, Start Year: 01/01/1965
33	C5NN17N750A	1	Guard Assy., Front Tow Hook , 4000-5000, NH-E Only, No Longer Serviced, Start Year: 01/01/1965
33	C5NN17N750A	1	Guard Assy., Front Tow Hook , 2000-3000, NH-E Only, No Longer Serviced, Years: 01/01/1965-03/31/1968
33	C7NN17N750A	1	Guard Assy., Front Tow Hook , 2000-3000, NH-E Only, No Longer Serviced, Start Year: 04/01/1968

17E02 REAR TOW HOOK MAIN FRAME KITS (NH-E)

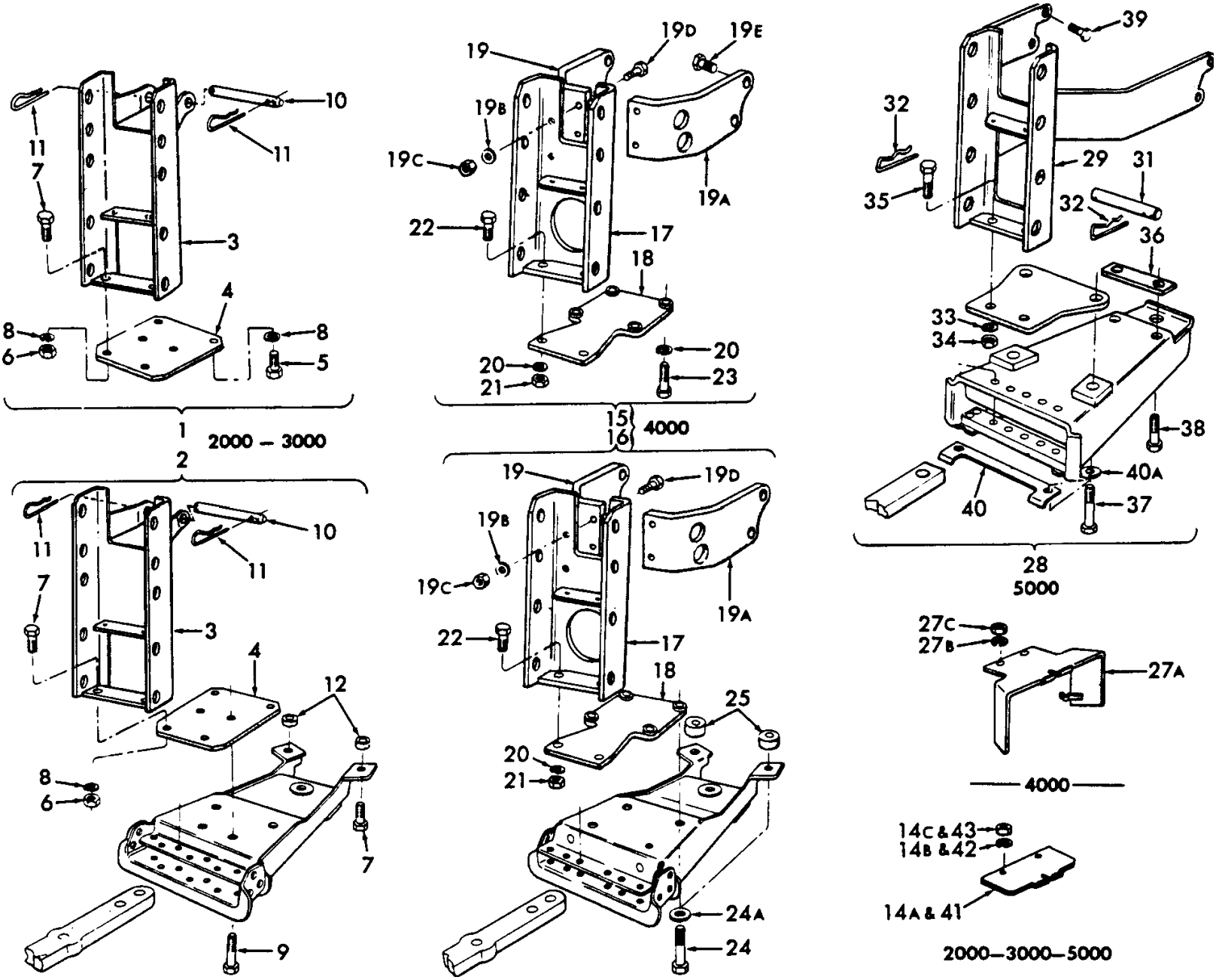

5000-SERIES 4 CYL TRACTOR (1/65-1/75)

17E02 REAR TOW HOOK MAIN FRAME KITS (NH-E)

Ref	Part Number	Qty	Description
1	NS	1	Kit, Main Frame, Rear, 2000-3000, NHNA Only, Start Year: 01/01/1965
2	NS	1	Kit, Main Frame, Rear, W/Swinging Drawbar, Germany, 2000-3000, Includes: Ref. 3 thru 12, NHNA Only, Start Year: 01/01/1965
3	C5NN5N190F	1	Frame Assy., Rear Tow Hook Main, W/ & L/Swinging Drawbar, 2000-3000, NH-E Only, No Longer Serviced, Start Year: 01/01/1965
4	NS	1	Plate, Rear Tow Hook Main, W/ & L/Swinging Drawbar, 2000-3000, NHNA Only, Start Year: 01/01/1965
4	C7NN5N183A	1	Plate, Rear Tow Hook Main, France, Not Part of Kit, 2000-3000, NH-E Only, No Longer Serviced, Start Year: 01/01/1965
5	304768S36	4	Screw, Cap, HH, G5, 5/8"-11 x 1-1/2", L/Swinging Drawbar, 2000-3000, Start Year: 01/01/1965
6	280374	2	Nut, G5, 5/8"-11, W/ & L/Swinging Drawbar, 2000-3000, Start Year: 01/01/1965
7	9627896	2	Screw, Cap, HH, G5, 5/8"-11 x 1-3/4", L/Swinging Drawbar, 2000-3000, Start Year: 01/01/1965
7	9627896	4	Screw, Cap, HH, G5, 5/8"-11 x 1-3/4", W/Swinging Drawbar, 2000-3000, Start Year: 01/01/1965
8	34811S36	6	Washer, Lock, 5/8", L/Swinging Drawbar, 2000-3000, Start Year: 01/01/1965
8	34811S36	2	Washer, Lock, 5/8", W/Swinging Drawbar, 2000-3000, Start Year: 01/01/1965
9	86505999	4	Screw, Cap, HH, G5, 5/8"-11 x 2", W/Swinging Drawbar, 2000-3000, Start Year: 01/01/1965
10	C5NN5N187A	1	Pin, Rear Tow Hook, Top, W/ & L/Swinging Drawbar, 2000-3000, NH-E Only, Start Year: 01/01/1965
11	377361S36	2	Pin, Spring Retaining, W/ & L/Swinging Drawbar, 2000-3000, Start Year: 01/01/1965
12	C5NNN806B	2	Spacer, Drawbar to Housing, W/Swinging Drawbar, 2000-3000, Start Year: 01/01/1965
14A	C5NNP790B	1	Guard, Rear PTO Universal Coupling, W/ & L/Swinging Drawbar, Germany & Italy, 2000-3000, NH-E Only, No Longer Serviced, Start Year: 01/01/1965
14B	80681	2	Washer, Lock, 5/16", W/ & L/Swinging Drawbar, Germany & Italy, 2000-3000, Start Year: 01/01/1965
14C	9635082	2	Nut, G5, 5/16"-18, W/ & L/Swinging Drawbar, Germany & Italy, 2000-3000, Start Year: 01/01/1965
	C7NN5N190A	1	Frame Assy., Tow Hook, Not Part of Kit, 2000-3000, Germany, Belgium, Netherlands, NH-E Only, No Longer Serviced, Start Year: 01/01/1965
	C7NN5N184C	2	Pin, Tow Hook, Rear, Not Part of Kit, 2000-3000, Germany, Belgium, Netherlands, NH-E Only, No Longer Serviced, Start Year: 08/01/1973
	D2NN5N185A	2	Pin, Tow Pin Retaining, Not Part of Kit, 2000-3000, Germany, Belgium, Netherlands, NH-E Only, No Longer Serviced, Start Year: 01/01/1965
15	NS	1	Kit, Main Frame, Rear, L/Swinging Drawbar, 4000, Order Components, NHNA Only, Start Year: 01/01/1965
16	NS	1	Kit, Main Frame, Rear, W/Swinging Drawbar, 4000, Includes: Ref. 17 thru 25, Order Components, NHNA Only, Start Year: 01/01/1965
16	NS	1	Kit, Main Frame, Rear, W/Swinging Drawbar, Germany & Italy, 4000, Includes: Ref. 17 thru 25, Order Components, NHNA Only, Start Year: 01/01/1965
17	NS	1	Frame Assy., Rear Tow Hook Main, W/ & L/Swinging Drawbar, 4000, Order Components, NHNA Only, Start Year: 01/01/1965
17	C7NN5N190C	1	Frame Assy., Rear Tow Hook Main, Not Part of Kit, France, 4000, NH-E Only, Start Year: 01/01/1965
18	NS	1	Plate, Rear Tow Hook Main Frame, W/ & L/Swinging Drawbar, Germany & Italy, 4000, Order Components, NHNA Only, Start Year: 01/01/1965
18	C5NN486D	1	Pin, Hydraulic Life Rocker Pivot, W/ & L/Swinging Drawbar, 4000, NH-E Only, Years: 01/01/1965-12/31/1966
19	NS	1	Bracket, Tow Hook Support, LH, W/ & L/Swinging Drawbar, 4000, NHNA Only, Start Year: 01/01/1967

5000-SERIES 4 CYL TRACTOR (1/65-1/75)

17E02 REAR TOW HOOK MAIN FRAME KITS (NH-E)

Ref	Part Number	Qty	Description
19A	NS	1	Bracket, Tow Hook Support, RH, W/ & L/Swinging Drawbar, 4000, NHNA Only, Start Year: 01/01/1967
19B	44735S36	4	Washer, 1/2", W/ & L/Swinging Drawbar, 4000, Start Year: 01/01/1967
19C	280431	4	Nut, G5, 1/2"-13, W/ & L/Swinging Drawbar, 4000, Start Year: 01/01/1967
19D	280524	4	Screw, Cap, HH, G5, 1/2"-13 x 1-5/8", W/ & L/Swinging Drawbar, 4000, Start Year: 01/01/1967
19E	304883S36	4	Screw, Cap, HH, G5, 5/8"-11 x 2-3/8", W/ & L/Swinging Drawbar, 4000, Start Year: 01/01/1967
20	86729275	6	Washer, Lock, 5/8", L/Swinging Drawbar, 4000, Start Year: 01/01/1965
20	86729275	2	Washer, Lock, 5/8", W/Swinging Drawbar, 4000, Start Year: 01/01/1965
21	280374	2	Nut, G5, 5/8"-11, W/ & L/Swinging Drawbar, 4000, Start Year: 01/01/1965
22	9627896	2	Screw, Cap, HH, G5, 5/8"-11 x 1-3/4", W/ & L/Swinging Drawbar, 4000, Start Year: 01/01/1965
23	82001789	4	Screw, Cap, HH, G5, 5/8"-11 x 1-7/8", L/Swinging Drawbar, 4000, No Longer Serviced (NHNA), Start Year: 01/01/1965
24	88556	6	Screw, Cap, HH, G5, 5/8"-11 x 2-1/4", Start Year: 01/01/1965
24A	351502S36	4	Washer, Flat, 5/8", 1.0" (25.4mm) O.D., W/ & L/Swinging Drawbar, 4000, Start Year: 01/01/1965
25	C5NNN806C	2	Spacer, Drawbar to Center Housing, W/Swinging Drawbar, 4000, NH-E Only, No Longer Serviced, Start Year: 01/01/1965
27A	C5NNP790C	1	Guard Assy., Rear PTO Universal Coupling, W/ & L/Swinging Drawbar, Germany & Italy, 4000, NH-E Only, Start Year: 01/01/1965
27B	80681	2	Washer, Lock, 5/16", W/ & L/Swinging Drawbar, Germany & Italy, 4000, Start Year: 01/01/1965
27C	9635082	2	Nut, G5, 5/16"-18, W/ & L/Swinging Drawbar, Germany & Italy, 4000, Start Year: 01/01/1965
	C7NN5N184A	1	Pin, Towing Hook, Rear, France, 4000, NH-E Only, Start Year: 01/01/1965
	C7NN5N184B	1	Pin, Towing Hook, Rear, W/Swinging Drawbar, Not Part of Kit, 4000, Germany, Belgium, Netherlands, NH-E Only, Start Year: 01/01/1965
	D6NN5N190A	1	Frame Assy., Rear Tow Hook, W/Swinging Drawbar, Not Part of Kit, 4000, Germany, Belgium, Netherlands, NH-E Only, Start Year: 01/01/1965
	C7NN5N184C	2	Pin, Towing Hook, Rear, W/Swinging Drawbar, Not Part of Kit, 4000, Germany, Belgium, Netherlands, NH-E Only, No Longer Serviced, Start Year: 08/01/1973
	D2NN5N185A	2	Pin, Towing Hook Retaining, W/Swinging Drawbar, 4000, Germany, Belgium, Netherlands, NH-E Only, No Longer Serviced, Start Year: 01/01/1965
	E27N995294	2	Pin & Ring Assy., L/Swinging Drawbar, 4000, Start Year: 01/01/1965
	D8NN5N180BA	1	Hook Assy., L/Swinging Drawbar, 4000, NH-E Only, No Longer Serviced, Start Year: 01/01/1965
	D8NN5N195AA	1	Pin, Clip & Chain Assy., L/Swinging Drawbar, 4000, NH-E Only, Start Year: 01/01/1965
28	NS	1	Kit, Main Frame, Rear, W/Swinging Drawbar, 5000-7000, Includes: Ref. 29 thru 40A, Order Components, NHNA Only, Start Year: 01/01/1965
29	C7NN5N190B	1	Frame Assy., Rear Tow Hook Main, Not Part of Kit, Replaces C5NN5N190H, 5000-7000, NH-E Only, Years: 01/01/1965-12/31/1973
29	NS	1	Plate, Rear Tow Hook Main Frame, 5000-7000, Order Components, No Longer Serviced, Start Year: 01/01/1965
31	C5NN486E	1	Pin, Hydraulic Lift Rocker Pivot, 5000-7000, NH-E Only, Years: 01/01/1965-12/31/1966
32	377361S36	2	Pin, Spring Retaining, 5000-7000, Years: 01/01/1965-12/31/1966
33	86729275	4	Washer, Lock, 5/8", 5000-7000, Start Year: 01/01/1965
34	280374	2	Nut, G5, 5/8"-11, 5000-7000, Start Year: 01/01/1965

5000-SERIES 4 CYL TRACTOR (1/65-1/75)

17E02 REAR TOW HOOK MAIN FRAME KITS (NH-E)

Ref	Part Number	Qty	Description
35	9627896	2	Screw, Cap, HH, G5, 5/8"-11 x 1-3/4", 5000-7000, Start Year: 01/01/1965
36	C5NNN806A	1	Spacer, Drawbar Hanger to Housing, Not Part of Kit, 5000-7000, NH-E Only, No Longer Serviced, Start Year: 01/01/1965
37	9823688	2	Screw, Cap, HH, G5, 7/8"-9 x 2-3/4", 5000-7000, Start Year: 01/01/1965
38	88556	2	Screw, Cap, HH, G5, 5/8"-11 x 2-1/4", Start Year: 01/01/1965
39	304883S36	4	Screw, Cap, HH, G5, 5/8"-11 x 2-3/8", 5000-7000, Start Year: 01/01/1967
40	C5NNN819D	1	Strap, Drawbar Hanger Reinforcing Lock, Germany, Not Part of Kit, 5000-7000, NH-E Only, No Longer Serviced, Start Year: 01/01/1965
40A	352619S36	2	Washer, Thick Flat, .880 ID x 1.50 OD x .12 Thk, 5000-7000, Start Year: 01/01/1965
41	C5NNP790B	1	Guard, Rear PTO Universal Coupling, Germany & Italy, 5000-7000, NH-E Only, No Longer Serviced, Start Year: 01/01/1965
42	80681	2	Washer, Lock, 5/16", Germany & Italy, 5000-7000, Start Year: 01/01/1965
43	9635082	1	Nut, G5, 5/16"-18, Germany & Italy, 5000-7000, Start Year: 01/01/1965
	C7NN5N184B	1	Pin, Towing Hook Rear, Germany, 5000-7000, NH-E Only, Start Year: 01/01/1965
	C7NN5N190D	1	Frame Assy., Rear Tow Hook, Not Part of Kit, 5000-7000, Germany, Belgium, Netherlands, NH-E Only, No Longer Serviced, Start Year: 01/01/1965
	C7NN5N184B	2	Pin, Towing Hook Rear, Not Part of Kit, 5000-7000, Germany, Belgium, Netherlands, NH-E Only, Start Year: 01/01/1965
	D2NN5N185A	2	Pin, Towing Hook Retaining, 5000-7000, Germany, Belgium, Netherlands, NH-E Only, No Longer Serviced, Start Year: 01/01/1965
	D4NN5N183B	2	Plate, Main Frame Mounting, 5000-7000, Germany, Belgium, Netherlands, NH-E Only, No Longer Serviced, Start Year: 01/01/1965
	E0NN5N190AA	1	Frame Assy., Rear Tow Hook, Germany, Belgium, 5000-7000, NH-E Only, No Longer Serviced, Start Year: 09/01/1973
	D3NN17N809A	1	Spacer, Rear Tow Hook, Germany, Belgium, 5000-7000, NH-E Only, No Longer Serviced, Start Year: 09/01/1973
	D3NN17N810A	4/6	Bolt, HH, Spacer to Housing, 3/4"-10 x 4.30, Germany, Belgium, 5000-7000, NH-E Only, Start Year: 09/01/1973
	D3NN17N811A	2	Bolt, HH, Anchor to Spacer to Housing, W/Internal Check Chains, Germany, Belgium, 5000-7000, NH-E Only, No Longer Serviced, Start Year: 09/01/1973
	D3NN17N807A	1	Bracket, Rear Tow Hook, LH, France, Netherlands, 5000-7000, NH-E Only, No Longer Serviced, Start Year: 01/01/1974
	D3NN17N804A	1	Bracket, Rear Tow Hook, RH, France, Netherlands, 5000-7000, NH-E Only, No Longer Serviced, Start Year: 01/01/1974
	D3NN5N190B	1	Frame Assy., Rear Tow Hook Main, France, Netherlands, 5000-7000, NH-E Only, No Longer Serviced, Start Year: 01/01/1974
	86729275	4	Washer, Lock, 5/8", France, Netherlands, 5000-7000, Start Year: 01/01/1974
	280374	4	Nut, G5, 5/8"-11, France, Netherlands, 5000-7000, Start Year: 01/01/1974
	86505999	4	Screw, Cap, HH, G5, 5/8"-11 x 2", Frame to Bracket, France, Netherlands, 5000-7000, Start Year: 01/01/1974

5000-SERIES 4 CYL TRACTOR (1/65-1/75)

17E02 REAR TOW HOOK MAIN FRAME KITS (NH-E)

Ref	Part Number	Qty	Description
	304883S36	4	Screw, Cap, HH, G5, 5/8"-11 x 2-3/8", Brackets to Housing, France, Netherlands, 5000-7000, Start Year: 01/01/1974
	NS	1	Fender Assy., Front, LH, 2100-3100, NHNA Only, Start Year: 01/01/1965
	NLS	1	Fender Assy., Front, LH, Rubber, 4100 {D3NN16006G6}, Start Year: 01/01/1965
	PL	1	Fender Assy., Front, LH, 5100-7100, NHNA Only, Start Year: 01/01/1965
	NS	1	Fender Assy., Front, RH, 2100-3100, NHNA Only, Start Year: 01/01/1965
	D1NN16005B	1	Fender Assy., Front, RH, 4100, NH-E Only, Years: 01/01/1965-02/28/1973
	NLS	1	Fender Assy., Front, RH, Rubber, 4100 {D3NN16005G5}, Start Year: 03/01/1973
	D1NN16005A	1	Fender Assy., Front, RH, 5100-7100, NH-E Only, Start Year: 01/01/1965
		1	Kit, Fender, Rubber, L/"Q" Cab, 2100-3100, No Longer Serviced, Start Year: 01/01/1965
		1	Kit, Fender, Rubber, W/"Q" Cab, 2100-3100, No Longer Serviced, Start Year: 04/01/1976
	C7NN17N860A	1	Mirror & Bracket Assy., Rear View, Includes: Baffle & Ref. 14, NH-E Only, No Longer Serviced, Start Year: 01/01/1965
	C7NN17N256A	1	Decal, Tachometer, 2100-3100, NH-E Only, No Longer Serviced, Start Year: 01/01/1965
	C7NN17N256C	1	Decal, Tachometer, 8 Speed Transmission, 4100, NH-E Only, No Longer Serviced, Start Year: 01/01/1965
	C7NN17N256D	1	Decal, Tachometer, 9 Speed Transmission, 4100, NH-E Only, No Longer Serviced, Start Year: 01/01/1965
	C7NN17N256E	1	Decal, Tachometer, 5100, NH-E Only, Start Year: 01/01/1965
	34804S36	2	Washer, Lock, #12, No Longer Serviced (NH-E), Start Year: 01/01/1965
	86512084	2	Nut, #12-24, Start Year: 01/01/1965
	NLS	2	Screw, #12-24 x 3/4" {352404S36}, Start Year: 01/01/1965
	81547	4	Washer, Lock, 7/16", 2100-3100, Start Year: 01/01/1965
	280717	4	Nut, G5, 7/16"-14, 2100-3100, Start Year: 01/01/1965
		4	Bolt, 7/16"-14 x 2.88, 2100-3100, Start Year: 01/01/1965
	PL	1	Clamp, Fender to Steering Arm, LH, 4100, NHNA Only, Start Year: 03/01/1973
	D1NN16N047A	1	Clamp, Fender to Steering Arm, LH, 5100-7100, NH-E Only, Start Year: 03/01/1973
	PL	1	Clamp, Fender to Steering Arm, RH, 4100, NHNA Only, Start Year: 03/01/1973
	PL	1	Clamp, Fender to Steering Arm, RH, 5100-7100, NHNA Only, Start Year: 03/01/1973
	EFPN17N679A	1	Kit, Rear View Mirror & Arm, U.S., Includes: Arm & the Following, NHNA Only, Start Year: 01/01/1965
	EFPN17N679A	1	Mirror Assy., Rear View, NHNA Only, Start Year: 01/01/1965
	87362	2	Washer, SAE, 5/16", Start Year: 01/01/1965
	87872	2	Screw, Cap, HH, G5, 5/16"-18 x 3/4", Start Year: 01/01/1965
	NLS	1	Plate, Reinforcement {D0NN17N684A}, Start Year: 01/01/1965

17E03 DRAWBAR TOWING PIN & CLIP KIT, ACCESSORY (NH-E)

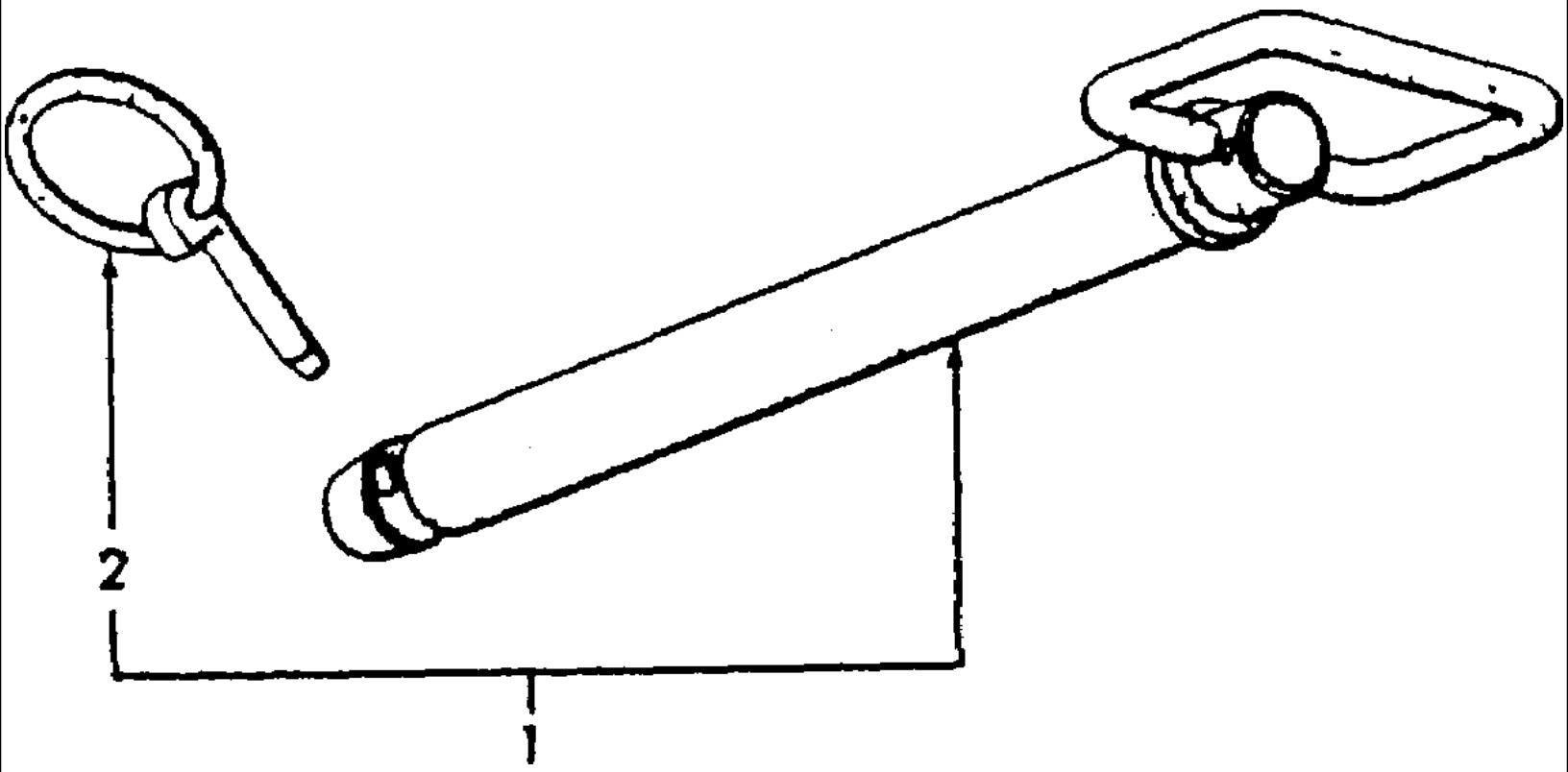

5000-SERIES 4 CYL TRACTOR (1/65-1/75)

17E03 DRAWBAR TOWING PIN & CLIP KIT, ACCESSORY (NH-E)

Ref	Part Number	Qty	Description
1	EFPND819A	AR	Kit, Drawbar Towing Pin & Clip, 1" Dia. Pin, Basildon & Antwerp, NH-E Only, Start Year: 01/01/1965
1	EFPND819B	AR	Kit, Drawbar Towing Pin & Clip, 7/8" Dia. Pin, Includes: Pin, Handle Assy. & Ref. 2, NH-E Only, Start Year: 01/01/1965
2	E27N995294	1	Pin & Ring Assy., Linch, Start Year: 01/01/1965

17E04 SAFETY EMBLEM PARTS, ACCESSORY (NHNA)

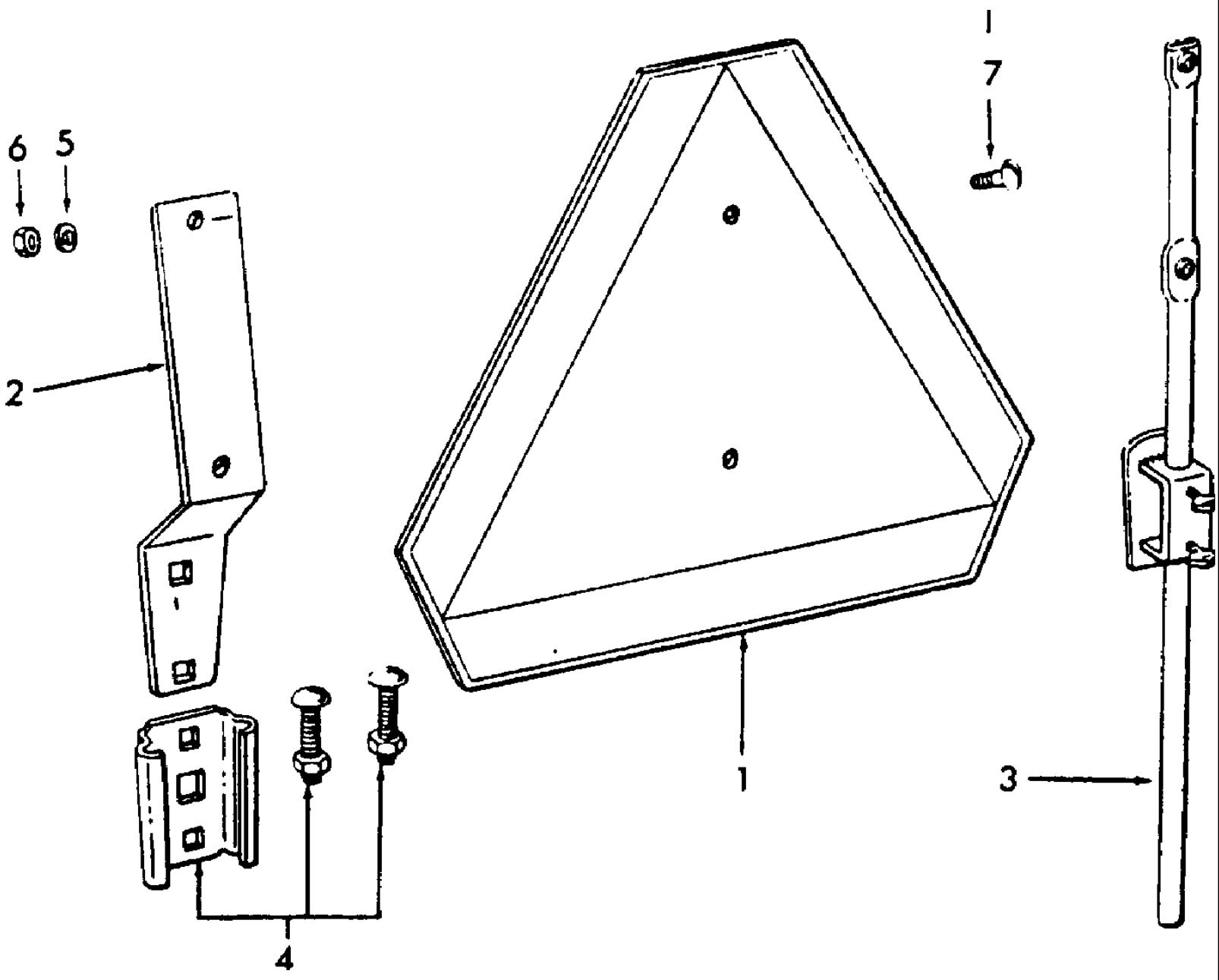

5000-SERIES 4 CYL TRACTOR (1/65-1/75)

17E04 SAFETY EMBLEM PARTS, ACCESSORY (NHNA)

Ref	Part Number	Qty	Description
1	86547710	1	Emblem, Slow Moving Vehicle, U.S.
2	E1NN19N206AB	1	Bracket, Slow Moving Vehicle Emblem Mounting
2	E1NN19N206AB	1	Spacer Mounting Assy., L/Socket
3	309741	1	Pole Mounting Assy., L/Socket, NHNA Only
4	86547711	AR	Decal, Slow Moving Vehicle, Used to Recondition Metal Sign or can be placed on any flat surface, No Longer Serviced (NH-E)
4	847590	1	Socket, Mounting, W/Nut & Bolts, (1) Required for either Spade or Pole Mounting
5	80684	2	Washer, Lock, #10
6	87304	2	Nut, #10-24
7	86511922	2	Screw, Pan Hd, #10-24 x 3/4", Emblem to Bracket
7	86571130	2	Support, Socket, Used W/Standard Pan Seat, California, 2100, NHNA Only

17F01 ENGINE COOLANT HEATER, ACCESSORY

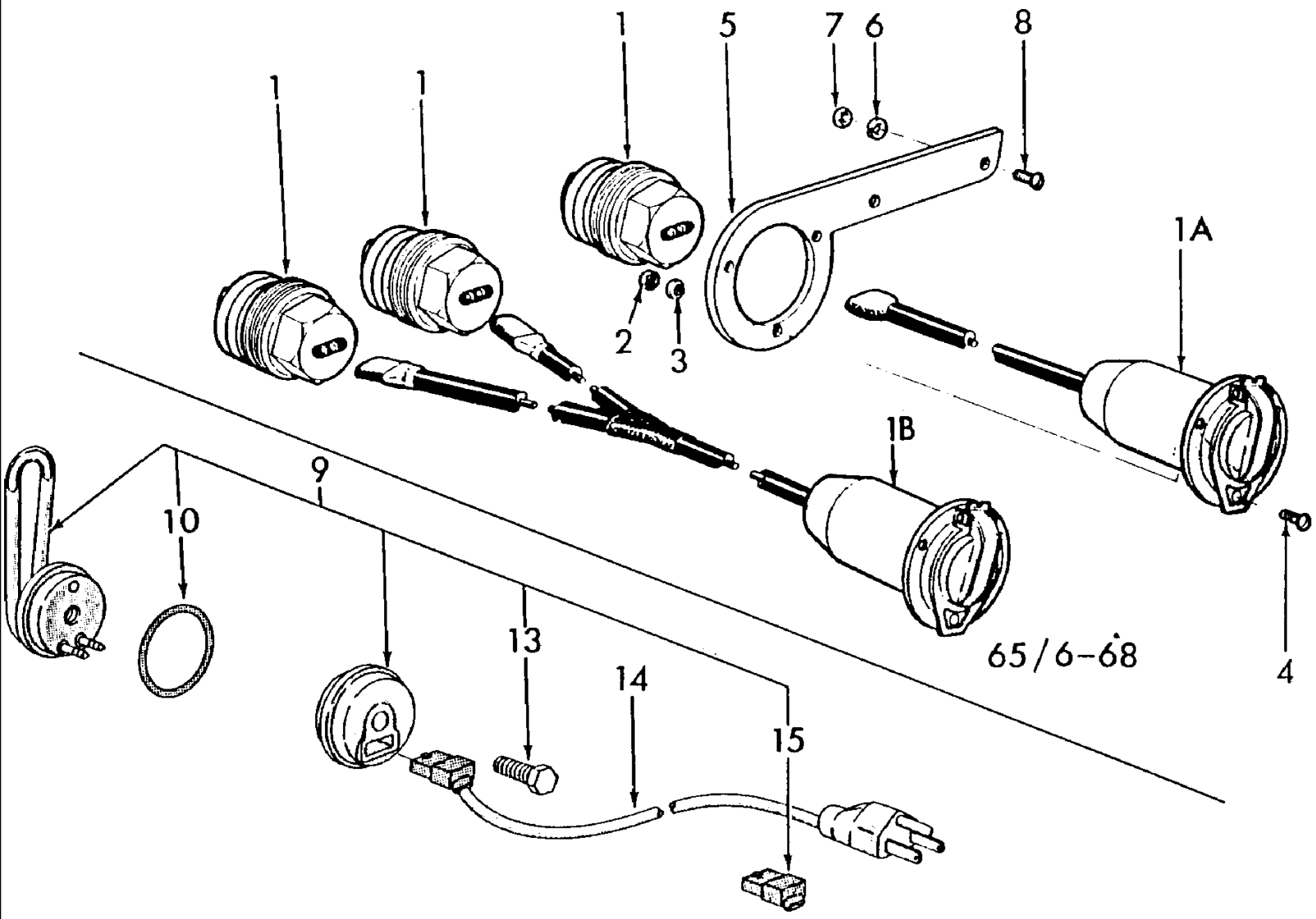

5000-SERIES 4 CYL TRACTOR (1/65-1/75)

17F01 ENGINE COOLANT HEATER, ACCESSORY

Ref	Part Number	Qty	Description
	D8NN8B152AB	1	Kit, Engine Coolant Heater, Single, 115 Volt, U.S., Except 5000, NHNA Only, Years: 01/01/1965-06/30/196
	D8NN19N229AB	1	Adapter, U.S., Use W/5" Starter, NHNA Only, No Longer Serviced, Years: 01/01/1965-06/30/1968
	NS	1	Kit, Engine Coolant Heater, Dual, 115 Volt, U.S., 5000, Includes: Ref. 1 thru 8, NHNA Only, Years: 04/01/1968-06/30/1968
1	D8NN8B156AB	1	Element Assy., Except 5000, NHNA Only, Years: 01/01/1965-06/30/1968
1	D8NN8B156AB	1	Element Assy., 5000, NHNA Only, Years: 01/01/1965-03/31/1968
1	D8NN8B156AB	2	Element Assy., 5000, NHNA Only, Years: 04/01/1968-06/30/1968
1A	C9NN8N048B	1	Cord Assy., Heater, Used W/Single Heater, Except 5000, NHNA Only, No Longer Serviced, Years: 01/01/1965-06/30/1968
1A	C9NN8N048B	1	Cord Assy., Heater, Used W/Single Heater, 5000, NHNA Only, No Longer Serviced, Years: 01/01/1965-03/31/1968
1B	D0NN8N048B	1	Cord Assy., Heater, Used W/Dual Heater, 5000, Years: 04/01/1968-06/30/1968
2	80684	3	Washer, Lock, #10, Years: 01/01/1965-06/30/1968
3	87304	3	Nut, #10-24, Years: 01/01/1965-06/30/1968
4	86511922	3	Screw, Pan Hd, #10-24 x 3/4", No Longer Serviced (NH-E), Years: 01/01/1965-06/30/1968
4	PL	3	Screw, Round Hd., #10-24 x 5/8, U.S., 5100, Years: 04/01/1968-06/30/1968
5	C5NN8B349A	1	Support, Heater Assy., No Longer Serviced (NHNA), Years: 01/01/1965-06/30/1968
6	80682	2	Washer, Lock, 1/4", Years: 01/01/1965-06/30/1968
7	7770	2	Nut, Hex, 1/4"-20, Years: 01/01/1965-06/30/1968
8	86511894	2	Screw, Truss Hd, 1/4"-20 x 3/4", No Longer Serviced (NH-E), Years: 01/01/1965-06/30/1968
9	C7NN8B152B	2	Kit, Engine Coolant Heater, U.S., 115 Volt, Use W/1.75" Dia. Hole, 5100-5200, Includes: Element & Ref. 10 thru 15, NHNA Only, Years: 07/01/1968-12/31/1970
9	C7NN8B152B	2	Kit, Engine Coolant Heater, U.S., 115 Volt, Use W/1.75" Dia. Hole, 5000, Includes: Element & Ref. 10 thru 15, NHNA Only, Start Year: 01/01/1973
9	C7NN8B152B	1	Kit, Engine Coolant Heater, U.S., 115 Volt, Use W/1.75" Dia. Hole, Except 5100-5200, Includes: Element & Ref. 10 thru 15, NHNA Only, Years: 07/01/1968-12/31/1970
9	86590140	2	Kit, Engine Coolant Heater, U.S., 115 Volt, 3 Cylinder, Used W/1.50" Dia. Hole, Includes: Element & Ref. 10 thru 15, Start Year: 01/01/1971
9	86578375	1	Kit, Engine Coolant Heater, U.S., 115 Volt, 4 Cylinder, Used W/1.50" Dia. Hole, Includes: Element & Ref. 10 thru 15, Start Year: 01/01/1971
9	D0NN8B152A	2	Kit, Engine Coolant Heater, Basildon-Antwerp, 230 Volt, Used W/1.75" (44.449mm) Dia. Hole, 5100, Includes: Element & Ref. 10 thru 15, Years: 07/01/1968-12/31/1970
9	D0NN8B152A	1	Kit, Engine Coolant Heater, Basildon-Antwerp, 230 Volt, Used W/1.75" (44.449mm) Dia. Hole, Except 5100, Includes: Element & Ref. 10 thru 15, Years: 07/01/1968-12/31/1970
9	D0NN8B152B	2	Kit, Engine Coolant Heater, U.K., 230 Volt, Used W/1.50" (38.1mm) Dia. Hole, 5100, Includes: Element & Ref. 10 thru 15, Start Year: 01/01/1971
9	D0NN8B152B	1	Kit, Engine Coolant Heater, U.K., 230 Volt, Used W/1.50" (38.1mm) Dia. Hole, Except 5100, Includes: Element & Ref. 10 thru 15, Start Year: 01/01/1971
10	9706747	2/1	O-Ring, 1.50" I.D. x .139" Thk, Years: 07/01/1968-12/31/1970
10	14463681	2/1	O-Ring, 1.234" ID x .139" Thk, Start Year: 01/01/1971
13	86977738	2/1	Screw, Cap, HH, G5, 5/16"-24 x 7/8", Years: 07/01/1968-12/31/1970

5000-SERIES 4 CYL TRACTOR (1/65-1/75)

17F01 ENGINE COOLANT HEATER, ACCESSORY

Ref	Part Number	Qty	Description
14	C7NN8N048A	2/1	Cord Assy., Single, W/Male Plug, U.S., NHNA Only, Start Year: 07/01/1968
14	D0NN8N048B	1	Cord Assy., Dual, W/Male Plug, U.S., 5000-7000, Start Year: 07/01/1968
14	D0NN8N048A	2/1	Cord Assy., Single, W/O Male Plug, U.K.-Antwerp, Start Year: 07/01/1968
15	D9NN8N049AA	2/1	Plug, Rubber, Dust Seal, Start Year: 07/01/1968
15	372047S100	2	Clip, Cord to Frame, 5000, Start Year: 07/01/1968
15	263117	1	Cable Tie, 3/32" x 11-1/2" L, Cord to Negative Battery Cable, Start Year: 07/01/1968

17G01 HYDRAULIC REMOTE CONTROL CYLINDER ASSEMBLY, ACCESSORY (NHNA)

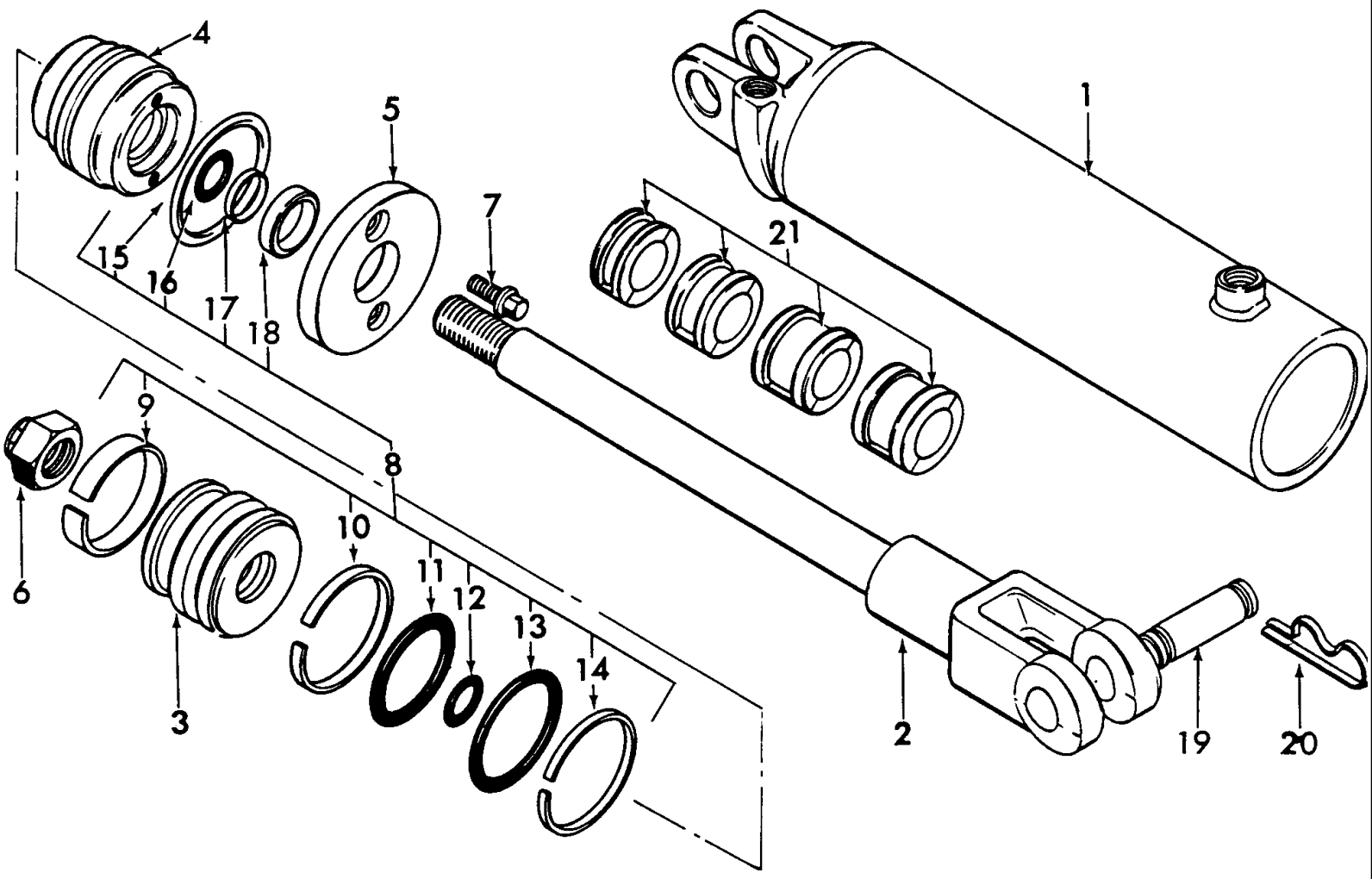

5000-SERIES 4 CYL TRACTOR (1/65-1/75)

17G01 HYDRAULIC REMOTE CONTROL CYLINDER ASSEMBLY, ACCESSORY (NHNA)

Ref	Part Number	Qty	Description
	CED2NNC846D	AR	Cylinder Assy., 2 x 8" D.A., Includes: Ref. 1 thru 18, NHNA Only, No Longer Serviced, Start Year: 01/01/1965
	CED2NNC846C	AR	Cylinder Assy., 3 x 8" D.A., Includes: Ref. 1 thru 18, NHNA Only, No Longer Serviced, Start Year: 01/01/1965
	CED2NNC846B	AR	Cylinder Assy., 3-1/2 x 8" D.A., Includes: Ref. 1 thru 18, NHNA Only, No Longer Serviced, Start Year: 01/01/1965
1	CE41200422	1	Barrel Assy., 2 x 8" D.A., NHNA Only, No Longer Serviced, Start Year: 01/01/1965
1	CE41302406	1	Barrel Assy., 3 x 8" D.A., NHNA Only, No Longer Serviced, Start Year: 01/01/1965
1	CE41342411	1	Barrel Assy., 3-1/2 x 8" D.A., NHNA Only, No Longer Serviced, Start Year: 01/01/1965
2	CE41200610	1	Rod Assy., Piston, 2 x 8" D.A., NHNA Only, No Longer Serviced, Start Year: 01/01/1965
2	CE41302602	1	Rod Assy., Piston, 3 x 8" & 3-1/2 x 8" D.A., NHNA Only, No Longer Serviced, Start Year: 01/01/1965
3	CE4120012	1	Piston, 2 x 8" D.A., NHNA Only, No Longer Serviced, Start Year: 01/01/1965
3	CE41306121	1	Piston, 3 x 8" D.A., NHNA Only, No Longer Serviced, Start Year: 01/01/1965
3	CE413453	1	Piston, 3-1/2 x 8" D.A., Replaces CE-41342-4, NHNA Only, No Longer Serviced, Start Year: 01/01/1965
4	CE4120058	1	Bearing, 2 x 8" D.A., NHNA Only, No Longer Serviced, Start Year: 01/01/1965
4	CE4130253	1	Bearing, 3 x 8" D.A., NHNA Only, No Longer Serviced, Start Year: 01/01/1965
4	CE4134254	1	Bearing, 3-1/2 x 8" D.A., NHNA Only, No Longer Serviced, Start Year: 01/01/1965
5	CE41200719	1	Plate, Bearing, 2 x 8" D.A., NHNA Only, No Longer Serviced, Start Year: 01/01/1965
5	CE41302704	1	Plate, Bearing, 3 x 8" D.A., NHNA Only, No Longer Serviced, Start Year: 01/01/1965
5	CE41342704	1	Plate, Bearing, 3-1/2 x 8" D.A., NHNA Only, No Longer Serviced, Start Year: 01/01/1965
6	CE1608410	1	Nut, Lock, 5/8"-18, 2 x 8" D.A., NHNA Only, No Longer Serviced, Start Year: 01/01/1965
6	CE1608416	1	Nut, Lock, 1"-14, 3 x 8" & 3-1/2 x 8" D.A., NHNA Only, No Longer Serviced, Start Year: 01/01/1965
7	88565	2	Screw, HWH, #8-32 x 5/8", Start Year: 01/01/1965
7	CE16186810	2	Screw, HWH, 1/4"-20 x 5/8, 3 x 8" & 3-1/2 x 8" D.A., NHNA Only, No Longer Serviced, Start Year: 01/01/1965
8	CE41200904	AR	Kit, Seal Repair, 2 x 8" D.A., Includes: Ref. 9 thru 18, NHNA Only, Start Year: 01/01/1965
8	CE41300922	AR	Kit, Seal Repair, 3 x 8" D.A., Includes: Ref. 9 thru 18, NHNA Only, Start Year: 01/01/1965
8	CE41340912	AR	Kit, Seal Repair, 3-1/2 x 8" D.A., Includes: Ref. 9 thru 18, NHNA Only, No Longer Serviced, Start Year: 01/01/1965
9	PL	1	Ring, Wide, All Cylinder Assemblies, 2 x 8", 3 x 8" & 3-1/2 x 8", NHNA Only, Start Year: 01/01/1965
10	PL	1	Ring, Slipper, All Cylinder Assemblies, 2 x 8", 3 x 8" & 3-1/2 x 8", NHNA Only, Start Year: 01/01/1965
11	PL	1	O-Ring, All Cylinder Assemblies, 2 x 8", 3 x 8" & 3-1/2 x 8", NHNA Only, Start Year: 01/01/1965
12	PL	1	O-Ring, All Cylinder Assemblies, 2 x 8", 3 x 8" & 3-1/2 x 8", NHNA Only, Start Year: 01/01/1965
13	PL	1	O-Ring, All Cylinder Assemblies, 2 x 8", 3 x 8" & 3-1/2 x 8", NHNA Only, Start Year: 01/01/1965
14	PL	1	Washer, Back-Up, All Cylinder Assemblies, 2 x 8", 3 x 8" & 3-1/2 x 8", NHNA Only, Start Year: 01/01/1965
15	PL	1	Ring, Lock, All Cylinder Assemblies, 2 x 8", 3 x 8" & 3-1/2 x 8", NHNA Only, Start Year: 01/01/1965
16	PL	1	O-Ring, All Cylinder Assemblies, 2 x 8", 3 x 8" & 3-1/2 x 8", NHNA Only, Start Year: 01/01/1965
17	PL	1	Washer, Back-Up, All Cylinder Assemblies, 2 x 8", 3 x 8" & 3-1/2 x 8", NHNA Only, Start Year: 01/01/1965
18	PL	1	Seal, All Cylinder Assemblies, 2 x 8", 3 x 8" & 3-1/2 x 8", NHNA Only, Start Year: 01/01/1965
19	CE41322704	2	Pin, Clevis, All Cylinder Assemblies, 2 x 8", 3 x 8" & 3-1/2 x 8", NHNA Only, No Longer Serviced, Start Year: 01/01/1965

17G01 HYDRAULIC REMOTE CONTROL CYLINDER ASSEMBLY, ACCESSORY (NHNA)

Ref	Part Number	Qty	Description
20	7000559	4	Pin, Clevis Spring, All Cylinder Assemblies, 2 x 8", 3 x 8" & 3-1/2 x 8", NHNA Only, No Longer Serviced, Start Year: 01/01/1965
21	CE41345711	1	Kit, Limit Stop, 2 x 8" D.A., Includes: Package of (4) Limit Stop Assemblies (1) each of 3/4", 1", 1-1/4", & 1-1/2", NHNA Only, No Longer Serviced, Start Year: 01/01/1965
21	CE41345711	1	Kit, Limit Stop, 3 x 8" & 3-1/2 x 8" D.A., Includes: Package of (4) Limit Stop Assemblies (1) each of 3/4", 1", 1-1/4", & 1-1/2", NHNA Only, No Longer Serviced, Start Year: 01/01/1965

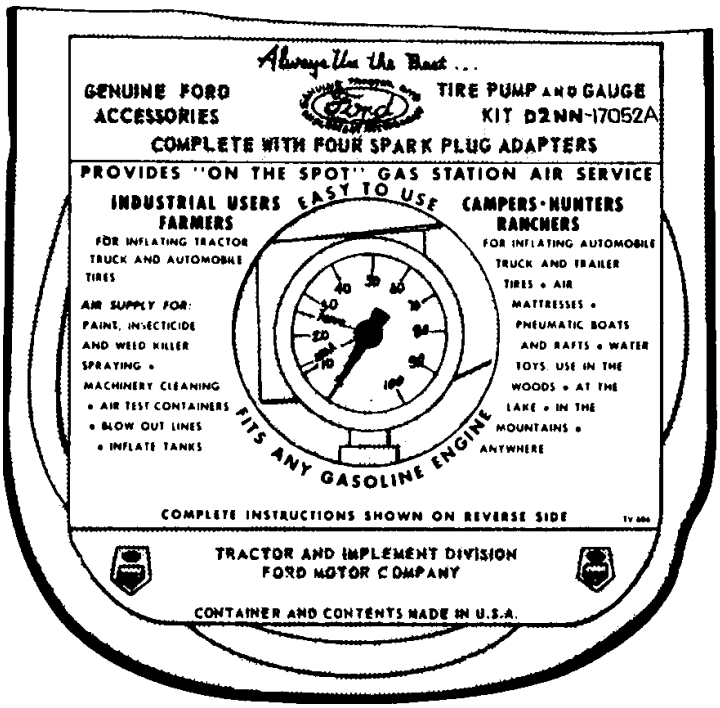
Always Use the Best ...
GENUINE FORD ACCESSORIES
TIRE PUMP AND GAUGE KIT D2NN-17052A
COMPLETE WITH FOUR SPARK PLUG ADAPTERS
PROVIDES "ON THE SPOT" GAS STATION AIR SERVICE
INDUSTRIAL USERS FARMERS
FOR INFLATING TRACTOR TRUCK AND AUTOMOBILE TIRES
AIR SUPPLY FOR: PAINT, INSECTICIDE AND WEED KILLER SPRAYING • MACHINERY CLEANING • AIR TEST CONTAINERS • BLOW OUT LINES • INFLATE TANKS
EASY TO USE
CAMPERS-HUNTERS RANCHERS
FOR INFLATING AUTOMOBILE TRUCK AND TRAILER TIRES • AIR MATTRESSES • PNEUMATIC BOATS AND RAFTS • WATER TOYS. USE IN THE WOODS • AT THE LAKE • IN THE MOUNTAINS • ANYWHERE
FITS ANY GASOLINE ENGINE
COMPLETE INSTRUCTIONS SHOWN ON REVERSE SIDE
TRACTOR AND IMPLEMENT DIVISION FORD MOTOR COMPANY
CONTAINER AND CONTENTS MADE IN U.S.A.

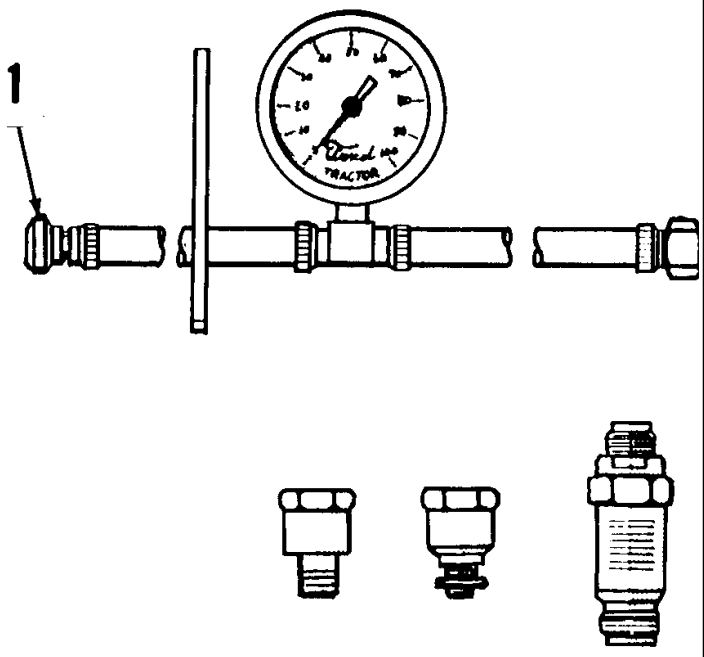
1

5000-SERIES 4 CYL TRACTOR (1/65-1/75)

17H01 TIRE PUMP, ACCESSORY, GASOLINE (PETROL) (NHNA)

Ref	Part Number	Qty	Description
1	D2NN17052A	1	Kit, Tire Pump Gauge & Hose Assy., Replaces P/N D1NN-17052-A Gasoline Engines Only, Includes: Pump & Ref. 1, NHNA Only, No Longer Serviced, Start Year: 01/01/1965
1	8C17063A	1	Connector Assy., Pump Hose, NHNA Only, No Longer Serviced, Start Year: 01/01/1965
1	8C17063A	1	Adapter Assy., 18mm, NHNA Only, No Longer Serviced, Start Year: 01/01/1965
1	8C17063A	1	Adapter 18mm to 14mm, 13/32" Reach, NHNA Only, No Longer Serviced, Start Year: 01/01/1965
1	8C17063A	1	Adapter, 18mm to 14mm, 3/4" Reach, NHNA Only, No Longer Serviced, Start Year: 01/01/1965

17H02 TIRE PUMP ASSEMBLY, FOOT TYPE (EXCEPT NHNA)

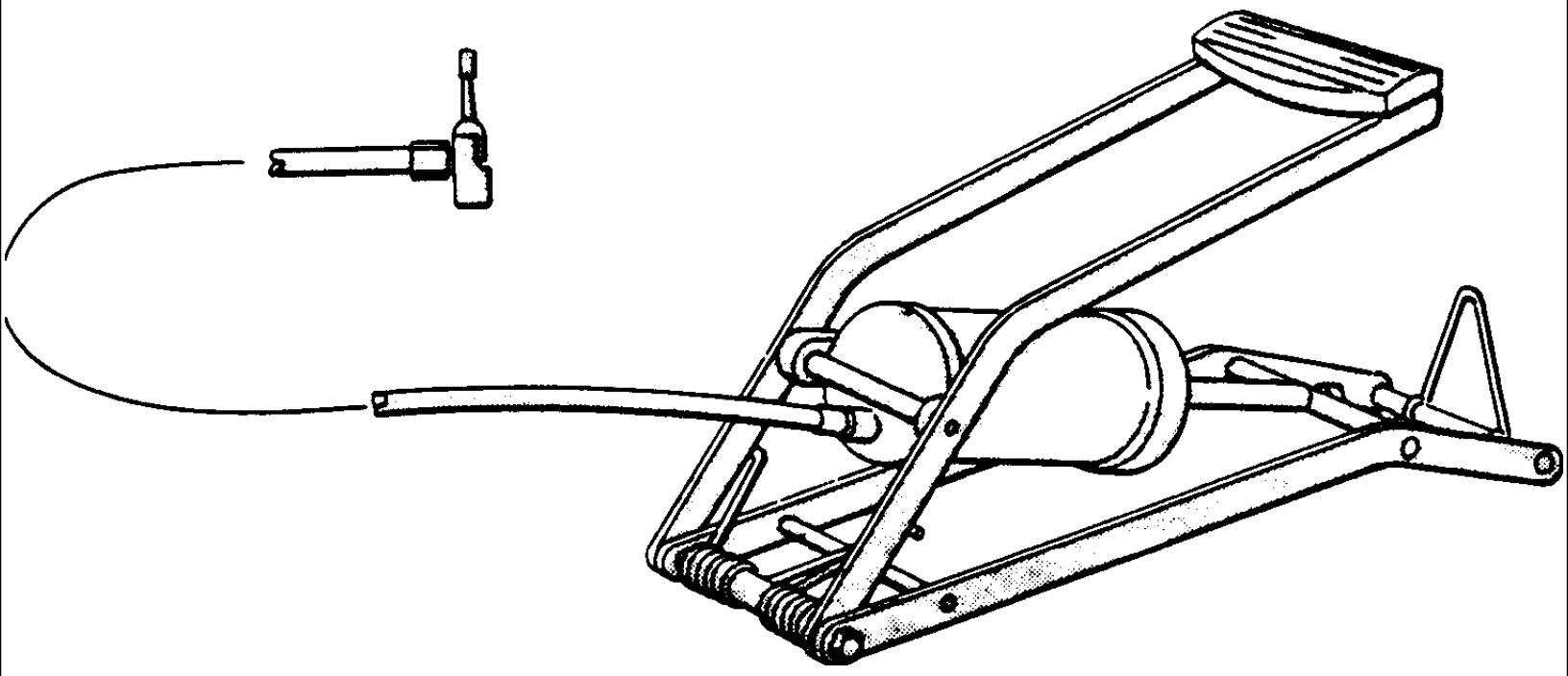

5000-SERIES 4 CYL TRACTOR (1/65-1/75)

17H02 TIRE PUMP ASSEMBLY, FOOT TYPE (EXCEPT NHNA)

Ref	Part Number	Qty	Description
		1	Pump Assy., Tire, Foot Type, Except U.S., NH-E Only, No Longer Serviced, Start Year: 01/01/1965