CATERPILLAR®

SEBP5122-02
October 2012

RUTHZIL TRATOR COMERCIAL DE PEÇAS LTDA 11 97083-6812 ROLANDO

Parts Manual

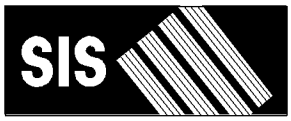

See "General Information" for New Parts Manual Features.

521B TRACK FELLER BUNCHER

F7B1-Up (Machine)
THX1-Up (Engine)
TXD1-Up (Engine)

Powered By C9 Engine

Product and Dealer Information

Note: For product identification plate locations, see the section “Product Identification Information” in the Operation and Maintenance Manual.

Delivery Date: _____

Product Information

Model: _____

Product Identification Number: _____

Engine Serial Number: _____

Transmission Serial Number: _____

Generator Serial Number: _____

Attachment Serial Numbers: _____

Attachment Information: _____

Customer Equipment Number: _____

Dealer Equipment Number: _____

Dealer Information

Name: _____ Branch: _____

Address: _____

_____

_____

	Dealer Contact	Phone Number	Hours
Sales:	_____	_____	_____
Parts:	_____	_____	_____
Service:	_____	_____	_____

MEMORANDA

TABLE OF CONTENTS

Name	Page
GENERAL INFORMATION	A4
REPAIR ALTERNATIVES	A7
SUPPLEMENTAL COOLANT ADDITIVES	A8
MAINTENANCE PARTS	A9
INDEX	A12
MACHINE ARRANGEMENT	1
CHASSIS AR	1
COMMON AR	1
ENGINE ARRANGEMENT	2
CONVERSION AR	2
ENGINE AR	3
ENGINE AR-COMPLETE	4
ENGINE AR-CORE	8
INSTALLATION AR-ENGINE	10
BASIC ENGINE	11
ACCESSORY & FAN DRIVE GP	11
BELT TENSIONER GP	13
CAMSHAFT GP	14
COVER GP-CYLINDER BLOCK	15
COVER GP-FLYWHEEL HOUSING	16
COVER GP-FRONT HOUSING	17
COVER GP-VALVE MECHANISM	20
CRANKSHAFT GP	22
CYLINDER BLOCK AS	23
CYLINDER BLOCK GP	25
CYLINDER HEAD AS	27
CYLINDER HEAD GP	29
DAMPER & PULLEY GP	33
FASTENER GP-CYLINDER HEAD	34
FASTENER GP-DAMPER & PULLEY	35
FASTENER GP-FLYWHEEL	36
FASTENER GP-VALVE COVER	37
FASTENER GP-VALVE COVER BASE	38
FLYWHEEL GP	39
GEAR GP-FRONT	40
HOUSING GP-FLYWHEEL	42
HOUSING GP-FRONT	44
LIFTING GP-ENGINE	45
MOUNTING GP-ENGINE	46
PAN GP-OIL	48
PISTON & ROD GP	49
PLUG GP-ENGINE	50
ROCKER ARM GP	53
SEAL GP-CRANKSHAFT	55
SUPPORT GP-ENGINE	56
VALVE MECHANISM GP	57
LUBRICATION SYSTEM	59
FILTER GP-ENGINE OIL	59
FUMES DISPOSAL GP	61
GAUGE GP-OIL LEVEL (DIPSTICK)	62
LINES GP-ENGINE OIL	63
LINES GP-FAN DRIVE	64
LINES GP-TURBOCHARGER OIL	65
PUMP GP-ENGINE OIL	67
COOLING SYSTEM	68
COOLER GP-ENGINE OIL	68
COOLING AR	69
FAN AR-REVERSIBLE	70
FAN GP-REVERSIBLE	71
GUARD GP-FAN	73
HOUSING & REGULATOR GP	74
LINES GP-COOLING	75
LINES GP-TURBOCHARGER WATER	77
PLUG GP-WATER LINES	79
PUMP AS-WATER	80
PUMP GP-WATER	81
RADIATOR & HYD OIL COOLER GP	83
RADIATOR & MOUNTING GP	85
AIR INLET AND EXHAUST SYSTEM	87
AIR CLEANER GP	87
ELBOW GP-AIR INLET	90
MANIFOLD GP-EXHAUST	91
MUFFLER GP	92
TURBOCHARGER GP	94
FUEL SYSTEM	96
FILTER GP-WATER SEP & FUEL	96
INJECTOR GP-FUEL	97
LINES GP-FUEL	98
PUMP & MTG GP-UNIT INJ HYD	101
PUMP GP-FILTER & FUEL TRANSFER	103
PUMP GP-FUEL INJECTION	104
PUMP GP-FUEL TRANSFER	106
PUMP GP-UNIT INJECTOR HYD	107
REGULATOR GP-FUEL PRESSURE	109
ELECTRICAL AND STARTING SYSTEM	111
ALARM GP	111
ALTERNATOR GP-CHARGING	112
BATTERY & WIRING GP	115
BLOCK GP-JUNCTION	121
CONTROL & MTG GP-ENGINE ELEK	122
CONTROL GP-ENGINE ELECTRONIC	123
ELECTRICAL AR	124
HEATER GP-JACKET WATER	125
LAMP GP-DOME	127
LAMP GP-FLOOD	128
LIGHTING GP-FLOOD	133
PLATE AS-BRUSH	136

TABLE OF CONTENTS

Name	Page
PLUG GP-CONNECTOR	137
PREHEATER GP-MACHINE	138
SENSOR GP-ENGINE	141
SENSOR GP-LIQUID LEVEL	142
SENSOR GP-PRESSURE	143
SENSOR GP-SPEED	145
SENSOR GP-TEMPERATURE	146
STARTING AID GP	148
STARTING AID GP-ETHER	150
STARTING AR-COLD WEATHER	152
STARTING MOTOR GP-ELECTRIC	153
SWITCH GP-DISCONNECT	160
SWITCH GP-LIMIT	162
SWITCH GP-MAGNETIC	163
SWITCH GP-PRESSURE	165
SWITCH GP-TOGGLE	166
VALVE GP-ETHER STARTING	167
WARNING GP-BACKUP	168
WIRING GP-BOOM	169
WIRING GP-CAB	172
WIRING GP-CONSOLE	187
WIRING GP-ELECTRONIC CONTROL	190
WIRING GP-ENGINE	192
WIRING GP-HEATER	196
WIRING GP-MACHINE	197
POWER TRAIN	204
DRIVE GP-FINAL	204
FASTENER GP-FINAL DRIVE	207
HEAD GP-MOTOR	208
LINES GP-PROPEL	210
MOTOR GP-TRAVEL	212
ROTATING GP-MOTOR	213
SPROCKET GP	215
VALVE GP-FLOW CONTROL	216
FRAME AND BODY	217
COUNTERWEIGHT GP	217
DOOR AS-ACCESS	219
FRAME GP-UPPER	220
GEAR & BEARING GP-SWING	222
GUARD GP-RADIATOR	224
GUARD GP-SWIVEL	226
HOOD AS	227
HOOD GP	228
UNDERCARRIAGE	230
ADJUSTMENT GP-HYDRAULIC TRACK	230
FRAME GP-UNDERCARRIAGE	231
GUARD GP-TRAVEL MOTOR	232
IDLER GP-FRONT	233
LINK AS-TRACK	236
ROLLER GP-TRACK	237
ROLLER GP-TRACK-DOUBLE FLANGE	239
ROLLER GP-TRACK-SINGLE FLANGE	240
SPRING GP-RECOIL	242
TRACK AR	243
TRACK GP	244
HYDRAULIC SYSTEM	249
BLOCK GP-HYDRAULIC	249
CAP GP-PROTECTION	250
COUPLING & MTG GP-PUMP	251
COVER GP-CONTROL VALVE	252
COVER GP-PUMP	253
CYLINDER & MTG GP-BOOM	254
CYLINDER & MTG GP-SAW	260
CYLINDER & MTG GP-STICK	261
CYLINDER AR-HYDRAULIC	265
CYLINDER GP-BOOM	267
CYLINDER GP-HOOD TILT	269
CYLINDER GP-HYDRAULIC	270
CYLINDER GP-STICK	274
CYLINDER GP-TILT	276
DRIVE AR-SWING	278
DRIVE GP-SWING	280
FILLER GP-HYDRAULIC OIL	283
FILTER & VALVE GP-PILOT	285
FILTER GP-OIL	288
GAUGE GP-SIGHT	293
HEAD GP-PUMP	294
HOUSING GP-FILTER	295
HYDRAULIC AR	296
HYDRAULIC AR-CIRCULAR SAW	297
HYDRAULIC AR-HARVESTER	299
HYDRAULIC AR-INTERMITTENT SAW	300
LINES GP-BOOM	301
LINES GP-BOOM CYLINDER	307
LINES GP-FRONT	309
LINES GP-HOOD TILT	311
LINES GP-HYDRAULIC	312
LINES GP-PILOT	315
LINES GP-PUMP	321
LINES GP-RETURN	325
LINES GP-RETURN & FILTER	327
LINES GP-SAW	329
LINES GP-STICK	334
LINES GP-TRAVEL MOTOR	340
MOTOR GP-SWING	342
PLUG GP-HYDRAULIC LINES	345
PUMP & MOTOR GP-HOOD TILT	346
PUMP & MOTOR GP-HYD TANK FILL	347
PUMP & MTG GP-HYDRAULIC	349
PUMP & MTG GP-SAW	350
PUMP GP-PISTON	353
ROTATING GP-PUMP	357
ROTOR GP-SWIVEL	360

TABLE OF CONTENTS

Name	Page
SHAFT GP-HYDRAULIC MOTOR	362
SWIVEL GP	363
TANK GP-HYDRAULIC & FUEL	364
VALVE & MTG GP-CONTROL	367
VALVE & MTG GP-MAIN CONTROL	373
VALVE GP-BRAKE	376
VALVE GP-CHECK & RELIEF	377
VALVE GP-CONTROL	378
VALVE GP-COUNTERBALANCE	398
VALVE GP-MAIN CONTROL	399
VALVE GP-PRESSURE CONTROL	403
VALVE GP-PUMP CONTROL	404
VALVE GP-RELIEF	407
VALVE GP-SOLENOID	408
VALVE GP-SOLENOID & MANIFOLD	411
VALVE GP-SWING CUSHION	413
IMPLEMENTS	414
BOOM GP	414
BRACKET GP-MOUNTING	418
LINES GP-GREASE	419
LINKAGE AR-FELLING HEAD	423
LINKAGE AR-HARVESTER HEAD	424
LINKAGE AR-INTERMITTENT SAW	425
LINKAGE GP-FELLING HEAD	426
STICK & BEARING AS	427
STICK GP	428
OPERATOR STATION	432
AIR CONDITIONER & MOUNTING GP	432
AIR CONDITIONER GP	434
ARMREST GP	443
CAB GP	445
COMPRESSOR GP-REFRIGERANT	447
CONSOLE GP-OPERATOR	448
CONTROL & MTG GP-JOYSTICK	454
CONTROL & MTG GP-PEDAL	455
CONTROL GP-HYDRAULIC PEDAL	456
CONTROL GP-MONITOR	457
DOOR GP-ACCESS	458
DOOR GP-CAB	459
DUCT GP-CAB AIR	461
FRAME GP-WINDOW	462
GUARD GP-WINDOW	463
HATCH GP-ROOF	464
INSTALLATION GP-RADIO	467
LINER GP-CAB	468
LINES GP-AIR CONDITIONER	469
MOUNTING GP-CAB	471
OPERATOR AR	472
PANEL GP-ELECTRONIC	473
PLATFORM GP-OPERATOR	475
RADIO GP	477
SEAT & MOUNTING GP	483
SEAT BELT GP	484
SEAT GP	485
SEAT GP-SUSPENSION	486
SUPPORT GP-SEAT	487
SUSPENSION GP-SEAT	488
TRIM GP-CAB	489
WINDOW GP-CAB	492
SERVICE EQUIPMENT AND SUPPLIES	498
FILM GP-U.S.	498
PLATE & FILM GP	499
PART NUMBER INDEX	B1

GENERAL INFORMATION

1. MACHINE IDENTIFICATION

Caterpillar machines are identified by Product Identification Numbers (PIN). Some components included in a machine may be identified by Serial Numbers (S/N). Typical components that will be serialized include engines, transmissions, bulldozers, and rippers. The machine and engine are further identified by arrangement numbers and in some cases modification numbers. These numbers are shown on the product identification plate(s) and on the master plate in the operator's compartment.

Caterpillar dealers need all of these numbers to determine accurate parts identification.

SIS *New Feature*

Effective First Quarter 2001 the Caterpillar Product Identification Number (PIN) changed from 8 to 17 characters. In an effort to provide uniform equipment identification, Caterpillar and other construction equipment manufacturers are moving to comply with the latest version of the product identification numbering standard. Non-road machine PINs are defined by ISO 10261. The new PIN format will apply to all Caterpillar machines and generator sets. The PIN plates and frame marking will display the 17 character PIN. The new format will look like the following:

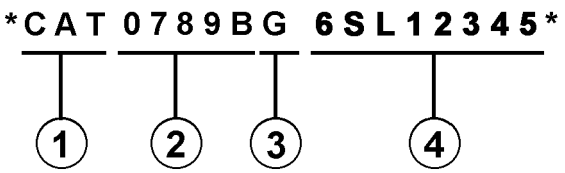

Where:

1. Caterpillar's World Manufacturing Code (characters 1-3)

2. Machine Descriptor (characters 4-8)

3. Check Character (character 9)

4. Machine Indicator Section (MIS) or Product Sequence Number (characters 10-17). These were previously referred to as the Serial Number.

Machines and generator sets produced before First Quarter 2001 will maintain their 8 character PIN format.

Components such as engines, transmissions, axles, etc. and work tools will continue to use an 8 character Serial Number (S/N).

2. ORDERING PARTS

⚠ WARNING

When replacement parts are required for this product Caterpillar recommends using Caterpillar replacement parts or parts with equivalent specifications including, but not limited to, physical dimensions, type, strength and material.

Failure to heed this warning can lead to premature failures, product damage, personal injury or death.

Quality Caterpillar replacement parts are available from Caterpillar dealers throughout the world. Their parts inventories are up to date and include all parts normally required to protect your investment in Caterpillar machines. Dealers may offer repair kits or remanufactured parts to allow selection of the most effective repair alternative for a particular situation. When ordering parts, your order should specify the quantity, part number, part name, and the serial number/product identification number of the machine for which the parts are needed.

3. PARTS MANUAL ORGANIZATION

Product information in this manual is presented as "information elements" that represent all of the components for the specific model. Engine Arrangement and Seat Group are examples of information elements. The information elements are organized alphabetically by part name and secondarily by part number within each major section of the manual.

4. TABLE OF CONTENTS

A table of contents (TOC) is found at the beginning of the manual. The TOC lists each section of the manual with a complete list of all information elements organized as they appear in the manual. Page numbers are provided for quick reference to detailed parts identification illustrations and serviceable consist lists.

5. MAINTENANCE PARTS INDEX

The Maintenance Parts Index, located near the beginning of the manual, references most frequently used maintenance part numbers, providing description, quantity, usage and page number. This information is organized alphabetically by part description.

6. INDEX

The index located near the front of the manual is an alphabetical listing of all information elements included in the manual. Page numbers are provided for quick reference to detailed parts identification illustrations and serviceable consist lists.

7. PART NUMBER INDEX

A numerical index listing all part numbers and the corresponding page number(s) appears at the back of the manual.

8. CAPTIONS

Captions located at the beginning of each information element identify the part number and part name along with additional descriptive information. PIN and S/N information found in each caption should be used to select correct information for a specific machine. Field replacement options, identification of optional attachment components, and where used ("part of") information is also provided.

The first line of a caption is shown in larger type font to indicate the beginning of an information element. Captions for additional pages that may be required to illustrate an information element will be shown in standard type font and will include the term *(contd.)* .

9. NON-SERVICED PARTS

In some instances it is necessary to display non-serviced parts that are a link to a lower level serviceable consist lists. These non-serviced part numbers are shown in *italic* type indicating that they are not available.

10. PARTS LIST REFERENCE NUMBERS

Numbers shown in the Ref No column correspond to numbers used in the associated graphic(s). An alphabetic suffix may be added to a reference number to identify lower level consist items. Numbers shown in the Graphic Ref column refer to the graphic number identifier displayed in the lower left corner of each illustration. The Graphic Ref number may be used in combination with the item Ref No to determine the correct part number. There may be intentional omission of a Ref No in a consist list as information is updated to reflect the latest serviceable part numbers.

11. INDENTED PART NAMES

When a part name is indented in a parts list, it is part of (included in) the group or assembly under which it is indented.

12. ILLUSTRATION REFERENCE LETTERS

When necessary, illustrations contain reference letters (A, B, C etc.) that are intended to track lines and harnesses from one point to another. They are also used to show where to reconnect illustrations that have been separated.

13. ABBREVIATIONS AND SYMBOLS

O.D. – Outside Diameter
I.D. – Inside Diameter
A – Not Part Of This Group
B – Use As Required
C – Change From Previous Type
D – Order By The Meter
E – Order By The Centimeter
F – Not Shown
G – Order By The Inch
I – Refer To Hydraulic Information System
M – Metric Part
R – Remfg Part May Be Available
Y – Separate Illustration
Z – Not Serviced Separately

SIS *New Feature*

14. DESCRIPTION OF TYPE CHANGES

Type - A type is defined as any configuration change that requires an additional Information Element for an Arrangement, Group, or Assembly. If serial number breaks for types are not available, a type # (Type 1, Type 2, etc.) will be displayed in the caption. These "type" changes are identified with a "C" note (change from previous type) in the Parts List. Only the "types" that apply to this Parts Manual will be included. Additional types may exist causing "C" notes to appear on an Information Element when no other types are shown.

15.<END>

This symbol indicates the end of an information element.

NOTE:

Continuing improvement and advancement of product design may cause changes to your machine which may not be included in this publication. Whenever a question arises regarding your Caterpillar product or this publication, please consult your Caterpillar dealer for the latest available information.

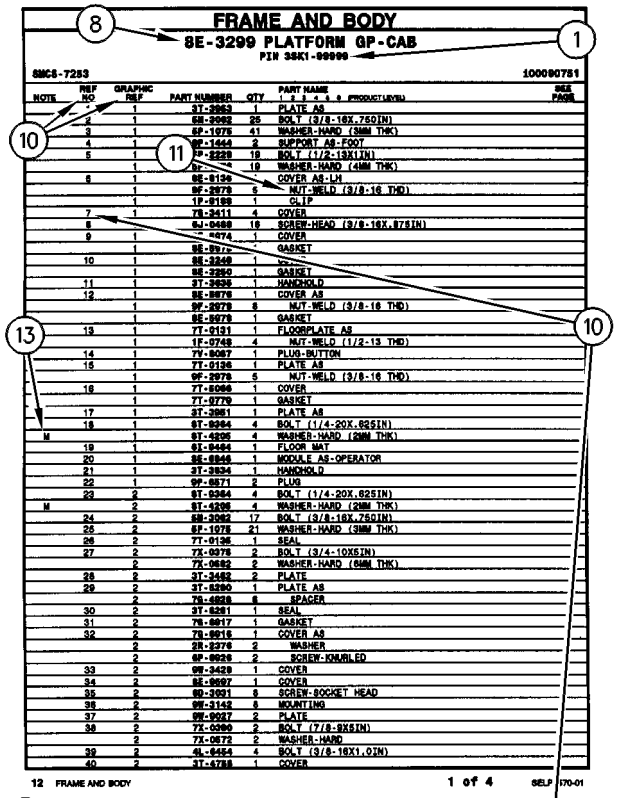
FRAME AND BODY
8E-3299 PLATFORM GP-CAB
PIN 3SK1-99999
SMCS-7283
100090751
12 FRAME AND BODY
1 of 4
SELP4570-01

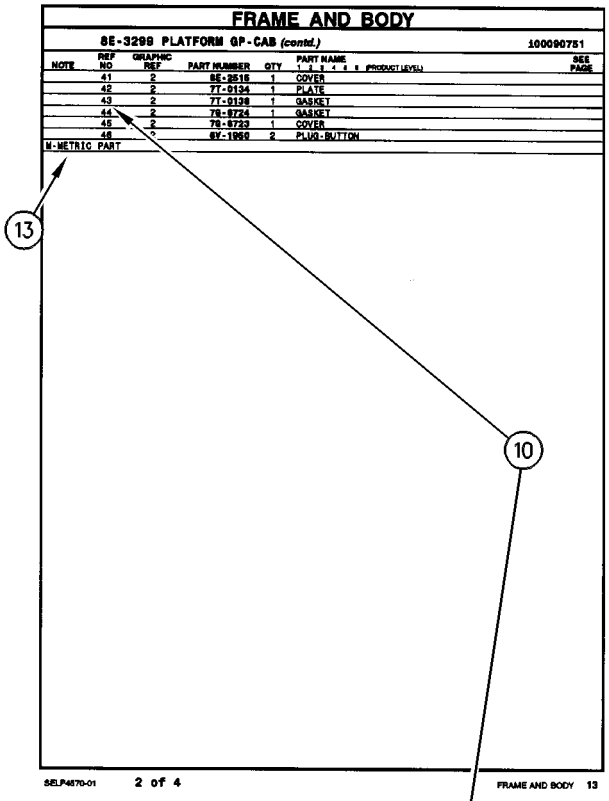
FRAME AND BODY
8E-3299 PLATFORM GP-CAB (contd.)
100090751
SELP4570-01
2 of 4
FRAME AND BODY 13

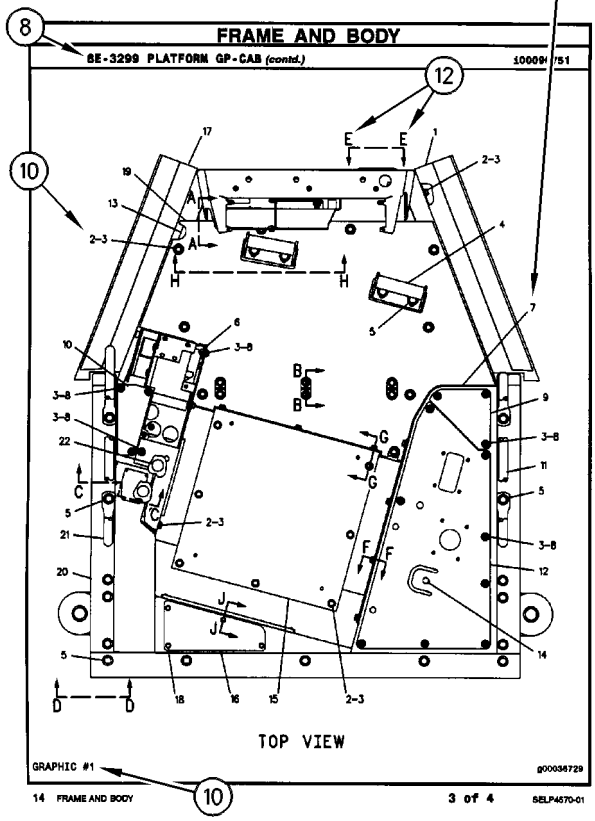
FRAME AND BODY
8E-3299 PLATFORM GP-CAB (contd.)
100090751
TOP VIEW
GRAPHIC #1
g00036729
14 FRAME AND BODY
3 of 4
SELP4570-01

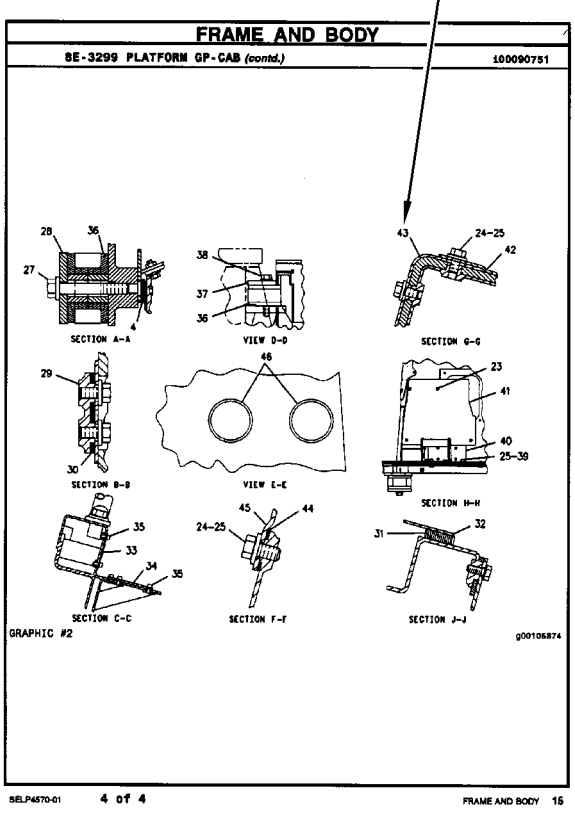
FRAME AND BODY
8E-3299 PLATFORM GP-CAB (contd.)
100090751
SECTION A-A
VIEW D-D
SECTION G-G
SECTION B-B
VIEW E-E
SECTION H-H
SECTION C-C
SECTION F-F
SECTION J-J
GRAPHIC #2
g00105874
SELP4570-01
4 of 4
FRAME AND BODY 15

REPAIR ALTERNATIVES

REMANUFACTURED COMPONENTS

As an option when making repairs consider Caterpillar Remanufactured Components. Components that are available through the Caterpillar Remanufactured Program are identified three ways in the parts book:

- with the letter R in the note field of the parts list
- with an R* at the beginning of the first line of the caption
- with an *R at the end of the first line of the caption

Typical components included in the Remanufacturing Program include:

ALTERNATORS
CONNECTING RODS
CRANKSHAFTS - UNDERSIZE
CRANKSHAFTS - UPGRADE TO NEW
CYLINDER HEADS
ELECTRONIC CONTROL MODULES (ECM)
ELECTRONIC SENSORS
FUEL INJECTORS
FUEL NOZZLES
FUEL PUMPS
GOVERNORS
OIL PUMPS
PISTONS
SHORT BLOCKS
STARTERS
TURBOCHARGERS - COMPLETE
TURBOCHARGER CARTRIDGES
WATER PUMPS

Caterpillar Remanufactured engines for many engine arrangements are also available.

SUPPLEMENTAL COOLANT ADDITIVES

CUSTOMER BENEFITS:

Protects against cavitation, foam, erosion, corrosion, and scale buildup in cooling systems.

- Provides measured coolant conditioner.

DESCRIPTION:

Additives deplete from the coolant with normal operation. For this reason, Supplemental Coolant Additives (SCA) must be added to all heavy duty coolants at regular intervals. In addition, when not using a fully formulated, pre-charged antifreeze, like Caterpillar's DEAC, an initial charge of SCA must be added to the cooling system. The amount of SCA added to the system is dependent on the capacity of the system.

The SCA for initial fill is provided as a liquid. SCA's for maintenance intervals are available in liquid form and as a spin-on element. (No Spin-on available for 3600 Family of Engines)

NOTE:

The amount of SCA added at initial fill is not the same as the amount added at maintenance intervals.

The coolant additive elements can be used with any ethylene or propylene glycol type antifreeze which meets ASTM D4985 or ASTM D5345 Specifications.

NOTE:

For use with standard heavy duty coolant only, not for use with Extended Life Coolant.

PARTS NEEDED:

Cooling System Capacity		Liquid SCA at Initial Fill	Liquid SCA at Maintenance*	Spin-on SCA Maintenance Element*
Liters	Gallons			
22-30	(6-8)	3P-2044 (1)	6V-3542 (1)	111-2370 (1)
30-38	(8-10)	3P-2044 (1) 6V-3542 (1)	111-2372 (1)	111-2369 (1)
38-49	(10-13)	3P-2044 (1) 8T-1589 (1)	111-2372 (1)	111-2369 (1)
49-64	(13-17)	3P-2044 (2)	8T-1589 (1)	9N-3368 (1)
64-83	(17-22)	3P-2044 (2) 8T-1589 (1)	111-2372 (1) 6V-3542 (1)	111-2371 (1)
83-114	(22-30)	3P-2044 (3) 8T-1589 (1)	3P-2044 (1)	9N-3718 (1)
114-163	(30-43)	3P-2044 (5)	3P-2044 (1) 6V-3542 (1)	111-2371 (2)
163-242	(43-64)	3P-2044 (8)	3P-2044 (2)	9N-3718 (2)

** Normal maintenance period is 250 hrs. See your Operation and Maintenance Manual for complete coolant maintenance instructions.*

( ) Indicates quantity required.

MAINTENANCE PARTS

DESCRIPTION	PART NUMBER	QTY	WHERE USED	PAGE
AIR INLET AND EXHAUST SYSTEM				
FILTER ELEMENT AS-AIR (PRIMARY)	290-1935	1	AIR CLEANER GP	87
FILTER ELEMENT AS-AIR (SECONDARY)	290-1936	1	AIR CLEANER GP	87
BASIC ENGINE				
BELT-SERPENTINE	190-4155	1	ACCESSORY & FAN DRIVE GP	11
BREATHER AS (CRANKCASE)	240-0041	1	COVER GP-CYLINDER BLOCK	15
CAP AS-ENGINE OIL FILLER	227-4531	1	COVER GP-VALVE MECHANISM	20
		1	COVER GP-VALVE MECHANISM	21
COOLING SYSTEM				
CAP AS (COOLANT FILL)	204-0920	1	RADIATOR & MOUNTING GP	85
CAP AS (COOLANT OVERFLOW)	171-3370	1	RADIATOR & MOUNTING GP	85
CAP-RADIATOR	148-2701	1	RADIATOR & HYD OIL COOLER GP	83
GASKET (WATER REGULATOR HOUSING)	191-4457	1	HOUSING & REGULATOR GP	74
HOSE-RADIATOR	224-6078	1	LINES GP-COOLING	75
REGULATOR-TEMPERATURE (92-DEG C) (WATER)	248-5513	1	HOUSING & REGULATOR GP	74
SEAL-LIP TYPE	3S-9643	1	HOUSING & REGULATOR GP	74

MAINTENANCE PARTS

DESCRIPTION	PART NUMBER	QTY	WHERE USED	PAGE
ELECTRICAL AND STARTING SYSTEM				
BATTERY GP (12-VOLT, MAINTENANCE FREE, WET)	115-2422	2	BATTERY & WIRING GP	117
		2	BATTERY & WIRING GP	119
CAP AS-FILLER (BATTERY)	123-1373	6	BATTERY & WIRING GP	117
		6	BATTERY & WIRING GP	119
CIRCUIT BREAKER AS (105-AMPERE) (ALTERNATOR)	171-2212	1	BATTERY & WIRING GP	115
CIRCUIT BREAKER AS (15-AMPERE) (FUSE PANEL)	291-5075	1	WIRING GP-CAB	173
		1	WIRING GP-CAB	181
CIRCUIT BREAKER AS (20-AMPERE) (ENGINE ECM)	6T-3644	1	BATTERY & WIRING GP	117
CIRCUIT BREAKER AS (30-AMPERE) (REVERSE POWER)	139-4724	1	BATTERY & WIRING GP	117
CIRCUIT BREAKER AS (50-AMPERE) (ENGINE START)	171-2206	1	BATTERY & WIRING GP	115
CIRCUIT BREAKER AS (80-AMPERE) (FUSE PANEL)	171-2210	1	BATTERY & WIRING GP	115
CIRCUIT BREAKER AS (90-AMPERE) (HOOD TILT ACTUATOR)	171-2211	2	BATTERY & WIRING GP	115
FILTER (ETHER START)	358-4889	1	VALVE GP-ETHER STARTING	167
FUSE (10-AMPERE)	9W-1442	15	WIRING GP-CAB	173
		15	WIRING GP-CAB	180
FUSE (15-AMPERE)	9W-1441	13	WIRING GP-CAB	173
		13	WIRING GP-CAB	180
FUSE (20-AMPERE)	9W-1446	2	WIRING GP-CAB	173
		2	WIRING GP-CAB	180
GLOW PLUG	236-4896	1	HEATER GP-JACKET WATER	125
KEY (BATTERY DISCONNECT)	8H-5306	1	SWITCH GP-DISCONNECT	160
LAMP (24-VOLT) (DOME)	156-9427	2	LAMP GP-DOME	127
LAMP (24-VOLT, 0.2-AMPERE)	7N-5876	1	WIRING GP-CAB	172
		1	WIRING GP-CAB	179
LAMP (24-VOLT, HID)	290-8160	1	LAMP GP-FLOOD	131
LAMP-HALOGEN (24-VOLT, 70-WATT)	351-9918	1	LAMP GP-FLOOD	128
		1	LAMP GP-FLOOD	129
		1	LAMP GP-FLOOD	130
		1	LAMP GP-FLOOD	132
FUEL SYSTEM				
FILTER AS-WATER SEP & FUEL (PRIMARY)	326-1644	1	FILTER GP-WATER SEP & FUEL	96
FILTER-FUEL (ADVANCED EFFICIENCY)	1R-0762	1	LINES GP-FUEL	99

MAINTENANCE PARTS

DESCRIPTION	PART NUMBER	QTY	WHERE USED	PAGE
HYDRAULIC SYSTEM				
BREATHER (SWING DRIVE)	4H-6112	1	DRIVE GP-SWING	280
BREATHER AS (SWING DRIVE)	227-6221	1	DRIVE GP-SWING	280
CAP AS	6V-9834	1	CAP GP-PROTECTION	250
		1	LINES GP-STICK	334
CAP AS-FUEL (LOCKABLE, VENTED)	7X-7700	1	TANK GP-HYDRAULIC & FUEL	364
CAP-DUST	6V-0852	7	LINES GP-PILOT	315
FILTER ELEMENT AS-OIL (ULTRA HIGH EFFICIENCY) (HYDRAULIC RETURN)	179-9806	1	FILTER GP-OIL	288
FILTER-OIL (ADVANCED EFFICIENCY) (HYDRAULIC)	5I-8670	1	FILTER & VALVE GP-PILOT	287
FILTER-OIL (ADVANCED EFFICIENCY) (HYDRAULIC, CASE DRAIN)	093-7521	1	FILTER GP-OIL	292
FILTER-OIL (ULTRA HIGH EFFICIENCY) (HYDRAULIC)	126-1813	1	FILTER & VALVE GP-PILOT	286
PLUG-DRAIN (HYDRAULIC TANK)	9J-7031	1	TANK GP-HYDRAULIC & FUEL	364
SCREEN	6E-5066	1	VALVE GP-SOLENOID & MANIFOLD	412
SCREEN AS (HYDRAULIC TANK)	396-0751	1	TANK GP-HYDRAULIC & FUEL	364
STRAINER-FUEL (FUEL TANK)	304-6608	1	TANK GP-HYDRAULIC & FUEL	364
LUBRICATION SYSTEM				
FILTER-ENGINE OIL (ADVANCED EFFICIENCY)	1R-1808	1	FILTER GP-ENGINE OIL	59
OPERATOR STATION				
DRYER-REFRIGERANT (RECEIVER)	176-1902	1	LINES GP-AIR CONDITIONER	469
FILTER ELEMENT-CAB AIR (STANDARD EFFICIENCY)	112-7448	1	AIR CONDITIONER & MOUNTING GP	432
		1	AIR CONDITIONER & MOUNTING GP	433
		1	DUCT GP-CAB AIR	461
FILTER ELEMENT-CAB AIR (ULTRA HIGH EFFICIENCY)	175-2838	1	AIR CONDITIONER & MOUNTING GP	432
		1	AIR CONDITIONER & MOUNTING GP	433
		1	DUCT GP-CAB AIR	461
FUSE (15-AMPERE) (THERMAL)	133-9012	1	AIR CONDITIONER GP	440
SEAT & MOUNTING GP (AIR SUSPENSION) (HIGH BACK, TILT)	327-6502	1	OPERATOR AR	472
SEAT BELT GP (RETRACTABLE, 76-MM (3-IN))	327-6540	1	SEAT BELT GP	484
POWER TRAIN				
PLUG (FINAL DRIVE, OIL DRAIN, FILL)	8U-5786	2	DRIVE GP-FINAL	204

INDEX

Name	Page
A	
ACCESSORY & FAN DRIVE GP	11
ADJUSTMENT GP-HYDRAULIC TRACK	230
AIR CLEANER GP	87, 88
AIR CONDITIONER & MOUNTING GP	432, 433
AIR CONDITIONER GP	434, 436, 437, 438, 440
ALARM GP	111
ALTERNATOR GP-CHARGING	112, 114
ARMREST GP–LH	444
ARMREST GP–RH	443
ATOMIZER GP-ETHER	150
B	
BASE GP-VALVE COVER	20, 21
BATTERY & WIRING GP	115
BATTERY & WIRING GP–COLD START	119
BATTERY GP (12-VOLT, MAINTENANCE FREE, WET)	117, 119
BELT TENSIONER GP	13
BELT-SERPENTINE	11
BLOCK AS-JUNCTION (BATTERY)	121
BLOCK GP-HYDRAULIC	249
BLOCK GP-JUNCTION–BATTERY	121
BOOM GP	414, 416
BRACKET GP-MOUNTING	418
BRAKE GP-PARKING	204
BREATHER (SWING DRIVE)	280
BREATHER AS (CRANKCASE)	15
BREATHER AS (SWING DRIVE)	280
C	
CAB GP	445, 446
CAMSHAFT GP	14
CAP AS	250, 334
CAP AS (COOLANT FILL)	85
CAP AS (COOLANT OVERFLOW)	85
CAP AS-ENGINE OIL FILLER	20, 21
CAP AS-FILLER (BATTERY)	117, 119
CAP AS-FUEL (LOCKABLE, VENTED)	364
CAP GP-PROTECTION–FRONT	250
CAP-DUST	315
CAP-RADIATOR	83
CHASSIS AR	1
CIRCUIT BREAKER AS (105-AMPERE) (ALTERNATOR)	115
CIRCUIT BREAKER AS (15-AMPERE) (FUSE PANEL)	173, 181
CIRCUIT BREAKER AS (20-AMPERE) (ENGINE ECM)	117
CIRCUIT BREAKER AS (30-AMPERE) (REVERSE POWER)	117
CIRCUIT BREAKER AS (50-AMPERE) (ENGINE START)	115
CIRCUIT BREAKER AS (80-AMPERE) (FUSE PANEL)	115
CIRCUIT BREAKER AS (90-AMPERE) (HOOD TILT ACTUATOR)	115
COMMON AR	1
COMPRESSOR GP-REFRIGERANT	447
CONSOLE GP-OPERATOR	448
CONSOLE GP-OPERATOR–LH	452
CONSOLE GP-OPERATOR–RH	450
CONTROL & MTG GP-ENGINE ELEK	122
CONTROL & MTG GP-JOYSTICK– FELLING HEAD	454
CONTROL & MTG GP-PEDAL	455
CONTROL GP-AIR & TEMPERATURE	172, 179
CONTROL GP-ENGINE ELECTRONIC	123
CONTROL GP-HAND (LH)	454
CONTROL GP-HAND (RH)	454
CONTROL GP-HEATER	125
CONTROL GP-HYDRAULIC PEDAL	456
CONTROL GP-MACHINE (IQAN, XA MODULE)	197
CONTROL GP-MONITOR	457
CONTROL GP-PEDAL (TRAVEL)	454
CONVERSION AR	2
COOLER GP-ENGINE OIL	68
COOLING AR	69
CORE AS-AFTERCOOLER	83
CORE AS-OIL COOLER (ENGINE)	68
CORE AS-OIL COOLER (HYDRAULIC)	83
COUNTERWEIGHT GP	217, 218
COUPLING & MTG GP-PUMP	251
COVER GP-CONTROL VALVE	252
COVER GP-CYLINDER BLOCK– CRANKCASE	15
COVER GP-FLYWHEEL HOUSING	16
COVER GP-FRONT HOUSING	18, 19

INDEX

Name	Page
COVER GP-FRONT HOUSING–ACCESSORY DRIVE	17
COVER GP-PUMP	253
COVER GP-VALVE MECHANISM	20, 21
CRANKSHAFT GP	22
CYLINDER & MTG GP-BOOM	254, 256, 258
CYLINDER & MTG GP-SAW	260
CYLINDER & MTG GP-STICK	261, 263
CYLINDER AR-HYDRAULIC	265, 266
CYLINDER BLOCK AS	23
CYLINDER BLOCK GP	25, 26
CYLINDER GP-BOOM	267
CYLINDER GP-HOOD TILT	269
CYLINDER GP-HYDRAULIC–BOOM	272
CYLINDER GP-HYDRAULIC–STICK	270
CYLINDER GP-STICK	274
CYLINDER GP-TILT–SAW	276
CYLINDER HEAD AS	27
CYLINDER HEAD GP	29, 31, 32

D

Name	Page
DAMPER & PULLEY GP	33
DOOR AS-ACCESS	219
DOOR GP-ACCESS–CAB AIR FILTER	458
DOOR GP-CAB	459
DRIVE AR-SWING	278
DRIVE GP-FINAL	204, 206
DRIVE GP-SWING	280, 282
DRYER-REFRIGERANT (RECEIVER)	469
DUCT GP-CAB AIR	461

E

Name	Page
ELBOW GP-AIR INLET	90
ELECTRICAL AR	124
ENGINE AR	3
ENGINE AR-COMPLETE	4, 5, 7
ENGINE AR-CORE	8, 9

F

Name	Page
FAN AR-REVERSIBLE	70
FAN GP-CIRCULATING (24-VOLT)	172, 179
FAN GP-REVERSIBLE	71
FASTENER GP-CYLINDER HEAD	34
FASTENER GP-DAMPER & PULLEY	35
FASTENER GP-FINAL DRIVE	207, 231
FASTENER GP-FLYWHEEL	36
FASTENER GP-VALVE COVER	37
FASTENER GP-VALVE COVER BASE	38
FILLER GP-HYDRAULIC OIL	283
FILM GP-U.S.	498
FILM-ENGINE (START, THROTTLE)	187
FILM-IDENTIFICATION (GROUP NO., SEQUENCE NO.)	438
FILM-INFORMATION (24-VOLT HEATER)	440
FILM-INFORMATION (24-VOLT)	500
FILM-INFORMATION (EMISSION CONTROL)	7
FILM-INFORMATION (HYDO ADVANCED 10)	500
FILM-INFORMATION (INPUT/OUTPUT)	500
FILM-INFORMATION (SAW SWITCH)	175, 182
FILM-INSTRUCTION (HYDRAULIC OIL RETURN FILTER)	288
FILM-INSTRUCTION (JOYSTICK CONTROL, PATTERN 1) (FELLER BUNCHER)	423, 424, 425
FILM-START AID (ENGINE)	138
FILM-WARNING (ALERT)	501
FILM-WARNING (FLYING DEBRIS, STAY BACK, INTL)	501
FILM-WARNING (FLYING DEBRIS, STAY BACK, U.S.)	498
FILM-WARNING (HOT FLUID UNDER PRESSURE, U.S.)	498
FILM-WARNING (HOT SURFACE, HANDS CLEAR)	498
FILM-WARNING (NO WELD, NO DRILL, READ OMM)	501
FILM-WARNING (SEAT BELT, U.S.)	498
FILM-WARNING (STAY CLEAR)	501
FILTER & VALVE GP-PILOT–HYDRAULIC OIL	285, 286, 287
FILTER (ETHER START)	167
FILTER AS-WATER SEP & FUEL (PRIMARY)	96
FILTER ELEMENT AS-AIR (PRIMARY)	87
FILTER ELEMENT AS-AIR (SECONDARY)	87

INDEX

Name	Page
FILTER ELEMENT AS-OIL (ULTRA HIGH EFFICIENCY) (HYDRAULIC RETURN)	288
FILTER ELEMENT-CAB AIR (STANDARD EFFICIENCY)	432, 433, 461
FILTER ELEMENT-CAB AIR (ULTRA HIGH EFFICIENCY)	432, 433, 461
FILTER GP-ENGINE OIL	59
FILTER GP-OIL–HYDRAULIC RETURN	288, 290
FILTER GP-OIL–HYDRAULIC, CASE DRAIN	292
FILTER GP-WATER SEP & FUEL–PRIMARY	96
FILTER-ENGINE OIL (ADVANCED EFFICIENCY)	59
FILTER-FUEL (ADVANCED EFFICIENCY)	99
FILTER-OIL (ADVANCED EFFICIENCY) (HYDRAULIC)	287
FILTER-OIL (ADVANCED EFFICIENCY) (HYDRAULIC, CASE DRAIN)	292
FILTER-OIL (ULTRA HIGH EFFICIENCY) (HYDRAULIC)	286
FINAL DRIVE GP	204, 206
FLOOR MAT	475
FLYWHEEL GP	39
FRAME GP-UNDERCARRIAGE	231
FRAME GP-UPPER	220
FRAME GP-WINDOW	462
FUMES DISPOSAL GP	61
FUSE (10-AMPERE)	173, 180
FUSE (15-AMPERE)	173, 180
FUSE (15-AMPERE) (THERMAL)	440
FUSE (20-AMPERE)	173, 180

G

Name	Page
GASKET (WATER REGULATOR HOUSING)	74
GAUGE GP-OIL LEVEL (DIPSTICK)–ENGINE	62
GAUGE GP-SIGHT (HYDRAULIC OIL LEVEL)	364
GAUGE GP-SIGHT–HYDRAULIC OIL LEVEL	293
GAUGE-OIL LEVEL (DIPSTICK) (ENGINE)	62
GAUGE-OIL LEVEL (DIPSTICK) (HYDRAULIC OIL)	280, 346
GEAR & BEARING GP-SWING	222, 223
GEAR GP-FRONT	40
GLOW PLUG	125
GUARD GP-FAN	73
GUARD GP-LINES	423, 425
GUARD GP-RADIATOR	224
GUARD GP-SWIVEL	226
GUARD GP-TRAVEL MOTOR	232
GUARD GP-WINDOW	463

H

Name	Page
HARNESS AS-CAB (MAIN)	172, 179
HARNESS AS-CAB (UPPER)	174, 181
HARNESS AS-CHASSIS	197
HARNESS AS-CONSOLE	174, 181, 198
HARNESS AS-CONSOLE (LH)	187
HARNESS AS-CONSOLE (RH)	187
HARNESS AS-ENGINE	190, 192
HARNESS AS-ENGINE (UNIT INJECTOR)	190
HARNESS AS-HEATER & AIR COND	438, 441
HARNESS AS-HEATER (PREHEATER)	125
HARNESS AS-LIGHTING	170
HARNESS AS-LIGHTING (ANGLED FLOODS, SERVICE LIGHTS)	197
HARNESS AS-LIGHTING (BOOM FLOODLIGHT)	169
HARNESS AS-REAR	199
HARNESS AS-SENSOR	199, 350
HARNESS AS-VALVE	199
HARNESS AS-WIRING	183, 197
HARNESS AS-WIRING (ARC SUPPRESSOR)	189
HATCH GP-ROOF–CAB FRONT	466
HATCH GP-ROOF–CAB, FRONT	465
HATCH GP-ROOF–CAB, REAR	464
HEAD GP-MOTOR	343
HEAD GP-MOTOR–TRAVEL	208
HEAD GP-PUMP–MAIN HYDRAULIC	294
HEATER GP-JACKET WATER–DIESEL FIRED	125
HOOD AS	227
HOOD GP	228
HOSE-RADIATOR	75
HOUSING & REGULATOR GP	74
HOUSING GP-FILTER	295
HOUSING GP-FLYWHEEL	42
HOUSING GP-FRONT	44
HYDRAULIC AR	296

INDEX

Name	Page
HYDRAULIC AR-CIRCULAR SAW–HIGH FLOW, NO TILT LINKAGE	298
HYDRAULIC AR-CIRCULAR SAW–LOW FLOW, NO TILT LINKAGE	297
HYDRAULIC AR-HARVESTER–NO TILT LINKAGE	299
HYDRAULIC AR-INTERMITTENT SAW–NO TILT LINKAGE	300

I

IDLER GP-FRONT	233, 234, 235
INDICATOR-AIR FILTER CHANGE	88
INJECTOR GP-FUEL	97
INSTALLATION AR-ENGINE	10
INSTALLATION GP-RADIO	467

K

KEY (BATTERY DISCONNECT)	160
KIT-CONTROL VALVE	380, 382, 384, 386, 388, 390, 392, 394
KIT-CONTROL VALVE (BOOM)	394
KIT-CONTROL VALVE (CONTROL VALVE)	396
KIT-SEAT SUSPENSION (AIR)	488

L

LAMP (24-VOLT) (DOME)	127
LAMP (24-VOLT, 0.2-AMPERE)	172, 179
LAMP (24-VOLT, HID)	131
LAMP GP-DOME	127
LAMP GP-FLOOD	128, 129, 130, 132
LAMP GP-FLOOD–HID	131
LAMP-HALOGEN (24-VOLT, 70-WATT)	128, 129, 130, 132
LIFTING GP-ENGINE	45
LIGHTING GP-FLOOD–CAB FRONT, SIDE	133
LIGHTING GP-FLOOD–HID–BOOM–CAB	135
LIGHTING GP-FLOOD–HOOD	134
LINER GP-CAB	468
LINES GP-AIR CONDITIONER	469
LINES GP-BOOM	301, 303, 305
LINES GP-BOOM CYLINDER	307, 308
LINES GP-COOLING	75
LINES GP-ENGINE OIL	63
LINES GP-FAN DRIVE	64
LINES GP-FRONT–SAW	309, 310
LINES GP-FUEL	98
LINES GP-GREASE	419, 421
LINES GP-GREASE–BOOM	422
LINES GP-HOOD TILT	311
LINES GP-HYDRAULIC	312
LINES GP-PILOT	315, 319
LINES GP-PROPEL	210
LINES GP-PUMP	321, 323
LINES GP-RETURN	325
LINES GP-RETURN & FILTER	327
LINES GP-SAW	329, 332
LINES GP-STICK	334, 336, 338
LINES GP-TRAVEL MOTOR	340
LINES GP-TURBOCHARGER OIL	65
LINES GP-TURBOCHARGER WATER	77
LINK AS-TRACK–GREASE LUBRICATED TRACK	236
LINKAGE AR-FELLING HEAD	423
LINKAGE AR-HARVESTER HEAD–LONG	424
LINKAGE AR-INTERMITTENT SAW	425
LINKAGE GP-FELLING HEAD	426

M

MANIFOLD GP-EXHAUST	91
MOTOR GP-SWING	342, 343
MOTOR GP-TRAVEL	212
MOUNTING GP-CAB	471
MOUNTING GP-ENGINE	46
MOUNTING GP-ETHER CANISTER	150
MOUNTING GP-FAN DRIVE	70
MUFFLER GP	92

O

OPERATOR AR	472

INDEX

Name	Page

P

PADLOCK GP 364, 499
PAN GP-OIL 48
PANEL GP-ELECTRONIC 473
PISTON & ROD GP 49
PLATE & FILM GP 499, 503
PLATE & FILM GP–INTERNATIONAL 499
PLATE AS-BRUSH 136
PLATE-IDENTIFICATION (ENGINE STOP, RUN) 172, 179, 499
PLATE-WARNING (HIGH PRESSURE CYLINDER) 230
PLATFORM GP-OPERATOR 475
PLUG (FINAL DRIVE, OIL DRAIN, FILL) 204
PLUG GP-CONNECTOR– ENGINE HARNESS, PROTECTIVE COVER . . . 137
PLUG GP-ENGINE 50, 51
PLUG GP-HYDRAULIC LINES 345
PLUG GP-WATER LINES 79
PLUG-DRAIN (HYDRAULIC TANK) 364
POTENTIOMETER AS (TEMPERATURE CONTROL) 187
PREHEATER GP-MACHINE 138
PUMP & MOTOR GP-HOOD TILT 346
PUMP & MOTOR GP-HYD TANK FILL 283, 347
PUMP & MTG GP-HYDRAULIC 349
PUMP & MTG GP-SAW 350
PUMP & MTG GP-UNIT INJ HYD 101
PUMP AS-WATER 80
PUMP GP-ENGINE OIL 67
PUMP GP-FILTER & FUEL TRANSFER– PRIMARY 103
PUMP GP-FUEL INJECTION 104, 105
PUMP GP-FUEL TRANSFER 103, 106, 107
PUMP GP-PISTON–MAIN HYDRAULIC 355
PUMP GP-PISTON–SAW 353
PUMP GP-UNIT INJECTOR HYD 107
PUMP GP-WATER 81, 82
PUMP-FUEL 125

R

RADIATOR & HYD OIL COOLER GP 83
RADIATOR & MOUNTING GP 85
RADIATOR GP 83
RADIO GP (AM/FM/WB/CD/USB) 477
RADIO GP–AM/FM/WB/CD/SIRIUS/USB 479
RADIO GP– AM/FM/WB/CD/SIRIUS/USB/BLUETOOTH . . . 481
RADIO GP–AM/FM/WB/CD/USB 477, 478
RADIO GP–AM/FM/WB/CD/XM/USB 480
RADIO GP– AM/FM/WB/CD/XM/USB/BLUETOOTH 482
REGULATOR AS-VOLTAGE (24-VOLT) (ALTERNATOR) 112
REGULATOR GP-FUEL PRESSURE 109, 110
REGULATOR-PRESSURE (FUEL TRANSFER PUMP) 106
REGULATOR-TEMPERATURE (92-DEG C) (WATER) 74
RELAY AS (24-VOLT) (AC, CONDENSER) 438, 440
RELAY AS (24-VOLT) (ANGLED SIDE FLOODLIGHTS) 473
RELAY AS (24-VOLT) (BOOM, RADIATOR FLOODLIGHTS) 473
RELAY AS (24-VOLT) (CAB FLOODLIGHTS) 473
RELAY AS (24-VOLT) (FRONT FLOODLIGHTS) 473
RELAY AS (24-VOLT) (FUEL TRANSFER PUMP) 473
RELAY AS (24-VOLT) (HYDRAULIC FILL PUMP, MOTOR) 473
RELAY AS (24-VOLT) (RADIATOR FLOODLIGHTS) 473
ROCKER ARM GP–EXHAUST 53
ROCKER ARM GP–INLET 54
ROLLER GP-TRACK 237, 238
ROLLER GP-TRACK–STAR 238
ROLLER GP-TRACK-DOUBLE FLANGE 239
ROLLER GP-TRACK-SINGLE FLANGE 240
ROLLER GP-TRACK-SINGLE FLANGE– CARRIER 241
ROTATING GP-MOTOR–TRAVEL 213, 214
ROTATING GP-PUMP–MAIN HYDRAULIC 357, 358, 359
ROTOR GP-SWIVEL 360, 361

S

SCREEN 412
SCREEN AS (HYDRAULIC TANK) 364
SEAL GP-CRANKSHAFT 55

INDEX

Name	Page
SEAL-CRANKSHAFT (FRONT)	55
SEAL-LIP TYPE	74
SEAT & MOUNTING GP (AIR SUSPENSION) (HIGH BACK, TILT)	472
SEAT & MOUNTING GP– HIGH BACK, TILT, AIR	483
SEAT BELT GP (RETRACTABLE, 76-MM (3-IN))	484
SEAT BELT GP–RETRACTABLE, 76-MM	484
SEAT GP (HIGH BACK, TILT)	486
SEAT GP–HIGH BACK, TILT	485
SEAT GP-SUSPENSION– HIGH BACK, TILT, AIR	486
SENDER AS-FUEL LEVEL	364
SENSOR AS-TEMPERATURE (HYDRAULIC OIL)	197
SENSOR GP-ENGINE	5
	9
	141
SENSOR GP-LIQUID LEVEL	142
SENSOR GP-LIQUID LEVEL (HYDRAULIC TANK)	197
SENSOR GP-PRESSURE	98
	143
	144
SENSOR GP-PRESSURE (ATMOSPHERIC)	141
SENSOR GP-PRESSURE (ENGINE OIL)	141
SENSOR GP-PRESSURE (INJECTION ACTUATION)	141
SENSOR GP-PRESSURE (LOAD SENSING)	350
	367
	369
	371
	373
SENSOR GP-PRESSURE (OUTLET AIR)	141
SENSOR GP-SPEED	145
SENSOR GP-SPEED (ENGINE TIMING)	141
SENSOR GP-SPEED–ENGINE TIMING	145
SENSOR GP-TEMPERATURE	146
	147
SENSOR GP-TEMPERATURE (COOLANT)	141
SENSOR GP-TEMPERATURE (HIGH)	125
SENSOR GP-TEMPERATURE (INTAKE AIR TEMPERATURE)	141
SENSOR-TEMPERATURE	146
	147
SENSOR-TEMPERATURE (COOLANT)	125
SHAFT GP-HYDRAULIC MOTOR	362
SOFTWARE GP-MACHINE	1
SOLENOID AS-STARTING MOTOR (24-VOLT)	153
	157
SPRING GP-RECOIL	242
SPROCKET GP	215
STARTING AID GP–AIR INLET MANIFOLD	148
	149
STARTING AID GP-ETHER	150
STARTING AR-COLD WEATHER	152
STARTING MOTOR GP-ELECTRIC	153
	156
STICK & BEARING AS	427
STICK GP	428
	430
STRAINER-FUEL (FUEL TANK)	364
SUPPORT GP-ENGINE	56
SUPPORT GP-SEAT	487
SUSPENSION GP-SEAT (AIR)	486
SUSPENSION GP-SEAT–AIR	488
SWITCH (DOME LAMP)	127
SWITCH (HOOD TILT)	346
SWITCH AS-LIMIT (HYD LOCKOUT, NEUTRAL START)	162
SWITCH AS-PRESSURE (HYDRAULIC OIL)	364
SWITCH AS-PRESSURE (REFRIGERANT COMPRESSOR)	438
	440
SWITCH AS-PRESSURE (REFRIGERANT)	438
SWITCH AS-ROCKER (24-VOLT) (AIR CONDITIONER ON, OFF)	172
	179
SWITCH AS-ROCKER (ALARM CANCEL)	175
	182
SWITCH AS-ROCKER (CAB LIGHTS)	172
	179
SWITCH AS-ROCKER (FLOODLIGHTS)	172
	179
SWITCH AS-ROCKER (HOOD TILT ACTUATOR)	175
	183
SWITCH AS-ROCKER (HORN)	175
	182
SWITCH AS-ROCKER (LOG ACCUMULATOR)	172
	179
SWITCH AS-ROCKER (REVERSIBLE FAN)	172
	179
SWITCH AS-ROCKER (TRAVEL SPEED)	175
	182
SWITCH AS-ROCKER (WORK LIGHTS)	172
	179
SWITCH AS-TOGGLE (GROUND LEVEL SHUTDOWN)	200
SWITCH GP-DISCONNECT	161
SWITCH GP-DISCONNECT–BATTERY	160
SWITCH GP-LIMIT– HYD LOCKOUT, NEUTRAL START	162
SWITCH GP-MAGNETIC (24-VOLT) (AIR INLET HEATER)	115
SWITCH GP-MAGNETIC–MAIN RELAY	164

INDEX

Name	Page
SWITCH GP-MAGNETIC–STARTING AID HEATER RELAY–AIR INLET HEATER	163
SWITCH GP-PRESSURE–HYDRAULIC FILTER BYPASS	165
SWITCH GP-TOGGLE (ENGINE STOP, RUN)	175, 182
SWITCH GP-TOGGLE (SAW BLADE ON, OFF)	175, 182
SWITCH GP-TOGGLE–SAW BLADE ON, OFF–ENGINE STOP, RUN	166
SWITCH-START (HYDRAULIC TANK FILL)	347
SWIVEL GP–WITHOUT TILT FUNCTION	363

T

TANK GP-COOLANT (INCLUDES COOLANT LEVEL SWITCH)	85
TANK GP-HYDRAULIC & FUEL	364
TRACK AR	243
TRACK GP	244, 245, 246
TRACK GP–LH	248
TRACK GP–RH	247
TRIM GP-CAB	489
TURBOCHARGER GP	94, 95

V

VALVE & MTG GP-CONTROL	367, 369, 371
VALVE & MTG GP-MAIN CONTROL	373
VALVE AS-BREAKER RELIEF (HYDRAULIC TANK)	364
VALVE GP-BRAKE	376
VALVE GP-CHECK	315, 327, 390, 392, 396
VALVE GP-CHECK & RELIEF–MAIN HYDRAULIC	377
VALVE GP-COMPENSATING	392
VALVE GP-CONTROL	392, 396
VALVE GP-CONTROL–4-BANK	378
VALVE GP-CONTROL–ACCUMULATOR ARM	380, 384
VALVE GP-CONTROL–BOOM	394
VALVE GP-CONTROL–FELLING HEAD	382
VALVE GP-CONTROL–INLET	379
VALVE GP-CONTROL–INTERMITTENT SAW	396
VALVE GP-CONTROL–STICK	388
VALVE GP-CONTROL–SWING	392
VALVE GP-CONTROL–TILT	386
VALVE GP-CONTROL–TRAVEL, RH, LH	390
VALVE GP-COUNTERBALANCE	398
VALVE GP-ETHER STARTING	167
VALVE GP-FLOW CONTROL–TRAVEL MOTOR	216
VALVE GP-MAIN CONTROL–HIGH FLOW	402
VALVE GP-MAIN CONTROL–INTERMITTENT SAW	399
VALVE GP-MAIN CONTROL–LOW FLOW	400
VALVE GP-MAIN CONTROL–LOW FLOW, NO TILT LINKAGE	401
VALVE GP-PILOT RELIEF (HYDRAULIC FILTER)	286, 287
VALVE GP-PRESSURE CONTROL–PILOT OIL PRESSURE	403
VALVE GP-PUMP CONTROL	396
VALVE GP-PUMP CONTROL (PRESSURE COMPENSATOR)	294
VALVE GP-PUMP CONTROL–PRESSURE COMPENSATOR–MAIN HYDRAULIC	404, 405
VALVE GP-RELIEF	380, 382, 384, 386, 388, 394
VALVE GP-RELIEF (CROSSOVER)	208
VALVE GP-RELIEF–SWING MOTOR	407
VALVE GP-SHUTOFF	278, 469
VALVE GP-SHUTOFF (HYDRAULIC OIL)	280
VALVE GP-SOLENOID	408, 409, 410
VALVE GP-SOLENOID & MANIFOLD	411, 412
VALVE GP-SOLENOID & MANIFOLD (SAW)	350
VALVE GP-SOLENOID (24-VOLT) (FAN)	412
VALVE GP-SOLENOID (24-VOLT) (PILOT SUPPLY)	412
VALVE GP-SOLENOID (24-VOLT) (SAW)	411
VALVE GP-SOLENOID (24-VOLT) (SWING)	412
VALVE GP-SOLENOID (24-VOLT) (TRAVEL MOTOR)	412
VALVE GP-SOLENOID (PUMP CONTROL)	412
VALVE GP-SWING CUSHION–FINE SWING	413
VALVE MECHANISM GP	57, 58

INDEX

Name	Page	Name	Page

W

WARNING GP-BACKUP 168
WINDOW GP-CAB 494
496
WINDOW GP-CAB (LH) 496
WINDOW GP-CAB–LH 492
WIRING GP-BOOM 169
170
WIRING GP-CAB 172
179
WIRING GP-CONSOLE 187
189
WIRING GP-ELECTRONIC CONTROL 190
WIRING GP-ENGINE 192
WIRING GP-HEATER–AIR INLET MANIFOLD . . . 196
WIRING GP-MACHINE 197

MEMORANDA

MACHINE ARRANGEMENT

362-3899 CHASSIS AR

S/N: F7B1-UP

PART OF 351-6848 COMMON AR

SMCS-7000 **i05100718**

NOTE	PART NUMBER	QTY	PART NAME 1 2 3 4 5 6 (PRODUCT LEVEL)	SEE PAGE
Y	*362-3860*	1	BRACKET GP-MOUNTING (VALVE)	418
Y	*355-8899*	1	COUNTERWEIGHT GP	217
Y	*339-6605*	1	FRAME GP-UPPER	220
Y	*339-8293*	1	HOOD GP	228
Y	*339-8294*	1	LINES GP-AIR CONDITIONER	469
Y	*339-8295*	1	LINES GP-FUEL	98
Y	*366-2652*	1	STARTING AID GP-ETHER	150
Y	**339-8296**	1	TANK GP-HYDRAULIC & FUEL	364
Y-SEPARATE ILLUSTRATION				

<END>

351-6848 COMMON AR

S/N: F7B1-UP

SMCS-7000 **i04535518**

NOTE	PART NUMBER	QTY	PART NAME 1 2 3 4 5 6 (PRODUCT LEVEL)	SEE PAGE
Y	*362-3899*	1	CHASSIS AR	1
Y	*362-3898*	1	COOLING AR	69
Y	*362-3897*	1	ELECTRICAL AR	124
Y	*374-4354*	1	ENGINE AR-COMPLETE	7
Y	*362-3900*	1	FRAME GP-UNDERCARRIAGE	231
Y	*362-3896*	1	HYDRAULIC AR	296
Y	*367-2135*	1	INSTALLATION AR-ENGINE	10
Y	*362-3893*	1	OPERATOR AR	472
Y	*364-0512*	1	PLATE & FILM GP	499
	372-8920	1	SOFTWARE GP-MACHINE	
Y-SEPARATE ILLUSTRATION				

<END>

ENGINE ARRANGEMENT

374-4357 CONVERSION AR

S/N: F7B1-UP

AN ATTACHMENT

SMCS-1000 **i04535960**

NOTE	PART NUMBER	QTY	PART NAME 1 2 3 4 5 6 (PRODUCT LEVEL)	SEE PAGE
Y	**367-4852**	1	ENGINE AR-COMPLETE	5

Y-SEPARATE ILLUSTRATION

ENGINE ARRANGEMENT

384-8429 ENGINE AR

S/N: TXD1-UP; THX1-UP
PART OF 347-1741, 367-4852 ENGINE AR-COMPLETE
ALSO AN ATTACHMENT

SMCS-1000 **i04557394**

NOTE	PART NUMBER	QTY	PART NAME 1 2 3 4 5 6 (PRODUCT LEVEL)	SEE PAGE
Y	*384-8426*	1	ENGINE AR-CORE	9
Y	*385-1745*	1	PLATE & FILM GP	503
	350-5894	1	ELECTRONICS GP-ENGINE RATINGS	

Y-SEPARATE ILLUSTRATION

ENGINE ARRANGEMENT

347-1741 ENGINE AR-COMPLETE

S/N: TXD1-UP; THX1-UP
226 BRAKE KW (303 BHP) AT 2000 RPM
PART OF 374-4354 ENGINE AR-COMPLETE

SMCS-1000 **i04985772**

NOTE	PART NUMBER	QTY	PART NAME 1 2 3 4 5 6 (PRODUCT LEVEL)	SEE PAGE
Y	*363-0271*	1	ACCESSORY & FAN DRIVE GP	11
Y	*217-6635*	1	ALTERNATOR GP-CHARGING	114
Y	*226-3561*	1	COMPRESSOR GP-REFRIGERANT	447
Y	*246-9365*	1	CONTROL & MTG GP-ENGINE ELEK	122
Y	*202-3301*	1	COVER GP-CYLINDER BLOCK (CRANKCASE BREATHER)	15
Y	*133-3089*	1	COVER GP-FLYWHEEL HOUSING	16
Y	*118-1727*	1	COVER GP-FRONT HOUSING (ACCESSORY DRIVE)	17
Y	*211-3285*	1	COVER GP-FRONT HOUSING	18
Y	*217-8669*	1	COVER GP-FRONT HOUSING	19
			S/N: TXD1-99999	
Y	*280-8003*	1	COVER GP-VALVE MECHANISM	20
Y	*165-4557*	1	DAMPER & PULLEY GP	33
Y	*173-6107*	1	ELBOW GP-AIR INLET	90
Y	*384-8429*	1	ENGINE AR	3
Y	*218-0859*	1	FASTENER GP-DAMPER & PULLEY	35
Y	*117-2794*	1	FASTENER GP-FLYWHEEL	36
Y	*236-7315*	1	FASTENER GP-VALVE COVER	37
Y	*233-0423*	1	FASTENER GP-VALVE COVER BASE	38
Y	*220-1998*	1	FILTER GP-ENGINE OIL	59
Y	*116-5386*	1	FLYWHEEL GP	39
Y	*226-3559*	1	FUMES DISPOSAL GP	61
Y	*219-9960*	1	GAUGE GP-OIL LEVEL (DIPSTICK) (ENGINE)	62
Y	*248-8835*	1	HOUSING & REGULATOR GP	74
Y	*187-0473*	1	HOUSING GP-FLYWHEEL	42
Y	*209-0758*	1	HOUSING GP-FRONT	44
Y	*191-3063*	1	LIFTING GP-ENGINE	45
Y	*202-6603*	1	LINES GP-ENGINE OIL	63
Y	*165-4465*	1	LINES GP-TURBOCHARGER OIL	65
Y	*244-0989*	1	LINES GP-TURBOCHARGER WATER	77
Y	*202-0996*	1	MANIFOLD GP-EXHAUST	91
Y	*219-9943*	1	PAN GP-OIL	48
Y	*235-8200*	1	PLUG GP-CONNECTOR (ENGINE HARNESS, PROT COVER)	137
Y	*169-3105*	1	PLUG GP-ENGINE	50
			S/N: TXD1-99999	
Y	*249-0157*	1	PLUG GP-ENGINE	51
			S/N: THX1-UP	
Y	*205-4013*	1	PLUG GP-WATER LINES	79
Y	*273-2445*	1	REGULATOR GP-FUEL PRESSURE	110
Y	*178-3899*	1	SEAL GP-CRANKSHAFT	55
Y	*238-3215*	1	STARTING AID GP	148
Y	*172-0961*	1	SUPPORT GP-ENGINE	56
Y	*258-8337*	1	TURBOCHARGER GP	95
Y	*330-6018*	1	WIRING GP-ELECTRONIC CONTROL (ENGINE)	190
Y	*269-3410*	1	WIRING GP-HEATER	196

Y-SEPARATE ILLUSTRATION

ENGINE ARRANGEMENT

367-4852 ENGINE AR-COMPLETE

S/N: TXD1-UP; THX1-UP
226 BRAKE KW (303 BHP) AT 2000 RPM
PART OF 374-4357 CONVERSION AR-ENGINE
AN ATTACHMENT

SMCS-1000 **i05119969**

NOTE	PART NUMBER	QTY	PART NAME 1 2 3 4 5 6 (PRODUCT LEVEL)	SEE PAGE
Y	*217-6635*	1	ALTERNATOR GP-CHARGING	114
Y	*224-7846*	1	BELT TENSIONER GP	13
			S/N: THX1-38526	
Y	*363-0271*	1	ACCESSORY & FAN DRIVE GP	11
			S/N: THX38527-UP	
Y	*226-3561*	1	COMPRESSOR GP-REFRIGERANT	447
Y	*246-9365*	1	CONTROL & MTG GP-ENGINE ELEK	122
Y	*202-3301*	1	COVER GP-CYLINDER BLOCK (CRANKCASE BREATHER)	15
Y	*133-3089*	1	COVER GP-FLYWHEEL HOUSING	16
Y	*118-1727*	1	COVER GP-FRONT HOUSING (ACCESSORY DRIVE)	17
Y	*211-3285*	1	COVER GP-FRONT HOUSING	18
Y	*217-8669*	1	COVER GP-FRONT HOUSING	19
			S/N: THX38527-UP	
Y	*280-8003*	1	COVER GP-VALVE MECHANISM	20
Y	*165-4557*	1	DAMPER & PULLEY GP	33
Y	*173-6107*	1	ELBOW GP-AIR INLET	90
Y	*350-9162*	1	ENGINE AR-CORE	8
			S/N: THX1-38526	
Y	*384-8429*	1	ENGINE AR	3
			S/N: THX38527-UP	
Y	*218-0859*	1	FASTENER GP-DAMPER & PULLEY	35
Y	*117-2794*	1	FASTENER GP-FLYWHEEL	36
Y	*236-7315*	1	FASTENER GP-VALVE COVER	37
Y	*233-0423*	1	FASTENER GP-VALVE COVER BASE	38
Y	*220-1998*	1	FILTER GP-ENGINE OIL	59
Y	*116-5386*	1	FLYWHEEL GP	39
Y	*226-3559*	1	FUMES DISPOSAL GP	61
Y	*219-9960*	1	GAUGE GP-OIL LEVEL (DIPSTICK)	62
Y	*248-8835*	1	HOUSING & REGULATOR GP	74
Y	*187-0473*	1	HOUSING GP-FLYWHEEL	42
Y	*209-0758*	1	HOUSING GP-FRONT	44
			S/N: THX38527-UP	
Y	*191-3063*	1	LIFTING GP-ENGINE	45
Y	*202-6603*	1	LINES GP-ENGINE OIL	63
Y	*165-4465*	1	LINES GP-TURBOCHARGER OIL	65
Y	*244-0989*	1	LINES GP-TURBOCHARGER WATER	77
Y	*202-0996*	1	MANIFOLD GP-EXHAUST	91
Y	*219-9943*	1	PAN GP-OIL	48
Y	*235-8200*	1	PLUG GP-CONNECTOR (ENGINE HARNESS, PROT COVER)	137
Y	*169-3105*	1	PLUG GP-ENGINE	50
			—OR—	
Y	*249-0157*	1	PLUG GP-ENGINE	51
Y	*205-4013*	1	PLUG GP-WATER LINES	79
Y	*202-7674*	1	PUMP GP-WATER	81
			S/N: THX1-38526	
Y	*273-2445*	1	REGULATOR GP-FUEL PRESSURE	110
Y	*178-3899*	1	SEAL GP-CRANKSHAFT	55
Y	*330-6034*	1	SENSOR GP-ENGINE	141
Y	*238-3215*	1	STARTING AID GP	148
Y	*172-0961*	1	SUPPORT GP-ENGINE	56
Y	*258-8337*	1	TURBOCHARGER GP	95
			S/N: THX38527-UP	

ENGINE ARRANGEMENT

367-4852 ENGINE AR-COMPLETE *(contd.)* i05119969

NOTE	PART NUMBER	QTY	PART NAME 1 2 3 4 5 6 (PRODUCT LEVEL)	SEE PAGE
Y	*330-6018*	1	WIRING GP-ELECTRONIC CONTROL (ENGINE)	190
			S/N: THX1-38526	
Y	*269-3410*	1	WIRING GP-HEATER	196

Y-SEPARATE ILLUSTRATION

ENGINE ARRANGEMENT

374-4354 ENGINE AR-COMPLETE

S/N: F7B1-UP

PART OF 351-6848 COMMON AR

SMCS-1000 **i05094189**

NOTE	PART NUMBER	QTY	PART NAME 1 2 3 4 5 6 (PRODUCT LEVEL)	SEE PAGE
Y	**347-1741**	1	ENGINE AR-COMPLETE	4
	349-6095	1	FILM-INFORMATION (EMISSION CONTROL)	
			(CENTERED ON RIGHT B-POST OF CAB BELOW ROPS FILM)	

Y-SEPARATE ILLUSTRATION

ENGINE ARRANGEMENT

350-9162 ENGINE AR-CORE

S/N: THX1-UP

PART OF 347-1741, 367-4852 ENGINE AR-COMPLETE

ALSO AN ATTACHMENT

SMCS-1000 **i04021784**

NOTE	PART NUMBER	QTY	PART NAME 1 2 3 4 5 6 (PRODUCT LEVEL)	SEE PAGE
Y	*242-0674*	1	CAMSHAFT GP	14
Y	*188-3826*	1	COOLER GP-ENGINE OIL	68
Y	*217-8669*	1	COVER GP-FRONT HOUSING	19
Y	*164-6148*	1	CRANKSHAFT GP	22
Y	*220-1951*	1	CYLINDER BLOCK GP	25
Y	*345-8414*	1	CYLINDER HEAD GP	31
Y	*213-4363*	1	FASTENER GP-CYLINDER HEAD	34
Y	*205-1321*	1	GEAR GP-FRONT	40
Y	*209-0758*	1	HOUSING GP-FRONT	44
Y	*265-1400*	6	PISTON & ROD GP	49
Y	*220-8233*	1	PUMP & MTG GP-UNIT INJ HYD	101
Y	*195-8098*	1	PUMP GP-ENGINE OIL	67
Y	*267-3362*	1	PUMP GP-FUEL INJECTION	105
Y	*258-8337*	1	TURBOCHARGER GP	95
Y	*242-0447*	1	VALVE MECHANISM GP	58
	350-5894	1	ELECTRONICS GP-ENGINE RATINGS	

Y-SEPARATE ILLUSTRATION

ENGINE ARRANGEMENT

384-8426 ENGINE AR-CORE

S/N: TXD1-UP; THX1-UP
PART OF 384-8429 ENGINE AR
ALSO AN ATTACHMENT

SMCS-1000 **i04557401**

NOTE	PART NUMBER	QTY	PART NAME 1 2 3 4 5 6 (PRODUCT LEVEL)	SEE PAGE
Y	*242-0674*	1	CAMSHAFT GP	14
Y	*188-3826*	1	COOLER GP-ENGINE OIL	68
Y	*164-6148*	1	CRANKSHAFT GP	22
Y	*220-1951*	1	CYLINDER BLOCK GP	25
Y	*384-5590*	1	CYLINDER HEAD GP	32
Y	*205-1321*	1	GEAR GP-FRONT	40
YR	*265-1400*	6	PISTON & ROD GP	49
Y	*220-8233*	1	PUMP & MTG GP-UNIT INJ HYD	101
Y	*195-8098*	1	PUMP GP-ENGINE OIL	67
Y	*267-3361*	6	PUMP GP-FUEL INJECTION	104
Y	*202-7674*	1	PUMP GP-WATER	81
Y	*330-6034*	1	SENSOR GP-ENGINE	141
Y	*242-0447*	1	VALVE MECHANISM GP	58

R-REMFG PART MAY BE AVAILABLE
Y-SEPARATE ILLUSTRATION

ENGINE ARRANGEMENT

367-2135 INSTALLATION AR-ENGINE

S/N: F7B1-UP

PART OF 351-6848 COMMON AR

SMCS-1000 **i04464212**

NOTE	PART NUMBER	QTY	PART NAME 1 2 3 4 5 6 (PRODUCT LEVEL)	SEE PAGE
Y	*367-2129*	1	AIR CLEANER GP	88
Y	*154-6643*	1	COUPLING & MTG GP-PUMP	251
Y	*216-9855*	1	MOUNTING GP-ENGINE	46
Y	*372-3160*	1	MUFFLER GP	92

Y-SEPARATE ILLUSTRATION

BASIC ENGINE

363-0271 ACCESSORY & FAN DRIVE GP

S/N: TXD1-UP; THX1-UP
PART OF 347-1741, 367-4852 ENGINE AR-COMPLETE
ALSO AN ATTACHMENT

SMCS-1207, 1359, 1405 **i04380476**

NOTE	REF NO	GRAPHIC REF	PART NUMBER	QTY	PART NAME 1 2 3 4 5 6 (PRODUCT LEVEL)	SEE PAGE
	1	1	**111-7238**	1	PLATE (THRUST)	
	2	1	**189-2449**	1	SUPPORT	
	3	1	**190-0643**	1	BELT TENSIONER	
	4	1	**190-3968**	1	SHAFT-FAN	
	5	1	**190-4155**	1	BELT-SERPENTINE	
	6	1	**226-7914**	1	BRACKET (FAN BEARING)	
	7	1	**228-5827**	1	RETAINER-BEARING	
	8	1	**243-2310**	1	COVER	
	9	1	**307-9798**	1	BEARING AS	
	10	1	**333-1207**	1	IDLER AS	
	11	1	**363-0255**	1	PULLEY-FAN	
	12	1	**363-0267**	1	SUPPORT AS	
M	13	1	**5C-7423**	4	SCREW (M6X1X16-MM)	
M	14	1	**6V-3940**	7	BOLT (M8X1.25X25-MM)	
M	15	1	**6V-5218**	2	BOLT (M8X1.25X35-MM)	
M	16	1	**6V-5219**	2	BOLT (M8X1.25X40-MM)	
	17	1	**6V-5839**	7	WASHER (11X21X2.5-MM THK)	
M	18	1	**6V-5842**	6	BOLT (M10X1.5X40-MM)	
M	19	1	**8T-0643**	1	BOLT (M10X1.5X80-MM)	
	20	1	**9M-1974**	5	WASHER-HARD (8.8X16X2-MM THK)	

M-METRIC PART

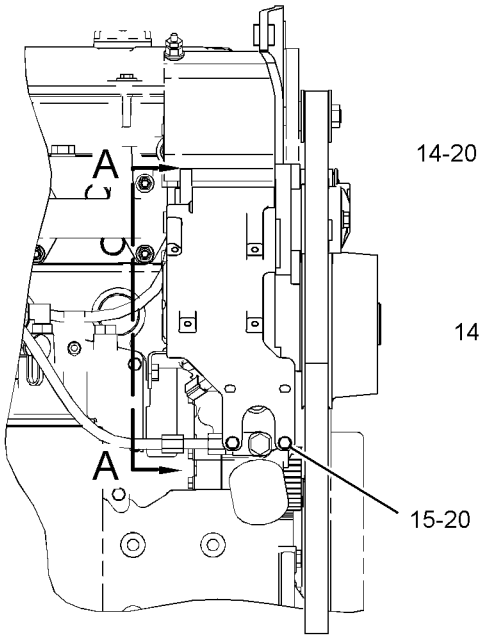

RIGHT SIDE VIEW OF ENGINE

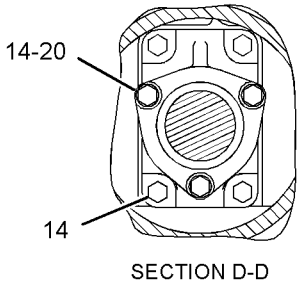

SECTION D-D

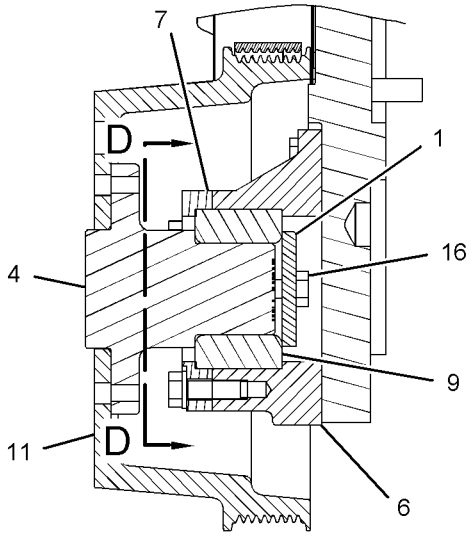

SECTION B-B

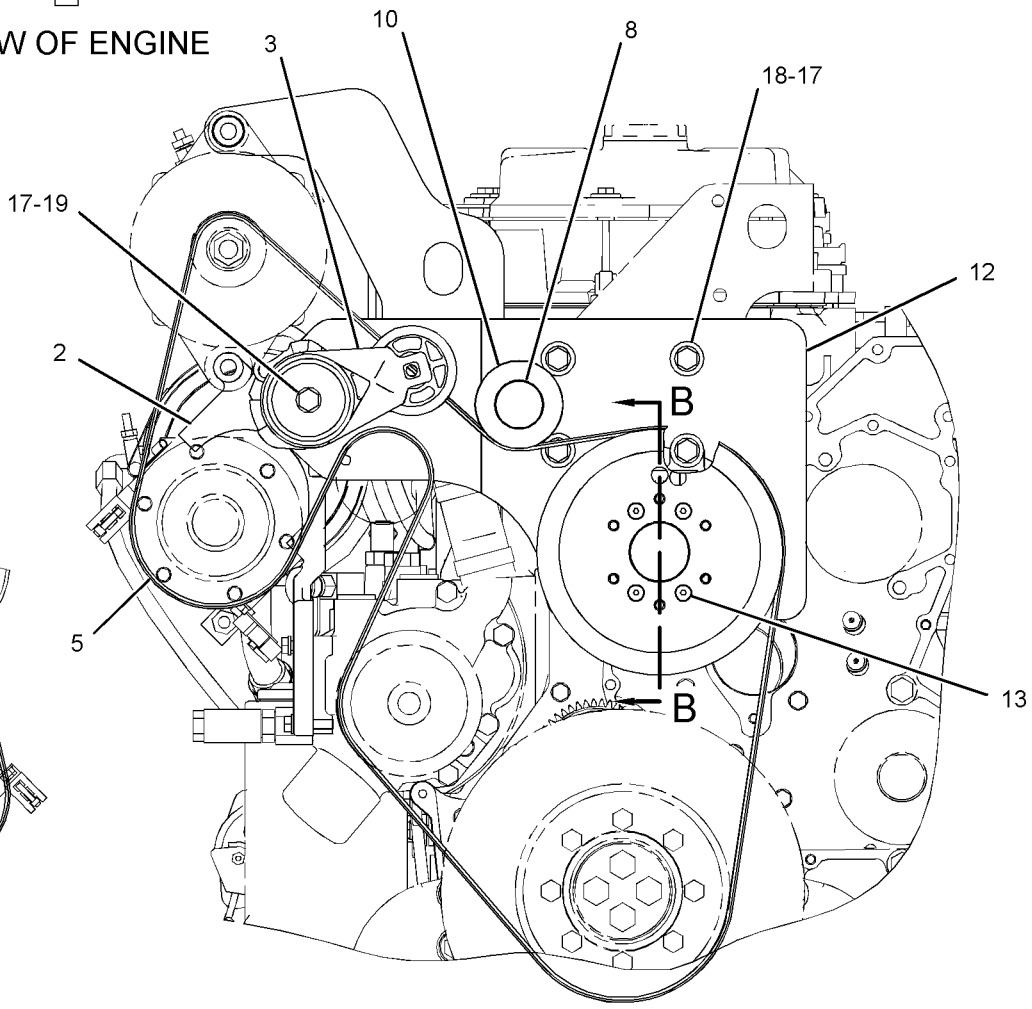

FRONT VIEW OF ENGINE

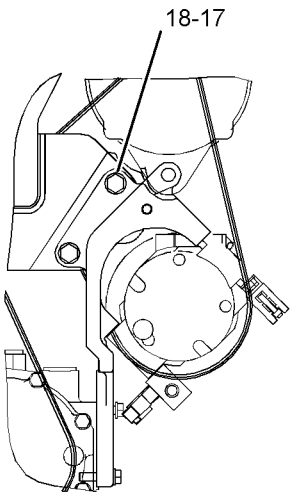

VIEW A-A

GRAPHIC #1 **<END>** g02730622

224-7846 BELT TENSIONER GP

S/N: THX1-38527
PART OF 367-4852 ENGINE AR-COMPLETE
AN ATTACHMENT

SMCS-1357, 1358, 1397 **i02450116**

NOTE	REF NO	GRAPHIC REF	PART NUMBER	QTY	PART NAME 1 2 3 4 5 6 (PRODUCT LEVEL)	SEE PAGE
	1	1	**190-0643**	1	BELT TENSIONER	
	2	1	**189-2449**	1	SUPPORT	
	3	1	**268-8897**	1	SUPPORT AS	
		1	**5V-9221**	1	SPACER (13.8X25X25-MM THK)	
M	4	1	**6V-5218**	2	BOLT (M8X1.25X35-MM)	
	5	1	**6V-5839**	7	WASHER (11X21X2.5-MM THK)	
M	6	1	**6V-5842**	6	BOLT (M10X1.5X40-MM)	
M	7	1	**8T-0643**	1	BOLT (M10X1.5X80-MM)	
	8	1	**9M-1974**	2	WASHER-HARD (8.8X16X2-MM THK)	
FM			**2W-9533**	4	BOLT (M8X1.25X10-MM)	
F			**9M-1974**	4	WASHER-HARD (8.8X16X2-MM THK)	

F-NOT SHOWN
M-METRIC PART

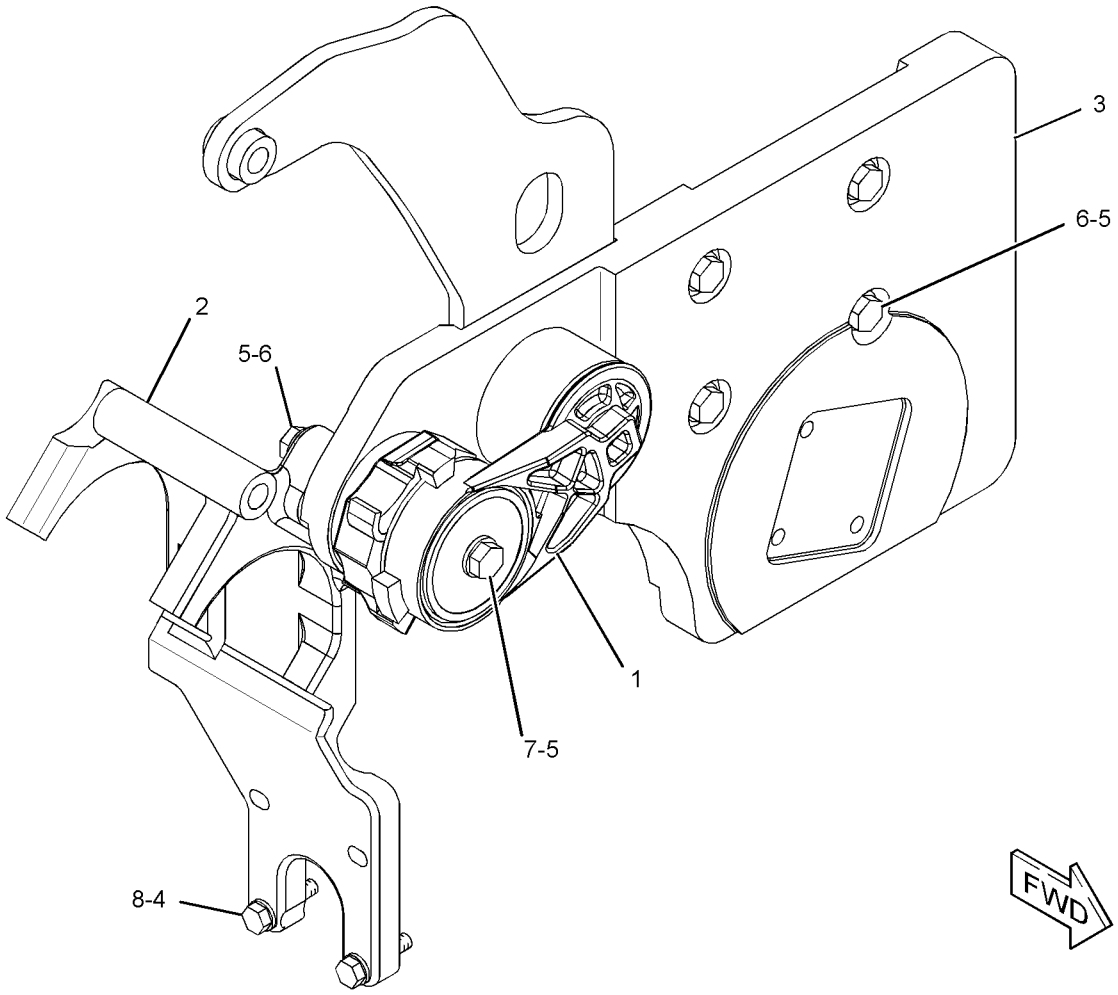

GRAPHIC #1 **<END>** g01286665

BASIC ENGINE

242-0674 CAMSHAFT GP

S/N: TXD1-UP; THX1-UP
PART OF 350-9162, 384-8426 ENGINE AR-CORE
ALSO AN ATTACHMENT

SMCS-1210 **i02499356**

NOTE	REF NO	GRAPHIC REF	PART NUMBER	QTY	PART NAME 1 2 3 4 5 6 (PRODUCT LEVEL)	SEE PAGE
	1	1	**107-7694**	1	PLATE-THRUST	
R	2	1	**242-0673**	1	CAMSHAFT AS	
	2A	1	**1B-8705**	1	KEY-WOODRUFF	
	2B	1	**224-3247**	1	GEAR (100-TEETH)	
M	3		**6V-3940**	2	BOLT (M8X1.25X25-MM)	

M-METRIC PART
R-REMFG PART MAY BE AVAILABLE

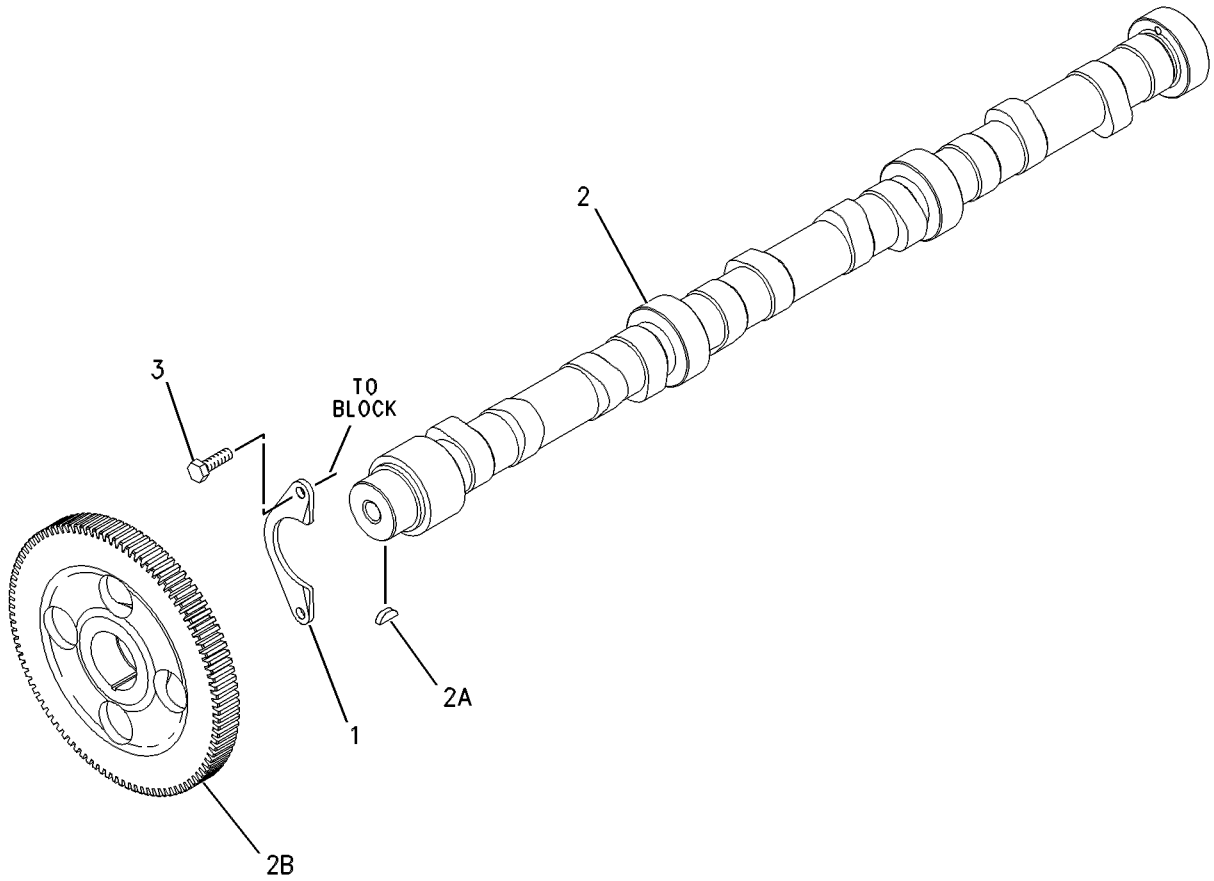

GRAPHIC #1 **<END>** g00626400

202-3301 COVER GP-CYLINDER BLOCK–CRANKCASE

S/N: TXD1-UP; THX1-UP
PART OF 347-1741, 367-4852 ENGINE AR-COMPLETE
ALSO AN ATTACHMENT

SMCS-1201 **i02535213**

NOTE	REF NO	GRAPHIC REF	PART NUMBER	QTY	PART NAME 1 2 3 4 5 6 (PRODUCT LEVEL)	SEE PAGE
	1	1	**213-2411**	1	COVER	
	2	1	**213-2410**	1	GASKET	
	3	1	**240-0041**	1	BREATHER AS (CRANKCASE)	
M	4	1	**3E-8005**	1	BOLT (M8X1.25X160-MM)	
M	5	1	**6V-3918**	2	BOLT (M8X1.25X50-MM)	
M	6	1	**6V-3940**	9	BOLT (M8X1.25X25-MM)	
	7	1	**9F-4446**	1	SEAL-O-RING (CRANKCASE BREATHER)	
	8	1	**9M-1974**	11	WASHER-HARD (8.8X16X2-MM THK)	
	9	1	**5N-4185**	1	WASHER-SPECIAL	

M-METRIC PART

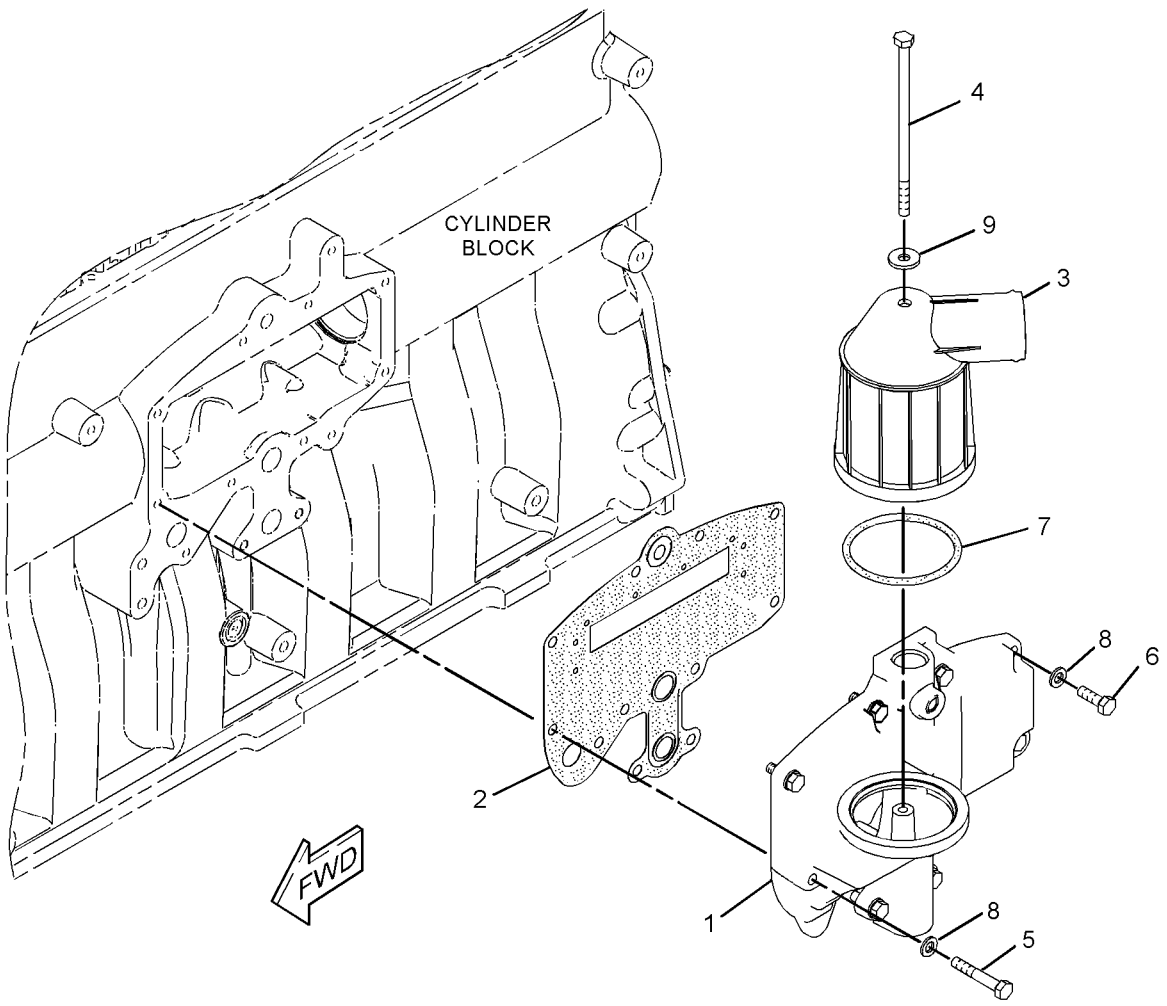

GRAPHIC #1 **<END>** g01216863

133-3089 COVER GP-FLYWHEEL HOUSING

S/N: TXD1-UP; THX1-UP
PART OF 347-1741, 367-4852 ENGINE AR-COMPLETE
FOR USE WITH RH MOUNTED STARTER
ALSO AN ATTACHMENT

SMCS-1157 **i02202316**

NOTE	REF NO	GRAPHIC REF	PART NUMBER	QTY	PART NAME 1 2 3 4 5 6 (PRODUCT LEVEL)	SEE PAGE
	1	1	**9Y-6089**	1	GASKET	
	2	1	**0S-1589**	3	BOLT (5/8-11X1.75-IN)	
	3	1	**4D-3704**	3	WASHER-HARD (17X30X5-MM THK)	
	4	1	**4N-1114**	1	COVER	

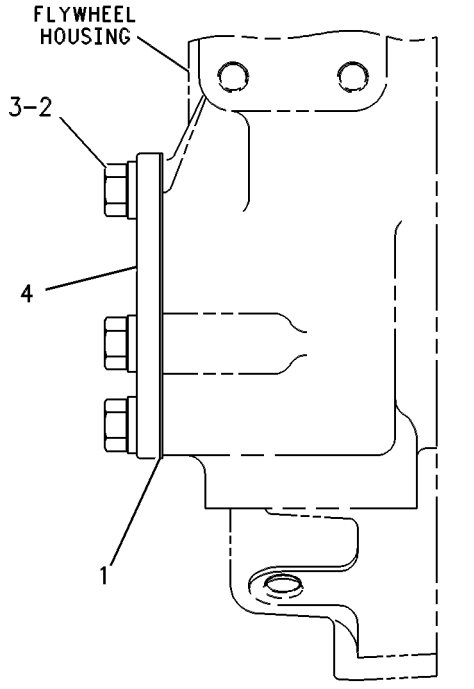

LEFT SIDE VIEW

GRAPHIC #1 **<END>** g00263620

118-1727 COVER GP-FRONT HOUSING–ACCESSORY DRIVE

S/N: TXD1-UP; THX1-UP
REQUIRED ON ENGINES WITHOUT FACTORY INSTALLED AIR COMPRESSOR
PART OF 347-1741, 367-4852 ENGINE AR-COMPLETE
ALSO AN ATTACHMENT

SMCS-1150 **i01784655**

NOTE	REF NO	GRAPHIC REF	PART NUMBER	QTY	PART NAME 1 2 3 4 5 6 (PRODUCT LEVEL)	SEE PAGE
	1	1	**5P-8245**	4	WASHER-HARD (13.5X25.5X3-MM THK)	
M	2	1	**6V-5696**	2	BOLT (M12X1.75X80-MM)	
	3	1	**4W-2026**	1	COVER	
	4	1	**135-9819**	1	SEAL-INTEGRAL	
M	5	1	**6V-8149**	2	NUT (M12X1.75-THD)	

M-METRIC PART

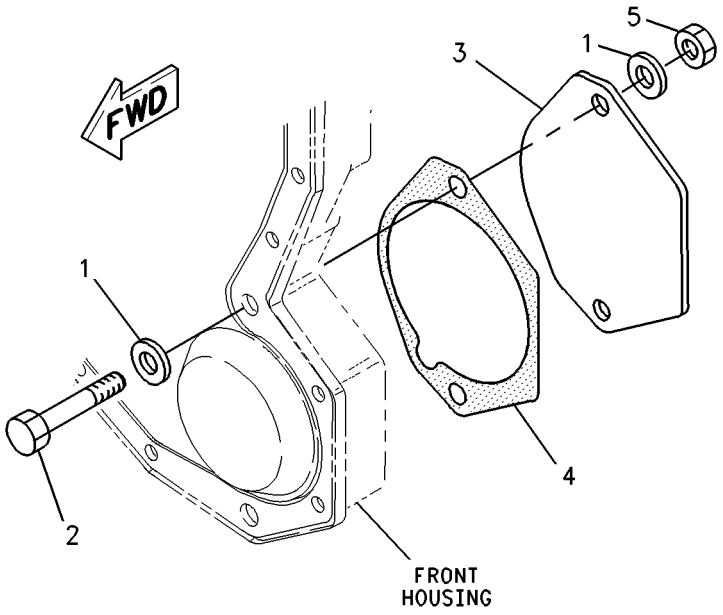

GRAPHIC #1 **<END>** g00897312

BASIC ENGINE

211-3285 COVER GP-FRONT HOUSING

S/N: TXD1-UP; THX1-UP
PART OF 347-1741, 367-4852 ENGINE AR-COMPLETE
ALSO AN ATTACHMENT

SMCS-1150 **i03176055**

NOTE	REF NO	GRAPHIC REF	PART NUMBER	QTY	PART NAME 1 2 3 4 5 6 (PRODUCT LEVEL)	SEE PAGE
M	1	1	**9X-2099**	2	STUD (M8X1.25X52.75-MM)	
	2	1	**7C-1445**	1	COVER	
	3	1	**166-1776**	1	COVER AS-FRONT	
	3A	1	**126-1757**	2	WASHER (10.85X19.3X1.27-MM THK)	
	3B	1	**136-0822**	2	STUD	
	4	1	**166-1781**	1	GASKET	
	5	1	**061-9455**	1	SEAL-O-RING	
M	6	1	**5C-7261**	2	NUT (M8X1.25-THD)	
M	7	1	**6V-2317**	10	BOLT (M8X1.25X30-MM)	
M	8	1	**8T-0100**	2	BOLT (M8X1.25X60-MM)	
	9	1	**8T-4224**	2	WASHER-HARD (8.8X16X2-MM THK)	

M-METRIC PART

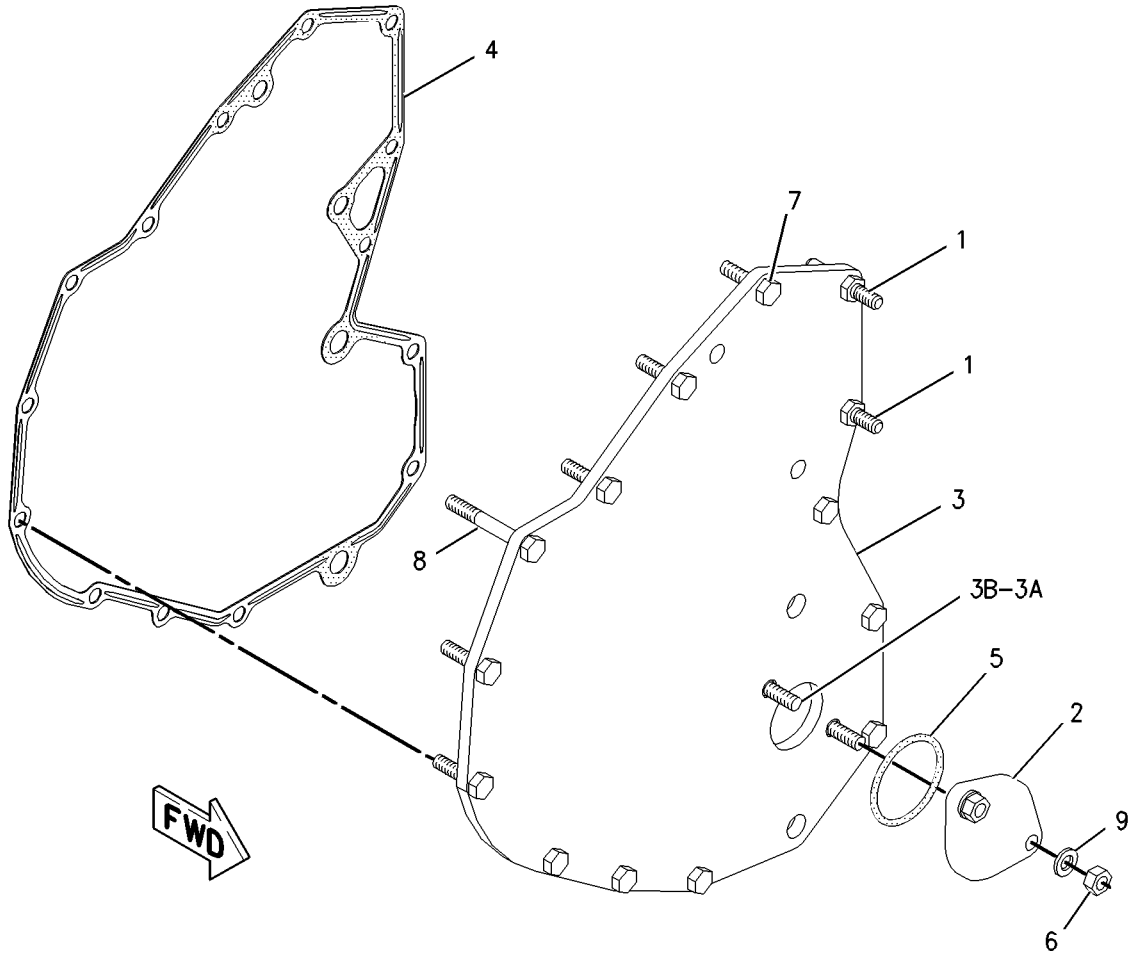

GRAPHIC #1 **<END>** g00827837

217-8669 COVER GP-FRONT HOUSING

S/N: TXD1-UP; THX1-UP
PART OF 347-1741, 367-4852 ENGINE AR-COMPLETE, 350-9162 ENGINE AR-CORE
FOR USE WITH 209-0758—PAGE 44
ALSO AN ATTACHMENT

SMCS-1150 **i02408354**

NOTE	REF NO	GRAPHIC REF	PART NUMBER	QTY	PART NAME 1 2 3 4 5 6 (PRODUCT LEVEL)	SEE PAGE
	1	1	**209-0760**	1	COVER AS-FRONT	
	1A	1	**126-1757**	2	WASHER (10.85X19.3X1.27-MM THK)	
	1B	1	**136-0822**	2	STUD	
	2	1	**209-0762**	1	GASKET AS	

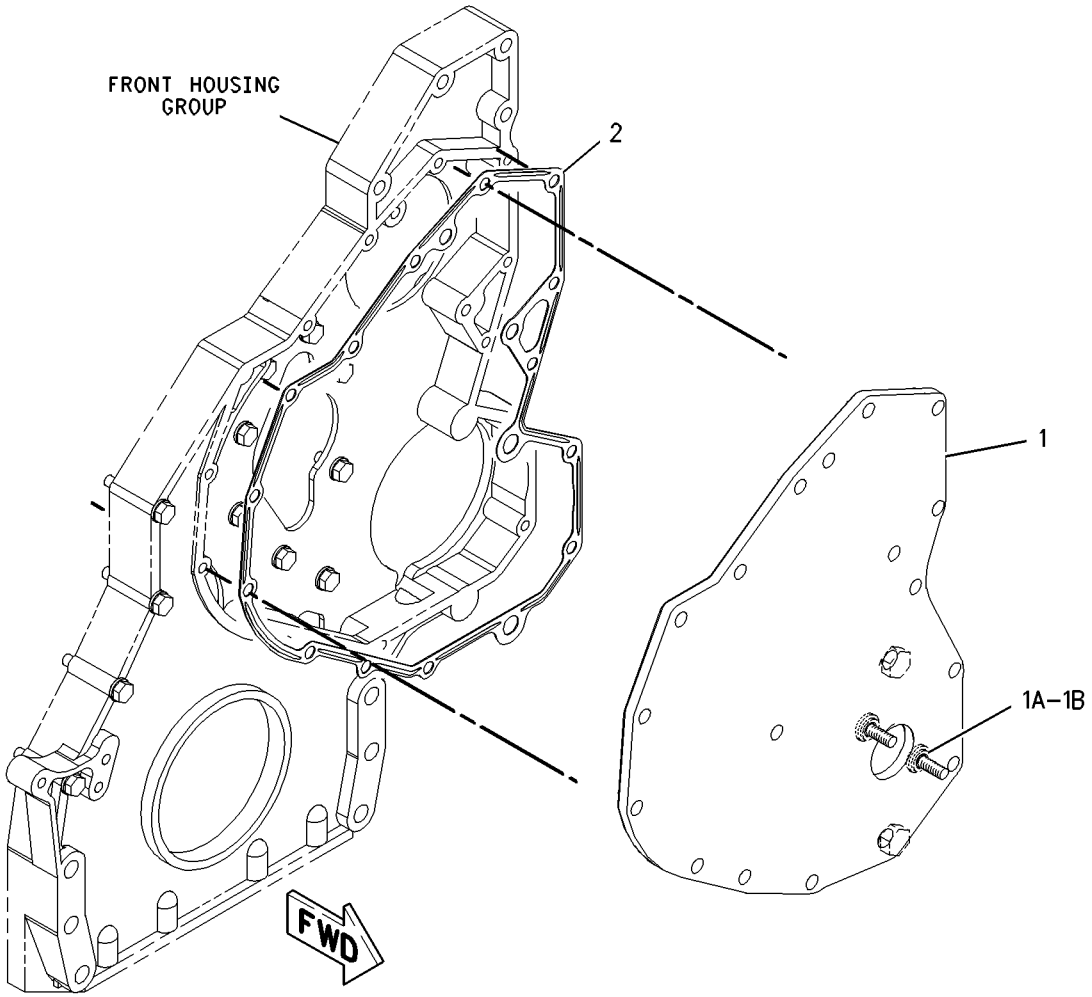

GRAPHIC #1 **<END>** g00849279

280-8003 COVER GP-VALVE MECHANISM

S/N: TXD1-UP; THX1-UP
PART OF 367-4852 ENGINE AR-COMPLETE
AN ATTACHMENT
TYPE 1

SMCS-1107 **i04096909**

NOTE	REF NO	GRAPHIC REF	PART NUMBER	QTY	PART NAME 1 2 3 4 5 6 (PRODUCT LEVEL)	SEE PAGE
	1	1	**353-6988**	1	BASE GP-VALVE COVER	
		1	**268-3490**	1	SEAL-VALVE COVER	
C	2	1	**358-7873**	1	COVER GP-VALVE MECHANISM	
		1	**285-4106**	1	SEAL-VALVE COVER	
	3	1	**227-4531**	1	CAP AS-ENGINE OIL FILLER	
		1	**7F-8268**	1	SEAL-O-RING	
C	4	1	**358-7876**	11	SLEEVE-SPACER	

C-CHANGE FROM PREVIOUS TYPE

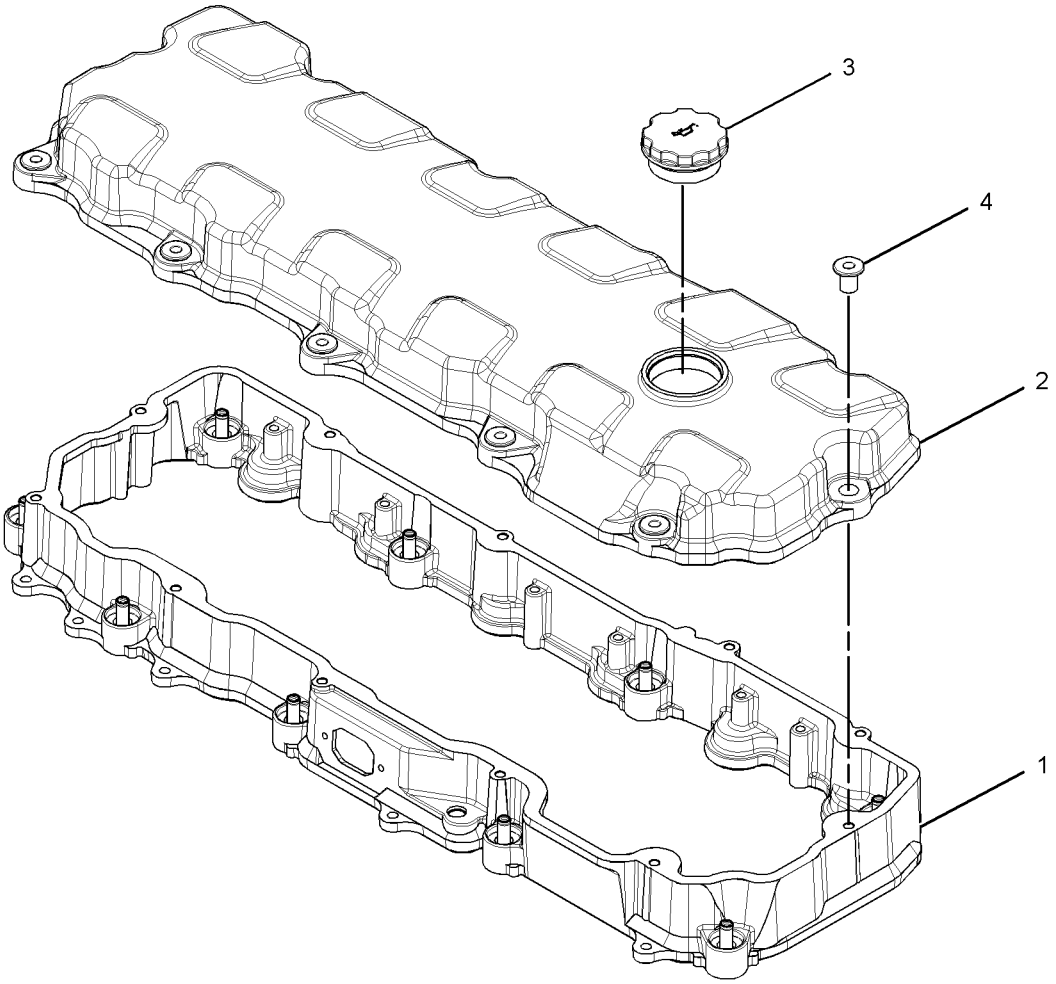

GRAPHIC #1 **<END>** g01309261

280-8003 COVER GP-VALVE MECHANISM

S/N: TXD1-UP; THX1-UP
PART OF 347-1741, 367-4852 ENGINE AR-COMPLETE
ALSO AN ATTACHMENT
TYPE 2

SMCS-1107 **i02605318**

NOTE	REF NO	GRAPHIC REF	PART NUMBER	QTY	PART NAME 1 2 3 4 5 6 (PRODUCT LEVEL)	SEE PAGE
	1	1	**271-2418**	1	BASE GP-VALVE COVER	
		1	**268-3490**	1	SEAL-VALVE COVER	
	2	1	**263-7823**	1	COVER GP-VALVE MECHANISM	
J		1	**217-5701**		SEAL-BULK (24-DM)	
	3	1	**227-4531**	1	CAP AS-ENGINE OIL FILLER	
		1	**7F-8268**	1	SEAL-O-RING	
	4	1	**246-5083**	11	SLEEVE-SPACER	

J-ORDER BY THE DECIMETER

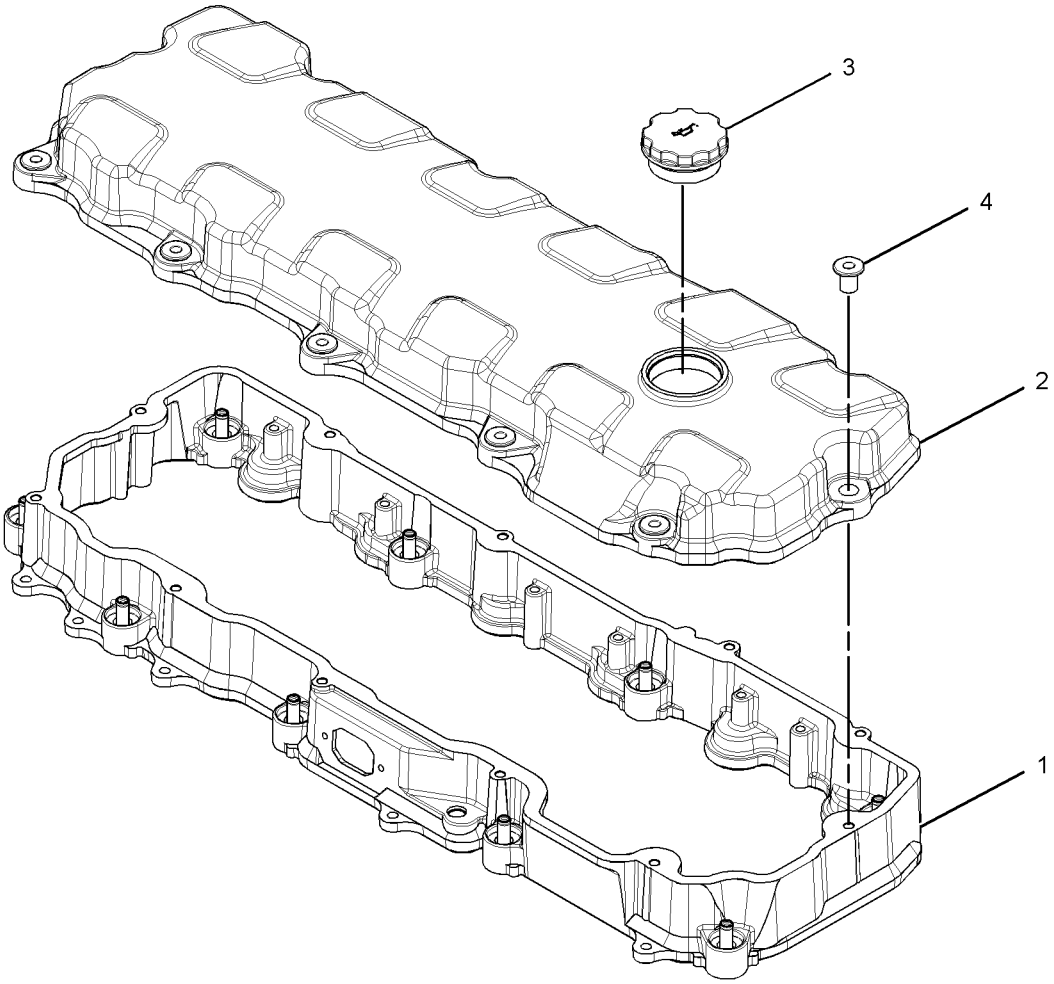

GRAPHIC #1 **<END>** g01309261

164-6148 CRANKSHAFT GP

S/N: TXD1-UP; THX1-UP
PART OF 350-9162, 384-8426 ENGINE AR-CORE
ALSO AN ATTACHMENT

SMCS-1202 **i04720944**

NOTE	REF NO	GRAPHIC REF	PART NUMBER	QTY	PART NAME 1 2 3 4 5 6 (PRODUCT LEVEL)	SEE PAGE
J	1	1	**151-2939**	7	BEARING-MAIN (STANDARD)	
AB			**282-1771**	7	BEARING-MAIN (0.25-MM US)	
AB			**282-1772**	7	BEARING-MAIN (0.51-MM US)	
R	2	1	**261-1544**	1	CRANKSHAFT AS	
	2A	1	**1B-8705**	1	KEY-WOODRUFF	
	2B	1	**2W-8147**	1	GEAR (50-TEETH)	
	2C	1	**9Y-0810**	1	SLEEVE-WEAR	
J	3	1	**246-3150**	2	PLATE-THRUST	
					AVAILABLE REPAIR KIT(S):	
AJ			**243-6716**		KIT-BEARING (STANDARD)	
					(INCLUDES A COMPLETE SET OF MAIN BEARINGS AND THRUST PLATES)	

A-NOT PART OF THIS GROUP
B-USE AS REQUIRED
J-KIT MARKED J INCLUDES PARTS MARKED J
R-REMFG PART MAY BE AVAILABLE

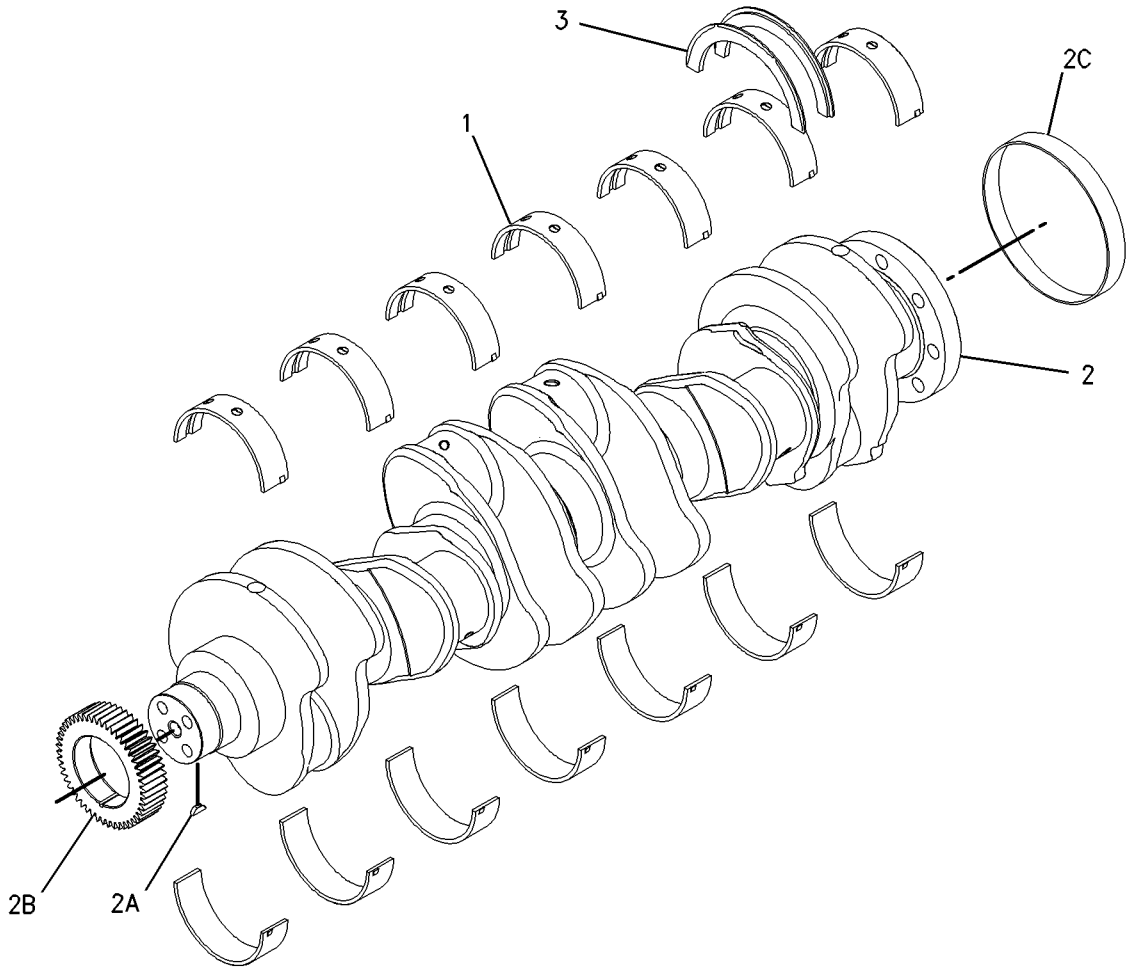

GRAPHIC #1 **<END>** g00789955

BASIC ENGINE

325-3915 CYLINDER BLOCK AS*R

S/N: TXD1-UP; THX1-UP
PART OF 220-1952 CYLINDER BLOCK GP
ALSO AN ATTACHMENT

SMCS-1201 **i03819464**

NOTE	REF NO	GRAPHIC REF	PART NUMBER	QTY	PART NAME 1 2 3 4 5 6 (PRODUCT LEVEL)	SEE PAGE
	1	1	**0L-1026**	2	PLUG-CUP	
	2	1	**3B-0623**	2	PLUG-CUP	
	3	1	**4F-5695**	4	PLUG-CUP	
M	4	1	**175-0454**	14	BOLT (M16X2X160-MM)	
	5	1	**203-5805**	2	BEARING-SLEEVE	
	6	1	**203-6090**	1	BEARING-SLEEVE	
	7	1	**212-7002**	7	CAP-BEARING	
	8	1	**216-5586**	1	BEARING-SLEEVE (CAMSHAFT)	
	9	1	**9X-8268**	14	WASHER (17.5X30X3.5-MM THK)	

M-METRIC PART

325-3915 CYLINDER BLOCK AS *(contd.)* **i03819464**

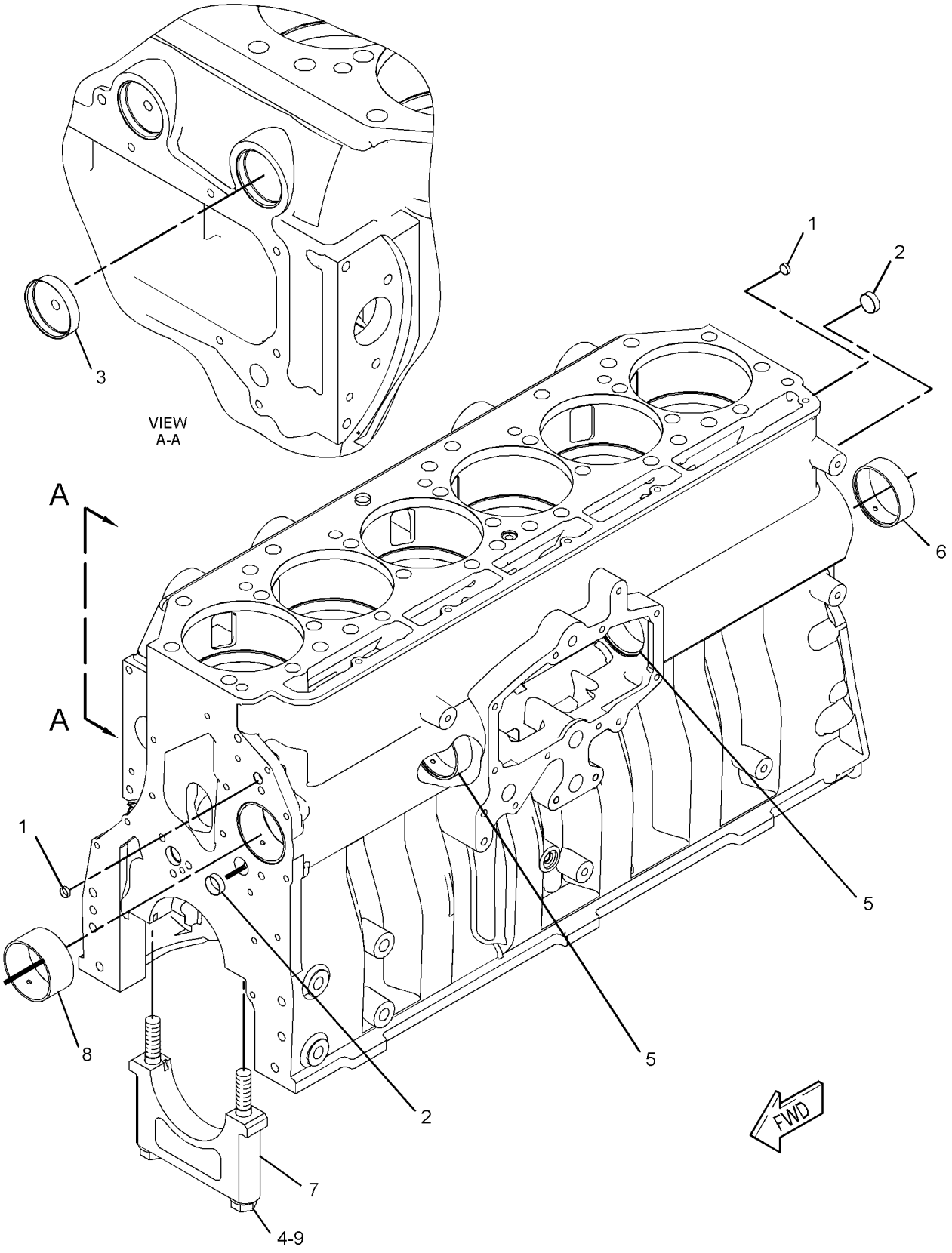

GRAPHIC #1 **<END>** g02073913

220-1951 CYLINDER BLOCK GP

S/N: TXD1-UP; THX1-UP
PART OF 350-9162, 384-8426 ENGINE AR-CORE
ALSO AN ATTACHMENT

SMCS-1201 **i04930912**

NOTE	REF NO	GRAPHIC REF	PART NUMBER	QTY	PART NAME 1 2 3 4 5 6 (PRODUCT LEVEL)	SEE PAGE
	1	1	**0S-0519**	1	PLUG-CUP	
	2	1	**1W-8407**	2	SLEEVE	
	3	1	**4G-4972**	1	SEAL-O-RING	
	4	1	*396-0393*	1	PLUG AS	
		1	**360-3677**	1	PLUG	
		1	**214-7566**	1	SEAL-O-RING	
Y	5	1	*220-1952*	1	CYLINDER BLOCK GP	26
	6	1	**6V-3538**	2	DOWEL	
	7	1	**7N-5683**	2	DOWEL	

Y-SEPARATE ILLUSTRATION

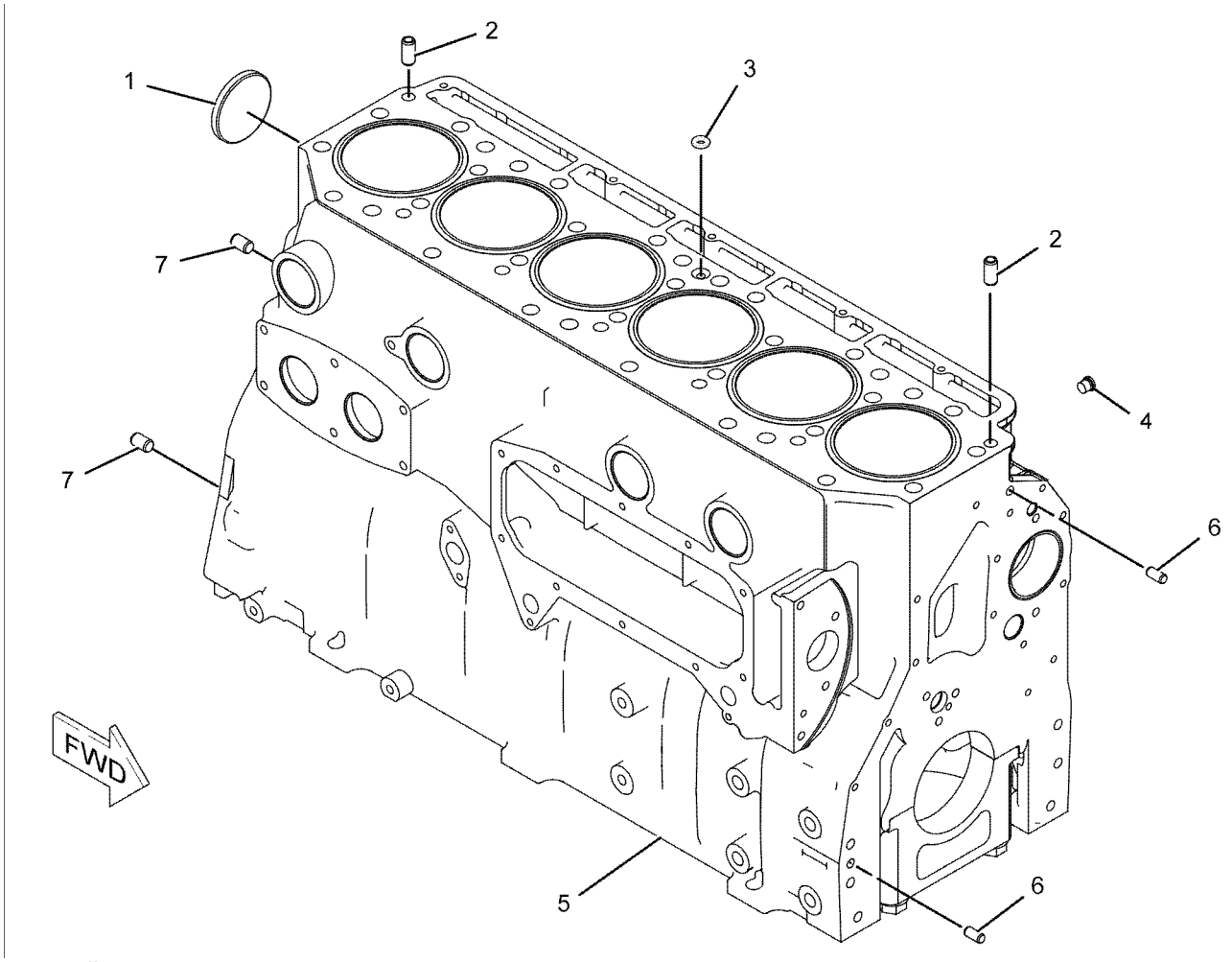

GRAPHIC #1 **<END>** g01059166

BASIC ENGINE

220-1952 CYLINDER BLOCK GP

S/N: TXD1-UP; THX1-UP
PART OF 220-1951 CYLINDER BLOCK GP
ALSO AN ATTACHMENT

SMCS-1201 **i05013652**

NOTE	REF NO	GRAPHIC REF	PART NUMBER	QTY	PART NAME 1 2 3 4 5 6 (PRODUCT LEVEL)	SEE PAGE
	1	1	**167-0024**	6	SEAL-LINER	
	2	1	**385-7276**	6	LINER-CYLINDER BLOCK	
YR	3	1	**325-3915**	1	CYLINDER BLOCK AS	23

R-REMFG PART MAY BE AVAILABLE
Y-SEPARATE ILLUSTRATION

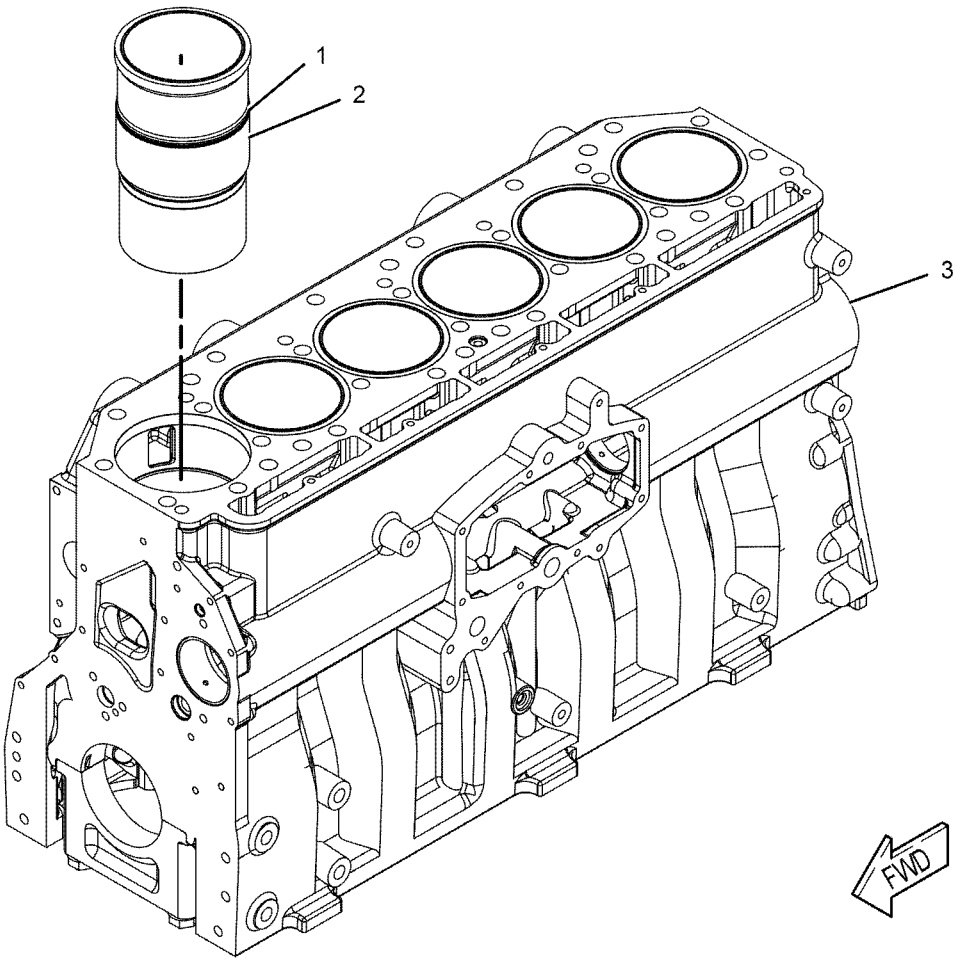

GRAPHIC #1 **<END>** g01032547

332-3619 CYLINDER HEAD AS

S/N: TXD1-UP; THX1-UP
PART OF 344-2149 CYLINDER HEAD GP
ALSO AN ATTACHMENT

SMCS-1100 **i04453666**

NOTE	REF NO	GRAPHIC REF	PART NUMBER	QTY	PART NAME 1 2 3 4 5 6 (PRODUCT LEVEL)	SEE PAGE
	1	1	**6V-7604**	7	PLUG-CUP (MARKED X)	
	2	1	**8M-5860**	18	PLUG-CUP (MARKED Z)	
	3	1	**212-8917**	12	INSERT-VALVE SEAT (EXHAUST) (STANDARD)	
AB		1	**317-7210**		INSERT-VALVE SEAT (0.127-MM OS, EXHAUST)	
AB		1	**317-7211**		INSERT-VALVE SEAT (0.25-MM OS, EXHAUST)	
AB		1	**254-3947**		INSERT-VALVE SEAT (0.508-MM OS, EXHAUST)	
	4	1	**227-1200**	6	SLEEVE-INJECTOR	
	5	1	**241-8388**	12	INSERT-VALVE SEAT (INLET) (STANDARD)	
AB		1	**317-7212**		INSERT-VALVE SEAT (0.127-MM OS, INLET)	
AB		1	**317-7213**		INSERT-VALVE SEAT (0.25-MM OS, INLET)	
AB		1	**254-3946**		INSERT-VALVE SEAT (0.508-MM OS, INLET)	
	6	1	**310-7255**	6	SEAL-O-RING	
	7	1	**310-7257**	6	SEAL-O-RING	

A-NOT PART OF THIS GROUP
B-USE AS REQUIRED

332-3619 **CYLINDER HEAD AS** *(contd.)* **i04453666**

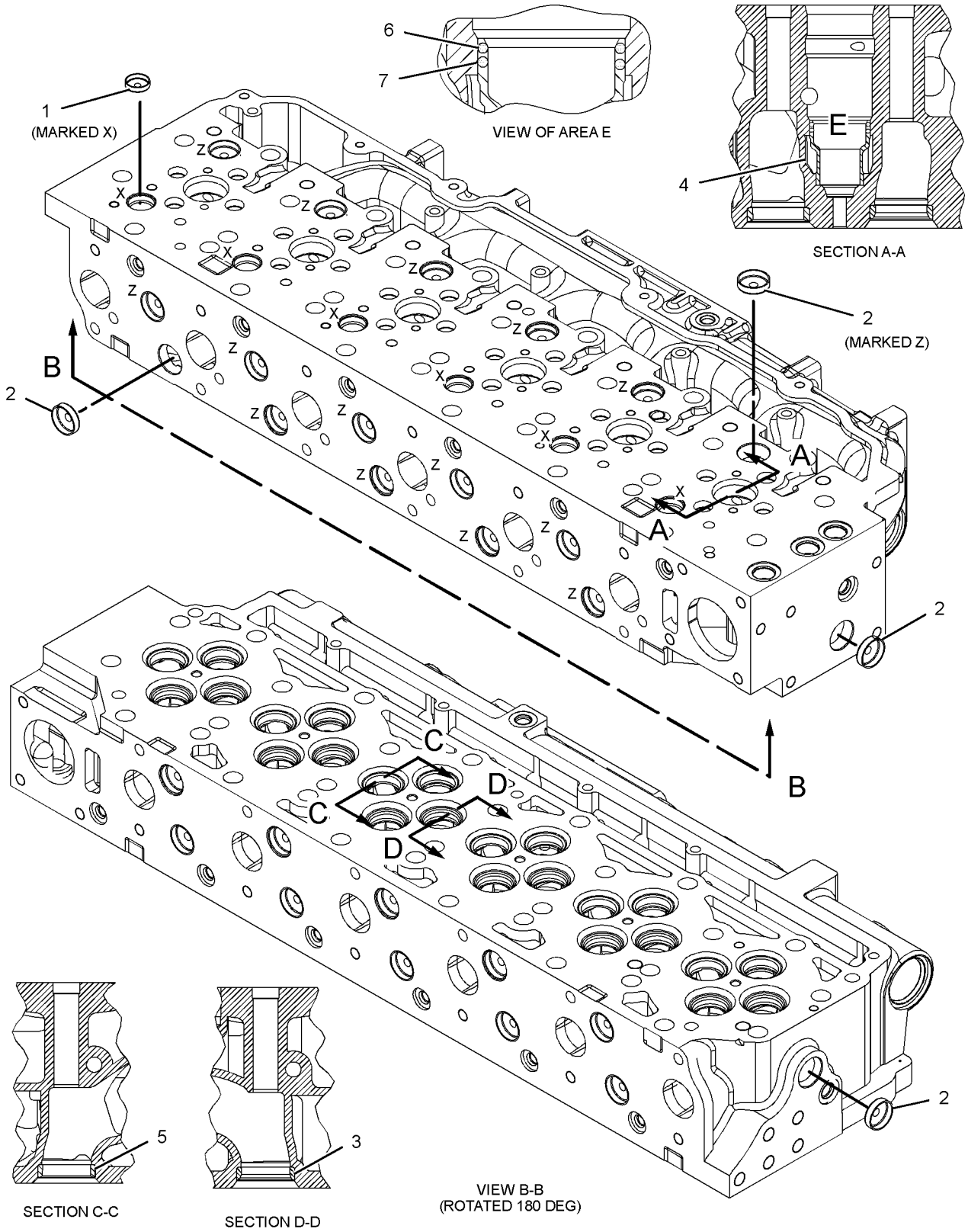

GRAPHIC #1 **<END>** g01414571

344-2149 CYLINDER HEAD GP*R

S/N: TXD1-UP; THX1-UP
PART OF 345-8414, 384-5590 CYLINDER HEAD GP
ALSO AN ATTACHMENT

SMCS-1100 **i04721257**

NOTE	REF NO	GRAPHIC REF	PART NUMBER	QTY	PART NAME 1 2 3 4 5 6 (PRODUCT LEVEL)	SEE PAGE
	1	1	**1W-2715**	24	LOCK-RETAINER (INLET)	
	2	1	**2A-4429**	24	LOCK-RETAINER (EXHAUST)	
	3	1	**163-2478**	12	SEAL-VALVE STEM (EXHAUST)	
	4	1	**190-6115**	12	SPRING-VALVE (INNER)	
	5	1	**190-6117**	12	SPRING-VALVE (OUTER)	
	6	1	**211-2134**	12	RETAINER (VALVE SPRING)	
	7	1	**217-0609**	6	SEAT-VALVE SPRING	
	8	1	**241-8383**	12	VALVE-EXHAUST	
	9	1	**241-8384**	12	RETAINER (VALVE SPRING)	
	10	1	**241-8386**	12	SPRING-VALVE (INNER)	
	11	1	**241-8385**	12	SPRING-VALVE (OUTER)	
	12	1	**241-8387**	6	SEAT	
	13	1	**241-8390**	12	SEAL-VALVE STEM	
	14	1	**252-7803**	12	VALVE-INLET	
	15	1	**259-5829**	12	GUIDE-VALVE (STANDARD, INTAKE)	
AB		1	**254-3941**		GUIDE-VALVE (0.13-MM OS)	
AB		1	**254-3942**		GUIDE-VALVE (0.5-MM OS)	
	16	1	**260-4856**	12	GUIDE-VALVE (STANDARD, EXHAUST)	
AB		1	**203-3237**		GUIDE-VALVE (0.13-MM OS, EXHAUST)	
AB		1	**203-3238**		GUIDE-VALVE (0.5-MM OS, EXHAUST)	
Y	17	1	*332-3619*	1	CYLINDER HEAD AS	27
	18	1	*319-6237*	2	PLUG AS	
					(EACH INCLUDES)	
		1	**228-7096**	1	SEAL-O-RING	
		1	**271-7442**	1	PLUG	
	19	1	*321-8638*	6	PLUG AS	
					(EACH INCLUDES)	
		1	**214-7568**	1	SEAL-O-RING	
		1	**321-8635**	1	PLUG	
	20	1	*307-2673*	2	PLUG AS	
					(EACH INCLUDES)	
		1	**9S-8005**	1	PLUG-O-RING	
		1	**238-5080**	1	SEAL-O-RING	
	21	1	**8T-6757**	2	PLUG-PIPE	

A-NOT PART OF THIS GROUP
B-USE AS REQUIRED
Y-SEPARATE ILLUSTRATION

344-2149 CYLINDER HEAD GP *(contd.)* **i04721257**

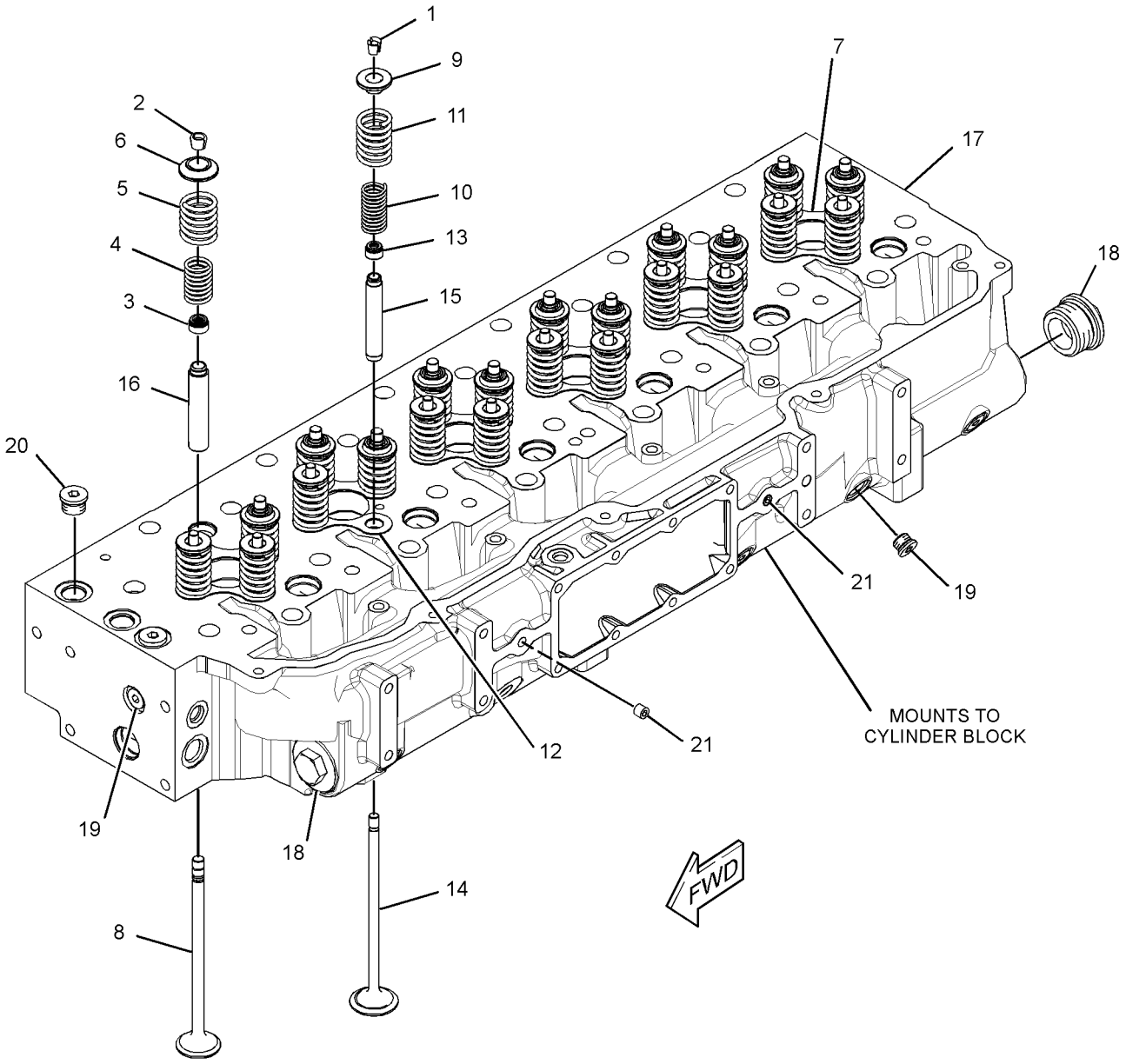

GRAPHIC #1 **<END>** g02236094

345-8414 CYLINDER HEAD GP

S/N: THX1-UP
PART OF 350-9162 ENGINE AR-CORE
ALSO AN ATTACHMENT

SMCS-1100 **i03708462**

NOTE	REF NO	GRAPHIC REF	PART NUMBER	QTY	PART NAME 1 2 3 4 5 6 (PRODUCT LEVEL)	SEE PAGE
	1	1	**2A-3746**	1	PLUG-CUP	
	2	1	**187-1315**	1	GASKET AS	
Y	3	1	**344-2149**	1	CYLINDER HEAD GP	29

Y-SEPARATE ILLUSTRATION

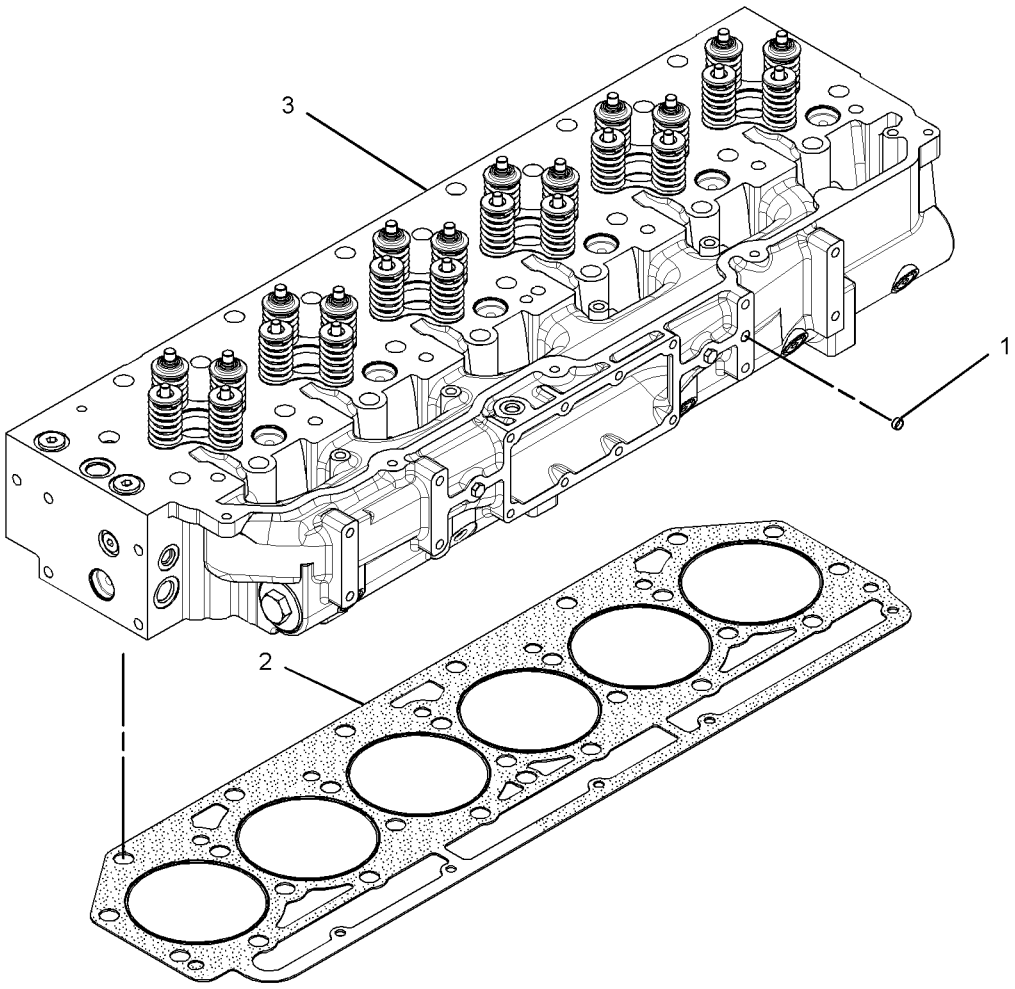

GRAPHIC #1 **<END>** g01979813

384-5590 CYLINDER HEAD GP

S/N: TXD1-UP; THX1-UP
PART OF 384-8426 ENGINE AR-CORE
ALSO AN ATTACHMENT

SMCS-1100 **i04534650**

NOTE	REF NO	GRAPHIC REF	PART NUMBER	QTY	PART NAME 1 2 3 4 5 6 (PRODUCT LEVEL)	SEE PAGE
	1	1	**2A-3746**	1	PLUG-CUP	
	2	1	**187-1315**	1	GASKET AS	
Y	3	1	*213-4363*	1	FASTENER GP-CYLINDER HEAD	34
YR	4	1	**344-2149**	1	CYLINDER HEAD GP	29

R-REMFG PART MAY BE AVAILABLE
Y-SEPARATE ILLUSTRATION

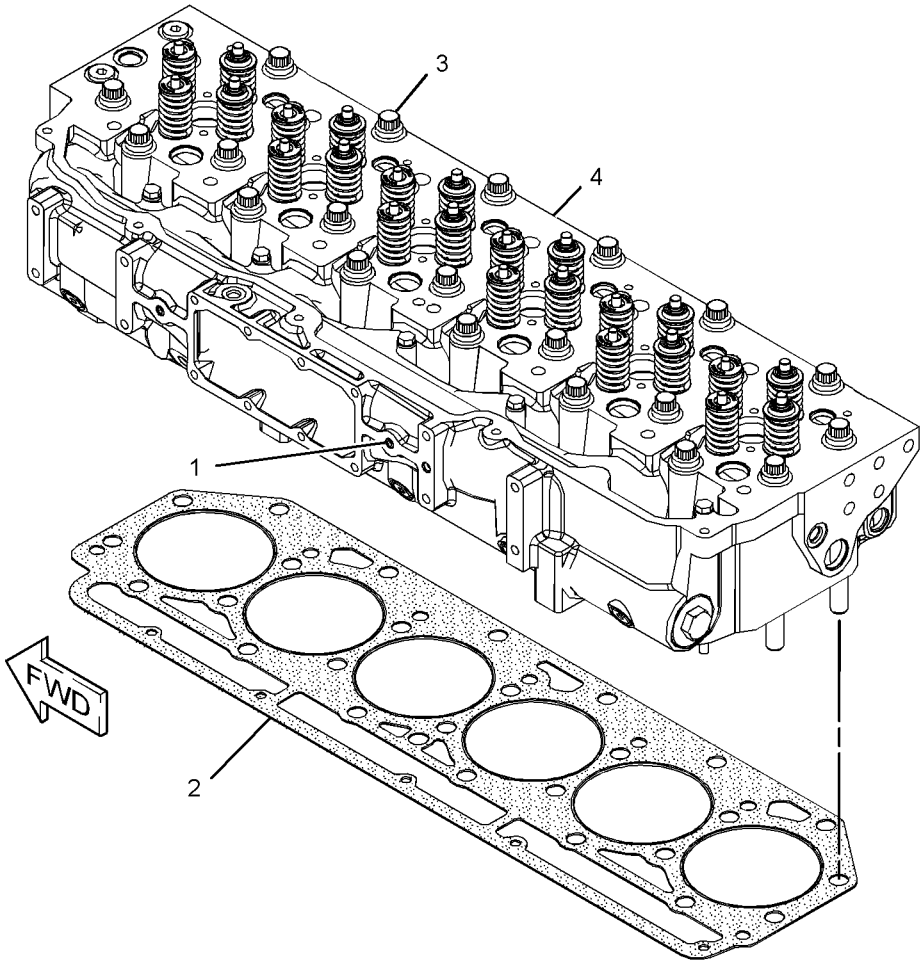

GRAPHIC #1 **<END>** g02802637

165-4557 DAMPER & PULLEY GP

S/N: TXD1-UP; THX1-UP
PROVIDES VISCOUS DAMPER WITH 8-GROOVE POLY-RIB PULLEY
PART OF 347-1741, 367-4852 ENGINE AR-COMPLETE
ALSO AN ATTACHMENT

SMCS-1205 **i03441001**

NOTE	REF NO	GRAPHIC REF	PART NUMBER	QTY	PART NAME 1 2 3 4 5 6 (PRODUCT LEVEL)	SEE PAGE
	1	1	**2W-7381**	1	PLATE-CLAMP	
	2	1	**167-8121**	1	DAMPER AS	
	3	1	**153-1036**	1	PULLEY-CRANKSHAFT (8-GROOVE)	
M	4	1	**8T-3666**	4	BOLT (M14X2X60-MM)	

M-METRIC PART

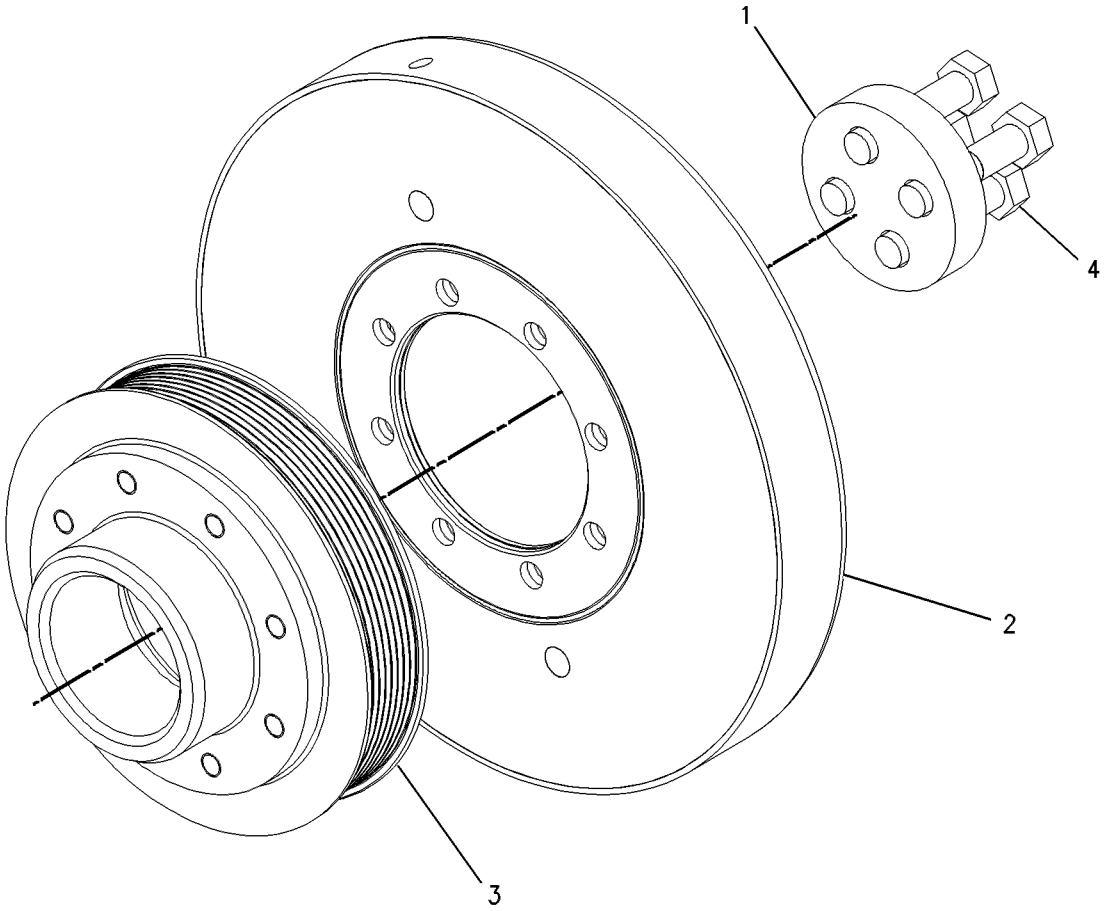

GRAPHIC #1 **<END>** g00585853

BASIC ENGINE

213-4363 FASTENER GP-CYLINDER HEAD

S/N: TXD1-UP; THX1-UP
PART OF 384-5590 CYLINDER HEAD GP, 350-9162 ENGINE AR-CORE
ALSO AN ATTACHMENT

SMCS-1100 **i02816939**

NOTE	REF NO	GRAPHIC REF	PART NUMBER	QTY	PART NAME 1 2 3 4 5 6 (PRODUCT LEVEL)	SEE PAGE
C	1	1	*290-6884*	26	FASTENER GP-CYLINDER HEAD	
					(EACH INCLUDES)	
		1	**9X-8268**	1	WASHER (17.5X30X3.5-MM THK)	
M		1	**263-2915**	1	BOLT-12 POINT HEAD (M16X2X180-MM)	
M	2	1	**8C-4984**	5	BOLT (M8X1.25X150-MM)	
	3	1	**9M-1974**	5	WASHER-HARD (8.8X16X2-MM THK)	

C-CHANGE FROM PREVIOUS TYPE
M-METRIC PART

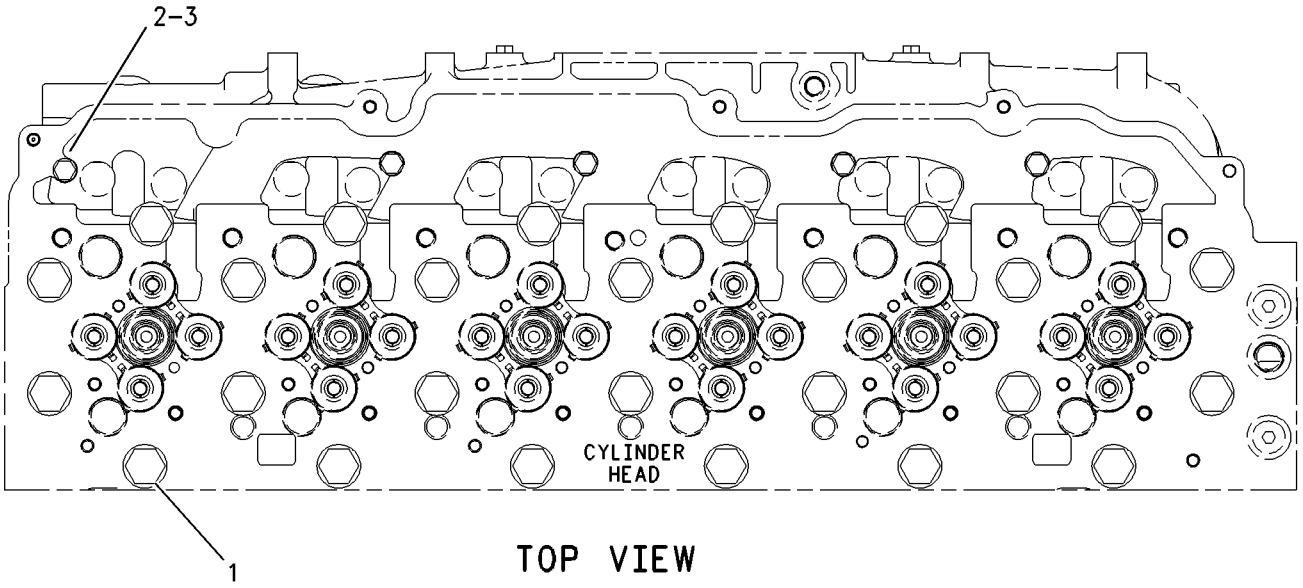

TOP VIEW

GRAPHIC #1 **<END>** g00919169

BASIC ENGINE

218-0859 FASTENER GP-DAMPER & PULLEY

S/N: TXD1-UP; THX1-UP
PART OF 347-1741, 367-4852 ENGINE AR-COMPLETE
ALSO AN ATTACHMENT

SMCS-1205, 7553 **i02094267**

NOTE	REF NO	GRAPHIC REF	PART NUMBER	QTY	PART NAME 1 2 3 4 5 6 (PRODUCT LEVEL)	SEE PAGE
	1	1	**228-3621**	1	SPACER (101.5X167X8-MM THK)	
M	2	1	**6V-4249**	8	BOLT (M10X1.5X50-MM)	

M-METRIC PART

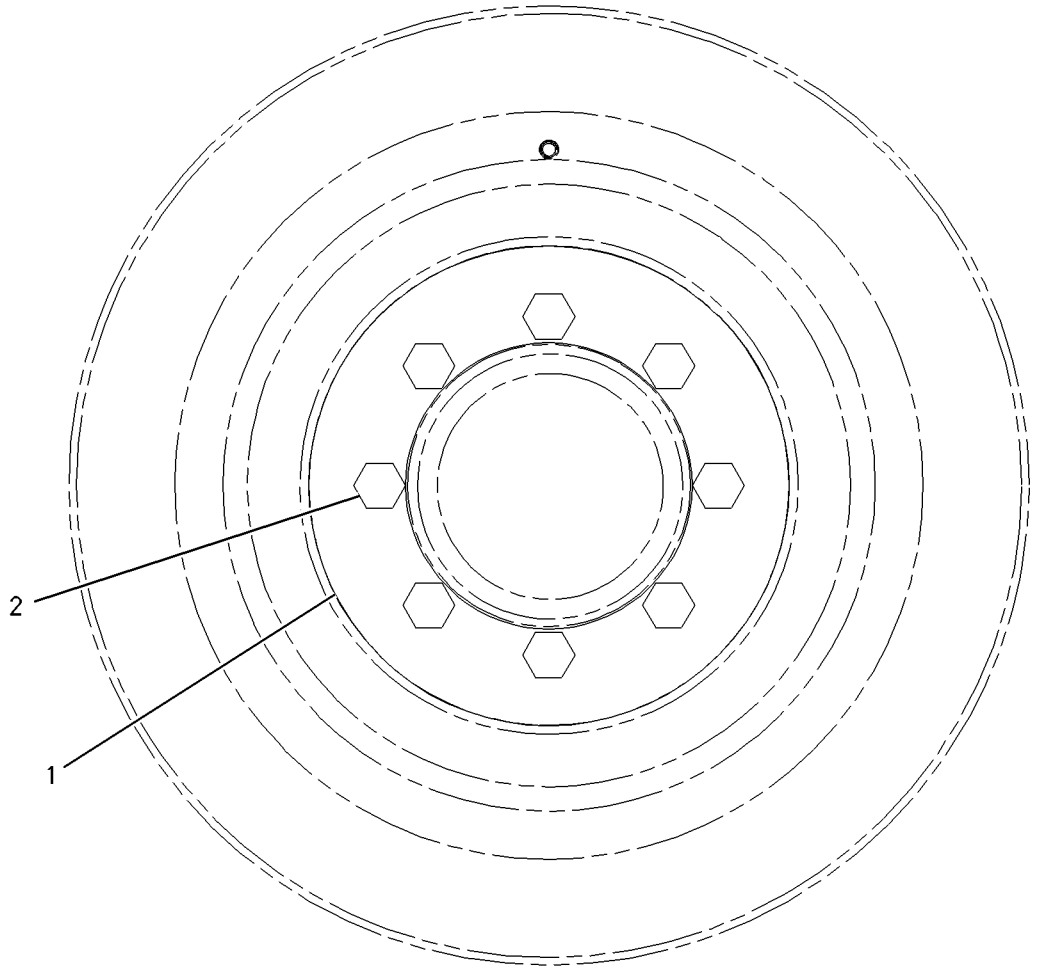

FRONT VIEW

GRAPHIC #1 **<END>** g00919524

117-2794 FASTENER GP-FLYWHEEL

S/N: TXD1-UP; THX1-UP
PART OF 347-1741, 367-4852 ENGINE AR-COMPLETE
CANNOT BE USED WITH GEAR GP-REAR (RPTO)
ALSO AN ATTACHMENT

SMCS-1156 **i02202361**

NOTE	REF NO	GRAPHIC REF	PART NUMBER	QTY	PART NAME 1 2 3 4 5 6 (PRODUCT LEVEL)	SEE PAGE
	1	1	**5P-8247**	8	WASHER-HARD (17X32X3.5-MM THK)	
M	2	1	**9X-2021**	8	BOLT-LOCKING (M16X2X45-MM)	

M-METRIC PART

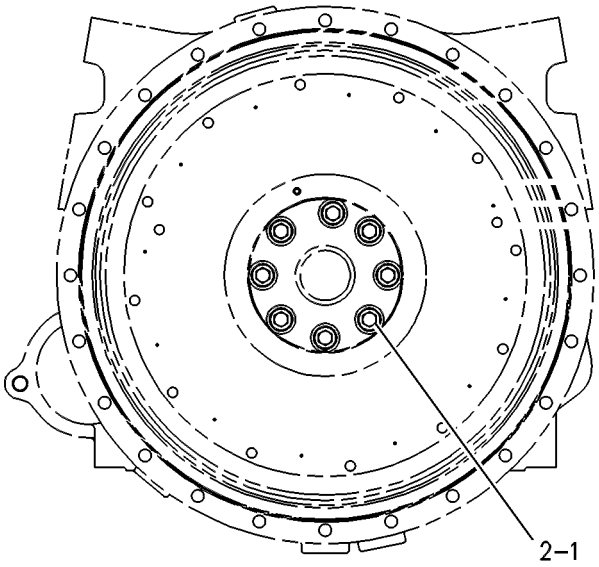

REAR VIEW

GRAPHIC #1 **<END>** g00251372

236-7315 FASTENER GP-VALVE COVER

S/N: TXD1-UP; THX1-UP
PART OF 347-1741, 367-4852 ENGINE AR-COMPLETE
ALSO AN ATTACHMENT

SMCS-1107 **i03888231**

NOTE	REF NO	GRAPHIC REF	PART NUMBER	QTY	PART NAME 1 2 3 4 5 6 (PRODUCT LEVEL)	SEE PAGE
M	1	1	**8T-6912**	11	BOLT (M8X1.25X50-MM)	
	2	1	**8T-4224**	11	WASHER-HARD (8.8X16X2-MM THK)	

M-METRIC PART

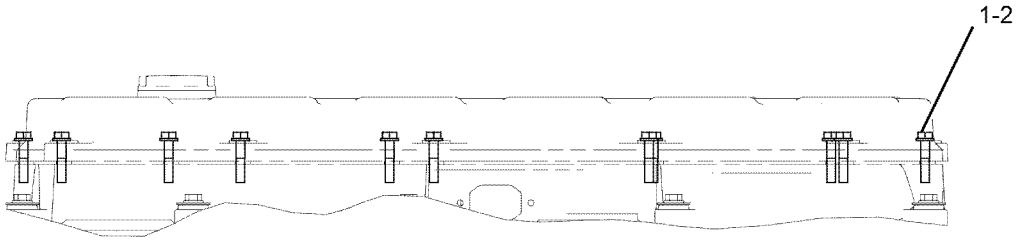

GRAPHIC #1 **<END>** g01013698

233-0423 FASTENER GP-VALVE COVER BASE

S/N: TXD1-UP; THX1-UP
PART OF 347-1741, 367-4852 ENGINE AR-COMPLETE
ALSO AN ATTACHMENT

SMCS-1120 **i02406308**

NOTE	REF NO	GRAPHIC REF	PART NUMBER	QTY	PART NAME 1 2 3 4 5 6 (PRODUCT LEVEL)	SEE PAGE
C	1	1	**244-4500**	9	SPRING	
CM	2	1	**8T-0100**	9	BOLT (M8X1.25X60-MM)	
C	3	1	**9N-0869**	9	WASHER-HARD (8.8X25.5X2-MM THK)	

C-CHANGE FROM PREVIOUS TYPE
M-METRIC PART

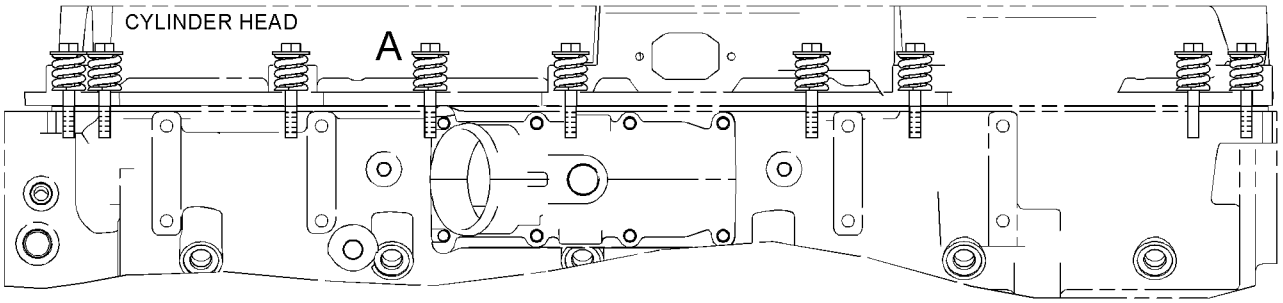

LEFT SIDE VIEW

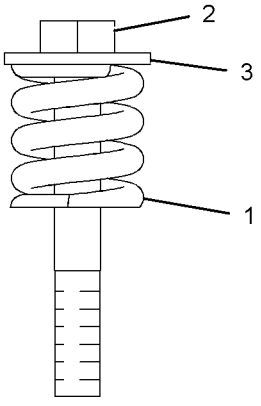

VIEW OF AREA A

GRAPHIC #1 **<END>** g01207018

116-5386 FLYWHEEL GP

S/N: TXD1-UP; THX1-UP
PART OF 347-1741, 367-4852 ENGINE AR-COMPLETE
ALSO AN ATTACHMENT

SMCS-1156 **i04544378**

NOTE	REF NO	GRAPHIC REF	PART NUMBER	QTY	PART NAME 1 2 3 4 5 6 (PRODUCT LEVEL)	SEE PAGE
C	1	1	**256-9661**	1	FLYWHEEL AS	
	2	1	**256-9651**	1	GEAR-FLYWHEEL (113-TEETH)	

C-CHANGE FROM PREVIOUS TYPE

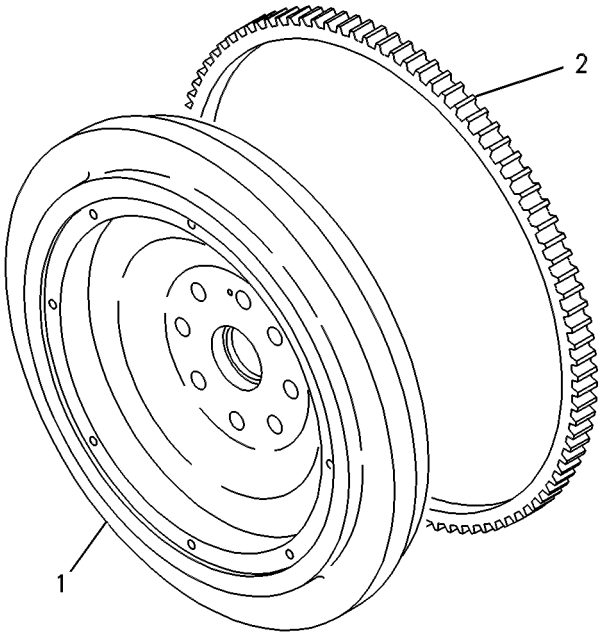

GRAPHIC #1 **<END>** g00269338

BASIC ENGINE

205-1321 GEAR GP-FRONT

S/N: TXD1-UP; THX1-UP
PART OF 350-9162, 384-8426 ENGINE AR-CORE
ALSO AN ATTACHMENT

SMCS-1151, 1162, 1206 **i02593035**

NOTE	REF NO	GRAPHIC REF	PART NUMBER	QTY	PART NAME 1 2 3 4 5 6 (PRODUCT LEVEL)	SEE PAGE
	1	1	**113-6069**	1	PLATE-THRUST	
	2	1	**115-4219**	1	PLATE-RETAINING	
	3	1	**200-4495**	1	SHAFT-IDLER	
	4	1	**205-1320**	1	GEAR AS-IDLER (50-TEETH)	
	4A	1	**115-4072**	1	BEARING	
M	5	1	**136-4183**	1	BOLT-12 POINT HEAD (M10X1.5X30-MM)	
M	6	1	**6V-5843**	2	BOLT (M10X1.5X45-MM)	

M-METRIC PART

205-1321 **GEAR GP-FRONT** *(contd.)* **i02593035**

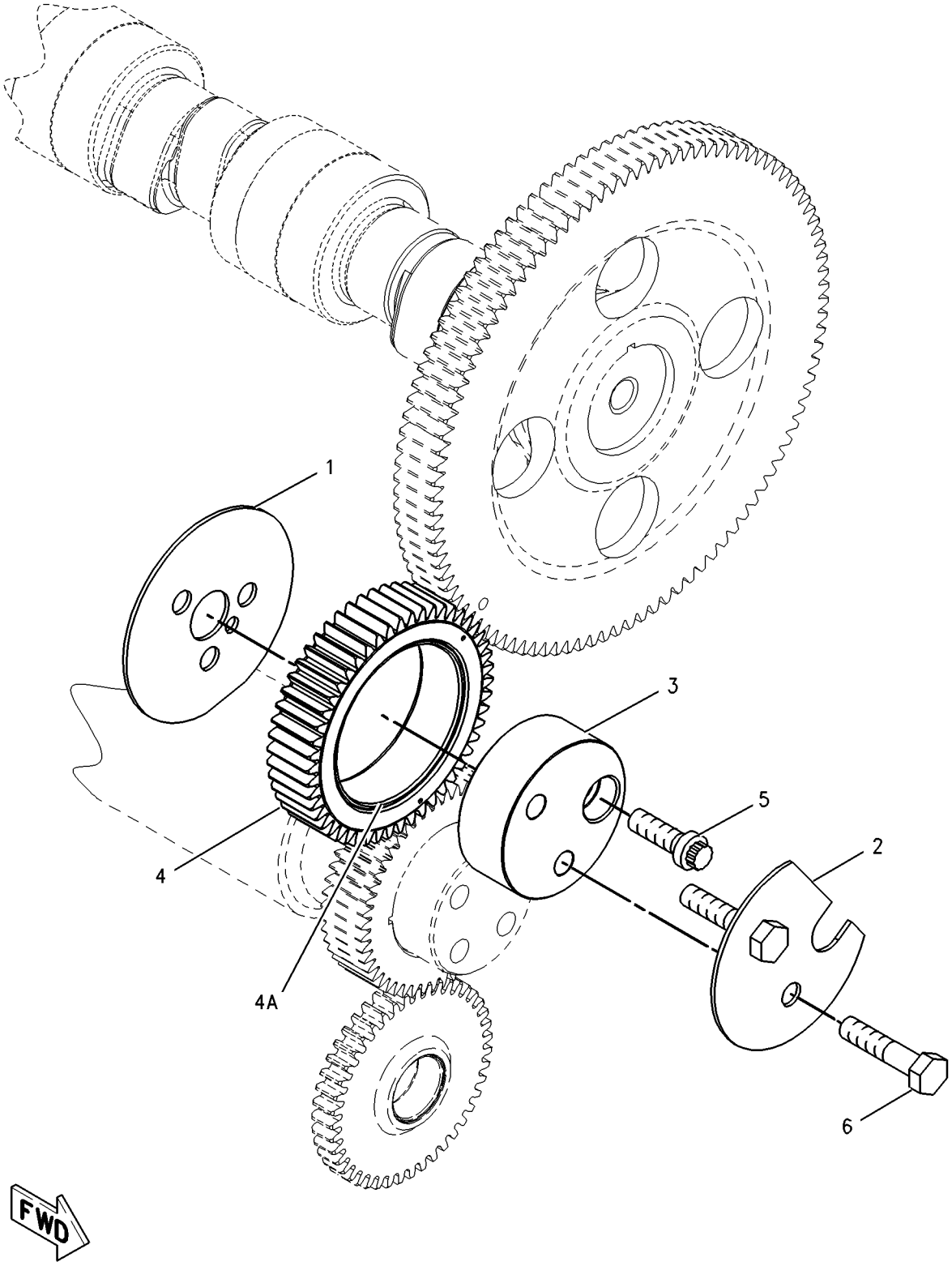

GRAPHIC #1 **<END>** g00870175

BASIC ENGINE

187-0473 HOUSING GP-FLYWHEEL

S/N: TXD1-UP; THX1-UP
PART OF 347-1741, 367-4852 ENGINE AR-COMPLETE
ALSO AN ATTACHMENT

SMCS-1157 **i04524524**

NOTE	REF NO	GRAPHIC REF	PART NUMBER	QTY	PART NAME 1 2 3 4 5 6 (PRODUCT LEVEL)	SEE PAGE
B	1	1	**1U-8846**		SEALANT-GASKET	
	2	1	**7C-1445**	1	COVER	
	3	1	**9M-1974**	2	WASHER-HARD (8.8X16X2-MM THK)	
C	4	1	**233-9770**	1	HOUSING-FLYWHEEL	
	5	1	**061-9455**	1	SEAL-O-RING	
C	6	1	**132-5789**	1	CLIP	
	7	1	*319-6234*	1	PLUG AS	
		1	**9S-9334**	1	PLUG-O-RING	
		1	**238-5084**	1	SEAL-O-RING	
	8	1	*321-8642*	1	PLUG AS	
		1	**9S-8003**	1	PLUG	
		1	**214-7567**	1	SEAL-O-RING	
C	9	1	**5P-8245**	14	WASHER-HARD (13.5X25.5X3-MM THK)	
M	10	1	**6V-5219**	2	BOLT (M8X1.25X40-MM)	
CM	11	1	**6V-8197**	14	BOLT (M12X1.75X40-MM)	
	12	1	**307-2673**	2	PLUG AS	
					(EACH INCLUDES)	
		1	**9S-8005**	1	PLUG-O-RING	
		1	**238-5080**	1	SEAL-O-RING	

B-USE AS REQUIRED
C-CHANGE FROM PREVIOUS TYPE
M-METRIC PART

187-0473 **HOUSING GP-FLYWHEEL** *(contd.)* **i04524524**

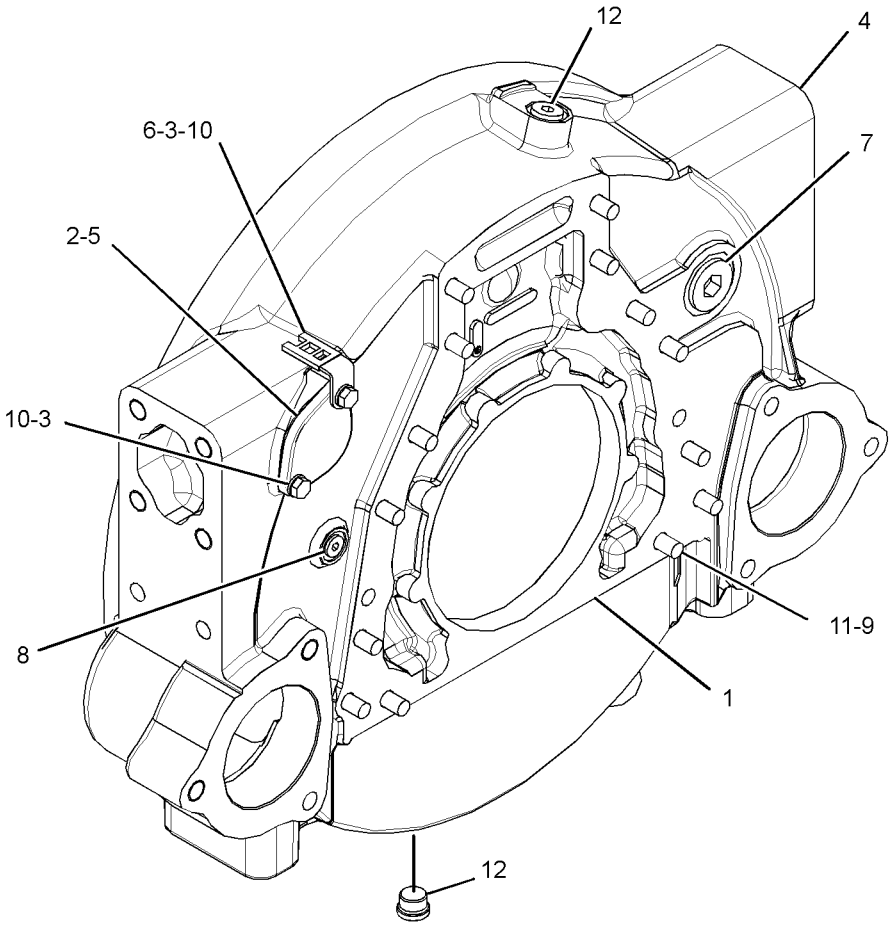

GRAPHIC #1 **<END>** g02726491

209-0758 HOUSING GP-FRONT

S/N: TXD1-UP; THX1-UP
PART OF 347-1741, 367-4852 ENGINE AR-COMPLETE, 350-9162 ENGINE AR-CORE
FOR USE WITH 217-8669—PAGE 19
ALSO AN ATTACHMENT

SMCS-1151, 1162, 1206 **i02280885**

NOTE	REF NO	GRAPHIC REF	PART NUMBER	QTY	PART NAME 1 2 3 4 5 6 (PRODUCT LEVEL)	SEE PAGE
	1	1	**245-3261**	1	HOUSING-FRONT	
M	2	1	**6V-3918**	4	BOLT (M8X1.25X50-MM)	
M	3	1	**6V-5217**	8	BOLT (M8X1.25X20-MM)	
	4	1	**9M-1974**	12	WASHER-HARD (8.8X16X2-MM THK)	
B	5	1	**1U-8846**		SEALANT-GASKET	

B-USE AS REQUIRED
M-METRIC PART

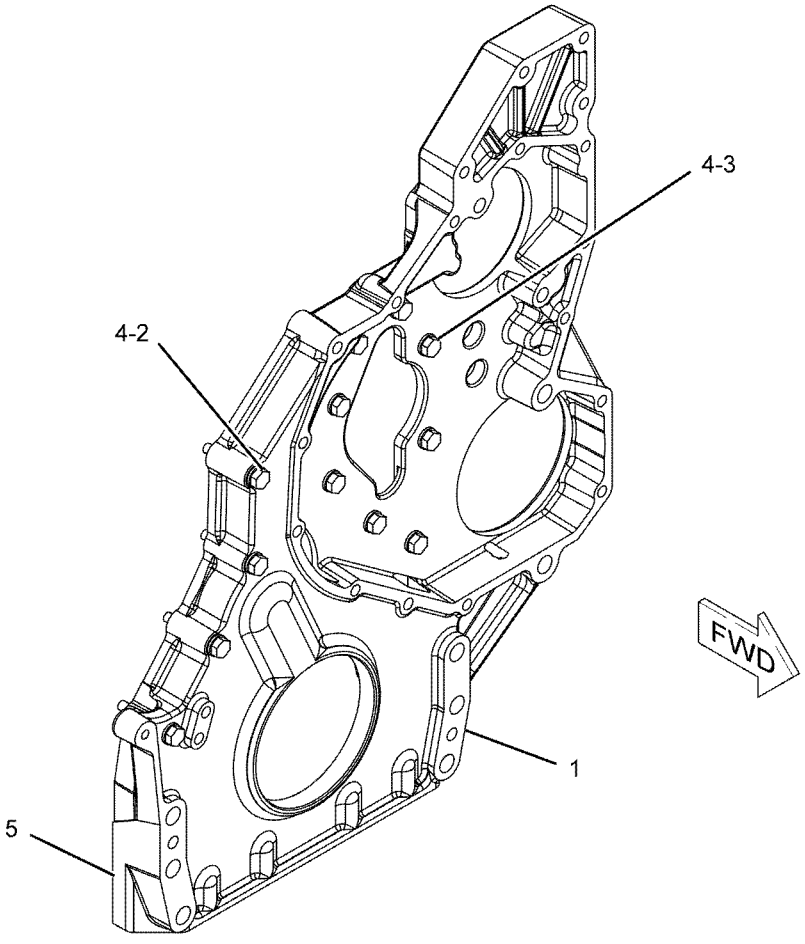

GRAPHIC #1 **<END>** g01141811

191-3063 LIFTING GP-ENGINE

S/N: TXD1-UP; THX1-UP
FRONT AND REAR
PART OF 347-1741, 367-4852 ENGINE AR-COMPLETE
ALSO AN ATTACHMENT

SMCS-1122 **i02561287**

NOTE	REF NO	GRAPHIC REF	PART NUMBER	QTY	PART NAME 1 2 3 4 5 6 (PRODUCT LEVEL)	SEE PAGE
	1	1	**228-4766**	1	PLATE-LIFTING (FRONT)	
	2	1	**166-1785**	1	PLATE-LIFTING (REAR)	
	3	1	**5P-8245**	3	WASHER-HARD (13.5X25.5X3-MM THK)	
M	4	1	**6V-8675**	3	BOLT (M12X1.75X35-MM)	

M-METRIC PART

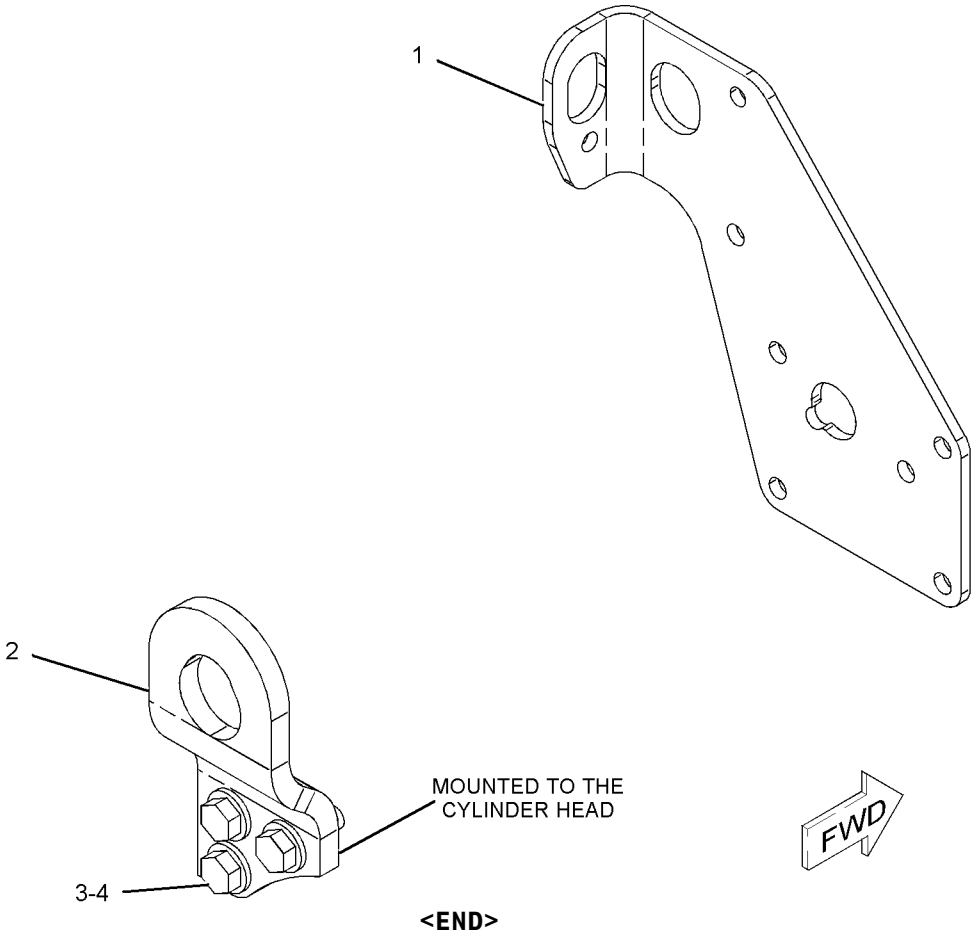

GRAPHIC #1 **<END>** g01057483

BASIC ENGINE

216-9855 MOUNTING GP-ENGINE

S/N: F7B1-UP

PART OF 367-2135 INSTALLATION AR-ENGINE

SMCS-1152 **i03253596**

NOTE	REF NO	GRAPHIC REF	PART NUMBER	QTY	PART NAME 1 2 3 4 5 6 (PRODUCT LEVEL)	SEE PAGE
	1	1	**5P-0597**	1	CLAMP-HOSE	
E	2	1	**9W-6582**	2	SLEEVE (74-MM)	
	3	1	**9W-9920**	2	MOUNTING AS-VIBRATION ISOLATOR	
	4	1	**118-9930**	2	SUPPORT AS	
					(EACH INCLUDES)	
M		1	**8T-4131**	1	NUT (M20X2.5-THD)	
	5	1	**125-2706**	2	PLATE AS	
					(EACH INCLUDES)	
M		1	**8T-3490**	1	NUT-WELD (M10X1.5-THD)	
	6	1	**139-8736**	2	MOUNT-FLEXIBLE (LOWER)	
	7	1	**139-8737**	2	MOUNT-FLEXIBLE (UPPER)	
M	8	1	**139-8873**	2	SUPPORT AS	
					(EACH INCLUDES)	
M		1	**8T-4001**	1	NUT (M24X3-THD)	
	9	1	**239-6602**	1	BRACKET AS	
	10	1	**226-6020**	1	BRACKET AS	
	11	1	**109-9437**	2	WASHER (24.5X135X12-MM THK)	
	12	1	**7X-0345**	6	BOLT (5/8-11X1.75-IN)	
	13	1	**7X-0346**	2	BOLT (5/8-11X2-IN)	
M	14	1	**7X-2567**	2	BOLT (M24X3X160-MM)	
	15	1	**8T-1482**	2	WASHER-HARD (26X50X8-MM THK)	
	16	1	**8T-4122**	10	WASHER-HARD (17X32X3.5-MM THK)	
	17	1	**8T-4123**	2	WASHER (22X35X3.5-MM THK)	
	18	1	**8T-4167**	2	WASHER-HARD (26X44X4-MM THK)	
M	19	1	**8T-6381**	2	BOLT (M20X2.5X120-MM)	
	20	1	**9W-6584**	2	WASHER (20.5X114X10-MM THK)	
E	21	1	**5P-0767**		HOSE (32-CM)	
	22	1	**095-1388**	1	CLAMP-HOSE	

E-ORDER BY THE CENTIMETER
M-METRIC PART

216-9855 **MOUNTING GP-ENGINE** *(contd.)* **i03253596**

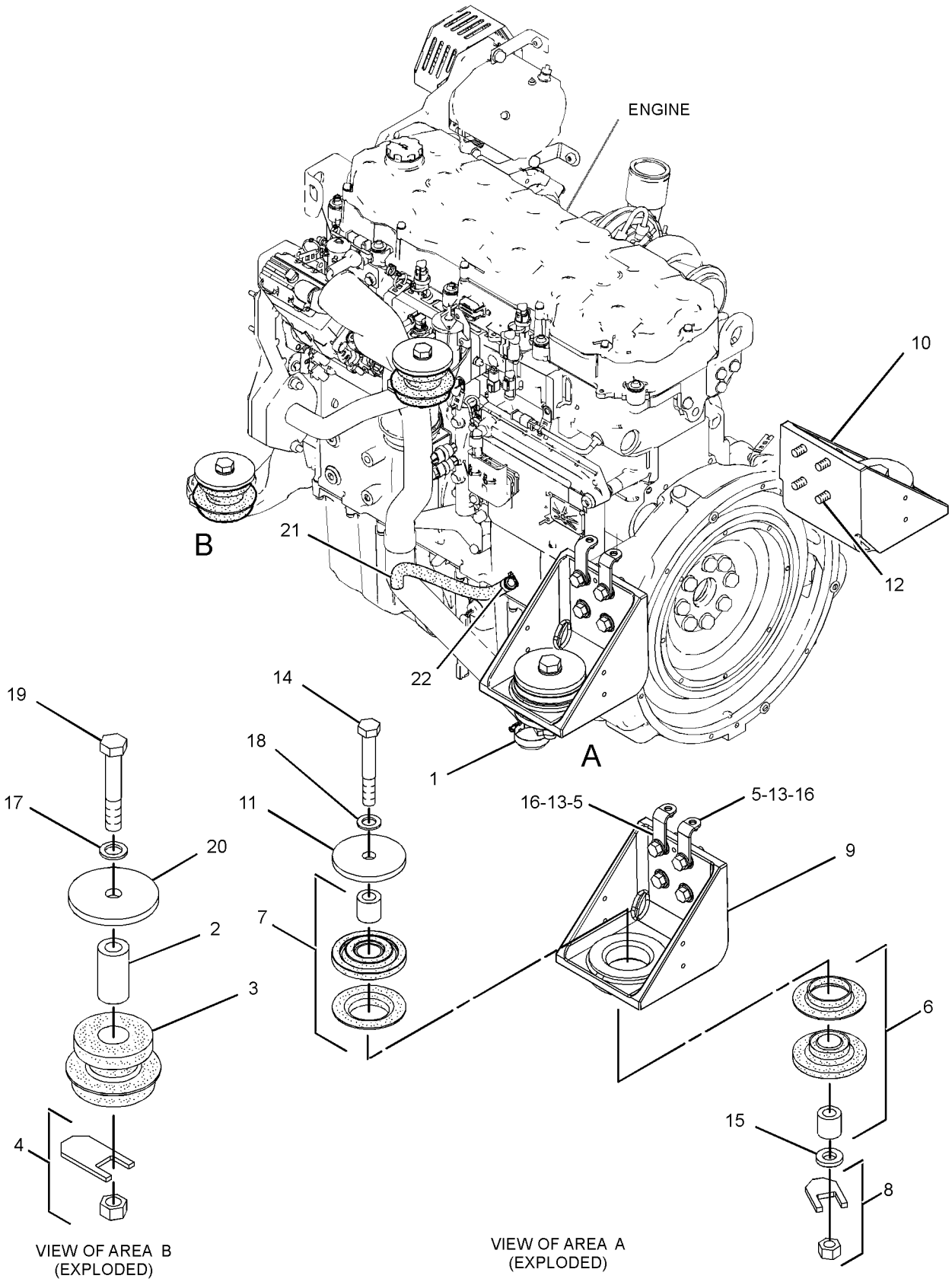

GRAPHIC #1 **<END>** g01613294

BASIC ENGINE

219-9943 PAN GP-OIL

S/N: TXD1-UP; THX1-UP
PART OF 347-1741, 367-4852 ENGINE AR-COMPLETE
ALSO AN ATTACHMENT

SMCS-1302 **i04985470**

NOTE	REF NO	GRAPHIC REF	PART NUMBER	QTY	PART NAME 1 2 3 4 5 6 (PRODUCT LEVEL)	SEE PAGE
	1	1	*351-0283*	1	VALVE AS-SHUTOFF (ENGINE OIL)	
		1	**6V-7238**	1	VALVE-SHUTOFF	
	1A	1	**238-5080**	1	SEAL-O-RING	
	2	1	**190-6114**	1	GASKET-OIL PAN	
	3	1	**221-9806**	1	PAN-OIL	
	4	1	*389-3709*	1	PLUG AS	
	4A	1	**238-5082**	1	SEAL-O-RING	
		1	**360-3682**	1	PLUG-O-RING	
	5	1	*398-5596*	1	PLUG AS	
	5A	1	**238-5080**	1	SEAL-O-RING	
		1	**360-3680**	1	PLUG	
M	6	1	**6V-3918**	32	BOLT (M8X1.25X50-MM)	
	7	1	**9M-1974**	32	WASHER-HARD (8.8X16X2-MM THK)	
BF			**4C-9612**		SEALANT-SILICONE	

B-USE AS REQUIRED
F-NOT SHOWN
M-METRIC PART

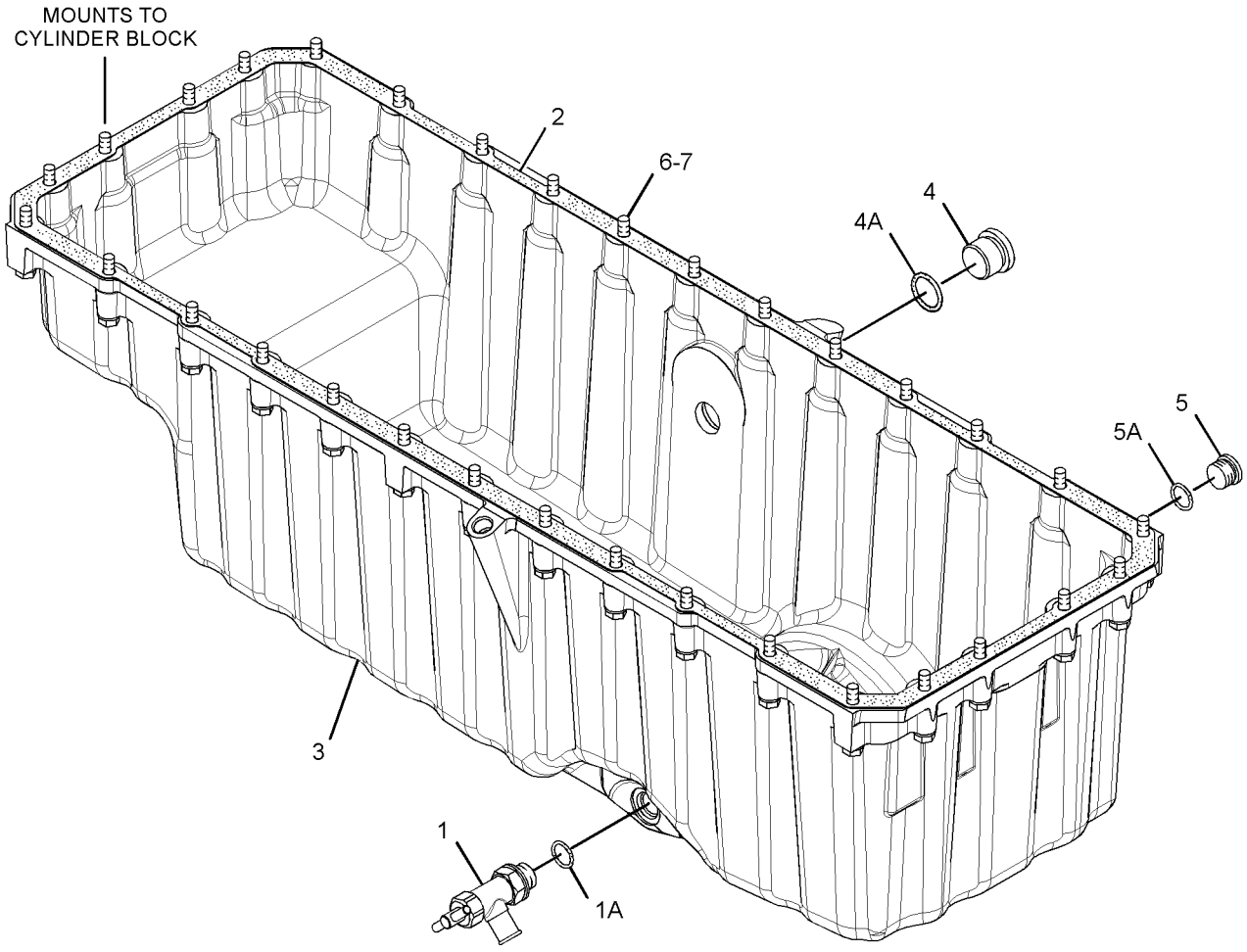

GRAPHIC #1 **<END>** g03168279

265-1400 PISTON & ROD GP*R

S/N: TXD1-UP; THX1-UP
16.1:1 COMPRESSION RATIO
PART OF 350-9162, 384-8426 ENGINE AR-CORE
ALSO AN ATTACHMENT

SMCS-1225 **i04821631**

NOTE	REF NO	GRAPHIC REF	PART NUMBER	QTY	PART NAME 1 2 3 4 5 6 (PRODUCT LEVEL)	SEE PAGE
	1	1	**213-3190**	1	BEARING (CONNECTING ROD)	
R	2	1	**160-8199**	1	ROD AS	
	2A	1	**160-8194**	1	BEARING (CONNECTING ROD)	
M	2B	1	**160-8197**	2	BOLT	
	3	1	**166-3648**	1	PIN-PISTON	
	4	1	**347-2382**	1	RING-PISTON (OIL CONTROL)	
	5	1	**385-1657**	1	CROWN AS-PISTON	
	6	1	**347-2381**	1	RING-PISTON (INTERMEDIATE)	
	7	1	**197-9367**	1	TUBE AS (PISTON COOLING JET)	
	8	1	**347-2380**	1	RING-PISTON (TOP)	
	9	1	**324-7380**	1	SKIRT-PISTON	
M	10	1	**6V-3940**	1	BOLT (M8X1.25X25-MM)	
	11	1	**7X-2908**	2	RING-RETAINING	

M-METRIC PART
R-REMFG PART MAY BE AVAILABLE

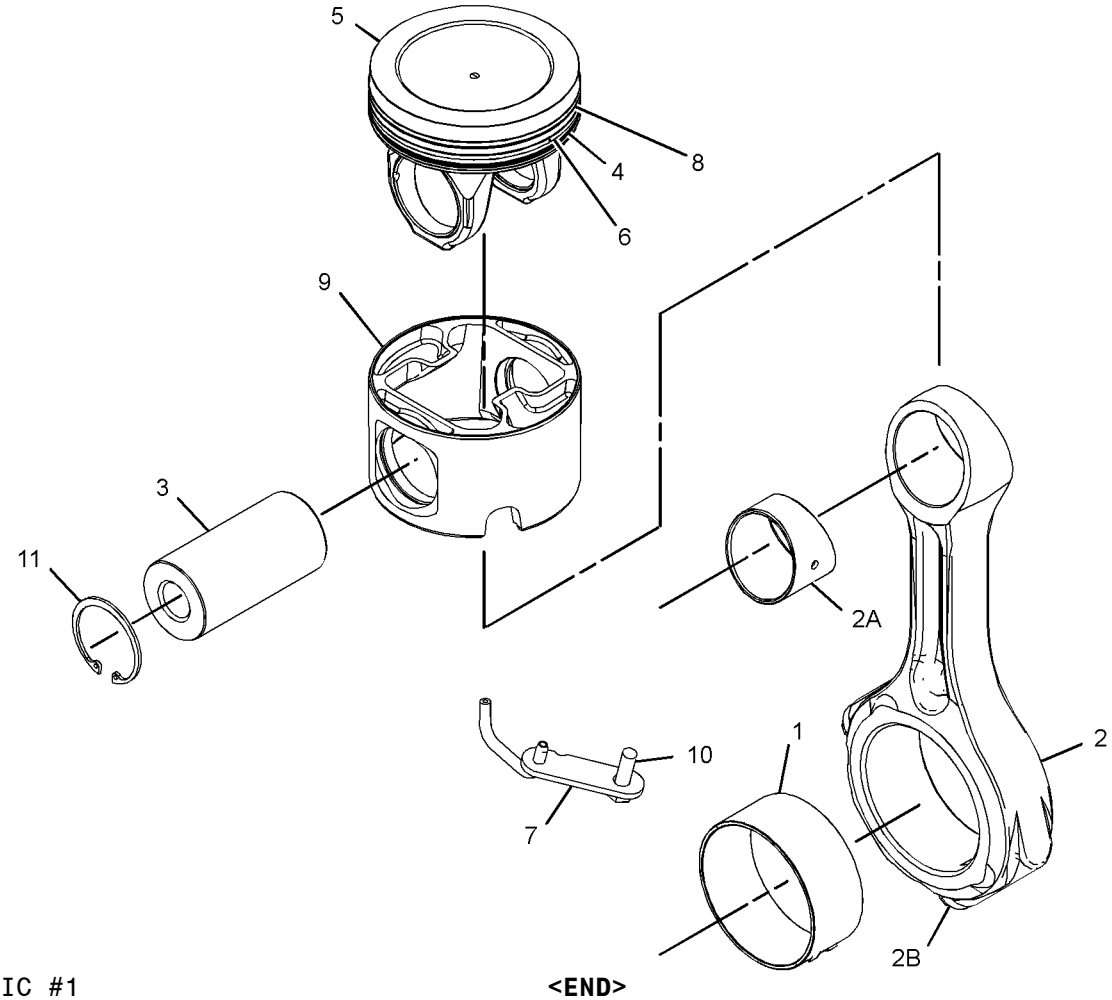

GRAPHIC #1 **<END>** g02511165

169-3105 PLUG GP-ENGINE

S/N: TXD1-UP; THX1-UP
REQUIRED WHEN NO AIR COMPRESSOR IS USED
PART OF 347-1741, 367-4852 ENGINE AR-COMPLETE
ALSO AN ATTACHMENT

SMCS-1000 **i04985596**

NOTE	REF NO	GRAPHIC REF	PART NUMBER	QTY	PART NAME 1 2 3 4 5 6 (PRODUCT LEVEL)	SEE PAGE
	1	1	*389-3709*	1	PLUG AS	
		1	**238-5082**	1	SEAL-O-RING	
		1	**360-3682**	1	PLUG-O-RING	
	2	1	*389-3708*	2	PLUG AS	
					(EACH INCLUDES)	
		1	**214-7568**	1	SEAL-O-RING	
		1	**360-3679**	1	PLUG-CONNECTOR	
	3	1	*398-5596*	2	PLUG AS	
					(EACH INCLUDES)	
		1	**238-5080**	1	SEAL-O-RING	
		1	**360-3680**	1	PLUG	

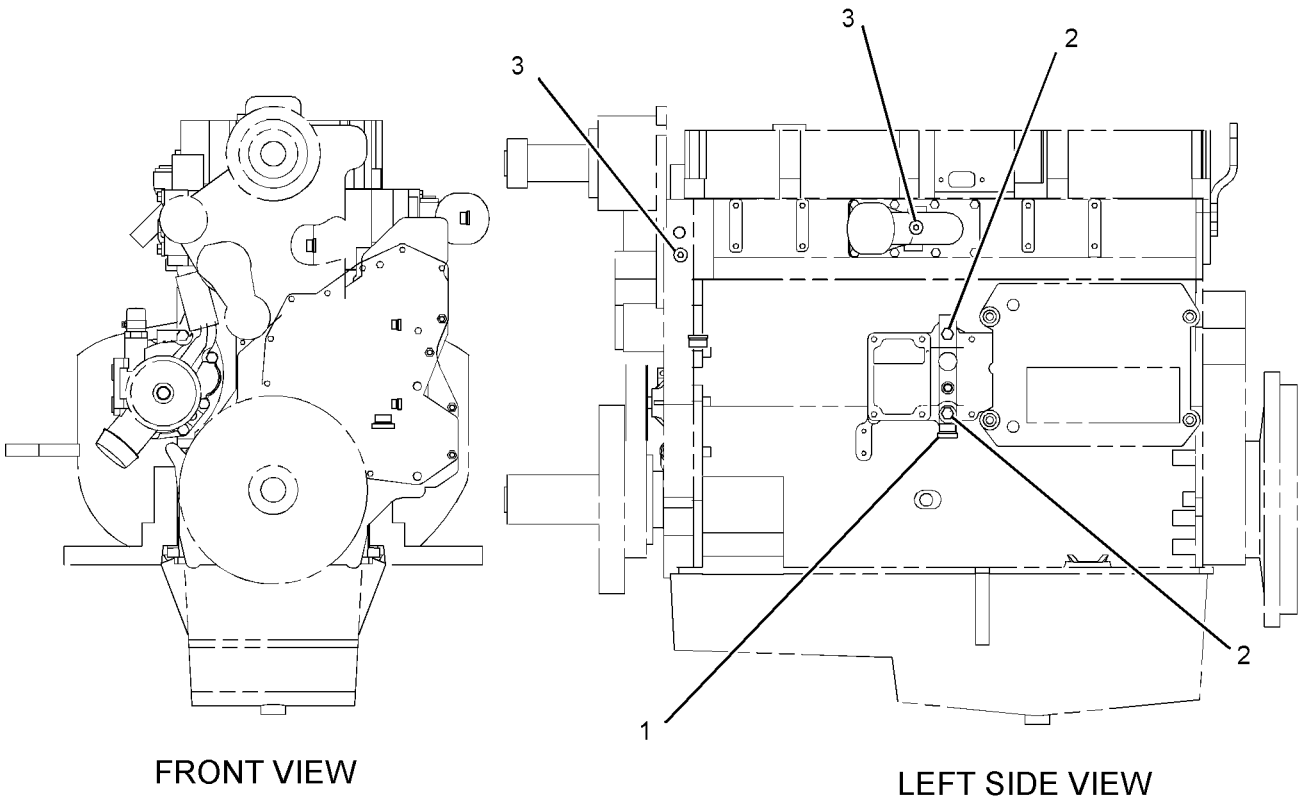

GRAPHIC #1 **<END>** g02731941

249-0157 PLUG GP-ENGINE

S/N: TXD1-UP; THX1-UP
PART OF 347-1741, 367-4852 ENGINE AR-COMPLETE
ALSO AN ATTACHMENT

SMCS-1000 **i04909966**

NOTE	REF NO	GRAPHIC REF	PART NUMBER	QTY	PART NAME 1 2 3 4 5 6 (PRODUCT LEVEL)	SEE PAGE
	1	1	*389-3708*	2	PLUG AS	
					(EACH INCLUDES)	
		1	**214-7568**	1	SEAL-O-RING	
		1	**360-3679**	1	PLUG-CONNECTOR	
	2	1	*389-3709*	1	PLUG AS	
		1	**238-5082**	1	SEAL-O-RING	
		1	**360-3682**	1	PLUG-O-RING	
	3	1	*398-5596*	1	PLUG AS	
		1	**238-5080**	1	SEAL-O-RING	
		1	**360-3680**	1	PLUG	
	4	1	*398-5601*	1	PLUG AS	
		1	**238-5081**	1	SEAL-O-RING	
		1	**360-3681**	1	PLUG-O-RING	

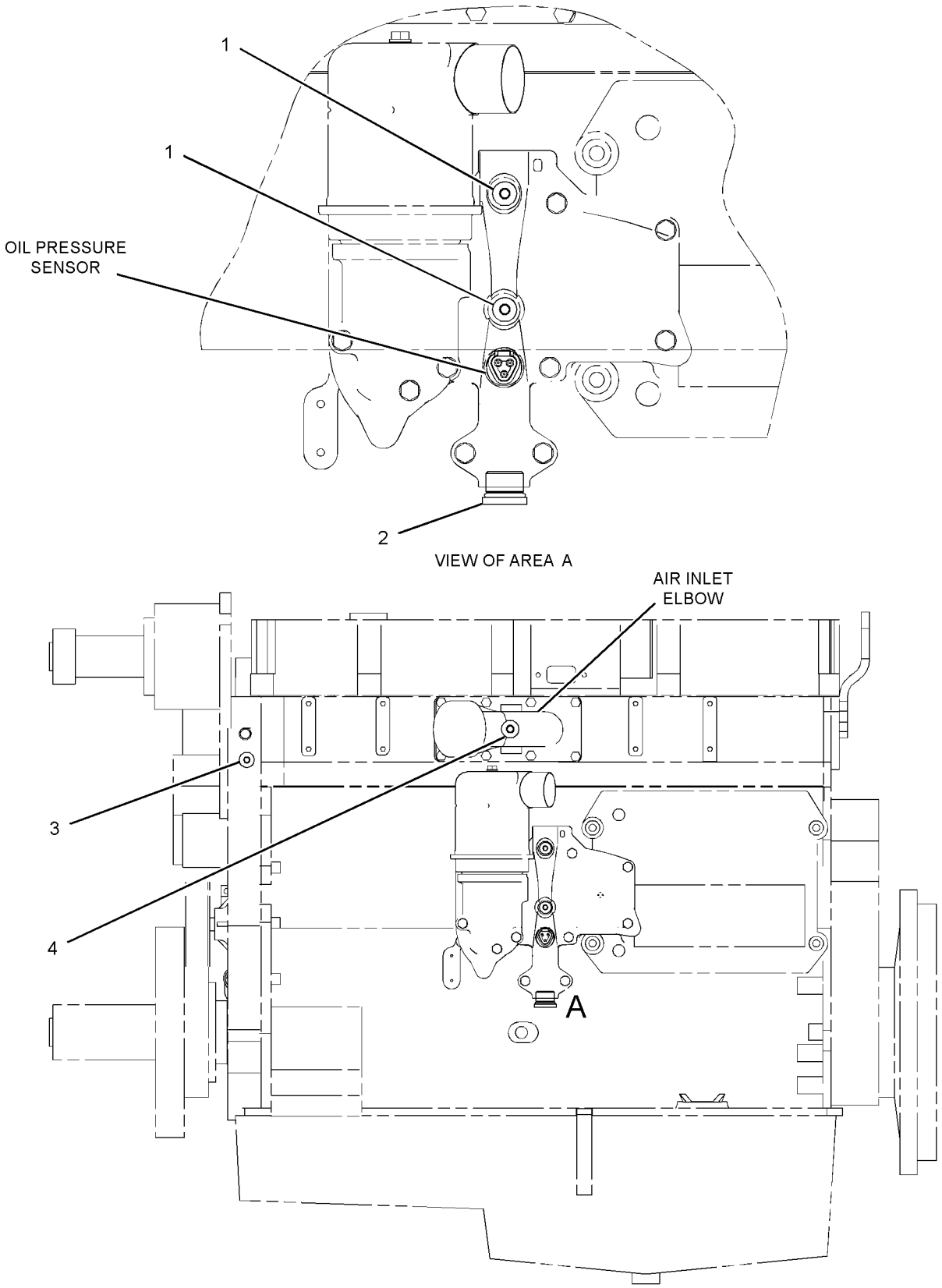

LEFT SIDE VIEW OF ENGINE

GRAPHIC #1

<END>

g03201842

213-9320 ROCKER ARM GP–EXHAUST

S/N: TXD1-UP; THX1-UP
PART OF 212-8926 VALVE MECHANISM GP
ALSO AN ATTACHMENT

SMCS-1123 **i02585219**

NOTE	REF NO	GRAPHIC REF	PART NUMBER	QTY	PART NAME 1 2 3 4 5 6 (PRODUCT LEVEL)	SEE PAGE
R	1	1	**163-2447**	1	ROCKER ARM AS	
M	2	1	**260-7524**	1	SCREW-VALVE ADJUSTMENT (M10X1.5-THD)	
M	3	1	**2Y-5829**	1	NUT (M10X1.5-THD)	

M-METRIC PART
R-REMFG PART MAY BE AVAILABLE

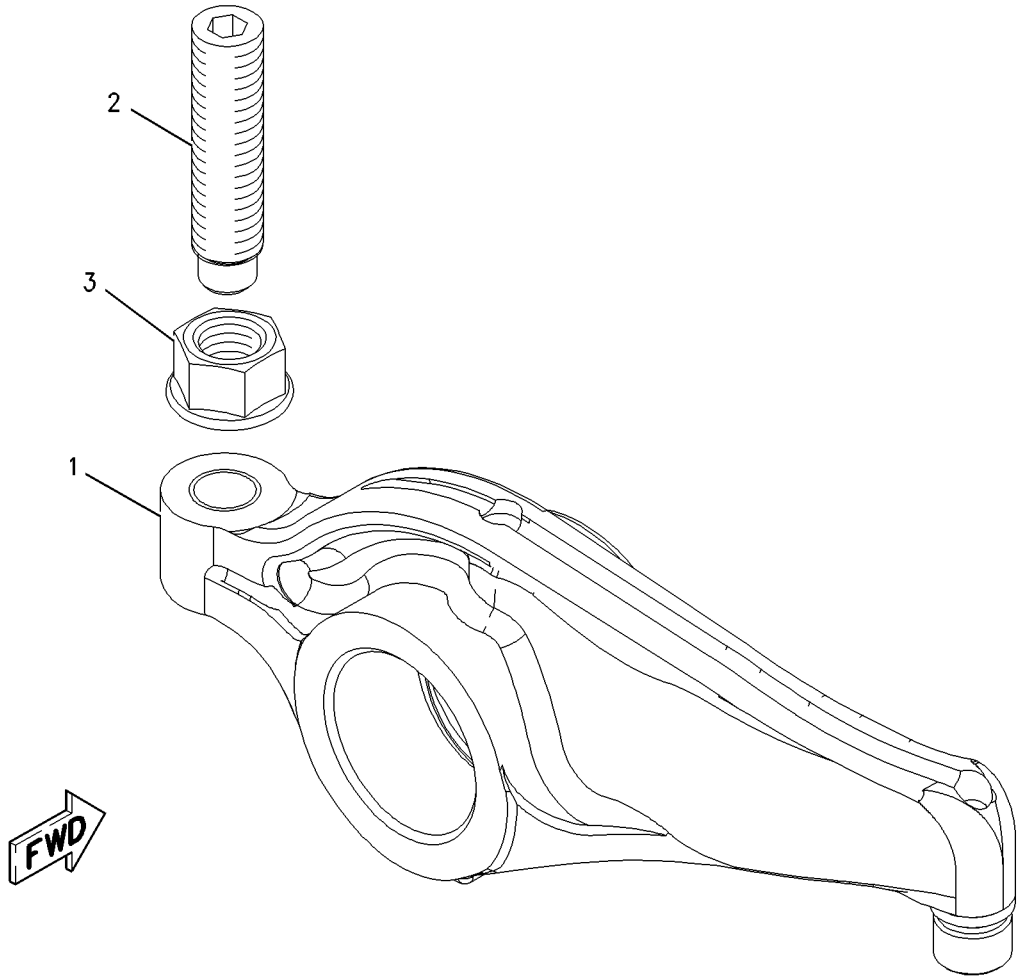

GRAPHIC #1 **<END>** g00848359

242-0329 ROCKER ARM GP–INLET

S/N: TXD1-UP; THX1-UP
PART OF 212-8926 VALVE MECHANISM GP
ALSO AN ATTACHMENT

SMCS-1123 **i02585529**

NOTE	REF NO	GRAPHIC REF	PART NUMBER	QTY	PART NAME 1 2 3 4 5 6 (PRODUCT LEVEL)	SEE PAGE
M	1	1	**260-7524**	1	SCREW-VALVE ADJUSTMENT (M10X1.5-THD)	
R	2	1	**242-0328**	1	ROCKER ARM AS	
M	3	1	**2Y-5829**	1	NUT (M10X1.5-THD)	

M-METRIC PART
R-REMFG PART MAY BE AVAILABLE

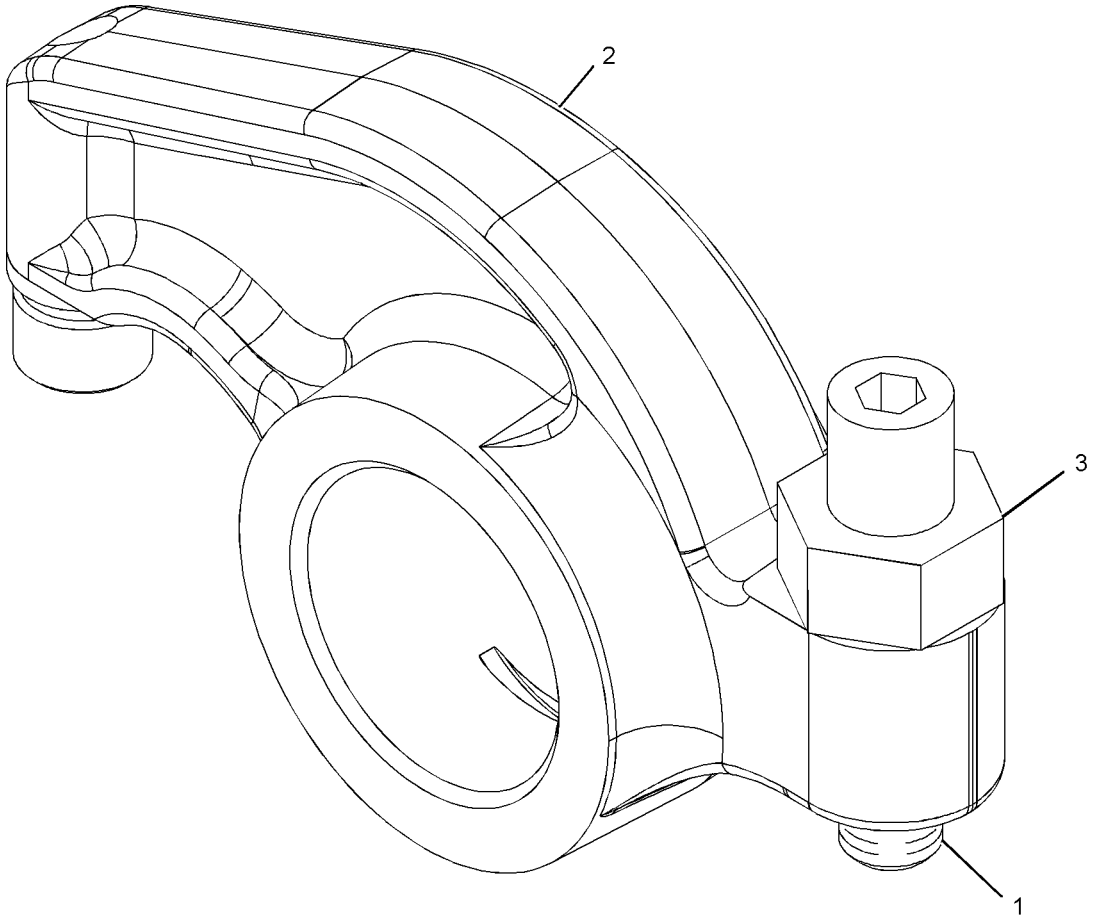

GRAPHIC #1 **<END>** g01056688

178-3899 SEAL GP-CRANKSHAFT

S/N: TXD1-UP; THX1-UP
PART OF 347-1741, 367-4852 ENGINE AR-COMPLETE
ALSO AN ATTACHMENT

SMCS-1160, 1161 **i03731983**

NOTE	REF NO	GRAPHIC REF	PART NUMBER	QTY	PART NAME 1 2 3 4 5 6 (PRODUCT LEVEL)	SEE PAGE
	1	1	**4R-9999**	1	EXCLUDER-CRANKSHAFT SEAL	
M	2	1	**206-3719**	9	BOLT AS	
	3	1	**245-7339**	1	SEAL-CRANKSHAFT (FRONT)	
	4	1	**285-4073**	1	SEAL GP-CRANKSHAFT (REAR)	

M-METRIC PART

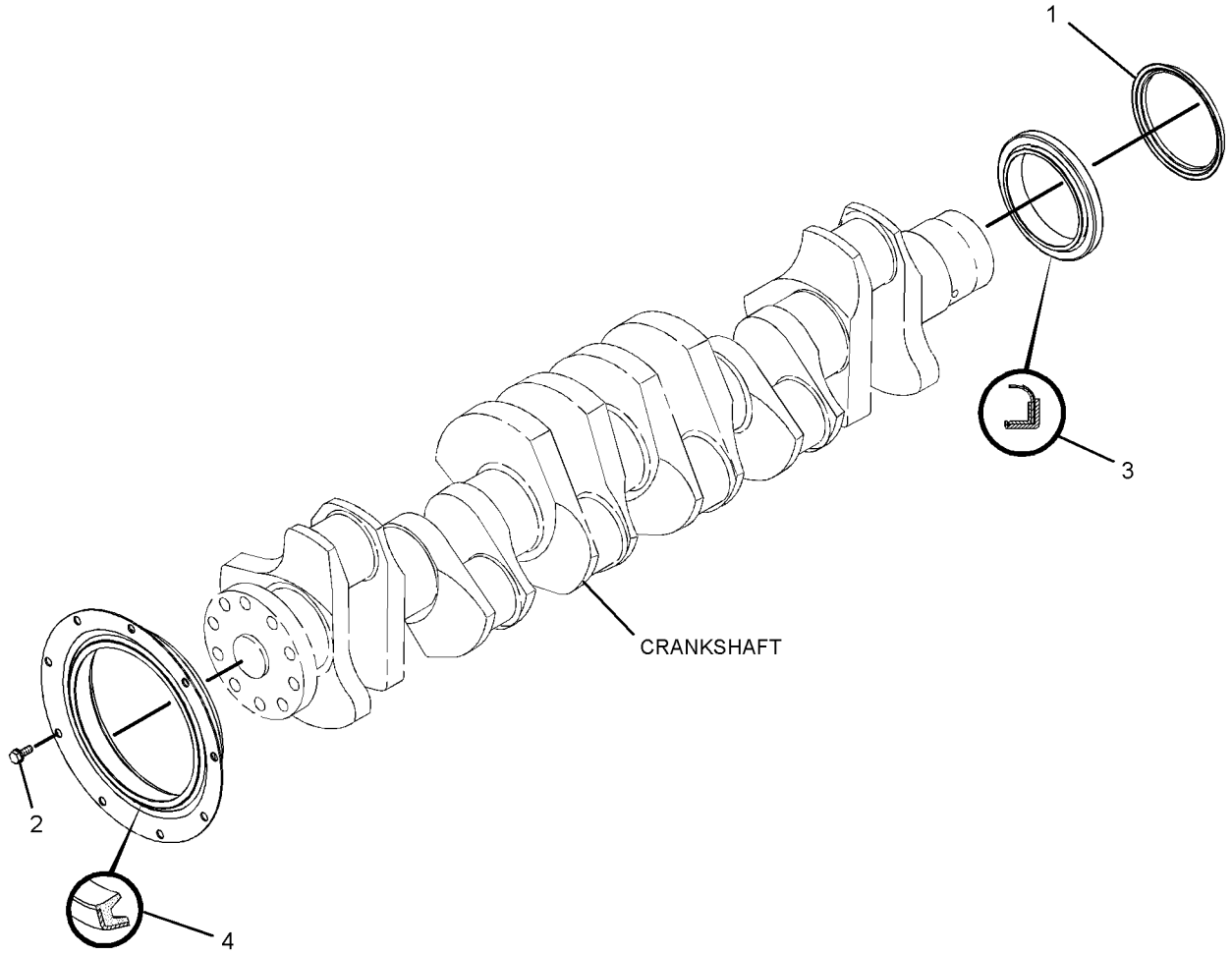

GRAPHIC #1 **<END>** g01439993

172-0961 SUPPORT GP-ENGINE

S/N: TXD1-UP; THX1-UP
PART OF 347-1741, 367-4852 ENGINE AR-COMPLETE
ALSO AN ATTACHMENT

SMCS-1152, 1153, 1154 **i02202418**

NOTE	REF NO	GRAPHIC REF	PART NUMBER	QTY	PART NAME 1 2 3 4 5 6 (PRODUCT LEVEL)	SEE PAGE
	1	1	**172-1001**	1	SUPPORT-FRONT	
	2	1	**5P-8245**	6	WASHER-HARD (13.5X25.5X3-MM THK)	
M	3	1	**6V-5696**	1	BOLT (M12X1.75X80-MM)	
M	4	1	**8T-0372**	5	BOLT (M12X1.75X90-MM)	

M-METRIC PART

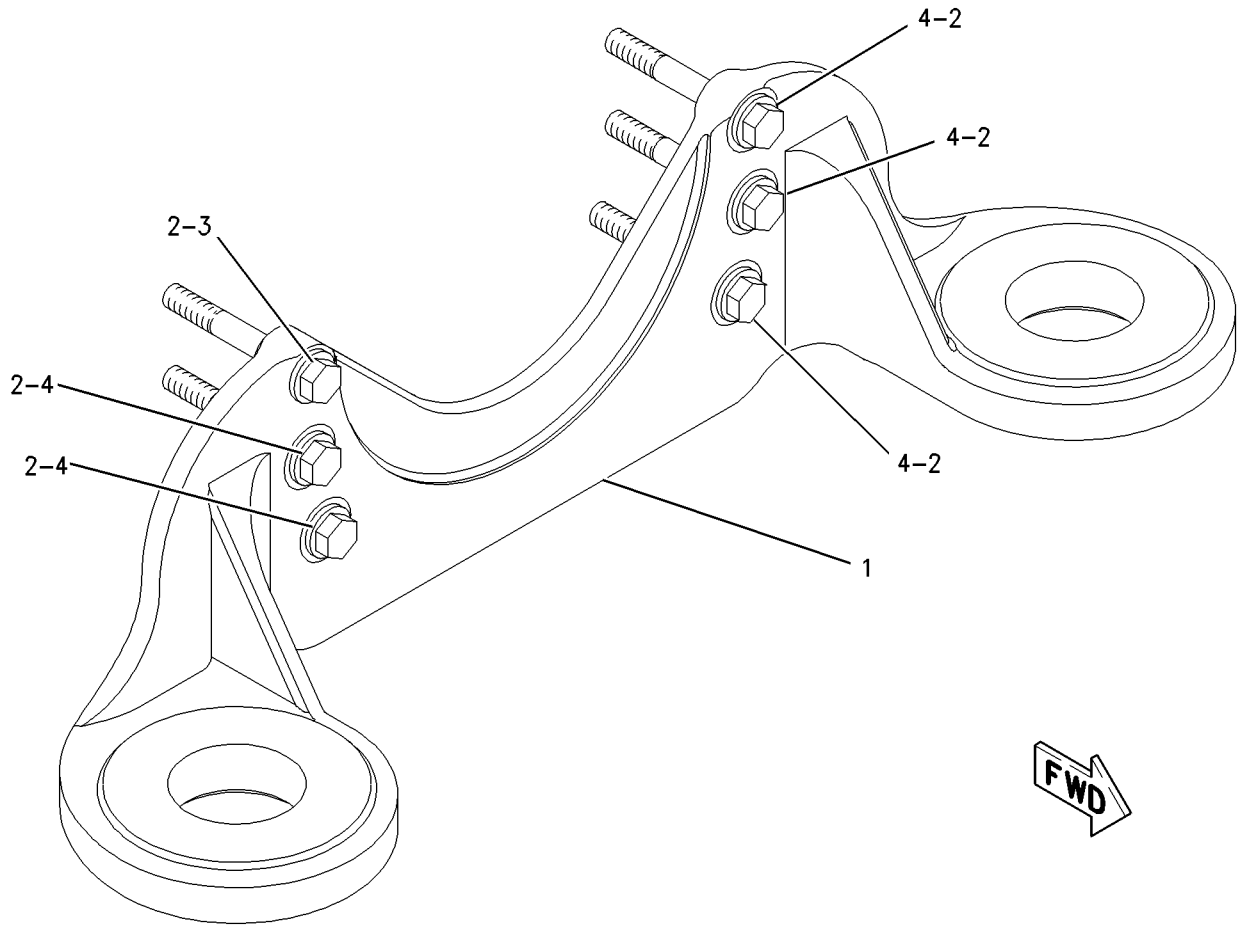

GRAPHIC #1 **<END>** g00859115

212-8926 VALVE MECHANISM GP

S/N: TXD1-UP; THX1-UP
PART OF 242-0447 VALVE MECHANISM GP
ALSO AN ATTACHMENT

SMCS-1209 **i02156137**

NOTE	REF NO	GRAPHIC REF	PART NUMBER	QTY	PART NAME 1 2 3 4 5 6 (PRODUCT LEVEL)	SEE PAGE
	1	1	**163-2445**	1	SHAFT AS-ROCKER ARM	
		1	**8F-6575**	2	PLUG-CUP	
	2	1	**163-2459**	6	SPRING	
	3	1	**164-5669**	2	STAND (END)	
	4	1	**176-5913**	4	STAND (MIDDLE)	
	5	1	**176-5914**	1	STAND (OIL)	
Y	6	1	*213-9320*	6	ROCKER ARM GP (EXHAUST)	53
Y	7	1	*242-0329*	6	ROCKER ARM GP (INLET)	54
	8	1	**5P-8245**	7	WASHER-HARD (13.5X25.5X3-MM THK)	
M	9	1	**8T-0646**	7	BOLT (M12X1.75X110-MM)	

M-METRIC PART
Y-SEPARATE ILLUSTRATION

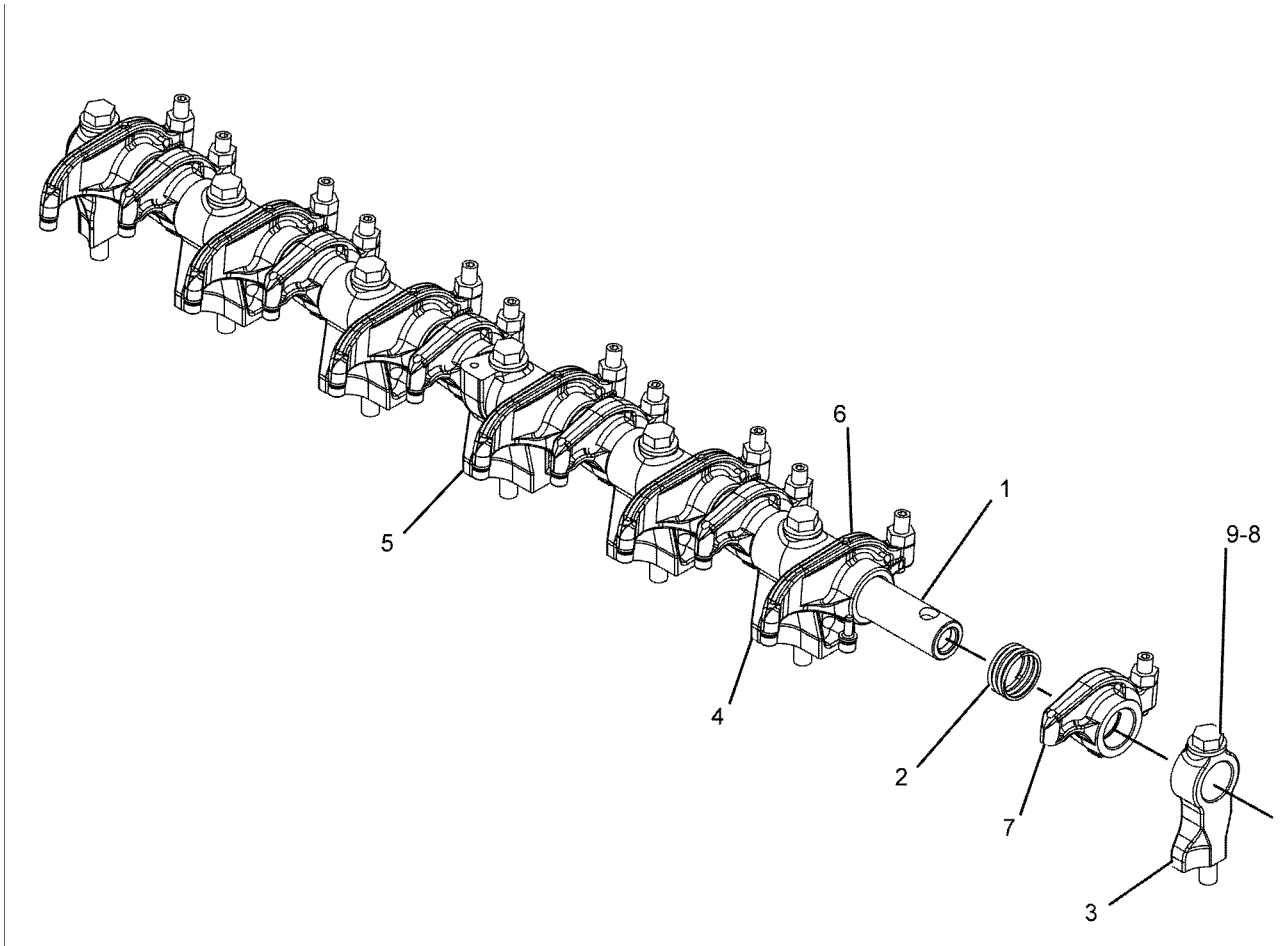

GRAPHIC #1 **<END>** g01069313

BASIC ENGINE

242-0447 VALVE MECHANISM GP

S/N: TXD1-UP; THX1-UP
PART OF 350-9162, 384-8426 ENGINE AR-CORE
ALSO AN ATTACHMENT

SMCS-1209 **i04683237**

NOTE	REF NO	GRAPHIC REF	PART NUMBER	QTY	PART NAME 1 2 3 4 5 6 (PRODUCT LEVEL)	SEE PAGE
	1	1	**384-4171**	12	SPRING-GUIDE	
	2	1	**264-6156**	12	ROD-VALVE PUSH	
	3	1	**384-4172**	12	LIFTER AS-VALVE	
Y	4	1	*212-8926*	1	VALVE MECHANISM GP	57
	5	1	**244-5891**	6	BRIDGE-VALVE	
	6	1	**255-8674**	6	BRIDGE-VALVE	

Y-SEPARATE ILLUSTRATION

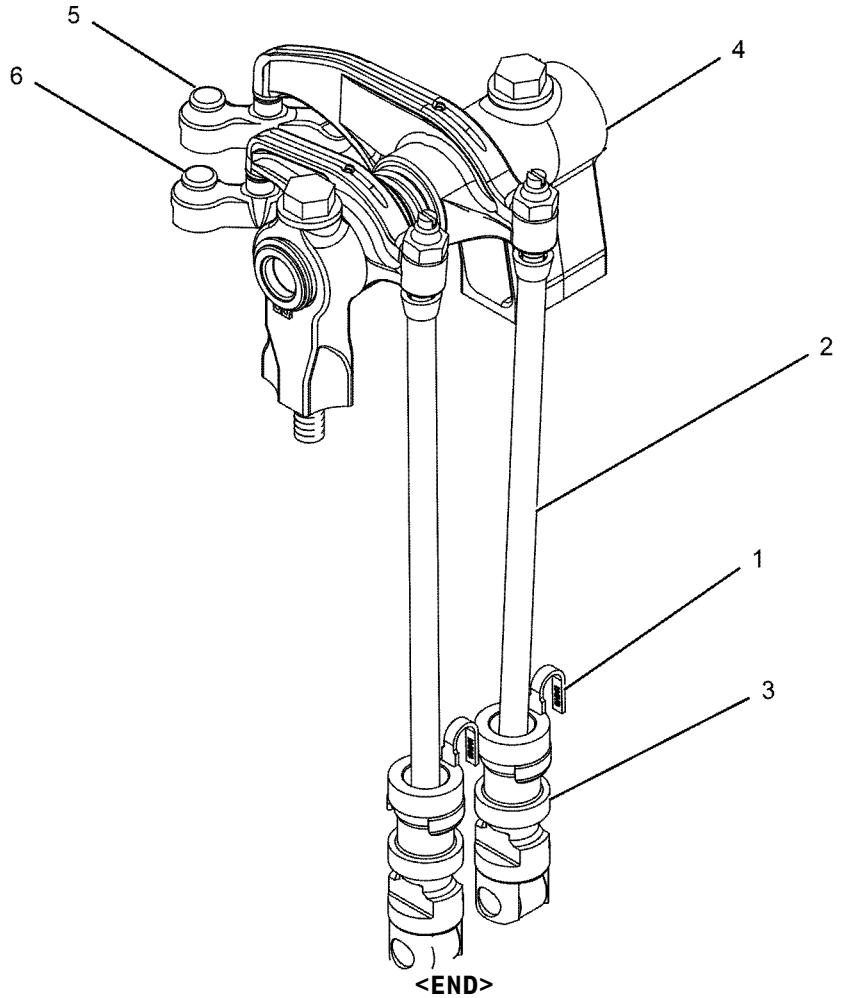

GRAPHIC #1 **<END>** g01043825

220-1998 FILTER GP-ENGINE OIL

S/N: TXD1-UP; THX1-UP
PART OF 347-1741, 367-4852 ENGINE AR-COMPLETE
ALSO AN ATTACHMENT

SMCS-1308 **i05096329**

NOTE	REF NO	GRAPHIC REF	PART NUMBER	QTY	PART NAME 1 2 3 4 5 6 (PRODUCT LEVEL)	SEE PAGE
	1	1	**1R-1808**	1	FILTER-ENGINE OIL (ADVANCED EFFICIENCY)	
	2	1	**7C-1493**	2	VALVE AS-BYPASS (ENGINE OIL FILTER)	
	3	1	**8C-3445**	1	CAP-DUST	
	4	1	**242-3864**	2	SPRING	
	5	1	**377-9587**	1	VALVE AS-FLUID SAMPLING (ENGINE OIL)	
		1	**214-7568**	1	SEAL-O-RING	
	6	1	**209-7290**	1	GASKET	
	7	1	**209-7291**	1	BASE AS-OIL FILTER (ENGINE)	
		1	**2P-4304**	1	STUD-HOLLOW	
	8	1	*315-9835*	1	ELBOW AS	
		1	**6V-0484**	1	ELBOW	
		1	**214-7568**	1	SEAL-O-RING	
	9	1	*329-5518*	1	ADAPTER AS	
		1	**8T-2353**	1	ADAPTER	
		1	**214-7566**	1	SEAL-O-RING	
	10	1	*377-9593*	2	PLUG AS	
					(EACH INCLUDES)	
		1	**9N-6152**	1	PLUG	
		1	**238-5081**	1	SEAL-O-RING	
M	11	1	**6V-5218**	11	BOLT (M8X1.25X35-MM)	
	12	1	**9M-1974**	12	WASHER-HARD (8.8X16X2-MM THK)	
M	13	1	**145-2264**	1	STUD (M8X1.25X35-MM)	

M-METRIC PART

220-1998 **FILTER GP-ENGINE OIL** *(contd.)* **i05096329**

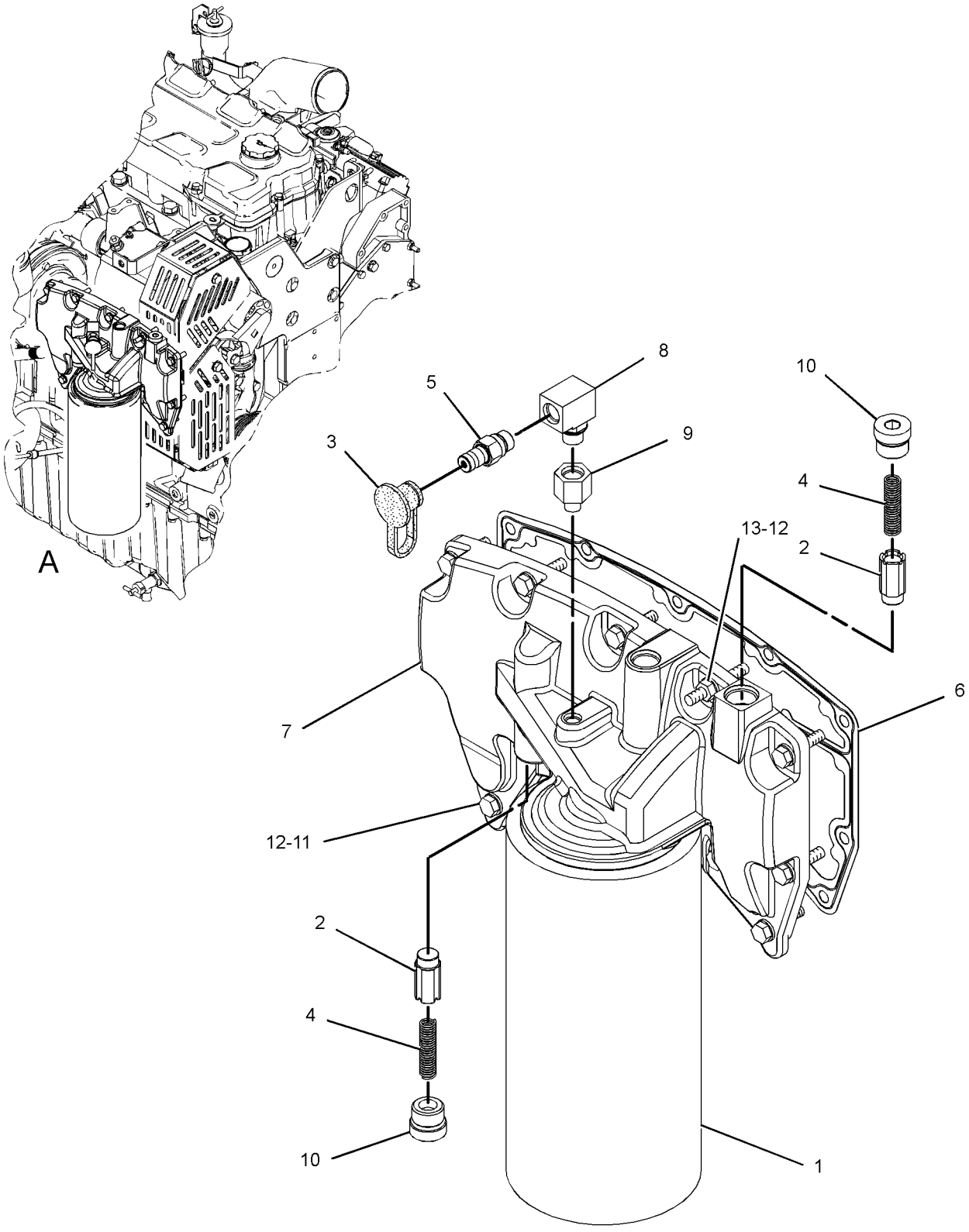

VIEW OF AREA A

GRAPHIC #1 **<END>** g03180036

226-3559 FUMES DISPOSAL GP

S/N: TXD1-UP; THX1-UP
PART OF 347-1741, 367-4852 ENGINE AR-COMPLETE
ALSO AN ATTACHMENT

SMCS-1317 **i03254620**

NOTE	REF NO	GRAPHIC REF	PART NUMBER	QTY	PART NAME 1 2 3 4 5 6 (PRODUCT LEVEL)	SEE PAGE
	1	1	**5P-0597**	1	CLAMP-HOSE	
	2	1	**220-1718**	1	BRACKET	
	3	1	**226-3534**	1	HOSE-FUMES DISPOSAL	
	4	1	**5P-4325**	1	CLIP	
M	5	1	**5P-7970**	1	NUT (M8X1.25-THD)	
M	6	1	**6V-5217**	1	BOLT (M8X1.25X20-MM)	
	7	1	**6V-5839**	1	WASHER (11X21X2.5-MM THK)	
M	8	1	**6V-6317**	1	BOLT (M10X1.5X20-MM)	
	9	1	**9M-1974**	2	WASHER-HARD (8.8X16X2-MM THK)	

M-METRIC PART

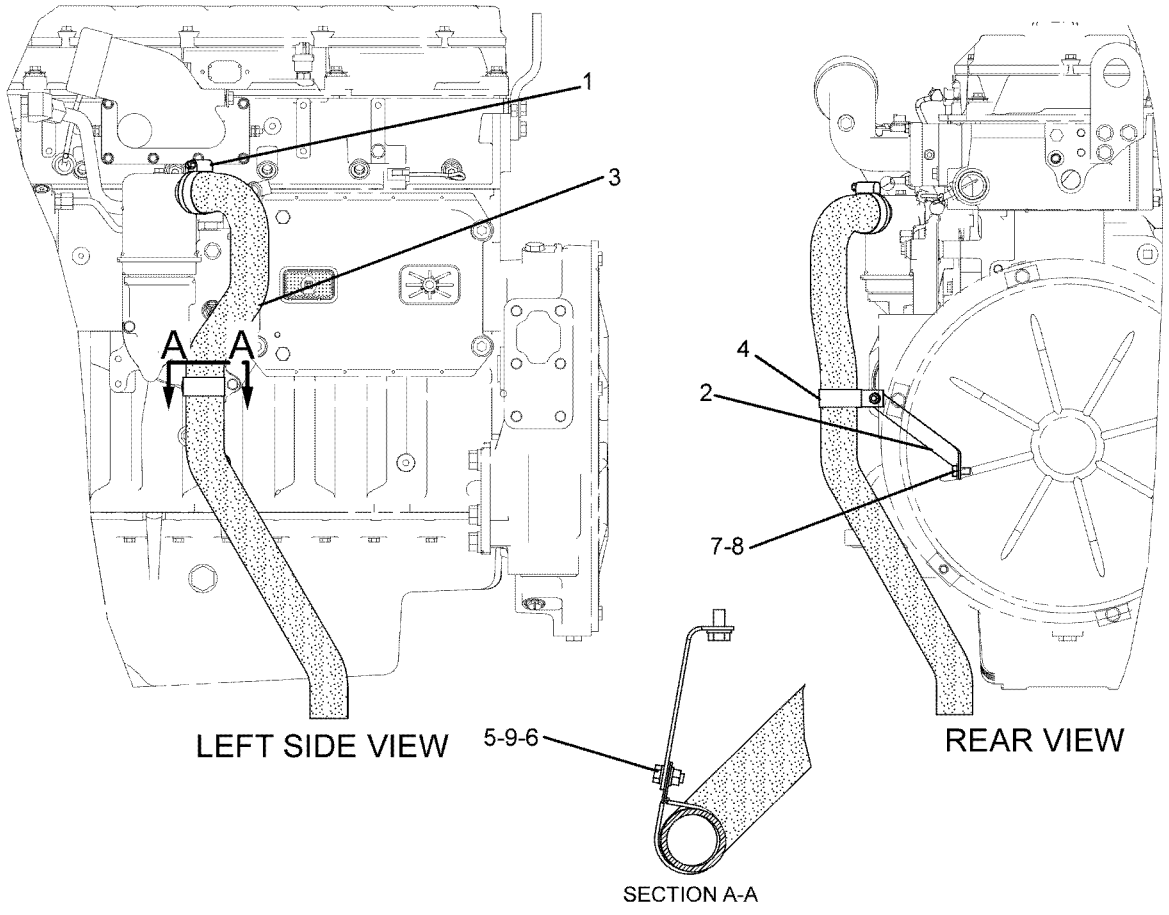

GRAPHIC #1 **<END>** g01056363

219-9960 GAUGE GP-OIL LEVEL (DIPSTICK)—ENGINE

S/N: TXD1-UP; THX1-UP
PART OF 347-1741, 367-4852 ENGINE AR-COMPLETE
ALSO AN ATTACHMENT

SMCS-1326 **i03807631**

NOTE	REF NO	GRAPHIC REF	PART NUMBER	QTY	PART NAME 1 2 3 4 5 6 (PRODUCT LEVEL)	SEE PAGE
	1	1	**187-0716**	1	TUBE AS-OIL GAUGE	
	2	1	**219-9959**	1	GAUGE-OIL LEVEL (DIPSTICK) (ENGINE)	

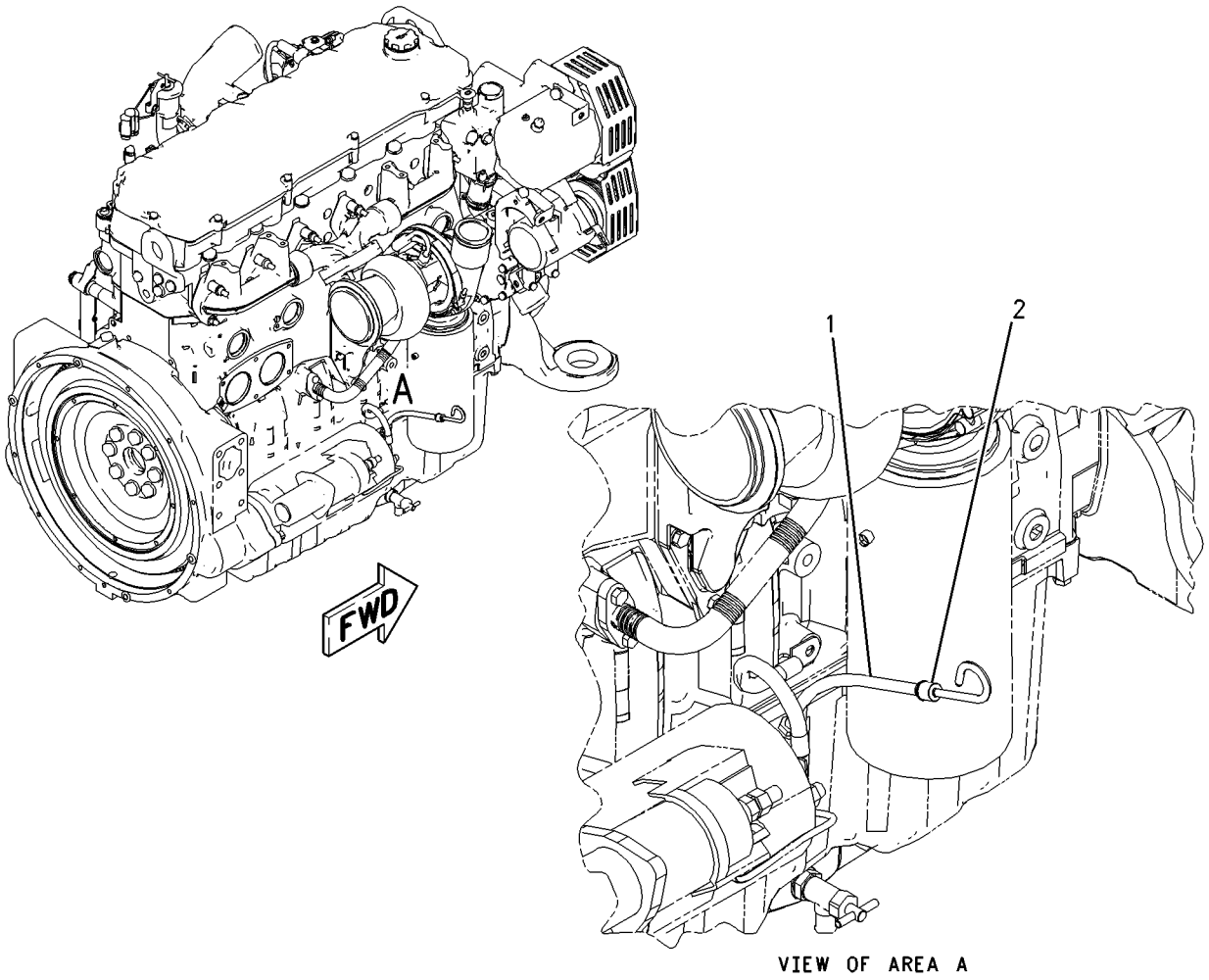

VIEW OF AREA A

GRAPHIC #1 **<END>** g00942797

202-6603 LINES GP-ENGINE OIL

S/N: TXD1-UP; THX1-UP
PART OF 347-1741, 367-4852 ENGINE AR-COMPLETE
ALSO AN ATTACHMENT

SMCS-1307 **i04983731**

NOTE	REF NO	GRAPHIC REF	PART NUMBER	QTY	PART NAME 1 2 3 4 5 6 (PRODUCT LEVEL)	SEE PAGE
	1	1	**234-0203**	1	ELBOW-OUTLET	
	2	1	**195-0452**	1	GASKET	
	3	1	**213-5213**	1	TUBE AS	
	4	1	**033-6034**	1	SEAL-O-RING	
	5	1	**9M-1974**	4	WASHER-HARD (8.8X16X2-MM THK)	
	6	1	**5P-7530**	1	SEAL-O-RING	
M	7	1	**8T-0292**	1	BOLT (M8X1.25X90-MM)	
M	8	1	**6V-3940**	3	BOLT (M8X1.25X25-MM)	

M-METRIC PART

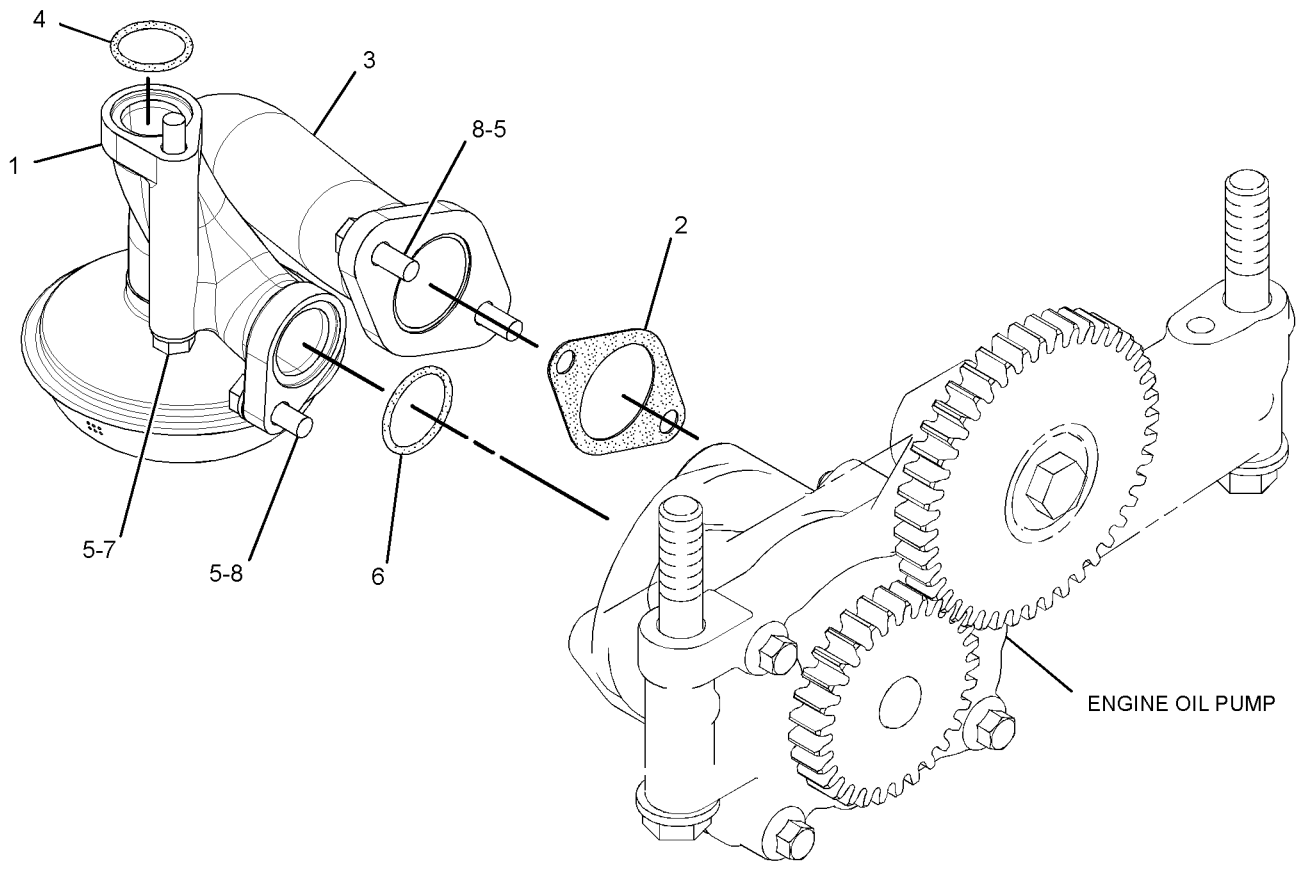

GRAPHIC #1 **<END>** g03173600

LUBRICATION SYSTEM

375-0180 LINES GP-FAN DRIVE

S/N: F7B1-UP

PART OF 361-5270 FAN AR-REVERSIBLE

SMCS-1359 **i04463261**

NOTE	REF NO	GRAPHIC REF	PART NUMBER	QTY	PART NAME 1 2 3 4 5 6 (PRODUCT LEVEL)	SEE PAGE
I	1	1	**363-1821**	1	HOSE AS	
	2	1	**372-3155**	1	TUBE AS	
	3	1	*149-5452*	1	UNION AS (STRAIGHT)	
		1	**6V-8994**	1	UNION (STRAIGHT)	
		1	**6V-8397**	2	SEAL-O-RING	
	4	1	*164-5570*	1	UNION AS	
		1	**6V-8730**	1	UNION (FACE SEAL)	
		1	**6V-8397**	2	SEAL-O-RING	
	5	1	*169-7386*	1	CONNECTOR AS	
		1	**101-0387**	1	CONNECTOR	
		1	**6V-8397**	1	SEAL-O-RING	
	6	1	**5P-6652**	2	WASHER (20X44.5X6-MM THK)	
	7	1	**5P-9297**	1	CLIP	
	8	1	**6V-9168**	1	NUT (11/16-16-THD)	
	9	1	**8T-4121**	1	WASHER-HARD (11X21X2.5-MM THK)	
M	10	1	**8T-4137**	1	BOLT (M10X1.5X20-MM)	

I-REFER TO HYDRAULIC INFORMATION SYSTEM
M-METRIC PART

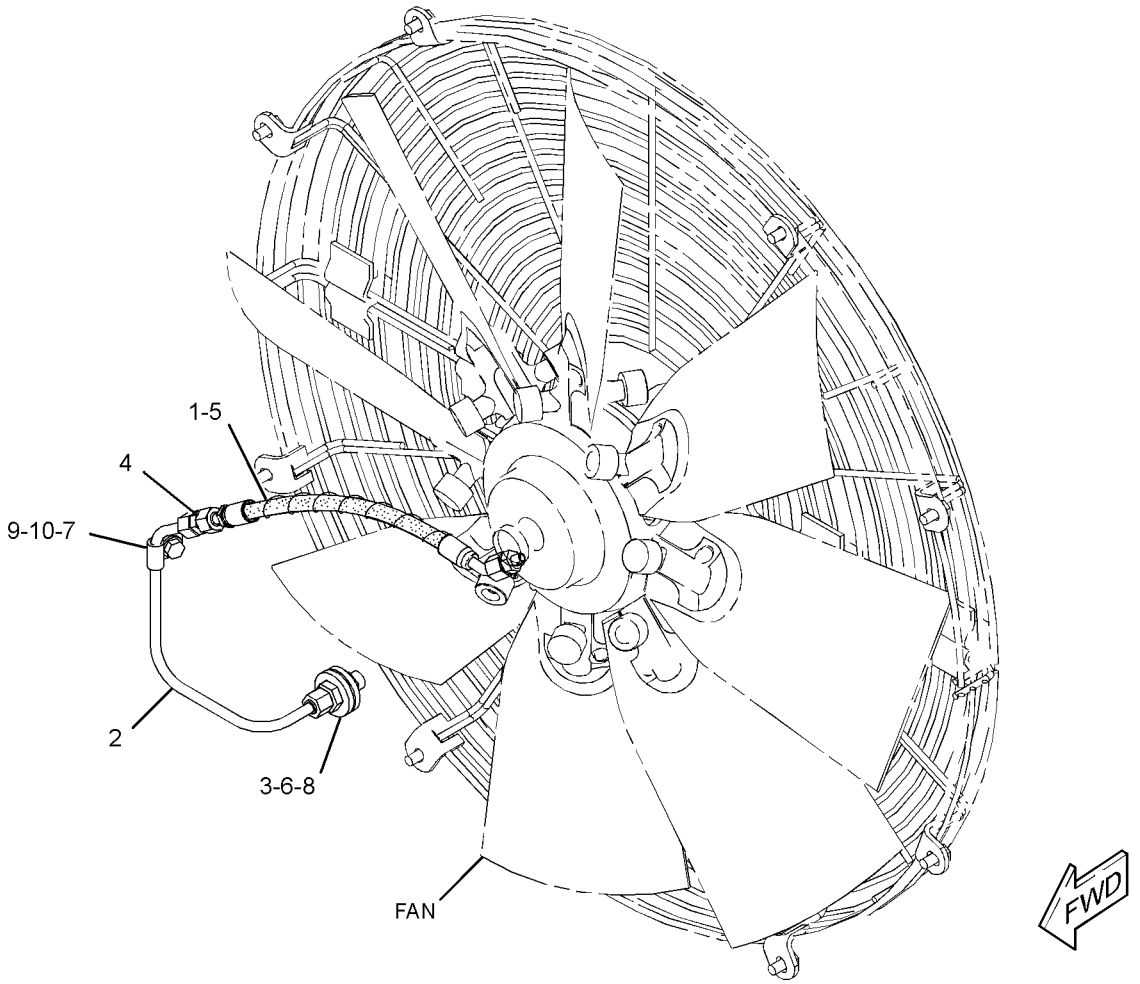

GRAPHIC #1 **<END>** g02729879

165-4465 LINES GP-TURBOCHARGER OIL

S/N: TXD1-UP; THX1-UP
PART OF 347-1741, 367-4852 ENGINE AR-COMPLETE
FOR USE WITH LOW MOUNT, REAR TURBOCHARGER EXHAUST
ALSO AN ATTACHMENT

SMCS-1052 **i04545039**

NOTE	REF NO	GRAPHIC REF	PART NUMBER	QTY	PART NAME 1 2 3 4 5 6 (PRODUCT LEVEL)	SEE PAGE
C	1	1	*183-3399*	1	CONNECTOR AS	
		1	**6V-8636**	1	CONNECTOR	
	1A	1	**214-7568**	1	SEAL-O-RING	
	1B	1	**228-7089**	1	SEAL-O-RING	
	2	1	**329-5511**	1	ELBOW AS	
		1	**6V-8723**	1	ELBOW	
	2A	1	**228-7089**	1	SEAL-O-RING	
	2B	1	**238-5080**	1	SEAL-O-RING	
C	3	1	**197-8419**	1	GASKET	
C	4	1	**246-6036**	1	HOSE	
	5	1	**249-9230**	1	HOSE AS	
C	6	1	**259-2993**	1	TUBE AS-DRAIN	
C	7	1	**259-2994**	1	TUBE AS-DRAIN	
C	8	1	**284-3502**	2	CLAMP-BAND	
C	9	1	**5P-7530**	1	SEAL-O-RING	
CM	10	1	**6V-3940**	2	BOLT (M8X1.25X25-MM)	
CM	11	1	**6V-5218**	2	BOLT (M8X1.25X35-MM)	
	12	1	**9M-1974**	4	WASHER-HARD (8.8X16X2-MM THK)	

C-CHANGE FROM PREVIOUS TYPE
M-METRIC PART

165-4465 **LINES GP-TURBOCHARGER OIL** ***(contd.)*** **i04545039**

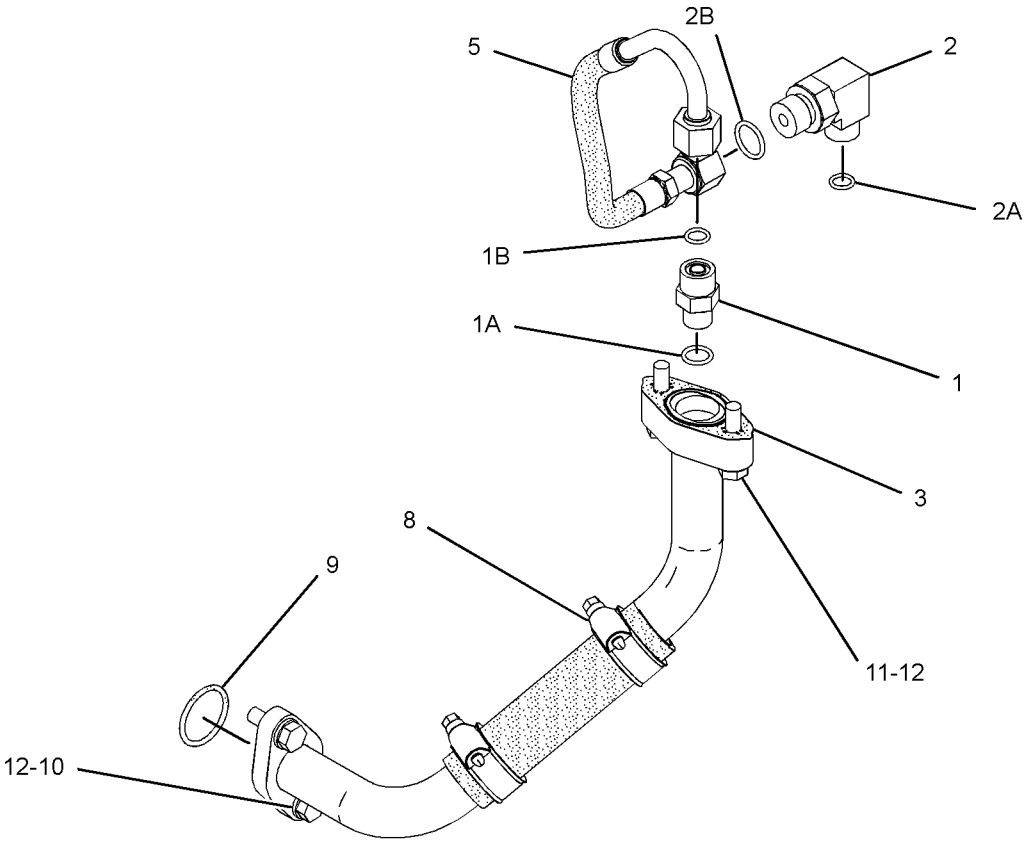

VIEW OF AREA A

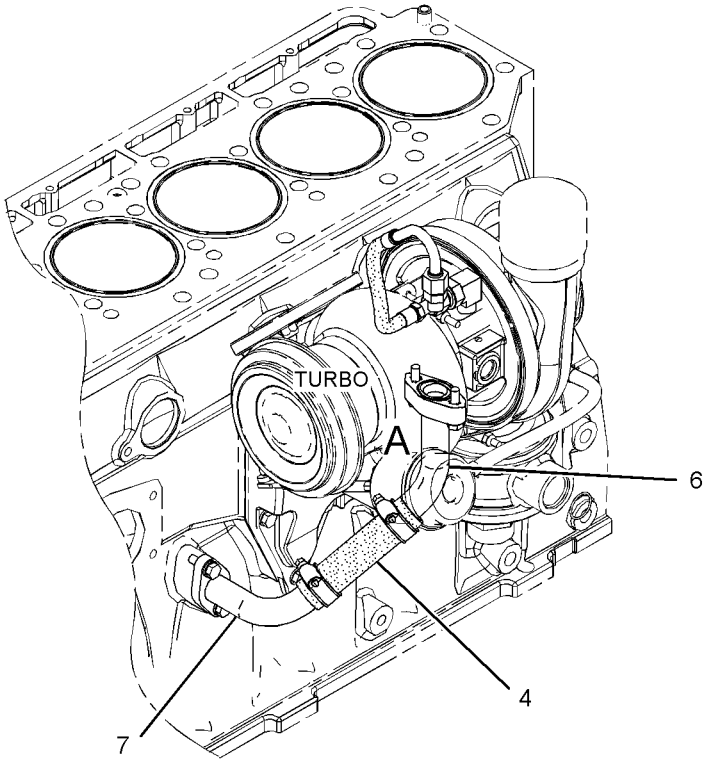

GRAPHIC #1

<END>

g02726921

195-8098 PUMP GP-ENGINE OIL

S/N: TXD1-UP; THX1-UP
PART OF 350-9162, 384-8426 ENGINE AR-CORE
ALSO AN ATTACHMENT

SMCS-1304, 1315 **i03979018**

NOTE	REF NO	GRAPHIC REF	PART NUMBER	QTY	PART NAME 1 2 3 4 5 6 (PRODUCT LEVEL)	SEE PAGE
C	1	1	*331-8906*	1	PUMP GP-ENGINE OIL	
	1A	1	**221-0144**	1	GEAR AS (60-TEETH)	
		1	**331-8905**	1	PUMP AS-ENGINE OIL	
M	2	1	**6V-1819**	2	BOLT (M10X1.5X100-MM)	
	3	1	**6V-5839**	2	WASHER (11X21X2.5-MM THK)	

C-CHANGE FROM PREVIOUS TYPE
M-METRIC PART

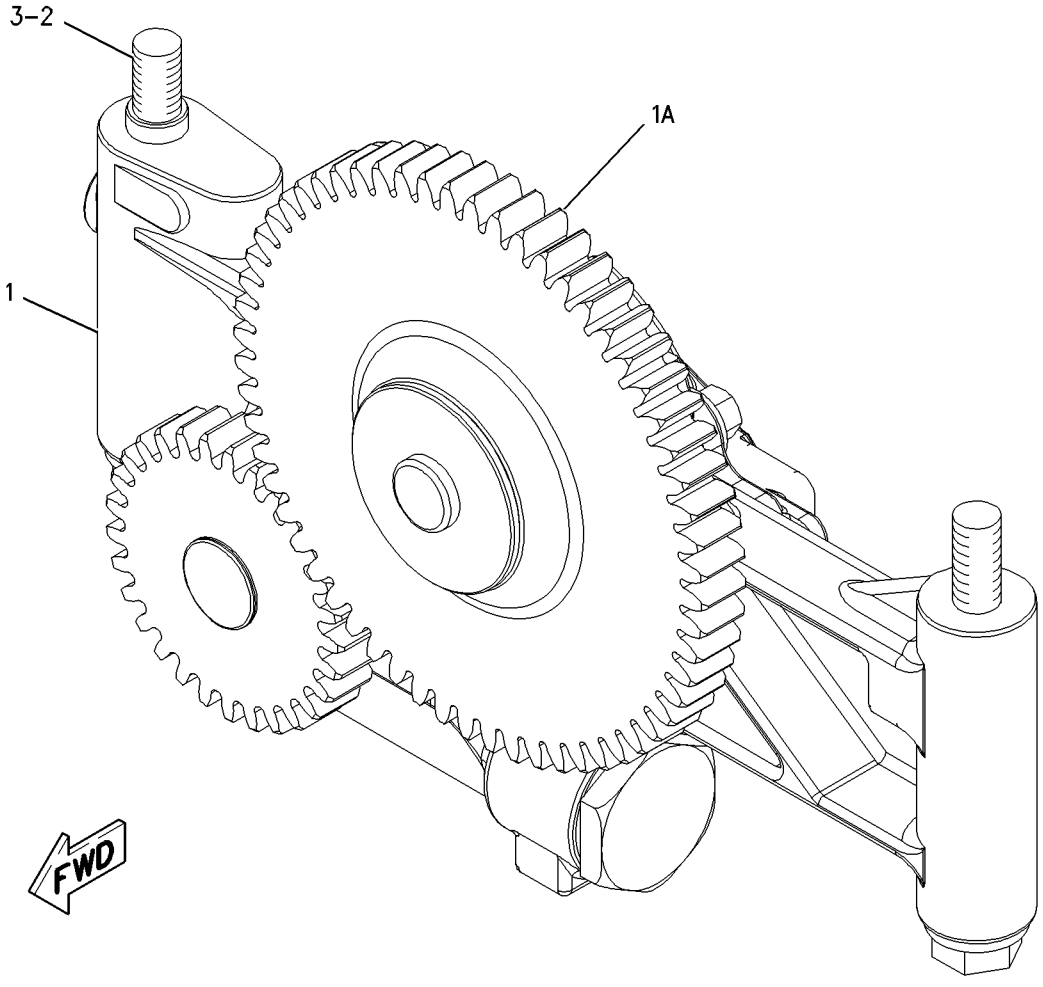

GRAPHIC #1 **<END>** g00909910

188-3826 COOLER GP-ENGINE OIL

S/N: TXD1-UP; THX1-UP
PART OF 350-9162, 384-8426 ENGINE AR-CORE
ALSO AN ATTACHMENT

SMCS-1378 **i02841155**

NOTE	REF NO	GRAPHIC REF	PART NUMBER	QTY	PART NAME 1 2 3 4 5 6 (PRODUCT LEVEL)	SEE PAGE
	1	1	**209-7293**	1	GASKET	
C	2	1	**293-9367**	1	CORE AS-OIL COOLER (ENGINE)	

C-CHANGE FROM PREVIOUS TYPE

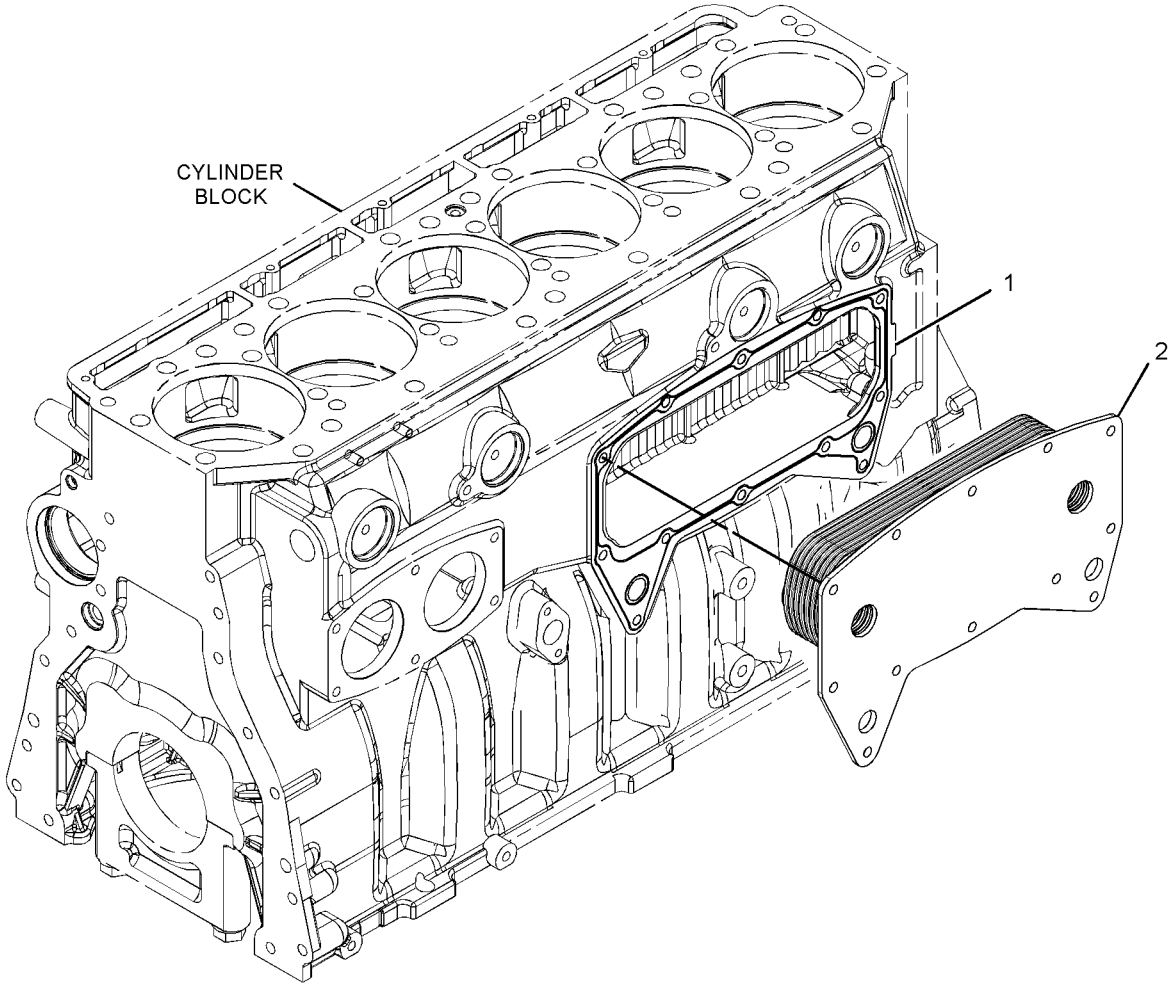

GRAPHIC #1 **<END>** g01419332

COOLING SYSTEM

362-3898 COOLING AR

S/N: F7B1-UP

PART OF 351-6848 COMMON AR

SMCS-1350 **i04463218**

NOTE	PART NUMBER	QTY	PART NAME 1 2 3 4 5 6 (PRODUCT LEVEL)	SEE PAGE
Y	*361-5270*	1	FAN AR-REVERSIBLE	70
Y	*355-8898*	1	GUARD GP-RADIATOR	224
Y	*364-0510*	1	LINES GP-COOLING	75
Y	*361-5267*	1	RADIATOR & MOUNTING GP	85

Y-SEPARATE ILLUSTRATION

<END>

COOLING SYSTEM

361-5270 FAN AR-REVERSIBLE

S/N: F7B1-UP

PART OF 362-3898 COOLING AR

SMCS-1356, 1360 **i05110549**

NOTE	REF NO	GRAPHIC REF	PART NUMBER	QTY	PART NAME 1 2 3 4 5 6 (PRODUCT LEVEL)	SEE PAGE
Y	1	1	**363-1819**	1	FAN GP-REVERSIBLE	71
Y	2	1	*375-0179*	1	GUARD GP-FAN	73
Y	3	1	*375-0180*	1	LINES GP-FAN DRIVE	64
	4	1	*375-0181*	1	MOUNTING GP-FAN DRIVE	
M		1	**7X-2538**	6	BOLT (M8X1.25X100-MM)	
		1	**8T-4224**	6	WASHER-HARD (8.8X16X2-MM THK)	

M-METRIC PART
Y-SEPARATE ILLUSTRATION

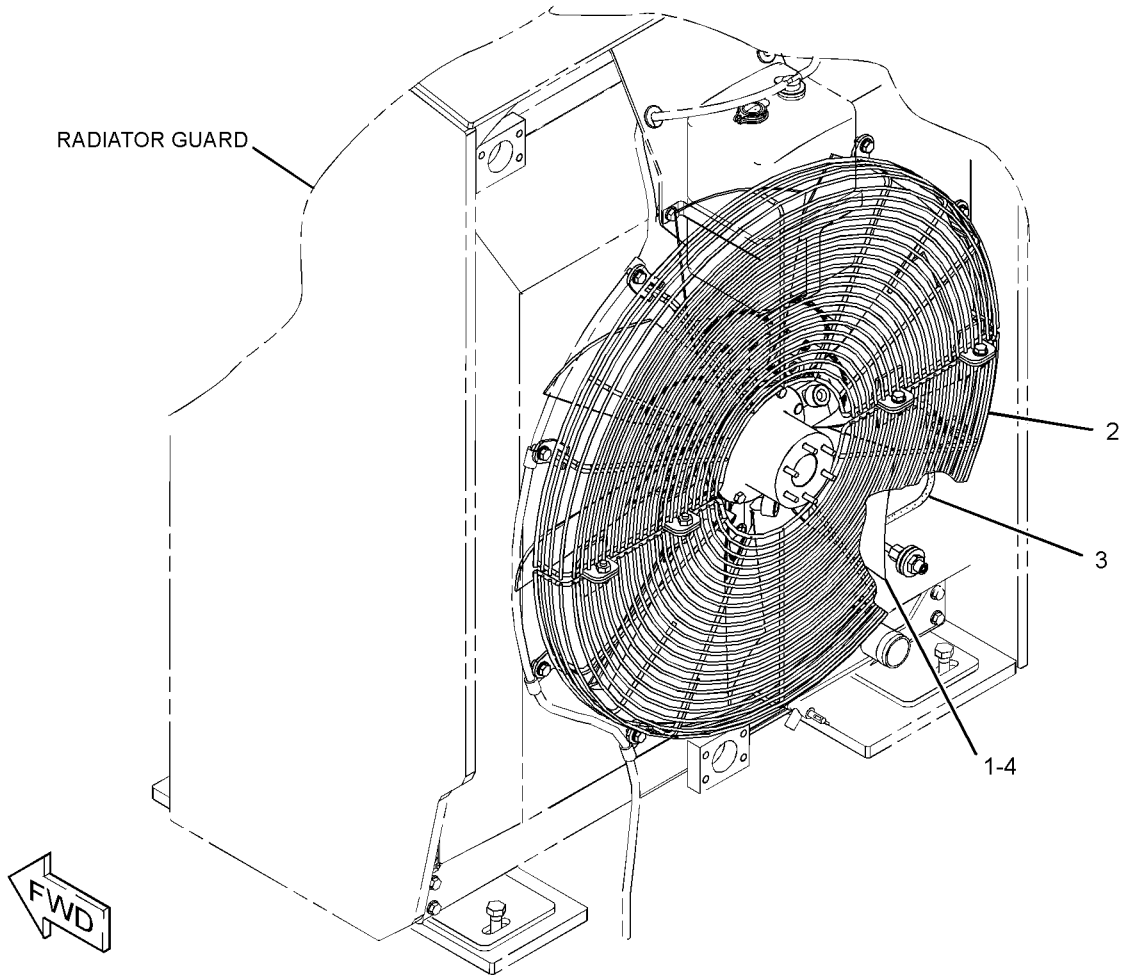

GRAPHIC #1 **<END>** g02729758

COOLING SYSTEM

363-1819 FAN GP-REVERSIBLE

S/N: F7B1-UP

PART OF 361-5270 FAN AR-REVERSIBLE

SMCS-1356, 1360 **i04463245**

NOTE	REF NO	GRAPHIC REF	PART NUMBER	QTY	PART NAME 1 2 3 4 5 6 (PRODUCT LEVEL)	SEE PAGE
	1	1	**363-9867**	1	UNION-ROTATING	
					(INCLUDES PARTS MARKED "N" IN GRAPHIC)	
	2	1	**363-9868**	1	CYLINDER	
	3	1	**363-9869**	1	KIT-SEAL (FAN)	
					(INCLUDES PARTS MARKED "L" IN GRAPHIC)	
					(INCLUDES SEALS)	
	4	1	**363-9870**	1	KIT-SHIM	
					(INCLUDES PARTS MARKED "J" IN GRAPHIC)	
					(INCLUDES BOLT & SHIMS)	
	5	1	**363-9871**	1	PISTON	
	6	1	**363-9872**	1	ADAPTER	
					(INCLUDES PARTS MARKED "K" IN GRAPHIC)	
	7	1	**363-9873**	1	SPRING	
	8	1	**363-9874**	1	KIT-FAN HUB	
					(INCLUDES FAN HUB)	
	9	1	**363-9875**	1	PLATE	
	10	1	**377-2978**	1	PLATE	
	11	1	**377-2979**	4	KIT-FAN BLADE	
					(EACH INCLUDES BLADES, NUTS, COUNTERWEIGHTS, RETAINERS, & BOLTS)	
	12	1	**4L-6454**	4	BOLT (3/8-16X1-IN)	
	13	1	**5D-4697**	8	BOLT-12 POINT HEAD (1/4-20X1-IN)	
	14	1	**9B-7237**	4	BOLT (3/8-16X1.25-IN)	

363-1819 FAN GP-REVERSIBLE *(contd.)* i04463245

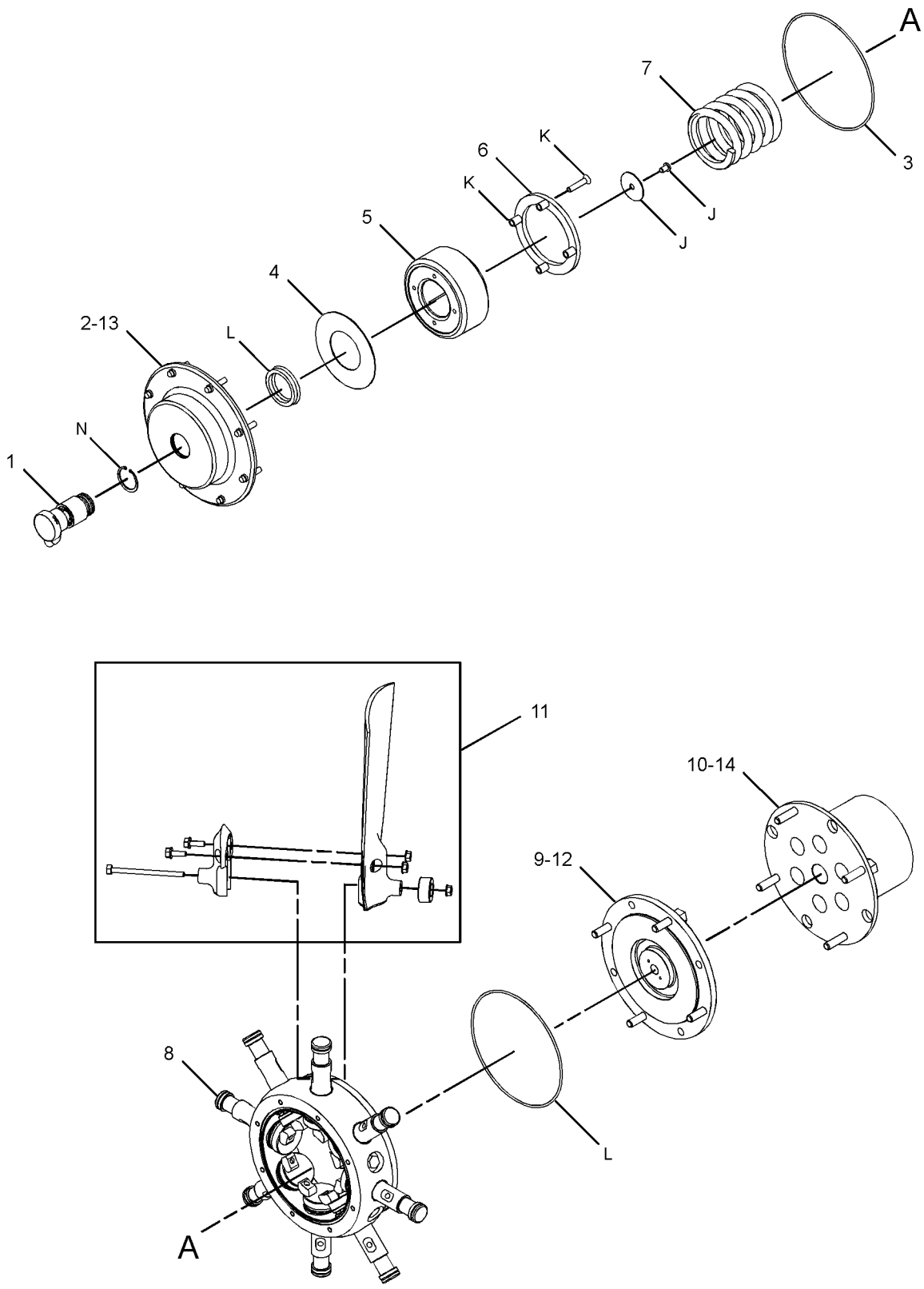

GRAPHIC #1 **<END>** g02728116

COOLING SYSTEM

375-0179 GUARD GP-FAN

S/N: F7B1-UP

PART OF 361-5270 FAN AR-REVERSIBLE

SMCS-1360 **i05016270**

NOTE	REF NO	GRAPHIC REF	PART NUMBER	QTY	PART NAME 1 2 3 4 5 6 (PRODUCT LEVEL)	SEE PAGE
	1	1	**198-0212**	2	GUARD AS	
					(EACH INCLUDES)	
M		1	**8T-3490**	2	NUT-WELD (M10X1.5-THD)	
	2	1	**8T-4121**	12	WASHER-HARD (11X21X2.5-MM THK)	
M	3	1	**8T-4136**	12	BOLT (M10X1.5X25-MM)	

M-METRIC PART

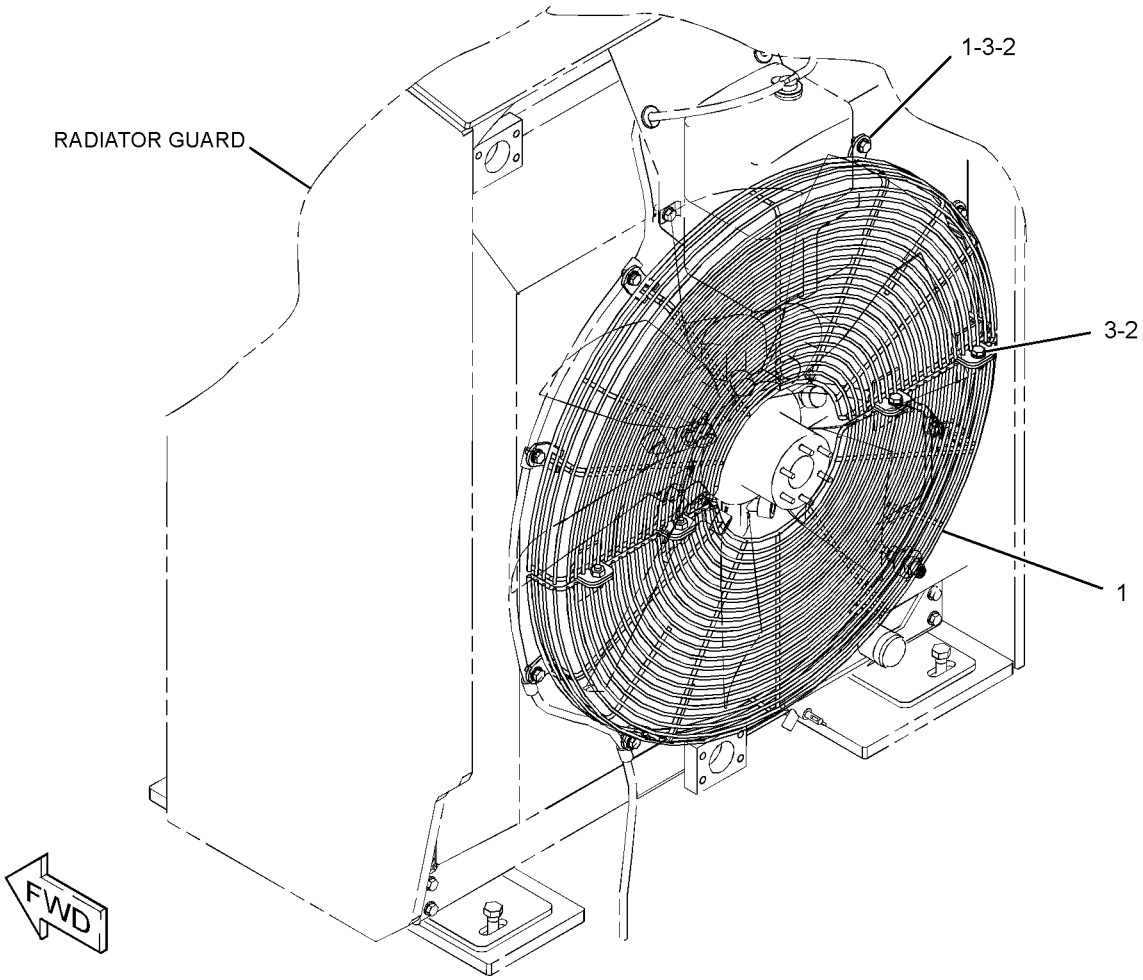

GRAPHIC #1 **<END>** g03193116

248-8835 HOUSING & REGULATOR GP

S/N: TXD1-UP; THX1-UP
PART OF 347-1741, 367-4852 ENGINE AR-COMPLETE
ALSO AN ATTACHMENT

SMCS-1355, 1393 **i04983435**

NOTE	REF NO	GRAPHIC REF	PART NUMBER	QTY	PART NAME 1 2 3 4 5 6 (PRODUCT LEVEL)	SEE PAGE
	1	1	**248-5513**	1	REGULATOR-TEMPERATURE (92-DEG C) (WATER)	
	2	1	**157-0670**	1	CAP-DUST	
	3	1	**280-6794**	1	HOSE	
	4	1	**217-5200**	1	HOUSING AS	
	4A	1	**3S-9643**	1	SEAL-LIP TYPE	
	5	1	**191-4457**	1	GASKET (WATER REGULATOR HOUSING)	
	6	1	**347-3148**	2	CLAMP-BAND	
	7	1	*392-0818*	1	PLUG AS	
		1	**6V-6609**	1	SEAL-O-RING	
		1	**360-3693**	1	PLUG	
	8	1	**154-9025**	1	VALVE-FLUID SAMPLING (COOLANT)	
	9	1	**4S-9191**	4	WASHER (12X22.5X5-MM THK)	
	10	1	**6B-5072**	1	BUSHING-REDUCING	
M	11	1	**8T-0644**	4	BOLT (M10X1.5X90-MM)	

M-METRIC PART

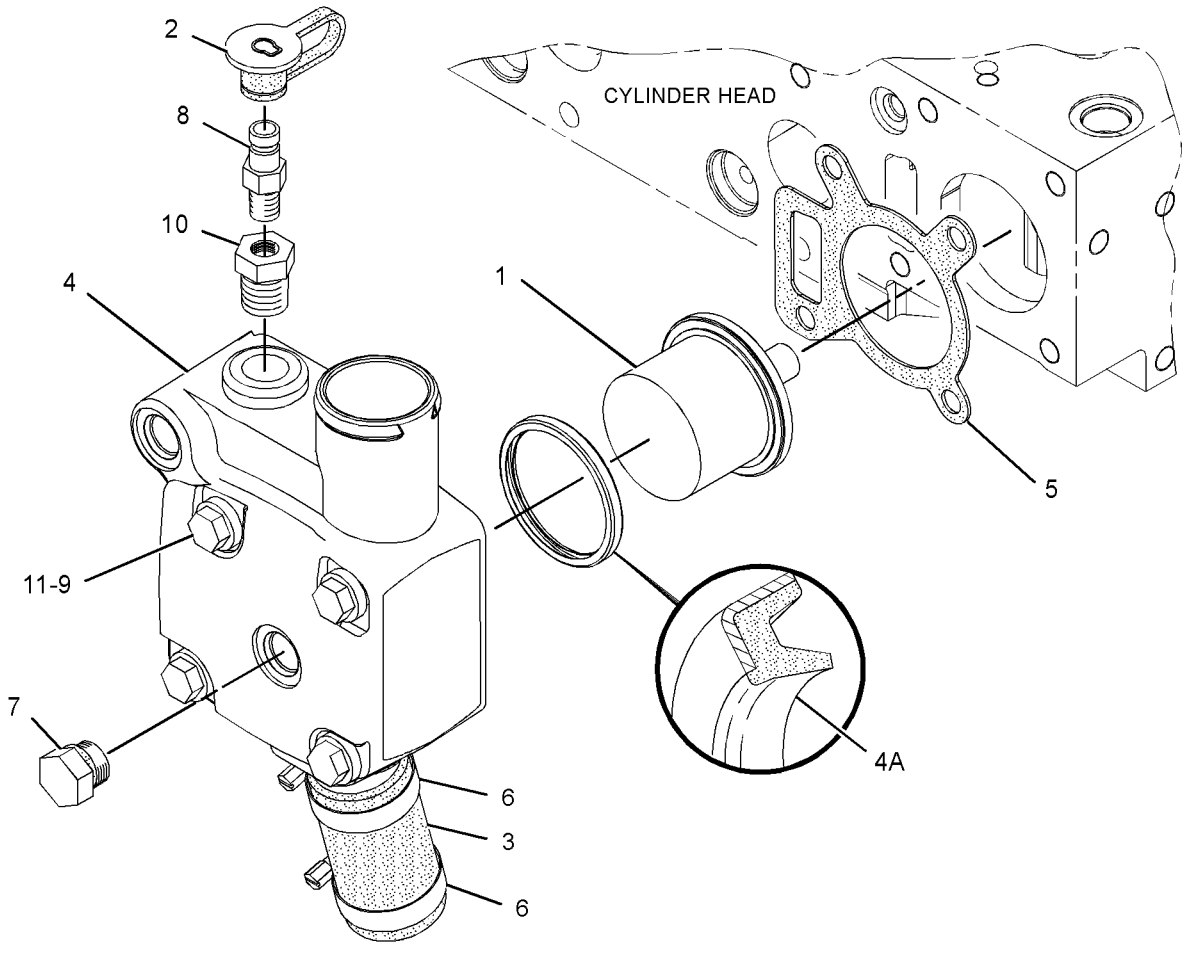

GRAPHIC #1 **<END>** g02678436

COOLING SYSTEM

364-0510 LINES GP-COOLING

S/N: F7B1-UP

PART OF 362-3898 COOLING AR

SMCS-1380, 5057 **i04993373**

NOTE	REF NO	GRAPHIC REF	PART NUMBER	QTY	PART NAME 1 2 3 4 5 6 (PRODUCT LEVEL)	SEE PAGE
	1	1	**205-6041**	2	HOSE	
	2	1	**211-9060**	1	HOSE	
	3	1	**224-6078**	1	HOSE-RADIATOR	
	4	1	**309-4069**	1	HOSE	
I	5	1	**365-7863**	1	HOSE AS	
	6	1	**370-1634**	1	TUBE	
	7	1	**370-1635**	1	HOSE	
	8	1	**370-1636**	1	TUBE	
	9	1	**380-6210**	1	TUBE AS	
	10	1	**380-6211**	1	TUBE AS	
	11	1	**1P-4582**	4	FLANGE-HALF	
	12	1	**208-6055**	7	CLAMP	
	13	1	**209-4573**	1	CLAMP-V BAND	
	14	1	**209-4580**	1	CLAMP	
	15	1	**212-6933**	3	CLAMP	
	16	1	**214-7458**	2	CLAMP-HOSE	
	17	1	**260-6696**	4	WASHER-COPPER (14X22X2.4-MM THK)	
	18	1	**3P-9847**	2	CLIP	
	19	1	**4J-0527**	2	SEAL-O-RING	
	20	1	**4V-5282**	2	GROMMET	
	21	1	**5F-8000**	1	SEAL-O-RING	
	22	1	**6V-2235**	2	CLIP	
	23	1	**8F-6711**	1	SEAL-O-RING	
	24	1	**8T-4121**	4	WASHER-HARD (11X21X2.5-MM THK)	
M	25	1	**8T-4137**	4	BOLT (M10X1.5X20-MM)	
M	26	1	**8T-4176**	2	BOLT (M12X1.75X90-MM)	
M	27	1	**8T-4184**	12	BOLT (M12X1.75X45-MM)	
	28	1	**8T-4223**	12	WASHER-HARD (13.5X25.5X3-MM THK)	
M	29	1	**8T-4648**	2	BOLT (M12X1.75X70-MM)	
E	30	1	**5P-1293**		HOSE (15-CM)	

E-ORDER BY THE CENTIMETER
I-REFER TO HYDRAULIC INFORMATION SYSTEM
M-METRIC PART

364-0510 **LINES GP-COOLING** *(contd.)* **i04993373**

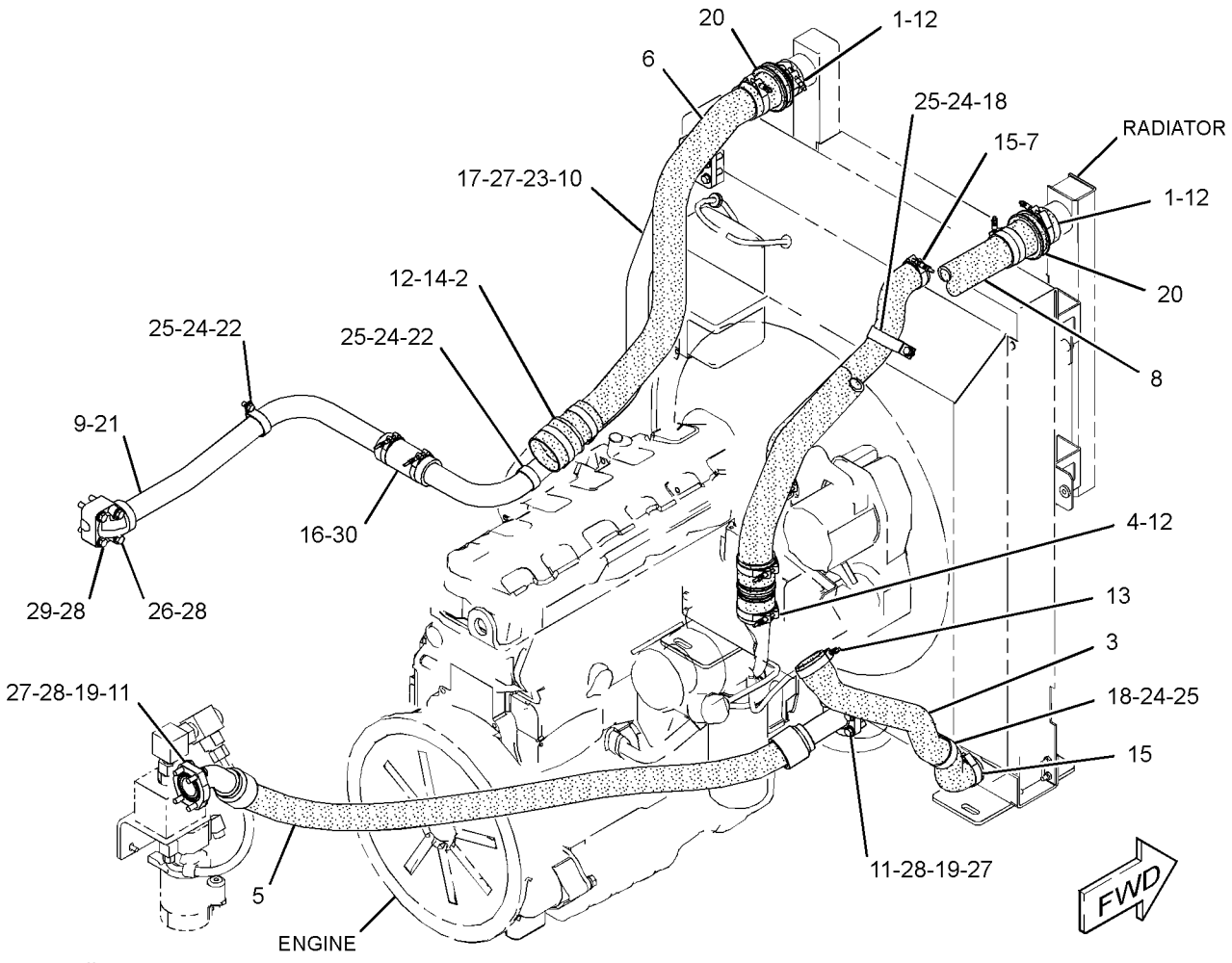

GRAPHIC #1 **<END>** g03192216

244-0989 LINES GP-TURBOCHARGER WATER

S/N: TXD1-UP; THX1-UP

PART OF 347-1741, 367-4852 ENGINE AR-COMPLETE

ALSO AN ATTACHMENT

SMCS-1052 **i04983911**

NOTE	REF NO	GRAPHIC REF	PART NUMBER	QTY	PART NAME 1 2 3 4 5 6 (PRODUCT LEVEL)	SEE PAGE
	1	1	*392-0810*	1	TEE AS	
		1	**6V-6609**	1	SEAL-O-RING	
		1	**118-0911**	1	TEE-O-RING PORT	
	2	1	*396-0412*	1	TEE AS	
		1	**6V-6609**	1	SEAL-O-RING	
		1	**120-9127**	1	TEE	
M	3	1	**5C-7261**	1	NUT (M8X1.25-THD)	
	4	1	**7B-7501**	1	CLIP	
	5	1	**244-0988**	2	HOSE AS	
	6	1	*353-5130*	3	ADAPTER AS	
					(EACH INCLUDES)	
		1	**6V-6609**	1	SEAL-O-RING	
		1	**8M-0505**	1	CONNECTOR	
	7	1	*365-0583*	1	CONNECTOR AS	
		1	**6V-6609**	1	SEAL-O-RING	
		1	**8T-1715**	1	ADAPTER	
	8	1	*396-0405*	2	PLUG AS	
					(EACH INCLUDES)	
		1	**6V-6609**	1	SEAL-O-RING	
		1	**360-3680**	1	PLUG	
	9	1	**8T-4224**	1	WASHER-HARD (8.8X16X2-MM THK)	

M-METRIC PART

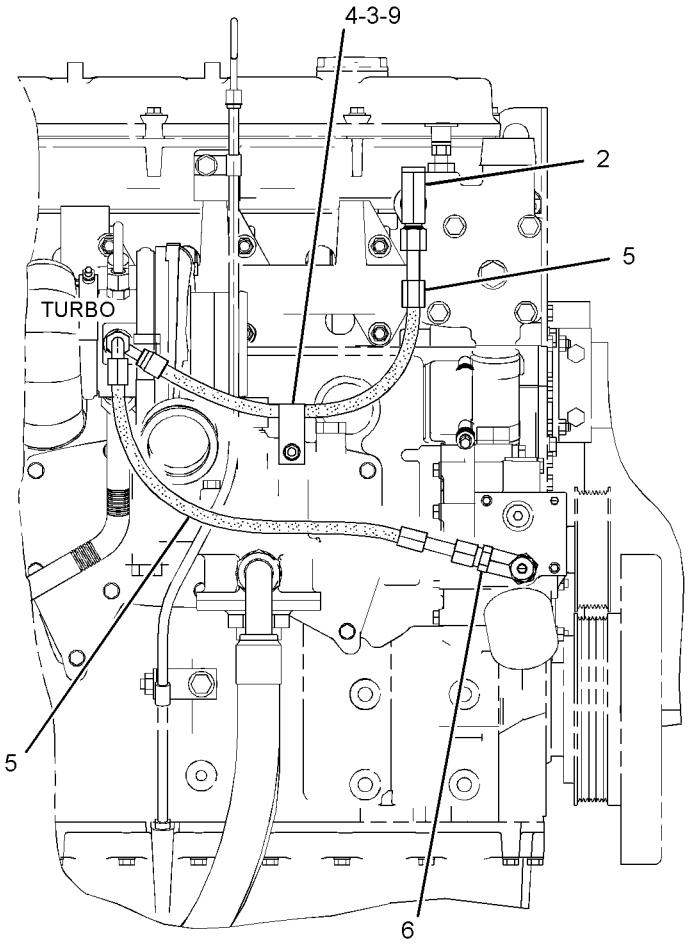

RIGHT SIDE VIEW OF ENGINE

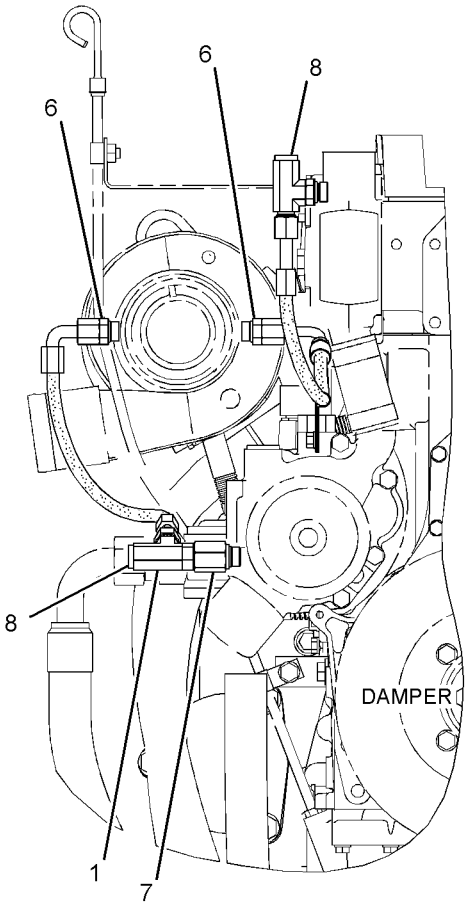

FRONT VIEW OF ENGINE

GRAPHIC #1 **<END>** g03182237

205-4013 PLUG GP-WATER LINES

S/N: TXD1-UP; THX1-UP

PROVIDES CUP PLUGS FOR THE RH SIDE OF BLOCK AND PIPE PLUG AT REAR OF BLOCK IN PLACE OF A JACKET WATER HEATER

PART OF 347-1741, 367-4852 ENGINE AR-COMPLETE

CANNOT BE USED WITH JACKET WATER HEATER

ALSO AN ATTACHMENT

SMCS-1393 **i03362904**

NOTE	REF NO	GRAPHIC REF	PART NUMBER	QTY	PART NAME 1 2 3 4 5 6 (PRODUCT LEVEL)	SEE PAGE
	1	1	**7L-7556**	2	PLUG-CUP (67.03-MM DIA)	
					—OR—	
		1	**209-1434**	2	PLUG-CUP (73.38-MM DIA)	
	2	1	**8T-6761**	1	PLUG-PIPE	

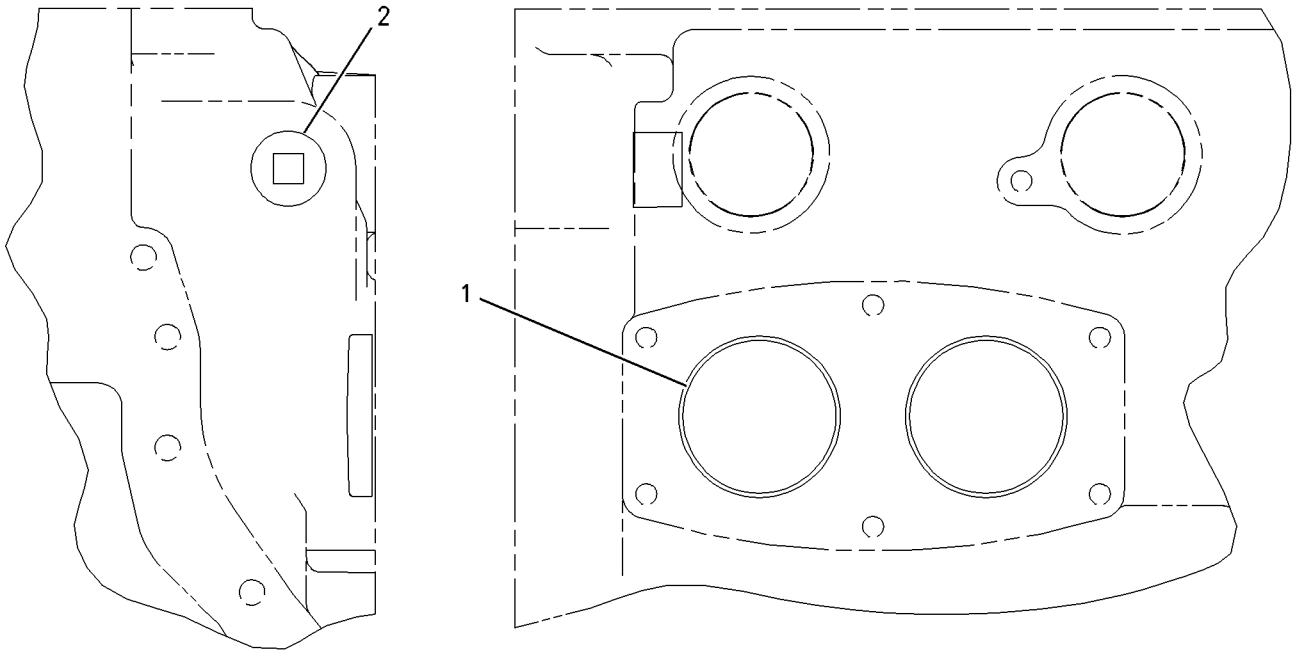

REAR VIEW RIGHT SIDE VIEW

GRAPHIC #1 **<END>** g00790624

352-2123 PUMP AS-WATER

S/N: TXD1-UP; THX1-UP
PART OF 352-2125 PUMP GP-WATER
ALSO AN ATTACHMENT

SMCS-1361 **i05127234**

NOTE	REF NO	GRAPHIC REF	PART NUMBER	QTY	PART NAME 1 2 3 4 5 6 (PRODUCT LEVEL)	SEE PAGE
	1	1	**397-1832**	1	SHAFT AS	
	2	1	**177-1056**	1	IMPELLER-PUMP	
	3	1	**197-9581**	1	PULLEY (8-GROOVE)	
	4	1	**216-2941**	1	HOUSING-PUMP	
	5	1	**350-5417**	1	SEAL-WATER PUMP	

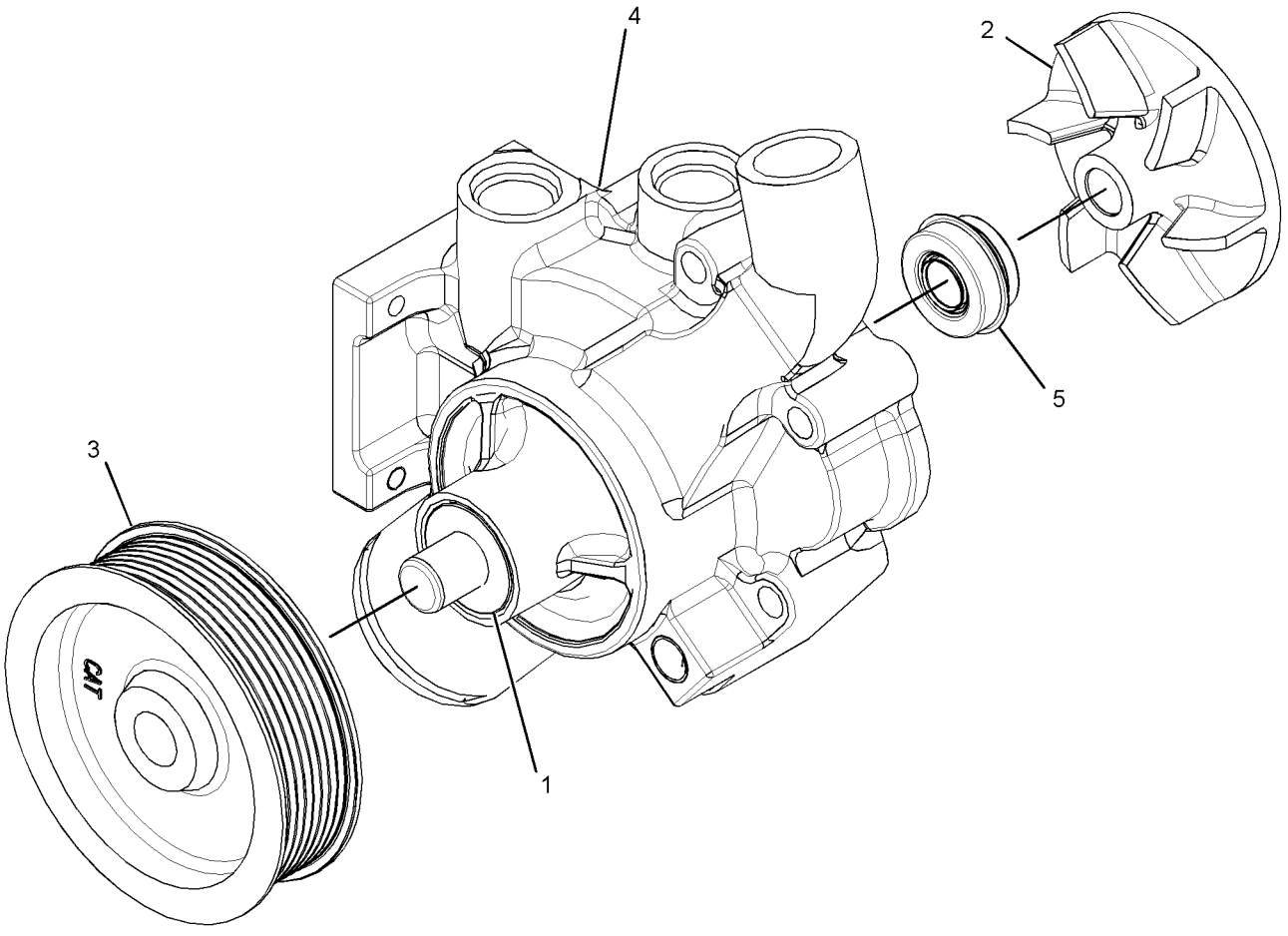

GRAPHIC #1 **<END>** g02828761

202-7674 PUMP GP-WATER

S/N: TXD1-UP; THX1-UP
PART OF 367-4852 ENGINE AR-COMPLETE, 384-8426 ENGINE AR-CORE
ALSO AN ATTACHMENT

SMCS-1361 **i04723067**

NOTE	REF NO	GRAPHIC REF	PART NUMBER	QTY	PART NAME 1 2 3 4 5 6 (PRODUCT LEVEL)	SEE PAGE
CYR	1	1	**352-2125**	1	PUMP GP-WATER	82
	2	1	**147-0182**	1	SEAL-O-RING	
	3	1	**384-9992**	1	SEAL-O-RING	
M	4	1	**8T-0644**	4	BOLT (M10X1.5X90-MM)	

C-CHANGE FROM PREVIOUS TYPE
M-METRIC PART
R-REMFG PART MAY BE AVAILABLE
Y-SEPARATE ILLUSTRATION

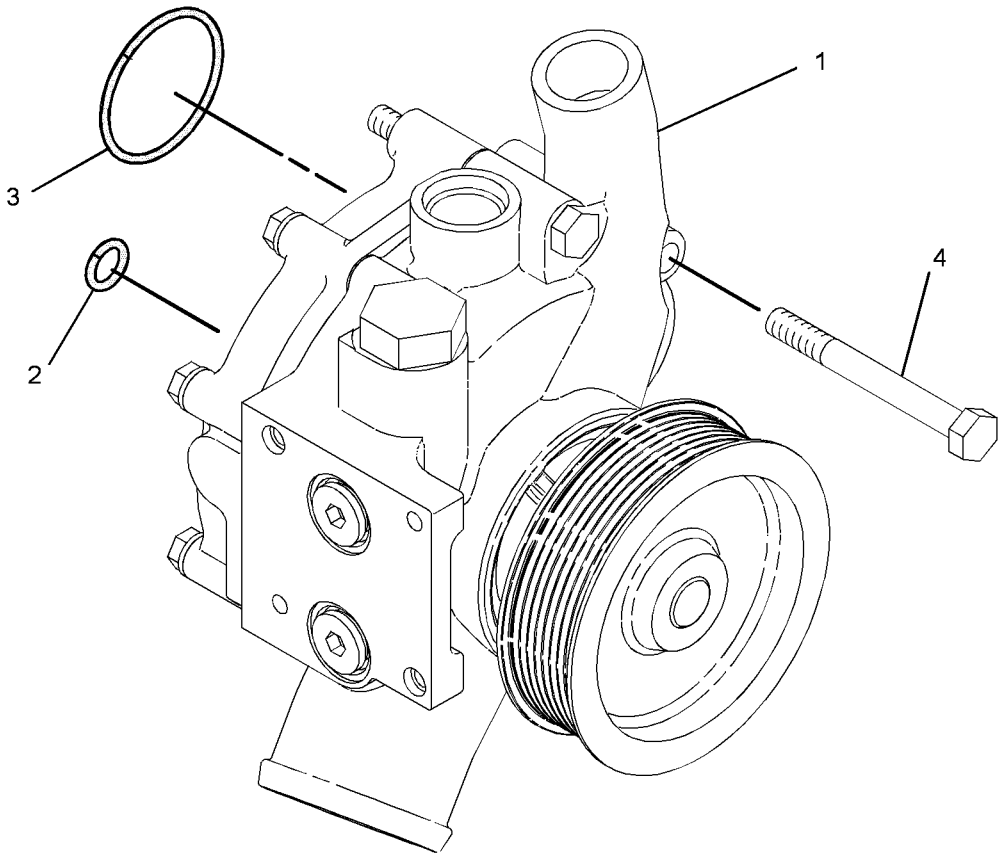

GRAPHIC #1 **<END>** g02075741

COOLING SYSTEM

352-2125 PUMP GP-WATER*R

S/N: TXD1-UP; THX1-UP
PART OF 202-7674 PUMP GP-WATER
ALSO AN ATTACHMENT

SMCS-1361 **i05015084**

NOTE	REF NO	GRAPHIC REF	PART NUMBER	QTY	PART NAME 1 2 3 4 5 6 (PRODUCT LEVEL)	SEE PAGE
	1	1	**177-1044**	1	COVER	
	2	1	**222-3901**	1	GASKET	
Y	3	1	**352-2123**	1	PUMP AS-WATER	80
	4	1	*396-0405*	2	PLUG AS	
					(EACH INCLUDES)	
		1	**6V-6609**	1	SEAL-O-RING	
		1	**360-3680**	1	PLUG	
	5	1	**183-2931**	4	BOLT AS	

Y-SEPARATE ILLUSTRATION

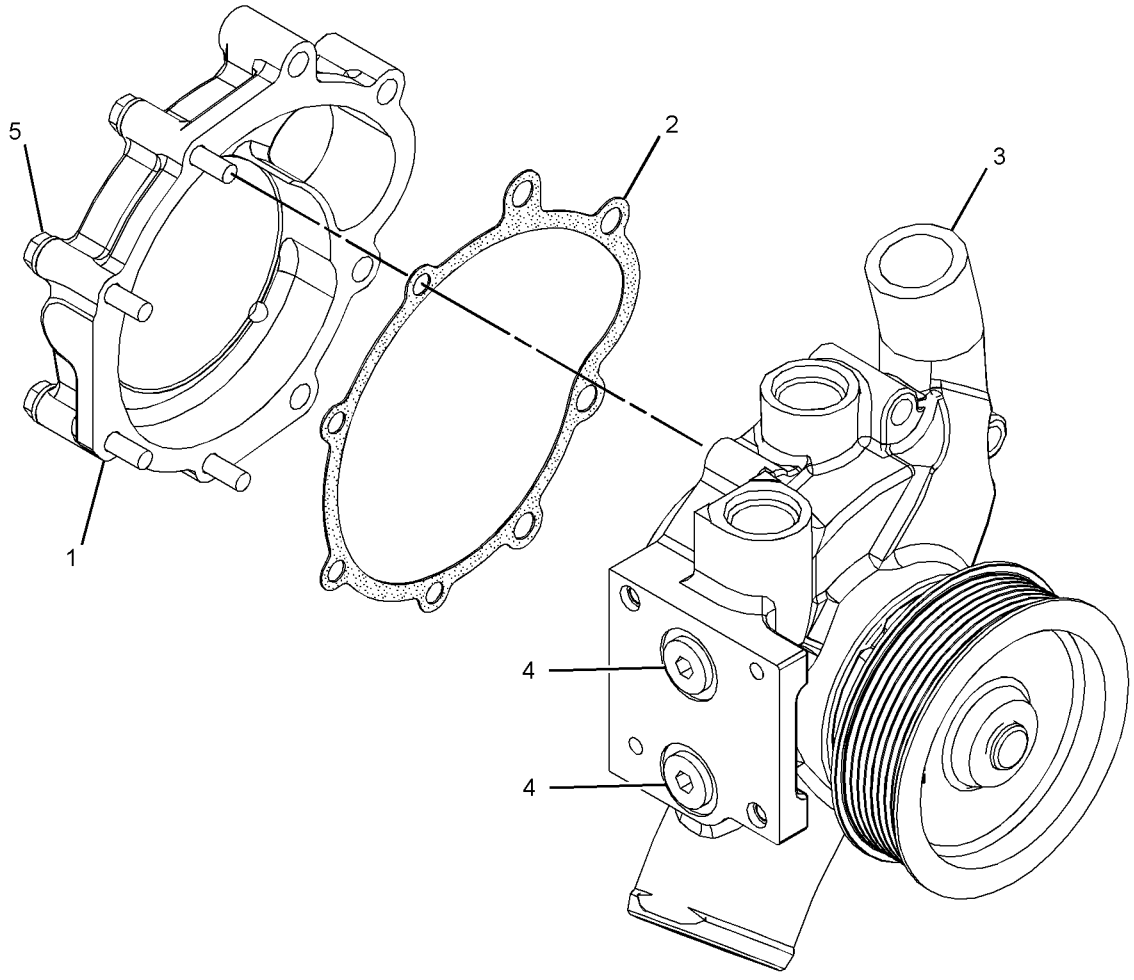

GRAPHIC #1 **<END>** g02641817

361-5268 RADIATOR & HYD OIL COOLER GP

S/N: F7B1-UP

PART OF 361-5267 RADIATOR & MOUNTING GP

SMCS-1351 **i04963056**

NOTE	REF NO	GRAPHIC REF	PART NUMBER	QTY	PART NAME 1 2 3 4 5 6 (PRODUCT LEVEL)	SEE PAGE
	1	1	**232-6682**	8	SLEEVE-RUBBER	
	2	1	**235-1022**	1	CHANNEL AS (TOP)	
	3	1	**352-3851**	1	RADIATOR GP	
		1	**148-2701**	1	CAP-RADIATOR	
	4	1	**352-3852**	1	CORE AS-OIL COOLER (HYDRAULIC)	
	5	1	**361-5269**	1	SHROUD AS-FAN	
		1	**7T-1099**	5	LINK	
M		1	**8T-3490**	13	NUT-WELD (M10X1.5-THD)	
	6	1	**257-2332**	1	CORE AS-AFTERCOOLER	
		1	**3J-5390**	2	PLUG	
	7	1	**370-1607**	1	CHANNEL AS	
M		1	**8T-3612**	5	NUT-WELD (M8X1.25-THD)	
	8	1	**370-1608**	1	CHANNEL AS	
M		1	**8T-3612**	5	NUT-WELD (M8X1.25-THD)	
	9	1	**373-6579**	1	CHANNEL AS	
M	10	1	**6V-7744**	16	LOCKNUT (M10X1.5-THD)	
	11	1	**8T-4121**	16	WASHER-HARD (11X21X2.5-MM THK)	
M	12	1	**8T-4189**	10	BOLT (M8X1.25X20-MM)	
M	13	1	**8T-4196**	16	BOLT (M10X1.5X35-MM)	
	14	1	**8T-4224**	10	WASHER-HARD (8.8X16X2-MM THK)	
D	15	1	**6V-1392**		SEAL (0.8-M)	
D	15A	1	**6V-1392**		SEAL (0.2-M)	
D	15B	1	**6V-1392**		SEAL (1.4-M EACH)	
D	15C	1	**6V-1392**		SEAL (1.0-M)	

D-ORDER BY THE METER
M-METRIC PART

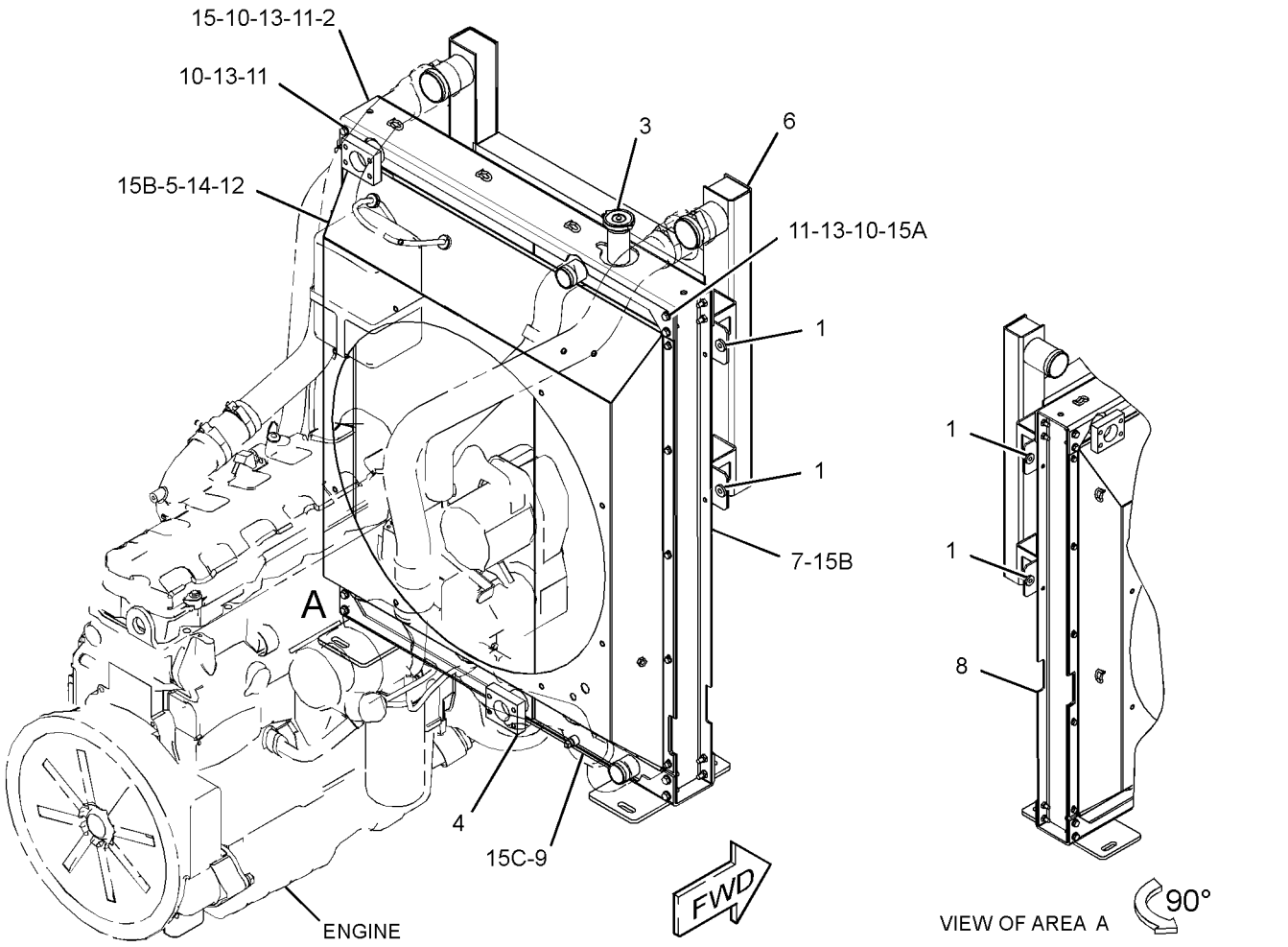

GRAPHIC #1 **<END>** g02729826

361-5267 RADIATOR & MOUNTING GP

S/N: F7B1-UP

PART OF 362-3898 COOLING AR

SMCS-1353 **i04963067**

NOTE	REF NO	GRAPHIC REF	PART NUMBER	QTY	PART NAME 1 2 3 4 5 6 (PRODUCT LEVEL)	SEE PAGE
	1	1	**8F-8151**	1	VALVE-SHUTOFF (COOLANT DRAIN)	
	2	1	**095-1388**	1	CLAMP-HOSE	
	4	1	**096-4035**	3	CLIP	
	6	1	**226-3630**	2	BRACKET	
	7	1	**230-2780**	1	TANK GP-COOLANT (INCLUDES COOLANT LEVEL SWITCH)	
		1	**171-3370**	1	CAP AS (COOLANT OVERFLOW)	
		1	**204-0920**	1	CAP AS (COOLANT FILL)	
Y	9	1	*361-5268*	1	RADIATOR & HYD OIL COOLER GP	83
	10	1	**085-9310**	4	SPACER (16.6X32X26-MM THK)	
	11	1	**124-1479**	5	CLIP	
	13	1	**7X-7729**	4	WASHER (11X25X3-MM THK)	
	14	1	**8T-4121**	7	WASHER-HARD (11X21X2.5-MM THK)	
M	15	1	**8T-4136**	4	BOLT (M10X1.5X25-MM)	
M	16	1	**8T-4139**	4	BOLT (M12X1.75X30-MM)	
M	17	1	**8T-4186**	4	BOLT (M10X1.5X40-MM)	
M	18	1	**8T-4193**	4	BOLT (M16X2X50-MM)	
	19	1	**8T-4223**	4	WASHER-HARD (13.5X25.5X3-MM THK)	
E	20	1	**5P-0767**		HOSE (35-CM)	
E	21	1	**7Y-1976**		HOSE-WATER (51-CM)	
E	21A	1	**7Y-1976**		HOSE-WATER (201-CM)	
	22	1	**5P-9299**	1	CLIP	
M	23	1	**8T-4137**	3	BOLT (M10X1.5X20-MM)	
	24	1	**385-4660**	1	CORE AS	
	25	1	**394-7580**	1	BRACKET	

E-ORDER BY THE CENTIMETER
M-METRIC PART
Y-SEPARATE ILLUSTRATION

361-5267 **RADIATOR & MOUNTING GP** *(contd.)* **i04963067**

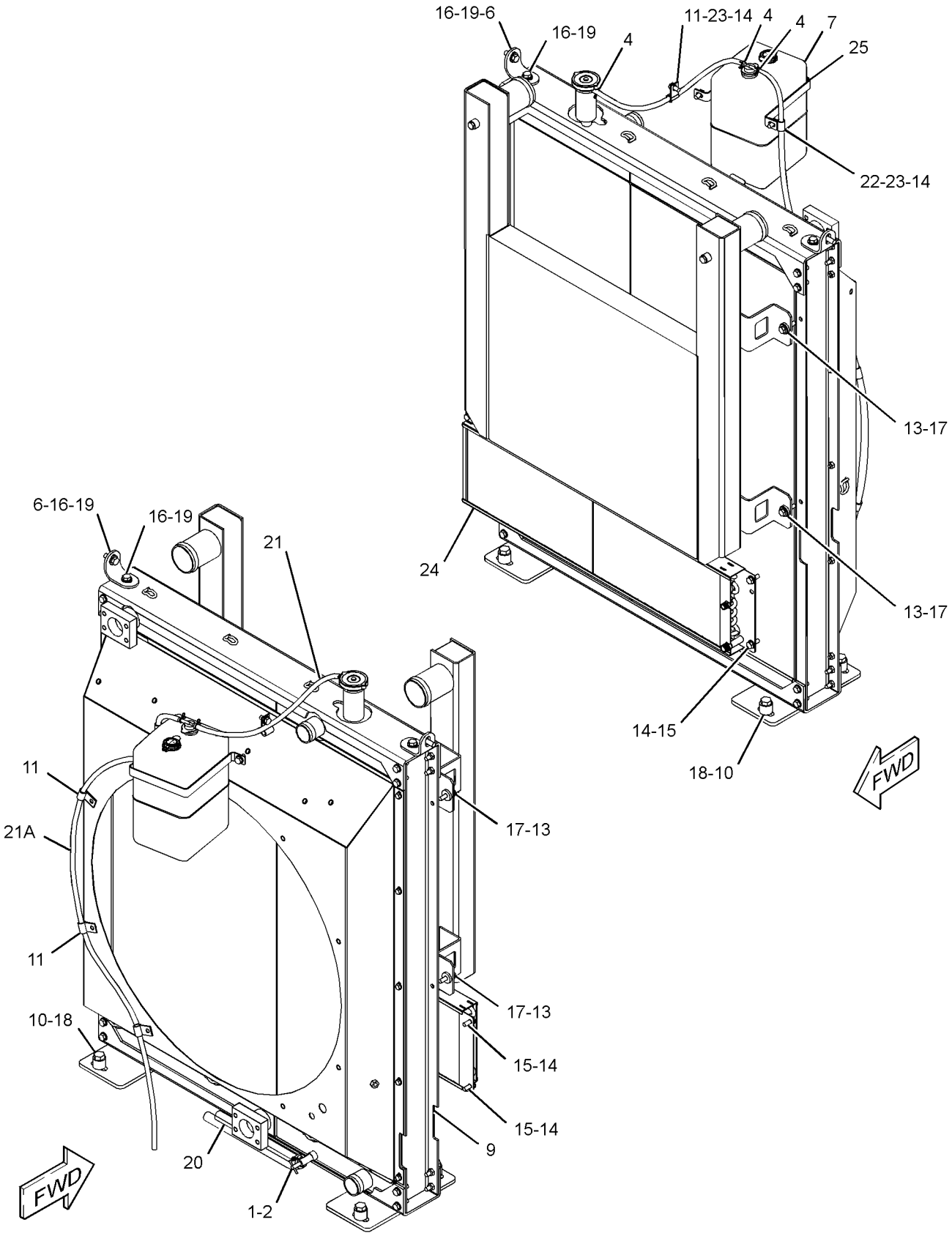

GRAPHIC #1 **<END>** g03193436

AIR INLET AND EXHAUST SYSTEM

317-9524 AIR CLEANER GP

S/N: F7B1-UP

PART OF 367-2129 AIR CLEANER GP

SMCS-1051, 1054 **i03161541**

NOTE	REF NO	GRAPHIC REF	PART NUMBER	QTY	PART NAME 1 2 3 4 5 6 (PRODUCT LEVEL)	SEE PAGE
	1	1	**116-5763**	12	CLIP-SPRING	
	2	1	**290-1935**	1	FILTER ELEMENT AS-AIR (PRIMARY)	
	3	1	**290-1936**	1	FILTER ELEMENT AS-AIR (SECONDARY)	
	4	1	**290-1937**	1	COVER AS-AIR CLEANER	
	4A	1	**290-1938**	4	LATCH AS	

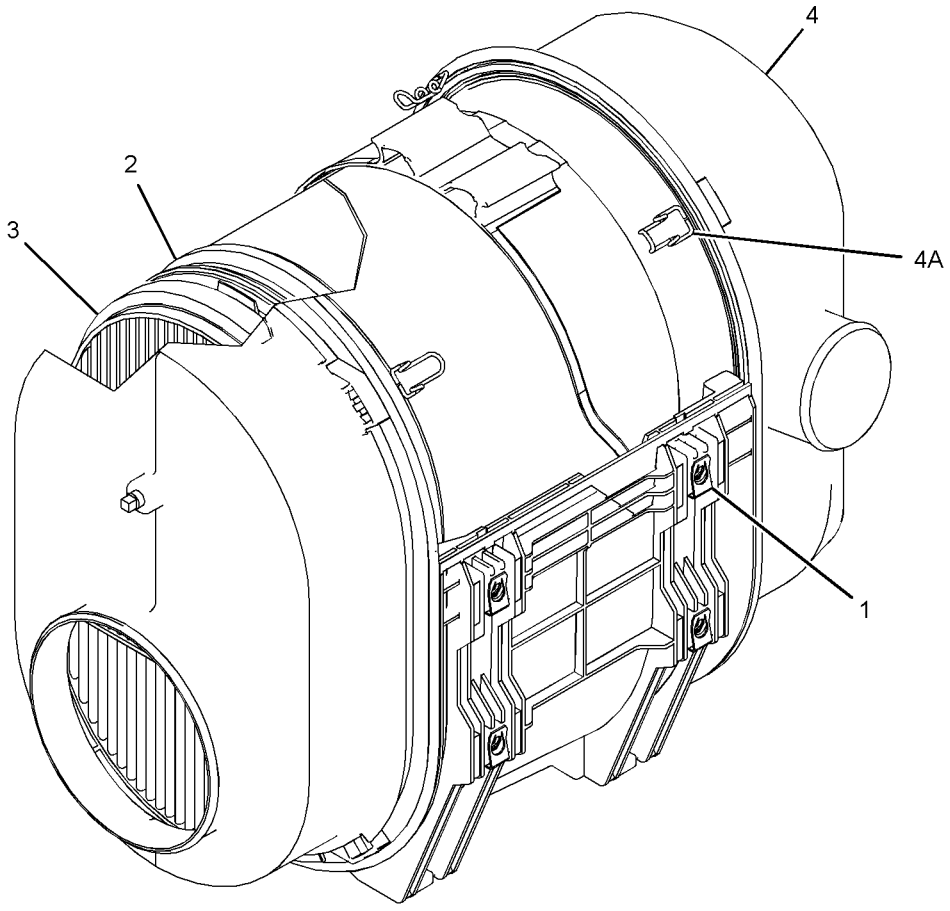

GRAPHIC #1 **<END>** g01622418

AIR INLET AND EXHAUST SYSTEM

367-2129 AIR CLEANER GP

S/N: F7B1-UP

PART OF 367-2135 INSTALLATION AR-ENGINE

SMCS-1051, 1054 **i04958492**

NOTE	REF NO	GRAPHIC REF	PART NUMBER	QTY	PART NAME 1 2 3 4 5 6 (PRODUCT LEVEL)	SEE PAGE
	1	1	**8U-6668**	1	VALVE	
	2	1	**110-0885**	2	BUMPER	
	3	1	**145-4212**	1	INDICATOR-AIR FILTER CHANGE	
	4	1	**187-8703**	1	HOSE-ELBOW	
	5	1	**188-2030**	1	HOSE-ELBOW	
Y	6	1	**317-9524**	1	AIR CLEANER GP	87
	7	1	**393-5559**	1	TUBE	
	8	1	**394-7565**	1	PLATE	
	9	1	**394-7566**	1	TUBE AS	
	10	1	**394-7569**	1	PLATE AS	
	11	1	**394-7573**	1	BRACKET AS	
	12	1	**169-6713**	1	ADAPTER AS	
		1	**7J-0204**	1	SEAL-O-RING	
	13	1	**209-4590**	1	CLAMP AS-BAND (T-BOLT)	
	14	1	**220-4126**	1	CLAMP	
	15	1	**240-2651**	2	CLAMP	
	16	1	**4M-8973**	1	ELBOW	
M	17	1	**5C-7261**	2	NUT (M8X1.25-THD)	
	18	1	**7X-7729**	4	WASHER (11X25X3-MM THK)	
	19	1	**8T-4121**	16	WASHER-HARD (11X21X2.5-MM THK)	
M	20	1	**8T-4136**	6	BOLT (M10X1.5X25-MM)	
M	21	1	**8T-4137**	4	BOLT (M10X1.5X20-MM)	
M	22	1	**8T-4195**	4	BOLT (M10X1.5X30-MM)	
M	23	1	**8T-4196**	6	BOLT (M10X1.5X35-MM)	
	24	1	**8T-4224**	4	WASHER-HARD (8.8X16X2-MM THK)	
M	25	1	**8T-4908**	4	BOLT (M8X1.25X25-MM)	
D	26	1	**5P-5902**		SEAL (1.1-M)	
D	27	1	**6V-9335**		SEAL (1.7-M)	

D-ORDER BY THE METER
M-METRIC PART
Y-SEPARATE ILLUSTRATION

367-2129 **AIR CLEANER GP** ***(contd.)*** **i04958492**

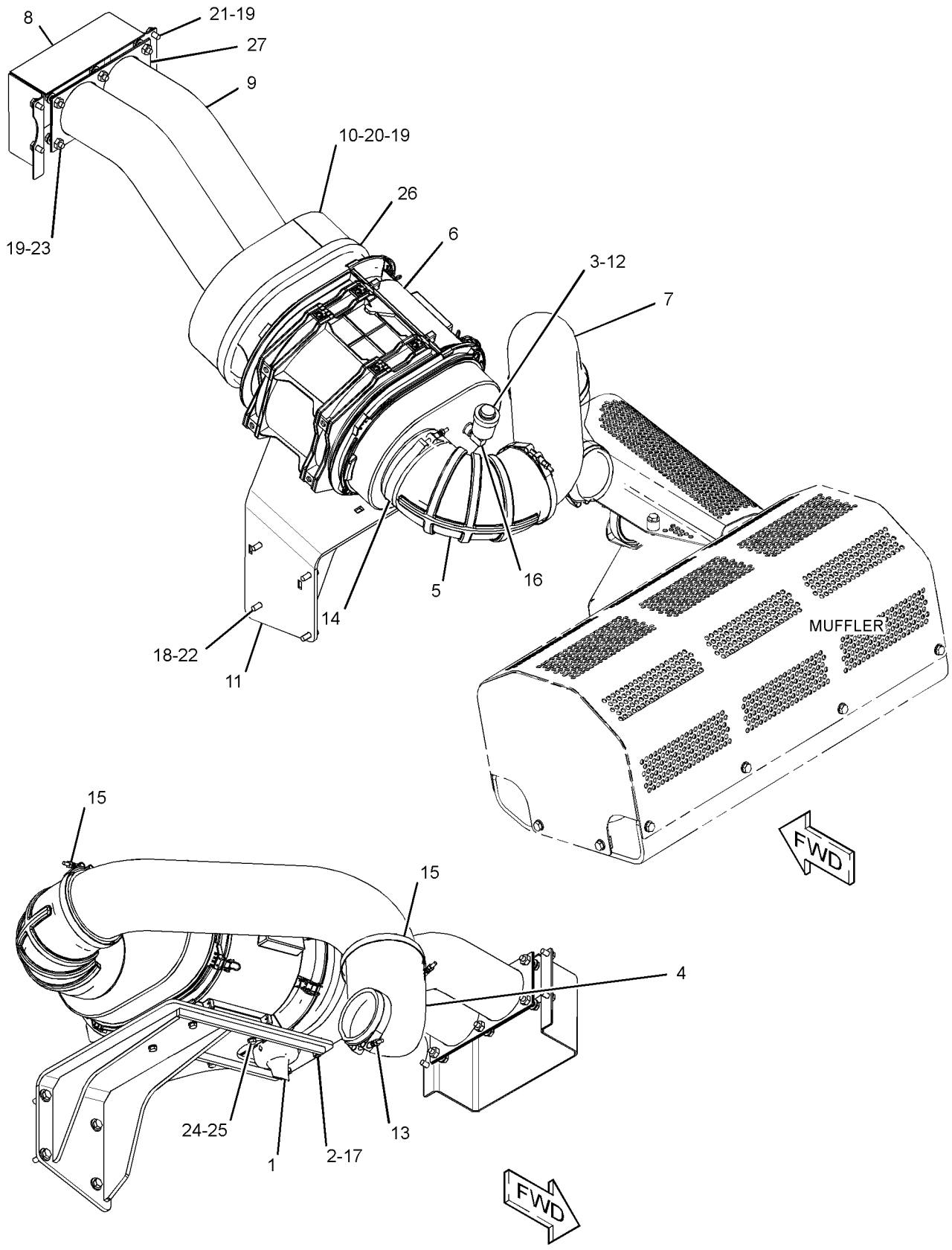

GRAPHIC #1 **<END>** g03180599

AIR INLET AND EXHAUST SYSTEM

173-6107 ELBOW GP-AIR INLET

S/N: TXD1-UP; THX1-UP
76-MM DIAMETER. LH, ANGLED FORWARD FACING
PART OF 347-1741, 367-4852 ENGINE AR-COMPLETE
ALSO AN ATTACHMENT

SMCS-1058 **i02202478**

NOTE	REF NO	GRAPHIC REF	PART NUMBER	QTY	PART NAME 1 2 3 4 5 6 (PRODUCT LEVEL)	SEE PAGE
M	1	1	**131-0353**	8	STUD (M8X1.25X82.75-MM)	
	2	1	**187-3971**	1	ELBOW	
	3	1	**3E-4352**	2	WASHER-HARD (8.8X20.5X2.5-MM THK)	
	4	1	**9M-1974**	6	WASHER-HARD (8.8X16X2-MM THK)	
B	5	1	**1U-8846**		SEALANT-GASKET	

B-USE AS REQUIRED
M-METRIC PART

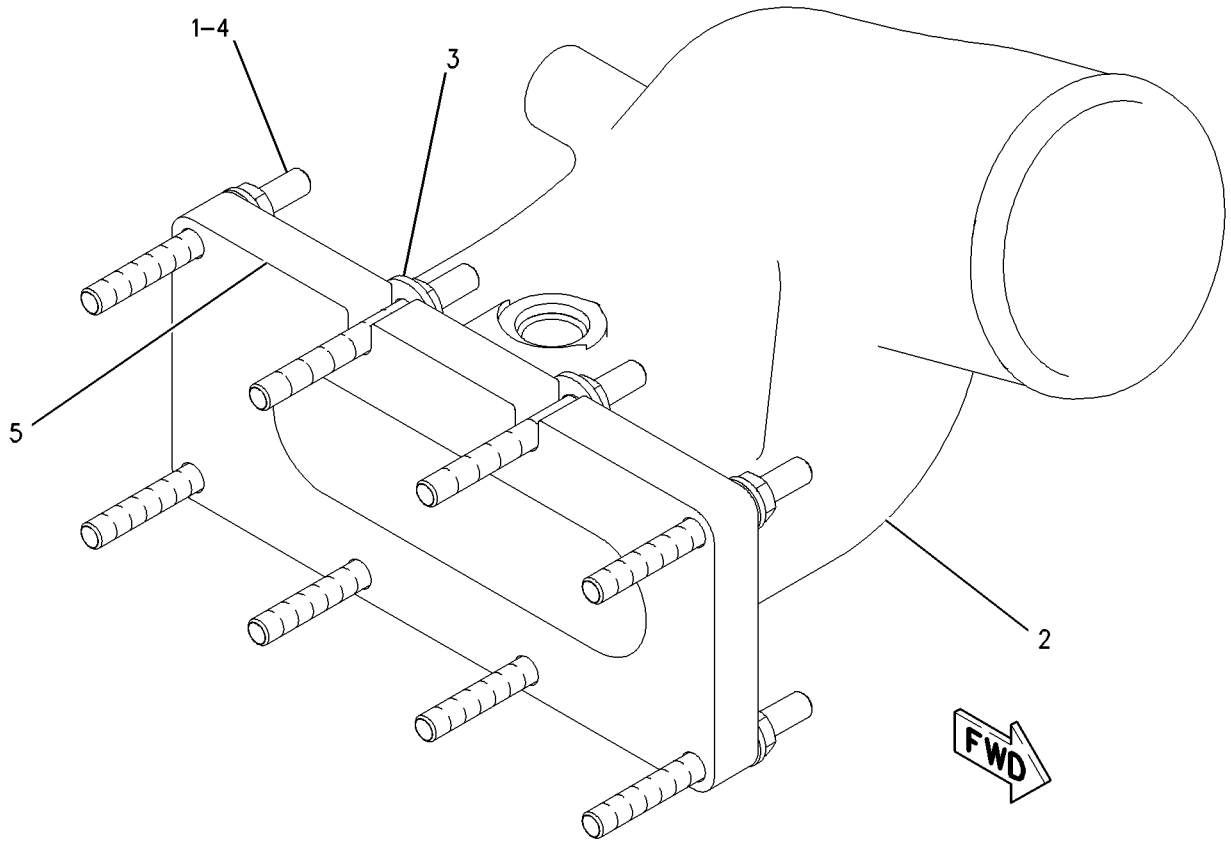

GRAPHIC #1 **<END>** g00758007

202-0996 MANIFOLD GP-EXHAUST

S/N: TXD1-UP; THX1-UP
PART OF 347-1741, 367-4852 ENGINE AR-COMPLETE
ALSO AN ATTACHMENT

SMCS-1059 **i04599931**

NOTE	REF NO	GRAPHIC REF	PART NUMBER	QTY	PART NAME 1 2 3 4 5 6 (PRODUCT LEVEL)	SEE PAGE
M	1	1	**3E-8017**	12	LOCKNUT (M10X1.5-THD)	
	2	1	**161-3411**	6	GASKET	
	3	1	**192-4697**	1	MANIFOLD-EXHAUST (CENTER)	
	4	1	**203-7775**	1	MANIFOLD-EXHAUST (FRONT)	
	5	1	**203-7778**	1	MANIFOLD-EXHAUST (REAR)	
M	6	1	**116-3715**	12	STUD-TAPERLOCK (M10X1.5X85-MM)	
	7	1	**4P-4369**	6	SPACER (12X19X23.5-MM THK)	
	8	1	**6V-5839**	12	WASHER (11X21X2.5-MM THK)	
M	9	1	**8T-7044**	4	STUD-TAPERLOCK (M10X1.5X40-MM)	

M-METRIC PART

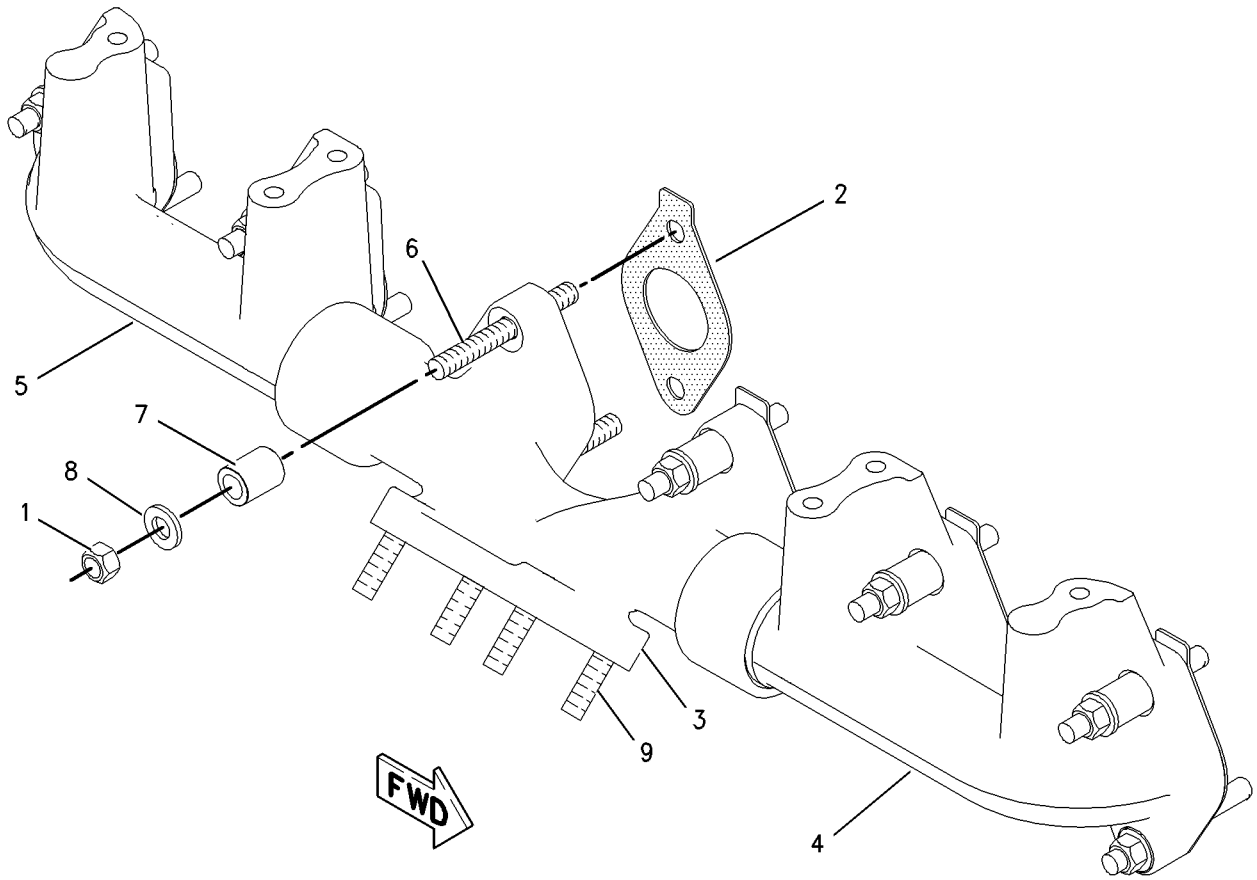

GRAPHIC #1 **<END>** g00827300

AIR INLET AND EXHAUST SYSTEM

372-3160 MUFFLER GP

S/N: F7B1-UP

PART OF 367-2135 INSTALLATION AR-ENGINE

SMCS-1062 **i04993371**

NOTE	REF NO	GRAPHIC REF	PART NUMBER	QTY	PART NAME 1 2 3 4 5 6 (PRODUCT LEVEL)	SEE PAGE
	1	1	**9N-1941**	1	CLAMP-V BAND	
	2	1	**205-9880**	1	MUFFLER AS	
	3	1	**372-3156**	1	BRACKET AS	
M		1	**8T-3490**	5	NUT-WELD (M10X1.5-THD)	
M		1	**9R-2613**	5	BOSS-WELD (M10X1.5X25-MM)	
	4	1	**372-3157**	1	GUARD AS	
M		1	**8T-3490**	6	NUT-WELD (M10X1.5-THD)	
	5	1	**372-3161**	1	PIPE AS	
	6	1	**392-3542**	1	COVER AS	
	7	1	**392-3543**	1	BRACKET AS	
	8	1	**091-9035**	3	SPACER (11X25X20-MM THK)	
	9	1	**131-8881**	1	CLAMP AS	
M	10	1	**160-8749**	2	BOLT (M12X1.75X60-MM)	
	11	1	**7X-0310**	4	BOLT (7/16-14X2-IN)	
	12	1	**7X-7729**	4	WASHER (11X25X3-MM THK)	
	13	1	**8T-4121**	21	WASHER-HARD (11X21X2.5-MM THK)	
M	14	1	**8T-4136**	9	BOLT (M10X1.5X25-MM)	
M	15	1	**8T-4137**	4	BOLT (M10X1.5X20-MM)	
M	16	1	**8T-4195**	8	BOLT (M10X1.5X30-MM)	
M	17	1	**8T-4196**	7	BOLT (M10X1.5X35-MM)	
	18	1	**8T-4223**	4	WASHER-HARD (13.5X25.5X3-MM THK)	
M	19	1	**8T-4244**	2	NUT (M12X1.75-THD)	
	20	1	**8T-5360**	4	WASHER (12X22.5X2.5-MM THK)	

M-METRIC PART

372-3160 **MUFFLER GP** *(contd.)* **i04993371**

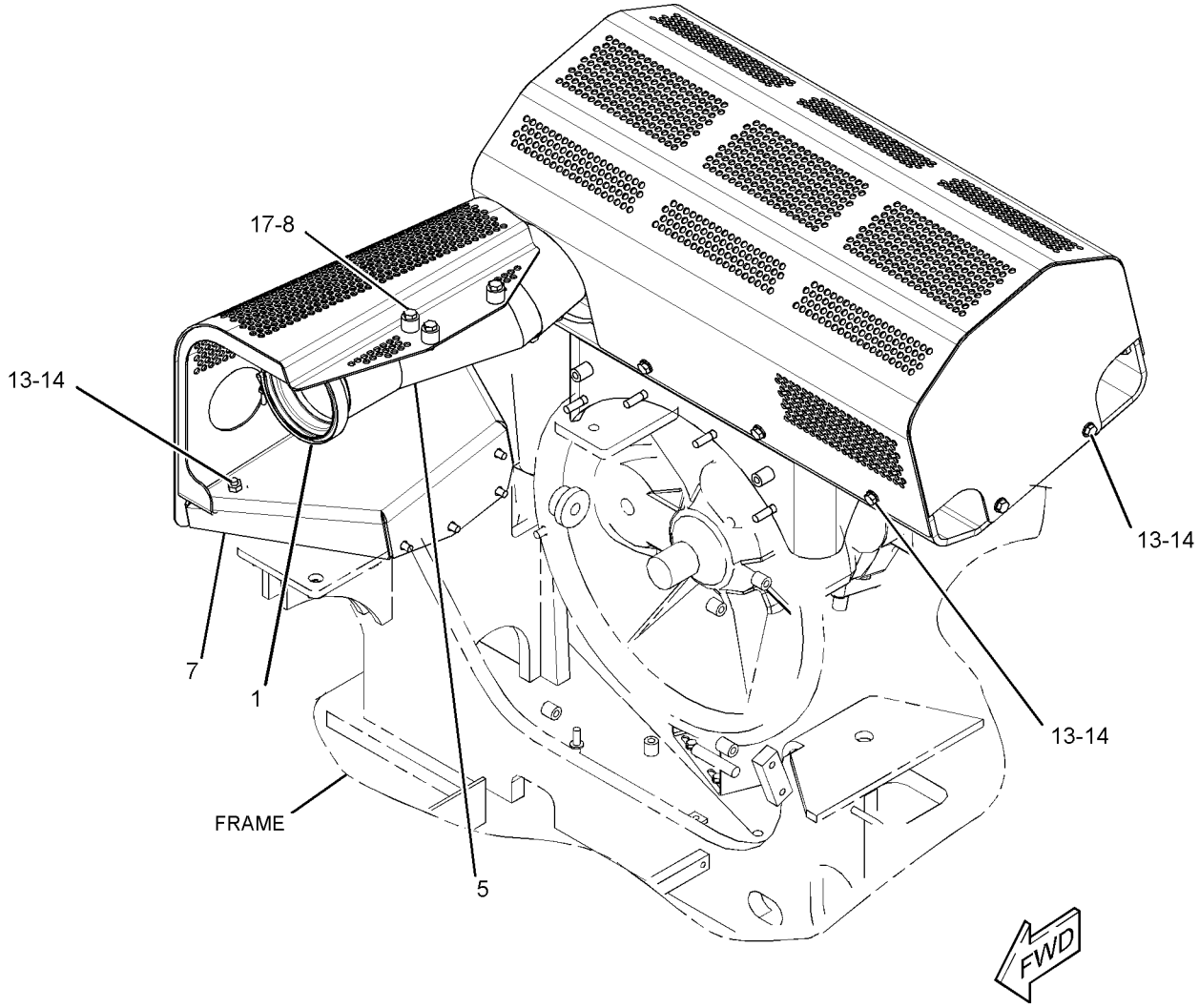

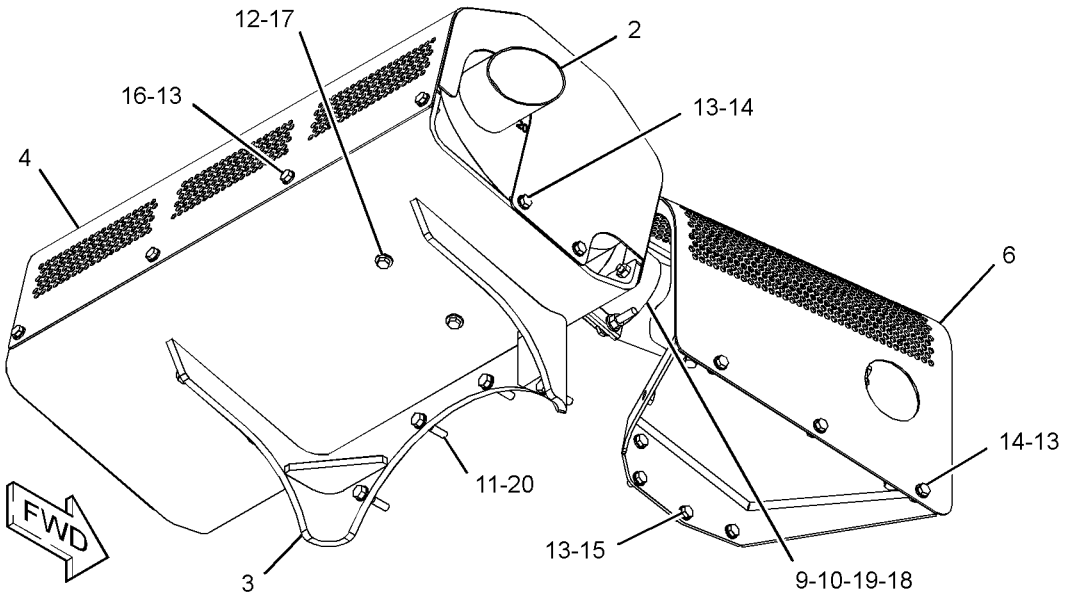

GRAPHIC #1 **<END>** g03180956

AIR INLET AND EXHAUST SYSTEM

250-7700 TURBOCHARGER GP*R

S/N: TXD1-UP; THX1-UP
PART OF 258-8337 TURBOCHARGER GP
ALSO AN ATTACHMENT

SMCS-1052, 1053 **i04546983**

NOTE	REF NO	GRAPHIC REF	PART NUMBER	QTY	PART NAME 1 2 3 4 5 6 (PRODUCT LEVEL)	SEE PAGE
	1	1	**137-1602**	1	CLAMP AS (TURBINE)	
	2	1	**5P-4536**	1	ELBOW	
	3	1	**248-5576**	1	CLAMP AS (V-BAND) (COMPRESSOR)	
	4	1	**161-6963**	2	CLAMP	
	5	1	**197-5010**	1	COVER-COMPRESSOR	
	6	1	**235-5507**	1	CARTRIDGE GP-TURBOCHARGER	
E	7	1	**242-3360**		HOSE (26-CM)	

E-ORDER BY THE CENTIMETER

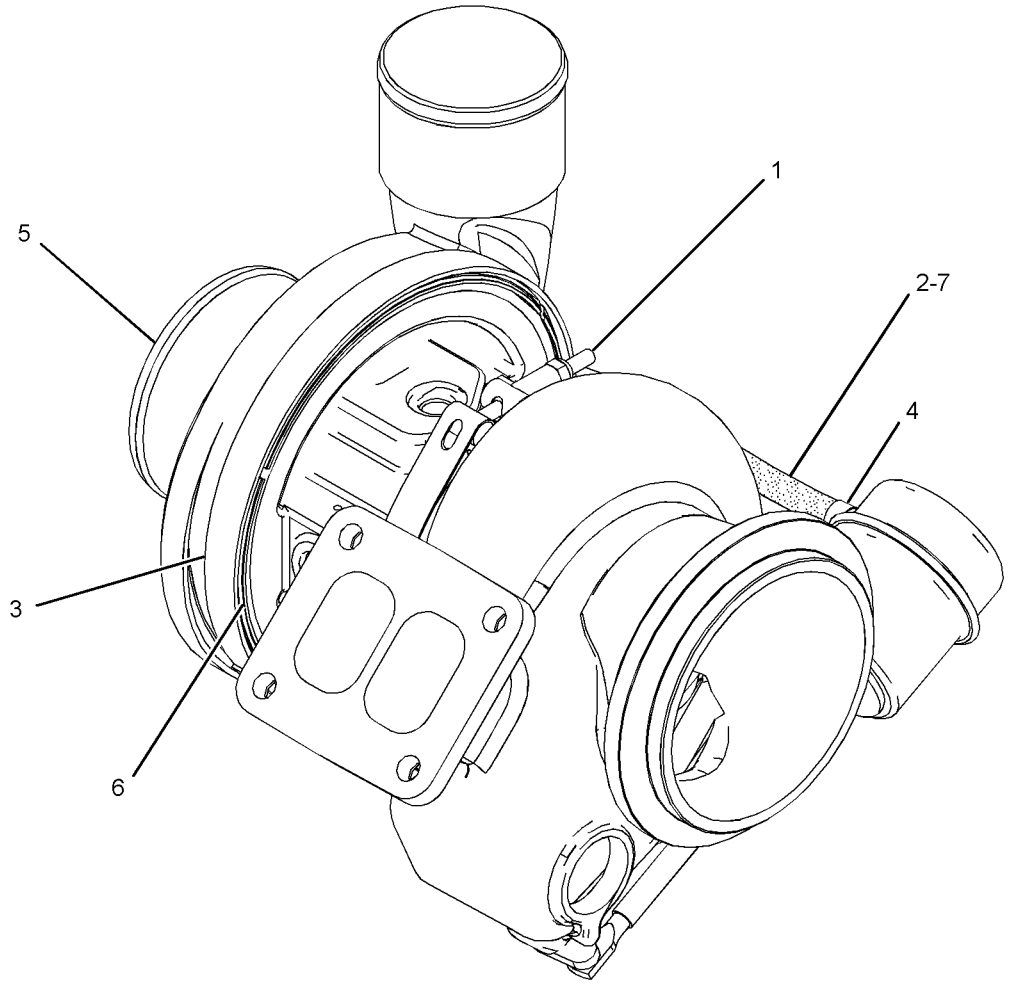

GRAPHIC #1 **<END>** g02730409

AIR INLET AND EXHAUST SYSTEM

258-8337 TURBOCHARGER GP

S/N: TXD1-UP; THX1-UP

PART OF 347-1741, 367-4852 ENGINE AR-COMPLETE, 350-9162 ENGINE AR-CORE

ALSO AN ATTACHMENT

SMCS-1052, 1053 **i04340153**

NOTE	REF NO	GRAPHIC REF	PART NUMBER	QTY	PART NAME 1 2 3 4 5 6 (PRODUCT LEVEL)	SEE PAGE
	1	1	**1P-0451**	1	GASKET	
M	2	1	**3E-8017**	4	LOCKNUT (M10X1.5-THD)	
YR	3	1	**250-7700**	1	TURBOCHARGER GP	94

M-METRIC PART
R-REMFG PART MAY BE AVAILABLE
Y-SEPARATE ILLUSTRATION

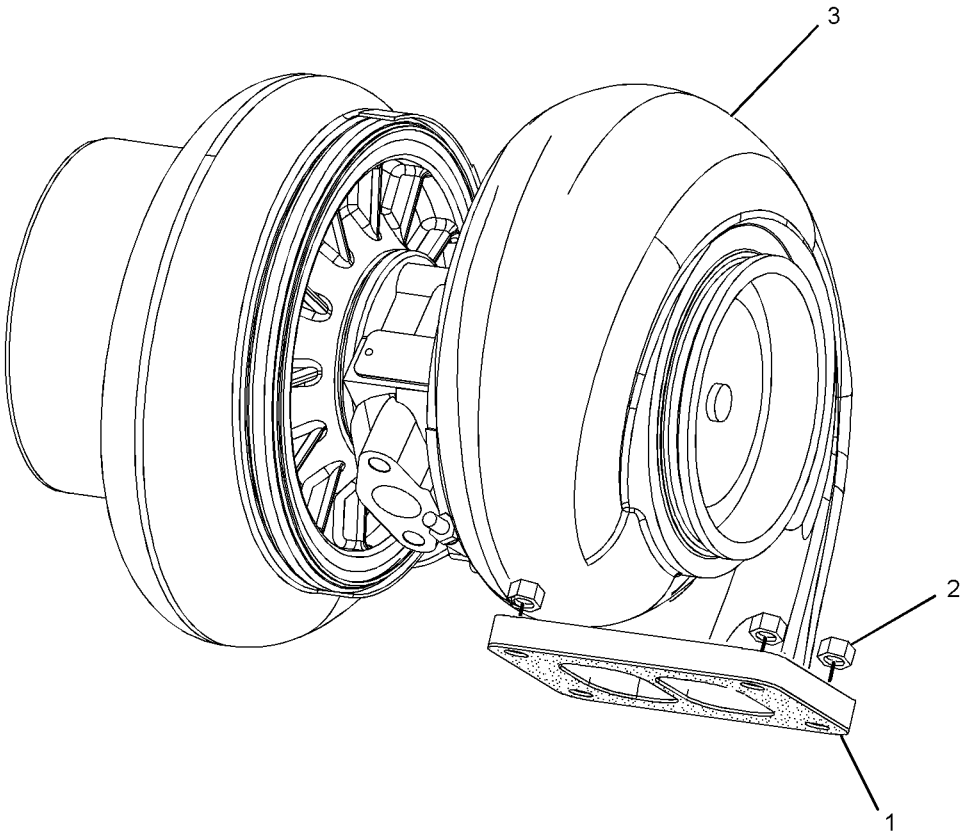

GRAPHIC #1 **<END>** g01187210

174-9570 FILTER GP-WATER SEP & FUEL–PRIMARY

S/N: F7B1-UP

PART OF 235-8725 PUMP GP-FILTER & FUEL TRANSFER

SMCS-1261, 1263 **i04393500**

NOTE	REF NO	GRAPHIC REF	PART NUMBER	QTY	PART NAME 1 2 3 4 5 6 (PRODUCT LEVEL)	SEE PAGE
	1	1	**326-1644**	1	FILTER AS-WATER SEP & FUEL (PRIMARY)	
	1A	1	**220-8678**	1	SEAL-RING (FUEL, WATER SEPARATOR)	
	2	1	**343-5527**	1	BOWL AS	
	2A	1	**3J-1907**	1	SEAL-O-RING	
	2B	1	**5F-9144**	1	SEAL-O-RING	
	2C	1	**8F-7219**	1	SEAL-O-RING	
	2D	1	**9S-8004**	1	PLUG-O-RING (DRAIN)	

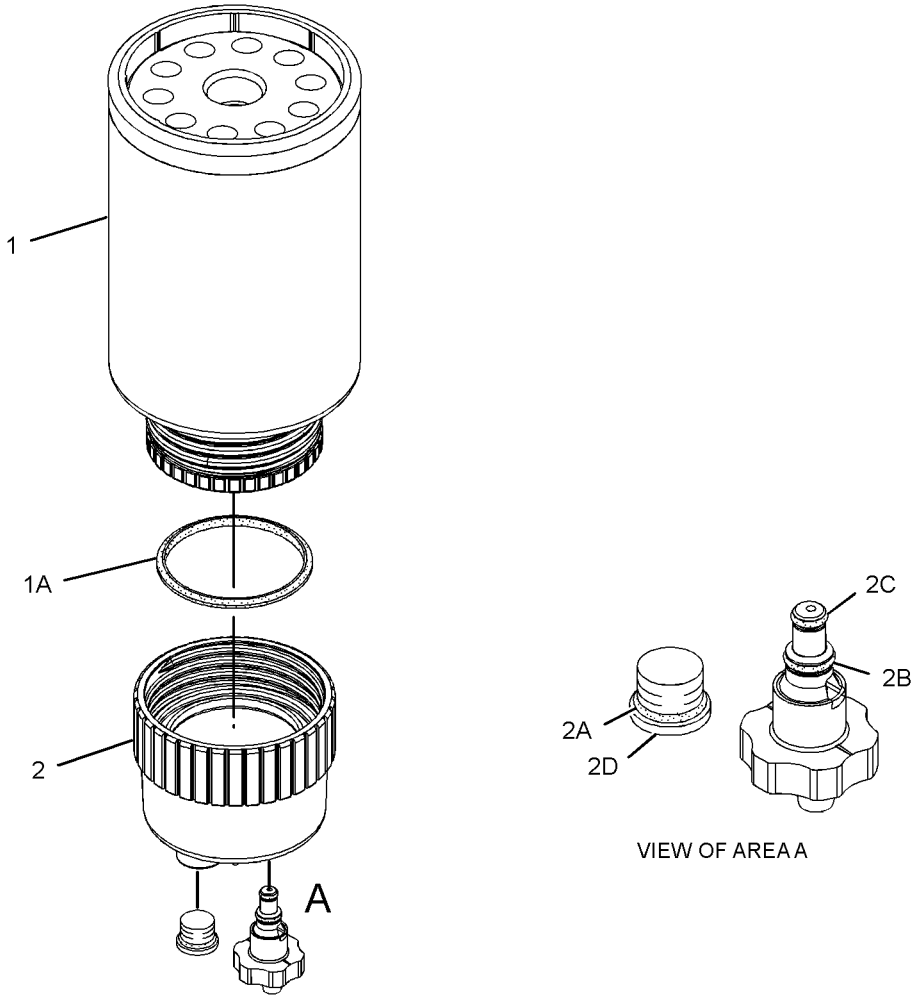

GRAPHIC #1 **<END>** g01960053

328-2574 INJECTOR GP-FUEL*R

S/N: TXD1-UP; THX1-UP
PART OF 267-3361 PUMP GP-FUEL INJECTION
ALSO AN ATTACHMENT

SMCS-1251, 1254, 1290, 1713 **i03173700**

NOTE	REF NO	GRAPHIC REF	PART NUMBER	QTY	PART NAME 1 2 3 4 5 6 (PRODUCT LEVEL)	SEE PAGE
	1	1	**149-5240**	1	RING-BACKUP	
	2	1	**293-0730**	1	RING-BACKUP	
	3	1	**109-3207**	1	SEAL-O-RING	
	4	1	**148-2903**	2	SEAL-O-RING (FUEL SYSTEM)	

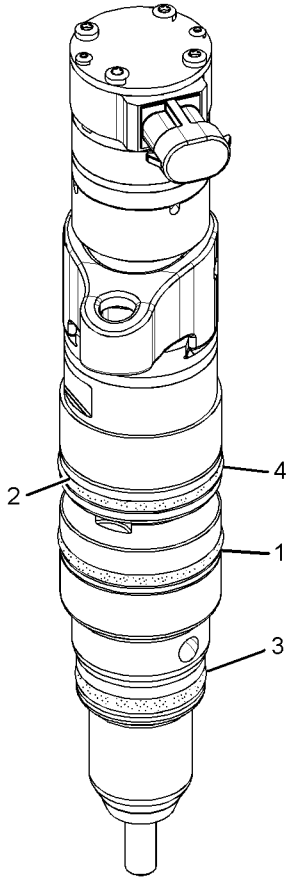

GRAPHIC #1 **<END>** g01624285

FUEL SYSTEM

339-8295 LINES GP-FUEL

S/N: F7B1-UP

PART OF 362-3899 CHASSIS AR

SMCS-1274 **i04993376**

NOTE	REF NO	GRAPHIC REF	PART NUMBER	QTY	PART NAME 1 2 3 4 5 6 (PRODUCT LEVEL)	SEE PAGE
	1	1	**8T-9655**	6	MOUNT-ISOLATION	
	2	1	**095-1386**	6	CLAMP-HOSE	
	3	1	**141-8275**	2	VALVE-DRAIN (FUEL FILTER)	
	4	1	*150-4027*	1	TEE AS	
		1	**3E-2310**	1	TEE	
		1	**3J-1907**	1	SEAL-O-RING	
		1	**6V-8397**	1	SEAL-O-RING	
	5	1	*169-7395*	1	ADAPTER AS	
		1	**156-6129**	1	ADAPTER	
		1	**6V-8398**	1	SEAL-O-RING	
	6	1	*173-7223*	1	ADAPTER AS	
		1	**9X-0261**	1	ADAPTER	
		1	**3J-1907**	1	SEAL-O-RING	
		1	**3J-7354**	1	SEAL-O-RING	
	7	1	**213-0064**	1	BASE AS (FUEL)	
		1	**9S-4167**	1	STUD-HOLLOW (1-14X1.47-IN)	
Y	8	1	*256-6915*	1	PUMP GP-FUEL TRANSFER	106
	9	1	**274-6719**	1	SENSOR GP-PRESSURE	
	10	1	*353-5124*	1	PLUG AS	
		1	**9S-8004**	1	PLUG-O-RING	
		1	**6V-3250**	1	SEAL-O-RING	
I	11	1	**361-5281**	1	HOSE AS	
I	12	1	**361-5282**	1	HOSE AS	
I	13	1	**361-5283**	1	HOSE AS	
I	14	1	**361-5284**	1	HOSE AS	
	15	1	**378-8863**	1	BRACKET	
I	16	1	**378-8864**	1	HOSE AS	
	17	1	**067-2551**	1	CLIP	
	18	1	**100-4336**	3	CLIP	
	19	1	**132-7032**	1	UNION	
	20	1	*148-8319*	1	CONNECTOR AS	
		1	**6V-8715**	1	CONNECTOR	
		1	**2M-9780**	1	SEAL-O-RING	
		1	**6V-8397**	1	SEAL-O-RING	
	21	1	*148-8336*	1	CONNECTOR AS	
		1	**6V-8636**	1	CONNECTOR	
		1	**3J-1907**	1	SEAL-O-RING	
		1	**6V-8397**	1	SEAL-O-RING	
	22	1	*148-8345*	1	CONNECTOR AS	
		1	**6V-8638**	1	CONNECTOR	
		1	**2M-9780**	1	SEAL-O-RING	
		1	**6V-8398**	1	SEAL-O-RING	
	23	1	*148-8364*	1	ELBOW AS	
		1	**6V-8625**	1	ELBOW	
		1	**3K-0360**	1	SEAL-O-RING	
		1	**6V-8398**	1	SEAL-O-RING	
	24	1	*148-8378*	1	ELBOW AS	
		1	**6V-8724**	1	ELBOW	
		1	**3J-1907**	1	SEAL-O-RING	
		1	**6V-8397**	1	SEAL-O-RING	
	25	1	*148-8444*	1	TEE AS-SWIVEL	
		1	**6V-9837**	1	TEE-SWIVEL	
		1	**6V-8398**	2	SEAL-O-RING	
	26	1	*150-4046*	1	ADAPTER AS	
		1	**5P-1404**	1	ADAPTER	
		1	**2M-9780**	1	SEAL-O-RING	

339-8295 **LINES GP-FUEL** ***(contd.)*** **i04993376**

NOTE	REF NO	GRAPHIC REF	PART NUMBER	QTY	PART NAME 1 2 3 4 5 6 (PRODUCT LEVEL)	SEE PAGE
	27	1	*148-8354*	1	ELBOW AS	
		1	**6V-9002**	1	ELBOW	
		1	**3K-0360**	1	SEAL-O-RING	
		1	**6V-8398**	1	SEAL-O-RING	
	28	1	**1R-0762**	1	FILTER-FUEL (ADVANCED EFFICIENCY)	
	29	1	**1S-0994**	3	CLIP	
	30	1	**5M-6214**	1	PLUG-PIPE	
	31	1	**6V-9169**	1	NUT (13/16-16-THD)	
	32	1	**7D-1553**	1	CLIP	
M	33	1	**7X-2539**	2	BOLT (M8X1.25X110-MM)	
	34	1	**8T-4121**	13	WASHER-HARD (11X21X2.5-MM THK)	
M	35	1	**8T-4136**	7	BOLT (M10X1.5X25-MM)	
M	36	1	**8T-4137**	1	BOLT (M10X1.5X20-MM)	
M	37	1	**8T-4195**	5	BOLT (M10X1.5X30-MM)	
M	38	1	**8T-6869**	1	BOLT (M8X1.25X60-MM)	
	39	1	**9N-0869**	6	WASHER-HARD (8.8X25.5X2-MM THK)	
E	40	1	**5P-1442**		HOSE (28-CM)	
E	40A	1	**5P-1442**		HOSE (40-CM)	
E	40B	1	**5P-1442**		HOSE (55-CM)	
E	40C	1	**5P-1442**		HOSE (32-CM)	
	41	1	**191-1783**	2	SPACER (8.5X12.7X87.3-MM THK)	
	42	1	**191-1782**	1	SPACER (8.5X12.7X38.2-MM THK)	

E-ORDER BY THE CENTIMETER
I-REFER TO HYDRAULIC INFORMATION SYSTEM
M-METRIC PART
Y-SEPARATE ILLUSTRATION

339-8295 **LINES GP-FUEL** *(contd.)* **i04993376**

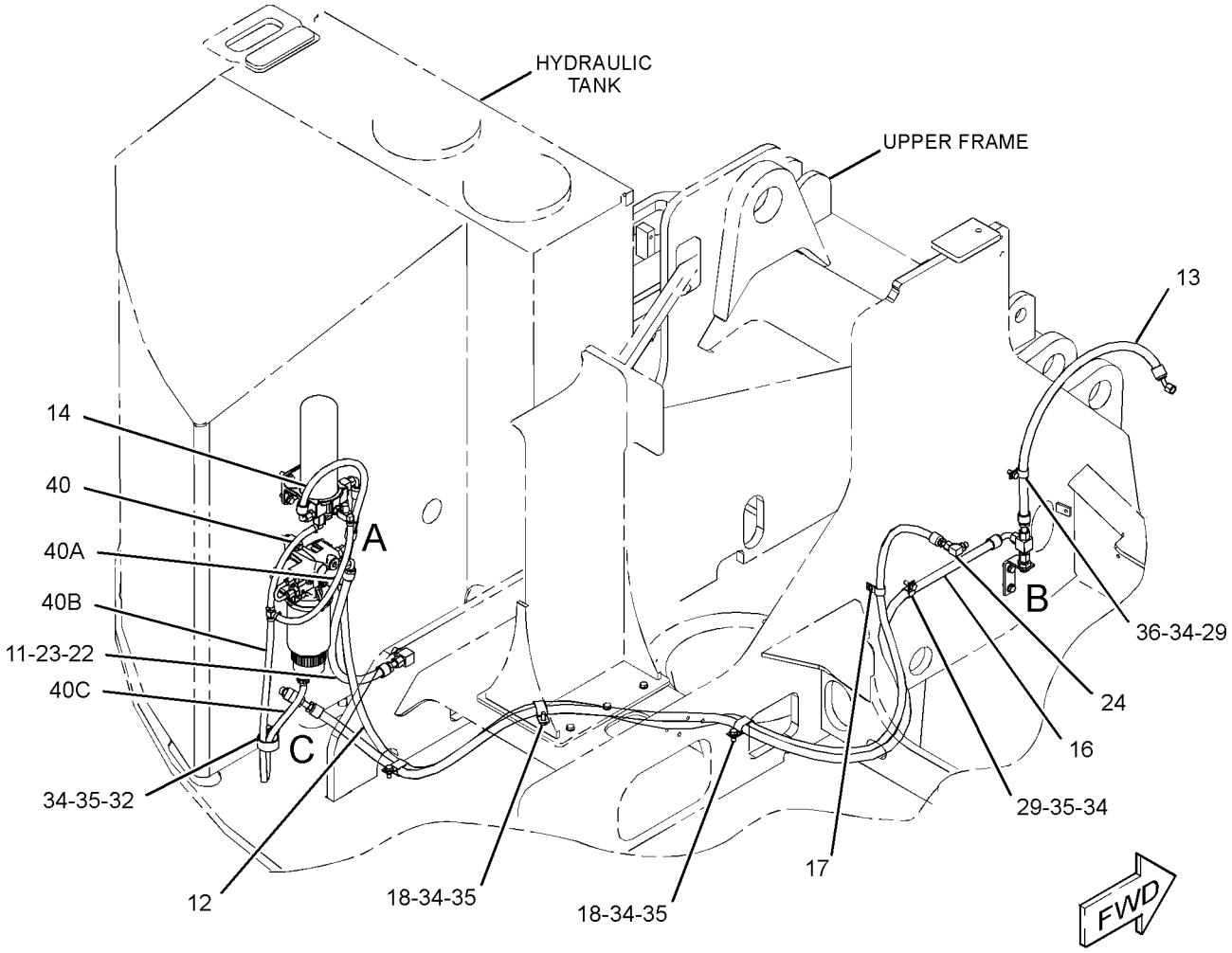

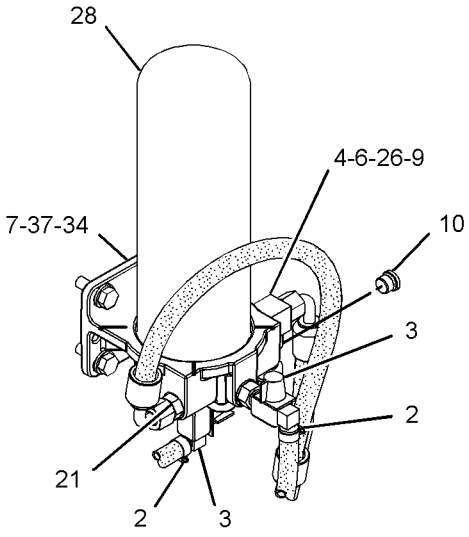

VIEW OF AREA A

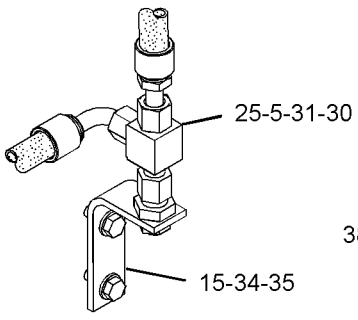

VIEW OF AREA B

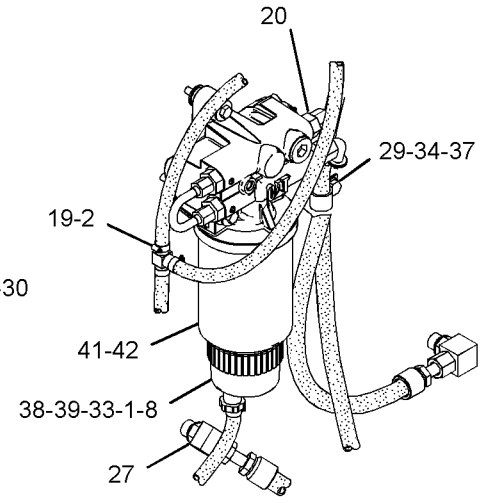

VIEW OF AREA C

GRAPHIC #1

<END>

g03177795

220-8233 PUMP & MTG GP-UNIT INJ HYD

S/N: TXD1-UP; THX1-UP
1.61 RATIO
PART OF 350-9162, 384-8426 ENGINE AR-CORE
ALSO AN ATTACHMENT

SMCS-1714 **i04987241**

NOTE	REF NO	GRAPHIC REF	PART NUMBER	QTY	PART NAME 1 2 3 4 5 6 (PRODUCT LEVEL)	SEE PAGE
	1	1	*371-7191*	1	ELBOW AS	
		1	**228-7090**	1	SEAL-O-RING	
		1	**214-7568**	1	SEAL-O-RING	
		1	**371-7190**	1	ADAPTER-ELBOW	
	2	1	*389-3708*	1	PLUG AS	
		1	**360-3679**	1	PLUG-CONNECTOR	
		1	**214-7568**	1	SEAL-O-RING	
	3	1	**227-5904**	1	SEAL-O-RING	
	4	1	**376-7673**	1	TUBE AS	
	5	1	**209-3172**	1	TUBE AS	
CYR	6	1	**319-0678**	1	PUMP GP-UNIT INJECTOR HYD	107
	7	1	*357-4619*	1	ELBOW AS	
		1	**030-7950**	1	ELBOW	
		1	**238-5082**	1	SEAL-O-RING	
	8	1	*377-9623*	1	ELBOW AS	
		1	**5P-3264**	1	ELBOW	
		1	**238-5081**	1	SEAL-O-RING	
	10	1	*319-6240*	1	CONNECTOR AS	
		1	**6V-9873**	1	CONNECTOR	
		1	**214-7568**	1	SEAL-O-RING	
		1	**228-7090**	1	SEAL-O-RING	
	11	1	**6V-5839**	2	WASHER (11X21X2.5-MM THK)	
M	12	1	**6V-7981**	2	BOLT (M10X1.5X70-MM)	
	13	1	**3E-9412**	1	DOWEL	

C-CHANGE FROM PREVIOUS TYPE
M-METRIC PART
R-REMFG PART MAY BE AVAILABLE
Y-SEPARATE ILLUSTRATION

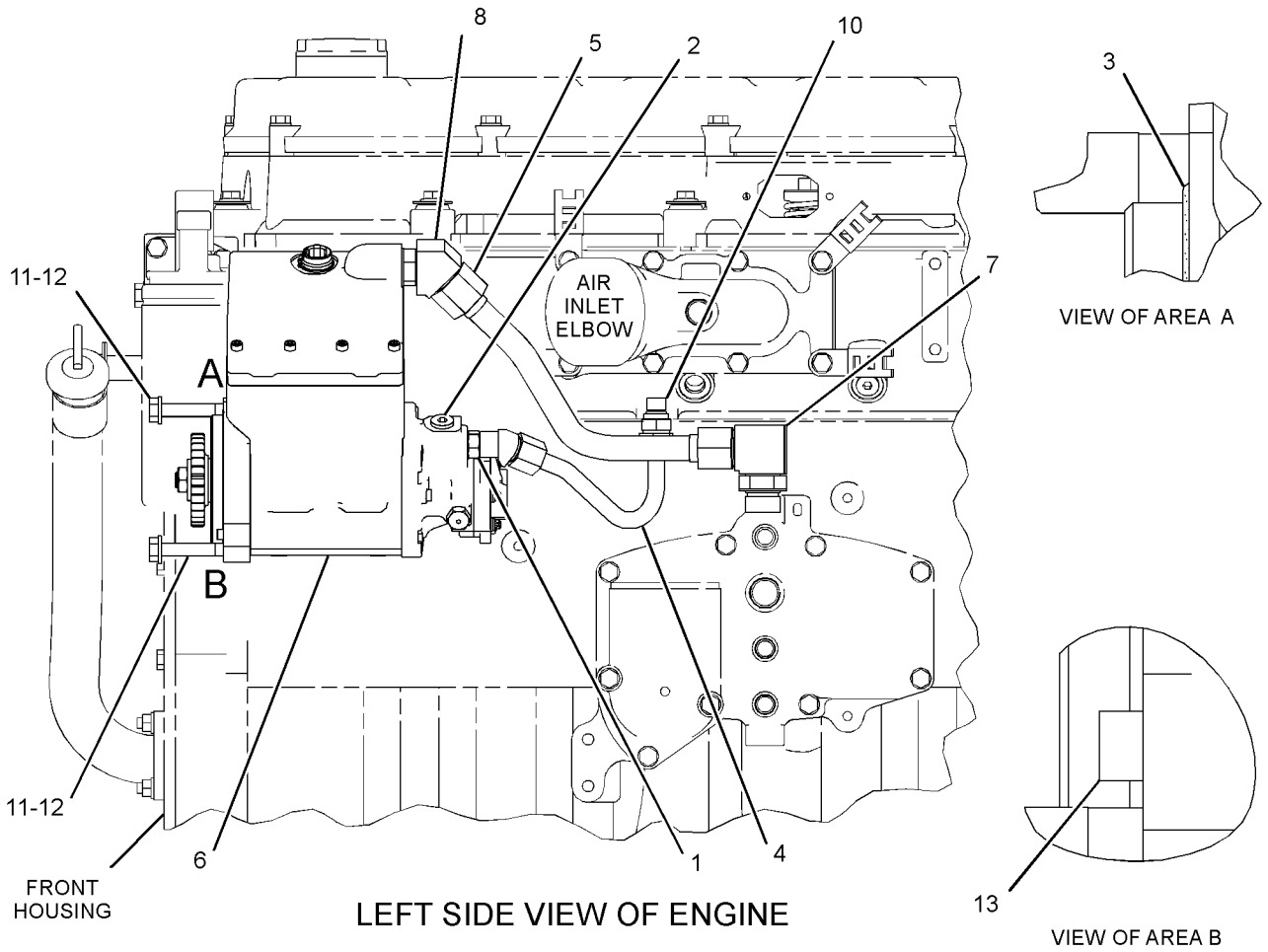

GRAPHIC #1 **<END>** g03163316

235-8725 PUMP GP-FILTER & FUEL TRANSFER–PRIMARY

S/N: F7B1-UP

PART OF 256-6915 PUMP GP-FUEL TRANSFER

SMCS-1256, 1260, 1261 **i03547587**

NOTE	REF NO	GRAPHIC REF	PART NUMBER	QTY	PART NAME 1 2 3 4 5 6 (PRODUCT LEVEL)	SEE PAGE
Y	1	1	*174-9570*	1	FILTER GP-WATER SEP & FUEL (PRIMARY)	96
	2	1	**235-8724**	1	PUMP GP-FUEL TRANSFER	
		1	**6D-5801**	2	LOCKNUT (8-32-THD)	
		1	**9S-2437**	3	SCREW-TAPPING (10-24X19.05-MM)	
		1	**9S-8002**	1	PLUG-O-RING	
		1	**179-7400**	2	SEAL (FUEL)	

Y-SEPARATE ILLUSTRATION

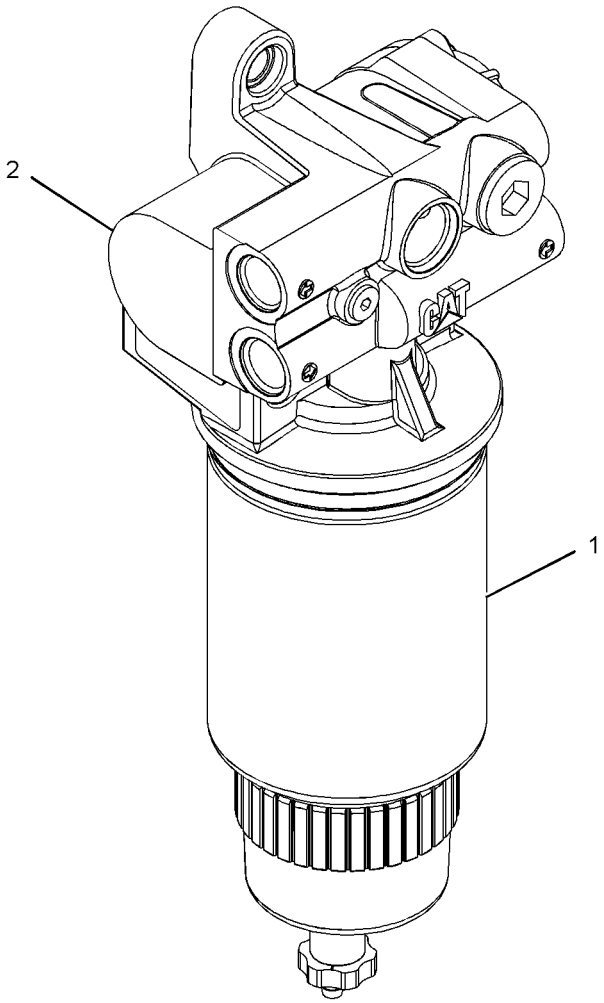

GRAPHIC #1 **<END>** g01107471

267-3361 PUMP GP-FUEL INJECTION

S/N: TXD1-UP; THX1-UP

PART OF 384-8426 ENGINE AR-CORE, 267-3362 PUMP GP-FUEL INJECTION

ALSO AN ATTACHMENT

SMCS-1251, 1290 **i03173562**

NOTE	REF NO	GRAPHIC REF	PART NUMBER	QTY	PART NAME 1 2 3 4 5 6 (PRODUCT LEVEL)	SEE PAGE
	1	1	**235-9651**	2	BOLT-SOCKET HEAD (M8X1.25X65-MM)	
CYR	2	1	**328-2574**	1	INJECTOR GP-FUEL	97

C-CHANGE FROM PREVIOUS TYPE
R-REMFG PART MAY BE AVAILABLE
Y-SEPARATE ILLUSTRATION

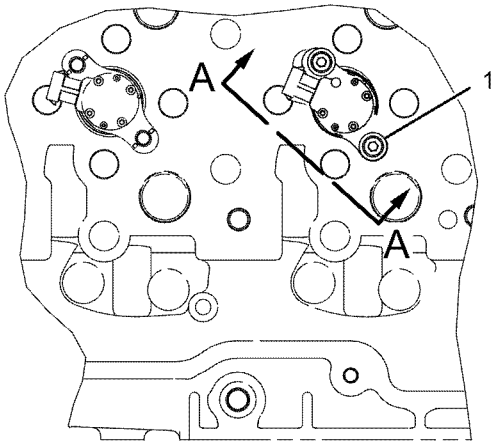

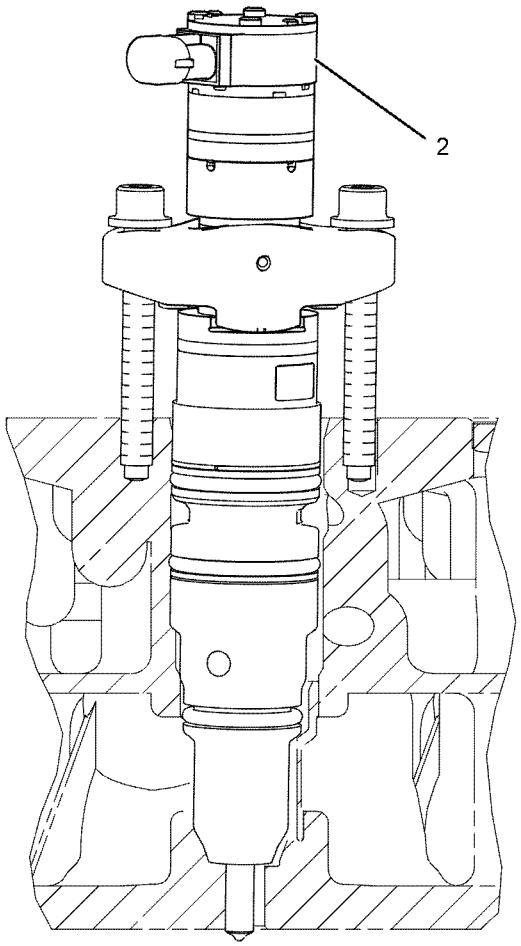

VIEW A-A
ROTATED 48° CCW

GRAPHIC #1 **<END>** g01147295

267-3362 PUMP GP-FUEL INJECTION

S/N: THX1-UP
PART OF 350-9162 ENGINE AR-CORE
ALSO AN ATTACHMENT

SMCS-1251, 1290 **i02337674**

NOTE	REF NO	GRAPHIC REF	PART NUMBER	QTY	PART NAME 1 2 3 4 5 6 (PRODUCT LEVEL)	SEE PAGE
Y	1	1	**267-3361**	6	PUMP GP-FUEL INJECTION	104

Y-SEPARATE ILLUSTRATION

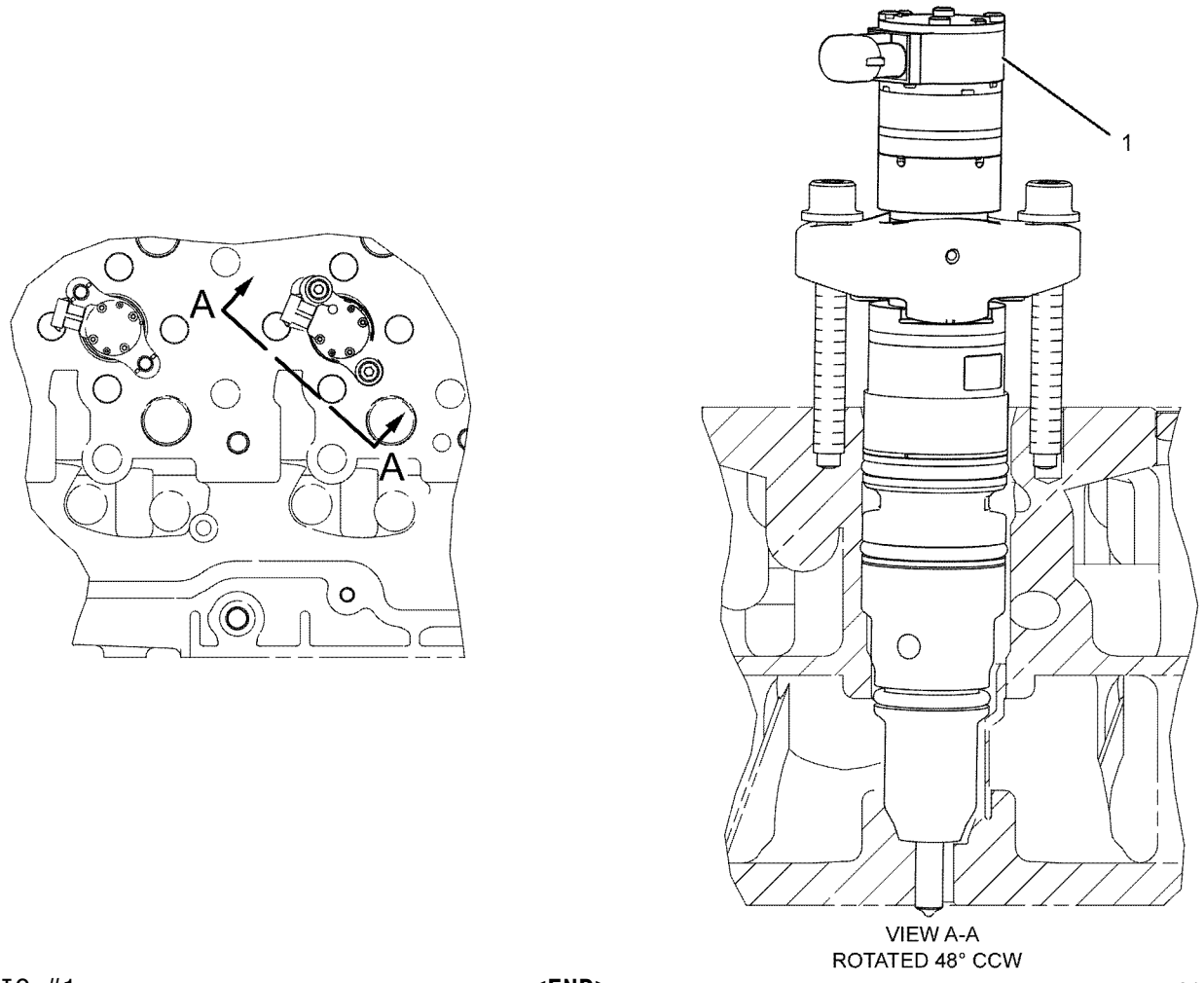

GRAPHIC #1 **<END>** g01147347

FUEL SYSTEM

256-6915 PUMP GP-FUEL TRANSFER

S/N: F7B1-UP

PART OF 339-8295 LINES GP-FUEL

SMCS-1256 **i03022753**

NOTE	REF NO	GRAPHIC REF	PART NUMBER	QTY	PART NAME 1 2 3 4 5 6 (PRODUCT LEVEL)	SEE PAGE
	1	1	**209-9234**	1	REGULATOR-PRESSURE (FUEL TRANSFER PUMP)	
Y	2	1	**235-8725**	1	PUMP GP-FILTER & FUEL TRANSFER (PRIMARY)	103
	3	1	**211-7730**	1	TUBE AS	
	4	1	**030-8194**	1	CONNECTOR	
	5	1	**136-7227**	2	SEAL-O-RING	

Y-SEPARATE ILLUSTRATION

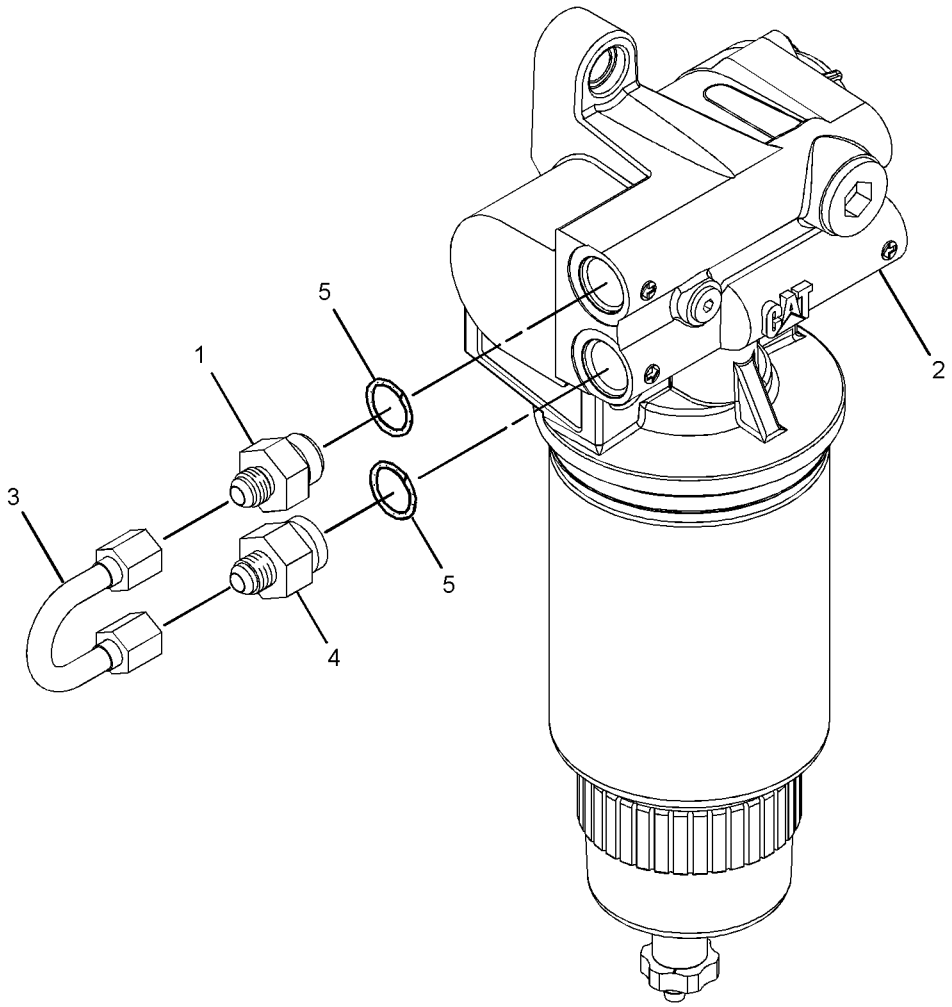

GRAPHIC #1 **<END>** g01526141

319-0678 PUMP GP-UNIT INJECTOR HYD*R

S/N: TXD1-UP; THX1-UP
PART OF 220-8233 PUMP & MTG GP-UNIT INJ HYD
ALSO AN ATTACHMENT

SMCS-1714 **i03754971**

NOTE	REF NO	GRAPHIC REF	PART NUMBER	QTY	PART NAME 1 2 3 4 5 6 (PRODUCT LEVEL)	SEE PAGE
M	1	1	**223-9848**	1	NUT (M12X1.25-THD)	
	2	1	**318-6357**	1	PUMP GP-FUEL TRANSFER	
		1	**5P-7814**	1	SEAL-O-RING	
		1	**7S-5005**	1	DOWEL	
		1	**8C-3079**	1	SEAL-O-RING	
	3	1	**179-8128**	1	SEAL-O-RING (FUEL SYSTEM)	
M	4	1	**228-5897**	4	BOLT-TORX (M8X1.25X136.7-MM)	
	5	1	**1F-7960**	1	WASHER (13.5X32X6-MM THK)	
	6	1	**239-2402**	3	SEAL-O-RING	

M-METRIC PART

REFER TO ALL ILLUSTRATIONS OF
THIS GROUP FOR AUXILIARY VIEWS

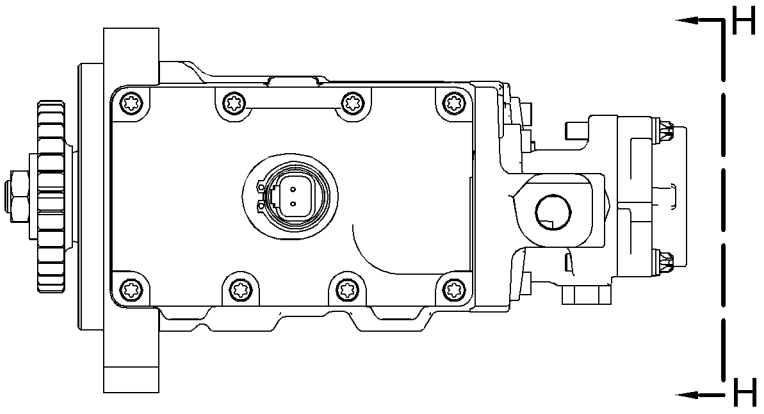

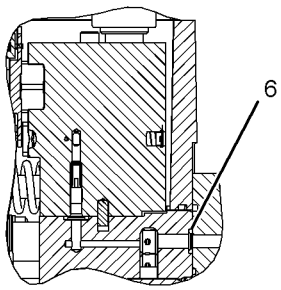

SECTION C-C

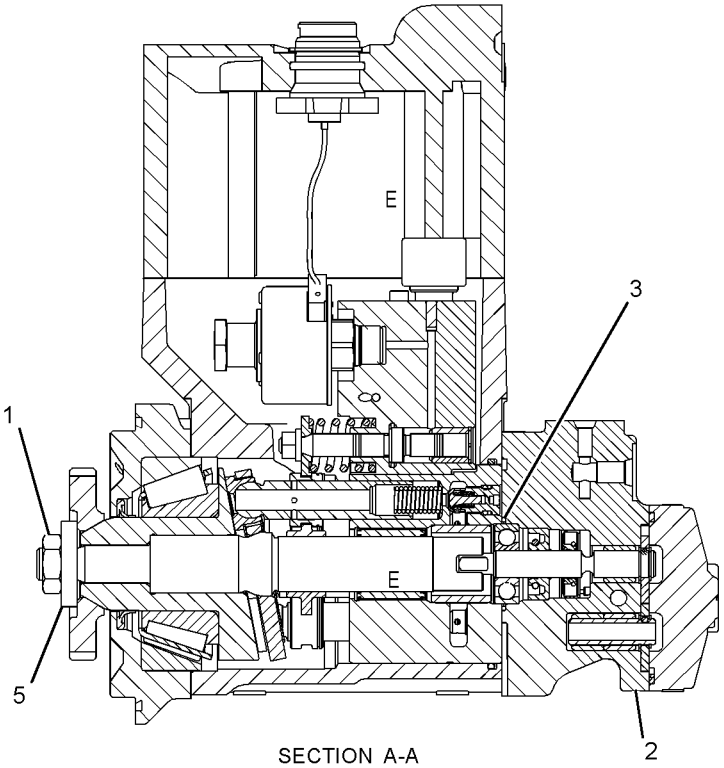

SECTION A-A

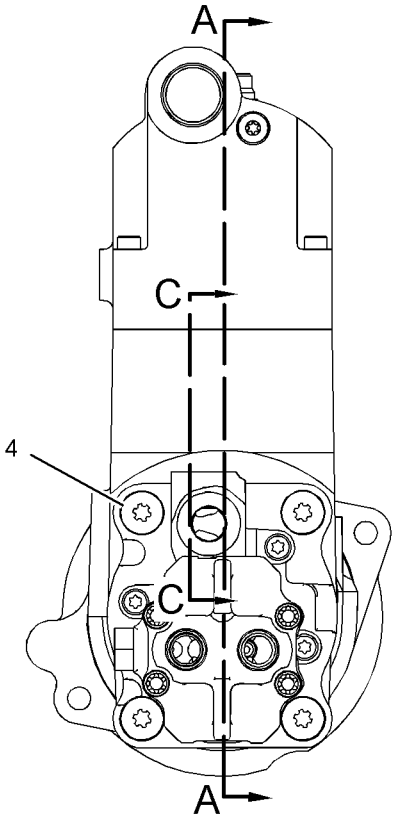

VIEW H-H

GRAPHIC #1 **<END>** g01455897

232-0343 REGULATOR GP-FUEL PRESSURE

S/N: TXD1-UP; THX1-UP
PART OF 273-2445 REGULATOR GP-FUEL PRESSURE
ALSO AN ATTACHMENT

SMCS-1715 **i04482873**

NOTE	REF NO	GRAPHIC REF	PART NUMBER	QTY	PART NAME 1 2 3 4 5 6 (PRODUCT LEVEL)	SEE PAGE
	1	1	**214-7568**	1	SEAL-O-RING	
	2	1	**369-6662**	1	REGULATOR AS (FUEL PRESSURE)	

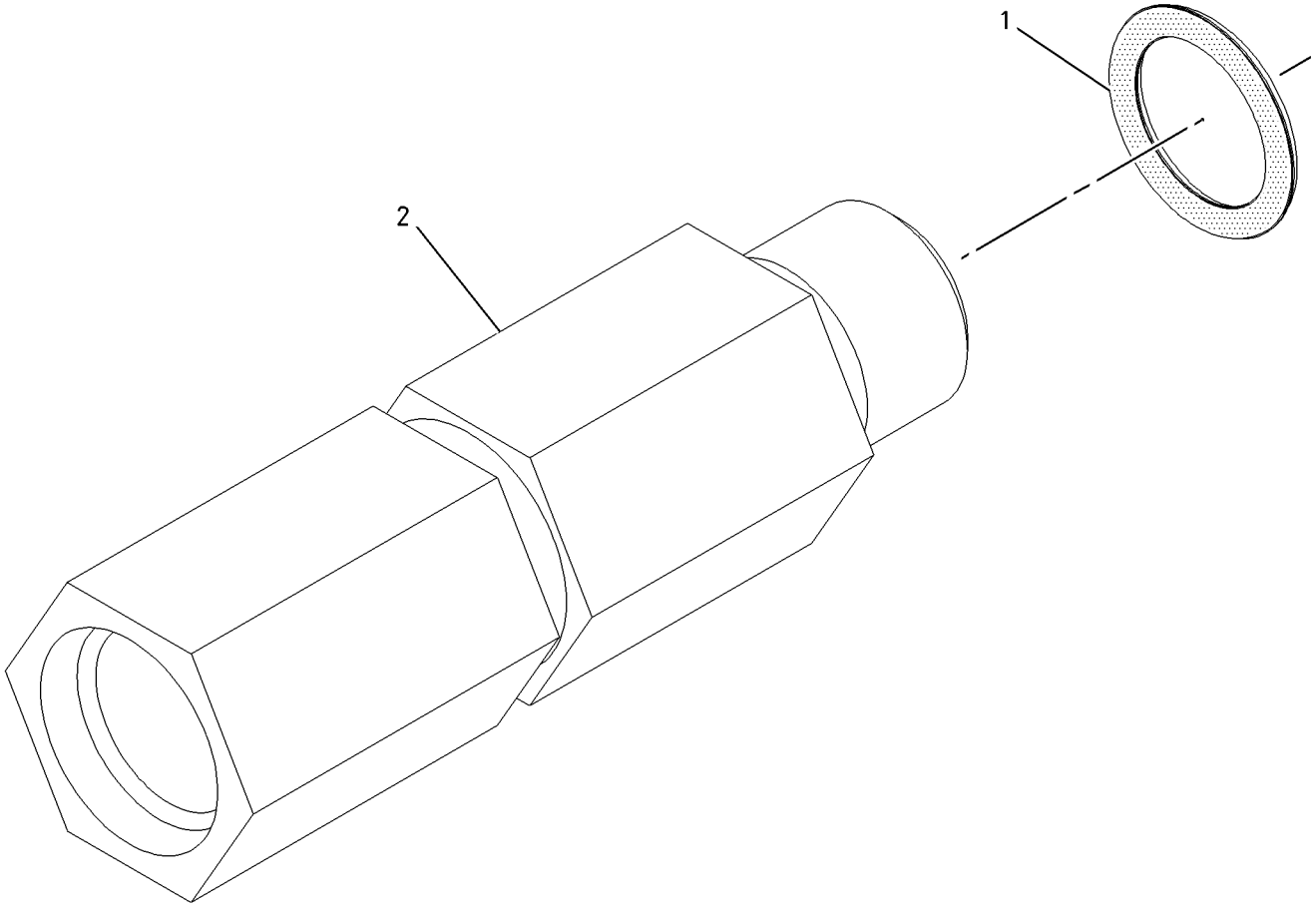

GRAPHIC #1 **<END>** g01004480

273-2445 REGULATOR GP-FUEL PRESSURE

S/N: TXD1-UP; THX1-UP
PART OF 347-1741, 367-4852 ENGINE AR-COMPLETE
ALSO AN ATTACHMENT

SMCS-1715 **i05096331**

NOTE	REF NO	GRAPHIC REF	PART NUMBER	QTY	PART NAME 1 2 3 4 5 6 (PRODUCT LEVEL)	SEE PAGE
Y	1	1	*232-0343*	1	REGULATOR GP-FUEL PRESSURE	109
	2	1	*183-3399*	1	CONNECTOR AS	
		1	**6V-8636**	1	CONNECTOR	
		1	**214-7568**	1	SEAL-O-RING	
		1	**228-7089**	1	SEAL-O-RING	
	3	1	*398-5597*	1	PLUG AS	
		1	**214-7568**	1	SEAL-O-RING	
		1	**360-3692**	1	PLUG	
	4	1	**6V-9829**	1	CAP AS	

Y-SEPARATE ILLUSTRATION

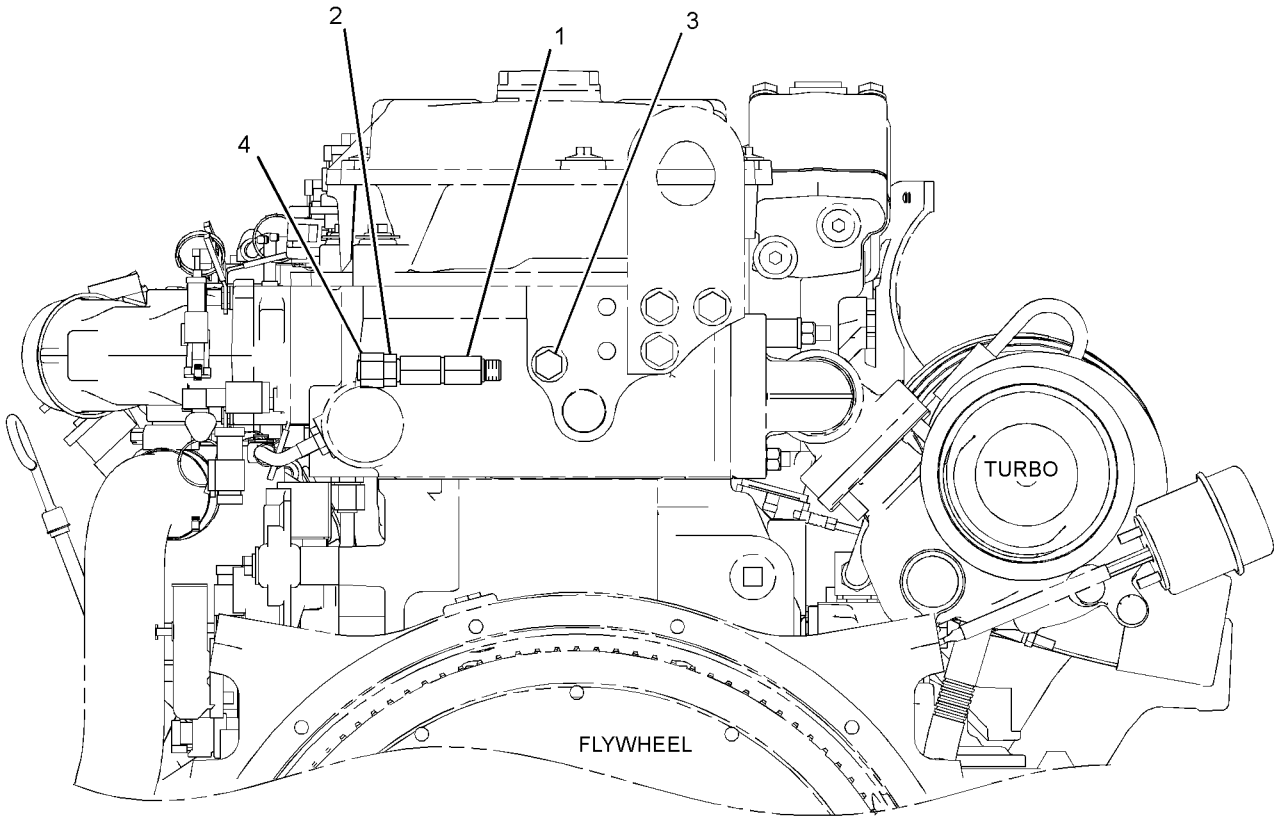

REAR VIEW OF ENGINE

GRAPHIC #1 **<END>** g03168640

3E-6328 ALARM GP

S/N: F7B1-UP
24-VOLT
PART OF 365-1387 WIRING GP-CAB

SMCS-7400, 7402, 7407 **i04156858**

NOTE	REF NO	GRAPHIC REF	PART NUMBER	QTY	PART NAME 1 2 3 4 5 6 (PRODUCT LEVEL)	SEE PAGE
	1	1	**102-8802**	1	KIT-RECEPTACLE (2-PIN)	
					(INCLUDES RECEPTACLE AS & WEDGE)	
	2	1	**8T-8729**	2	PIN-CONNECTOR (16-GA TO 18-GA)	

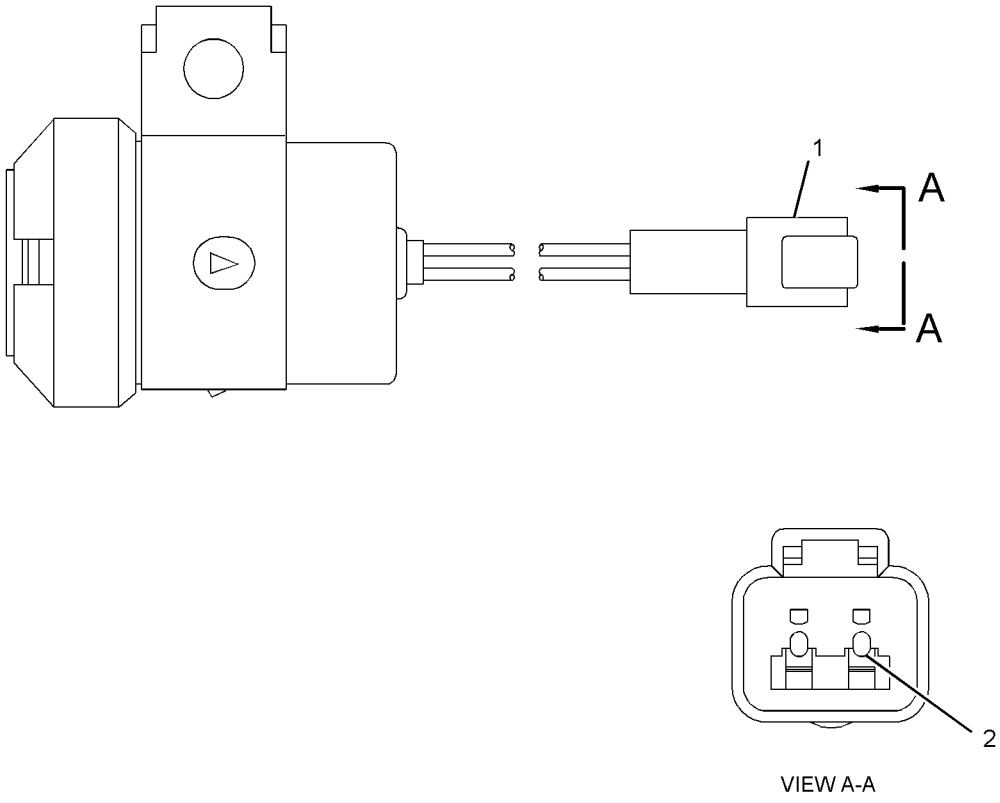

VIEW A-A

GRAPHIC #1 **<END>** g01342739

197-8820 ALTERNATOR GP-CHARGING*R

S/N: TXD1-UP; THX1-UP
24-VOLT, 95-AMPERE
PART OF 217-6635 ALTERNATOR GP-CHARGING
ALSO AN ATTACHMENT

SMCS-1405 **i04934566**

NOTE	REF NO	GRAPHIC REF	PART NUMBER	QTY	PART NAME 1 2 3 4 5 6 (PRODUCT LEVEL)	SEE PAGE
	1	1	**185-2653**	1	FRAME	
	2	1	**5S-7349**	1	BOLT (1/4-20X0.5-IN)	
	3	1	**185-2639**	1	FAN AS	
	4	1	**1H-3244**	1	LOCKWASHER	
	5	1	**185-2645**	1	FRAME	
	6	1	**2K-4821**	1	LOCKNUT (5/8-18-THD)	
	7	1	**5P-8247**	1	WASHER-HARD (17X32X3.5-MM THK)	
	8	1	**228-9657**	1	COVER AS	
	9	1	**8T-4205**	1	WASHER-HARD (7.2X14.5X2-MM THK)	
	10	1	**185-2647**	1	GROMMET	
	11	1	**9L-6770**	1	CAP-DUST	
	12	1	**205-0626**	1	STATOR AS-ALTERNATOR	
	13	1	**185-2638**	2	COLLAR	
	14	1	**185-2654**	1	PLATE	
	15	1	**185-2650**	1	ROTOR AS	
	16	1	**185-2644**	1	COIL AS	
	17	1	**185-2648**	1	REGULATOR AS-VOLTAGE (24-VOLT) (ALTERNATOR)	
	18	1	**6V-8189**	1	NUT (5/16-18-THD)	
	19	1	**8T-4224**	1	WASHER-HARD (8.8X16X2-MM THK)	
	20	1	**3F-9556**	1	LOCKWASHER	
	21	1	**185-2655**	1	KIT-BEARING (ALTERNATOR)	
					(INCLUDES BEARINGS)	
	22	1	**199-8436**	1	KIT-TERMINAL (ALTERNATOR AIR)	
					(INCLUDES HOLDER AS, PLATE, INSULATOR, PIN, BOLTS, GROMMET & NUTS)	
	23	1	**199-7891**	1	KIT-TERMINAL (ALTERNATOR AIR)	
					(INCLUDES INSULATORS, WASHERS & NUTS)	
	24	1	**185-2658**	1	KIT-HARDWARE (ALTERNATOR AIR)	
					(INCLUDES BOLTS)	

197-8820 ALTERNATOR GP-CHARGING *(contd.)* **i04934566**

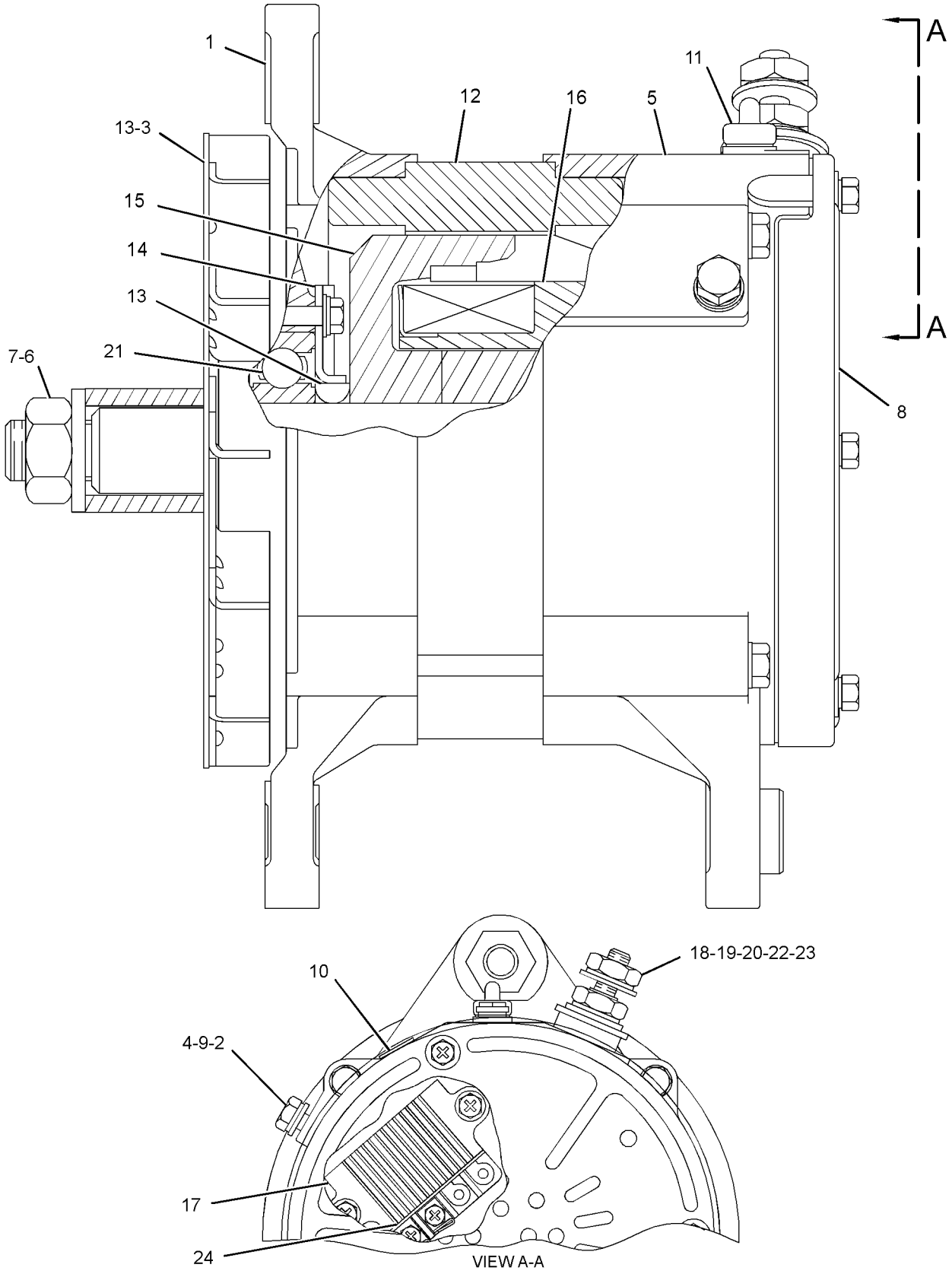

GRAPHIC #1 **<END>** g03117736

217-6635 ALTERNATOR GP-CHARGING

S/N: TXD1-UP; THX1-UP
24-VOLT, 95-AMPERE
PART OF 347-1741, 367-4852 ENGINE AR-COMPLETE
ALSO AN ATTACHMENT

SMCS-1405 **i02241392**

NOTE	REF NO	GRAPHIC REF	PART NUMBER	QTY	PART NAME 1 2 3 4 5 6 (PRODUCT LEVEL)	SEE PAGE
	1	1	**129-5096**	1	PULLEY-ALTERNATOR (8-GROOVE)	
	2	1	**191-8041**	1	ANGLE AS	
M		1	**8T-3490**	1	NUT-WELD (M10X1.5-THD)	
YR	3	1	**197-8820**	1	ALTERNATOR GP-CHARGING (24-VOLT, 95-AMPERE)	112
	4	1	**203-0199**	2	SPACER (HEX)	
	5	1	**258-7531**	1	GUARD AS	
	6	1	**225-1448**	1	BRACKET AS	
M		1	**8T-3490**	2	NUT-WELD (M10X1.5-THD)	
	7	1	**7X-0325**	1	BOLT (1/2-13X2.5-IN)	
	8	1	**7X-0340**	1	BOLT (1/2-13X6.5-IN)	
	9	1	**8T-4121**	1	WASHER-HARD (11X21X2.5-MM THK)	
M	10	1	**8T-4136**	1	BOLT (M10X1.5X25-MM)	
	11	1	**8T-4223**	3	WASHER-HARD (13.5X25.5X3-MM THK)	

M-METRIC PART
R-REMFG PART MAY BE AVAILABLE
Y-SEPARATE ILLUSTRATION

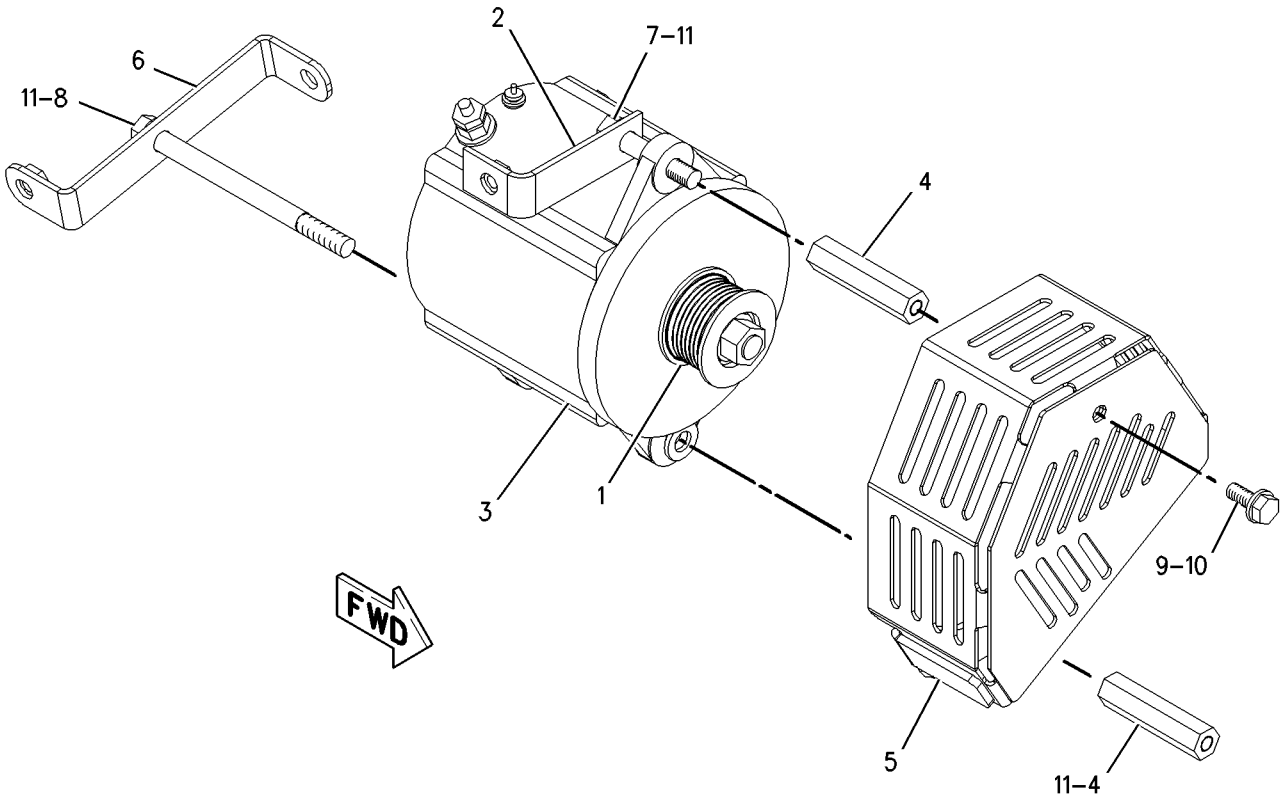

GRAPHIC #1 **<END>** g00942351

ELECTRICAL AND STARTING SYSTEM

339-8300 BATTERY & WIRING GP

S/N: F7B1-UP

PART OF 362-3897 ELECTRICAL AR

SMCS-1401, 1402, 1408 **i05119321**

NOTE	REF NO	GRAPHIC REF	PART NUMBER	QTY	PART NAME 1 2 3 4 5 6 (PRODUCT LEVEL)	SEE PAGE
	1	1	**7K-1181**	2	STRAP-CABLE	
Y	2	1	**7N-0718**	1	SWITCH GP-DISCONNECT (BATTERY)	160
	3	1	**8X-9618**	1	STRAP AS-GROUND	
Y	4	1	**9W-0742**	1	BLOCK GP-JUNCTION (BATTERY)	121
	5	1	**108-2949**	4	ROD	
	7	1	**171-2206**	1	CIRCUIT BREAKER AS (50-AMPERE) (ENGINE START)	
		1	**4E-5724**	2	WASHER (7X12X1-MM THK)	
		1	**8T-0122**	2	NUT-FULL (1/4-28-THD)	
		1	**253-2111**	2	LOCKWASHER	
	8	1	**171-2210**	1	CIRCUIT BREAKER AS (80-AMPERE) (FUSE PANEL)	
		1	**4E-5724**	2	WASHER (7X12X1-MM THK)	
		1	**8T-0122**	2	NUT-FULL (1/4-28-THD)	
		1	**253-2111**	2	LOCKWASHER	
	9	1	**171-2211**	2	CIRCUIT BREAKER AS (90-AMPERE) (HOOD TILT ACTUATOR)	
					(EACH INCLUDES)	
		1	**4E-5724**	2	WASHER (7X12X1-MM THK)	
		1	**8T-0122**	2	NUT-FULL (1/4-28-THD)	
		1	**253-2111**	2	LOCKWASHER	
	10	1	**171-2212**	1	CIRCUIT BREAKER AS (105-AMPERE) (ALTERNATOR)	
		1	**4E-5724**	2	WASHER (7X12X1-MM THK)	
		1	**8T-0122**	2	NUT-FULL (1/4-28-THD)	
		1	**253-2111**	2	LOCKWASHER	
	11	1	**200-6345**	1	MOUNT (DUAL SWIVEL)	
	12	1	**204-2281**	2	STRAP-CABLE	
Y	13	1	**209-5582**	1	SWITCH GP-MAGNETIC (24-VOLT) (AIR INLET HEATER)	163
Y	14	1	**237-7602**	1	SWITCH GP-DISCONNECT (BATTERY)	161
	15	1	**320-9023**	1	STRAP	
	16	1	**340-8094**	2	BRACKET AS	
	18	1	**363-0138**	1	PLATE AS	
M		1	**6V-9632**	4	NUT-WELD (M6X1-THD)	
		1	**7T-1099**	2	LINK	
M		1	**8T-3490**	3	NUT-WELD (M10X1.5-THD)	
M		1	**9R-2613**	1	BOSS-WELD (M10X1.5X25-MM)	
M		1	**9R-2672**	1	BOSS-THREADED (M10X1.5-THD)	
	19	1	**363-0166**	2	PLATE	
	20	1	**363-0167**	1	SEAL	
	21	1	**363-0168**	1	CABLE AS	
		1	**4D-1248**	1	TERMINAL (00-GA, 3/8-IN SCREW)	
E		1	**159-8049**		CABLE (00-GA, RED) (32-CM)	
E		1	**125-7876**		TUBE-HEAT SHRINK (17.78-MM DIA) (5-CM)	
		1	**190-3849**	1	COVER-TERMINAL (RED)	
		1	**208-4617**	1	TERMINAL-RING (00-GA, 1/2-IN SCREW)	
	22	1	**363-0169**	1	CABLE AS	
		1	**1S-7251**	1	TERMINAL-CABLE (00-GA, 1/2-IN SCREW)	
E		1	**159-8049**		CABLE (00-GA, RED) (141-CM)	
		1	**7T-9987**	1	COVER AS-TERMINAL (RED)	
		1	**8L-8413**	1	STRAP-CABLE (WHITE)	
		1	**3S-6049**	1	TERMINAL AS-BATTERY (POSITIVE)	
		1	**1M-6119**	1	BOLT (5/16-18X1.375-IN)	
		1	**1M-6120**	1	NUT (5/16-18-THD)	
		1	**301-0091**	1	COVER-TERMINAL (RED)	
	24	1	**363-1775**	1	CABLE AS	
E		1	**159-8050**		CABLE (00-GA, BLACK) (199-CM)	
		1	**7T-9988**	1	COVER AS-TERMINAL (BLACK)	

339-8300 **BATTERY & WIRING GP** *(contd.)* **i05119321**

NOTE	REF NO	GRAPHIC REF	PART NUMBER	QTY	PART NAME 1 2 3 4 5 6 (PRODUCT LEVEL)	SEE PAGE
		1	**8L-8413**	1	STRAP-CABLE (WHITE)	
		1	**3S-6050**	1	TERMINAL AS-BATTERY (NEGATIVE)	
		1	**1M-6119**	1	BOLT (5/16-18X1.375-IN)	
		1	**1M-6120**	1	NUT (5/16-18-THD)	
		1	**208-4617**	1	TERMINAL-RING (00-GA, 1/2-IN SCREW)	
		1	**299-9092**	1	COVER-TERMINAL	
	25	1	**363-1776**	1	CABLE AS	
		1	**1S-7252**	2	TERMINAL-CABLE (00-GA, 3/8-IN SCREW)	
E		1	**159-8050**		CABLE (00-GA, BLACK) (37-CM)	
	26	1	**363-1777**	1	CABLE AS	
E		1	**159-8049**		CABLE (00-GA, RED) (39-CM)	
		1	**7T-9987**	1	COVER AS-TERMINAL (RED)	
		1	**7T-9988**	1	COVER AS-TERMINAL (BLACK)	
					(EACH COVER AS INCLUDES)	
		1	**8L-8413**	1	STRAP-CABLE (WHITE)	
		1	**3S-6050**	1	TERMINAL AS-BATTERY (NEGATIVE)	
		1	**3S-6049**	1	TERMINAL AS-BATTERY (POSITIVE)	
					(EACH TERMINAL AS INCLUDES)	
		1	**1M-6119**	1	BOLT (5/16-18X1.375-IN)	
		1	**1M-6120**	1	NUT (5/16-18-THD)	
	27	1	**363-1779**	1	CABLE AS	
		1	**1M-4986**	1	TERMINAL-RING (0-GA, 1/2-IN SCREW)	
E		1	**5P-0760**		CABLE (00-GA, RED) (205-CM)	
		1	**030-1708**	1	TERMINAL-RING	
		1	**301-0091**	2	COVER-TERMINAL (RED)	
	28	1	**363-1781**	1	CABLE AS	
D		1	**6V-2369**		CABLE (4-GA, BLACK) (1.6-M)	
		1	**9G-4343**	1	TERMINAL-RING (4-GA, 1/4-IN SCREW)	
		1	**5P-3454**	1	TERMINAL-RING (4-GA, 5/16-IN SCREW)	
		1	**135-2543**	1	BOOT (RED)	
	30	1	**363-1783**	1	CABLE AS	
		1	**3L-6513**	1	TERMINAL-RING (1-GA TO 2-GA, 1/2-IN SCREW)	
E		1	**8C-3056**		CABLE (2-GA, RED) (85-CM)	
		1	**030-1712**	1	TERMINAL-RING (2-GA, 1/4-IN SCREW)	
	31	1	**363-1784**	1	CABLE AS	
D		1	**6V-2369**		CABLE (4-GA, BLACK) (0.4-M)	
		1	**9G-4343**	1	TERMINAL-RING (4-GA, 1/4-IN SCREW)	
		1	**5P-3454**	1	TERMINAL-RING (4-GA, 5/16-IN SCREW)	
		1	**135-2543**	1	BOOT (RED)	
	32	1	**363-1789**	1	PLATE AS	
M		1	**6V-9632**	2	NUT-WELD (M6X1-THD)	
		1	**7T-1099**	2	LINK	
	33	1	**364-0496**	1	WIRE AS-BATTERY	
D		1	**5P-5622**		WIRE (10-GA, BLACK) (0.2-M)	
		1	**2L-8065**	1	TERMINAL-RING (10-GA TO 12-GA, NO. 8 SCREW)	
		1	**2L-8067**	1	TERMINAL-RING (10-GA TO 12-GA, 1/4-IN SCREW)	
	34	1	**364-0509**	1	CABLE AS	
		1	**1S-7251**	1	TERMINAL-CABLE (00-GA, 1/2-IN SCREW)	
E		1	**159-8049**		CABLE (00-GA, RED) (39-CM)	
		1	**276-1786**	1	COVER-TERMINAL (RED)	
		1	**301-0091**	1	COVER-TERMINAL (RED)	
		1	**315-0180**	1	TERMINAL-RING	
	35	1	**364-0514**	1	CABLE AS	
D		1	**6V-2369**		CABLE (4-GA, BLACK) (0.4-M)	
		1	**5P-3454**	1	TERMINAL-RING (4-GA, 5/16-IN SCREW)	
		1	**9G-4336**	1	TERMINAL-RING (4-GA, 3/8-IN SCREW)	
	36	1	**364-0515**	1	WIRE AS-BATTERY	
	37	1	**370-1633**	4	PLATE	
	38	1	**9G-2758**	1	LOCKOUT-SWITCH	

339-8300 **BATTERY & WIRING GP** *(contd.)* **i05119321**

NOTE	REF NO	GRAPHIC REF	PART NUMBER	QTY	PART NAME 1 2 3 4 5 6 (PRODUCT LEVEL)	SEE PAGE
	39	1	**115-2422**	2	BATTERY GP (12-VOLT, MAINTENANCE FREE, WET)	
					(EACH INCLUDES)	
		1	**123-1373**	6	CAP AS-FILLER (BATTERY)	
	40	1	**139-4724**	1	CIRCUIT BREAKER AS (30-AMPERE) (REVERSE POWER)	
		1	**6V-8378**	2	NUT (10-32-THD)	
		1	**8F-1434**	2	LOCKWASHER	
		1	**8T-0328**	2	WASHER-HARD (5.5X10X1-MM THK)	
	41	1	**174-5907**	6	CLIP	
	42	1	**198-4766**	3	WASHER-HARD (11X25X10-MM THK)	
	47	1	**2V-1771**	5	GROMMET	
	50	1	**336-8614**	3	CLIP	
	51	1	**4B-4274**	14	WASHER (5.5X13X1.2-MM THK)	
	53	1	**5L-4507**	14	SCREW-MACHINE (10-32X0.875-IN)	
	54	1	**6D-4246**	12	CLIP	
	55	1	**6T-3644**	1	CIRCUIT BREAKER AS (20-AMPERE) (ENGINE ECM)	
		1	**6V-8376**	2	SCREW-MACHINE (8-32X0.25-IN)	
		1	**9B-7233**	2	LOCKWASHER	
M	56	1	**6V-7744**	2	LOCKNUT (M10X1.5-THD)	
	58	1	**8T-4121**	42	WASHER-HARD (11X21X2.5-MM THK)	
M	59	1	**8T-4133**	13	NUT (M10X1.5-THD)	
M	60	1	**8T-4136**	7	BOLT (M10X1.5X25-MM)	
M	61	1	**8T-4137**	16	BOLT (M10X1.5X20-MM)	
M	62	1	**8T-4138**	4	BOLT (M6X1X20-MM)	
M	63	1	**8T-4139**	2	BOLT (M12X1.75X30-MM)	
M	64	1	**8T-4179**	2	BOLT (M12X1.75X20-MM)	
M	66	1	**8T-4192**	1	BOLT (M12X1.75X25-MM)	
	68	1	**8T-4205**	4	WASHER-HARD (7.2X14.5X2-MM THK)	
	69	1	**8T-4223**	7	WASHER-HARD (13.5X25.5X3-MM THK)	
M	71	1	**8T-4970**	2	BOLT (M6X1X14-MM)	
M	72	1	**8T-5436**	2	BOLT (M10X1.5X130-MM)	
	73	1	**8X-5489**	5	SLEEVE	
	74	1	**9X-8256**	2	WASHER (6.6X12X2-MM THK)	
	75	1	**8W-8909**	4	SLEEVE	
	76	1	**8D-9671**	1	CLIP	
	77	1	**353-7957**	3	GROMMET	
M	78	1	**8T-4182**	1	BOLT (M10X1.5X45-MM)	
	79	1	**1S-0994**	1	CLIP	

D-ORDER BY THE METER
E-ORDER BY THE CENTIMETER
M-METRIC PART
Y-SEPARATE ILLUSTRATION

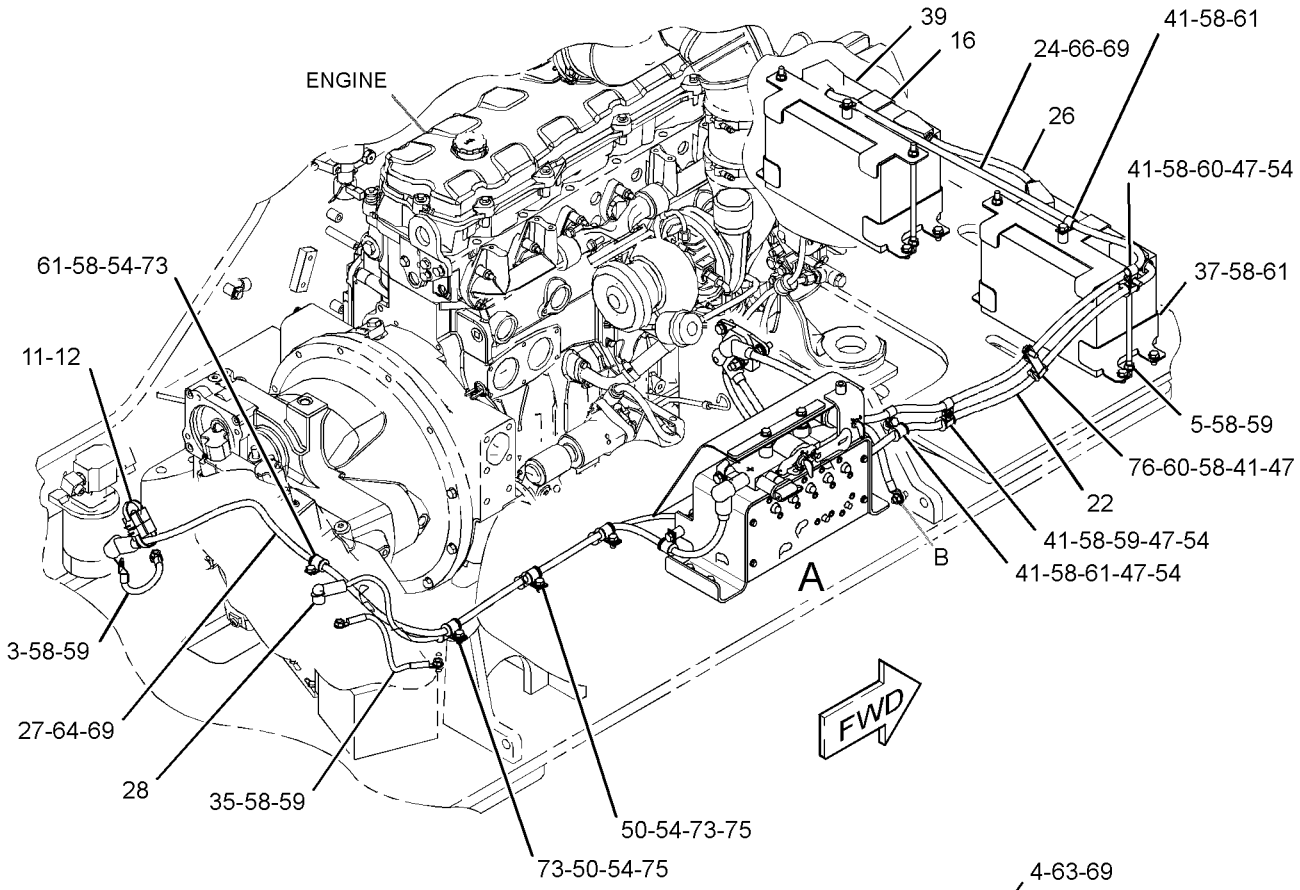

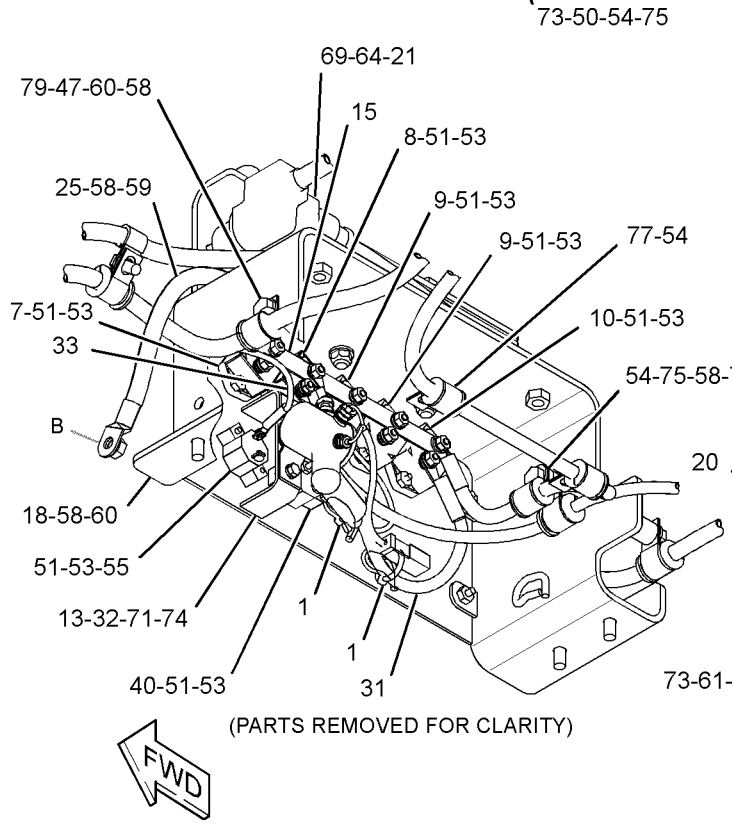

(PARTS REMOVED FOR CLARITY)

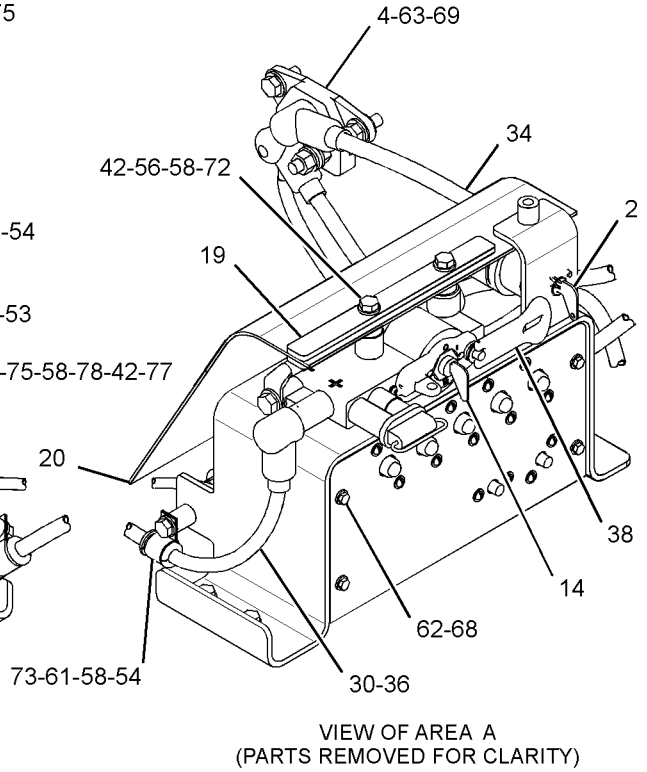

VIEW OF AREA A
(PARTS REMOVED FOR CLARITY)

GRAPHIC #1 **<END>** g03184716

394-4490 BATTERY & WIRING GP–COLD START

S/N: F7B1-UP
PART OF 380-0632 STARTING AR-COLD WEATHER
AN ATTACHMENT

SMCS-1401, 1402, 1408 **i05096675**

NOTE	REF NO	GRAPHIC REF	PART NUMBER	QTY	PART NAME 1 2 3 4 5 6 (PRODUCT LEVEL)	SEE PAGE
	1	1	**170-6929**	1	CABLE AS	
E		1	**159-8049**		CABLE (00-GA, RED) (31-CM)	
		1	**9G-0002**	1	COVER AS-TERMINAL (RED)	
		1	**8L-8413**	1	STRAP-CABLE (WHITE)	
		1	**9G-0005**	1	COVER AS-TERMINAL (BLACK)	
		1	**8L-8413**	1	STRAP-CABLE (WHITE)	
		1	**8C-5918**	1	TERMINAL AS (NEGATIVE)	
		1	**1M-6119**	1	BOLT (5/16-18X1.375-IN)	
		1	**1M-6120**	1	NUT (5/16-18-THD)	
		1	**8T-9756**	1	TERMINAL AS (POSITIVE)	
		1	**1M-6119**	1	BOLT (5/16-18X1.375-IN)	
		1	**1M-6120**	1	NUT (5/16-18-THD)	
	2	1	**209-3349**	1	ROD	
	3	1	**363-0137**	1	PLATE AS	
M		1	**9R-2613**	1	BOSS-WELD (M10X1.5X25-MM)	
	4	1	**363-0170**	1	CABLE AS	
E		1	**159-8050**		CABLE (00-GA, BLACK) (72-CM)	
		1	**8C-5918**	1	TERMINAL AS (NEGATIVE)	
		1	**1M-6119**	1	BOLT (5/16-18X1.375-IN)	
		1	**1M-6120**	1	NUT (5/16-18-THD)	
		1	**9G-0005**	1	COVER AS-TERMINAL (BLACK)	
		1	**8L-8413**	1	STRAP-CABLE (WHITE)	
		1	**208-4617**	1	TERMINAL-RING (00-GA, 1/2-IN SCREW)	
	5	1	**363-1782**	1	CABLE AS	
		1	**1S-7251**	1	TERMINAL-CABLE (00-GA, 1/2-IN SCREW)	
E		1	**159-8049**		CABLE (00-GA, RED) (89-CM)	
		1	**3S-6049**	1	TERMINAL AS-BATTERY (POSITIVE)	
		1	**1M-6119**	1	BOLT (5/16-18X1.375-IN)	
		1	**1M-6120**	1	NUT (5/16-18-THD)	
		1	**301-0091**	1	COVER-TERMINAL (RED)	
	6	1	**115-2422**	2	BATTERY GP (12-VOLT, MAINTENANCE FREE, WET)	
					(EACH INCLUDES)	
		1	**123-1373**	6	CAP AS-FILLER (BATTERY)	
	7	1	**174-5907**	1	CLIP	
	8	1	**1S-0994**	1	CLIP	
	9	1	**2V-1771**	3	GROMMET	
	10	1	**313-9198**	2	CLIP	
	11	1	**8T-4121**	2	WASHER-HARD (11X21X2.5-MM THK)	
M	12	1	**8T-4133**	2	NUT (M10X1.5-THD)	
M	13	1	**8T-4136**	1	BOLT (M10X1.5X25-MM)	
M	14	1	**8T-4137**	1	BOLT (M10X1.5X20-MM)	
	15	1	**8T-4226**	1	WASHER-PLATED (10.5X45X3-MM THK)	

E-ORDER BY THE CENTIMETER
M-METRIC PART

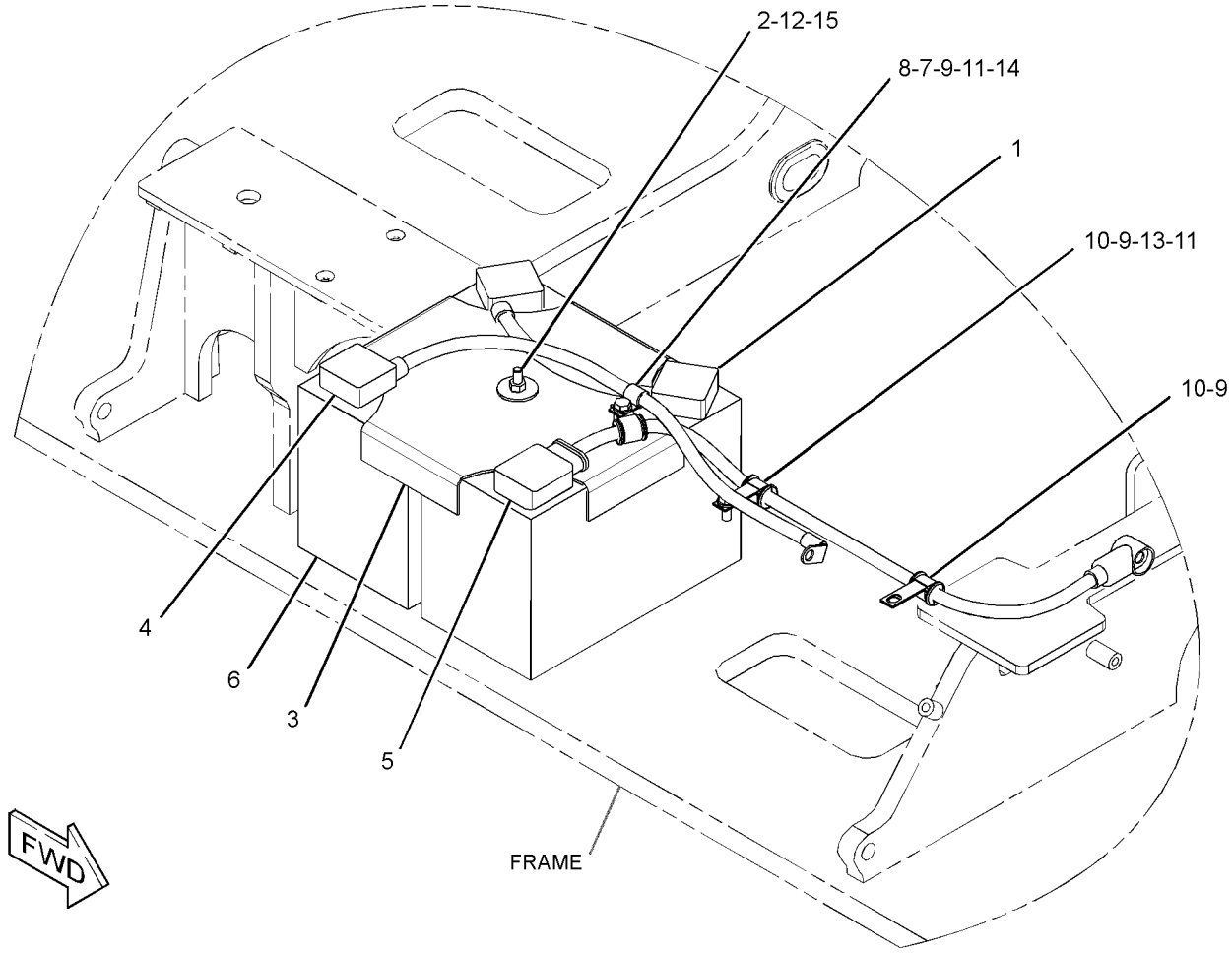

GRAPHIC #1 **<END>** g03193238

9W-0742 BLOCK GP-JUNCTION–BATTERY

S/N: F7B1-UP

PART OF 339-8300 BATTERY & WIRING GP

SMCS-7426 **i04166370**

NOTE	REF NO	GRAPHIC REF	PART NUMBER	QTY	PART NAME 1 2 3 4 5 6 (PRODUCT LEVEL)	SEE PAGE
	1	1	**8C-6358**	1	BLOCK AS-JUNCTION (BATTERY)	
		1	**1D-5117**	3	NUT-JAM (1/2-13-THD)	
	1A	1	**8T-3519**	3	BOLT-BRONZE (1/2-13X2-IN)	
D	2	1	**6V-2722**		TUBE-HEAT SHRINK (0.01-M)	
	3	1	**7F-0560**	6	WASHER (0.516X0.938X0.101-IN THK)	
	4	1	**8T-3518**	6	NUT-FULL (1/2-13-THD)	

D-ORDER BY THE METER

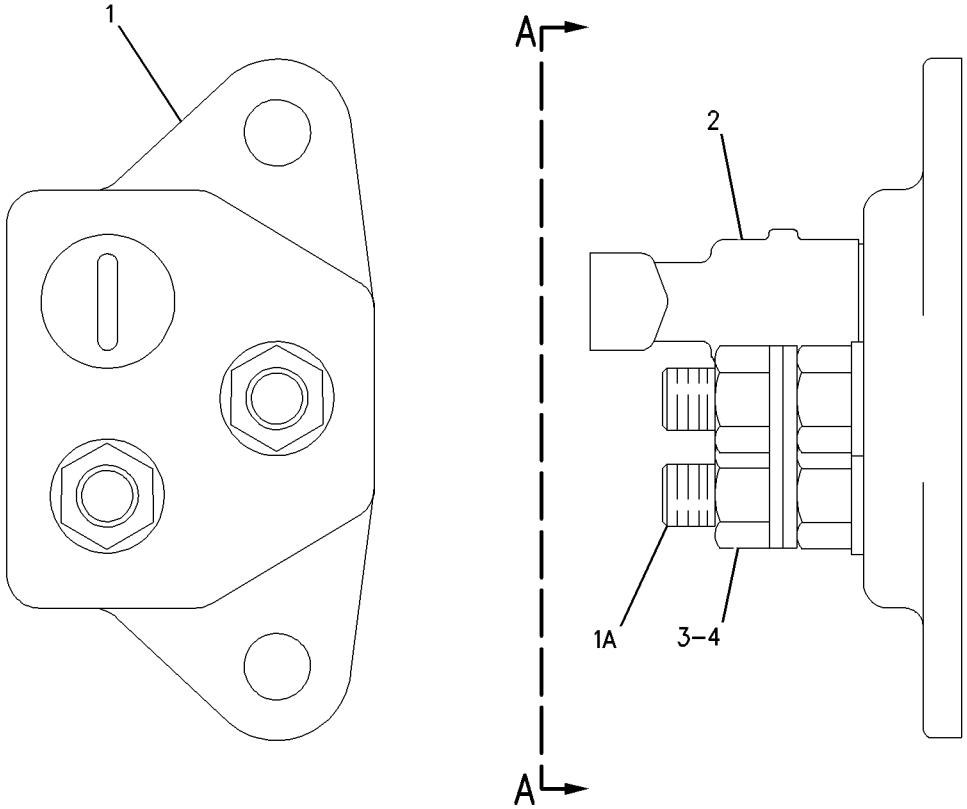

VIEW A-A

GRAPHIC #1 **<END>** g00650721

246-9365 CONTROL & MTG GP-ENGINE ELEK

S/N: TXD1-UP; THX1-UP
AIR COOLED
PART OF 347-1741, 367-4852 ENGINE AR-COMPLETE
ALSO AN ATTACHMENT

SMCS-1901 **i04026280**

NOTE	REF NO	GRAPHIC REF	PART NUMBER	QTY	PART NAME 1 2 3 4 5 6 (PRODUCT LEVEL)	SEE PAGE
	1	1	**8T-9655**	8	MOUNT-ISOLATION	
	2	1	**101-3128**	4	SPACER-SPECIAL	
M	3	1	**143-9392**	4	STUD (M8X1.25-THD)	
Y	4	1	*226-7473*	1	CONTROL GP-ENGINE ELECTRONIC	123
	6	1	**233-0891**	1	BRACKET AS	
M		1	**232-1693**	1	BOLT-FLANGE HEAD (M6X1X35-MM)	
	7	1	**9M-1974**	4	WASHER-HARD (8.8X16X2-MM THK)	
	8	1	**9N-0869**	4	WASHER-HARD (8.8X25.5X2-MM THK)	

M-METRIC PART
Y-SEPARATE ILLUSTRATION

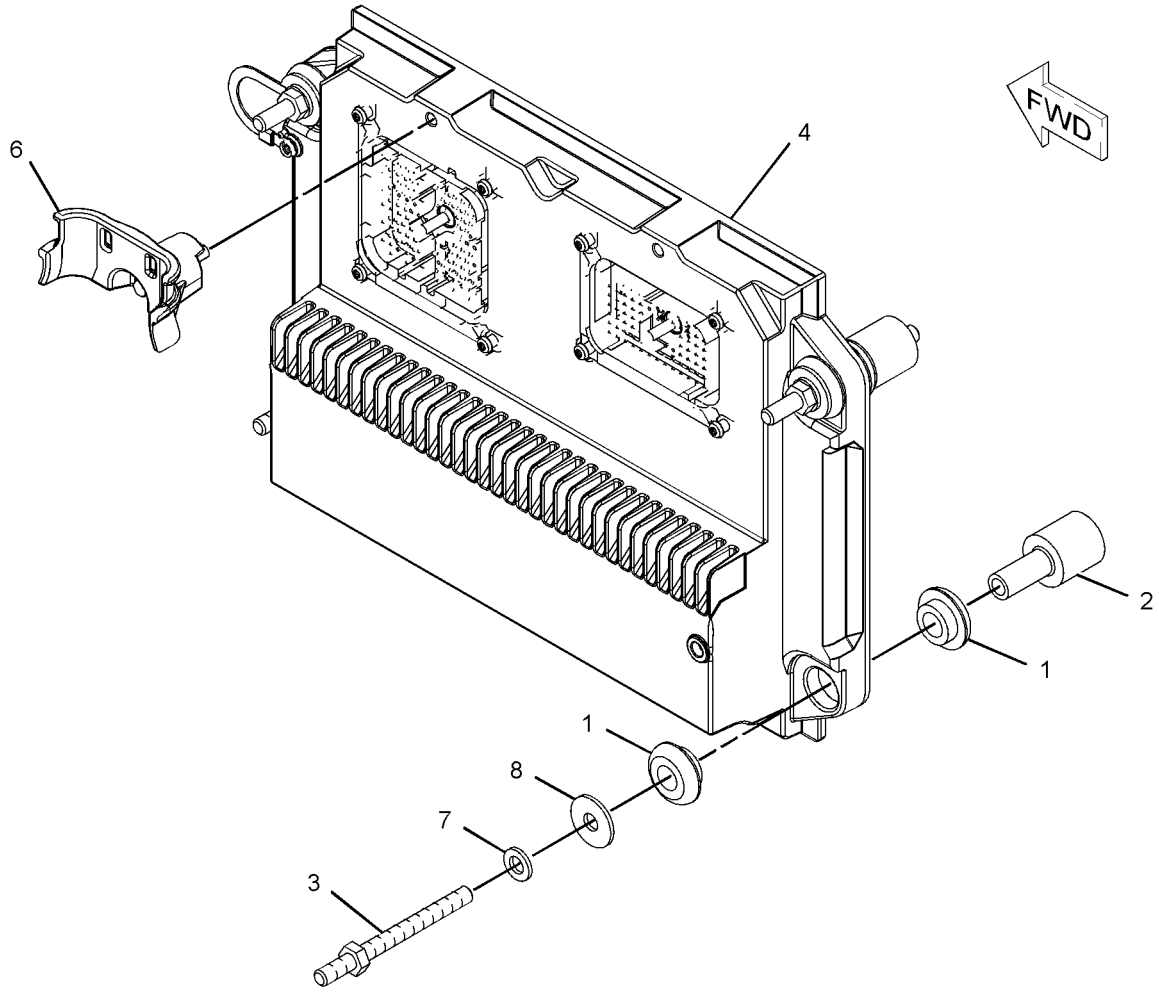

GRAPHIC #1 **<END>** g01131857

ELECTRICAL AND STARTING SYSTEM

226-7473 CONTROL GP-ENGINE ELECTRONIC

S/N: TXD1-UP; THX1-UP
PART OF 246-9365 CONTROL & MTG GP-ENGINE ELEK
ALSO AN ATTACHMENT

SMCS-1901 **i04453657**

NOTE	REF NO	GRAPHIC REF	PART NUMBER	QTY	PART NAME 1 2 3 4 5 6 (PRODUCT LEVEL)	SEE PAGE
	1	1	**372-2905**	1	CONTROL GP-ELECTRONIC (ENGINE)	

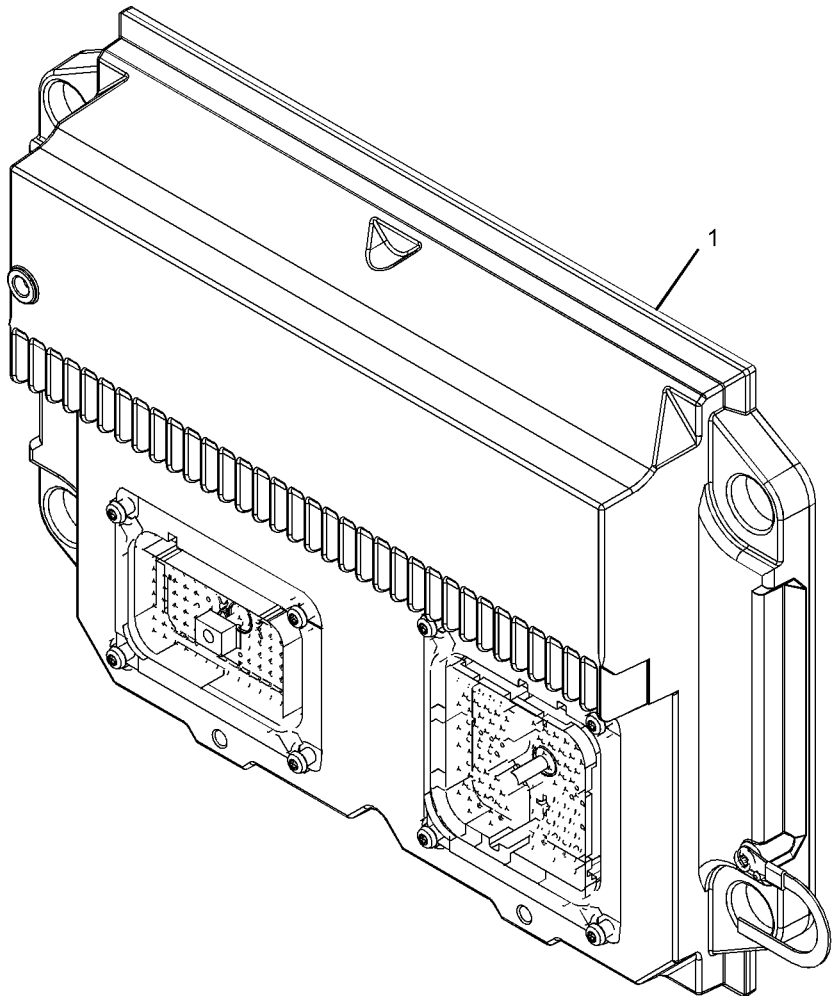

GRAPHIC #1 **<END>** g01101798

ELECTRICAL AND STARTING SYSTEM

362-3897 ELECTRICAL AR

S/N: F7B1-UP

PART OF 351-6848 COMMON AR

SMCS-1408 **i05115836**

NOTE	REF NO	GRAPHIC REF	PART NUMBER	QTY	PART NAME 1 2 3 4 5 6 (PRODUCT LEVEL)	SEE PAGE
Y	1	1	*339-8297*	1	WARNING GP-BACKUP	168
Y	2	1	*339-8299*	1	LIGHTING GP-FLOOD (HOOD)	134
Y	3	1	*339-8300*	1	BATTERY & WIRING GP	115
Y	4	1	*339-8301*	1	WIRING GP-ENGINE	192
Y	5	1	*362-3885*	1	WIRING GP-MACHINE	197

Y-SEPARATE ILLUSTRATION

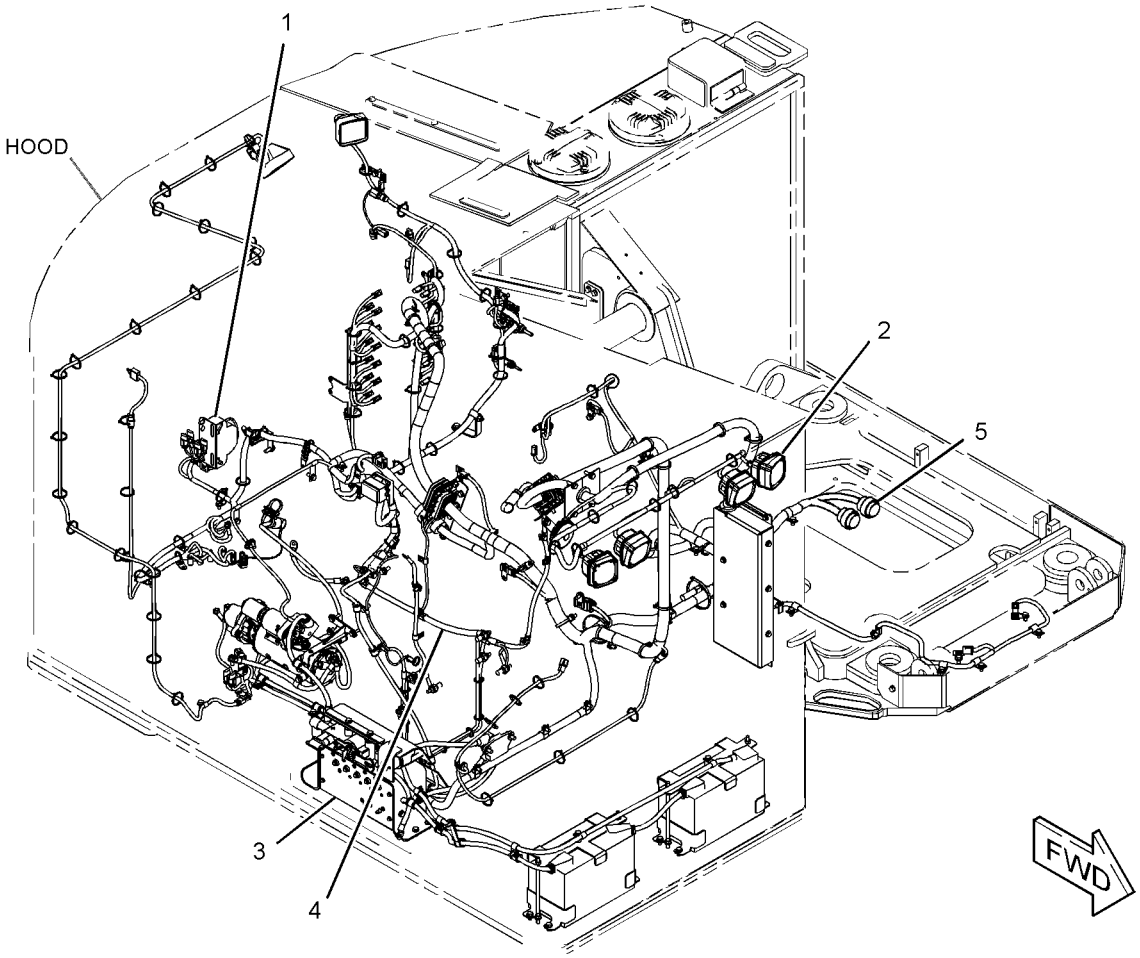

GRAPHIC #1 **<END>** g03180977

380-0634 HEATER GP-JACKET WATER—DIESEL FIRED

S/N: F7B1-UP
24-VOLT
PART OF 380-0633 PREHEATER GP-MACHINE
AN ATTACHMENT

SMCS-1383 **i04501240**

NOTE	REF NO	GRAPHIC REF	PART NUMBER	QTY	PART NAME 1 2 3 4 5 6 (PRODUCT LEVEL)	SEE PAGE
	1	1	**3B-4505**	2	LOCKWASHER	
	2	1	**4D-7794**	1	CLIP	
	3	1	**6Q-8408**	1	CLIP	
M	4	1	**8T-4189**	1	BOLT (M8X1.25X20-MM)	
M	5	1	**8T-4200**	1	BOLT (M8X1.25X16-MM)	
	6	1	**095-1586**	1	SEAL-O-RING	
	7	1	**138-1108**	2	CLAMP	
	8	1	**149-0660**	2	SEAL-O-RING	
	9	1	**201-0095**	1	PUMP-FUEL	
	10	1	**231-6687**	1	HARNESS AS-HEATER (PREHEATER)	
	11	1	**231-6688**	1	PUMP-WATER	
	12	1	**231-6689**	1	CONTROL GP-HEATER	
	13	1	**236-4896**	1	GLOW PLUG	
	14	1	**231-6691**	1	SLEEVE	
	15	1	**231-6692**	1	SENSOR-TEMPERATURE (COOLANT)	
	16	1	**236-4894**	1	SENSOR GP-TEMPERATURE (HIGH)	
E	17	1	**137-4673**		HOSE-FUEL (40-CM)	

E-ORDER BY THE CENTIMETER
M-METRIC PART

380-0634 HEATER GP-JACKET WATER *(contd.)* i04501240

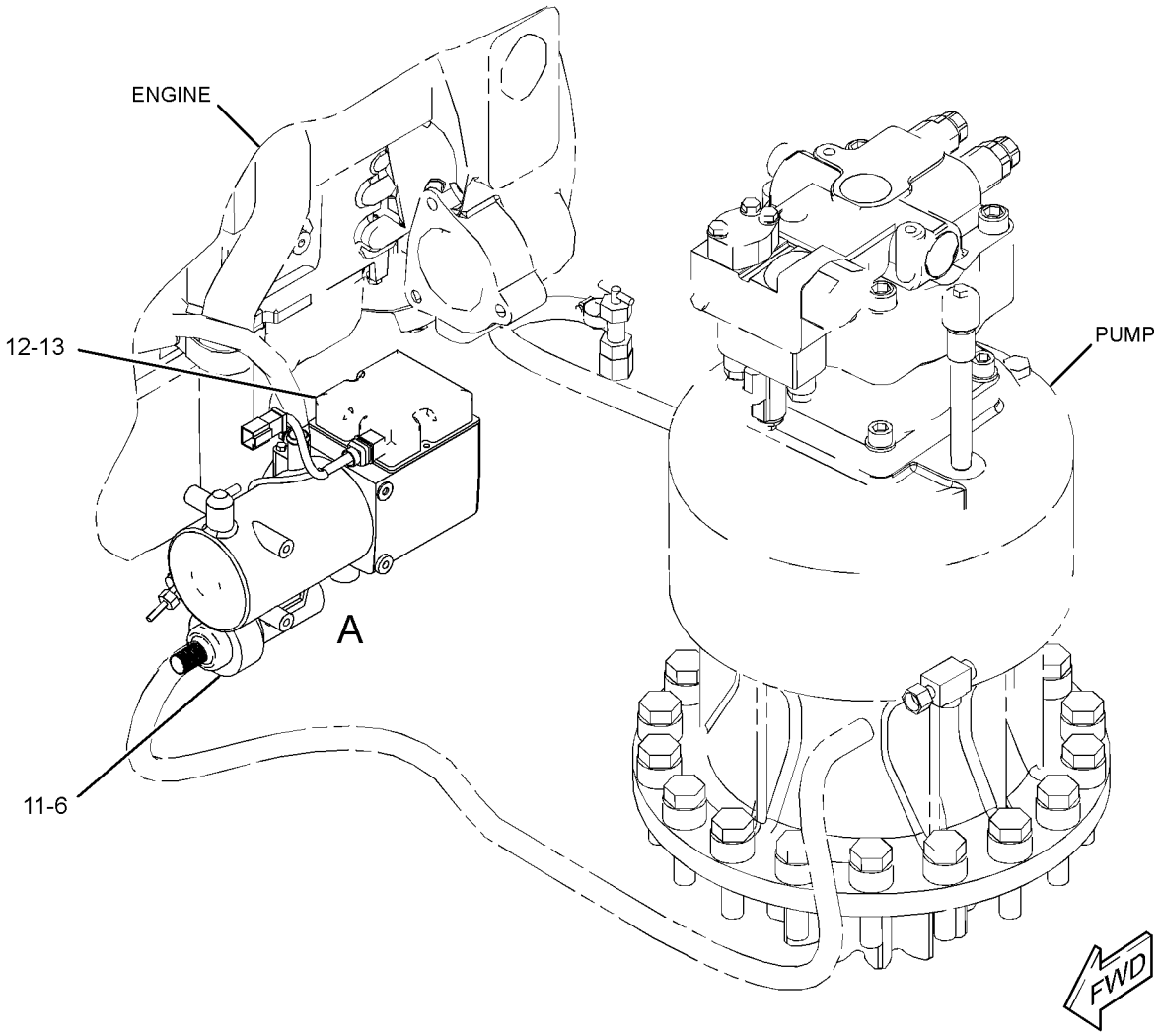

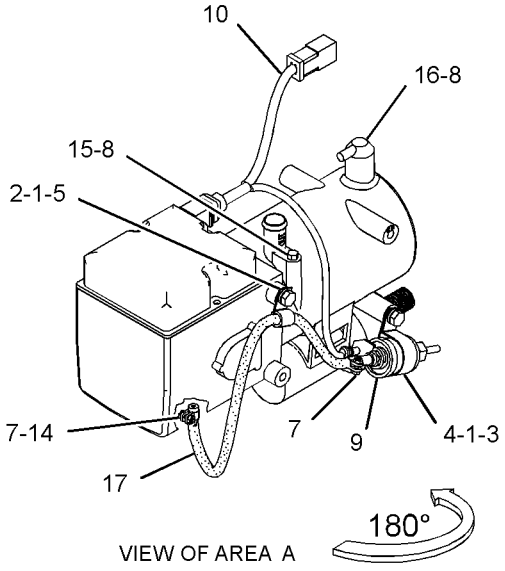

GRAPHIC #1 **<END>** g02736276

162-7755 LAMP GP-DOME

S/N: F7B1-UP
24-VOLT
PART OF 365-1387 WIRING GP-CAB

SMCS-1433 **i05114769**

NOTE	REF NO	GRAPHIC REF	PART NUMBER	QTY	PART NAME 1 2 3 4 5 6 (PRODUCT LEVEL)	SEE PAGE
	1	1	**156-9426**	1	SWITCH (DOME LAMP)	
	2	1	**156-9427**	2	LAMP (24-VOLT) (DOME)	
	3	1	**156-9428**	1	LENS	

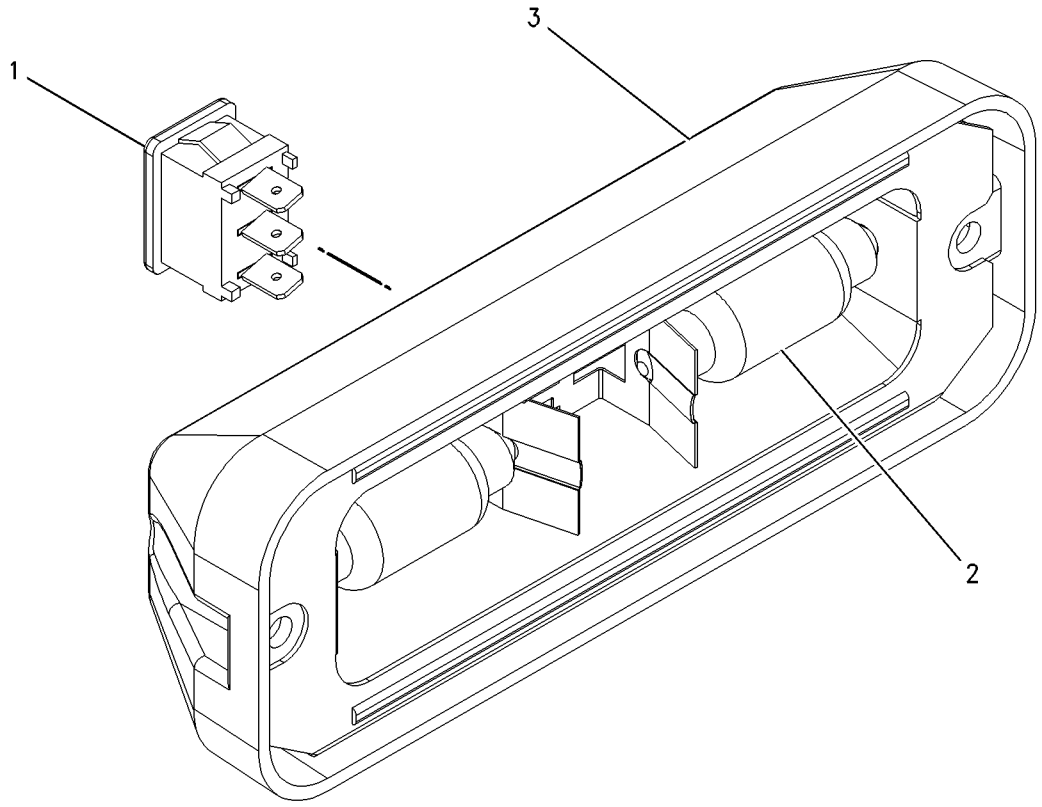

GRAPHIC #1 **<END>** g00975643

219-6485 LAMP GP-FLOOD

S/N: F7B1-UP
24-VOLT, 70-WATT
PART OF 380-0813, 382-0646 WIRING GP-BOOM
AN ATTACHMENT

SMCS-1434 **i05096969**

NOTE	REF NO	GRAPHIC REF	PART NUMBER	QTY	PART NAME 1 2 3 4 5 6 (PRODUCT LEVEL)	SEE PAGE
	1	1	**351-9918**	1	LAMP-HALOGEN (24-VOLT, 70-WATT)	
	2	1	**9X-4244**	2	SCREW-SPECIAL (M4X1.79X25-MM)	
	3	1	**175-4291**	1	BRACKET AS	
	4	1	**202-6614**	1	LENS AS (FLOODLIGHT)	
	5	1	**175-4292**	1	BODY AS	
	6	1	**164-7556**	1	BRACKET (LAMP RETAINING)	
	7	1	**247-4285**	1	BOLT (M8X1.25X50-MM)	
M	8	1	**6V-9189**	1	LOCKNUT (M8X1.25-THD)	
	9	1	**8T-4224**	2	WASHER-HARD (8.8X16X2-MM THK)	

M-METRIC PART

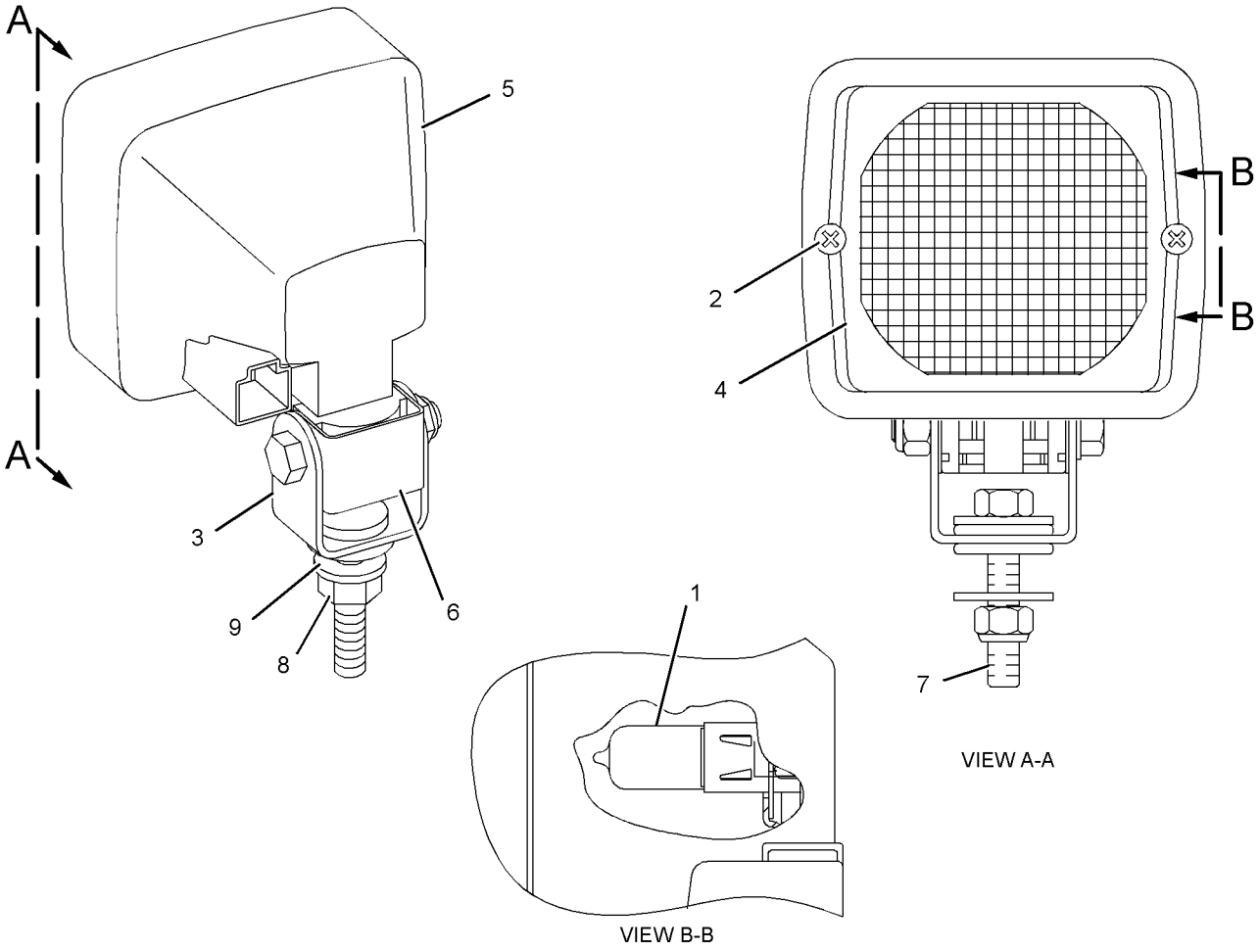

GRAPHIC #1 **<END>** g02075738

219-6487 LAMP GP-FLOOD

S/N: F7B1-UP
24-VOLT, 70-WATT
PART OF 339-8299 LIGHTING GP-FLOOD

SMCS-1434 **i04321929**

NOTE	REF NO	GRAPHIC REF	PART NUMBER	QTY	PART NAME 1 2 3 4 5 6 (PRODUCT LEVEL)	SEE PAGE
	1	1	**351-9918**	1	LAMP-HALOGEN (24-VOLT, 70-WATT)	
M	2	1	**8T-6912**	1	BOLT (M8X1.25X50-MM)	
M	3	1	**6V-9189**	1	LOCKNUT (M8X1.25-THD)	
	4	1	**8T-4224**	2	WASHER-HARD (8.8X16X2-MM THK)	
	5	1	**9X-4244**	2	SCREW-SPECIAL (M4X1.79X25-MM)	
	6	1	**175-4291**	1	BRACKET AS	
	7	1	**202-6614**	1	LENS AS (FLOODLIGHT)	
	8	1	**175-4292**	1	BODY AS	
	9	1	**164-7556**	1	BRACKET (LAMP RETAINING)	

M-METRIC PART

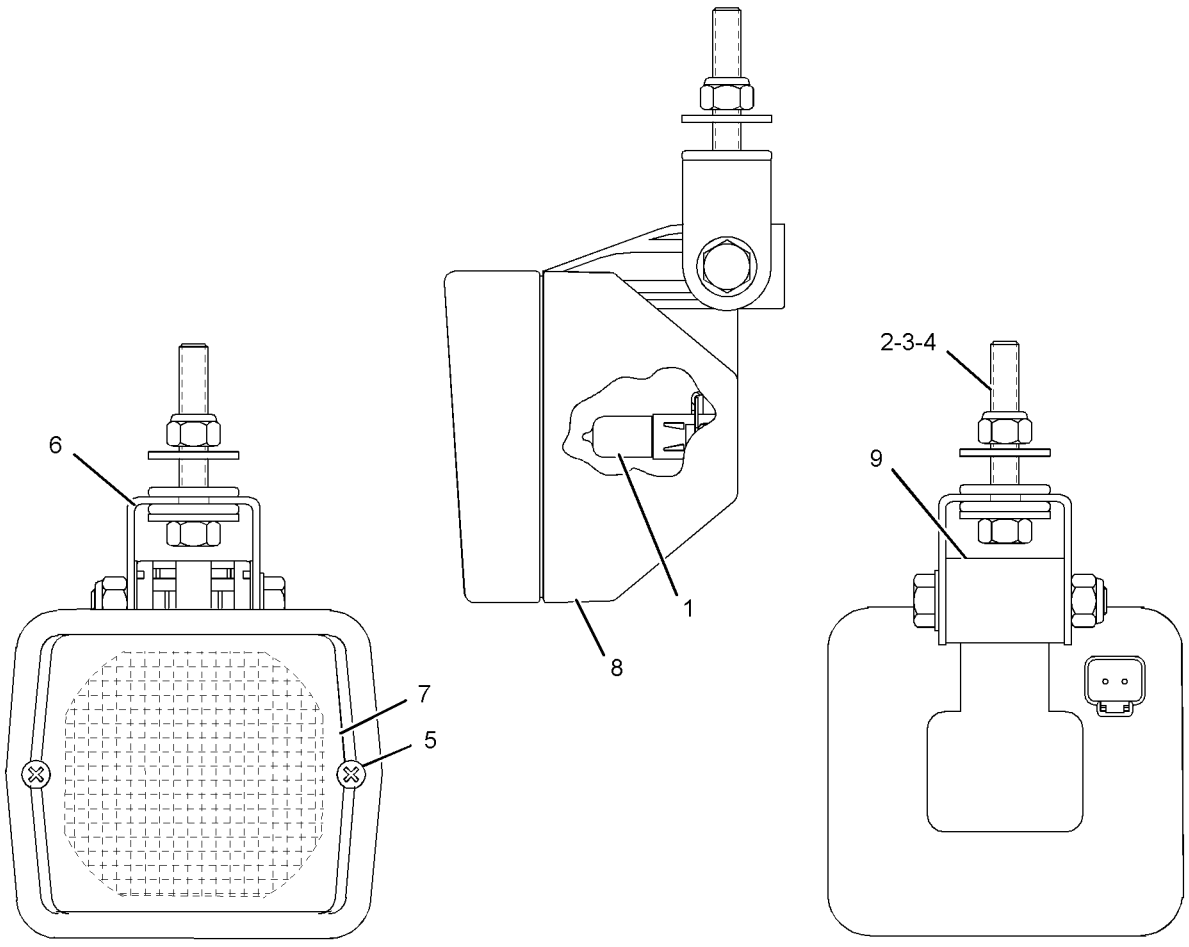

GRAPHIC #1 **<END>** g02167882

234-4325 LAMP GP-FLOOD

S/N: F7B1-UP
24-VOLT, 70 WATT
PART OF 320-7443 LIGHTING GP-FLOOD

SMCS-1434 **i04383997**

NOTE	REF NO	GRAPHIC REF	PART NUMBER	QTY	PART NAME 1 2 3 4 5 6 (PRODUCT LEVEL)	SEE PAGE
	1	1	**351-9918**	1	LAMP-HALOGEN (24-VOLT, 70-WATT)	
M	2	1	**8T-0389**	1	LOCKNUT (M10X1.5-THD)	
	3	1	**9X-4244**	2	SCREW-SPECIAL (M4X1.79X25-MM)	
	4	1	**202-6614**	1	LENS AS (FLOODLIGHT)	
	5	1	**234-7730**	1	BODY AS	
	6	1	**164-7556**	1	BRACKET (LAMP RETAINING)	
	7	1	**234-7731**	1	BRACKET AS	
	8	1	**8T-4121**	1	WASHER-HARD (11X21X2.5-MM THK)	

M-METRIC PART

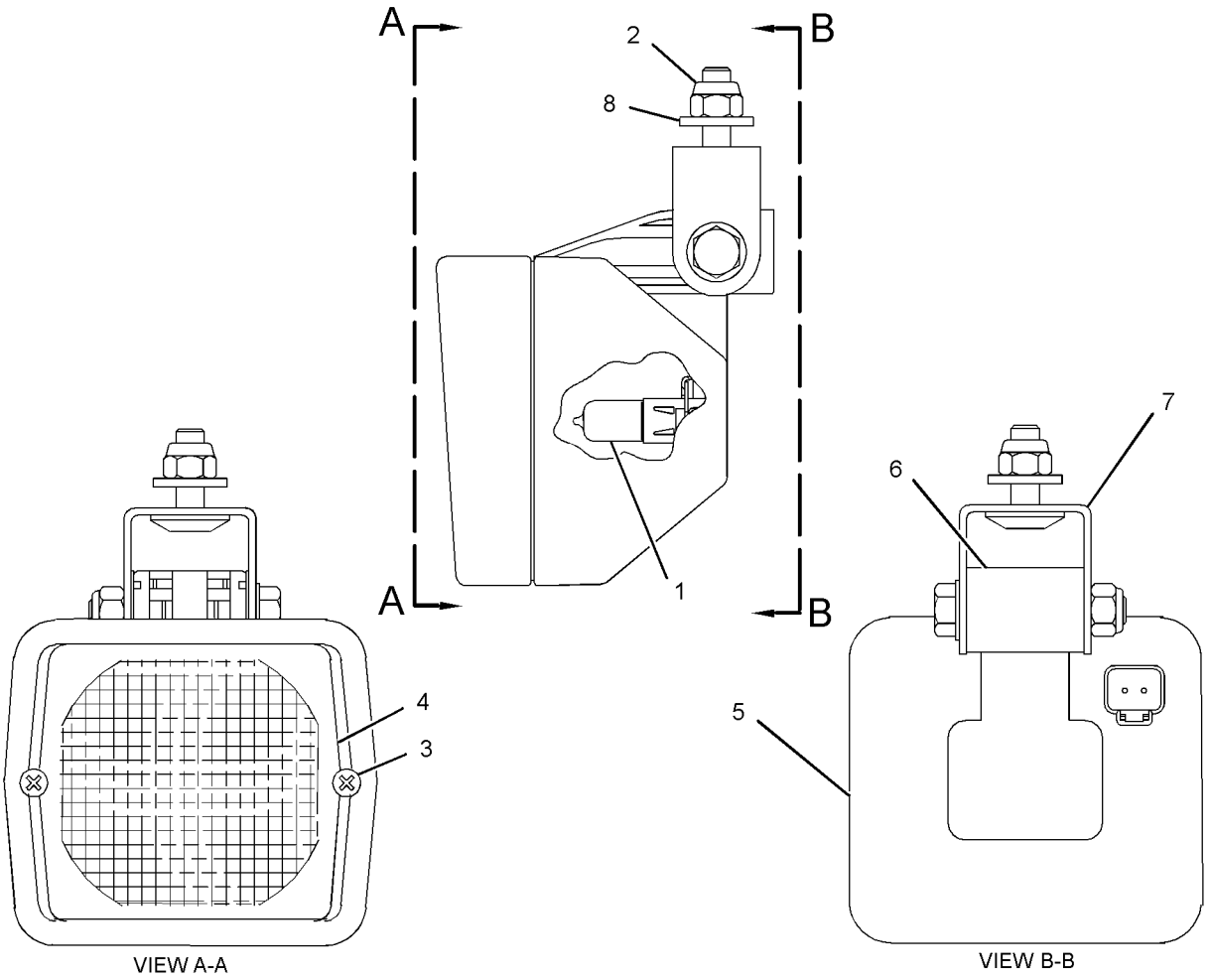

GRAPHIC #1 **<END>** g01246703

319-7380 LAMP GP-FLOOD–HID

S/N: F7B1-UP
24-VOLT, 35-WATT
PART OF 382-0648 LIGHTING GP-FLOOD
AN ATTACHMENT

SMCS-1434 **i03030193**

NOTE	REF NO	GRAPHIC REF	PART NUMBER	QTY	PART NAME 1 2 3 4 5 6 (PRODUCT LEVEL)	SEE PAGE
	1	1	**291-2943**	1	LENS	
	2	1	**290-8160**	1	LAMP (24-VOLT, HID)	
	3	1	**8T-4121**	2	WASHER-HARD (11X21X2.5-MM THK)	
	4	1	**9X-4244**	2	SCREW-SPECIAL (M4X1.79X25-MM)	
	5	1	**317-7685**	1	BRACKET	
	6	1	**229-9974**	1	BEZEL (HID)	
	7	1	**319-7384**	1	BALLAST AS (24-VOLT, 35-WATT, HID)	
M	8	1	**6V-7744**	1	LOCKNUT (M10X1.5-THD)	
M	9	1	**8T-4189**	1	BOLT (M8X1.25X20-MM)	
M	10	1	**6V-9189**	1	LOCKNUT (M8X1.25-THD)	

M-METRIC PART

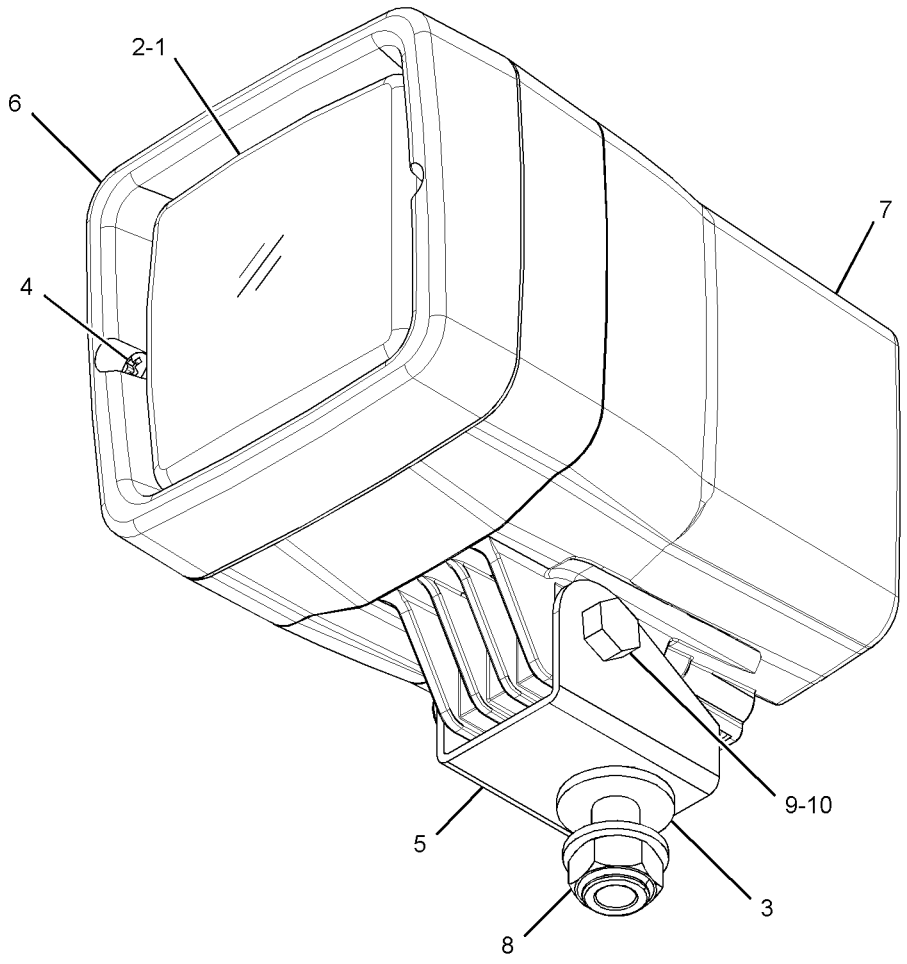

GRAPHIC #1 **<END>** g01428424

321-0836 LAMP GP-FLOOD

S/N: F7B1-UP
24-VOLT, 70-WATT
PART OF 320-7443, 339-8299 LIGHTING GP-FLOOD

SMCS-1434 **i04542755**

NOTE	REF NO	GRAPHIC REF	PART NUMBER	QTY	PART NAME 1 2 3 4 5 6 (PRODUCT LEVEL)	SEE PAGE
	1	1	**351-9918**	1	LAMP-HALOGEN (24-VOLT, 70-WATT)	
	2	1	**102-8802**	1	KIT-RECEPTACLE (2-PIN)	
					(INCLUDES REDEPTACLE AS & WEDGE)	
	3	1	**8T-8729**	2	PIN-CONNECTOR (16-GA TO 18-GA)	
	4	1	**383-6901**	1	LENS AS (FLOODLIGHT)	

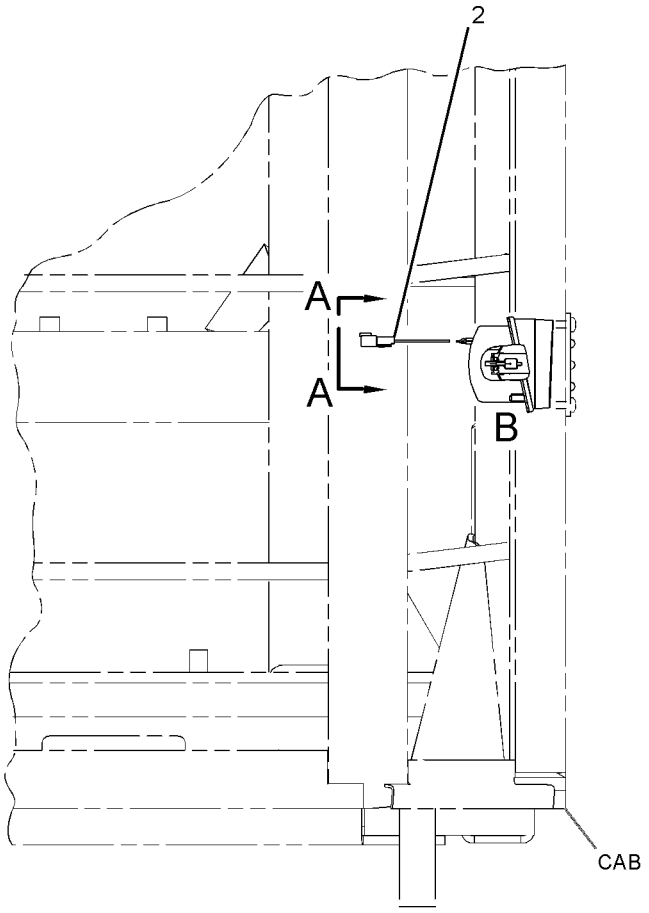

FRONT VIEW

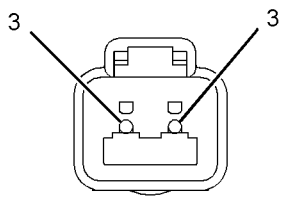

VIEW A-A

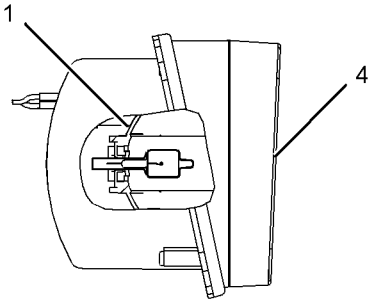

VIEW OF AREA B

GRAPHIC #1 **<END>** g02729958

320-7443 LIGHTING GP-FLOOD—CAB FRONT, SIDE

S/N: F7B1-UP

PART OF 362-3893 OPERATOR AR

SMCS-1434 **i04401676**

NOTE	REF NO	GRAPHIC REF	PART NUMBER	QTY	PART NAME 1 2 3 4 5 6 (PRODUCT LEVEL)	SEE PAGE
Y	1	1	**234-4325**	2	LAMP GP-FLOOD (24-VOLT) (CAB FRONT)	130
	2	1	**320-7452**	1	GUARD AS	
Y	3	1	**321-0836**	1	LAMP GP-FLOOD (24-VOLT) (SIDE)	132
	4	1	**344-4872**	2	GUARD AS-LIGHT	
	5	1	**344-4876**	2	PLATE-MOUNTING	
M	6	1	**095-0746**	4	SCREW-MACHINE (M8X1.25X16-MM)	
M	7	1	**5C-7261**	2	NUT (M8X1.25-THD)	
	8	1	**8T-4224**	12	WASHER-HARD (8.8X16X2-MM THK)	
M	9	1	**8T-6912**	2	BOLT (M8X1.25X50-MM)	
M	10	1	**8T-7547**	8	BOLT (M8X1.25X30-MM)	

M-METRIC PART
Y-SEPARATE ILLUSTRATION

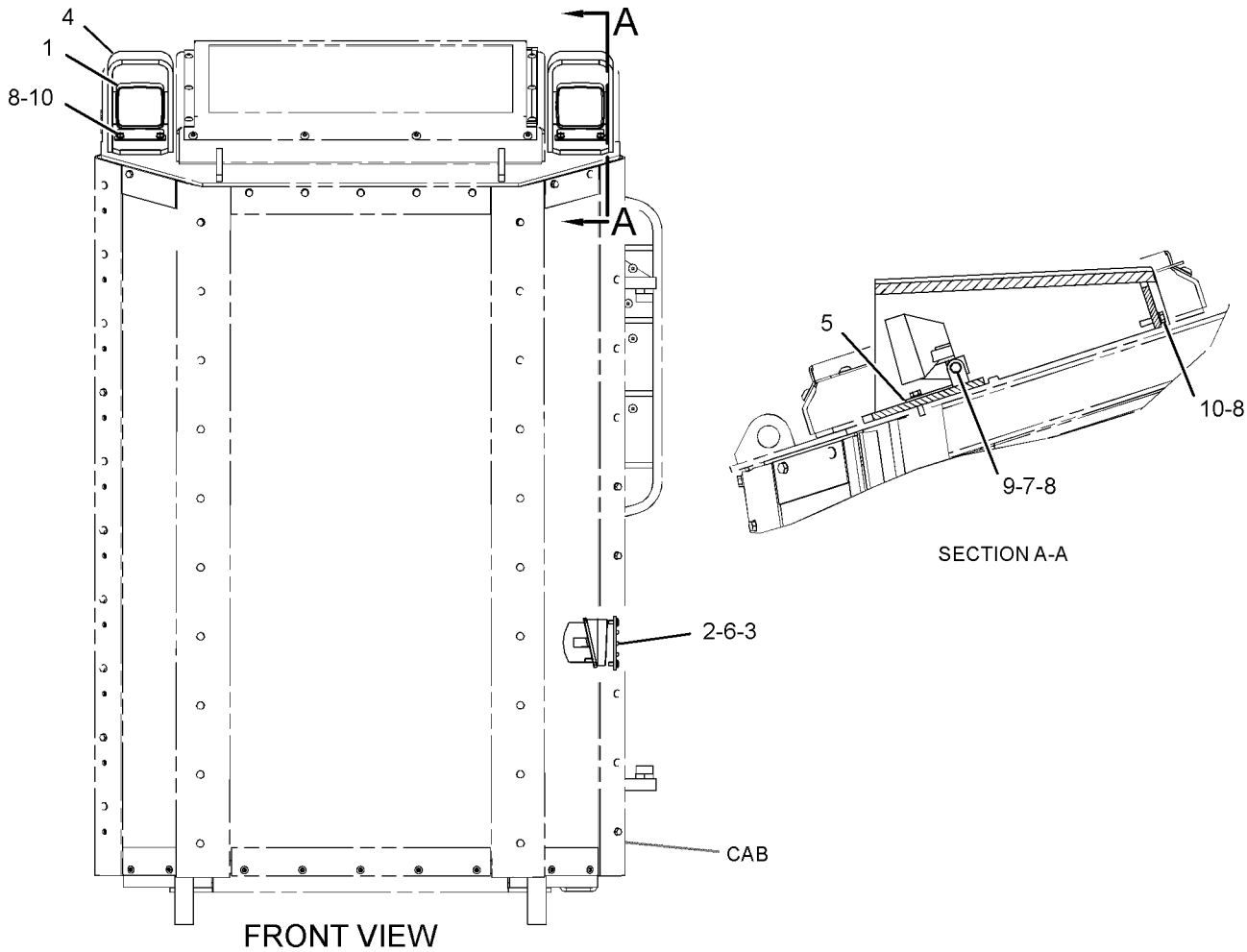

GRAPHIC #1 **<END>** g02115433

339-8299 LIGHTING GP-FLOOD–HOOD

S/N: F7B1-UP
24-VOLT
PART OF 362-3897 ELECTRICAL AR

SMCS-1434 **i05103209**

NOTE	REF NO	GRAPHIC REF	PART NUMBER	QTY	PART NAME 1 2 3 4 5 6 (PRODUCT LEVEL)	SEE PAGE
Y	1	1	**219-6487**	2	LAMP GP-FLOOD (24-VOLT, 70-WATT) (UNDER HOOD)	129
Y	2	1	**321-0836**	4	LAMP GP-FLOOD (24-VOLT) (FRONT)	132

Y-SEPARATE ILLUSTRATION

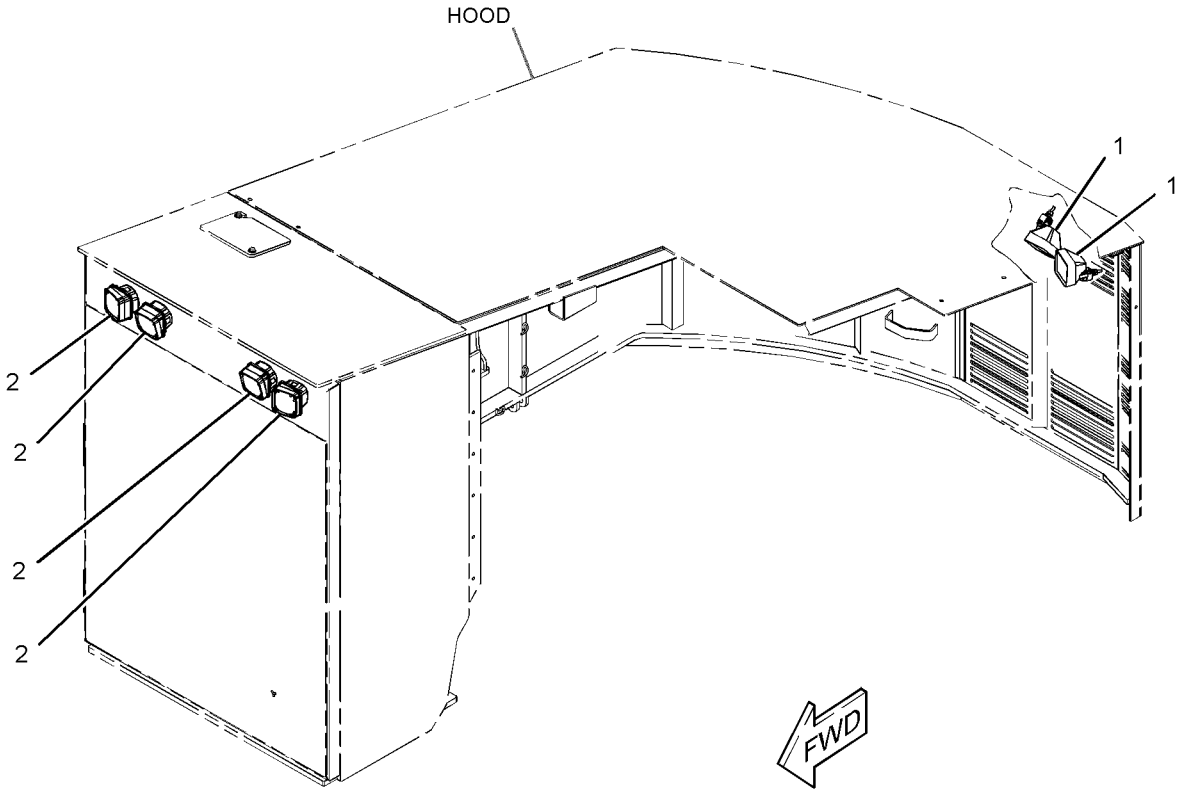

GRAPHIC #1 **<END>** g02728991

382-0648 LIGHTING GP-FLOOD–HID–BOOM–CAB

S/N: F7B1-UP

FOR USE WITH 379-5860–PAGE 425, 379-5870–PAGE 423. CANNOT BE USED WITH 378-8875–PAGE 250, 376-8000–PAGE 424 AN ATTACHMENT

SMCS-1434 **i04514372**

NOTE	REF NO	GRAPHIC REF	PART NUMBER	QTY	PART NAME 1 2 3 4 5 6 (PRODUCT LEVEL)	SEE PAGE
Y	1	1	**319-7380**	4	LAMP GP-FLOOD (24-VOLT, HID)	131
Y-SEPARATE ILLUSTRATION						

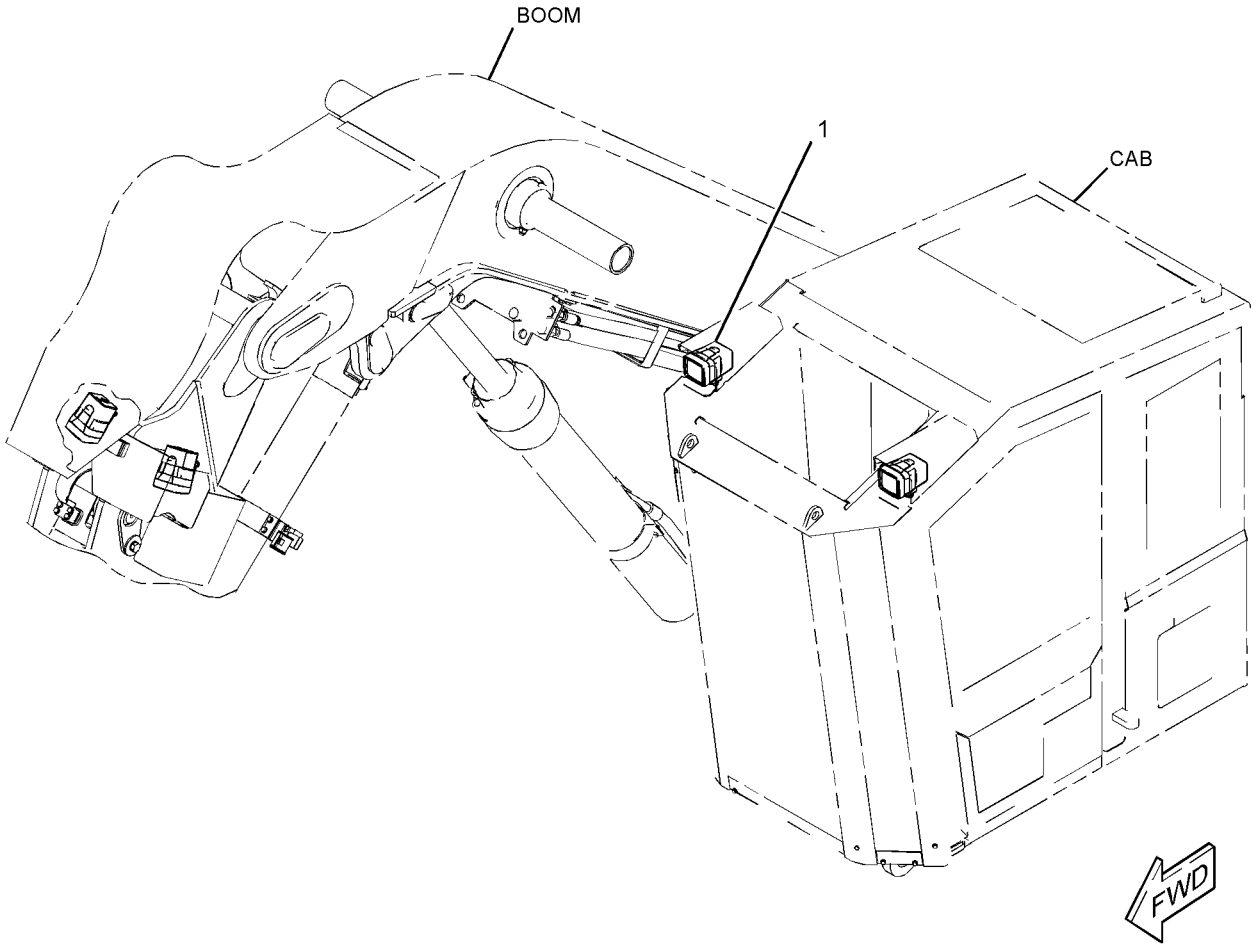

GRAPHIC #1 **<END>** g02734630

3T-9525 PLATE AS-BRUSH

S/N: F7B1-UP

PART OF 338-3454 STARTING MOTOR GP-ELECTRIC

SMCS-4463 **i04083269**

NOTE	REF NO	GRAPHIC REF	PART NUMBER	QTY	PART NAME 1 2 3 4 5 6 (PRODUCT LEVEL)	SEE PAGE
	1	1	**6T-0372**	1	PLATE	
	2	1	**6T-0371**	1	INSULATOR	
	3	1	**9F-5599**	12	LOCKWASHER	
	4	1	**6T-0363**	6	HOLDER AS-BRUSH	
					(EACH INCLUDES)	
		1	**3T-9494**	1	SPRING	
	5	1	**3T-4709**	3	PLATE	
	6	1	**3T-4710**	3	PLATE	
	7	1	**2L-6679**	3	PLATE-INSULATOR	
	8	1	**7F-3525**	6	WASHER-BUSHING (0.207X0.39X0.09-IN THK)	
	9	1	**5P-6298**	12	SCREW-MACHINE (10-32X0.5-IN)	

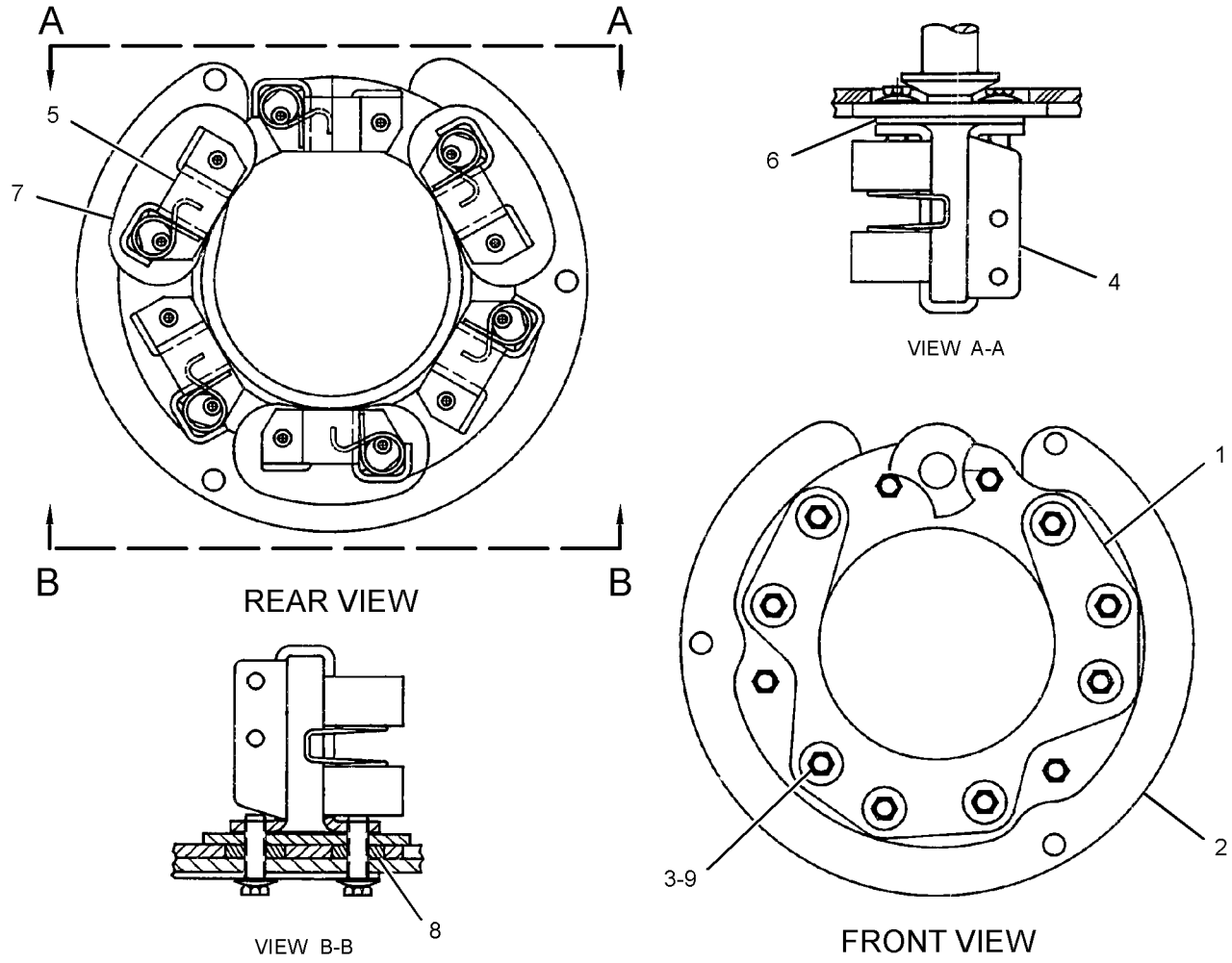

GRAPHIC #1 **<END>** g02294074

235-8200 PLUG GP-CONNECTOR–

ENGINE HARNESS, PROTECTIVE COVER

S/N: TXD1-UP; THX1-UP

PART OF 347-1741, 367-4852 ENGINE AR-COMPLETE

ALSO AN ATTACHMENT

SMCS-1403, 1408 **i02951922**

NOTE	REF NO	GRAPHIC REF	PART NUMBER	QTY	PART NAME 1 2 3 4 5 6 (PRODUCT LEVEL)	SEE PAGE
	1	1	**246-9353**	1	PLUG AS	
	1A	1	**8T-8737**	8	PLUG-SEAL	
	1B	1	**102-8806**	1	KIT-RECEPTACLE (8-PIN)	
					(INCLUDES RECEPTACLE AS & WEDGE)	
	2	1	**3S-2093**	1	STRAP-CABLE	

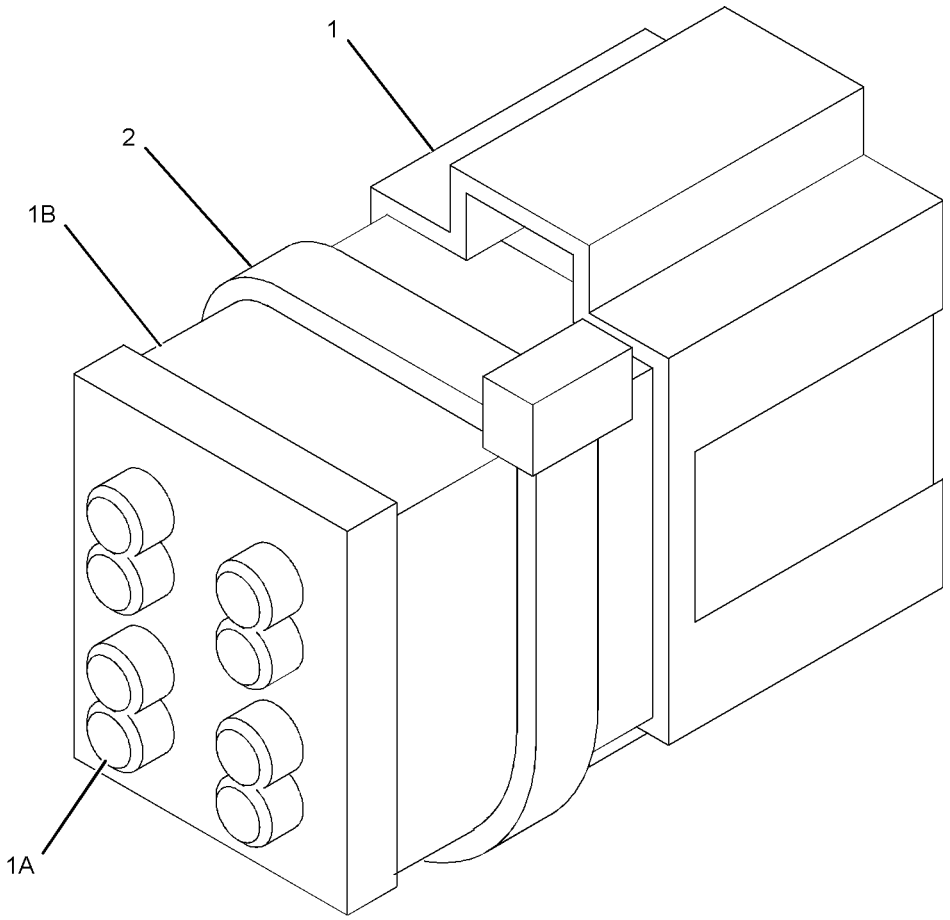

GRAPHIC #1 **<END>** g01105455

380-0633 PREHEATER GP-MACHINE

S/N: F7B1-UP

PART OF 380-0632 STARTING AR-COLD WEATHER

AN ATTACHMENT

SMCS-1296, 1383, 5096, 7304 **i04963066**

NOTE	REF NO	GRAPHIC REF	PART NUMBER	QTY	PART NAME 1 2 3 4 5 6 (PRODUCT LEVEL)	SEE PAGE
	1	1	**4Y-9072**	1	CONNECTOR	
	2	1	**7L-2406**	1	CLIP	
	3	1	**8C-6524**	1	ADAPTER	
	4	1	**110-2218**	1	TEE-SWIVEL	
	5	1	**126-9653**	4	BOSS	
	6	1	*194-2903*	1	ELBOW AS	
		1	**8T-0119**	1	ELBOW	
		1	**3K-0360**	1	SEAL-O-RING	
	7	1	**177-2215**	1	STRAP-DUAL CLAMP	
	8	1	**214-0890**	1	CONTROL AS-TIMER (PREHEATER)	
	9	1	**222-4734**	1	VALVE AS-SHUTOFF	
		1	**3K-0360**	1	SEAL-O-RING	
		1	**4E-0754**	1	VALVE-SHUTOFF	
	10	1	**223-9813**	1	FILM-START AID (ENGINE)	
	11	1	**245-0887**	1	HEATER AS (HYDRAULIC TANK)	
	12	1	**250-1431**	1	VALVE-SHUTOFF	
	13	1	*357-4509*	1	TEE AS	
		1	**6V-8789**	1	TEE	
		1	**6V-8398**	3	SEAL-O-RING	
	14	1	**372-4552**	1	PLATE	
Y	15	1	**380-0634**	1	HEATER GP-JACKET WATER	125
I	16	1	**380-1278**	1	HOSE AS	
I	17	1	**380-1279**	1	HOSE AS	
I	18	1	**380-1280**	1	HOSE AS	
I	19	1	**380-1284**	1	HOSE AS	
	20	1	**380-1289**	1	PLATE	
	21	1	**380-1392**	1	TUBE-EXHAUST	
	22	1	**380-6163**	1	FITTING-HOSE	
	23	1	**380-7259**	1	TUBE	
	24	1	**044-4101**	1	COUPLING-PIPE	
	25	1	**099-3001**	2	CLIP	
	26	1	**149-7738**	1	CLIP	
	27	1	**1P-4278**	2	CLAMP-HOSE	
	28	1	**1S-0994**	1	CLIP	
	29	1	**1S-1015**	2	CLIP	
	30	1	**211-5237**	2	CONNECTOR	
	31	1	*277-8840*	1	CONNECTOR AS	
		1	**3K-0360**	1	SEAL-O-RING	
		1	**6V-8398**	1	SEAL-O-RING	
		1	**268-1606**	1	CONNECTOR	
	32	1	**280-8911**	1	CLAMP-BAND	
	33	1	**2S-3440**	6	CLAMP-HOSE	
	34	1	**3K-0360**	1	SEAL-O-RING	
	35	1	**6D-1641**	2	CLIP	
	36	1	**6V-8398**	5	SEAL-O-RING	
	37	1	**7X-7729**	4	WASHER (11X25X3-MM THK)	
	38	1	**8C-6872**	1	CONNECTOR	
	39	1	**8S-0948**	1	CLIP	
	40	1	**8T-4121**	4	WASHER-HARD (11X21X2.5-MM THK)	
M	41	1	**8T-4137**	4	BOLT (M10X1.5X20-MM)	
M	42	1	**8T-4186**	4	BOLT (M10X1.5X40-MM)	
M	43	1	**8T-4200**	4	BOLT (M8X1.25X16-MM)	
	44	1	**8T-4224**	4	WASHER-HARD (8.8X16X2-MM THK)	
E	45	1	**5P-0767**		HOSE (239-CM)	
E	45A	1	**5P-0767**		HOSE (165-CM)	

380-0633 **PREHEATER GP-MACHINE** *(contd.)* **i04963066**

NOTE	REF NO	GRAPHIC REF	PART NUMBER	QTY	PART NAME 1 2 3 4 5 6 (PRODUCT LEVEL)	SEE PAGE
G	46	1	**122-6906**		HOSE-HYDRAULIC (2.4-IN)	
E	47	1	**8C-3391**		HOSE (34-CM)	
E	48	1	**326-3568**		INSULATION (45-CM)	

E-ORDER BY THE CENTIMETER
G-ORDER BY THE INCH
I-REFER TO HYDRAULIC INFORMATION SYSTEM
M-METRIC PART
Y-SEPARATE ILLUSTRATION

380-0633 **PREHEATER GP-MACHINE** *(contd.)* **i04963066**

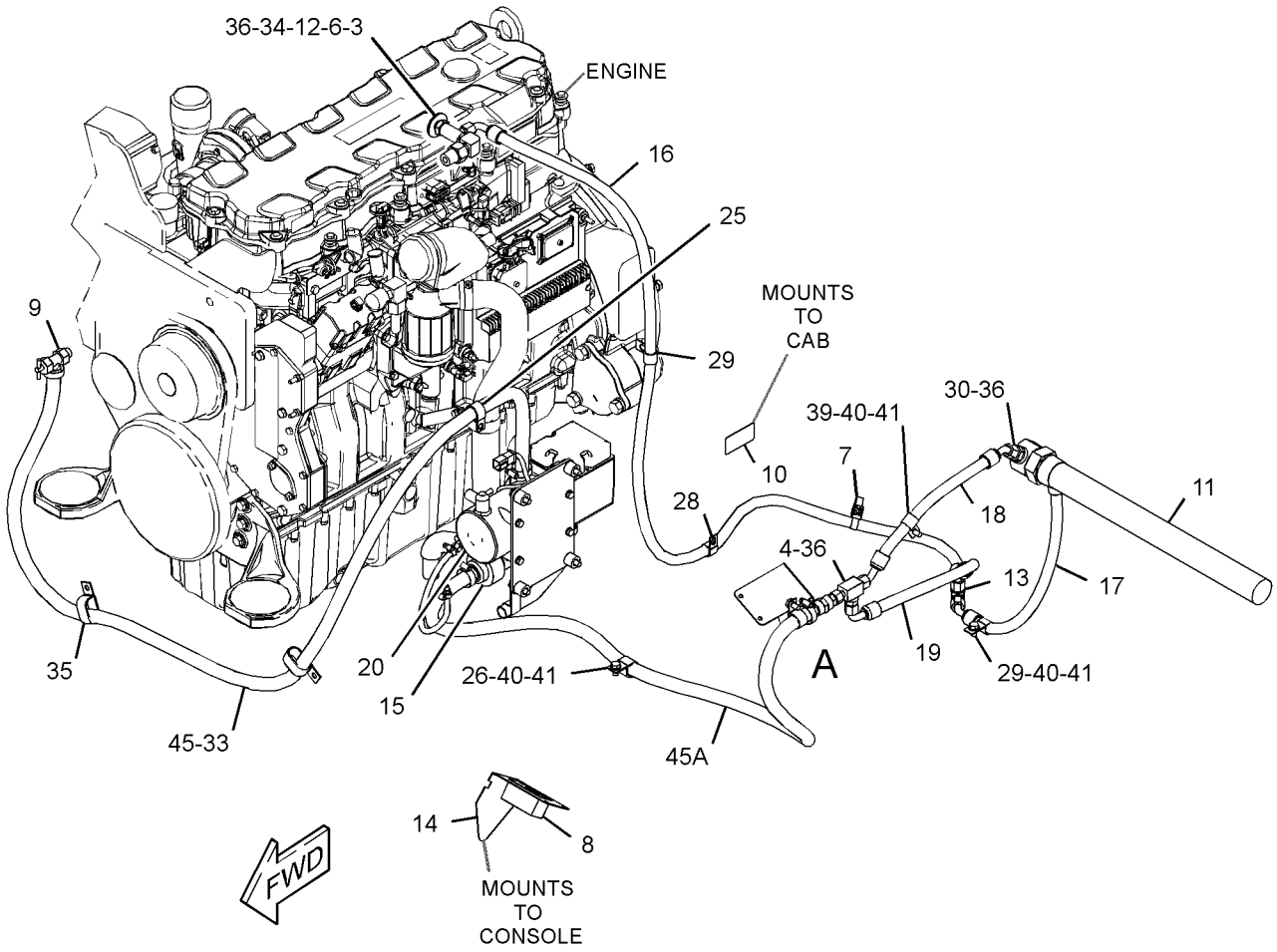

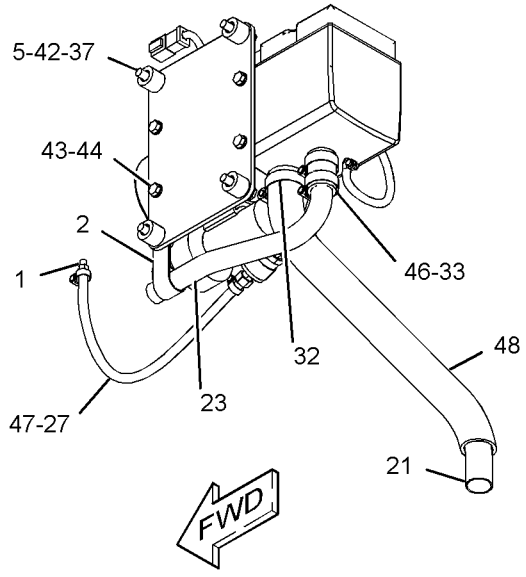

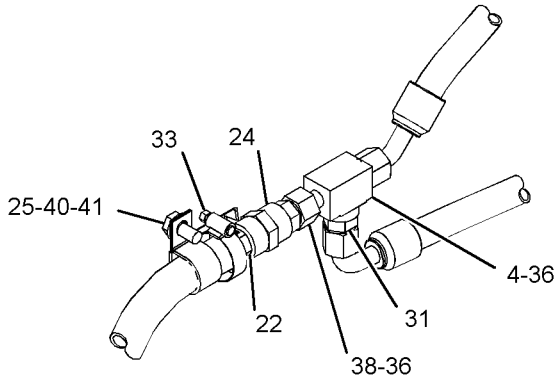

VIEW OF AREA A

GRAPHIC #1 **<END>** g03252558

330-6034 SENSOR GP-ENGINE

S/N: TXD1-UP; THX1-UP
PART OF 367-4852 ENGINE AR-COMPLETE, 384-8426 ENGINE AR-CORE
ALSO AN ATTACHMENT

SMCS-1000, 1906, 1907, 1924, 7422 **i04723513**

NOTE	REF NO	GRAPHIC REF	PART NUMBER	QTY	PART NAME 1 2 3 4 5 6 (PRODUCT LEVEL)	SEE PAGE
Y	1	1	*234-5012*	1	SENSOR GP-TEMPERATURE (COOLANT)	146
Y	2	1	*234-5013*	1	SENSOR GP-TEMPERATURE (INTAKE AIR TEMPERATURE)	147
Y	3	1	*236-6221*	1	SENSOR GP-SPEED (ENGINE TIMING)	145
	4	1	**276-6793**	1	SENSOR GP-PRESSURE (OUTLET AIR)	
Y	5	1	*267-1402*	1	SENSOR GP-PRESSURE (INJECTION ACTUATION)	143
	6	1	**274-6719**	1	SENSOR GP-PRESSURE (ENGINE OIL)	
Y	7	1	*303-3357*	1	SENSOR GP-PRESSURE (ATMOSPHERIC)	144
	8	1	*329-5451*	1	ADAPTER AS	
		1	**9X-0261**	1	ADAPTER	
		1	**214-7566**	1	SEAL-O-RING	
		1	**214-7568**	1	SEAL-O-RING	
	9	1	**3E-4352**	1	WASHER-HARD (8.8X20.5X2.5-MM THK)	
M	10	1	**6V-3940**	1	BOLT (M8X1.25X25-MM)	
	11	1	*353-5112*	1	ADAPTER AS	
		1	**9X-0262**	1	ADAPTER	
		1	**214-7566**	2	SEAL-O-RING	

M-METRIC PART
Y-SEPARATE ILLUSTRATION

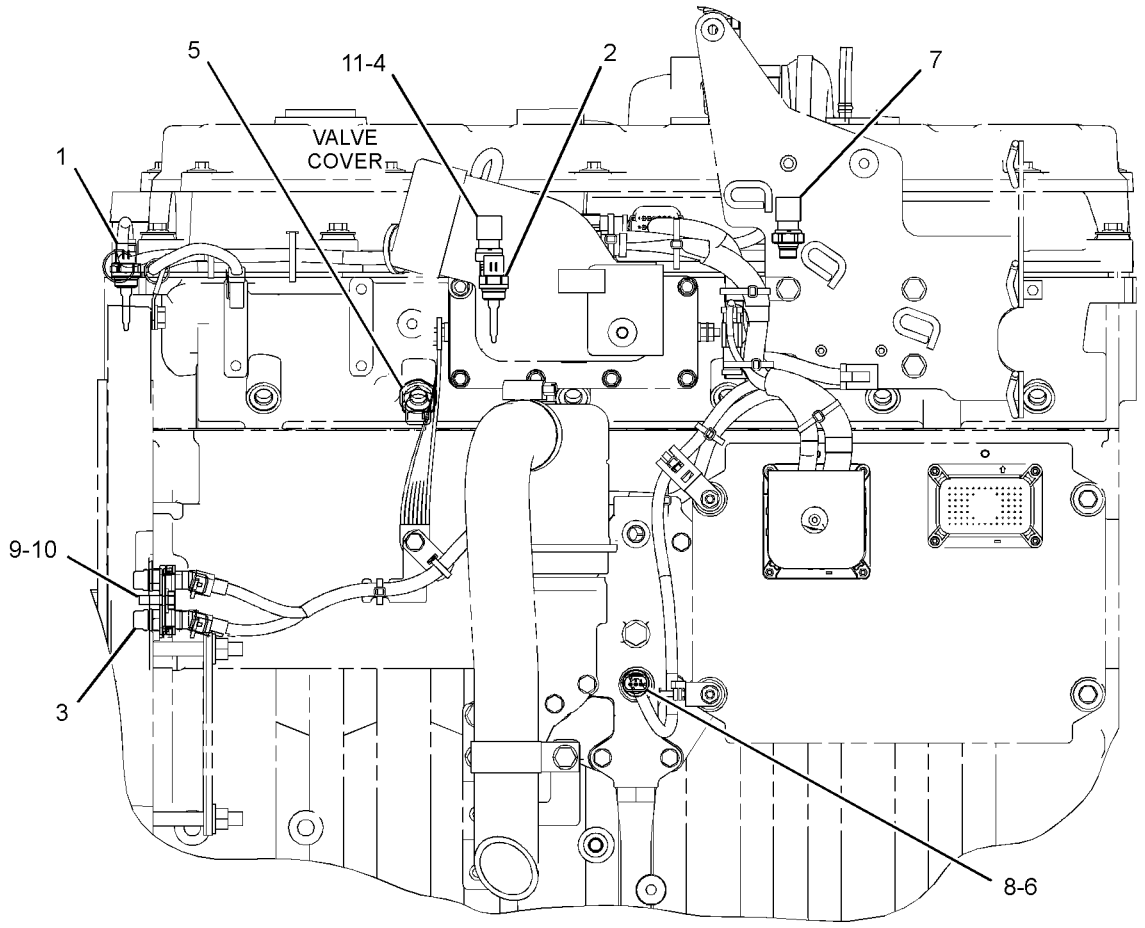

LEFT SIDE VIEW OF ENGINE

GRAPHIC #1 **<END>** g02844399

306-6875 SENSOR GP-LIQUID LEVEL

S/N: F7B1-UP

PART OF 362-3885 WIRING GP-MACHINE

SMCS-7422 **i04433205**

NOTE	REF NO	GRAPHIC REF	PART NUMBER	QTY	PART NAME 1 2 3 4 5 6 (PRODUCT LEVEL)	SEE PAGE
	1	1	**171-0596**	1	RECEPTACLE AS-CONNECTOR	
	2	1	**8T-8729**	3	PIN-CONNECTOR (16-GA TO 18-GA)	
	3	1	**3E-3371**	1	WEDGE-RECEPTACLE LOCK (3-PIN)	

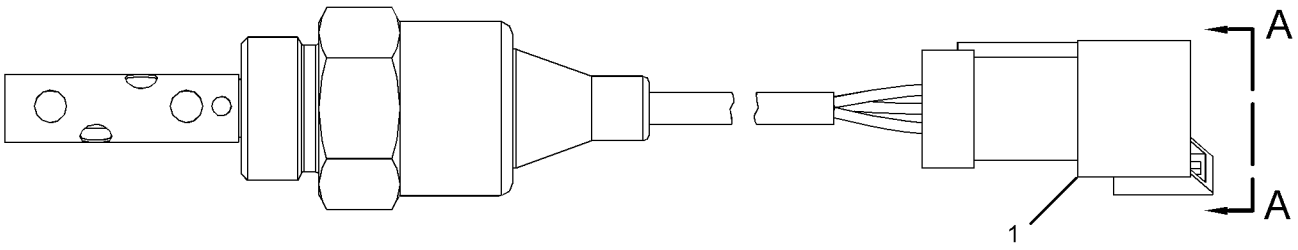

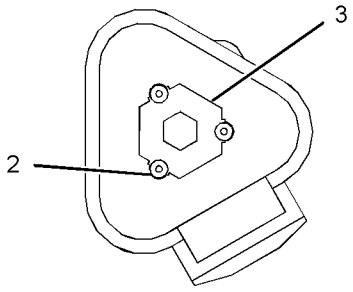

VIEW A-A

GRAPHIC #1

<END>

g02625892

267-1402 SENSOR GP-PRESSURE

S/N: TXD1-UP; THX1-UP
AMPSEAL CONNECTOR
PART OF 330-6034 SENSOR GP-ENGINE
ALSO AN ATTACHMENT

SMCS-1439, 1916, 1917, 1923, 1924 **i02328182**

NOTE	REF NO	GRAPHIC REF	PART NUMBER	QTY	PART NAME 1 2 3 4 5 6 (PRODUCT LEVEL)	SEE PAGE
	1	1	**214-7567**	1	SEAL-O-RING	
	2	1	**248-2169**	1	SENSOR GP-PRESSURE	

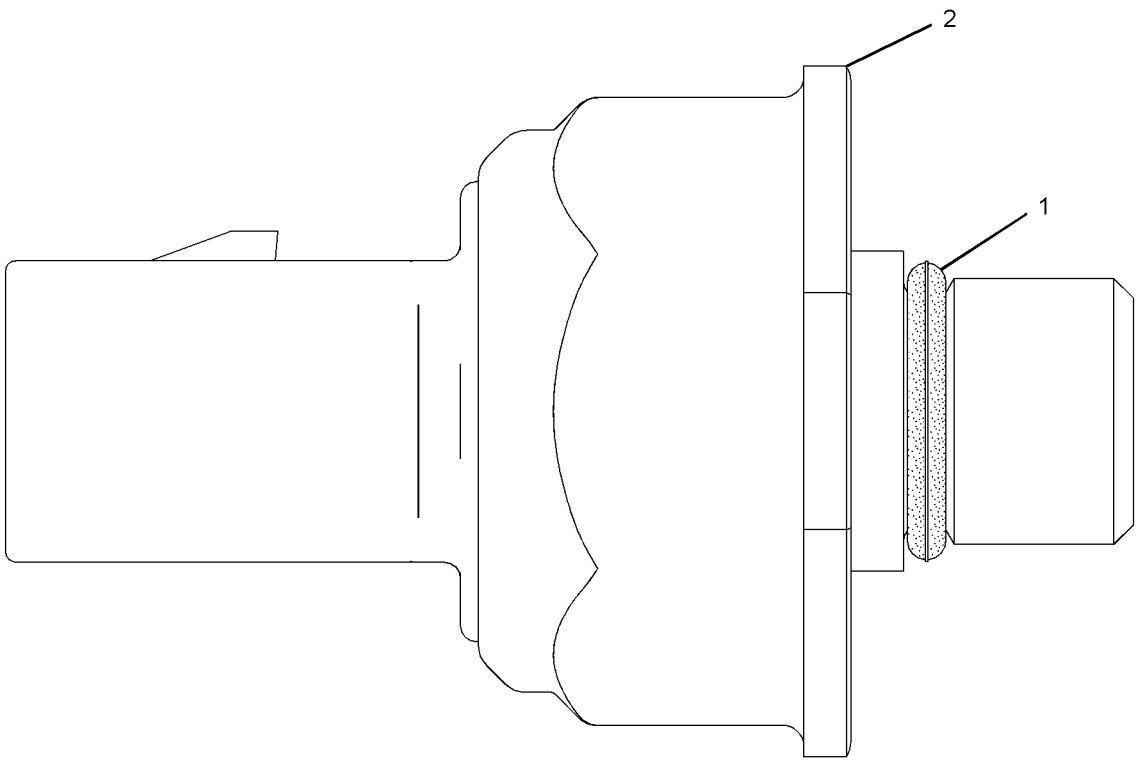

GRAPHIC #1 **<END>** g01164283

303-3357 SENSOR GP-PRESSURE

S/N: TXD1-UP; THX1-UP
PART OF 330-6034 SENSOR GP-ENGINE
ALSO AN ATTACHMENT

SMCS-1439, 1916, 1917, 1923, 1924 **i05020737**

NOTE	REF NO	GRAPHIC REF	PART NUMBER	QTY	PART NAME 1 2 3 4 5 6 (PRODUCT LEVEL)	SEE PAGE
	1	1	**296-8060**	1	SENSOR GP-PRESSURE	
	2	1	**214-7568**	1	SEAL-O-RING	

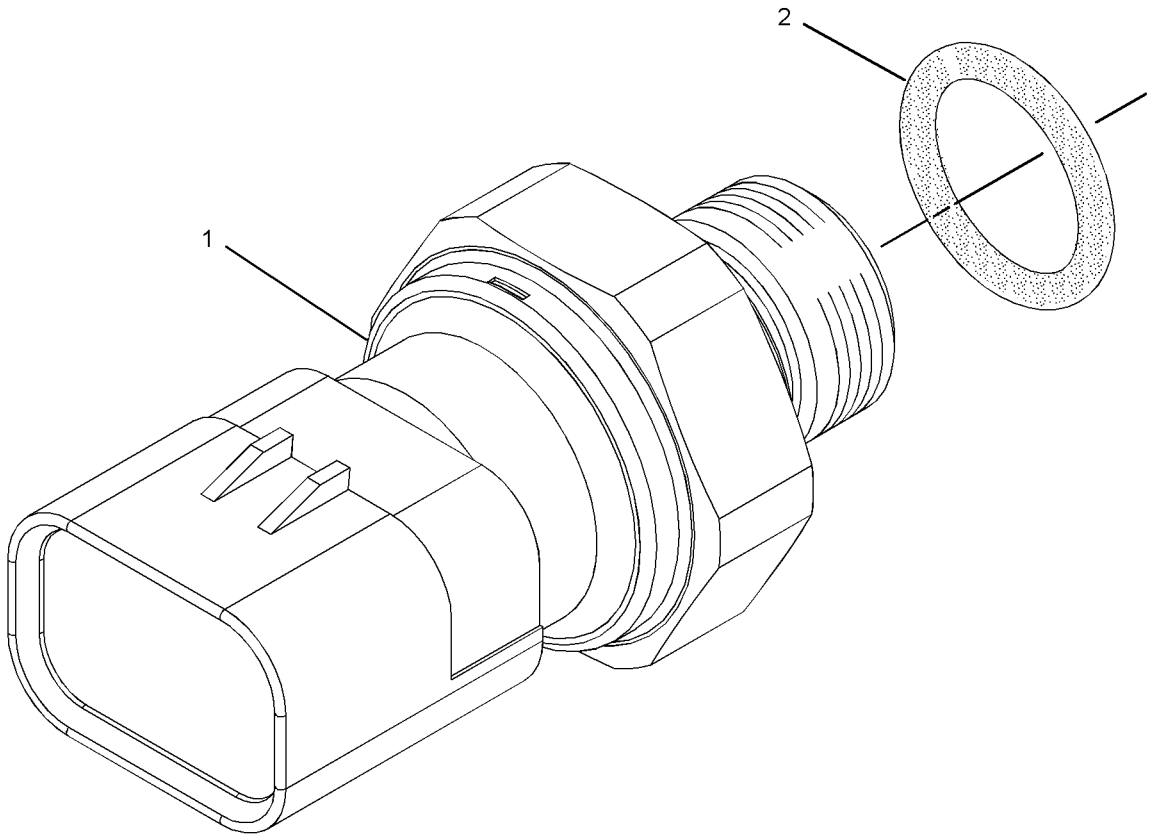

GRAPHIC #1 **<END>** g01331369

236-6221 SENSOR GP-SPEED–ENGINE TIMING

S/N: TXD1-UP; THX1-UP
PART OF 330-6034 SENSOR GP-ENGINE
ALSO AN ATTACHMENT

SMCS-1907, 1912, 4803, 7493 **i04565642**

NOTE	REF NO	GRAPHIC REF	PART NUMBER	QTY	PART NAME 1 2 3 4 5 6 (PRODUCT LEVEL)	SEE PAGE
	1	1	**228-4947**	2	SEAL-O-RING	
	2	1	**245-4630**	1	SENSOR GP-SPEED	

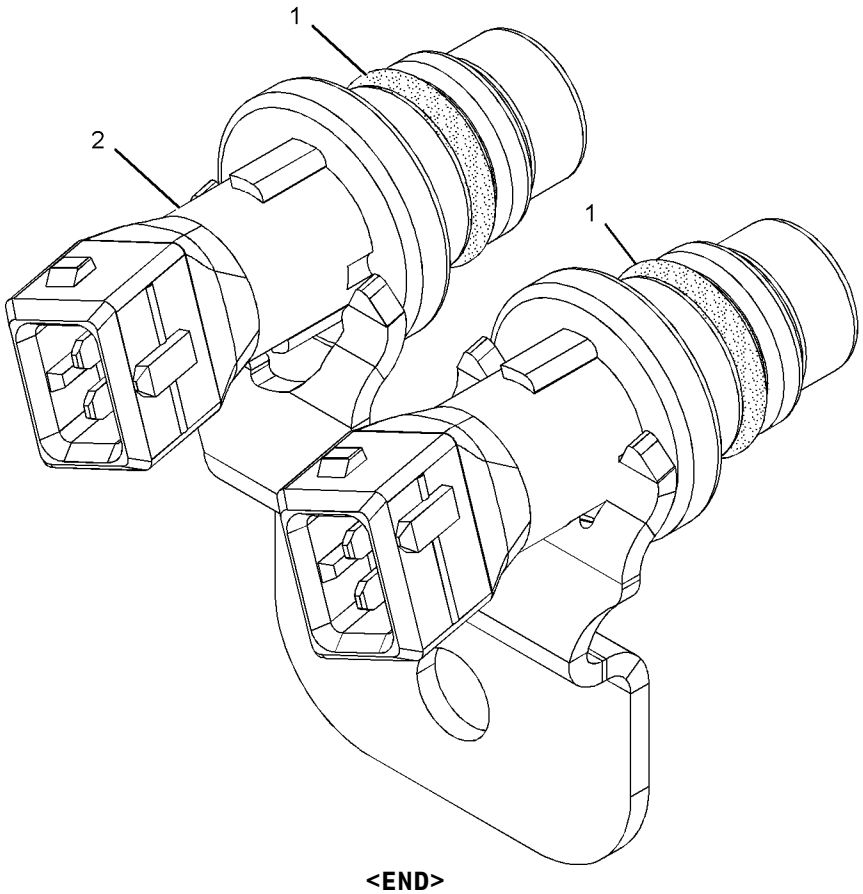

GRAPHIC #1 **<END>** g01013894

234-5012 SENSOR GP-TEMPERATURE

S/N: TXD1-UP; THX1-UP
PART OF 330-6034 SENSOR GP-ENGINE
ALSO AN ATTACHMENT

SMCS-1906, 1921, 1922, 1928, 1929, 3290, 7344 **i02660829**

NOTE	REF NO	GRAPHIC REF	PART NUMBER	QTY	PART NAME 1 2 3 4 5 6 (PRODUCT LEVEL)	SEE PAGE
	1	1	**256-6453**	1	SENSOR-TEMPERATURE	
	2	1	**6V-6609**	1	SEAL-O-RING	

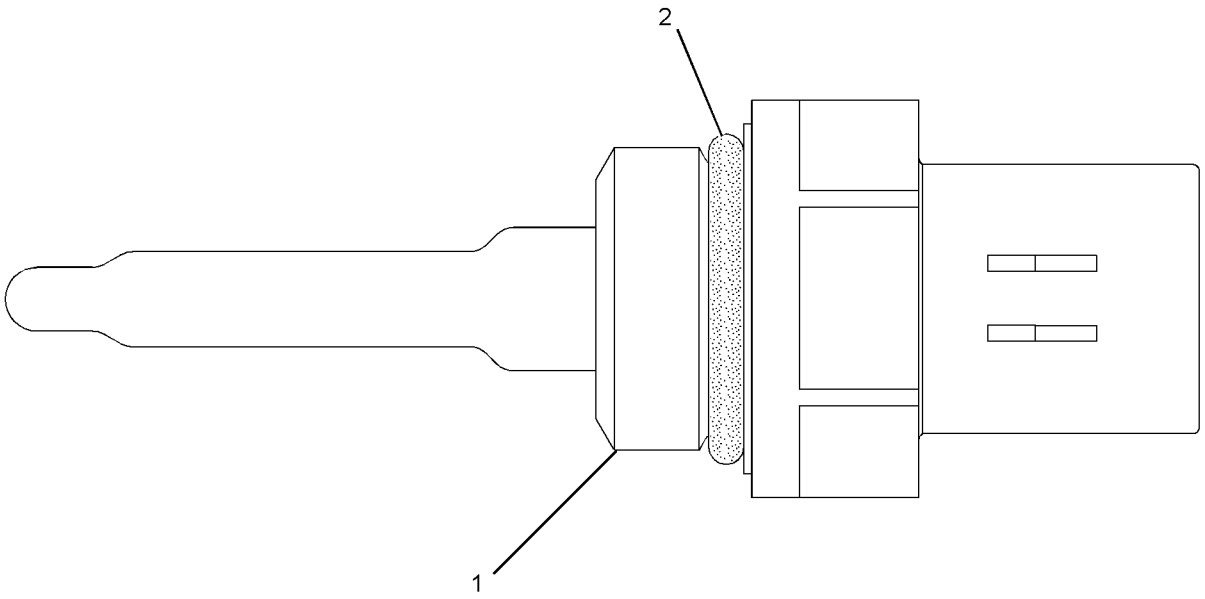

GRAPHIC #1 **<END>** g01164284

234-5013 SENSOR GP-TEMPERATURE

S/N: TXD1-UP; THX1-UP
PART OF 330-6034 SENSOR GP-ENGINE
ALSO AN ATTACHMENT

SMCS-1906, 1921, 1922, 1928, 1929, 3290, 7344 **i04461691**

NOTE	REF NO	GRAPHIC REF	PART NUMBER	QTY	PART NAME 1 2 3 4 5 6 (PRODUCT LEVEL)	SEE PAGE
	1	1	**256-6453**	1	SENSOR-TEMPERATURE	
	2	1	**238-5080**	1	SEAL-O-RING	

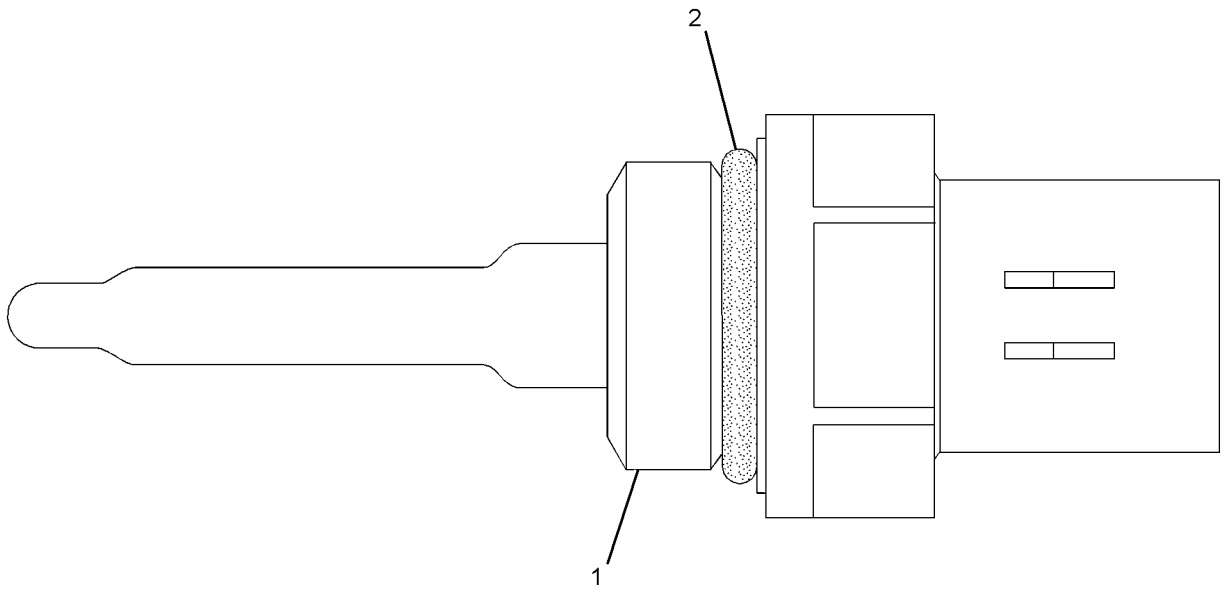

GRAPHIC #1 **<END>** g01164268

238-3215 STARTING AID GP–AIR INLET MANIFOLD

S/N: THX1-UP
24-VOLT, 2000-WATT. LH SIDE OF ENGINE BETWEEN HEAD AND AIR INLET ELBOW
PART OF 347-1741, 367-4852 ENGINE AR-COMPLETE
CANNOT BE USED WITH MID MOUNT FUEL FILTER
ALSO AN ATTACHMENT

SMCS-1090 **i05099589**

NOTE	REF NO	GRAPHIC REF	PART NUMBER	QTY	PART NAME 1 2 3 4 5 6 (PRODUCT LEVEL)	SEE PAGE
C	1	1	**324-3257**	1	HEATER AS-AIR INLET (24-VOLT, 1892-WATT) (STARTING AID)	
C	2	1	**344-9225**	1	STRAP-GROUNDING	
C	3	1	**3E-4352**	1	WASHER-HARD (8.8X20.5X2.5-MM THK)	
CM	4	1	**5C-2890**	1	NUT (M6X1-THD)	
CM	5	1	**6V-5217**	1	BOLT (M8X1.25X20-MM)	
C	6	1	**9X-8256**	1	WASHER (6.6X12X2-MM THK)	
B	7	1	**1U-8846**		SEALANT-GASKET	

B-USE AS REQUIRED
C-CHANGE FROM PREVIOUS TYPE
M-METRIC PART

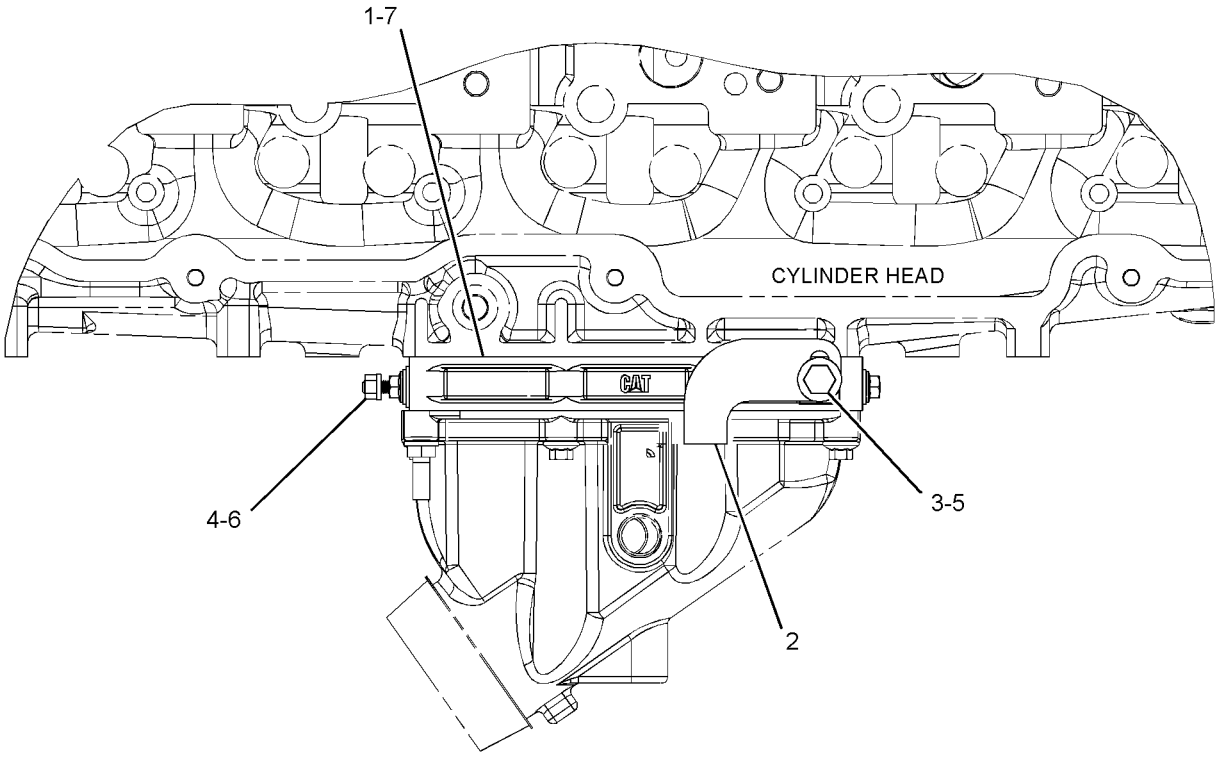

TOP VIEW OF ENGINE

GRAPHIC #1 **<END>** g02353738

238-3215 STARTING AID GP—AIR INLET MANIFOLD

S/N: TXD1-UP; THX1-UP
24-VOLT, 2000-WATT. LH SIDE OF ENGINE BETWEEN HEAD AND AIR INLET ELBOW
PART OF 347-1741, 367-4852 ENGINE AR-COMPLETE
CANNOT BE USED WITH MID MOUNT FUEL FILTER
ALSO AN ATTACHMENT

SMCS-1090 **i02392103**

NOTE	REF NO	GRAPHIC REF	PART NUMBER	QTY	PART NAME 1 2 3 4 5 6 (PRODUCT LEVEL)	SEE PAGE
	1	1	**7E-5714**	1	STRAP-GROUNDING	
	2	1	**238-3216**	1	HEATER AS (STARTING AID)	
M	3	1	**5C-2890**	2	NUT (M6X1-THD)	
	4	1	**9X-8256**	2	WASHER (6.6X12X2-MM THK)	
BF			**1U-8846**		SEALANT-GASKET	

B-USE AS REQUIRED
F-NOT SHOWN
M-METRIC PART

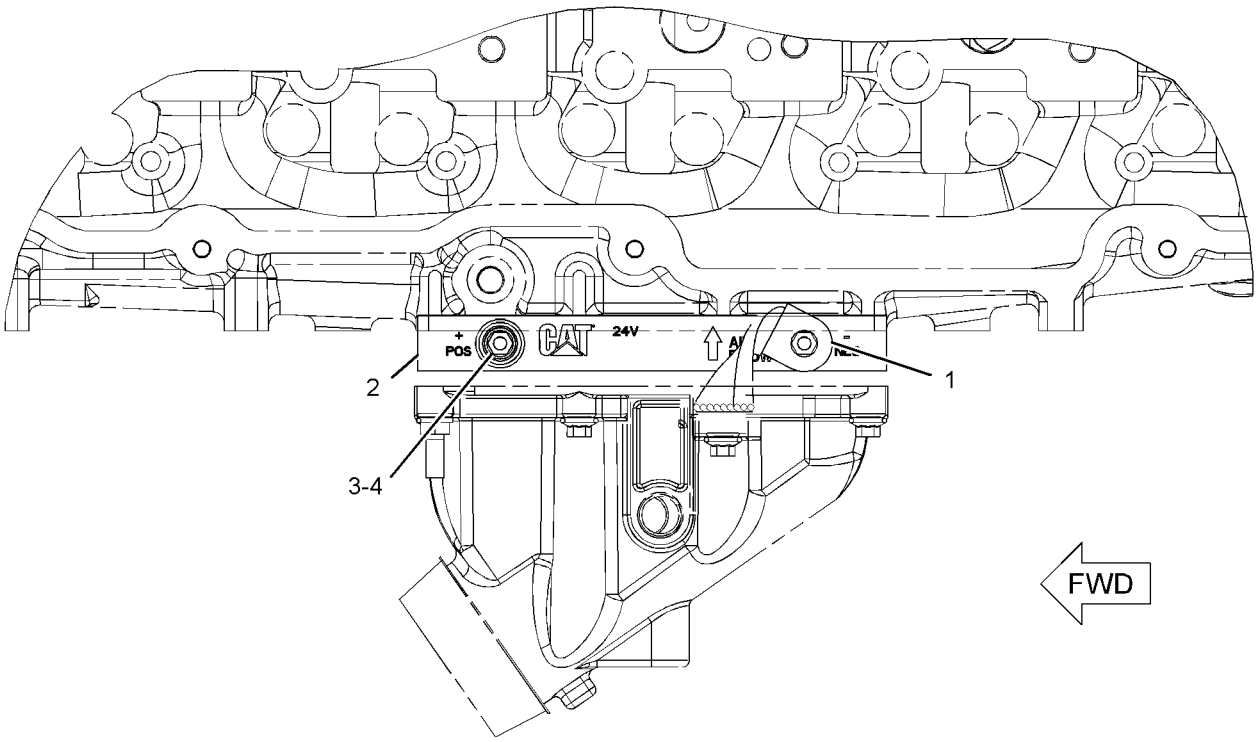

TOP VIEW

GRAPHIC #1 **<END>** g01200323

ELECTRICAL AND STARTING SYSTEM

366-2652 STARTING AID GP-ETHER

S/N: F7B1-UP

PART OF 362-3899 CHASSIS AR

SMCS-1456 **i04993372**

NOTE	REF NO	GRAPHIC REF	PART NUMBER	QTY	PART NAME 1 2 3 4 5 6 (PRODUCT LEVEL)	SEE PAGE
	1	1	**9T-6635**	1	PLUG	
Y	2	1	**239-1134**	1	VALVE GP-ETHER STARTING (24-VOLT)	167
	3	1	**276-5436**	1	FITTING AS	
	4	1	**251-4345**	1	ATOMIZER GP-ETHER	
		1	**236-4545**	1	NUT-SLEEVE (5/16-24-THD)	
	5	1	*276-6597*	1	MOUNTING GP-ETHER CANISTER	
		1	**236-8013**	1	BRACKET	
		1	**276-6596**	1	CLAMP	
M	6	1	**5C-7261**	2	NUT (M8X1.25-THD)	
	7	1	**6V-2686**	1	CLIP	
	8	1	**8L-2786**	1	SEAL-O-RING	
	9	1	**8T-4121**	1	WASHER-HARD (11X21X2.5-MM THK)	
M	10	1	**8T-4137**	1	BOLT (M10X1.5X20-MM)	
M	11	1	**8T-4189**	6	BOLT (M8X1.25X20-MM)	
	12	1	**8T-4224**	8	WASHER-HARD (8.8X16X2-MM THK)	
D	13	1	**5P-5630**		TUBE (0.5-M)	
A		1	**275-3634**	1	CYLINDER AS-ETHER (U.S.)	
					(MUST BE PROCURED LOCALLY FROM YOUR CAT DEALER)	

A-NOT PART OF THIS GROUP
D-ORDER BY THE METER
M-METRIC PART
Y-SEPARATE ILLUSTRATION

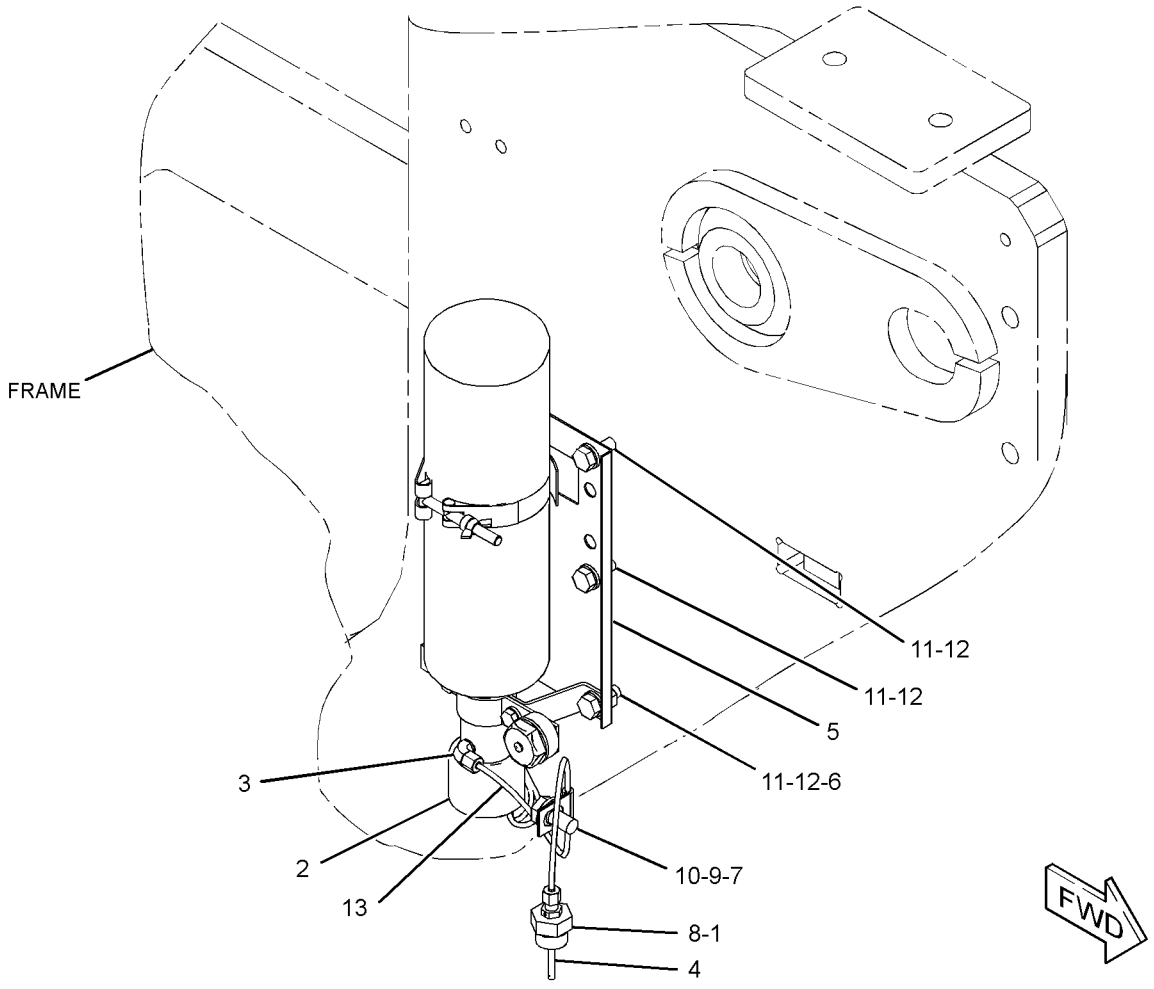

GRAPHIC #1 **<END>** g03191956

ELECTRICAL AND STARTING SYSTEM

380-0632 STARTING AR-COLD WEATHER

S/N: F7B1-UP

AN ATTACHMENT

SMCS-1450 **i04963065**

NOTE	PART NUMBER	QTY	PART NAME 1 2 3 4 5 6 (PRODUCT LEVEL)	SEE PAGE
Y	*394-4490*	1	BATTERY & WIRING GP	119
Y	*380-0633*	1	PREHEATER GP-MACHINE	138

Y-SEPARATE ILLUSTRATION

<END>

ELECTRICAL AND STARTING SYSTEM

338-3454 STARTING MOTOR GP-ELECTRIC*R

S/N: F7B1-UP

24-VOLT

FIELD REPLACEMENT FOR 338-3457—PAGE 156

SMCS-1453 **i04921760**

NOTE	REF NO	GRAPHIC REF	PART NUMBER	QTY	PART NAME 1 2 3 4 5 6 (PRODUCT LEVEL)	SEE PAGE
	1	1	**7M-0326**	1	CONNECTOR	
	2	1	**9H-3757**	2	WASHER (0.516X1X0.094-IN THK)	
	3	1	**1S-7446**	3	SCREW-MACHINE (8-32X0.437-IN)	
	4	1	**8C-9660**	3	WASHER (4.6X7.9X0.8-MM THK)	
	5	1	**9S-2544**	9	SCREW-HEX HEAD (8-32X11.13-MM)	
	6	1	**7M-0327**	1	WASHER-THRUST (17.4X25.4X1.6-MM THK)	
	7	1	**3T-3418**	1	FRAME AS-END	
		1	**3T-3423**	1	CUP	
		1	**3T-3424**	1	PLUG-FELT	
		1	**9G-4101**	1	BUSHING-END	
Y	8	1	**3T-9525**	1	PLATE AS-BRUSH (STARTING MOTOR)	136
	9	1	**1T-0808**	2	WASHER (0.516X0.812X0.09-IN THK)	
	10	1	**3T-3422**	1	WIRE AS	
	11	1	**2J-8163**	2	SEAL-O-RING	
	12	1	**7X-3373**	1	BOLT (5/16-18X0.88-IN)	
	13	1	**3T-3434**	6	PLUG	
	14	1	**5J-5314**	5	BOLT (5/16-18X1.5-IN)	
	15	1	**3L-3380**	1	BUSHING-TERMINAL	
	16	1	**8C-3089**	1	SEAL-O-RING	
	17	1	**4M-1853**	1	LEVER AS-SHIFT	
	18	1	**5M-3034**	1	LOCKNUT (5/16-24-THD)	
	19	1	**7L-2894**	4	GASKET	
	20	1	**4M-1831**	4	PLUG-LEVER HOUSING	
	21	1	**4M-1854**	1	SHAFT-LEVER	
	22	1	**1H-1023**	1	SEAL-O-RING	
	23	1	**2D-6392**	1	SEAL-O-RING	
	24	1	**7T-3974**	1	HOUSING AS-DRIVE	
	25	1	**6N-3826**	1	DRIVE AS-MOTOR	
	26	1	**2H-3429**	1	RING-RETAINING	
	27	1	**6V-1322**	4	BOLT (1/4-20X0.375-IN)	
	28	1	**8T-4205**	4	WASHER-HARD (7.2X14.5X2-MM THK)	
	29	1	**6N-3279**	1	INSULATOR	
	30	1	**0S-1597**	13	BOLT (1/4-28X1-IN)	
	31	1	**1M-9971**	1	SPACER (0.835X1.72X0.188-IN THK)	
	32	1	**1H-2629**	3	STRIP-INSULATION	
	33	1	**7M-0324**	1	COIL AS-FIELD	
	34	1	**3R-8797**	12	SCREW & WASHER AS (3/8-24X0.72-IN)	
	35	1	**7F-3488**	6	SHOE-POLE	
	36	1	**7M-8651**	1	ARMATURE AS	
	37	1	**7M-0325**	1	INSULATOR	
	38	1	**3T-9524**	6	BRUSH AS	
	39	1	**3N-3763**	1	KIT-TERMINAL (STARTING MOTOR) (INCLUDES BUSHINGS & WASHERS)	
	40	1	**338-3453**	1	SOLENOID AS-STARTING MOTOR (24-VOLT)	
	40A	1	**3R-8801**	1	CLAMP	
	42	1	**8F-1434**	2	LOCKWASHER	
	43	1	**6V-8188**	6	NUT (1/2-13-THD)	
	44	1	**7X-0562**	6	WASHER-HARD (13.5X19X0.8-MM THK)	
	45	1	**4B-2049**	6	NUT (10-32-THD)	
	46	1	**8T-0328**	10	WASHER-HARD (5.5X10X1-MM THK)	
	47	1	**3T-9494**	6	SPRING	
	48	1	**3E-7771**	1	HOUSING AS (STARTING MOTOR)	
	49	1	**9G-4101**	1	BUSHING-END	
	50	1	**3T-3424**	3	PLUG-FELT	
	51	1	**3T-3423**	3	CUP	

338-3454 STARTING MOTOR GP-ELECTRIC *(contd.)* i04921760

NOTE	REF NO	GRAPHIC REF	PART NUMBER	QTY	PART NAME 1 2 3 4 5 6 (PRODUCT LEVEL)	SEE PAGE
	52	1	**1M-9968**	1	BUSHING	
	53	1	**2F-6678**	1	SEAL-LIP TYPE	
	54	1	**4L-2729**	1	WASHER (0.844X1.9X0.188-IN THK)	
	55	1	**4M-1896**	1	BUSHING-TERMINAL	
	56	1	**045-4065**	4	SCREW-MACHINE (10-32X0.75-IN)	
	58	1	**125-6535**	1	COVER-STARTING MOTOR	
Y-SEPARATE ILLUSTRATION						

338-3454 STARTING MOTOR GP-ELECTRIC *(contd.)* **i04921760**

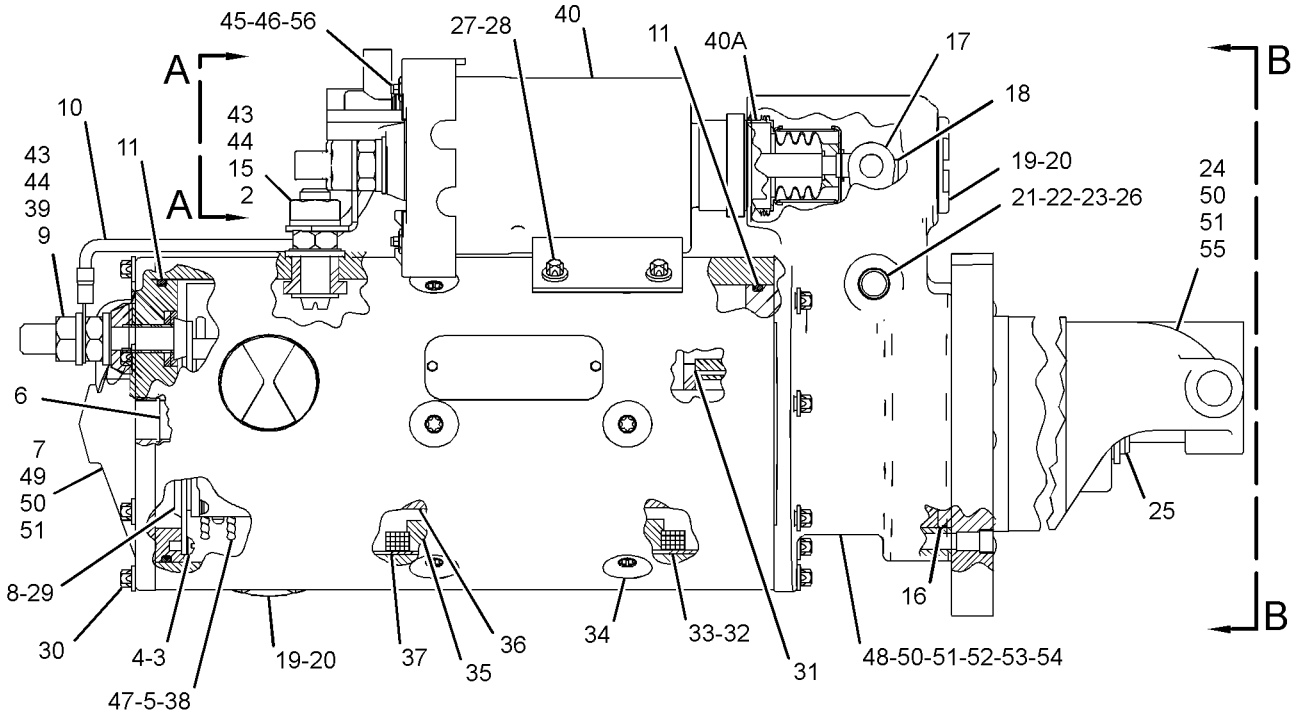

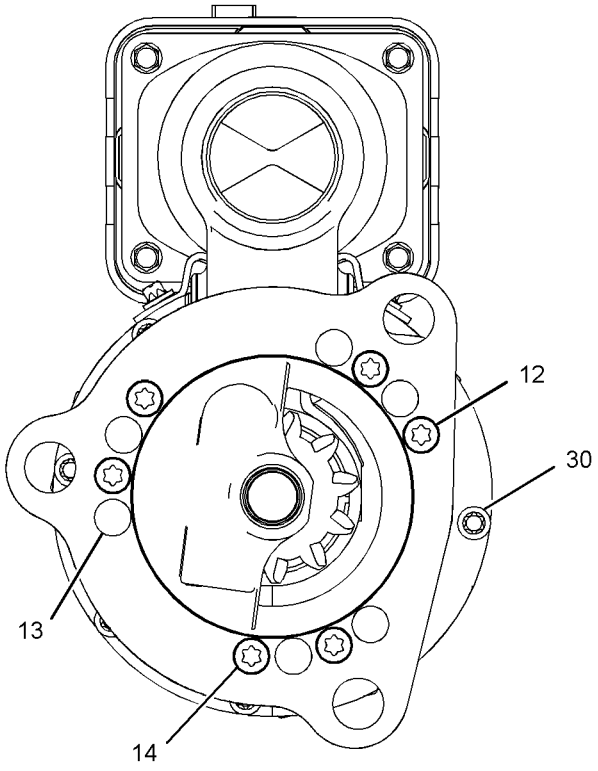

VIEW B-B

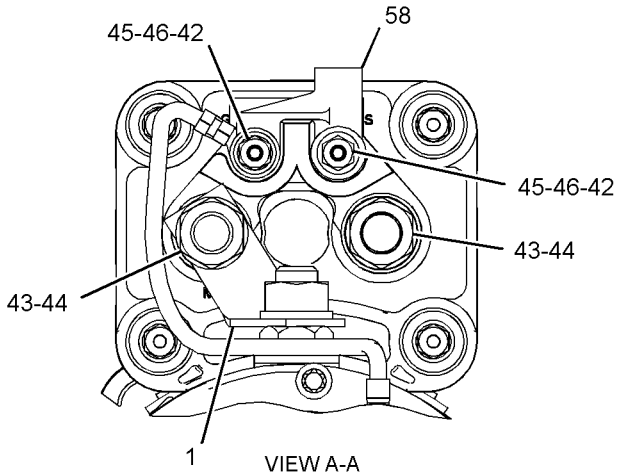

VIEW A-A

GRAPHIC #1 **<END>** g03090296

ELECTRICAL AND STARTING SYSTEM

338-3457 STARTING MOTOR GP-ELECTRIC

S/N: F7B1-UP
24-VOLT
PART OF 339-8301 WIRING GP-ENGINE
FIELD REPLACEMENT ORDER 338-3454—PAGE 153

SMCS-1453 **i05016627**

NOTE	REF NO	GRAPHIC REF	PART NUMBER	QTY	PART NAME 1 2 3 4 5 6 (PRODUCT LEVEL)	SEE PAGE
	1	1	**7M-0326**	1	CONNECTOR	
	2	1	**9H-3757**	2	WASHER (0.516X1X0.094-IN THK)	
	3	1	**1S-7446**	3	SCREW-MACHINE (8-32X0.437-IN)	
	4	1	**8C-9660**	3	WASHER (4.6X7.9X0.8-MM THK)	
	5	1	**9S-2544**	9	SCREW-HEX HEAD (8-32X11.13-MM)	
	6	1	**7M-0327**	1	WASHER-THRUST (17.4X25.4X1.6-MM THK)	
	7	1	**3T-3418**	1	FRAME AS-END	
		1	**3T-3423**	1	CUP	
		1	**3T-3424**	1	PLUG-FELT	
		1	**9G-4101**	1	BUSHING-END	
	8	1	**3T-9525**	1	PLATE AS-BRUSH (STARTING MOTOR)	
	8A	2	**6T-0372**	1	PLATE	
	8B	2	**6T-0371**	1	INSULATOR	
	8C	2	**6T-0363**	6	HOLDER AS-BRUSH	
					(EACH INCLUDES)	
		2	**3T-9494**	1	SPRING	
	8D	2	**3T-4709**	3	PLATE	
	8E	2	**3T-4710**	3	PLATE	
	8F	2	**2L-6679**	3	PLATE-INSULATOR	
	8G	2	**7F-3525**	6	WASHER-BUSHING (0.207X0.39X0.09-IN THK)	
	8H	2	**5P-6298**	12	SCREW-MACHINE (10-32X0.5-IN)	
	8I	2	**9F-5599**	12	LOCKWASHER	
	9	1	**1T-0808**	2	WASHER (0.516X0.812X0.09-IN THK)	
	10	1	**3T-3422**	1	WIRE AS	
	11	1	**2J-8163**	2	SEAL-O-RING	
	12	1	**7X-3373**	1	BOLT (5/16-18X0.88-IN)	
	13	1	**3T-3434**	6	PLUG	
	14	1	**5J-5314**	5	BOLT (5/16-18X1.5-IN)	
	15	1	**3L-3380**	1	BUSHING-TERMINAL	
	16	1	**8C-3089**	1	SEAL-O-RING	
	17	1	**4M-1853**	1	LEVER AS-SHIFT	
	18	1	**5M-3034**	1	LOCKNUT (5/16-24-THD)	
	19	1	**7L-2894**	4	GASKET	
	20	1	**4M-1831**	4	PLUG-LEVER HOUSING	
	21	1	**4M-1854**	1	SHAFT-LEVER	
	22	1	**1H-1023**	1	SEAL-O-RING	
	23	1	**2D-6392**	1	SEAL-O-RING	
	24	1	**7T-3974**	1	HOUSING AS-DRIVE	
	25	1	**6N-3826**	1	DRIVE AS-MOTOR	
	26	1	**2H-3429**	1	RING-RETAINING	
	27	1	**6V-1322**	4	BOLT (1/4-20X0.375-IN)	
	28	1	**8T-4205**	4	WASHER-HARD (7.2X14.5X2-MM THK)	
	29	1	**6N-3279**	1	INSULATOR	
	30	1	**0S-1597**	13	BOLT (1/4-28X1-IN)	
	31	1	**1M-9971**	1	SPACER (0.835X1.72X0.188-IN THK)	
	32	1	**1H-2629**	3	STRIP-INSULATION	
	33	1	**7M-0324**	1	COIL AS-FIELD	
	34	1	**3R-8797**	12	SCREW & WASHER AS (3/8-24X0.72-IN)	
	35	1	**7F-3488**	6	SHOE-POLE	
	36	1	**7M-8651**	1	ARMATURE AS	
	37	1	**7M-0325**	1	INSULATOR	
	38	1	**3T-9524**	6	BRUSH AS	
	39	1	**3N-3763**	1	KIT-TERMINAL (STARTING MOTOR)	
					(INCLUDES BUSHINGS & WASHER)	

338-3457 **STARTING MOTOR GP-ELECTRIC** *(contd.)* **i05016627**

NOTE	REF NO	GRAPHIC REF	PART NUMBER	QTY	PART NAME 1 2 3 4 5 6 (PRODUCT LEVEL)	SEE PAGE
	40	1	**338-3453**	1	SOLENOID AS-STARTING MOTOR (24-VOLT)	
		1	**3R-8801**	1	CLAMP	
	41	1	**3R-8801**	1	CLAMP	
	42	1	**8F-1434**	2	LOCKWASHER	
	43	1	**6V-8188**	6	NUT (1/2-13-THD)	
	44	1	**7X-0562**	6	WASHER-HARD (13.5X19X0.8-MM THK)	
	45	1	**4B-2049**	6	NUT (10-32-THD)	
	46	1	**8T-0328**	10	WASHER-HARD (5.5X10X1-MM THK)	
	47	1	**3T-9494**	6	SPRING	
	48	1	**3E-7771**	1	HOUSING AS (STARTING MOTOR)	
	49	1	**9G-4101**	1	BUSHING-END	
	50	1	**3T-3424**	3	PLUG-FELT	
	51	1	**3T-3423**	3	CUP	
	52	1	**1M-9968**	1	BUSHING	
	53	1	**2F-6678**	1	SEAL-LIP TYPE	
	54	1	**4L-2729**	1	WASHER (0.844X1.9X0.188-IN THK)	
	55	1	**4M-1896**	1	BUSHING-TERMINAL	
	56	1	**045-4065**	4	SCREW-MACHINE (10-32X0.75-IN)	
	58	1	**125-6535**	2	COVER-STARTING MOTOR	

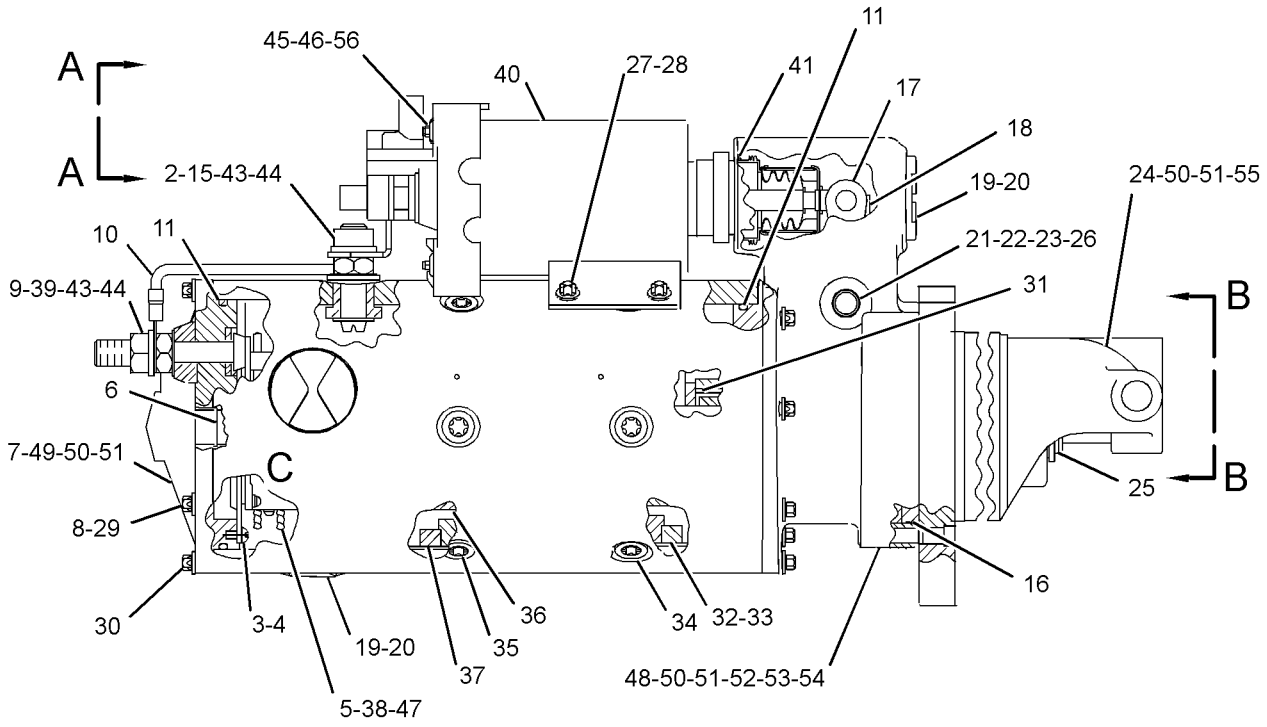

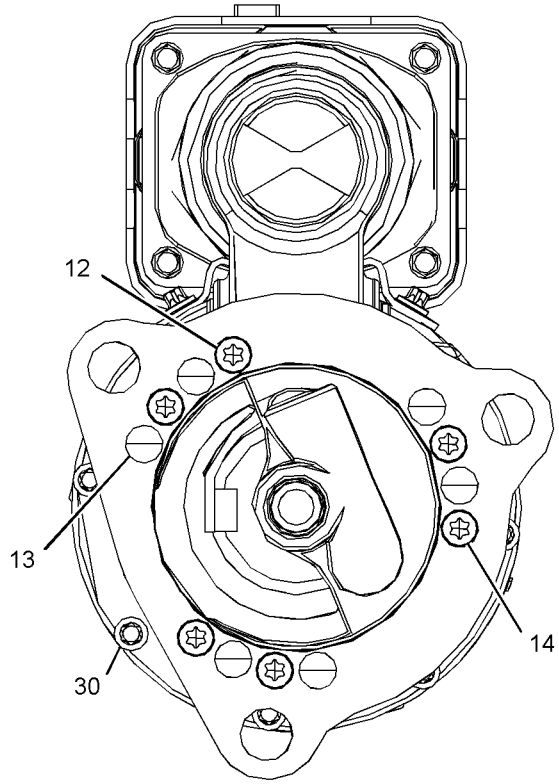

VIEW B-B

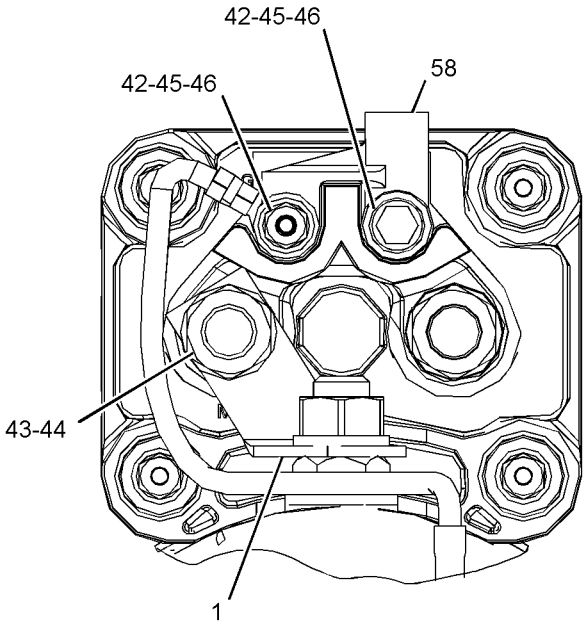

VIEW A-A

REFER TO ALL ILLUSTRATIONS OF THIS GROUP FOR AUXILIARY VIEWS

GRAPHIC #1

g03193156

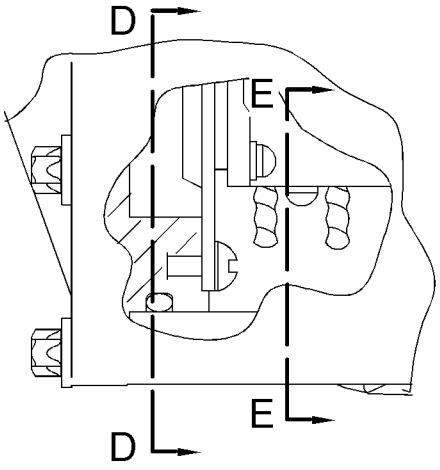

VIEW AREA C

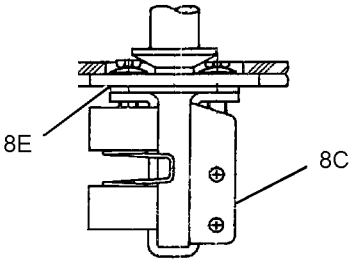

SECTION G-G

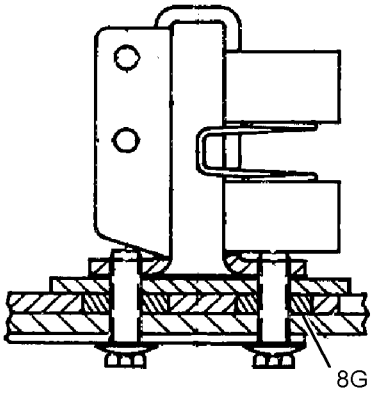

SECTION F-F

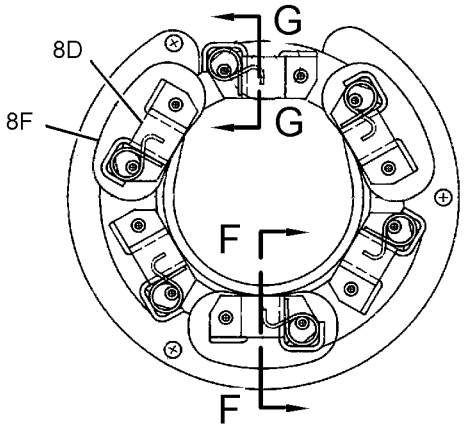

SECTION E-E

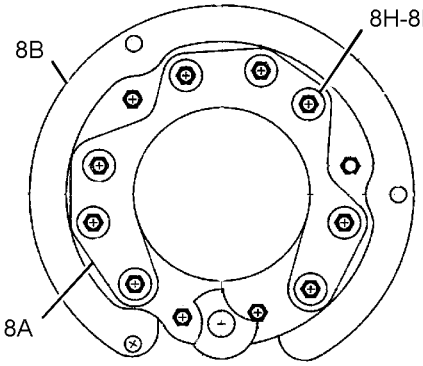

SECTION D-D

GRAPHIC #2 **<END>** g02446798

7N-0718 SWITCH GP-DISCONNECT–BATTERY

S/N: F7B1-UP

12-VOLT

PART OF 339-8300 BATTERY & WIRING GP, 237-7602 SWITCH GP-DISCONNECT

SMCS-1411 **i02459121**

NOTE	REF NO	GRAPHIC REF	PART NUMBER	QTY	PART NAME 1 2 3 4 5 6 (PRODUCT LEVEL)	SEE PAGE
	1	1	**8H-5306**	1	KEY (BATTERY DISCONNECT)	
	2	1	**8H-5303**	1	NUT (3/4-16-THD)	
	3	1	**2H-3922**	2	LOCKWASHER	
	4	1	**9F-5644**	2	LOCKWASHER	
	5	1	**6F-7045**	2	NUT-FULL (3/8-24-THD)	

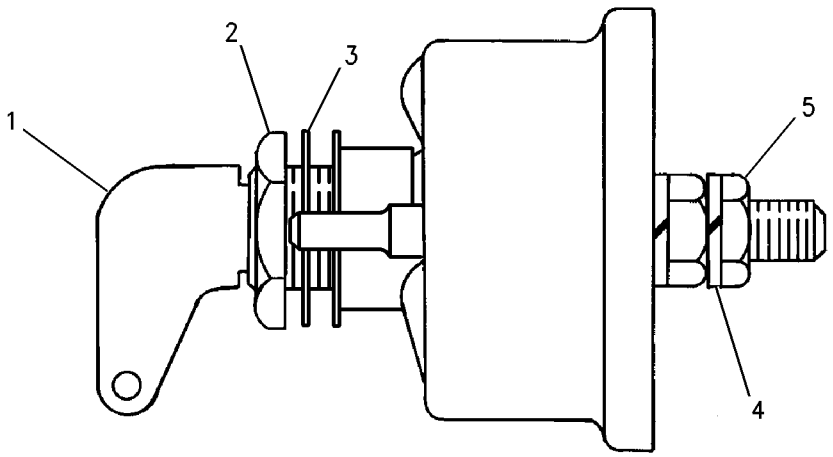

GRAPHIC #1 **<END>** g00715584

237-7602 SWITCH GP-DISCONNECT

S/N: F7B1-UP

PART OF 339-8300 BATTERY & WIRING GP

SMCS-1411 **i05099789**

NOTE	REF NO	GRAPHIC REF	PART NUMBER	QTY	PART NAME 1 2 3 4 5 6 (PRODUCT LEVEL)	SEE PAGE
	1	1	**318-6259**	1	COVER AS	
Y	2	1	**7N-0718**	1	SWITCH GP-DISCONNECT (BATTERY)	160

Y-SEPARATE ILLUSTRATION

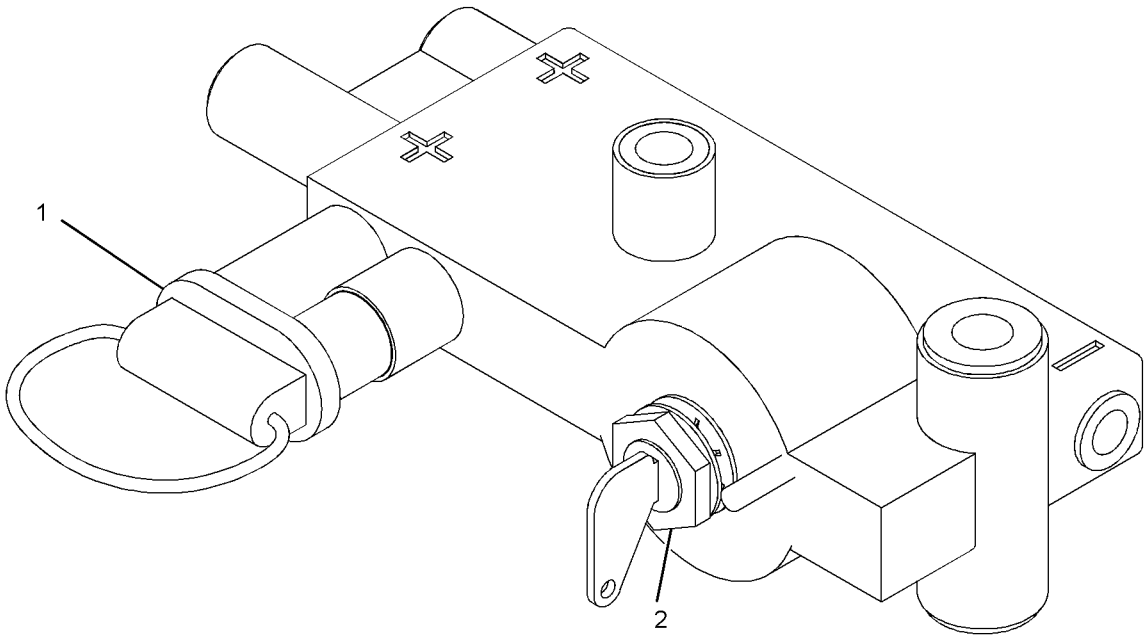

GRAPHIC #1 **<END>** g02475498

234-6613 SWITCH GP-LIMIT–HYD LOCKOUT, NEUTRAL START

S/N: F7B1-UP

PART OF 259-7349 CONSOLE GP-OPERATOR

SMCS-1435 **i03346001**

NOTE	REF NO	GRAPHIC REF	PART NUMBER	QTY	PART NAME 1 2 3 4 5 6 (PRODUCT LEVEL)	SEE PAGE
	1	1	**3S-2093**	1	STRAP-CABLE	
	2	1	**4I-3038**	2	WASHER (3.3X8X0.5-MM THK)	
	3	1	**111-4799**	1	SWITCH AS-LIMIT (HYD LOCKOUT, NEUTRAL START)	
		1	**102-8803**	1	KIT-RECEPTACLE (3-PIN)	
					(INCLUDES RECEPTACLE AS & WEDGE)	
		1	**186-3735**	3	PIN-CONNECTOR (16-GA TO 18-GA)	
D		1	**5P-5998**		TUBE (0.3-M)	
M	4	1	**185-8286**	2	SCREW-MACHINE (M4X0.7X8-MM)	
	5	1	**234-6615**	1	KNOB	
	6	1	**087-4683**	2	LOCKWASHER	
M	7	1	**120-9027**	2	SCREW-PAN HEAD (M3X0.5X16-MM)	

D-ORDER BY THE METER
M-METRIC PART

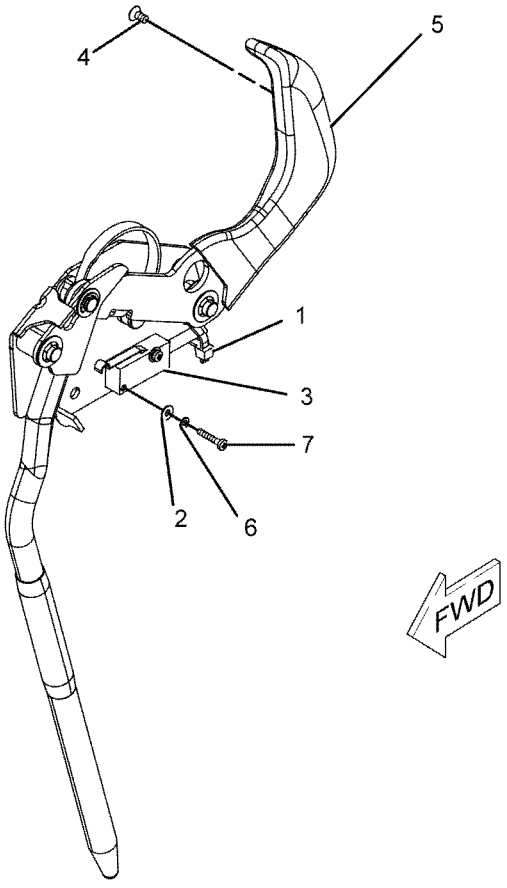

GRAPHIC #1 **<END>** g01096293

209-5582 SWITCH GP-MAGNETIC–STARTING AID HEATER RELAY–AIR INLET HEATER

24-VOLT

PART OF 339-8300 BATTERY & WIRING GP, 269-3410 WIRING GP-HEATER

ALSO AN ATTACHMENT

SMCS-7499 **i03753277**

NOTE	REF NO	GRAPHIC REF	PART NUMBER	QTY	PART NAME 1 2 3 4 5 6 (PRODUCT LEVEL)	SEE PAGE
	1	1	**102-8802**	1	KIT-RECEPTACLE (2-PIN)	
					(INCLUDES RECEPTACLE AS & WEDGE)	
	2	1	**8T-8729**	2	PIN-CONNECTOR (16-GA TO 18-GA)	
	3	1	**3F-9556**	2	LOCKWASHER	
	4	1	**6V-8186**	2	NUT-FULL (5/16-24-THD)	
	5	1	**6V-8378**	2	NUT (10-32-THD)	
	6	1	**8F-1434**	2	LOCKWASHER	

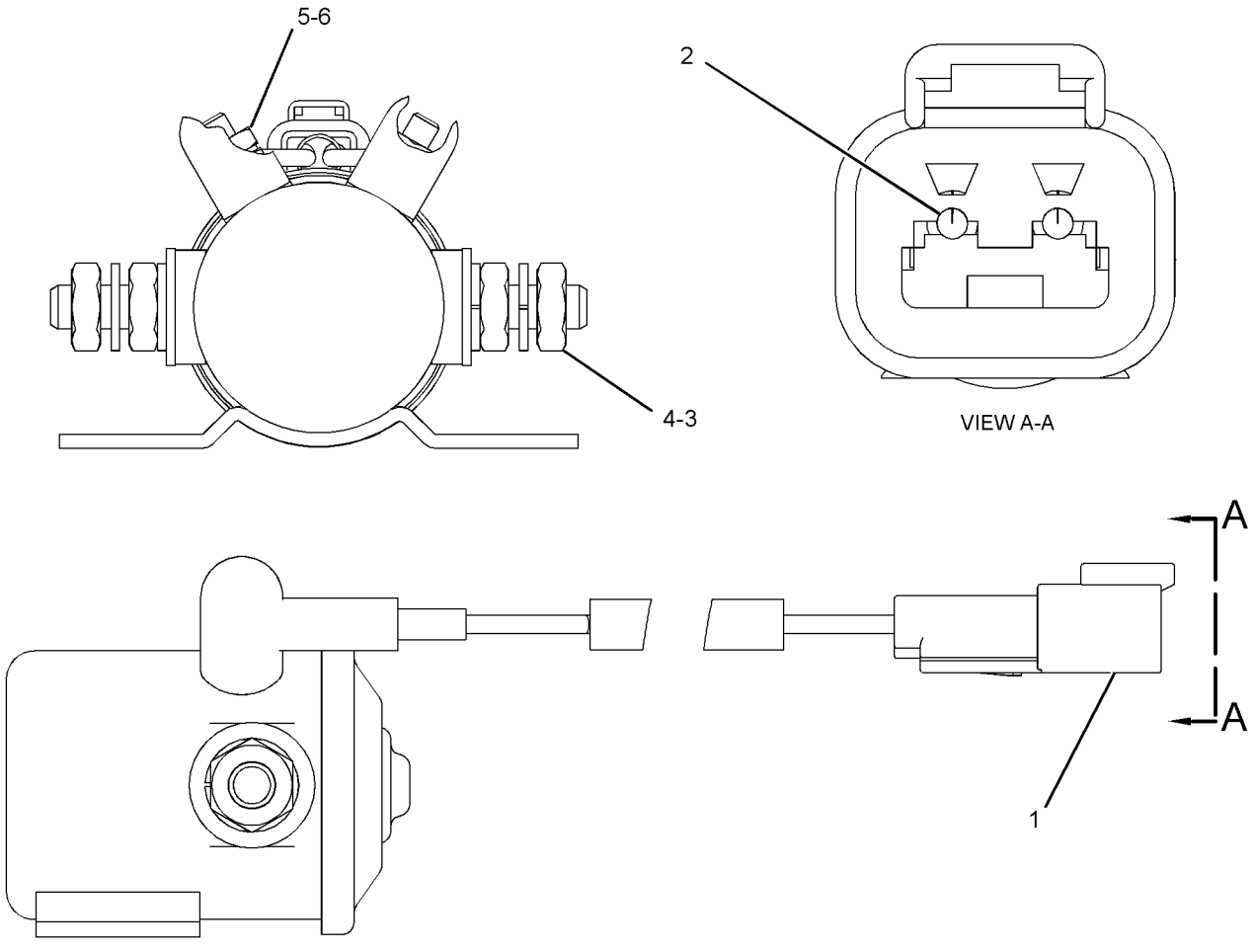

GRAPHIC #1 **<END>** g01279452

241-8368 SWITCH GP-MAGNETIC–MAIN RELAY

S/N: F7B1-UP
24-VOLT
PART OF 375-1044 PANEL GP-ELECTRONIC

SMCS-7499 **i04805648**

NOTE	REF NO	GRAPHIC REF	PART NUMBER	QTY	PART NAME 1 2 3 4 5 6 (PRODUCT LEVEL)	SEE PAGE
	1	1	**155-2270**	1	KIT-CONNECTING PLUG (2-PIN)	
					(INCLUDES PLUG AS, WEDGE & INTERFACE SEAL)	
	2	1	**4F-2294**	2	NUT-JAM (5/16-24-THD)	
	3	1	**8T-8730**	2	SOCKET-CONNECTOR (16-GA TO 18-GA)	

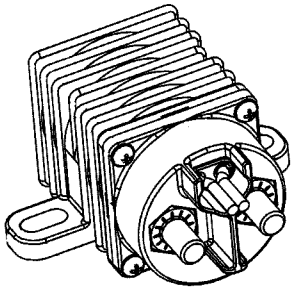

ISOMETRIC VIEW

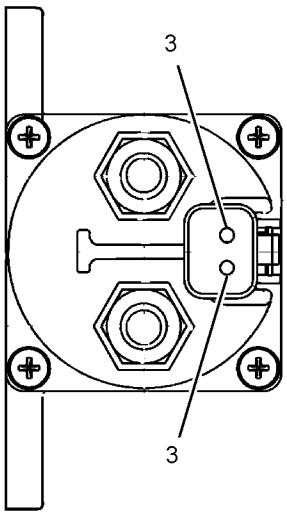

VIEW A-A

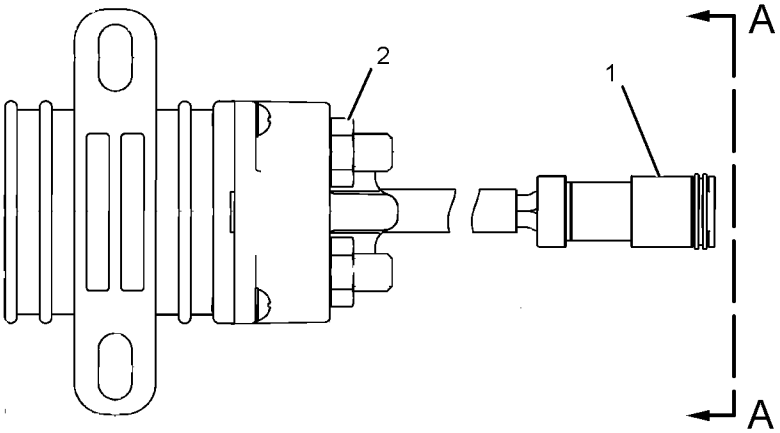

GRAPHIC #1 **<END>** g01077362

258-0883 SWITCH GP-PRESSURE–HYDRAULIC FILTER BYPASS

S/N: F7B1-UP

PART OF 362-3885 WIRING GP-MACHINE

SMCS-1435 **i05094142**

NOTE	REF NO	GRAPHIC REF	PART NUMBER	QTY	PART NAME 1 2 3 4 5 6 (PRODUCT LEVEL)	SEE PAGE
	1	1	**102-8802**	1	KIT-RECEPTACLE (2-PIN)	
					(INCLUDES RECEPTACLE AS & WEDGE)	
	2	1	**9X-7737**	1	SEAL-O-RING	
	3	1	**8T-8729**	2	PIN-CONNECTOR (16-GA TO 18-GA)	
E	4	1	**9X-1813**		SLEEVE (14-CM)	
	5	1	**6V-4589**	1	SEAL-O-RING	

E-ORDER BY THE CENTIMETER

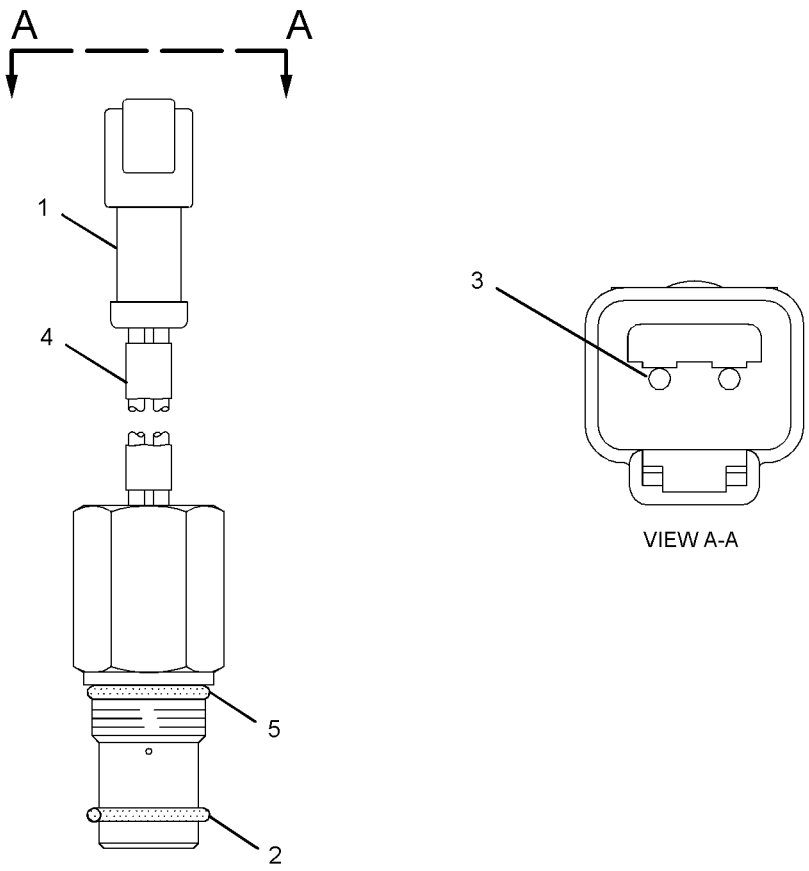

GRAPHIC #1 **<END>** g01960393

158-6634 SWITCH GP-TOGGLE–SAW BLADE ON, OFF–ENGINE STOP, RUN

S/N: F7B1-UP

PART OF 365-1387 WIRING GP-CAB

SMCS-7332 **i04551566**

NOTE	REF NO	GRAPHIC REF	PART NUMBER	QTY	PART NAME 1 2 3 4 5 6 (PRODUCT LEVEL)	SEE PAGE
	1	1	**6T-3631**	2	NUT-HEX (15/32-32-THD)	
	2	1	**6T-3632**	1	LOCKWASHER	
	3	1	**6T-3633**	1	RING-LOCKING	
	4	1	**102-8804**	1	KIT-RECEPTACLE (4-PIN)	
					(INCLUDES RECEPTACLE AS & WEDGE)	
	5	1	**8T-8729**	3	PIN-CONNECTOR (16-GA TO 18-GA)	
	6	1	**9G-3695**	1	PLUG-SEAL	

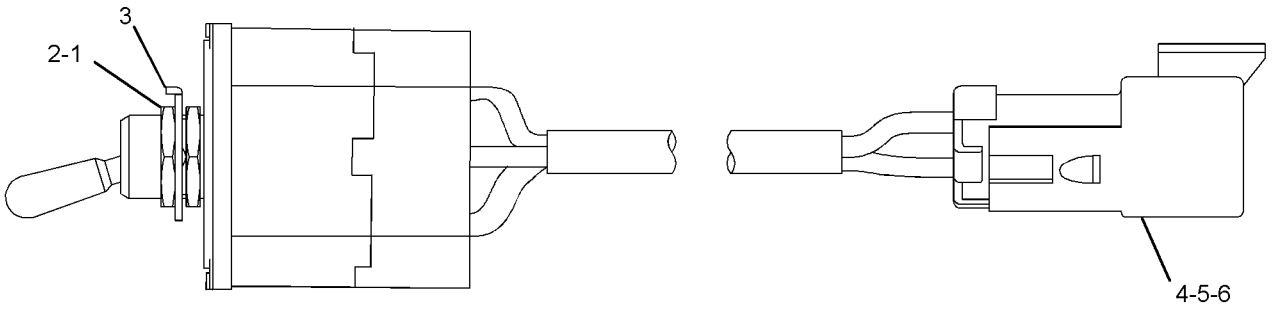

GRAPHIC #1 **<END>** g01618710

239-1134 VALVE GP-ETHER STARTING

S/N: F7B1-UP
24-VOLT
PART OF 366-2652 STARTING AID GP-ETHER

SMCS-1456 **i03894416**

NOTE	REF NO	GRAPHIC REF	PART NUMBER	QTY	PART NAME 1 2 3 4 5 6 (PRODUCT LEVEL)	SEE PAGE
	1	1	**7N-9801**	1	GASKET	
	2	1	**102-8802**	1	KIT-RECEPTACLE (2-PIN)	
					(INCLUDES RECEPTACLE AS & WEDGE)	
	3	1	**8T-8729**	2	PIN-CONNECTOR (16-GA TO 18-GA)	
	4	1	**358-4889**	1	FILTER (ETHER START)	

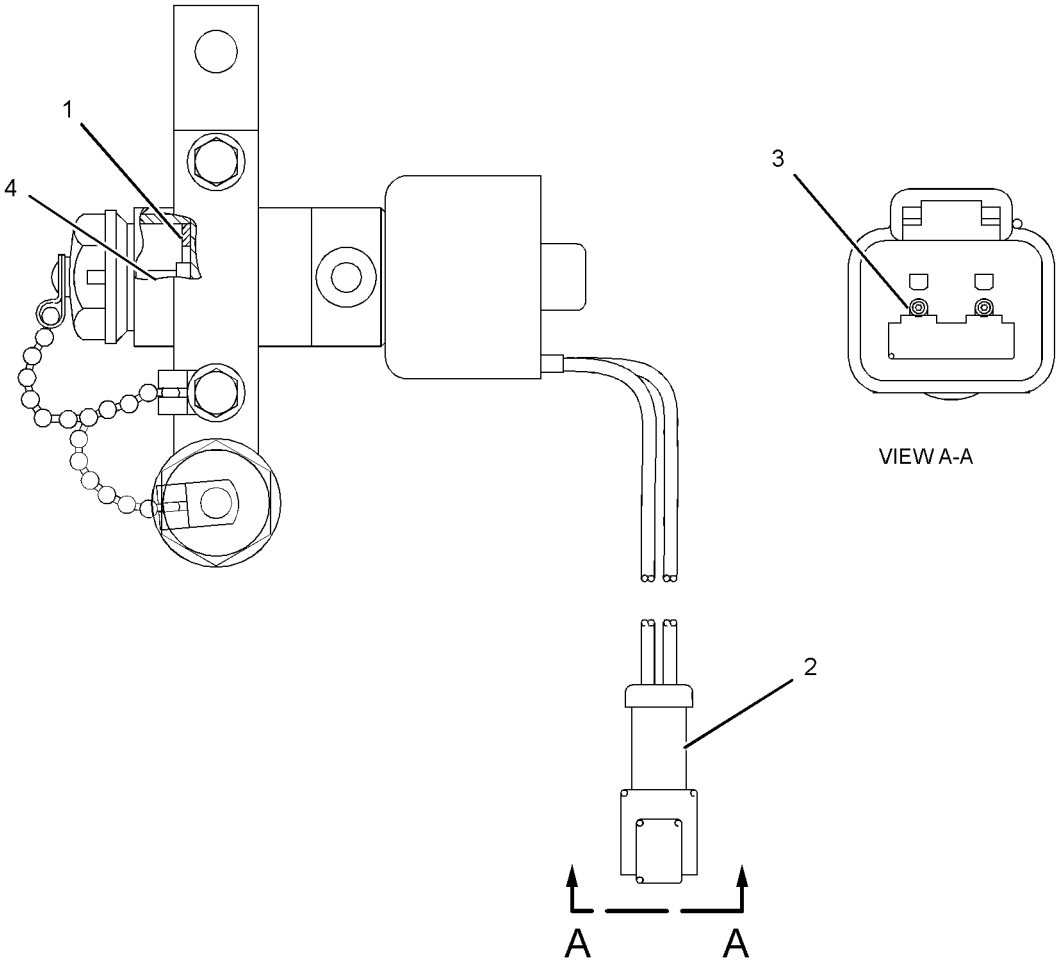

GRAPHIC #1 **<END>** g02138138

339-8297 WARNING GP-BACKUP

S/N: F7B1-UP

PART OF 362-3897 ELECTRICAL AR

SMCS-7406 **i04963053**

NOTE	REF NO	GRAPHIC REF	PART NUMBER	QTY	PART NAME 1 2 3 4 5 6 (PRODUCT LEVEL)	SEE PAGE
	1	1	**174-7875**	1	HORN AS (24-VOLT, HIGH TONE)	
M	2	1	**8T-4137**	3	BOLT (M10X1.5X20-MM)	
	3	1	**220-0229**	1	ALARM AS (BACKUP)	
		1	**102-8802**	1	KIT-RECEPTACLE (2-PIN)	
					(INCLUDES RECEPTACLE AS & WEDGE)	
		1	**8T-8729**	2	PIN-CONNECTOR (16-GA TO 18-GA)	
D		1	**5P-5623**		WIRE-ELECTRICAL (16-GA, BLACK) (0.4-M EACH)	
E		1	**9X-1813**		SLEEVE (29-CM)	
	4	1	**7X-7729**	3	WASHER (11X25X3-MM THK)	

D-ORDER BY THE METER
E-ORDER BY THE CENTIMETER
M-METRIC PART

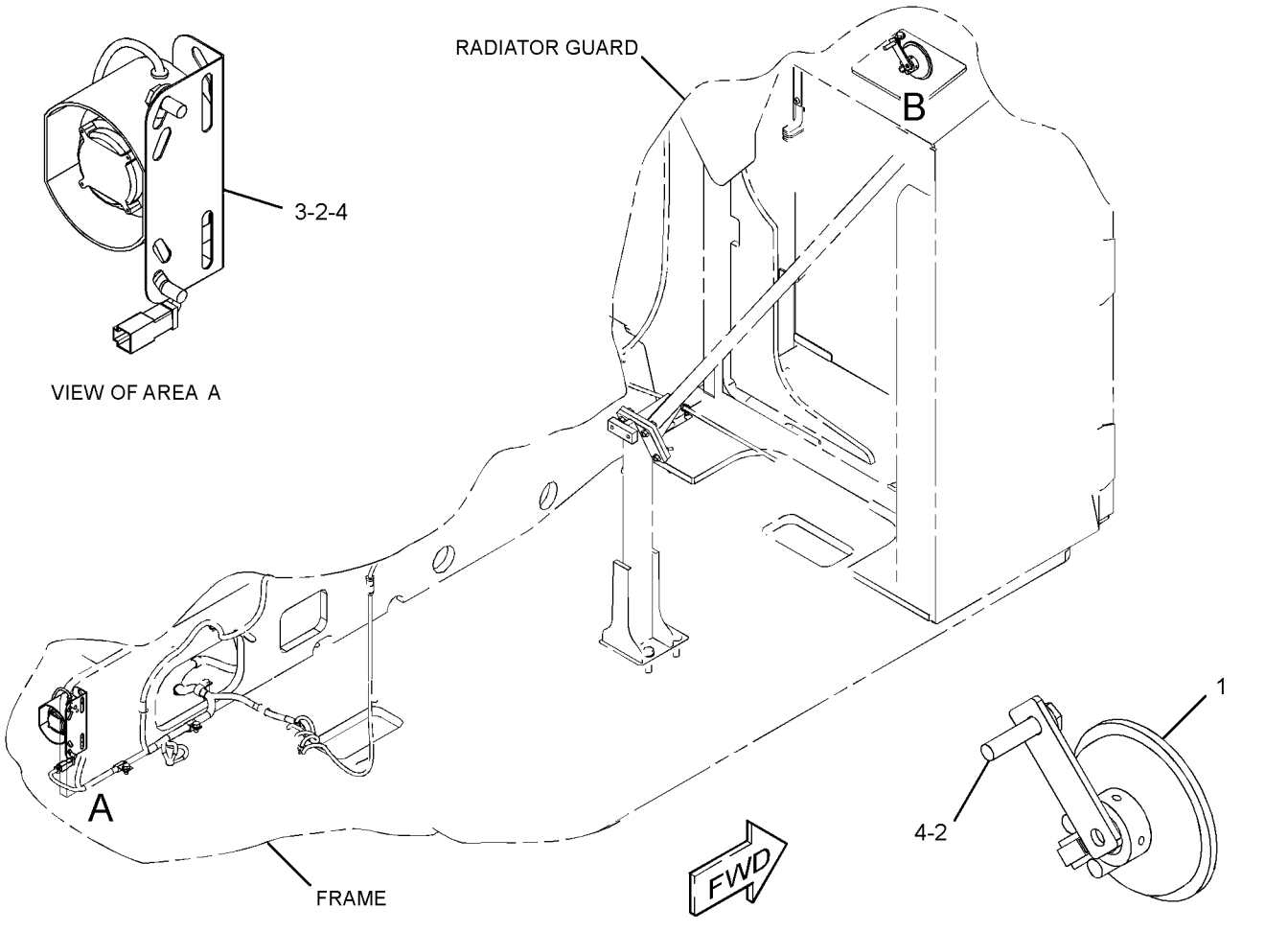

GRAPHIC #1 **<END>** g03148316

380-0813 WIRING GP-BOOM

S/N: F7B1-UP

PART OF 379-5870 LINKAGE AR-FELLING HEAD, 379-5860 LINKAGE AR-INTERMITTENT SAW

AN ATTACHMENT

SMCS-1408 **i05109853**

NOTE	REF NO	GRAPHIC REF	PART NUMBER	QTY	PART NAME 1 2 3 4 5 6 (PRODUCT LEVEL)	SEE PAGE
	1	1	**378-8865**	1	HARNESS AS-LIGHTING (BOOM FLOODLIGHT)	
E		1	**125-7875**		TUBE-HEAT SHRINK (7.44-MM DIA) (10-CM)	
		1	**126-1768**	6	SOCKET-CONNECTOR (14-GA TO 16-GA)	
		1	**155-2270**	3	KIT-CONNECTING PLUG (2-PIN)	
					(EACH INCLUDES PLUG AS, WEDGE, & INTERFACE SEAL)	
	2	1	*155-2026*	1	UNION AS	
		1	**6V-8998**	1	UNION	
		1	**5K-9090**	2	SEAL-O-RING	
Y	3	1	**219-6485**	2	LAMP GP-FLOOD (24-VOLT) (BOOM)	128
	4	1	**5P-9297**	2	CLIP	
	5	1	**6V-9172**	1	NUT (1-7/16-12-THD)	
	6	1	**8T-4121**	2	WASHER-HARD (11X21X2.5-MM THK)	
M	7	1	**8T-4185**	2	BOLT (M10X1.5X50-MM)	
	8	1	**9C-2741**	2	SPACER (13.94X17.14X34-MM THK)	

E-ORDER BY THE CENTIMETER
M-METRIC PART
Y-SEPARATE ILLUSTRATION

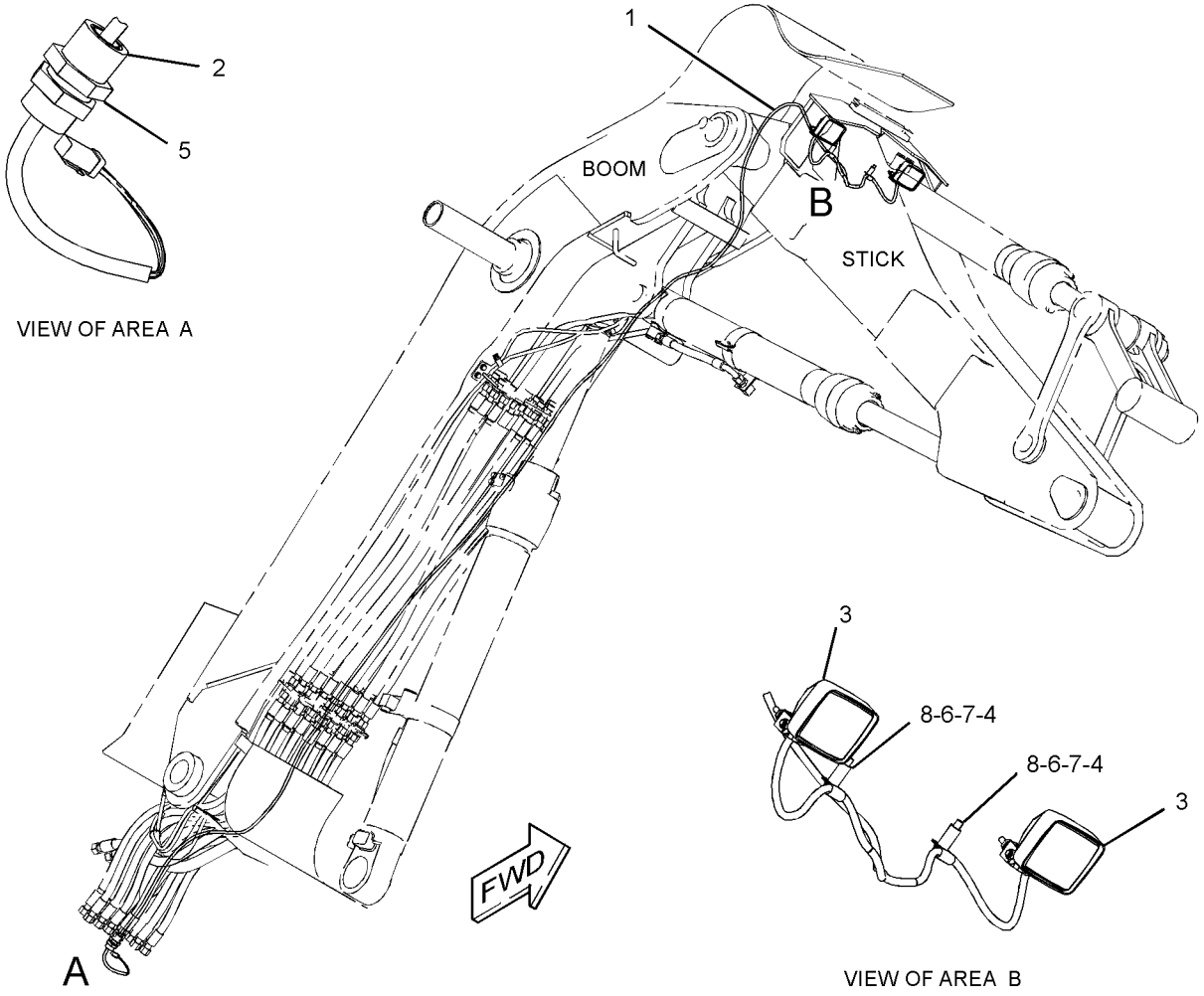

GRAPHIC #1 **<END>** g02734858

382-0646 WIRING GP-BOOM

S/N: F7B1-UP
PART OF 376-8000 LINKAGE AR-HARVESTER HEAD
AN ATTACHMENT

SMCS-1408 **i04491002**

NOTE	REF NO	GRAPHIC REF	PART NUMBER	QTY	PART NAME 1 2 3 4 5 6 (PRODUCT LEVEL)	SEE PAGE
	1	1	**7K-1181**	1	STRAP-CABLE	
	2	1	**238-8344**		HOSE (32.3-IN)	
	3	1	**269-7678**	1	CLIP	
	4	1	**382-0647**	1	HARNESS AS-LIGHTING	
E		1	**125-7875**		TUBE-HEAT SHRINK (7.44-MM DIA) (10-CM)	
		1	**126-1768**	6	SOCKET-CONNECTOR (14-GA TO 16-GA)	
		1	**155-2270**	3	KIT-CONNECTING PLUG (2-PIN)	
					(EACH INCLUDES PLUG AS, WEDGE, & INTERFACE SEAL)	
	5	1	**124-0174**	11	CLIP	
Y	6	1	**219-6485**	2	LAMP GP-FLOOD (24-VOLT) (BOOM)	128
	7	1	**267-8828**	2	GROMMET	
	8	1	**5P-7464**	2	CLIP (SLOT)	
	9	1	**5P-7465**	2	CLIP (TAB)	
	10	1	**6V-1249**	2	GROMMET	
	11	1	**8T-4121**	11	WASHER-HARD (11X21X2.5-MM THK)	
M	12	1	**8T-4133**	8	NUT (M10X1.5-THD)	
M	13	1	**8T-4136**	2	BOLT (M10X1.5X25-MM)	
M	14	1	**8T-4137**	1	BOLT (M10X1.5X20-MM)	

E-ORDER BY THE CENTIMETER
M-METRIC PART
Y-SEPARATE ILLUSTRATION

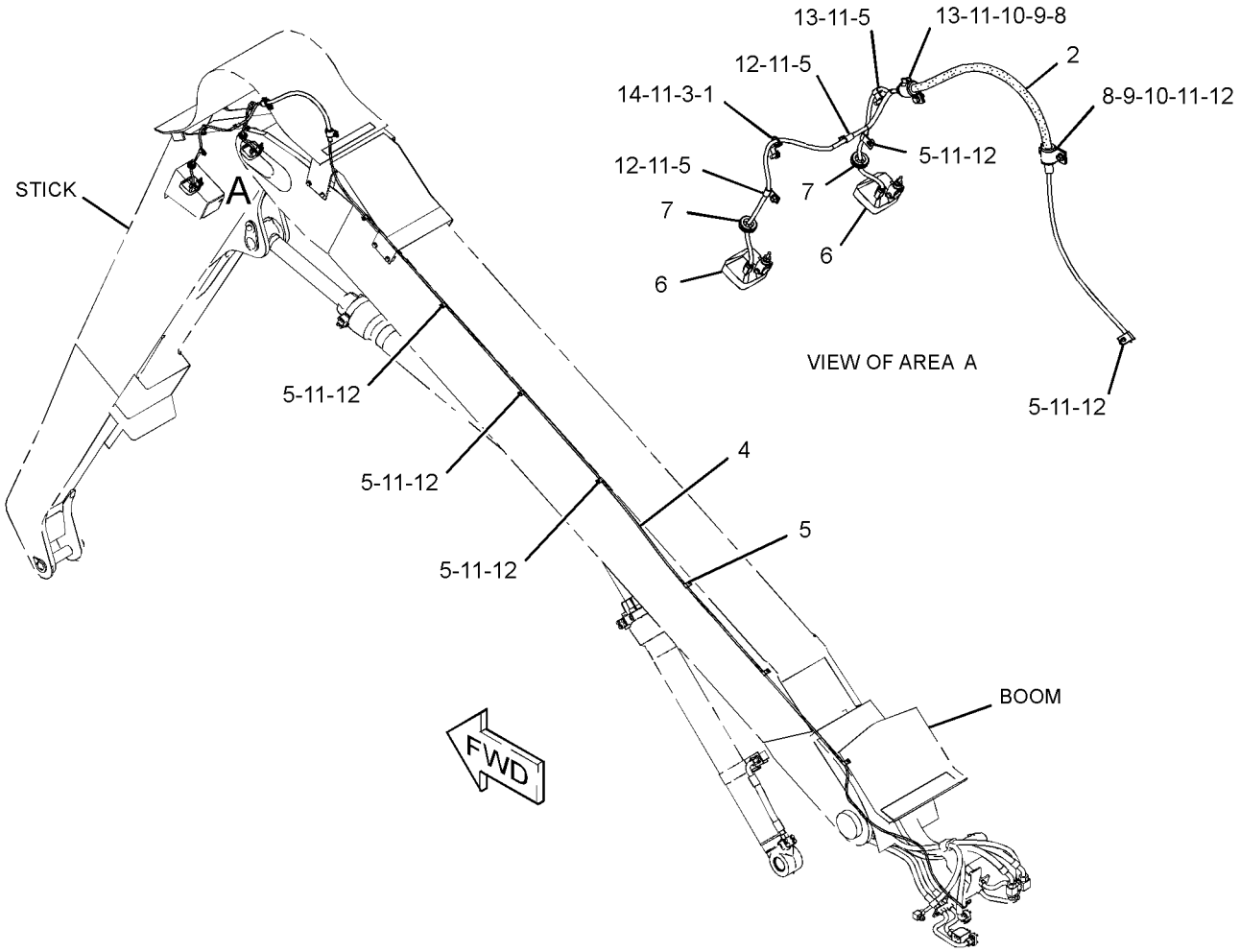

GRAPHIC #1 **<END>** g02721178

365-1387 WIRING GP-CAB

S/N: F7B1-UP
PART OF 362-3893 OPERATOR AR
TYPE 1

SMCS-1408, 7301 **i05109191**

NOTE	REF NO	GRAPHIC REF	PART NUMBER	QTY	PART NAME 1 2 3 4 5 6 (PRODUCT LEVEL)	SEE PAGE
Y	1	2	**3E-6328**	1	ALARM GP (24-VOLT)	111
	2	2,3	**3S-2093**	42	STRAP-CABLE	
	3	2,3	**6T-6969**	2	GUARD-SWITCH	
	4	3	**7I-2673**	1	STRAP-CABLE	
	5	2	**7N-5876**	1	LAMP (24-VOLT, 0.2-AMPERE)	
	6	3	**7U-4891**	4	SCREW (10-32X1-IN)	
M	7	3	**8T-0337**	2	SCREW-MACHINE (M4X0.7X12-MM)	
	8	1	**8X-5803**	1	STRAP AS-GROUND	
	9	2	**117-2311**	2	SOCKET-AUXILIARY POWER (12-VOLT)	
	10	3	**131-0359**	1	PLATE-IDENTIFICATION (ENGINE STOP, RUN)	
Y	11	1	**162-7755**	1	LAMP GP-DOME (24-VOLT)	127
	12	2	**164-0655**	1	PANEL-SWITCH	
	13	3	**172-9200**	1	SUPPRESSOR-ARC	
	14	2	**180-5316**	1	FAN GP-CIRCULATING (24-VOLT)	
		2	**3S-2093**	1	STRAP-CABLE	
		2	**9X-3401**	2	PIN-CONNECTOR (16-GA TO 18-GA)	
		2	**102-8802**	2	KIT-RECEPTACLE (2-PIN)	
					(EACH INCLUDES RECEPTACLE AS & WEDGE)	
	15	3	**180-9900**	1	CAP AS	
		3	**5P-7958**	1	SLEEVE-CABLE SPLICE	
		3	**8C-6354**	1	CAP-RECEPTACLE (ET CONNECTOR)	
		3	**179-9392**	1	LANYARD	
	16	3	**189-2512**	1	PLATE	
	17	3	**193-3973**	2	STRAP-CABLE	
	18	3	**204-8000**	2	MOUNTING-CABLE TIE	
	19	3	**243-5634**	2	PLATE	
	20	2	**258-4178**	1	FLANGE-MOUNTING	
	21	3	**262-7667**	1	PLATE	
	22	1	**263-2106**	1	PLATE AS	
	23	2	**267-2808**	4	PLATE	
	24	2	**267-8010**	1	SWITCH AS-ROCKER (WORK LIGHTS)	
	24A	2	**267-8010**	1	SWITCH AS-ROCKER (CAB LIGHTS)	
	24B	2	**267-8010**	1	SWITCH AS-ROCKER (FLOODLIGHTS)	
					(EACH INCLUDES)	
		2	**167-3542**	1	RECEPTACLE-CONNECTOR (5-PIN)	
		2	**167-3543**	4	TERMINAL (MALE)	
	25	2	**267-8011**	1	SWITCH AS-ROCKER (REVERSIBLE FAN)	
		2	**167-3542**	1	RECEPTACLE-CONNECTOR (5-PIN)	
		2	**167-3543**	4	TERMINAL (MALE)	
	26	3	**289-1210**	1	COVER	
	27	1	*300-4231*	1	CONTROL GP-AIR & TEMPERATURE	
M		1	**9X-2045**	2	SCREW-TRUSS HEAD (M6X1X20-MM)	
		1	**248-4220**	1	PANEL AS (AIR CONDITIONER, HEATER CONT)	
		1	**284-3662**	1	SWITCH AS-ROCKER (24-VOLT) (AIR CONDITIONER ON, OFF)	
	28	2	**327-6232**	1	BRACKET	
	29	2	**372-7911**	1	PANEL AS	
	30	2	**373-2376**	1	SWITCH AS-ROCKER (LOG ACCUMULATOR)	
		2	**167-3542**	1	RECEPTACLE-CONNECTOR (5-PIN)	
		2	**167-3543**	4	TERMINAL (MALE)	
Y	31	2	*374-4362*	1	WIRING GP-CONSOLE	187
	32	3	**374-4367**	1	HARNESS AS-CAB (MAIN)	
		3	**102-8802**	2	KIT-RECEPTACLE (2-PIN)	
		3	**102-8804**	1	KIT-RECEPTACLE (4-PIN)	
					(EACH INCLUDES RECEPTACLE AS & WEDGE)	

365-1387 **WIRING GP-CAB** ***(contd.)*** **i05109191**

NOTE	REF NO	GRAPHIC REF	PART NUMBER	QTY	PART NAME 1 2 3 4 5 6 (PRODUCT LEVEL)	SEE PAGE
		3	**7G-7917**	9	PLUG-SEAL	
		3	**7G-7919**	3	PLUG-SEAL	
		3	**8N-1513**	1	RECEPTACLE AS-CONNECTOR (37-PIN)	
		3	**8N-1522**	1	NUT (2-1/4-16-THD)	
		3	**8N-1519**	1	RECEPTACLE AS-CONNECTOR (12-PIN)	
		3	**8N-1522**	1	NUT (2-1/4-16-THD)	
		3	**8N-1521**	2	BELL AS-END	
		3	**8N-1523**	2	LOCKWASHER	
		3	**9X-6856**	28	PIN-CONNECTOR (16-GA TO 18-GA)	
		3	**8N-1540**	8	PIN-CONNECTOR (12-GA TO 14-GA)	
		3	**8N-1548**	1	PIN-CONNECTOR (4-GA)	
		3	**8T-8737**	23	PLUG-SEAL	
		3	**9R-9806**	12	TERMINAL-BLADE (18-GA TO 20-GA)	
		3	**9W-1441**	13	FUSE (15-AMPERE)	
		3	**9W-1442**	15	FUSE (10-AMPERE)	
		3	**9W-1446**	2	FUSE (20-AMPERE)	
		3	**9W-2032**	2	TERMINAL-BLADE (10-GA TO 12-GA)	
		3	**9W-2033**	16	TERMINAL-BLADE (14-GA TO 16-GA)	
		3	**9X-1054**	7	PLUG AS-CONNECTOR (4-PIN)	
		3	**9X-1056**	14	TERMINAL-RECEPTACLE (14-GA TO 16-GA)	
		3	**9X-6772**	2	STRAP-CABLE	
		3	**100-5041**	14	TERMINAL-RECEPTACLE (18-GA TO 20-GA)	
E		3	**125-7874**		TUBE-HEAT SHRINK (5.72-MM DIA) (60-CM)	
E		3	**125-7875**		TUBE-HEAT SHRINK (7.44-MM DIA) (10-CM)	
		3	**9X-3402**	2	SOCKET-CONNECTOR (16-GA TO 18-GA)	
					—OR—	
		3	**126-1768**	2	SOCKET-CONNECTOR (14-GA TO 16-GA)	
		3	*131-1478*	3	TERMINAL AS	
					(EACH INCLUDES)	
		3	**9G-4343**	1	TERMINAL-RING (4-GA, 1/4-IN SCREW)	
		3	*131-1479*	2	TERMINAL AS	
					(EACH INCLUDES)	
		3	**5P-3454**	1	TERMINAL-RING (4-GA, 5/16-IN SCREW)	
		3	*131-1491*	2	TERMINAL AS	
					(EACH INCLUDES)	
		3	**3T-4692**	1	TERMINAL-RING (6-GA, 7/16-IN SCREW)	
		3	**3T-4693**	1	TERMINAL-RING (8-GA, 7/16-IN SCREW)	
E		3	**119-3662**		TUBE-HEAT SHRINK (10.85-MM DIA) (4-CM)	
		3	*131-1499*	3	TERMINAL AS	
					(EACH INCLUDES)	
		3	**3T-4696**	1	TERMINAL-RING (10-GA TO 12-GA, 7/16-IN SCREW)	
E		3	**125-7875**		TUBE-HEAT SHRINK (7.44-MM DIA) (4-CM)	
		3	**155-2255**	2	KIT-CONNECTING PLUG (12-PIN)	
		3	**155-2256**	1	KIT-CONNECTING PLUG (12-PIN)	
		3	**155-2270**	6	KIT-CONNECTING PLUG (2-PIN)	
		3	**155-2271**	2	KIT-CONNECTING PLUG (4-PIN)	
		3	**155-2274**	2	KIT-CONNECTING PLUG (6-PIN)	
		3	**155-2265**	1	KIT-CONNECTING PLUG (8-PIN)	
					(EACH INCLUDES PLUG AS, WEDGE & INTERFACE SEAL)	
		3	**9X-3401**	42	PIN-CONNECTOR (16-GA TO 18-GA)	
					—OR—	
		3	**126-1767**	42	PIN-CONNECTOR (14-GA TO 16-GA)	
		3	**230-4011**	1	PLUG AS-CONNECTOR (2-PIN)	
		3	**264-7029**	1	SEAL-CONNECTOR	
		3	**230-4012**	1	RECEPTACLE AS-CONNECTOR (2-PIN)	
		3	**291-5075**	1	CIRCUIT BREAKER AS (15-AMPERE) (FUSE PANEL)	
		3	**376-0922**	1	BLOCK AS-FUSE	
		3	**1H-3244**	2	LOCKWASHER	

365-1387 **WIRING GP-CAB** ***(contd.)*** **i05109191**

NOTE	REF NO	GRAPHIC REF	PART NUMBER	QTY	PART NAME 1 2 3 4 5 6 (PRODUCT LEVEL)	SEE PAGE
		3	**6V-8185**	2	NUT (1/4-20-THD)	
		3	**8T-4205**	2	WASHER-HARD (7.2X14.5X2-MM THK)	
		3	**151-1398**	4	KIT-TERMINAL (LOCK)	
		3	**200-8789**	1	SEAL	
	33	1	**374-4368**	1	HARNESS AS-CONSOLE	
		1	**3T-3157**	1	TERMINAL-BLADE (16-GA TO 20-GA)	
		1	**3T-3158**	1	SOCKET-LAMP	
		1	**3T-3159**	1	SPRING	
		1	**3T-3278**	1	BOOT	
		1	**5P-4571**	4	TERMINAL-BLADE (14-GA TO 16-GA)	
		1	**6D-4161**	1	CONTACT	
		1	**8T-8737**	15	PLUG-SEAL	
		1	*9G-1906*	1	CONNECTOR AS	
		1	**3M-6018**	1	TERMINAL	
		1	**5P-6271**	1	CONNECTOR AS	
		1	**9W-1951**	1	RECEPTACLE-CONNECTOR (9-PIN)	
		1	**102-7965**	37	TERMINAL (FEMALE)	
		1	*131-1499*	5	TERMINAL AS	
					(EACH INCLUDES)	
		1	**3T-4696**	1	TERMINAL-RING (10-GA TO 12-GA, 7/16-IN SCREW)	
E		1	**125-7875**		TUBE-HEAT SHRINK (7.44-MM DIA) (4-CM)	
		1	**155-2270**	4	KIT-CONNECTING PLUG (2-PIN)	
		1	**155-2271**	4	KIT-CONNECTING PLUG (4-PIN)	
					(EACH INCLUDES PLUG AS, WEDGE & INTERFACE SEAL)	
		1	**163-6803**	9	PLUG-CONNECTOR (5-PIN)	
		1	**167-3487**	9	WEDGE-PLUG LOCK (5-PIN)	
		1	**169-0705**	6	SEAL	
		1	**9X-3401**	4	PIN-CONNECTOR (16-GA TO 18-GA)	
					—OR—	
		1	**126-1767**	4	PIN-CONNECTOR (14-GA TO 16-GA)	
		1	**183-7754**	5	TERMINAL	
		1	**224-9263**	1	TAB	
		1	**253-8110**	1	PLUG	
		1	**253-8111**	1	PLUG	
		1	**283-8106**	18	SOCKET-CONNECTOR (20-GA)	
		1	**374-8372**	18	SOCKET-CONNECTOR (16-GA TO 18-GA)	
	34	1	**374-4369**	1	HARNESS AS-CAB (UPPER)	
		1	**102-8803**	1	KIT-RECEPTACLE (3-PIN)	
		1	**102-8806**	1	KIT-RECEPTACLE (8-PIN)	
		1	**102-8801**	2	KIT-RECEPTACLE (12-PIN)	
					(EACH INCLUDES RECEPTACLE AS & WEDGE)	
		1	**8T-8737**	5	PLUG-SEAL	
E		1	**125-7874**		TUBE-HEAT SHRINK (5.72-MM DIA) (25-CM)	
		1	**126-1767**	13	PIN-CONNECTOR (14-GA TO 16-GA)	
		1	**126-1768**	13	SOCKET-CONNECTOR (14-GA TO 16-GA)	
		1	*130-6789*	3	TERMINAL AS-BLADE	
					(EACH INCLUDES)	
		1	**5P-4571**	1	TERMINAL-BLADE (14-GA TO 16-GA)	
		1	**097-7234**	1	TERMINAL-BLADE (18-GA TO 22-GA)	
		1	*131-1498*	2	TERMINAL AS	
					(EACH INCLUDES)	
		1	**2L-8069**	1	TERMINAL-RING (2-GA TO 10-GA, 3/8-IN SCREW)	
		1	**2L-8079**	1	TERMINAL-RING (14-GA TO 16-GA, 3/8-IN SCREW)	
		1	**155-2255**	1	KIT-CONNECTING PLUG (12-PIN)	
		1	**155-2270**	4	KIT-CONNECTING PLUG (2-PIN)	
		1	**155-2260**	3	KIT-CONNECTING PLUG (3-PIN)	

365-1387 **WIRING GP-CAB** ***(contd.)*** **i05109191**

NOTE	REF NO	GRAPHIC REF	PART NUMBER	QTY	PART NAME 1 2 3 4 5 6 (PRODUCT LEVEL)	SEE PAGE
		1	**174-0503**	1	KIT-CONNECTING PLUG (3-PIN)	
					(EACH INCLUDES PLUG AS, WEDGE & INTERFACE SEAL)	
		1	*165-7097*	2	TERMINAL AS	
					(EACH INCLUDES)	
		1	**5P-2957**	1	TERMINAL-BLADE (14-GA TO 16-GA)	
		1	**5P-5602**	1	TERMINAL-BLADE (18-GA TO 22-GA)	
		1	**172-8037**	1	CONNECTOR (RADIO)	
		1	**172-8039**	8	TERMINAL (RADIO)	
		1	**9X-3401**	8	PIN-CONNECTOR (16-GA TO 18-GA)	
					—OR—	
		1	**126-1767**	8	PIN-CONNECTOR (14-GA TO 16-GA)	
		1	**185-1860**	8	SEAL-WIRE	
		1	**235-4123**	8	TERMINAL (18-GA TO 20-GA)	
		1	**245-7434**	1	KIT-CONNECTING PLUG (10-PIN)	
		1	**370-4059**	1	KIT-RECEPTACLE	
					(EACH INCLUDES RECEPTACLE AS & WEDGE)	
	35	3	**374-4432**	1	PLATE	
	36	2	**378-0667**	1	SWITCH AS-ROCKER (HORN)	
		2	**167-3542**	1	RECEPTACLE-CONNECTOR (5-PIN)	
		2	**167-3543**	4	TERMINAL (MALE)	
	37	3	**096-6166**	3	WASHER-HARD (4.5X9X1-MM THK)	
	38	2	**110-2028**	4	SCREW-PAN HEAD (10-14X0.75-IN)	
	39	1,2	**130-5300**	2	CLIP	
M	40	3	**155-4098**	4	SCREW-BUTTON HEAD (M3X0.5X1-MM)	
Y	41	3	**158-6634**	1	SWITCH GP-TOGGLE (ENGINE STOP, RUN)	166
Y	41A	2	**158-6634**	1	SWITCH GP-TOGGLE (SAW BLADE ON, OFF)	166
M	42	1	**200-1131**	2	SCREW-TRUSS HEAD (M4X0.7X20-MM)	
	43	2	**312-1427**	1	SWITCH AS-ROCKER (TRAVEL SPEED)	
		2	**167-3542**	1	RECEPTACLE-CONNECTOR (5-PIN)	
		2	**167-3543**	4	TERMINAL (MALE)	
	44	2	**312-1429**	1	SWITCH AS-ROCKER (ALARM CANCEL)	
		2	**167-3542**	1	RECEPTACLE-CONNECTOR (5-PIN)	
		2	**167-3543**	1	TERMINAL (MALE)	
	45	2	**373-2424**	1	FILM-INFORMATION (SAW SWITCH)	
	46	3	**7X-4743**	1	GROMMET	
M	47	2	**7Y-7389**	4	SCREW (M5X0.8X16-MM)	
	48	1,2,3	**8T-4121**	11	WASHER-HARD (11X21X2.5-MM THK)	
M	49	3	**8T-4136**	2	BOLT (M10X1.5X25-MM)	
M	50	2	**8T-4137**	1	BOLT (M10X1.5X20-MM)	
M	51	2	**8T-4138**	2	BOLT (M6X1X20-MM)	
M	52	2	**8T-4189**	4	BOLT (M8X1.25X20-MM)	
M	53	3	**8T-4191**	4	BOLT (M10X1.5X16-MM)	
M	54	2,3	**8T-4195**	3	BOLT (M10X1.5X30-MM)	
	55	1	**8T-4223**	1	WASHER-HARD (13.5X25.5X3-MM THK)	
	56	2	**8T-4224**	4	WASHER-HARD (8.8X16X2-MM THK)	
M	57	1	**8T-4244**	1	NUT (M12X1.75-THD)	
	58	2	**9W-0335**	1	LIGHTER AS-CIGAR (24-VOLT)	
M	59	1	**9X-2041**	1	SCREW-TRUSS HEAD (M10X1.5X20-MM)	
M	60	3	**9X-2042**	4	SCREW-TRUSS HEAD (M6X1X12-MM)	
	61	1	**9X-2121**	2	SCREW-PAN HEAD (8-18X0.5-IN)	
	62	2	**9X-7345**	4	GROMMET	
	63	2	**9X-8256**	6	WASHER (6.6X12X2-MM THK)	
	64	2	**373-2377**	1	SWITCH AS-ROCKER (HOOD TILT ACTUATOR)	
		2	**167-3542**	1	RECEPTACLE-CONNECTOR (5-PIN)	
		2	**167-3543**	1	TERMINAL (MALE)	

E-ORDER BY THE CENTIMETER
M-METRIC PART
Y-SEPARATE ILLUSTRATION

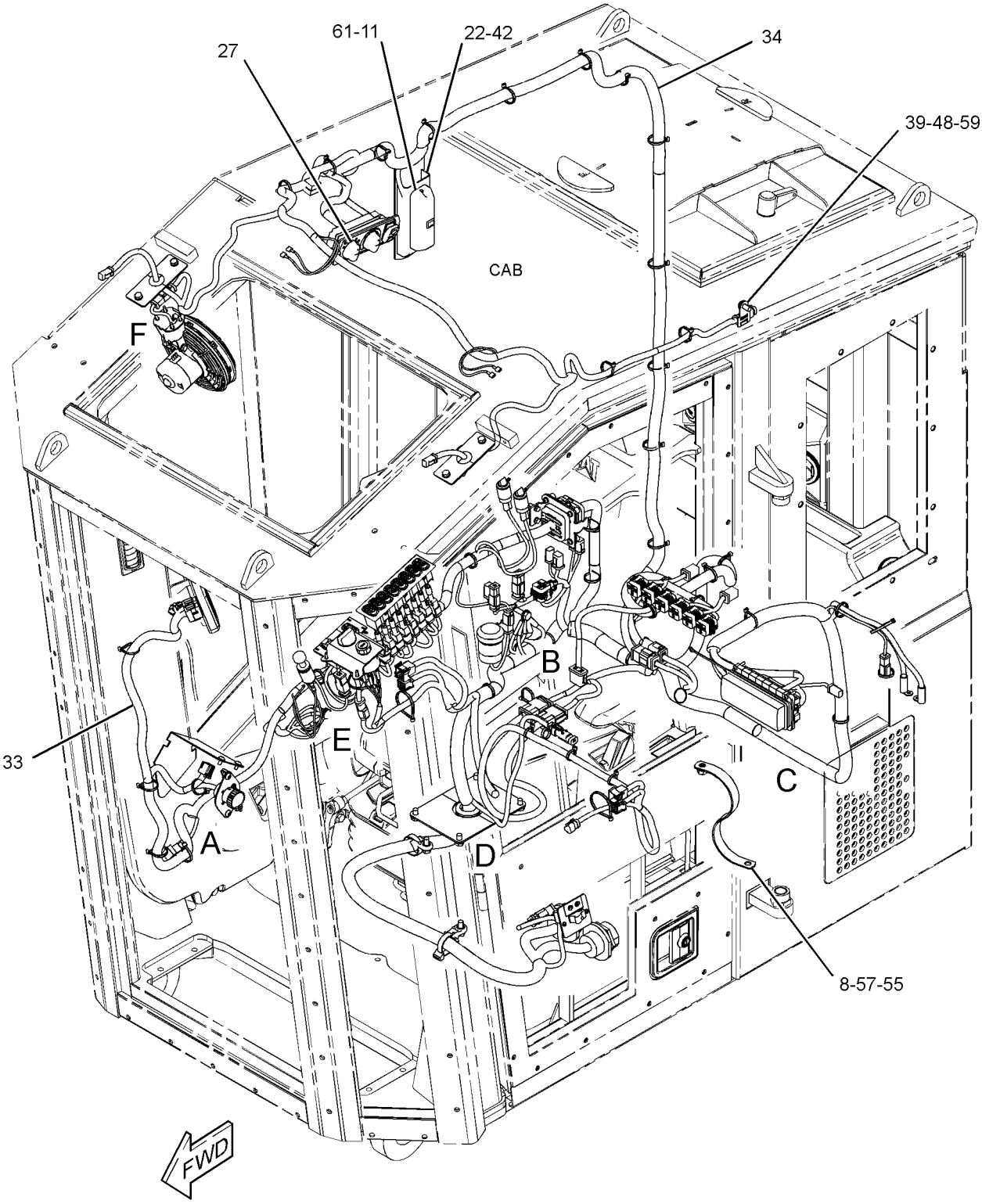

REFER TO ALL ILLUSTRATIONS OF
THIS GROUP FOR AUXILIARY VIEWS

GRAPHIC #1

g02521619

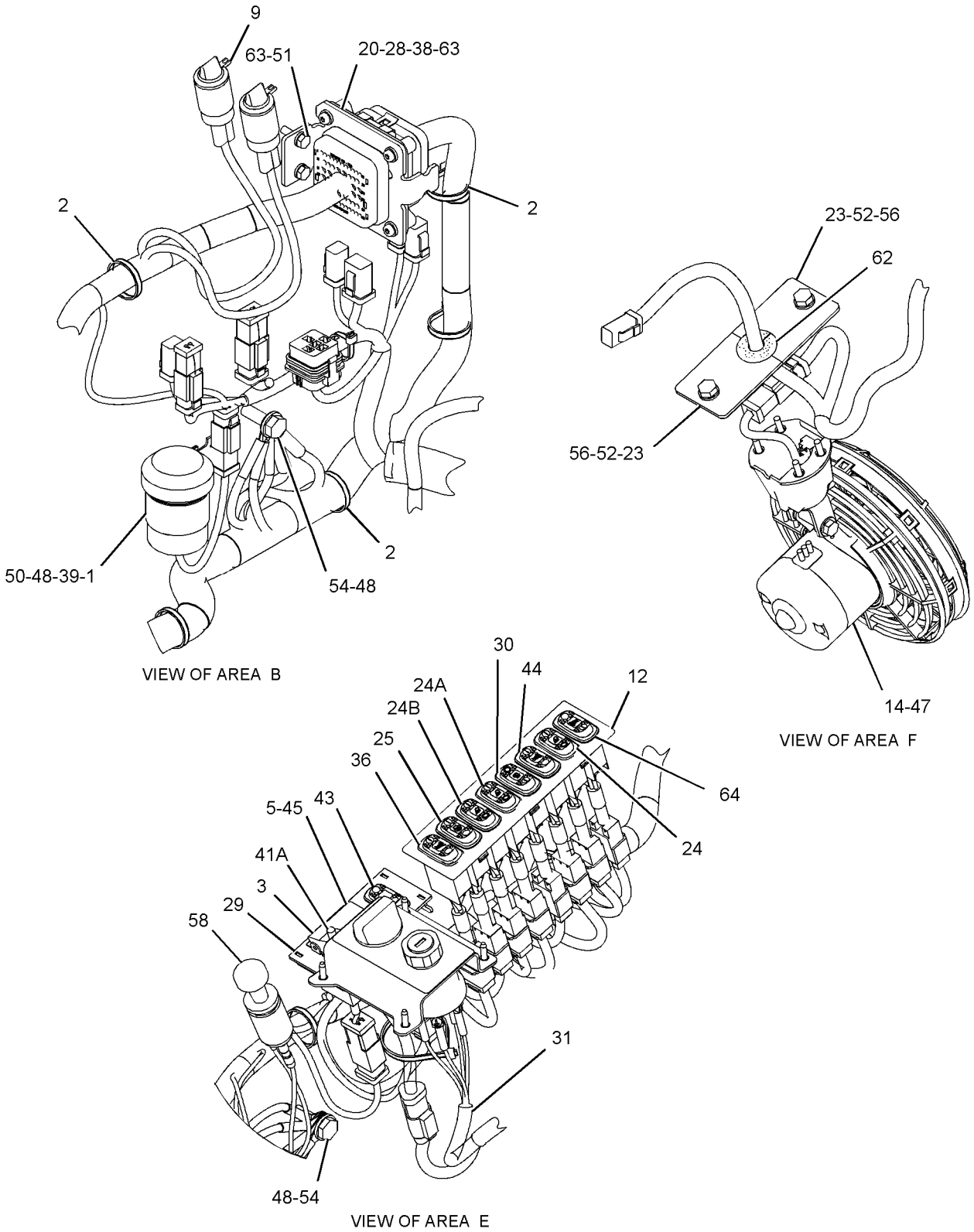

GRAPHIC #2 g03272457

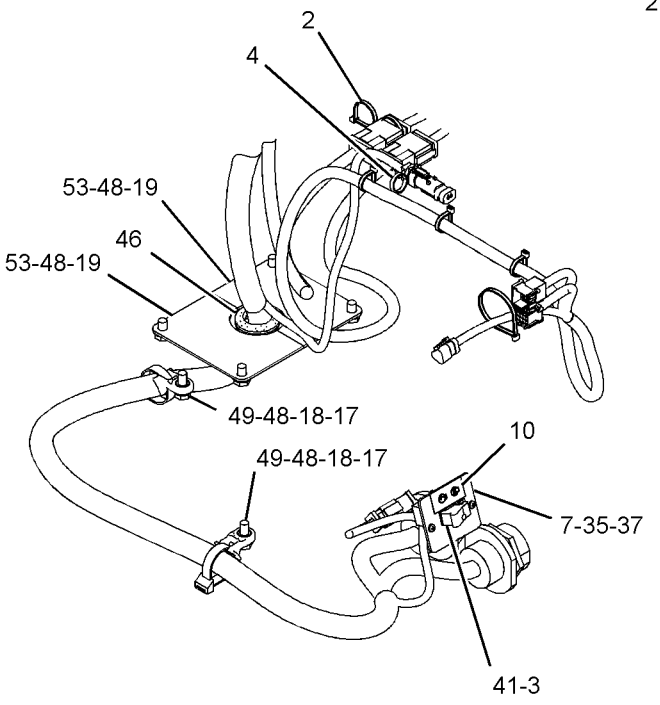

VIEW OF AREA D

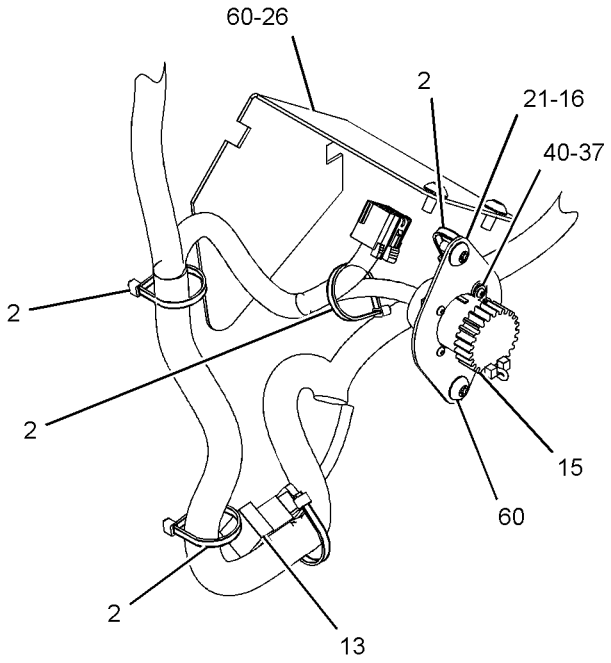

VIEW OF AREA A

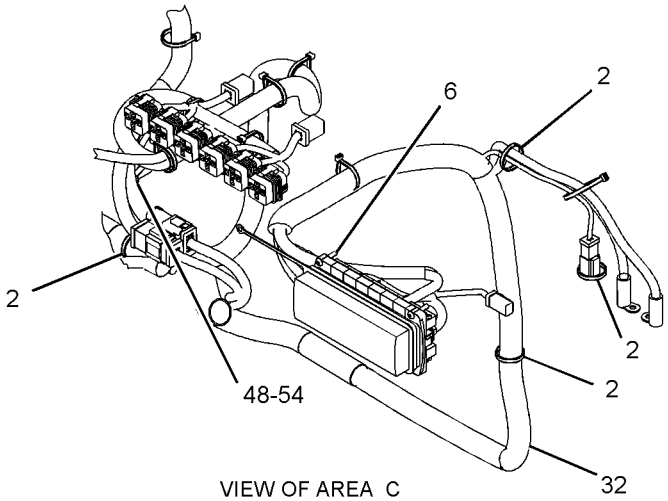

VIEW OF AREA C

GRAPHIC #3 **<END>** g02521616

365-1387 WIRING GP-CAB

S/N: F7B1-UP
PART OF 362-3893 OPERATOR AR
TYPE 2

SMCS-1408, 7301 **i05108950**

NOTE	REF NO	GRAPHIC REF	PART NUMBER	QTY	PART NAME 1 2 3 4 5 6 (PRODUCT LEVEL)	SEE PAGE
Y	1	2	**3E-6328**	1	ALARM GP (24-VOLT)	111
	2	2,3	**3S-2093**	43	STRAP-CABLE	
	3	2,3	**6T-6969**	2	GUARD-SWITCH	
	4	3	**7I-2673**	1	STRAP-CABLE	
	5	2	**7N-5876**	1	LAMP (24-VOLT, 0.2-AMPERE)	
	6	3	**7U-4891**	4	SCREW (10-32X1-IN)	
M	7	3	**8T-0337**	2	SCREW-MACHINE (M4X0.7X12-MM)	
	8	1	**8X-5803**	1	STRAP AS-GROUND	
	9	2	**117-2311**	2	SOCKET-AUXILIARY POWER (12-VOLT)	
	10	3	**131-0359**	1	PLATE-IDENTIFICATION (ENGINE STOP, RUN)	
Y	11	1	**162-7755**	1	LAMP GP-DOME (24-VOLT)	127
	12	2	**164-0655**	1	PANEL-SWITCH	
	13	3	**172-9200**	1	SUPPRESSOR-ARC	
	14	2	**180-5316**	1	FAN GP-CIRCULATING (24-VOLT)	
		2	**3S-2093**	1	STRAP-CABLE	
		2	**9X-3401**	2	PIN-CONNECTOR (16-GA TO 18-GA)	
		2	**102-8802**	2	KIT-RECEPTACLE (2-PIN)	
					(EACH INCLUDES RECEPTACLE AS & WEDGE)	
	15	3	**180-9900**	1	CAP AS	
		3	**5P-7958**	1	SLEEVE-CABLE SPLICE	
		3	**8C-6354**	1	CAP-RECEPTACLE (ET CONNECTOR)	
		3	**179-9392**	1	LANYARD	
	16	3	**189-2512**	1	PLATE	
	17	3	**193-3973**	2	STRAP-CABLE	
	18	3	**204-8000**	2	MOUNTING-CABLE TIE	
	19	3	**243-5634**	2	PLATE	
	20	2	**258-4178**	1	FLANGE-MOUNTING	
	21	3	**262-7667**	1	PLATE	
	22	1	**263-2106**	1	PLATE AS	
	23	2	**267-2808**	4	PLATE	
	24	2	**267-8010**	1	SWITCH AS-ROCKER (WORK LIGHTS)	
	24A	2	**267-8010**	1	SWITCH AS-ROCKER (CAB LIGHTS)	
	24B	2	**267-8010**	1	SWITCH AS-ROCKER (FLOODLIGHTS)	
					(EACH INCLUDES)	
		2	**167-3542**	1	RECEPTACLE-CONNECTOR (5-PIN)	
		2	**167-3543**	4	TERMINAL (MALE)	
	25	2	**267-8011**	1	SWITCH AS-ROCKER (REVERSIBLE FAN)	
		2	**167-3542**	1	RECEPTACLE-CONNECTOR (5-PIN)	
		2	**167-3543**	4	TERMINAL (MALE)	
	26	3	**289-1210**	1	COVER	
	27	1	*300-4231*	1	CONTROL GP-AIR & TEMPERATURE	
M		1	**9X-2045**	2	SCREW-TRUSS HEAD (M6X1X20-MM)	
		1	**248-4220**	1	PANEL AS (AIR CONDITIONER, HEATER CONT)	
		1	**284-3662**	1	SWITCH AS-ROCKER (24-VOLT) (AIR CONDITIONER ON, OFF)	
	28	2	**327-6232**	1	BRACKET	
	29	2	**372-7911**	1	PANEL AS	
	30	2	**373-2376**	1	SWITCH AS-ROCKER (LOG ACCUMULATOR)	
		2	**167-3542**	1	RECEPTACLE-CONNECTOR (5-PIN)	
		2	**167-3543**	4	TERMINAL (MALE)	
Y	31	2	*374-4362*	1	WIRING GP-CONSOLE	187
	32	3	**374-4367**	1	HARNESS AS-CAB (MAIN)	
		3	**102-8802**	2	KIT-RECEPTACLE (2-PIN)	

365-1387 **WIRING GP-CAB** ***(contd.)*** **i05108950**

NOTE	REF NO	GRAPHIC REF	PART NUMBER	QTY	PART NAME 1 2 3 4 5 6 (PRODUCT LEVEL)	SEE PAGE
		3	**102-8804**	1	KIT-RECEPTACLE (4-PIN)	
					(EACH RECEPTACLE KIT INCLUDES RECEPTACLE AS & WEDGE)	
		3	**7G-7917**	9	PLUG-SEAL	
		3	**7G-7919**	3	PLUG-SEAL	
		3	**8N-1513**	1	RECEPTACLE AS-CONNECTOR (37-PIN)	
		3	**8N-1519**	1	RECEPTACLE AS-CONNECTOR (12-PIN)	
					(EACH RECEPTACLE AS INCLUDES)	
		3	**8N-1522**	1	NUT (2-1/4-16-THD)	
		3	**8N-1521**	2	BELL AS-END	
		3	**8N-1523**	2	LOCKWASHER	
		3	**9X-6856**	28	PIN-CONNECTOR (16-GA TO 18-GA)	
		3	**8N-1540**	8	PIN-CONNECTOR (12-GA TO 14-GA)	
		3	**8N-1548**	1	PIN-CONNECTOR (4-GA)	
		3	**8T-8737**	23	PLUG-SEAL	
		3	**9R-9806**	12	TERMINAL-BLADE (18-GA TO 20-GA)	
		3	**9W-1441**	13	FUSE (15-AMPERE)	
		3	**9W-1442**	15	FUSE (10-AMPERE)	
		3	**9W-1446**	2	FUSE (20-AMPERE)	
		3	**9W-2032**	2	TERMINAL-BLADE (10-GA TO 12-GA)	
		3	**9W-2033**	16	TERMINAL-BLADE (14-GA TO 16-GA)	
		3	**9X-1054**	7	PLUG AS-CONNECTOR (4-PIN)	
		3	**9X-1056**	14	TERMINAL-RECEPTACLE (14-GA TO 16-GA)	
		3	**7K-1181**	2	STRAP-CABLE	
		3	**100-5041**	14	TERMINAL-RECEPTACLE (18-GA TO 20-GA)	
E		3	**125-7874**		TUBE-HEAT SHRINK (5.72-MM DIA) (70-CM)	
E		3	**125-7875**		TUBE-HEAT SHRINK (7.44-MM DIA) (10-CM)	
		3	**9X-3402**	2	SOCKET-CONNECTOR (16-GA TO 18-GA)	
					—OR—	
		3	**126-1768**	2	SOCKET-CONNECTOR (14-GA TO 16-GA)	
		3	**9G-4343**	3	TERMINAL-RING (4-GA, 1/4-IN SCREW)	
		3	**5P-3454**	2	TERMINAL-RING (4-GA, 5/16-IN SCREW)	
		3	**3T-4692**	2	TERMINAL-RING (6-GA, 7/16-IN SCREW)	
					—OR—	
		3	**3T-4693**	2	TERMINAL-RING (8-GA, 7/16-IN SCREW)	
		3	**3T-4696**	3	TERMINAL-RING (10-GA TO 12-GA, 7/16-IN SCREW)	
		3	**155-2255**	2	KIT-CONNECTING PLUG (12-PIN)	
		3	**155-2256**	1	KIT-CONNECTING PLUG (12-PIN)	
		3	**155-2270**	6	KIT-CONNECTING PLUG (2-PIN)	
		3	**155-2271**	3	KIT-CONNECTING PLUG (4-PIN)	
		3	**155-2274**	2	KIT-CONNECTING PLUG (6-PIN)	
		3	**155-2265**	1	KIT-CONNECTING PLUG (8-PIN)	
					(EACH PLUG KIT INCLUDES PLUG AS, WEDGE, & INTERFACE SEAL)	
		3	**9X-3401**	13	PIN-CONNECTOR (16-GA TO 18-GA)	
					—OR—	
		3	**126-1767**	13	PIN-CONNECTOR (14-GA TO 16-GA)	
		3	**194-5226**	88	WIRE AS (16-GA)	
					—OR—	
		3	**194-5227**	88	WIRE AS (14-GA)	
		3	**230-4011**	1	PLUG AS-CONNECTOR (2-PIN)	
		3	**264-7029**	1	SEAL-CONNECTOR	
		3	**230-4011**	1	PLUG AS-CONNECTOR (2-PIN)	
		3	**230-4012**	1	RECEPTACLE AS-CONNECTOR (2-PIN)	
		3	**230-5008**	1	PLUG AS-CONNECTOR (4-PIN)	
		3	**237-0166**	1	KIT-CONNECTING PLUG (12-PIN)	
					(INCLUDES PLUG AS & WEDGE)	
		3	**258-4170**	1	RECEPTACLE AS	

365-1387 **WIRING GP-CAB** ***(contd.)*** **i05108950**

NOTE	REF NO	GRAPHIC REF	PART NUMBER	QTY	PART NAME 1 2 3 4 5 6 (PRODUCT LEVEL)	SEE PAGE
		3	**271-5604**	24	PIN-CONNECTOR (20-GA)	
					—OR—	
		3	**347-0109**	24	WIRE AS	
		3	**291-5075**	1	CIRCUIT BREAKER AS (15-AMPERE) (FUSE PANEL)	
		3	**376-0922**	1	BLOCK AS-FUSE	
		3	**1H-3244**	2	LOCKWASHER	
		3	**6V-8185**	2	NUT (1/4-20-THD)	
		3	**8T-4205**	2	WASHER-HARD (7.2X14.5X2-MM THK)	
		3	**151-1398**	4	KIT-TERMINAL (LOCK)	
		3	**200-8789**	1	SEAL	
	33	1	**374-4368**	1	HARNESS AS-CONSOLE	
		1	**3T-3157**	1	TERMINAL-BLADE (16-GA TO 20-GA)	
		1	**3T-3158**	1	SOCKET-LAMP	
		1	**3T-3159**	1	SPRING	
		1	**3T-3278**	1	BOOT	
		1	**5P-4571**	5	TERMINAL-BLADE (14-GA TO 16-GA)	
		1	**6D-4161**	1	CONTACT	
		1	**7T-0094**	5	SOCKET-CONNECTOR (12-GA TO 14-GA)	
		1	**9X-0196**	2	TERMINAL AS	
		1	**8T-8737**	15	PLUG-SEAL	
		1	**5P-6271**	1	CONNECTOR AS	
		1	**9W-1951**	1	RECEPTACLE-CONNECTOR (9-PIN)	
		1	**102-7965**	37	TERMINAL (FEMALE)	
E		1	**125-7874**		TUBE-HEAT SHRINK (5.72-MM DIA) (20-M)	
E		1	**125-7875**		TUBE-HEAT SHRINK (7.44-MM DIA) (5-CM)	
		1	**5P-4571**	37	TERMINAL-BLADE (14-GA TO 16-GA)	
		1	**3T-4696**	5	TERMINAL-RING (10-GA TO 12-GA, 7/16-IN SCREW)	
		1	**155-2270**	1	KIT-CONNECTING PLUG (2-PIN)	
		1	**155-2271**	2	KIT-CONNECTING PLUG (4-PIN)	
					(EACH PLUG KIT INCLUDES PLUG AS, WEDGE, & INTERFACE SEAL)	
		1	**163-6803**	9	PLUG-CONNECTOR (5-PIN)	
		1	**169-0705**	6	SEAL	
		1	**9X-3401**	4	PIN-CONNECTOR (16-GA TO 18-GA)	
					—OR—	
		1	**126-1767**	4	PIN-CONNECTOR (14-GA TO 16-GA)	
		1	**194-5226**	19	WIRE AS (16-GA)	
					—OR—	
		1	**194-5227**	19	WIRE AS (14-GA)	
		1	**183-7754**	5	TERMINAL	
		1	**224-9263**	1	TAB	
		1	**253-8110**	1	PLUG	
		1	**253-8111**	1	PLUG	
		1	**258-4172**	1	PLUG AS-CONNECTOR	
		1	**283-8106**	18	SOCKET-CONNECTOR (20-GA)	
					—OR—	
		1	**374-8372**	18	SOCKET-CONNECTOR (16-GA TO 18-GA)	
	34	1	**374-4369**	1	HARNESS AS-CAB (UPPER)	
		1	**102-8803**	1	KIT-RECEPTACLE (3-PIN)	
		1	**102-8806**	1	KIT-RECEPTACLE (8-PIN)	
					(EACH INCLUDES RECEPTACLE AS & WEDGE)	
		1	**8T-8737**	5	PLUG-SEAL	
E		1	**119-3662**		TUBE-HEAT SHRINK (10.85-MM DIA) (7-CM)	
E		1	**125-7874**		TUBE-HEAT SHRINK (5.72-MM DIA) (10-CM)	
E		1	**125-7875**		TUBE-HEAT SHRINK (7.44-MM DIA) (10-CM)	
		1	**126-1767**	13	PIN-CONNECTOR (14-GA TO 16-GA)	
		1	**126-1768**	13	SOCKET-CONNECTOR (14-GA TO 16-GA)	
		1	**5P-4571**	3	TERMINAL-BLADE (14-GA TO 16-GA)	
		1	**097-7234**	1	TERMINAL-BLADE (18-GA TO 22-GA)	

365-1387 **WIRING GP-CAB** *(contd.)* **i05108950**

NOTE	REF NO	GRAPHIC REF	PART NUMBER	QTY	PART NAME 1 2 3 4 5 6 (PRODUCT LEVEL)	SEE PAGE
		1	**2L-8069**	2	TERMINAL-RING (2-GA TO 10-GA, 3/8-IN SCREW)	
		1	**2L-8079**	1	TERMINAL-RING (14-GA TO 16-GA, 3/8-IN SCREW)	
		1	**155-2255**	1	KIT-CONNECTING PLUG (12-PIN)	
		1	**155-2270**	3	KIT-CONNECTING PLUG (2-PIN)	
		1	**155-2260**	1	KIT-CONNECTING PLUG (3-PIN)	
		1	**174-0503**	1	KIT-CONNECTING PLUG (3-PIN)	
					(EACH PLUG KIT INCLUDES PLUG AS, WEDGE, & INTERFACE SEAL)	
		1	**5P-2957**	2	TERMINAL-BLADE (14-GA TO 16-GA)	
					—OR—	
		1	**5P-5602**	2	TERMINAL-BLADE (18-GA TO 22-GA)	
		1	**172-8037**	1	CONNECTOR (RADIO)	
		1	**172-8039**	8	TERMINAL (RADIO)	
		1	**9X-3401**	8	PIN-CONNECTOR (16-GA TO 18-GA)	
					—OR—	
		1	**126-1767**	8	PIN-CONNECTOR (14-GA TO 16-GA)	
		1	**194-5226**	5	WIRE AS (16-GA)	
					—OR—	
		1	**194-5227**	5	WIRE AS (14-GA)	
		1	**185-1861**	8	SEAL-WIRE	
		1	**202-5397**	2	PLUG	
		1	**204-1297**	8	TERMINAL AS-BLADE (18-GA TO 20-GA)	
		1	**235-4123**	1	TERMINAL (18-GA TO 20-GA)	
		1	**245-7434**	1	KIT-CONNECTING PLUG (10-PIN)	
		1	**370-4059**	1	KIT-RECEPTACLE	
					(INCLUDES RECEPTACLE AS & WEDGE)	
	35	3	**374-4432**	1	PLATE	
	36	2	**378-0667**	1	SWITCH AS-ROCKER (HORN)	
		2	**167-3542**	1	RECEPTACLE-CONNECTOR (5-PIN)	
		2	**167-3543**	4	TERMINAL (MALE)	
	37	3	**096-6166**	3	WASHER-HARD (4.5X9X1-MM THK)	
	38	2	**110-2028**	4	SCREW-PAN HEAD (10-14X0.75-IN)	
	39	1,2	**130-5300**	2	CLIP	
M	40	3	**155-4098**	4	SCREW-BUTTON HEAD (M3X0.5X1-MM)	
Y	41	3	**158-6634**	1	SWITCH GP-TOGGLE (ENGINE STOP, RUN)	166
Y	41A	2	**158-6634**	1	SWITCH GP-TOGGLE (SAW BLADE ON, OFF)	166
M	42	1	**200-1131**	2	SCREW-TRUSS HEAD (M4X0.7X20-MM)	
	43	2	**312-1427**	1	SWITCH AS-ROCKER (TRAVEL SPEED)	
		2	**167-3542**	1	RECEPTACLE-CONNECTOR (5-PIN)	
		2	**167-3543**	4	TERMINAL (MALE)	
	44	2	**312-1429**	1	SWITCH AS-ROCKER (ALARM CANCEL)	
		2	**167-3542**	1	RECEPTACLE-CONNECTOR (5-PIN)	
		2	**167-3543**	1	TERMINAL (MALE)	
	45	2	**373-2424**	1	FILM-INFORMATION (SAW SWITCH)	
	46	3	**7X-4743**	1	GROMMET	
M	47	2	**7Y-7389**	4	SCREW (M5X0.8X16-MM)	
	48	1,2,3	**8T-4121**	11	WASHER-HARD (11X21X2.5-MM THK)	
M	49	3	**8T-4136**	2	BOLT (M10X1.5X25-MM)	
M	50	2	**8T-4137**	1	BOLT (M10X1.5X20-MM)	
M	51	2	**8T-4138**	2	BOLT (M6X1X20-MM)	
M	52	2	**8T-4189**	4	BOLT (M8X1.25X20-MM)	
M	53	3	**8T-4191**	4	BOLT (M10X1.5X16-MM)	
M	54	2,3	**8T-4195**	3	BOLT (M10X1.5X30-MM)	
	55	1	**8T-4223**	1	WASHER-HARD (13.5X25.5X3-MM THK)	
	56	2	**8T-4224**	4	WASHER-HARD (8.8X16X2-MM THK)	
M	57	1	**8T-4244**	1	NUT (M12X1.75-THD)	
	58	2	**9W-0335**	1	LIGHTER AS-CIGAR (24-VOLT)	
M	59	1	**9X-2041**	1	SCREW-TRUSS HEAD (M10X1.5X20-MM)	
M	60	3	**9X-2042**	4	SCREW-TRUSS HEAD (M6X1X12-MM)	

365-1387 **WIRING GP-CAB** ***(contd.)*** **i05108950**

NOTE	REF NO	GRAPHIC REF	PART NUMBER	QTY	PART NAME 1 2 3 4 5 6 (PRODUCT LEVEL)	SEE PAGE
	61	1	**9X-2121**	2	SCREW-PAN HEAD (8-18XO.5-IN)	
	62	2	**9X-7345**	2	GROMMET	
	63	2	**9X-8256**	6	WASHER (6.6X12X2-MM THK)	
	64	2	**373-2377**	1	SWITCH AS-ROCKER (HOOD TILT ACTUATOR)	
		2	**167-3542**	1	RECEPTACLE-CONNECTOR (5-PIN)	
		2	**167-3543**	1	TERMINAL (MALE)	
	65	3	**396-4545**	1	HARNESS AS-WIRING	
		3	**8T-8737**	2	PLUG-SEAL	
		3	**9X-3401**	2	PIN-CONNECTOR (16-GA TO 18-GA)	
					—OR—	
		3	**126-1767**	2	PIN-CONNECTOR (14-GA TO 16-GA)	
		3	**230-5009**	1	RECEPTACLE AS-CONNECTOR (4-PIN)	

E-ORDER BY THE CENTIMETER
M-METRIC PART
Y-SEPARATE ILLUSTRATION

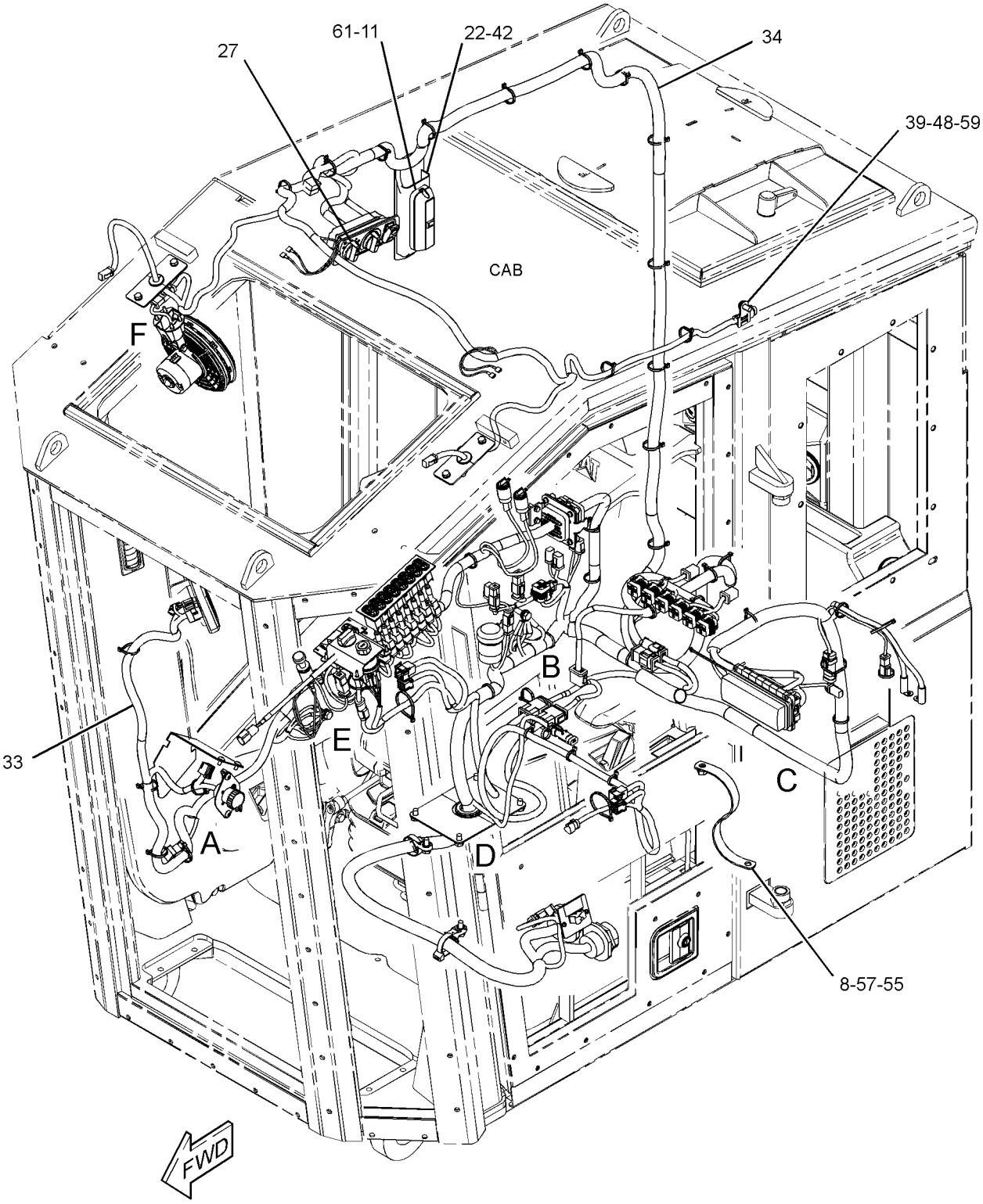

REFER TO ALL ILLUSTRATIONS OF
THIS GROUP FOR AUXILIARY VIEWS

GRAPHIC #1

g03198176

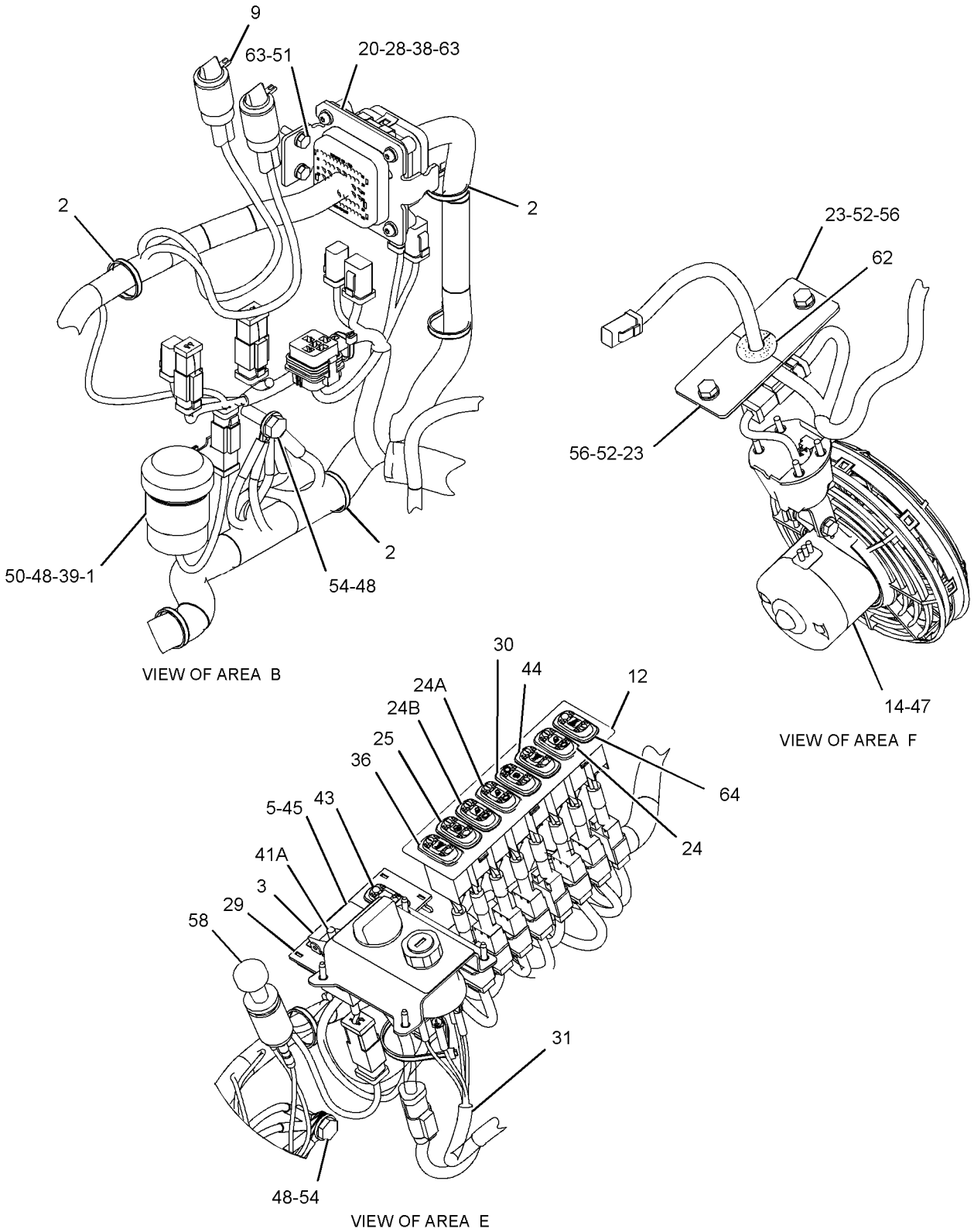

GRAPHIC #2 g03272478

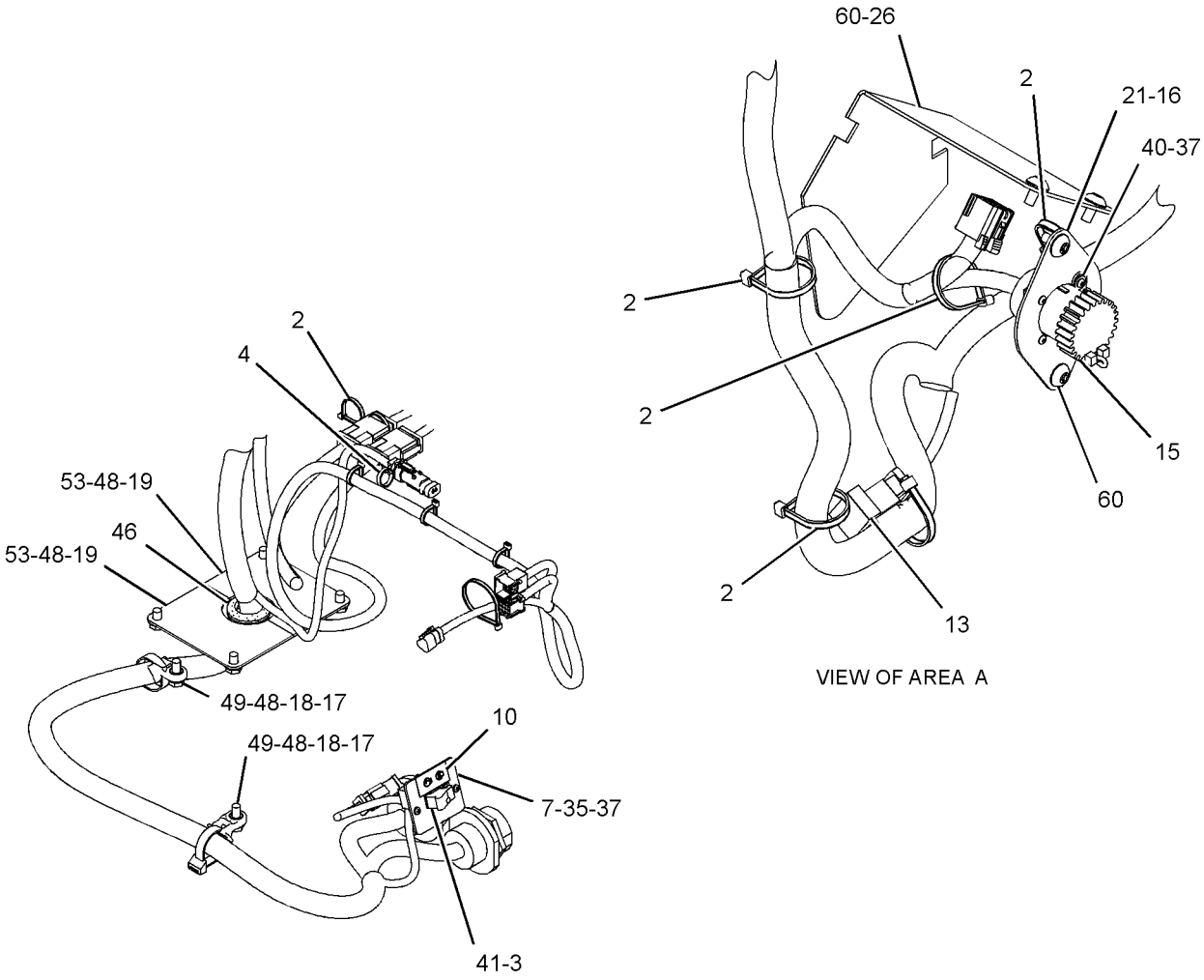

VIEW OF AREA A

VIEW OF AREA D

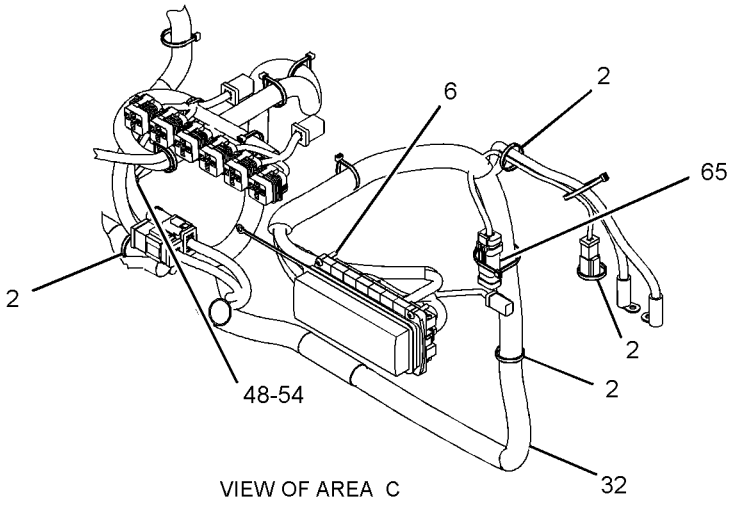

VIEW OF AREA C

GRAPHIC #3 **<END>** g03198179

374-4362 WIRING GP-CONSOLE

S/N: F7B1-UP

PART OF 365-1387 WIRING GP-CAB

SMCS-1408 **i04363800**

NOTE	REF NO	GRAPHIC REF	PART NUMBER	QTY	PART NAME 1 2 3 4 5 6 (PRODUCT LEVEL)	SEE PAGE
	1	1	**3S-2093**	6	STRAP-CABLE	
	2	1	**110-6109**	1	KNOB-CONTROL (THROTTLE)	
	3	1	**228-7114**	1	FILM-ENGINE (START, THROTTLE)	
	4	1	**255-2751**	1	SWITCH GP-START (KEY START)	
		1	**6V-8362**	4	SCREW-MACHINE (8-32X0.31-IN)	
		1	**7T-6799**	1	NUT-MOUNTING (1-32-THD)	
		1	**9B-7233**	4	LOCKWASHER	
	5	1	**291-2165**	1	POTENTIOMETER AS (TEMPERATURE CONTROL)	
		1	**102-8803**	1	KIT-RECEPTACLE (3-PIN)	
					(INCLUDES RECEPTACLE AS & WEDGE)	
		1	**8T-8729**	1	PIN-CONNECTOR (16-GA TO 18-GA)	
		1	**236-8722**	1	WASHER (10.5X22.2X1.6-MM THK)	
	6	1	**372-2537**	1	PLATE	
	7	1	**374-4370**	1	HARNESS AS-CONSOLE (LH)	
		1	**102-8801**	4	KIT-RECEPTACLE (12-PIN)	
					(EACH INCLUDES RECEPTACLE AS & WEDGE)	
		1	**3S-2093**	1	STRAP-CABLE	
		1	**8T-8737**	1	PLUG-SEAL	
		1	**155-2260**	5	KIT-CONNECTING PLUG (3-PIN)	
		1	**174-0503**	2	KIT-CONNECTING PLUG (3-PIN)	
					(EACH INCLUDES PLUG AS, WEDGE & INTERFACE SEAL)	
		1	**9X-3401**	11	PIN-CONNECTOR (16-GA TO 18-GA)	
					—OR—	
		1	**126-1767**	11	PIN-CONNECTOR (14-GA TO 16-GA)	
		1	**183-7754**	4	TERMINAL	
		1	**222-4161**	1	RESISTOR AS	
		1	**224-9261**	4	TERMINAL	
		1	**224-9263**	1	TAB	
	8	1	**374-4371**	1	HARNESS AS-CONSOLE (RH)	
		1	**102-8801**	2	KIT-RECEPTACLE (12-PIN)	
					(EACH INCLUDES RECEPTACLE AS & WEDGE)	
		1	**3S-2093**	1	STRAP-CABLE	
E		1	**125-7874**		TUBE-HEAT SHRINK (5.72-MM DIA) (5-CM)	
		1	*128-4183*	4	TERMINAL AS	
					(EACH INCLUDES)	
		1	**2L-8075**	1	TERMINAL-RING (14-GA TO 16-GA, NO. 8 SCREW)	
		1	**155-2260**	5	KIT-CONNECTING PLUG (3-PIN)	
		1	**174-0503**	2	KIT-CONNECTING PLUG (3-PIN)	
					(EACH INCLUDES PLUG AS, WEDGE & INTERFACE SEAL)	
		1	**9X-3401**	12	PIN-CONNECTOR (16-GA TO 18-GA)	
					—OR—	
		1	**126-1767**	12	PIN-CONNECTOR (14-GA TO 16-GA)	
		1	**183-7754**	4	TERMINAL	
		1	**190-7614**	1	KIT-RECEPTACLE (12-PIN)	
					(INCLUDES RECEPTACLE AS & WEDGE)	
		1	**222-4162**	1	RESISTOR AS	
		1	**224-9261**	6	TERMINAL	
		1	**224-9263**	1	TAB	
	9	1	**119-5026**	4	SCREW-PAN HEAD (10-16X0.63-IN)	

E-ORDER BY THE CENTIMETER

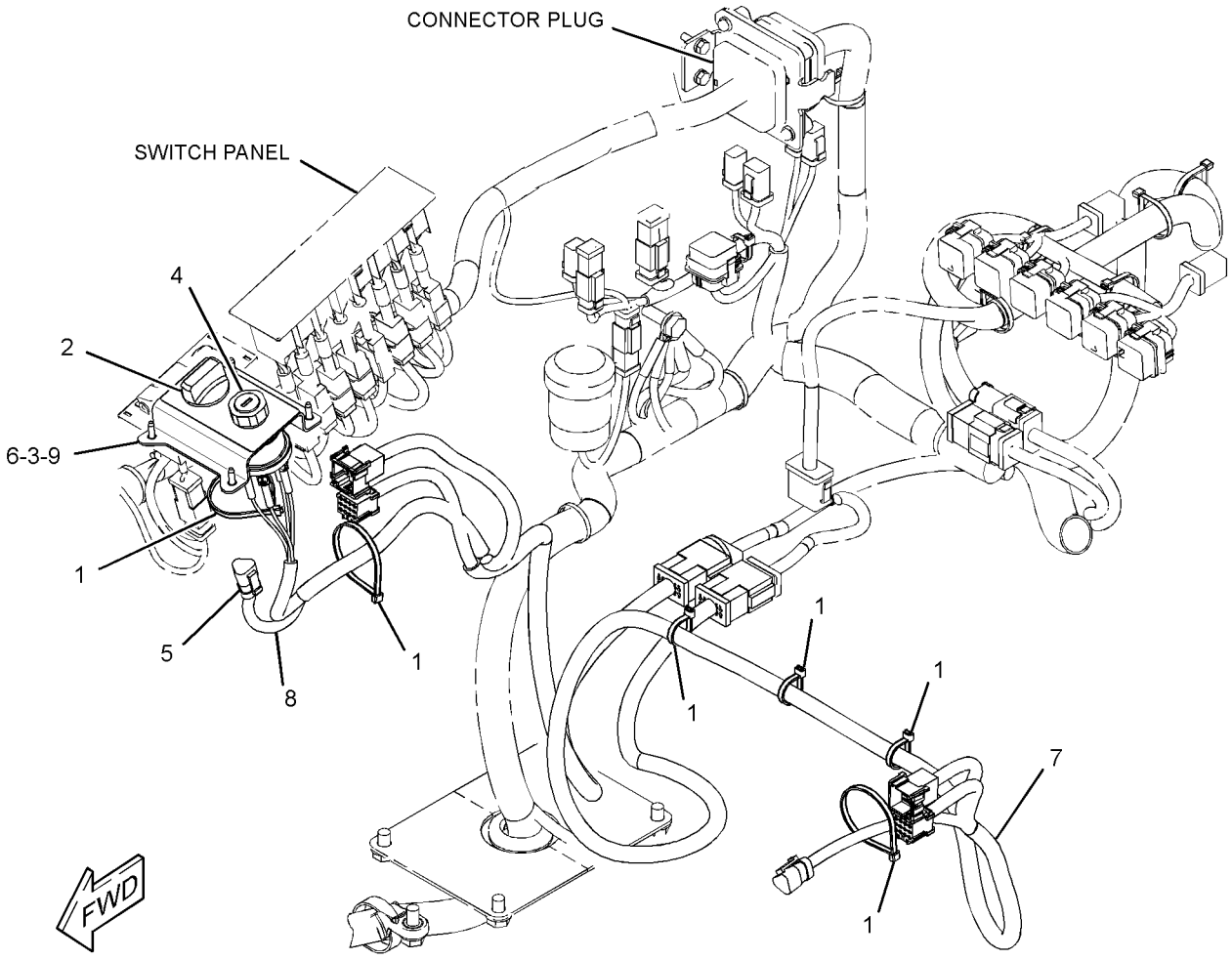

GRAPHIC #1 **<END>** g02521456

396-9171 WIRING GP-CONSOLE

S/N: F7B1-UP
PART OF 373-6571 HYDRAULIC AR-HARVESTER
AN ATTACHMENT

SMCS-1408 **i04958497**

NOTE	REF NO	GRAPHIC REF	PART NUMBER	QTY	PART NAME 1 2 3 4 5 6 (PRODUCT LEVEL)	SEE PAGE
	1	1	**172-9200**	1	SUPPRESSOR-ARC	
	2	1	**395-3150**	1	HARNESS AS-WIRING (ARC SUPPRESSOR)	
		1	**102-8805**	1	KIT-RECEPTACLE (6-PIN)	
					(INCLUDES RECEPTACLE AS & WEDGE)	
		1	**8T-8737**	4	PLUG-SEAL	
		1	**155-2271**	1	KIT-CONNECTING PLUG (4-PIN)	
					(INCLUDES PLUG AS, WEDGE, & INTERFACE SEAL)	
		1	**9X-3401**	3	PIN-CONNECTOR (16-GA TO 18-GA)	
					—OR—	
		1	**126-1767**	3	PIN-CONNECTOR (14-GA TO 16-GA)	
		1	**194-5226**	1	WIRE AS (16-GA)	
					—OR—	
		1	**194-5227**	1	WIRE AS (14-GA)	
	3	1	**3S-2093**	1	STRAP-CABLE	

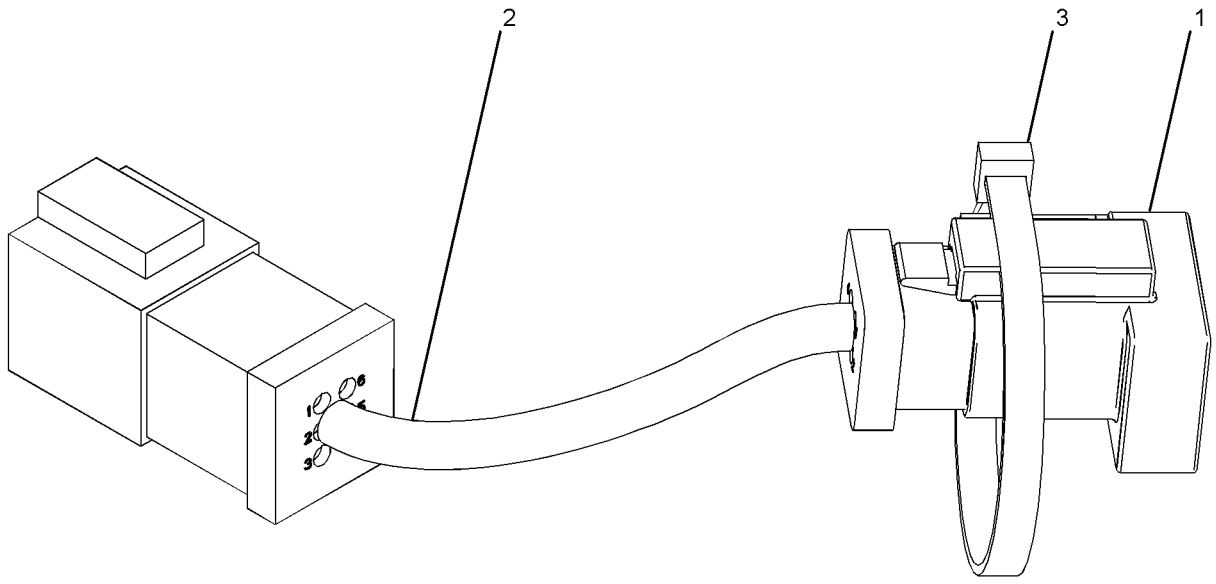

GRAPHIC #1 **<END>** g03192160

ELECTRICAL AND STARTING SYSTEM

330-6018 WIRING GP-ELECTRONIC CONTROL

S/N: TXD1-UP; THX1-UP
PART OF 347-1741, 367-4852 ENGINE AR-COMPLETE
ALSO AN ATTACHMENT

SMCS-1408 **i03836474**

NOTE	REF NO	GRAPHIC REF	PART NUMBER	QTY	PART NAME 1 2 3 4 5 6 (PRODUCT LEVEL)	SEE PAGE
	1	1	**3S-2093**	18	STRAP-CABLE	
	2	1	**215-3249**	1	HARNESS AS-ENGINE (UNIT INJECTOR)	
		1	**3S-2093**	5	STRAP-CABLE	
		1	**105-1797**	5	MOUNT	
		1	**9X-3401**	12	PIN-CONNECTOR (16-GA TO 18-GA)	
					—OR—	
		1	**126-1767**	12	PIN-CONNECTOR (14-GA TO 16-GA)	
		1	**172-6064**	1	WEDGE-RECEPTACLE LOCK	
		1	**191-7823**	1	RECEPTACLE AS	
		1	**307-8428**	1	GASKET	
	3	1	**323-9140**	1	HARNESS AS-ENGINE	
		1	**102-8802**	1	KIT-RECEPTACLE (2-PIN)	
					(EACH RECEPTACLE KIT INCLUDES RECEPTACLE AS & WEDGE)	
		1	**8T-8737**	95	PLUG-SEAL	
		1	**100-3320**	1	PLUG AS-CONNECTOR (2-PIN)	
		1	**126-5011**	1	SEAL-CONNECTOR	
		1	**305-5362**	4	TERMINAL AS (18-GA)	
		1	**111-2416**	1	PLUG AS-CONNECTOR (2-PIN)	
		1	**126-5011**	1	SEAL-CONNECTOR	
E		1	**125-7874**		TUBE-HEAT SHRINK (5.72-MM DIA) (25-CM)	
E		1	**125-7875**		TUBE-HEAT SHRINK (7.44-MM DIA) (15-CM)	
		1	**155-2270**	3	KIT-CONNECTING PLUG (2-PIN)	
		1	**155-2265**	1	KIT-CONNECTING PLUG (8-PIN)	
					(EACH PLUG KIT INCLUDES PLUG AS & WEDGE)	
		1	**172-6062**	1	PLUG AS-CONNECTOR (18-PIN)	
		1	**172-6065**	1	WEDGE-PLUG LOCK	
		1	**180-9340**	1	SOCKET-CONNECTOR (14-GA TO 18-GA)	
		1	**211-6807**	1	COVER-CONNECTOR	
		1	**230-4011**	2	PLUG AS-CONNECTOR (2-PIN)	
					(EACH INCLUDES)	
		1	**264-7029**	1	SEAL-CONNECTOR	
		1	**230-4013**	1	PLUG AS-CONNECTOR (3-PIN)	
		1	**264-7030**	1	SEAL-CONNECTOR	
		1	**237-0227**	3	PLUG AS-CONNECTOR (3-PIN)	
					(EACH INCLUDES)	
		1	**264-7030**	1	SEAL-CONNECTOR	
		1	**264-5732**	1	PLUG AS-CONNECTOR (120-PIN)	
		1	**288-7324**	1	SEAL-CONNECTOR	
	4	1	**4P-7581**	6	CLIP	
	5	1	**4P-8134**	2	CLIP	
M	6	1	**5P-7970**	3	NUT (M8X1.25-THD)	
M	7	1	**6V-5217**	1	BOLT (M8X1.25X20-MM)	
	8	1	**6V-5839**	3	WASHER (11X21X2.5-MM THK)	
M	9	1	**6V-6317**	2	BOLT (M10X1.5X20-MM)	
M	10	1	**7I-2272**	2	BOLT (M5X0.8X12-MM)	
	11	1	**8T-0328**	2	WASHER-HARD (5.5X10X1-MM THK)	
M	12	1	**8T-4137**	1	BOLT (M10X1.5X20-MM)	
	13	1	**8T-4205**	1	WASHER-HARD (7.2X14.5X2-MM THK)	
M	14	1	**8T-5451**	1	BOLT (M6X1X12-MM)	
	15	1	**9M-1974**	3	WASHER-HARD (8.8X16X2-MM THK)	
	16	1	**9X-2332**	1	CLIP	

E-ORDER BY THE CENTIMETER
M-METRIC PART

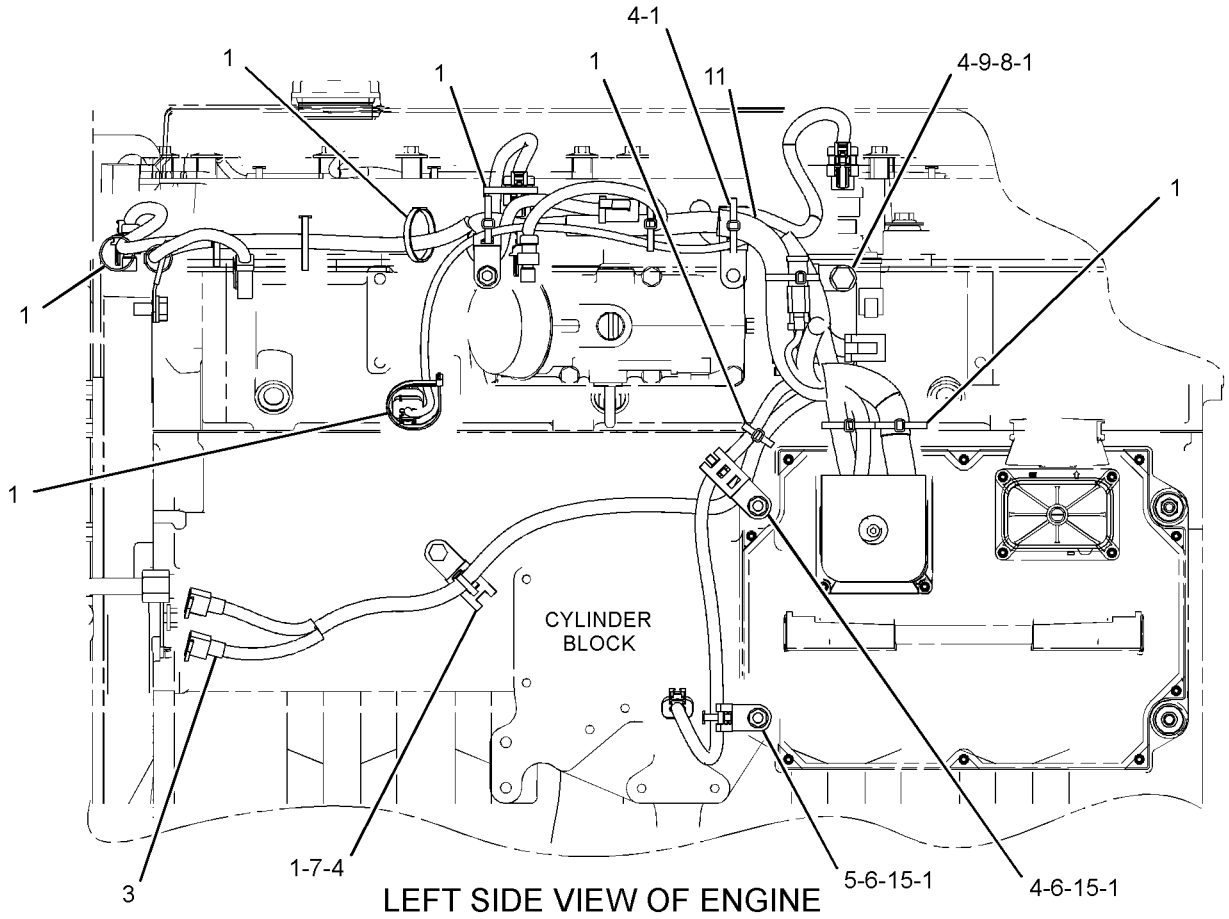

LEFT SIDE VIEW OF ENGINE

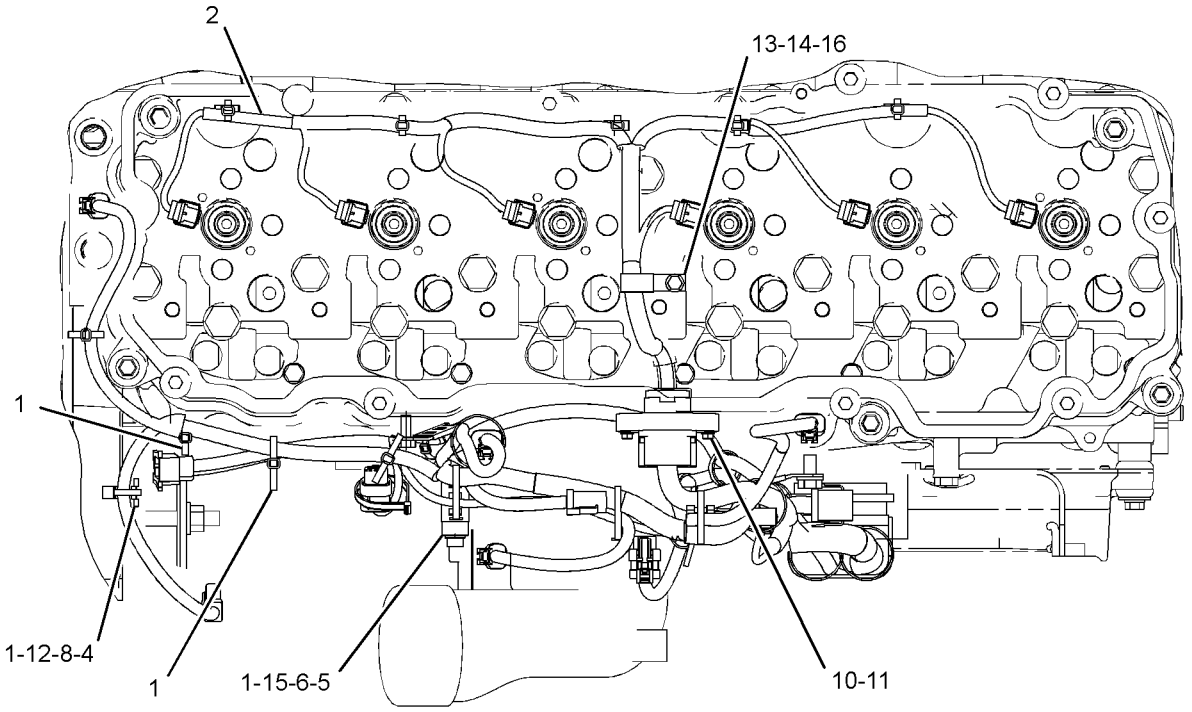

TOP VIEW OF ENGINE

GRAPHIC #1 **<END>** g02088302

ELECTRICAL AND STARTING SYSTEM

339-8301 WIRING GP-ENGINE

S/N: F7B1-UP

PART OF 362-3897 ELECTRICAL AR

SMCS-1408 **i04993375**

NOTE	REF NO	GRAPHIC REF	PART NUMBER	QTY	PART NAME 1 2 3 4 5 6 (PRODUCT LEVEL)	SEE PAGE
	1	1	**3S-2093**	1	STRAP-CABLE	
	2	1	**4N-1059**	1	GASKET	
	3	1	**7K-1181**	12	STRAP-CABLE	
	4	1	**8Y-9603**	1	CABLE AS-STARTING MOTOR	
		1	**1S-7251**	1	TERMINAL-CABLE (00-GA, 1/2-IN SCREW)	
		1	**1S-7252**	1	TERMINAL-CABLE (00-GA, 3/8-IN SCREW)	
E		1	**159-8050**		CABLE (00-GA, BLACK) (28-CM)	
	5	1	**174-3016**	1	PLUG AS-CONNECTOR (3-PIN)	
	6	1	**189-3158**	1	SUPPRESSOR-ARC	
	7	1	**192-5017**	1	BRACKET AS	
	8	1	**225-1453**	1	BRACKET AS	
M		1	**8T-3490**	3	NUT-WELD (M10X1.5-THD)	
	9	1	**225-4155**	1	CABLE AS	
		1	**3L-6513**	1	TERMINAL-RING (1-GA TO 2-GA, 1/2-IN SCREW)	
E		1	**8C-0596**		CABLE (2-GA) (60-CM)	
		1	**030-1712**	1	TERMINAL-RING (2-GA, 1/4-IN SCREW)	
	10	1	**226-0901**	1	TUBE	
	11	1	**291-4361**	1	HARNESS AS-ENGINE	
		1	**102-8802**	1	KIT-RECEPTACLE (2-PIN)	
		1	**102-8803**	1	KIT-RECEPTACLE (3-PIN)	
		1	**102-8806**	1	KIT-RECEPTACLE (8-PIN)	
					(EACH RECEPTACLE KIT INCLUDES RECEPTACLE AS & WEDGE)	
		1	**3S-2093**	2	STRAP-CABLE	
		1	**7G-7917**	1	PLUG-SEAL	
		1	**7G-7919**	1	PLUG-SEAL	
		1	**7G-7920**	1	PLUG-SEAL	
		1	**7K-1181**	2	STRAP-CABLE	
		1	**8N-1518**	1	PLUG AS-CONNECTOR (25-PIN)	
		1	**8N-1521**	1	BELL AS-END	
		1	**9X-6857**	15	SOCKET-CONNECTOR (16-GA TO 18-GA)	
		1	**8N-1541**	4	SOCKET-CONNECTOR (12-GA TO 14-GA)	
		1	**8N-1543**	1	SOCKET-CONNECTOR (10-GA)	
		1	**8N-1545**	1	SOCKET-CONNECTOR (8-GA)	
		1	**8N-1549**	1	SOCKET-CONNECTOR (4-GA)	
		1	**8T-8729**	2	PIN-CONNECTOR (16-GA TO 18-GA)	
		1	**8T-8730**	16	SOCKET-CONNECTOR (16-GA TO 18-GA)	
		1	**8T-8737**	58	PLUG-SEAL	
		1	**9W-0844**	8	SOCKET-CONNECTOR (14-GA TO 16-GA)	
		1	**110-8769**	1	WIRE AS	
E		1	**119-3662**		TUBE-HEAT SHRINK (10.85-MM DIA) (7-CM)	
E		1	**125-7874**		TUBE-HEAT SHRINK (5.72-MM DIA) (15-CM)	
		1	**126-1767**	2	PIN-CONNECTOR (14-GA TO 16-GA)	
		1	**126-1774**	1	COVER-CONNECTOR	
		1	**5P-3454**	1	TERMINAL-RING (4-GA, 5/16-IN SCREW)	
		1	**3T-4692**	1	TERMINAL-RING (6-GA, 7/16-IN SCREW)	
					—OR—	
		1	**3T-4693**	1	TERMINAL-RING (8-GA, 7/16-IN SCREW)	
		1	**3T-4696**	1	TERMINAL-RING (10-GA TO 12-GA, 7/16-IN SCREW)	
		1	**2L-8078**	1	TERMINAL-RING (14-GA TO 16-GA, 5/16-IN SCREW)	
		1	**135-2543**	1	BOOT (RED)	
		1	**155-2270**	3	KIT-CONNECTING PLUG (2-PIN)	
					(EACH INCLUDES PLUG AS, WEDGE, & INTERFACE SEAL)	
		1	**160-7689**	1	PLUG AS-CONNECTOR (70-PIN)	

339-8301 **WIRING GP-ENGINE** ***(contd.)*** **i04993375**

NOTE	REF NO	GRAPHIC REF	PART NUMBER	QTY	PART NAME 1 2 3 4 5 6 (PRODUCT LEVEL)	SEE PAGE
		1	**159-9322**	1	SEAL-O-RING	
B		1	**1P-0810**	1	TAPE-ELECTRICAL	
		1	**9X-3401**	3	PIN-CONNECTOR (16-GA TO 18-GA)	
					—OR—	
		1	**126-1767**	3	PIN-CONNECTOR (14-GA TO 16-GA)	
		1	**2L-8049**	1	TERMINAL-RING (6-GA, NO. 10 SCREW)	
					—OR—	
		1	**2L-8057**	1	TERMINAL-RING (8-GA, NO. 10 SCREW)	
Y	12	1	*338-3457*	1	STARTING MOTOR GP-ELECTRIC (24-VOLT)	156
	13	1	**363-1778**	1	CABLE AS	
		1	**1S-7251**	1	TERMINAL-CABLE (00-GA, 1/2-IN SCREW)	
E		1	**159-8049**		CABLE (00-GA, RED) (54-CM)	
		1	**190-3848**	1	TERMINAL-RING	
		1	**301-0091**	1	COVER-TERMINAL (RED)	
	14	1	**363-1780**	1	CABLE AS	
		1	**6T-5598**	1	TERMINAL-RING (1-GA TO 2-GA, 5/16-IN SCREW)	
E		1	**8C-3056**		CABLE (2-GA, RED) (164-CM)	
		1	**8T-8827**	1	BOOT (RED)	
		1	**030-1712**	1	TERMINAL-RING (2-GA, 1/4-IN SCREW)	
		1	**135-2543**	1	BOOT (RED)	
	15	1	**364-0513**	1	CABLE AS	
		1	**1S-7251**	1	TERMINAL-CABLE (00-GA, 1/2-IN SCREW)	
		1	**1S-7252**	1	TERMINAL-CABLE (00-GA, 3/8-IN SCREW)	
E		1	**159-8050**		CABLE (00-GA, BLACK) (59-CM)	
	17	1	**091-9035**	2	SPACER (11X25X20-MM THK)	
	18	1	**124-9633**	1	CLIP	
	19	1	**130-5300**	2	CLIP	
	20	1	**132-7551**	1	SPACER (11X19X6-MM THK)	
	21	1	**149-9129**	1	CLIP	
	23	1	**1S-0994**	3	CLIP	
	24	1	**205-7299**	1	CLIP	
	25	1	**212-0430**	5	STUD (M10X1.5X25-MM, M16X2X25-MM)	
	26	1	**2V-1771**	1	GROMMET	
	28	1	**4D-7735**	1	CLIP	
	29	1	**4D-7794**	1	CLIP	
	30	1	**4P-7581**	1	CLIP	
M	31	1	**5C-7261**	1	NUT (M8X1.25-THD)	
	32	1	**5K-3294**	1	CLIP	
	33	1	**5P-4116**	2	WASHER-HARD (8.8X20.5X2-MM THK)	
	34	1	**5P-9085**	1	CLIP	
	35	1	**353-7957**	6	GROMMET	
	36	1	**6D-4246**	6	CLIP	
	37	1	**7X-0507**	1	WASHER-HARD (12X22.5X5-MM THK)	
M	38	1	**7X-2537**	1	BOLT (M8X1.25X35-MM)	
	39	1	**7X-7729**	2	WASHER (11X25X3-MM THK)	
	40	1	**8M-2770**	4	CLIP	
	41	1	**8M-2772**	3	CLIP	
	42	1	**8M-2773**	1	CLIP	
	43	1	**8S-0948**	1	CLIP	
	44	1	**8S-2332**	3	BOLT-12 POINT HEAD (5/8-11X1.75-IN)	
	45	1	**8S-8820**	2	CLIP	
	46	1	**8T-4121**	24	WASHER-HARD (11X21X2.5-MM THK)	
M	47	1	**8T-4133**	6	NUT (M10X1.5-THD)	
M	48	1	**8T-4136**	6	BOLT (M10X1.5X25-MM)	
M	49	1	**8T-4137**	9	BOLT (M10X1.5X20-MM)	
M	50	1	**8T-4186**	2	BOLT (M10X1.5X40-MM)	
M	51	1	**8T-4191**	1	BOLT (M10X1.5X16-MM)	
M	52	1	**8T-4195**	2	BOLT (M10X1.5X30-MM)	
	53	1	**8T-4224**	1	WASHER-HARD (8.8X16X2-MM THK)	

339-8301 **WIRING GP-ENGINE** *(contd.)* **i04993375**

NOTE	REF NO	GRAPHIC REF	PART NUMBER	QTY	PART NAME 1 2 3 4 5 6 (PRODUCT LEVEL)	SEE PAGE
M	54	1	**8T-7547**	1	BOLT (M8X1.25X30-MM)	
	55	1	**9M-8406**	2	CLIP	
	57	1	**186-0359**	2	CLIP	
	58	1	**269-7678**	1	CLIP	
	59	1	**147-8856**	1	BRACKET AS	

B-USE AS REQUIRED
E-ORDER BY THE CENTIMETER
M-METRIC PART
Y-SEPARATE ILLUSTRATION

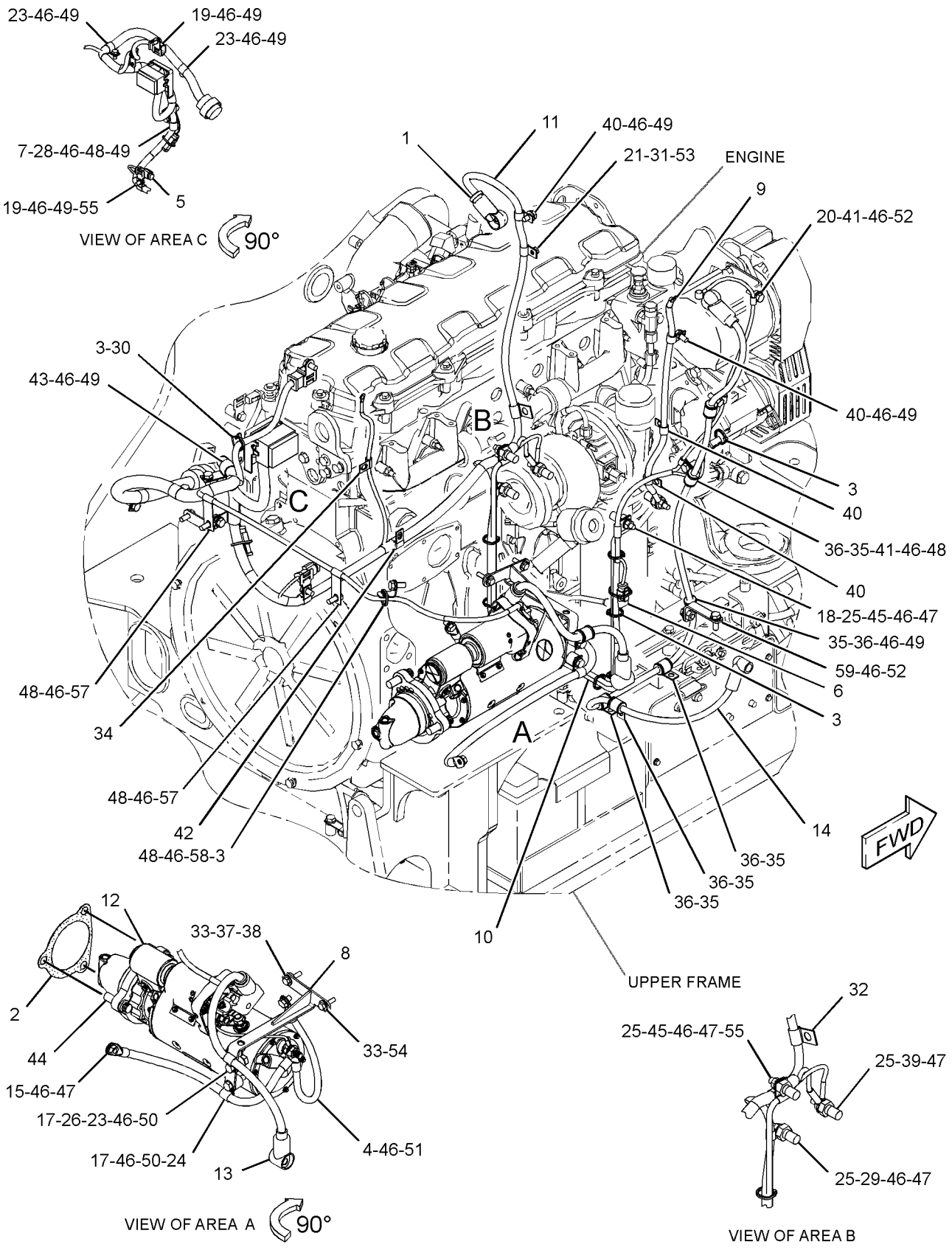

GRAPHIC #1 **<END>** g03182962

269-3410 WIRING GP-HEATER–AIR INLET MANIFOLD

S/N: TXD1-UP; THX1-UP
PART OF 347-1741, 367-4852 ENGINE AR-COMPLETE
ALSO AN ATTACHMENT

SMCS-7304 **i04921777**

NOTE	REF NO	GRAPHIC REF	PART NUMBER	QTY	PART NAME 1 2 3 4 5 6 (PRODUCT LEVEL)	SEE PAGE
	1	1	**3S-2093**	1	STRAP-CABLE	
Y	2	1	**209-5582**	1	SWITCH GP-MAGNETIC (24-VOLT) (STARTING AID HEATER)	163
	3	1	**224-1377**	1	WIRE AS	
	4	1	**283-1226**	1	BRACKET AS	
	5	1	**208-9277**	2	BOLT-FLANGE HEAD (M6X1X20-MM)	
	6	1	**6V-5839**	2	WASHER (11X21X2.5-MM THK)	
M	7	1	**6V-6317**	1	BOLT (M10X1.5X20-MM)	
M	8	1	**6V-4248**	1	BOLT (M10X1.5X25-MM)	

M-METRIC PART
Y-SEPARATE ILLUSTRATION

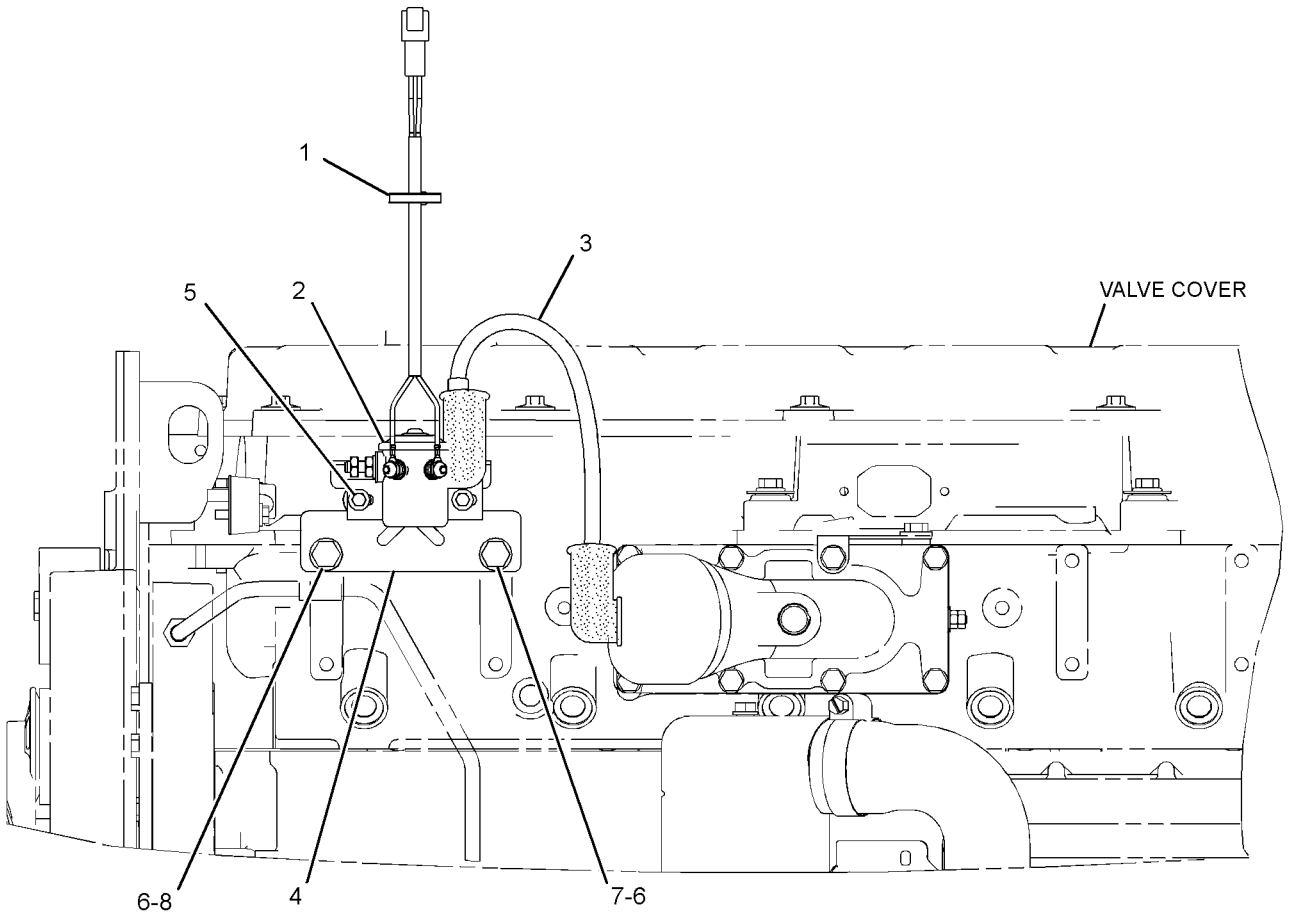

LEFT SIDE VIEW OF ENGINE

GRAPHIC #1 **<END>** g03088176

ELECTRICAL AND STARTING SYSTEM

362-3885 WIRING GP-MACHINE

S/N: F7B1-UP

PART OF 362-3897 ELECTRICAL AR

SMCS-1408 **i04958494**

NOTE	REF NO	GRAPHIC REF	PART NUMBER	QTY	PART NAME 1 2 3 4 5 6 (PRODUCT LEVEL)	SEE PAGE
	1	2	**139-2397**	1	BRACKET AS	
	2	1,2,3	**189-3158**	10	SUPPRESSOR-ARC	
Y	3	3	**258-0883**	1	SWITCH GP-PRESSURE (HYDRAULIC FILTER BYPASS)	165
	4	3	**264-4297**	1	SENSOR AS-TEMPERATURE (HYDRAULIC OIL)	
		3	**137-6645**	1	PAD-CONNECTOR	
	5	2	**266-5885**	1	RESISTOR AS	
		2	**102-8802**	4	KIT-RECEPTACLE (2-PIN)	
					(EACH INCLUDES RECEPTACLE AS & WEDGE)	
		2	**8T-8729**	2	PIN-CONNECTOR (16-GA TO 18-GA)	
E		2	**125-7876**		TUBE-HEAT SHRINK (17.78-MM DIA) (4-CM)	
	6	3	**274-7921**	2	CONTROL GP-MACHINE (IQAN, XA MODULE)	
	7	3	**279-5629**	1	BRACKET AS	
M		3	**8T-3490**	1	NUT-WELD (M10X1.5-THD)	
Y	8	3	**306-6875**	1	SENSOR GP-LIQUID LEVEL (HYDRAULIC TANK)	142
	9	2	**347-0596**	2	FLANGE-MOUNTING	
	10	3	**364-0494**	1	HARNESS AS-WIRING	
		3	**102-8801**	1	KIT-RECEPTACLE (12-PIN)	
					(INCLUDES RECEPTACLE AS & WEDGE)	
		3	**8T-8729**	4	PIN-CONNECTOR (16-GA TO 18-GA)	
		3	**8T-8737**	8	PLUG-SEAL	
	11	1	**378-8862**	1	HARNESS AS-LIGHTING (ANGLED FLOODS, SERVICE LIGHTS)	
		1	**155-2270**	4	KIT-CONNECTING PLUG (2-PIN)	
					(EACH INCLUDES RECEPTACLE AS & WEDGE)	
		1	**180-9340**	4	SOCKET-CONNECTOR (14-GA TO 18-GA)	
	12	3	**382-0642**	2	PLATE	
	13	3	**392-5400**	1	BRACKET AS	
	14	3	**392-5401**	1	BRACKET	
	15	1	**395-3146**	1	HARNESS AS-CHASSIS	
		1	**102-8802**	2	KIT-RECEPTACLE (2-PIN)	
		1	**102-8804**	2	KIT-RECEPTACLE (4-PIN)	
		1	**102-8801**	1	KIT-RECEPTACLE (12-PIN)	
					(EACH RECEPTACLE KIT INCLUDES RECEPTACLE AS & WEGDE)	
		1	**7G-7917**	10	PLUG-SEAL	
		1	**7G-7919**	4	PLUG-SEAL	
		1	**7G-7920**	1	PLUG-SEAL	
		1	**7T-0094**	14	SOCKET-CONNECTOR (12-GA TO 14-GA)	
		1	**8N-1514**	1	PLUG AS-CONNECTOR (37-PIN)	
		1	**8N-1517**	1	RECEPTACLE AS-CONNECTOR (25-PIN)	
		1	**8N-1522**	1	NUT (2-1/4-16-THD)	
		1	**8N-1520**	1	PLUG AS-CONNECTOR (12-PIN)	
		1	**8N-1521**	3	BELL AS-END	
		1	**8N-1523**	1	LOCKWASHER	
		1	**9X-6856**	15	PIN-CONNECTOR (16-GA TO 18-GA)	
		1	**9X-6857**	28	SOCKET-CONNECTOR (16-GA TO 18-GA)	
		1	**8N-1540**	4	PIN-CONNECTOR (12-GA TO 14-GA)	
		1	**8N-1541**	8	SOCKET-CONNECTOR (12-GA TO 14-GA)	
		1	**8N-1542**	1	PIN-CONNECTOR (10-GA)	
		1	**8N-1544**	1	PIN-CONNECTOR (8-GA)	
		1	**8N-1548**	1	PIN-CONNECTOR (4-GA)	
		1	**8N-1549**	1	SOCKET-CONNECTOR (4-GA)	
		1	**8T-8737**	49	PLUG-SEAL	
		1	**7K-1181**	3	STRAP-CABLE	
E		1	**119-3662**		TUBE-HEAT SHRINK (10.85-MM DIA) (13-CM)	
E		1	**125-7874**		TUBE-HEAT SHRINK (5.72-MM DIA) (60-CM)	

362-3885 **WIRING GP-MACHINE** *(contd.)* **i04958494**

NOTE	REF NO	GRAPHIC REF	PART NUMBER	QTY	PART NAME 1 2 3 4 5 6 (PRODUCT LEVEL)	SEE PAGE
E		1	**125-7875**		TUBE-HEAT SHRINK (7.44-MM DIA) (40-CM)	
		1	**126-1767**	2	PIN-CONNECTOR (14-GA TO 16-GA)	
		1	**126-1768**	4	SOCKET-CONNECTOR (14-GA TO 16-GA)	
		1	**9G-4343**	2	TERMINAL-RING (4-GA, 1/4-IN SCREW)	
		1	**2L-8051**	1	TERMINAL-RING (6-GA, 5/16-IN SCREW)	
					—OR—	
		1	**5P-3455**	1	TERMINAL-RING (8-GA, 5/16-IN SCREW)	
		1	**2L-8065**	1	TERMINAL-RING (10-GA TO 12-GA, NO. 8 SCREW)	
		1	**2L-8066**	1	TERMINAL-RING (10-GA TO 12-GA, NO. 10 SCREW)	
		1	**2L-8069**	3	TERMINAL-RING (2-GA TO 10-GA, 3/8-IN SCREW)	
		1	**2L-8079**	4	TERMINAL-RING (14-GA TO 16-GA, 3/8-IN SCREW)	
		1	**155-2255**	1	KIT-CONNECTING PLUG (12-PIN)	
		1	**155-2260**	1	KIT-CONNECTING PLUG (3-PIN)	
		1	**155-2270**	12	KIT-CONNECTING PLUG (2-PIN)	
		1	**155-2271**	1	KIT-CONNECTING PLUG (4-PIN)	
		1	**155-2274**	2	KIT-CONNECTING PLUG (6-PIN)	
					(EACH PLUG KIT INCLUDES PLUG AS, WEDGE, & INTERFACE SEAL)	
B		1	**1P-0810**		TAPE-ELECTRICAL	
		1	**169-0705**	18	SEAL	
		1	**9X-3401**	3	PIN-CONNECTOR (16-GA TO 18-GA)	
					—OR—	
		1	**126-1767**	3	PIN-CONNECTOR (14-GA TO 16-GA)	
		1	**194-5226**	181	WIRE AS (16-GA)	
					—OR—	
		1	**194-5227**	181	WIRE AS (14-GA)	
		1	**274-8267**	4	PLUG	
	16	1	**395-3147**	1	HARNESS AS-CONSOLE	
		1	**3S-2093**	2	STRAP-CABLE	
		1	**7T-0093**	8	PIN-CONNECTOR (12-GA TO 14-GA)	
		1	**8T-8737**	9	PLUG-SEAL	
E		1	**119-3662**		TUBE-HEAT SHRINK (10.85-MM DIA) (7-CM)	
E		1	**125-7874**		TUBE-HEAT SHRINK (5.72-MM DIA) (5-CM)	
E		1	**125-7875**		TUBE-HEAT SHRINK (7.44-MM DIA) (15-CM)	
		1	**155-2255**	1	KIT-CONNECTING PLUG (12-PIN)	
		1	**155-2270**	6	KIT-CONNECTING PLUG (2-PIN)	
					(EACH PLUG KIT INCLUDES PLUG AS, WEDGE, & INTERFACE SEAL)	
		1	**169-0705**	8	SEAL	
		1	**9X-3401**	71	PIN-CONNECTOR (16-GA TO 18-GA)	
					—OR—	
		1	**126-1767**	71	PIN-CONNECTOR (14-GA TO 16-GA)	
		1	**194-5226**	24	WIRE AS (16-GA)	
					—OR—	
		1	**194-5227**	24	WIRE AS (14-GA)	
		1	**183-7749**	2	CONNECTOR	
		1	**184-1432**	2	CONNECTOR	
		1	**202-5414**	1	RESISTOR AS	
		1	**222-4162**	1	RESISTOR AS	
		1	*226-1817*	4	TERMINAL AS	
					(EACH INCLUDES)	
		1	**185-1861**	1	SEAL-WIRE	
		1	*226-1818*	4	TERMINAL AS	
					(EACH INCLUDES)	
		1	**158-6706**	1	TERMINAL	
		1	**185-1860**	1	SEAL-WIRE	
		1	*226-1819*	62	TERMINAL AS	
					(EACH INCLUDES)	

362-3885 **WIRING GP-MACHINE** *(contd.)* **i04958494**

NOTE	REF NO	GRAPHIC REF	PART NUMBER	QTY	PART NAME 1 2 3 4 5 6 (PRODUCT LEVEL)	SEE PAGE
		1	**247-5008**	1	TERMINAL	
		1	**279-5772**	1	SEAL	
			274-8267	2	PLUG	
			347-0593	1	RECEPTACLE AS	
	17	1	**395-3148**	1	HARNESS AS-VALVE	
		1	**102-8802**	7	KIT-RECEPTACLE (2-PIN)	
					(EACH INCLUDES RECEPTACLE AS & WEDGE)	
		1	**7T-0093**	6	PIN-CONNECTOR (12-GA TO 14-GA)	
		1	**8T-8737**	31	PLUG-SEAL	
E		1	**125-7874**		TUBE-HEAT SHRINK (5.72-MM DIA) (70-CM)	
E		1	**125-7875**		TUBE-HEAT SHRINK (7.44-MM DIA) (10-CM)	
		1	**155-2255**	1	KIT-CONNECTING PLUG (12-PIN)	
		1	**155-2256**	1	KIT-CONNECTING PLUG (12-PIN)	
		1	**155-2260**	1	KIT-CONNECTING PLUG (3-PIN)	
		1	**155-2270**	33	KIT-CONNECTING PLUG (2-PIN)	
					(EACH PLUG KIT INCLUDES PLUG AS, WEDGE, & INTERFACE SEAL)	
		1	**169-0705**	10	SEAL	
		1	**9X-3401**	69	PIN-CONNECTOR (16-GA TO 18-GA)	
					—OR—	
		1	**126-1767**	69	PIN-CONNECTOR (14-GA TO 16-GA)	
		1	**194-5226**	96	WIRE AS (16-GA)	
					—OR—	
		1	**194-5227**	96	WIRE AS (14-GA)	
		1	**237-0227**	3	PLUG AS-CONNECTOR (3-PIN)	
					(EACH INCLUDES)	
		1	**264-7030**	1	SEAL-CONNECTOR	
		1	**274-8267**	2	PLUG	
		1	**316-4373**	4	PLUG-SEAL	
	18	1	**395-3149**	1	HARNESS AS-REAR	
		1	**102-8801**	1	KIT-RECEPTACLE (12-PIN)	
		1	**190-7614**	1	KIT-RECEPTACLE (12-PIN)	
					(EACH RECEPTACLE KIT INCLUDES RECEPTACLE AS & WEDGE)	
		1	**8T-8737**	8	PLUG-SEAL	
E		1	**125-7874**		TUBE-HEAT SHRINK (5.72-MM DIA) (25-CM)	
E		1	**125-7875**		TUBE-HEAT SHRINK (7.44-MM DIA) (10-CM)	
		1	**2L-8052**	1	TERMINAL-RING (6-GA, 3/8-IN SCREW)	
					—OR—	
		1	**2L-8060**	1	TERMINAL-RING (8-GA, 3/8-IN SCREW)	
		1	**2L-8069**	2	TERMINAL-RING (2-GA TO 10-GA, 3/8-IN SCREW)	
		1	**2L-8076**	1	TERMINAL-RING (14-GA TO 16-GA, NO. 10 SCREW)	
		1	**155-2260**	1	KIT-CONNECTING PLUG (3-PIN)	
		1	**155-2270**	10	KIT-CONNECTING PLUG (2-PIN)	
		1	**155-2274**	1	KIT-CONNECTING PLUG (6-PIN)	
					(EACH PLUG KIT INCLUDES PLUG AS, WEDGE, & INTERFACE SEAL)	
		1	**9X-3401**	18	PIN-CONNECTOR (16-GA TO 18-GA)	
					—OR—	
		1	**126-1767**	18	PIN-CONNECTOR (14-GA TO 16-GA)	
		1	**194-5226**	27	WIRE AS (16-GA)	
					—OR—	
		1	**194-5227**	27	WIRE AS (14-GA)	
	19	2	**395-3296**	2	BRACKET	
	20	3	**395-3297**	2	PLATE	
	21	1	**396-1595**	1	HARNESS AS-SENSOR	
		1	**102-8803**	1	KIT-RECEPTACLE (3-PIN)	
					(INCLUDES RECEPTACLE AS & WEDGE)	

362-3885 **WIRING GP-MACHINE** *(contd.)* **i04958494**

NOTE	REF NO	GRAPHIC REF	PART NUMBER	QTY	PART NAME 1 2 3 4 5 6 (PRODUCT LEVEL)	SEE PAGE
		1	**9X-3401**	3	PIN-CONNECTOR (16-GA TO 18-GA)	
					—OR—	
		1	**126-1767**	3	PIN-CONNECTOR (14-GA TO 16-GA)	
		1	**271-5604**	3	PIN-CONNECTOR (20-GA)	
					—OR—	
		1	**347-0109**	3	WIRE AS	
	22	2	**110-2028**	8	SCREW-PAN HEAD (10-14X0.75-IN)	
	23	1,2,3	**130-5300**	25	CLIP	
	24	1,2,3	**132-5789**	6	CLIP	
	25	3	**199-8026**	2	GROMMET	
	26	3	**1S-0994**	1	CLIP	
	27	2	**240-7193**	2	RESISTOR AS (500-OHM, 2-WATT)	
		2	**102-8802**	4	KIT-RECEPTACLE (2-PIN)	
					(EACH INCLUDES RECEPTACLE & WEDGE)	
		2	**9X-3401**	2	PIN-CONNECTOR (16-GA TO 18-GA)	
	28	1	**260-5864**	1	SWITCH AS-TOGGLE (GROUND LEVEL SHUTDOWN)	
		1	**102-8803**	1	KIT-RECEPTACLE (3-PIN)	
					(INCLUDES RECEPTACLE AS & WEDHE	
		1	**8T-8729**	3	PIN-CONNECTOR (16-GA TO 18-GA)	
		1	**6T-3631**	2	NUT-HEX (15/32-32-THD)	
		1	**6T-3632**	1	LOCKWASHER	
		1	**6T-3633**	1	RING-LOCKING	
	29	2	**277-1873**	1	CLIP	
	30	3	**2M-9780**	1	SEAL-O-RING	
	31	2	**2V-8260**	1	GROMMET	
	32	1	**310-1898**	1	CLIP	
	33	1,2	**352-3964**	2	CLIP	
	34	3	**3E-4352**	11	WASHER-HARD (8.8X20.5X2.5-MM THK)	
	35	3	**3K-0360**	1	SEAL-O-RING	
	36	1,2,3	**3S-2093**	76	STRAP-CABLE	
	37	2	**4D-7794**	2	CLIP	
	38	2	**4K-8864**	3	CLIP	
	39	1,2,3	**4P-7581**	9	CLIP	
	40	3	**4P-8134**	1	CLIP	
M	41	3	**5C-2890**	4	NUT (M6X1-THD)	
	42	2	**6D-3479**	6	CLIP	
	43	2	**6D-4244**	5	CLIP	
	44	2	**6V-1889**	2	CLIP	
	45	2,3	**7K-1181**	20	STRAP-CABLE	
	46	2	**8T-0328**	8	WASHER-HARD (5.5X10X1-MM THK)	
	47	1,2,3	**8T-4121**	56	WASHER-HARD (11X21X2.5-MM THK)	
M	48	1,2	**8T-4133**	4	NUT (M10X1.5-THD)	
M	49	1,2,3	**8T-4136**	6	BOLT (M10X1.5X25-MM)	
M	50	1,2,3	**8T-4137**	40	BOLT (M10X1.5X20-MM)	
M	51	3	**8T-4189**	6	BOLT (M8X1.25X20-MM)	
M	52	1,3	**8T-4195**	6	BOLT (M10X1.5X30-MM)	
M	53	3	**8T-4200**	2	BOLT (M8X1.25X16-MM)	
	54	3	**8T-4205**	4	WASHER-HARD (7.2X14.5X2-MM THK)	

B-USE AS REQUIRED
E-ORDER BY THE CENTIMETER
M-METRIC PART
Y-SEPARATE ILLUSTRATION

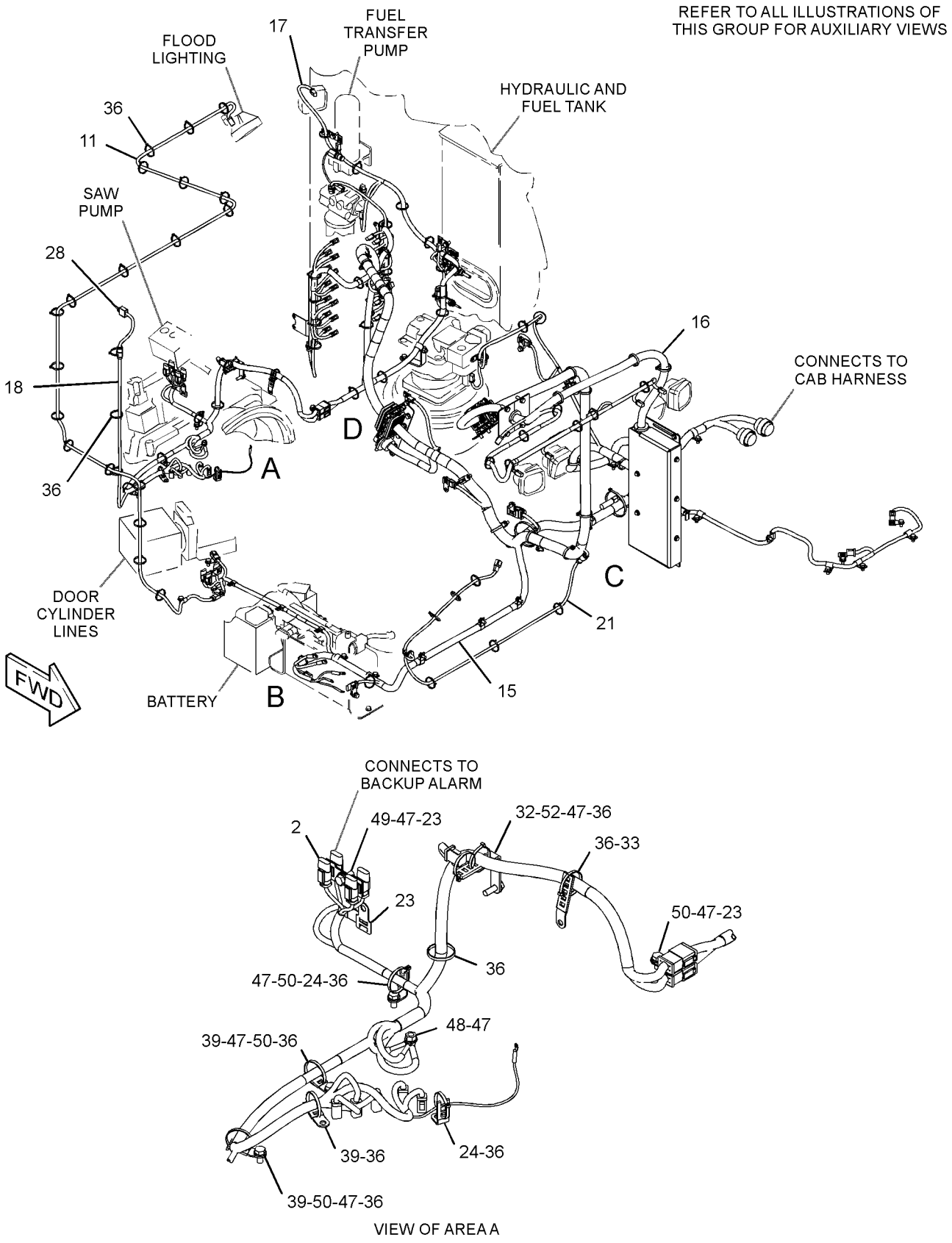

GRAPHIC #1 g03249459

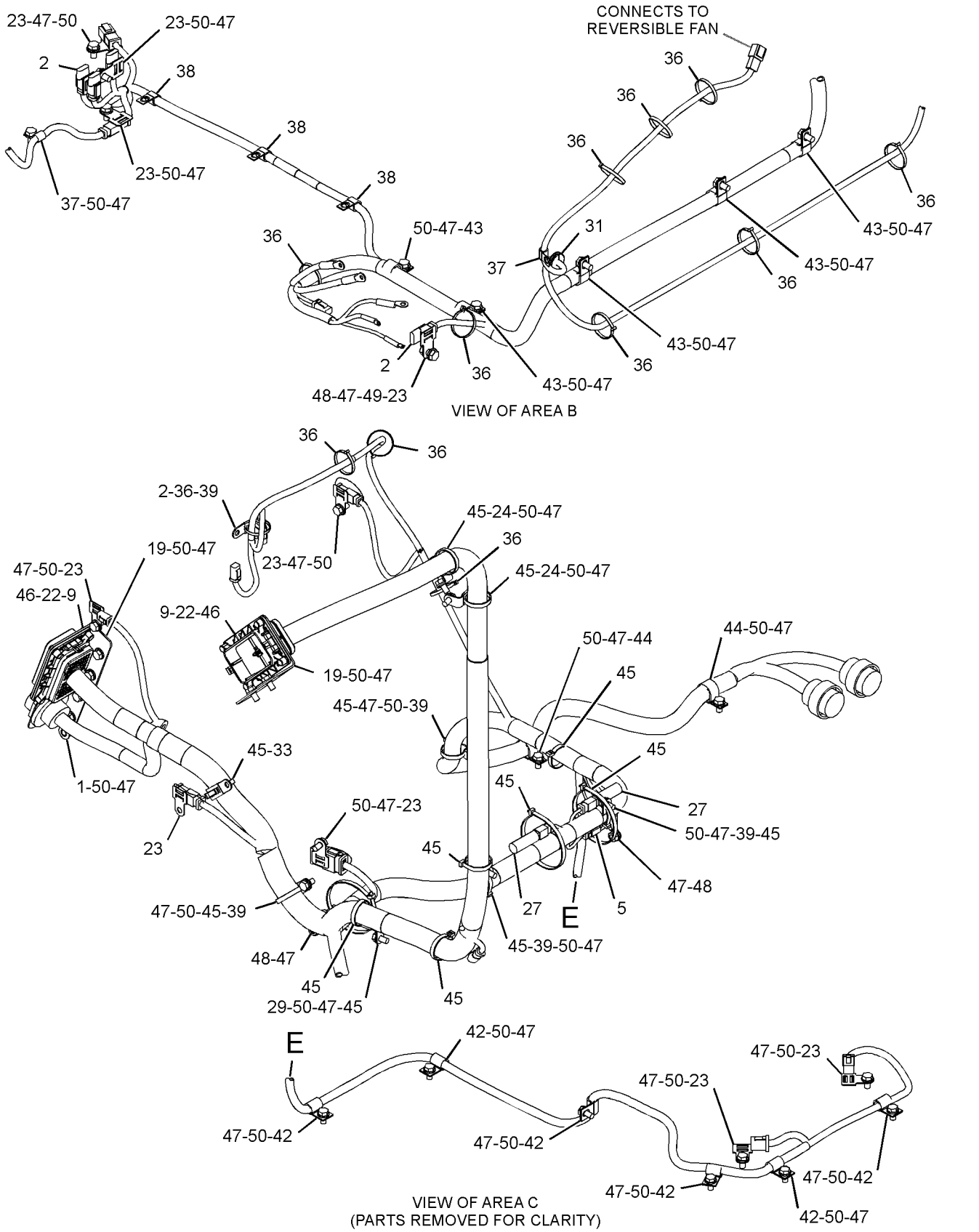

GRAPHIC #2

g03249461

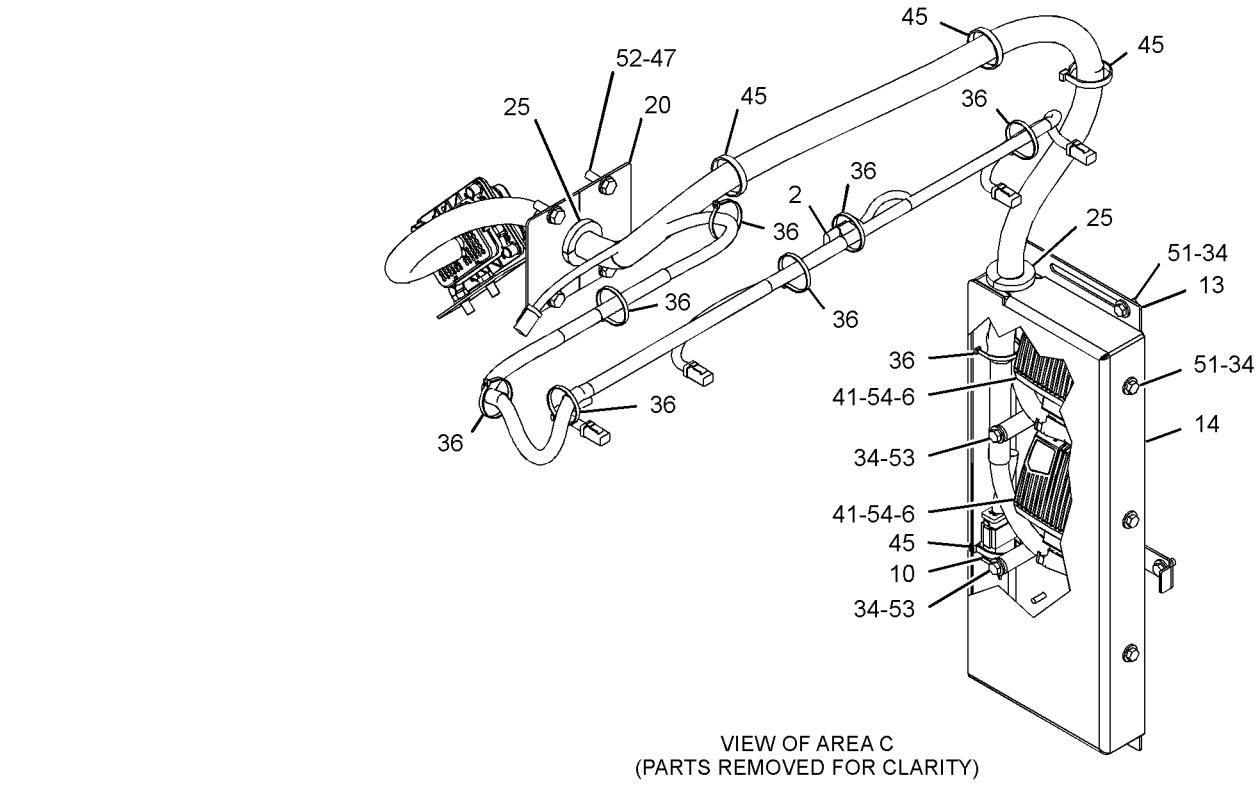

VIEW OF AREA C
(PARTS REMOVED FOR CLARITY)

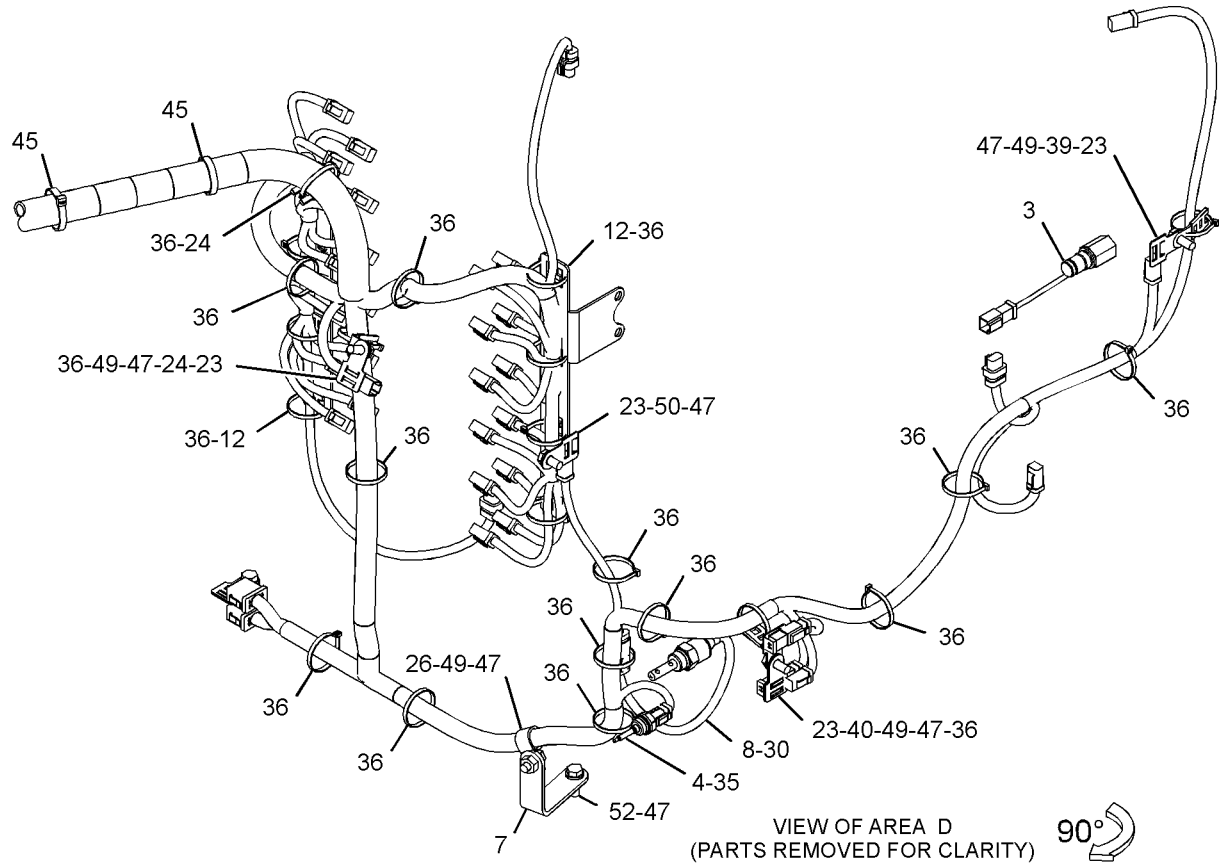

VIEW OF AREA D
(PARTS REMOVED FOR CLARITY)

90°

GRAPHIC #3 **<END>** g03249463

POWER TRAIN

165-6209 DRIVE GP-FINAL

S/N: F7B1-UP

PART OF 318-9121 DRIVE GP-FINAL

SMCS-4050 **i05102731**

NOTE	REF NO	GRAPHIC REF	PART NUMBER	QTY	PART NAME 1 2 3 4 5 6 (PRODUCT LEVEL)	SEE PAGE
	1	1	**185-0701**	1	HOUSING-MOTOR	
	2	1	**208-0097**	1	PLUG	
	3	1	**152-8707**	1	COUPLER	
	4	1	**185-0751**	1	CARRIER	
	5	1	**185-0752**	1	PLATE	
	6	1	**7X-2910**	1	RING-RETAINING	
	7	1	**183-3302**	1	WASHER-COPPER (8.2X11.9X1-MM THK)	
	8	1	**174-3069**	1	RING-RETAINING	
	9	1	**185-0780**	1	PLUG	
	10	1	**8T-9521**	1	SEAL-O-RING	
	11	1	**185-0753**	5	GEAR-PLANETARY	
	12	1	**108-3222**	10	BEARING AS-ROLLER	
	13	1	**110-6193**	10	WASHER (80X86X2.7-MM THK)	
	14	1	**109-0118**	5	RING-RETAINING	
	15	1	**185-0754**	1	SEAL GP-DUO-CONE	
	16	1	**095-0928**	5	RING-RETAINING (EXTERNAL)	
	17	1	**185-0755**	1	GEAR-SUN	
	18	1	**183-6930**	1	RING-RETAINING	
M	19	1	**185-0759**	1	NUT-SHAFT (M205X2-THD)	
	20	1	**3D-9132**	1	CONE-BEARING	
	21	1	**176-0053**	1	BEARING AS-SPECIAL	
	22	1	**197-7471**	1	SEAL-O-RING	
	23	1	**193-0337**	1	SPACER	
	24	1	**185-0778**	1	WASHER-THRUST (62X85X4.8-MM THK)	
	25	1	**185-0762**	1	PISTON-BRAKE	
	26	1	**185-0763**	1	PLATE	
	27	1	**8H-5352**	1	BALL BEARING	
	28	1	**7U-3538**	1	RING-RETAINING	
	29	1	**9X-2858**	6	RING-RETAINING	
	30	1	**176-0051**	6	RING-LOCATING	
	31	1	**185-0764**	1	BRAKE GP-PARKING	
	32	1	**6V-7644**	3	RING-RETAINING	
	33	1	**176-0055**	3	BEARING	
	34	1	**185-0777**	3	GEAR-PLANETARY (35-TEETH)	
	35	1	**185-0766**	1	SEAL GP (PARKING BRAKE)	
	36	1	**185-0776**	1	CARRIER	
	37	1	**132-9741**	1	WASHER (HOUSING)	
	38	1	**185-0774**	1	GEAR-SUN (17-TEETH)	
	39	1	**151-2115**	2	WASHER-COPPER (18X22X1.5-MM THK)	
	40	1	**8U-5786**	2	PLUG (FINAL DRIVE, OIL DRAIN, FILL)	
M	41	1	**8T-8441**	12	BOLT-SOCKET HEAD (M12X1.75X25-MM)	
	42	1	**109-5695**	1	SEAL-O-RING	
	43	1	**109-6494**	1	RING-RETAINING	
	44	1	**209-4433**	2	DOWEL	
	45	1	**8T-4241**	3	RING-RETAINING (EXTERNAL)	
	46	1	**109-5707**	1	SEAL-O-RING	
	47	1	**185-0768**	1	HOUSING	
M	48	1	**9X-8480**	24	BOLT (M24X3X110-MM)	
	49	1	**185-0769**	1	GEAR-RING	
	50	1	**137-7148**	3	BEARING-ROLLER	
	51	1	**185-0770**	1	COVER	
	52	1	**185-0771**	1	GEAR-SUN	
	53	1	**185-0772**	1	CARRIER	
	54	1	**185-0773**	3	GEAR-PLANETARY	
	55	1	**3D-9133**	1	CUP-BEARING	

M-METRIC PART

165-6209 DRIVE GP-FINAL *(contd.)* **i05102731**

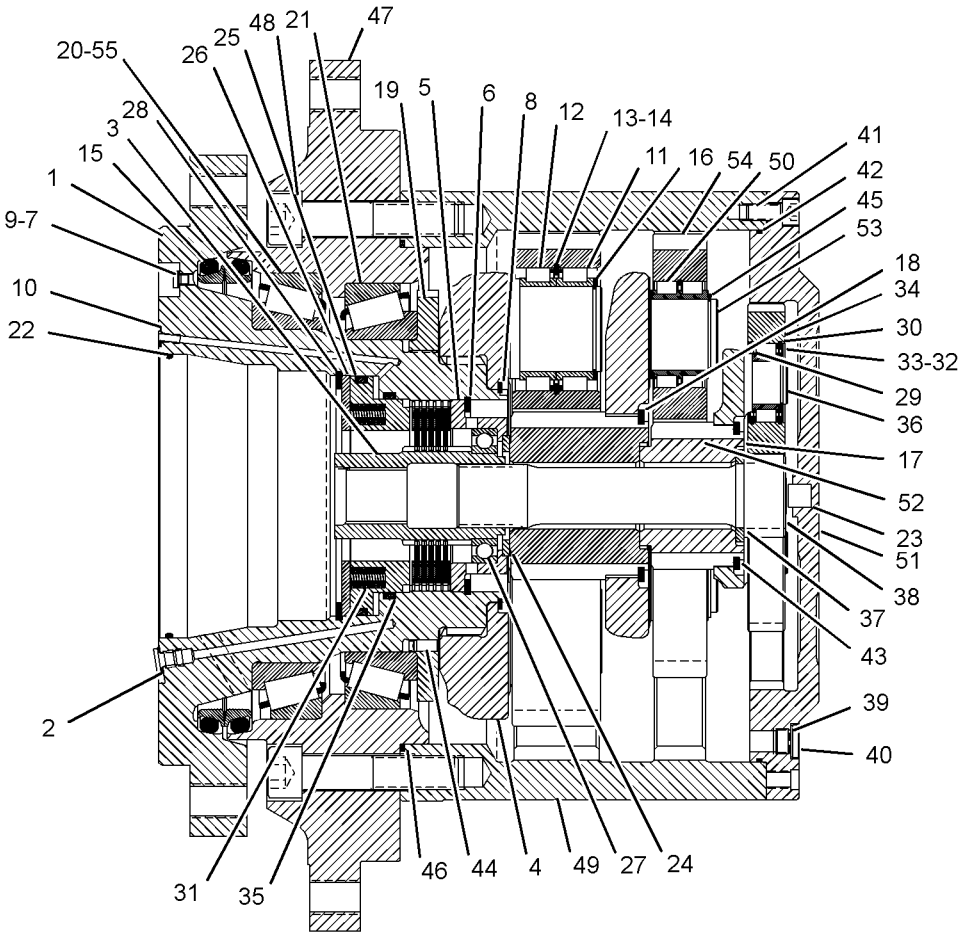

GRAPHIC #1 **<END>** g03047962

318-9121 DRIVE GP-FINAL

S/N: F7B1-UP

PART OF 362-3900 FRAME GP-UNDERCARRIAGE

SMCS-4050 **i03942490**

NOTE	REF NO	GRAPHIC REF	PART NUMBER	QTY	PART NAME 1 2 3 4 5 6 (PRODUCT LEVEL)	SEE PAGE
Y	1	1	**165-6209**	1	DRIVE GP-FINAL	204
Y	2	1	**320-2393**	1	MOTOR GP-TRAVEL	212
M	3	1	**8T-5460**	2	BOLT (M20X2.5X40-MM)	

M-METRIC PART
Y-SEPARATE ILLUSTRATION

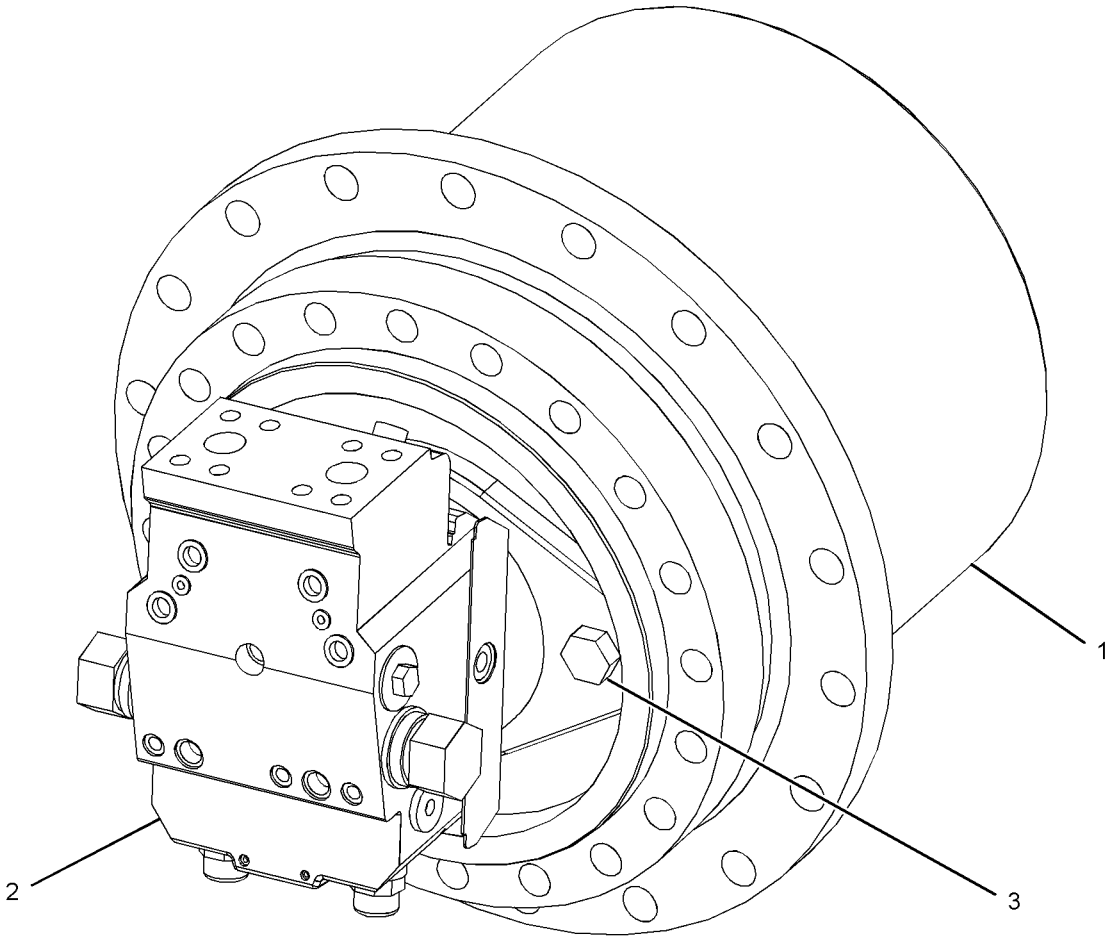

GRAPHIC #1 **<END>** g01215323

220-1362 FASTENER GP-FINAL DRIVE

S/N: F7B1-UP

PART OF 362-3900 FRAME GP-UNDERCARRIAGE

SMCS-4050, 7553 **i04463565**

NOTE	REF NO	GRAPHIC REF	PART NUMBER	QTY	PART NAME 1 2 3 4 5 6 (PRODUCT LEVEL)	SEE PAGE
M	1	1	**8T-5878**	40	BOLT (M24X3X80-MM)	
	2	1	**8T-4167**	40	WASHER-HARD (26X44X4-MM THK)	

M-METRIC PART

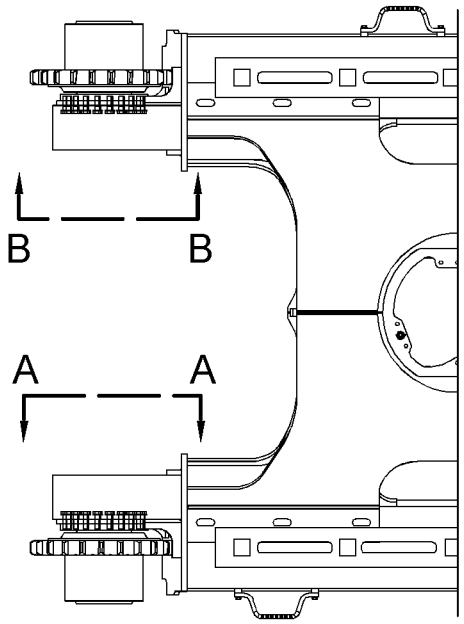

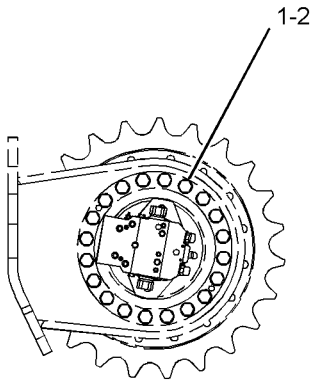

VIEW A-A

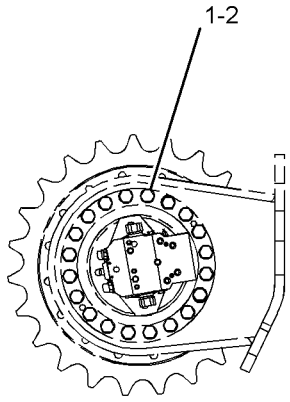

VIEW B-B

GRAPHIC #1 **<END>** g01326510

291-1126 HEAD GP-MOTOR–TRAVEL

S/N: F7B1-UP

PART OF 320-2393 MOTOR GP-TRAVEL

SMCS-3202, 5058 **i03551420**

NOTE	REF NO	GRAPHIC REF	PART NUMBER	QTY	PART NAME 1 2 3 4 5 6 (PRODUCT LEVEL)	SEE PAGE
	1	1	**142-1384**	1	PLUG	
	2	1	**6V-8352**	1	SEAL-O-RING	
	3	1	**120-4394**	6	PLUG-BREAK OFF	
	4	1	**209-9719**	3	FITTING-PLUG	
	5	1	**142-1382**	1	PISTON	
	6	1	**192-2893**	1	HEAD	
	7	1	**081-3959**	1	PLUG AS	
		1	**126-9093**	1	SEAL	
	8	1	**9T-3928**	5	PLUG AS	
					(EACH INCLUDES)	
		1	**187-8001**	1	SEAL	
	9	1	**123-5798**	1	SEAT	
	10	1	**192-3292**	1	PIN	
	11	1	**123-5799**	1	SEAT	
M	12	1	**9T-3853**	1	LOCKNUT (M6X1-THD)	
	13	1	**107-3117**	1	SEAL-O-RING	
M	14	1	**095-9804**	4	BOLT-SOCKET HEAD (M12X1.75X110-MM)	
Y	15	1	**194-6973**	1	VALVE GP-BRAKE (PRESSURE RELEASE)	376
	16	1	**142-1383**	1	PIN-TRUNNION	
	17	1	**194-6972**	2	PIN	
M	18	1	**095-9232**	2	BOLT-SOCKET HEAD (M12X1.75X95-MM)	
M	19	1	**8C-8729**	2	BOLT-SOCKET HEAD (M12X1.75X80-MM)	
J	20	1	**194-6982**	2	VALVE GP-RELIEF (CROSSOVER)	
	21	1	**190-9752**	1	PLUG	
Y	22	1	**291-1122**	1	VALVE GP-FLOW CONTROL (TRAVEL MOTOR)	216
Y	23	1	**192-3293**	2	VALVE GP-CHECK & RELIEF (TRAVEL MOTOR)	377
	24	1	**191-2708**	1	VALVE AS-SHUTTLE (TRAVEL BRAKE)	
	25	1	**192-2900**	1	PISTON-CONTROL	
	26	1	**192-2895**	1	ADAPTER-BUSHING	
	27	1	**123-5791**	1	SPRING	
	28	1	**194-6970**	1	PLUG-ADAPTER	
	29	1	**194-6971**	1	RETAINER	
	30	1	**178-2841**	1	SETSCREW	
	31	1	**3J-1907**	1	SEAL-O-RING	
	32	1	**9S-8004**	1	PLUG-O-RING	
					AVAILABLE REPAIR KIT(S):	
J			**194-6983**	1	KIT-SEAL (RELIEF VALVE)	
					(INCLUDES SEALS, RINGS & NUT)	

J-KIT MARKED J SERVICES PART MARKED J
M-METRIC PART
Y-SEPARATE ILLUSTRATION

291-1126 HEAD GP-MOTOR *(contd.)* **i03551420**

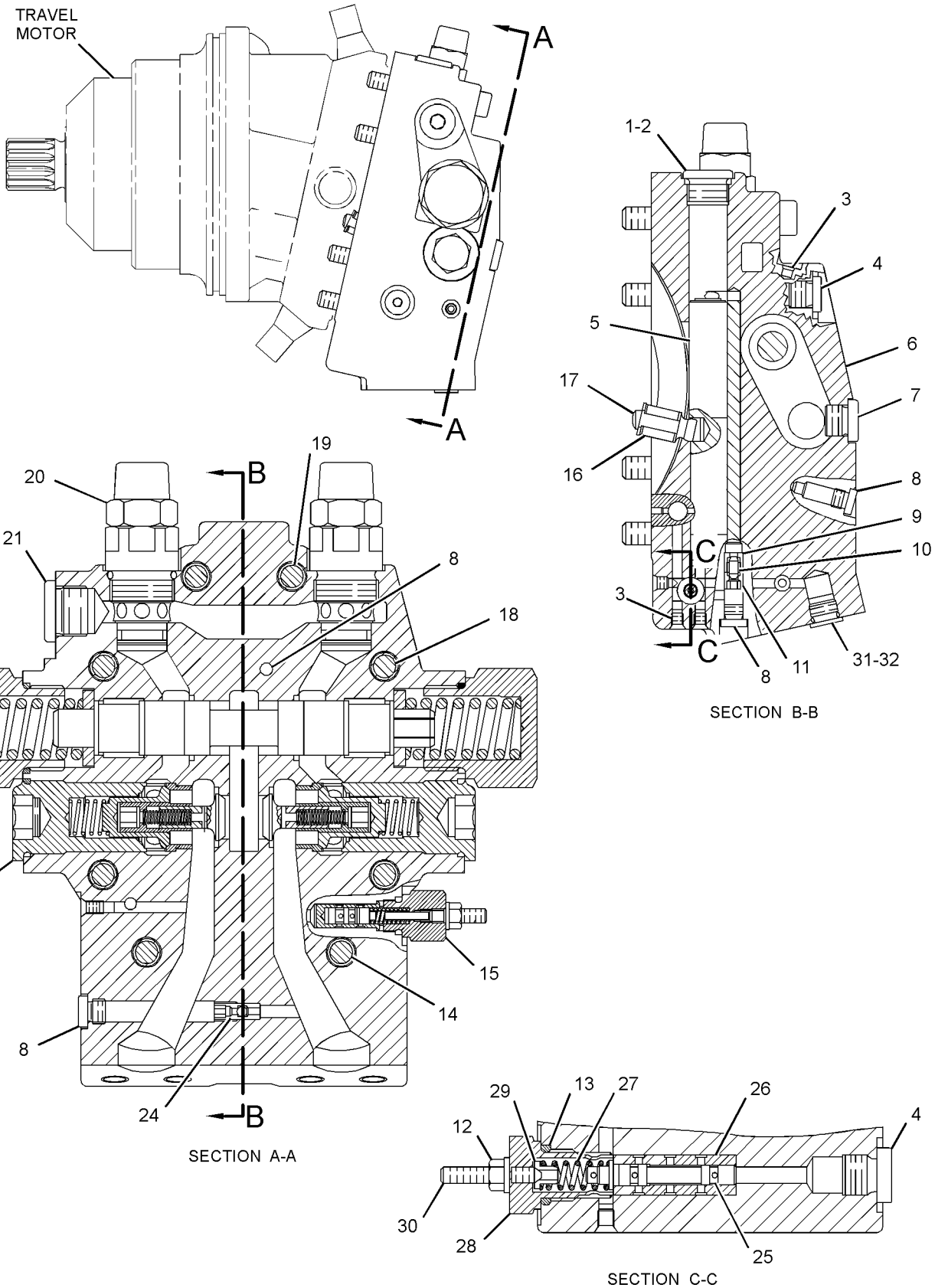

GRAPHIC #1 **<END>** g01619290

POWER TRAIN

367-2130 LINES GP-PROPEL

S/N: F7B1-UP

PART OF 362-3896 HYDRAULIC AR

SMCS-3154, 5058, 5070 **i04958512**

NOTE	REF NO	GRAPHIC REF	PART NUMBER	QTY	PART NAME 1 2 3 4 5 6 (PRODUCT LEVEL)	SEE PAGE
	1	1	**4I-5546**	1	SUPPORT	
	2	1	**7Y-1649**	1	BOOT	
	3	1	**093-0543**	1	RETAINER	
	4	1	*160-7627*	4	CONNECTOR AS	
					(EACH INCLUDES)	
		1	**3J-1907**	1	SEAL-O-RING	
		1	**6V-8397**	1	SEAL-O-RING	
		1	**122-2340**	1	CONNECTOR	
	5	1	**279-5058**	4	MANIFOLD	
	6	1	**303-5984**	2	TUBE AS	
I	7	1	**365-7879**	1	HOSE AS	
I	8	1	**365-7880**	1	HOSE AS	
I	9	1	**366-0690**	1	HOSE AS	
I	10	1	**366-0691**	1	HOSE AS	
	11	1	**1P-3702**	4	SEAL-RECTANGULAR	
	12	1	**1P-3703**	8	SEAL-RECTANGULAR	
	13	1	**5P-0600**	1	CLAMP-HOSE	
	14	1	**5P-1076**	2	WASHER-HARD (13.5X30X4-MM THK)	
	15	1	**6V-0400**	8	FLANGE-HALF	
	16	1	**8T-4121**	24	WASHER-HARD (11X21X2.5-MM THK)	
M	17	1	**8T-4136**	8	BOLT (M10X1.5X25-MM)	
M	18	1	**8T-4182**	16	BOLT (M10X1.5X45-MM)	
	19	1	**8T-4223**	16	WASHER-HARD (13.5X25.5X3-MM THK)	
M	20	1	**8T-4648**	2	BOLT (M12X1.75X70-MM)	
M	21	1	**8T-6868**	16	BOLT (M12X1.75X80-MM)	
	22	1	**8T-9403**	8	FLANGE-HALF	

I-REFER TO HYDRAULIC INFORMATION SYSTEM
M-METRIC PART

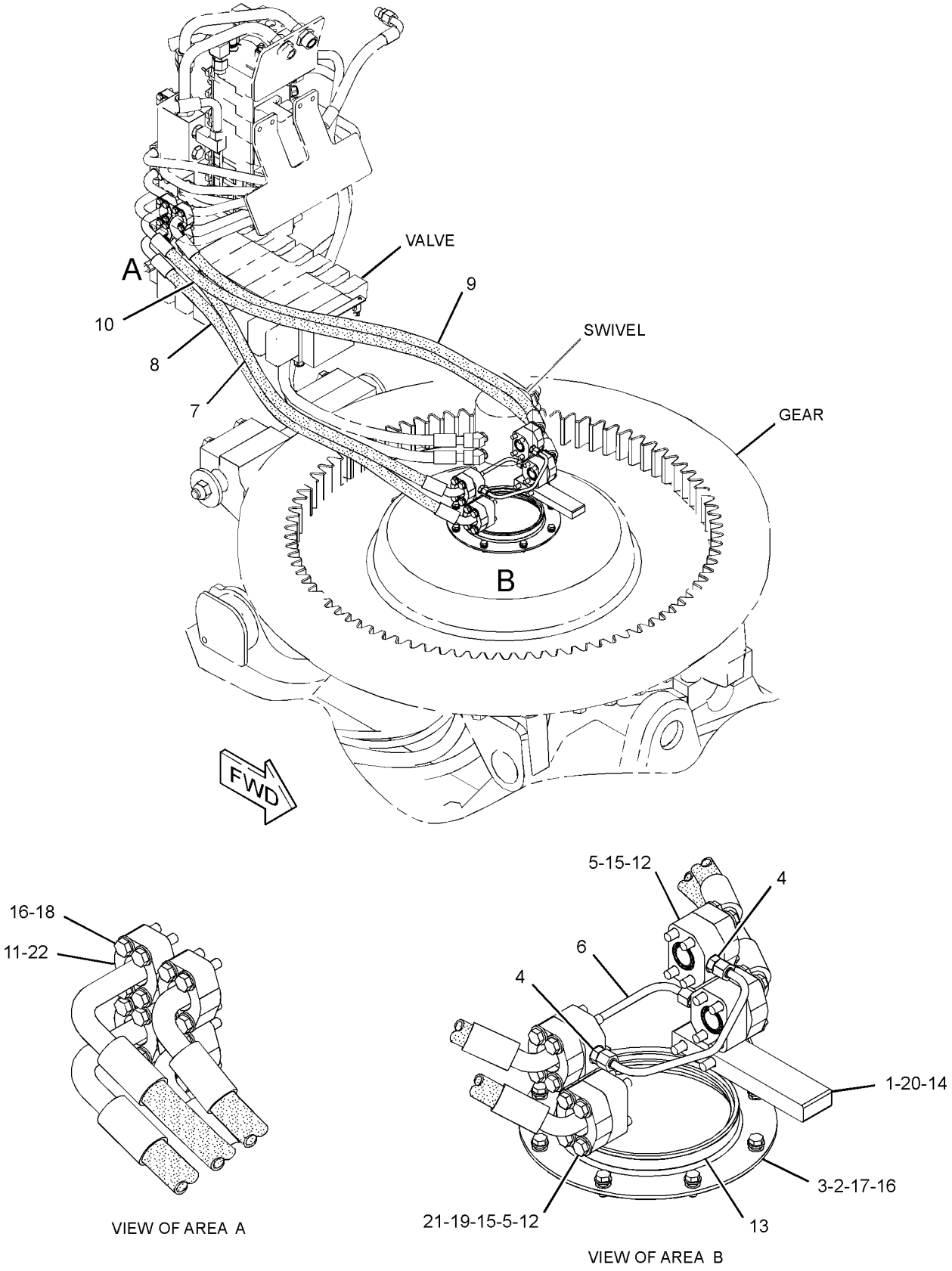

GRAPHIC #1 **<END>** g02729174

320-2393 MOTOR GP-TRAVEL

S/N: F7B1-UP

PART OF 318-9121 DRIVE GP-FINAL

SMCS-4351 **i03942530**

NOTE	REF NO	GRAPHIC REF	PART NUMBER	QTY	PART NAME 1 2 3 4 5 6 (PRODUCT LEVEL)	SEE PAGE
Y	1	1	**190-8121**	1	ROTATING GP-MOTOR (TRAVEL)	213
	2	1	**192-2891**	1	HOUSING	
M	3	1	**125-1379**	1	SETSCREW-SOCKET (M12X1.75-THD)	
M	4	1	**6E-3283**	2	LOCKNUT (M12X1.75-THD)	
	5	1	**6F-4718**	1	SEAL-O-RING	
Y	6	1	**291-1126**	1	HEAD GP-MOTOR	208
	7	1	**9X-7680**	1	SEAL-O-RING	
M	8	1	**9X-8482**	1	SETSCREW-SOCKET (M12X1.75X70-MM)	
	9	1	**124-9913**	1	SEAL-SHAFT	
	10	1	**124-9914**	1	SHIM (3-MM THK)	
	11	1	**2W-1145**	1	RING-RETAINING	
	12	1	**9S-8005**	2	PLUG-O-RING	
	13	1	**3K-0360**	2	SEAL-O-RING	

M-METRIC PART
Y-SEPARATE ILLUSTRATION

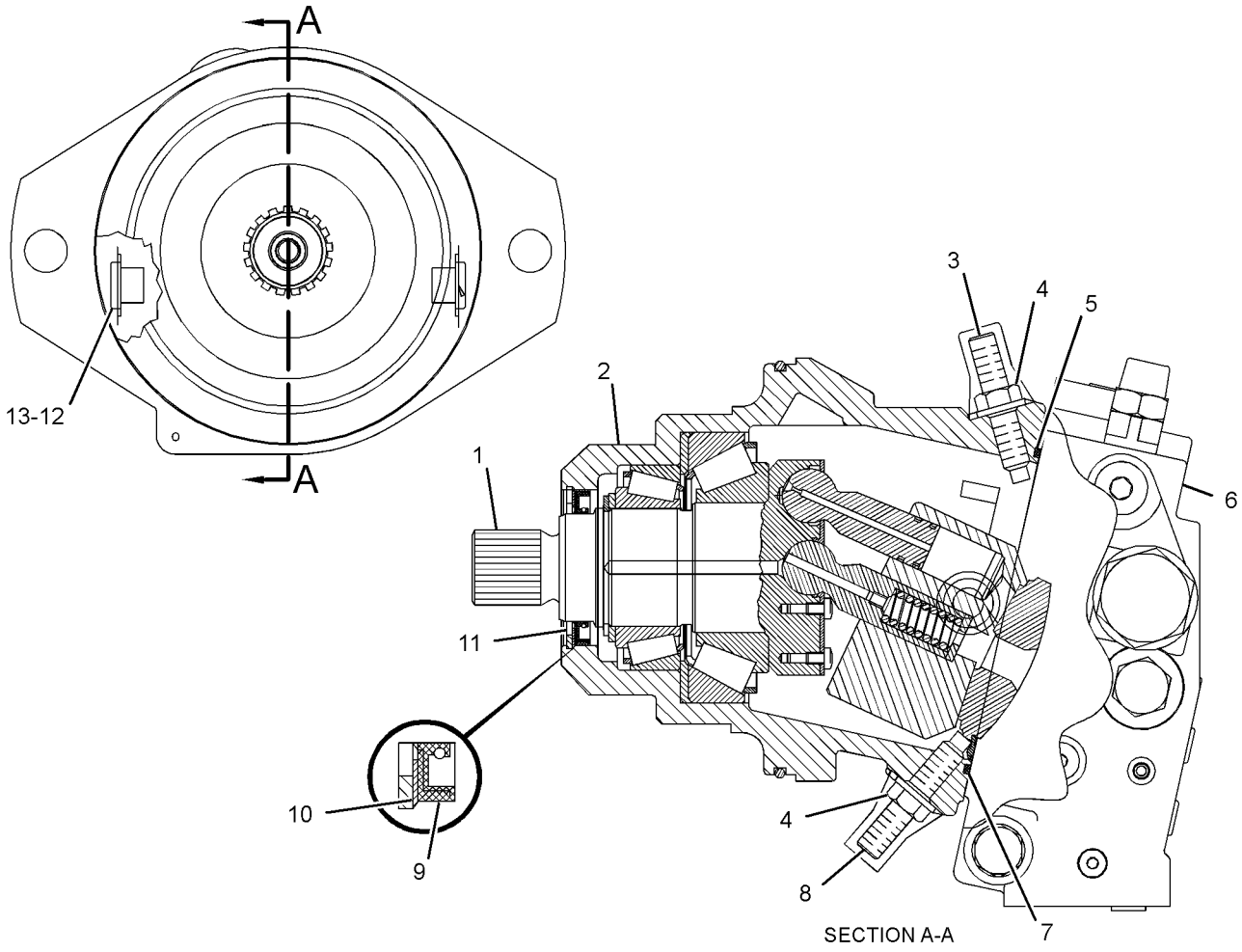

GRAPHIC #1 **<END>** g01335439

190-8121 ROTATING GP-MOTOR–TRAVEL

S/N: F7B1-UP

PART OF 320-2393 MOTOR GP-TRAVEL

SMCS-4351, 5058 **i02609253**

NOTE	REF NO	GRAPHIC REF	PART NUMBER	QTY	PART NAME 1 2 3 4 5 6 (PRODUCT LEVEL)	SEE PAGE
Y	1	1	**191-0883**	1	ROTATING GP-MOTOR (TRAVEL)	214
Y	2	1	**191-0886**	1	SHAFT GP-HYDRAULIC MOTOR	362

Y-SEPARATE ILLUSTRATION

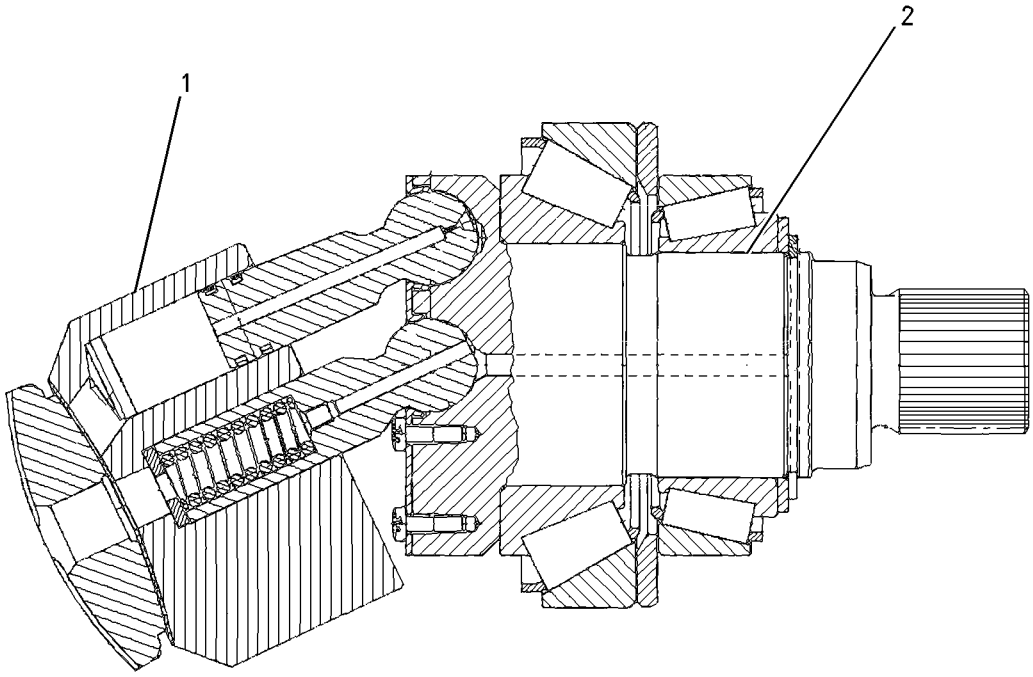

GRAPHIC #1 **<END>** g00699932

191-0883 ROTATING GP-MOTOR–TRAVEL

S/N: F7B1-UP

PART OF 190-8121 ROTATING GP-MOTOR

SMCS-4351, 5058 **i03354364**

NOTE	REF NO	GRAPHIC REF	PART NUMBER	QTY	PART NAME 1 2 3 4 5 6 (PRODUCT LEVEL)	SEE PAGE
	1	1	**9T-3370**	1	BARREL-CYLINDER	
	2	1	**124-9929**	1	PLATE-CONTROL	
	3	1	**124-9930**	1	PIN-CENTER	
	4	1	**165-6976**	7	PISTON AS	
					(EACH INCLUDES)	
		1	**9T-3745**	2	RING	
B	5	1	**124-9932**	1	SHIM (3.5-MM THK)	
B		1	**124-9933**	1	SHIM (3.6-MM THK)	
B		1	**124-9934**	1	SHIM (3.7-MM THK)	
B		1	**124-9935**	1	SHIM (3.8-MM THK)	
B		1	**124-9936**	1	SHIM (3.9-MM THK)	
B		1	**124-9937**	1	SHIM (4-MM THK)	
	6	1	**124-9938**	1	SPRING	
	7	1	**167-6701**	1	PLATE-RETAINING	
M	8	1	**113-4419**	14	SCREW-SPECIAL (M5X0.8X8-MM)	

B-USE AS REQUIRED
M-METRIC PART

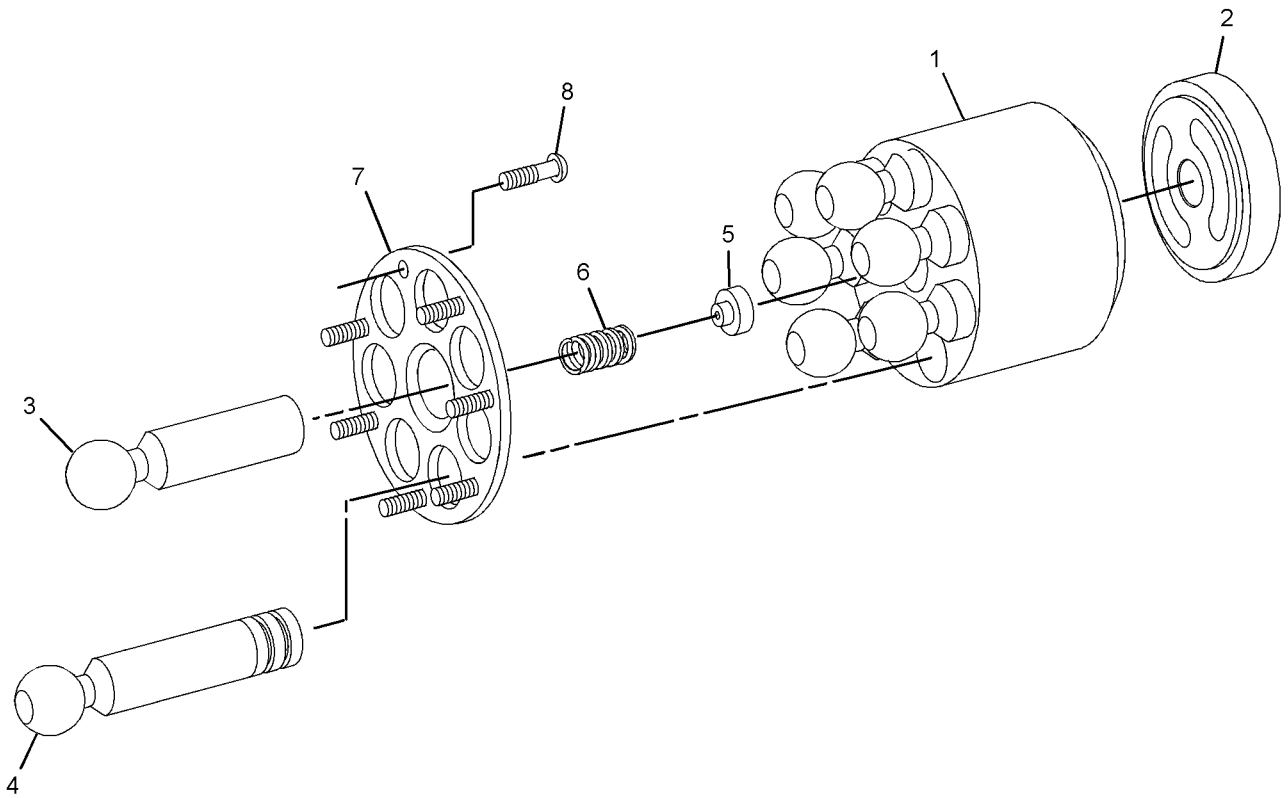

GRAPHIC #1 **<END>** g01732533

7Y-0763 SPROCKET GP

S/N: F7B1-UP

PART OF 362-3900 FRAME GP-UNDERCARRIAGE

SMCS-4164 **i00629969**

NOTE	REF NO	GRAPHIC REF	PART NUMBER	QTY	PART NAME 1 2 3 4 5 6 (PRODUCT LEVEL)	SEE PAGE
	1	1	**6Y-5685**	1	SPROCKET-TRACK	
M	2	1	**7X-2575**	16	BOLT (M24X3X60MM)	

M-METRIC PART

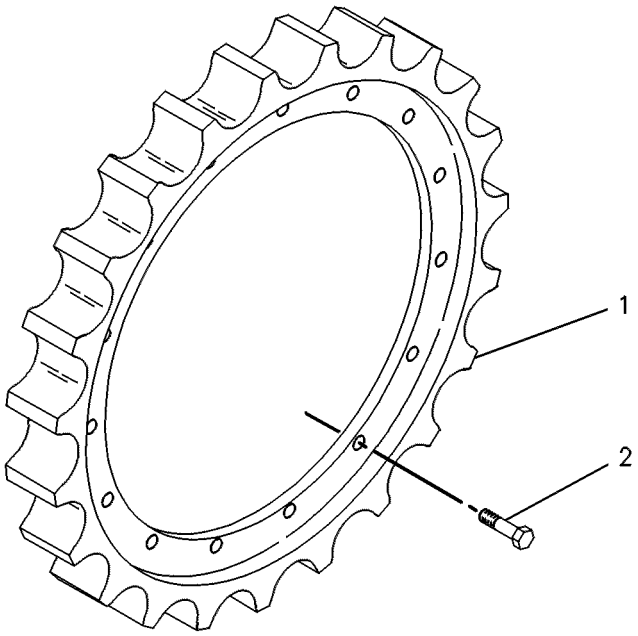

GRAPHIC #1 **<END>** g00237357

291-1122 VALVE GP-FLOW CONTROL–TRAVEL MOTOR

S/N: F7B1-UP

PART OF 291-1126 HEAD GP-MOTOR

SMCS-3030, 3073, 5137 **i02992825**

NOTE	REF NO	GRAPHIC REF	PART NUMBER	QTY	PART NAME 1 2 3 4 5 6 (PRODUCT LEVEL)	SEE PAGE
	1	1	**3E-6767**	2	SEAL-O-RING	
	2	1	**192-3286**	2	PLUG	
	3	1	**192-3289**	2	SPRING	
	4	1	**192-3290**	2	WASHER	
	5	1	**123-5799**	2	SEAT	
	6	1	**123-5798**	2	SEAT	

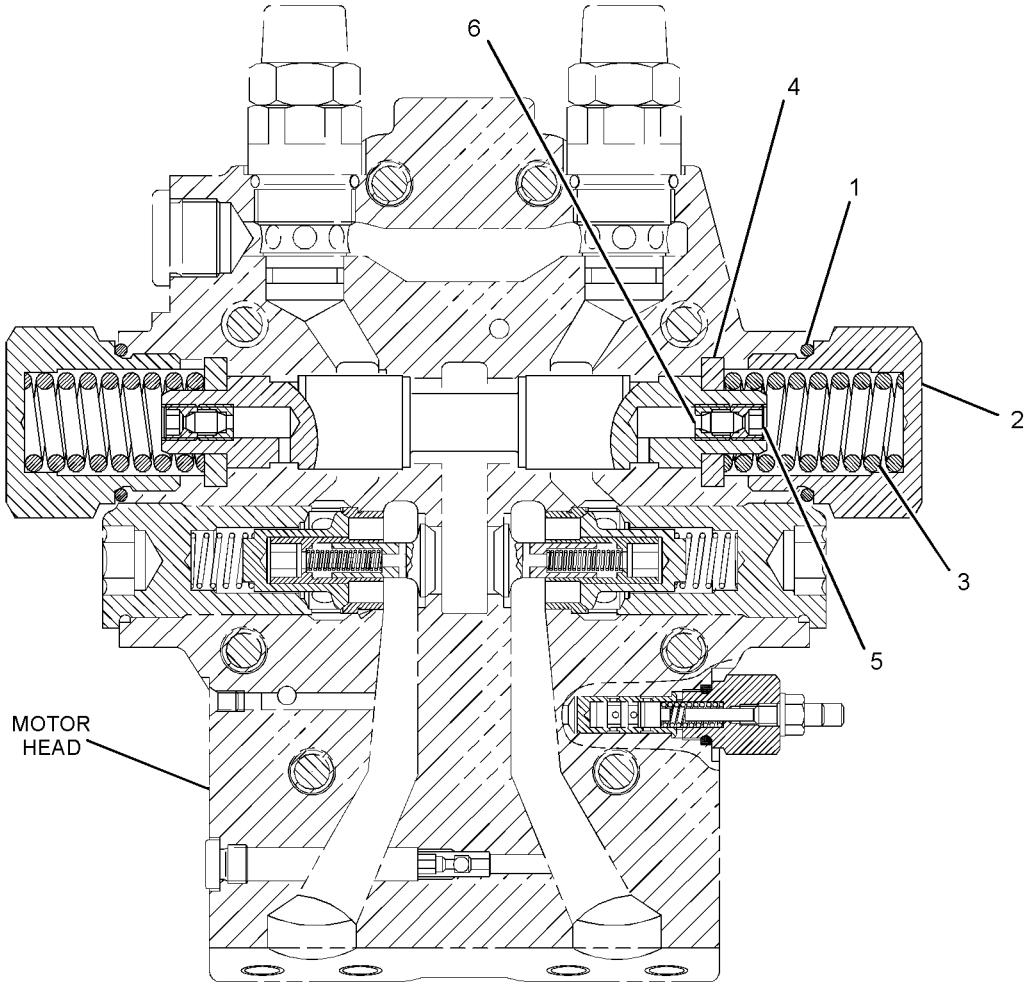

GRAPHIC #1 **<END>** g01618964

FRAME AND BODY

355-8899 COUNTERWEIGHT GP

S/N: F7B1-UP
435-KG (957-LB)
PART OF 362-3899 CHASSIS AR

SMCS-7056 **i04464062**

NOTE	REF NO	GRAPHIC REF	PART NUMBER	QTY	PART NAME 1 2 3 4 5 6 (PRODUCT LEVEL)	SEE PAGE
	1	1	**361-5287**	1	PLATE	
M	2	1	**7X-2576**	8	BOLT (M24X3X70-MM)	
	3	1	**8T-4167**	8	WASHER-HARD (26X44X4-MM THK)	

M-METRIC PART

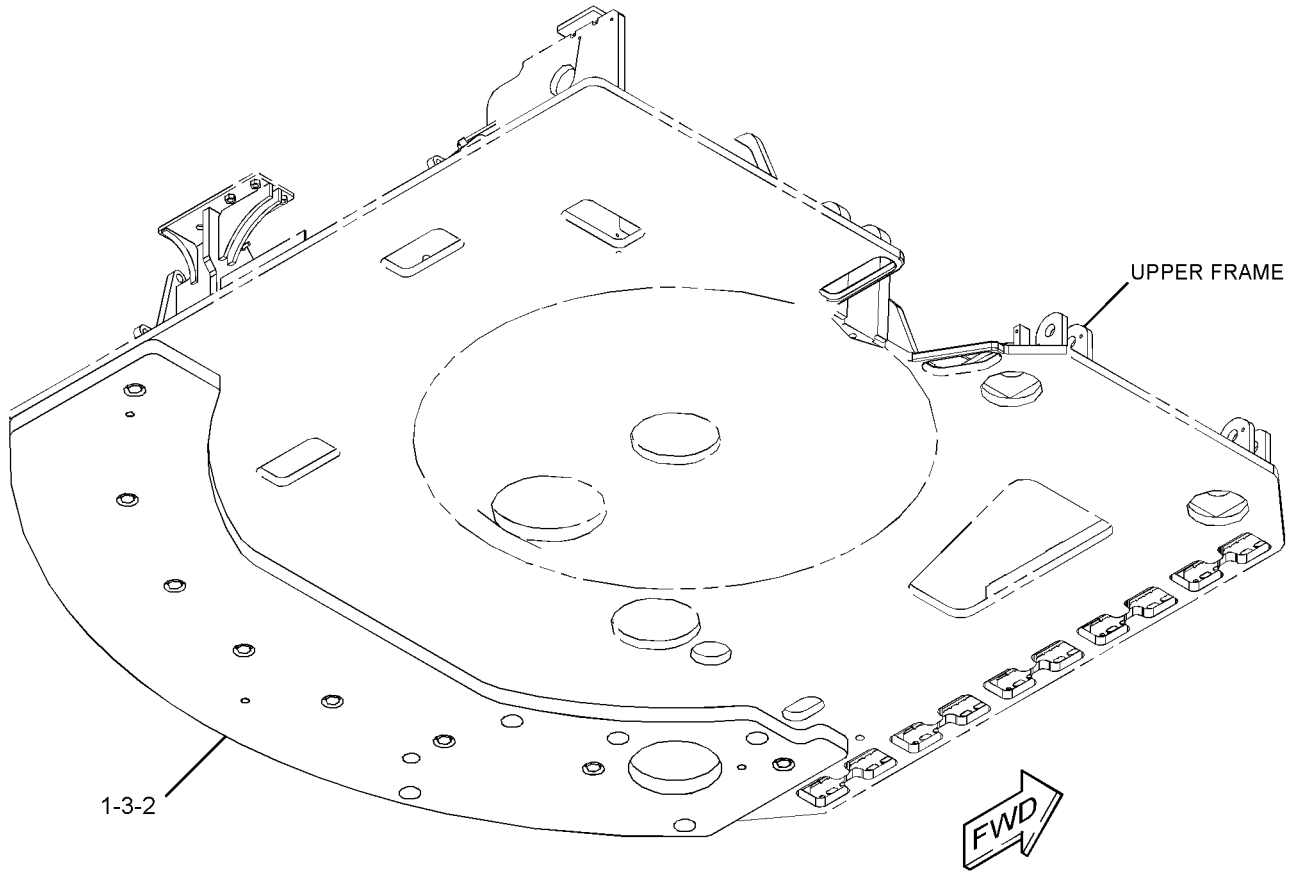

GRAPHIC #1 **<END>** g02735371

379-3671 COUNTERWEIGHT GP

S/N: F7B1-UP
718-KG (1580-LB)
AN ATTACHMENT

SMCS-7056 **i04461342**

NOTE	REF NO	GRAPHIC REF	PART NUMBER	QTY	PART NAME 1 2 3 4 5 6 (PRODUCT LEVEL)	SEE PAGE
	1	1	**379-3670**	1	PLATE	
M	2	1	**7X-2576**	8	BOLT (M24X3X70-MM)	
	3	1	**8T-4167**	8	WASHER-HARD (26X44X4-MM THK)	

M-METRIC PART

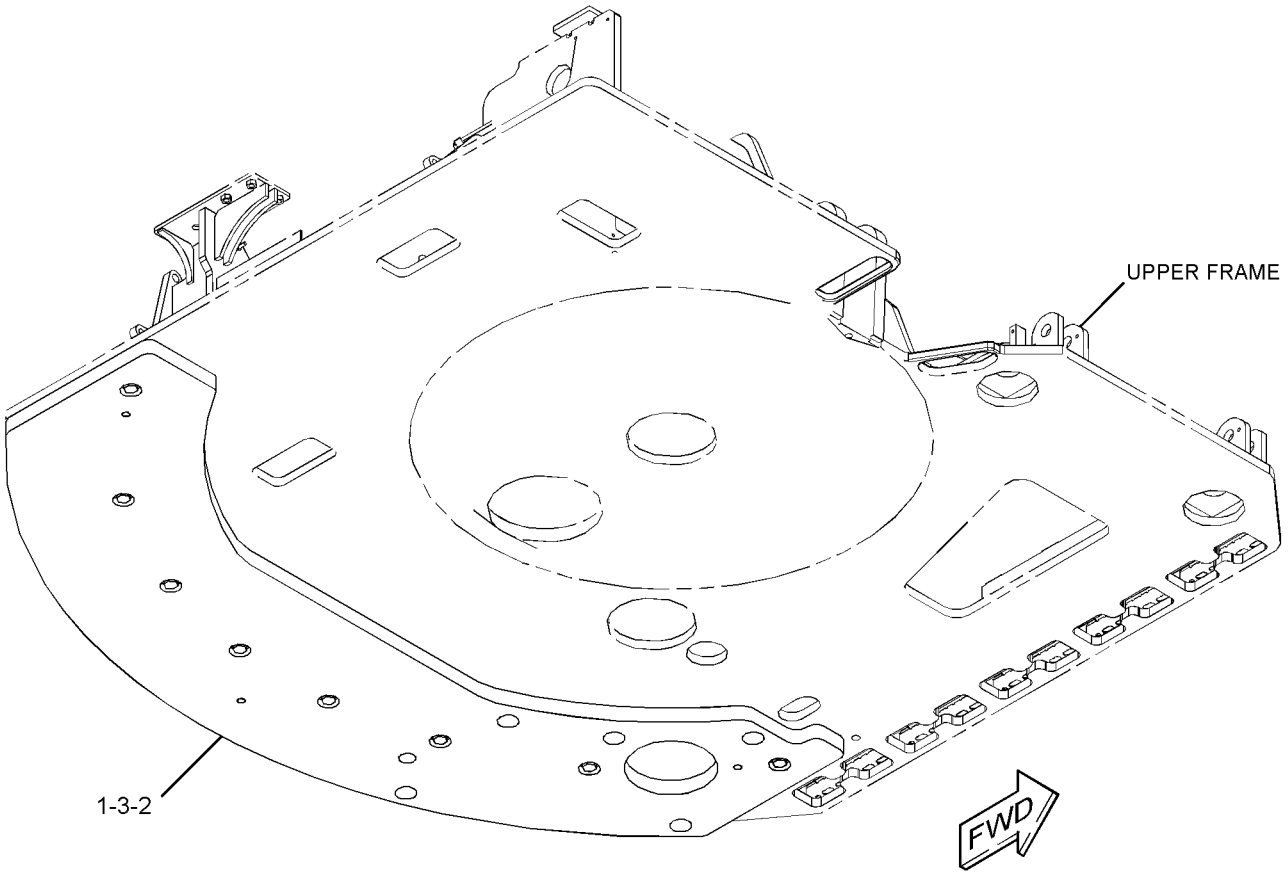

GRAPHIC #1 **<END>** g02735371

FRAME AND BODY

370-1630 DOOR AS-ACCESS

S/N: F7B1-UP

PART OF 355-8898 GUARD GP-RADIATOR

SMCS-7273 **i05103709**

NOTE	REF NO	GRAPHIC REF	PART NUMBER	QTY	PART NAME 1 2 3 4 5 6 (PRODUCT LEVEL)	SEE PAGE
	1	1	**317-1670**	1	PIN	
	2	1	**370-1620**	1	DOOR AS-ACCESS	
	3	1	*370-1625*	1	DOOR AS-ACCESS	
M		1	**8T-3991**	22	SCREW-BUTTON HEAD (M6X1X20-MM)	
		1	**340-9897**	12	PLATE	
		1	**370-1626**	1	SCREEN	
		1	**372-3150**	1	FRAME AS-DOOR	
M		1	**6V-9632**	22	NUT-WELD (M6X1-THD)	
	4	1	**6S-6646**	2	PIN-COTTER	
	5	1	**9D-8353**	2	PIN	

M-METRIC PART

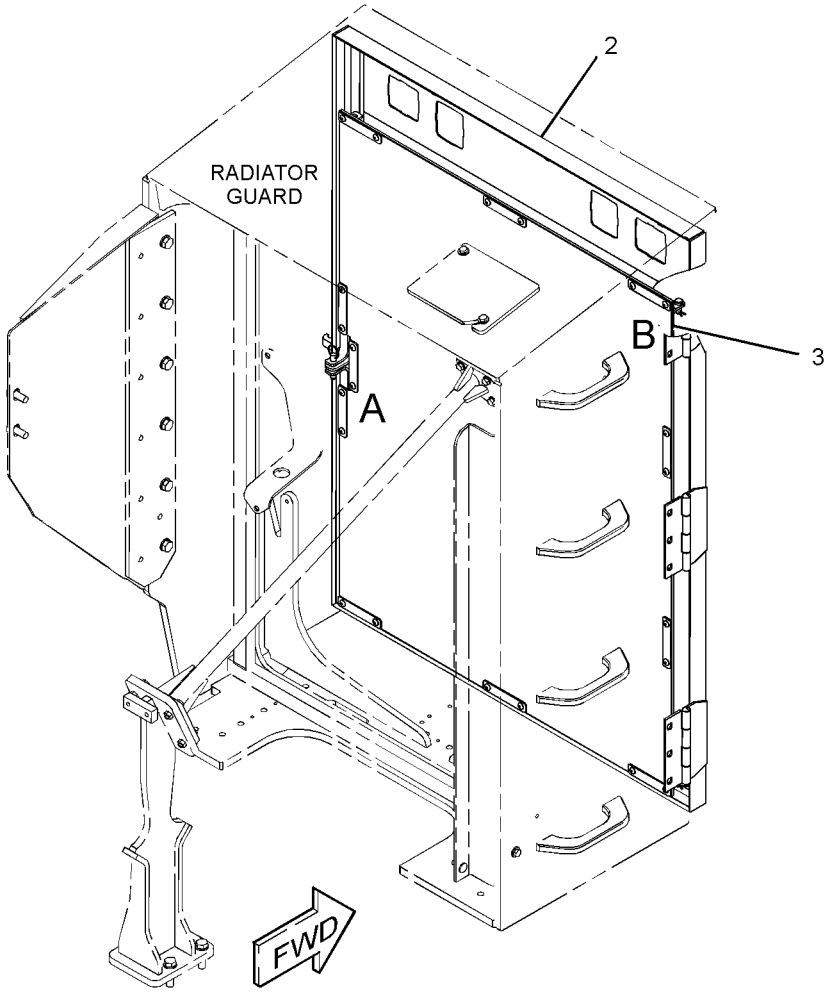

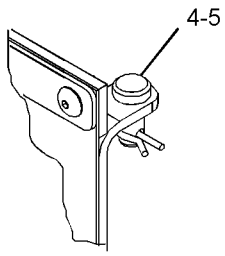

VIEW OF AREA B

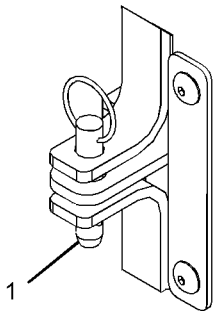

VIEW OF AREA A

GRAPHIC #1 **<END>** g03272640

FRAME AND BODY

339-6605 FRAME GP-UPPER

S/N: F7B1-UP

PART OF 362-3899 CHASSIS AR

SMCS-7051 **i04963050**

NOTE	REF NO	GRAPHIC REF	PART NUMBER	QTY	PART NAME 1 2 3 4 5 6 (PRODUCT LEVEL)	SEE PAGE
	1	1	**5U-6181**	1	PAD	
	2	1	**7Y-1647**	1	GASKET	
B	3	1	**7Y-2498**	1	SHIM (1.6-MM THK)	
B	4	1	**7Y-3355**	2	SHIM (1.6-MM THK)	
	5	1	**087-4587**	3	GROMMET	
B	6	1	**093-0083**	1	SHIM (1-MM THK)	
B	7	1	**093-0090**	2	SHIM (1-MM THK)	
B	8	1	**093-0115**	1	SHIM (2-MM THK)	
B	9	1	**093-0122**	2	SHIM (2-MM THK)	
	10	1	**107-3157**	2	WASHER (22X76.2X6-MM THK)	
	11	1	**212-8020**	3	PLATE	
	12	1	**212-8024**	1	PIN AS	
	13	1	**212-8085**	1	PIN AS	
	14	1	**214-7833**	1	GUARD AS	
M		1	**8T-3612**	2	NUT-WELD (M8X1.25-THD)	
	15	1	**214-7835**	1	STRIP	
	16	1	**361-5291**	1	GUARD	
	17	1	**361-5292**	1	GUARD	
	18	1	**362-3882**	1	HANDLE AS	
	19	1	**362-3883**	1	HANDLE AS	
	20	1	**363-0140**	1	FRAME AS	
	21	1	**363-0157**	1	PLATE	
	22	1	**363-0158**	1	PLATE	
	23	1	**093-0364**	1	SPACER (103X140X12-MM THK)	
	24	1	**095-1302**	1	DOWEL	
	25	1	**148-5018**	2	GROMMET	
	26	1	**6V-8237**	38	WASHER (26X44X4-MM THK)	
M	27	1	**7X-2553**	18	BOLT (M16X2X40-MM)	
	28	1	**7Y-1648**	1	STRIP	
	29	1	**7Y-8165**	2	GROMMET	
	30	1	**7Y-8167**	1	GROMMET	
M	31	1	**8T-0669**	32	BOLT (M24X3X130-MM)	
M	32	1	**8T-0671**	6	BOLT (M24X3X150-MM)	
	33	1	**8T-4121**	22	WASHER-HARD (11X21X2.5-MM THK)	
	34	1	**8T-4123**	2	WASHER (22X35X3.5-MM THK)	
M	35	1	**8T-4133**	2	NUT (M10X1.5-THD)	
M	36	1	**8T-4136**	14	BOLT (M10X1.5X25-MM)	
M	37	1	**8T-4139**	4	BOLT (M12X1.75X30-MM)	
M	38	1	**8T-4195**	6	BOLT (M10X1.5X30-MM)	
	39	1	**8T-4223**	4	WASHER-HARD (13.5X25.5X3-MM THK)	
M	40	1	**8T-4780**	2	BOLT (M20X2.5X30-MM)	
	41	1	**9X-8257**	18	WASHER (17.5X30X3.5-MM THK)	
D	42	1	**5P-8309**		SEAL (3-M)	
	43	1	**202-4004**	1	GROMMET	

B-USE AS REQUIRED
D-ORDER BY THE METER
M-METRIC PART

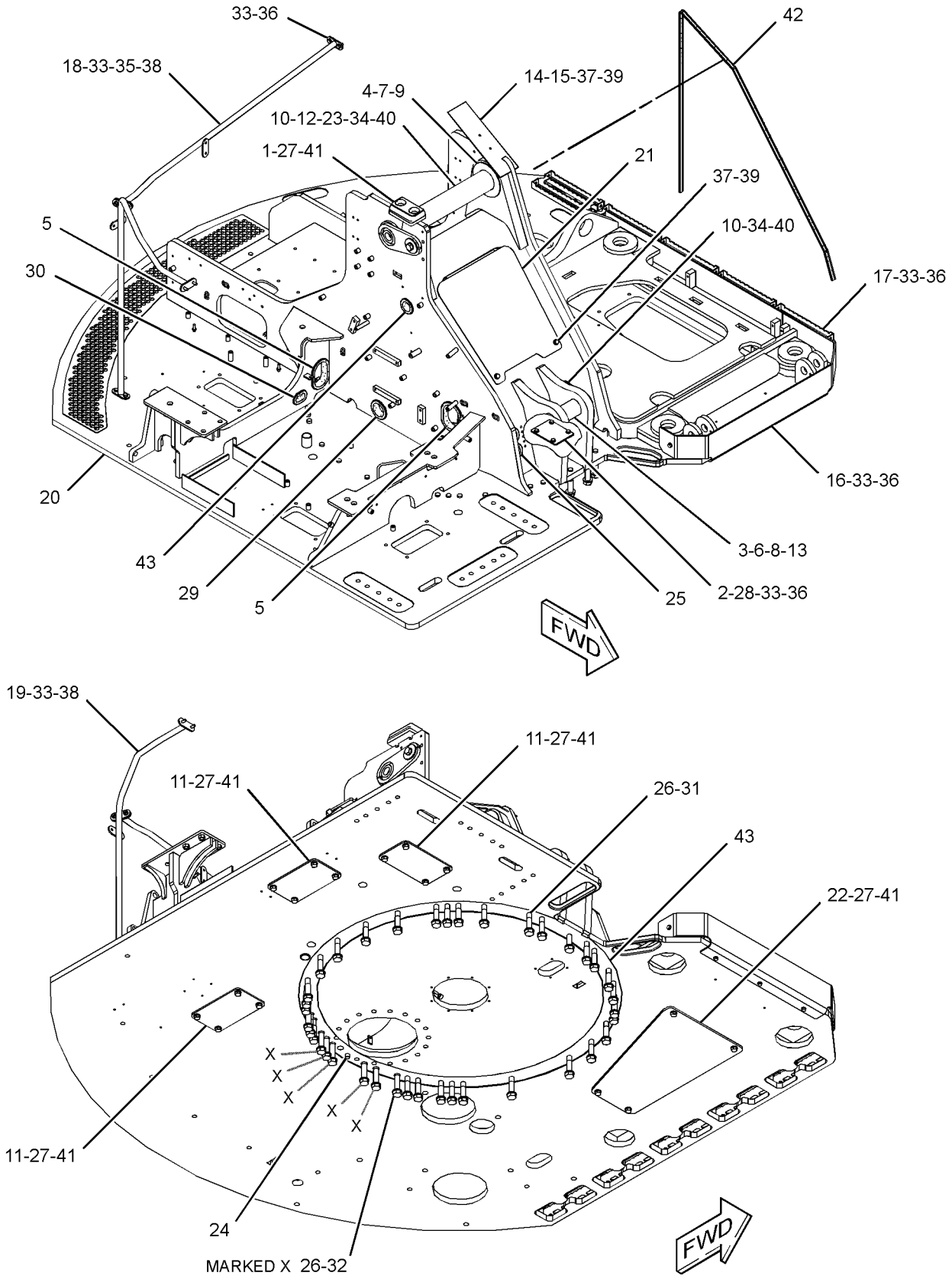

GRAPHIC #1 **<END>** g03179036

152-1735 GEAR & BEARING GP-SWING

S/N: F7B1-UP

PART OF 362-3900 FRAME GP-UNDERCARRIAGE

SMCS-7063 **i04538109**

NOTE	REF NO	GRAPHIC REF	PART NUMBER	QTY	PART NAME 1 2 3 4 5 6 (PRODUCT LEVEL)	SEE PAGE
	1	1	**3B-8489**	1	FITTING-GREASE	
	2	1	**7Y-0336**	42	SPACER (24.5X44X24-MM THK)	
	3	1	**096-6095**	1	PLUG	
CY	4	1	**353-0558**	1	GEAR & BEARING GP-SWING (122-BEARING)	223
	5	1	**4J-0522**	1	SEAL-O-RING	
M	6	1	**173-9684**	42	BOLT (M24X3X100-MM)	
B	7	1	**1U-8846**		SEALANT-GASKET	

B-USE AS REQUIRED
C-CHANGE FROM PREVIOUS TYPE
M-METRIC PART
Y-SEPARATE ILLUSTRATION

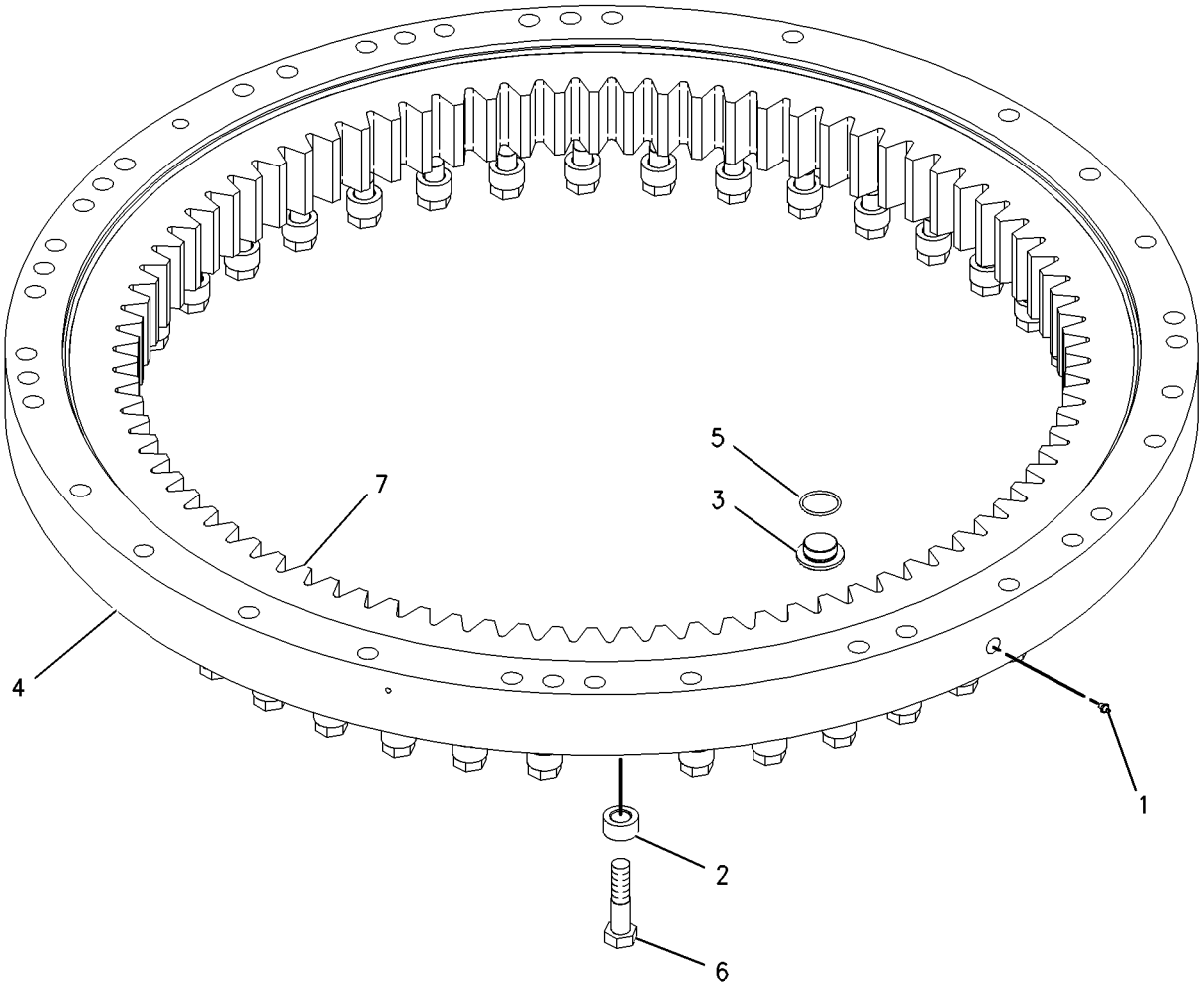

GRAPHIC #1 **<END>** g00977553

353-0558 GEAR & BEARING GP-SWING

S/N: F7B1-UP

PART OF 152-1735 GEAR & BEARING GP-SWING

SMCS-7063 **i04296310**

NOTE	REF NO	GRAPHIC REF	PART NUMBER	QTY	PART NAME 1 2 3 4 5 6 (PRODUCT LEVEL)	SEE PAGE
	1	1	**227-6073**	1	SEAL-DUST	
	2	1	**3B-8489**	1	FITTING-GREASE	
E	3	1	**148-4685**		SEAL (414-CM)	

E-ORDER BY THE CENTIMETER

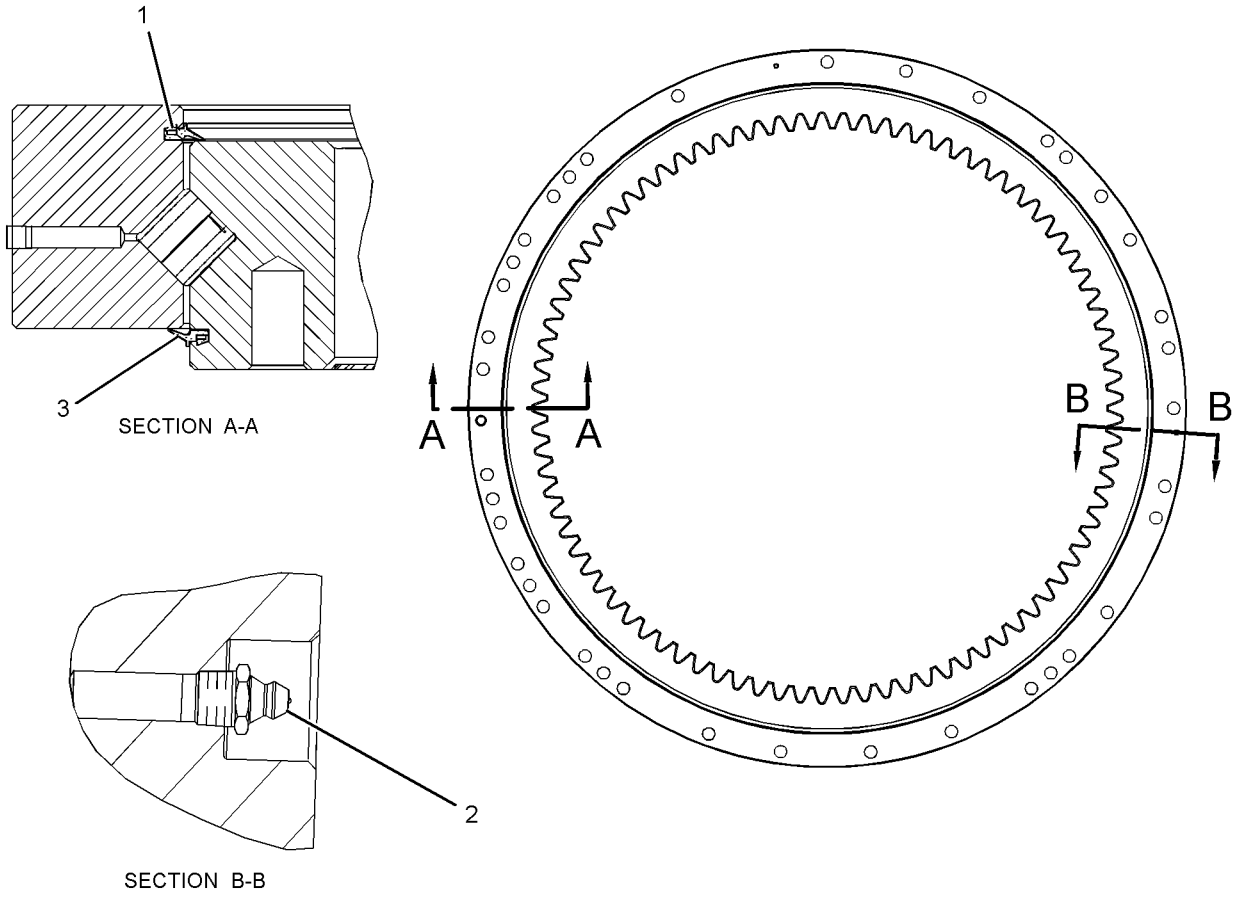

GRAPHIC #1 **<END>** g01901027

FRAME AND BODY

355-8898 GUARD GP-RADIATOR

S/N: F7B1-UP

PART OF 362-3898 COOLING AR

SMCS-7155 **i05116691**

NOTE	REF NO	GRAPHIC REF	PART NUMBER	QTY	PART NAME 1 2 3 4 5 6 (PRODUCT LEVEL)	SEE PAGE
	1	1	**189-8789**	2	BUMPER AS	
	2	1	**263-6411**	1	PLATE	
	3	1	**361-5294**	1	BRACE AS	
		1	**9C-4935**	1	PLATE	
M		1	**159-9541**	4	NUT-WELD (M10X1.5-THD)	
	4	1	**367-2110**	1	GUARD AS-RADIATOR	
M		1	**159-9540**	2	NUT-WELD (M8X1.25-THD)	
M		1	**159-9541**	7	NUT-WELD (M10X1.5-THD)	
		1	**263-1182**	1	LATCH AS (HEAVY-DUTY)	
		1	**264-1499**	1	LOCKPIN	
		1	**333-0593**	4	HANDLE	
		1	*375-4642*	1	GUSSET AS	
M		1	**159-9541**	3	NUT-WELD (M10X1.5-THD)	
	5	1	**370-1614**	3	PLATE	
Y	7	1	*370-1630*	1	DOOR AS-ACCESS	219
	8	1	**370-1654**	1	BRACE AS	
	9	1	**375-0166**	1	PLATE	
	10	1	**375-5871**	4	PLATE	
	11	1	**375-5874**	1	ANGLE AS	
M		1	**159-9541**	3	NUT-WELD (M10X1.5-THD)	
	12	1	**2S-7593**	15	WASHER-HARD (17X35X5-MM THK)	
M	13	1	**6V-3303**	15	BOLT (M16X2X60-MM)	
M	14	1	**5C-7261**	2	NUT (M8X1.25-THD)	
	15	1	**7X-7729**	7	WASHER (11X25X3-MM THK)	
	16	1	**8T-4121**	20	WASHER-HARD (11X21X2.5-MM THK)	
M	17	1	**8T-4140**	4	BOLT (M16X2X60-MM)	
M	18	1	**8T-4182**	3	BOLT (M10X1.5X45-MM)	
M	19	1	**8T-4185**	3	BOLT (M10X1.5X50-MM)	
M	20	1	**8T-4186**	6	BOLT (M10X1.5X40-MM)	
M	21	1	**8T-4195**	10	BOLT (M10X1.5X30-MM)	
M	22	1	**8T-4779**	6	BOLT (M16X2X35-MM)	
M	23	1	**9X-2616**	6	SCREW-SOCKET (M8X1.25X16-MM)	
	24	1	**9X-8257**	12	WASHER (17.5X30X3.5-MM THK)	
D	25	1	**6V-6604**		SEAL (1.3-M EACH)	
D	25A	1	**6V-6604**		SEAL (1.2-M EACH)	
	26	1	**394-7576**	1	BRACKET AS	
M		1	**8T-3490**	1	NUT-WELD (M10X1.5-THD)	
	27	1	**385-4654**	1	BRACE AS	
	28	1	**363-1822**	1	PLATE AS	
	29	1	**317-1670**	1	PIN	
	30	1	**9C-2979**	1	SPACER (10.5X16X7-MM THK)	
	31	1	**8T-4223**	6	WASHER-HARD (13.5X25.5X3-MM THK)	
M	32	1	**8T-4196**	4	BOLT (M10X1.5X35-MM)	
M	33	1	**8T-4192**	6	BOLT (M12X1.75X25-MM)	
M	34	1	**7X-2553**	2	BOLT (M16X2X40-MM)	

D-ORDER BY THE METER
M-METRIC PART
Y-SEPARATE ILLUSTRATION

355-8898 **GUARD GP-RADIATOR** *(contd.)* **i05116691**

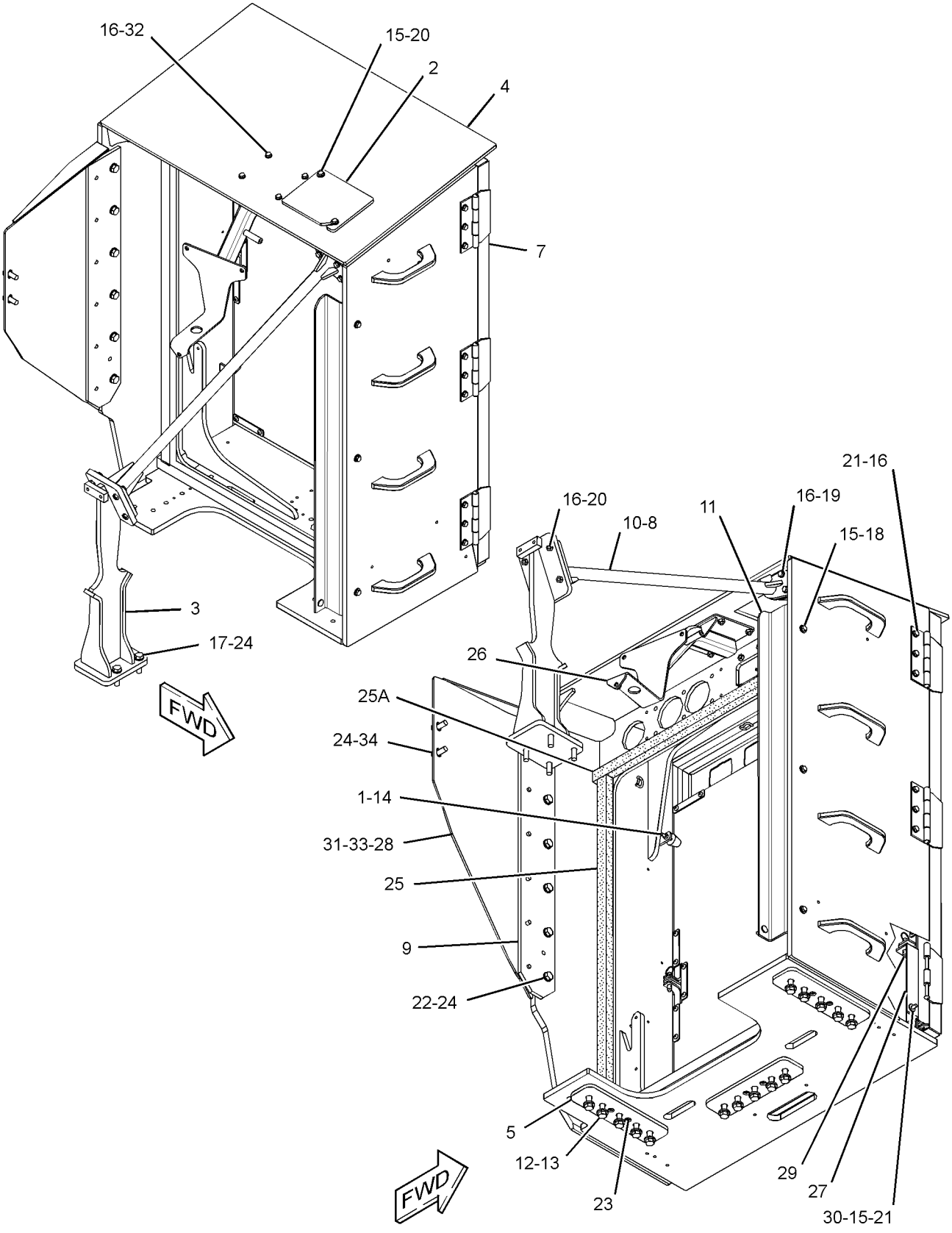

GRAPHIC #1

<END>

g03192176

100-3721 GUARD GP-SWIVEL

S/N: F7B1-UP

PART OF 362-3900 FRAME GP-UNDERCARRIAGE

SMCS-7183 **i01535119**

NOTE	REF NO	GRAPHIC REF	PART NUMBER	QTY	PART NAME 1 2 3 4 5 6 (PRODUCT LEVEL)	SEE PAGE
	1	1	**100-9973**	1	COVER AS	
	2	1	**8T-5439**	1	WASHER-HARD (21.5X45X6-MM THK)	
M	3	1	**8T-4131**	1	NUT (M20X2.5-THD)	
	4	1	**3B-4632**	1	PIN-COTTER	
M	5	1	**8T-4141**	2	BOLT (M20X2.5X70-MM)	
M	6	1	**8T-6430**	6	BOLT (M20X2.5X50-MM)	

M-METRIC PART

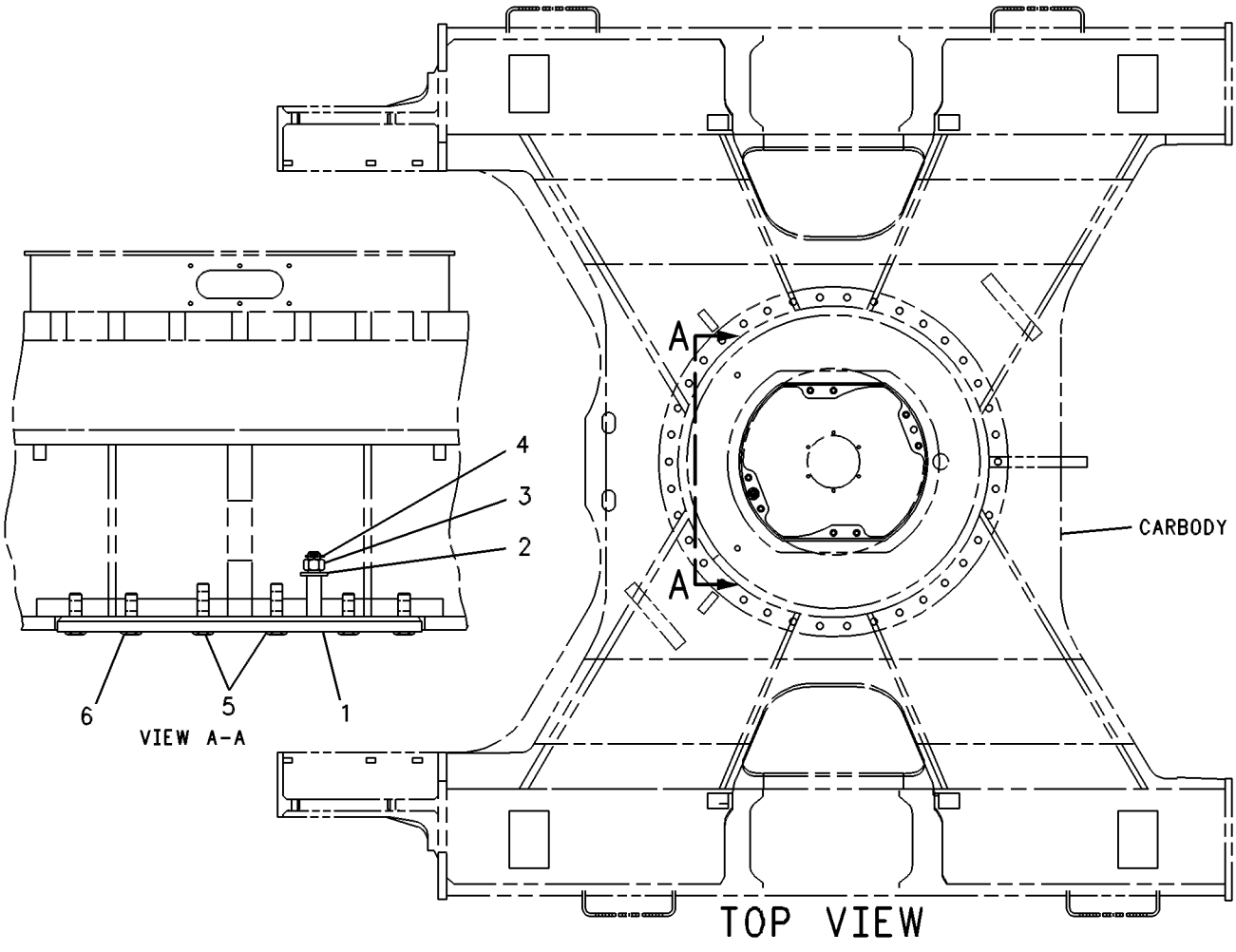

GRAPHIC #1 **<END>** g00263174

FRAME AND BODY

361-5319 HOOD AS

S/N: F7B1-UP

PART OF 339-8293 HOOD GP

SMCS-7251 **i04465391**

NOTE	REF NO	GRAPHIC REF	PART NUMBER	QTY	PART NAME 1 2 3 4 5 6 (PRODUCT LEVEL)	SEE PAGE
	1	1	**6V-9511**	4	PLUG (1-3/16-12-THD)	
M	2	1	**8T-7503**	2	STUD-WELD	
	3	1	**172-8120**	2	HINGE	
	4	1	**234-1531**	1	STEP	
	5	1	**362-3878**	1	DOOR AS-ACCESS	
	6	1	**143-7596**	2	BOSS (M20X2.5X30-MM)	
	7	1	**7T-1099**	20	LINK	
M	8	1	**8T-3490**	16	NUT-WELD (M10X1.5-THD)	
M	9	1	**8T-3597**	5	NUT-WELD (M12X1.75-THD)	
	10	1	**8T-4121**	2	WASHER-HARD (11X21X2.5-MM THK)	
M	11	1	**8T-4195**	2	BOLT (M10X1.5X30-MM)	

M-METRIC PART

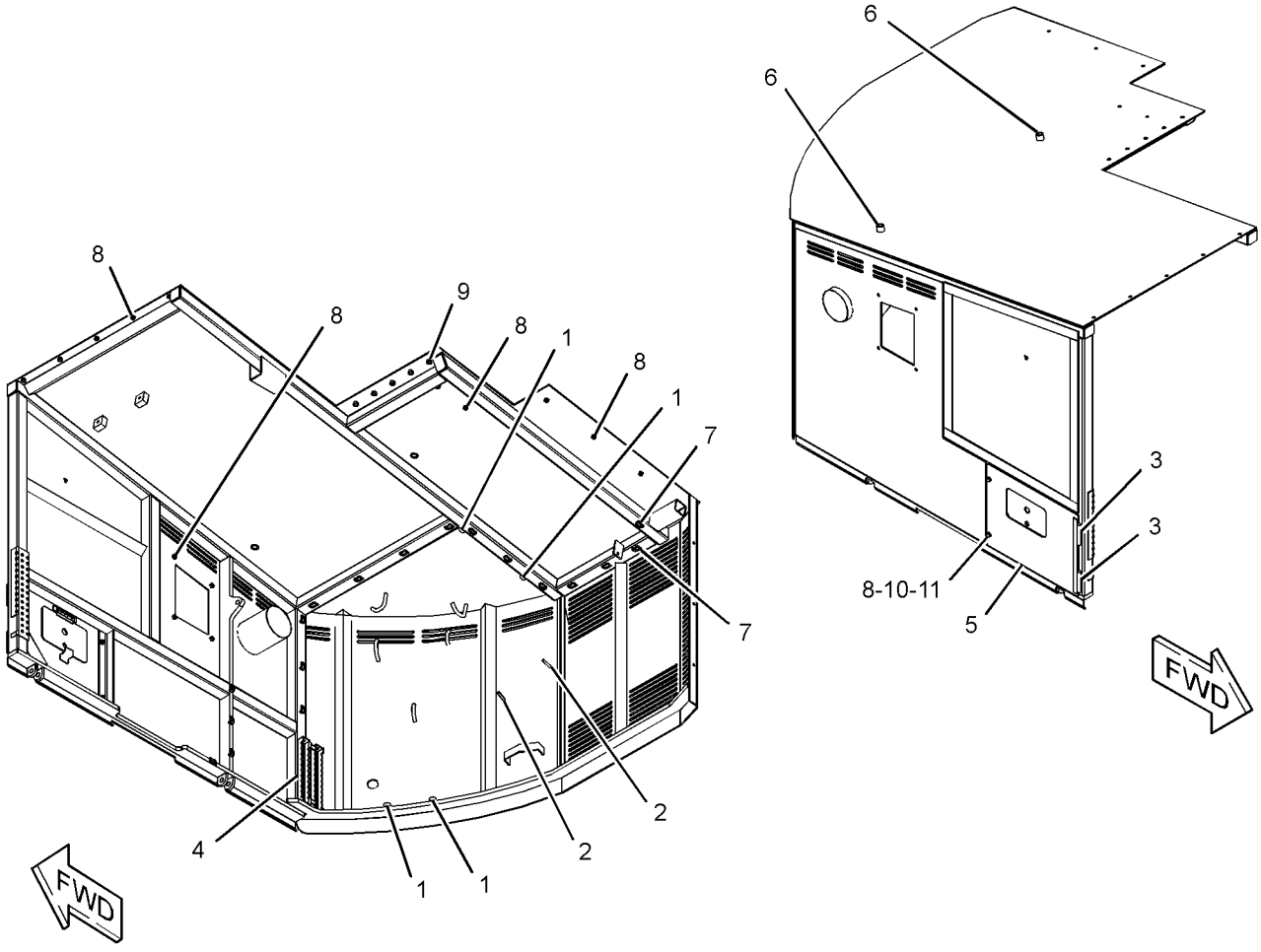

GRAPHIC #1 **<END>** g02728496

FRAME AND BODY

339-8293 HOOD GP

S/N: F7B1-UP

PART OF 362-3899 CHASSIS AR

SMCS-7251 **i04963051**

NOTE	REF NO	GRAPHIC REF	PART NUMBER	QTY	PART NAME 1 2 3 4 5 6 (PRODUCT LEVEL)	SEE PAGE
M	1	1	**6V-8949**	2	NUT (M10X1.5-THD)	
J	2	1	**226-0294**	1	LOCK AS	
			226-0339	1	CAM	
	3	1	**158-3059**	2	EYEBOLT (M8X1.25X100-MM)	
	4	1	**214-7520**	1	SEAL	
	5	1	**214-7521**	1	STRIP	
	6	1	**251-7631**	1	PLATE	
	7	1	**251-7632**	1	PLATE	
	8	1	**266-6652**	1	COVER AS	
Y	9	1	**361-5319**	1	HOOD AS	227
	10	1	**362-3846**	1	SEAL	
	11	1	**362-3850**	1	SEAL	
	12	1	**362-3851**	1	STRIP	
	13	1	**362-3854**	1	STRIP	
	14	1	**362-3855**	1	SEAL	
	15	1	**362-3856**	1	STRIP	
	16	1	**379-6987**	1	COVER	
M	17	1	**6V-7688**	2	LOCKNUT (M20X2.5-THD)	
M	18	1	**7X-2564**	1	BOLT (M20X2.5X90-MM)	
M	19	1	**7X-2565**	1	BOLT (M20X2.5X100-MM)	
	20	1	**8T-4121**	16	WASHER-HARD (11X21X2.5-MM THK)	
M	21	1	**8T-4133**	3	NUT (M10X1.5-THD)	
M	22	1	**8T-4195**	7	BOLT (M10X1.5X30-MM)	
M	23	1	**8T-4196**	10	BOLT (M10X1.5X35-MM)	
BD	24	1	**5P-5895**		TREAD-NONSKID	

B-USE AS REQUIRED
D-ORDER BY THE METER
J-REQUIRES CORPORATE KEY
M-METRIC PART
Y-SEPARATE ILLUSTRATION

339-8293 **HOOD GP** *(contd.)* **i04963051**

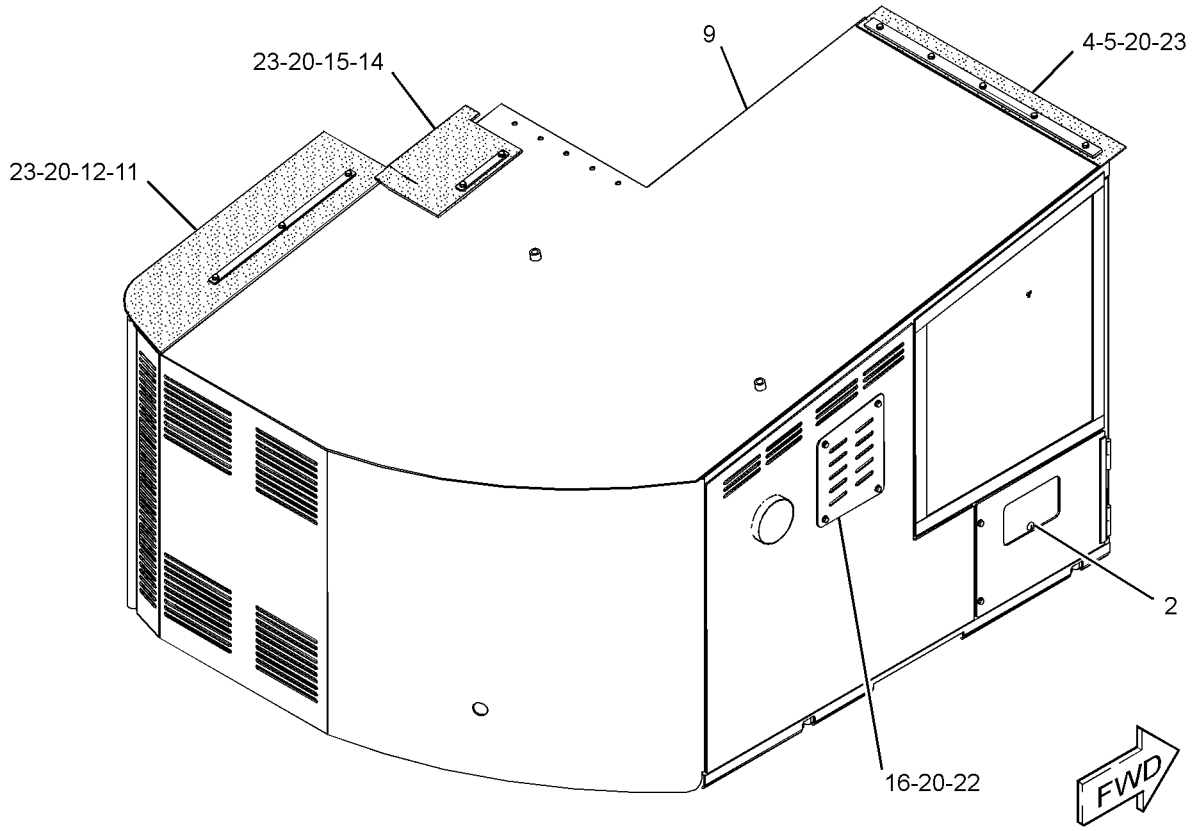

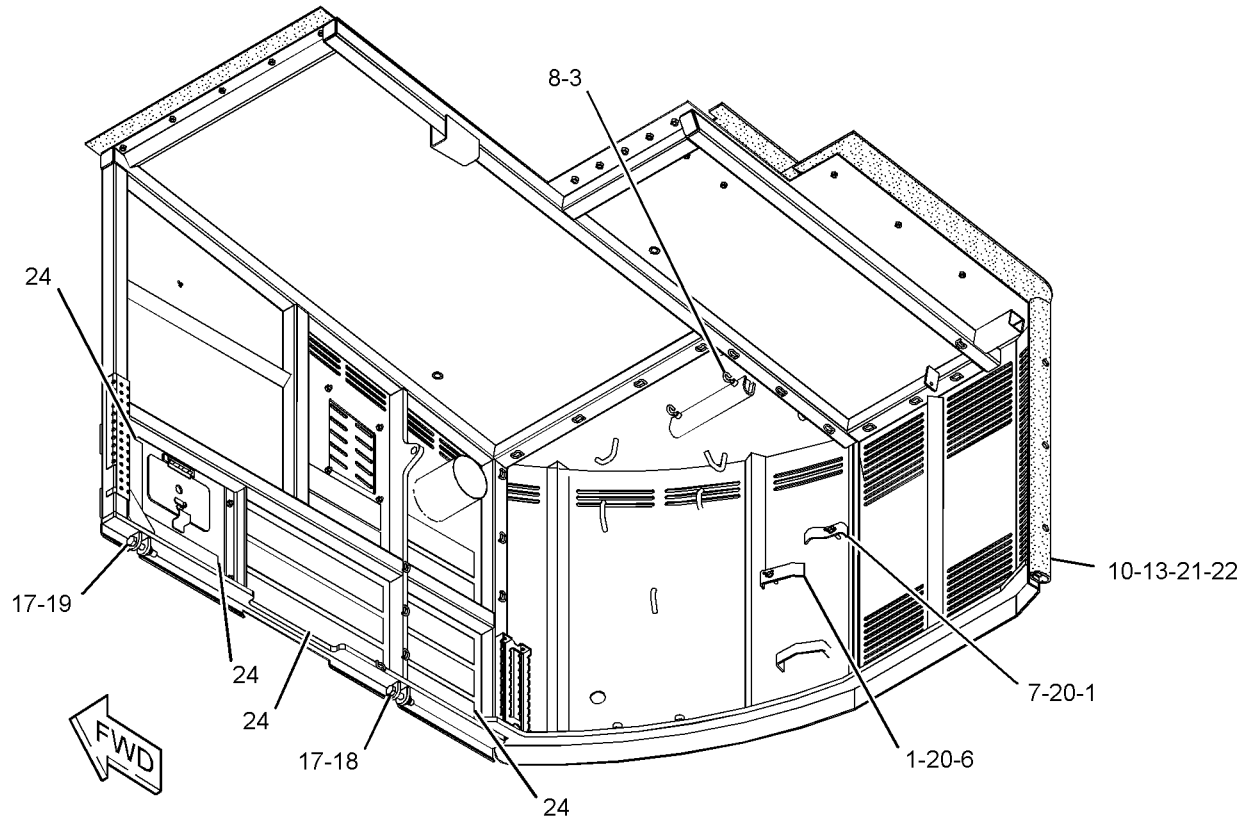

GRAPHIC #1 **<END>** g03193097

297-9152 ADJUSTMENT GP-HYDRAULIC TRACK

S/N: F7B1-UP

PART OF 280-6760 IDLER GP-FRONT

SMCS-4157 **i05119045**

NOTE	REF NO	GRAPHIC REF	PART NUMBER	QTY	PART NAME 1 2 3 4 5 6 (PRODUCT LEVEL)	SEE PAGE
	1	1	**2S-5926**	1	VALVE-RELIEF	
	2	1	**6I-6550**	1	PLATE AS	
	2A	1	**4B-4158**	4	SCREW-DRIVE (NO 4X0.25-IN)	
	2B	1	**6I-6551**	1	PLATE	
	2C	1	**253-1346**	1	PLATE-WARNING (HIGH PRESSURE CYLINDER)	
R	3	1	**7Y-1866**	1	CYLINDER	
	4	1	**198-2953**	1	SEAL-WIPER	
	5	1	**357-7540**	1	VALVE-FILL (TRACK TENSIONER)	
	6	1	**248-7178**	2	SEAL-O-RING	
	7	1	**297-9157**	1	PISTON	
	8	1	**093-1509**	2	RING-BACKUP	
	9	1	**7Y-1884**	2	RING-BACKUP	
M	10	1	**8T-4191**	2	BOLT (M10X1.5X16-MM)	

M-METRIC PART
R-REMFG PART MAY BE AVAILABLE

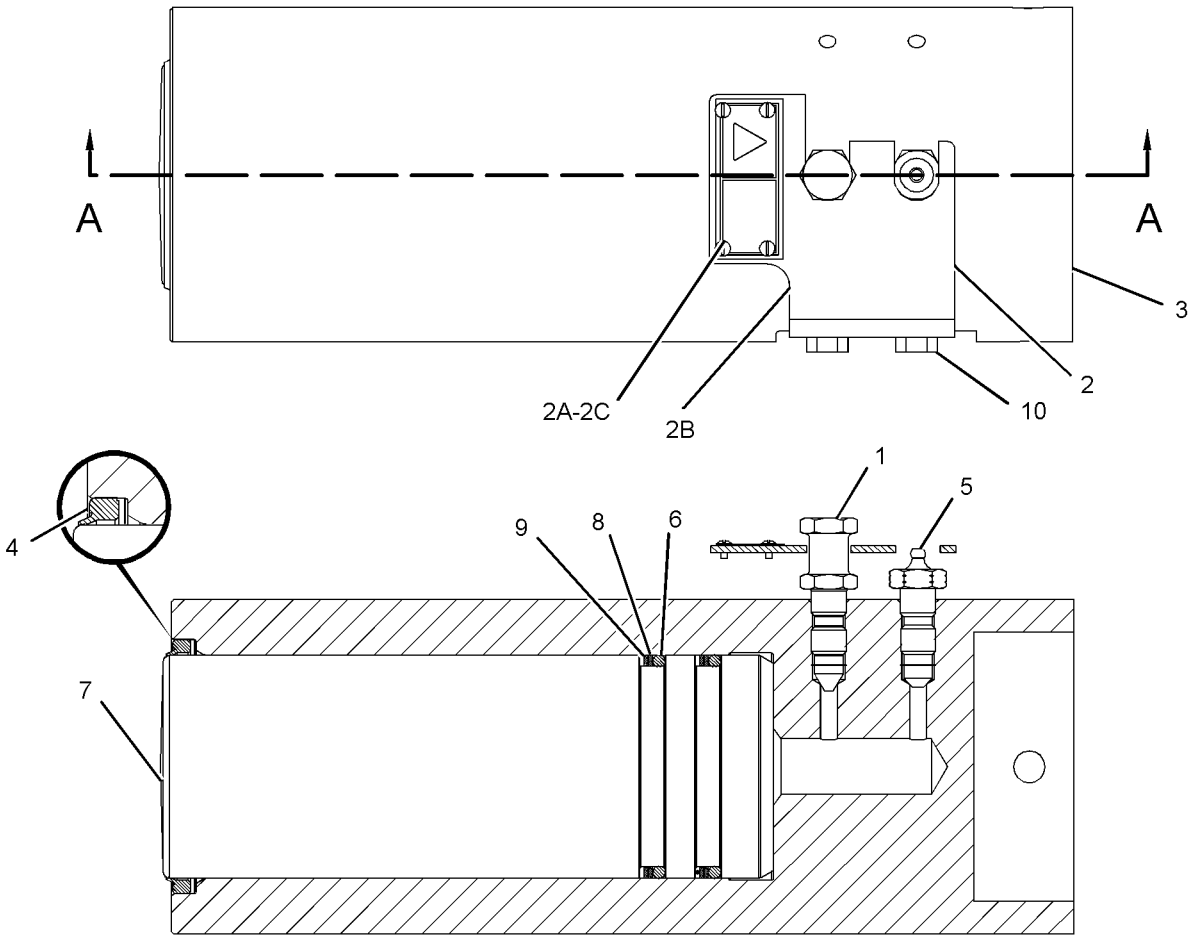

SECTION A-A

GRAPHIC #1 **<END>** g02765397

UNDERCARRIAGE

362-3900 FRAME GP-UNDERCARRIAGE

S/N: F7B1-UP

PART OF 351-6848 COMMON AR

SMCS-4150 **i04464066**

NOTE	PART NUMBER	QTY	PART NAME 1 2 3 4 5 6 (PRODUCT LEVEL)	SEE PAGE
Y	*318-9121*	2	DRIVE GP-FINAL	206
Y	*220-1362*	1	FASTENER GP-FINAL DRIVE	207
Y	*152-1735*	1	GEAR & BEARING GP-SWING	222
Y	*100-3721*	1	GUARD GP-SWIVEL	226
Y	*365-5798*	1	GUARD GP-TRAVEL MOTOR	232
Y	*280-6760*	1	IDLER GP-FRONT	234
Y	*339-8348*	1	LINES GP-TRAVEL MOTOR	340
Y	*339-8350*	1	ROLLER GP-TRACK	238
Y	*7Y-0763*	2	SPROCKET GP	215
	364-2231	1	FRAME AS-UNDERCARRIAGE	

Y-SEPARATE ILLUSTRATION

<END>

365-5798 GUARD GP-TRAVEL MOTOR

S/N: F7B1-UP

PART OF 362-3900 FRAME GP-UNDERCARRIAGE

SMCS-7163 **i04380475**

NOTE	REF NO	GRAPHIC REF	PART NUMBER	QTY	PART NAME 1 2 3 4 5 6 (PRODUCT LEVEL)	SEE PAGE
	1	1	**9Q-5543**	2	COVER	
	2	1	**269-0005**	4	STEP AS	
					(EACH INCLUDES)	
		1	**162-5389**	1	STEP AS	
	3	1	**364-2177**	2	PLATE	
M	4	1	**8T-4183**	4	BOLT (M12X1.75X40-MM)	
	5	1	**8T-4223**	20	WASHER-HARD (13.5X25.5X3-MM THK)	
M	6	1	**8T-4956**	16	BOLT (M12X1.75X35-MM)	
M	7	1	**8T-7338**	24	BOLT (M16X2X45-MM)	
	8	1	**9X-8257**	24	WASHER (17.5X30X3.5-MM THK)	

M-METRIC PART

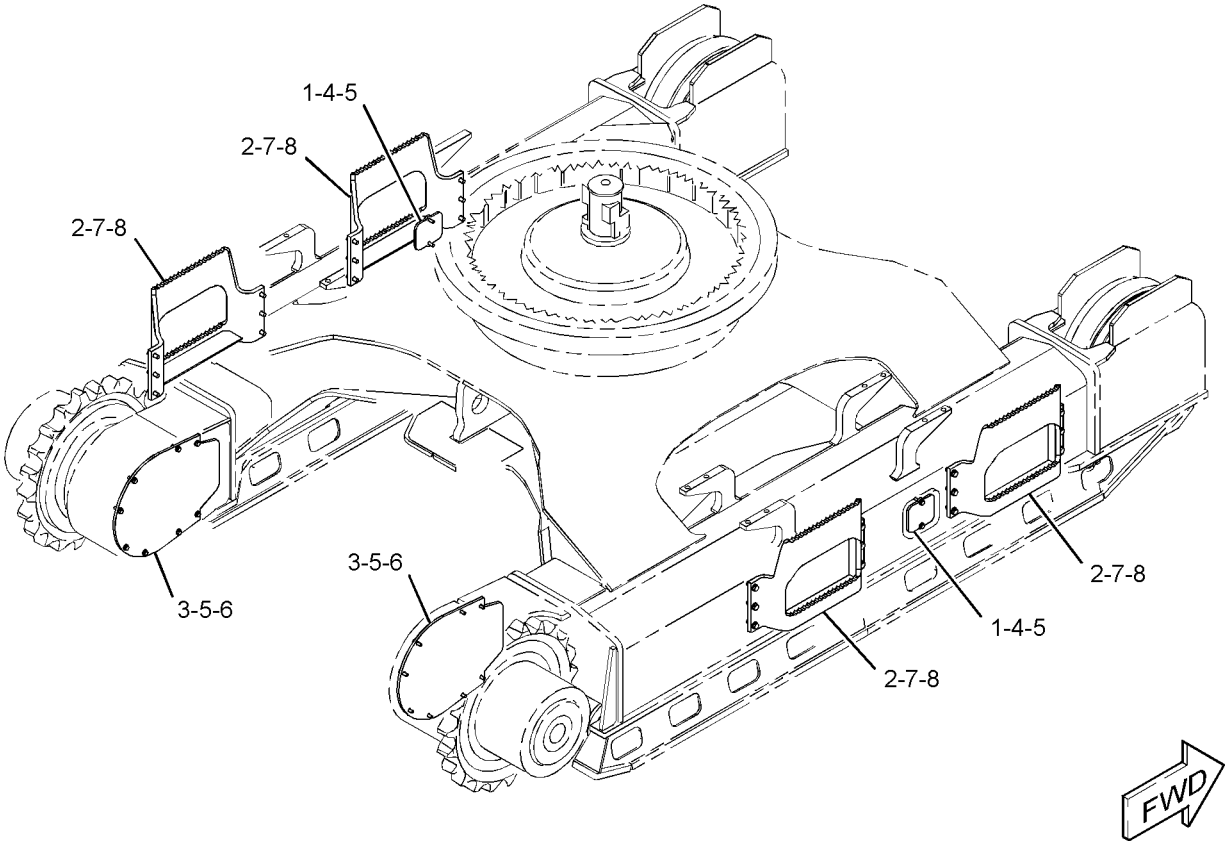

GRAPHIC #1 **<END>** g02730368

136-2422 IDLER GP-FRONT

S/N: F7B1-UP

PART OF 280-6761 IDLER GP-FRONT

SMCS-4159 **i04508094**

NOTE	REF NO	GRAPHIC REF	PART NUMBER	QTY	PART NAME 1 2 3 4 5 6 (PRODUCT LEVEL)	SEE PAGE
	1	1	**136-3847**	1	IDLER AS	
	2	1	**6Y-8023**	2	BEARING-IDLER	
	3	1	**109-0881**	2	SEAL GP-DUO-CONE	
					(EACH INCLUDES)	
		1	**5P-9120**	2	RING-SEALING	
	4	1	**1H-7339**	2	SEAL-O-RING	
	5	1	**6Y-8028**	1	SHAFT-IDLER	
	6	1	**115-3699**	2	BEARING-FRONT	
	7	1	**7H-3171**	1	PLUG-PIPE	
	8	1	**6Y-8029**	2	PIN-SPRING	

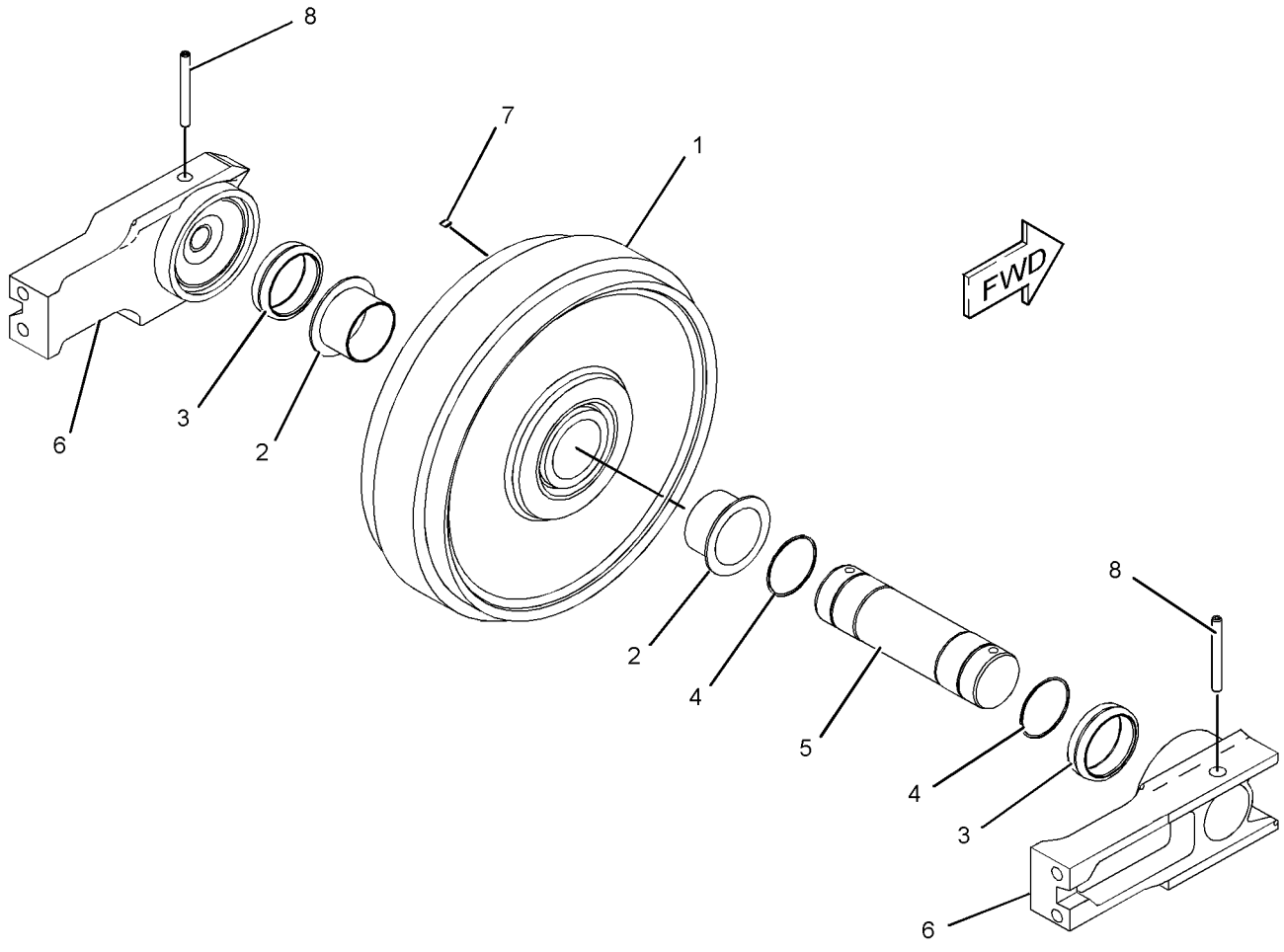

GRAPHIC #1 **<END>** g02687017

280-6760 IDLER GP-FRONT

S/N: F7B1-UP

PART OF 362-3900 FRAME GP-UNDERCARRIAGE

SMCS-4159 **i04463585**

NOTE	REF NO	GRAPHIC REF	PART NUMBER	QTY	PART NAME 1 2 3 4 5 6 (PRODUCT LEVEL)	SEE PAGE
CY	1	1	**297-9152**	2	ADJUSTMENT GP-HYDRAULIC TRACK	230
Y	2	1	*280-6761*	2	IDLER GP-FRONT	235
M	3	1	**095-1280**	4	SETSCREW-SOCKET (M16X2X20-MM)	

QUANTITIES SHOWN ARE THOSE REQUIRED FOR BOTH LH AND RH SIDES
C-CHANGE FROM PREVIOUS TYPE
M-METRIC PART
Y-SEPARATE ILLUSTRATION

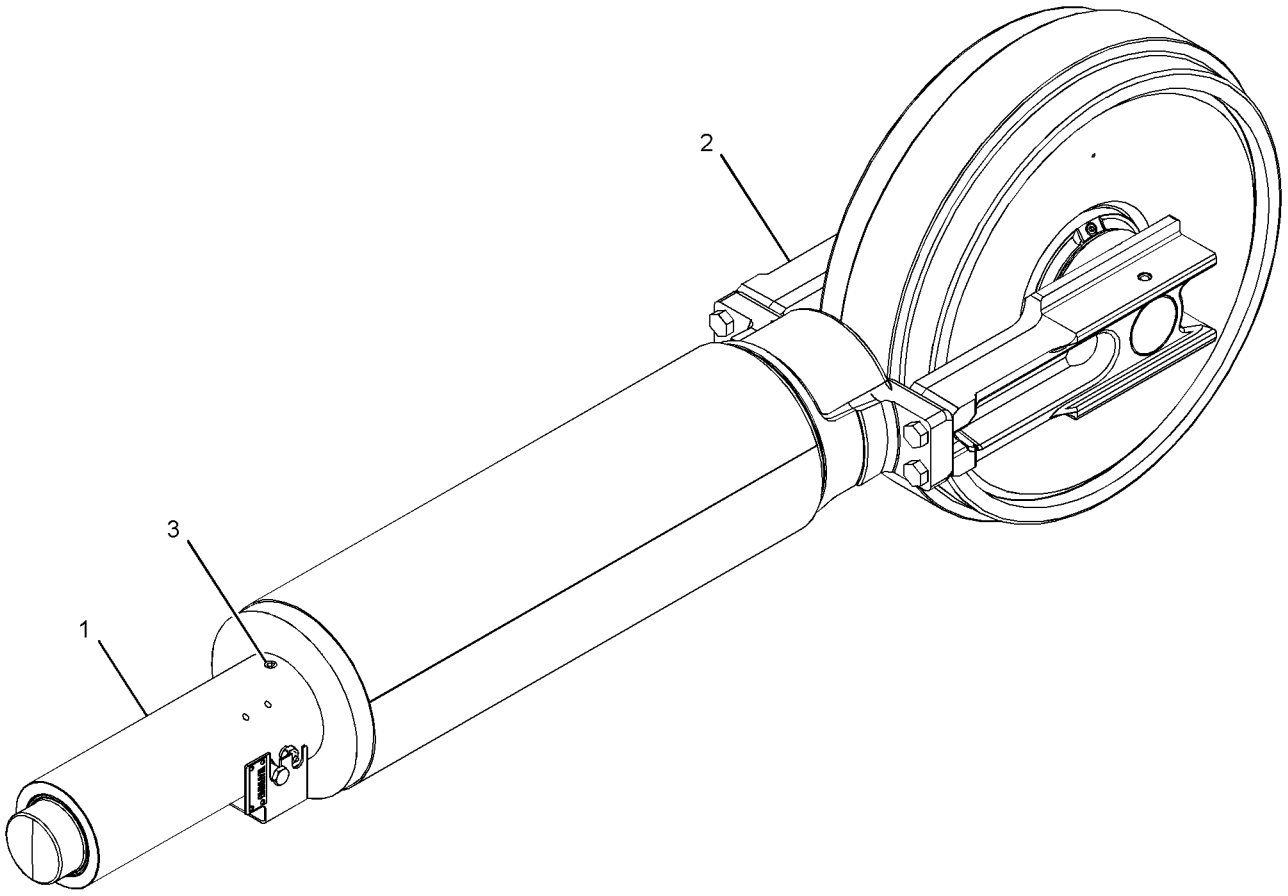

GRAPHIC #1 **<END>** g01256605

280-6761 IDLER GP-FRONT

S/N: F7B1-UP

PART OF 280-6760 IDLER GP-FRONT

SMCS-4159 **i04546539**

NOTE	REF NO	GRAPHIC REF	PART NUMBER	QTY	PART NAME 1 2 3 4 5 6 (PRODUCT LEVEL)	SEE PAGE
Y	1	1	**136-2422**	1	IDLER GP-FRONT	233
Y	2	1	*248-7170*	1	SPRING GP-RECOIL	242
M	3	1	**7X-2563**	4	BOLT (M20X2.5X60-MM)	

M-METRIC PART
Y-SEPARATE ILLUSTRATION

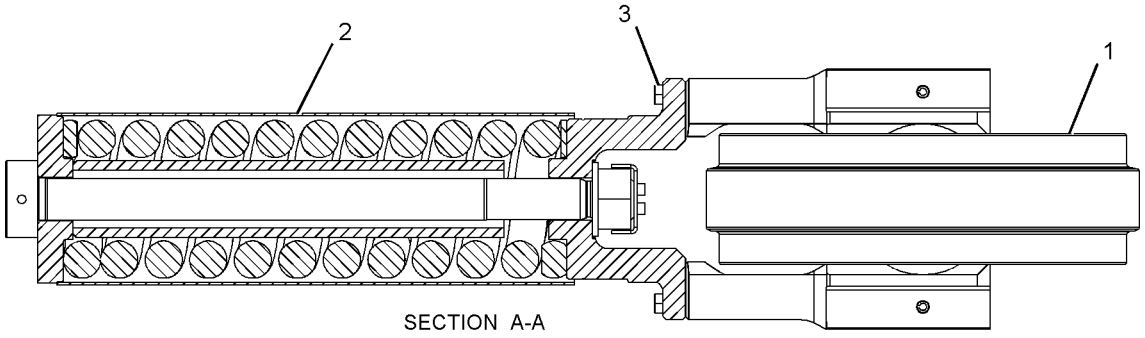

SECTION A-A

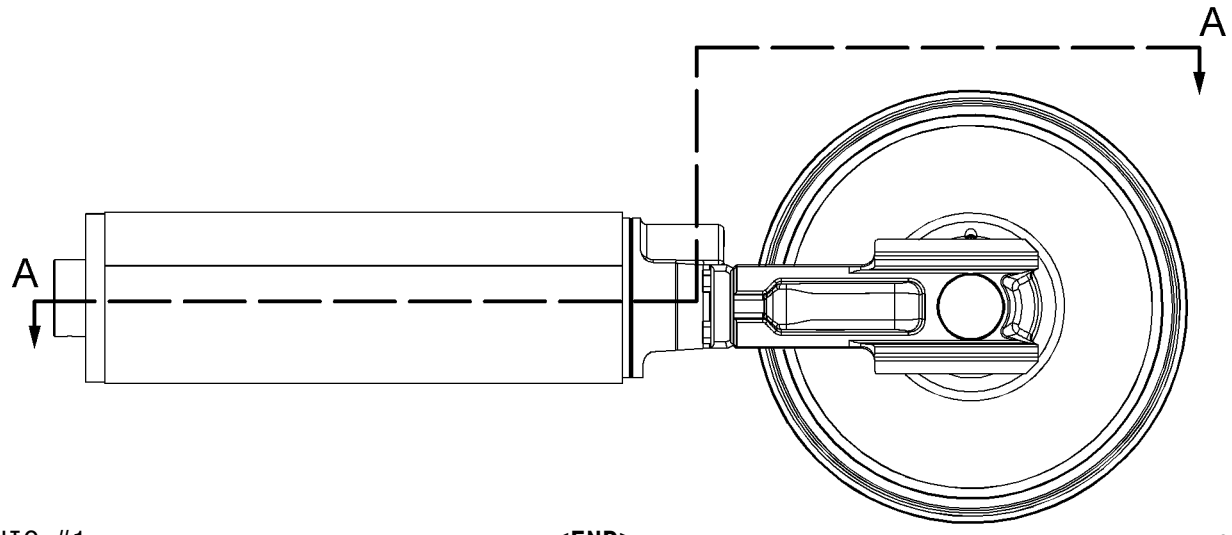

GRAPHIC #1 **<END>** g01096241

213-1975 LINK AS-TRACK—GREASE LUBRICATED TRACK

S/N: F7B1-UP
47-SECTION
PART OF 152-1734, 188-9778, 188-9779, 415-6805, 415-6806 TRACK GP
AN ATTACHMENT

SMCS-4169, 4171 **i02907437**

NOTE	PART NUMBER	QTY	PART NAME 1 2 3 4 5 6 (PRODUCT LEVEL)	SEE PAGE
	201-0828	1	BUSHING-TRACK MASTER	
	321-1463	46	BUSHING-TRACK	
	6Y-2589	47	LINK-TRACK (RH)	
	6Y-2590	47	LINK-TRACK (LH)	
	6Y-2748	1	PIN-TRACK MASTER	
	6Y-2751	46	PIN-TRACK	
	179-3428	2	SEAL-TRACK MASTER	
	179-3426	92	SEAL-TRACK	

<END>

228-6405 ROLLER GP-TRACK

S/N: F7B1-UP
PART OF 336-7738 ROLLER GP-TRACK
AN ATTACHMENT

SMCS-4180 **i01931064**

NOTE	REF NO	GRAPHIC REF	PART NUMBER	QTY	PART NAME 1 2 3 4 5 6 (PRODUCT LEVEL)	SEE PAGE
Y	1	1	**183-2874**	1	ROLLER GP-TRACK-SINGLE FLANGE	240

Y-SEPARATE ILLUSTRATION

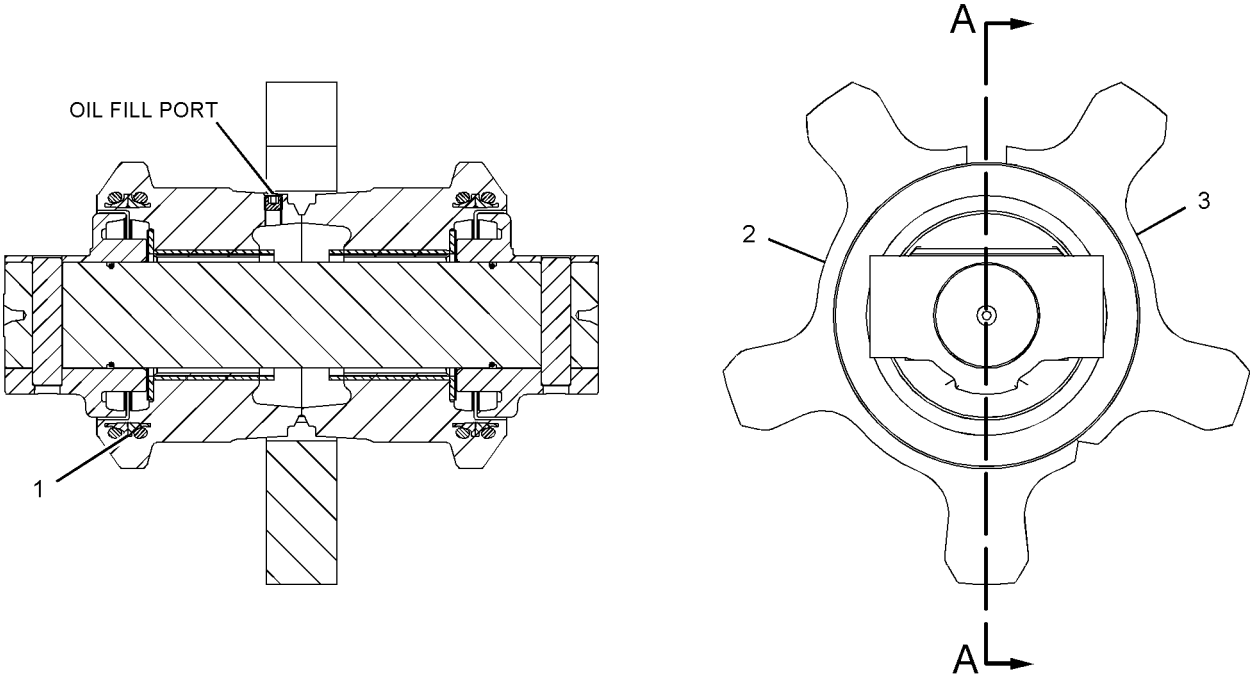

GRAPHIC #1 **<END>** g01008347

UNDERCARRIAGE

336-7738 ROLLER GP-TRACK—STAR

S/N: F7B1-UP
CANNOT BE USED WITH 336-7737—PAGE 241
AN ATTACHMENT

SMCS-4180 **i03489154**

NOTE	PART NUMBER	QTY	PART NAME 1 2 3 4 5 6 (PRODUCT LEVEL)	SEE PAGE
Y	**228-6405**	4	ROLLER GP-TRACK (SINGLE FLANGE)	237
M	**7X-2454**	16	BOLT (M24X3X110-MM)	
	8T-4167	16	WASHER-HARD (26X44X4-MM THK)	

M-METRIC PART
Y-SEPARATE ILLUSTRATION

<END>

339-8350 ROLLER GP-TRACK

S/N: F7B1-UP
PART OF 362-3900 FRAME GP-UNDERCARRIAGE

SMCS-4180 **i04380477**

NOTE	PART NUMBER	QTY	PART NAME 1 2 3 4 5 6 (PRODUCT LEVEL)	SEE PAGE
Y	**183-2874**	2	ROLLER GP-TRACK-SINGLE FLANGE	240
Y	**183-2879**	16	ROLLER GP-TRACK-DOUBLE FLANGE	239
M	**7X-2454**	72	BOLT (M24X3X110-MM)	
	8T-4167	72	WASHER-HARD (26X44X4-MM THK)	

M-METRIC PART
Y-SEPARATE ILLUSTRATION

<END>

183-2879 ROLLER GP-TRACK-DOUBLE FLANGE

S/N: F7B1-UP

PART OF 339-8350 ROLLER GP-TRACK

SMCS-4180 **i01348115**

NOTE	REF NO	GRAPHIC REF	PART NUMBER	QTY	PART NAME 1 2 3 4 5 6 (PRODUCT LEVEL)	SEE PAGE
	1	1	**8F-8882**	2	SEAL-O-RING	
	2	1	**9W-2146**	1	PLUG	
	3	1	**148-3533**	2	SEAL GP-DUO-CONE	
	4	1	**179-1497**	2	COLLAR-TRACK ROLLER	
	5	1	**179-1499**	2	DOWEL	
	6	1	*183-2880*	1	ROLLER & BEARING AS	
	6A	1	**6Y-2792**	2	BEARING	
	7	1	**183-2883**	1	SHAFT-TRACK ROLLER	

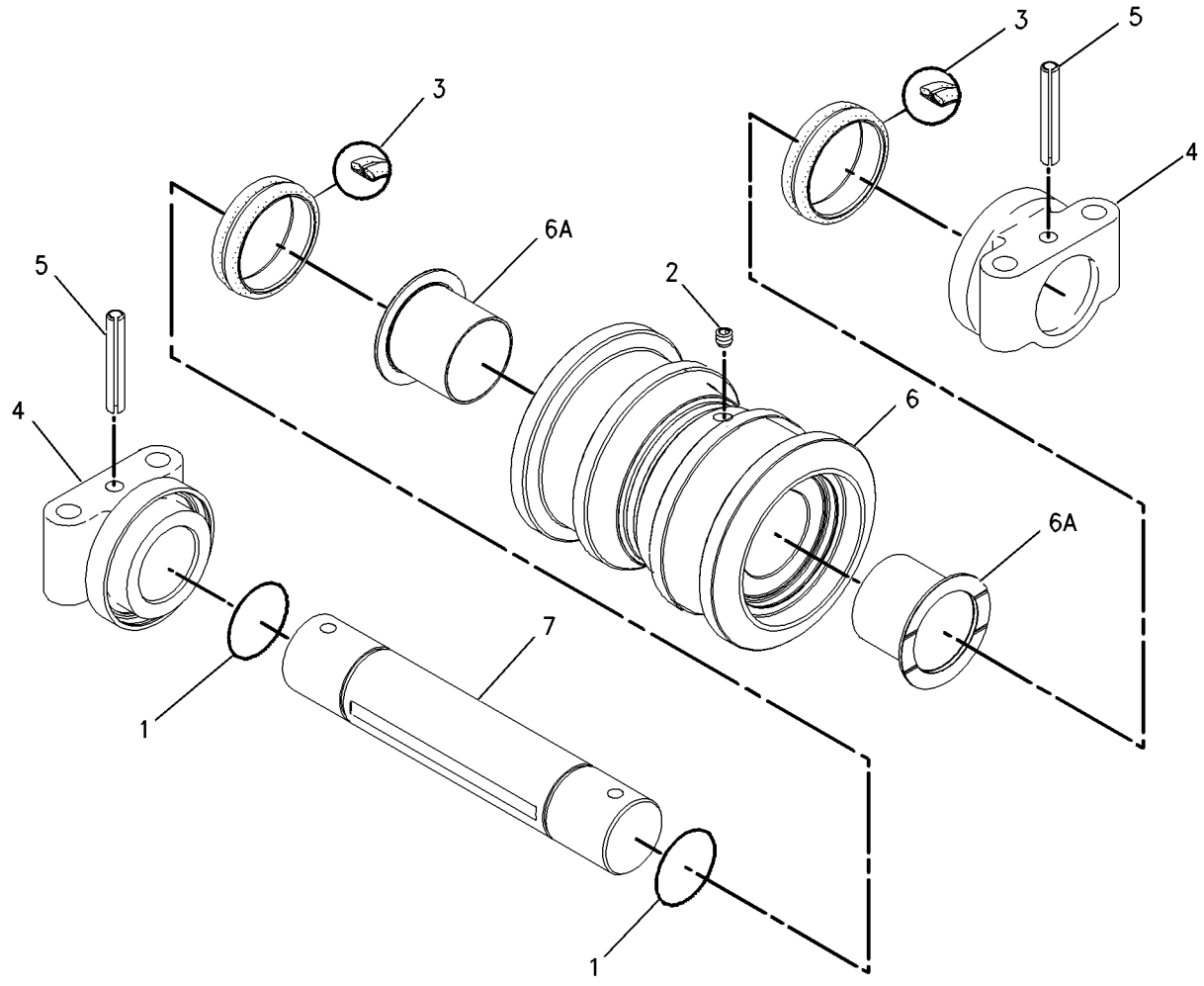

GRAPHIC #1 **<END>** g00712691

183-2874 ROLLER GP-TRACK-SINGLE FLANGE

S/N: F7B1-UP

PART OF 228-6405, 339-8350 ROLLER GP-TRACK, 336-7737 ROLLER GP-TRACK-SINGLE FLANGE

ALSO AN ATTACHMENT

SMCS-4180 **i01348101**

NOTE	REF NO	GRAPHIC REF	PART NUMBER	QTY	PART NAME 1 2 3 4 5 6 (PRODUCT LEVEL)	SEE PAGE
	1	1	**183-2875**	1	ROLLER & BEARING AS	
	1A	1	**6Y-2792**	2	BEARING	
	2	1	**9W-2146**	1	PLUG	
	3	1	**148-3533**	2	SEAL GP-DUO-CONE	
					(EACH INCLUDES)	
		1	**160-6631**	2	RING-TORIC	
	4	1	**179-1497**	2	COLLAR-TRACK ROLLER	
	5	1	**179-1499**	2	DOWEL	
	6	1	**183-2883**	1	SHAFT-TRACK ROLLER	
	7	1	**8F-8882**	2	SEAL-O-RING	

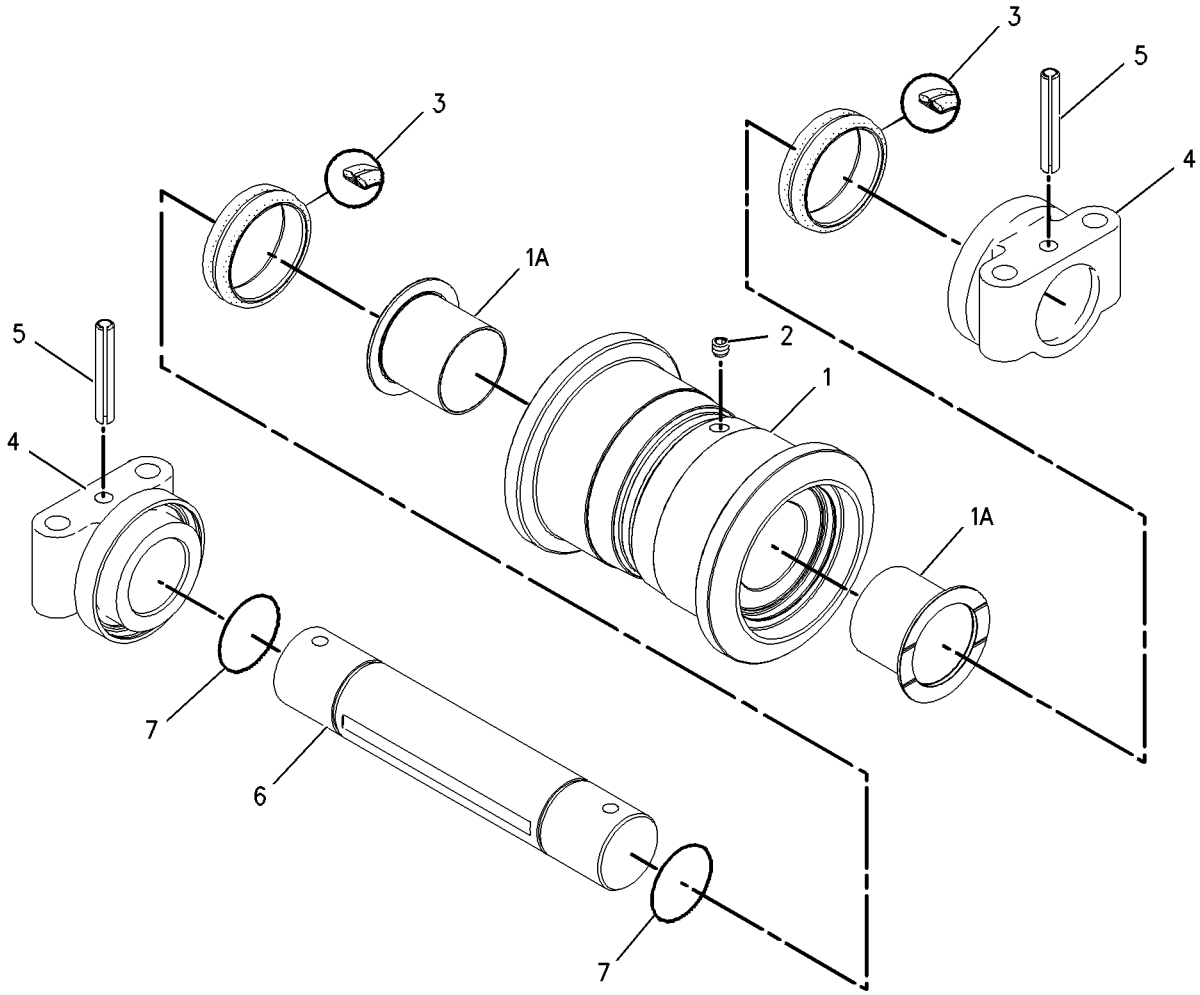

GRAPHIC #1 **<END>** g00686090

336-7737 ROLLER GP-TRACK-SINGLE FLANGE—CARRIER

S/N: F7B1-UP

CANNOT BE USED WITH 336-7738—PAGE 238

AN ATTACHMENT

SMCS-4180 **i03556916**

NOTE	PART NUMBER	QTY	PART NAME 1 2 3 4 5 6 (PRODUCT LEVEL)	SEE PAGE
Y	**183-2874**	4	ROLLER GP-TRACK-SINGLE FLANGE	240
M	**7X-2454**	16	BOLT (M24X3X110-MM)	
	8T-4167	16	WASHER-HARD (26X44X4-MM THK)	

M-METRIC PART
Y-SEPARATE ILLUSTRATION

<END>

248-7170 SPRING GP-RECOIL

S/N: F7B1-UP

PART OF 280-6761 IDLER GP-FRONT

SMCS-4158 **i02449820**

NOTE	REF NO	GRAPHIC REF	PART NUMBER	QTY	PART NAME 1 2 3 4 5 6 (PRODUCT LEVEL)	SEE PAGE
	1	1	**7Y-1221**	1	STRIP	
	2	1	**7Y-1459**	1	WASHER (66X115X9-MM THK)	
	3	1	**194-1238**	1	ROD	
	4	1	**248-7171**	1	SUPPORT	
	5	1	**194-1253**	1	SPRING	
	6	1	**194-1254**	1	SUPPORT AS	
M	7	1	**7Y-1460**	1	NUT (M64X6-THD)	
M	8	1	**8T-9080**	2	BOLT-SOCKET HEAD (M12X1.75X20-MM)	

M-METRIC PART

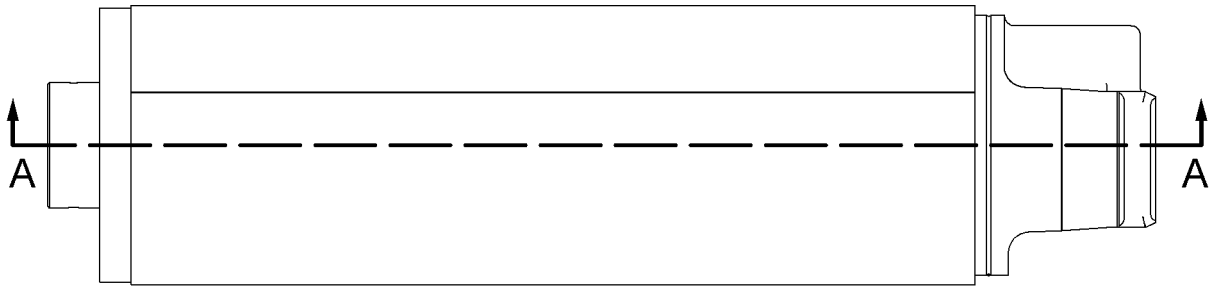

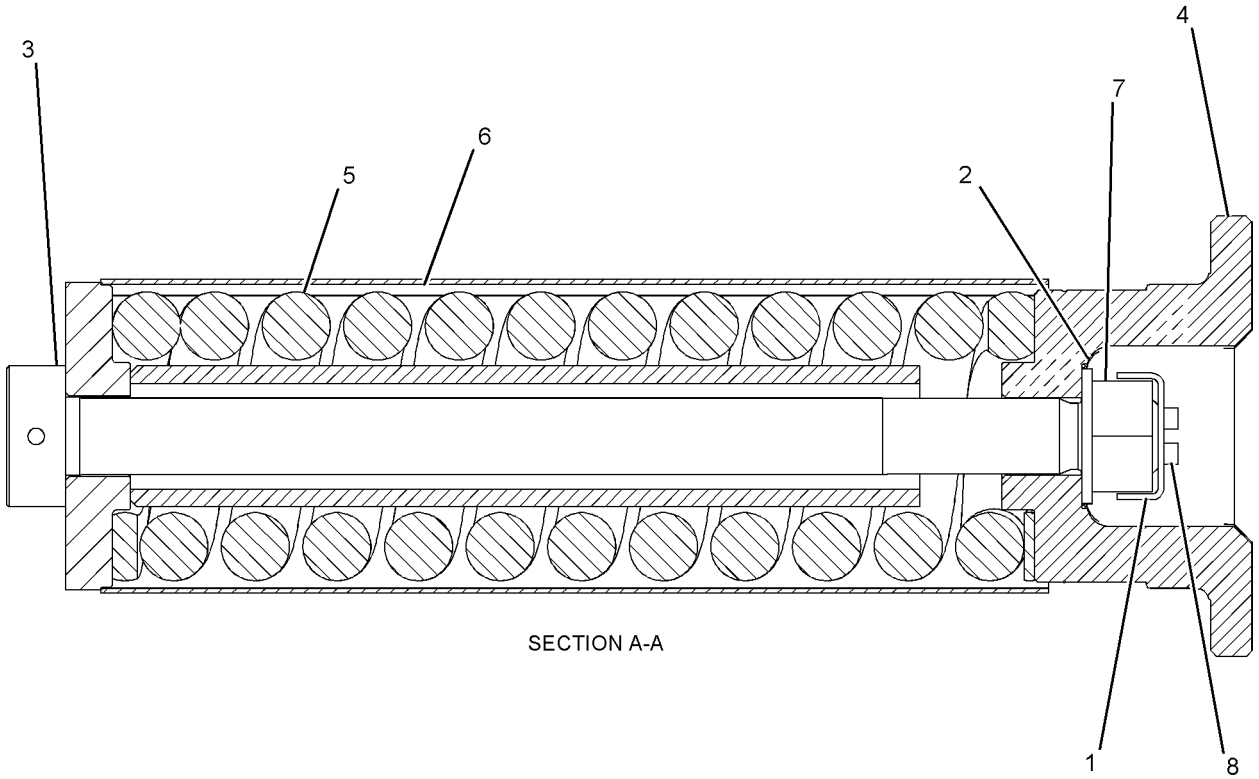

SECTION A-A

GRAPHIC #1 **<END>** g01096242

UNDERCARRIAGE

219-4808 TRACK AR

S/N: F7B1-UP
700-MM(27.6-IN) SINGLE GROUSER SHOE, GREASED LUBRICATED TRACK, EXTREME SERVICE
CANNOT BE USED WITH 239-1305–PAGE 243, 290-5754–PAGE 243
AN ATTACHMENT

SMCS-4170 **i05133133**

NOTE	PART NUMBER	QTY	PART NAME 1 2 3 4 5 6 (PRODUCT LEVEL)	SEE PAGE
Y	*188-9778*	2	TRACK GP	245
Y-SEPARATE ILLUSTRATION				

<END>

239-1305 TRACK AR

S/N: F7B1-UP
600-MM(23.6-IN) SINGLE GROUSER SHOE, GREASED LUBRICATED TRACK, EXTREME SERVICE
CANNOT BE USED WITH 219-4808–PAGE 243, 290-5754–PAGE 243
AN ATTACHMENT

SMCS-4170 **i03489460**

NOTE	PART NUMBER	QTY	PART NAME 1 2 3 4 5 6 (PRODUCT LEVEL)	SEE PAGE
Y	*152-1734*	2	TRACK GP	244
Y-SEPARATE ILLUSTRATION				

<END>

290-5754 TRACK AR

S/N: F7B1-UP
700-MM(27.56-IN) DOUBLE GROUSER SHOE, GREASED LUBRICATED TRACK, EXTREME SERVICE
CANNOT BE USED WITH 239-1305–PAGE 243, 219-4808–PAGE 243
AN ATTACHMENT

SMCS-4170 **i03489650**

NOTE	PART NUMBER	QTY	PART NAME 1 2 3 4 5 6 (PRODUCT LEVEL)	SEE PAGE
Y	*188-9779*	2	TRACK GP	246
Y-SEPARATE ILLUSTRATION				

<END>

417-4869 TRACK AR

S/N: F7B1-UP
900-MM(35.43-IN)TRIPLE GROUSHER SHOE, GREASED LUBRICATED TRACK, HEAVY DUTY
AN ATTACHMENT

SMCS-4170 **i04958670**

NOTE	PART NUMBER	QTY	PART NAME 1 2 3 4 5 6 (PRODUCT LEVEL)	SEE PAGE
Y	*415-6805*	1	TRACK GP (RH)	247
Y	*415-6806*	1	TRACK GP (LH)	248
Y-SEPARATE ILLUSTRATION				

<END>

UNDERCARRIAGE

152-1734 TRACK GP

S/N: F7B1-UP
600-MM (23.6-IN) SINGLE GROUSER SHOE.
GREASED LUBRICATED TRACK, EXTREME SERVICE, TRAPEZOIDAL, CLIPPING
PART OF 239-1305 TRACK AR
AN ATTACHMENT

SMCS-4170 **i04853133**

NOTE	PART NUMBER	QTY	PART NAME 1 2 3 4 5 6 (PRODUCT LEVEL)	SEE PAGE
Y	**213-1975**	1	LINK AS-TRACK	236
M	**143-4891**	188	BOLT-TRACK (M22X1.5X73-MM)	
M	**9W-4381**	188	NUT-TRACK (M22X1.5-THD)	
	331-3631	47	SHOE-TRACK	

M-METRIC PART
Y-SEPARATE ILLUSTRATION

<END>

188-9778 TRACK GP

S/N: F7B1-UP
700-MM (27.6-IN) SINGLE GROUSER SHOE.
GREASED LUBRICATED TRACK, EXTREME SERVICE, TRAPEZOIDAL, CLIPPING
PART OF 219-4808 TRACK AR
AN ATTACHMENT

SMCS-4170 **i03505501**

NOTE	REF NO	GRAPHIC REF	PART NUMBER	QTY	PART NAME 1 2 3 4 5 6 (PRODUCT LEVEL)	SEE PAGE
Y	1	1	**213-1975**	1	LINK AS-TRACK	236
	2	1	**152-8558**	47	SHOE-TRACK	
M	3	1	**143-4891**	188	BOLT-TRACK (M22X1.5X73-MM)	
M	4	1	**9W-4381**	188	NUT-TRACK (M22X1.5-THD)	

M-METRIC PART
Y-SEPARATE ILLUSTRATION

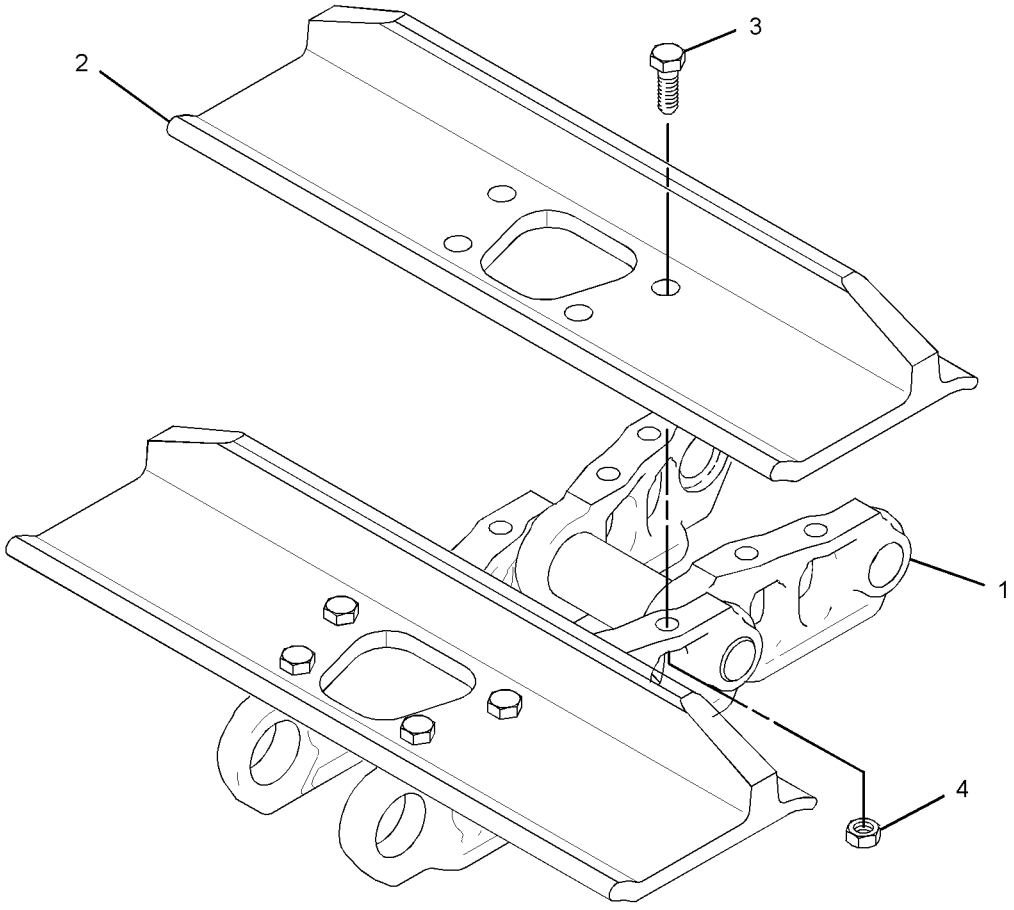

GRAPHIC #1 **<END>** g01840793

188-9779 TRACK GP

S/N: F7B1-UP
700-MM (27.6-IN) DOUBLE GROUSER SHOE.
GREASE LUBRICATED TRACK, EXTREME SERVICE, TRAPEZOIDAL
PART OF 290-5754 TRACK AR
AN ATTACHMENT

SMCS-4170 **i01774767**

NOTE	REF NO	GRAPHIC REF	PART NUMBER	QTY	PART NAME 1 2 3 4 5 6 (PRODUCT LEVEL)	SEE PAGE
Y	1	1	**213-1975**	1	LINK AS-TRACK	236
	2	1	**196-4083**	47	SHOE-TRACK	
M	3	1	**143-4891**	188	BOLT-TRACK (M22X1.5X73MM)	
M	4	1	**9W-4381**	188	NUT-TRACK (M22X1.5 THD)	

M-METRIC PART
Y-SEPARATE ILLUSTRATION

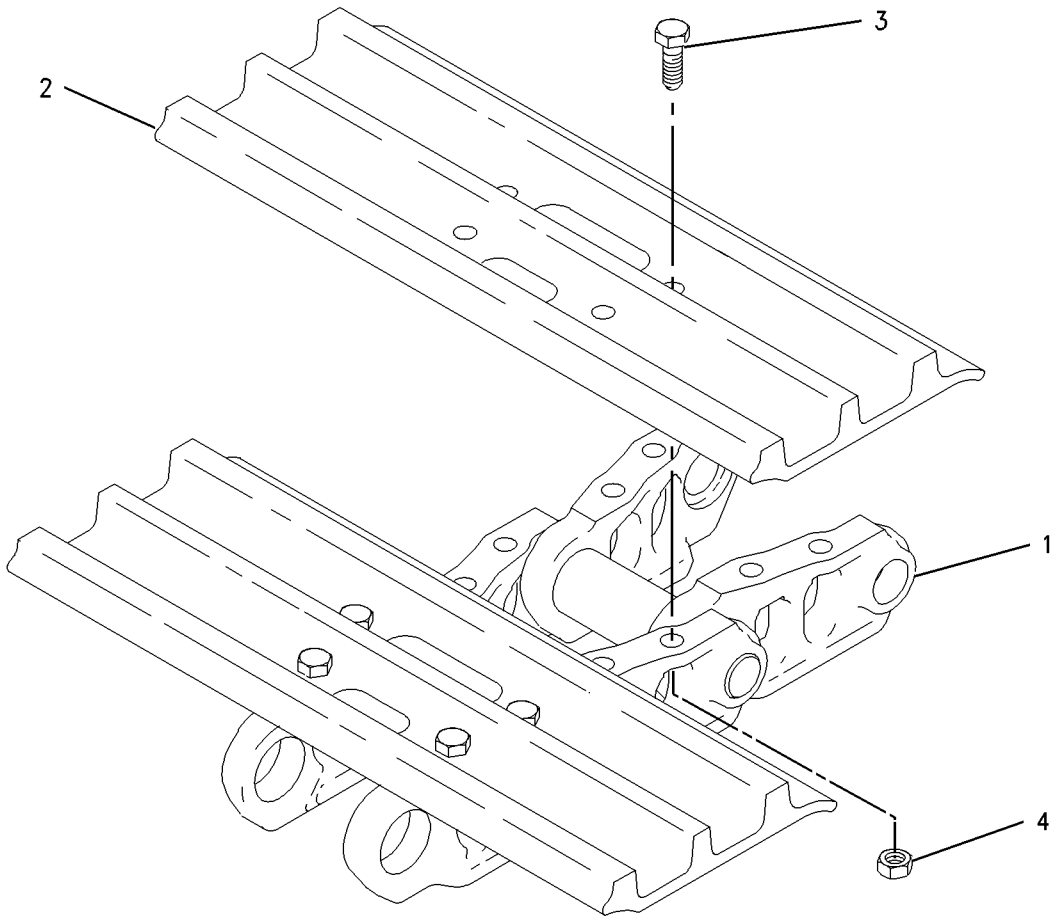

GRAPHIC #1 **<END>** g00729920

415-6805 TRACK GP–RH

S/N: F7B1-UP
900-MM (35.43-IN)TRIPLE GROUSER SHOE, GREASED LUBRICATED TRACK, HEAVY DUTY
PART OF 417-4869 TRACK AR
AN ATTACHMENT

SMCS-4170 **i04958673**

NOTE	REF NO	GRAPHIC REF	PART NUMBER	QTY	PART NAME 1 2 3 4 5 6 (PRODUCT LEVEL)	SEE PAGE
	1	1	**415-6807**	47	JOINT AS	
					(EACH INCLUDES)	
	1A	1	**6Y-2589**	1	LINK-TRACK (RH)	
	1B	1	**415-6809**	1	PIN-TRACK	
	1C	1	**415-6811**	1	BUSHING-TRACK	
	2	1	**415-6814**	47	SHOE-TRACK	
Y	3	1	**213-1975**	1	LINK AS-TRACK	236
M	4	1	**318-2558**	282	BOLT-TRACK (M22X1.5X73-MM)	
M	5	1	**9W-4381**	282	NUT-TRACK (M22X1.5-THD)	

M-METRIC PART
Y-SEPARATE ILLUSTRATION

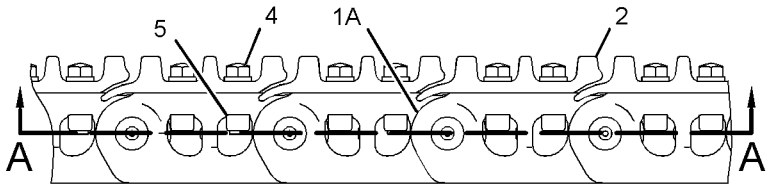

RIGHT SIDE VIEW

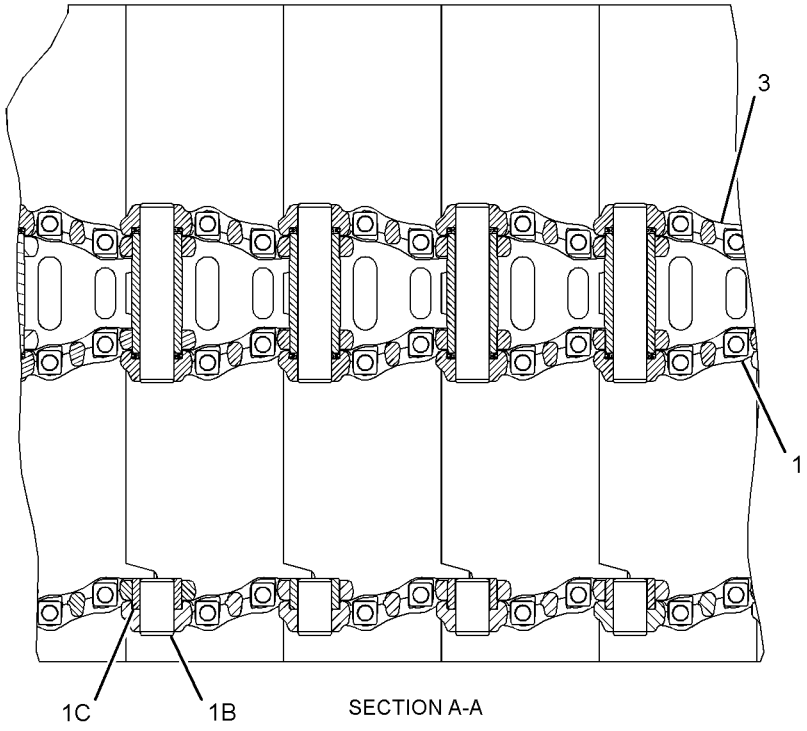

SECTION A-A

GRAPHIC #1 **<END>** g03207156

415-6806 TRACK GP–LH

S/N: F7B1-UP
900-MM(35.43-IN)TRIPLE GROUSER SHOE, GREASED LUBRICATED TRACK, HEAVY DUTY
PART OF 417-4869 TRACK AR
AN ATTACHMENT

SMCS-4170 **i04958674**

NOTE	REF NO	GRAPHIC REF	PART NUMBER	QTY	PART NAME 1 2 3 4 5 6 (PRODUCT LEVEL)	SEE PAGE
	1	1	**415-6808**	47	JOINT AS	
					(EACH INCLUDES)	
	1A	1	**6Y-2590**	1	LINK-TRACK (LH)	
	1B	1	**415-6809**	1	PIN-TRACK	
	1C	1	**415-6811**	1	BUSHING-TRACK	
Y	2	1	**213-1975**	1	LINK AS-TRACK	236
	3	1	**415-6813**	47	SHOE-TRACK	
M	4	1	**318-2558**	282	BOLT-TRACK (M22X1.5X73-MM)	
M	5	1	**9W-4381**	282	NUT-TRACK (M22X1.5-THD)	

M-METRIC PART
Y-SEPARATE ILLUSTRATION

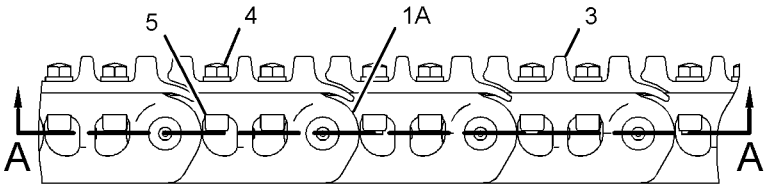

LEFT SIDE VIEW

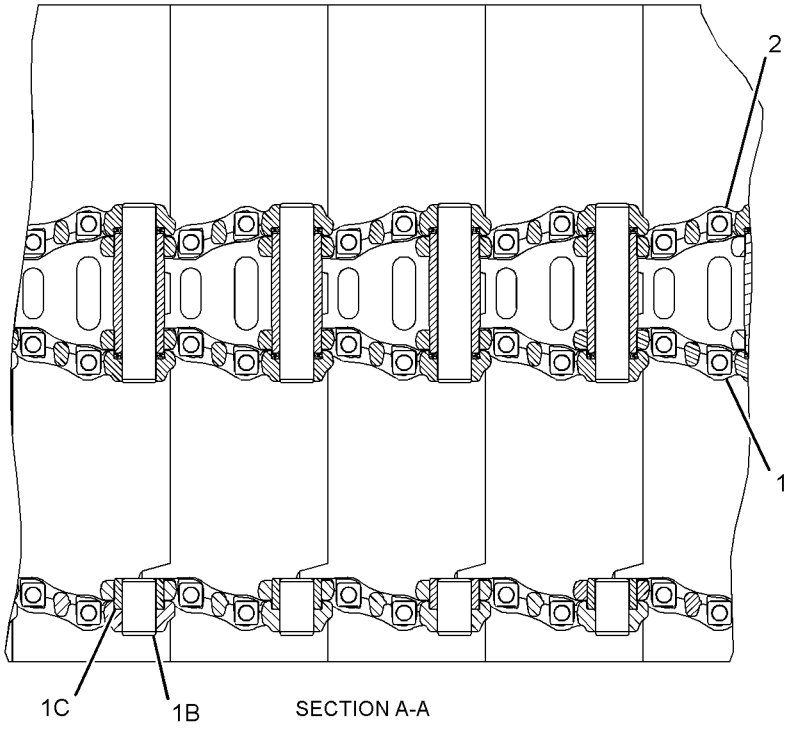

SECTION A-A

GRAPHIC #1 **<END>** g03207178

177-2617 BLOCK GP-HYDRAULIC

S/N: F7B1-UP

PART OF 188-4145 FILTER GP-OIL

SMCS-5264 **i04566297**

NOTE	REF NO	GRAPHIC REF	PART NUMBER	QTY	PART NAME 1 2 3 4 5 6 (PRODUCT LEVEL)	SEE PAGE
	1	1	**137-3628**	1	SHIM (0.1-MM THK)	
	2	1	**177-2619**	2	PACKING	
	3	1	**179-9618**	1	PLATE-SLIDE	
	4	1	**5L-4758**	1	SEAL-O-RING	
M	5	1	**137-3626**	1	BOLT-SPECIAL	

M-METRIC PART

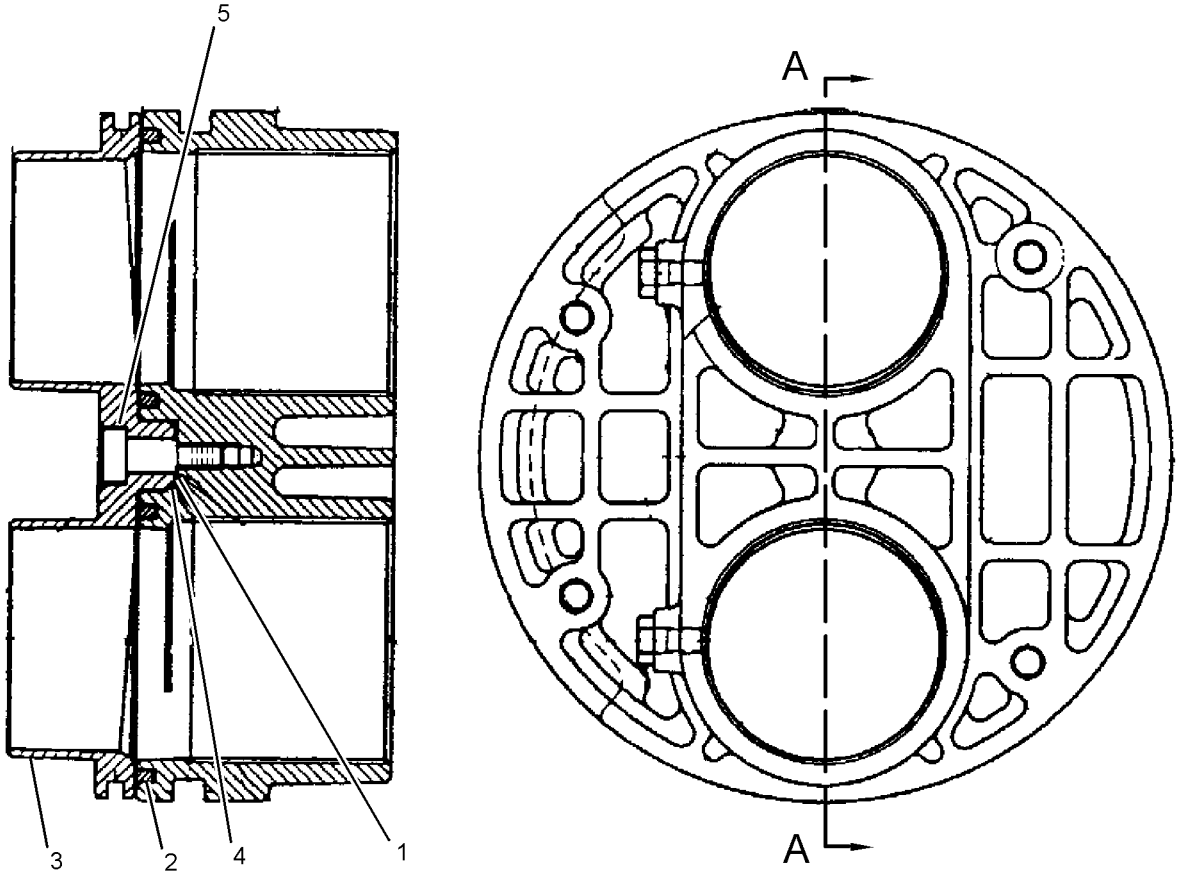

SECTION A-A

GRAPHIC #1 **<END>** g01434831

378-8875 CAP GP-PROTECTION—FRONT

S/N: F7B1-UP

FOR USE WITH 373-6573—PAGE 300. CANNOT BE USED WITH 376-8000—PAGE 424, 379-5860—PAGE 425, 379-5870—PAGE 423

AN ATTACHMENT

SMCS-0663 **i05111451**

NOTE	REF NO	GRAPHIC REF	PART NUMBER	QTY	PART NAME 1 2 3 4 5 6 (PRODUCT LEVEL)	SEE PAGE
	1	1	**6V-9832**	11	CAP AS	
	2	1	**6V-9833**	2	CAP AS	
	3	1	**6V-9834**	1	CAP AS	

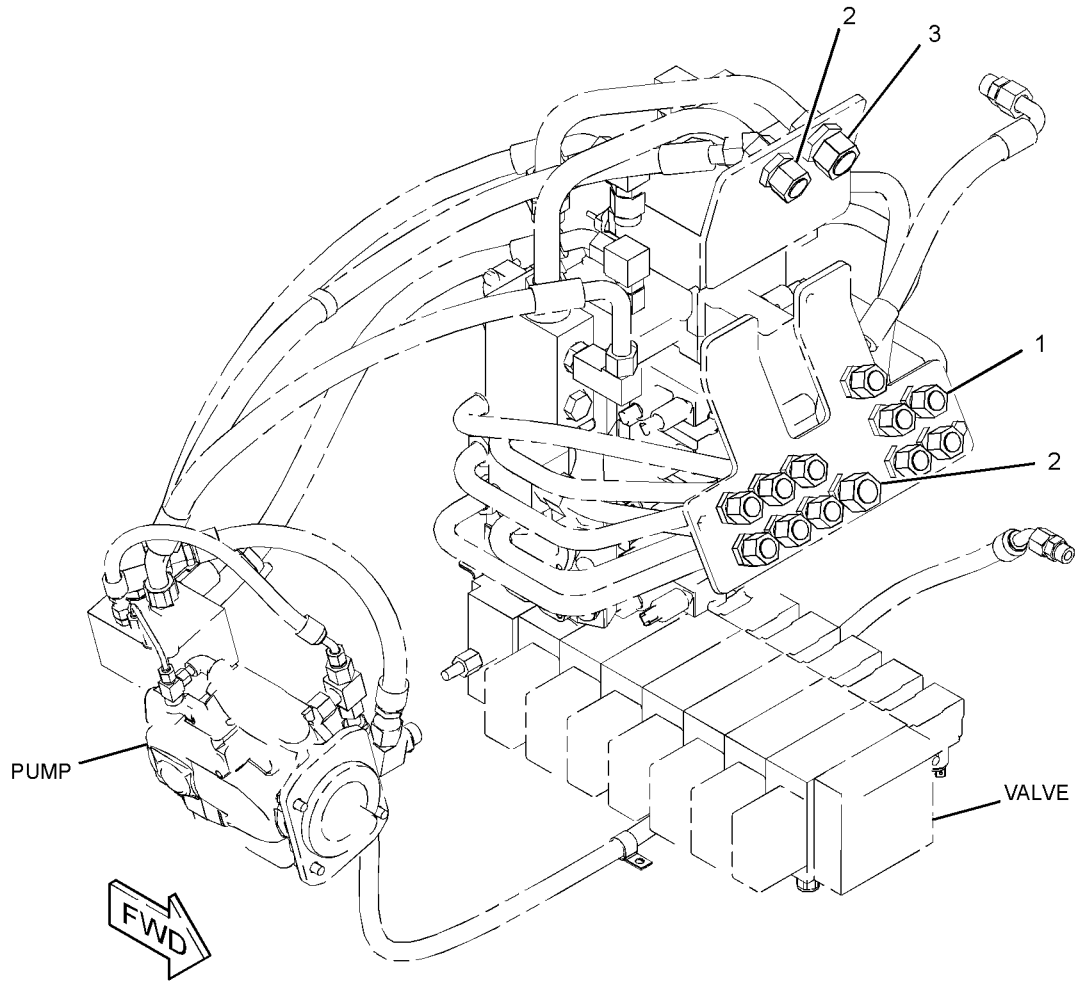

GRAPHIC #1 **<END>** g02737218

154-6643 COUPLING & MTG GP-PUMP

S/N: F7B1-UP

PART OF 367-2135 INSTALLATION AR-ENGINE

SMCS-3252, 5062 **i02308535**

NOTE	REF NO	GRAPHIC REF	PART NUMBER	QTY	PART NAME 1 2 3 4 5 6 (PRODUCT LEVEL)	SEE PAGE
	1	1	**154-5558**	1	FLANGE	
C	2	1	**3B-1915**	8	BOLT (3/8-16X1.375-IN)	
	3	1	**154-5559**	1	HUB	

C-CHANGE FROM PREVIOUS TYPE

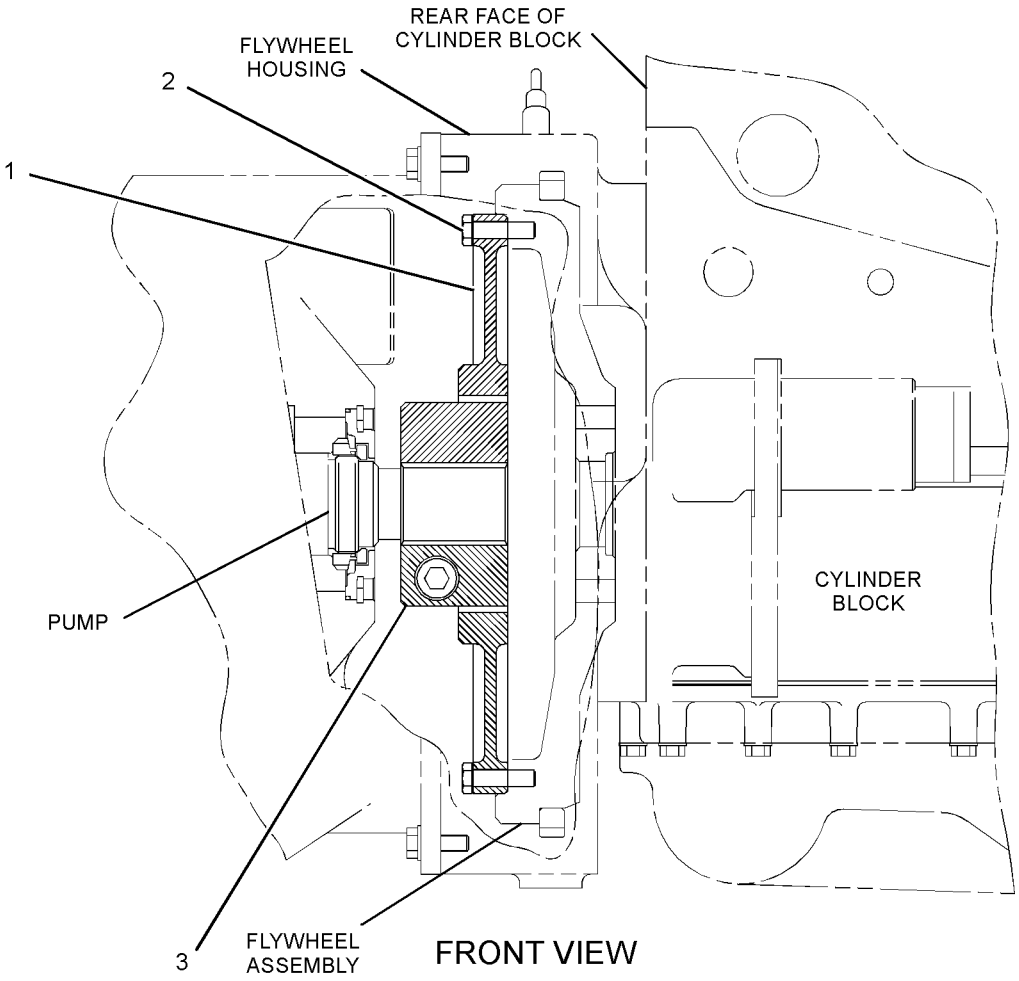

GRAPHIC #1 **<END>** g01156374

HYDRAULIC SYSTEM

227-2141 COVER GP-CONTROL VALVE

S/N: F7B1-UP
PART OF 373-7704 VALVE GP-CONTROL, 361-5307, 373-7694, 373-7702, 373-7703 VALVE GP-MAIN CONTROL AN ATTACHMENT

SMCS-5051 **i03539531**

NOTE	REF NO	GRAPHIC REF	PART NUMBER	QTY	PART NAME 1 2 3 4 5 6 (PRODUCT LEVEL)	SEE PAGE
	1	1	**227-2151**	1	KIT-CONTROL VALVE (MOUNTING BRACKETS)	
	2	1	**227-2150**	1	KIT-CONTROL VALVE (SEAL)	
					(INCLUDES RINGS & WASHERS)	

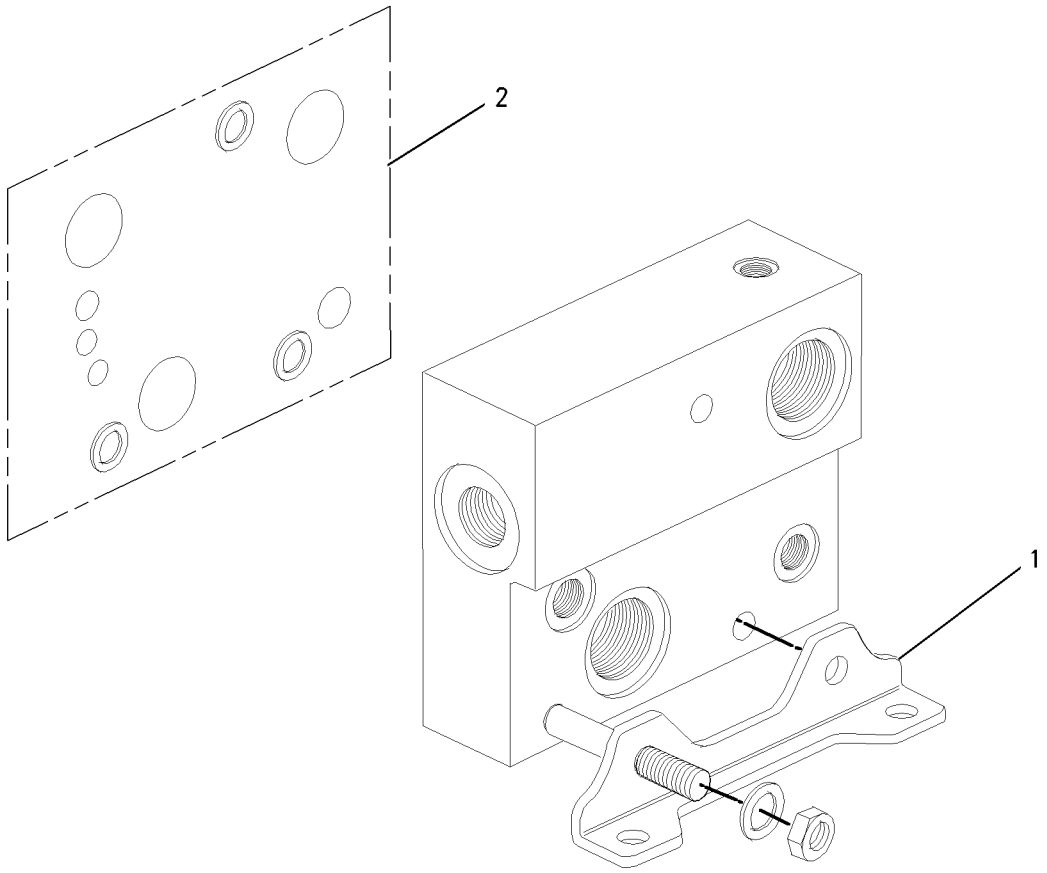

GRAPHIC #1 **<END>** g00985162

HYDRAULIC SYSTEM

177-2521 COVER GP-PUMP

S/N: F7B1-UP

PART OF 308-4488 HEAD GP-PUMP

SMCS-5070 **i03539520**

NOTE	REF NO	GRAPHIC REF	PART NUMBER	QTY	PART NAME 1 2 3 4 5 6 (PRODUCT LEVEL)	SEE PAGE
M	1	1	**9X-2403**	1	SETSCREW-HEX SOCKET (M12X1.75X50-MM)	
M	2	1	**6E-3283**	1	LOCKNUT (M12X1.75-THD)	
	3	1	**177-2530**	1	COVER	
	4	1	**4J-5573**	1	SEAL-O-RING	
M	5	1	**8T-2503**	4	BOLT-SOCKET HEAD (M14X2X35-MM)	
	6	1	**123-7562**	1	SEAL-O-RING	
	7	1	**9T-3929**	1	PLUG AS	

M-METRIC PART

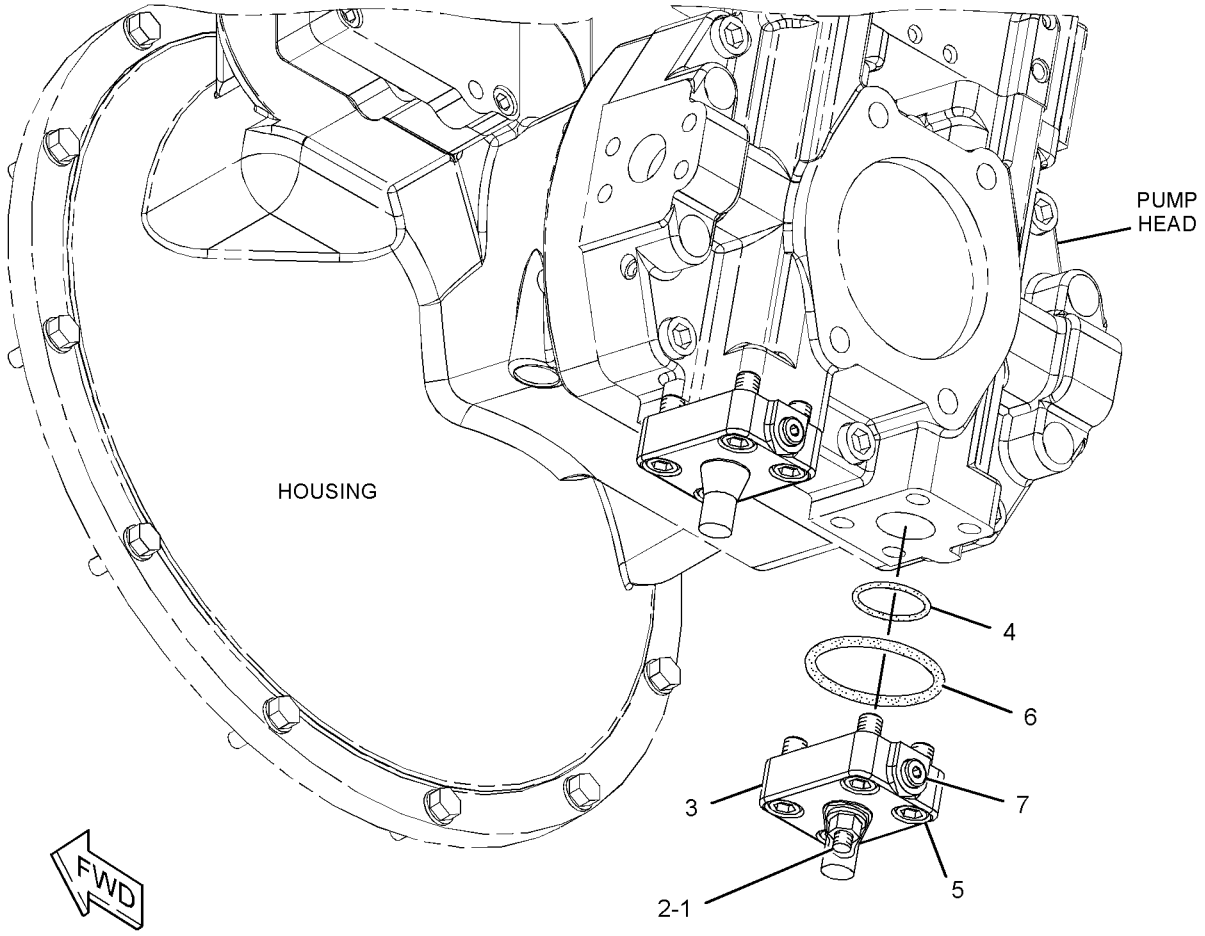

GRAPHIC #1 **<END>** g01434228

HYDRAULIC SYSTEM

327-8141 CYLINDER & MTG GP-BOOM

S/N: F7B1-UP

PART OF 380-0879 CYLINDER & MTG GP-BOOM

AN ATTACHMENT

SMCS-5456 **i03430329**

NOTE	REF NO	GRAPHIC REF	PART NUMBER	QTY	PART NAME 1 2 3 4 5 6 (PRODUCT LEVEL)	SEE PAGE
	1	1	**6I-6721**	2	ELBOW	
	2	1	**124-0910**	1	SUPPORT AS	
	3	1	**124-0911**	1	SUPPORT AS	
I	4	1	**241-3512**	1	HOSE AS	
	5	1	**241-3513**	1	PLATE	
Y	6	1	**322-3568**	1	CYLINDER GP-BOOM	267
	7	1	*164-5577*	1	ELBOW AS	
		1	**5K-9090**	2	SEAL-O-RING	
		1	**6V-8984**	1	ELBOW	
	8	1	**1P-3704**	2	SEAL-RECTANGULAR	
	9	1	**5K-9090**	2	SEAL-O-RING	
	10	1	**5P-7468**	1	CLIP (SLOT)	
	11	1	**5P-7469**	1	CLIP (TAB)	
	12	1	**5P-8444**	1	GROMMET	
	13	1	**6V-9172**	1	NUT (1-7/16-12-THD)	
	14	1	**8T-4121**	4	WASHER-HARD (11X21X2.5-MM THK)	
M	15	1	**8T-4139**	1	BOLT (M12X1.75X30-MM)	
M	16	1	**8T-4192**	1	BOLT (M12X1.75X25-MM)	
M	17	1	**8T-4196**	4	BOLT (M10X1.5X35-MM)	
	18	1	**8T-4223**	10	WASHER-HARD (13.5X25.5X3-MM THK)	
M	19	1	**8T-4648**	8	BOLT (M12X1.75X70-MM)	

I-REFER TO HYDRAULIC INFORMATION SYSTEM
M-METRIC PART
Y-SEPARATE ILLUSTRATION

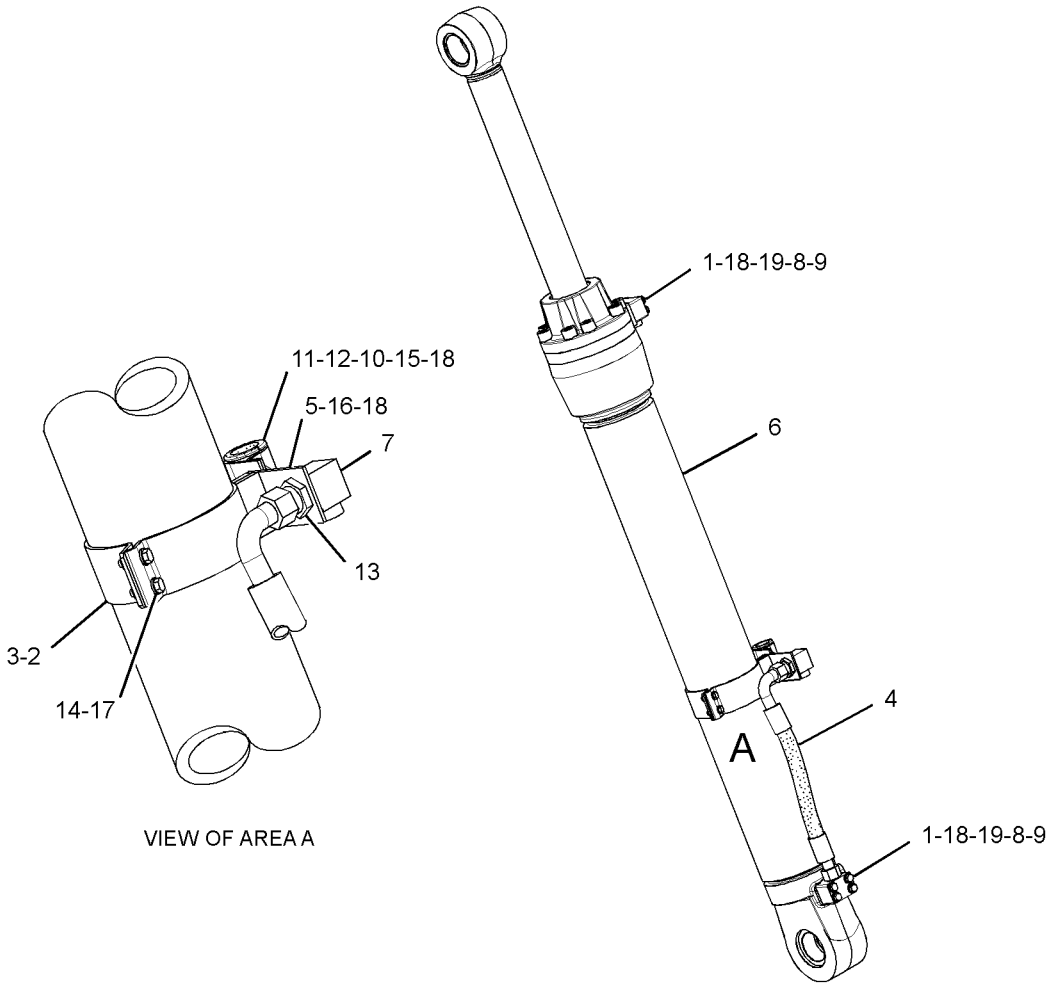

GRAPHIC #1 **<END>** g01801994

HYDRAULIC SYSTEM

376-7988 CYLINDER & MTG GP-BOOM

S/N: F7B1-UP

PART OF 376-7991 CYLINDER AR-HYDRAULIC

AN ATTACHMENT

SMCS-5456 **i04491018**

NOTE	REF NO	GRAPHIC REF	PART NUMBER	QTY	PART NAME 1 2 3 4 5 6 (PRODUCT LEVEL)	SEE PAGE
	1	1	**6I-6721**	2	ELBOW	
	2	1	**119-2324**	1	SUPPORT AS	
I	3	1	**241-3512**	1	HOSE AS	
	4	1	**241-3513**	1	PLATE	
	5	1	**119-2325**	1	SUPPORT AS	
M		1	**8T-3490**	2	NUT-WELD (M10X1.5-THD)	
Y	6	1	**289-7868**	1	CYLINDER GP-HYDRAULIC (BOOM)	272
	7	1	*164-5577*	1	ELBOW AS	
		1	**6V-8984**	1	ELBOW	
		1	**5K-9090**	2	SEAL-O-RING	
	8	1	**1P-3704**	2	SEAL-RECTANGULAR	
	9	1	**5K-9090**	2	SEAL-O-RING	
	10	1	**5P-7468**	1	CLIP (SLOT)	
	11	1	**5P-7469**	1	CLIP (TAB)	
	12	1	**5P-8444**	1	GROMMET	
	13	1	**6V-9172**	1	NUT (1-7/16-12-THD)	
	14	1	**8T-4121**	4	WASHER-HARD (11X21X2.5-MM THK)	
M	15	1	**8T-4139**	1	BOLT (M12X1.75X30-MM)	
M	16	1	**8T-4192**	1	BOLT (M12X1.75X25-MM)	
M	17	1	**8T-4196**	4	BOLT (M10X1.5X35-MM)	
	18	1	**8T-4223**	10	WASHER-HARD (13.5X25.5X3-MM THK)	
M	19	1	**8T-4648**	8	BOLT (M12X1.75X70-MM)	

I-REFER TO HYDRAULIC INFORMATION SYSTEM
M-METRIC PART
Y-SEPARATE ILLUSTRATION

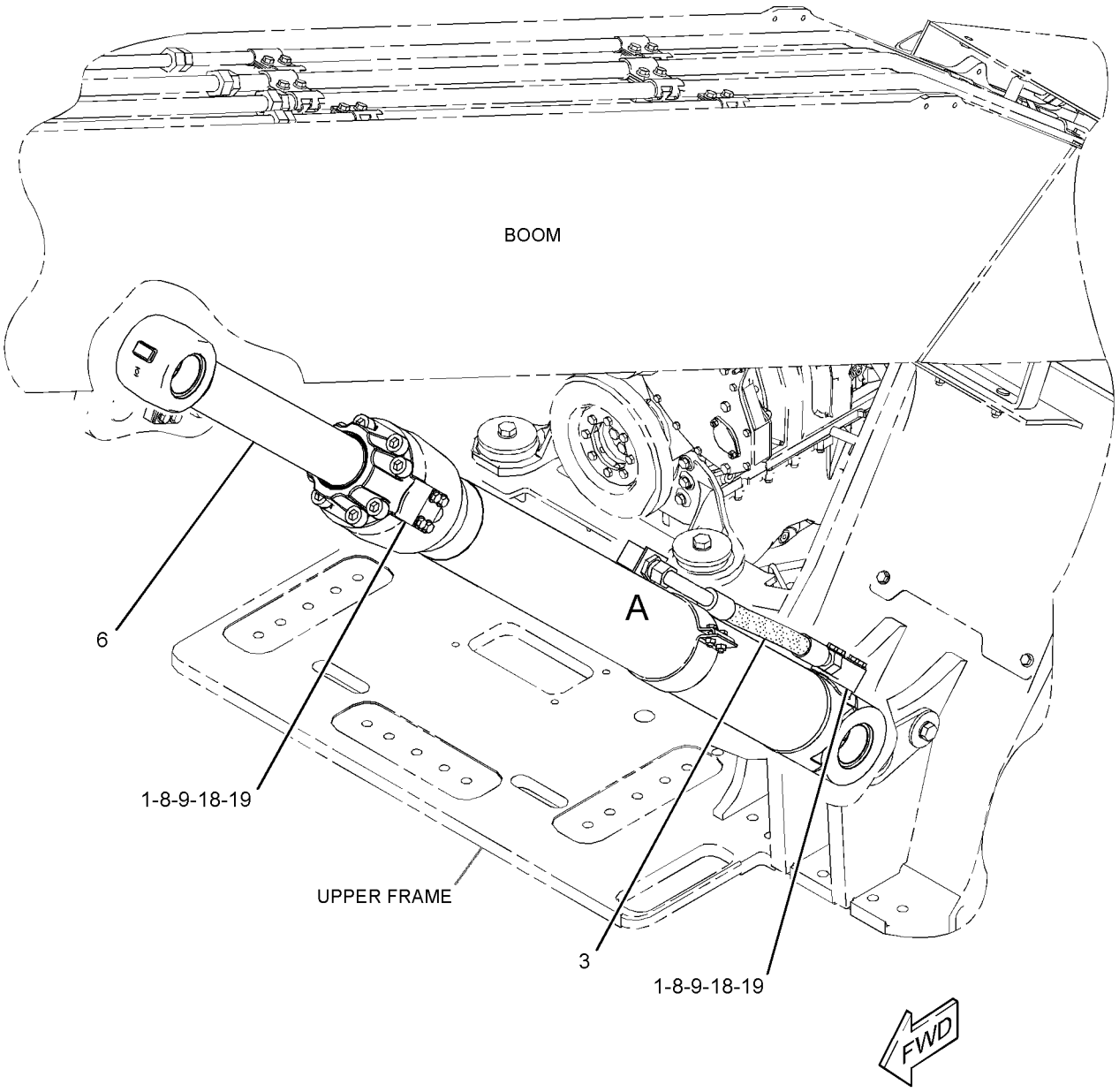

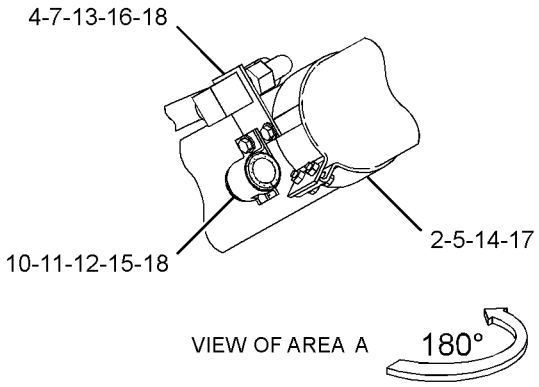

GRAPHIC #1 **<END>** g02737156

HYDRAULIC SYSTEM

380-0879 CYLINDER & MTG GP-BOOM

S/N: F7B1-UP

PART OF 379-5858 CYLINDER AR-HYDRAULIC

AN ATTACHMENT

SMCS-5456 **i04461416**

NOTE	REF NO	GRAPHIC REF	PART NUMBER	QTY	PART NAME 1 2 3 4 5 6 (PRODUCT LEVEL)	SEE PAGE
	1	1	**6I-6721**	2	ELBOW	
	2	1	**124-0910**	1	SUPPORT AS	
	3	1	**124-0911**	1	SUPPORT AS	
I	4	1	**241-3512**	1	HOSE AS	
	5	1	**241-3513**	1	PLATE	
Y	6	1	**327-8141**	1	CYLINDER & MTG GP-BOOM	254
	7	1	*164-5577*	1	ELBOW AS	
		1	**6V-8984**	1	ELBOW	
		1	**5K-9090**	2	SEAL-O-RING	
	8	1	**1P-3704**	2	SEAL-RECTANGULAR	
	9	1	**5K-9090**	2	SEAL-O-RING	
	10	1	**5P-7468**	1	CLIP (SLOT)	
	11	1	**5P-7469**	1	CLIP (TAB)	
	12	1	**5P-8444**	1	GROMMET	
	13	1	**6V-9172**	1	NUT (1-7/16-12-THD)	
	14	1	**8T-4121**	4	WASHER-HARD (11X21X2.5-MM THK)	
M	15	1	**8T-4139**	1	BOLT (M12X1.75X30-MM)	
M	16	1	**8T-4192**	1	BOLT (M12X1.75X25-MM)	
M	17	1	**8T-4196**	4	BOLT (M10X1.5X35-MM)	
	18	1	**8T-4223**	10	WASHER-HARD (13.5X25.5X3-MM THK)	
M	19	1	**8T-4648**	8	BOLT (M12X1.75X70-MM)	

I-REFER TO HYDRAULIC INFORMATION SYSTEM
M-METRIC PART
Y-SEPARATE ILLUSTRATION

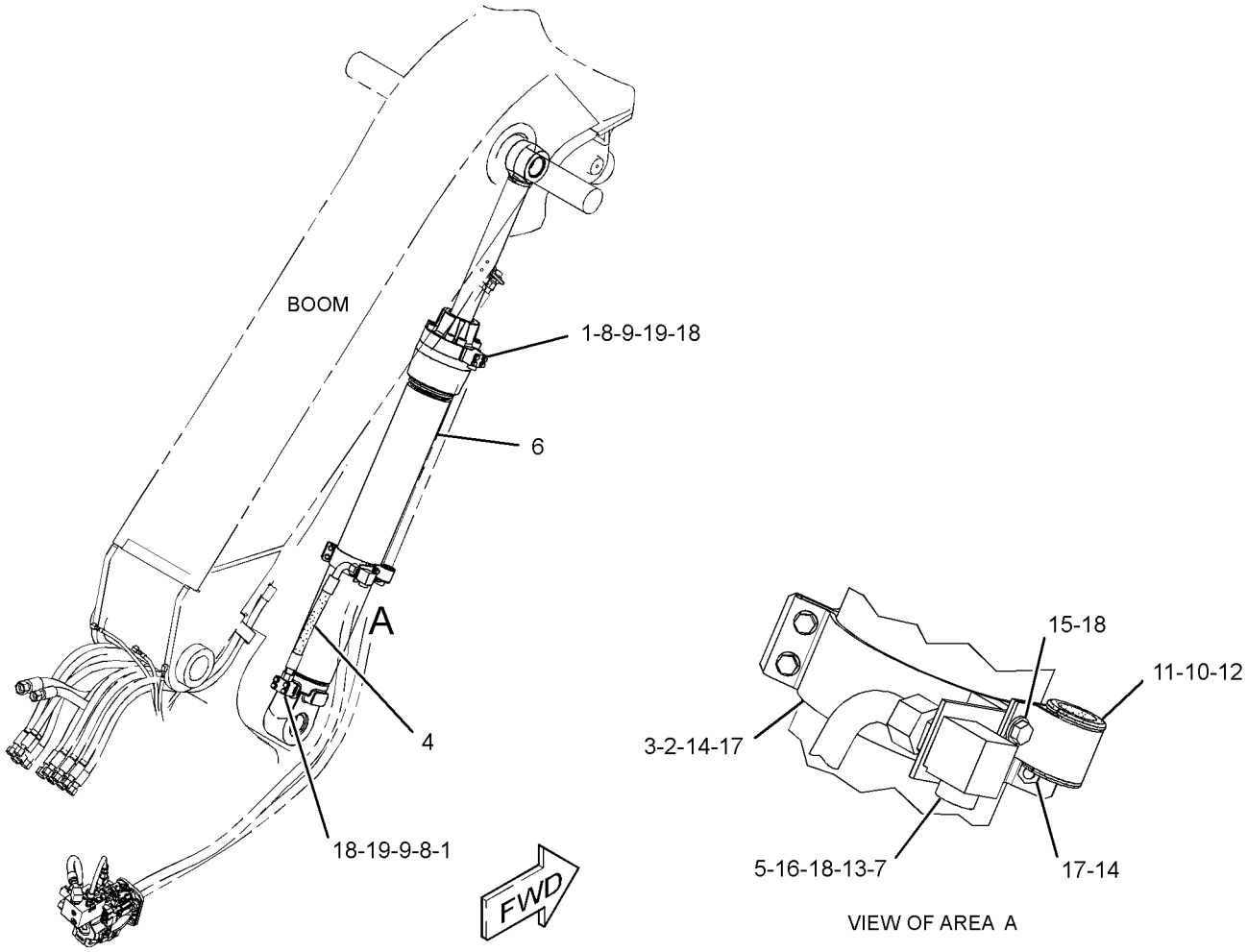

GRAPHIC #1 **<END>** g02734477

HYDRAULIC SYSTEM

381-8651 CYLINDER & MTG GP-SAW

S/N: F7B1-UP

PART OF 379-5858 CYLINDER AR-HYDRAULIC

AN ATTACHMENT

SMCS-5558 **i04461420**

NOTE	REF NO	GRAPHIC REF	PART NUMBER	QTY	PART NAME 1 2 3 4 5 6 (PRODUCT LEVEL)	SEE PAGE
	1	1	**178-5922**	2	ELBOW	
Y	2	1	**274-7480**	1	CYLINDER GP-TILT (SAW)	276
	3	1	**1P-3703**	2	SEAL-RECTANGULAR	
	4	1	**6V-9746**	2	SEAL-O-RING	
	5	1	**8T-4121**	8	WASHER-HARD (11X21X2.5-MM THK)	
M	6	1	**8T-6466**	8	BOLT (M10X1.5X60-MM)	

M-METRIC PART
Y-SEPARATE ILLUSTRATION

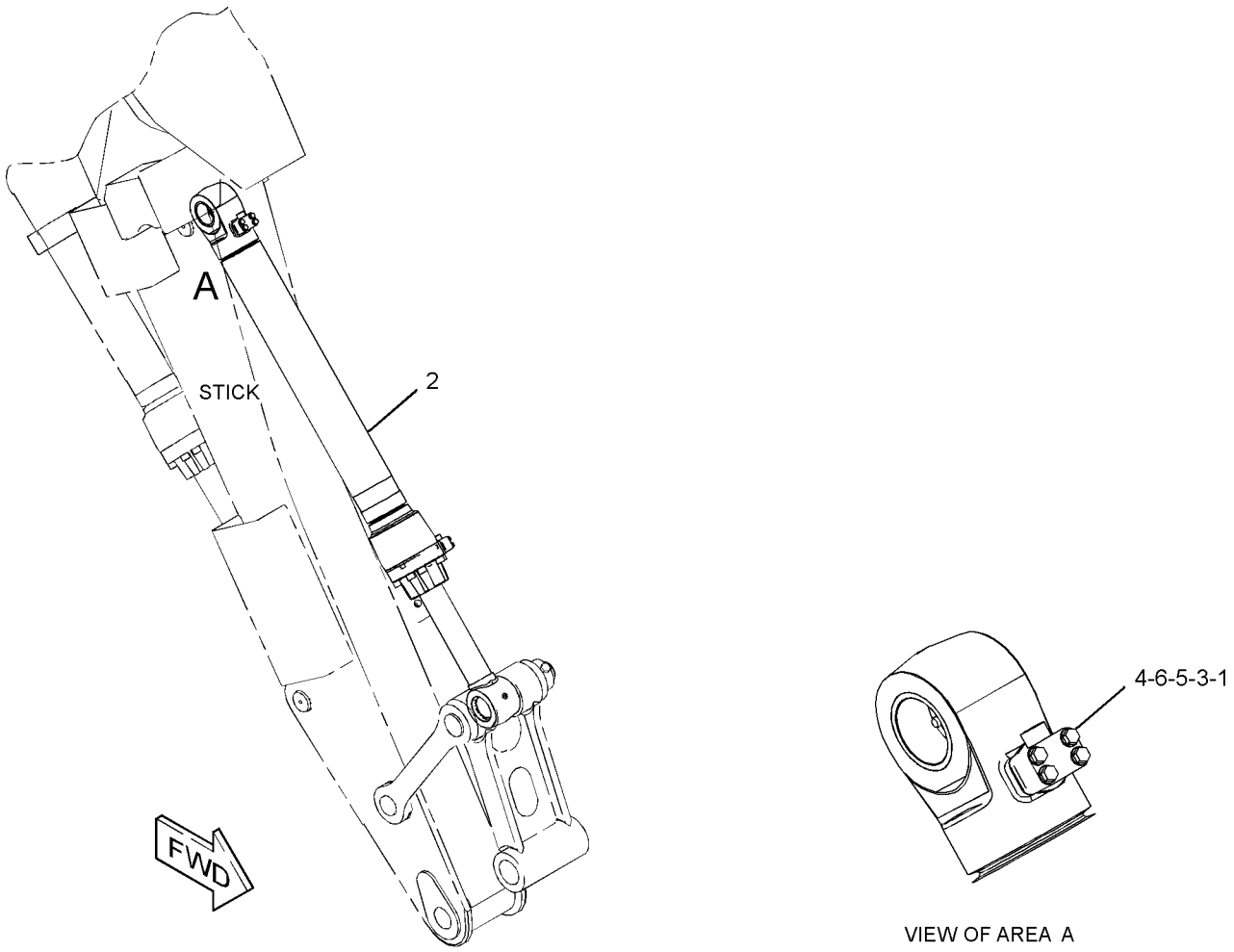

GRAPHIC #1 **<END>** g02735344

376-7989 CYLINDER & MTG GP-STICK

S/N: F7B1-UP

PART OF 376-7991 CYLINDER AR-HYDRAULIC

AN ATTACHMENT

SMCS-5458 **i04491016**

NOTE	REF NO	GRAPHIC REF	PART NUMBER	QTY	PART NAME 1 2 3 4 5 6 (PRODUCT LEVEL)	SEE PAGE
	1	1	**178-5922**	2	ELBOW	
Y	2	1	**215-9097**	1	CYLINDER GP-HYDRAULIC (STICK)	270
	3	1	**220-8661**	1	PLATE	
	4	1	**119-2381**	1	SUPPORT AS	
	5	1	**119-2382**	1	SUPPORT AS	
I	6	1	**233-2356**	1	HOSE AS	
	7	1	*148-8376*	1	ELBOW AS	
		1	**6V-8983**	1	ELBOW	
		1	**6V-9746**	1	SEAL-O-RING	
	8	1	**1P-3703**	2	SEAL-RECTANGULAR	
	9	1	**2P-1293**	1	LOCKNUT (1-3/16-12-THD)	
	10	1	**5P-7468**	1	CLIP (SLOT)	
	11	1	**5P-7469**	1	CLIP (TAB)	
	12	1	**6V-1874**	1	GROMMET	
	13	1	**6V-9746**	2	SEAL-O-RING	
	14	1	**8T-4121**	12	WASHER-HARD (11X21X2.5-MM THK)	
M	15	1	**8T-4139**	1	BOLT (M12X1.75X30-MM)	
M	16	1	**8T-4192**	1	BOLT (M12X1.75X25-MM)	
M	17	1	**8T-4196**	4	BOLT (M10X1.5X35-MM)	
	18	1	**8T-4223**	2	WASHER-HARD (13.5X25.5X3-MM THK)	
M	19	1	**8T-6466**	8	BOLT (M10X1.5X60-MM)	

I-REFER TO HYDRAULIC INFORMATION SYSTEM
M-METRIC PART
Y-SEPARATE ILLUSTRATION

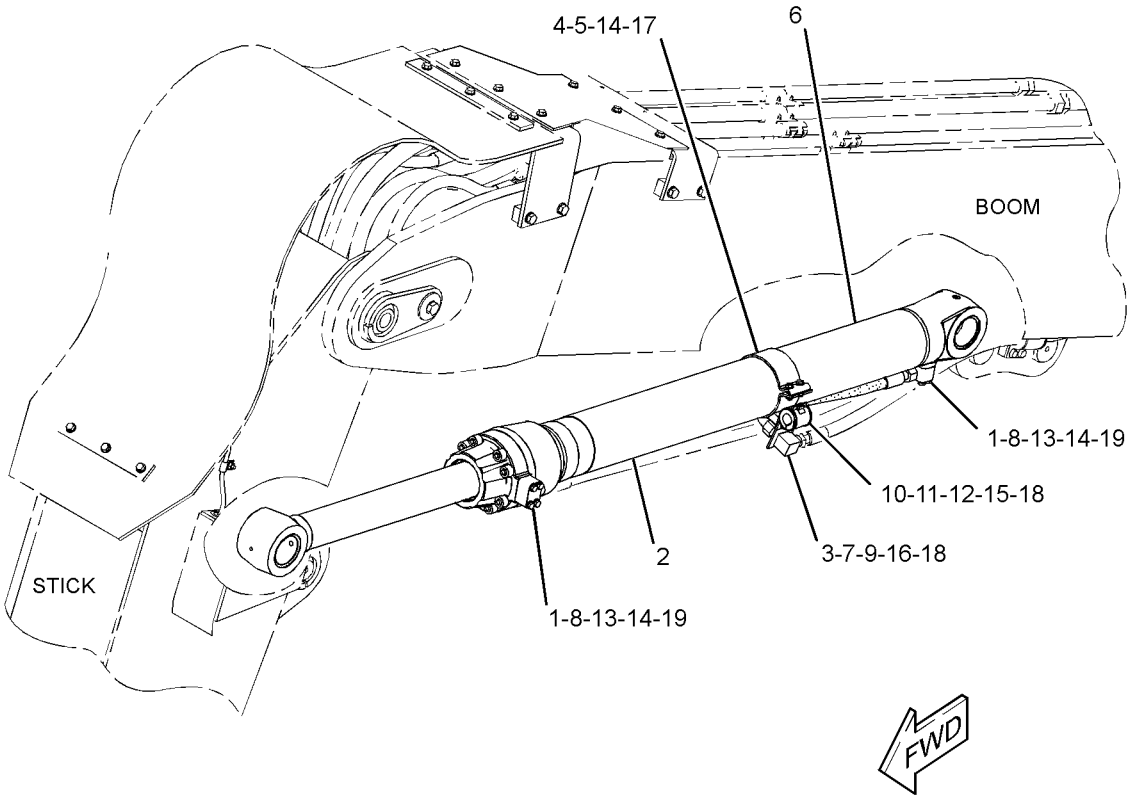

GRAPHIC #1 **<END>** g02737599

HYDRAULIC SYSTEM

379-5865 CYLINDER & MTG GP-STICK

S/N: F7B1-UP

PART OF 379-5858 CYLINDER AR-HYDRAULIC

AN ATTACHMENT

SMCS-5458 **i05103951**

NOTE	REF NO	GRAPHIC REF	PART NUMBER	QTY	PART NAME 1 2 3 4 5 6 (PRODUCT LEVEL)	SEE PAGE
	1	1	**178-5922**	2	ELBOW	
Y	2	1	**215-9092**	1	CYLINDER GP-STICK	274
	3	1	**220-8661**	1	PLATE	
	4	1	**119-2381**	1	SUPPORT AS	
	5	1	**119-2382**	1	SUPPORT AS	
I	6	1	**233-2356**	1	HOSE AS	
	7	1	*148-8376*	1	ELBOW AS	
		1	**6V-8983**	1	ELBOW	
		1	**6V-9746**	1	SEAL-O-RING	
	8	1	**1P-3703**	2	SEAL-RECTANGULAR	
	9	1	**2P-1293**	1	LOCKNUT (1-3/16-12-THD)	
	10	1	**5P-7468**	1	CLIP (SLOT)	
	11	1	**5P-7469**	1	CLIP (TAB)	
	12	1	**6V-1874**	1	GROMMET	
	13	1	**6V-9746**	2	SEAL-O-RING	
	14	1	**8T-4121**	12	WASHER-HARD (11X21X2.5-MM THK)	
M	15	1	**8T-4139**	1	BOLT (M12X1.75X30-MM)	
M	16	1	**8T-4192**	1	BOLT (M12X1.75X25-MM)	
M	17	1	**8T-4196**	4	BOLT (M10X1.5X35-MM)	
	18	1	**8T-4223**	2	WASHER-HARD (13.5X25.5X3-MM THK)	
M	19	1	**8T-6466**	8	BOLT (M10X1.5X60-MM)	

I-REFER TO HYDRAULIC INFORMATION SYSTEM
M-METRIC PART
Y-SEPARATE ILLUSTRATION

379-5865 **CYLINDER & MTG GP-STICK** *(contd.)* **i05103951**

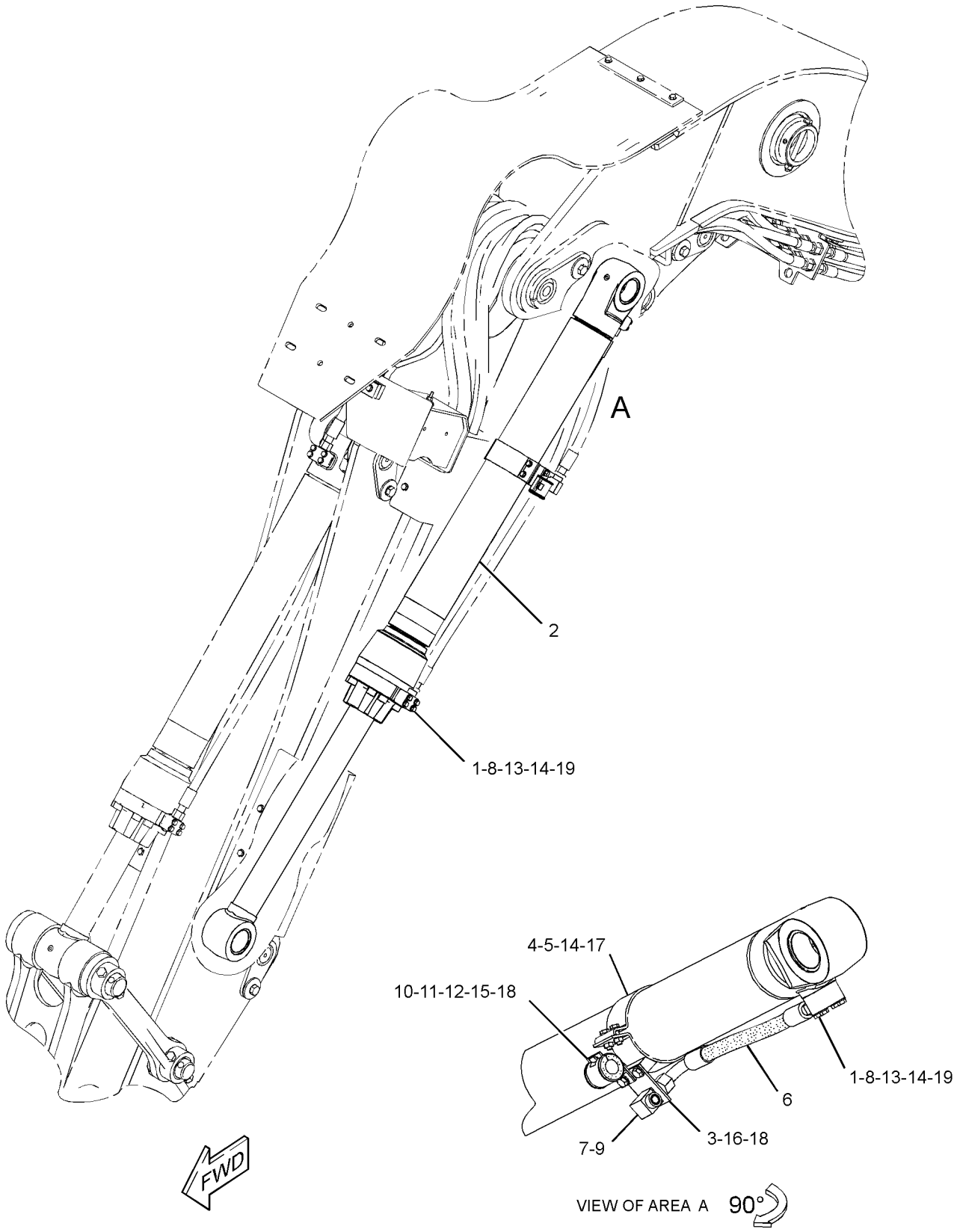

GRAPHIC #1 **<END>** g02738416

376-7991 CYLINDER AR-HYDRAULIC

S/N: F7B1-UP

PART OF 376-8000 LINKAGE AR-HARVESTER HEAD

AN ATTACHMENT

SMCS-5104, 5456, 5458 **i04491014**

NOTE	REF NO	GRAPHIC REF	PART NUMBER	QTY	PART NAME 1 2 3 4 5 6 (PRODUCT LEVEL)	SEE PAGE
Y	1	1	*376-7988*	1	CYLINDER & MTG GP-BOOM	256
Y	2	1	*376-7989*	1	CYLINDER & MTG GP-STICK	261

Y-SEPARATE ILLUSTRATION

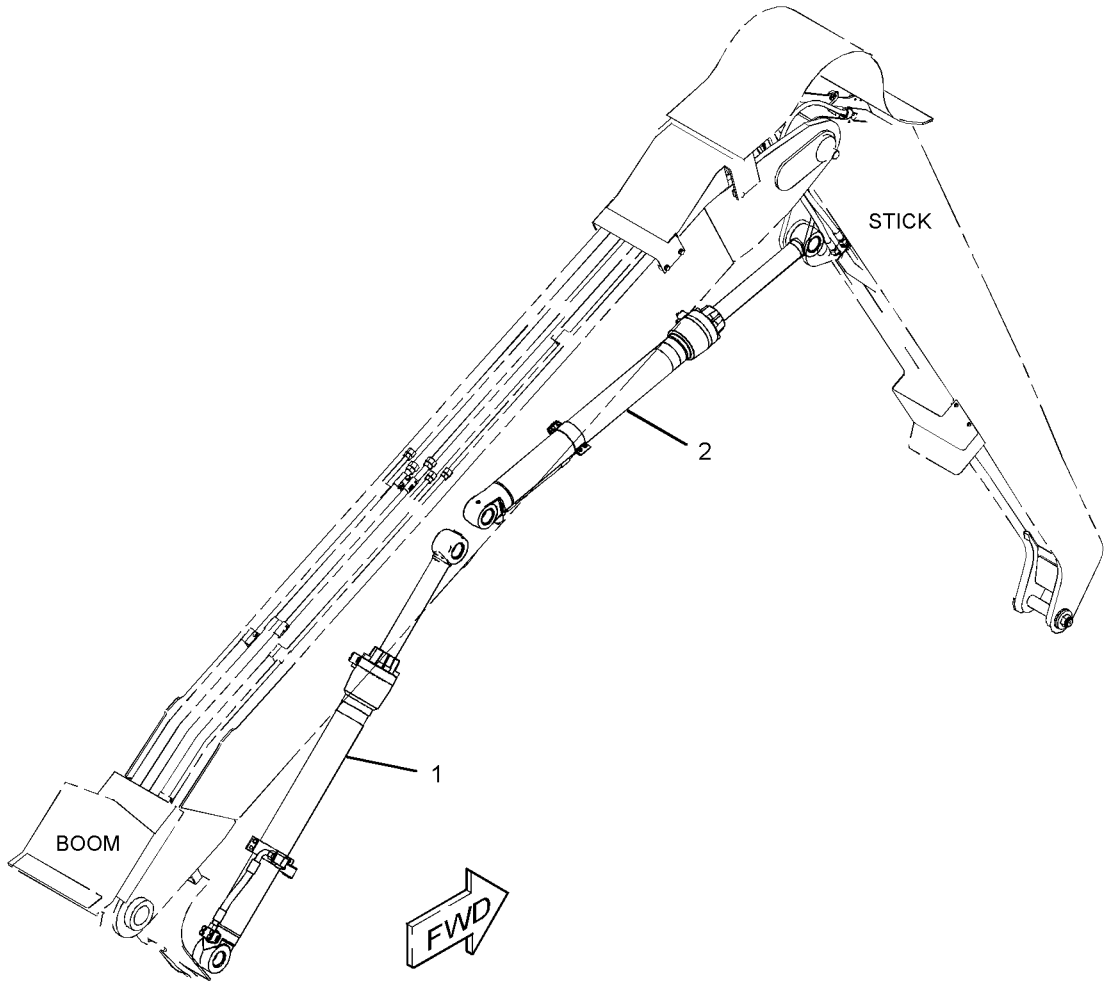

GRAPHIC #1 **<END>** g02735458

379-5858 CYLINDER AR-HYDRAULIC

S/N: F7B1-UP

PART OF 379-5870 LINKAGE AR-FELLING HEAD, 379-5860 LINKAGE AR-INTERMITTENT SAW

AN ATTACHMENT

SMCS-5104, 5456, 5458 **i04461356**

NOTE	REF NO	GRAPHIC REF	PART NUMBER	QTY	PART NAME 1 2 3 4 5 6 (PRODUCT LEVEL)	SEE PAGE
Y	1	1	*379-5865*	1	CYLINDER & MTG GP-STICK	263
Y	2	1	*380-0879*	1	CYLINDER & MTG GP-BOOM	258
Y	3	1	*381-8651*	1	CYLINDER & MTG GP-SAW	260
	4	1	**6C-6053**	2	SHIM	

Y-SEPARATE ILLUSTRATION

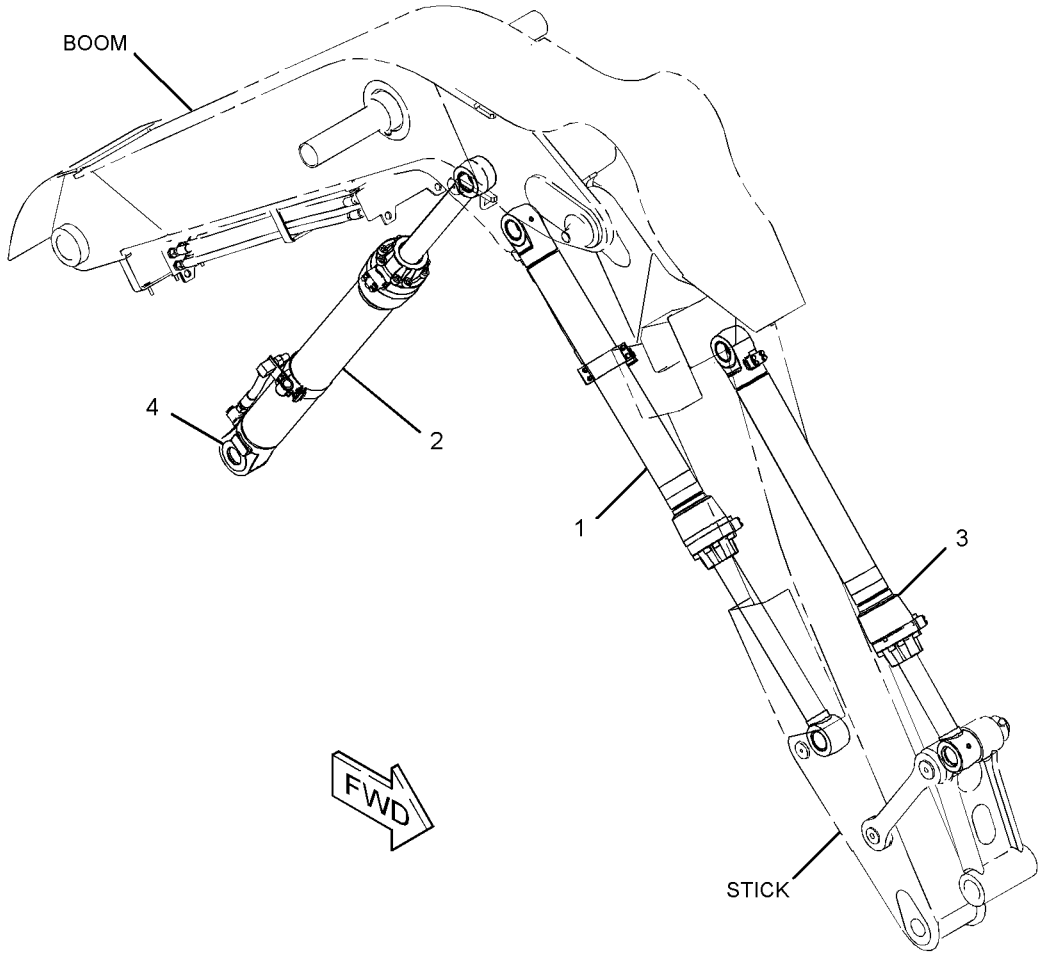

GRAPHIC #1 **<END>** g02721208

322-3568 CYLINDER GP-BOOM

S/N: F7B1-UP
160-MM (6.3-IN) BORE X 1331-MM (52.4-IN) STROKE
PART OF 327-8141 CYLINDER & MTG GP-BOOM
AN ATTACHMENT

SMCS-5456 **i03430335**

NOTE	REF NO	GRAPHIC REF	PART NUMBER	QTY	PART NAME 1 2 3 4 5 6 (PRODUCT LEVEL)	SEE PAGE
	1	1	**6C-6088**	1	HEAD	
	2	1	**7Y-4622**	1	LOCKNUT (SPECIAL)	
	3	1	**7Y-4631**	1	RING-RETAINING	
	4	1	**087-5005**	1	STOP	
	5	1	**103-8379**	1	RING	
	6	1	**103-8380**	1	STOP	
J	7	1	**165-9288**	1	SEAL-LIP TYPE	
	8	1	**185-0592**	1	PISTON	
	9	1	**322-3567**	1	CYLINDER AS-HYDRAULIC	
	9A	1	**312-4344**	1	BEARING-SLEEVE	
	10	1	**324-0789**	1	ROD AS	
	10A	1	**7Y-5128**	1	BEARING-SLEEVE	
J	11	1	**087-5550**	1	RING-BACKUP	
J	12	1	**095-0929**	2	RING-RETAINING	
J	13	1	**095-1635**	1	SEAL-O-RING	
	14	1	**103-8378**	1	RING-RETAINING	
J	15	1	**170-9846**	1	SEAL-BUFFER	
J	16	1	**185-0230**	2	RING	
J	17	1	**185-0231**	1	RING	
J	18	1	**216-0004**	1	SEAL-U-CUP	
	19	1	**6C-6093**	1	BEARING-SLEEVE	
J	20	1	**6I-6784**	1	RING-SEAL	
J	21	1	**7Y-4628**	1	RING (BACKUP)	
M	22	1	**7Y-5239**	8	BOLT-SOCKET HEAD (M24X3X100-MM)	
J	23	1	**9X-3604**	1	SEAL AS	
					AVAILABLE REPAIR KIT(S):	
J			**252-1191**	1	KIT-SEAL	
					(INCLUDES RING-SEALS, RING BACK-UP, SEAL AS, RING RETAINING, SEAL-O-RING,SEAL-BUFFER, RINGS & SEAL-U-CUPS)	

J-KIT MARKED J SERVICES PARTS MARKED J
M-METRIC PART

322-3568 CYLINDER GP-BOOM *(contd.)* **i03430335**

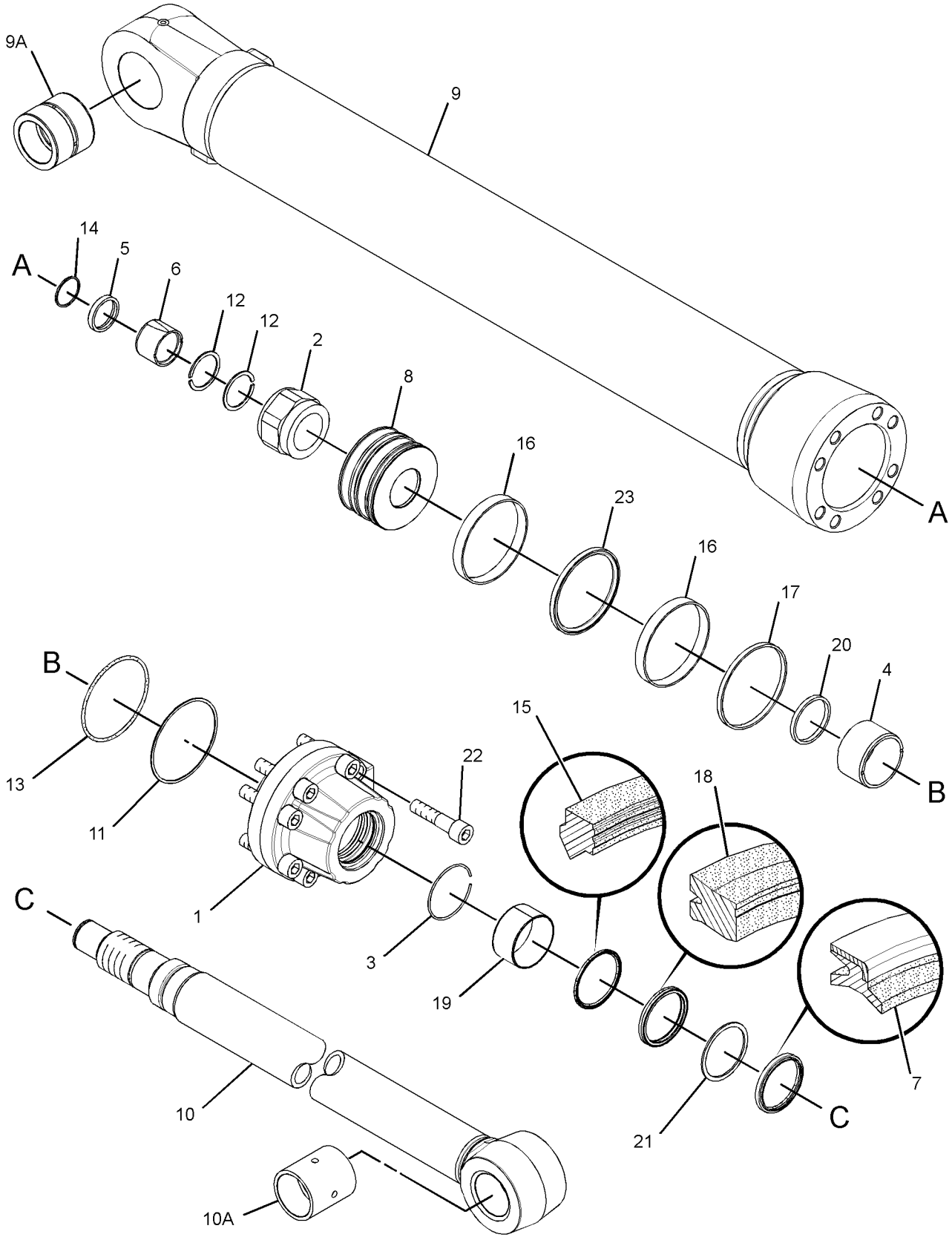

GRAPHIC #1 **<END>** g01874821

HYDRAULIC SYSTEM

251-8281 CYLINDER GP-HOOD TILT

S/N: F7B1-UP
50.8-MM (2-IN) BORE X 406.4-MM (16-IN) STROKE
PART OF 339-8307 LINES GP-HOOD TILT

SMCS-5104 **i02626251**

NOTE	REF NO	GRAPHIC REF	PART NUMBER	QTY	PART NAME 1 2 3 4 5 6 (PRODUCT LEVEL)	SEE PAGE
	1	1	**110-5915**	1	CLEVIS	
	2	1	**234-3374**	2	PIN	
	3	1	**234-3375**	4	PIN	
Y	4	1	**105-8117**	1	VALVE GP-COUNTERBALANCE	398
	5	1	**234-3377**	1	KIT-SEAL	
					(INCLUDES SEALS & RINGS)	

Y-SEPARATE ILLUSTRATION

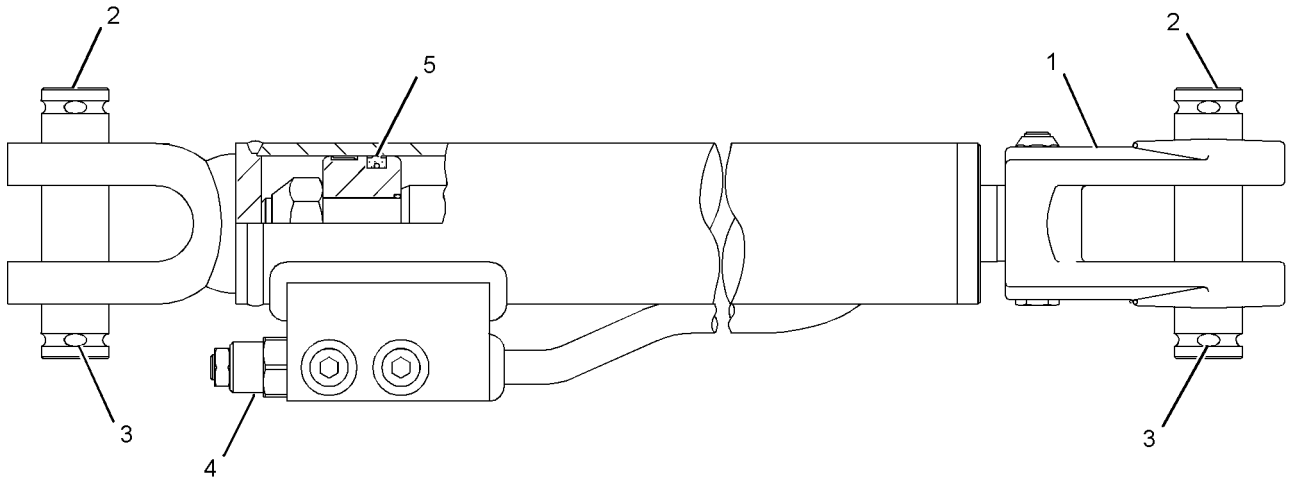

GRAPHIC #1 **<END>** g01072031

HYDRAULIC SYSTEM

215-9097 CYLINDER GP-HYDRAULIC–STICK

S/N: F7B1-UP
130-MM (5.1-IN) BORE X 1372-MM (54-IN) STROKE
PART OF 376-7989 CYLINDER & MTG GP-STICK
AN ATTACHMENT

SMCS-4303, 5102, 5105, 5116, 5138, 5149, 5362, 5576, 5816, 7201, 7562 **i02626253**

NOTE	REF NO	GRAPHIC REF	PART NUMBER	QTY	PART NAME 1 2 3 4 5 6 (PRODUCT LEVEL)	SEE PAGE
	1	1	**7Y-4620**	1	HEAD	
	2	1	**7Y-4631**	1	RING-RETAINING	
	3	1	**087-5005**	1	STOP	
	4	1	**128-9260**	1	BEARING-SLEEVE	
	5	1	**147-5851**	1	PISTON	
J	6	1	**147-5852**	1	RING	
J	7	1	**147-5853**	1	RING	
	8	1	**167-2476**	1	SEAL-WIPER	
	9	1	**215-9099**	1	CYLINDER AS-BOOM	
		1	**7Y-5128**	1	BEARING-SLEEVE	
	10	1	**215-9108**	1	ROD AS	
		1	**7Y-5128**	1	BEARING-SLEEVE	
	11	1	**095-0929**	2	RING-RETAINING	
J	12	1	**095-1631**	1	SEAL-O-RING	
	13	1	**103-8378**	1	RING-RETAINING	
	14	1	**103-8379**	1	RING	
	15	1	**103-8380**	1	STOP	
J	16	1	**150-5884**	1	RING	
J	17	1	**150-5885**	1	SEAL-BUFFER	
J	18	1	**6I-6784**	1	RING-SEAL	
	19	1	**7Y-4622**	1	LOCKNUT (SPECIAL)	
J	20	1	**7Y-4628**	1	RING (BACKUP)	
	21	1	**167-2327**	1	SEAL-U-CUP	
J	22	1	**7Y-4633**	1	RING-BACKUP	
M	23	1	**7Y-5216**	8	BOLT-SOCKET HEAD (M20X2.5X80-MM)	
J	24	1	**9X-3595**	1	SEAL AS	
					AVAILABLE REPAIR KIT(S):	
J			**165-9419**	1	KIT-SEAL	
					(INCLUDES SEALS & RINGS)	

J-KIT MARKED J SERVICES PARTS MARKED J
M-METRIC PART

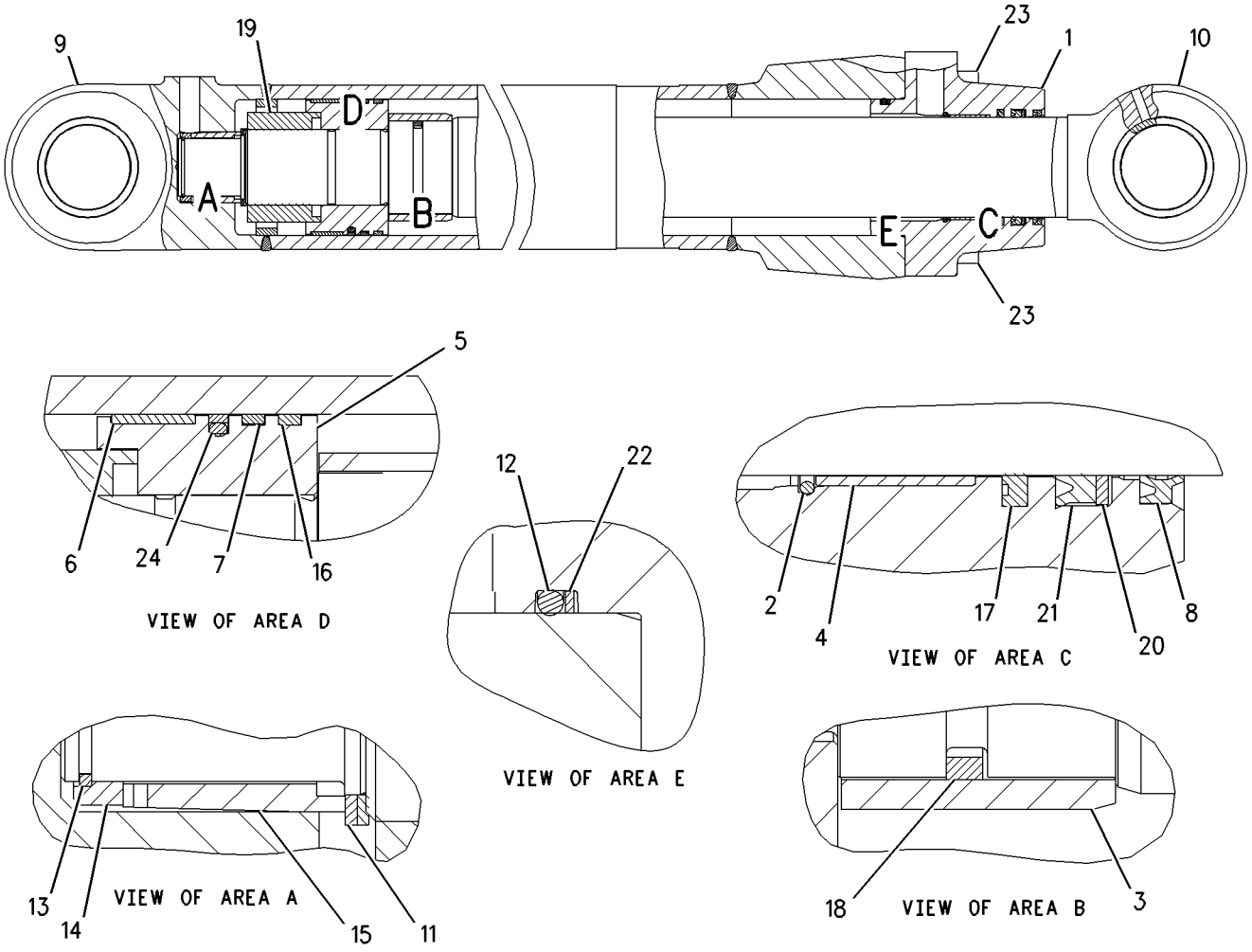

GRAPHIC #1 **<END>** g00946252

HYDRAULIC SYSTEM

289-7868 CYLINDER GP-HYDRAULIC–BOOM

S/N: F7B1-UP
140-MM (5.5-IN) BORE X 1430-MM (56.3-IN) STROKE
PART OF 376-7988 CYLINDER & MTG GP-BOOM
AN ATTACHMENT

SMCS-4303, 5102, 5105, 5116, 5138, 5149, 5362, 5576, 5816, 7201, 7562

i02890595

NOTE	REF NO	GRAPHIC REF	PART NUMBER	QTY	PART NAME 1 2 3 4 5 6 (PRODUCT LEVEL)	SEE PAGE
	1	1	**087-5434**	1	HEAD	
M	2	1	**123-2060**	1	LOCKNUT (M80X2-THD)	
	3	1	**158-9064**	1	PISTON	
J	4	1	**158-9065**	2	RING	
R	5	1	**165-9226**	1	CYLINDER AS	
J	6	1	**179-9667**	1	RING	
J	7	1	**216-0005**	1	SEAL-U-CUP	
J	8	1	**247-8791**	1	RING-SEAL	
JR	9	1	**289-7870**	1	ROD & BEARING AS	
		1	**236-6269**	1	BUSHING	
J	10	1	**170-9847**	1	SEAL-BUFFER	
	11	1	**087-5431**	1	STOP	
J	12	1	**087-5436**	1	RING-BACKUP	
	13	1	**093-1572**	1	RING-RETAINING	
	14	1	**095-0929**	2	RING-RETAINING	
J	15	1	**095-1632**	1	SEAL-O-RING	
J	16	1	**096-2665**	1	RING-BACKUP	
	17	1	**103-8378**	1	RING-RETAINING	
	18	1	**103-8379**	1	RING	
	19	1	**103-8380**	1	STOP	
	20	1	**114-0757**	1	BUSHING	
J	21	1	**165-9289**	1	SEAL-LIP TYPE	
M	22	1	**7Y-5215**	8	BOLT-SOCKET HEAD (M24X3X90-MM)	
J	23	1	**9X-3598**	1	SEAL AS	
					AVAILABLE REPAIR KIT(S):	
J			**247-8792**	1	KIT-SEAL	

J-KIT MARKED J SERVICES PART MARKED J.
M-METRIC PART
R-REMFG PART MAY BE AVAILABLE

289-7868 CYLINDER GP-HYDRAULIC *(contd.)* **i02890595**

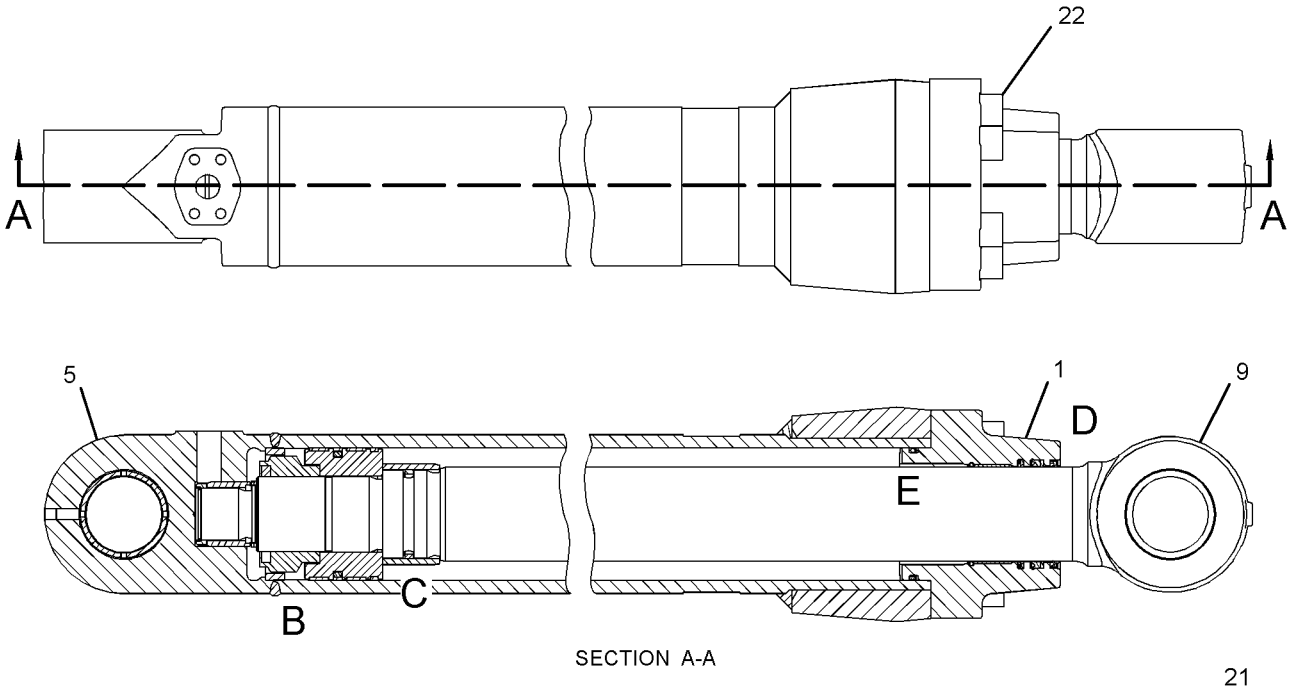

SECTION A-A

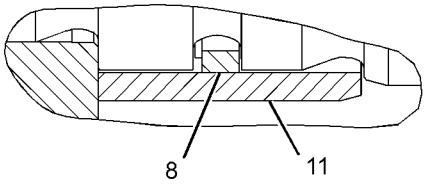

VIEW OF AREA C

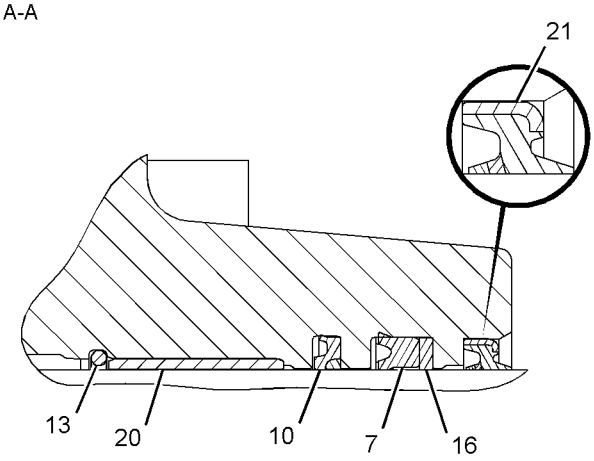

VIEW OF AREA D

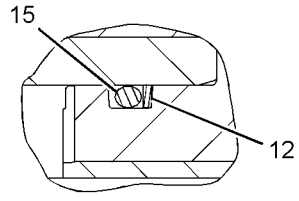

VIEW OF AREA E

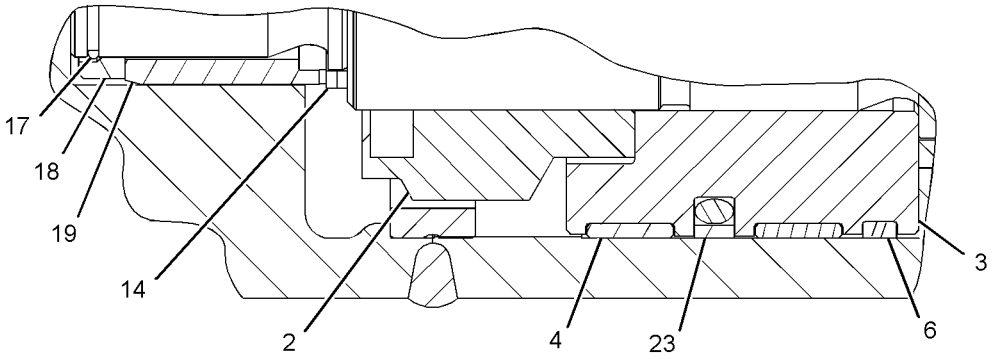

VIEW OF AREA B

GRAPHIC #1 **<END>** g01440628

HYDRAULIC SYSTEM

215-9092 CYLINDER GP-STICK

S/N: F7B1-UP
130-MM (5.1-IN) BORE X 1219-MM (48-IN) STROKE
PART OF 379-5865 CYLINDER & MTG GP-STICK
AN ATTACHMENT

SMCS-5458 **i02626257**

NOTE	REF NO	GRAPHIC REF	PART NUMBER	QTY	PART NAME 1 2 3 4 5 6 (PRODUCT LEVEL)	SEE PAGE
	1	1	**7Y-4620**	1	HEAD	
	2	1	**7Y-4631**	1	RING-RETAINING	
	3	1	**087-5005**	1	STOP	
	4	1	**128-9260**	1	BEARING-SLEEVE	
	5	1	**147-5851**	1	PISTON	
	6	1	**147-5852**	1	RING	
	7	1	**147-5853**	1	RING	
	8	1	**167-2476**	1	SEAL-WIPER	
	9	1	**215-9093**	1	CYLINDER AS-STICK	
		1	**7Y-5128**	1	BEARING-SLEEVE	
	10	1	**215-9095**	1	ROD AS	
		1	**7Y-5128**	1	BEARING-SLEEVE	
	11	1	**095-0929**	2	RING-RETAINING	
	12	1	**095-1631**	1	SEAL-O-RING	
	13	1	**103-8378**	1	RING-RETAINING	
	14	1	**103-8379**	1	RING	
	15	1	**103-8380**	1	STOP	
	16	1	**150-5884**	1	RING	
	17	1	**150-5885**	1	SEAL-BUFFER	
	18	1	**6I-6784**	1	RING-SEAL	
	19	1	**7Y-4622**	1	LOCKNUT (SPECIAL)	
	20	1	**7Y-4628**	1	RING (BACKUP)	
	21	1	**167-2327**	1	SEAL-U-CUP	
	22	1	**7Y-4633**	1	RING-BACKUP	
M	23	1	**7Y-5216**	8	BOLT-SOCKET HEAD (M20X2.5X80-MM)	
	24	1	**9X-3595**	1	SEAL AS	
					AVAILABLE REPAIR KIT(S):	
			165-9419	1	KIT-SEAL	
					(INCLUDES SEALS & RINGS)	

M-METRIC PART

215-9092 CYLINDER GP-STICK *(contd.)* **i02626257**

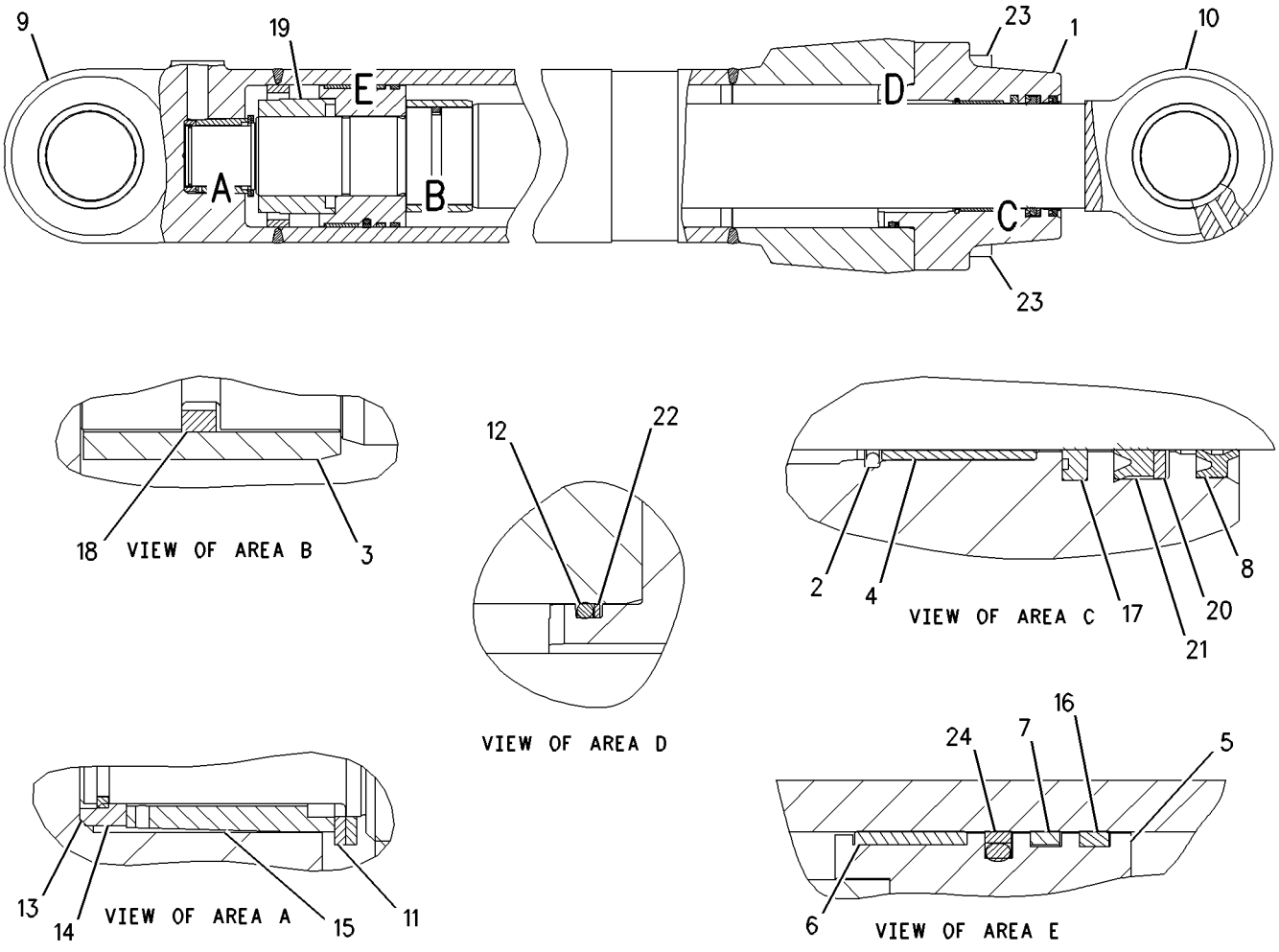

GRAPHIC #1 **<END>** g00947736

HYDRAULIC SYSTEM

274-7480 CYLINDER GP-TILT–SAW

S/N: F7B1-UP
130-MM (5.1-IN) BORE X 1076.5-MM (42.4-IN) STROKE
PART OF 381-8651 CYLINDER & MTG GP-SAW
AN ATTACHMENT

SMCS-5104, 5457 **i04963049**

NOTE	REF NO	GRAPHIC REF	PART NUMBER	QTY	PART NAME 1 2 3 4 5 6 (PRODUCT LEVEL)	SEE PAGE
	1	1	**7I-1351**	1	STOP	
	2	1	**7I-1353**	1	HEAD	
J	3	1	**9X-3595**	1	SEAL AS (DIA 130-BORE)	
	4	1	**093-1571**	1	RING-RETAINING	
J	5	1	**096-1588**	1	RING-BACKUP	
	6	1	**103-8378**	1	RING-RETAINING	
	7	1	**103-8379**	1	RING	
	8	1	**103-8380**	1	STOP	
J	9	1	**147-5852**	1	RING	
J	10	1	**147-5853**	1	RING	
J	11	1	**167-2212**	1	SEAL AS-BUFFER	
	12	1	**274-7481**	1	ROD AS	
		1	**7Y-5128**	1	BUSHING	
	13	1	**274-7483**	1	PISTON	
	14	1	**277-3225**	1	CYLINDER AS	
		1	*223-0527*	1	CAP AS	
		1	**7Y-5128**	1	BUSHING	
	15	1	**095-0929**	2	RING-RETAINING	
J	16	1	**095-1631**	1	SEAL-O-RING	
	17	1	**114-0758**	1	BUSHING	
	18	1	**150-5884**	1	RING	
J	19	1	**165-9287**	1	SEAL-LIP TYPE	
J	20	1	**167-2325**	1	SEAL-U-CUP	
	21	1	**254-5697**	1	LOCKNUT-SPECIAL	
J	22	1	**7I-1352**	1	RING-SEAL	
J	23	1	**7Y-4633**	1	RING-BACKUP	
M	24	1	**7Y-5216**	8	BOLT-SOCKET HEAD (M20X2.5X80-MM)	
					AVAILABLE REPAIR KIT(S):	
J			**344-6336**	1	KIT-HYD CYLINDER SEAL	
					(INCLUDES RINGS & SEALS)	

J-KIT MARKED J SERVICES PARTS MARKED J
M-METRIC PART

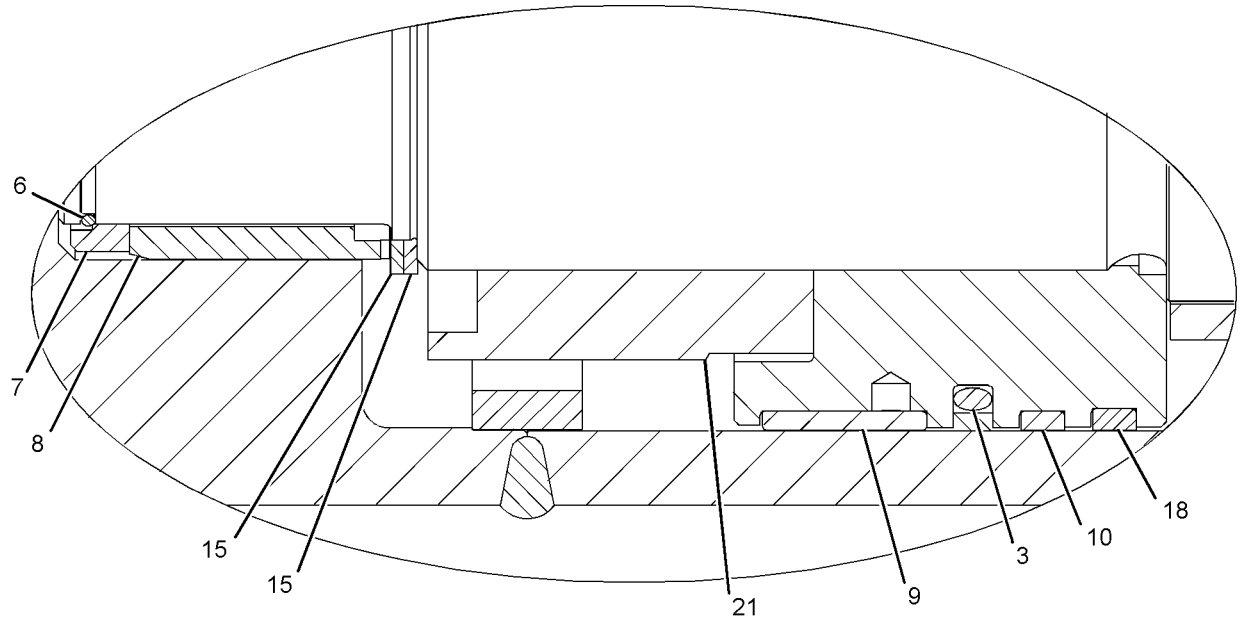

VIEW OF AREA B

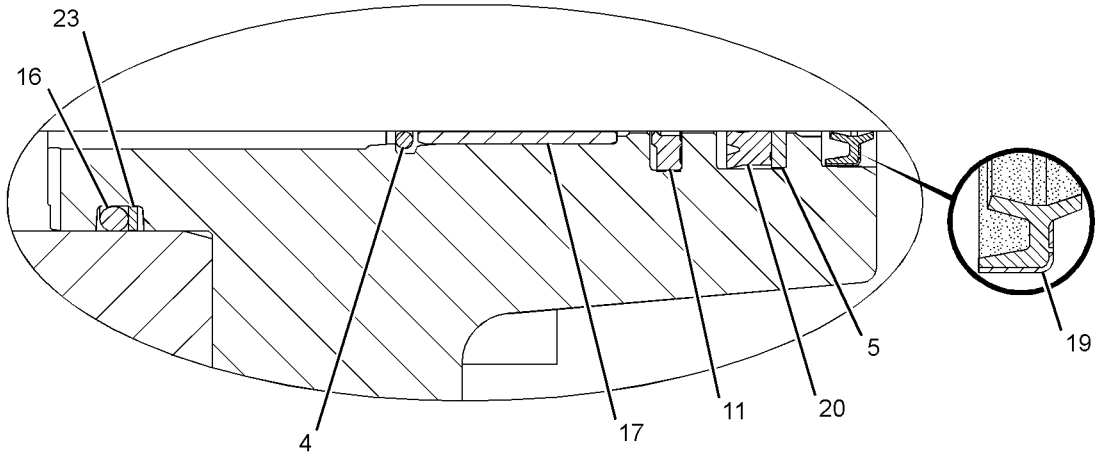

VIEW OF AREA A

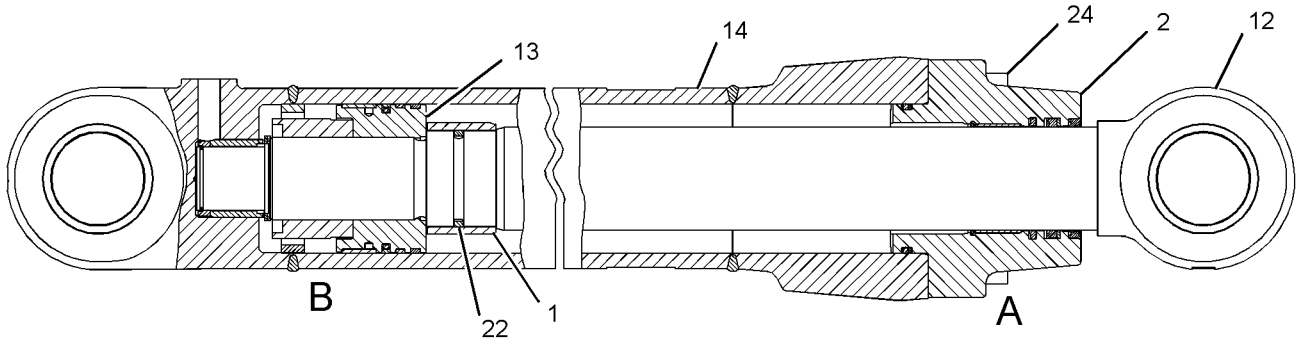

GRAPHIC #1 **<END>** g01611973

HYDRAULIC SYSTEM

339-8310 DRIVE AR-SWING

S/N: F7B1-UP

PART OF 362-3896 HYDRAULIC AR

SMCS-5459 **i04465398**

NOTE	REF NO	GRAPHIC REF	PART NUMBER	QTY	PART NAME 1 2 3 4 5 6 (PRODUCT LEVEL)	SEE PAGE
	1	1	**2B-7561**	2	CORK	
	2	1	**5D-1026**	2	CLAMP-BAND	
	3	1	**7Y-0336**	16	SPACER (24.5X44X24-MM THK)	
	4	1	**096-4755**	1	PIN	
	5	1	*165-2273*	1	VALVE GP-SHUTOFF	
		1	**6V-7238**	1	VALVE-SHUTOFF	
		1	**3K-0360**	1	SEAL-O-RING	
	6	1	**168-9860**	1	PLUG	
Y	7	1	*220-8623*	1	DRIVE GP-SWING	282
Y	8	1	**322-8716**	1	VALVE GP-SWING CUSHION (FINE SWING)	413
I	9	1	**364-0484**	1	HOSE AS	
I	10	1	**364-0485**	1	HOSE AS	
M	11	1	**112-3929**	16	BOLT (M24X3X100-MM)	
	12	1	**149-7738**	1	CLIP	
	13	1	**1P-3702**	4	SEAL-RECTANGULAR	
	14	1	**6D-4244**	1	CLIP	
	15	1	**6V-1889**	1	CLIP	
	16	1	**8T-4121**	18	WASHER-HARD (11X21X2.5-MM THK)	
M	17	1	**8T-4136**	1	BOLT (M10X1.5X25-MM)	
M	18	1	**8T-4178**	6	BOLT (M10X1.5X90-MM)	
M	19	1	**8T-4182**	16	BOLT (M10X1.5X45-MM)	
M	20	1	**8T-4195**	1	BOLT (M10X1.5X30-MM)	
	21	1	**8T-9403**	8	FLANGE-HALF	
E	22	1	**5P-0767**		HOSE (95-CM)	
F			**8C-8422**		SEALANT	

E-ORDER BY THE CENTIMETER
F-NOT SHOWN
I-REFER TO HYDRAULIC INFORMATION SYSTEM
M-METRIC PART
Y-SEPARATE ILLUSTRATION

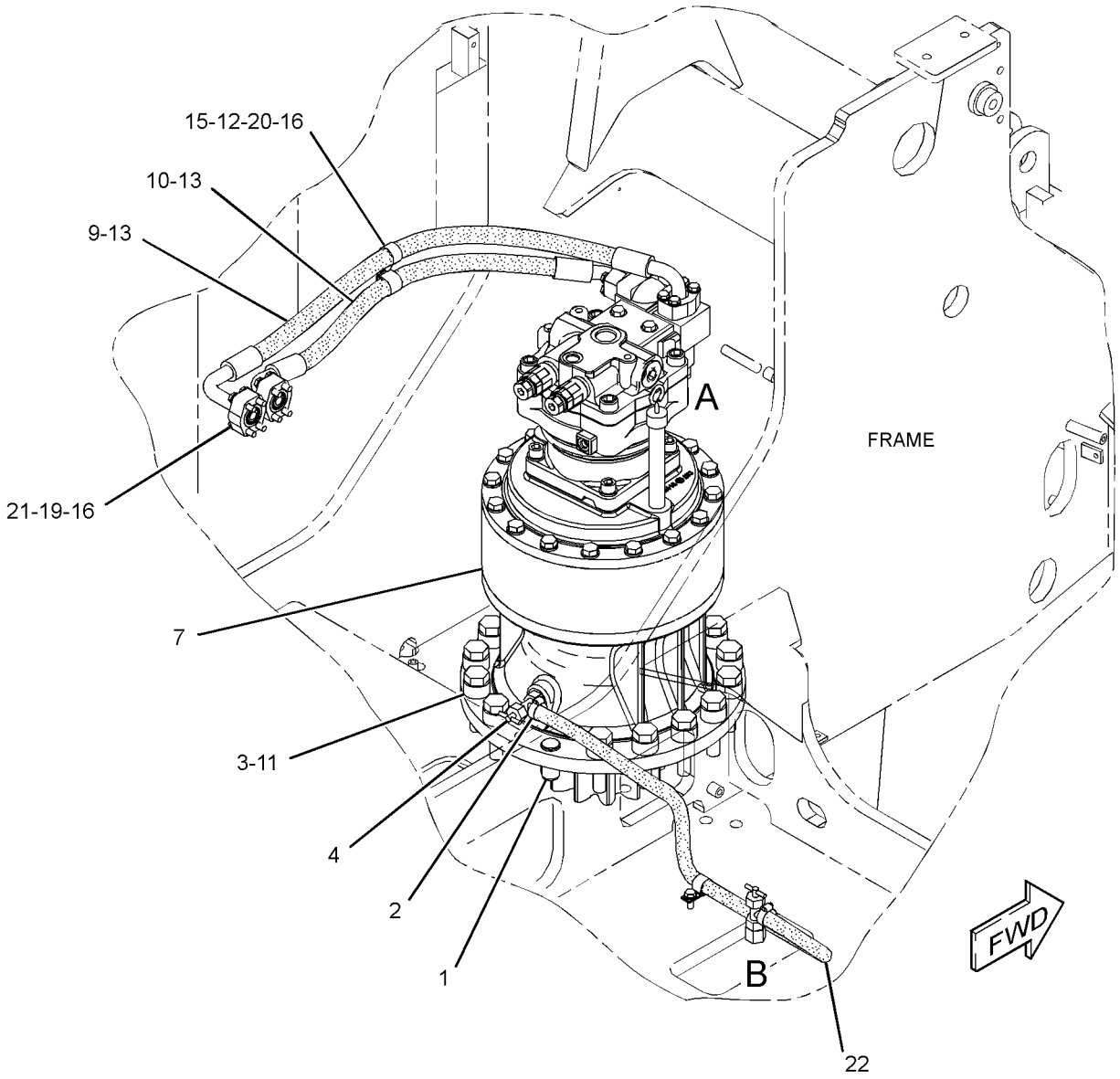

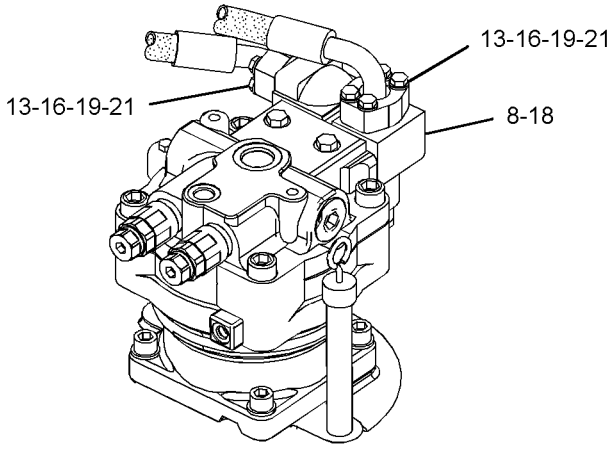

VIEW OF AREA A

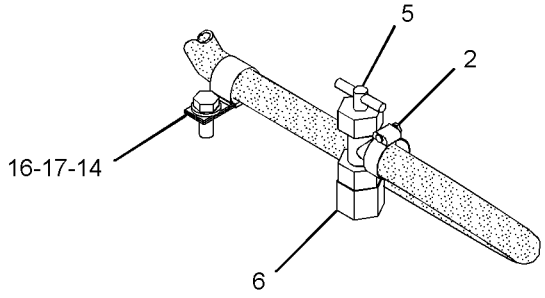

VIEW OF AREA B

GRAPHIC #1 **<END>** g02728350

HYDRAULIC SYSTEM

201-7808 DRIVE GP-SWING

S/N: F7B1-UP

PART OF 220-8623 DRIVE GP-SWING

SMCS-5459 **i03347794**

NOTE	REF NO	GRAPHIC REF	PART NUMBER	QTY	PART NAME 1 2 3 4 5 6 (PRODUCT LEVEL)	SEE PAGE
	1	1	**4I-7466**	4	GEAR-PLANETARY (23-TEETH)	
	2	1	**227-6221**	1	BREATHER AS (SWING DRIVE)	
		1	**4H-6112**	1	BREATHER (SWING DRIVE)	
		1	**227-6215**	1	BOSS (1/4-18-THD)	
		1	**267-6785**	1	PIPE	
	3	1	*165-2273*	1	VALVE GP-SHUTOFF (HYDRAULIC OIL)	
		1	**3K-0360**	1	SEAL-O-RING	
		1	**6V-7238**	1	VALVE-SHUTOFF	
	4	1	**7I-7728**	1	CARRIER-PLANETARY	
	5	1	**7Y-0225**	3	SHAFT-PLANETARY	
	6	1	**093-1730**	2	RING-RETAINING	
	7	1	**093-1731**	1	RING-RETAINING	
	8	1	**094-0611**	6	WASHER (47.3X76X1-MM THK)	
M	9	1	**094-1528**	8	WASHER (53X84X1-MM THK)	
	10	1	**096-2653**	1	RING-RETAINING	
	11	1	**114-1383**	4	SHAFT-PLANETARY	
	12	1	**114-1401**	1	COVER-HOUSING	
	13	1	**169-5617**	1	GEAR-SUN (18-TEETH)	
	14	1	**169-5618**	3	GEAR-PLANETARY (27-TEETH)	
	15	1	**171-9280**	1	GEAR-RING (72-TEETH)	
	16	1	**171-9283**	1	GEAR-SUN (24-TEETH)	
	17	1	**171-9375**	1	SEAL-O-RING	
	18	1	**191-2579**	1	CARRIER-PLANETARY	
	19	1	**191-2694**	1	SHAFT-PINION	
	20	1	**191-2695**	1	HOUSING	
	21	1	**191-2696**	1	CAGE	
	22	1	**191-2697**	1	SPACER (110X140X90.1-MM THK)	
	23	1	**7Y-1115**	1	PIPE-GAUGE	
	24	1	**093-2357**	1	GAUGE-OIL LEVEL (DIPSTICK) (HYDRAULIC OIL)	
	25	1	**095-0891**	7	PIN-SPRING	
	26	1	**135-9044**	2	SEAL-LIP TYPE	
	27	1	**136-2904**	1	BEARING	
	28	1	**136-2940**	1	BEARING	
B	29		**1U-8846**		SEALANT-GASKET	
	30	1	**7Y-0252**	3	BEARING AS-ROLLER	
	31	1	**191-2513**	8	BEARING AS-ROLLER	
	32	1	**7Y-1434**	2	SPACER (40X69.5X6-MM THK)	
	33	1	**8J-8879**	1	SEAL-O-RING	
M	34	1	**8T-4183**	8	BOLT (M12X1.75X40-MM)	
	35	1	**8T-4223**	8	WASHER-HARD (13.5X25.5X3-MM THK)	
M	36	1	**8T-6385**	16	BOLT (M16X2X180-MM)	
	37	1	**9X-8257**	16	WASHER (17.5X30X3.5-MM THK)	

B-USE AS REQUIRED
M-METRIC PART

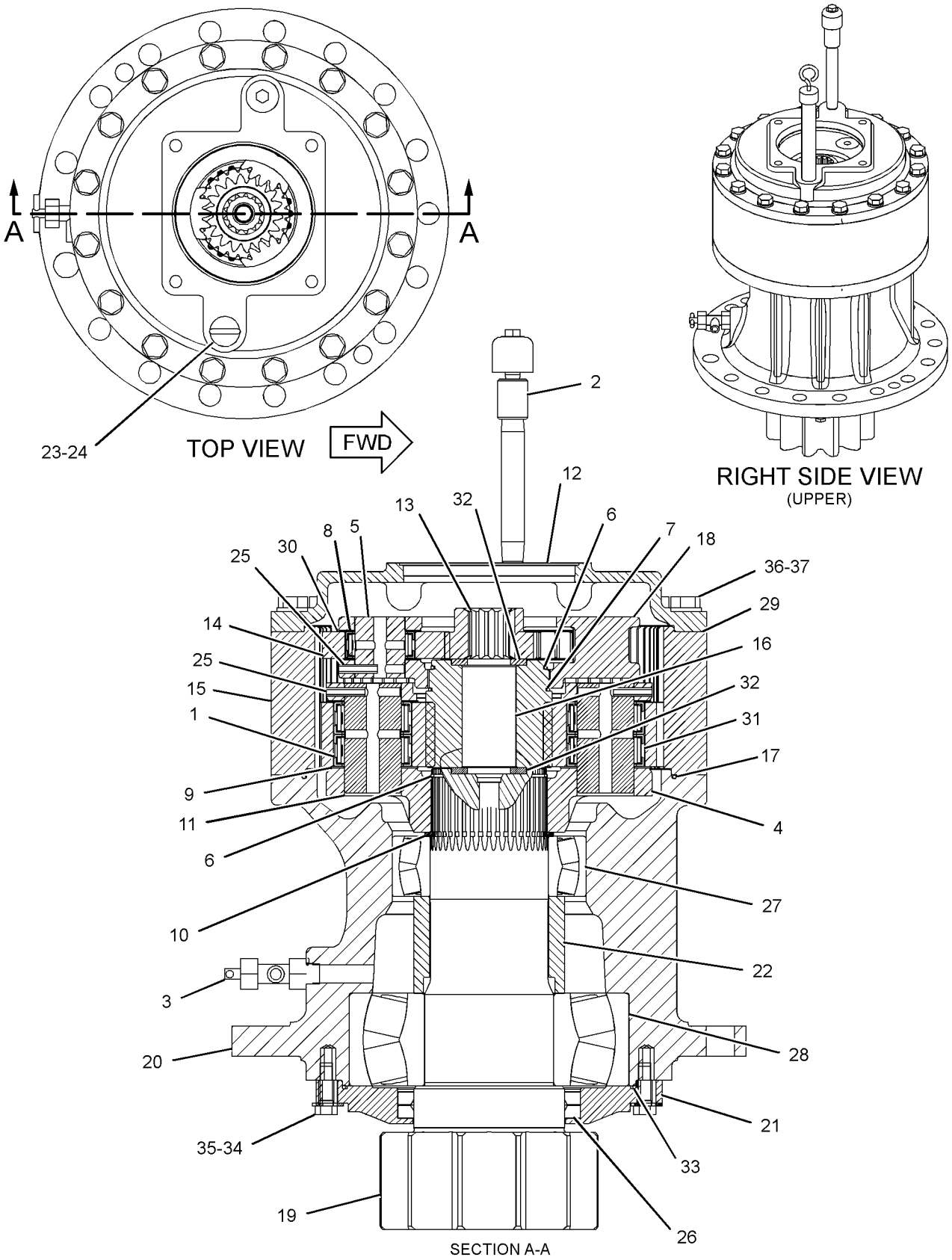

GRAPHIC #1

<END>

g01270997

HYDRAULIC SYSTEM

220-8623 DRIVE GP-SWING

S/N: F7B1-UP

PART OF 339-8310 DRIVE AR-SWING

SMCS-5459 **i03942249**

NOTE	REF NO	GRAPHIC REF	PART NUMBER	QTY	PART NAME 1 2 3 4 5 6 (PRODUCT LEVEL)	SEE PAGE
Y	1	1	**201-7808**	1	DRIVE GP-SWING	280
CY	2	1	**334-9971**	1	MOTOR GP-SWING	342
	3	1	**6V-5204**	1	RING-RETAINING	
M	4	1	**8T-4944**	4	BOLT-SOCKET HEAD (M16X2X40-MM)	
	5	1	**8T-6404**	1	SEAL-O-RING	
	6	1	**9X-8257**	4	WASHER (17.5X30X3.5-MM THK)	

C-CHANGE FROM PREVIOUS TYPE
M-METRIC PART
Y-SEPARATE ILLUSTRATION

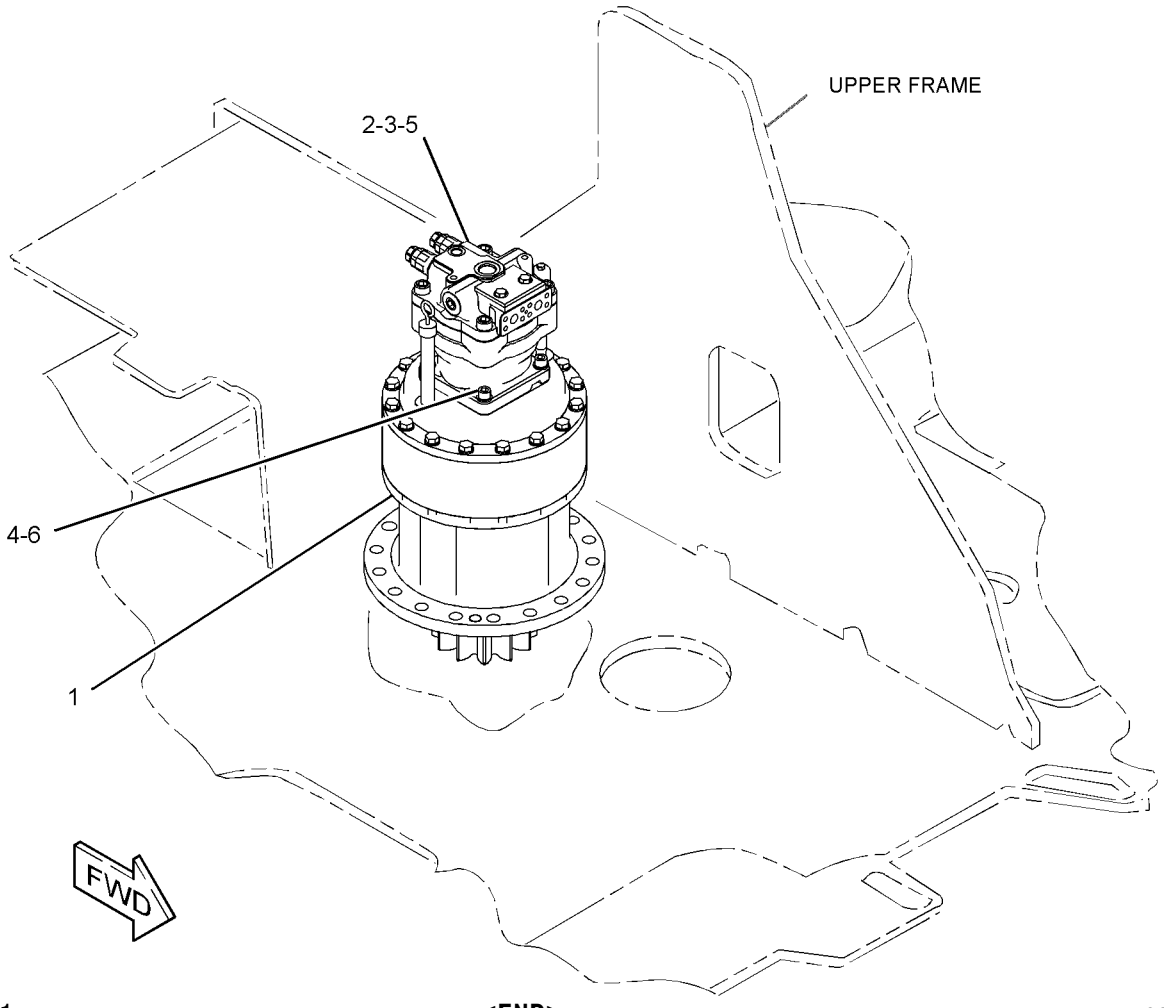

GRAPHIC #1 **<END>** g02157857

339-8305 FILLER GP-HYDRAULIC OIL

S/N: F7B1-UP

PART OF 362-3896 HYDRAULIC AR

SMCS-5056 **i04497974**

NOTE	REF NO	GRAPHIC REF	PART NUMBER	QTY	PART NAME 1 2 3 4 5 6 (PRODUCT LEVEL)	SEE PAGE
	1	1	**3B-7726**	1	CAP-PIPE	
Y	2	1	**354-1825**	1	PUMP & MOTOR GP-HYD TANK FILL	347
	3	1	**363-0159**	1	PLATE	
I	4	1	**363-1786**	1	HOSE AS	
I	5	1	**363-1787**	1	HOSE AS	
	6	1	**367-2106**	1	PIPE	
	7	1	*148-8364*	1	ELBOW AS	
		1	**6V-8625**	1	ELBOW	
		1	**3K-0360**	1	SEAL-O-RING	
		1	**6V-8398**	1	SEAL-O-RING	
	8	1	*148-8390*	1	ELBOW AS	
		1	**6V-8626**	1	ELBOW	
		1	**2M-9780**	1	SEAL-O-RING	
		1	**7J-9108**	1	SEAL-O-RING	
	9	1	**4L-9337**	2	BOLT (3/8-16X1.5-IN)	
	10	1	**8T-4121**	2	WASHER-HARD (11X21X2.5-MM THK)	
M	11	1	**8T-4133**	1	NUT (M10X1.5-THD)	
M	12	1	**8T-4136**	1	BOLT (M10X1.5X25-MM)	
	13	1	**8T-4896**	2	WASHER-HARD (10.2X18.5X2.5-MM THK)	

I-REFER TO HYDRAULIC INFORMATION SYSTEM
M-METRIC PART
Y-SEPARATE ILLUSTRATION

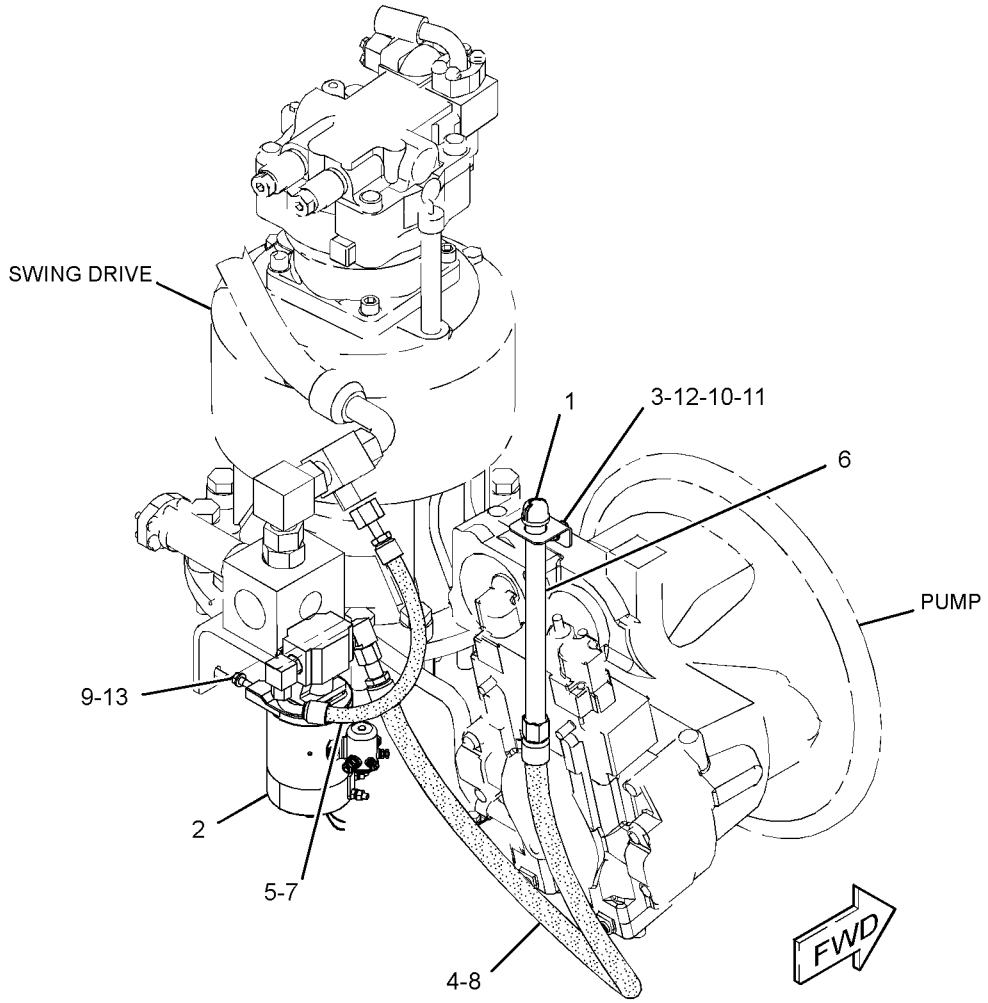

GRAPHIC #1

<END>

g02734705

158-8987 FILTER & VALVE GP-PILOT–HYDRAULIC OIL

S/N: F7B1-UP

PART OF 355-8897 LINES GP-PILOT

SMCS-5072, 5092 **i02699305**

NOTE	PART NUMBER	QTY	PART NAME 1 2 3 4 5 6 (PRODUCT LEVEL)	SEE PAGE
Y	*188-2084*	1	FILTER & VALVE GP-PILOT (HYDRAULIC OIL)	286
			(REQUIRES FILTER AS WITH 2-12-THD)	
			–OR–	
Y	*289-7836*	1	FILTER & VALVE GP-PILOT (HYDRAULIC OIL)	287
			(REQUIRES FILTER AS WITH M45X2-THD)	

Y-SEPARATE ILLUSTRATION

<END>

188-2084 FILTER & VALVE GP-PILOT—HYDRAULIC OIL

S/N: F7B1-UP

PART OF 158-8987 FILTER & VALVE GP-PILOT

SMCS-5072, 5092 **i02881845**

NOTE	REF NO	GRAPHIC REF	PART NUMBER	QTY	PART NAME 1 2 3 4 5 6 (PRODUCT LEVEL)	SEE PAGE
	1	1	**103-8236**	1	RING	
	2	1	**126-1813**	1	FILTER-OIL (ULTRA HIGH EFFICIENCY) (HYDRAULIC)	
	3	1	**215-4909**	1	VALVE GP-PILOT RELIEF (HYDRAULIC FILTER)	
	3A	1	**095-1584**	1	SEAL-O-RING	
	3B	1	**095-1590**	1	SEAL-O-RING	
	3C	1	**095-1596**	1	SEAL-O-RING	
Z	4	1		1	BASE	

Z-NOT SERVICED SEPARATELY

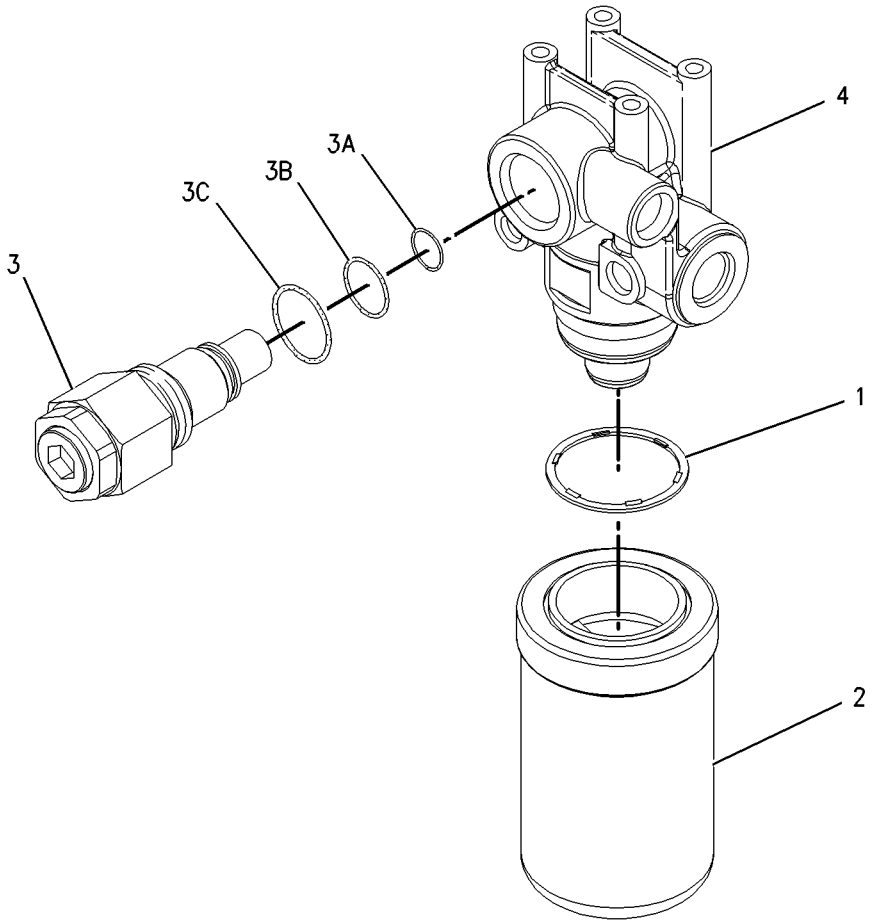

GRAPHIC #1 **<END>** g00949881

289-7836 FILTER & VALVE GP-PILOT–HYDRAULIC OIL

S/N: F7B1-UP

PART OF 158-8987 FILTER & VALVE GP-PILOT

SMCS-5072, 5092 **i03132237**

NOTE	REF NO	GRAPHIC REF	PART NUMBER	QTY	PART NAME 1 2 3 4 5 6 (PRODUCT LEVEL)	SEE PAGE
	1	1	**5I-8670**	1	FILTER-OIL (ADVANCED EFFICIENCY) (HYDRAULIC)	
	2	1	**215-4909**	1	VALVE GP-PILOT RELIEF (HYDRAULIC FILTER)	
	2A	1	**095-1584**	1	SEAL-O-RING	
	2B	1	**095-1590**	1	SEAL-O-RING	
	2C	1	**095-1596**	1	SEAL-O-RING	

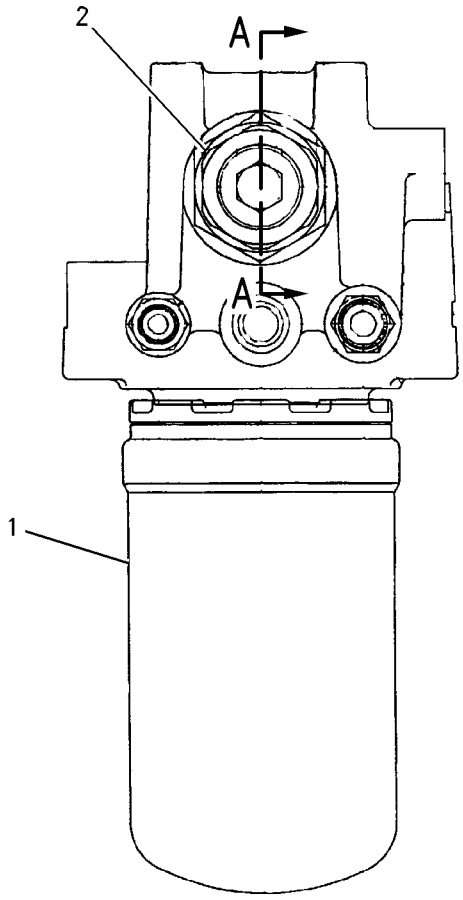

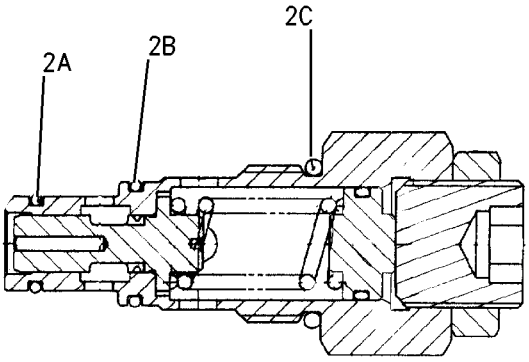

SECTION A–A

GRAPHIC #1 **<END>** g00842119

HYDRAULIC SYSTEM

188-4142 FILTER GP-OIL—HYDRAULIC RETURN

S/N: F7B1-UP

PART OF 188-4145 FILTER GP-OIL

SMCS-3004, 4295, 431F, 5068, 5091, 5092 **i05110014**

NOTE	REF NO	GRAPHIC REF	PART NUMBER	QTY	PART NAME 1 2 3 4 5 6 (PRODUCT LEVEL)	SEE PAGE
	1	1	**204-2762**	1	PLATE	
JM	2	1	**173-3529**	6	BOLT (M6X1X15-MM)	
J	3	1	**3T-7528**	6	SEAL-O-RING	
	4	1	**173-3513**	1	BASE	
J	5	1	**3E-4297**	2	SEAL-O-RING	
M	6	1	**137-3626**	1	BOLT-SPECIAL	
Z	7	1		1	SHELL AS	
	8	1	**179-9806**	1	FILTER ELEMENT AS-OIL (ULTRA HIGH EFFICIENCY) (HYDRAULIC RETURN)	
J	9	1	**137-3623**	4	SEAL-O-RING	
J	10	1	**6V-7658**	2	SEAL-O-RING	
J	11	1	**177-2553**	1	SEAL-O-RING	
J	12	1	**095-1681**	1	SEAL-O-RING	
	13	1	**173-3515**	1	RING-RETAINING	
	14	1	**173-3516**	1	HANDLE	
J	15	1	**4J-7533**	1	SEAL-O-RING	
J	16	1	**9S-4180**	1	PLUG	
JM	17	1	**137-3624**	8	SCREW (M3X0.5X5-MM)	
J	18	1	**137-3625**	2	PAD	
	19	1	**173-3517**	1	PLATE	
J	20	1	**137-3628**	1	SHIM (0.1-MM THK)	
	21	1	**188-4143**	1	FILM-INSTRUCTION (HYDRAULIC OIL RETURN FILTER)	
					AVAILABLE REPAIR KIT(S):	
J			**201-9299**	1	KIT-SERVICE (HYDRAULIC RETURN FILTER)	
					(ALSO INCLUDES SEALS, BLOTTING PAD, SHIM, BOLT & SCREW)	

J-KIT MARKED J SERVICES PARTS MARKED J
M-METRIC PART
Z-NOT SERVICED SEPARATELY

188-4142 FILTER GP-OIL *(contd.)* **i05110014**

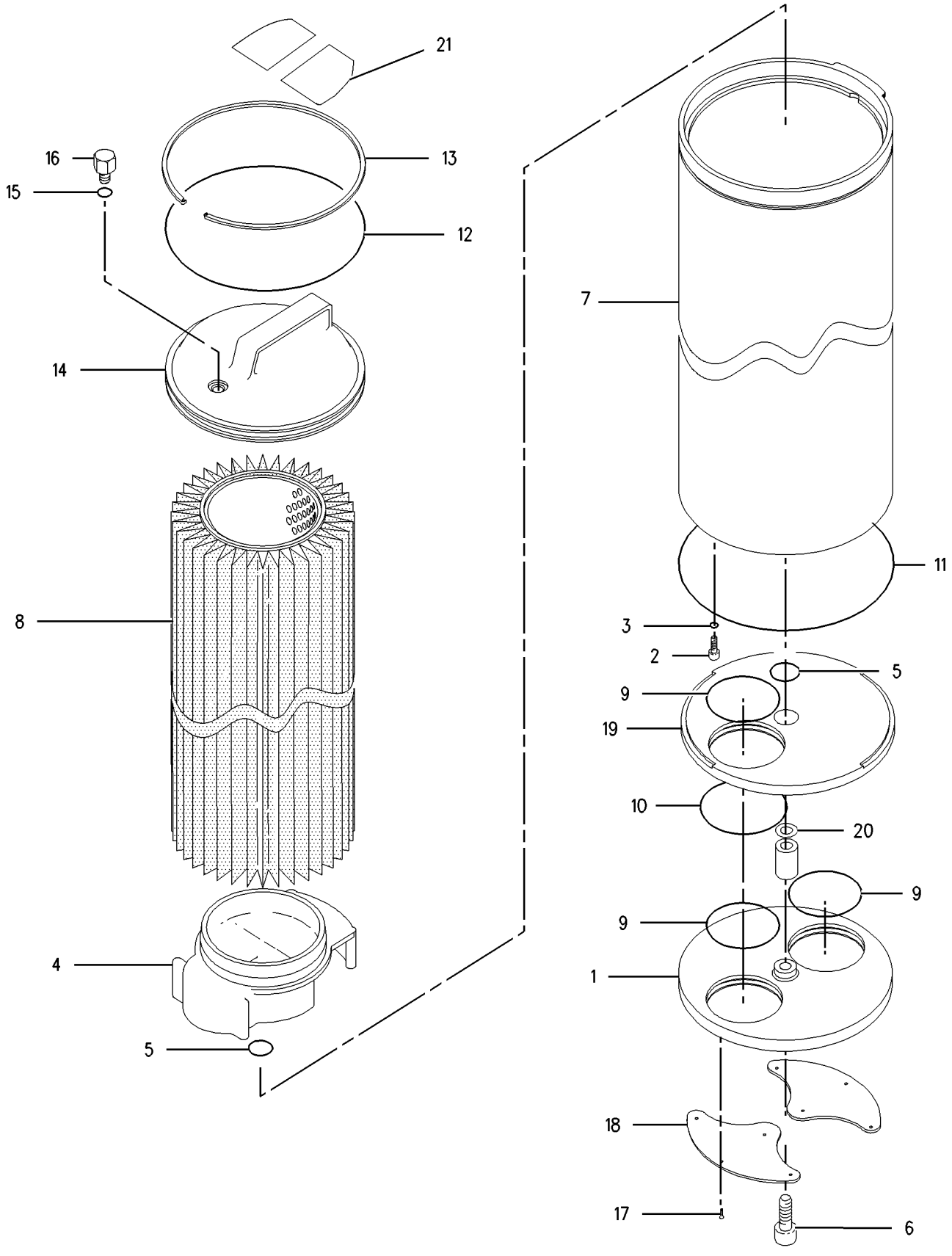

GRAPHIC #1 **<END>** g00923879

188-4145 FILTER GP-OIL—HYDRAULIC RETURN

S/N: F7B1-UP

PART OF 339-8296 TANK GP-HYDRAULIC & FUEL

SMCS-3004, 4295, 431F, 5068, 5091, 5092 **i02495385**

NOTE	REF NO	GRAPHIC REF	PART NUMBER	QTY	PART NAME 1 2 3 4 5 6 (PRODUCT LEVEL)	SEE PAGE
Y	1	1	**177-2620**	1	HOUSING GP-FILTER	295
Y	2	1	**177-2617**	1	BLOCK GP-HYDRAULIC	249
	3	1	**177-2625**	1	PACKING	
	4	1	**095-1682**	1	SEAL-O-RING	
M	5	1	**8T-4189**	4	BOLT (M8X1.25X20-MM)	
	6	1	**8T-4224**	4	WASHER-HARD (8.8X16X2-MM THK)	
Y	7	1	**188-4142**	1	FILTER GP-OIL (HYDRAULIC RETURN)	288
	8	1	**173-3510**	1	COVER	
	9	1	**123-2003**	1	SEAL-O-RING	
M	10	1	**8T-4184**	4	BOLT (M12X1.75X45-MM)	
	11	1	**8T-4223**	4	WASHER-HARD (13.5X25.5X3-MM THK)	
	12	1	**175-6178**	1	HOUSING	
	13	1	**177-2623**	1	VALVE AS (BYPASS)	
	14	1	**175-6174**	1	PIPE	
M	15	1	**8T-4970**	2	BOLT (M6X1X14-MM)	
	16	1	**175-6176**	1	SEAL-O-RING	
M	17	1	**6V-8932**	1	SETSCREW-SOCKET (M6X1X10-MM)	
	18	1	**095-1663**	2	SEAL-O-RING	
	19	1	**187-7171**	2	BOLT (M8X1.25X14-MM)	
	20	1	**175-6175**	1	PIPE	

M-METRIC PART
Y-SEPARATE ILLUSTRATION

188-4145 **FILTER GP-OIL** *(contd.)* **i02495385**

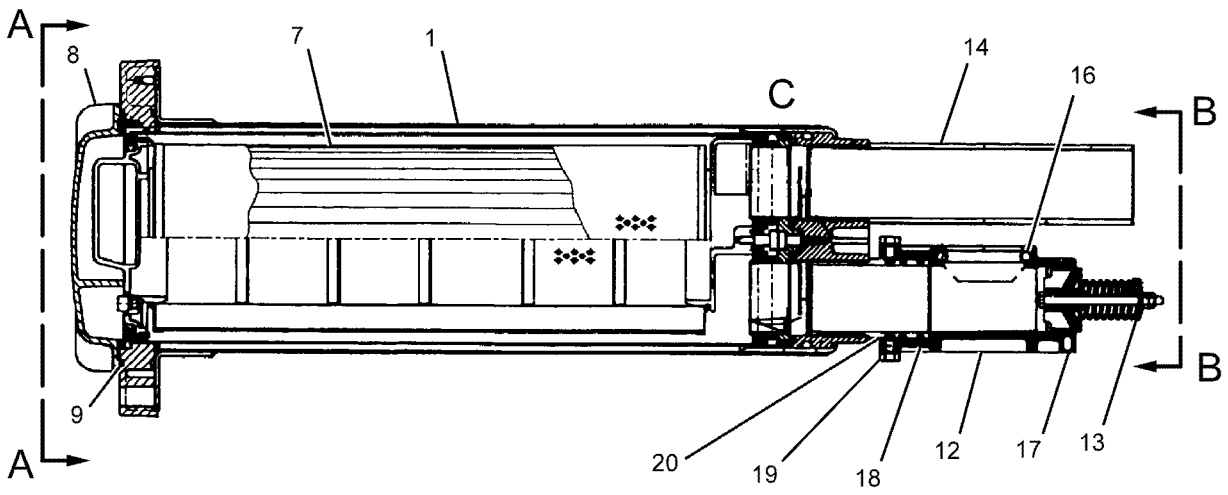

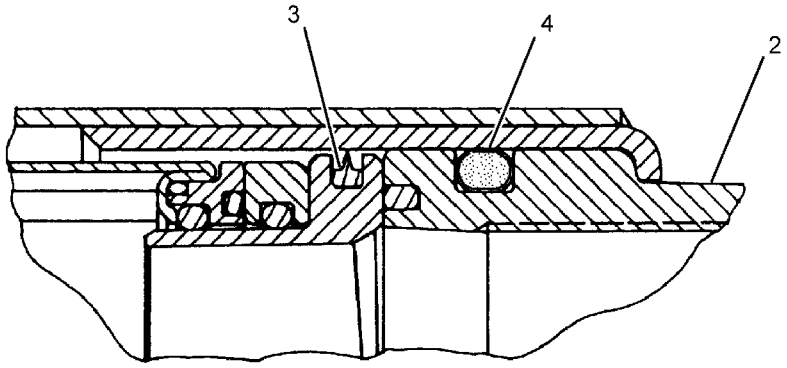

VIEW OF AREA C

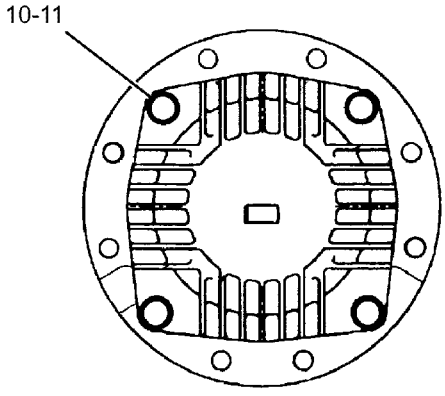

VIEW A-A

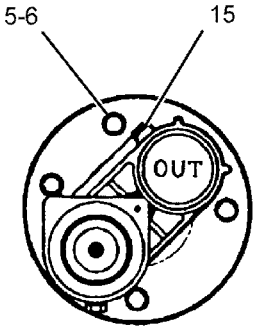

VIEW B-B

GRAPHIC #1 **<END>** g01123506

HYDRAULIC SYSTEM

289-8194 FILTER GP-OIL–HYDRAULIC, CASE DRAIN

S/N: F7B1-UP

PART OF 339-8306 LINES GP-RETURN & FILTER

SMCS-3004, 4295, 431F, 5068, 5091, 5092 **i04527961**

NOTE	REF NO	GRAPHIC REF	PART NUMBER	QTY	PART NAME 1 2 3 4 5 6 (PRODUCT LEVEL)	SEE PAGE
	1	1	**093-7521**	1	FILTER-OIL (ADVANCED EFFICIENCY) (HYDRAULIC, CASE DRAIN)	
	2	1	**289-8195**	1	HEAD AS-FILTER	

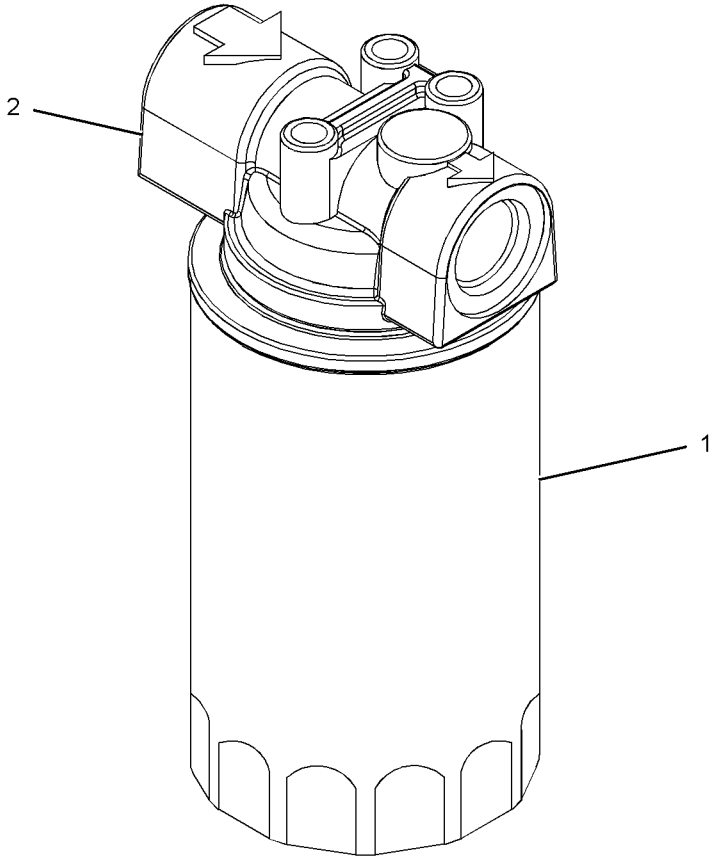

GRAPHIC #1 **<END>** g01388302

347-6081 GAUGE GP-SIGHT—HYDRAULIC OIL LEVEL

S/N: F7B1-UP

PART OF 339-8296 TANK GP-HYDRAULIC & FUEL

SMCS-7479 **i04177751**

NOTE	REF NO	GRAPHIC REF	PART NUMBER	QTY	PART NAME 1 2 3 4 5 6 (PRODUCT LEVEL)	SEE PAGE
	1	1	**236-3257**	1	PIPE	
M	2	1	**236-3259**	2	BOLT-SPECIAL	
	3	1	**347-6082**	2	BLOCK	
	4	1	**6F-6672**	4	SEAL-O-RING	
	5	1	**6F-4855**	4	SEAL-O-RING	

M-METRIC PART

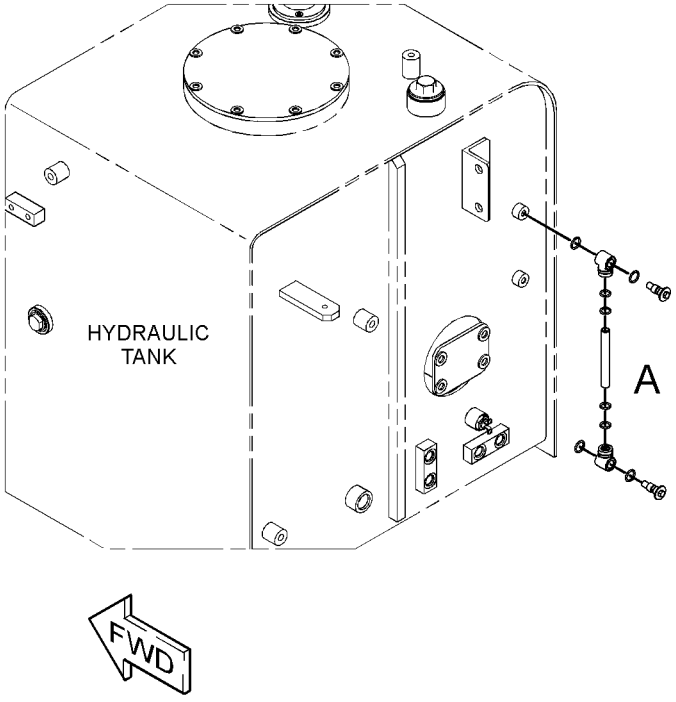

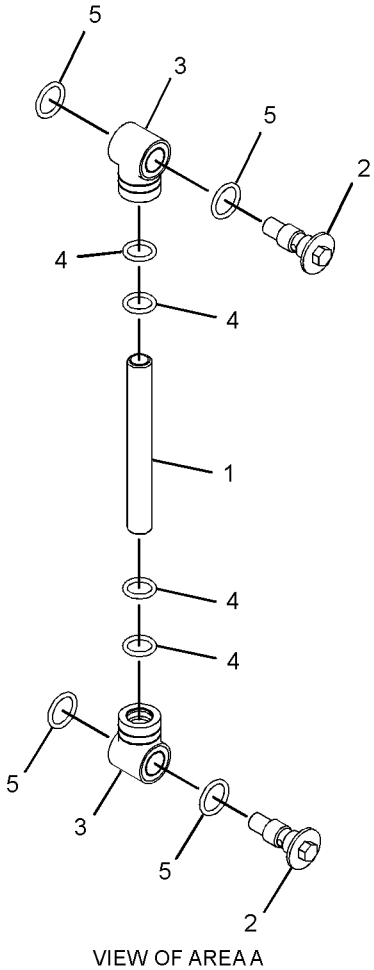

VIEW OF AREA A

GRAPHIC #1 **<END>** g02303838

308-4488 HEAD GP-PUMP–MAIN HYDRAULIC

S/N: F7B1-UP

PART OF 307-1696 PUMP GP-PISTON

SMCS-3222, 5070, 5086 **i02878643**

NOTE	REF NO	GRAPHIC REF	PART NUMBER	QTY	PART NAME 1 2 3 4 5 6 (PRODUCT LEVEL)	SEE PAGE
Y	1	1	**177-2521**	2	COVER GP-PUMP	253
Y	2	1	**308-4489**	1	VALVE GP-PUMP CONTROL (PRESSURE COMPENSATOR)	405
	3	1	**177-2523**	1	HOUSING	
	4	1	**177-2524**	1	GASKET	
	5	1	**177-2525**	2	PISTON	
	6	1	**177-2526**	2	ROD	
	7	1	**268-3003**	2	SPACER	
	8	1	**177-2528**	2	SPRING	
	9	1	**247-8946**	2	PISTON	
	10	1	**124-9884**	2	PIN-THREADED	
M	11	1	**7X-2553**	2	BOLT (M16X2X40-MM)	
	12	1	**247-8947**	4	RING	
M	13	1	**8T-2393**	8	BOLT-SOCKET HEAD (M16X2X60-MM)	
M	14	1	**3E-8008**	4	BOLT-SOCKET HEAD (M16X2X90-MM)	
	15	1	**159-7666**	2	DOWEL	
	16	1	**120-4394**	1	PLUG-BREAK OFF	
M	17	1	**123-2017**	1	PLUG	

M-METRIC PART
Y-SEPARATE ILLUSTRATION

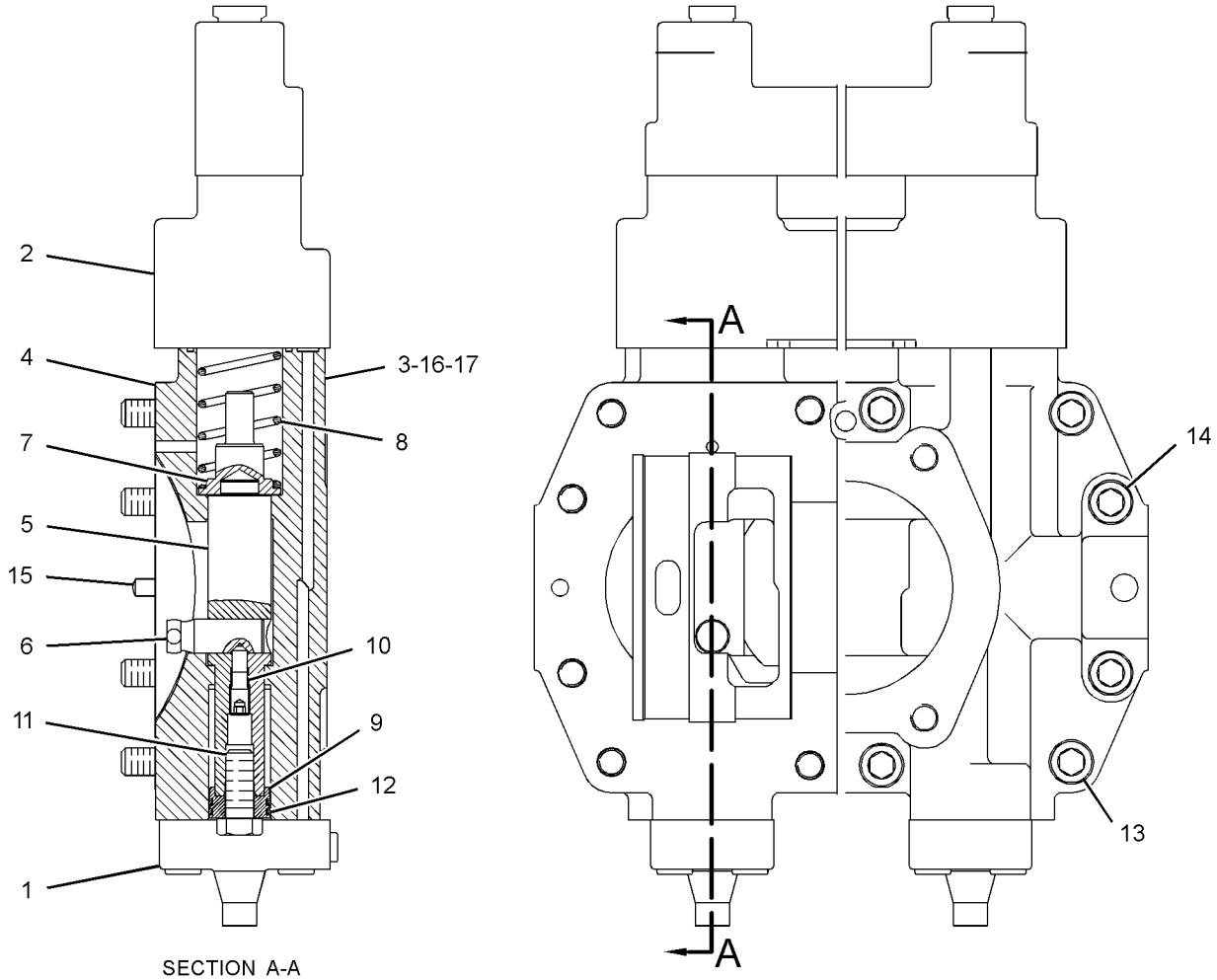

SECTION A-A

GRAPHIC #1 **<END>** g01433850

HYDRAULIC SYSTEM

177-2620 HOUSING GP-FILTER

S/N: F7B1-UP

PART OF 188-4145 FILTER GP-OIL

SMCS-5068 **i03358546**

NOTE	REF NO	GRAPHIC REF	PART NUMBER	QTY	PART NAME 1 2 3 4 5 6 (PRODUCT LEVEL)	SEE PAGE
	1	1	**177-2621**	1	FLANGE AS	
	2	1	**123-2003**	1	SEAL-O-RING	
M	3	1	**095-0757**	4	SCREW-MACHINE (M6X1X8.6-MM)	

M-METRIC PART

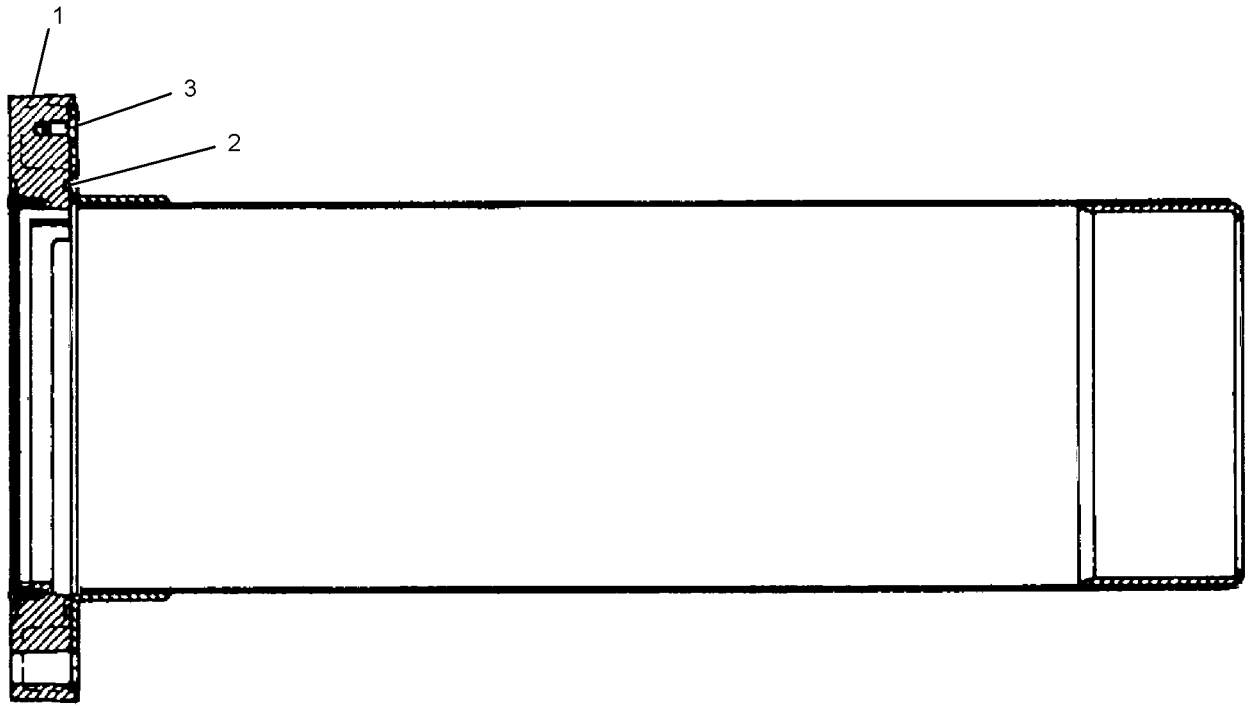

GRAPHIC #1 **<END>** g01733534

HYDRAULIC SYSTEM

362-3896 HYDRAULIC AR

S/N: F7B1-UP

PART OF 351-6848 COMMON AR

SMCS-5050 **i04501243**

NOTE	PART NUMBER	QTY	PART NAME 1 2 3 4 5 6 (PRODUCT LEVEL)	SEE PAGE
Y	*339-8310*	1	DRIVE AR-SWING	278
Y	*339-8305*	1	FILLER GP-HYDRAULIC OIL	283
Y	*339-8307*	1	LINES GP-HOOD TILT	311
Y	*355-8897*	1	LINES GP-PILOT	315
Y	*367-2130*	1	LINES GP-PROPEL	210
Y	*339-8306*	1	LINES GP-RETURN & FILTER	327
Y	*378-8858*	1	PUMP & MTG GP-HYDRAULIC	349

Y-SEPARATE ILLUSTRATION

<END>

373-6575 HYDRAULIC AR-CIRCULAR SAW–
LOW FLOW, NO TILT LINKAGE
S/N: F7B1-UP

FOR USE WITH 379-5870–PAGE 423. CANNOT BE USED WITH 373-6577–PAGE 298, 373-6573–PAGE 300, 373-6571–PAGE 299 AN ATTACHMENT

SMCS-5050, 5051 **i04493075**

NOTE	REF NO	GRAPHIC REF	PART NUMBER	QTY	PART NAME 1 2 3 4 5 6 (PRODUCT LEVEL)	SEE PAGE
Y	1	1	*339-8308*	1	LINES GP-PUMP	321
Y	2	1	*339-8359*	1	PUMP & MTG GP-SAW	350
Y	3	1	*375-0155*	1	VALVE & MTG GP-CONTROL	369
Y	4	1	*375-0159*	1	LINES GP-RETURN	325
Y	5	1	*375-0160*	1	LINES GP-PILOT	319
Y	6	1	*375-0161*	1	LINES GP-BOOM CYLINDER	307
Y	7	1	*375-0164*	1	LINES GP-SAW	332

Y-SEPARATE ILLUSTRATION

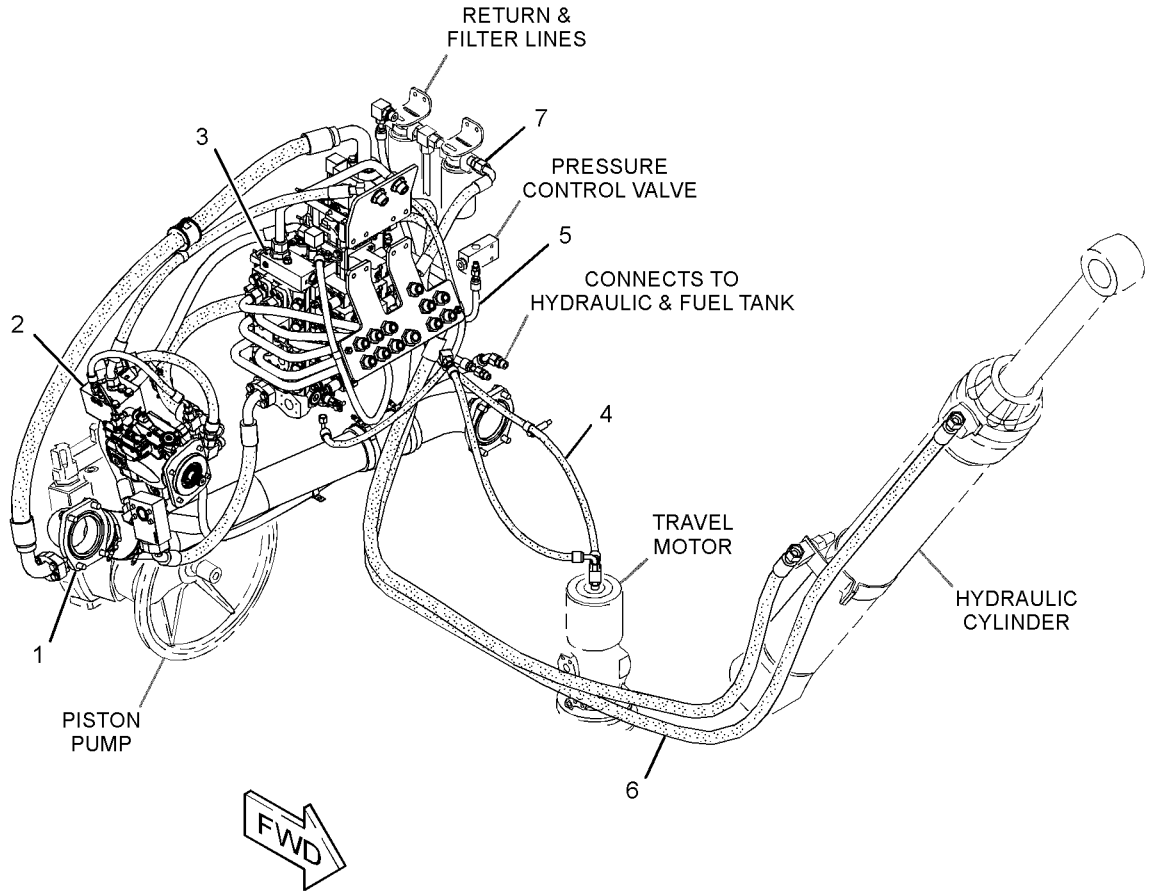

GRAPHIC #1 **<END>** g02734536

373-6577 HYDRAULIC AR-CIRCULAR SAW–
HIGH FLOW, NO TILT LINKAGE
S/N: F7B1-UP

FOR USE WITH 379-5870–PAGE 423. CANNOT BE USED WITH 373-6575–PAGE 297, 373-6573–PAGE 300, 373-6571–PAGE 299 AN ATTACHMENT

SMCS-5050, 5051 **i04493112**

NOTE	REF NO	GRAPHIC REF	PART NUMBER	QTY	PART NAME 1 2 3 4 5 6 (PRODUCT LEVEL)	SEE PAGE
Y	1	1	*339-8308*	1	LINES GP-PUMP	321
Y	2	1	*339-8359*	1	PUMP & MTG GP-SAW	350
Y	3	1	*375-0157*	1	VALVE & MTG GP-CONTROL	371
Y	4	1	*375-0159*	1	LINES GP-RETURN	325
Y	5	1	*375-0160*	1	LINES GP-PILOT	319
Y	6	1	*375-0161*	1	LINES GP-BOOM CYLINDER	307
Y	7	1	*375-0164*	1	LINES GP-SAW	332

Y-SEPARATE ILLUSTRATION

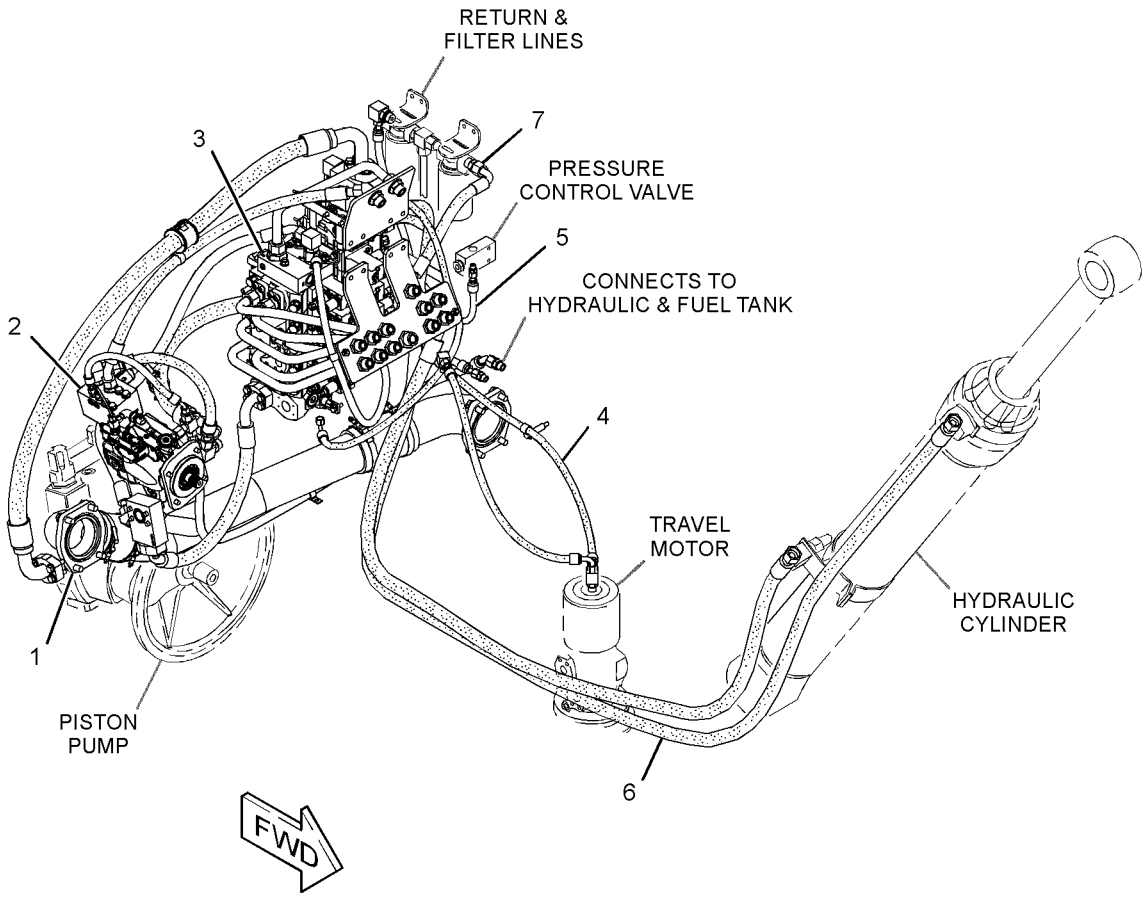

GRAPHIC #1 **<END>** g02734621

HYDRAULIC SYSTEM

373-6571 HYDRAULIC AR-HARVESTER—NO TILT LINKAGE

S/N: F7B1-UP

FOR USE WITH 376-8000—PAGE 424. CANNOT BE USED WITH 373-6577—PAGE 298, 373-6573—PAGE 300, 373-6575—PAGE 297 AN ATTACHMENT

SMCS-5050, 6320 **i04958491**

NOTE	REF NO	GRAPHIC REF	PART NUMBER	QTY	PART NAME 1 2 3 4 5 6 (PRODUCT LEVEL)	SEE PAGE
Y	1	1	*375-0151*	1	VALVE & MTG GP-CONTROL	367
Y	2	1	*375-0159*	1	LINES GP-RETURN	325
Y	3	1	*375-0160*	1	LINES GP-PILOT	319
Y	4	1	*378-8856*	1	LINES GP-PUMP	323
Y	5	1	*382-0643*	1	LINES GP-BOOM CYLINDER	308
	6	1	**2M-9780**	1	SEAL-O-RING	
	7	1	**3D-2824**	1	SEAL-O-RING	
	8	1	**9S-4183**	1	PLUG	
	9	1	**9S-4190**	1	PLUG-O-RING	
Y	10	1	*396-9171*	1	WIRING GP-CONSOLE	189

Y-SEPARATE ILLUSTRATION

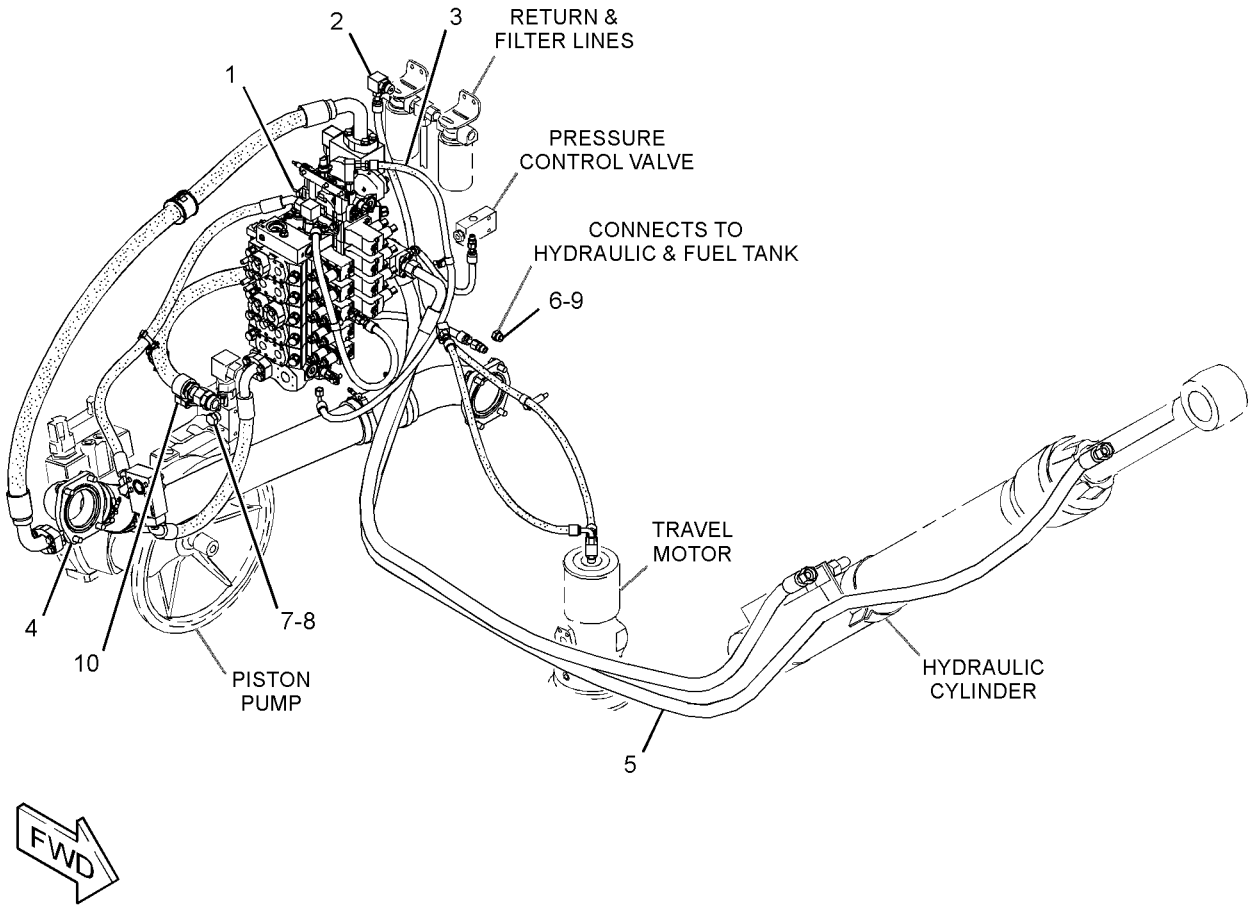

GRAPHIC #1 **<END>** g03180858

373-6573 HYDRAULIC AR-INTERMITTENT SAW–

NO TILT LINKAGE

S/N: F7B1-UP

FOR USE WITH 379-5860–PAGE 425, 378-8875–PAGE 250. CANNOT BE USED WITH 373-6577–PAGE 298, 373-6571–PAGE 299, 373-6575–PAGE 297 AN ATTACHMENT

SMCS-5050, 6543 **i04490953**

NOTE	REF NO	GRAPHIC REF	PART NUMBER	QTY	PART NAME 1 2 3 4 5 6 (PRODUCT LEVEL)	SEE PAGE
Y	1	1	*339-8308*	1	LINES GP-PUMP	321
Y	2	1	*339-8359*	1	PUMP & MTG GP-SAW	350
Y	3	1	*375-0153*	1	VALVE & MTG GP-MAIN CONTROL	373
Y	4	1	*375-0159*	1	LINES GP-RETURN	325
Y	5	1	*375-0160*	1	LINES GP-PILOT	319
Y	6	1	*375-0161*	1	LINES GP-BOOM CYLINDER	307
Y	7	1	*375-0162*	1	LINES GP-SAW	329

Y-SEPARATE ILLUSTRATION

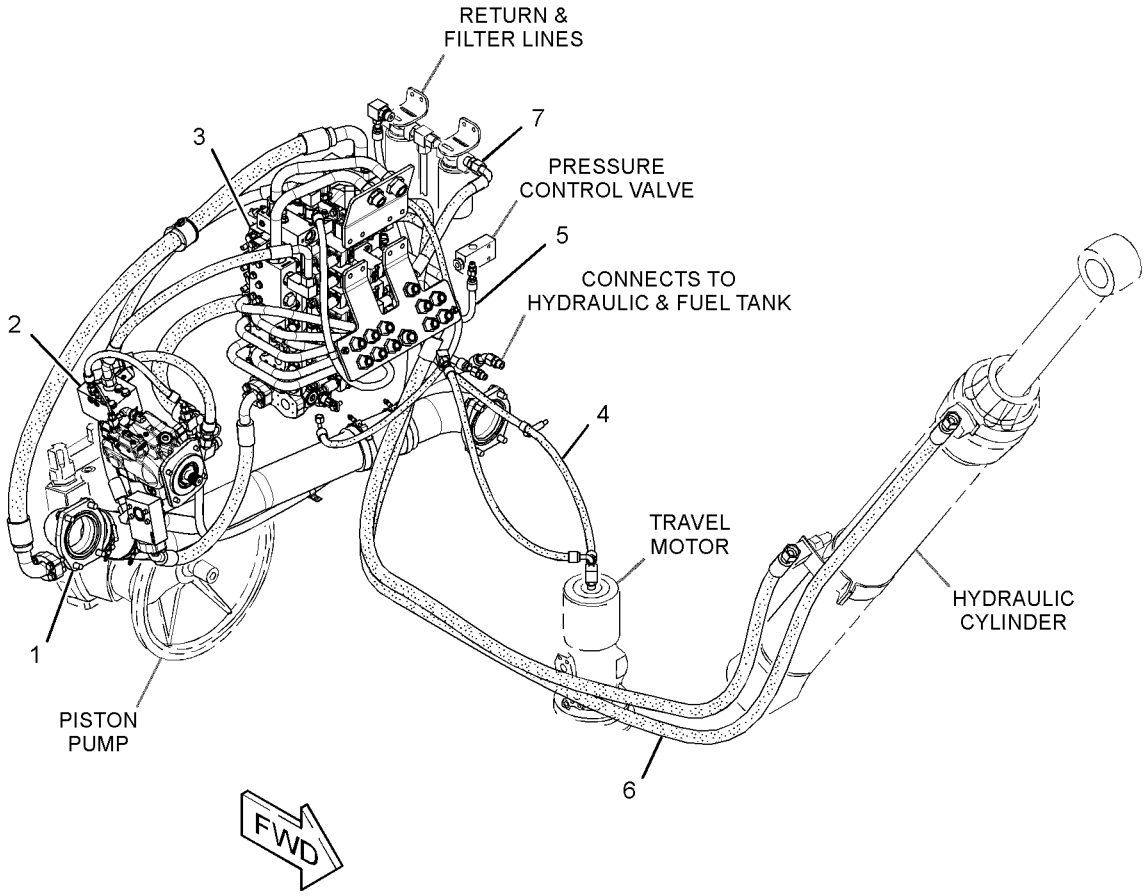

GRAPHIC #1 **<END>** g02734256

HYDRAULIC SYSTEM

379-5861 LINES GP-BOOM

S/N: F7B1-UP

PART OF 379-5860 LINKAGE AR-INTERMITTENT SAW

AN ATTACHMENT

SMCS-5057 **i04461365**

NOTE	REF NO	GRAPHIC REF	PART NUMBER	QTY	PART NAME 1 2 3 4 5 6 (PRODUCT LEVEL)	SEE PAGE
	1	1	**205-0829**	2	TAG-IDENTIFICATION (SAW OIL DRAIN)	
	2	1	**205-0830**	2	TAG-IDENTIFICATION (AA HEAD)	
	3	1	**205-0831**	2	TAG-IDENTIFICATION (AA ROD)	
	4	1	**205-0832**	2	TAG-IDENTIFICATION (GA HEAD)	
	5	1	**205-0833**	2	TAG-IDENTIFICATION (GA ROD)	
	6	1	**205-0834**	2	TAG-IDENTIFICATION (TILT HEAD)	
	7	1	**205-0835**	2	TAG-IDENTIFICATION (TILT ROD)	
	8	1	**225-5473**	8	REDUCER	
I	9	1	**256-0485**	11	HOSE AS	
I	10	1	**379-5850**	1	HOSE AS	
I	11	1	**379-5853**	2	HOSE AS	
	12	1	*148-8455*	22	UNION AS	
					(EACH INCLUDES)	
		1	**6V-8997**	1	UNION	
		1	**6V-9746**	2	SEAL-O-RING	
	13	1	*155-2026*	4	UNION AS	
					(EACH INCLUDES)	
		1	**5K-9090**	2	SEAL-O-RING	
		1	**6V-8998**	1	UNION	
	14	1	*216-2817*	2	UNION AS	
					(EACH INCLUDES)	
		1	**6V-8400**	2	SEAL-O-RING	
		1	**110-9160**	1	UNION	
	15	1	**2P-1293**	22	LOCKNUT (1-3/16-12-THD)	
	16	1	**6V-9172**	4	NUT (1-7/16-12-THD)	
	17	1	**6V-9173**	2	NUT-BULKHEAD (1-11/16-12-THD)	

I-REFER TO HYDRAULIC INFORMATION SYSTEM

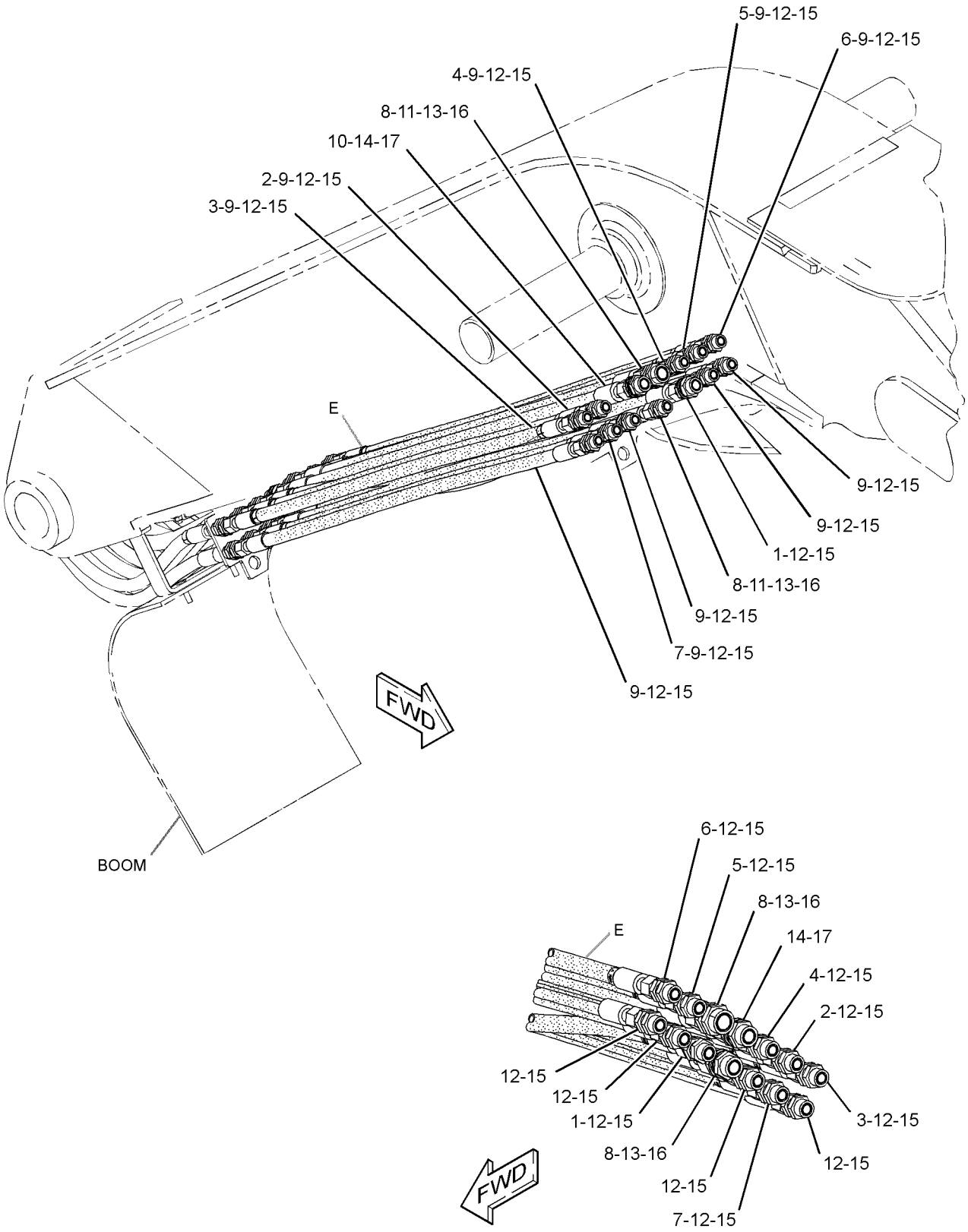

GRAPHIC #1 **<END>** g02738302

HYDRAULIC SYSTEM

379-5869 LINES GP-BOOM

S/N: F7B1-UP

PART OF 379-5870 LINKAGE AR-FELLING HEAD

AN ATTACHMENT

SMCS-5057 **i04461381**

NOTE	REF NO	GRAPHIC REF	PART NUMBER	QTY	PART NAME 1 2 3 4 5 6 (PRODUCT LEVEL)	SEE PAGE
	1	1	**205-0827**	2	TAG-IDENTIFICATION (SAW OIL SUPPLY)	
	2	1	**205-0828**	2	TAG-IDENTIFICATION (SAW OIL RETURN)	
	3	1	**205-0829**	2	TAG-IDENTIFICATION (SAW OIL DRAIN)	
	4	1	**205-0830**	2	TAG-IDENTIFICATION (AA HEAD)	
	5	1	**205-0831**	2	TAG-IDENTIFICATION (AA ROD)	
	6	1	**205-0832**	2	TAG-IDENTIFICATION (GA HEAD)	
	7	1	**205-0833**	2	TAG-IDENTIFICATION (GA ROD)	
	8	1	**205-0834**	2	TAG-IDENTIFICATION (TILT HEAD)	
	9	1	**205-0835**	2	TAG-IDENTIFICATION (TILT ROD)	
	10	1	**221-1446**	8	REDUCER	
	11	1	**225-5473**	4	REDUCER	
I	12	1	**256-0485**	13	HOSE AS	
I	13	1	**379-5853**	1	HOSE AS	
	14	1	*148-8455*	26	UNION AS	
					(EACH INCLUDES)	
		1	**6V-8997**	1	UNION	
		1	**6V-9746**	2	SEAL-O-RING	
	15	1	*155-2026*	2	UNION AS	
					(EACH INCLUDES)	
		1	**6V-8998**	1	UNION	
		1	**5K-9090**	2	SEAL-O-RING	
	16	1	**2P-1293**	26	LOCKNUT (1-3/16-12-THD)	
	17	1	**6V-9172**	2	NUT (1-7/16-12-THD)	

I-REFER TO HYDRAULIC INFORMATION SYSTEM

379-5869 **LINES GP-BOOM** *(contd.)* **i04461381**

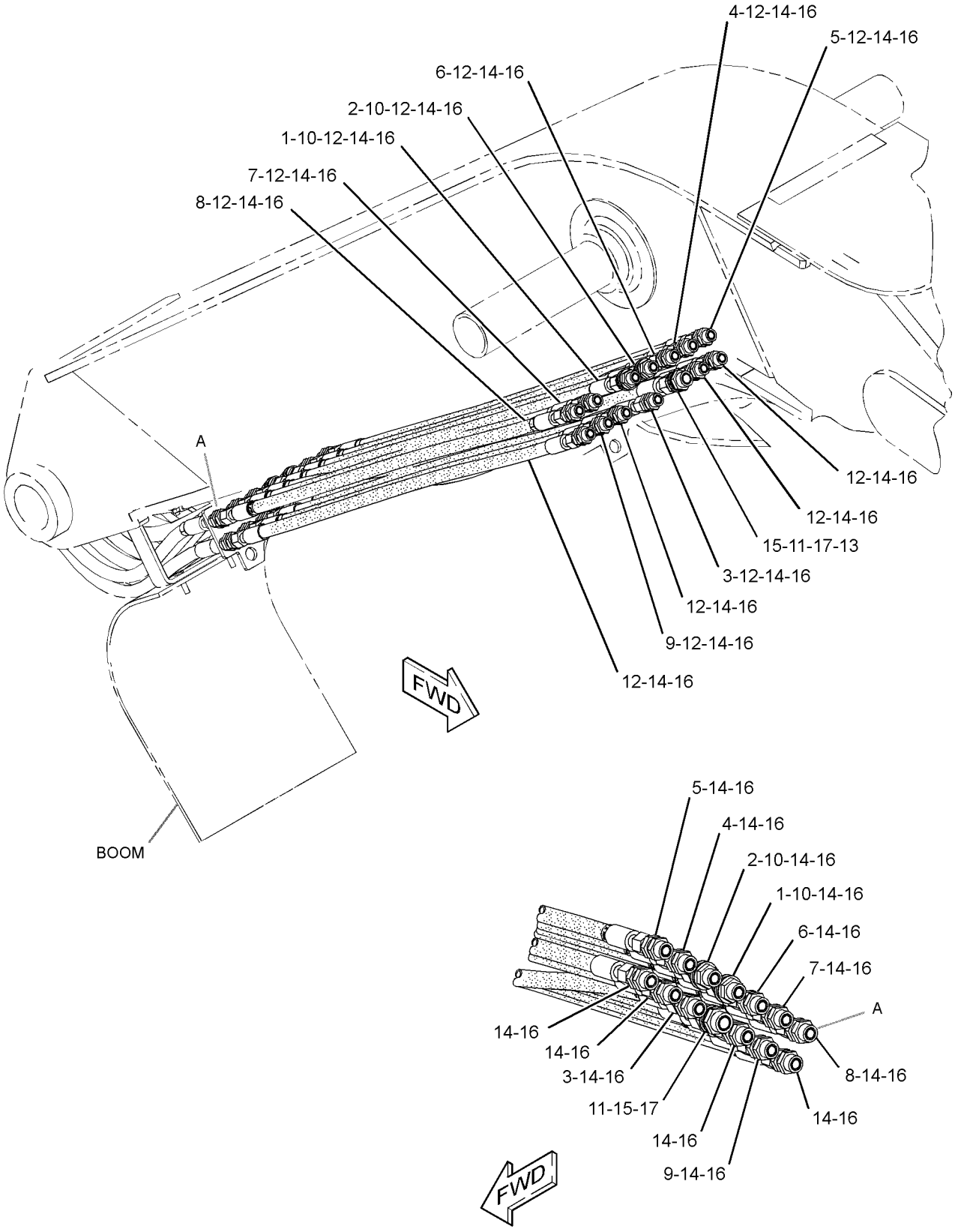

GRAPHIC #1 **<END>** g02735413

HYDRAULIC SYSTEM

383-6280 LINES GP-BOOM

S/N: F7B1-UP
PART OF 376-8000 LINKAGE AR-HARVESTER HEAD
AN ATTACHMENT

SMCS-5057 **i04536976**

NOTE	REF NO	GRAPHIC REF	PART NUMBER	QTY	PART NAME 1 2 3 4 5 6 (PRODUCT LEVEL)	SEE PAGE
	1	1	**205-0827**	2	TAG-IDENTIFICATION (SAW OIL SUPPLY)	
	2	1	**205-0828**	2	TAG-IDENTIFICATION (SAW OIL RETURN)	
	3	1	**205-0829**	2	TAG-IDENTIFICATION (SAW OIL DRAIN)	
	4	1	**383-6271**	1	TUBE AS	
	5	1	**383-6272**	1	TUBE AS	
	6	1	**383-6273**	1	TUBE AS	
	7	1	**383-6274**	1	TUBE AS	
	8	1	**383-6275**	1	TUBE AS	
	9	1	**383-6276**	1	TUBE AS	
	10	1	**383-6277**	1	TUBE AS	
	11	1	**383-6278**	1	TUBE AS	
	12	1	**383-6279**	1	TUBE AS	
	13	1	**383-6281**	1	TUBE AS	
	14	1	**383-6282**	1	TUBE AS	
	15	1	**383-6283**	1	TUBE AS	
	16	1	**383-6287**	1	HOSE AS	
		1	**153-0825**	1	COUPLING AS-PERMANENT	
		1	**7X-4827**	1	NUT (3/16X12-THD)	
G		1	**161-1835**		HOSE-HYDRAULIC (63-IN)	
	17	1	**383-6288**	1	HOSE AS	
		1	**153-0825**		COUPLING AS-PERMANENT	
		1	**7X-4827**	1	NUT (3/16X12-THD)	
G		1	**161-1835**		HOSE-HYDRAULIC (102-IN)	
	18	1	**5K-9090**	2	SEAL-O-RING	
	19	1	**6V-1616**	42	CLAMP-HALF	
	20	1	**6V-1876**	1	GROMMET	
M	21	1	**6V-3668**	2	BOLT (M12X1.75X30-MM)	
M	22	1	**6V-8197**	16	BOLT (M12X1.75X40-MM)	
	23	1	**6V-8400**	2	SEAL-O-RING	
M	24	1	**6V-8675**	18	BOLT (M12X1.75X35-MM)	
	25	1	**6V-9746**	2	SEAL-O-RING	
	26	1	**7G-5984**	1	CLIP (TAB)	
	27	1	**7G-5985**	1	CLIP (SLOT)	
	28	1	**5K-9090**	1	SEAL-O-RING	
	29	1	**8K-4691**	20	CLAMP-HALF	
M	30	1	**8T-4192**	2	BOLT (M12X1.75X25-MM)	
	31	1	**8T-4223**	38	WASHER-HARD (13.5X25.5X3-MM THK)	

G-ORDER BY THE INCH
M-METRIC PART

383-6280 **LINES GP-BOOM** *(contd.)* **i04536976**

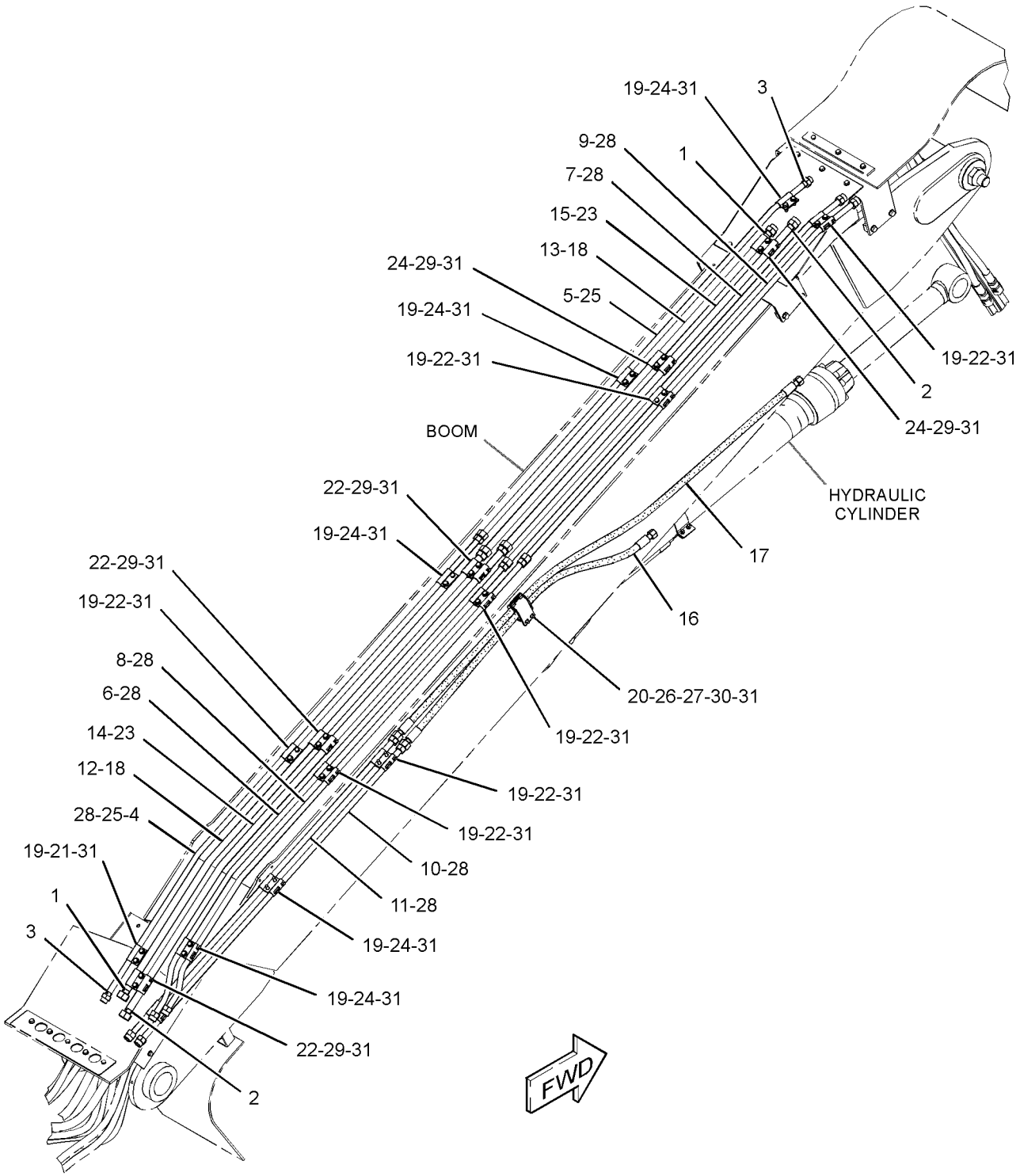

GRAPHIC #1 **<END>** g02736320

375-0161 LINES GP-BOOM CYLINDER

S/N: F7B1-UP

PART OF 373-6575, 373-6577 HYDRAULIC AR-CIRCULAR SAW, 373-6573 HYDRAULIC AR-INTERMITTENT SAW AN ATTACHMENT

SMCS-5057, 5456 **i04479478**

NOTE	REF NO	GRAPHIC REF	PART NUMBER	QTY	PART NAME 1 2 3 4 5 6 (PRODUCT LEVEL)	SEE PAGE
I	1	1	**365-7877**	1	HOSE AS	
I	2	1	**365-7878**	1	HOSE AS	

I-REFER TO HYDRAULIC INFORMATION SYSTEM

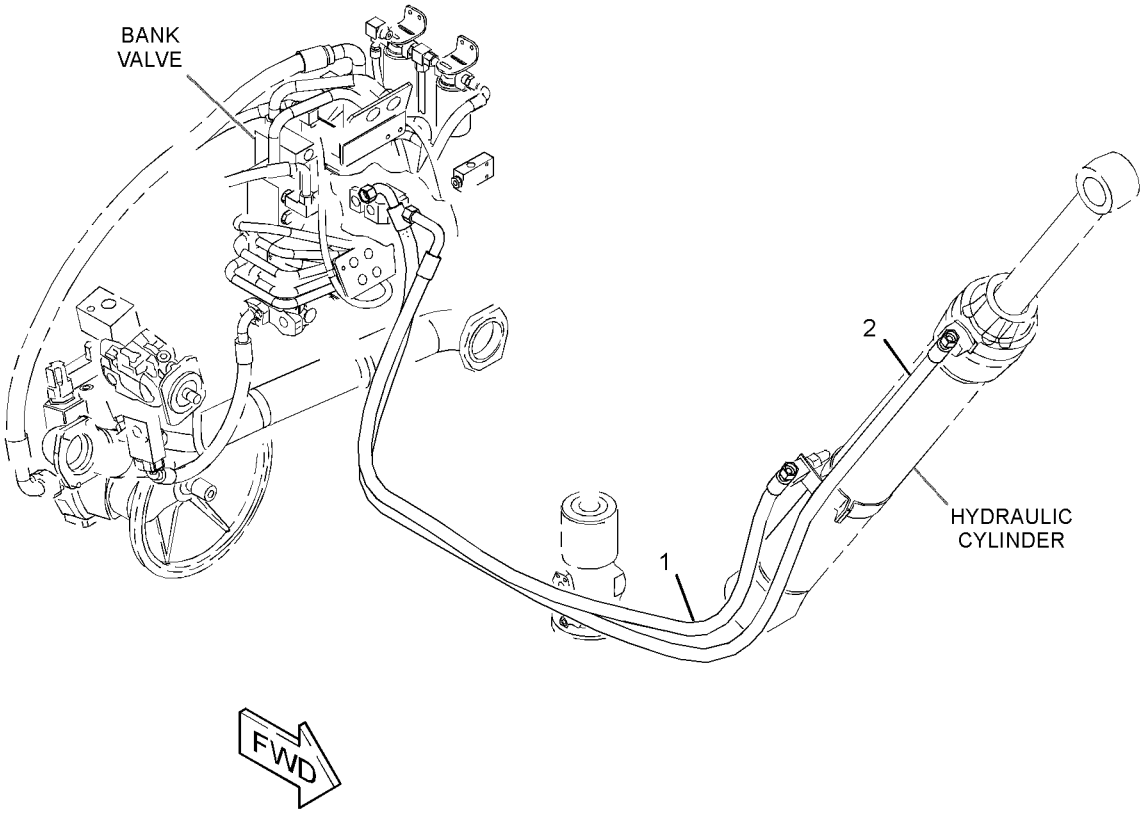

GRAPHIC #1 **<END>** g02734910

HYDRAULIC SYSTEM

382-0643 LINES GP-BOOM CYLINDER

S/N: F7B1-UP

PART OF 373-6571 HYDRAULIC AR-HARVESTER

AN ATTACHMENT

SMCS-5057, 5456 **i04479770**

NOTE	REF NO	GRAPHIC REF	PART NUMBER	QTY	PART NAME 1 2 3 4 5 6 (PRODUCT LEVEL)	SEE PAGE
I	1	1	**382-0644**	1	HOSE AS	
I	2	1	**382-0645**	1	HOSE AS	

I-REFER TO HYDRAULIC INFORMATION SYSTEM

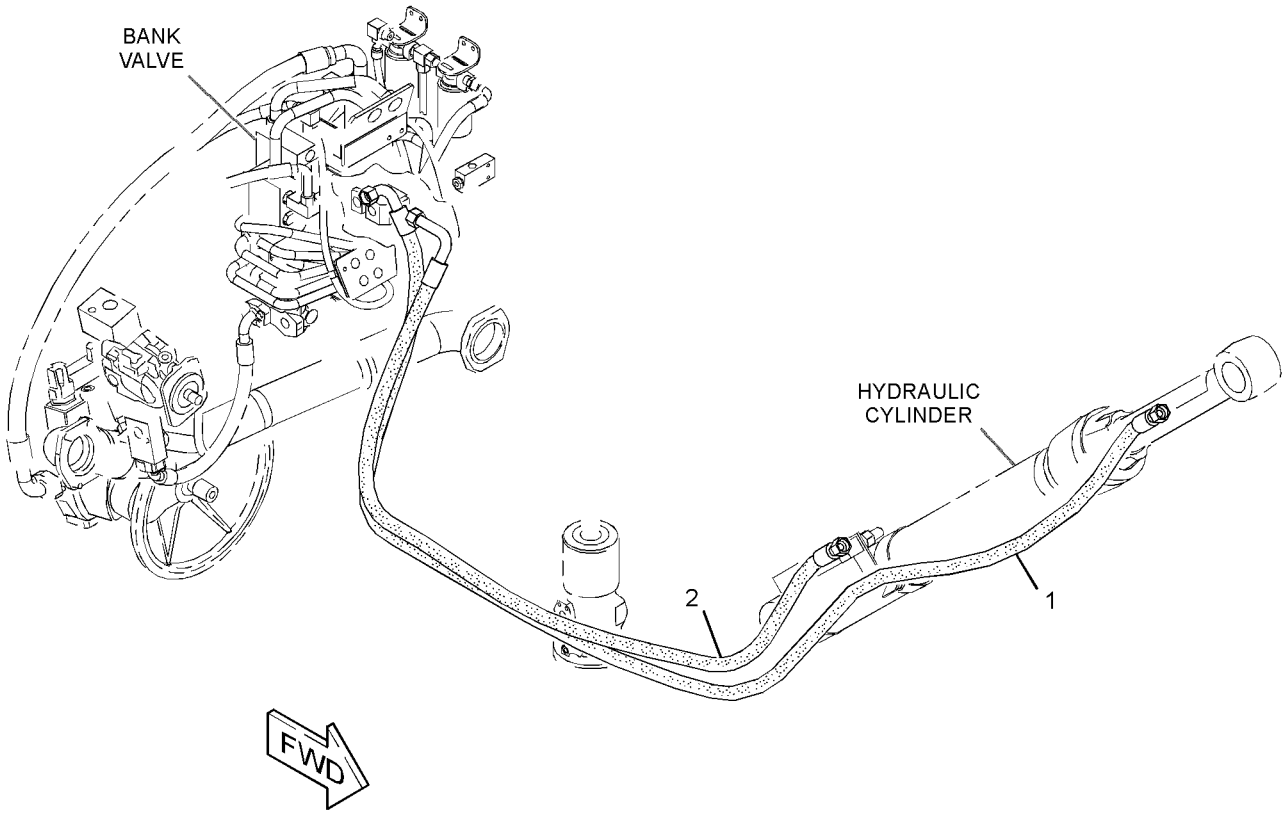

GRAPHIC #1 **<END>** g02735117

378-8870 LINES GP-FRONT–SAW

S/N: F7B1-UP

PART OF 379-5870 LINKAGE AR-FELLING HEAD

AN ATTACHMENT

SMCS-5057 **i04461329**

NOTE	REF NO	GRAPHIC REF	PART NUMBER	QTY	PART NAME 1 2 3 4 5 6 (PRODUCT LEVEL)	SEE PAGE
	1	1	**205-0827**	2	TAG-IDENTIFICATION (SAW OIL SUPPLY)	
	2	1	**205-0828**	2	TAG-IDENTIFICATION (SAW OIL RETURN)	
	3	1	**205-0829**	2	TAG-IDENTIFICATION (SAW OIL DRAIN)	
	4	1	**205-0830**	2	TAG-IDENTIFICATION (AA HEAD)	
	5	1	**205-0831**	2	TAG-IDENTIFICATION (AA ROD)	
	6	1	**205-0832**	2	TAG-IDENTIFICATION (GA HEAD)	
	7	1	**205-0833**	2	TAG-IDENTIFICATION (GA ROD)	
	8	1	**205-0834**	2	TAG-IDENTIFICATION (TILT HEAD)	
	9	1	**205-0835**	2	TAG-IDENTIFICATION (TILT ROD)	
I	10	1	**378-4585**	10	HOSE AS	
I	11	1	**378-4586**	2	HOSE AS	
I	12	1	**378-4587**	1	HOSE AS	
I	13	1	**380-0814**	1	HOSE AS	

I-REFER TO HYDRAULIC INFORMATION SYSTEM

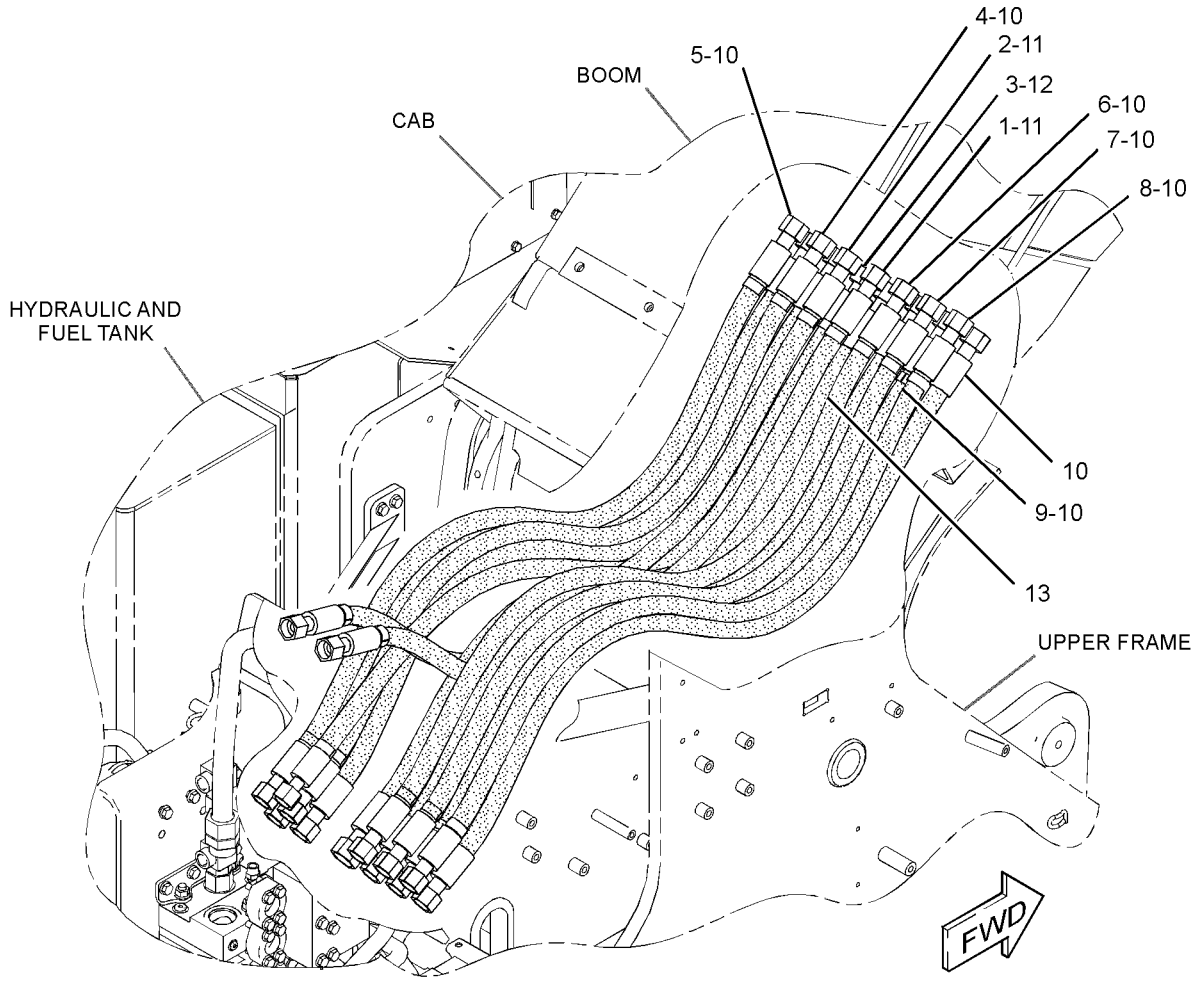

GRAPHIC #1 **<END>** g02735800

HYDRAULIC SYSTEM

378-8871 LINES GP-FRONT–SAW

S/N: F7B1-UP

PART OF 379-5860 LINKAGE AR-INTERMITTENT SAW

AN ATTACHMENT

SMCS-5057 **i04963061**

NOTE	REF NO	GRAPHIC REF	PART NUMBER	QTY	PART NAME 1 2 3 4 5 6 (PRODUCT LEVEL)	SEE PAGE
	1	1	**205-0829**	2	TAG-IDENTIFICATION (SAW OIL DRAIN)	
	2	1	**205-0830**	2	TAG-IDENTIFICATION (AA HEAD)	
	3	1	**205-0831**	2	TAG-IDENTIFICATION (AA ROD)	
	4	1	**205-0832**	2	TAG-IDENTIFICATION (GA HEAD)	
	5	1	**205-0833**	2	TAG-IDENTIFICATION (GA ROD)	
	6	1	**205-0834**	2	TAG-IDENTIFICATION (TILT HEAD)	
	7	1	**205-0835**	2	TAG-IDENTIFICATION (TILT ROD)	
I	8	1	**378-4585**	10	HOSE AS	
I	9	1	**378-4587**	1	HOSE AS	
I	10	1	**379-5850**	1	HOSE AS	
I	11	1	**378-4589**	1	HOSE AS	
I	12	1	**380-0814**	1	HOSE AS	

I-REFER TO HYDRAULIC INFORMATION SYSTEM

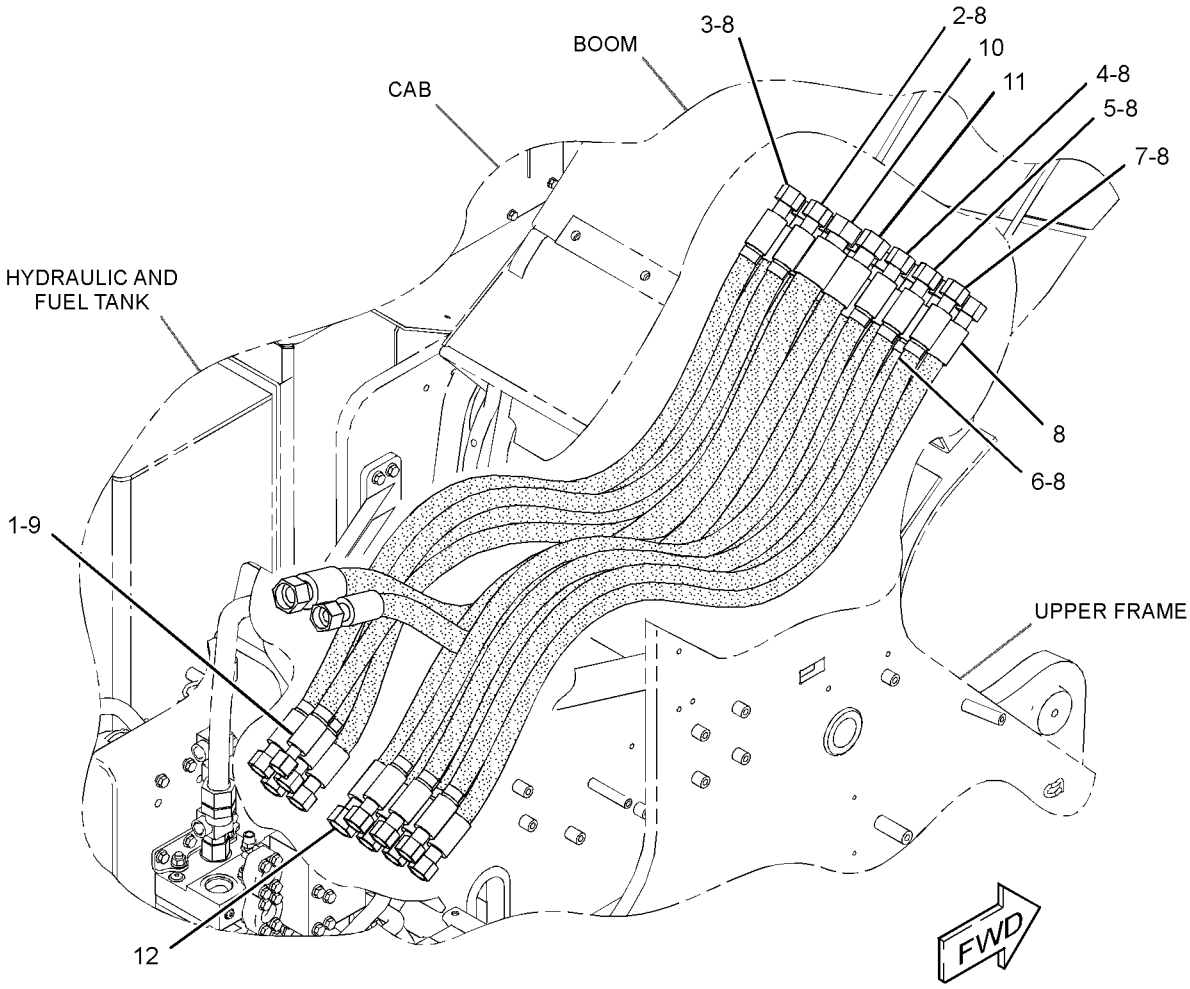

GRAPHIC #1 **<END>** g02736476

HYDRAULIC SYSTEM

339-8307 LINES GP-HOOD TILT

S/N: F7B1-UP

PART OF 362-3896 HYDRAULIC AR

SMCS-725L **i04465409**

NOTE	REF NO	GRAPHIC REF	PART NUMBER	QTY	PART NAME 1 2 3 4 5 6 (PRODUCT LEVEL)	SEE PAGE
Y	1	1	**251-8281**	1	CYLINDER GP-HOOD TILT	269
I	2	1	**363-1807**	1	HOSE AS	
I	3	1	**363-1808**	1	HOSE AS	
Y	4	1	**363-1809**	1	PUMP & MOTOR GP-HOOD TILT	346
	5	1	*148-8325*	3	CONNECTOR AS	
					(EACH INCLUDES)	
		1	**6V-8641**	1	CONNECTOR	
		1	**3J-1907**	1	SEAL-O-RING	
		1	**4J-5477**	1	SEAL-O-RING	
	6	1	*148-8368*	1	ELBOW AS	
		1	**6V-8627**	1	ELBOW	
		1	**3J-1907**	1	SEAL-O-RING	
		1	**4J-5477**	1	SEAL-O-RING	
M	7	1	**8T-4189**	4	BOLT (M8X1.25X20-MM)	
	8	1	**8T-4224**	4	WASHER-HARD (8.8X16X2-MM THK)	

I-REFER TO HYDRAULIC INFORMATION SYSTEM
M-METRIC PART
Y-SEPARATE ILLUSTRATION

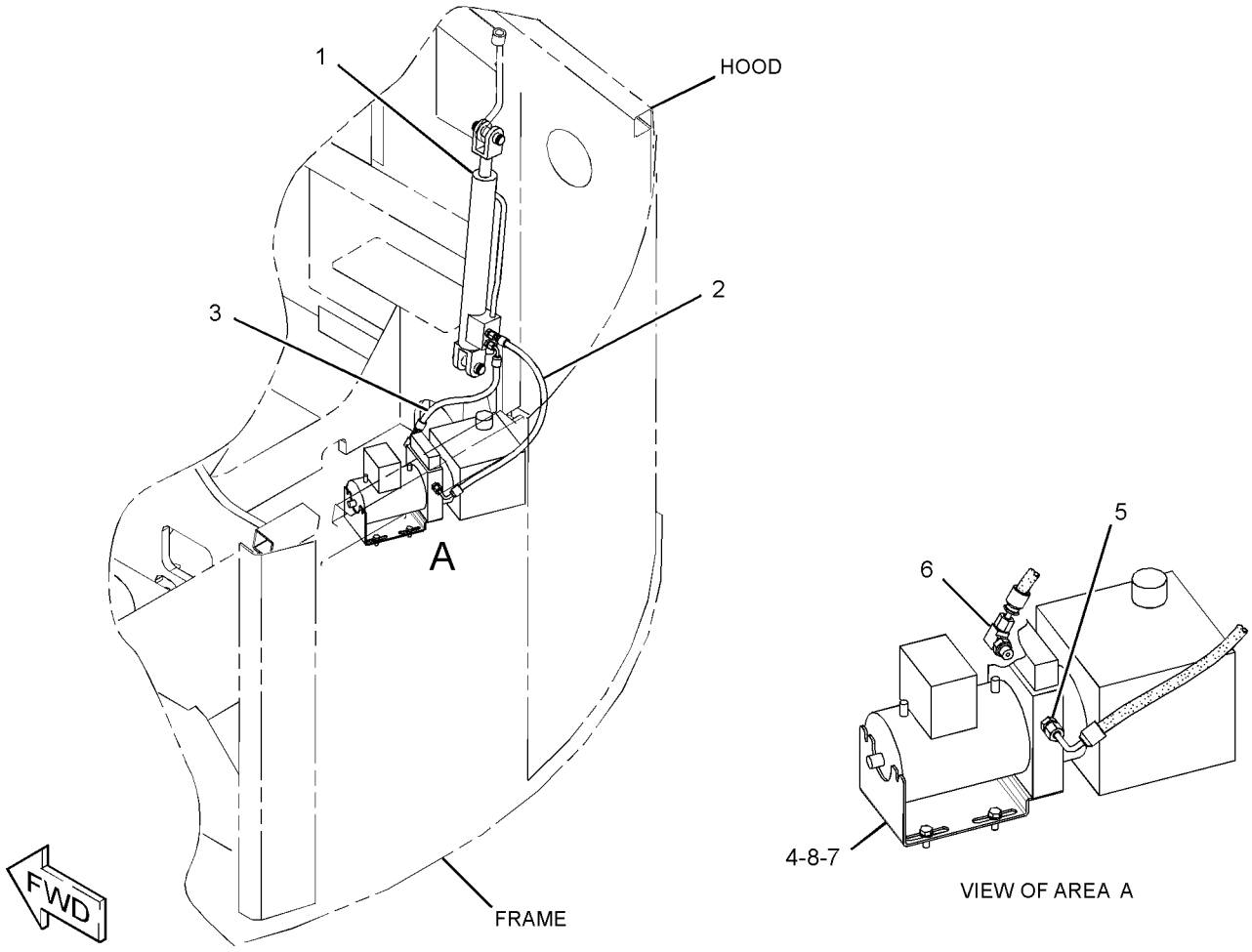

GRAPHIC #1 **<END>** g02729199

HYDRAULIC SYSTEM

375-0165 LINES GP-HYDRAULIC

S/N: F7B1-UP

PART OF 376-8000 LINKAGE AR-HARVESTER HEAD

AN ATTACHMENT

SMCS-5057 **i04661095**

NOTE	REF NO	GRAPHIC REF	PART NUMBER	QTY	PART NAME 1 2 3 4 5 6 (PRODUCT LEVEL)	SEE PAGE
	1	1	**104-9693**	3	FLANGE	
	2	1	**364-0488**	1	TUBE AS	
	3	1	**364-0489**	1	TUBE AS	
I	4	1	**366-0696**	1	HOSE AS	
I	5	1	**366-0697**	1	HOSE AS	
	6	1	**373-6583**	1	HOSE AS	
	7	1	**373-6584**	1	HOSE AS	
	8	1	**375-0168**	1	HOSE AS	
	9	1	**375-0169**	2	HOSE AS	
	10	1	**375-0176**	1	BRACKET	
	11	1	**375-0177**	1	TUBE AS	
	12	1	**375-0178**	1	TUBE AS	
I	13	1	**378-8859**	1	HOSE AS	
	14	1	**378-8869**	1	MANIFOLD	
I	15	1	**381-0215**	1	HOSE AS	
	16	1	**381-0217**	1	PLATE AS	
		1	**7T-1099**	2	LINK	
M		1	**8T-3490**	3	NUT-WELD (M10X1.5-THD)	
	17	1	**381-0392**	1	HOSE AS	
M	18	1	**101-7404**	12	BOLT-SOCKET HEAD (M10X1.5X30-MM)	
	19	1	**132-5789**	1	CLIP	
	20	1	*148-8347*	1	ELBOW AS	
		1	**6V-9007**	1	ELBOW	
		1	**3D-2824**	1	SEAL-O-RING	
		1	**6V-9746**	1	SEAL-O-RING	
	21	1	*148-8387*	2	ELBOW AS	
					(EACH INCLUDES)	
		1	**6V-9855**	1	ELBOW	
		1	**6V-8400**	1	SEAL-O-RING	
	22	1	*165-4932*	1	TEE AS	
		1	**6V-8786**	1	TEE	
		1	**2S-4078**	1	SEAL-O-RING	
		1	**6V-8400**	2	SEAL-O-RING	
	23	1	**1P-3702**	2	SEAL-RECTANGULAR	
	24	1	**1P-3703**	4	SEAL-RECTANGULAR	
	25	1	**2P-1293**	4	LOCKNUT (1-3/16-12-THD)	
	26	1	**5K-9090**	4	SEAL-O-RING	
	27	1	**5P-7466**	1	CLIP (SLOT)	
	28	1	**5P-7467**	1	CLIP (TAB)	
	29	1	**5P-8112**	1	GROMMET	
	30	1	*357-4464*	1	ELBOW AS	
		1	**5K-9090**	1	SEAL-O-RING	
		1	**6V-9854**	1	ELBOW	
	31	1	*357-4381*	1	CONNECTOR AS	
		1	**5K-9090**	1	SEAL-O-RING	
		1	**6V-8635**	1	CONNECTOR	
		1	**7M-8485**	1	SEAL-O-RING	
	32	1	**6V-8948**	1	REDUCER	
	33	1	**6V-8998**	2	UNION	
	34	1	**6V-9172**	2	NUT (1-7/16-12-THD)	
	35	1	**6V-9746**	4	SEAL-O-RING	
	36	1	**262-7873**	8	WASHER (30.5X48X2-MM THK)	
	37	1	**7G-3832**	1	GROMMET	
	38	1	**7G-3833**	1	CLIP (TAB)	
	39	1	**7G-3834**	1	CLIP (SLOT)	

375-0165 **LINES GP-HYDRAULIC** *(contd.)* **i04661095**

NOTE	REF NO	GRAPHIC REF	PART NUMBER	QTY	PART NAME 1 2 3 4 5 6 (PRODUCT LEVEL)	SEE PAGE
	40	1	**7G-5984**	1	CLIP (TAB)	
	41	1	**7G-5985**	1	CLIP (SLOT)	
	42	1	**7G-5986**	1	GROMMET	
	43	1	**389-2246**	1	PLATE	
	44	1	**8T-4121**	21	WASHER-HARD (11X21X2.5-MM THK)	
M	45	1	**8T-4133**	4	NUT (M10X1.5-THD)	
M	46	1	**8T-4182**	8	BOLT (M10X1.5X45-MM)	
M	47	1	**8T-4185**	4	BOLT (M10X1.5X50-MM)	
M	48	1	**8T-4195**	1	BOLT (M10X1.5X30-MM)	
M	49	1	**8T-4198**	4	BOLT (M10X1.5X100-MM)	
	50	1	*148-8453*	2	TEE AS	
					(EACH INCLUDES)	
		1	**5K-9090**	1	SEAL-O-RING	
		1	**6V-8400**	2	SEAL-O-RING	
		1	**8T-5907**	1	TEE-UNION	
	51	1	**8T-9403**	4	FLANGE-HALF	

I-REFER TO HYDRAULIC INFORMATION SYSTEM
M-METRIC PART

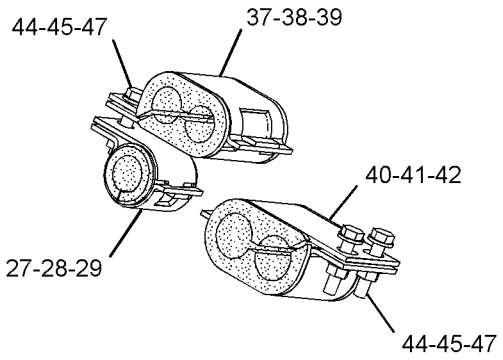

VIEW OF AREA B
(BRACKET REMOVED FOR CLARITY)

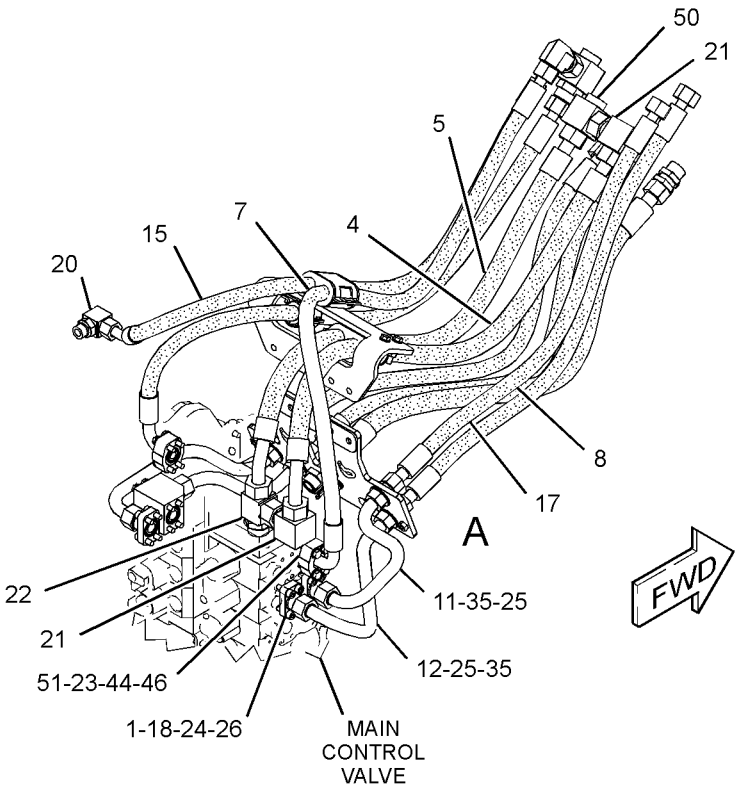

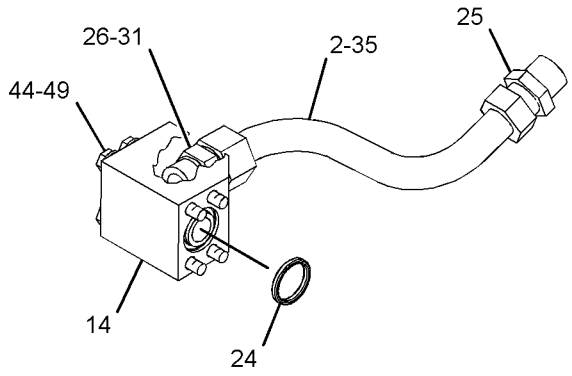

VIEW OF AREA C

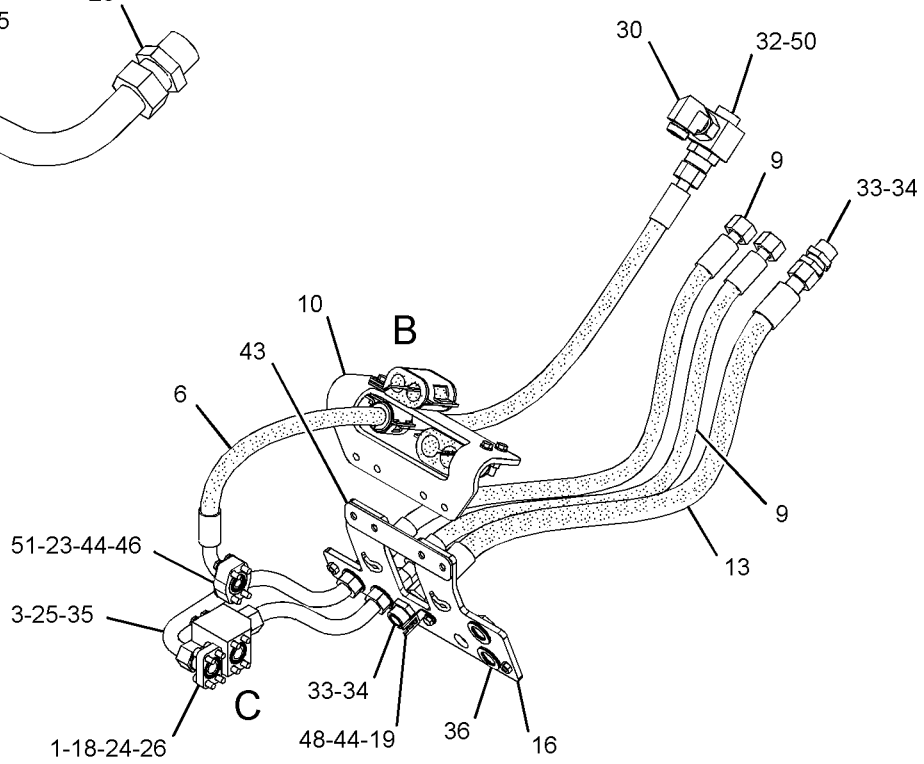

VIEW OF AREA A
(PARTS REMOVED FOR CLARITY)

GRAPHIC #1 **<END>** g03033377

HYDRAULIC SYSTEM

355-8897 LINES GP-PILOT

S/N: F7B1-UP

PART OF 362-3896 HYDRAULIC AR

SMCS-5057, 5059 **i04465698**

NOTE	REF NO	GRAPHIC REF	PART NUMBER	QTY	PART NAME 1 2 3 4 5 6 (PRODUCT LEVEL)	SEE PAGE
	1	1	**6V-0852**	7	CAP-DUST	
	2	1	*150-4027*	2	TEE AS	
					(EACH INCLUDES)	
		1	**3E-2310**	1	TEE	
		1	**3J-1907**	1	SEAL-O-RING	
		1	**6V-8397**	1	SEAL-O-RING	
	3	1	*150-4036*	1	TEE AS	
		1	**118-0911**	1	TEE-O-RING PORT	
		1	**3K-0360**	1	SEAL-O-RING	
Y	4	1	**158-8987**	1	FILTER & VALVE GP-PILOT (HYDRAULIC OIL)	285
	5	1	*165-6365*	5	FITTING AS	
					(EACH INCLUDES)	
		1	**7W-7381**	1	FITTING-OUTLET	
		1	**3J-1907**	1	SEAL-O-RING	
Y	6	1	**167-1555**	1	VALVE GP-PRESSURE CONTROL	403
	7	1	*168-1968*	1	TEE AS	
		1	**126-6872**	1	TEE	
		1	**3J-1907**	1	SEAL-O-RING	
		1	**6V-8397**	1	SEAL-O-RING	
	8	1	**200-6345**	1	MOUNT (DUAL SWIVEL)	
	9	1	**204-2281**	2	STRAP-CABLE	
	10	1	**308-9433**	1	VALVE GP-CHECK	
		1	**3K-0360**	1	SEAL-O-RING	
		1	**6V-8398**	1	SEAL-O-RING	
	11	1	**361-5285**	1	BRACKET AS	
M		1	**8T-3612**	1	NUT-WELD (M8X1.25-THD)	
I	12	1	**362-3859**	1	HOSE AS	
I	13	1	**363-1794**	1	HOSE AS	
I	14	1	**363-1796**	1	HOSE AS	
I	15	1	**363-1797**	1	HOSE AS	
I	16	1	**363-1799**	1	HOSE AS	
I	17	1	**363-1800**	1	HOSE AS	
I	18	1	**363-1801**	1	HOSE AS	
I	19	1	**363-1802**	1	HOSE AS	
I	20	1	**363-1803**	1	HOSE AS	
I	21	1	**363-1816**	1	HOSE AS	
I	22	1	**363-1817**	1	HOSE AS	
I	23	1	**363-1818**	1	HOSE AS	
I	24	1	**363-1820**	1	HOSE AS	
I	25	1	**367-2101**	1	HOSE AS	
I	26	1	**367-2141**	1	HOSE AS	
Y	27	1	*375-2674*	1	VALVE GP-SOLENOID & MANIFOLD	412
	28	1	**067-2551**	1	CLIP	
M	29	1	**085-8091**	2	BOLT (M10X1.5X55-MM)	
	30	1	*148-8336*	3	CONNECTOR AS	
					(EACH INCLUDES)	
		1	**6V-8636**	1	CONNECTOR	
		1	**3J-1907**	1	SEAL-O-RING	
		1	**6V-8397**	1	SEAL-O-RING	
	31	1	*148-8340*	1	CONNECTOR AS	
		1	**6V-8639**	1	CONNECTOR	
		1	**3K-0360**	1	SEAL-O-RING	
		1	**6V-8398**	1	SEAL-O-RING	
	32	1	*148-8345*	2	CONNECTOR AS	
					(EACH INCLUDES)	
		1	**6V-8638**	1	CONNECTOR	

355-8897 **LINES GP-PILOT** *(contd.)* **i04465698**

NOTE	REF NO	GRAPHIC REF	PART NUMBER	QTY	PART NAME 1 2 3 4 5 6 (PRODUCT LEVEL)	SEE PAGE
		1	**2M-9780**	1	SEAL-O-RING	
		1	**6V-8398**	1	SEAL-O-RING	
	33	1	*148-8353*	1	ELBOW AS	
		1	**6V-9001**	1	ELBOW	
		1	**3J-1907**	1	SEAL-O-RING	
		1	**6V-8397**	1	SEAL-O-RING	
	34	1	*148-8354*	1	ELBOW AS	
		1	**6V-9002**	1	ELBOW	
		1	**3K-0360**	1	SEAL-O-RING	
		1	**6V-8398**	1	SEAL-O-RING	
	35	1	*148-8364*	2	ELBOW AS	
					(EACH INCLUDES)	
		1	**6V-8625**	1	ELBOW	
		1	**3K-0360**	1	SEAL-O-RING	
		1	**6V-8398**	1	SEAL-O-RING	
	36	1	*148-8367*	2	ELBOW AS	
					(EACH INCLUDES)	
		1	**6V-9850**	1	ELBOW	
		1	**6V-8397**	1	SEAL-O-RING	
	37	1	*148-8372*	1	ELBOW AS	
		1	**6V-8721**	1	ELBOW	
		1	**2M-9780**	1	SEAL-O-RING	
		1	**6V-8398**	1	SEAL-O-RING	
	38	1	*148-8378*	5	ELBOW AS	
					(EACH INCLUDES)	
		1	**6V-8724**	1	ELBOW	
		1	**3J-1907**	1	SEAL-O-RING	
		1	**6V-8397**	1	SEAL-O-RING	
	39	1	*148-8435*	2	TEE AS	
					(EACH INCLUDES)	
		1	**6V-8781**	1	TEE	
		1	**3J-1907**	1	SEAL-O-RING	
		1	**6V-8397**	2	SEAL-O-RING	
	40	1	*148-8444*	1	TEE AS-SWIVEL	
		1	**6V-9837**	1	TEE-SWIVEL	
		1	**6V-8398**	2	SEAL-O-RING	
	41	1	*150-3036*	3	ELBOW AS	
					(EACH INCLUDES)	
		1	**8T-1905**	1	ELBOW	
		1	**3J-1907**	1	SEAL-O-RING	
		1	**6V-8397**	1	SEAL-O-RING	
	42	1	*150-4043*	1	CONNECTOR AS	
		1	**6V-9873**	1	CONNECTOR	
		1	**3J-1907**	1	SEAL-O-RING	
		1	**6V-8398**	1	SEAL-O-RING	
	43	1	*153-6252*	1	CONNECTOR AS	
		1	**9X-8408**	1	CONNECTOR	
		1	**6V-8398**	1	SEAL-O-RING	
		1	**7M-8485**	1	SEAL-O-RING	
	44	1	*164-5567*	7	COUPLER AS-QUICK DISCONNECT (MALE)	
					(EACH INCLUDES)	
		1	**6V-3965**	1	FITTING (QUICK DISCONNECT)	
		1	**214-7568**	1	SEAL-O-RING	
	45	1	**1S-0994**	3	CLIP	
	46	1	*241-6215*	1	ELBOW AS	
		1	**6V-8076**	1	ELBOW	
		1	**3J-1907**	1	SEAL-O-RING	
	47	1	**5K-5338**	1	CLIP	
	48	1	**5P-7462**	1	CLIP (SLOT)	

355-8897 **LINES GP-PILOT** *(contd.)* **i04465698**

NOTE	REF NO	GRAPHIC REF	PART NUMBER	QTY	PART NAME 1 2 3 4 5 6 (PRODUCT LEVEL)	SEE PAGE
	49	1	**5P-7463**	1	CLIP (TAB)	
	50	1	**6D-4246**	1	CLIP	
	51	1	**6V-0683**	1	GROMMET	
	52	1	**8T-4121**	13	WASHER-HARD (11X21X2.5-MM THK)	
M	53	1	**8T-4136**	7	BOLT (M10X1.5X25-MM)	
M	54	1	**8T-4154**	1	BOLT (M8X1.25X35-MM)	
M	55	1	**8T-4196**	2	BOLT (M10X1.5X35-MM)	
	56	1	**8T-4224**	5	WASHER-HARD (8.8X16X2-MM THK)	
M	57	1	**8T-4908**	4	BOLT (M8X1.25X25-MM)	
M	58	1	**8T-6685**	2	BOLT (M10X1.5X110-MM)	
	59	1	**9M-8406**	3	CLIP	

I-REFER TO HYDRAULIC INFORMATION SYSTEM
M-METRIC PART
Y-SEPARATE ILLUSTRATION

355-8897 **LINES GP-PILOT** *(contd.)* **i04465698**

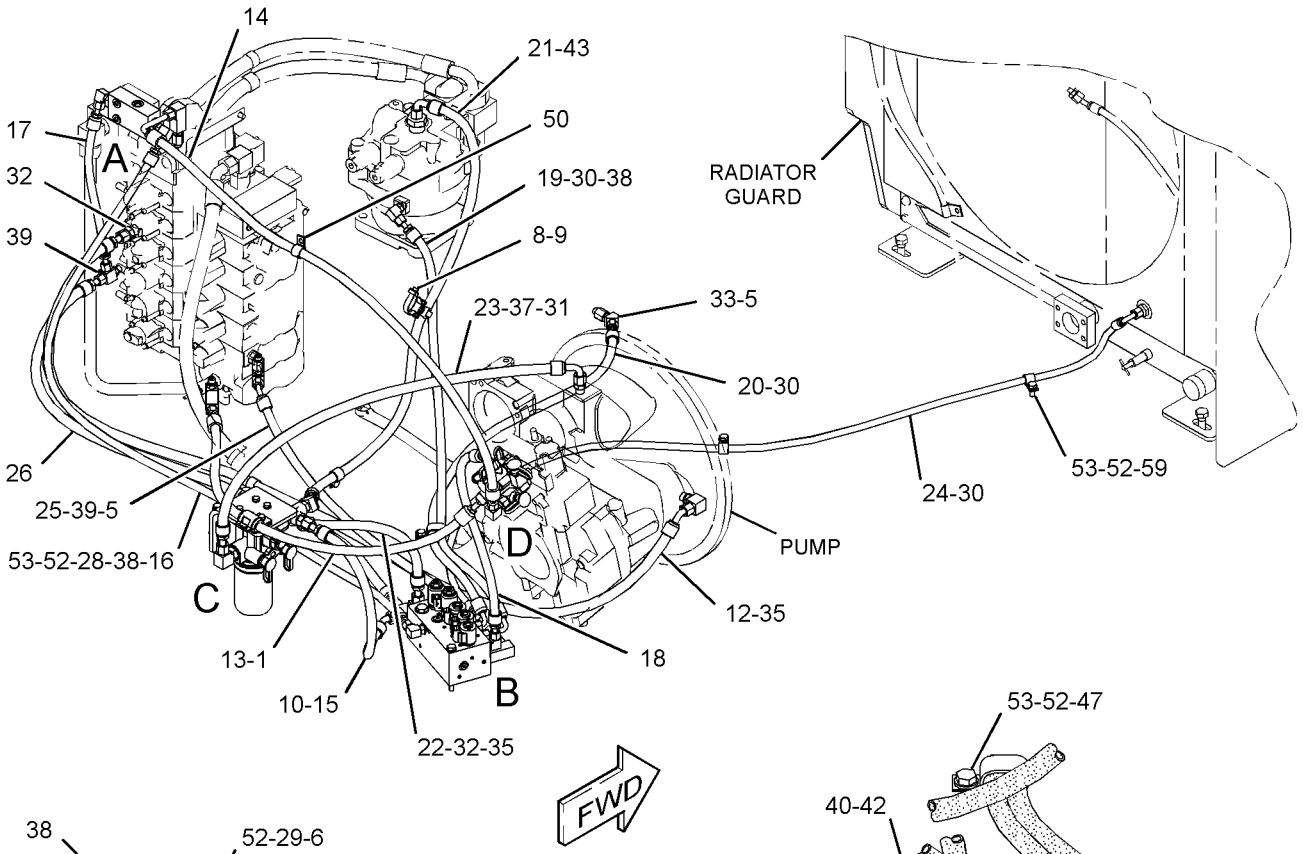

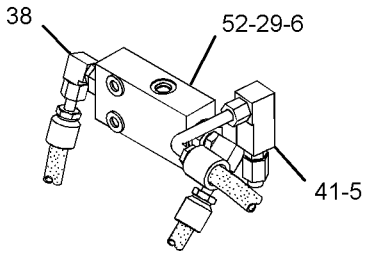

VIEW OF AREA A

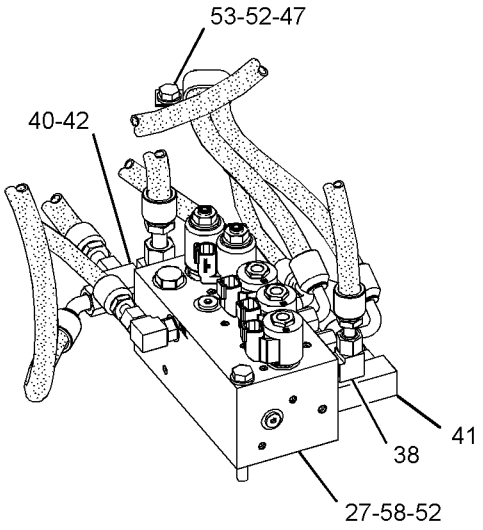

VIEW OF AREA B

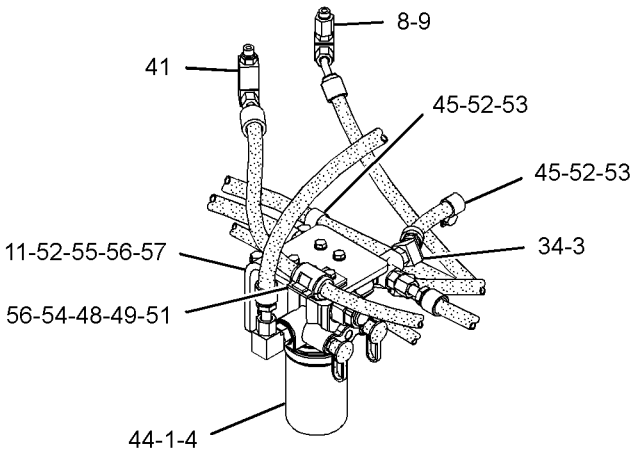

VIEW OF AREA C

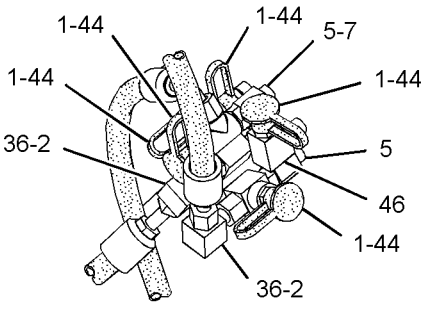

VIEW OF AREA D

GRAPHIC #1 **<END>** g02729653

HYDRAULIC SYSTEM

375-0160 LINES GP-PILOT

S/N: F7B1-UP

PART OF 373-6575, 373-6577 HYDRAULIC AR-CIRCULAR SAW, 373-6571 HYDRAULIC AR-HARVESTER, 373-6573 HYDRAULIC AR-INTERMITTENT SAW AN ATTACHMENT

SMCS-5057, 5059 **i04477949**

NOTE	REF NO	GRAPHIC REF	PART NUMBER	QTY	PART NAME 1 2 3 4 5 6 (PRODUCT LEVEL)	SEE PAGE
	1	1	**123-4750**	1	VALVE-CHECK	
	2	1	*165-6365*	1	FITTING AS	
		1	**3J-1907**	1	SEAL-O-RING	
		1	**7W-7381**	1	FITTING-OUTLET	
I	3	1	**363-1798**	1	HOSE AS	
I	4	1	**367-2102**	1	HOSE AS	
I	5	1	**367-2103**	1	HOSE AS	
I	6	1	**367-2104**	1	HOSE AS	
	7	1	**067-2551**	1	CLIP	
	8	1	*148-8336*	2	CONNECTOR AS	
					(EACH INCLUDES)	
		1	**3J-1907**	1	SEAL-O-RING	
		1	**6V-8397**	1	SEAL-O-RING	
		1	**6V-8636**	1	CONNECTOR	
	9	1	*148-8340*	1	CONNECTOR AS	
		1	**3K-0360**	1	SEAL-O-RING	
		1	**6V-8398**	1	SEAL-O-RING	
		1	**6V-8639**	1	CONNECTOR	
	10	1	*150-3036*	1	ELBOW AS	
		1	**3J-1907**	1	SEAL-O-RING	
		1	**6V-8397**	1	SEAL-O-RING	
		1	**8T-1905**	1	ELBOW	
	11	1	**1S-0994**	1	CLIP	
	12	1	*250-1417*	1	ELBOW AS	
		1	**3J-1907**	1	SEAL-O-RING	
		1	**6V-8397**	2	SEAL-O-RING	
		1	**250-1416**	1	ELBOW	
	13	1	**8T-4121**	2	WASHER-HARD (11X21X2.5-MM THK)	
M	14	1	**8T-4195**	2	BOLT (M10X1.5X30-MM)	

I-REFER TO HYDRAULIC INFORMATION SYSTEM
M-METRIC PART

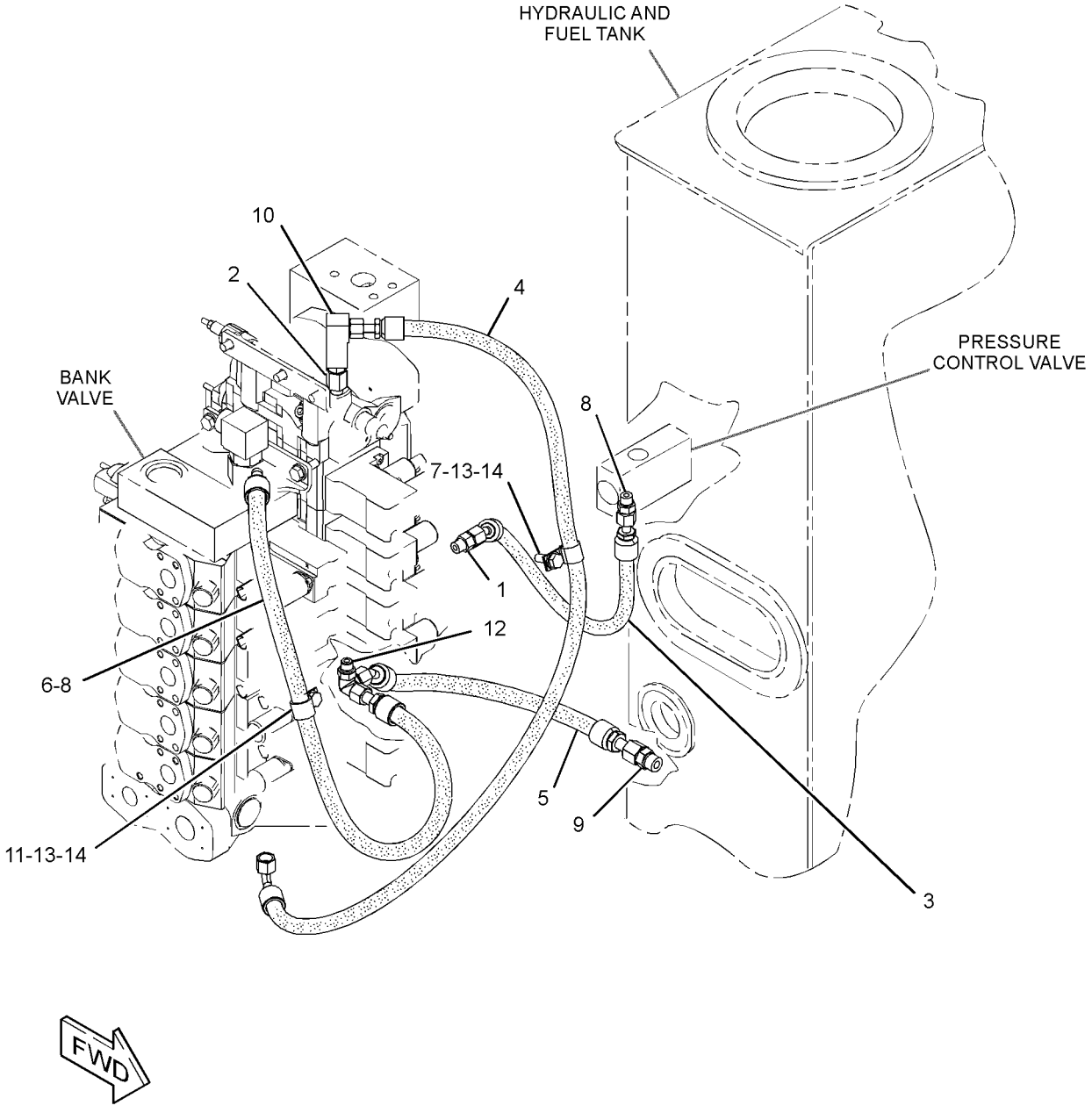

GRAPHIC #1 **<END>** g02730008

HYDRAULIC SYSTEM

339-8308 LINES GP-PUMP

S/N: F7B1-UP

PART OF 373-6575, 373-6577 HYDRAULIC AR-CIRCULAR SAW, 373-6573 HYDRAULIC AR-INTERMITTENT SAW AN ATTACHMENT

SMCS-5057 **i04477985**

NOTE	REF NO	GRAPHIC REF	PART NUMBER	QTY	PART NAME 1 2 3 4 5 6 (PRODUCT LEVEL)	SEE PAGE
	1	1	**4E-4334**	2	HOSE	
	2	1	**220-8658**	1	MANIFOLD	
	3	1	**364-0498**	1	TUBE AS	
	4	1	**364-0499**	1	TUBE AS	
	5	1	**364-0501**	1	TUBE AS	
I	6	1	**365-7864**	1	HOSE AS	
I	7	1	**365-7865**	1	HOSE AS	
	8	1	**365-7866**	1	ADAPTER	
	9	1	**1P-3703**	2	SEAL-RECTANGULAR	
	10	1	**1P-3704**	3	SEAL-RECTANGULAR	
	11	1	**1P-4582**	2	FLANGE-HALF	
	12	1	**1P-5767**	4	FLANGE-HALF	
	13	1	**221-8571**	2	CLAMP	
	14	1	**222-2277**	4	CLAMP	
	15	1	**4J-0527**	1	SEAL-O-RING	
	16	1	**5P-1979**	2	SEAL-O-RING	
	17	1	**5P-7470**	1	CLIP (SLOT)	
	18	1	**5P-7471**	1	CLIP (TAB)	
	19	1	**6V-0400**	4	FLANGE-HALF	
	20	1	**6V-1875**	1	GROMMET	
	21	1	**8T-4121**	2	WASHER-HARD (11X21X2.5-MM THK)	
M	22	1	**8T-4133**	1	NUT (M10X1.5-THD)	
M	23	1	**8T-4184**	12	BOLT (M12X1.75X45-MM)	
M	24	1	**8T-4186**	1	BOLT (M10X1.5X40-MM)	
M	25	1	**8T-4194**	8	BOLT (M12X1.75X50-MM)	
	26	1	**8T-4223**	24	WASHER-HARD (13.5X25.5X3-MM THK)	
M	27	1	**8T-4910**	4	BOLT (M12X1.75X60-MM)	
M	28	1	**8T-7338**	8	BOLT (M16X2X45-MM)	
	29	1	**9X-8257**	8	WASHER (17.5X30X3.5-MM THK)	
G	30	1	**122-6876**		HOSE-HYDRAULIC (6-IN)	

G-ORDER BY THE INCH
I-REFER TO HYDRAULIC INFORMATION SYSTEM
M-METRIC PART

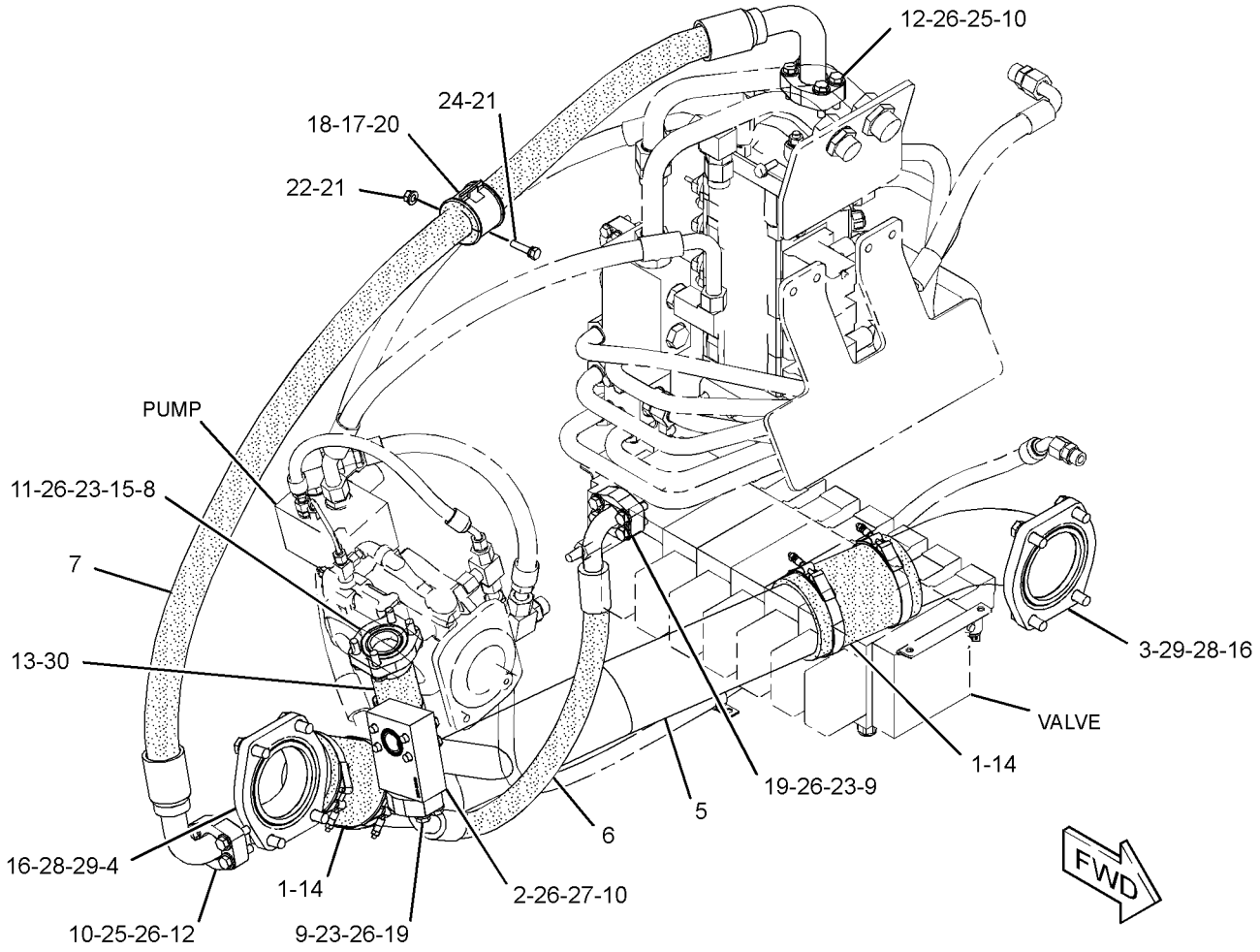

GRAPHIC #1 **<END>** g02727243

HYDRAULIC SYSTEM

378-8856 LINES GP-PUMP

S/N: F7B1-UP

PART OF 373-6571 HYDRAULIC AR-HARVESTER

AN ATTACHMENT

SMCS-5057 **i04479772**

NOTE	REF NO	GRAPHIC REF	PART NUMBER	QTY	PART NAME 1 2 3 4 5 6 (PRODUCT LEVEL)	SEE PAGE
	1	1	**4E-4334**	2	HOSE	
	2	1	**220-8658**	1	MANIFOLD	
	3	1	**364-0498**	1	TUBE AS	
	4	1	**364-0499**	1	TUBE AS	
I	5	1	**365-7864**	1	HOSE AS	
I	6	1	**365-7865**	1	HOSE AS	
	7	1	**365-9916**	1	TUBE	
	8	1	**1P-3703**	2	SEAL-RECTANGULAR	
	9	1	**1P-3704**	3	SEAL-RECTANGULAR	
	10	1	**1P-5767**	4	FLANGE-HALF	
	11	1	**222-2277**	4	CLAMP	
	12	1	**5P-1979**	2	SEAL-O-RING	
	13	1	**5P-7470**	1	CLIP (SLOT)	
	14	1	**5P-7471**	1	CLIP (TAB)	
	15	1	**6V-0400**	4	FLANGE-HALF	
	16	1	**6V-1875**	1	GROMMET	
	17	1	**8T-4121**	2	WASHER-HARD (11X21X2.5-MM THK)	
M	18	1	**8T-4133**	1	NUT (M10X1.5-THD)	
M	19	1	**8T-4184**	8	BOLT (M12X1.75X45-MM)	
M	20	1	**8T-4186**	1	BOLT (M10X1.5X40-MM)	
M	21	1	**8T-4194**	8	BOLT (M12X1.75X50-MM)	
	22	1	**8T-4223**	20	WASHER-HARD (13.5X25.5X3-MM THK)	
M	23	1	**8T-4910**	4	BOLT (M12X1.75X60-MM)	
M	24	1	**8T-7338**	8	BOLT (M16X2X45-MM)	
	25	1	**9X-8257**	8	WASHER (17.5X30X3.5-MM THK)	

I-REFER TO HYDRAULIC INFORMATION SYSTEM
M-METRIC PART

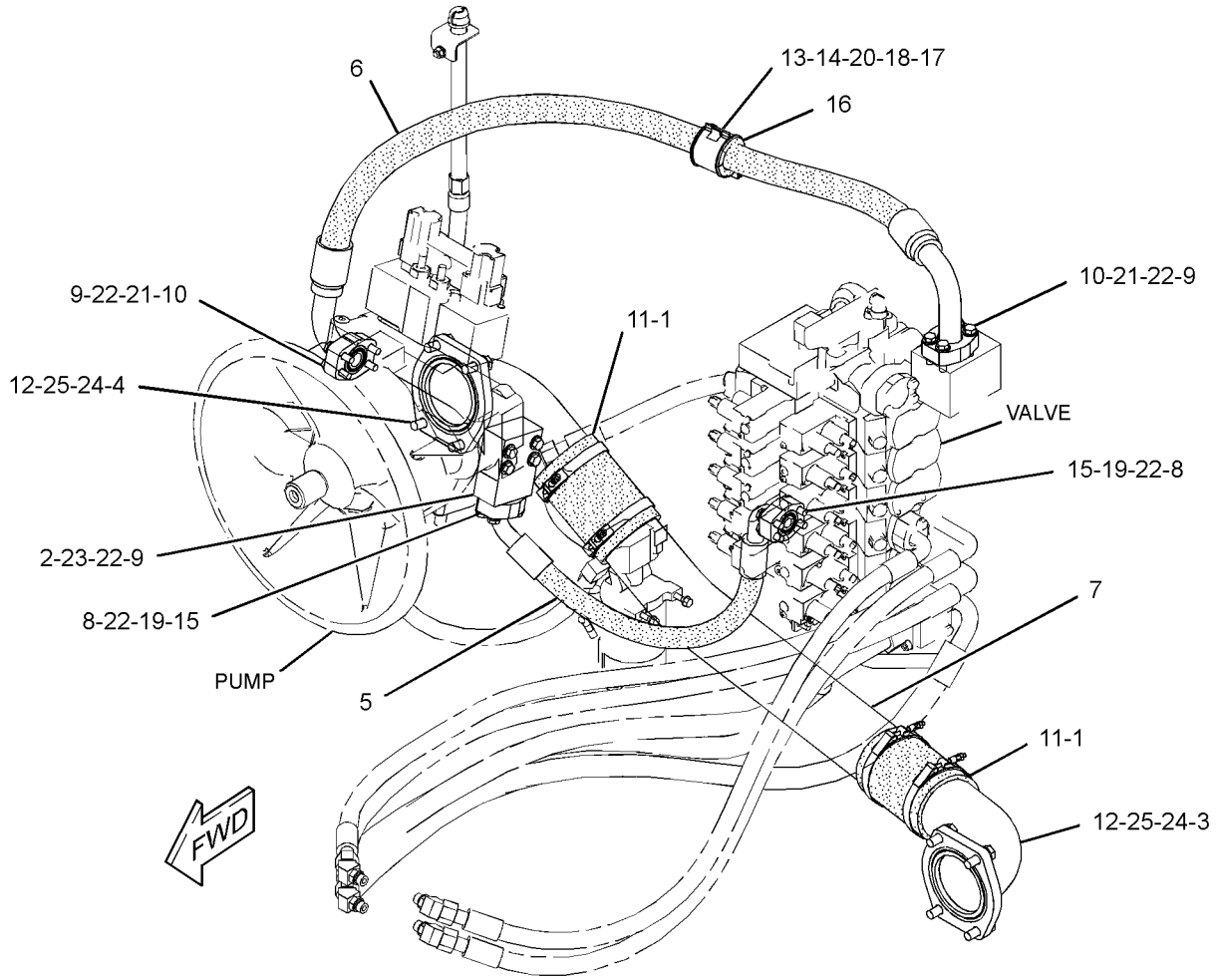

GRAPHIC #1 **<END>** g02735297

HYDRAULIC SYSTEM

375-0159 LINES GP-RETURN

S/N: F7B1-UP

PART OF 373-6575, 373-6577 HYDRAULIC AR-CIRCULAR SAW, 373-6571 HYDRAULIC AR-HARVESTER, 373-6573 HYDRAULIC AR-INTERMITTENT SAW AN ATTACHMENT

SMCS-5057 **i04479480**

NOTE	REF NO	GRAPHIC REF	PART NUMBER	QTY	PART NAME 1 2 3 4 5 6 (PRODUCT LEVEL)	SEE PAGE
I	1	1	**363-1805**	1	HOSE AS	
I	2	1	**370-1649**	1	HOSE AS	
I	3	1	**373-6569**	1	HOSE AS	
	4	1	*148-8334*	1	CONNECTOR AS	
		1	**2S-4078**	1	SEAL-O-RING	
		1	**6V-8400**	1	SEAL-O-RING	
		1	**8T-3611**	1	CONNECTOR	
	5	1	*148-8356*	1	ELBOW AS	
		1	**2S-4078**	1	SEAL-O-RING	
		1	**6V-8400**	1	SEAL-O-RING	
		1	**6V-9009**	1	ELBOW	
	6	1	*148-8364*	1	ELBOW AS	
		1	**3K-0360**	1	SEAL-O-RING	
		1	**6V-8398**	1	SEAL-O-RING	
		1	**6V-8625**	1	ELBOW	
	7	1	*148-8381*	1	ELBOW AS	
		1	**3D-2824**	1	SEAL-O-RING	
		1	**6V-8398**	1	SEAL-O-RING	
		1	**8T-5429**	1	ELBOW	
	8	1	*164-6872*	1	TEE AS	
		1	**2M-9780**	1	SEAL-O-RING	
		1	**6V-8398**	2	SEAL-O-RING	
		1	**115-8634**	1	TEE-O-RING	
	9	1	**1F-3584**	1	SPACER	
	10	1	**1S-0994**	1	CLIP	
	11	1	**8T-4121**	1	WASHER-HARD (11X21X2.5-MM THK)	
M	12	1	**8T-4172**	1	BOLT (M10X1.5X80-MM)	

I-REFER TO HYDRAULIC INFORMATION SYSTEM
M-METRIC PART

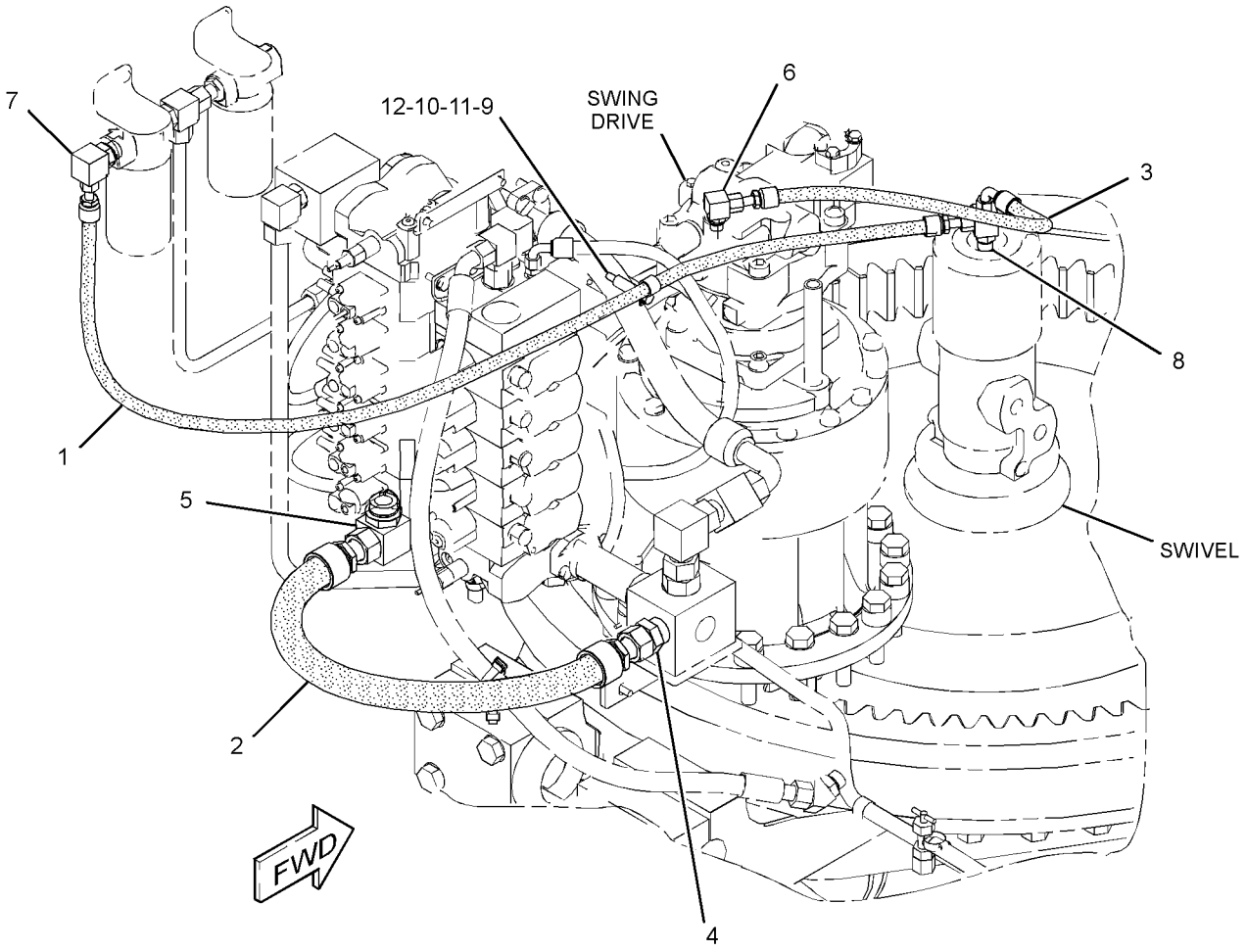

GRAPHIC #1 **<END>** g02730371

HYDRAULIC SYSTEM

339-8306 LINES GP-RETURN & FILTER

S/N: F7B1-UP

PART OF 362-3896 HYDRAULIC AR

SMCS-5057 **i04465699**

NOTE	REF NO	GRAPHIC REF	PART NUMBER	QTY	PART NAME 1 2 3 4 5 6 (PRODUCT LEVEL)	SEE PAGE
	1	1	*148-8327*	1	CONNECTOR AS	
		1	**6V-8637**	1	CONNECTOR	
		1	**3D-2824**	1	SEAL-O-RING	
		1	**6V-9746**	1	SEAL-O-RING	
	2	1	*148-8387*	1	ELBOW AS	
		1	**6V-9855**	1	ELBOW	
		1	**6V-8400**	1	SEAL-O-RING	
	3	1	*163-1057*	1	TEE AS	
		1	**7X-2429**	1	TEE-SWIVEL	
		1	**6V-8400**	2	SEAL-O-RING	
	4	1	*164-5574*	1	TEE AS	
		1	**6V-8784**	1	TEE-FACE SEAL	
		1	**3D-2824**	1	SEAL-O-RING	
		1	**6V-9746**	2	SEAL-O-RING	
	5	1	**193-8308**	1	ADAPTER	
	6	1	**253-7537**	1	VALVE GP-CHECK	
		1	**2S-4078**	1	SEAL-O-RING	
		1	**6V-8400**	1	SEAL-O-RING	
	7	1	**361-5318**	1	BRACKET	
	8	1	**362-3873**	1	BRACKET	
	9	1	**363-1830**	1	TUBE AS	
	10	1	**370-1646**	1	BRACKET	
	11	1	**370-1651**	1	MANIFOLD	
	12	1	*185-0002*	1	REDUCER AS	
		1	**6V-8947**	1	REDUCER	
		1	**6V-9746**	1	SEAL-O-RING	
	13	1	**1P-4578**	2	FLANGE-HALF	
	14	1	**1P-4579**	2	FLANGE-HALF	
Y	15	1	**289-8194**	2	FILTER GP-OIL (HYDRAULIC, CASE DRAIN)	292
	16	1	**296-5807**	2	CLAMP	
	17	1	*334-2781*	1	CONNECTOR AS	
		1	**7I-8310**	1	COUPLING AS	
		1	**238-5082**	1	SEAL-O-RING	
I	18	1	**377-2980**	1	HOSE AS	
	19	1	**4J-0522**	1	SEAL-O-RING	
	20	1	**4J-0524**	1	SEAL-O-RING	
E	21	1	**5P-1291**		HOSE (16-CM)	
	22	1	**6V-8558**	1	NUT-FACE SEAL (1-11/16-12-THD)	
	23	1	**8T-4121**	19	WASHER-HARD (11X21X2.5-MM THK)	
M	24	1	**8T-4136**	6	BOLT (M10X1.5X25-MM)	
M	25	1	**8T-4137**	4	BOLT (M10X1.5X20-MM)	
M	26	1	**8T-4184**	4	BOLT (M12X1.75X45-MM)	
M	27	1	**8T-4195**	9	BOLT (M10X1.5X30-MM)	
	28	1	**8T-4223**	4	WASHER-HARD (13.5X25.5X3-MM THK)	
	29	1	*9U-6996*	1	CONNECTOR AS	
		1	**5P-1947**	1	CONNECTOR	
		1	**6K-6307**	1	SEAL-O-RING	

E-ORDER BY THE CENTIMETER
I-REFER TO HYDRAULIC INFORMATION SYSTEM
M-METRIC PART
Y-SEPARATE ILLUSTRATION

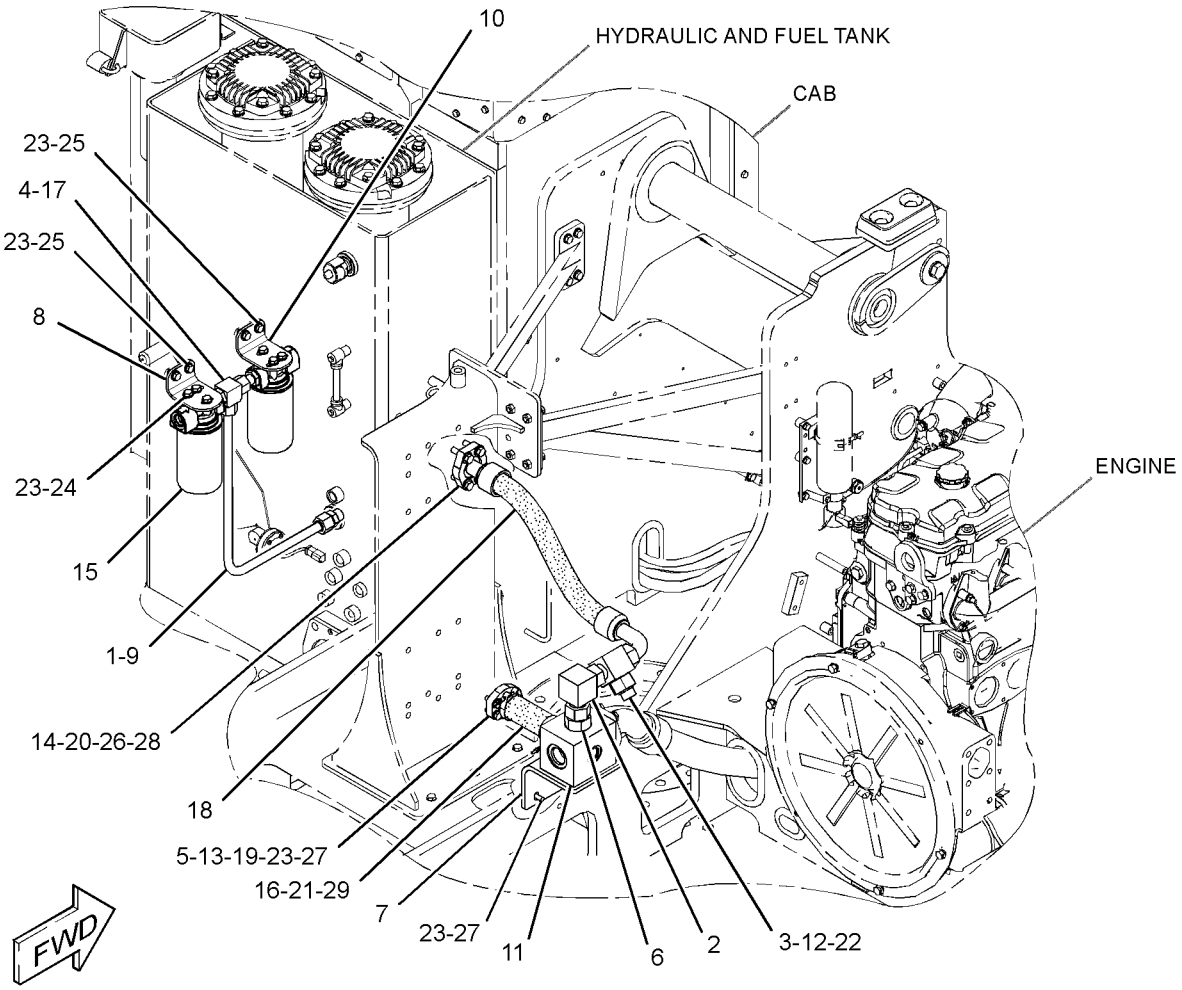

GRAPHIC #1 **<END>** g02729889

HYDRAULIC SYSTEM

375-0162 LINES GP-SAW

S/N: F7B1-UP

PART OF 373-6573 HYDRAULIC AR-INTERMITTENT SAW

AN ATTACHMENT

SMCS-5057, 6543 **i04963059**

NOTE	REF NO	GRAPHIC REF	PART NUMBER	QTY	PART NAME 1 2 3 4 5 6 (PRODUCT LEVEL)	SEE PAGE
	1	1	**378-4578**	1	PLATE	
	2	1	**378-8869**	2	MANIFOLD	
	3	1	**104-9693**	8	FLANGE	
	4	1	*106-8715*	1	ELBOW AS	
		1	**8C-8400**	1	ELBOW	
		1	**3D-2824**	1	SEAL-O-RING	
		1	**6V-9746**	1	SEAL-O-RING	
	5	1	**225-5473**	2	REDUCER	
	6	1	**378-4579**	1	PLATE AS	
I	7	1	**378-4584**	1	HOSE AS	
I	8	1	**378-4590**	1	HOSE AS	
	9	1	**378-4594**	1	TUBE AS	
	10	1	**378-4595**	1	TUBE AS	
	11	1	**378-4597**	1	TUBE AS	
	12	1	**378-4598**	1	TUBE AS	
	13	1	**378-4599**	1	TUBE AS	
	14	1	**378-4600**	1	TUBE AS	
	15	1	**378-4601**	1	TUBE AS	
	16	1	**378-4602**	1	TUBE AS	
	17	1	**378-4603**	1	TUBE AS	
	18	1	**378-4604**	1	TUBE AS	
	19	1	**378-4605**	1	TUBE AS	
	20	1	**378-4606**	1	TUBE AS	
M	21	1	**101-7404**	32	BOLT-SOCKET HEAD (M10X1.5X30-MM)	
	22	1	*148-8327*	2	CONNECTOR AS	
					(EACH INCLUDES)	
		1	**6V-8637**	1	CONNECTOR	
		1	**3D-2824**	1	SEAL-O-RING	
		1	**6V-9746**	1	SEAL-O-RING	
	23	1	*148-8334*	2	CONNECTOR AS	
					(EACH INCLUDES)	
		1	**8T-3611**	1	CONNECTOR	
		1	**2S-4078**	1	SEAL-O-RING	
		1	**6V-8400**	1	SEAL-O-RING	
	24	1	*148-8335*	2	CONNECTOR AS	
					(EACH INCLUDES)	
		1	**6V-8635**	1	CONNECTOR	
		1	**5K-9090**	1	SEAL-O-RING	
		1	**7M-8485**	1	SEAL-O-RING	
	25	1	*148-8376*	1	ELBOW AS	
		1	**6V-8983**	1	ELBOW	
		1	**6V-9746**	2	SEAL-O-RING	
	26	1	*155-2026*	1	UNION AS	
		1	**6V-8998**	1	UNION	
		1	**5K-9090**	2	SEAL-O-RING	
	27	1	**1P-3703**	10	SEAL-RECTANGULAR	
	28	1	**2P-1293**	11	LOCKNUT (1-3/16-12-THD)	
	29	1	**5K-9090**	9	SEAL-O-RING	
	30	1	**6V-8400**	1	SEAL-O-RING	
	31	1	**6V-9172**	2	NUT (1-7/16-12-THD)	
	32	1	**6V-9173**	1	NUT-BULKHEAD (1-11/16-12-THD)	
	33	1	**6V-9746**	10	SEAL-O-RING	
	34	1	**8T-4121**	8	WASHER-HARD (11X21X2.5-MM THK)	
M	35	1	**8T-4198**	8	BOLT (M10X1.5X100-MM)	
	36	1	**389-2246**	1	PLATE	

375-0162 **LINES GP-SAW** ***(contd.)*** **i04963059**

NOTE	REF NO	GRAPHIC REF	PART NUMBER	QTY	PART NAME 1 2 3 4 5 6 (PRODUCT LEVEL)	SEE PAGE
	37	1	**262-7873**	20	WASHER (30.5X48X2-MM THK)	

I-REFER TO HYDRAULIC INFORMATION SYSTEM
M-METRIC PART

375-0162 **LINES GP-SAW** *(contd.)* **i04963059**

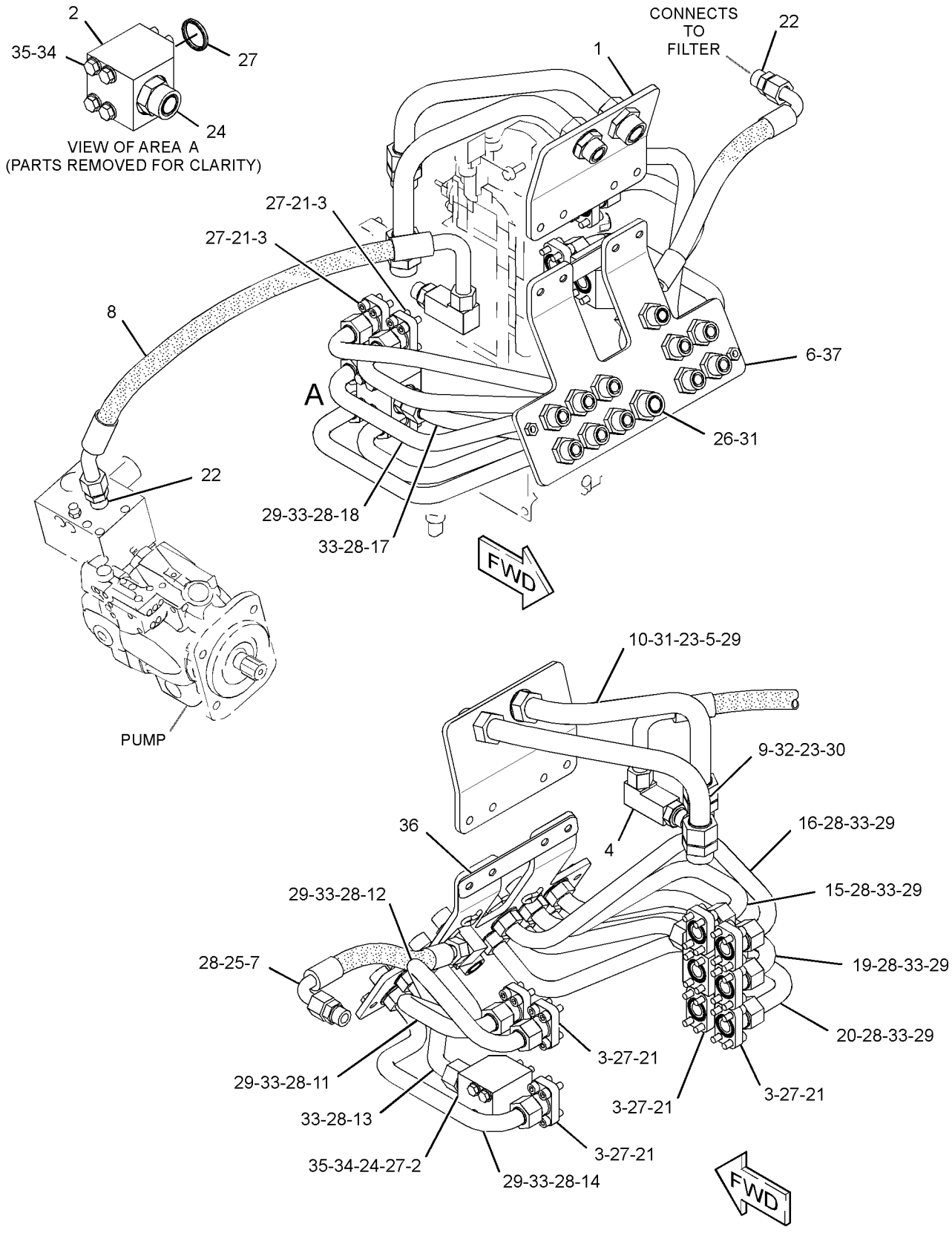

GRAPHIC #1 **<END>** g03148476

HYDRAULIC SYSTEM

375-0164 LINES GP-SAW

S/N: F7B1-UP

PART OF 373-6575, 373-6577 HYDRAULIC AR-CIRCULAR SAW

AN ATTACHMENT

SMCS-5057, 6543 **i04963060**

NOTE	REF NO	GRAPHIC REF	PART NUMBER	QTY	PART NAME 1 2 3 4 5 6 (PRODUCT LEVEL)	SEE PAGE
	1	1	**378-4578**	1	PLATE	
	2	1	**378-8869**	2	MANIFOLD	
	3	1	**104-9693**	8	FLANGE	
	4	1	**221-1446**	4	REDUCER	
	5	1	**378-4579**	1	PLATE AS	
I	6	1	**378-4583**	1	HOSE AS	
I	7	1	**378-4584**	1	HOSE AS	
	8	1	**378-4596**	1	TUBE AS	
	9	1	**378-4597**	1	TUBE AS	
	10	1	**378-4598**	1	TUBE AS	
	11	1	**378-4599**	1	TUBE AS	
	12	1	**378-4600**	1	TUBE AS	
	13	1	**378-4601**	1	TUBE AS	
	14	1	**378-4602**	1	TUBE AS	
	15	1	**378-4603**	1	TUBE AS	
	16	1	**378-4604**	1	TUBE AS	
	17	1	**378-4605**	1	TUBE AS	
	18	1	**378-4606**	1	TUBE AS	
M	19	1	**101-7404**	32	BOLT-SOCKET HEAD (M10X1.5X30-MM)	
	20	1	*148-8323*	1	CONNECTOR AS	
		1	**2S-4078**	1	SEAL-O-RING	
		1	**5K-9090**	1	SEAL-O-RING	
		1	**6V-9875**	1	CONNECTOR	
	21	1	*148-8327*	2	CONNECTOR AS	
					(EACH INCLUDES)	
		1	**3D-2824**	1	SEAL-O-RING	
		1	**6V-8637**	1	CONNECTOR	
		1	**6V-9746**	1	SEAL-O-RING	
	22	1	*148-8335*	2	CONNECTOR AS	
					(EACH INCLUDES)	
		1	**5K-9090**	1	SEAL-O-RING	
		1	**6V-8635**	1	CONNECTOR	
		1	**7M-8485**	1	SEAL-O-RING	
	23	1	*148-8376*	1	ELBOW AS	
		1	**6V-8983**	1	ELBOW	
		1	**6V-9746**	2	SEAL-O-RING	
	24	1	*155-2026*	1	UNION AS	
		1	**5K-9090**	2	SEAL-O-RING	
		1	**6V-8998**	1	UNION	
	25	1	*165-4933*	1	ELBOW AS	
		1	**6V-8990**	1	ELBOW	
		1	**6V-9746**	2	SEAL-O-RING	
	26	1	**1P-3703**	10	SEAL-RECTANGULAR	
	27	1	**2P-1293**	13	LOCKNUT (1-3/16-12-THD)	
	28	1	**5K-9090**	8	SEAL-O-RING	
	29	1	**6V-1889**	1	CLIP	
	30	1	**6V-9172**	1	NUT (1-7/16-12-THD)	
	31	1	**6V-9746**	11	SEAL-O-RING	
	32	1	**8T-4121**	8	WASHER-HARD (11X21X2.5-MM THK)	
M	33	1	**8T-4198**	8	BOLT (M10X1.5X100-MM)	
	34	1	**389-2246**	1	PLATE	
	35	1	**262-7873**	20	WASHER (30.5X48X2-MM THK)	

I-REFER TO HYDRAULIC INFORMATION SYSTEM
M-METRIC PART

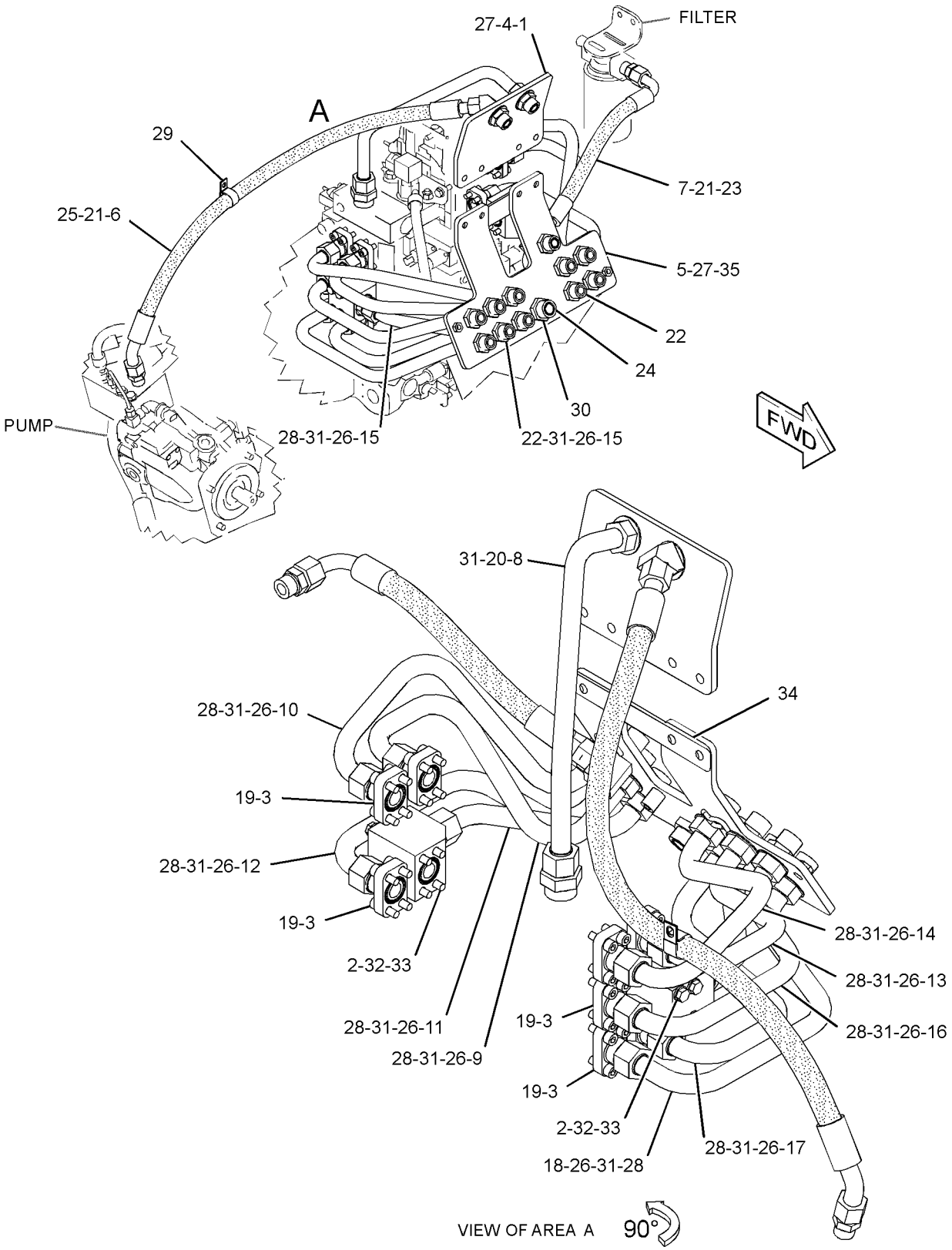

GRAPHIC #1

<END>

g03148478

HYDRAULIC SYSTEM

379-5856 LINES GP-STICK

S/N: F7B1-UP

PART OF 379-5860 LINKAGE AR-INTERMITTENT SAW

AN ATTACHMENT

SMCS-5057, 5458 **i04963062**

NOTE	REF NO	GRAPHIC REF	PART NUMBER	QTY	PART NAME 1 2 3 4 5 6 (PRODUCT LEVEL)	SEE PAGE
	1	1	**205-0829**	4	TAG-IDENTIFICATION (SAW OIL DRAIN)	
	2	1	**205-0830**	4	TAG-IDENTIFICATION (AA HEAD)	
	3	1	**205-0831**	4	TAG-IDENTIFICATION (AA ROD)	
	4	1	**205-0832**	4	TAG-IDENTIFICATION (GA HEAD)	
	5	1	**205-0833**	4	TAG-IDENTIFICATION (GA ROD)	
	6	1	**205-0834**	4	TAG-IDENTIFICATION (TILT HEAD)	
	7	1	**205-0835**	4	TAG-IDENTIFICATION (TILT ROD)	
	8	1	**221-1446**	11	REDUCER	
I	9	1	**256-0485**	8	HOSE AS	
I	10	1	**256-0487**	1	HOSE AS	
I	11	1	**256-0488**	1	HOSE AS	
I	12	1	**256-0489**	9	HOSE AS	
I	13	1	**256-0490**	1	HOSE AS	
I	14	1	**256-0491**	1	HOSE AS	
I	15	1	**379-5847**	1	HOSE AS	
I	16	1	**379-5849**	1	HOSE AS	
I	17	1	**379-5851**	1	HOSE AS	
I	18	1	**379-5853**	1	HOSE AS	
	19	1	*148-8455*	14	UNION AS	
					(EACH INCLUDES)	
		1	**6V-8997**	1	UNION	
		1	**6V-9746**	2	SEAL-O-RING	
	20	1	*155-2026*	3	UNION AS	
					(EACH INCLUDES)	
		1	**5K-9090**	2	SEAL-O-RING	
		1	**6V-8998**	1	UNION	
	21	1	*216-2817*	2	UNION AS	
					(EACH INCLUDES)	
		1	**6V-8400**	2	SEAL-O-RING	
		1	**110-9160**	1	UNION	
	22	1	**2P-1293**	14	LOCKNUT (1-3/16-12-THD)	
	23	1	**6V-9172**	3	NUT (1-7/16-12-THD)	
	24	1	**6V-9173**	2	NUT-BULKHEAD (1-11/16-12-THD)	
	25	1	**6V-9832**	7	CAP AS	
	26	1	**6V-9833**	1	CAP AS	
	27	1	**6V-9834**	1	CAP AS	

I-REFER TO HYDRAULIC INFORMATION SYSTEM

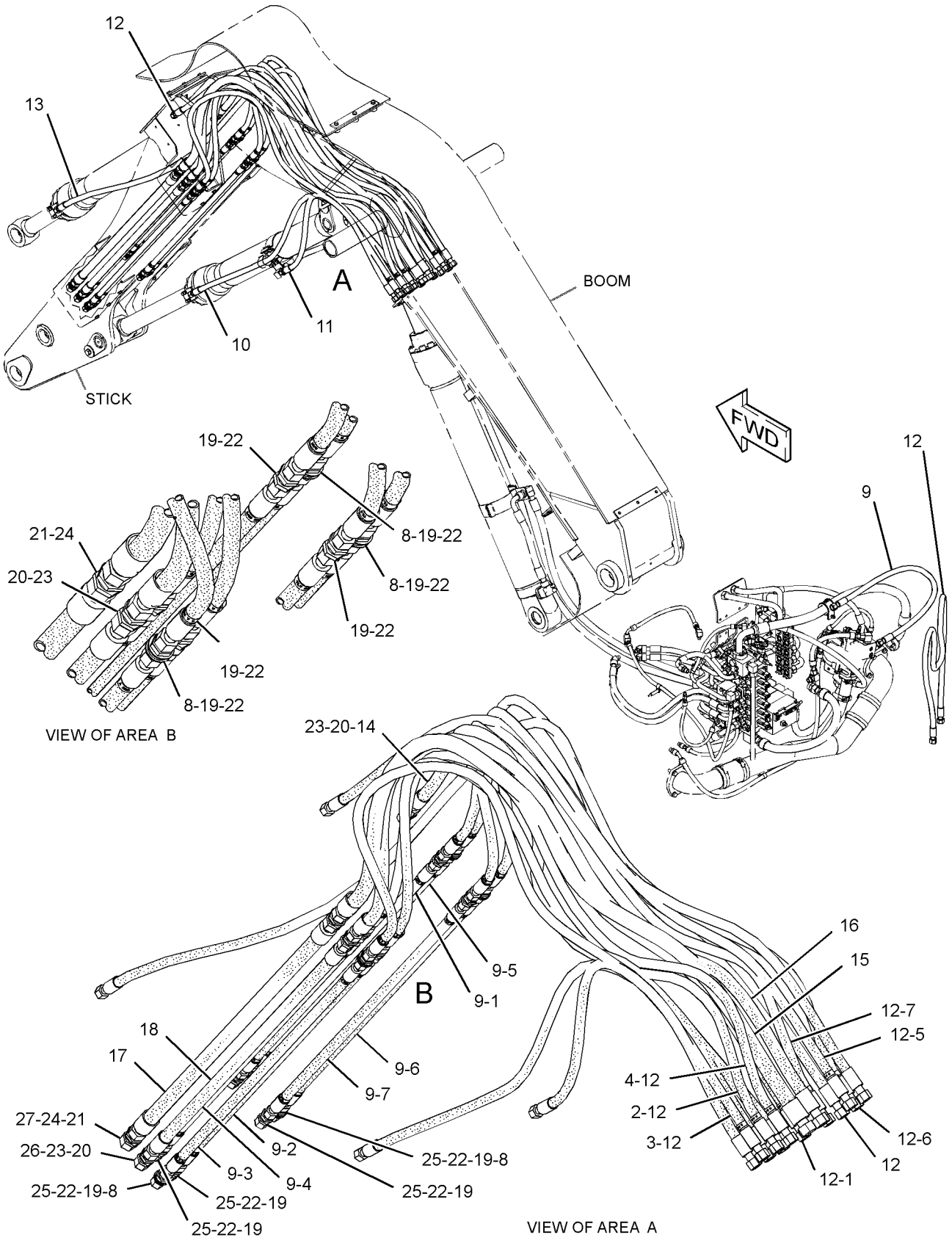

GRAPHIC #1 **<END>** g02739537

HYDRAULIC SYSTEM

379-5868 LINES GP-STICK

S/N: F7B1-UP

PART OF 379-5870 LINKAGE AR-FELLING HEAD

AN ATTACHMENT

SMCS-5057, 5458 **i04461377**

NOTE	REF NO	GRAPHIC REF	PART NUMBER	QTY	PART NAME 1 2 3 4 5 6 (PRODUCT LEVEL)	SEE PAGE
	1	1	**205-0827**	4	TAG-IDENTIFICATION (SAW OIL SUPPLY)	
	2	1	**205-0828**	4	TAG-IDENTIFICATION (SAW OIL RETURN)	
	3	1	**205-0829**	4	TAG-IDENTIFICATION (SAW OIL DRAIN)	
	4	1	**205-0830**	4	TAG-IDENTIFICATION (AA HEAD)	
	5	1	**205-0831**	4	TAG-IDENTIFICATION (AA ROD)	
	6	1	**205-0832**	4	TAG-IDENTIFICATION (GA HEAD)	
	7	1	**205-0833**	4	TAG-IDENTIFICATION (GA ROD)	
	8	1	**205-0834**	4	TAG-IDENTIFICATION (TILT HEAD)	
	9	1	**205-0835**	4	TAG-IDENTIFICATION (TILT ROD)	
	10	1	**221-1446**	15	REDUCER	
I	11	1	**256-0485**	10	HOSE AS	
I	12	1	**256-0487**	1	HOSE AS	
I	13	1	**256-0488**	1	HOSE AS	
I	14	1	**256-0489**	11	HOSE AS	
I	15	1	**256-0490**	1	HOSE AS	
I	16	1	**256-0491**	1	HOSE AS	
	17	1	*148-8455*	18	UNION AS	
					(EACH INCLUDES)	
		1	**6V-8997**	1	UNION	
		1	**6V-9746**	2	SEAL-O-RING	
	18	1	*155-2026*	1	UNION AS	
		1	**6V-8998**	1	UNION	
		1	**5K-9090**	2	SEAL-O-RING	
	19	1	**2P-1293**	18	LOCKNUT (1-3/16-12-THD)	
	20	1	**6V-9172**	1	NUT (1-7/16-12-THD)	

I-REFER TO HYDRAULIC INFORMATION SYSTEM

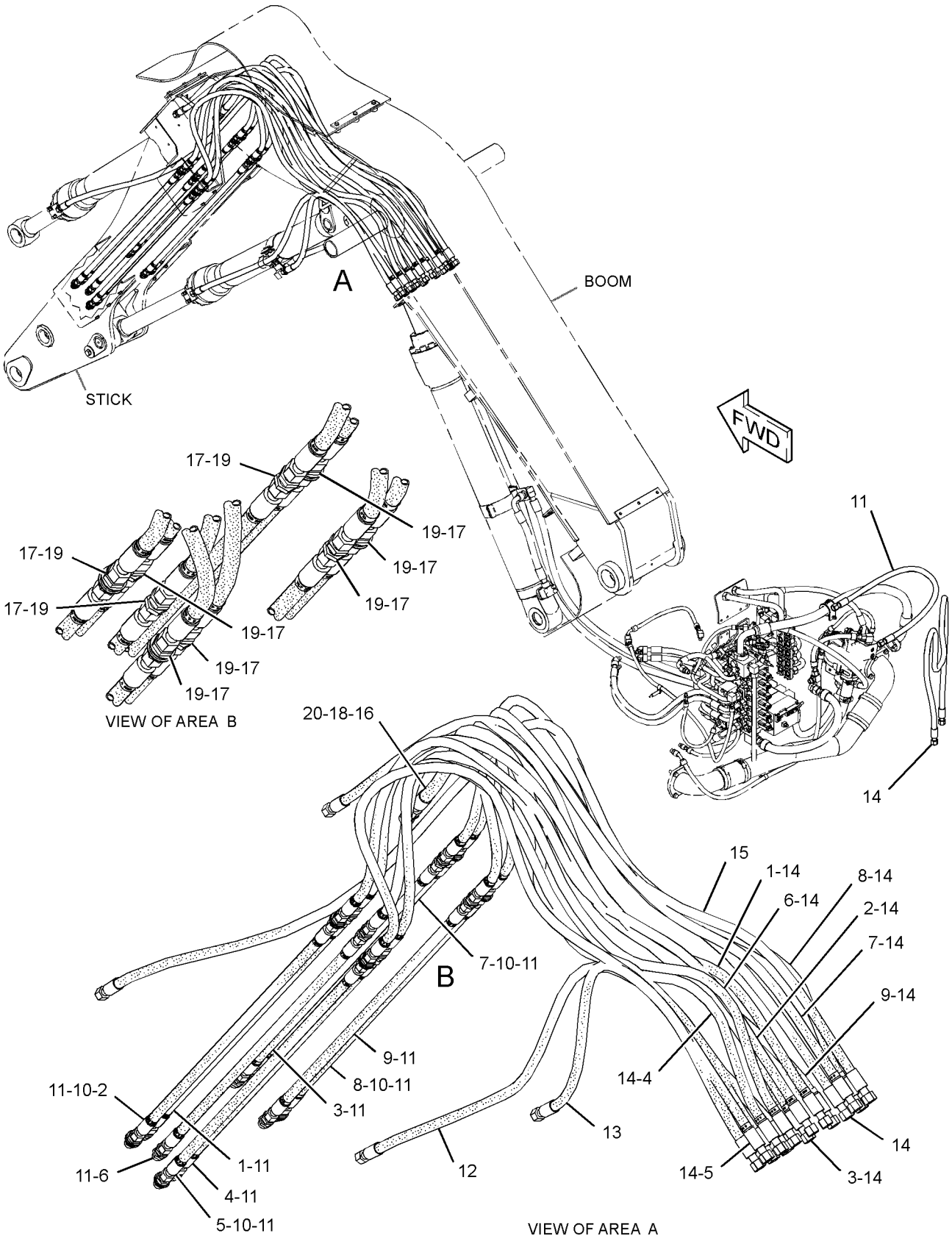

GRAPHIC #1 **<END>** g02748718

HYDRAULIC SYSTEM

383-6290 LINES GP-STICK

S/N: F7B1-UP
PART OF 376-8000 LINKAGE AR-HARVESTER HEAD
AN ATTACHMENT

SMCS-5057, 5458 **i04536975**

NOTE	REF NO	GRAPHIC REF	PART NUMBER	QTY	PART NAME 1 2 3 4 5 6 (PRODUCT LEVEL)	SEE PAGE
	1	1	**205-0827**	4	TAG-IDENTIFICATION (SAW OIL SUPPLY)	
	2	1	**205-0828**	2	TAG-IDENTIFICATION (SAW OIL RETURN)	
	3	1	**205-0829**	4	TAG-IDENTIFICATION (SAW OIL DRAIN)	
	4	1	**383-6284**	1	TUBE AS	
	5	1	**383-6285**	1	TUBE AS	
	6	1	**383-6286**	1	TUBE AS	
I	7	1	**383-6289**	1	HOSE AS	
I	8	1	**383-6291**	1	HOSE AS	
I	9	1	**383-6292**	1	HOSE AS	
	10	1	**383-6293**	1	HOSE AS	
G		1	**165-0020**		HOSE (55.2-IN)	
	11	1	**383-6294**	1	HOSE AS	
G		1	**165-0020**		HOSE (54.8-IN)	
	12	1	**383-6802**	1	TUBE AS	
	13	1	**383-6803**	1	TUBE AS	
	14	1	**5K-9090**	6	SEAL-O-RING	
	15	1	**6V-1616**	10	CLAMP-HALF	
M	16	1	**6V-8197**	8	BOLT (M12X1.75X40-MM)	
	17	1	**6V-8400**	2	SEAL-O-RING	
M	18	1	**6V-8675**	6	BOLT (M12X1.75X35-MM)	
	19	1	**6V-9172**	2	NUT (1-7/16-12-THD)	
	20	1	**6V-9746**	2	SEAL-O-RING	
	21	1	**6V-9832**	1	CAP AS	
	22	1	**6V-9833**	3	CAP AS	
	23	1	**6V-9834**	1	CAP AS	
	24	1	**8K-4691**	12	CLAMP-HALF	
	25	1	**8T-4223**	14	WASHER-HARD (13.5X25.5X3-MM THK)	

G-ORDER BY THE INCH
I-REFER TO HYDRAULIC INFORMATION SYSTEM
M-METRIC PART

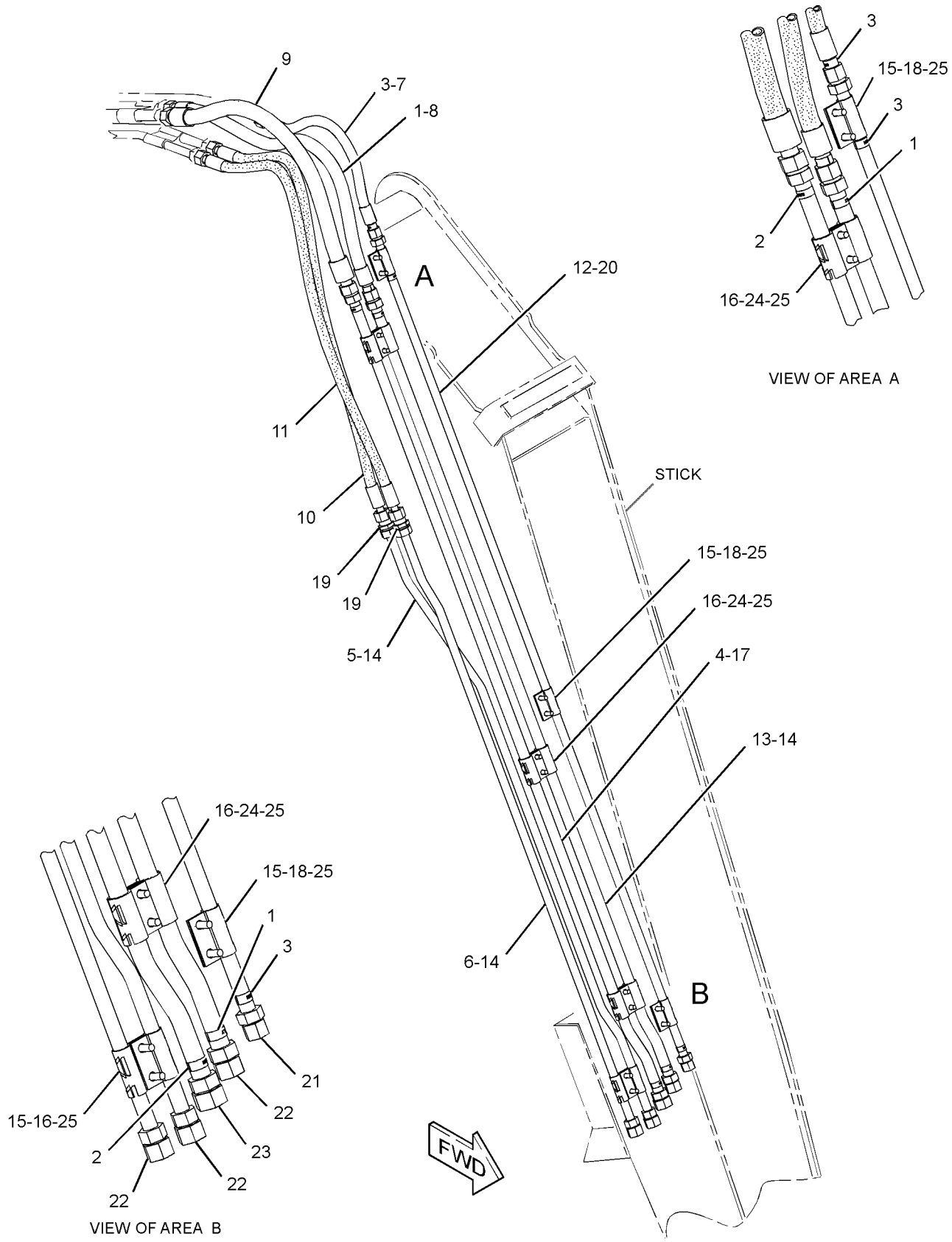

GRAPHIC #1 **<END>** g02736478

HYDRAULIC SYSTEM

339-8348 LINES GP-TRAVEL MOTOR

S/N: F7B1-UP

PART OF 362-3900 FRAME GP-UNDERCARRIAGE

SMCS-5057, 5058 **i04380472**

NOTE	REF NO	GRAPHIC REF	PART NUMBER	QTY	PART NAME 1 2 3 4 5 6 (PRODUCT LEVEL)	SEE PAGE
	1	1	**7K-1181**	8	STRAP-CABLE	
	2	1	**108-7118**	4	GROMMET	
Y	3	1	*159-5871*	1	SWIVEL GP (WITHOUT TILT FUNCTION)	363
	4	1	*164-5552*	1	CONNECTOR AS	
		1	**3D-2824**	1	SEAL-O-RING	
		1	**4I-7745**	1	CONNECTOR	
		1	**6V-8398**	1	SEAL-O-RING	
I	5	1	**364-0505**	2	HOSE AS	
I	6	1	**364-0506**	2	HOSE AS	
I	7	1	**364-0507**	4	HOSE AS	
	8	1	*148-8364*	2	ELBOW AS	
					(EACH INCLUDES)	
		1	**3K-0360**	1	SEAL-O-RING	
		1	**6V-8398**	1	SEAL-O-RING	
		1	**6V-8625**	1	ELBOW	
	9	1	*148-8378*	2	ELBOW AS	
					(EACH INCLUDES)	
		1	**3J-1907**	1	SEAL-O-RING	
		1	**6V-8397**	1	SEAL-O-RING	
		1	**6V-8724**	1	ELBOW	
	10	1	*148-8439*	1	TEE AS	
		1	**3J-1907**	1	SEAL-O-RING	
		1	**6V-8397**	2	SEAL-O-RING	
		1	**6V-8774**	1	TEE	
	11	1	*150-4037*	1	TEE AS	
		1	**6V-8398**	2	SEAL-O-RING	
		1	**6V-9844**	1	TEE-SWIVEL	
	12	1	**1P-3703**	8	SEAL-RECTANGULAR	
	13	1	**6V-0400**	16	FLANGE-HALF	
	14	1	**8T-4121**	6	WASHER-HARD (11X21X2.5-MM THK)	
M	15	1	**8T-4136**	6	BOLT (M10X1.5X25-MM)	
M	16	1	**8T-4184**	32	BOLT (M12X1.75X45-MM)	
	17	1	**8T-4223**	32	WASHER-HARD (13.5X25.5X3-MM THK)	
B	18	1	**1U-8846**		SEALANT-GASKET	

B-USE AS REQUIRED
I-REFER TO HYDRAULIC INFORMATION SYSTEM
M-METRIC PART
Y-SEPARATE ILLUSTRATION

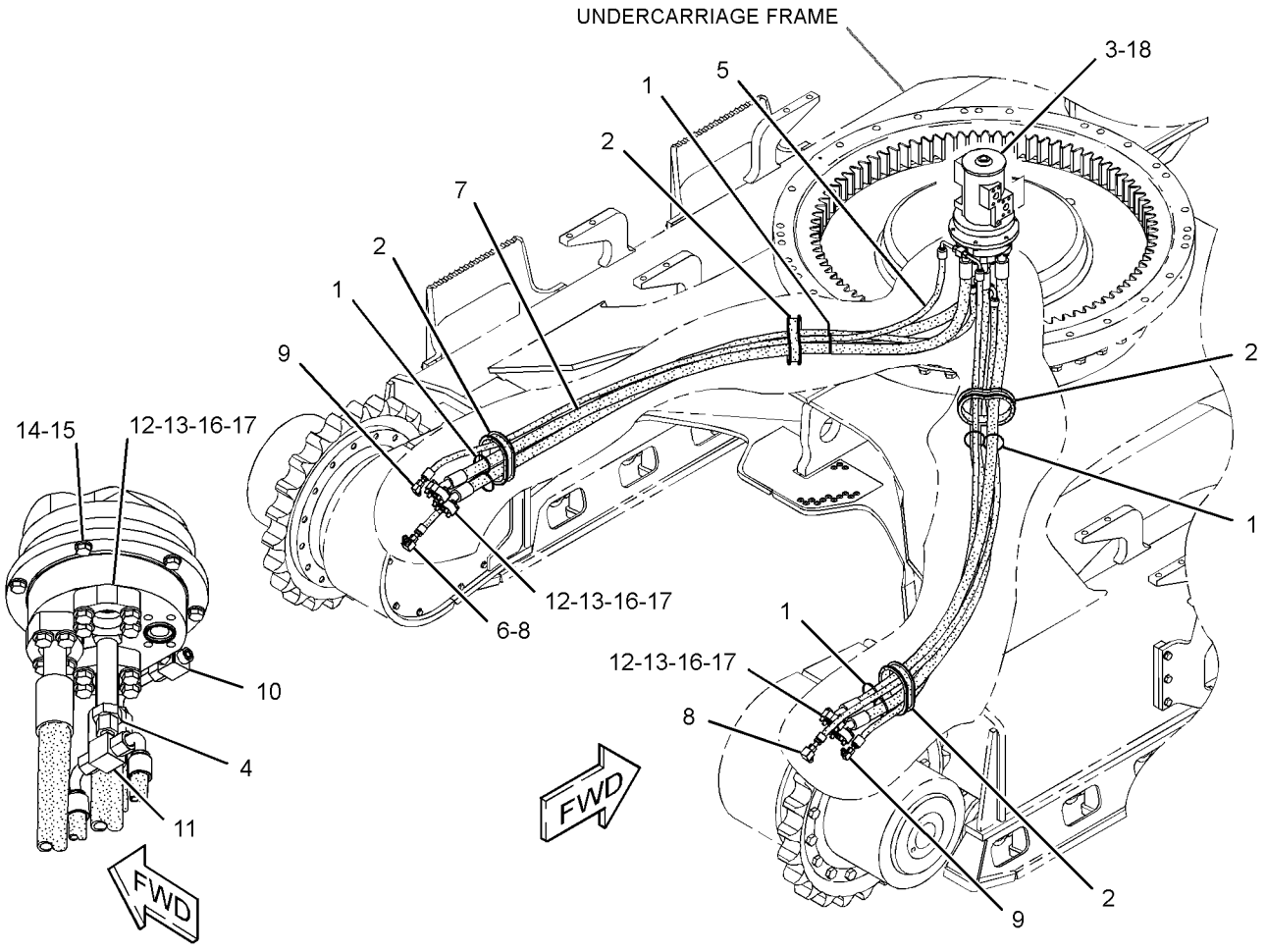

(PARTS REMOVED FOR CLARITY)

GRAPHIC #1

<END>

g02730825

HYDRAULIC SYSTEM

334-9971 MOTOR GP-SWING

S/N: F7B1-UP

PART OF 220-8623 DRIVE GP-SWING

SMCS-5058 **i03891469**

NOTE	REF NO	GRAPHIC REF	PART NUMBER	QTY	PART NAME 1 2 3 4 5 6 (PRODUCT LEVEL)	SEE PAGE
Y	1	1	**184-3830**	2	VALVE GP-RELIEF (SWING MOTOR)	407
Y	2	1	**334-9978**	1	MOTOR GP-SWING	343

Y-SEPARATE ILLUSTRATION

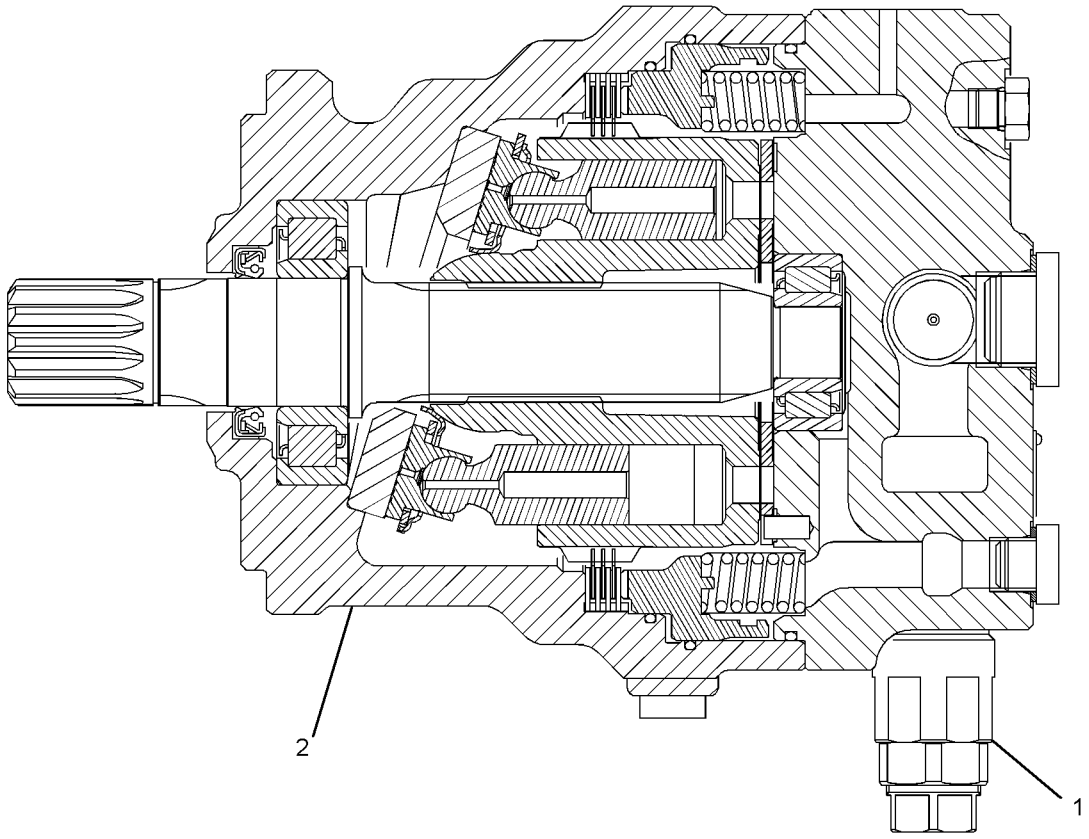

GRAPHIC #1 **<END>** g01820114

334-9978 MOTOR GP-SWING

S/N: F7B1-UP

PART OF 334-9971 MOTOR GP-SWING

SMCS-5058 **i03966489**

NOTE	REF NO	GRAPHIC REF	PART NUMBER	QTY	PART NAME 1 2 3 4 5 6 (PRODUCT LEVEL)	SEE PAGE
	1	1	**188-4163**	1	SHAFT	
J	2	1	**096-1533**	1	SEAL-LIP TYPE	
	3	1	**188-4170**	1	BEARING	
	4	1	**188-4169**	1	BODY	
	5	1	**188-4165**	1	PLATE	
	6	1	**188-4167**	1	PLATE	
	7	1	**334-9982**	1	PISTON AS	
	8	1	**188-4166**	1	PLATE	
	9	1	**188-4164**	1	BARREL	
	10	1	**188-4172**	3	PLATE-FRICTION	
	11	1	**188-4173**	4	PLATE-SEPARATOR	
	12	1	**7Y-4290**	1	PISTON-BRAKE	
J	13	1	**5J-2383**	1	SEAL-O-RING	
J	14	1	**7Y-4294**	1	SEAL-O-RING	
J	15	1	**4I-5849**	1	SEAL-O-RING	
	16	1	**123-2139**	20	SPRING	
	17	1	**188-4162**	1	HEAD GP-MOTOR	
		1	**099-8111**	2	PIN-SPRING	
J	18	1	**3J-1907**	2	SEAL-O-RING	
	19	1	**110-5525**	2	PLUG	
	20	1	**204-2677**	1	PLATE-VALVE	
	21	1	**188-4171**	1	BEARING	
	22	1	**170-9996**	2	PLUG	
	23	1	**170-9985**	2	VALVE	
M	24	1	**7Y-5221**	4	BOLT-SOCKET HEAD (M20X2.5X45-MM)	
	25	1	**170-9986**	2	SPRING	
J	26	1	**095-1600**	2	SEAL-O-RING	
					AVAILABLE REPAIR KIT(S):	
J			**188-4176**	1	KIT-SEAL (SWING MOTOR)	

J-KIT MARKED J SERVICES PART(S) MARKED J
M-METRIC PART

334-9978 MOTOR GP-SWING *(contd.)* i03966489

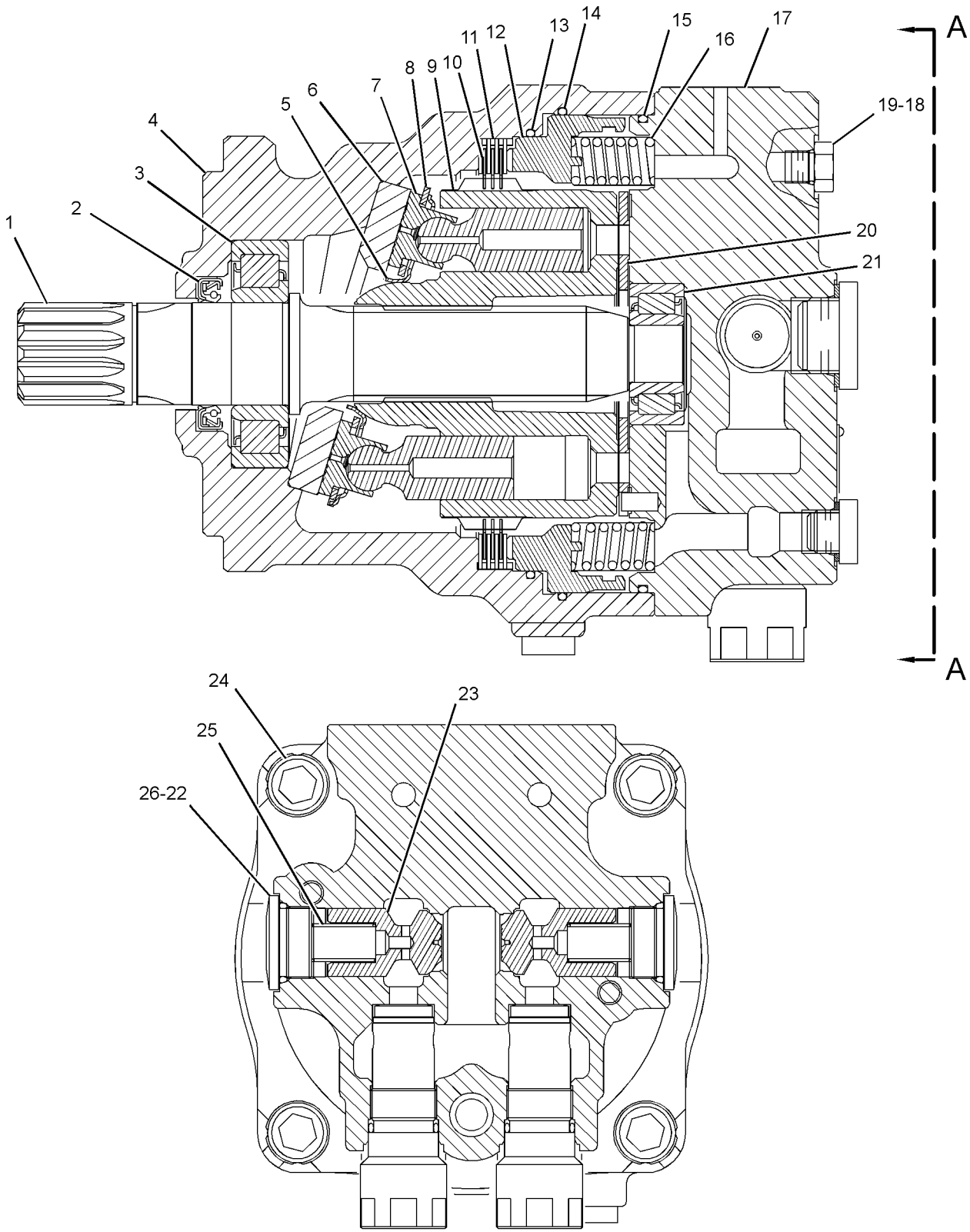

VIEW A-A

GRAPHIC #1 **<END>** g01820134

HYDRAULIC SYSTEM

245-9873 PLUG GP-HYDRAULIC LINES

S/N: F7B1-UP

CANNOT BE USED WITH ANY HEAD AR, 379-5860—PAGE 425, 376-8000—PAGE 424, 378-8875—PAGE 250

AN ATTACHMENT

SMCS-5057 **i02054638**

NOTE	PART NUMBER	QTY	PART NAME 1 2 3 4 5 6 (PRODUCT LEVEL)	SEE PAGE
	6V-9832	9	CAP AS	

<END>

HYDRAULIC SYSTEM

363-1809 PUMP & MOTOR GP-HOOD TILT

S/N: F7B1-UP

PART OF 339-8307 LINES GP-HOOD TILT

SMCS-5073, 5927 **i05102533**

NOTE	REF NO	GRAPHIC REF	PART NUMBER	QTY	PART NAME 1 2 3 4 5 6 (PRODUCT LEVEL)	SEE PAGE
	1	1	**113-5794**	1	MOTOR-ELECTRIC	
	2	1	**132-6777**	1	SWITCH (HOOD TILT)	
	3	1	**223-8844**	1	VALVE	
	4	1	**223-8823**	1	VALVE	
	5	1	**149-1973**	3	BOOT	
	6	1	**159-1900**	3	BOOT	
	7	1	**105-8097**	1	TUBE	
	8	1	**105-8098**	1	TUBE	
	9	1	**105-8096**	1	SCREEN-FILTER (HYDRAULIC OIL)	
	10	1	**149-1137**	1	CABLE AS	
	11	1	**329-5298**	1	GAUGE-OIL LEVEL (DIPSTICK) (HYDRAULIC OIL)	
	12	1	**375-0170**	1	RESERVOIR	

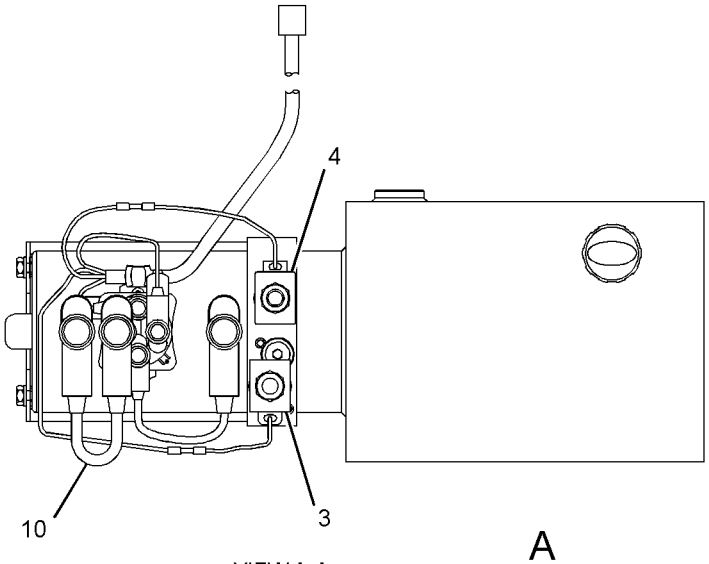

VIEW A-A

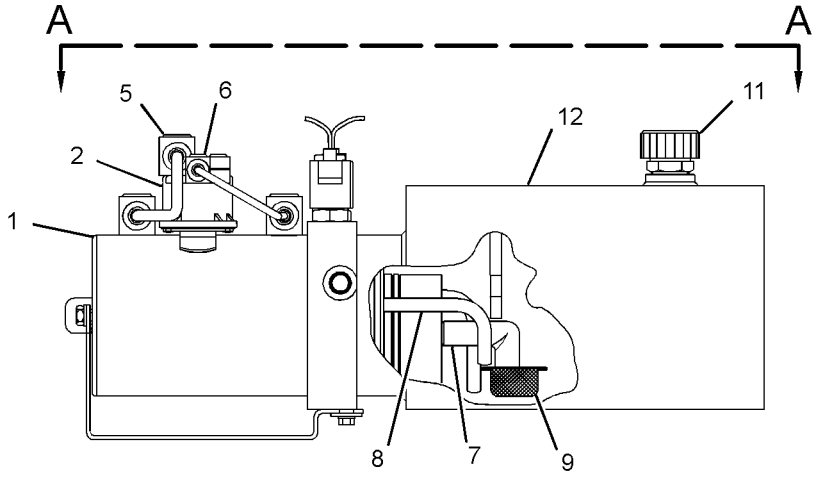

GRAPHIC #1 **<END>** g02729251

354-1825 PUMP & MOTOR GP-HYD TANK FILL

S/N: F7B1-UP

PART OF 339-8305 FILLER GP-HYDRAULIC OIL

SMCS-5073, 5927 **i04991713**

NOTE	REF NO	GRAPHIC REF	PART NUMBER	QTY	PART NAME 1 2 3 4 5 6 (PRODUCT LEVEL)	SEE PAGE
	1	1	**377-2345**	1	MOTOR	
	2	1	**373-8155**	1	SWITCH-START (HYDRAULIC TANK FILL)	
	3	1	**1V-8795**	1	COUPLING	
	4	1	**107-4015**	1	MOTOR	
	5	1	**381-8100**	1	PUMP	
	6	1	**381-8128**	1	KIT-SEAL	
					(INCLUDES GASKETS, RING & SEAL)	
	7	1	**8W-0013**	1	KIT-GASKET	
					(INCLUDES GASKETS)	

354-1825 PUMP & MOTOR GP-HYD TANK FILL *(contd.)* i04991713

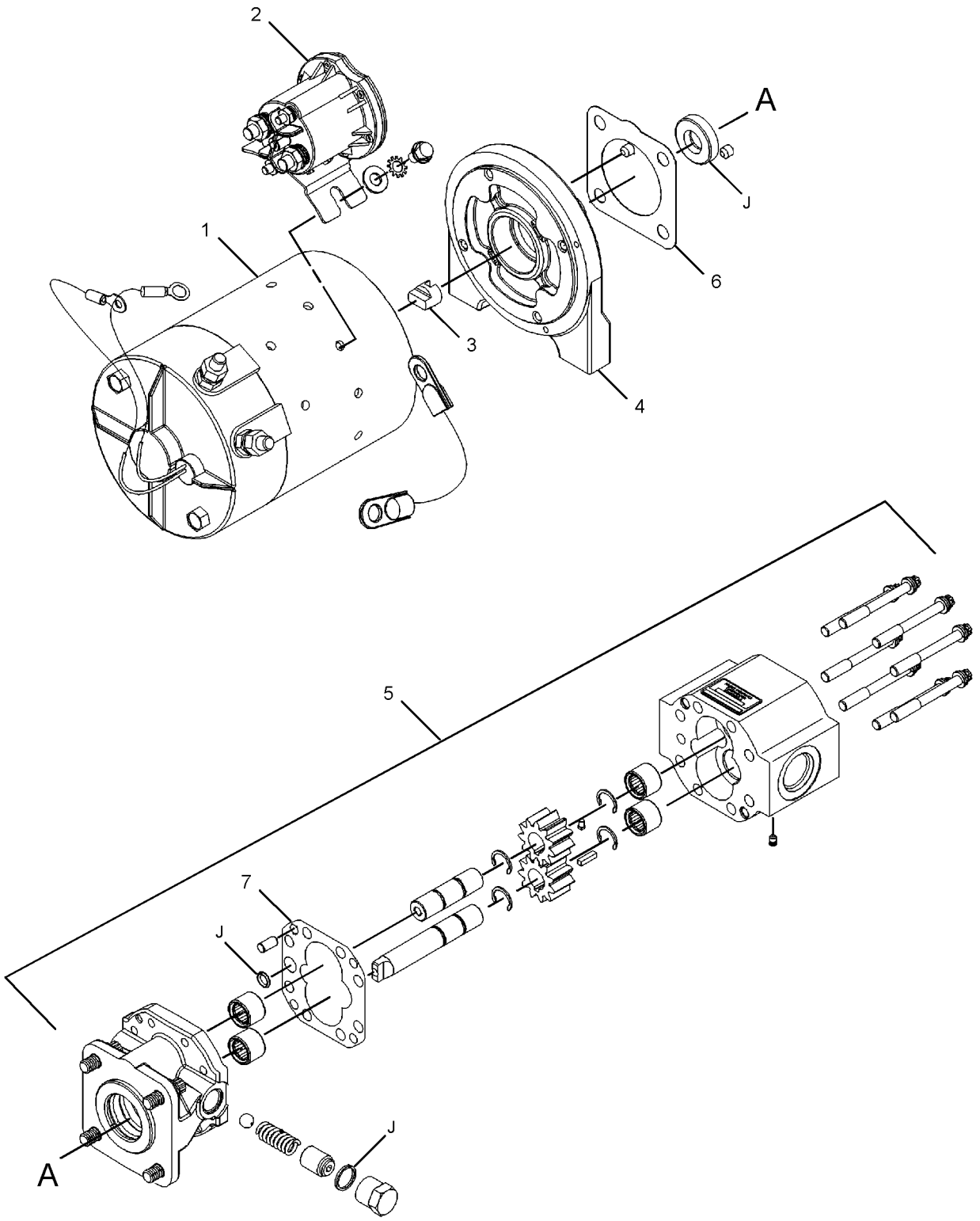

GRAPHIC #1 **<END>** g02701877

HYDRAULIC SYSTEM

378-8858 PUMP & MTG GP-HYDRAULIC

S/N: F7B1-UP

PART OF 362-3896 HYDRAULIC AR

SMCS-1387, 4324, 5055, 5070, 5073, 5084 **i04465399**

NOTE	REF NO	GRAPHIC REF	PART NUMBER	QTY	PART NAME 1 2 3 4 5 6 (PRODUCT LEVEL)	SEE PAGE
Y	1	1	**307-1696**	1	PUMP GP-PISTON (MAIN HYDRAULIC)	355
	2	1	**8T-5360**	7	WASHER (12X22.5X2.5-MM THK)	
	3	1	**8T-8916**	7	BOLT (7/16-14X1.5-IN)	

Y-SEPARATE ILLUSTRATION

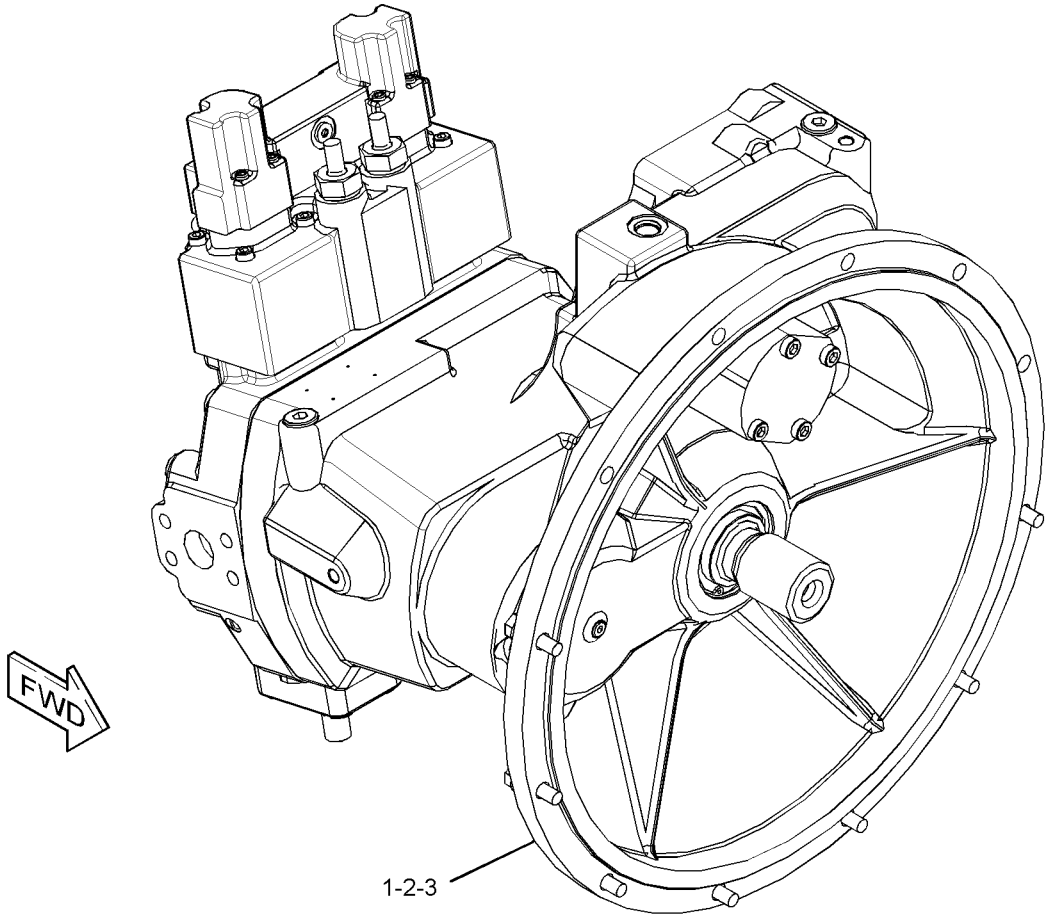

GRAPHIC #1 **<END>** g02728142

HYDRAULIC SYSTEM

339-8359 PUMP & MTG GP-SAW

S/N: F7B1-UP

PART OF 373-6575, 373-6577 HYDRAULIC AR-CIRCULAR SAW, 373-6573 HYDRAULIC AR-INTERMITTENT SAW AN ATTACHMENT

SMCS-5070, 6543 **i05102692**

NOTE	REF NO	GRAPHIC REF	PART NUMBER	QTY	PART NAME 1 2 3 4 5 6 (PRODUCT LEVEL)	SEE PAGE
	1	1	**6V-0852**	1	CAP-DUST	
	2	1	**199-2856**	1	TUBE AS	
	3	1	**213-3745**	1	ELBOW	
Y	4	1	**222-5781**	1	VALVE GP-SOLENOID & MANIFOLD (SAW)	411
Y	5	1	**268-8259**	1	PUMP GP-PISTON (SAW)	353
	6	1	**335-5321**	1	SENSOR GP-PRESSURE (LOAD SENSING)	
I	7	1	**363-1815**	1	HOSE AS	
I	8	1	**366-2653**	1	HOSE AS	
I	9	1	**366-2654**	1	HOSE AS	
	10	1	*148-8315*	2	CONNECTOR AS	
					(EACH INCLUDES)	
		1	**6V-8642**	1	CONNECTOR	
		1	**2M-9780**	1	SEAL-O-RING	
		1	**7J-9108**	1	SEAL-O-RING	
	11	1	*148-8316*	1	CONNECTOR AS	
		1	**6V-8647**	1	CONNECTOR	
		1	**3J-7354**	1	SEAL-O-RING	
		1	**4J-5477**	1	SEAL-O-RING	
	12	1	*148-8326*	1	CONNECTOR AS	
		1	**6V-9872**	1	CONNECTOR	
		1	**3J-7354**	1	SEAL-O-RING	
		1	**6V-8397**	1	SEAL-O-RING	
	13	1	*148-8347*	2	ELBOW AS	
					(EACH INCLUDES)	
		1	**6V-9007**	1	ELBOW	
		1	**3D-2824**	1	SEAL-O-RING	
		1	**6V-9746**	1	SEAL-O-RING	
	14	1	*150-4029*	1	TEE AS	
		1	**6V-8780**	1	TEE-FACE SEAL	
		1	**3J-7354**	1	SEAL-O-RING	
		1	**4J-5477**	2	SEAL-O-RING	
	15	1	*150-4031*	1	TEE AS	
		1	**6V-9845**	1	TEE-SWIVEL	
		1	**7J-9108**	2	SEAL-O-RING	
	16	1	**3J-1907**	1	SEAL-O-RING	
	17	1	**6D-4244**	1	CLIP	
	18	1	**6V-8397**	1	SEAL-O-RING	
	19	1	**6V-8555**	1	NUT-FACE SEAL (1-14-THD)	
	20	1	**6V-8938**	1	REDUCER-O-RING	
M	21	1	**8T-4139**	4	BOLT (M12X1.75X30-MM)	
	22	1	**8T-4223**	8	WASHER-HARD (13.5X25.5X3-MM THK)	
M	23	1	**8T-5041**	4	BOLT (M12X1.75X120-MM)	
	24	1	**395-3151**	1	HARNESS AS-SENSOR	
		1	**102-8805**	1	KIT-RECEPTACLE (6-PIN)	
					(INCLUDES RECEPTACLE AS & WEDGE)	
		1	**8T-8737**	1	PLUG-SEAL	
E		1	**125-7874**		TUBE-HEAT SHRINK (5.72-MM DIA) (10-CM)	
		1	**155-2270**	2	KIT-CONNECTING PLUG (2-PIN)	
					(EACH INCLUDES PLUG AS, WEDGE, & INTERFACE SEAL)	
		1	**9X-3401**	5	PIN-CONNECTOR (16-GA TO 18-GA)	
					—OR—	
		1	**126-1767**	5	PIN-CONNECTOR (14-GA TO 16-GA)	

339-8359 **PUMP & MTG GP-SAW** *(contd.)* **i05102692**

NOTE	REF NO	GRAPHIC REF	PART NUMBER	QTY	PART NAME 1 2 3 4 5 6 (PRODUCT LEVEL)	SEE PAGE
		1	**194-5226**	7	WIRE AS (16-GA)	
					—OR—	
		1	**194-5227**	7	WIRE AS (14-GA)	
		1	**237-0227**	1	PLUG AS-CONNECTOR (3-PIN)	
		1	**264-7030**	1	SEAL-CONNECTOR	
	25	1	**352-3969**	1	CLIP	
	26	1	**189-3158**	1	SUPPRESSOR-ARC	
	27	1	**130-5301**	1	CLIP	
	28	1	**4P-7428**	2	CLIP	
	29	1	**3S-2093**	3	STRAP-CABLE	

E-ORDER BY THE CENTIMETER
I-REFER TO HYDRAULIC INFORMATION SYSTEM
M-METRIC PART
Y-SEPARATE ILLUSTRATION

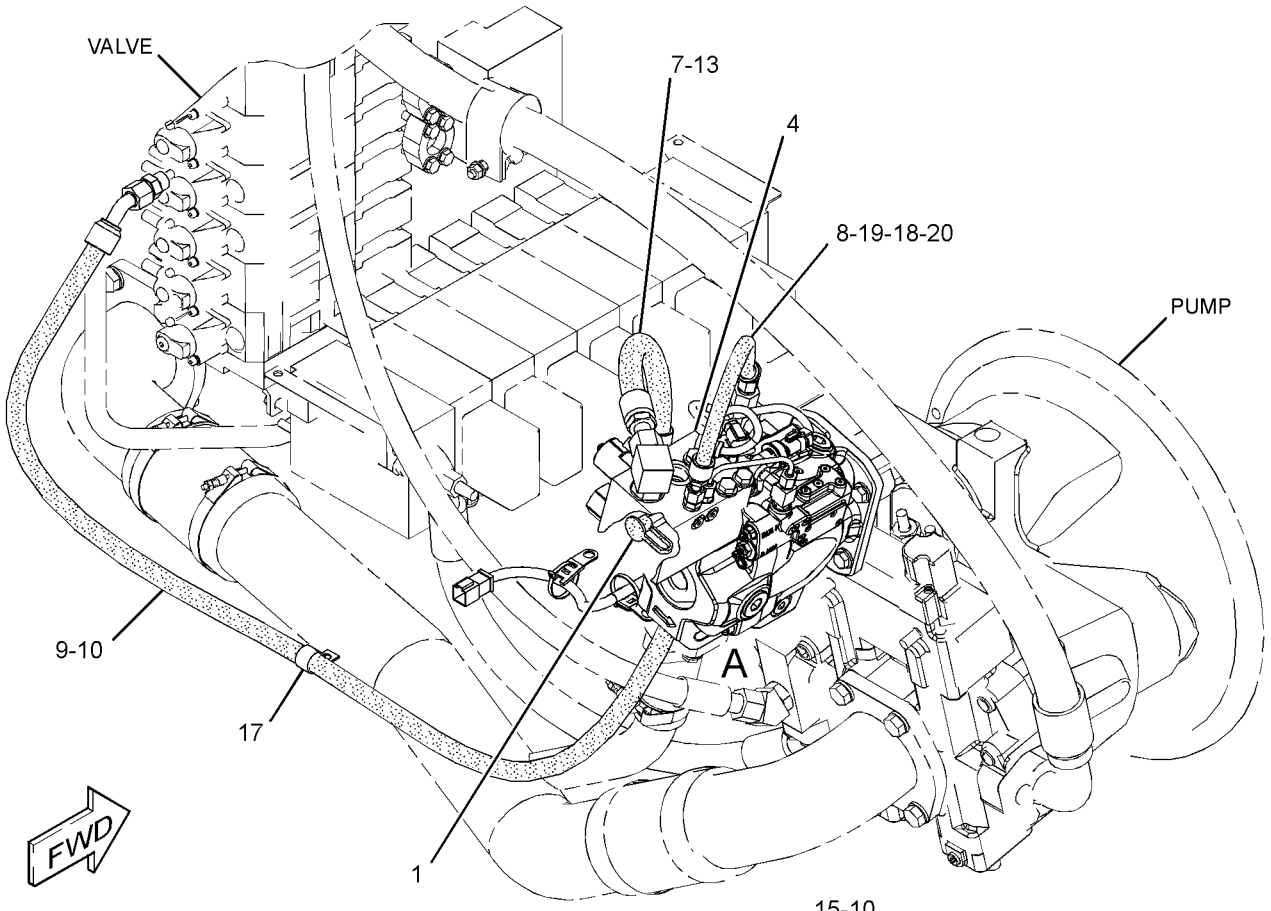

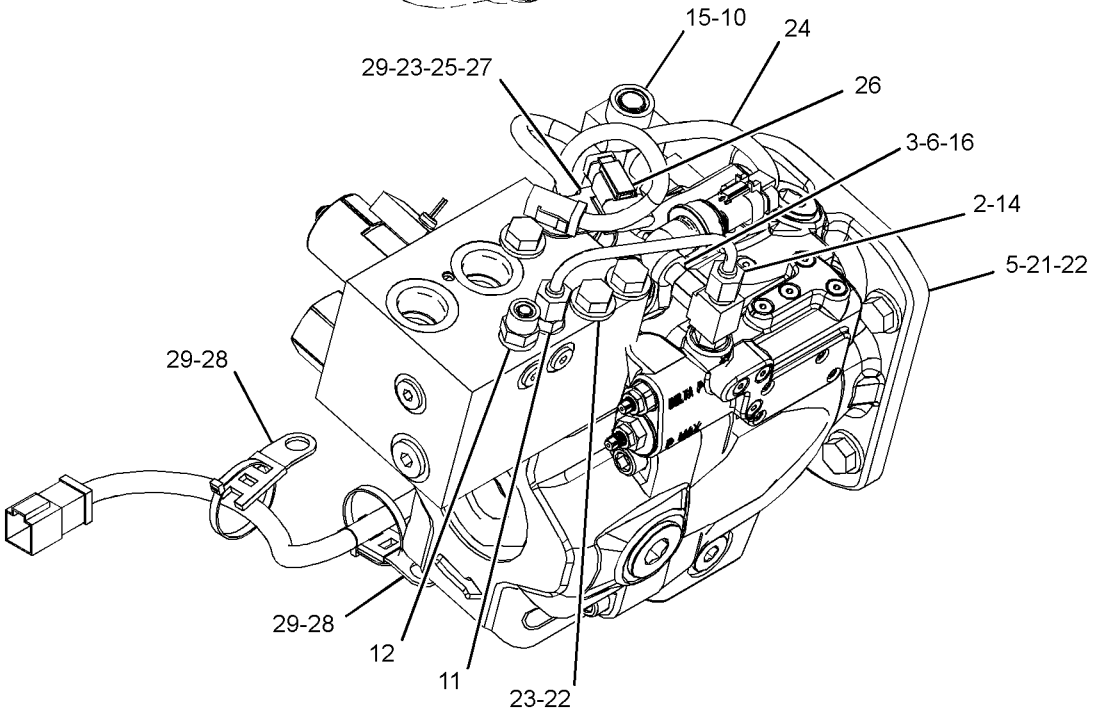

VIEW OF AREA A
(PARTS REMOVED FOR CLARITY)

GRAPHIC #1 **<END>** g03180640

268-8259 PUMP GP-PISTON–SAW

S/N: F7B1-UP

PART OF 339-8359 PUMP & MTG GP-SAW

AN ATTACHMENT

SMCS-5070 **i03157323**

NOTE	REF NO	GRAPHIC REF	PART NUMBER	QTY	PART NAME 1 2 3 4 5 6 (PRODUCT LEVEL)	SEE PAGE
M	1	1	**095-0670**	4	BOLT (M12X1.75X45-MM)	
	2	1	**221-1384**	1	HEAD GP-PUMP (CLOCKWISE ROTATION)	
	3	1	**262-4405**	1	KIT-SEAL	
					(INCLUDES SHAFT SEAL, O-RING PLUG & O-RINGS)	
	4	1	**262-7896**	1	KIT-PUMP ROTATING GROUP	
					(INCLUDES VALVE PLATE, BARREL AS, BALL SEAT, SLIPPER RETAINER & PISTON SLIPPER ASSEMBLIES)	
	5	1	**221-1340**	1	KIT-SHAFT	
	6	1	**221-1351**	1	COMPENSATOR AS	
	7	1	**221-1287**	1	SWASHPLATE AS	
	8	1	**221-1375**	2	BEARING	
	9	1	**221-9393**	1	PLUG AS	
	10	1	**9S-8008**	1	PLUG-O-RING	
	11	1	**110-6349**	1	FITTING AS (QUICK DISCONNECT)	
	12	1	**9S-9334**	1	PLUG-O-RING	
	13	1	**9S-8001**	6	PLUG-O-RING	
	14	1	**9S-8006**	1	PLUG-O-RING	
	15	1	**9S-8002**	1	PLUG-O-RING	
	16	1	**127-0785**	1	ELBOW	

M-METRIC PART

268-8259 PUMP GP-PISTON *(contd.)* **i03157323**

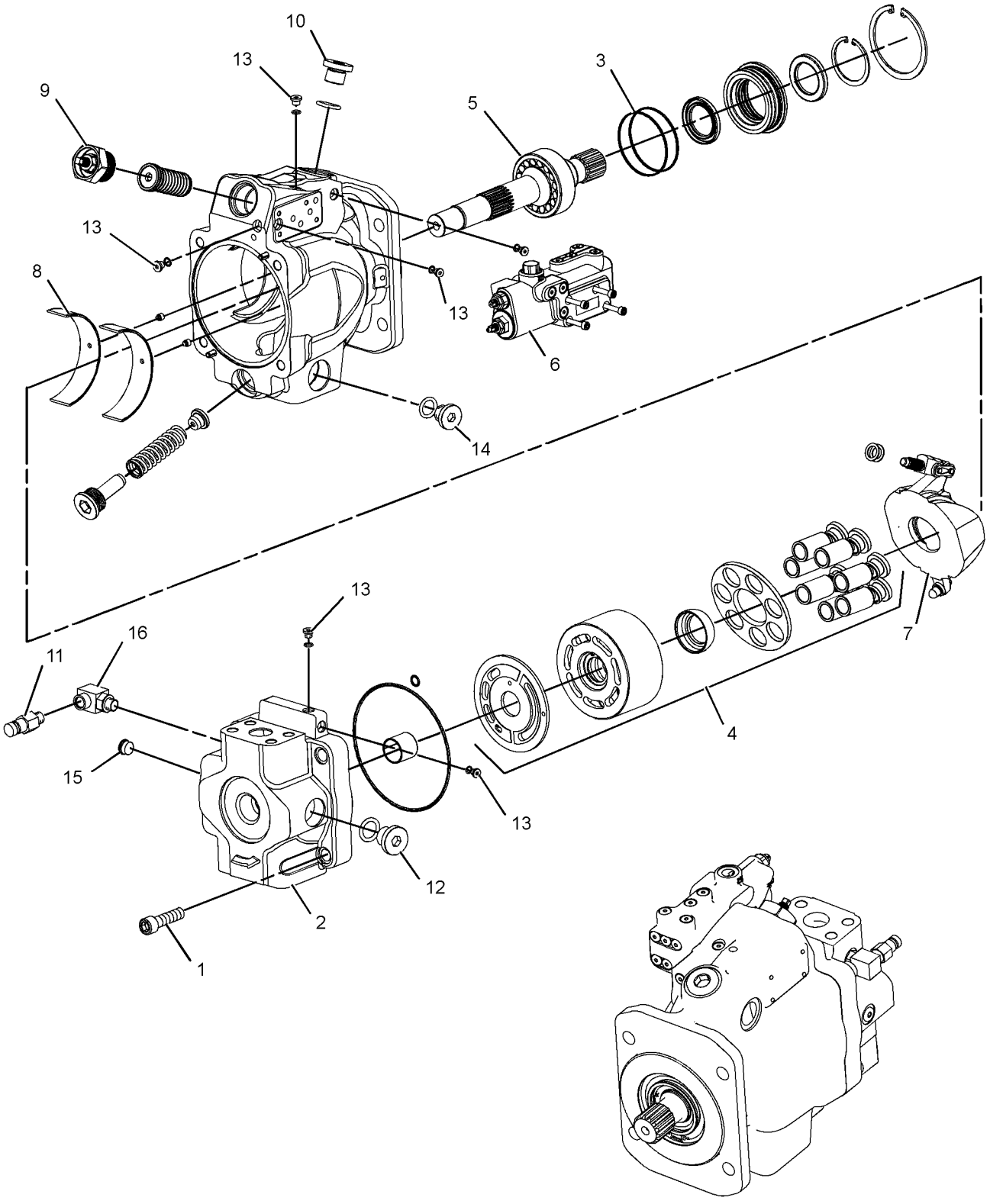

GRAPHIC #1 **<END>** g01161193

307-1696 PUMP GP-PISTON—MAIN HYDRAULIC*R

S/N: F7B1-UP

PART OF 378-8858 PUMP & MTG GP-HYDRAULIC

SMCS-5070 **i05110789**

NOTE	REF NO	GRAPHIC REF	PART NUMBER	QTY	PART NAME 1 2 3 4 5 6 (PRODUCT LEVEL)	SEE PAGE
	1	1	**095-0991**	1	BALL BEARING	
	2	1	**081-3801**	3	PLUG AS	
					(EACH INCLUDES)	
		1	**126-9092**	1	SEAL	
	3	1	**188-4094**	2	BEARING	
	4	1	**177-2484**	1	KEY-WOODRUFF	
	5	1	**177-2480**	1	GEAR	
	6	1	**242-6775**	1	SHAFT	
	7	1	**188-4093**	1	HOUSING	
M	8	1	**8T-8441**	4	BOLT-SOCKET HEAD (M12X1.75X25-MM)	
	9	1	**2W-1145**	1	RING-RETAINING (INTERNAL)	
	10	1	**177-2482**	1	SHIM (1-MM THK)	
	11	1	**124-9913**	1	SEAL-SHAFT	
Y	12	1	**283-5977**	1	ROTATING GP-PUMP (MAIN HYDRAULIC)	357
	13	1	**9T-3928**	1	PLUG AS (PISTON MOTOR)	
		1	**187-8001**	1	SEAL	
Y	14	1	**283-5978**	1	ROTATING GP-PUMP (MAIN HYDRAULIC)	358
	15	1	**5F-3106**	1	SEAL-O-RING	
	16	1	**198-3818**	1	FLANGE	
	17	1	**5F-3144**	1	SEAL-O-RING	
	18	1	**2D-5658**	1	BALL BEARING	
	19	1	**198-3817**	1	GEAR (46-TEETH)	
Y	20	1	**308-4488**	1	HEAD GP-PUMP (MAIN HYDRAULIC)	294

M-METRIC PART
Y-SEPARATE ILLUSTRATION

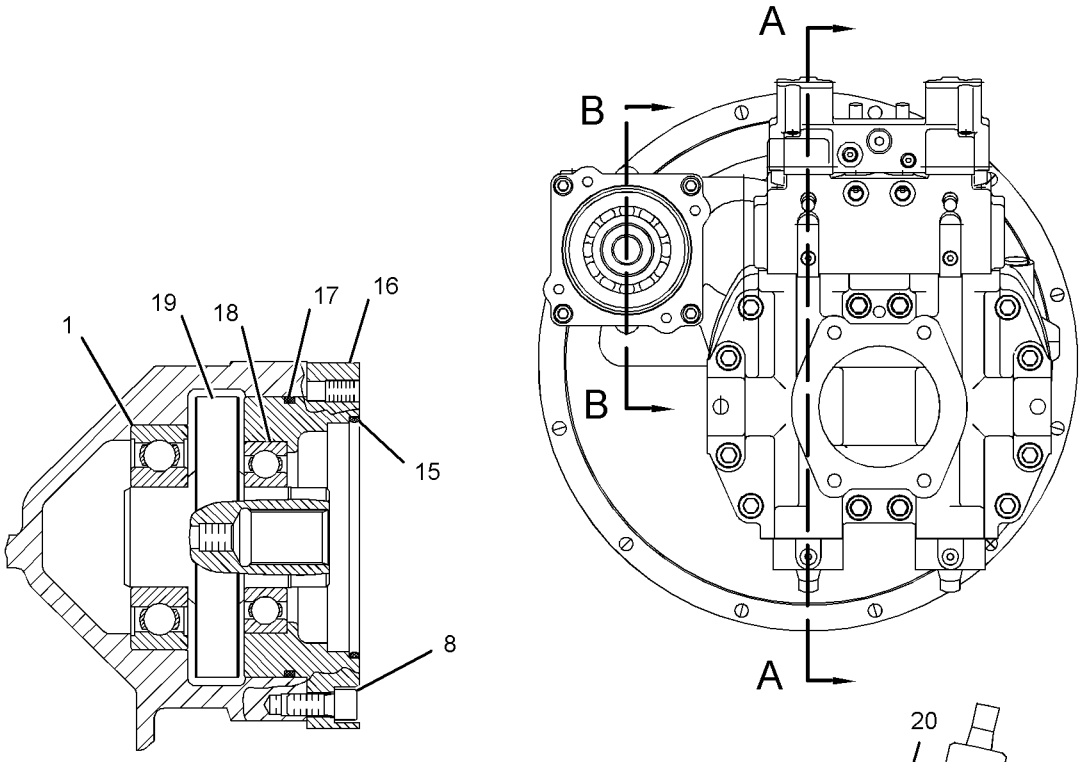

SECTION B-B

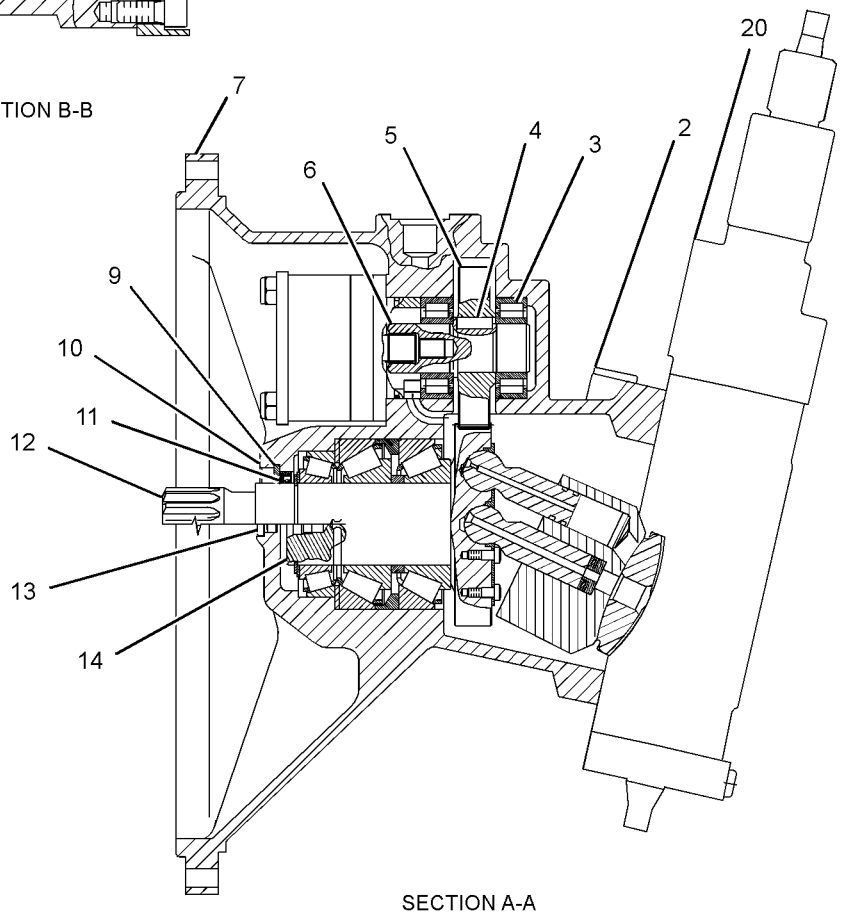

SECTION A-A

GRAPHIC #1 **<END>** g01433674

283-5977 ROTATING GP-PUMP—MAIN HYDRAULIC

S/N: F7B1-UP

PART OF 307-1696 PUMP GP-PISTON

SMCS-5070 **i05119510**

NOTE	REF NO	GRAPHIC REF	PART NUMBER	QTY	PART NAME 1 2 3 4 5 6 (PRODUCT LEVEL)	SEE PAGE
	1	1	**216-0036**	1	SHAFT	
	2	1	**177-2500**	1	BEARING	
B	3	1	**177-2487**	1	SHIM (3.3-MM THK)	
B		1	**177-2488**	1	SHIM (3.4-MM THK)	
B		1	**177-2489**	1	SHIM (3.5-MM THK)	
	4	1	**177-2499**	1	BEARING AS	
Y	5	1	**283-5979**	1	ROTATING GP-PUMP (MAIN HYDRAULIC)	359
	6	1	**194-8261**	1	PLATE-VALVE	
B	7	1	**177-2491**	1	PLATE (2.6-MM THK)	
B		1	**177-2492**	1	PLATE (2.65-MM THK)	
B		1	**177-2493**	1	PLATE (2.7-MM THK)	
B		1	**177-2494**	1	PLATE (2.75-MM THK)	
B		1	**177-2495**	1	PLATE (2.8-MM THK)	
B		1	**177-2496**	1	PLATE (2.85-MM THK)	
B		1	**177-2497**	1	PLATE (2.9-MM THK)	
B		1	**177-2498**	1	PLATE (2.95-MM THK)	
	8	1	**127-8987**	1	RING-RETAINING	

B-USE AS REQUIRED
Y-SEPARATE ILLUSTRATION

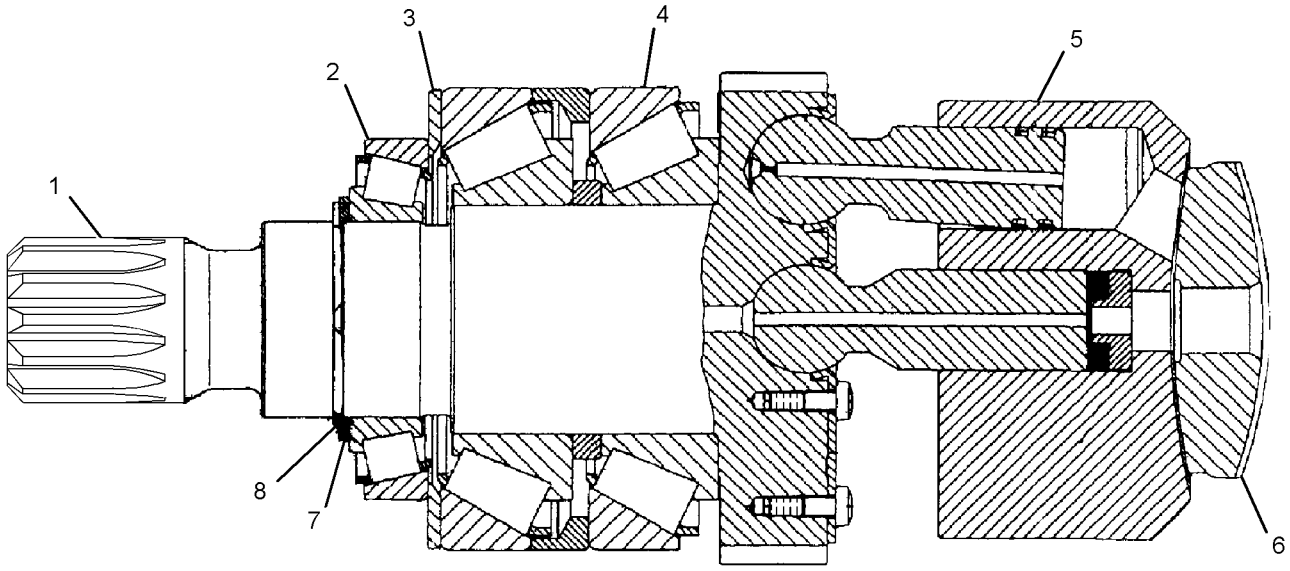

GRAPHIC #1 **<END>** g01730555

HYDRAULIC SYSTEM

283-5978 ROTATING GP-PUMP—MAIN HYDRAULIC

S/N: F7B1-UP

PART OF 307-1696 PUMP GP-PISTON

SMCS-5070 **i03354481**

NOTE	REF NO	GRAPHIC REF	PART NUMBER	QTY	PART NAME 1 2 3 4 5 6 (PRODUCT LEVEL)	SEE PAGE
B	1	1	**177-2491**	1	PLATE (2.6-MM THK)	
B		1	**177-2492**	1	PLATE (2.65-MM THK)	
B		1	**177-2493**	1	PLATE (2.7-MM THK)	
B		1	**177-2494**	1	PLATE (2.75-MM THK)	
B		1	**177-2495**	1	PLATE (2.8-MM THK)	
B		1	**177-2496**	1	PLATE (2.85-MM THK)	
B		1	**177-2497**	1	PLATE (2.9-MM THK)	
B		1	**177-2498**	1	PLATE (2.95-MM THK)	
Y	2	1	**283-5979**	1	ROTATING GP-PUMP (MAIN HYDRAULIC)	359
	3	1	**194-8263**	1	PLATE-VALVE	
	4	1	**216-0037**	1	SHAFT	
	5	1	**188-4103**	1	BEARING AS	
B	6	1	**177-2513**	1	SHIM (6.2-MM THK)	
B		1	**177-2514**	1	SHIM (6.3-MM THK)	
B		1	**177-2515**	1	SHIM (6.4-MM THK)	
B		1	**177-2516**	1	SHIM (6.5-MM THK)	
B		1	**177-2517**	1	SHIM (6.6-MM THK)	
	7	1	**177-2500**	1	BEARING	
	8	1	**127-8987**	1	RING-RETAINING	

B-USE AS REQUIRED
Y-SEPARATE ILLUSTRATION

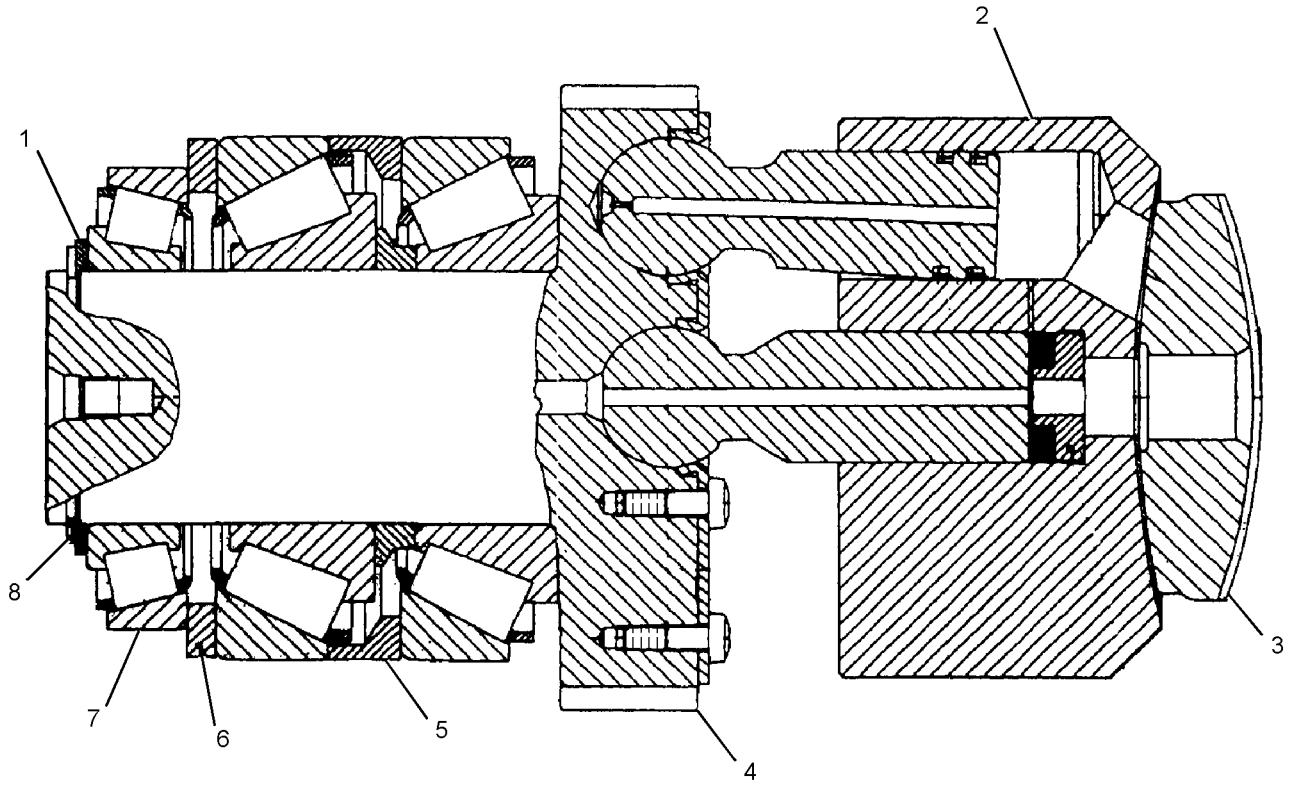

GRAPHIC #1 **<END>** g01730636

283-5979 ROTATING GP-PUMP—MAIN HYDRAULIC

S/N: F7B1-UP

PART OF 283-5977, 283-5978 ROTATING GP-PUMP

SMCS-5070 **i03344460**

NOTE	REF NO	GRAPHIC REF	PART NUMBER	QTY	PART NAME 1 2 3 4 5 6 (PRODUCT LEVEL)	SEE PAGE
	1	1	**283-5980**	7	PISTON AS	
					(EACH INCLUDES)	
		1	**283-5981**	2	RING-SEAL	
	2	1	**177-2502**	1	PIN	
	3	1	**188-4097**	1	BARREL	
	4	1	**247-8851**	1	KIT-SPACER (PUMP ROTATING GROUP)	
	5	1	**177-2510**	4	SPRING	
	6	1	**177-2511**	1	PLATE	
	7	1	**216-0029**	14	SCREW (M6X20-MM)	

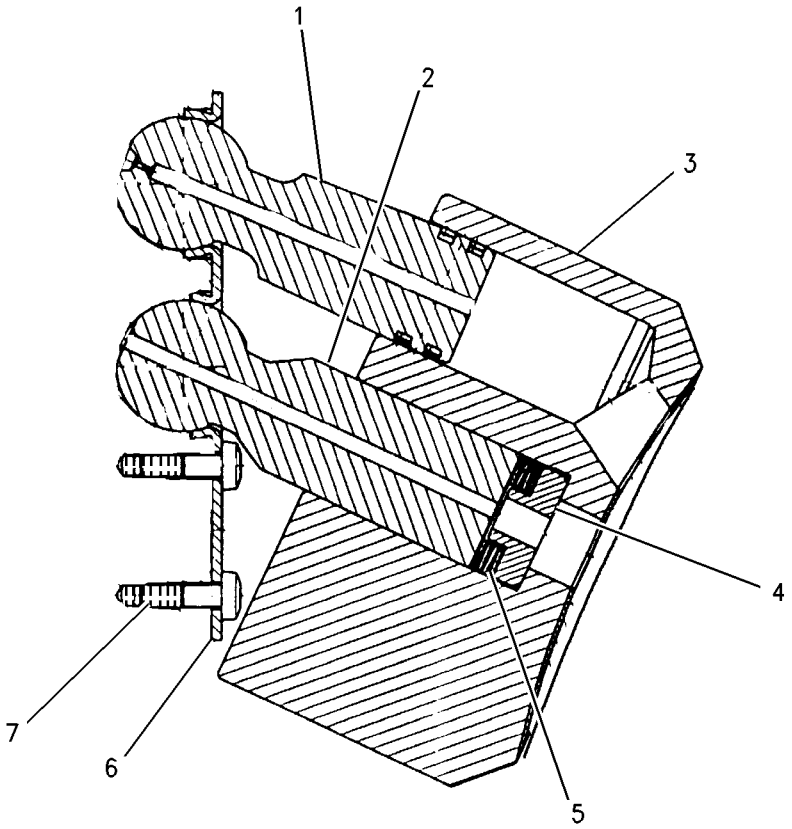

GRAPHIC #1 **<END>** g00949009

HYDRAULIC SYSTEM

4I-6262 ROTOR GP-SWIVEL

S/N: F7B1-UP

PART OF 159-5871 SWIVEL GP

SMCS-5060 **i03122149**

NOTE	PART NUMBER	QTY	PART NAME 1 2 3 4 5 6 (PRODUCT LEVEL)	SEE PAGE
Y	*4I-6263*	1	ROTOR GP-SWIVEL	361

Y-SEPARATE ILLUSTRATION

<END>

4I-6263 ROTOR GP-SWIVEL

S/N: F7B1-UP

PART OF 4I-6262 ROTOR GP-SWIVEL

SMCS-5060 **i00613067**

NOTE	REF NO	GRAPHIC REF	PART NUMBER	QTY	PART NAME 1 2 3 4 5 6 (PRODUCT LEVEL)	SEE PAGE
M	1	1	**8T-4139**	5	BOLT (M12X1.75X30-MM)	
	2	1	**8T-4223**	5	WASHER-HARD (13.5X25.5X3-MM THK)	
	3	1	**7Y-4804**	1	PLATE	
B	4	1	**1U-8846**		SEALANT-GASKET	
	5	1	**7Y-4803**	1	ROTOR	

B-USE AS REQUIRED
M-METRIC PART

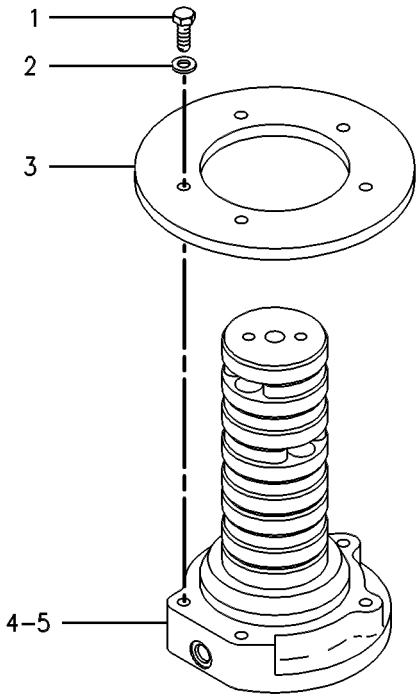

GRAPHIC #1 **<END>** g00272886

HYDRAULIC SYSTEM

191-0886 SHAFT GP-HYDRAULIC MOTOR

S/N: F7B1-UP

PART OF 190-8121 ROTATING GP-MOTOR

SMCS-5058 **i02623510**

NOTE	REF NO	GRAPHIC REF	PART NUMBER	QTY	PART NAME 1 2 3 4 5 6 (PRODUCT LEVEL)	SEE PAGE
	1	1	**191-1955**	1	KIT-BEARING	
	2	1	**095-0929**	1	RING-RETAINING	

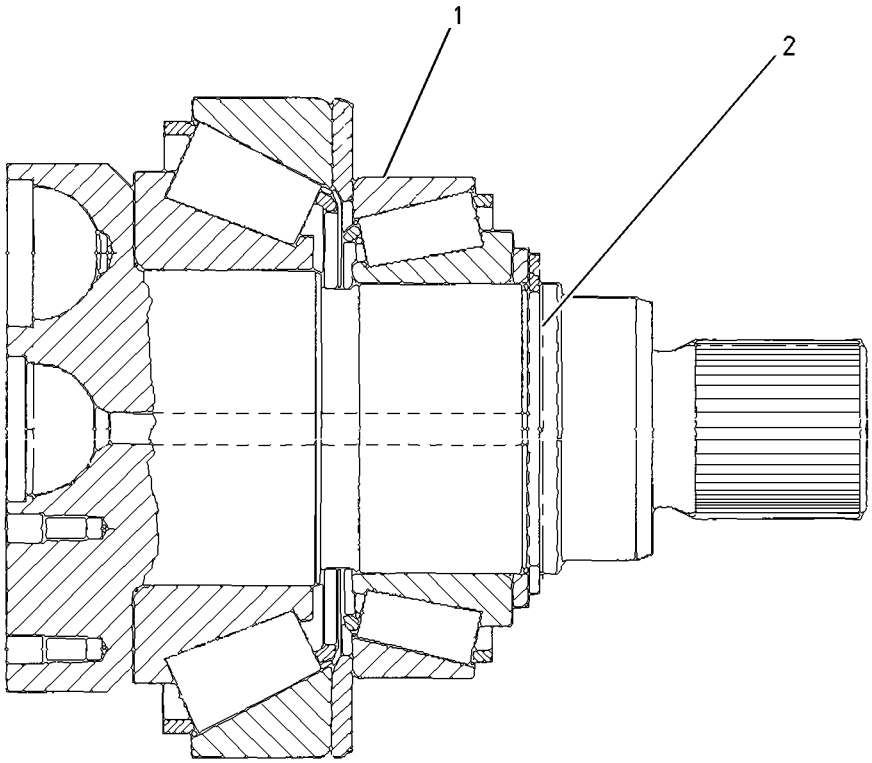

GRAPHIC #1 **<END>** g00699834

159-5871 SWIVEL GP—WITHOUT TILT FUNCTION

S/N: F7B1-UP

PART OF 339-8348 LINES GP-TRAVEL MOTOR

SMCS-5060 **i02293747**

NOTE	REF NO	GRAPHIC REF	PART NUMBER	QTY	PART NAME 1 2 3 4 5 6 (PRODUCT LEVEL)	SEE PAGE
M	1	1	**8T-4136**	6	BOLT (M10X1.5X25-MM)	
	2	1	**8T-4121**	3	WASHER-HARD (11X21X2.5-MM THK)	
	3	1	**7Y-4817**	1	COVER	
	4	1	**095-1716**	1	SEAL-O-RING	
	5	1	**7I-7131**	1	RETAINER	
	6	1	**7Y-4801**	1	HOUSING	
	7	1	**141-2163**	5	SEAL AS	
	8	1	**095-1625**	3	SEAL-O-RING	
Y	9	1	**4I-6262**	1	ROTOR GP-SWIVEL	360
C	10	1	**8T-6759**	1	PLUG-PIPE	

C-CHANGE FROM PREVIOUS TYPE
M-METRIC PART
Y-SEPARATE ILLUSTRATION

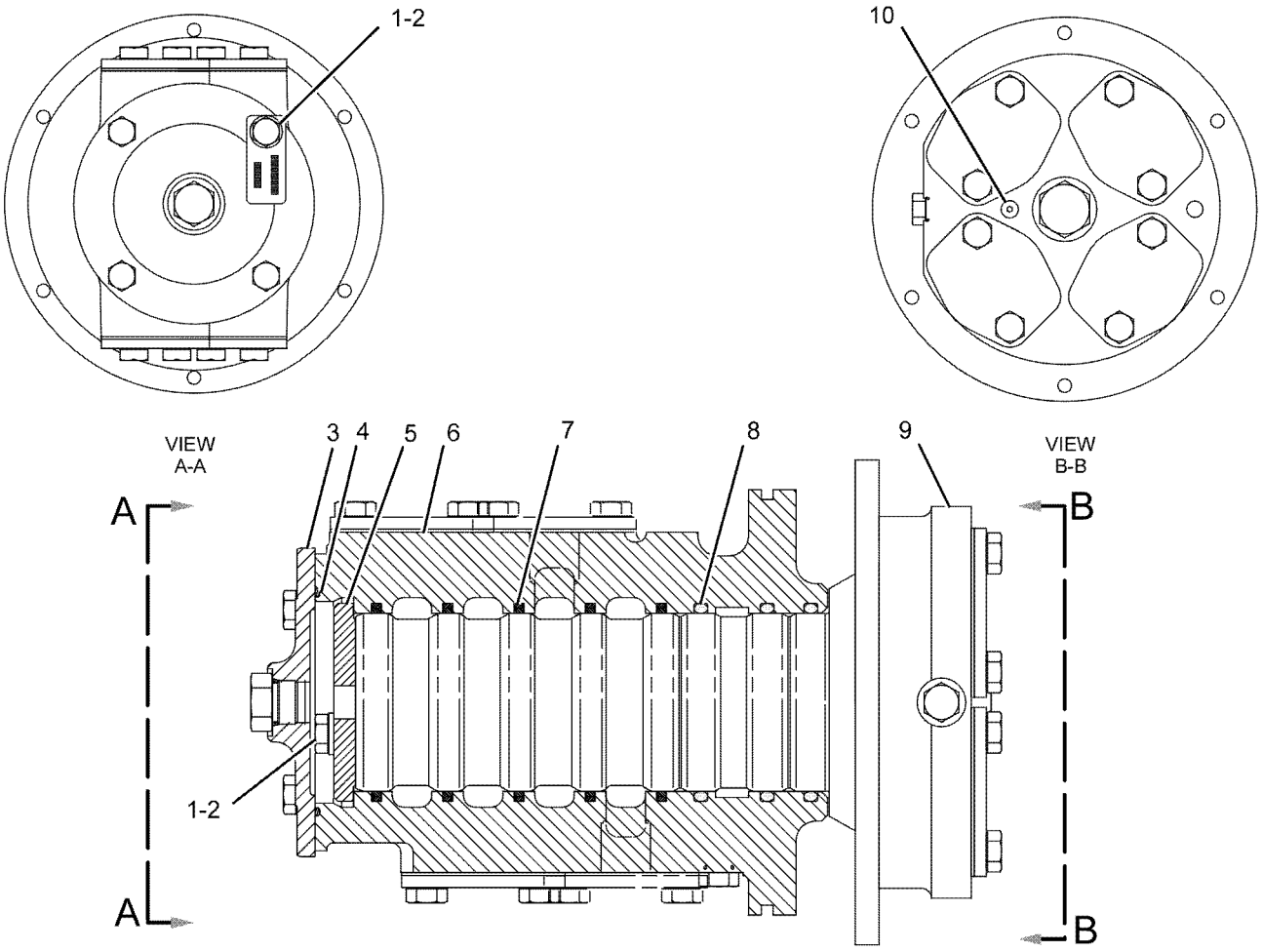

GRAPHIC #1 **<END>** g01150717

HYDRAULIC SYSTEM

339-8296 TANK GP-HYDRAULIC & FUEL

S/N: F7B1-UP

PART OF 362-3899 CHASSIS AR

SMCS-1273, 5056 **i04958510**

NOTE	REF NO	GRAPHIC REF	PART NUMBER	QTY	PART NAME 1 2 3 4 5 6 (PRODUCT LEVEL)	SEE PAGE
	1	1	**1H-8306**	1	SCREW-PURGE (1/2-20X1.625-IN)	
	2	1	**1U-2827**	1	GUIDE-VALVE (HYDRAULIC TANK DRAIN)	
	3	1	**4I-0378**	1	GASKET-RUBBER	
	4	1	**246-2641**	1	PADLOCK GP	
		1	**5P-8500**	1	KEY	
	5	1	**6E-3635**	1	RETAINER	
	6	1	**7X-7700**	1	CAP AS-FUEL (LOCKABLE, VENTED)	
		1	**9X-2205**	1	KIT-CAP FILTER (FUEL TANK)	
					(INCLUDES GASKETS, VALVE, SCREW, & FILTER AS)	
		1	**9X-8600**	1	SEAL-O-RING	
	7	1	**8J-8782**	1	BODY-DRAIN VALVE	
	8	1	**8J-8783**	1	VALVE (HYDRAULIC TANK DRAIN)	
	9	1	**9J-7031**	1	PLUG-DRAIN (HYDRAULIC TANK)	
	10	1	**093-1588**	2	COVER	
	11	1	**4H-6520**	1	SEAL-O-RING	
Y	12	1	**188-4145**	2	FILTER GP-OIL (HYDRAULIC RETURN)	290
	13	1	**384-5243**	2	ROD	
	14	1	**396-0751**	1	SCREEN AS (HYDRAULIC TANK)	
	16	1	**315-4441**	1	SWITCH AS-PRESSURE (HYDRAULIC OIL)	
	17	1	**340-5937**	1	HANDLE	
	18	1	**340-5939**	1	PLATE	
	19	1	**341-1842**	1	SENDER AS-FUEL LEVEL	
		1	**102-8802**	1	KIT-RECEPTACLE (2-PIN)	
					(INCLUDES RECEPTACLE AS & WEDGE)	
		1	**8T-8729**	2	PIN-CONNECTOR (16-GA TO 18-GA)	
Y	20	1	**347-6081**	1	GAUGE GP-SIGHT (HYDRAULIC OIL LEVEL)	293
	21	1	**358-9477**	1	VALVE AS-BREAKER RELIEF (HYDRAULIC TANK)	
		1	**3D-2824**	1	SEAL-O-RING	
	22	1	**361-5271**	1	TANK AS-HYDRAULIC & FUEL	
	23	1	**361-5312**	1	PLATE	
	24	1	**378-7766**	1	MANIFOLD	
	25	1	**378-7767**	1	PIPE	
	26	1	**378-7768**	1	PIPE	
M	27	1	**095-0736**	5	SCREW-MACHINE (M5X0.8X10-MM)	
	28	1	**095-1706**	1	SEAL-O-RING	
	29	1	**095-1730**	2	SEAL-O-RING	
	30	1	**130-2321**	3	WASHER (13.5X25.5X3-MM THK)	
	31	1	*148-8406*	1	PLUG AS	
		1	**7M-8485**	1	SEAL-O-RING	
		1	**9S-9334**	1	PLUG-O-RING	
	32	1	**165-3256**	1	PIPE AS	
	33	1	**175-6176**	2	SEAL-O-RING	
	34	1	**1H-8278**	2	SEAL-O-RING	
	35	1	**260-9188**	1	PLUG	
	36	1	**304-6608**	1	STRAINER-FUEL (FUEL TANK)	
	37	1	**4H-9027**	1	PLUG-PIPE	
	38	1	**5H-6005**	3	SEAL-O-RING	
	39	1	**5M-2057**	1	SEAL-O-RING	
	40	1	**6D-9157**	1	SEAL-O-RING	
M	41	1	**6V-3668**	3	BOLT (M12X1.75X30-MM)	
M	42	1	**6V-6787**	8	BOLT (M20X2.5X55-MM)	
M	43	1	**6V-7743**	2	LOCKNUT (M6X1-THD)	
	44	1	**7B-3039**	1	SPRING	
M	45	1	**8T-0267**	2	BOLT-SOCKET HEAD (M6X1X12-MM)	
	46	1	**8T-0328**	5	WASHER-HARD (5.5X10X1-MM THK)	

339-8296 TANK GP-HYDRAULIC & FUEL *(contd.)* i04958510

NOTE	REF NO	GRAPHIC REF	PART NUMBER	QTY	PART NAME 1 2 3 4 5 6 (PRODUCT LEVEL)	SEE PAGE
	47	1	**8T-3298**	1	SEAL-RECTANGULAR	
	48	1	**8T-4121**	15	WASHER-HARD (11X21X2.5-MM THK)	
M	49	1	**8T-4136**	1	BOLT (M10X1.5X25-MM)	
M	50	1	**8T-4137**	12	BOLT (M10X1.5X20-MM)	
M	51	1	**8T-4186**	2	BOLT (M10X1.5X40-MM)	
M	52	1	**8T-4194**	16	BOLT (M12X1.75X50-MM)	
M	53	1	**8T-4201**	1	BOLT-LOCKING (M10X1.5X20-MM)	
	54	1	**8T-4223**	16	WASHER-HARD (13.5X25.5X3-MM THK)	
	55	1	**8T-5439**	8	WASHER-HARD (21.5X45X6-MM THK)	
M	56	1	**8T-7586**	11	BOLT (M10X1.5X100-MM)	
M	57	1	**8T-7964**	2	NUT (M6X1-THD)	
D	58	1	**5P-5970**		SEAL (0.7-M)	
D	58A	1	**5P-5970**		SEAL (0.4-M)	
D	58B	1	**5P-5970**		SEAL (1.3-M EACH)	
D	58C	1	**5P-5970**		SEAL (1.1-M)	

D-ORDER BY THE METER
M-METRIC PART
Y-SEPARATE ILLUSTRATION

339-8296 TANK GP-HYDRAULIC & FUEL *(contd.)* i04958510

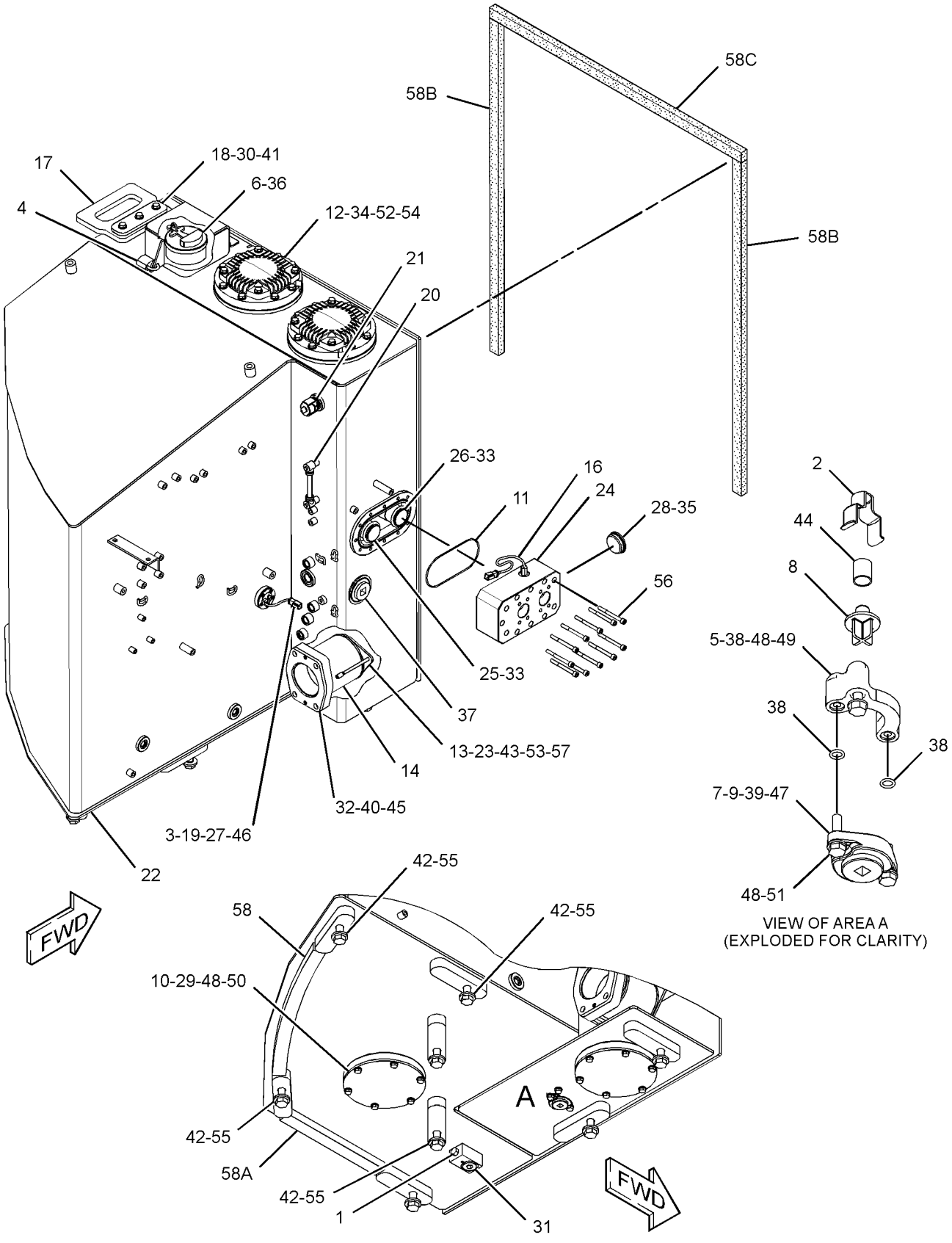

GRAPHIC #1 **<END>** g02732291

HYDRAULIC SYSTEM

375-0151 VALVE & MTG GP-CONTROL

S/N: F7B1-UP

PART OF 373-6571 HYDRAULIC AR-HARVESTER

AN ATTACHMENT

SMCS-5051 **i04493058**

NOTE	REF NO	GRAPHIC REF	PART NUMBER	QTY	PART NAME 1 2 3 4 5 6 (PRODUCT LEVEL)	SEE PAGE
	1	1	**104-9693**	2	FLANGE	
	2	1	**200-6345**	1	MOUNT (DUAL SWIVEL)	
	3	1	**204-2281**	2	STRAP-CABLE	
	4	1	**220-8659**	1	MANIFOLD	
	5	1	**220-8660**	1	MANIFOLD	
	6	1	**335-5321**	2	SENSOR GP-PRESSURE (LOAD SENSING)	
I	7	1	**363-1824**	1	HOSE AS	
	8	1	**365-7868**	1	TUBE AS	
Y	9	1	**373-7703**	1	VALVE GP-MAIN CONTROL (5-BANK) (HIGH FLOW)	402
Y	10	1	**373-7704**	1	VALVE GP-CONTROL (4-BANK) (HIGH FLOW)	378
M	11	1	**101-7404**	8	BOLT-SOCKET HEAD (M10X1.5X30-MM)	
	12	1	*148-8310*	2	ADAPTER AS	
					(EACH INCLUDES)	
		1	**8T-0151**	1	ADAPTER	
		1	**3J-1907**	1	SEAL-O-RING	
	13	1	*148-8335*	1	CONNECTOR AS	
		1	**6V-8635**	1	CONNECTOR	
		1	**5K-9090**	1	SEAL-O-RING	
		1	**7M-8485**	1	SEAL-O-RING	
	14	1	*148-8347*	1	ELBOW AS	
		1	**6V-9007**	1	ELBOW	
		1	**3D-2824**	1	SEAL-O-RING	
		1	**6V-9746**	1	SEAL-O-RING	
	15	1	*148-8362*	1	ELBOW AS	
		1	**8T-6684**	1	ELBOW	
		1	**3D-2824**	1	SEAL-O-RING	
		1	**5K-9090**	1	SEAL-O-RING	
	16	1	*153-6237*	1	ELBOW AS	
		1	**6V-9004**	1	ELBOW	
		1	**3D-2824**	1	SEAL-O-RING	
		1	**6V-9746**	1	SEAL-O-RING	
	17	1	*164-4180*	1	PLUG AS	
		1	**9S-4181**	1	PLUG-O-RING	
		1	**7M-8485**	1	SEAL-O-RING	
	18	1	*172-4621*	1	ADAPTER AS	
		1	**6V-0301**	1	ADAPTER	
		1	**7M-8485**	1	SEAL-O-RING	
	19	1	**1P-3702**	7	SEAL-RECTANGULAR	
	20	1	**1P-3703**	2	SEAL-RECTANGULAR	
	21	1	**1P-4578**	2	FLANGE-HALF	
	22	1	**3J-1907**	2	SEAL-O-RING	
	23	1	**5H-4020**	1	COVER	
	24	1	**5K-9090**	2	SEAL-O-RING	
	25	1	**5P-0046**	4	COVER	
M	26	1	**7X-2550**	4	BOLT (M12X1.75X110-MM)	
	27	1	**8T-4121**	36	WASHER-HARD (11X21X2.5-MM THK)	
M	28	1	**8T-4137**	6	BOLT (M10X1.5X20-MM)	
M	29	1	**8T-4182**	20	BOLT (M10X1.5X45-MM)	
M	30	1	**8T-4195**	6	BOLT (M10X1.5X30-MM)	
	31	1	**8T-4223**	4	WASHER-HARD (13.5X25.5X3-MM THK)	
M	32	1	**8T-6685**	4	BOLT (M10X1.5X110-MM)	
	33	1	**8T-9403**	8	FLANGE-HALF	

I-REFER TO HYDRAULIC INFORMATION SYSTEM
M-METRIC PART
Y-SEPARATE ILLUSTRATION

375-0151 **VALVE & MTG GP-CONTROL** *(contd.)* **i04493058**

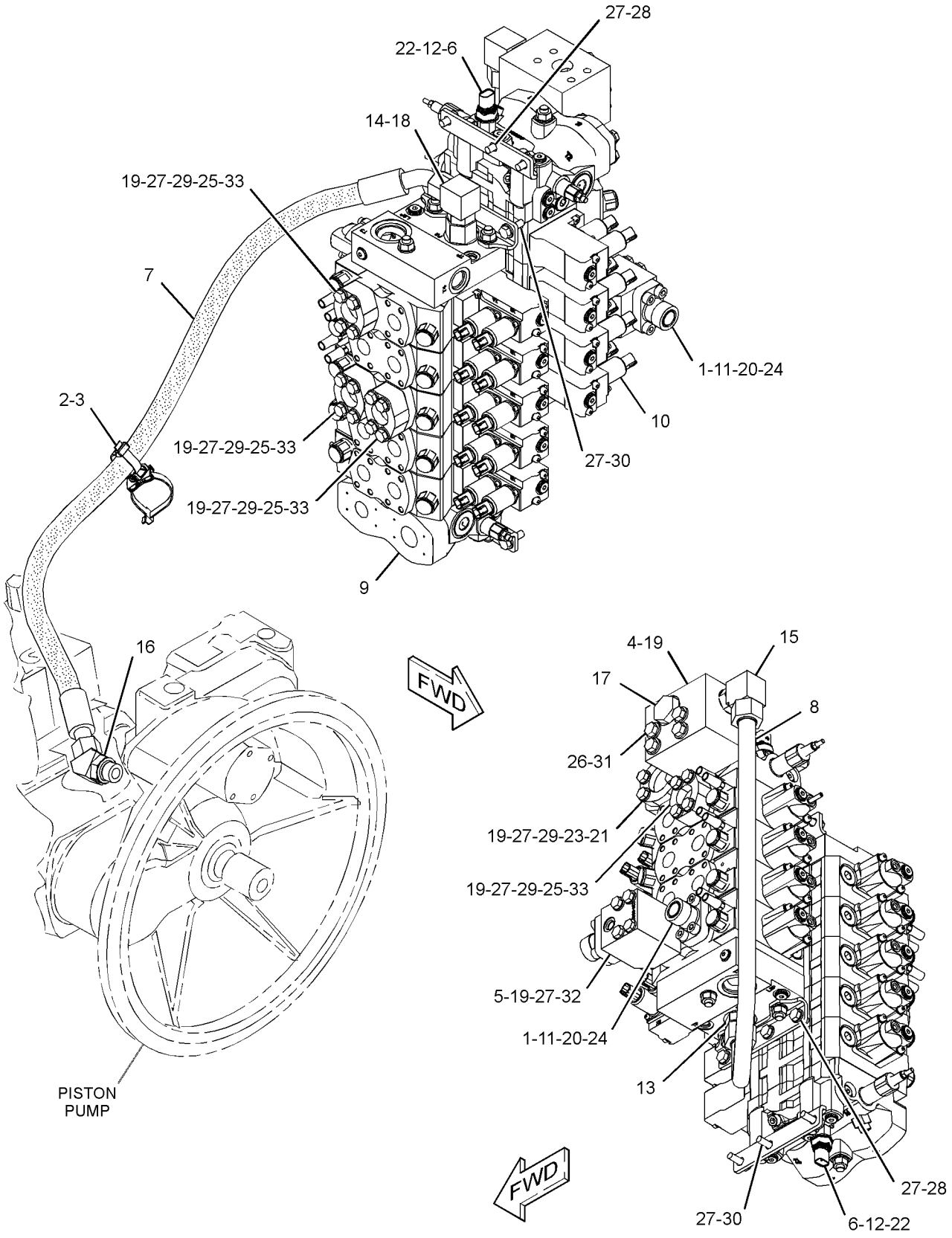

GRAPHIC #1 **<END>** g02735407

HYDRAULIC SYSTEM

375-0155 VALVE & MTG GP-CONTROL

S/N: F7B1-UP

PART OF 373-6575 HYDRAULIC AR-CIRCULAR SAW AN ATTACHMENT

SMCS-5051 **i04493064**

NOTE	REF NO	GRAPHIC REF	PART NUMBER	QTY	PART NAME 1 2 3 4 5 6 (PRODUCT LEVEL)	SEE PAGE
	1	1	**104-9693**	2	FLANGE	
	2	1	**200-6345**	1	MOUNT (DUAL SWIVEL)	
	3	1	**204-2281**	2	STRAP-CABLE	
	4	1	**220-8659**	1	MANIFOLD	
	5	1	**220-8660**	1	MANIFOLD	
	6	1	**335-5321**	2	SENSOR GP-PRESSURE (LOAD SENSING)	
I	7	1	**363-1824**	1	HOSE AS	
	8	1	**365-7868**	1	TUBE AS	
Y	9	1	**373-7694**	1	VALVE GP-MAIN CONTROL (5-BANK) (LOW FLOW)	400
Y	10	1	**373-7702**	1	VALVE GP-MAIN CONTROL (4-BANK) (LOW FLOW)	401
M	11	1	**101-7404**	8	BOLT-SOCKET HEAD (M10X1.5X30-MM)	
	12	1	*148-8310*	2	ADAPTER AS	
					(EACH INCLUDES)	
		1	**8T-0151**	1	ADAPTER	
		1	**3J-1907**	1	SEAL-O-RING	
	13	1	*148-8335*	1	CONNECTOR AS	
		1	**6V-8635**	1	CONNECTOR	
		1	**5K-9090**	1	SEAL-O-RING	
		1	**7M-8485**	1	SEAL-O-RING	
	14	1	*148-8347*	1	ELBOW AS	
		1	**6V-9007**	1	ELBOW	
		1	**3D-2824**	1	SEAL-O-RING	
		1	**6V-9746**	1	SEAL-O-RING	
	15	1	*148-8362*	1	ELBOW AS	
		1	**8T-6684**	1	ELBOW	
		1	**3D-2824**	1	SEAL-O-RING	
		1	**5K-9090**	1	SEAL-O-RING	
	16	1	*153-6237*	1	ELBOW AS	
		1	**6V-9004**	1	ELBOW	
		1	**3D-2824**	1	SEAL-O-RING	
		1	**6V-9746**	1	SEAL-O-RING	
	17	1	*164-4180*	1	PLUG AS	
		1	**9S-4181**	1	PLUG-O-RING	
		1	**7M-8485**	1	SEAL-O-RING	
	18	1	*172-4621*	1	ADAPTER AS	
		1	**6V-0301**	1	ADAPTER	
		1	**7M-8485**	1	SEAL-O-RING	
	19	1	**1P-3702**	1	SEAL-RECTANGULAR	
	20	1	**1P-3703**	3	SEAL-RECTANGULAR	
	21	1	**1P-4578**	2	FLANGE-HALF	
	22	1	**3J-1907**	2	SEAL-O-RING	
	23	1	**4J-0522**	1	SEAL-O-RING	
	24	1	**5H-4020**	1	COVER	
	25	1	**5K-9090**	2	SEAL-O-RING	
M	26	1	**7X-2550**	4	BOLT (M12X1.75X110-MM)	
	27	1	**8T-4121**	20	WASHER-HARD (11X21X2.5-MM THK)	
M	28	1	**8T-4137**	6	BOLT (M10X1.5X20-MM)	
M	29	1	**8T-4182**	4	BOLT (M10X1.5X45-MM)	
M	30	1	**8T-4195**	6	BOLT (M10X1.5X30-MM)	
	31	1	**8T-4223**	4	WASHER-HARD (13.5X25.5X3-MM THK)	
M	32	1	**8T-6685**	4	BOLT (M10X1.5X110-MM)	

I-REFER TO HYDRAULIC INFORMATION SYSTEM
M-METRIC PART
Y-SEPARATE ILLUSTRATION

375-0155 **VALVE & MTG GP-CONTROL** *(contd.)* **i04493064**

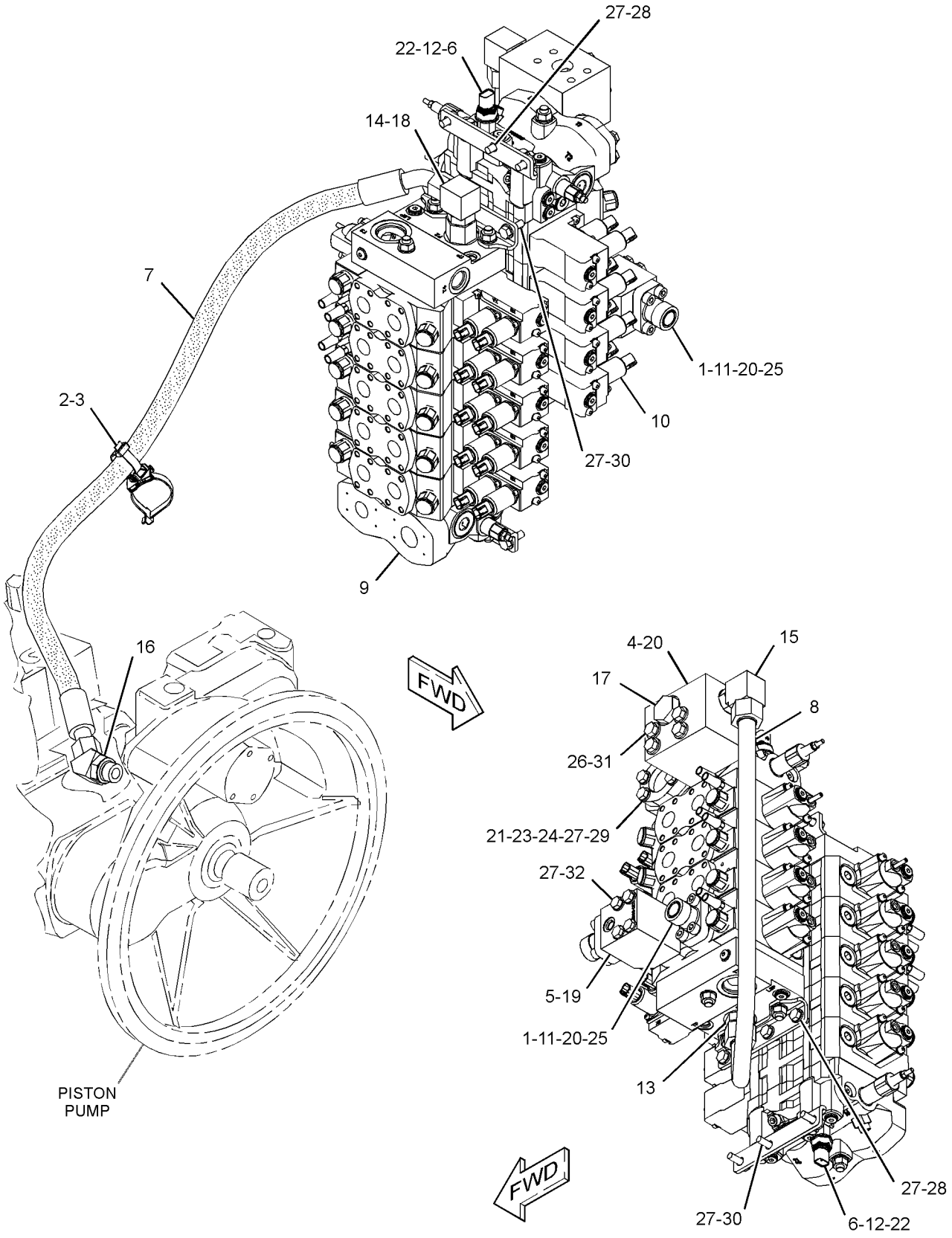

GRAPHIC #1 **<END>** g02735406

HYDRAULIC SYSTEM

375-0157 VALVE & MTG GP-CONTROL

S/N: F7B1-UP

PART OF 373-6577 HYDRAULIC AR-CIRCULAR SAW AN ATTACHMENT

SMCS-5051 **i04493050**

NOTE	REF NO	GRAPHIC REF	PART NUMBER	QTY	PART NAME 1 2 3 4 5 6 (PRODUCT LEVEL)	SEE PAGE
	1	1	**104-9693**	2	FLANGE	
	2	1	**200-6345**	1	MOUNT (DUAL SWIVEL)	
	3	1	**204-2281**	2	STRAP-CABLE	
	4	1	**220-8659**	1	MANIFOLD	
	5	1	**220-8660**	1	MANIFOLD	
	6	1	**335-5321**	2	SENSOR GP-PRESSURE (LOAD SENSING)	
I	7	1	*363-1824*	1	HOSE AS	
	8	1	**365-7868**	1	TUBE AS	
Y	9	1	**373-7703**	1	VALVE GP-MAIN CONTROL (5-BANK) (HIGH FLOW)	402
Y	10	1	**373-7704**	1	VALVE GP-CONTROL (4-BANK) (HIGH FLOW)	378
M	11	1	**101-7404**	8	BOLT-SOCKET HEAD (M10X1.5X30-MM)	
	12	1	*148-8310*	2	ADAPTER AS	
					(EACH INCLUDES)	
		1	**8T-0151**	1	ADAPTER	
		1	**3J-1907**	1	SEAL-O-RING	
	13	1	*148-8335*	1	CONNECTOR AS	
		1	**6V-8635**	1	CONNECTOR	
		1	**5K-9090**	1	SEAL-O-RING	
		1	**7M-8485**	1	SEAL-O-RING	
	14	1	*148-8347*	1	ELBOW AS	
		1	**6V-9007**	1	ELBOW	
		1	**3D-2824**	1	SEAL-O-RING	
		1	**6V-9746**	1	SEAL-O-RING	
	15	1	*148-8362*	1	ELBOW AS	
		1	**8T-6684**	1	ELBOW	
		1	**3D-2824**	1	SEAL-O-RING	
		1	**5K-9090**	1	SEAL-O-RING	
	16	1	*153-6237*	1	ELBOW AS	
		1	**6V-9004**	1	ELBOW	
		1	**3D-2824**	1	SEAL-O-RING	
		1	**6V-9746**	1	SEAL-O-RING	
	17	1	*164-4180*	1	PLUG AS	
		1	**9S-4181**	1	PLUG-O-RING	
		1	**7M-8485**	1	SEAL-O-RING	
	18	1	*172-4621*	1	ADAPTER AS	
		1	**6V-0301**	1	ADAPTER	
		1	**7M-8485**	1	SEAL-O-RING	
	19	1	**1P-3702**	1	SEAL-RECTANGULAR	
	20	1	**1P-3703**	3	SEAL-RECTANGULAR	
	21	1	**1P-4578**	2	FLANGE-HALF	
	22	1	**3J-1907**	2	SEAL-O-RING	
	23	1	**4J-0522**	1	SEAL-O-RING	
	24	1	**5H-4020**	1	COVER	
	25	1	**5K-9090**	2	SEAL-O-RING	
M	26	1	**7X-2550**	4	BOLT (M12X1.75X110-MM)	
	27	1	**8T-4121**	20	WASHER-HARD (11X21X2.5-MM THK)	
M	28	1	**8T-4137**	6	BOLT (M10X1.5X20-MM)	
M	29	1	**8T-4195**	6	BOLT (M10X1.5X30-MM)	
M	30	1	**8T-4196**	4	BOLT (M10X1.5X35-MM)	
	31	1	**8T-4223**	4	WASHER-HARD (13.5X25.5X3-MM THK)	
M	32	1	**8T-6685**	4	BOLT (M10X1.5X110-MM)	

I-REFER TO HYDRAULIC INFORMATION SYSTEM
M-METRIC PART
Y-SEPARATE ILLUSTRATION

375-0157 **VALVE & MTG GP-CONTROL** *(contd.)* **i04493050**

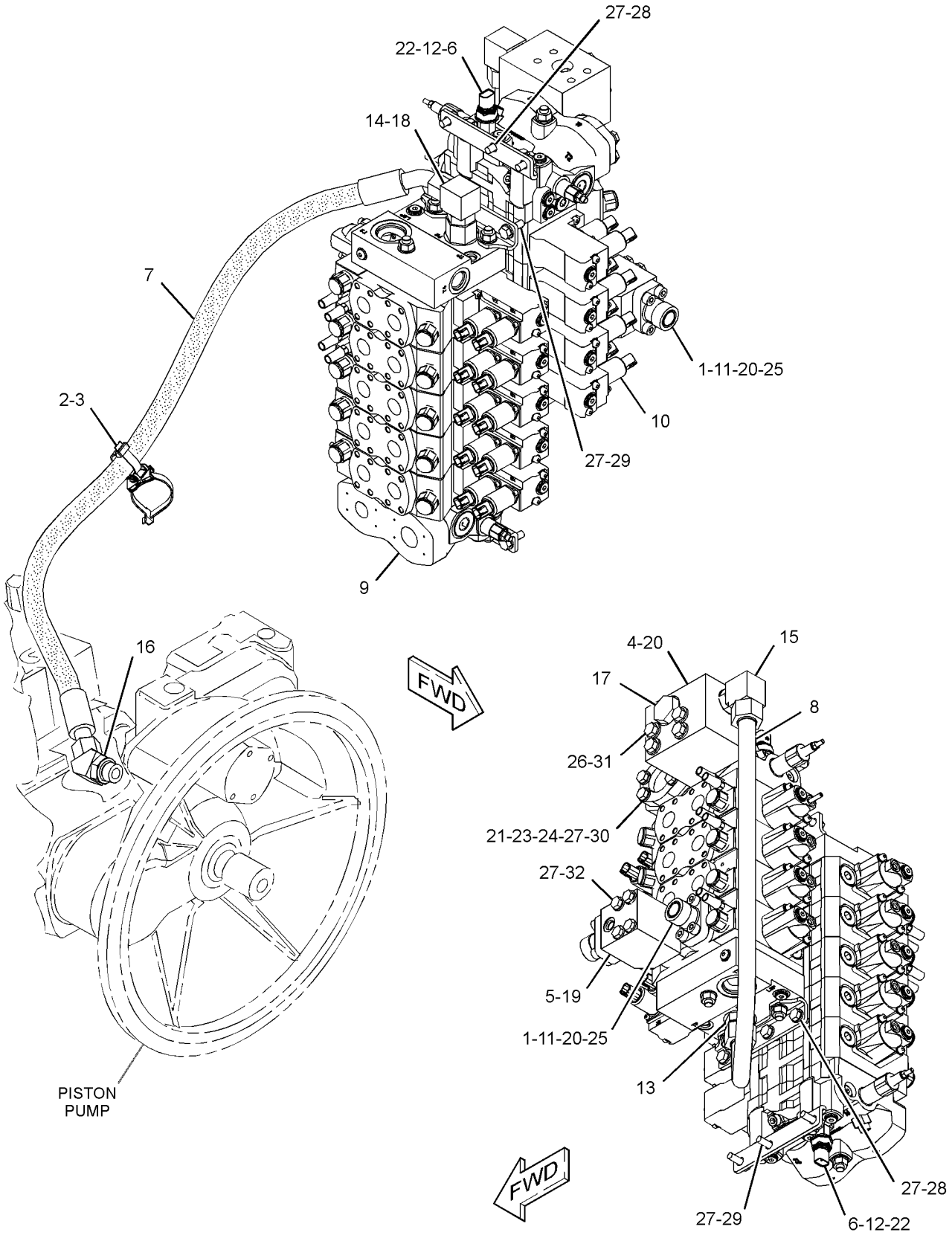

GRAPHIC #1 **<END>** g02735373

HYDRAULIC SYSTEM

375-0153 VALVE & MTG GP-MAIN CONTROL

S/N: F7B1-UP

PART OF 373-6573 HYDRAULIC AR-INTERMITTENT SAW AN ATTACHMENT

SMCS-5051 **i04491011**

NOTE	REF NO	GRAPHIC REF	PART NUMBER	QTY	PART NAME 1 2 3 4 5 6 (PRODUCT LEVEL)	SEE PAGE
	1	1	**104-9693**	2	FLANGE	
	2	1	**220-8659**	1	MANIFOLD	
	3	1	**220-8660**	1	MANIFOLD	
	4	1	**242-3273**	1	MANIFOLD	
	5	1	**335-5321**	2	SENSOR GP-PRESSURE (LOAD SENSING)	
Y	6	1	**361-5307**	1	VALVE GP-MAIN CONTROL (7-BANK) (INTERMITTENT SAW)	399
	7	1	**365-7868**	1	TUBE AS	
Y	8	1	**373-7704**	1	VALVE GP-CONTROL (4-BANK) (HIGH FLOW)	378
M	9	1	**101-7404**	8	BOLT-SOCKET HEAD (M10X1.5X30-MM)	
	10	1	*148-8310*	2	ADAPTER AS	
					(EACH INCLUDES)	
		1	**8T-0151**	1	ADAPTER	
		1	**3J-1907**	1	SEAL-O-RING	
	11	1	*148-8335*	1	CONNECTOR AS	
		1	**6V-8635**	1	CONNECTOR	
		1	**5K-9090**	1	SEAL-O-RING	
		1	**7M-8485**	1	SEAL-O-RING	
	12	1	*148-8347*	1	ELBOW AS	
		1	**6V-9007**	1	ELBOW	
		1	**3D-2824**	1	SEAL-O-RING	
		1	**6V-9746**	1	SEAL-O-RING	
	13	1	*148-8362*	1	ELBOW AS	
		1	**8T-6684**	1	ELBOW	
		1	**3D-2824**	1	SEAL-O-RING	
		1	**5K-9090**	1	SEAL-O-RING	
	14	1	*148-8408*	1	PLUG AS	
		1	**9S-4183**	1	PLUG	
		1	**3D-2824**	1	SEAL-O-RING	
	15	1	*153-6237*	1	ELBOW AS	
		1	**6V-9004**	1	ELBOW	
		1	**3D-2824**	1	SEAL-O-RING	
		1	**6V-9746**	1	SEAL-O-RING	
	16	1	*164-4180*	1	PLUG AS	
		1	**9S-4181**	1	PLUG-O-RING	
		1	**7M-8485**	1	SEAL-O-RING	
	17	1	*172-4621*	1	ADAPTER AS	
		1	**6V-0301**	1	ADAPTER	
		1	**7M-8485**	1	SEAL-O-RING	
	18	1	**1P-3702**	3	SEAL-RECTANGULAR	
	19	1	**1P-3703**	5	SEAL-RECTANGULAR	
	20	1	**1P-4578**	2	FLANGE-HALF	
I	21	1	**363-1824**	1	HOSE AS	
	22	1	**3J-1907**	2	SEAL-O-RING	
	23	1	**4J-0522**	1	SEAL-O-RING	
	24	1	**5H-4020**	1	COVER	
	25	1	**5K-9090**	2	SEAL-O-RING	
	26	1	**5P-0046**	2	COVER	
M	27	1	**7X-2550**	4	BOLT (M12X1.75X110-MM)	
	28	1	**8T-4121**	34	WASHER-HARD (11X21X2.5-MM THK)	
M	29	1	**8T-4137**	6	BOLT (M10X1.5X20-MM)	
M	30	1	**8T-4182**	12	BOLT (M10X1.5X45-MM)	
M	31	1	**8T-4195**	6	BOLT (M10X1.5X30-MM)	
M	32	1	**8T-4198**	6	BOLT (M10X1.5X100-MM)	
	33	1	**8T-4223**	4	WASHER-HARD (13.5X25.5X3-MM THK)	

375-0153 VALVE & MTG GP-MAIN CONTROL *(contd.)* i04491011

NOTE	REF NO	GRAPHIC REF	PART NUMBER	QTY	PART NAME 1 2 3 4 5 6 (PRODUCT LEVEL)	SEE PAGE
M	34	1	**8T-6685**	4	BOLT (M10X1.5X110-MM)	
	35	1	**8T-9403**	4	FLANGE-HALF	

I-REFER TO HYDRAULIC INFORMATION SYSTEM
M-METRIC PART
Y-SEPARATE ILLUSTRATION

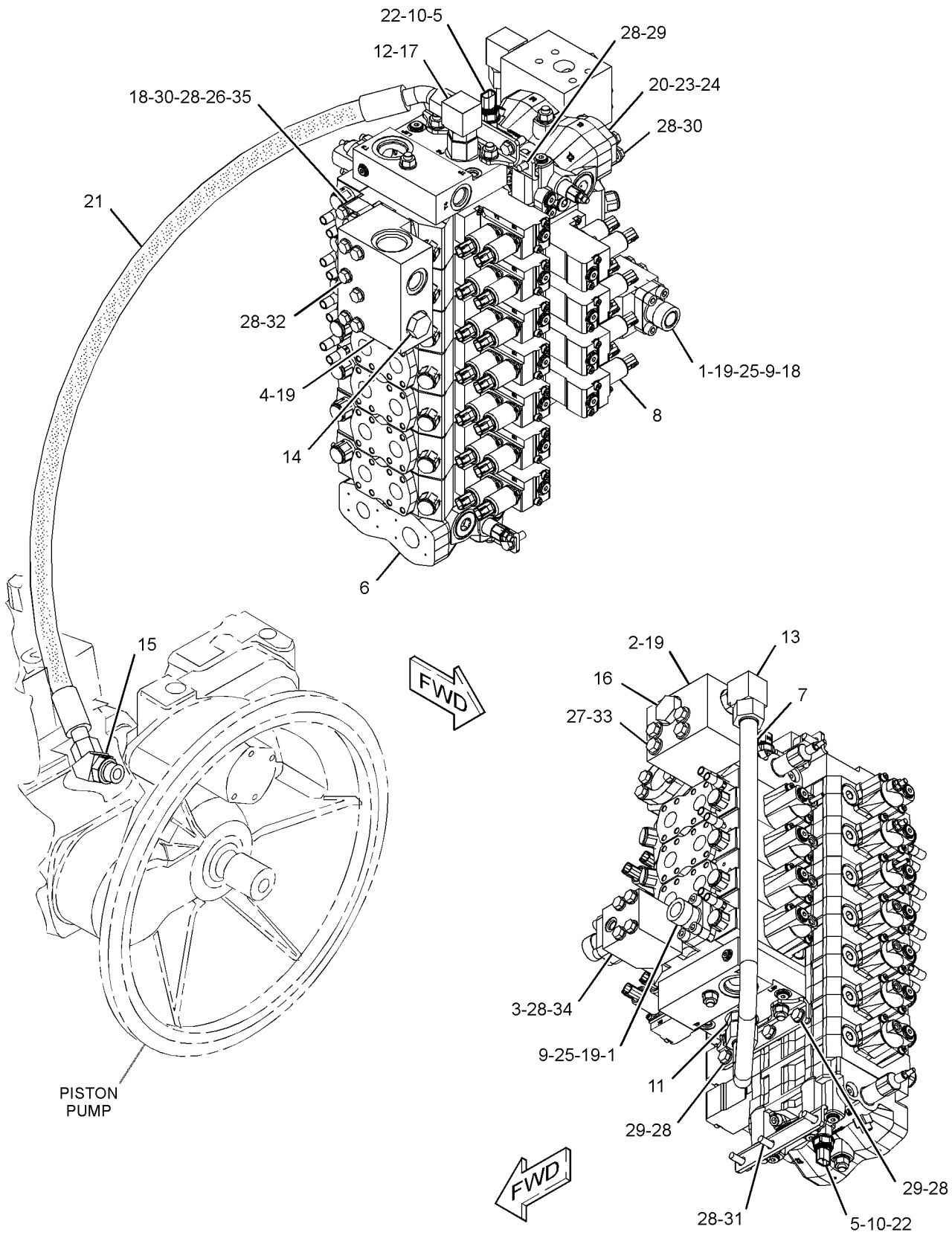

GRAPHIC #1 **<END>** g02735329

HYDRAULIC SYSTEM

194-6973 VALVE GP-BRAKE

S/N: F7B1-UP

PART OF 291-1126 HEAD GP-MOTOR

SMCS-4265, 4282 **i03339002**

NOTE	REF NO	GRAPHIC REF	PART NUMBER	QTY	PART NAME 1 2 3 4 5 6 (PRODUCT LEVEL)	SEE PAGE
	1	1	**109-3204**	1	SEAL-O-RING	
	2	1	**163-7967**	1	DOWEL	
	3	1	**194-6979**	1	SPRING	
	4	1	**194-6976**	1	PISTON	
	5	1	**194-6977**	1	BUSHING	
B	6	1	**194-6980**	2	SHIM (0.5-MM THK)	
M	7	1	**9T-3853**	1	LOCKNUT (M6X1-THD)	
M	8	1	**096-3656**	1	SETSCREW-SOCKET	

B-USE AS REQUIRED
M-METRIC PART

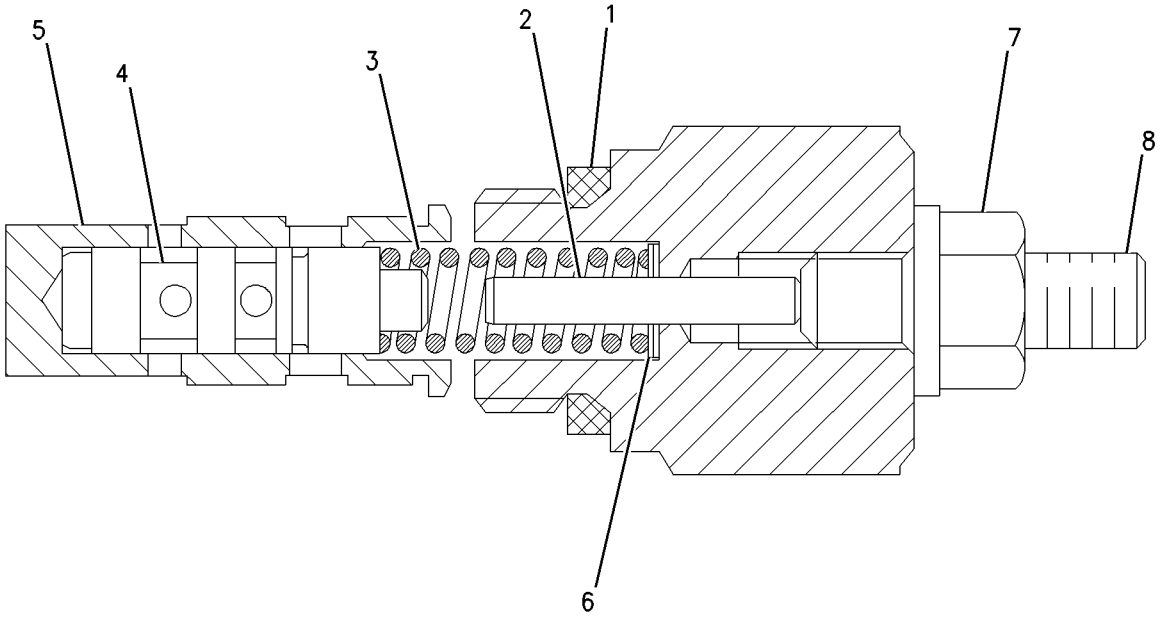

GRAPHIC #1 **<END>** g00874875

192-3293 VALVE GP-CHECK & RELIEF—MAIN HYDRAULIC

S/N: F7B1-UP

PART OF 291-1126 HEAD GP-MOTOR

SMCS-5117, 5453 **i01502535**

NOTE	REF NO	GRAPHIC REF	PART NUMBER	QTY	PART NAME 1 2 3 4 5 6 (PRODUCT LEVEL)	SEE PAGE
	1	1	**192-3294**	1	POPPET	
	2	1	**192-9208**	1	SPRING	
	3	1	**194-3281**	1	SEAT	
	4	1	**194-3282**	1	POPPET	
	5	1	**194-3283**	1	SPRING	
	6	1	**194-6601**	1	PLUG	
	7	1	**6V-3550**	1	SEAL-O-RING	

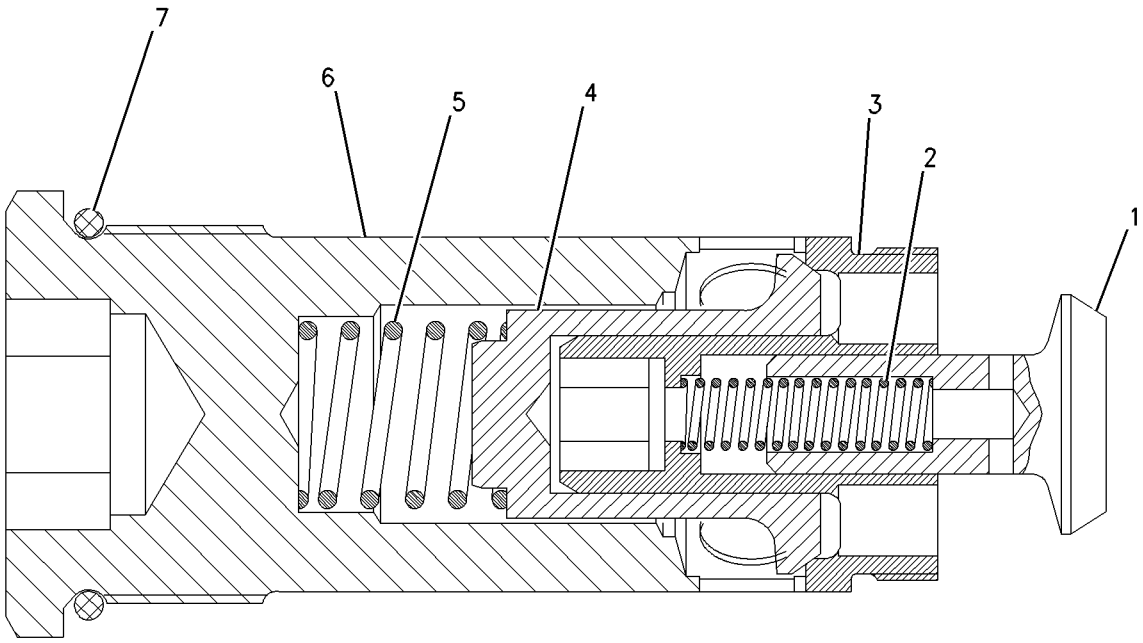

GRAPHIC #1 **<END>** g00794021

HYDRAULIC SYSTEM

373-7704 VALVE GP-CONTROL–4-BANK

S/N: F7B1-UP
HIGH FLOW
PART OF 375-0151, 375-0157 VALVE & MTG GP-CONTROL, 375-0153 VALVE & MTG GP-MAIN CONTROL
AN ATTACHMENT

SMCS-5051 **i04479790**

NOTE	REF NO	GRAPHIC REF	PART NUMBER	QTY	PART NAME 1 2 3 4 5 6 (PRODUCT LEVEL)	SEE PAGE
Y	1	1	**378-2539**	1	VALVE GP-CONTROL (INLET)	379
Y	2	1	**378-2541**	1	VALVE GP-CONTROL (ACCUMULATOR ARMS)	380
Y	3	1	**381-1520**	1	VALVE GP-CONTROL (SWING)	392
Y	4	1	**378-2545**	1	VALVE GP-CONTROL (STICK)	388
Y	5	1	**381-1522**	1	VALVE GP-CONTROL (BOOM)	394
Y	6	1	**227-2141**	1	COVER GP-CONTROL VALVE (OUTLET)	252
	7	1	**323-8310**	1	KIT-SEAL (INLET CONTROL)	
					(INCLUDES WASHERS, O-RINGS, PLUGS, BACK UP RING & SCREWS)	
	8	1	**227-2150**	1	KIT-CONTROL VALVE (SEAL)	
					(INCLUDES O-RINGS & WASHERS)	
	9	1	**378-4639**	1	KIT-SEAL (SWING CONTROL)	
					(INCLUDES O-RINGS & BACK UP RINGS)	
	10	1	**378-4631**	1	KIT-FASTENER (TIE ROD)	
					(INCLUDES WASHERS, NUTS & TIE RODS)	

Y-SEPARATE ILLUSTRATION

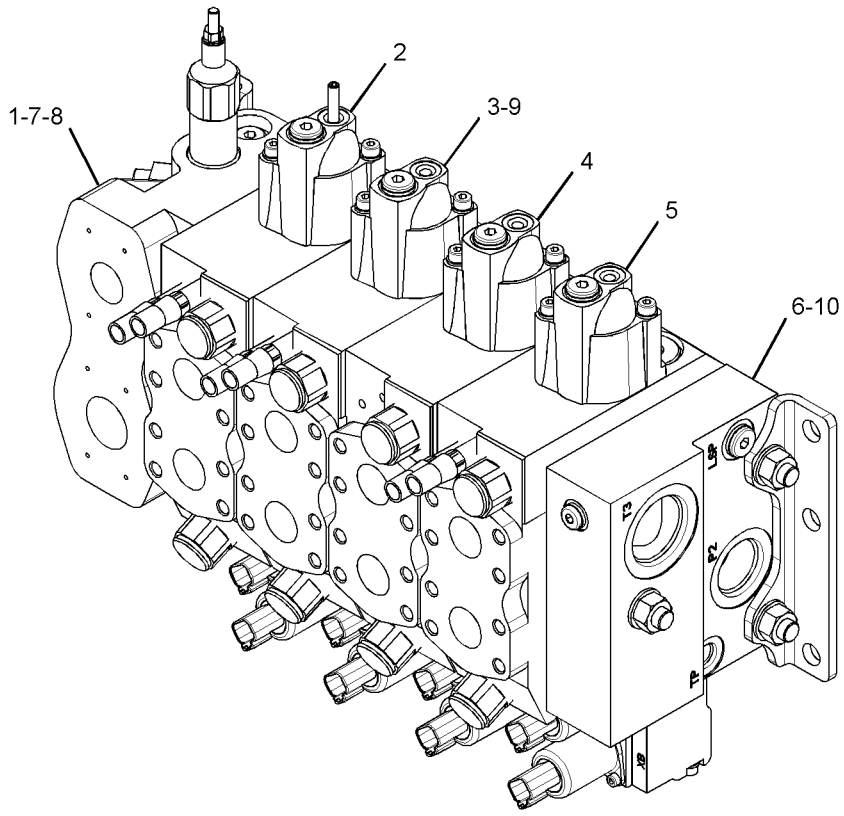

GRAPHIC #1 **<END>** g02733613

378-2539 VALVE GP-CONTROL–INLET

S/N: F7B1-UP

PART OF 373-7704 VALVE GP-CONTROL, 361-5307, 373-7694, 373-7702, 373-7703 VALVE GP-MAIN CONTROL AN ATTACHMENT

SMCS-5051 **i04372371**

NOTE	REF NO	GRAPHIC REF	PART NUMBER	QTY	PART NAME 1 2 3 4 5 6 (PRODUCT LEVEL)	SEE PAGE
	1	1	**378-4635**	1	KIT-RELIEF VALVE	
	2	1	**352-7870**	1	SET-SEAL	
	3	1	**378-4636**	1	KIT-RELIEF VALVE	
	4	1	**227-2144**	1	KIT-RELIEF VALVE	
	5	1	**323-8310**	1	KIT-SEAL	
					(INCLUDES SEALS)	

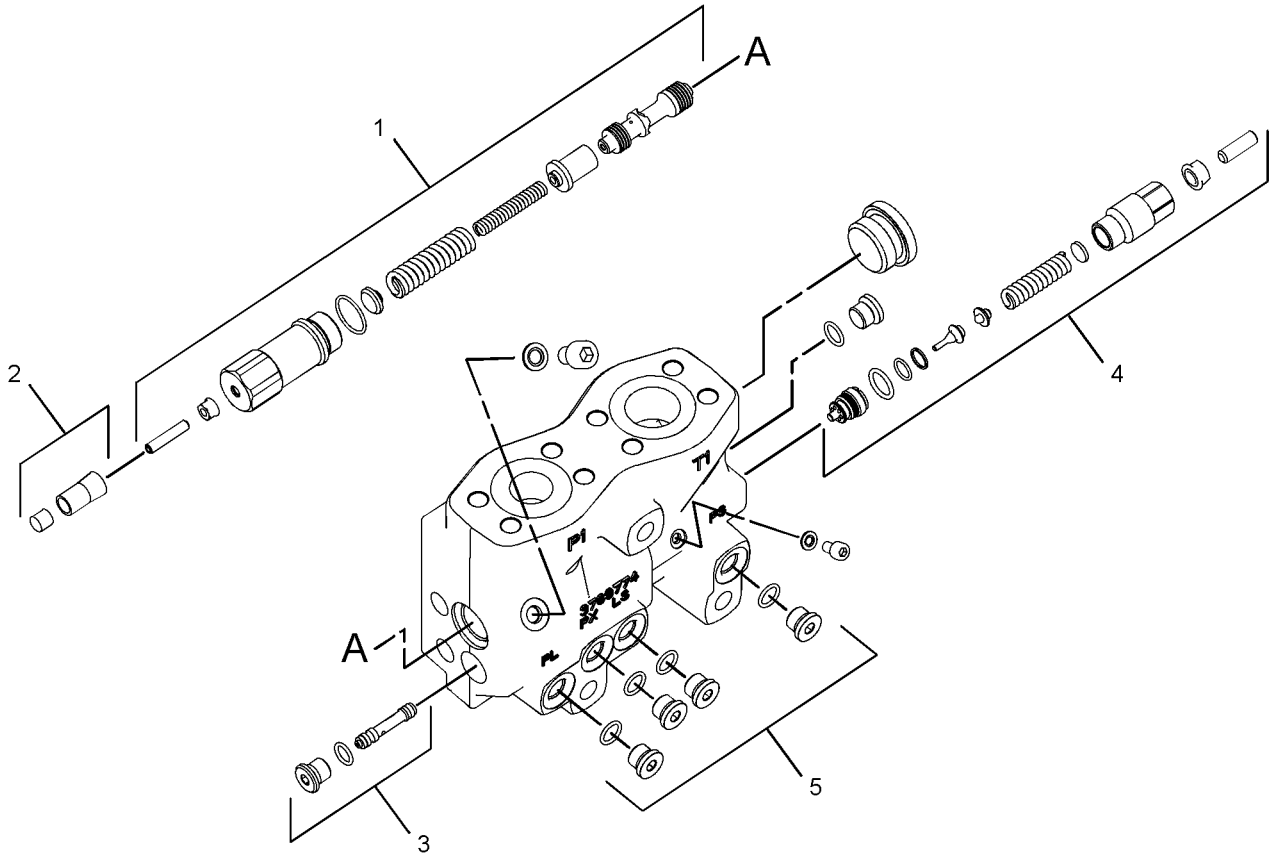

GRAPHIC #1 **<END>** g02537298

378-2541 VALVE GP-CONTROL–ACCUMULATOR ARM

S/N: F7B1-UP

PART OF 373-7704 VALVE GP-CONTROL, 373-7694, 373-7702 VALVE GP-MAIN CONTROL AN ATTACHMENT

SMCS-5051 **i05111629**

NOTE	REF NO	GRAPHIC REF	PART NUMBER	QTY	PART NAME 1 2 3 4 5 6 (PRODUCT LEVEL)	SEE PAGE
	1	1	**168-3440**	2	VALVE GP-RELIEF	
	2	1	**350-7684**	2	KIT-SEAL	
					(EACH INCLUDES O-RINGS)	
	3	1	**219-6498**	2	KIT-PRESSURE REDUCING VALVE	
					(EACH INCLUDES)	
		1	**219-6530**	1	KIT-SEAL (CONTROL VALVE)	
	4	1	**220-3363**	1	KIT-CAP	
					(INCLUDES O-RING, WASHERS, BOLTS, & KIT SEAL)	
	5	1	**378-4713**	1	KIT-CONTROL VALVE	
					(INCLUDES PLUGS, O-RINGS, WASHER, SCREWS, PISTONS, & KAS SPOOL)	
	6	1	**378-4638**	1	KIT-SEAL	
					(INCLUDES O-RINGS & BACKUP RINGS)	
	7	1	**227-2150**	1	KIT-CONTROL VALVE (SEAL)	
					(INCLUDES RINGS & WASHERS)	
	8	1	**378-4712**	1	KIT-CONTROL VALVE	
					(INCLUDES CAP, PLUG, SCREWS, WASHERS, & O-RINGS)	
	9	1	**370-8999**	2	KIT-CONTROL VALVE	
					(EACH INCLUDES 24V DEUTSCH STEELS, SCREWS, & RESTRICTOR)	
	10	1	**378-4640**	1	KIT-SEAL	
					(INCLUDES O-RINGS)	
	11	1	**378-4715**	2	ORIFICE	
	12	1	**378-4639**	1	KIT-SEAL	
					(INCLUDES BACKUP-RINGS & O-RINGS)	

378-2541 VALVE GP-CONTROL *(contd.)* **i05111629**

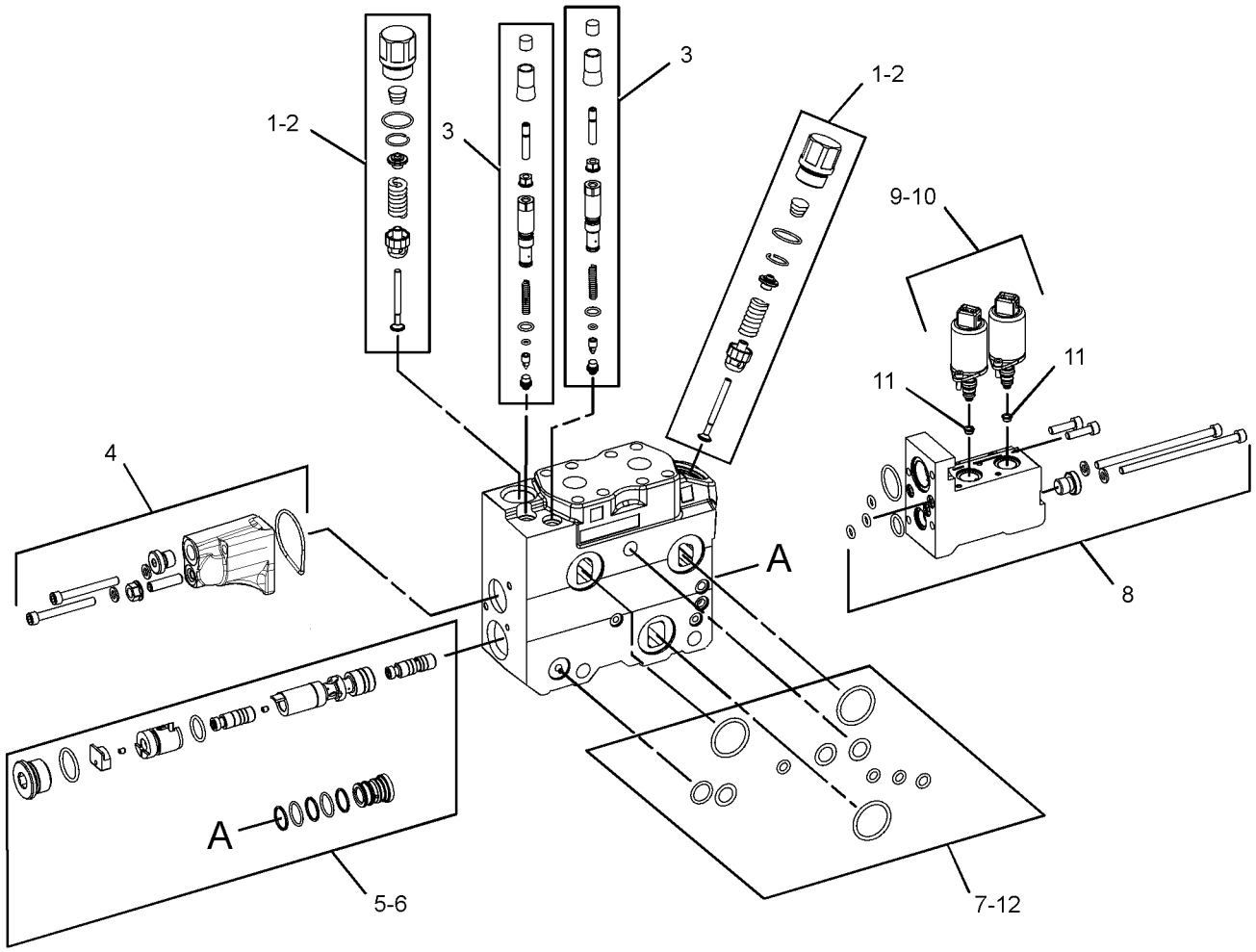

GRAPHIC #1 **<END>** g02536676

378-2542 VALVE GP-CONTROL—FELLING HEAD

S/N: F7B1-UP

PART OF 361-5307, 373-7694, 373-7703 VALVE GP-MAIN CONTROL

AN ATTACHMENT

SMCS-5051 **i05111770**

NOTE	REF NO	GRAPHIC REF	PART NUMBER	QTY	PART NAME 1 2 3 4 5 6 (PRODUCT LEVEL)	SEE PAGE
	1	1	**168-3443**	2	VALVE GP-RELIEF	
	2	1	**350-7684**	2	KIT-SEAL	
					(EACH INCLUDES O-RINGS)	
	3	1	**378-4711**	1	KIT-CONTROL VALVE	
					(INCLUDES SCREWS, CAP, O-RING, WASHERS, & PLUGS)	
	4	1	**378-4713**	1	KIT-CONTROL VALVE	
					(INCLUDES PLUGS, O-RINGS, WASHER, SCREWS, PISTONS, & KAS SPOOL)	
	5	1	**378-4638**	1	KIT-SEAL	
					(INCLUDES O-RINGS & BACKUP RINGS)	
	6	1	**227-2150**	1	KIT-CONTROL VALVE (SEAL)	
					(INCLUDES RINGS & WASHERS)	
	7	1	**378-4712**	1	KIT-CONTROL VALVE	
					(INCLUDES CAP, PLUG, SCREWS, WASHERS, SCREWS, & O-RINGS)	
	8	1	**370-8999**	2	KIT-CONTROL VALVE	
					(EACH INCLUDES 24V DEUTSCH STEELS, SCREWS, & RESTRICTOR)	
	9	1	**378-4640**	1	KIT-SEAL	
					(INCLUDES O-RINGS)	
	10	1	**378-4715**	2	ORIFICE	
	11	1	**378-4639**	1	KIT-SEAL	
					(INCLUDES BACKUP RINGS & O-RINGS)	

378-2542 VALVE GP-CONTROL *(contd.)* **i05111770**

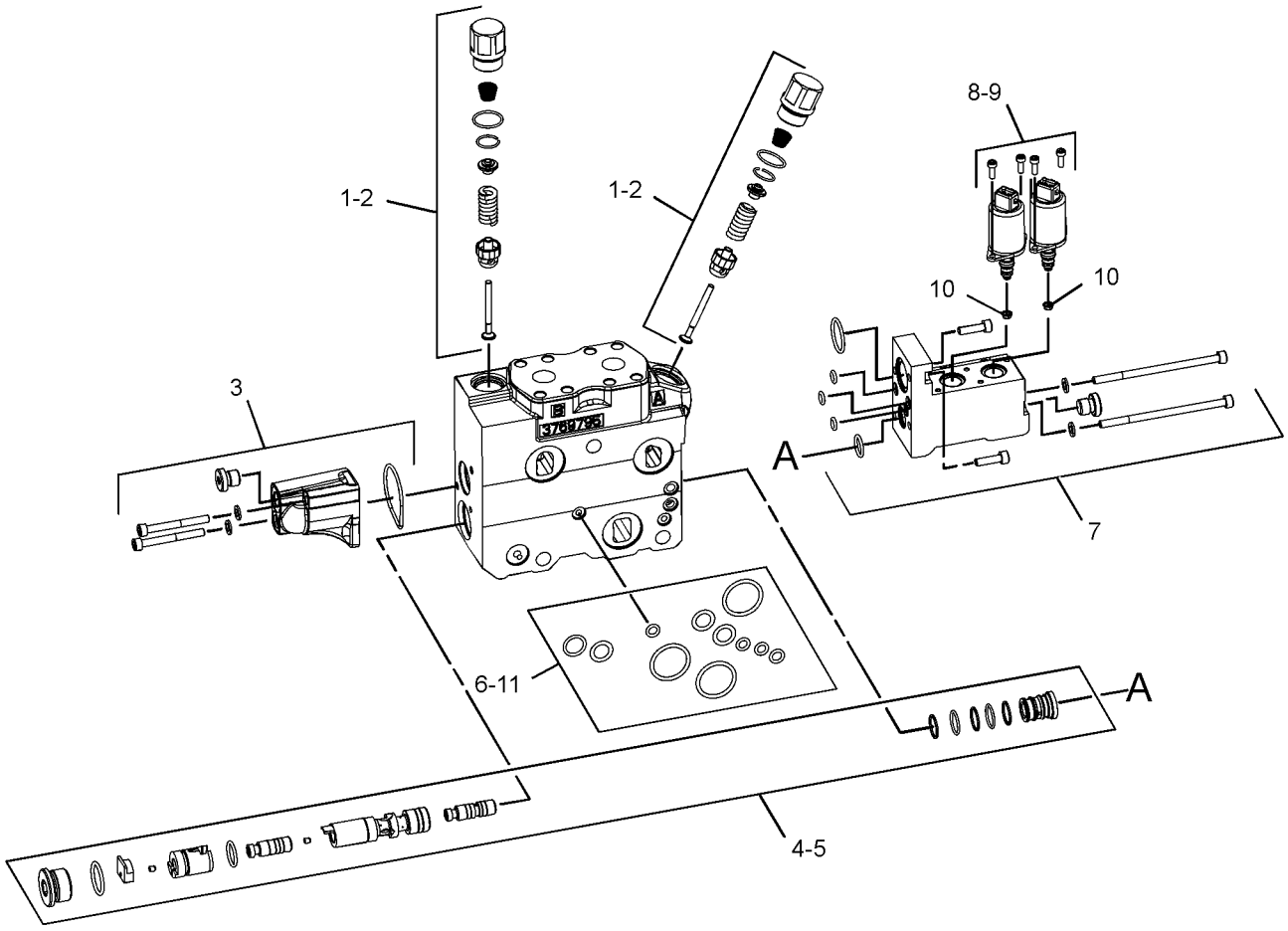

GRAPHIC #1 **<END>** g02537158

HYDRAULIC SYSTEM

378-2543 VALVE GP-CONTROL–ACCUMULATOR ARM

S/N: F7B1-UP

PART OF 361-5307, 373-7703 VALVE GP-MAIN CONTROL

AN ATTACHMENT

SMCS-5051 **i05111829**

NOTE	REF NO	GRAPHIC REF	PART NUMBER	QTY	PART NAME 1 2 3 4 5 6 (PRODUCT LEVEL)	SEE PAGE
	1	1	**168-3440**	2	VALVE GP-RELIEF	
	2	1	**350-7684**	2	KIT-SEAL	
					(EACH INCLUDES O-RINGS)	
	3	1	**219-6498**	2	KIT-PRESSURE REDUCING VALVE	
					(EACH INCLUDES)	
		1	**219-6530**	1	KIT-SEAL (CONTROL VALVE)	
	4	1	**220-3363**	1	KIT-CAP	
					(INCLUDES RING, WASHERS, BOLTS, & SEAL KIT)	
	5	1	**378-4713**	1	KIT-CONTROL VALVE	
					(INCLUDES PLUGS, O-RINGS, WASHER, SCREWS, PISTONS, & KAS SPOOL)	
	6	1	**378-4638**	1	KIT-SEAL	
					(INCLUDES O-RINGS & BACKUP RINGS)	
	7	1	**227-2150**	1	KIT-CONTROL VALVE (SEAL)	
					(INCLUDES RINGS & WASHERS)	
	8	1	**378-4712**	1	KIT-CONTROL VALVE	
					(INCLUDES CAP, PLUG, SCREWS, WASHERS, SCREWS, & O-RINGS)	
	9	1	**370-8999**	2	KIT-CONTROL VALVE	
					(EACH INCLUDES 24V DEUTSCH STEELS, SCREWS, & RESTRICTOR)	
	10	1	**378-4640**	1	KIT-SEAL	
					(INCLUDES O-RINGS)	
	11	1	**378-4715**	2	ORIFICE	
	12	1	**378-4639**	1	KIT-SEAL	
					(INCLUDES BACKUP RINGS & O-RINGS)	

378-2543 VALVE GP-CONTROL *(contd.)* **i05111829**

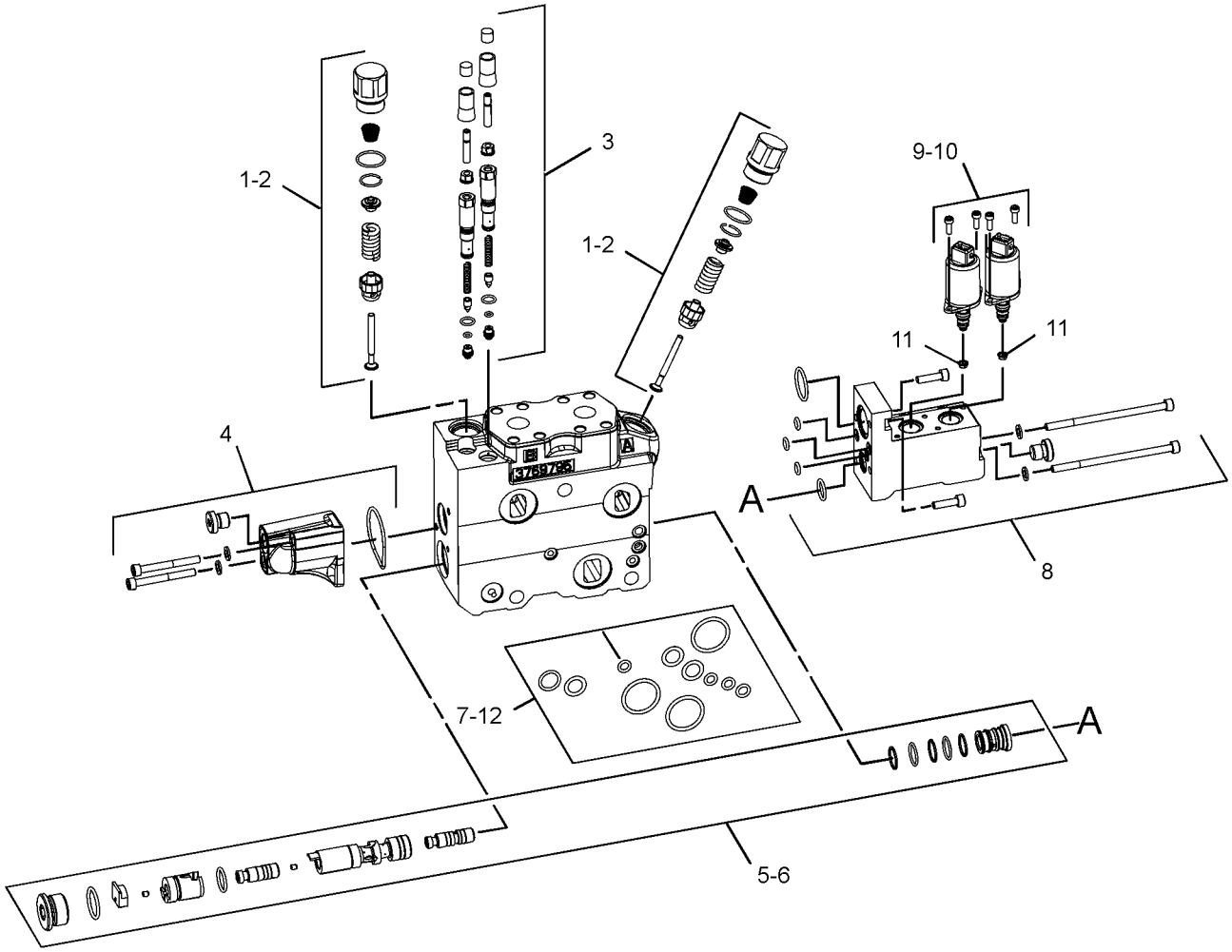

GRAPHIC #1 **<END>** g02545236

HYDRAULIC SYSTEM

378-2544 VALVE GP-CONTROL—TILT

S/N: F7B1-UP

PART OF 361-5307, 373-7694, 373-7703 VALVE GP-MAIN CONTROL

AN ATTACHMENT

SMCS-5051 **i05112056**

NOTE	REF NO	GRAPHIC REF	PART NUMBER	QTY	PART NAME 1 2 3 4 5 6 (PRODUCT LEVEL)	SEE PAGE
	1	1	**168-3443**	2	VALVE GP-RELIEF	
	2	1	**350-7684**	2	KIT-SEAL	
					(EACH INCLUDES O-RINGS)	
	3	1	**219-6498**	2	KIT-PRESSURE REDUCING VALVE	
					(EACH INCLUDES)	
		1	**219-6530**	1	KIT-SEAL (CONTROL VALVE)	
	4	1	**378-4711**	1	KIT-CONTROL VALVE	
					(INCLUDES SCREWS, CAP, O-RING, WASHERS, & PLUG)	
	5	1	**378-4713**	1	KIT-CONTROL VALVE	
					(INCLUDES PLUGS, O-RINGS, WASHER, SCREWS, PISTONS, & KAS SPOOL)	
	6	1	**378-4638**	1	KIT-SEAL	
					(INCLUDES O-RINGS & BACKUP RINGS)	
	7	1	**227-2150**	1	KIT-CONTROL VALVE (SEAL)	
					(INCLUDES RINGS & WASHERS)	
	8	1	**378-4712**	1	KIT-CONTROL VALVE	
					(INCLUDES CAP, PLUG, SCREWS, WASHERS, SCREWS, & O-RINGS)	
	9	1	**370-8999**	2	KIT-CONTROL VALVE	
					(EACH INCLUDES 24V DEUTSCH STEELS, SCREWS, & RESTRICTOR)	
	10	1	**378-4640**	1	KIT-SEAL	
					(INCLUDES O-RINGS)	
	11	1	**378-4715**	2	ORIFICE	
	12	1	**378-4639**	1	KIT-SEAL	
					(INCLUDES BACKUP RINGS & O-RINGS)	

378-2544 VALVE GP-CONTROL *(contd.)* **i05112056**

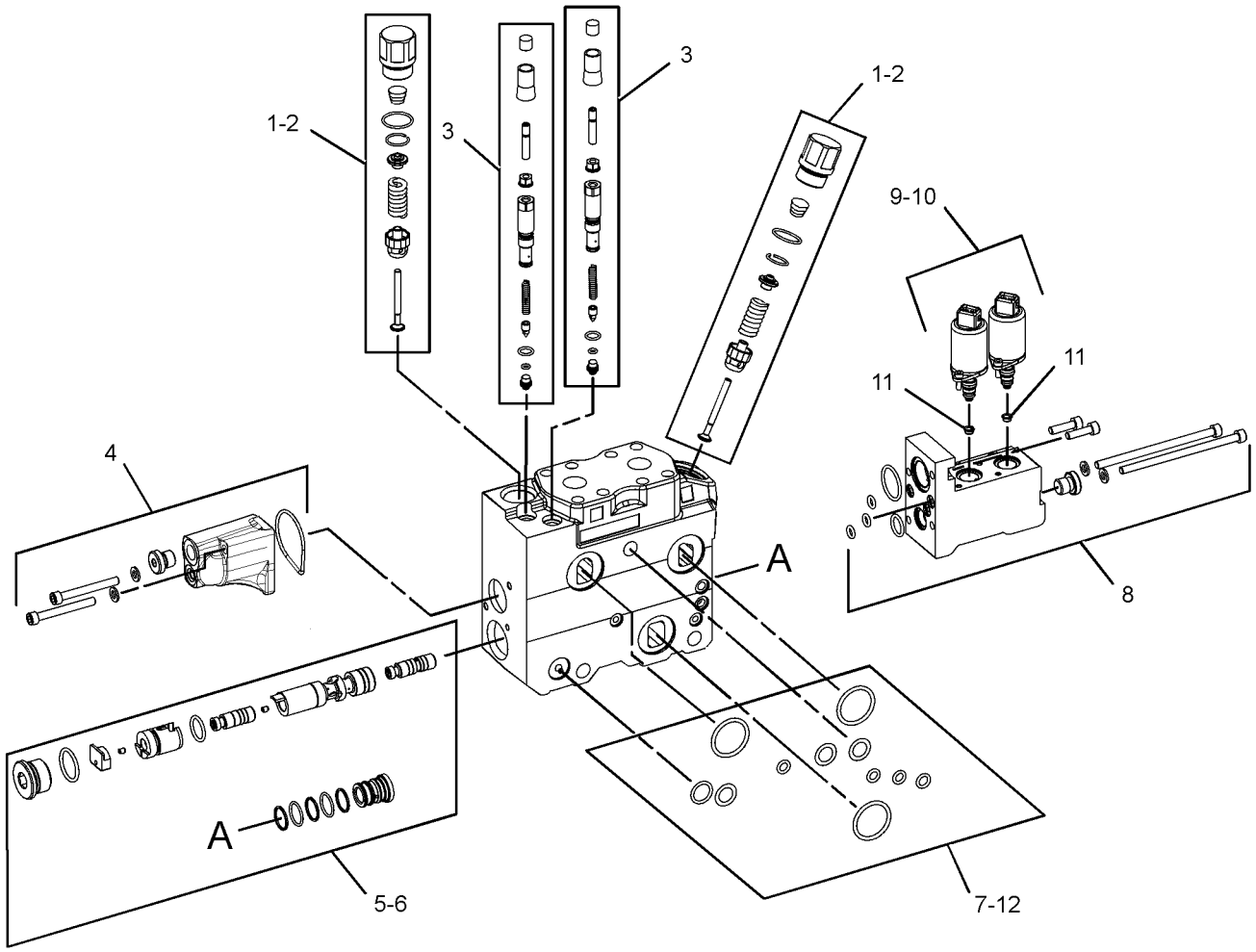

GRAPHIC #1 **<END>** g02537484

HYDRAULIC SYSTEM

378-2545 VALVE GP-CONTROL–STICK

S/N: F7B1-UP

PART OF 373-7704 VALVE GP-CONTROL, 373-7702 VALVE GP-MAIN CONTROL

AN ATTACHMENT

SMCS-5051 **i05114069**

NOTE	REF NO	GRAPHIC REF	PART NUMBER	QTY	PART NAME 1 2 3 4 5 6 (PRODUCT LEVEL)	SEE PAGE
	1	1	**168-3443**	2	VALVE GP-RELIEF	
	2	1	**350-7684**	2	KIT-SEAL	
					(EACH INCLUDES O-RINGS)	
	3	1	**378-4711**	1	KIT-CONTROL VALVE	
					(INCLUDES SCREWS, CAP, O-RING, WASHERS, & PLUG)	
	4	1	**378-4713**	1	KIT-CONTROL VALVE	
					(INCLUDES PLUGS, O-RINGS, WASHER, SCREWS, PISTONS, & KAS SPOOL)	
	5	1	**378-4638**	1	KIT-SEAL	
					(INCLUDES O-RINGS & BACKUP RINGS)	
	6	1	**227-2150**	1	KIT-CONTROL VALVE (SEAL)	
					(INCLUDES RINGS & WASHERS)	
	7	1	**378-4712**	1	KIT-CONTROL VALVE	
					(INCLUDES CAP, PLUG, SCREWS, WASHERS, SCREWS, & O-RINGS)	
	8	1	**370-8999**	2	KIT-CONTROL VALVE	
					(EACH INCLUDES 24V DEUTSCH STEELS, SCREWS, & RESTRICTOR)	
	9	1	**378-4640**	1	KIT-SEAL	
					(INCLUDES O-RINGS)	
	10	1	**378-4715**	2	ORIFICE	
	11	1	**378-4639**	1	KIT-SEAL	
					(INCLUDES BACKUP RINGS & O-RINGS)	

378-2545 VALVE GP-CONTROL *(contd.)* **i05114069**

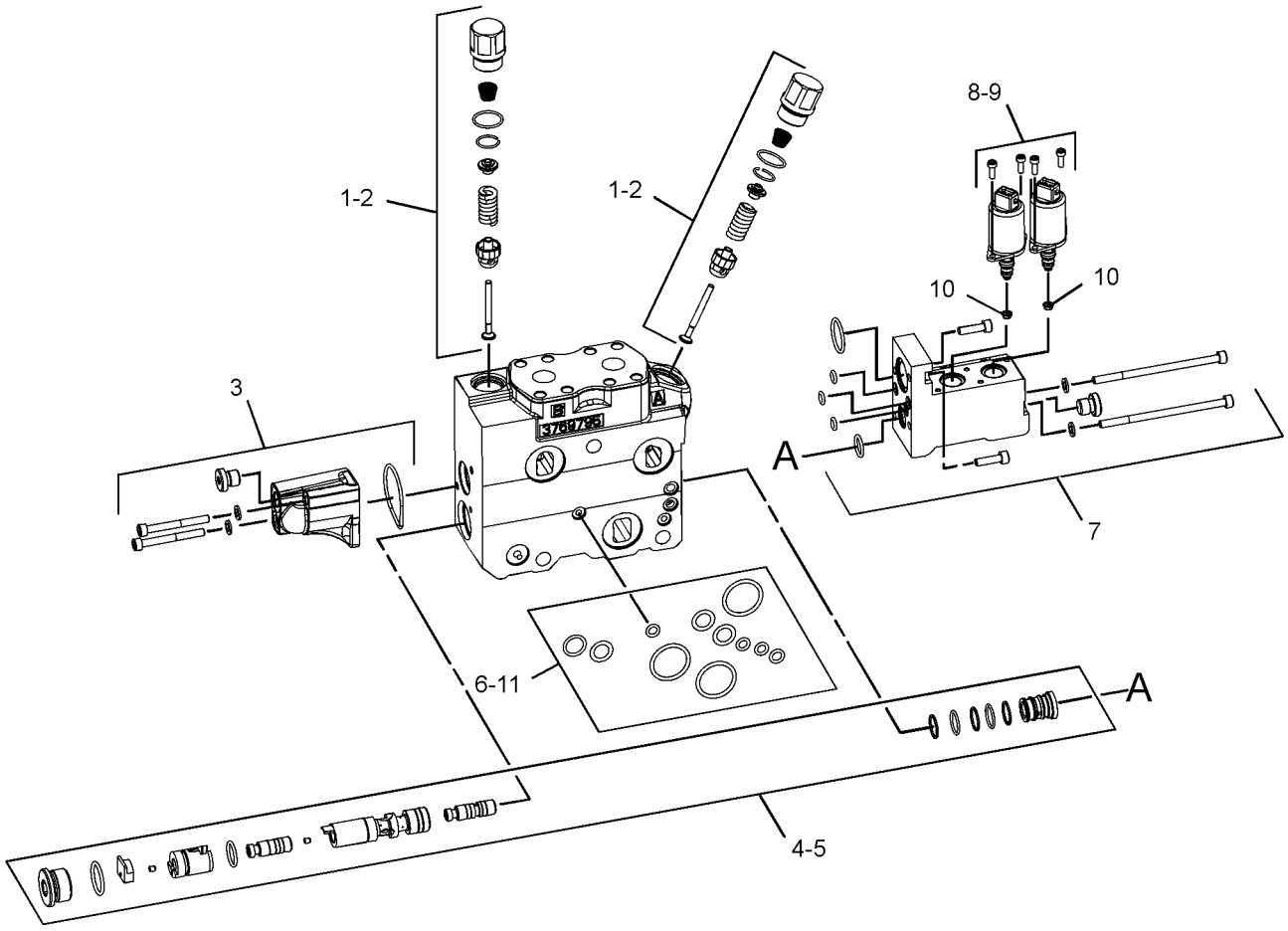

GRAPHIC #1 **<END>** g02537158

378-2548 VALVE GP-CONTROL—TRAVEL, RH, LH

S/N: F7B1-UP

PART OF 361-5307, 373-7694, 373-7703 VALVE GP-MAIN CONTROL AN ATTACHMENT

SMCS-5051 **i05114331**

NOTE	REF NO	GRAPHIC REF	PART NUMBER	QTY	PART NAME 1 2 3 4 5 6 (PRODUCT LEVEL)	SEE PAGE
	1	1	**183-9425**	2	VALVE GP-CHECK	
					(EACH INCLUDES)	
		1	**8J-2413**	1	SEAL-O-RING	
	2	1	**350-7684**	2	KIT-SEAL	
					(EACH INCLUDES O-RINGS)	
	3	1	**378-4711**	1	KIT-CONTROL VALVE	
					(INCLUDES SCREWS, CAP, O-RING, WASHERS, & PLUG)	
	4	1	**378-4713**	1	KIT-CONTROL VALVE	
					(INCLUDES PLUGS, O-RINGS, WASHER, SCREWS, PISTONS, & KAS SPOOL)	
	5	1	**227-2150**	1	KIT-CONTROL VALVE (SEAL)	
					(INCLUDES RINGS & WASHERS)	
	6	1	**378-4638**	1	KIT-SEAL	
					(INCLUDES O-RINGS & BACKUP RINGS)	
	7	1	**378-4712**	1	KIT-CONTROL VALVE	
					(INCLUDES CAP, PLUG, SCREWS, WASHERS, SCREWS, & O-RINGS)	
	8	1	**370-8999**	2	KIT-CONTROL VALVE	
					(EACH INCLUDES 24V DEUTSCH STEELS, SCREWS, & RESTRICTOR)	
	9	1	**378-4640**	1	KIT-SEAL	
					(INCLUDES O-RINGS)	
	10	1	**378-4715**	2	ORIFICE	
	11	1	**378-4639**	1	KIT-SEAL	
					(INCLUDES BACKUP RINGS & O-RINGS)	

378-2548 VALVE GP-CONTROL *(contd.)* **i05114331**

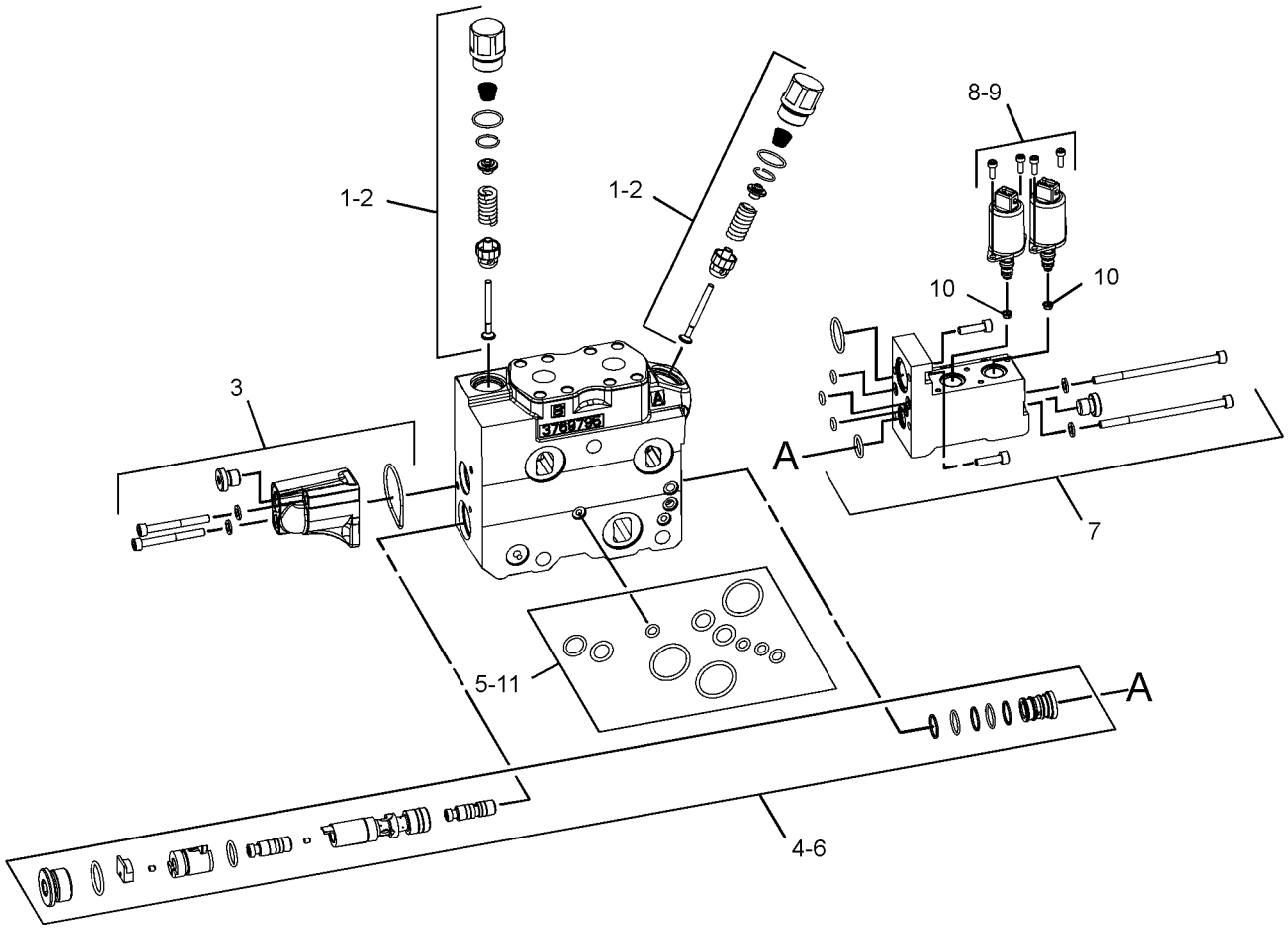

GRAPHIC #1 **<END>** g02545119

HYDRAULIC SYSTEM

381-1520 VALVE GP-CONTROL—SWING

S/N: F7B1-UP

PART OF 373-7704 VALVE GP-CONTROL, 373-7702 VALVE GP-MAIN CONTROL

AN ATTACHMENT

SMCS-5051 **i05114391**

NOTE	REF NO	GRAPHIC REF	PART NUMBER	QTY	PART NAME 1 2 3 4 5 6 (PRODUCT LEVEL)	SEE PAGE
	1	1	**183-9425**	2	VALVE GP-CHECK	
					(EACH INCLUDES)	
		1	**8J-2413**	1	SEAL-O-RING	
	2	1	**350-7684**	1	KIT-SEAL (CONTROL VALVE)	
					(INCLUDES O-RINGS)	
	3	1	**219-6498**	2	KIT-PRESSURE REDUCING VALVE	
					(EACH INCLUDES)	
		1	**219-6530**	1	KIT-SEAL (CONTROL VALVE)	
					(INCLUDES O-RINGS)	
	4	1	**378-4711**	1	KIT-CONTROL VALVE	
					(INCLUDES SCREWS, CAP, O-RING, WASHERS, & PLUG)	
	5	1	**171-2462**	1	VALVE GP-COMPENSATING	
	6	1	**279-3450**	1	PLUG AS	
		1	**279-3451**	1	KIT-SEAL (CONTROL VALVE)	
					(INCLUDES O-RINGS & BACK UP RINGS)	
	7	1	**227-2150**	1	KIT-CONTROL VALVE (SEAL)	
					(INCLUDES O-RINGS & WASHERS)	
	8	1	**378-4716**	1	VALVE GP-CONTROL	
	9	1	**378-4712**	1	KIT-CONTROL VALVE	
					(INCLUDES CAP, PLUG, SCREWS, WASHERS, SCREWS, & O-RINGS)	
	10	1	**370-8999**	2	KIT-CONTROL VALVE	
					(EACH INCLUDES 24V DEUTSCH STEELS, SCREWS, & RESTRICTOR)	
	11	1	**378-4640**	1	KIT-SEAL (CONTROL VALVE)	
					(INCLUDES O-RINGS)	
	12	1	**378-4715**	2	ORIFICE	
	13	1	**378-4639**	1	KIT-SEAL (CONTROL VALVE)	
					(INCLUDES O-RINGS & BACK UP RINGS)	

381-1520 VALVE GP-CONTROL *(contd.)* **i05114391**

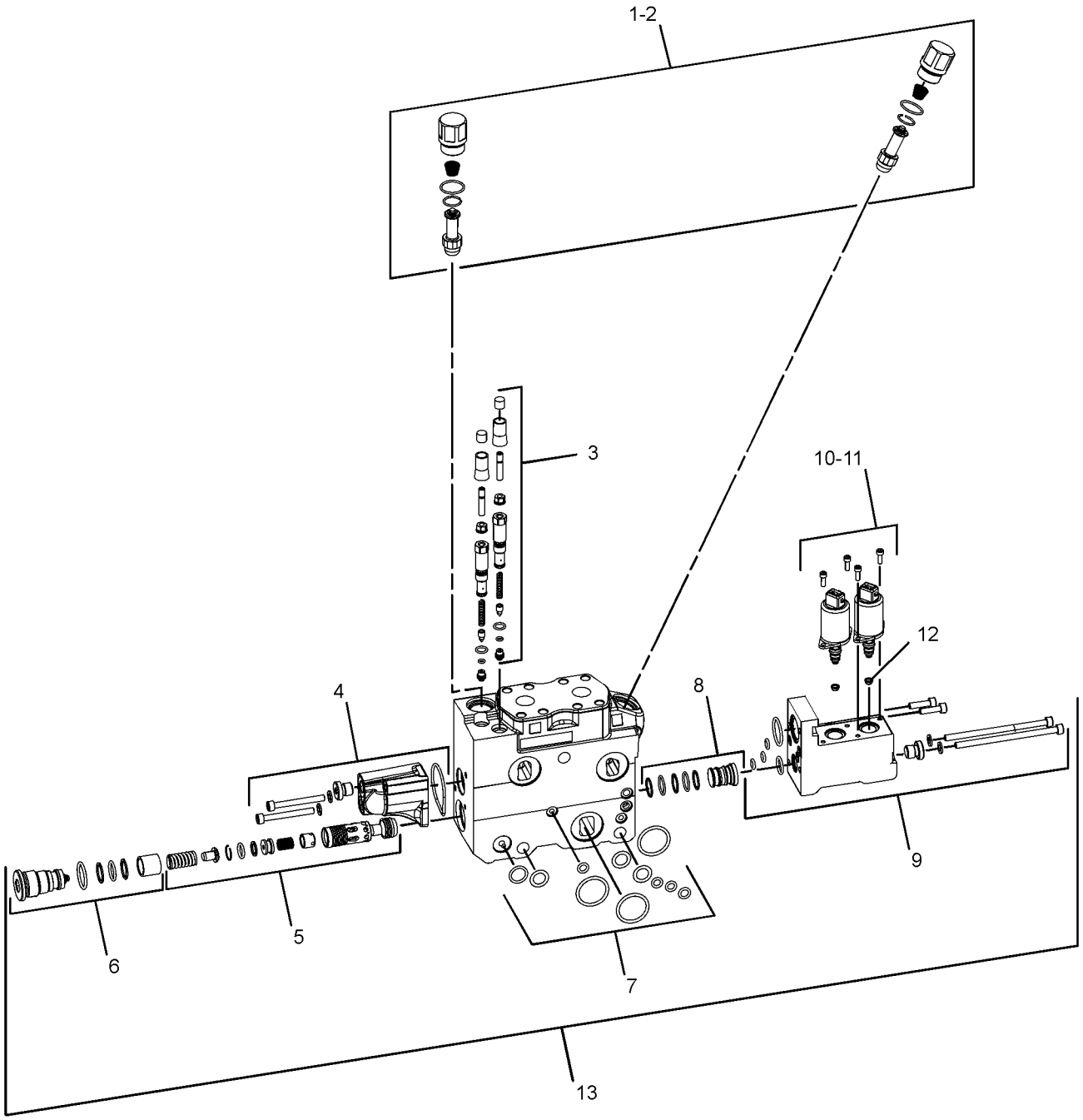

GRAPHIC #1 **<END>** g02734043

HYDRAULIC SYSTEM

381-1522 VALVE GP-CONTROL–BOOM

S/N: F7B1-UP

PART OF 373-7704 VALVE GP-CONTROL, 373-7702 VALVE GP-MAIN CONTROL

AN ATTACHMENT

SMCS-5051 **i05114418**

NOTE	REF NO	GRAPHIC REF	PART NUMBER	QTY	PART NAME 1 2 3 4 5 6 (PRODUCT LEVEL)	SEE PAGE
	1	1	**168-3443**	1	VALVE GP-RELIEF	
	2	1	**168-3437**	1	VALVE GP-RELIEF	
	3	1	**350-7684**	1	KIT-SEAL (CONTROL VALVE)	
					(INCLUDES O-RINGS)	
	4	1	**219-6498**	2	KIT-PRESSURE REDUCING VALVE (SIGNAL LIMITER)	
					(EACH INCLUDES)	
		1	**219-6530**	1	KIT-SEAL (CONTROL VALVE)	
					(INCLUDES O-RINGS)	
	5	1	**378-4711**	1	KIT-CONTROL VALVE	
					(INCLUDES SCREWS, CAP, O-RING, WASHERS, & PLUG)	
	6	1	**378-4713**	1	KIT-CONTROL VALVE (BOOM)	
					(INCLUDES PLUGS, O-RINGS, WASHER, SCREWS, PISTONS, & KAS SPOOL)	
	7	1	**378-4638**	1	KIT-SEAL (CONTROL VALVE)	
					(INCLUDES O-RINGS & BACK UP RINGS)	
	8	1	**227-2150**	1	KIT-CONTROL VALVE (SEAL)	
					(INCLUDES O-RINGS & WASHERS)	
	9	1	**378-4712**	1	KIT-CONTROL VALVE	
					(INCLUDES CAP, PLUG, SCREWS, WASHERS, SCREWS, & O-RINGS)	
	10	1	**370-8999**	2	KIT-CONTROL VALVE	
					(EACH INCLUDES 24V DEUTSCH STEELS, SCREWS, & RESTRICTOR)	
	11	1	**378-4640**	1	KIT-SEAL (CONTROL VALVE)	
					(INCLUDES O-RINGS)	
	12	1	**378-4715**	2	ORIFICE	
	13	1	**378-4639**	1	KIT-SEAL (CONTROL VALVE)	
					(INCLUDES O-RINGS & BACK UP RINGS)	

381-1522 VALVE GP-CONTROL *(contd.)* **i05114418**

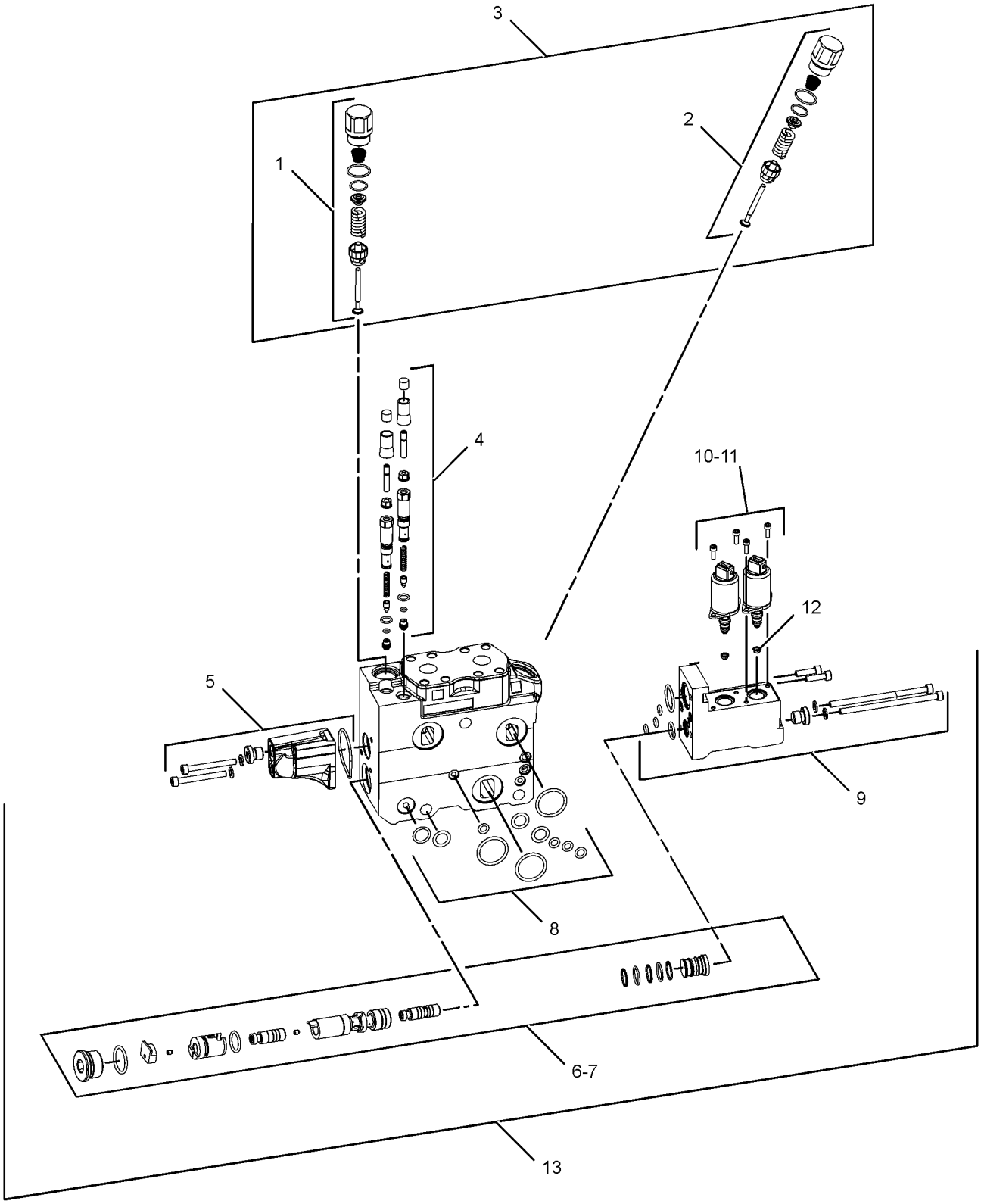

GRAPHIC #1 **<END>** g02734901

381-1523 VALVE GP-CONTROL—INTERMITTENT SAW

S/N: F7B1-UP

PART OF 361-5307 VALVE GP-MAIN CONTROL

AN ATTACHMENT

SMCS-5051 **i05114457**

NOTE	REF NO	GRAPHIC REF	PART NUMBER	QTY	PART NAME 1 2 3 4 5 6 (PRODUCT LEVEL)	SEE PAGE
	1	1	**183-9425**	2	VALVE GP-CHECK	
					(EACH INCLUDES)	
		1	**8J-2413**	1	SEAL-O-RING	
	2	1	**350-7684**	1	KIT-SEAL (CONTROL VALVE)	
					(INCLUDES O-RINGS)	
	3	1	**219-6498**	2	KIT-PRESSURE REDUCING VALVE (SIGNAL L)	
					(EACH INCLUDES)	
		1	**219-6530**	1	KIT-SEAL (CONTROL VALVE)	
					(INCLUDES O-RINGS)	
	4	1	**378-4711**	1	KIT-CONTROL VALVE	
					(INCLUDES SCREWS, CAP, O-RING, WASHERS, & PLUG)	
	5	1	**287-6699**	1	VALVE GP-PUMP CONTROL	
	6	1	**279-3450**	1	PLUG AS	
		1	**279-3451**	1	KIT-SEAL (CONTROL VALVE)	
					(INCLUDES O-RINGS & BACK UP RINGS)	
	7	1	**227-2150**	1	KIT-CONTROL VALVE (SEAL)	
					(INCLUDES O-RINGS & WASHERS)	
	8	1	**378-4716**	1	VALVE GP-CONTROL	
	9	1	**378-4712**	1	KIT-CONTROL VALVE	
					(INCLUDES CAP, PLUG, SCREWS, WASHERS, SCREWS, & O-RINGS)	
	10	1	**370-8999**	2	KIT-CONTROL VALVE (CONTROL VALVE)	
					(EACH INCLUDES 24V DEUTSCH STEELS, SCREWS, & RESTRICTOR)	
	11	1	**378-4640**	1	KIT-SEAL (CONTROL VALVE)	
					(INCLUDES O-RINGS)	
	12	1	**378-4715**	2	ORIFICE	
	13	1	**378-4639**	1	KIT-SEAL (CONTROL VALVE)	
					(INCLUDES O-RINGS & BACK UP RINGS)	

381-1523 VALVE GP-CONTROL *(contd.)* **i05114457**

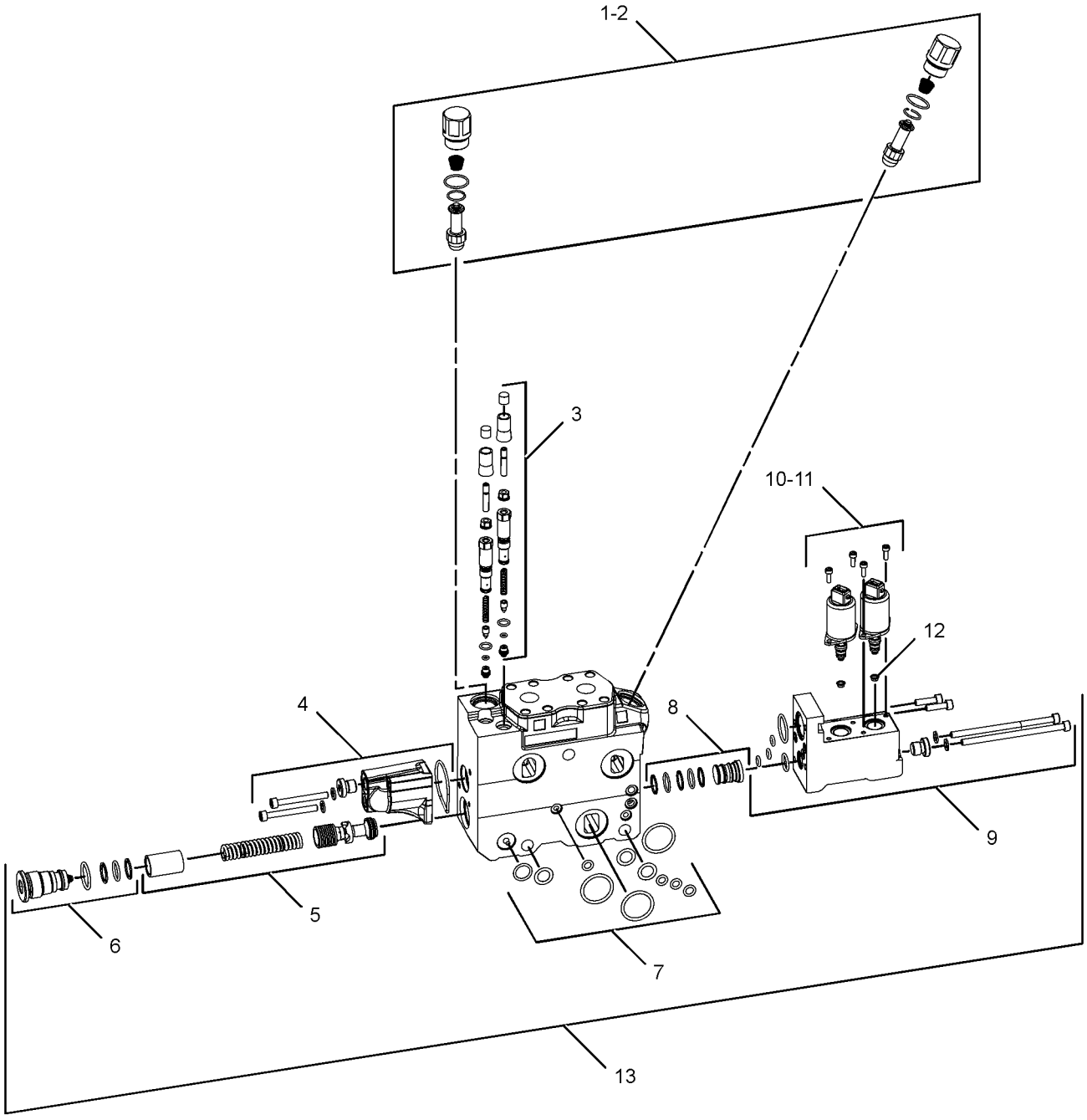

GRAPHIC #1 **<END>** g02735259

HYDRAULIC SYSTEM

105-8117 VALVE GP-COUNTERBALANCE

S/N: F7B1-UP

PART OF 251-8281 CYLINDER GP-HOOD TILT

SMCS-5058, 5811 **i03122182**

NOTE	PART NUMBER	QTY	PART NAME 1 2 3 4 5 6 (PRODUCT LEVEL)	SEE PAGE
	114-3616	1	KIT-SEAL (COUNTERBALANCE VALVE)	
			(INCLUDES RINGS & SEALS)	

<END>

361-5307 VALVE GP-MAIN CONTROL—INTERMITTENT SAW

S/N: F7B1-UP

PART OF 375-0153 VALVE & MTG GP-MAIN CONTROL

AN ATTACHMENT

SMCS-5051 **i05106318**

NOTE	REF NO	GRAPHIC REF	PART NUMBER	QTY	PART NAME 1 2 3 4 5 6 (PRODUCT LEVEL)	SEE PAGE
Y	1	1	**378-2539**	1	VALVE GP-CONTROL (INLET)	379
Y	2	1	**378-2548**	1	VALVE GP-CONTROL (TRAVEL, RH)	390
Y	2A	1	**378-2548**	1	VALVE GP-CONTROL (TRAVEL, LH)	390
Y	3	1	**378-2542**	1	VALVE GP-CONTROL (FELLING HEAD)	382
Y	4	1	**378-2544**	1	VALVE GP-CONTROL (TILT)	386
Y	5	1	**378-2543**	1	VALVE GP-CONTROL (GRAB ARM)	384
Y	6	1	**381-1523**	2	VALVE GP-CONTROL (INTERMITTENT SAW)	396
Y	7	1	**227-2141**	1	COVER GP-CONTROL VALVE (OUTLET)	252
	8	1	**323-8310**	1	KIT-SEAL (INLET CONTROL)	
					(INCLUDES WASHERS, O-RINGS, PLUGS, BACK UP RING & SCREWS)	
	9	1	**227-2150**	1	KIT-CONTROL VALVE (SEAL)	
					(INCLUDES O-RINGS & WASHERS)	
	10	1	**378-4639**	1	KIT-SEAL (GRAPPLE)	
					(INCLUDES O-RINGS & BACK UP RINGS)	
	11	1	**378-4629**	1	KIT-FASTENER	
					(INCLUDES WASHERS, NUTS & TIE RODS)	

Y-SEPARATE ILLUSTRATION

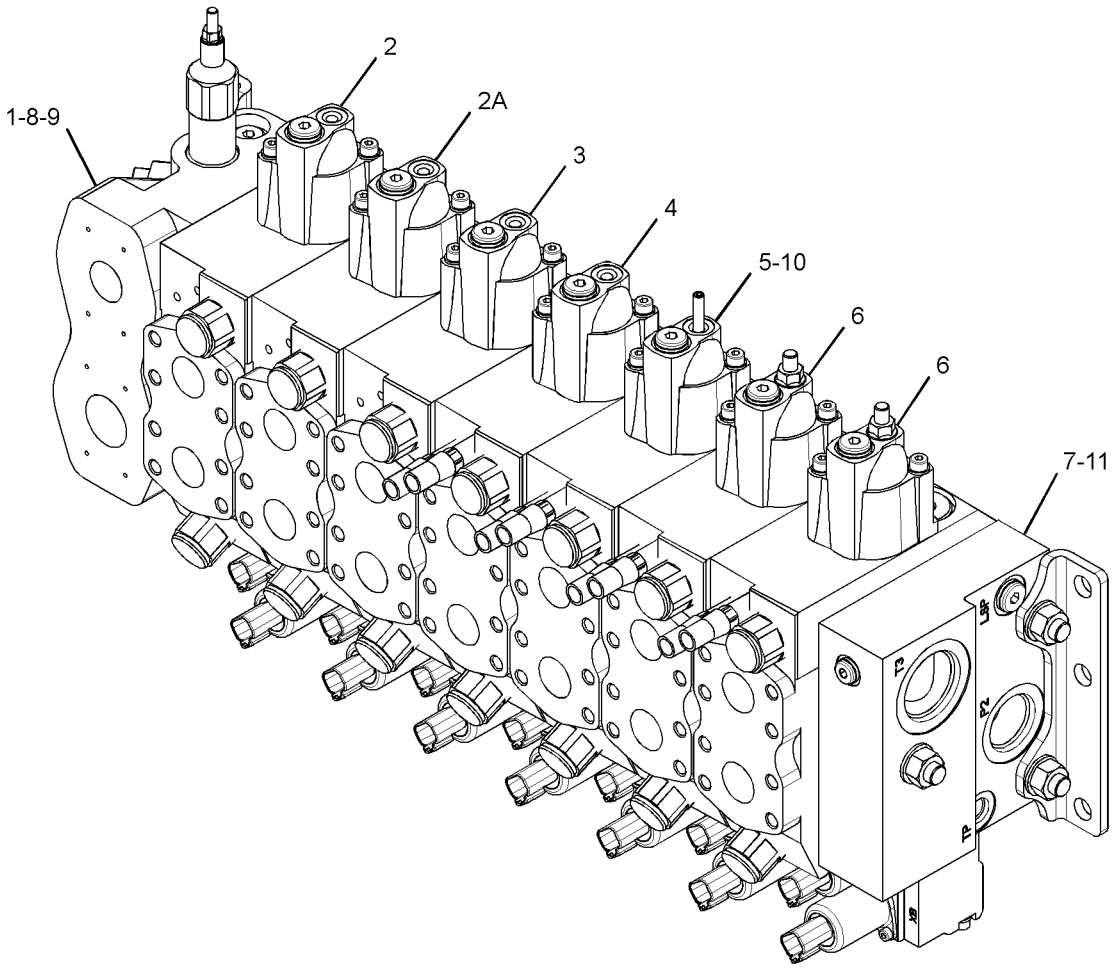

GRAPHIC #1 **<END>** g02733642

HYDRAULIC SYSTEM

373-7694 VALVE GP-MAIN CONTROL–LOW FLOW

S/N: F7B1-UP

PART OF 375-0155 VALVE & MTG GP-CONTROL

AN ATTACHMENT

SMCS-5051 **i05106350**

NOTE	REF NO	GRAPHIC REF	PART NUMBER	QTY	PART NAME 1 2 3 4 5 6 (PRODUCT LEVEL)	SEE PAGE
Y	1	1	**378-2539**	1	VALVE GP-CONTROL (INLET)	379
Y	2	1	**378-2548**	1	VALVE GP-CONTROL (TRAVEL, RH)	390
Y	2A	1	**378-2548**	1	VALVE GP-CONTROL (TRAVEL, LH)	390
Y	3	1	**378-2542**	1	VALVE GP-CONTROL (FELLING HEAD)	382
Y	4	1	**378-2544**	1	VALVE GP-CONTROL (TILT)	386
Y	5	1	**378-2541**	1	VALVE GP-CONTROL (GRAB ARM)	380
Y	6	1	**227-2141**	1	COVER GP-CONTROL VALVE (OUTLET)	252
	7	1	**323-8310**	1	KIT-SEAL (INLET CONTROL)	
					(INCLUDES WASHERS, RINGS, PLUGS, & SCREWS)	
	8	1	**227-2150**	1	KIT-CONTROL VALVE (SEAL)	
					(INCLUDES RINGS & WASHERS)	
	9	1	**378-4639**	1	KIT-SEAL (FELLING HEAD)	
					(INCLUDES RINGS)	
	10	1	**382-1745**	1	KIT-FASTENER (TIE ROD)	
					(INCLUDES WASHERS, NUTS, & TIE RODS)	

Y-SEPARATE ILLUSTRATION

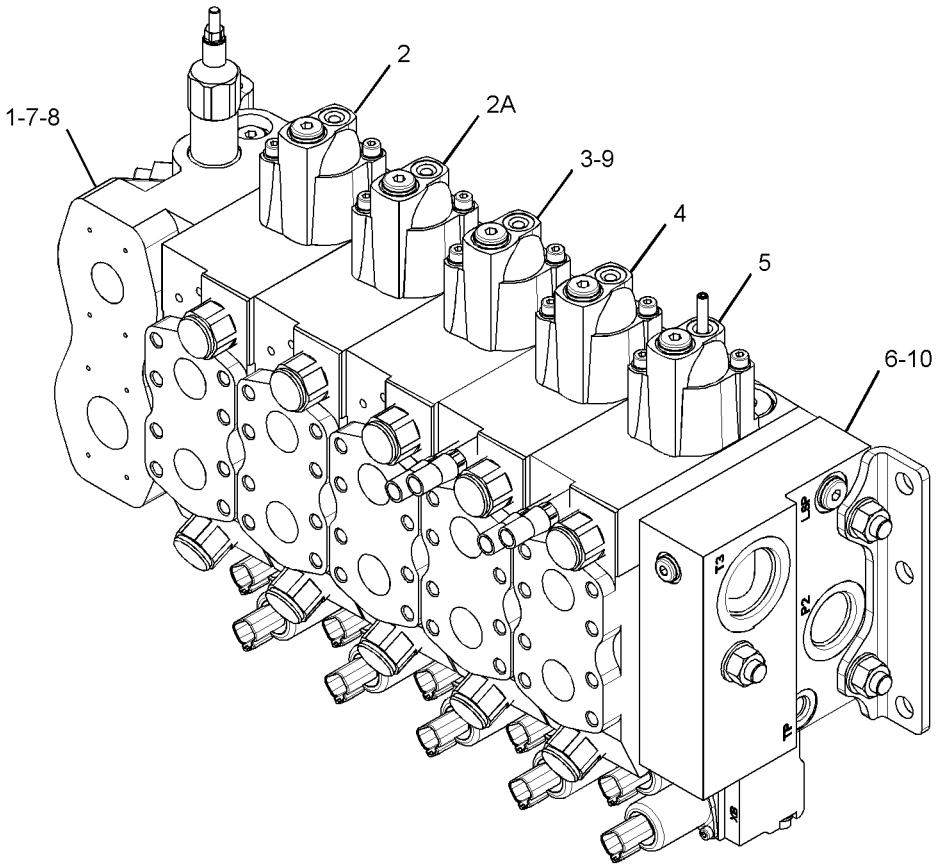

GRAPHIC #1 **<END>** g02733601

373-7702 VALVE GP-MAIN CONTROL–
LOW FLOW, NO TILT LINKAGE
S/N: F7B1-UP
PART OF 375-0155 VALVE & MTG GP-CONTROL
AN ATTACHMENT

SMCS-5051 **i04479792**

NOTE	REF NO	GRAPHIC REF	PART NUMBER	QTY	PART NAME 1 2 3 4 5 6 (PRODUCT LEVEL)	SEE PAGE
Y	1	1	**378-2539**	1	VALVE GP-CONTROL (INLET)	379
Y	2	1	**378-2541**	1	VALVE GP-CONTROL (ACCUMULATOR ARMS)	380
Y	3	1	**381-1520**	1	VALVE GP-CONTROL (SWING)	392
Y	4	1	**378-2545**	1	VALVE GP-CONTROL (STICK)	388
Y	5	1	**381-1522**	1	VALVE GP-CONTROL (BOOM)	394
Y	6	1	**227-2141**	1	COVER GP-CONTROL VALVE (OUTLET)	252
	7	1	**323-8310**	1	KIT-SEAL (INLET CONTROL)	
					(INCLUDES WASHERS, O-RINGS, PLUGS, BACK UP RING & SCREWS)	
	8	1	**227-2150**	1	KIT-CONTROL VALVE (SEAL)	
					(INCLUDES O-RINGS & WASHERS)	
	9	1	**378-4639**	1	KIT-SEAL (SWING CONTROL)	
					(INCLUDES O-RINGS & BACK UP RINGS)	
	10	1	**378-4631**	1	KIT-FASTENER (TIE ROD)	
					(INCLUDES WASHERS, NUTS & TIE RODS)	

Y-SEPARATE ILLUSTRATION

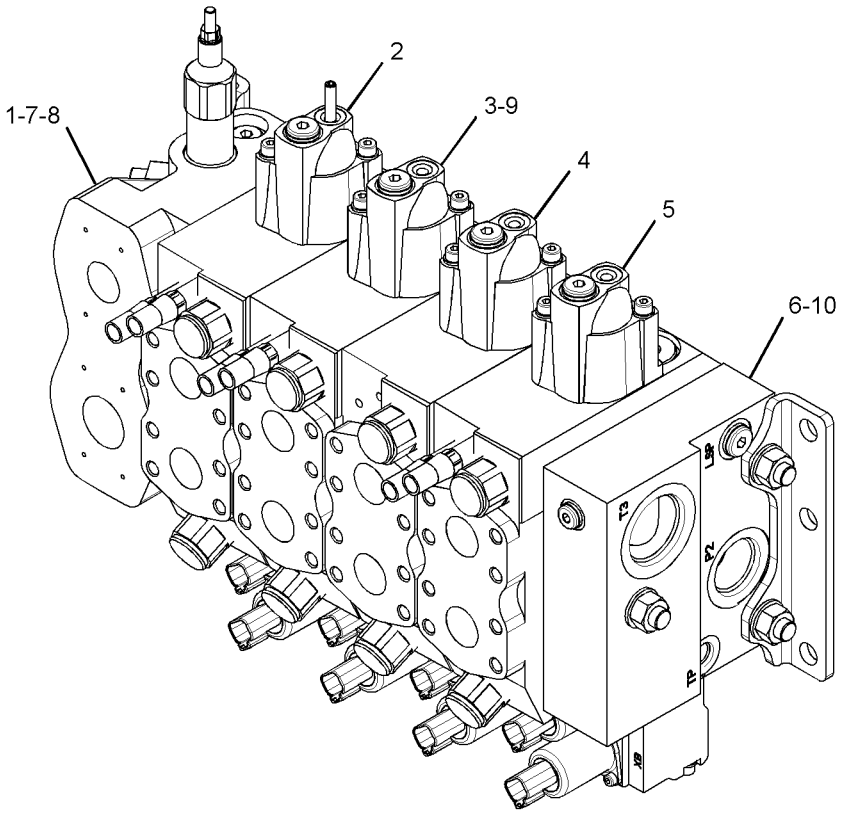

GRAPHIC #1 **<END>** g02733620

HYDRAULIC SYSTEM

373-7703 VALVE GP-MAIN CONTROL–HIGH FLOW

S/N: F7B1-UP

PART OF 375-0151, 375-0157 VALVE & MTG GP-CONTROL

AN ATTACHMENT

SMCS-5051 **i05106409**

NOTE	REF NO	GRAPHIC REF	PART NUMBER	QTY	PART NAME 1 2 3 4 5 6 (PRODUCT LEVEL)	SEE PAGE
Y	1	1	**378-2539**	1	VALVE GP-CONTROL (INLET)	379
Y	2	1	**378-2548**	1	VALVE GP-CONTROL (TRAVEL, RH)	390
Y	2A	1	**378-2548**	1	VALVE GP-CONTROL (TRAVEL, LH)	390
Y	3	1	**378-2542**	1	VALVE GP-CONTROL (FELLING HEAD)	382
Y	4	1	**378-2544**	1	VALVE GP-CONTROL (TILT)	386
Y	5	1	**378-2543**	1	VALVE GP-CONTROL (GRAB ARM)	384
Y	6	1	**227-2141**	1	COVER GP-CONTROL VALVE (OUTLET)	252
	7	1	**323-8310**	1	KIT-SEAL (INLET CONTROL)	
					(INCLUDES WASHERS, RINGS, PLUGS, & SCREWS)	
	8	1	**227-2150**	1	KIT-CONTROL VALVE (SEAL)	
					(INCLUDES WASHERS & RINGS)	
	9	1	**378-4639**	1	KIT-SEAL (FELLING HEAD)	
					(INCLUDES RINGS)	
	10	1	**382-1745**	1	KIT-FASTENER (TIE ROD)	
					(INCLUDES WASHERS, NUTS, & TIE RODS)	

Y-SEPARATE ILLUSTRATION

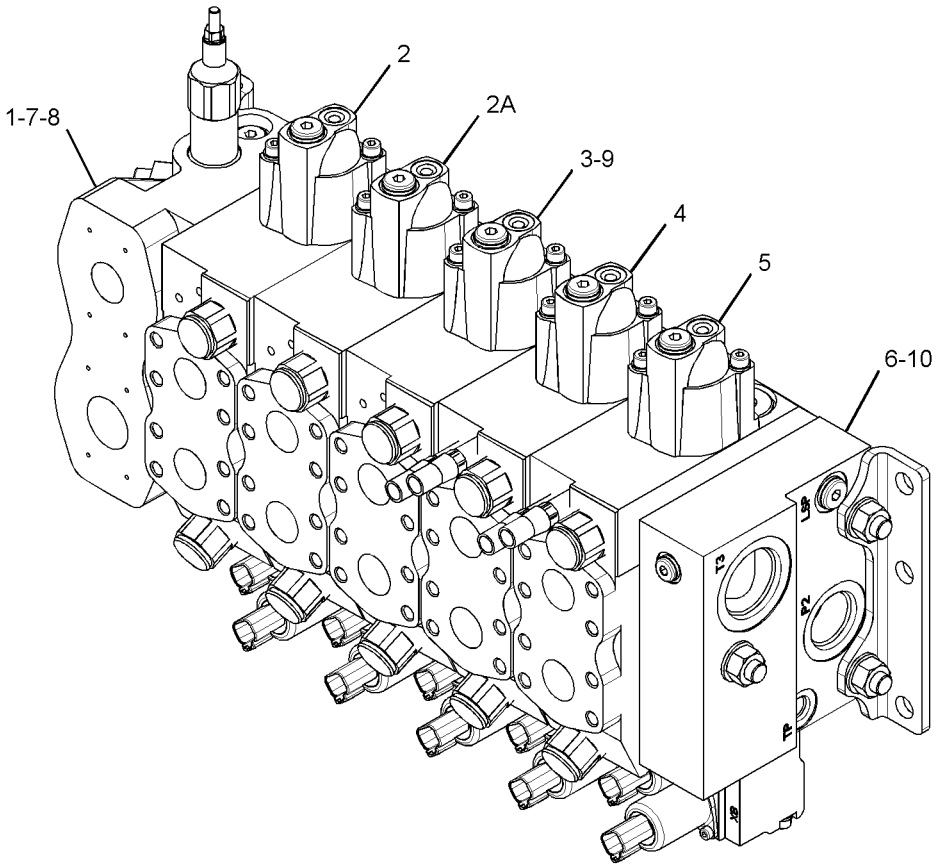

GRAPHIC #1 **<END>** g02733457

167-1555 VALVE GP-PRESSURE CONTROL-

PILOT OIL PRESSURE

S/N: F7B1-UP

PART OF 355-8897 LINES GP-PILOT

SMCS-5117 **i02237590**

NOTE	REF NO	GRAPHIC REF	PART NUMBER	QTY	PART NAME 1 2 3 4 5 6 (PRODUCT LEVEL)	SEE PAGE
	1	1	**7S-8553**	1	SPRING	
B	2	1	**5S-7001**	2	SPACER (7.54X14.15X0.9-MM THK)	
B	3	1	**5S-7018**	3	SPACER (7.54X14.15X0.25-MM THK)	
	4	1	**108-3866**	2	ADAPTER	
	5	1	**2M-9780**	2	SEAL-O-RING	

B-USE AS REQUIRED

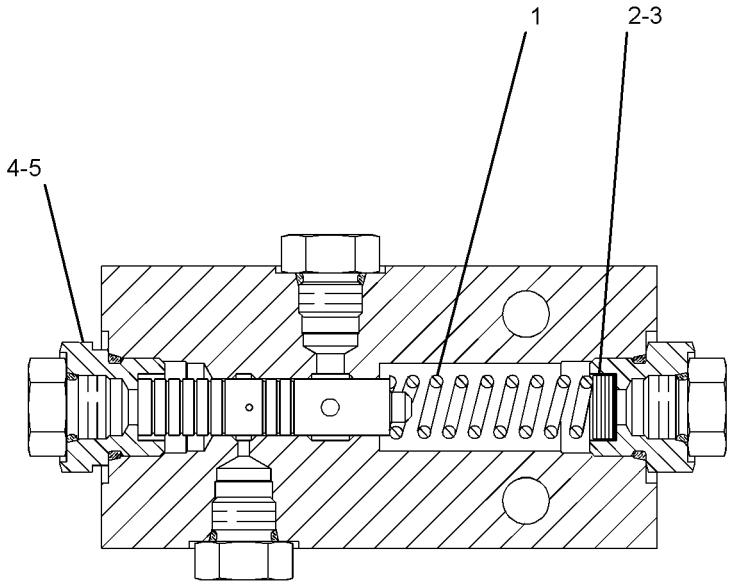

GRAPHIC #1 **<END>** g01128528

198-3811 VALVE GP-PUMP CONTROL–PRESSURE COMPENSATOR–MAIN HYDRAULIC

S/N: F7B1-UP

PART OF 308-4489 VALVE GP-PUMP CONTROL

SMCS-5455 **i01497599**

NOTE	REF NO	GRAPHIC REF	PART NUMBER	QTY	PART NAME 1 2 3 4 5 6 (PRODUCT LEVEL)	SEE PAGE
	1	1	**198-3816**	1	HOUSING	
	2	1	**177-2538**	2	PISTON	
	3	1	**177-2539**	2	PISTON	
	4	1	**120-4394**	5	PLUG-BREAK OFF	
M	5	1	**123-2017**	1	PLUG	
	6	1	**160-1757**	1	PLUG	
	7	1	**6J-3134**	2	SEAL-O-RING	
	8	1	**6V-8218**	2	SEAL-O-RING	
	9	1	**191-3107**	2	PIN (REGULATOR PISTON)	
	10	1	**150-5785**	2	DOWEL	
M	11	1	**6V-8653**	6	BOLT-SOCKET HEAD (M6X1X40-MM)	
	12	1	**9S-8004**	1	PLUG-O-RING	
	13	1	**3J-1907**	1	SEAL-O-RING	

M-METRIC PART

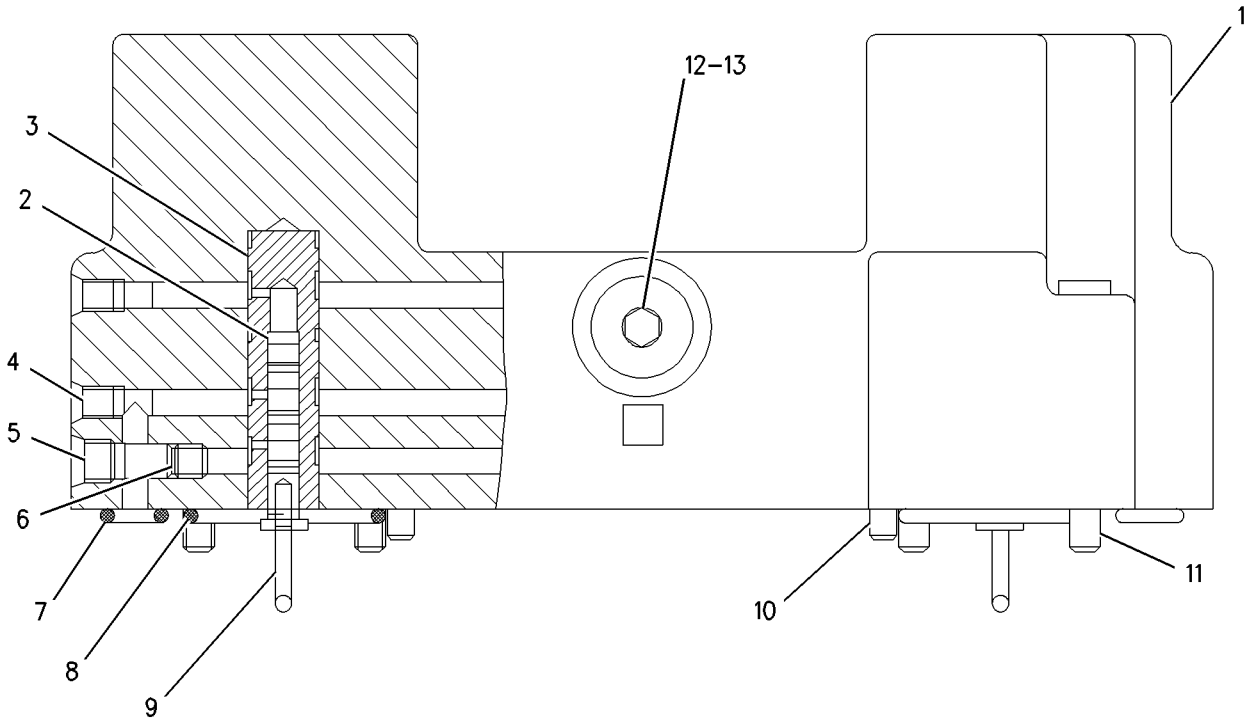

GRAPHIC #1 **<END>** g00787774

308-4489 VALVE GP-PUMP CONTROL–PRESSURE COMPENSATOR–MAIN HYDRAULIC

S/N: F7B1-UP

PART OF 308-4488 HEAD GP-PUMP

SMCS-5455 **i02878656**

NOTE	REF NO	GRAPHIC REF	PART NUMBER	QTY	PART NAME 1 2 3 4 5 6 (PRODUCT LEVEL)	SEE PAGE
Y	1	1	**198-3811**	1	VALVE GP-PUMP CONTROL (PRESSURE COMPENSATOR)	404
	2	1	**5I-4277**	2	ORIFICE	
	3	1	**198-3813**	1	HOUSING	
	4	1	**123-1979**	2	PISTON	
	5	1	**123-1981**	2	SEAT	
	6	1	**279-5057**	2	SPRING	
M	7	1	**087-4759**	2	SETSCREW	
	8	1	**270-3522**	2	SPACER	
	9	1	**177-2534**	2	SPACER	
	10	1	**177-2535**	2	SPRING	
	11	1	**177-2536**	2	SPRING	
	12	1	**178-7903**	2	RING	
	13	1	**6V-3683**	2	SEAL-O-RING	
M	14	1	**123-2017**	12	PLUG	
	15	1	**178-7897**	2	RETAINER	
	16	1	**178-7896**	2	SETSCREW	
	17	1	**178-7895**	2	RETAINER	
	18	1	**178-7893**	2	SPRING	
	19	1	**178-7894**	2	SPRING	
	20	1	**178-7892**	2	RETAINER	
	21	1	**178-7891**	2	PISTON	
	22	1	**198-3814**	2	SLEEVE	
	23	1	**178-7900**	2	PLUG	
M	24	1	**8T-2394**	6	BOLT-SOCKET HEAD (M8X1.25X90-MM)	
	25	1	**6J-3134**	2	SEAL-O-RING	
M	26	1	**9T-3853**	4	LOCKNUT (M6X1-THD)	
	27	1	**7Y-5269**	2	SEAL-O-RING	
	28	1	**9T-3928**	2	PLUG AS	
					(EACH INCLUDES)	
		1	**187-8001**	1	SEAL	

M-METRIC PART
Y-SEPARATE ILLUSTRATION

308-4489 VALVE GP-PUMP CONTROL *(contd.)* i02878656

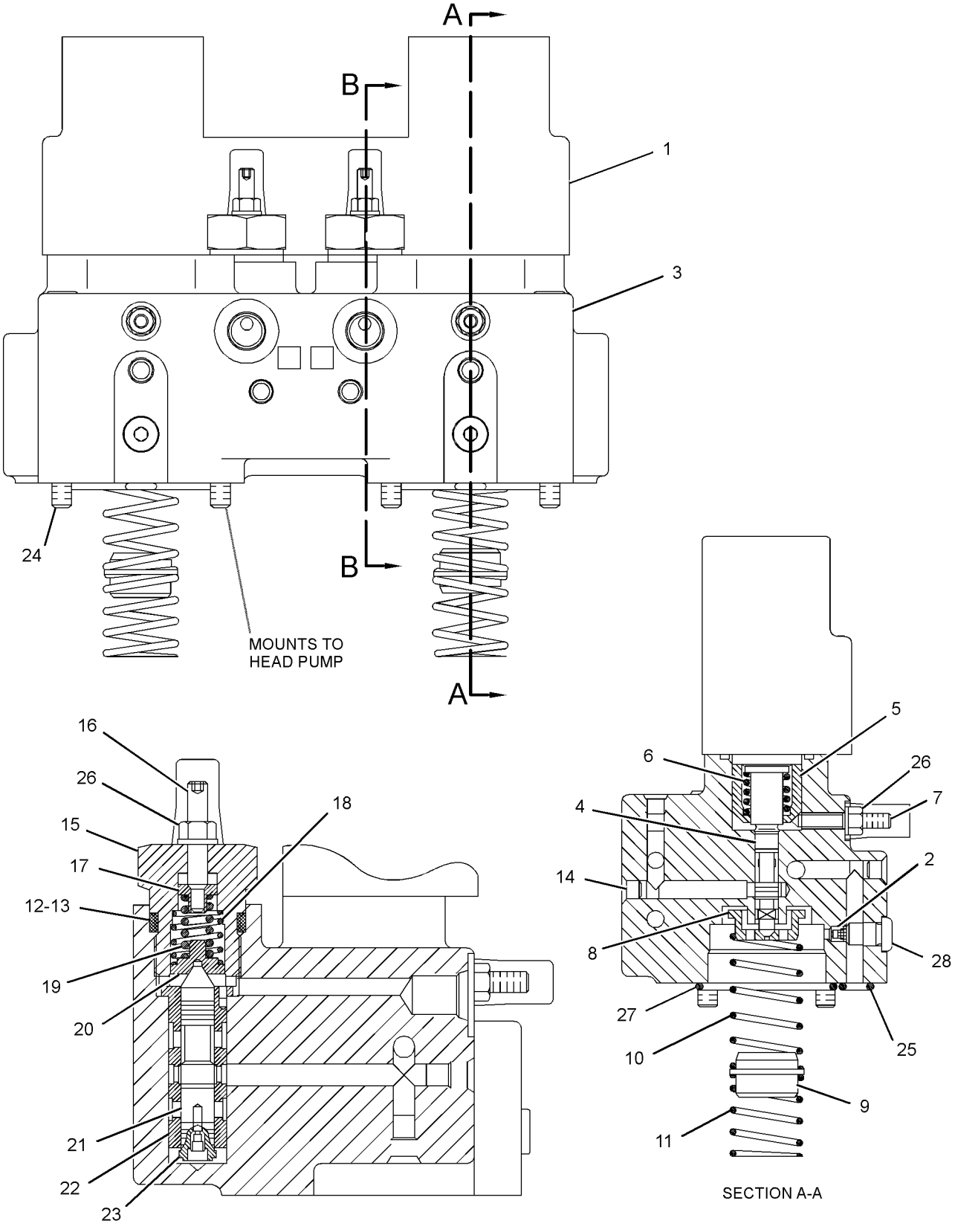

GRAPHIC #1 **<END>** g01434606

184-3830 VALVE GP-RELIEF–SWING MOTOR

S/N: F7B1-UP

PART OF 334-9971 MOTOR GP-SWING

SMCS-5069, 5117 **i01819078**

NOTE	REF NO	GRAPHIC REF	PART NUMBER	QTY	PART NAME 1 2 3 4 5 6 (PRODUCT LEVEL)	SEE PAGE
	1	1	**168-0766**	1	PLUG	
	2	1	**168-0765**	1	RING-BACKUP	
	3	1	**7J-9933**	1	SEAL-O-RING	
M	4	1	**168-0764**	1	LOCKNUT (M33X1.5-THD)	
	5	1	**7I-0966**	1	RING-BACKUP	
	6	1	**6V-5556**	1	SEAL-O-RING	
	7	1	**168-0763**	1	RETAINER	
	8	1	**095-1698**	1	SEAL-O-RING	
	9	1	**168-0713**	1	BODY AS	
	10	1	**191-3201**	1	SPRING	

M-METRIC PART

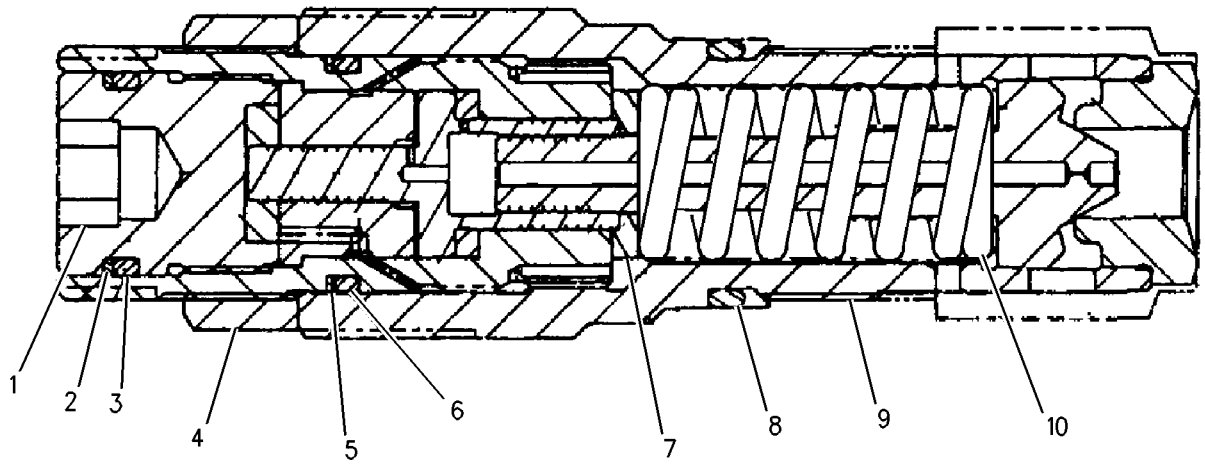

GRAPHIC #1 **<END>** g00928673

171-3685 VALVE GP-SOLENOID

S/N: F7B1-UP
24-VOLT
PART OF 222-5781 VALVE GP-SOLENOID & MANIFOLD
AN ATTACHMENT

SMCS-5479 **i03617282**

NOTE	REF NO	GRAPHIC REF	PART NUMBER	QTY	PART NAME 1 2 3 4 5 6 (PRODUCT LEVEL)	SEE PAGE
C	1	1	**218-9894**	1	COIL AS	
		1	**214-6368**	1	WASHER-SPRING	
		1	**186-3735**	2	PIN-CONNECTOR (16-GA TO 18-GA)	
		1	**1S-9593**	2	STRAP-CABLE	
		1	**102-8802**	2	KIT-RECEPTACLE (2-PIN)	
					(EACH INCLUDES RECEPTACLE AS & WEDGE)	
	2	1	**171-3684**	1	VALVE AS	
		1	**8C-9987**	1	WASHER (8.3X28X2.5-MM THK)	
		1	**111-0343**	1	LOCKNUT (5/16-18-THD)	
	3	1	**111-0343**	1	LOCKNUT (5/16-18-THD)	
	4	1	**8C-9987**	1	WASHER (8.3X28X2.5-MM THK)	
					AVAILABLE REPAIR KIT(S):	
			160-3771	1	KIT-SEAL	
					(INCLUDES SEALS & RINGS)	

C-CHANGE FROM PREVIOUS TYPE

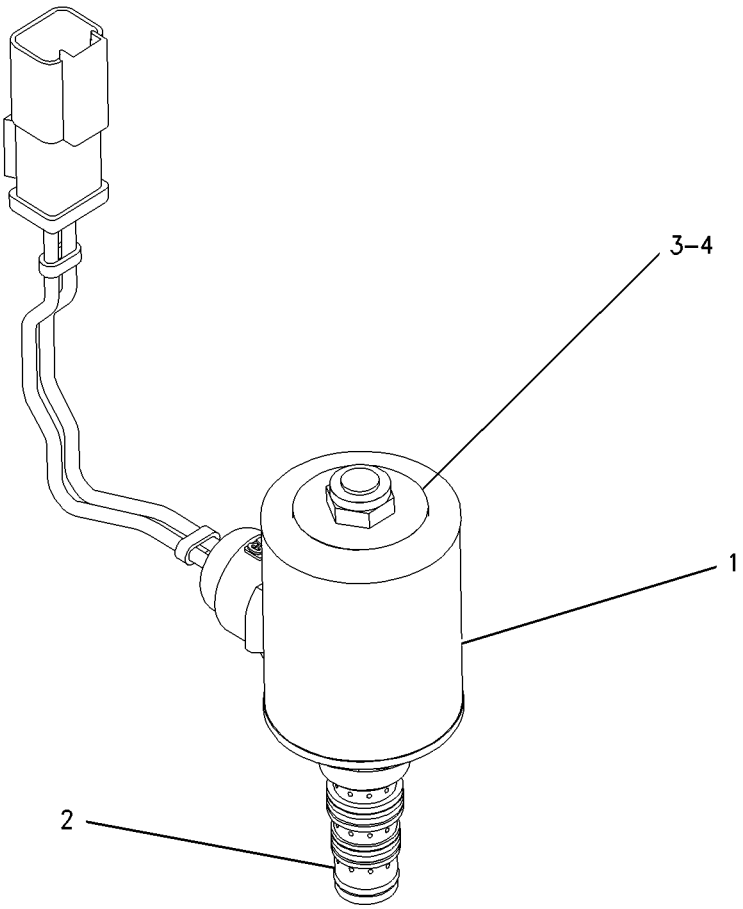

GRAPHIC #1 **<END>** g00862996

195-3739 VALVE GP-SOLENOID

S/N: F7B1-UP
24-VOLT
PART OF 375-2674 VALVE GP-SOLENOID & MANIFOLD

SMCS-5479 **i03996251**

NOTE	REF NO	GRAPHIC REF	PART NUMBER	QTY	PART NAME 1 2 3 4 5 6 (PRODUCT LEVEL)	SEE PAGE
	1	1	**323-9531**	1	COIL AS (24-VOLT)	
	2	1	**164-2108**	1	WASHER (13.03X25.4X2.38-MM THK)	
	3	1	**218-2373**	1	NUT (1/2-28-THD)	
					AVAILABLE REPAIR KIT(S):	
			175-3892	1	KIT-SEAL (SOLENOID VALVE)	

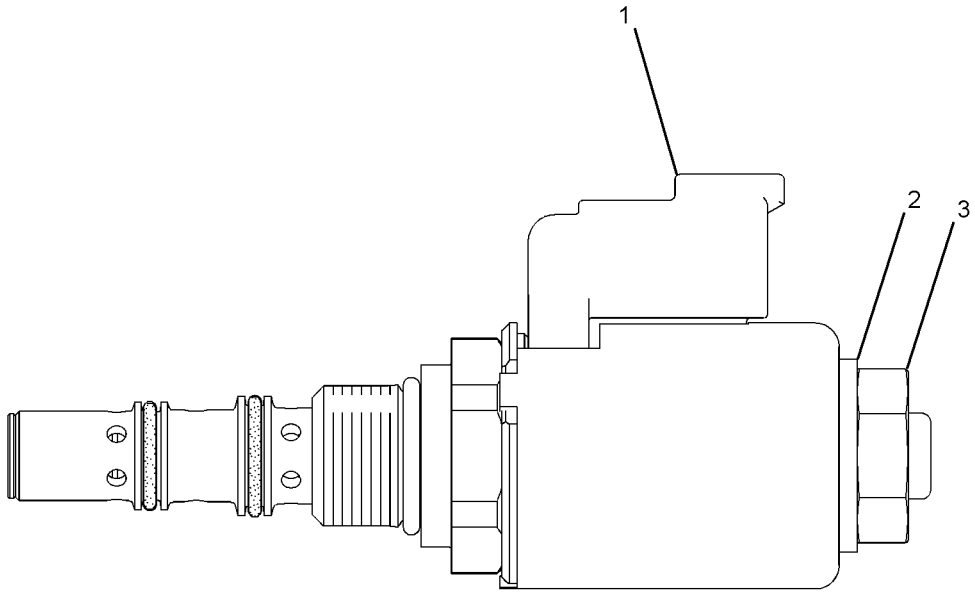

GRAPHIC #1 **<END>** g01453365

HYDRAULIC SYSTEM

315-4412 VALVE GP-SOLENOID

S/N: F7B1-UP

PART OF 322-8716 VALVE GP-SWING CUSHION

SMCS-5479 **i02935369**

NOTE	REF NO	GRAPHIC REF	PART NUMBER	QTY	PART NAME 1 2 3 4 5 6 (PRODUCT LEVEL)	SEE PAGE
	1	1	**126-6514**	1	SEAL-O-RING	
	2	1	**126-6515**	1	SEAL-O-RING	
	3	1	**126-6516**	1	SEAL-O-RING	
	4	1	**095-1586**	1	SEAL-O-RING	

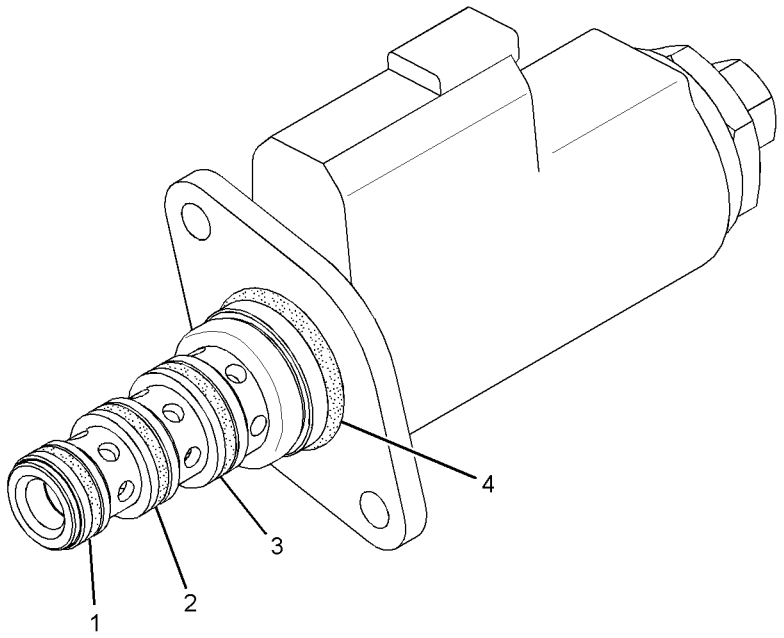

GRAPHIC #1 **<END>** g01456627

222-5781 VALVE GP-SOLENOID & MANIFOLD

S/N: F7B1-UP
PART OF 339-8359 PUMP & MTG GP-SAW
AN ATTACHMENT

SMCS-5264, 5479 **i03996245**

NOTE	REF NO	GRAPHIC REF	PART NUMBER	QTY	PART NAME 1 2 3 4 5 6 (PRODUCT LEVEL)	SEE PAGE
	1	1	**9S-8002**	2	PLUG-O-RING	
	2	1	**3J-1907**	2	SEAL-O-RING	
	3	1	**9S-8005**	1	PLUG-O-RING	
	4	1	**3K-0360**	1	SEAL-O-RING	
Y	5	1	**171-3685**	1	VALVE GP-SOLENOID (24-VOLT) (SAW)	408
	6	1	**4J-0520**	1	SEAL-O-RING	
	7	1	**9S-8004**	2	PLUG-O-RING	
	8	1	**3J-7354**	2	SEAL-O-RING	
	9	1	**224-8164**	2	CARTRIDGE AS-VALVE	
					(EACH INCLUDES)	
		1	**239-6336**	1	KIT-SEAL	
					(INCLUDES O-RING SEALS & BACK-UP RINGS)	

Y-SEPARATE ILLUSTRATION

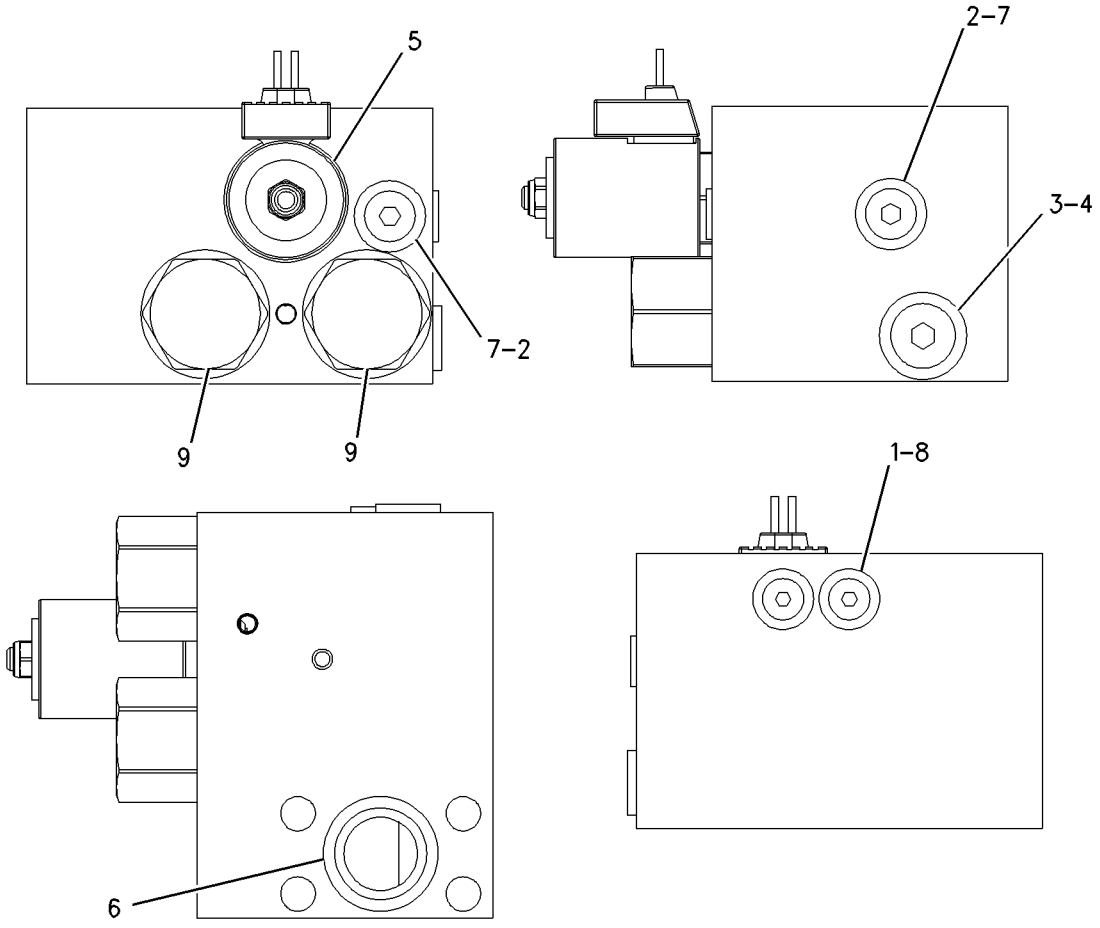

GRAPHIC #1 **<END>** g00948873

HYDRAULIC SYSTEM

375-2674 VALVE GP-SOLENOID & MANIFOLD

S/N: F7B1-UP

PART OF 355-8897 LINES GP-PILOT

SMCS-5264, 5479 **i04604092**

NOTE	REF NO	GRAPHIC REF	PART NUMBER	QTY	PART NAME 1 2 3 4 5 6 (PRODUCT LEVEL)	SEE PAGE
	1	1	**6E-5066**	1	SCREEN	
	2	1	**174-4913**	1	VALVE GP-SOLENOID (24-VOLT) (FAN)	
Y	3	1	**195-3739**	1	VALVE GP-SOLENOID (PUMP CONTROL)	409
	4	1	**333-8242**	1	VALVE GP-SOLENOID (24-VOLT) (TRAVEL MOTOR)	
		1	**250-6148**	1	COIL AS (24-VOLT)	
	4A	1	**333-8242**	1	VALVE GP-SOLENOID (24-VOLT) (SWING)	
		1	**250-6148**	1	COIL AS (24-VOLT)	
	4B	1	**333-8242**	1	VALVE GP-SOLENOID (24-VOLT) (PILOT SUPPLY)	
		1	**250-6148**	1	COIL AS (24-VOLT)	

Y-SEPARATE ILLUSTRATION

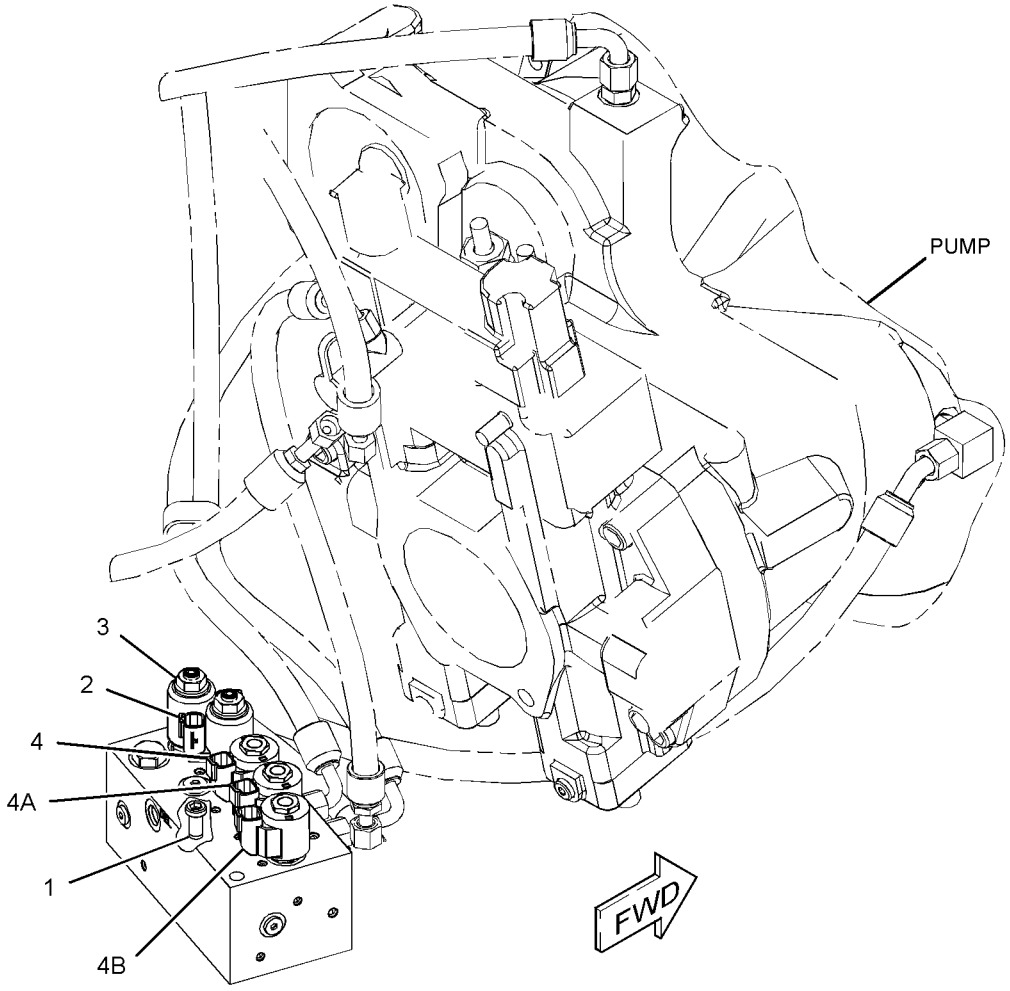

GRAPHIC #1 **<END>** g02729332

322-8716 VALVE GP-SWING CUSHION—FINE SWING

S/N: F7B1-UP

PART OF 339-8310 DRIVE AR-SWING

SMCS-5480 **i03399466**

NOTE	REF NO	GRAPHIC REF	PART NUMBER	QTY	PART NAME 1 2 3 4 5 6 (PRODUCT LEVEL)	SEE PAGE
	1	1	**5B-9304**	2	SCREW-DRIVE (NO 2X3/16-IN)	
M	2	1	**8T-0288**	2	BOLT (M5X0.8X12-MM)	
	3	1	**133-6788**	2	ORIFICE	
	4	1	**8T-6759**	6	PLUG-PIPE	
	5	1	**095-1576**	1	SEAL-O-RING	
Y	6	1	**315-4412**	1	VALVE GP-SOLENOID (FINE SWING)	410
	7	1	**173-3536**	2	VALVE GP-RELIEF (CUSHION CROSSOVER)	
					(EACH INCLUDES)	
		1	**095-1586**	1	SEAL-O-RING	
		1	**095-1785**	1	RING-BACKUP	
	8	1	**095-1698**	2	SEAL-O-RING	

M-METRIC PART
Y-SEPARATE ILLUSTRATION

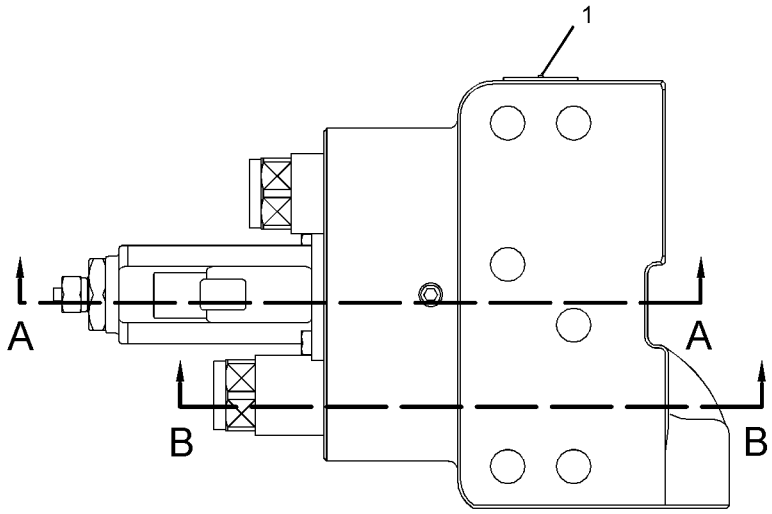

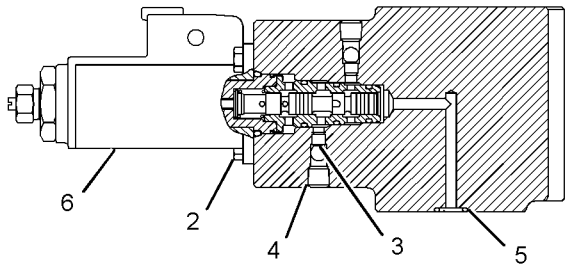

SECTION A-A

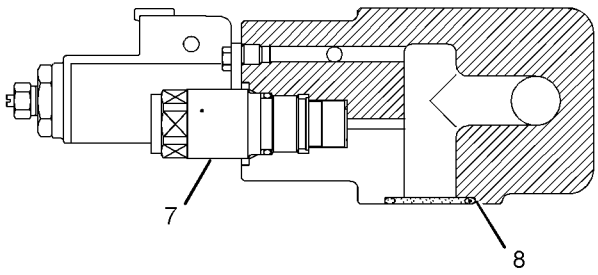

SECTION B-B

GRAPHIC #1 **<END>** g01762393

IMPLEMENTS

376-7999 BOOM GP

S/N: F7B1-UP

PART OF 376-8000 LINKAGE AR-HARVESTER HEAD

AN ATTACHMENT

SMCS-6301, 6302, 6460, 6501, 6516, 6521, 6535, 6536 **i04524789**

NOTE	REF NO	GRAPHIC REF	PART NUMBER	QTY	PART NAME 1 2 3 4 5 6 (PRODUCT LEVEL)	SEE PAGE
B	1	1	**7Y-2498**	2	SHIM (1.6-MM THK)	
B	2	1	**7Y-3355**	2	SHIM (1.6-MM THK)	
B	3	1	**093-0083**	2	SHIM (1-MM THK)	
B	4	1	**093-0090**	2	SHIM (1-MM THK)	
B	5	1	**093-0115**	2	SHIM (2-MM THK)	
B	6	1	**093-0122**	2	SHIM (2-MM THK)	
	7	1	**107-3157**	3	WASHER (22X76.2X6-MM THK)	
	8	1	**212-8080**	1	GUARD-DEBRIS (RUBBER, FRONT)	
	9	1	**212-8082**	1	WASHER-SPECIAL	
	10	1	**212-8085**	2	PIN AS	
	11	1	**212-8092**	1	PLATE	
	12	1	**212-8097**	1	PIN AS	
	13	1	**228-6690**	1	SPACER (103X140X12-MM THK)	
	14	1	**362-3853**	1	PLATE	
	15	1	**364-2229**	1	COVER AS	
M		1	**8T-3597**	3	NUT-WELD (M12X1.75-THD)	
	16	1	**364-2232**	1	PLATE	
	17	1	**376-7998**	1	BOOM & BEARING AS	
		1	**7Y-2397**	2	BUSHING	
	18	1	**383-1489**	1	COVER AS	
	19	1	**383-1492**	1	COVER AS	
	20	1	**383-1493**	1	PLATE	
	21	1	**384-2568**	1	FLAP	
	22	1	**384-3282**	1	FLAP	
	23	1	**2J-0564**	1	LOCKNUT (2-12-THD)	
	24	1	**6C-6053**	2	SHIM	
	25	1	**8T-4123**	3	WASHER (22X35X3.5-MM THK)	
M	26	1	**8T-4183**	12	BOLT (M12X1.75X40-MM)	
M	27	1	**8T-4192**	6	BOLT (M12X1.75X25-MM)	
	28	1	**8T-4223**	21	WASHER-HARD (13.5X25.5X3-MM THK)	
M	29	1	**8T-4244**	3	NUT (M12X1.75-THD)	
M	30	1	**8T-4779**	8	BOLT (M16X2X35-MM)	
M	31	1	**8T-4780**	3	BOLT (M20X2.5X30-MM)	
	32	1	**9X-4597**	2	SEAL-LIP TYPE	
	33	1	**9X-8257**	8	WASHER (17.5X30X3.5-MM THK)	

B-USE AS REQUIRED
M-METRIC PART

376-7999 **BOOM GP** *(contd.)* **i04524789**

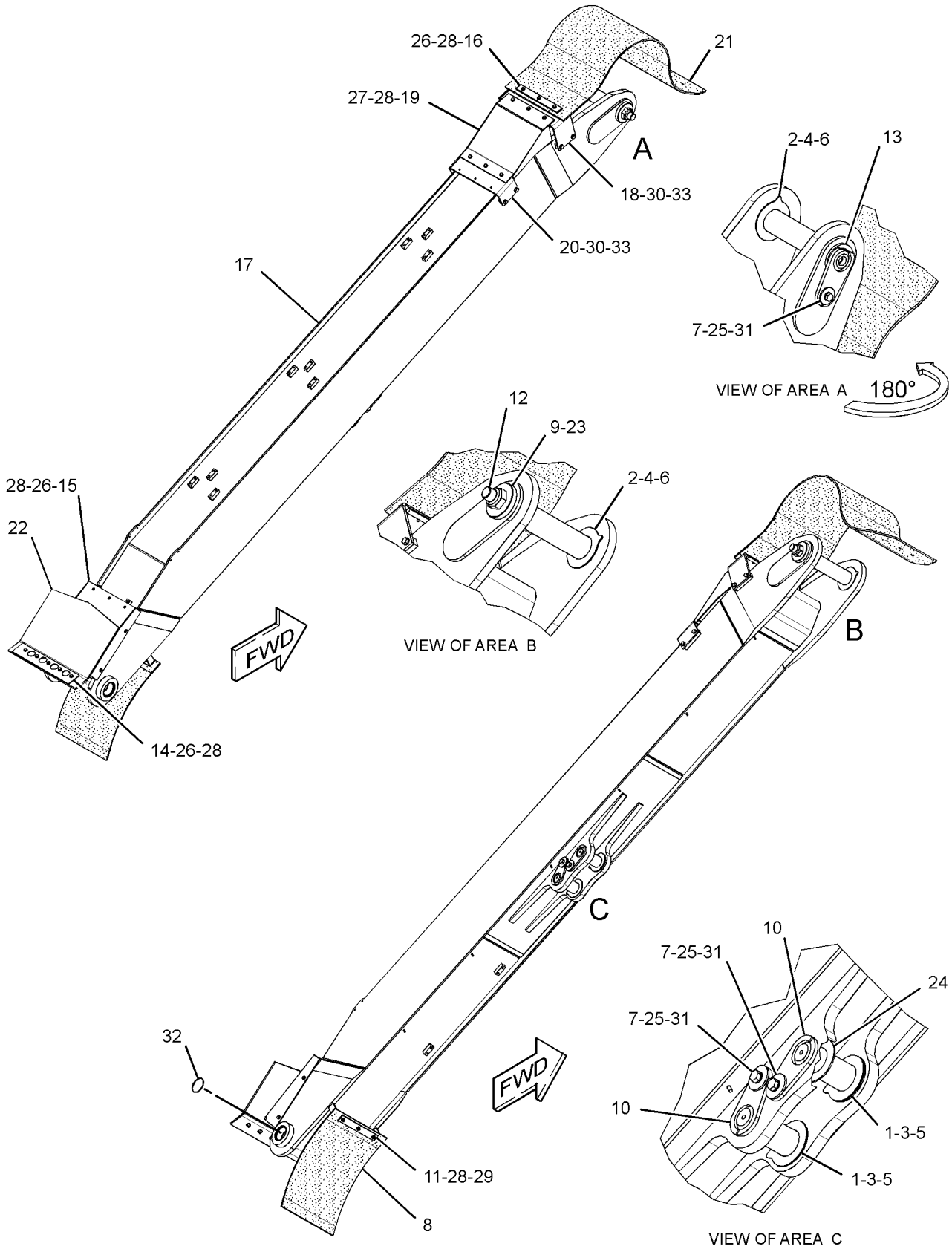

GRAPHIC #1 **<END>** g02728038

IMPLEMENTS

379-5857 BOOM GP

S/N: F7B1-UP

PART OF 379-5870 LINKAGE AR-FELLING HEAD, 379-5860 LINKAGE AR-INTERMITTENT SAW

AN ATTACHMENT

SMCS-6301, 6302, 6460, 6501, 6516, 6521, 6535, 6536 **i04769553**

NOTE	REF NO	GRAPHIC REF	PART NUMBER	QTY	PART NAME 1 2 3 4 5 6 (PRODUCT LEVEL)	SEE PAGE
B	1	1	**7Y-2498**	2	SHIM (1.6-MM THK)	
B	2	1	**7Y-3355**	2	SHIM (1.6-MM THK)	
B	3	1	**093-0083**	2	SHIM (1-MM THK)	
B	4	1	**093-0090**	2	SHIM (1-MM THK)	
B	5	1	**093-0115**	2	SHIM (2-MM THK)	
B	6	1	**093-0122**	2	SHIM (2-MM THK)	
	7	1	**107-3157**	3	WASHER (22X76.2X6-MM THK)	
	8	1	**212-8079**	1	GUARD-DEBRIS (RUBBER, REAR)	
	9	1	**212-8080**	1	GUARD-DEBRIS (RUBBER, FRONT)	
	10	1	**212-8082**	1	WASHER-SPECIAL	
	11	1	**212-8085**	2	PIN AS	
	12	1	**212-8086**	2	COLLAR	
	13	1	**212-8087**	2	GROMMET	
	14	1	**212-8090**	1	TUBE AS	
	15	1	**212-8092**	2	PLATE	
	16	1	**212-8097**	1	PIN AS	
	17	1	**228-6690**	1	SPACER (103X140X12-MM THK)	
	18	1	**392-7641**	1	BOOM & BEARING AS	
	18A	1	**7Y-2397**	2	BUSHING	
M		1	**112-9073**	2	STUD-WELD (M12X1.75X21.1-MM)	
		1	**117-5604**	3	STUD	
		1	**212-8879**	2	BOSS (M20X2.5X25-MM)	
	19	1	**348-7658**	1	PLATE	
	20	1	**379-5862**	1	PLATE	
	21	1	**379-5863**	1	PLATE AS	
	22	1	**2J-0564**	1	LOCKNUT (2-12-THD)	
	23	1	**3B-8603**	2	SETSCREW-SOCKET	
	24	1	**8T-4123**	3	WASHER (22X35X3.5-MM THK)	
	25	1	**8T-4223**	15	WASHER-HARD (13.5X25.5X3-MM THK)	
M	26	1	**8T-4244**	5	NUT (M12X1.75-THD)	
M	27	1	**8T-4778**	2	LOCKNUT (M16X2-THD)	
M	28	1	**8T-4780**	3	BOLT (M20X2.5X30-MM)	
M	29	1	**8T-4956**	10	BOLT (M12X1.75X35-MM)	
M	30	1	**8T-6385**	2	BOLT (M16X2X180-MM)	
	31	1	**9X-4597**	2	SEAL-LIP TYPE	
	32	1	**9X-8257**	4	WASHER (17.5X30X3.5-MM THK)	
	33	1	**8T-4121**	4	WASHER-HARD (11X21X2.5-MM THK)	
M	34	1	**8T-4136**	4	BOLT (M10X1.5X25-MM)	
	35	1	**391-9847**	1	GUARD AS	

B-USE AS REQUIRED
M-METRIC PART

379-5857 **BOOM GP** *(contd.)* **i04769553**

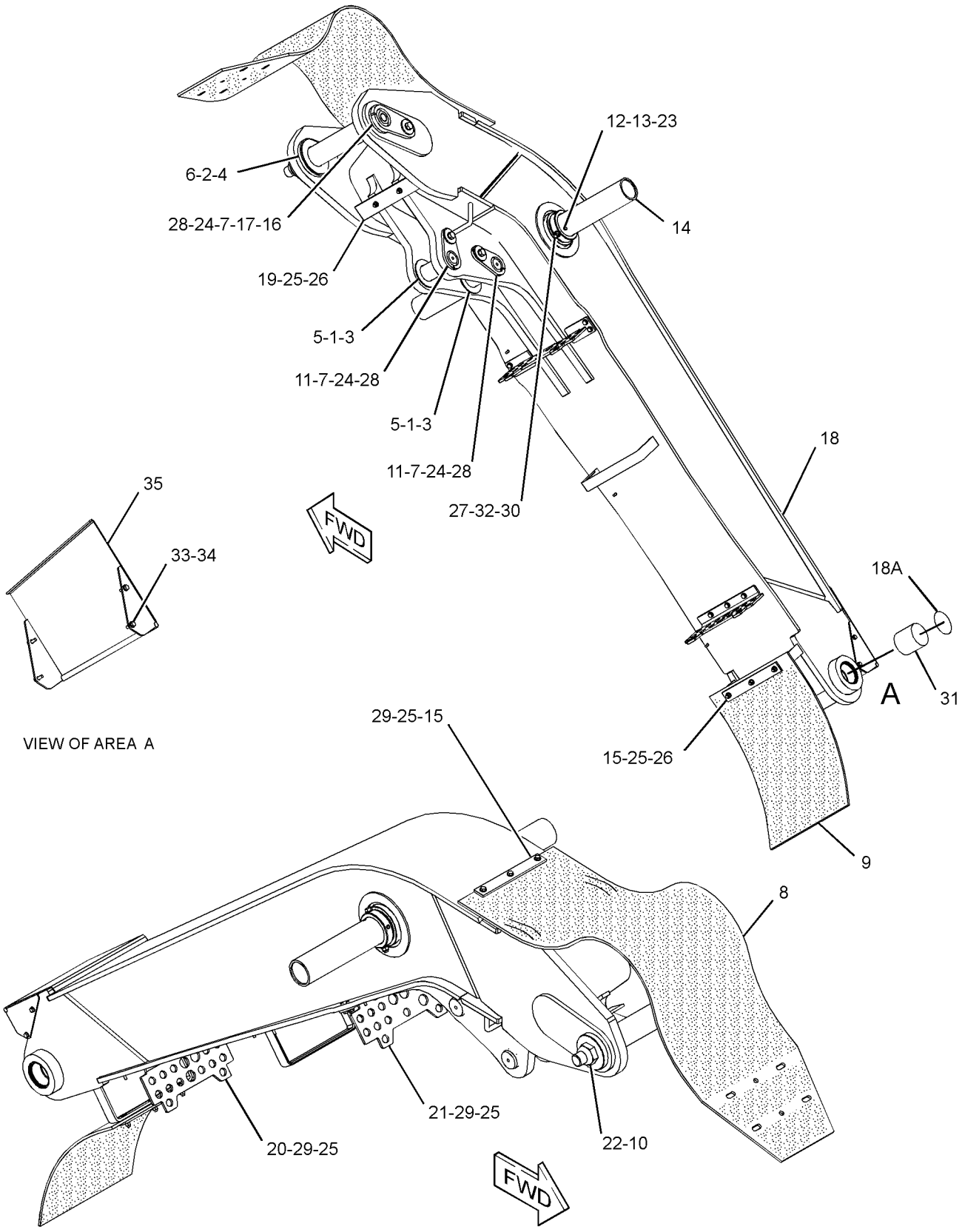

GRAPHIC #1 **<END>** g03011703

362-3860 BRACKET GP-MOUNTING

S/N: F7B1-UP

PART OF 362-3899 CHASSIS AR

SMCS-6700, 7079, 7253 **i05087957**

NOTE	REF NO	GRAPHIC REF	PART NUMBER	QTY	PART NAME 1 2 3 4 5 6 (PRODUCT LEVEL)	SEE PAGE
	1	1	**362-3861**	1	PLATE AS	
	2	1	**362-3864**	2	PLATE AS	
	3	1	**372-3154**	4	PLATE	
	4	1	**7X-7729**	22	WASHER (11X25X3-MM THK)	
M	5	1	**8T-4182**	4	BOLT (M10X1.5X45-MM)	
M	6	1	**8T-4185**	4	BOLT (M10X1.5X50-MM)	
M	7	1	**8T-4186**	14	BOLT (M10X1.5X40-MM)	

M-METRIC PART

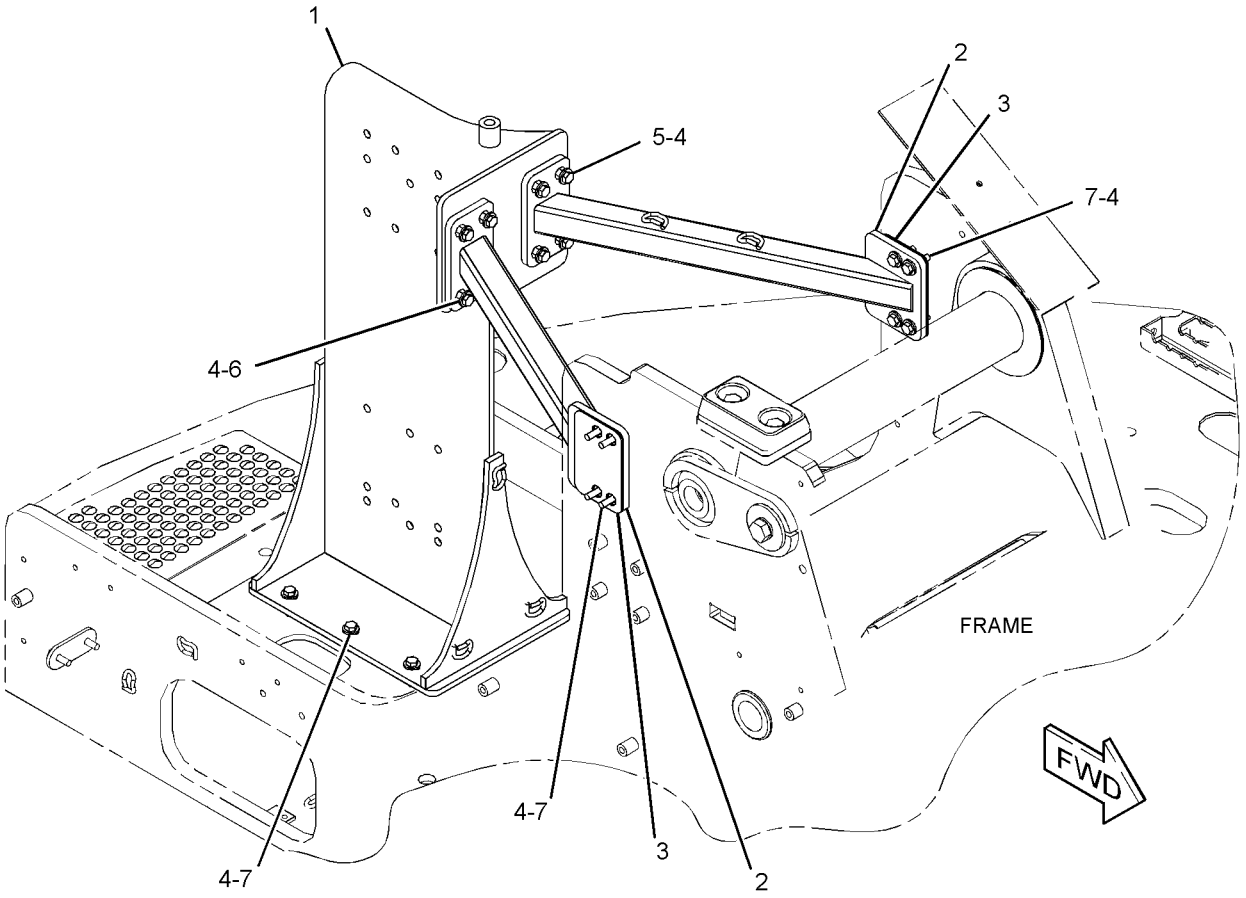

GRAPHIC #1 **<END>** g03255196

378-8867 LINES GP-GREASE

S/N: F7B1-UP

PART OF 376-8000 LINKAGE AR-HARVESTER HEAD

AN ATTACHMENT

SMCS-7510 **i04516469**

NOTE	REF NO	GRAPHIC REF	PART NUMBER	QTY	PART NAME 1 2 3 4 5 6 (PRODUCT LEVEL)	SEE PAGE
	1	1	**3B-8489**	9	FITTING-GREASE	
	2	1	**3S-2093**	1	STRAP-CABLE	
I	3	1	**240-0334**	1	HOSE AS	
I	4	1	**240-0335**	1	HOSE AS	
I	5	1	**378-8872**	1	HOSE AS	
I	6	1	**378-8873**	1	HOSE AS	
I	7	1	**378-8874**	1	HOSE AS	
	8	1	**384-0406**	1	TUBE AS	
	9	1	**384-0407**	1	TUBE AS	
	10	1	**384-0408**	1	TUBE AS	
	11	1	**384-0409**	1	TUBE AS	
I	12	1	**384-0410**	1	HOSE AS	
	13	1	**147-6603**	2	SEAL-O-RING	
	14	1	**2R-1939**	2	CLIP	
	15	1	**3B-6552**	3	ELBOW-PIPE	
	16	1	**3B-8822**	2	ELBOW	
	17	1	**4D-6466**	5	CLIP	
	18	1	**4K-3026**	2	EXTENSION	
	19	1	**5K-3294**	1	CLIP	
	20	1	**6L-3616**	4	CONNECTOR	
	21	1	**6V-4245**	3	ELBOW	
	22	1	**7D-1728**	6	CLIP	
	23	1	**7K-1181**	1	STRAP-CABLE	
	24	1	**8M-2772**	2	CLIP	
	25	1	**8T-4121**	12	WASHER-HARD (11X21X2.5-MM THK)	
M	26	1	**8T-4133**	12	NUT (M10X1.5-THD)	

I-REFER TO HYDRAULIC INFORMATION SYSTEM
M-METRIC PART

378-8867 **LINES GP-GREASE** *(contd.)* **i04516469**

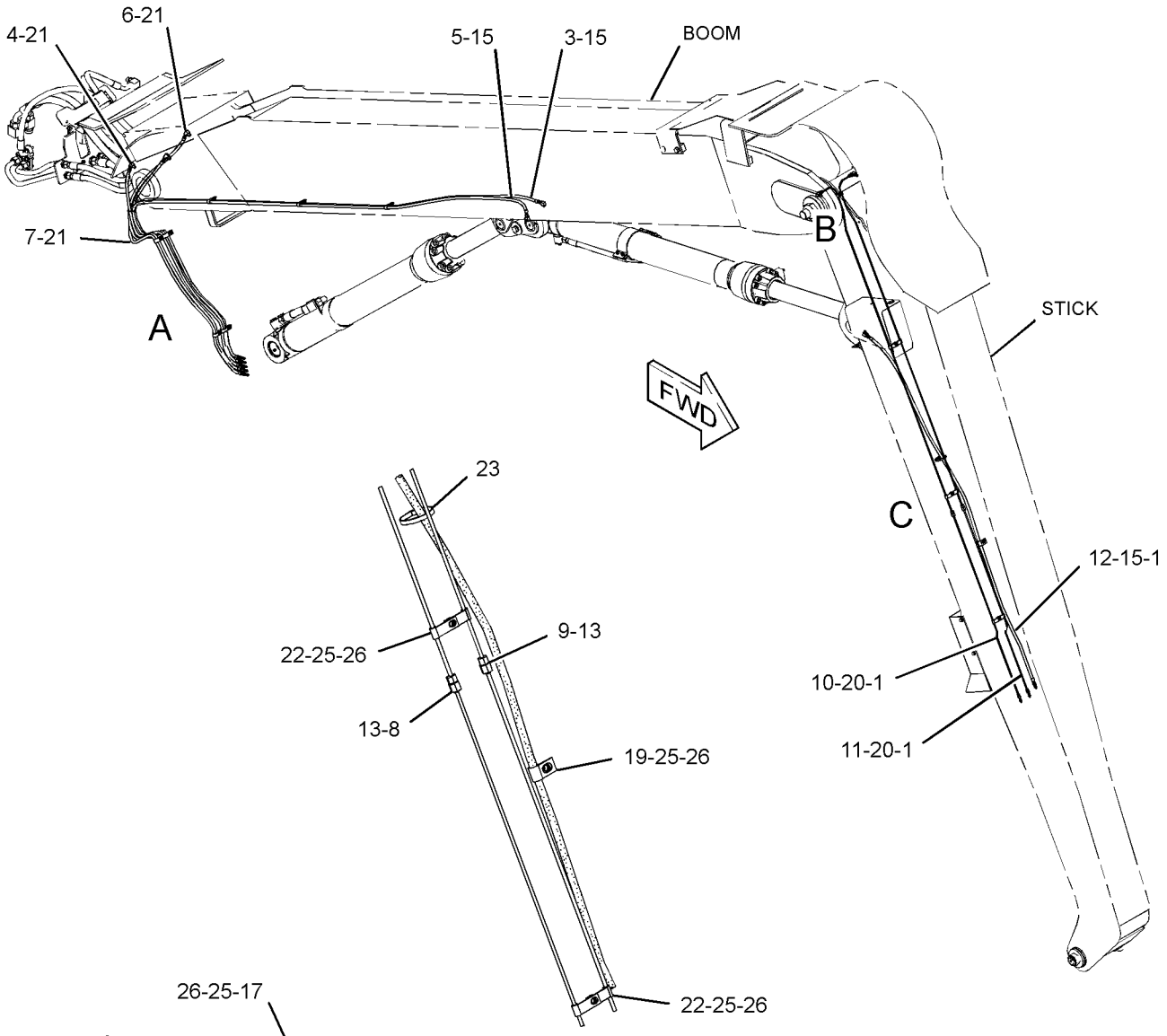

VIEW OF AREA C

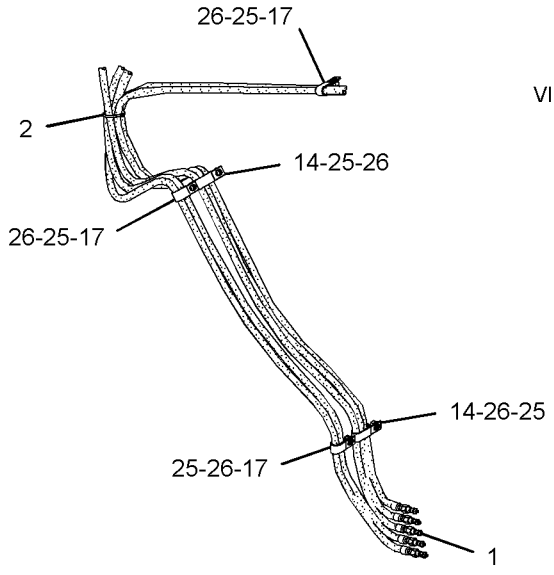

VIEW OF AREA A

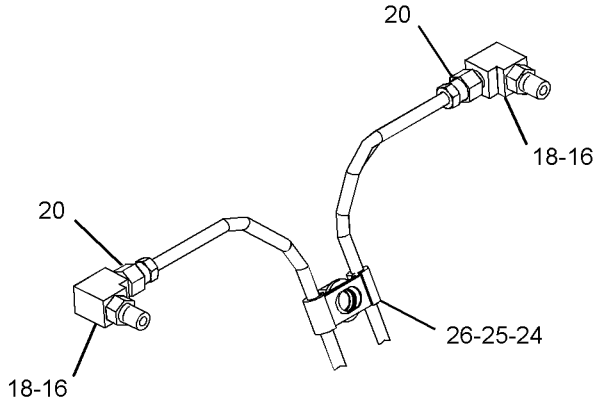

VIEW OF AREA B

GRAPHIC #1 **<END>** g02727450

380-0816 LINES GP-GREASE

S/N: F7B1-UP

PART OF 379-5870 LINKAGE AR-FELLING HEAD, 379-5860 LINKAGE AR-INTERMITTENT SAW

AN ATTACHMENT

SMCS-7510 **i04461405**

NOTE	REF NO	GRAPHIC REF	PART NUMBER	QTY	PART NAME 1 2 3 4 5 6 (PRODUCT LEVEL)	SEE PAGE
	1	1	**3B-8489**	7	FITTING-GREASE	
I	2	1	**334-6600**	2	HOSE AS	
I	3	1	**334-6601**	1	HOSE AS	
Y	4	1	*380-0817*	1	LINES GP-GREASE (BOOM)	422
	5	1	**2R-1939**	2	CLIP	
	6	1	**3B-8822**	2	ELBOW	
	7	1	**4M-5317**	1	BUSHING-REDUCING	
	8	1	**6K-6967**	2	ADAPTER-PIPE	
	9	1	**8T-4121**	2	WASHER-HARD (11X21X2.5-MM THK)	
M	10	1	**8T-4133**	2	NUT (M10X1.5-THD)	

I-REFER TO HYDRAULIC INFORMATION SYSTEM
M-METRIC PART
Y-SEPARATE ILLUSTRATION

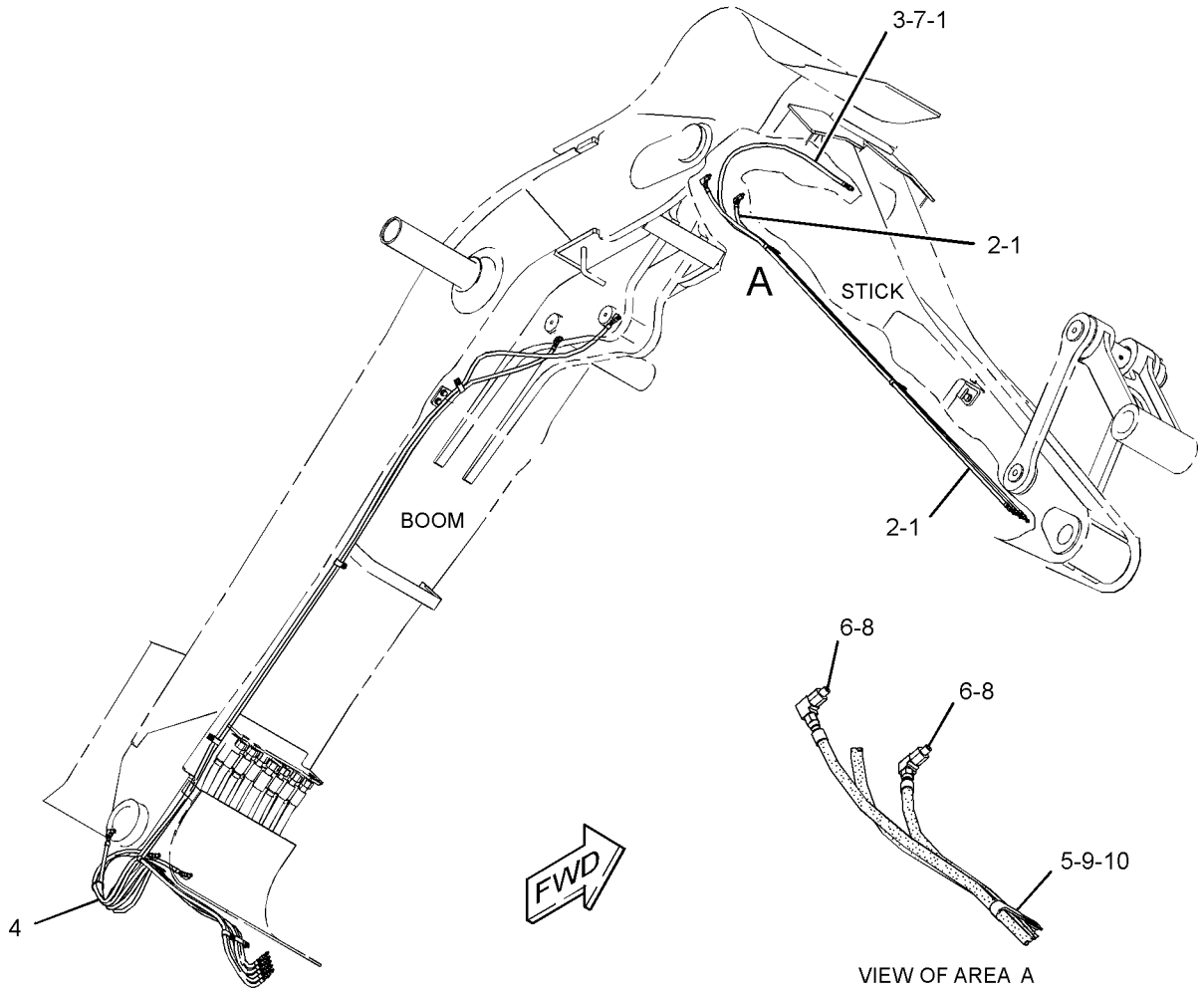

GRAPHIC #1 **<END>** g02736496

380-0817 LINES GP-GREASE–BOOM

S/N: F7B1-UP
PART OF 380-0816 LINES GP-GREASE
AN ATTACHMENT

SMCS-7510 **i04461409**

NOTE	REF NO	GRAPHIC REF	PART NUMBER	QTY	PART NAME 1 2 3 4 5 6 (PRODUCT LEVEL)	SEE PAGE
	1	1	**3B-8489**	6	FITTING-GREASE	
	2	1	**3S-2093**	1	STRAP-CABLE	
I	3	1	**240-0333**	1	HOSE AS	
I	4	1	**240-0334**	1	HOSE AS	
I	5	1	**240-0335**	1	HOSE AS	
I	6	1	**240-0336**	2	HOSE AS	
	7	1	**2R-1939**	2	CLIP	
	8	1	**3B-6552**	2	ELBOW-PIPE	
	9	1	**4D-6466**	5	CLIP	
	10	1	**6V-4245**	3	ELBOW	
	11	1	**8T-4121**	7	WASHER-HARD (11X21X2.5-MM THK)	
M	12	1	**8T-4133**	7	NUT (M10X1.5-THD)	

I-REFER TO HYDRAULIC INFORMATION SYSTEM
M-METRIC PART

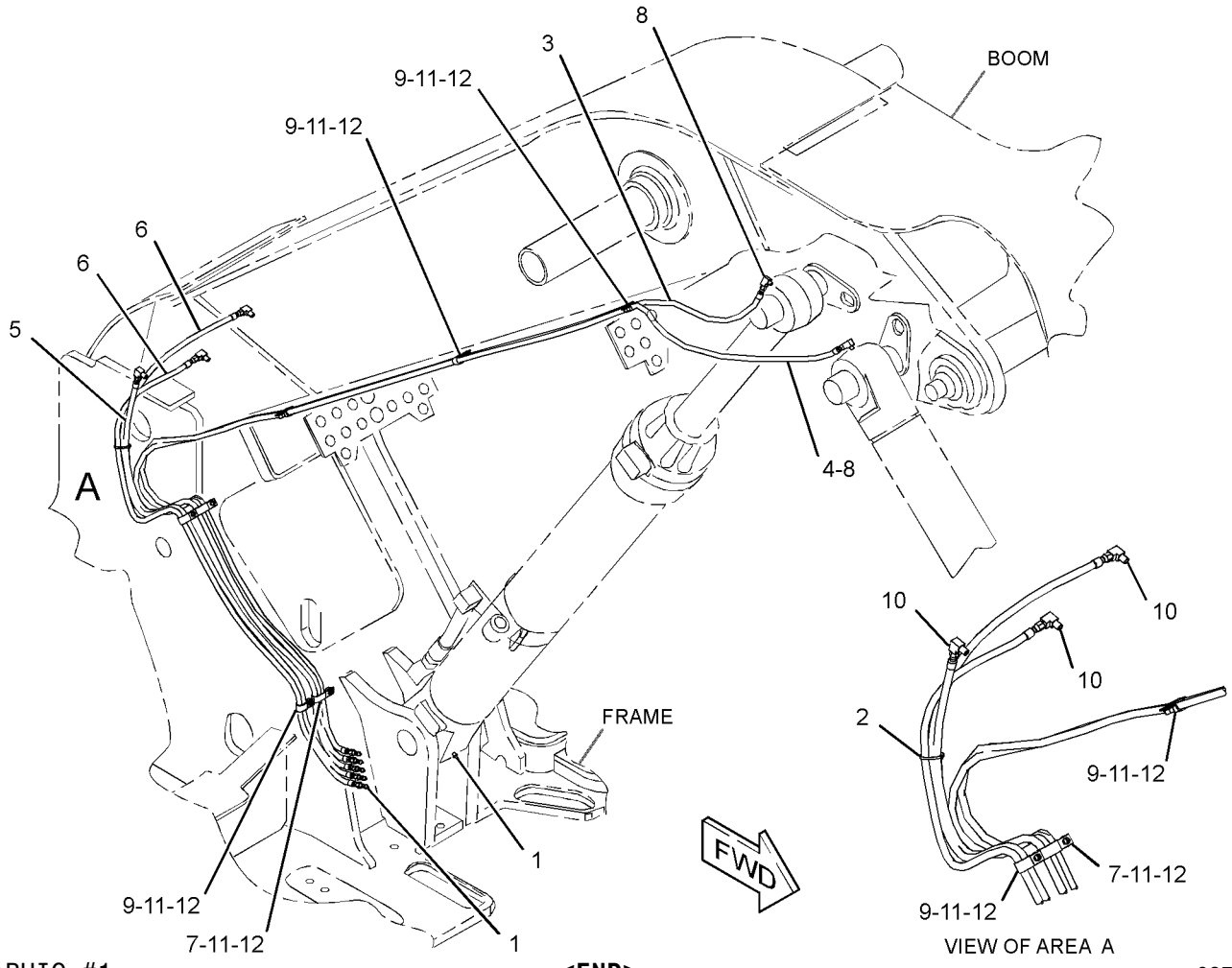

GRAPHIC #1 **<END>** g02737017

379-5870 LINKAGE AR-FELLING HEAD

S/N: F7B1-UP

CANNOT BE USED WITH 379-5860—PAGE 425, 376-8000—PAGE 424, 373-6571—PAGE 299, 373-6573—PAGE 300

AN ATTACHMENT

SMCS-6000 **i05106474**

NOTE	REF NO	GRAPHIC REF	PART NUMBER	QTY	PART NAME 1 2 3 4 5 6 (PRODUCT LEVEL)	SEE PAGE
	1	1	**265-0830**	1	FILM-INSTRUCTION (JOYSTICK CONTROL, PATTERN 1) (FELLER BUNCHER)	
Y	2	1	*378-8870*	1	LINES GP-FRONT	309
Y	3	1	*379-5857*	1	BOOM GP	416
Y	4	1	*379-5858*	1	CYLINDER AR-HYDRAULIC	266
Y	5	1	*379-5868*	1	LINES GP-STICK	336
Y	6	1	*379-5869*	1	LINES GP-BOOM	303
	7	1	*379-6989*	1	GUARD GP-LINES	
M		1	**8T-4183**	5	BOLT (M12X1.75X40-MM)	
		1	**8T-4223**	5	WASHER-HARD (13.5X25.5X3-MM THK)	
		1	**362-3853**	1	PLATE	
		1	**392-7639**	1	FLAP	
Y	8	1	*380-0812*	1	STICK GP (FELLING HEAD)	430
Y	9	1	*380-0813*	1	WIRING GP-BOOM	169
Y	10	1	*380-0815*	1	LINKAGE GP-FELLING HEAD	426
Y	11	1	*380-0816*	1	LINES GP-GREASE (BOOM, STICK)	421

M-METRIC PART
Y-SEPARATE ILLUSTRATION

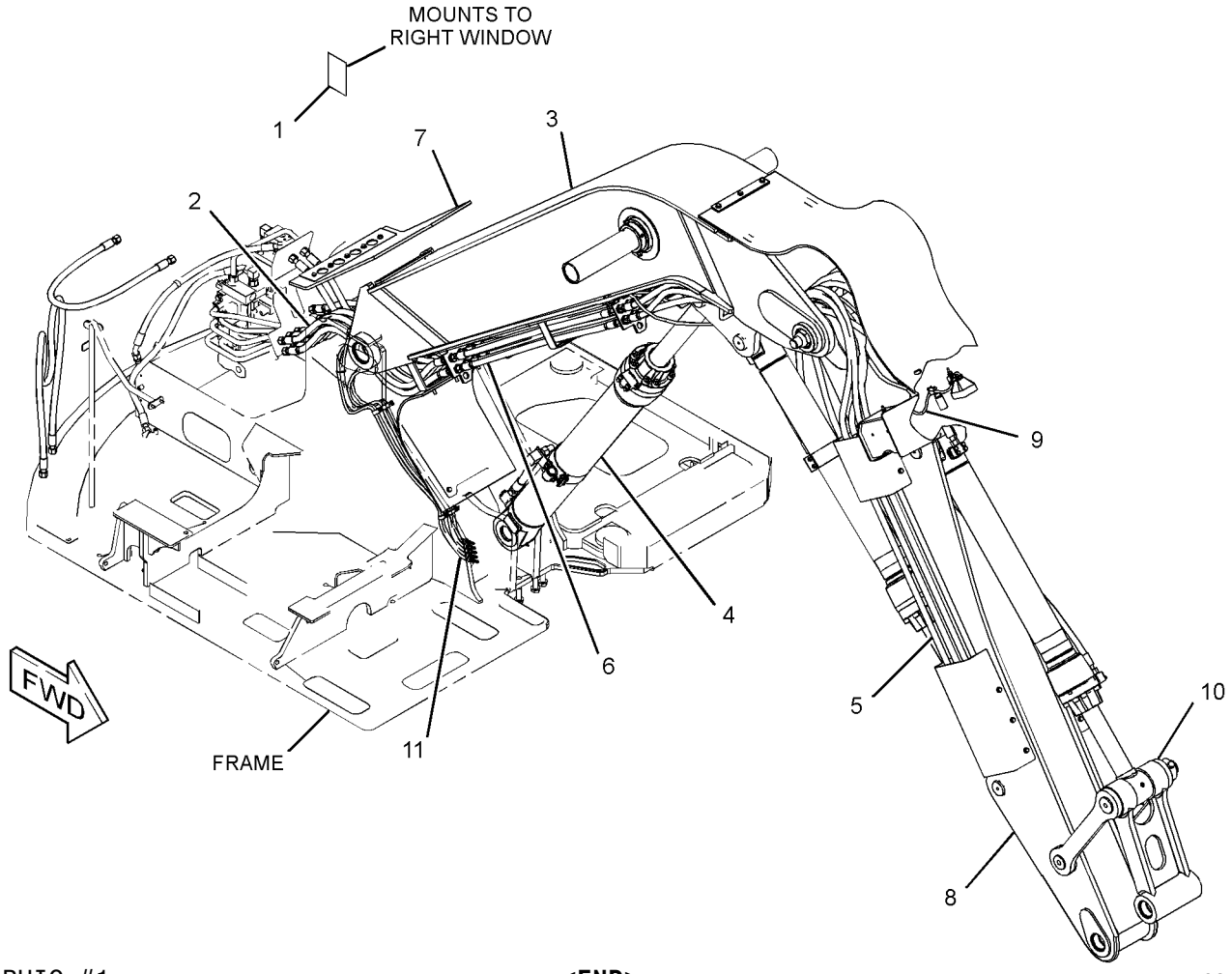

GRAPHIC #1 **<END>** g03159028

376-8000 LINKAGE AR-HARVESTER HEAD—LONG

S/N: F7B1-UP

CANNOT BE USED WITH 379-5860—PAGE 425, 379-5870—PAGE 423, 373-6575—PAGE 297, 373-6573—PAGE 300

AN ATTACHMENT

SMCS-6000 **i05106509**

NOTE	REF NO	GRAPHIC REF	PART NUMBER	QTY	PART NAME 1 2 3 4 5 6 (PRODUCT LEVEL)	SEE PAGE
	1	1	**265-0830**	1	FILM-INSTRUCTION (JOYSTICK CONTROL, PATTERN 1) (FELLER BUNCHER)	
Y	2	1	*375-0165*	1	LINES GP-HYDRAULIC (HARVESTER)	312
Y	3	1	*376-7987*	1	STICK GP	428
Y	4	1	*376-7991*	1	CYLINDER AR-HYDRAULIC	265
Y	5	1	*376-7999*	1	BOOM GP	414
Y	6	1	*378-8867*	1	LINES GP-GREASE	419
Y	7	1	*382-0646*	1	WIRING GP-BOOM (FLOODLIGHTS)	170
Y	8	1	*383-6280*	1	LINES GP-BOOM	305
Y	9	1	*383-6290*	1	LINES GP-STICK	338

Y-SEPARATE ILLUSTRATION

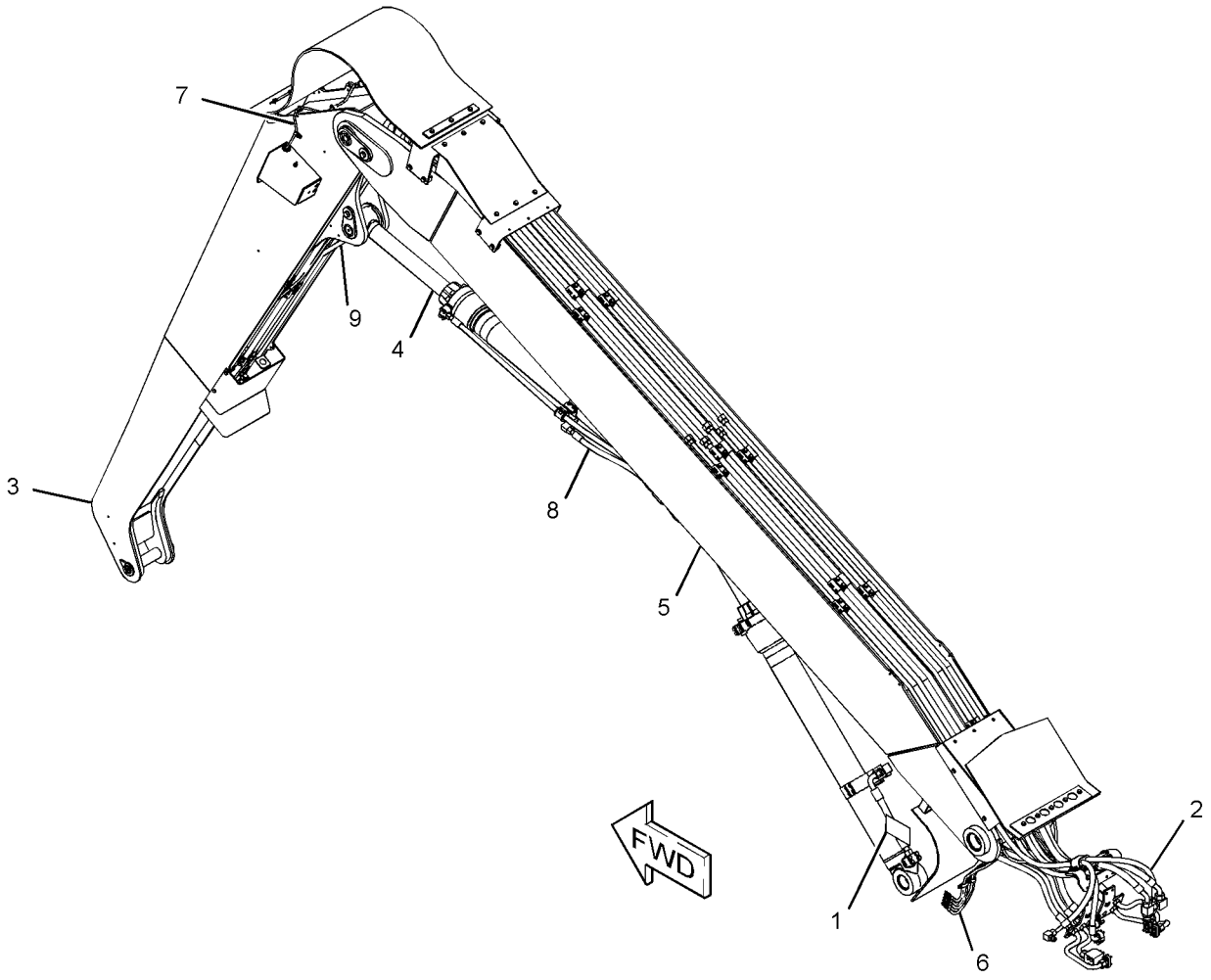

GRAPHIC #1 **<END>** g02734918

379-5860 LINKAGE AR-INTERMITTENT SAW

S/N: F7B1-UP

CANNOT BE USED WITH 379-5870—PAGE 423, 376-8000—PAGE 424, 373-6571—PAGE 299, 373-6575—PAGE 297, 373-6577—PAGE 298

AN ATTACHMENT

SMCS-6000 **i05106533**

NOTE	REF NO	GRAPHIC REF	PART NUMBER	QTY	PART NAME 1 2 3 4 5 6 (PRODUCT LEVEL)	SEE PAGE
	1	1	**265-0830**	1	FILM-INSTRUCTION (JOYSTICK CONTROL, PATTERN 1) (FELLER BUNCHER)	
Y	2	1	*378-8871*	1	LINES GP-FRONT	310
Y	3	1	*379-5856*	1	LINES GP-STICK	334
Y	4	1	*379-5857*	1	BOOM GP	416
Y	5	1	*379-5858*	1	CYLINDER AR-HYDRAULIC	266
Y	6	1	*379-5861*	1	LINES GP-BOOM	301
	7	1	*379-6989*	1	GUARD GP-LINES	
M		1	**8T-4183**	5	BOLT (M12X1.75X40-MM)	
		1	**8T-4223**	5	WASHER-HARD (13.5X25.5X3-MM THK)	
		1	**362-3853**	1	PLATE	
		1	**392-7639**	1	FLAP	
Y	8	1	*380-0812*	1	STICK GP (FELLING HEAD)	430
Y	9	1	*380-0813*	1	WIRING GP-BOOM	169
Y	10	1	*380-0815*	1	LINKAGE GP-FELLING HEAD	426
Y	11	1	*380-0816*	1	LINES GP-GREASE (BOOM, STICK)	421

M-METRIC PART
Y-SEPARATE ILLUSTRATION

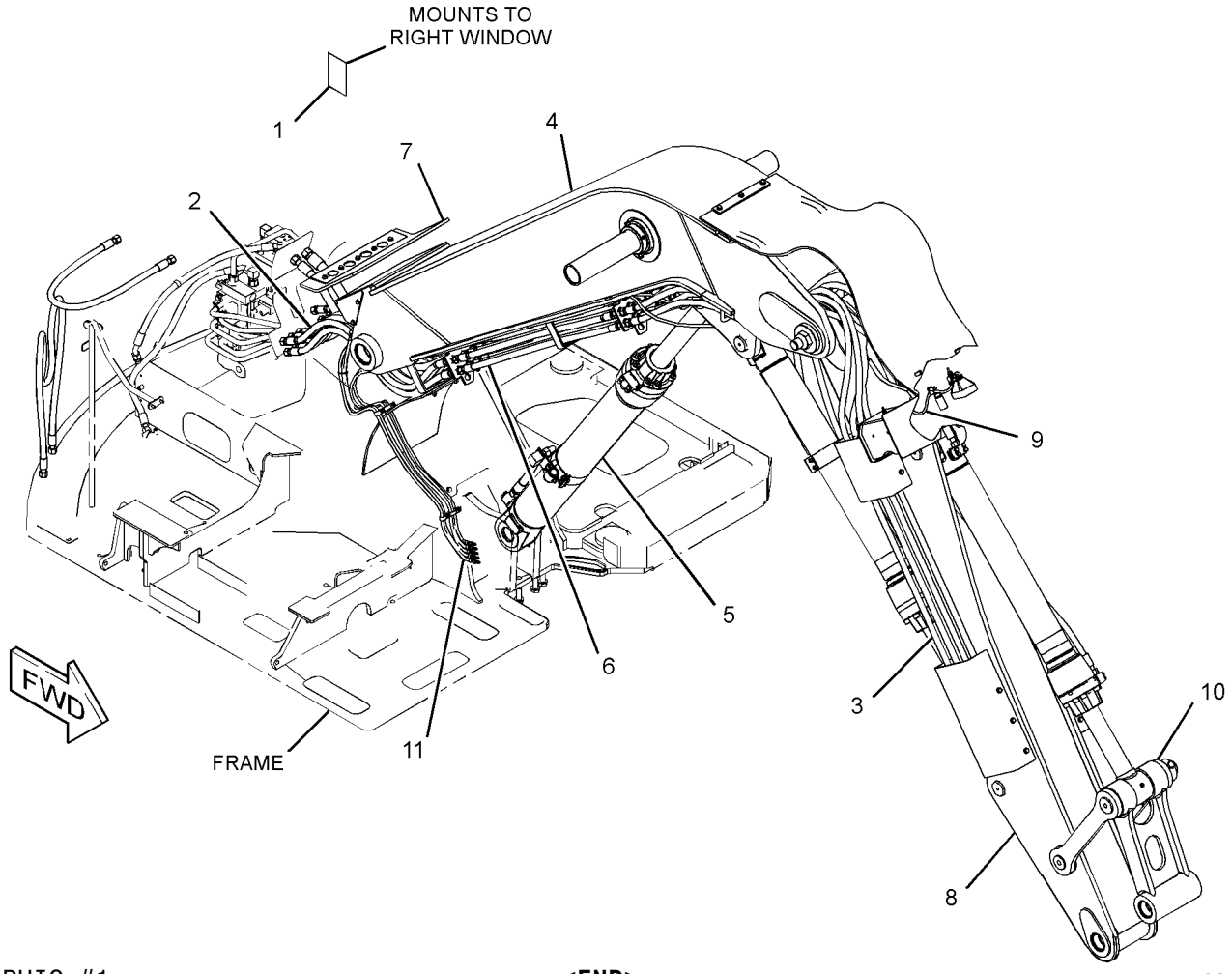

GRAPHIC #1 **<END>** g03157550

380-0815 LINKAGE GP-FELLING HEAD

S/N: F7B1-UP

PART OF 379-5870 LINKAGE AR-FELLING HEAD, 379-5860 LINKAGE AR-INTERMITTENT SAW

AN ATTACHMENT

SMCS-6000 **i04461401**

NOTE	REF NO	GRAPHIC REF	PART NUMBER	QTY	PART NAME 1 2 3 4 5 6 (PRODUCT LEVEL)	SEE PAGE
B	1	1	**7Y-2498**	2	SHIM (1.6-MM THK)	
B	2	1	**093-0083**	2	SHIM (1-MM THK)	
B	3	1	**093-0086**	2	SHIM (1-MM THK)	
B	4	1	**093-0115**	2	SHIM (2-MM THK)	
B	5	1	**093-0118**	2	SHIM (2-MM THK)	
	6	1	**212-8075**	1	LINK AS	
	6A	1	**7Y-3427**	4	BUSHING	
	7	1	**213-0094**	1	LINK AS	
		1	**213-0095**	1	LINK	
	8	1	**213-0095**	1	LINK	
	9	1	**186-5730**	1	PIN	
	10	1	**186-5732**	1	PIN	
	11	1	**096-0854**	6	SEAL-LIP TYPE	
B	12	1	**7Y-2496**	2	SHIM (1.6-MM THK)	
M	13	1	**8T-4131**	4	NUT (M20X2.5-THD)	
M	14	1	**8T-4170**	2	BOLT (M20X2.5X150-MM)	

B-USE AS REQUIRED
M-METRIC PART

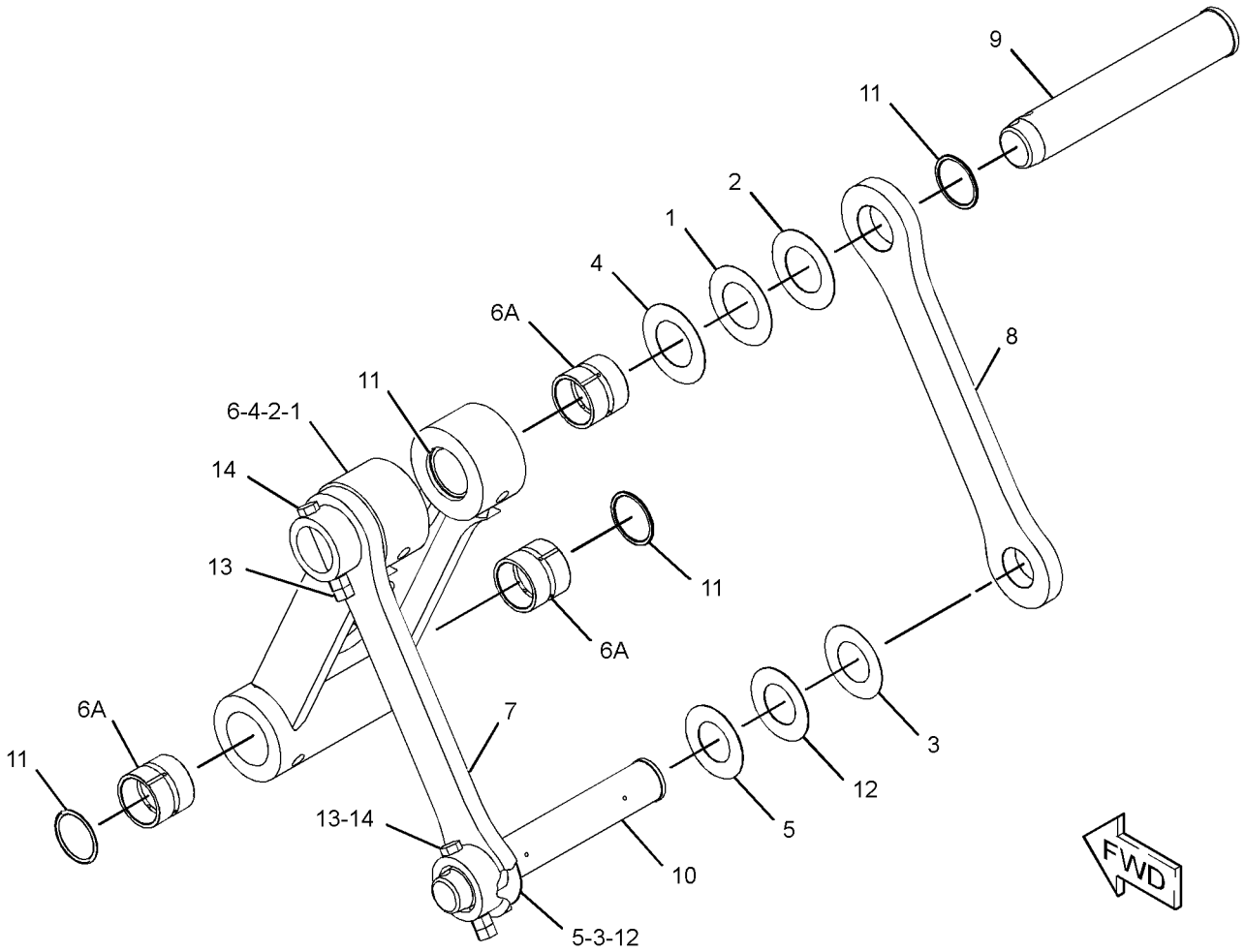

GRAPHIC #1 **<END>** g02735940

376-7986 STICK & BEARING AS

S/N: F7B1-UP
PART OF 376-7987 STICK GP
AN ATTACHMENT

SMCS-6502 **i04524791**

NOTE	REF NO	GRAPHIC REF	PART NUMBER	QTY	PART NAME 1 2 3 4 5 6 (PRODUCT LEVEL)	SEE PAGE
	1	1	*376-7985*	1	STICK AS	
		1	**2R-1920**	3	BLOCK	
		1	**7Y-4090**	8	PLATE	
		1	**117-5604**	8	STUD	
		1	**212-8879**	1	BOSS (M20X2.5X25-MM)	
	2	1	**7Y-2397**	2	BUSHING	

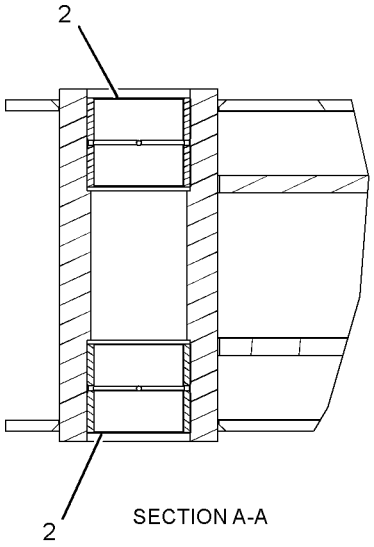

SECTION A-A

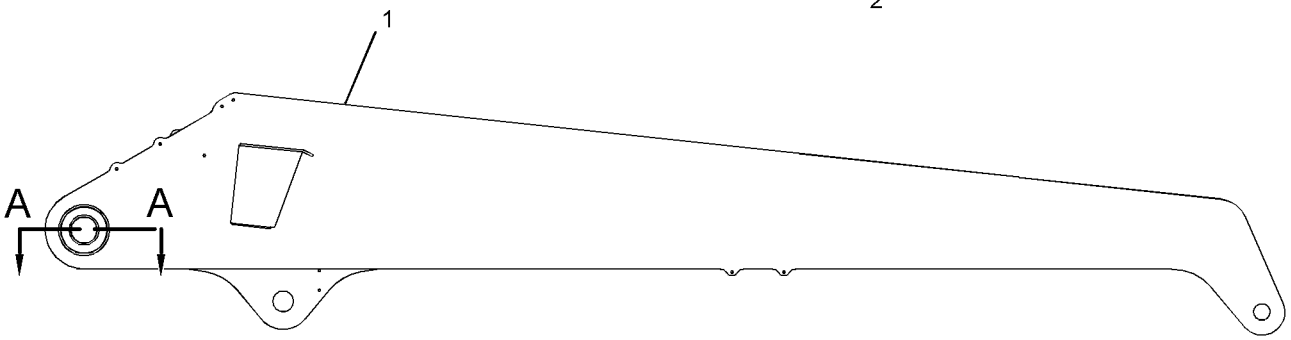

RIGHT SIDE VIEW

GRAPHIC #1 **<END>** g02727093

IMPLEMENTS

376-7987 STICK GP

S/N: F7B1-UP
PART OF 376-8000 LINKAGE AR-HARVESTER HEAD
AN ATTACHMENT

SMCS-6502 **i04524790**

NOTE	REF NO	GRAPHIC REF	PART NUMBER	QTY	PART NAME 1 2 3 4 5 6 (PRODUCT LEVEL)	SEE PAGE
	1	1	**3V-9744**	1	SPACER	
	2	1	**7Y-1459**	1	WASHER (66X115X9-MM THK)	
B	3	1	**7Y-2498**	2	SHIM (1.6-MM THK)	
B	4	1	**093-0083**	2	SHIM (1-MM THK)	
B	5	1	**093-0115**	2	SHIM (2-MM THK)	
	6	1	**107-3157**	1	WASHER (22X76.2X6-MM THK)	
	7	1	**147-2383**	1	SPACER (39X110X12-MM THK)	
	8	1	**212-8085**	1	PIN AS	
	9	1	**253-0751**	1	PIN AS	
	10	1	**334-6269**	1	PLATE	
	11	1	**9X-8256**	2	WASHER (6.6X12X2-MM THK)	
	12	1	**335-8372**	1	PLATE	
Y	13	1	**376-7986**	1	STICK & BEARING AS	427
	14	1	**383-1494**	1	PLATE	
	15	1	**383-8555**	1	PLATE	
	16	1	**384-0222**	1	COVER AS	
	17	1	**2J-3950**	1	LOCKNUT (1-1/2-12-THD)	
M	18	1	**7X-2619**	2	BOLT (M6X1X10-MM)	
	19	1	**7X-7729**	4	WASHER (11X25X3-MM THK)	
	20	1	**8T-4121**	6	WASHER-HARD (11X21X2.5-MM THK)	
	21	1	**8T-4123**	1	WASHER (22X35X3.5-MM THK)	
M	22	1	**8T-4136**	6	BOLT (M10X1.5X25-MM)	
M	23	1	**8T-4183**	3	BOLT (M12X1.75X40-MM)	
M	24	1	**8T-4195**	4	BOLT (M10X1.5X30-MM)	
	25	1	**8T-4223**	5	WASHER-HARD (13.5X25.5X3-MM THK)	
M	26	1	**8T-4780**	1	BOLT (M20X2.5X30-MM)	
M	27	1	**8T-4910**	2	BOLT (M12X1.75X60-MM)	
	28	1	**9X-4597**	2	SEAL-LIP TYPE	

B-USE AS REQUIRED
M-METRIC PART
Y-SEPARATE ILLUSTRATION

376-7987 **STICK GP** *(contd.)* **i04524790**

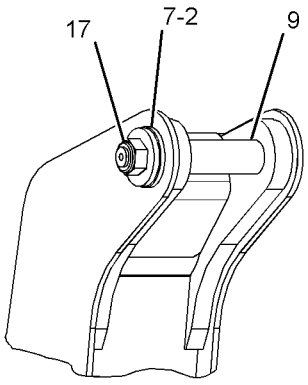

VIEW OF AREA A

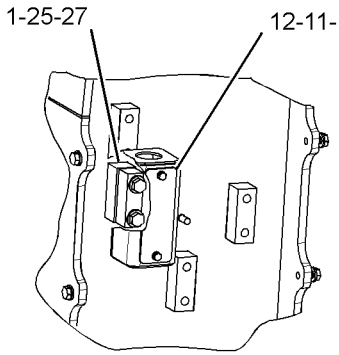

VIEW OF AREA B
(COVER REMOVED FOR CLARITY)

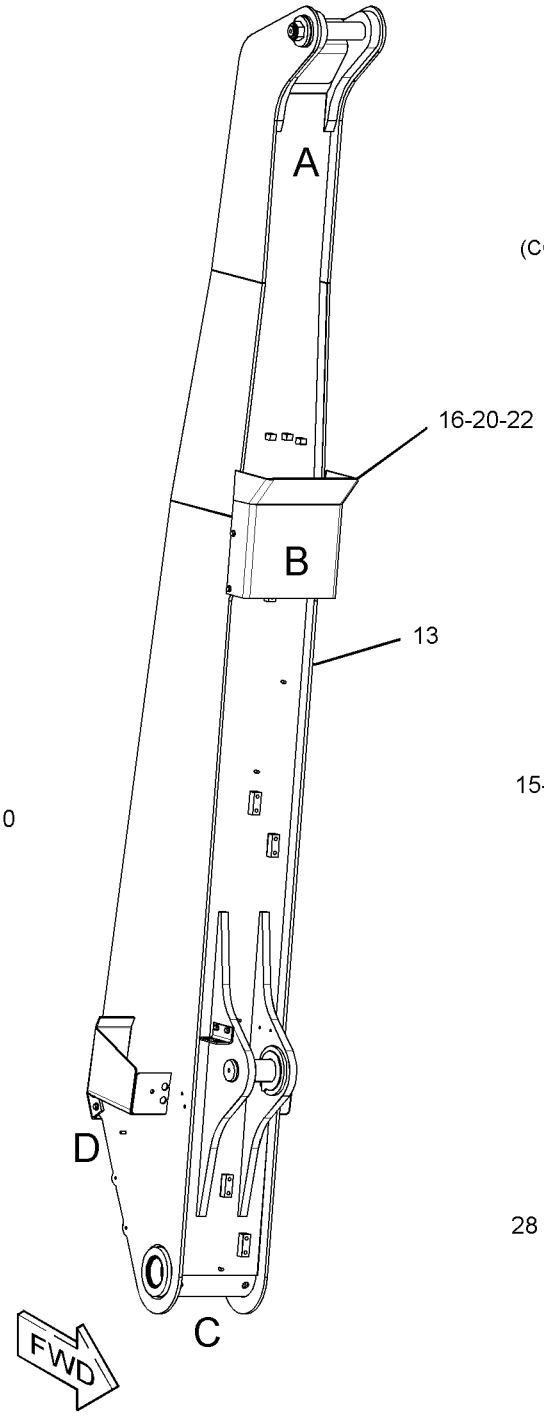

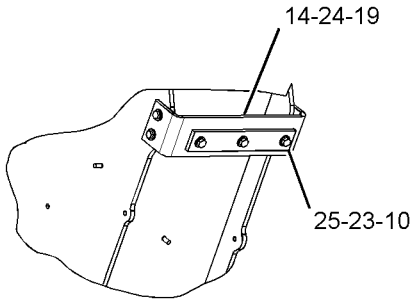

VIEW OF AREA D 180°

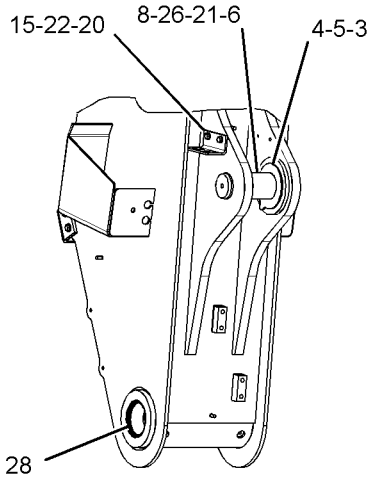

VIEW OF AREA C

GRAPHIC #1 **<END>** g02728194

IMPLEMENTS

380-0812 STICK GP

S/N: F7B1-UP

PART OF 379-5870 LINKAGE AR-FELLING HEAD, 379-5860 LINKAGE AR-INTERMITTENT SAW

AN ATTACHMENT

SMCS-6502 **i04461393**

NOTE	REF NO	GRAPHIC REF	PART NUMBER	QTY	PART NAME 1 2 3 4 5 6 (PRODUCT LEVEL)	SEE PAGE
B	1	1	**7Y-2498**	4	SHIM (1.6-MM THK)	
B	2	1	**093-0083**	4	SHIM (1-MM THK)	
B	3	1	**093-0115**	4	SHIM (2-MM THK)	
	4	1	**093-1434**	2	SEAL-LIP TYPE	
	5	1	**107-3157**	2	WASHER (22X76.2X6-MM THK)	
	6	1	**334-6269**	1	PLATE	
	7	1	**347-6971**	1	STICK & BEARING AS	
	7A	1	**7Y-2397**	2	BUSHING	
	7B	1	**7Y-3427**	2	BUSHING	
	7C	1	**107-9845**	2	BUSHING	
	8	1	**347-6982**	1	PLATE	
	9	1	**347-6983**	1	PLATE	
	10	1	**347-6984**	2	PIN AS	
	11	1	**347-6986**	2	PLATE AS	
	12	1	**348-4444**	2	PLATE	
	13	1	**349-4192**	2	PLATE AS	
	14	1	**096-0854**	2	SEAL-LIP TYPE	
M	15	1	**7X-2553**	16	BOLT (M16X2X40-MM)	
	16	1	**8T-4123**	2	WASHER (22X35X3.5-MM THK)	
M	17	1	**8T-4183**	3	BOLT (M12X1.75X40-MM)	
M	18	1	**8T-4192**	18	BOLT (M12X1.75X25-MM)	
	19	1	**8T-4223**	21	WASHER-HARD (13.5X25.5X3-MM THK)	
M	20	1	**8T-4780**	2	BOLT (M20X2.5X30-MM)	
	21	1	**9X-4597**	2	SEAL-LIP TYPE	
	22	1	**9X-8257**	16	WASHER (17.5X30X3.5-MM THK)	

B-USE AS REQUIRED
M-METRIC PART

380-0812 **STICK GP** *(contd.)* **i04461393**

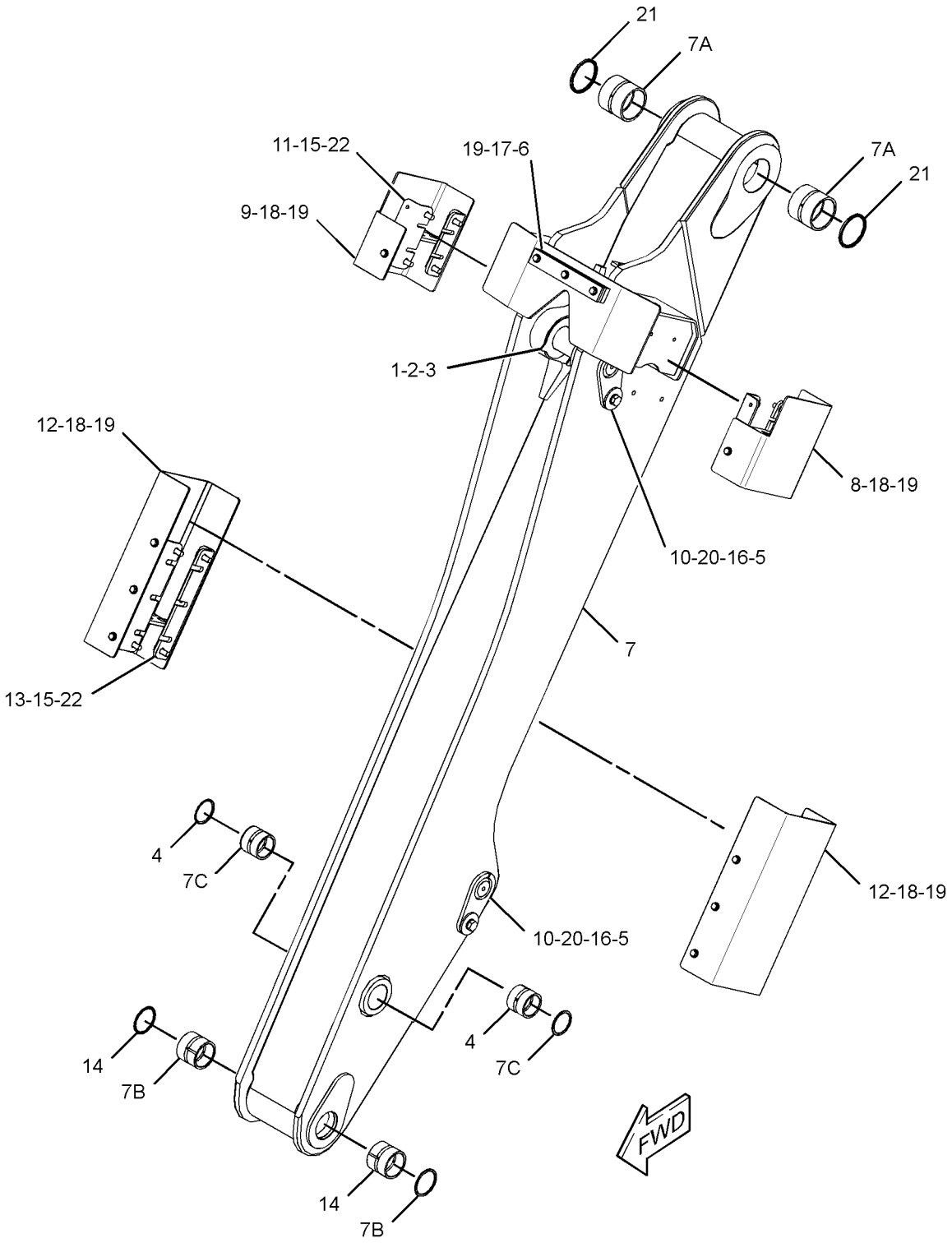

GRAPHIC #1 **<END>** g02736937

OPERATOR STATION

365-4915 AIR CONDITIONER & MOUNTING GP

S/N: F7B1-UP
PART OF 254-5493 AIR CONDITIONER GP
TYPE 1

SMCS-7320 **i05106614**

NOTE	REF NO	GRAPHIC REF	PART NUMBER	QTY	PART NAME 1 2 3 4 5 6 (PRODUCT LEVEL)	SEE PAGE
	1	1	**112-7448**	1	FILTER ELEMENT-CAB AIR (STANDARD EFFICIENCY)	
					—OR—	
AF		1	**175-2838**	1	FILTER ELEMENT-CAB AIR (ULTRA HIGH EFFICIENCY)	
Y	2	1	*363-7129*	1	AIR CONDITIONER GP	438
	3	1	**5P-0537**	2	WASHER-HARD (7.2X14.5X2-MM THK)	
	4	1	**8T-4121**	3	WASHER-HARD (11X21X2.5-MM THK)	
M	5	1	**8T-4137**	3	BOLT (M10X1.5X20-MM)	
M	6	1	**8T-4138**	2	BOLT (M6X1X20-MM)	

A-NOT PART OF THIS GROUP
F-NOT SHOWN
M-METRIC PART
Y-SEPARATE ILLUSTRATION

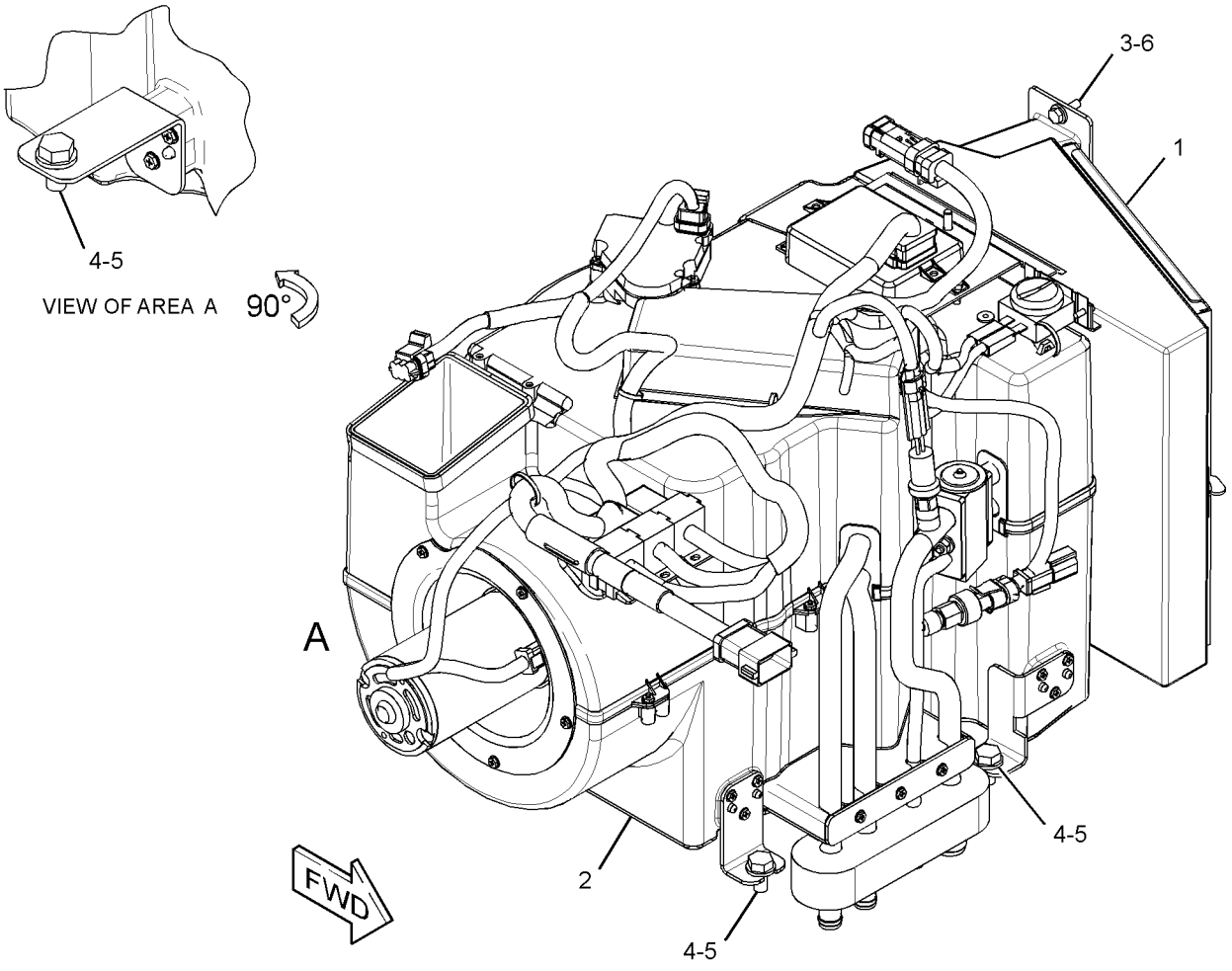

GRAPHIC #1 **<END>** g02361277

365-4915 AIR CONDITIONER & MOUNTING GP

S/N: F7B1-UP

PART OF 254-5493 AIR CONDITIONER GP

TYPE 2

SMCS-7320 **i05115594**

NOTE	REF NO	GRAPHIC REF	PART NUMBER	QTY	PART NAME 1 2 3 4 5 6 (PRODUCT LEVEL)	SEE PAGE
	1	1	**112-7448**	1	FILTER ELEMENT-CAB AIR (STANDARD EFFICIENCY)	
					—OR—	
AF			**175-2838**	1	FILTER ELEMENT-CAB AIR (ULTRA HIGH EFFICIENCY)	
M	2	1	**8T-4138**	2	BOLT (M6X1X20-MM)	
CY	3	1	*372-5222*	1	AIR CONDITIONER GP	440
	4	1	**5P-0537**	2	WASHER-HARD (7.2X14.5X2-MM THK)	
	5	1	**8T-4121**	3	WASHER-HARD (11X21X2.5-MM THK)	
M	6	1	**8T-4137**	3	BOLT (M10X1.5X20-MM)	

A-NOT PART OF THIS GROUP
C-CHANGE FROM PREVIOUS TYPE
F-NOT SHOWN
M-METRIC PART
Y-SEPARATE ILLUSTRATION

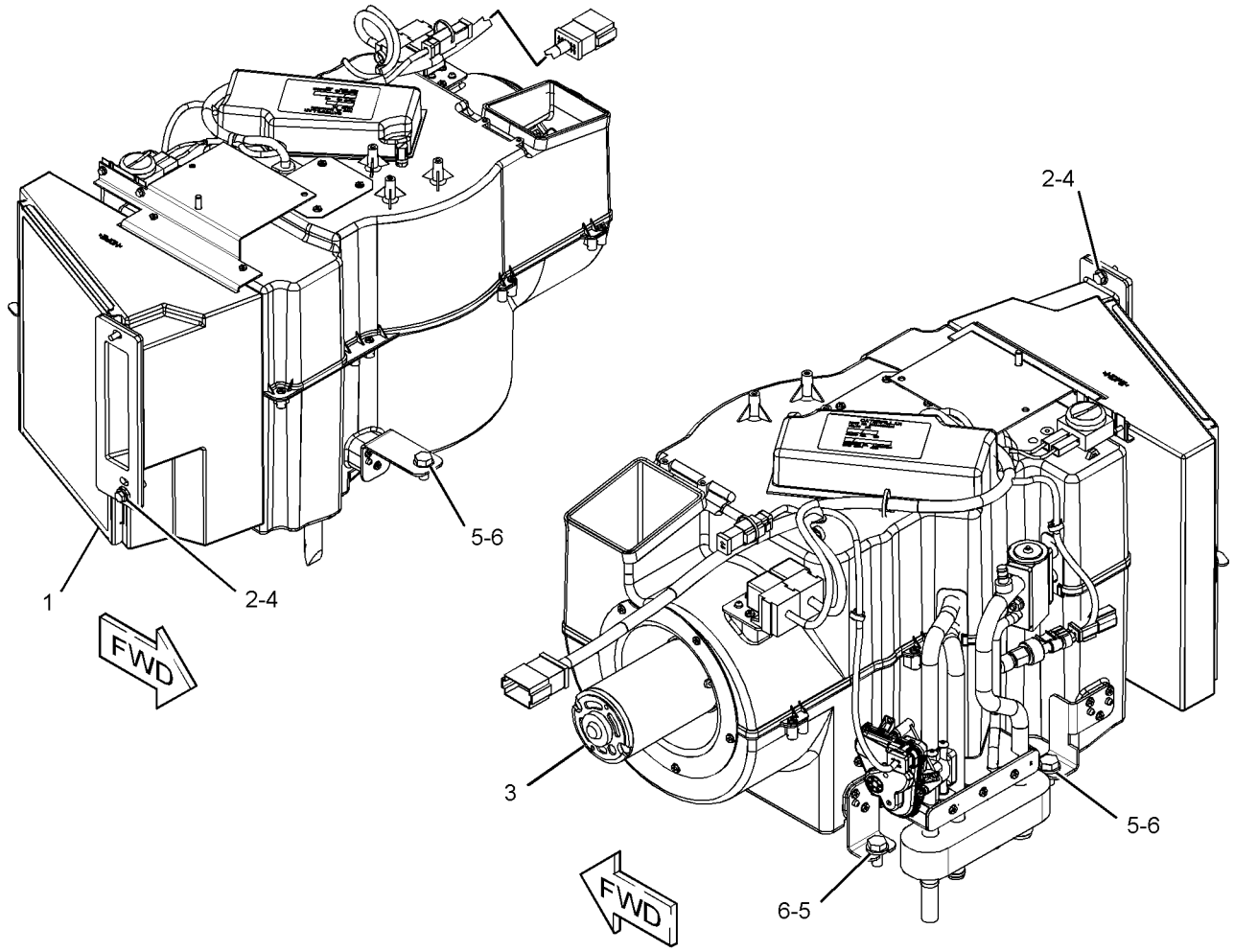

GRAPHIC #1 **<END>** g02728436

OPERATOR STATION

250-0398 AIR CONDITIONER GP

S/N: F7B1-UP

PART OF 363-7129 AIR CONDITIONER GP

SMCS-7320 **i03471344**

NOTE	REF NO	GRAPHIC REF	PART NUMBER	QTY	PART NAME 1 2 3 4 5 6 (PRODUCT LEVEL)	SEE PAGE
	1	1	**2R-8159**	2	BOLT-SOCKET HEAD (10-32X1.5-IN)	
	2	1	**037-4838**	1	CLAMP	
	3	1	**133-8714**	1	GROMMET	
	4	1	**177-6687**	1	COIL AS-HEATER	
	5	1	**177-6689**	1	PLATE	
	6	1	**177-6690**	1	PLATE	
	7	1	**177-6692**	1	PLATE	
	8	1	**177-6694**	1	PLATE	
	9	1	**177-6696**	2	GROMMET	
	10	1	**177-6698**	4	GASKET	
	11	1	**177-6700**	2	TUBE-DRAIN	
	12	1	**177-6701**	1	GASKET	
	13	1	**177-6707**	1	HOUSING	
	14	1	**177-6708**	1	COVER	
	15	1	**177-6710**	1	RING	
	16	1	**177-6726**	1	TUBE	
	17	1	**177-6727**	1	ACTUATOR	
	18	1	**320-1457**	1	DOOR AS	
	19	1	**177-6733**	1	DOOR AS	
	20	1	**179-4673**	1	GASKET	
	21	1	**179-4674**	1	GASKET	
	22	1	**179-4682**	2	LEVER	
	23	1	**179-4683**	1	ROD	
	24	1	**179-6136**	1	GASKET	
M	25	1	**187-7719**	30	SCREW-HEX FLANGE (M5X2.24X14-MM)	
	26	1	**189-2456**	5	CLIP	
	27	1	**191-0979**	1	WHEEL-BLOWER	
	28	1	**193-0702**	1	GASKET	
	29	1	**228-9043**	1	COIL AS-EVAPORATOR	
	30	1	**228-9044**	1	VALVE (EXPANSION)	
	31	1	**288-1556**	1	MOTOR AS-FAN	
	32	1	**228-9539**	1	PLATE	
	33	1	**284-4177**	1	TUBE AS	
	34	1	**251-6773**	1	BRACKET	
	35	1	**4B-4274**	2	WASHER (5.5X13X1.2-MM THK)	
M	36	1	**5C-2890**	1	NUT (M6X1-THD)	
	37	1	**8T-4205**	1	WASHER-HARD (7.2X14.5X2-MM THK)	
	38	1	**9X-7380**	1	SEAL-O-RING	
	39	1	**9X-7381**	1	SEAL-O-RING	
	40	1	**9X-7382**	2	SEAL-O-RING	

M-METRIC PART

250-0398 AIR CONDITIONER GP *(contd.)*

i03471344

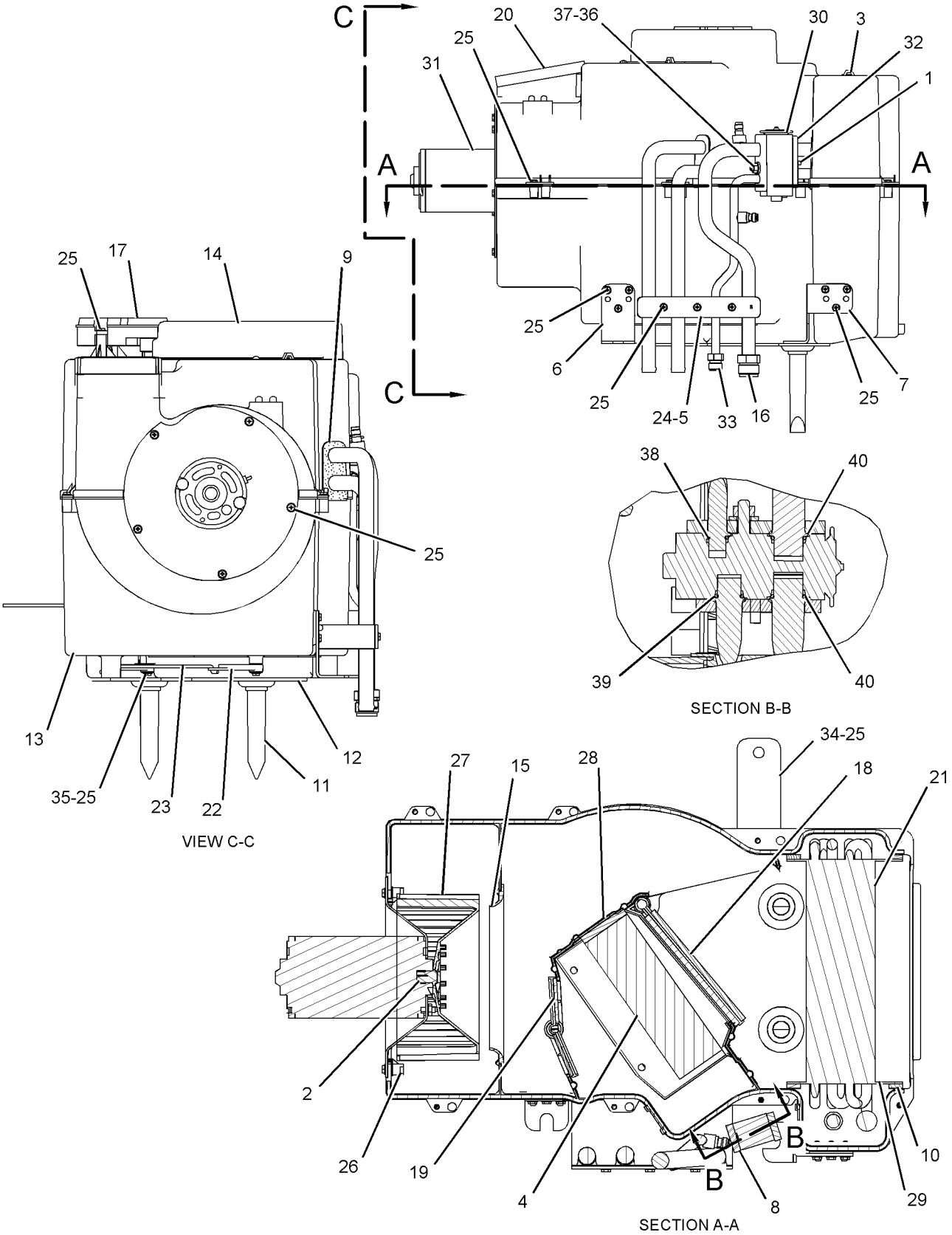

GRAPHIC #1

<END>

g01325489

OPERATOR STATION

254-5493 AIR CONDITIONER GP

S/N: F7B1-UP
PART OF 362-3893 OPERATOR AR
TYPE 1

SMCS-7320 **i04703234**

NOTE	REF NO	GRAPHIC REF	PART NUMBER	QTY	PART NAME 1 2 3 4 5 6 (PRODUCT LEVEL)	SEE PAGE
	1	1	**338-1942**	1	TIMER AS-ON DELAY (24-VOLT)	
		1	**243-4507**	1	RECEPTACLE AS-CONNECTOR (4-PIN)	
		1	**144-1636**	4	PIN-CONNECTOR (14-GA TO 18-GA)	
CY	2	1	*365-3556*	1	DUCT GP-CAB AIR	461
CY	3	1	*365-4915*	1	AIR CONDITIONER & MOUNTING GP	432
M	4	1	**5C-2890**	1	NUT (M6X1-THD)	
	5	1	**6V-7646**	1	WASHER-HARD (7.2X25X2-MM THK)	

C-CHANGE FROM PREVIOUS TYPE
M-METRIC PART
Y-SEPARATE ILLUSTRATION

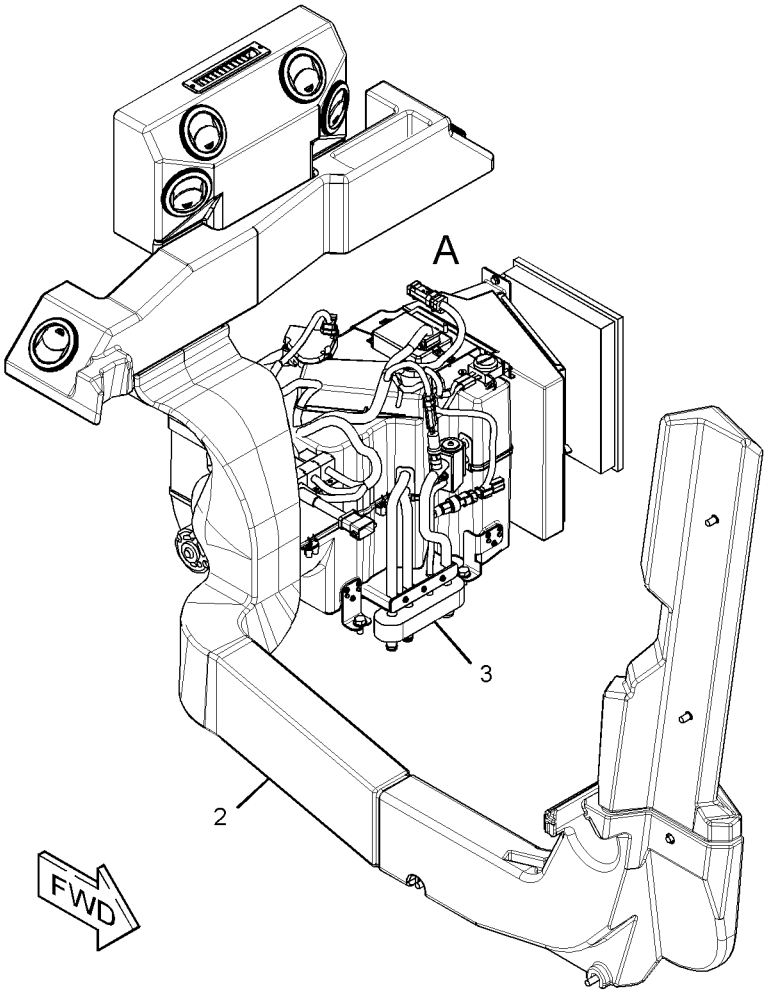

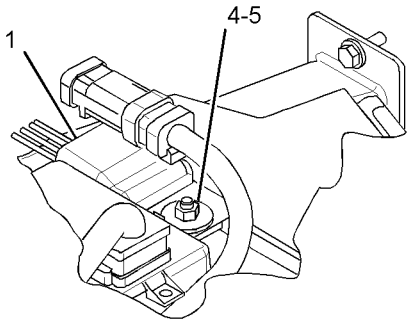

VIEW OF AREA A

GRAPHIC #1 **<END>** g02361476

OPERATOR STATION

254-5493 AIR CONDITIONER GP

S/N: F7B1-UP
PART OF 362-3893 OPERATOR AR
TYPE 2

SMCS-7320 **i04703233**

NOTE	REF NO	GRAPHIC REF	PART NUMBER	QTY	PART NAME 1 2 3 4 5 6 (PRODUCT LEVEL)	SEE PAGE
	1	1	**338-1942**	1	TIMER AS-ON DELAY (24-VOLT)	
		1	**243-4507**	1	RECEPTACLE AS-CONNECTOR (4-PIN)	
		1	**144-1636**	4	PIN-CONNECTOR (14-GA TO 18-GA)	
Y	2	1	*365-3556*	1	DUCT GP-CAB AIR	461
Y	3	1	*365-4915*	1	AIR CONDITIONER & MOUNTING GP	432
M	4	1	**5C-2890**	1	NUT (M6X1-THD)	
	5	1	**6V-7646**	1	WASHER-HARD (7.2X25X2-MM THK)	

M-METRIC PART
Y-SEPARATE ILLUSTRATION

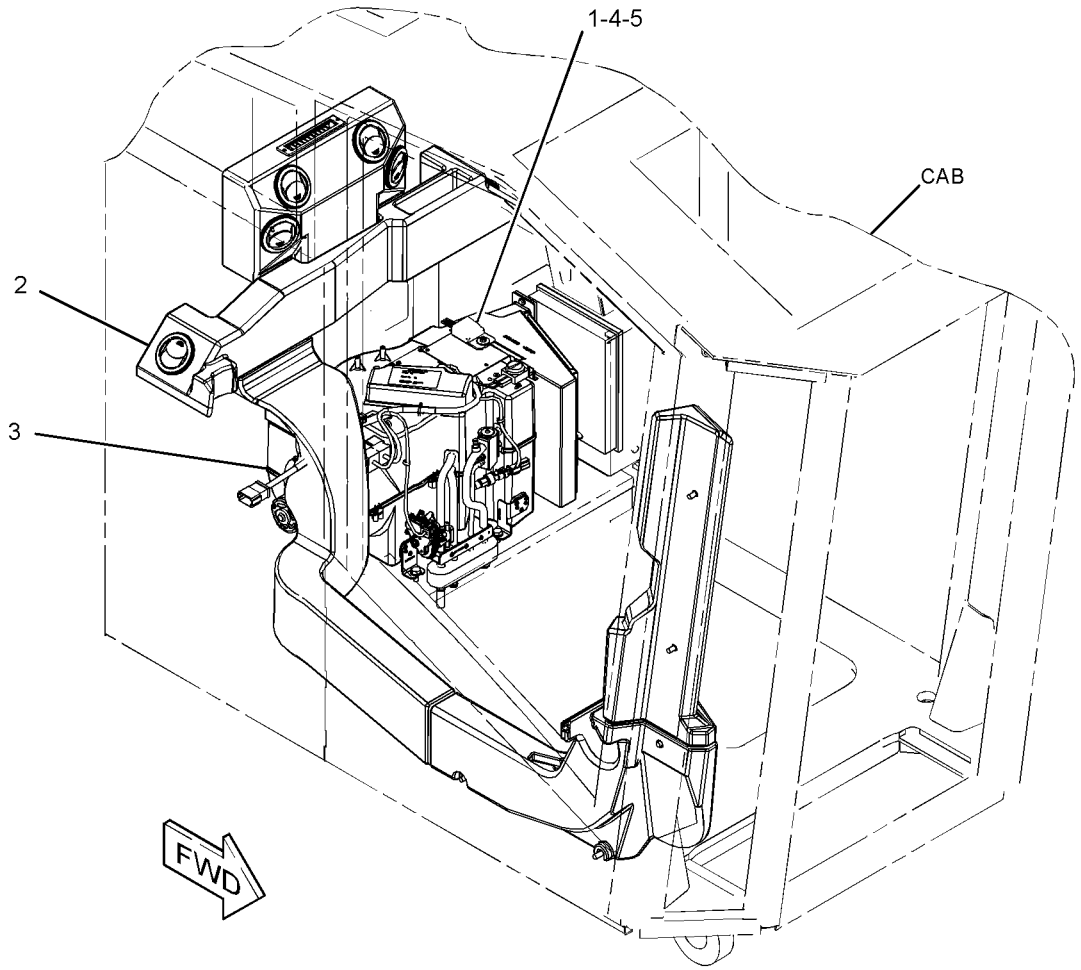

GRAPHIC #1 **<END>** g02738397

OPERATOR STATION

363-7129 AIR CONDITIONER GP

S/N: F7B1-UP

PART OF 365-4915 AIR CONDITIONER & MOUNTING GP

SMCS-7320 **i05106670**

NOTE	REF NO	GRAPHIC REF	PART NUMBER	QTY	PART NAME 1 2 3 4 5 6 (PRODUCT LEVEL)	SEE PAGE
	1	1	**3B-4501**	2	LOCKWASHER	
	2	1	**3E-5464**	1	THERMOSTAT (HVAC)	
	3	1	**3E-6477**	2	RELAY AS (24-VOLT) (AC, CONDENSER)	
	4	1	**3S-2093**	4	STRAP-CABLE	
	5	1	**8C-3756**	1	FILM-IDENTIFICATION (GROUP NO., SEQUENCE NO.)	
	6	1	**114-5333**	1	SWITCH AS-PRESSURE (REFRIGERANT COMPRESSOR)	
		1	**102-8802**	4	KIT-RECEPTACLE (2-PIN)	
					(EACH INCLUDES RECEPTACLE AS & WEDGE)	
		1	**8T-8729**	2	PIN-CONNECTOR (16-GA TO 18-GA)	
M	7	1	**187-7719**	4	SCREW-HEX FLANGE (M5X2.24X14-MM)	
	8	1	**288-5845**	1	SWITCH AS-PRESSURE (REFRIGERANT)	
	9	1	**191-1005**	1	GASKET	
	10	1	**199-7933**	1	CONTROL AS	
	11	1	**202-9041**	1	GASKET	
Y	12	1	**250-0398**	1	AIR CONDITIONER GP	434
	13	1	**251-6770**	1	PLENUM AS	
		1	**177-6699**	1	GASKET	
		1	**8L-7905**	2	RIVET-POP	
	14	1	**295-1804**	1	BRACKET AS	
	15	1	**343-8072**	1	HARNESS AS-HEATER & AIR COND	
		1	**102-8801**	4	KIT-RECEPTACLE (12-PIN)	
					(EACH INCLUDES RECEPTACLE AS & WEDGE)	
		1	**6T-6505**	2	HOUSING-RECEPTACLE (BLADE, POSITIVE LOCK)	
		1	**6T-6506**	2	TERMINAL-BLADE (14-GA TO 18-GA)	
E		1	**6V-2722**		TUBE-HEAT SHRINK (25.4-MM DIA) (2-CM)	
		1	**8T-8729**	7	PIN-CONNECTOR (16-GA TO 18-GA)	
		1	**8T-8730**	3	SOCKET-CONNECTOR (16-GA TO 18-GA)	
		1	**8T-8737**	11	PLUG-SEAL	
		1	**9W-0844**	6	SOCKET-CONNECTOR (14-GA TO 16-GA)	
		1	**9W-0852**	3	PIN-CONNECTOR (14-GA TO 16-GA)	
		1	**100-6674**	10	SEAL-CONNECTOR	
		1	**111-6793**	12	TERMINAL-RECEPTACLE (14-GA TO 16-GA)	
		1	**111-6795**	3	HOUSING-RELAY	
		1	**111-6816**	3	LOCK	
E		1	**119-3662**		TUBE-HEAT SHRINK (10.85-MM DIA) (26-CM)	
		1	**124-5640**	4	TERMINAL-SOCKET	
E		1	**125-7875**		TUBE-HEAT SHRINK (7.44-MM DIA) (25-CM)	
		1	**9X-3402**	4	SOCKET-CONNECTOR (16-GA TO 18-GA)	
					—OR—	
		1	**126-1768**	4	SOCKET-CONNECTOR (14-GA TO 16-GA)	
		1	**155-2255**	1	KIT-CONNECTING PLUG (12-PIN)	
		1	**155-2270**	4	KIT-CONNECTING PLUG (2-PIN)	
					(EACH INCLUDES PLUG AS, WEDGE & INTERFACE SEAL)	
		1	**230-5008**	1	PLUG AS-CONNECTOR (4-PIN)	
		1	**264-7031**	1	SEAL-CONNECTOR	
		1	**230-5009**	1	RECEPTACLE AS-CONNECTOR (4-PIN)	
	16	1	**364-0891**	1	PLATE	
M	17	1	**8C-8457**	4	SCREW-MACHINE (M5X0.8X14-MM)	
	18	1	**8T-6631**	2	SCREW-MACHINE (8-32X0.5-IN)	

E-ORDER BY THE CENTIMETER
M-METRIC PART
Y-SEPARATE ILLUSTRATION

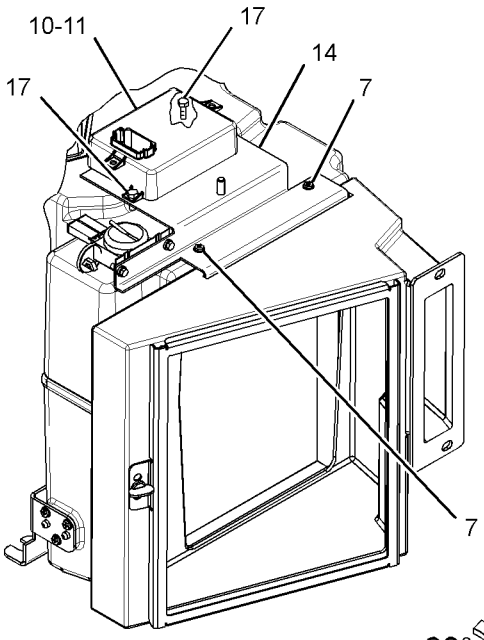

VIEW OF AREA B
(HARNESS REMOVED FOR CLARITY)

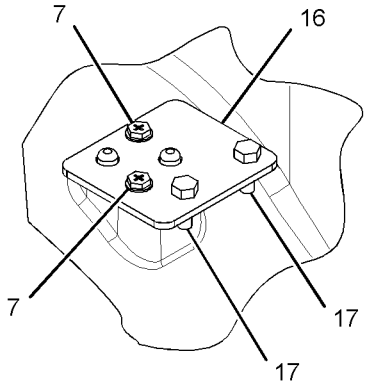

VIEW OF AREA A
(COMPONENTS REMOVED FOR CLARITY)

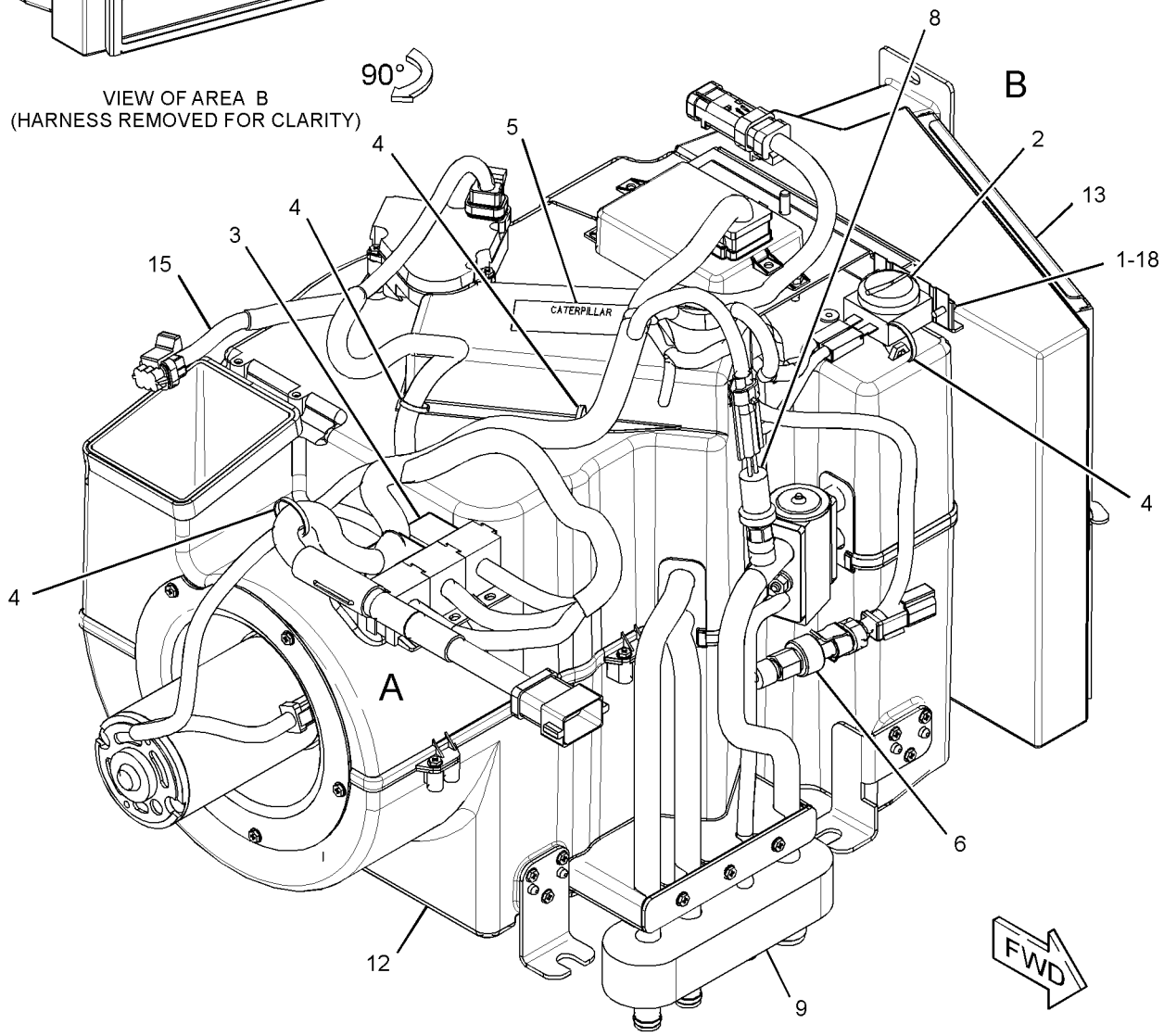

GRAPHIC #1 **<END>** g02367337

OPERATOR STATION

372-5222 AIR CONDITIONER GP

S/N: F7B1-UP

PART OF 365-4915 AIR CONDITIONER & MOUNTING GP

SMCS-7320 **i05106929**

NOTE	REF NO	GRAPHIC REF	PART NUMBER	QTY	PART NAME 1 2 3 4 5 6 (PRODUCT LEVEL)	SEE PAGE
	1	1	**133-8714**	1	GROMMET	
	2	1	**2R-8159**	2	BOLT-SOCKET HEAD (10-32X1.5-IN)	
	3	1	**3B-4501**	2	LOCKWASHER	
	4	1	**3E-5464**	1	THERMOSTAT (HVAC)	
	5	1	**3E-6477**	2	RELAY AS (24-VOLT) (AC, CONDENSER)	
	6	1	**3S-2093**	2	STRAP-CABLE	
	7	1	**8L-7905**	4	RIVET-POP	
	8	1	**037-4838**	1	CLAMP	
	9	1	**114-3140**	1	GROMMET	
	10	1	**114-5333**	1	SWITCH AS-PRESSURE (REFRIGERANT COMPRESSOR)	
		1	**102-8802**	1	KIT-RECEPTACLE (2-PIN)	
					(INCLUDES RECEPTACLE AS & WEDGE)	
		1	**8T-8729**	2	PIN-CONNECTOR (16-GA TO 18-GA)	
	11	1	**131-3093**	1	BUSHING	
	12	1	**133-9012**	1	FUSE (15-AMPERE) (THERMAL)	
	13	1	**177-6689**	1	PLATE	
	14	1	**177-6690**	1	PLATE	
	15	1	**177-6692**	1	PLATE	
	16	1	**177-6694**	1	PLATE	
	17	1	**177-6696**	2	GROMMET	
	18	1	**177-6698**	4	GASKET	
	19	1	**177-6700**	2	TUBE-DRAIN	
	20	1	**177-6701**	1	GASKET	
	21	1	**177-6707**	1	HOUSING	
	22	1	**177-6710**	1	RING	
	23	1	**177-6711**	1	DOOR	
	24	1	**177-6726**	1	TUBE	
	25	1	**179-4673**	1	GASKET	
	26	1	**179-4674**	1	GASKET	
	27	1	**179-6136**	1	GASKET	
M	28	1	**187-7719**	32	SCREW-HEX FLANGE (M5X2.24X14-MM)	
	29	1	**189-2456**	5	CLIP	
	30	1	**191-0979**	1	WHEEL-BLOWER	
	31	1	**191-1005**	1	GASKET	
	32	1	**193-0702**	1	GASKET	
	33	1	**202-9041**	1	GASKET	
	34	1	**206-1345**	2	STRAP-CABLE	
	35	1	**208-2929**	1	GASKET	
	36	1	**228-9043**	1	COIL AS-EVAPORATOR	
	37	1	**228-9044**	1	VALVE	
	38	1	**228-9539**	1	PLATE	
	39	1	**248-6772**	8	SCREW-MACHINE (8-16X7.75-IN)	
	40	1	**251-6770**	1	PLENUM AS	
		1	**8L-7905**	2	RIVET-POP	
		1	**177-6699**	1	GASKET	
	41	1	**251-6773**	1	BRACKET	
	42	1	**257-5029**	1	RESISTOR AS	
	43	1	**265-9620**	1	ACTUATOR (ELECTRONIC)	
	44	1	**268-8769**	1	VALVE AS-WATER (HEATER)	
	45	1	**284-4177**	1	TUBE AS	
	46	1	**288-1556**	1	MOTOR AS-FAN	
	47	1	**295-1804**	1	BRACKET AS	
	48	1	**298-2652**	1	CLIP	
	49	1	**119-3859**	2	SCREW-PAN HEAD (10-16X0.75-IN)	
	50	1	**322-4474**	1	FILM-INFORMATION (24-VOLT HEATER)	
	51	1	**323-5865**	1	TUBE	

372-5222 **AIR CONDITIONER GP** *(contd.)* **i05106929**

NOTE	REF NO	GRAPHIC REF	PART NUMBER	QTY	PART NAME 1 2 3 4 5 6 (PRODUCT LEVEL)	SEE PAGE
	52	1	**364-0672**	1	COIL AS-HEATER	
	53	1	**364-0891**	1	PLATE	
	55	1	**372-6092**	1	GUARD AS	
	56	1	**372-6629**	1	COVER	
	57	1	**373-5807**	2	PLATE	
	58	1	**374-2088**	1	HARNESS AS-HEATER & AIR COND	
		1	**102-8801**	1	KIT-RECEPTACLE (12-PIN)	
					(INCLUDES RECEPTACLE AS & WEDGE)	
		1	**6T-6506**	2	TERMINAL-BLADE (14-GA TO 18-GA)	
		1	**6T-6506**	2	TERMINAL-BLADE (14-GA TO 18-GA)	
		1	**8T-8729**	11	PIN-CONNECTOR (16-GA TO 18-GA)	
		1	**8T-8730**	5	SOCKET-CONNECTOR (16-GA TO 18-GA)	
		1	**8T-8737**	2	PLUG-SEAL	
		1	**100-6674**	2	SEAL-CONNECTOR	
		1	**111-6792**	2	TERMINAL-RECEPTACLE (18-GA TO 20-GA)	
		1	**111-6793**	6	TERMINAL-RECEPTACLE (14-GA TO 16-GA)	
		1	**111-6795**	2	HOUSING-RELAY	
		1	**111-6816**	2	LOCK	
E		1	**119-3662**		TUBE-HEAT SHRINK (10.85-MM DIA) (20-CM)	
		1	**124-5640**	2	TERMINAL-SOCKET	
E		1	**125-7874**		TUBE-HEAT SHRINK (5.72-MM DIA) (5-CM)	
		1	**130-6788**	2	TERMINAL AS-BLADE	
E		1	**6V-9023**		TUBE-HEAT SHRINK (12.7-MM DIA) (4-CM)	
		1	**155-2270**	1	KIT-CONNECTING PLUG (2-PIN)	
		1	**155-2271**	1	KIT-CONNECTING PLUG (4-PIN)	
					(EACH PLUG KIT INCLUDES PLUG AS, WEDGE, & INTERFACE SEAL)	
		1	**192-2112**	4	SOCKET-TERMINAL	
	59	1	**4D-2297**	2	SEAL-O-RING	
M	60	1	**5C-2890**	1	NUT (M6X1-THD)	
	61	1	**5L-6688**	2	BUTTON-PLUG	
M	62	1	**8C-7581**	1	SCREW-MACHINE (M4XO.7X8-MM)	
M	63	1	**8C-8457**	2	SCREW-MACHINE (M5XO.8X14-MM)	
	64	1	**8T-4205**	1	WASHER-HARD (7.2X14.5X2-MM THK)	
	65	1	**8T-6631**	2	SCREW-MACHINE (8-32XO.5-IN)	
	66	1	**9X-7378**	1	SEAL-O-RING	
	67	1	**9X-7380**	1	SEAL-O-RING	
	68	1	**9X-7381**	1	SEAL-O-RING	
	69	1	**9X-7382**	2	SEAL-O-RING	
D	70	1	**5P-5639**		SEAL (0.4-M)	

D-ORDER BY THE METER
E-ORDER BY THE CENTIMETER
M-METRIC PART

372-5222 **AIR CONDITIONER GP** *(contd.)* **i05106929**

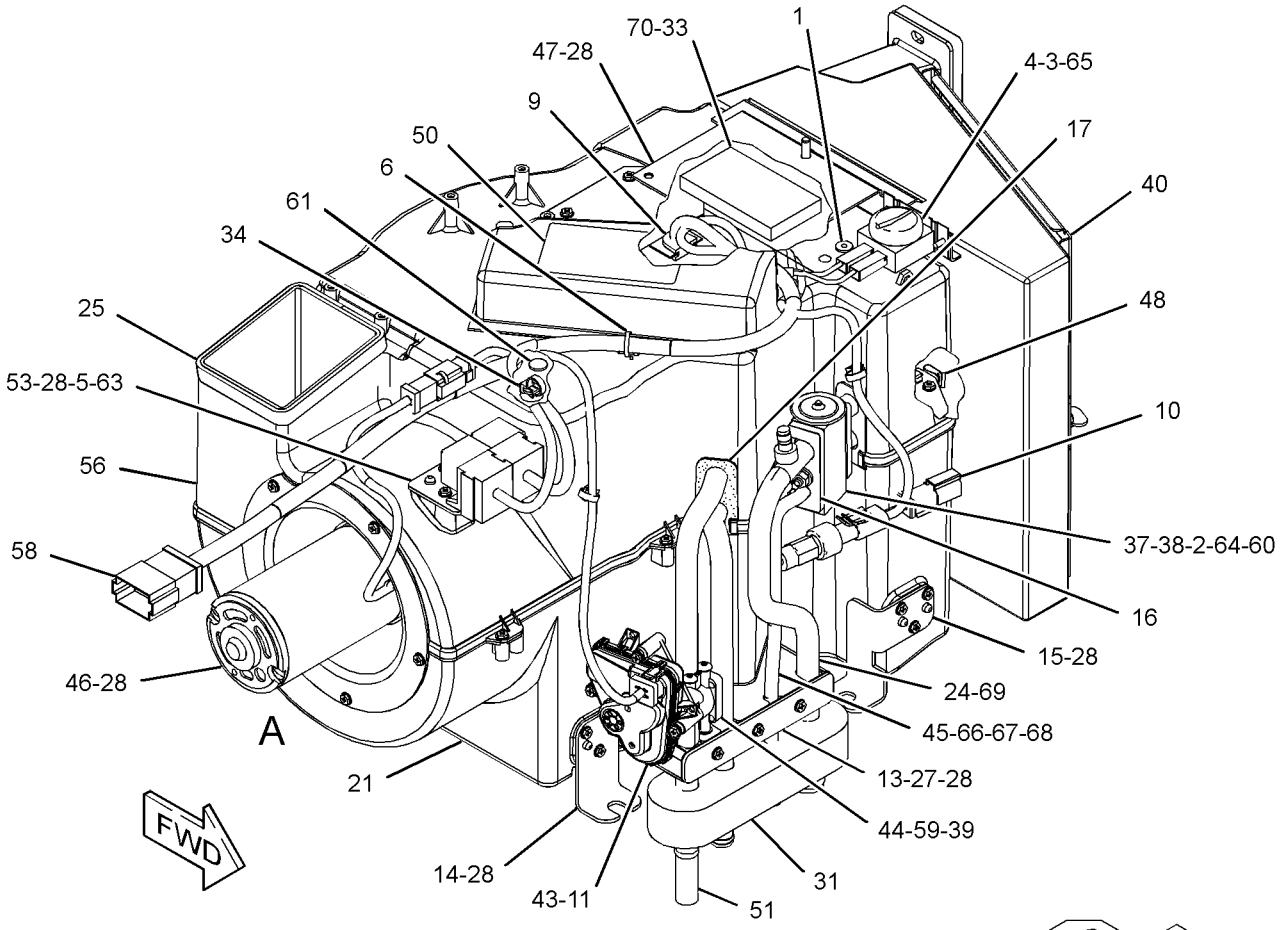

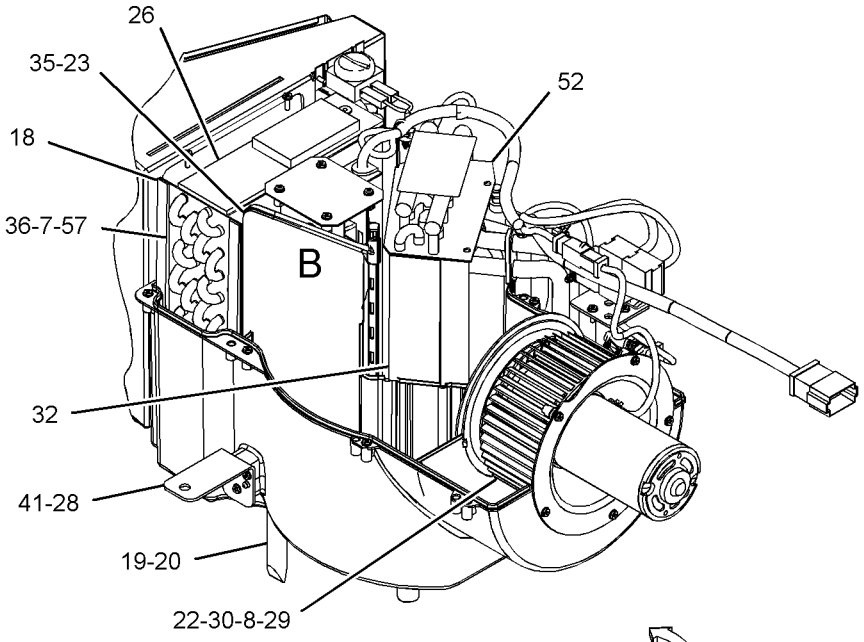

VIEW OF AREA A
(PARTS REMOVED FOR CLARITY)

90°

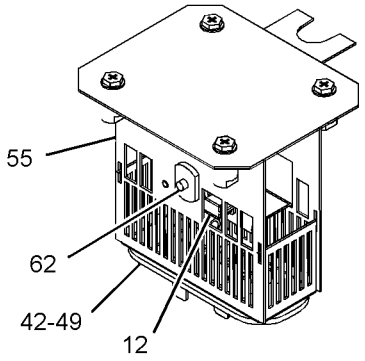

VIEW OF AREA B
(PARTS REMOVED FOR CLARITY)

GRAPHIC #1 **<END>** g02739584

OPERATOR STATION

259-7346 ARMREST GP–RH

S/N: F7B1-UP

PART OF 259-7348 CONSOLE GP-OPERATOR

SMCS-7307 **i02488250**

NOTE	REF NO	GRAPHIC REF	PART NUMBER	QTY	PART NAME 1 2 3 4 5 6 (PRODUCT LEVEL)	SEE PAGE
M	1	1	**171-7325**	3	SCREW-TAPPING (M5X0.8-THD)	
M	2	1	**185-8286**	2	SCREW-MACHINE (M4X0.7X8-MM)	
	3	1	**235-8951**	1	SUPPORT AS	
	4	1	**235-8996**	1	COVER	
	5	1	**235-8997**	1	KNOB	
	6	1	**279-3161**	1	CUSHION	

M-METRIC PART

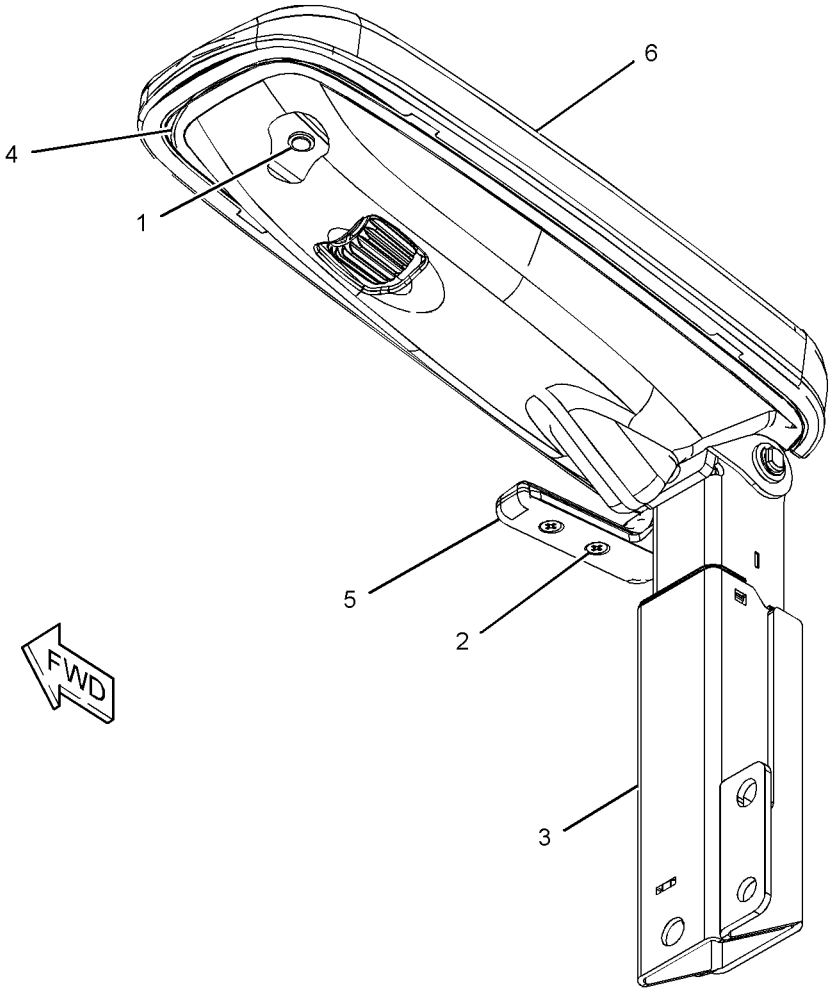

GRAPHIC #1 **<END>** g01217218

OPERATOR STATION

259-7347 ARMREST GP–LH

S/N: F7B1-UP

PART OF 259-7349 CONSOLE GP-OPERATOR

SMCS-7307 **i02474510**

NOTE	REF NO	GRAPHIC REF	PART NUMBER	QTY	PART NAME 1 2 3 4 5 6 (PRODUCT LEVEL)	SEE PAGE
M	1	1	**171-7325**	3	SCREW-TAPPING (M5X0.8-THD)	
M	2	1	**185-8286**	2	SCREW-MACHINE (M4X0.7X8-MM)	
	3	1	**235-8952**	1	SUPPORT AS	
	4	1	**235-8996**	1	COVER	
	5	1	**235-8998**	1	KNOB	
	6	1	**259-7345**	1	CUSHION	

M-METRIC PART

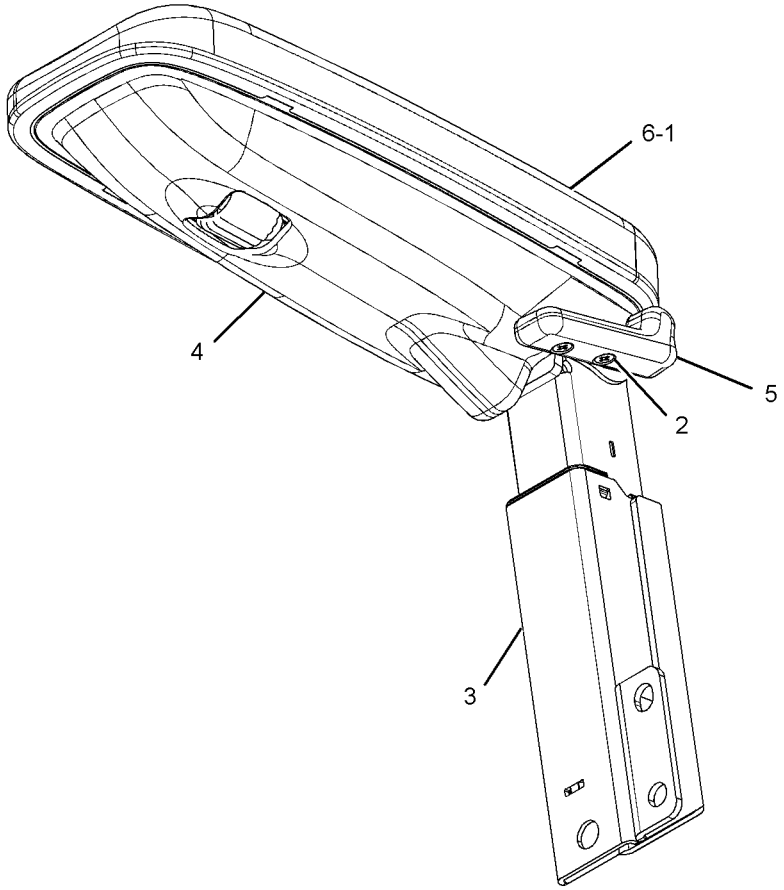

GRAPHIC #1 **<END>** g01210886

OPERATOR STATION

370-9181 CAB GP

S/N: F7B1-UP

PART OF 370-9182 CAB GP

SMCS-7301, 7325 **i05106953**

NOTE	REF NO	GRAPHIC REF	PART NUMBER	QTY	PART NAME 1 2 3 4 5 6 (PRODUCT LEVEL)	SEE PAGE
	1	1	**257-5597**	2	INSERT-THREADED	
Y	2	1	*320-7459*	1	DOOR GP-ACCESS (CAB AIR FILTER)	458
Y	3	1	*321-3821*	1	FRAME GP-WINDOW	462
Y	4	1	*323-2220*	1	HATCH GP-ROOF (CAB, REAR)	464
Y	5	1	*334-1077*	1	DOOR GP-CAB	459
	6	1	**370-9180**	1	ROPS AS-ENCLOSED	

Y-SEPARATE ILLUSTRATION

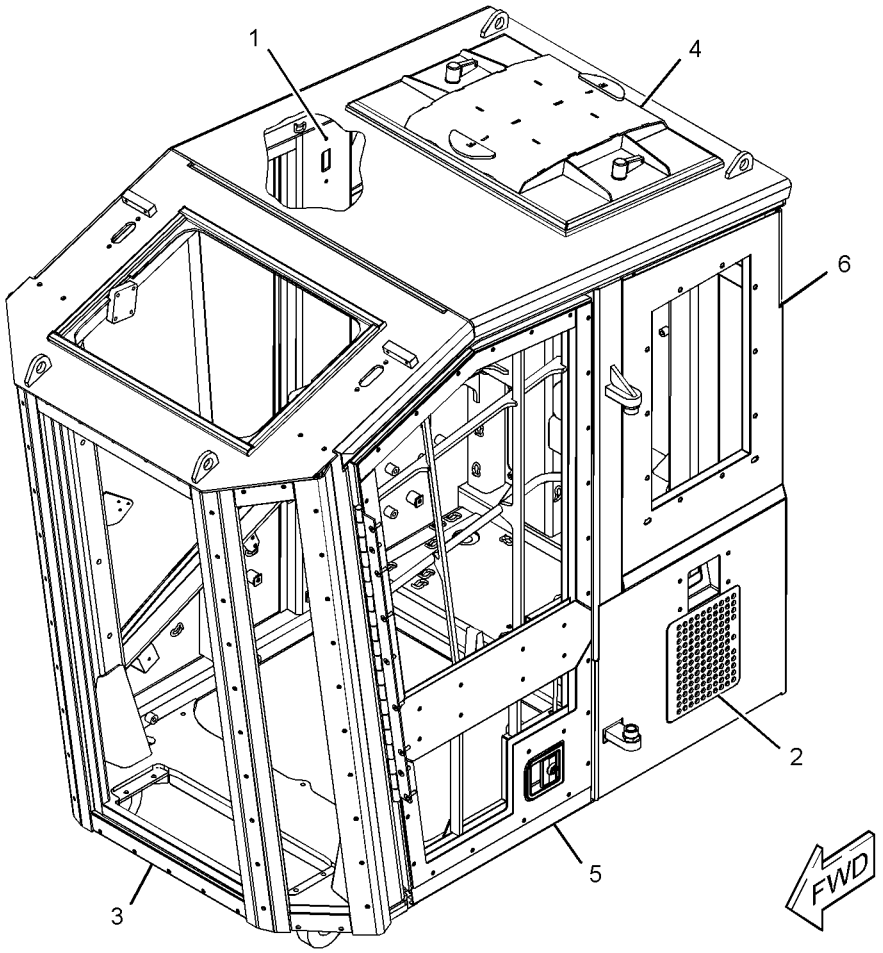

GRAPHIC #1 **<END>** g02477983

OPERATOR STATION

370-9182 CAB GP

S/N: F7B1-UP

PART OF 362-3893 OPERATOR AR

SMCS-7301, 7325 **i04316418**

NOTE	REF NO	GRAPHIC REF	PART NUMBER	QTY	PART NAME 1 2 3 4 5 6 (PRODUCT LEVEL)	SEE PAGE
Y	1	1	*197-9880*	1	GUARD GP-WINDOW	463
	2	1	**237-9460**	1	PLATE	
Y	3	1	*321-3822*	1	WINDOW GP-CAB	494
Y	4	1	*329-5158*	1	HATCH GP-ROOF (CAB)	465
Y	5	1	**370-9181**	1	CAB GP	445
M	6	1	**8T-4189**	4	BOLT (M8X1.25X20-MM)	
	7	1	**8T-4224**	4	WASHER-HARD (8.8X16X2-MM THK)	
D	8	1	**5P-5942**		SEAL (0.8-M)	
D	8A	1	**5P-5942**		SEAL (0.6-M)	

D-ORDER BY THE METER
M-METRIC PART
Y-SEPARATE ILLUSTRATION

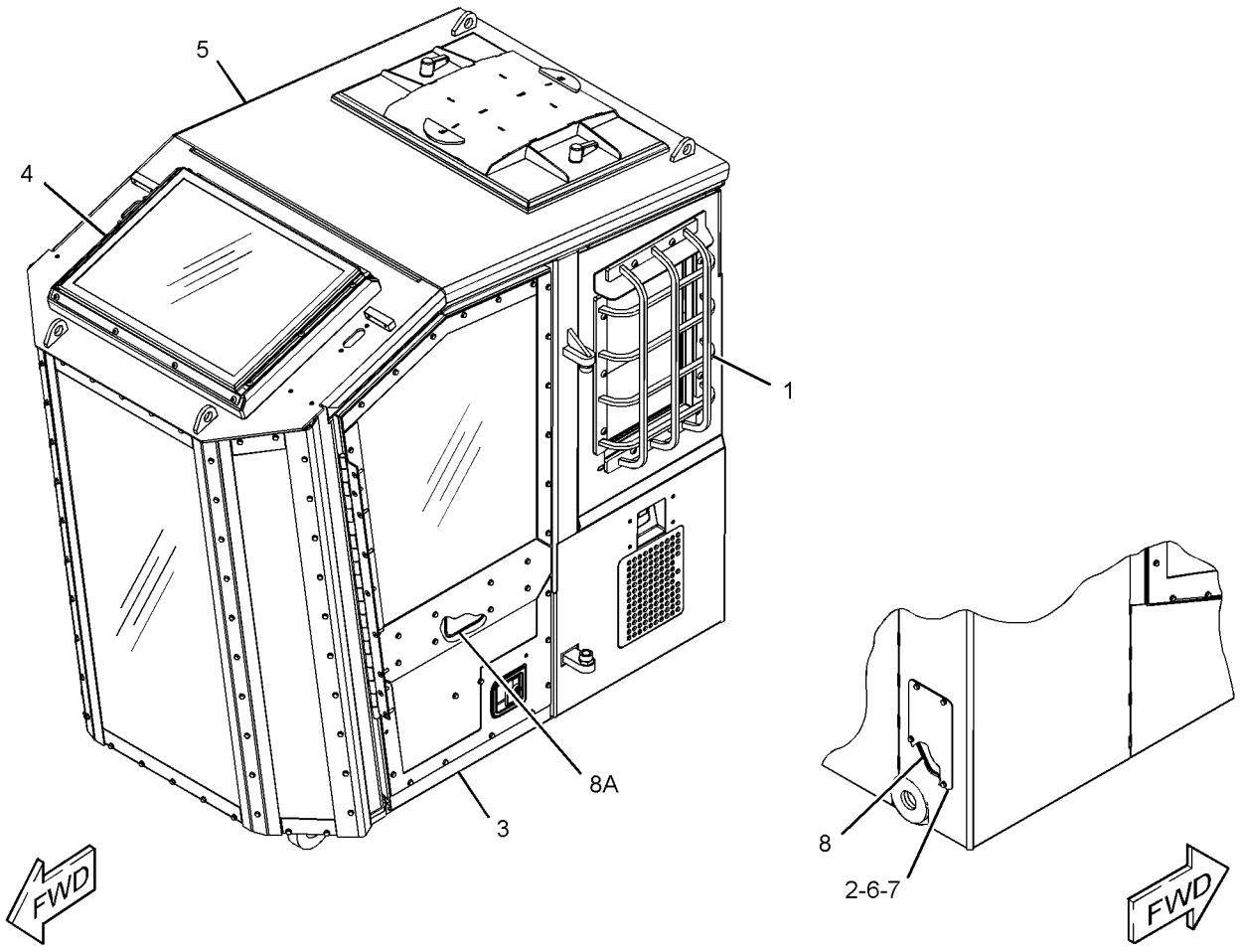

GRAPHIC #1 **<END>** g02478113

OPERATOR STATION

226-3561 COMPRESSOR GP-REFRIGERANT

S/N: TXD1-UP; THX1-UP
PART OF 347-1741, 367-4852 ENGINE AR-COMPLETE
ALSO AN ATTACHMENT

SMCS-1802 **i03497941**

NOTE	REF NO	GRAPHIC REF	PART NUMBER	QTY	PART NAME 1 2 3 4 5 6 (PRODUCT LEVEL)	SEE PAGE
	1	1	**147-3150**	1	ANGLE AS	
M		1	**8T-3490**	1	NUT-WELD (M10X1.5-THD)	
	2	1	**226-4864**	1	GUARD AS	
	3	1	**130-5300**	1	CLIP	
	4	1	**132-5789**	1	CLIP	
C	5	1	**305-0324**	1	COMPRESSOR GP-REFRIGERANT	
C	6	1	**3S-2093**	1	STRAP-CABLE	
M	7	1	**8T-3647**	4	BOLT (M8X1.25X80-MM)	
	8	1	**8T-4121**	1	WASHER-HARD (11X21X2.5-MM THK)	
M	9	1	**8T-4136**	1	BOLT (M10X1.5X25-MM)	
	10	1	**8T-4224**	6	WASHER-HARD (8.8X16X2-MM THK)	
M	11	1	**7X-2537**	2	BOLT (M8X1.25X35-MM)	

C-CHANGE FROM PREVIOUS TYPE
M-METRIC PART

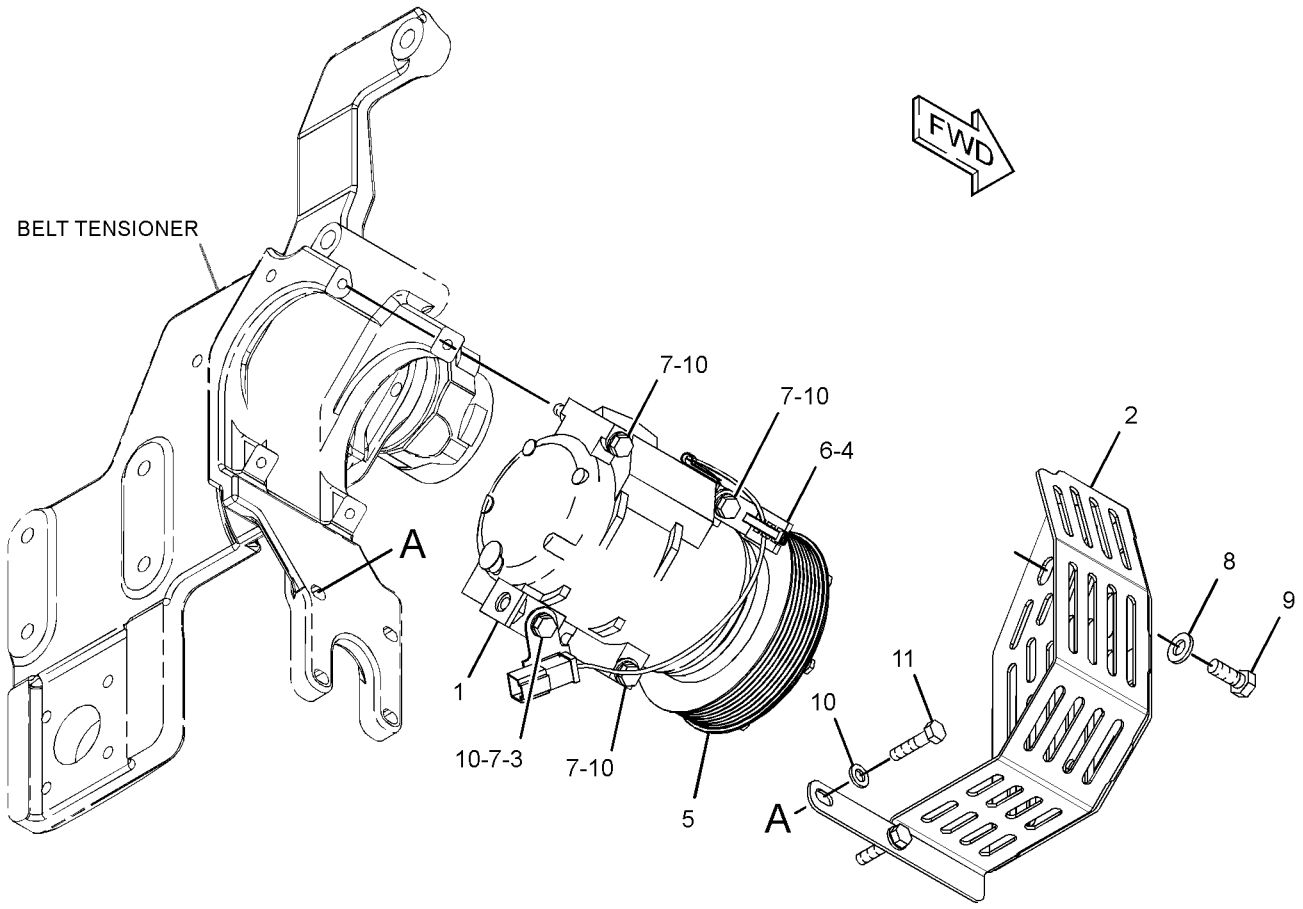

GRAPHIC #1 **<END>** g01854354

OPERATOR STATION

243-5686 CONSOLE GP-OPERATOR

S/N: F7B1-UP

PART OF 362-3893 OPERATOR AR

SMCS-5258 **i04219292**

NOTE	REF NO	GRAPHIC REF	PART NUMBER	QTY	PART NAME 1 2 3 4 5 6 (PRODUCT LEVEL)	SEE PAGE
	1	1	**185-8284**	1	COVER	
Y	2	1	*259-7348*	1	CONSOLE GP-OPERATOR (RH)	450
Y	3	1	*259-7349*	1	CONSOLE GP-OPERATOR (LH)	452
M	4	1	**9X-2043**	16	SCREW-TRUSS HEAD (M6X1X14-MM)	

M-METRIC PART
Y-SEPARATE ILLUSTRATION

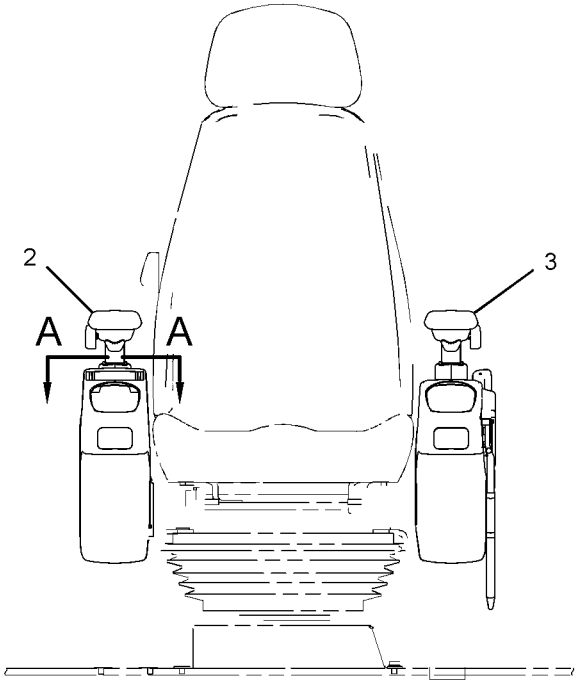

FRONT VIEW

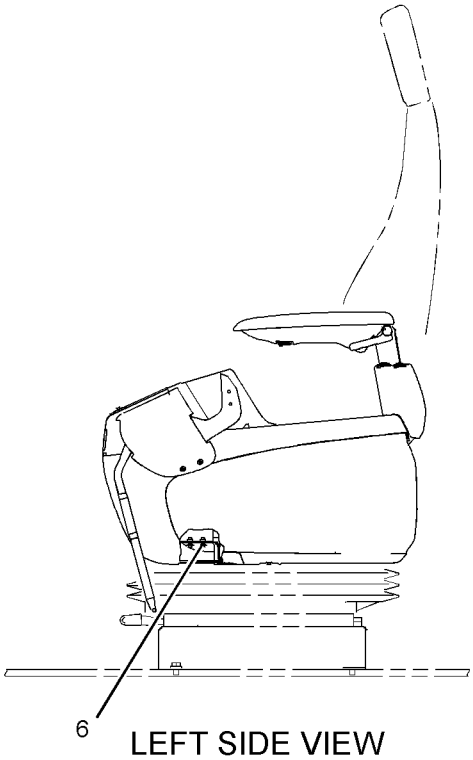

LEFT SIDE VIEW

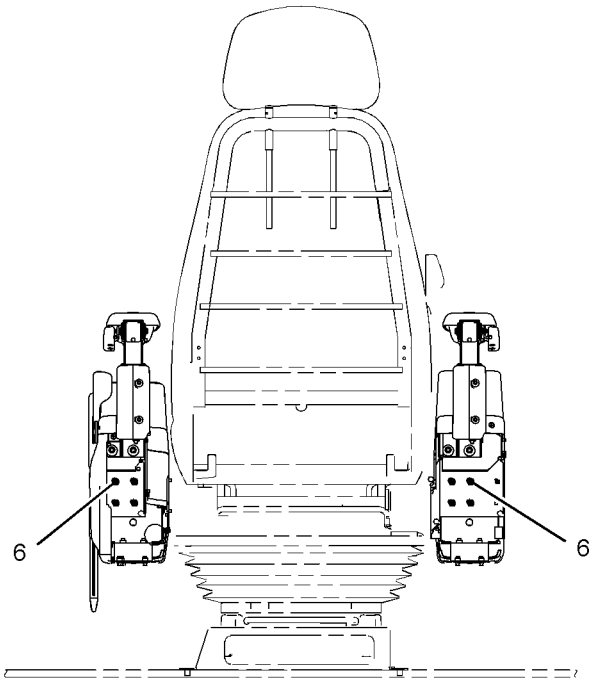

REAR VIEW

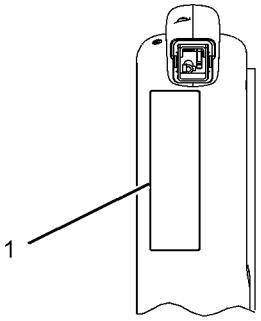

SECTION A-A

GRAPHIC #1 **<END>** g02467456

OPERATOR STATION

259-7348 CONSOLE GP-OPERATOR—RH

S/N: F7B1-UP

PART OF 243-5686 CONSOLE GP-OPERATOR

SMCS-5258 **i02474320**

NOTE	REF NO	GRAPHIC REF	PART NUMBER	QTY	PART NAME 1 2 3 4 5 6 (PRODUCT LEVEL)	SEE PAGE
M	1	1	**128-2135**	4	SCREW-TRUSS HEAD (M6X1X13-MM)	
	2	1	**185-8284**	1	COVER	
	3	1	**234-6579**	2	NUT-SPEED	
	4	1	**234-6580**	2	CAP	
	5	1	**234-6602**	1	COVER	
	6	1	**234-6604**	1	COVER	
	7	1	**234-6608**	1	COVER	
	8	1	**234-6609**	1	COVER	
	9	1	**234-6610**	1	COVER	
	10	1	**235-8914**	4	NUT-SPEED	
	11	1	**235-8966**	2	BASE-MOUNTING	
	12	1	**245-7790**	2	SCREW-TAPPING	
	13	1	**245-7926**	1	SUPPORT AS	
	14	1	**245-7948**	4	SCREW-TAPPING	
Y	15	1	**259-7346**	1	ARMREST GP (RH)	443
M	16	1	**9X-2041**	3	SCREW-TRUSS HEAD (M10X1.5X20-MM)	

M-METRIC PART
Y-SEPARATE ILLUSTRATION

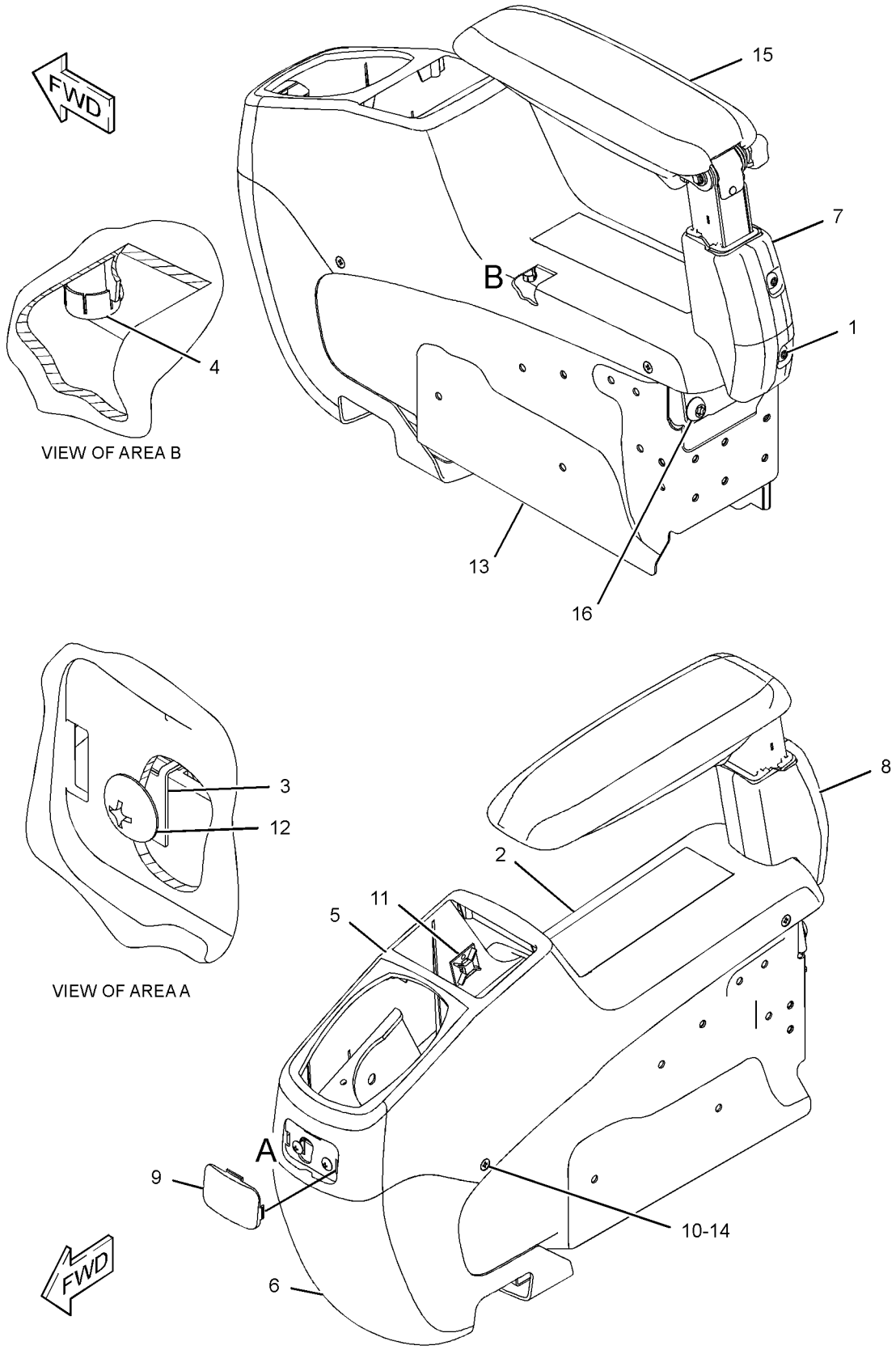

GRAPHIC #1 **<END>** g01217107

OPERATOR STATION

259-7349 CONSOLE GP-OPERATOR—LH

S/N: F7B1-UP

PART OF 243-5686 CONSOLE GP-OPERATOR

SMCS-5258 **i05106991**

NOTE	REF NO	GRAPHIC REF	PART NUMBER	QTY	PART NAME 1 2 3 4 5 6 (PRODUCT LEVEL)	SEE PAGE
M	1	1	**128-2135**	5	SCREW-TRUSS HEAD (M6X1X13-MM)	
M	2	1	**171-7325**	3	SCREW-TAPPING (M5X0.8-THD)	
	3	1	**234-6579**	6	NUT-SPEED	
	4	1	**234-6580**	4	CAP	
	5	1	**234-6603**	1	COVER	
	6	1	**234-6605**	1	COVER	
	7	1	**234-6608**	1	COVER	
	8	1	**234-6609**	1	COVER	
	9	1	**234-6610**	1	COVER	
	10	1	**234-6611**	1	CASE	
	11	1	**234-6612**	1	COVER	
Y	12	1	**234-6613**	1	SWITCH GP-LIMIT (HYD LOCKOUT, NEUTRAL START)	162
	13	1	**234-6614**	1	COVER	
	14	1	**235-8914**	4	NUT-SPEED	
	15	1	**235-8965**	1	GUARD	
	16	1	**245-7790**	3	SCREW-TAPPING	
	17	1	**245-7925**	1	SUPPORT AS	
	18	1	**245-7948**	7	SCREW-TAPPING	
	19	1	**259-7202**	1	ASHTRAY	
Y	20	1	**259-7347**	1	ARMREST GP (LH)	444
M	21	1	**9X-2041**	3	SCREW-TRUSS HEAD (M10X1.5X20-MM)	
M	22	1	**9X-2042**	2	SCREW-TRUSS HEAD (M6X1X12-MM)	

M-METRIC PART
Y-SEPARATE ILLUSTRATION

259-7349 **CONSOLE GP-OPERATOR** *(contd.)* **i05106991**

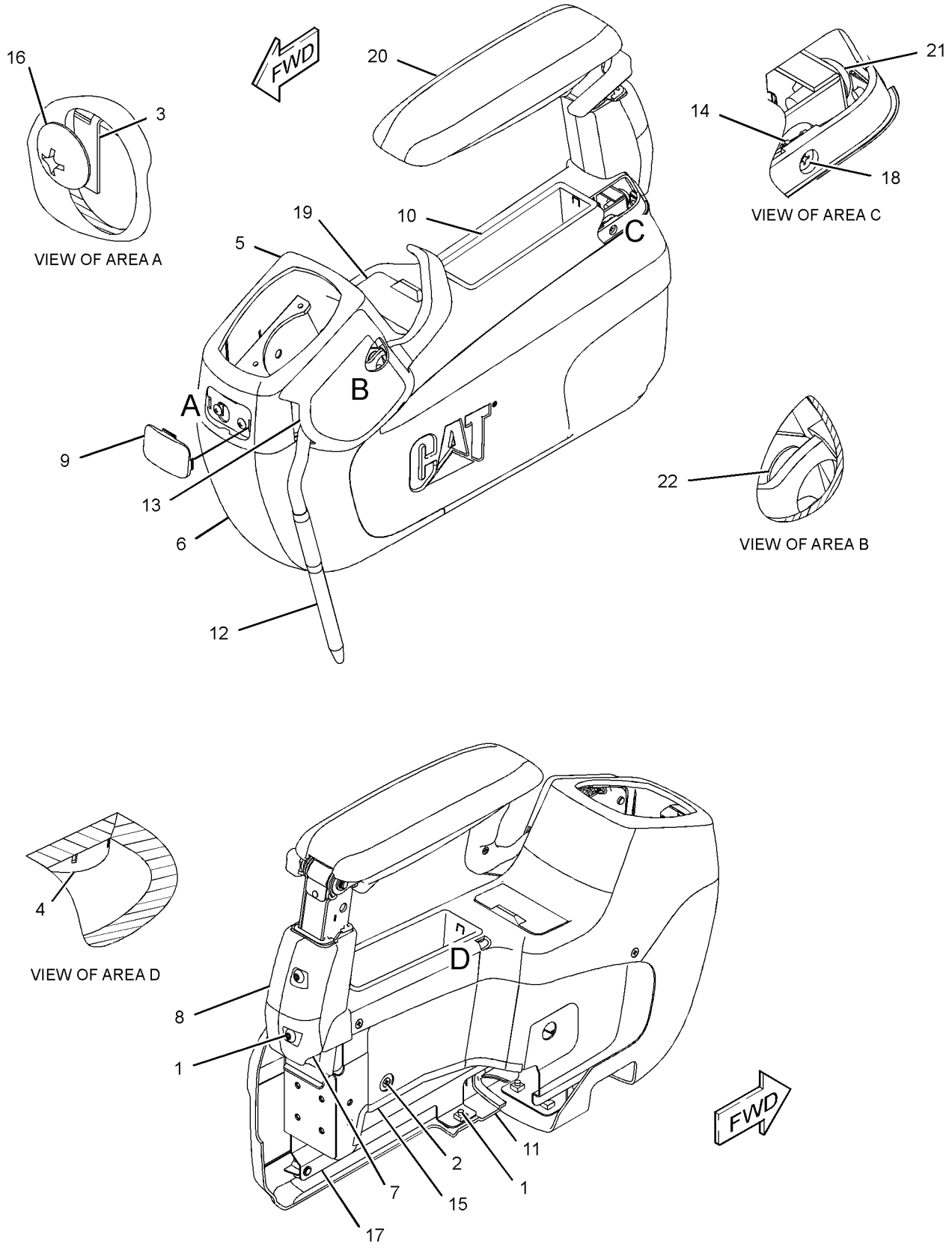

GRAPHIC #1 **<END>** g01217096

OPERATOR STATION

224-4990 CONTROL & MTG GP-JOYSTICK—FELLING HEAD

S/N: F7B1-UP

PART OF 362-3893 OPERATOR AR

SMCS-5063, 5705 **i03882355**

NOTE	REF NO	GRAPHIC REF	PART NUMBER	QTY	PART NAME 1 2 3 4 5 6 (PRODUCT LEVEL)	SEE PAGE
	1	1	**223-0539**	2	CONTROL GP-PEDAL (TRAVEL)	
					(EACH INCLUDES)	
		1	**186-3735**	5	PIN-CONNECTOR (16-GA TO 18-GA)	
		1	**8T-8737**	1	PLUG-SEAL	
		1	**102-8805**	1	KIT-RECEPTACLE (6-PIN)	
					(INCLUDES RECEPTACLE AS & WEDGE)	
	2	1	**224-8173**	4	PLATE	
	3	1	**297-6429**	1	BRACKET AS (LH)	
	4	1	**297-6430**	1	BRACKET AS (RH)	
	5	1	**297-6439**	2	PLATE	
	6	1	**307-5476**	2	TAPE	
C	7	1	**359-4143**	1	CONTROL GP-HAND (LH)	
C	8	1	**359-4144**	1	CONTROL GP-HAND (RH)	
M	9	1	**7X-2619**	6	BOLT (M6X1X10-MM)	
	10	1	**8T-4121**	4	WASHER-HARD (11X21X2.5-MM THK)	
M	11	1	**8T-4186**	4	BOLT (M10X1.5X40-MM)	
	12	1	**9X-8256**	6	WASHER (6.6X12X2-MM THK)	

C-CHANGE FROM PREVIOUS TYPE
M-METRIC PART

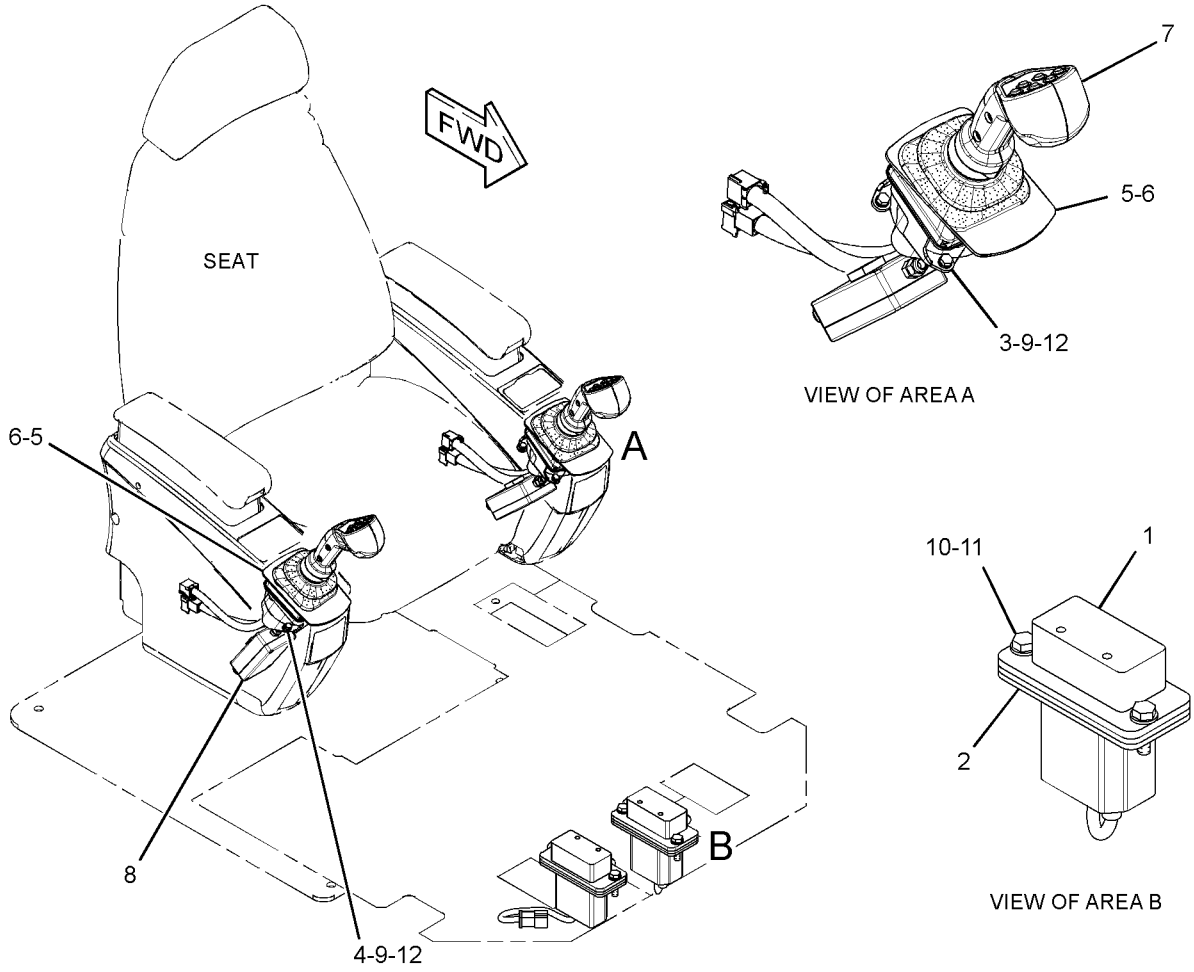

GRAPHIC #1 **<END>** g01829713

OPERATOR STATION

238-8167 CONTROL & MTG GP-PEDAL

S/N: F7B1-UP

PART OF 362-3893 OPERATOR AR

SMCS-5462 **i02290630**

NOTE	REF NO	GRAPHIC REF	PART NUMBER	QTY	PART NAME 1 2 3 4 5 6 (PRODUCT LEVEL)	SEE PAGE
	1	1	**5P-4116**	4	WASHER-HARD (8.8X20.5X2-MM THK)	
M	2	1	**8T-7547**	4	BOLT (M8X1.25X30-MM)	
Y	3	1	*231-2613*	1	CONTROL GP-HYDRAULIC PEDAL	456
	4	1	**238-8222**	1	PLATE AS	
M		1	**8T-3490**	8	NUT-WELD (M10X1.5 THD)	

M-METRIC PART
Y-SEPARATE ILLUSTRATION

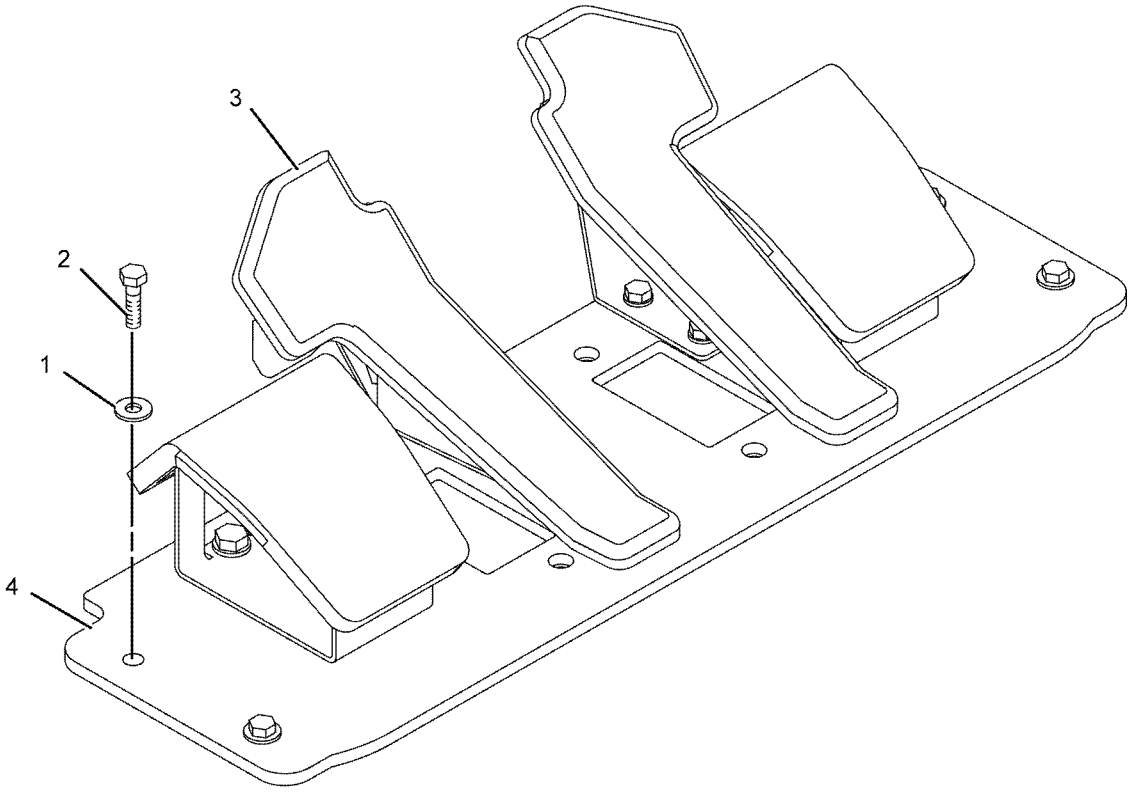

GRAPHIC #1 **<END>** g01147486

OPERATOR STATION

231-2613 CONTROL GP-HYDRAULIC PEDAL

S/N: F7B1-UP

PART OF 238-8167 CONTROL & MTG GP-PEDAL

SMCS-5059, 5063 **i03182169**

NOTE	REF NO	GRAPHIC REF	PART NUMBER	QTY	PART NAME 1 2 3 4 5 6 (PRODUCT LEVEL)	SEE PAGE
	1	1	**117-6349**	1	PEDAL AS (LH)	
M		1	**8T-3490**	2	NUT-WELD (M10X1.5-THD)	
	2	1	**117-6350**	1	PEDAL AS (RH)	
M		1	**8T-3490**	2	NUT-WELD (M10X1.5-THD)	
	3	1	**117-6356**	2	STEP AS	
	4	1	**122-9608**	1	PEDAL-RUBBER (RH)	
	5	1	**122-9609**	1	PEDAL-RUBBER (LH)	
	6	1	**122-9610**	2	STEP	
	7	1	**8T-4121**	4	WASHER-HARD (11X21X2.5-MM THK)	
M	8	1	**8T-4137**	4	BOLT (M10X1.5X20-MM)	
M	9	1	**8T-4200**	4	BOLT (M8X1.25X16-MM)	
	10	1	**8T-4224**	4	WASHER-HARD (8.8X16X2-MM THK)	

M-METRIC PART

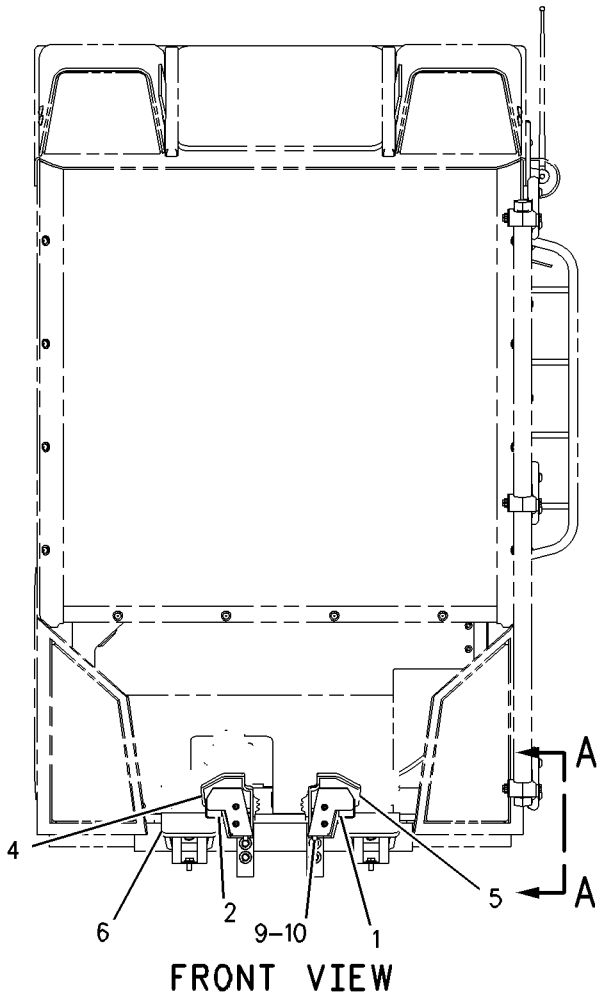

FRONT VIEW

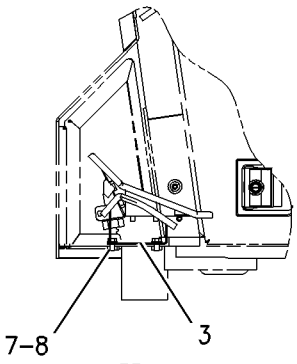

VIEW A–A

GRAPHIC #1 **<END>** g00948328

OPERATOR STATION

368-3009 CONTROL GP-MONITOR

S/N: F7B1-UP

PART OF 362-3893 OPERATOR AR

SMCS-7490 **i04316417**

NOTE	REF NO	GRAPHIC REF	PART NUMBER	QTY	PART NAME 1 2 3 4 5 6 (PRODUCT LEVEL)	SEE PAGE
	1	1	**354-1827**	1	CONTROLLER	
	2	1	**372-4138**	1	BRACKET AS	
M	3	1	**131-3987**	4	SCREW (M4X0.7X12-MM)	
M	4	1	**9X-2043**	3	SCREW-TRUSS HEAD (M6X1X14-MM)	

M-METRIC PART

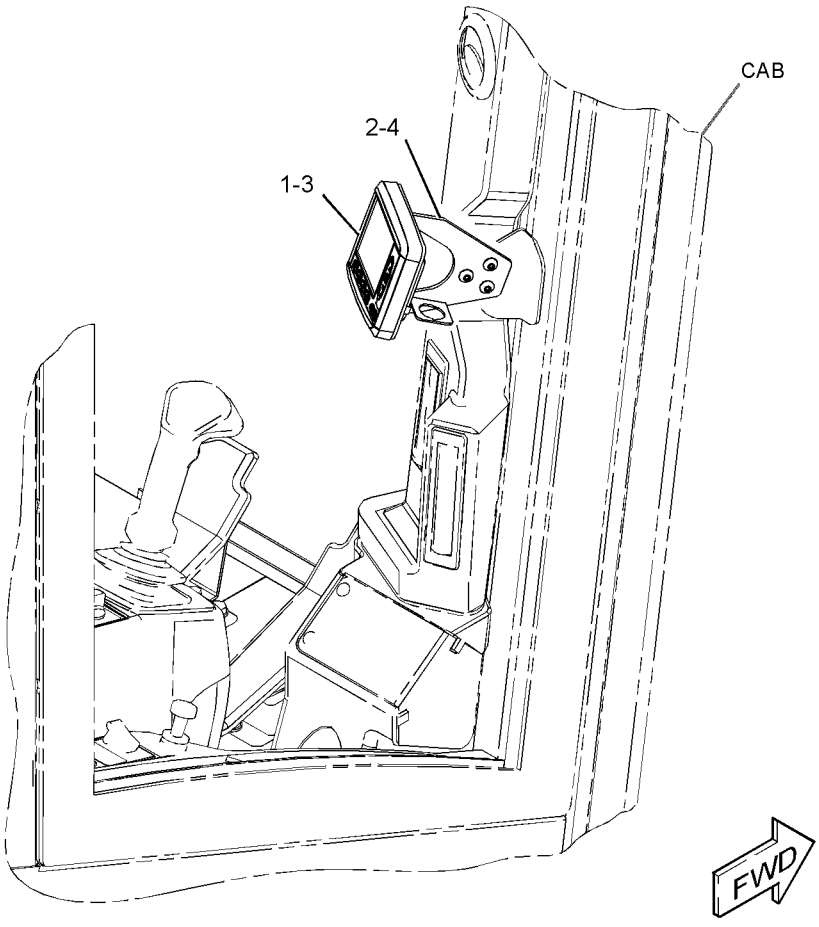

GRAPHIC #1 **<END>** g02476885

OPERATOR STATION

320-7459 DOOR GP-ACCESS—CAB AIR FILTER

S/N: F7B1-UP

PART OF 370-9181 CAB GP

SMCS-7273 **i04497551**

NOTE	REF NO	GRAPHIC REF	PART NUMBER	QTY	PART NAME 1 2 3 4 5 6 (PRODUCT LEVEL)	SEE PAGE
	1	1	**208-0305**	1	LATCH AS	
	2	1	**320-7460**	1	DOOR	
M	3	1	**095-0736**	2	SCREW-MACHINE (M5X0.8X10-MM)	
M	4	1	**9X-2042**	3	SCREW-TRUSS HEAD (M6X1X12-MM)	

M-METRIC PART

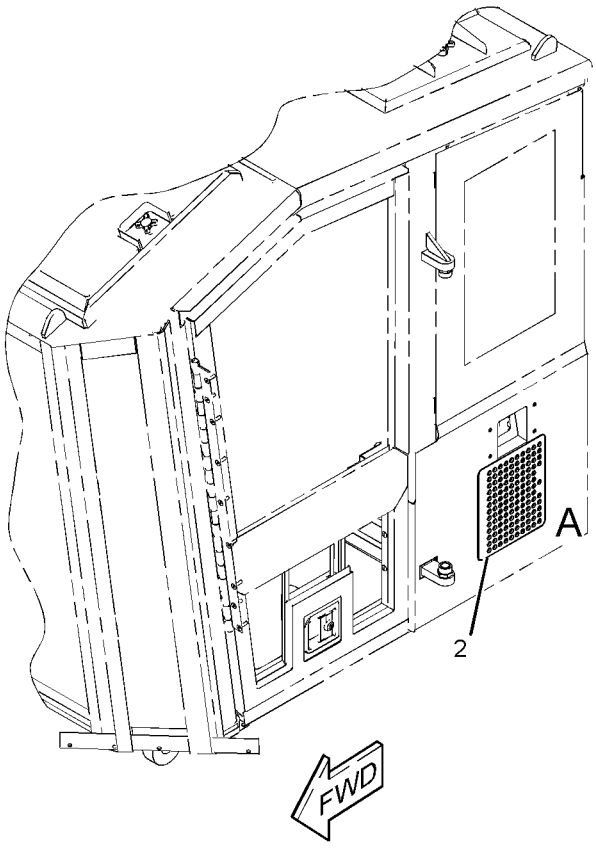

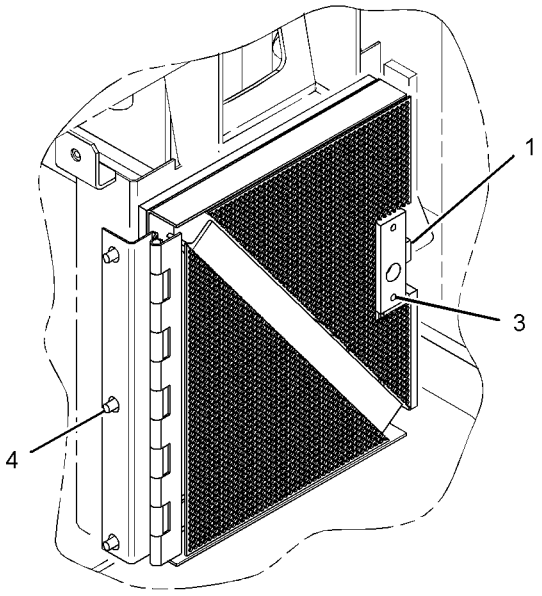

VIEW OF AREA A
(DOOR REMOVED FOR CLARITY)

GRAPHIC #1 **<END>** g02709053

OPERATOR STATION

334-1077 DOOR GP-CAB

S/N: F7B1-UP

PART OF 370-9181 CAB GP

SMCS-7308 **i04579393**

NOTE	REF NO	GRAPHIC REF	PART NUMBER	QTY	PART NAME 1 2 3 4 5 6 (PRODUCT LEVEL)	SEE PAGE
	1	1	**2A-6397**	2	STRAP	
	2	1	**6G-9485**	1	LEVER	
	3	1	**8T-1814**	2	BRACKET-HANDLE	
	4	1	**8T-3504**	1	HANDLE AS-INSIDE	
J	5	1	**8Y-6359**	1	HANDLE AS	
		1	**8Y-4501**	1	SPRING-HANDLE	
M	6	1	**9X-2546**	2	BOLT (M6X1X20-MM)	
	7	1	**090-9554**	2	STUD-BALL	
	8	1	**144-4107**	2	FASTENER	
	9	1	**191-5077**	4	STRAP	
	10	1	**247-4330**	1	PLATE	
	11	1	**334-1089**	1	PLATE	
	12	1	**247-4332**	1	PLATE	
	13	1	**247-4333**	1	PLATE	
	14	1	**247-4335**	1	PLATE	
	15	1	**334-1091**	1	COVER	
	16	1	**360-9597**	1	STRIKER AS	
	17	1	**334-1092**	1	COVER AS	
	18	1	**281-9217**	1	BRACKET AS	
	19	1	**282-1960**	1	HINGE	
	20	1	**282-2061**	1	BRACKET AS	
	21	1	**282-2154**	1	BRACKET AS	
M		1	**8T-3612**	1	NUT-WELD (M8X1.25-THD)	
M	22	1	**282-3007**	18	SCREW-FLAT HEAD (M8X1.25X30-MM)	
	23	1	**293-8877**	1	SEAL	
	24	1	**293-8878**	1	SEAL	
	25	1	**293-8879**	1	SEAL	
	26	1	**334-1081**	1	DOOR AS-CAB	
	27	1	**334-1153**	1	LATCH-DOOR	
	28	1	**334-1156**	1	LINK AS	
	29	1	**334-1157**	1	LINK AS	
					(EACH LINK AS INCLUDES)	
		1	**6V-8185**	1	NUT (1/4-20-THD)	
		1	**108-5471**	1	CLEVIS	
	30	1	**334-1571**	1	STRUT	
	31	1	**3E-4352**	14	WASHER-HARD (8.8X20.5X2.5-MM THK)	
	32	1	**3E-4353**	2	WASHER-HARD (11X25X3-MM THK)	
M	33	1	**4I-8439**	4	SCREW (M8X1.25X16-MM)	
	34	1	**6V-2687**	4	SCREW-PAN HEAD (10-24X1-IN)	
M	35	1	**6V-7357**	4	BOLT (M6X1X25-MM)	
	36	1	**6V-7636**	4	PIN AS-SPRING	
M	37	1	**6V-8225**	2	NUT (M6X1-THD)	
M	38	1	**8T-4136**	2	BOLT (M10X1.5X25-MM)	
M	39	1	**8T-4189**	4	BOLT (M8X1.25X20-MM)	
	40	1	**8T-4205**	4	WASHER-HARD (7.2X14.5X2-MM THK)	
M	41	1	**8T-4908**	2	BOLT (M8X1.25X25-MM)	
M	42	1	**8T-7547**	8	BOLT (M8X1.25X30-MM)	
	43	1	**8Y-4614**	1	SEAL-HANDLE	
M	44	1	**9X-2044**	4	SCREW-TRUSS HEAD (M6X1X16-MM)	
	45	1	**9X-8256**	2	WASHER (6.6X12X2-MM THK)	
E	46	1	**178-8894**		SEAL (388-CM)	

E-ORDER BY THE CENTIMETER
J-REQUIRES CORPORATE KEY
M-METRIC PART

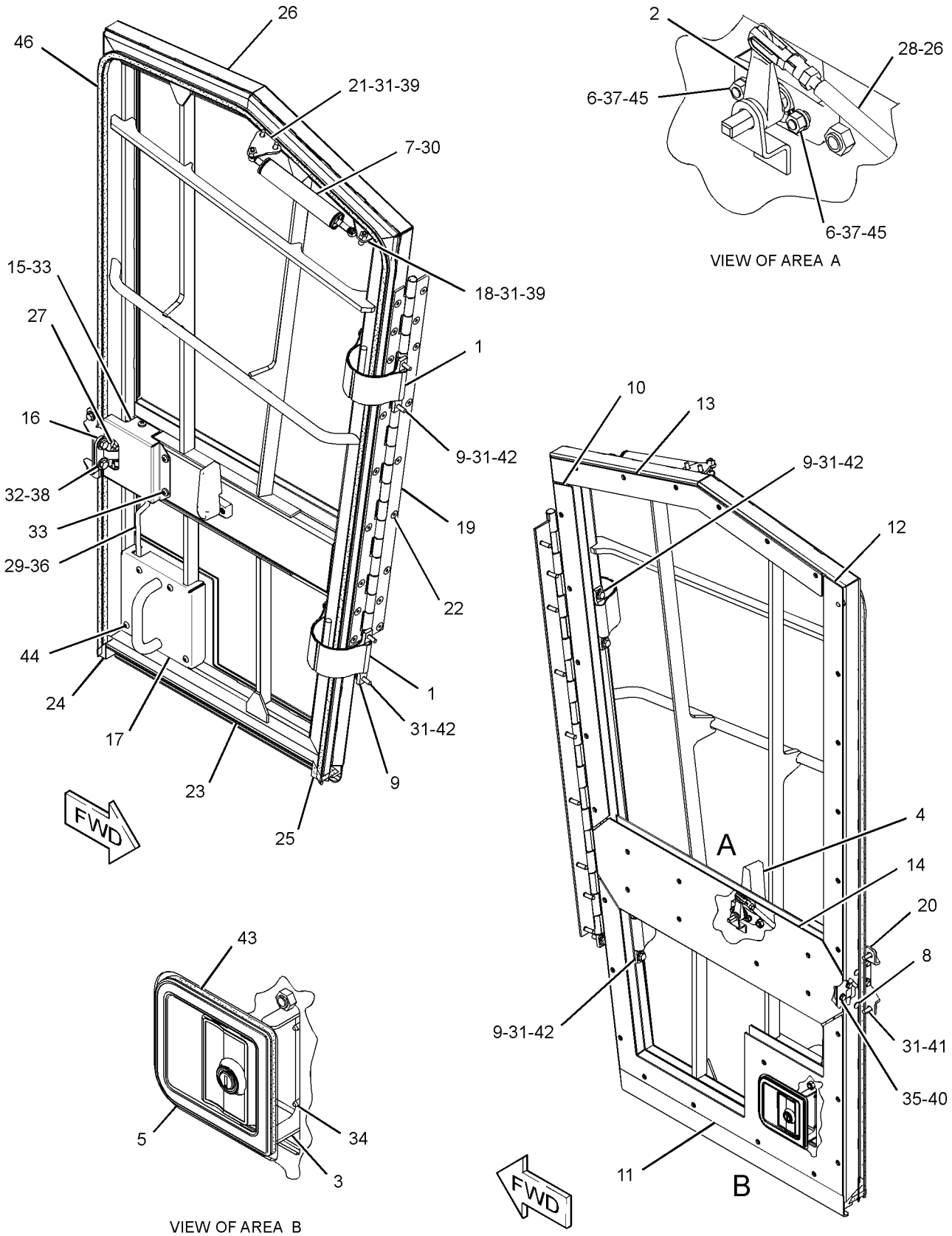

GRAPHIC #1 **<END>** g02133994

OPERATOR STATION

365-3556 DUCT GP-CAB AIR

S/N: F7B1-UP

PART OF 254-5493 AIR CONDITIONER GP

SMCS-734D **i05107218**

NOTE	REF NO	GRAPHIC REF	PART NUMBER	QTY	PART NAME 1 2 3 4 5 6 (PRODUCT LEVEL)	SEE PAGE
	1	1	**112-7448**	1	FILTER ELEMENT-CAB AIR (STANDARD EFFICIENCY)	
	2	1	**164-8474**	10	LOUVER AS-VENT	
	3	1	**171-4047**	2	LOUVER AS-VENT	
	4	1	**186-5107**	2	SCREW-DRIVE (NO 8-16X1.25-IN)	
	5	1	**239-1380**	1	DUCT	
M	6	1	**8T-5005**	2	BOLT (M10X1.5X70-MM)	
	7	1	**8Y-6388**	3	LOUVER AS-VENT	
	8	1	**243-6307**	1	DUCT AS	
	9	1	**243-6310**	1	DUCT AS	
	10	1	**358-6603**	1	DUCT AS	
	11	1	**358-6604**	1	DUCT AS	
	12	1	**100-9992**	2	WASHER (4.8X25X2-MM THK)	
	13	1	**104-2091**	10	SCREW-FLAT HEAD (6-20X0.5-IN)	
	14	1	**7X-0772**	9	WASHER-HARD (10.2X25.5X2.5-MM THK)	
M	15	1	**8T-4137**	7	BOLT (M10X1.5X20-MM)	
AF		1	**175-2838**	1	FILTER ELEMENT-CAB AIR (ULTRA HIGH EFFICIENCY)	

A-NOT PART OF THIS GROUP
F-NOT SHOWN
M-METRIC PART

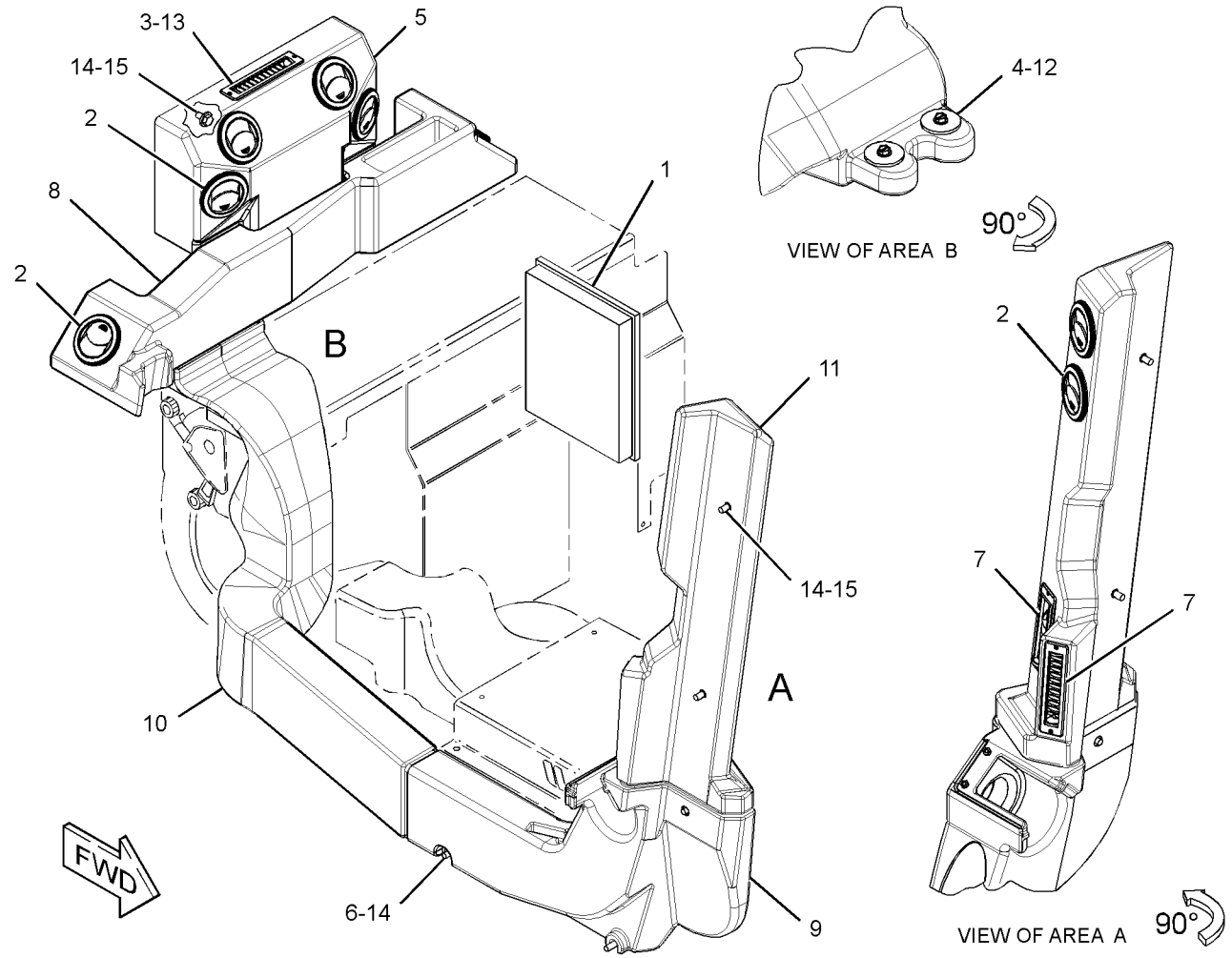

GRAPHIC #1 **<END>** g02361096

OPERATOR STATION

321-3821 FRAME GP-WINDOW

S/N: F7B1-UP

PART OF 370-9181 CAB GP

SMCS-7310 **i03883846**

NOTE	REF NO	GRAPHIC REF	PART NUMBER	QTY	PART NAME 1 2 3 4 5 6 (PRODUCT LEVEL)	SEE PAGE
	1	1	**317-6825**	2	PLATE	
	2	1	**317-6826**	1	PLATE	
	3	1	**317-6828**	1	ANGLE	
	4	1	**317-6829**	1	ANGLE	
	5	1	**317-6830**	1	ANGLE	
	6	1	**317-6831**	1	ANGLE	
	7	1	**319-8192**	1	ANGLE AS	
	8	1	**319-8232**	1	ANGLE AS	
	9	1	**319-8233**	1	ANGLE AS	
	10	1	**344-1759**	1	RETAINER	
	11	1	**344-1760**	1	RETAINER	
	12	1	**344-1761**	1	RETAINER	
	13	1	**344-1763**	1	RETAINER	
	14	1	**344-1771**	1	RETAINER	

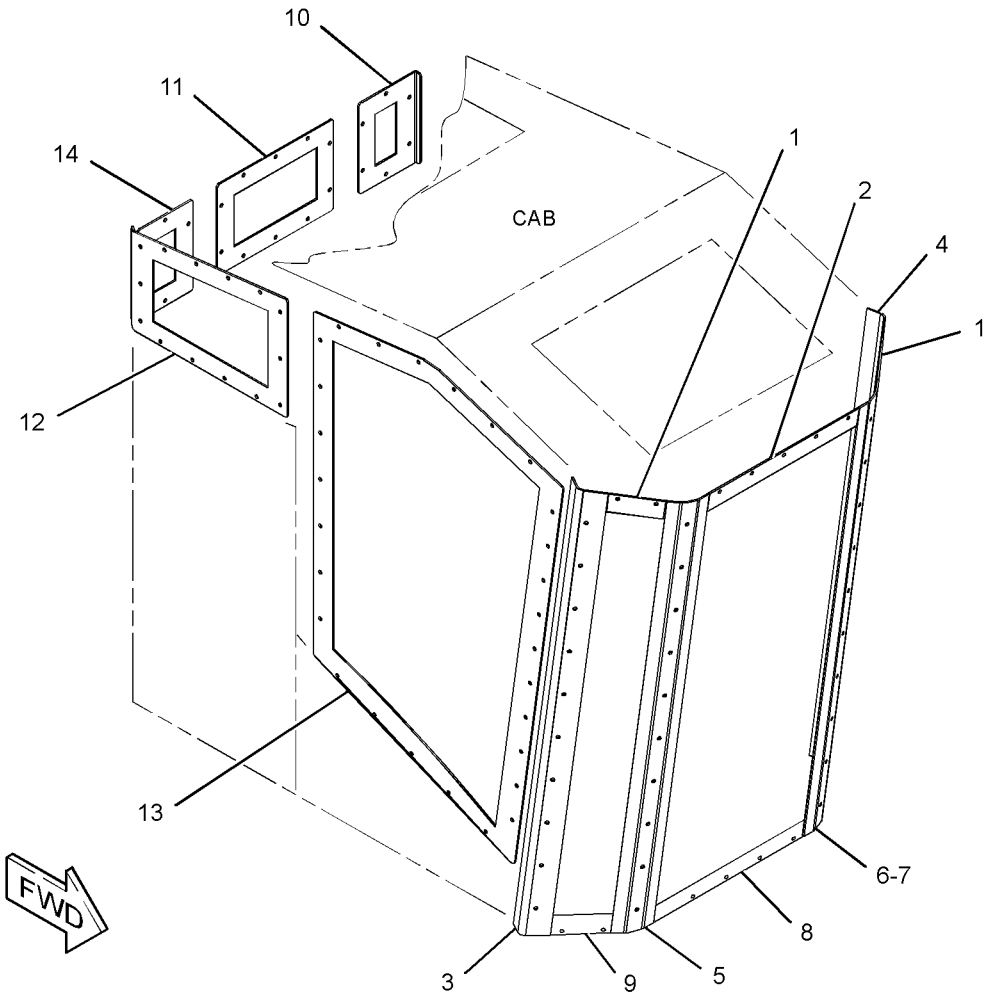

GRAPHIC #1

<END>

g02131435

OPERATOR STATION

197-9880 GUARD GP-WINDOW

S/N: F7B1-UP

PART OF 370-9182 CAB GP

SMCS-7182, 7315 **i01727716**

NOTE	REF NO	GRAPHIC REF	PART NUMBER	QTY	PART NAME 1 2 3 4 5 6 (PRODUCT LEVEL)	SEE PAGE
	1	1	**197-9890**	1	ANGLE	
	2	1	**197-9891**	1	GUARD AS	
M	3	1	**9X-2039**	2	SCREW-TRUSS HEAD	
M	4	1	**9X-2040**	8	SCREW-TRUSS HEAD	

M-METRIC PART

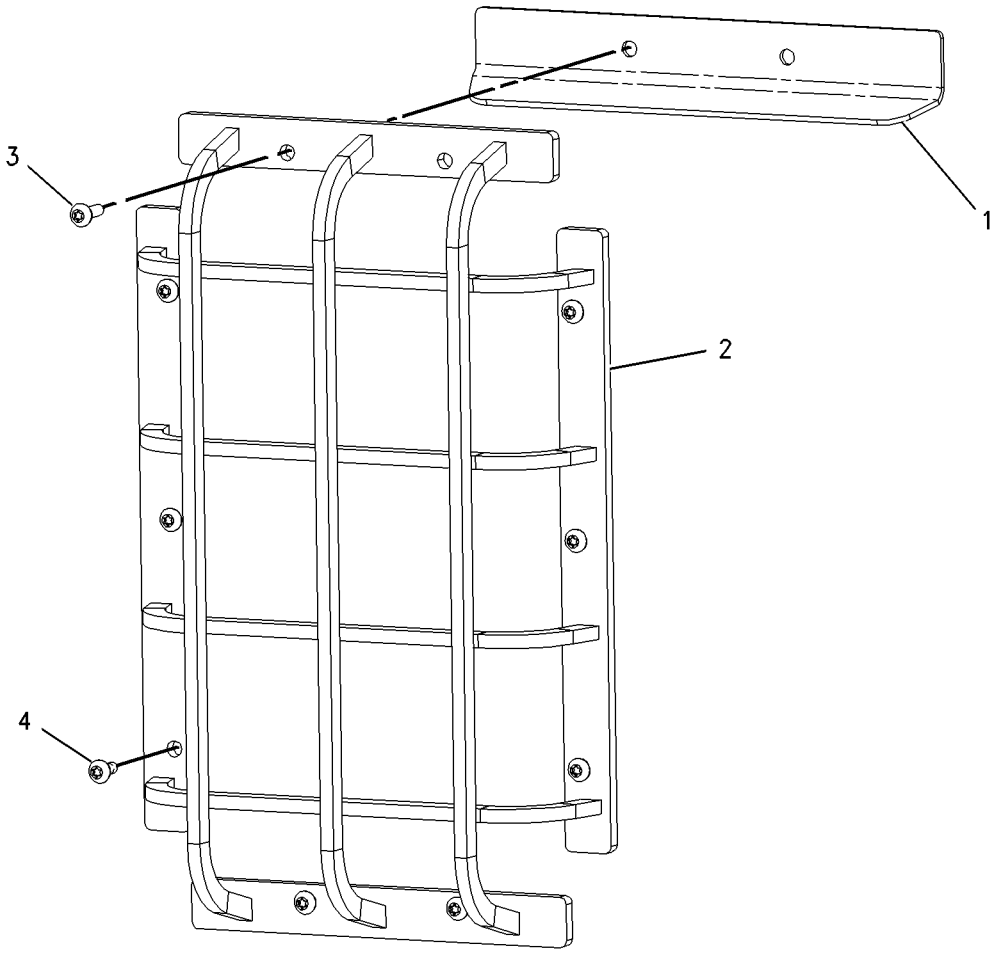

GRAPHIC #1 **<END>** g00887657

OPERATOR STATION

323-2220 HATCH GP-ROOF–CAB, REAR

S/N: F7B1-UP

PART OF 370-9181 CAB GP

SMCS-7303 **i04577394**

NOTE	REF NO	GRAPHIC REF	PART NUMBER	QTY	PART NAME 1 2 3 4 5 6 (PRODUCT LEVEL)	SEE PAGE
	1	1	**321-0016**	2	SEAL-WASHER	
	2	1	**323-2221**	1	HATCH AS	
	3	1	**323-2229**	1	CATCH AS (LH)	
	4	1	**323-2288**	2	LATCH	
	5	1	**325-6732**	1	CATCH AS (RH)	
	6	1	**8T-4121**	8	WASHER-HARD (11X21X2.5-MM THK)	
M	7	1	**9X-2040**	8	SCREW-TRUSS HEAD (M10X1.5X25-MM)	
D	8	1	**6V-8109**		SEAL (3-M)	

D-ORDER BY THE METER
M-METRIC PART

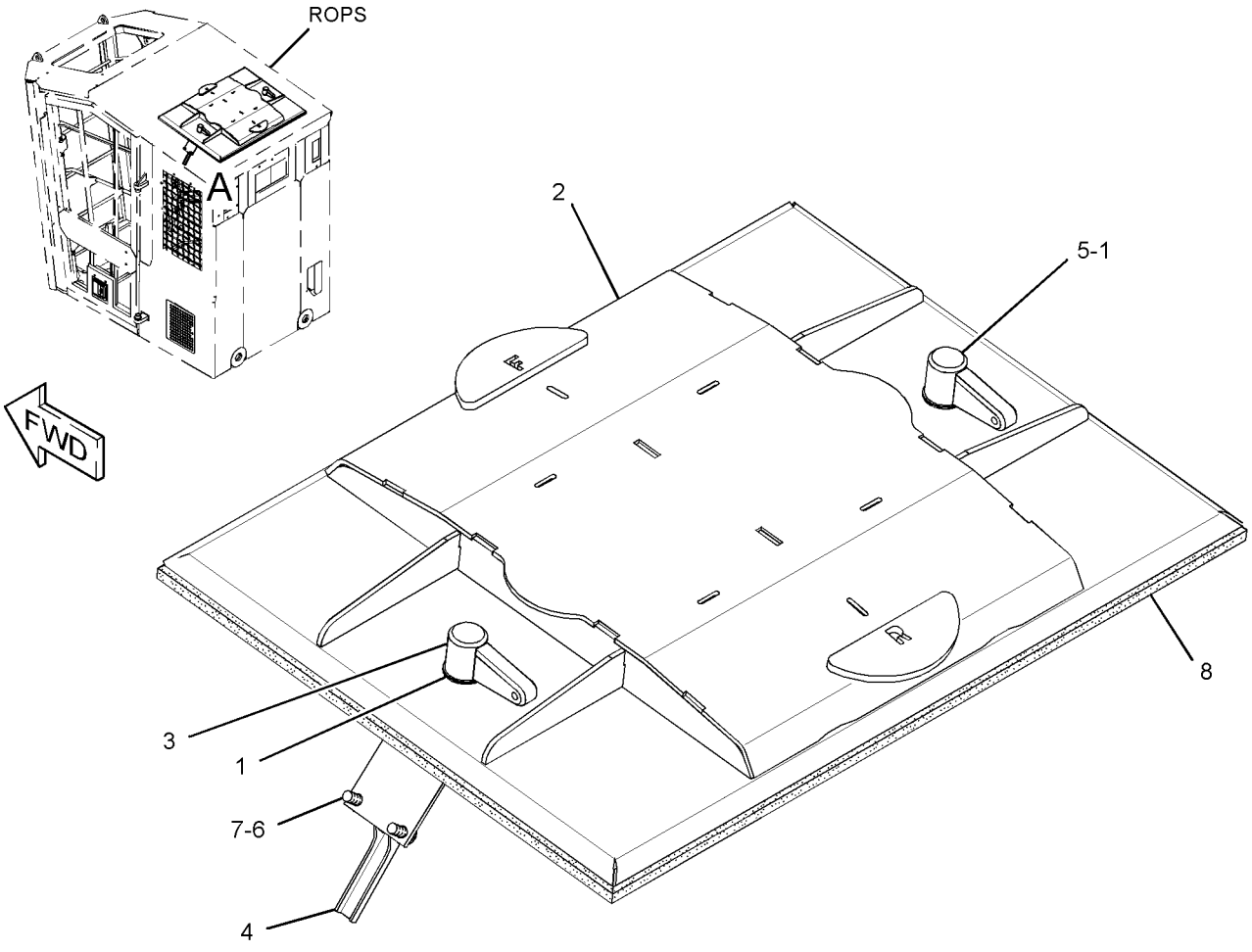

VIEW OF AREA A

GRAPHIC #1 **<END>** g02797597

329-5158 HATCH GP-ROOF–CAB, FRONT

S/N: F7B1-UP

PART OF 370-9182 CAB GP

SMCS-7303 **i04629412**

NOTE	REF NO	GRAPHIC REF	PART NUMBER	QTY	PART NAME 1 2 3 4 5 6 (PRODUCT LEVEL)	SEE PAGE
	1	1	**323-2288**	2	LATCH	
	2	1	**329-3117**	1	WINDOW	
	3	1	**329-5157**	1	HATCH AS	
	4	1	**338-8900**	1	RETAINER	
M	5	1	**127-2170**	14	SCREW-TRUSS HEAD (M8X1.25X20-MM)	
	6	1	**8T-4121**	8	WASHER-HARD (11X21X2.5-MM THK)	
M	7	1	**9X-2040**	8	SCREW-TRUSS HEAD (M10X1.5X25-MM)	
D	8	1	**6V-8109**		SEAL (3-M)	
J	9	1	**284-3953**		SEAL (24.2-DM)	
J	9A	1	**284-3953**		SEAL (23.8-DM)	

D-ORDER BY THE METER
J-ORDER BY THE DECIMETER
M-METRIC PART

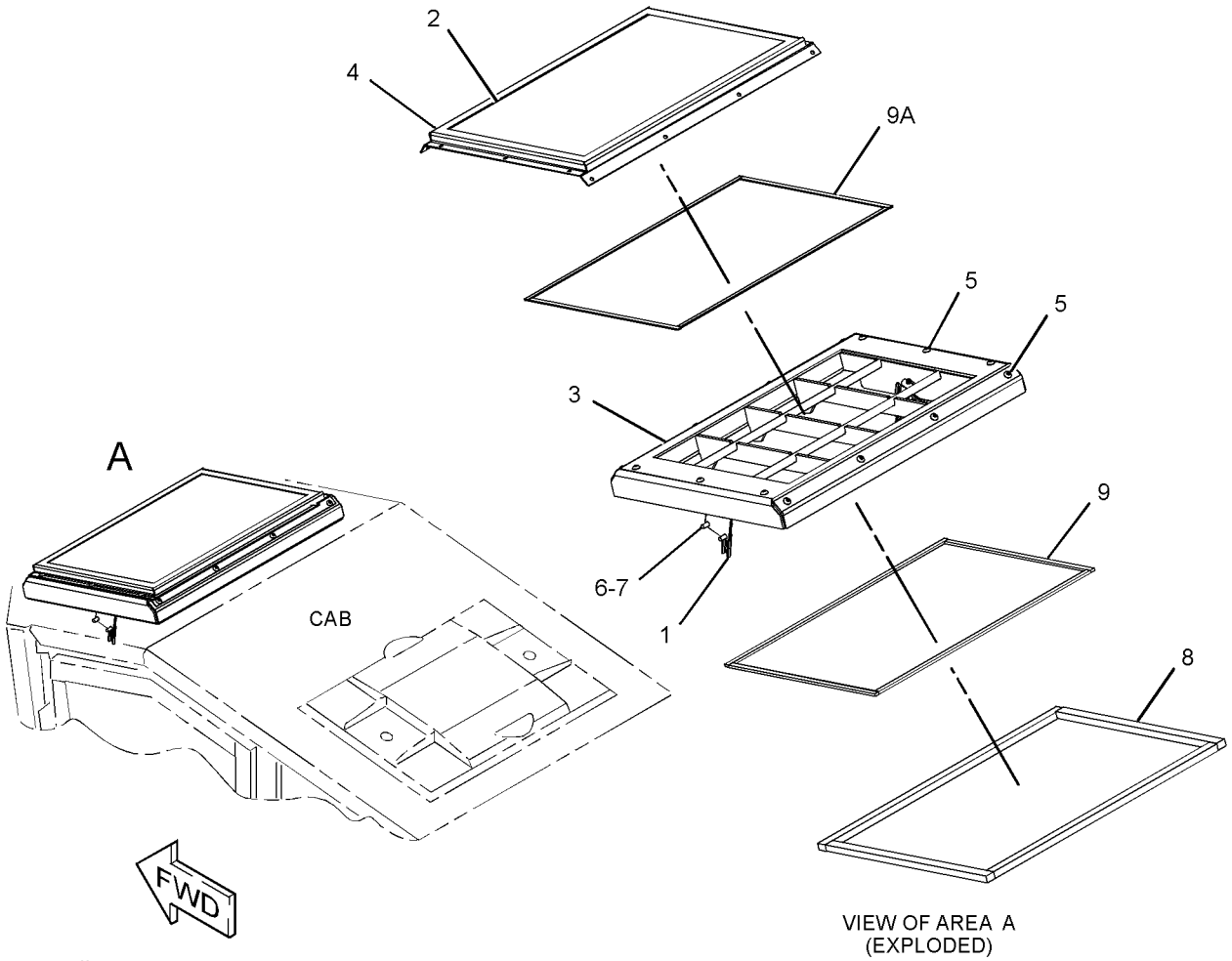

VIEW OF AREA A
(EXPLODED)

GRAPHIC #1 **<END>** g02131351

OPERATOR STATION

329-5162 HATCH GP-ROOF—CAB FRONT

S/N: F7B1-UP

AN ATTACHMENT

SMCS-7303 **i04629413**

NOTE	REF NO	GRAPHIC REF	PART NUMBER	QTY	PART NAME 1 2 3 4 5 6 (PRODUCT LEVEL)	SEE PAGE
	1	1	**323-2288**	2	LATCH	
	2	1	**329-3110**	1	WINDOW	
	3	1	**329-5161**	1	DOOR AS-ACCESS (CAB ROOF)	
	4	1	**338-8899**	1	RETAINER	
M	5	1	**127-2170**	14	SCREW-TRUSS HEAD (M8X1.25X20-MM)	
	6	1	**8T-4121**	8	WASHER-HARD (11X21X2.5-MM THK)	
M	7	1	**9X-2040**	8	SCREW-TRUSS HEAD (M10X1.5X25-MM)	
D	8	1	**6V-8109**		SEAL (3-M)	
J	9	1	**284-3953**		SEAL (19.9-DM)	
J	9A	1	**284-3953**		SEAL (20.2-DM)	

D-ORDER BY THE METER
J-ORDER BY THE DECIMETER
M-METRIC PART

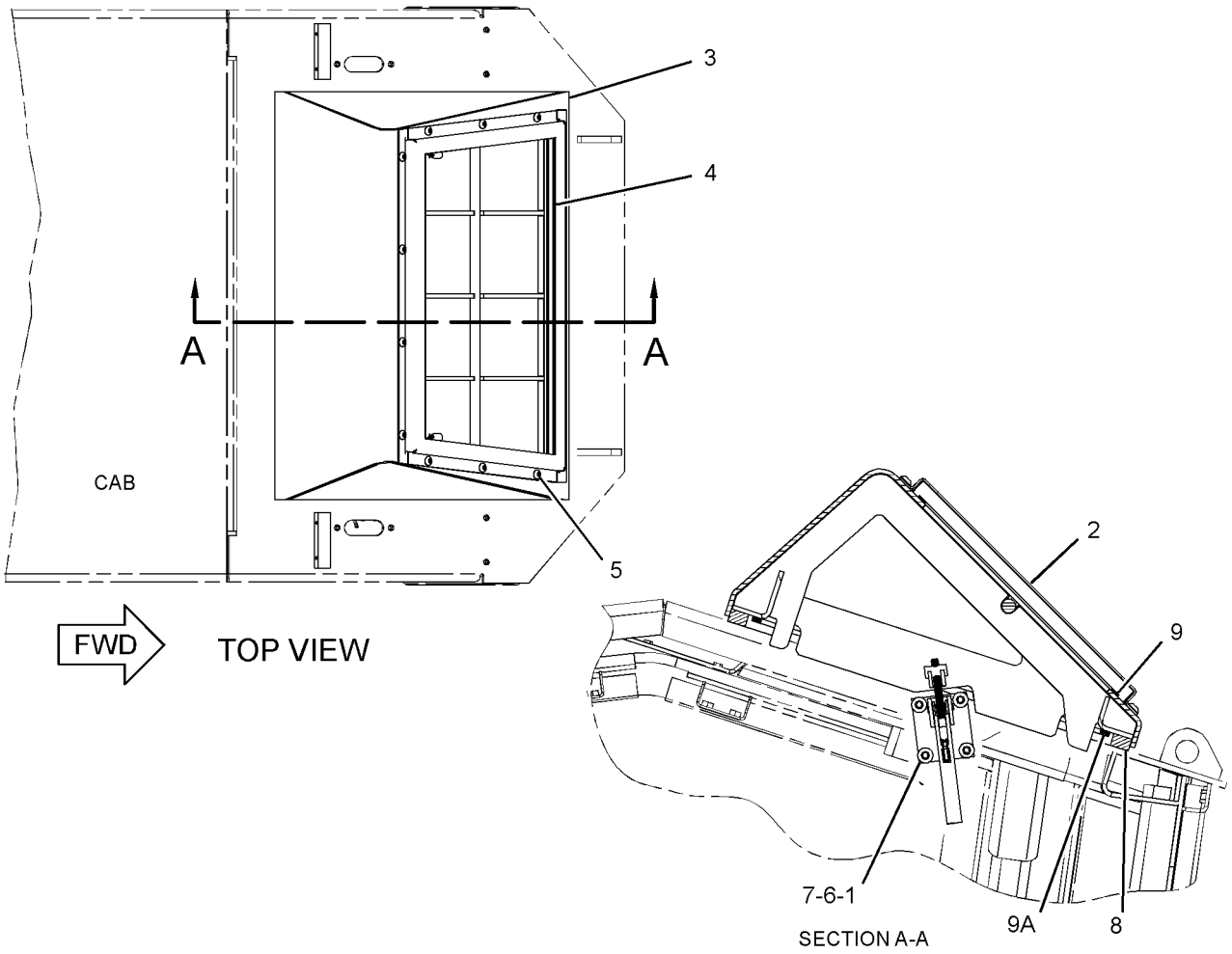

GRAPHIC #1 **<END>** g02156920

OPERATOR STATION

373-3973 INSTALLATION GP-RADIO

S/N: F7B1-UP

PART OF 362-3893 OPERATOR AR

SMCS-7338 **i04663310**

NOTE	REF NO	GRAPHIC REF	PART NUMBER	QTY	PART NAME 1 2 3 4 5 6 (PRODUCT LEVEL)	SEE PAGE
	1	1	**6T-7695**	2	SPEAKER AS-RADIO	
	2	1	**8E-1118**	1	ANTENNA AS	
	3	1	**9U-8263**	1	COVER	
	4	1	**9U-8746**	1	CABLE AS-COAXIAL	
	5	1	**101-3055**	2	COVER-SPEAKER	
M	6	1	**113-0919**	8	BOLT-SOCKET HEAD (M4X0.7X25-MM)	
	7	1	**374-0707**	1	COVER	
M	8	1	**9X-2042**	5	SCREW-TRUSS HEAD (M6X1X12-MM)	

M-METRIC PART

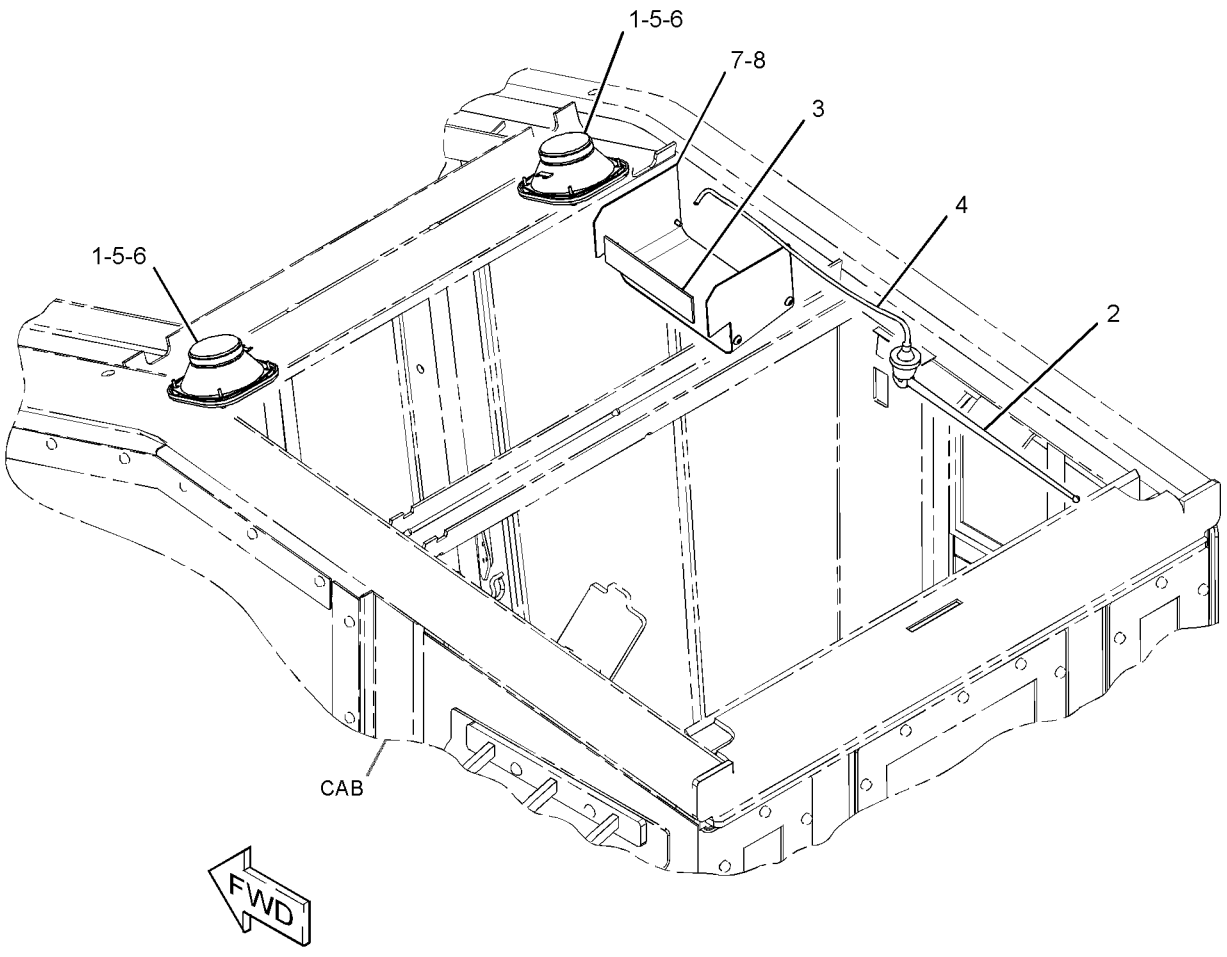

GRAPHIC #1 **<END>** g02476794

OPERATOR STATION

373-2682 LINER GP-CAB

S/N: F7B1-UP

PART OF 373-2681 TRIM GP-CAB

SMCS-7329 **i04369647**

NOTE	REF NO	GRAPHIC REF	PART NUMBER	QTY	PART NAME 1 2 3 4 5 6 (PRODUCT LEVEL)	SEE PAGE
	1	1	**263-2761**	1	FOAM	
	2	1	**263-2764**	1	FOAM	
	3	1	**263-2765**	1	FOAM	
	4	1	**263-3338**	1	FOAM	
	5	1	**280-1072**	1	FOAM	
	6	1	**323-2232**	1	FOAM	
	7	1	**323-2233**	1	FOAM	
	8	1	**323-2234**	1	FOAM	
	9	1	**337-0733**	1	FOAM	
	10	1	**337-0734**	1	FOAM	
	11	1	**373-2683**	1	FOAM	

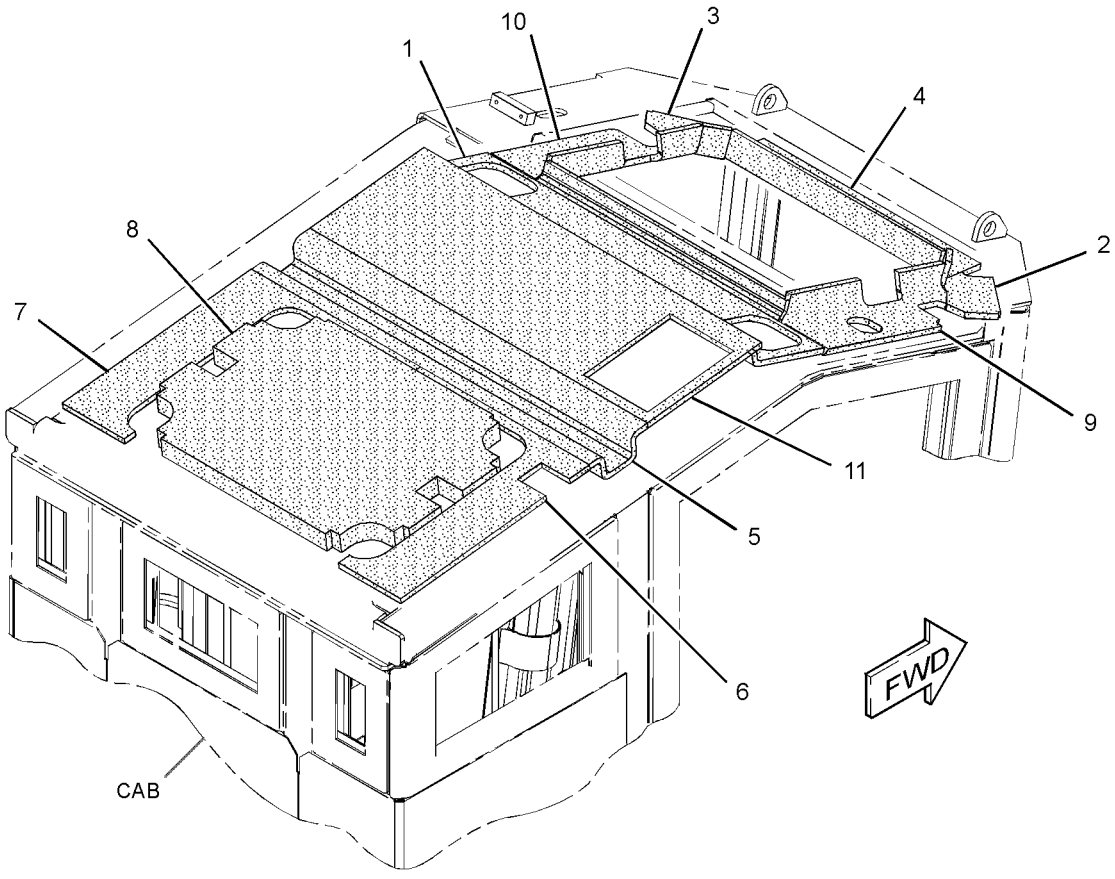

GRAPHIC #1 **<END>** g02530622

OPERATOR STATION

339-8294 LINES GP-AIR CONDITIONER

S/N: F7B1-UP

PART OF 362-3899 CHASSIS AR

SMCS-1808 **i04963052**

NOTE	REF NO	GRAPHIC REF	PART NUMBER	QTY	PART NAME 1 2 3 4 5 6 (PRODUCT LEVEL)	SEE PAGE
	1	1	**5D-1026**	4	CLAMP-BAND	
	3	1	**121-7098**	1	BRACKET AS	
M		1	**8T-4138**	2	BOLT (M6X1X20-MM)	
		1	**9X-8256**	2	WASHER (6.6X12X2-MM THK)	
	5	1	*165-2273*	2	VALVE GP-SHUTOFF	
					(EACH INCLUDES)	
		1	**3K-0360**	1	SEAL-O-RING	
		1	**6V-7238**	1	VALVE-SHUTOFF	
	6	1	**176-1902**	1	DRYER-REFRIGERANT (RECEIVER)	
	7	1	*194-2903*	2	ELBOW AS	
					(EACH INCLUDES)	
		1	**3K-0360**	1	SEAL-O-RING	
		1	**8T-0119**	1	ELBOW	
	9	1	**204-2281**	3	STRAP-CABLE	
	10	1	*341-0087*	1	PLUG AS	
		1	**6V-6609**	1	SEAL-O-RING	
		1	**9S-4185**	1	PLUG-O-RING	
	11	1	**366-2632**	1	HOSE AS	
	12	1	**366-2633**	1	HOSE AS	
	13	1	**366-2634**	1	HOSE AS	
	14	1	**366-2635**	1	HOSE AS	
	16	1	**223-3490**	1	CLIP	
	18	1	**5K-5338**	2	CLIP	
	19	1	**5P-4325**	1	CLIP	
	20	1	**5P-6994**	1	CLIP	
	21	1	**6D-1641**	5	CLIP	
	22	1	**6D-3479**	1	CLIP	
M	23	1	**6V-7357**	2	BOLT (M6X1X25-MM)	
	24	1	**8T-4121**	11	WASHER-HARD (11X21X2.5-MM THK)	
M	25	1	**8T-4136**	2	BOLT (M10X1.5X25-MM)	
M	26	1	**8T-4137**	6	BOLT (M10X1.5X20-MM)	
M	28	1	**8T-4189**	2	BOLT (M8X1.25X20-MM)	
M	29	1	**8T-4196**	1	BOLT (M10X1.5X35-MM)	
	30	1	**8T-4224**	2	WASHER-HARD (8.8X16X2-MM THK)	
M	32	1	**8T-4971**	2	BOLT (M6X1X30-MM)	
	33	1	**9M-8406**	1	CLIP	
	34	1	**9X-8250**	3	CLIP	
	35	1	**9X-8256**	4	WASHER (6.6X12X2-MM THK)	
E	36	1	**5P-0767**		HOSE (413-CM)	
E	36A	1	**5P-0767**		HOSE (340-CM)	
	37	1	*392-0804*	1	TEE AS	
		1	**168-3332**	1	TEE-ADAPTER	
		1	**238-5080**	1	SEAL-O-RING	
	38	1	**302-3908**	2	SPACER (11X20X30-MM THK)	
M	39	1	**8T-6466**	2	BOLT (M10X1.5X60-MM)	

E-ORDER BY THE CENTIMETER
M-METRIC PART

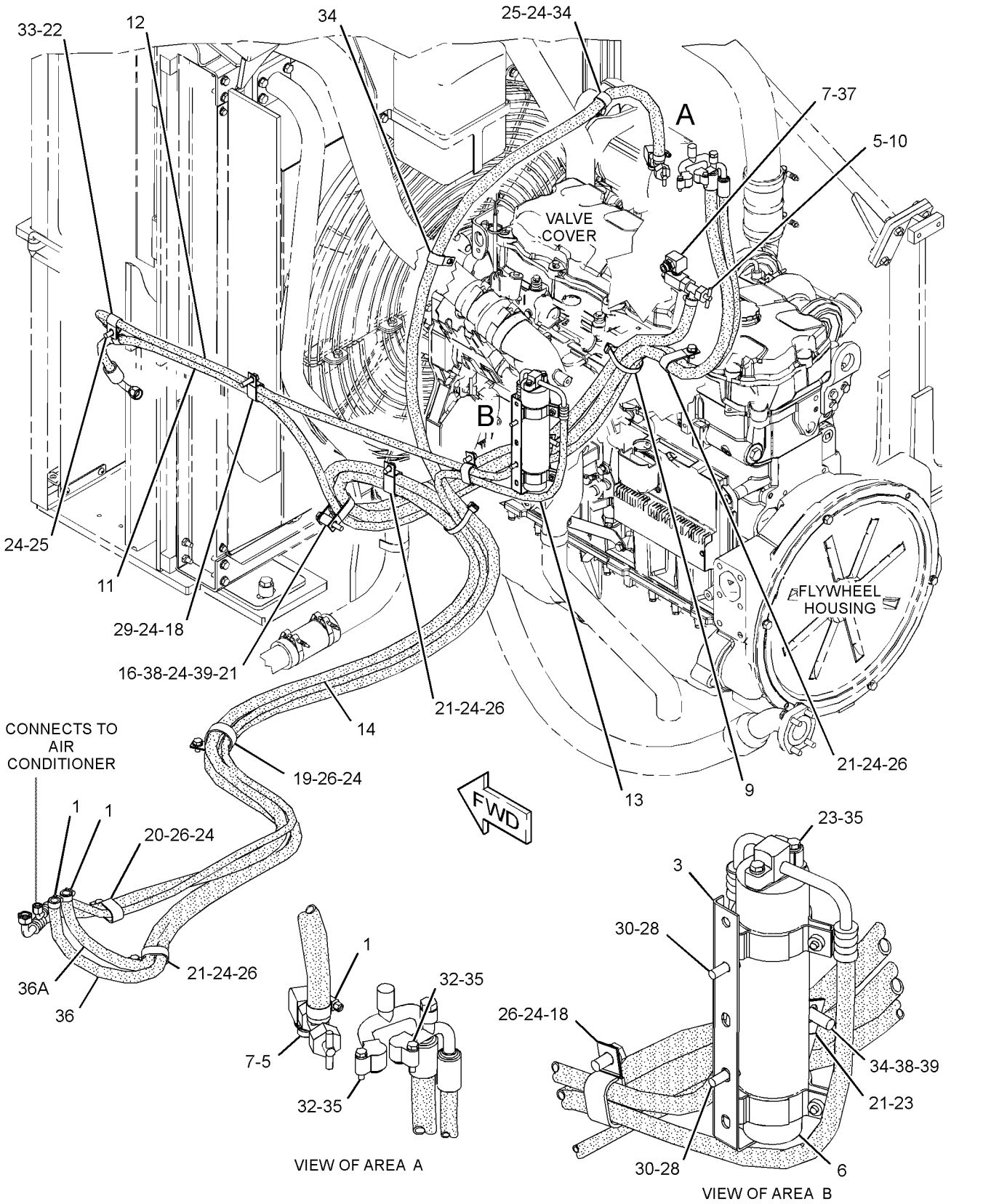

GRAPHIC #1 **<END>** g03182816

OPERATOR STATION

344-3989 MOUNTING GP-CAB

S/N: F7B1-UP

PART OF 362-3893 OPERATOR AR

i04271009

NOTE	REF NO	GRAPHIC REF	PART NUMBER	QTY	PART NAME 1 2 3 4 5 6 (PRODUCT LEVEL)	SEE PAGE
	1	1	**7X-0593**	4	WASHER-HARD (34X57X6-MM THK)	
	2	1	**8W-8512**	2	PIN AS	
	3	1	**117-8131**	8	MOUNT AS	
	4	1	**242-6098**	8	SLEEVE	
	5	1	**248-0539**	8	WASHER (32X135X12-MM THK)	
	6	1	**253-7639**	2	PIN AS	
	7	1	**255-4704**	1	NUT AS	
M	8	1	**3E-8029**	1	BOLT (M30X3.5X230-MM)	
	9	1	**7X-7729**	2	WASHER (11X25X3-MM THK)	
M	10	1	**8T-4137**	2	BOLT (M10X1.5X20-MM)	
M	11	1	**8T-4139**	2	BOLT (M12X1.75X30-MM)	
	12	1	**8T-4223**	2	WASHER-HARD (13.5X25.5X3-MM THK)	
M	13	1	**8T-6624**	3	BOLT (M30X3.5X180-MM)	

M-METRIC PART

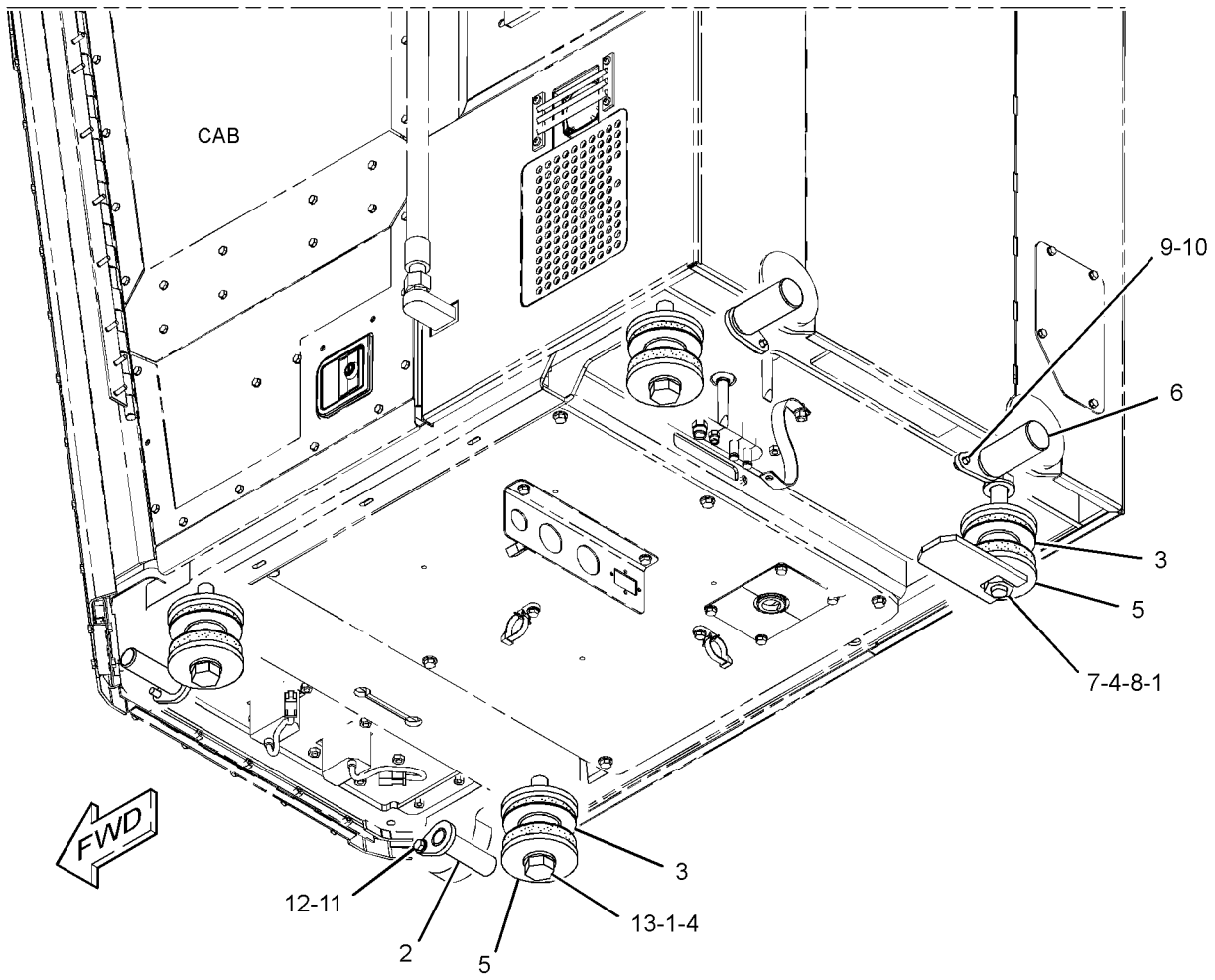

GRAPHIC #1 **<END>** g02532641

OPERATOR STATION

362-3893 OPERATOR AR

S/N: F7B1-UP

PART OF 351-6848 COMMON AR

SMCS-7301 **i05107250**

NOTE	PART NUMBER	QTY	PART NAME 1 2 3 4 5 6 (PRODUCT LEVEL)	SEE PAGE
Y	*254-5493*	1	AIR CONDITIONER GP	436
Y	*370-9182*	1	CAB GP	446
Y	*243-5686*	1	CONSOLE GP-OPERATOR	448
Y	*224-4990*	1	CONTROL & MTG GP-JOYSTICK (FELLING HEAD)	454
Y	*238-8167*	1	CONTROL & MTG GP-PEDAL	455
Y	*368-3009*	1	CONTROL GP-MONITOR	457
Y	*373-3973*	1	INSTALLATION GP-RADIO	467
Y	*320-7443*	1	LIGHTING GP-FLOOD (CAB FRONT, SIDE)	133
Y	*344-3989*	1	MOUNTING GP-CAB	471
Y	*375-1044*	1	PANEL GP-ELECTRONIC	473
Y	*373-2679*	1	PLATFORM GP-OPERATOR	475
Y	*327-6502*	1	SEAT & MOUNTING GP (AIR SUSPENSION) (HIGH BACK, TILT)	483
Y	*305-0466*	1	SEAT BELT GP (RETRACTABLE, 76-MM)	484
Y	*327-6523*	1	SUPPORT GP-SEAT	487
Y	*373-2681*	1	TRIM GP-CAB	489
Y	*365-1387*	1	WIRING GP-CAB	172

Y-SEPARATE ILLUSTRATION

<END>

OPERATOR STATION

375-1044 PANEL GP-ELECTRONIC

S/N: F7B1-UP

PART OF 362-3893 OPERATOR AR

SMCS-4490, 5163, 7451, 7490 **i04925418**

NOTE	REF NO	GRAPHIC REF	PART NUMBER	QTY	PART NAME 1 2 3 4 5 6 (PRODUCT LEVEL)	SEE PAGE
	1	1	**3E-5239**	1	RELAY AS (24-VOLT) (FRONT FLOODLIGHTS)	
	1A	1	**3E-5239**	1	RELAY AS (24-VOLT) (BOOM, RADIATOR FLOODLIGHTS)	
	1B	1	**3E-5239**	1	RELAY AS (24-VOLT) (ANGLED SIDE FLOODLIGHTS)	
	1C	1	**3E-5239**	1	RELAY AS (24-VOLT) (RADIATOR FLOODLIGHTS)	
	1D	1	**3E-5239**	1	RELAY AS (24-VOLT) (FUEL TRANSFER PUMP)	
	1E	1	**3E-5239**	1	RELAY AS (24-VOLT) (HYDRAULIC FILL PUMP, MOTOR)	
	1F	1	**3E-5239**	1	RELAY AS (24-VOLT) (CAB FLOODLIGHTS)	
	2	1	**172-9200**	1	SUPPRESSOR-ARC	
	3	1	**340-7161**	2	CONVERTER-POWER (24-VOLT TO 12-VOLT)	
Y	4	1	**241-8368**	1	SWITCH GP-MAGNETIC (24-VOLT) (MAIN RELAY)	164
M	5	1	**8T-4171**	1	BOLT (M6X1X12-MM)	
	6	1	**264-7801**	1	PLATE AS	
	7	1	**9X-8256**	3	WASHER (6.6X12X2-MM THK)	
	8	1	**130-5300**	7	CLIP	
	9	1	**132-5789**	1	CLIP	
M	10	1	**123-0707**	3	SCREW-HEX SOCKET (M4X0.7X20-MM)	
	11	1	**189-3158**	4	SUPPRESSOR-ARC	
M	12	1	**9X-2042**	6	SCREW-TRUSS HEAD (M6X1X12-MM)	
	13	1	**8T-4121**	6	WASHER-HARD (11X21X2.5-MM THK)	
M	14	1	**8T-4137**	6	BOLT (M10X1.5X20-MM)	
M	15	1	**8T-4138**	2	BOLT (M6X1X20-MM)	
	16	1	**8T-0328**	3	WASHER-HARD (5.5X10X1-MM THK)	

M-METRIC PART
Y-SEPARATE ILLUSTRATION

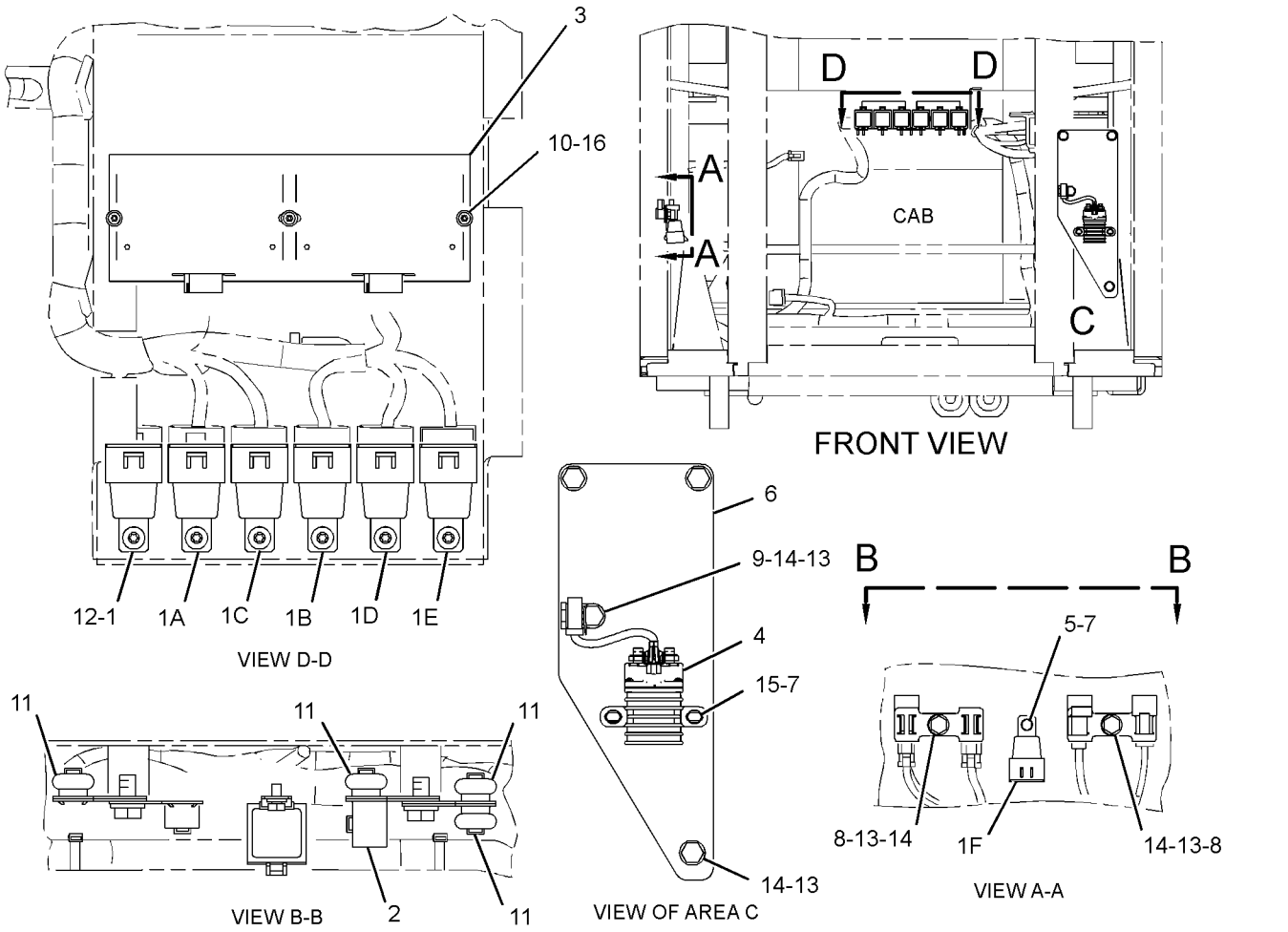

GRAPHIC #1

<END>

g03154017

OPERATOR STATION

373-2679 PLATFORM GP-OPERATOR

S/N: F7B1-UP

PART OF 362-3893 OPERATOR AR

SMCS-7253 **i04316423**

NOTE	REF NO	GRAPHIC REF	PART NUMBER	QTY	PART NAME 1 2 3 4 5 6 (PRODUCT LEVEL)	SEE PAGE
M	1	1	**129-5167**	3	SCREW (M6X1X8-MM)	
	2	1	**238-7570**	1	TREAD	
	3	1	**245-4436**	1	PLATE	
	4	1	**372-7908**	1	PLATE	
	5	1	**261-0859**	1	FOAM	
	6	1	**261-0860**	1	FLOOR MAT	
M	7	1	**139-4613**	2	BOLT (M10X1.5X16-MM)	
	8	1	**8T-4121**	2	WASHER-HARD (11X21X2.5-MM THK)	
M	9	1	**8T-4139**	6	BOLT (M12X1.75X30-MM)	
	10	1	**8T-4223**	6	WASHER-HARD (13.5X25.5X3-MM THK)	
	11	1	**135-8965**	1	GROMMET	

M-METRIC PART

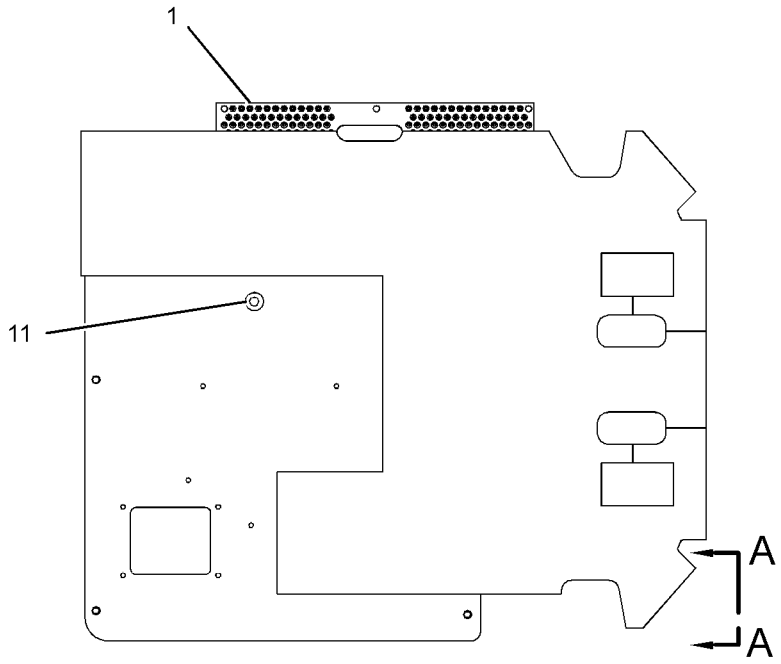

TOP VIEW

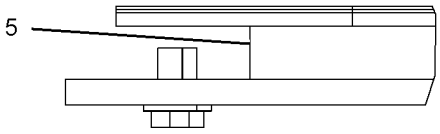

VIEW A-A

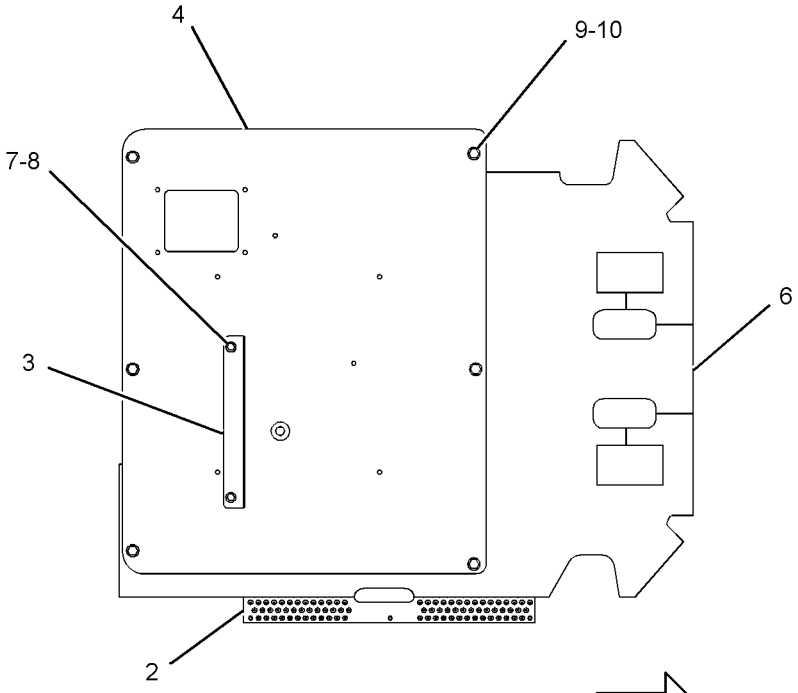

BOTTOM VIEW

GRAPHIC #1 **<END>** g02478999

OPERATOR STATION

285-2371 RADIO GP–AM/FM/WB/CD/USB

S/N: F7B1-UP

AN ATTACHMENT

SMCS-7338, 733C **i05107369**

NOTE	REF NO	GRAPHIC REF	PART NUMBER	QTY	PART NAME 1 2 3 4 5 6 (PRODUCT LEVEL)	SEE PAGE
	1	1	**136-5490**	1	BUSHING (RADIO MOUNT)	
CY	2	1	**366-8410**	1	RADIO GP (AM/FM/WB/CD/USB)	478
	3	1	**8K-1433**	1	GROMMET	

C-CHANGE FROM PREVIOUS TYPE
Y-SEPARATE ILLUSTRATION

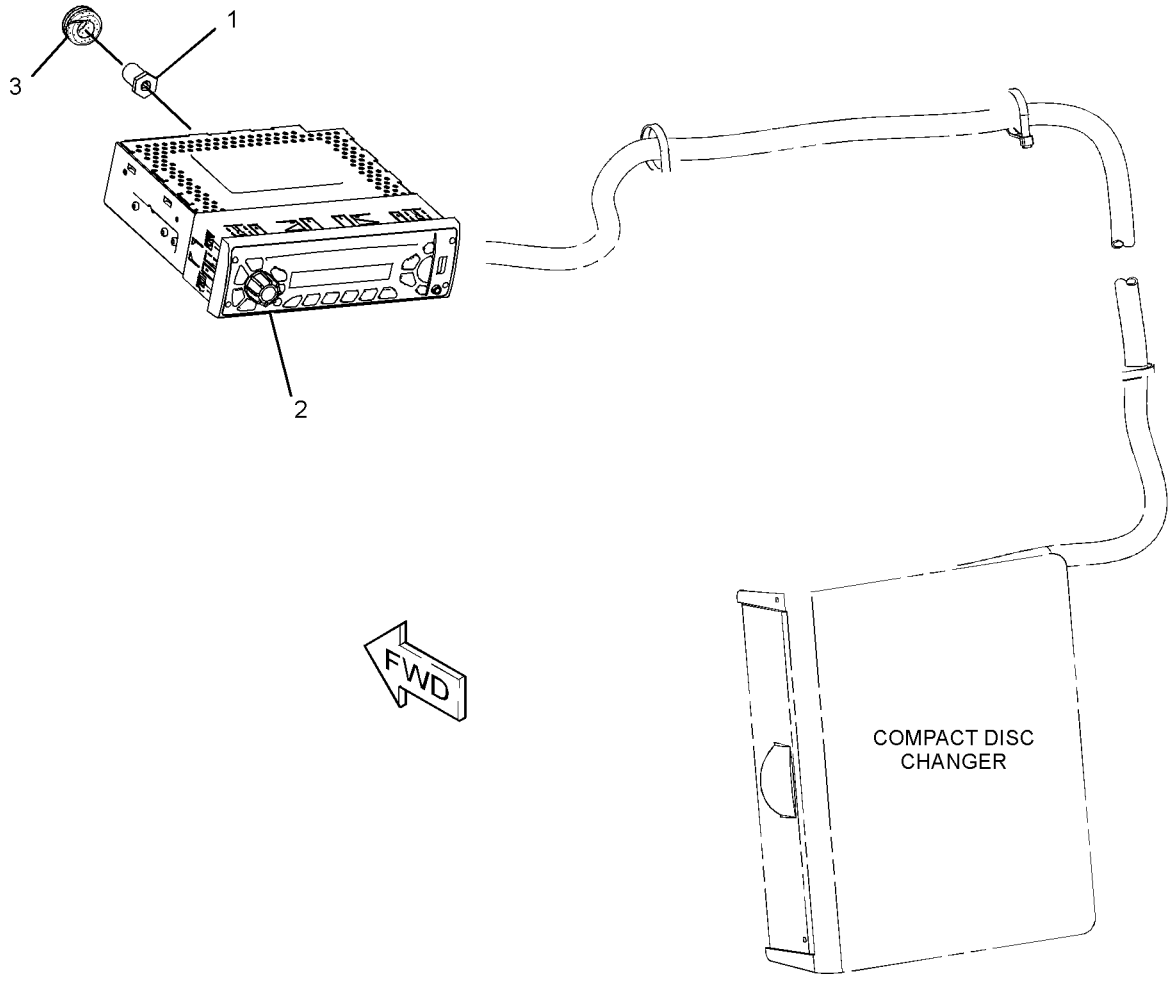

GRAPHIC #1 **<END>** g02115893

OPERATOR STATION

366-8410 RADIO GP—AM/FM/WB/CD/USB

S/N: F7B1-UP

PART OF 285-2371 RADIO GP

OPTIONAL FIELD REPLACEMENT ORDER 366-8411—PAGE 479, 366-8412—PAGE 480, 366-8413—PAGE 481, 366-8414—PAGE 482

AN ATTACHMENT

SMCS-7338, 733C **i04466430**

NOTE	REF NO	GRAPHIC REF	PART NUMBER	QTY	PART NAME 1 2 3 4 5 6 (PRODUCT LEVEL)	SEE PAGE
					NO SERVICED PARTS	

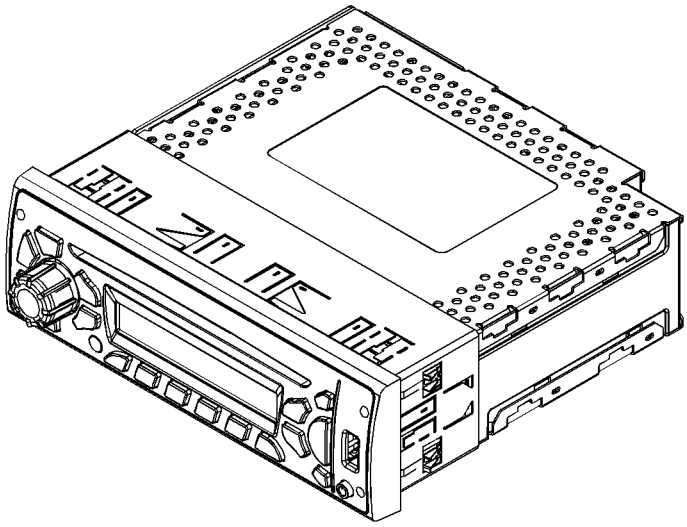

GRAPHIC #1 **<END>** g02748036

OPERATOR STATION

366-8411 RADIO GP—AM/FM/WB/CD/SIRIUS/USB

S/N: F7B1-UP

FIELD REPLACEMENT FOR 366-8410—PAGE 478

SMCS-7338, 733C **i04599091**

NOTE	REF NO	GRAPHIC REF	PART NUMBER	QTY	PART NAME 1 2 3 4 5 6 (PRODUCT LEVEL)	SEE PAGE
					NO SERVICED PARTS	

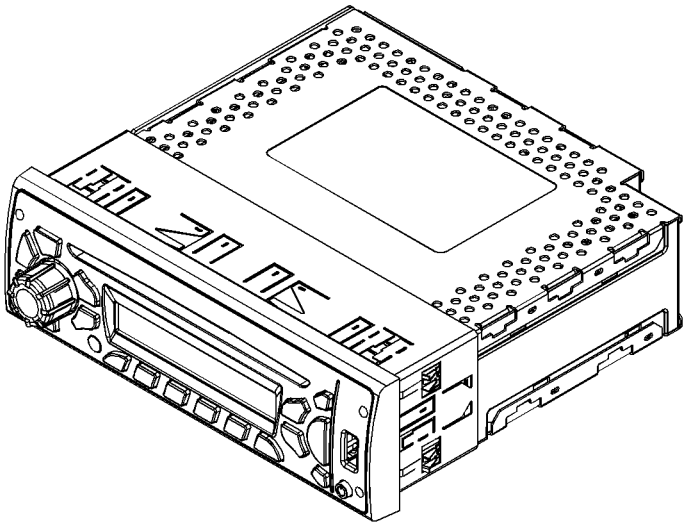

GRAPHIC #1 **<END>** g02748036

OPERATOR STATION

366-8412 RADIO GP—AM/FM/WB/CD/XM/USB

S/N: F7B1-UP

FIELD REPLACEMENT FOR 366-8410—PAGE 478

SMCS-7338, 733C **i04594032**

NOTE	REF NO	GRAPHIC REF	PART NUMBER	QTY	PART NAME 1 2 3 4 5 6 (PRODUCT LEVEL)	SEE PAGE
					NO SERVICED PARTS	

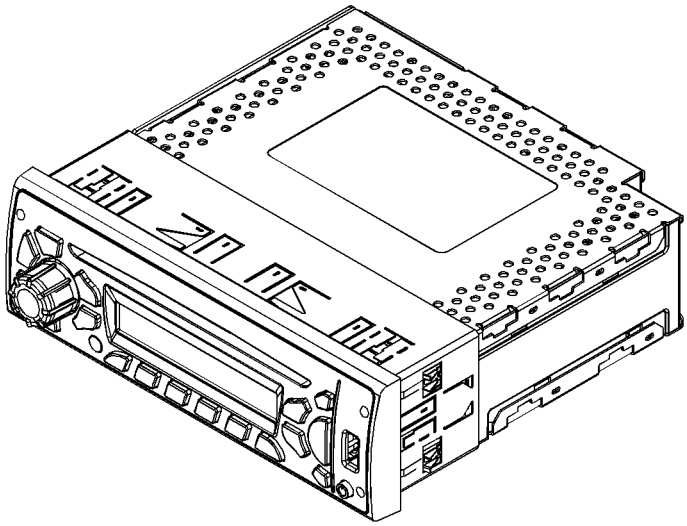

GRAPHIC #1 **<END>** g02748036

366-8413 RADIO GP—AM/FM/WB/CD/SIRIUS/USB/BLUETOOTH

S/N: F7B1-UP

FIELD REPLACEMENT FOR 366-8410—PAGE 478

SMCS-7338, 733C **i04599109**

NOTE	REF NO	GRAPHIC REF	PART NUMBER	QTY	PART NAME 1 2 3 4 5 6 (PRODUCT LEVEL)	SEE PAGE
					NO SERVICED PARTS	

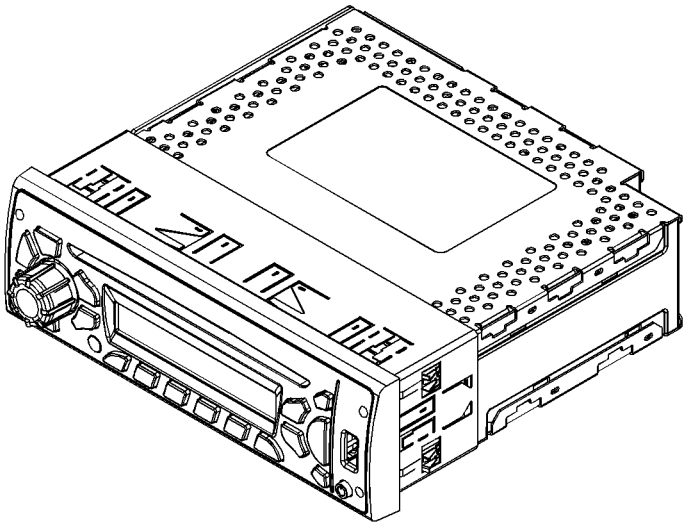

GRAPHIC #1 **<END>** g02748036

OPERATOR STATION

366-8414 RADIO GP—AM/FM/WB/CD/XM/USB/BLUETOOTH

S/N: F7B1-UP

FIELD REPLACEMENT FOR 366-8410—PAGE 478

SMCS-7338, 733C **i04599110**

NOTE	REF NO	GRAPHIC REF	PART NUMBER	QTY	PART NAME 1 2 3 4 5 6 (PRODUCT LEVEL)	SEE PAGE
					NO SERVICED PARTS	

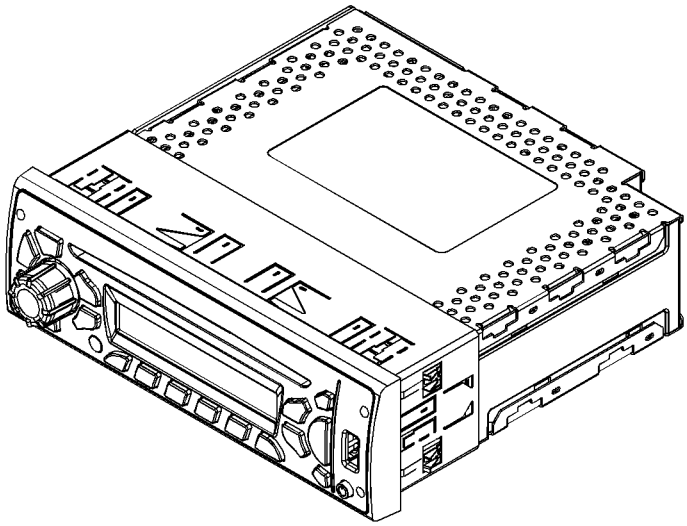

GRAPHIC #1 **<END>** g02748036

327-6502 SEAT & MOUNTING GP–HIGH BACK, TILT, AIR

S/N: F7B1-UP

PART OF 362-3893 OPERATOR AR

SMCS-7312 **i03811749**

NOTE	REF NO	GRAPHIC REF	PART NUMBER	QTY	PART NAME 1 2 3 4 5 6 (PRODUCT LEVEL)	SEE PAGE
Y	1	1	*327-6508*	1	SEAT GP-SUSPENSION (HIGH BACK, TILT)	486
M	2	1	**6V-8202**	4	BOLT-SOCKET HEAD (M8X1.25X16-MM)	

M-METRIC PART
Y-SEPARATE ILLUSTRATION

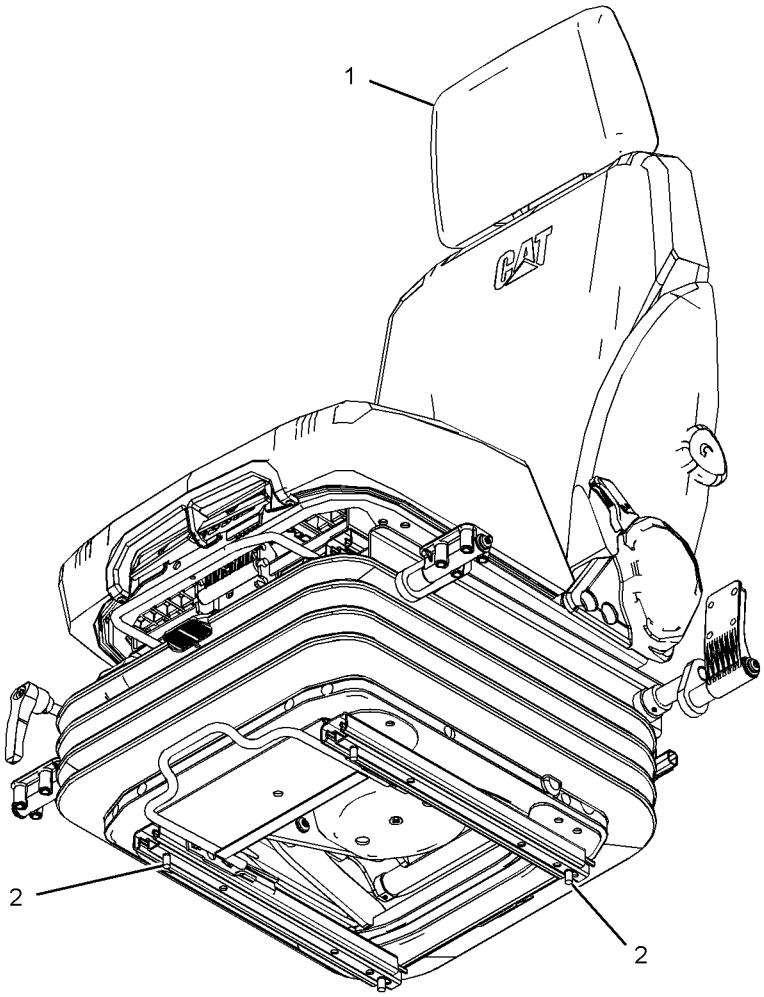

GRAPHIC #1 **<END>** g01958332

OPERATOR STATION

305-0466 SEAT BELT GP—RETRACTABLE, 76-MM

S/N: F7B1-UP

PART OF 362-3893 OPERATOR AR

SMCS-7327 **i03440942**

NOTE	REF NO	GRAPHIC REF	PART NUMBER	QTY	PART NAME 1 2 3 4 5 6 (PRODUCT LEVEL)	SEE PAGE
	1	1	**327-6540**	1	SEAT BELT GP (RETRACTABLE, 76-MM (3-IN))	

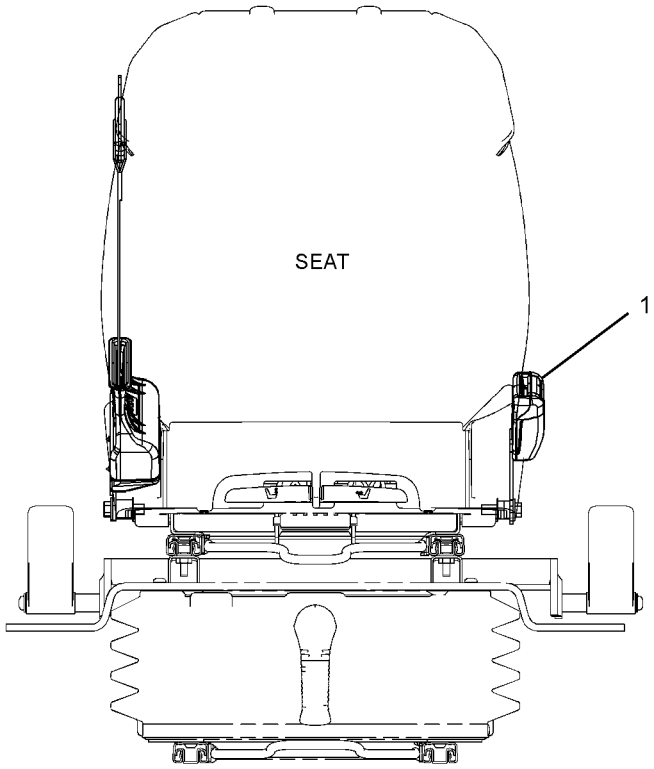

FRONT VIEW

GRAPHIC #1 **<END>** g01813653

OPERATOR STATION

327-6512 SEAT GP—HIGH BACK, TILT

S/N: F7B1-UP

PART OF 327-6508 SEAT GP-SUSPENSION

SMCS-7312 **i04610109**

NOTE	REF NO	GRAPHIC REF	PART NUMBER	QTY	PART NAME 1 2 3 4 5 6 (PRODUCT LEVEL)	SEE PAGE
	1	1	**178-5659**	1	HANDLE (LUMBAR SUPPORT ADJUSTER)	
	2	1	**316-8987**	2	BRACKET	
	3	1	**327-6515**	1	HEADREST AS-SEAT (CLOTH)	
	4	1	**327-6640**	1	KIT-HANDLE (RECLINER)	
	5	1	**327-6642**	1	KIT-SEAT TILT (ADJUSTER)	
	6	1	**327-6643**	1	KIT-ADJUSTER (CUSHION POSITIONING)	
	7	1	**333-4160**	1	KIT-SEAT (HIGH BACK, MANUAL)	
					(INCLUDES LEVER, SPRING & PIN)	
	8	1	**333-4179**	2	BOLT-SPECIAL	
M	9	1	**9X-2616**	4	SCREW-SOCKET (M8X1.25X16-MM)	

M-METRIC PART

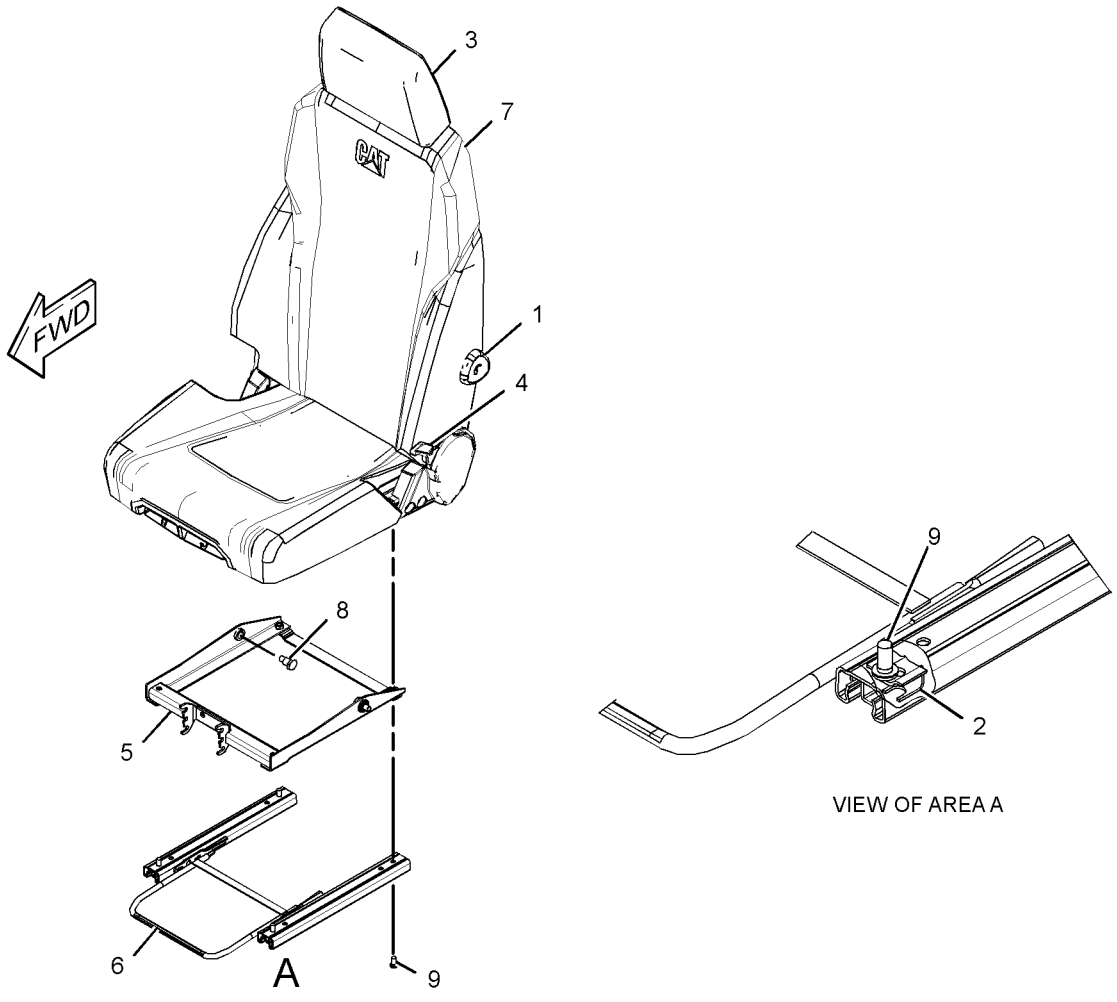

VIEW OF AREA A

GRAPHIC #1 **<END>** g02173701

OPERATOR STATION

327-6508 SEAT GP-SUSPENSION—HIGH BACK, TILT, AIR

S/N: F7B1-UP

PART OF 327-6502 SEAT & MOUNTING GP

SMCS-7324, 7336 **i03811771**

NOTE	REF NO	GRAPHIC REF	PART NUMBER	QTY	PART NAME 1 2 3 4 5 6 (PRODUCT LEVEL)	SEE PAGE
	1	1	**316-8987**	2	BRACKET	
Y	2	1	**327-6512**	1	SEAT GP (HIGH BACK, TILT)	485
Y	3	1	**327-6521**	1	SUSPENSION GP-SEAT (AIR)	488
M	4	1	**5A-3604**	4	BOLT-SOCKET HEAD (M8X1.25X25-MM)	

M-METRIC PART
Y-SEPARATE ILLUSTRATION

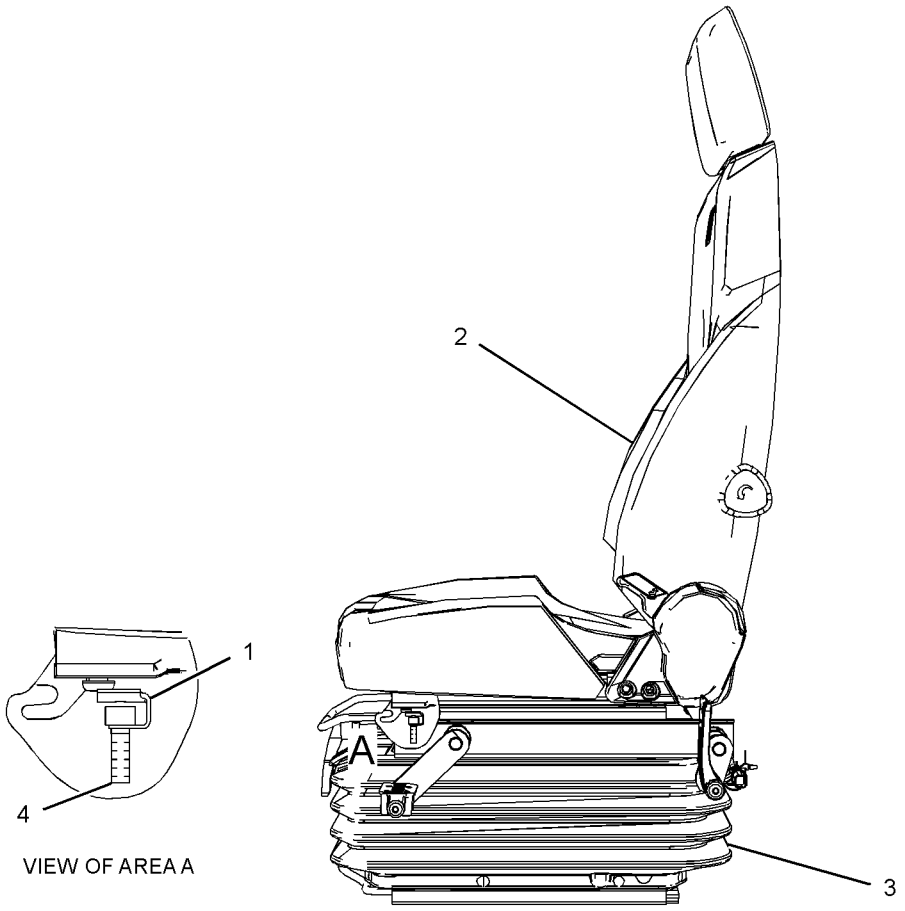

GRAPHIC #1 **<END>** g01999995

OPERATOR STATION

327-6523 SUPPORT GP-SEAT

S/N: F7B1-UP

PART OF 362-3893 OPERATOR AR

SMCS-7321 **i03440943**

NOTE	REF NO	GRAPHIC REF	PART NUMBER	QTY	PART NAME 1 2 3 4 5 6 (PRODUCT LEVEL)	SEE PAGE
	1	1	**327-6538**	1	SUPPORT AS-SEAT	
	2	1	**8T-4121**	4	WASHER-HARD (11X21X2.5-MM THK)	
M	3	1	**8T-4191**	4	BOLT (M10X1.5X16-MM)	

M-METRIC PART

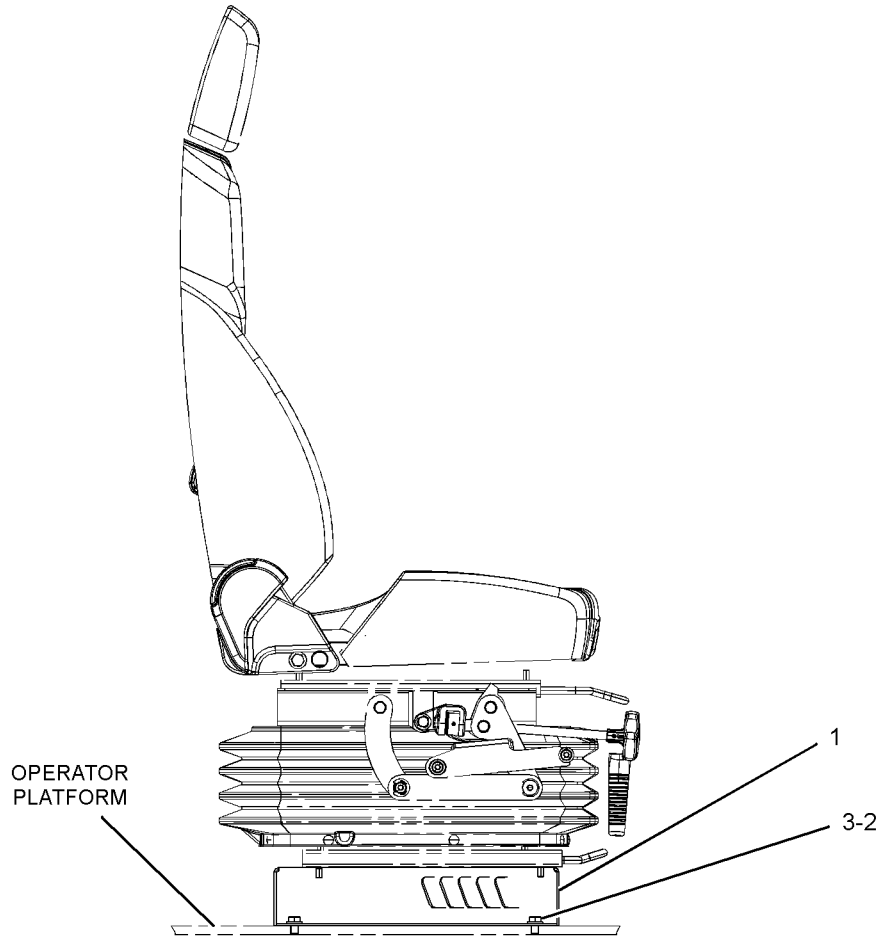

RIGHT SIDE VIEW

GRAPHIC #1

<END>

g01809475

OPERATOR STATION

327-6521 SUSPENSION GP-SEAT–AIR

S/N: F7B1-UP

PART OF 327-6508 SEAT GP-SUSPENSION

SMCS-7324 **i04894133**

NOTE	REF NO	GRAPHIC REF	PART NUMBER	QTY	PART NAME 1 2 3 4 5 6 (PRODUCT LEVEL)	SEE PAGE
	1	1	**7I-2673**	1	STRAP-CABLE	
	2	1	**327-6644**	1	KIT-BRACKET (CONSOLE RAISE, LOWER)	
		1	**372-9306**	16	SPACER (16.5X28.5X0.1-MM THK)	
	3	1	**327-6648**	1	KIT-ADJUSTER (SEAT POSITION)	
	4	1	**333-4157**	1	KIT-SEAT SUSPENSION (AIR)	

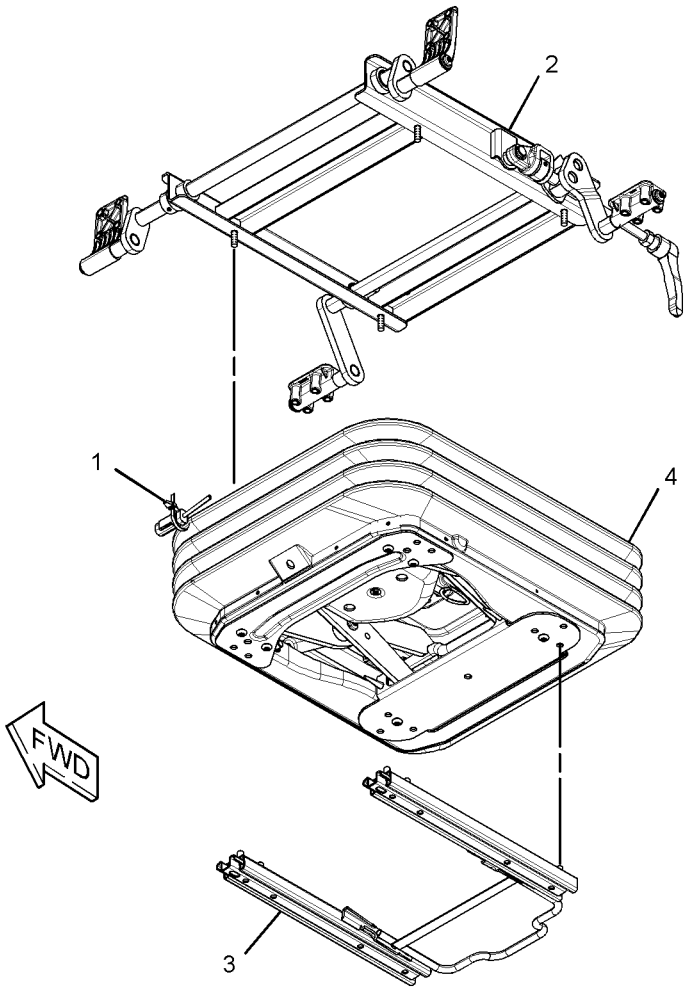

GRAPHIC #1 **<END>** g01637857

OPERATOR STATION

373-2681 TRIM GP-CAB

S/N: F7B1-UP

PART OF 362-3893 OPERATOR AR

SMCS-7301, 7329 **i04604289**

NOTE	REF NO	GRAPHIC REF	PART NUMBER	QTY	PART NAME 1 2 3 4 5 6 (PRODUCT LEVEL)	SEE PAGE
	1	1	**6V-8928**	2	HOOK-COAT	
M	2	1	**128-2135**	4	SCREW-TRUSS HEAD (M6X1X13-MM)	
	3	1	**372-6581**	1	HANDRAIL AS	
	4	1	**234-6473**	1	COVER-FRONT (UPPER, RH)	
	5	1	**234-6474**	1	COVER-CONSOLE (UPPER, RH)	
	6	1	**234-6480**	1	BRACKET AS	
	7	1	**234-6483**	1	BRACKET AS	
	8	1	**234-6490**	1	CUP	
	9	1	**234-6498**	4	RIVET	
	10	1	**238-7572**	1	FOAM	
	11	2	**249-2427**	4	PLUG	
	12	2	**263-2833**	1	COVER	
	13	2	**299-5614**	1	COVER AS	
	14	2	**299-5620**	1	TRAY AS	
M		2	**6V-9632**	14	NUT-WELD (M6X1-THD)	
		2	**7T-1099**	4	LINK	
M		2	**9X-2032**	9	NUT-WELD (M4X0.7-THD)	
	15	1	**305-0330**	1	COVER (LOWER, RH)	
	16	1	**305-0333**	1	BRACKET	
I	17	1	**320-7474**	1	HOSE AS	
Y	18	1	*373-2682*	1	LINER GP-CAB	468
	19	2	**8T-4121**	2	WASHER-HARD (11X21X2.5-MM THK)	
M	20	2	**8T-4137**	2	BOLT (M10X1.5X20-MM)	
M	21	1	**9X-2040**	4	SCREW-TRUSS HEAD (M10X1.5X25-MM)	
M	22	1,2	**9X-2042**	18	SCREW-TRUSS HEAD (M6X1X12-MM)	
M	23	2	**9X-2043**	3	SCREW-TRUSS HEAD (M6X1X14-MM)	
M	24	2	**9X-2044**	3	SCREW-TRUSS HEAD (M6X1X16-MM)	
M	25	1	**9X-2045**	2	SCREW-TRUSS HEAD (M6X1X20-MM)	
D	26	2	**8T-3425**		CHANNEL-TRIM (0.2-M EACH)	
D	26A	2	**8T-3425**		CHANNEL-TRIM (0.8-M)	
D	26B	2	**8T-3425**		CHANNEL-TRIM (0.4-M EACH)	
D	26C	1	**8T-3425**		CHANNEL-TRIM (1.2-M)	
D	26D	2	**8T-3425**		CHANNEL-TRIM (0.3-M)	
D	26E	1	**8T-3425**		CHANNEL-TRIM (1-M)	
E	27	2	**8C-7332**		TRIM-EDGE (7.5-CM EACH)	
	28	1	**164-0655**	1	PANEL-SWITCH	

D-ORDER BY THE METER
E-ORDER BY THE CENTIMETER
I-REFER TO HYDRAULIC INFORMATION SYSTEM
M-METRIC PART
Y-SEPARATE ILLUSTRATION

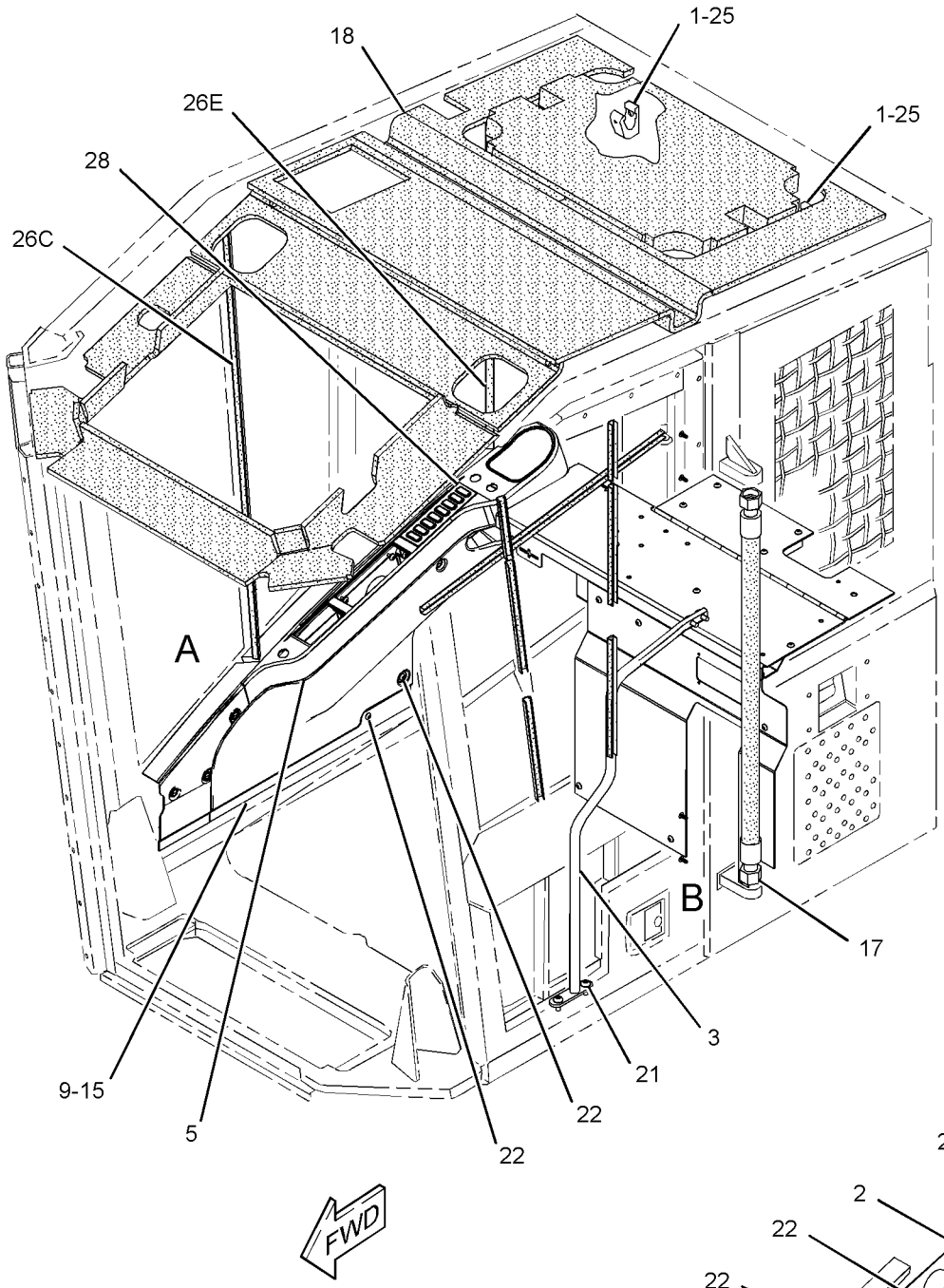

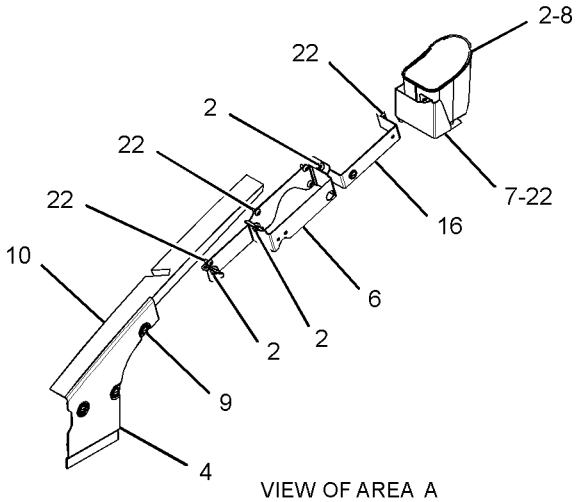

REFER TO ALL ILLUSTRATIONS OF THIS GROUP FOR AUXILIARY VIEWS

VIEW OF AREA A
(COVERS REMOVED FOR CLARITY)

GRAPHIC #1

g02476808

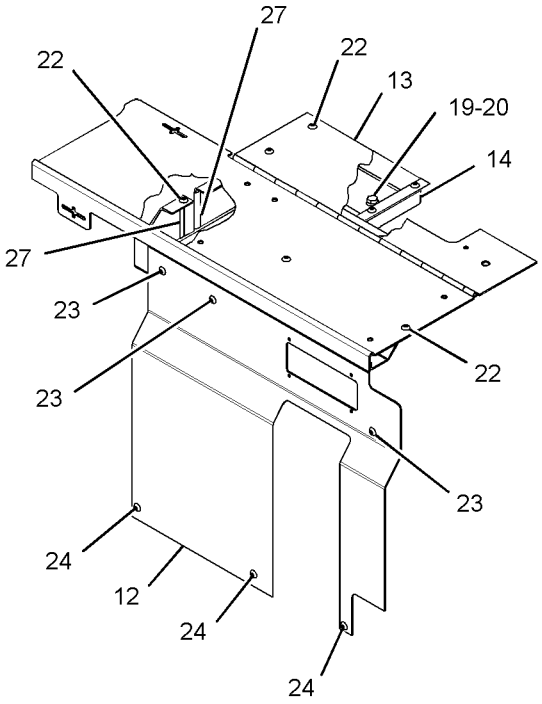

VIEW OF AREA B
(HOSE REMOVED FOR CLARITY)

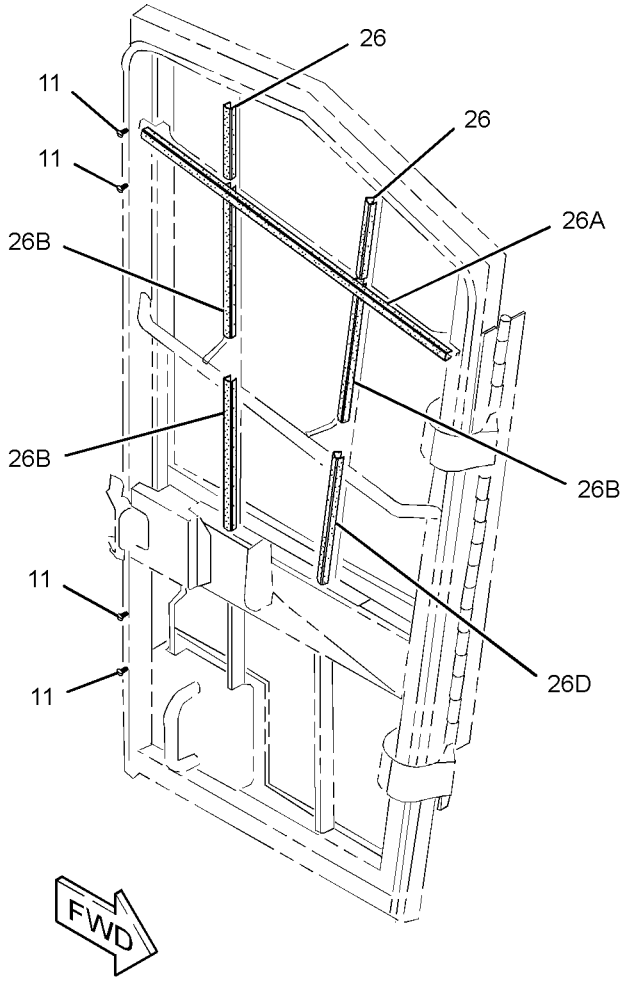

GRAPHIC #2 **<END>** g02476816

OPERATOR STATION

196-2392 WINDOW GP-CAB—LH

S/N: F7B1-UP

PART OF 321-3822 WINDOW GP-CAB

SMCS-7310 **i03899954**

NOTE	REF NO	GRAPHIC REF	PART NUMBER	QTY	PART NAME 1 2 3 4 5 6 (PRODUCT LEVEL)	SEE PAGE
	1	1	**4B-4674**	4	WASHER (6.4X14.5X1.6-MM THK)	
	2	1	**9R-9753**	1	CATCH AS (RH)	
	3	1	**9R-9754**	1	CATCH AS (LH)	
					(EACH CATCH AS INCLUDES)	
		1	**150-8015**	1	GASKET	
	4	1	**134-1030**	2	HINGE-LH	
	5	1	**196-2387**	1	FRAME AS-LOWER	
	6	1	**196-2388**	1	FRAME AS-UPPER	
	6A	1	**9X-6258**	4	SCREW-MACHINE (6-32X0.5-IN)	
	6B	1	**210-6023**	1	RAIL-RH	
	6C	1	**210-6024**	1	RAIL-LH	
D	7	1	**9X-2533**		STOP (0.1-M)	
D	8	1	**9X-2532**		SEAL (0.4-M)	
	9	1	**210-6025**	1	GLASS (FIXED, LOWER)	
	10	1	**211-4694**	1	GLASS (SLIDING, UPPER)	
	11	1	**211-4735**	1	STRIP AS	
E	12	1	**8Y-6896**		GLAZING (160-CM)	
	13	1	**3E-9865**	4	LOCKNUT (1/4-20-THD)	
	14	1	**4B-1281**	4	SCREW-MACHINE (1/4-20X0.625-IN)	
M	15	1	**6V-9673**	4	SCREW-MACHINE (M5X0.8X12-MM)	
	16	1	**9X-6258**	4	SCREW-MACHINE (6-32X0.5-IN)	
E	17	1	**8Y-6913**		GLAZING (87-CM)	

D-ORDER BY THE METER
E-ORDER BY THE CENTIMETER
M-METRIC PART

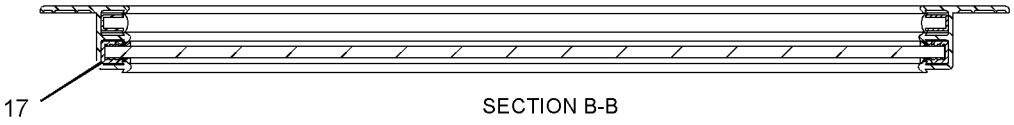

SECTION B-B

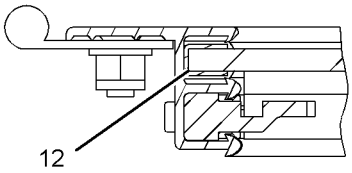

SECTION C

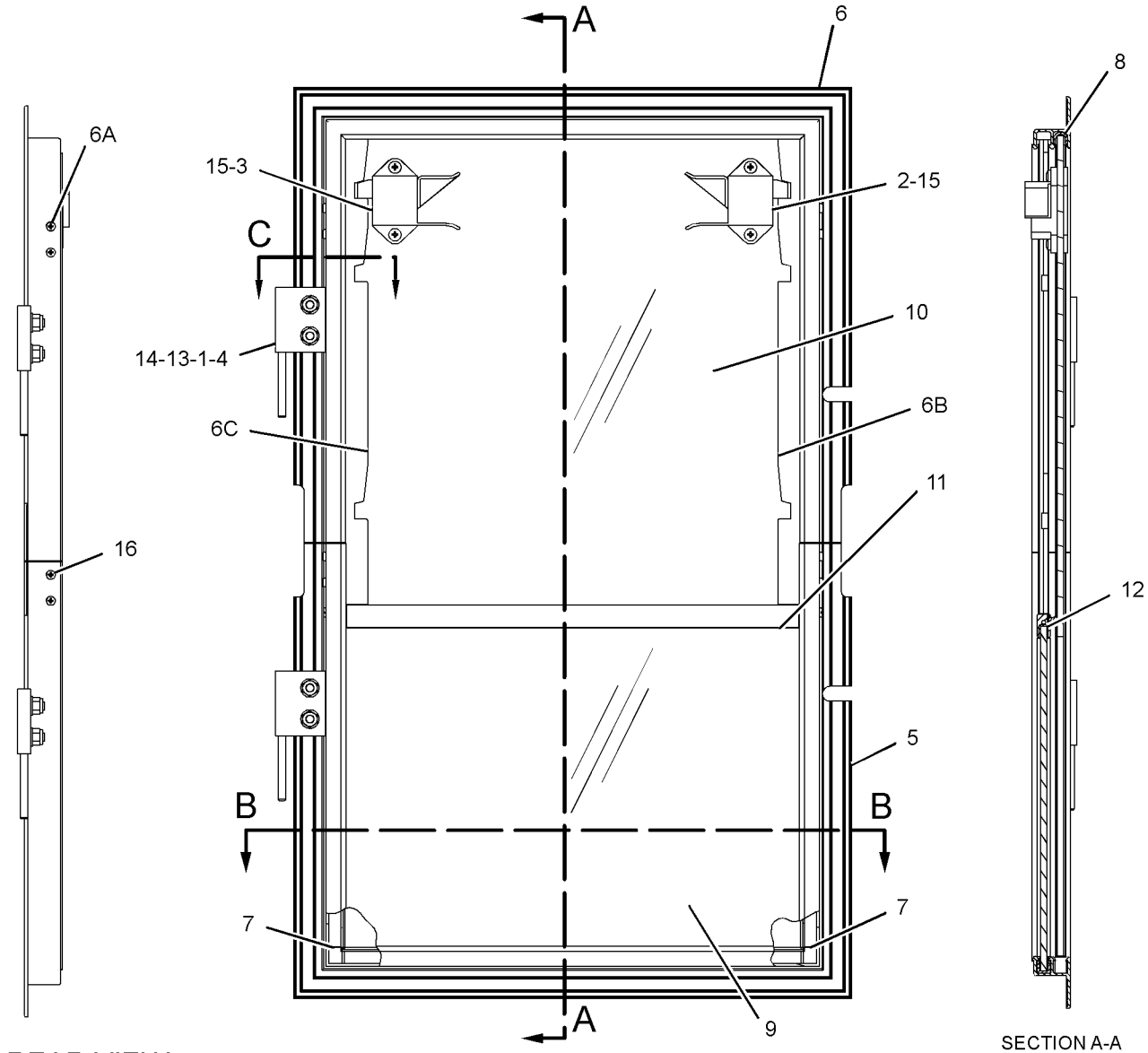

REAR VIEW

RIGHT SIDE VIEW
(INSIDE CAB)

SECTION A-A

GRAPHIC #1

<END>

g02142886

OPERATOR STATION

321-3822 WINDOW GP-CAB

S/N: F7B1-UP
PART OF 370-9182 CAB GP
TYPE 1

SMCS-7310 **i03885381**

NOTE	REF NO	GRAPHIC REF	PART NUMBER	QTY	PART NAME 1 2 3 4 5 6 (PRODUCT LEVEL)	SEE PAGE
CY	1	1	**196-2392**	1	WINDOW GP-CAB (LH)	492
	2	1	**237-9386**	1	WINDOW (LEFT SIDE, FRONT, UPPER)	
	3	1	**321-3792**	1	WINDOW (RIGHT SIDE)	
	4	1	**321-3793**	1	WINDOW (FRONT, LH)	
	5	1	**321-3794**	1	WINDOW (FRONT CENTER)	
	6	1	**321-3795**	1	WINDOW (FRONT, RH)	
	7	1	**321-3796**	1	WINDOW (RIGHT FRONT)	
	8	1	**321-3797**	2	WINDOW (REAR, LH, RH)	
	9	1	**321-3798**	1	WINDOW (REAR CENTER)	
C	10	1	**336-9429**	1	WINDOW (LEFT SIDE, FRONT, LOWER)	
M	11	1	**3E-9854**	2	BOLT (M8X1.25X20-MM)	
C	12	1	**5P-4116**	2	WASHER-HARD (8.8X20.5X2-MM THK)	
CM	13	1	**7X-2537**	9	BOLT (M8X1.25X35-MM)	
CM	14	1	**8T-4189**	149	BOLT (M8X1.25X20-MM)	
C	15	1	**8T-4224**	158	WASHER-HARD (8.8X16X2-MM THK)	
L	16	1	**322-7173**		SEAL (7-DM EACH)	
L	16A	1	**322-7173**		SEAL (10.3-DM)	
L	16B	1	**322-7173**		SEAL (4.2-DM)	
L	16C	1	**322-7173**		SEAL (4.5-DM)	
L	16D	1	**322-7173**		SEAL (12-DM)	
L	16E	1	**322-7173**		SEAL (6.2-DM)	
L	16F	1	**322-7173**		SEAL (7.4-DM)	
L	16G	1	**322-7173**		SEAL (11-DM)	
CL	17	1	**294-2434**		SEAL (4.1-DM)	
CL	17A	1	**294-2434**		SEAL (4.3-DM EACH)	
CL	17B	1	**294-2434**		SEAL (9-DM)	
CL	17C	1	**294-2434**		SEAL (6.7-DM EACH)	
CL	17D	1	**294-2434**		SEAL (2.5-DM)	
CL	17E	1	**294-2434**		SEAL (6.2-DM)	
CL	17F	1	**294-2434**		SEAL (3.5-DM EACH)	
CL	17G	1	**294-2434**		SEAL (2-DM)	
L	18	1	**284-3953**		SEAL (32.6-DM EACH)	
L	18A	1	**284-3953**		SEAL (40.1-DM)	

C-CHANGE FROM PREVIOUS TYPE
L-ORDER BY THE DECIMETER
M-METRIC PART
Y-SEPARATE ILLUSTRATION

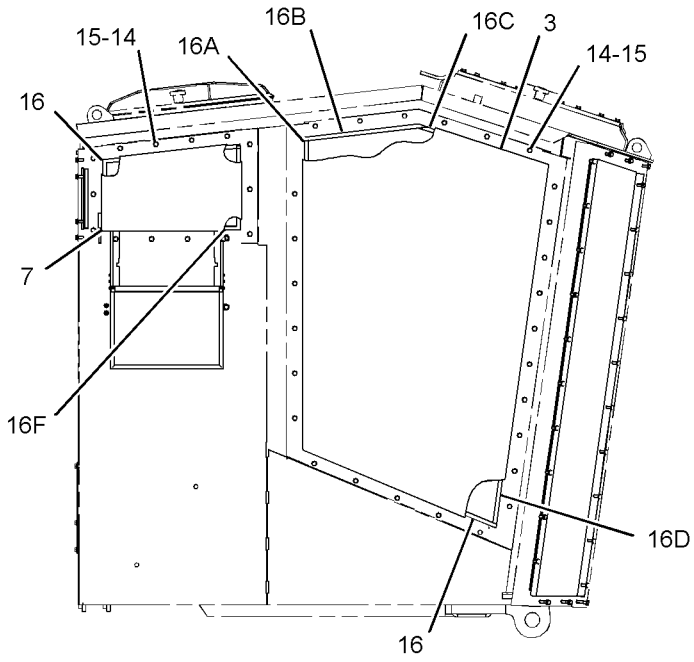

RIGHT SIDE VIEW

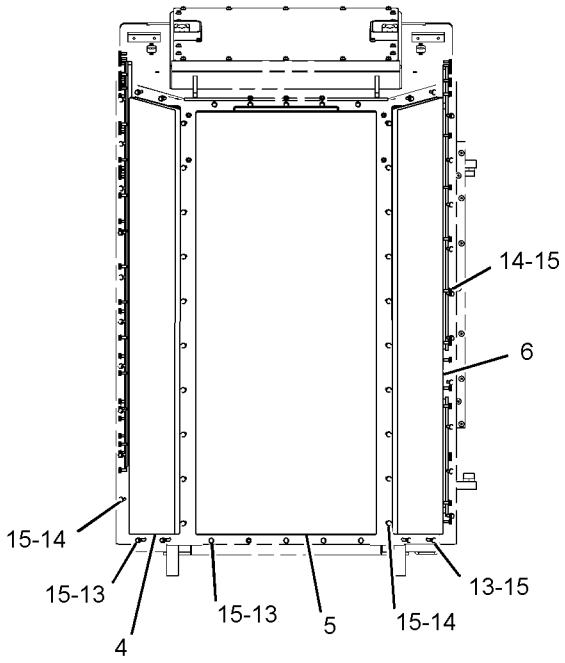

FRONT VIEW

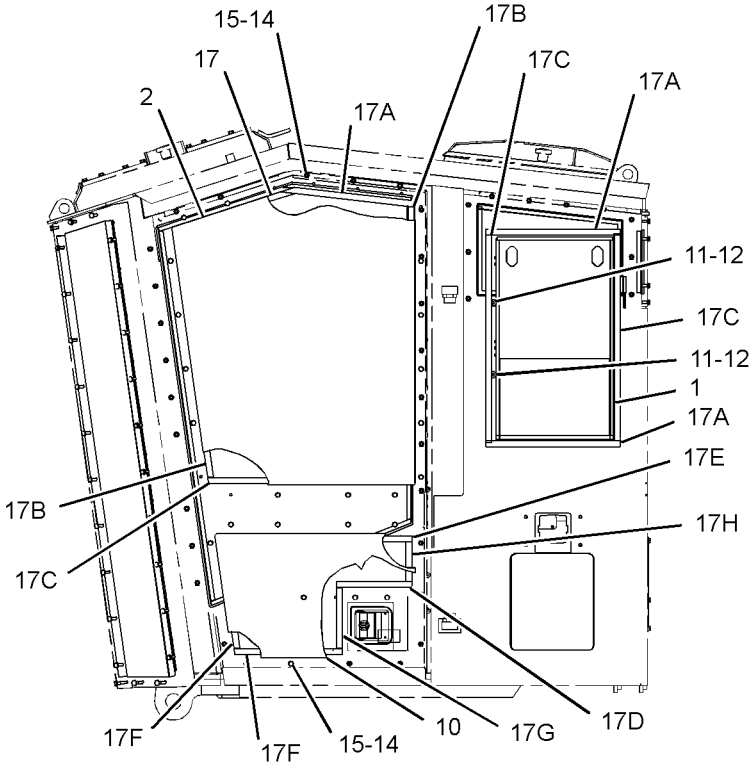

LEFT SIDE VIEW

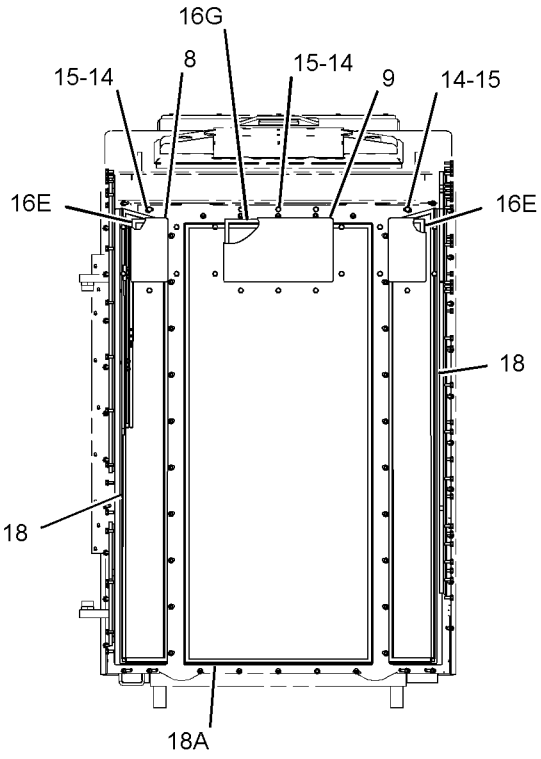

REAR VIEW

GRAPHIC #1 **<END>** g02131705

OPERATOR STATION

321-3822 WINDOW GP-CAB

S/N: F7B1-UP
PART OF 370-9182 CAB GP
TYPE 2

SMCS-7310 **i05016653**

NOTE	REF NO	GRAPHIC REF	PART NUMBER	QTY	PART NAME 1 2 3 4 5 6 (PRODUCT LEVEL)	SEE PAGE
C	1	1	**339-4289**	1	WINDOW GP-CAB (LH)	
	2	1	**237-9386**	1	WINDOW (LEFT SIDE, FRONT, UPPER)	
	3	1	**321-3792**	1	WINDOW (RIGHT SIDE)	
	4	1	**321-3793**	1	WINDOW (FRONT, LH)	
	5	1	**321-3794**	1	WINDOW (FRONT CENTER)	
	6	1	**321-3795**	1	WINDOW (FRONT, RH)	
	7	1	**321-3796**	1	WINDOW (RIGHT FRONT)	
	8	1	**321-3797**	2	WINDOW (REAR, LH, RH)	
	9	1	**321-3798**	1	WINDOW (REAR CENTER)	
	10	1	**336-9429**	1	WINDOW (LEFT SIDE, FRONT, LOWER)	
M	11	1	**3E-9854**	2	BOLT (M8X1.25X20-MM)	
	12	1	**5P-4116**	2	WASHER-HARD (8.8X20.5X2-MM THK)	
M	13	1	**7X-2537**	9	BOLT (M8X1.25X35-MM)	
CM	14	1	**8T-4908**	150	BOLT (M8X1.25X25-MM)	
C	15	1	**7X-0613**	159	WASHER-HARD (8.8X25.5X5-MM THK)	
CL	16	1	**322-7173**		SEAL (14-DM)	
CL	16A	1	**322-7173**		SEAL (37.4-DM)	
CL	16B	1	**322-7173**		SEAL (32.5-DM EACH)	
CL	16C	1	**322-7173**		SEAL (6.0-DM EACH)	
CL	16D	1	**322-7173**		SEAL (10.1-DM)	
CL	16E	1	**322-7173**		SEAL (40-DM)	
CL	16F	1	**322-7173**		SEAL (30.9-DM)	
CL	16G	1	**322-7173**		SEAL (18.8-DM)	
CL	19	1	**284-3953**		SEAL (14.2-DM EACH)	
CL	19A	1	**284-3953**		SEAL (37.5-DM)	
CL	19B	1	**284-3953**		SEAL (5.6-DM)	
CL	19C	1	**284-3953**		SEAL (1.6-DM EACH)	
CL	19D	1	**284-3953**		SEAL (5.7-DM)	
CL	19E	1	**284-3953**		SEAL (14.4-DM EACH)	
CL	19F	1	**284-3953**		SEAL (8.1-DM)	
CL	19G	1	**284-3953**		SEAL (7.9-DM)	
CL	19H	1	**284-3953**		SEAL (13.1-DM)	
CL	19J	1	**284-3953**		SEAL (6.3-DM)	
CL	19K	1	**284-3953**		SEAL (8.9-DM)	
CL	19L	1	**284-3953**		SEAL (20.6-DM)	
CL	19M	1	**284-3953**		SEAL (11-DM)	
CL	19P	1	**284-3953**		SEAL (6.1-DM EACH)	

C-CHANGE FROM PREVIOUS TYPE
L-ORDER BY THE DECIMETER
M-METRIC PART

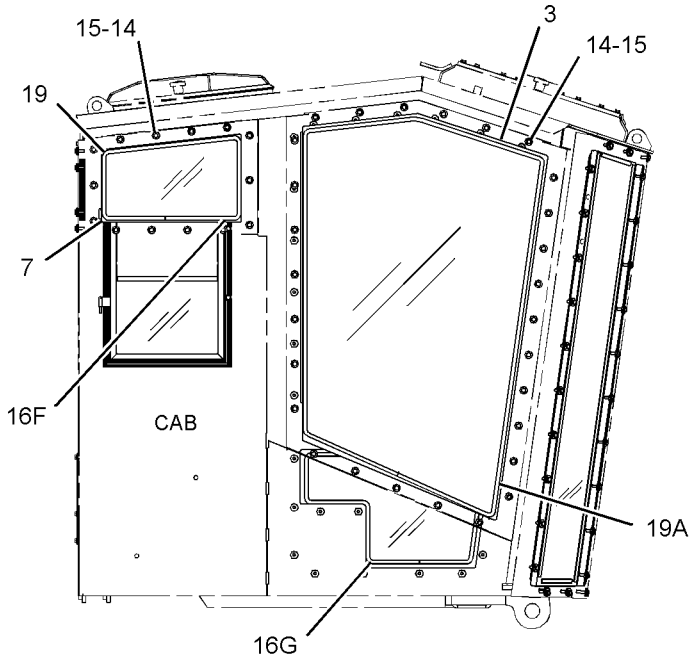

RIGHT SIDE VIEW

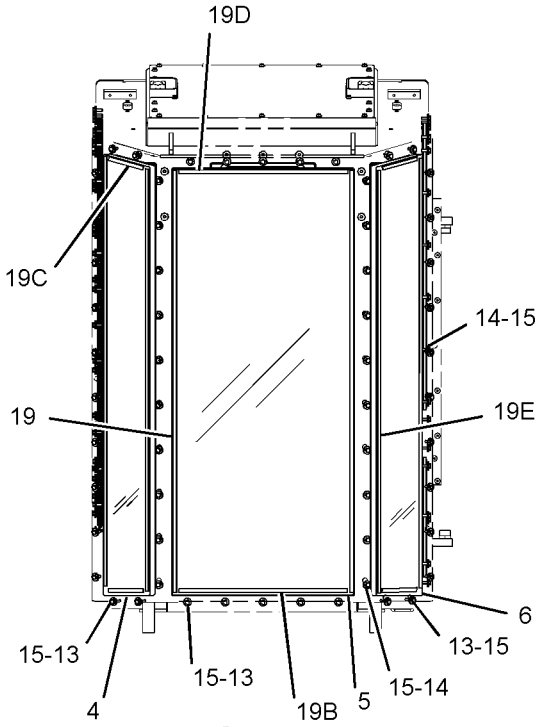

FRONT VIEW

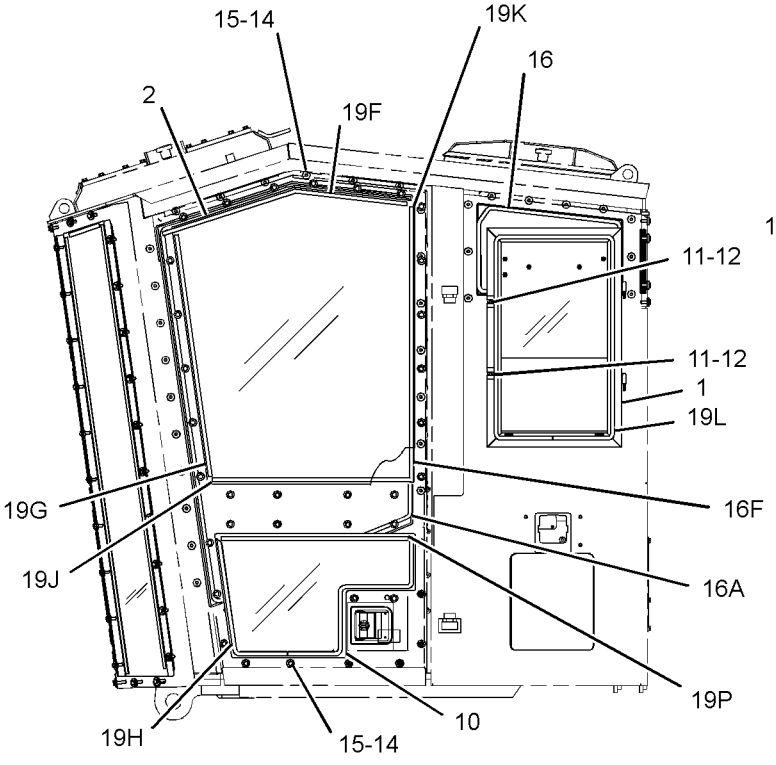

LEFT SIDE VIEW

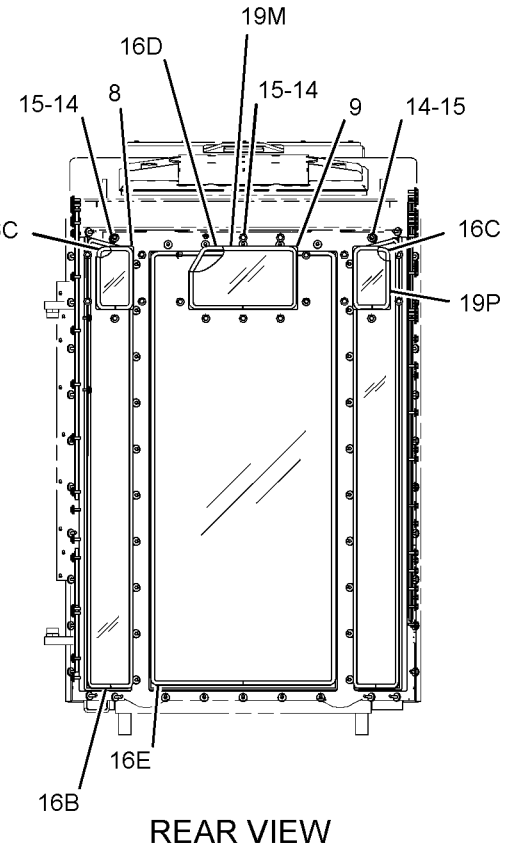

REAR VIEW

GRAPHIC #1 **<END>** g03198216

SERVICE EQUIPMENT AND SUPPLIES

382-0641 FILM GP-U.S.

S/N: F7B1-UP

AN ATTACHMENT

SMCS-7405, 7557 **i05107434**

NOTE	PART NUMBER	QTY	PART NAME 1 2 3 4 5 6 (PRODUCT LEVEL)	SEE PAGE
	179-6803	1	FILM-IDENTIFICATION (300-FT)	
			(ON BOTH SIDES OF BOOM)	
	224-7717	1	FILM-WARNING (SEAT BELT, U.S.)	
			(INSIDE CAB ON B-POST FROM TOP TO BOTTOM STARTING WITH LEFT HAND SIDE VERTICAL FILM)	
			(TO LEFT WITH FOLLOWING FROM TOP TO BOTTOM WITH ENTIRE FILM CLUSTER CENTERED ON B-POST)	
			(1-ROPS FILM, 2-UNIVERSAL FILM, 3-NO WELD/NO DRILL FILM, 4-WARNING SEATBELT, 5-EH FUNCTION, 6-DANGER POWERLINES)	
			(7-CAB WARNING, 8-SAW WARNING)	
	224-7842	1	FILM-WARNING (TRIP POINT)	
			(UNDER HOOD ON HOOD CYLINDER ORIENTED SO THAT YOU SEE FILM WHEN APPROACHING CYLINDER)	
	225-0313	1	FILM-WARNING (JUMP START, READ OMM, U.S.)	
			(NEAR BATTERIES)	
	225-4130	2	FILM-WARNING (FLYING DEBRIS, STAY BACK, U.S.)	
			(ON EACH SIDE OF STICK NEAR HEAD ATTACHMENT)	
	225-4256	1	FILM-WARNING (HOT FLUID UNDER PRESSURE, U.S.)	
			(ON RADIATOR ACCESS PLATE ON HOOD ORIENTED WITH BOTTOM EDGE OF FILM AT BOTTOM EDGE OF COVER PLATE)	
	226-4862	2	FILM-WARNING (CRUSH HAZARD, STAY BACK)	
			(ON BOTH SIDES OF MACHINE - UPPER FRAME REAR)	
	228-2615	1	FILM-WARNING (UNIVERSAL, U.S.)	
			(INSIDE CAB ON B-POST FROM TOP TO BOTTOM STARTING WITH LEFT HAND SIDE VERTICAL FILM)	
			(TO LEFT WITH FOLLOWING FROM TOP TO BOTTOM WITH ENTIRE FILM CLUSTER CENTERED ON B-POST)	
			(1-ROPS FILM, 2-UNIVERSAL FILM, 3-NO WELD/NO DRILL FILM, 4-WARNING SEATBELT, 5-EH FUNCTION, 6-DANGER POWERLINES)	
			(7-CAB WARNING, 8-SAW WARNING)	
	228-2692	2	FILM-WARNING (SAW-STAY BACK)	
			(ON EACH SIDE OF STICK NEAR HEAD ATTACHMENT)	
	228-2780	2	FILM-WARNING (MACHINE SWING, CRUSHING, U.S.)	
			(ON BOTH SIDES OF MACHINE - UPPER FRAME REAR)	
	228-4688	1	FILM-WARNING (DO NOT OPERATE)	
			(INSIDE CAB ON B-POST FROM TOP TO BOTTOM STARTING WITH LEFT HAND SIDE VERTICAL FILM)	
			(TO LEFT WITH FOLLOWING FROM TOP TO BOTTOM WITH ENTIRE FILM CLUSTER CENTERED ON B-POST)	
			(1-ROPS FILM, 2-UNIVERSAL FILM, 3-NO WELD/NO DRILL FILM, 4-WARNING SEATBELT, 5-EH FUNCTION, 6-DANGER POWERLINES)	
			(7-CAB WARNING, 8-SAW WARNING)	
	228-4751	1	FILM-WARNING (FLYING DEBRIS)	
			(INSIDE CAB ON B-POST FROM TOP TO BOTTOM STARTING WITH LEFT HAND SIDE VERTICAL FILM)	
			(TO LEFT WITH FOLLOWING FROM TOP TO BOTTOM WITH ENTIRE FILM CLUSTER CENTERED ON B-POST)	
			(1-ROPS FILM, 2-UNIVERSAL FILM, 3-NO WELD/NO DRILL FILM, 4-WARNING SEATBELT, 5-EH FUNCTION, 6-DANGER POWERLINES)	
			(7-CAB WARNING, 8-SAW WARNING)	
	228-7315	1	FILM-WARNING (HOT SURFACE, HANDS CLEAR)	
			(ON COOLER FRONT FACE NEAR AIR CLEANER)	
	228-9105	1	FILM-WARNING (HOT SURFACE-VERTICAL)	
			(RADIATOR GP ON ATAAC CORE)	

382-0641 **FILM GP-U.S.** ***(contd.)*** **i05107434**

NOTE	PART NUMBER	QTY	PART NAME 1 2 3 4 5 6 (PRODUCT LEVEL)	SEE PAGE
	228-9253	1	FILM-WARNING (ELECTRICAL HAZARD, U.S.)	
			(INSIDE CAB ON B-POST FROM TOP TO BOTTOM STARTING WITH LEFT HAND SIDE VERTICAL FILM)	
			(TO LEFT WITH FOLLOWING FROM TOP TO BOTTOM WITH ENTIRE FILM CLUSTER CENTERED ON B-POST)	
			(1-ROPS FILM, 2-UNIVERSAL FILM, 3-NO WELD/NO DRILL FILM, 4-WARNING SEATBELT, 5-EH FUNCTION, 6-DANGER POWERLINES)	
			(7-CAB WARNING, 8-SAW WARNING)	
	298-4563	2	FILM-WARNING (HIGH PRESSURE, READ OMM)	
			(ON LID TO BOLTED ON HYDRAULIC FILTERS)	
	376-9458	1	FILM-WARNING (STAY BACK 300-FT)	
			(ON REAR OF MACHINE)	

<END>

364-0512 PLATE & FILM GP

S/N: F7B1-UP

PART OF 351-6848 COMMON AR

SMCS-7405, 7557 **i04477929**

NOTE	PART NUMBER	QTY	PART NAME 1 2 3 4 5 6 (PRODUCT LEVEL)	SEE PAGE
Y	*378-9147*	1	PLATE & FILM GP	499
	365-7873	1	FILM-IDENTIFICATION (CAT 521B, RH)	
			(ON RIGHT SIDE OF MACHINE)	
	365-7874	1	FILM-IDENTIFICATION (CAT 521B, LH)	
			(ON LEFT SIDE OF MACHINE)	
	246-2641	1	PADLOCK GP	
	5P-8500	1	KEY	

Y-SEPARATE ILLUSTRATION

<END>

378-9147 PLATE & FILM GP–INTERNATIONAL

S/N: F7B1-UP

PART OF 364-0512 PLATE & FILM GP

SMCS-7405, 7557 **i05107490**

NOTE	PART NUMBER	QTY	PART NAME 1 2 3 4 5 6 (PRODUCT LEVEL)	SEE PAGE
	131-0359	1	PLATE-IDENTIFICATION (ENGINE STOP, RUN)	
			(NEXT TO MACHINE CUT OFF SWITCH IN CAB ON LOWER LH SIDE OF OPERATOR SEAT)	
	8H-8648	1	PLATE-INSTRUCTION (DISCONNECT SWITCH)	
			(AROUND BATTERY DISCOUNT SWITCH BATTERY SYMBOL VISIBLE)	
A	**4W-1413**	1	PLATE-SERIAL NUMBER (ENGINE)	
			(ON ENGINE BLOCK)	
	239-6986	1	PLATE-SERIAL NUMBER (MACHINE)	
			(ON UPPER FRAME PLATE LOOKING AT MACHINE-RIGHT OF BOOM PIN, CENTERED FROM SIDE TO SIDE & TOP TO BOTTOM)	
	5P-7957	1	LANYARD	
			(SECURE TO BOLT INSIDE CAB AFTER PASSING THROUGH OMM)	
	5P-7958	1	SLEEVE-CABLE SPLICE	

378-9147 **PLATE & FILM GP** *(contd.)* **i05107490**

NOTE	PART NUMBER	QTY	PART NAME 1 2 3 4 5 6 (PRODUCT LEVEL)	SEE PAGE
			(SECURE TO BOLT INSIDE CAB AFTER PASSING THROUGH OMM)	
	361-5297	1	FILM-CERTIFICATION (ROPS, FOPS, READ OMM)	
			(INSIDE CAB ON B-POST FROM TOP TO BOTTOM STARTING WITH LH SIDE VERTICAL FILM. FIRST PLACE UNIVERSAL FILM TO LEFT WITH	
			THE FOLLOWING FROM TOP TO BOTTOM WITH ENTIRE FILM CLUSTER CENTERED ON B-POST. 1-ROPS, 2-UNIVERSAL, 3- NO WELD/NO DRILL,	
			4-WARNING SEALT BELT, 5-EH FUNCTION, 6-DANGER POWER LINES, 7-CAB WARNING & 8-SAW WARNING))	
	365-7870	1	FILM-CIRCUIT	
			(UNDER HOOD ON BREAKER BOX BELOW BREAKERS)	
	228-5805	1	FILM-CONTROL (FILL PUMP SWITCH)	
			(ON HYDRAULIC OIL FILL PUMP SWITCH BRACKET NEAR SWITCH)	
	8C-5898	1	FILM-IDENTIFICATION (FUEL DRAIN)	
			(NEAR FUEL TANK DRAIN LOCATION)	
	169-2876	2	FILM-IDENTIFICATION (POWER RECEPTACLE, 12-VOLT)	
			(IN CAB, RH CONSOLE NEXT TO FRONT RECEPTACLE & TWO BACK RECEPTACLES)	
	228-5821	2	FILM-IDENTIFICATION (100-M)	
			(ON BOTH SIDES OF BOOM)	
	378-8868	1	FILM-IDENTIFICATION (FUSE PANEL)	
			(INSIDE CAB ON REAR CONSOLE ABOVE FUSE BOX)	
	378-8880	4	FILM-IDENTIFICATION (ALTERNATE EXIT, READ OMM)	
			(IN CAB ON EACH SIDE OF SKYLIGHT/HATCH.1-NEXT TO RH LATCH & 1-NEXT TO LH LATCH)	
	298-8086	1	FILM-IDENTIFICATION (CAT)	
			(ON REAR OF MACHINE)	
	7X-7644	2	FILM-INFORMATION (TIE-DOWN)	
			(RIGHT OF HOOK ON CAR BODY FRONT & REAR)	
	134-7258	1	FILM-INFORMATION (EXTENDED LIFE COOLANT)	
			(ON COOLANT RECOVER BOTTLE FACING SERVICE SIDE OF MACHINE UNDER HOOD)	
	146-6747	2	FILM-INFORMATION (24-VOLT)	
			(ON BREAKER BOX UNDER HOOD IN RH CORNER OF BOX)	
	201-2733	1	FILM-INFORMATION (INPUT/OUTPUT)	
			(INSIDE CAB ON COVER TO COMPUTER PLUG IN)	
	228-3282	1	FILM-INFORMATION (HYDRAULIC OIL LEVEL)	
			(NEAR HYDRAULIC TANK SITE GAUGE)	
	228-6045	1	FILM-INFORMATION (BOOM LOWER, READ OMM)	
			(INSIDE CAB ON B-POST FROM TOP TO BOTTOM STARTING WITH LH SIDE VERTICAL FILM. FIRST PLACE UNIVERSAL FILM TO LEFT WITH	
			THE FOLLOWING FROM TOP TO BOTTOM WITH ENTIRE FILM CLUSTER CENTERED ON B-POST. 1-ROPS, 2-UNIVERSAL, 3- NO WELD/NO DRILL,	
			4-WARNING SEALT BELT, 5-EH FUNCTION, 6-DANGER POWER LINES, 7-CAB WARNING & 8-SAW WARNING)	
	229-0887	1	FILM-INFORMATION (AIR CLEANER)	
			(UNDER HOOD ON AIR CLEANER INTAKE FLAT)	
	259-8068	1	FILM-INFORMATION (WEIGHT LIMIT, PLATFORM)	
			(UNDER HOOD NEXT TO FIRST STEP TREAD PLATE, TO THE LEFT OF TREAD PLATE ORIENTED WITH BOTTOM OF FILM TOWARD TREAD PLATE)	
	334-4603	2	FILM-INFORMATION (HYDO ADVANCED 10)	
			(ON LID, HYDRAULIC FILTERS)	
	110-6395	1	FILM-INSTRUCTION (AIR CONDITIONER)	

378-9147 **PLATE & FILM GP** *(contd.)* **i05107490**

NOTE	PART NUMBER	QTY	PART NAME 1 2 3 4 5 6 (PRODUCT LEVEL)	SEE PAGE
			(NEAR A/C CHARGING VALVE)	
	129-7680	1	FILM-INSTRUCTION (HYDRAULIC TANK OIL DRAIN)	
			(NEAR HYDRAULIC TANK DRAIN VALVE UNDER MACHINE PLATFORM)	
	223-9818	1	FILM-INSTRUCTION (WINDOW CLEANING, READ OMM)	
			(RH WINDOW, UPPER REAR CORNER)	
	190-5386	2	FILM-STRIPE (ROUND RED REFLECTIVE)	
			(ON REAR OF MACHINE ABOVE STAY CLEAR WARNING FILM)	
	179-6801	2	FILM-WARNING (STAY CLEAR)	
			(ON BOTH SIDES OF BOOM)	
	179-6802	2	FILM-WARNING (ALERT)	
			(ON BOTH SIDES OF BOOM)	
	219-0305	1	FILM-WARNING (NO WELD, NO DRILL, READ OMM)	
			(INSIDE CAB ON B-POST FROM TOP TO BOTTOM STARTING WITH LH SIDE VERTICAL FILM. FIRST PLACE UNIVERSAL FILM TO LEFT WITH	
			THE FOLLOWING FROM TOP TO BOTTOM WITH ENTIRE FILM CLUSTER CENTERED ON B-POST. 1-ROPS, 2-UNIVERSAL, 3- NO WELD/NO DRILL,	
			4-WARNING SEALT BELT, 5-EH FUNCTION, 6-DANGER POWER LINES, 7-CAB WARNING & 8- SAW WARNING)	
	221-8045	1	FILM-WARNING (SEAT BELT, INTERNATIONAL)	
			(INSIDE CAB ON B-POST FROM TOP TO BOTTOM STARTING WITH LH SIDE VERTICAL FILM. FIRST PLACE UNIVERSAL FILM TO LEFT WITH	
			THE FOLLOWING FROM TOP TO BOTTOM WITH ENTIRE FILM CLUSTER CENTERED ON B-POST. 1-ROPS, 2-UNIVERSAL, 3- NO WELD/NO DRILL,	
			4-WARNING SEALT BELT, 5-EH FUNCTION, 6-DANGER POWER LINES, 7-CAB WARNING & 8-SAW-WARNING)	
	224-1276	1	FILM-WARNING (TRIP POINT)	
			(UNDER HOOD CYLINDER ORIENTED TO SEE FILM WHEN APPROACHING CYLINDER)	
	225-0312	1	FILM-WARNING (JUMP START, READ OMM, INTL)	
			(UNDER HOOD ON BREAKER BOX NEXT TO BATTERIES)	
	225-4131	2	FILM-WARNING (FLYING DEBRIS, STAY BACK, INTL)	
			(EACH SIDE OF STICK NEAR HEAD ATTACHMENT)	
	225-4257	1	FILM-WARNING (HOT FLUID UNDER PRESS)	
			(ON RADIATOR ACCESS PLATE ON HOOD ORIENTED WITH BOTTOM EDGE OF FILM AT BOTTOM EDGE OF COVER PLATE)	
	226-4863	1	FILM-WARNING (CRUSH HAZARD, STAY BACK)	
			(ON RH SIDE OF HOOD BEHIND REAR HINGE)	
	228-2616	1	FILM-WARNING (UNIVERSAL, READ OMM)	
			(INSIDE CAB ON B-POST FROM TOP TO BOTTOM STARTING WITH LH SIDE VERTICAL FILM. FIRST PLACE UNIVERSAL FILM TO LEFT WITH	
			THE FOLLOWING FROM TOP TO BOTTOM WITH ENTIRE FILM CLUSTER CENTERED ON B-POST. 1-ROPS, 2-UNIVERSAL, 3- NO WELD/NO DRILL,	
			4-WARNING SEALT BELT, 5-EH FUNCTION, 6-DANGER POWER LINES, 7-CAB WARNING & 8-SAW WARNING)	
	228-2781	2	FILM-WARNING (MACHINE SWING, CRUSHING, INTL)	
			(ON BOTH SIDES OF MACHINE-UPPER FRAME REAR)	
	228-4752	1	FILM-WARNING (FLYING DEBRIS)	
			(INSIDE CAB ON B-POST FROM TOP TO BOTTOM STARTING WITH LH SIDE VERTICAL FILM. FIRST PLACE UNIVERSAL FILM TO LEFT WITH	
			THE FOLLOWING FROM TOP TO BOTTOM WITH ENTIRE FILM CLUSTER CENTERED ON B-POST. 1-ROPS, 2-UNIVERSAL, 3- NO WELD/NO DRILL,	
			4-WARNING SEALT BELT, 5-EH FUNCTION, 6-DANGER POWER LINES, 7-CAB WARNING 8-SAW WARNING)	

378-9147 **PLATE & FILM GP** *(contd.)* **i05107490**

NOTE	PART NUMBER	QTY	PART NAME 1 2 3 4 5 6 (PRODUCT LEVEL)	SEE PAGE
	228-7316	1	FILM-WARNING (HOT SURFACE, HANDS CLEAR, INTL)	
			(ON COOLER FRONT FACE NEAR AIR CLEANER)	
	228-9106	1	FILM-WARNING (HOT SURFACE, HANDS CLEAR, INTL)	
			(RADIATOR GUARD ON ATTAC CORE)	
	228-9254	1	FILM-WARNING (ELEC HAZARD, READ OMM, INTL)	
			(INSIDE CAB ON B-POST FROM TOP TO BOTTOM STARTING WITH LH SIDE VERTICAL FILM. FIRST PLACE UNIVERSAL FILM TO LEFT WITH	
			THE FOLLOWING FROM TOP TO BOTTOM WITH ENTIRE FILM CLUSTER CENTERED ON B-POST. 1-ROPS, 2-UNIVERSAL, 3- NO WELD/NO DRILL,	
			4-WARNING SEALT BELT, 5-EH FUNCTION, 6-DANGER POWER LINES, 7-CAB WARNING & 8-SAW WARNING))	
	298-4564	1	FILM-WARNING (HOT FLUID UNDER PRESSURE)	
			(ON LID, HYDRAULIC FILTERS)	
	376-9444	1	FILM-WARNING (STAY BACK 100-M)	
			(ON REAR OF MACHINE)	
	228-2693	2	FILM-WARNING (STAY BACK)	
			(ON EACH SIDE OF STICK NEAR HEAD ATTACHMENT)	
	228-9632	1	FILM-WARNING (DO NOT OPERATE)	
			(INSIDE CAB ON B-POST FROM TOP TO BOTTOM STARTING WITH LH SIDE VERTICAL FILM. FIRST PLACE UNIVERSAL FILM TO LEFT WITH	
			THE FOLLOWING FROM TOP TO BOTTOM WITH ENTIRE FILM CLUSTER CENTERED ON B-POST. 1-ROPS, 2-UNIVERSAL, 3- NO WELD/NO DRILL,	
			4-WARNING SEALT BELT, 5-EH FUNCTION, 6-DANGER POWER LINES, 7-CAB WARNING & 8-SAW WARNING))	

A-NOT PART OF THIS GROUP

<END>

385-1745 PLATE & FILM GP

S/N: TXD1-UP; THX1-UP
PART OF 384-8429 ENGINE AR
ALSO AN ATTACHMENT

SMCS-7405, 7557 **i04993244**

NOTE	REF NO	GRAPHIC REF	PART NUMBER	QTY	PART NAME 1 2 3 4 5 6 (PRODUCT LEVEL)	SEE PAGE
	1	1	**3N-3469**	1	TAG-INSTRUCTION (ENGINE PRESTART)	
	2	1	**8L-8413**	1	STRAP-CABLE (WHITE)	
	3	1	**293-9659**	2	FILM-WARNING (UNIVERSAL, READ OMM)	
	4	1	**136-9066**	1	FILM-INFORMATION (ENGINE OIL)	
	5	1	**208-7616**	1	FILM-IDENTIFICATION (CAT C9)	
	6	1	**246-2900**	1	FILM-IDENTIFICATION (OIL FILTER)	

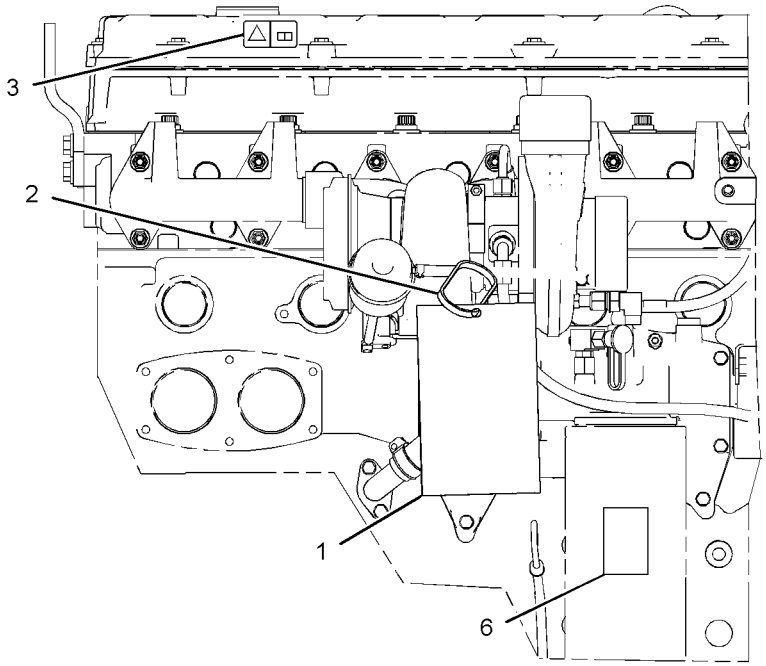

RIGHT SIDE VIEW OF ENGINE

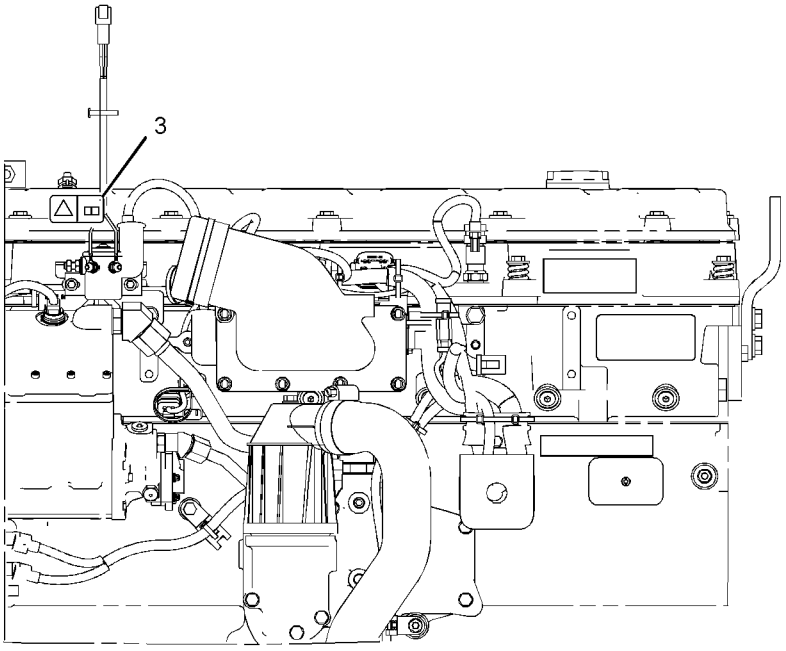

LEFT SIDE VIEW OF ENGINE

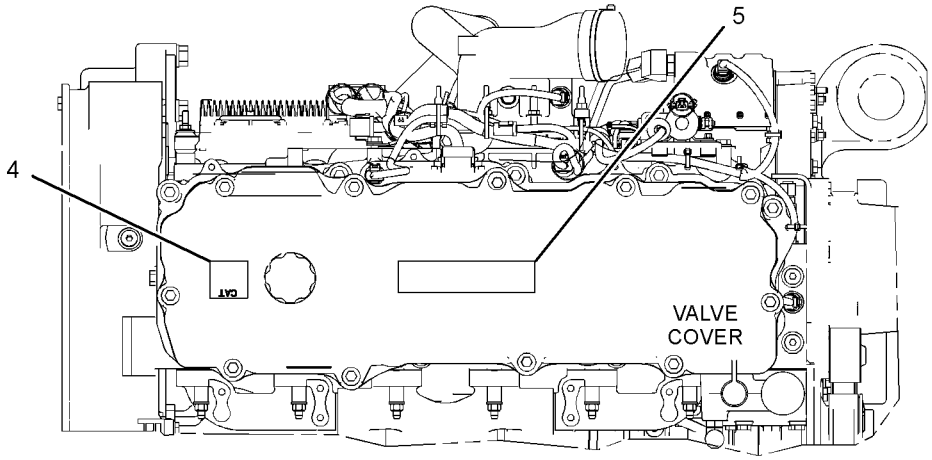

TOP VIEW OF ENGINE

GRAPHIC #1 **<END>** g03173958

PART NUMBER INDEX

Part	Page
0	
0L-1026	23
0S-0519	25
0S-1589	16
0S-1597	153
	156
1	
1B-8705	14
	22
1D-5117	121
1F-3584	325
1F-7960	107
1H-1023	153
	156
1H-2629	153
	156
1H-3244	112
	173
	181
1H-7339	233
1H-8278	364
1H-8306	364
1M-4986	116
1M-6119	115
	116
	119
1M-6120	115
	116
	119
1M-9968	154
	157
1M-9971	153
	156
1P-0451	95
1P-0810	193
	198
1P-3702	210
	278
	312
	367
	369
	371
	373
1P-3703	210
	260
	261
	263
	312
	321
	323
	329
	332
	340
	367
	369
	371
	373
1P-3704	254
	256
	258
	321
	323
1P-4278	138
1P-4578	327
	367
	369
	371
	373
1P-4579	327
1P-4582	75
	321
1P-5767	321
	323
1R-0762	99
1R-1808	59
1S-0994	99
	117
	119
	138
	193
	200
	316
	319
	325
1S-1015	138
1S-7251	115
	116
	119
1S-7252	116
	192
	193
1S-7446	153
	156
1S-9593	408
1T-0808	153
	156
1U-2827	364
1U-8846	42
	44
	90
	148
	149
	222
	280
	340
	361
1V-8795	347
1W-2715	29
1W-8407	25
2	
2A-3746	31
	32
2A-4429	29
2A-6397	459
2B-7561	278
2D-5658	355
2D-6392	153
	156
2F-6678	154
	157
2H-3429	153
	156
2H-3922	160
2J-0564	414
	416
2J-3950	428
2J-8163	153
	156
2K-4821	112
2L-6679	136
	156
2L-8049	193
2L-8051	198
2L-8052	199
2L-8057	193
2L-8060	199
2L-8065	116
	198
2L-8066	198
2L-8067	116
2L-8069	174
	182
	198
	199
2L-8075	187
2L-8076	199
2L-8078	192
2L-8079	174
	182
	198
2M-9780	98
	200
	283
	299
	316
	325
	350
	403
2P-1293	261
	263
	301
	303
	312
	329
	332
	334
	336
2P-4304	59
2R-1920	427
2R-1939	419
	421
	422
2R-8159	434
	440
2S-3440	138
2S-4078	312
	325
	327
	329
	332
2S-5926	230
2S-7593	224
2V-1771	117
	119
	193
2V-8260	200
2W-1145	212
	355
2W-7381	33
2W-8147	22
2W-9533	13
2Y-5829	53
	54
3	
3B-0623	23
3B-1915	251
3B-4501	438
	440
3B-4505	125
3B-4632	226
3B-6552	419
	422
3B-7726	283
3B-8489	222
	223
	419
	421
	422
3B-8603	416
3B-8822	419
	421
3D-2824	299
	312
	325
	327
	329
	332
	340
	350
	364
	367
	369
	371
	373
3D-9132	204
3D-9133	204
3E-2310	98
	315
3E-3371	142
3E-4297	288
3E-4352	90
	141
	148
	200
	459
3E-4353	459
3E-5239	473
3E-5464	438
	440
3E-6328	►111
	172
	179
3E-6477	438
	440
3E-6767	216
3E-7771	153
	157
3E-8005	15

► **PRIMARY REFERENCE**

PART NUMBER INDEX

Part	Page
3E-8008	294
3E-8017	91
	95
3E-8029	471
3E-9412	101
3E-9854	494
	496
3E-9865	492
3F-9556	112
	163
3J-1907	96
	98
	208
	210
	311
	315
	316
	319
	340
	343
	350
	367
	369
	371
	373
	404
	411
3J-5390	83
3J-7354	98
	350
	411
3K-0360	98
	99
	138
	200
	212
	278
	280
	283
	315
	316
	319
	325
	340
	411
	469
3L-3380	153
	156
3L-6513	116
	192
3M-6018	174
3N-3469	503
3N-3763	153
	156
3P-9847	75
3R-8797	153
	156
3R-8801	153
	157
3S-2093	137
	162
	172
	179
	187
	189
	190
	192
	196
	198
	200
	351
	419
	422
	438
	440
	447
3S-6049	115
	116
	119
3S-6050	116
3S-9643	74
3T-3157	174
	181
3T-3158	174
	181
3T-3159	174
	181
3T-3278	174
	181
3T-3418	153
	156
3T-3422	153
	156
3T-3423	153
	156
	157
3T-3424	153
	156
	157
3T-3434	153
	156
3T-4692	173
	180
	192
3T-4693	173
	180
	192
3T-4696	173
	174
	180
	181
	192
3T-4709	136
	156
3T-4710	136
	156
3T-7528	288
3T-9494	136
	153
	156
	157
3T-9524	153
	156
3T-9525	▶136
	153
	156
3V-9744	428

4

Part	Page
4B-1281	492
4B-2049	153
	157
4B-4158	230
4B-4274	117
	434
4B-4674	492
4C-9612	48
4D-1248	115
4D-2297	441
4D-3704	16
4D-6466	419
	422
4D-7735	193
4D-7794	125
	193
	200
4E-0754	138
4E-4334	321
	323
4E-5724	115
4F-2294	164
4F-5695	23
4G-4972	25
4H-6112	280
4H-6520	364
4H-9027	364
4I-0378	364
4I-3038	162
4I-5546	210
4I-5849	343
4I-6262	▶360
	363
4I-6263	360
	▶361
4I-7466	280
4I-7745	340
4I-8439	459
4J-0520	411
4J-0522	222
	327
	369
	371
	373
4J-0524	327
4J-0527	75
	321
4J-5477	311
	350
4J-5573	253
4J-7533	288
4K-3026	419
4K-8864	200
4L-2729	154
	157
4L-6454	71
4L-9337	283
4M-1831	153
	156
4M-1853	153
	156
4M-1854	153
	156
4M-1896	154
	157
4M-5317	421
4M-8973	88
4N-1059	192
4N-1114	16
4P-4369	91
4P-7428	351
4P-7581	190
	193
	200
4P-8134	190
	200
4R-9999	55
4S-9191	74
4V-5282	75
4W-1413	499
4W-2026	17
4Y-9072	138

5

Part	Page
5A-3604	486
5B-9304	413
5C-2890	148
	149
	200
	434
	436
	437
	441
5C-7261	18
	77
	88
	133
	150
	193
	224
5C-7423	11
5D-1026	278
	469
5D-4697	71
5F-3106	355
5F-3144	355
5F-8000	75
5F-9144	96
5H-4020	367
	369
	371
	373
5H-6005	364
5I-4277	405
5I-8670	287
5J-2383	343
5J-5314	153
	156
5K-3294	193
	419
5K-5338	316
	469
5K-9090	169
	254
	256
	258

▶ **PRIMARY REFERENCE**

PART NUMBER INDEX

Part	Page
	301
	303
	305
	312
	313
	329
	332
	334
	336
	338
	367
	369
	371
	373
5L-4507	117
5L-4758	249
5L-6688	441
5M-2057	364
5M-3034	153
	156
5M-6214	99
5N-4185	15
5P-0046	367
	373
5P-0537	432
	433
5P-0597	46
	61
5P-0600	210
5P-0760	116
5P-0767	46
	85
	138
	278
	469
5P-1076	210
5P-1291	327
5P-1293	75
5P-1404	98
5P-1442	99
5P-1947	327
5P-1979	321
	323
5P-2957	175
	182
5P-3264	101
5P-3454	116
	173
	180
	192
5P-3455	198
5P-4116	193
	455
	494
	496
5P-4325	61
	469
5P-4536	94
5P-4571	174
	181
5P-5602	175
	182
5P-5622	116
5P-5623	168
5P-5630	150
5P-5639	441
5P-5895	228
5P-5902	88
5P-5942	446
5P-5970	365
5P-5998	162
5P-6271	174
	181
5P-6298	136
	156
5P-6652	64
5P-6994	469
5P-7462	316
5P-7463	317
5P-7464	170
5P-7465	170
5P-7466	312
5P-7467	312
5P-7468	254
	256
	258
	261
	263
5P-7469	254
	256
	258
	261
	263
5P-7470	321
	323
5P-7471	321
	323
5P-7530	63
	65
5P-7814	107
5P-7957	499
5P-7958	172
	179
	499
5P-7970	61
	190
5P-8112	312
5P-8245	17
	42
	45
	56
	57
5P-8247	36
	112
5P-8309	220
5P-8444	254
	256
	258
5P-8500	364
	499
5P-9085	193
5P-9120	233
5P-9297	64
	169
5P-9299	85
5S-7001	403
5S-7018	403
5S-7349	112
5U-6181	220
5V-9221	13

6

Part	Page
	441
6B-5072	74
6C-6053	266
	414
6C-6088	267
6C-6093	267
6D-1641	138
	469
6D-3479	200
	469
6D-4161	174
	181
6D-4244	200
	278
	350
6D-4246	117
	193
	317
6D-5801	103
6D-9157	364
6E-3283	212
	253
6E-3635	364
6E-5066	412
6F-4718	212
6F-4855	293
6F-6672	293
6F-7045	160
6G-9485	459
6I-6550	230
6I-6551	230
6I-6721	254
	256
	258
6I-6784	267
	270
	274
6J-3134	404
	405
6K-6307	327
6K-6967	421
6L-3616	419
6N-3279	153
	156
6N-3826	153
	156
6Q-8408	125
6S-6646	219
6T-0363	136
	156
6T-0371	136
	156
6T-0372	136
	156
6T-3631	166
	200
6T-3632	166
	200
6T-3633	166
	200
6T-3644	117
6T-5598	193
6T-6505	438
6T-6506	438
6T-6969	172
	179
6T-7695	467
6V-0301	367
	369
	371
	373
6V-0400	210
	321
	323
	340
6V-0484	59
6V-0683	317
6V-0852	315
	350
6V-1249	170
6V-1322	153
	156
6V-1392	83
6V-1616	305
	338
6V-1819	67
6V-1874	261
	263
6V-1875	321
	323
6V-1876	305
6V-1889	200
	278
	332
6V-2235	75
6V-2317	18
6V-2369	116
6V-2686	150
6V-2687	459
6V-2722	121
	438
6V-3250	98
6V-3303	224
6V-3538	25
6V-3550	377
6V-3668	305
	364
6V-3683	405
6V-3918	15
	44
	48
6V-3940	11
	14
	15
	49
	63
	65
	141
6V-3965	316
6V-4245	419
	422
6V-4248	196
6V-4249	35
6V-4589	165
6V-5204	282
6V-5217	44
	61
	148

► **PRIMARY REFERENCE**

PART NUMBER INDEX

Part	Page	Part	Page	Part	Page	Part	Page
	190	6V-8218	404	6V-8653	404		301
6V-5218	11	6V-8225	459	6V-8675	45		303
	13	6V-8237	220		305		312
	59	6V-8352	208		338		329
	65	6V-8362	187	6V-8715	98		332
6V-5219	11	6V-8376	117	6V-8721	316		334
	42	6V-8378	117	6V-8723	65		336
6V-5556	407		163	6V-8724	98		338
6V-5696	17	6V-8397	64		316	6V-9173	301
	56		98		340		329
6V-5839	11		210	6V-8730	64		334
	13		315	6V-8774	340	6V-9189	128
	61		316	6V-8780	350		129
	67		319	6V-8781	316		131
	91		340	6V-8784	327	6V-9335	88
	101		350	6V-8786	312	6V-9511	227
	190	6V-8398	98	6V-8789	138	6V-9632	115
	196		99	6V-8928	489		116
6V-5842	11		138	6V-8932	290		219
	13		283	6V-8938	350		489
6V-5843	40		315	6V-8947	327	6V-9673	492
6V-6317	61		316	6V-8948	312	6V-9746	260
	190		319	6V-8949	228		261
	196		325	6V-8983	261		263
6V-6604	224		340		263		301
6V-6609	74	6V-8400	301		329		303
	77		305		332		305
	82		312	6V-8984	254		312
	146		313		256		327
	469		325		258		329
6V-6787	364		327	6V-8990	332		332
6V-7238	48		329	6V-8994	64		334
	278		334	6V-8997	301		336
	280		338		303		338
	469	6V-8555	350		334		350
6V-7357	459	6V-8558	327		336		367
	469	6V-8625	98	6V-8998	169		369
6V-7604	27		283		301		371
6V-7636	459		316		303		373
6V-7644	204		325		312	6V-9829	110
6V-7646	436		340		329	6V-9832	250
	437	6V-8626	283		332		334
6V-7658	288	6V-8627	311		334		338
6V-7688	228	6V-8635	312		336		345
6V-7743	364		329	6V-9001	316	6V-9833	250
6V-7744	83		332	6V-9002	99		334
	117		367		316		338
	131		369	6V-9004	367	6V-9834	250
6V-7981	101		371		369		334
6V-8076	316		373		371		338
6V-8109	464	6V-8636	65		373	6V-9837	98
	465		98	6V-9007	312		316
	466		110		350	6V-9844	340
6V-8149	17		315		367	6V-9845	350
6V-8185	174		319		369	6V-9850	316
	181	6V-8637	327		371	6V-9854	312
	459		329		373	6V-9855	312
6V-8186	163		332	6V-9009	325		327
6V-8188	153	6V-8638	98	6V-9023	441	6V-9872	350
	157		315	6V-9168	64	6V-9873	101
6V-8189	112	6V-8639	315	6V-9169	99		316
6V-8197	42		319	6V-9172	169	6V-9875	332
	305	6V-8641	311		254	6Y-2589	236
	338	6V-8642	350		256		247
6V-8202	483	6V-8647	350		258	6Y-2590	236

PART NUMBER INDEX

Part	Page
	248
6Y-2748	236
6Y-2751	236
6Y-2792	239
	240
6Y-5685	215
6Y-8023	233
6Y-8028	233
6Y-8029	233
7	
7B-3039	364
7B-7501	77
7C-1445	18
	42
7C-1493	59
7D-1553	99
7D-1728	419
7E-5714	149
7F-0560	121
7F-3488	153
	156
7F-3525	136
	156
7F-8268	20
	21
7G-3832	312
7G-3833	312
7G-3834	312
7G-5984	305
	313
7G-5985	305
	313
7G-5986	313
7G-7917	173
	180
	192
	197
7G-7919	173
	180
	192
	197
7G-7920	192
	197
7H-3171	233
7I-0966	407
7I-1351	276
7I-1352	276
7I-1353	276
7I-2272	190
7I-2673	172
	179
	488
7I-7131	363
7I-7728	280
7I-8310	327
7J-0204	88
7J-9108	283
	350
7J-9933	407
7K-1181	115
	170
	180
7L-2406	138
7L-2894	153
	156
7L-7556	79
7M-0324	153
	156
7M-0325	153
	156
7M-0326	153
	156
7M-0327	153
	156
7M-8485	312
	316
	329
	332
	364
	367
	369
	371
	373
7M-8651	153
	156
7N-0718	115
	▶160
	161
7N-5683	25
7N-5876	172
	179
7N-9801	167
7S-5005	107
7S-8553	403
7T-0093	198
	199
7T-0094	181
	197
7T-1099	83
	115
	116
	227
	312
	489
7T-3974	153
	156
7T-6799	187
7T-9987	115
	116
7T-9988	115
	116
7U-3538	204
7U-4891	172
	179
7W-7381	315
	319
7X-0310	92
7X-0325	114
7X-0340	114
7X-0345	46
7X-0346	46
7X-0507	193
7X-0562	153
	157
7X-0593	471
7X-0613	496
7X-0772	461
7X-2429	327
7X-2454	238
	241
7X-2537	193
	447
	494
	496
7X-2538	70
7X-2539	99
7X-2550	367
	369
	371
	373
7X-2553	220
	224
	294
	430
7X-2563	235
7X-2564	228
7X-2565	228
7X-2567	46
7X-2575	215
7X-2576	217
	218
7X-2619	428
	454
7X-2908	49
7X-2910	204
7X-3373	153
	156
7X-4743	175
	182
7X-4827	305
7X-7644	500
7X-7700	364
7X-7729	85
	88
	92
	138
	168
	193
	224
	418
	428
	471
7Y-0225	280
7Y-0252	280
7Y-0336	222
	278
7Y-0763	▶215
	231
7Y-1115	280
7Y-1221	242
7Y-1434	280
7Y-1459	242
	428
7Y-1460	242
7Y-1647	220
7Y-1648	220
7Y-1649	210
7Y-1866	230
7Y-1884	230
7Y-1976	85
7Y-2397	414
	416
	427
	430
7Y-2496	426
7Y-2498	220
	414
	416
	426
	428
	430
7Y-3355	220
	414
	416
7Y-3427	426
	430
7Y-4090	427
7Y-4290	343
7Y-4294	343
7Y-4620	270
	274
7Y-4622	267
	270
	274
7Y-4628	267
	270
	274
7Y-4631	267
	270
	274
7Y-4633	270
	274
	276
7Y-4801	363
7Y-4803	361
7Y-4804	361
7Y-4817	363
7Y-5128	267
	270
	274
	276
7Y-5215	272
7Y-5216	270
	274
	276
7Y-5221	343
7Y-5239	267
7Y-5269	405
7Y-7389	175
	182
7Y-8165	220
7Y-8167	220
8	
8C-0596	192
8C-3056	116
	193
8C-3079	107
8C-3089	153
	156

▶ **PRIMARY REFERENCE**

PART NUMBER INDEX

Part	Page	Part	Page	Part	Page	Part	Page
8C-3391	139		180	8T-2353	59		260
8C-3445	59	8N-1520	197	8T-2393	294		261
8C-3756	438	8N-1521	173	8T-2394	405		263
8C-4984	34		180	8T-2503	253		278
8C-5898	500		192	8T-3298	365		283
8C-5918	119		197	8T-3425	489		313
8C-6354	172	8N-1522	173	8T-3490	46		317
	179		180		73		319
8C-6358	121		197		83		321
8C-6524	138	8N-1523	173		92		323
8C-6872	138		180		114		325
8C-7332	489		197		115		327
8C-7581	441	8N-1540	173		192		329
8C-8400	329		180		197		332
8C-8422	278		197		224		340
8C-8457	438	8N-1541	192		227		363
	441		197		256		365
8C-8729	208	8N-1542	197		312		367
8C-9660	153	8N-1543	192		447		369
	156	8N-1544	197		455		371
8C-9987	408	8N-1545	192		456		373
8D-9671	117	8N-1548	173	8T-3504	459		416
8E-1118	467		180	8T-3518	121		419
8F-1434	117		197	8T-3519	121		421
	153	8N-1549	192	8T-3597	227		422
	157		197		414		428
	163	8S-0948	138	8T-3611	325		432
8F-6575	57		193		329		433
8F-6711	75	8S-2332	193	8T-3612	83		447
8F-7219	96	8S-8820	193		220		454
8F-8151	85	8T-0100	18		315		456
8F-8882	239		38		459		464
	240	8T-0119	138	8T-3647	447		465
8H-5303	160		469	8T-3666	33		466
8H-5306	160	8T-0122	115	8T-3991	219		469
8H-5352	204	8T-0151	367	8T-4001	46		473
8H-8648	499		369	8T-4121	64		475
8J-2413	390		371		73		487
	392		373		75		489
	396	8T-0267	364		83	8T-4122	46
8J-8782	364	8T-0288	413		85	8T-4123	46
8J-8783	364	8T-0292	63		88		220
8J-8879	280	8T-0328	117		92		414
8K-1433	477		153		99		416
8K-4691	305		157		114		428
	338		190		117		430
8L-2786	150		200		119	8T-4131	46
8L-7905	438		364		130		226
	440		473		131		426
8L-8413	115	8T-0337	172		138	8T-4133	117
	116		179		150		119
	119	8T-0372	56		169		170
	503	8T-0389	130		170		193
8M-0505	77	8T-0643	11		175		200
8M-2770	193		13		182		220
8M-2772	193	8T-0644	74		193		228
	419		81		200		283
8M-2773	193	8T-0646	57		210		313
8M-5860	27	8T-0669	220		220		321
8N-1513	173	8T-0671	220		224		323
	180	8T-1482	46		227		419
8N-1514	197	8T-1715	77		228		421
8N-1517	197	8T-1814	459		254		422
8N-1518	192	8T-1905	316		256	8T-4136	73
8N-1519	173		319		258		85

PART NUMBER INDEX

Part	Page	Part	Page	Part	Page	Part	Page
	88		220		182		138
	92		254		200		200
	99		256		290		456
	114		258		311	8T-4201	365
	117		261		446	8T-4205	112
	119		263		459		117
	170		350		469		153
	175		361		494		156
	182		471	8T-4191	175		174
	193		475		182		181
	200	8T-4140	224		193		190
	210	8T-4141	226		230		200
	220	8T-4154	317		487		434
	278	8T-4167	46	8T-4192	117		441
	283		207		224		459
	317		217		254	8T-4223	75
	327		218		256		85
	340		238		258		92
	363		241		261		114
	365	8T-4170	426		263		117
	416	8T-4171	473		305		175
	428	8T-4172	325		414		182
	447	8T-4176	75		430		210
	459	8T-4178	278	8T-4193	85		220
	469	8T-4179	117	8T-4194	321		224
8T-4137	64	8T-4182	117		323		232
	75		210		365		254
	85		224	8T-4195	88		256
	88		278		92		258
	92		313		99		261
	99		367		175		263
	117		369		182		280
	119		373		193		290
	138		418		200		305
	150	8T-4183	232		220		321
	168		280		224		323
	170		414		227		327
	175		423		228		338
	182		425		278		340
	190		428		313		350
	193		430		319		361
	200	8T-4184	75		327		365
	327		290		367		367
	365		321		369		369
	367		323		371		371
	369		327		373		373
	371		340		428		414
	373	8T-4185	169	8T-4196	83		416
	432		224		88		423
	433		313		92		425
	456		418		224		428
	461	8T-4186	85		228		430
	469		138		254		471
	471		193		256		475
	473		224		258	8T-4224	18
	489		321		261		37
8T-4138	117		323		263		70
	175		365		317		77
	182		418		371		83
	432		454		469		88
	433	8T-4189	83	8T-4198	313		112
	469		125		329		128
	473		131		332		129
8T-4139	85		150		373		133
	117		175	8T-4200	125		138

► **PRIMARY REFERENCE**

PART NUMBER INDEX

Part	Page
	150
	175
	182
	193
	290
	311
	317
	446
	447
	456
	469
	494
8T-4226	119
8T-4241	204
8T-4244	92
	175
	182
	414
	416
8T-4648	75
	210
	254
	256
	258
8T-4778	416
8T-4779	224
	414
8T-4780	220
	414
	416
	428
	430
8T-4896	283
8T-4908	88
	317
	459
	496
8T-4910	321
	323
	428
8T-4944	282
8T-4956	232
	416
8T-4970	117
	290
8T-4971	469
8T-5005	461
8T-5041	350
8T-5360	92
	349
8T-5429	325
8T-5436	117
8T-5439	226
	365
8T-5451	190
8T-5460	206
8T-5878	207
8T-5907	313
8T-6381	46
8T-6385	280
	416
8T-6404	282
8T-6430	226
8T-6466	260
	261
	263
	469
8T-6624	471
8T-6631	438
	441
8T-6684	367
	369
	371
	373
8T-6685	317
	367
	369
	371
	374
8T-6757	29
8T-6759	363
	413
8T-6761	79
8T-6868	210
8T-6869	99
8T-6912	37
	129
	133
8T-7044	91
8T-7338	232
	321
	323
8T-7503	227
8T-7547	133
	194
	455
	459
8T-7586	365
8T-7964	365
8T-8441	204
	355
8T-8729	111
	132
	142
	163
	165
	166
	167
	168
	187
	192
	197
	198
	199
	350
	438
	441
	454
8T-8827	193
8T-8916	349
8T-9080	242
8T-9403	210
	278
	313
	367
	374
8T-9521	204
8T-9655	98
	122
8T-9756	119
8U-5786	204
8U-6668	88
8W-0013	347
8W-8512	471
8W-8909	117
8X-5489	117
8X-5803	172
	179
8X-9618	115
8Y-4501	459
8Y-4614	459
8Y-6359	459
8Y-6388	461
8Y-6896	492
8Y-6913	492
8Y-9603	192
9	
9B-7233	117
	187
9B-7237	71
9C-2741	169
9C-2979	224
9C-4935	224
9D-8353	219
9F-4446	15
9F-5599	136
	156
9F-5644	160
9G-0002	119
9G-0005	119
9G-1906	174
9G-2758	116
9G-3695	166
9G-4101	153
	156
	157
9G-4336	116
9G-4343	116
	173
	180
	198
9H-3757	153
	156
9J-7031	364
9L-6770	112
9M-1974	11
	13
	15
	34
	42
	44
	48
	59
	61
	63
	65
	90
	122
	190
9M-8406	194
	317
	469
9N-0869	38
	99
	122
9N-1941	92
9N-6152	59
9Q-5543	232
9R-2613	92
	115
	119
9R-2672	115
9R-9753	492
9R-9754	492
9R-9806	173
	180
9S-2437	103
9S-2544	153
	156
9S-4167	98
9S-4180	288
9S-4181	367
	369
	371
	373
9S-4183	299
	373
9S-4185	469
9S-4190	299
9S-8001	353
9S-8002	103
	353
	411
9S-8003	42
9S-8004	96
	98
	208
	404
	411
9S-8005	29
	42
	212
	411
9S-8006	353
9S-8008	353
9S-9334	42
	353

PART NUMBER INDEX

Part	Page	Part	Page	Part	Page	Part	Page
	364	9X-2042	175	9X-6857	192	085-8091	315
9T-3370	214		182		197	085-9310	85
9T-3745	214		452	9X-7345	175	087-4587	220
9T-3853	208		458		183	087-4683	162
	376		467	9X-7378	441	087-4759	405
	405		473	9X-7380	434	087-5005	267
9T-3928	208		489		441		270
	355	9X-2043	448	9X-7381	434		274
	405		457		441	087-5431	272
9T-3929	253		489	9X-7382	434	087-5434	272
9T-6635	150	9X-2044	459		441	087-5436	272
9U-6996	327		489	9X-7680	212	087-5550	267
9U-8263	467	9X-2045	172	9X-7737	165	090-9554	459
9U-8746	467		179	9X-8250	469	091-9035	92
9W-0335	175		489	9X-8256	117		193
	182	9X-2099	18		148	093-0083	220
9W-0742	115	9X-2121	175		149		414
	▶121		183		175		416
9W-0844	192	9X-2205	364		183		426
	438	9X-2332	190		428		428
9W-0852	438	9X-2403	253		454		430
9W-1441	173	9X-2532	492		459	093-0086	426
	180	9X-2533	492		469	093-0090	220
9W-1442	173	9X-2546	459		473		414
	180	9X-2616	224	9X-8257	220		416
9W-1446	173		485		224	093-0115	220
	180	9X-2858	204		232		414
9W-1951	174	9X-3401	172		280		416
	181		173		282		426
9W-2032	173		174		321		428
	180		175		323		430
9W-2033	173		179		414	093-0118	426
	180		180		416	093-0122	220
9W-2146	239		181		430		414
	240		182	9X-8268	23		416
9W-4381	244		183		34	093-0364	220
	245		187	9X-8408	316	093-0543	210
	246		189	9X-8480	204	093-1434	430
	247		190	9X-8482	212	093-1509	230
	248		193	9X-8600	364	093-1571	276
9W-6582	46		198	9Y-0810	22	093-1572	272
9W-6584	46		199	9Y-6089	16	093-1588	364
9W-9920	46		200			093-1730	280
9X-0196	181		350			093-1731	280
9X-0261	98	9X-3402	173	**0**		093-2357	280
	141		180			093-7521	292
9X-0262	141		438	030-1708	116	094-0611	280
9X-1054	173	9X-3595	270	030-1712	116	094-1528	280
	180		274		192	095-0670	353
9X-1056	173		276		193	095-0736	364
	180	9X-3598	272	030-7950	101		458
9X-1813	165	9X-3604	267	030-8194	106	095-0746	133
	168	9X-4244	128	033-6034	63	095-0757	295
9X-2021	36		129	037-4838	434	095-0891	280
9X-2032	489		130		440	095-0928	204
9X-2039	463		131	044-4101	138	095-0929	267
9X-2040	463	9X-4597	414	045-4065	154		270
	464		416		157		272
	465		428	061-9455	18		274
	466		430		42		276
	489	9X-6258	492	067-2551	98		362
9X-2041	175	9X-6772	173		315	095-0991	355
	182	9X-6856	173		319	095-1280	234
	450		180	081-3801	355	095-1302	220
	452		197	081-3959	208	095-1386	98

▶ **PRIMARY REFERENCE**

PART NUMBER INDEX

Part	Page
095-1388	46
	85
095-1576	413
095-1584	286
	287
095-1586	125
	410
	413
095-1590	286
	287
095-1596	286
	287
095-1600	343
095-1625	363
095-1631	270
	274
	276
095-1632	272
095-1635	267
095-1663	290
095-1681	288
095-1682	290
095-1698	407
	413
095-1706	364
095-1716	363
095-1730	364
095-1785	413
095-9232	208
095-9804	208
096-0854	426
	430
096-1533	343
096-1588	276
096-2653	280
096-2665	272
096-3656	376
096-4035	85
096-4755	278
096-6095	222
096-6166	175
	182
097-7234	174
	181
099-3001	138
099-8111	343
1	
100-3320	190
100-3721	▶226
	231
100-4336	98
100-5041	173
	180
100-6674	438
	441
100-9973	226
100-9992	461
101-0387	64
101-3055	467
101-3128	122
101-7404	312
	329
	332
	367
	369
	371
	373
102-7965	174
	181
102-8801	174
	187
	197
	199
	438
	441
102-8802	111
	132
	163
	165
	167
	168
	172
	179
	190
	192
	197
	199
	200
	364
	408
	438
	440
102-8803	162
	174
	181
	187
	192
	199
	200
102-8804	166
	172
	180
	197
102-8805	189
	350
	454
102-8806	137
	174
	181
	192
103-8236	286
103-8378	267
	270
	272
	274
	276
103-8379	267
	270
	272
	274
	276
103-8380	267
	270
	272
	274
	276
104-2091	461
104-9693	312
	329
	332
	367
	369
	371
	373
105-1797	190
105-8096	346
105-8097	346
105-8098	346
105-8117	269
	▶398
106-8715	329
107-3117	208
107-3157	220
	414
	416
	428
	430
107-4015	347
107-7694	14
107-9845	430
108-2949	115
108-3222	204
108-3866	403
108-5471	459
108-7118	340
109-0118	204
109-0881	233
109-3204	376
109-3207	97
109-5695	204
109-5707	204
109-6494	204
109-9437	46
110-0885	88
110-2028	175
	182
	200
110-2218	138
110-5525	343
110-5915	269
110-6109	187
110-6193	204
110-6349	353
110-6395	500
110-8769	192
110-9160	301
	334
111-0343	408
111-2416	190
111-4799	162
111-6792	441
111-6793	438
	441
111-6795	438
	441
111-6816	438
	441
111-7238	11
112-3929	278
112-7448	432
	433
	461
112-9073	416
113-0919	467
113-4419	214
113-5794	346
113-6069	40
114-0757	272
114-0758	276
114-1383	280
114-1401	280
114-3140	440
114-3616	398
114-5333	438
	440
115-2422	117
	119
115-3699	233
115-4072	40
115-4219	40
115-8634	325
116-3715	91
116-5386	4
	5
	▶39
116-5763	87
117-2311	172
	179
117-2794	4
	5
	▶36
117-5604	416
	427
117-6349	456
117-6350	456
117-6356	456
117-8131	471
118-0911	77
	315
118-1727	4
	5
	▶17
118-9930	46
119-2324	256
119-2325	256
119-2381	261
	263
119-2382	261
	263
119-3662	173
	181
	192
	197
	198
	438
	441
119-3859	440
119-5026	187
120-4394	208
	294
	404
120-9027	162
120-9127	77
121-7098	469
122-2340	210
122-6876	321
122-6906	139

▶ **PRIMARY REFERENCE**

PART NUMBER INDEX

Part	Page
122-9608	456
122-9609	456
122-9610	456
123-0707	473
123-1373	117
	119
123-1979	405
123-1981	405
123-2003	290
	295
123-2017	294
	404
	405
123-2060	272
123-2139	343
123-4750	319
123-5791	208
123-5798	208
	216
123-5799	208
	216
123-7562	253
124-0174	170
124-0910	254
	258
124-0911	254
	258
124-1479	85
124-5640	438
	441
124-9633	193
124-9884	294
124-9913	212
	355
124-9914	212
124-9929	214
124-9930	214
124-9932	214
124-9933	214
124-9934	214
124-9935	214
124-9936	214
124-9937	214
124-9938	214
125-1379	212
125-2706	46
125-6535	154
	157
125-7874	173
	174
	180
	181
	187
	190
	192
	197
	198
	199
	350
	441
125-7875	169
	170
	173
	174
	180
125-7876	115
	197
126-1757	18
	19
126-1767	173
	174
	175
	180
	181
	182
	183
	187
	189
	190
	192
	193
	198
	199
	200
	350
126-1768	169
	170
	173
	174
	180
	181
	190
	198
	199
	200
	447
	473
	351
126-1774	192
126-1813	286
126-5011	190
126-6514	410
126-6515	410
126-6516	410
126-6872	315
126-9092	355
126-9093	208
126-9653	138
127-0785	353
127-2170	465
127-8987	357
	358
128-2135	450
	452
	489
128-4183	187
128-9260	270
	274
129-5096	114
129-5167	475
129-7680	501
130-2321	364
130-5300	175
	182
	193
	200
	447
	473
130-5301	351
130-6788	441
130-6789	174
131-0353	90
131-0359	172
	179
	499
131-1478	173
131-1479	173
131-1491	173
131-1498	174
131-1499	173
	174
131-3093	440
131-3987	457
131-8881	92
132-5789	42
	200
	312
	447
	473
132-6777	346
132-7032	98
132-7551	193
132-9741	204
133-3089	4
	5
	▶16
133-6788	413
133-8714	434
	440
133-9012	440
134-1030	492
134-7258	500
135-2543	116
	192
	193
135-8965	475
135-9044	280
135-9819	17
136-0822	18
	19
136-2422	▶233
	235
136-2904	280
136-2940	280
136-3847	233
136-4183	40
136-5490	477
136-7227	106
136-9066	503
137-1602	94
137-3623	288
137-3624	288
137-3625	288
137-3626	249
	288
137-3628	249
	288
137-4673	125
137-6645	197
137-7148	204
138-1108	125
139-2397	197
139-4613	475
139-4724	117
139-8736	46
139-8737	46
139-8873	46
141-2163	363
141-8275	98
142-1382	208
142-1383	208
142-1384	208
143-4891	244
	245
	246
143-7596	227
143-9392	122
144-1636	436
	437
144-4107	459
145-2264	59
145-4212	88
146-6747	500
147-0182	81
147-2383	428
147-3150	447
147-5851	270
	274
147-5852	270
	274
	276
147-5853	270
	274
	276
147-6603	419
147-8856	194
148-2701	83
148-2903	97
148-3533	239
	240
148-4685	223
148-5018	220
148-8310	367
	369
	371
	373
148-8315	350
148-8316	350
148-8319	98
148-8323	332
148-8325	311
148-8326	350
148-8327	327
	329
	332
148-8334	325
	329
148-8335	329
	332
	367
	369
	371
	373
148-8336	98
	315
	319
148-8340	315
	319
148-8345	98

▶ **PRIMARY REFERENCE**

PART NUMBER INDEX

Part	Page
	315
148-8347	312
	350
	367
	369
	371
	373
148-8353	316
148-8354	99
	316
148-8356	325
148-8362	367
	369
	371
	373
148-8364	98
	283
	316
	325
	340
148-8367	316
148-8368	311
148-8372	316
148-8376	261
	263
	329
	332
148-8378	98
	316
	340
148-8381	325
148-8387	312
	327
148-8390	283
148-8406	364
148-8408	373
148-8435	316
148-8439	340
148-8444	98
	316
148-8453	313
148-8455	301
	303
	334
	336
149-0660	125
149-1137	346
149-1973	346
149-5240	97
149-5452	64
149-7738	138
	278
149-9129	193
150-3036	316
	319
150-4027	98
	315
150-4029	350
150-4031	350
150-4036	315
150-4037	340
150-4043	316
150-4046	98
150-5785	404
150-5884	270
	274
	276
150-5885	270
	274
150-8015	492
151-1398	174
	181
151-2115	204
151-2939	22
152-1734	243
	▶244
152-1735	▶222
	231
152-8558	245
152-8707	204
153-0825	305
153-1036	33
153-6237	367
	369
	371
	373
153-6252	316
154-5558	251
154-5559	251
154-6643	10
	▶251
154-9025	74
155-2026	169
	301
	303
	329
	332
	334
	336
155-2255	173
	174
	180
	182
	198
	199
	438
155-2256	173
	180
	199
155-2260	174
	182
	187
	198
	199
155-2265	173
	180
	190
155-2270	164
	169
	170
	173
	174
	180
	181
	182
	190
	192
	197
	198
	199
	350
	438
	441
155-2271	173
	174
	180
	181
	189
	198
	441
155-2274	173
	180
	198
	199
155-4098	175
	182
156-6129	98
156-9426	127
156-9427	127
156-9428	127
157-0670	74
158-3059	228
158-6634	▶166
	175
	182
158-6706	198
158-8987	▶285
	315
158-9064	272
158-9065	272
159-1900	346
159-5871	340
	▶363
159-7666	294
159-8049	115
	116
	119
	193
159-8050	115
	116
	119
	192
	193
159-9322	193
159-9540	224
159-9541	224
160-1757	404
160-3771	408
160-6631	240
160-7627	210
160-7689	192
160-8194	49
160-8197	49
160-8199	49
160-8749	92
161-1835	305
161-3411	91
161-6963	94
162-5389	232
162-7755	▶127
	172
	179
163-1057	327
163-2445	57
163-2447	53
163-2459	57
163-2478	29
163-6803	174
	181
163-7967	376
164-0655	172
	179
	489
164-2108	409
164-4180	367
	369
	371
	373
164-5552	340
164-5567	316
164-5570	64
164-5574	327
164-5577	254
	256
	258
164-5669	57
164-6148	8
	9
	▶22
164-6872	325
164-7556	128
	129
	130
164-8474	461
165-0020	338
165-2273	278
	280
	469
165-3256	364
165-4465	4
	5
	▶65
165-4557	4
	5
	▶33
165-4932	312
165-4933	332
165-6209	▶204
	206
165-6365	315
	319
165-6976	214
165-7097	175
165-9226	272
165-9287	276
165-9288	267
165-9289	272
165-9419	270
	274
166-1776	18
166-1781	18
166-1785	45
166-3648	49
167-0024	26
167-1555	315
	▶403
167-2212	276
167-2325	276
167-2327	270
	274

▶ **PRIMARY REFERENCE**

PART NUMBER INDEX

Part	Page
167-2476	270
	274
167-3487	174
167-3542	172
	175
	179
	182
	183
167-3543	172
	175
	179
	182
	183
167-6701	214
167-8121	33
168-0713	407
168-0763	407
168-0764	407
168-0765	407
168-0766	407
168-1968	315
168-3332	469
168-3437	394
168-3440	380
	384
168-3443	382
	386
	388
	394
168-9860	278
169-0705	174
	181
	198
	199
169-2876	500
169-3105	4
	5
	▶50
169-5617	280
169-5618	280
169-6713	88
169-7386	64
169-7395	98
170-6929	119
170-9846	267
170-9847	272
170-9985	343
170-9986	343
170-9996	343
171-0596	142
171-2206	115
171-2210	115
171-2211	115
171-2212	115
171-2462	392
171-3370	85
171-3684	408
171-3685	▶408
	411
171-4047	461
171-7325	443
	444
	452
171-9280	280
171-9283	280
171-9375	280
172-0961	4
	5
	▶56
172-1001	56
172-4621	367
	369
	371
	373
172-6062	190
172-6064	190
172-6065	190
172-8037	175
	182
172-8039	175
	182
172-8120	227
172-9200	172
	179
	189
	473
173-3510	290
173-3513	288
173-3515	288
173-3516	288
173-3517	288
173-3529	288
173-3536	413
173-6107	4
	5
	▶90
173-7223	98
173-9684	222
174-0503	175
	182
	187
174-3016	192
174-3069	204
174-4913	412
174-5907	117
	119
174-7875	168
174-9570	▶96
	103
175-0454	23
175-2838	432
	433
	461
175-3892	409
175-4291	128
	129
175-4292	128
	129
175-6174	290
175-6175	290
175-6176	290
	364
175-6178	290
176-0051	204
176-0053	204
176-0055	204
176-1902	469
176-5913	57
176-5914	57
177-1044	82
177-1056	80
	440
177-2215	138
177-2480	355
177-2482	355
177-2484	355
177-2487	357
177-2488	357
177-2489	357
177-2491	357
	358
177-2492	357
	358
177-2493	357
	358
177-2494	357
	358
177-2495	357
	358
177-2496	357
	358
177-2497	357
	358
177-2498	357
	358
177-2499	357
177-2500	357
	358
177-2502	359
177-2510	359
177-2511	359
177-2513	358
177-2514	358
177-2515	358
177-2516	358
177-2517	358
177-2521	▶253
	294
177-2523	294
177-2524	294
177-2525	294
177-2526	294
177-2528	294
177-2530	253
177-2534	405
177-2535	405
177-2536	405
177-2538	404
177-2539	404
177-2553	288
177-2617	▶249
	290
177-2619	249
177-2620	290
	▶295
177-2621	295
177-2623	290
177-2625	290
177-6687	434
177-6689	434
	440
177-6690	434
	440
177-6692	434
	440
177-6694	434
	440
177-6696	434
	440
177-6698	434
	440
177-6699	438
	440
177-6700	434
	440
177-6701	434
	440
177-6707	434
	440
177-6708	434
177-6710	434
	440
177-6711	440
177-6726	434
	440
177-6727	434
177-6733	434
178-2841	208
178-3899	4
	5
	▶55
178-5659	485
178-5922	260
	261
	263
178-7891	405
178-7892	405
178-7893	405
178-7894	405
178-7895	405
178-7896	405
178-7897	405
178-7900	405
178-7903	405
178-8894	459
179-1497	239
	240
179-1499	239
	240
179-3426	236
179-3428	236
179-4673	434
	440
179-4674	434
	440
179-4682	434
179-4683	434
179-6136	434
	440
179-6801	501
179-6802	501
179-6803	498
179-7400	103
179-8128	107
179-9392	172
	179
179-9618	249
179-9667	272
179-9806	288
180-5316	172
	179

▶ **PRIMARY REFERENCE**

PART NUMBER INDEX

Part	Page
180-9340	190
	197
180-9900	172
	179
183-2874	237
	238
	▶240
	241
183-2875	240
183-2879	238
	▶239
183-2880	239
183-2883	239
	240
183-2931	82
183-3302	204
183-3399	65
	110
183-6930	204
183-7749	198
183-7754	174
	181
	187
183-9425	390
	392
	396
184-1432	198
184-3830	342
	▶407
185-0002	327
185-0230	267
185-0231	267
185-0592	267
185-0701	204
185-0751	204
185-0752	204
185-0753	204
185-0754	204
185-0755	204
185-0759	204
185-0762	204
185-0763	204
185-0764	204
185-0766	204
185-0768	204
185-0769	204
185-0770	204
185-0771	204
185-0772	204
185-0773	204
185-0774	204
185-0776	204
185-0777	204
185-0778	204
185-0780	204
185-1860	175
	198
185-1861	182
	198
185-2638	112
185-2639	112
185-2644	112
185-2645	112
185-2647	112
185-2648	112
185-2650	112
185-2653	112
185-2654	112
185-2655	112
185-2658	112
185-8284	448
	450
185-8286	162
	443
	444
186-0359	194
186-3735	162
	408
	454
186-5107	461
186-5730	426
186-5732	426
187-0473	4
	5
	▶42
187-0716	62
187-1315	31
	32
187-3971	90
187-7171	290
187-7719	434
	438
	440
187-8001	208
	355
	405
187-8703	88
188-2030	88
188-2084	285
	▶286
188-3826	8
	9
	▶68
188-4093	355
188-4094	355
188-4097	359
188-4103	358
188-4142	▶288
	290
188-4143	288
188-4145	▶290
	364
188-4162	343
188-4163	343
188-4164	343
188-4165	343
188-4166	343
188-4167	343
188-4169	343
188-4170	343
188-4171	343
188-4172	343
188-4173	343
188-4176	343
188-9778	243
	▶245
188-9779	243
	▶246
189-2449	11
	13
189-2456	434
	440
189-2512	172
	179
189-3158	192
	197
	351
	473
189-8789	224
190-0643	11
	13
190-3848	193
190-3849	115
190-3968	11
190-4155	11
190-5386	501
190-6114	48
190-6115	29
190-6117	29
190-7614	187
	199
190-8121	212
	▶213
190-9752	208
191-0883	213
	▶214
191-0886	213
	▶362
191-0979	434
	440
191-1005	438
	440
191-1782	99
191-1783	99
191-1955	362
191-2513	280
191-2579	280
191-2694	280
191-2695	280
191-2696	280
191-2697	280
191-2708	208
191-3063	4
	5
	▶45
191-3107	404
191-3201	407
191-4457	74
191-5077	459
191-7823	190
191-8041	114
192-2112	441
192-2891	212
192-2893	208
192-2895	208
192-2900	208
192-3286	216
192-3289	216
192-3290	216
192-3292	208
192-3293	208
	▶377
192-3294	377
192-4697	91
192-5017	192
192-9208	377
193-0337	204
193-0702	434
	440
193-3973	172
	179
193-8308	327
194-1238	242
194-1253	242
194-1254	242
194-2903	138
	469
194-3281	377
194-3282	377
194-3283	377
194-5226	180
	181
	182
	189
	198
	199
	351
194-5227	180
	181
	182
	189
	198
	199
	351
194-6601	377
194-6970	208
194-6971	208
194-6972	208
194-6973	208
	▶376
194-6976	376
194-6977	376
194-6979	376
194-6980	376
194-6982	208
194-6983	208
194-8261	357
194-8263	358
195-0452	63
195-3739	▶409
	412
195-8098	8
	9
	▶67
196-2387	492
196-2388	492
196-2392	▶492
	494
196-4083	246
197-5010	94
197-7471	204
197-8419	65
197-8820	▶112
	114
197-9367	49
197-9581	80
197-9880	446
	▶463
197-9890	463
197-9891	463

▶ **PRIMARY REFERENCE**

PART NUMBER INDEX

Part	Page
198-0212	73
198-2953	230
198-3811	▶404
	405
198-3813	405
198-3814	405
198-3816	404
198-3817	355
198-3818	355
198-4766	117
199-2856	350
199-7891	112
199-7933	438
199-8026	200
199-8436	112
2	
200-1131	175
	182
200-4495	40
200-6345	115
	315
	367
	369
	371
200-8789	174
	181
201-0095	125
201-0828	236
201-2733	500
201-7808	▶280
	282
201-9299	288
202-0996	4
	5
	▶91
202-3301	4
	5
	▶15
202-4004	220
202-5397	182
202-5414	198
202-6603	4
	5
	▶63
202-6614	128
	129
	130
202-7674	5
	9
	▶81
202-9041	438
	440
203-0199	114
203-3237	29
203-3238	29
203-5805	23
203-6090	23
203-7775	91
203-7778	91
204-0920	85
204-1297	182
204-2281	115
204-2677	343
204-2762	288
204-8000	172
	179
205-0626	112
205-0827	303
	305
	309
	336
	338
205-0828	303
	305
	309
	336
	338
205-0829	301
	303
	305
	309
	310
	334
	336
	338
205-0830	301
	303
	309
	310
	334
	336
205-0831	301
	303
	309
	310
	334
	336
205-0832	301
	303
	309
	310
	334
	336
205-0833	301
	303
	309
	310
	334
	336
205-0834	301
	303
	309
	310
	334
	336
205-0835	301
	303
	309
	310
	334
	336
205-1320	40
205-1321	8
	9
	▶40
205-4013	4
	5
	▶79
205-6041	75
205-7299	193
205-9880	92
206-1345	440
206-3719	55
208-0097	204
208-0305	458
208-2929	440
208-4617	115
	116
	119
208-6055	75
208-7616	503
208-9277	196
209-0758	4
	5
	8
	▶44
209-0760	19
209-0762	19
209-1434	79
209-3172	101
209-3349	119
209-4433	204
209-4573	75
209-4580	75
209-4590	88
209-5582	115
	▶163
	196
209-7290	59
209-7291	59
209-7293	68
209-9234	106
209-9719	208
210-6023	492
210-6024	492
210-6025	492
211-2134	29
211-3285	4
	5
	▶18
211-4694	492
211-4735	492
211-5237	138
211-6807	190
211-7730	106
211-9060	75
212-0430	193
212-6933	75
212-7002	23
212-8020	220
212-8024	220
212-8075	426
212-8079	416
212-8080	414
	416
212-8082	414
	416
212-8085	220
	414
	416
	428
212-8086	416
212-8087	416
212-8090	416
212-8092	414
	416
212-8097	414
	416
212-8879	416
	427
212-8917	27
212-8926	▶57
	58
213-0064	98
213-0094	426
213-0095	426
213-1975	▶236
	244
	245
	246
	247
	248
213-2410	15
213-2411	15
213-3190	49
213-3745	350
213-4363	8
	32
	▶34
213-5213	63
213-9320	▶53
	57
214-0890	138
214-6368	408
214-7458	75
214-7520	228
214-7521	228
214-7566	25
	59
	141
214-7567	42
	143
214-7568	29
	50
	51
	59
	65
	101
	109
	110
	141
	144
	316
214-7833	220
214-7835	220
215-3249	190
215-4909	286
	287
215-9092	263
	▶274
215-9093	274
215-9095	274

▶ **PRIMARY REFERENCE**

PART NUMBER INDEX

Part	Page
215-9097	261
	▶270
215-9099	270
215-9108	270
216-0004	267
216-0005	272
216-0029	359
216-0036	357
216-0037	358
216-2817	301
	334
216-2941	80
216-5586	23
216-9855	10
	▶46
217-0609	29
217-5200	74
217-5701	21
217-6635	4
	5
	▶114
217-8669	4
	5
	8
	▶19
218-0859	4
	5
	▶35
218-2373	409
218-9894	408
219-0305	501
219-4808	▶243
219-6485	▶128
	169
	170
219-6487	▶129
	134
219-6498	380
	384
	386
	392
	394
	396
219-6530	380
	384
	386
	392
	394
	396
219-9943	4
	5
	▶48
219-9959	62
219-9960	4
	5
	▶62
220-0229	168
220-1362	▶207
	231
220-1718	61
220-1951	8
	9
	▶25
220-1952	25
	▶26
220-1998	4
	5
	▶59
220-3363	380
	384
220-4126	88
220-8233	8
	9
	▶101
220-8623	278
	▶282
220-8658	321
	323
220-8659	367
	369
	371
	373
220-8660	367
	369
	371
	373
220-8661	261
	263
220-8678	96
221-0144	67
221-1287	353
221-1340	353
221-1351	353
221-1375	353
221-1384	353
221-1446	303
	332
	334
	336
221-8045	501
221-8571	321
221-9393	353
221-9806	48
222-2277	321
	323
222-3901	82
222-4161	187
222-4162	187
	198
222-4734	138
222-5781	350
	▶411
223-0527	276
223-0539	454
223-3490	469
223-8823	346
223-8844	346
223-9813	138
223-9818	501
223-9848	107
224-1276	501
224-1377	196
224-3247	14
224-4990	▶454
	472
224-6078	75
224-7717	498
224-7842	498
224-7846	5
	▶13
224-8164	411
224-8173	454
224-9261	187
224-9263	174
	181
	187
225-0312	501
225-0313	498
225-1448	114
225-1453	192
225-4130	498
225-4131	501
225-4155	192
225-4256	498
225-4257	501
225-5473	301
	303
	329
226-0294	228
226-0339	228
226-0901	192
226-1817	198
226-1818	198
226-1819	198
226-3534	61
226-3559	4
	5
	▶61
226-3561	4
	5
	▶447
226-3630	85
226-4862	498
226-4863	501
226-4864	447
226-6020	46
226-7473	122
	▶123
226-7914	11
227-1200	27
227-2141	▶252
	378
	399
	400
	401
	402
227-2144	379
227-2150	252
	378
	380
	382
	384
	386
	388
	390
	392
	394
	396
	399
	400
	401
	402
227-2151	252
227-4531	20
	21
227-5904	101
227-6073	223
227-6215	280
227-6221	280
228-2615	498
228-2616	501
228-2692	498
228-2693	502
228-2780	498
228-2781	501
228-3282	500
228-3621	35
228-4688	498
228-4751	498
228-4752	501
228-4766	45
228-4947	145
228-5805	500
228-5821	500
228-5827	11
228-5897	107
228-6045	500
228-6405	▶237
	238
228-6690	414
	416
228-7089	65
	110
228-7090	101
228-7096	29
228-7114	187
228-7315	498
228-7316	502
228-9043	434
	440
228-9044	434
	440
228-9105	498
228-9106	502
228-9253	499
228-9254	502
228-9539	434
	440
228-9632	502
228-9657	112
229-0887	500
229-9974	131
230-2780	85
230-4011	173
	180
	190
230-4012	173
	180
230-4013	190
230-5008	180
	438
230-5009	183
	438
231-2613	455
	▶456
231-6687	125
231-6688	125
231-6689	125
231-6691	125
231-6692	125

▶ **PRIMARY REFERENCE**

PART NUMBER INDEX

Part	Page	Part	Page	Part	Page	Part	Page
232-0343	▶109	235-8966	450	240-0333	422	245-7926	450
	110	235-8996	443	240-0334	419	245-7948	450
232-1693	122		444		422		452
232-6682	83	235-8997	443	240-0335	419	245-9873	▶345
233-0423	4	235-8998	444		422	246-2641	364
	5	235-9651	104	240-0336	422		499
	▶38	236-3257	293	240-2651	88	246-2900	503
233-0891	122	236-3259	293	240-7193	200	246-3150	22
233-2356	261	236-4545	150	241-3512	254	246-5083	21
	263	236-4894	125		256	246-6036	65
233-9770	42	236-4896	125		258	246-9353	137
234-0203	63	236-6221	141	241-3513	254	246-9365	4
234-1531	227		▶145		256		5
234-3374	269	236-6269	272		258		▶122
234-3375	269	236-7315	4	241-6215	316	247-4285	128
234-3377	269		5	241-8368	▶164	247-4330	459
234-4325	▶130		▶37		473	247-4332	459
	133	236-8013	150	241-8383	29	247-4333	459
234-5012	141	236-8722	187	241-8384	29	247-4335	459
	▶146	237-0166	180	241-8385	29	247-5008	199
234-5013	141	237-0227	190	241-8386	29	247-8791	272
	▶147		199	241-8387	29	247-8792	272
234-6473	489		351	241-8388	27	247-8851	359
234-6474	489	237-7602	115	241-8390	29	247-8946	294
234-6480	489		▶161	242-0328	54	247-8947	294
234-6483	489	237-9386	494	242-0329	▶54	248-0539	471
234-6490	489		496		57	248-2169	143
234-6498	489	237-9460	446	242-0447	8	248-4220	172
234-6579	450	238-3215	4		9		179
	452		5		▶58	248-5513	74
234-6580	450		▶148	242-0673	14	248-5576	94
	452		▶149	242-0674	8	248-6772	440
234-6602	450	238-3216	149		9	248-7170	235
234-6603	452	238-5080	29		▶14		▶242
234-6604	450		42	242-3273	373	248-7171	242
234-6605	452		48	242-3360	94	248-7178	230
234-6608	450		50	242-3864	59	248-8835	4
	452		51	242-6098	471		5
234-6609	450		65	242-6775	355		▶74
	452		147	243-2310	11	249-0157	4
234-6610	450		469	243-4507	436		5
	452	238-5081	51		437		▶51
234-6611	452		59	243-5634	172	249-2427	489
234-6612	452		101		179	249-9230	65
234-6613	▶162	238-5082	48	243-5686	▶448	250-0398	▶434
	452		50		472		438
234-6614	452		51	243-6307	461	250-1416	319
234-6615	162		101	243-6310	461	250-1417	319
234-7730	130		327	243-6716	22	250-1431	138
234-7731	130	238-5084	42	244-0988	77	250-6148	412
235-1022	83	238-7570	475	244-0989	4	250-7700	▶94
235-4123	175	238-7572	489		5		95
	182	238-8167	▶455		▶77	251-4345	150
235-5507	94		472	244-4500	38	251-6770	438
235-8200	4	238-8222	455	244-5891	58		440
	5	238-8344	170	245-0887	138	251-6773	434
	▶137	239-1134	150	245-3261	44		440
235-8724	103		▶167	245-4436	475	251-7631	228
235-8725	▶103	239-1305	▶243	245-4630	145	251-7632	228
	106	239-1380	461	245-7339	55	251-8281	▶269
235-8914	450	239-2402	107	245-7434	175		311
	452	239-6336	411		182	252-1191	267
235-8951	443	239-6602	46	245-7790	450	252-7803	29
235-8952	444	239-6986	499		452	253-0751	428
235-8965	452	240-0041	15	245-7925	452	253-1346	230

▶ **PRIMARY REFERENCE**

PART NUMBER INDEX

Part	Page
253-2111	115
253-7537	327
253-7639	471
253-8110	174
	181
253-8111	174
	181
254-3941	29
254-3942	29
254-3946	27
254-3947	27
254-5493	▶436
	▶437
	472
254-5697	276
255-2751	187
255-4704	471
255-8674	58
256-0485	301
	303
	334
	336
256-0487	334
	336
256-0488	334
	336
256-0489	334
	336
256-0490	334
	336
256-0491	334
	336
256-6453	146
	147
256-6915	98
	▶106
256-9651	39
256-9661	39
257-2332	83
257-5029	440
257-5597	445
258-0883	▶165
	197
258-4170	180
258-4172	181
258-4178	172
	179
258-7531	114
258-8337	4
	5
	8
	▶95
259-2993	65
259-2994	65
259-5829	29
259-7202	452
259-7345	444
259-7346	▶443
	450
259-7347	▶444
	452
259-7348	448
	▶450
259-7349	448
	▶452
259-8068	500
260-4856	29
260-5864	200
260-6696	75
260-7524	53
	54
260-9188	364
261-0859	475
261-0860	475
261-1544	22
262-4405	353
262-7667	172
	179
262-7873	312
	330
	332
262-7896	353
263-1182	224
263-2106	172
	179
263-2761	468
263-2764	468
263-2765	468
263-2833	489
263-2915	34
263-3338	468
263-6411	224
263-7823	21
264-1499	224
264-4297	197
264-5732	190
264-6156	58
264-7029	173
	180
	190
264-7030	190
	199
	351
264-7031	438
264-7801	473
265-0830	423
	424
	425
265-1400	8
	9
	▶49
265-9620	440
266-5885	197
266-6652	228
267-1402	141
	▶143
267-2808	172
	179
267-3361	9
	▶104
	105
267-3362	8
	▶105
267-6785	280
267-8010	172
	179
267-8011	172
	179
267-8828	170
268-1606	138
268-3003	294
268-3490	20
	21
268-8259	350
	▶353
268-8769	440
268-8897	13
269-0005	232
269-3410	4
	6
	▶196
269-7678	170
	194
270-3522	405
271-2418	21
271-5604	181
	200
271-7442	29
273-2445	4
	5
	▶110
274-6719	98
	141
274-7480	260
	▶276
274-7481	276
274-7483	276
274-7921	197
274-8267	198
	199
275-3634	150
276-1786	116
276-5436	150
276-6596	150
276-6597	150
276-6793	141
277-1873	200
277-3225	276
277-8840	138
279-3161	443
279-3450	392
	396
279-3451	392
	396
279-5057	405
279-5058	210
279-5629	197
279-5772	199
280-1072	468
280-6760	231
	▶234
280-6761	234
	▶235
280-6794	74
280-8003	4
	5
	▶20
	▶21
280-8911	138
281-9217	459
282-1771	22
282-1772	22
282-1960	459
282-2061	459
282-2154	459
282-3007	459
283-1226	196
283-5977	355
	▶357
283-5978	355
	▶358
283-5979	357
	358
	▶359
283-5980	359
283-5981	359
283-8106	174
	181
284-3502	65
284-3662	172
	179
284-3953	465
	466
	494
	496
284-4177	434
	440
285-2371	▶477
285-4073	55
285-4106	20
287-6699	396
288-1556	434
	440
288-5845	438
288-7324	190
289-1210	172
	179
289-7836	285
	▶287
289-7868	256
	▶272
289-7870	272
289-8194	▶292
	327
289-8195	292
290-1935	87
290-1936	87
290-1937	87
290-1938	87
290-5754	▶243
290-6884	34
290-8160	131
291-1122	208
	▶216
291-1126	▶208
	212
291-2165	187
291-2943	131
291-4361	192
291-5075	173
	181
293-0730	97
293-8877	459
293-8878	459
293-8879	459
293-9367	68
293-9659	503
294-2434	494
295-1804	438
	440

▶ **PRIMARY REFERENCE**

PART NUMBER INDEX

Part	Page
296-5807	327
296-8060	144
297-6429	454
297-6430	454
297-6439	454
297-9152	▶230
	234
297-9157	230
298-2652	440
298-4563	499
298-4564	502
298-8086	500
299-5614	489
299-5620	489
299-9092	116
3	
300-4231	172
	179
301-0091	115
	116
	119
	193
302-3908	469
303-3357	141
	▶144
303-5984	210
304-6608	364
305-0324	447
305-0330	489
305-0333	489
305-0466	472
	▶484
305-5362	190
306-6875	▶142
	197
307-1696	349
	▶355
307-2673	29
	42
307-5476	454
307-8428	190
307-9798	11
308-4488	▶294
	355
308-4489	294
	▶405
308-9433	315
309-4069	75
310-1898	200
310-7255	27
310-7257	27
312-1427	175
	182
312-1429	175
	182
312-4344	267
313-9198	119
315-0180	116
315-4412	▶410
	413
315-4441	364
315-9835	59
316-4373	199
316-8987	485
	486
317-1670	219
	224
317-6825	462
317-6826	462
317-6828	462
317-6829	462
317-6830	462
317-6831	462
317-7210	27
317-7211	27
317-7212	27
317-7213	27
317-7685	131
317-9524	▶87
	88
318-2558	247
	248
318-6259	161
318-6357	107
318-9121	▶206
	231
319-0678	101
	▶107
319-6234	42
319-6237	29
319-6240	101
319-7380	▶131
	135
319-7384	131
319-8192	462
319-8232	462
319-8233	462
320-1457	434
320-2393	206
	▶212
320-7443	▶133
	472
320-7452	133
320-7459	445
	▶458
320-7460	458
320-7474	489
320-9023	115
321-0016	464
321-0836	▶132
	133
	134
321-1463	236
321-3792	494
	496
321-3793	494
	496
321-3794	494
	496
321-3795	494
	496
321-3796	494
	496
321-3797	494
	496
321-3798	494
	496
321-3821	445
	▶462
321-3822	446
	▶494
	▶496
321-8635	29
321-8638	29
321-8642	42
322-3567	267
322-3568	254
	▶267
322-4474	440
322-7173	494
	496
322-8716	278
	▶413
323-2220	445
	▶464
323-2221	464
323-2229	464
323-2232	468
323-2233	468
323-2234	468
323-2288	464
	465
	466
323-5865	440
323-8310	378
	379
	399
	400
	401
	402
323-9140	190
323-9531	409
324-0789	267
324-3257	148
324-7380	49
325-3915	▶23
	26
325-6732	464
326-1644	96
326-3568	139
327-6232	172
	179
327-6502	472
	▶483
327-6508	483
	▶486
327-6512	▶485
	486
327-6515	485
327-6521	486
	▶488
327-6523	472
	▶487
327-6538	487
327-6540	484
327-6640	485
327-6642	485
327-6643	485
327-6644	488
327-6648	488
327-8141	▶254
	258
328-2574	▶97
	104
329-3110	466
329-3117	465
329-5157	465
329-5158	446
	▶465
329-5161	466
329-5162	▶466
329-5298	346
329-5451	141
329-5511	65
329-5518	59
330-6018	4
	6
	▶190
330-6034	5
	9
	▶141
331-3631	244
331-8905	67
331-8906	67
332-3619	▶27
	29
333-0593	224
333-1207	11
333-4157	488
333-4160	485
333-4179	485
333-8242	412
334-1077	445
	▶459
334-1081	459
334-1089	459
334-1091	459
334-1092	459
334-1153	459
334-1156	459
334-1157	459
334-1571	459
334-2781	327
334-4603	500
334-6269	428
	430
334-6600	421
334-6601	421
334-9971	282
	▶342
334-9978	342
	▶343
334-9982	343
335-5321	350
	367
	369
	371
	373
335-8372	428
336-7737	▶241
336-7738	▶238
336-8614	117
336-9429	494
	496
337-0733	468
337-0734	468
338-1942	436

▶ **PRIMARY REFERENCE**

PART NUMBER INDEX

Part	Page	Part	Page	Part	Page	Part	Page
	437		472		193	362-3851	228
338-3453	153	344-4872	133	354-1825	283	362-3853	414
	157	344-4876	133		▶347		423
338-3454	▶153	344-6336	276	354-1827	457		425
338-3457	▶156	344-9225	148	355-8897	296	362-3854	228
	193	345-8414	8		▶315	362-3855	228
338-8899	466		▶31	355-8898	69	362-3856	228
338-8900	465	347-0109	181		▶224	362-3859	315
339-4289	496		200	355-8899	1	362-3860	1
339-6605	1	347-0593	199		▶217		▶418
	▶220	347-0596	197	357-4381	312	362-3861	418
339-8293	1	347-1741	▶4	357-4464	312	362-3864	418
	▶228		7	357-4509	138	362-3873	327
339-8294	1	347-2380	49	357-4619	101	362-3878	227
	▶469	347-2381	49	357-7540	230	362-3882	220
339-8295	1	347-2382	49	358-4889	167	362-3883	220
	▶98	347-3148	74	358-6603	461	362-3885	124
339-8296	1	347-6081	▶293	358-6604	461		▶197
	▶364		364	358-7873	20	362-3893	1
339-8297	124	347-6082	293	358-7876	20		▶472
	▶168	347-6971	430	358-9477	364	362-3896	1
339-8299	124	347-6982	430	359-4143	454		▶296
	▶134	347-6983	430	359-4144	454	362-3897	1
339-8300	▶115	347-6984	430	360-3677	25		▶124
	124	347-6986	430	360-3679	50	362-3898	1
339-8301	124	348-4444	430		51		▶69
	▶192	348-7658	416		101	362-3899	▶1
339-8305	▶283	349-4192	430	360-3680	48	362-3900	1
	296	349-6095	7		50		▶231
339-8306	296	350-5417	80		51	363-0137	119
	▶327	350-5894	3		77	363-0138	115
339-8307	296		8		82	363-0140	220
	▶311	350-7684	380	360-3681	51	363-0157	220
339-8308	297		382	360-3682	48	363-0158	220
	298		384		50	363-0159	283
	300		386		51	363-0166	115
	▶321		388	360-3692	110	363-0167	115
339-8310	▶278		390	360-3693	74	363-0168	115
	296		392	360-9597	459	363-0169	115
339-8348	231		394	361-5267	69	363-0170	119
	▶340		396		▶85	363-0255	11
339-8350	231	350-9162	5	361-5268	▶83	363-0267	11
	▶238		▶8		85	363-0271	4
339-8359	297	351-0283	48	361-5269	83		5
	298	351-6848	▶1	361-5270	69		▶11
	300	351-9918	128		▶70	363-1775	115
	▶350		129	361-5271	364	363-1776	116
340-5937	364		130	361-5281	98	363-1777	116
340-5939	364		132	361-5282	98	363-1778	193
340-7161	473	352-2123	▶80	361-5283	98	363-1779	116
340-8094	115		82	361-5284	98	363-1780	193
340-9897	219	352-2125	81	361-5285	315	363-1781	116
341-0087	469		▶82	361-5287	217	363-1782	119
341-1842	364	352-3851	83	361-5291	220	363-1783	116
343-5527	96	352-3852	83	361-5292	220	363-1784	116
343-8072	438	352-3964	200	361-5294	224	363-1786	283
344-1759	462	352-3969	351	361-5297	500	363-1787	283
344-1760	462	352-7870	379	361-5307	373	363-1789	116
344-1761	462	353-0558	222		▶399	363-1794	315
344-1763	462		▶223	361-5312	364	363-1796	315
344-1771	462	353-5112	141	361-5318	327	363-1797	315
344-2149	▶29	353-5124	98	361-5319	▶227	363-1798	319
	31	353-5130	77		228	363-1799	315
	32	353-6988	20	362-3846	228	363-1800	315
344-3989	▶471	353-7957	117	362-3850	228	363-1801	315

▶ **PRIMARY REFERENCE**

PART NUMBER INDEX

Part	Page	Part	Page	Part	Page	Part	Page
363-1802	315	365-3556	436	370-1614	224		489
363-1803	315		437	370-1620	219	373-2683	468
363-1805	325		▶461	370-1625	219	373-3973	▶467
363-1807	311	365-4915	▶432	370-1626	219		472
363-1808	311		▶433	370-1630	▶219	373-5807	441
363-1809	311		436		224	373-6569	325
	▶346		437	370-1633	116	373-6571	▶299
363-1815	350	365-5798	231	370-1634	75	373-6573	▶300
363-1816	315		▶232	370-1635	75	373-6575	▶297
363-1817	315	365-7863	75	370-1636	75	373-6577	▶298
363-1818	315	365-7864	321	370-1646	327	373-6579	83
363-1819	70		323	370-1649	325	373-6583	312
	▶71	365-7865	321	370-1651	327	373-6584	312
363-1820	315		323	370-1654	224	373-7694	369
363-1821	64	365-7866	321	370-4059	175		▶400
363-1822	224	365-7868	367		182	373-7702	369
363-1824	367		369	370-8999	380		▶401
	369		371		382	373-7703	367
	371		373		384		371
	373	365-7870	500		386		▶402
363-1830	327	365-7873	499		388	373-7704	367
363-7129	432	365-7874	499		390		371
	▶438	365-7877	307		392		373
363-9867	71	365-7878	307		394		▶378
363-9868	71	365-7879	210		396	373-8155	347
363-9869	71	365-7880	210	370-9180	445	374-0707	467
363-9870	71	365-9916	323	370-9181	▶445	374-2088	441
363-9871	71	366-0690	210		446	374-4354	1
363-9872	71	366-0691	210	370-9182	▶446		▶7
363-9873	71	366-0696	312		472	374-4357	▶2
363-9874	71	366-0697	312	371-7190	101	374-4362	172
363-9875	71	366-2632	469	371-7191	101		179
364-0484	278	366-2633	469	372-2537	187		▶187
364-0485	278	366-2634	469	372-2905	123	374-4367	172
364-0488	312	366-2635	469	372-3150	219		179
364-0489	312	366-2652	1	372-3154	418	374-4368	174
364-0494	197		▶150	372-3155	64		181
364-0496	116	366-2653	350	372-3156	92	374-4369	174
364-0498	321	366-2654	350	372-3157	92		181
	323	366-8410	477	372-3160	10	374-4370	187
364-0499	321		▶478		▶92	374-4371	187
	323	366-8411	▶479	372-3161	92	374-4432	175
364-0501	321	366-8412	▶480	372-4138	457		182
364-0505	340	366-8413	▶481	372-4552	138	374-8372	174
364-0506	340	366-8414	▶482	372-5222	433		181
364-0507	340	367-2101	315		▶440	375-0151	299
364-0509	116	367-2102	319	372-6092	441		▶367
364-0510	69	367-2103	319	372-6581	489	375-0153	300
	▶75	367-2104	319	372-6629	441		▶373
364-0512	1	367-2106	283	372-7908	475	375-0155	297
	▶499	367-2110	224	372-7911	172		▶369
364-0513	193	367-2129	10		179	375-0157	298
364-0514	116		▶88	372-8920	1		▶371
364-0515	116	367-2130	▶210	372-9306	488	375-0159	297
364-0672	441		296	373-2376	172		298
364-0891	438	367-2135	1		179		299
	441		▶10	373-2377	175		300
364-2177	232	367-2141	315		183		▶325
364-2229	414	367-4852	2	373-2424	175	375-0160	297
364-2231	231		▶5		182		298
364-2232	414	368-3009	▶457	373-2679	472		299
365-0583	77		472		▶475		300
365-1387	▶172	369-6662	109	373-2681	472		▶319
	▶179	370-1607	83		▶489	375-0161	297
	472	370-1608	83	373-2682	▶468		298

▶ **PRIMARY REFERENCE**

PART NUMBER INDEX

Part	Page	Part	Page	Part	Page	Part	Page
	300		400		386		▶323
	▶307		401		388	378-8858	296
375-0162	300	378-2542	▶382		390		▶349
	▶329		399		394	378-8859	312
375-0164	297		400	378-4639	378	378-8862	197
	298		402		380	378-8863	98
	▶332	378-2543	▶384		382	378-8864	98
375-0165	▶312		399		384	378-8865	169
	424		402		386	378-8867	▶419
375-0166	224	378-2544	▶386		388		424
375-0168	312		399		390	378-8868	500
375-0169	312		400		392	378-8869	312
375-0170	346		402		394		329
375-0176	312	378-2545	378		396		332
375-0177	312		▶388		399	378-8870	▶309
375-0178	312		401		400		423
375-0179	70	378-2548	▶390		401	378-8871	▶310
	▶73		399		402		425
375-0180	▶64		400	378-4640	380	378-8872	419
	70		402		382	378-8873	419
375-0181	70	378-4578	329		384	378-8874	419
375-1044	472		332		386	378-8875	▶250
	▶473	378-4579	329		388	378-8880	500
375-2674	315		332		390	378-9147	499
	▶412	378-4583	332		392	379-3670	218
375-4642	224	378-4584	329		394	379-3671	▶218
375-5871	224		332		396	379-5847	334
375-5874	224	378-4585	309	378-4711	382	379-5849	334
376-0922	173		310		386	379-5850	301
	181	378-4586	309		388		310
376-7673	101	378-4587	309		390	379-5851	334
376-7985	427		310		392	379-5853	301
376-7986	▶427	378-4589	310		394		303
	428	378-4590	329		396		334
376-7987	424	378-4594	329	378-4712	380	379-5856	▶334
	▶428	378-4595	329		382		425
376-7988	▶256	378-4596	332		384	379-5857	▶416
	265	378-4597	329		386		423
376-7989	▶261		332		388		425
	265	378-4598	329		390	379-5858	▶266
376-7991	▶265		332		392		423
	424	378-4599	329		394		425
376-7998	414		332		396	379-5860	▶425
376-7999	▶414	378-4600	329	378-4713	380	379-5861	▶301
	424		332		382		425
376-8000	▶424	378-4601	329		384	379-5862	416
376-9444	502		332		386	379-5863	416
376-9458	499	378-4602	329		388	379-5865	▶263
377-2345	347		332		390		266
377-2978	71	378-4603	329		394	379-5868	▶336
377-2979	71		332	378-4715	380		423
377-2980	327	378-4604	329		382	379-5869	▶303
377-9587	59		332		384		423
377-9593	59	378-4605	329		386	379-5870	▶423
377-9623	101		332		388	379-6987	228
378-0667	175	378-4606	329		390	379-6989	423
	182		332		392		425
378-2539	378	378-4629	399		394	380-0632	▶152
	▶379	378-4631	378		396	380-0633	▶138
	399		401	378-4716	392		152
	400	378-4635	379		396	380-0634	▶125
	401	378-4636	379	378-7766	364		138
	402	378-4638	380	378-7767	364	380-0812	423
378-2541	378		382	378-7768	364		425
	▶380		384	378-8856	299		▶430

▶ **PRIMARY REFERENCE**

PART NUMBER INDEX

Part	Page
380-0813	▶169
	423
	425
380-0814	309
	310
380-0815	423
	425
	▶426
380-0816	▶421
	423
	425
380-0817	421
	▶422
380-0879	▶258
	266
380-1278	138
380-1279	138
380-1280	138
380-1284	138
380-1289	138
380-1392	138
380-6163	138
380-6210	75
380-6211	75
380-7259	138
381-0215	312
381-0217	312
381-0392	312
381-1520	378
	▶392
	401
381-1522	378
	▶394
	401
381-1523	▶396
	399
381-8100	347
381-8128	347
381-8651	▶260
	266
382-0641	▶498
382-0642	197
382-0643	299
	▶308
382-0644	308
382-0645	308
382-0646	▶170
	424
382-0647	170
382-0648	▶135
382-1745	400
	402
383-1489	414
383-1492	414
383-1493	414
383-1494	428
383-6271	305
383-6272	305
383-6273	305
383-6274	305
383-6275	305
383-6276	305
383-6277	305
383-6278	305
383-6279	305
383-6280	▶305
	424
383-6281	305
383-6282	305
383-6283	305
383-6284	338
383-6285	338
383-6286	338
383-6287	305
383-6288	305
383-6289	338
383-6290	▶338
	424
383-6291	338
383-6292	338
383-6293	338
383-6294	338
383-6802	338
383-6803	338
383-6901	132
383-8555	428
384-0222	428
384-0406	419
384-0407	419
384-0408	419
384-0409	419
384-0410	419
384-2568	414
384-3282	414
384-4171	58
384-4172	58
384-5243	364
384-5590	9
	▶32
384-8426	3
	▶9
384-8429	▶3
	4
	5
384-9992	81
385-1657	49
385-1745	3
	▶503
385-4654	224
385-4660	85
385-7276	26
389-2246	313
	329
	332
389-3708	50
	51
	101
389-3709	48
	50
	51
391-9847	416
392-0804	469
392-0810	77
392-0818	74
392-3542	92
392-3543	92
392-5400	197
392-5401	197
392-7639	423
	425
392-7641	416
393-5559	88
394-4490	▶119
	152
394-7565	88
394-7566	88
394-7569	88
394-7573	88
394-7576	224
394-7580	85
395-3146	197
395-3147	198
395-3148	199
395-3149	199
395-3150	189
395-3151	350
395-3296	199
395-3297	199
396-0393	25
396-0405	77
	82
396-0412	77
396-0751	364
396-1595	199
396-4545	183
396-9171	▶189
	299
397-1832	80
398-5596	48
	50
	51
398-5597	110
398-5601	51

4

Part	Page
415-6805	243
	▶247
415-6806	243
	▶248
415-6807	247
415-6808	248
415-6809	247
	248
415-6811	247
	248
415-6813	248
415-6814	247
417-4869	▶243

▶ **PRIMARY REFERENCE**

MEMORANDA



© 2012 CATERPILLAR
ALL RIGHTS
RESERVED

CAT, CATERPILLAR, THEIR RESPECTIVE LOGOS, “CATERPILLAR YELLOW” AND THE POWER EDGE TRADE DRESS, AS WELL AS CORPORATE AND PRODUCT IDENTITY USED HEREIN, ARE TRADEMARKS OF CATERPILLAR AND MAY NOT BE USED WITHOUT PERMISSION.