544J UTILITY LOADER
(S.N. -611799)

RUTHZIL TRATOR COMERCIAL DE PEÇAS LTDA 11 97083-6812 ROLANDO CITRANGULO

JOHN DEERE

MARÇO 2007

PARTS CATALOG

544J UTILITY LOADER
(S.N. -611799)

PC9339 (Mar-07) English

Worldwide Construction and Forestry Division
Worldwide Edition
Litho in U.S.A. (Revised)
COPYRIGHT © 2007
DEERE & COMPANY
Moline, Illinois
All rights reserved

INTRODUCTION AND CUSTOMER INFORMATION

T194007A -UN-10NOV03



LEFT SIDE VIEW OF JOHN DEERE 544J LOADER
(MANUFACTURED 2004-2007)

TO THE CUSTOMER

THE PART NUMBERS IN THIS PARTS CATALOG WERE CORRECT AT THE TIME YOUR CATALOG WAS PUBLISHED. IT IS OUR POLICY TO CONSTANTLY IMPROVE OUR MACHINES, AND THEREFORE, PART NUMBERS MAY CHANGE. WHEN ORDERING PARTS, VERIFY PART NUMBERS THROUGH YOUR DEALER.

(SPECIFICATIONS AND DESIGN SUBJECT TO CHANGE WITHOUT NOTICE)

SERIAL NUMBER LOCATION

EACH 544J LOADER HAS SIX SERIAL NUMBER PLATES: ONE FOR THE PRODUCT IDENTIFICATION NUMBER, ONE FOR THE TRANSMISSION, ONE FOR THE HYDRAULIC PUMP, ONE FOR THE ENGINE SERIAL NUMBER, ONE FOR EACH AXLE, AND ONE FOR THE CONTROL VALVE.

THE PRODUCT IDENTIFICATION NUMBER PLATE IS LOCATED ON THE LEFT SIDE OF THE ENGINE FRAME NEAR THE TRANSMISSION OIL FILL.

THE TRANSMISSION SERIAL NUMBER PLATE IS LOCATED ON THE LOWER RIGHT REAR OF THE TRANSMISSION CASE.

THE HYDRAULIC PUMP SERIAL NUMBER PLATE IS LOCATED ON THE LOWER LEFT OF THE HYDRAULIC PUMP.

THE ENGINE SERIAL NUMBER PLATE IS LOCATED ON THE LEFT SIDE OF THE ENGINE NEAR THE WATER SEPERATOR.

THE AXLE SERIAL NUMBER PLATES ARE LOCATED ON THE INPUT SIDE OF EACH DIFFERENTIAL CASE.

THE CONTROL VALVE SERIAL NUMBER PLATE IS LOCATED ON THE REAR CENTER OF THE CONTROL VALVE.

LEFT, RIGHT, FRONT, AND REAR OF THE LOADER ARE REFERENCED BY FACING THE DIRECTION OF LOADER FORWARD TRAVEL.

WHENEVER SERIAL NUMBERS ARE REQUIRED ON WARRANTY CLAIMS OR CORRESPONDENCE PERTAINING TO THIS PRODUCT, IT IS EXTREMELY IMPORTANT THAT ALL CHARACTERS BE FURNISHED. THIS POINT CANNOT BE EMPHASIZED ENOUGH.

PRODUCT IDENTIFICATION NUMBER PLATE

TP16004 -UN-01JAN94

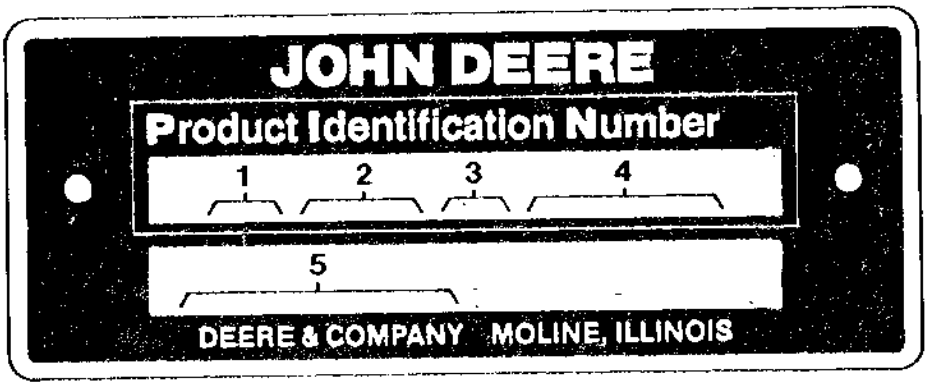

TP16004

1. DESIGNATES LOADER MANUFACTURER	DW - JOHN DEERE DAVENPORT WORKS
2. DESIGNATES LOADER MODEL	544J
3. DESIGNATES LOADER CONFIGURATION	Z WITH ZBAR H WITH HIGH LIFT T WITH TOOL CARRIER
4. DESIGNATES LOADER SERIAL NUMBER	XXXXXX
5. DESIGNATES UNIT TYPE	LOADER

ENGINE SERIAL NUMBER PLATE

T134833 -UN-23OCT00



T134833

FIRST LINE	DEFINES
PE - JOHN DEERE TORREON	DESIGNATES ENGINE MANUFACTURER.
6	DESIGNATES NUMBER OF CYLINDERS.
6.8	DESIGNATES LITER DISPLACEMENT.
H - TURBOCHARGED DIESEL WITH INTERCOOLER	DESIGNATES TYPE OF AIR INTAKE SYSTEM.
XXXXXX	DESIGNATES ENGINE SERIAL NUMBER.

SECOND LINE	APPLICATION
PE6068HDW56	544J LOADER

SERIAL NUMBER LISTING INFORMATION

SERIAL NUMBER INFORMATION IS LISTED TO SHOW ON WHICH MACHINES EACH PART CAN BE USED; FOR EXAMPLE:

-	THE PART CAN BE USED ON ALL MACHINES.
XXXXXX-	THE PART CAN BE USED ON ALL MACHINES BEGINNING WITH THE SERIAL NUMBER LISTED.
-XXXXXX	THE PART CAN BE USED ON ALL MACHINES UP TO AND INCLUDING THE SERIAL NUMBER LISTED.
XXXXXX-XXXXXX	THE PART CAN BE USED ON ALL MACHINES BETWEEN AND INCLUDING THE SERIAL NUMBERS LISTED.

WHEN XXXXXX'S ARE LISTED IN PLACE OF A SERIAL NUMBER, A SERIAL NUMBER CHANGE WAS MADE BUT THE EXACT SERIAL NUMBER WAS NOT AVAILABLE WHEN THE CATALOG WAS PRODUCED.

DIRECTION ARROW

ARROWS ARE USED WITH ILLUSTRATIONS TO INDICATE THE FRONT OF THE UNIT. "RIGHT-HAND" AND "LEFT-HAND" SIDES ARE DETERMINED BY FACING IN THE DIRECTION OF MACHINE FORWARD TRAVEL.

BOX-ENCLOSED ILLUSTRATIONS

A KEY NUMBER, SHOWN IN THE PARTS LIST, IS ASSIGNED TO A BOX ENCLOSING ALL PARTS SOLD AS A SERVICE ASSEMBLY.

COMPLETE GOODS LISTINGS

COMPLETE GOODS ARE LISTED IN BOLD FACE TYPE. ORDER SEPARATELY. DO NOT INCLUDE ON REPLACEMENT PARTS ORDER.

SI UNITS OF MEASURE

METRIC DIMENSIONS ARE GIVEN, WHERE APPLICABLE, THROUGHOUT THIS PARTS CATALOG.

REMARKS AND ABBREVIATIONS

THE FOLLOWING REMARKS AND ABBREVIATIONS MAY APPEAR THROUGHOUT THE PARTS CATALOG. REFER TO THE FOLLOWING CHART FOR TRANSLATIONS TO LANGUAGES OTHER THAN ENGLISH.

REMARKS AND ABBREVIATIONS

TX1007193 -UN-04MAY06

PHRASE	ENGLISH	FRANCAIS	DEUTSCH	ITALIANO	ESPANOL	SVENSKA
ALSO ORDER, ORD W/	Also order	Commander aussi	Ebenso bestellen	Ordinare anche	Pedir también	Beställ även
AMP	Ampere	Ampère	Ampere	Ampere	Amperio	Ampere
APPL, APPL ONLY	This application only	Uniquement pour cette utilisation	Nur für diese Anwendung	Solo per questa applicazione	Solo para este propósito	Endast för denna användning
AR	As required	Selon le besoin	Nach Bedarf	Secondo necessità	Según necesidad	Vid behov
ASSY	Complete assembly	Ensemble complet	Kompl.-Zusammenbau	Gruppo completo	Montaje completo	Komplett montering
CA, CONVENIENCE ASSY	Convenience assembly	Ensemble convenance	Komfort-Zusammenbau	Montaggio pratico	Montaje de conveniencia	Lämplig montering
CCW	Counter-clockwise	Sens anti-horaire	Gegen Uhrzeigersinn	Senso antiorario	A la izquierda	Moturs
COMPLETE	Complete	Complet	Vollständig	Completo	Completo	Fullständig
COMPLETE GOODS	Complete goods	Compléter marchandises	Vollst. Waren	Merci complete	Mercancías completas	Kompletta varor
CTL CUT TO LENGTH	Cut to length	Couper à la longueur	Auf Länge zurechtschneiden	Tagliare alla lunghezza	Corte a la longitud	Skära till längd
CW	Clockwise	Sens horaire	Im Uhrzeigersinn	In senso orario	A la derecha	Medurs
FOR	For	Pour	Für	Per	Para	För
FRONT	Front	Avant	Vorn	Anteriore	Frente	Fram
GAS	Gasoline	Essence	Benzin	Benzina	Gasolina	Bensin
HP	Horsepower	Puissance en cv	Leistung	Potenza	Potencia	Hästkraft
HFWD	Hydraulic Front-wheel Drive	Traction Avant Hydraulique	Hydraulischer Vorderradantrieb	Trazione Anteriore Idraulica	Traccion Delantera Hidraulica	Hydraulisk Framhjulsdrift
HS, HEAD MARKED	High strength, head marked	Haute résistance, tête marquée	Hochfest, vorn gekennzeichnet	Contrassegnato in testa, ad alta resistenza	Alta fuerza, marca en cabeza	Hög styrka, huvudmärkt
ID	Inside diameter	Diamétre intérieur	Innendurch-messer	Diametro interno	Diá. interior	Innerdiameter
INCH	Inch	Pouce	In.	Pollice	Pulg.	Tum
INCL KEYS	Includes keys...	Comprend les positions...	Einschließlich Schlüssel...	Include le chiavette...	Incluye posiciones...	Inklusive nycklar...
INCL, INCLUDES	Includes...	Comprend...	Enthält...	Include...	Incluye...	Inkluderar...
INCLUDES PARTS/ ITEMS MARKED	Includes parts/items marked...	Comprend les pièces/articles marqués...	Enthält gekennzeichnete Teile/Pos. ...	Include i pezzi e gli elementi contrassegnati...	Incluye piezas marcadas...	Inkluderar markerade delar/artiklar...
INNER	Inner	Intérieur	Innerer	Interno	Interno	Inre, invändig
KIT	Kit	Kit	Kit	Kit	Juego	Sats
L	Number of links	Nombre de maillons	Anzahl der Glieder	Numero di maglie	Nº de eslabones	Antal länkar
LGTH	Length	Longueur	Länge	Lunghezza	Longitud	Längd
LGP	Low Ground Pressure	Faible Pression Au Sol	Niederer Bodendruck	Bassa Pressione Sul Suelo	Baja Presion Sobre El Suelo	Laagt Marktryck
LH	Left-hand	Gauche	Links	Sinistra	Izquierda	Vänster
LT	Long Track	Chenille Longue	Mit Langem Laufwerk	Cingolo Lungo	Cadena Largo	Laangt Larvband
LOW, LOWER	Lower	Inférieur	Unterer	Inferiore	Inferior	Nedre
MAKE FROM, MF	Make from	Faireavec	Herstellen von	Fabbricare da	Hacer de	Tillverka av
MARKED	Marked	Marqué	Markiert	Contrassegnato	Marcado	Märkt

TX1007193

REMARKS AND ABBREVIATIONS

TX1007195 -UN-04MAY06

PHRASE	ENGLISH	FRANCAIS	DEUTSCH	ITALIANO	ESPANOL	SVENSKA
MATCHED SET	Matched set	Ensemble assorti	Passender Satz	Set abbinato	Sistema emparejado	Anpassad sats
MFWD	Mechanical Front-Wheel Drive	Pont Avant	Allradantrieb	Ruota Motrice Meccanica Anteriore	Traccion Delantera Mecanica	Mekanisk Framhjulsdrift
NA, NOT USED THIS APPL	Not used this application	Ne sert pas pour cette application	In dieser Anwendung nicht benutzt	Non usato in questa applicazione	No se usa en esta aplicación	Ej använd i detta sammanhang
NLA	No longer available	Epuisé	Nicht mehr lieferbar	Non più disponibile	Descontinuado	Ej längre tillgänglig
NSEP	Not supplied separately	Non livré séparément	Nicht einzeln lieferbar	Non fornito separatamente	No se suministra por separado	Kan ej erhållas separat
OD	Outside diameter	Diamètre extérieur	Außendurch-messer	Diametro esterno	Diá. exterior	Ytterdiameter
OPTIONAL	Optional	En option	Wahlweise	Opzionale	Opcional	Valfri
OR	Or	Ou	Oder	Oppure	O	Eller
ORD, ORDER	Order	Commander	Bestellen	Ordinare	Pídase	Order
OS	Oversize	Sur-dimension	Übergröße	Maggiorato	Sobretamaño	Överdimension
OUTER	Outer	Externe	Äußerer	Esterno	Externo	Yttre, utvändig
PKG, PACKG	Package, Packet of	Emballage, paquet de	Verpackung, verpackt mit	In confezione da	Paquete de	I sats; paket
PTO	Power Take Off	Prise De Force	Zapfwelle	Presa Di Forza	Toma De Fuerza	Kraftuttag
RATIO	Ratio	Rapport	Übersetzungs-verhältnis	Rapporto	Índice	Förhållande
REAR	Rear	Arrière	Hinten	Posteriore	Trasero	Bak; bakre
REMAN	Remanufactured	Echange Standard	Generalveberholt	Refatto	Refabricador por	Renoverad
REPL	Replaces	Remplace	Ersetzt	Sostituisce	Sustituye	Ersätter
RH	Right-hand	Droit	Rechts	Destra	Derecha	Höger
SN	Serial number	Numéro de série	Seriennummer	Numero di serie	Nº de serie	Serienummer
STD	Standard	Standard	Standard	Standard	Normal	Standard
SUB	Replaced by	Remplacé par	Ersetzt durch	Sostituito da	Sustituido por	Ersatt med
SUB COMPONENTS	Substitute components (of the kit or assy)	Substituer les composants (du kit ou de l'ensemble)	Komponenten ersetzen (des Kits oder der Baugruppe)	Sostituire i componenti (del kito del gruppo)	Sustituir los componentes	Ersätta komponenterna (i satsen eller monteringen)
SUB FOR	Subsitutes for	Remplace	Ersatz für	Sostituisce	Sustitución para	Ersätter
TEETH, Z	Number of gear teeth	Nombre de dents d'engrenages	Zahl der Zahnradzähne	Numero di denti dell'ingranaggio	Nº de dientes de engranaje	Antal redskapständer
TK	Thickness	Épaisseur	Stärke	Spessore	Espesor	Tjocklek
UP, UPPER	Upper	Supérieur	Oberer	Superiore	Superior	Övre
US	Undersize	Sous-dimension	Untergröße	Minorato	Subtamaño	Underdimension
USE WITH	Use with	À utiliser avec	Verwenden mit	Usare con	Usar con	Använd med
USE UNTIL EXHAUSTED	Use until exhausted	Utilisation jusqu'à épuisé	Verwenden, bis erschöpft	Usare fino all'esaurimento	Usar hasta agotar	Använda till uttömd
W/	With	Avec	Mit	Con	Con	Med; inklusive
W/O	Without	Sans	Ohne	Senza	Sin	Utan; exklusive
WHOLE GOODS	Whole goods	Marchandises entières	Vollständige Waren	Merci intere	Mercancías enteras	Hela varor
XLT	Extra Long Track	Chenille Extra Longue	Mit Extra Langem Laufwerk	Cingolo Extra Lungo	Cadena Extra Larga	Extra Laangt Larvband
VEC	Vehicle Electronic Controller	Controleur Elektronisches Du Vehicule	Elektronisches Steuergeraet Des Fahrzeugs	Unità Di Comando Elettronica Del Veicolo	Unidad de Control Electronico del Vehiculo	Elektronisk Fordonsstyrenhet
VLC	Vehicle Load Center	Coffret De Repartition Du Vehicule	Verteilerstation Des Fahrzeugs	Centro Di Carico Del Veicolo	Centro De Cargas Del Vehiculo	Fordonets Elcentral

TX1007195

ALPHABETICAL INDEX

PAGE

A

A/C AND HEATER BLOWER SWITCH....1674-11
A/C AND HEATER BLOWER WIRING HARNESS....1674-11
A/C AND HEATER THERMOSTAT SWITCH....1830-4
A/C BLOWER MOTOR AND SWITCH....1830-4
A/C BRACKET....1830-12
A/C COMPRESSOR....1830-12
A/C CONDENSER....1830-14
A/C DELETE COVER....1830-10
A/C DUCTS....1830-11
ABSORBTION, SOUND....1913-6
ACCESS PANEL....1810-2
ACCESS PLATFORM AND STEPS....1822-2
ACCUMULATOR....2160-8
ACCUMULATOR, BRAKE....1060-6
ACCUMULATOR, RIDE CONTROL (S.N. -594432)....3160-92
ACCUMULATOR, RIDE CONTROL (S.N. 594433-)....3160-94
ACTUATOR, RETURN-TO-DIG (FOR USE WITH TOOL CARRIER)....3166-6
ACTUATOR, RETURN-TO-DIG (NOT FOR USE WITH TOOL CARRIER)....3166-2
ADAPTER, ENGINE OIL COOLER....0419-2
ADAPTER, OIL PRESSURE SENSOR....1674-14
ADDITION OF AUXILIARY JOYSTICK TO TOOL CARRIER JOYSTICK CONTROLLER KIT....3160-88
ADDITION OF AUXILIARY TO JOYSTICK CONTROLLER KIT....3160-84
ADDITION OF AUXILIARY TO TOOL CARRIER JOYSTICK CONTROLLER KIT....3160-84
ADDITION OF AUXILIARY TO TOOL CARRIER TWO LEVER CONTROLLER KIT....3160-76
ADDITION OF AUXILIARY TO TWO LEVER CONTROLLER KIT....3160-76
ADDITON OF AUXILIARY JOYSTICK TO JOYSTICK CONTROLLER KIT....3160-88
AIR CLEANER....0520-2
AIR CLEANER FILTER....0520-2
AIR CLEANER HOSE....0520-2
AIR CLEANER SENSOR....0520-2
AIR COOLER, CHARGE....0510-2
AIR COOLER, CHARGE....0510-3A
AIR FILTER RESTRICTION INDICATOR SENSOR....0520-2
AIR HEATER, ENGINE....0505-4
AIR INTAKE TEMPERATURE SENSOR....0414-2
AIR INTAKE, ENGINE....0414-2
AIR PRECLEANER KIT....0520-4
ALARM AND CAB MONITOR....1674-10
ALARM, BACKUP....1810-36
ALTERNATOR (55 AMP)....1672-2
ALTERNATOR (80 AMP)....1672-6
ALTERNATOR BRACKET, UPPER....0423-2
ALTERNATOR CAPACITOR (55 AMP)....1672-2
ALTERNATOR CAPACITOR (80 AMP)....1672-6
ALTERNATOR DRIVE BELT (55 AMP)....1672-2
ALTERNATOR DRIVE BELT (80 AMP)....1672-6
ALTERNATOR MOUNTING BRACKETS (55 AMP)....1672-2
ALTERNATOR MOUNTING BRACKETS (80 AMP)....1672-6
ALTERNATOR REAR COVER (55 AMP)....1672-4
ALTERNATOR REAR COVER (80 AMP)....1672-8
ANTENNA, RADIO (SER. NO. -590067)....2001-6
ANTENNA, RADIO (SERIAL NO.600741-)....2001-7C
ANTENNA, RADIO (SER.NO. 590068-600740)....2001-7A

PAGE

ANTI-SKID MAT, COUNTERWEIGHT....1749-2
ARM REST....1821-2
ARM REST, RIGHT....1821-6
ARM, ROCKER....0402-3
ARM, WIPER (FRONT)....1810-26
ASH TRAY....1810-41
ASSEMBLY, U-JOINT....3160-82
ATTACHMENT COUPLER CYLINDER (POWERLLEL LINKAGE)....3104-8
ATTACHMENT COUPLER CYLINDER (Z-BAR LINKAGE)....3104-6
ATTACHMENT COUPLER HYDRAULIC CYLINDER (POWERLLEL AND Z-BAR LINKAGE)....3104-14
ATTACHMENT COUPLER HYDRAULIC CYLINDER (POWERLLEL AND Z-BAR LINKAGE)....3104-16
ATTACHMENT COUPLER, TOOL CARRIER....3104-2
ATTACHMENT COUPLER, Z-BAR LINKAGE....3104-6
ATTACHMENT HI-VIS COUPLER HYDRAULIC CYLINDER (POWERLLEL AND Z-BAR LINKAGE)....3104-18
ATTACHMENT LINKAGE, COUPLER, HI-VIS (POWERLLEL)....3104-10
ATTACHMENT LINKAGE, COUPLER, HI-VIS (Z-BAR)....3104-12
AUXILIARY CONTROLLER DETENT KIT....3160-78
AUXILIARY CUTTING EDGE....3102-10
AUXILIARY DRIVE COVER....0404-6
AUXILIARY HYDRAULICS, FOURTH FUNCTION (FOR USE WITH POWERLLEL LINKAGE)....3160-62
AUXILIARY HYDRAULICS, FOURTH FUNCTION (FOR USE WITH TC)....3160-70
AUXILIARY HYDRAULICS, FOURTH FUNCTION (Z-BAR LINKAGE) (S.N. -594432)....3160-54
AUXILIARY HYDRAULICS, FOURTH FUNCTION (Z-BAR LINKAGE) (S.N. 594433-)....3160-56
AUXILIARY HYDRAULICS, THIRD FUNCTION (FOR USE WITH POWERLLEL LINKAGE)....3160-62
AUXILIARY HYDRAULICS, THIRD FUNCTION (FOR USE WITH TC)....3160-68
AUXILIARY HYDRAULICS, THIRD FUNCTION (POWERLLEL LINKAGE) (BOOM TO COUPLER)....3163-6
AUXILIARY HYDRAULICS, THIRD FUNCTION (Z-BAR LINKAGE) (BOOM TO COUPLER)....3163-4
AUXILIARY HYDRAULICS, THIRD FUNCTION (Z-BAR LINKAGE) (S.N. -594432)....3160-52
AUXILIARY HYDRAULICS, THIRD FUNCTION (Z-BAR LINKAGE) (S.N. 594433-)....3160-56
AUXILIARY JOYSTICK PILOT CONTROLLER COMPONENTS....3160-90
AUXILIARY JOYSTICK PILOT CONTROLLER REPAIR KIT....3160-90
AUXILIARY SINGLE LEVER CONTROLLER COMPONENTS....3160-78
AUXILIARY SINGLE LEVER CONTROLLER REPAIR KIT....3160-78
AUXILIARY VALVE SECTION LOADER CONTROL VALVE (S.N. -594432)....3160-36
AUXILIARY VALVE SECTION LOADER CONTROL VALVE (S.N. 594433-)....3160-38
AUXILIARY VALVE SECTION COMPONENTS LOADER CONTROL VALVE (S.N. -594432)....3160-36
AUXILIARY VALVE SECTION COMPONENTS LOADER CONTROL VALVE (S.N. 594433-)....3160-38
AUXILIARY WEAR PLATES....3102-10
AXLE BREATHER EXTENSION KIT....0260-18
AXLE CENTER SERVICE KITS....0210-24

ALPHABETICAL INDEX - CONTINUED

PAGE

AXLE COOLER, HOSES AND FITTINGS (FACTORY INSTALLED AXLE COOLER) 0260-8
AXLE COOLER, HOSES AND FITTINGS (FIELD INSTALLED AXLE COOLER) 0260-12
AXLE DISCONNECT 0260-14
AXLE DISCONNECT LINE 0260-16
AXLE DISCONNECT VALVE COMPONENTS 3160-97
AXLE DRIVE SHAFTS....0325-2
AXLE HOUSING, FRONT....0210-18
AXLE HOUSING, REAR....0210-20
AXLE INPUT DISCONNECT 0260-14
AXLE INPUT YOKE 0210-3
AXLE OIL CIRCULATION HOSES 0260-10
AXLE OIL CIRCULATION PUMP AND MOTOR....0260-6
AXLE OIL COOLER (FACTORY INSTALLED AXLE COOLER)....0260-8
AXLE OIL COOLER (FIELD INSTALLED AXLE COOLER) 0260-12
AXLE OIL COOLER HYDRAULIC HOSES (FACTORY INSTALLED AXLE COOLER)....0260-8
AXLE OIL COOLER HYDRAULIC HOSES (FIELD INSTALLED AXLE COOLER) 0260-12
AXLE SHAFT, FRONT 0210-18
AXLE SHAFT, REAR 0210-20
AXLE STOP (12 DEGREE)....0242-6
AXLE STOP (6 DEGREE)....0242-4
AXLE, FRONT....0210-2
AXLE, REAR....0210-2

B

BACKREST CUSHION 1821-2
BACKUP ALARM....1810-36
BAFFLE SOUND, ABSORBER....1913-6
BAR, FRAME LOCK 1913-2
BARREL ASSEMBLY, COUPLER CYLINDER (POWERLLEL AND Z-BAR LINKAGE) 3104-14
BARREL ASSEMBLY, COUPLER CYLINDER (POWERLLEL AND Z-BAR LINKAGE) 3104-16
BARREL ASSEMBLY, HI-VIS COUPLER CYLINDER (POWERLLEL AND Z-BAR LINKAGE) 3104-18
BARREL, BOOM CYLINDER (FOR USE WITH TC)....3165-10
BARREL, TILT CYLINDER (FOR USE WITH TC)....3165-12
BASE SEAT 1810-18
BASE, OIL FILTER, ENGINE....0407-8
BASE, SEAT 1810-20
BATTERY (625 CCA) 1671-2
BATTERY (950 CCA) 1671-2
BATTERY CABLES....1671-2
BATTERY COVERS....1913-4
BATTERY DISCONNECT 1671-2
BATTERY DISCONNECT SWITCH....1671-2
BEARING, DRIVELINE/PARKING BRAKE....1060-12
BEARINGS, CONNECTING ROD 0403-2
BEARINGS, CRANKSHAFT 0401-2
BELT TENSIONER (55 AMP) 1672-2
BELT TENSIONER (80 AMP) 1672-6
BELT TENSIONER, ENGINE....0429-1
BELT TENSIONER, HARSH ENVIRONMENT ALTERN ATOR (100 AMP)....1672-10
BELT, ALTERNATOR DRIVE (55 AMP) 1672-2
BELT, ALTERNATOR DRIVE (80 AMP) 1672-6
BELT, HARSH ENVIRONMENT ALTERNATOR (100 AMP) 1672-10

PAGE

BLADE, WIPER.... 1810-28
BLADE, WIPER (FRONT).... 1810-26
BLOCK HEATER.... 0505-6
BLOCK, CYLINDER.... 0404-2
BLOCK, SHORT.... 0450-2
BLOWER MOTOR AND SWITCH, HEATER.... 1830-8
BLOWER MOTOR AND SWITCH, HEATER AND A/C 1830-4
BLOWER SWITCH, A/C AND HEATER.... 1674-11
BOOM CYLINDER.... 3165-4
BOOM CYLINDER (FOR USE WITH POWERLLEL LINKAGE).... 3165-16
BOOM CYLINDER (FOR USE WITH TC) 3165-10
BOOM CYLINDER HYDRAULIC FITTINGS 3165-2
BOOM CYLINDER HYDRAULICS (S.N. -594432) (FOR USE WITH Z-BAR LINKAGE).... 3160-48
BOOM CYLINDER HYDRAULICS (S.N. 594433-) (FOR USE WITH Z-BAR LINKAGE).... 3160-50
BOOM CYLINDER LOCK 3140-24
BOOM CYLINDER PIN, LOADER FRAME (POWERLLEL LINKAGE).... 3140-6
BOOM CYLINDER PIN, LOADER FRAME (TOOL CARRIER) 3140-4
BOOM CYLINDER PIN, LOADER FRAME (Z-BAR LINKAGE).... 3140-2
BOOM CYLINDER PINS.... 3165-2
BOOM CYLINDER PINS AND FITTINGS, POWERLLEL LINKAGE 3165-14
BOOM CYLINDER PINS AND FITTINGS, TOOL CARRIER.... 3165-8
BOOM CYLINDER ROD.... 3165-4
BOOM CYLINDER ROD (FOR USE WITH POWERLLEL LINKAGE).... 3165-16
BOOM CYLINDER ROD SEAL KIT 3165-4
BOOM CYLINDER ROD SEAL KIT (FOR USE WITH POWERLLEL LINKAGE).... 3165-16
BOOM KICKOUT SENSOR (TOOL CARRIER) 3166-8
BOOM KICKOUT/RETURN TO CARRY (TOOL CARRIER) 3166-8
BOOM KICKOUT/RETURN TO CARRY, LOADER.... 3166-4
BOOM KICKOUT/RETURN TO CARRY, LOADER (POWERLLEL LINKAGE).... 3166-12
BOOM LINKAGE, HIGH LIFT LOADER BOOM.... 3140-16
BOOM LINKAGE, LOADER.... 3140-16
BOOM LINKAGE, POWERLLEL.... 3140-20
BOOM LINKAGE, TOOL CARRIER.... 3140-18
BOOM PIVOT PIN (POWERLLEL LINKAGE).... 3140-6
BOOM PIVOT PIN (Z-BAR LINKAGE).... 3140-2
BOOM PIVOT PIN (TOOL CARRIER) 3140-4
BOOM SECTION VALVE LOADER CONTROL VALVE (S.N. -594432).... 3160-32
BOOM SECTION VALVE LOADER CONTROL VALVE (S.N. 594433-).... 3160-34
BOOM TO COUPLER PIN DISCONNECT HOSES (POWERLLEL LINKAGE).... 3160-122
BOOM TO COUPLER PIN DISCONNECT HOSES (Z-BAR LINKAGE).... 3160-116
BOOM TO COUPLER THIRD FUNCTION HYDRAULIC HOSES (Z-BAR LINKAGE).... 3163-4
BOOM TO COUPLER THIRD FUNCTION HYDRAULIC HOSES (POWERLLEL LINKAGE) 3163-6
BOOM, LOADER 3140-8
BOOM, POWERLLEL LINKAGE.... 3140-12
BOOM, TOOL CARRIER 3140-10

ALPHABETICAL INDEX - CONTINUED

PAGE

BOOT 3160-82
BOOT, TWO LEVER PILOT CONTROLLER....3160-74
BORE KIT, BOOM CYLINDER
(FOR USE WITH TC) 3165-10
BORE KIT, BUCKET CYLINDER 3165-4
BORE KIT, BUCKET CYLINDER 3165-6
BORE KIT, BUCKET CYLINDER
(FOR USE WITH POWERLLEL LINKAGE) 3165-16
BORE KIT, BUCKET CYLINDER
(FOR USE WITH POWERLLEL LINKAGE) 3165-18
BORE KIT, TILT CYLINDER
(FOR USE WITH TC) 3165-12
BORE SEAL KIT, COUPLER CYLINDER
(POWERLLEL AND Z-BAR LINKAGE) 3104-14
BORE SEAL KIT, COUPLER CYLINDER
(POWERLLEL AND Z-BAR LINKAGE) 3104-16
BORE SEAL KIT, HI-VIS COUPLER CYLINDER
(POWERLLEL AND Z-BAR LINKAGE) 3104-18
BOTTOM GUARD, ABSORBER 1913-6
BOTTOM GUARD, FRONT 1746-4
BOTTOM GUARD, FUEL TANK 1746-2
BOTTOM GUARD, TRANSMISSION 1746-4
BOWL, FUEL FILTER SEDIMENT 0420-2
BRACKET EXTENSIONS, FRONT FENDER
(TOOL CARRIER) 1927-10
BRACKET, A/C 1830-12
BRACKET, BRAKE PEDAL 1060-2
BRACKET, FIRE EXTINGUISHER 1810-18
BRACKET, FIRE EXTINGUISHER 1810-20
BRACKET, LICENSE PLATE 1673-8
BRACKET, MUFFLER 0530-2
BRACKET, STEERING VALVE 1810-50
BRACKET, TURBOCHARGER OIL LINE 0530-2
BRACKET, UPPER ALTERNATOR 0423-2
BRACKETS, ENGINE MOUNTING 0540-2
BRACKETS, MOUNTING, TRANSMISSION 0342-2
BRACKETS, SEAT 1821-2
BRACKETS, WIPER MOUNTING 1810-30
BRAKE ACCUMULATOR 1060-6
BRAKE LINES 1060-10
BRAKE PEDAL 1060-2
BRAKE PEDAL BRACKET 1060-2
BRAKE VALVE 1060-2
BRAKE VALVE FITTINGS 1060-2
BRAKE VALVE HYDRAULICS 1060-10
BRAKE VALVE SWITCH 1060-2
BRAKE, PARKING 1060-12
BUCKET CONVERSION PIVOT PLATE
(HI-VIS LINKAGE) 3104-22
BUCKET CONVERSION PIVOT PLATE
(POWERLLEL LINKAGE) 3104-20
BUCKET CUTTING EDGE 3102-2
BUCKET CUTTING EDGE (ATTACHMENT COUPLER) 3102-4
BUCKET CYLINDER 3165-6
BUCKET CYLINDER
(FOR USE WITH POWERLLEL LINKAGE) 3165-18
BUCKET CYLINDER BORE KIT 3165-4
BUCKET CYLINDER BORE KIT 3165-6
BUCKET CYLINDER BORE KIT
(FOR USE WITH POWERLLEL LINKAGE) 3165-16
BUCKET CYLINDER BORE KIT
(FOR USE WITH POWERLLEL LINKAGE) 3165-18
BUCKET CYLINDER HYDRAULIC FITTINGS 3165-2
BUCKET CYLINDER HYDRAULICS TO LOADER
CONTROL VALVE (POWERLLEL LINKAGE) 3160-60
BUCKET CYLINDER HYDRAULICS TO LOADER
CONTROL VALVE(FOR USE WITH TC) 3160-66

PAGE

BUCKET CYLINDER HYDRAULICS(S.N. -594432)
(FOR USE WITH Z-BAR LINKAGE) 3160-48
BUCKET CYLINDER HYDRAULICS(S.N. 594433-)
(FOR USE WITH Z-BAR LINKAGE) 3160-50
BUCKET CYLINDER PIN, LOADER FRAME
(POWERLLEL LINKAGE) 3140-6
BUCKET CYLINDER PIN, LOADER FRAME
(Z-BAR LINKAGE) 3140-2
BUCKET CYLINDER PINS 3165-2
BUCKET CYLINDER ROD 3165-6
BUCKET CYLINDER ROD
(FOR USE WITH POWERLLEL LINKAGE) 3165-18
BUCKET CYLINDER ROD SEAL KIT 3165-6
BUCKET CYLINDER ROD SEAL KIT
(FOR USE WITH POWERLLEL LINKAGE) 3165-18
BUCKET EDGE (JAGZ) 3102-12
BUCKET LINKAGE 3140-16
BUCKET LINKAGE
(POWERLLEL LINKAGE) 3140-20
BUCKET SECTION VALVE
LOADER CONTROL VALVE (S.N. -594432) 3160-28
BUCKET SECTION VALVE
LOADER CONTROL VALVE (S.N. 594433-) 3160-30
BUCKET SPILL GUARD 3102-2
BUCKET TEETH, LOADER 3102-8
BUCKET VALVE SECTION
LOADER CONTROL VALVE (S.N. -594432) 3160-28
BUCKET VALVE SECTION
LOADER CONTROL VALVE (S.N. 594433-) 3160-30
BUCKET, LOADER (ATTACHMENT COUPLER) 3102-4
BUCKET, LOADER (HI-VIS COUPLER) 3102-6
BUCKETS, LOADER 3102-2
BUMPER, BUTTON 1910-4
BUSHING, HI-VIS LINKAGE ATTACHMENT
COUPLER (POWERLLEL) 3104-10
BUSHING, HI-VIS LINKAGE ATTACHMENT
COUPLER (Z-BAR) 3104-12
BUSHING, LOADER BOOM 3140-8
BUSHINGS, POWERLLEL LINKAGE BOOM 3140-12
BUTTON BUMPER 1910-4
BYPASS VALVE LINES, TRANSMISSION 0360-4
BYPASS VALVE, ENGINE OIL 0404-2
BYPASS VALVE, OIL FILTER 0407-8

C

CAB 1810-2
CAB BACK PLATE 1810-18
CAB CONTROL UNIT HOUSING 1674-6
CAB DOOR 1810-6
CAB DOOR HOLD OPEN LATCH 1810-2
CAB FLOOR MAT 1810-46
CAB GLASS 1810-4
CAB LABELS AND DECALS 1322-4
CAB LEFT SIDE CONSOLE COVER 1810-42
CAB MONITOR AND ALARM 1674-10
CAB MONITOR CONSOLE 1810-8
CAB MOUNTS
(FRONT AND REAR) 1810-22
CAB PEDESTAL 1810-12
CAB ROOF, PLASTIC 1810-34
CAB SHIELDS 1810-32
CAB WIRING HARNESS 1674-6
CABLE, HEATER CONTROL 1830-2
CABLE, HEATER CONTROL 1830-6
CABLE, HI-VIS COUPLER HYDRAULIC HOSES 3163-2

ALPHABETICAL INDEX - CONTINUED

PAGE

CABLES, BATTERY 1671-2
CAMSHAFT 0404-1
CAMSHAFT FOLLOWERS 0402-3
CAMSHAFT GEAR 0404-1
CANOPY 1810-16
CANOPY FLOOR MAT 1810-46
CANOPY HEADLINER 1810-16
CANOPY LABELS AND DECALS 1322-10
CANOPY MONITOR CONSOLE 1810-10
CANOPY MONITOR HOUSING 1810-10
CANOPY PEDESTAL 1810-12
CANOPY REAR WINDOW 1810-16
CANOPY ROOF, PLASTIC 1810-34
CANOPY ROPS 1810-16
CAP, ENGINE OIL FILLER 0407-2
CAP, FUEL TANK 0560-2
CAP, MAIN BEARING 0404-2
CAP, RADIATOR 0510-2
CAP, RADIATOR 0510-3A
CAP, WINDOW WASHER 1810-24
CAP,HYDRAULIC OIL RESERVOIR FILLER 2160-6
CAPACATIOR, ALTERNATOR (55 AMP) 1672-2
CAPACITOR, ALTERNATOR (80 AMP) 1672-6
CARRIER, PLANET PINION 0210-22
CASE, FRONT DIFFERETIAL LOCK 0210-6
CASE, FRONT STANDARD DIFFERENTIAL 0210-10
CASE, REAR DIFFERENTIAL LOCK 0210-8
CASE, REAR STANDARD DIFFERENTIAL 0210-12
CASSETTE PLAYER
(SER. NO. -590067) 2001-6
CASSETTE PLAYER
(SERIAL NO.600741-) 2001-7C
CASSETTE PLAYER (SER.NO. 590068-600740) 2001-7A
CD PLAYER (SER. NO. -590067) 2001-6
CD PLAYER (SER.NO. 590068-600740) 2001-7A
CD PLAYER (SERIAL NO.600741-) 2001-7C
CHARGE AIR COOLER 0510-2
CHARGE AIR COOLER 0510-3A
CIRCULATION PUMP AND MOTOR, AXLE OIL 0260-6
CLAMP, HI LIFT BOOM TO COUPLER, THIRD
FUNCTION HYD HOSES (Z-BAR LINKAGE) 3163-4
CLAMP, HI-VIS COUPLER HYDRAULIC HOSES 3163-2
CLEANER,AIR 0520-2
CLOSE MOUNTED STEPS 1822-4
CLUTCH ASSEMBLY (FIRST GEAR) 0350-30
CLUTCH ASSEMBLY (HIGH RANGE) 0350-36
CLUTCH ASSEMBLY (SECOND GEAR) 0350-32
CLUTCH ASSEMBLY (THIRD GEAR) 0350-34
CLUTCH ASSEMBLY DRIVESHAFT (FIRST GEAR) 0350-30
CLUTCH ASSEMBLY DRIVESHAFT (HIGH RANGE) 0350-36
CLUTCH ASSEMBLY DRIVESHAFT (SECOND GEAR) 0350-32
CLUTCH ASSEMBLY DRIVESHAFT (THIRD GEAR) 0350-34
CLUTCH ASSEMBLY DRUM (FIRST GEAR) 0350-30
CLUTCH ASSEMBLY DRUM (HIGH RANGE) 0350-36
CLUTCH ASSEMBLY DRUM (SECOND GEAR) 0350-32
CLUTCH ASSEMBLY DRUM (THIRD GEAR) 0350-34
CLUTCH ASSEMBLY, FORWARD 0350-26
CLUTCH ASSEMBLY, REVERSE 0350-28
CLUTCH, STARTING MOTOR 0422-2
COAT HOOK 1810-40
COLD WEATHER STARTING AID 0505-2
COLD WEATHER STARTING AID SWITCH 0505-2
COLUMN, LOWER STEERING 1810-50
COLUMN, STEERING 1810-48
COMPARTMENT, LOAD CENTER 1674-6
COMPONENTS, AUXILIARY JOYSTICK PILOT
CONTROLLER 3160-90

PAGE

COMPONENTS, AUXILIARY VALVE SECTION
LOADER CONTROL VALVE (S.N. -594432) 3160-36
COMPONENTS, AUXILIARY VALVE SECTION
LOADER CONTROL VALVE (S.N. 594433-) 3160-38
COMPONENTS, HVAC MODULE 1830-4
COMPONENTS, SINGLE AND DUAL AUXILIARY
CONTROLLER 3160-78
COMPONENTS, VALVE, PIN AND AXLE DISCON 3160-97
COMPONENTS,HYDRAULIC OIL PRESSURE
REGULATOR VALVE 2160-10
COMPRESSOR, A/C 1830-12
CONDENSER, A/C 1830-14
CONDITIONER, ENGINE COOLANT 1369-4
CONNECTING ROD 0403-2
CONSOLE CAB 1810-54
CONSOLE COVER, CAB LEFT SIDE 1810-42
CONSOLE, CANOPY MONITOR 1810-10
CONSOLE, CUPHOLDER 1810-54
CONSULE, MONITOR 1810-8
CONTROL UNIT HOUSING, CAB 1674-6
CONTROL UNIT, ENGINE 1674-6
CONTROL UNIT, TRANSMISSION 1674-6
CONTROL VALVE MANIFOLD, TRANSMISSION 0350-16
CONTROL VALVE STUD ASSEMBLY, LOADER
(2-SPOOL) (S.N. 594433-) 3160-4
CONTROL VALVE STUD ASSEMBLY, LOADER
(3-SPOOL) (S.N. 594433-) 3160-10
CONTROL VALVE STUD ASSEMBLY, LOADER
(4-SPOOL) (S.N. 594433-) 3160-16
CONTROL VALVE TIE BOLTS, LOADER
(2-SPOOL) (S.N. 594433-) 3160-4
CONTROL VALVE TIE BOLTS, LOADER
(3-SPOOL) (S.N. 594433-) 3160-10
CONTROL VALVE TIE BOLTS, LOADER
(4-SPOOL) (S.N. 594433-) 3160-16
CONTROL VALVE, COVER, ABSORBER 1913-6
CONTROL VALVE, LOADER (2-SPOOL)
(S.N. -594432) 3160-2
CONTROL VALVE, LOADER (2-SPOOL)
(S.N. 594433-) 3160-4
CONTROL VALVE, LOADER (2-SPOOL)
TOOL CARRIER 3160-6
CONTROL VALVE, LOADER (3-SPOOL)
(S.N. -594432) 3160-8
CONTROL VALVE, LOADER (3-SPOOL)
(S.N. 594433-) 3160-10
CONTROL VALVE, LOADER (3-SPOOL)
TOOL CARRIER 3160-12
CONTROL VALVE, LOADER (4-SPOOL)
(S.N. -594432) 3160-14
CONTROL VALVE, LOADER (4-SPOOL)
(S.N. 594433-) 3160-16
CONTROL VALVE, LOADER (4-SPOOL)
TOOL CARRIER 3160-18
CONTROL VALVE, RIDE
(S.N. -594432) 3160-92
CONTROL VALVE, RIDE
(S.N. 594433-) 3160-94
CONTROL VALVE, TRANSMISSION 0350-18
CONTROL, TEMPERATURE 1830-2
CONTROL, TEMPERATURE 1830-6
CONTROL,RADIO REMOTE
(SER. NO. -590067) 2001-6
CONTROL,RADIO REMOTE
(SER.NO. 590068-600740) 2001-7A
CONTROL,RADIO REMOTE
(SERIAL NO.600741-) 2001-7C

ALPHABETICAL INDEX - CONTINUED

PAGE

CONTROLLER, AUXILIARY JOYSTICK PILOT 3160-90
CONTROLLER, AUXILIARY SINGLE LEVER 3160-78
CONTROLLER, JOYSTICK PILOT 3160-82
CONTROLLER, TWO LEVER PILOT 3160-74
CONVERSION BUCKET PIVOT PLATE
(HI-VIS LINKAGE) 3104-22
CONVERSION BUCKET PIVOT PLATE
(POWERLLEL LINKAGE) 3104-20
CONVERSION KIT, JOYSTICK FNR 3160-86
CONVERTER (10 AMP)
(24 VOLT TO 12 VOLT) 1674-13
CONVERTER (5 AMP)
(24 VOLT TO 12 VOLT) 1674-12
CONVERTER AND POWER PLUG (10 AMP)
(24 VOLT TO 12 VOLT) 1674-13
CONVERTER AND POWER PLUG (5 AMP)
(24 VOLT TO 12 VOLT) 1674-12
CONVERTER RELIEF VALVE 0350-22
CONVERTER, TORQUE 0350-4
COOLANT CONDITIONER, ENGINE 1369-4
COOLANT HEATER, ENGINE 0505-6
COOLANT RECOVERY TANK 0510-2
COOLANT RECOVERY TANK 0510-3A
COOLANT TEMPERATURE SENSOR 1674-14
COOLER, AXLE
(FACTORY INSTALLED AXLE COOLER) 0260-8
COOLER, AXLE
(FIELD INSTALLED AXLE COOLER) 0260-12
COOLER, CHARGE AIR 0510-2
COOLER, CHARGE AIR 0510-3A
COOLER, ENGINE OIL 0419-2
COOLER, HYDRAULIC OIL 0510-2
COOLER, HYDRAULIC OIL 0510-3A
COOLER, TRANSMISSION OIL 0510-2
COOLER, TRANSMISSION OIL 0510-3A
COOLING SYSTEM ACCESS PANELS 1910-6
COUNTERWEIGHT, LINKAGE COUPLER 1520-2
COUNTERWEIGHT, MAIN 1749-2
COUPLER HYDRAULIC CYLINDER, ATTACHMENT
(POWERLLEL AND Z-BAR LINKAGE) 3104-14
COUPLER HYDRAULIC CYLINDER, ATTACHMENT
(POWERLLEL AND Z-BAR LINKAGE) 3104-16
COUPLER, ATTACHMENT
(Z-BAR LINKAGE) 3104-6
COUPLER, POWERLLEL LINKAGE 3104-8
COUPLER, TOOL CARRIER ATTACHMENT 3104-2
COVER, A/C DELETE 1830-10
COVER, AUXILIARY DRIVE 0404-6
COVER, CAB LEFT SIDE CONSOLE 1810-42
COVER, CONSOLE SWITCH 1810-54
COVER, DRIVE DAMPER 0350-38
COVER, FRESH AIR HOUSING 1810-44
COVER, HI-VIS LINKAGE ATTACHMENT COUPLER
(POWERLLEL) 3104-10
COVER, HI-VIS LINKAGE ATTACHMENT COUPLER
(Z-BAR) 3104-12
COVER, INJECTION PUMP ACCESS 0417-2
COVER, REAR, ALTERNATOR (55 AMP) 1672-4
COVER, REAR, ALTERNATOR (80 AMP) 1672-8
COVER, ROCKER ARM 0402-2
COVER, STEERING COLUMN 1810-52
COVER, THERMOSTAT 0418-2
COVER, TIMING GEAR 0417-2
COVER, TRANSMISSION 0350-13
COVER, TRANSMISSION HOUSING 0350-8
COVER, VANDAL 1810-20
COVER,GEARBOX HOUSING 0350-8

PAGE

COVER,TORQUE CONVERTER HOUSING 0350-4
COVERS, BATTERY 1913-4
CRANKSHAFT AND BEARINGS 0401-2
CRANKSHAFT DAMPER 0429-2
CRANKSHAFT PULLEY 0429-2
CUPHOLDER CONSOLE 1810-54
CUSHION, BACKREST 1821-2
CUSHION, SEAT 1821-2
CUSHIONS, STEERING, ENGINE FRAME 1740-4
CUTTING EDGE (JAGZ) 3102-12
CUTTING EDGE, AUXILIARY 3102-10
CUTTING EDGE, LOADER BUCKET 3102-2
CUTTING EDGE,BUCKET 3102-2
CUTTING EDGE,BUCKET (ATTACHMENT COUPLER) 3102-4
CYLINDER BLOCK 0404-2
CYLINDER HEAD 0409-2
CYLINDER HEAD GASKET 0409-2
CYLINDER HEAD REMOVAL GASKET SET 0452-4
CYLINDER LINER 0403-2
CYLINDER LOCK, BOOM 3140-24
CYLINDER-FITTING ROCK GUARD 1746-6
CYLINDER, ATTACHMENT COUPLER
(POWERLLEL AND Z-BAR LINKAGE) 3104-14
CYLINDER, ATTACHMENT COUPLER
(POWERLLEL AND Z-BAR LINKAGE) 3104-16
CYLINDER, ATTACHMENT COUPLER
(POWERLLEL LINKAGE) 3104-8
CYLINDER, ATTACHMENT COUPLER
(Z-BAR LINKAGE) 3104-6
CYLINDER, ATTACHMENT HI-VIS COUPLER
(POWERLLEL AND Z-BAR LINKAGE) 3104-18
CYLINDER, BOOM 3165-4
CYLINDER, BOOM
(FOR USE WITH POWERLLEL LINKAGE) 3165-16
CYLINDER, BOOM
(FOR USE WITH TC) 3165-10
CYLINDER, BUCKET 3165-6
CYLINDER, BUCKET
(FOR USE WITH POWERLLEL LINKAGE) 3165-18
CYLINDER, HI-VIS LINKAGE ATTACHMENT
COUPLER (POWERLLEL) 3104-10
CYLINDER, HI-VIS LINKAGE ATTACHMENT
COUPLER (Z-BAR) 3104-12
CYLINDER, POWERLLEL LINKAGE COUPLER 3104-8
CYLINDER, STEERING 0960-10
CYLINDER, TILT
(FOR USE WITH TC) 3165-12
CYLINDER, TOOL CARRIER ATTACHMENT
COUPLER 3104-4
CYLINDER, Z-BAR ATTACHMENT COUPLER 3104-6

D

DAMPER, CRANKSHAFT 0429-2
DAMPER, DRIVE AND COVER 0350-38
DASH MODULE WIRING WITH JOYSTICK 1674-9
DECALS AND LABELS (CANOPY) 1322-10
DECALS AND LABELS (FRENCH) 1322-6
DECALS AND LABELS (SPANISH) 1322-8
DECALS AND LABELS, CAB 1322-4
DECALS AND TRADEMARKS (ENGLISH) 1322-2
DETENT KIT, AUXILIARY CONTROLLER 3160-78
DIFFERENTIAL CASE, FRONT, LOCK 0210-6
DIFFERENTIAL CASE, FRONT, STANDARD 0210-10
DIFFERENTIAL CASE, REAR, LOCK 0210-8
DIFFERENTIAL CASE, REAR, STANDARD 0210-12

ALPHABETICAL INDEX - CONTINUED

PAGE

DIFFERENTIAL DRIVE SHAFTS 0325-2
DIFFERENTIAL LOCK LINE, FRONT 0260-2
DIFFERENTIAL LOCK LINES, FRONT AND REAR 0260-4
DIFFERENTIAL LOCK SWITCH 0260-19
DIFFERENTIAL SUPPORTS AND LUBE LINES 0242-2
DIFFERENTIAL, HYDRAULIC ACTUATED 0210-14
DIFFERENTIAL, STANDARD 0210-16
DIODES, VEC 1674-16
DIPSTICK, ENGINE OIL 0407-7
DISCONNECT VALVE COMPONENTS,PIN AND AXLE 3160-97
DISCONNECT, AXLE INPUT 0260-14
DISCONNECT, BATTERY 1671-2
DOMELIGHT AND HEADLINER 1810-14
DOMELIGHT SWITCH, DOOR ACTIVATED 1673-5
DOOR 1810-6
DOOR ACTIVATED DOMELIGHT SWITCH 1673-5
DOOR GLASS 1810-6
DOOR LATCH, BATTERY COVERS 1913-4
DOOR, ACCESS 1810-2
DOOR, BATTERY COVERS 1913-4
DOOR, ENGINE SERVICE 1910-4
DRAIN KIT, ENVIRONMENTAL 1369-2
DRAIN VALVE, ENGINE OIL 0407-4
DRIP RAIL 1810-17A
DRIVE BELT TENSIONER 0429-1
DRIVE DAMPER AND COVER 0350-38
DRIVE HI-BEAM LAMP (SN -603805) 1673-2
DRIVE HI-BEAM LAMP (SN 603806-) 1673-3A
DRIVE SHAFT, ENGINE 0325-2
DRIVE SHAFTS, AXLE DIFFERENTIALS 0325-2
DRIVE SHAFTS, TRANSMISSION 0325-2
DRIVELINE BEARNG/PARKING BRAKE 1060-12
DRIVESHAFT, CLUTCH ASSEMBLY (FIRST GEAR) 0350-30
DRIVESHAFT, CLUTCH ASSEMBLY (HIGH RANGE) 0350-36
DRIVESHAFT, CLUTCH ASSEMBLY (THIRD GEAR) 0350-34
DRIVESHAFT, CLUTCH ASSEMBLY, SECOND GEAR 0350-32
DRIVESHAFT, FORWARD CLUTCH ASSEMBLY 0350-26
DRIVESHAFT, REVERSE CLUTCH ASSEMBLY 0350-28
DRUM, CLUTCH ASSEMBLY (FIRST GEAR) 0350-30
DRUM, CLUTCH ASSEMBLY (HIGH RANGE) 0350-36
DRUM, CLUTCH ASSEMBLY (SECOND GEAR) 0350-32
DRUM, CLUTCH ASSEMBLY (THIRD GEAR) 0350-34
DRUM, FORWARD CLUTCH ASSEMBLY 0350-26
DRUM, REVERSE CLUTCH ASSEMBLY 0350-28
DUAL JOYSTICK PILOT CONTROLLER AND HYDRAULIC HOSES 3160-88
DUCT, FRESH AIR 1830-2
DUCT, FRESH AIR 1830-6
DUCTS, HEATER AND A/C 1830-11

E

EDGE, BUCKET (JAGZ) 3102-12
EDGE, CUTTING (JAGZ) 3102-12
ELECTRIC FIFTH FUNCTION 3160-26
ELECTRICAL CENTER, VEHICLE 1674-16
ELEMENT, A/C FILTER 1830-2
ELEMENT, ENGINE OIL FILTER 0407-8
ELEMENT, FUEL FILTER 0420-2
ELEMENT, TRANSMISSION OIL FILTER 0350-2
EMBLEM, SLOW MOVING VEHICLE 1810-37
EMBLEM, SMV 1810-37
ENGINE AIR HEATER 0505-4
ENGINE AIR HEATER FUSE HOLDER 0505-4

PAGE

ENGINE AIR HEATER RELAY 0505-4
ENGINE AIR HEATER WIRE HARNESS 0505-4
ENGINE AIR PLENUM 1910-4
ENGINE COMPARTMENT STEP 1822-6
ENGINE CONTROL UNIT 1674-6
ENGINE COOLANT HEATER 0505-6
ENGINE COOLANT TEMPERATURE AND OIL PRESSURE SENSORS 1674-14
ENGINE COOLANT TEMPERATURE SENSOR 1674-14
ENGINE DOOR, ABSORBER 1913-6
ENGINE DRIVE SHAFT 0325-2
ENGINE FAN DRIVE HYDRAULIC MOTOR 0510-6
ENGINE FAN DRIVE HYDRAULIC PUMP 0510-6
ENGINE FRAME 1740-2
ENGINE FRAME PIN 1740-2
ENGINE FRAME STEERING CUSHIONS 1740-4
ENGINE FRAME WIRING HARNESS 1674-2
ENGINE FRAME WIRING HARNESS (POWERLLEL LINKAGE) (SN -603810) 1674-4
ENGINE FRAME WIRING HARNESS (POWERLLEL LINKAGE) (SN 603811-) 1674-5A
ENGINE GASKET SET, CYL. HEAD REMOVAL 0452-4
ENGINE GASKET SET, IN-VEHICLE OVERHAUL 0452-4
ENGINE GASKET SET, MAJOR OVERHAUL 0452-2
ENGINE MOUNTING BRACKETS 0540-2
ENGINE OIL BYPASS VALVE 0404-2
ENGINE OIL COOLER 0419-2
ENGINE OIL DIPSTICK 0407-7
ENGINE OIL FILLER 0407-2
ENGINE OIL FILTER & HEADER 0407-8
ENGINE OIL PAN 0407-4
ENGINE OIL PRESSURE REGULATING VALVE 0404-2
ENGINE OIL PRESSURE SENSOR 1674-14
ENGINE OIL PUMP 0407-6
ENGINE OIL PUMP INTAKE 0407-4
ENGINE OVERHAUL KIT 0403-2
ENGINE OVERHAUL KIT (750J) 0450-4
ENGINE SHORT BLOCK 0450-2
ENGINE SIDE SHIELD LATCH 1910-4
ENGINE SIDE SHIELD PLATE 1910-4
ENGINE SIDE SHIELDS 1910-4
ENGINE SPEED CONTROL LINKAGE 0515-2
ENGINE SPEED CONTROL PEDAL 0515-2
ENGINE SPEED CONTROL SENSOR 0515-2
ENGINE SPEED SENSOR 0578-1
ENGINE SPEED SENSOR WHEEL 0401-2
ENGINE VENTILATING SYSTEM 0408-1
ENVIRONMENTAL DRAIN KIT 1369-2
ETHER STARTING AID 0505-2
EXHAUST MANIFOLD 0410-2
EXHAUST PIPE 0530-2
EXHAUST VALVE 0409-2
EXTENSION KIT, AXLE BREATHER 0260-18
EXTENSION KIT, PARKING BRAKE 0260-18
EXTENSIONS, BRACKET, FRONT FENDER (TOOL CARRIER) 1927-10
EXTERNAL OIL LINES, TRANSMISSION 0360-4
EXTIGUISHER, FIRE 1810-20
EXTINGUISHER, FIRE 1810-18

F

FAN DOOR 0510-4
FAN DRIVE HYDRAULIC HOSES 0510-6
FAN DRIVE HYDRAULIC PUMP 0510-6
FAN DRIVE MOTOR 0510-6

ALPHABETICAL INDEX - CONTINUED

PAGE

FAN DRIVE, REVERSE, HYDRAULIC PUMP....0510-8
FAN DRIVE, REVERSE, MOTOR....0510-8
FAN GUARD....0510-4
FAN SHROUD....0510-4
FENDER BRACKET EXTENSIONS (TOOL CARRIER)....1927-10
FENDERS, FRONT....1927-2
FENDERS, FRONT FULL COVERAGE....1927-6
FENDERS, REAR....1927-4
FENDERS, REAR FULL COVERAGE....1927-8
FENDERS, REAR (W/LATCH) FULL COVERAGE....1927-9A
FIELD....3160-87
FIELD KIT....3160-87
FIELD KIT, PIN DISCONNECT (Z-BAR LINKAGE)(S.N. -594432)....3160-112
FIELD KIT, PIN DISCONNECT (Z-BAR LINKAGE)(S.N. 594433-)....3160-114
FIFTH FUNCTION VALVE SECTION (SER. NO. - XXXXXX)....3160-44
FIFTH FUNCTION VALVE SECTION (SER. NO. XXXXXX -)....3160-46
FIFTH FUNTION KIT....3160-26
FILL TUBE, TRANSMISSION....0360-2
FILLER NECK, ENGINE OIL....0407-2
FILTER ELEMENT, TRANSMISSION OIL....0350-2
FILTER HEAD, TRANSMISSION OIL....0350-2
FILTER RESTRICTION SWITCH, TRANSMISSION OIL....0350-16
FILTER, ENGINE OIL....0407-8
FILTER, FINAL FUEL....0420-2
FILTER, FRESH AIR....1830-2
FILTER, FRESH AIR....1830-6
FILTER, HVAC RECIRCULATION....1830-4
FILTER, HVAC RECIRCULATION....1830-8
FILTER, HYDRAULIC OIL....2160-6
FILTER, PRIMARY FUEL (PRE-FILTER)....0420-2
FILTER, TRANSMISSION OIL....0350-2
FILTER,AIR CLEANER....0520-2
FINAL DRIVE SHAFT....0210-22
FIRE EXTINGUISHER AND BRACKET....1810-18
FIRE EXTINGUISHER AND BRACKET....1810-20
FITTINGS, DUAL JOYSTICK PILOT CONTROLLER....3160-88
FITTINGS, HEATER....1830-16
FITTINGS, HI-VIS COUPLER HYDRAULIC HOSES....3163-2
FITTINGS, HYDRAULIC, BOOM CYLINDER....3165-2
FITTINGS, HYDRAULIC, BUCKET CLINDER....3165-2
FITTINGS, JOYSTICK PILOT CONTROLLER....3160-80
FITTINGS, JOYSTICK PILOT CONTROLLER WITH AUXILARY....3160-84
FITTINGS, POWERLLEL LINKAGE BOOM CYLINDER....3165-14
FITTINGS, POWERLLEL LINKAGE TILT CYLINDER....3165-14
FITTINGS, PRESSURE REGULATOR VALVE....2160-8
FITTINGS, STEERING COMPENSATOR VALVE (SERIAL NO. 601560 -)....0960-4
FITTINGS, STEERING CYLINDER....0960-8
FITTINGS, STEERING VALVE (SERIAL NO. - 601559)....0960-2
FITTINGS, STEERING VALVE (SERIAL NO. 601560 -)....0960-3A
FITTINGS, TOOL CARRIER BOOM CYLINDER....3165-8
FITTINGS, TOOL CARRIER TILT CYLINDER....3165-8
FITTINGS, TRANSMISSION....0350-2

PAGE

FITTINGS, TWO LEVER PILOT CONTROLLER....3160-72
FITTINGS, TWO LEVER PILOT CONTROLLER WITH AUXILARY....3160-76
FLOOR MAT,CAB....1810-46
FLOOR MAT,CANOPY....1810-46
FLUID, STARTING AID....0505-2
FLYWHEEL....0433-1
FLYWHEEL HOUSING....0433-2
FNR CONVERSION KIT....3160-86
FNR CONVERSION KIT....3160-87
FOLLOWERS, CAMSHAFT....0402-3
FORKS, GUARD....3103-6
FORKS, PALLET....3103-2
FORKS, PALLET (HI-VIS)....3103-4
FORWARD CLUTCH ASSEMBLY....0350-26
FORWARD CLUTCH ASSEMBLY DRIVESHAFT....0350-26
FORWARD CLUTCH ASSEMBLY DRUM....0350-26
FOUR PINION HYDRAULIC DIFFERENTIAL....0210-14
FOUR SPOOL CONTROL VALVE (S.N. -594432)....3160-14
FOUR SPOOL CONTROL VALVE, LOADER (S.N. 594433-)....3160-16
FOUR SPOOL CONTROL VALVE, LOADER TOOL CARRIER....3160-18
FOUR SPOOL LOADER CONTROL VALVE (S.N. -594432)....3160-14
FOUR SPOOL LOADER CONTROL VALVE (S.N. 594433-)....3160-16
FOUR SPOOL LOADER CONTROL VALVE, TOOL CARRIER....3160-18
FOUR SPOOL TOOL CARRIER CONTROL VALVE....3160-18
FOUR SPOOL VALVE, LOADER CONTROL (S.N. 594433-)....3160-16
FOUR SPOOL VALVE, LOADER CONTROL TOOL CARRIER....3160-18
FOURTH FUNCTION AUXILIARY HYDRAULICS (FOR USE WITH POWERLLEL LINKAGE)....3160-62
FOURTH FUNCTION AUXILIARY HYDRAULICS (FOR USE WITH TC)....3160-70
FOURTH FUNCTION AUXILIARY HYDRAULICS (Z-BAR LINKAGE) (S.N. -594432)....3160-54
FOURTH FUNCTION AUXILIARY HYDRAULICS (Z-BAR LINKAGE) (S.N. 594433-)....3160-56
FRAME LOCK BAR....1913-2
FRAME, ENGINE....1740-2
FRAME, GUARD....3103-6
FRAME, LOADER (POWERLLEL LINKAGE)....3140-6
FRAME, LOADER (Z-BAR LINKAGE)....3140-2
FRAME, PALLET FORK....3103-2
FRAME, PALLET FORK (HI-VIS)....3103-4
FRAME, TOOL CARRIER....3140-4
FRENCH LABELS AND DECALS....1322-6
FRESH AIR DUCT....1830-2
FRESH AIR DUCT....1830-6
FRESH AIR FILTER....1830-2
FRESH AIR FILTER....1830-6
FRESH AIR FILTER ELEMENT....1830-2
FRESH AIR FILTER ELEMENT....1830-6
FRESH AIR HOUSING COVER....1810-44
FRONT AND REAR WINDOW WASHER....1810-24
FRONT AND REAR WORK LAMP....1673-4
FRONT AXLE....0210-2
FRONT AXLE CAPSCREWS (POWERLLEL LINKAGE)....3140-6

ALPHABETICAL INDEX - CONTINUED

PAGE

FRONT AXLE CAPSCREWS (TOOL CARRIER) 3140-4
FRONT AXLE CAPSCREWS (Z-BAR LINKAGE) 3140-2
FRONT AXLE DISCONNECT 0260-14
FRONT AXLE HOUSING 0210-18
FRONT AXLE MOUNTING (POWERLLEL LINKAGE) 3140-6
FRONT AXLE MOUNTING (Z-BAR LINKAGE) 3140-2
FRONT AXLE SHAFT 0210-18
FRONT BOTTOM GUARD 1746-4
FRONT CONSOLE WIRING HARNESS 1674-8
FRONT CONSOLE WIRING HARNESS 1674-9
FRONT DASH MODULE WIRING 1674-8
FRONT DIFFERENTIAL LOCK HOUSING 0210-6
FRONT DIFFERENTIAL LOCK LINE 0260-2
FRONT DIFFERENTIAL LOCK LINE 0260-4
FRONT DIFFERETIAL LOCK CASE 0210-6
FRONT FENDER BRACKET EXTENSIONS (TOOL CARRIER) 1927-10
FRONT FENDERS 1927-2
FRONT FENDERS FULL COVERAGE 1927-6
FRONT LIGHT (SN -603805) 1673-2
FRONT LIGHT (SN 603806-) 1673-3A
FRONT OIL SEAL, ENGINE 0417-2
FRONT PLATE 0404-4
FRONT SPIRAL BEVEL GEAR AND SHAFT 0210-4
FRONT STANDARD DIFFERENTIAL CASE 0210-10
FRONT STANDARD DIFFERENTIAL HOUSING 0210-10
FRONT TURN AND MARKER LIGHT (SN -603805) 1673-2
FRONT TURN AND MARKER LIGHT (SN 603806-) 1673-3A
FRONT WINDSHIELD WIPER 1810-26
FUEL FILTER LINES 0420-4
FUEL FILTER, FINAL 0420-2
FUEL FILTER, PRIMARY (PRE-FILTER) 0420-2
FUEL HOSES 0560-2
FUEL INJECTION LINE 0413-2
FUEL INJECTION PUMP 0413-2
FUEL INJECTION SYSTEM 0413-2
FUEL TANK 0560-2
FUEL TANK BOTTOM GUARD 1746-2
FUEL TANK CAP 0560-2
FUEL TANK FILLER HOSE 0560-2
FUEL TANK SENDER 0560-2
FUEL TRANSFER PUMP 0421-2
FUSE HOLDER, ENGINE AIR HEATER 0505-4
FUSES, VEC 1674-16

G

GASKET SET, CYLINDER HEAD REMOVAL 0452-4
GASKET SET, ENGINE MAJOR OVERHAUL 0452-2
GASKET SET, IN-VEHICLE OVERHAUL 0452-4
GASKET, CYLINDER HEAD 0409-2
GASKET, EXHAUST MANIFOLD 0410-2
GASKET, OIL FILTER HOUSING 0407-8
GASKET, OIL PAN 0407-4
GASKET, TRANSMISSION 0350-13
GASKET, TURBOCHARGER 0416-1
GEAR SHIFT SYSTEM 0350-16

PAGE

GEAR, CAMSHAFT 0404-1
GEAR, CRANKSHAFT 0401-2
GEAR, ENGINE OIL PUMP 0407-6
GEAR, FUEL INJECTION PUMP 0413-2
GEAR, IDLER 0404-4
GEAR, PLANET PINION 0210-22
GEAR, RING 0210-4
GEAR, RING 0210-5
GEAR, TRANSMISSION INPUT 0350-6
GEARBOX HOUSING 0350-8
GEARBOX HOUSING COVER 0350-8
GEARBOX HOUSING OUTPUT SHAFT 0350-20
GEARBOX HOUSING OUTPUT SHAFT YOKE 0350-20
GLASS 1810-4
GUARD FORKS 3103-6
GUARD, BOTTOM, FUEL TANK 1746-2
GUARD, FAN 0510-4
GUARD, FRONT BOTTOM 1746-4
GUARD, LOADER BUCKET 3102-2
GUARD, REAR FULL COVERAGE FENDER 1927-9A
GUARD, ROCK, CYLINDER-FITTING 1746-6
GUARD, TRANSMISSION BOTTOM 1746-4
GUARDS, TRANSMISSION 1913-3
GUIDE ASSEMBLY 3160-82

H

HANDLE, PILOT CONTROLLER 3160-82
HANDLE, REAR PLASTIC 1910-6
HANDLE, TWO LEVER PILOT CONTROLLER 3160-74
HANDLE,REAR FULL COVERAGE FENDER 1927-9A
HARNESS, MAIN WIRING 1674-2
HARNESS, MAIN WIRING (POWERLLEL LINKAGE) (SN -603810) 1674-4
HARNESS, MAIN WIRING (POWERLLEL LINKAGE) (SN 603811-) 1674-5A
HARNESS, RETURN TO DIG 1674-15
HARSH ENVIRONMENT ALTERNATOR BELT (100 A MP) 1672-10
HARSH ENVIRONMENT ALTERNATOR BELT TENSIO NER (100 AMP) 1672-10
HARSH ENVIRONMENT ALTERNATOR MOUNTING BR ACKETS (100 AMP) 1672-10
HEAD, CYLINDER 0409-2
HEAD, FUEL FILTER 0420-2
HEADER, ENGINE OIL FILTER 0407-8
HEADLINER AND DOMELIGHT 1810-14
HEADLINER, CANOPY 1810-16
HEADREST 1821-2
HEATER AND A/C BLOWER SWITCH 1674-11
HEATER AND A/C BLOWER WIRING HARNESS 1674-11
HEATER BLOWER MOTOR AND SWITCH 1830-4
HEATER BLOWER MOTOR AND SWITCH 1830-8
HEATER CONTROL CABLE 1830-2
HEATER CONTROL CABLE 1830-6
HEATER DUCTS 1830-11
HEATER FITTINGS 1830-16
HEATER HOSES 1830-16
HEATER THERMOSTAT SWITCH 1830-8
HEATER, ENGINE AIR 0505-4
HEATER, ENGINE COOLANT 0505-6
HEATING AND A/C LOUVERS 1810-8
HEATING AND AIR CONDITIONING OUTLET DUCT 1830-11
HI-VIS COUPLER BUCKET 3102-6
HI-VIS COUPLER HYDRAULIC CYLINDER, ATTAC HMENT (POWERLLEL AND Z-BAR LINKAGE) 3104-18

ALPHABETICAL INDEX - CONTINUED

PAGE

HI-VIS LINKAGE ATTACHMENT COUPLER (POWERLLEL) 3104-10
HI-VIS LINKAGE ATTACHMENT COUPLER (Z-BAR) 3104-12
HI-VIS LINKAGE CONVERSION BUCKET PIVOT PLATE 3104-22
HI-VIS LINKAGE COUPLER (POWERLLEL) 3104-10
HI-VIS LINKAGE COUPLER (Z-BAR) 3104-12
HIGH LIFT LOADER BOOM LINKAGE 3140-16
HINGE, REAR FULL COVERAGE FENDER 1927-9A
HITCH ASSEMBLY 1520-2
HITCH ASSEMBLY WITH 8" PROTECTION BUMPER 1520-2
HOOD 1910-2
HOOD, ABSORBER....1913-6
HOOK, COAT 1810-40
HOOKS, LIFT....1330-2
HORN 1810-35
HORN SWITCH 1810-48
HOSE, A/C....1830-12
HOSE, FUEL TANK FILLER 0560-2
HOSE, HYDRAULIC, CONTROL VALVE TO BUCKET CYLINDER (FOR USE WITH TC) 3160-66
HOSE, HYDRAULIC, CONTROL VALVE TO BUCKET CYLINDER (POWERLLEL LINKAGE)....3160-60
HOSE, HYDRAULIC, CONTROL VALVE TO BOOM CYLINDER (FOR USE WITH TC)....3160-66
HOSE, HYDRAULIC, CONTROL VALVE TO BOOM CYLINDER (POWERLLEL LINKAGE) 3160-60
HOSE, HYDRAULIC, FOURTH FUNCTION AUXILIARY HYDRAULICS (FOR USE WITH TC)....3160-70
HOSE, HYDRAULIC, THIRD FUNCTION AUXILIARY HYDRAULICS(FOR USE WITH TC)....3160-68
HOSE, RADIATOR....0510-2
HOSE, RADIATOR.... 0510-3A
HOSE, VALVE COVER VENT....0408-1
HOSE,AIR CLEANER....0520-2
HOSE,STEERING CYLINDER HYDRAULIC (SERIAL NO. - 601559)....0960-6
HOSE,STEERING CYLINDER HYDRAULIC (SERIAL NO. 601560 -).... 0960-7A
HOSES AND FITTINGS, AXLE CIRCULATION 0260-10
HOSES AND FITTINGS, AXLE COOLING....0260-10
HOSES, DUAL JOYSTICK PILOT CONTROLLER....3160-88
HOSES, ENVIRONMENTAL DRAIN....1369-2
HOSES, FUEL 0560-2
HOSES, HEATER 1830-16
HOSES, HYDRAULIC FAN DRIVE 0510-6
HOSES, HYDRAULIC PIN DISCONNECT AND AXLE DISONNECT VALVE (S.N. -594432)....3160-102
HOSES, HYDRAULIC PIN DISCONNECT AND AXLE DISONNECT VALVE (S.N. 594433-)....3160-106
HOSES, HYDRAULIC, FOURTH FUNCTION (Z-BAR LINKAGE) (S.N. -594432) 3160-54
HOSES, HYDRAULIC, FOURTH FUNCTION (Z-BAR LINKAGE) (S.N. 594433-) 3160-56
HOSES, HYDRAULIC, HI-VIS LINKAGE ATTACHMENT COUPLER 3163-2
HOSES, HYDRAULIC, PIN DISCONNECT (FOR USE WITH POWERLLEL LINKAGE) 3160-120
HOSES, HYDRAULIC, PIN DISCONNECT (FOR USE WITH TC) 3160-110
HOSES, HYDRAULIC, PIN DISCONNECT (Z-BAR LINKAGE)(S.N. -594432) 3160-112
HOSES, HYDRAULIC, PIN DISCONNECT (Z-BAR LINKAGE)(S.N. 594433-) 3160-114
HOSES, HYDRAULIC, THIRD FUNCTION (POWERLLEL LINKAGE) (BOOM TO COUPLER).....3163-6

PAGE

HOSES, HYDRAULIC, THIRD FUNCTION (Z-BAR LINKAGE) (S.N. -594432) 3160-52
HOSES, HYDRAULIC, THIRD FUNCTION (Z-BAR LINKAGE) (S.N. 594433-) 3160-56
HOSES, HYDRAULIC, THIRD FUNCTION (Z-BAR LINKAGE) (BOOM TO COUPLER).... 3163-4
HOSES, JOYSTICK PILOT CONTROLLER.... 3160-80
HOSES, JOYSTICK PILOT CONTROLLER WITH AUXILARY 3160-84
HOSES, LUBRICATION, STEERING CYLINDER 0960-8
HOSES, PIN DISCONNECT HYDRAULIC (BOOM TO COUPLER)(POWERLLEL LINKAGE) 3160-122
HOSES, PIN DISCONNECT HYDRAULIC (BOOM TO COUPLER)(Z-BAR LINKAGE) 3160-116
HOSES, RIDE CONTROL (S.N. -594432) 3160-92
HOSES, RIDE CONTROL (S.N. 594433-) 3160-94
HOSES, TURBOCHARGER 0416-1
HOSES, TWO LEVER PILOT CONTROLLER.... 3160-72
HOSES, TWO LEVER PILOT CONTROLLER WITH AUXILARY 3160-76
HOSES,BOOM AND BUCKET CYLINDER HYDRAULIC (Z-BAR LINKAGE) (S.N. -594432) 3160-48
HOSES,BOOM AND BUCKET CYLINDER HYDRAULIC (Z-BAR LINKAGE) (S.N. 594433-) 3160-50
HOUSING, CAB CONTROL UNIT 1674-6
HOUSING, CANOPY MONITOR 1810-10
HOUSING, ENGINE OIL PUMP 0407-6
HOUSING, FLYWHEEL.... 0433-2
HOUSING, FRONT AXLE.... 0210-18
HOUSING, FRONT AXLE DISCONNECT 0260-14
HOUSING, FRONT DIFFERENTIAL LOCK.... 0210-6
HOUSING, FRONT STANDARD DIFFERENTIAL 0210-10
HOUSING, GEARBOX.... 0350-8
HOUSING, HVAC.... 1830-4
HOUSING, HVAC.... 1830-8
HOUSING, MONITOR.... 1810-8
HOUSING, REAR AXLE 0210-20
HOUSING, REAR DIFFERENTIAL LOCK 0210-8
HOUSING, REAR STANDARD DIFFERENTIAL.... 0210-12
HOUSING, TRANSMISSION 0350-8
HOUSING,TORQUE CONVERTER.... 0350-4
HVAC HOUSING.... 1830-4
HVAC HOUSING.... 1830-8
HVAC MODULE COMPONENTS 1830-4
HVAC RECIRCULATION FILTER.... 1830-4
HVAC RECIRCULATION FILTER.... 1830-8
HVAC WIRING 1674-11
HYDRAULIC ACTUATED DIFFERENTIAL 0210-14
HYDRAULIC CYLINDER, ATTACHMENT COUPLER (POWERLLEL AND Z-BAR LINKAGE) 3104-14
HYDRAULIC CYLINDER, ATTACHMENT COUPLER (POWERLLEL AND Z-BAR LINKAGE) 3104-16
HYDRAULIC CYLINDER, ATTACHMENT HI-VIS COUPLER (POWERLLEL AND Z-BAR LINKAGE) 3104-18
HYDRAULIC CYLINDER, HI-VIS LINKAGE ATTACHMENT COUPLER (POWERLLEL) 3104-10
HYDRAULIC CYLINDER, HI-VIS LINKAGE ATTACHMENT COUPLER (Z-BAR) 3104-12
HYDRAULIC DIFFERENTIAL, FOUR PINION 0210-14
HYDRAULIC HOSES, AXLE COOLER (FACTORY INSTALLED AXLE COOLER) 0260-8
HYDRAULIC HOSES, AXLE COOLER (FIELD INSTALLED AXLE COOLER) 0260-12
HYDRAULIC HOSES, FAN DRIVE 0510-6
HYDRAULIC HOSES, HI-VIS COUPLER 3163-2

ALPHABETICAL INDEX - CONTINUED

PAGE

HYDRAULIC HOSES, PIN DISCONNECT (BOOM TO COUPLER)(POWERLLEL LINKAGE) 3160-122
HYDRAULIC HOSES, PIN DISCONNECT (BOOM TO COUPLER)(Z-BAR LINKAGE) 3160-116
HYDRAULIC HOSES, REVERSE FAN DRIVE 0510-8
HYDRAULIC HOSES, RIDE CONTROL (S.N. -594432) 3160-92
HYDRAULIC HOSES, RIDE CONTROL (S.N. 594433-) 3160-94
HYDRAULIC HOSES, THIRD FUNCTION BOOM TO COUPLER (POWERLLEL LINKAGE) 3163-6
HYDRAULIC HOSES, THIRD FUNCTION BOOM TO COUPLER, (Z-BAR LINKAGE) 3163-4
HYDRAULIC LINES, MAIN 2160-12
HYDRAULIC LINES, PARK BRAKE SOLENOID VALVE 1060-8
HYDRAULIC OIL COOLER 0510-2
HYDRAULIC OIL COOLER 0510-3A
HYDRAULIC OIL FILTER 2160-6
HYDRAULIC OIL LEVEL GAUGE 2160-6
HYDRAULIC OIL PRESSURE REGULATOR VALVE 2160-10
HYDRAULIC OIL RESERVOIR 2160-6
HYDRAULIC OIL RESERVOIR FILLER CAP 2160-6
HYDRAULIC OIL TEMPERATURE SENSOR 2160-6
HYDRAULIC PUMP. STEERING 2160-2
HYDRAULIC PUMP, FAN DRIVE 0510-6
HYDRAULIC PUMP, LOADER 2160-2
HYDRAULIC PUMP, LOADER AND STEERING 2160-2
HYDRAULIC PUMP, REVERSE FAN DRIVE 0510-8
HYDRAULICS, BOOM CYLINDER (S.N. -594432) (FOR USE WITH Z-BAR LINKAGE) 3160-48
HYDRAULICS, BOOM CYLINDER (S.N. 594433-) (FOR USE WITH Z-BAR LINKAGE) 3160-50
HYDRAULICS, BRAKE VALVE 1060-10
HYDRAULICS, BUCKET CYLINDER TO LOADER CONTROL VALVE (POWERLLEL LINKAGE) 3160-60
HYDRAULICS, BUCKET CYLINDER TO LOADER CONTROL VALVE(FOR USE WITH TC) 3160-66
HYDRAULICS, FOURTH FUNCTION (Z-BAR LINKAGE) (S.N. -594432) 3160-54
HYDRAULICS, THIRD FUNCTION (Z-BAR LINKAGE) (S.N. -594432) 3160-52
HYDRAULICS,BUCKET CYLINDER(S.N. -594432) (FOR USE WITH Z-BAR LINKAGE) 3160-48
HYDRAULICS,BUCKET CYLINDER(S.N. 594433-) (FOR USE WITH Z-BAR LINKAGE) 3160-50

I

IDLER GEAR 0404-4
IGNITION SWITCH 1674-6
IN-VEHICLE OVERHAUL GASKET SET 0452-4
INJECTION PUMP ACCESS COVER 0417-2
INJECTION SYSTEM, FUEL 0413-2
INLET SECTION VALVE WITH RELIEF VALVE LOADER CONTROL VALVE (S.N. -594432) 3160-20
INLET SECTION VALVE WITH RELIEF VALVE LOADER CONTROL VALVE (S.N. 594433-) 3160-22
INLET, WATER PUMP 0417-4
INPUT DRIVE YOKE 0350-4
INPUT GEAR, TRANSMISSION 0350-6
INPUT PINION SHAFT 0210-4
INPUT PINION SHAFT 0210-5
INPUT SHAFT 0350-4
INPUT SHAFT, TRANSMISSION 0350-6
INPUT YOKE 0210-3

PAGE

INPUT YOKE 0210-26
INSERT, ENGINE VALVE SEAT 0409-2
INSIDE REAR VIEW MIRROR 1810-39A
INTAKE VALVE 0409-2
INTAKE, AIR (ENGINE) 0414-2
INTAKE, ENGINE OIL PUMP 0407-4

J

JAGZ CUTTING EDGE 3102-12
JAGZ LOADER BUCKET CUTTING EDGE 3102-12
JOYSTICK FNR CONVERSION KIT 3160-86
JOYSTICK FNR CONVERSION KIT 3160-87
JOYSTICK LABEL 3160-87
JOYSTICK PILOT CONTROLLER 3160-80
JOYSTICK PILOT CONTROLLER 3160-82
JOYSTICK PILOT CONTROLLER WITH AUXILARY 3160-84
JOYSTICK TO TWO LEVER CONVERSION KIT 3160-72
JOYSTICK WITH AUX. TO TWO LEVER WITH AUX. CONVERSION KIT 3160-76

K

KEY, IGNITION 1674-6
KICKDOWN SWITCH, TWO LEVER PILOT CONTROLLER 3160-74
KICKOUT, BOOM (TOOL CARRIER) 3166-8
KICKOUT,LOADER BOOM 3166-4
KICKOUT,LOADER BOOM (POWERLLEL LINKAGE) 3166-12
KIT, ADDITION OF AUXILIARY JOYSTICK TO JOYSTICK CONTROLLER 3160-88
KIT, ADDITION OF AUXILIARY JOYSTICK TO TOOL CARRIER JOYSTICK CONTROLLER 3160-88
KIT, ADDITION OF AUXILIARY TO JOYSTICK CONTROLLER 3160-84
KIT, ADDITION OF AUXILIARY TO TOOL CARRIER JOYSTICK CONTROLLER 3160-84
KIT, ADDITION OF AUXILIARY TO TOOL CARRIER TWO LEVER CONTROLLER 3160-76
KIT, ADDITION OF AUXILIARY TO TWO LEVER CONTROLLER 3160-76
KIT, AUXILIARY JOYSTICK PILOT CONTROLLER REPAIR 3160-90
KIT, AUXILIARY SINGLE LEVER CONTROLLER REPAIR 3160-78
KIT, AXLE BREATHER 0260-18
KIT, BOOM CYLINDER BORE (FOR USE WITH TC) 3165-10
KIT, BOOM CYLINDER ROD SEAL 3165-4
KIT, BOOM CYLINDER ROD SEAL (FOR USE WITH POWERLLEL LINKAGE) 3165-16
KIT, BOOM CYLINDER ROD SEAL (FOR USE WITH TC) 3165-10
KIT, BOOM TO COUPLER, THIRD FUNCTION HYD HOSES (Z-BAR LINKAGE) 3163-4
KIT, BUCKET CYLINDER BORE 3165-4
KIT, BUCKET CYLINDER BORE 3165-6
KIT, BUCKET CYLINDER BORE (FOR USE WITH POWERLLEL LINKAGE) 3165-16
KIT, BUCKET CYLINDER BORE (FOR USE WITH POWERLLEL LINKAGE) 3165-18
KIT, BUCKET CYLINDER ROD SEAL 3165-6
KIT, BUCKET CYLINDER ROD SEAL (FOR USE WITH POWERLLEL LINKAGE) 3165-18

ALPHABETICAL INDEX - CONTINUED

PAGE

KIT, CYLINDER HEAD REMOVAL GASKET 0452-4
KIT, CYLINDER LINER AND PISTON 0403-2
KIT, CYLINDER LINER O-RING 0403-2
KIT, ENGINE MAJOR OVERHAUL GASKET 0452-2
KIT, ENGINE OVERHAUL....0403-2
KIT, ENVIRONMENTAL DRAIN 1369-2
KIT, FIFTH VALVE
(SER. NO. XXXXXX -) 3160-46
KIT, FIFTH VALVE SECTION
(SER. NO. - XXXXXX)....3160-44
KIT, FITTING, QUICK-DISCONNECT
(FOR USE WITH POWERLLEL LINKAGE) 3160-62
KIT, HI LIFT BOOM TO COUPLER, THIRD
FUNCTION HYD HOSES (Z-BAR LINKAGE)....3163-4
KIT, IN-VEHICLE OVERHAUL GASKET....0452-4
KIT, JOYSTICK TO TWO LEVER CONVERSION 3160-72
KIT, JOYSTICK WITH AUX. TO TWO LEVER
WITH AUX. CONVERSION....3160-76
KIT, OUTLET VALVE SECTION
LOADER CONTROL VALVE (S.N. -594432)....3160-40
KIT, OUTLET VALVE SECTION
LOADER CONTROL VALVE (S.N. 594433-)....3160-42
KIT, PARKING BRAKE BREATHER....0260-18
KIT, PIN DISCONNECT
(Z-BAR LINKAGE)(S.N. -594432) 3160-112
KIT, PIN DISCONNECT
(Z-BAR LINKAGE)(S.N. 594433-) 3160-114
KIT, PISTON/LINER....0403-2
KIT, REAR PLATFORM....1927-4
KIT, REVERSE FAN DRIVE....0510-8
KIT, STEERING COMPENSATOR VALVE SEAL
(SERIAL NO. 601560 -)....0960-4
KIT, STEERING VALVE SEAL
(SERIAL NO. - 601559)....0960-2
KIT, STEERING VALVE SEAL
(SERIAL NO. 601560 -).... 0960-3A
KIT, TILT CYLINDER BORE
(FOR USE WITH TC) 3165-12
KIT, TILT CYLINDER ROD SEAL
(FOR USE WITH TC) 3165-12
KIT, TIMING GEAR COVER SERVICE....0417-2
KIT, TWO LEVER TO JOYSTICK CONVERSION 3160-80
KIT, TWO LEVER WITH AUX. TO JOYSTICK
WITH AUX. CONVERSION....3160-84
KIT, WATER PUMP SEAL....0417-2
KIT,STEERING CYLINDER REPAIR 0960-10
KITS, AXLE CENTER SERVICE....0210-24
KITS, FUEL FILTER....0420-2
KITS, HI-VIS COUPLER HYDRAULIC HOSES....3163-2
KITS, SERVICE, CENTER, AXLE....0210-24

L

LABEL AND DECALS (CANOPY) 1322-10
LABELS AND DECALS (FRENCH) 1322-6
LABELS AND DECALS (SPANISH)....1322-8
LABELS AND DECALS, CAB 1322-4
LABELS AND TRADEMARKS (ENGLISH)....1322-2
LAMP, HI-BEAM, DRIVE
(SN -603805)....1673-2
LAMP, HI-BEAM, DRIVE
(SN 603806-).... 1673-3A
LAMP, LICENSE PLATE....1673-8
LAMP, STOP 1673-6
LAMP, TAIL....1673-6
LAMP, TURN 1673-6

PAGE

LATCH, BATTERY COVERS DOOR 1913-4
LATCH, DOOR 1810-6
LATCH, ENGINE SIDE SHIELD.... 1910-4
LATCH, HOOD 1910-2
LATCH, REAR FULL COVERAGE FENDER 1927-9A
LATCH,CAB DOOR HOLD-OPEN 1810-2
LICENSE PLATE BRACKET AND LIGHT.... 1673-8
LICENSE PLATE LAMP 1673-8
LICENSE PLATE LIGHT 1673-8
LICENSE PLATE LIGHT 1674-2
LICENSE PLATE LIGHT
(POWERLLEL LINKAGE) (SN -603810) 1674-4
LICENSE PLATE LIGHT
(POWERLLEL LINKAGE) (SN 603811-) 1674-5A
LIFT HOOKS.... 1330-2
LIFT STRAPS, ENGINE.... 0404-7
LIGHT, FRONT
(SN -603805).... 1673-2
LIGHT, FRONT
(SN 603806-) 1673-3A
LIGHT, LICENSE PLATE.... 1673-8
LIGHT, STOP 1673-6
LIGHT, TURN 1673-6
LIGHT, TURN AND MARKER
(SN -603805).... 1673-2
LIGHT, TURN AND MARKER
(SN 603806-) 1673-3A
LINE, AXLE DISCONNECT 0260-16
LINE, DIFFERENTIAL LOCK, FRONT.... 0260-2
LINE, FUEL FILTER 0420-4
LINER, CYLINDER 0403-2
LINES, DIFFERENTIAL LOCK, FRONT AND REAR.... 0260-4
LINES, FOURTH FUNCTION HYDRAULIC
(Z-BAR LINKAGE) (S.N. -594432) 3160-54
LINES, FUEL INJECTION.... 0413-2
LINES, HYDRAULIC, PIN DISCONNECT
(BOOM TO COUPLER)(POWERLLEL LINKAGE) 3160-122
LINES, HYDRAULIC, PIN DISCONNECT
(BOOM TO COUPLER)(Z-BAR LINKAGE) 3160-116
LINES, HYDRAULIC, PIN DISCONNECT
(FOR USE WITH POWERLLEL LINKAGE).... 3160-120
LINES, HYDRAULIC, PIN DISCONNECT
(FOR USE WITH TC) 3160-110
LINES, HYDRAULIC, PIN DISCONNECT
(Z-BAR LINKAGE)(S.N. -594432) 3160-112
LINES, HYDRAULIC, PIN DISCONNECT
(Z-BAR LINKAGE)(S.N. 594433-) 3160-114
LINES, JOYSTICK PILOT CONTROLLER.... 3160-80
LINES, JOYSTICK PILOT CONTROLLER WITH
AUXILARY 3160-84
LINES, MAIN HYDRAULIC 2160-12
LINES, THIRD FUNCTION HYDRAULIC
(Z-BAR LINKAGE) (S.N. -594432) 3160-52
LINES, TRANSMISSION EXTERNAL OIL.... 0360-4
LINES, TURBOCHARGER OIL.... 0416-1
LINES, TWO LEVER PILOT CONTROLLER WITH
AUXILARY 3160-76
LINKAGE COUPLER COUNTERWEIGHT 1520-2
LINKAGE COUPLER, HI-VIS (POWERLLEL) 3104-10
LINKAGE COUPLER, HI-VIS (Z-BAR).... 3104-12
LINKAGE COUPLER, POWERLLEL LINKAGE 3104-8
LINKAGE, BUCKET 3140-16
LINKAGE, BUCKET
(POWERLLEL LINKAGE).... 3140-20
LINKAGE, HIGH LIFT LOADER BOOM.... 3140-16
LINKAGE, LOADER BOOM 3140-16
LINKAGE, POWERLLEL.... 3140-20

ALPHABETICAL INDEX - CONTINUED

PAGE

LINKAGE, STEERING COLUMN....1810-48
LINKAGE, TOOL CARRIER BOOM....3140-18
LINKAGE,ENGINE SPEED CONTROL....0515-2
LOAD CENTER COMPARTMENT....1674-6
LOAD CENTER WIRING HARNESS....1674-6
LOAD SENSE RELIEF VALVE
LOADER CONTROL VALVE (S.N. -594432)....3160-40
LOADER ATTACHMENT COUPLER
(Z-BAR LINKAGE)....3104-6
LOADER ATTACHMENT COUPLER BUCKET....3102-4
LOADER BOOM....3140-8
LOADER BOOM BUSHING....3140-8
LOADER BOOM KICKOUT SENSOR....3166-4
LOADER BOOM KICKOUT SENSOR
(POWERLLEL LINKAGE)....3166-12
LOADER BOOM KICKOUT/RETURN TO CARRY....3166-4
LOADER BOOM KICKOUT/RETURN TO CARRY
(POWERLLEL LINKAGE)....3166-12
LOADER BOOM LINKAGE....3140-16
LOADER BOOM LINKAGE
(POWERLLEL LINKAGE)....3140-20
LOADER BOOM LINKAGE, HIGH LIFT....3140-16
LOADER BOOM PIN....3140-8
LOADER BOOM POWERLLEL LINKAGE....3140-20
LOADER BUCKET (ATTACHMENT COUPLER)....3102-4
LOADER BUCKET (HI-VIS COUPLER)....3102-6
LOADER BUCKET CUTTING EDGE....3102-2
LOADER BUCKET CUTTING EDGE (JAGZ)....3102-12
LOADER BUCKET GUARD....3102-2
LOADER BUCKET PINS....3102-2
LOADER BUCKET TEETH....3102-8
LOADER BUCKETS....3102-2
LOADER CONTROL VALVE (2-SPOOL)
(S.N. -594432)....3160-2
LOADER CONTROL VALVE (2-SPOOL)
(S.N. 594433-)....3160-4
LOADER CONTROL VALVE (2-SPOOL)
TOOL CARRIER....3160-6
LOADER CONTROL VALVE (3-SPOOL)
(S.N. -594432)....3160-8
LOADER CONTROL VALVE (3-SPOOL)
(S.N. 594433-)....3160-10
LOADER CONTROL VALVE (3-SPOOL)
TOOL CARRIER....3160-12
LOADER CONTROL VALVE (4-SPOOL)
(S.N. -594432)....3160-14
LOADER CONTROL VALVE (4-SPOOL)
(S.N. 594433-)....3160-16
LOADER CONTROL VALVE (4-SPOOL)
TOOL CARRIER....3160-18
LOADER CONTROL VALVE STUD ASSEMBLY
(S.N. -594432)....3160-20
LOADER CONTROL VALVE STUD ASSEMBLY
(2-SPOOL) (S.N. 594433-)....3160-4
LOADER CONTROL VALVE STUD ASSEMBLY
(3-SPOOL) (S.N. 594433-)....3160-10
LOADER CONTROL VALVE STUD ASSEMBLY
(4-SPOOL) (S.N. 594433-)....3160-16
LOADER CONTROL VALVE TIE BOLTS
(2-SPOOL) (S.N. 594433-)....3160-4
LOADER CONTROL VALVE TIE BOLTS
(3-SPOOL) (S.N. 594433-)....3160-10
LOADER CONTROL VALVE TIE BOLTS
(4-SPOOL) (S.N. 594433-)....3160-16
LOADER CONTROL VALVE TO BUCKET CYLINDER
HYDRAULICS (POWERLLEL LINKAGE)....3160-60

PAGE

LOADER CONTROL VALVE TO BUCKET CYLINDER
HYDRAULICS(FOR USE WITH TC)....3160-66
LOADER FRAME
(POWERLLEL LINKAGE)....3140-6
LOADER FRAME
(Z-BAR LINKAGE)....3140-2
LOADER FRAME BOOM CYLINDER PIN
(POWERLLEL LINKAGE)....3140-6
LOADER FRAME BOOM CYLINDER PIN
(Z-BAR LINKAGE)....3140-2
LOADER FRAME BUCKET CYLINDER PIN
(POWERLLEL LINKAGE)....3140-6
LOADER FRAME BUCKET CYLINDER PIN
(Z-BAR LINKAGE)....3140-2
LOADER FRAME WIRING HARNESS....1674-2
LOADER FRAME WIRING HARNESS
(POWERLLEL LINKAGE) (SN -603810)....1674-4
LOADER FRAME WIRING HARNESS
(POWERLLEL LINKAGE) (SN 603811-)....1674-5A
LOADER LINKAGE....3140-16
LOADER LINKAGE
(POWERLLEL LINKAGE)....3140-20
LOADER SHANKS....3102-8
LOCK BAR, FRAME....1913-2
LOCK MECHANISM, GUARD FORK....3103-6
LOCK MECHANISM, PALLET FORK (HI-VIS)....3103-4
LOCK, BOOM CYLINDER....3140-24
LOGGER RIM ASSEMBLY (ONE PIECE)....0110-6
LOUVERS, HEATING AND A/C....1810-8
LOUVERS, VENTILATION....1810-8
LOWER STEERING COLUMN....1810-50
LUBRICATION LINES, DIFFERENTIAL SUPPORTS....0242-2

M

MAGNETIC PICK-UP SENSOR, ENGINE....0417-2
MAIN BEARING CAP....0404-2
MAIN BEARINGS....0401-2
MAIN COUNTERWEIGHT....1749-2
MAIN HYDRAULIC LINES....2160-12
MAIN WIRING HARNESS....1674-2
MAIN WIRING HARNESS
(POWERLLEL LINKAGE) (SN -603810)....1674-4
MAIN WIRING HARNESS
(POWERLLEL LINKAGE) (SN 603811-)....1674-5A
MANIFOLD, AIR INTAKE....0414-2
MANIFOLD, EXHAUST....0410-2
MANIFOLD, TRANSMISSION CONTROL VALVE....0350-16
MAT, ANTI-SKID, COUNTERWEIGHT....1749-2
MIRROR, OUTSIDE....1810-38
MIRROR, REAR VIEW, INSIDE....1810-39A
MODULE, HVAC....1830-4
MODULE, HVAC....1830-8
MONITOR CONSULE, CAB....1810-8
MONITOR CONS0LE, CANOPY....1810-10
MONITOR HOUSING....1810-8
MONITOR HOUSING, CANOPY....1810-10
MOTOR AND SWITCH, HEATER....1830-8
MOTOR AND SWITCH, HEATER AND A/C BLOWER....1830-4
MOTOR, REVERSE FAN DRIVE....0510-8
MOTOR, STARTING....0422-2
MOTOR,FAN DRIVE....0510-6
MOUNTING BRACKETS, ALTERNATOR (55 AMP)....1672-2
MOUNTING BRACKETS, ALTERNATOR (80 AMP)....1672-6
MOUNTING BRACKETS, ENGINE....0540-2

ALPHABETICAL INDEX - CONTINUED

PAGE

MOUNTING BRACKETS, HARSH ENVIRONMENT ALT ERNATOR (100 AMP) 1672-10
MOUNTING BRACKETS, TRANSMISSION....0342-2
MOUNTING CAPSCREWS, FRONT AXLE (TOOL CARRIER) 3140-4
MOUNTING, FRONT AXLE (POWERLLEL LINKAGE)....3140-6
MOUNTING, FRONT AXLE (Z-BAR LINKAGE)....3140-2
MOUNTS, CAB (FRONT AND REAR) 1810-22
MUFFLER 0530-2
MUFFLER BRACKET 0530-2

N

NOZZLE, FUEL INJECTION....0413-2

O

O'RINGS, HI-VIS COUPLER HYDRAULIC HOSES....3163-2
OIL COOLER, AXLE (FACTORY INSTALLED AXLE COOLER)....0260-8
OIL COOLER, AXLE (FIELD INSTALLED AXLE COOLER) 0260-12
OIL COOLER, ENGINE 0419-2
OIL COOLER,HYDRAULIC 0510-2
OIL COOLER,HYDRAULIC 0510-3A
OIL COOLER,TRANSMISSION....0510-2
OIL COOLER,TRANSMISSION.... 0510-3A
OIL DIPSTICK, ENGINE....0407-7
OIL DRAIN VALVE, ENGINE 0407-4
OIL FILL, TRANSMISSION....0360-2
OIL FILLER, ENGINE 0407-2
OIL FILTER & BASE, ENGINE 0407-8
OIL FILTER BYPASS VALVE 0407-8
OIL FILTER ELEMENT, TRANSMISSION 0350-2
OIL FILTER HEAD, TRANSMISSION 0350-2
OIL FILTER RESTRICTION INDICATOR SWITCH, TRANSMISSION....0350-16
OIL FILTER, TRANSMISSION....0350-2
OIL LINES, TRANSMISSION EXTERNAL....0360-4
OIL LINES, TRANSMISSION INTERNAL....0350-14
OIL LINES, TRANSMISSION THERMAL BYPASS VALVE 0360-4
OIL PAN, ENGINE 0407-4
OIL PRESSURE REGULATING VALVE, ENGINE....0404-2
OIL PRESSURE SENSOR 1674-14
OIL PUMP, ENGINE....0407-6
OIL PUMP, TRANSMISSION 0350-12
OIL SEAL, ENGINE FRONT....0417-2
OPERATOR STATION FRONT PEDESTAL....1810-12
ORIFICE, PISTON COOLING....0404-2
OSCILLATING DIFFERENTIAL SUPPORT....0242-2
OUTLET SECTION LOADER CONTROL VALVE (S.N. -594432)....3160-40
OUTLET SECTION LOADER CONTROL VALVE (S.N. 594433-)....3160-42
OUTLET SECTION COMPONENTS LOADER CONTROL VALVE (S.N. -594432)....3160-40
OUTLET SECTION COMPONENTS LOADER CONTROL VALVE (S.N. 594433-)....3160-42
OUTLET SECTION SEAL KIT LOADER CONTROL VALVE (S.N. -594432)....3160-40

PAGE

OUTLET SECTION SEAL KIT LOADER CONTROL VALVE (S.N. 594433-) 3160-42
OUTSIDE MIRROR.... 1810-38
OVERHAUL GASKET SET (IN-VEHICLE).... 0452-4
OVERHAUL KIT, ENGINE.... 0403-2
OVERHAUL KIT, ENGINE.... 0452-2
OVERHAUL KIT, ENGINE (750J).... 0450-4

P

PALLET FORK ASSEMBLY 3103-2
PALLET FORK FRAME.... 3103-2
PALLET FORKS.... 3103-2
PALLET FORKS (HI-VIS) 3103-4
PAN, ENGINE OIL.... 0407-4
PARK BRAKE SOLENOID VALVE 1060-4
PARK BRAKE SOLENOID VALVE HYDRAULIC LINES 1060-8
PARKING BRAKE BREATHER EXTENSION KIT.... 0260-18
PARKING BRAKE SWITCH 1674-8
PARKING BRAKE SWITCH 1674-9
PARKING BRAKE/ DRIVELINE BEARING 1060-12
PEDAL, BRAKE 1060-2
PEDAL,ENGINE SPEED CONTROL 0515-2
PEDESTAL, CAB 1810-12
PEDESTAL, CANOPY.... 1810-12
PEDESTAL, OPERATOR STATION FRONT 1810-12
PICK-UP SENSOR, ENGINE MAGNETIC.... 0417-2
PILOT CONTROLLER HANDLE.... 3160-82
PILOT CONTROLLER WITH AUXILARY, JOYSTICK.... 3160-84
PILOT CONTROLLER, DUAL JOYSTICK.... 3160-88
PILOT CONTROLLER, JOYSTICK.... 3160-80
PILOT CONTROLLER, TWO LEVER 3160-72
PILOT CONTROLLER, TWO LEVER WITH AUXILARY.... 3160-76
PILOT LINES, JOYSTICK PILOT CONTROLLER.... 3160-80
PILOT LINES, JOYSTICK PILOT CONTROLLER WITH AUXILARY 3160-84
PILOT LINES, TWO LEVER PILOT CONTROLLER.... 3160-72
PILOT LINES, TWO LEVER PILOT CONTROLLER WITH AUXILARY 3160-76
PIN AND AXLE DISCONNECT VALVE AND HYDRAULIC HOSES (S.N. -594432).... 3160-102
PIN AND AXLE DISCONNECT VALVE AND HYDRAULIC HOSES (S.N. 594433-).... 3160-106
PIN AND AXLE DISCONNECT VALVE COMPONENTS.... 3160-97
PIN DISCONNECT HYDRAULIC HOSES (BOOM TO COUPLER)(POWERLLEL LINKAGE) 3160-122
PIN DISCONNECT HYDRAULIC HOSES (BOOM TO COUPLER)(Z-BAR LINKAGE) 3160-116
PIN DISCONNECT HYDRAULIC LINES (FOR USE WITH POWERLLEL LINKAGE).... 3160-120
PIN DISCONNECT HYDRAULIC LINES (FOR USE WITH TC) 3160-110
PIN DISCONNECT HYDRAULIC LINES (Z-BAR LINKAGE)(S.N. -594432) 3160-112
PIN DISCONNECT HYDRAULIC LINES (Z-BAR LINKAGE)(S.N. 594433-) 3160-114
PIN DISCONNECT KIT (FOR USE WITH POWERLLEL LINKAGE).... 3160-120
PIN DISCONNECT VALVE COMPONENTS.... 3160-97
PIN, BOOM CYLINDER, LOADER FRAME (TOOL CARRIER) 3140-4
PIN, BOOM PIVOT (POWERLLEL LINKAGE).... 3140-6

ALPHABETICAL INDEX - CONTINUED

PAGE

PIN, BOOM PIVOT (Z-BAR LINKAGE) 3140-2
PIN, BOOM PIVOT (TOOL CARRIER) 3140-4
PIN, HI-VIS LINKAGE ATTACHMENT COUPLER (POWERLLEL) 3104-10
PIN, HI-VIS LINKAGE ATTACHMENT COUPLER (Z-BAR) 3104-12
PIN, HITCH 1520-2
PIN, LOADER BOOM 3140-8
PIN, LOADER FRAME BOOM CYLINDER (POWERLLEL LINKAGE) 3140-6
PIN, LOADER FRAME BOOM CYLINDER (Z-BAR LINKAGE) 3140-2
PIN, LOADER FRAME BUCKET CYLINDER (POWERLLEL LINKAGE) 3140-6
PIN, LOADER FRAME BUCKET CYLINDER (Z-BAR LINKAGE) 3140-2
PIN, STEERING CYLINDER (TOOL CARRIER) 3140-4
PIN, TOOL CARRIER FRAME PIVOT 3140-4
PIN,ENGINE FRAME 1740-2
PIN,STEERING CYLINDER (POWERLLEL LINKAGE) 3140-6
PIN,STEERING CYLINDER (Z-BAR LINKAGE) 3140-2
PINION CARRIER, PLANET 0210-22
PINION SHAFT 0210-4
PINION SHAFT 0210-5
PINS, BOOM CYLINDER 3165-2
PINS, BUCKET CYLINDER 3165-2
PINS, LOADER BUCKET 3102-2
PINS, POWERLLEL LINKAGE BOOM CYLINDER 3165-14
PINS, POWERLLEL LINKAGE TILT CYLINDER 3165-14
PINS, TOOL CARRIER BOOM CYLINDER 3165-8
PINS, TOOL CARRIER TILT CYLINDER 3165-8
PIPE, EXHAUST 0530-2
PISTON COOLING ORIFICE 0404-2
PISTON RINGS 0403-2
PISTON/LINER KIT 0403-2
PISTON, ENGINE 0403-2
PIVOT PIN, BOOM (POWERLLEL LINKAGE) 3140-6
PIVOT PIN, BOOM (Z-BAR LINKAGE) 3140-2
PIVOT PIN, BOOM (TOOL CARRIER) 3140-4
PIVOT PIN, LOADER FRAME (POWERLLEL LINKAGE) 3140-6
PIVOT PIN, LOADER FRAME (Z-BAR LINKAGE) 3140-2
PIVOT PIN, TOOL CARRIER FRAME 3140-4
PIVOT PLATE, HI-VIS LINKAGE BUCKET CONVERSION 3104-22
PIVOT PLATE, POWERLLEL LINKAGE BUCKET CONVERSION 3104-20
PLANET PINION CARRIER 0210-22
PLANET PINION GEAR 0210-22
PLANETARY FINAL DRIVE 0210-22
PLASTIC HANDLE, REAR 1910-6
PLATE, CONVERSION BUCKET PIVOT (HI-VIS LINKAGE) 3104-22
PLATE, CONVERSION BUCKET PIVOT (POWERLLEL LINKAGE) 3104-20
PLATE, DUAL JOYSTICK PILOT CONTROLLER 3160-88
PLATE, ENGINE SIDE SHIELD 1910-4
PLATE, FRONT 0404-4
PLATE, JOYSTICK PILOT CONTROLLER 3160-80
PLATE, JOYSTICK PILOT CONTROLLER WITH AUXILARY 3160-84

PAGE

PLATE, TWO LEVER PILOT CONTROLLER 3160-72
PLATE, TWO LEVER PILOT CONTROLLER WITH AUXILARY 3160-76
PLATFORM, ACCESS 1822-2
PLATFORM, REAR 1927-4
PLENUM, ENGINE AIR 1910-4
PLUG, TRANSMISSION DRAIN 0350-8
PLUMBING, AXLE COOLING 0260-10
PLUMBING, AXLE DISCONNECT 0260-16
PLUMBING, RIDE CONTROL (S.N. -594432) 3160-92
PLUMBING, RIDE CONTROL (S.N. 594433-) 3160-94
POTENTIOMETER, RETURN-TO-DIG (FOR USE WI TH POWERLLEL LINKAGE) 3166-10
POWER PLUG AND CONVERTER (10 AMP) (24 VOLT TO 12 VOLT) 1674-13
POWER PLUG AND CONVERTER (5 AMP) (24 VOLT TO 12 VOLT) 1674-12
POWER TAKE-OFF 0350-24
POWER TAKE-OFF SHAFT 0350-24
POWERLLEL LINKAGE 3140-20
POWERLLEL LINKAGE BOOM 3140-12
POWERLLEL LINKAGE BOOM CYLINDER PINS AND FITTINGS 3165-14
POWERLLEL LINKAGE CONVERSION BUCKET PIVOT PLATE 3104-20
POWERLLEL LINKAGE COUPLER 3104-8
POWERLLEL LINKAGE CYLINDER PINS AND FITTINGS 3165-14
PRECLEANER, AIR, KIT 0520-4
PRESSURE REDUCING VALVE, COMPONENTS 2160-10
PRESSURE REGULATOR VALVE FITTINGS 2160-8
PRESSURE REGULATOR VALVE, HYDRAULIC OIL 2160-10
PRV FITTINGS 2160-8
PRV VALVE COMPONENTS 2160-10
PULLEY AND CLUTCH KIT, A/C 1830-12
PULLEY, CRANKSHAFT 0429-2
PULLEY, TENSIONER 0429-1
PULLEY, WATER PUMP 0417-4
PUMP AND MOTOR CIRCULATION, AXLE OIL 0260-6
PUMP, ENGINE OIL 0407-6
PUMP, FUEL INJECTION 0413-2
PUMP, FUEL TRANSFER 0421-2
PUMP, HYDRAULIC, FAN DRIVE 0510-6
PUMP, HYDRAULIC, LOADER 2160-2
PUMP, HYDRAULIC, STEERING 2160-2
PUMP, TRANSMISSION OIL 0350-12
PUMP, WATER 0417-2
PUMP, WINDOW WASHER 1810-24
PUMP,SECONDARY STEERING (SER. NO. - 601559) 0930-2
PUSH PIN ASSEMBLY 3160-82
PUSH ROD, FUEL TRANSFER PUMP 0421-2
PUSH ROD, ROCKER ARM 0402-3

Q

QUICK-DISCONNECT FITTING KIT (FOR USE WITH POWERLLEL LINKAGE) 3160-62

R

RADIATOR 0510-2
RADIATOR 0510-3A

ALPHABETICAL INDEX - CONTINUED

PAGE

RADIATOR CAP....0510-2
RADIATOR CAP.... 0510-3A
RADIATOR HOSE....0510-2
RADIATOR HOSE.... 0510-3A
RADIO (SER. NO. -590067) 2001-6
RADIO (SER.NO. 590068-600740) 2001-7A
RADIO (SERIAL NO.600741-) 2001-7C
RADIO ANTENNA (SER. NO. -590067) 2001-6
RADIO ANTENNA (SER.NO. 590068-600740) 2001-7A
RADIO ANTENNA (SERIAL NO.600741-) 2001-7C
RADIO REMOTE CONTROL
(SER. NO. -590067) 2001-6
RADIO REMOTE CONTROL
(SER.NO. 590068-600740) 2001-7A
RADIO REMOTE CONTROL
(SERIAL NO.600741-) 2001-7C
RADIO SPEAKER
(SER. NO. -590067) 2001-6
RADIO SPEAKER
(SERIAL NO.600741-) 2001-7C
RADIO SPEAKER (SER.NO. 590068-600740) 2001-7A
RAIL, DRIP 1810-17A
REAR AXLE....0210-2
REAR AXLE HOUSING....0210-20
REAR AXLE SHAFT....0210-20
REAR COVER, ALTERNATOR (55 AMP) 1672-4
REAR COVER, ALTERNATOR (80 AMP) 1672-8
REAR DIFFERENTIAL LOCK CASE....0210-8
REAR DIFFERENTIAL LOCK HOUSING....0210-8
REAR DIFFERENTIAL LOCK LINE....0260-4
REAR FENDERS....1927-4
REAR FENDERS
FULL COVERAGE 1927-8
REAR FENDERS (W/LATCH)
FULL COVERAGE 1927-9A
REAR FRAME WIRING HARNESS....1674-2
REAR FRAME WIRING HARNESS
(POWERLLEL LINKAGE) (SN -603810) 1674-4
REAR FRAME WIRING HARNESS
(POWERLLEL LINKAGE) (SN 603811-) 1674-5A
REAR PLASTIC HANDLE 1910-6
REAR PLATFORM....1927-4
REAR SEAL, ENGINE 0401-2
REAR SEAL, ENGINE 0433-2
REAR SPIRAL BEVEL GEAR AND SHAFT 0210-5
REAR STANDARD DIFFERENTIAL CASE 0210-12
REAR STANDARD DIFFERENTIAL HOUSING 0210-12
REAR STEP....1822-6
REAR WINDOW RETAINERS 1810-16
REAR WINDOW, CANOPY 1810-16
REAR WINDSHIELD WIPER....1810-28
RECIEVER-DRIER 1830-14
RECIRCULATION FILTER, HVAC 1830-4
RECIRCULATION FILTER, HVAC 1830-8
REDUCING VALVE, COMPONENTS 2160-10
REGULATING VALVE 3160-82
REGULATOR, VOLTAGE (55 AMP) 1672-2
REGULATOR, VOLTAGE (80 AMP) 1672-6
RELAY, ENGINE AIR HEATER 0505-4
RELAYS, VEC....1674-16
RELIEF VALVE, LOAD SENSE
LOADER CONTROL VALVE (S.N. -594432)....3160-40
RELIEF VALVE, REVERSE FAN DRIVE 0510-10
RELIEF VALVE, VALVE INLET SECTION
LOADER CONTROL VALVE (S.N. -594432)....3160-20
RELIEF VALVE, VALVE INLET SECTION
LOADER CONTROL VALVE (S.N. 594433-)....3160-22

PAGE

RESERVIOR, ABSORBER 1913-6
RESERVOIR, HYDRAULIC OIL 2160-6
REST, RIGHT ARM.... 1821-6
RESTRICTION INDICATOR SENSOR, AIR FILTER 0520-2
RESTRICTION INDICATOR SWITCH,
TRANSMISSION OIL FILTER 0350-16
RESTRICTION SWITCH, HYDRAULIC RETURN 2160-6
RETAINERS, REAR WINDOW 1810-16
RETURN TO CARRY SENSOR (TOOL CARRIER).... 3166-8
RETURN TO CARRY SENSOR, LOADER 3166-4
RETURN TO CARRY SENSOR, LOADER
(POWERLLEL LINKAGE).... 3166-12
RETURN TO DIG HARNESS.... 1674-15
RETURN-TO-DIG ACTUATOR (FOR USE WITH
TOOL CARRIER) 3166-6
RETURN-TO-DIG ACTUATOR (NOT FOR USE WITH
TOOL CARRIER) 3166-2
RETURN-TO-DIG POTENTIOMETER (FOR USE WIT
H POWERLLEL LINKAGE) 3166-10
RETURN-TO-DIG SENSOR (FOR USE WITH
TOOL CARRIER) 3166-6
RETURN-TO-DIG SENSOR (FOR USE WITH POWER
LLEL LINKAGE) 3166-10
RETURN-TO-DIG SENSOR (NOT FOR USE WITH
TOOL CARRIER) 3166-2
REVERSE CLUTCH ASSEMBLY.... 0350-28
REVERSE CLUTCH ASSEMBLY DRIVESHAFT.... 0350-28
REVERSE CLUTCH ASSEMBLY DRUM.... 0350-28
REVERSE FAN DRIVE HYDRAULIC HOSES 0510-8
REVERSE FAN DRIVE KIT.... 0510-8
REVERSE FAN DRIVE RELIEF VALVE.... 0510-10
REVERSE FAN DRIVE SOLENOID VALVE.... 0510-10
RIDE CONTROL AND HYDRAULIC HOSES
(S.N. -594432) 3160-92
RIDE CONTROL AND HYDRAULIC HOSES
(S.N. 594433-) 3160-94
RIDE CONTROL SOLENOID VALVE.... 3160-96
RIDE CONTROL VALVE 3160-96
RIM, WHEEL (FIVE PIECE)
(25 X 19.5).... 0110-4
RIM, WHEEL (THREE PIECE)
(25 X 17).... 0110-2
RIM, WHEEL, LOGGER (ONE PIECE) 0110-6
RING GEAR.... 0210-4
RING GEAR.... 0210-5
RINGS, PISTON.... 0403-2
ROCK GUARD, CYLINDER-FITTING.... 1746-6
ROCKER ARM COVER 0402-2
ROCKER ARM SHAFT 0402-3
ROCKER ARMS 0402-3
ROD SEAL KIT, BOOM CYLINDER.... 3165-4
ROD SEAL KIT, BOOM CYLINDER
(FOR USE WITH POWERLLEL LINKAGE).... 3165-16
ROD SEAL KIT, BOOM CYLINDER
(FOR USE WITH TC) 3165-10
ROD SEAL KIT, BUCKET CYLINDER 3165-6
ROD SEAL KIT, BUCKET CYLINDER
(FOR USE WITH POWERLLEL LINKAGE).... 3165-18
ROD SEAL KIT, COUPLER CYLINDER
(POWERLLEL AND Z-BAR LINKAGE) 3104-14
ROD SEAL KIT, COUPLER CYLINDER
(POWERLLEL AND Z-BAR LINKAGE) 3104-16
ROD SEAL KIT, HI-VIS COUPLER CYLINDER
(POWERLLEL AND Z-BAR LINKAGE) 3104-18
ROD SEAL KIT, TILT CYLINDER
(FOR USE WITH TC) 3165-12
ROD, BOOM CYLINDER 3165-4

ALPHABETICAL INDEX - CONTINUED

PAGE

ROD, BOOM CYLINDER (FOR USE WITH POWERLLEL LINKAGE) 3165-16
ROD, BOOM CYLINDER (FOR USE WITH TC) 3165-10
ROD, BUCKET CYLINDER....3165-6
ROD, BUCKET CYLINDER (FOR USE WITH POWERLLEL LINKAGE) 3165-18
ROD, CONNECTING 0403-2
ROD, PUSH 0402-3
ROD, TILT CYLINDER (FOR USE WITH TC) 3165-12
ROOF PLASTIC....1810-34
ROPS....1810-2
ROPS, CANOPY....1810-16
ROTATOR, ENGINE VALVE....0409-2

S

SEAL KIT, ATTACHMENT COUPLER CYLINDER (POWERLLEL AND Z-BAR LINKAGE) 3104-14
SEAL KIT, ATTACHMENT COUPLER CYLINDER (POWERLLEL AND Z-BAR LINKAGE) 3104-16
SEAL KIT, ATTACHMENT HI-VIS COUPLER CYLINDER (POWERLLEL AND Z-BAR LINKAGE)....3104-18
SEAL KIT, OUTLET VALVE SECTION LOADER CONTROL VALVE (S.N. -594432)....3160-40
SEAL KIT, OUTLET VALVE SECTION LOADER CONTROL VALVE (S.N. 594433-)....3160-42
SEAL, CRANKSHAFT 0401-2
SEAL, CRANKSHAFT REAR 0433-2
SEAL, ENGINE FRONT OIL....0417-2
SEAL, WATER PUMP 0417-2
SEALED SWITCH MODULE 1674-6
SEALS, HI-VIS COUPLER HYDRAULIC HOSES 3163-2
SEAT BASE 1810-18
SEAT BASE 1810-20
SEAT BRACKETS....1821-2
SEAT CUSHION 1821-2
SEAT DECK....1810-18
SEAT DECK....1810-20
SEAT SUSPENSION 1821-2
SEAT SUSPENSION (AIR SUSPENSION) 1821-4
SEAT, RIGHT ARM REST....1821-6
SEAT, SUSPENSION (AIR SUSPENSION) 1821-4
SECONDARY STEERING (SER. NO. - 601559) 0930-2
SECONDARY STEERING PUMP (SER. NO. - 601559) 0930-2
SECONDARY STEERING SWITCH (SER. NO. - 601559) 0930-2
SECONDARY STEERING WIRE HARNESS (SER. NO. - 601559) 0930-2
SECTION, AUXILIARY LOADER CONTROL VALVE (S.N. -594432)....3160-36
SECTION, AUXILIARY LOADER CONTROL VALVE (S.N. 594433-)....3160-38
SECTION, VALVE, BOOM LOADER CONTROL VALVE (S.N. -594432)....3160-32
SECTION, VALVE, BOOM LOADER CONTROL VALVE (S.N. 594433-)....3160-34
SECTION, VALVE, BUCKET LOADER CONTROL VALVE (S.N. -594432)....3160-28
SECTION, VALVE, BUCKET LOADER CONTROL VALVE (S.N. 594433-)....3160-30

PAGE

SECTION, VALVE, FIFTH (SER. NO. - XXXXXX)....3160-44
SECTION, VALVE, FIFTH (SER. NO. XXXXXX -)....3160-46
SECTION, VALVE, INLET, WITH RELIEF VALVE LOADER CONTROL VALVE (S.N. -594432)....3160-20
SECTION, VALVE, INLET, WITH RELIEF VALVE LOADER CONTROL VALVE (S.N. 594433-)....3160-22
SEDIMENT BOWL, FUEL FILTER....0420-2
SENDER, FUEL TANK....0560-2
SENSOR, AIR FILTER RESTRICTION INDICATOR 0520-2
SENSOR, AIR TEMPERATURE 0578-1
SENSOR, BOOM KICKOUT (TOOL CARRIER)....3166-8
SENSOR, ENGINE COOLANT TEMPERATURE 1674-14
SENSOR, ENGINE HEAD TEMPERATURE 0578-1
SENSOR, ENGINE MAGNETIC PICK-UP....0417-2
SENSOR, ENGINE OIL PRESSURE....1674-14
SENSOR, ENGINE SPEED....0578-1
SENSOR, ENGINE WATER TEMPERATURE 0578-1
SENSOR, LOADER BOOM KICKOUT 3166-4
SENSOR, LOADER BOOM KICKOUT (POWERLLEL LINKAGE)....3166-12
SENSOR, RETURN TO CARRY (TOOL CARRIER)....3166-8
SENSOR, RETURN TO CARRY, LOADER....3166-4
SENSOR, RETURN TO CARRY, LOADER (POWERLLEL LINKAGE)....3166-12
SENSOR, RETURN-TO-DIG (FOR USE WITH TOOL CARRIER) 3166-6
SENSOR, RETURN-TO-DIG (FOR USE WITH POWE RLLEL LINKAGE)....3166-10
SENSOR, RETURN-TO-DIG (NOT FOR USE WITH TOOL CARRIER) 3166-2
SENSOR, TACHOMETER 0417-2
SENSOR, TACHOMETER DRIVE 0578-1
SENSOR, TRANSMISSION SPEED 0350-10
SENSOR, TRANSMISSION TEMPERATURE....0350-18
SENSOR,ENGINE SPEED CONTROL....0515-2
SENSOR,HYDRAULIC OIL TEMPERATURE....2160-6
SERVICE DOOR, ABSORBER....1913-6
SERVICE DOOR, ENGINE 1910-4
SERVICE KITS, CENTER, AXLE....0210-24
SHAFT AND SPIRAL BEVEL GEAR, FRONT....0210-4
SHAFT AND SPIRAL BEVEL GEAR, REAR 0210-5
SHAFT AXLE DIFFERENTIALS 0325-2
SHAFT YOKE, OUTPUT, GEARBOX HOUSING....0350-20
SHAFT, ENGINE DRIVE....0325-2
SHAFT, FINAL DRIVE....0210-22
SHAFT, FRONT AXLE 0210-18
SHAFT, IDLER GEAR 0404-4
SHAFT, OUTPUT, GEARBOX HOUSING 0350-20
SHAFT, PINION 0210-4
SHAFT, PINION 0210-5
SHAFT, REAR AXLE....0210-20
SHAFT, ROCKER ARM....0402-3
SHAFT, TRANSMISSION DRIVE 0325-2
SHAFT, TRANSMISSION INPUT....0350-6
SHAFT,POWER TAKE-OFF....0350-24
SHAFT,TORQUE CONVERTER....0350-4
SHANKS, LOADER....3102-8
SHIELDS, CAB 1810-32
SHIELDS, TRANSMISSION....1913-3
SHIFTER ASSEMBLY....1674-8
SHIFTER ASSEMBLY TO JOYSTICK FNR CONVERSION KIT....3160-86
SHORT BLOCK, ENGINE....0450-2
SIDE COUNTERWEIGHT....1749-2
SIDE SHIELD STRIKER BAR....1910-6

ALPHABETICAL INDEX - CONTINUED

PAGE

SIDE SHIELDS, COOLING....1910-6
SIDE SHIELDS, ENGINE....1910-4
SIGHT GAUGE, TRANSMISSION....0360-2
SINGLE AND DUAL AUXILIARY CONTROLLER COMPONENTS....3160-78
SLOW MOVING VEHICLE EMBLEM....1810-37
SMV EMBLEM....1810-37
SOLENOID ASSEMBLY....3160-82
SOLENOID VALVE, PARK BRAKE....1060-4
SOLENOID VALVE, REVERSE FAN DRIVE....0510-10
SOLENOID VALVE, RIDE CONTROL....3160-96
SOLENOID, STARTING MOTOR....0422-2
SOLENOID, TWO LEVER PILOT CONTROLLER....3160-74
SOUND ABSORBTION....1913-6
SOUND, ABSORBER....1913-6
SPACER, WHEEL....0110-8
SPACERS, HI-VIS LINKAGE ATTACHMENT COUPLER (POWERLLEL)....3104-10
SPACERS, HI-VIS LINKAGE ATTACHMENT COUPLER (Z-BAR)....3104-12
SPANISH LABELS AND DECALS....1322-8
SPEAKER, RADIO (SER. NO. -590067)....2001-6
SPEAKER, RADIO (SERIAL NO.600741-)....2001-7C
SPEAKER, RADIO (SER.NO. 590068-600740)....2001-7A
SPILL GUARD, BUCKET....3102-2
SPIRAL BEVEL GEAR AND SHAFT, FRONT....0210-4
SPIRAL BEVEL GEAR AND SHAFT, REAR....0210-5
SPLIT WHEEL RIM ASSEMBLY (FIVE PIECE) (25 X 19.5)....0110-4
SPLIT WHEEL RIM ASSEMBLY (THREE PIECE) (25 X 17)....0110-2
SPRING, ENGINE VALVE....0409-2
STANDARD DIFFERENTIAL....0210-16
STARING AID, COLD WEATHER....0505-2
STARTER IGNITION SWITCH (CAB)....1674-6
STARTING AID FLUID....0505-2
STARTING AID, ETHER....0505-2
STARTING MOTOR....0422-2
STATOR KIT, A/C....1830-12
STEERING COLUMN....1810-48
STEERING COLUMN CLAMP AND COVER....1674-9
STEERING COLUMN COVER....1810-52
STEERING COLUMN LINKAGE....1810-48
STEERING COLUMN, LOWER....1810-50
STEERING COMPENSATOR VALVE (SERIAL NO. 601560 -)....0960-4
STEERING COMPENSATOR VALVE FITTINGS (SERIAL NO. 601560 -)....0960-4
STEERING COMPENSATOR VALVE SEAL KIT (SERIAL NO. 601560 -)....0960-4
STEERING CUSHIONS....1740-4
STEERING CYLINDER....0960-10
STEERING CYLINDER FITTINGS....0960-8
STEERING CYLINDER HYDRAULIC HOSE (SERIAL NO. - 601559)....0960-6
STEERING CYLINDER HYDRAULIC HOSE (SERIAL NO. 601560 -)....0960-7A
STEERING CYLINDER PIN (POWERLLEL LINKAGE)....3140-6
STEERING CYLINDER PIN (Z-BAR LINKAGE)....3140-2
STEERING CYLINDER PIN (TOOL CARRIER)....3140-4
STEERING CYLINDER REPAIR KIT....0960-10
STEERING HOSES (SERIAL NO. - 601559)....0960-6

PAGE

STEERING HOSES (SERIAL NO. 601560 -)....0960-7A
STEERING VALVE (SERIAL NO. - 601559)....0960-2
STEERING VALVE (SERIAL NO. 601560 -)....0960-3A
STEERING VALVE BRACKET....1810-50
STEERING VALVE FITTINGS (SERIAL NO. - 601559)....0960-2
STEERING VALVE FITTINGS (SERIAL NO. 601560 -)....0960-3A
STEERING VALVE SEAL KIT (SERIAL NO. - 601559)....0960-2
STEERING VALVE SEAL KIT (SERIAL NO. 601560 -)....0960-3A
STEERING WHEEL....1810-48
STEERING, SECONDARY (SER. NO. - 601559)....0930-2
STEP, ENGINE COMPARTMENT....1822-6
STEP, REAR....1822-6
STEPS....1822-2
STEPS,CLOSE MOUNTED....1822-4
STOP LAMP....1673-6
STOP LIGHT....1673-6
STOP, AXLE (12 DEGREE)....0242-6
STOP, AXLE (6 DEGREE)....0242-4
STRAP, ENGINE LIFT....0404-7
STRIKER BAR, SIDE SHIELD....1910-6
STUD ASSEMBLY, LOADER CONTROL VALVE (S.N. -594432)....3160-20
STUD ASSEMBLY, LOADER CONTROL VALVE (2-SPOOL) (S.N. 594433-)....3160-4
STUD ASSEMBLY, LOADER CONTROL VALVE (3-SPOOL) (S.N. 594433-)....3160-10
STUD ASSEMBLY, LOADER CONTROL VALVE (4-SPOOL) (S.N. 594433-)....3160-16
SUN VISOR....1810-47
SUPPORTS, DIFFERERNTIAL....0242-2
SURGE TANK....0510-2
SURGE TANK....0510-3A
SUSPENSION SEAT (AIR SUSPENSION)....1821-4
SUSPENSION, SEAT....1821-2
SWITCH COVER CONSOLE....1810-54
SWITCH INTERFACE, CONTROL PANEL....1674-6
SWITCH PARKING BRAKE....1674-8
SWITCH WIPER....1810-30
SWITCH, A/C AND HEATER BLOWER....1674-11
SWITCH, A/C AND HEATER THERMOSTAT....1830-4
SWITCH, BATTERY DISCONNECT....1671-2
SWITCH, BRAKE VALVE....1060-2
SWITCH, DIFFERENTIAL LOCK....0260-19
SWITCH, DOMELIGHT, DOOR ACTIVATED....1673-5
SWITCH, HEATER AND A/C BLOWER MOTOR....1830-4
SWITCH, HEATER BLOWER MOTOR....1830-8
SWITCH, HEATER THERMOSTAT....1830-8
SWITCH, HORN....1810-48
SWITCH, IGNITION....1674-6
SWITCH, KICKDOWN, TWO LEVER PILOT CONTROLLER....3160-74
SWITCH, PARKING BRAKE....1674-9
SWITCH, SECONDARY STEERING (SER. NO. - 601559)....0930-2
SWITCH, TRANSMISSION OIL FILTER RESTRICTION INDICATOR....0350-16
SWITCH,COLD WEATHER STARTING AID....0505-2
SYSTEM, FUEL INJECTION....0413-2

ALPHABETICAL INDEX - CONTINUED

PAGE

T

TACHOMETER DRIVE SENSOR 0578-1
TACHOMETER SENSOR 0417-2
TANK, FUEL....0560-2
TANK, WINDOW WASHER....1810-24
TANK,COOLANT RECOVERY....0510-2
TANK,COOLANT RECOVERY.... 0510-3A
TEETH, LOADER BUCKET....3102-8
TEMPERATURE CONTROL....1830-2
TEMPERATURE CONTROL....1830-6
TEMPERATURE SENSOR, ENGINE HEAD 0578-1
TEMPERATURE SENSOR, HYDRAULIC OIL....2160-6
TEMPERATURE SENSOR, TRANSMISSION....0350-18
TENSIONER PULLEY 0429-1
TENSIONER, BELT (55 AMP) 1672-2
TENSIONER, BELT (80 AMP) 1672-6
TENSIONER, BELT, HARSH ENVIRONMENT ALTER NATOR (100 AMP) 1672-10
TENSIONER, DRIVE BELT 0429-1
THERMAL BYPASS VALVE LINES, TRANSMISSION 0360-4
THERMAL BYPASS VALVE, TRANSMISSION....0360-4
THERMOSTAT 0418-2
THERMOSTAT COVER....0418-2
THERMOSTAT COVER TUBE....0418-2
THERMOSTAT, A/C AND HEATER SWITCH....1830-4
THERMOSTAT, HEATER SWITCH 1830-8
THIRD FUNCTION AUXILIARY HYDRAULICS (FOR USE WITH POWERLLEL LINKAGE) 3160-62
THIRD FUNCTION AUXILIARY HYDRAULICS (FOR USE WITH TC) 3160-68
THIRD FUNCTION AUXILIARY HYDRAULICS (POWERLLEL LINKAGE) (BOOM TO COUPLER) 3163-6
THIRD FUNCTION AUXILIARY HYDRAULICS (Z-BAR LINKAGE) (S.N. -594432) 3160-52
THIRD FUNCTION AUXILIARY HYDRAULICS (Z-BAR LINKAGE) (S.N. 594433-) 3160-56
THIRD FUNCTION AUXILIARY HYDRAULICS (Z-BAR LINKAGE) (BOOM TO COUPLER)....3163-4
THIRD FUNCTION BOOM TO COUPLER PLUMING (Z-BAR LINKAGE) 3163-4
THIRD FUNCTION BOOM TO COUPLER PLUMBING (POWERLLEL LINKAGE)....3163-6
THREE SPOOL CONTROL VALVE (S.N. -594432)....3160-8
THREE SPOOL CONTROL VALVE, LOADER (S.N. 594433-)....3160-10
THREE SPOOL CONTROL VALVE, LOADER TOOL CARRIER....3160-12
THREE SPOOL LOADER CONTROL VALVE (S.N. -594432)....3160-8
THREE SPOOL LOADER CONTROL VALVE (S.N. 594433-)....3160-10
THREE SPOOL LOADER CONTROL VALVE, TOOL CARRIER....3160-12
THREE SPOOL TOOL CARRIER CONTROL VALVE 3160-12
THREE SPOOL VALVE, LOADER CONTROL (S.N. 594433-)....3160-10
THREE SPOOL VALVE, LOADER CONTROL TOOL CARRIER....3160-12
TIE BOLTS, LOADER CONTROL VALVE (2-SPOOL) (S.N. 594433-)....3160-4
TIE BOLTS, LOADER CONTROL VALVE (3-SPOOL) (S.N. 594433-)....3160-10
TIE BOLTS, LOADER CONTROL VALVE (4-SPOOL) (S.N. 594433-)....3160-16

PAGE

TILT CYLINDER (FOR USE WITH TC) 3165-12
TILT CYLINDER PINS AND FITTINGS, POWERLLEL LINKAGE 3165-14
TILT CYLINDER PINS AND FITTINGS, TOOL CARRIER.... 3165-8
TIMING GEAR COVER.... 0417-2
TIRE VALVE STEM (FIVE PIECE) (25 X 19.5).... 0110-4
TIRE VALVE STEM (THREE PIECE) (25 X 17).... 0110-2
TOOL CARRIER ATTACHMENT COUPLER 3104-2
TOOL CARRIER ATTACHMENT COUPLER CYLINDER 3104-4
TOOL CARRIER BOOM 3140-10
TOOL CARRIER BOOM CYLINDER PINS AND FITTINGS 3165-8
TOOL CARRIER BOOM LINKAGE.... 3140-18
TOOL CARRIER FOUR SPOOL CONTROL VALVE 3160-18
TOOL CARRIER FRAME.... 3140-4
TOOL CARRIER FRAME PIVOT PIN 3140-4
TOOL CARRIER LINKAGE.... 3140-18
TOOL CARRIER THREE SPOOL CONTROL VALVE 3160-12
TOOL CARRIER TILT CYLINDER PINS AND FITTINGS 3165-8
TOOL CARRIER TWO SPOOL CONTROL VALVE 3160-6
TORQUE CONVERTER.... 0350-4
TORQUE CONVERTER DRIVE SHAFT.... 0350-4
TORQUE CONVERTER HOUSING.... 0350-4
TORQUE CONVERTER HOUSING COVER 0350-4
TRADEMARKS AND LABELS (ENGLISH).... 1322-2
TRANS. COVER, ABSORBER 1913-6
TRANSFER PUMP, FUEL.... 0421-2
TRANSMISSION.... 0350-2
TRANSMISSION BOTTOM GUARD.... 1746-4
TRANSMISSION CONTROL UNIT.... 1674-6
TRANSMISSION CONTROL VALVE 0350-18
TRANSMISSION CONTROL VALVE MANIFOLD.... 0350-16
TRANSMISSION COVER 0350-13
TRANSMISSION DRAIN PLUG.... 0350-8
TRANSMISSION DRIVE SHAFTS.... 0325-2
TRANSMISSION EXTERNAL OIL LINES.... 0360-4
TRANSMISSION FITTINGS 0350-2
TRANSMISSION GASKET 0350-13
TRANSMISSION GUARDS.... 1913-3
TRANSMISSION HOUSING 0350-8
TRANSMISSION HOUSING COVER 0350-8
TRANSMISSION INPUT GEAR.... 0350-6
TRANSMISSION INPUT SHAFT 0350-6
TRANSMISSION INTERNAL OIL LINES.... 0350-14
TRANSMISSION LINES, THERMAL BYPASS VALVE 0360-4
TRANSMISSION MOUNTING BRACKETS.... 0342-2
TRANSMISSION OIL COOLER.... 0510-2
TRANSMISSION OIL COOLER.... 0510-3A
TRANSMISSION OIL FILL.... 0360-2
TRANSMISSION OIL FILTER 0350-2
TRANSMISSION OIL FILTER ELEMENT 0350-2
TRANSMISSION OIL FILTER HEAD 0350-2
TRANSMISSION OIL FILTER RESTRICTION INDICATOR SWITCH 0350-16
TRANSMISSION OIL LINES,INTERNAL.... 0350-14
TRANSMISSION OIL PUMP.... 0350-12
TRANSMISSION SHIELDS 1913-3
TRANSMISSION SIGHT GAUGE 0360-2
TRANSMISSION SPEED SENSOR 0350-10
TRANSMISSION TEMPERATURE SENSOR.... 0350-18
TRANSMISSION THERMAL BYPASS VALVE.... 0360-4
TRANSMISSION WIRING HARNESS 1674-2

ALPHABETICAL INDEX - CONTINUED

PAGE

TRANSMISSION WIRING HARNESS (POWERLLEL LINKAGE) (SN -603810) 1674-4
TRANSMISSION WIRING HARNESS (POWERLLEL LINKAGE) (SN 603811-) 1674-5A
TRAY, ASH....1810-41
TUBE, THERMOSTAT COVER....0418-2
TURBOCHARGER AND OIL LINES....0416-1
TURBOCHARGER OIL LINE BRACKET....0530-2
TURN AND MARKER LIGHT (SN -603805)....1673-2
TURN AND MARKER LIGHT (SN 603806-) 1673-3A
TURN LAMP 1673-6
TURN LIGHT 1673-6
TWO LEVER PILOT CONTROLLER 3160-72
TWO LEVER PILOT CONTROLLER 3160-74
TWO LEVER PILOT CONTROLLER BOOT 3160-74
TWO LEVER PILOT CONTROLLER COMPONENTS 3160-74
TWO LEVER PILOT CONTROLLER SOLENOID....3160-74
TWO LEVER PILOT CONTROLLER WITH AUXILARY....3160-76
TWO LEVER TO JOYSTICK CONVERSION KIT 3160-80
TWO LEVER WITH AUX. TO JOYSTICK WITH AUX. CONVERSION KIT 3160-84
TWO SPOOL CONTROL VALVE, LOADER (S.N. -594432)....3160-2
TWO SPOOL CONTROL VALVE, LOADER (S.N. 594433-)....3160-4
TWO SPOOL CONTROL VALVE, LOADER TOOL CARRIER....3160-6
TWO SPOOL LOADER CONTROL VALVE (S.N. -594432)....3160-2
TWO SPOOL LOADER CONTROL VALVE (S.N. 594433-)....3160-4
TWO SPOOL LOADER CONTROL VALVE, TOOL CARRIER....3160-6
TWO SPOOL TOOL CARRIER CONTROL VALVE 3160-6
TWO SPOOL VALVE, LOADER CONTROL (S.N. -594432)....3160-2
TWO SPOOL VALVE, LOADER CONTROL (S.N. 594433-)....3160-4
TWO SPOOL VALVE, LOADER CONTROL TOOL CARRIER....3160-6

U

U-JOINT ASSEMBLY 3160-82
UPPER ALTERNATOR BRACKET....0423-2

V

VALVE COMPONENTS, AUXILIARY SECTION LOADER CONTROL VALVE (S.N. -594432)....3160-36
VALVE COMPONENTS, AUXILIARY SECTION LOADER CONTROL VALVE (S.N. 594433-)....3160-38
VALVE COMPONENTS, PIN DISCONNECT....3160-97
VALVE COMPONENTS,PIN AND AXLE DISCONNECT....3160-97
VALVE COVER, ENGINE....0402-2
VALVE LINES, TRANSMISSION THERMAL BYPASS 0360-4
VALVE MANIFOLD, TRANSMISSION CONTROL....0350-16
VALVE SECTION, BUCKET LOADER CONTROL VALVE (S.N. -594432)....3160-28
VALVE SECTION, BUCKET LOADER CONTROL VALVE (S.N. 594433-)....3160-30
VALVE STEM, TIRE (FIVE PIECE) (25 X 19.5)....0110-4

PAGE

VALVE STEM, TIRE (THREE PIECE) (25 X 17)....0110-2
VALVE, AUXILIARY LOADER CONTROL VALVE (S.N. -594432)....3160-36
VALVE, AUXILIARY LOADER CONTROL VALVE (S.N. 594433-)....3160-38
VALVE, BOOM SECTION LOADER CONTROL VALVE (S.N. -594432)....3160-32
VALVE, BOOM SECTION LOADER CONTROL VALVE (S.N. 594433-)....3160-34
VALVE, BRAKE 1060-2
VALVE, BRAKE, HYDRAULICS 1060-10
VALVE, BUCKET SECTION LOADER CONTROL VALVE (S.N. -594432)....3160-28
VALVE, BUCKET SECTION LOADER CONTROL VALVE (S.N. 594433-)....3160-30
VALVE, ENGINE OIL BYPASS....0404-2
VALVE, ENGINE OIL DRAIN....0407-4
VALVE, ENGINE OIL PRESSURE REGULATING....0404-2
VALVE, EXHAUST 0409-2
VALVE, FIFTH FUNCTION (SER. NO. - XXXXXX)....3160-44
VALVE, FIFTH FUNCTION (SER. NO. XXXXXX -)....3160-46
VALVE, INLET SECTION WITH RELIEF VALVE LOADER CONTROL VALVE (S.N. -594432)....3160-20
VALVE, INLET SECTION WITH RELIEF VALVE LOADER CONTROL VALVE (S.N. 594433-)....3160-22
VALVE, INTAKE....0409-2
VALVE, LOADER CONTROL (2-SPOOL) (S.N. -594432)....3160-2
VALVE, LOADER CONTROL (2-SPOOL) (S.N. 594433-)....3160-4
VALVE, LOADER CONTROL (2-SPOOL) TOOL CARRIER....3160-6
VALVE, LOADER CONTROL (3-SPOOL) (S.N. -594432)....3160-8
VALVE, LOADER CONTROL (3-SPOOL) (S.N. 594433-)....3160-10
VALVE, LOADER CONTROL (3-SPOOL) TOOL CARRIER....3160-12
VALVE, LOADER CONTROL (4-SPOOL) (S.N. -594432)....3160-14
VALVE, LOADER CONTROL (4-SPOOL) (S.N. 594433-)....3160-16
VALVE, LOADER CONTROL (4-SPOOL) TOOL CARRIER....3160-18
VALVE, OIL FILTER BYPASS....0407-8
VALVE, PIN AND AXLE DISCONNECT....3160-97
VALVE, PRESSURE REGULATOR FITTINGS 2160-8
VALVE, REGULATING 3160-82
VALVE, REVERSE FAN DRIVE, RELIEF....0510-10
VALVE, REVERSE FAN DRIVE, SOLENOID....0510-10
VALVE, RIDE CONTROL 3160-96
VALVE, SOLENOID, PARK BRAKE 1060-4
VALVE, STEERING (SERIAL NO. - 601559)....0960-2
VALVE, STEERING (SERIAL NO. 601560 -)....0960-3A
VALVE, STEERING COMPENSATOR (SERIAL NO. 601560 -)....0960-4
VALVE, STEERING COMPENSATOR, KIT (SERIAL NO. 601560 -)....0960-4
VALVE, STEERING, BRACKET 1810-50
VALVE, STEERING, KIT (SERIAL NO. - 601559)....0960-2

ALPHABETICAL INDEX - CONTINUED

PAGE

VALVE, STEERING, KIT
(SERIAL NO. 601560 -) 0960-3A
VALVE, TRANSMISSION THERMAL BYPASS 0360-4
VALVE,CONVERTER RELIEF 0350-22
VALVES, ENVIRONMENTAL DRAIN 1369-2
VANDAL COVER 1810-20
VEHICLE ELECTRICAL CENTER 1674-16
VENTILATING SYSTEM, ENGINE 0408-1
VENTILATION, LOUVERS 1810-8
VISOR, SUN 1810-47
VOLTAGE REGULATOR (55 AMP) 1672-2
VOLTAGE REGULATOR (80 AMP) 1672-6

W

WATER PUMP 0417-2
WATER PUMP INLET 0417-4
WATER PUMP PULLEY 0417-4
WATER TEMPERATURE SENSOR 0578-1
WEAR PLATES, AUXILIARY 3102-10
WHEEL RIM ASSSEMBLY (FIVE PIECE)
(25 X 19.5) 0110-4
WHEEL RIM ASSSEMBLY (THREE PIECE)
(25 X 17) 0110-2
WHEEL RIM, LOGGER (ONE PIECE) 0110-6
WHEEL SPACER 0110-8
WHEEL, ENGINE SPEED SENSOR 0401-2
WHEEL, STEERING 1810-48
WINDOW WASHER CAP 1810-24
WINDOW WASHER PUMP 1810-24
WINDOW WASHER TANK 1810-24
WINDOW WASHER, FRONT AND REAR 1810-24
WINDOW, CANOPY REAR 1810-16
WINDOWS 1810-4
WINDSHIELD WIPER
(FRONT) 1810-26
WINDSHIELD WIPER, REAR 1810-28
WIPER ARM
(FRONT) 1810-26
WIPER BLADE 1810-28
WIPER BLADE
(FRONT) 1810-26
WIPER MOUNTING BRACKETS 1810-30
WIPER SWITCH 1810-30
WIRE HARNESS, ENGINE AIR HEATER 0505-4
WIRE HARNESS,SECONDARY STEERING
(SER. NO. - 601559) 0930-2
WIRING HARNESS, CAB 1674-6
WIRING HARNESS, ENGINE 1674-2
WIRING HARNESS, ENGINE
(POWERLLEL LINKAGE) (SN -603810) 1674-4
WIRING HARNESS, ENGINE
(POWERLLEL LINKAGE) (SN 603811-) 1674-5A
WIRING HARNESS, ENGINE FRAME 1674-2
WIRING HARNESS, ENGINE FRAME
(POWERLLEL LINKAGE) (SN -603810) 1674-4
WIRING HARNESS, ENGINE FRAME
(POWERLLEL LINKAGE) (SN 603811-) 1674-5A
WIRING HARNESS, FRONT CONSOLE 1674-8
WIRING HARNESS, FRONT CONSOLE 1674-9
WIRING HARNESS, LOAD CENTER 1674-6
WIRING HARNESS, LOADER FRAME 1674-2
WIRING HARNESS, LOADER FRAME
(POWERLLEL LINKAGE) (SN -603810) 1674-4
WIRING HARNESS, LOADER FRAME
(POWERLLEL LINKAGE) (SN 603811-) 1674-5A

PAGE

WIRING HARNESS, MAIN 1674-2
WIRING HARNESS, MAIN
(POWERLLEL LINKAGE) (SN -603810) 1674-4
WIRING HARNESS, MAIN
(POWERLLEL LINKAGE) (SN 603811-) 1674-5A
WIRING HARNESS, REAR FRAME 1674-2
WIRING HARNESS, REAR FRAME
(POWERLLEL LINKAGE) (SN -603810) 1674-4
WIRING HARNESS, REAR FRAME
(POWERLLEL LINKAGE) (SN 603811-) 1674-5A
WIRING HARNESS, TRANSMISSION 1674-2
WIRING HARNESS, TRANSMISSION
(POWERLLEL LINKAGE) (SN -603810) 1674-4
WIRING HARNESS, TRANSMISSION
(POWERLLEL LINKAGE) (SN 603811-) 1674-5A
WIRING, A/C AND HEATER BLOWER 1674-11
WIRING, FRONT DASH MODULE 1674-8
WIRING, HVAC 1674-11
WORK LAMP, FRONT AND REAR 1673-4
WRIST ARM REST, RIGHT 1821-6

Y

YOKE, GEARBOX HOUSING OUTPUT SHAFT 0350-20
YOKE, INPUT 0210-3
YOKE, INPUT 0210-26
YOKE, INPUT DRIVE 0350-4

Z

Z-BAR LINKAGE ATTACHMENT COUPLER 3104-6

WHEEL (25 X 17)
ROUE (25 X 17)
RUEDA (25 X 17)

T193567 -UN-18AUG03

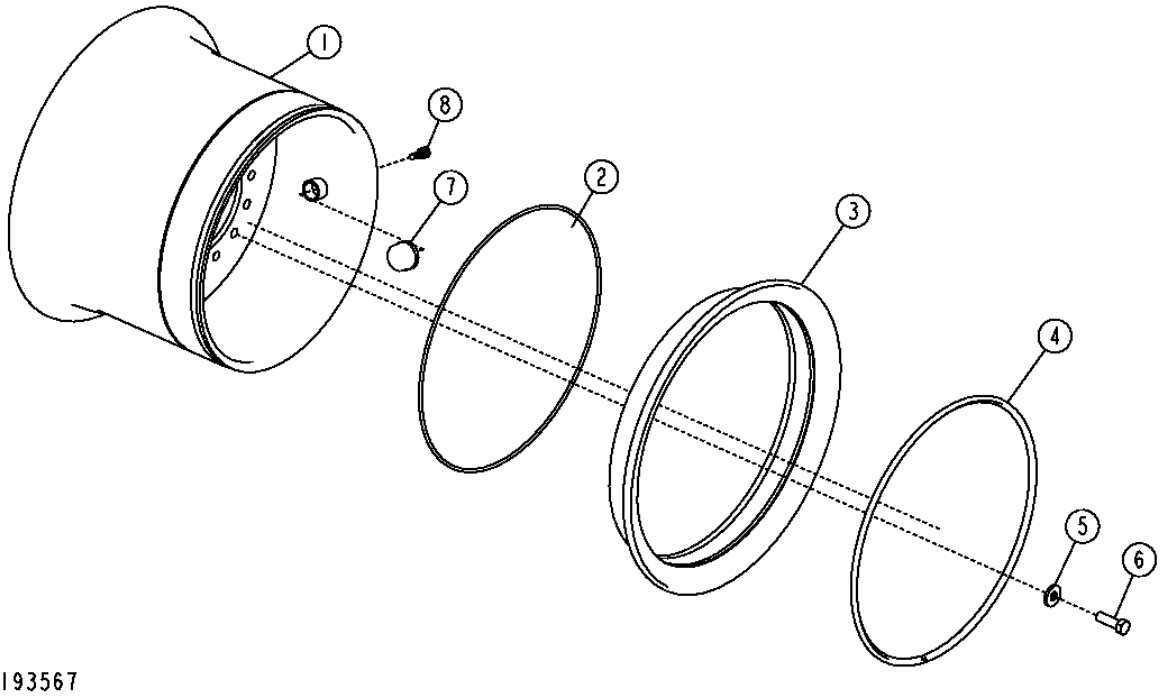

THIS PARTS LISTING IS CONTINUED

WHEEL (25 X 17)
ROUE (25 X 17)
RUEDA (25 X 17)

KEY	PART NO.	PART NAME	QTY.	SERIAL NO.	REMARKS
1	AT304418	WHEEL	1	-595865	(635 MM X 356 MM) (25 X 17 RIM) (20.5 INCH WIDE TIRE)
	AT317299	WHEEL	1	595866-	
2	T59933	O-RING	1		
3	T27532	WHEEL RING	1	-595865	(635MM X 432MM)(25 X 17 RIM) (20.5 INCH WIDE TIRE)
	T212453	WHEEL RING	1	595866-	
4	T27194	WHEEL RING	1	-595865	
	T212452	WHEEL RING	1	595866-	
5	T151797	WASHER	14		
6	19M8224	CAP SCREW	14		M20 X 60
7	15H710	FITTING	1		38.100 MM
8	AT25226	TIRE VALVE STEM	1		

WHEEL (FIVE PIECE) (25 X 19.5)
ROUE (CINQ PIECES) (25 X 19.5)
RUEDA (CINCO PIEZAS) (25 X 19.5)

T193569 -UN-18AUG03

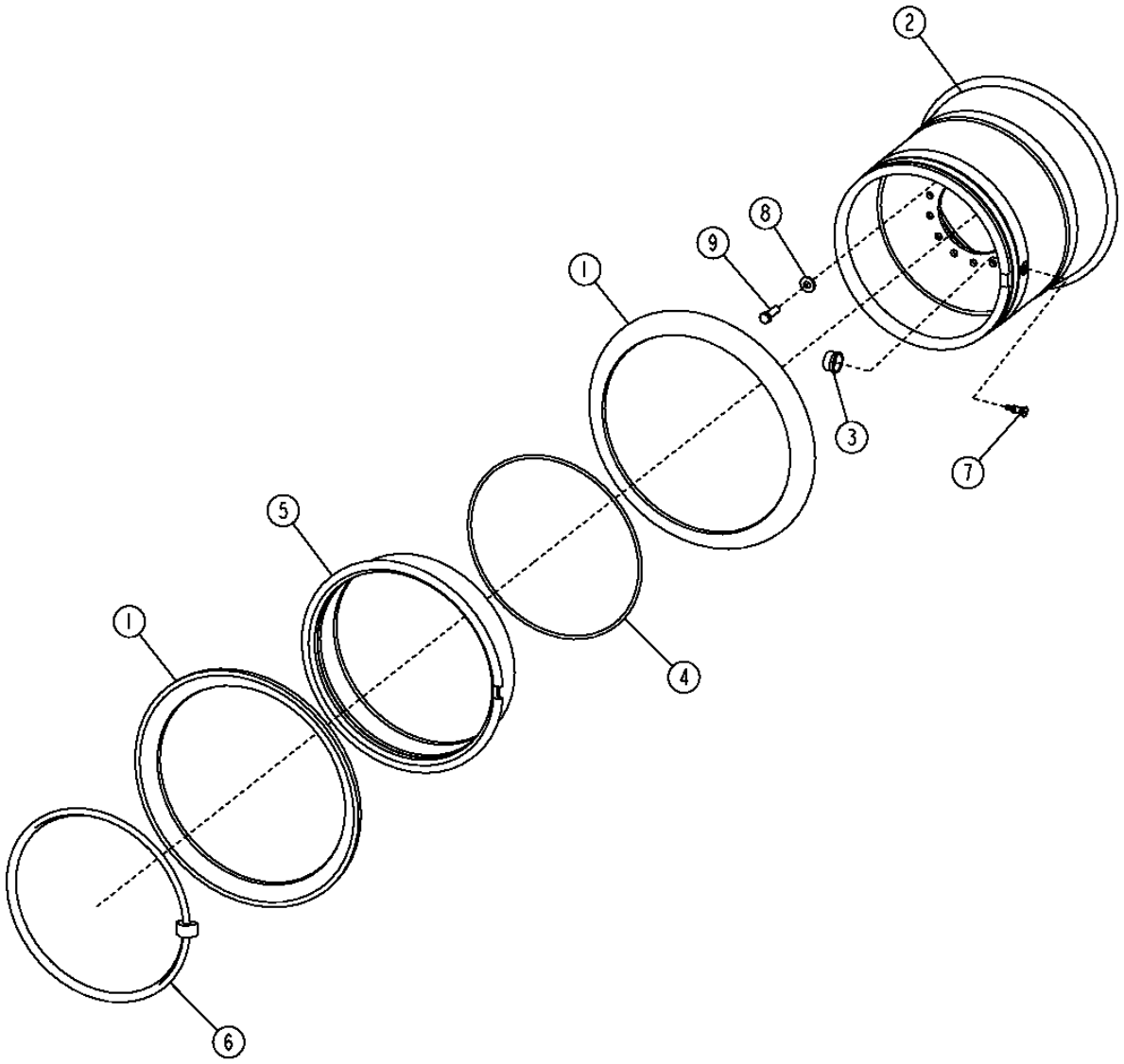

T193569

WHEEL (FIVE PIECE) (25 X 19.5)
ROUE (CINQ PIECES) (25 X 19.5)
RUEDA (CINCO PIEZAS) (25 X 19.5)

KEY	PART NO.	PART NAME	QTY.	SERIAL NO.	REMARKS
1	R29477	WHEEL RING	2		(USE WITH 25"X19.5"X2.5 MP RIM)
2	AT304421	WHEEL	1		
3	15H710	FITTING	1		
4	R29480	O-RING	1		
5	U43961	WHEEL RING	1		(USE WITH 25"X19.5"X2.5 MP RIM)
6	R29479	WHEEL RING	1		
7	AT335172	TIRE VALVE STEM	1		(SUB FOR AT67275) (USE WITH 25"X19.5"X2.5 MP RIM)
8	T151797	WASHER	14		20.625 X 47.625 X 6.220 MM
9	19M8224	CAP SCREW	14		M20 X 60

WHEEL
ROUE
RUEDA

T193573 -UN-19AUG03

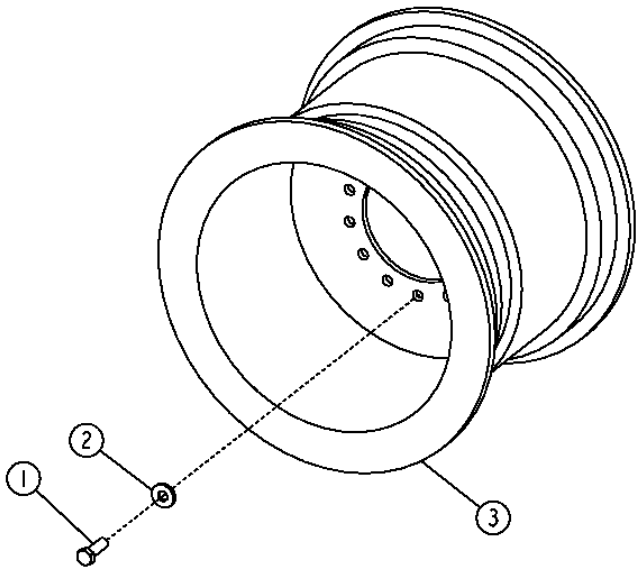

T193573

WHEEL
ROUE
RUEDA

KEY	PART NO.	PART NAME	QTY.	SERIAL NO.	REMARKS
1	19M8224	CAP SCREW	14		M20 X 60
2	T151797	WASHER	14		
3	AT79708	WHEEL	1		

WHEEL SPACER
ECARTEUR DE ROUE
ESPACIADOR DE LA RUEDA

TP60706 -UN-06APR99

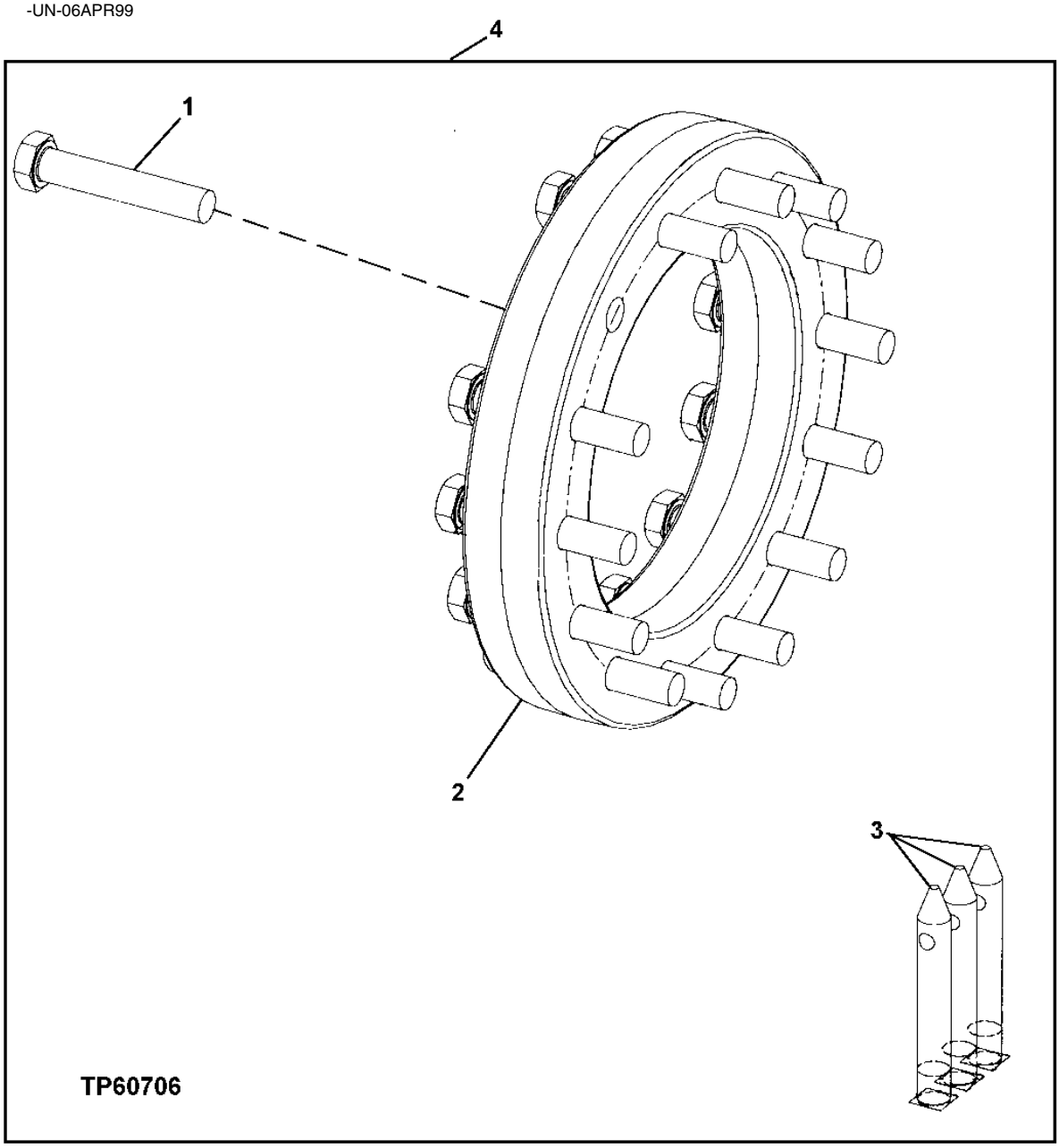

WHEEL SPACER
ECARTEUR DE ROUE
ESPACIADOR DE LA RUEDA

KEY	PART NO.	PART NAME	QTY.	SERIAL NO.	REMARKS
1	19M7969	CAP SCREW	56		M20 X 110
2	T66862	SPACER	4		
3	T176455	STUD	3		
4	.....	SPACER	1		WHEEL (AT220872 NLA) (SUB COMPONENTS)

AXLE (1200 SERIES)
ESSIEU (1200 SERIE)
EJE (1200 SERIE)

RXP021914 -UN-17JAN97

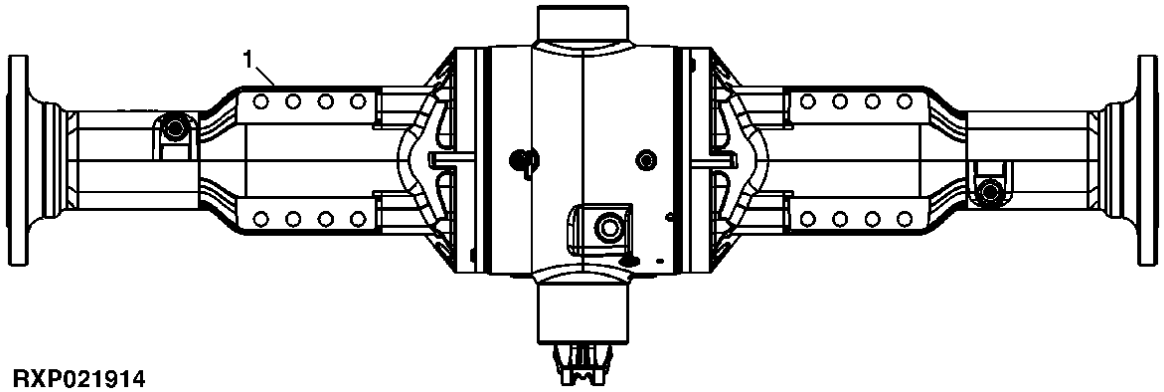

RXP021914

KEY	PART NO.	PART NAME	QTY.	AXLE SERIAL NO.	REMARKS
1	YZ18670	AXLE	1		STD, DIFF, NON-OSCILLATING (CA)
	YZ18671	**AXLE**	**1**		**STD HYDRAULIC ACTUATED NON-OSCILLATING (CA)**
	YZ18673	**AXLE**	**1**		**STD DIFF CASE OSCILLATING (CA)**
	YZ18674	**AXLE**	**1**		**STD HYDRAULIC ACTUATED DIFF LOCK OSCILLATING (CA)**

INPUT YOKE (RE68069)
CHAPE D'ENTREE (RE68069)
HORQUILLA DE ENTRADA (RE68069)

TX1006380 -UN-24APR06

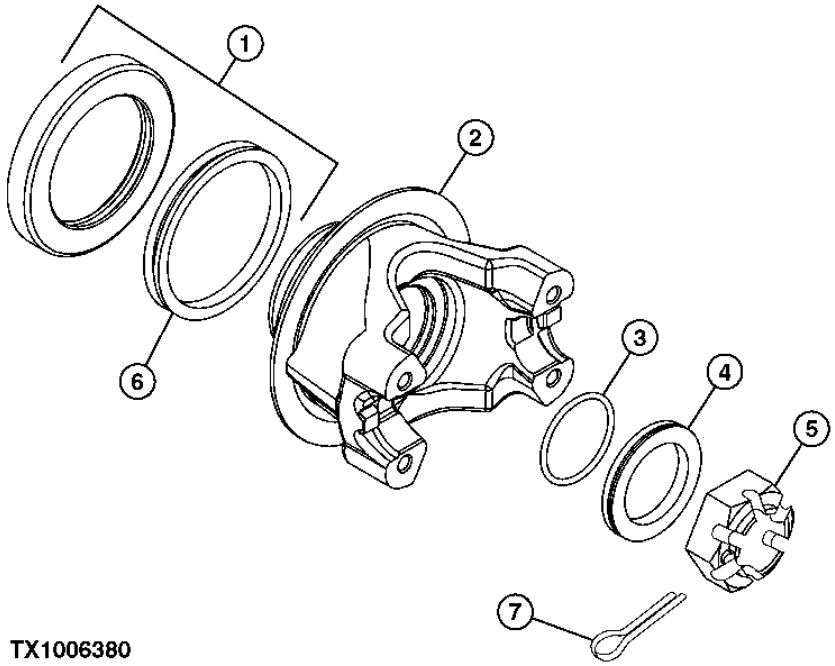

TX1006380

KEY	PART NO.	PART NAME	QTY.	AXLE SERIAL NO.	REMARKS
1	RE45312	SEAL KIT	1		
	AT314206	SEAL	1		(FOR HARSH ENVIRONMENT)
2	RE67789	YOKE	1		(MARKED R132403)
3	U10289	O-RING	1		
4	R48733	WASHER	AR		(.25")(6.35 MM)
	R48734	WASHER	AR		(.248")(6.299 MM)
	R48735	WASHER	AR		(.245")(6.223 MM)
5	R48776	NUT	1		
6	R89581	SEAL	1		
7	11M7032	COTTER PIN	1		

FRONT SPIRAL BEVEL INPUT PINION AND RING GEAR SET (RE68056)
PIGNON D'ENTREE CONIQUE HELICOIDAL AVANT ET TRAIN DE COURONNES (RE68056)
JUEGO DE CORONA DENTADA Y PINON CONICO DE ENTRADA DE DIENTES HELICOIDALES DELANTERO (RE68056)

RE027760 -UN-03APR97

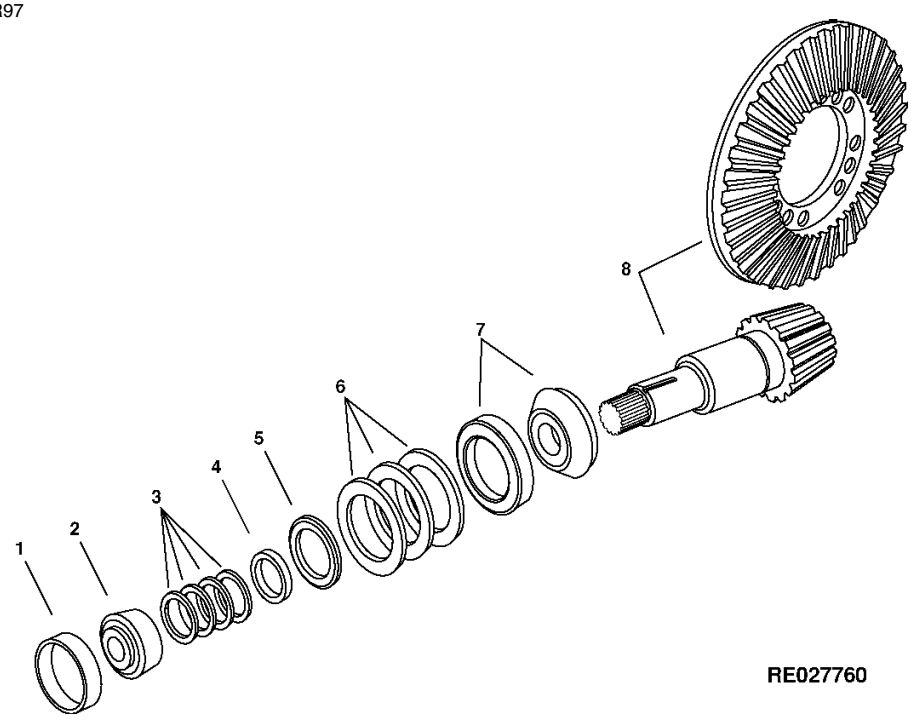

RE027760

KEY	*PART NO.*	*PART NAME*	*QTY.*	*SERIAL NO.*	*REMARKS*
1	JD8240	BEARING CUP	1		
2	JD8974	BEARING CONE	1		
3	R45197	SHIM	3		0.178MM(0.007")
	R45198	SHIM	2		0.254MM(0.010")
	R45199	SHIM	3		0.305MM(0.012")
	R45200	SHIM	3		0.381MM(0.015")
4	R163333	SPACER	1		
5	R163180	SHIELD	1		
6	R163181	SHIM	3		0.076MM(0.003")
	R163182	SHIM	3		0.127MM(0.0005")
	R163183	SHIM	3		0.254MM(0.010")
7	RE163170	BEARING	1		
8	RE163174	RING GEAR AND PINION	1		L.H. ASSY, (MARKED R132449 AND R163177)

REAR SPIRAL BEVEL INPUT PINION AND RING GEAR SET (RE68059)
JEU DE COURONNES ET DE PIGNONS D'ENTREE CONIQUES HELICOIDAUX ARRIERE (RE68059)
JUEGO DE CORONA DENTADA Y PINON DE ENTRADA DE DIENTES HELICOIDALES TRASEROS (RE68059)

RE027760 -UN-03APR97

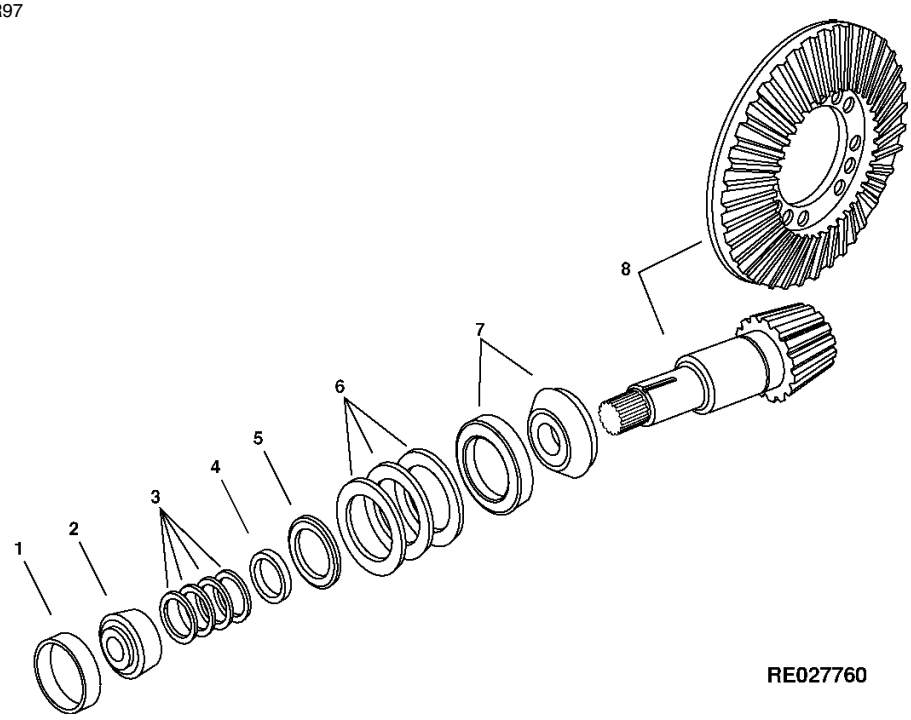

RE027760

KEY	*PART NO.*	*PART NAME*	*QTY.*	*SERIAL NO.*	*REMARKS*
1	JD8240	BEARING CUP	1		
2	JD8974	BEARING CONE	1		
3	R45197	SHIM	3		0.178MM(0.007")
	R45198	SHIM	2		0.254MM(0.010")
	R45199	SHIM	3		0.305MM(0.012")
	R45200	SHIM	3		0.381MM(0.015")
4	R163333	SPACER	1		
5	R163180	SHIELD	1		
6	R163181	SHIM	3		0.076MM(0.003")
	R163182	SHIM	3		0.127MM(0.0005")
	R163183	SHIM	3		0.254MM(0.010")
7	RE163170	BEARING	1		
8	RE163175	RING GEAR AND PINION	1		R.H. ASSY, (MARKED R132447 AND R163179)

FRONT DIFFERENTIAL LOCK DIFFERENTIAL CASE (RE68087)
BOITE DE DIFFERENTIEL DE BLOCAGE DE DIFFERENTIEL AVANT (RE68087)
CAJA DEL DIFERENCIAL DE BLOQUEO DEL DIFERENCIAL DELANTERO (RE68087)

YZ3924A -UN-04AUG04

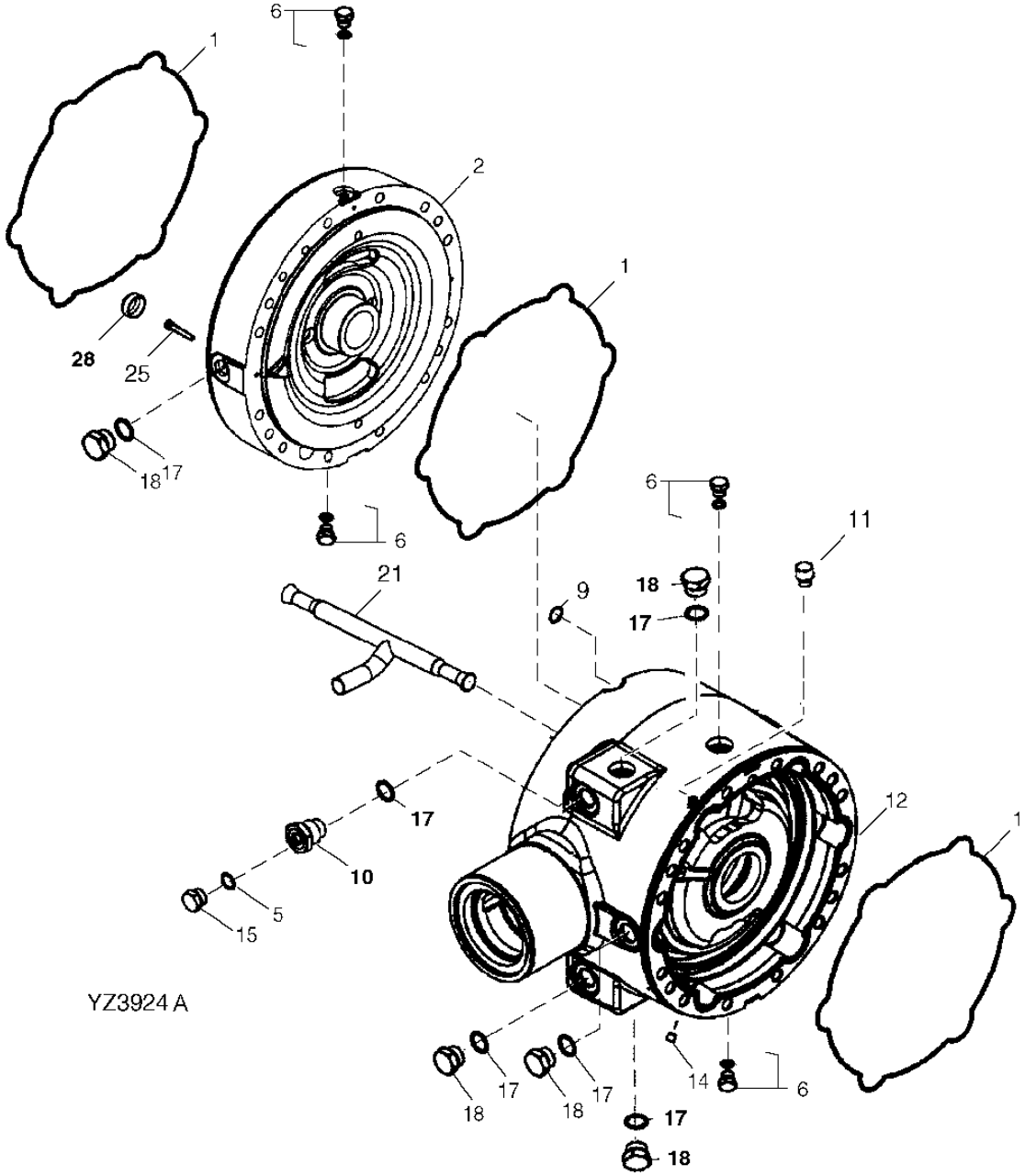

FRONT DIFFERENTIAL LOCK DIFFERENTIAL CASE (RE68087)
BOITE DE DIFFERENTIEL DE BLOCAGE DE DIFFERENTIEL AVANT (RE68087)
CAJA DEL DIFERENCIAL DE BLOQUEO DEL DIFERENCIAL DELANTERO (RE68087)

KEY	PART NO.	PART NAME	QTY.	AXLE SERIAL NO.	REMARKS
1	R133037	O-RING	3		
2	R133038	COVER	1		
5	R26286	O-RING	1		
6	RE46684	FITTING PLUG	4		
9	T44604	O-RING	1		
10	R160699	ADAPTER FITTING	1		
11	R131795	PRESSURE RELIEF FITTING	1		
12	RE163875	CASE	1		(MARKED YZ120187) (INCLUDES 405R AND (2) 400R)
14	15H558	PIPE PLUG	1		
15	R27094	DRAIN PLUG	1		
17	F3171	O-RING	1		
18	R27175	DRAIN PLUG	1		(SUB FOR R116801)
21	R159757	TEE FITTING	1		
25	19M8513	SCREW	2		
28	R160155	PLUG	6		

REAR DIFFERENTIAL LOCK DIFFERENTIAL CASE (RE68088, RE67146)
BOITE DE DIFFERENTIEL DE BLOCAGE DE DIFFERENTIEL ARRIERE (RE68088, RE67146)
CAJA DEL DIFERENCIAL DE BLOQUEO DEL DIFERENCIAL TRASERO (RE68088, RE67146)

YZ3922B -UN-06OCT04

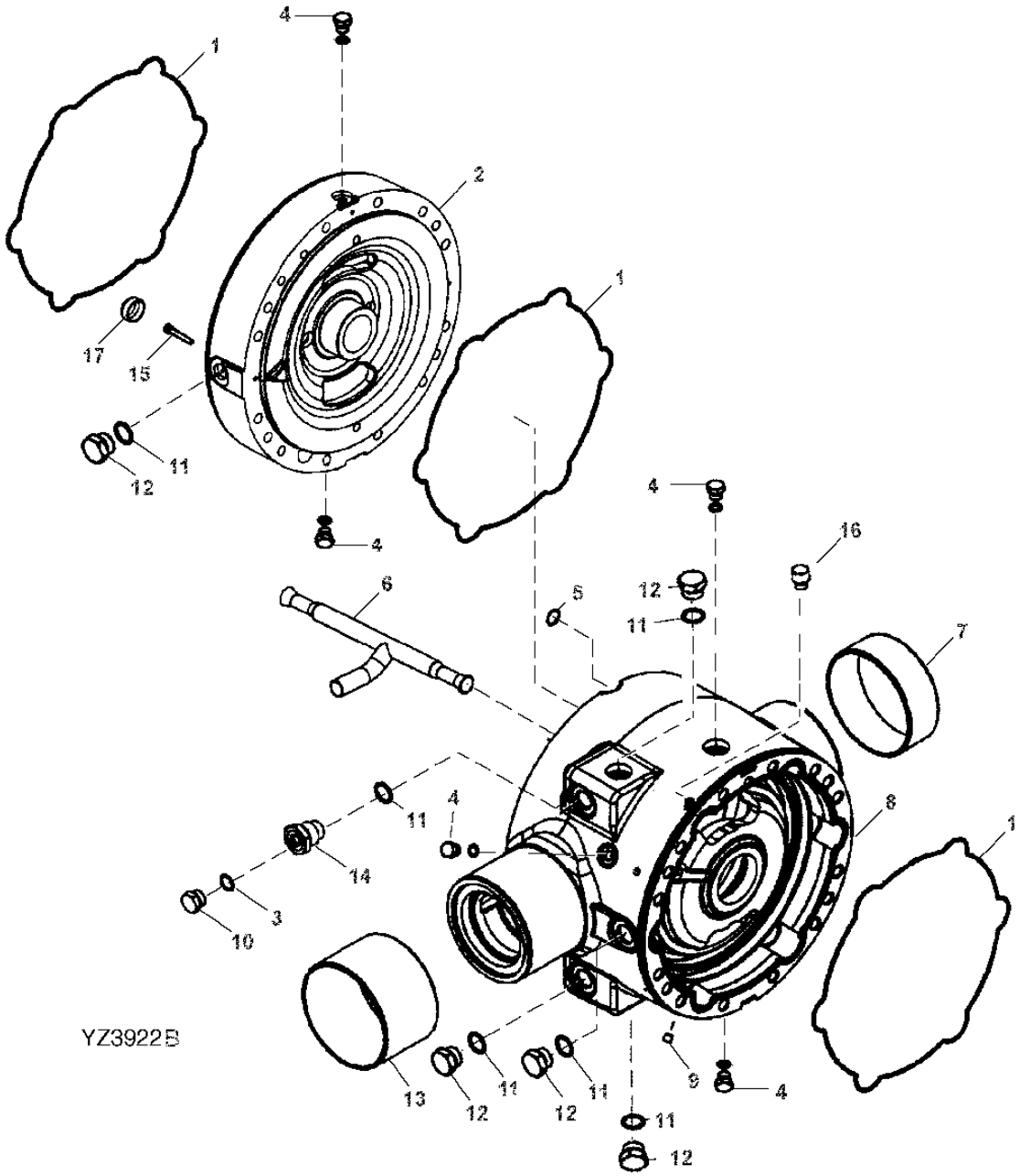

REAR DIFFERENTIAL LOCK DIFFERENTIAL CASE (RE68088, RE67146)
BOITE DE DIFFERENTIEL DE BLOCAGE DE DIFFERENTIEL ARRIERE (RE68088, RE67146)
CAJA DEL DIFERENCIAL DE BLOQUEO DEL DIFERENCIAL TRASERO (RE68088, RE67146)

KEY	PART NO.	PART NAME	QTY.	AXLE SERIAL NO.	REMARKS
1	R133037	O-RING	3		
2	R133038	COVER	1		
3	R26286	O-RING	1		
4	RE46684	FITTING PLUG	5		
5	T44604	O-RING	1		
6	R159757	TEE FITTING	1		
7	R132113	SLEEVE	1		
8	R161759	CASE	1	-573853	(SUB FOR R132814 OR R152616) (SUB RE164422)
	RE163874	CASE	1	573854-	(WITH BALLS AND SLEEVES) (INCLUDES: R132113 AND R160831 SLEEVES AND (3)400R AND (1)405R BALLS) (MARKED YZ120190)
9	15H558	PIPE PLUG	1		
10	R27094	DRAIN PLUG	1		
11	F3171R	O-RING	6		
12	R27175	DRAIN PLUG	5		(SUB FOR R116801)
13	R160831	SLEEVE	1		(SUB FOR R132114)
14	R160699	ADAPTER FITTING	1		
15	19M8513	SCREW	2		
16	R131795	PRESSURE RELIEF FITTING	1		
17	.....	FITTING	3		(SUB F3171R AND R27175)

FRONT STANDARD DIFFERENTIAL CASE (RE68085- NLA)
BOITE DE DIFFERENTIEL STANDARD AVANT (RE68085- NLA)
CAJA DEL DIFERENCIAL ESTANDAR DELANTERO (RE68085- NLA)

YZ3928 -UN-17FEB03

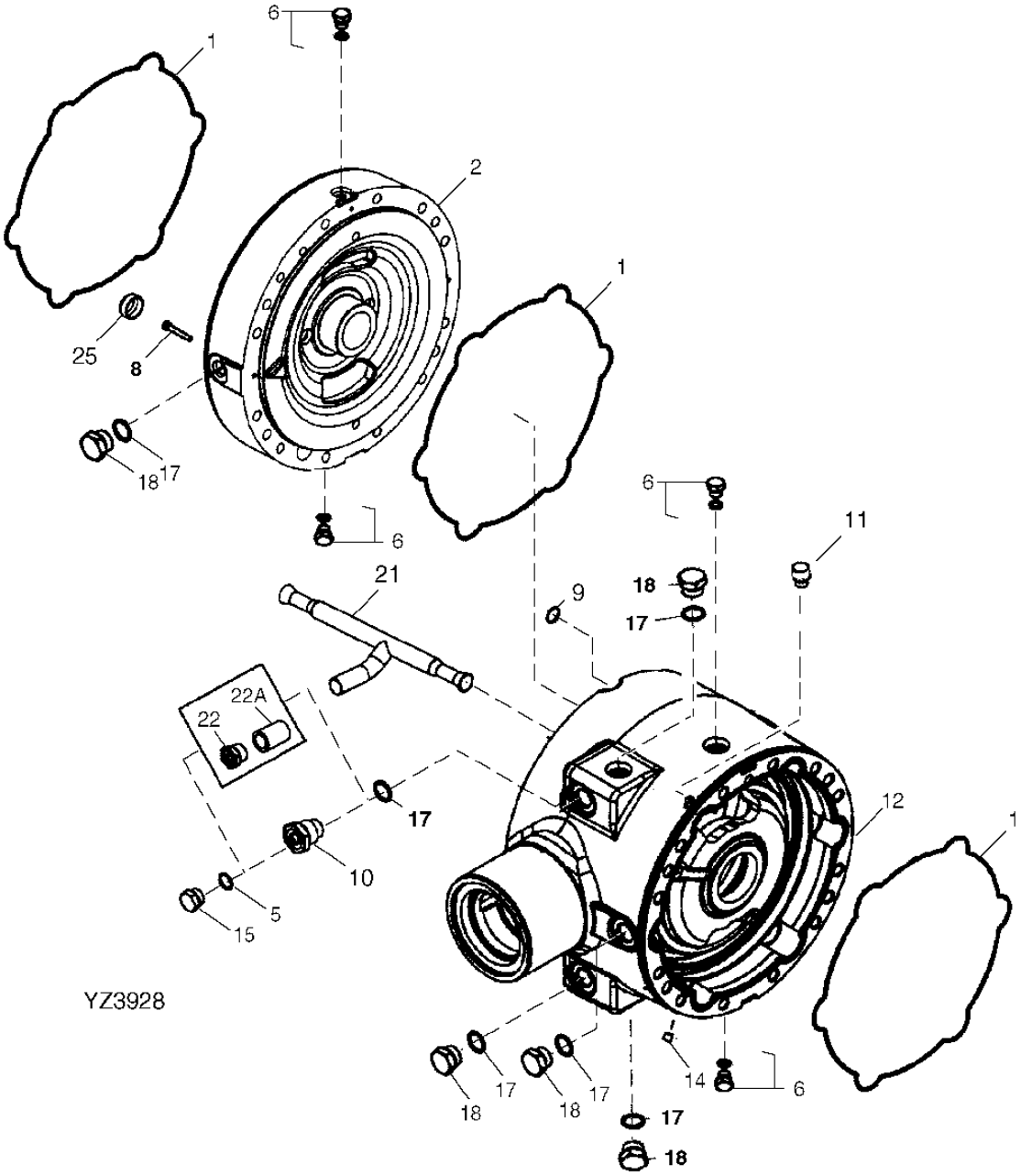

FRONT STANDARD DIFFERENTIAL CASE (RE68085- NLA)
BOITE DE DIFFERENTIEL STANDARD AVANT (RE68085- NLA)
CAJA DEL DIFERENCIAL ESTANDAR DELANTERO (RE68085- NLA)

KEY	PART NO.	PART NAME	QTY.	AXLE SERIAL NO.	REMARKS
1	R133037	O-RING	3		
2	R133038	COVER	1		
5	R26286	O-RING	1		
6	RE46684	FITTING PLUG	4		
8	19M8513	SCREW	2		
9	T44604	O-RING	1		
10	R160699	ADAPTER FITTING	1		
11	R131795	PRESSURE RELIEF FITTING	1		
12	YZ120191	CASE	1		
14	15H558	PIPE PLUG	1		
15	R27094	DRAIN PLUG	1		
17	F3171R	O-RING	6		
18	R116801	PIPE PLUG	5		
21	R159757	TEE FITTING	1		
22	R160154	ADAPTER FITTING	1		(SUB R160699)
22A	R159759	SLEEVE	1		(SUB R160699)
25	R160155	PLUG	6		

REAR STANDARD DIFFERENTIAL CASE (RE68086)
BOITE DE DIFFERENTIEL STANDARD ARRIERE (RE68086)
CAJA DEL DIFERENCIAL ESTANDAR TRASERO (RE68086)

YZ3923A -UN-05AUG04

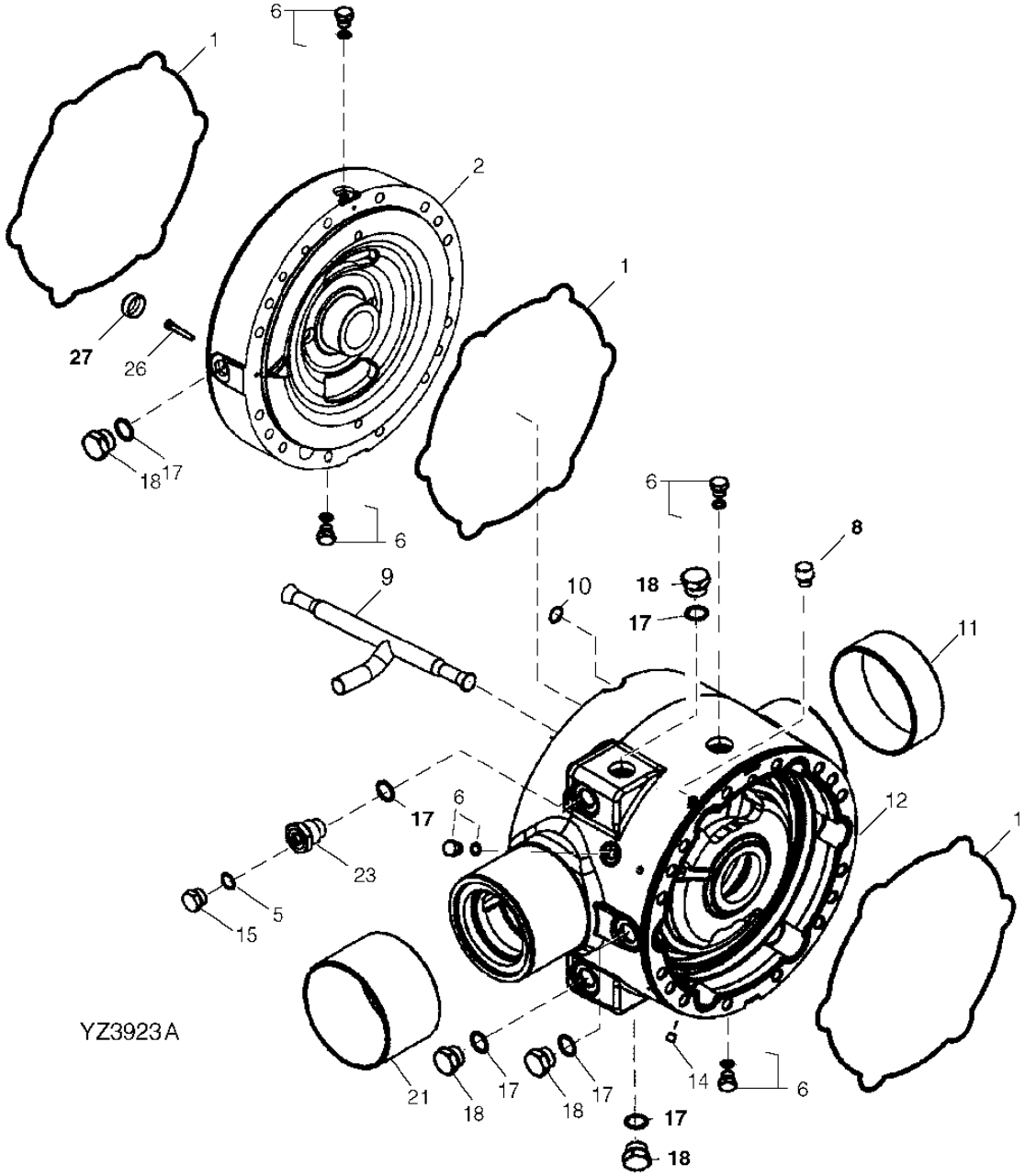

REAR STANDARD DIFFERENTIAL CASE (RE68086)
BOITE DE DIFFERENTIEL STANDARD ARRIERE (RE68086)
CAJA DEL DIFERENCIAL ESTANDAR TRASERO (RE68086)

KEY	PART NO.	PART NAME	QTY.	AXLE SERIAL NO.	REMARKS
1	R133037	O-RING	3		
2	R133038	COVER	1		
5	R26286	O-RING	1		
6	RE46684	FITTING PLUG	4		
8	R131795	PRESSURE RELIEF FITTING	1		
9	R159757	TEE FITTING	1		
10	T44604	O-RING	1		
11	R132113	SLEEVE	1		
12	RE163878	CASE	1		(WITH SLEEVES) (MARKED YZ120192) (INCLUDES R132113 AND R160831)
14	15H558	PIPE PLUG	1		
15	R27094	DRAIN PLUG	1		
17	F3171R	O-RING	1		
18	R27175	DRAIN PLUG	1		(SUB FOR R116801)
21	R160831	SLEEVE	1		(SUB FOR R132114)
23	R160699	ADAPTER FITTING	1		
26	19M8513	SCREW	2		
27	R160155	PLUG	6		

FOUR PINION HYD ACTUATED DIFFERENTIAL (RE68084)
DIFFERENTIEL HYDRAULIQUE QUATRE PIGNONS (RE68084)
DIFERENCIAL ACCIONADO HIDRAULICAMENTE POR CUATRO PINONES (RE68084)

RE027880 -UN-14APR97

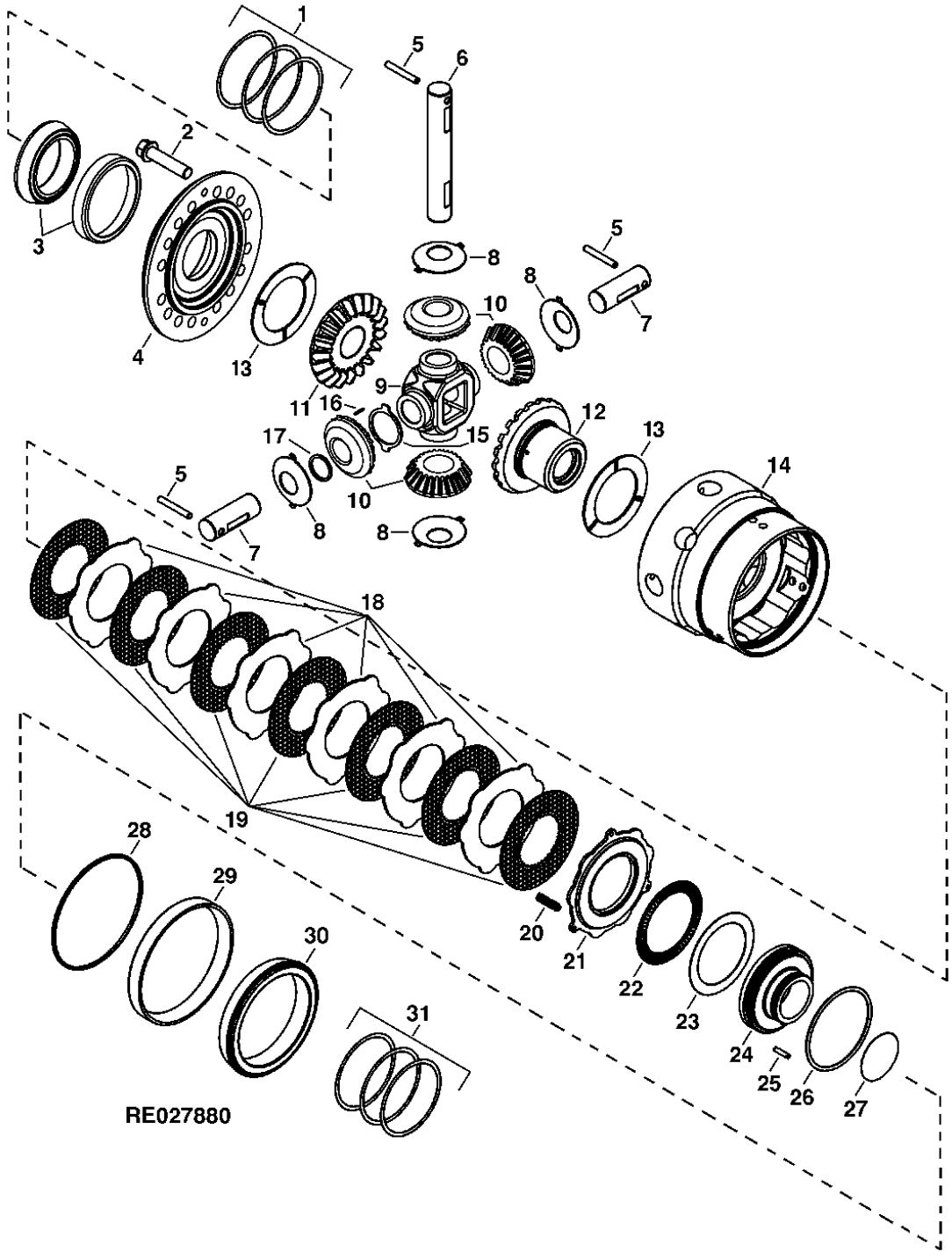

FOUR PINION HYD ACTUATED DIFFERENTIAL (RE68084)
DIFFERENTIEL HYDRAULIQUE QUATRE PIGNONS (RE68084)
DIFERENCIAL ACCIONADO HIDRAULICAMENTE POR CUATRO PINONES (RE68084)

KEY	PART NO.	PART NAME	QTY.	AXLE SERIAL NO.	REMARKS
1	R133113	SHIM	AR		0.08 MM (.003")
	R133114	SHIM	AR		0.13 MM (.005")
	R133115	SHIM	AR		0.25 MM (.009")
2	R134183	CAP SCREW	16		
3	RE61191	TAPERED ROLLER BEARING	1		(SUB FOR R121805)
4	R132683	COVER	1		
5	R57254	NEEDLE ROLLER	3		
6	R132827	PINION SHAFT	1		
7	R132828	PINION SHAFT	2		
8	R59460	THRUST WASHER	4		
9	R132836	HUB	1		
10	R134726	PINION	4		
11	R132825	BEVEL GEAR	1		
12	R132826	BEVEL GEAR	1		
13	R99466	THRUST WASHER	2		
14	R132737	HOUSING	1		
15	R70113	THRUST WASHER	4		
16	R70115	NEEDLE ROLLER	104		
17	R70112	THRUST WASHER	4		
18	R132575	CLUTCH PLATE	6		
19	RE67715	DISK	7		
20	R120236	SPRING	3		
21	R132576	CLUTCH PLATE	1		
22	RE68725	NEEDLE BEARING	1		
23	R132520	THRUST WASHER	1		
24	RE166220	PISTON	1		(SUB FOR R132679)
25	R109082	NEEDLE ROLLER	1		
26	YZ120622	O-RING	1		(SUB FOR R134270)
27	YZ120623	O-RING	1		(SUB FOR R134269)
28	R132832	WASHER	1		
29	JD9115	BEARING CUP	1		
30	JD9050	BEARING CONE	1		
31	R133110	SHIM	AR		0.076MM(0.003")
	R133111	SHIM	AR		0.127MM(0.005")
	R133112	SHIM	AR		0.254MM(0.010")

THIS PARTS LISTING IS CONTINUED

STANDARD DIFFERENTIAL (RE68081)
DIFFERENTIEL STANDARD (RE68081)
DIFERENCIAL ESTANDAR (RE68081)

RE027807 -UN-03APR97

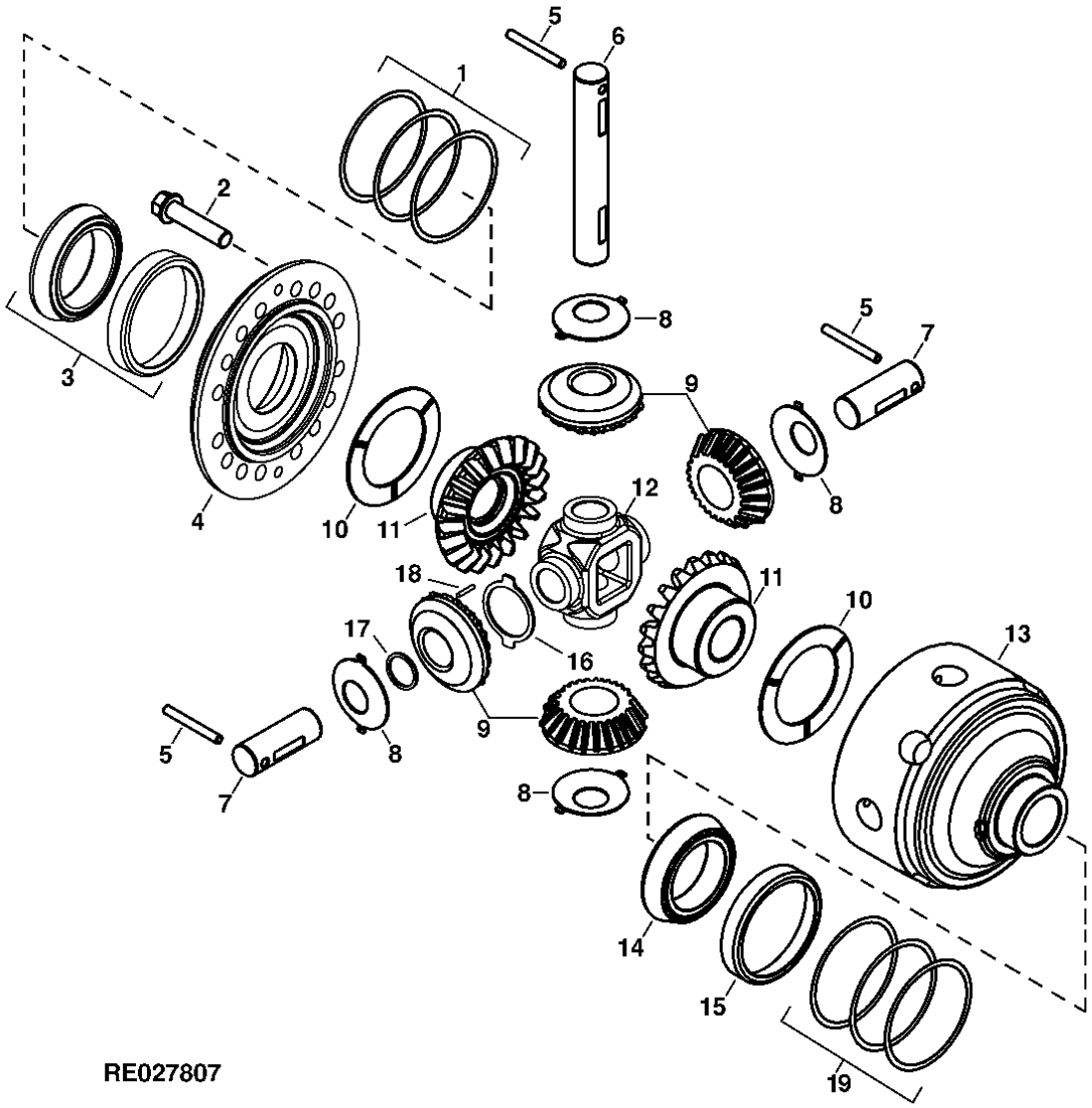

RE027807

STANDARD DIFFERENTIAL (RE68081)
DIFFERENTIEL STANDARD (RE68081)
DIFERENCIAL ESTANDAR (RE68081)

KEY	PART NO.	PART NAME	QTY.	AXLE SERIAL NO.	REMARKS
1	R133113	SHIM	3		0.08 MM (.003")
	R133114	SHIM	3		0.13 MM (.005")
	R133115	SHIM	3		0.25 MM (.009")
2	R134183	CAP SCREW	16		
3	RE61191	TAPERED ROLLER BEARING	1		(SUB FOR R121805)
4	R132830	COVER	1		
5	R62129	NEEDLE ROLLER	3		
6	R132827	PINION SHAFT	1		
7	R132828	PINION SHAFT	2		
8	R59460	THRUST WASHER	4		
9	R134726	PINION	4		
10	R99466	THRUST WASHER	2		
11	R132831	BEVEL GEAR	2		
12	R132836	HUB	1		
13	R132829	HOUSING	1		
14	JD8159	BEARING CONE	1		
15	JD8210	BEARING CUP	1		
16	R70113	THRUST WASHER	4		
17	R70112	THRUST WASHER	4		
18	R70115	NEEDLE ROLLER	104		
19	T34354	SHIM	3		0.05 MM (.002")
	T34355	SHIM	3		0.13 MM (.005")
	T34356	SHIM	3		0.25 MM (.010)

FRONT AXLE HOUSING AND SHAFT (RE68073)
CARTER ET ARBRE D'ESSIEU DE PONT AVANT (RE68073)
EJE Y CAJA DEL PUENTE DELANTERO (RE68073)

RE68073 -UN-05AUG04

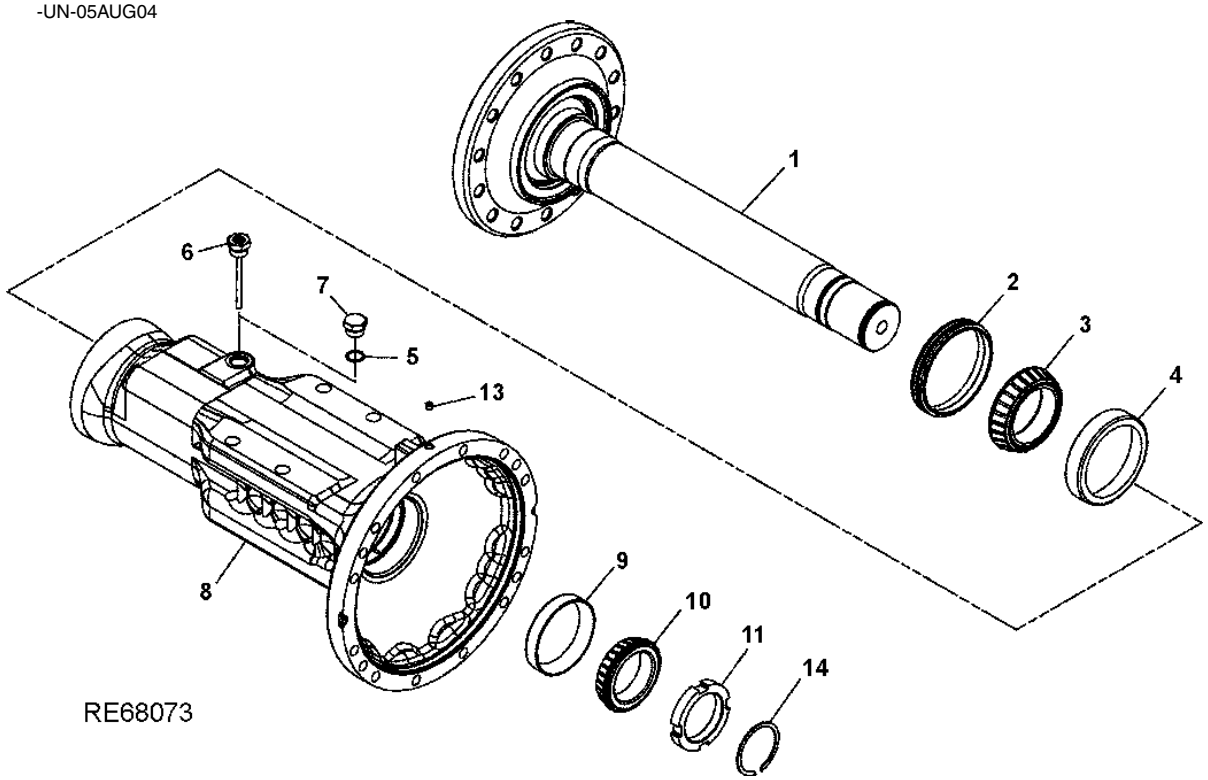

FRONT AXLE HOUSING AND SHAFT (RE68073)
CARTER ET ARBRE D'ESSIEU DE PONT AVANT (RE68073)
EJE Y CAJA DEL PUENTE DELANTERO (RE68073)

KEY	PART NO.	PART NAME	QTY.	SERIAL NO.	REMARKS
1	YZ120416	COVER	2		(SUB FOR RE151391) (SUB FOR RE67745)
2	YZ121201	SEAL	2		(SUB FOR YZ120452) (FACE SEAL)
3	JD9018	BEARING CONE	2		
4	JD8248	BEARING CUP	2		
5	F3171R	O-RING	1		
6	RE160141	DIPSTICK	1		(SUB FOR RE68300)
7	R27175	DRAIN PLUG	1		(SUB FOR R116801)
8	R132624	HOUSING	2		
9	JD9118	BEARING CUP	2		
10	JD9055	BEARING CONE	2		
11	R129890	NUT	2		
13	15H558	PIPE PLUG	1		
14	R26285	SNAP RING	2		

REAR AXLE HOUSING AND SHAFT (RE68074)(RE156263)
CARTER ET ARBRE D'ESSIEU DE PONT ARRIERE (RE68074)(RE156263)
EJE Y CAJA DEL PUENTE TRASERO (RE68074)(RE156263)

RE68074 -UN-05AUG04

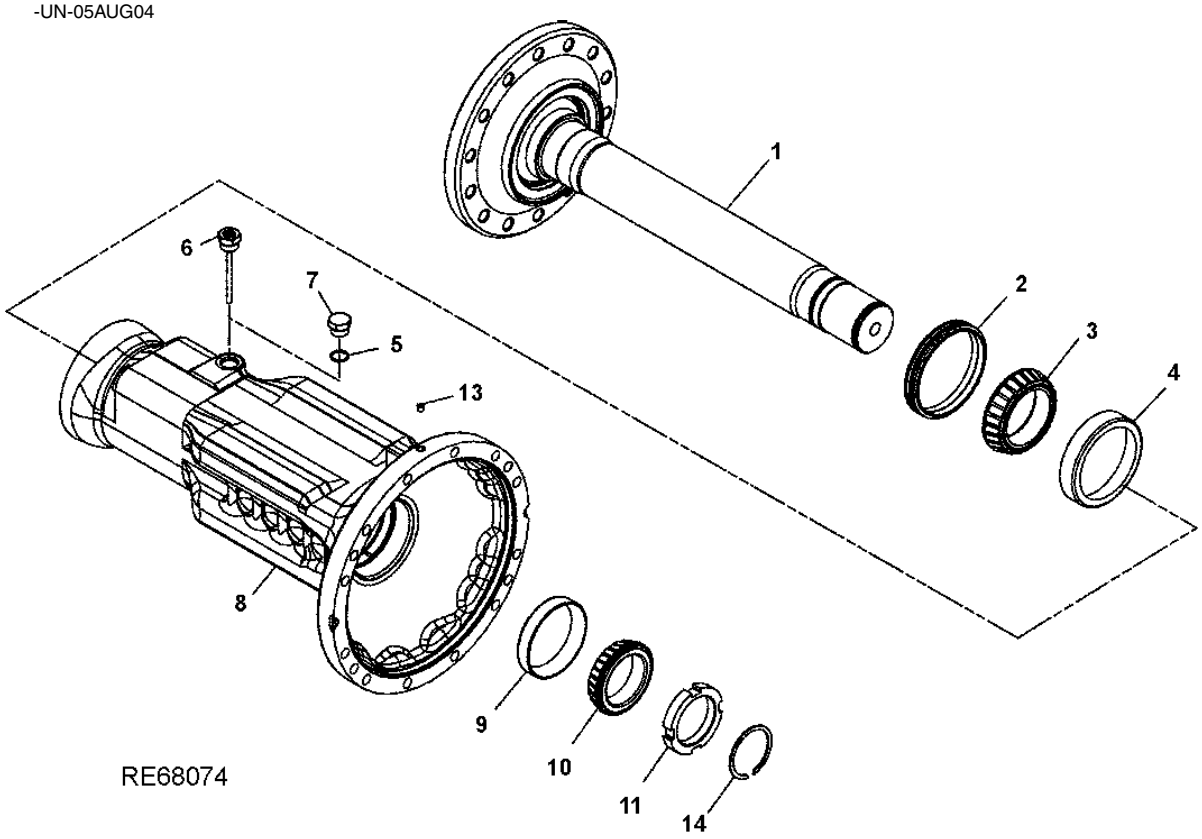

REAR AXLE HOUSING AND SHAFT (RE68074)(RE156263)
CARTER ET ARBRE D'ESSIEU DE PONT ARRIERE (RE68074)(RE156263)
EJE Y CAJA DEL PUENTE TRASERO (RE68074)(RE156263)

KEY	PART NO.	PART NAME	QTY.	AXLE SERIAL NO.	REMARKS
1	YZ120416	COVER	2		(SUB FOR RE151391) (SUB FOR RE67745)
2	YZ121201	SEAL	2		(SUB FOR YZ120452) (FACE SEAL)
3	JD9018	BEARING CONE	2		
4	JD8248	BEARING CUP	2		
5	F3171R	O-RING	1		
6	RE160141	DIPSTICK	1		(SUB FOR RE68300)
7	R27175	DRAIN PLUG	1		(SUB FOR R116801)
8	R133334	HOUSING	2		
9	JD9118	BEARING CUP	2		
10	JD9055	BEARING CONE	2		
11	R129890	NUT	2		
13	15H558	PIPE PLUG	1		
14	R26285	SNAP RING	2		

THIS PARTS LISTING IS CONTINUED

PLANETARY FINAL DRIVE (YZ120434)
REDUCTION FINALE A PLANETAIRE (YZ120434)
MANDO FINAL PLANETARIO (YZ120434)

YZ3916 -UN-22JAN03

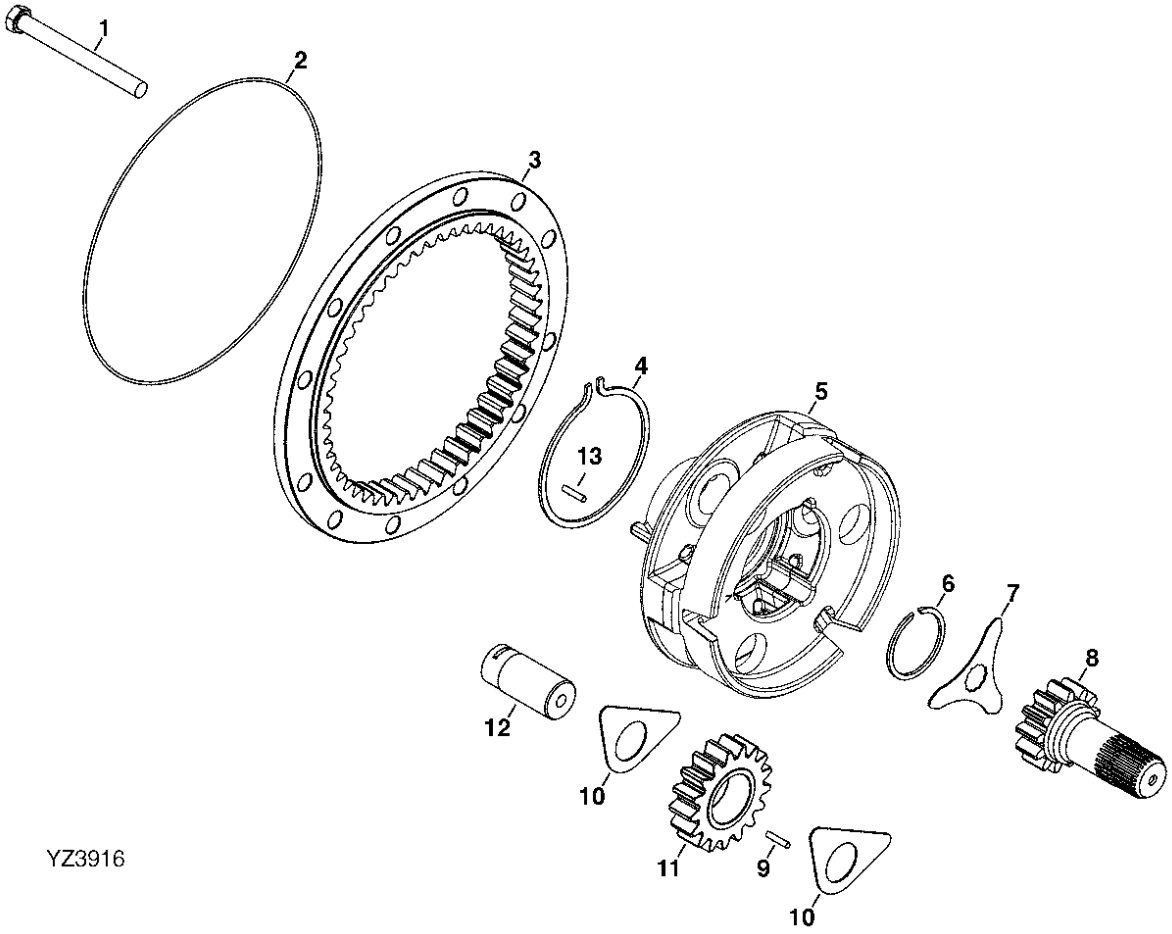

YZ3916

PLANETARY FINAL DRIVE (YZ120434)
REDUCTION FINALE A PLANETAIRE (YZ120434)
MANDO FINAL PLANETARIO (YZ120434)

KEY	PART NO.	PART NAME	QTY.	SERIAL NO.	REMARKS
1	19M8019	CAP SCREW	16		M16X160 MM, COVER SIDE
	19M7720	CAP SCREW	16		M16X80 MM
2	R87047	RING	1		
3	YZ120431	PLANET PINION	1		
4	R57055	SNAP RING	1		
5	YZ120448	PLANET PINION CARRIER	1		(ALSO ORDER YZ120909)
6	R26285	SNAP RING	1		
7	R93172	LOCK PLATE	1		
8	YZ120433	HOUSING	1		
9	R63249	NEEDLE ROLLER	81		
10	YZ120569	THRUST WASHER	6		(SUB FOR R132857)
11	YZ120432	UNIVERSAL DRIVESHAFT	3		
12	R132858	PINION SHAFT	3		
13	YZ120909	SPRING PIN	1		(SUB FOR 34H348 OR 34H171)

AXLE CENTER SERVICE KITS (RE166422, RE166424, RE166425, RE166427)
KITS D'ENTRETIEN DE CENTRE D'ESSIEU (RE166422, RE166424, RE166425, RE166427)
JUEGOS DE SERVICIO CENTRAL DE PUENTE (RE166422, RE166424, RE166425, RE166427)

T141253A -UN-17JUL03

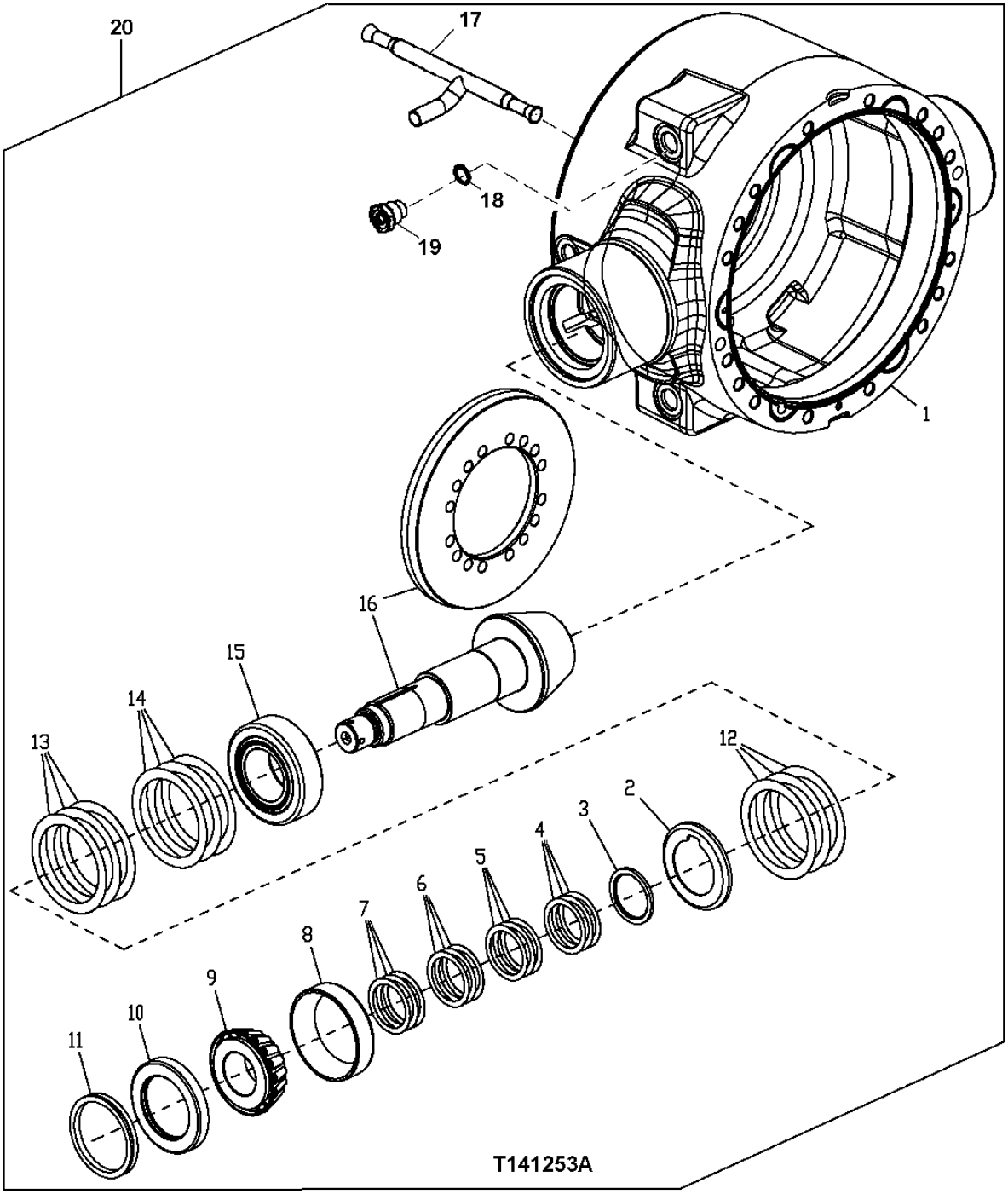

AXLE CENTER SERVICE KITS (RE166422, RE166424, RE166425, RE166427)
KITS D'ENTRETIEN DE CENTRE D'ESSIEU (RE166422, RE166424, RE166425, RE166427)
JUEGOS DE SERVICIO CENTRAL DE PUENTE (RE166422, RE166424, RE166425, RE166427)

KEY	PART NO.	PART NAME	QTY.	AXLE SERIAL NO.	REMARKS
1	RE163874	CASE	1		DIFFERENTIAL LOCK (REAR)
	RE163875	CASE	1		DIFFERENTIAL LOCK (FRONT)
	RE163878	CASE	1		STANDARD, REAR
	YZ120191	CASE	1		STANDARD, FRONT
2	R163180	SHIELD	1		
3	R163333	SPACER	1		
4	R45197	SHIM	3		0.178MM (0.007")
5	R45198	SHIM	3		0.254MM (0.010")
6	R45199	SHIM	3		0.305MM (0.012")
7	R45200	SHIM	3		0.381MM (0.015")
8	JD8240	BEARING CUP	1		
9	JD8974	BEARING CONE	1		
10	RE45312	SEAL KIT	1		
	AT314206	SEAL	1		(FOR HARSH ENVIRONMENT)
11	R89581	SEAL	1		
12	R163182	SHIM	3		0.127MM (0.005")
13	R163183	SHIM	3		0.254MM (0.010")
14	R163181	SHIM	3		0.076MM (0.003")
15	RE163170	BEARING	1		
16	RE163175	RING GEAR AND PINION	1		REAR
	RE163174	RING GEAR AND PINION	1		FRONT
17	R159757	TEE FITTING	1		
18	F3171R	O-RING	1		
19	R160699	ADAPTER FITTING	1		
20	RE164422	CASE	1		DIFFERENTIAL LOCK (REAR)
	RE164424	CASE	1		DIFFERENTIAL LOCK (FRONT)
	RE164425	CASE	1		STANDARD (REAR)
	RE164427	CASE	1		STANDARD (FRONT)

DUAL BRAKE SYSTEM (RE68080)
FREIN A DOUBLE CIRCUIT (RE68080)
SISTEMA DE FRENOS DOBLE (RE68080)

RE68080A -UN-01OCT04

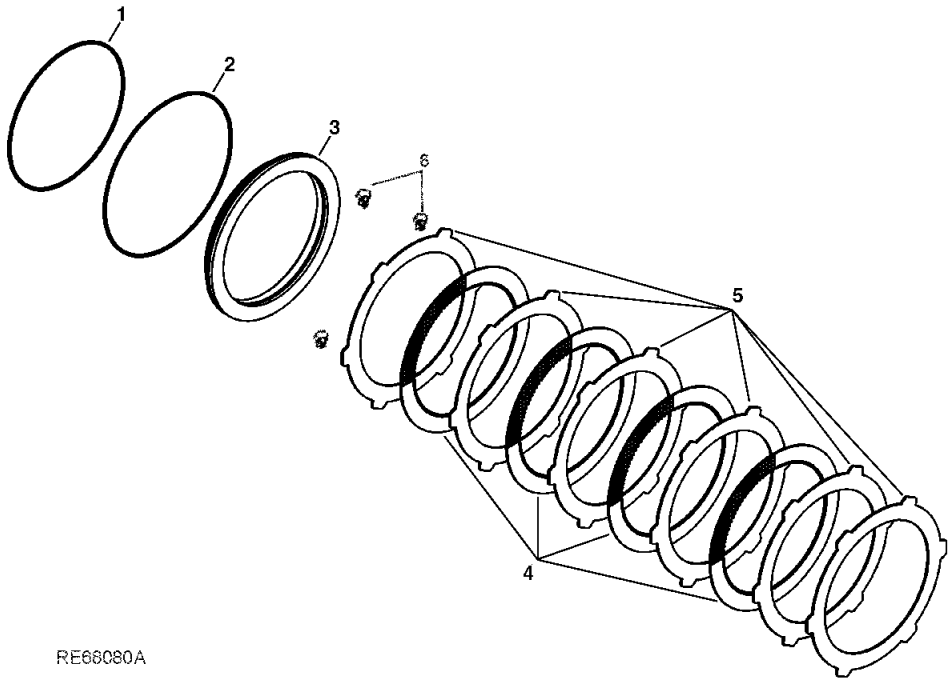

KEY	PART NO.	PART NAME	QTY.	AXLE SERIAL NO.	REMARKS
1	R156900	SEAL	2		
2	R156899	SEAL	2		
3	R132511	PISTON	2		
4	RE159198	DISK WITH INNER SPLINE	8		
5	R161862	PLATE	12		
6	RE46684	FITTING PLUG	3		

MEMORANDA
MEMORANDA
MEMORANDA

DIFFERENTIAL SUPPORTS AND LUBRICATION LINES
SUPPORTS ET CONDUITES GRAISSAGE DIFFERENTIEL
SOPORTES DEL DIFERENCIAL Y LINEAS DE LUBRICACION

TP60252 -UN-18MAR98

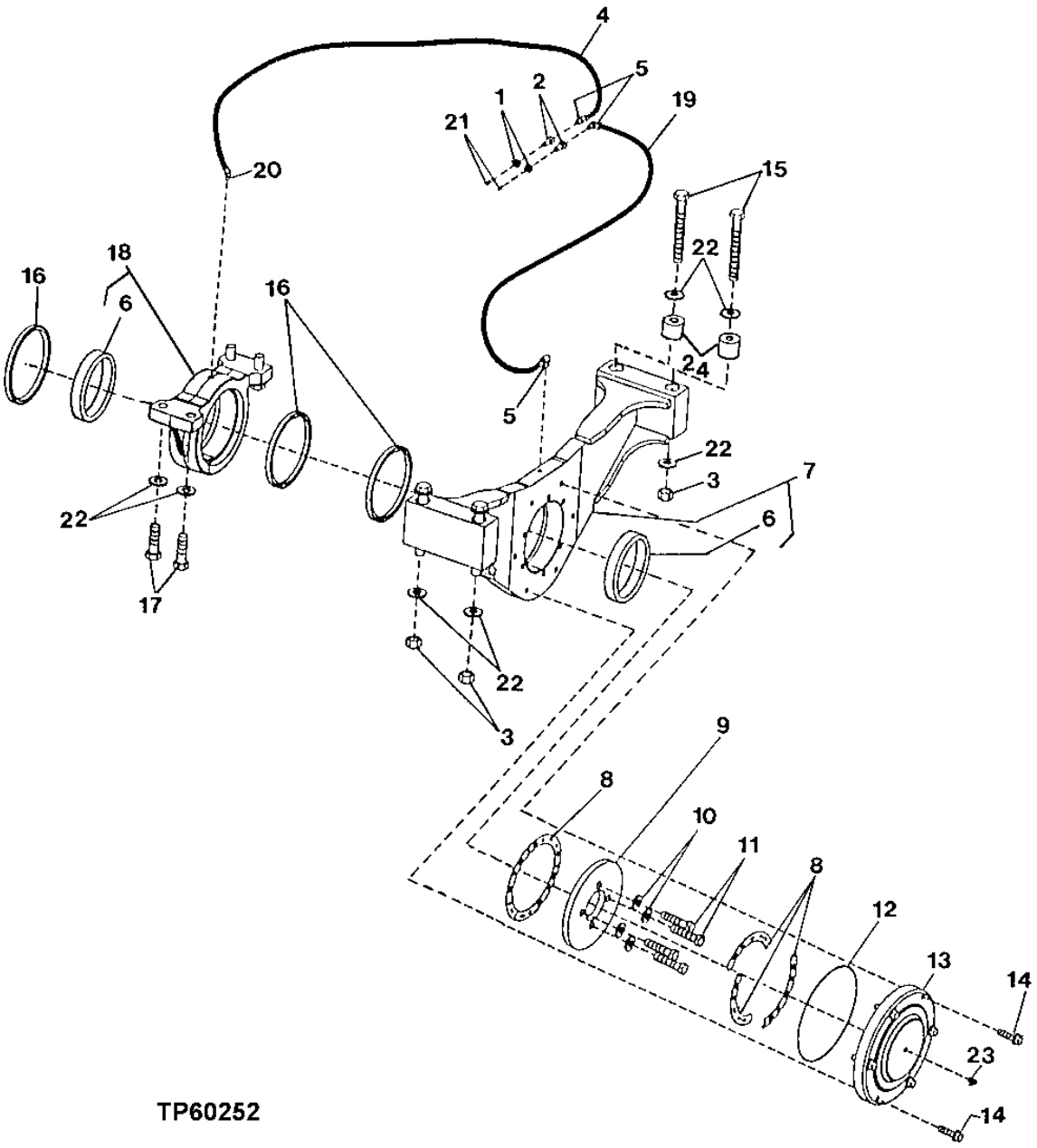

TP60252

DIFFERENTIAL SUPPORTS AND LUBRICATION LINES
SUPPORTS ET CONDUITES GRAISSAGE DIFFERENTIEL
SOPORTES DEL DIFERENCIAL Y LINEAS DE LUBRICACION

KEY	PART NO.	PART NAME	QTY.	SERIAL NO.	REMARKS
1	E12379	NUT	2		3.175 MM
2	R36311	FITTING	2		
3	14M7277	NUT	4		M20
4	AT207022	HYDRAULIC HOSE	1		
5	T56112	ELBOW FITTING	3		
6	T167837	BUSHING	2		
7	AT221583	REAR AXLE SUPPORT	1		
8	T167924	THRUST BEARING	6		
9	T157055	DISK	1		
10	24M7241	WASHER	4		17 X 34 X 4 MM
11	19M7719	CAP SCREW	4		M16 X 70
12	T169329	O-RING	1		
13	T157056	COVER	1		
14	19M7813	SCREW	6		M12 X 45
15	19M7778	CAP SCREW	4		M20 X 220
16	AT206794	SEAL	3		
17	19M8639	CAP SCREW	4		M20 X 70, (SUB FOR 19M8638)
18	AT210606	REAR AXLE SUPPORT	1		
19	AT207023	HYDRAULIC HOSE	1		
20	M45937	ELBOW FITTING	1		
21	JD7797	LUBRICATION FITTING	2		(SUB FOR JD7842, THIS APPLICATION)
22	24M7242	WASHER	12		21.400 X 42 X 5 MM
23	JD7781	LUBRICATION FITTING	1		
24	T174463	BUSHING	4		

AXLE STOP (6 DEGREE)
BUTEE D'ESSIEU (6 DEGRES)
TOPE DEL EJE (6 GRADOS)

TX1008627 -UN-08JUN06

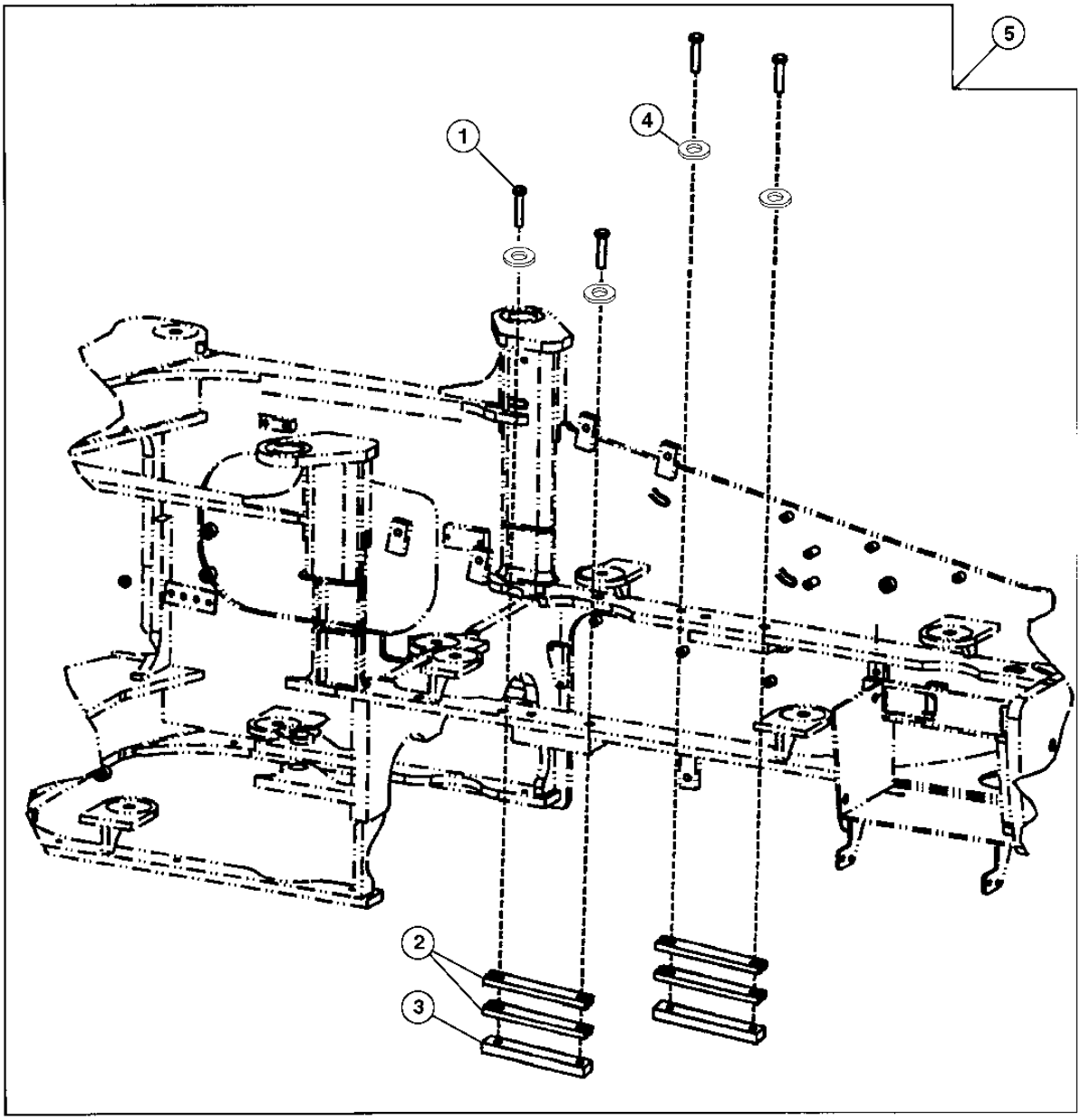

TX1008627

AXLE STOP (6 DEGREE)
BUTEE D'ESSIEU (6 DEGRES)
TOPE DEL EJE (6 GRADOS)

KEY	*PART NO.*	*PART NAME*	*QTY.*	*SERIAL NO.*	*REMARKS*
1	19M7941	CAP SCREW	4		M16 X 120
2	T168247	STRAP	8		
3	T157315	STRAP	2		
4	24M7241	WASHER	1		17 X 34 X 4 MM
5	**AT207057**	**STOP**	**1**		**AXLE STOP**

AXLE STOP (8 DEGREE)
BUTEE D'ESSIEU (8 DEGRES)
TOPE DEL EJE (8 GRADOS)

TX1008672 -UN-09JUN06

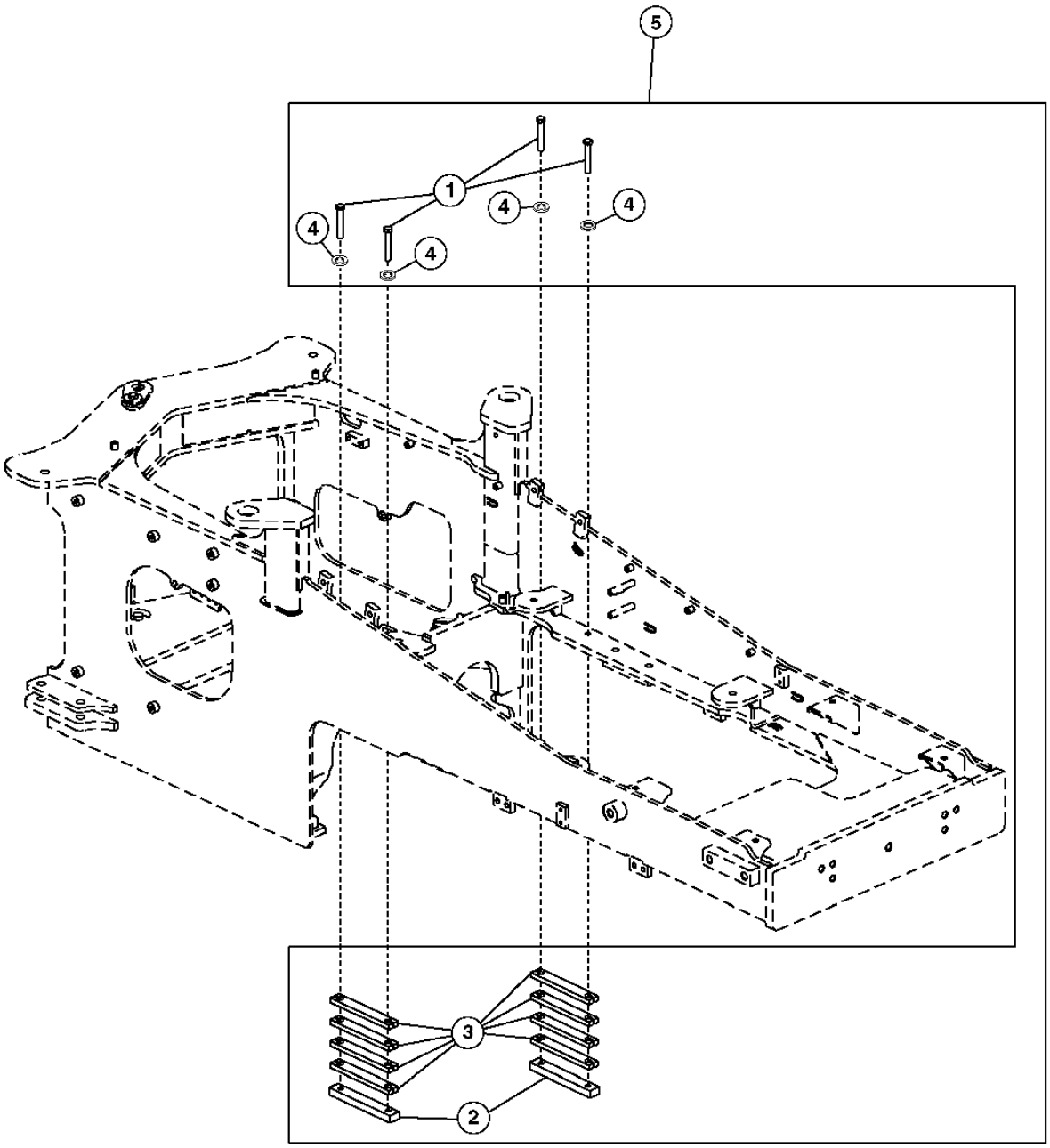

TX1008672

AXLE STOP (8 DEGREE)
BUTEE D'ESSIEU (8 DEGRES)
TOPE DEL EJE (8 GRADOS)

KEY	*PART NO.*	*PART NAME*	*QTY.*	*SERIAL NO.*	*REMARKS*
1	19M7884	CAP SCREW	4		M16 X 110, (SUB FOR 19M8020)
2	T157315	STRAP	2		
3	T223785	STRAP	8		(SUB FOR T167862)
4	24M7241	WASHER	1		
5	**AT306600**	**FIELD INSTALLATION KIT**	**1**		**(8 DEGREE AXLE STOP)**

AXLES, DIFFERENTIALS AND SUSPENSION SYSTEM HYDRAULICS (INCLUDING FWD) 0260

FRONT DIFFERENTIAL LOCK LINES
CONDUITES DE BLOCAGE DE DIFFERENTIEL AVANT
LINEAS DE BLOQUEO DEL DIFERENCIAL DELANTERO

T193425 -UN-09SEP03

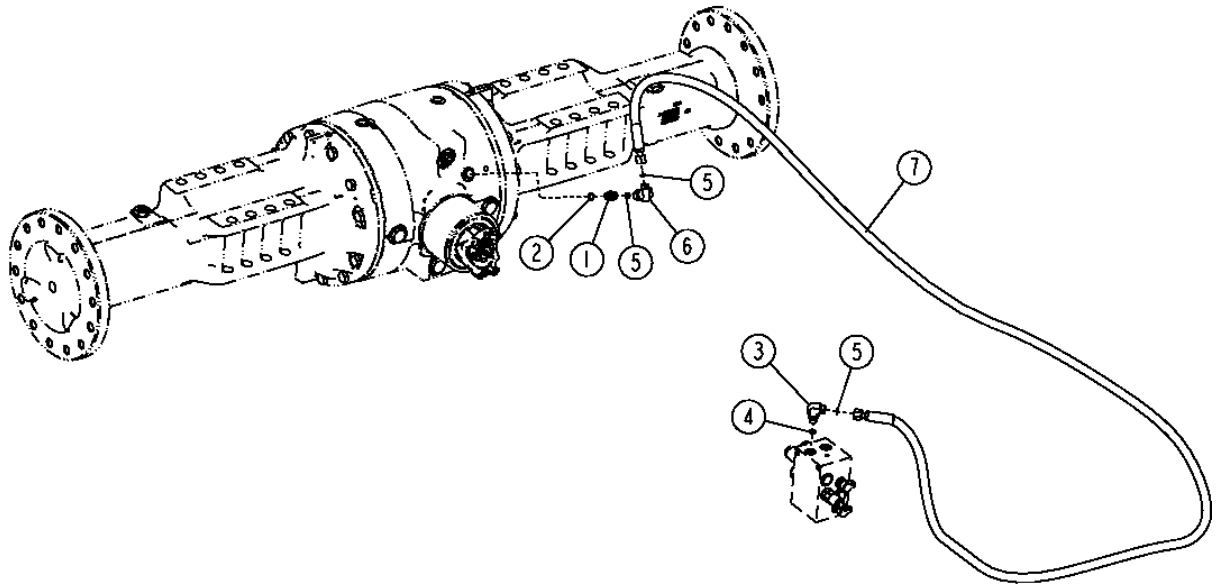

T193425

FRONT DIFFERENTIAL LOCK LINES
CONDUITES DE BLOCAGE DE DIFFERENTIEL AVANT
LINEAS DE BLOQUEO DEL DIFERENCIAL DELANTERO

KEY	*PART NO.*	*PART NAME*	*QTY.*	*SERIAL NO.*	*REMARKS*
1	38H5002	ADAPTER FITTING	1		
2	51M7041	O-RING	1		
3	38H1004	ELBOW FITTING	1		
4	R26448	O-RING	1		
5	T77613	O-RING	3		
6	38H1094	ELBOW FITTING	1		
7	AT304143	HYDRAULIC HOSE - FABRICATE	1		

FRONT AND REAR DIFFERENTIAL LOCK LINES
CONDUITES DE BLOCAGE DE DIFFERENTIEL AVANT ET ARRIERE
LINEAS DE BLOQUEO DEL DIFERENCIAL TRASERO Y DELANTERO

TX1006272 -UN-27APR06

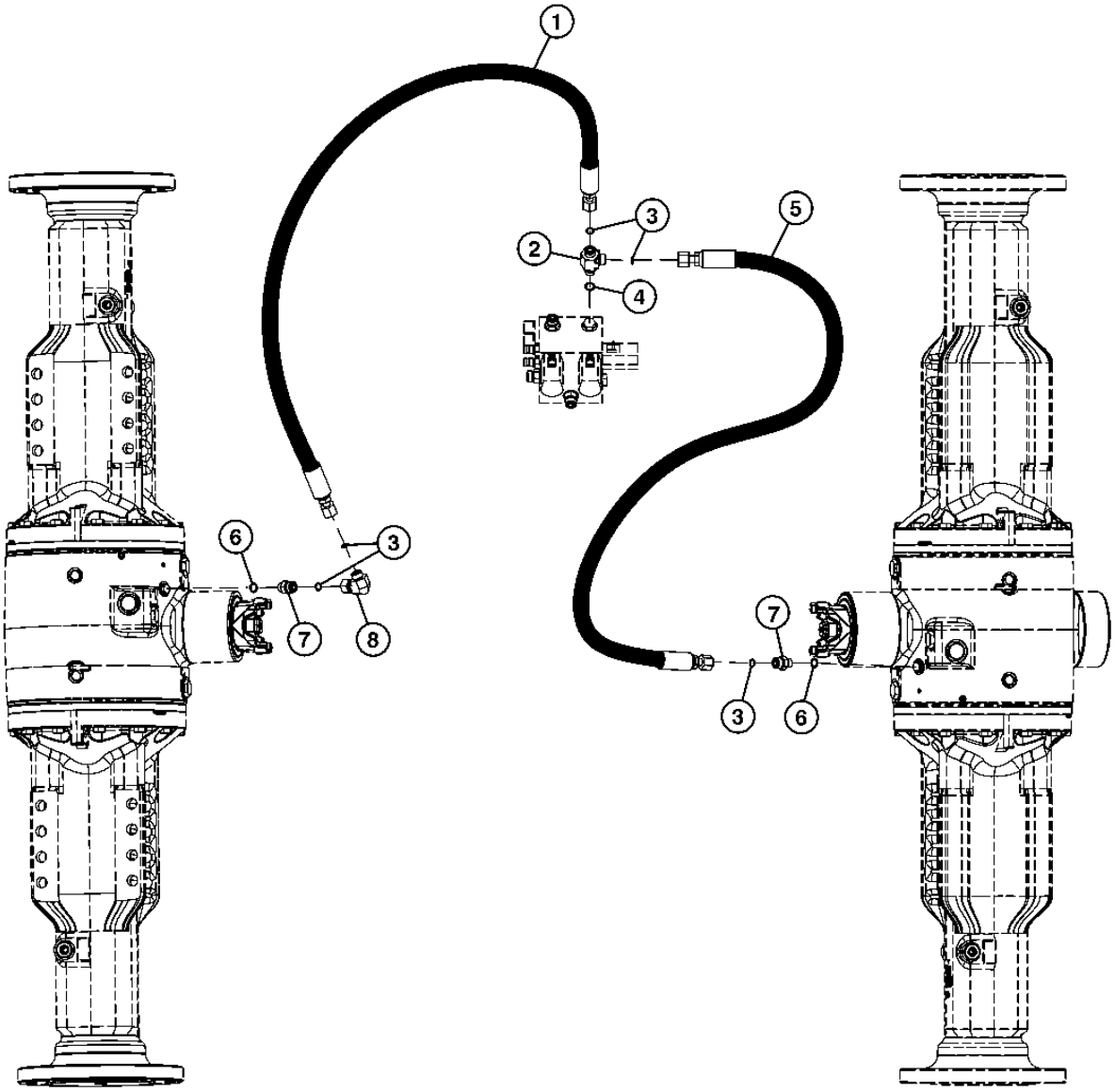

TX1006272

FRONT AND REAR DIFFERENTIAL LOCK LINES
CONDUITES DE BLOCAGE DE DIFFERENTIEL AVANT ET ARRIERE
LINEAS DE BLOQUEO DEL DIFERENCIAL TRASERO Y DELANTERO

KEY	*PART NO.*	*PART NAME*	*QTY.*	*SERIAL NO.*	*REMARKS*
1	AT304143	HYDRAULIC HOSE - FABRICATE	1		
2	38H1023	TEE FITTING	1		
3	T77613	O-RING	5		
4	R26448	O-RING	1		
5	AT161549	HYDRAULIC HOSE - FABRICATE	1		
6	51M7041	O-RING	2		
7	38H5002	ADAPTER FITTING	2		
8	38H1094	ELBOW FITTING	1		

AXLE OIL CIRCULATION PUMP AND MOTOR
POMPE ET MOTEUR DE CIRCULATION D'HUILE D'ESSIEU
MOTOR Y BOMBA DE CIRCULACION DE ACEITE DEL EJE

T210080 -UN-14APR05

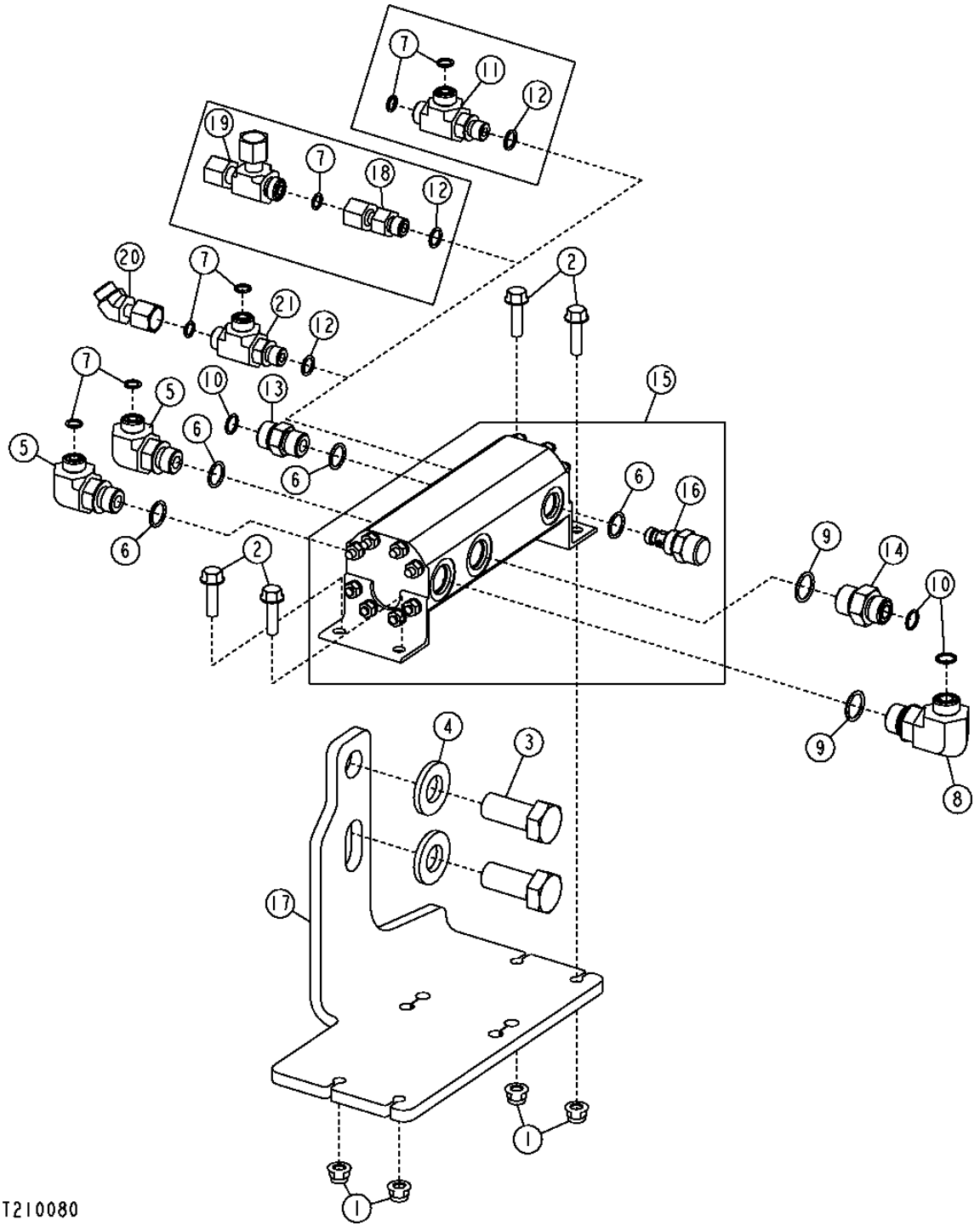

THIS PARTS LISTING IS CONTINUED

AXLE OIL CIRCULATION PUMP AND MOTOR
POMPE ET MOTEUR DE CIRCULATION D'HUILE D'ESSIEU
MOTOR Y BOMBA DE CIRCULACION DE ACEITE DEL EJE

KEY	PART NO.	PART NAME	QTY.	SERIAL NO.	REMARKS
1	14M7396	LOCK NUT	4		M8
2	19M7868	SCREW	4		M8 X 30
3	19M7950	CAP SCREW	2		M20 X 45
4	24M7242	WASHER	2		21.400 X 42 X 5 MM
5	38H1010	ELBOW FITTING	2		
6	R26375	O-RING	4		
7	T77613	O-RING	4		
8	38H1012	ELBOW FITTING	1		
9	R26906	O-RING	2		
10	T77857	O-RING	3		
11	38H1023	TEE FITTING	1	-594432	
12	R26448	O-RING	1		
13	38H1161	ADAPTER FITTING	1		
14	38H1174	ADAPTER FITTING	1		
15	AT220832	PUMP	1		
16	AT223728	VALVE	1		
	AT223805	SEAL KIT	1		
17	T197061	BRACKET	1		
18	38H1067	ADAPTER FITTING	1	594433-596166	
19	AT219792	TEE FITTING	1	594433-596166	
20	62H1052	ADAPTER FITTING	1	596167-	
21	38H1023	TEE FITTING	1	596167-	

AXLE CIRCULATION HOSES AND AXLE COOLERS
FLEXIBLES CIRCULATION ESSIEU ET REFROIDISSEURS ESSIEU
MANGUERAS DE CIRCULACION DEL EJE Y ENFRIADORES DEL EJE

T196086 -UN-20NOV03

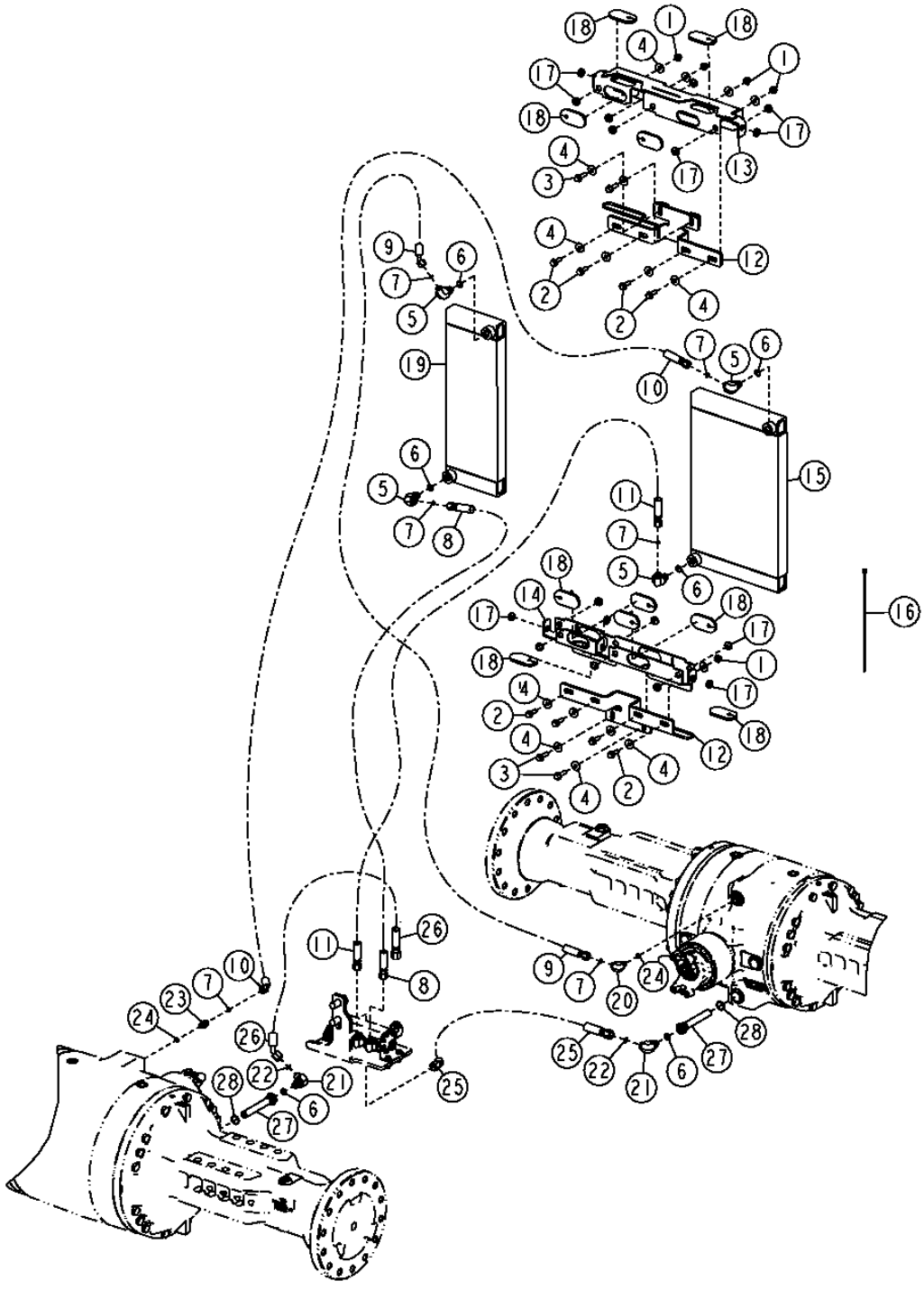

THIS PARTS LISTING IS CONTINUED

AXLE CIRCULATION HOSES AND AXLE COOLERS
FLEXIBLES CIRCULATION ESSIEU ET REFROIDISSEURS ESSIEU
MANGUERAS DE CIRCULACION DEL EJE Y ENFRIADORES DEL EJE

KEY	PART NO.	PART NAME	QTY.	SERIAL NO.	REMARKS
1	14M7296	FLANGE NUT	8		M10
2	19M7786	SCREW	8		M10 X 30
3	19M7835	SCREW	4		M10 X 35
4	24M7296	WASHER	20		10.500 X 30 X 2.500 MM
5	38H1010	ELBOW FITTING	4		
6	R26375	O-RING	6		
7	T77613	O-RING	6		
8	AT304909	HYDRAULIC HOSE - FABRICATE	1		11/16" X 176-3/4" X 11/16"
9	AT304910	HYDRAULIC HOSE - FABRICATE	1		11/16" X 128-1/2" X 11/16"
10	AT304911	HYDRAULIC HOSE - FABRICATE	1		11/16" X 246-3/4" X 11/16"
11	AT304912	HYDRAULIC HOSE - FABRICATE	1		11/16" X 168-3/4" X 11/16"
12	AT305165	BRACKET	2		
13	AT306489	BRACKET	1		
14	AT306496	BRACKET	1		
15	AT228457	OIL COOLER	1		
	AT307617	OIL COOLER	1		(HARSH ENVIRONMENT)
16	H77698	TIE BAND	4		
17	T162238	GROMMET	18		
18	T201546	GROMMET	12		
19	AT228457	OIL COOLER	1		
	AT307617	OIL COOLER	1		(HARSH ENVIRONMENT)
20	38H1430	ELBOW FITTING	1		
21	38H1005	ELBOW FITTING	2		
22	T77857	O-RING	2		
23	38H1170	ADAPTER FITTING	1		
24	R26286	O-RING	2		
25	AT220733	HYDRAULIC HOSE - FABRICATE	1		1" X 22" X 1-3/16"
26	AT220735	HYDRAULIC HOSE - FABRICATE	1		13/16" X 130" X 13/16"
27	AT220925	OIL FILTER	2		
28	U12547	O-RING	2		

AXLE OIL CIRCULATION HOSES
FLEXIBLES DE CIRUCLATION D'HUILE D'ESSIEU
MANGUERAS DE CIRCULACION DE ACEITE DEL PUENTE

T196091 -UN-11NOV03

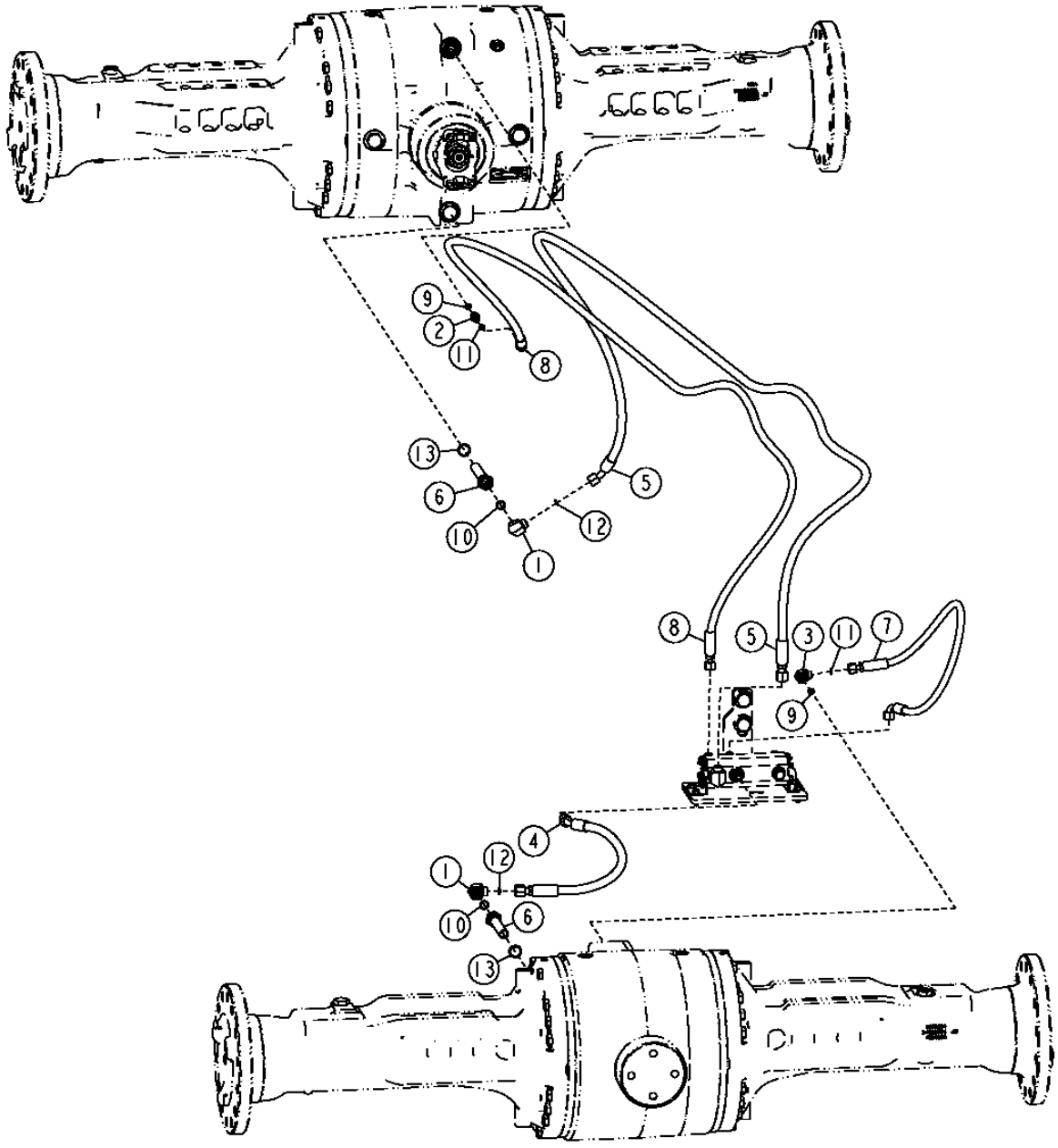

T196091

AXLE OIL CIRCULATION HOSES
FLEXIBLES DE CIRUCLATION D'HUILE D'ESSIEU
MANGUERAS DE CIRCULACION DE ACEITE DEL PUENTE

KEY	PART NO.	PART NAME	QTY.	SERIAL NO.	REMARKS
1	38H1005	ELBOW FITTING	2		
2	38H1170	ADAPTER FITTING	1		
3	38H1430	ELBOW FITTING	1		
4	AT220733	HYDRAULIC HOSE - FABRICATE	1		
5	AT220735	HYDRAULIC HOSE - FABRICATE	1		
6	AT220925	OIL FILTER	2		
7	AT227603	HYDRAULIC HOSE - FABRICATE	1		
8	AT227604	HYDRAULIC HOSE - FABRICATE	1		(SUB FOR AT304901)
9	R26286	O-RING	2		
10	R26375	O-RING	2		
11	T77613	O-RING	2		
12	T77857	O-RING	2		
13	U12547	O-RING	2		

FIELD INSTALLED AXLE COOLERS AND HOSES
REFROIDISSEURS ET FLEXIBLES D'ESSIEU INSTALLES EN USINE
MANGUERAS Y ENFRIADORES DEL EJE INSTALADOS EN EL CAMPO

T196092 -UN-18NOV03

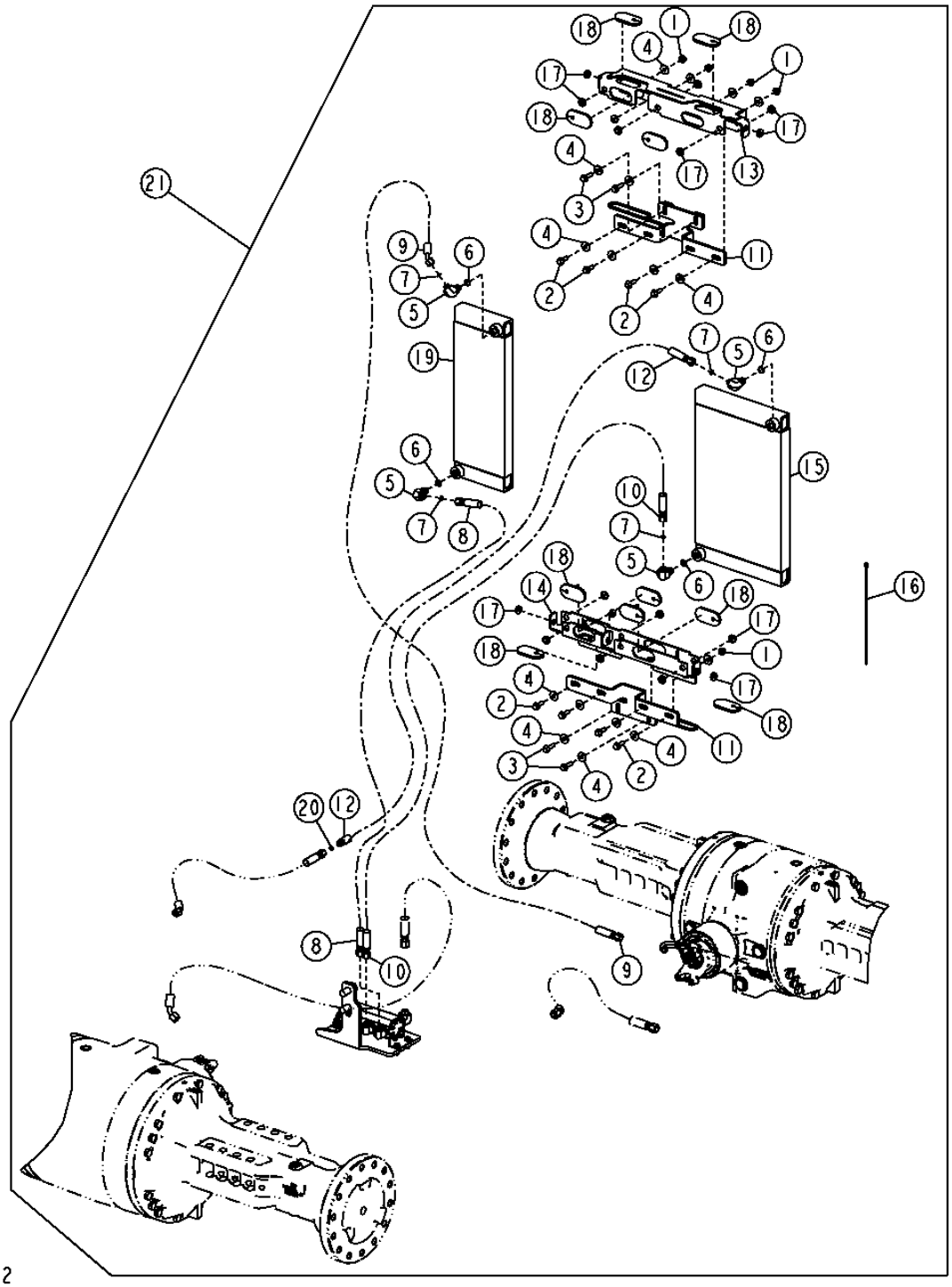

FIELD INSTALLED AXLE COOLERS AND HOSES
REFROIDISSEURS ET FLEXIBLES D'ESSIEU INSTALLES EN USINE
MANGUERAS Y ENFRIADORES DEL EJE INSTALADOS EN EL CAMPO

KEY	*PART NO.*	*PART NAME*	*QTY.*	*SERIAL NO.*	*REMARKS*
1	14M7296	FLANGE NUT	8		M10
2	19M7786	SCREW	8		M10 X 30
3	19M7835	SCREW	4		M10 X 35
4	24M7296	WASHER	20		10.500 X 30 X 2.500 MM
5	38H1010	ELBOW FITTING	4		
6	R26375	O-RING	4		
7	T77613	O-RING	4		
8	AT304909	HYDRAULIC HOSE - FABRICATE	1		11/16" X 176-3/4" X 11/16"
9	AT304910	HYDRAULIC HOSE - FABRICATE	1		11/16" X 128-1/2" X 11/16"
10	AT304912	HYDRAULIC HOSE - FABRICATE	1		11/16" X 168-3/4" X 11/16"
11	AT305165	BRACKET	2		
12	AT306890	HYDRAULIC HOSE - FABRICATE	1		
13	AT306489	BRACKET	1		
14	AT306496	BRACKET	1		
15	AT228457	OIL COOLER	1		
16	H77698	TIE BAND	4		
17	T162238	GROMMET	22		
18	T201546	GROMMET	12		
19	AT228457	OIL COOLER	1		
20	T77613	O-RING	1		
21	**AT228285**	**FIELD INSTALLATION KIT**	**1**		**(WHOLEGOODS)**

FRONT AXLE DISCONNECT
DECONNEXION D'ESSIEU DE PONT AVANT
DESCONEXION DEL PUENTE DELANTERO

T195256 -UN-13OCT03

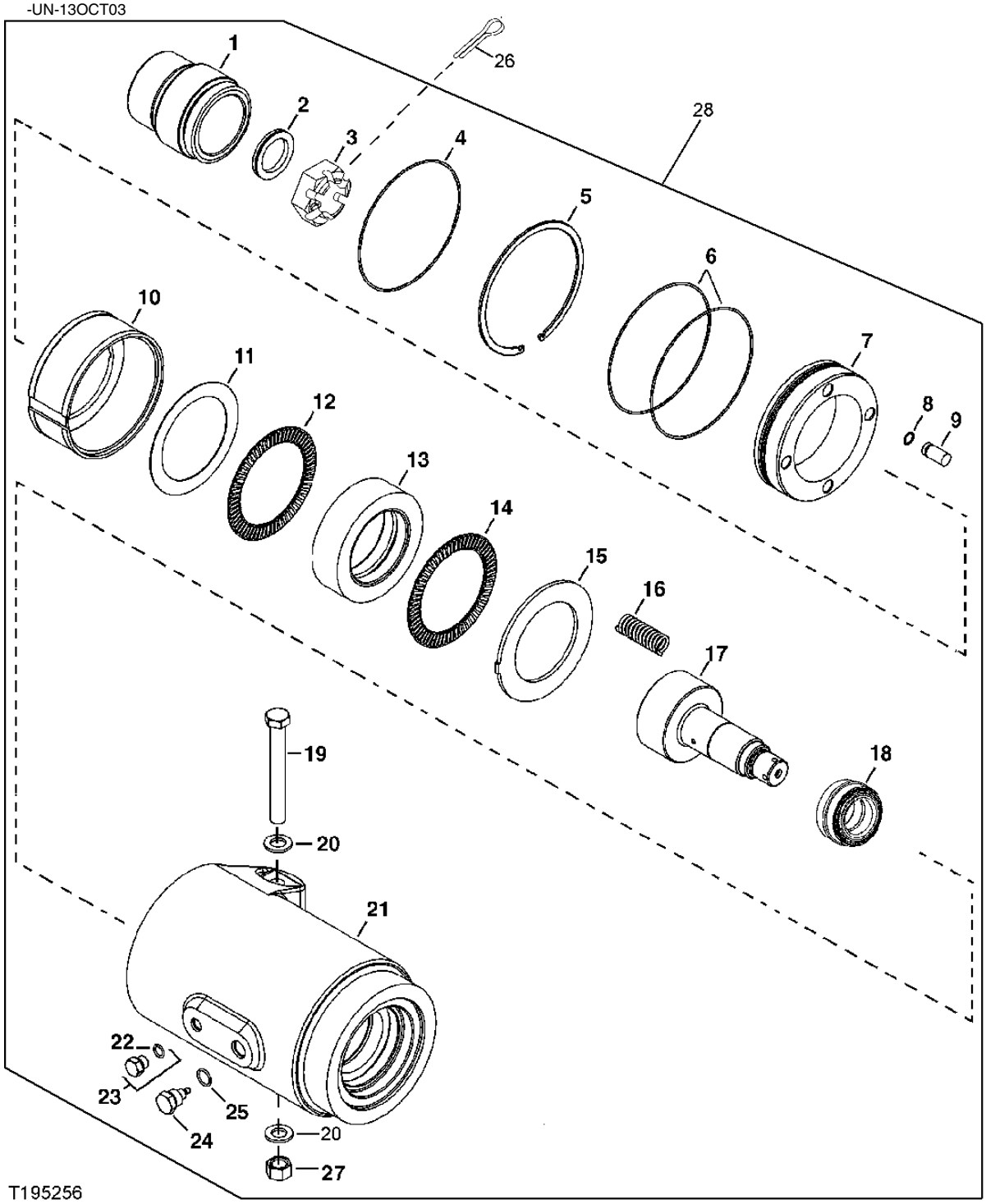

FRONT AXLE DISCONNECT
DECONNEXION D'ESSIEU DE PONT AVANT
DESCONEXION DEL PUENTE DELANTERO

KEY	PART NO.	PART NAME	QTY.	AXLE SERIAL NO.	REMARKS
1	R134673	YOKE	1		
2	R48734	WASHER	1		
3	R151933	NUT	1		
4	T56238	O-RING	1		
5	R135298	RING	1		
6	R136314	O-RING	2		
7	R134674	SLEEVE	1		
8	R135118	SEAL	4		
9	R135805	PIN	4		
10	R134675	PISTON	1		
11	R132520	THRUST WASHER	1		
12	RE68725	NEEDLE BEARING	1		
13	R134677	SHIFT COLLAR	1		
14	RE68725	NEEDLE BEARING	1		
15	R134676	PLATE	1		
16	R38185	SPRING	4		
17	R134672	UNIVERSAL DRIVESHAFT	1		
18	AU42978	TAPERED ROLLER BEARING	1		
19	19M7732	CAP SCREW	1		M16 X 130
20	24M7338	WASHER	2		17 X 30 X 3 MM
21	R134671	HOUSING	1		
22	51M7041	O-RING	1		
23	RE46684	FITTING PLUG	1		
24	R36943	FITTING	1		
25	R26375	O-RING	1		
26	11M7032	COTTER PIN	1		
27	14M7276	NUT	1		M16
28	RE67138	AXLE	1		

AXLE DISCONNECT PLUMBING
TUYAUTERIE DECONNEXION ESSIEU
TUBERIA DE DESCONEXION DE PUENTE

T202198 -UN-11AUG04

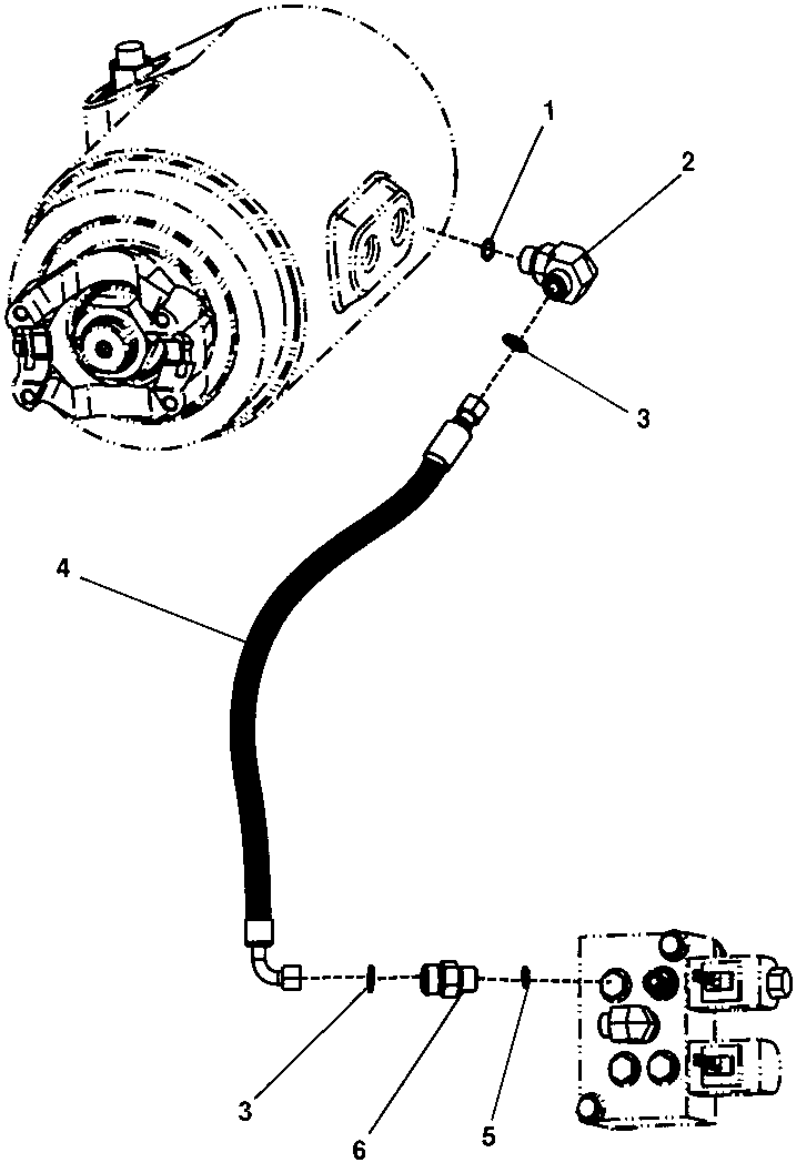

T202198

AXLE DISCONNECT PLUMBING
TUYAUTERIE DECONNEXION ESSIEU
TUBERIA DE DESCONEXION DE PUENTE

KEY	PART NO.	PART NAME	QTY.	SERIAL NO.	REMARKS
1	51M7041	O-RING	1		
2	38H5016	ELBOW FITTING	1		
3	T77613	O-RING	2		
4	AT167553	HYDRAULIC HOSE - FABRICATE	1		
5	R26448	O-RING	1		
6	38H1160	ADAPTER FITTING	1		

AXLE AND PARKING BRAKE BREATHER EXTENSION KIT
KIT D'EXTENSION DE RENIFLARD DE FREIN D'ESSIEU ET DE STAIONNEMENT
JUEGO DE EXTENSION DE RESPIRADERO DEL FRENO DE ESTACIONAMIENTO Y EJE

TX1006275 -UN-27APR06

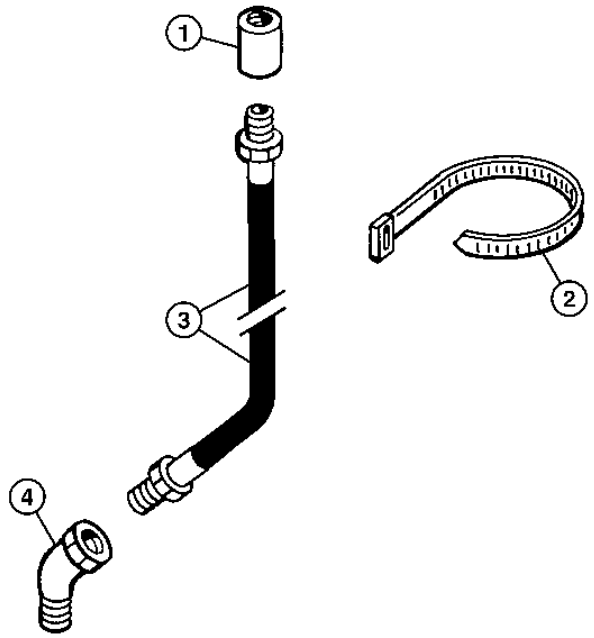

TX1006275

KEY	*PART NO.*	*PART NAME*	*QTY.*	*SERIAL NO.*	*REMARKS*
1	15H84	COUPLING	3		3.175 MM
2	H77698	TIE BAND	9		
3	AT207023	HYDRAULIC HOSE	3		
4	M45937	ELBOW FITTING	3		

DIFFERENTIAL LOCK SWITCH
INTERRUPTEUR DE BLOCAGE DU DIFFERENTIEL
INTERRUPTOR DE TRABA DEL DIFERENCIAL

TP48545 -UN-07NOV96

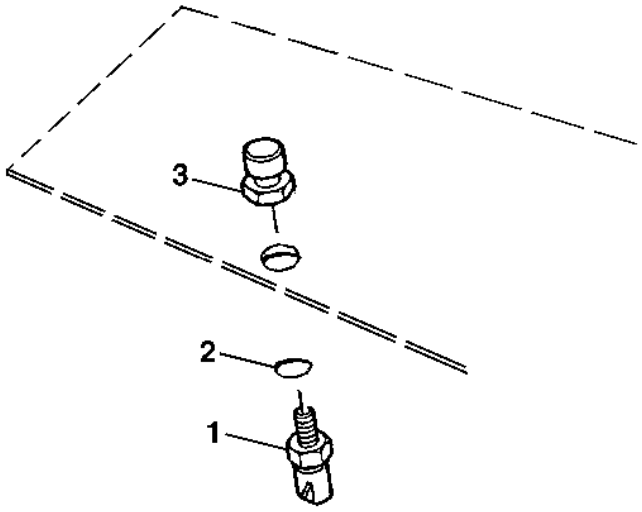

TP48545

KEY	*PART NO.*	*PART NAME*	*QTY.*	*SERIAL NO.*	*REMARKS*
1	RE46534	SWITCH	1		
2	51M7042	O-RING	1		13.300 X 2.200 MM
3	RE43637	ACTUATOR	1		

DRIVE SHAFTS
ARBRES ENTRAINEMENT
EJES IMPULSORES

T193494 -UN-15AUG03

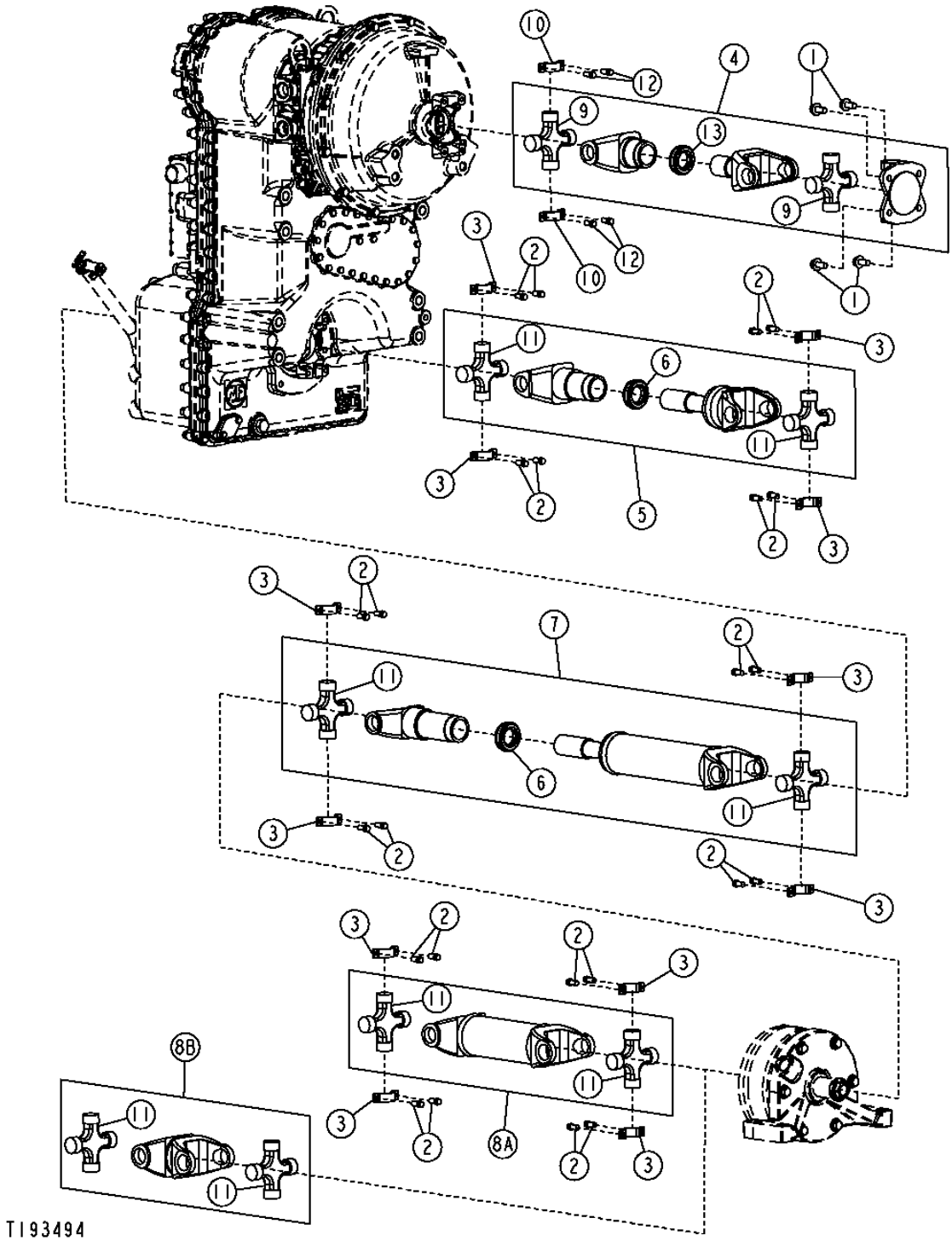

THIS PARTS LISTING IS CONTINUED

DRIVE SHAFTS
ARBRES ENTRAINEMENT
EJES IMPULSORES

KEY	*PART NO.*	*PART NAME*	*QTY.*	*SERIAL NO.*	*REMARKS*
1	19M7789	SCREW	4		M12 X 30
2	R85169	SCREW	24		
3	T203475	STRAP	12		
4	AT209661	DRIVE SHAFT	1		(ENGINE TO TRANSMISSION)
5	AT207292	UNIVERSAL DRIVESHAFT	1		(TRANSMISSION TO REAR AXLE)
6	AT210271	CAP	2		
7	AT207293	UNIVERSAL DRIVESHAFT	1		(TRANSMISSION TO PARKING BRAKE)
8A	AT207294	UNIVERSAL DRIVESHAFT	1		(PARKING BRAKE TO FRONT AXLE) (WITHOUT FRONT AXLE DISCONNECT)
8B	AT220547	DRIVE SHAFT	1		(PARKING BRAKE TO FRONT AXLE) (WITH FRONT AXLE DISCONNECT)
9	AT206861	UNIVERSAL JOINT	2		
10	T203450	HALF CLAMP	2		
11	AT207990	SPIDER	6		
12	T113128	SCREW	4		
13	AT210101	CAP	1		

TRANSMISSION MOUNTING BRACKETS
SUPPORTS DE MONTAGE DE TRANSMISSION
ESCUADRAS DE MONTAJE DE TRANSMISION

T193522 -UN-14AUG03

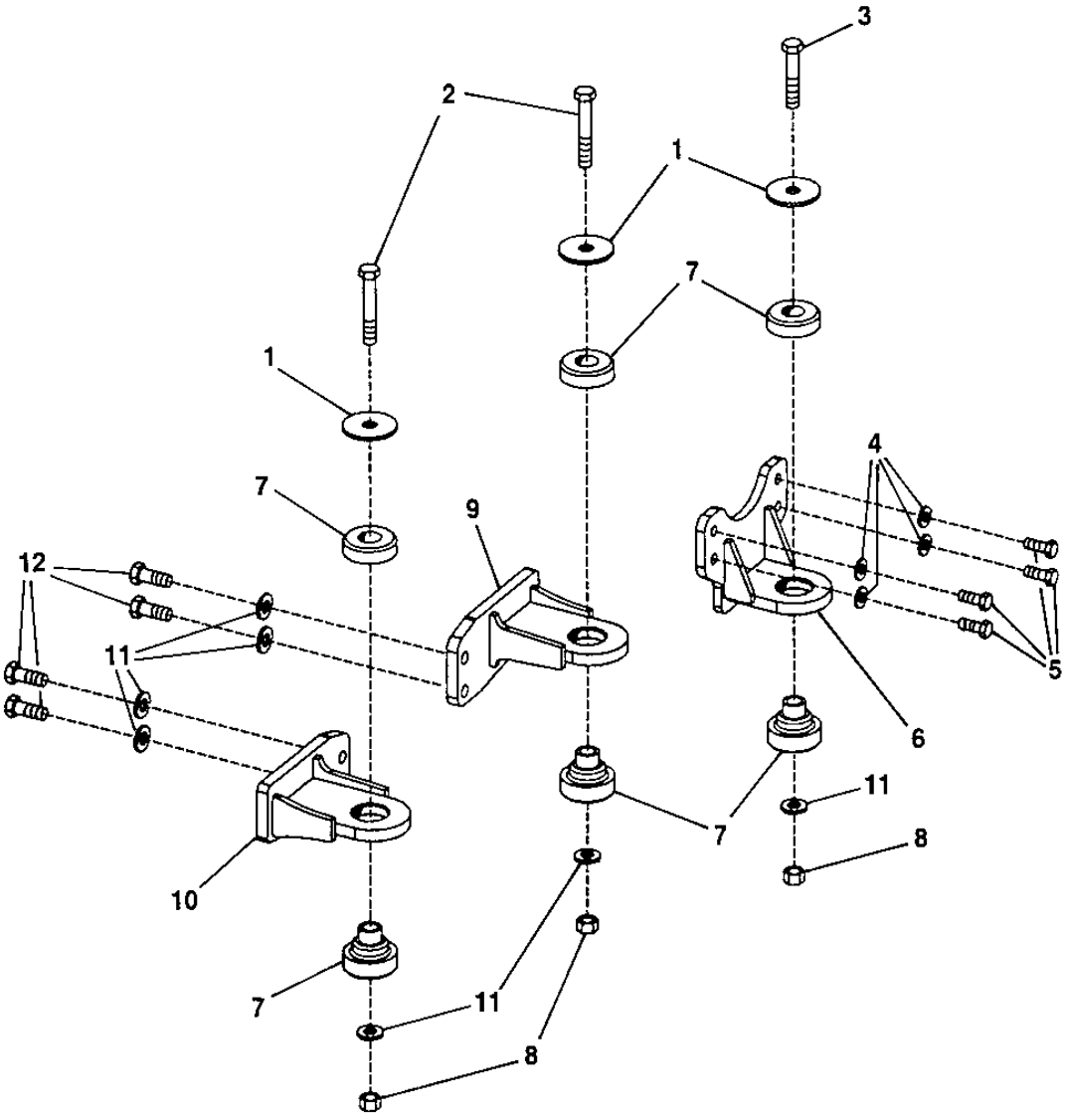

T193522

TRANSMISSION MOUNTING BRACKETS
SUPPORTS DE MONTAGE DE TRANSMISSION
ESCUADRAS DE MONTAJE DE TRANSMISION

KEY	*PART NO.*	*PART NAME*	*QTY.*	*SERIAL NO.*	*REMARKS*
1	T42977	WASHER	3		23.012 X 88.900 X 6 MM
2	19M7883	SCREW	2		M20 X 120
3	19M7968	CAP SCREW	1		M20 X 130
4	24M7241	WASHER	4		17 X 34 X 4 MM
5	19M7488	CAP SCREW	4		M16 X 40
6	AT209221	SUPPORT	1		
7	AT165288	ISOLATOR	3		
8	14M7277	NUT	3		M20
9	AT209997	SUPPORT	1		
10	AT209996	SUPPORT	1		
11	24M7242	WASHER	7		21.400 X 42 X 5 MM
12	19M7487	CAP SCREW	4		M20 X 50

TRANSMISSION
TRANSMISSION
TRANSMISION

T192819 -UN-10JUL03

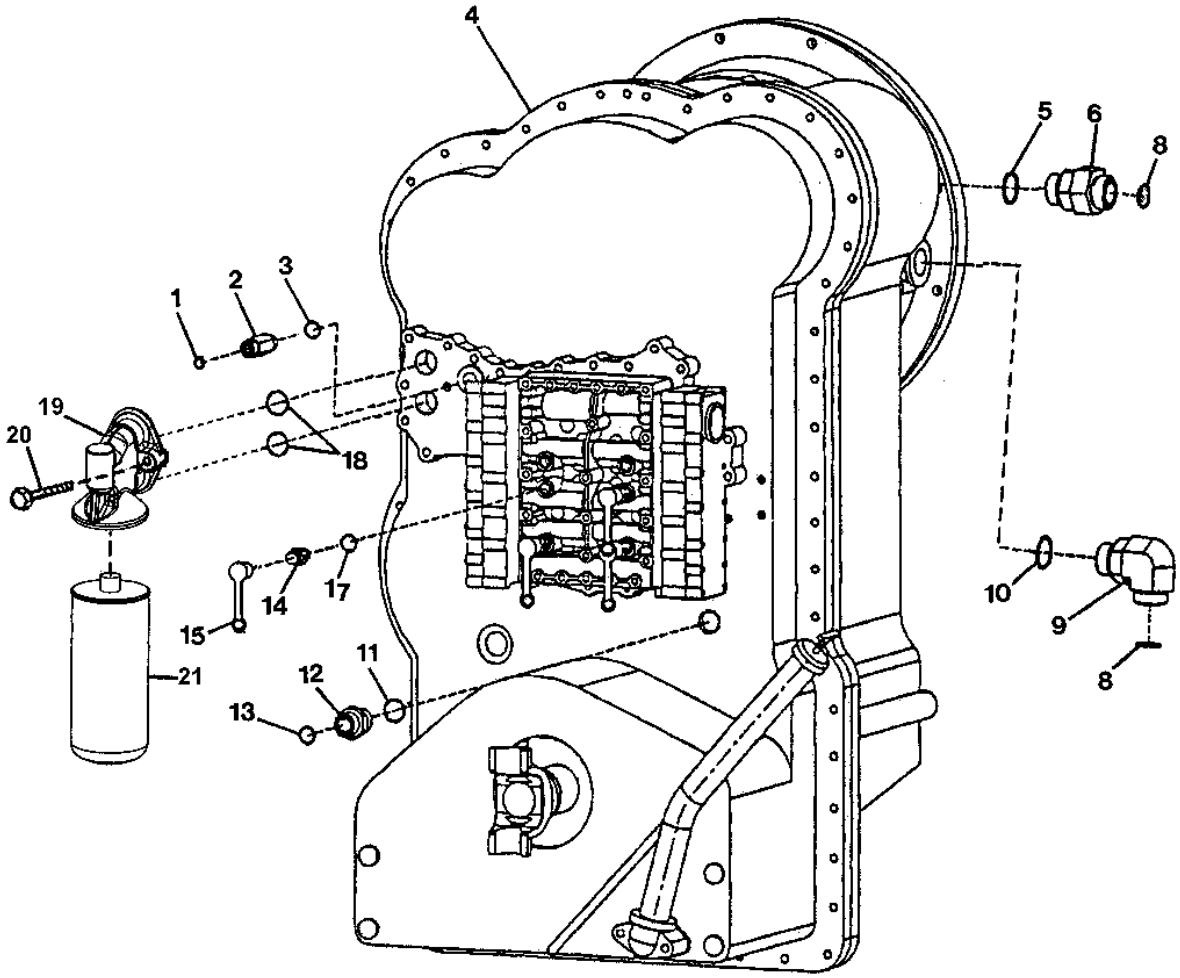

T192819

TRANSMISSION
TRANSMISSION
TRANSMISION

KEY	PART NO.	PART NAME	QTY.	TRANSMISSION SERIAL NO.	REMARKS
1	T77613	O-RING	1		
2	38H5178	ADAPTER FITTING	1		
3	51M7042	O-RING	1		13.300 X 2.200 MM
4	AT305660	TRANSMISSION	1		(REMAN) (SUB FOR AT227782)
5	R29936	O-RING	1		
6	38H1164	ADAPTER FITTING	1		
8	T76938	O-RING	2		
9	38H1037	ELBOW FITTING	1		
10	51M7048	O-RING	1		
11	T24210	O-RING	1		
12	T172732	ADAPTER FITTING	1		
13	T77932	O-RING	1		
14	AT202955	DIAGNOSTIC COUPLING	4		
15	R77175	COVER	4		
17	51M7039	O-RING	4		8.100 X 1.600 MM
18	T172318	O-RING	2		
19	T177997	FILTER HEAD	1		
20	T173819	CAP SCREW	2		
21	AT222005	OIL FILTER	1		

TORQUE CONVERTER
CONVERTISSEUR DE COUPLE
CONVERTIDOR DE PAR

T192713 -UN-11JUL03

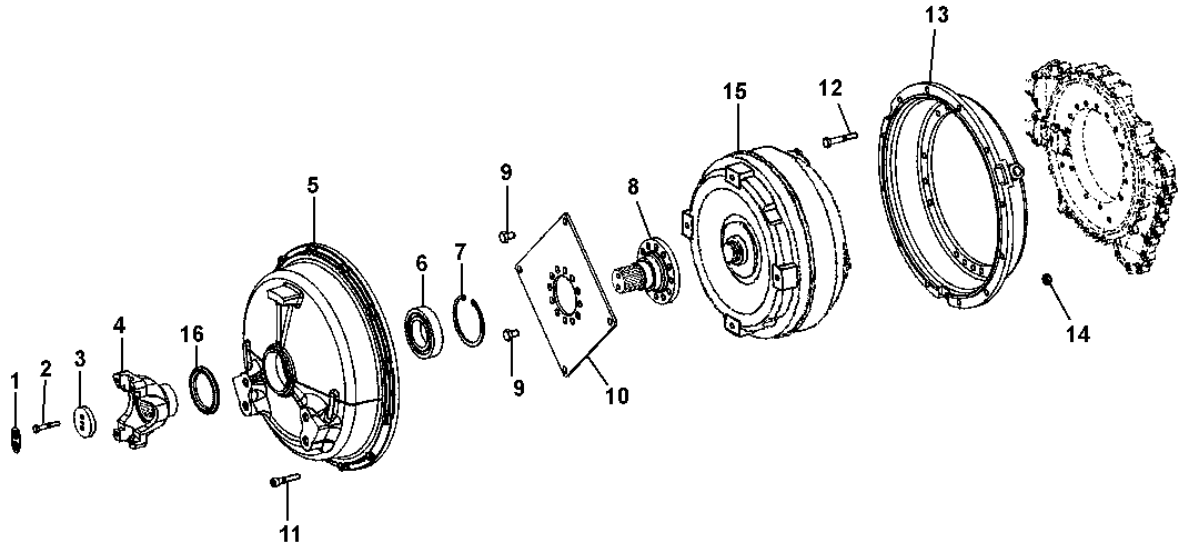

T192713

TORQUE CONVERTER
CONVERTISSEUR DE COUPLE
CONVERTIDOR DE PAR

KEY	PART NO.	PART NAME	QTY.	TRANSMISSION SERIAL NO.	REMARKS
1	T116613	WASHER	1		
2	19M8397	CAP SCREW	2		M8 X 50
3	T116516	SPACER	1		
4	T179944	UNIVERSAL JOINT YOKE	1		
5	T195240	HOUSING	1		
6	T195242	BALL BEARING	1		
7	T195243	SNAP RING	1		
8	T195241	UNIVERSAL DRIVESHAFT	1		
9	19M8017	CAP SCREW	16		M12 X 20
10	T172812	DIAPHRAGM	1		
11	19M7179	CAP SCREW	12		M10 X 50
12	19M7742	CAP SCREW	18		M10 X 65
13	T179276	HOUSING	1		
14	14M7274	NUT	12		M10
15	AT228319	TORQUE CONVERTER	1		(REMAN) (SUB FOR AT228185)
16	T196792	SCREEN	1		

TRANSMISSION INPUT SHAFT
ARBRE D'ENTREE DE TRANSMISSION
EJE DE ENTRADA DE LA TRANSMISION

T192712 -UN-11JUL03

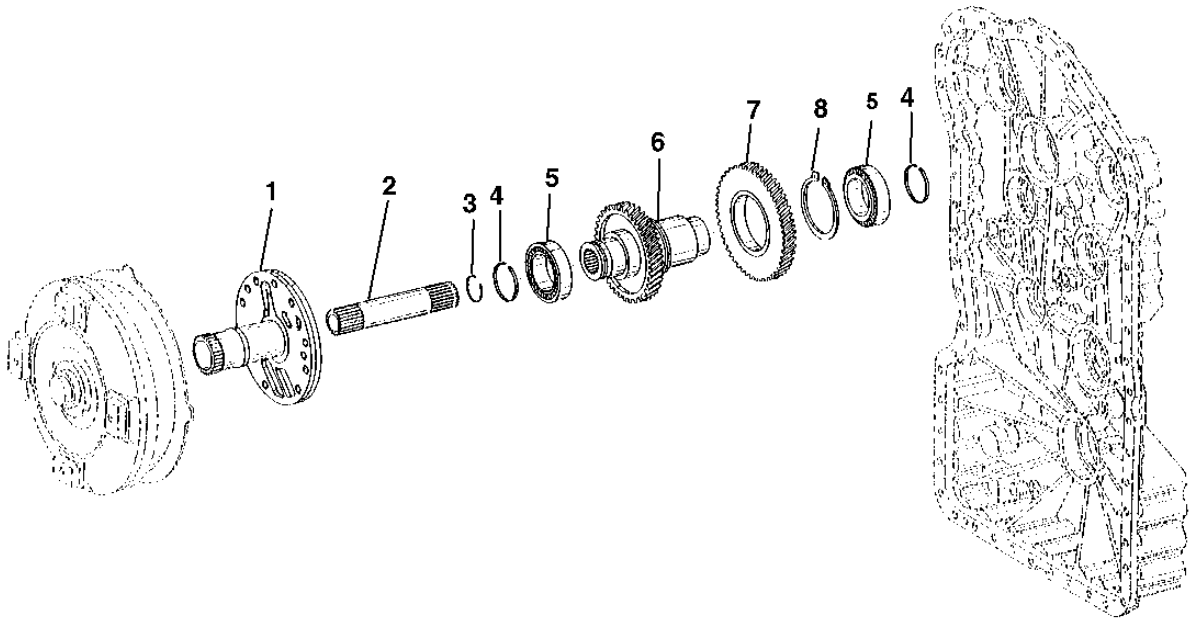

T192712

TRANSMISSION INPUT SHAFT
ARBRE D'ENTREE DE TRANSMISSION
EJE DE ENTRADA DE LA TRANSMISION

KEY	PART NO.	PART NAME	QTY.	TRANSMISSION SERIAL NO.	REMARKS
1	T195207	UNIVERSAL DRIVESHAFT	1		
2	T171114	PINION SHAFT	1		
3	T171178	SNAP RING	1		
4	T181535	PISTON RING	2		
5	T171126	BEARING	2		IMPORTANT-HIGH TOLERANCE BEARING REQUIRED IN THIS LOCATION. USE ONLY JOHN DEERE PARTS SOURCED BEARINGS.
6	T172796	UNIVERSAL DRIVESHAFT	1		
7	T171115	GEAR	1		
8	40M7220	SNAP RING	1		

TRANSMISSION HOUSING
CARTER DE TRANSMISSION
CAJA DE LA TRANSMISION

T193498 -UN-21AUG03

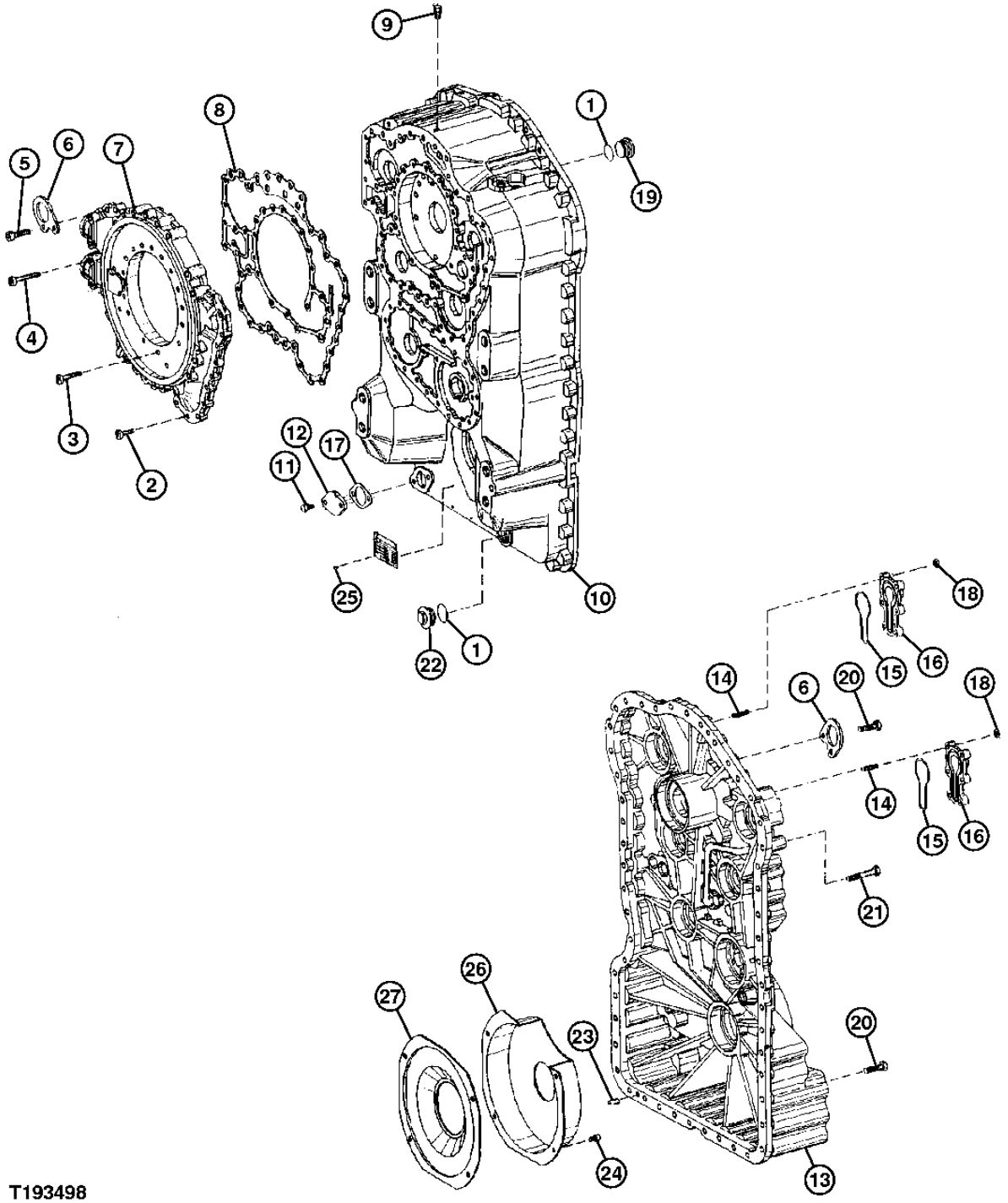

T193498

TRANSMISSION HOUSING
CARTER DE TRANSMISSION
CAJA DE LA TRANSMISION

KEY	PART NO.	PART NAME	QTY.	TRANSMISSION SERIAL NO.	REMARKS
1	T174107	O-RING	2		
2	T161208	CAP SCREW	15		
3	19M2972	CAP SCREW	21		M8 X 45
4	T173819	CAP SCREW	4		
5	19M8338	SCREW	2		M10 X 40
6	T171112	PLATE	2		
7	T173063	MANIFOLD	1		
8	T172795	GASKET	1		
9	T116918	BREATHER	1		
10	T197458	TRANSMISSION CASE	1		
11	19M7284	CAP SCREW	2		M8 X 18
12	T144370	PLATE	1		
13	T179673	HOUSING	1		
14	T180884	STUD	12		
15	T174238	O-RING	2		
16	T171111	COVER	2		
17	T116604	GASKET	1		
18	14M7298	FLANGE NUT	12		M8
19	T173216	PLUG	1		
20	19M8338	SCREW	44		M10 X 40
21	19M8340	SCREW	7		M10 X 65
22	T172094	DRAIN PLUG	1		
23	T179691	PIN	2		
24	19M7964	CAP SCREW	4		M8 X 12
25	25M7021	GROOVE PIN	4		3 X 5 MM
26	T171958	COVER	1		
27	T171957	COVER	1		

TRANSMISSION SPEED SENSOR
CAPTEUR DE VITESSE DE TRANSMISSION
SENSOR DE VELOCIDAD DE LA TRANSMISION

T193503 -UN-18AUG03

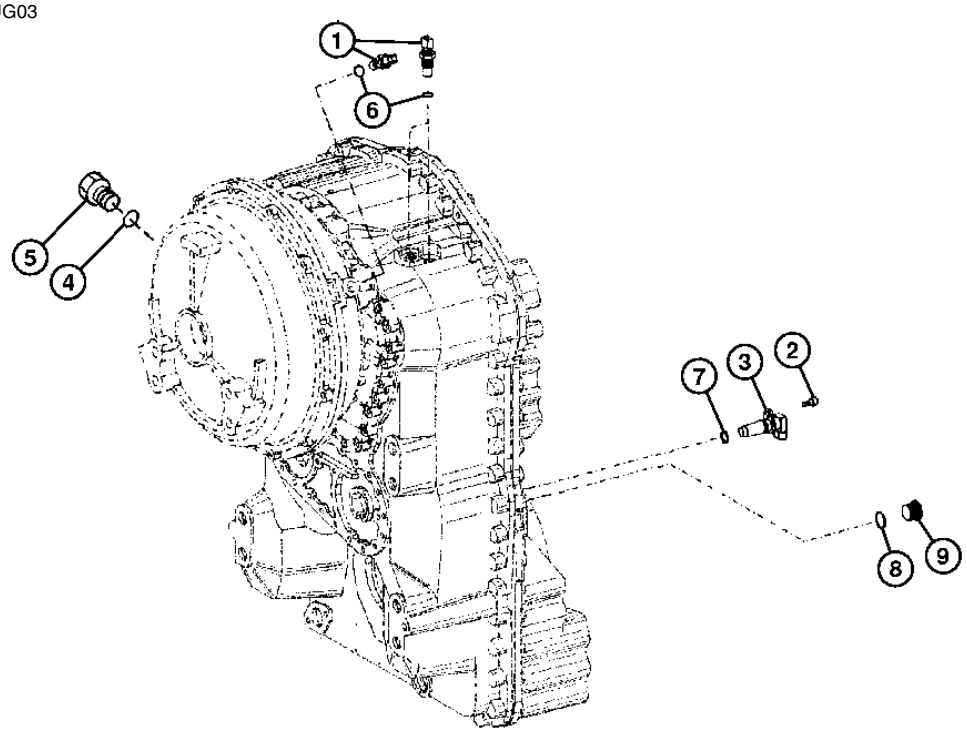

T193503

TRANSMISSION SPEED SENSOR
CAPTEUR DE VITESSE DE TRANSMISSION
SENSOR DE VELOCIDAD DE LA TRANSMISION

KEY	PART NO.	PART NAME	QTY.	TRANSMISSION SERIAL NO.	REMARKS
1	AT210773	SENSOR	3		
2	19M7932	CAP SCREW	1		M8 X 16
3	T179510	SENSOR	1		
4	T176796	O-RING	1		
5	T175750	PLUG	1		
6	R104558	O-RING	3		
7	R73599	O-RING	1		
8	T174236	O-RING	1		
9	T173217	FITTING PLUG	1		

TRANSMISSION OIL PUMP
POMPE A HUILE DE BOITE
BOMBA DE ACEITE DE LA TRANSMISION

T193485 -UN-14AUG03

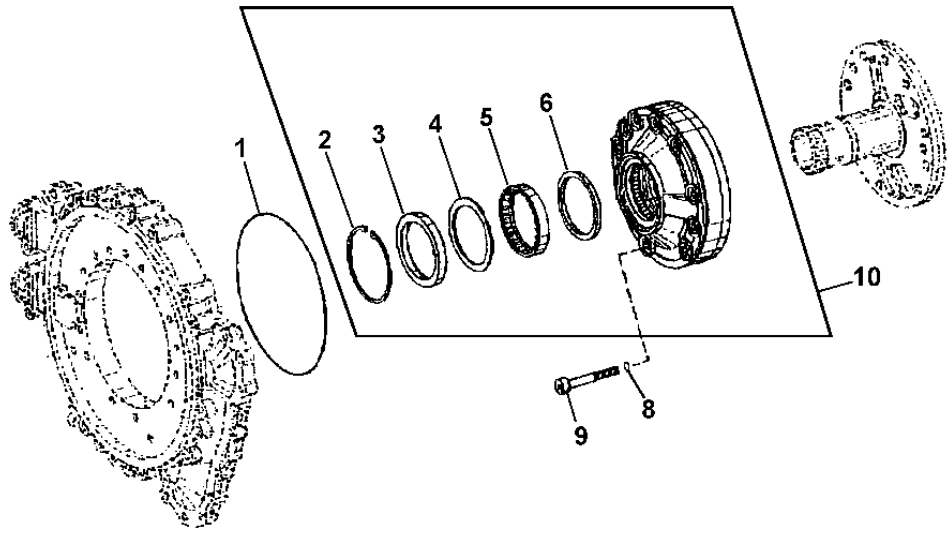

T193485

KEY	PART NO.	PART NAME	QTY.	SERIAL NO.	REMARKS
1	L40273	O-RING	1		
2	T173400	SNAP RING	1		
3	T173399	SEAL	1		
4	T173397	THRUST WASHER	1		
5	T173398	BEARING	1		
6	T173396	RING	1		
8	T174239	O-RING	10		
9	T207759	BOLT	10		
10	AT334451	FLOW CONTROL HYD. VALVE	1		(SUB FOR AT223279)

TRANSMISSION COVER AND GASKET
COUVERCLE ET JONT DE TRANSMISSION
EMPAQUETADURA Y CUBIERTA DE LA TRANSMISION

TP55579 -UN-14JUL97

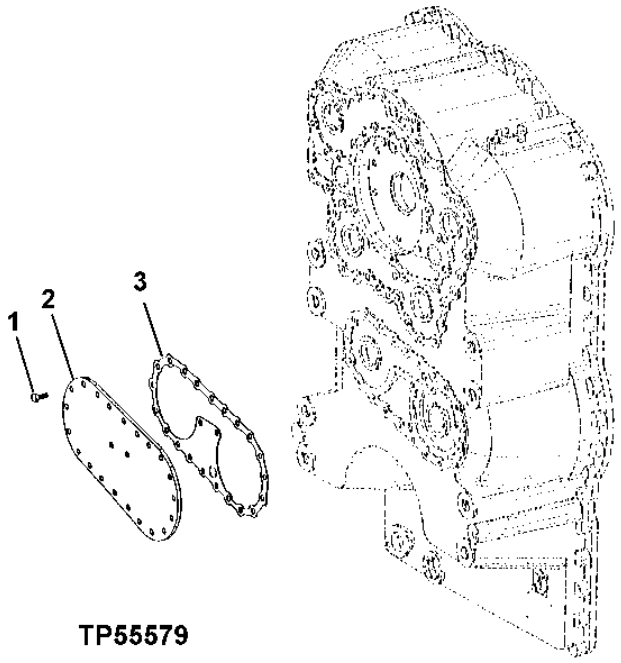

TP55579

KEY	*PART NO.*	*PART NAME*	*QTY.*	*TRANSMISSION SERIAL NO.*	*REMARKS*
1	19M7284	CAP SCREW	23		M8 X 18
2	T172814	COVER	1		
3	T181474	GASKET	1		

TRANSMISSION INTERNAL OIL LINES
CONDUITES D'HUILE INTERNES DE TRANSMISSION
LINEAS INTERNAS DE ACEITE DE LA TRANSMISION

T193492 -UN-21AUG03

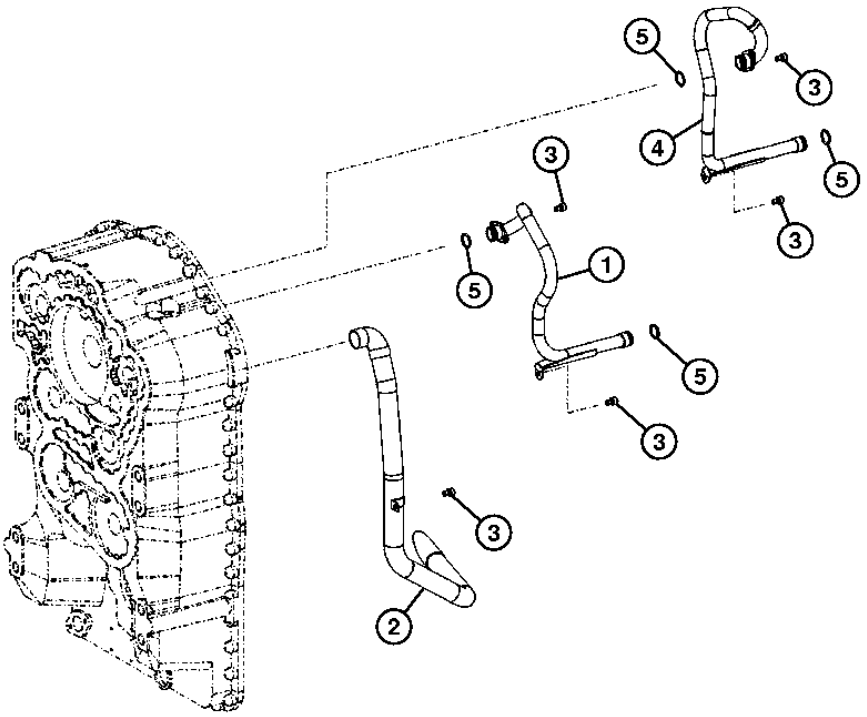

T193492

TRANSMISSION INTERNAL OIL LINES
CONDUITES D'HUILE INTERNES DE TRANSMISSION
LINEAS INTERNAS DE ACEITE DE LA TRANSMISION

KEY	PART NO.	PART NAME	QTY.	TRANSMISSION SERIAL NO.	REMARKS
1	T197459	LINE	1		
2	T172791	TUBE	1		
3	19M7964	CAP SCREW	7		M8 X 12
4	T197460	LINE	1		
5	T174234	O-RING	4		

TRANSMISSION CONTROL VALVE MANIFOLD
COLLECTEUR DE DISTRIBUTEUR DE TRANSMISSION
COLECTOR DE LA VALVULA DE CONTROL DE TRANSMISION

T193514 -UN-21AUG03

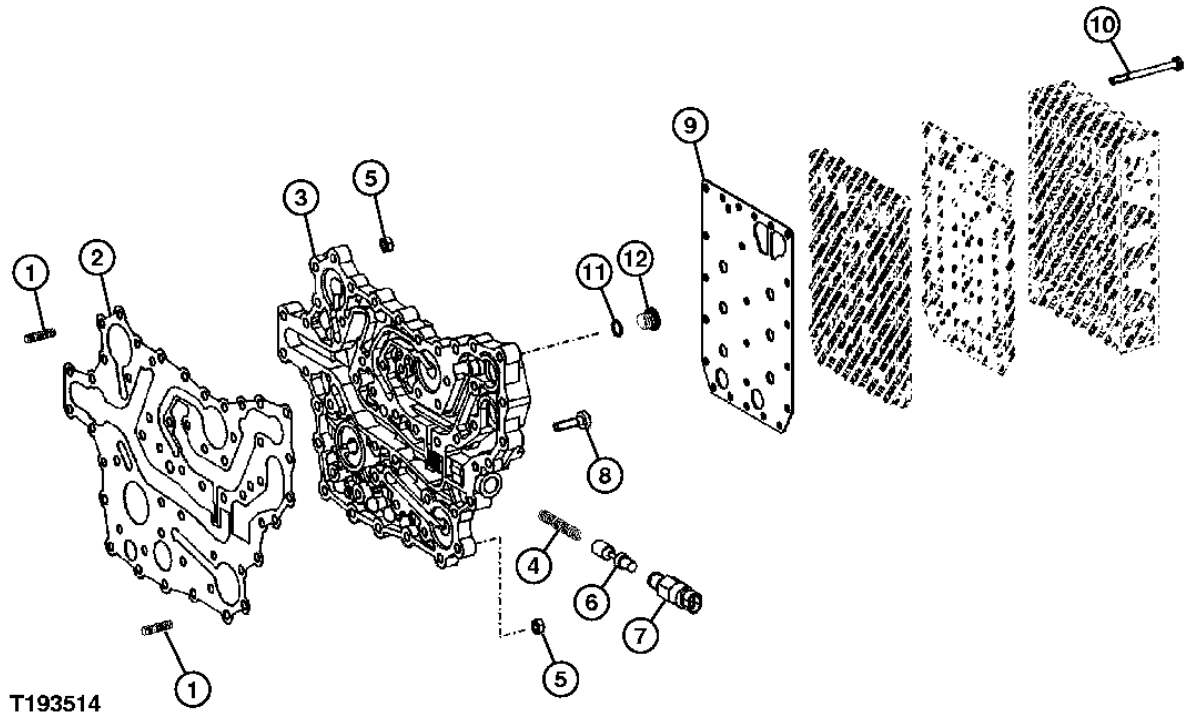

TRANSMISSION CONTROL VALVE MANIFOLD
COLLECTEUR DE DISTRIBUTEUR DE TRANSMISSION
COLECTOR DE LA VALVULA DE CONTROL DE TRANSMISION

KEY	PART NO.	PART NAME	QTY.	TRANSMISSION SERIAL NO.	REMARKS
1	T180884	STUD	14		
2	T203554	GASKET	1		
3	T203555	PLATE	1		
4	T177979	SPRING	1		
5	14M7298	FLANGE NUT	14		M8
6	T203742	VALVE SPOOL	1		
7	T173873	PRESSURE SWITCH	1		(TRANS. OIL FILTER RESTRICTION INDICATOR)
8	T161208	CAP SCREW	37		
9	T174393	PLATE	1		(SUB FOR T195274) (ALSO ORDER T173870 AND T174394)
10	T173123	CAP SCREW	23		(SUB FOR T195055)
11	T74552	O-RING	1		
12	T122803	FITTING PLUG	1		

TRANSMISSION CONTROL VALVE
DISTRIBUTEUR DE TRANSMISSION
VALVULA DE CONTROL DE TRANSMISION

T192815 -UN-28JUL03

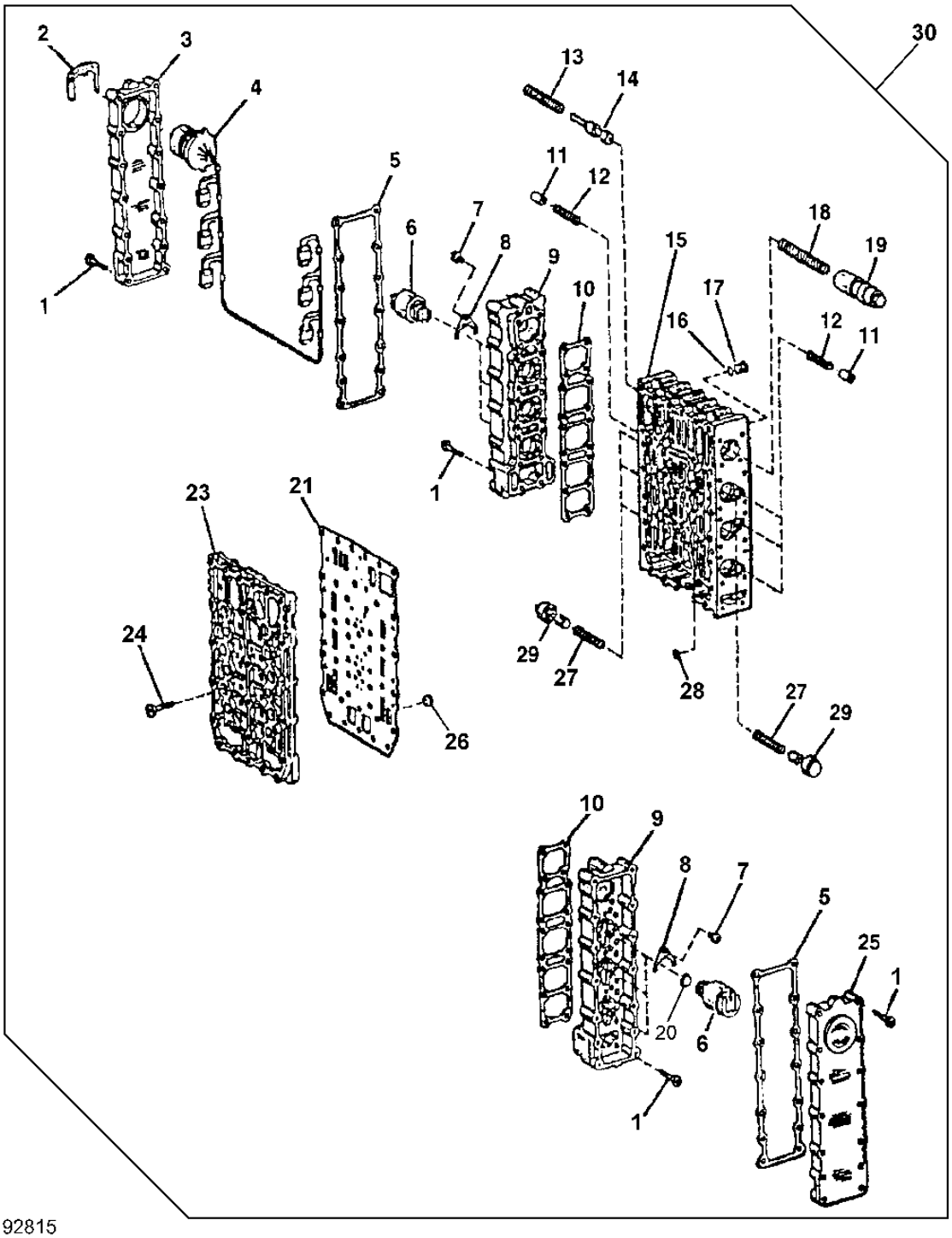

T192815

TRANSMISSION CONTROL VALVE
DISTRIBUTEUR DE TRANSMISSION
VALVULA DE CONTROL DE TRANSMSION

KEY	PART NO.	PART NAME	QTY.	TRANSMISSION SERIAL NO.	REMARKS
1	T173131	CAP SCREW	64		
2	T161207	CLAMP	1		
3	T173138	COVER	1		
4	T179721	WIRING HARNESS	1		(INCLUDES TRANSMISSION TEMPERATURE SENSOR)
5	T182254	GASKET	2		
6	T169607	SOLENOID VALVE	6		
7	19M7600	SCREW	6		M5 X 12, (SUB FOR T159602)
8	T144486	PLATE	6		
9	T177221	HOUSING	2		
10	T182196	GASKET	2		
11	T169766	PIN FASTENER	6		
12	T169712	COMPRESSION SPRING	6		
13	T173126	COMPRESSION SPRING	1		
14	T173125	PISTON	1		
15	T177219	FLOW CONTROL HYD. VALVE	1		
16	T116416	O-RING	8		
17	T175862	PLUG	8		
18	T173128	COMPRESSION SPRING	1		
19	T205369	PISTON	1		
20	T170196	O-RING	6		
21	T179532	PLATE	1		(SUB FOR T195052) (ALSO ORDER T179531 AND T179533)
23	T203767	PLATE	1		
24	T195275	CAP SCREW	18		
25	T173139	COVER	1		
26	T174396	SCREEN	6		
27	T169711	COMPRESSION SPRING	6		
28	T169707	ORIFICE	6		
29	T173511	PISTON	6		
30	AT220039	HYD ACTUATED CONTROL VALVE	1		

GEARBOX HOUSING OUTPUT SHAFT
ARBRE SORTIE CARTER BOITE ENGRENAGES
EJE DE SALIDA DE LA CAJA DE ENGRANAJES

TP62705 -UN-23NOV99

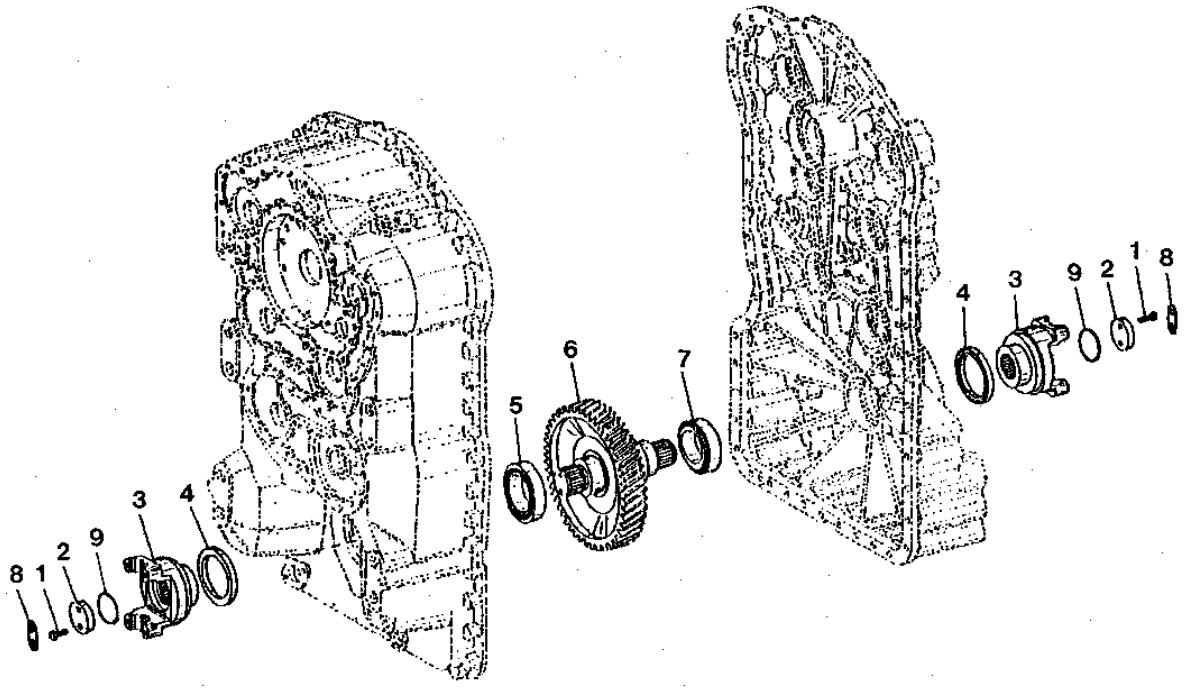

TP62705

GEARBOX HOUSING OUTPUT SHAFT
ARBRE SORTIE CARTER BOITE ENGRENAGES
EJE DE SALIDA DE LA CAJA DE ENGRANAJES

KEY	*PART NO.*	*PART NAME*	*QTY.*	*SERIAL NO.*	*REMARKS*
1	19M7407	CAP SCREW	4		M8 X 25
2	T116460	SPACER	2		
3	T173510	YOKE WITH TUBE	2		
	T225912	YOKE	2		(FOR HARSH ENVIRONMENT)
4	T141386	SEAL	2		
5	T171126	BEARING	1		IMPORTANT-HIGH TOLERANCE BEARING REQUIRED IN THIS LOCATION. DO NOT SUBSTITUTE STANDARD BEARING.
6	T171181	PINION SHAFT	1		
7	T171126	BEARING	1		IMPORTANT-HIGH TOLERANCE BEARING REQUIRED IN THIS LOCATION. DO NOT SUBSTITUTE STANDARD BEARING.
8	T116481	WASHER	2		TAB
9	T123707	O-RING	2		

CONVERTER RELIEF AND MINIMUM PRESSURE VALVES
CLAPETS DE DECHARGE DU CONVERTISSEUR ET DE PRESSION MINIMALE
VALVULAS DE PRESION MINIMA Y ALIVIO DEL CONVERTIDOR

T155456 -UN-03JUN02

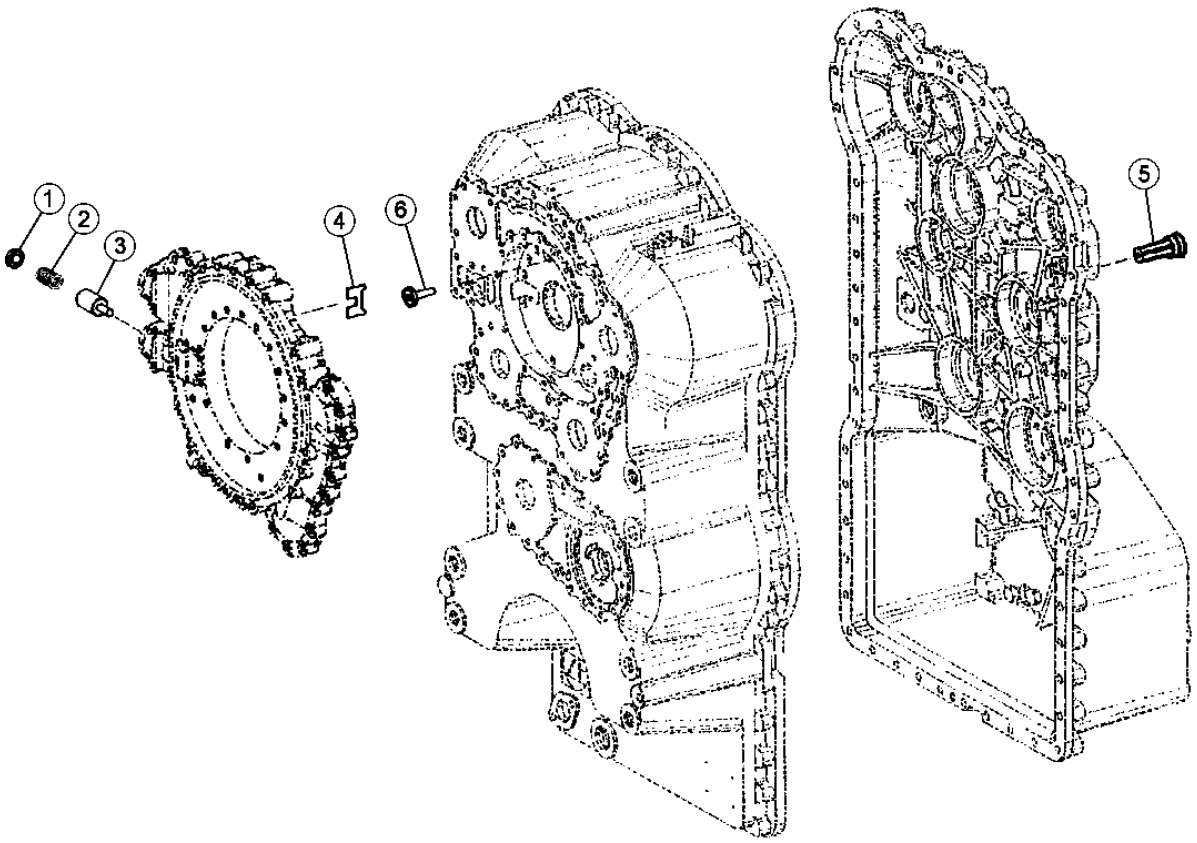

T155456

CONVERTER RELIEF AND MINIMUM PRESSURE VALVES
CLAPETS DE DECHARGE DU CONVERTISSEUR ET DE PRESSION MINIMALE
VALVULAS DE PRESION MINIMA Y ALIVIO DEL CONVERTIDOR

KEY	PART NO.	PART NAME	QTY.	TRANSMISSION SERIAL NO.	REMARKS
1	T173145	PLATE	1		
2	T176528	COMPRESSION SPRING	1		
3	T176527	PISTON	1		
4	T173146	WASHER	1		
5	T176526	FLOW CONTROL HYD. VALVE	1		
6	T195270	PRESSURE RELIEF VALVE	1		

POWER TAKE-OFF
PRISE DE FORCE
TOMA DE FUERZA

T193518 -UN-21AUG03

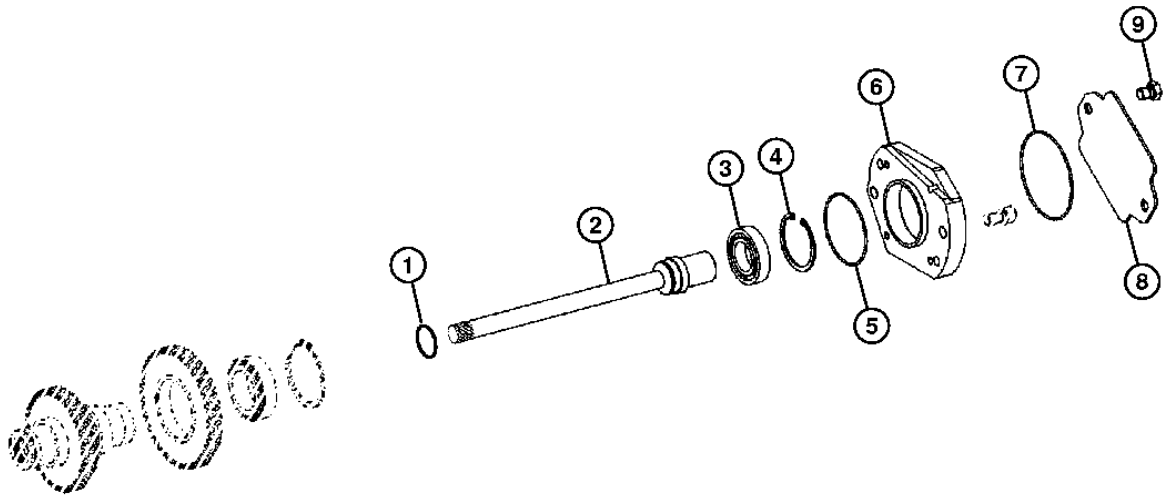

T193518

POWER TAKE-OFF
PRISE DE FORCE
TOMA DE FUERZA

KEY	PART NO.	PART NAME	QTY.	TRANSMISSION SERIAL NO.	REMARKS
1	T172118	PISTON RING	1		
2	T201811	PINION SHAFT	1		
3	T171140	BALL BEARING	1		
4	40M1872	SNAP RING	1		
5	T169035	RING	1		
6	T201812	FLANGE	1		
7	T174529	O-RING	1		

CLUTCH ASSEMBLY (FORWARD CLUTCH)
EMBRAYAGE (EMBRAYAGE MARCHE AVANT)
CONJUNTO DEL EMGRAGUE (EMBRAGUE DE AVANCE)

TP62886 -UN-25AUG00

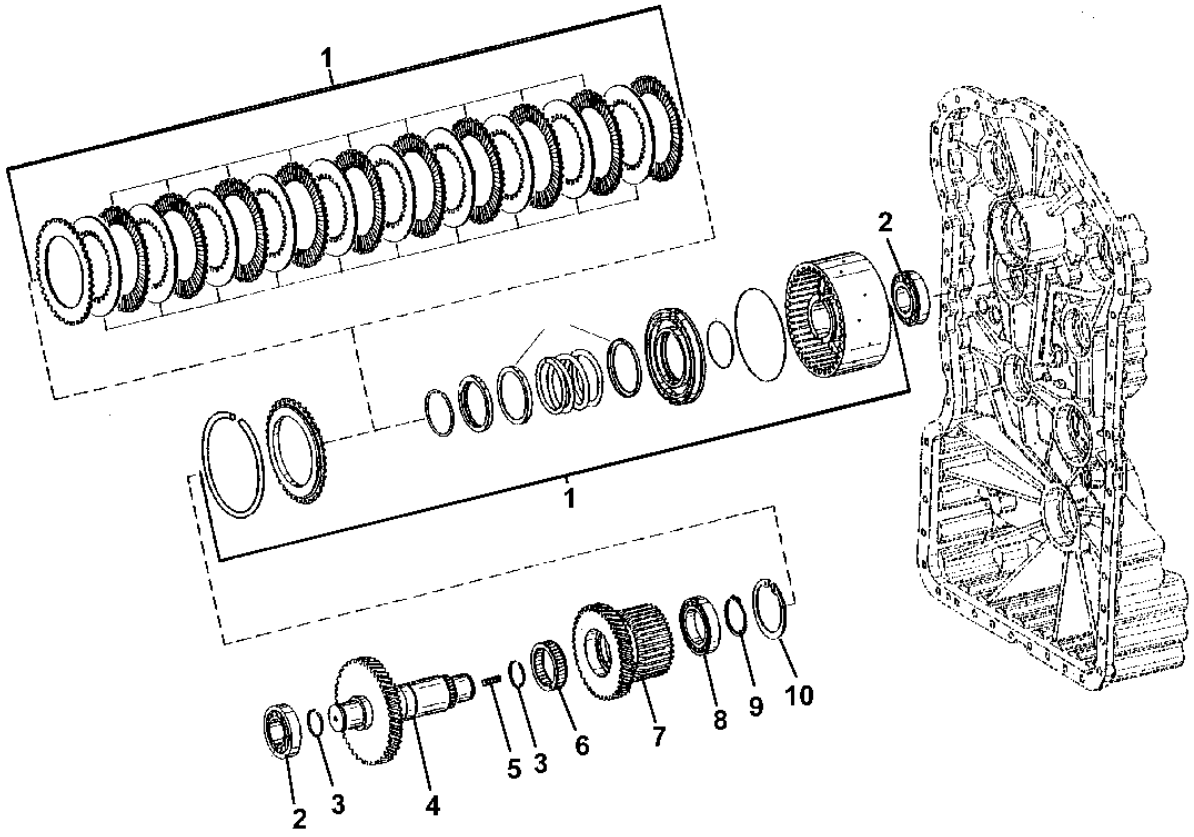

TP62886

CLUTCH ASSEMBLY (FORWARD CLUTCH)
EMBRAYAGE (EMBRAYAGE MARCHE AVANT)
CONJUNTO DEL EMBRAGUE (EMBRAGUE DE AVANCE)

KEY	*PART NO.*	*PART NAME*	*QTY.*	*TRANSMISSION SERIAL NO.*	*REMARKS*
1	AT331641	CLUTCH	1		(SUB FOR AT223305)
2	T171156	BEARING	2		IMPORTANT-HIGH TOLERANCE BEARING REQUIRED IN IN THIS LOCATION. USE ONLY JOHN DEERE PARTS SOURCED BEARINGS.
3	T172115	PISTON RING	2		
4	T171217	PINION SHAFT	1		
5	T171153	STUD	1		
6	T172302	NEEDLE BEARING	1		
7	T172817	GEAR	1		
8	T197553	BALL BEARING	1		
9	T159519	SNAP RING	1		
10	40M7060	SNAP RING	1		

CLUTCH ASSEMBLY (REVERSE CLUTCH)
EMBRAYAGE (EMBRAYAGE DE MARCHE ARRIERE)
CONJUNTO DEL EMBRAGUE (EMBRAGUE DE RETROCESO)

TP62887 -UN-25AUG00

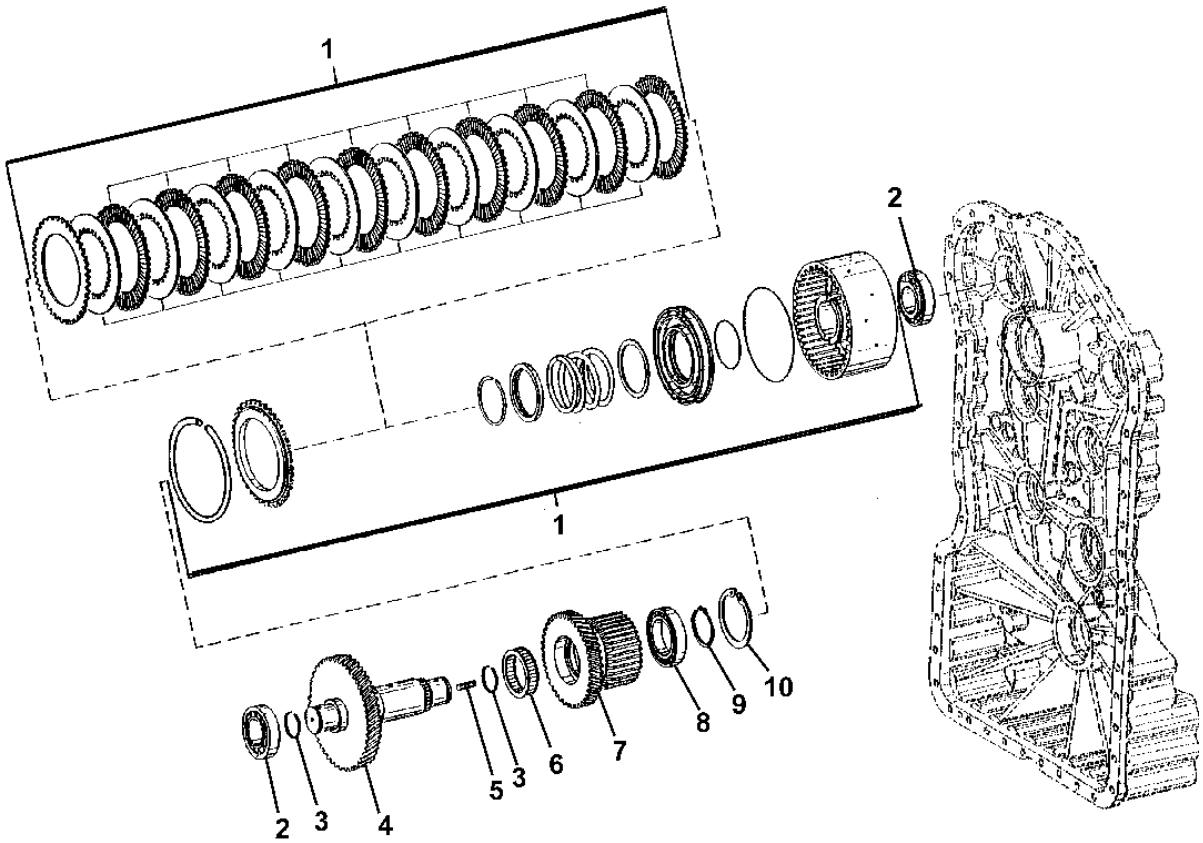

TP62887

CLUTCH ASSEMBLY (REVERSE CLUTCH)
EMBRAYAGE (EMBRAYAGE DE MARCHE ARRIERE)
CONJUNTO DEL EMBRAGUE (EMBRAGUE DE RETROCESO)

KEY	*PART NO.*	*PART NAME*	*QTY.*	*TRANSMISSION SERIAL NO.*	*REMARKS*
1	AT331641	CLUTCH	1		(SUB FOR AT223305)
2	T171156	BEARING	2		IMPORTANT-HIGH TOLERANCE BEARING REQUIRED IN THIS LOCATION. USE ONLY JOHN DEERE PARTS SOURCED BEARINGS.
3	T172115	PISTON RING	2		
4	T171224	PINION SHAFT	1		
5	T171153	STUD	1		
6	T172302	NEEDLE BEARING	1		
7	T172817	GEAR	1		
8	T197553	BALL BEARING	1		
9	T159519	SNAP RING	1		
10	40M7060	SNAP RING	1		

CLUTCH ASSEMBLY (FIRST GEAR)
EMBRAYAGE (PREMIÈRE VITESSE)
CONJUNTO DEL EMBRAGUE (PRIMERA MARCHA)

TP62882 -UN-25AUG00

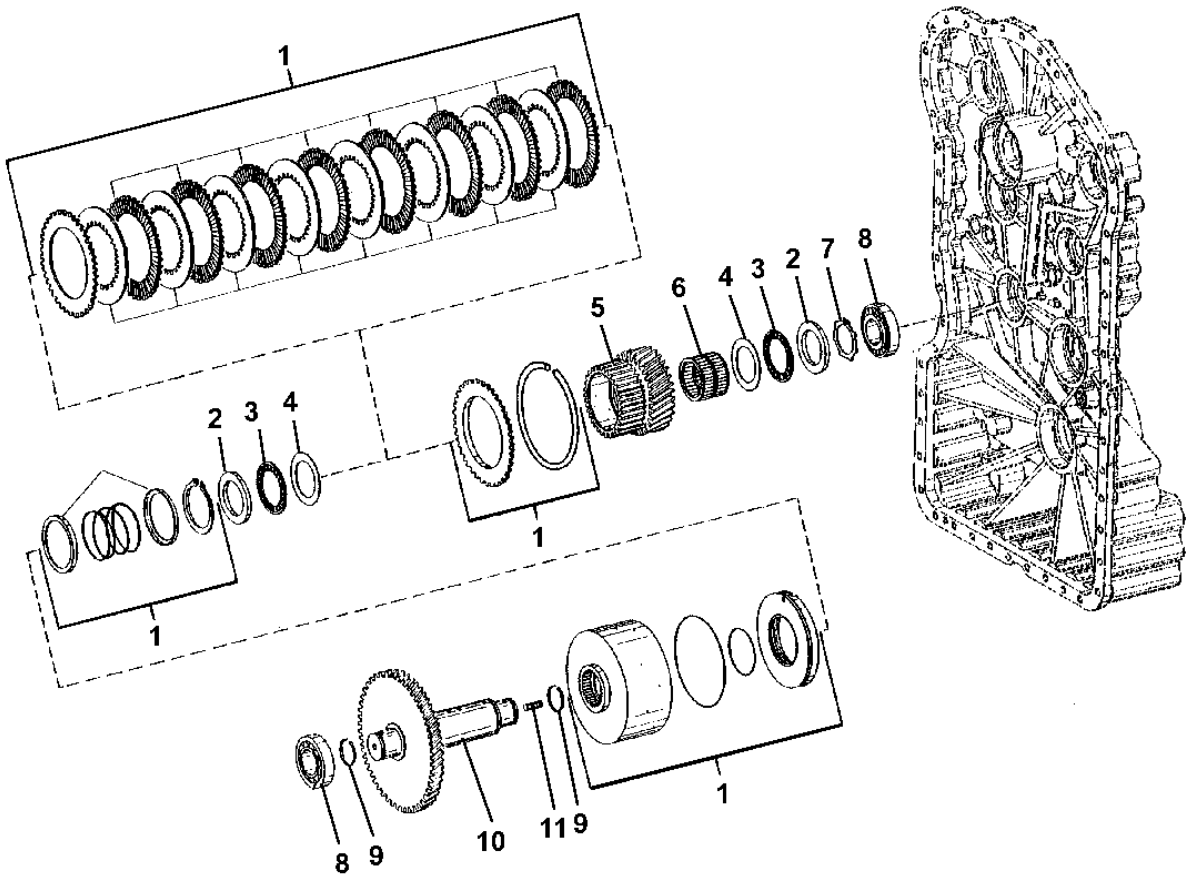

TP62882

CLUTCH ASSEMBLY (FIRST GEAR)
EMBRAYAGE (PREMIÈRE VITESSE)
CONJUNTO DEL EMBRAGUE (PRIMERA MARCHA)

KEY	PART NO.	PART NAME	QTY.	TRANSMISSION SERIAL NO.	REMARKS
1	AT331639	CLUTCH	1		(SUB FOR AT223299)
2	T172104	DISK	2		
3	T172129	THRUST BEARING	2		
4	T172130	THRUST WASHER	2		
5	T195260	GEAR	1		
6	T179594	NEEDLE BEARING	1		
7	T173036	SNAP RING	1		
8	T171156	BEARING	2		IMPORTANT-HIGH TOLERANCE BEARING REQUIRED IN THIS LOCATION. USE ONLY JOHN DEERE PARTS SOURCED BEARINGS.
9	T172115	PISTON RING	2		
10	T172816	UNIVERSAL DRIVESHAFT	1		
11	T171153	STUD	1		

CLUTCH ASSEMBLY (SECOND GEAR)
EMBRAYAGE (DEUXIÈME VITESSE)
CONJUNTO DEL EMBRAGUE (SEGUNDA MARCHA)

TP62883 -UN-25AUG00

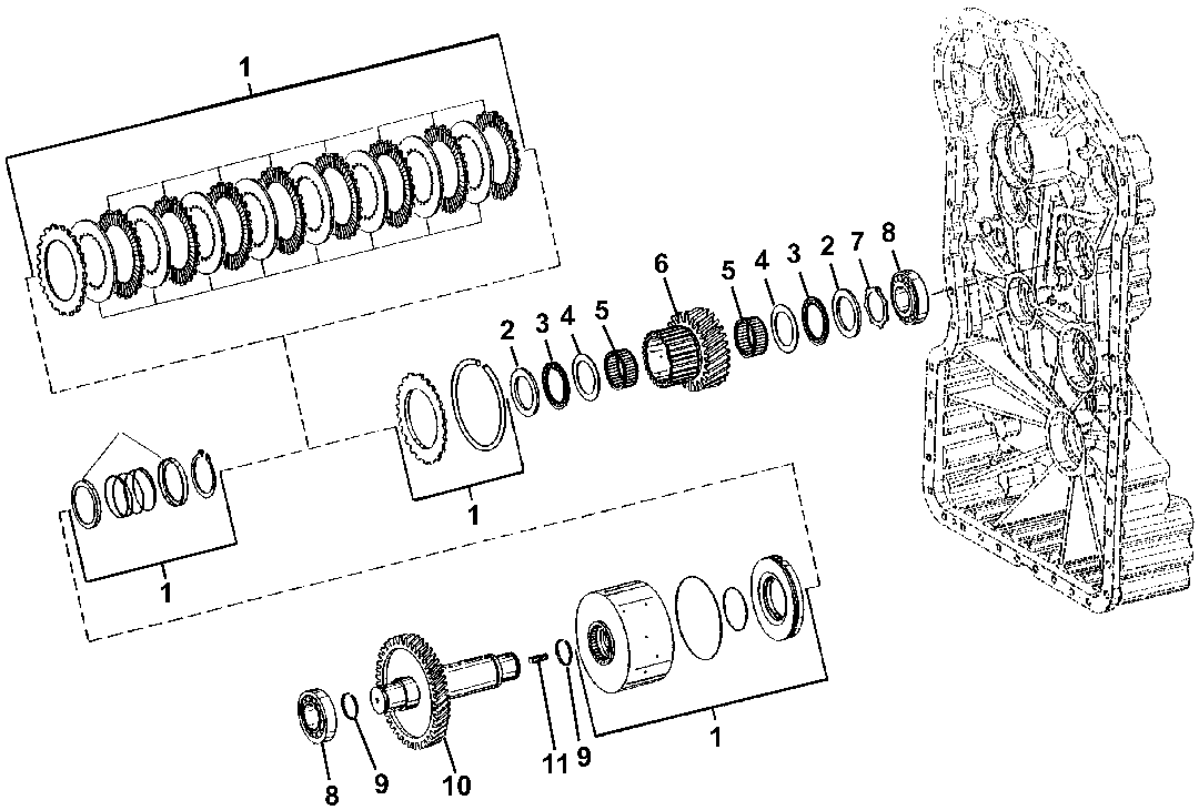

TP62883

CLUTCH ASSEMBLY (SECOND GEAR)
EMBRAYAGE (DEUXIEME VITESSE)
CONJUNTO DEL EMBRAGUE (SEGUNDA MARCHA)

KEY	PART NO.	PART NAME	QTY.	TRANSMISSION SERIAL NO.	REMARKS
1	AT331640	CLUTCH	1		(SUB FOR AT223301)
2	T172136	DISK	2		
3	AT179498	NEEDLE BEARING	2		
4	T172138	THRUST WASHER	2		
5	T172139	NEEDLE BEARING	2		
6	T180459	GEAR	1		
7	T173038	SNAP RING	1		
8	T171156	BEARING	2		IMPORTANT-HIGH TOLERANCE BEARING REQUIRED IN THIS LOCATION. USE ONLY JOHN DEERE PARTS SOURCED BEARINGS.
9	T172115	PISTON RING	2		
10	T171206	UNIVERSAL DRIVESHAFT	1		
11	T171153	STUD	1		

CLUTCH ASSEMBLY (THIRD GEAR)
EMBRAYAGE (TROISIÈME VITESSE)
CONJUNTO DEL EMBRAGUE (TERCERA MARCHA)

TP62884 -UN-25AUG00

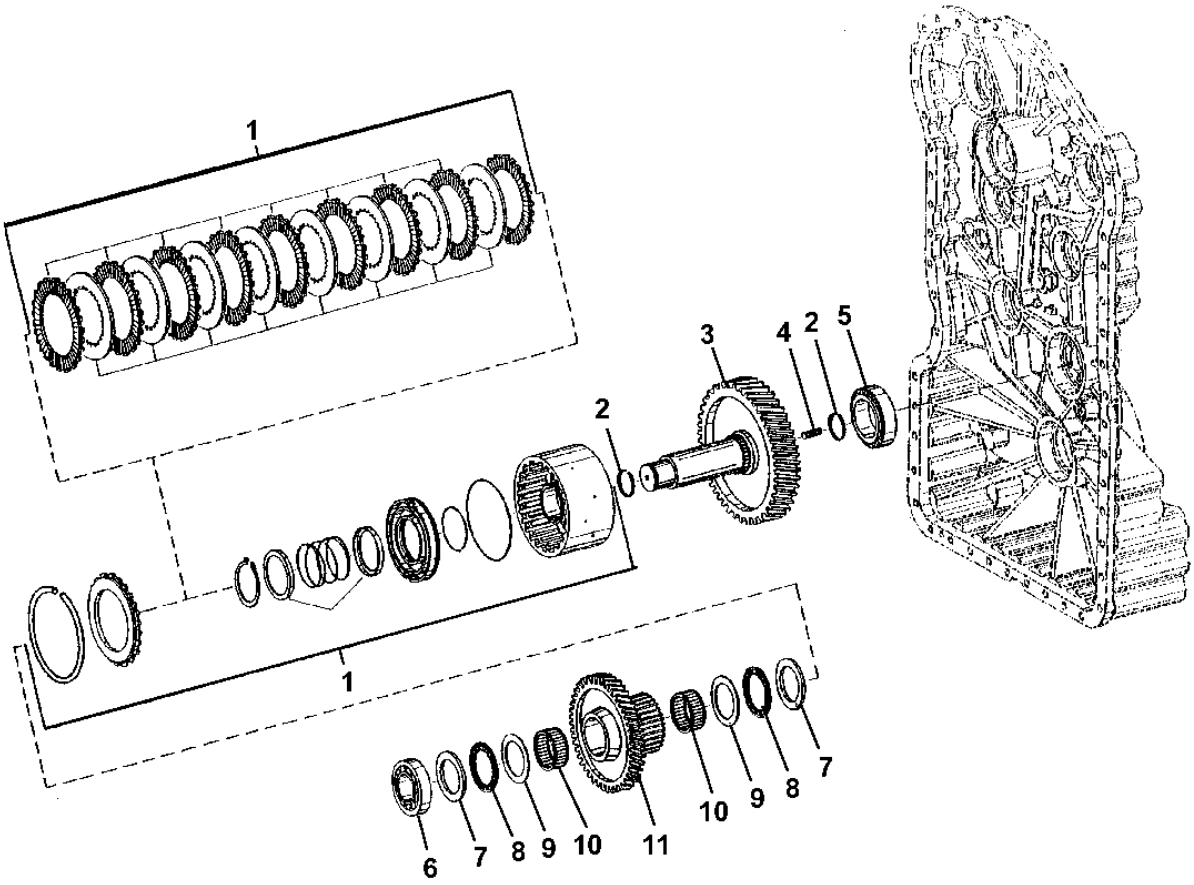

TP62884

CLUTCH ASSEMBLY (THIRD GEAR)
EMBRAYAGE (TROISIÈME VITESSE)
CONJUNTO DEL EMBRAGUE (TERCERA MARCHA)

KEY	PART NO.	PART NAME	QTY.	TRANSMISSION SERIAL NO.	REMARKS
1	AT331640	CLUTCH	1		(SUB FOR AT223301)
2	T172115	PISTON RING	2		
3	T171212	PINION SHAFT	1		
4	T171153	STUD	1		
5	T171126	BEARING	1		IMPORTANT-HIGH TOLERANCE BEARING REQUIRED IN THIS LOCATION. USE ONLY JOHN DEERE PARTS SOURCED BEARINGS.
6	T171156	BEARING	1		IMPORTANT-HIGH TOLERANCE BEARING REQUIRED IN THIS LOCATION. USE ONLY JOHN DEERE PARTS SOURCED BEARINGS.
7	T172136	DISK	2		
8	AT179498	NEEDLE BEARING	2		
9	T172138	THRUST WASHER	2		
10	T172139	NEEDLE BEARING	2		
11	T172275	GEAR	1		

CLUTCH ASSEMBLY (HIGH RANGE)
EMBRAYAGE (RAPPORTS LONGS)
CONJUNTO DEL EMBRAGUE (REGIMEN ALTO)

TP62885 -UN-25AUG00

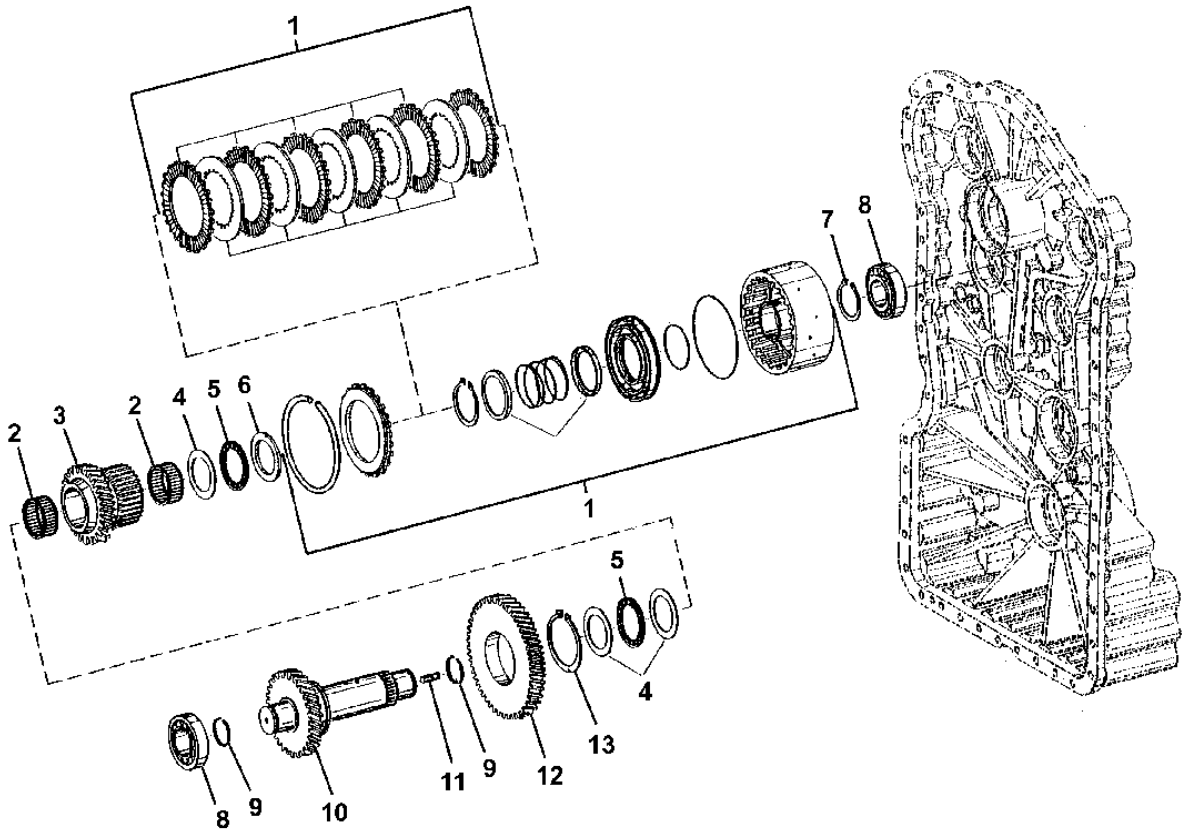

TP62885

CLUTCH ASSEMBLY (HIGH RANGE)
EMBRAYAGE (RAPPORTS LONGS)
CONJUNTO DEL EMBRAGUE (REGIMEN ALTO)

KEY	*PART NO.*	*PART NAME*	*QTY.*	*TRANSMISSION SERIAL NO.*	*REMARKS*
1	AT331638	CLUTCH	1		(SUB FOR AT223240)
2	T172139	NEEDLE BEARING	2		
3	T172276	IDLER	1		
4	T172138	THRUST WASHER	3		
5	AT179498	NEEDLE BEARING	2		
6	T172136	DISK	1		
7	L110729	SNAP RING	1		
8	T171156	BEARING	2		IMPORTANT-HIGH TOLERANCE BEARING REQUIRED IN THIS LOCATION. USE ONLY JOHN DEERE PARTS SOURCED BEARINGS.
9	T172115	PISTON RING	2		
10	T171213	PINION SHAFT	1		
11	T171153	STUD	1		
12	T171216	GEAR	1		
13	40M7150	SNAP RING	1		

DRIVE DAMPER AND COVER
AMORTISSEUR ET COUVERCLE D'ENTRAINEMENT
CUBIERTA Y AMORTIGUADOR DE LINEA DE MANDO

TP62719 -UN-05JAN00

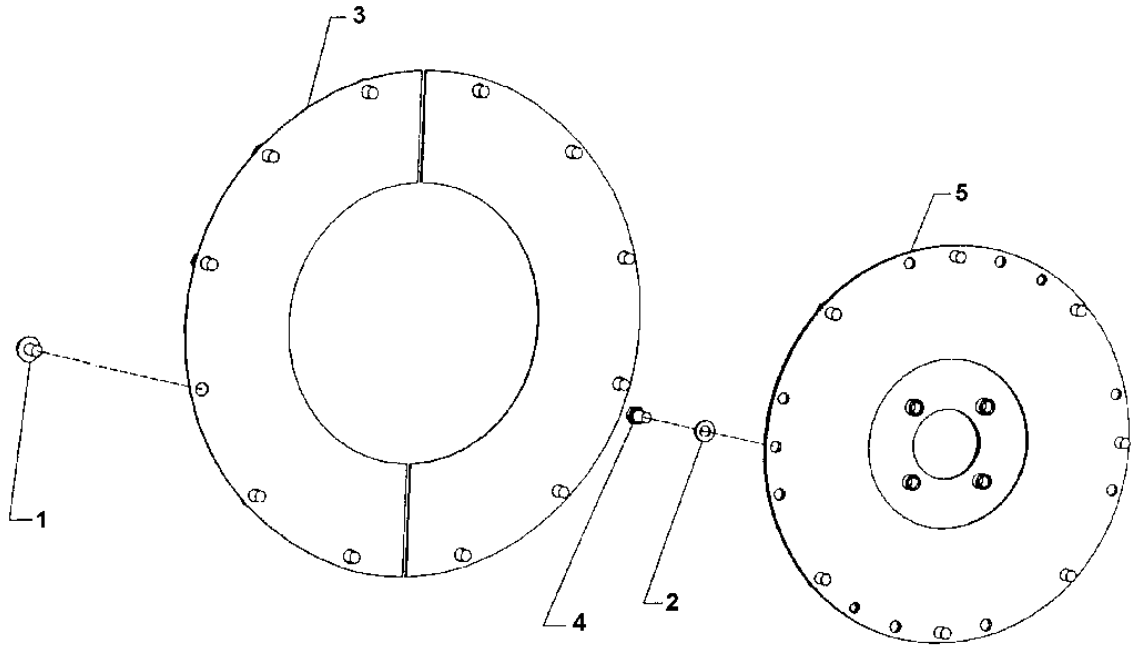

TP62719

DRIVE DAMPER AND COVER
AMORTISSEUR ET COUVERCLE D'ENTRAINEMENT
CUBIERTA Y AMORTIGUADOR DE LINEA DE MANDO

KEY	*PART NO.*	*PART NAME*	*QTY.*	*SERIAL NO.*	*REMARKS*
1	19M7784	SCREW	12		M10 X 20, (SUB FOR 19M7783)
2	24H1864	WASHER	8		13/32" X 3/4" X 7/64"
3	T101731	COVER	2		
4	19H1648	CAP SCREW	8		9.525 X 19.050 MM
5	AT308993	TORSIONAL DAMPER	1		(SUB FOR AT206784)

TRANSMISSION OIL FILL
REMPLISSAGE D'HUILE DE TRANSMISSION
LLENADO DE ACEITE DE LA TRANSMISION

T193211 -UN-21JUL03

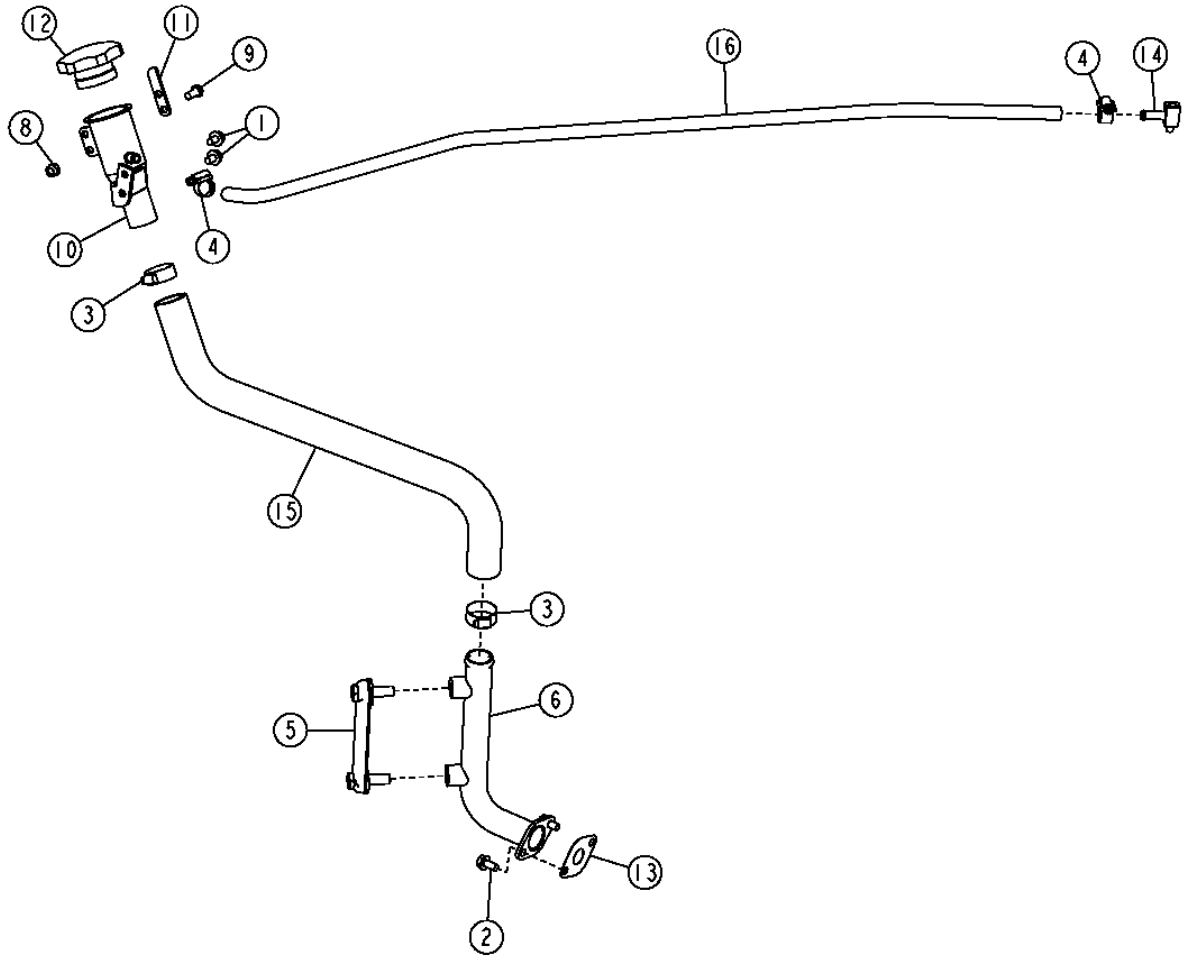

T193211

TRANSMISSION OIL FILL
REMPLISSAGE D'HUILE DE TRANSMISSION
LLENADO DE ACEITE DE LA TRANSMISION

KEY	PART NO.	PART NAME	QTY.	SERIAL NO.	REMARKS
1	19M7864	SCREW	2		
2	19M7865	SCREW	2	-XXXXXX	M8 X 16
	19M7867	SCREW	2	XXXXXX-	M8 X 25
3	AR21839	CLAMP	2		
4	AR21836	CLAMP	2		
5	AT227279	LEVEL GAUGE	1		
6	.....	TUBE	1	-XXXXXX	(ORDER AT324881, R105415 AND (2) 19M7867) (AT315021 OR AT227651 NLA)
	AT324881	TUBE	1	XXXXXX-	
8	14M7426	LOCK NUT	1		
9	19M7162	CAP SCREW	1		
10	AT227248	FILLER NECK	1		
11	T196464	STRAP	1		
12	RE500250	FILLER CAP	1		
13	T116604	GASKET	1	-XXXXXX	
	R105415	O-RING	1	XXXXXX-	NOT ILLUSTRATED CORRECTLY
14	T196587	TEE FITTING	1		
15	T197505	HOSE	1		
16	M87571	BULK HOSE	1		

TRANSMISSION OIL LINES AND THERMAL BYPASS VALVE
CONDUITES D'HUILE DE TRANSMISSION ET VANNE DE DERIVATION THERMIQUE
LINEAS DE ACEITE DE LA TRANSMISION Y VALVULA DERIVADORA TERMICA

TX1006276 -UN-27APR06

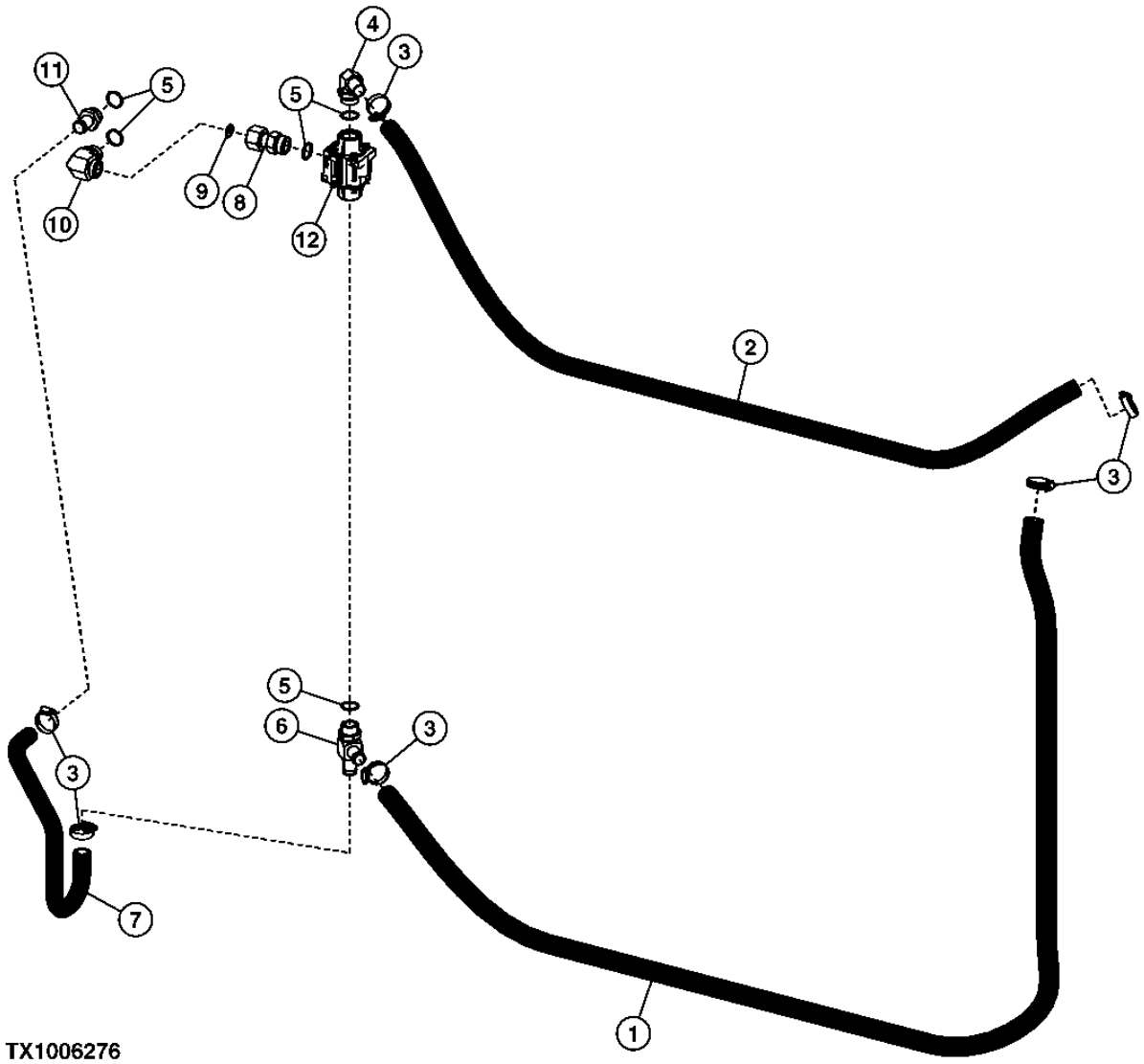

TX1006276

TRANSMISSION OIL LINES AND THERMAL BYPASS VALVE
CONDUITES D'HUILE DE TRANSMISSION ET VANNE DE DERIVATION THERMIQUE
LINEAS DE ACEITE DE LA TRANSMISION Y VALVULA DE DERIVADORA TERMICA

KEY	*PART NO.*	*PART NAME*	*QTY.*	*SERIAL NO.*	*REMARKS*
1	T195730	BULK HOSE	1		
2	T195731	BULK HOSE	1		
3	AR21839	CLAMP	6		
4	AH75162	FITTING	1		
5	R29936	O-RING	5		
6	AT223584	FITTING	1		
7	T180529	HOSE	1		
8	38H1071	ADAPTER FITTING	1		
9	T76938	O-RING	1		
10	38H1037	ELBOW FITTING	1		
11	T29747	HOSE FITTING	1		
12	AT325611	CONTROL VALVE	1		(SUB FOR AT225189, AT129526)

CRANKSHAFT AND BEARINGS
VILEBREQUIN ET ROULEMENTS
CIGUENAL Y COJINETES

RGP9614 -UN-07MAY03

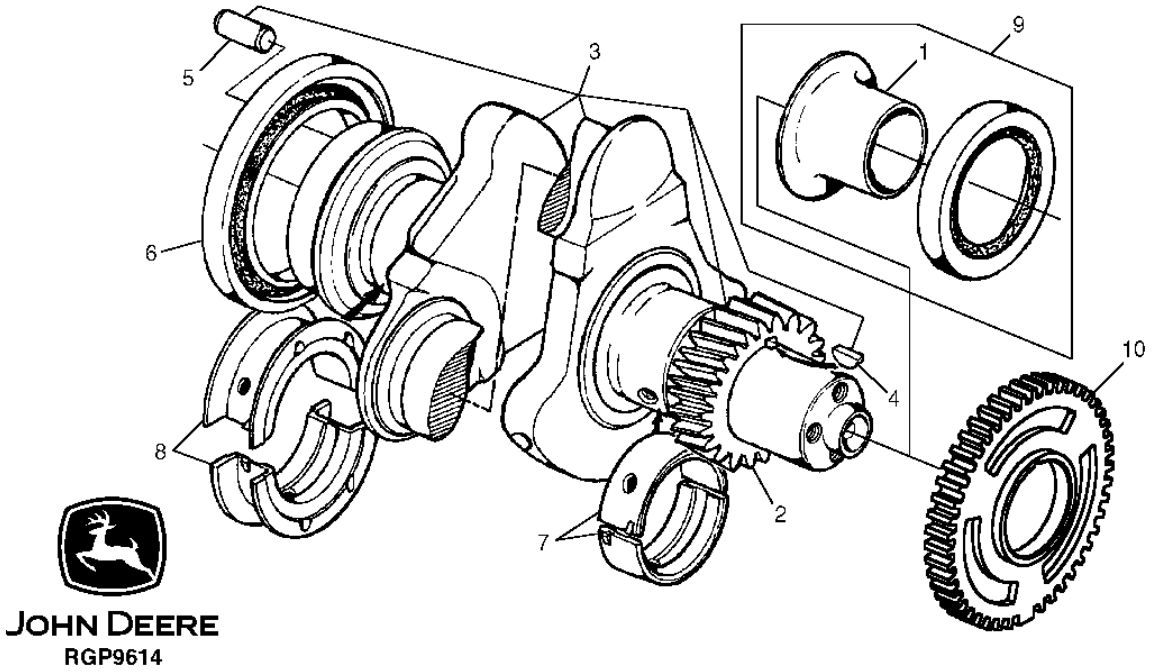

JOHN DEERE
RGP9614

KEY	PART NO.	PART NAME	QTY.	ENGINE SERIAL NO.	REMARKS
1	RE59811	SLEEVE	1		
2	R120631	GEAR	1		(30 TEETH)
3	RE504638	CRANKSHAFT	1		(MARKED R113596)
4	R505609	SHAFT KEY	1		
5	R48685	DOWEL PIN	1		
6	RE44574	SEAL	1		REAR
7	RE65165	BEARING KIT	6		STD, (KIT R123561 AND R123562)
	RE65911	BEARING	AR		0.254 MM (.010") US, (KIT R130576 AND R130577)
8	RE65168	BEARING KIT	1		STD, (KIT R123563 AND R123564)
	RE65912	THRUST BEARING	AR		0.254 MM (.010") US, (KIT R130574 AND R130575)
9	RE516340	KIT	1		FRONT, (MARKED RE52346 OR RE505515) (SUB FOR RE59810)
10	R501489	WHEEL SPEED SENSOR	1		TIMING

MEMORANDA
MEMORANDA
MEMORANDA

ROCKER ARM COVER
COUVERCLE DE CULBUTEURS
TAPA DE BALANCINES

T147439 -UN-12DEC01

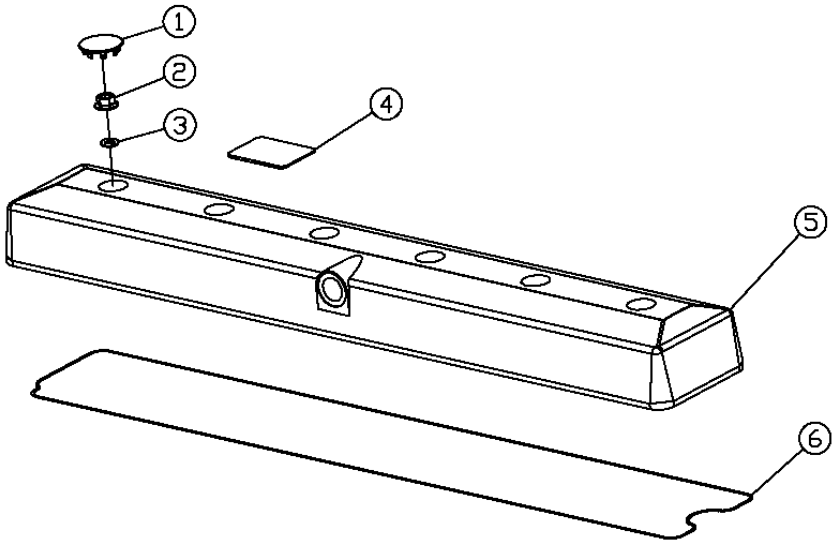

T147439

KEY	PART NO.	PART NAME	QTY.	ENGINE SERIAL NO.	REMARKS
1	H23125	PLUG	6		
2	R123574	NUT	6		
3	R123575	O-RING	6		
4	R121674	MEDALLION	1		
5	RE503027	VALVE COVER	1		
6	R123543	GASKET	1		
	RE520540	GASKET KIT	1		(HIGH TEMPERATURE GASKET)

ROCKER ARM SHAFT, ROCKER ARMS, PUSH RODS AND CAMSHAFT FOLLOWERS
ARBRE CULBUTEURS, CULBUTEURS, TIGES DE CULBUTEUR ET SUIVEURS D'ARBRE A CAMES
EJE DEL BALANCIN, BALANCINES, VARILLAS DE EMPUJE Y SEGUIDORES DEL ARBOL DE LEVAS

TP49263 -UN-20JUN95

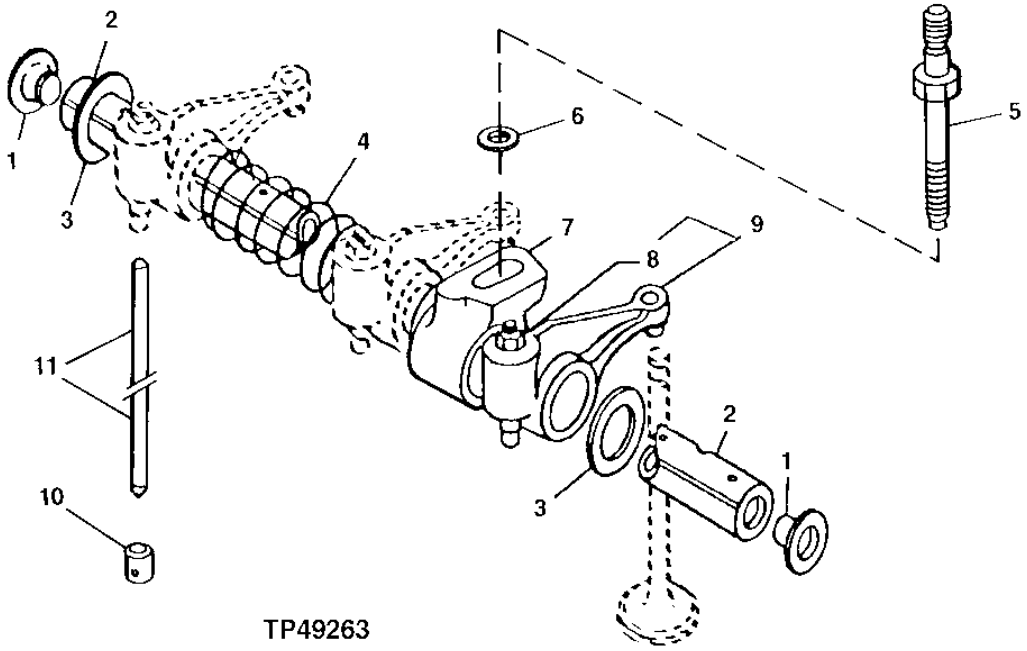

TP49263

KEY	PART NO.	PART NAME	QTY.	ENGINE SERIAL NO.	REMARKS
1	R54565	PLUG	2		
2	R123514	ROCKER ARM SHAFT	1		
3	T20316	WASHER	2		
4	T20314	SPRING	5		
5	R123271	STUD	6		
6	24M7346	WASHER	6		11 X 20 X 2 MM
7	R123161	SUPPORT	6		
8	14M7148	NUT	1		M10
9	RE508317	ROCKER ARM	12		(ALSO ORDER R107731)
10	R123565	CAM FOLLOWER	12		
11	R107731	PUSH ROD	12		

CONNECTING RODS, PISTONS AND LINERS
BIELLES, PISTONS ET CHEMISES
BIELAS, EMBOLOS Y FORROS

TP49283 -UN-17JUL95

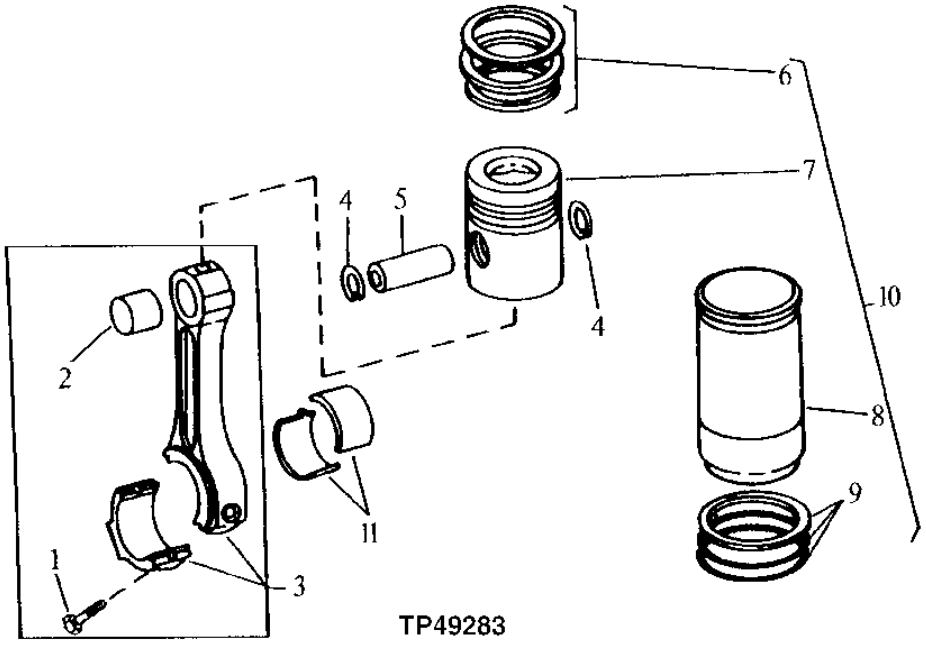

TP49283

KEY	PART NO.	PART NAME	QTY.	ENGINE SERIAL NO.	REMARKS
1	R501124	SCREW	12		
2	R114082	BUSHING	6		
3	RE500608	CONNECTING ROD	6		(MARKED R500335)
	SE501094	CONNECTING ROD	6		(REMANUFACTURED FOR RE500608)
4	R54114	SNAP RING	12		
5	R123177	PISTON PIN	6		
6	RE507852	PISTON RING KIT	6		
7	.....	PISTON	6		(ORDER RE507850)
8	.....	CYLINDER LINER	6		(ORDER RE507850)
9	R26121	O-RING	6		
	R48767	PACKING	6		
	R55453	O-RING	6		
	AR65507	O-RING KIT	6		
10	RE507850	PISTON-LINER KIT	6		(MARKED RE509540, RE507609 OR RE55512)
	RE526966	ENGINE OVERHAUL KIT	1		
11	RE65908	BEARING	8		
	RE65909	BEARING	12		.010" US

CAMSHAFT AND GEAR
ARBRE A CAMES ET PIGNON
ARBOL DE LEVAS Y ENGRANAJE

TP69520 -UN-02JUN00

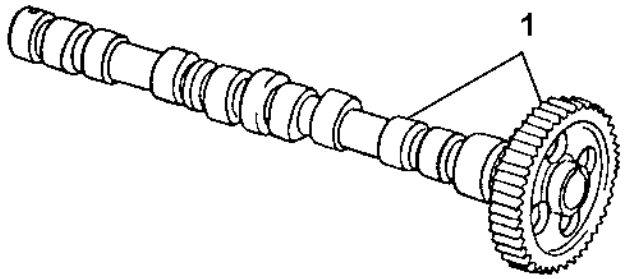

TP69520

KEY	PART NO.	PART NAME	QTY.	ENGINE SERIAL NO.	REMARKS
1	RE507149	CAMSHAFT	1		(WITH GEAR AND KEY) (MARKED R504535)

CYLINDER BLOCK, MAIN BEARING CAPS AND OIL PRESSURE VALVE
BLOC-CYLINDRES, CHAPEAUX DE PALIERS ET SOUPAPE DE PRESSION D'HUILE
BLOQUE DE CILINDROS, TAPAS DE COJINETE DE BANCADA Y VALVULA DE PRESION DE ACEITE

RGP9591 -UN-23APR03

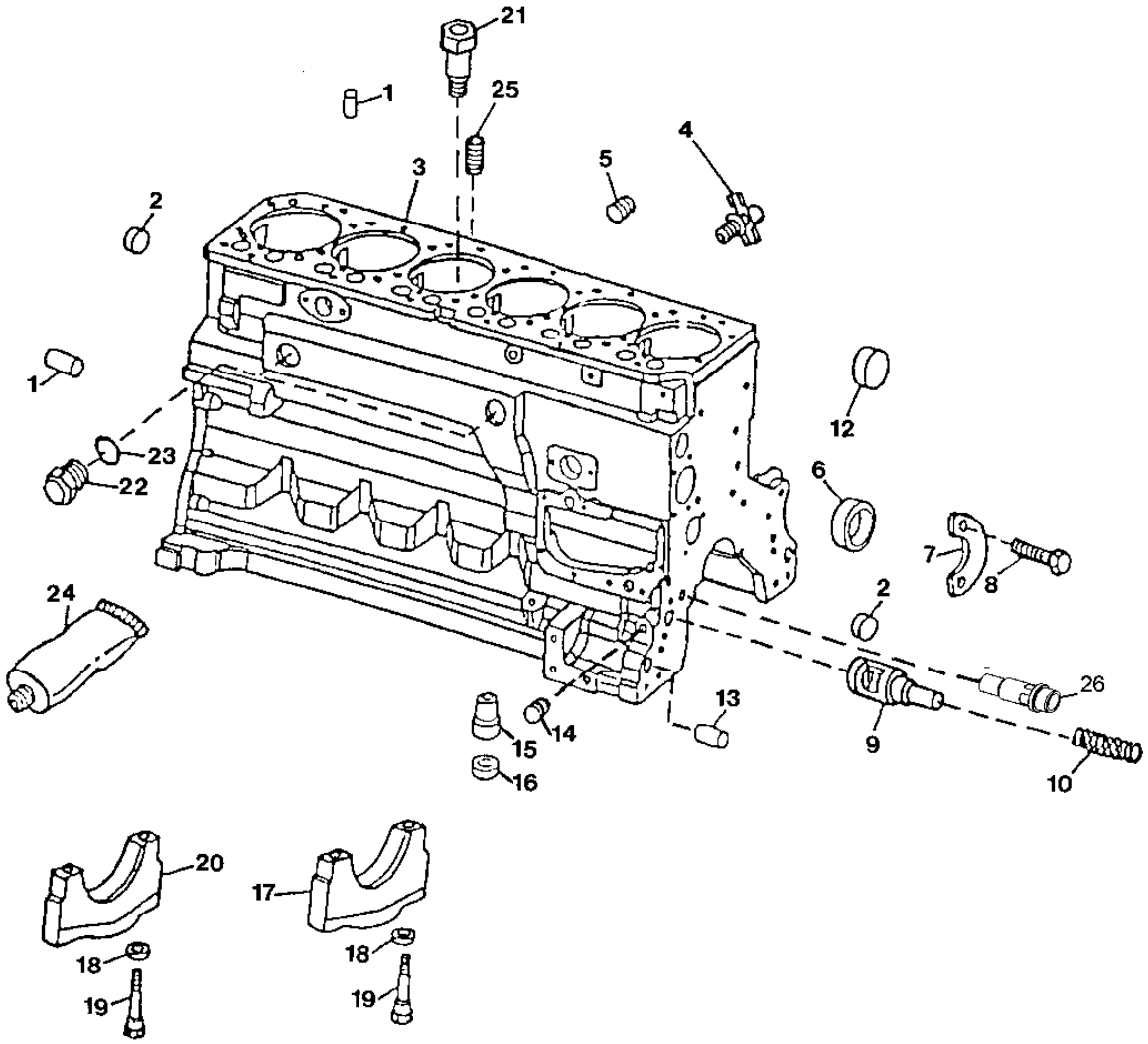

RGP9591

CYLINDER BLOCK, MAIN BEARING CAPS AND OIL PRESSURE VALVE
BLOC-CYLINDRES, CHAPEAUX DE PALIERS ET SOUPAPE DE PRESSION D'HUILE
BLOQUE DE CILINDROS, TAPAS DE COJINETE DE BANCADA Y VALVULA DE PRESION DE ACEITE

KEY	*PART NO.*	*PART NAME*	*QTY.*	*ENGINE SERIAL NO.*	*REMARKS*
1	R48685	DOWEL PIN	4		
2	T18891	PLUG	2		
3	.....	CYLINDER BLOCK	1		(ORDER RE518527)
4	AT13740	DRAIN VALVE	1		1/4"
5	R104592	PIPE PLUG	7		
6	R119874	BUSHING	1		CAMSHAFT
7	R132518	PLATE	1		
8	19M8999	SCREW	2		M8 X 25
9	R121043	VALVE	1		ENGINE OIL BY-PASS
10	R111137	SPRING	1		
12	R116466	BUSHING	1		
13	R26650	DOWEL PIN	2		
14	15H623	PIPE PLUG	1		3/8"
15	R115390	BUSHING	1		
16	R75892	O-RING	1		
17	R114241	BEARING CAP	6		MAIN BEARING
18	T20168	WASHER	14		
19	T23474	CAP SCREW	14		
20	R132186	BEARING CAP	1		MAIN THRUST BEARING
21	R131182	ORIFICE	6		
22	RE508185	FITTING	2		(WITHOUT CAB HEAT)
	R123616	PLUG	2		(WITH CAB HEAT)
23	U13639	O-RING	2		
24	PM38655	SEALANT	1		(SUB FOR T43514) (PLASTIC GASKET)
25	RE57836	PIPE PLUG	AR		1/2", (SUB FOR 15H624)
26	RE505501	BLEED VALVE	1		(OIL PRESSURE REGULATING)

FRONT PLATE AND IDLER GEAR
PLAQUE AVANT ET PIGNON INTERMEDIAIRE
ENGRANAJES INTERMEDIOS Y PLACA DELANTERA

TX1008795 -UN-20JUN06

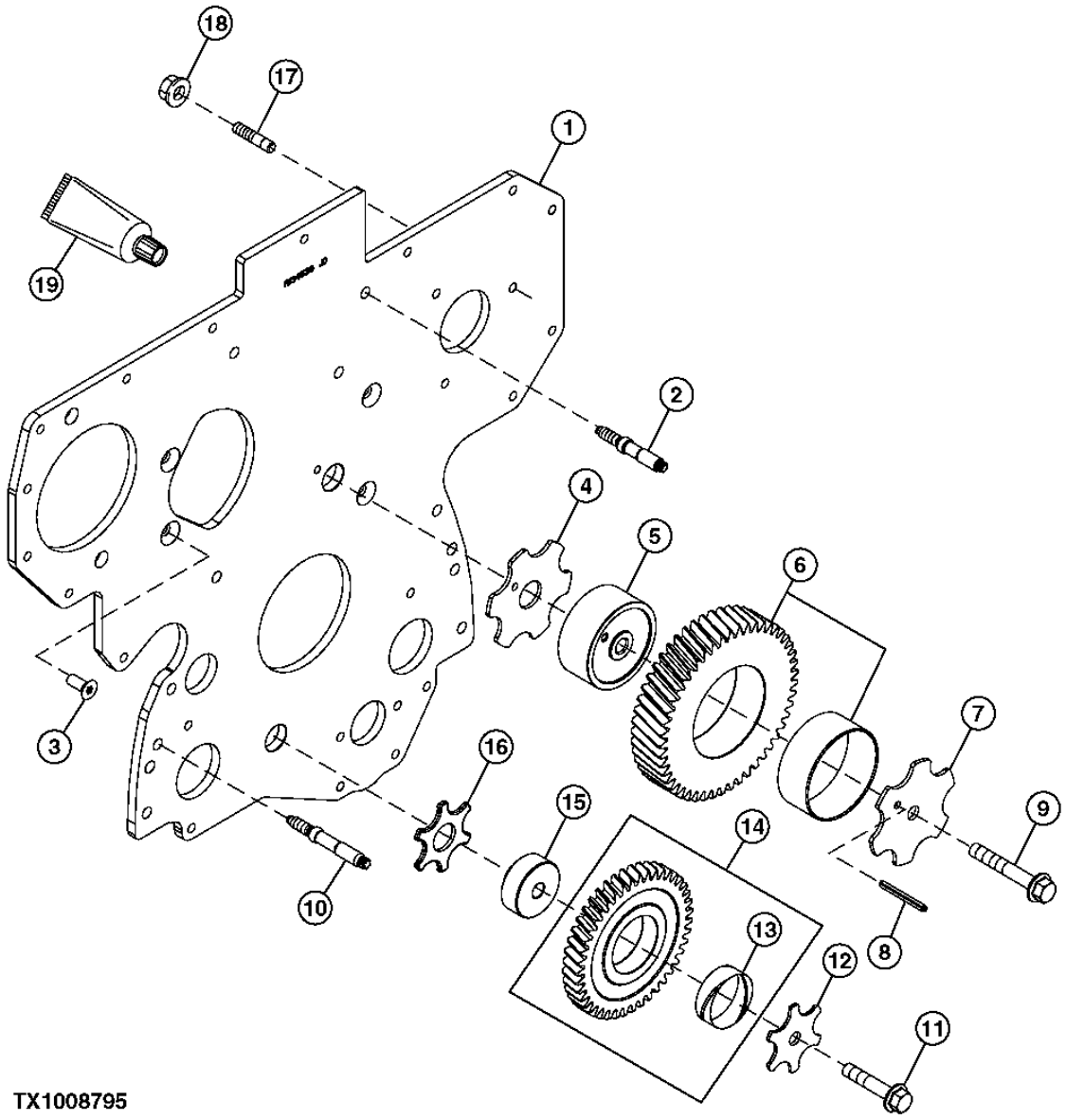

TX1008795

FRONT PLATE AND IDLER GEAR
PLAQUE AVANT ET PIGNON INTERMEDIAIRE
ENGRANAJES INTERMEDIOS Y PLACA DELANTERA

KEY	PART NO.	PART NAME	QTY.	ENGINE SERIAL NO.	REMARKS
1	R134526	PLATE	1		
2	R134518	STUD	2		
3	R136475	SCREW	4		
4	R123174	THRUST WASHER	1		ID X OD = 22MM X 84MM
5	R120641	SHAFT	1		OD 70MM
6	RE56313	GEAR	1		Z = 49, (MARKED R505121)
7	R131206	THRUST WASHER	1		ID X OD = 11MM X 84MM
8	34H288	SPRING PIN	1		3/16" X 1-3/4"
9	19M8997	SCREW	1		M10 X 65
10	R123584	STUD	4		
11	19M8966	SCREW	1		M10 X 50
12	R131283	THRUST WASHER	1		ID X OD = 11MM X 60MM
13	R114193	BUSHING	1		OD 47.7MM
14	RE56369	GEAR	1		Z = 43, (MARKED R120636)
15	R114194	SHAFT	1		OD 44.5MM
16	R101225	THRUST WASHER	1		ID X OD = 22MM X 60MM
17	R116386	STUD	3		
18	14M7298	FLANGE NUT	3		M8
19	PM38655	SEALANT	AR		GASKET MAKER 515™ (NON-CALIFORNIA ONLY)

AUXILIARY DRIVE COVER
COUVERCLE D'ENTRAINEMENT AUXILIAIRE
CUBIERTA DE MANDO AUXILIAR

RGP10928 -UN-15MAR05

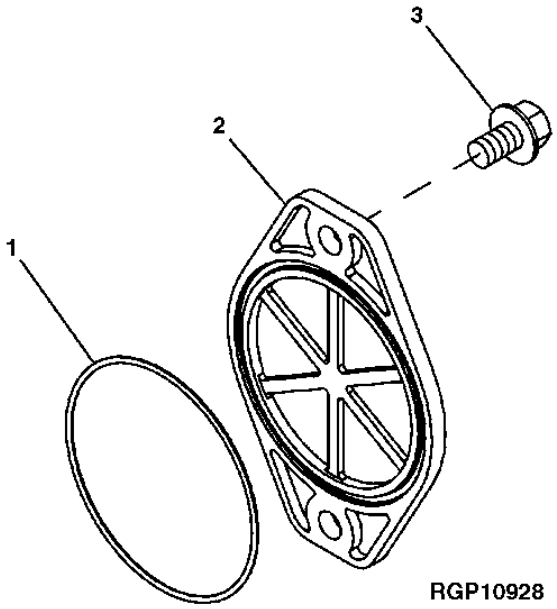

RGP10928

KEY	PART NO.	PART NAME	QTY.	ENGINE SERIAL NO.	REMARKS
1	T20758	O-RING	1		107.620 X 2.616 MM (4.237" X 0.103")
2	R135757	COVER	1		
3	19M7790	SCREW	2		M12 X 35

LIFT STRAPS
ECLISSES D'APAREIL DE LEVAGE
TIRAS DE ELEVADOR

RGP7560 -UN-26JUN01

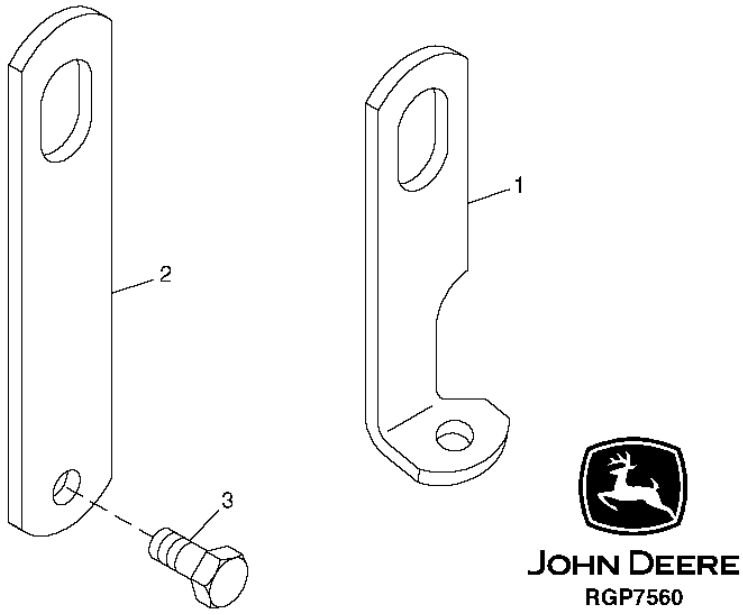

KEY	PART NO.	PART NAME	QTY.	ENGINE SERIAL NO.	REMARKS
1	.....	STRAP	1		(R502175 NLA) (FRONT)
2	R502329	STRAP	1		(REAR)
3	19M7788	SCREW	2		M12 X 25

OIL FILLER NECK (RH SIDE) AND COVER (LH SIDE)
GOULOT REMPLISSAGE HUILE DROIT ET COUVERCLE GAUCHE
CUELLO DE LLENADO DE ACEITE (DER) Y CUBIERTA (IZQ)

CDP45012 -UN-16OCT01

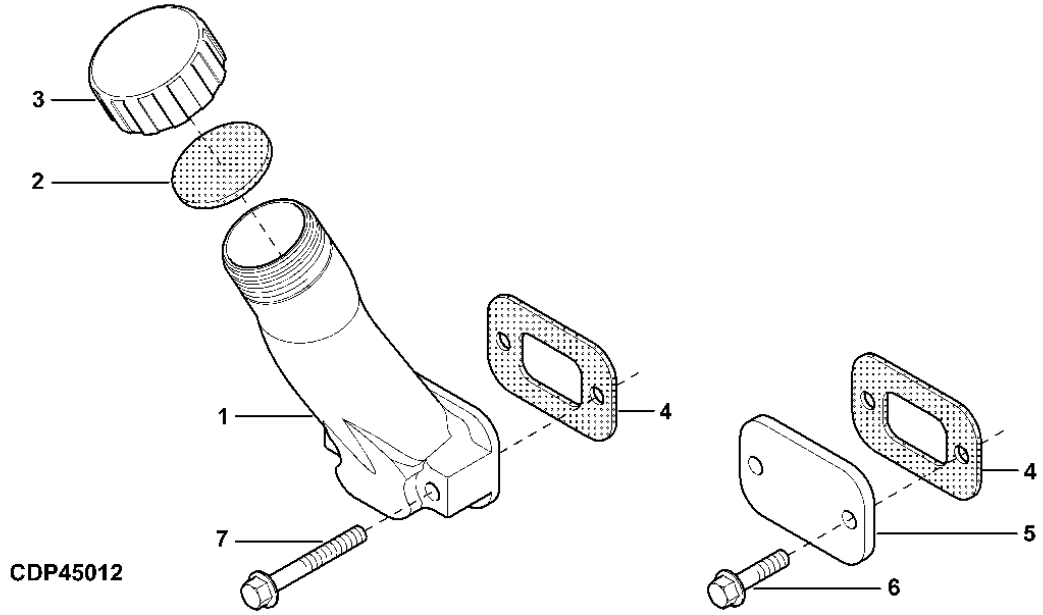

OIL FILLER NECK (RH SIDE) AND COVER (LH SIDE)
GOULOT REMPLISSAGE HUILE DROIT ET COUVERCLE GAUCHE
CUELLO DE LLANDO DE ACEITE (DER) Y CUBIERTA (IZQ)

KEY	*PART NO.*	*PART NAME*	*QTY.*	*ENGINE SERIAL NO.*	*REMARKS*
1	R123558	FILLER NECK	1		RH
2	R80135	GASKET	1		
3	R80136	FILLER CAP	1		
4	R136495	GASKET	2		
5	R116296	COVER	1		LH
6	RE67238	SCREW	2		M8 X 20
7	RE67240	SCREW	2		M8 X 50

ENGINE OIL PAN AND GASKET
CARTER D'HUILE MOTEUR ET JOINT
CARTER DE ACEITE Y EMPAQUETADURA

RGP10134 -UN-12NOV03

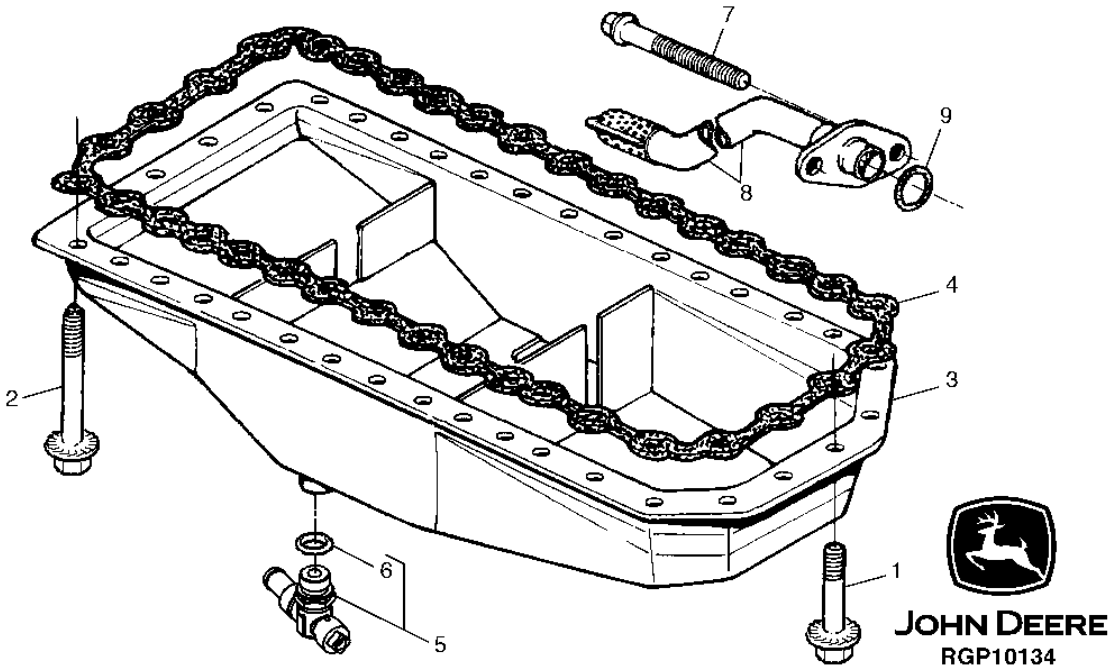

ENGINE OIL PAN AND GASKET
CARTER D'HUILE MOTEUR ET JOINT
CARTER DE ACEITE Y EMPAQUETADURA

KEY	*PART NO.*	*PART NAME*	*QTY.*	*ENGINE SERIAL NO.*	*REMARKS*
1	19M7866	SCREW	6		M8 X 20, (SUB FOR 19M8062)
2	19M8163	BOLT	30		M8 X 16
3	RE500612	OIL PAN	1		(MARKED RE500614)
4	R500349	GASKET	1		
5	RE507950	DRAIN VALVE	1		
6	51M7045	O-RING	1		19.300 X 2.200 MM
7	19M8986	SCREW	2		M8 X 100
8	RE71143	OIL PUMP INTAKE	1		
9	R61871	O-RING	1		

ENGINE OIL PUMP
POMPE A HUILE MOTEUR
BOMBA DE ACEITE DEL MOTOR

RGP6223 -UN-28APR03

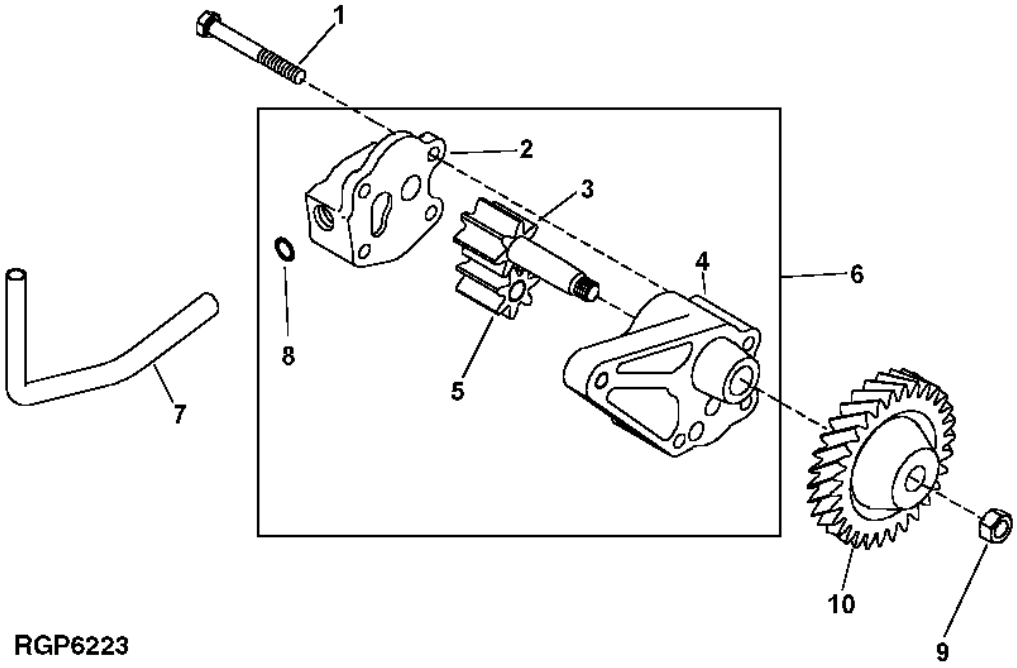

RGP6223

KEY	PART NO.	PART NAME	QTY.	ENGINE SERIAL NO.	REMARKS
1	19M8987	SCREW	2		M8 X 65
2	.....	COVER	1		(ORDER RE504914)
3	.....	GEAR	1		(ORDER RE504914)
4	.....	HOUSING	1		(ORDER RE504914)
5	.....	GEAR	1		(ORDER RE504914)
6	RE504914	OIL PUMP	1		(MARKED R502687)
7	R121376	TUBE	1		
8	R97185	O-RING	1		
9	14M7066	NUT	1		M12
10	R120638	GEAR	1		

ENGINE OIL DIPSTICK
JAUGE A HUILE MOTEUR
ASPILLA PARA MEDIR EL NIVEL DE ACEITE DEL MOTOR

RGP6190 -UN-17MAR00

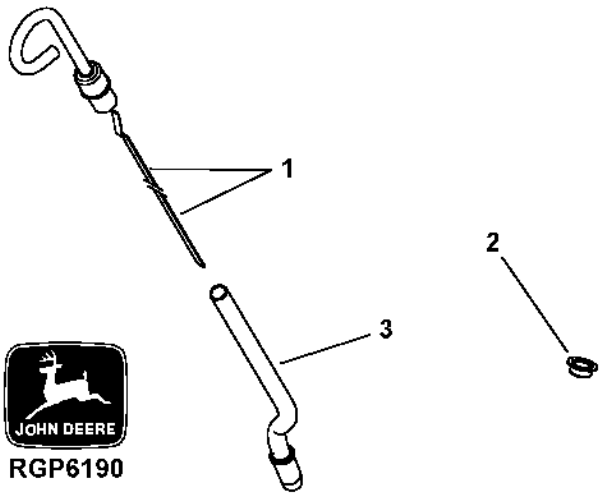

KEY	*PART NO.*	*PART NAME*	*QTY.*	*ENGINE SERIAL NO.*	*REMARKS*
1	RE69243	DIPSTICK	1		
2	R502725	PLUG	1		
3	R502604	DIPSTICK TUBE	1		

OIL FILTER
FILTRE A HUILE
FILTRO DE ACEITE

RGP8909 -UN-24OCT02

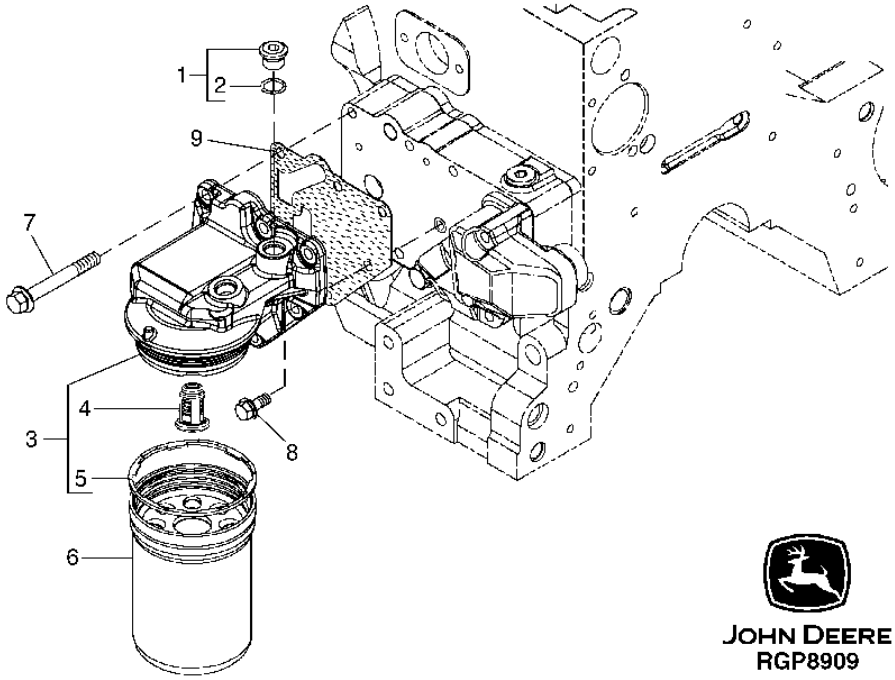

KEY	PART NO.	PART NAME	QTY.	ENGINE SERIAL NO.	REMARKS
1	RE52242	DRAIN PLUG	2		M16 X 1.5
2	51M7042	O-RING	1		13.300 X 2.200 MM
3	RE504562	FILTER HEAD	1		(MARKED R502338)
4	RE504543	VALVE	1		
5	R502513	SEAL	1		
6	RE504836	OIL FILTER	1		(ALSO ORDER R502513)
7	19M7802	SCREW	5		M8 X 65
8	RE67238	SCREW	1		M22 X 1.5
9	R501484	GASKET	1		

VENTILATING SYSTEM
SYSTEME DE VENTILATION
SISTEMA DE VENTILACION

RGP9868 -UN-24JUL03

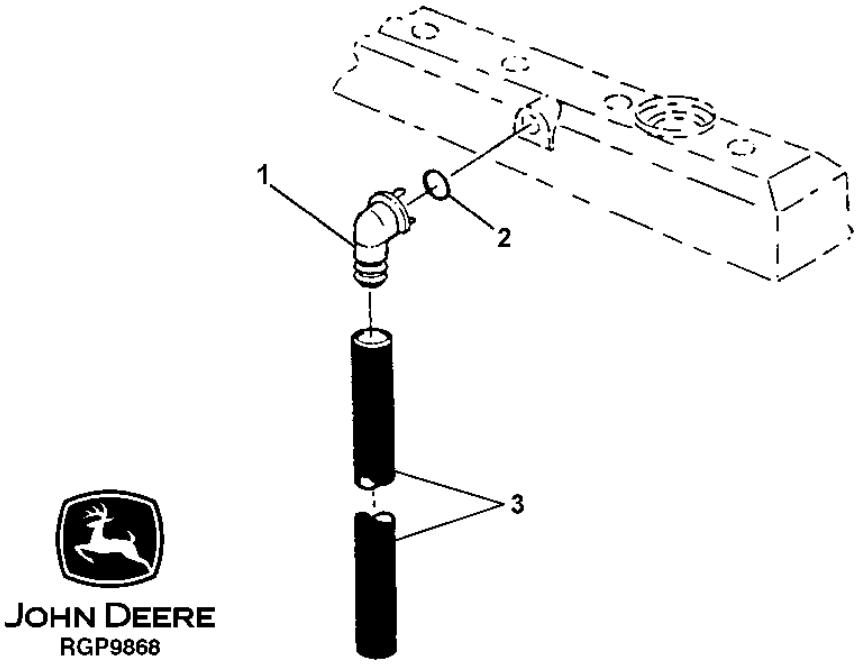

KEY	PART NO.	PART NAME	QTY.	ENGINE SERIAL NO.	REMARKS
1	R123586	ELBOW FITTING	1		
2	R72328	O-RING	1		18.720 X 2.616 MM (0.737" X 0.103")
3	.....	HOSE	1		(1100MM) (CUT TO LENGTH) (MAKE FROM TY22505)

CYLINDER HEAD, HEAD GASKET AND VALVES
CULASSE, JOINT DE CULASSE ET SOUPAPES
CULATA, EMPAQUETADURA DE CULATA Y VALVULAS

TP49043 -UN-06SEP95

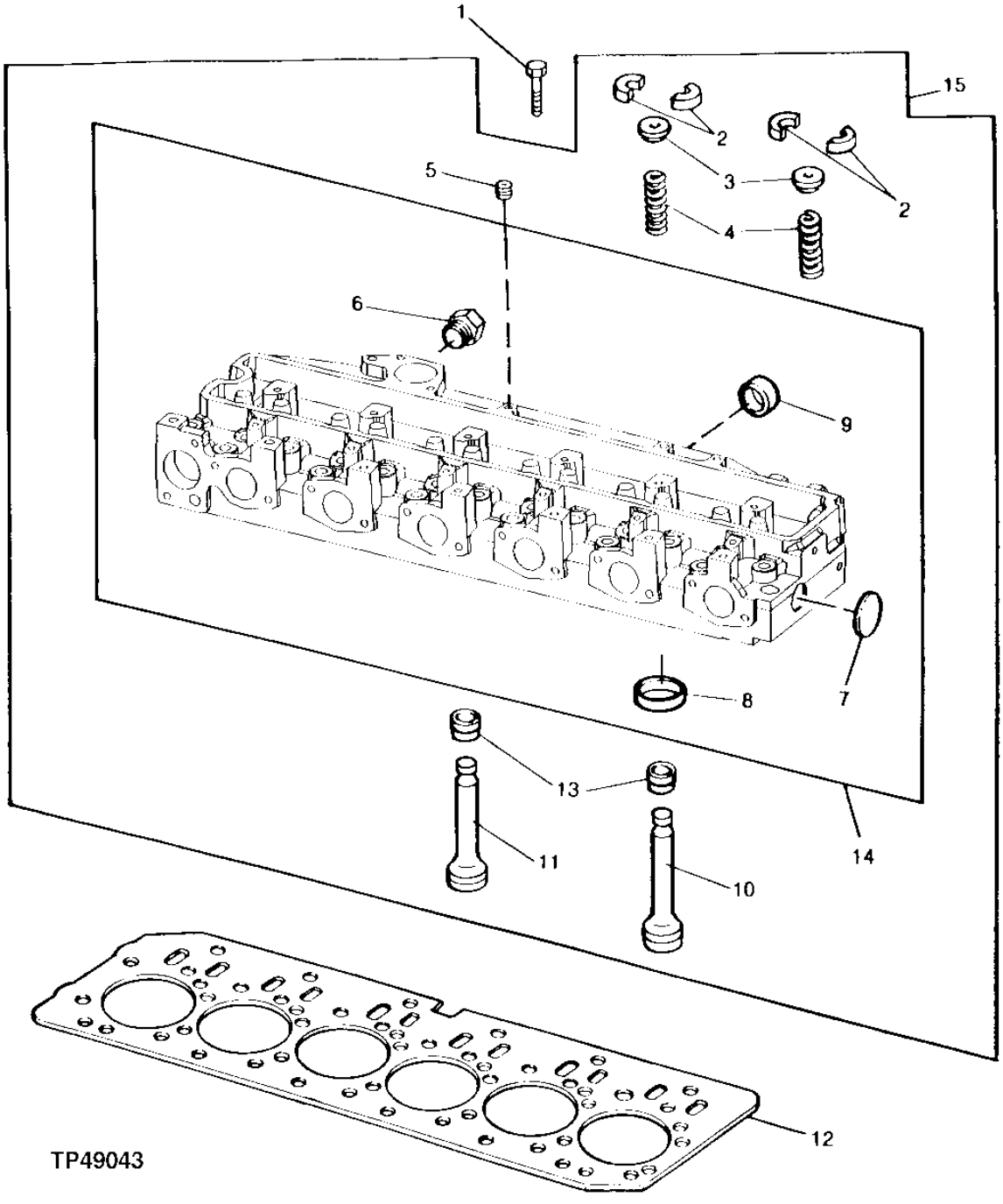

CYLINDER HEAD, HEAD GASKET AND VALVES
CULASSE, JOINT DE CULASSE ET SOUPAPES
CULATA, EMPAQUETADURA DE CULATA Y VALVULAS

KEY	PART NO.	PART NAME	QTY.	ENGINE SERIAL NO.	REMARKS
1	R85363	CAP SCREW	26		
2	R91889	RETAINER	24		
3	RE60005	ROTATOR	12		
4	R26125	SPRING	12		
5	R104592	PIPE PLUG	1		
6	T58477	FITTING	1		
	R26906	O-RING	1		
7	CD16284	PLUG	1		
8	R98063	VALVE SEAT INSERT	6		STD, INTAKE VALVE
	R98335	VALVE SEAT INSERT	6		OS, INTAKE VALVE
	R85687	VALVE SEAT INSERT	6		STD, EXHAUST VALVE
	R93910	VALVE SEAT INSERT	6		OS, EXHAUST VALVE
9	R43409	PLUG	3		
10	R90692	EXHAUST VALVE	6		STD
11	R98062	INTAKE VALVE	6		STD
12	R116516	ENGINE CYLINDER HEAD GASKET	1		
13	RE31617	SEAL	12		
14	.....	CYLINDER HEAD	1		(MARKED R121608) (ORDER RE57489)
15	RE57489	CYLINDER HEAD	1		(MARKED R121608)

EXHAUST MANIFOLD
COLLECTEUR D'ECHAPPEMENT
COLECTOR DE ESCAPE

CD42732A -UN-10OCT01

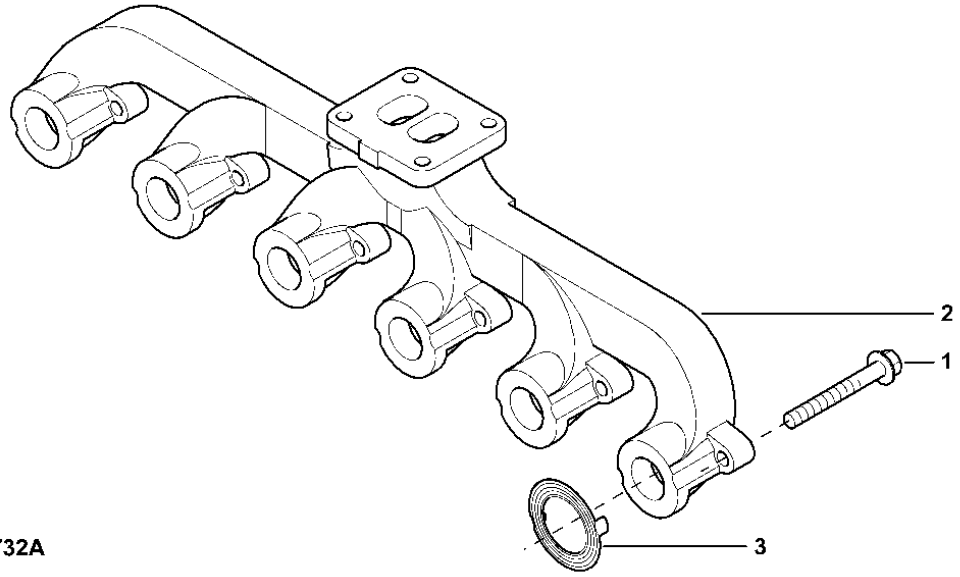

CD42732A

KEY	*PART NO.*	*PART NAME*	*QTY.*	*ENGINE SERIAL NO.*	*REMARKS*
1	19M7810	SCREW	12		M10 X 80
2	R132203	EXHAUST MANIFOLD	1		
3	R521439	GASKET	6		(SUB FOR R90658)

MEMORANDA
MEMORANDA
MEMORANDA

FUEL INJECTION SYSTEM
CIRCUIT D'INJECTION DE CARBURANT
SISTEMA DE INYECCION DE COMBUSTIBLE

RGP10982 -UN-06JUN05

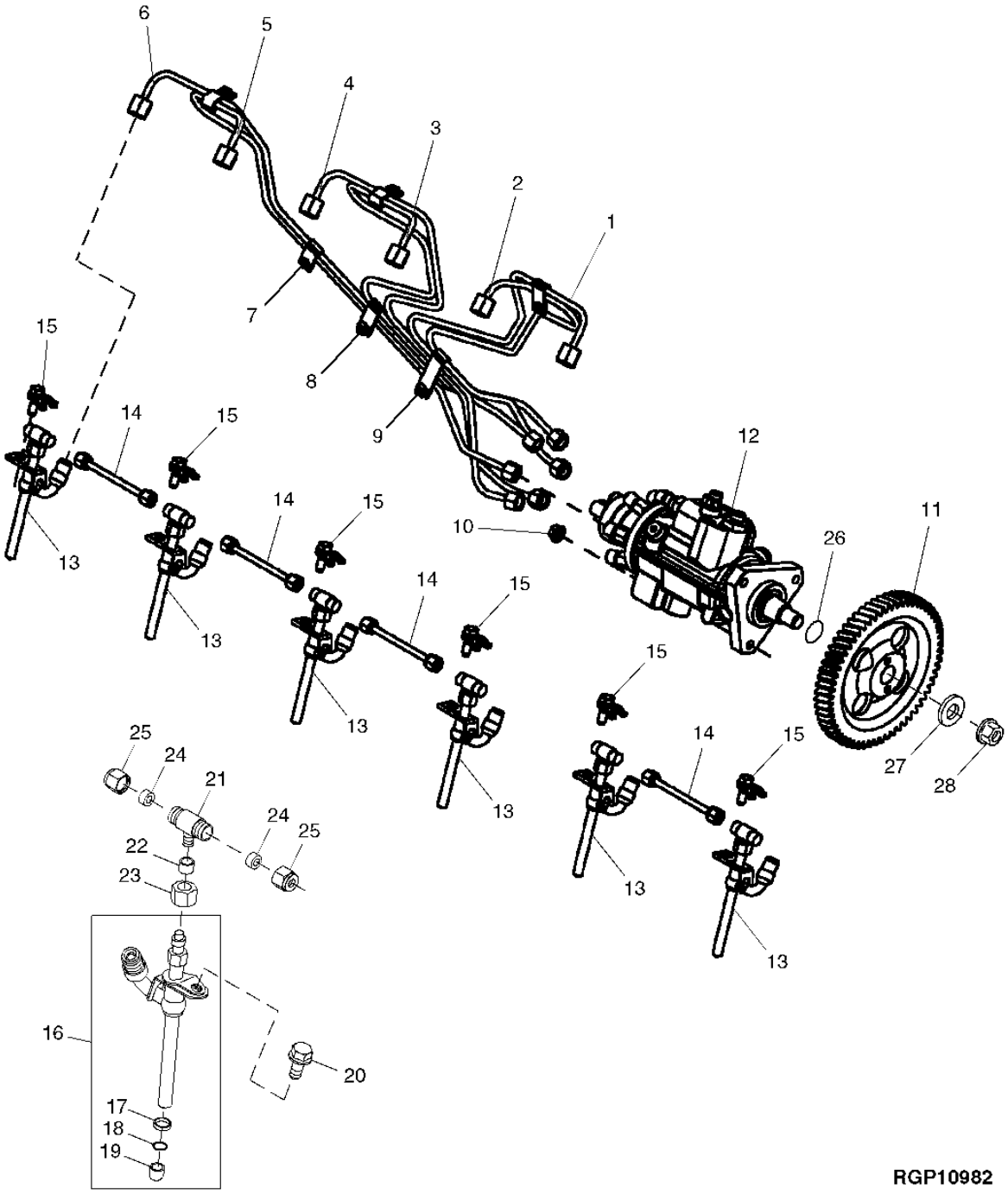

RGP10982

FUEL INJECTION SYSTEM
CIRCUIT D'INJECTION DE CARBURANT
SISTEMA DE INYECCION DE COMBUSTIBLE

KEY	PART NO.	PART NAME	QTY.	ENGINE SERIAL NO.	REMARKS
1	RE515228	FUEL LINE	1		NO. 1
2	RE515229	FUEL LINE	1		NO. 2
3	RE515230	FUEL LINE	1		NO. 3
4	RE515231	FUEL LINE	1		NO. 4
5	RE515232	FUEL LINE	1		NO. 5
6	RE515233	FUEL LINE	1		NO. 6
7	RE19797	CLAMP	4		(INCLUDES 19M7923)
8	RE20901	CLAMP	1		(INCLUDES 19M8560)
9	RE19800	CLAMP	1		(INCLUDES 19M7923)
10	14M7298	FLANGE NUT	3		M8
11	R505472	GEAR	1		
12	RE518088	FUEL INJECTION PUMP	1		(A) (STANADYNE DE10)
	RE521822	KIT	1		(TEMPERATURE SENSOR)
	RE521823	KIT	1		(PRESSURE REGULATOR)
	RE521824	KIT	1		(TIMING PIN HOLE)
	RE521825	KIT	1		(TRANSPUMP SCREW)
	RE522109	KIT	1		(SOLENOID CONNECTOR)
	SE501236	FUEL INJECTION PUMP	1		(REMANUFACTURED FOR RE518088) CALL 1-888-697-3626
13	RE507766	INJECTION NOZZLE	6	-413699	
	SE500831	INJECTION NOZZLE	1	-413699	(REMANUFACTURED FOR RE507766) (PKG OF 6)
	SE501103	NOZZLE	AR	-413699	(REMANUFACTURED FOR RE507766) (PKG OF 1)
	RE531116	KIT	1	-413699	
14	RE68748	TUBE	4		(INCLUDES (2) R51936 AND (2) R123593)
15	RE508716	CLAMP	6	-413699	
16	RE48786	INJECTION NOZZLE	6	413700-	
	SE500827	INJECTION NOZZLE	1	413700-	(REMANUFACTURED FOR RE48786) (PKG OF 6)
	SE501101	NOZZLE	AR	413700-	(REMANUFACTURED FOR RE48786) (PKG OF 1)
17	R500390	WASHER	AR	413700-	
18	R92352	PACKING	1	413700-	
19	T24472	CAP	AR	413700-	(PROTECTIVE SHIPPING)
20	R116366	SCREW	6	413700-	
21	R71963	TEE FITTING	6	413700-	
22	R79605	WASHER	6	413700-	
23	R79604	TUBE NUT	6	413700-	
24	R51936	SEALING WASHER	AR	413700-	
25	R123593	TUBE NUT	AR	413700-	
26	R502076	O-RING	1		
27	R132874	WASHER	1		
28	R91360	NUT	1		M14

(A) SEE YOUR AUTHORIZED PUMP REPAIR STATION FOR INTERNAL PARTS
(A) CONSULTER LA STATION DE REPARATION DE POMPE AGREEE POUR LES PIECES INTERNES
(A) CONSULTAR A UN TALLER AUTORIZADO DE REPARACION DE BOMBAS PARA LAS PIEZAS INTERNAS

AIR INTAKE SYSTEM
SYSTEME D'ADMISSION D'AIR
SISTEMA DE ADMISION DE AIRE

RGP10089 -UN-28AUG03

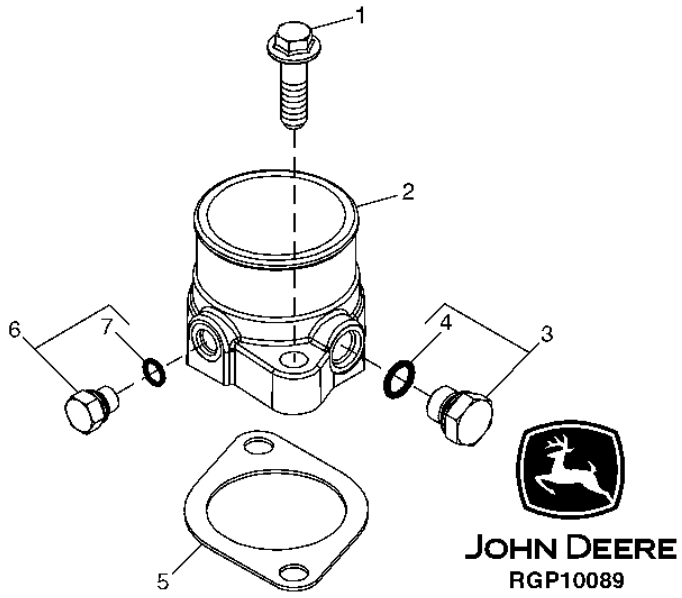

KEY	PART NO.	PART NAME	QTY.	ENGINE SERIAL NO.	REMARKS
1	R500394	SCREW	2		
2	R504694	INTAKE MANIFOLD	1		
3	RE60071	FITTING	1		
4	51M7039	O-RING	1		8.100 X 1.600 MM
5	R81275	GASKET	1		
6	RE61812	SENSOR	1		
7	51M7041	O-RING	1		

TURBOCHARGER
TURBOCOMPRESSEUR
TURBOCARGADOR

RGP6264 -UN-29JAN02

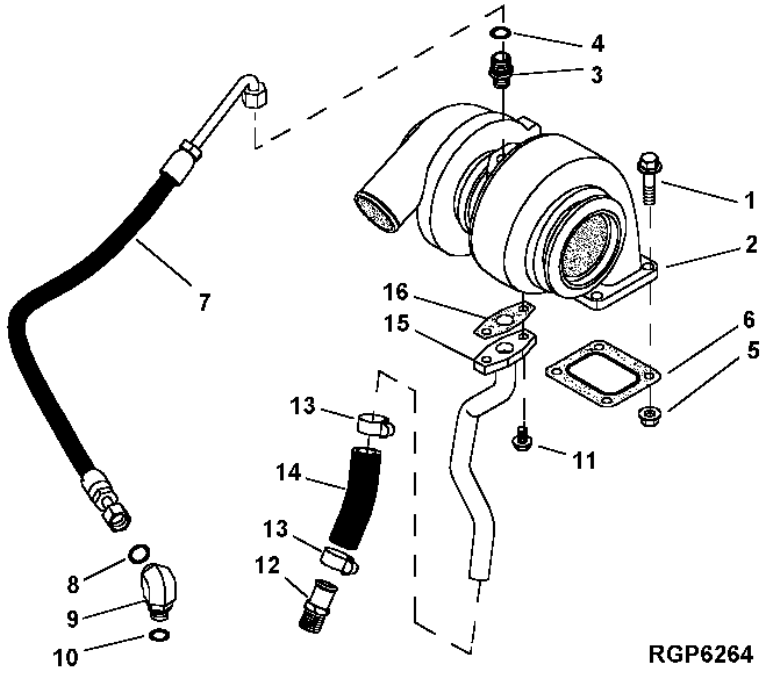

KEY	PART NO.	PART NAME	QTY.	ENGINE SERIAL NO.	REMARKS
1	19M8162	SCREW	4		M10 X 40
2	RE521561	TURBOCHARGER	1		(BORG-WARNER) (MARKED RE521560)
3	M87733	ADAPTER FITTING	1		
4	R63548	O-RING	1		
5	14M7296	FLANGE NUT	4		M10
6	R123572	GASKET	1		
7	RE503211	HYDRAULIC HOSE	1		
8	T77613	O-RING	1		
9	38H5035	ELBOW FITTING	1		
10	51M7042	O-RING	2		
11	19M7866	SCREW	2		M8 X 20
12	RE54885	HOSE FITTING	1		
13	RE65978	CLAMP	2		
14	R120013	HOSE	1		(CUT TO LENGTH)
15	RE68234	OIL LINE	1		
16	R123570	GASKET	1		

TIMING GEAR COVER AND WATER PUMP
CARTER DE DISTRIBUTION ET POMPE A EAU
CUBIERTA DE ENGRANAJES DE DISTRIBUCION Y BOMBA DE AGUA

RGP11876 -UN-18APR06

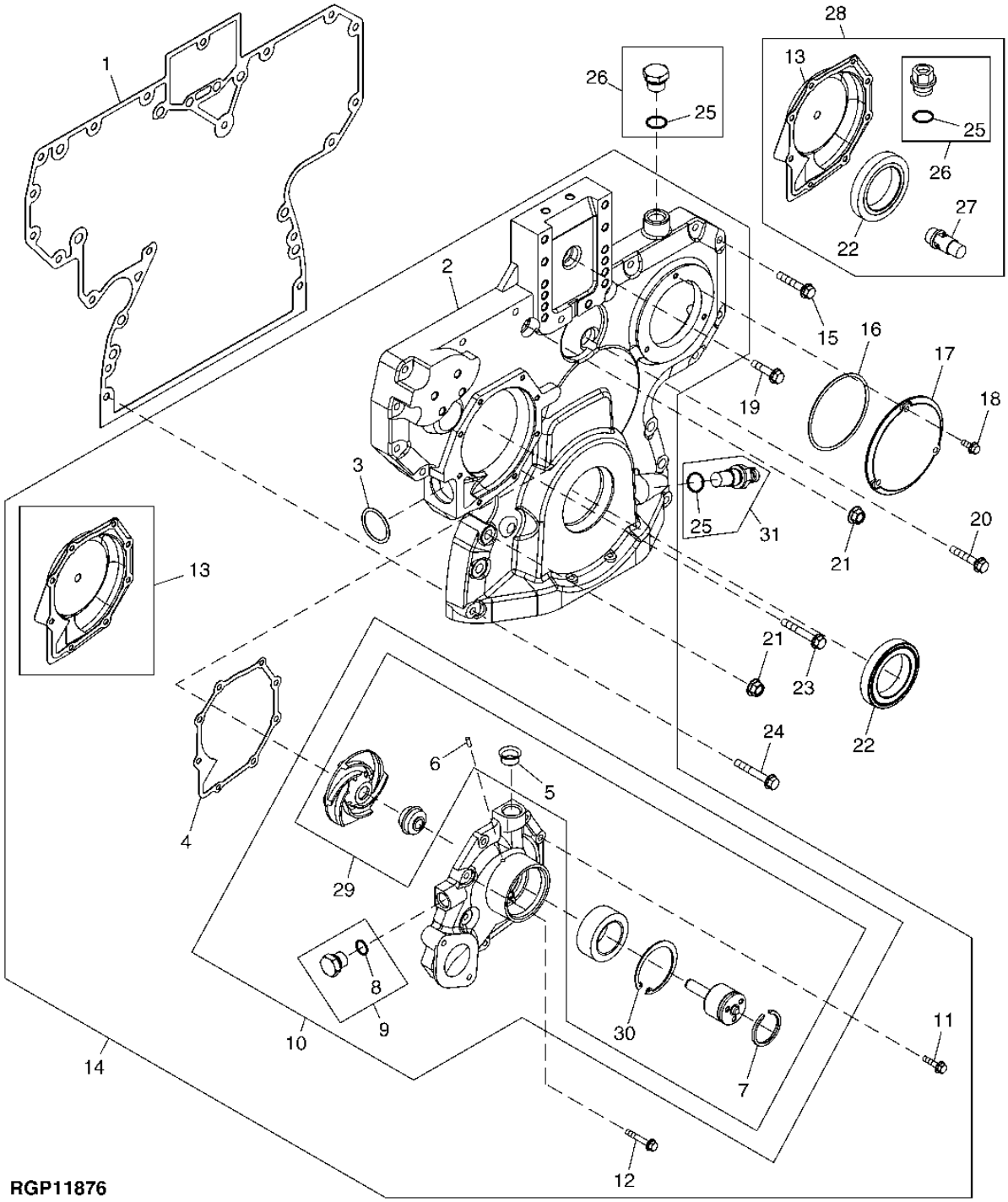

TIMING GEAR COVER AND WATER PUMP
CARTER DE DISTRIBUTION ET POMPE A EAU
CUBIERTA DE ENGRANAJES DE DISTRIBUCION Y BOMBA DE AGUA

KEY	PART NO.	PART NAME	QTY.	ENGINE SERIAL NO.	REMARKS
1	R136515	GASKET	1		(USE WITH R504724 OR RE506380)
	R520131	GASKET	1		(USE WITH R520129 OR RE523460)
2	R504724	COVER	1		NLA, (SUB R520129) (ALSO ORDER R520131 AND RE515978)
	R520129	COVER	1		(ALSO ORDER R520131 AND RE515978)
3	R504734	O-RING	1		37.694 X 3.531 MM (1.484" X 0.139")
4	R123417	GASKET	1		
5	R123226	GASKET	1		
6	R100369	FILTER	2		
7	A364R	SNAP RING	1		
8	51M7043	O-RING	1		15.300 X 2.200 MM (0.602" X 0.087")
9	RE46685	FITTING PLUG	2		
10	RE505981	WATER PUMP	1		(MARKED RE505981)
11	19M7863	SCREW	5		M6 X 25
12	19M7796	SCREW	3		M6 X 30
13	RE508566	KIT	1		
14	RE506380	COVER	1		NLA, (SUB RE523460) (ALSO ORDER R520131)
	RE523460	COVER	1		(ALSO ORDER R520131)
15	19M8317	SCREW	10		M8 X 40
16	R121424	O-RING	1		91.669 X 3.531 MM (3.609" X 0.139")
17	R121411	COVER	1		
18	19M7775	SCREW	3		M6 X 16
19	19M8291	SCREW	1		M8 X 35
20	RE67239	SCREW	1		
21	14M7296	FLANGE NUT	6		M10
22	RE516340	KIT	1		SEAL
23	19M7801	SCREW	1		M8 X 60
24	19M7979	SCREW	2		M8 X 55
25	51M7044	O-RING	1		17.300 X 2.200 MM (0.681" X 0.087")
26	RE517370	FITTING	2		
27	RE505501	BLEED VALVE	1		OIL PRESSURE REGULATING
28	RE515978	KIT	1		TIMING GEAR COVER SERVICE
29	RE515314	KIT	1		WATER PUMP SEAL
30	51M7044	O-RING	1		17.300 X 2.200 MM (0.681" X 0.087")
31	RE519144	SENSOR	1		M20, 12V-24V, TACHOMETER MAGNETIC PICK-UP

WATER PUMP INLET AND PULLEY
ENTREE DE POMPE A EAU ET POULIE
ENTRADA DE BOMBA DE AGUA Y POLEA

TP80015 -UN-19OCT98

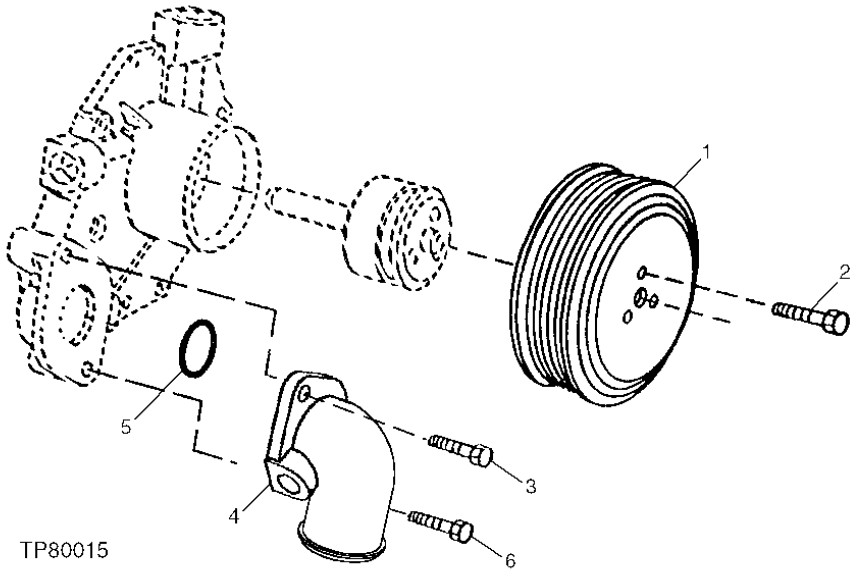

KEY	*PART NO.*	*PART NAME*	*QTY.*	*ENGINE SERIAL NO.*	*REMARKS*
1	R121038	PULLEY	1		
2	19M7774	SCREW	3		M6 X 12
3	19M7867	SCREW	1		M8 X 25
4	R121635	ELBOW FITTING	1		
5	R89944	O-RING	1		
6	19M7802	SCREW	1		M8 X 65

MEMORANDA
MEMORANDA
MEMORANDA

THERMOSTAT AND THERMOSTAT COVER
THERMOSTAT ET COUVERCLE DE THERMOSTAT
TERMOSTATO Y CUBIERTA DEL TERMOSTATO

RGP9956 -UN-28AUG03

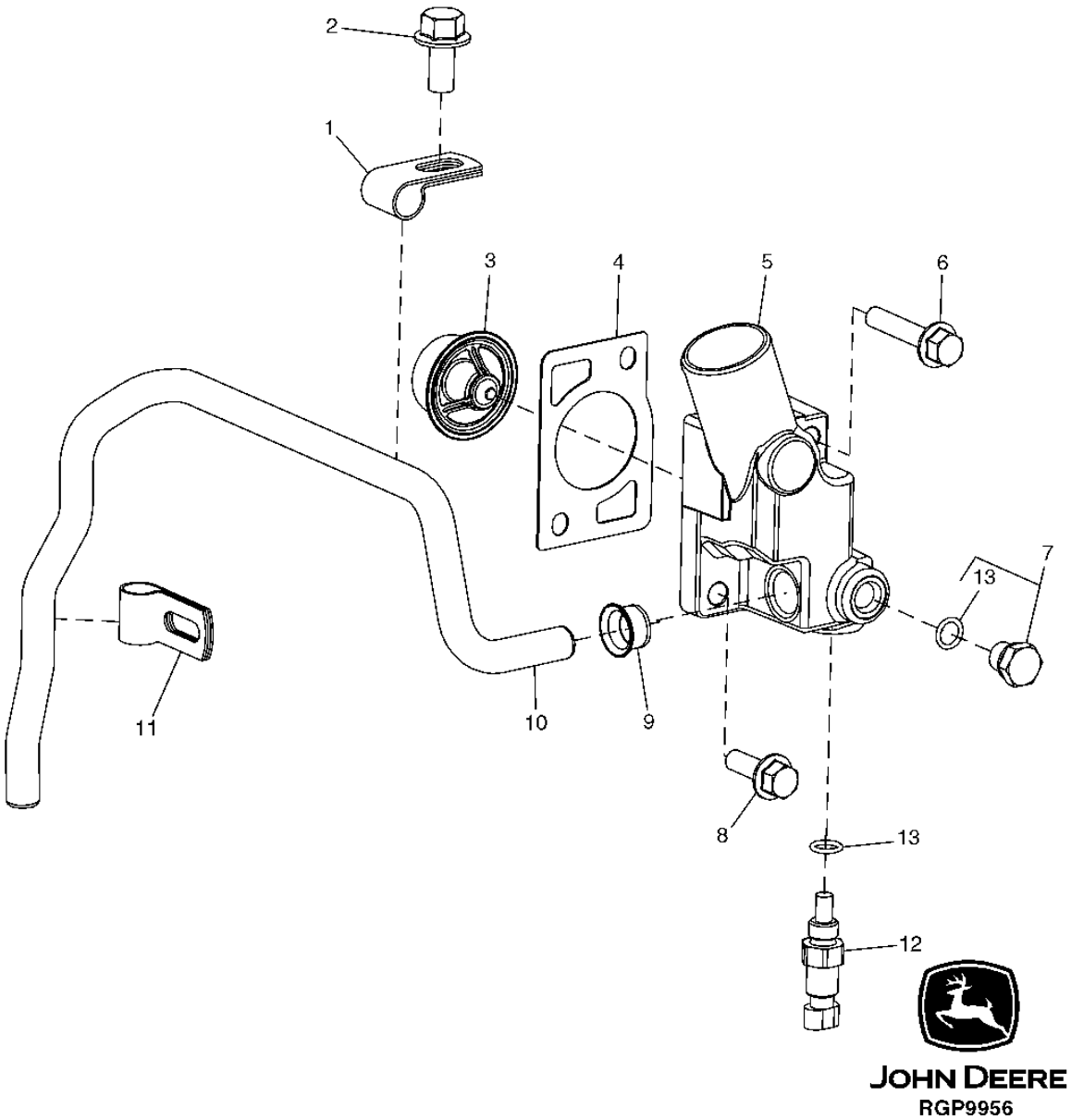

THERMOSTAT AND THERMOSTAT COVER
THERMOSTAT ET COUVERCLE DE THERMOSTAT
TERMOSTATO Y CUBIERTA DEL TERMOSTATO

KEY	PART NO.	PART NAME	QTY.	ENGINE SERIAL NO.	REMARKS
1	R123323	CLAMP	1		
2	19M7788	SCREW	1		M12 X 25
3	RE522076	THERMOSTAT	1		82° C (180° F)
4	R502814	GASKET	1		
5	R131016	COVER	1		
6	19M8292	SCREW	1		M10 X 50
7	RE46684	FITTING PLUG	1		
8	19M7786	SCREW	1		M10 X 30
9	R123226	GASKET	1		
10	R501144	TUBE	1		
11	R123324	CLAMP	1		
12	RE46684	FITTING PLUG	1		(FOR SHIPPING PURPOSES)
	RE52722	SENSOR	1		
13	51M7041	O-RING	2		11.300 X 2.200 MM

ENGINE OIL COOLER
REFROIDISSEUR D'HUILE MOTEUR
ENFRIADOR DE ACEITE DEL MOTOR

RGP10120 -UN-05NOV03

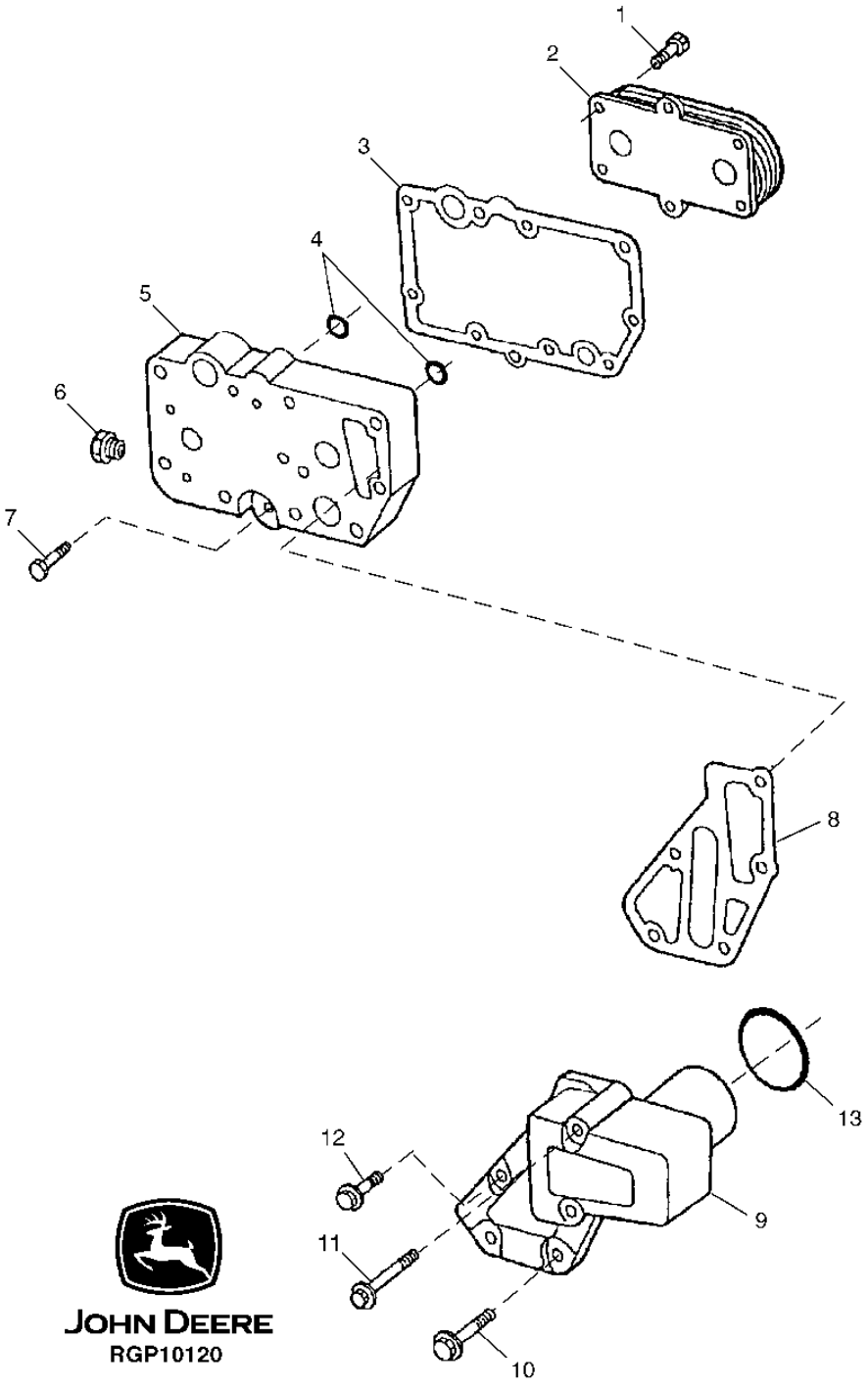

ENGINE OIL COOLER
REFROIDISSEUR D'HUILE MOTEUR
ENFRIADOR DE ACEITE DEL MOTOR

KEY	*PART NO.*	*PART NAME*	*QTY.*	*ENGINE SERIAL NO.*	*REMARKS*
1	RE67231	SCREW	6		M6 X 16 (WITH PRE-APPLIED SEALANT)
2	RE522821	OIL COOLER	1		(INCLUDES RE56690, (6) RE67231, R123471 AND T122075)
3	R123501	GASKET	1		
4	T122075	O-RING	2		
5	R123471	HOUSING	1		
6	RE46686	FITTING PLUG	1		
7	RE46685	FITTING PLUG	1		
8	R501428	GASKET	1		
9	R502811	ADAPTER FITTING	1		
10	19M7802	SCREW	2		M8 X 65
11	19M7970	SCREW	2		M8 X 100
12	RE67238	SCREW	1		M8 X 1.25 X 20 (WITH PRE-APPLIED SEALANT)
13	R504734	O-RING	1		

FUEL FILTER AND WATER SEPARATOR
FILTRE A CARBURANT ET SEPARATEUR D'EAU
SEPARADOR DE AGUA Y FILTRO DE COMBUSTIBLE

TX1010654 -UN-28JUL06

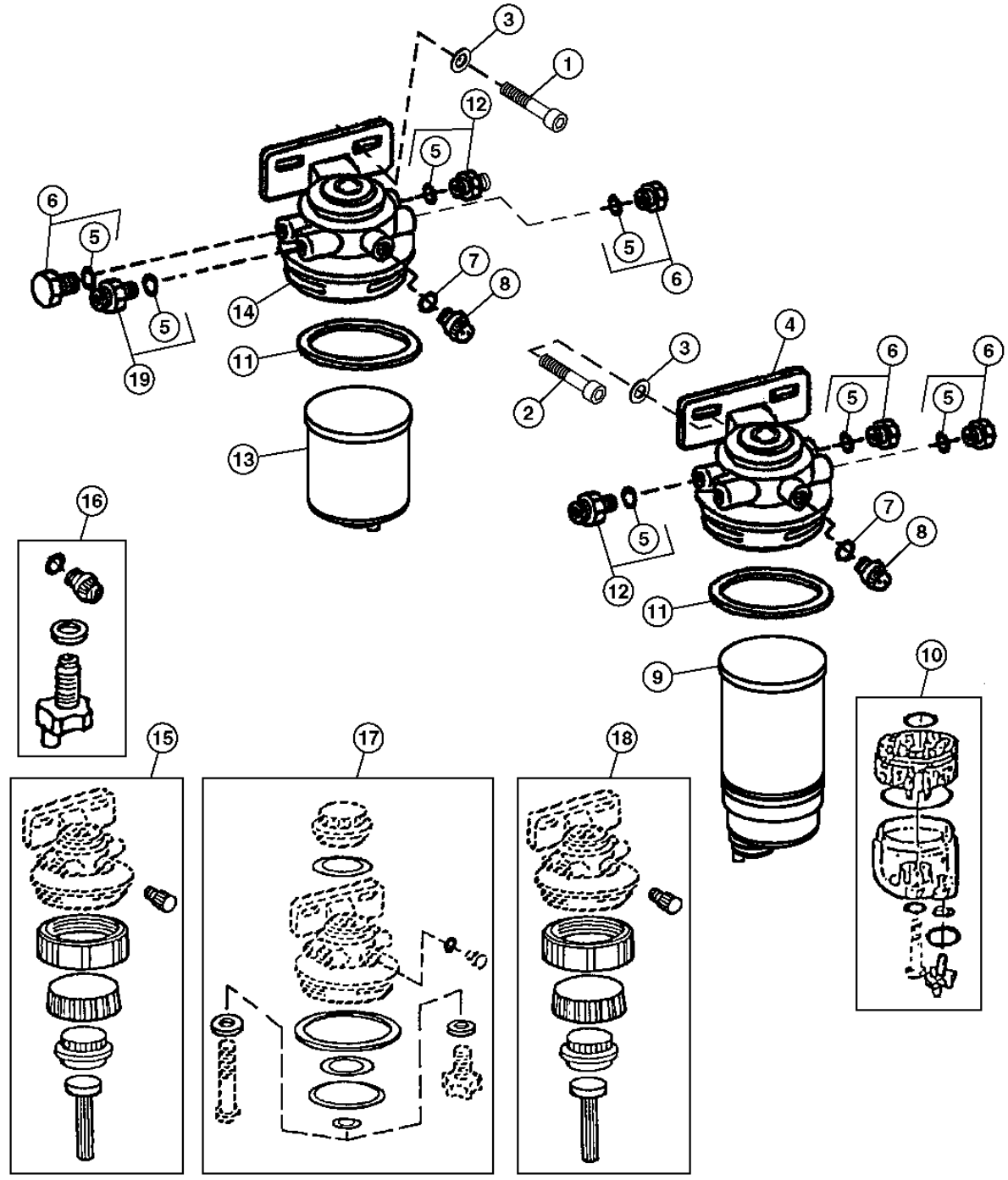

TX1010654

FUEL FILTER AND WATER SEPARATOR
FILTRE A CARBURANT ET SEPARATEUR D'EAU
SEPARADOR DE AGUA Y FILTRO DE COMBUSTIBLE

KEY	PART NO.	PART NAME	QTY.	ENGINE SERIAL NO.	REMARKS
1	19M8328	SCREW	2		M10 X 25
2	19M8578	SCREW	2		M10 X 40
3	24M7096	WASHER	4		10.500 X 18 X 1.600 MM
4	RE508847	FILTER	1		(INCLUDES R113562, R113563, R113565 AND RE526834)
5	51M7040	O-RING	1		9.300 X 2.200 MM
6	RE46686	FITTING PLUG	4		M12 X 1.5
7	R113562	O-RING	2		
8	R113563	DRAIN PLUG	2		
9	RE509036	FUEL FILTER	1		30 MICRON PRE-FILTER (PRIMARY), 6.0" (152.4 MM) ELEMENT LENGTH, (SUB FOR RE517180, THIS APPLICATION) (ALSO ORDER R113565)
10	RE51650	SEDIMENT BOWL	1		(USE WITH RE517180 OR RE509036)
11	R113565	O-RING	2		
12	RE60029	ADAPTER FITTING	2		M12X1.5 X 9/16"-24UNF
13	RE509032	FILTER ELEMENT	1		2 MICRON FINAL, 6.0" (152.4 MM) ELEMENT LENGTH, (ALSO ORDER R113565)
14	RE509794	FILTER HEAD	1		(INCLUDES R113562, R113563, R113565 AND RE526834)
15	RE526834	SEAL KIT	1		(D) (SUB FOR RE51649)
16	RE60854	DRAIN VALVE	1		(A)
17	RE516553	SEAL KIT	1		(B)
	RE516512	O-RING KIT	1		(C) (PKG 10)
18	RE526834	SEAL KIT	1		(D) (SUB FOR RE51649)
19	RE60030	FITTING	1		M12 X 1.5 X 5/8"-24UNF

(A) VALVE
(A) SOUPAPE
(A) VALVULA

(B) SEAL
(B) JOINT A LEVRE
(B) RETEN

(C) O-RING, WITHOUT HAND PRIMER
(C) JOINTS TORIQUES, SANS AMORCEUR A MAIN
(C) ANILLOS "O", SIN CEBADOR MANUAL

(D) MECHANICAL COMPONENTS
(D) COMPOSANTS MECANIQUES
(D) COMPONENTES MECANICOS

FUEL FILTER LINES
CONDUITES DU FILTRE A CARBURANT
LINEAS DE FILTRO DE ACEITE

RGP10983 -UN-09JUN05

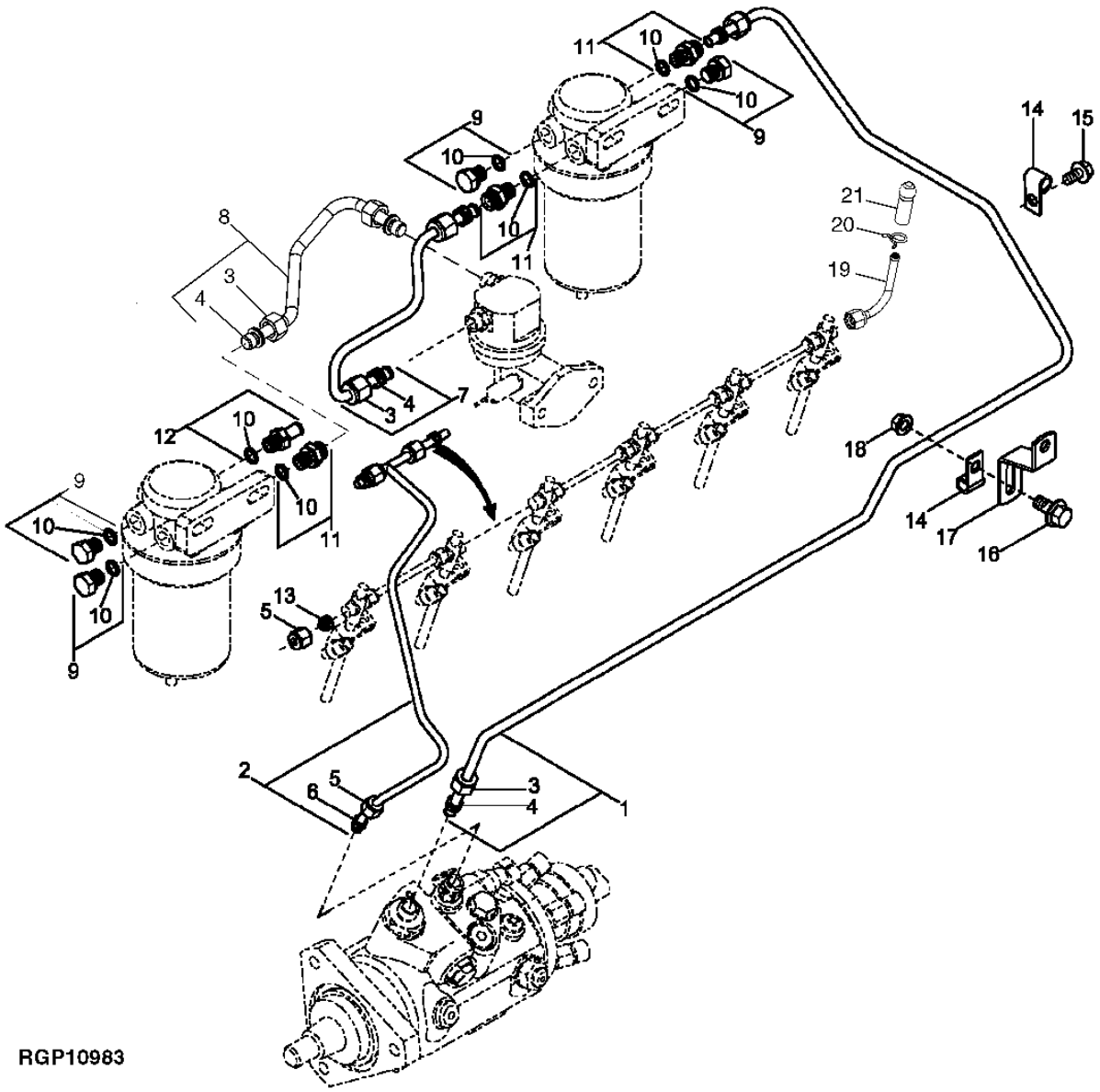

FUEL FILTER LINES
CONDUITES DU FILTRE A CARBURANT
LINEAS DEL FILTRO DE ACEITE

KEY	PART NO.	PART NAME	QTY.	ENGINE SERIAL NO.	REMARKS
1	RE516510	FUEL LINE	1		
2	RE507598	FUEL LINE	1	-413699	
	RE515815	FUEL LINE	1	413700-	
3	R123594	TUBE NUT	AR		9/16"-24UNEF
4	R74012	SEALING WASHER	AR		
5	R123593	TUBE NUT	AR		
6	R51936	SEALING WASHER	AR		
7	RE60037	FUEL LINE	1		
8	RE515512	FUEL LINE	1		
9	RE46686	FITTING PLUG	4		M12 X 1.5
10	51M7040	O-RING	1		9.300 X 2.200 MM
11	RE60029	ADAPTER FITTING	3		M12X1.5 X 9/16"-24UNEF
12	RE500576	FITTING	1		
13	AR85519	PLUG	1		
14	T13814	CLAMP	2		
15	19M7784	SCREW	1		M10 X 20
16	19M7865	SCREW	1		M8 X 16
17	R504859	BRACKET	1		
18	14M7524	FLANGE NUT	1		M8
19	AR104650	FUEL LINE	1		
20	T13254	CLAMP	1		
21	K1011176	SLEEVE	1		

FUEL TRANSFER PUMP
POMPE DE TRANSFERT DE CARBURANT
BOMBA DE TRANSFERENCIA DE COMBUSTIBLE

RGP8271 -UN-05NOV01

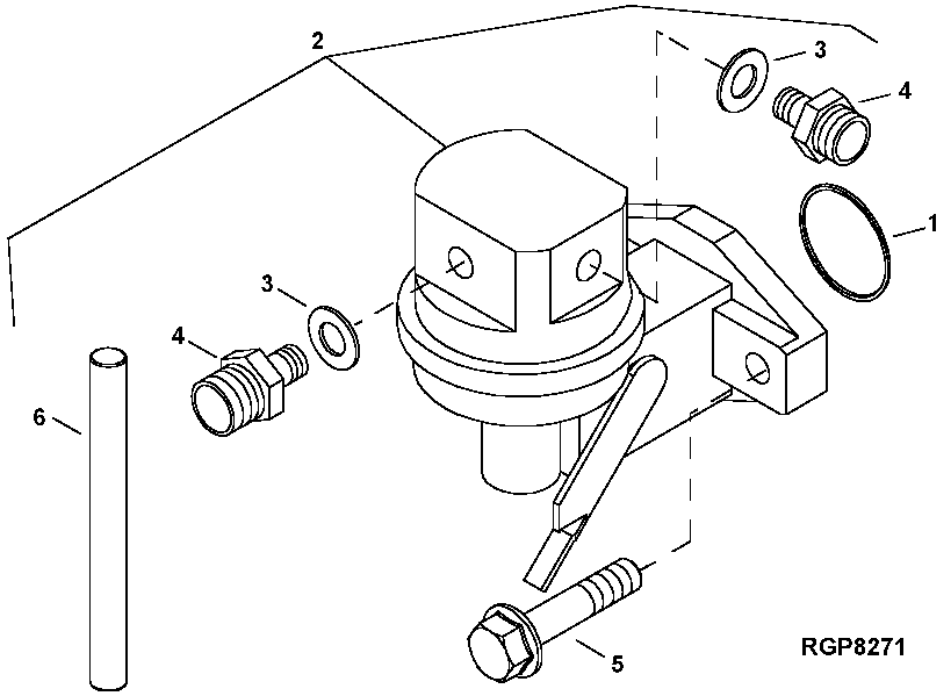

KEY	PART NO.	PART NAME	QTY.	ENGINE SERIAL NO.	REMARKS
1	R123273	O-RING	1		
2	RE66153	FUEL PUMP	1		
3	R500271	O-RING	2		
4	R500270	FITTING	2		
5	RE504233	CAP SCREW	2		
6	R133405	PIN	1		

MEMORANDA
MEMORANDA
MEMORANDA

STARTING MOTOR (24 VOLT) (DENSO)
DEMARREUR (24 VOLT) (DENSO)
ARRANCADOR (24 VOLT) (DENSO)

TP58434 -UN-08APR99

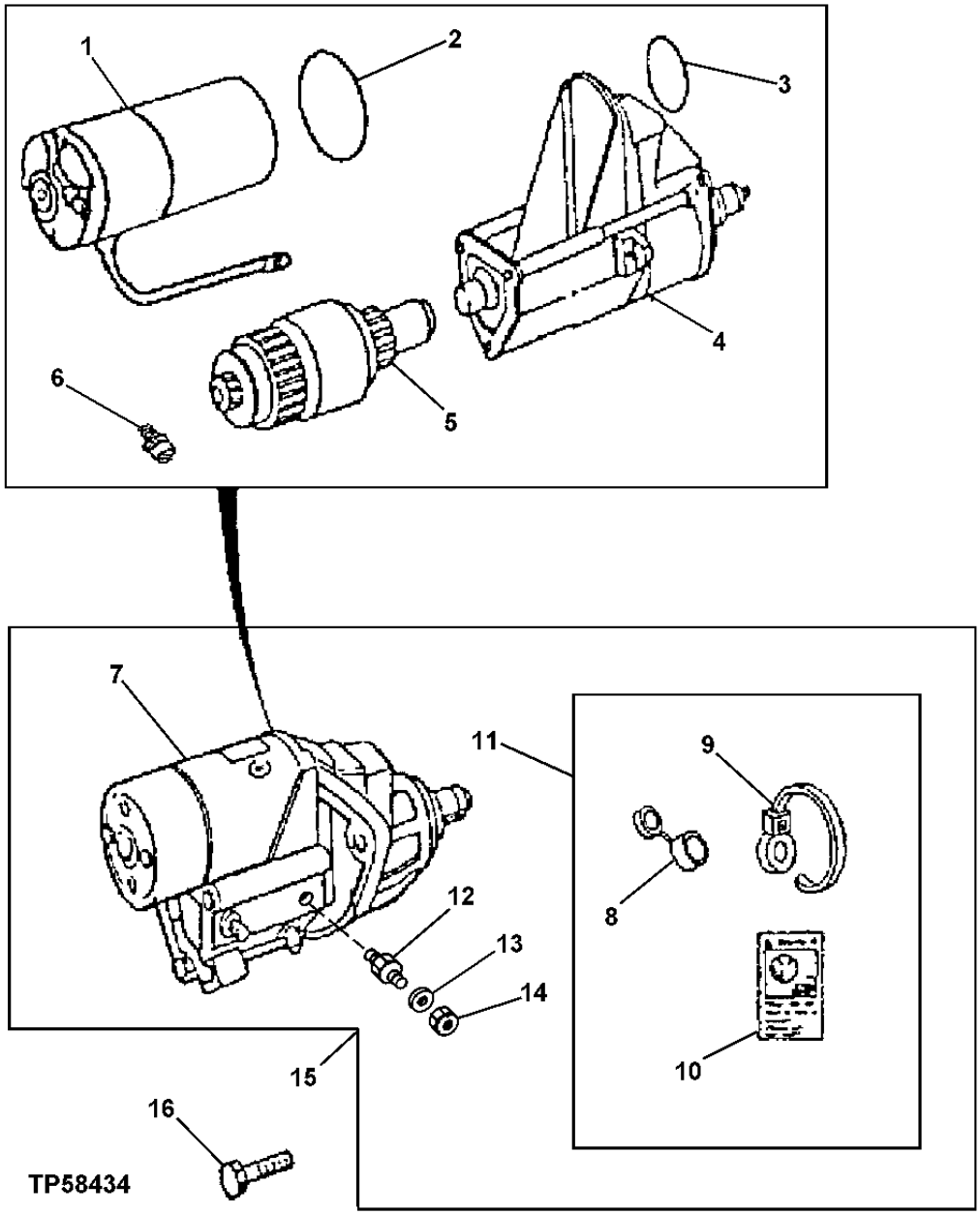

THIS PARTS LISTING IS CONTINUED

STARTING MOTOR (24 VOLT) (DENSO)
DEMARREUR (24 VOLT) (DENSO)
ARRANCADOR (24 VOLT) (DENSO)

KEY	*PART NO.*	*PART NAME*	*QTY.*	*ENGINE SERIAL NO.*	*REMARKS*
1	RE70678	SWITCH	1		
2	R135509	SEAL	1		
3	R135510	O-RING	1		
4	.....	STARTER MOTOR	1		(ORDER RE501150)
5	RE70682	CLUTCH	1		
6	RE71256	SCREW WITH WASHER	1		M5 X .8
7	.....	STARTER MOTOR	1		(MARKED RE501060) (ORDER RE501150)
8	.....	COVER	1		(TERMINAL INSULATION)
9	R96703	TIE BAND	1		
10	T146102	LABEL	1		(BYPASS START)
11	RE70756	KIT	1		(SOLENOID KIT)
12	R136052	STUD	1		
13	24M7047	WASHER	1		13 X 24 X 2.500 MM
14	14M7299	FLANGE NUT	1		M12
15	RE501150	STARTER MOTOR KIT	1		(STARTER AND SOLENOID)
	TY24443	STARTER MOTOR	1		(REMAN)
	SE501406	STARTER MOTOR	1		(REMANUFACTURED FOR TY24443)
16	19M7786	SCREW	3		M10 X 30

UPPER ALTERNATOR BRACKET
SUPPORT SUPERIEUR ALTERNATEUR
ESCUADRA SUPERIOR DEL ALTERNADOR

RGP10121 -UN-05NOV03

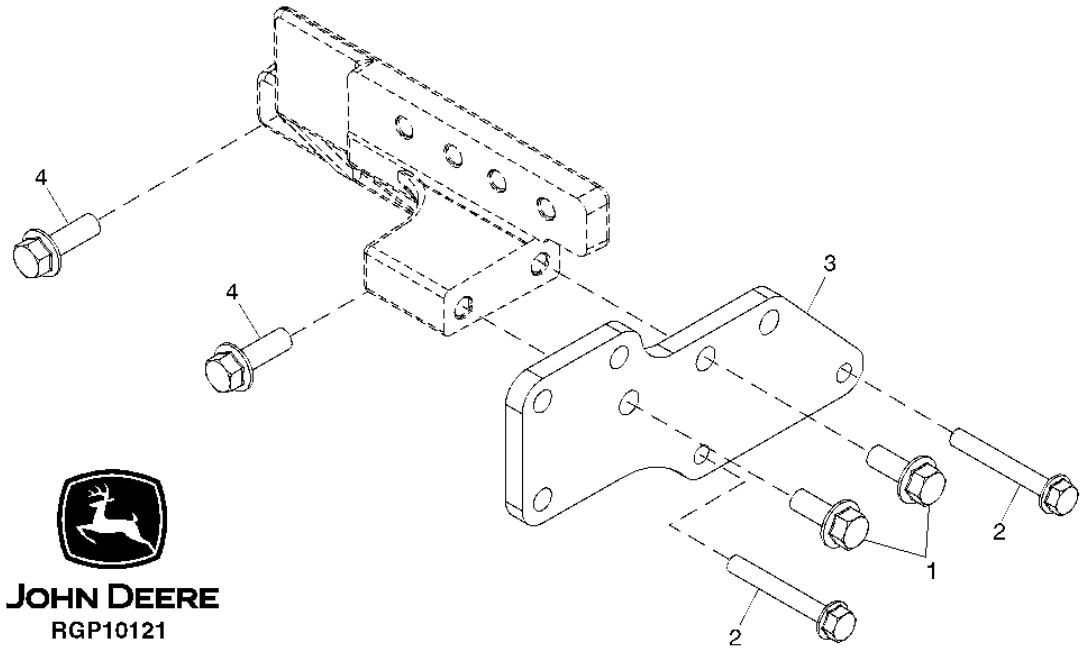

KEY	*PART NO.*	*PART NAME*	*QTY.*	*ENGINE SERIAL NO.*	*REMARKS*
1	19M7801	SCREW	2		M8 X 60
2	19M7785	SCREW	2		M10 X 25
3	R132913	SUPPORT	1		
4	19M7786	SCREW	2		M10 X 30

AUTOMATIC BELT TENSIONER
TENDEUR COURROIE AUTOMATIQUE
TENSOR DE CORREA AUTOMATICO

RGP10123 -UN-06NOV03

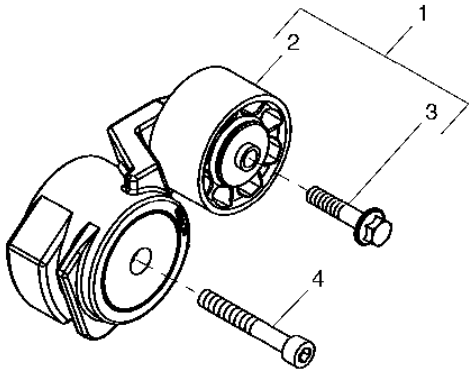

JOHN DEERE
RGP10123

KEY	PART NO.	PART NAME	QTY.	ENGINE SERIAL NO.	REMARKS
1	RE70536	PULLEY	1		
2	RE505264	PULLEY	1		
3	R503813	BOLT	1		LH THREAD
4	19M8131	SCREW	1		M10 X 70

CRANKSHAFT PULLEY AND DAMPER
POULIE DE VILEBREQUIN ET AMORTISSEUR
POLEA DE CIGUENAL Y AMORTIGUADOR

TP53318 -UN-21AUG96

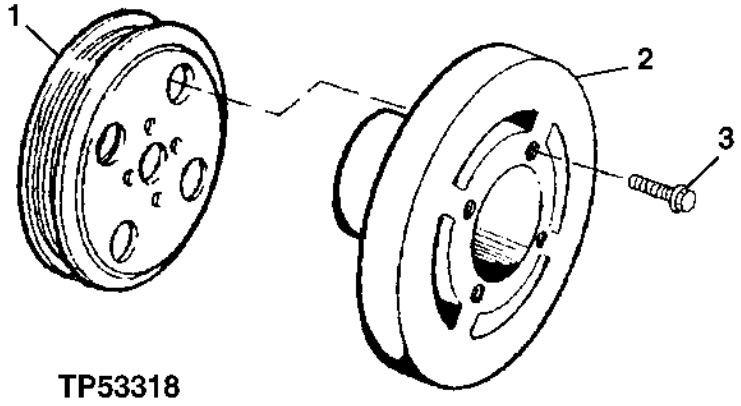

TP53318

KEY	PART NO.	PART NAME	QTY.	ENGINE SERIAL NO.	REMARKS
1	R133295	PULLEY	1		
2	RE59355	TORSIONAL DAMPER	1		
3	R121897	BOLT	4		

FLYWHEEL
VOLANT-MOTEUR
VOLANTE

RGP6022 -UN-04APR00

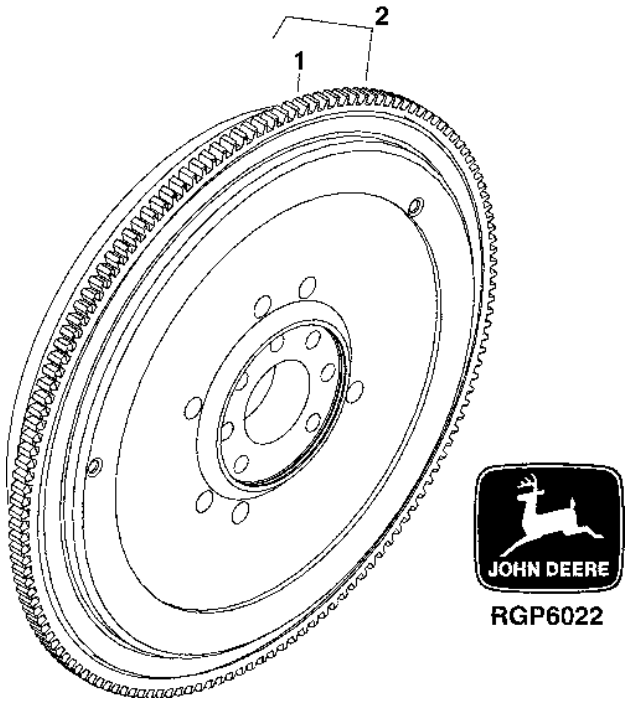

KEY	PART NO.	PART NAME	QTY.	ENGINE SERIAL NO.	REMARKS
1	R28811	RING GEAR	1		
2	RE500398	FLYWHEEL	1		(MARKED R500219)

FLYWHEEL HOUSING
CARTER DE VOLANT-MOTEUR
CAJA DEL VOLANTE

RGP7503 -UN-17MAY01

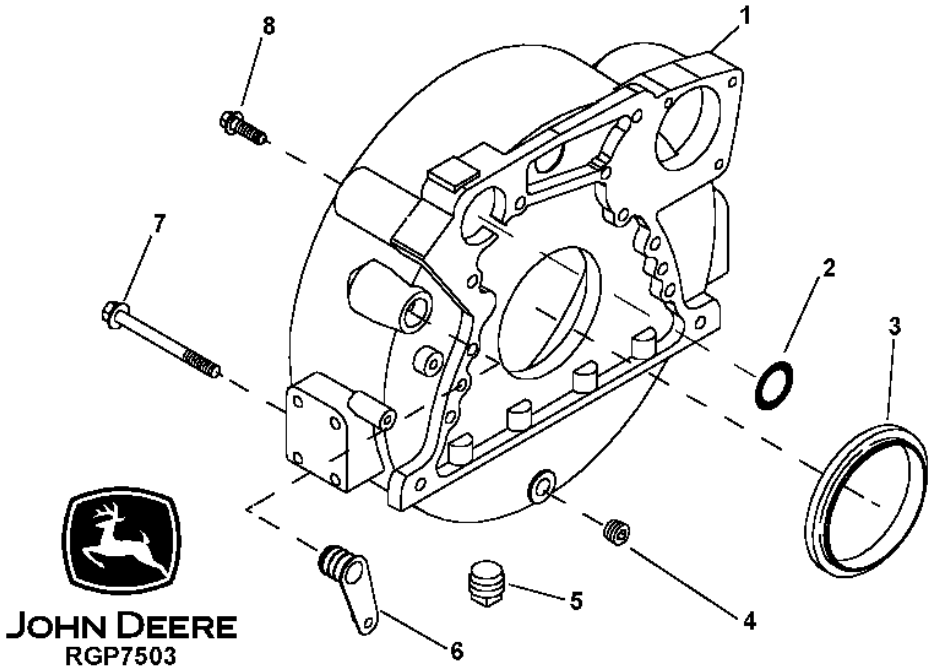

KEY	PART NO.	PART NAME	QTY.	ENGINE SERIAL NO.	REMARKS
1	R503450	HOUSING	1		(ALSO ORDER R61467)
2	R61467	O-RING	1		
3	RE44574	SEAL	1		
4	RE57836	PIPE PLUG	1		(SUB FOR 15H624)
5	15H562	PIPE PLUG	1		1"
6	R131769	PLUG	1		
7	19M8306	SCREW	4		M12 X 50
8	R135918	BOLT	8		

MEMORANDA
MEMORANDA
MEMORANDA

ENGINE SHORT BLOCK
BLOC MOTEUR COURT
BLOQUE CORTO DEL MOTOR

T155863 -UN-13JUN02

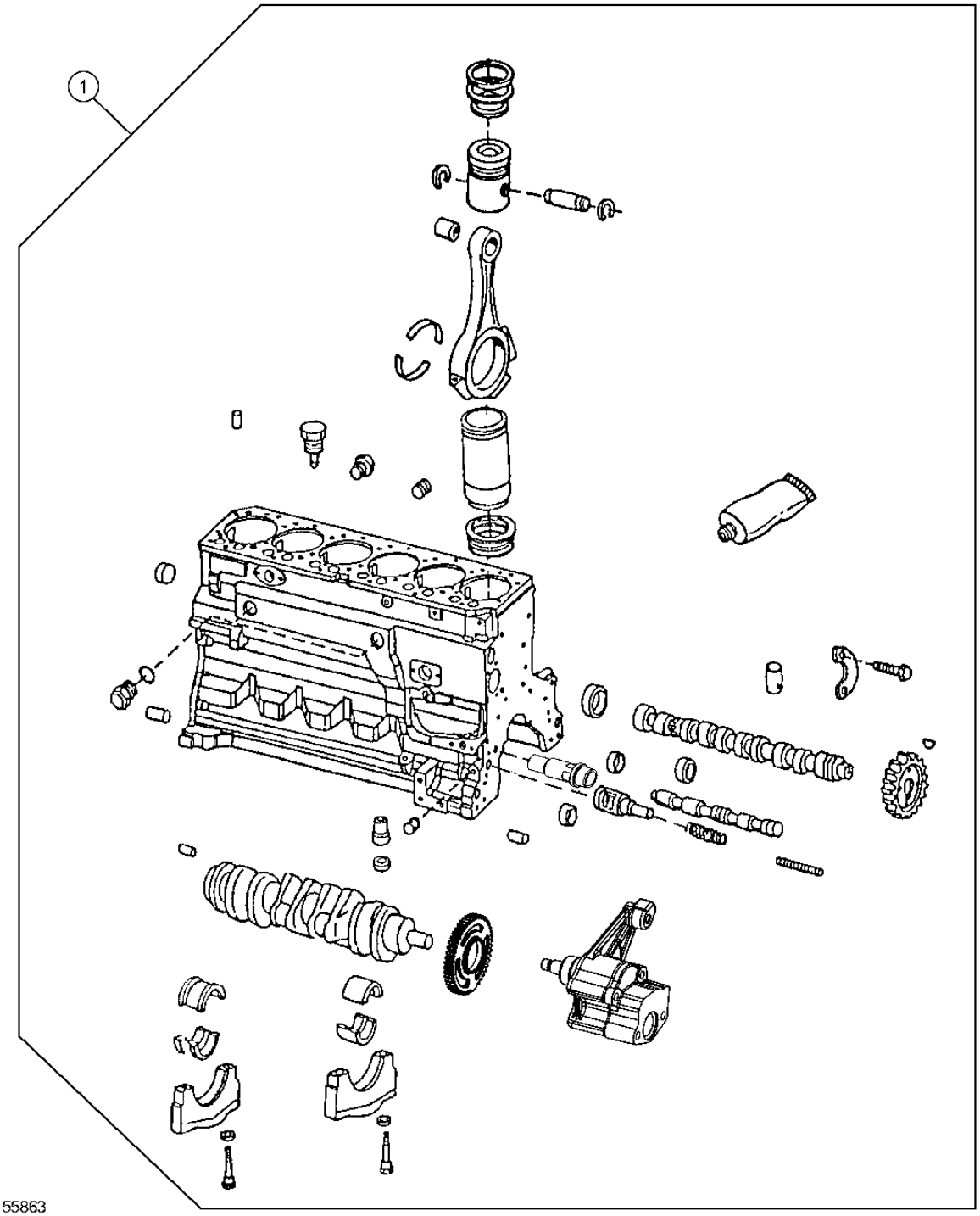

ENGINE SHORT BLOCK
BLOC MOTEUR COURT
BLOQUE CORTO DEL MOTOR

KEY	*PART NO.*	*PART NAME*	*QTY.*	*ENGINE SERIAL NO.*	*REMARKS*
1	RE518527	SHORT ENGINE	1		(MARKED R119565) (DOES NOT INCLUDE FRONT PLATE)
	SE501146	COMPLETE BLOCK ASSEMBLY	1		REMAN - PE6068HDW56

OVERHAUL KIT
JEU DE REMISE EN ETAT
JUEGO DE RECONSTRUCCION

TP28491 -UN-01JAN94

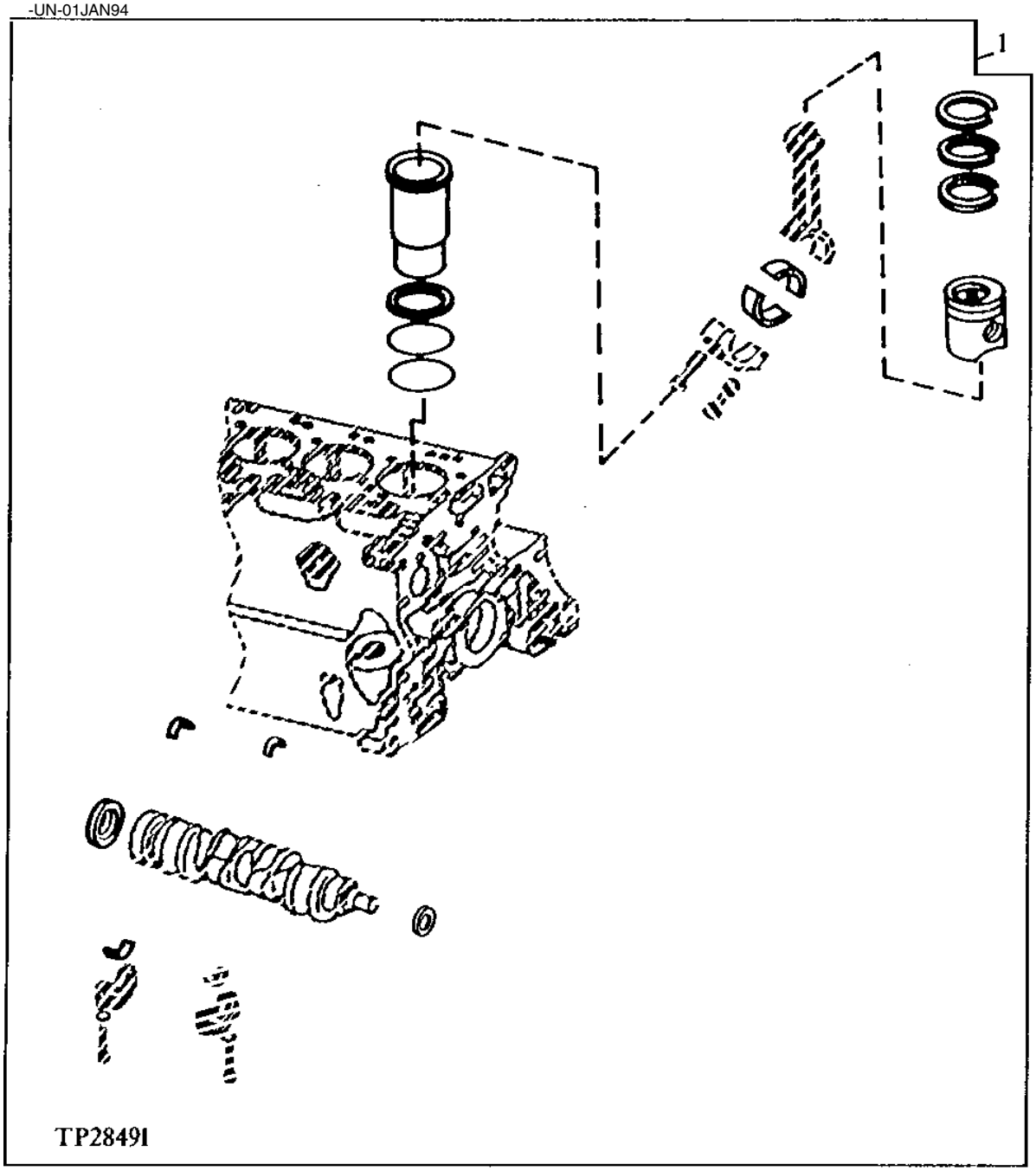

OVERHAUL KIT
JEU DE REMISE EN ETAT
JUEGO DE RECONSTRUCCION

KEY	*PART NO.*	*PART NAME*	*QTY.*	*ENGINE SERIAL NO.*	*REMARKS*
1	RE527324	ENGINE OVERHAUL KIT	1		

ENGINE MAJOR OVERHAUL GASKET SET
JEU DE JOINTS POUR REMISE A NEUF MAJEURE DE MOTEUR
JUEGO DE EMPAQUETADURAS PARA REACONDICIONAMIENTO MAYOR DEL MOTOR

TP55370 -UN-11MAY98

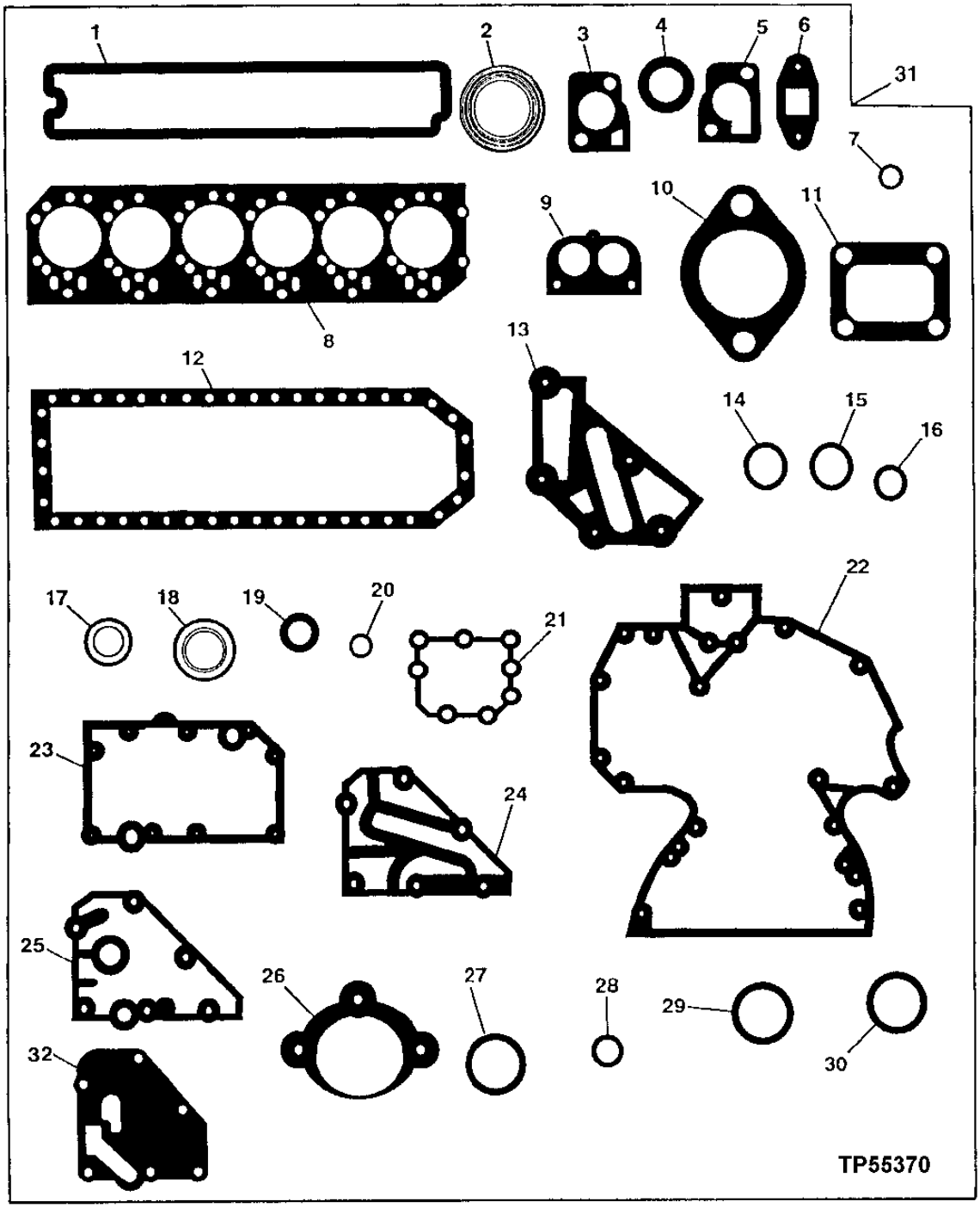

ENGINE MAJOR OVERHAUL GASKET SET
JEU DE JOINTS POUR REMISE A NEUF MAJEURE DE MOTEUR
JUEGO DE EMPAQUETADURAS PARA REACONDICIONAMIENTO MAYOR DEL MOTOR

KEY	PART NO.	PART NAME	QTY.	ENGINE SERIAL NO.	REMARKS
1	R123543	GASKET	1		ROCKER ARM COVER
2	R521439	GASKET	6		EXHAUST MANIFOLD
3	R502814	GASKET	1		THERMOSTAT COVER
4	R123226	GASKET	2		WATER BY-PASS TUBE
5	R123345	GASKET	1		THERMOSTAT HOUSING
6	R105346	GASKET	1		TURBOCHARGER OIL OUTLET TUBE
7	R123575	GASKET	6		ROCKER ARM COVER HOLD DOWN STUD
8	R116516	GASKET	1		CYLINDER HEAD
9	R501373	GASKET	1		THERMOSTAT COVER
10	R81275	GASKET	1		AIR INLET
11	R123572	GASKET	1		TURBOCHARGER TO EXHAUST MANIFOLD
12	R123354	GASKET	1		ENGINE OIL PAN
13	R501428	GASKET	1		COOLANT PASSAGE ADAPTER
14	R75892	O-RING	1		OIL PUMP TUBE CONNECTOR
15	R97185	O-RING	2		OIL PUMP OUTLET TUBE TO COVER
16	R61871	O-RING	1		OIL PUMP INTAKE TUBE
17	A4827R	WASHER	1		OIL PRESSURE REGULATOR PLUG
18	RE44574	SEAL	1		REAR OIL SEAL
19	RE516340	KIT	1		(MARKED RE52346 OR RE505515) (SUB FOR RE59810) FRONT OIL SEAL
20	R123273	O-RING	1		FUEL TRANSFER PUMP
21	R123417	GASKET	1		WATER PUMP
22	R136516	GASKET	AR		TIMING GEAR COVER
	R136515	GASKET	AR		TIMING GEAR COVER FOR AUXILIARY DRIVE
23	R123501	GASKET	1		OIL COOLER HOUSING
24	R502864	GASKET	1		REMOTE OIL FILTER ADAPTER
25	R123525	GASKET	AR		OIL FILTER HEADER
26	R53108	GASKET	1		STARTING MOTOR
27	R72328	O-RING	4		REMOTE OIL FILTER TUBES
28	R89944	O-RING	1		WATER PUMP INLET
29	R504734	O-RING	2		CONNECTOR TUBE TO TIMING GEAR COVER
30	T122075	O-RING	2		OIL COOLER TO HOUSING
31	RE526965	GASKET KIT	1		ENGINE MAJOR OVERHAUL
32	R500374	GASKET	1		OIL FILTER HEADER

CYLINDER HEAD REMOVAL AND IN-VEHICLE OVERHAUL GASKET SETS
DEPOSE TETE VERIN ET JEUX JOINTS REMISE EN ETAT DANS VEHICULE
RETIRO DE CULATA Y JUEGOS DE EMPAQUETADURAS PARA REACONDICIONAMIENTO DEL VEHICULO

TP49294 -UN-28SEP95

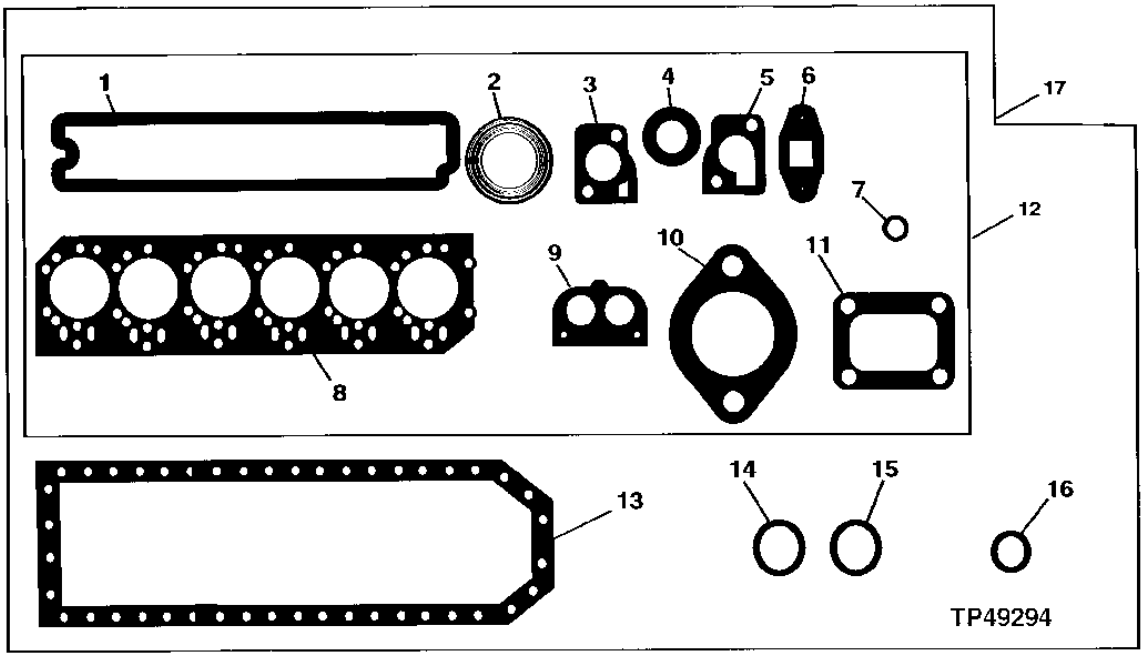

KEY	PART NO.	PART NAME	QTY.	ENGINE SERIAL NO.	REMARKS
1	R123543	GASKET	1		ROCKER ARM COVER
2	R521439	GASKET	6		EXHAUST MANIFOLD
3	R502814	GASKET	1		THERMOSTAT COVER
4	R123226	GASKET	2		WATER BY-PASS TUBE
5	R123345	GASKET	1		THERMOSTAT HOUSING
6	R105346	GASKET	1		TURBOCHARGER OIL OUTLET LINE
7	R123575	O-RING	6		ROCKER ARM COVER HOLD DOWN STUD
8	R116516	ENGINE CYLINDER HEAD GASKET	1		CYLINDER HEAD
9	R501373	GASKET	1		THERMOSTAT COVER
10	R81275	GASKET	1		AIR INLET
11	R123572	GASKET	1		TURBOCHARGER TO EXHAUST MANIFOLD
12	RE66083	GASKET KIT	1		(ORDER RE526673) NLA CYLINDER HEAD REMOVAL
13	R123354	GASKET	1		ENGINE OIL PAN
14	R75892	GASKET	1		OIL PUMP TUBE CONNECTOR
15	R97185	O-RING	1		OIL PUMP OUTLET TUBE TO COVER
16	R61871	O-RING	1		OIL PUMP INTAKE TUBE TO COVER
17	RE526673	GASKET KIT	1		IN CHASSIS OVERHAUL

MEMORANDA
MEMORANDA
MEMORANDA

ETHER STARTING AID
AIDE AU DEMARRAGE ETHER
FLUIDO AUXILIAR DE ARRANQUE

TX1008855 -UN-14JUN06

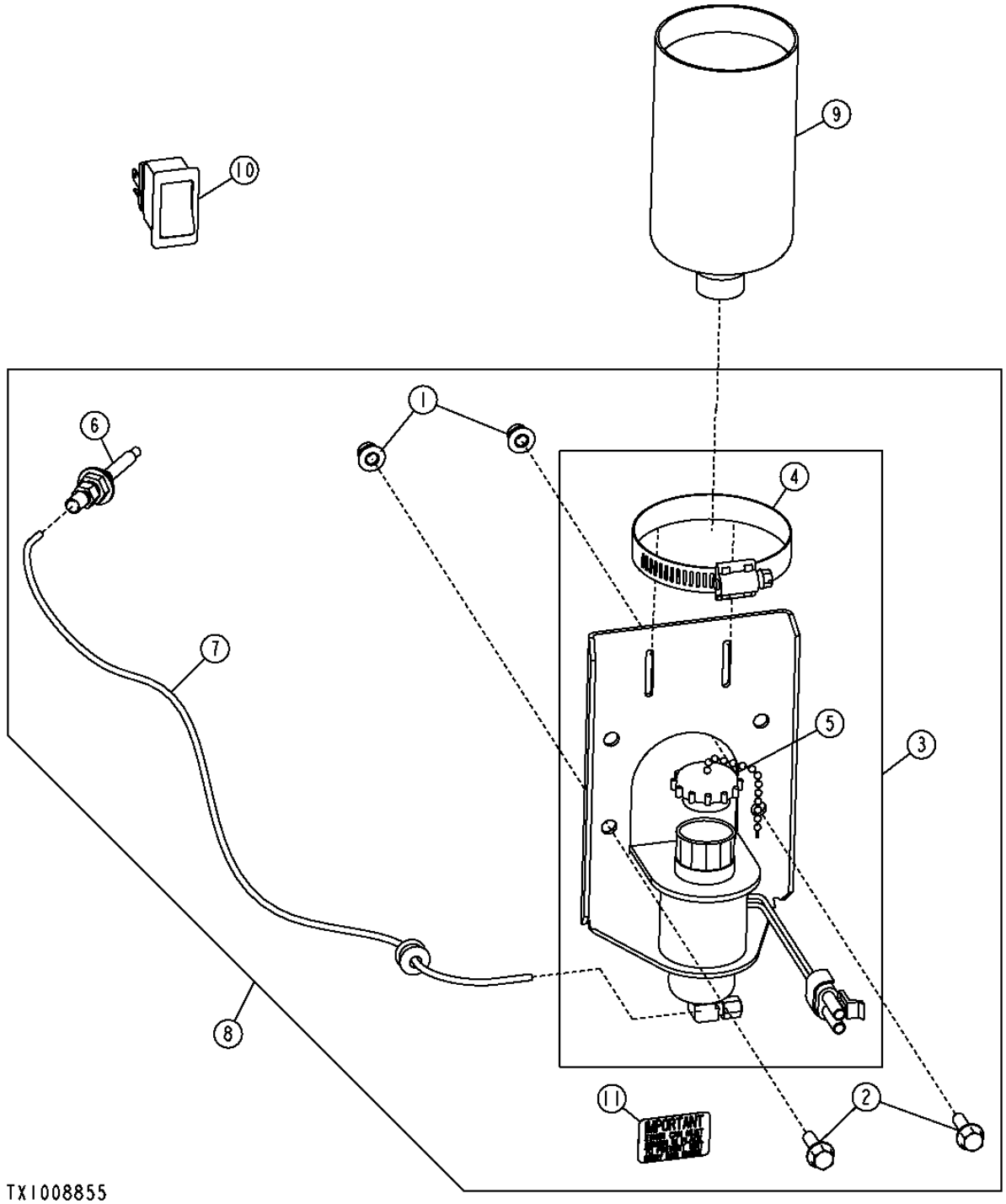

ETHER STARTING AID
AIDE AU DEMARRAGE ETHER
FLUIDO AUXILIAR DE ARRANQUE

KEY	*PART NO.*	*PART NAME*	*QTY.*	*SERIAL NO.*	*REMARKS*
1	14M7397	LOCK NUT	2		M6
2	19M7862	SCREW	2		M6 X 20
3	AT170759	SOLENOID	1		
4	AR21999	HOSE CLAMP	1		
5	AT171539	CAP (HAT)	1		
6	AT183222	NOZZLE	1		
7	T78593	TUBE	1		
	R27583	GROMMET	1		
8	AT227576	FIELD INSTALLATION KIT	1		
9	AT171162	STARTING FLUID	1		
10	AT202842	TOGGLE/ROCKER SWITCH	1		
11	T42170	LABEL	1		

ENGINE AIR HEATER
CHAUFFAGE D'AIR DU MOTEUR
CALEFACTOR DE AIRE DEL MOTOR

T202143 -UN-10AUG04

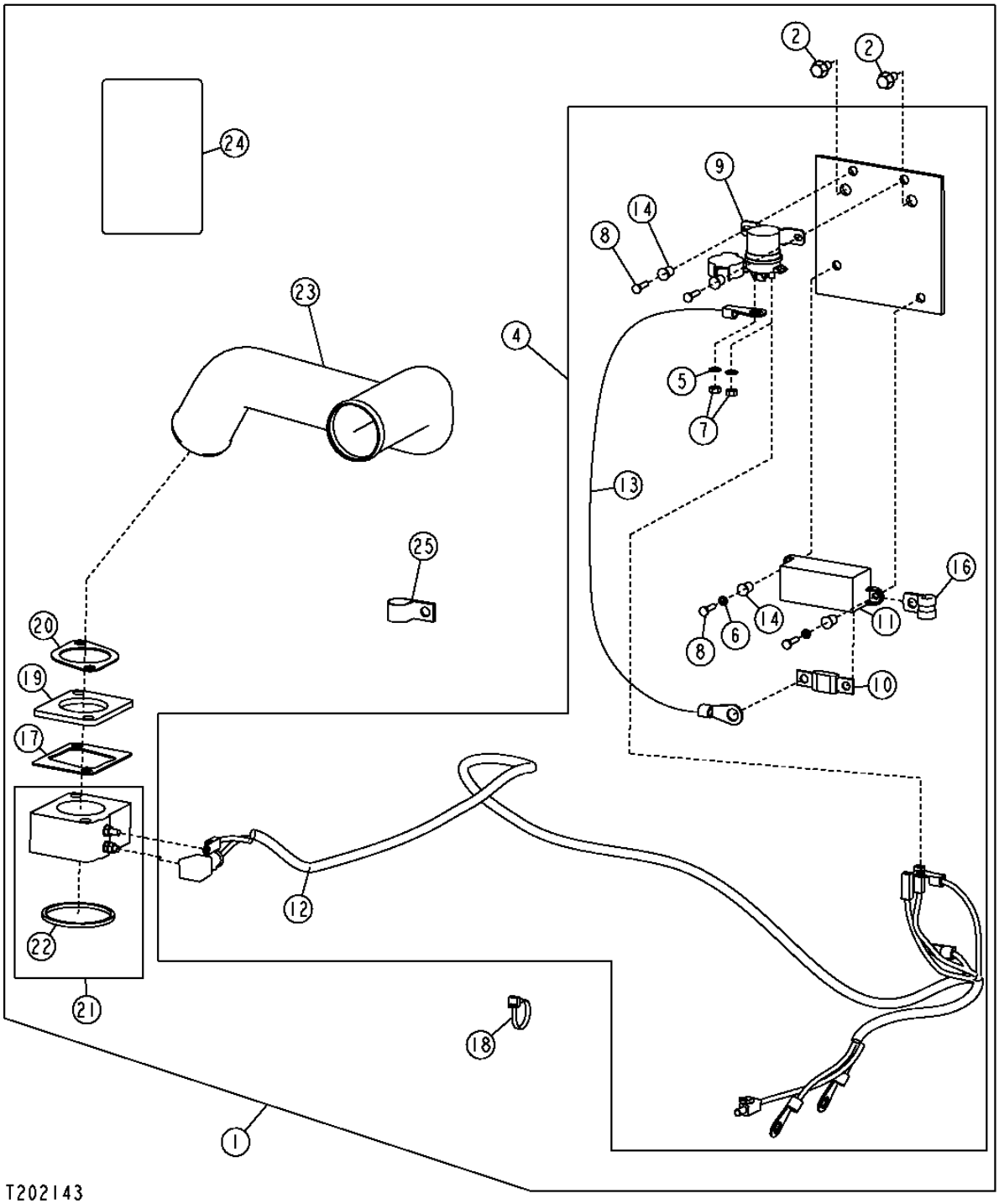

ENGINE AIR HEATER
CHAUFFAGE D'AIR DU MOTEUR
CALEFACTOR DE AIRE DEL MOTOR

KEY	*PART NO.*	*PART NAME*	*QTY.*	*SERIAL NO.*	*REMARKS*
1	AT307703	HEATER	1		
2	19M7865	SCREW	2		M8 X 16
3	19M8977	SCREW	2		M10 X 85
4	AT302845	WIRING HARNESS	1		
5	12H297	LOCK WASHER	2		
6	12M7064	LOCK WASHER	2		
7	14M7272	NUT	2		M6
8	21M7022	SCREW	4		M5 X 20
9	AT145341	RELAY	1		(24 VOLT)
10	AT203566	FUSE	1		(125 AMP)
11	AT206818	FUSE HOLDER	1		
12	AT302829	WIRING HARNESS	1		(ENGINE AIR HEATER)
13	AT304334	WIRING HARNESS	1		(RELAY TO FUSE)
14	T103238	NUT	4		
16	T75276	CLAMP	1		
17	R133893	GASKET	1		
18	R44302	TIE BAND	2		
19	R504507	PLATE	1		
20	R81275	GASKET	1		
21	RE502669	HEATER	1		
22	R501459	O-RING	1		
23	T195579	TUBE	1		
24	T208085	SAFETY SIGN	1		(SUB FOR T196474) (ENGINE AIR HEATER START / STOP)
25	T78787	CLAMP	AR		

ENGINE COOLANT HEATER
CHAUFFE-BLOC MOTEUR
CALEFACTOR DE REFRIGERANTE DE MOTOR

T194389 -UN-05SEP03

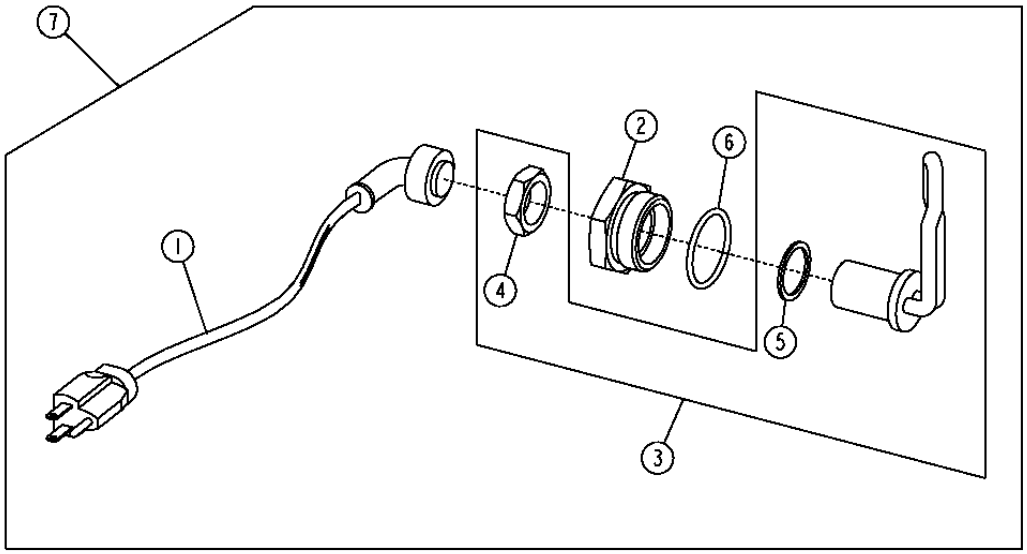

T194389

KEY	PART NO.	PART NAME	QTY.	ENGINE SERIAL NO.	REMARKS
1	AR50411	WIRING LEAD	1		
2	R54123	ADAPTER FITTING	1		
3	RE524676	HEATING ELEMENT	1		(SUB FOR RE504122)
4	.....	NUT	1		(SUB RE524676) (RE504122 NLA)
5	R47693	GASKET	1		
6	U13639	O-RING	1		1.475" X 0.118"
7	**RE227949**	**COOLANT HEATER**	**1**		**(SUB FOR AR62492) (WHOLEGOODS)**

MEMORANDA
MEMORANDA
MEMORANDA

COOLING SYSTEM
CIRCUIT DE REFROIDISSEMENT
SISTEMA DE ENFRIAMIENTO

T203738 -UN-07OCT04

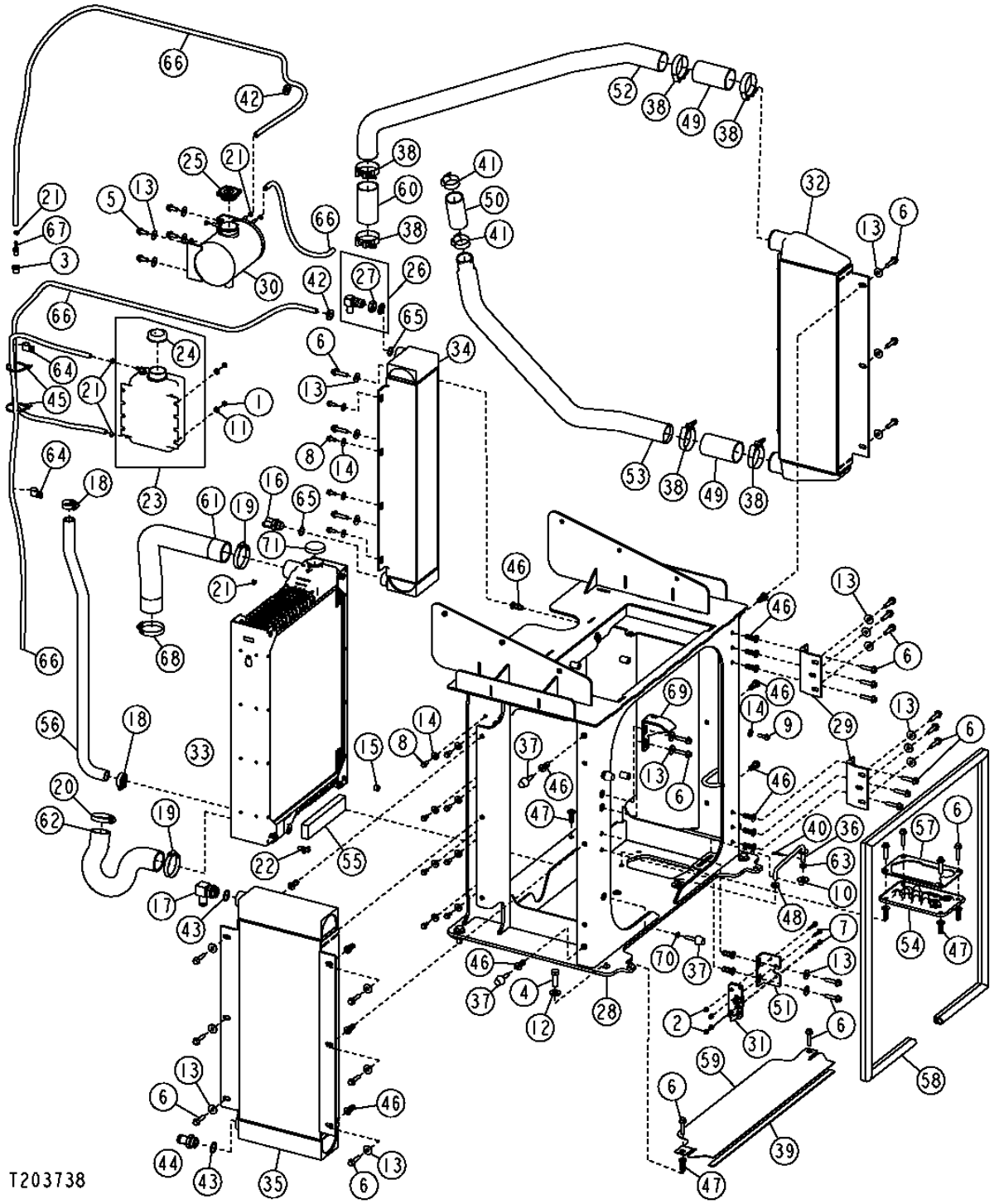

THIS PARTS LISTING IS CONTINUED

COOLING SYSTEM
CIRCUIT DE REFROIDISSEMENT
SISTEMA DE ENFRIAMIENTO

KEY	PART NO.	PART NAME	QTY.	SERIAL NO.	REMARKS
1	14M7303	FLANGE NUT	4		M6
2	14M7397	LOCK NUT	4		M6
3	15H625	PIPE BUSHING	1		1/4"
4	19M7489	CAP SCREW	4		M16 X 45
5	19M7785	SCREW	4		M10 X 25
6	19M7805	SCREW	37		M10 X 45
7	19M7833	SCREW	4		M6 X 35
8	19M7866	SCREW	12		M8 X 20
9	19M7868	SCREW	2		M8 X 30
10	24H1330	WASHER	1		11.913 X 34.925 X 2.769 MM
11	24M7139	WASHER	4		6.400 X 18 X 1.600 MM
12	24M7241	WASHER	4		17 X 34 X 4 MM
13	24M7296	WASHER	29		10.500 X 30 X 2.500 MM
14	24M7298	WASHER	13		8.400 X 25 X 2 MM
15	28H862	SPACER	2		0.423" X 0.675" X 7/16"
16	AH75159	FITTING	1		
17	AH75162	FITTING	1		
18	AR21839	CLAMP	2		
19	AH170895	CLAMP	2		(SUB FOR AR21999)
20	RE56098	CLAMP	2		(SUB FOR RE52034)
21	TY22462	CLAMP	7		(SUB FOR AR48236)
22	AT13740	DRAIN VALVE	1		
23	AT166459	TANK	1		
24	AT106413	CAP	1		
25	RE24391	FILLER CAP	1		(SUB FOR RE167464)
26	AT21574	FITTING	1		
27	R27390	NUT	1		
28	AT324668	FRAME	1		(SUB FOR AT226128)
29	AT226573	HINGE	2		
30	AT228224	TANK	1		
31	AT307911	LATCH	1		
32	AT304250	AIR COOLER	1		(CHARGE AIR COOLER)
	AT307613	HEAT SINK	1		(HARSH ENVIRONMENT) (CHARGE AIR COOLER)
33	AT226131	RADIATOR	1		
	AT307605	RADIATOR	1		(HARSH ENVIRONMENT) (RADIATOR)
34	AT226130	OIL COOLER	1		(HYDRAULIC)
	AT307607	OIL COOLER	1		(HARSH ENVIRONMENT) (HYDRAULIC OIL COOLER)
35	AT226276	OIL COOLER	1		(TRANSMISSION)
	AT307606	OIL COOLER	1		(HARSH ENVIRONMENT) (TRANSMISSION OIL COOLER)

THIS PARTS LISTING IS CONTINUED

COOLING SYSTEM (CONTINUED)
CIRCUIT DE REFROIDISSEMENT (SUITE)
SISTEMA DE ENFRIAMIENTO (CONTINUACION)

T203738 -UN-07OCT04

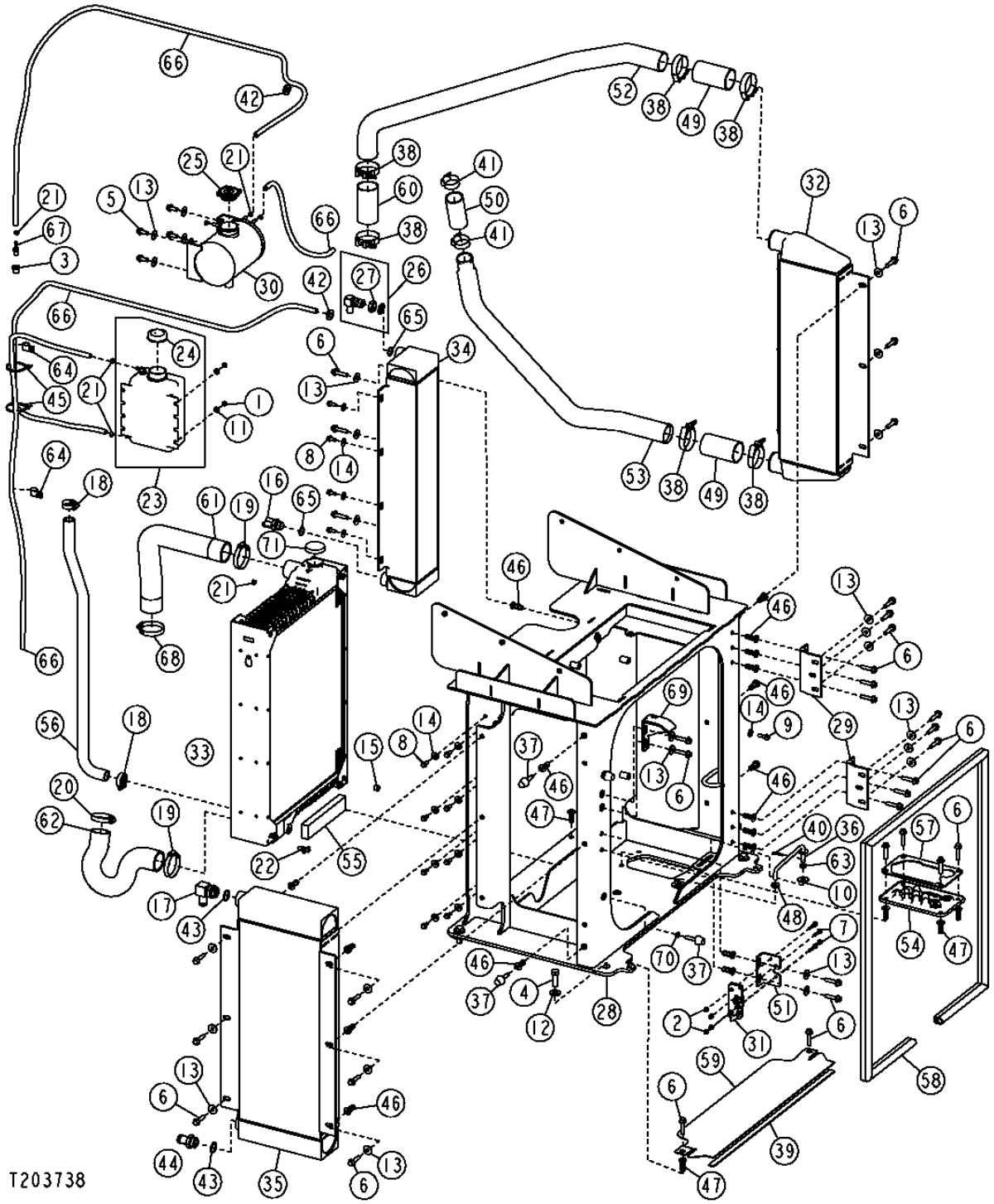

COOLING SYSTEM (CONTINUED)
CIRCUIT DE REFROIDISSEMENT (SUITE)
SISTEMA DE ENFRIAMIENTO (CONTINUACION)

KEY	PART NO.	PART NAME	QTY.	SERIAL NO.	REMARKS
36	AT305673	ROD	1		
37	AT306690	BUMPER	6		
38	AH170895	CLAMP	6		(SUB FOR AT37693)
39	T66419	ISOLATOR	1		(CUT TO LENGTH) 27 INCHES (685.8 MM)
40	J16931	PIN	1		
41	R110531	CLAMP	2		
42	RE56098	CLAMP	2		(SUB FOR R115350)
43	R29936	O-RING	2		
44	T29747	HOSE FITTING	1		
45	R44302	TIE BAND	3		
46	T148410	NUT	31		
47	T148411	NUT	10		
48	T162238	GROMMET	1		
49	T181778	HOSE	2		
50	T181953	HOSE	1		
51	T182554	BRACKET	1		
52	T202963	TUBE	1		
53	T195580	TUBE	1		
54	T197427	GROMMET	1		
55	T197574	ISOLATOR	2		
56	T200475	RADIATOR HOSE	1		
57	T201589	SEALING RING	1		
58	T202637	ISOLATOR	1		
59	T203130	SHIELD	1		
60	T198039	HOSE	1		
61	T196084	RADIATOR HOSE	1		
62	T196085	RADIATOR HOSE	1		
63	T27260	WASHER	1		
64	T74416	CLAMP	2		
65	U12547	O-RING	2		
66	.....	BULK HOSE	4		(CUT TO LENGTH) (MAKE FROM TY22324)
67	R43583	FITTING	1		
69	T226561	PLATE	1		(SUB FOR AT307806)
70	14M7152	NUT	6		
71	AT182802	FILLER CAP	1		

DOOR WITH FAN AND FAN GUARD
PORTIERE AVEC VENTILATEUR ET PROTECTION VENTILATEUR
PUERTA CON VENTILADOR Y PROTECTOR DEL VENTILADOR

T210121 -UN-14APR05

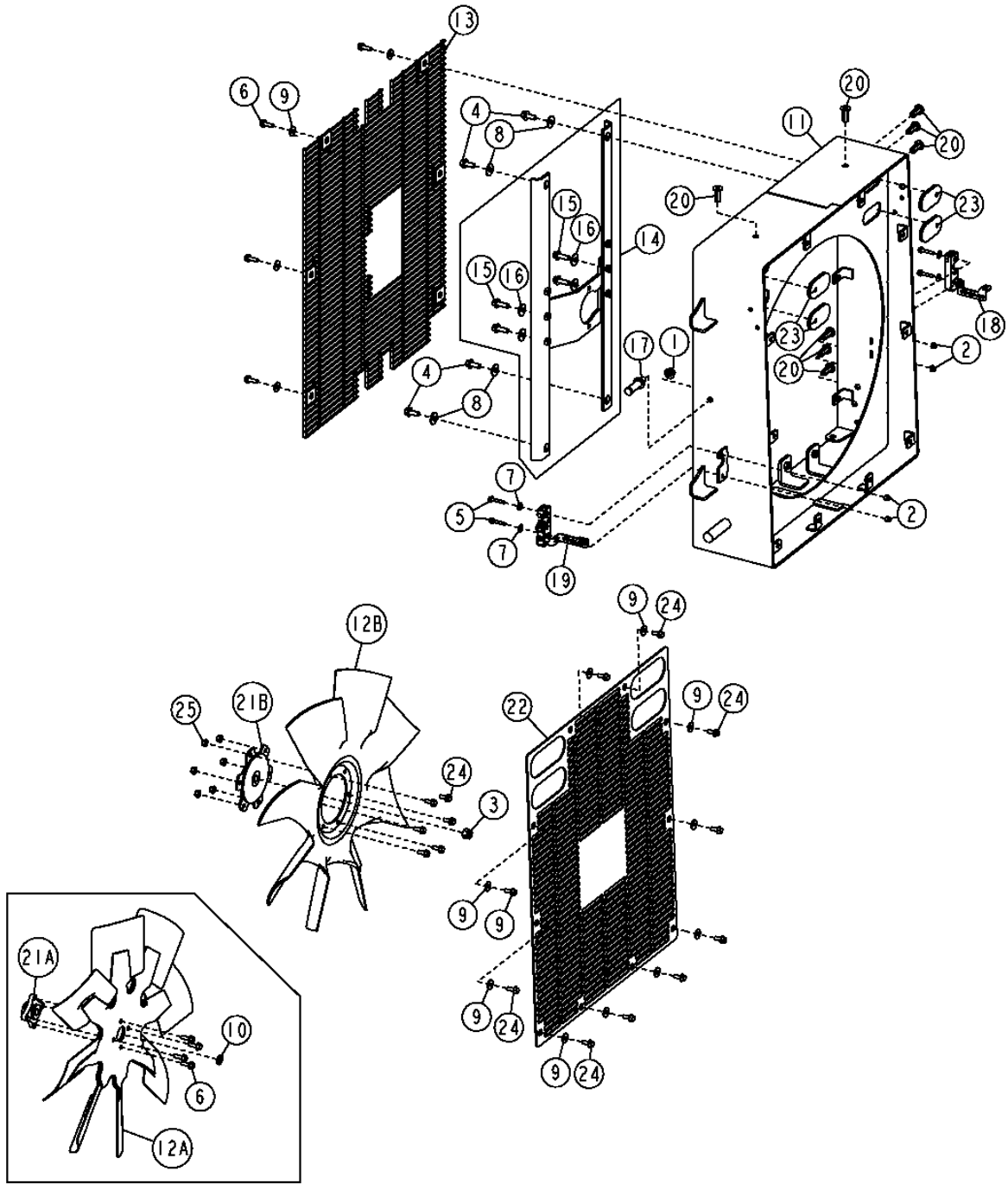

T210121

DOOR WITH FAN AND FAN GUARD
PORTIERE AVEC VENTILATEUR ET PROTECTION VENTILATEUR
PUERTA CON VENTILADOR Y PROTECTOR DEL VENTILADOR

KEY	PART NO.	PART NAME	QTY.	SERIAL NO.	REMARKS
1	14M7299	FLANGE NUT	1		M12
2	14M7397	LOCK NUT	4		M6
3	14M7540	LOCK NUT	1		M14
4	19M7785	SCREW	4		M10 X 25
5	19M7833	SCREW	4		M6 X 35
6	19M7867	SCREW	10	-595719	M8 X 25
	19M7867	SCREW	6	595720-	
7	24M7139	WASHER	4		6.400 X 18 X 1.600 MM
8	24M7296	WASHER	4		10.500 X 30 X 2.500 MM
9	24M7298	WASHER	16		8.400 X 25 X 2 MM
10	24M7427	WASHER	1	-595719	15 X 24 X 2.500 MM
11	AT226168	FRAME	1		
12A	AT226170	FAN	1	-595719	
12B	AT311287	FAN	1	595720-	
13	AT227579	GUARD	1		
14	AT228206	FRAME	1	-595719	
	AT313598	FRAME	1	595720-	
15	19M7786	SCREW	4		M10 X 30
16	24M7296	WASHER	4		10.500 X 30 X 2.500 MM
17	AT301711	STRIKER	1		
18	AT306930	LATCH	1		
19	AT306931	LATCH	1		
20	T148409	NUT	8		
21A	T182462	HUB	1	-595719	
21B	AT210712	HUB	1	595720-	
22	T195424	GUARD	1		
23	T201546	GROMMET	4		
24	19M7866	SCREW	10	-595719	M8 X 20
	19M7866	SCREW	16	595720-	
25	14M7298	FLANGE NUT	6	595720-	

FAN DRIVE HYDRAULIC PUMP, MOTOR AND HOSES
POMPE, MOTEUR ET FLEXIBLES HYDRAULIQUES COMMANDE VENTILATEUR
BOMBA HIDRAULICA DE MANDO DEL VENTILADOR, MOTOR Y MANGUERAS

T200309 -UN-26MAY04

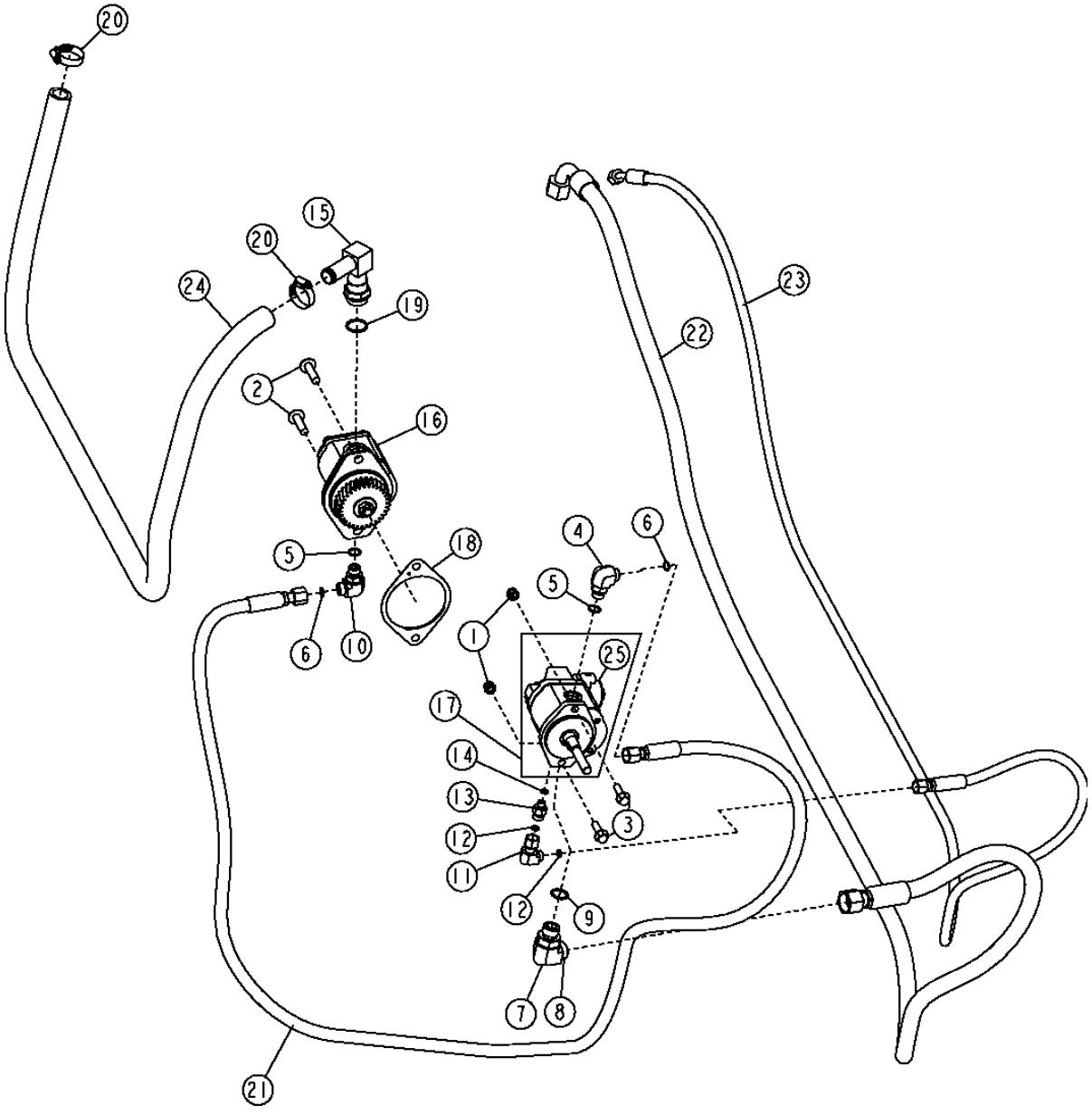

T200309

FAN DRIVE HYDRAULIC PUMP, MOTOR AND HOSES
POMPE, MOTEUR ET FLEXIBLES HYDRAULIQUES COMMANDE VENTILATEUR
BOMBA HIDRAULICA DE MANDO DEL VENTILADOR, MOTOR Y MANGUERAS

KEY	*PART NO.*	*PART NAME*	*QTY.*	*SERIAL NO.*	*REMARKS*
1	14M7517	LOCK NUT	2		M10
2	19M7813	SCREW	2		M12 X 45
3	19M7835	SCREW	2		M10 X 35
4	38H1005	ELBOW FITTING	1		
5	R26375	O-RING	2		
6	T77857	O-RING	2		
7	38H1007	ELBOW FITTING	1		
8	T77858	O-RING	1		
9	U12547	O-RING	1		
10	38H1005	ELBOW FITTING	1		
11	38H1094	ELBOW FITTING	1		
12	T77613	O-RING	2		
13	38H1309	ADAPTER FITTING	1		
14	R28782	O-RING	1		
15	AH96708	ELBOW FITTING	1		
16	AT227018	HYDRAULIC PUMP	1		
	AT224424	SEAL KIT	1		(HYDRAULIC PUMP)
17	AT227019	HYDRAULIC MOTOR	1		
	AT224864	SEAL KIT	1		(NOT ILLUSTRATED)
18	R522690	GASKET	1		(SUB FOR R134465)
19	R29936	O-RING	1		
20	AR21839	CLAMP	2		
21	AT310555	HYDRAULIC HOSE - FABRICATE	1		
22	AT314989	HYDRAULIC HOSE - FABRICATE	1		(SUB FOR AT310556)
23	AT314990	HYDRAULIC HOSE - FABRICATE	1		(SUB FOR AT310557)
24	T208097	HYDRAULIC HOSE - FABRICATE	1		(SUB FOR T174659)
25	AT227508	PRESSURE RELIEF VALVE	1		

REVERSE FAN DRIVE HYDRAULIC PUMP, MOTOR AND HOSES
POMPE, MOTEUR ET FLEXIBLES HYDRAULIQUES COMMANDE INVERSION SENS VENTILATEUR
BOMBA HIDRAULICA DE MANDO DE RETROCESO DEL VENTILADOR, MOTOR Y MANGUERAS

T197913 -UN-24FEB04

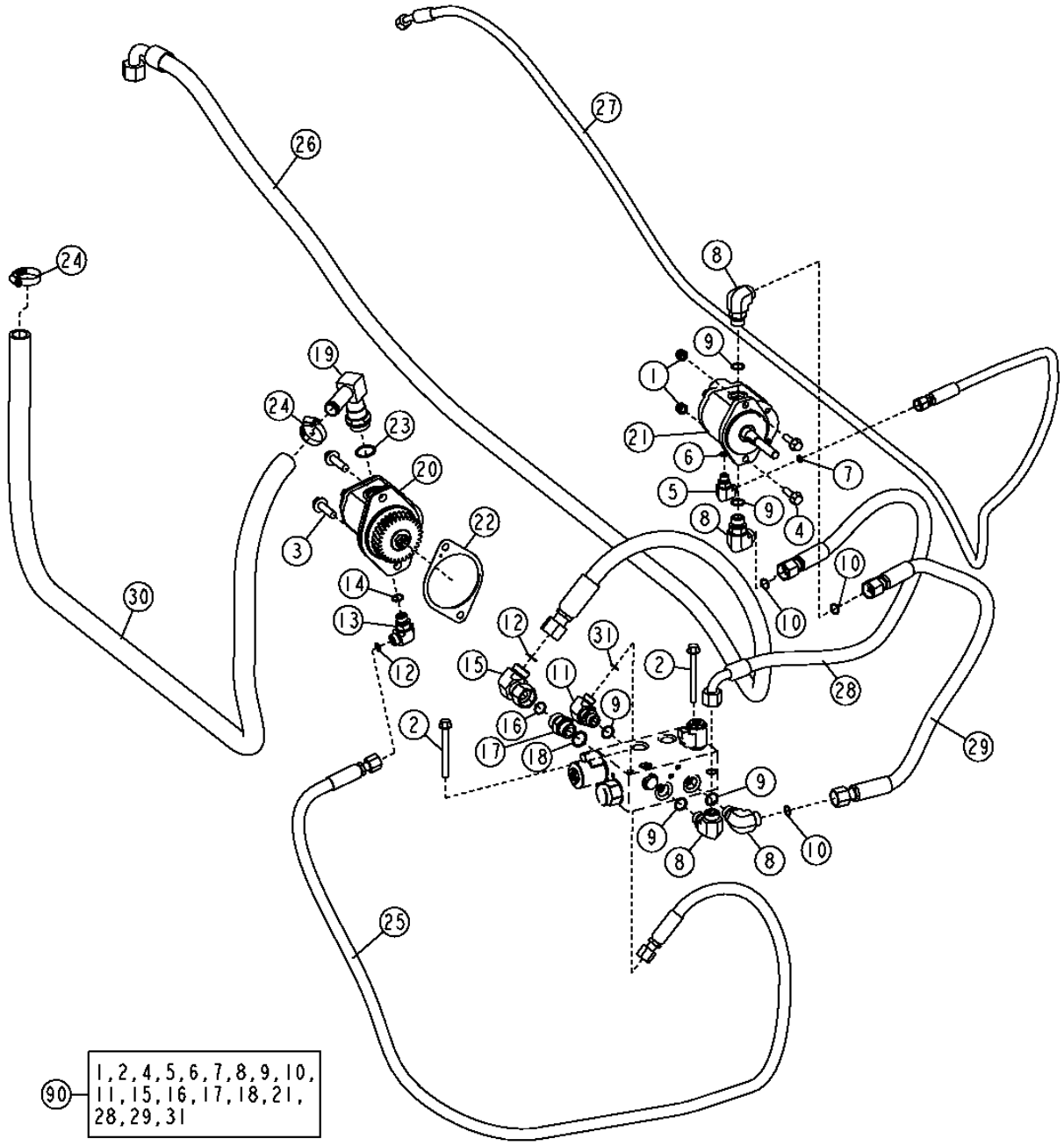

T197913

REVERSE FAN DRIVE HYDRAULIC PUMP, MOTOR AND HOSES
POMPE, MOTEUR ET FLEXIBLES HYDRAULIQUES COMMANDE INVERSION SENS VENTILATEUR
BOMBA HIDRAULICA DE MANDO DE RETROCESO DEL VENTILADOR, MOTOR Y MANGUERAS

KEY	*PART NO.*	*PART NAME*	*QTY.*	*SERIAL NO.*	*REMARKS*
1	14M7517	LOCK NUT	2		M10
2	19M7812	SCREW	2		M10 X 100
3	19M7813	SCREW	2		M12 X 45
4	19M7835	SCREW	2		M10 X 35
5	38H1004	ELBOW FITTING	1		
6	R26448	O-RING	1		
7	T77613	O-RING	1		
8	38H1006	ELBOW FITTING	4		
9	R26906	O-RING	5		
10	T77932	O-RING	4		
11	38H1012	ELBOW FITTING	1		
12	T77857	O-RING	2		
13	38H1005	ELBOW FITTING	1		
14	R26375	O-RING	1		
15	38H1097	ELBOW FITTING	1		
16	T77857	O-RING	1		
17	38H1163	ADAPTER FITTING	1		
18	U12547	O-RING	1		
19	AH96708	ELBOW FITTING	1		
20	AT227018	HYDRAULIC PUMP	1		
	AT224424	SEAL KIT	1		
21	AT227025	HYDRAULIC MOTOR	1		
22	R522690	GASKET	1		(SUB FOR R134465)
23	R29936	O-RING	1		
24	AR21839	CLAMP	2		
25	AT310555	HYDRAULIC HOSE - FABRICATE	1		
26	AT314989	HYDRAULIC HOSE - FABRICATE	1		(SUB FOR AT310556)
27	AT314990	HYDRAULIC HOSE - FABRICATE	1		(SUB FOR AT310557)
28	AT228112	HYDRAULIC HOSE - FABRICATE	1		
29	AT304406	HYDRAULIC HOSE - FABRICATE	1		
30	T208097	HYDRAULIC HOSE - FABRICATE	1		(SUB FOR T174659)
31	T77857	O-RING	1		
90	**AT226727**	**FIELD INSTALLATION KIT**	**1**		**(WHOLE GOODS) (INCLUDES REVERSE FAN SOLENOID VALVE, COMPONENTS LISTED ON FOLLOWING PAGE)**

REVERSE FAN DRIVE SOLENOID VALVE
ELECTROVANNE DE COMMANDE D'INVERSION DE SENS DU VENTILATEUR
VALVULA DE SOLENOIDE DE MANDO DE RETROCESO DEL VENTILADOR

T157977 -UN-29JUL02

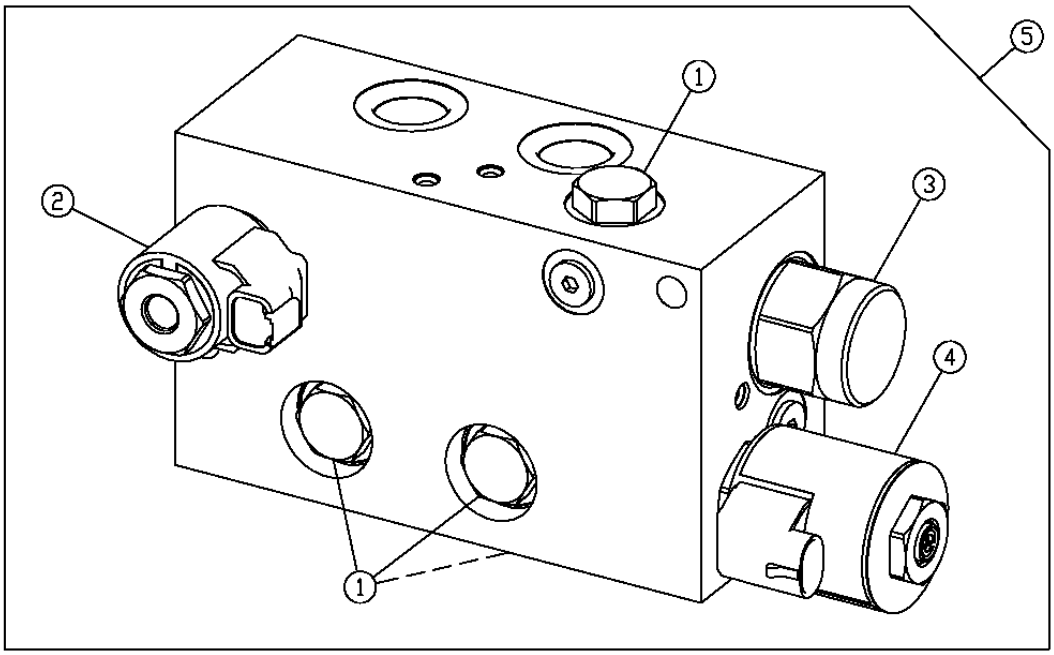

T157977

KEY	PART NO.	PART NAME	QTY.	SERIAL NO.	REMARKS
1	AT224570	CHECK VALVE	4		
	AT224862	SEAL KIT	1		
2	AT224866	SOLENOID VALVE	1		
	AT224706	SEAL KIT	1		
	AT224865	SOLENOID VALVE COIL	1		
	T181306	NUT	1		
3	AT226109	SOLENOID HYDRAULIC VALVE	1		
	AT226110	SEAL KIT	1		
4	AT227508	PRESSURE RELIEF VALVE	1		
5	AT227022	SOLENOID VALVE	1		

MEMORANDA
MEMORANDA
MEMORANDA

ENGINE SPEED CONTROL AND SENSORS
COMMANDE ET CAPTEURS REGIME MOTEUR
CONTROL DE VELOCIDAD DEL MOTOR Y SENSORES

T195683 -UN-23OCT03

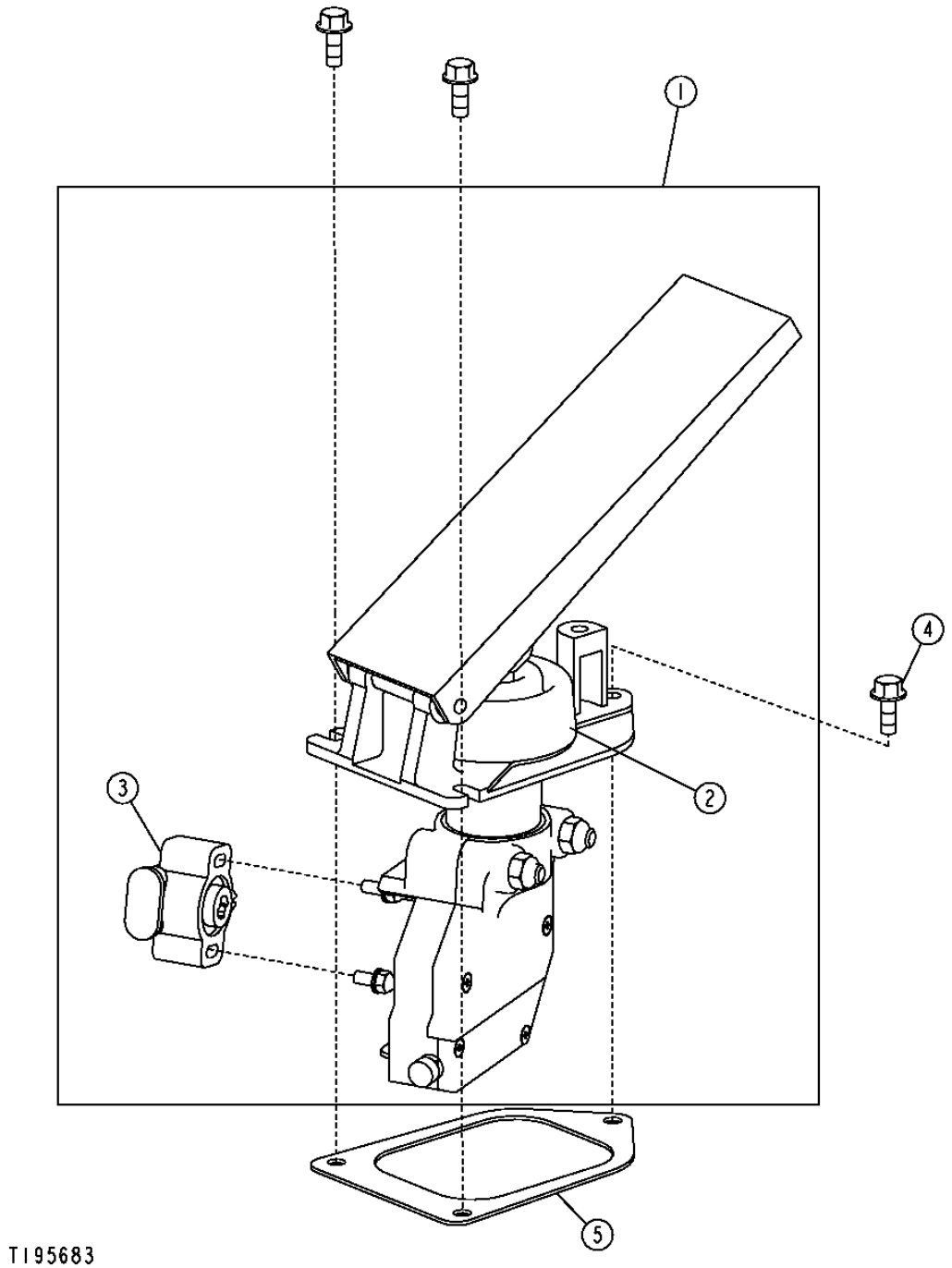

ENGINE SPEED CONTROL AND SENSORS
COMMANDE ET CAPTEURS REGIME MOTEUR
CONTROL DE VELOCIDAD DEL MOTOR Y SENSORES

KEY	*PART NO.*	*PART NAME*	*QTY.*	*SERIAL NO.*	*REMARKS*
1	AT306702	ACCELERATOR	1		
2	T174634	BOOT	1		
3	AT323307	SENSOR	1		(SUB FOR AT306703)
4	M113243	SCREW	3		
5	T172927	GASKET	1		

AIR CLEANER, AIR CLEANER FILTERS AND AIR CLEANER HOSE
FILTRE A AIR, FLEXIBLES DE FILTRE A AIR ET ELEMENTS DE FILTRE A AIR
FILTRO DE AIRE, MANGUERAS Y ELEMENTOS DEL FILTRO DE AIRE

T197255 -UN-15JAN04

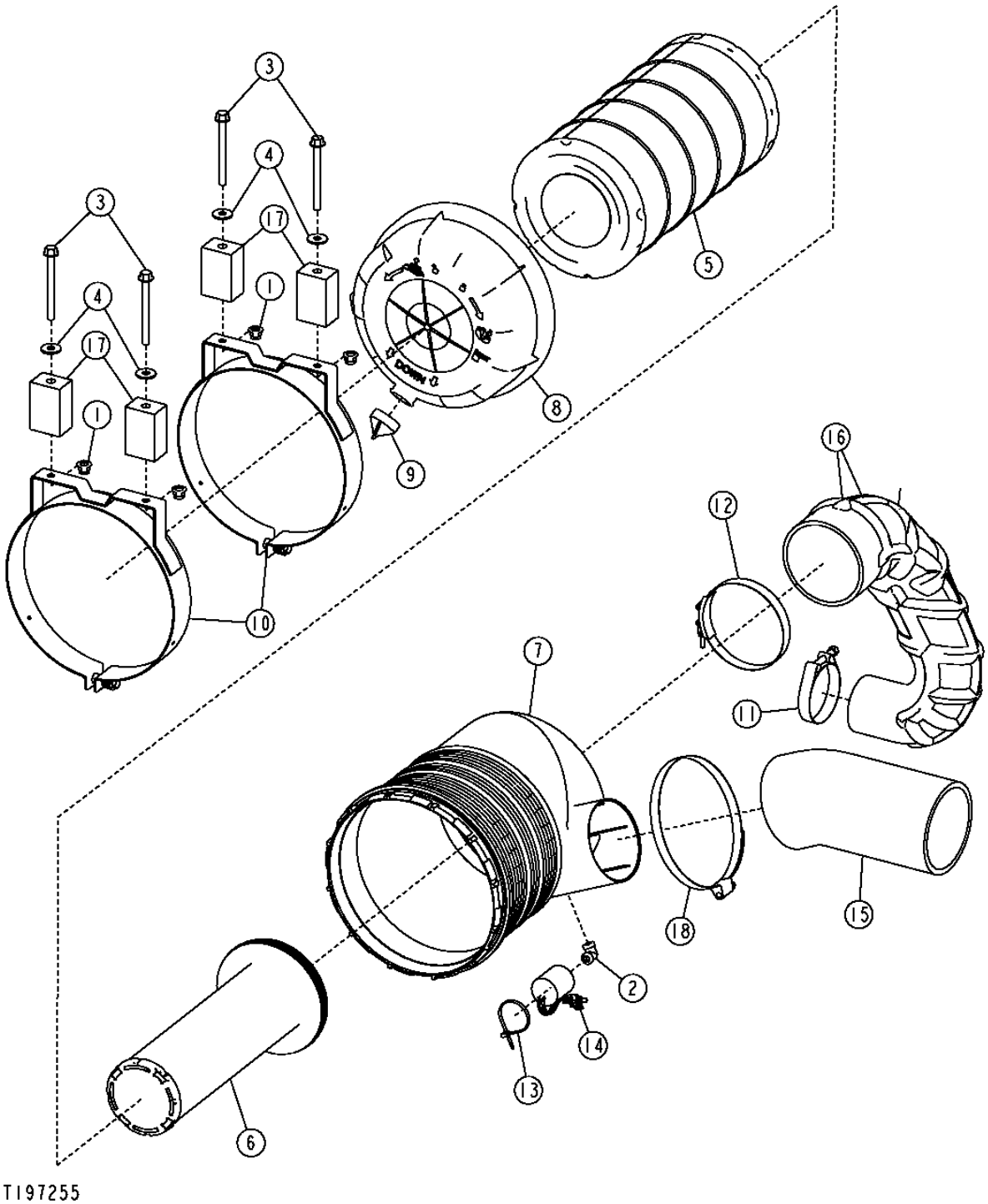

AIR CLEANER, AIR CLEANER FILTERS AND AIR CLEANER HOSE
FILTRE A AIR, FLEXIBLES DE FILTRE A AIR ET ELEMENTS DE FILTRE A AIR
FILTRO DE AIRE, MANGUERAS Y ELEMENTOS DEL FILTRO DE AIRE

KEY	*PART NO.*	*PART NAME*	*QTY.*	*SERIAL NO.*	*REMARKS*
1	14M7400	LOCK NUT	4		
2	T219672	ELBOW FITTING	1		1/8", (SUB FOR 15H95)
3	19M7809	SCREW	4		M10 X 70
4	24M7296	WASHER	4		10.500 X 30 X 2.500 MM
5	AT300487	FILTER ELEMENT	1		
6	AT314583	FILTER ELEMENT	1		(SUB FOR AT300488)
7	.....	HOUSING	1	-593740	(SUB AT314356) (SUB FOR AT300493)
	.....	HOUSING	1	593741-604657	(SUB AT329958) (SUB FOR AT314356)
	AT329958	HOUSING	1	604658-	
8	.....	COVER	1	-593740	(SUB T210777) (SUB FOR T200278)
	.....	COVER	1	593741-604657	(SUB T223372) (SUB FOR T210777)
	T223372	COVER	1	604658-	
9	M89679	EJECTOR	1		(SUB FOR T200280)
10	AT300489	CLAMP	2		
11	AT37476	HOSE CLAMP	1		
12	AT53439	HOSE CLAMP	1		
13	R44302	TIE BAND	1		
14	RE68255	SENSOR	1		
15	T200281	HOSE	1		
16	T200284	HOSE	1		
17	T197153	STRAP	4		
18	AR85327	CLAMP	1		

AIR PRECLEANER KIT
JEU DE PREFILTRO DE AIRE
JUEGO DEL PREFILTRO DE AIRE

T193530 -UN-18AUG03

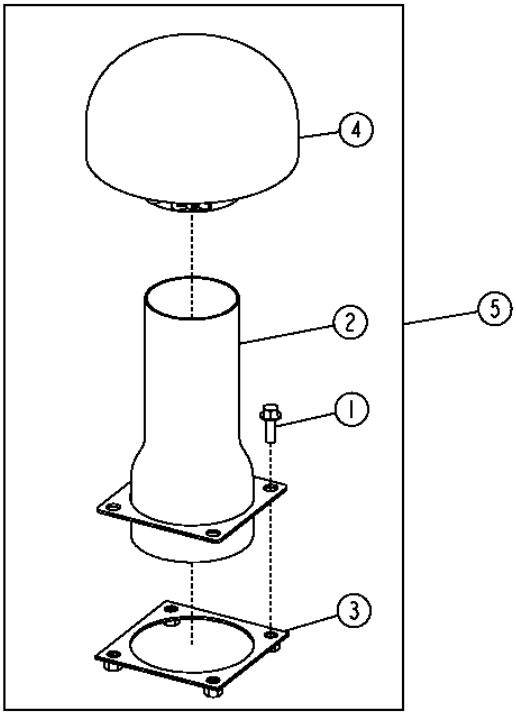

T193530

AIR PRECLEANER KIT
JEU DE PREFILTRO DE AIRE
JUEGO DEL PREFILTRO DE AIRE

KEY	*PART NO.*	*PART NAME*	*QTY.*	*SERIAL NO.*	*REMARKS*
1	19M7786	SCREW	4		M10 X 30
2	AT227816	ADAPTER FITTING	1		
3	AT227835	PLATE	1		
4	TY24861	PRECLEANER	1		
5	**AT306688**	**KIT**	**1**		

MUFFLER AND EXHAUST PIPE
SILENCIEUX ET TUYAU D'ECHAPPEMENT
SILENCIADOR Y TUBO DE ESCAPE

T198524 -UN-18MAR04

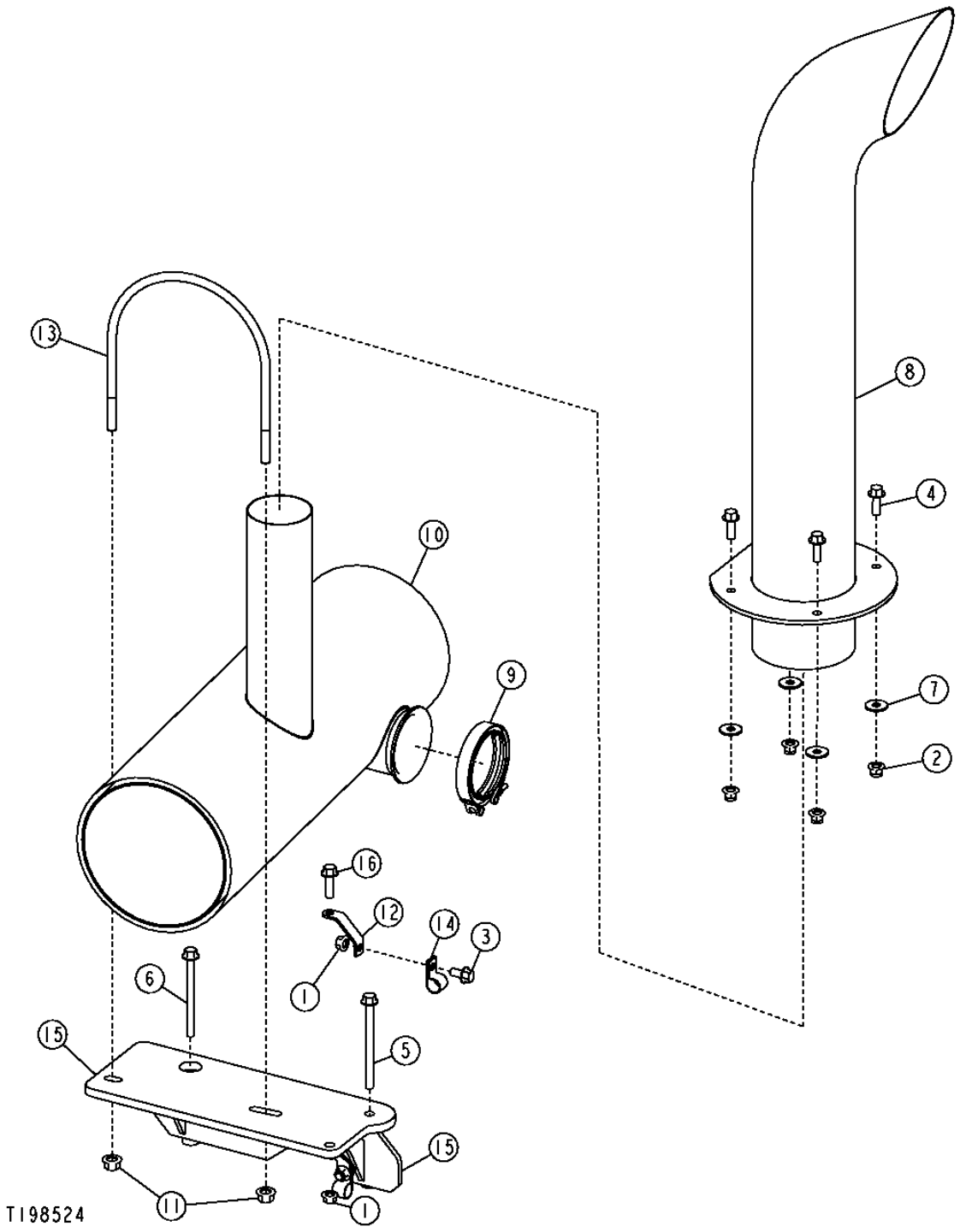

MUFFLER AND EXHAUST PIPE
SILENCIEUX ET TUYAU D'ECHAPPEMENT
SILENCIADOR Y TUBO DE ESCAPE

KEY	PART NO.	PART NAME	QTY.	SERIAL NO.	REMARKS
1	14M7296	FLANGE NUT	3		M10
2	14M7400	LOCK NUT	4		M10
3	19M7784	SCREW	2		M10 X 20
4	19M7786	SCREW	4		M10 X 30
5	19M7898	SCREW	1		M10 X 130
6	19M7944	SCREW	1		M10 X 120
7	24M7296	WASHER	4		10.500 X 30 X 2.500 MM
8	AT209141	EXHAUST PIPE	1	-597825	(BLACK)
	AT320673	EXHAUST PIPE	1	597826-	(BLACK)
	AT220440	EXHAUST PIPE	1	-598909	(CHROME)
	AT320674	EXHAUST PIPE	1	598910-	(CHROME)
9	AT222597	CLAMP	1		(SUB FOR RE166242)
10	AT307928	MUFFLER	1		(SUB FOR AT227532)
11	E80242	LOCK NUT	2		
12	R136110	BRACKET	2		
13	T201869	U-BOLT	1		
14	T74416	CLAMP	2		
15	AT228883	BRACKET	1		
16	19M7835	SCREW	1		

ENGINE MOUNTING BRACKETS
SUPPORTS DE MONTAGE DU MOTEUR
ESCUADRAS DE MONTAJE DEL MOTOR

T193484 -UN-19AUG03

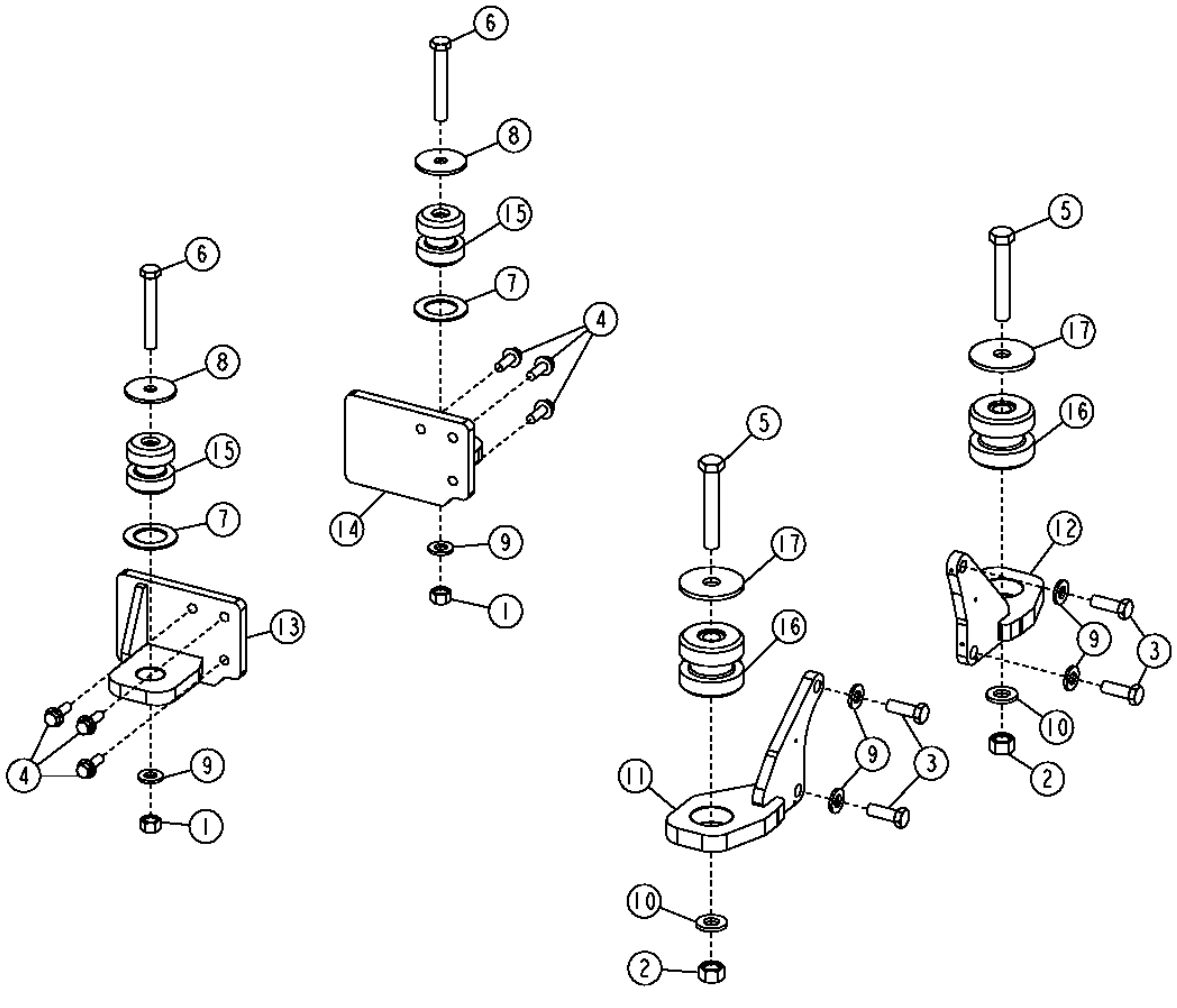

T193484

ENGINE MOUNTING BRACKETS
SUPPORTS DE MONTAGE DU MOTEUR
ESCUADRAS DE MONTAJE DEL MOTOR

KEY	*PART NO.*	*PART NAME*	*QTY.*	*SERIAL NO.*	*REMARKS*
1	14M7276	NUT	2		M16
2	14M7277	NUT	2		M20
3	19M7489	CAP SCREW	4		M16 X 45
4	19M7790	SCREW	6		M12 X 35
5	19M7883	SCREW	2		M20 X 120
6	19M7884	CAP SCREW	2		
7	24H1571	WASHER	2		1-25/32" X 2-7/8" X 0.120"
8	24H1852	WASHER	2		21/32" X 2-3/4" X 0.180"
9	24M7241	WASHER	6		17 X 34 X 4 MM
10	24M7242	WASHER	2		21.400 X 42 X 5 MM
11	AT206908	SUPPORT	1		
12	AT206909	SUPPORT	1		
13	AT206914	SUPPORT	1		
14	AT206915	SUPPORT	1		
15	AT227710	ISOLATOR	2		
16	AT227815	ISOLATOR	2		
17	T42977	WASHER	2		

FUEL TANK AND FUEL TANK HOSES
FLEXIBLES DE RESERVOIR DE CARBURANT
MANGUERAS DEL TANQUE DE COMBUSTIBLE

T211550 -UN-02JUN05

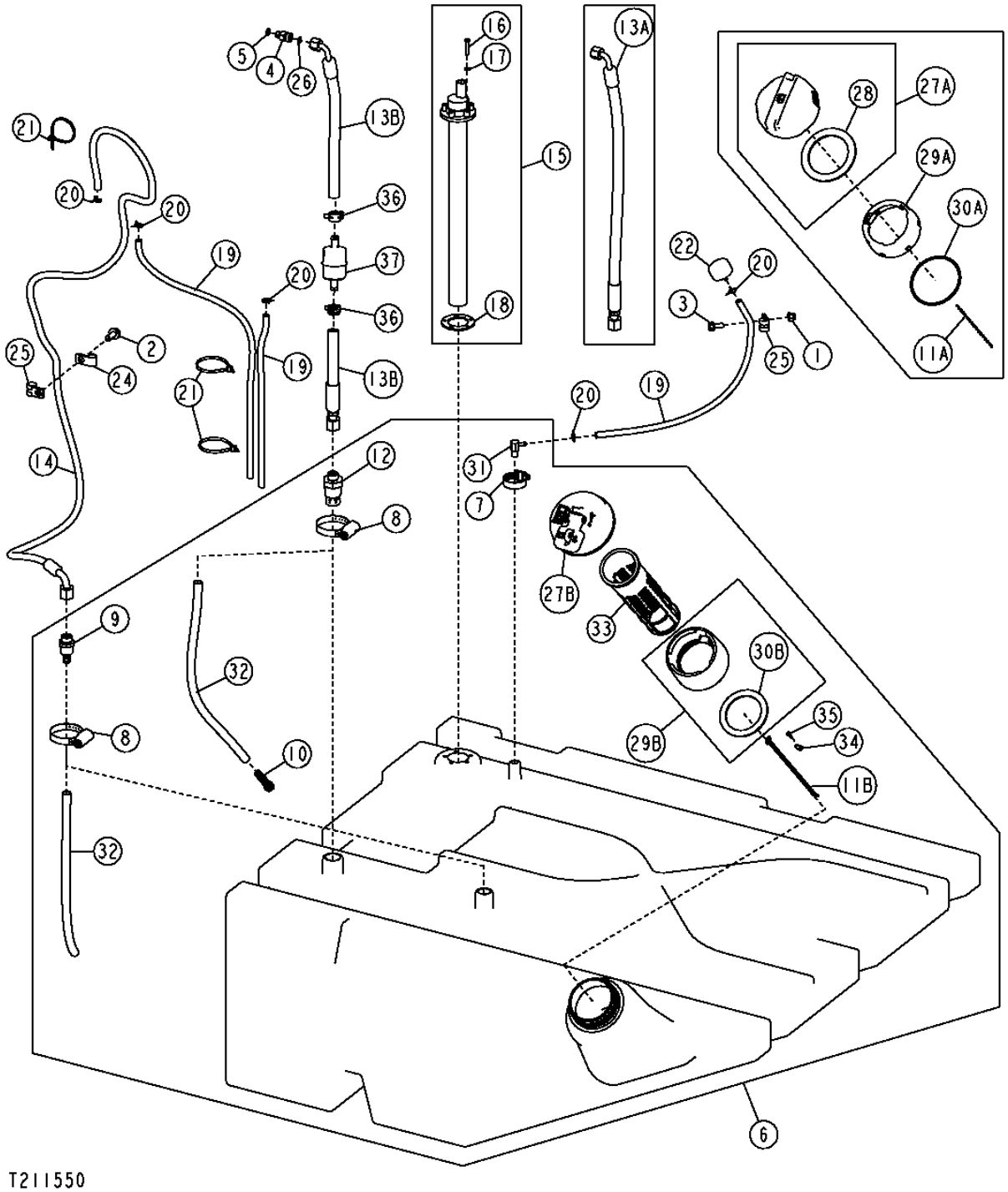

FUEL TANK AND FUEL TANK HOSES
FLEXIBLES DE RESERVOIR DE CARBURANT
MANGUERAS DEL TANQUE DE COMBUSTIBLE

KEY	PART NO.	PART NAME	QTY.	SERIAL NO.	REMARKS
1	14M7396	LOCK NUT	1		M8
2	19M7785	SCREW	1		M10 X 25
3	19M7866	SCREW	1		M8 X 20
4	38H5008	ADAPTER FITTING	1		
5	51M7040	O-RING	1		
6	.....	FUEL TANK	1	-594158	(SUB AT316140)
	AT316140	FUEL TANK	1	594159-	
7	AR21839	CLAMP	1		
8	TY22470	CLAMP	2		(SUB FOR AR21840)
9	R193666	FITTING	1		
10	R194311	COMPRESSION SPRING	1		
11	RE158953	CHAIN LINK	1		
11A	RE158953	CHAIN LINK	1	-594158	
11B	AH159448	LINK CHAIN	1	594159-	
12	RE194040	FITTING	1		
13A	.....	HYDRAULIC HOSE - FABRICATE	1	-598853	(AT227820 NLA) (ORDER AT323720, AT223493 AND (2) R184863)
13B	AT323720	HYDRAULIC HOSE - FABRICATE	1	598854-	
14	AT227821	HYDRAULIC HOSE - FABRICATE	1		
15	AT227936	FUEL SENDER	1		
16	19M7317	SCREW	5		M5 X 30
17	24M7027	WASHER	5		5.300 X 10 X 1 MM
18	T196733	GASKET	1		
19	.....	BULK HOSE	AR		(CUT TO LENGTH) (MAKE FROM T79477)
20	T13254	CLAMP	5		
21	R44302	TIE BAND	3		
22	RE52504	BREATHER	1		
24	T75197	CLAMP	1		
25	T75276	CLAMP	2		
26	T77613	O-RING	1		
27A	RE224279	FILLER CAP	1	-594158	
27B	RE234193	FILLER CAP	1	594159-	(SUB FOR AH165080)
28	R224278	GASKET	1		
29A	R116933	FUNNEL	1	-594158	
29B	AH165079	ADAPTER FITTING	1	594159-	
30A	R120233	O-RING	1	-594158	
30B	H172014	GASKET	1	594159-	
31	RE179976	CHECK VALVE	1		
32	R216843	HOSE	2		
33	AH162914	STRAINER	1	594159-	
34	H174381	CHANNEL	1	594159-	
35	T164203	SCREW	1	594159-	
36	R184863	HOSE CLAMP	2		
37	AT223493	FUEL FILTER	1		

MEMORANDA
MEMORANDA
MEMORANDA

ENGINE SENSORS
CAPTEURS DU MOTEUR
SENSORES DEL MOTOR

CDP45110 -UN-18DEC01

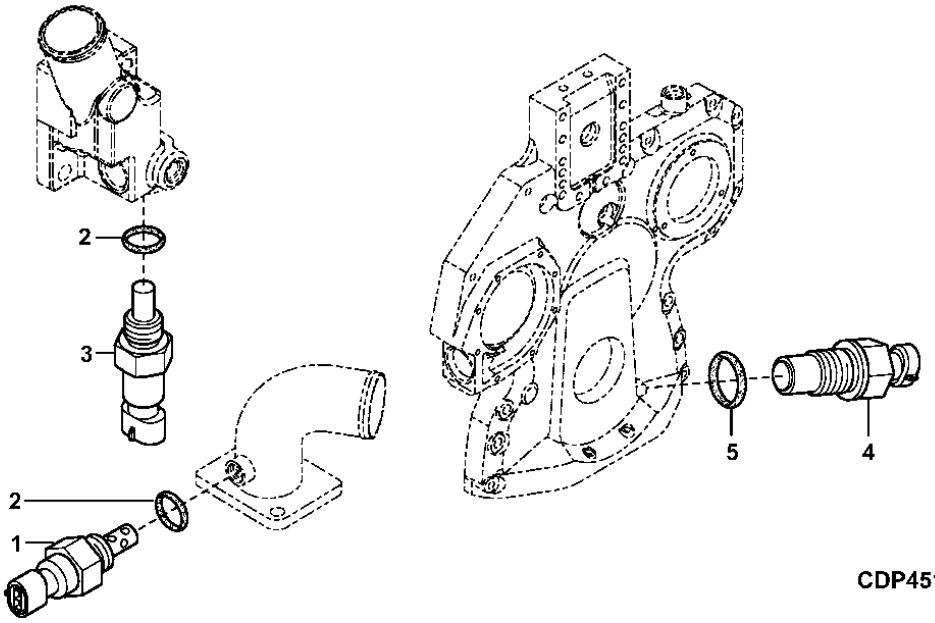

CDP45110

KEY	*PART NO.*	*PART NAME*	*QTY.*	*ENGINE SERIAL NO.*	*REMARKS*
1	RE61812	SENSOR	1		M14 X 1.5, AIR TEMPERATURE, (ALSO ORDER 51M7041)
2	51M7041	O-RING	2		11.300 X 2.200 MM
3	RE52722	SENSOR	1		M14 X 1.5, WATER TEMPERATURE, (ALSO ORDER 51M7041)
4	RE519144	SENSOR	1		M20 X 1.5, (ALSO ORDER 51M7044) (CRANKSHAFT POSITION SENSOR)
5	51M7044	O-RING	1		17.300 X 2.200 MM

SECONDARY STEERING (S.N. -601559)
DIRECTION AUXILIAIRE (S.N. -601559)
DIRECCION AUXILIAR (S.N. -601559)

T194005 -UN-25SEP03

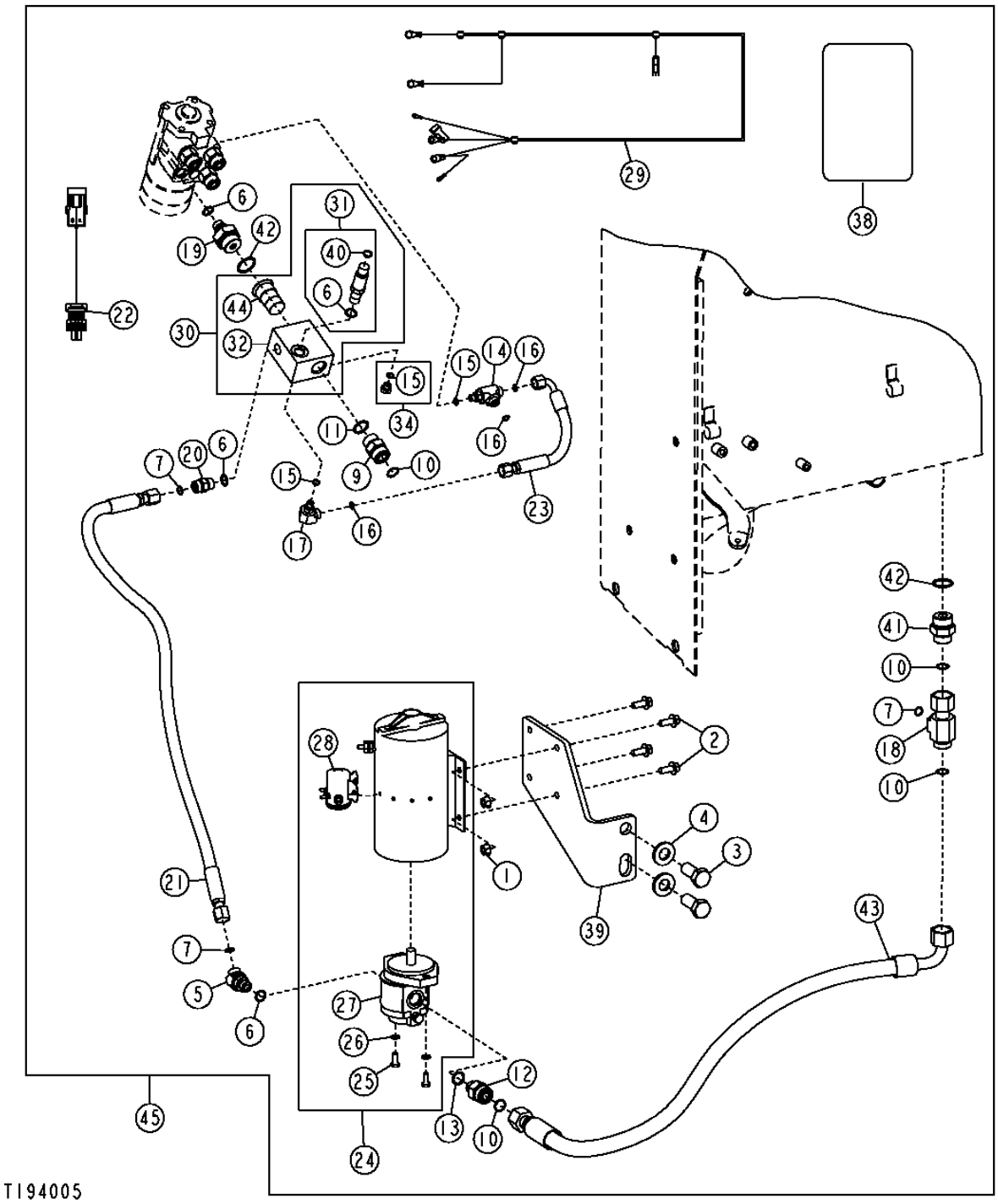

SECONDARY STEERING (S.N. -601559)
DIRECTION AUXILIAIRE (S.N. -601559)
DIRECCION AUXILIAR (S.N. -601559)

KEY	PART NO.	PART NAME	QTY.	SERIAL NO.	REMARKS
1	14M7296	FLANGE NUT	4		M10
2	19M7785	SCREW	4		M10 X 25
3	19M7950	CAP SCREW	2		M20 X 45
4	24M7242	WASHER	2		21.400 X 42 X 5 MM
5	38H1046	ELBOW FITTING	1		
6	R26375	O-RING	4		
7	T77857	O-RING	3		
9	38H1163	ADAPTER FITTING	1		
10	T77858	O-RING	4		
11	U12547	O-RING	1		
12	38H1193	ADAPTER FITTING	1		
13	R26906	O-RING	1		
14	38H1434	TEE FITTING	1		
15	R28782	O-RING	3		
16	T77613	O-RING	3		
17	38H1435	ELBOW FITTING	1		45 °
18	38H1532	TEE FITTING	1		
19	AT116114	ADAPTER FITTING	1		
20	AT141527	CHECK VALVE	1		
21	AT175781	HYDRAULIC HOSE - FABRICATE	1		
22	AT203492	WIRING HARNESS	1		
23	AT208725	HYDRAULIC HOSE - FABRICATE	1		
24	AT209537	PUMP	1		
25	19H1900	CAP SCREW	2		5/16" X 3/4"
26	24M7095	WASHER	2		0.331" X 0.591" X 0.063"
27	AT210092	PUMP	1		
28	AT210093	SOLENOID	1		
29	AT210155	WIRING HARNESS	1		
30	AT210207	VALVE	1		
31	AT210399	SWITCH	1		
32	T173324	JUNCTION BLOCK	1		
34	AT223648	FITTING	1		
38	T146443	SAFETY SIGN	1		(CAUTION SECONDARY STEERING)
39	T173579	BRACKET	1		
40	R26448	O-RING	1		
41	38H1194	ADAPTER FITTING	1		
42	R29936	O-RING	2		
43	AT203180	HYDRAULIC HOSE - FABRICATE	1		
44	AT116373	CHECK VALVE	1		
45	AT306511	MOUNTING PARTS	1		

STEERING VALVE AND FITTINGS (SN. - 601559)
VERIN ET RACCORDS DE DIRECTION (SN. - 601559)
ADAPTADORES Y VALVULA DE LA DIRECCION (SN. - 601559)

TX1002544 -UN-18JAN06

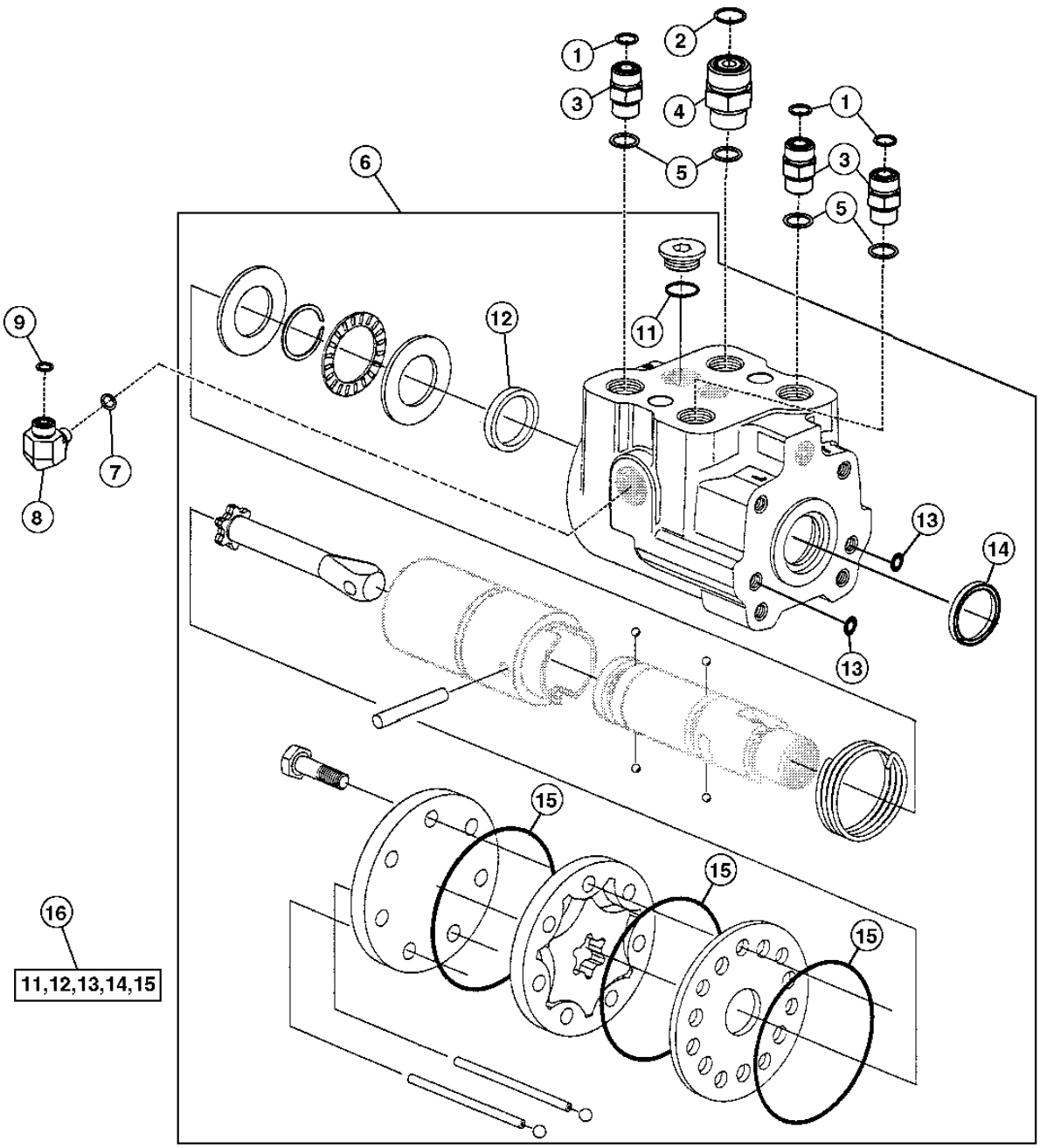

TX1002544

STEERING VALVE AND FITTINGS (SN. - 601559)
VERIN ET RACCORDS DE DIRECTION (SN. - 601559)
ADAPTADORES Y VALVULA DE LA DIRECCION (SN. - 601559)

KEY	*PART NO.*	*PART NAME*	*QTY.*	*SERIAL NO.*	*REMARKS*
1	T77857	O-RING	3		
2	T77858	O-RING	1		
3	38H1161	ADAPTER FITTING	3		
4	38H1178	ADAPTER FITTING	1		
5	R26375	O-RING	4		
6	AT320570	FLOW CONTROL HYD. VALVE	1		(SUB FOR AT309163, AT223388)
7	R28782	O-RING	1		
8	38H1435	ELBOW FITTING	1		
9	T77613	O-RING	1		
11	R26375	O-RING	1		
12	T180289	SEAL	1		
13	R10093	O-RING	2		
14	C15104	SEAL	1		
15	T180290	O-RING	3		
16	AT330806	SEAL KIT	1		(AT176325 NLA) (SUB FOR AT223439, THIS APPLICATION)

STEERING VALVE AND FITTINGS (SN. 601560 -)
VERIN ET RACCORDS DE DIRECTION (SN. 601560 -)
ADAPTADORES Y VALVULA DE LA DIRECCION (SN. 601560 -)

TX1002545 -UN-18JAN06

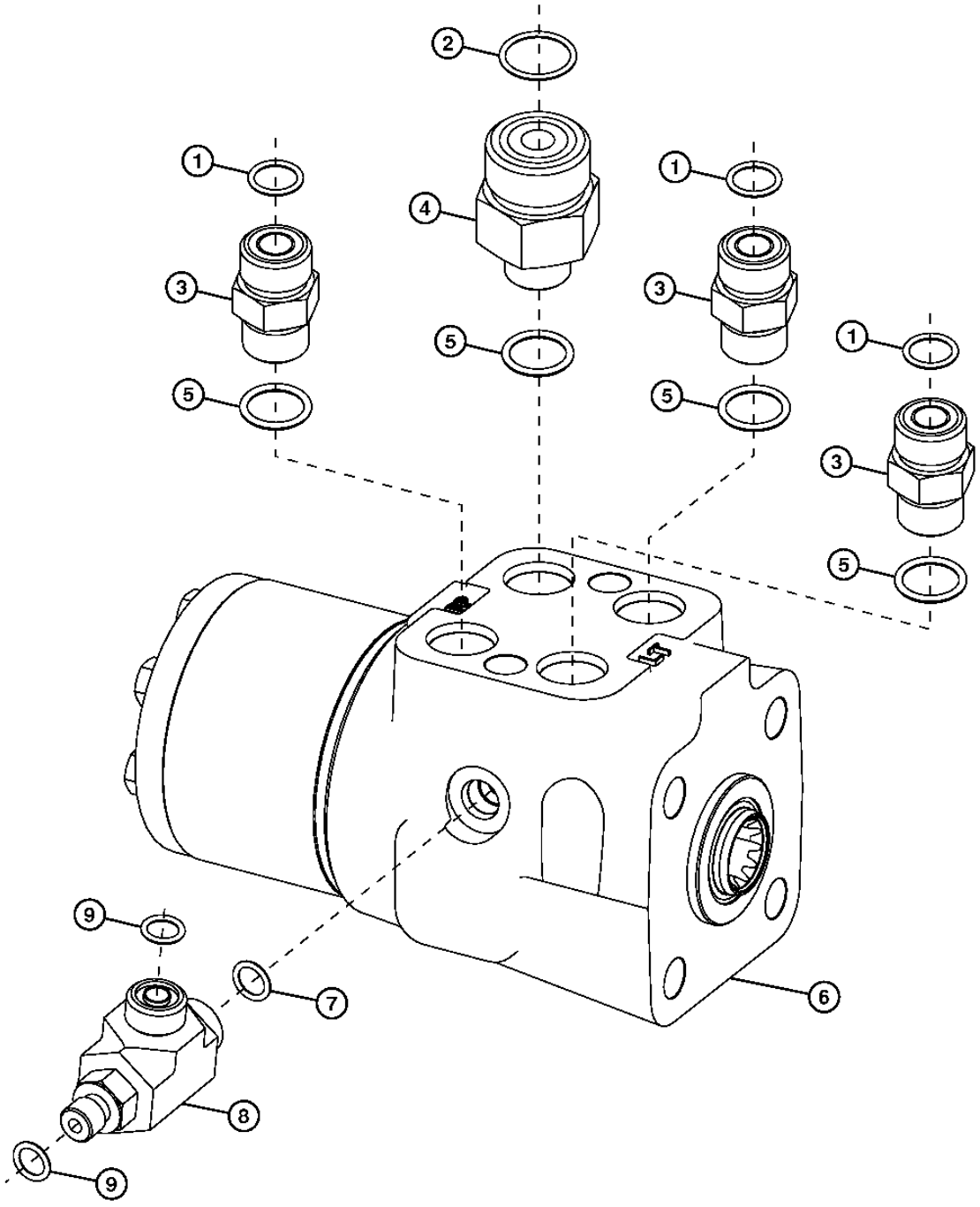

TX1002545

STEERING VALVE AND FITTINGS (SN. 601560 -)
VERIN ET RACCORDS DE DIRECTION (SN. 601560 -)
ADAPTADORES Y VALVULA DE LA DIRECCION (SN. 601560 -)

KEY	PART NO.	PART NAME	QTY.	SERIAL NO.	REMARKS
1	T77857	O-RING	3		
2	T77858	O-RING	1		
3	38H1161	ADAPTER FITTING	3		
4	38H1178	ADAPTER FITTING	1		
5	R26375	O-RING	4		
6	AT323285	VALVE	1		
	AT316249	SEAL KIT	1		
7	R28782	O-RING	1		
8	38H1434	TEE FITTING	1		
9	T77613	O-RING	2		

STEERING COMPENSATOR VALVE (SN. 601560 -)
SOUPAPE DE DIRECTION (SN. 601560 -)
VALVULA DE LA DIRECCION (SN. 601560 -)

TX1002547 -UN-18JAN06

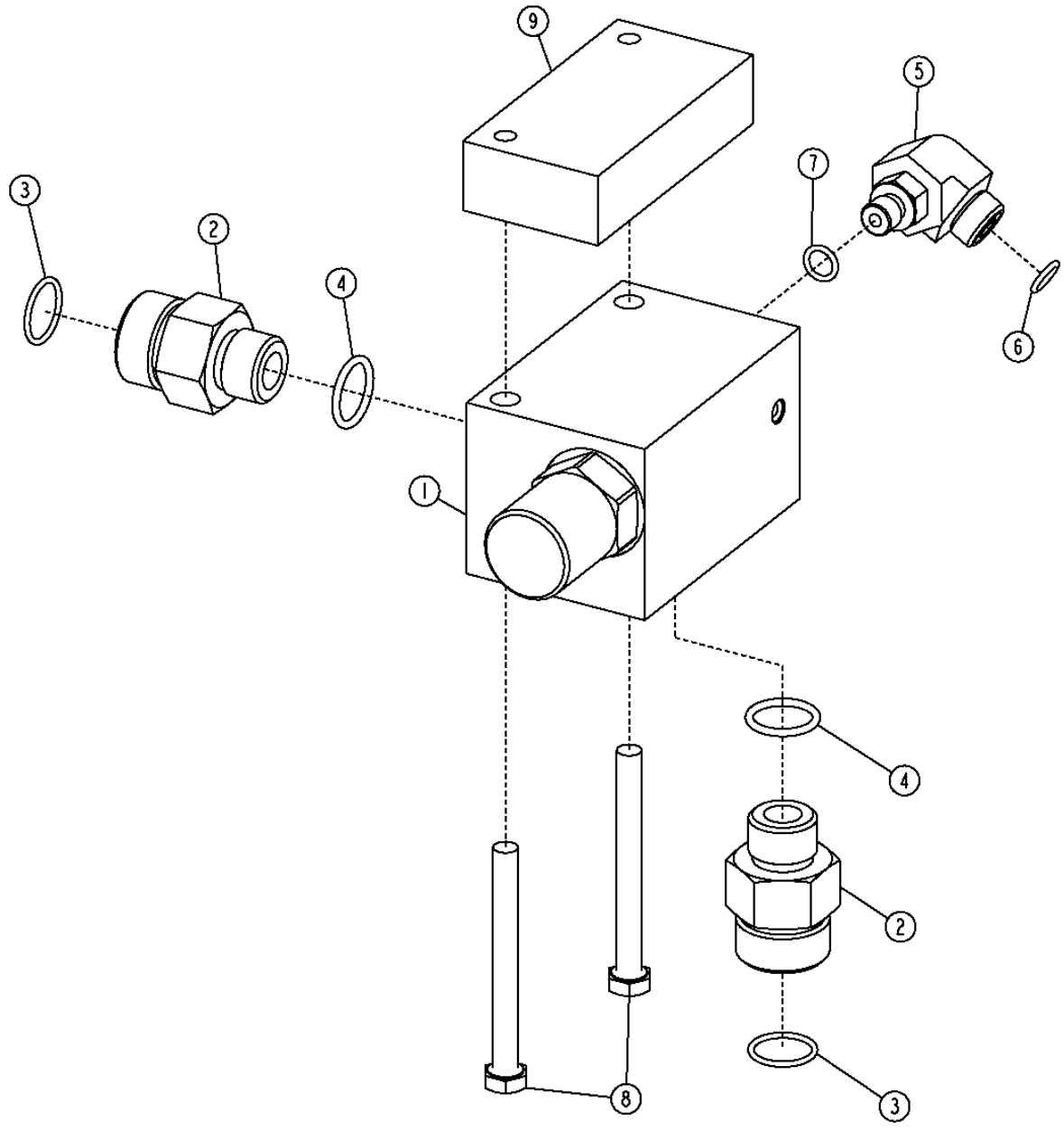

TX1002547

STEERING COMPENSATOR VALVE (SN. 601560 -)
SOUPAPE DE DIRECTION (SN. 601560 -)
VALVULA DE LA DIRECCION (SN. 601560 -)

KEY	PART NO.	PART NAME	QTY.	SERIAL NO.	REMARKS
1	AT323286	VALVE	1		
	AT323845	SEAL KIT	1		
2	38H1193	ADAPTER FITTING	2		
3	T77858	O-RING	2		
4	R26906	O-RING	2		
5	38H1435	ELBOW FITTING	1		
6	T77613	O-RING	1		
7	R28782	O-RING	1		
8	19M8039	SCREW	2		M8 X 80, (SUB FOR 19M8504)
9	T203047	STRAP	1		

STEERING CYLINDER HYDRAULIC HOSES (SN. - 601559)
FLEXIBLES HYDRAULIQUES DE VERIN DE DIRECTION (SN. - 601559)
MANGUERAS HIDRAULICAS DE CILINDROS DE LA DIRECCION (SN. - 601559)

T194388 -UN-27AUG03

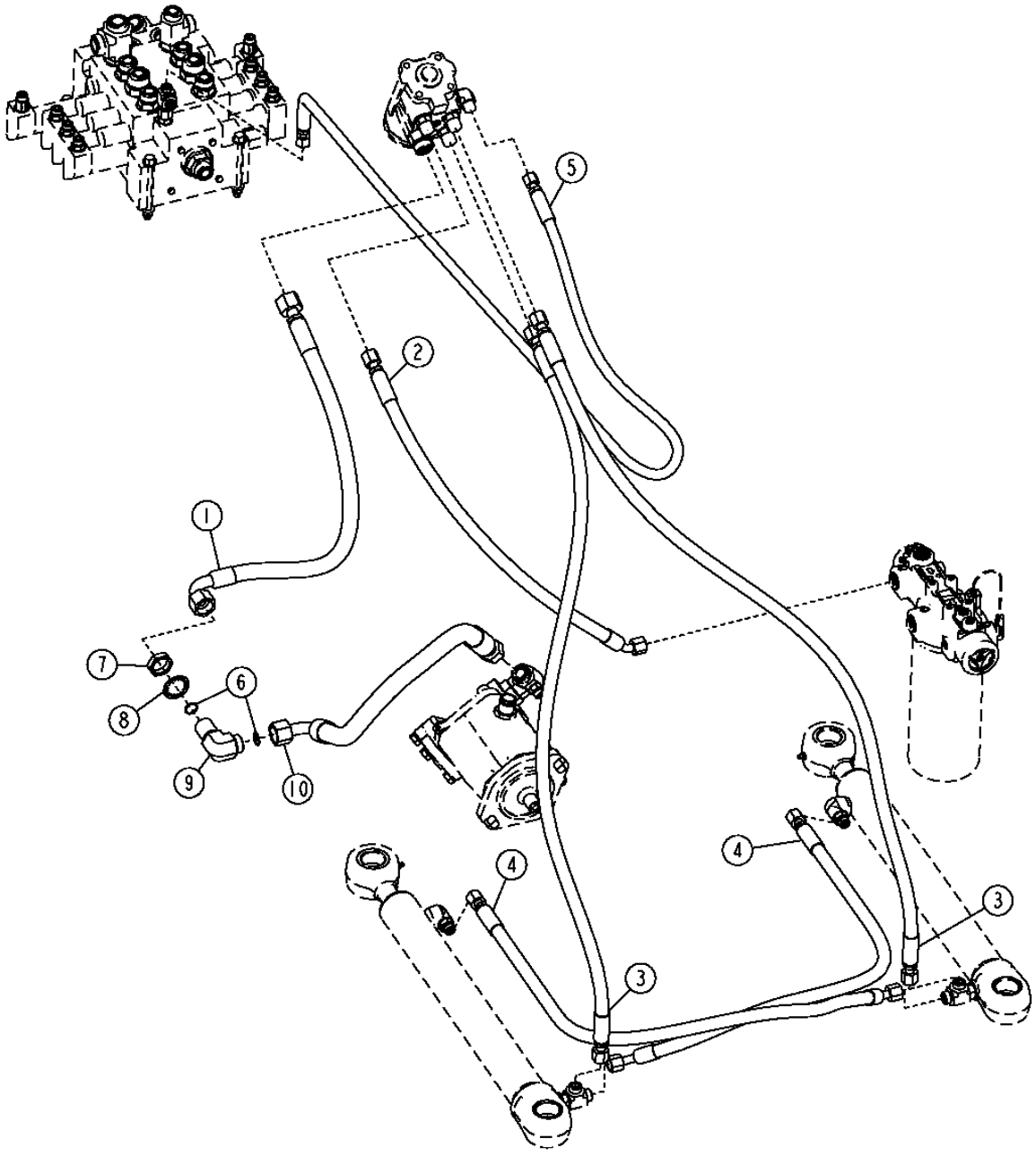

T194388

STEERING CYLINDER HYDRAULIC HOSES (SN. - 601559)
FLEXIBLES HYDRAULIQUES DE VERIN DE DIRECTION (SN. - 601559)
MANGUERAS HIDRAULICAS DE CILINDROS DE LA DIRECCION (SN. - 601559)

KEY	*PART NO.*	*PART NAME*	*QTY.*	*SERIAL NO.*	*REMARKS*
1	AT332441	HYDRAULIC HOSE - FABRICATE	1		(SUB FOR AT228193) (SUB FOR AT225275, THIS APPLICATION)
2	AT303273	HYDRAULIC HOSE - FABRICATE	1		
3	AT222561	HYDRAULIC HOSE - FABRICATE	2		
4	AT334083	HYDRAULIC HOSE - FABRICATE	2		(SUB FOR AT207072)
5	AT169939	HYDRAULIC HOSE - FABRICATE	1	-594432	
	AT314734	HYDRAULIC HOSE - FABRICATE	1	594433-	
6	T77858	O-RING	2		
7	T78707	NUT	1		30.175 MM
8	T174275	LOCK WASHER	1		
9	38H1324	ELBOW FITTING	1		
10	AT226808	HYDRAULIC HOSE - FABRICATE	1		

STEERING CYLINDER HYDRAULIC HOSES (SN. 601560 -)
FLEXIBLES HYDRAULIQUES DE VERIN DE DIRECTION (SN. 601560 -)
MANGUERAS HIDRAULICAS DE CILINDROS DE LA DIRECCION (SN. 601560 -)

TX1002546 -UN-23JAN06

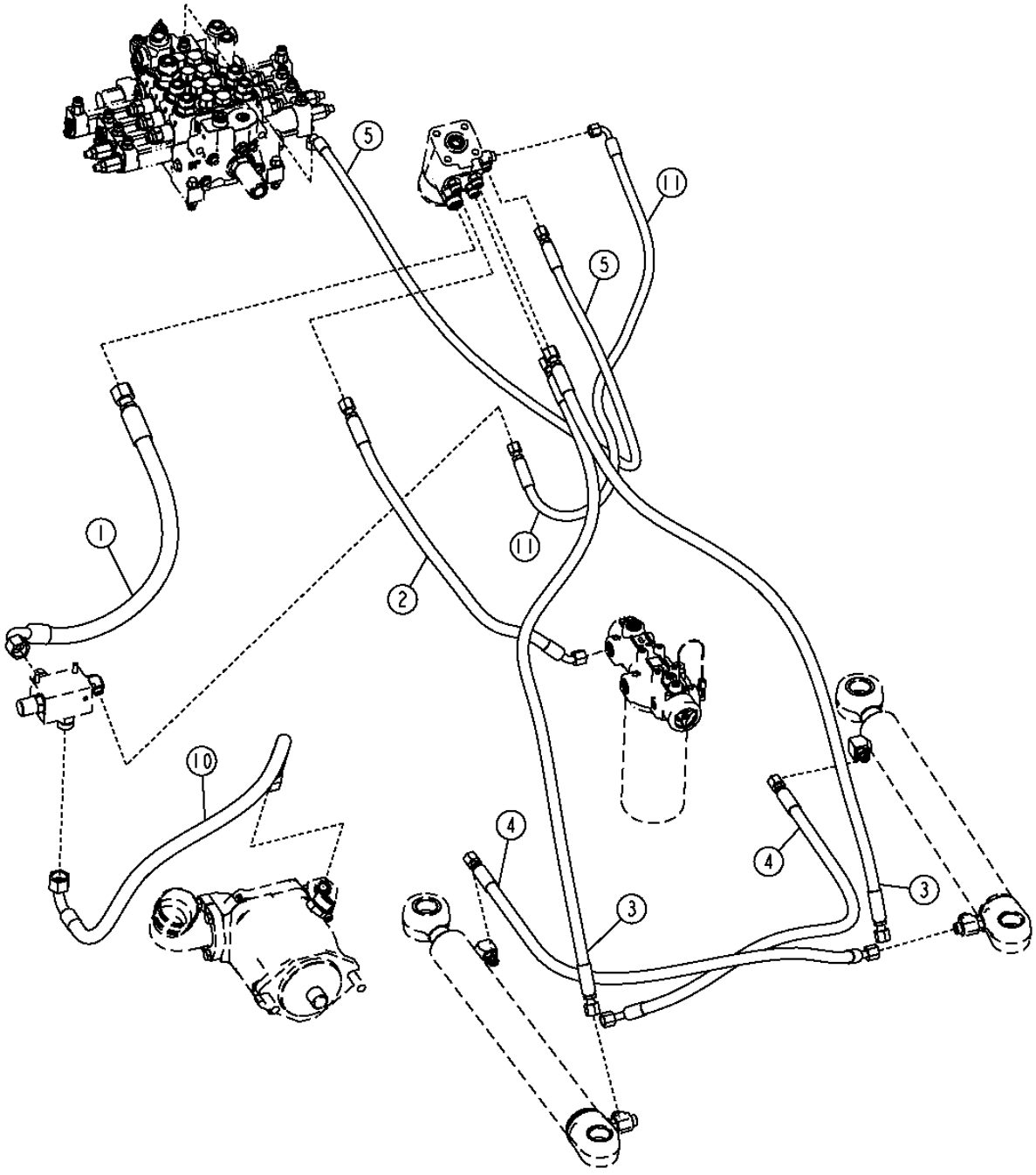

TX1002546

STEERING CYLINDER HYDRAULIC HOSES (SN. 601560 -)
FLEXIBLES HYDRAULIQUES DE VERIN DE DIRECTION (SN. 601560 -)
MANGUERAS HIDRAULICAS DE CILINDROS DE LA DIRECCION (SN. 601560 -)

KEY	PART NO.	PART NAME	QTY.	SERIAL NO.	REMARKS
1	AT332441	HYDRAULIC HOSE - FABRICATE	1		(SUB FOR AT228193) (SUB FOR AT225275, THIS APPLICATION)
2	AT303273	HYDRAULIC HOSE - FABRICATE	1		
3	AT222561	HYDRAULIC HOSE - FABRICATE	2		
4	AT334083	HYDRAULIC HOSE - FABRICATE	2		(SUB FOR AT207072)
5	AT169939	HYDRAULIC HOSE - FABRICATE	1	-594432	
	AT314734	HYDRAULIC HOSE - FABRICATE	1	594433-	
10	AT226808	HYDRAULIC HOSE - FABRICATE	1		
11	AT325889	HYDRAULIC HOSE - FABRICATE	1		

STEERING CYLINDER FITTINGS AND LUBRICATION HOSES
RACCORDS ET FLEXIBLES DE GRAISSAGE DU VERIN DE DIRECTION
ADAPTADORES DEL CILINDRO DE LA DIRECCION Y MANGUERAS DE LUBRICACION

TX1006280 -UN-27APR06

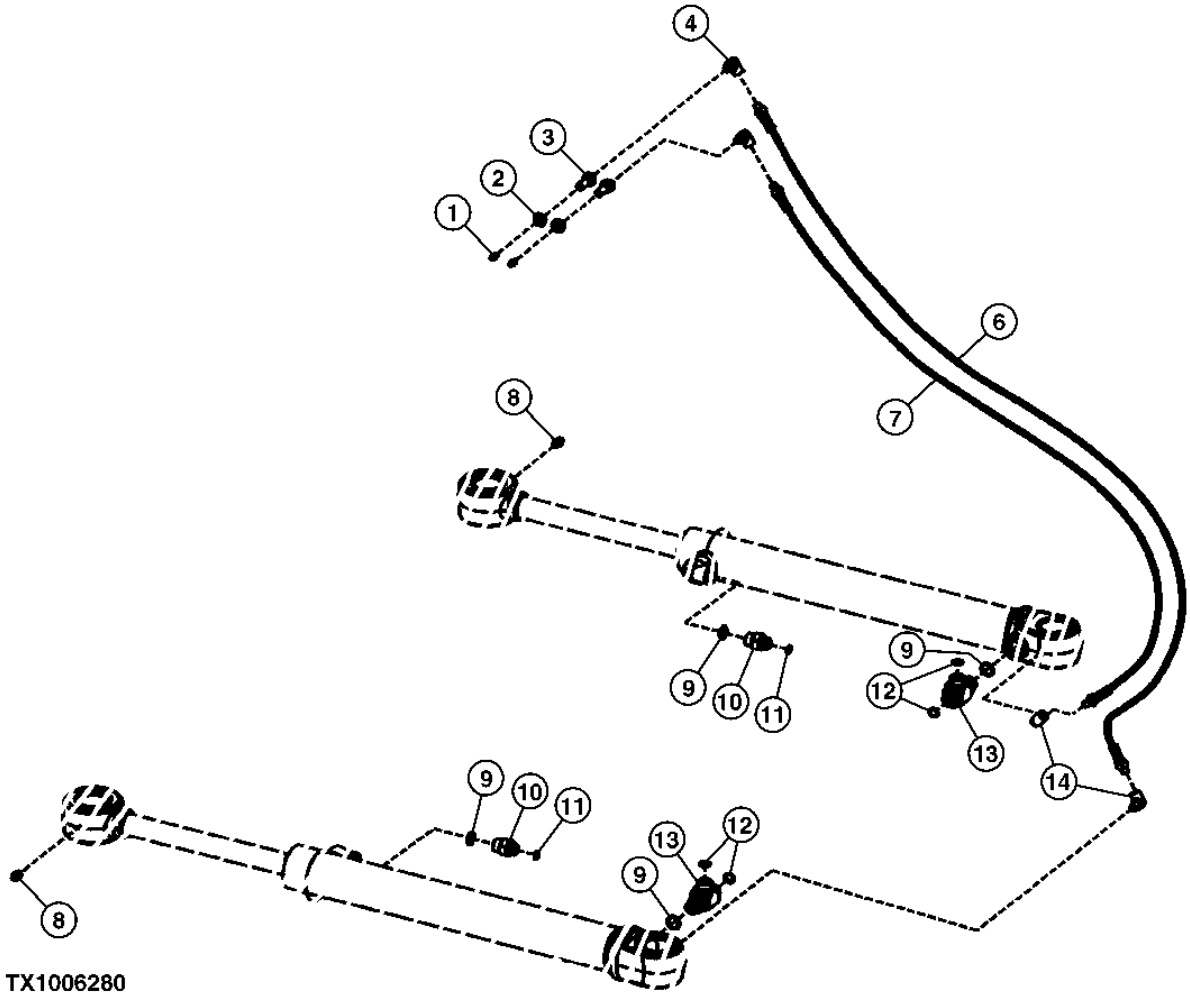

TX1006280

STEERING CYLINDER FITTINGS AND LUBRICATION HOSES
RACCORDS ET FLEXIBLES DE GRAISSAGE DU VERIN DE DIRECTION
ADAPTADORES DEL CILINDRO DE LA DIRECCION Y MANGUERAS DE LUBRICACION

KEY	*PART NO.*	*PART NAME*	*QTY.*	*SERIAL NO.*	*REMARKS*
1	JD7797	LUBRICATION FITTING	2		(SUB FOR JD7842, THIS APPLICATION)
2	E12379	NUT	2		
3	R36311	FITTING	2		
4	T56112	ELBOW FITTING	2		
5	H77698	TIE BAND	1		
6	AT207022	HYDRAULIC HOSE	1		
7	AT207023	HYDRAULIC HOSE	1		
8	JD7759	LUBRICATION FITTING	2		
9	R26375	O-RING	4		
10	38H1171	ADAPTER FITTING	2		
11	T77613	O-RING	2		
12	T77857	O-RING	4		
13	38H1024	TEE FITTING	2		
14	M45937	ELBOW FITTING	2		

STEERING CYLINDER
VERIN DE DIRECTION
CILINDRO DE LA DIRECCION

T195544 -UN-21OCT03

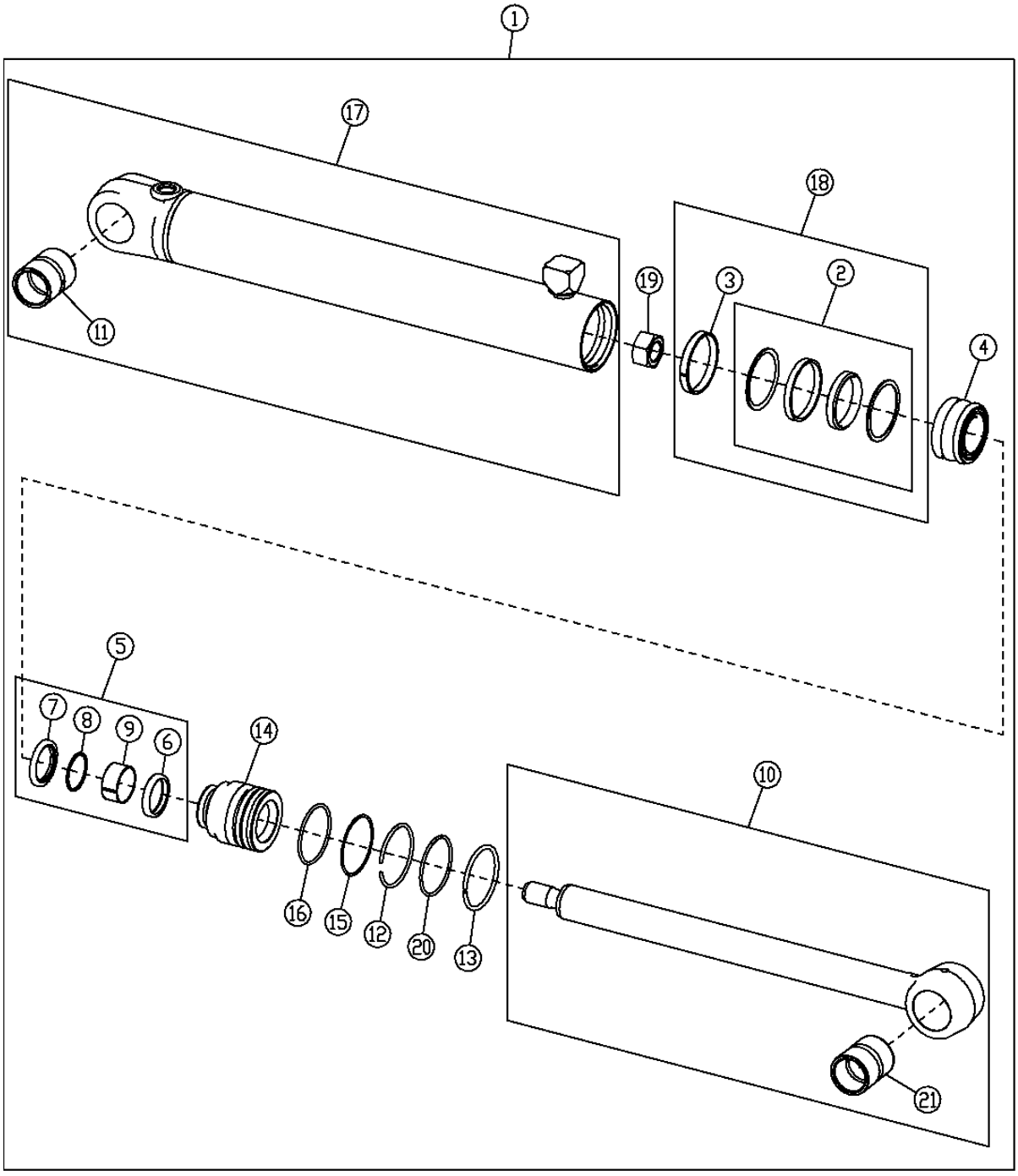

T195544

STEERING CYLINDER
VERIN DE DIRECTION
CILINDRO DE LA DIRECCION

KEY	PART NO.	PART NAME	QTY.	SERIAL NO.	REMARKS
1	AH211379	HYDRAULIC CYLINDER	1		
2	RE27205	SEAL	1		
3	H155359	SCRAPER RING	1		
4	H155358	PISTON	1		
5	AH149194	HYDRAULIC CYLINDER KIT	1		
6	AH150453	SEAL	1		
7	AH148608	SEAL	1		
8	H155655	SEAL	1		
9	H157897	WEAR RING	1		(SUB FOR H157947)
10	AH147740	ROD	1		
11	H143405	BUSHING	1		
12	H164982	SNAP RING	1		
13	H211156	SNAP RING	1		
14	H211093	HYDR. CYLINDER ROD GUIDE	1		
15	U13461	BACK-UP RING	1		
16	R93633	O-RING	1		
17	AH211316	HYDRAULIC CYLINDER BARREL	1		
18	AH212087	HYDRAULIC CYLINDER KIT	1		
19	H170536	NUT	1		
20	H63262	O-RING	1		
21	H158192	BUSHING	1		

BRAKE VALVE, PEDALS AND LINKAGE
SOUPAPE, PEDALES ET TRINGLERIE DE FREIN
VALVULA DE FRENOS, PEDALES Y VARILLAJE

TX1006037 -UN-21APR06

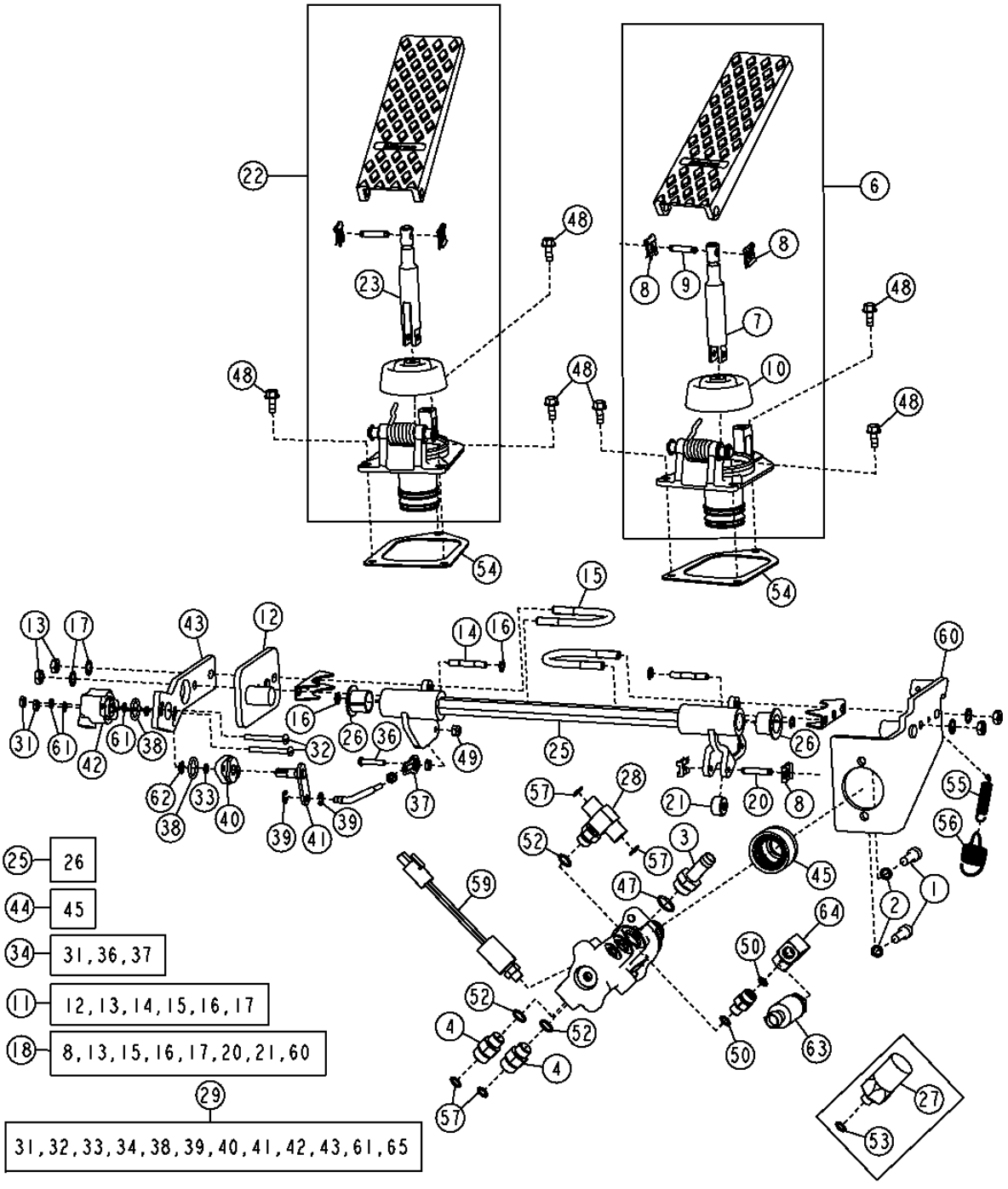

BRAKE VALVE, PEDALS AND LINKAGE (S.N. -604689)
SOUPAPE, PEDALES ET TRINGLERIE DE FREIN (S.N. -604689)
VALVULA DE FRENOS, PEDALES Y VARILLAJE (S.N. -604689)

KEY	PART NO.	PART NAME	QTY.	SERIAL NO.	REMARKS
1	19M7657	SCREW	2		
2	24M7313	WASHER	2		
3	T38282	HOSE FITTING	1		
4	AT181313	CHECK VALVE	2		
6	AT203457	PEDAL	1		(RIGHT)
7	AT208088	PUSH ROD	1		
8	T157212	CLIP	6		
9	T157258	PIN	2		
10	T174634	BOOT	2		
11	AT208085	KIT	1		(LEFT PEDAL BRACKET)
12	AT314267	SUPPORT	1		(SUB FOR AT208167)
13	R53317	LOCK NUT	4		
14	T157211	PIN	2		
15	T157220	CLAMP	2		
16	T170180	SNAP RING	4		
17	T170181	LOCK WASHER	4		
18	AT208086	HOSE KIT	1		(RIGHT PEDAL BRACKET)
20	T157257	PIN	1		
21	T175236	ROLLER	1		
22	AT208087	PEDAL	1		(LEFT)
23	AT208163	PUSH ROD	1		
25	AT208089	ROCKER ARM	1		
26	T157223	BEARING	2		
27	AT206721	SWITCH	1	-600914	(STD)
	AT222371	SWITCH	1	-600914	(HARSH ENVIRONMENT)
28	AT207529	CHECK VALVE	1		
29	AT210291	CLUTCH KIT	1		(CLUTCH CUTOFF)
31	14H631	NUT	2		4.826 MM
32	21H1390	SCREW	2		
33	A4365R	O-RING	1		6.071 X 1.778 MM
34	AT210877	LINKAGE	1		
35	14H631	NUT	1		4.826 MM
36	21H985	SCREW	1		
37	AH108055	LINK END	1		
38	P48347	O-RING	2		
39	R72654	SNAP RING	2		
40	R86457	SUPPORT	1		
41	RE24468	SHAFT	1		
42	RE69297	SENSOR	1		(SUB FOR RE35704)
43	T172274	SUPPORT	1		
44	AT331208	FLOW CONTROL HYD. VALVE	1		(SUB FOR AT210229)
45	AT207948	SEAL KIT	1		
46	AT207947	SEAL	1		
47	R26375	O-RING	1		
48	M113243	SCREW	6		
49	N203905	LOCK NUT	1		
50	R26287	O-RING	1		
51	R26375	O-RING	1		
52	R26448	O-RING	3		
53	R28782	O-RING	1	-600914	
54	T172927	GASKET	2		
55	T176108	SPRING	1		
56	T176111	SPRING	1		
57	T77613	O-RING	4		
59	AT223535	PRESSURE SWITCH	1		(STD)
	AT222372	SWITCH	1		(HARSH ENVIRONMENT)
60	AT314266	SUPPORT	1		(SUB FOR AT208166)
61	12M7060	WASHER	4		5.300 MM, (SUB FOR 12H295)
62	R72653	SNAP RING	1		
63	38H1159	ADAPTER FITTING	1	600915-	
64	AT322982	TRANSDUCER	1	600915-	
65	AT326970	FITTING	1	600915-	

PARK BRAKE SOLENOID VALVE
ELECTROVANNE DE FREIN DE STATIONNEMENT
VALVULA DE SOLENOIDE DE FRENO DE ESTACIONAMIENTO

T196520 -UN-26NOV03

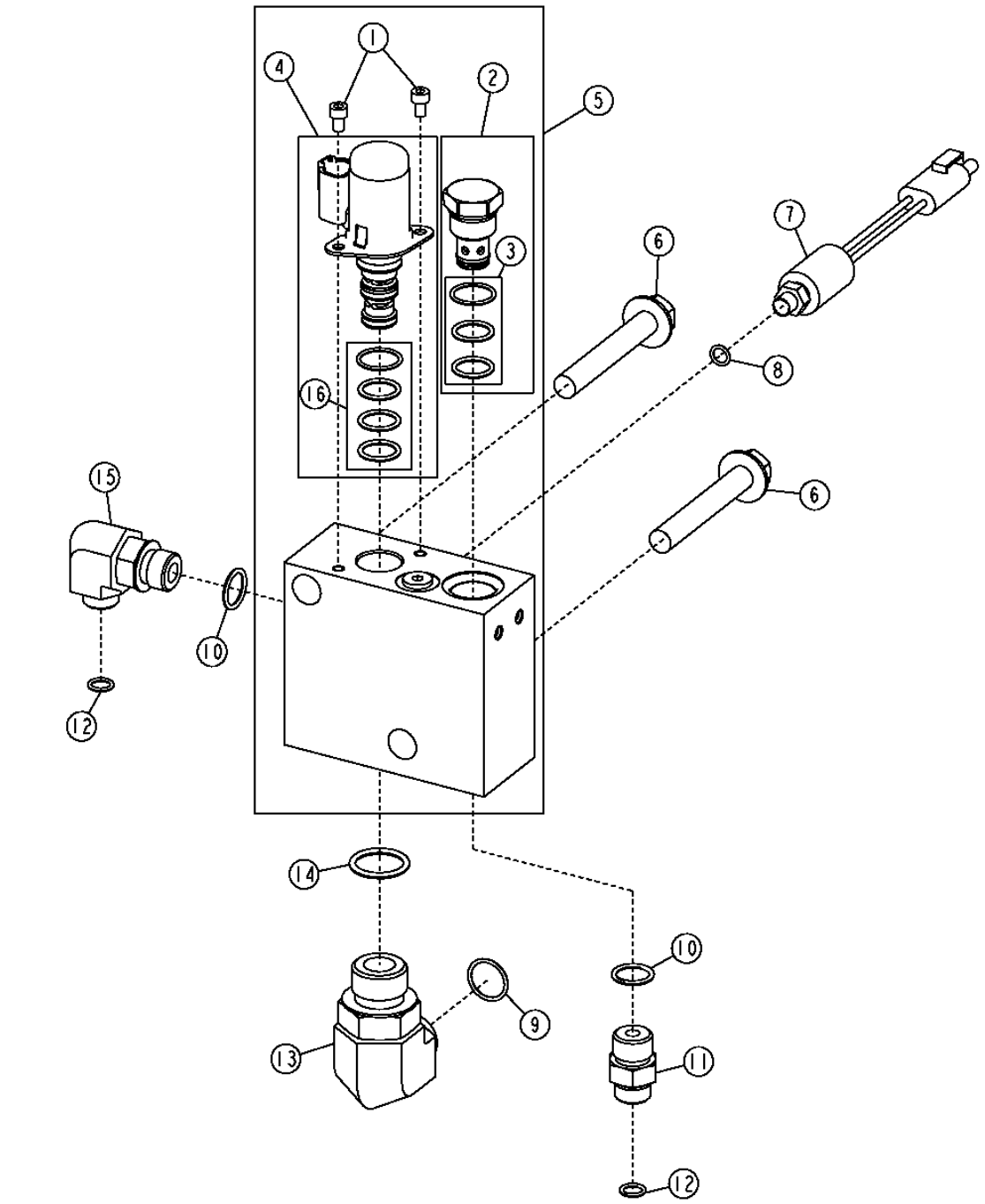

PARK BRAKE SOLENOID VALVE
ELECTROVANNE DE FREIN DE STATIONNEMENT
VALVULA DE SOLENOIDE DE FRENO DE ESTACIONAMIENTO

KEY	*PART NO.*	*PART NAME*	*QTY.*	*SERIAL NO.*	*REMARKS*
1	19M9150	SCREW	2		
2	AT224863	CHECK VALVE	1		
3	AT224864	SEAL KIT	1		(CHECK VALVE)
4	AT224576	SOLENOID VALVE	1		
5	AT224497	FLOW CONTROL HYD. VALVE	1		(WHEN REPLACING AT206811 ALSO ORDER (2) R78065, 57M8021, AND 57M8022)
6	19M7818	SCREW	2		
7	AT223538	PRESSURE SWITCH	1		(STD)
	AT222367	SWITCH	1		(HARSH ENVIRONMENT)
8	R26287	O-RING	1		
9	T77858	O-RING	1		
10	R26375	O-RING	2		
11	38H1171	ADAPTER FITTING	1		
12	T77613	O-RING	2		
13	38H1404	ELBOW FITTING	1		
14	U12547	O-RING	1		
15	38H1010	ELBOW FITTING	1		
16	AT224873	SEAL KIT	1		(SOLENOID VALVE)

BRAKE ACCUMULATOR
ACCUMULATEUR DE FREIN
ACUMULADOR DE FRENO

T194621 -UN-23SEP03

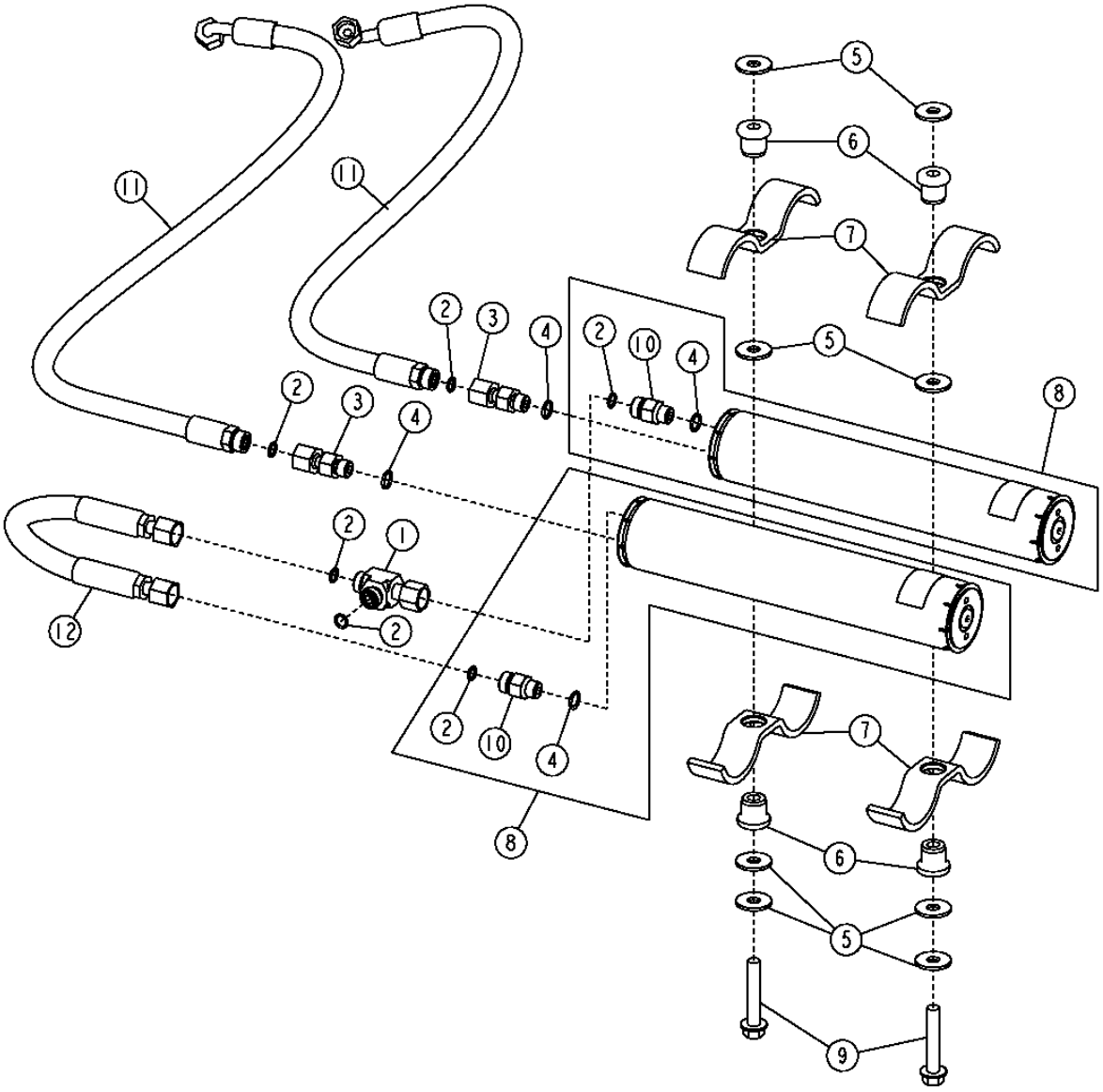

T194621

BRAKE ACCUMULATOR
ACCUMULATEUR DE FREIN
ACUMULADOR DE FRENO

KEY	*PART NO.*	*PART NAME*	*QTY.*	*SERIAL NO.*	*REMARKS*
1	38H1030	TEE FITTING	1		
2	T77613	O-RING	6		
3	38H1067	ADAPTER FITTING	2		
4	R26448	O-RING	4		
5	24M7296	WASHER	8		10.500 X 30 X 2.500 MM
6	AT116162	ISOLATOR	4		
7	T168393	CLAMP	4		
8	AT224430	HYDRAULIC ACCUMULATOR	2		
9	19M7807	SCREW	2		M10 X 60
10	AT225573	CHECK VALVE	2		
11	AT222414	HYDRAULIC HOSE - FABRICATE	2		
12	AT223768	HYDRAULIC HOSE - FABRICATE	1		

PARK BRAKE SOLENOID VALVE HYDRAULIC LINES
CONDUITES HYDRAULIQUES DE L'ELECTROVANNE DU FREIN DE STATIONNEMENT
LINEAS HIDRAULICAS DE LA VALVULA DE SOLENOIDE DEL FRENO DE ESTACIONAMIENTO

TX1006283 -UN-27APR06

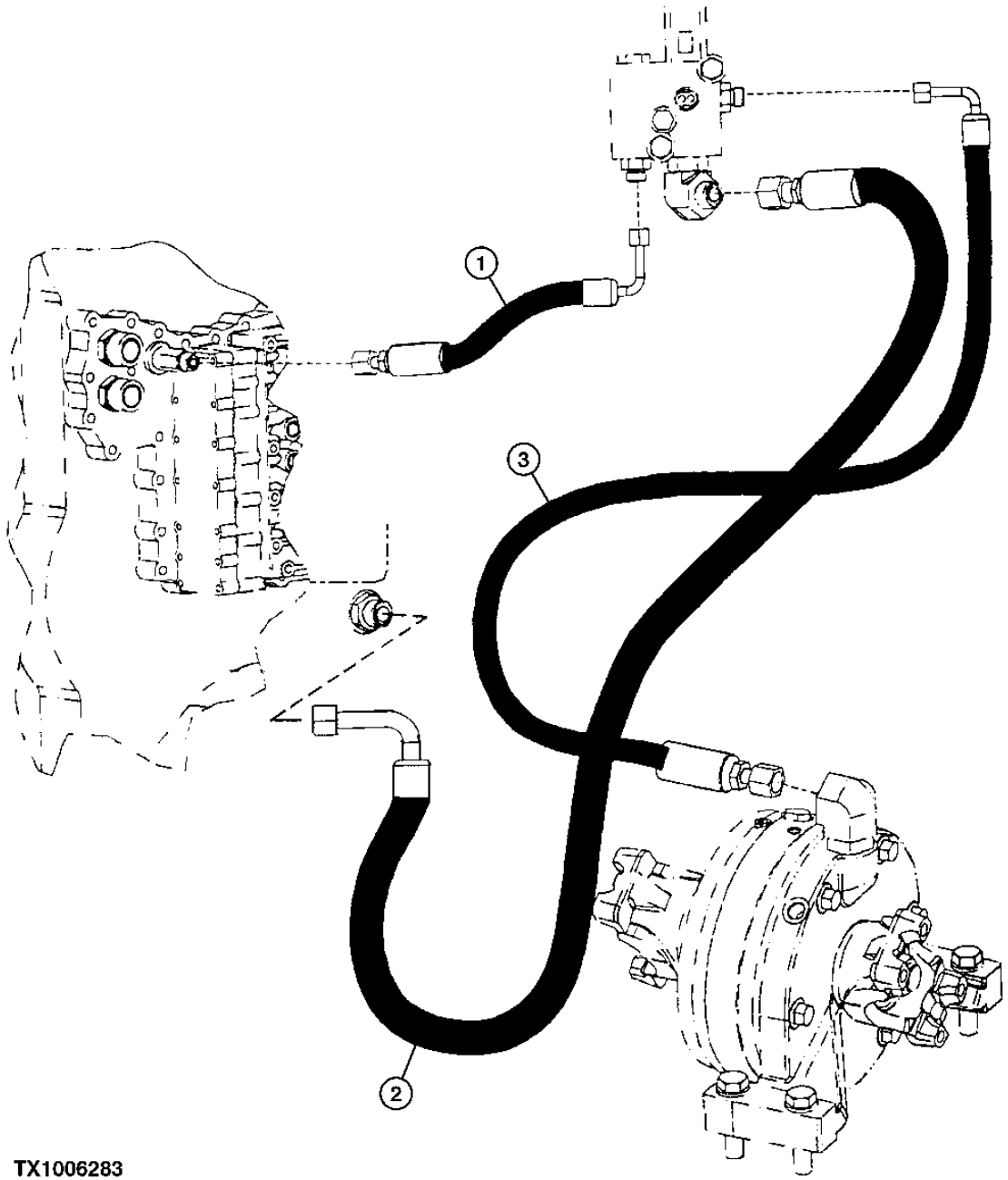

TX1006283

PARK BRAKE SOLENOID VALVE HYDRAULIC LINES
CONDUITES HYDRAULIQUES DE L'ELECTROVANNE DU FREIN DE STATIONNEMENT
LINEAS HIDRAULICAS DE LA VALVULA DE SOLENOIDE DEL FRENO DE ESTACIONAMIENTO

KEY	*PART NO.*	*PART NAME*	*QTY.*	*SERIAL NO.*	*REMARKS*
1	AT209907	HYDRAULIC HOSE - FABRICATE	1		
2	AT208015	HYDRAULIC HOSE - FABRICATE	1		
3	AT167553	HYDRAULIC HOSE - FABRICATE	1		

BRAKE VALVE HYDRAULICS
CIRCUIT HYDRAULIQUE SOUPAPE FREIN
SISTEMA HIDRAULICA DE LA VALVULA DE FRENOS

T203905 -UN-06OCT04

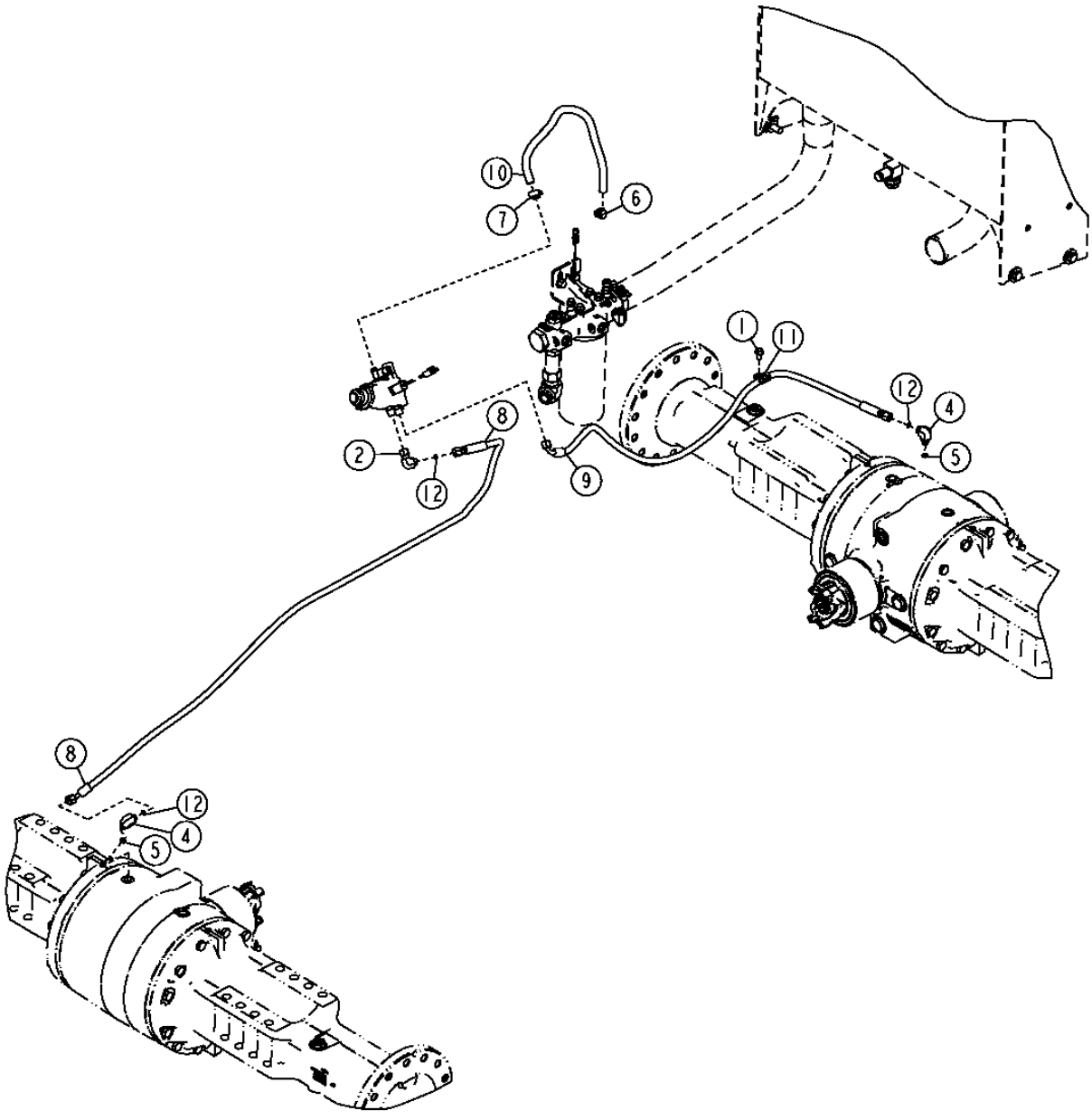

T203905

BRAKE VALVE HYDRAULICS
CIRCUIT HYDRAULIQUE SOUPAPE FREIN
SISTEMA HIDRAULICO DE LA VALVULA DE FRENOS

KEY	*PART NO.*	*PART NAME*	*QTY.*	*SERIAL NO.*	*REMARKS*
1	19M7784	SCREW	1		
2	38H1094	ELBOW FITTING	1		
4	38H5016	ELBOW FITTING	2		
5	51M7041	O-RING	2		
6	AR21836	CLAMP	1		
7	AR21837	CLAMP	1		
8	AT223949	HYDRAULIC HOSE - FABRICATE	1		
9	AT79576	HYDRAULIC HOSE - FABRICATE	1		
10	T168383	HYDRAULIC HOSE - FABRICATE	1		
11	T76252	CLAMP	1		
12	T77613	O-RING	3		

DRIVELINE BEARING AND PARKING BRAKE
PALIER LIGNE ET FREIN STATIONNEMENT COMMANDE
COJINETE DE LINEA DE MANDO Y FRENO DE ESTACIONAMIENTO

T192673 -UN-14JUL03

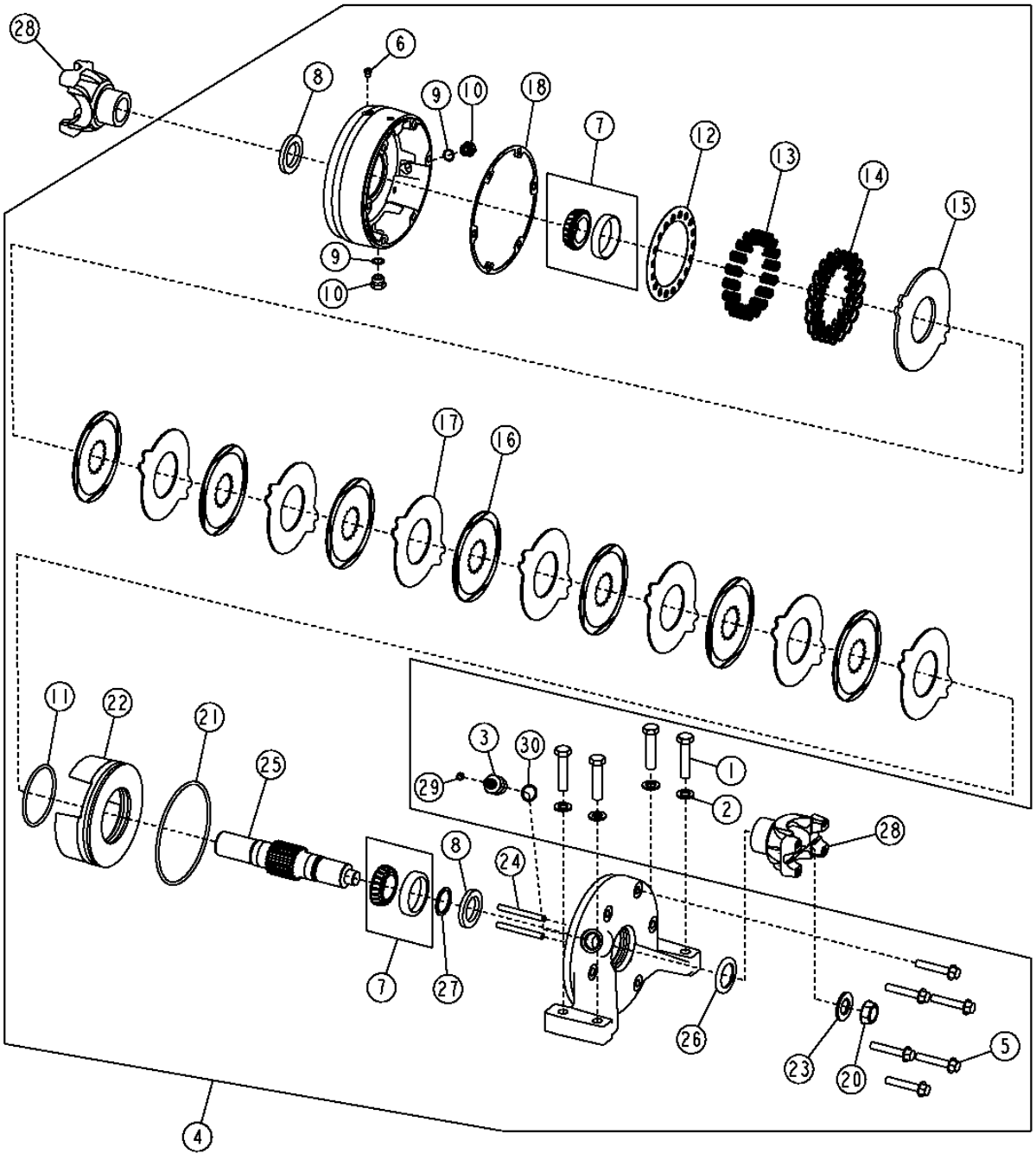

T192673

DRIVELINE BEARING AND PARKING BRAKE
PALIER LIGNE ET FREIN STATIONNEMENT COMMANDE
COJINETE DE LINEA DE MANDO Y FRENO DE ESTACIONAMIENTO

KEY	PART NO.	PART NAME	QTY.	SERIAL NO.	REMARKS
1	19M7719	CAP SCREW	4		
2	24M7338	WASHER	4		LIP
3	38H1338	ADAPTER FITTING	1		FACE
4	**AT203533**	**BRAKE**	**1**		**(WHOLEGOODS)**
5	19M7817	SCREW	6		
6	AT208411	PRESSURE RELIEF VALVE	1		
7	AT209496	BEARING	2		
8	AT225727	SEAL	2		
9	R26375	O-RING	2		
10	R39112	FITTING	2		
11	R74657	O-RING	1		
12	T169103	RETAINER	1		
13	T169104	COMPRESSION SPRING	18		
14	T169105	COMPRESSION SPRING	18		
15	T169107	BRAKE DISK	1		
16	T169108	BRAKE DISK	7		
17	T169109	BRAKE DISK	7		
18	T169110	GASKET	1		
20	T169113	NUT	1		
21	T169116	O-RING	1		
22	T169290	PISTON	1		
23	T172856	WASHER	1		
24	T173230	PIN	2		ASSY
25	T226802	UNIVERSAL DRIVESHAFT	1		(SUB FOR T169281)
26	T173593	WASHER	1		
27	U12167	SNAP RING	1		
28	H121681	UNIVERSAL JOINT YOKE	2		
29	T77613	O-RING	1		
30	U12547	O-RING	1		

DECALS AND TRADEMARKS (ENGLISH)
AUTOCOLLANTS ET MARQUES COMMERCIALES (ANGLAIS)
CALCOMANIAS Y MARCAS REGISTRADAS (INGLESE)

T204747 -UN-23NOV04

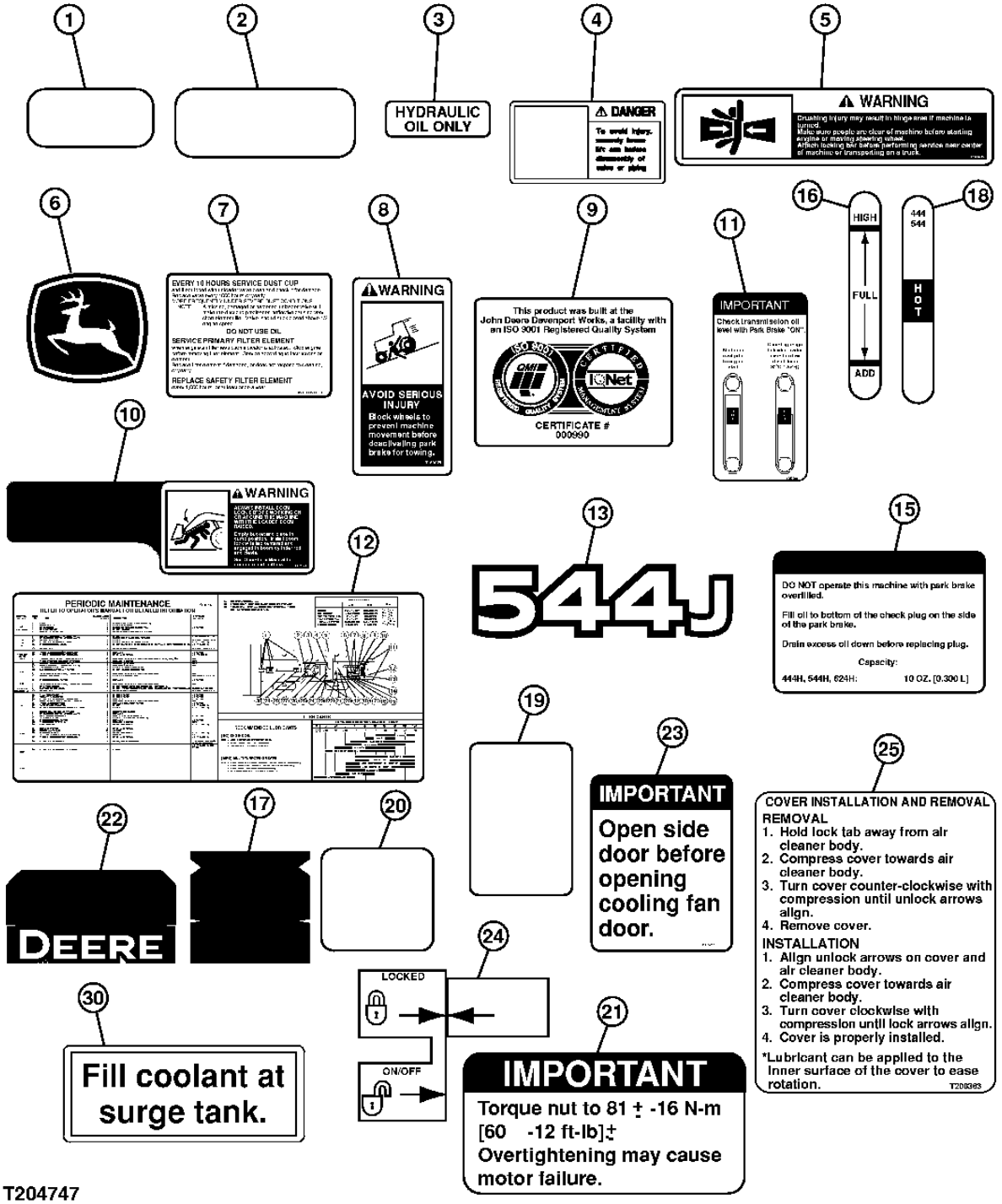

T204747

DECALS AND TRADEMARKS (ENGLISH)
AUTOCOLLANTS ET MARQUES COMMERCIALES (ANGLAIS)
CALCOMANIAS Y MARCAS REGISTRADAS (INGLESE)

KEY	PART NO.	PART NAME	QTY.	SERIAL NO.	REMARKS
1	H21259	MAT	3		(ANTI-SKID)
2	JD5902	REFLECTOR	2		(RED)
3	T218566	LABEL	1		(SUB FOR T101942) (HYDRAULIC OIL)
4	T146175	SAFETY SIGN	1		(DANGER - BOOM)
5	T146436	SAFETY SIGN	2		(WARNING - ARTICULATION)
6	JD5749	LABEL	1		(LEAPING DEER)
7	T146605	LABEL	1		(AIR CLEANER)
8	T159028	LABEL	1		(PARK BRAKE)
9	T175744	LABEL	1		(ISO 9001)
10	T182191	LABEL	2		(BOOM LOCK)
11	T200055	LABEL	2		(TRANSMISSION OIL FILL INSTRUCTIONS)
12	T225025	LABEL	1		(SUB FOR T201074) (PERIODIC MAINTENANCE)
13	T200011	LABEL	2		(MODEL DESIGNATION)
15	T207741	LABEL	1		(SUB FOR T195710) (PARK BRAKE OVERFILL)
16	T197300	LABEL	1		(HYDRAULIC RESERVOIR SIGHT GAUGE)
17	T200079	LABEL	2		
18	T200058	LABEL	1		(TRANSMISSION SIGHT GAUGE)
19	JD5906	REFLECTOR	2		(AMBER)
20	T153680	LABEL	2		(TIE DOWN)
21	T175135	LABEL	1		(FAN HUB WARNING)
22	T198187	LABEL	2		
23	T205211	LABEL	1		
24	.....	LABEL	1		(SUB FOR T208362) (AIR CLEANER)
25	.....	LABEL	1		(SUB FOR T208363) (AIR CLEANER)
26	T225397	LABEL	1		(AXLE OIL LEVEL) BLANK LABEL, NOT ILLUSTRATED, (SUB FOR T217412)
30	T208695	LABEL	1		

CAB LABELS AND DECALS
ETIQUETTES ET AUTOCOLLANTS CABINE
ETIQUETAS Y CALCOMANIAS DE LA CABINA

T194856 -UN-15OCT03

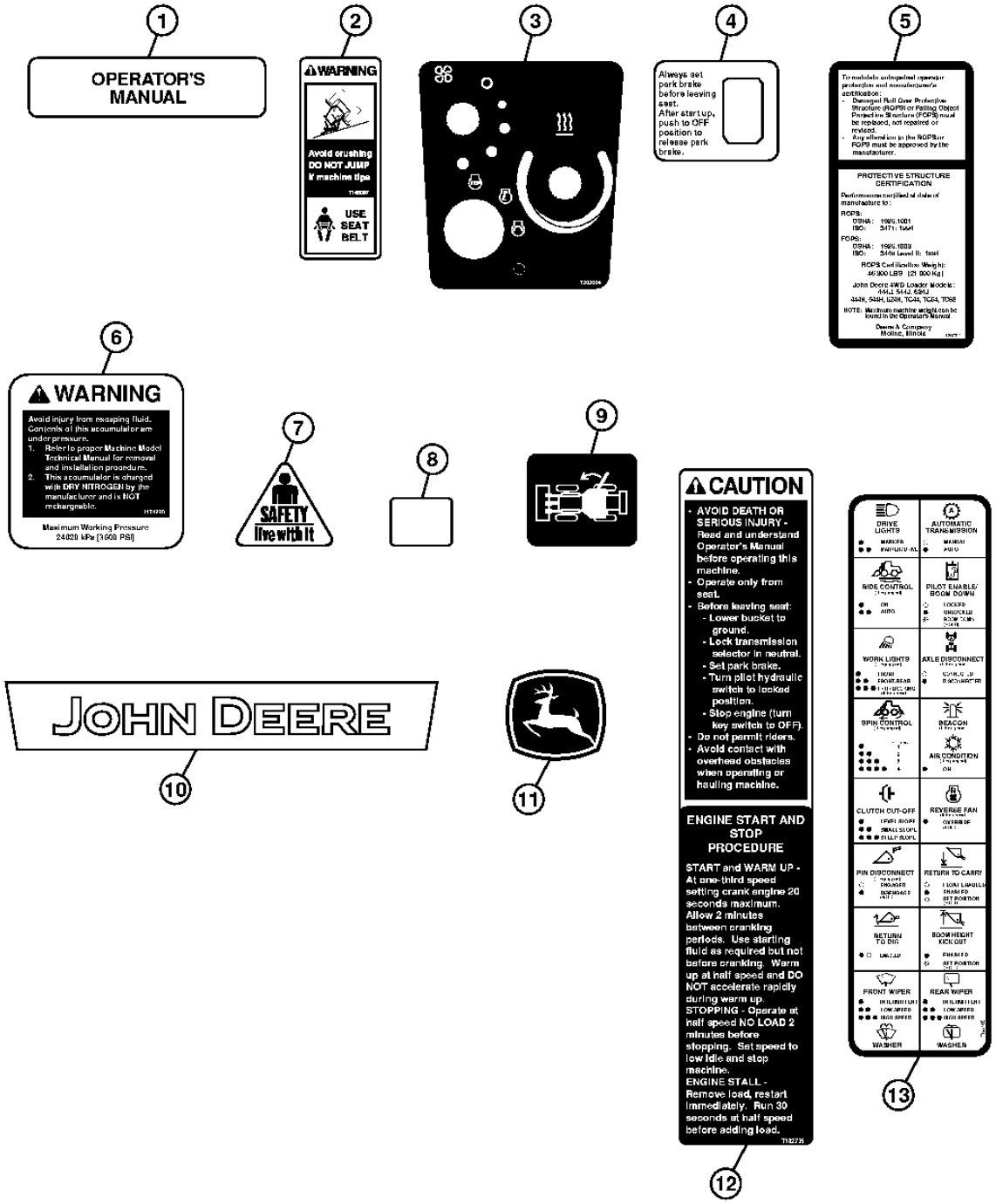

T194856

CAB LABELS AND DECALS
ETIQUETTES ET AUTOCOLLANTS CABINE
ETIQUETAS Y CALCOMANIAS DE LA CABINA

KEY	*PART NO.*	*PART NAME*	*QTY.*	*SERIAL NO.*	*REMARKS*
1	T148083	LABEL	1		(OPERATOR'S MANUAL)
2	T146097	LABEL	1		(WARNING - USE SEAT BELT)
3	T202884	LABEL	1		(KEY START/HVAC PANEL)
4	T171228	LABEL	1		(ON/OFF PARK BRAKE SWITCH)
5	T200712	LABEL	1		(ROPS)
6	T174298	LABEL	2	-598673	(WARNING - ACCUMULATOR)
	T215155	LABEL	2	598674-	
7	H138955	LABEL	2		(CAUTION)
8	T171223	LABEL	1		(DOOR RELEASE-LEFT SIDE OF UNIT)
9	T174735	LABEL	1		(DOOR RELEASE-RIGHT SIDE OF UNIT)
10	T215208	LABEL	1		(SUB FOR T182183) (JOHN DEERE)
11	JD5822	LABEL	2		(LEAPING DEER)
12	T182795	SAFETY SIGN	1		(CAUTION - ENGINE START/STOP)
13	T197186	LABEL	1		(SWITCH DESCRIPTION)

DECALS AND LABELS (FRENCH)
AUTOCOLLANTS (FRANCAIS)
ETIQUETAS Y CALCOMANIAS (FRANCES)

T201655 -UN-14JUL04

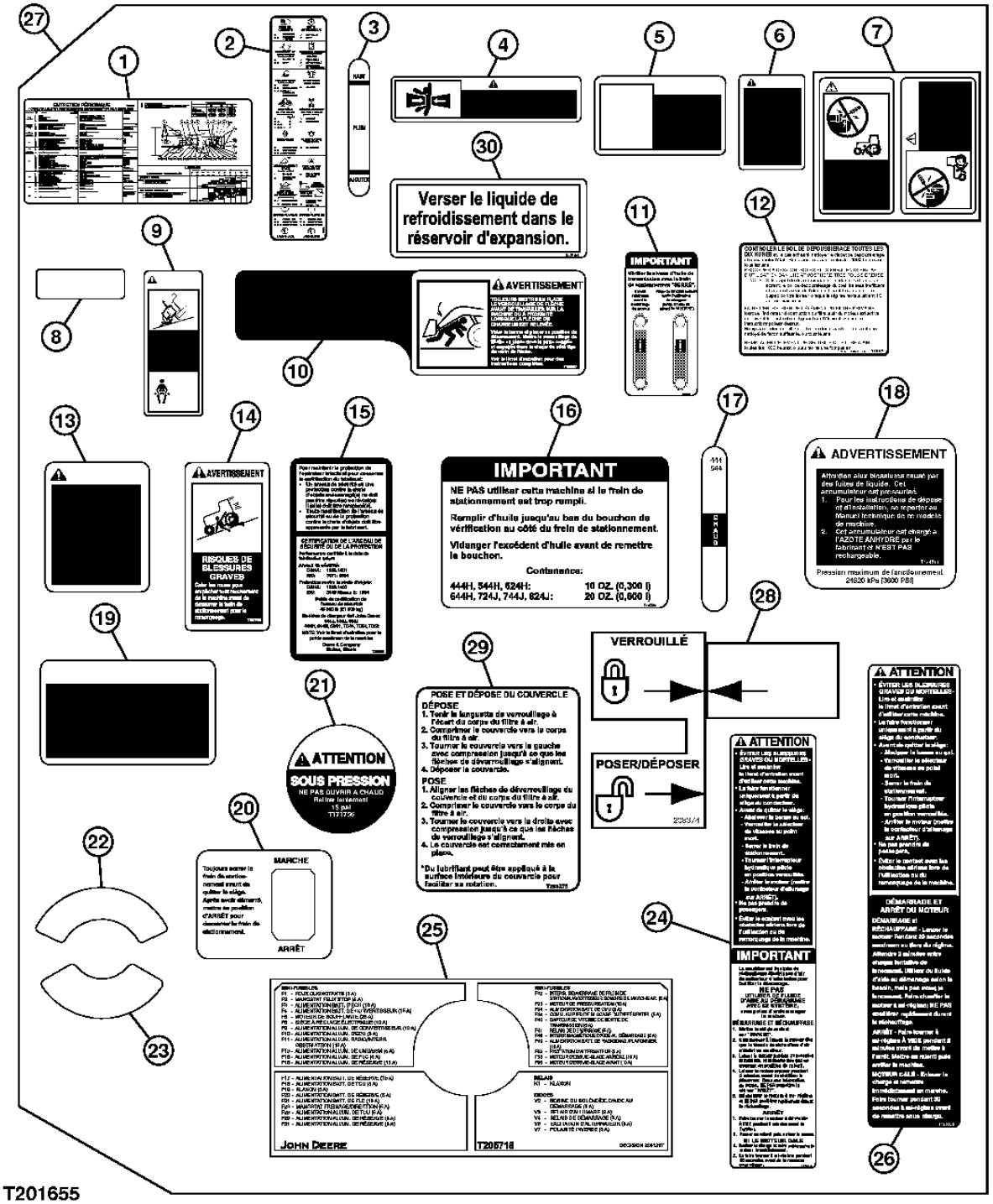

DECALS AND LABELS (FRENCH)
AUTOCOLLANTS (FRANCAIS)
ETIQUETAS Y CALCOMANIAS (FRANCES)

KEY	PART NO.	PART NAME	QTY.	SERIAL NO.	REMARKS
1	T225026	LABEL	1		(SUB FOR T201076) (PERIODIC MAINTENANCE)
2	T200791	LABEL	1		(START/STOP SWITCH PAD)
3	T197323	LABEL	1		(HYDRAULIC RESERVOIR SIGHT GAUGE)
4	T146496	SAFETY SIGN	2		(WARNING)
5	T146178	SAFETY SIGN	1		(DANGER)
6	T146494	SAFETY SIGN	1		(CAUTION - SECONDARY STEERING)
7	T146104	SAFETY SIGN	1		(BYPASS START)
8	T218568	LABEL	1		(SUB FOR T102618) (HYDRAULIC OIL)
9	T146099	SAFETY SIGN	1		(WARNING - SEAT BELT)
10	T195857	LABEL	2		(BOOM LOCK)
11	T200056	LABEL	1		(TRANSMISSION OIL CHECK)
12	T146607	LABEL	1		(AIR CLEANER)
13	T146908	SAFETY SIGN	2		(WARNING - RIDE ACCUMULATOR)
14	T160762	LABEL	1		(WARNING - PARK BRAKE)
15	T200786	LABEL	1		(ROPS)
16	T207750	LABEL	1		(SUB FOR T195759) (PARK BRAKE OVERFILL)
17	T200059	LABEL	1		(TRANSMISSION SIGHT GAUGE)
18	T174300	LABEL	2		(ACCUMULATOR)
19	T146495	SAFETY SIGN	2		(CAUTION)
20	T171750	LABEL	1		(PARK BRAKE SWITCH)
21	T171756	LABEL	1		(RADIATOR CAP)
22	T63224	LABEL	1		(DISCONNECT)
23	CD12569	LABEL	1		(OIL FILTER ELEMENT)
24	T208087	SAFETY SIGN	1		(SUB FOR T196476) (CAUTION - ENGINE AIR HEATER)
25	T205718	LABEL	1		(VEHICLE INFORMATION)
26	T195558	LABEL	1		(ENGINE START/STOP)
27	.....	LABEL KIT	1		(AT301050 NLA) (FRENCH) (MUST ALSO ORDER TRANSLATED OPERATOR'S MANUAL THROUGH YOUR AUTHORIZED DEALER)
28	T208374	LABEL	1		(AIR CLEANER)
29	T208375	LABEL	1		(AIR CLEANER)
30	T208794	LABEL	1		(FILL COOLANT AT SURGE TANK)

DECALS AND LABELS (SPANISH)
AUTOCOLLANTS (ESPAGNOLE)
ETIQUETAS Y CALCOMANIAS (ESPAÑOL)

T201656 -UN-14JUL04

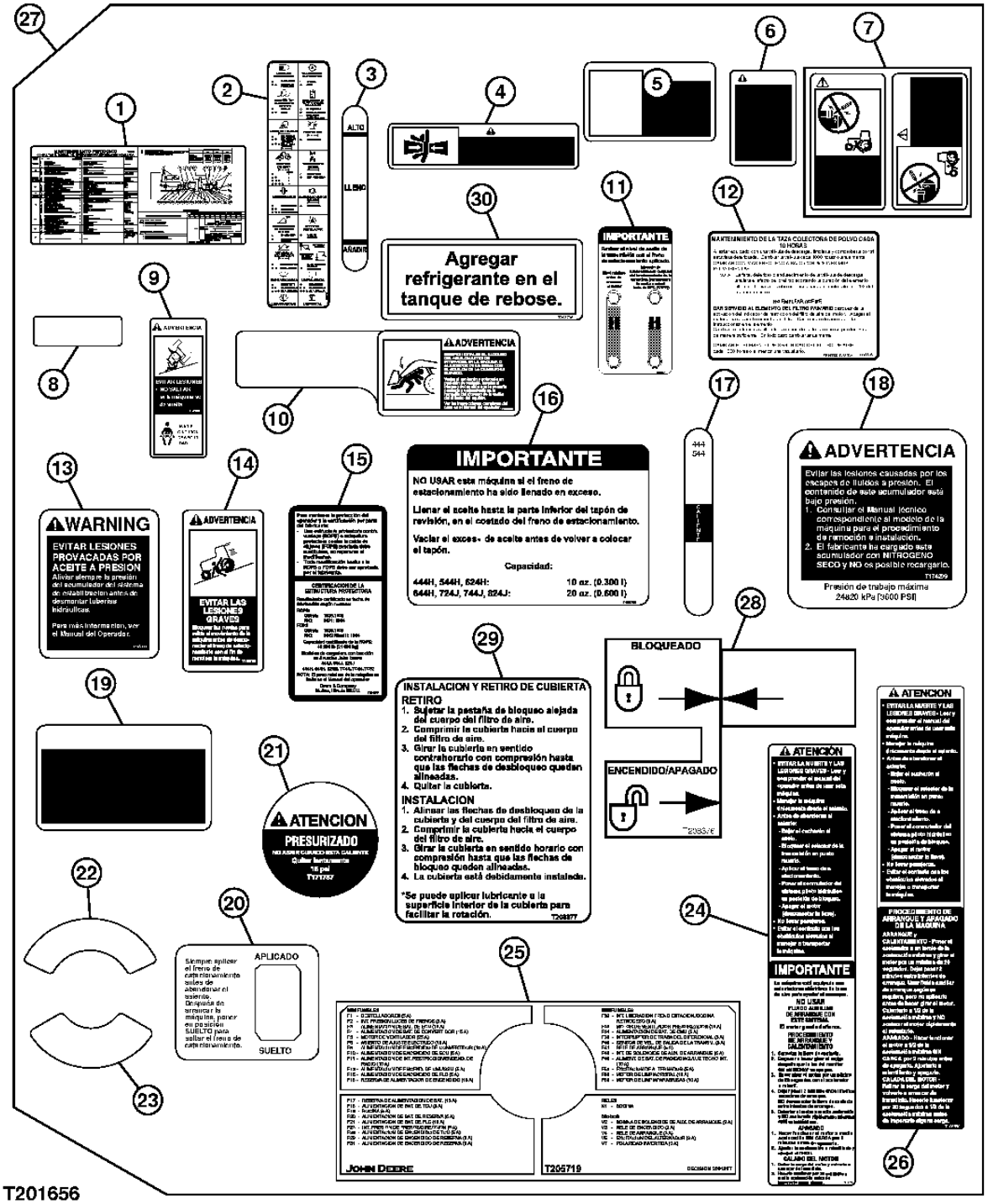

DECALS AND LABELS (SPANISH)
AUTOCOLLANTS (ESPAGNOLE)
ETIQUETAS Y CALCOMANIAS (ESPANOL)

KEY	PART NO.	PART NAME	QTY.	SERIAL NO.	REMARKS
1	T225027	LABEL	1		(SUB FOR T201075) (PERIODIC MAINTENANCE)
2	T200818	LABEL	1		(START/STOP SWITCH PAD)
3	T197324	LABEL	1		(HYDRAULIC RESERVOIR SIGHT GAUGE)
4	T146504	SAFETY SIGN	1		(WARNING - ARTICULATION JOINT)
5	T146180	SAFETY SIGN	1		(DANGER - BOOM)
6	T146502	SAFETY SIGN	1		(CAUTION - SECONDARY STEERING)
7	T146106	SAFETY SIGN	1		(STARTER BYPASS START)
8	T218567	LABEL	1		(SUB FOR T102620) (HYDRAULIC OIL)
9	T146098	SAFETY SIGN	1		(WARNING - SEAT BELT)
10	T195858	LABEL	1		(BOOM LOCK)
11	T200057	LABEL	1		(TRANSMISSION OIL CHECK)
12	T146606	LABEL	1		(AIR CLEANER)
13	T146911	LABEL	1		(WARNING - ACCUMULATOR)
14	T160769	SAFETY SIGN	1		(WARNING - PARK BRAKE)
15	T200814	LABEL	1		(ROPS)
16	T207751	LABEL	1		(SUB FOR T195760) (PARK BRAKE OVERFILL)
17	T200060	LABEL	1		(TRANSMISSION SIGHT GAUGE)
18	T174299	LABEL	1		(BRAKE ACCUMULATOR)
19	T146503	SAFETY SIGN	2		(CAUTION - DUAL BATTERIES)
20	T171751	LABEL	1		(PARK BRAKE SWITCH)
21	T171757	LABEL	1		(RADIATOR CAP)
22	T63225	LABEL	1		(BATTERY DISCONNECT)
23	T64217	LABEL	1		(OIL FILTER ELEMENT)
24	T208086	SAFETY SIGN	1		(SUB FOR T196475) (CAUTION - ENGINE AIR HEATER)
25	T205719	LABEL	1		(VEHICLE)
26	T195559	LABEL	1		(ENGINE START-STOP)
27	.....	LABEL KIT	1		(AT301092 NLA) (SPANISH) (IMPORTANT: MUST ALSO ORDER TRANSLATED OPERATOR'S MANUAL THROUGH YOUR AUTHORIZED DEALER)
28	T208376	LABEL	1		(AIR CLEANER)
29	T208377	LABEL	1		(AIR CLEANER)
30	T208795	LABEL	1		(FILL COOLANT AT SURGE TANK)

CANOPY LABELS AND DECALS
ETIQUETTES ET AUTOCOLLANTS EVENT
ETIQUETAS Y CALCOMANIAS DEL DOSEL

T194879 -UN-15OCT03

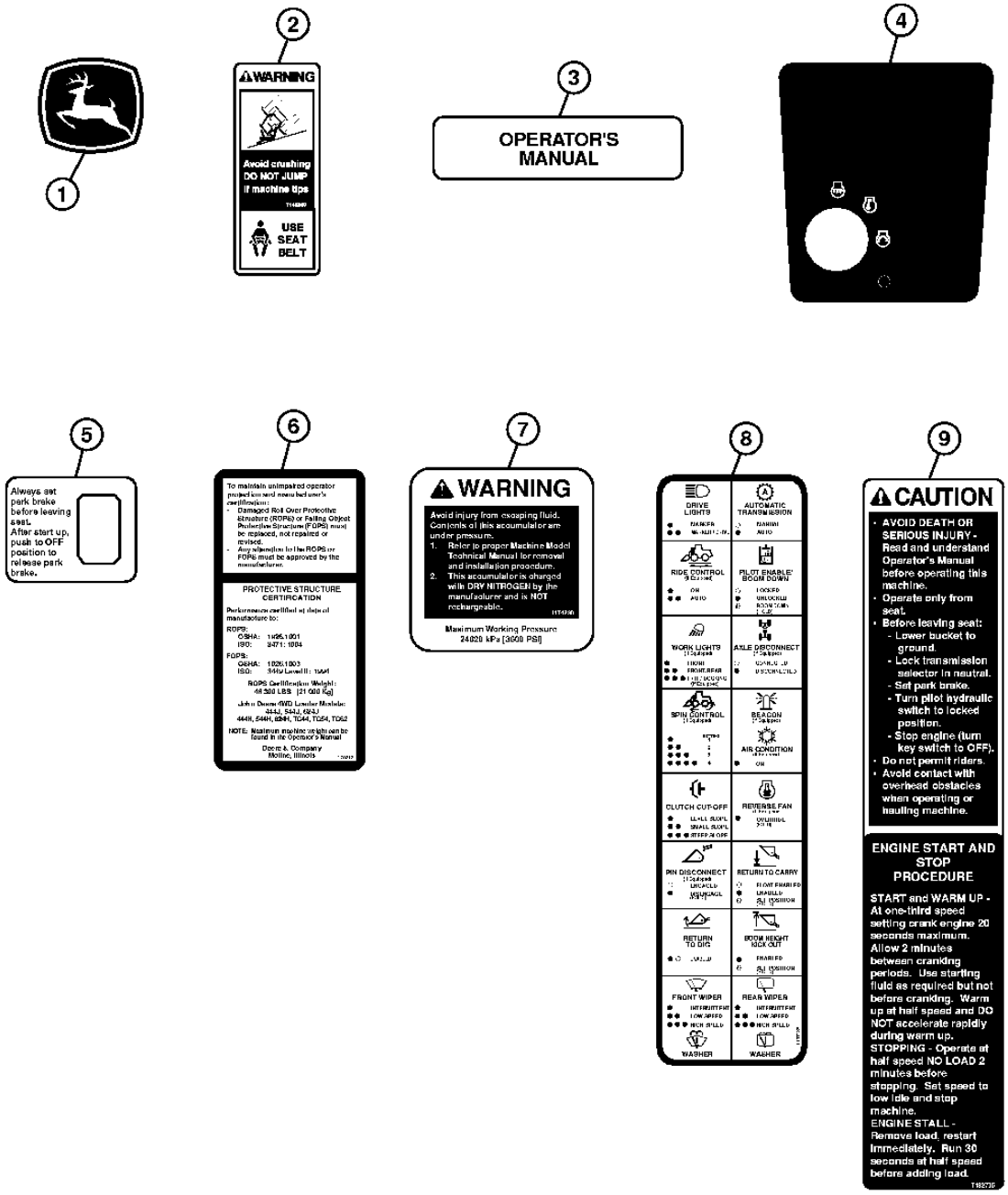

T194879

CANOPY LABELS AND DECALS
ETIQUETTES ET AUTOCOLLANTS EVENT
ETIQUETAS Y CALCOMANIAS DEL DOSEL

KEY	*PART NO.*	*PART NAME*	*QTY.*	*SERIAL NO.*	*REMARKS*
1	JD5822	LABEL	2		(LEAPING DEER)
2	T146097	LABEL	1		(WARNING - SEAT BELT)
3	T148083	LABEL	1		(OPERATOR'S MANUAL)
4	T203671	LABEL	1		(KEY START)
5	T171228	LABEL	1		(PARK BRAKE SWITCH)
6	T200712	LABEL	1		(ROPS)
7	T215155	LABEL	2		(SUB FOR T174298) (WARNING - ACCUMULATOR)
8	T197186	LABEL	1		(START/STOP SWITCH)
9	T182795	SAFETY SIGN	1		(CAUTION - ENGINE START/STOP)

LIFT HOOKS
CROCHETS RELEVAGE
GANCHOS DE LEVANTE

TX1006284 -UN-27APR06

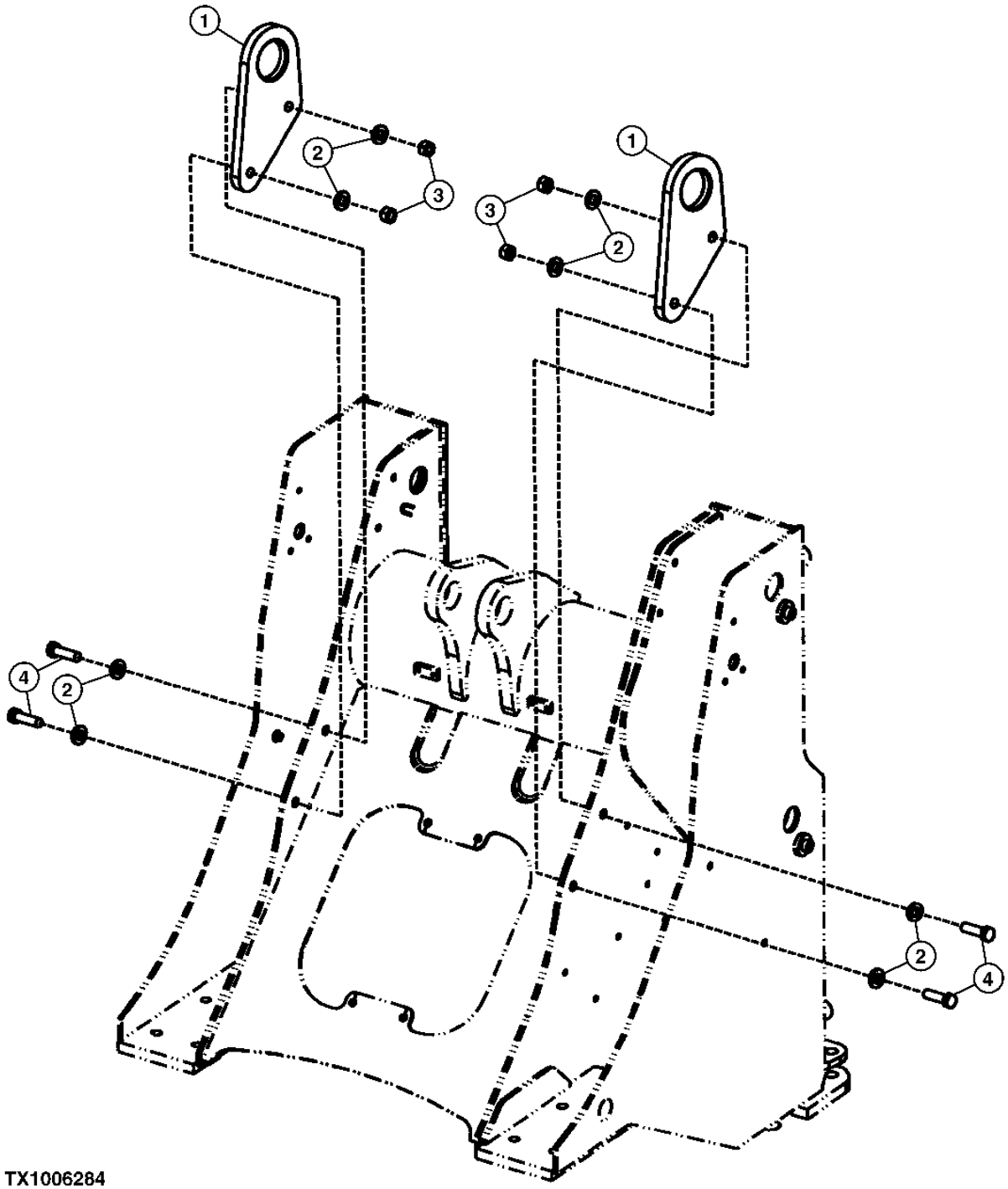

TX1006284

LIFT HOOKS
CROCHETS RELEVAGE
GANCHOS DE LEVANTE

KEY	*PART NO.*	*PART NAME*	*QTY.*	*SERIAL NO.*	*REMARKS*
1	T156995	PLATE	2		
2	24M7242	WASHER	8		21.400 X 42 X 5 MM
3	14M7277	NUT	4		M20
4	19M8639	CAP SCREW	4		M20 X 70

ENVIRONMENTAL DRAIN KIT
ENSEMBLE DE VIDANGE ECOLOGIQUE
CONJUNTO DE VACIADO AMBIENTAL

T202090 -UN-10AUG04

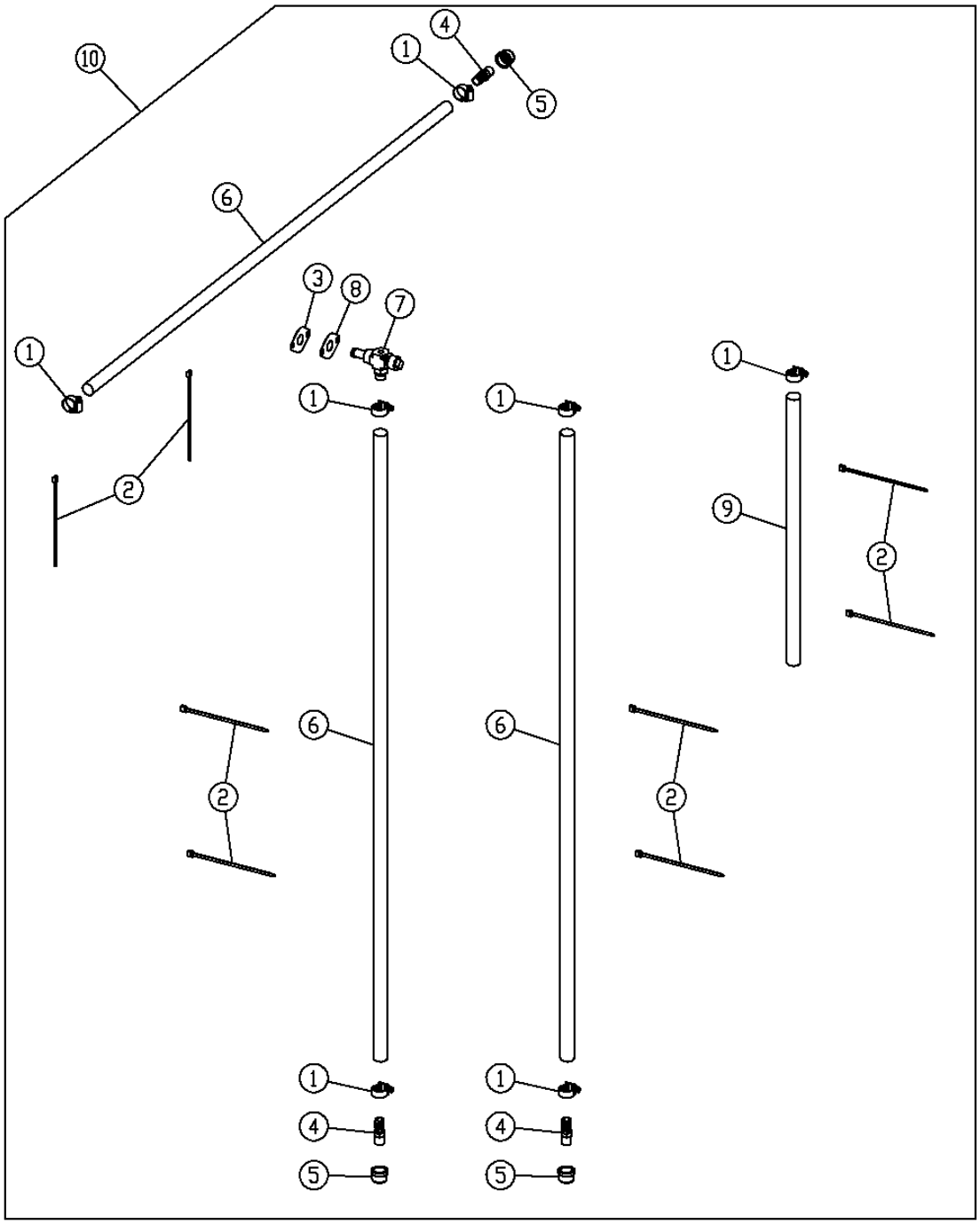

T202090

ENVIRONMENTAL DRAIN KIT
ENSEMBLE DE VIDANGE ECOLOGIQUE
CONJUNTO DE VACIADO AMBIENTAL

KEY	*PART NO.*	*PART NAME*	*QTY.*	*SERIAL NO.*	*REMARKS*
1	AR21837	CLAMP	7		
2	R44302	TIE BAND	8		
3	T116604	GASKET	1		
4	H23196	FITTING	3		
5	15H3	FITTING	3		
6	.....	BULK HOSE	1		(MAKE FROM T60811) (CUT TO LENGTH)
7	RE507950	DRAIN VALVE	1		
8	T216182	ADAPTER FITTING	1		(ALSO ORDER T116604) (SUB FOR T196749)
9	.....	BULK HOSE	1		(MAKE FROM M87571) (CUT TO LENGTH)
10	**AT210490**	**KIT**	**1**		**(WHOLEGOODS)**

ENGINE COOLANT CONDITIONER
CONDITIONNEUR DE LIQUIDE DE REFROIDISSEMENT DU MOTEUR
CONDICIONADOR DEL REFRIGERANTE DEL MOTOR

RGP9624 -UN-26JUN03



KEY	PART NO.	PART NAME	QTY.	ENGINE SERIAL NO.	REMARKS
1	TY16004	ENGINE COOLANT CONDITIONER	1		
2	TY16005	ENGINE COOLANT CONDITIONER	1		

MEMORANDA
MEMORANDA
MEMORANDA

HITCH ASSEMBLY
ATTELAGE
CONJUNTO DE ENGANCHE

T203507 -UN-29SEP04

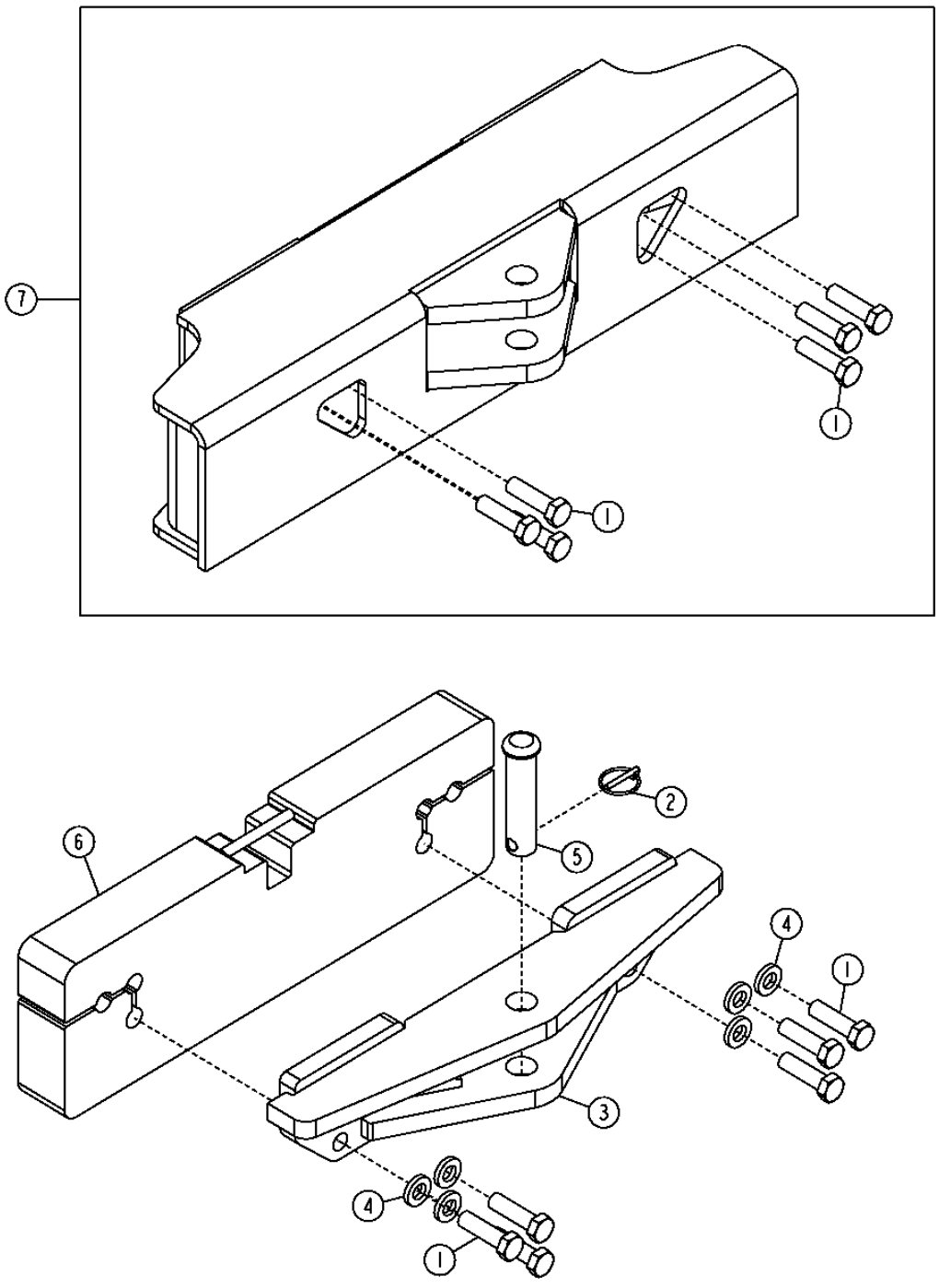

THIS PARTS LISTING IS CONTINUED

HITCH ASSEMBLY
ATTELAGE
CONJUNTO DE ENGANCHE

KEY	*PART NO.*	*PART NAME*	*QTY.*	*SERIAL NO.*	*REMARKS*
1	19M8639	CAP SCREW	6		M20 X 70
	19M7921	CAP SCREW	6		M20 X 150, (USE WITH 3" COUNTERWEIGHT)
2	AA21292	QUICK LOCK PIN	1		
3	AT227738	DRAWBAR	1		
4	24M7242	WASHER	6		21.400 X 42 X 5 MM
5	T23914	PIN	1		
6	AT315002	COUNTERWEIGHT	1		(3")
7	**AT317731**	**DRAWBAR**	**1**		**(WHOLEGOODS) (FOR USE WITH Z-BAR) (HITCH WITH 8" REAR PROTECTION BUMPER)**
	.....	DRAWBAR	1		(NLA) (WHOLEGOODS) (SUB FOR AT317789) (FOR USE WITH POWERLLEL™ LINKAGE) (HITCH WITH 8" REAR PROTECTION BUMPER)

BATTERIES, BATTERY CABLES, AND BATTERY CLAMPS
BATTERIES, FILS DE BATTERIE ET COSSES DE BATTERIE
BATERIAS, CABLES DE LA BATERIA Y ABRAZADERAS DE LA BATERIA

T193752 -UN-31OCT03

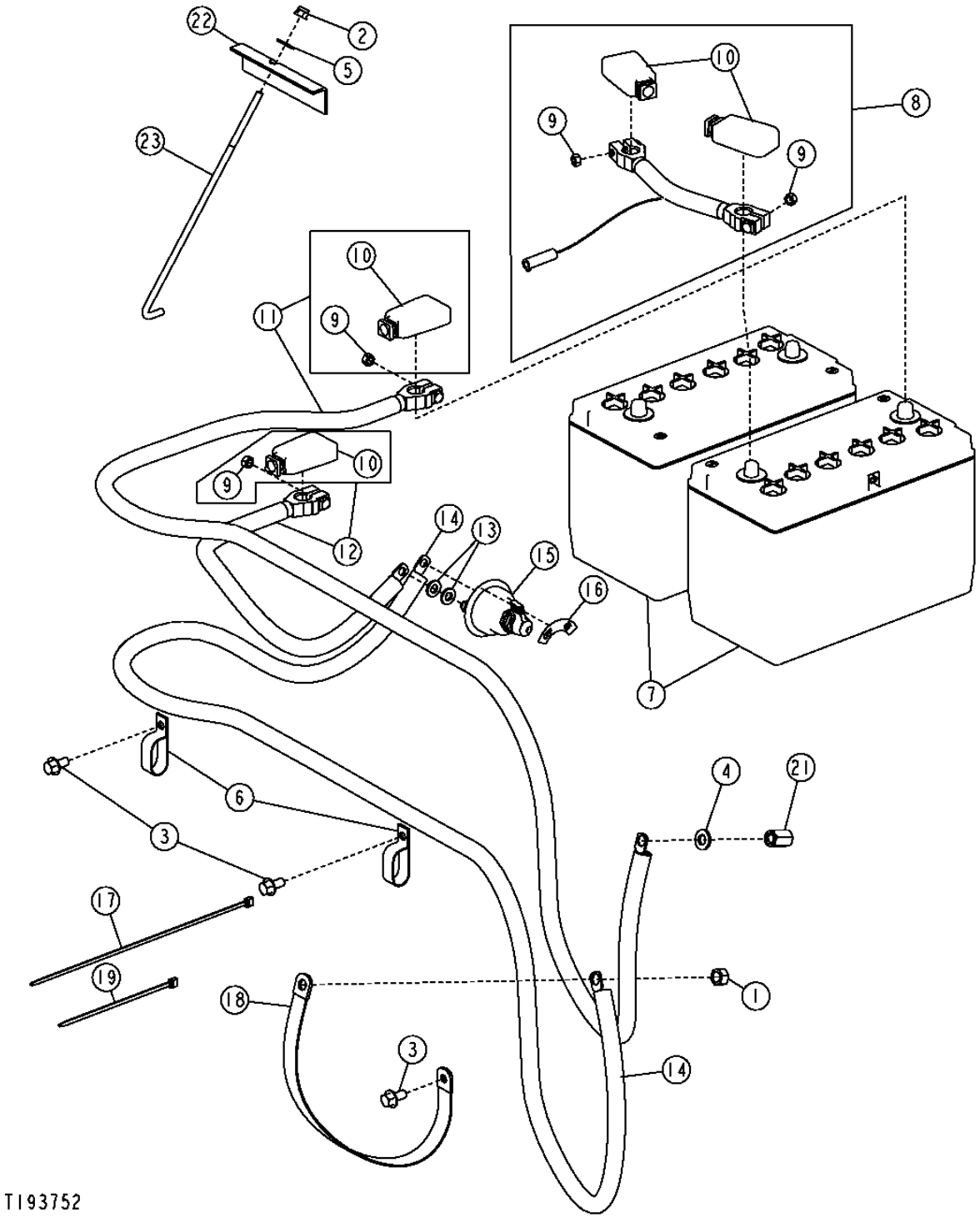

THIS PARTS LISTING IS CONTINUED

BATTERIES, BATTERY CABLES, AND BATTERY CLAMPS
BATTERIES, FILS DE BATTERIE ET COSSES DE BATTERIE
BATERIAS, CABLES DE LA BATERIA Y ABRAZADERAS DE LA BATERIA

KEY	PART NO.	PART NAME	QTY.	SERIAL NO.	REMARKS
1	14H1040	NUT	1		1/2"
2	14M7396	LOCK NUT	1		M8
3	19M7784	SCREW	3		M10 X 20
4	24M7240	WASHER	1		13 X 25 X 3 MM
5	24M7298	WASHER	1		8.400 X 25 X 2 MM
6	AH77869	CLIP	2		
7	TY21741	DRY CHARGED BATTERY	2		(625 CCA)
	TY6128	DRY CHARGED BATTERY	2		(950 CCA)
8	AT228312	BATTERY CABLE	1		
9	14H785	NUT	4		5/16"
10	T107117	COVER	1		
11	AT228313	BATTERY CABLE	1		(BATTERY TO STARTER)
12	AT228407	BATTERY CABLE	1		(BATTERY TO DISCONNECT)
13	24M7239	WASHER	2		10.700 X 21 X 2.500 MM
14	AT228311	BATTERY CABLE	1		(DISCONNECT TO BATTERY)
15	AT41188	SWITCH	1		(BATTERY DISCONNECT)
16	T42199	LABEL	1		(DISCONNECT)
17	H77698	TIE BAND	3		
18	R36545	GROUND CABLE	1		
19	R44302	TIE BAND	1		
20	T134104	COVER	1		
21	T174530	NUT	1		
22	T197467	ANGLE	1		
23	T79471	HOOK BOLT	1		

ALTERNATOR, REGULATOR AND CHARGING SYSTEM WIRING 1672

ALTERNATOR, MOUNTING BRACKETS, BELT AND BELT TENSIONER (55 AMP)
ALTERNATEUR, SUPPORTS MONTAGE, COURROIE ET TENDEUR DE COURROIE (55 AMP)
ALTERNADOR, ESCUADRAS DE MONTAJE, CORREA Y TENSOR DE CORREA (55 AMP)

T193929 -UN-04SEP03

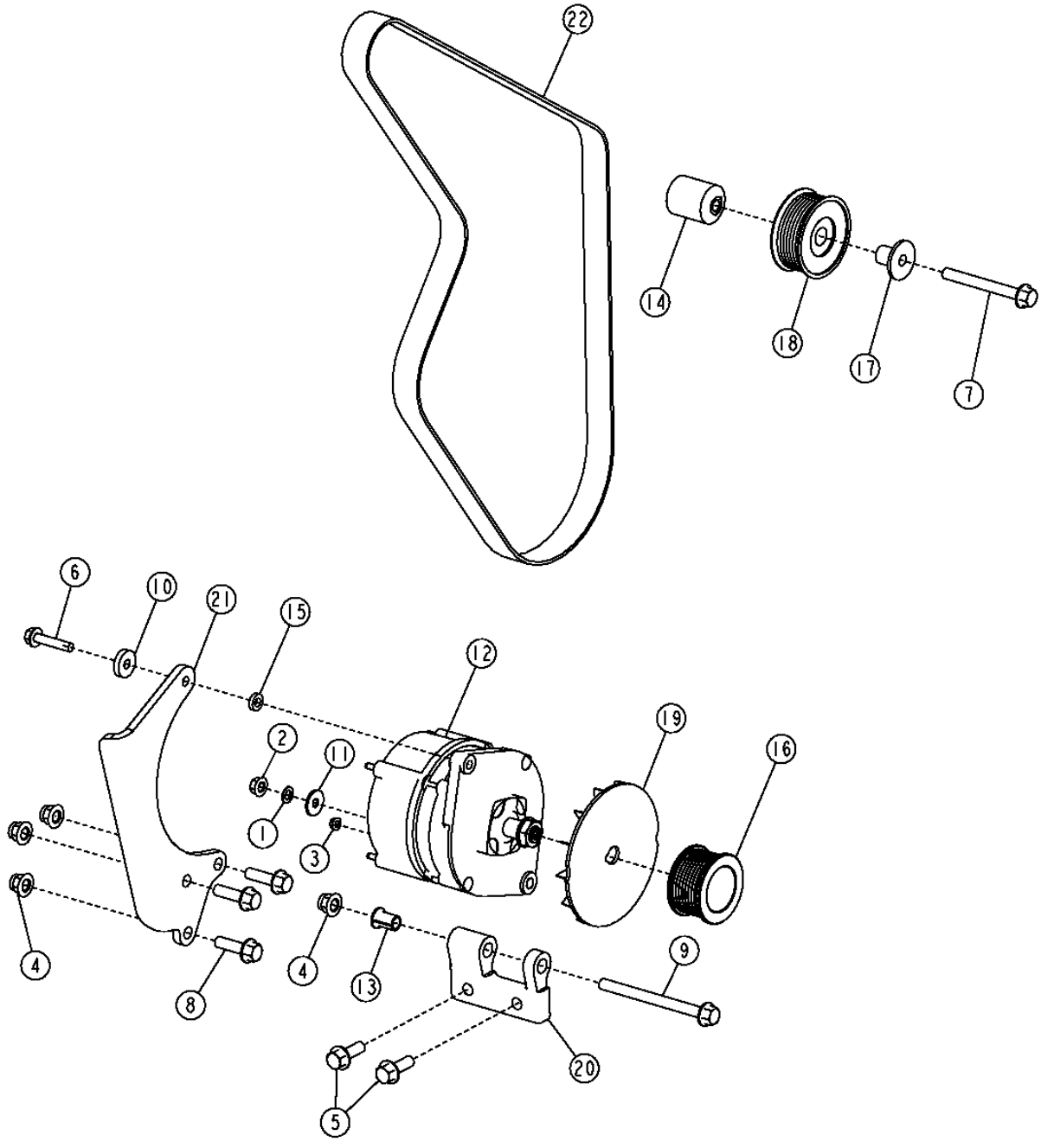

ALTERNATOR, REGULATOR AND CHARGING SYSTEM WIRING 1672

ALTERNATOR, MOUNTING BRACKETS, BELT AND BELT TENSIONER (55 AMP)
ALTERNATEUR, SUPPORTS MONTAGE, COURROIE ET TENDEUR DE COURROIE (55 AMP)
ALTERNADOR, ESCUADRAS DE MONTAJE, CORREA Y TENSOR DE CORREA (55 AMP)

KEY	PART NO.	PART NAME	QTY.	SERIAL NO.	REMARKS
1	12M7032	LOCK WASHER	1		8.400 MM
2	14M7298	FLANGE NUT	1		M8
3	14M7375	FLANGE NUT	1		M5
4	14M7400	LOCK NUT	4		M10
5	19M7786	SCREW	2		M10 X 30
6	19M7798	SCREW	1		M8 X 40
7	19M7811	SCREW	1		M10 X 90
8	19M7835	SCREW	3		M10 X 35
9	19M7944	SCREW	1		M10 X 120
10	24H1621	WASHER	1		11/32" X 1" X 0.220"
11	24M7207	WASHER	1		8.400 X 24 X 2 MM
12	TY26045	ALTERNATOR	1		(REMAN) (INCLUDES AT163156 AND H144095) (SUB FOR AT228217 AND TY6798)
	AT163156	REGULATOR	1		
	H144095	CAPACITOR	1		
	SE501362	ALTERNATOR	1		(REMANUFACTURED FOR TY26045)
13	R100377	BUSHING	1		
14	R133643	SPACER	1		
15	R48808	WASHER	1		
16	R501486	PULLEY	1		
17	R502079	SLEEVE	1		
18	AT211041	IDLER	1		(W/O AC)
	RE505264	PULLEY	1		(WITH AC)
19	T158584	FAN	1		
20	T179468	BRACKET	1		
21	T195239	STRAP	1		
22	T197521	V-BELT	1		(W/O AC)
	T197520	V-BELT	1		(WITH AC)

ALTERNATOR REAR COVER (55 AMP)
COUVERCLE ARRIERE ALTERNATEUR (55 AMP)
CUBIERTA TRASERA DEL ALTERNADOR (55 AMP)

TX1006285 -UN-27APR06

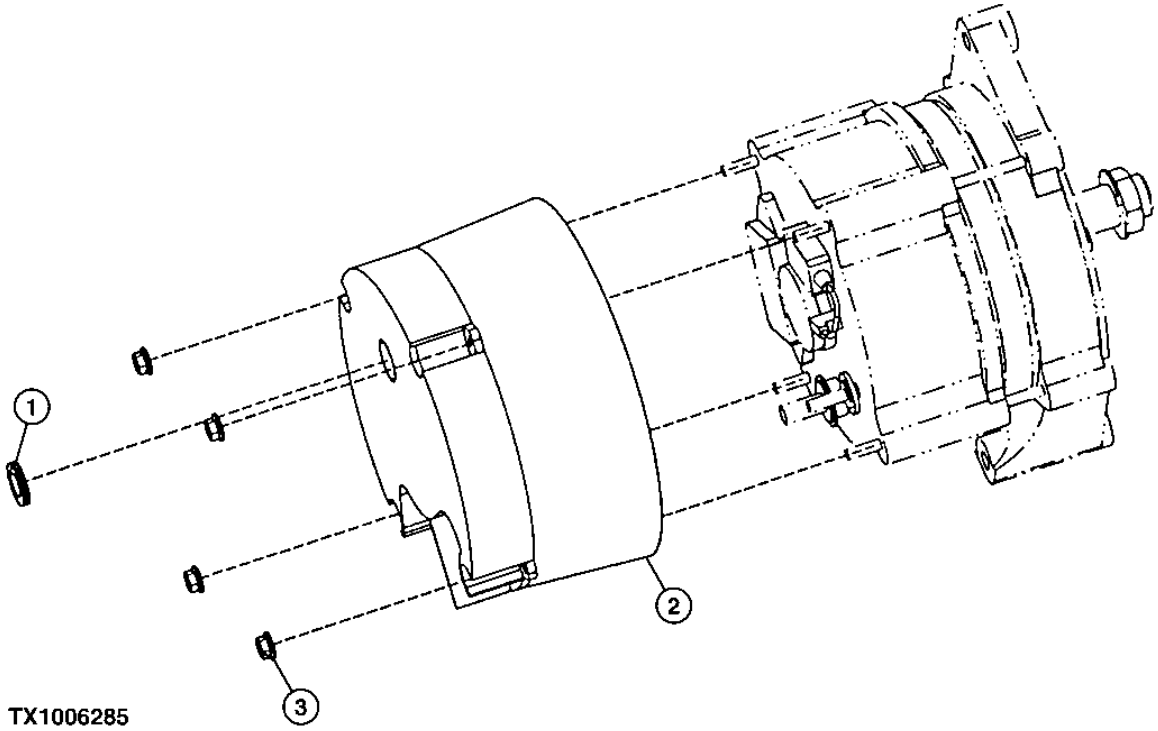

ALTERNATOR REAR COVER (55 AMP)
COUVERCLE ARRIERE ALTERNATEUR (55 AMP)
CUBIERTA TRASERA DEL ALTERNADOR (55 AMP)

KEY	*PART NO.*	*PART NAME*	*QTY.*	*SERIAL NO.*	*REMARKS*
1	R27180	GROMMET	1		
2	AH138291	SCREEN	1		(SUB FOR AT207952)
3	14M7375	FLANGE NUT	4		M5

ALTERNATOR, REGULATOR AND CHARGING SYSTEM WIRING 1672

ALTERNATOR, MOUNTING BRACKETS, BELT AND BELT TENSIONER (80 AMP)
ALTERNATEUR, SUPPORTS MONTAGE, COURROIE ET TENDEUR DE COURROIE (80 AMP)
ALTERNADOR, ESCUADRAS DE MONTAJE, CORREA Y TENSOR DE CORREA (80 AMP)

TX1004660 -UN-14MAR06

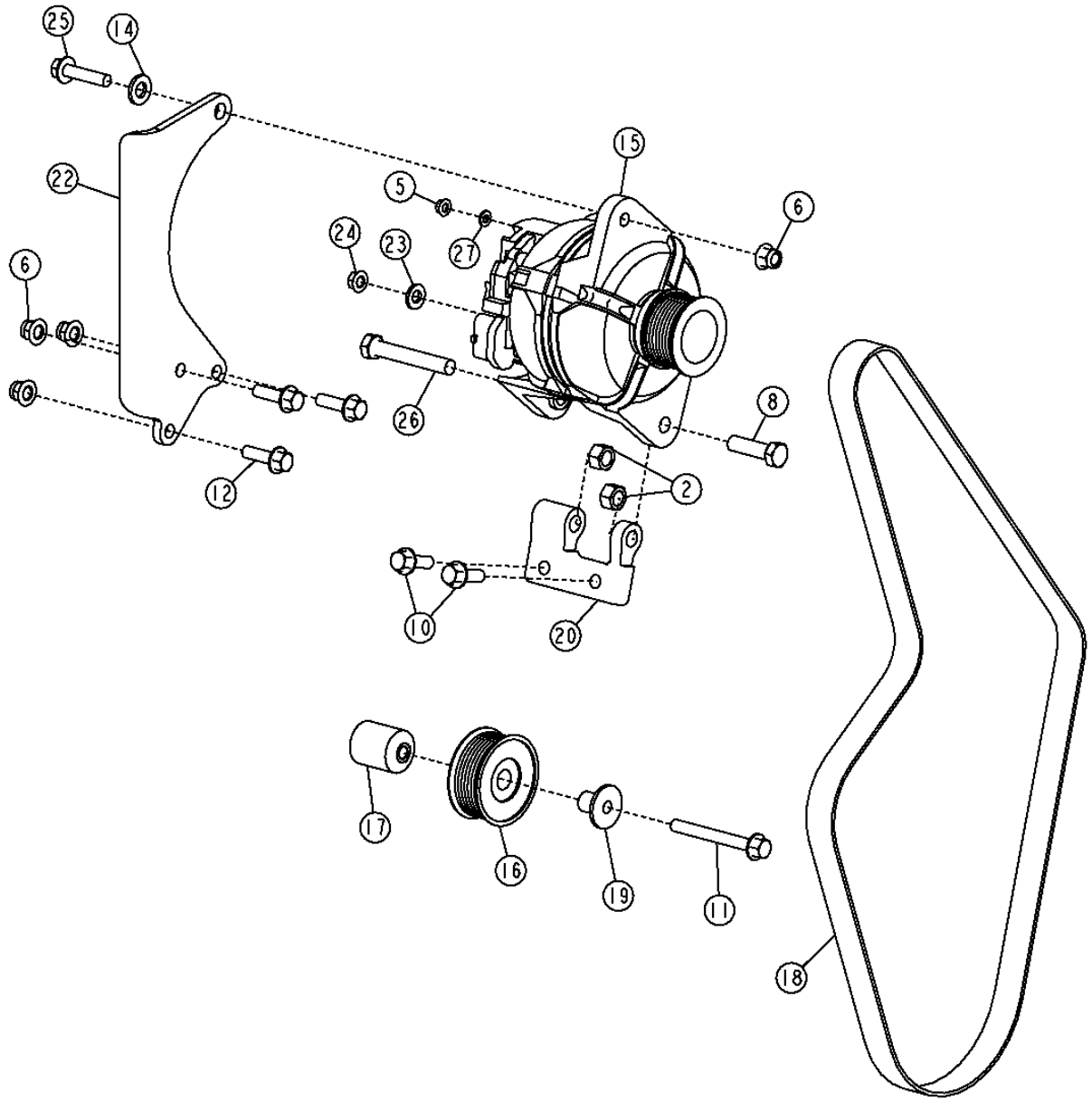

TX1004660

ALTERNATOR, REGULATOR AND CHARGING SYSTEM WIRING 1672

ALTERNATOR, MOUNTING BRACKETS, BELT AND BELT TENSIONER (80 AMP)
ALTERNATEUR, SUPPORTS MONTAGE, COURROIE ET TENDEUR DE COURROIE (80 AMP)
ALTERNADOR, ESCUADRAS DE MONTAJE, CORREA Y TENSOR DE CORREA (80 AMP)

KEY	PART NO.	PART NAME	QTY.	SERIAL NO.	REMARKS
1	12H325	LOCK WASHER	1		7/16"
2	14H1040	NUT	2	-XXXXXX	1/2"
	14H1040	NUT	1	XXXXXX-	1/2"
	14M7401	LOCK NUT	1	XXXXXX-	M12
3	14H849	NUT	1		7/16"
4	14M7100	NUT	1		M4
5	14M7303	FLANGE NUT	1		M6
6	14M7400	LOCK NUT	3		M10
7	19H1820	CAP SCREW	1		1/2" X 3"
8	19H2473	CAP SCREW	1		1/2" X 1-3/4"
9	19H3385	CAP SCREW	1		1/2" X 1-1/8"
10	19M7786	SCREW	2		M10 X 30
11	19M7811	SCREW	1		M10 X 90
12	19M7835	SCREW	3		M10 X 35
13	24M7146	WASHER	2		4.300 X 12 X 1 MM
14	24M7240	WASHER	1		13 X 25 X 3 MM
15	TY25955	ALTERNATOR	1	-600128	(REMAN) (SUB FOR AT208541 OR TY6794)
	AT303320	ALTERNATOR	1	600129-	
	SE501346	ALTERNATOR	1		(REMANUFACTURED FOR TY25953)
	SE501348	ALTERNATOR	1		(REMANUFACTURED FOR TY25955)
16	AT211041	IDLER	1		(W/O AC)
	RE505264	PULLEY	1		(WITH AC)
17	R133643	SPACER	1		
18	R500384	V-BELT	1		(W/O AC)
	T195188	V-BELT	1		(WITH AC)
19	R502079	SLEEVE	1		
20	T179468	BRACKET	1		
21	T181325	PULLEY	1		
22	T195244	STRAP	1		
23	24M7239	WASHER	1	600129-	
24	14M7298	FLANGE NUT	3	600129-	
25	19M7805	SCREW	9	600129-	
26	19H3520	CAP SCREW	1	600155-XXXXXX	
	19M8122	CAP SCREW	1	XXXXXX-	M12 X 85
27	24M7239	WASHER	1		

ALTERNATOR REAR COVER (80 AMP)
COUVERCLE ARRIERE ALTERNATEUR (80 AMP)
CUBIERTA TRASERA DEL ALTERNADOR (80 AMP)

TP60231 -UN-11MAR98

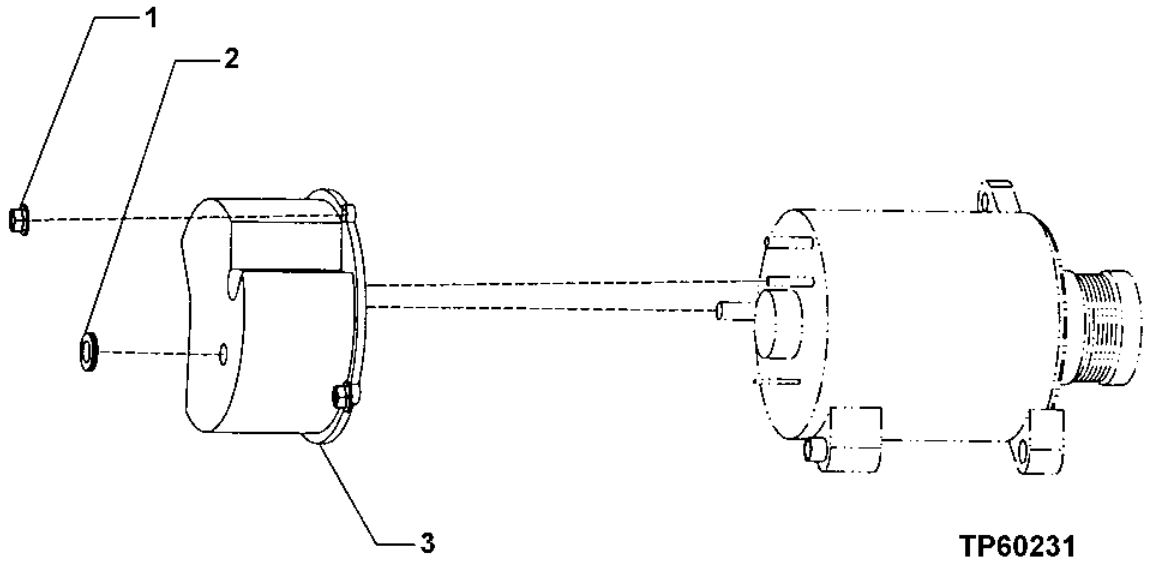

TP60231

ALTERNATOR REAR COVER (80 AMP)
COUVERCLE ARRIERE ALTERNATEUR (80 AMP)
CUBIERTA TRASERA DEL ALTERNADOR (80 AMP)

KEY	*PART NO.*	*PART NAME*	*QTY.*	*SERIAL NO.*	*REMARKS*
1	14M7375	FLANGE NUT	4		M5
2	R27180	GROMMET	1		
3	AT160704	SCREEN	1		

HARSH ENVIRONMENT ALTERNATOR MOUNTING BRACKETS AND BELT (100 AMP)
SUPPORTS ET COURROIE MONTAGE ALTERNATEUR ENVIRONNEMENT DIFFICILE (100 AMP)
ESCUADRAS DE MONTAJE DEL ALTERNADOR PARA AMBIENTE CORROSIVO Y CORREA (100 AMP)

T194443 -UN-02SEP03

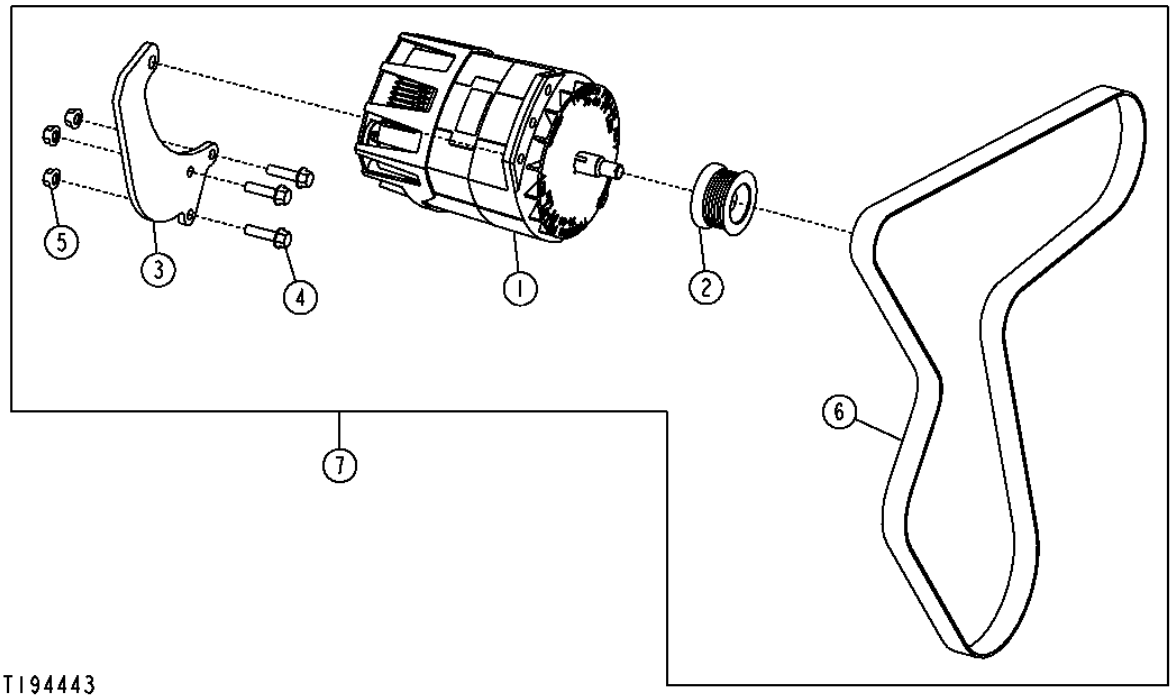

HARSH ENVIRONMENT ALTERNATOR MOUNTING BRACKETS AND BELT (100 AMP)
SUPPORTS ET COURROIE MONTAGE ALTERNATEUR ENVIRONNEMENT DIFFICILE (100 AMP)
ESCUADRAS DE MONTAJE DEL ALTERNADOR PARA AMBIENTE CORROSIVO Y CORREA (100 AMP)

KEY	*PART NO.*	*PART NAME*	*QTY.*	*SERIAL NO.*	*REMARKS*
1	AT226924	ALTERNATOR	1		
2	R128859	PULLEY	1		
3	T205944	STRAP	1		
4	19M8162	SCREW	3		M10 X 40
5	14M7296	FLANGE NUT	3		M10
6	T186776	V-BELT	1		(W/O A/C)
	T208891	V-BELT	1		(W/ A/C)
7	AT307481	ALTERNATOR	1		(HARSH ENVIRONMENT) (W/O A/C)
	AT307482	ALTERNATOR	1		(HARSH ENVIRONMENT) (W/ A/C)

FRONT LIGHTS AND BRACKETS (SN -603805)
FEUX ET SUPPORTS AVANT (SN -603805)
ESCUADRAS Y LUCES DELANTERAS (SN -603805)

T217156 -UN-25JAN06

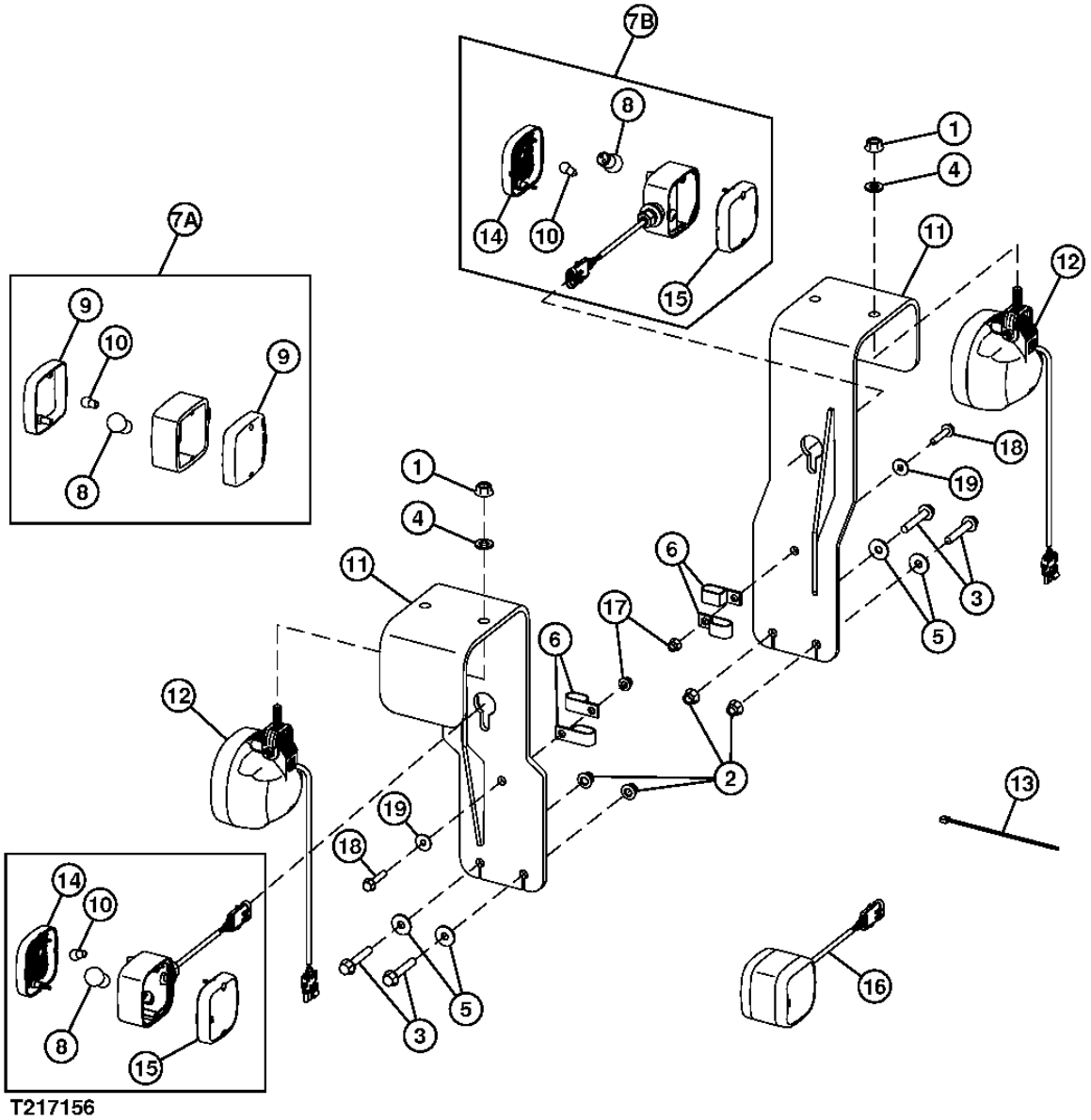

T217156

FRONT LIGHTS AND BRACKETS (SN -603805)
FEUX ET SUPPORTS AVANT (SN -603805)
ESCUADRAS Y LUCES DELANTERAS (SN -603805)

KEY	PART NO.	PART NAME	QTY.	SERIAL NO.	REMARKS
1	14M7299	FLANGE NUT	2		M12
2	14M7400	LOCK NUT	6	-XXXXXX	M10
	14M7400	LOCK NUT	4	XXXXXX-	M10
3	19M7806	SCREW	6	-XXXXXX	M10 X 50
	19M7804	SCREW	4	XXXXXX-	M10 X 40
4	24M7240	WASHER	2		13 X 25 X 3 MM
5	24M7296	WASHER	6	-XXXXXX	10.500 X 30 X 2.500 MM
	24M7296	WASHER	4	XXXXXX-	10.500 X 30 X 2.500 MM
6	AH97280	CLIP	4		
7A	.....	LAMP	2	-597322	(SUB AT309550) (AT206878 NLA) (INCANDESCENT)
	AT222365	TURN SIGNAL LAMP	2		(HARSH ENVIRONMENT)
7B	AT309550	LAMP	2	597323-	(INCANDESCENT)
8	AT210333	BULB	1		
9	.....	LENS	2	-597322	(SUB AT309550) (T176372 NLA)
10	U44537	BULB	1		
11	AT210246	SUPPORT	2		
12	AT324484	SIDE LIGHT	2		(STANDARD) (AT227260 NLA)
	AT135758	BULB	2		
	AT225086	LAMP	2		(HARSH ENVIRONMENT)
13	R44302	TIE BAND	5		
14	T208364	LENS	1	597323-	
15	T208365	LENS	1	597323-	
16	AT307090	LAMP	1		(LED)
17	14M7396	LOCK NUT	2	XXXXXX-	M8
18	19M7798	SCREW	2	XXXXXX-	M8 X 40
19	24M7298	WASHER	2	XXXXXX-	8.400 X 25 X 2 MM

FRONT LIGHTS AND BRACKETS (SN 603806-)
FEUX ET SUPPORTS AVANT (SN 603806-)
ESCUADRAS Y LUCES DELANTERAS (SN 603806-)

TX1007141 -UN-03MAY06

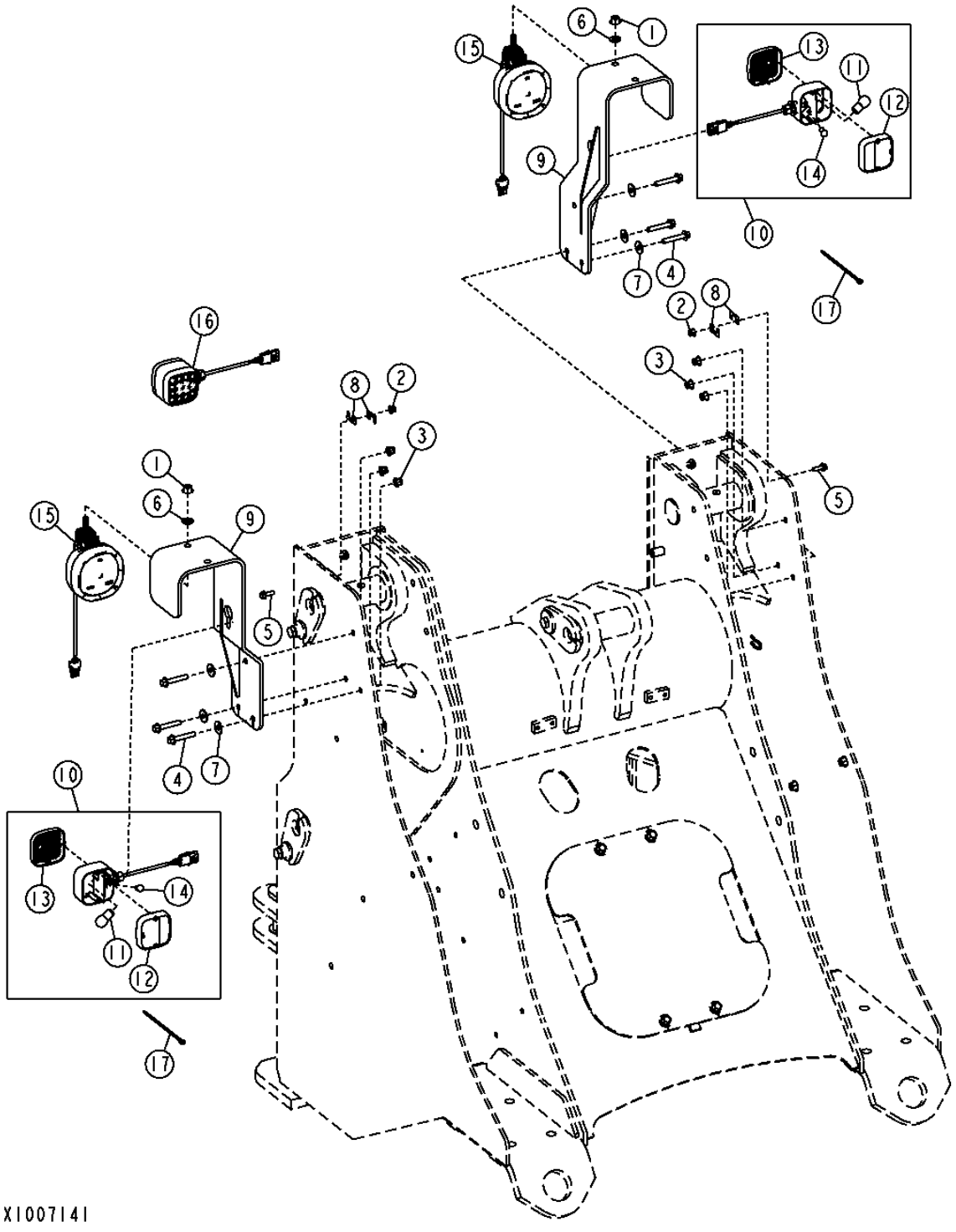

THIS PARTS LISTING IS CONTINUED

FRONT LIGHTS AND BRACKETS (SN 603806-)
FEUX ET SUPPORTS AVANT (SN 603806-)
ESCUADRAS Y LUCES DELANTERAS (SN 603806-)

KEY	*PART NO.*	*PART NAME*	*QTY.*	*SERIAL NO.*	*REMARKS*
1	14M7299	FLANGE NUT	2		M12
2	14M7396	LOCK NUT	2		M8
3	14M7400	LOCK NUT	6		M10
4	19M7806	SCREW	6		M10 X 50
5	19M7867	SCREW	2		M8 X 25
6	24M7240	WASHER	2		13 X 25 X 3 MM
7	24M7296	WASHER	6		10.500 X 30 X 2.500 MM
8	57M8736	ELEC. CONNECTOR ACCESSORY	4		(57M8998 NLA)
9	AT210246	SUPPORT	2		
10	AT309550	LAMP	2		(TURN SIGNAL)
11	AT210333	BULB	1		
12	T208364	LENS	1		
13	T208365	LENS	1		
14	U44537	BULB	1		
15	AT324484	SIDE LIGHT	2		
	AT135758	BULB	1		
16	AT307090	LAMP	1		(LED TURN SIGNAL)
17	R44302	TIE BAND	2		

FRONT AND REAR WORK LAMP
PROJECTEUR TRAVAIL AVANT ET ARRIERE
LUZ DE TRABAJO TRASERA Y DELANTERA

TP62820 -UN-08JUN00

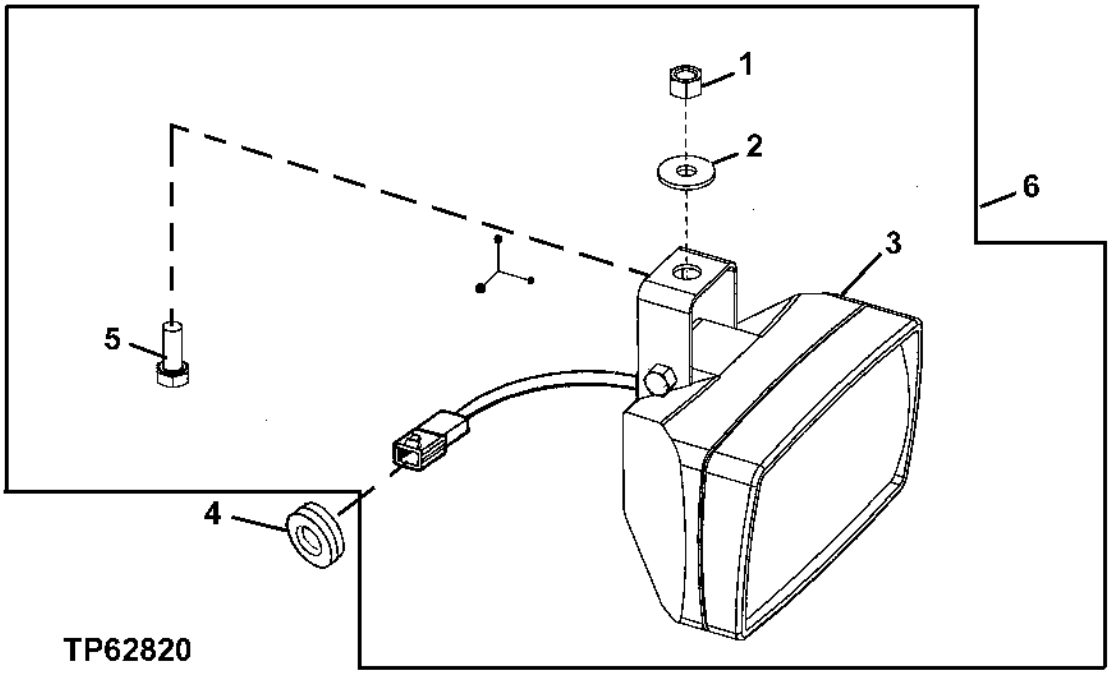

KEY	PART NO.	PART NAME	QTY.	SERIAL NO.	REMARKS
1	14M7166	LOCK NUT	1		M8
2	24M7207	WASHER	1		8.400 X 24 X 2 MM
3	.....	LAMP	1		(SUB AT208435)
	AT135758	BULB	1		(NOT ILLUSTRATED)
4	H81678	GROMMET	1		
5	19M7139	CAP SCREW	1		M8 X 20
6	AT208435	LAMP	1	-600971	(STANDARD)
	AT305931	FLOODLAMP	1	600972-	(STANDARD)
	AT226338	FLOODLAMP	1		(HARSH ENVIRONMENT)

DOOR-ACTIVATED DOMELIGHT SWITCH
NTERRUPTEUR PLAFONNIER ACTIVE PAR OUVERTURE PORTE
INTERRUPTOR DE LA LUZ DE TECHO ACTIVADO CON LA PUERTA

T192974 -UN-13AUG03

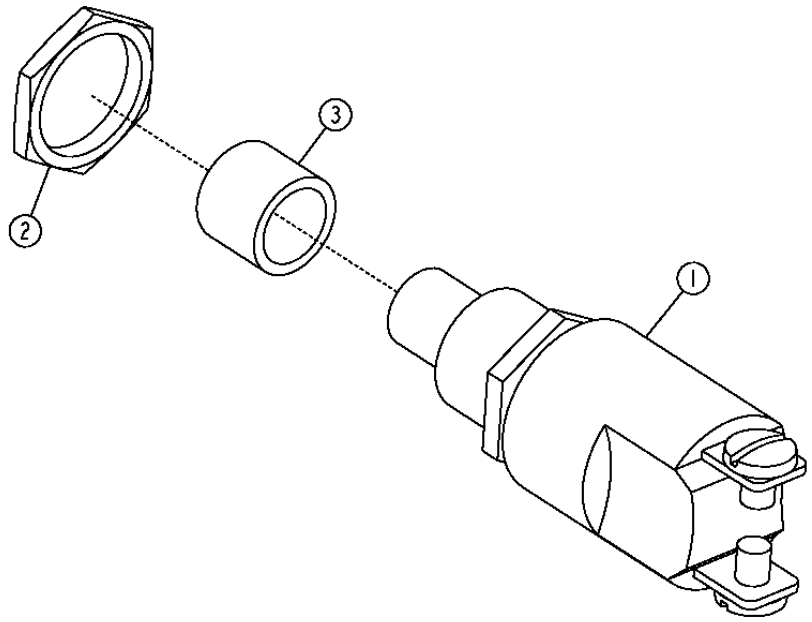

T192974

KEY	PART NO.	PART NAME	QTY.	SERIAL NO.	REMARKS
1	RE51234	PUSH SWITCH	1		(CAB ONLY)
2	R44097	NUT	1		
3	T182914	CAP	1		(DOME SWITCH)

STOP, TURN, AND TAIL LIGHT
FEUX DE STOP, CLIGNOTANTS ET FEUX ARRIERE
LUZ DE PARE, VIRAJE Y COLA

TX1006286 -UN-27APR06

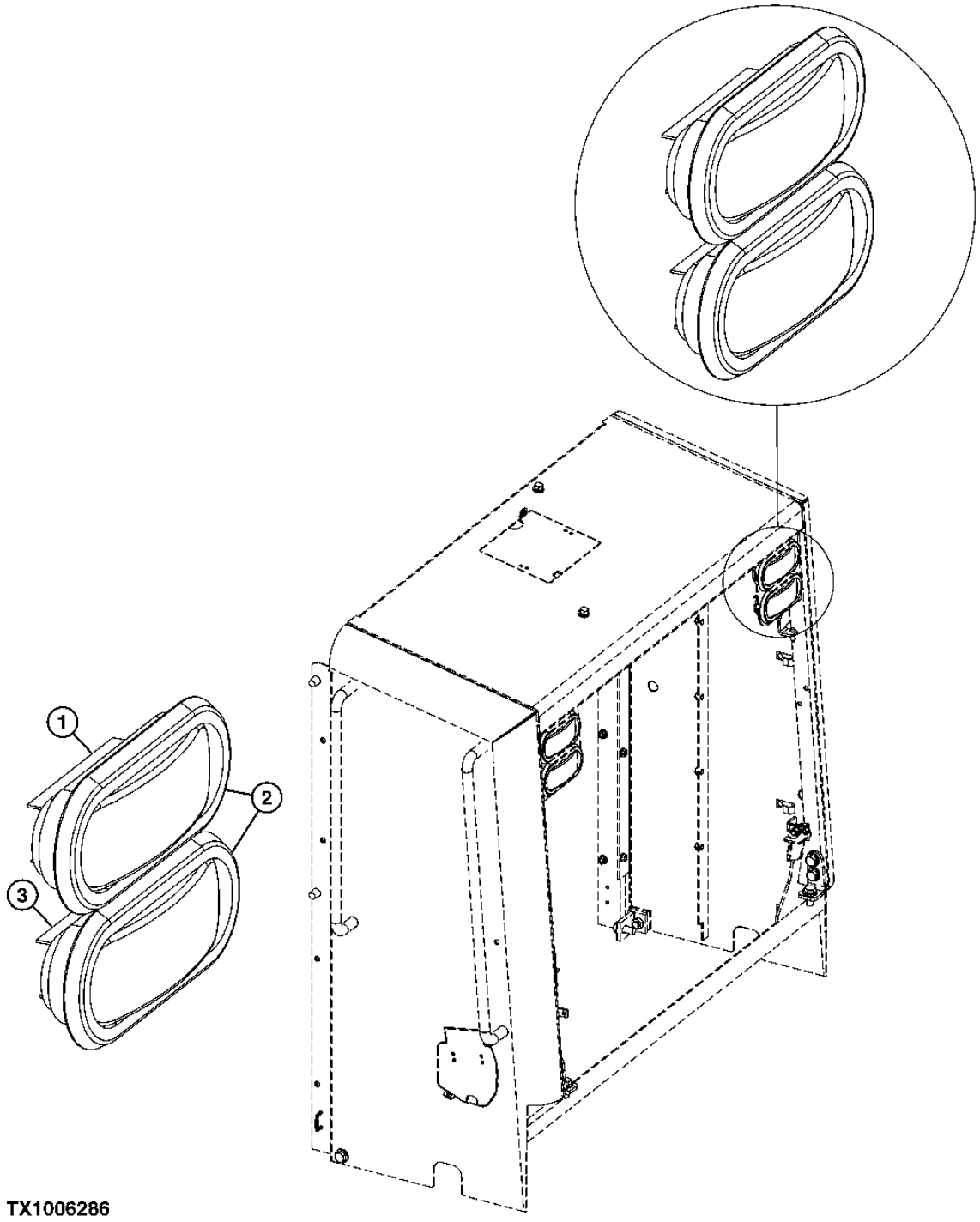

TX1006286

STOP, TURN, AND TAIL LIGHT
FEUX DE STOP, CLIGNOTANTS ET FEUX ARRIERE
LUZ DE PARE, VIRAJE Y COLA

KEY	*PART NO.*	*PART NAME*	*QTY.*	*SERIAL NO.*	*REMARKS*
1	T178947	TURN SIGNAL LAMP	2		STANDARD (AMBER)
	T180074	TURN SIGNAL LAMP	2		HEAVY-DUTY (AMBER)
2	T178948	RETAINER	4		
3	T178946	TAIL LAMP	2		STANDARD (RED)
	T180075	TAIL LAMP	2		HEAVY-DUTY (RED)
4	AT223807	WIRING HARNESS	2		LED JUMPER (USE WITH HEAVY DUTY) (NOT ILLUSTRATED)

LICENSE PLATE BRACKET AND LIGHT
SUPPORT ET ECLAIRAGE PLAQUE MINERALOGIQUE
ESCUADRA Y LUZ DE MATRICULA

T193972 -UN-13NOV03

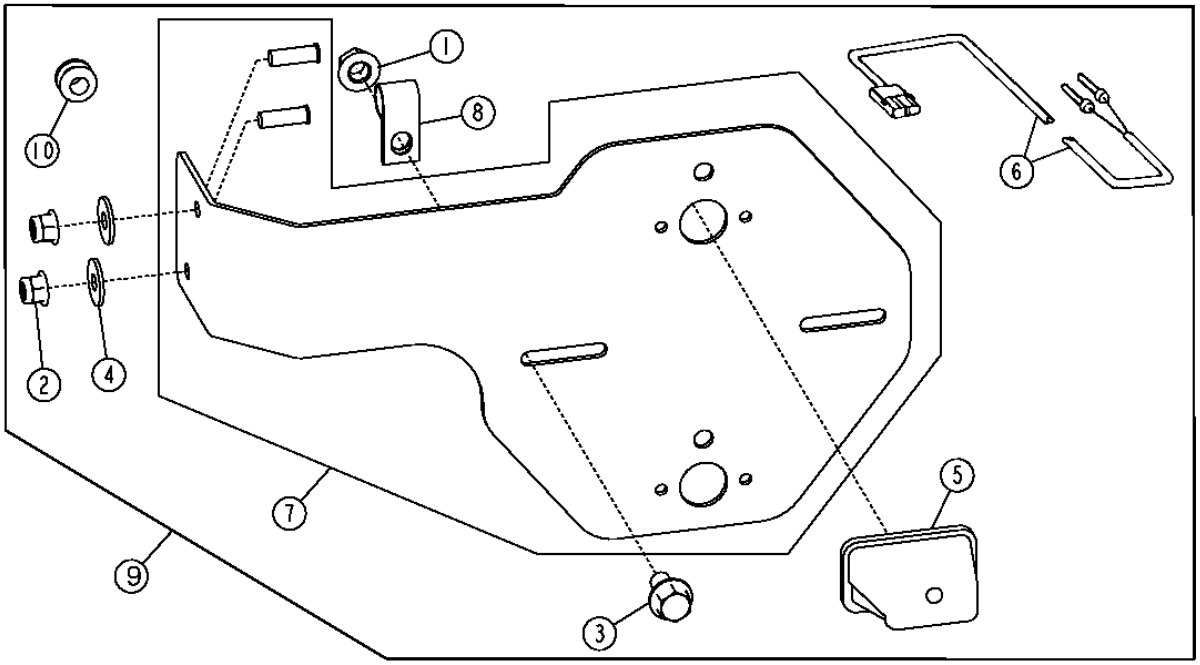

T193972

LICENSE PLATE BRACKET AND LIGHT
SUPPORT ET ECLAIRAGE PLAQUE MINERALOGIQUE
ESCUADRA Y LUZ DE MATRICULA

KEY	*PART NO.*	*PART NAME*	*QTY.*	*SERIAL NO.*	*REMARKS*
1	14M7296	FLANGE NUT	1		M10
2	14M7396	LOCK NUT	2		M8
3	19M7784	SCREW	1		M10 X 20
4	24M7298	WASHER	2		8.400 X 25 X 2 MM
5	AT202789	LAMP	1		(INCLUDES BULB, AT173354)
	AT173354	BULB	1		
6	AT203137	WIRING HARNESS	1		
7	AT301914	BRACKET	1		
8	T75197	CLAMP	1		
9	AT228289	KIT	1		(LICENSE PLATE WITH LIGHT)
10	T70154	GROMMET	1		

MAIN WIRING HARNESS
FAISCEAU CABLAGE PRINCIPAL
ARNES DE ALAMBRADO PRINCIPAL

TX1007117 -UN-03MAY06

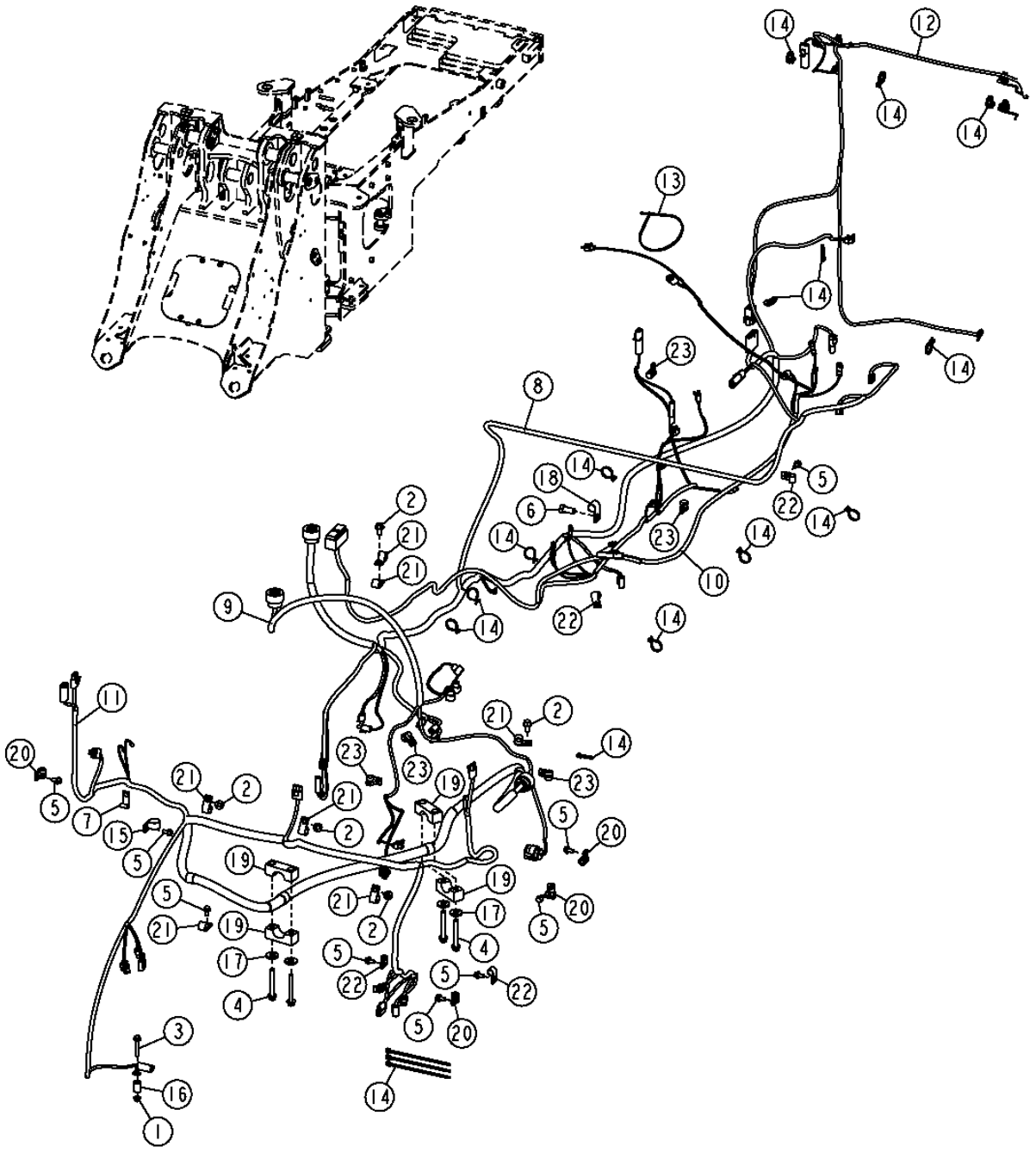

MAIN WIRING HARNESS
FAISCEAU CABLAGE PRINCIPAL
ARNES DE ALAMBRADO PRINCIPAL

KEY	PART NO.	PART NAME	QTY.	SERIAL NO.	REMARKS
1	14M7298	FLANGE NUT	1		M8
2	19M7784	SCREW	5		M10 X 20
3	19M7800	SCREW	1		M8 X 50
4	19M7810	SCREW	4		M10 X 80
5	19M7865	SCREW	9		M8 X 16
6	19M7877	CAP SCREW	1		M14 X 30
7	AH89557	CLIP	1		
8	AT227139	WIRING HARNESS	1		(ENGINE FRAME)
	AT306736	WIRING HARNESS	1		(ENGINE FRAME) (HARSH ENVIRONMENT)
9	AT301026	WIRING HARNESS	1		(TRANSMISSION)
	AT308672	WIRING HARNESS	1		(TRANSMISSION) (HARSH ENVIRONMENT)
10	AT315406	WIRING HARNESS	1		(ENGINE - TIER II)
	AT315412	WIRING HARNESS	1		(SUB FOR AT308671) (ENGINE - TIER II) (HARSH ENVIRONMENT)
11	AT227138	WIRING HARNESS	1	-600916	(LOADER FRAME)
	AT320922	WIRING HARNESS	1	600917-	(LOADER FRAME)
	AT307221	WIRING HARNESS	1		(LOADER FRAME) (TOOL CARRIER)
	AT306641	WIRING HARNESS	1		(LOADER FRAME) (HARSH ENVIRONMENT)
12	AT322892	WIRING HARNESS	1		(REAR FRAME)
	AT307333	WIRING HARNESS	1		(REAR FRAME) (HARSH ENVIRONMENT)
13	H77698	TIE BAND	1		
14	R44302	TIE BAND	17		
15	T102934	CLAMP	1		
16	T147891	BUSHING	1		
17	T29342	WASHER	4		
18	T64784	CLIP	1		
19	T67995	CLAMP	4		
20	T74412	CLAMP	4		
21	T74416	CLAMP	7		
22	T75197	CLAMP	4		
23	T75276	CLAMP	5		

MAIN WIRING HARNESS (POWERLLEL™ LINKAGE) (SN -603810)
FAISCEAU CABLAGE PRINCIPAL (TRINGLERIE POWERLLEL™) (SN -603810)
ARNES DE ALAMBRADO PRINCIPAL (VARILLAJE POWERLLEL™) (SN -603810)

T202163 -UN-17AUG04

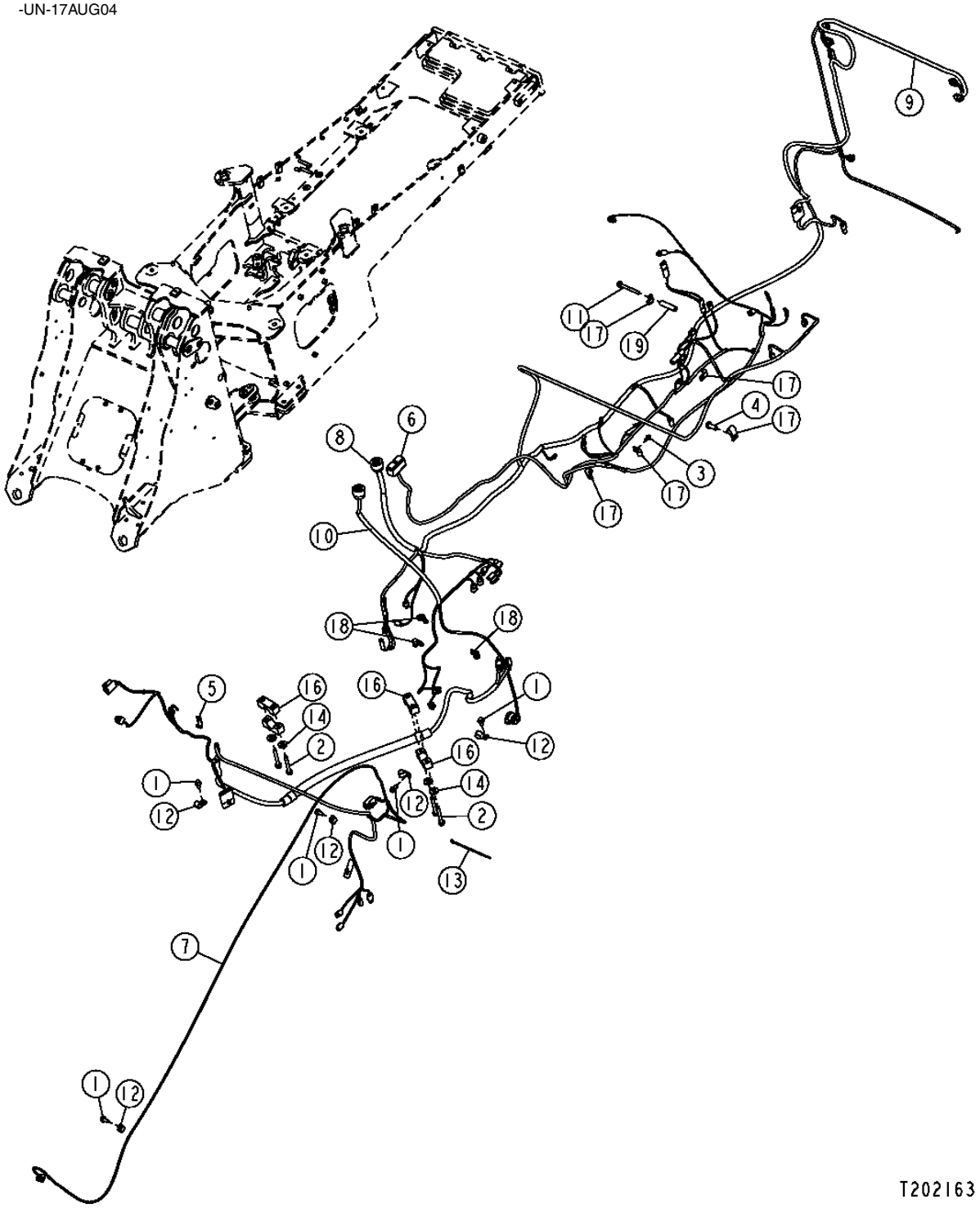

MAIN WIRING HARNESS (POWERLLEL™ LINKAGE) (SN -603810)
FAISCEAU PRINCIPAL DE FILS (TRINGLERIE POWERLLEL™) (SN -603810)
ARNES DE CABLEADO PRINCIPAL (VARILLAJE POWERLLEL™) (SN -603810)

KEY	PART NO.	PART NAME	QTY.	SERIAL NO.	REMARKS
1	19M7784	SCREW	2		M10 X 20
2	19M7810	SCREW	4		M10 X 80
3	19M7865	SCREW	1		M8 X 16
4	19M7877	CAP SCREW	1		M14 X 30
5	AH89557	CLIP	1		
6	AT315406	WIRING HARNESS	1		(ENGINE HARNESS)
7	AT302089	WIRING HARNESS	1	-600916	(LOADER FRAME HARNESS)
	AT318329	WIRING HARNESS	1	600917-	
8	AT227139	WIRING HARNESS	1		(ENGINE FRAME HARNESS)
9	AT322892	WIRING HARNESS	1		(SUB FOR AT228167) (REAR FRAME HARNESS)
10	AT301026	WIRING HARNESS	1		(TRANSMISSION HARNESS)
11	19M7811	SCREW	1		M10 X 90
12	T74416	CLAMP	7		
13	R44302	TIE BAND	26		
14	T29342	WASHER	4		
15	T64784	CLIP	1		
16	T67995	CLAMP	4		
17	T75197	CLAMP	4		
18	T75276	CLAMP	3		
19	28H3399	SPACER	1		

MAIN WIRING HARNESS (POWERLLEL™ LINKAGE) (SN 603811-)
FAISCEAU CABLAGE PRINCIPAL (TRINGLERIE POWERLLEL™) (SN 603811-)
ARNES DE ALAMBRADO PRINCIPAL (VARILLAJE POWERLLEL™) (SN 603811-)

TX1007132 -UN-04MAY06

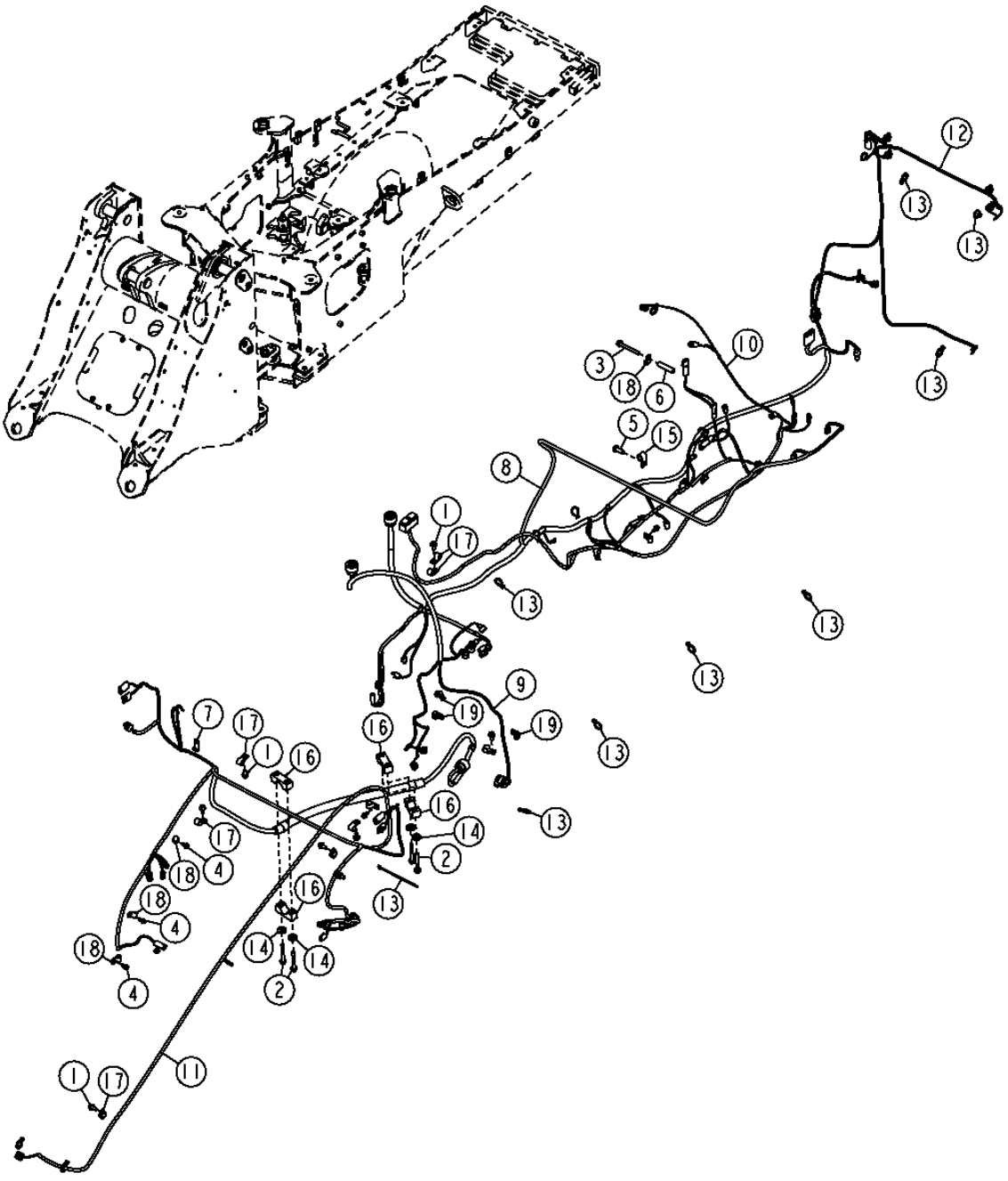

MAIN WIRING HARNESS (POWERLLEL™ LINKAGE) (SN 603811-)
FAISCEAU CABLAGE PRINCIPAL (TRINGLERIE POWERLLEL™) (SN 603811-)
ARNES DE ALAMBRADO PRINCIPAL (VARILLAJE POWERLLEL™) (SN 603811-)

KEY	*PART NO.*	*PART NAME*	*QTY.*	*SERIAL NO.*	*REMARKS*
1	19M7784	SCREW	7		M10 X 20
2	19M7810	SCREW	4		M10 X 80
3	19M7811	SCREW	1		M10 X 90
4	19M7865	SCREW	5		M8 X 16
5	19M7877	CAP SCREW	1		M14 X 30
6	28H3399	SPACER	1		
7	AH89557	CLIP	1		
8	AT227139	WIRING HARNESS	1		(ENGINE FRAME)
9	AT301026	WIRING HARNESS	1		(TRANSMISSION)
10	AT315406	WIRING HARNESS	1		(ENGINE - TIER II)
11	AT318329	WIRING HARNESS	1		(LOADER FRAME)
12	AT322892	WIRING HARNESS	1		(REAR FRAME)
13	R44302	TIE BAND	22		
14	T29342	WASHER	4		
15	T64784	CLIP	1		
16	T67995	CLAMP	4		
17	T74416	CLAMP	12		
18	T75197	CLAMP	7		
19	T75276	CLAMP	3		

CAB WIRING HARNESS
FAISCEAU DE CABINE
ARNES DE CABINA

TX1007143 -UN-14JUN06

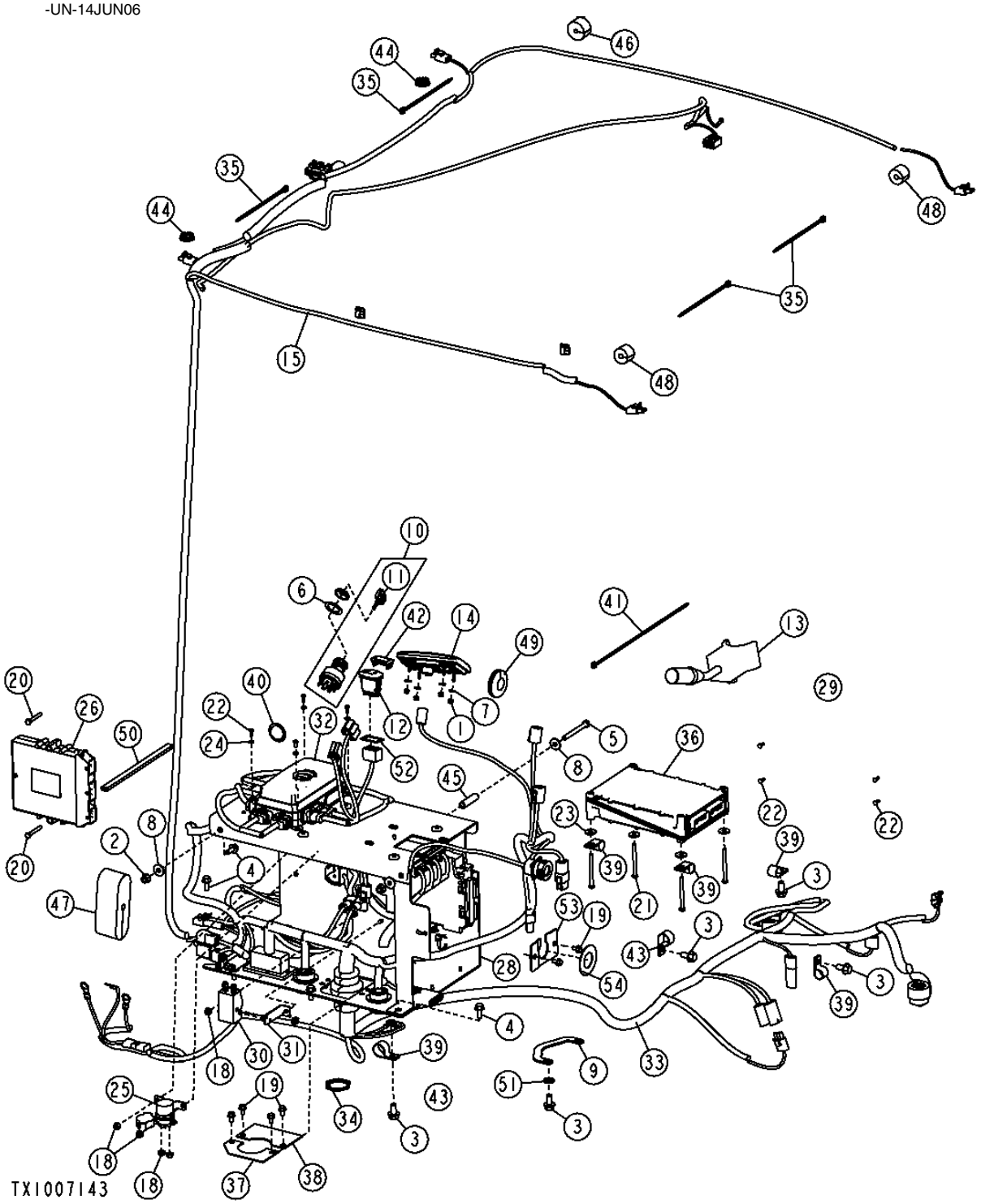

THIS PARTS LISTING IS CONTINUED

CAB WIRING HARNESS
FAISCEAU DE CABINE
ARNES DE CABINA

KEY	PART NO.	PART NAME	QTY.	SERIAL NO.	REMARKS
1	14M7360	LOCK NUT	4		M5
2	14M7396	LOCK NUT	2		M8
3	19M7784	SCREW	5		M10 X 20
4	19M7866	SCREW	6		M8 X 20
5	19M8504	CAP SCREW	1		M8 X 80
6	24H1441	WASHER	1		1-1/64" X 1-1/2" X 0.048"
7	24M7054	WASHER	4		6.400 X 12 X 1.600 MM
8	24M7298	WASHER	3		8.400 X 25 X 2 MM
9	AP22660	GROUND CABLE	1		215.900 MM
10	AT195301	SWITCH	1		(KEY)
11	AT195302	KEY	1		
12	AT202786	SWITCH	1	-593630	(FOUR WAY FLASHER SWITCH) (ROCKER)
	AT304026	SWITCH	1	593631-	(FOUR WAY FLASHER SWITCH) (ROCKER)
13	AT210334	SWITCH	1		(TURN)
14	AT312110	PUSH SWITCH	1		(SEALED SWITCH PANEL) (SUB FOR AT310056)
15	AT300676	WIRING HARNESS	1		(CAB ROOF)
	AT308673	WIRING HARNESS	1		(CAB ROOF) (HARSH ENVIRONMENT)
18	14M7303	FLANGE NUT	4		M6
19	19M7774	SCREW	4		M6 X 12
20	19M8538	CAP SCREW	2		M6 X 45
21	21M7250	SCREW	4		M4 X 12
22	21M7250	SCREW	6		M4 X 12
23	24M7100	WASHER	4		6.600 X 22 X 2 MM
25	AT145341	RELAY	1		(24 VOLT)
26	AT314374	VEHICLE CONTROLLER	1		(SUB FOR AT311902, AT226495) (FLC)
27	R44342	NUT	1		
28	T196129	BRACKET	1		
	T207717	BRACKET	1		(HARSH ENVIRONMENT)
29	AT336601	TRANSMISSION CONTROLLER	1		(SUB FOR AT311905, AT300098 AND AT316303)
30	AT300537	RELAY	1		
31	T200363	ANGLE	2		
33	AT302954	WIRING HARNESS	1	-593630	(LOAD CENTER)
	AT314322	WIRING HARNESS	1	593631-597641	
	AT314322	WIRING HARNESS	1	597642-	(ALSO ORDER AT301498 AND 24H1500)
	AT310020	WIRING HARNESS	1		(HARSH ENVIRONMENT)
34	57M8035	NUT	2		(SUB FOR E73240)
35	R44302	TIE BAND	5		
36	RE522529	ENGINE CONTROLLER	1		(SUB FOR RE519775)
37	T181604	PLATE	1		
38	T181605	PLATE	1		
39	T74416	CLAMP	3		
40	T206624	PLUG	2		(SUB FOR GX20510, THIS APPLICATION)
41	H77698	TIE BAND	3		
42	M115279	PLUG	1		
43	T102934	CLAMP	2		
44	T152230	PLUG	2		
45	T167775	BUSHING	1		
46	T182861	ISOLATOR	1		
47	T182862	PLUG	1	-604940	
	T224069	PLUG	1	604941-	
48	T182871	ISOLATOR	2		
49	T46876	GROMMET	1		
50	.....	SEALING TRIM	1		(MAKE FROM T180533 BULK MATERIAL, CUT TO 9.76 INCHES)
51	24M7239	WASHER	1		
52	T211678	SEAL	1	593631-	
53	AT301498	PLATE	1		
54	24H1500	WASHER	1		

FRONT DASH MODULE WIRING AND SHIFTER ASSEMBLY
CABLAGE MODULE TABLEAU BORD AVANT ET LEVIER VITESSES
CONJUNTO DE ALAMBRADO DEL MODULO DEL TABLERO DELANTERO Y CONJUNTO DE CAMBIOS

TX1006288 -UN-27APR06

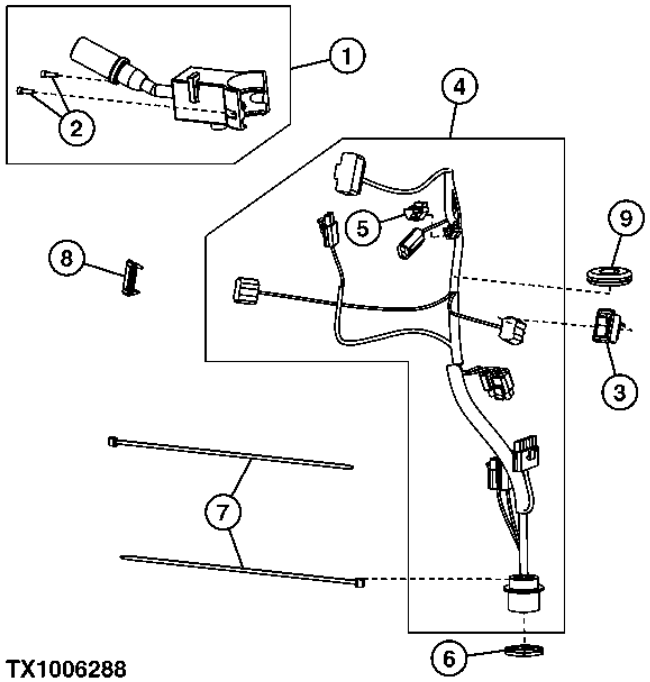

TX1006288

KEY	PART NO.	PART NAME	QTY.	SERIAL NO.	REMARKS
1	AT176801	SWITCH	1		(ALSO ORDER (2) 19M8581) (SHIFTER ASSEMBLY)
2	19M8581	SCREW	2		M5 X 20, (SUB FOR 19M8146)
3	AT208630	SWITCH	1		(PARK BRAKE)
4	AT227134	WIRING HARNESS	1		(FRONT CONSOLE)
5	57M8131	ELEC. CONNECTOR TERMINAL	1		
6	57M8035	NUT	1		(SUB FOR E73240)
7	H77698	TIE BAND	2		
8	M115279	PLUG	1		
9	T46876	GROMMET	1		

DASH MODULE WIRING WITH JOYSTICK GEAR SELECTION
CABLAGE MODULE TABLEAU BORD AVEC SELECTION VITESSE MANCHE A BALAI
ALAMBRADO DEL MODULO DE TABLERO CON SELECCION DE ENGRANAJES DE LA PALANCA DE CONTROL

T212821 -UN-15AUG05

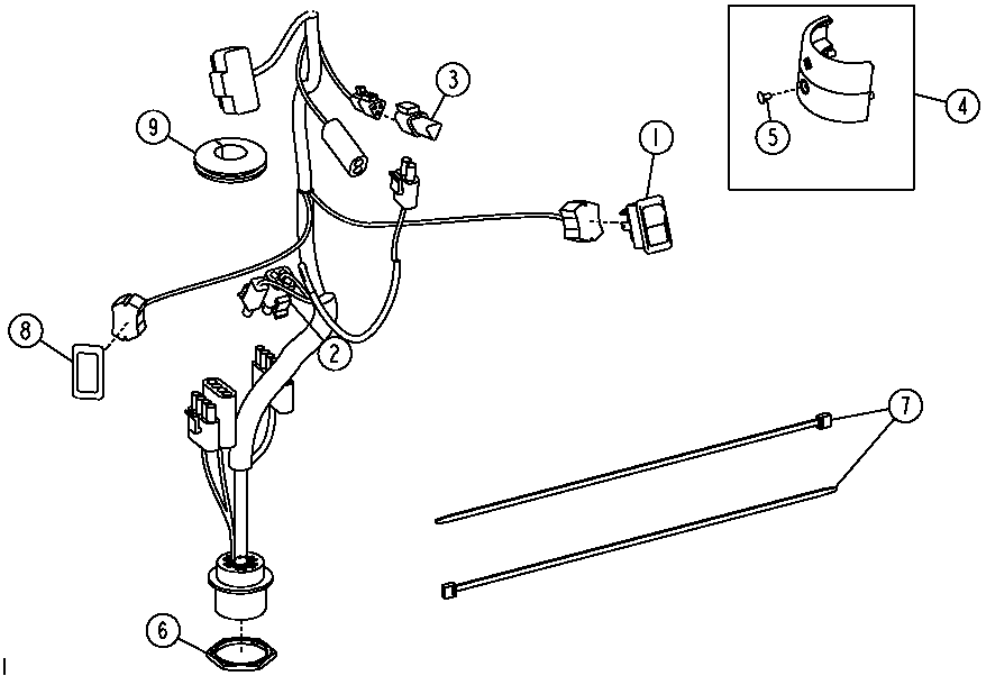

KEY	PART NO.	PART NAME	QTY.	SERIAL NO.	REMARKS
1	AT208630	SWITCH	1		(PARK BRAKE)
2	AT227134	WIRING HARNESS	1		(FRONT CONSOLE)
3	57M8131	ELEC. CONNECTOR TERMINAL	1		
4	AT300921	KIT	1		(STEERING COLUMN CLAMP & COVER)
5	21M7258	SCREW	1		M4 X 8
6	57M8035	NUT	1		(SUB FOR E73240)
7	H77698	TIE BAND	2		
8	M115279	PLUG	1		
9	T46876	GROMMET	1		

CAB MONITOR AND ALARM
MONINTEUR ET ALARME CABINE
MONITOR Y ALARMA DE LA CABINA

T193991 -UN-21AUG03

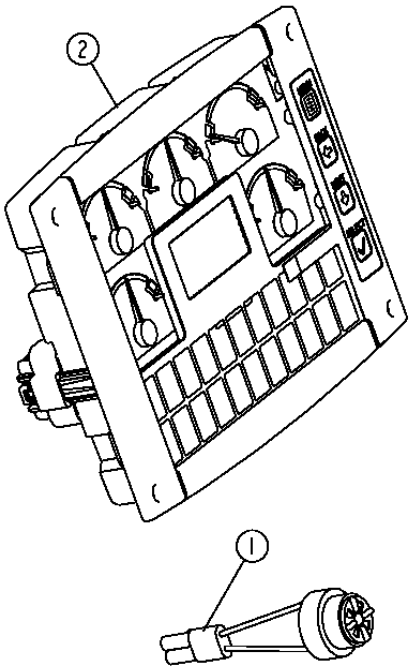

KEY	*PART NO.*	*PART NAME*	*QTY.*	*SERIAL NO.*	*REMARKS*
1	AT160480	ALARM SYSTEM	1		
2	AT312178	MONITOR	1		(SUB FOR AT313501, AT226944)

HVAC WIRING
CABLAGE CHAUFFAGE, VENTILATION ET CLIMATISATION
ALAMBRADO DE CLIMATIZACION

T193988 -UN-18AUG03

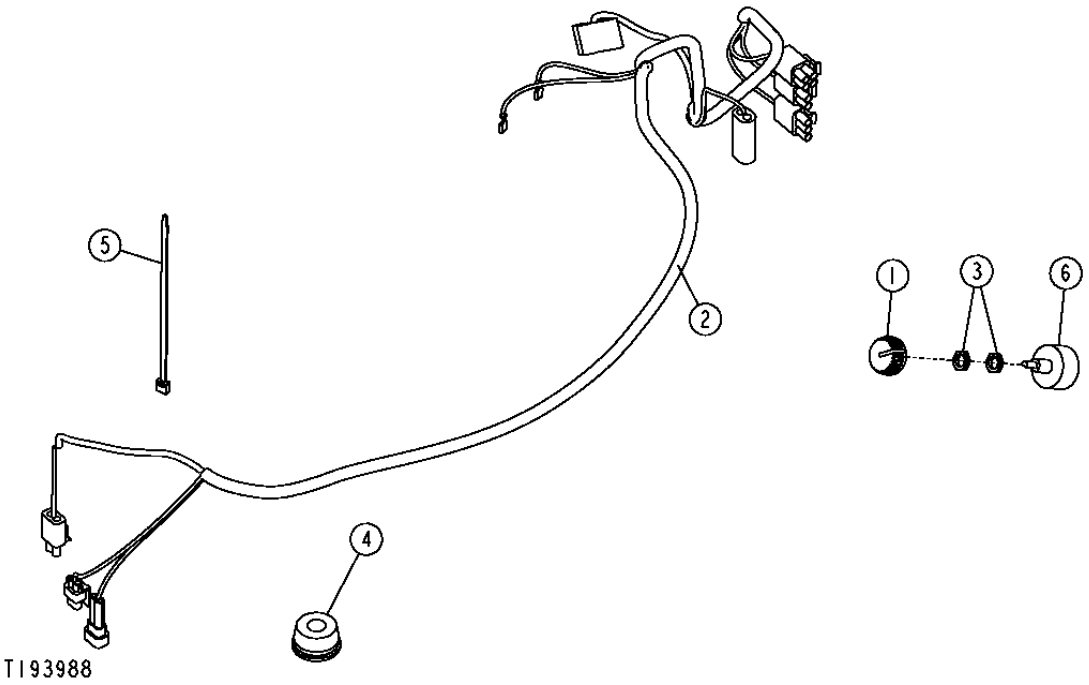

KEY	PART NO.	PART NAME	QTY.	SERIAL NO.	REMARKS
1	AL76568	KNOB	1		
2	AT202934	WIRING HARNESS	1		(A/C & BLOWER)
3	R44165	LOCK NUT	2		
4	T182870	ISOLATOR	1		(SUB FOR N119177)
5	R44302	TIE BAND	1		
6	RE43497	SWITCH	1		

CONVERTER (5 AMP) (24 VOLT TO 12 VOLT)
CONVERTISSEUR (5 AMP) (24V A 12V)
CONVERTIDOR (5 AMP) (24V A 12V)

T193986 -UN-22AUG03

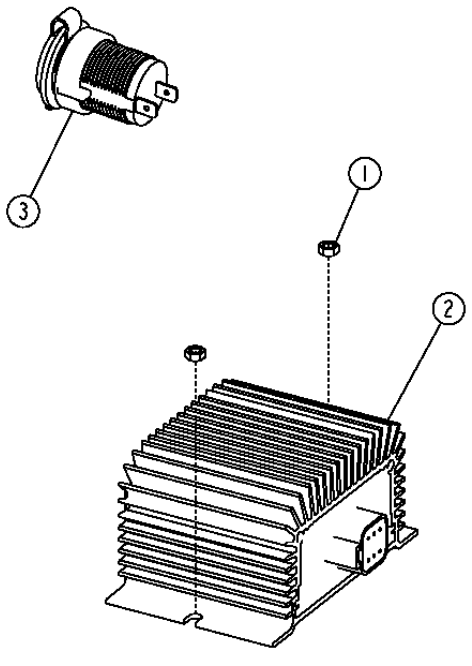

KEY	PART NO.	PART NAME	QTY.	SERIAL NO.	REMARKS
1	14M7100	NUT	2		M4
2	AT224893	CONVERTER	1		(5 AMP)
3	GY20126	SOCKET OUTLET	1		POWER PLUG

CONVERTER (10 AMP) (24 VOLT TO 12 VOLT)
CONVERTISSEUR (5 AMP) (24V A 12V)
CONVERTIDOR (5 AMP) (24V A 12V)

T193985 -UN-22AUG03

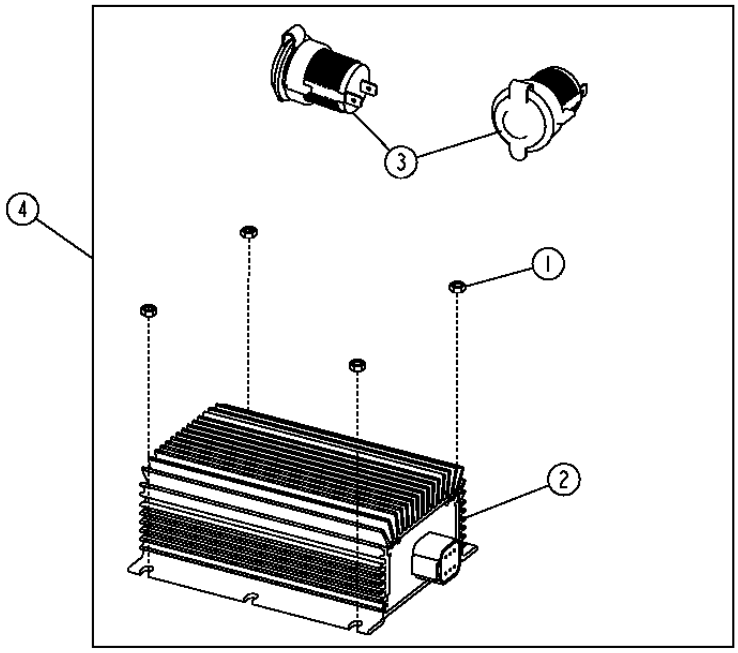

T193985

KEY	*PART NO.*	*PART NAME*	*QTY.*	*SERIAL NO.*	*REMARKS*
1	14M7100	NUT	4		M4
2	AT224894	CONVERTER	1		(10 AMP)
3	GY20126	SOCKET OUTLET	2		POWER PLUG
4	**AT306828**	**CONVERTER**	**1**		

ENGINE COOLANT TEMPERATURE AND OIL PRESSURE SENSORS
CAPTEURS TEMPERATURE LIQUIDE REFROIDISSEMENT ET PRESSION HUILE MOTEUR
SENSORES DE PRESION DE ACEITE Y TEMPERATURA DEL REFRIGERANTE DEL MOTOR

T194523 -UN-04SEP03

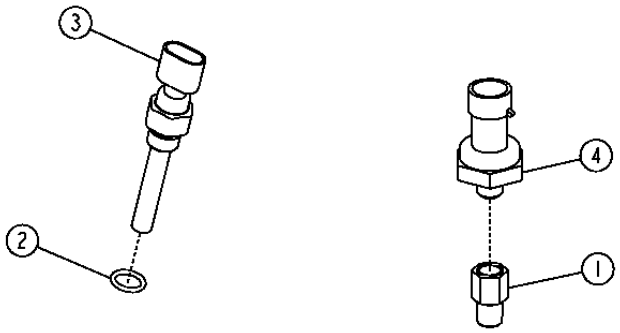

T194523

KEY	PART NO.	PART NAME	QTY.	SERIAL NO.	REMARKS
1	P40098	ADAPTER FITTING	1		
2	R26286	O-RING	1		
3	RE151433	COOLANT TEMPERATURE SENSOR	1		
4	RE167207	PRESSURE SENSOR	1		(OIL PRESSURE SENSOR)

RETURN TO DIG HARNESS
FAISCEAU DE RETOUR EN POSITION DE CREUSEMENT
ARNES DE RETORNO PARA EXCAVAR

T200874 -UN-10JUN04

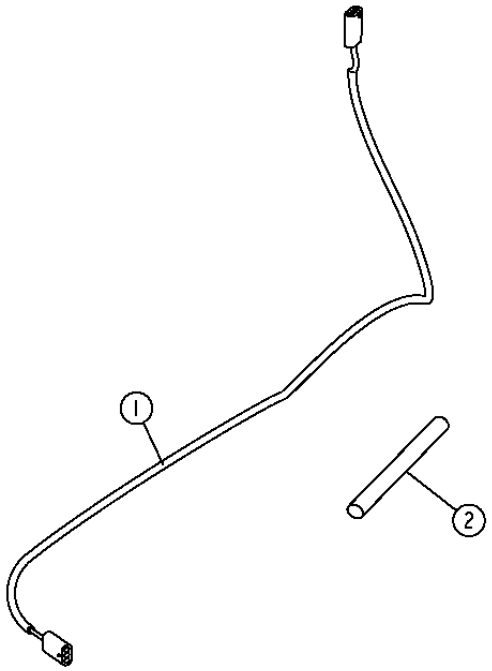

T200874

KEY	*PART NO.*	*PART NAME*	*QTY.*	*SERIAL NO.*	*REMARKS*
1	AT202827	WIRING HARNESS	1		(RETURN-TO-DIG HARNESS)
	AT221628	WIRING HARNESS	1		(RETURN-TO-DIG HARNESS) (HARSH ENVIRONMENT)
	AT208024	STAND-OFF	1		(USE WITH TOOL CARRIER)
	AT303807	WIRING HARNESS	1		(USE WITH TOOL CARRIER)
2	.....	BULK HOSE	1		(MAKE FROM T148181 CUT TO LENGTH)

VEHICLE ELECTRICAL CENTER (VEC)
CENTRE ELECTRIQUE DU VEHICULE (VEC)
CENTRO ELECTRICO DEL VEHICULO (VEC)

T209740 -UN-01APR05

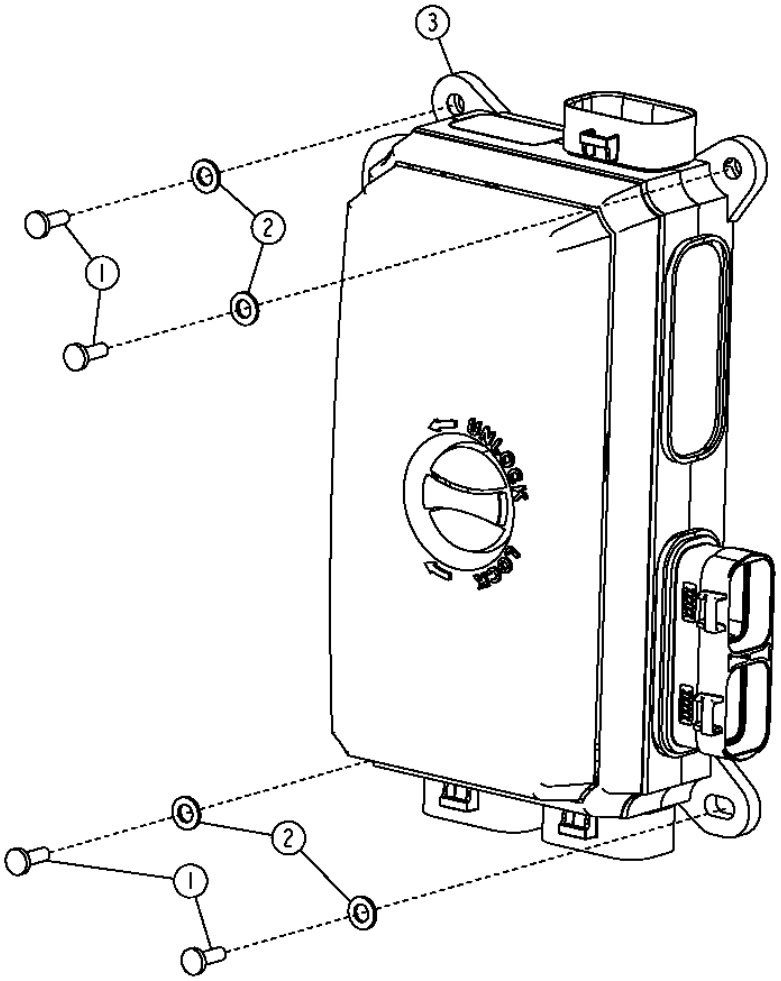

T209740

VEHICLE ELECTRICAL CENTER (VEC)
CENTRE ELECTRIQUE DU VEHICULE (VEC)
CENTRO ELECTRICO DEL VEHICULO (VEC)

KEY	*PART NO.*	*PART NAME*	*QTY.*	*SERIAL NO.*	*REMARKS*
1	21M7250	SCREW	4		M4 X 12
2	24M7087	WASHER	4		5.500 X 10 X 1 MM
3	AT301777	VEHICLE CONTROLLER	1		(VEC)(INCLUDES ALL FUSES, DIODES, AND RELAYS)
4	57M7688	FUSE	18		(NOT ILLUSTRATED) (5 AMP)
5	57M7689	FUSE	10		(NOT ILLUSTRATED) (10AMP)
6	57M7690	FUSE	3		(NOT ILLUSTRATED) (15AMP)
7	57M8623	FUSE	1		(NOT ILLUSTRATED) (25AMP)
8	57M8640	DIODE	5		(NOT ILLUSTRATED)
9	AT305389	RELAY	1		(NOT ILLUSTRATED) (24 VOLT)

ENGINE FRAME
CHASSIS DE MOTEUR
BASTIDOR DEL MOTOR

T212659 -UN-15AUG05

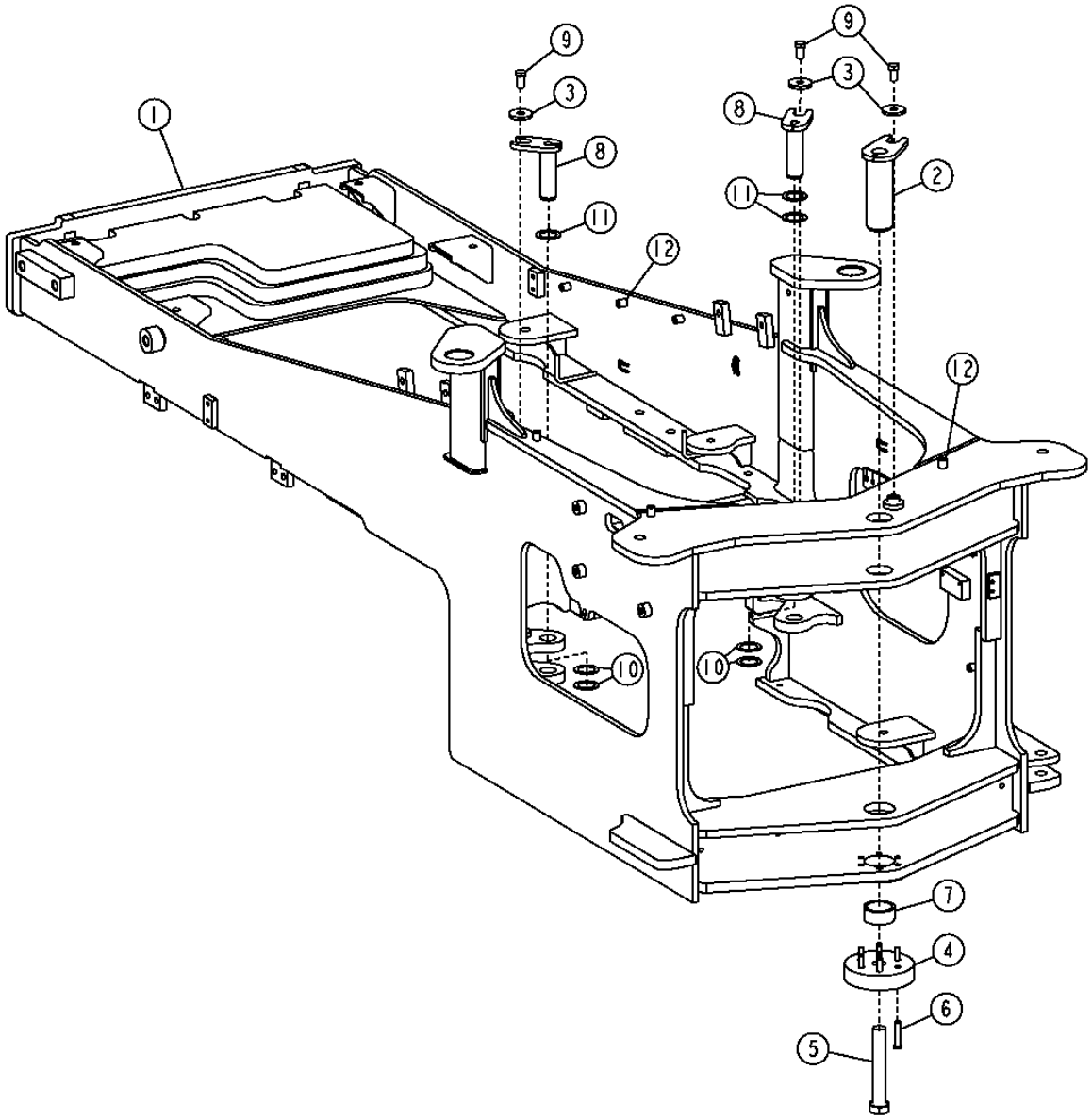

T212659

ENGINE FRAME
CHASSIS DE MOTEUR
BASTIDOR DEL MOTOR

KEY	PART NO.	PART NAME	QTY.	SERIAL NO.	REMARKS
1	AT226400	FRAME	1		(CA)
2	AT206751	PIN	1		
3	T176064	BUSHING	3		(SUB FOR T146246)
4	T182446	COVER	1		
5	19M9190	CAP SCREW	1		M30 X 200
6	19M7363	CAP SCREW	6		M12 X 60
7	T182265	BUSHING	1		
8	AT133204	PIN FASTENER	2		
9	19M7488	CAP SCREW	3		M16 X 40, (SUB FOR 19M8029)
10	24H1556	WASHER	4		1-41/64" X 2-3/8" X 0.048"
11	24H1558	WASHER	3		1-41/64" X 2-3/8" X 0.075"
12	T72414	BUSHING	13		

ENGINE FRAME STEERING CUSHIONS
COUSSINS DIRECTION BATI MOTEUR
AMORTIGUADORES DE LA DIRECCION DEL BASTIDOR DEL MOTOR

TX1006290 -UN-24APR06

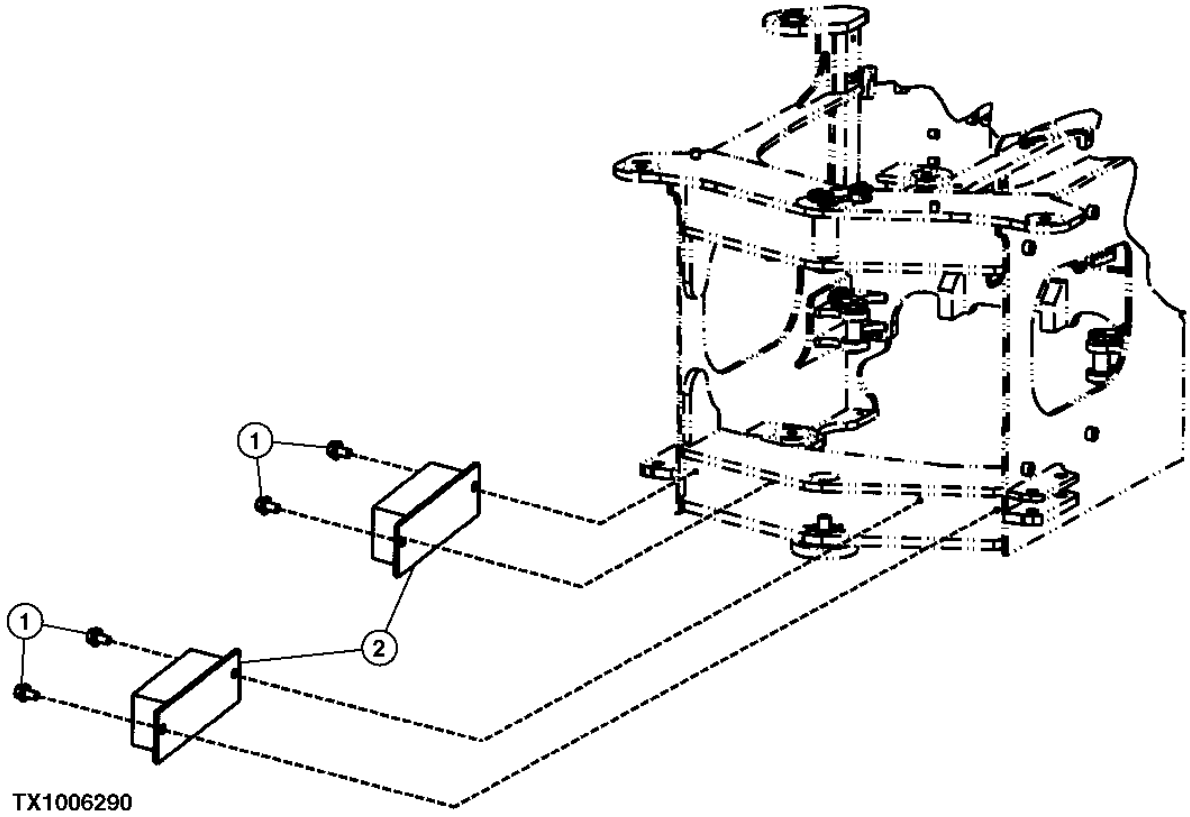

ENGINE FRAME STEERING CUSHIONS
COUSSINS DIRECTION BATI MOTEUR
AMORTIGUADORES DE LA DIRECCION DEL BASTIDOR DEL MOTOR

KEY	*PART NO.*	*PART NAME*	*QTY.*	*SERIAL NO.*	*REMARKS*
1	19M7788	SCREW	4		M12 X 25
2	AT143577	BUMPER	2		

FUEL TANK BOTTOM GUARD
PROTECTION INFERIEURE RESERVOIR CARBURANT
PROTECTOR DEL TANQUE DE COMBUSTIBLE INFERIOR

T193526 -UN-27AUG03

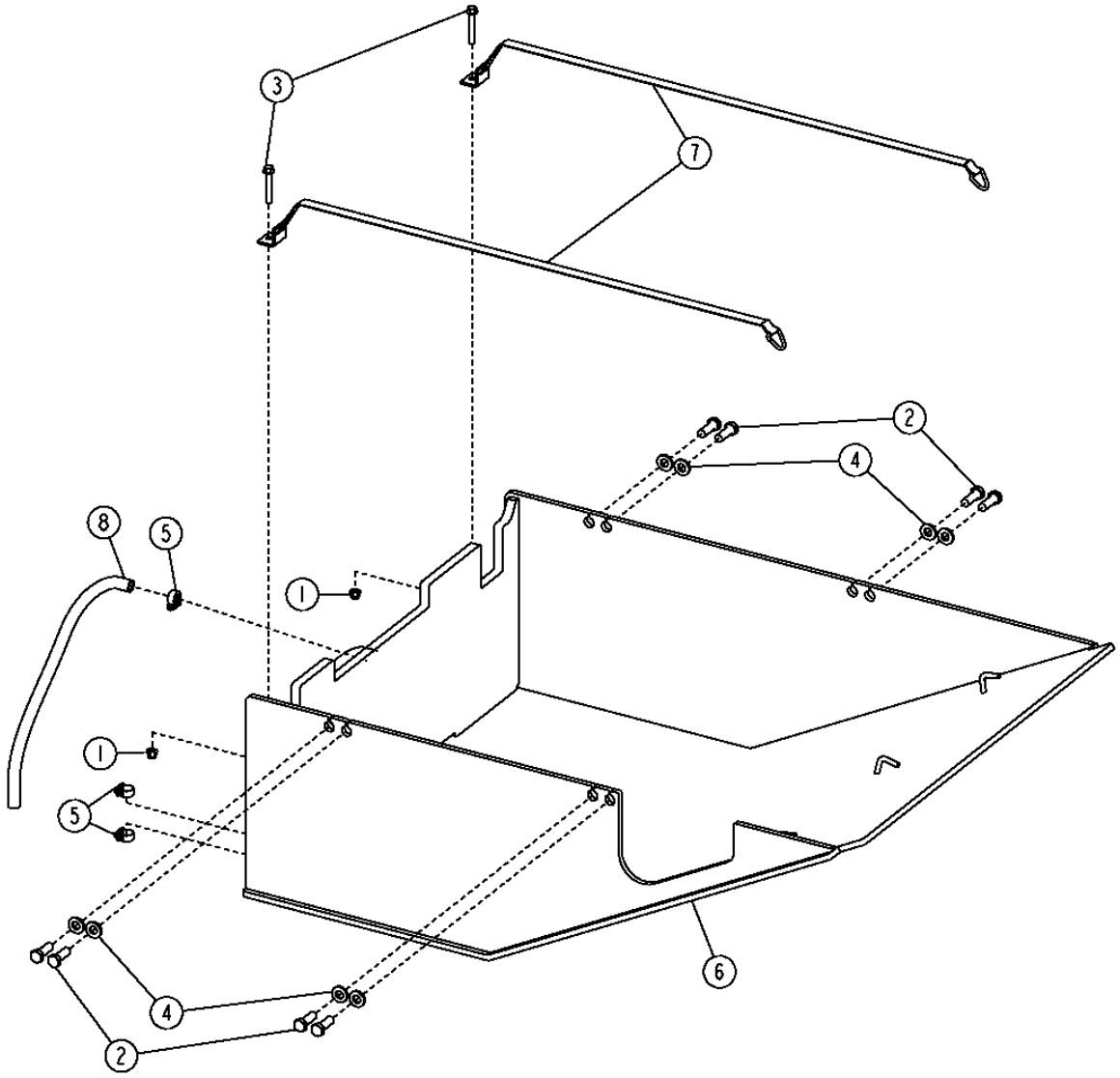

T193526

FUEL TANK BOTTOM GUARD
PROTECTION INFERIEURE RESERVOIR CARBURANT
PROTECTOR DEL TANQUE DE COMBUSTIBLE INFERIOR

KEY	*PART NO.*	*PART NAME*	*QTY.*	*SERIAL NO.*	*REMARKS*
1	14M7400	LOCK NUT	2		M10
2	19M7489	CAP SCREW	8		M16 X 45
3	19M8114	SCREW	2		M10 X 70
4	24M7241	WASHER	8		17 X 34 X 4 MM
5	AR21837	CLAMP	3		
6	AT226715	GUARD	1		
7	AT226716	STRAP	2		
8	.....	BULK HOSE	1		(FURNISH T60811 BULK MATERIAL CUT TO 3.5 FT)

TRANSMISSION BOTTOM GUARD AND FRONT BOTTOM GUARD
PROTECTION INFERIEURE DE TRANSMISSION ET PROTECTION INFERIEURE AVANT
PROTECTOR INFERIOR DE LA TRANSMISION Y PROTECTOR INFERIOR DELANTERO

T196906 -UN-18DEC03

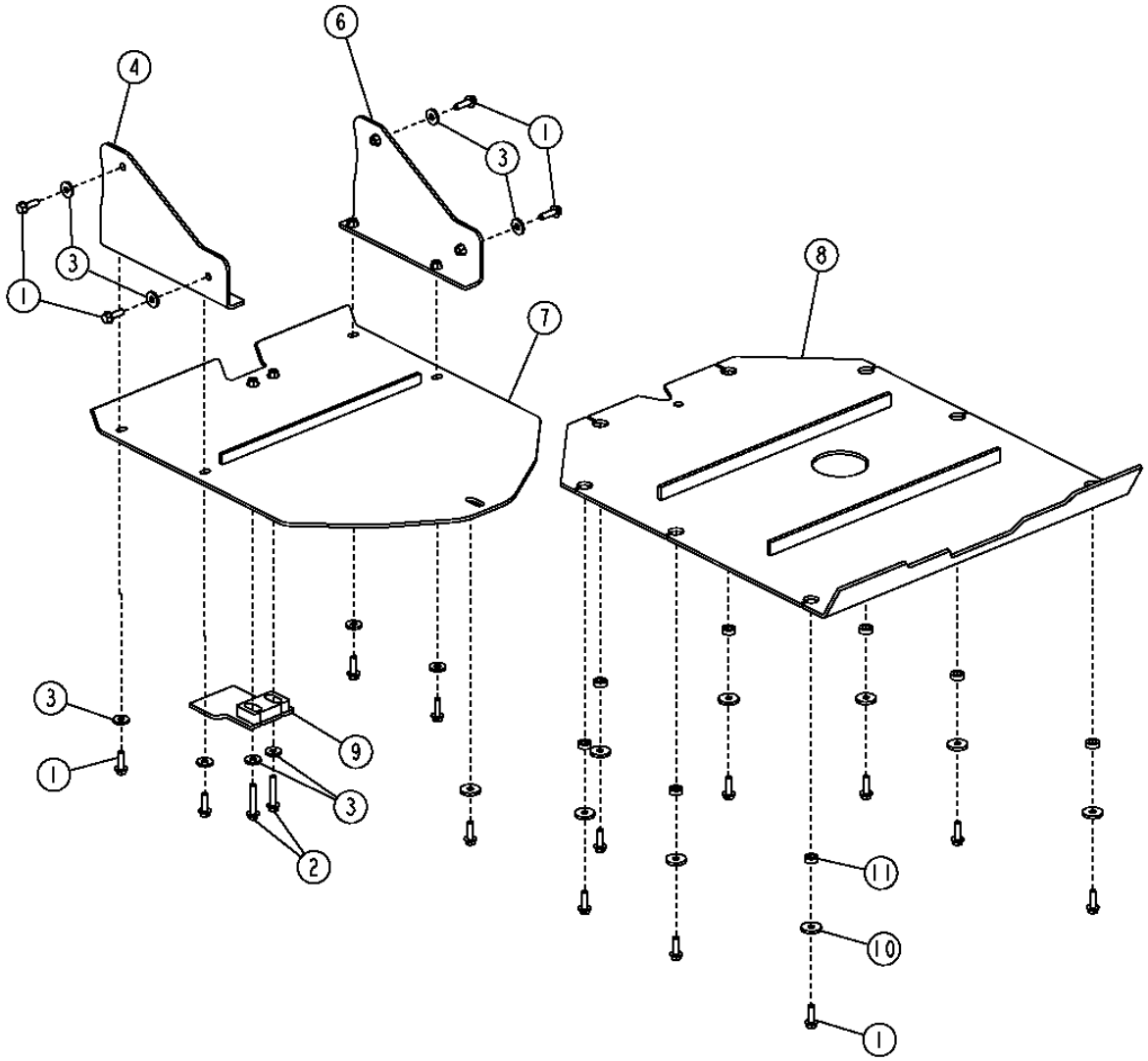

T196906

TRANSMISSION BOTTOM GUARD AND FRONT BOTTOM GUARD
PROTECTION INFERIEURE DE TRANSMISSION ET PROTECTION INFERIEURE AVANT
PROTECTOR INFERIOR DE LA TRANSMISION Y PROTECTOR INFERIOR DELANTERO

KEY	*PART NO.*	*PART NAME*	*QTY.*	*SERIAL NO.*	*REMARKS*
1	19M7791	BOLT	17		M12 X 40
2	19M7817	SCREW	2		M12 X 70
3	24M7226	WASHER	10		13 X 35 X 5 MM
4	AT207432	SUPPORT	1		(LH)
5	14M7443	FLANGE NUT	10		M12
6	AT207433	SUPPORT	1		(RH)
7	AT206895	GUARD	1		(FRONT)
8	AT206894	GUARD	1		(TRANSMISSION)
9	AT221332	GUARD	1		(EXTENSION)
10	T20217	WASHER	9		12.954 X 43.942 X 6.350 MM
11	T197569	BUSHING	8		

CYLINDER-FITTING ROCK GUARDS
PARE-PIERRES RACCORD CYLINDRE
PROTECTORES CONTRA ROCAS ADAPTADOR, CILINDRO

TX1006293 -UN-24APR06

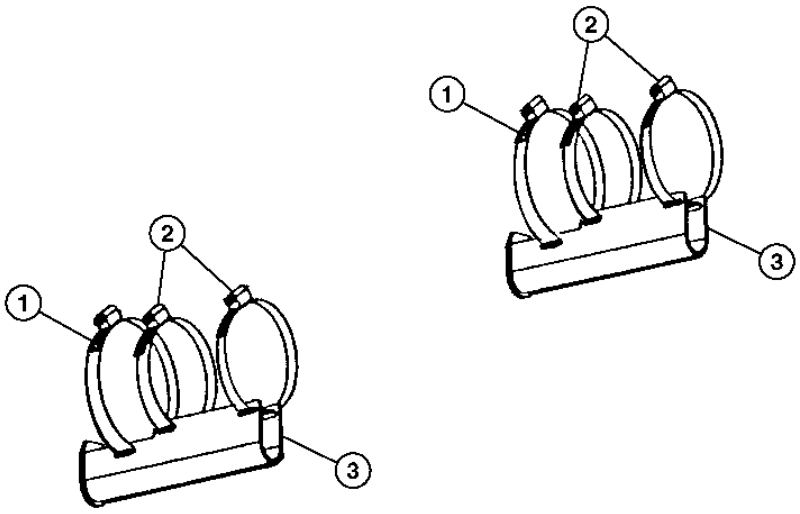

TX1006293

KEY	*PART NO.*	*PART NAME*	*QTY.*	*SERIAL NO.*	*REMARKS*
1	TY22494	HOSE CLAMP	2		
2	AR85327	CLAMP	4		
3	AT222012	COVER	2		

MEMORANDA
MEMORANDA
MEMORANDA

MAIN COUNTERWEIGHT
CONTREPOIDS PRINCIPAL
CONTRAPESO PRINCIPAL

T200936 -UN-15JUN04

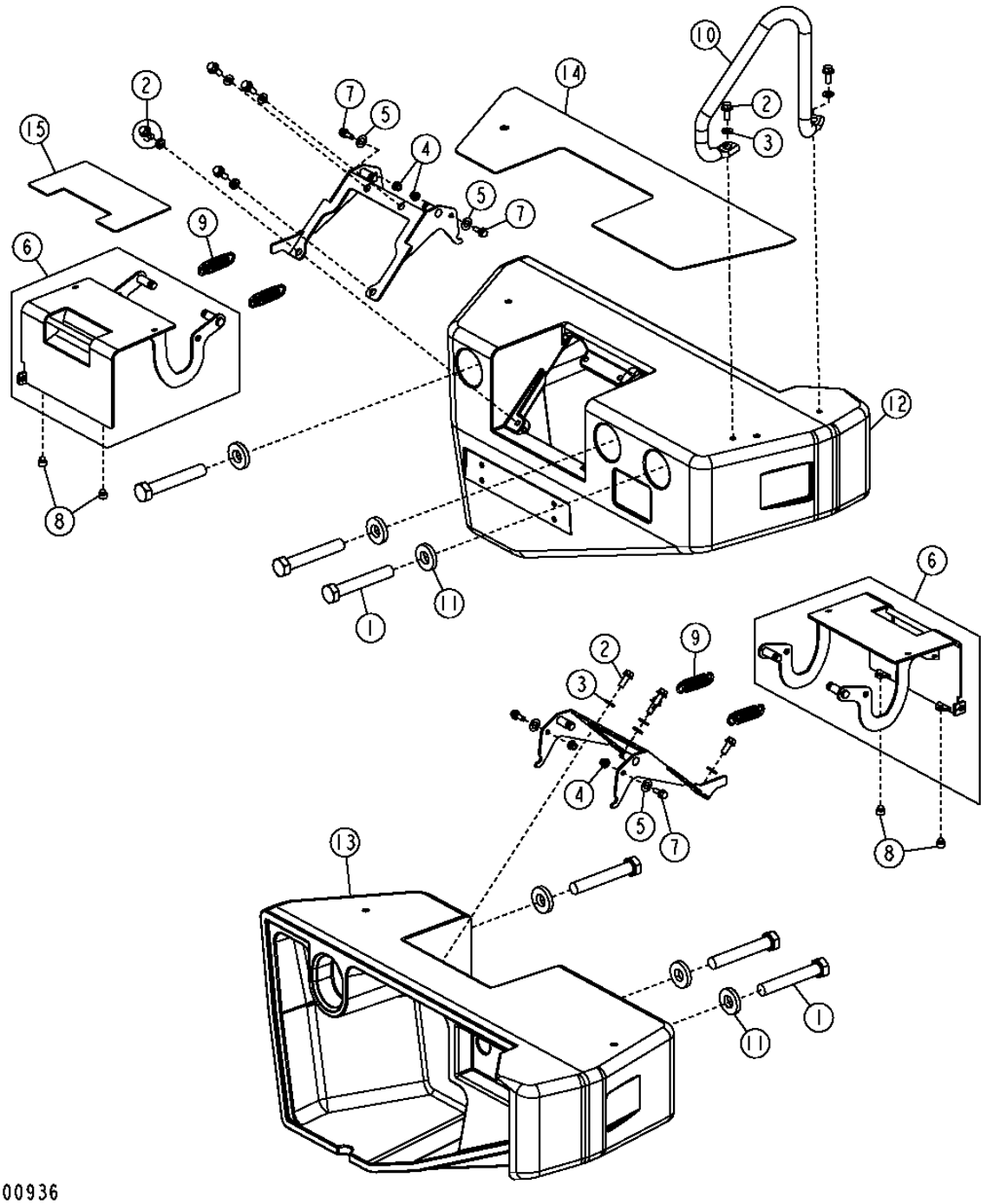

MAIN COUNTERWEIGHT
CONTREPOIDS PRINCIPAL
CONTRAPESO PRINCIPAL

KEY	*PART NO.*	*PART NAME*	*QTY.*	*SERIAL NO.*	*REMARKS*
1	19M7781	CAP SCREW	6		M24 X 150
2	19M7785	SCREW	6		M10 X 25
3	24M7239	WASHER	6		10.700 X 21 X 2.500 MM
4	14M7396	LOCK NUT	2		M8
5	24H1849	WASHER	2		17/32" X 1" X 0.036"
6	AT228414	DOOR	1		
7	H169568	SCREW	2		
8	T175361	GROMMET	2		
9	T203290	EXTENSION SPRING	2		
10	T197440	HANDLE	1		
11	T152076	WASHER	6		
12	T195982	COUNTERWEIGHT	1		(LH) (CONVENIENCE ASSY)
13	T204109	COUNTERWEIGHT	1		(RH) (CONVENIENCE ASSY)
14	T198178	MAT	1		(ANTI-SKID FOR LH COUNTERWEIGHT)
15	T198179	MAT	1		(ANTI-SKID FOR LH COUNTERWEIGHT DOOR)

CAB
CABINE
CABINA

T193727 -UN-16OCT03

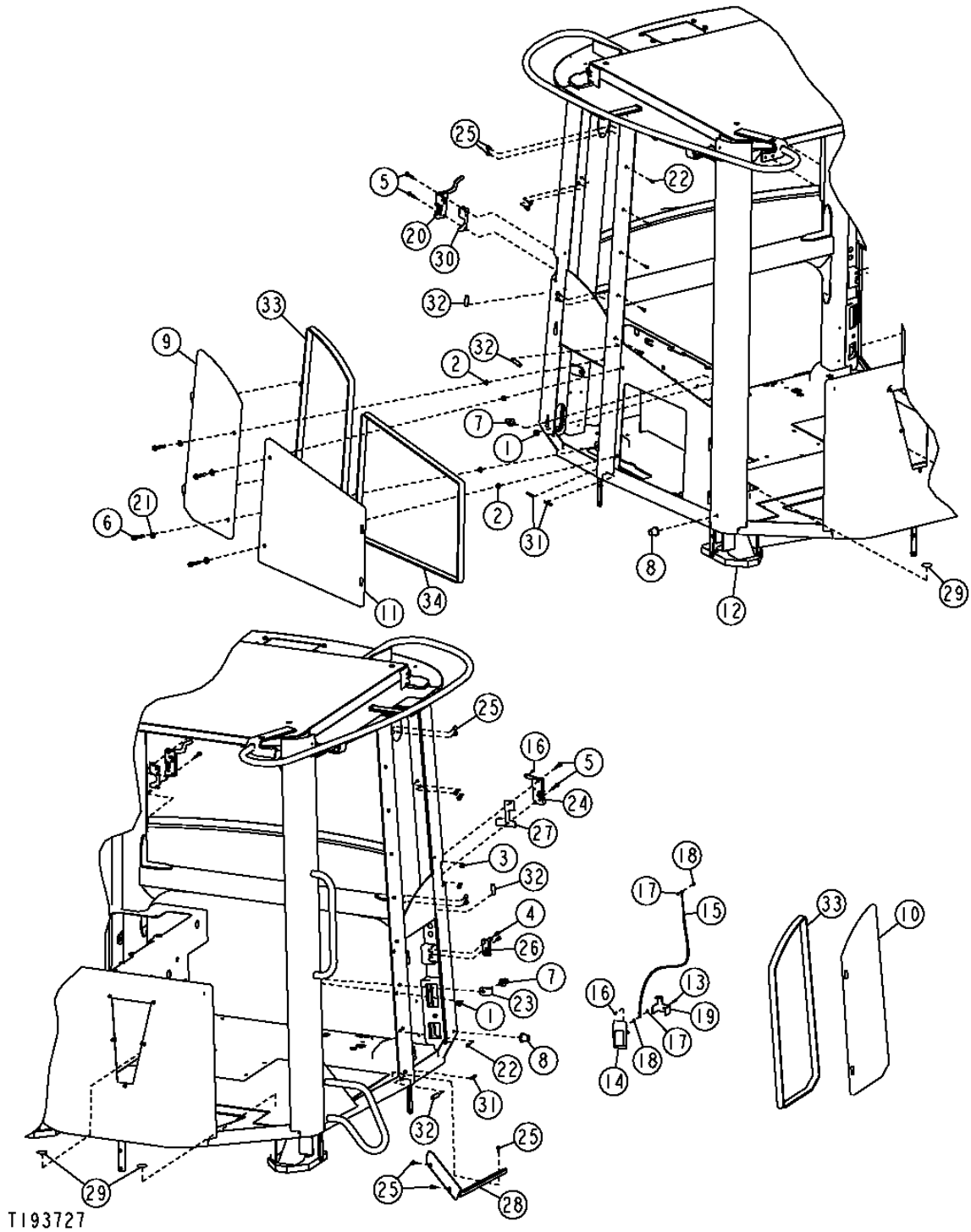

CAB
CABINE
CABINA

KEY	PART NO.	PART NAME	QTY.	SERIAL NO.	REMARKS
1	14H813	NUT	2		7/16"
2	14M7298	FLANGE NUT	4		M8
3	14M7397	LOCK NUT	4		M6
4	19H1948	CAP SCREW	2		1/4" X 3/4"
5	19M7797	SCREW	4		M6 X 40
6	19M8318	SCREW	4		M8 X 45
7	AR91896	STRIKER	2		
8	AT211296	BUMPER	2		
9	AT224989	DOOR	1		(ACCESS PANEL, RIGHT HAND REAR)
10	AT224990	DOOR	1		(ACCESS PANEL, LEFT HAND REAR)
11	AT224991	DOOR	1		(ACCESS PANEL, RIGHT HAND FRONT)
12	AT315446	CAB FRAME	1		(SUB FOR AT226372)
13	19H3370	CAP SCREW	1		0.190" X 5/8"
14	AT227544	LATCH	1		
15	AT227545	PUSH PULL CABLE	1		
16	T178113	CLIP	2	-600445	(SUB L985T AND 11M7093, THIS APPLICATION)
	L985T	PIN FASTENER	2	600446-	
17	T178112	PIN FASTENER	2	-600445	(SUB L985T AND 11M7093, THIS APPLICATION)
	11M7093	COTTER PIN	2	600446-	
18	T178114	SPACER	2		
19	T196309	BRACKET	1		
20	.....	LATCH	1	-XXXXXX	(AT303411 NLA)
	AT315290	LATCH	1	XXXXXX-	
21	H110232	WASHER	4		0.406" X 0.890" X 0.059"
22	M114063	SCREW	15		M6 X 16
23	T135583	GUARD	1		
24	.....	LATCH	1	-XXXXXX	(T167504 NLA)
	AT310702	LATCH	1	XXXXXX-	
25	TCU14336	SCREW	15		
26	T167658	LATCH	1		
27	T177505	BRACKET	1		
28	T180930	RETAINER	1		
29	T186793	LABEL	3		(GRAY CIRCLE)
30	T201708	PLATE	1		
31	T203614	ISOLATOR	3		
32	T203615	ISOLATOR	4		
33	.....	ISOLATOR	1		(MAKE FROM AT305130) (CUT TO 75.5 IN.(1918 MM))
34	AT305130	ISOLATOR	1		

CAB GLASS
GLACE CABINE
VIDRIO DE LA CABINA

T193725 -UN-30SEP03

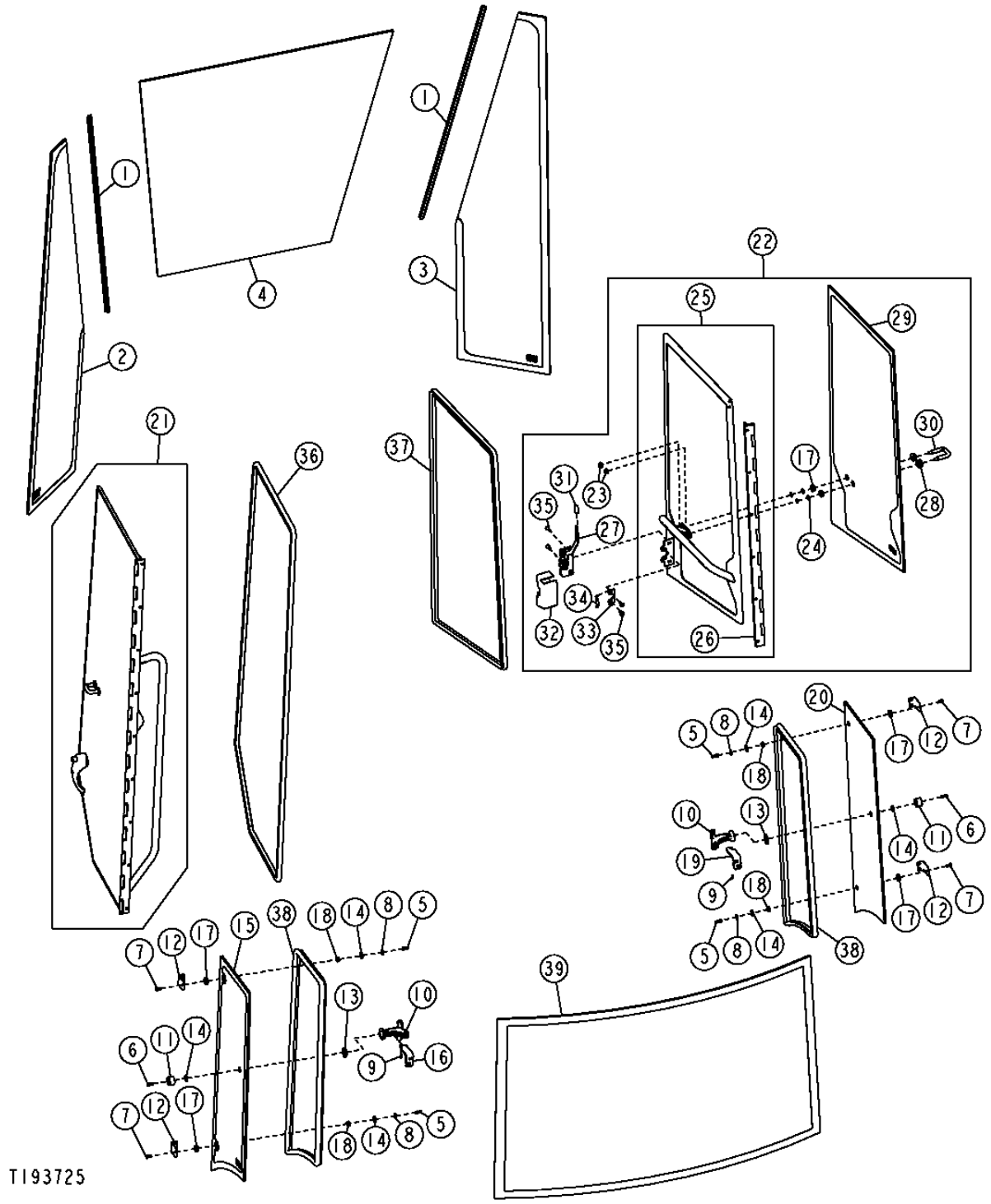

CAB GLASS
GLACE CABINE
VIDRIO DE LA CABINA

KEY	PART NO.	PART NAME	QTY.	SERIAL NO.	REMARKS
1	T182903	SEAL	2		
2	T182927	WINDOWPANE	1		(LEFT FRONT)
3	T182928	WINDOWPANE	1		(RIGHT FRONT)
4	T196237	WINDSHIELD	1		(FRONT)
5	14M7376	LOCK NUT	4		M6
6	19M7768	SCREW	2		M6 X 16
7	19M8648	SCREW	4		M6 X 16
8	24M7251	WASHER	4		6.400 X 18 X 1.600 MM
9	34H275	SPRING PIN	2		3/16" X 1/2"
10	AT226000	LATCH	2		
11	T184135	BUMPER	2		(SUB FOR T101090)
12	T167594	ANGLE	4		
	T167593	SCREW	8		(NOT ILLUSTRATED) (HINGE TO CAB FRAME)
13	T167659	WASHER	2		
14	T167683	WASHER	6		
15	T178221	WINDOWPANE	1		(LEFT HAND VENT WINDOW)
16	T178534	BRACKET	1		
17	T182899	WASHER	6		
18	T182902	BUSHING	4		
19	T177827	BRACKET	1		
20	T178220	WINDOWPANE	1		(RIGHT HAND VENT WINDOW)
21	AT224994	DOOR	1		(LH)
22	AT226151	WINDOW	1		(RIGHT HAND WINDOW ASSEMBLY)
23	14M7424	FLANGE NUT	2		M8
24	24M7362	WASHER	2		8.400 X 16 X 1.600 MM
25	AT226152	DOOR	1		(GRAY RIGHT HAND WINDOW FRAME)
26	T167505	HINGE	1		
27	AT226176	LATCH	1		
28	T167514	GROMMET	2		
29	T167527	WINDOWPANE	1		(RIGHT HAND DOOR)
30	T167546	STRIKER	1		
31	T167630	GRIP	1		
32	T182695	COVER	1		
33	T197455	BRACKET	1		
34	T197456	EXTENSION SPRING	1		
35	TCU14336	SCREW	4		M6 X 16
36	AT305126	ISOLATOR	1		
37	.....	ISOLATOR	1		(MAKE FROM AT305126) (CUT TO 120 IN.(3048 MM))
38	.....	ISOLATOR	1		(MAKE FROM AT305126) (CUT TO 86 IN.(2184 MM))
39	T167519	WINDOW	1		(REAR)

CAB DOOR
PORTE DE CABINE
PUERTA DE CABINA

T193726 -UN-30SEP03

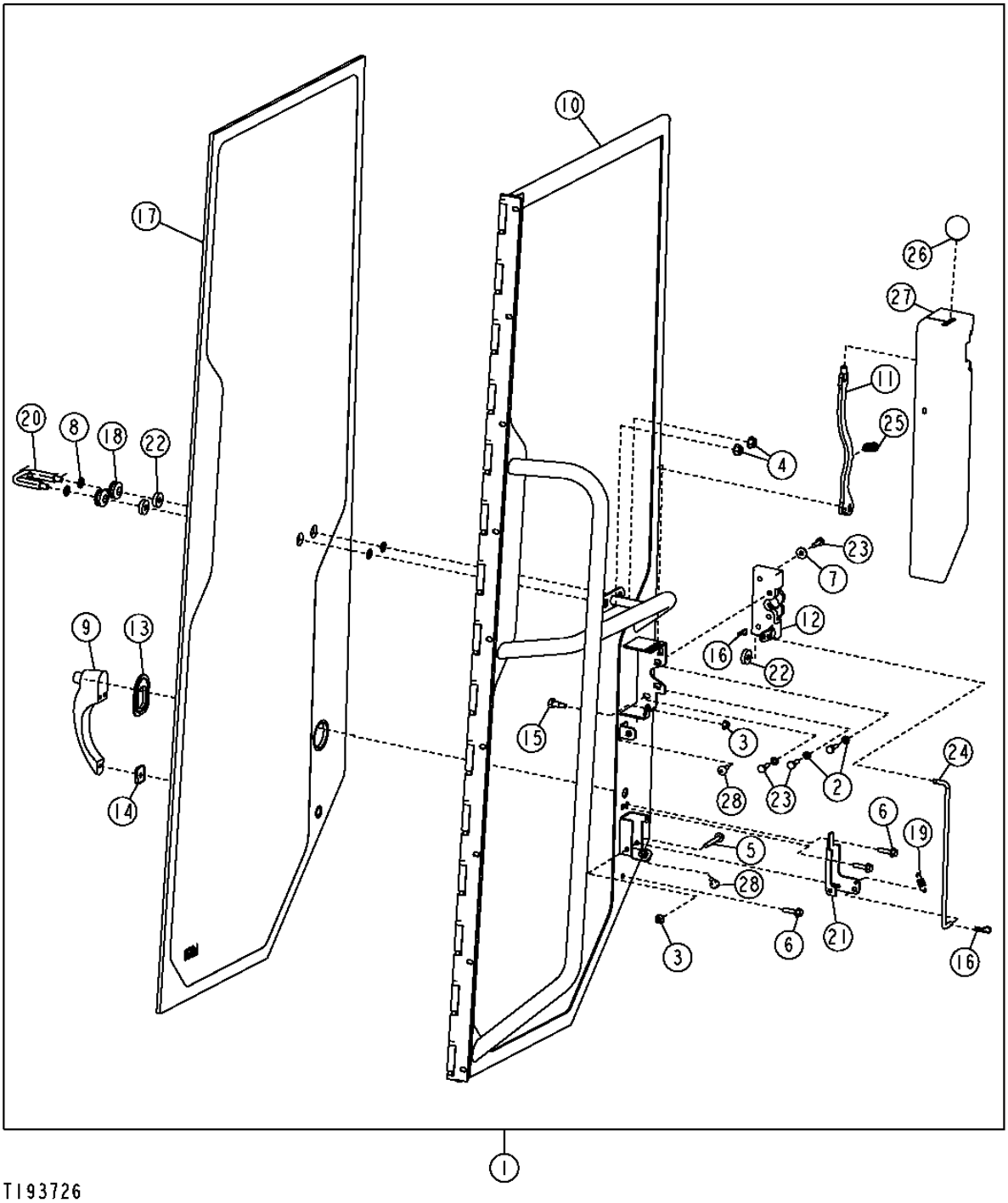

T193726

CAB DOOR
PORTE DE CABINE
PUERTA DE CABINA

KEY	PART NO.	PART NAME	QTY.	SERIAL NO.	REMARKS
1	AT224994	DOOR	1		(LH) (ASSY)
2	12M7006	LOCK WASHER	3		6 MM
3	14M7303	FLANGE NUT	2		M6
4	14M7424	FLANGE NUT	2		M8
5	19M7834	SCREW	1		M6 X 45
6	19M7863	SCREW	3		M6 X 25
7	24M7251	WASHER	1		6.400 X 18 X 1.600 MM
8	24M7362	WASHER	2		8.400 X 16 X 1.600 MM
9	AH121227	HANDLE	1		
10	AT224995	DOOR	1		(GRAY LEFT DOOR FRAME)
11	AT303493	CONTROL LEVER	1		(LEFT HAND DOOR RELEASE)
12	AT83105	LATCH	1		
13	H126081	BEZEL	1		
14	H126082	BEZEL	1		
15	.....	BOLT	1		(SUB 19M7077 AND T213560) (SUB FOR H131424)
16	H132922	COTTER PIN	2		
17	T167508	WINDOWPANE	1		(LH)
18	T167514	GROMMET	2		
19	T167530	SPRING	1		
20	T167546	STRIKER	1		
21	T167618	ARM	1		
22	T182899	WASHER	3		
23	T182963	SCREW	4		
24	T182967	ROD	1		
25	H95874	SPRING	1		
26	T182969	KNOB	1		
27	T182972	COVER	1		
28	TCU14336	SCREW	2		

CAB MONITOR CONSOLE
CONSOLE MONITEUR CABINE
CONSOLA DE MONITOR DE CABINA

T193669 -UN-24OCT03

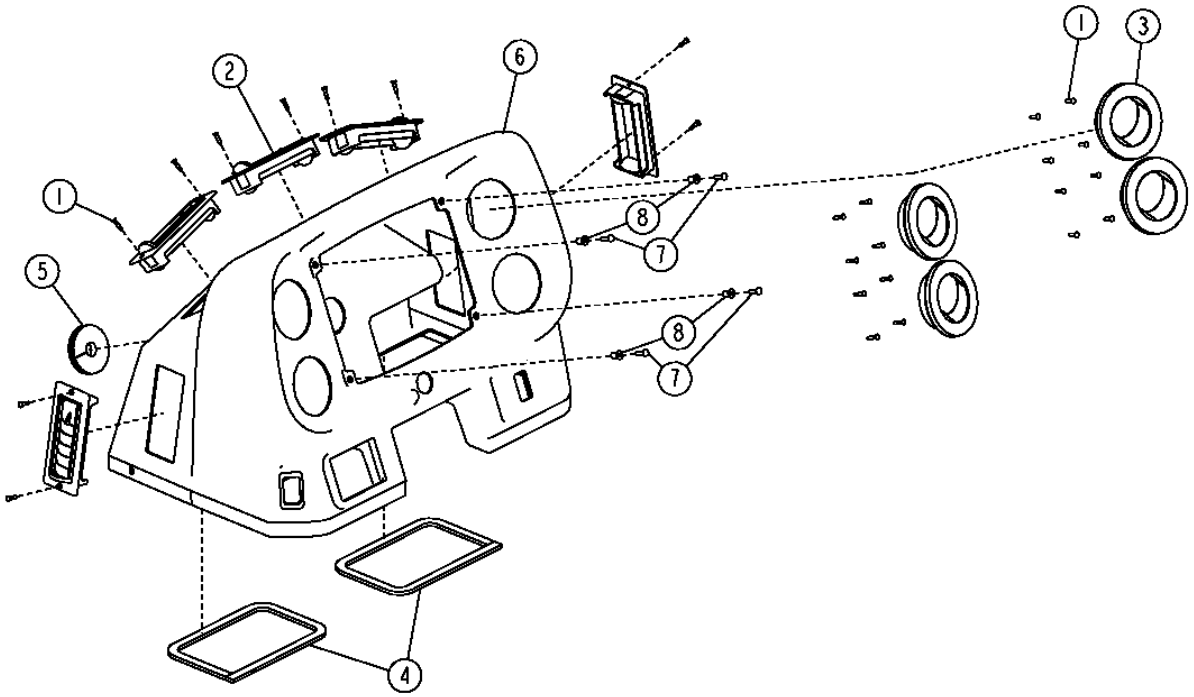

T193669

CAB MONITOR CONSOLE
CONSOLE MONITEUR CABINE
CONSOLA DE MONITOR DE CABINA

KEY	PART NO.	PART NAME	QTY.	SERIAL NO.	REMARKS
1	37M7333	SCREW	26		
2	AT227668	LOUVER	5		
3	AT227669	LOUVER	4		
4	H81330	ISOLATOR	2		
5	R117845	GROMMET	1		
6	T196471	CONSOLE	1		
7	T82791	SCREW	4		
8	T82792	NUT	4		

CANOPY MONITOR CONSOLE
CONSOLE MONITEUR EVENT
CONSOLA DEL MONITOR DEL DOSEL

T193739 -UN-19AUG03

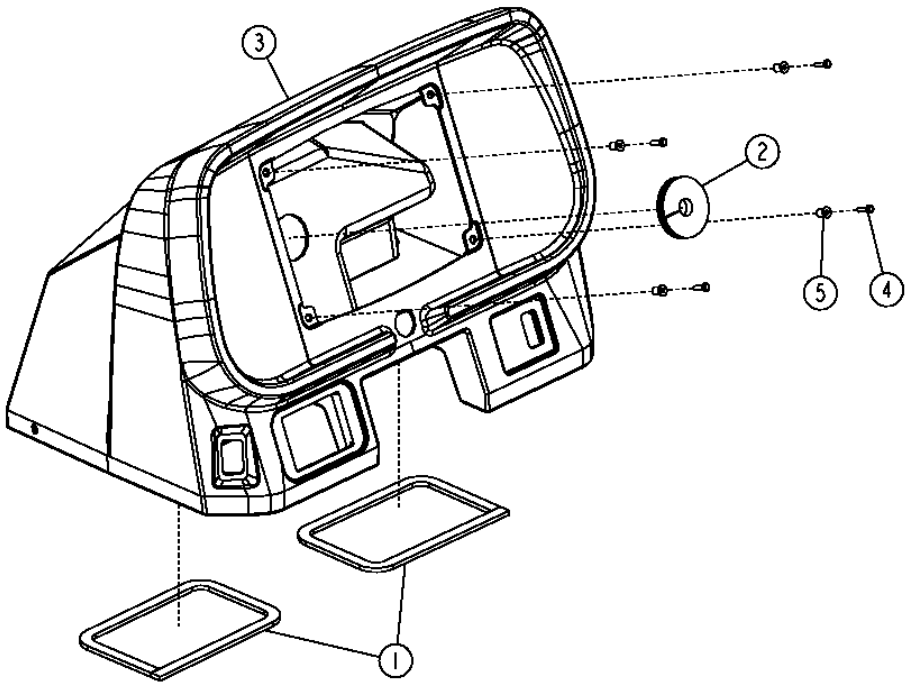

CANOPY MONITOR CONSOLE
CONSOLE MONITEUR EVENT
CONSOLA DEL MONITOR DEL DOSEL

KEY	PART NO.	PART NAME	QTY.	SERIAL NO.	REMARKS
1	H81330	ISOLATOR	2		
2	R117845	GROMMET	1		
3	T196621	CONSOLE	1		
4	T82791	SCREW	4		
5	T82792	NUT	4		

OPERATOR STATION FRONT PEDESTAL
SOCLE AVANT DE POSTE DE CONDUITE
PEDESTAL DELANTERO DEL PUESTO DEL OPERADOR

T193670 -UN-20AUG03

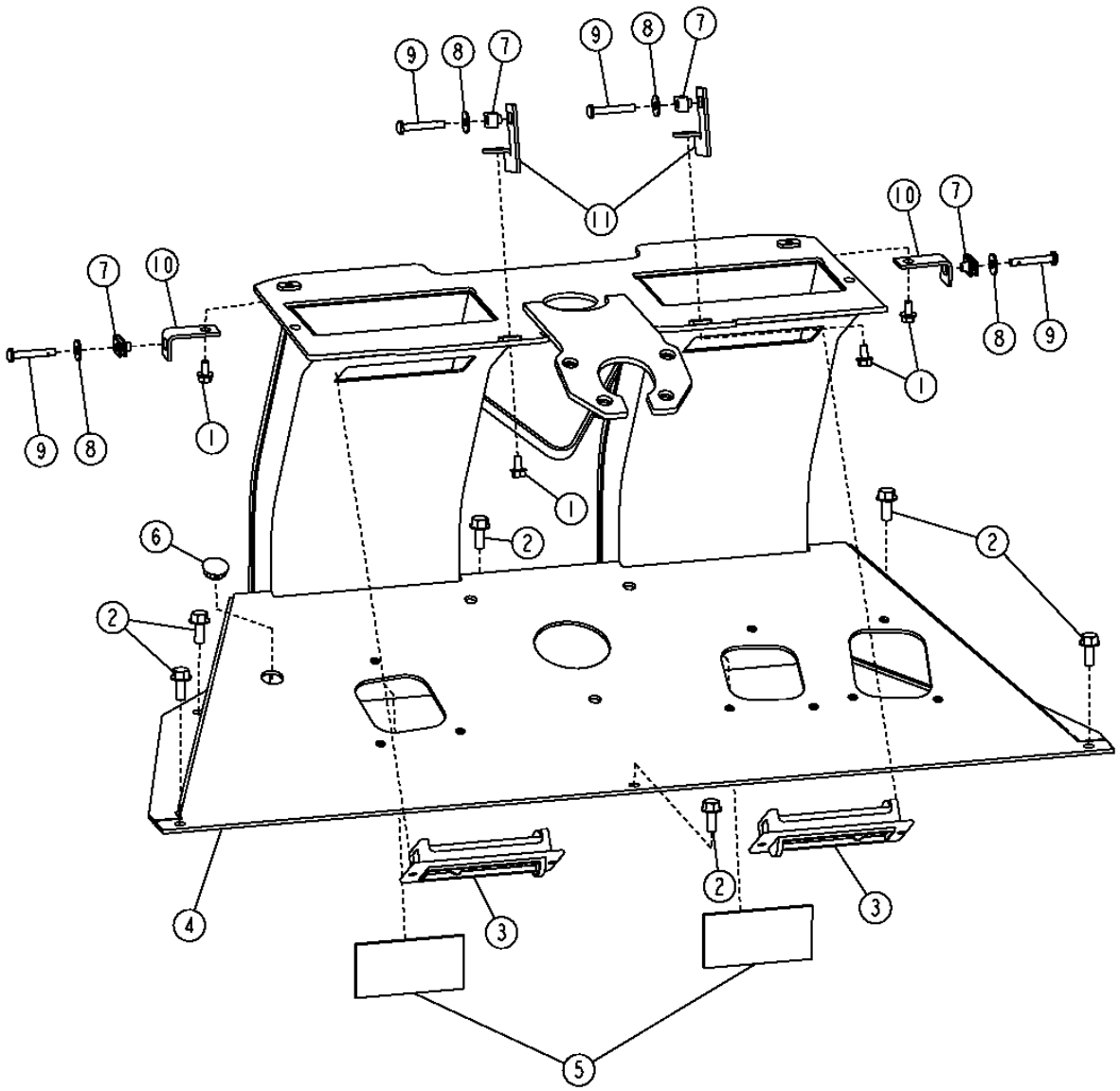

OPERATOR STATION FRONT PEDESTAL
SOCLE AVANT DE POSTE DE CONDUITE
PEDESTAL DELANTERO DEL PUESTO DEL OPERADOR

KEY	*PART NO.*	*PART NAME*	*QTY.*	*SERIAL NO.*	*REMARKS*
1	19M7774	SCREW	4		M6 X 12
2	19M7866	SCREW	6		M8 X 20
3	AT227668	LOUVER	2		
4	AT227965	PEDESTAL	1		
5	T66418	ISOLATOR	2		
6	H34597	PLUG	1		
7	M84972	NUT	4		
8	24H1821	WASHER	4		
9	T134874	SELF-LOCKING SCREW	4		(SUB FOR 21M7403)
10	T196711	ANGLE	2		(BACK)
11	T196712	BRACKET	2		(FRONT)

HEADLINER AND DOMELIGHT
REVETEMENT DE TOIT ET PLAFONNIER
LUZ DE TECHO Y FORRO

T193652 -UN-08SEP03

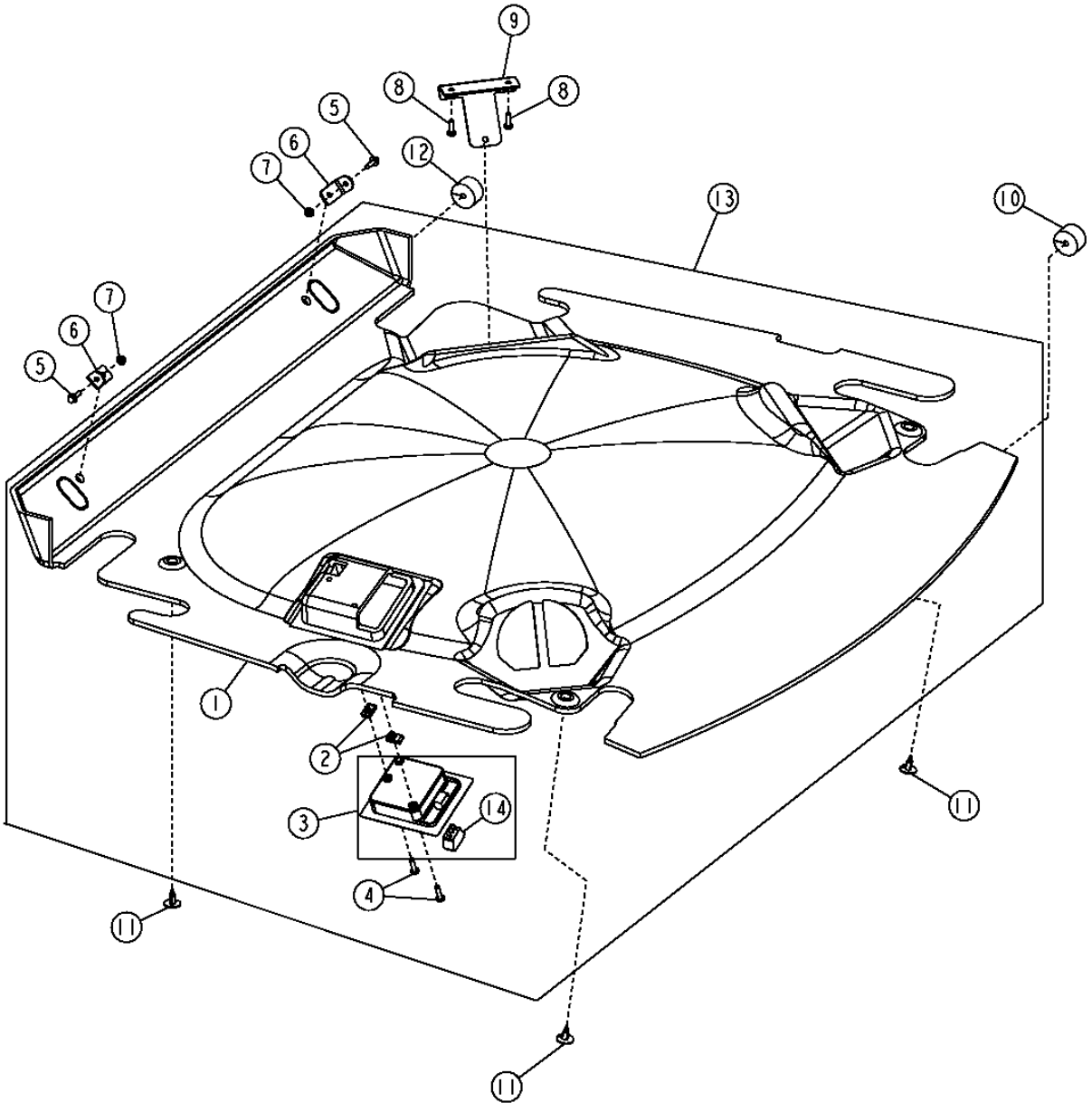

HEADLINER AND DOMELIGHT
REVETEMENT DE TOIT ET PLAFONNIER
LUZ DE TECHO Y FORRO

KEY	PART NO.	PART NAME	QTY.	SERIAL NO.	REMARKS
1	T181908	HEADLINER	1		(A)
	T181520	HEADLINER	1		(B)
2	M84972	NUT	2		
3	AT224923	LAMP	1		INCLUDES BULB AND LENS
	AT173355	BULB	1		
4	T134895	SELF-LOCKING SCREW	2		(SUB FOR 21M7310)
5	19M7862	SCREW	2		M6 X 20
6	T181050	ANGLE	2		
7	14M7303	FLANGE NUT	2		M6
8	19H1948	CAP SCREW	2		1/4" X 3/4"
9	T180418	STRAP	1		(A)
10	T182870	ISOLATOR	1		(A) (SUB FOR T182861)
	T182870	ISOLATOR	1		(B)
11	T184892	RETAINER	4		
12	T182870	ISOLATOR	1		(A) (SUB FOR T182861)
	T65643	GROMMET	1		(B) (SUB FOR T182871, THIS APPLICATION)
13	AT224234	HEADLINER	1		(A)
	AT224233	HEADLINER	1		(B)
14	RE48838	TOGGLE/ROCKER SWITCH	1		(DOME LIGHT)

(A) WITHOUT RADIO
(A) AVEC RADIO
(A) SANS RADIO

(B) WITH RADIO
(B) CON RADIO
(B) SIN RADIO

CANOPY, REAR WINDOW, AND HEADLINER
AUVENT, GLACE ARRIERE ET REVETEMENT DE TOIT
DOSEL, FORRO Y VENTANA TRASERA

T193850 -UN-09SEP03

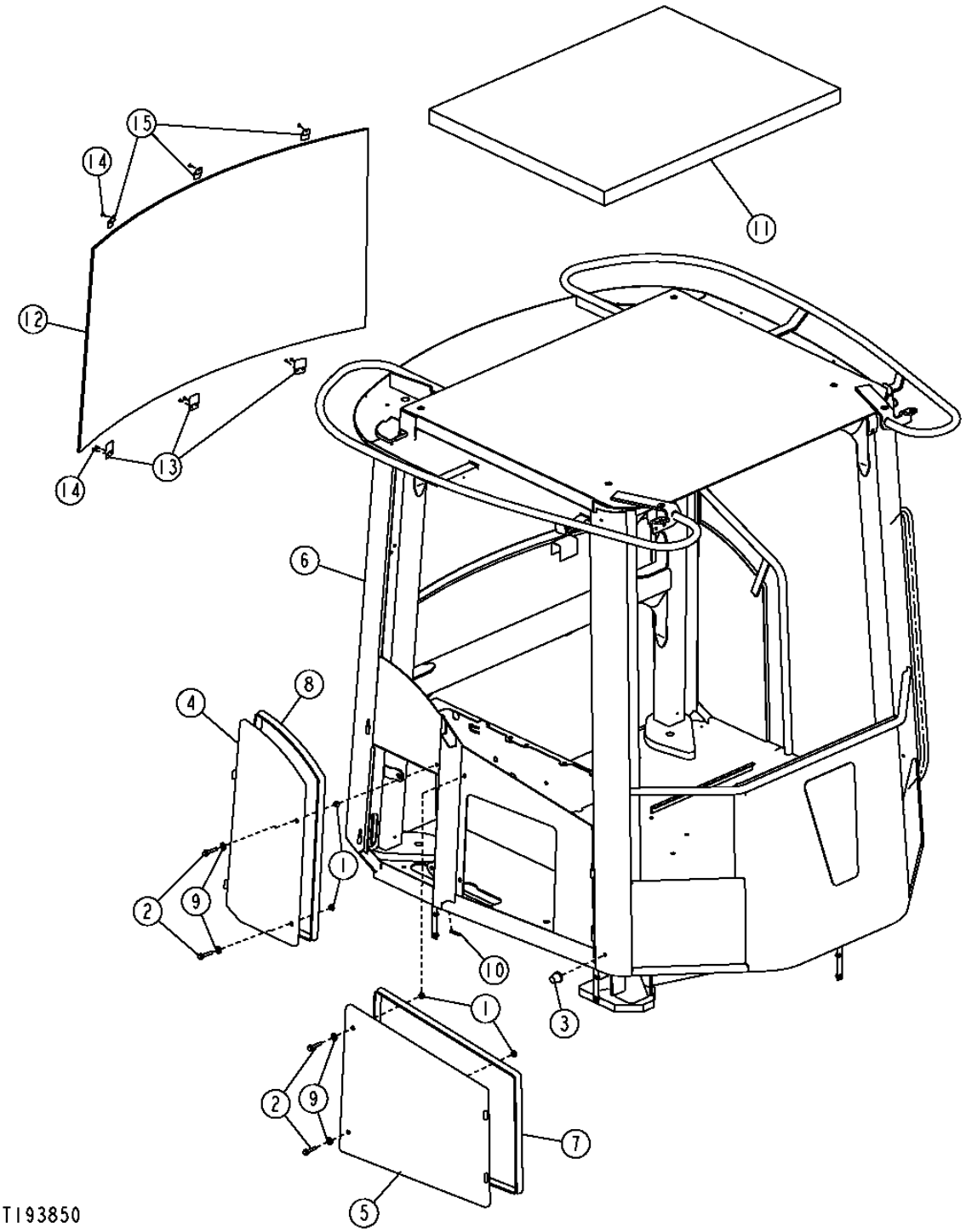

CANOPY, REAR WINDOW, AND HEADLINER
AUVENT, GLACE ARRIERE ET REVETEMENT DE TOIT
DOSEL, FORRO Y VENTANA TRASERA

KEY	PART NO.	PART NAME	QTY.	SERIAL NO.	REMARKS
1	14M7298	FLANGE NUT	4		M8
2	19M8318	SCREW	4		M8 X 45
3	AT211296	BUMPER	1		
4	AT224989	DOOR	1		(ACCESS PANEL, RH REAR)
5	AT224991	DOOR	1		(ACCESS PANEL, RH FRONT)
6	AT226377	CAB FRAME	1		
7	AT305130	ISOLATOR	1		
8	.....	ISOLATOR	1		(MAKE FROM AT305130) (CUT TO 75.5 IN.(1918MM))
9	H110232	WASHER	4		0.406" X 0.890" X 0.059"
10	T203614	ISOLATOR	2		(1/4" CORD) (CUT TO 1 9/16 IN. (40 MM))
11	T180921	HEADLINER	1		
12	T167519	WINDOW	1		(REAR)
13	T182952	RETAINER	3		
14	AT44188	RIVET	9		
15	T182925	RETAINER	3		

DRIP RAIL
GOUTTIERE
RIEL DE VACIADO

TP62704 -UN-23NOV99

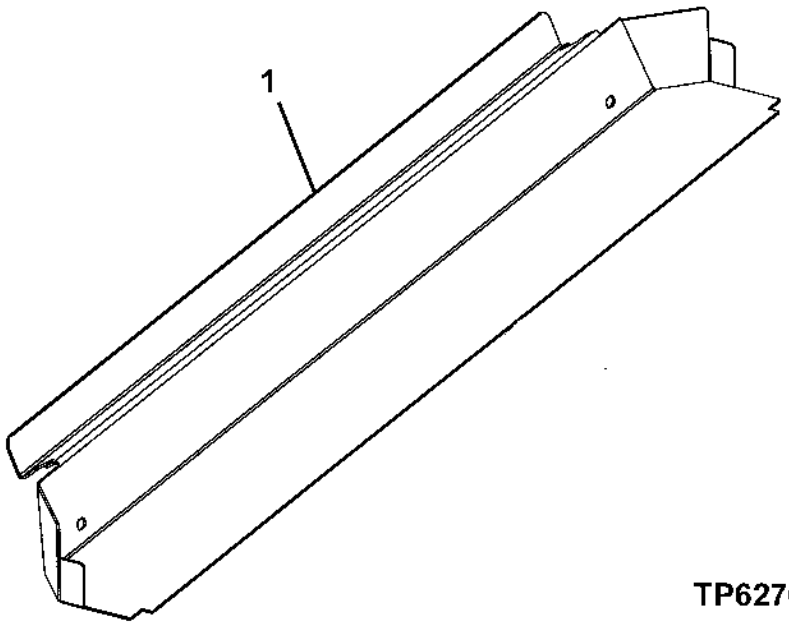

KEY	PART NO.	PART NAME	QTY.	SERIAL NO.	REMARKS
1	AT325643	RAIL	1		(SUB FOR AT224933)

MEMORANDA
MEMORANDA
MEMORANDA

CAB TRIM, SEAT BASE AND FIRE EXTINGUISHER
GARNITURE CABINE, BASE SIEGE ET EXTINCTEUR
PIEZAS DE ADORNO DE LA CABINA, BASE DEL ASIENTO Y EXTINGUIDOR DE INCENDIOS

T193870 -UN-22SEP03

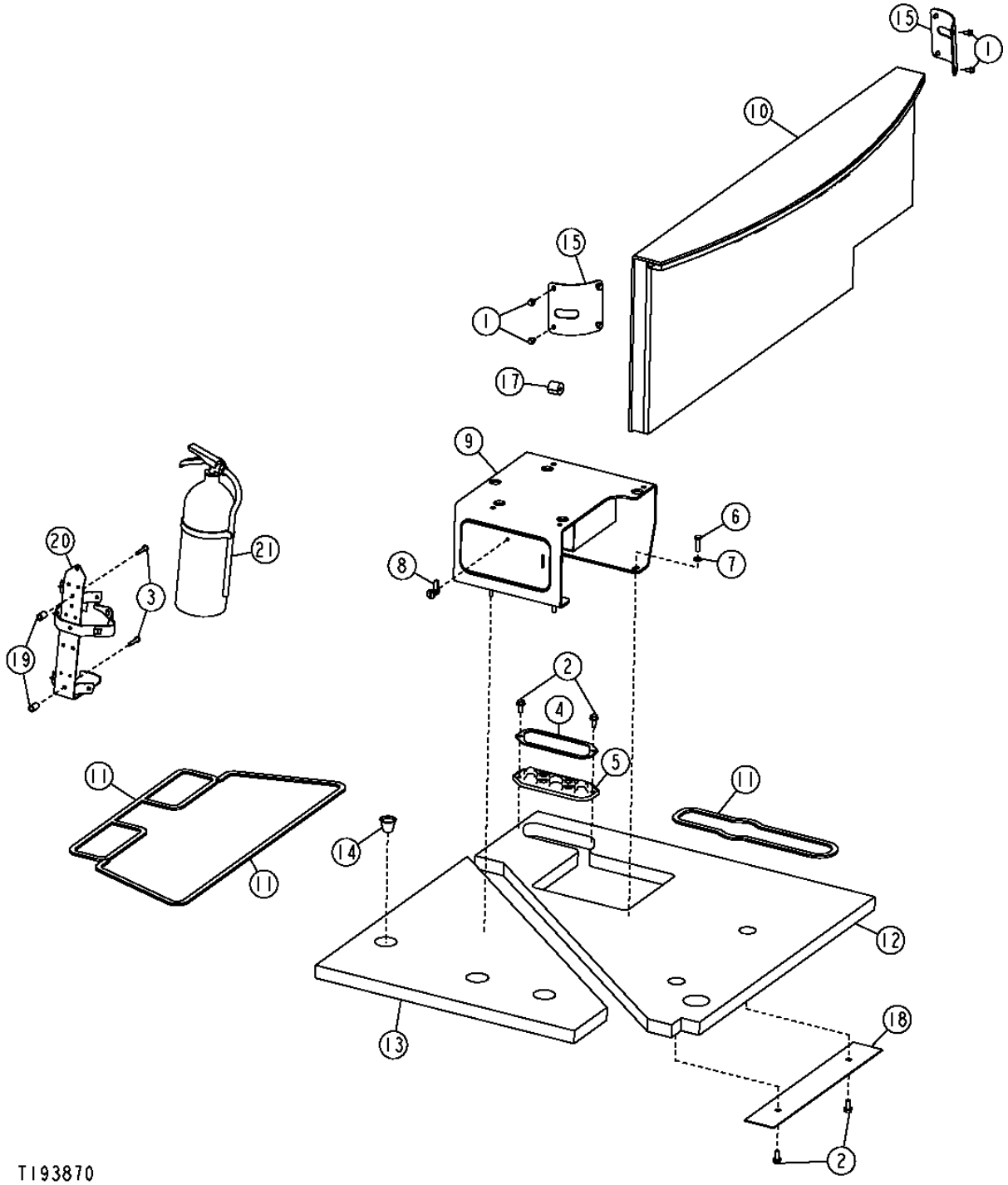

CAB TRIM, SEAT BASE AND FIRE EXTINGUISHER
GARNITURE CABINE, BASE SIEGE ET EXTINCTEUR
PIEZAS DE ADORNO DE LA CABINA, BASE DEL ASIENTO Y EXTINGUIDOR DE INCENDIOS

KEY	*PART NO.*	*PART NAME*	*QTY.*	*SERIAL NO.*	*REMARKS*
1	19M7774	SCREW	8		M6 X 12
2	19M7866	SCREW	4		M8 X 20
3	21M7247	SCREW	2		M6 X 35
4	T172991	PLATE	1		
5	T172992	GROMMET	1		
6	19M7868	SCREW	5		M8 X 30, (SUB FOR 19M7513)
7	24M7238	WASHER	5		8.700 X 17 X 2 MM
8	AT151931	LATCH	1		
9	AT224235	FLOOR	1		
10	AT225706	PAD	1		
11	.....	WEATHERSTRIP	1		(MAKE FROM H81330) (CUT TO LENGTH)
12	T167770	ISOLATOR	1		
13	T209094	ISOLATOR	1		(SUB FOR T167771)
14	T180408	PLUG	1		
15	T205472	COVER	2		
17	T182860	ISOLATOR	1		
18	T182906	PLATE	1		
19	28H3423	BUSHING	2		0.364" X 0.540" X 7/8"
20	AT189390	BRACKET	1		
21	AT189487	FIRE EXTINGUISHER	1		

CANOPY TRIM, SEAT BASE AND FIRE EXTINGUISHER
GARNITURE AUVENT, BASE SIEGE ET EXTINCTEUR
ADORNO DEL DOSEL, BASE DEL ASIENTO Y EXTINGUIDOR DE INCENDIOS

TX1008150 -UN-24MAY06

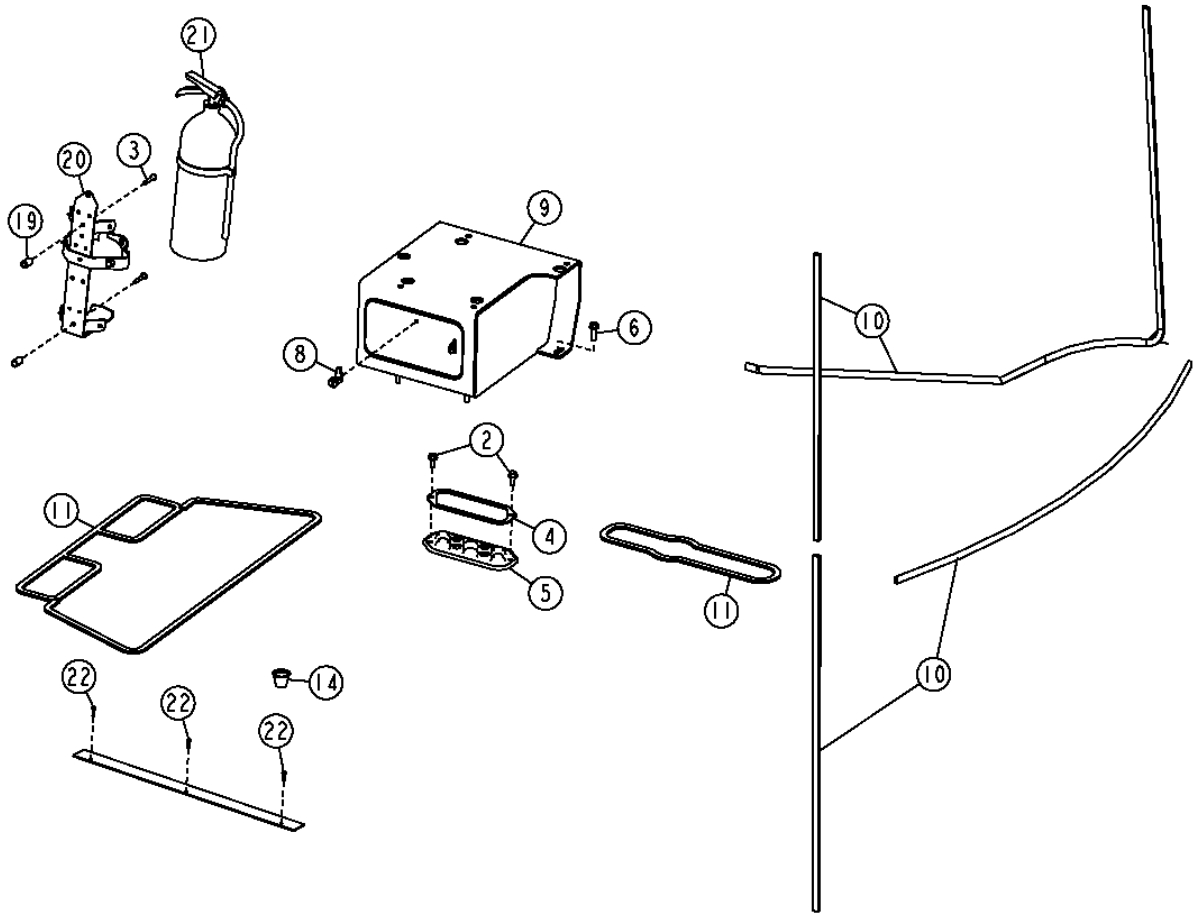

TX1008150

CANOPY TRIM, SEAT BASE AND FIRE EXTINGUISHER
GARNITURE AUVENT, BASE SIEGE ET EXTINCTEUR
ADORNO DEL DOSEL, BASE DEL ASIENTO Y EXTINGUIDOR DE INCENDIOS

KEY	*PART NO.*	*PART NAME*	*QTY.*	*SERIAL NO.*	*REMARKS*
2	19M7866	SCREW	2		M8 X 20
3	21M7247	SCREW	2		M6 X 35
4	T172991	PLATE	1		
5	T172992	GROMMET	1		
6	19M7868	SCREW	5		M8 X 30, (SUB FOR 19M7513)
8	AT151931	LATCH	1		
9	AT224237	FLOOR	1		
10	T180533	SEALING TRIM	1		
11	H81330	ISOLATOR	12		120"
14	T180408	PLUG	1		
19	28H3423	BUSHING	2		0.364" X 0.540" X 7/8"
20	AT189390	BRACKET	1		
21	AT189487	FIRE EXTINGUISHER	1		
22	T182888	SCREW	3		

FRONT AND REAR CAB MOUNTS
MONTAGES CABINE AVANT ET ARRIERE
SOPORTES DE LA CABINA TRASERO Y DELANTERO

TX1006295 -UN-24APR06

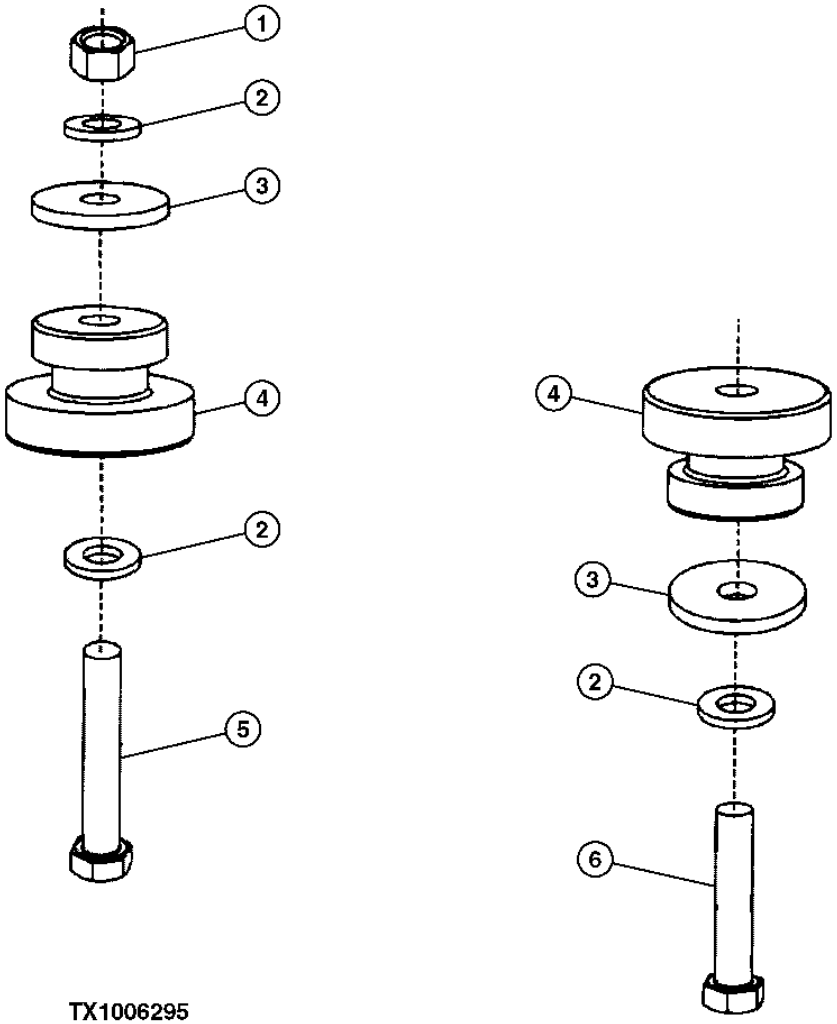

TX1006295

FRONT AND REAR CAB MOUNTS
MONTAGES CABINE AVANT ET ARRIERE
SOPORTES DE LA CABINA TRASERO Y DELANTERO

KEY	*PART NO.*	*PART NAME*	*QTY.*	*SERIAL NO.*	*REMARKS*
1	14M7278	NUT	2		M24
2	24M7243	WASHER	6		25.400 X 50 X 6 MM
3	T153535	WASHER	4		
4	AT170005	ISOLATOR	4		
5	19M7781	CAP SCREW	2		M24 X 150
6	19M7903	CAP SCREW	2		M24 X 120

WINDOW WASHER AND HOSES
LAVEUR DE GLACE ET FLEXIBLES
MANGUERAS Y LAVAPARABRISAS

T193102 -UN-22AUG03

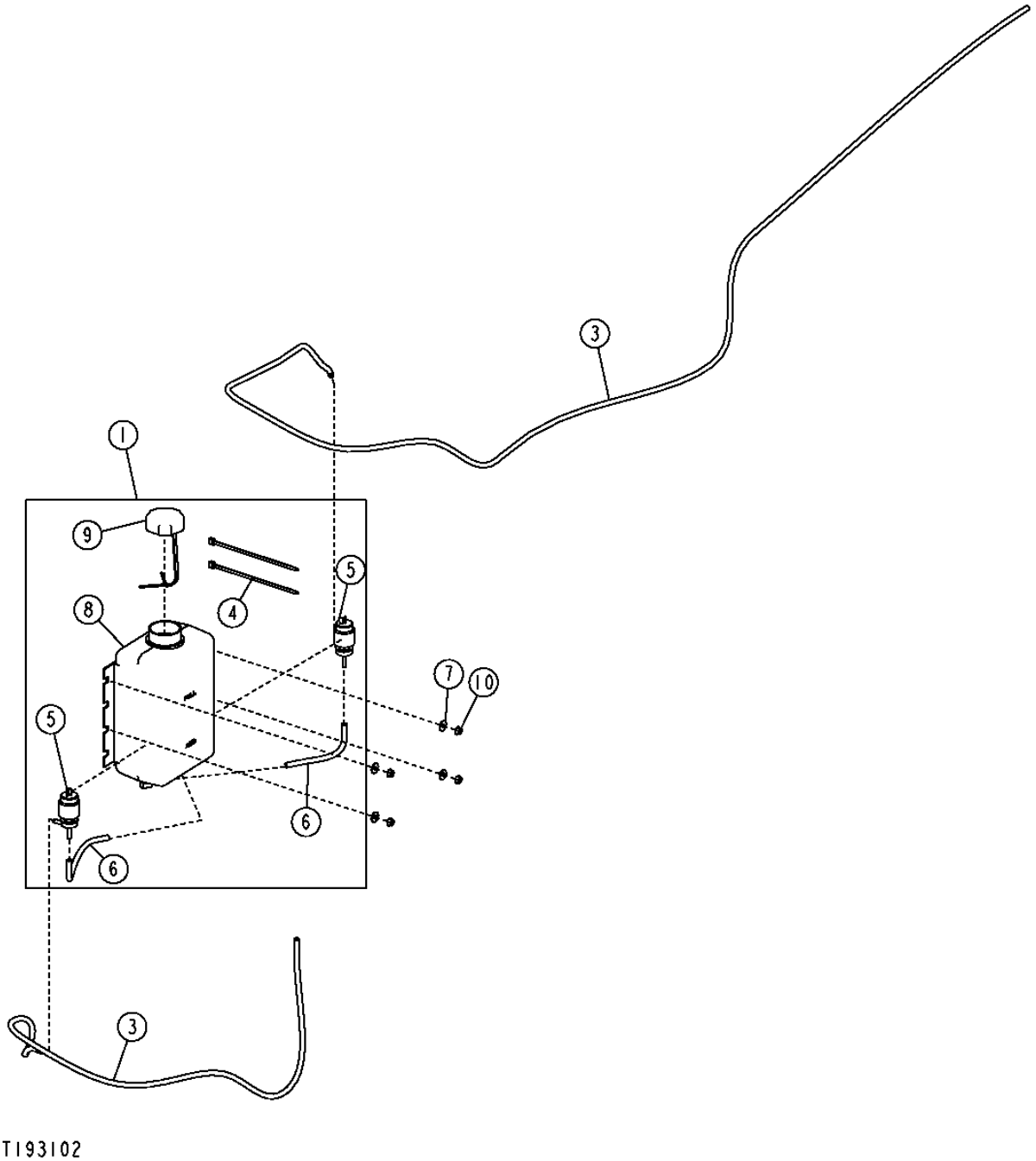

WINDOW WASHER AND HOSES
LAVEUR DE GLACE ET FLEXIBLES
MANGUERAS Y LAVAPARABRISAS

KEY	*PART NO.*	*PART NAME*	*QTY.*	*SERIAL NO.*	*REMARKS*
1	AT209947	TANK	1		(ASSY)
3	.....	HOSE	AR		(CUT TO LENGTH) (MAKE FROM R120653) (SUB FOR R54445 AND R104595)
4	R44302	TIE BAND	2		
5	AT106365	PUMP	2		
6	.....	HOSE	AR		(CUT TO LENGTH) (MAKE FROM R120653) (SUB FOR R54445 AND R104595)
7	24M7139	WASHER	4		6.400 X 18 X 1.600 MM, TO BOSSES ON ACCESS DOOR
8	T147618	TANK	1		
9	AT173193	CAP	1		
10	14M7303	FLANGE NUT	4		

FRONT WINDSHIELD WIPER
ESSUIE-GLACES AVANT
LIMPIAPARABRISAS FRONTAL

T188479 -UN-25MAR03

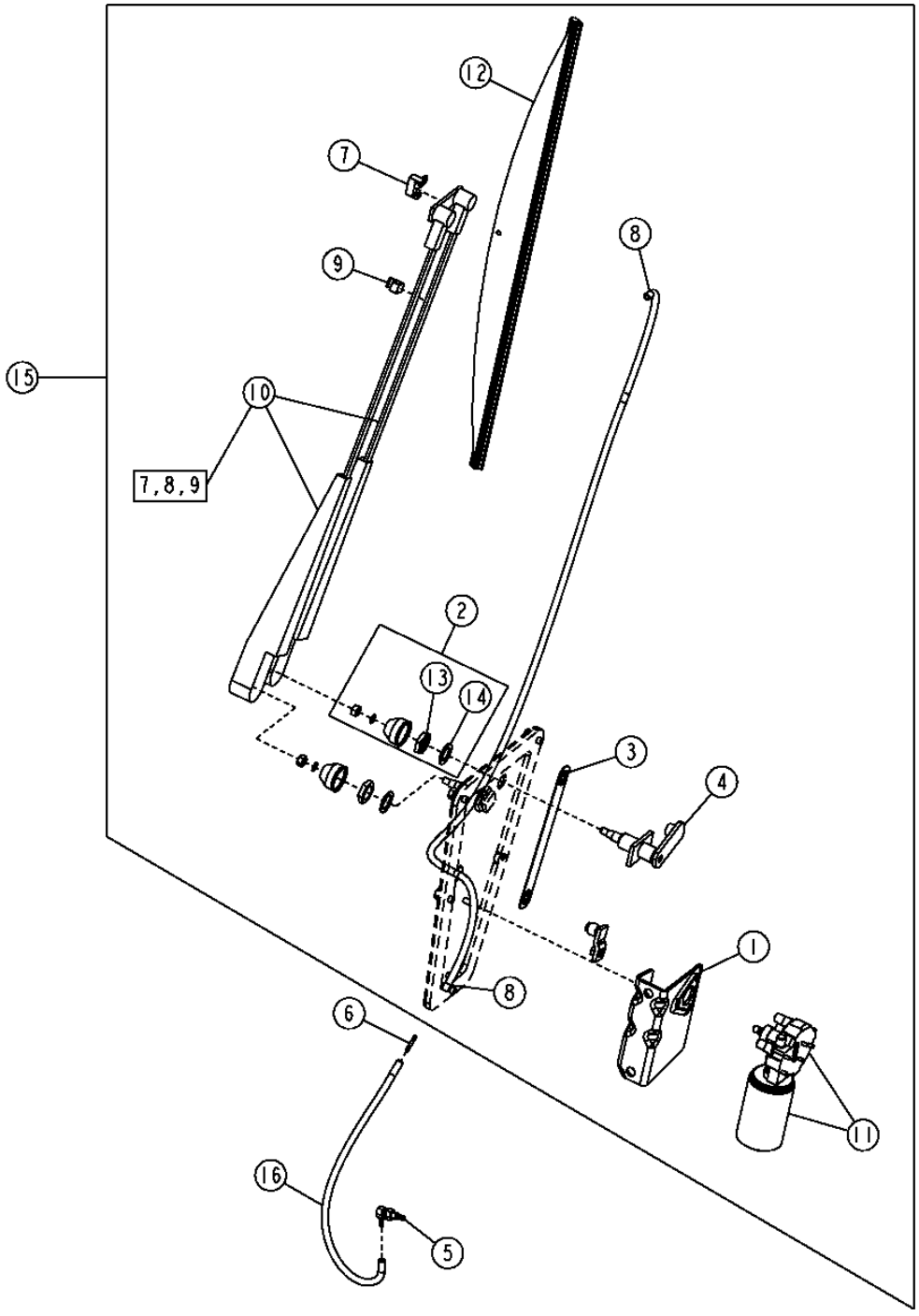

FRONT WINDSHIELD WIPER
ESSUIE-GLACES AVANT
LIMPIAPARABRISAS FRONTAL

KEY	*PART NO.*	*PART NAME*	*QTY.*	*SERIAL NO.*	*REMARKS*
1	RE16879	BRACKET	1		
2	RE40049	KIT	2		(WIPER MOUNTING HARDWARE)
3	T172652	LINK	1		
4	T202343	PIVOT	1		
5	AT116970	ELBOW FITTING	1		
6	T182919	FITTING	1		
7	AT137920	WINDSHIELD WASHER	1		
8	R54445	HOSE	1		
9	AT137921	CLIP	1		
10	AT209909	WIPER ARM	1		
11	AT209908	WIPER MOTOR	1		
12	AT324681	WIPER BLADE	1		(SUB FOR AT138215)
13	AT138180	NUT	2		
14	R63667	WASHER	2		
15	AT202726	WINDSHIELD WIPER	1		
16	.....	HYDRAULIC HOSE - FABRICATE	1		(CUT TO 15 IN.) (MAKE FROM R120653)

REAR WINDSHIELD WIPER
ESSUIE-GLACE ARRIERE
LIMPIADOR DE PARABRISAS TRASERO

T193133 -UN-18NOV03

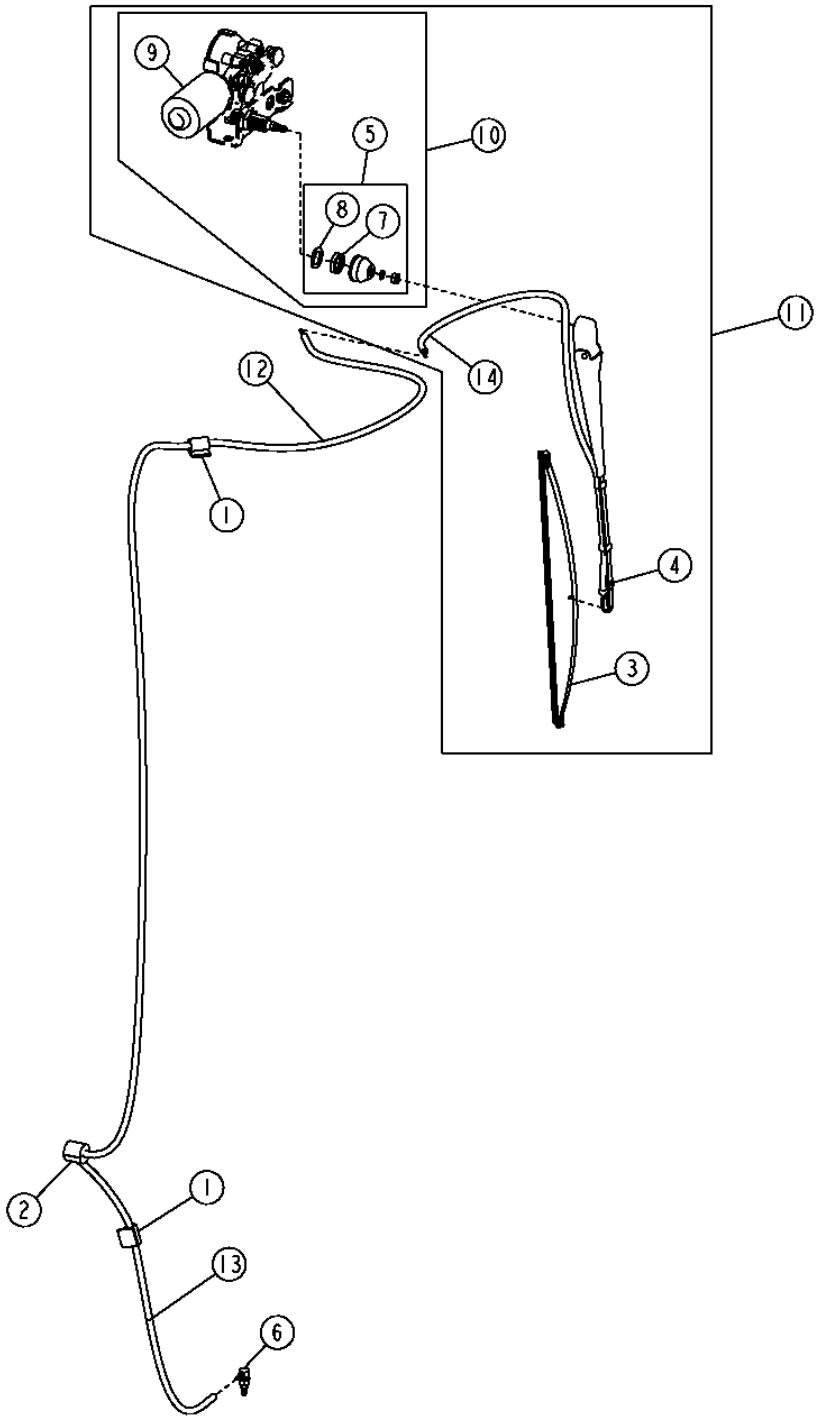

REAR WINDSHIELD WIPER
ESSUIE-GLACE ARRIERE
LIMPIADOR DE PARABRISAS TRASERO

KEY	PART NO.	PART NAME	QTY.	SERIAL NO.	REMARKS
1	T182909	CLIP	2		
2	T182860	ISOLATOR	1		
3	AL153660	WIPER BLADE	1		(INCLUDES R120653) (SUB FOR AT209912)
4	AT209910	WIPER ARM	1	-867756	
	AT304633	WIPER ARM	1	867757-	
5	RE40049	KIT	1		(HARDWARE)
6	AT116970	ELBOW FITTING	1		
7	AT138180	NUT	1		
8	R63667	WASHER	1		
9	AT209908	WIPER MOTOR	1		(24V)
10	AT224217	WIPER MOTOR	1	-867756	(WIPER DRIVE & MOTOR)
	AT324849	WIPER MOTOR	1	867757-	
11	.....	MOTOR	1		(REAR WIPER ASSEMBLY) (AT202784 NLA) (FURNISH COMPONENTS)
12	T182919	FITTING	1		
13	.....	BULK HOSE	1		(MAKE FROM R120653) (CUT TO 96 IN.)
14	.....	BULK HOSE	1		(MAKE FROM R120653) (CUT TO LENGTH)

WIPER MOUNTING BRACKETS
SUPPORTS MONTAGE ESSUIE-GLACE
ESCUADRAS DE MONTAJE DEL LIMPIAPARABRISAS

T193134 -UN-01AUG03

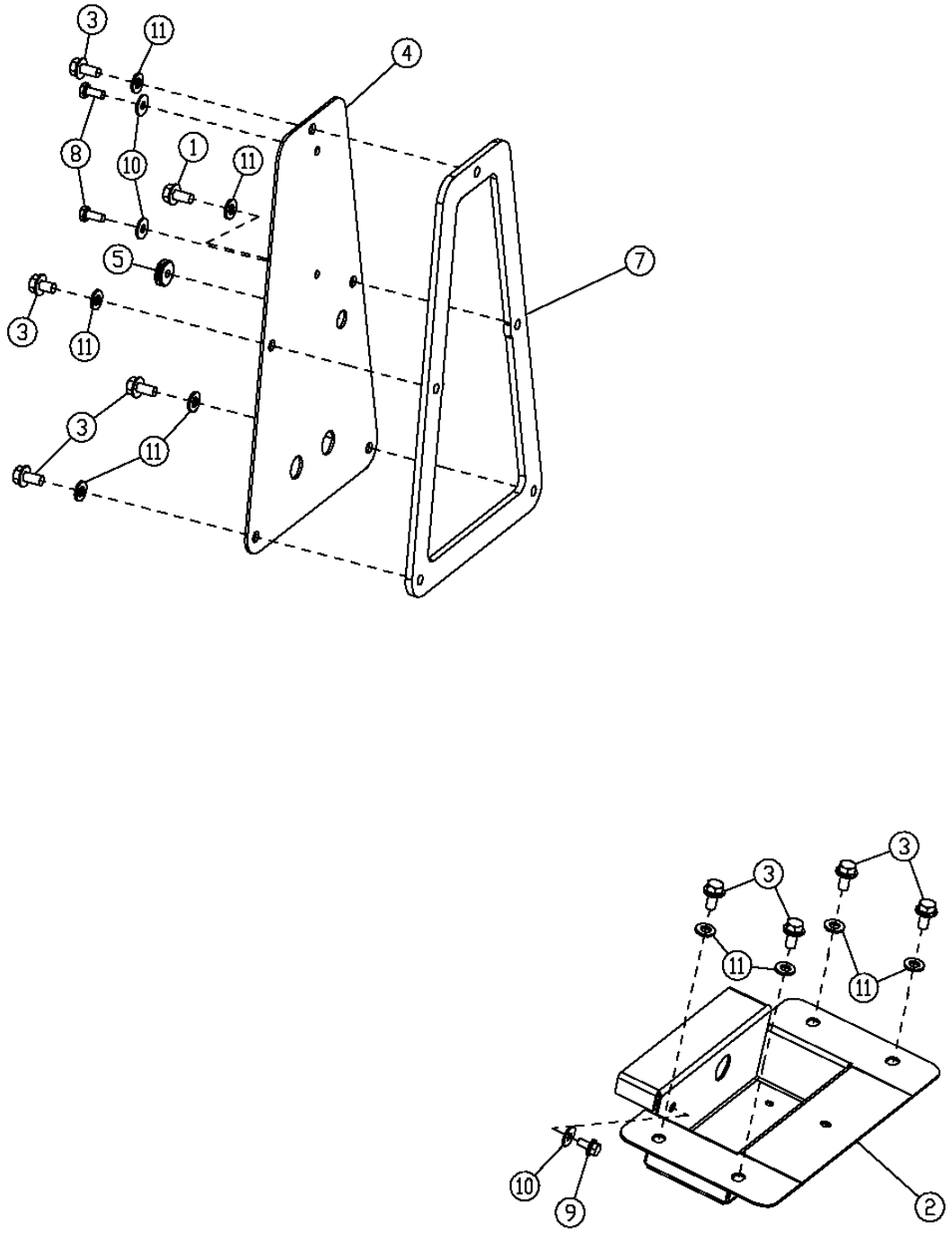

T193134

WIPER MOUNTING BRACKETS
SUPPORTS MONTAGE ESSUIE-GLACE
ESCUADRAS DE MONTAJE DEL LIMPIAPARABRISAS

KEY	*PART NO.*	*PART NAME*	*QTY.*	*SERIAL NO.*	*REMARKS*
1	19M7865	SCREW	1		M8 X 16
2	T181412	TRAY	1		BRACKET, REAR WIPER MOUNTING
3	19M7865	SCREW	8		M8 X 16
4	T181413	PLATE	1		
5	T182874	GROMMET	1		
7	T167754	SEAL	1		
8	19M7775	SCREW	2		M6 X 16, (SUB FOR 19H3138, THIS APPLICATION)
9	19M7774	SCREW	1		M6 X 12
10	24M7139	WASHER	3		6.400 X 18 X 1.600 MM
11	24M7238	WASHER	9		

CAB SHIELDS
PROTECTIONS CABINE
ESCUDOS DE LA CABINA

TP60306 -UN-08APR98

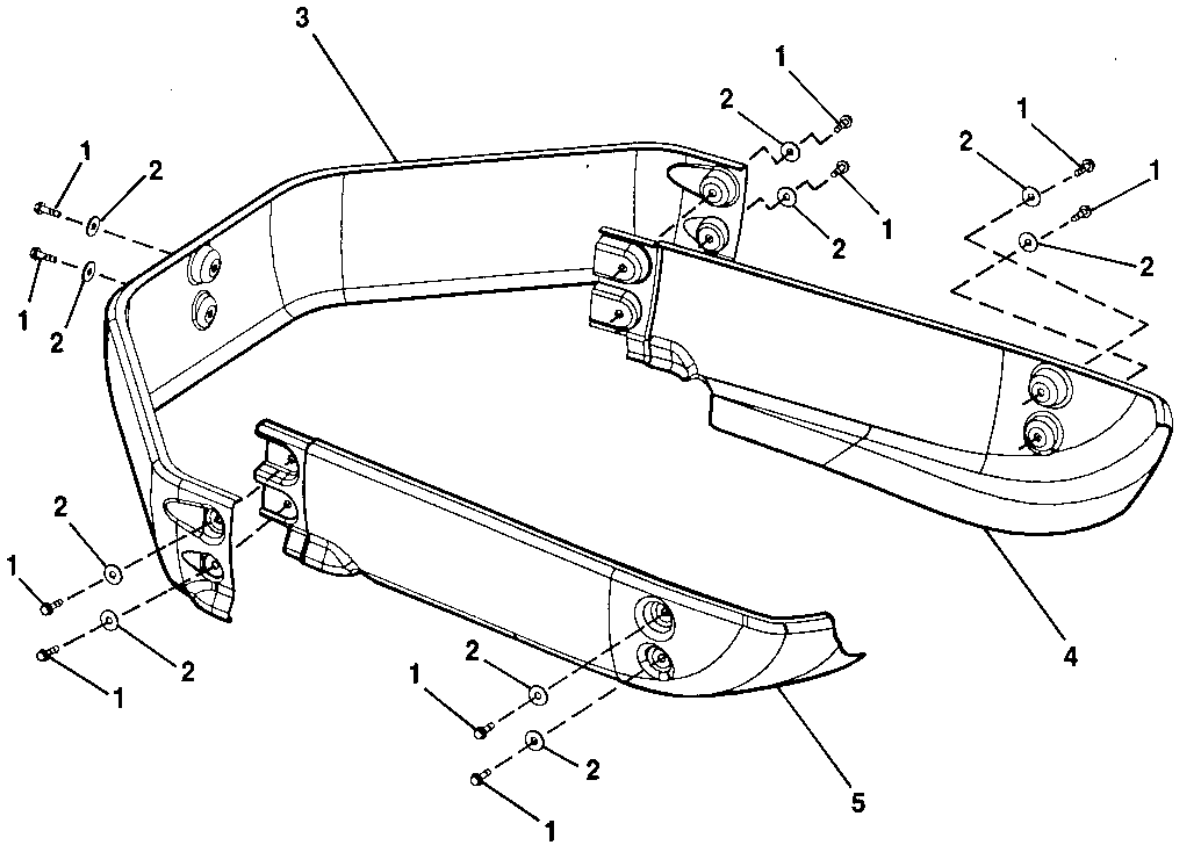

TP60306

CAB SHIELDS
PROTECTIONS CABINE
ESCUDOS DE LA CABINA

KEY	*PART NO.*	*PART NAME*	*QTY.*	*SERIAL NO.*	*REMARKS*
1	19M7868	SCREW	10		
2	24M7296	WASHER	10		10.500 X 30 X 2.500 MM
3	T175015	SHIELD	1		
4	T174886	SHIELD	1		(RH) (GRAY)
5	T174887	SHIELD	1		(LH) (GRAY)

ROOF
TOIT
TECHO

T193660 -UN-19AUG03

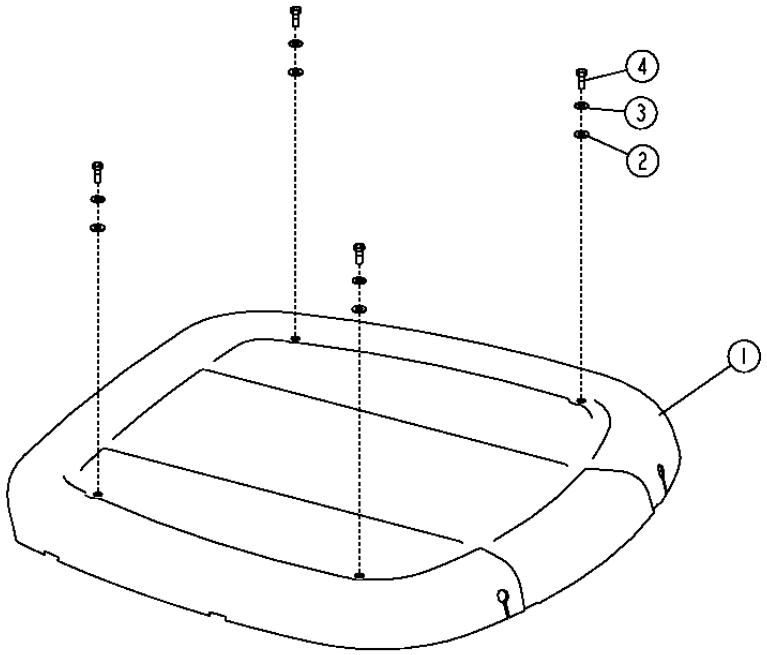

T193660

KEY	PART NO.	PART NAME	QTY.	SERIAL NO.	REMARKS
1	AT226578	ROOF	1		(PLASTIC)
	AT227013	ROOF	1		(PAINTABLE)
2	T167659	WASHER	4		
3	24H1368	WASHER	4		
4	T182920	CAP SCREW	4		

HORN
KLAXON
BOCINA

TP60387 -UN-13MAY98

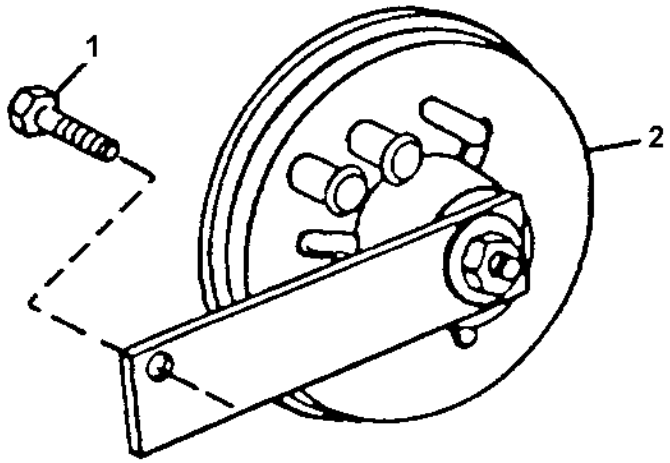

TP60387

KEY	PART NO.	PART NAME	QTY.	SERIAL NO.	REMARKS
1	19M7864	SCREW	1	-XXXXXX	M8 X 12
	19M7865	SCREW	1	XXXXXX-	
2	AT226282	HORN	1		LOW NOTE

BACKUP ALARM
AVERTISSEUR SONORE DE MARCHE ARRIERE
BOCINA DE RETROCESO

T193992 -UN-18AUG03

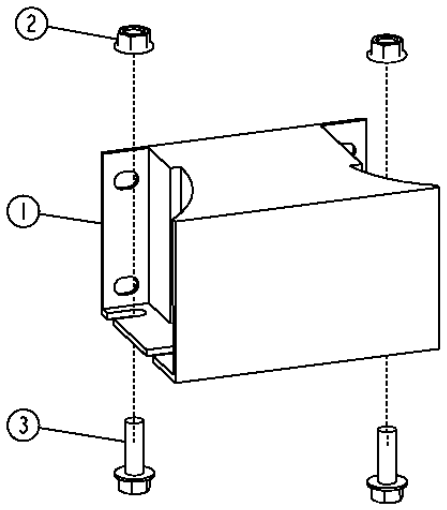

T193992

KEY	*PART NO.*	*PART NAME*	*QTY.*	*SERIAL NO.*	*REMARKS*
1	AT120461	TRAVEL WARNING ALARM	1		
2	14M7298	FLANGE NUT	2		M8
3	19M7867	SCREW	2		M8 X 25

SLOW MOVING VEHICLE EMBLEM
SIGNAL DE VEHICULE LENT
ETIQUETA DE VEHICULO DE MOVIMIENTO LENTO

T194002 -UN-20AUG03

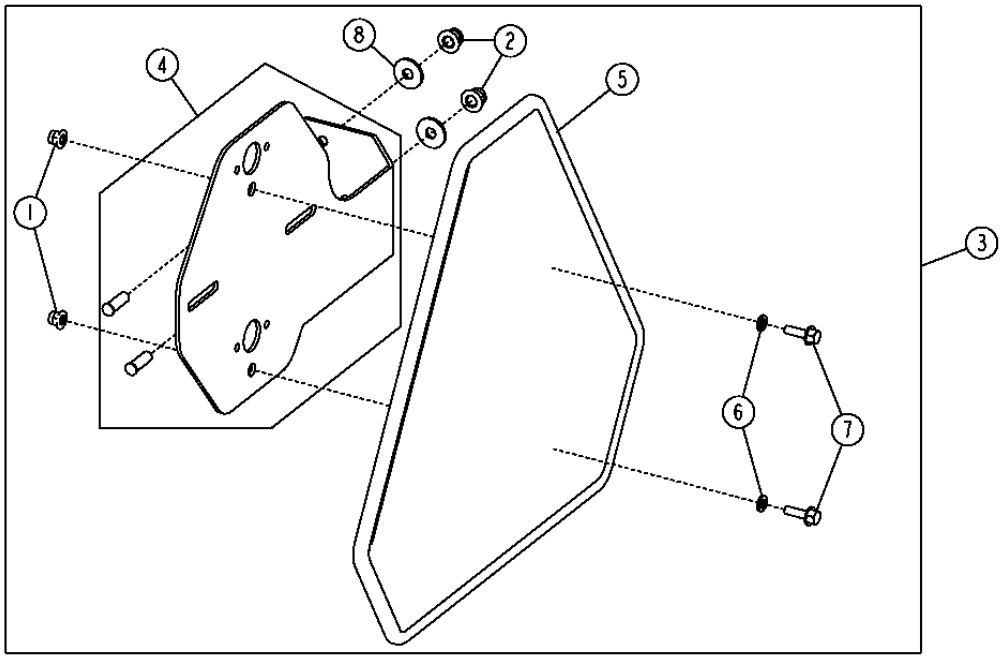

T194002

KEY	PART NO.	PART NAME	QTY.	SERIAL NO.	REMARKS
1	14M7397	LOCK NUT	2		M6
2	14M7396	LOCK NUT	2		M8
3	**AT301913**	**SMV EMBLEM**	**1**		**(WHOLE GOODS)**
4	AT301914	BRACKET	1		
5	JD5929	SMV EMBLEM	1		
6	24M7088	WASHER	2		6.600 X 12 X 1.600 MM
7	19M7862	SCREW	2		M6 X 20
8	24M7298	WASHER	2		8.400 X 25 X 2 MM

OUTSIDE MIRROR FOR CAB OR CANOPY
RETROVISEUR EXTERIEUR POUR CABINE ET AUVENT
ESPEJO RETROVISOR EXTERIOR PARA CABINA O DOSEL

T192728 -UN-18AUG03

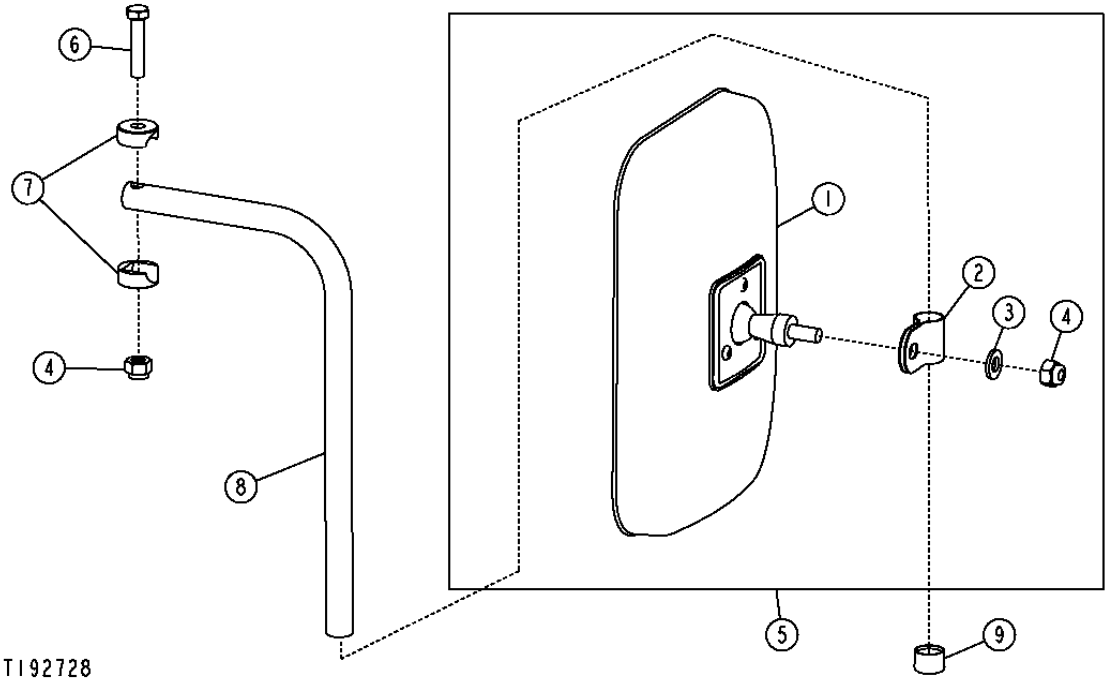

KEY	PART NO.	PART NAME	QTY.	SERIAL NO.	REMARKS
1	AT157226	REAR VIEW MIRROR	1		
2	T119564	CLAMP	1		
3	24M7239	WASHER	1		10.700 X 21 X 2.500 MM
4	T11234	LOCK NUT	2		
5	AT103919	REAR VIEW MIRROR	1		
6	19H2791	CAP SCREW	1		3/8" X 1-3/4"
7	T115030	HALF CLAMP	2		
8	T115031	RIB	1		
9	T128437	CAP	1		

MEMORANDA
MEMORANDA
MEMORANDA

INSIDE REAR VIEW MIRROR
INTERIEUR RETROVISEUR ARRIERE
ESPEJO RETROVISOR INTERIOR

TX1006817 -UN-27APR06

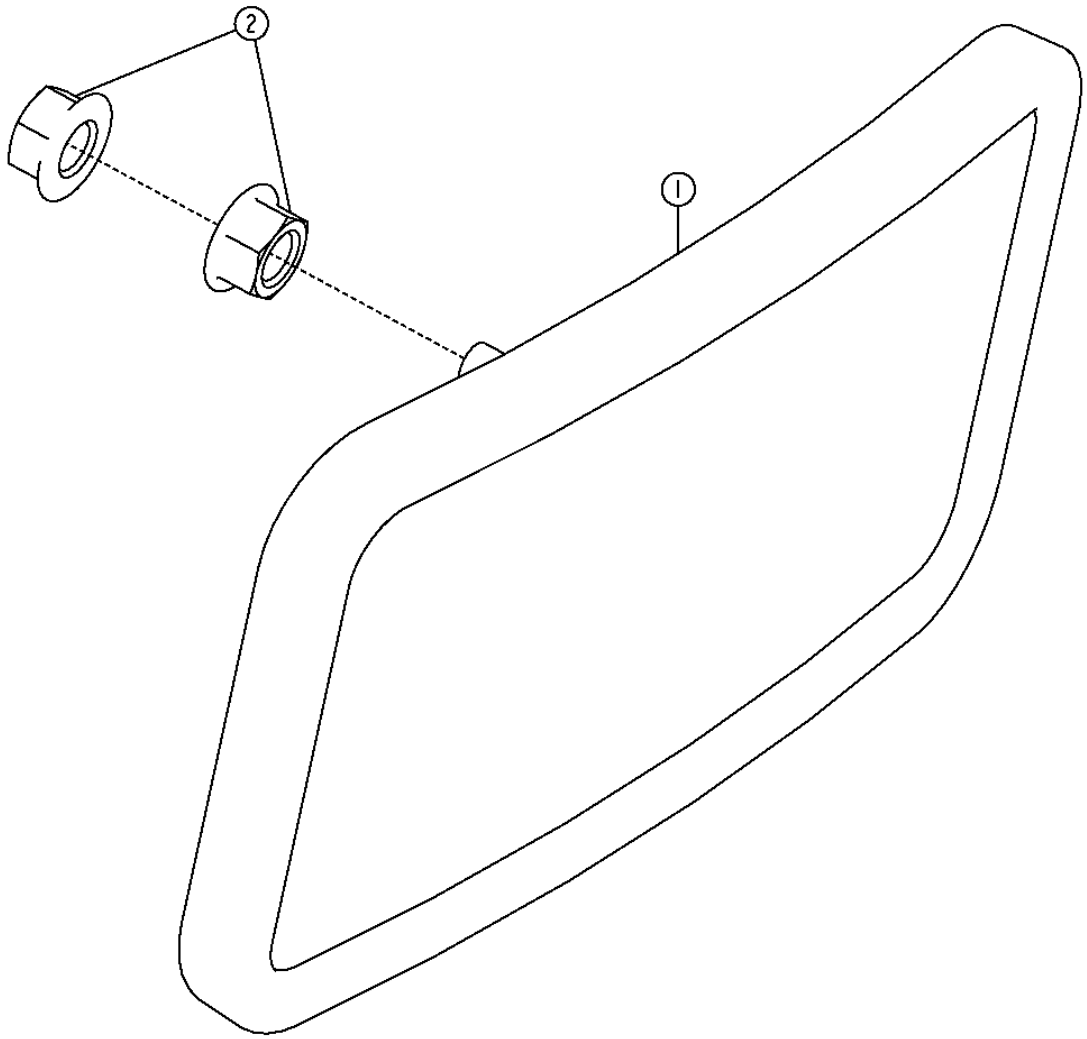

TX1006817

THIS PARTS LISTING IS CONTINUED

INSIDE REAR VIEW MIRROR
INTERIEUR RETROVISEUR ARRIERE
ESPEJO RETROVISOR INTERIOR

KEY	PART NO.	PART NAME	QTY.	SERIAL NO.	REMARKS
1	AT196427	REAR VIEW MIRROR	1		
2	14M7298	FLANGE NUT	2		M8

COAT HOOK
PATERE
GANCHO PARA ABRIGO

TP60658 -UN-08MAR99

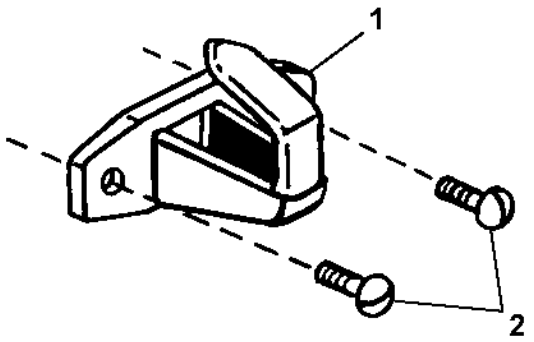

TP60658

KEY	*PART NO.*	*PART NAME*	*QTY.*	*SERIAL NO.*	*REMARKS*
1	L102023	HOOK	1		
2	21M7305	SCREW	2		M6 X 12

ASH TRAY
CENDRIER
CENICERO

T193027 -UN-06AUG03

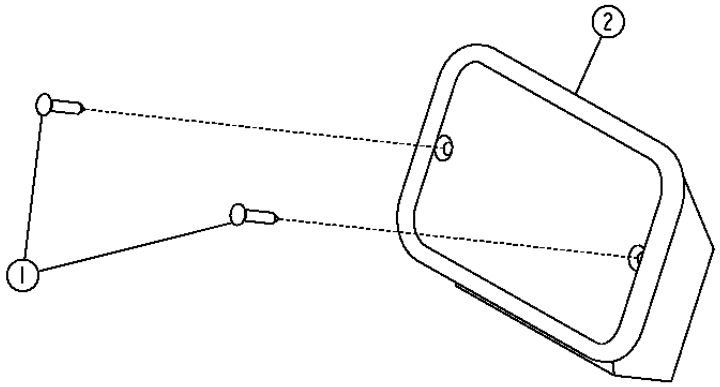

T193027

KEY	PART NO.	PART NAME	QTY.	SERIAL NO.	REMARKS
1	37M7333	SCREW	2		
2	AT59892	ASHTRAY	1		

CAB LEFT SIDE CONSOLE COVER
COUVERCLE CONSOLE GAUCHE CABINE
CUBIERTA DE CONSOLA DE LADO IZQUIERDO DE CABINA

T192999 -UN-20AUG03

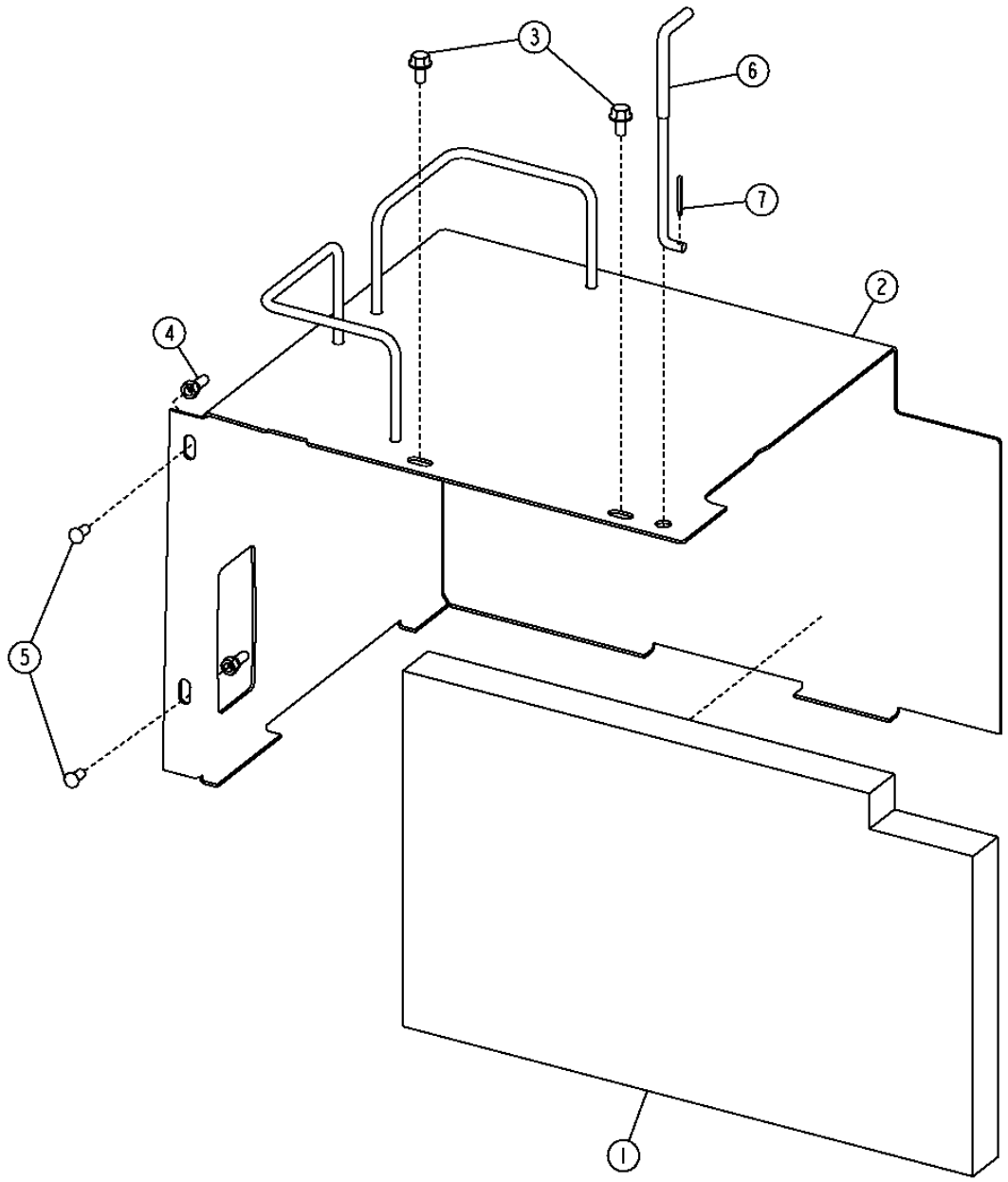

T192999

CAB LEFT SIDE CONSOLE COVER
COUVERCLE CONSOLE GAUCHE CABINE
CUBIERTA DE CONSOLA DE LADO IZQUIERDO DE CABINA

KEY	*PART NO.*	*PART NAME*	*QTY.*	*SERIAL NO.*	*REMARKS*
1	T171849	ISOLATOR	1		
2	AT227549	COVER	1		
3	19M7774	SCREW	2		M6 X 12
4	14M7376	LOCK NUT	2		M6
5	T167593	SCREW	2		
6	T167764	ROD	1		
7	11M7081	COTTER PIN	1		2.500 X 20 MM

FRESH AIR HOUSING COVER
COUVERCLE BATI FILTRE AIR FRAIS
CUBIERTA DE CAJA DE AIRE FRESCO

TP60556 -UN-01DEC98

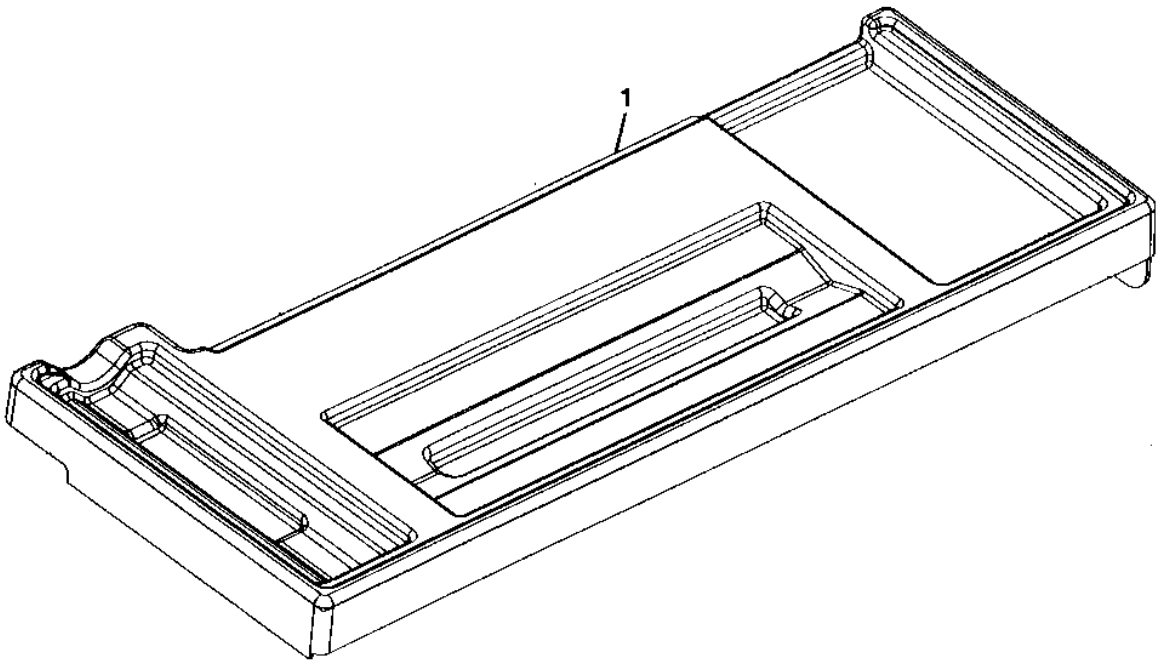

TP60556

FRESH AIR HOUSING COVER
COUVERCLE BATI FILTRE AIR FRAIS
CUBIERTA DE CAJA DE AIRE FRESCO

KEY	*PART NO.*	*PART NAME*	*QTY.*	*SERIAL NO.*	*REMARKS*
1	AT222402	COVER	1		

CAB AND CANOPY FLOOR MAT
CABINE ET TAPIS PLANCHER AUVENT
FELPUDO DE CABINA Y DOSEL

TP55529 -UN-13MAY97

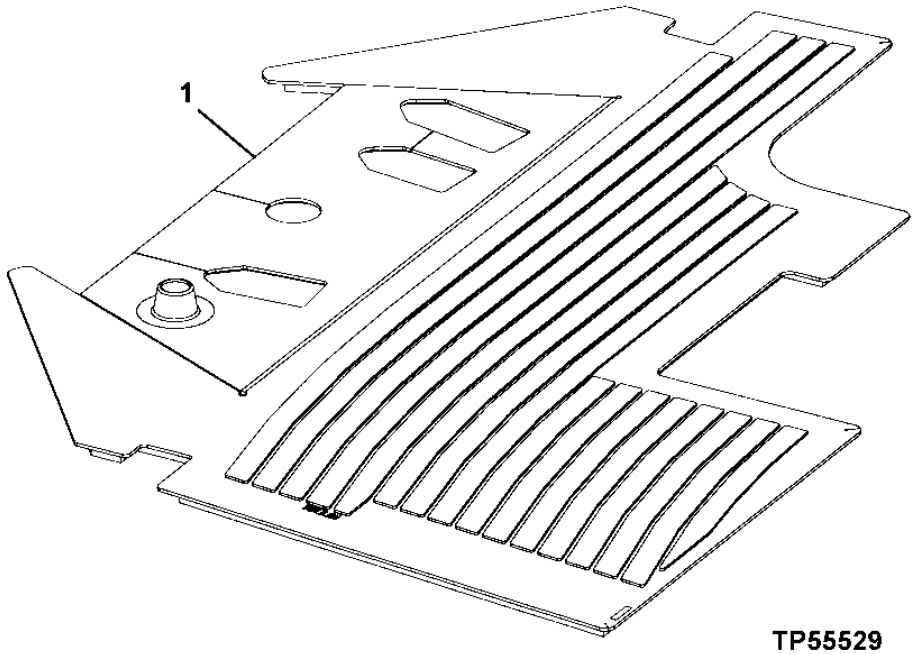

KEY	PART NO.	PART NAME	QTY.	SERIAL NO.	REMARKS
1	AT207144	MAT	1		

SUN VISOR
PARE-SOLEIL
PARASOL

T141042 -UN-09APR01

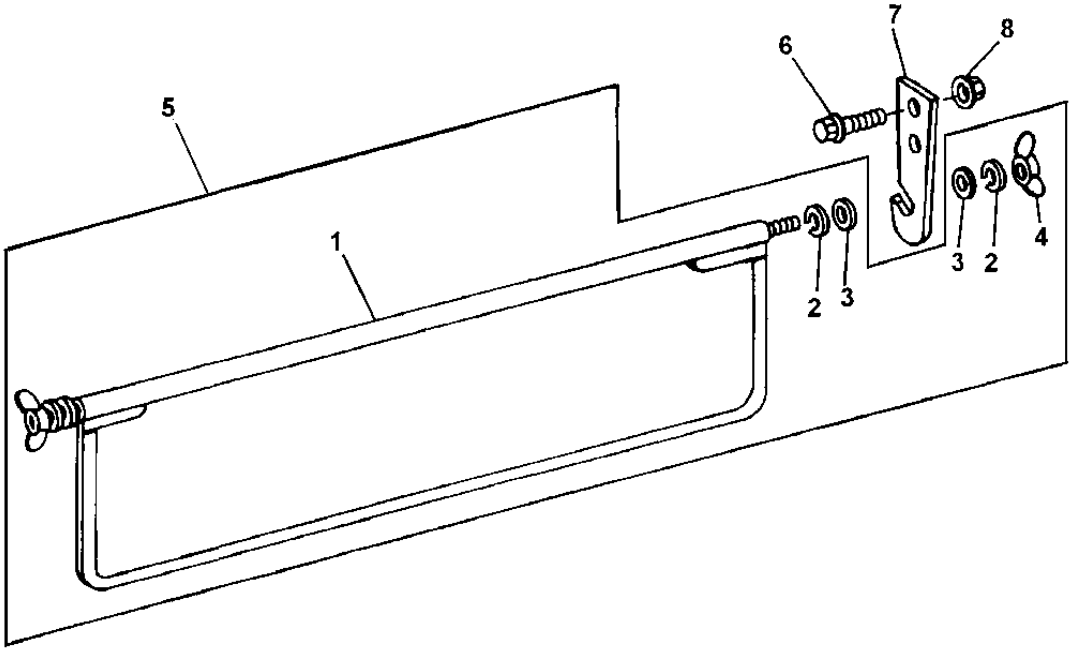

T141042

KEY	PART NO.	PART NAME	QTY.	SERIAL NO.	REMARKS
1	.....	SUN VISOR	1		(SUB AT217448)
2	24H1285	WASHER	4		17/64" X 7/16" X 0.065"
3	N218377	WASHER	4		
4	M47887	WING NUT	2		6.350 MM
5	AT217448	SUN VISOR	1		
6	19M7862	SCREW	2		M6 X 20
7	T181797	BRACKET	2		
8	14M7303	FLANGE NUT	2		M6

STEERING WHEEL, COLUMN AND LINKAGE
VOLANT, COLONNE ET TRINGLERIE
VOLANTE, COLUMNA Y VARILLAJE

T195299 -UN-21OCT03

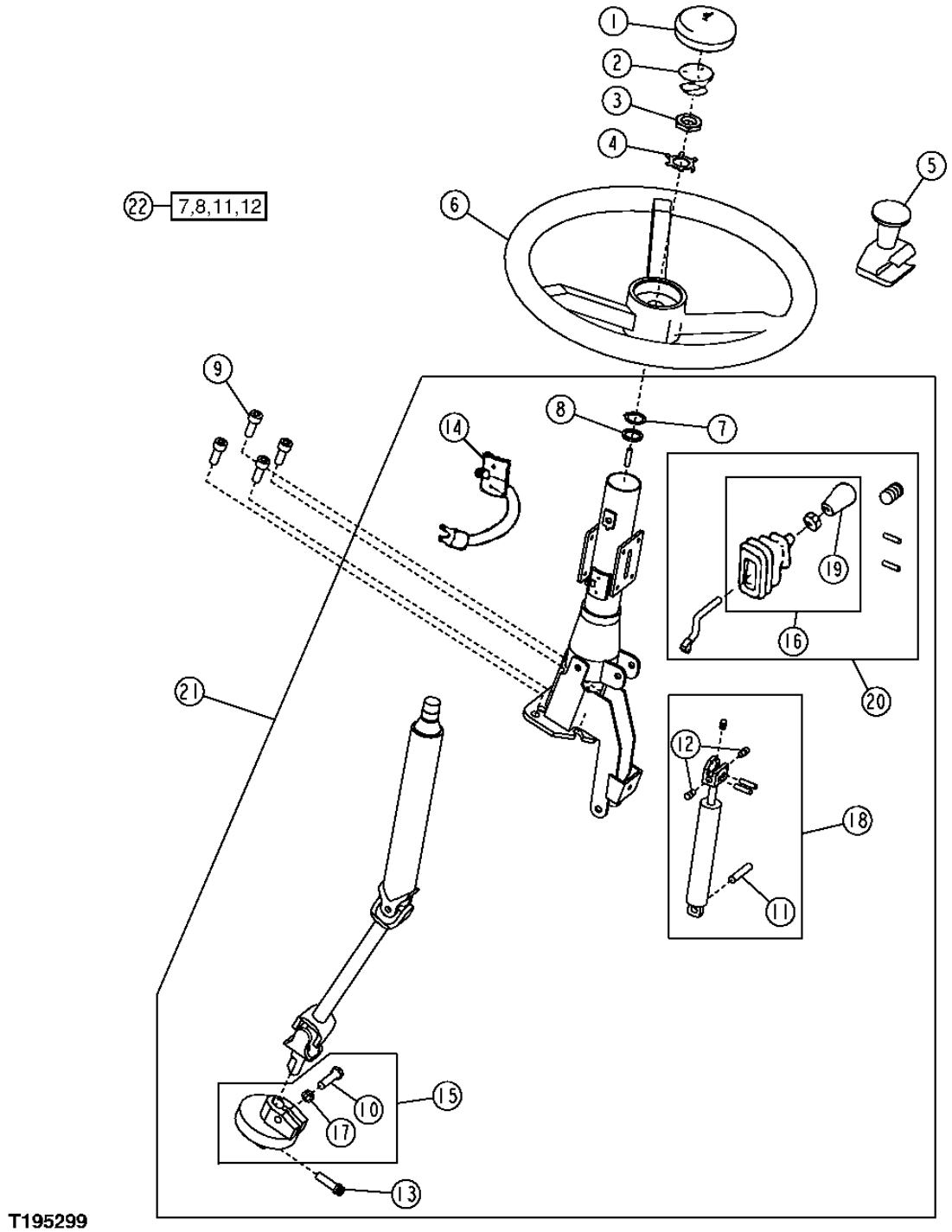

T195299

STEERING WHEEL, COLUMN AND LINKAGE
VOLANT, COLONNE ET TRINGLERIE
VOLANTE, COLUMNA Y VARILLAJE

KEY	PART NO.	PART NAME	QTY.	SERIAL NO.	REMARKS
1	T154131	COVER	1		
2	AT222153	SWITCH	1		
3	T13630	NUT	1		
4	T17148	LOCK WASHER	1		
5	AT169849	KNOB	1		
6	AT139694	STEERING WHEEL	1		
7	.....	SNAP RING	1		
8	.....	SEALING WASHER	1		
9	19M8328	SCREW	4		M10 X 25
10	19H2544	CAP SCREW	1		
11	.....	DOWEL PIN	1		
12	.....	SCREW	2		
13	T39049	SCREW	1		
14	AT162719	BRUSH SET	1		
15	AT220226	KIT	1		ISOLATOR
16	AT191487	KIT	1		KNOB
17	.....	WASHER	1		
18	AT160662	KIT	1		GAS CYLINDER ASSEMBLY
19	AT220223	KIT	1		KNOB
20	AT220224	KIT	1		TILT LEVER
21	AT300524	STEERING COLUMN	1		
22	RE56109	KIT	1		STEERING COLUMN

LOWER STEERING COLUMN
COLONNE DIRECTION INFERIEURE
COLUMNA INFERIOR DE LA DIRECCION

T212760 -UN-19JUL05

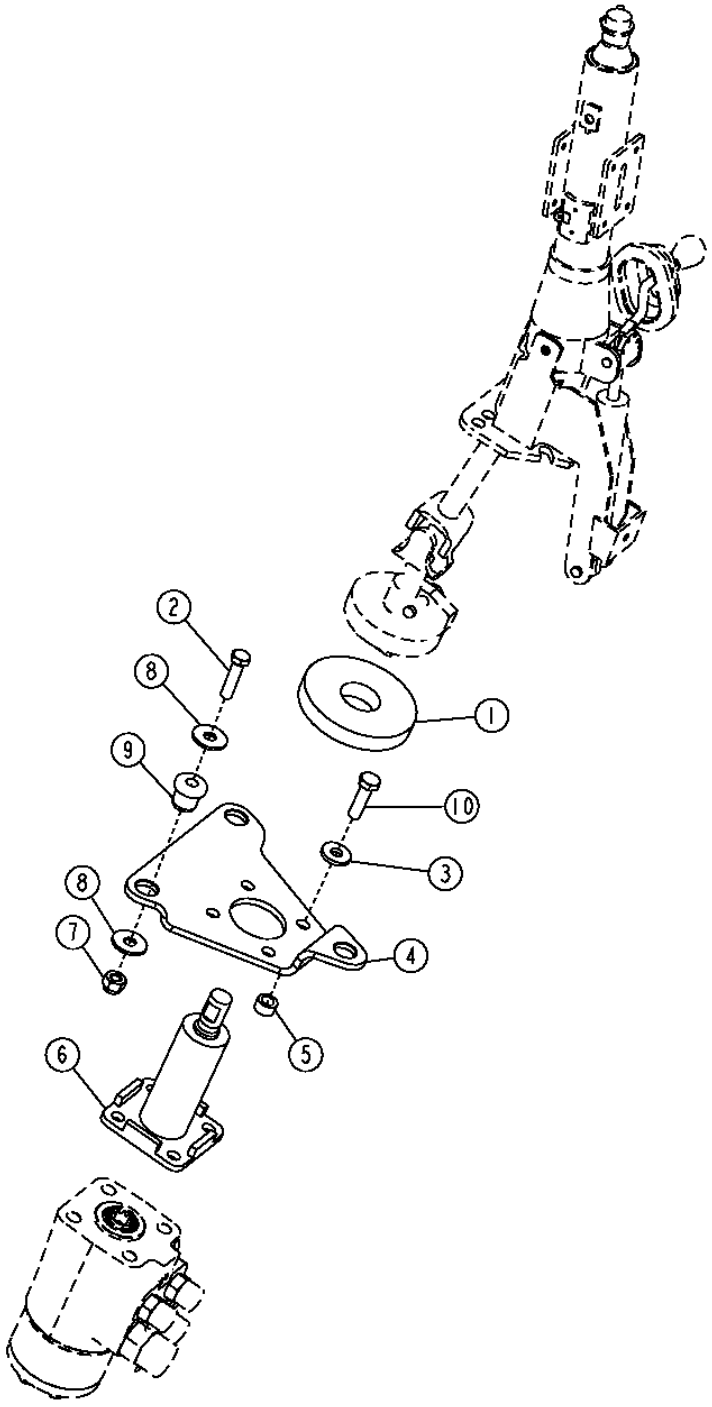

T212760

LOWER STEERING COLUMN
COLONNE DIRECTION INFERIEURE
COLUMNA INFERIOR DE LA DIRECCION

KEY	*PART NO.*	*PART NAME*	*QTY.*	*SERIAL NO.*	*REMARKS*
1	T131980	ISOLATOR	1		
2	19H2633	CAP SCREW	3		
3	24H1308	WASHER	4		13/32" X 1" X 0.134"
4	T168276	BRACKET	1		TO CAB FLOOR
5	28H860	WASHER	4		0.423" X 0.675" X 3/8"
6	AT156896	STEERING COLUMN	1		LOWER
7	14M7400	LOCK NUT	3		M10
8	24M7296	WASHER	6		10.500 X 30 X 2.500 MM
9	AT116162	ISOLATOR	3		
10	19M7550	CAP SCREW	4		

STEERING COLUMN COVERS
COUVERCLE DE COLONNE DE DIRECTION
CUBIERTA DE LA COLUMNA DE DIRECCION

TP60362 -UN-27APR98

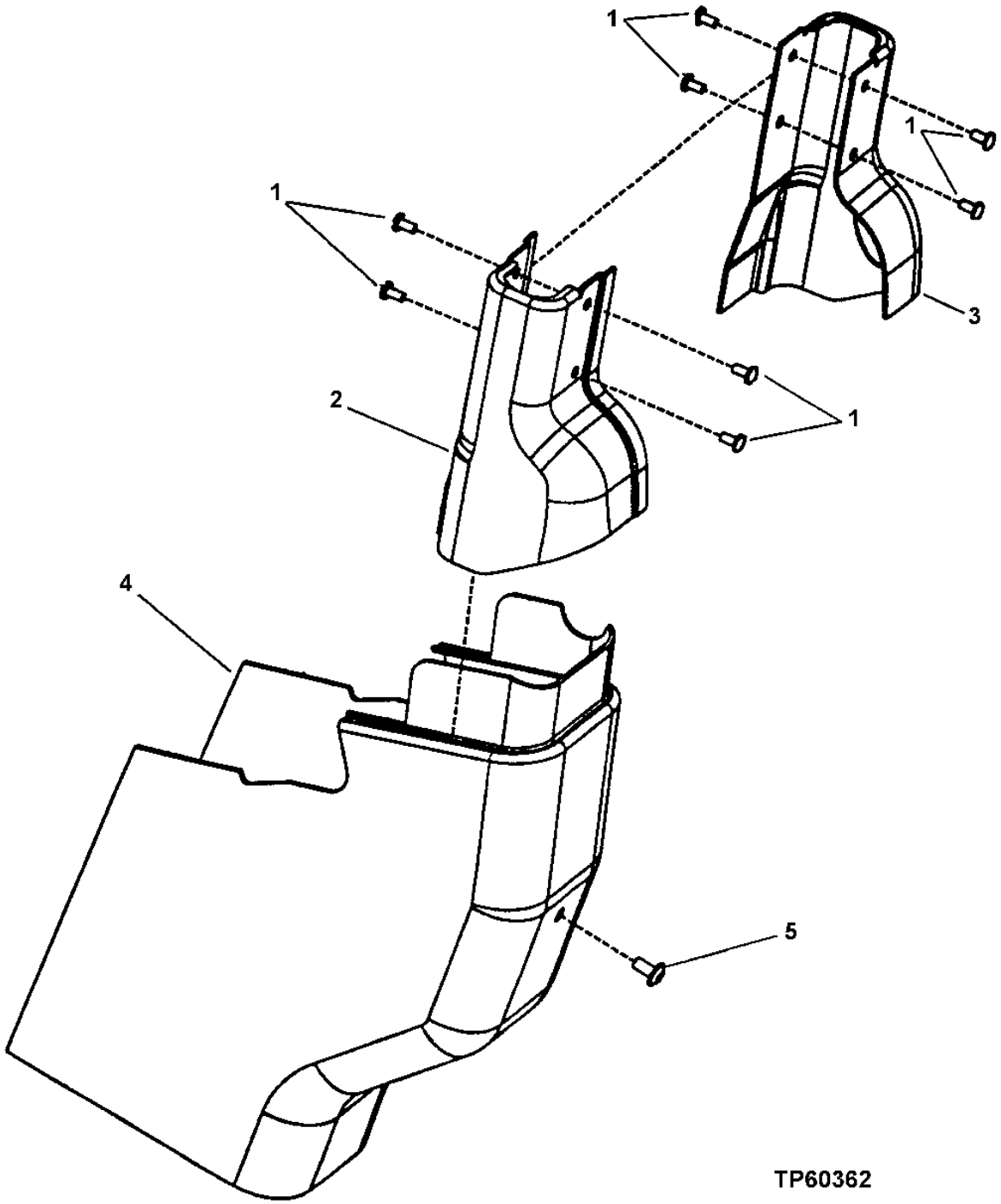

STEERING COLUMN COVERS
COUVERCLE DE COLONNE DE DIRECTION
CUBIERTA DE LA COLUMNA DE DIRECCION

KEY	*PART NO.*	*PART NAME*	*QTY.*	*SERIAL NO.*	*REMARKS*
1	21M7305	SCREW	8		M6 X 12
2	T173100	COVER	1		UPPER
	T211353	COVER	1		(FOR USE WITH JOYSTICK MOUNTED FNR)
3	T173099	COVER	1		UPPER
4	T156784	COVER	1		LOWER
5	19M8675	SCREW	1		M8 X 16

RIGHT HAND CAB CONSOLE
CONSOLE CABINE DROITE
CONSOLA DE LA CABINA DEL LADO DERECHO

T216042 -UN-25OCT05

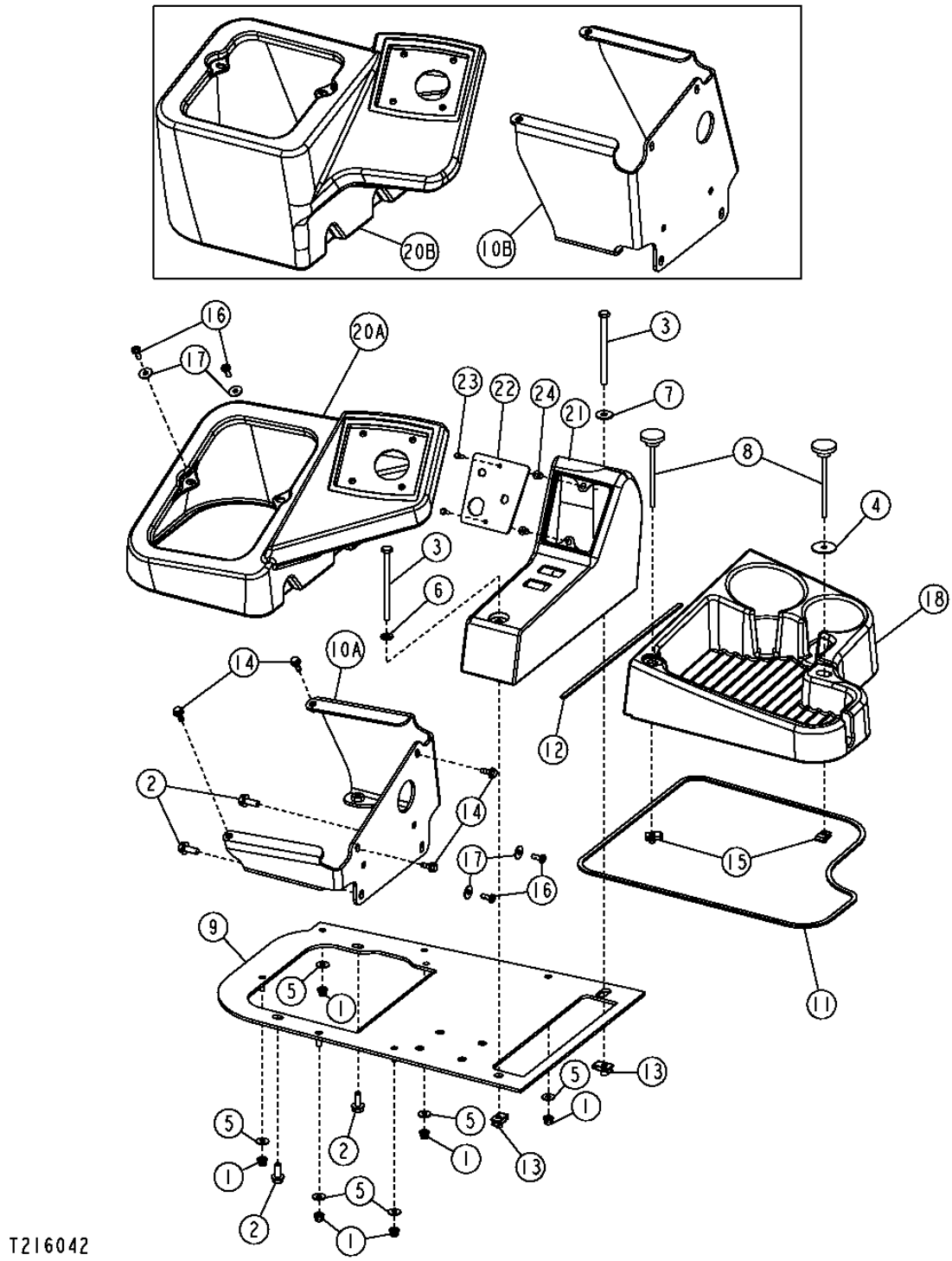

RIGHT HAND CAB CONSOLE
CONSOLE CABINE DROITE
CONSOLA DE LA CABINA DEL LADO DERECHO

KEY	PART NO.	PART NAME	QTY.	SERIAL NO.	REMARKS
1	14M7165	LOCK NUT	6		M6
2	19M7866	SCREW	4		M8 X 20
3	19M7997	CAP SCREW	2		M8 X 110
4	24H1695	WASHER	1		9/32" X 1-3/8" X 0.065"
5	24M7139	WASHER	6		6.400 X 18 X 1.600 MM
6	24M7238	WASHER	1		8.700 X 17 X 2 MM
7	24M7298	WASHER	1		8.400 X 25 X 2 MM
8	AT226334	KNOB	2		
9	AT310413	PLATE	1		(SUB FOR AT228253)
10A	AT310414	BRACKET	1		(SHORT) (SUB FOR AT300441)
10B	AT310412	BRACKET	1		(TALL) (SUB FOR AT227794)
11	T180533	SEALING TRIM	1		
12	.....	ISOLATOR	1		(MAKE FROM T207925) (CUT TO 4.25 FT.)
13	H156360	NUT	2		
14	M113243	SCREW	4		
15	M84972	NUT	2		
16	T133674	SELF-LOCKING SCREW	4		(SUB FOR 21M7292)
17	24H1821	WASHER	4		
18	T182612	COVER	1		
20A	T200267	COVER	1		(SHORT)
20B	T196622	COVER	1		(TALL)
21	T202883	CONSOLE	1		
22	T203128	PLATE	1		
23	T82791	SCREW	2		
24	T82792	NUT	2		

SEAT AND SEAT SUSPENSION
SIEGE ET SUSPENSION DE SIEGE
ASIENTO Y SUSPENSION DEL ASIENTO

T195239 -UN-21OCT03

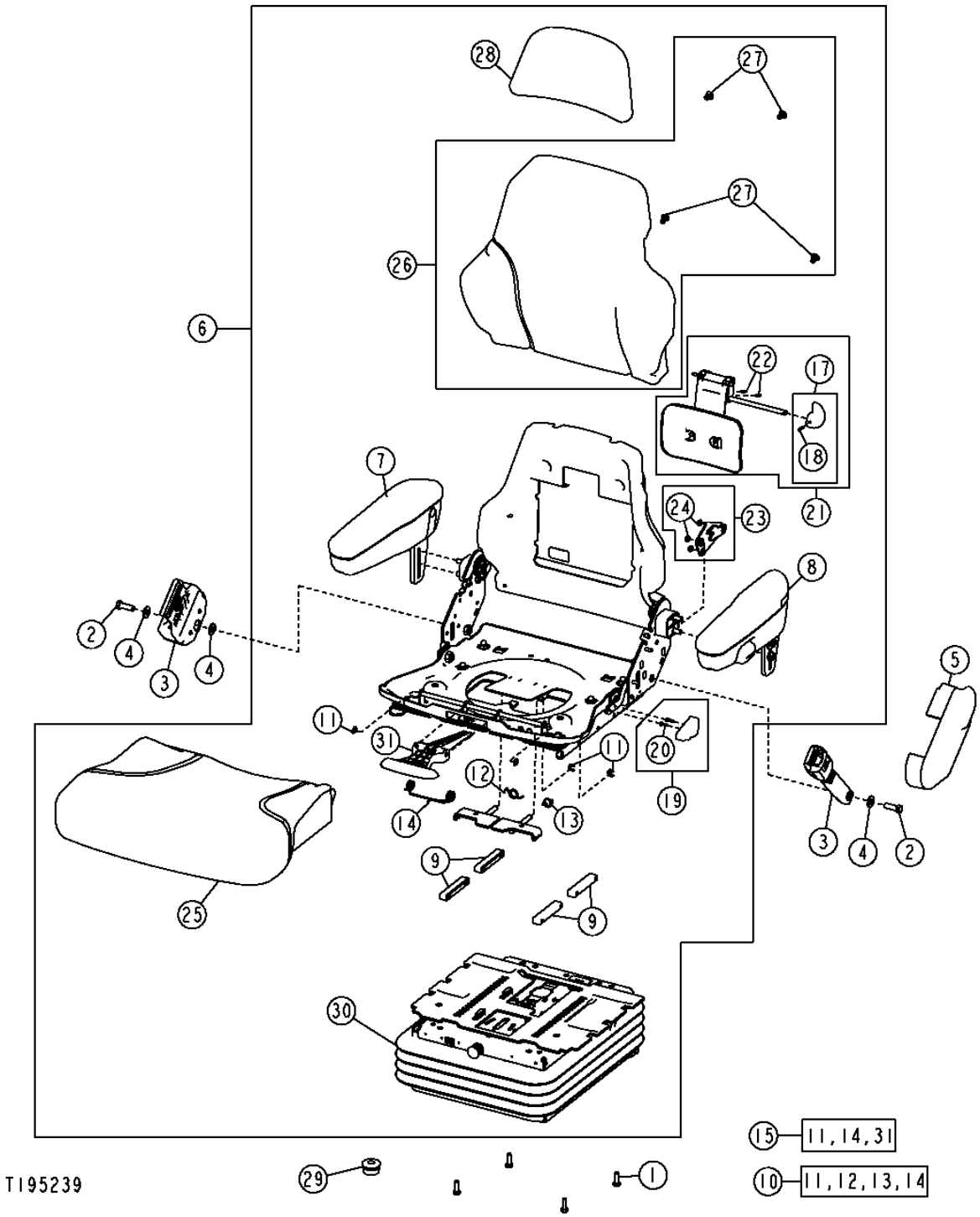

SEAT AND SEAT SUSPENSION
SIEGE ET SUSPENSION DE SIEGE
ASIENTO Y SUSPENSION DEL ASIENTO

KEY	PART NO.	PART NAME	QTY.	SERIAL NO.	REMARKS
1	19M7866	SCREW	4		
2	19H3569	CAP SCREW	2		
3	AT308199	SEAT BELT	1		
4	T105740	WASHER	4		
5	T163962	COVER	1		
6	AT307474	SEAT	1	-592825	GRAY VINYL
	AT311919	SEAT	1	592826-	GRAY VINYL
	AT224248	SEAT	1	-592825	GRAY CLOTH
	AT310435	SEAT	1	592826-	GRAY CLOTH
7	AT195441	ARMREST KIT	1		(R.H.)
	AT315715	PAD	1		
8	AT195442	ARMREST KIT	1		(L.H.)
	AT315761	PAD	1		
9	AT209020	KIT	1		SLIDE PUCK KIT
10	AT209021	KIT	1		SLIDE SPRING KIT
11	R72655	SNAP RING	4		
12	T163334	SPRING	1		
13	T163335	SPRING	1		
14	T163336	TORSION SPRING	1		
15	AT209022	HOSE KIT	1		SLIDE CONTROL KIT
17	AT209024	KIT	1		LUMBAR KNOB KIT
18	34H262	SPRING PIN	1		
19	AT209025	KIT	1		RECLINER KNOB KIT
20	37H121	SCREW	1		
21	AT209026	KIT	1		LUMBAR SERVICE KIT
22	34H387	SPRING PIN	2		
23	AT209225	KIT	1		RECLINER SERVICE KIT (INCLUDES RECLINER KNOB KIT AND TORSION SPRING)
24	M453T	LOCK NUT	3		
25	AT221015	SEAT	1		GRAY VINYL
	AT308795	CUSHION	1		(SUB FOR AT221019) GRAY CLOTH
26	AT221016	PAD	1		GRAY VINYL
	AT308796	CUSHION	1		(SUB FOR AT221020) GRAY CLOTH
27	T171686	CLIP	4		
28	AT221017	CUSHION	1		GRAY VINYL
	AT308797	CUSHION	1		(SUB FOR AT221021) GRAY CLOTH
29	T182870	ISOLATOR	1		(SUB FOR N119177)
30	AT208531	SEAT SUSPENSION	1	-592825	
	AT311918	SEAT SUSPENSION	1	592826-	
31	.....	CONTROL	1		

SEAT SUSPENSION
SUSPENSION DE SIEGE
SUSPENSION DEL ASIENTO

T195125 -UN-25SEP03

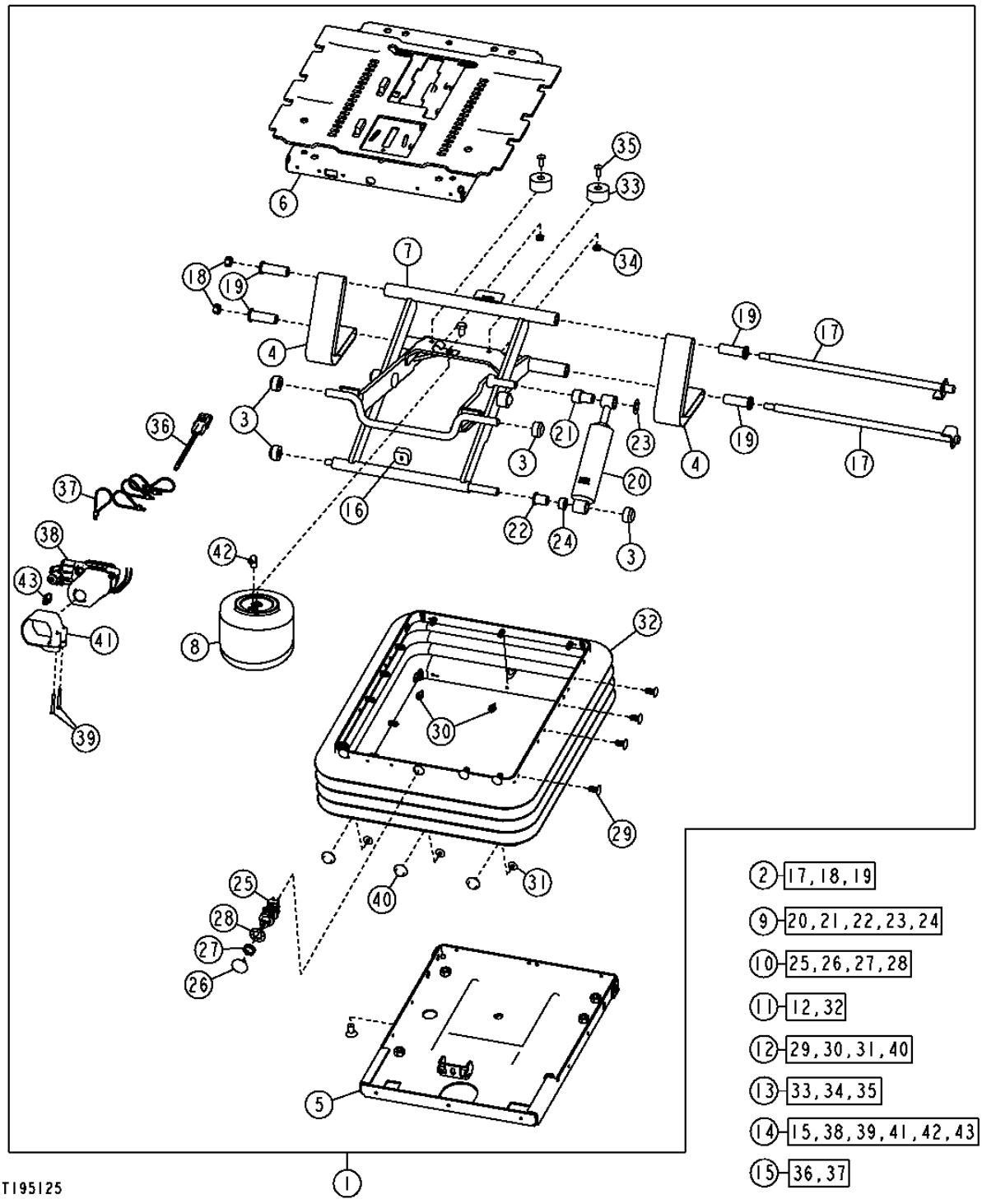

SEAT SUSPENSION
SUSPENSION DE SIEGE
SUSPENSION DEL ASIENTO

KEY	PART NO.	PART NAME	QTY.	SERIAL NO.	REMARKS
1	AT208531	SEAT SUSPENSION	1	-592825	
	AT311918	SEAT SUSPENSION	1	592826-	
2	AT173313	SHAFT	1		
3	AT173314	SEAT BEARING ROLLER KIT	1		
4	AT173315	KIT	1		TETHER BELT SERVICE KIT
5	AT208483	HOUSING	1		
6	AT208484	HOUSING	1	-592825	
	AT313399	HOUSING	1	592826-	
7	AT208485	ARM	1		
8	AT208486	ABSORBER	1		(AIR BLADDER SPRING)
9	AT208487	KIT	1		SUSPENSION SHOCK SERVICE KIT
10	AT208490	SELECTIVE CONTROL VALVE	1		
11	AT208491	KIT	1		(INCLUDES AT173321) BOOT SERVICE KIT
12	AT173321	SEAT SUSPENSION BOOT KIT	1		
13	AT209469	KIT	1		BUMPER SERVICE KIT
14	AT226676	COMPRESSOR	1		
15	AT208488	WIRING HARNESS	1		
16	T55224	BUMPER	1		
17	.....	SHAFT	2		(SUB AT173313)
18	.....	LOCK NUT	2		(SUB AT173313)
19	.....	BUSHING	4		(SUB AT173313)
20	.....	SHOCK ABSORBER	1		(SUB AT208487)
21	.....	BEARING	1		(SUB AT208487)
22	.....	ECCENTRIC LOCKING COLLAR	1		(SUB AT208487)
23	.....	PUSH NUT	1		(SUB AT208487)
24	.....	SPACER	1		(SUB AT208487)
25	.....	HYD ACTUATED CONTROL VALVE	1		(SUB AT208490)
26	.....	KNOB	1		(SUB AT208490)
27	.....	NUT	1		(SUB AT208490)
28	.....	LOCK WASHER	1		(SUB AT208490)
29	.....	CLIP	23		(SUB AT173321)
30	.....	RIVET	3		(SUB AT173321)
31	.....	RIVET	3		(SUB AT173321)
32	.....	BOOT	1		(SUB AT208491)
33	.....	BUMPER	2		(SUB AT209469)
34	.....	LOCK NUT	2		(SUB AT209469)
35	.....	SCREW	2		(SUB AT209469)
36	.....	WIRING HARNESS	1		(SUB AT208488)
37	.....	TIE BAND	4		(SUB AT208488)
38	.....	COMPRESSOR	1		(SUB AT226676)
39	.....	SPRING PIN	2		(SUB AT226676)
40	.....	RIVET	6		(SUB AT173321)
41	.....	CLAMP	1		(SUB AT226676)
42	.....	PIPE ELBOW	1		(SUB AT226676)
43	.....	TAB CONNECTOR BODY	1		(SUB AT226676)

RIGHT ARM REST
ACCOUDOIR DROIT
APOYABRAZOS DERECHO

T212897 -UN-26JUL05

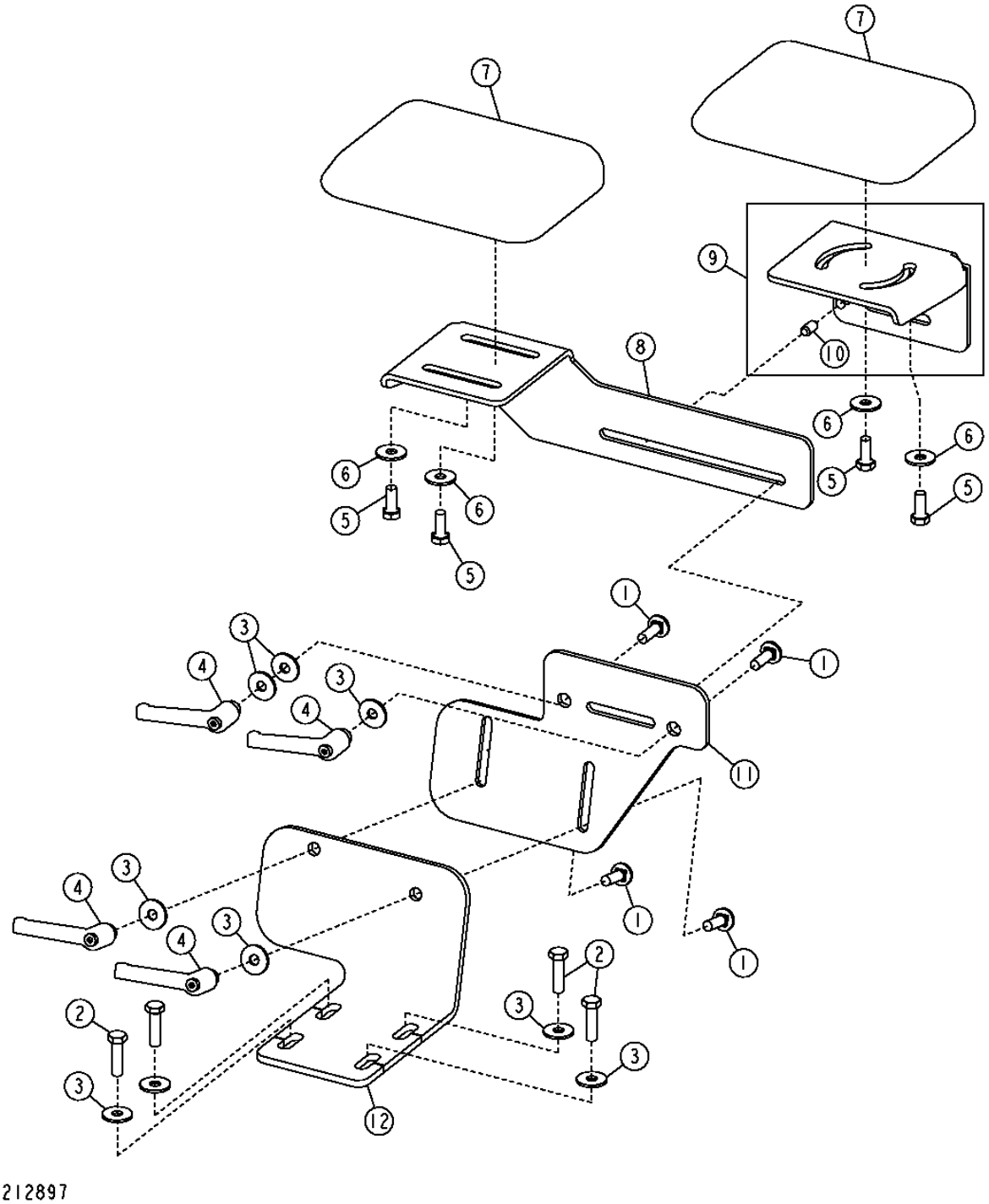

RIGHT ARM REST
ACCOUDOIR DROIT
APOYABRAZOS DERECHO

KEY	PART NO.	PART NAME	QTY.	SERIAL NO.	REMARKS
1	03M7185	BOLT	4		M8 X 25
2	19M7868	SCREW	4		M8 X 30, (SUB FOR 19M7513)
3	24M7298	WASHER	9		8.400 X 25 X 2 MM
4	AT227063	LEVER	4		
5	19M7881	SCREW	4		M8 X 20
6	24M7298	WASHER	4		8.400 X 25 X 2 MM
7	AT327621	CUSHION	2		(SUB FOR AT171679)
8	T200161	SUPPORT	1		
9	AT300115	BRACKET	1		
10	44M7027	PIN	1		
11	T209601	SUPPORT	1		(SINGLE LEVER CONTROLLER)
	T200158	SUPPORT	1		(TWO LEVER CONTROLLER)
12	T209602	SUPPORT	1		(SINGLE LEVER CONTROLLER)
	T200159	SUPPORT	1		(TWO LEVER CONTROLLER)

ACCESS PLATFORM AND STEPS
PLATE-FORME ACCES ET MARCHES
PLATAFORMA DE ACCESO Y PELDANOS

T151369 -UN-14FEB02

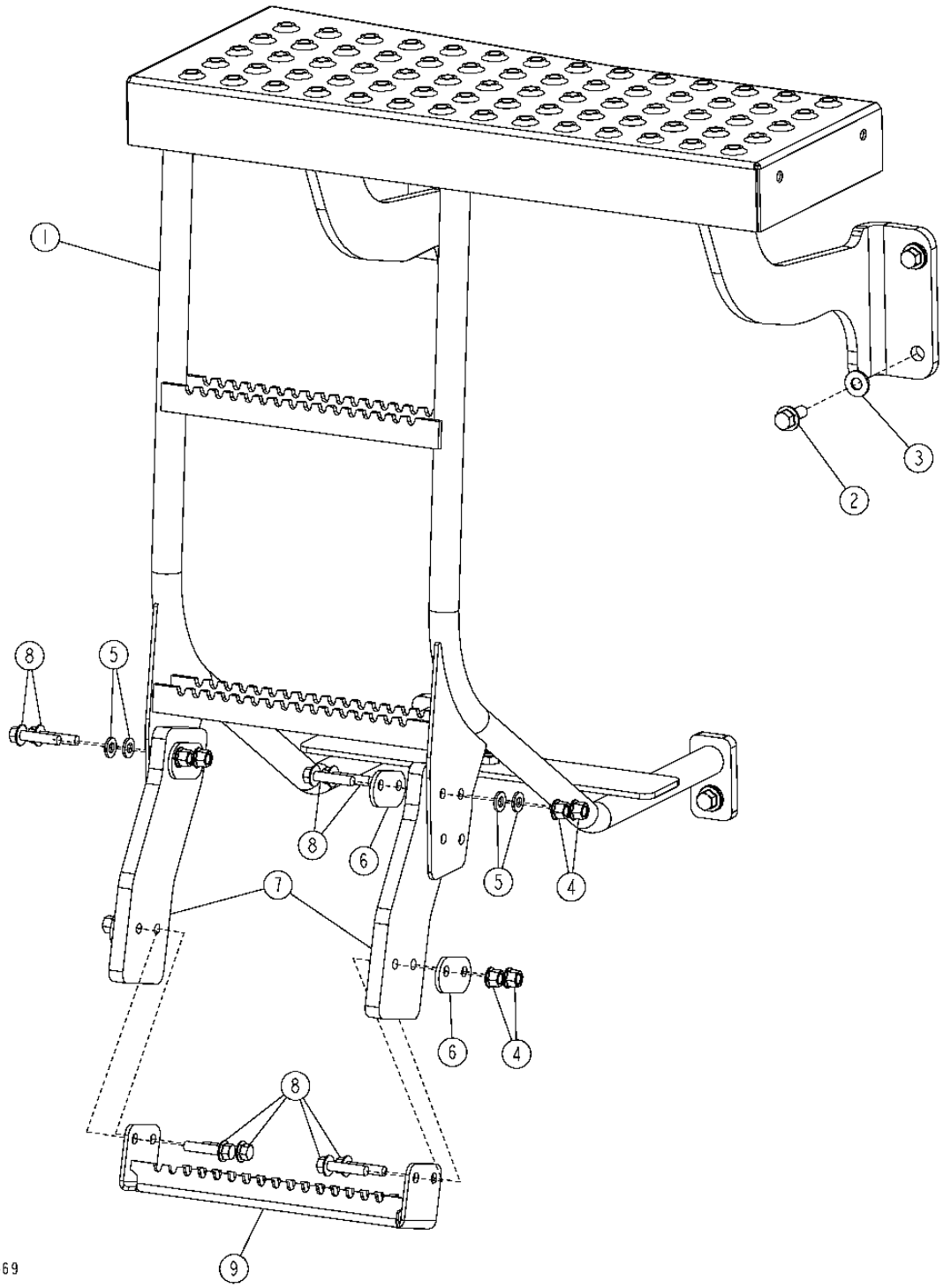

ACCESS PLATFORM AND STEPS
PLATE-FORME ACCES ET MARCHES
PLATAFORMA DE ACCESO Y PELDANOS

KEY	PART NO.	PART NAME	QTY.	SERIAL NO.	REMARKS
1	AT223989	PLATFORM	1	-598479	
	AT323672	PLATFORM	1	598480-	
2	19M7789	SCREW	5		M12 X 30
3	T178063	WASHER	5		
4	14M7400	LOCK NUT	8		
5	24M7239	WASHER	4		
6	T173779	STRAP	4		
7	T177503	STRAP	2		
8	19M7805	SCREW	8		
9	T176870	STEP	1		

CLOSE MOUNTED STEPS
MARCHES RAPPROCHEES
PELDANOS DE MONTAJE ESTRECHO

TP62532 -UN-04MAY99

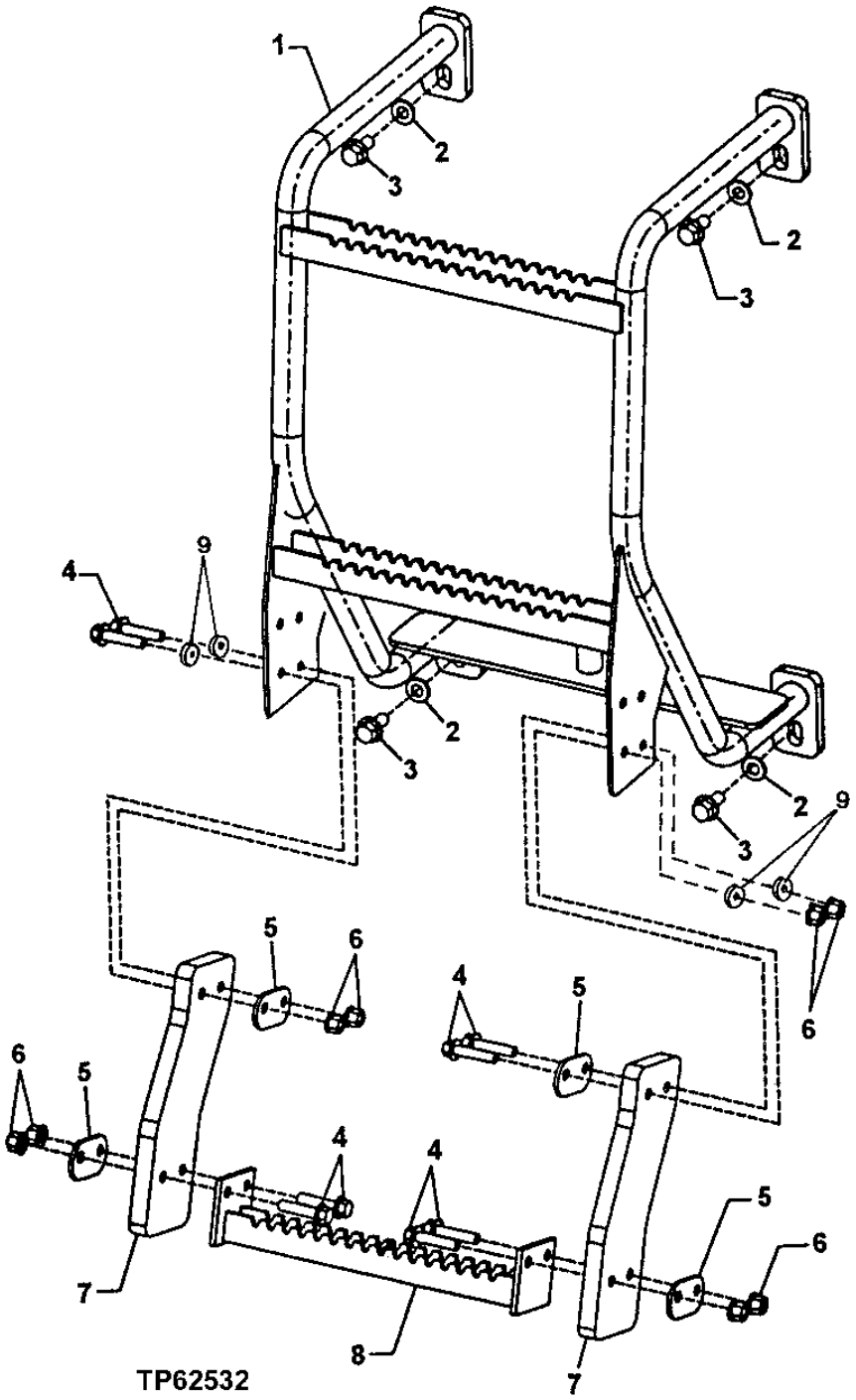

CLOSE MOUNTED STEPS
MARCHES RAPPROCHEES
PELDANOS DE MONTAJE ESTRECHO

KEY	PART NO.	PART NAME	QTY.	SERIAL NO.	REMARKS
1	AT209698	STEP	1		
2	T178063	WASHER	4		
3	19M7789	SCREW	4		M12 X 30
4	19M7805	SCREW	8		M10 X 45
5	T173779	STRAP	4		
6	14M7400	LOCK NUT	8		M10
7	T177503	STRAP	2		
8	T176870	STEP	1		
9	24M7239	WASHER	4		10.700 X 21 X 2.500 MM

ENGINE COMPARTMENT STEP
MARCHE DE COMPARTIMENT MOTEUR
PELDANO DEL COMPARTIMIENTO DEL MOTOR

TX1017822 -UN-

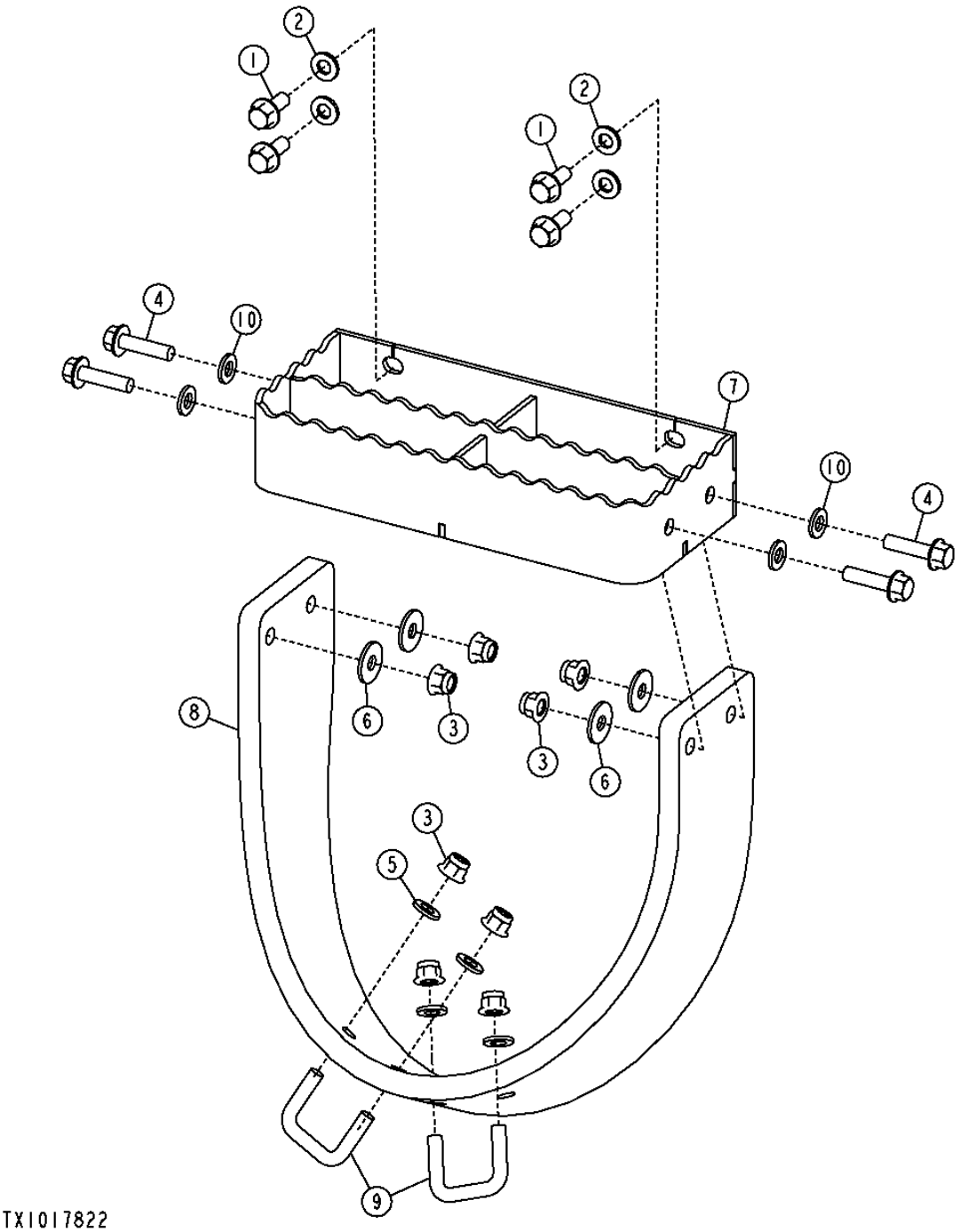

THIS PARTS LISTING IS CONTINUED

ENGINE COMPARTMENT STEP
MARCHE DE COMPARTIMENT MOTEUR
PELDANO DEL COMPARTIMIENTO DEL MOTOR

KEY	PART NO.	PART NAME	QTY.	SERIAL NO.	REMARKS
1	19M7785	SCREW	4		M10 X 25
2	24M7239	WASHER	4	-XXXXXX	10.700 X 21 X 2.500 MM
3	14M7400	LOCK NUT	8		M10
4	19M7806	SCREW	4	-XXXXXX	M10 X 50
	19M7804	SCREW	4	XXXXXX-	M10 X 40
5	24M7239	WASHER	4		10.700 X 21 X 2.500 MM
6	24M7296	WASHER	4		10.500 X 30 X 2.500 MM
7	AT228809	STEP	1		
8	T217427	STRAP	1		(SUB FOR T197442)
9	W29909	U-BOLT	2		
10	24M7239	WASHER	2	-XXXXXX	

HVAC MODULE
MODULE CHAUFFAGE, VENTILATION ET CLIMATISATION
MODULO DE CLIMATIZACION

T193582 -UN-21AUG03

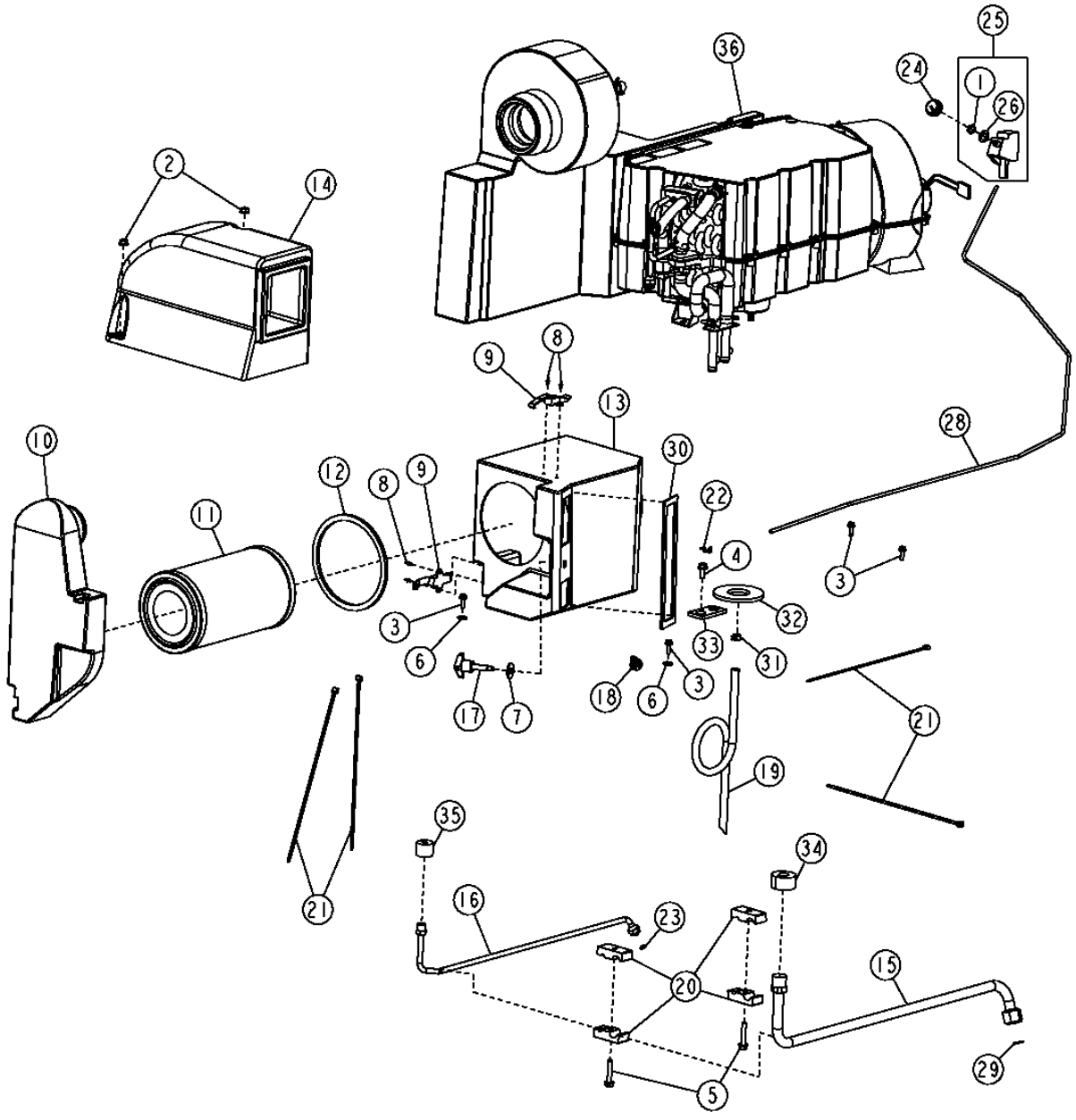

HVAC MODULE
MODULE CHAUFFAGE, VENTILATION ET CLIMATISATION
MODULO DE CLIMATIZACION

KEY	PART NO.	PART NAME	QTY.	SERIAL NO.	REMARKS
1	R203687	NUT	1		
2	14M7298	FLANGE NUT	2		M8
3	19M7862	SCREW	4		M6 X 20
4	19M7866	SCREW	3		M8 X 20
5	19M8318	SCREW	2		M8 X 45
6	24M7139	WASHER	2		6.400 X 18 X 1.600 MM
7	24M7296	WASHER	1		10.500 X 30 X 2.500 MM
8	H86981	RIVET	4		
9	R121465	LATCH	2		
10	T167945	AIR DUCT	1		
11	T168220	AIR FILTER	1		
	AT321942	ACTIVATED CARBON AIR FILTER	1		(ODOR REDUCING)
12	T170053	SEAL	1		
13	T171459	AIR DUCT	1		
14	AT209668	AIR DUCT	1		
15	AT210561	LINE	1		(SUB FOR AT306912 AND AT310782)
16	AT306913	TUBE	1		
17	AT220953	KNOB	1		
18	AT226249	JUMPER	1		
19	Z59685	HOSE	1		(SUB FOR B14604) (4.5 LIN. FT.)
20	H114865	CLAMP	4		
21	H77698	TIE BAND	4		
22	L57881	CLIP	1		
23	R10093	O-RING	1		
24	AL76568	KNOB	1		
25	RE46742	CONTROL	1		
26	12H292	LOCK WASHER	1		1/2"
28	RE58614	PUSH PULL CABLE	1		
29	T143169	O-RING	1		
30	T167676	SEAL	1		
31	T174427	CLAMP	1		
32	T182852	SEALING WASHER	1		
33	T182858	GASKET	1		
34	T182870	ISOLATOR	1		
35	T182871	ISOLATOR	1		
36	T182906	PLATE	1		

HVAC MODULE COMPONENTS
COMPOSANTS MODULE CHAUFFAGE, VENTILATION ET CLIMATISATION
COMPONENTES DEL MODULO DE CLIMATIZACION

TX1008275 -UN-14JUN06

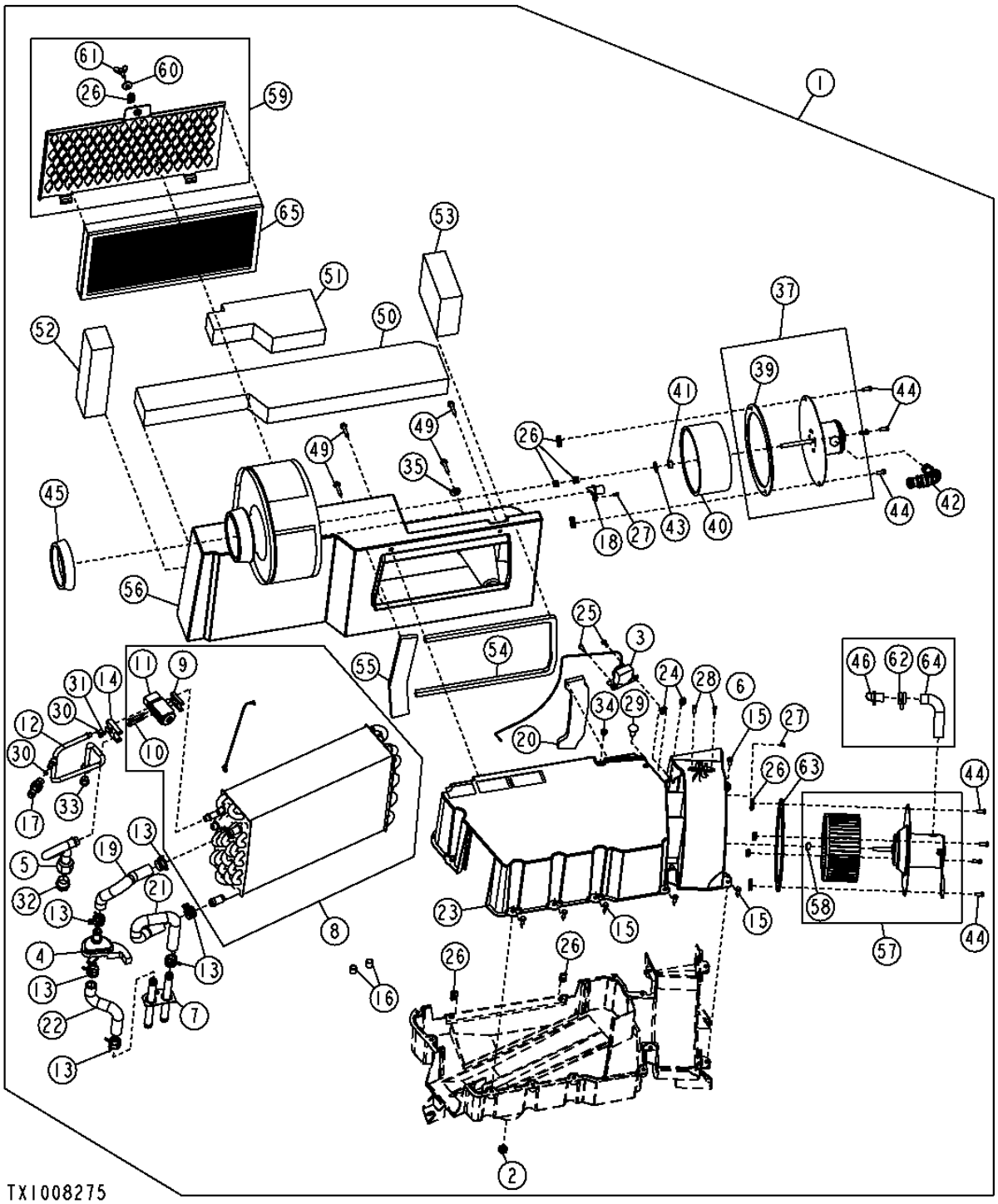

THIS PARTS LISTING IS CONTINUED

HVAC MODULE COMPONENTS
COMPOSANTS MODULE CHAUFFAGE, VENTILATION ET CLIMATISATION
COMPONENTES DEL MODULO DE CLIMATIZACION

KEY	PART NO.	PART NAME	QTY.	SERIAL NO.	REMARKS
1	AT329722	MODULE	1		(SUB FOR AT223531)
2	14H934	NUT	1		
3	RE198074	TEMPERATURE SWITCH	1		(SUB FOR AH144020)
4	AT193500	HAND OPERATED VALVE	1		
5	AT210086	STRUCTURAL TUBING	1		
6	.....	RESISTOR	1		(AT307197 NLA) (SUB AT318987)
7	AT219778	HOSE	1		
8	AT329723	HEAT EXCHANGER	1		(SUB FOR AT225899)
9	L77943	PLATE	1		
10	PT11778	BOLT	2		(SUB FOR M67176)
11	RE174764	VALVE	1		
12	AT226309	TUBE	1		
13	R117721	CLAMP	6		
14	R125223	PLATE	1		
15	R129110	SCREW	12		
16	R50770	CAP	2		
17	RE157329	SWITCH	1		
18	RE36133	TUBE	1		
19	T170133	HOSE	1		
20	T59937	ISOLATOR	1		
21	T172933	HOSE	1		
22	T172934	HOSE	1		
23	T174109	HOUSING	1		
24	T178115	CLEVIS	2		
25	T178116	CAP SCREW	2		
26	T178117	CLEVIS	13		
27	T178118	CAP SCREW	1		
28	T178119	CAP SCREW	2		
29	T178120	RIVET	1		
30	T178123	O-RING	2		
31	T178124	SCREW	1		
32	T178125	PLUG	1		
33	T178126	PLUG	1		
34	T178971	GROMMET	1		
35	24H1122	WASHER	1		
37	AT225451	BLOWER MOTOR	1		
38	R117721	CLAMP	1		
39	R121664	SEAL	1		
40	R121666	IMPELLER	1		
41	R97332	CLIP	1		
42	R97336	HOSE	1	-592249	
	T165169	HOSE	1	592250-	
43	T178127	PUSH NUT	1		
44	T178251	CAP SCREW	8		
45	R119171	SEAL	1		
46	RE36133	TUBE	1	-592249	
49	T178130	BOLT	4		
50	T178131	ISOLATOR	1		
51	T178132	ISOLATOR	1		
52	T178133	ISOLATOR	1		
53	T178134	ISOLATOR	1		
54	T178135	ISOLATOR	1		
55	T178136	ISOLATOR	1		
56	T180929	AIR PLENUM	1		
57	.....	KIT	1	-592249	(SUB AT313282) BLOWER SERVICE KIT (AT224930 NLA)
	AT313282	KIT	1	592250-	
58	R97332	CLIP	1		
59	AT305405	COVER	1		
60	24M7100	WASHER	1		
61	T181524	WING SCREW	1		
62	R117721	CLAMP	1	-592249	
63	R121664	SEAL	1		
64	R97336	HOSE	1	-592249	
65	T156471	AIR FILTER	1		(SUB FOR AT227170)
67	R33259	O-RING	1		

HVAC MODULE (HEATER ONLY)
MODULE CHAUFFAGE, VENTILATION ET CLIMATISATION (CHAUFFAGE SEULEMENT)
MODULO DE CLIMATIZACION (SOLO CALEFACTOR)

T193662 -UN-09SEP03

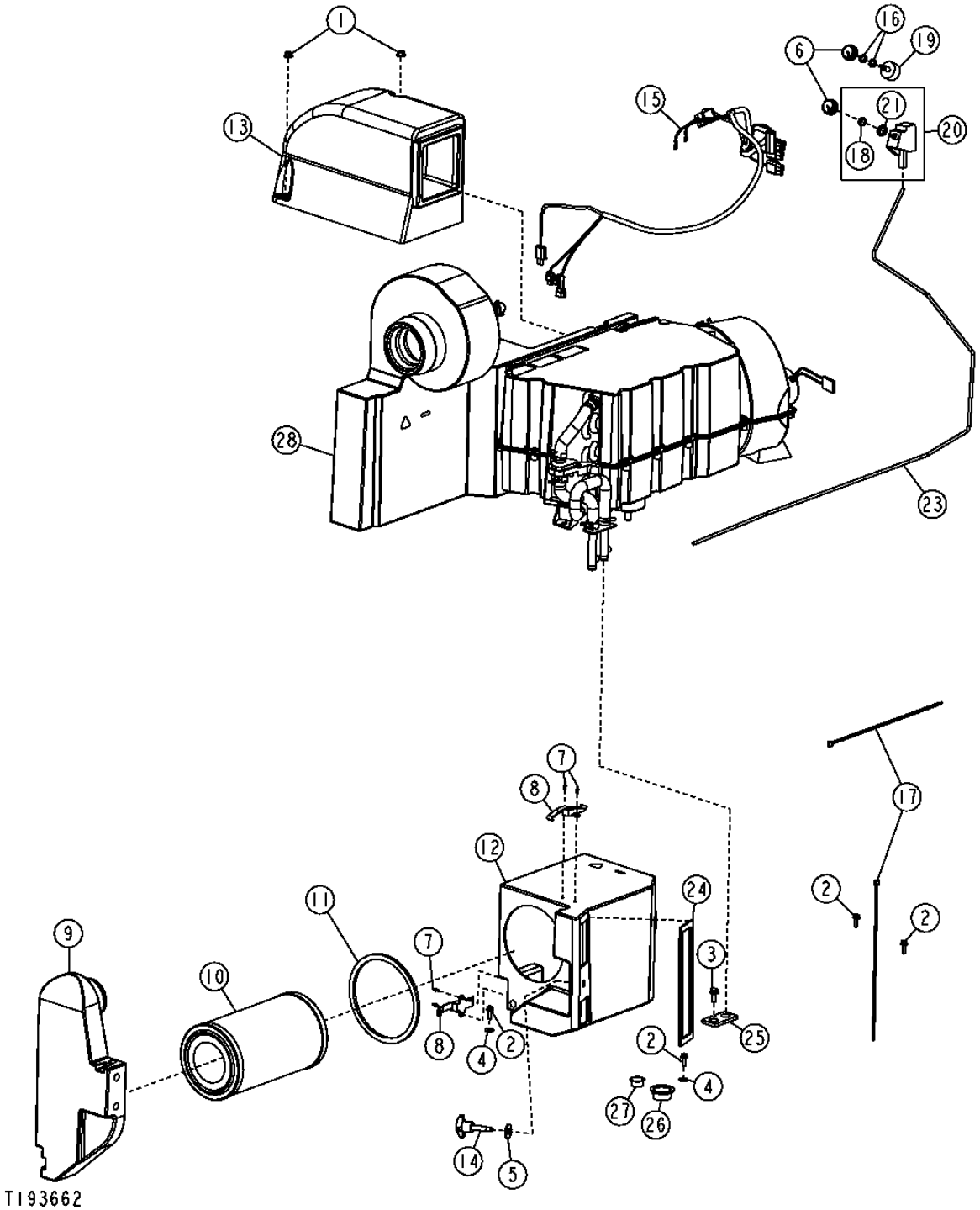

HVAC MODULE (HEATER ONLY)
MODULE CHAUFFAGE, VENTILATION ET CLIMATISATION (CHAUFFAGE SEULEMENT)
MODULO DE CLIMATIZACION (SOLO CALEFACTOR)

KEY	PART NO.	PART NAME	QTY.	SERIAL NO.	REMARKS
1	14M7298	FLANGE NUT	2		M8
2	19M7862	SCREW	4		M6 X 20
3	19M7866	SCREW	1		M8 X 20
4	24M7139	WASHER	2		6.400 X 18 X 1.600 MM
5	24M7296	WASHER	1		10.500 X 30 X 2.500 MM
6	AL76568	KNOB	2		
7	H86981	RIVET	4		
8	R121465	LATCH	2		
9	T167945	AIR DUCT	1		
10	T168220	AIR FILTER	1		
	AT321942	ACTIVATED CARBON AIR FILTER	1		(ODOR REDUCING)
11	T170053	SEAL	1		
12	T171459	AIR DUCT	1		
13	AT209668	AIR DUCT	1		
14	AT220953	KNOB	1		
15	AT202934	WIRING HARNESS	1		
16	R44165	LOCK NUT	2		
17	H77698	TIE BAND	1		
18	R203687	NUT	1		
19	RE43497	SWITCH	1		
20	RE46742	CONTROL	1		
21	12H292	LOCK WASHER	1		1/2"
23	RE58614	PUSH PULL CABLE	1		
24	T167676	SEAL	1		
25	T182858	GASKET	1		
26	T182876	PLUG	1		
27	T182877	PLUG	1		
28	AT329720	HEATER	1		(SUB FOR AT221452)

HVAC MODULE COMPONENTS (HEATER ONLY)
COMPOSANTS MODULE CHAUFFAGE, VENTILATION ET CLIMATISATION (CHAUFFAGE SEULEMENT)
COMPONENTES DEL MODULO DE CLIMATIZACION (SOLO CALEFACTOR)

T212762 -UN-25JUL05

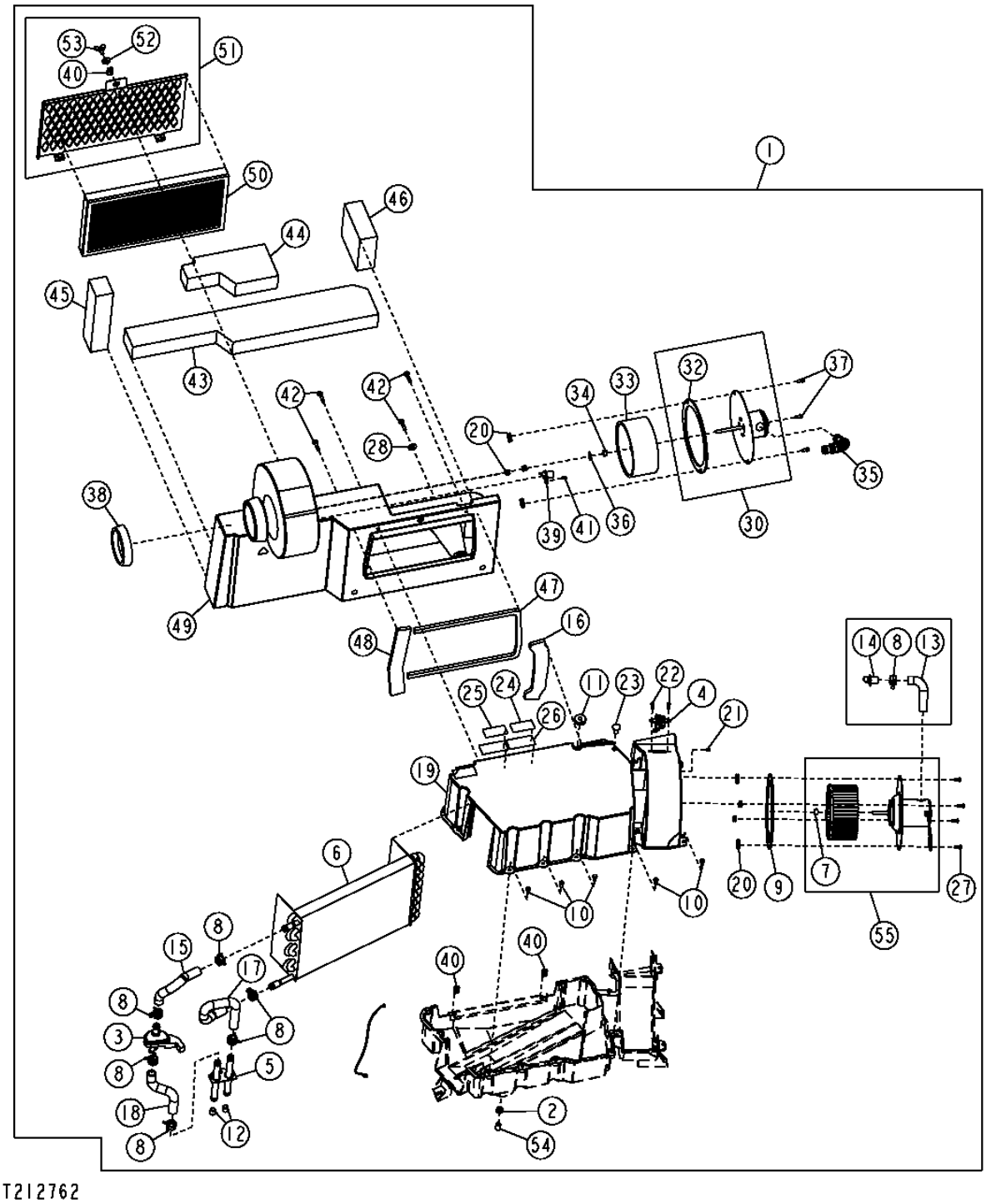

HVAC MODULE COMPONENTS (HEATER ONLY)
COMPOSANTS MODULE CHAUFFAGE, VENTILATION ET CLIMATISATION (CHAUFFAGE SEULEMENT)
COMPONENTES DEL MODULO DE CLIMATIZACION (SOLO CALEFACTOR)

KEY	PART NO.	PART NAME	QTY.	SERIAL NO.	REMARKS
1	AT329720	HEATER	1		(SUB FOR AT221452)
2	14H934	NUT	1	-603836	7/16"
3	AT193500	HAND OPERATED VALVE	1		
4	.....	RESISTOR	1		(AT307197 NLA) (SUB AT318987)
5	AT219778	HOSE	1		
6	AT329721	HEATER	1		(SUB FOR AT222210)
7	R97332	CLIP	1		
8	R117721	CLAMP	7	-592249	
	R117721	CLAMP	6	592250-	
9	R121664	SEAL	1		
10	R129110	SCREW	12		
11	R41440	GROMMET	1		
12	R50770	CAP	2		
13	R97336	HOSE	1	-592249	
14	RE36133	TUBE	1	-592249	
15	T170133	HOSE	1		
16	T59937	ISOLATOR	1		
17	T172933	HOSE	1		
18	T172934	HOSE	1		
19	T174109	HOUSING	1		
20	T178117	CLEVIS	8		
21	T178118	CAP SCREW	1		
22	T178119	CAP SCREW	2		
23	T178120	RIVET	1		
24	T178248	LABEL	1		
25	T178249	LABEL	1		
26	T178250	LABEL	2		
27	T178251	CAP SCREW	4		
28	24H1122	WASHER	1		3/8" X 7/8" X 0.083"
30	AT225451	BLOWER MOTOR	1		
31	R117721	CLAMP	1	-592249	
32	R121664	SEAL	1		
33	R121666	IMPELLER	1		
34	R97332	CLIP	1		
35	R97336	HOSE	1	-592249	
	T165169	HOSE	1	592250-	
36	T178127	PUSH NUT	1		
37	T178251	CAP SCREW	1		
38	R119171	SEAL	1		
39	RE36133	TUBE	1		
40	T178117	CLEVIS	5		
41	T178118	CAP SCREW	1		
42	T178130	BOLT	4		
43	T178131	ISOLATOR	1		
44	T178132	ISOLATOR	1		
45	T178133	ISOLATOR	1		
46	T178134	ISOLATOR	1		
47	T178135	ISOLATOR	1		
48	T178136	ISOLATOR	1		
49	T180929	AIR PLENUM	1		
50	AT227170	FILTER	1		
51	AT305405	COVER	1		
52	24M7100	WASHER	1		
53	T181524	WING SCREW	1		
54	T178252	CAP	1	-603836	
55	.....	KIT	1	-592249	(SUB AT313282) BLOWER SERVICE KIT (AT224930 NLA)
	AT313282	KIT	1	592250-	

A/C DELETE COVER
SUPPRIMER COUVERCLE CLIMATISEUR
CUBIERTA ELIMINACION DE ACONDICIONADOR DE AIRE

T197232 -UN-07JAN04

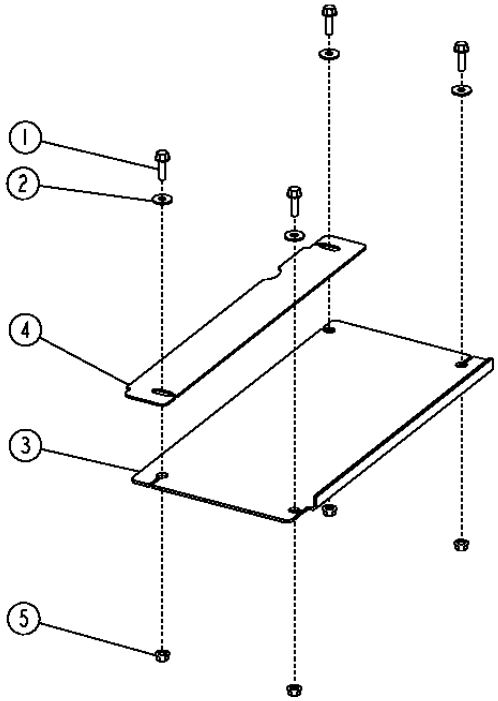

KEY	PART NO.	PART NAME	QTY.	SERIAL NO.	REMARKS
1	19M7786	SCREW	4		M10 X 30
2	24M7296	WASHER	4		10.500 X 30 X 2.500 MM
3	T196698	COVER	1		
4	T200820	COVER	1		
5	14M7296	FLANGE NUT	4		M10

HEATING AND AIR CONDITIONING OUTLET DUCTS
CONDUITS SORTIE CHAUFFAGE ET CLIMATISATION
REGISTROS DE SALIDA DEL CALEFACTOR Y ACONDICIONADOR DE AIRE

TP62831 -UN-29JUN00

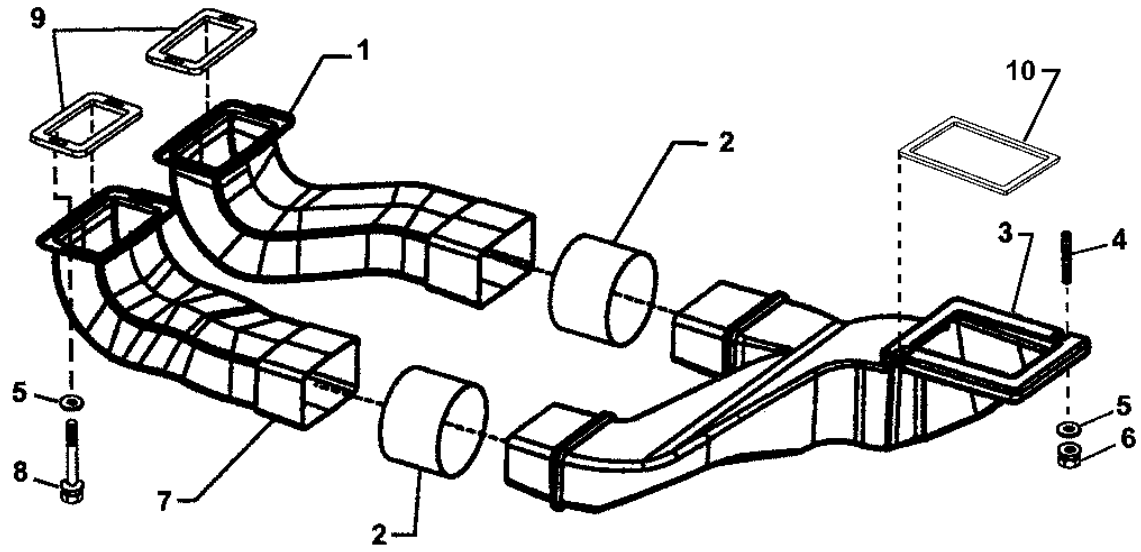

TP62831

KEY	*PART NO.*	*PART NAME*	*QTY.*	*SERIAL NO.*	*REMARKS*
1	T173768	AIR DUCT	1		(RH)
2	T171082	SEAL	2		
3	T207669	AIR DUCT	1		(SUB FOR T175855)
4	T167759	STUD	2		
5	24M7298	WASHER	6		8.400 X 25 X 2 MM
6	14M7298	FLANGE NUT	2		M8
7	T156256	AIR DUCT	1		(LH)
8	19M7800	SCREW	4		M8 X 50
9	T182872	SEAL	2		
10	H94158	WEATHERSTRIP	1		(SUB FOR T167679)

A/C COMPRESSOR
COMPRESSEUR DE CLIMATISATION
COMPRESOR DE ACONDICIONADOR DE AIRE

TX1002414 -UN-12JAN06

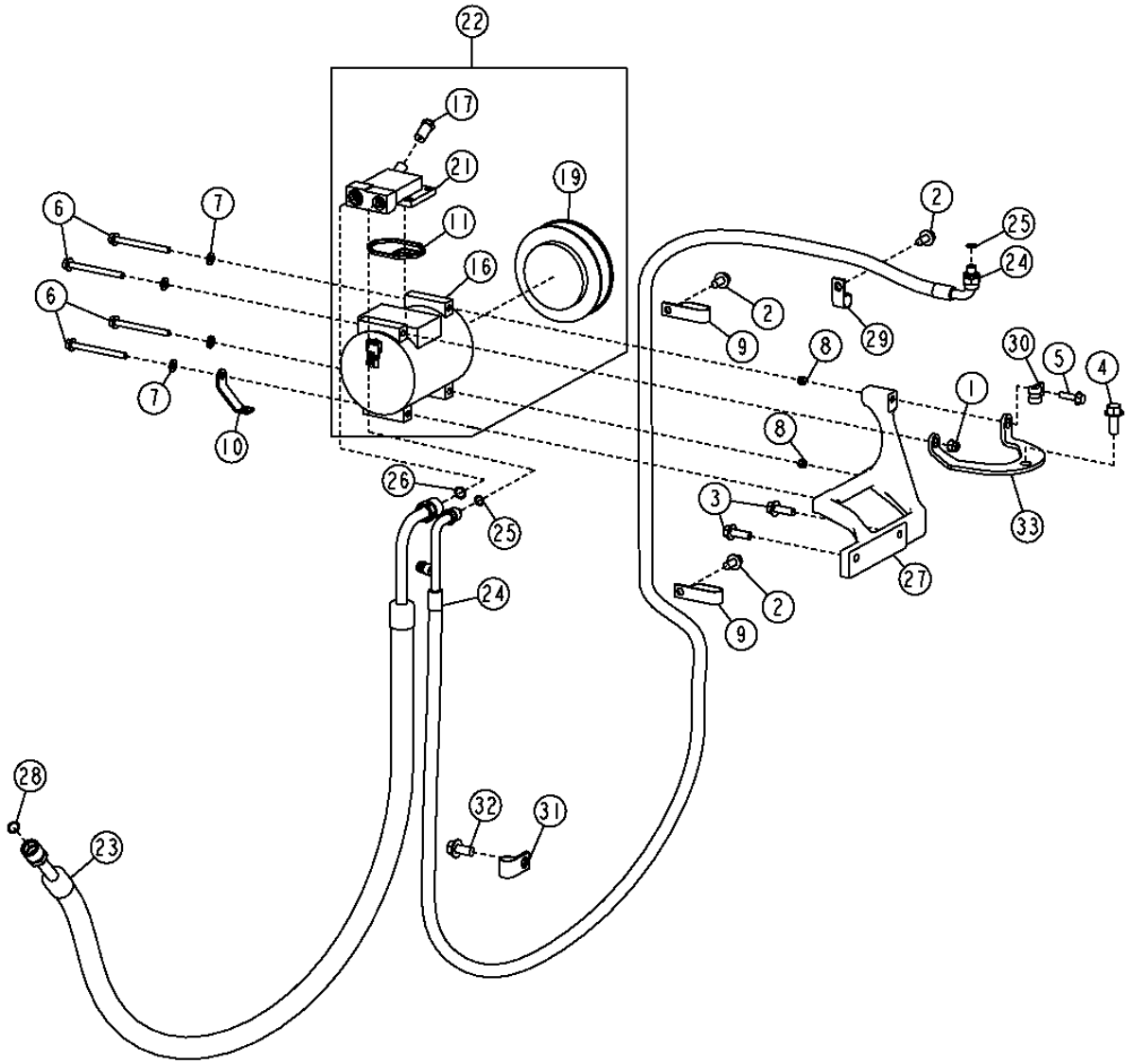

TX1002414

A/C COMPRESSOR
CONDENSEUR DE CLIMATISATION
COMPRESOR DE ACONDICIONADOR DE AIRE

KEY	PART NO.	PART NAME	QTY.	SERIAL NO.	REMARKS
1	14M7396	LOCK NUT	1		M8
2	19M7784	SCREW	3		M10 X 20
3	19M7786	SCREW	2		M10 X 30
4	19M7789	SCREW	1		M12 X 30
5	19M7868	SCREW	1		M8 X 30
6	19M7913	SCREW	4		M8 X 90
7	24M7238	WASHER	4		8.700 X 17 X 2 MM
8	34M7189	SPRING PIN	2		11 X 8 MM
9	R56171	CLIP	2		(SUB FOR AH97280)
10	R136110	BRACKET	1		
11	R115742	SEAL	1		
16	RE52454	COMPRESSOR	1		
17	RE52506	FLOW CONTROL HYD. VALVE	1		
19	RE52508	KIT	1		(CLUTCH AND PULLEY) (INCLUDES AT163872 AND R115743)
21	RE55423	MANIFOLD	1		
22	AT226273	COMPRESSOR	1		
	R78057	ELEC. CONNECTOR TERMINAL	2		(NOT ILLUSTRATED) (CONTACT SLEEVE)
	R78059	ELEC. CONNECTOR SEAL	2		(NOT ILLUSTRATED) (WIRE)
	RE12363	ELECTRICAL CONNECTOR ASSY	1		(NOT ILLUSTRATED) (TWO-WAY TOWER CONNECTOR)
	RE52507	KIT	1		(NOT ILLUSTRATED) (PULLEY AND CLUTCH KIT)
	RE52509	SEAL KIT	1		(NOT ILLUSTRATED) (SHAFT SEAL KIT)
23	AT227754	REFRIGERANT HOSE	1		
24	AT227755	REFRIGERANT HOSE	1		
25	R113050	O-RING	2		
26	R33259	O-RING	1		
27	R504192	BRACKET	1		(SUB FOR T143169)
28	R113050	O-RING	1		
29	T74416	CLAMP	1		(SUB FOR T76252)
30	T78974	CLAMP	1		
31	T64784	CLIP	1		
32	19M7788	SCREW	1		M12 X 25
33	R504191	BRACKET	1		

A/C CONDENSER
CONDENSEUR DE CLIMATISATION
CONDENSADOR DE ACONDICIONADOR DE AIRE

TX1002412 -UN-12JAN06

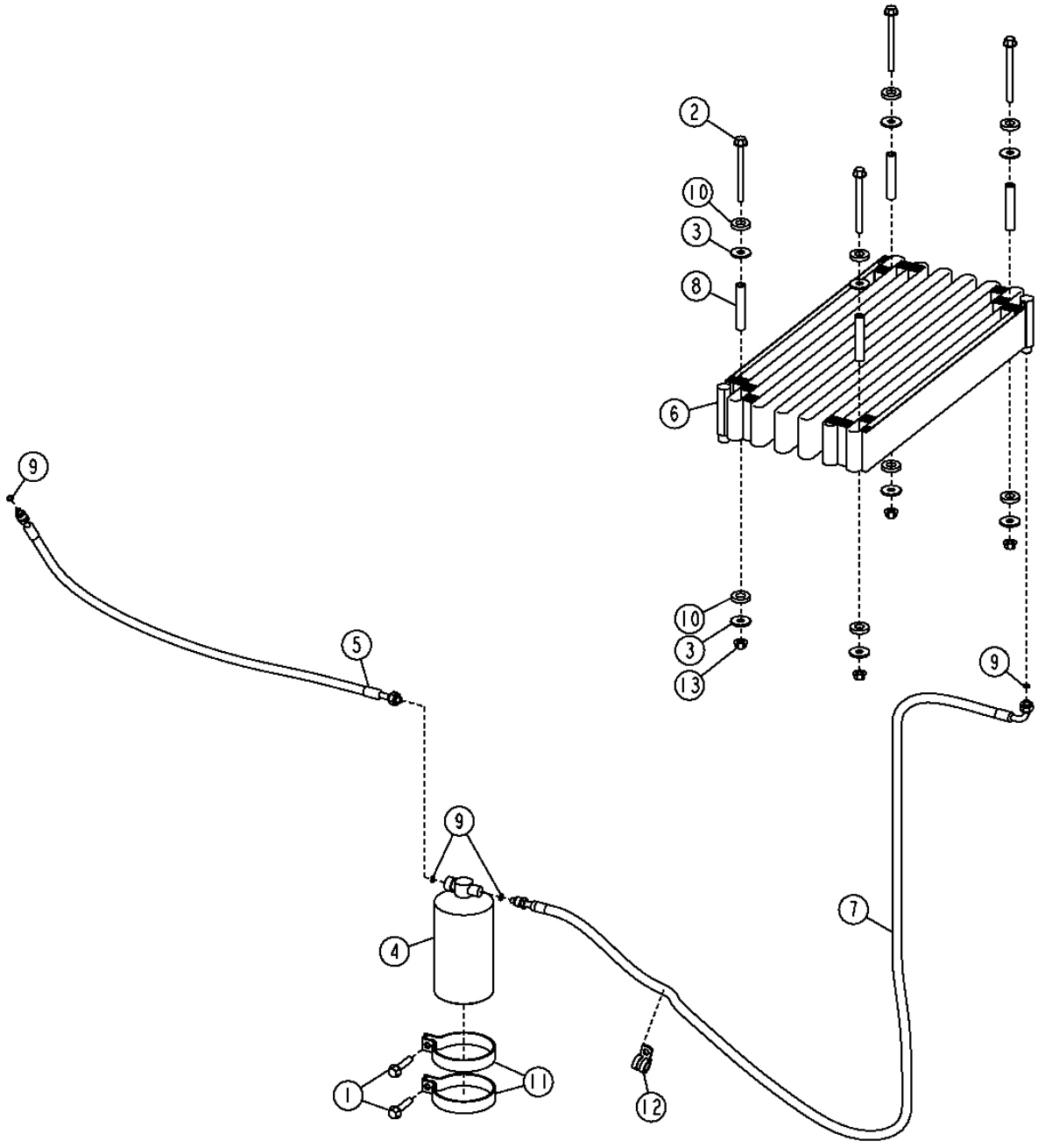

TX1002412

A/C CONDENSER
CONDENSEUR DE CLIMATISATION
CONDENSADOR DE ACONDICIONADOR DE AIRE

KEY	*PART NO.*	*PART NAME*	*QTY.*	*SERIAL NO.*	*REMARKS*
1	19M7806	SCREW	2		M10 X 50
2	19M7836	SCREW	4		M10 X 110
3	24M7101	WASHER	8		11 X 34 X 3 MM
4	AT162848	RECEIVER-DRYER	1		
5	AT208776	HOSE	1		
6	AT228240	VAPOR CONDENSER	1		
	AT307612	HEAT EXCHANGER	1		(HARSH ENVIRONMENT)
7	AT280631	REFRIGERANT HOSE	1		
8	N117290	SPACER	4		
9	R10093	O-RING	4		
10	T158424	WASHER	8		
11	T190513	CLAMP	2		
12	T76252	CLAMP	2		
13	14M7296	FLANGE NUT	4		M10

HEATER HOSES AND FITTINGS
FLEXIBLES ET RACCORDS CHAUFFAGE
MANGUERAS Y ADAPTADORES DEL CALEFACTOR

T196750 -UN-18DEC03

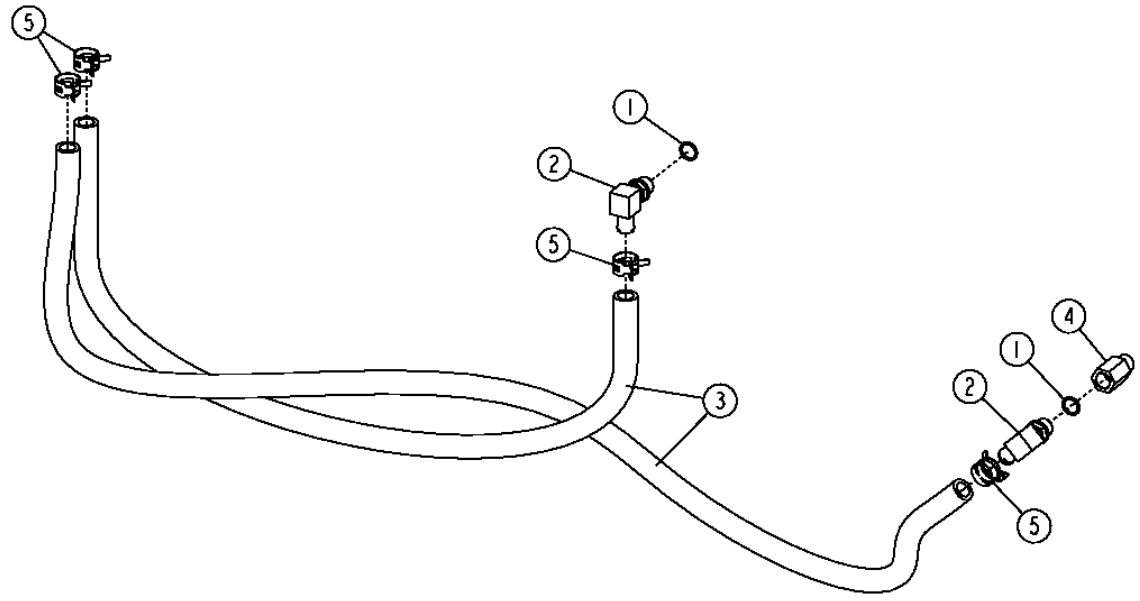

T196750

HEATER HOSES AND FITTINGS
FLEXIBLES ET RACCORDS CHAUFFAGE
MANGUERAS Y ADAPTADORES DEL CALEFACTOR

KEY	*PART NO.*	*PART NAME*	*QTY.*	*SERIAL NO.*	*REMARKS*
1	51M7043	O-RING	2		15.300 X 2.200 MM
2	AT174697	ELBOW FITTING	2		
3	.....	BULK HOSE	1		(FURNISH TY22328, CUT TO LENGTH)
4	RE520229	ADAPTER FITTING	1		(SUB FOR RE68908)
5	T184924	HOSE CLAMP	4		

HOOD
CAPOT
CAPO

T201646 -UN-02AUG04

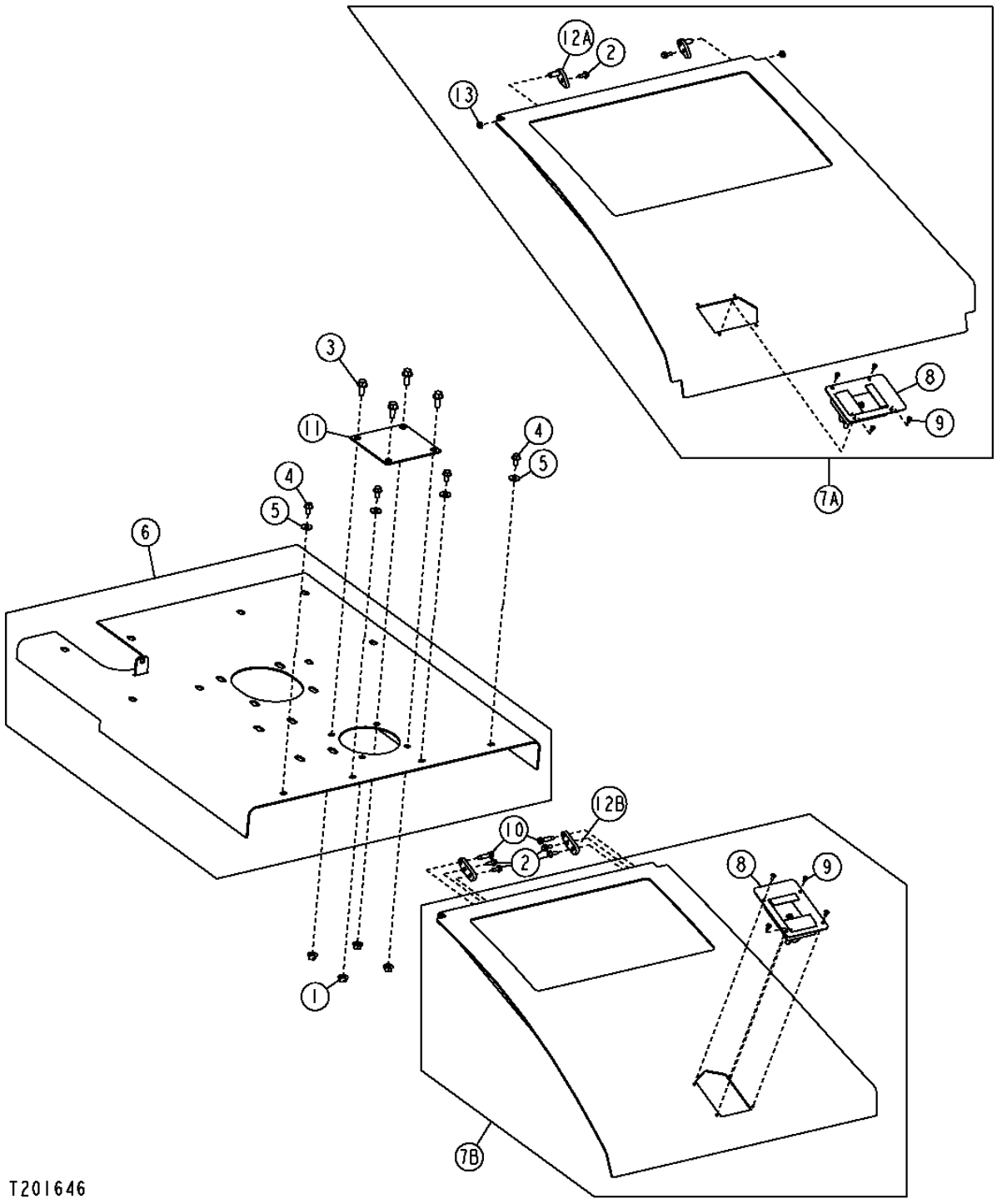

HOOD
CAPOT
CAPO

KEY	PART NO.	PART NAME	QTY.	SERIAL NO.	REMARKS
1	14M7296	FLANGE NUT	4		M10
2	19M7775	SCREW	2	-XXXXXX	M6 X 16
	19M7775	SCREW	4	XXXXXX-	M6 X 16
3	19M7785	SCREW	4		M10 X 25
4	19M7865	SCREW	4		M8 X 16
5	24M7207	WASHER	4		8.400 X 24 X 2 MM
6	AT227027	HOOD	1		
7A	.....	HOOD	1	-XXXXXX	(AT228843 NLA) (SUB AT310761) (ALSO ORDER AT310759, AT310760, T208352, T208039 AND T208317)
7B	AT310761	HOOD	1	XXXXXX-	
8	AT221696	LATCH	1		
9	H85233	RIVET	4		
10	R187539	SCREW	2		
11	T198109	REINFORCEMENT	1		
12A	AT304375	PIN	2	-XXXXXX	
12B	T208317	PLATE	2	XXXXXX-	
13	M148224	WASHER	2		

ENGINE SIDE SHIELDS
PANNEAUX LATERAUX DE MOTEUR
ESCUDOS LATERALES DEL MOTOR

T202405 -UN-23AUG04

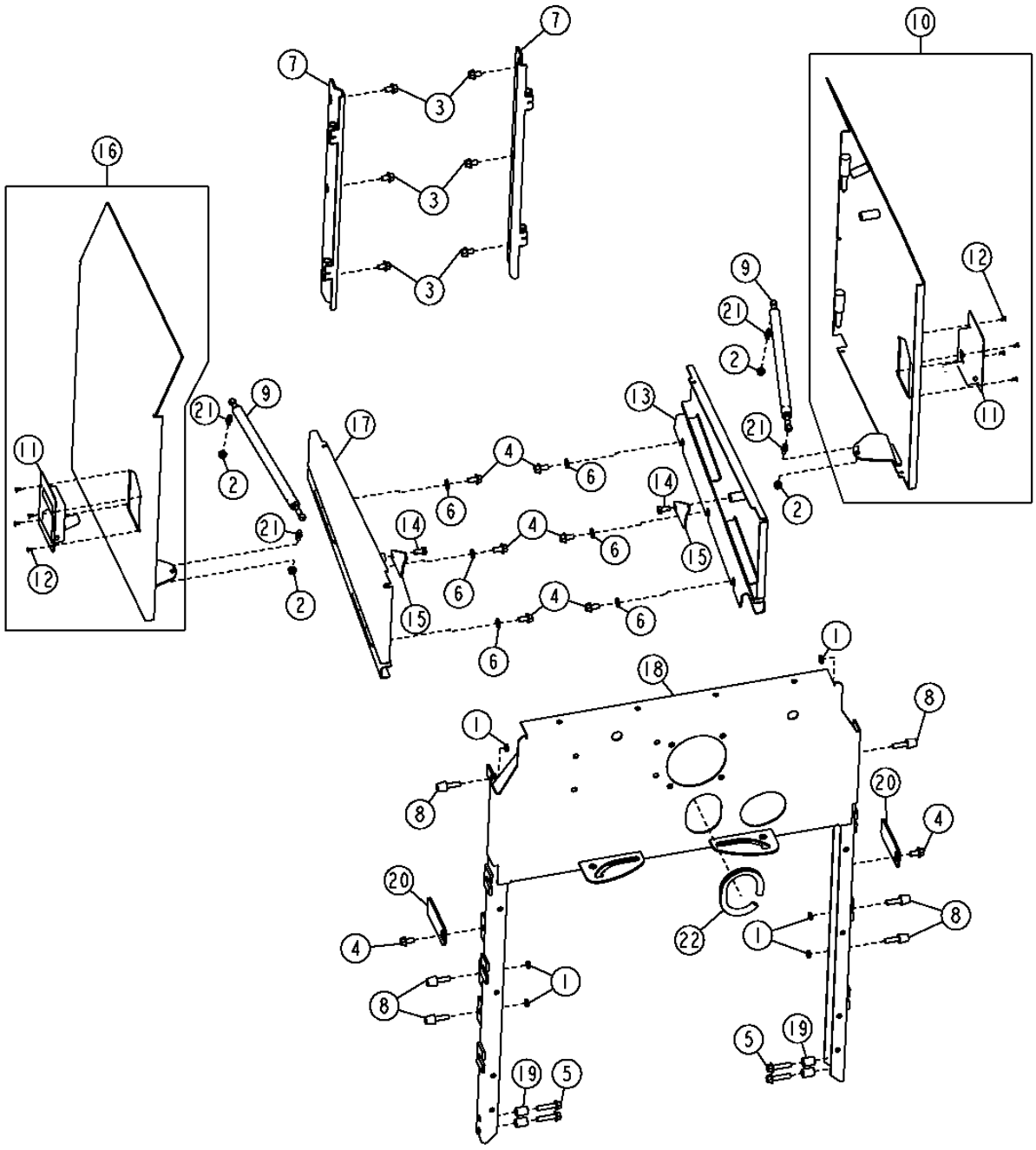

THIS PARTS LISTING IS CONTINUED

ENGINE SIDE SHIELDS
PANNEAUX LATERAUX DE MOTEUR
ESCUDOS LATERALES DEL MOTOR

KEY	*PART NO.*	*PART NAME*	*QTY.*	*SERIAL NO.*	*REMARKS*
1	14M7152	NUT	6		M10
2	14M7298	FLANGE NUT	4		M8
3	19M7784	SCREW	4		M10 X 20, (SUB FOR 19M7783)
4	19M7784	SCREW	10		M10 X 20
5	19M7805	SCREW	4		M10 X 45
6	24M7239	WASHER	6		10.700 X 21 X 2.500 MM
7	AT208159	HINGE	2		
8	AT219974	BUMPER	6		
9	AT226229	CYLINDER	2		
	T182758	CLIP	4		(DOOR CYLINDER) (NOT ILLUSTRATED)
10	AT327529	DOOR	1		(FRONT RIGHT) (SUB FOR AT226851)
11	AT221696	LATCH	2		(SUB FOR AT280208)
12	H85233	RIVET	8		
13	AT327522	DOOR	1		(RIGHT SERVICE DOOR) (SUB FOR AT228543)
14	T105891	CAP SCREW	2		
15	T168119	PLATE	2		
16	AT327530	DOOR	1		(FRONT LEFT) (SUB FOR AT226852)
17	AT327523	DOOR	1		(LEFT SERVICE DOOR) (SUB FOR AT228544)
18	AT320323	ISOLATOR	1		(SUB FOR AT226847)
19	T147891	BUSHING	4		
20	T168135	STRAP	2		
21	T177909	BALL STUD	4		
22	.....	MOLDING	1		(MAKE FROM T61861) (CUT TO LENGTH)

REAR SIDE PANELS
PANNEAUX LATERAUX ARRIERE
PANELES LATERALES TRASEROS

T205109 -UN-11JAN05

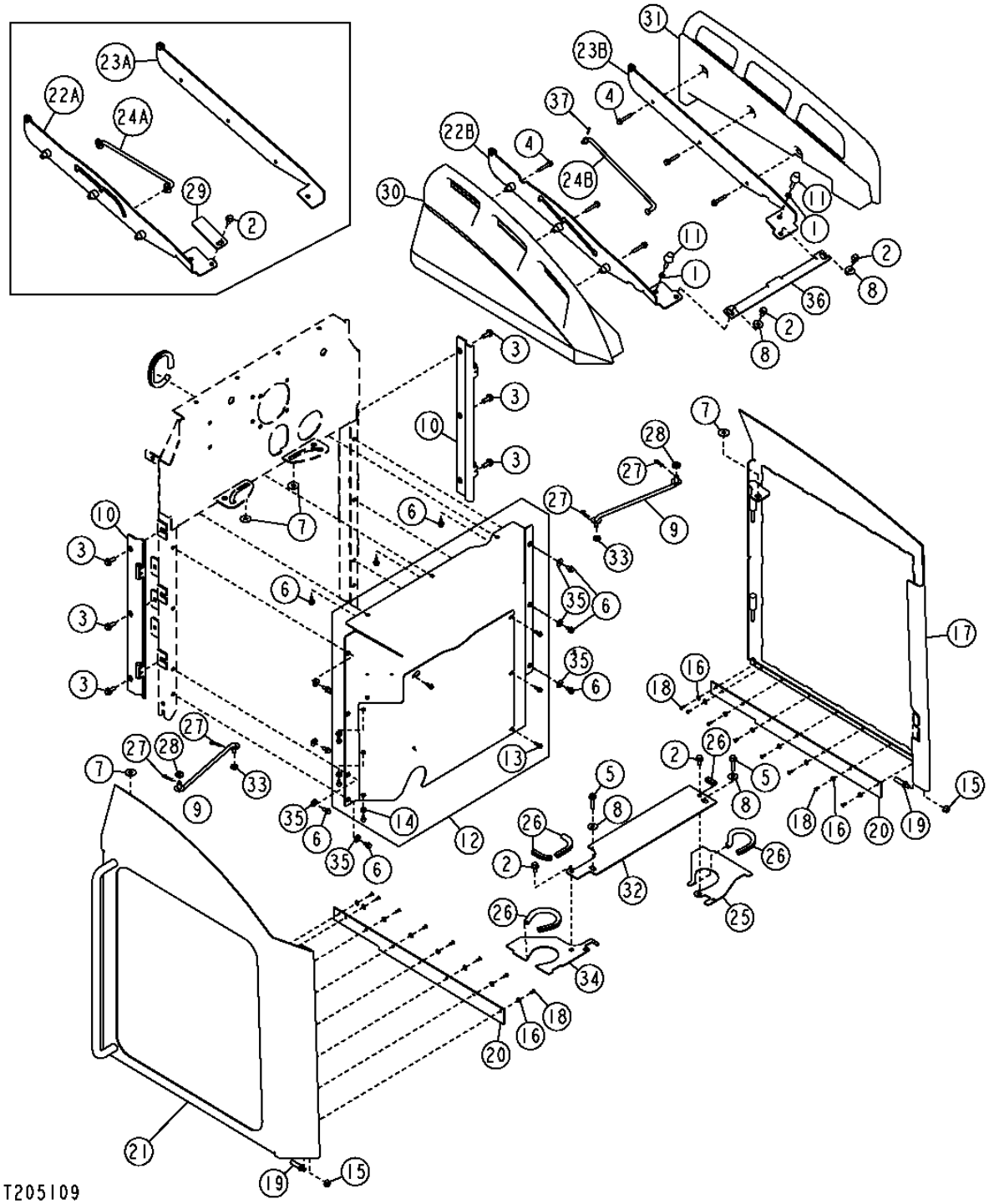

REAR SIDE PANELS
PANNEAUX LATERAUX ARRIERE
PANELES LATERALES TRASEROS

KEY	PART NO.	PART NAME	QTY.	SERIAL NO.	REMARKS
1	14M7152	NUT	2		M10
2	19M7784	SCREW	4		M10 X 20
3	19M7785	SCREW	6		M10 X 25
4	19M7800	SCREW	6		M8 X 50
5	19M7805	SCREW	2		M10 X 45
6	19M7865	SCREW	10		M8 X 16
7	24H1330	WASHER	4		15/32" X 1-3/8" X 7/64"
8	24M7296	WASHER	4		10.500 X 30 X 2.500 MM
9	AT312053	ROD	2		(SUB FOR AT179840)
10	AT208159	HINGE	2		
11	AT306690	BUMPER	2		
12	AT320322	ISOLATOR	1		(SUB FOR AT226150)
13	19M7862	SCREW	7		M6 X 20
14	24M7139	WASHER	3		6.400 X 18 X 1.600 MM
15	14M7296	FLANGE NUT	2		M10
16	.....	WASHER	16		(24M7138 NA)
17	AT327519	DOOR	1		(SUB FOR AT228416)
18	M68628	RIVET	16		
19	T201880	STUD	2		
20	T204624	FLAP	2		
21	AT327518	DOOR	1		(SUB FOR AT228408)
22A	AT228158	BRACKET	1	-XXXXXX	
22B	AT310759	BRACKET	1	XXXXXX-	(USE WITH AT310761)
23A	AT228405	BRACKET	1	-XXXXXX	
23B	AT310760	BRACKET	1	XXXXXX-	(USE WITH AT310761)
24A	AT228748	ROD	1	-XXXXXX	
24B	T208352	ROD	1	XXXXXX-	(USE WITH AT310761)
25	AT303636	ISOLATOR	1		
26	.....	BULK HOSE	1		(MAKE FROM T58056 BULK MATERIAL, CUT TO LENGTH 2.5 FT.)
27	J16931	PIN	4		
28	T162238	GROMMET	2		
29	T168135	STRAP	3	-XXXXXX	
	T168135	STRAP	2	XXXXXX-	
30	T197100	HANDLE	1		
31	T197575	HANDLE	1		
32	T202067	PLATE	1		
33	T27260	WASHER	2		
34	AT303014	ISOLATOR	1		
35	24M7298	WASHER	7		8.400 X 25 X 2 MM
36	T208039	BRACKET	1	XXXXXX-	(USE WITH AT310761)
37	11M7059	COTTER PIN	1		

FRAME LOCKING BAR
BARRE VERROUILLAGE BATI
BARRA DE BLOQUEO DEL CHASIS

T193217 -UN-06AUG03

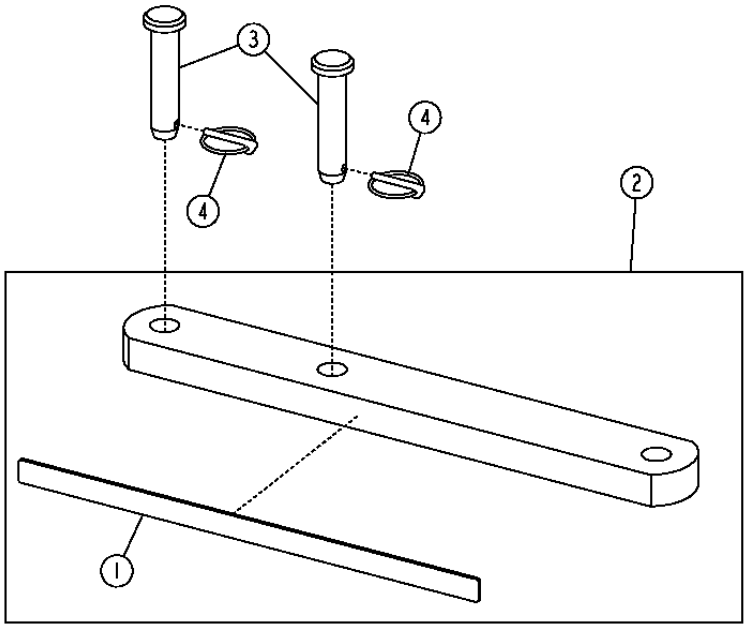

T193217

KEY	PART NO.	PART NAME	QTY.	SERIAL NO.	REMARKS
1	T182192	SAFETY SIGN	2		(WARNING, ARTICULATION LOCK)
2	AT226155	BAR	1		
3	R53296	PIN FASTENER	2		
4	AA21292	QUICK LOCK PIN	2		

TRANSMISSION SHIELDS
PROTECTIONS DE TRANSMISSION
ESCUDOS DE LA TRANSMISION

T193759 -UN-31OCT03

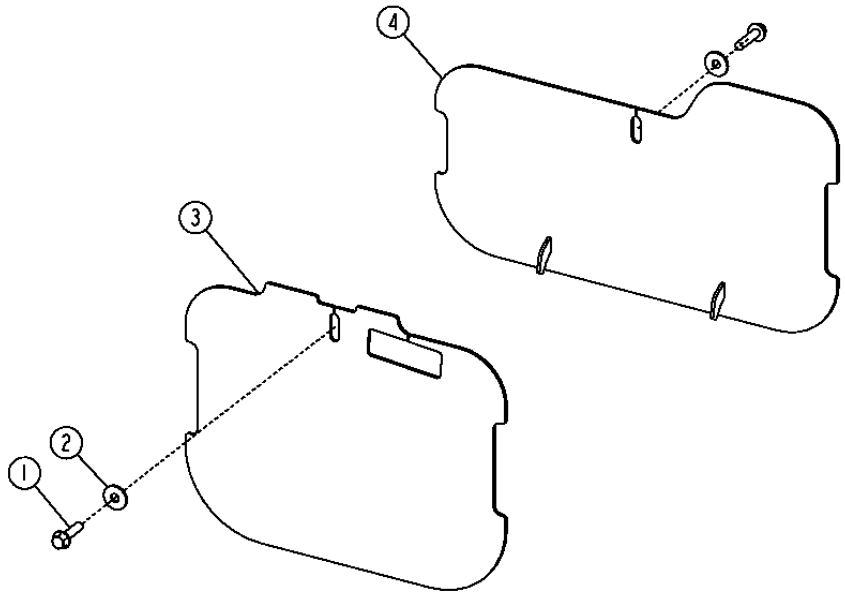

T193759

KEY	PART NO.	PART NAME	QTY.	SERIAL NO.	REMARKS
1	19M7791	BOLT	2	-XXXXXX	M12 X 40, (SUB FOR (2) 19M7814)
	19M7814	SCREW	2	XXXXXX-	M12 X 50
2	24M7180	WASHER	2		13 X 37 X 3 MM
3	.....	COVER	1	-XXXXXX	LH, (ORDER AT323687) (AT300081 NLA)
	AT323687	COVER	1	XXXXXX-	LH
4	AT227073	COVER	1		RH

BATTERY COVERS
COUVERCLES DE BATTERIES
CUBIERTAS DE LA BATERIA

T196507 -UN-20NOV03

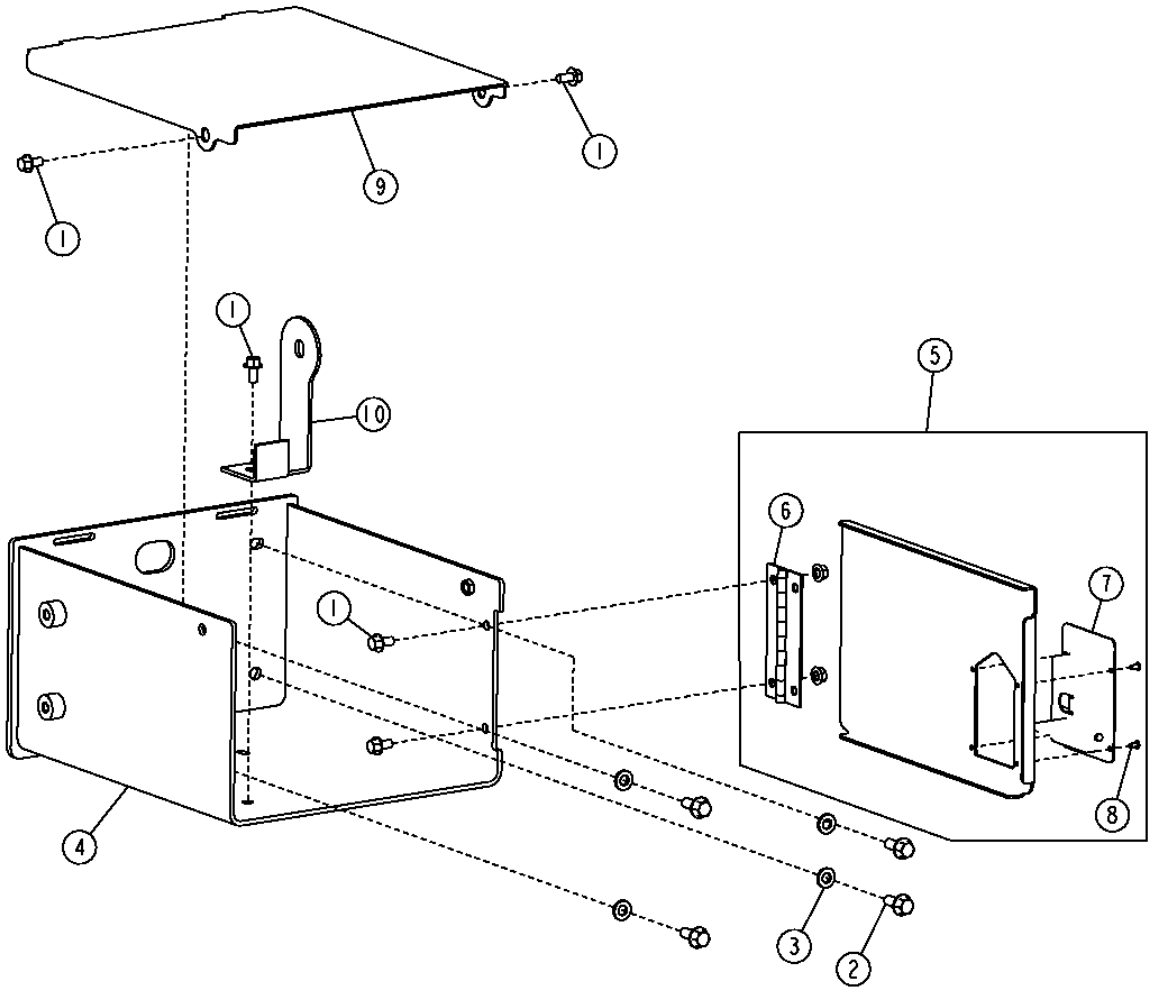

T196507

BATTERY COVERS
COUVERCLES DE BATTERIES
CUBIERTAS DE LA BATERIA

KEY	PART NO.	PART NAME	QTY.	SERIAL NO.	REMARKS
1	19M7784	SCREW	5		M10 X 20
2	19M7788	SCREW	4		M12 X 25
3	24M7240	WASHER	4		13 X 25 X 3 MM
4	AT226791	BATTERY BOX	1		
5	AT228623	DOOR	1	-XXXXXX	
	AT327535	DOOR	1	XXXXXX-	
6	AT162114	HINGE	1		
7	AT221696	LATCH	1		(SUB FOR AT280208)
8	H85233	RIVET	4		
9	T195708	COVER	1		
10	T197667	BRACKET	1		

SOUND ABSORBTION
ABSORPTION ACOUSTIQUE
ABSORCION DE SONIDO

T202822 -UN-29SEP04

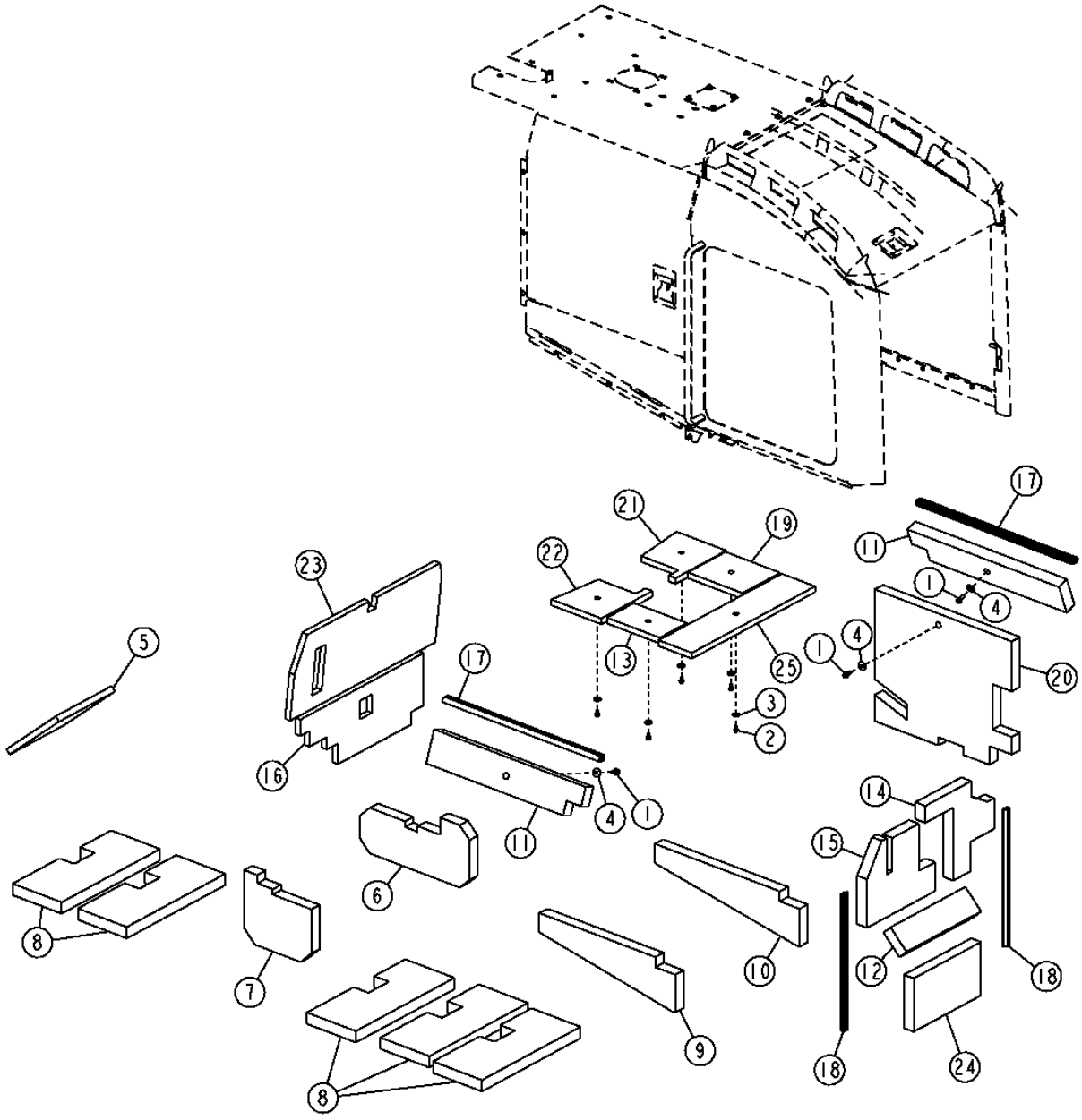

THIS PARTS LISTING IS CONTINUED

SOUND ABSORBTION
ABSORPTION ACOUSTIQUE
ABSORCION DE SONIDO

KEY	PART NO.	PART NAME	QTY.	SERIAL NO.	REMARKS
1	19M7785	SCREW	13		M10 X 25
2	19M7865	SCREW	5		M8 X 16
3	24M7024	WASHER	5		9 X 28 X 3 MM
4	24M7101	WASHER	13		11 X 34 X 3 MM
5	T206155	ISOLATOR	1		CONTROL VALVE COVER
6	T206157	ISOLATOR	1		RIGHT TRANSMISSION COVER
7	T206158	ISOLATOR	1		LEFT TRANSMISSION COVER
8	T206159	ISOLATOR	5		BOTTOM GUARD
9	T206160	ISOLATOR	1		LEFT SERVICE DOOR
10	T206161	ISOLATOR	1		RIGHT SERVICE DOOR
11	T206162	ISOLATOR	2		LEFT ENGINE DOOR
12	T206163	ISOLATOR	1		RIGHT ENGINE DOOR
13	T206164	ISOLATOR	1		HOOD
14	T206300	ISOLATOR	1		BAFFLE SOUND
15	T206301	ISOLATOR	1		BAFFLE SOUND
16	T206339	ISOLATOR	1		RESERVOIR SOUND
17	T206348	ISOLATOR	2		SEAL
18	T206368	ISOLATOR	2		SEAL, SOUND ABSORBER
19	T210426	ISOLATOR	1		HOOD
20	T210488	ISOLATOR	1		RIGHT DOOR
21	T210489	ISOLATOR	1		HOOD
22	T210490	ISOLATOR	1		HOOD
23	T210510	ISOLATOR	1		RESERVOIR
24	T210511	ISOLATOR	1		BAFFLE
25	T210522	ISOLATOR	1		SOUND

FRONT FENDERS
AILES AVANT
GUARDABARROS DELANTERO

T198059 -UN-09MAR04

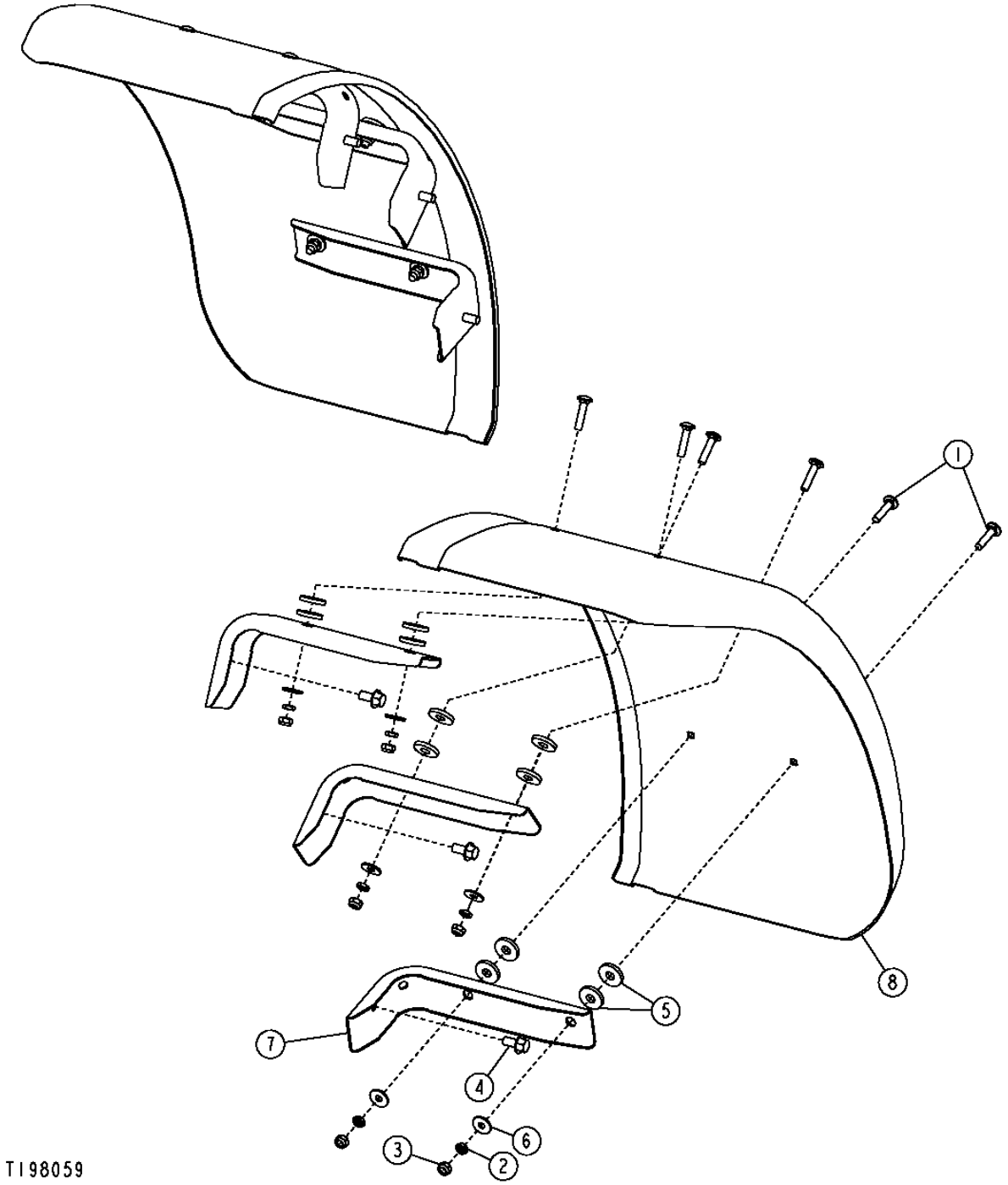

FRONT FENDERS
AILES AVANT
GUARDABARROS DELANTERO

KEY	PART NO.	PART NAME	QTY.	SERIAL NO.	REMARKS
1	03M7195	BOLT	12		M10 X 45
2	14M7152	NUT	12		M10
3	14M7167	LOCK NUT	12		M10
4	19M7788	SCREW	6		M12 X 25
5	T22381	WASHER	24		10.414 X 38.100 X 5.588 MM
6	24M7296	WASHER	12		10.500 X 30 X 2.500 MM
7	T178368	SUPPORT	6		
8	T205471	FENDER	2		

RIGHT AND LEFT REAR PLATFORMS
PLATE-FORMES ARRIERE DROITE ET GAUCHE
PLATAFORMAS TRASERA IZQUIERDA Y DERECHA

TX1017454 -UN-17JAN07

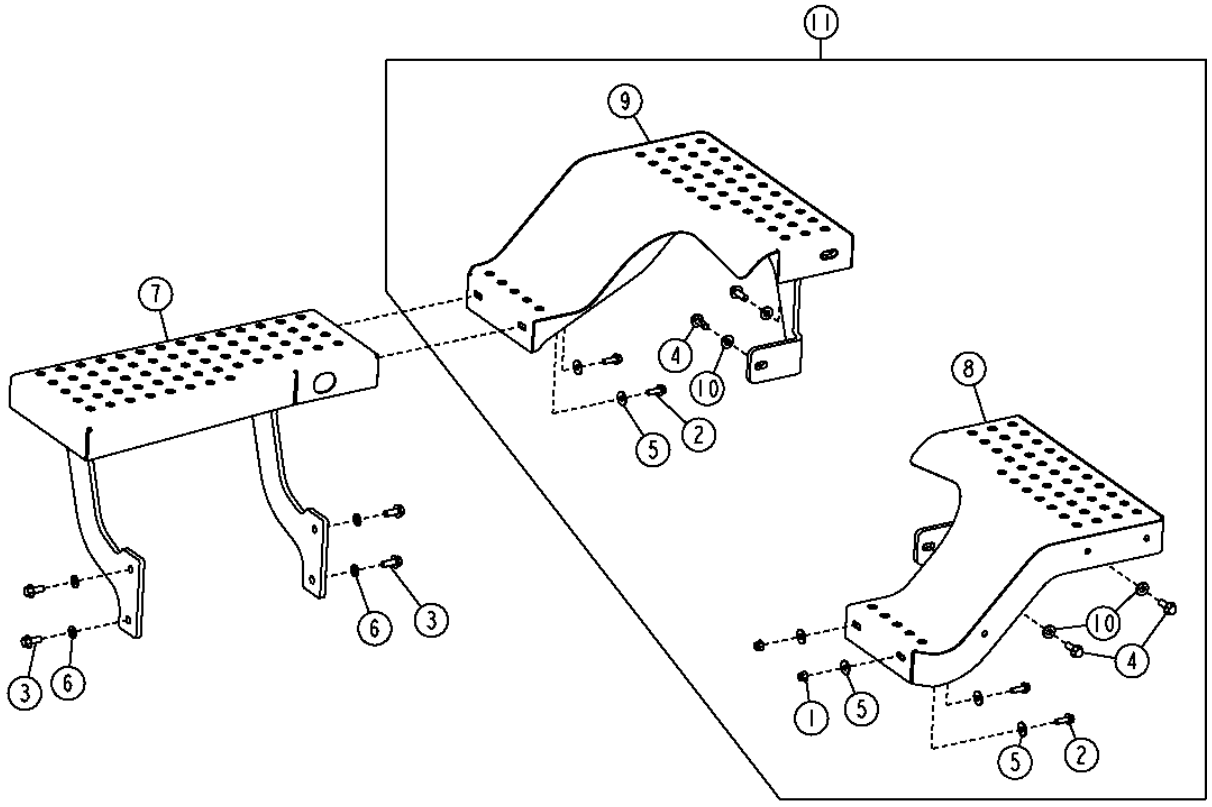

TX1017454

RIGHT AND LEFT REAR PLATFORMS
PLATE-FORMES ARRIERE DROITE ET GAUCHE
PLATAFORMAS TRASERA IZQUIERDA Y DERECHA

KEY	PART NO.	PART NAME	QTY.	SERIAL NO.	REMARKS
1	14M7400	LOCK NUT	4		M10
2	19M7786	SCREW	4		M10 X 30
3	19M7789	SCREW	4		M12 X 30
4	19M7790	SCREW	4		M12 X 35
5	24M7180	WASHER	8		13 X 37 X 3 MM
6	24M7240	WASHER	4		13 X 25 X 3 MM
7	AT327499	PLATFORM	1		(SUB FOR AT226789)
8	AT327502	FENDER	1		(SUB FOR AT306454 OR AT225159)
9	AT327503	FENDER	1		(SUB FOR AT306455 OR AT225160)
10	T178063	WASHER	4		
11	AT303755	FENDER	1		MATCHED SET

FULL COVERAGE FRONT FENDERS
AILES AVANT PLEINE COUVERTURE
GUARDABARROS DELANTEROS DE COBERTURA TOTAL

T198654 -UN-06APR04

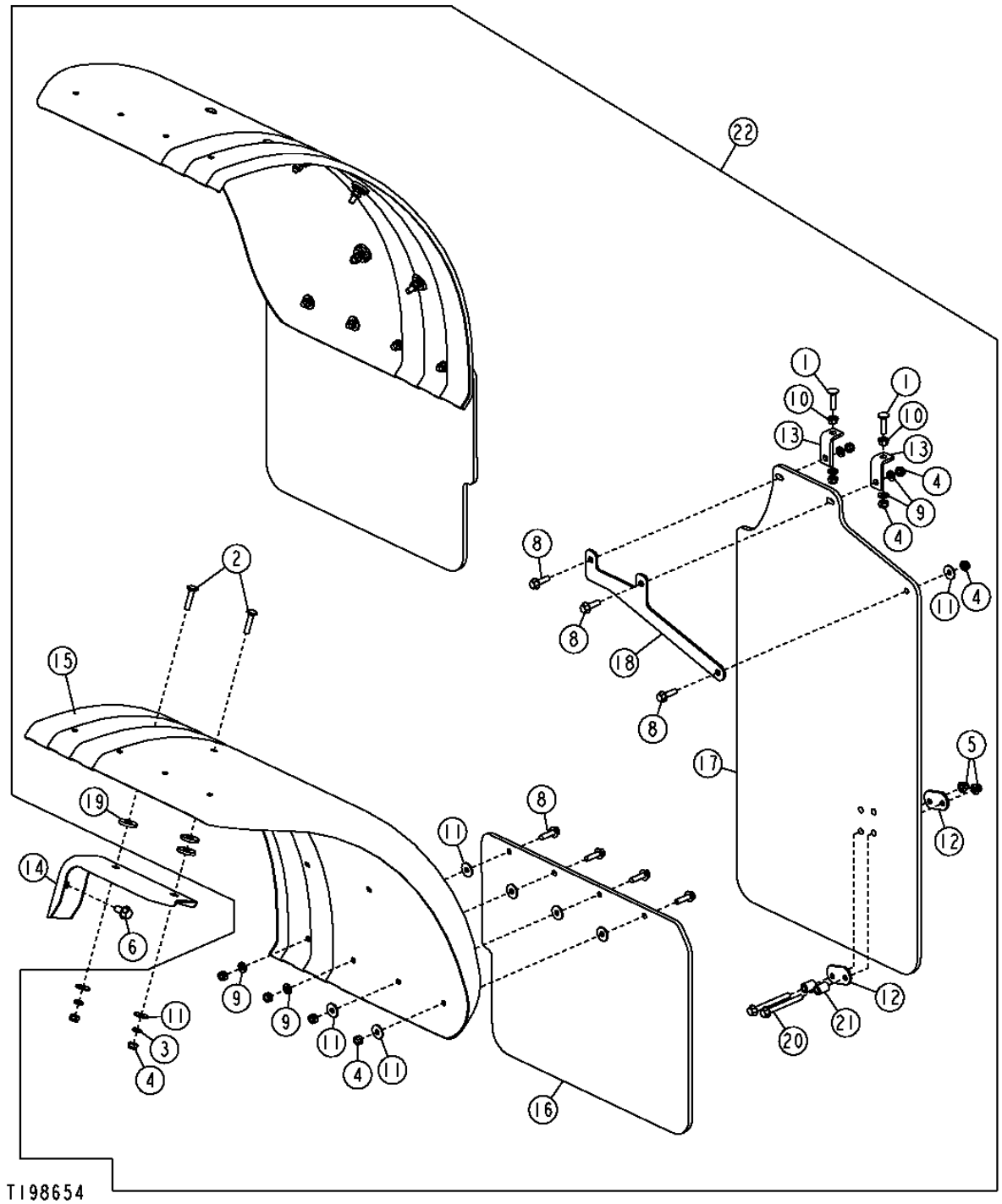

FULL COVERAGE FRONT FENDERS
AILES AVANT PLEINE COUVERTURE
GUARDABARROS DELANTEROS DE COBERTURA TOTAL

KEY	*PART NO.*	*PART NAME*	*QTY.*	*SERIAL NO.*	*REMARKS*
1	03M7195	BOLT	2		M10 X 45
2	03M7195	BOLT	12		M10 X 45
3	14M7152	NUT	12		M10
4	14M7400	LOCK NUT	25		M10, (SUB FOR 14M7167, THIS APPLICATION)
5	14M7400	LOCK NUT	2		M10
6	19M7788	SCREW	6		M12 X 25
7	19M7808	SCREW	2		M10 X 65
8	19M7835	SCREW	11		M10 X 35
9	24M7239	WASHER	8		10.700 X 21 X 2.500 MM
10	24M7296	WASHER	2		10.500 X 30 X 2.500 MM
11	24M7296	WASHER	25		10.500 X 30 X 2.500 MM
12	T173779	STRAP	2		
13	T176357	ANGLE	2		
14	T178368	SUPPORT	6		
15	T203075	FENDER	2		
16	T203077	SPLASH GUARDS	2		
17	T204701	SPLASH GUARDS	1		
18	T204744	PLATE	1		
19	T22381	WASHER	18		
20	19M7812	SCREW	2		M10 X 100
21	T147891	BUSHING	2		
22	**AT311823**	**KIT**	**1**		**FENDER (WHOLEGOODS)**

FULL COVERAGE REAR FENDERS (W/O LATCH)
AILES ARRIERE PLEINE COUVERTURE (W/O VERROUILLAGE)
GUARDABARROS TRASEROS DE COBERTURA TOTAL (W/O PESTILLO)

T198846 -UN-29APR04

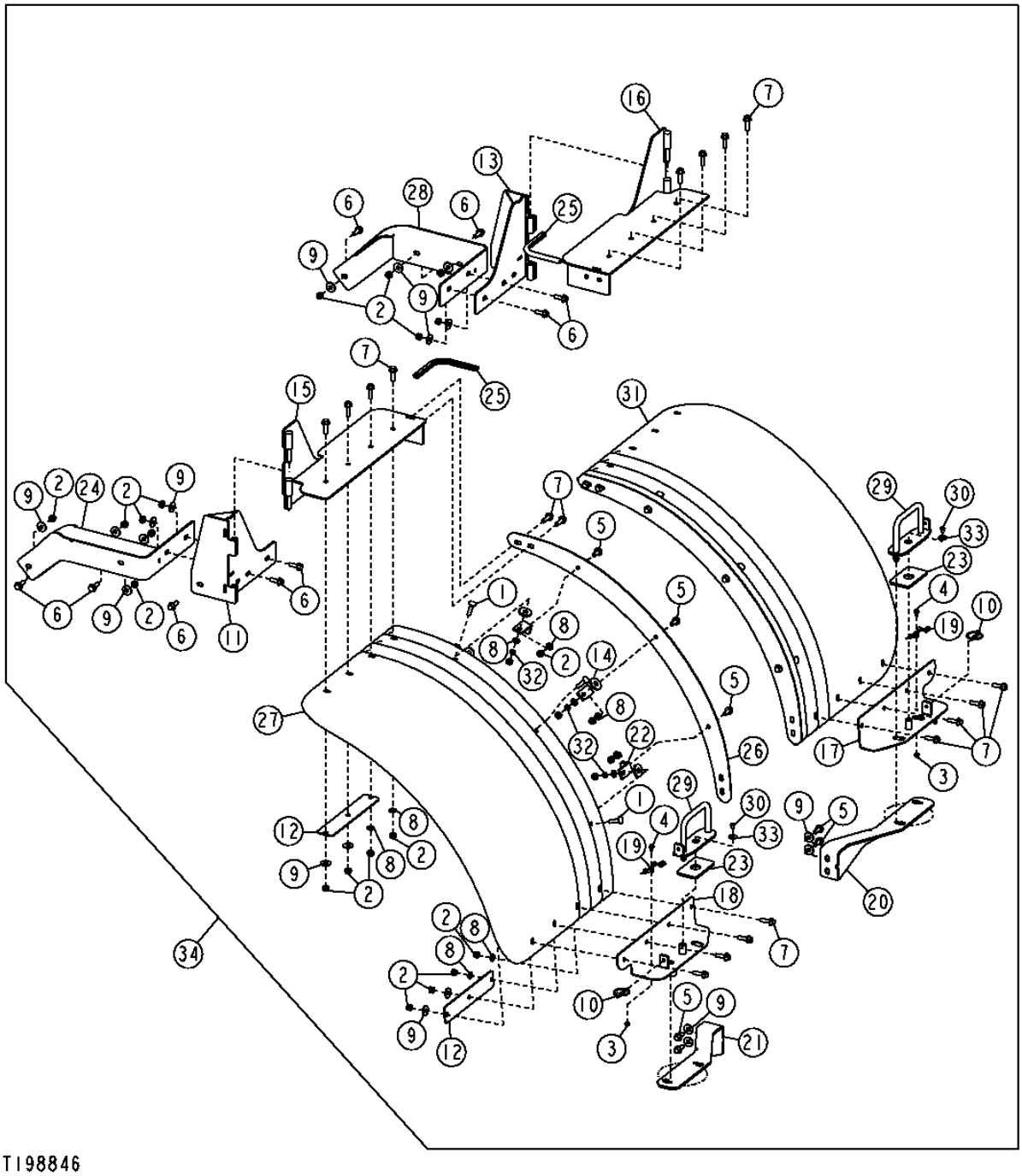

FULL COVERAGE REAR FENDERS (W/O LATCH)
AILES ARRIERE PLEINE COUVERTURE (W/O VERROUILLAGE)
GUARDABARROS TRASEROS DE COBERTURA TOTAL (W/O PESTILLO)

KEY	PART NO.	PART NAME	QTY.	SERIAL NO.	REMARKS
1	03M7195	BOLT	6		M10 X 45
2	14M7167	LOCK NUT	44		M10
3	14M7303	FLANGE NUT	2		M6
4	19M7774	SCREW	2		M6 X 12
5	19M7785	SCREW	10		M10 X 25
6	19M7786	SCREW	12		M10 X 30
7	19M7835	SCREW	20		M10 X 35
8	24M7239	WASHER	20		10.700 X 21 X 2.500 MM
9	24M7296	WASHER	28		10.500 X 30 X 2.500 MM
10	AA21292	QUICK LOCK PIN	2		
11	AT301819	HINGE	1		
12	T204644	PLATE	4		
13	AT301820	HINGE	1		
14	T22381	WASHER	6		
15	AT305572	HINGE	1		
16	AT305573	HINGE	1		
17	AT305574	BRACKET	1		
18	AT305575	BRACKET	1		
19	AT305830	CABLE	2		
20	AT306099	SUPPORT	1		
21	AT306227	SUPPORT	1		
22	T176357	ANGLE	6		
23	T207650	PAD	2		
24	AT309249	BRACKET	1		
25	.....	ISOLATOR	1		(MAKE FROM T58056 BULK MATERIAL, CUT TO LENGTH)
26	T203965	PLATE	2		
27	T204518	FENDER	1		
28	AT309530	BRACKET	1		
29	AT308784	HANDLE	2		
30	R131664	CAP SCREW	2		
31	T204518	FENDER	1		
32	14M7152	NUT	6		M10
33	24M7298	WASHER	2		8.400 X 25 X 2 MM
34	**AT312131**	**KIT**	**1**		**FENDER (WHOLEGOODS)**

FULL COVERAGE REAR FENDERS (W/LATCH)
GUARDABARROS TRASEROS DE COBERTURA TOTAL (W/VERROUILLAGE)
AILES ARRIERE PLEINE COUVERTURE (W/PESTILLO)

TX1017451 -UN-

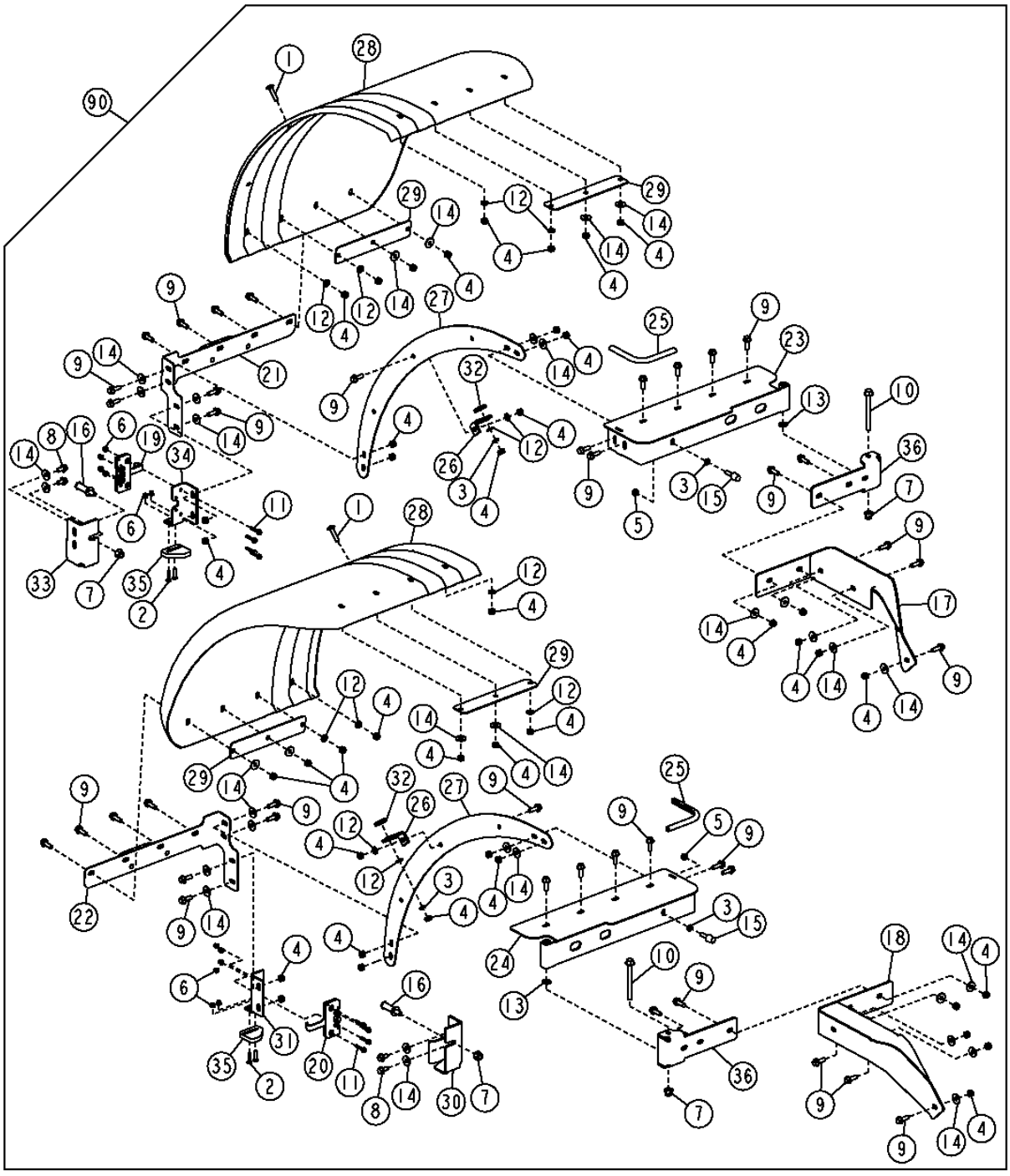

FULL COVERAGE REAR FENDERS (W/LATCH)
GUARDABARROS TRASEROS DE COBERTURA TOTAL (W/VERROUILLAGE)
AILES ARRIERE PLEINE COUVERTURE (W/PESTILLO)

KEY	PART NO.	PART NAME	QTY.	SERIAL NO.	REMARKS
1	03M7195	BOLT	6		
2	03M7290	BOLT	4		
3	14M7152	NUT	8		M10
4	14M7167	LOCK NUT	50		M10
5	14M7274	NUT	2		M10
6	14M7397	LOCK NUT	12		M6
7	14M7401	LOCK NUT	4		M12
8	19M7784	SCREW	4		M10 X 20
9	19M7786	SCREW	44		M10 X 30
10	19M7821	SCREW	2		M12 X 120
11	19M7833	SCREW	8		M6 X 35
12	24M7239	WASHER	20		10.700 X 21 X 2.500 MM
13	24M7240	WASHER	2		13 X 25 X 3 MM
14	24M7296	WASHER	34		10.500 X 30 X 2.500 MM
15	AT219974	BUMPER	2		
16	AT301711	STRIKER	2		
17	AT309249	BRACKET	1		LH
18	AT309530	BRACKET	1		RH
19	AT322382	LATCH	1		LH
20	AT322383	LATCH	1		RH
21	AT328356	BRACKET	1		LH
22	AT328357	BRACKET	1		RH
23	AT328366	HINGE	1		LH
24	AT328367	HINGE	1		RH
25	.....	MOLDING	2		(MAKE FROM T58056) (CTL, 1'(305 MM))
26	T176357	ANGLE	6		
27	T203965	PLATE	2		
28	T204518	FENDER	2		
29	T204644	PLATE	4		
30	T221186	BRACKET	1		
31	T222260	BRACKET	1		
32	T22381	WASHER	6		
33	T224462	BRACKET	1		
34	T224463	BRACKET	1		
35	T224498	PAD	2		
36	T224529	BRACKET	2		
90	**AT312131**	**FIELD INSTALLATION KIT**	**1**		**(WHOLEGOODS) FULL COVERAGE REAR FENDER**

FENDER BRACKET EXTENSIONS (TOOL CARRIER)
EXTENSIONS SUPPORT AILE (PORTE-OUTILS)
EXTENSIONES DE ESCUADRA DEL GUARDABARROS (PORTAHERRAMIENTAS)

T202125 -UN-10AUG04

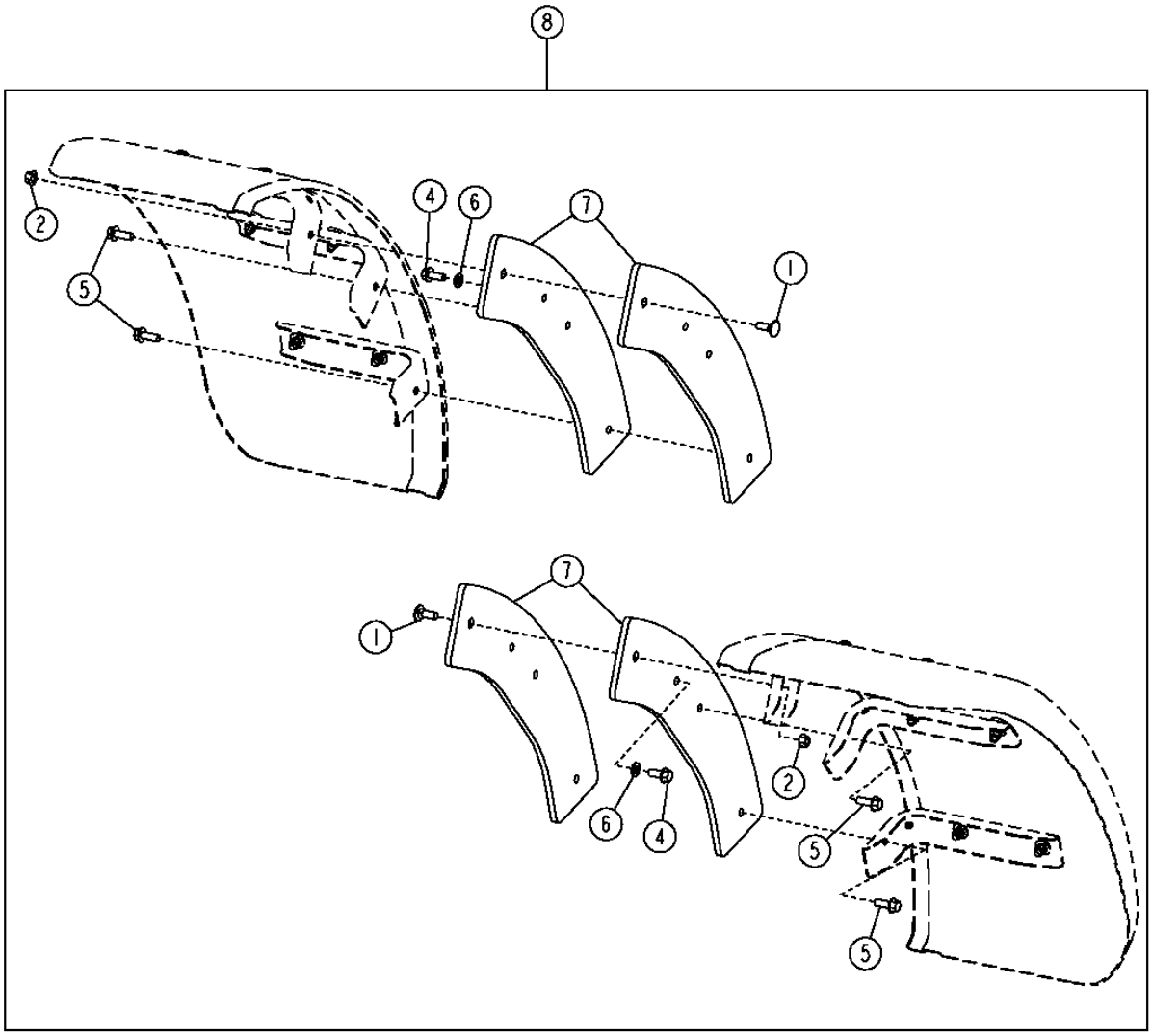

T202125

FENDER BRACKET EXTENSIONS (TOOL CARRIER)
EXTENSIONS SUPPORT AILE (PORTE-OUTILS)
EXTENSIONES DE ESCUADRA DEL GUARDABARROS PORTAHERRAMIENTAS)

KEY	*PART NO.*	*PART NAME*	*QTY.*	*SERIAL NO.*	*REMARKS*
1	03M7083	BOLT	2		M12 X 35
2	14M7299	FLANGE NUT	2		M12
4	19M7789	SCREW	2		M12 X 30
5	19M7790	SCREW	4		M12 X 35
6	24M7240	WASHER	2		13 X 25 X 3 MM
7	T206642	PLATE	2		
8	.....	BRACKET	1		(AT310495 NLA) (FURNISH COMPONENTS)

RADIO, RADIO SPEAKERS AND ANTENNA (SN -590067)
RADIO, HAUTS-PARLEURS ET ANTENNE (SN -590067)
RADIO, ALTAVOCES DEL RADIO Y ANTENA (SN -590067)

T192643 -UN-01JUL03

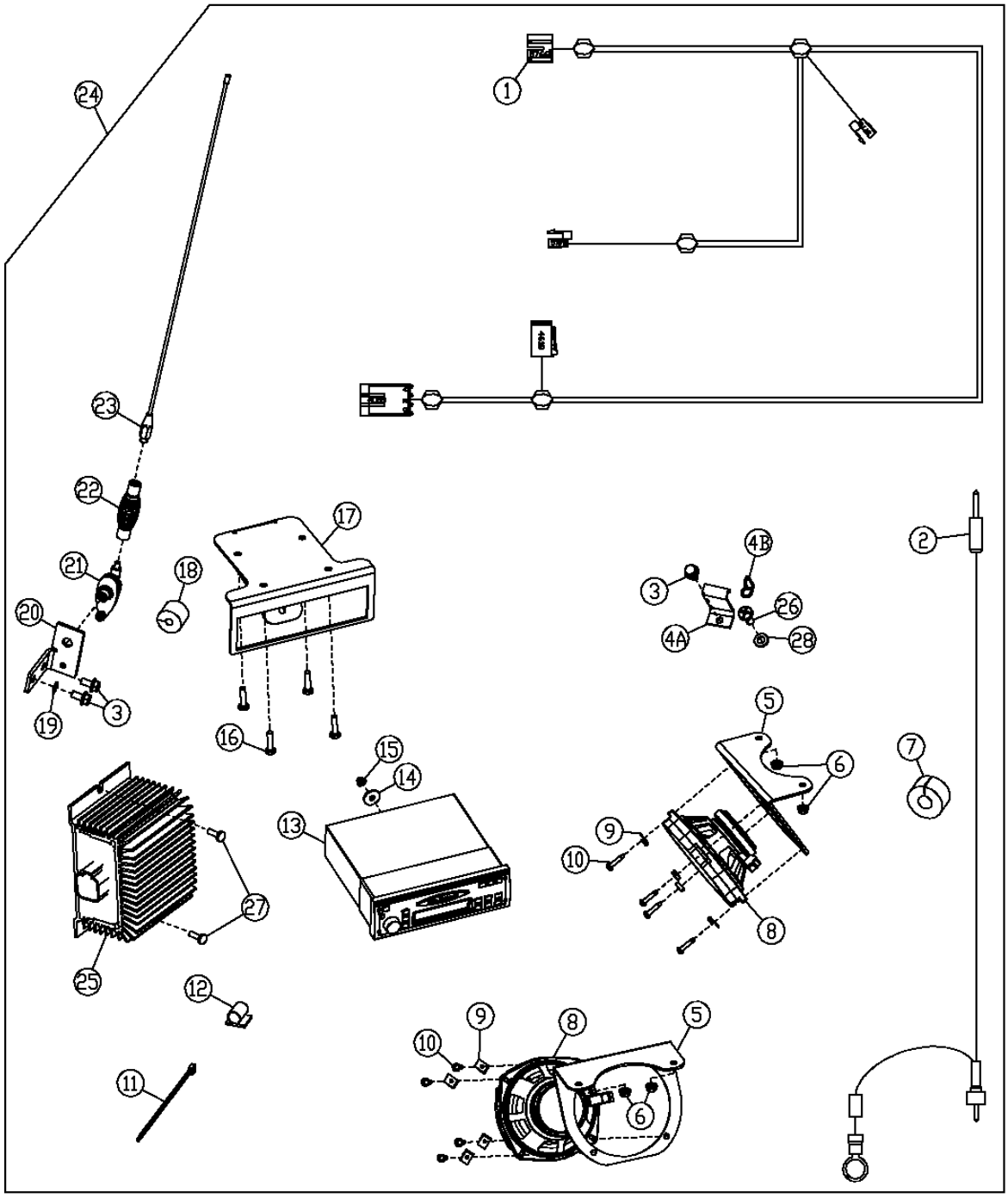

T192643

RADIO, RADIO SPEAKERS AND ANTENNA (SN -590067)
RADIO, HAUTS-PARLEURS ET ANTENNE (SN -590067)
RADIO, ALTAVOCES DEL RADIO Y ANTENA (SN -590067)

KEY	*PART NO.*	*PART NAME*	*QTY.*	*SERIAL NO.*	*REMARKS*
1	AT223870	RADIO SPEAKER WRG HARNESS	1		
2	AT223897	CABLE	1		
3	19M7865	SCREW	3		M8 X 16
4A	T180573	BRACKET	1		(USE WITH 19M7865)
4B	R126033	HOOK	1		(USE WITH T133674 AND 24M7054)
5	T180338	BRACKET	2		
6	14M7303	FLANGE NUT	4		M6
7	T182870	ISOLATOR	1		
8	AT188759	SPEAKER	2		
9	R53528	NUT	8		
10	T182888	SCREW	8		(SUB FOR 37M7070)
11	R44302	TIE BAND	1		
12	T182909	CLIP	3		
13	AT192957	RADIO	1		(WITH CASSETTE) (USE IF AVAILABLE) (SUB RE190140)
	RE190139	RADIO	1		(SUB FOR AT192956)
	RE190140	RADIO	1		(WITH CASSETTE) (SUB FOR AT192957)
	RE227953	RADIO	1		(WITH COMPACT DISC) (SUB FOR AT192958 AND RE190141)
14	24M7100	WASHER	1		6.600 X 22 X 2 MM
15	14M7375	FLANGE NUT	1		M5
16	19H1948	CAP SCREW	4		6.350 X 19.050 MM
17	T180420	BRACKET	1		
18	T182871	ISOLATOR	1		
19	12M7032	LOCK WASHER	1		8.400 MM
20	T180487	BRACKET	1		
21	RE168454	BASE	1		ANTENNA
22	RE61651	SPRING	1		
23	AR104516	ANTENNA	1		
24	**AT306829**	**KIT**	**1**		
	AT306830	**KIT**	**1**		**(WITH CASSETTE)**
	AT306831	**KIT**	**1**		**(WITH COMPACT DISC)**
25	AT224893	CONVERTER	1		
26	T133674	SELF-LOCKING SCREW	1		(SUB FOR 21M7292)
27	21M7250	SCREW	2		
28	24M7054	WASHER	1		
29	R76695	NUT	1		(NOT ILLUSTRATED)

RADIO, RADIO SPEAKERS AND ANTENNA (SN 590068-600740)
RADIO, HAUTS-PARLEURS ET ANTENNE (SN 590068-600740)
RADIO, ALTAVOCES DEL RADIO Y ANTENA (SN590068-600740)

T193559 -UN-14AUG03

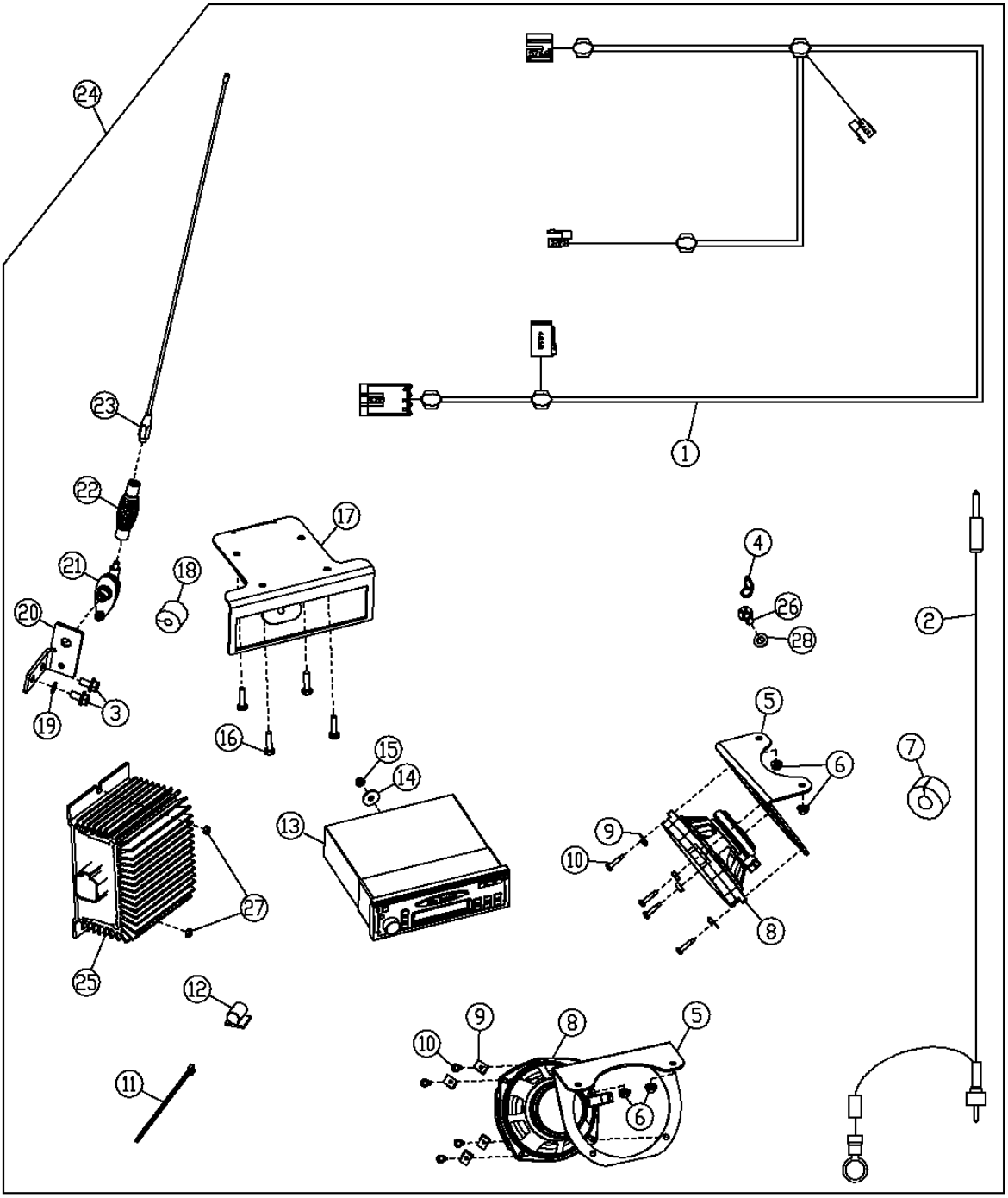

RADIO, RADIO SPEAKERS AND ANTENNA (SN 590068-600740)
RADIO, HAUTS-PARLEURS ET ANTENNE (SN 590068-600740)
RADIO, ALTAVOCES DEL RADIO Y ANTENA (SN590068-600740)

KEY	*PART NO.*	*PART NAME*	*QTY.*	*SERIAL NO.*	*REMARKS*
1	AT223870	RADIO SPEAKER WRG HARNESS	1		
2	AT223897	CABLE	1		
3	19M7865	SCREW	2		M8 X 16
4	R126033	HOOK	1		
5	T180338	BRACKET	2		
6	14M7303	FLANGE NUT	4		M6
7	T182870	ISOLATOR	1		
8	AT188759	SPEAKER	2		
9	R53528	NUT	8		
10	37M7070	SCREW	8		
11	R44302	TIE BAND	1		
12	.....	CLIP	3		
13	RE190139	RADIO	1		
	RE190140	RADIO	1		(WITH CASETTE)
	RE227953	RADIO	1		(WITH COMPACT DISC) (SUB FOR RE190141)
14	24M7100	WASHER	1		6.600 X 22 X 2 MM
15	14M7375	FLANGE NUT	1		M5
16	19H1948	CAP SCREW	4		6.350 X 19.050 MM
17	T180420	BRACKET	1		
18	T182871	ISOLATOR	1		
19	12M7032	LOCK WASHER	1		8.400 MM
20	T180487	BRACKET	1		
21	RE168454	BASE	1		ANTENNA
22	RE61651	SPRING	1		
23	AR104516	ANTENNA	1		
24	**AT306829**	**KIT**	**1**		**(WITH WEATHERBAND)**
	AT306830	**KIT**	**1**		**(WITH CASSETTE)**
	AT306831	**KIT**	**1**		**(WITH COMPACT DISC)**
25	AT224893	CONVERTER	1		
26	T133674	SELF-LOCKING SCREW	1		(SUB FOR 21M7292)
27	14M7100	NUT	2		
28	24M7054	WASHER	1		

RADIO, RADIO SPEAKERS AND ANTENNA (SN 600741-)
RADIO, HAUTS-PARLEURS ET ANTENNE (SN 600741-)
RADIO, ALTAVOCES DEL RADIO Y ANTENA (SN 600741-)

T213273 -UN-31AUG05

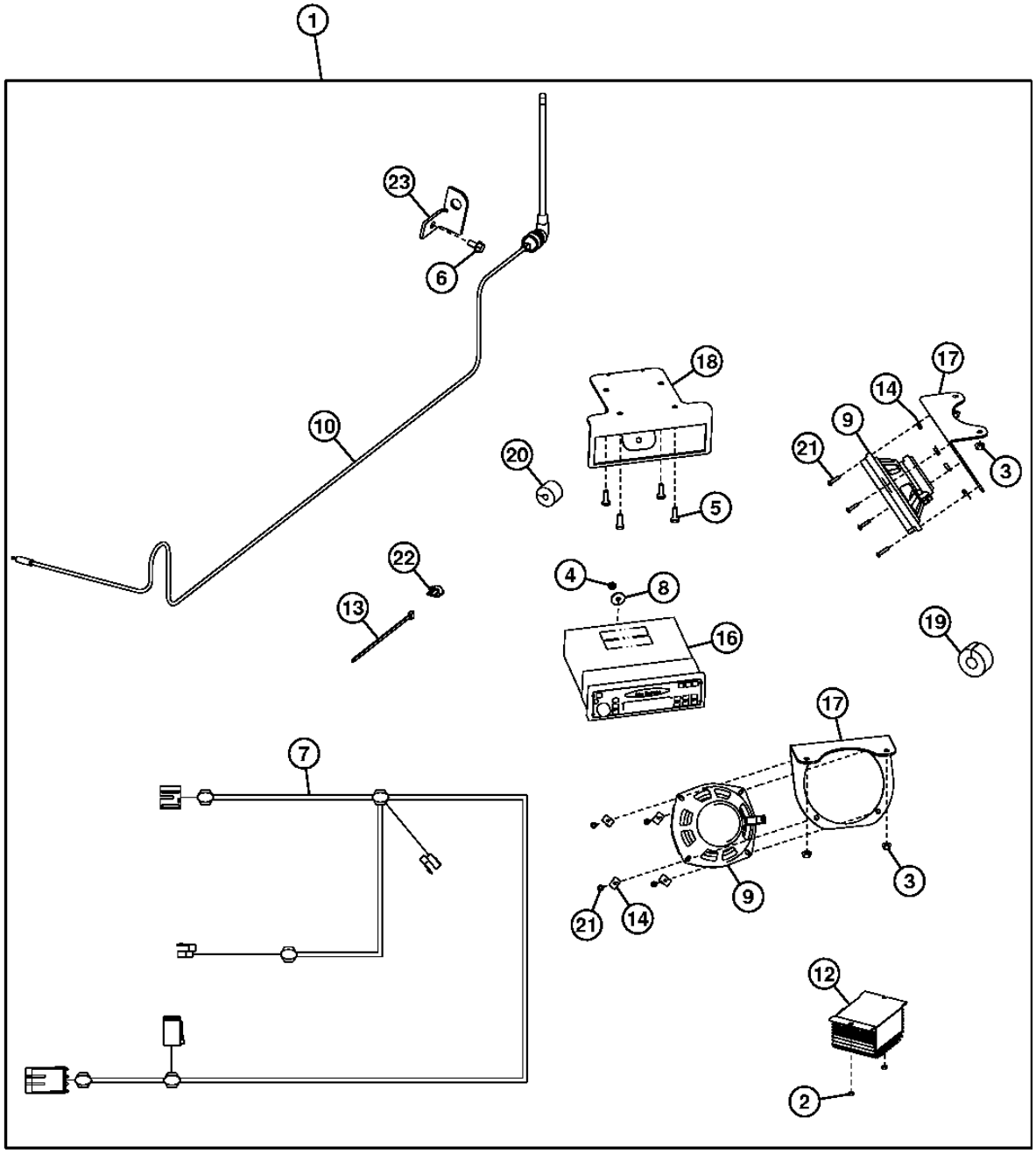

T213273

RADIO, RADIO SPEAKERS AND ANTENNA (SN 600741-)
RADIO, HAUTS-PARLEURS ET ANTENNE (SN 600741-)
RADIO, ALTAVOCES DEL RADIO Y ANTENA (SN 600741-)

KEY	*PART NO.*	*PART NAME*	*QTY.*	*SERIAL NO.*	*REMARKS*
1	AT306829	FIELD INSTALLATION KIT	1		(AM/FM/WB)
	AT306830	**FIELD INSTALLATION KIT**	**1**		**(WITH CASSETTE)**
	AT306831	**FIELD INSTALLATION KIT**	**1**		**(WITH COMPACT DISC)**
2	14M7100	NUT	2		M4
3	14M7303	FLANGE NUT	4		M6
4	14M7375	FLANGE NUT	1		M5
5	19H1948	CAP SCREW	4		1/4" X 3/4"
6	19M7865	SCREW	1		M8 X 16
7	AT223870	RADIO SPEAKER WRG HARNESS	1		
8	24M7100	WASHER	1		6.600 X 22 X 2 MM
9	AT188759	SPEAKER	2		
10	AT199388	ANTENNA	1		
12	AT224893	CONVERTER	1		
13	R44302	TIE BAND	1		
14	R53528	NUT	8		
16	RE190139	RADIO	1		
	RE190140	RADIO	1		(WITH CASSETTE)
	RE227953	RADIO	1		(WITH COMPACT DISC)
17	T180338	BRACKET	2		
18	T180420	BRACKET	1		
19	T182870	ISOLATOR	1		
20	T182871	ISOLATOR	1		
21	T182888	SCREW	8		
22	T182909	CLIP	6		
23	T204635	BRACKET	1		

HYDRAULIC PUMP
POMPE HYDRAULIQUE
BOMBA HIDRAULICA

T211513 -UN-02JUN05

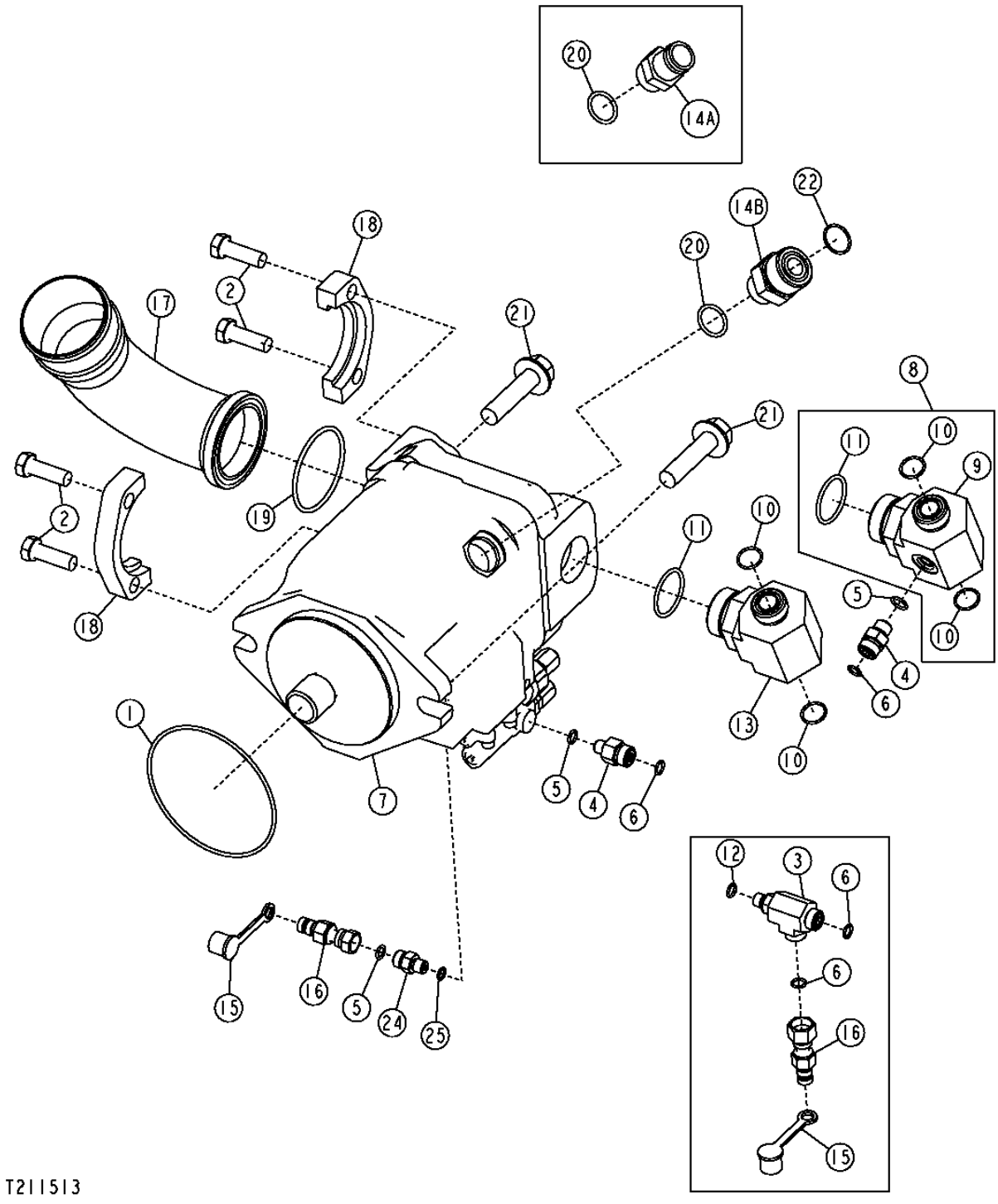

HYDRAULIC PUMP
POMPE HYDRAULIQUE
BOMBA HIDRAULICA

KEY	PART NO.	PART NAME	QTY.	SERIAL NO.	REMARKS
1	T107883	O-RING	1		(SUB FOR T132071)
2	19H2993	CAP SCREW	4		1/2" X 1-1/2"
3	38H1434	TEE FITTING	1	-598271	
4	38H1160	ADAPTER FITTING	1	-598271	
5	R26448	O-RING	1	598272-	
6	T77613	O-RING	1		
7	AT226829	HYDRAULIC PUMP	1		
	AT302145	SEAL KIT	1		(HYDRAULIC PUMP)
	T201525	SEAL	1		(SEAL RING FOR ADJUSTMENT CARTRIDGES)
	AT302144	SPOOL VALVE	1		(PUMP CONTROL VALVE)
	AT306219	SEAL KIT	1		(PUMP CONTROL VALVE)
	T201521	GASKET	1		(CONTROL VALVE SEAL PLATE)
8	AT307000	TEE FITTING	1	-594432	
9	AT306999	TEE FITTING	1	-594432	
10	T77858	O-RING	2		
11	U13639	O-RING	1		
12	R28782	O-RING	1	-597271	
13	38H1607	TEE FITTING	1	594433-	
14A	R44852	FITTING	1	-597271	
14B	38H1179	ADAPTER FITTING	1	597272-	
15	R77175	COVER	1		
16A	RE60701	DIAGNOSTIC COUPLING	1	-597271	
16B	RE60700	DIAGNOSTIC COUPLING	1	598272-	
17	T204584	TUBE	1		
18	U44384	FLANGE FITTING	2		
19	U12331	O-RING	1		
20	U12547	O-RING	1		
21	19M7825	SCREW	2		
22	T76938	O-RING	1	598272-	
24	38H1159	ADAPTER FITTING	1	598272-	
25	T77814	O-RING	1	598272-	

HYDRAULIC OIL RESERVOIR
RESERVOIR HUILE HYDRAULIQUE
DEPOSITO DE ACEITE HIDRAULICO

T211844 -UN-17JUN05

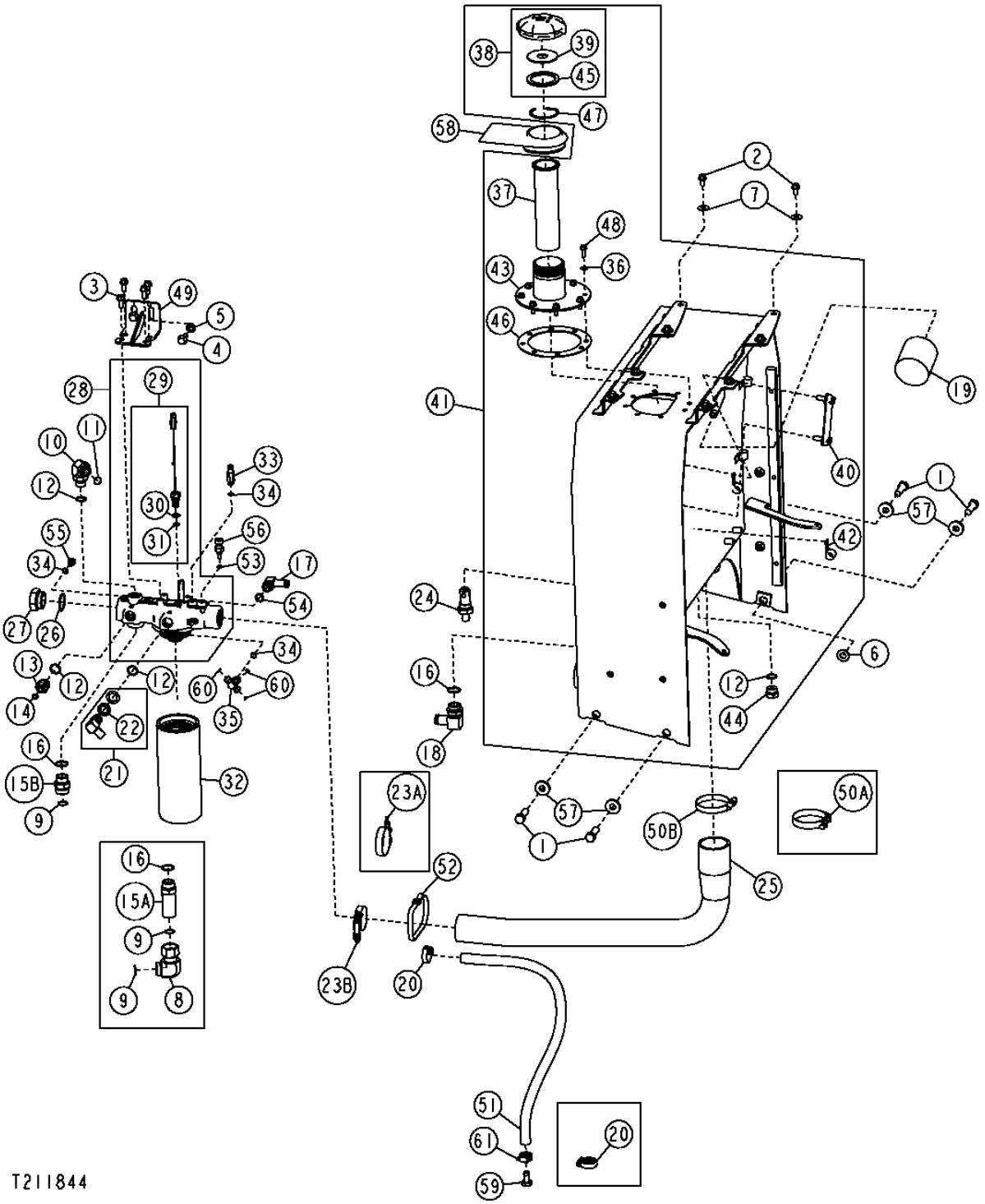

HYDRAULIC OIL RESERVOIR
RESERVOIR HUILE HYDRAULIQUE
DEPOSITO DE ACEITE HIDRAULICO

KEY	PART NO.	PART NAME	QTY.	SERIAL NO.	REMARKS
1	19M7409	CAP SCREW	4		M16 X 50
2	19M7784	SCREW	8		M10 X 20
3	19M7785	SCREW	4		M10 X 25
4	19M7788	SCREW	2		M12 X 25
5	24M7240	WASHER	2		13 X 25 X 3 MM
6	24M7241	WASHER	2		17 X 34 X 4 MM
7	24M7296	WASHER	8		10.500 X 30 X 2.500 MM
8	38H1098	ELBOW FITTING	1	-594432	
9	T76938	O-RING	2	-594432	
	T76938	O-RING	1	594433-	
10	38H1007	ELBOW FITTING	1		
11	T77858	O-RING	1		
12	U12547	O-RING	4		
13	38H1175	ADAPTER FITTING	1		
14	T77857	O-RING	1		
15A	38H1216	ADAPTER FITTING	1	-594432	
15B	38H1164	ADAPTER FITTING	1	594433-	
16	R29936	O-RING	2		
17	AH64349	HOSE FITTING	1		
18	AH75162	FITTING	1		
19	AM39653	OIL FILTER	1		
20	AR21839	CLAMP	2		
21	AT21574	FITTING	1		
22	R27390	NUT	1		
23A	AH170895	CLAMP	1	-XXXXXX	
23B	AH170895	CLAMP	1	XXXXXX-	
24	AT221897	CHECK VALVE	1		
25	AT223658	HOSE	1		
26	R26773	O-RING	1		
27	T181201	FITTING	1		
28	AT224797	FILTER HEAD	1		
29	AT307045	PRESSURE SWITCH	1		(SUB FOR AT280924)
30	R26375	O-RING	1		
31	P46051	O-RING	1		
32	AT310905	OIL FILTER	1		(SUB FOR AT228474)
33	M72389	ADAPTER FITTING	1		
34	R26448	O-RING	3		
35	AT224266	TEE FITTING	1		
36	24H1136	WASHER	8		11/32" X 11/16" X 0.065"
37	AT161638	STRAINER	1		
38	AT177950	FILLER CAP	1		
39	H148166	WASHER	1		
40	AT227279	LEVEL GAUGE	1		
41	AT227491	HYDRAULIC RESERVOIR	1	-XXXXXX	
	AT329811	HYDRAULIC RESERVOIR	1	XXXXXX-	
42	.....	CLAMP	5		
43	AT227644	HOUSING	1		
44	R27175	DRAIN PLUG	1		
45	T103461	SEALING WASHER	1		
46	T205033	GASKET	1	-XXXXXX	
	T106595	GASKET	1	XXXXXX-	
47	T39155	SNAP RING	1		
48	T81403	SCREW	8		
49	AT228747	BRACKET	1		
50A	AT37476	HOSE CLAMP	1	-XXXXXX	
50B	RE52702	CLAMP	1	XXXXXX-	
51	.....	BULK HOSE	1		(FURNISH T148181 BULK MATERIAL, CUT TO 3 FT)
52	N189220	TIE BAND	1		
53	R26286	O-RING	1		
54	R26906	O-RING	1		
55	R27218	FITTING PLUG	1		
56	RE38310	SENSOR	1		
57	T119912	WASHER	4		
58	T196312	BOOT	1		
59	T203776	PLUG	1		
60	T77613	O-RING	3		
61	AT79195	CLAMP	1	-XXXXXX	

PRESSURE REGULATOR VALVE FITTINGS
RACCORDS REGULATEUR PRESSION
ADAPTADORES DE LA VALVULA REGULADORA DE PRESION

TX1015000 -UN-15DEC06

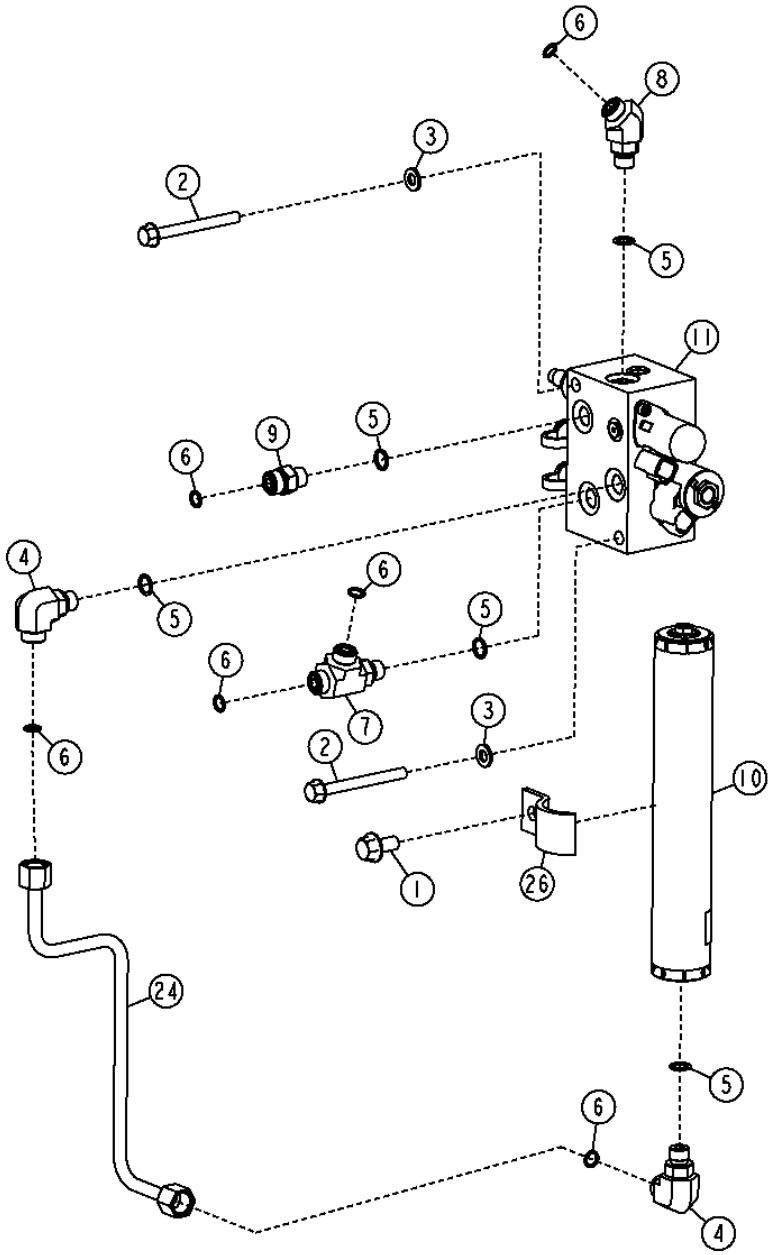

TX1015000

PRESSURE REGULATOR VALVE FITTINGS
RACCORDS REGULATEUR PRESSION
ADAPTADORES DE LA VALVULA REGULADORA DE PRESION

KEY	PART NO.	PART NAME	QTY.	SERIAL NO.	REMARKS
1	19M7784	SCREW	1		M10 X 20
2	19M8039	SCREW	2		M8 X 80
3	24M7238	WASHER	2		8.700 X 17 X 2 MM
4	38H1004	ELBOW FITTING	2		
5	R26448	O-RING	4		11.887 X 1.981 MM
6	T77613	O-RING	5		9.246 X 1.778 MM
7	38H1023	TEE FITTING	1		
8	38H1045	ELBOW FITTING	1		
9	38H1160	ADAPTER FITTING	1		
10	AT225574	HYDRAULIC ACCUMULATOR	1		
11	AT333904	HYDRAULIC PRESSURE VALVE	1		
24	AT334453	OIL LINE	1		
26	R68904	CLAMP	1		

PRESSURE REGULATOR VALVE COMPONENTS
COMPOSANTS REGULATEUR PRESSION
COMPONENTES DE LA VALVULA REGULADORA DE PRESION

T196513 -UN-20NOV03

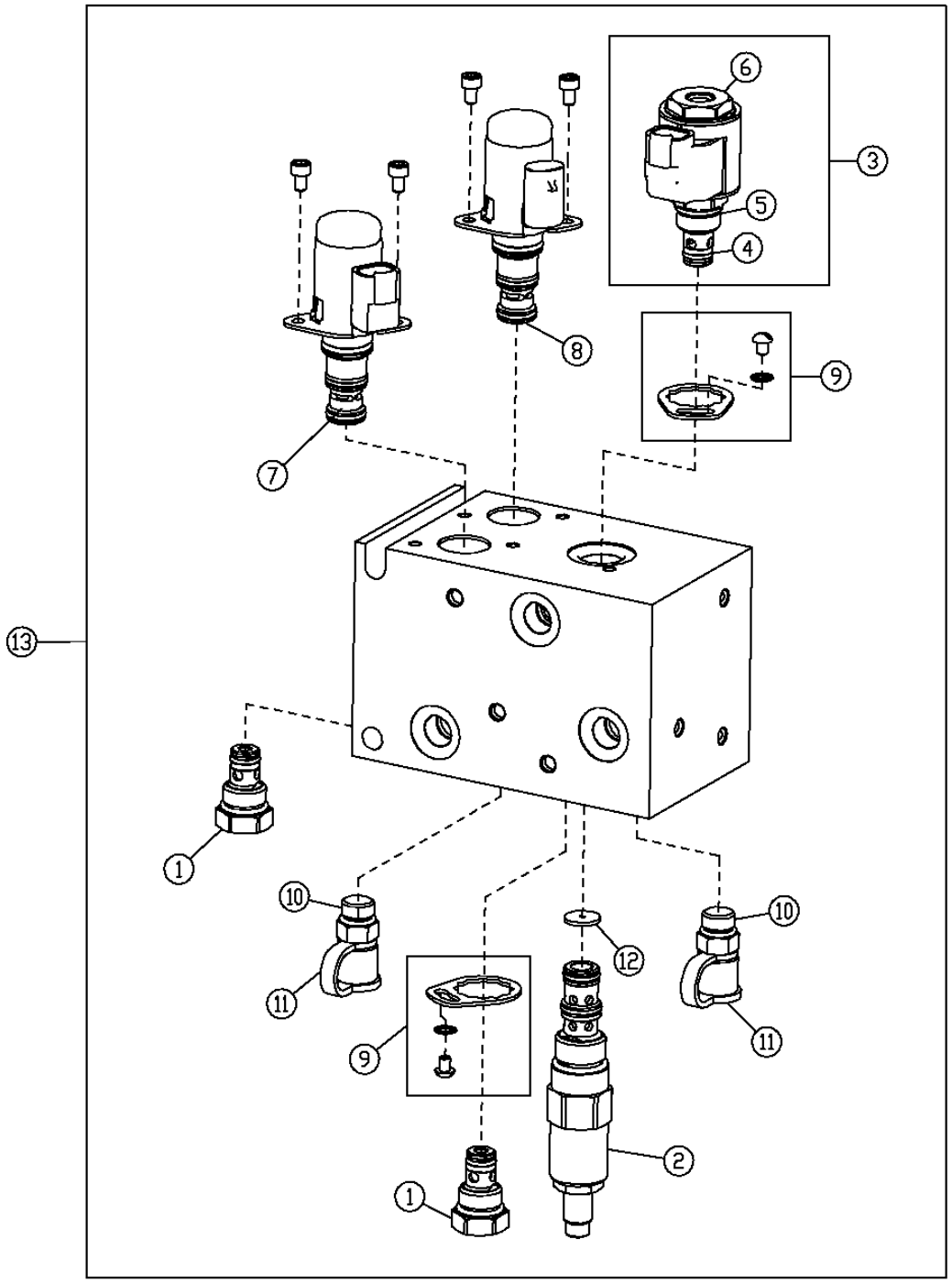

T196513

PRESSURE REGULATOR VALVE COMPONENTS
COMPOSANTS REGULATEUR PRESSION
COMPONENTES DE LA VALVULA REGULADORA DE PRESION

KEY	PART NO.	PART NAME	QTY.	SERIAL NO.	REMARKS
1	AT224570	CHECK VALVE	2		
	AT224862	SEAL KIT	1		
2	AT313708	OIL PRESSURE REG. VALVE	1		(SUB FOR AT307314)
	AT196943	SEAL KIT	1		
3	AT309494	SOLENOID VALVE	1		
4	AT307315	SOLENOID VALVE	1		
5	AT333811	SOLENOID VALVE COIL	1		
6	T225291	NUT	1		
7	AT307302	FLOW CONTROL HYD. VALVE	1		(PILOT)
	AT224873	SEAL KIT	1		
8	AT307301	FLOW CONTROL HYD. VALVE	1		(DIFFERENTIAL)
	AT224873	SEAL KIT	1		
9	AT307304	KIT	2		
10	AH125760	HYD. QUICK-CONNECT COUPLER	2		
11	R77175	COVER	2		
12	T205670	ORIFICE	1		
13	AT228138	HYD ACTUATED CONTROL VALVE	1		

MAIN HYDRAULIC LINES
CONDUITES HYDRAULIQUES PRINCIPALES
LINEAS HIDRAULICAS PRINCIPALES

T209842 -UN-30MAR05

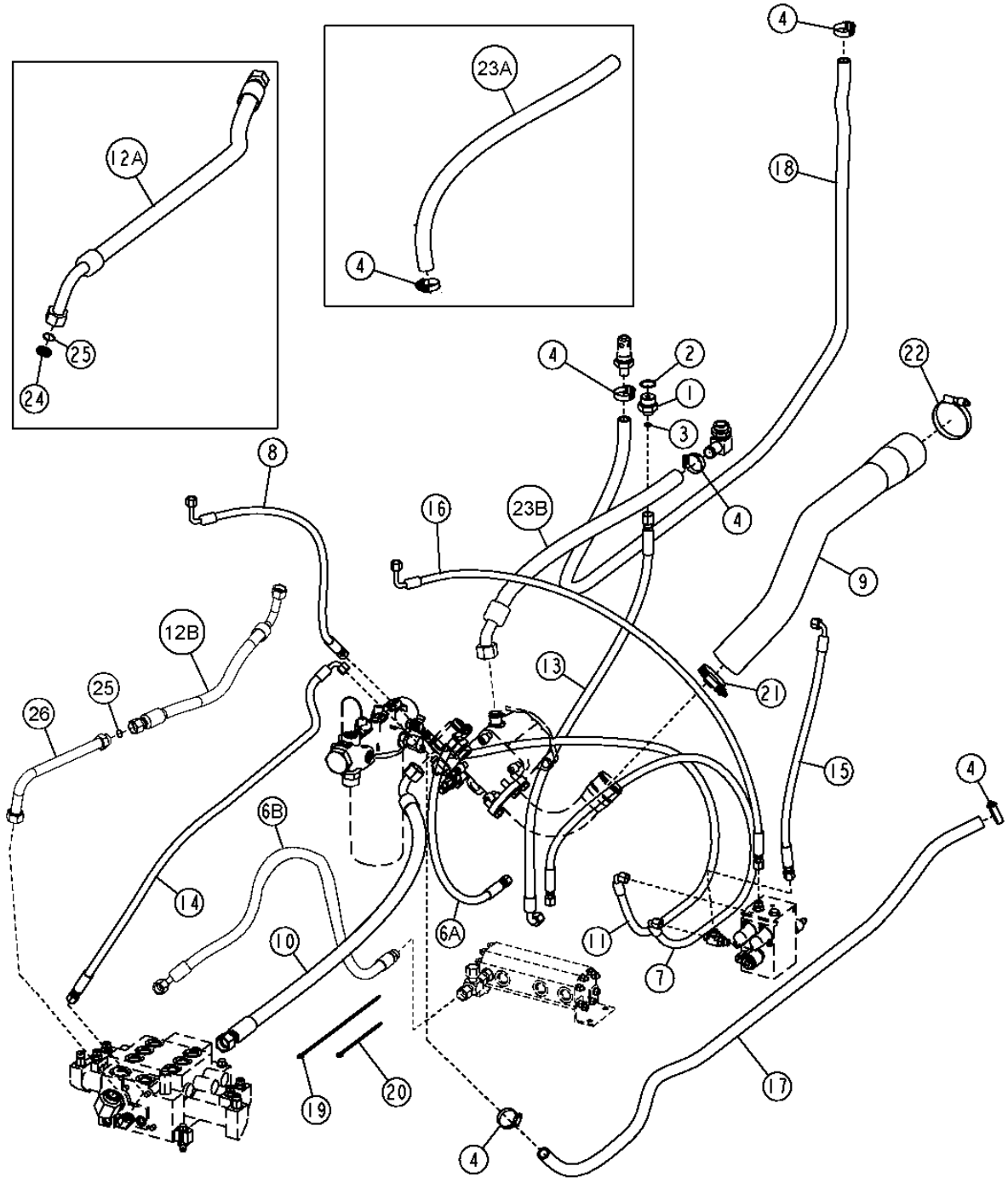

T209842

MAIN HYDRAULIC LINES
CONDUITES HYDRAULIQUES PRINCIPALES
LINEAS HIDRAULICAS PRINCIPALES

KEY	PART NO.	PART NAME	QTY.	SERIAL NO.	REMARKS
1	38H1176	ADAPTER FITTING	1		
2	R29936	O-RING	1		
3	T77857	O-RING	1		
4	TY22467	CLAMP	4		(SUB FOR AT79195)
5	AR21839	CLAMP	2	-XXXXXX	
	AR21839	CLAMP	1	XXXXXX-	
6A	AT210667	HYDRAULIC HOSE - FABRICATE	1	-594432	
6B	AT314847	HYDRAULIC HOSE - FABRICATE	1	594433-596166	
	AT318345	HYDRAULIC HOSE - FABRICATE	1	596167-	
7	AT222163	HYDRAULIC HOSE - FABRICATE	1	-594432	
	AT314844	HYDRAULIC HOSE - FABRICATE	1	594433-596166	
	AT222163	HYDRAULIC HOSE - FABRICATE	1	596167-	
8	AT226614	HYDRAULIC HOSE - FABRICATE	1		
9	AT228616	SUCTION HOSE	1		
10	AT310764	HYDRAULIC HOSE - FABRICATE	1	-594432	(SUB FOR AT304325)
	AT314334	HYDRAULIC HOSE - FABRICATE	1	594433-	(FOR USE WITH 2-SPOOL VALVE)
	AT316332	HYDRAULIC HOSE - FABRICATE	1	594433-	(FOR USE WITH 3 OR 4-SPOOL VALVE)
11	AT158098	HYDRAULIC HOSE - FABRICATE	1		(SUB FOR AT304125)
12A	AT208164	HYDRAULIC HOSE - FABRICATE	1	-594432	
12B	AT308232	HYDRAULIC HOSE - FABRICATE	1	594433-	
13	AT223815	HYDRAULIC HOSE - FABRICATE	1		
14	AT158103	HYDRAULIC HOSE - FABRICATE	1		(SUB FOR AT304346, THIS APPLICATION)
15	AT310561	HYDRAULIC HOSE - FABRICATE	1		(SUB FOR AT304897)
16	AT304899	HYDRAULIC HOSE - FABRICATE	1		
17	.....	BULK HOSE	1		(MAKE FROM T148181 BULK MATERIAL, CUT TO LENGTH)
18	.....	BULK HOSE	1		(MAKE FROM T148181 BULK MATERIAL, CUT TO LENGTH)
19	H77698	TIE BAND	8		
20	R44302	TIE BAND	2		
21	RE52702	CLAMP	1		
22	RE52702	CLAMP	1		
23A	T182114	HYDRAULIC HOSE - FABRICATE	1	-597716	
23B	AT223173	HYDRAULIC HOSE - FABRICATE	1	597717-	
24	T201843	ORIFICE	1	-594432	
25	T76938	O-RING	1		
26	AT307934	OIL LINE	1	594433-	

LOADER BUCKET, CUTTING EDGE, SPILL GUARD, AND BUCKET PINS
BENNE DE CHARGEUR, TRANCHANT, PROTECTION CONTRE DEVERSEMENT ET AXES BENNE
CUCHARON DE CARGADORA, BORDE CORTANTE, PROTECTOR CONTRA SALPICADURAS Y PASADORES CUCHARON

T201455 -UN-07JUL04

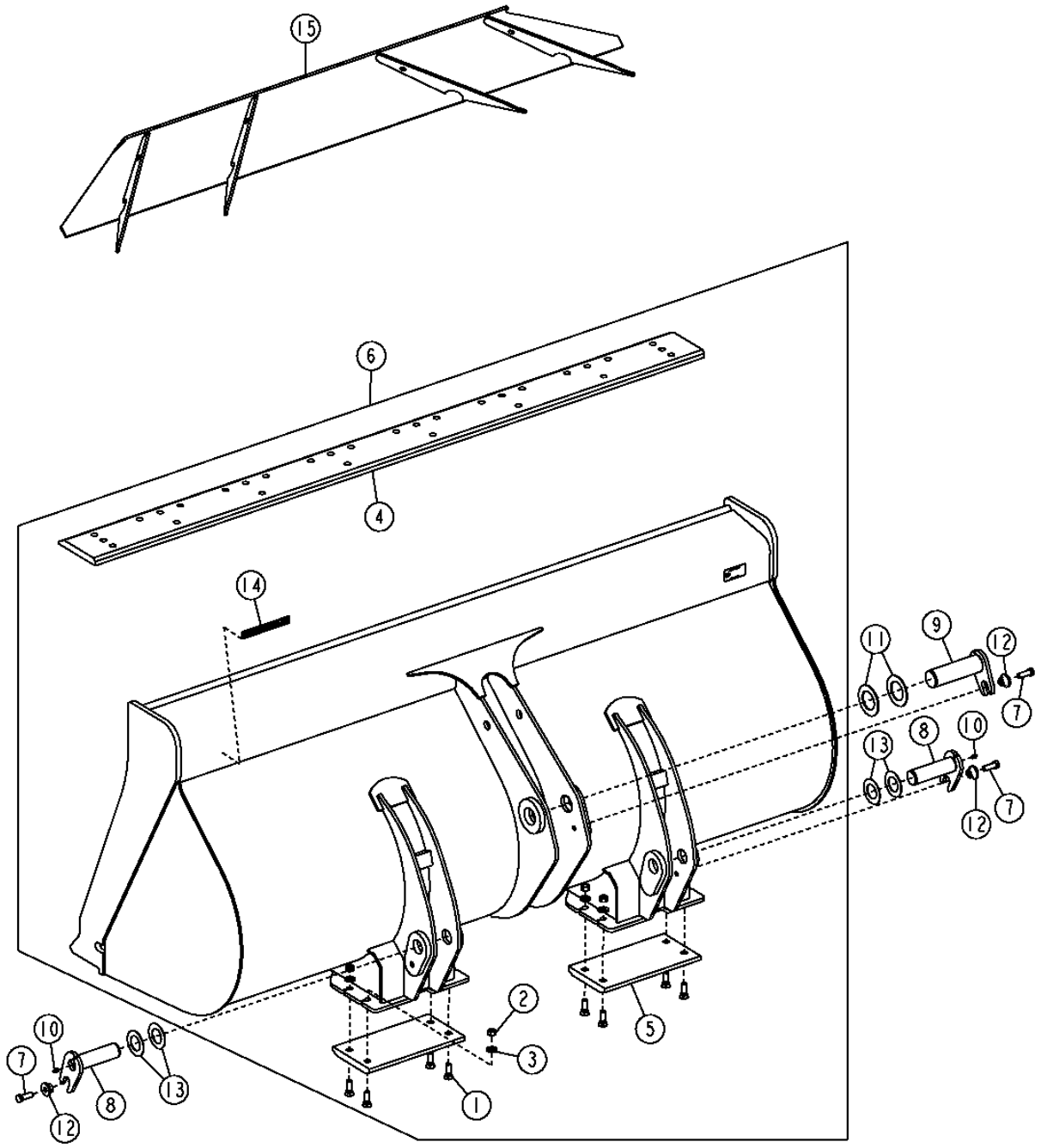

T201455

BUCKET (INCLUDING TEETH) 3102

LOADER BUCKET, CUTTING EDGE, SPILL GUARD, AND BUCKET PINS
BENNE DE CHARGEUR, TRANCHANT, PROTECTION CONTRE DEVERSEMENT ET AXES BENNE
CUCHARON DE CARGADORA, BORDE CORTANTE, PROTECTOR CONTRA SALPICADURAS Y PASADORES CUCHARON

KEY	PART NO.	PART NAME	QTY.	SERIAL NO.	REMARKS
1	10H1040	BOLT	8		5/8" X 2"
2	14H1039	NUT	8		5/8"
3	24M7241	WASHER	8		17 X 34 X 4 MM
4	T157282	CUTTING EDGE	1		(2550 MM WIDE)
	T157465	CUTTING EDGE	1		(2690 MM WIDE)
	T169142	CUTTING EDGE	1		(2550 MM WIDE)(FOR USE WITH JAGZ CUTTING EDGES)
	T169128	CUTTING EDGE	1		(2690 MM WIDE)(FOR USE WITH JAGZ CUTTING EDGES)
5	T157457	SHOE	2		
6	.....	LOADER BUCKET	1		(AT302060 NLA) (CA) (2.5 YD Z-BAR LINKAGE BUCKET) (2550 MM CUTTING EDGE WIDTH)
	.....	LOADER BUCKET	1		(AT302061 NLA) (CA) (3.0 YD Z-BAR LINKAGE BUCKET) (2550 MM CUTTING EDGE WIDTH)
	AT307131	**LOADER BUCKET**	**1**		**(CA) (3.0 YD Z-BAR LINKAGE BUCKET) (2690 MM CUTTING EDGE WIDTH)**
	.....	LOADER BUCKET	1		(AT302066 NLA) (CA) (3.0 YD Z-BAR LINKAGE BUCKET W/JAGZ) (2550 MM CUTTING EDGE WIDTH)
	.....	LOADER BUCKET	1		(AT302067 NLA) (CA) (3.0 YD Z-BAR LINKAGE BUCKET W/JAGZ) (2690 MM CUTTING EDGE WIDTH)
	.....	LOADER BUCKET	1		(AT302056 NLA) (CA) (2.5 YD POWERLLEL LINKAGE BUCKET) (2550 MM CUTTING EDGE WIDTH)
	.....	LOADER BUCKET	1		(AT302057 NLA) (CA) (3.0 YD POWERLLEL LINKAGE BUCKET) (2550 MM CUTTING EDGE WIDTH)
	AT308467	**LOADER BUCKET**	**1**		**(CA) (3.0 YD POWERLLEL LINKAGE BUCKET) (2690 MM CUTTING EDGE WIDTH)**
	.....	LOADER BUCKET	1		(AT314656 NLA) (CA) (3.0 YD POWERLLEL LINKAGE BUCKET W/JAGZ)) (2550 MM CUTTING EDGE WIDTH)
	.....	LOADER BUCKET	1		(AT314940 NLA) (CA) (3.0 YD POWERLLEL LINKAGE BUCKET W/JAGZ) (2690 MM CUTTING EDGE WIDTH)
7	19M7489	CAP SCREW	3		M16 X 45
8	AT301543	PIN	2		
9	AT308031	PIN	1		(FOR USE WITH Z-BAR LINKAGE)
	AT308029	PIN	1		(FOR USE WITH POWERLLEL LINKAGE)
10	JD7759	LUBRICATION FITTING	2		
11	24H1240	WASHER	2		(FOR USE WITH Z-BAR LINKAGE)
	T171734	WASHER	2		(FOR USE WITH POWERLLEL LINKAGE)
12	T176064	BUSHING	3		
13	T102171	WASHER	4		
14	T213143	LABEL	1		(SUB FOR KV22121) WORKSITE PRO™
15	**AT203247**	**PLATE**	**1**		**(FIELD INSTALLATION KIT) (SPILLGUARD)**

LOADER ATTACHMENT COUPLER BUCKET
BENNE ACCOUPLEMENT ACCESSOIRE CHARGEUR
CUCHARON DEL ACOPLADOR DE SUJECION DE LA CARGADORA

T201457 -UN-07JUL04

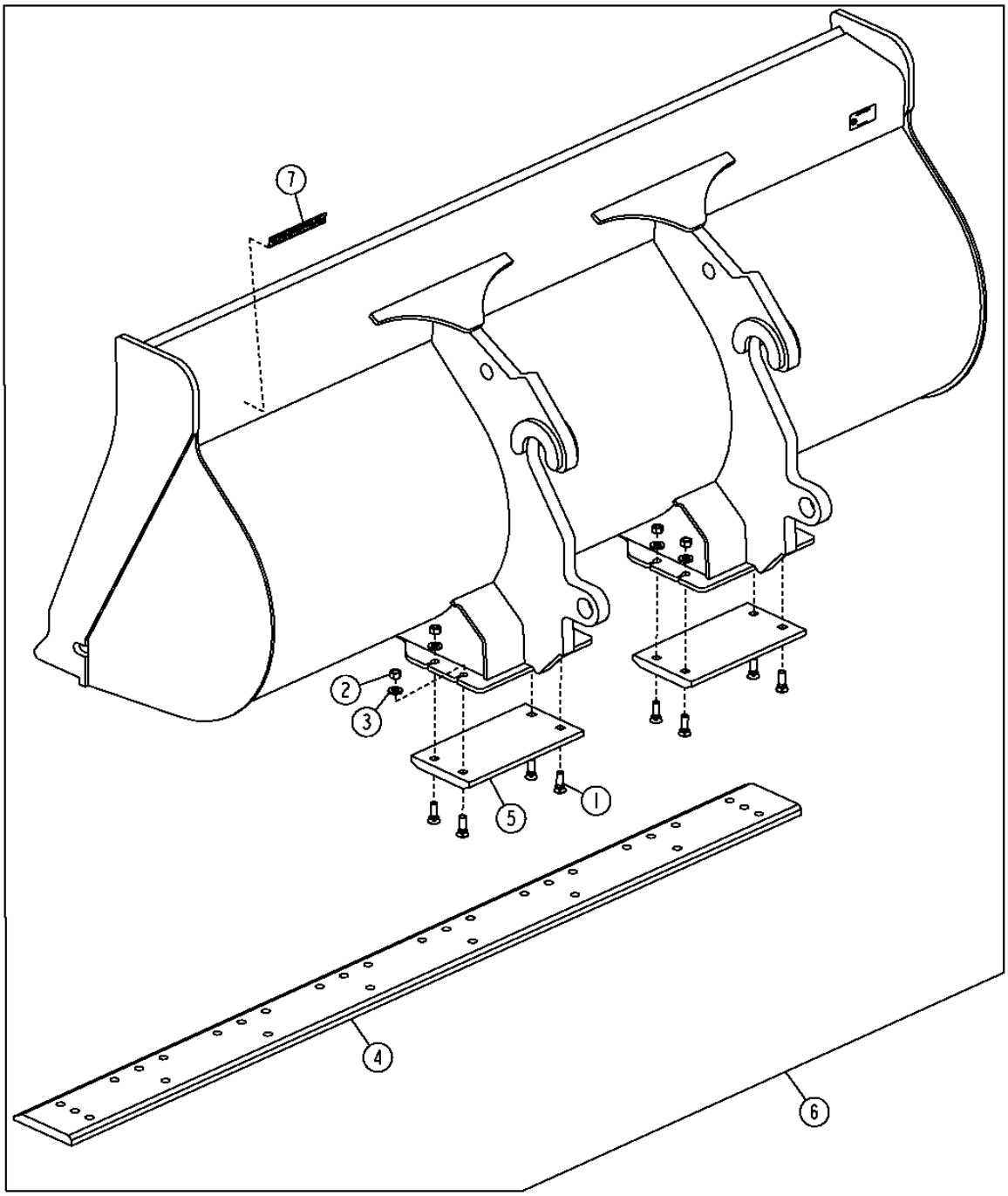

T201457

LOADER ATTACHMENT COUPLER BUCKET
BENNE ACCOUPLEMENT ACCESSOIRE CHARGEUR
CUCHARON DEL ACOPLADOR DE SUJECION DE LA CARGADORA

KEY	*PART NO.*	*PART NAME*	*QTY.*	*SERIAL NO.*	*REMARKS*
1	10H1040	BOLT	8		5/8" X 2"
2	14H1039	NUT	8		5/8"
3	24M7241	WASHER	8		17 X 34 X 4 MM
4	T157282	CUTTING EDGE	1		(2.5 YARD BUCKET)
	T157465	CUTTING EDGE	1		(3.0 YARD BUCKET)
5	T156599	SHOE	2		(2.5 YARD BUCKET)
	T157457	SHOE	2		(3.0 YARD BUCKET)
6	**AT301992**	**LOADER BUCKET**	**1**		**(CA) (2.5 YD BUCKET) (2550 MM WIDE CUTTING EDGE)**
	AT302059	**LOADER BUCKET**	**1**		**(CA) (3.0 YD BUCKET) (2690 MM WIDE CUTTING EDGE)**
7	T213143	LABEL	1		(SUB FOR KV22121)

HI-VIS COUPLER BUCKET
BENNE COUPLEUR HI-VIS
CUCHARON DEL ACOPLADOR DE HI-VIS

TX1003202 -UN-31JAN06

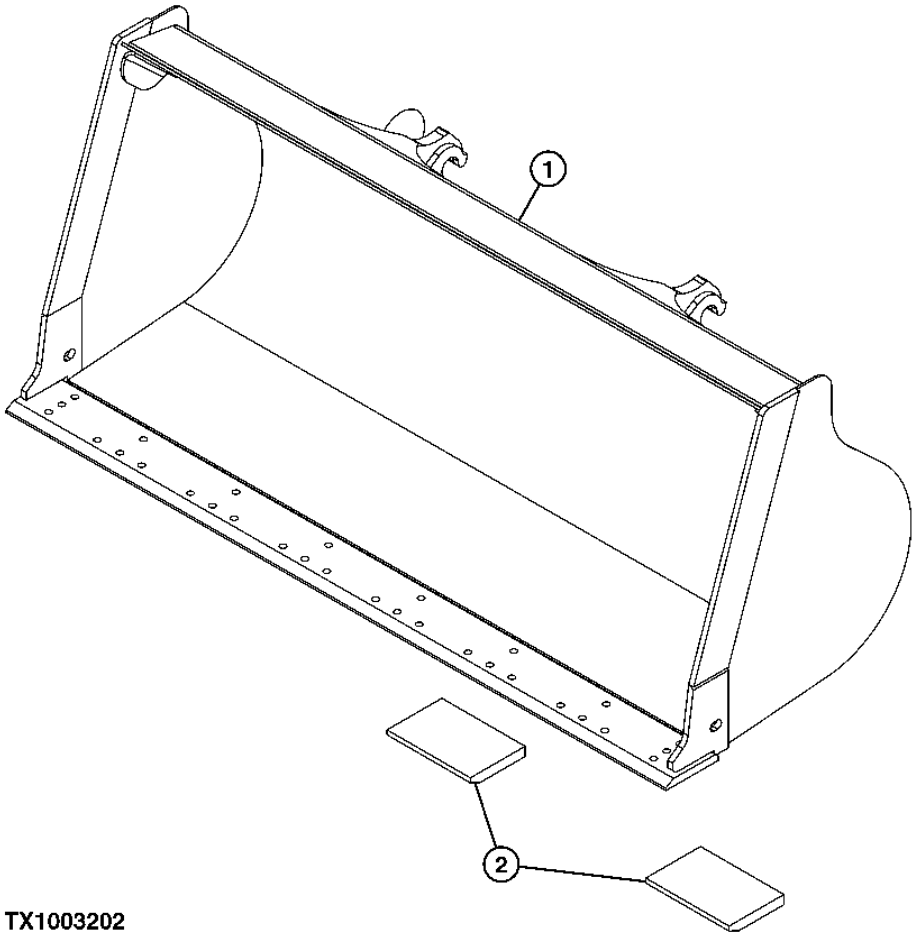

TX1003202

THIS PARTS LISTING IS CONTINUED

HI-VIS COUPLER BUCKET
BENNE COUPLEUR HI-VIS
CUCHARON DEL ACOPLADOR DE HI-VIS

KEY	*PART NO.*	*PART NAME*	*QTY.*	*SERIAL NO.*	*REMARKS*
1	AT326789	LOADER BUCKET	1		(CA) (3.0 YARD BUCKET)
	AT326790	**LOADER BUCKET**	**1**		**(CA) (2.5 YARD BUCKET)**
2	T217625	SKID PLATE	2		

LOADER BUCKET TEETH AND SHANKS
DENTS ET PORT-DENTS DE BENNE DE CHARGEUR
DIENTES Y VASTAGOS DEL CUCHARON DE LA CARGADORA

T192445 -UN-30JUN03

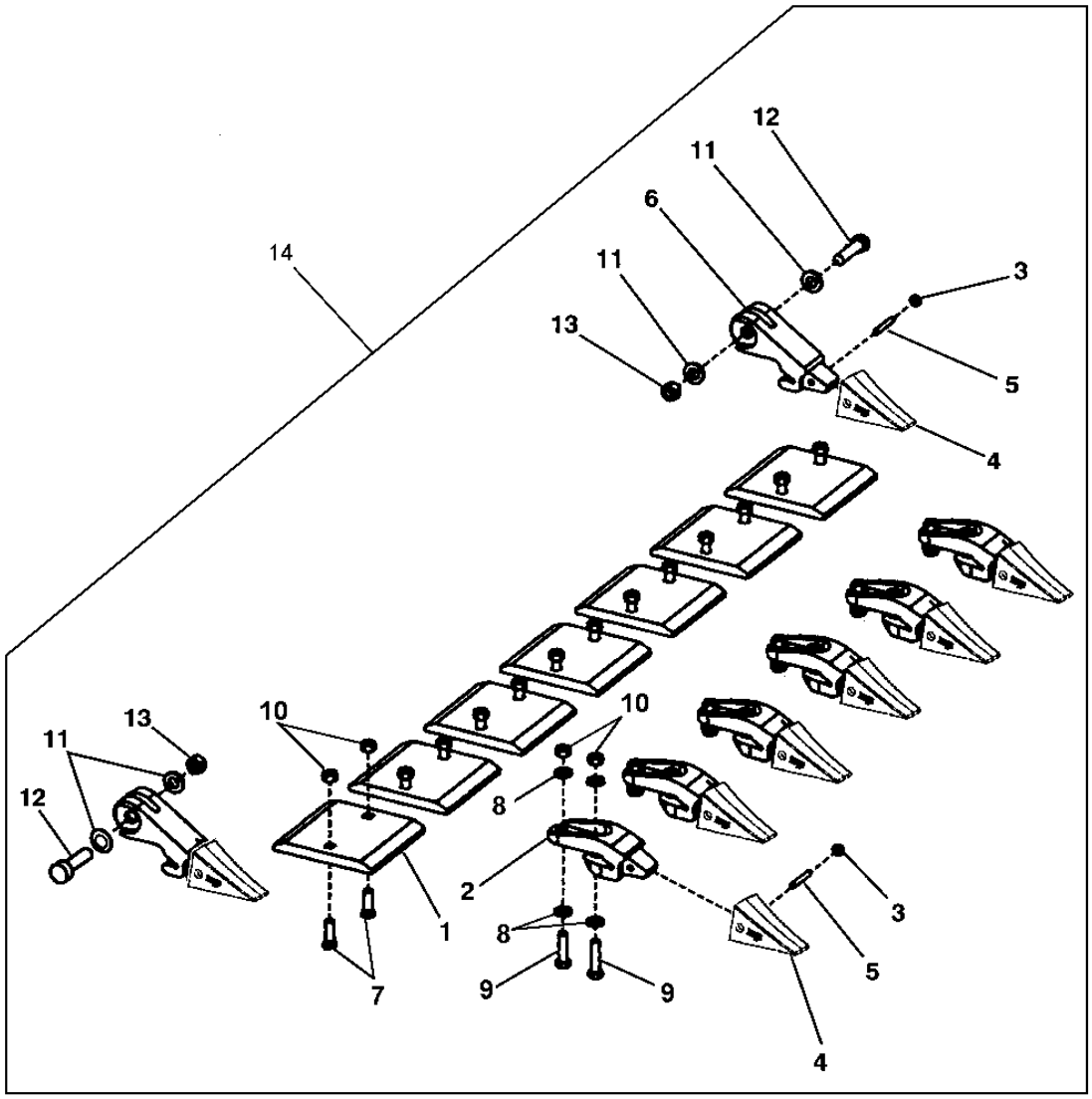

T192445

LOADER BUCKET TEETH AND SHANKS
DENTS ET PORT-DENTS DE BENNE DE CHARGEUR
DIENTES Y VASTAGOS DEL CUCHARON DE LA CARGADORA

KEY	*PART NO.*	*PART NAME*	*QTY.*	*SERIAL NO.*	*REMARKS*
1	T157306	CUTTING EDGE	7		(FOR BUCKETS WITH 2550 MM WIDE CUTTING EDGE)
	T157493	CUTTING EDGE	7		(FOR BUCKETS WITH 2690 MM WIDE CUTTING EDGE)
2	T25CA	BUCKET TOOTH ADAPTER	6		
3	T3G9609	WASHER	8		
4	TF1U3252L	TOOTH	8		(25 SERIES FANGGS LOADER)
5	T9J2258	PIN FASTENER	8		
6	T25EA	BUCKET TOOTH ADAPTER	2		
7	T146934	BOLT	14		
8	24M7242	WASHER	24		
9	19H3167	CAP SCREW	12		3/4" X 3-1/4"
10	14H1058	NUT	26		3/4"
11	24M7243	WASHER	4		25.400 X 50 X 6 MM
12	19M7889	CAP SCREW	2		M24 X 80, (FOR BUCKETS WITH 2550 MM WIDE CUTTING EDGE)
	19M8288	CAP SCREW	2		M24 X 90, (FOR BUCKETS WITH 2690 MM WIDE CUTTING EDGE)
13	14M7278	NUT	2		M24
14	**AT208834**	**CUTTING EDGE**	**1**		**(FOR BUCKETS WITH 2550 MM WIDE CUTTING EDGE)**
	AT209156	**CUTTING EDGE**	**1**		**(FOR BUCKETS WITH 2690 MM WIDE CUTTING EDGE)**

LOADER BUCKET CUTTING EDGE
TRANCHANT DE BENNE DE CHARGEUR
BORDE CORTANTE DEL CUCHARON DE LA CARGADORA

TP55659 -UN-15SEP97

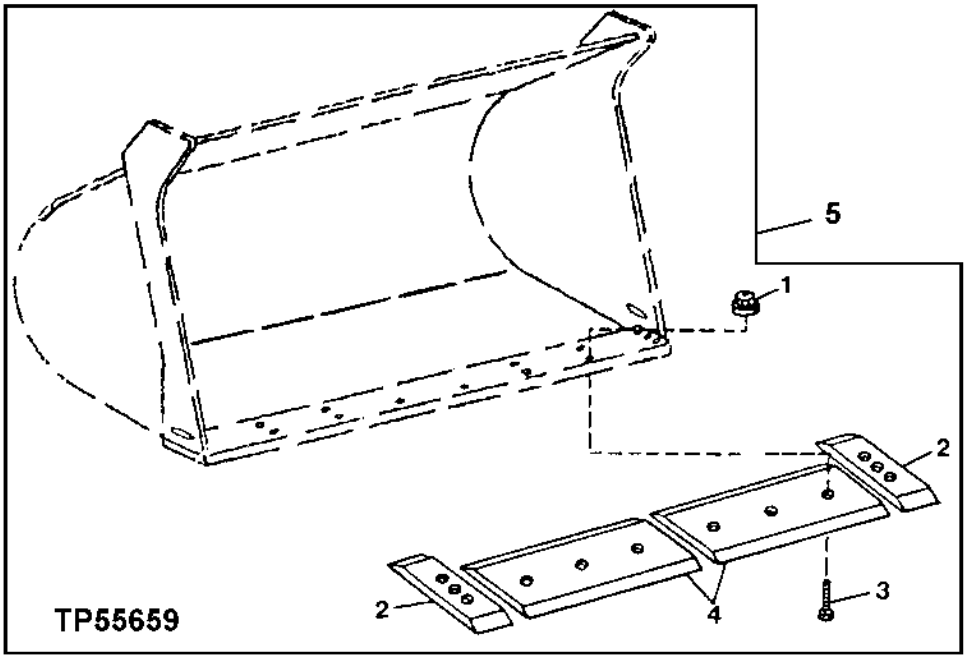

KEY	*PART NO.*	*PART NAME*	*QTY.*	*SERIAL NO.*	*REMARKS*
1	14H1058	NUT	12		3/4"
2	T146672	CUTTING EDGE	2		
3	T146934	BOLT	12		
4	T157311	CUTTING EDGE	2		(FOR USE WITH 3.0 YD BUCKETS) (100.4 INCHES WIDE
	T157492	CUTTING EDGE	2		(FOR USE WITH 3.0 YD BUCKETS) (105.9 INCHES WIDE)
5	**AT208833**	**CUTTING EDGE**	**1**		**(WHOLEGOODS) (FOR USE WITH 2.5 YD BUCKETS)**
	AT209155	**CUTTING EDGE**	**1**		**(WHOLEGOODS) (FOR USE WITH 3.0 YD BUCKETS)**

MEMORANDA
MEMORANDA
MEMORANDA

JAGZ LOADER BUCKET CUTTING EDGES
TRANCHANTS BENNE CHARGEUR JAGZ
BORDES CORTANTES DE CUCHARON DE CARGADORA JAGZ

T189247 -UN-04APR03

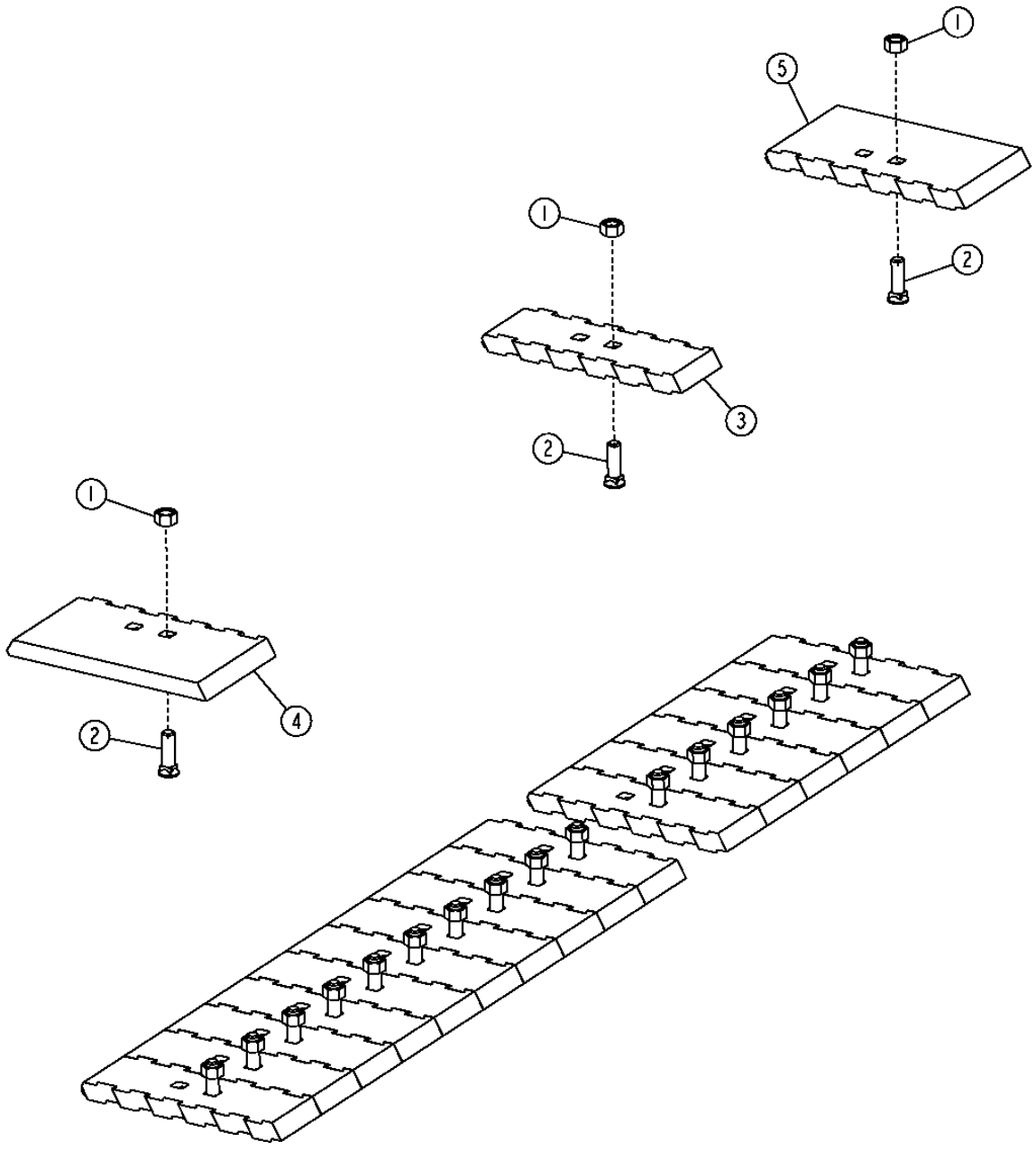

JAGZ LOADER BUCKET CUTTING EDGES
TRANCHANTS BENNE CHARGEUR JAGZ
BORDES CORTANTES DE CUCHARON DE CARGADORA JAGZ

KEY	PART NO.	PART NAME	QTY.	SERIAL NO.	REMARKS
1	14H1048	NUT	16		
2	T146933	BOLT	16		
3	T825110	CUTTING EDGE	14		(CENTER SEGMENT)
4	T825115	CUTTING EDGE	1		(RIGHT SEGMENT)
5	T825116	CUTTING EDGE	1		(LEFT SEGMENT)

PALLET FORKS
FOURCHES A PALETTES
HORQUILLAS PARA TARIMAS

TX1007110 -UN-01MAY06

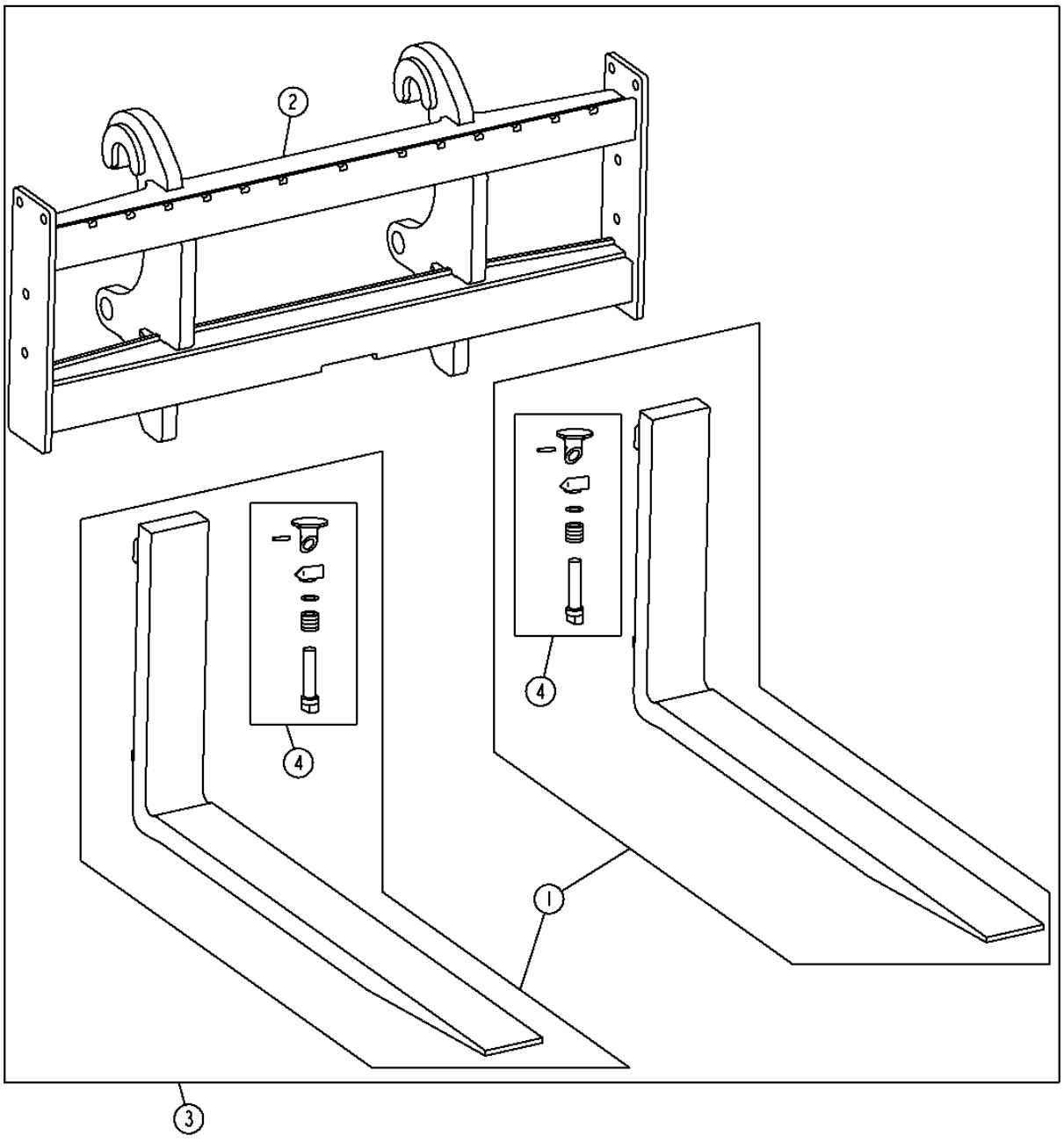

PALLET FORKS
FOURCHES A PALETTES
HORQUILLAS PARA TARIMAS

KEY	PART NO.	PART NAME	QTY.	SERIAL NO.	REMARKS
1	AT308065	FORK	2		(48 INCH) (CA)
	AT308066	**FORK**	**2**		**(60 INCH) (CA)**
2	**AT310060**	**FRAME**	**1**		**(CA)**
3	**AT300238**	**FORK**	**1**		**(FIELD KIT) (48 INCH)**
	AT300237	**FORK**	**1**		**(FIELD KIT) (60 INCH)**
4	AT332401	KIT	2		(USE WITH CASCADE FORKS)
	AT332401	KIT	2		(USE WITH NON CASCADE FORKS)

HI-VIS PALLET FORKS
FOURCHE A PALETTES HI-VIS
HORQUILLAS PARA TARIMAS DE HI-VIS

TX1017227 -UN-08JAN07

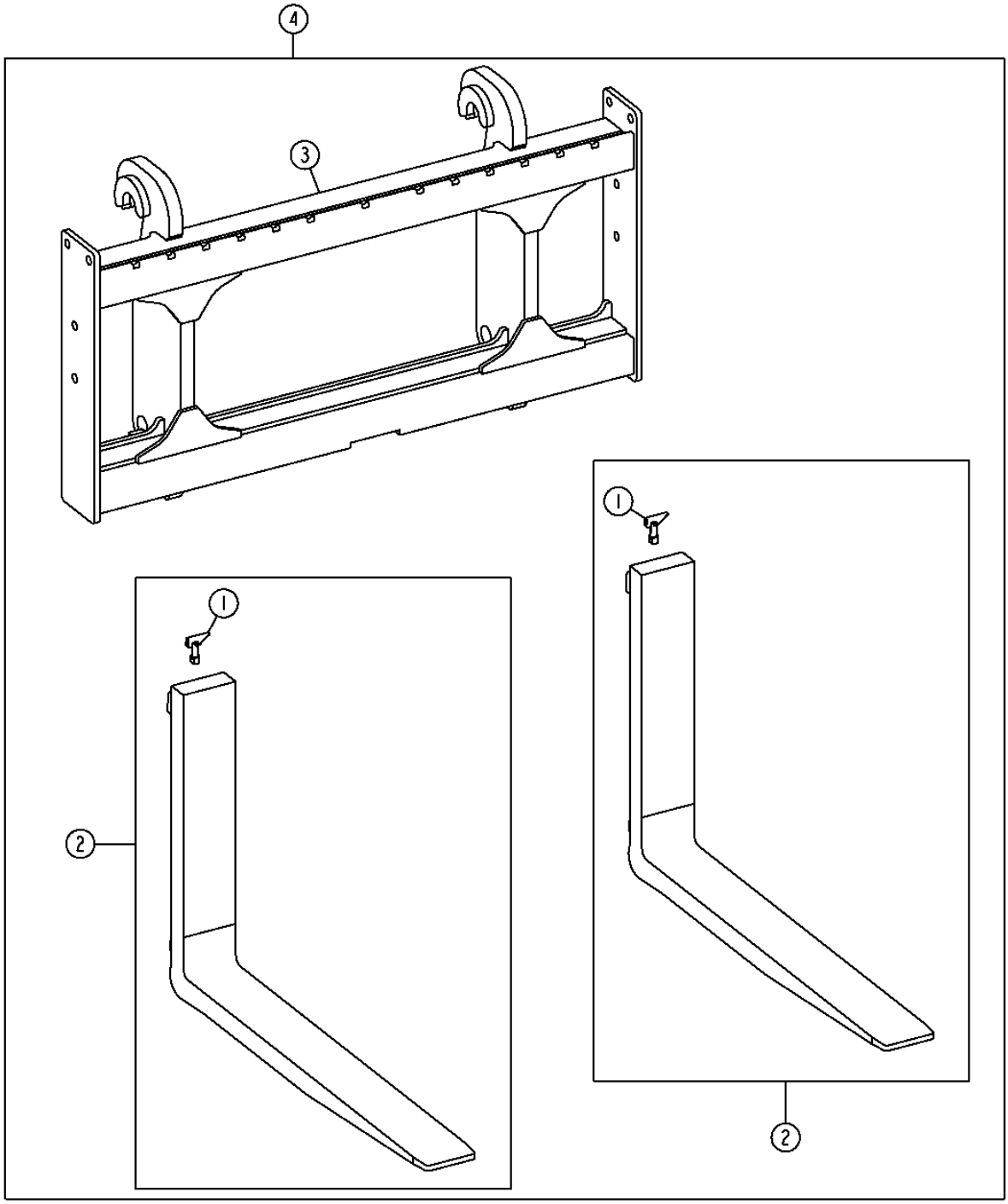

HI-VIS PALLET FORKS
FOURCHE A PALETTES HI-VIS
HORQUILLAS PARA TARIMAS DE HI-VIS

KEY	PART NO.	PART NAME	QTY.	SERIAL NO.	REMARKS
1	AT308067	LOCK	2		
2	**AT326640**	**TINE**	**2**		**(48 INCH) (CA)**
	AT326190	**TINE**	**2**		**(60 INCH) (CA)**
3	**AT326184**	**FRAME**	**1**		**(60 INCH) (CA)**
	AT326203	**FRAME**	**1**		**(90 INCH) (CA)**
4	**AT326792**	**FRAME**	**1**		**(60 INCH FRAME WITH 60 INCH TINES) (CA)**
	AT326793	**FRAME**	**1**		**(60 INCH FRAME WITH 48 INCH TINES) (CA)**
	AT326794	**FRAME**	**1**		**(90 INCH FRAME WITH 60 INCH TINES) (CA)**
	AT326795	**FRAME**	**1**		**(90 INCH FRAME WITH 48 INCH TINES) (CA)**

FORK FRAME GUARD
GARDE DE BATI FOURCHE
PROTECTOR DEL BASTIDOR DE HORQUILLA

TX1006179 -UN-11APR06

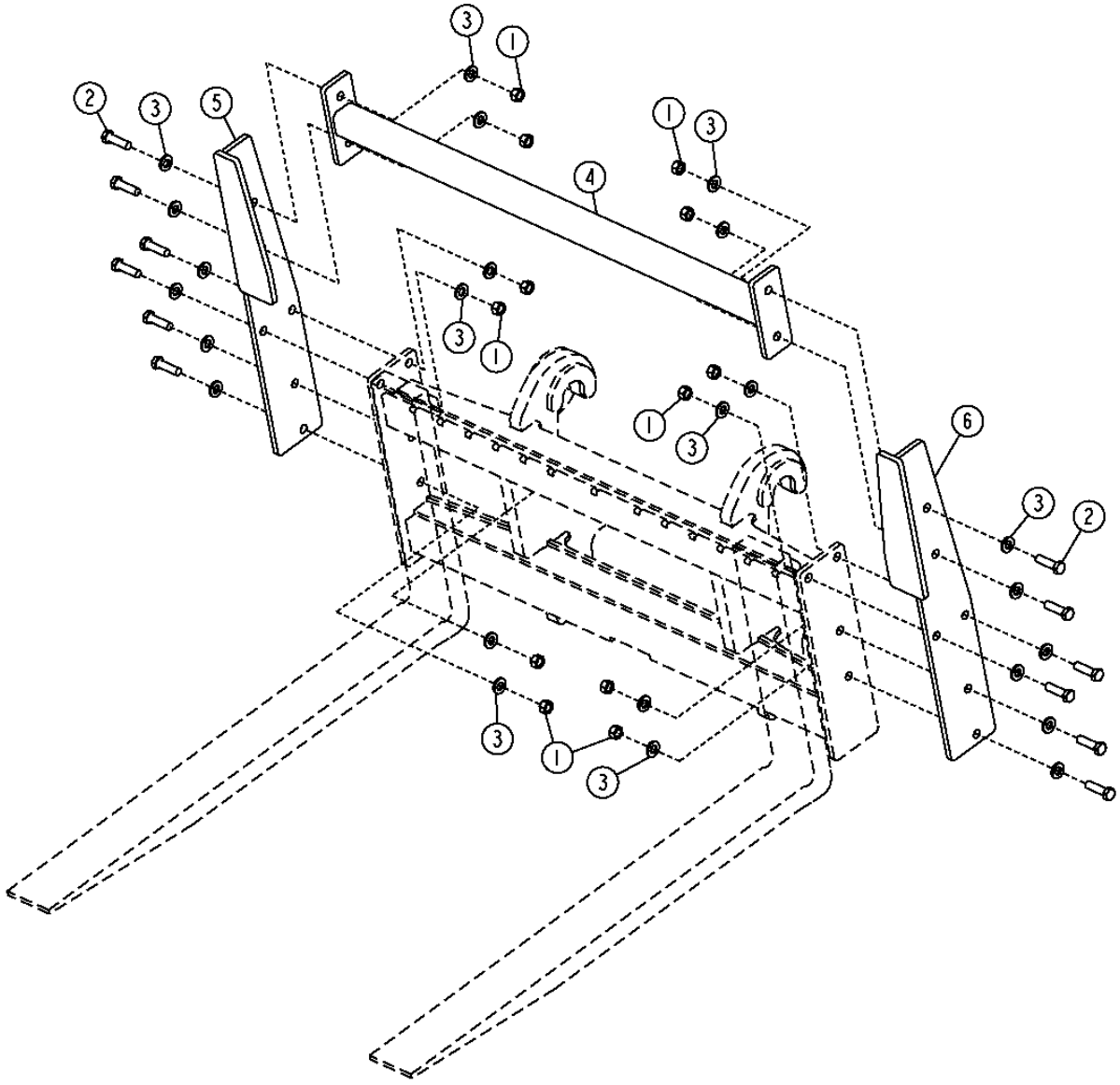

THIS PARTS LISTING IS CONTINUED

FORK FRAME GUARD
GARDE DE BATI FOURCHE
PROTECTOR DEL BASTIDOR DE HORQUILLA

KEY	PART NO.	PART NAME	QTY.	SERIAL NO.	REMARKS
1	14M7277	NUT	12		M20
2	19M8639	CAP SCREW	12		M20 X 70
3	24M7242	WASHER	24		21.400 X 42 X 5 MM
4	AT323120	BRACKET	1		(60" ASSY)
	AT323337	BRACKET	1		(90" ASSY)
5	AT323318	PLATE	1		
6	AT323319	PLATE	1		

TOOL CARRIER ATTACHMENT COUPLER
COUPLEUR ACCESSOIRES PORTE-OUTILS
ACOPLADOR DE SUJECION DEL PORTAHERRAMIENTAS

T194434 -UN-31OCT03

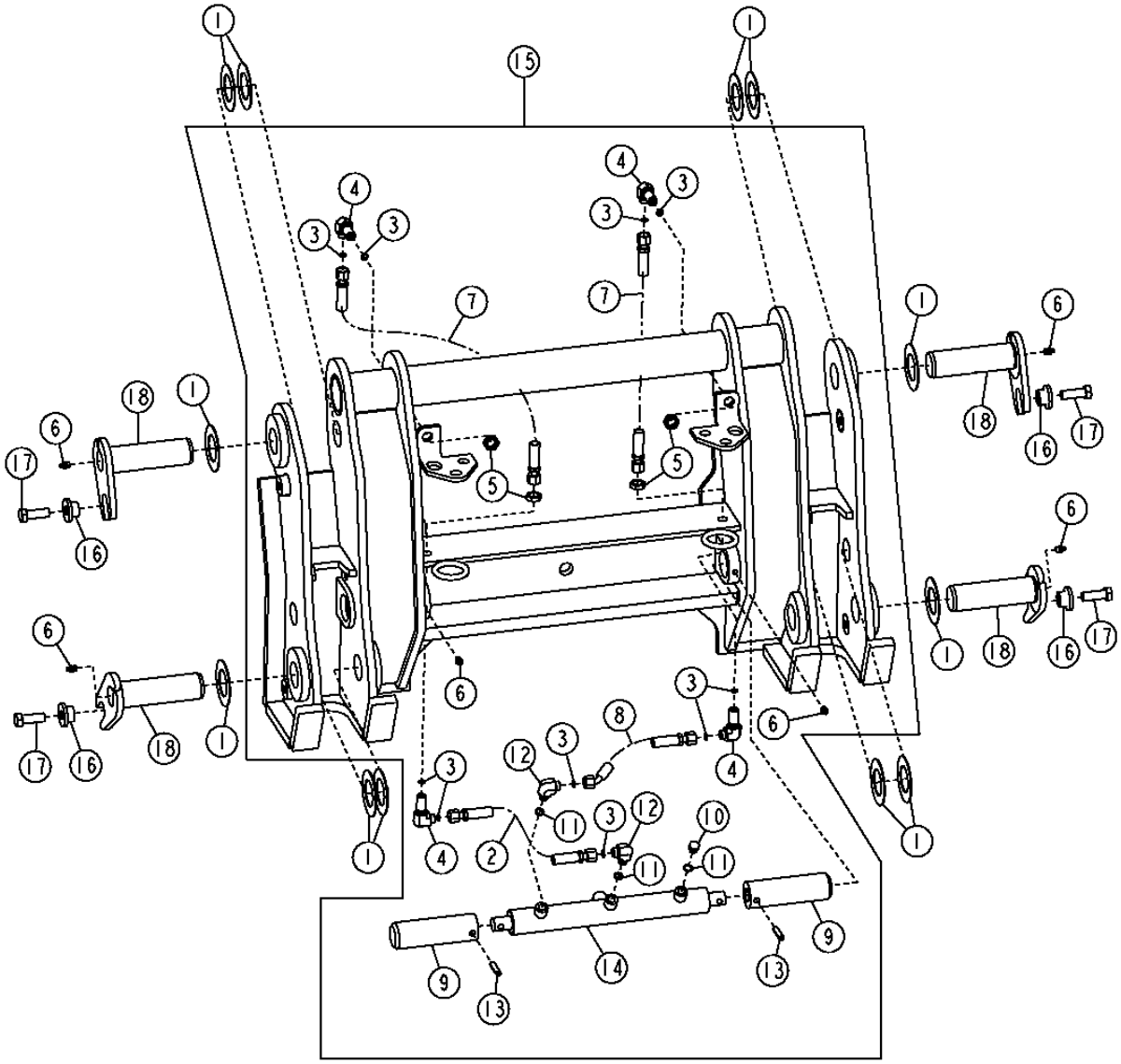

T194434

TOOL CARRIER ATTACHMENT COUPLER
COUPLEUR ACCESSOIRES PORTE-OUTILS
ACOPLADOR DE SUJECION DEL PORTAHERRAMIENTAS

KEY	*PART NO.*	*PART NAME*	*QTY.*	*SERIAL NO.*	*REMARKS*
1	T102171	WASHER	14		
2	AT220059	HYDRAULIC HOSE - FABRICATE	1		
3	T77613	O-RING	10		
4	38H1393	ELBOW FITTING	4		90 DEGREE
5	T81029	NUT	4		
6	JD7759	LUBRICATION FITTING	6		
7	AT220060	HYDRAULIC HOSE - FABRICATE	2		LEFT AND RIGHT SIDES
8	AT220058	HYDRAULIC HOSE - FABRICATE	1		LEFT HAND SIDE
9	T171552	PIN	2		
10	R27218	FITTING PLUG	1		
11	R26448	O-RING	3		
12	38H1004	ELBOW FITTING	2		90 DEGREE
13	34H353	SPRING PIN	2		3/8" X 1-3/4"
14	AT209163	CYLINDER	1		
15	AT209576	QUICK COUPLER	1		
16	T176064	BUSHING	4		
17	19M7489	CAP SCREW	4		M16 X 45
18	AT207924	PIN	4		

TOOL CARRIER ATTACHMENT COUPLER HYDRAULIC CYLINDER
VERIN HYDRAULIQUE COUPLEUR ACCESSOIRE PORTE-OUTILS
CILINDRO HIDRAULICO DEL ACOPLADOR DE SUJECION DEL PORTAHERRAMIENTAS

TX1006296 -UN-24APR06

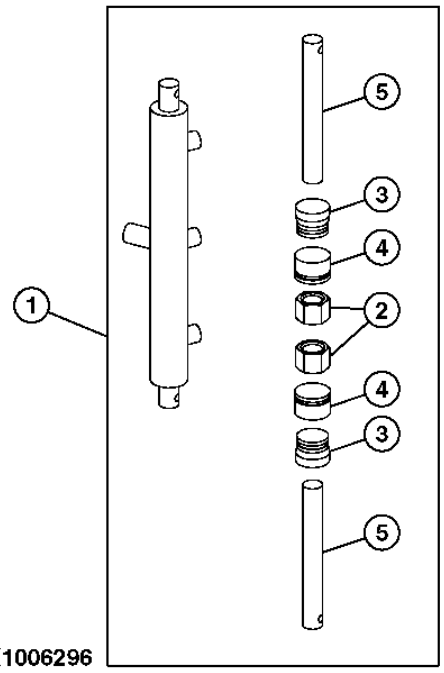

TX1006296

KEY	PART NO.	PART NAME	QTY.	SERIAL NO.	REMARKS
1	AT209163	CYLINDER	1		
2	T175222	NUT	2		
3	T175223	HYDR. CYLINDER ROD GUIDE	2		
4	T175224	PISTON REPLACEMENT KIT	2		
5	T175225	ROD	2		

MEMORANDA
MEMORANDA
MEMORANDA

Z-BAR LINKAGE ATTACHMENT COUPLER
COUPLEUR ACCESSOIRE TRINGLERIE CINEMATIQUE EN Z
ACOPLADOR DE SUJECION DE VARILLAJE DE BARRA EN Z

T207815 -UN-11MAR05

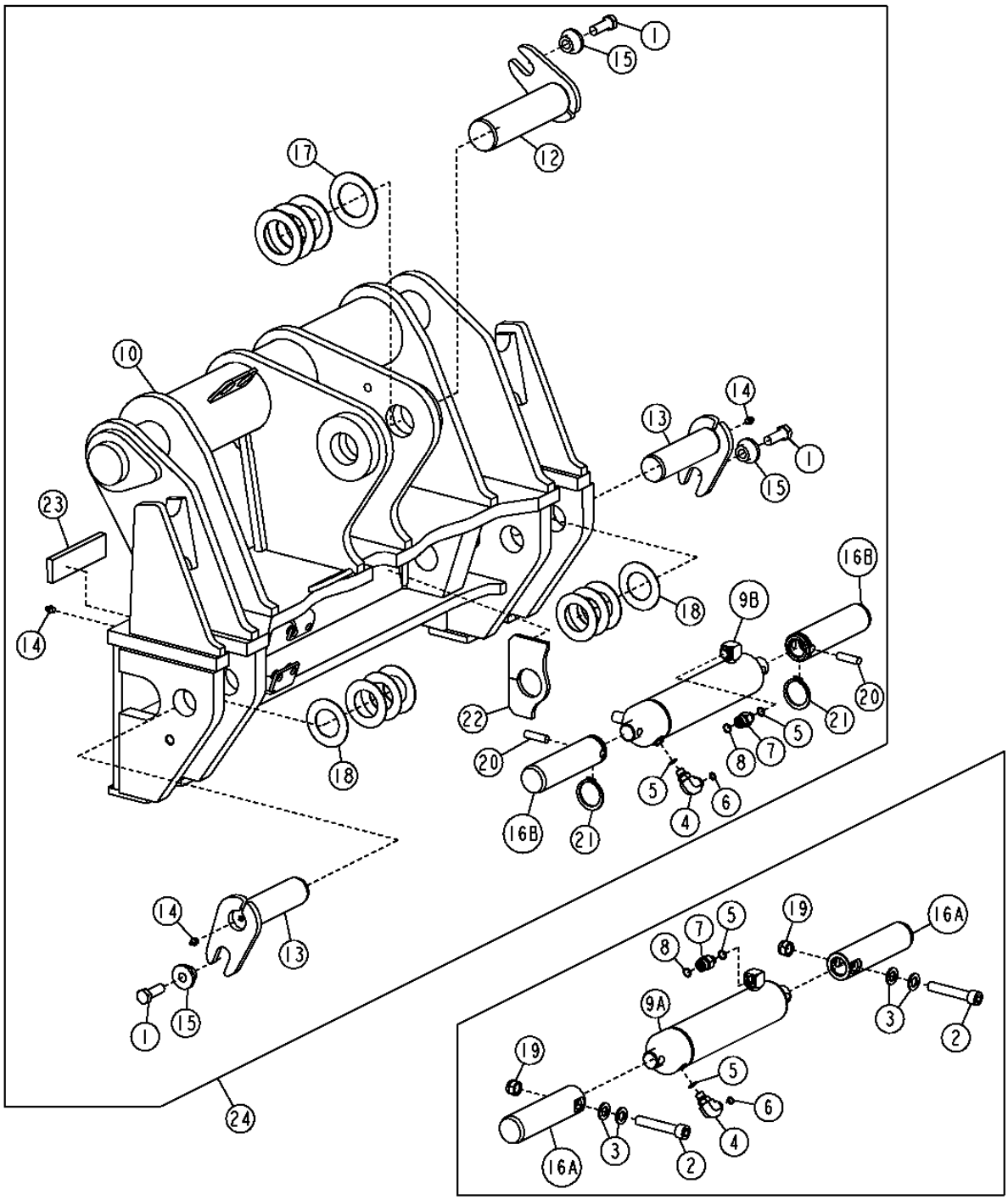

T207815

Z-BAR LINKAGE ATTACHMENT COUPLER
COUPLEUR ACCESSOIRE TRINGLERIE CINEMATIQUE EN Z
ACOPLADOR DE SUJECION DE VARILLAJE DE BARRA EN Z

KEY	*PART NO.*	*PART NAME*	*QTY.*	*SERIAL NO.*	*REMARKS*
1	19M7489	CAP SCREW	3		M16 X 45
2	19M8342	SCREW	2		M16 X 90
3	24M7338	WASHER	6		17 X 30 X 3 MM
4	38H1004	ELBOW FITTING	1		
5	R26448	O-RING	2		
6	T77613	O-RING	1		
7	38H1173	ADAPTER FITTING	1		
8	T77857	O-RING	1		
9A	AH212349	HYDRAULIC CYLINDER	1		(COMPONENTS LISTED ON ANOTHER PAGE)
9B	AH217541	HYDRAULIC CYLINDER	1		(COMPONENTS LISTED ON ANOTHER PAGE)
10	.....	QUICK COUPLER	1		(AT300956 NLA) (FURNISH AT311387)
	AT317970	QUICK COUPLER	1		(USE WITH AH217541)
12	AT308024	PIN	1		
13	AT301215	PIN	2		
14	JD7759	LUBRICATION FITTING	4		
15	T176064	BUSHING	3		
16A	T209423	PIN FASTENER	2		(SUB FOR T200758)
16B	T213442	PIN FASTENER	2		
17	T102171	WASHER	4		(SUB FOR T54474)
18	T63795	WASHER	8		
19	14M7328	LOCK NUT	2		M16
20	H89151	DOWEL PIN	2		
21	T61226	SNAP RING	2		
22	.....	PLATE	1		(T213440 NLA)
23	T213441	PLATE	1		
24	**AT311387**	**QUICK COUPLER**	**1**		**(WHOLE GOODS)(Z-BAR FIELD KIT)**

POWERLLEL™ LINKAGE ATTACHMENT COUPLER
COUPLEUR ACCESSOIRE TRINGLERIE POWERLLEL™
ACOPLADOR DE SUJECION DE VARILLAJE POWERLLEL™

T207799 -UN-11MAR05

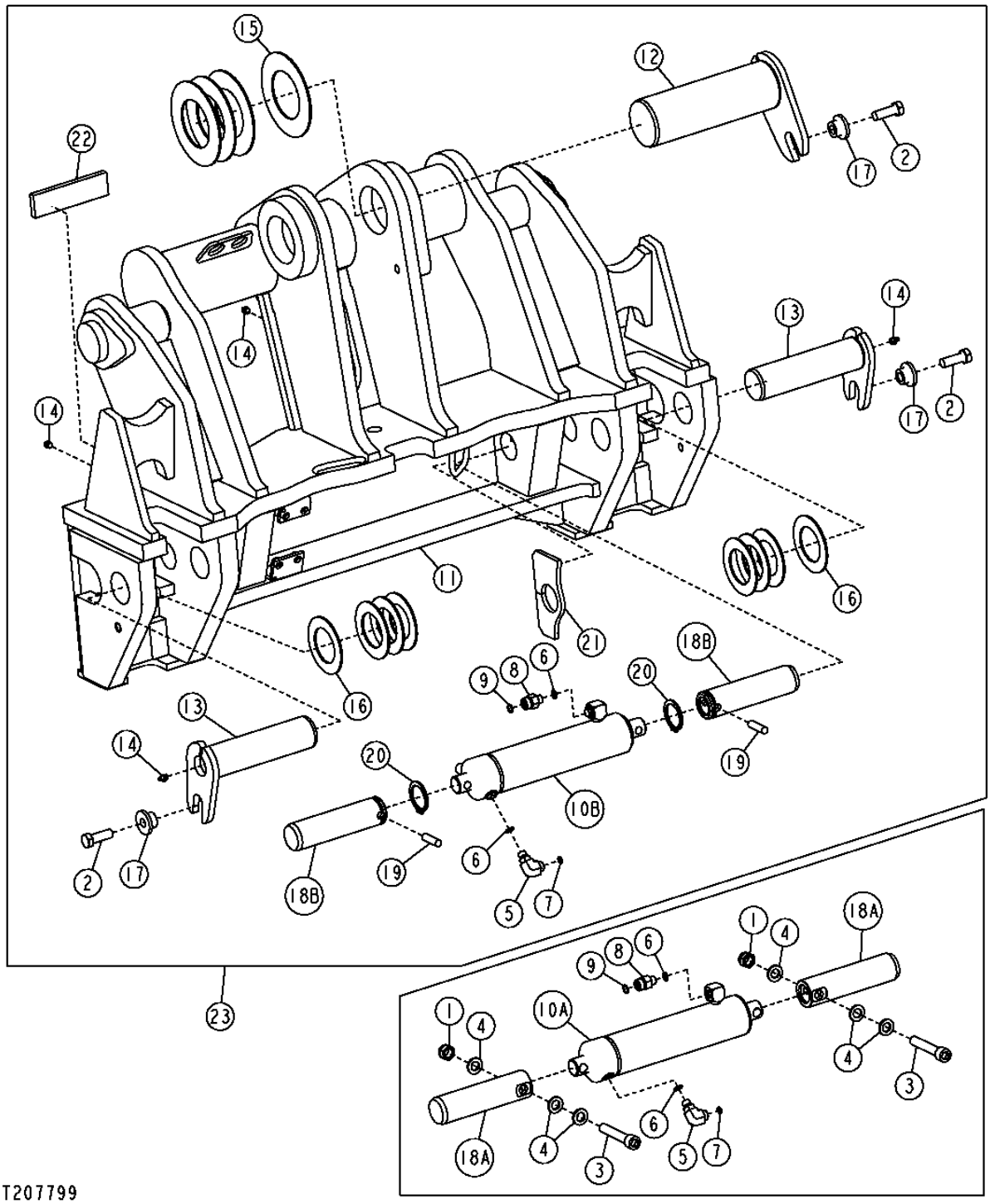

T207799

POWERLLEL™ LINKAGE ATTACHMENT COUPLER
COUPLEUR ACCESSOIRE TRINGLERIE POWERLLEL™
ACOPLADOR DE SUJECION DE VARILLAJE POWERLLEL™

KEY	*PART NO.*	*PART NAME*	*QTY.*	*SERIAL NO.*	*REMARKS*
1	14M7328	LOCK NUT	2		M16
2	19M7489	CAP SCREW	3		M16 X 45
3	19M8342	SCREW	2		M16 X 90
4	24M7338	WASHER	6		17 X 30 X 3 MM
5	38H1004	ELBOW FITTING	1		
6	R26448	O-RING	2		
7	T77613	O-RING	1		
8	38H1173	ADAPTER FITTING	1		
9	T77857	O-RING	1		
10A	AH212349	HYDRAULIC CYLINDER	1		(COMPONENTS LISTED ON ANOTHER PAGE)
10B	AH217541	HYDRAULIC CYLINDER	1		(COMPONENTS LISTED ON ANOTHER PAGE)
11	.....	QUICK COUPLER	1		(AT301175 NLA)(FURNISH AT320690)
	AT317968	QUICK COUPLER	1		(USE WITH AH217541)
12	AT207718	PIN	1		
13	AT301215	PIN	2		
14	JD7759	LUBRICATION FITTING	4		
15	T171734	WASHER	4		84.500 X 140 X 3.250 MM
16	T102171	WASHER	8		66.500 X 108 X 3 MM, (SUB FOR T54474)
17	T176064	BUSHING	3		
18A	T209423	PIN FASTENER	2		
18B	T213442	PIN FASTENER	2		
19	H89151	DOWEL PIN	2		
20	T61226	SNAP RING	2		
21	.....	PLATE	1		(T213440 NLA)
22	T213441	PLATE	1		
23	**AT320690**	**QUICK COUPLER**	**1**		

HI-VIS COUPLER POWERLLEL™ LINKAGE ATTACHMENT
ACCESSOIRE TRINGLERIE POWERLLEL™ COUPLEUR HI-VIS
SUJECION DE VARILLAJE POWERLLEL™ DEL ACOPLADOR DE HI-VIS

T217537 -UN-23JAN06

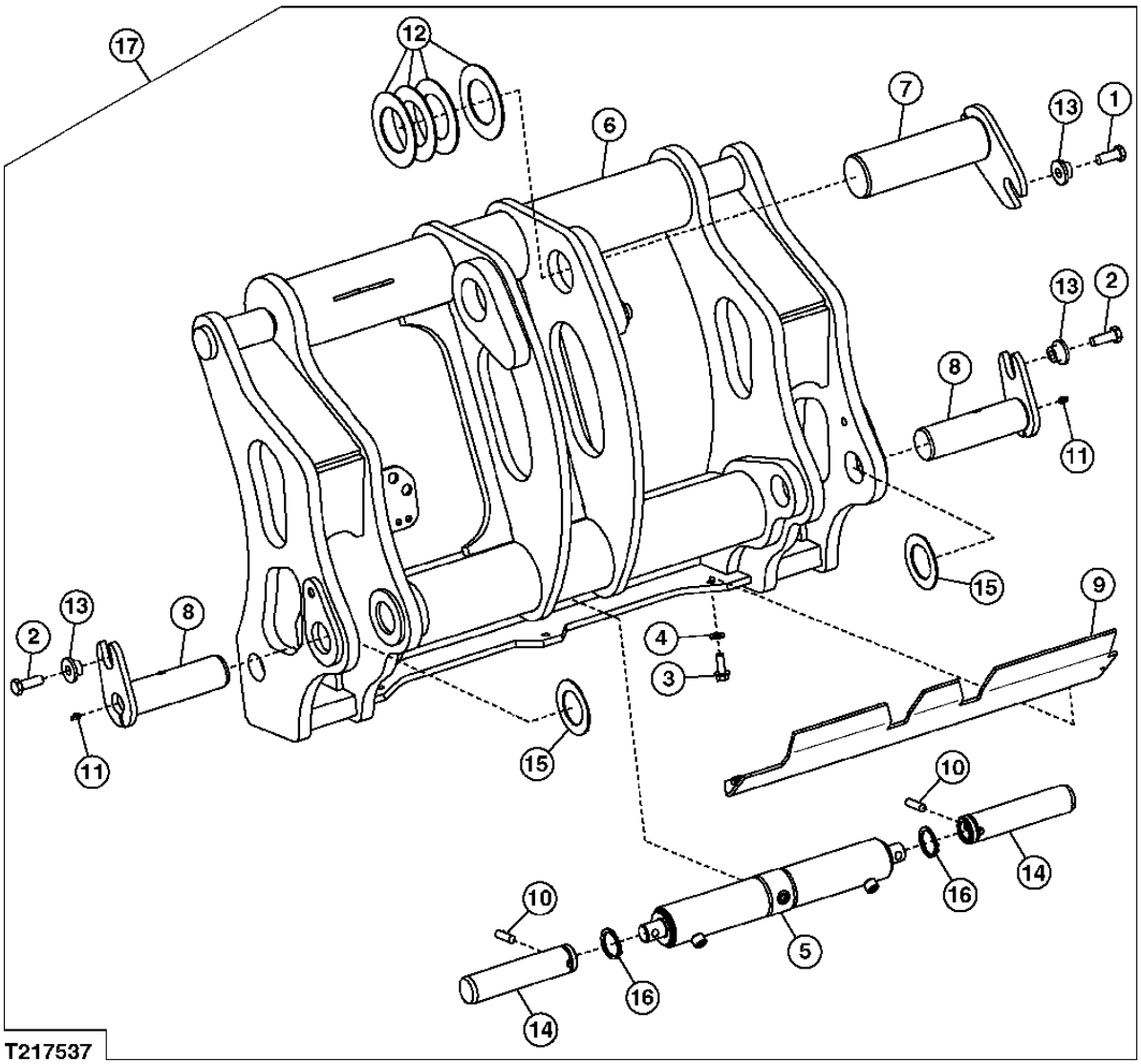

HI-VIS COUPLER POWERLLEL™ LINKAGE ATTACHMENT
ACCESSOIRE TRINGLERIE POWERLLEL™ COUPLEUR HI-VIS
SUJECION DE VARILLAJE POWERLLEL™ DEL ACOPLADOR DE HI-VIS

KEY	*PART NO.*	*PART NAME*	*QTY.*	*SERIAL NO.*	*REMARKS*
1	19M7488	CAP SCREW	1		M16 X 40
2	19M7489	CAP SCREW	2		M16 X 45
3	19M7790	SCREW	3		M12 X 35
4	24M7240	WASHER	3		13 X 25 X 3 MM
5	AH222122	HYDRAULIC CYLINDER	1		
6	AT320163	QUICK COUPLER	1		
7	AT320164	PIN FASTENER	1		
8	AT320165	PIN FASTENER	2		
9	AT324184	COVER	1		
10	H89151	DOWEL PIN	2		
11	JD7759	LUBRICATION FITTING	2		
12	T171734	WASHER	4		
13	T176064	BUSHING	3		
14	T214207	PIN FASTENER	2		
15	T102171	WASHER	2		(SUB FOR T54474)
16	T61226	SNAP RING	2		
17	**AT326784**	**KIT**	**1**		**(WHOLEGOODS) ALSO ORDER T223488 INSTALLATION INSTRUCTION**

HI-VIS COUPLER Z-BAR LINKAGE ATTACHMENT
ACCESSOIRE TRINGLERIE CINEMATIQUE EN Z COUPLEUR HI-VIS
SUJECION DEL VARILLAJE DE BARRA EN Z DEL ACOPLADOR DE HI-VIS

T217538 -UN-23JAN06

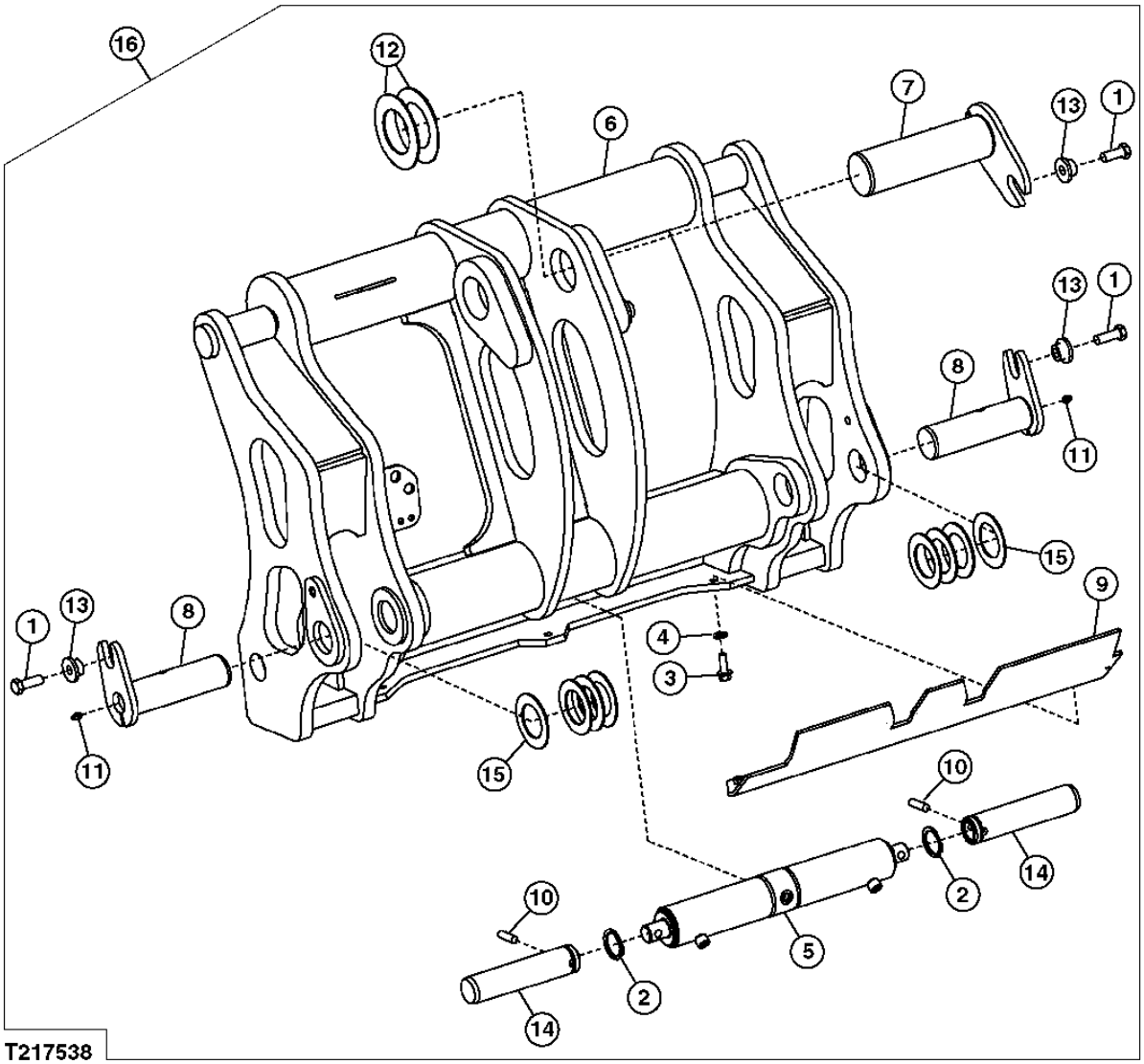

HI-VIS COUPLER Z-BAR LINKAGE ATTACHMENT
ACCESSOIRE TRINGLERIE CINEMATIQUE EN Z COUPLEUR HI-VIS
SUJECION DEL VARILLAJE DE BARRA EN Z DEL ACOPLADOR DE HI-VIS

KEY	*PART NO.*	*PART NAME*	*QTY.*	*SERIAL NO.*	*REMARKS*
1	19M7489	CAP SCREW	3		M16 X 45
2	T61226	SNAP RING	2		
3	19M7790	SCREW	3		M12 X 35
4	24M7240	WASHER	3		13 X 25 X 3 MM
5	AH222122	HYDRAULIC CYLINDER	1		
6	AT322729	QUICK COUPLER	1		
7	AT308024	PIN	1		
8	AT320165	PIN FASTENER	2		
9	AT324271	COVER	1		
10	H89151	DOWEL PIN	2		
11	JD7759	LUBRICATION FITTING	2		
12	24H1240	WASHER	2		3-1/32" X 4-1/2" X 0.105"
13	T176064	BUSHING	3		
14	T214207	PIN FASTENER	2		
15	T102171	WASHER	8		(SUB FOR T54474)
16	**AT326785**	**KIT**	**1**		**(WHOLEGOODS) ALSO ORDER T223488 INSTALLATION INSTRUCTION**

ATTACHMENT COUPLER HYDRAULIC CYLINDER (BOLT-ON PINS)
VERIN HYDRAULIQUE ACCOUPLEMENT ACCESSOIRE (AXES BOULONNES)
CILINDRO HIDRAULICO DEL ACOPLADOR DE SUJECION (PASADORES EMPERNADOS)

T202516 -UN-31AUG04

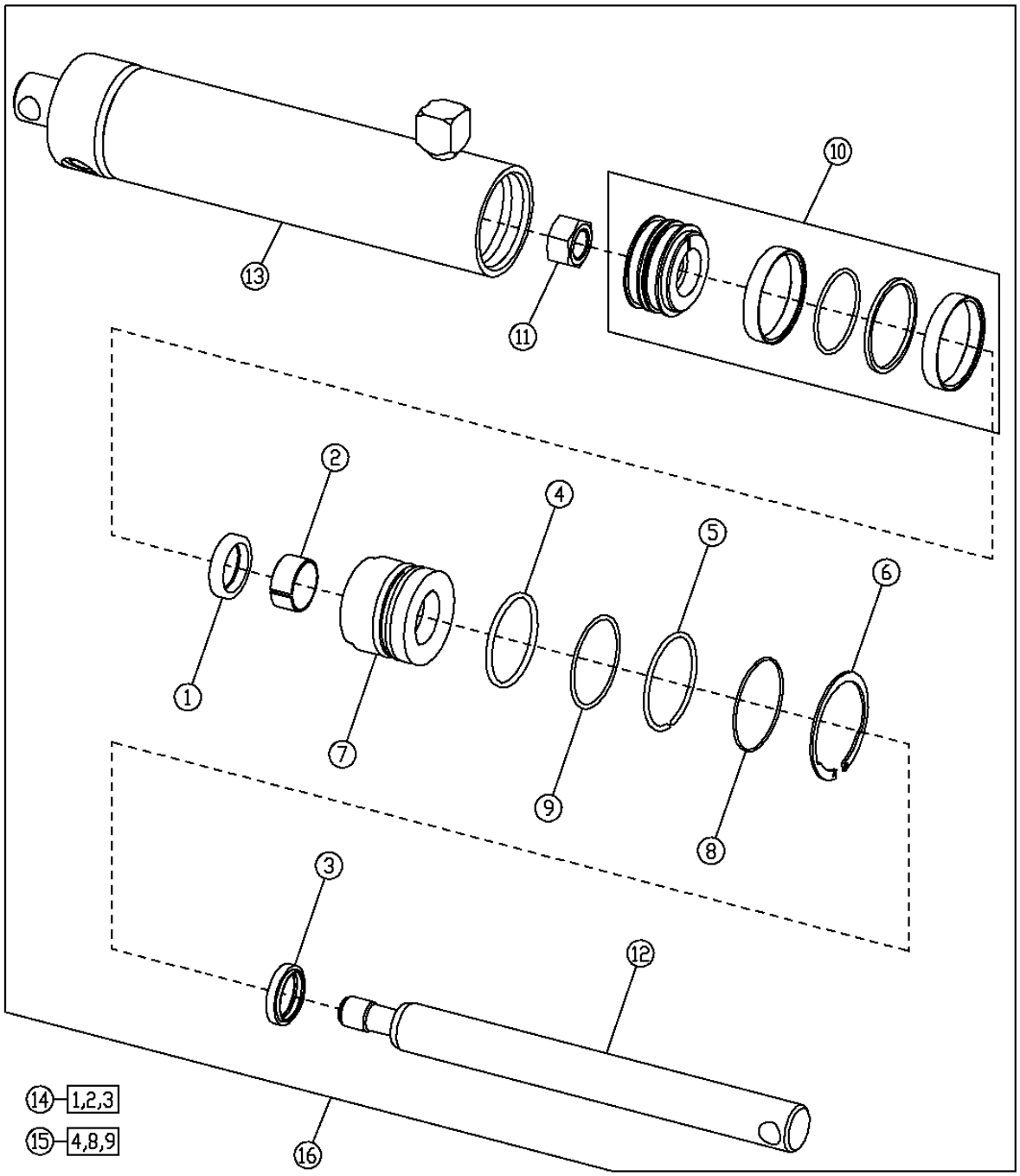

ATTACHMENT COUPLER HYDRAULIC CYLINDER (BOLT-ON PINS)
VERIN HYDRAULIQUE ACCOUPLEMENT ACCESSOIRE (AXES BOULONNES)
CILINDRO HIDRAULICO DEL ACOPLADOR DE SUJECION (PASADORES EMPERNADOS)

KEY	*PART NO.*	*PART NAME*	*QTY.*	*SERIAL NO.*	*REMARKS*
1	H154514	SEAL	1		
2	H156058	WEAR RING	1		
3	H156586	SEAL	1		
4	R93633	O-RING	1		
5	H164982	SNAP RING	1		
6	H165169	SNAP RING	1		
7	H171334	HYDR. CYLINDER ROD GUIDE	1		
8	N260556	O-RING	1		
9	U13461	BACK-UP RING	1		
10	AH142159	PISTON	1		
11	H170535	NUT	1		
12	H206836	ROD	1		
13	AH212350	HYDRAULIC CYLINDER BARREL	1		
14	AH148823	KIT	1		(ROD SEAL KIT)
15	AH212088	HYDRAULIC CYLINDER KIT	1		(BORE SEAL KIT)
16	AH212349	HYDRAULIC CYLINDER	1		

ATTACHMENT COUPLER HYDRAULIC CYLINDER (CLIP-ON PINS)
VERIN HYDRAULIQUE ACCOUPLEMENT ACCESSOIRE (AXES VERROUILLABLES)
CILINDRO HIDRAULICO DEL ACOPLADOR DE SUJECION (PASADORES CON PRESILLA)

T207802 -UN-21FEB05

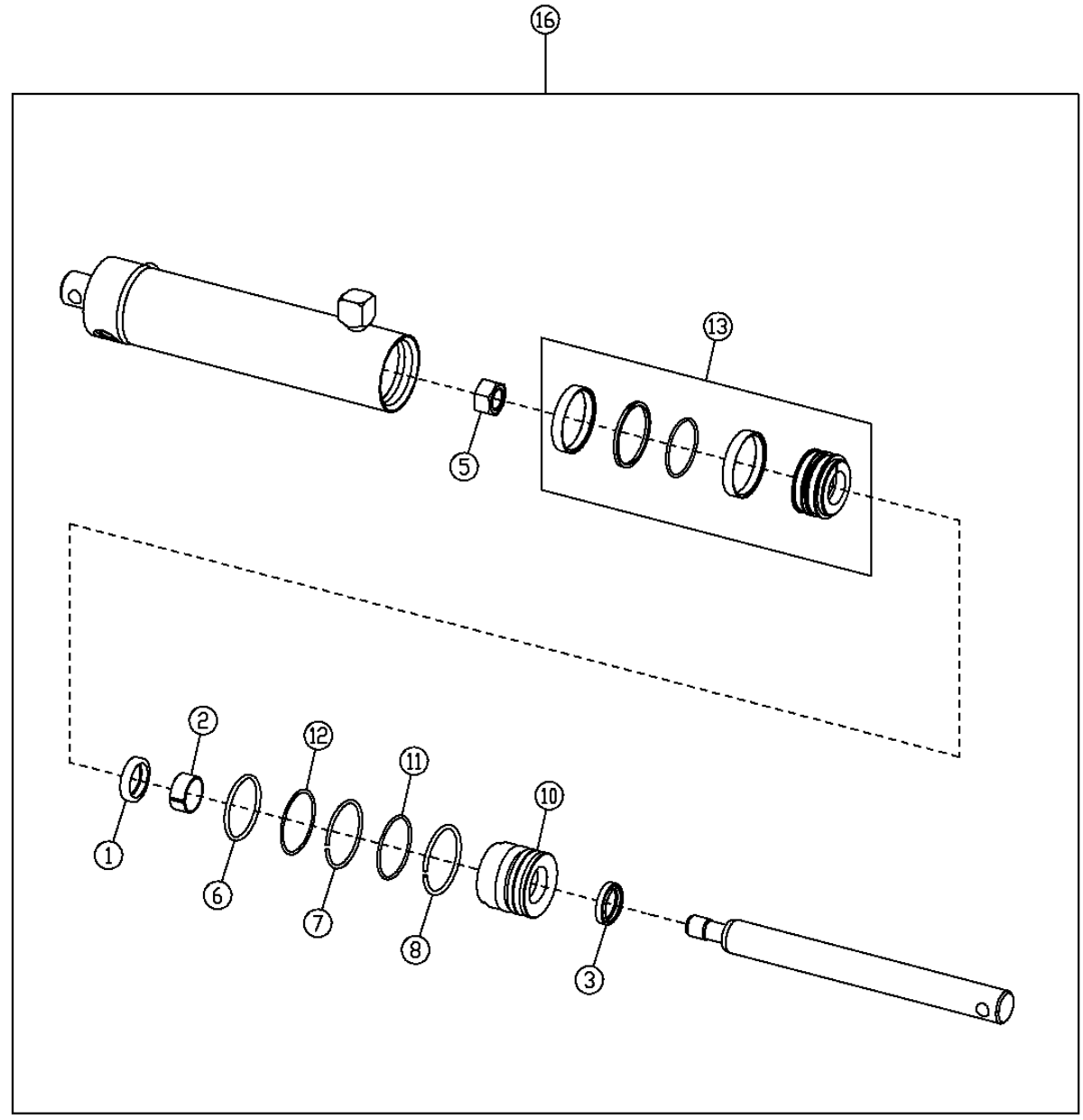

14	11,12
15	1,2,3

T207802

ATTACHMENT COUPLER HYDRAULIC CYLINDER (CLIP-ON PINS)
VERIN HYDRAULIQUE ACCOUPLEMENT ACCESSOIRE (AXES VERROUILLABLES)
CILINDRO HIDRAULICO DEL ACOPLADOR DE SUJECION (PASADORES CON PRESILLA)

KEY	*PART NO.*	*PART NAME*	*QTY.*	*SERIAL NO.*	*REMARKS*
1	H154514	SEAL	1		
2	H156058	WEAR RING	1		
3	H156586	SEAL	1		
5	H170535	NUT	1		
6	R93633	O-RING	1		(SUB FOR H161156)
7	H164982	SNAP RING	1		
8	H211156	SNAP RING	1		
10	H210874	HYDR. CYLINDER ROD GUIDE	1		
11	H63262	O-RING	1		
12	U13461	BACK-UP RING	1		
13	AH142159	PISTON	1		
14	AH212088	HYDRAULIC CYLINDER KIT	1		(BORE SEAL KIT)
15	AH148823	KIT	1		(ROD SEAL KIT)
16	AH217541	HYDRAULIC CYLINDER	1		

ATTACHMENT HI-VIS COUPLER HYDRAULIC CYLINDER
VERIN HYDRAULIQUE ACCOUPLEMENT ACCESSOIRE HI-VIS
SUJECION DEL CILINDRO HIDRAULICO DEL ACOPLADOR DE HI-VIS

T217558 -UN-30JAN06

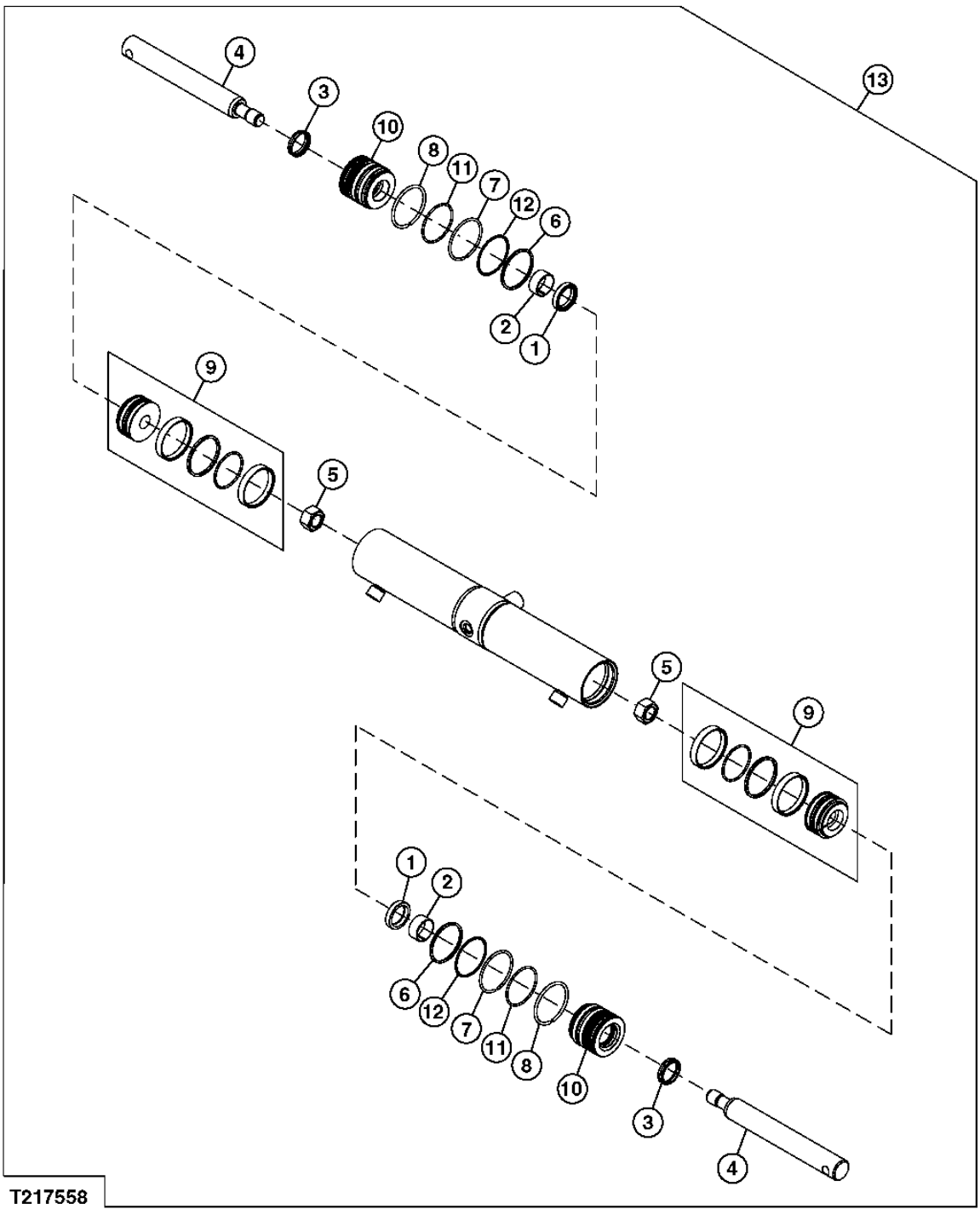

ATTACHMENT HI-VIS COUPLER HYDRAULIC CYLINDER
VERIN HYDRAULIQUE ACCOUPLEMENT ACCESSOIRE HI-VIS
SUJECION DEL CILINDRO HIDRAULICO DEL ACOPLADOR DE HI-VIS

KEY	*PART NO.*	*PART NAME*	*QTY.*	*SERIAL NO.*	*REMARKS*
1	H154514	SEAL	2		
2	H156058	WEAR RING	2		
3	H156586	SEAL	2		
4	H219217	ROD	2		
5	H170535	NUT	2		
6	R93633	O-RING	2		
7	H164982	SNAP RING	2		
8	H211156	SNAP RING	2		
9	AH142159	PISTON	2		
10	H210874	HYDR. CYLINDER ROD GUIDE	2		
11	H63262	O-RING	2		
12	U13461	BACK-UP RING	2		
13	AH222122	HYDRAULIC CYLINDER	1		

CONVERSION BUCKET PIVOT PLATE (FOR USE WITH POWERLLEL™ LINKAGE)
PLAQUE PIVOT BENNE CONVERSION (A UTILISER AVEC TRINGLERIE POWERLLEL™)
PLACA DE PIVOTE DEL CUCHARON DE CONVERSION (PARA USO CON VARILLAJE POWERLLEL™)

T202690 -UN-01SEP04

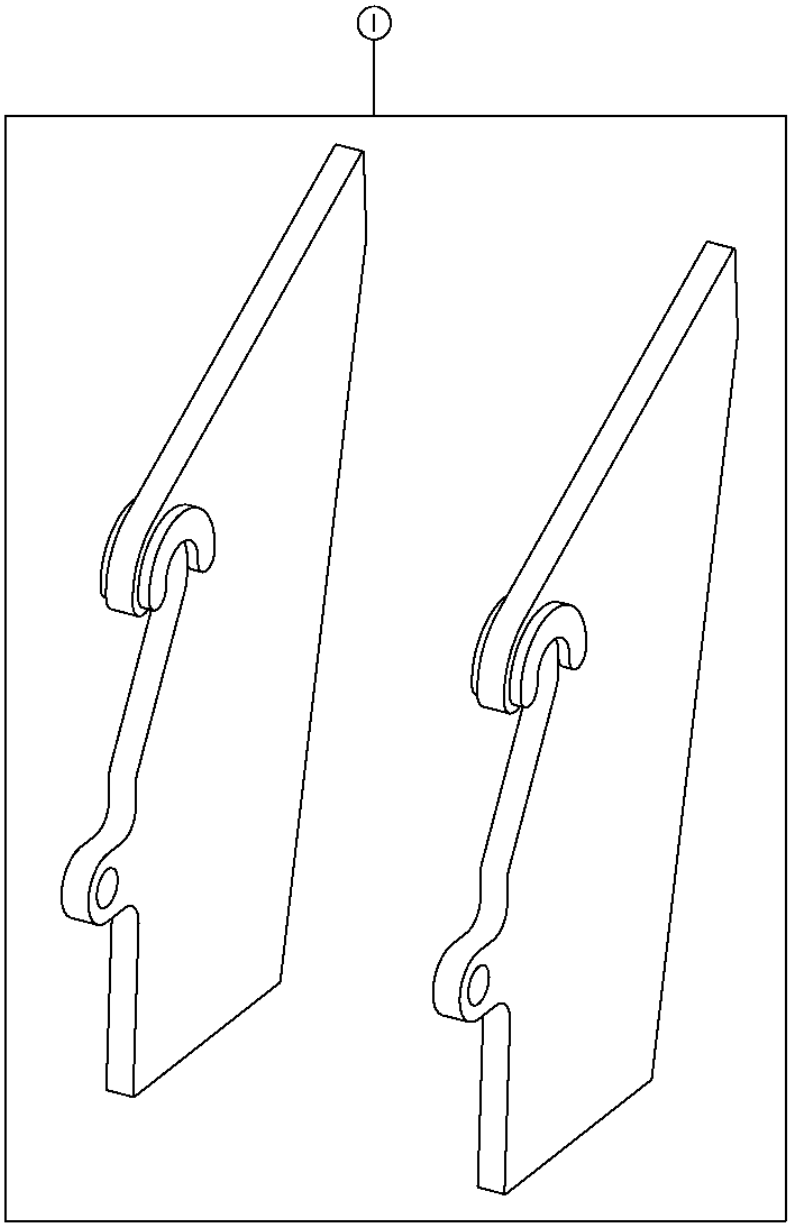

T202690

CONVERSION BUCKET PIVOT PLATE (FOR USE WITH POWERLLEL™ LINKAGE)
PLAQUE PIVOT BENNE CONVERSION (A UTILISER AVEC TRINGLERIE POWERLLEL™)
PLACA DE PIVOTE DEL CUCHARON DE CONVERSION (PARA USO CON VARILLAJE POWERLLEL™)

KEY	*PART NO.*	*PART NAME*	*QTY.*	*SERIAL NO.*	*REMARKS*
1	AT315871	PLATE	1		(WHOLEGOODS)

HI-VIS PIVOT COUPLER BLANKS
FLANS COUPLEUR PIVOT HI-VIS
BANCOS DEL ACOPLADOR DE PIVOTE DE HI-VIS

T217557 -UN-24JAN06

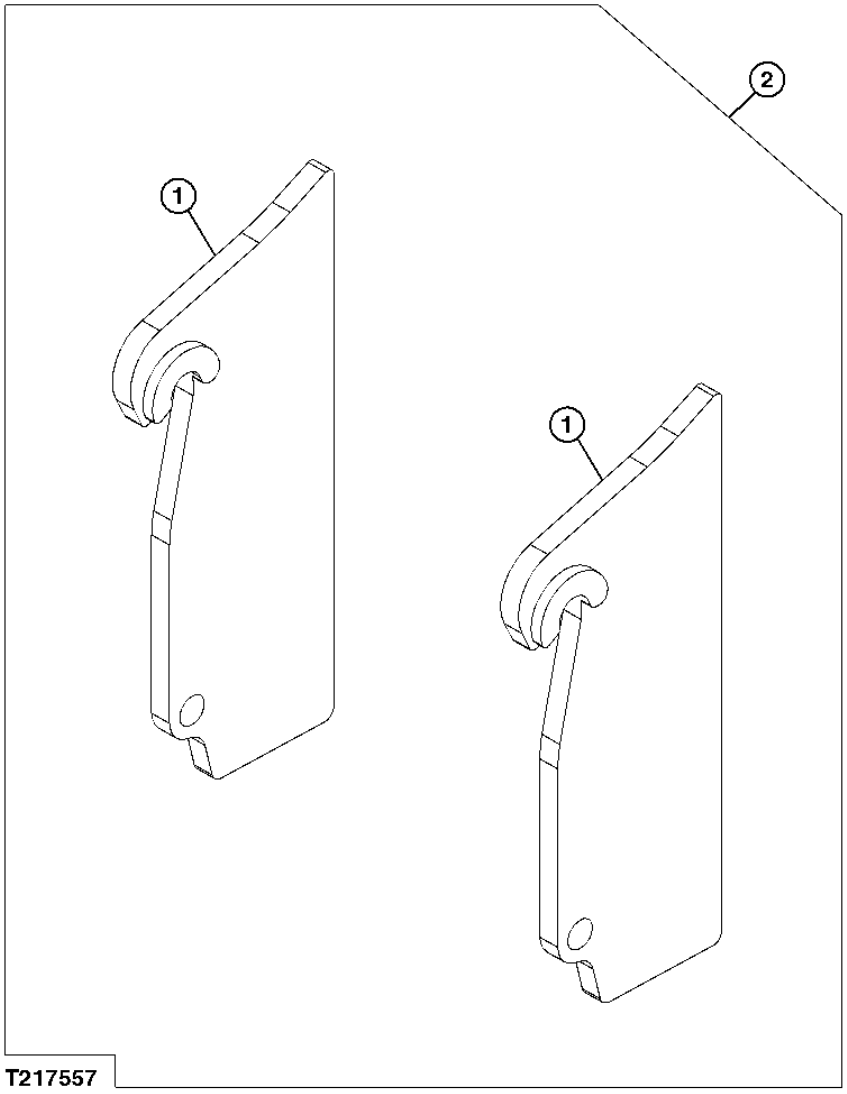

HI-VIS PIVOT COUPLER BLANKS
FLANS COUPLEUR PIVOT HI-VIS
BANCOS DEL ACOPLADOR DE PIVOTE DE HI-VIS

KEY	*PART NO.*	*PART NAME*	*QTY.*	*SERIAL NO.*	*REMARKS*
1	AT329819	FRAME	2		(WHOLEGOODS)
2	**AT330639**	**PLATE**	**1**		**(WHOLEGOODS)**

LOADER FRAME
BATI DE CHARGEUR
BASTIDOR DE CARGADORA

TX1008744 -UN-16JUN06

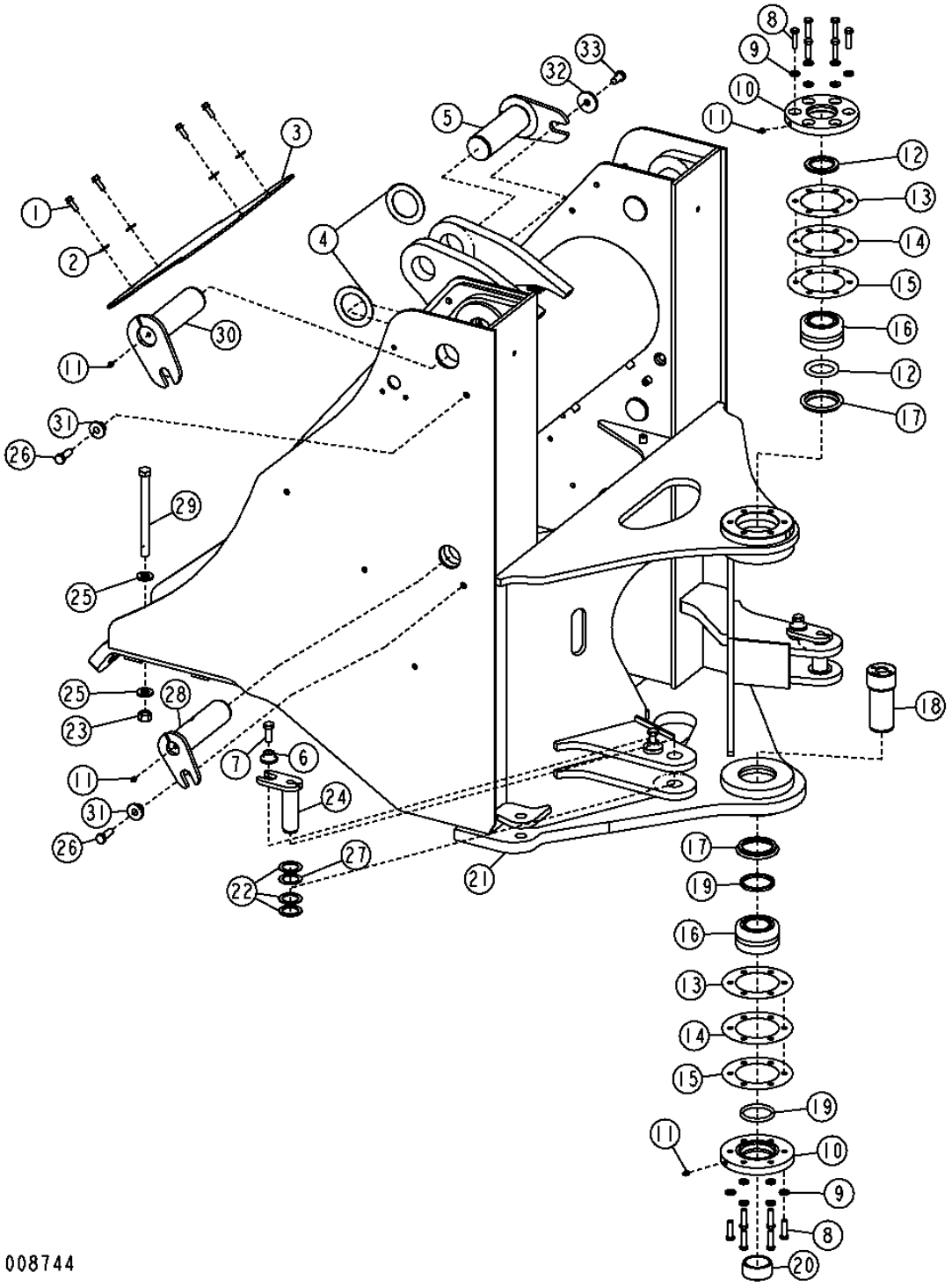

THIS PARTS LISTING IS CONTINUED

LOADER FRAME
BATI DE CHARGEUR
BASTIDOR DE CARGADORA

KEY	PART NO.	PART NAME	QTY.	SERIAL NO.	REMARKS
1	19M7786	SCREW	4		M10 X 30
2	24M7296	WASHER	4		10.500 X 30 X 2.500 MM
3	T157234	COVER	2		
4	24H1240	WASHER	3		3-1/32" X 4-1/2" X 0.105"
5	AT207321	PIN	1		BUCKET CYLINDER
6	T176064	BUSHING	3		(SUB FOR T146246)
7	19M7488	CAP SCREW	3		M16 X 40, (SUB FOR 19M8029)
8	19M7496	CAP SCREW	12		M12 X 45
9	24M7240	WASHER	12		13 X 25 X 3 MM
10	T200888	COVER	2		
11	JD7759	LUBRICATION FITTING	6		
12	T157029	SEAL	2		
13	T130057	SHIM	4		0.508MM(0.020")
14	T130058	SHIM	2		0.254MM(0.010")
15	T130059	SHIM	2		0.127MM(0.005")
16	AT203483	BEARING	2		
17	T157030	SPACER	2		
18	T182571	PIN	1		
19	T60752	SEAL	2		LOWER ARTICULATION
20	T182265	BUSHING	1		
21	**AT206735**	**FRAME**	**1**		**(CA)**
22	24H1558	WASHER	6		1-41/64" X 2-3/8" X 0.075"
23	14M7277	NUT	8		M20, (FRONT AXLE TO FRAME)
24	AT203570	PIN	2		STEERING CYLINDER
25	24M7242	WASHER	16		21.400 X 42 X 5 MM, (FRONT AXLE TO FRAME)
26	19M7489	CAP SCREW	4		M16 X 45
27	24H1556	WASHER	2		1-41/64" X 2-3/8" X 0.048"
28	AT206738	PIN	2		(BOOM CYLINDER)
29	19M7779	CAP SCREW	8		M20 X 240, (FRONT AXLE TO FRAME)
30	AT318927	PIN	2		(SUB FOR AT206736) BOOM PIVOT
31	T176064	BUSHING	4		
32	T146246	WASHER	1		
33	19M8029	CAP SCREW	1		M16 X 30

TOOL CARRIER FRAME
BATI PORTE-OUTILS
BASTIDOR DEL PORTAHERRAMIENTAS

T196652 -UN-26NOV03

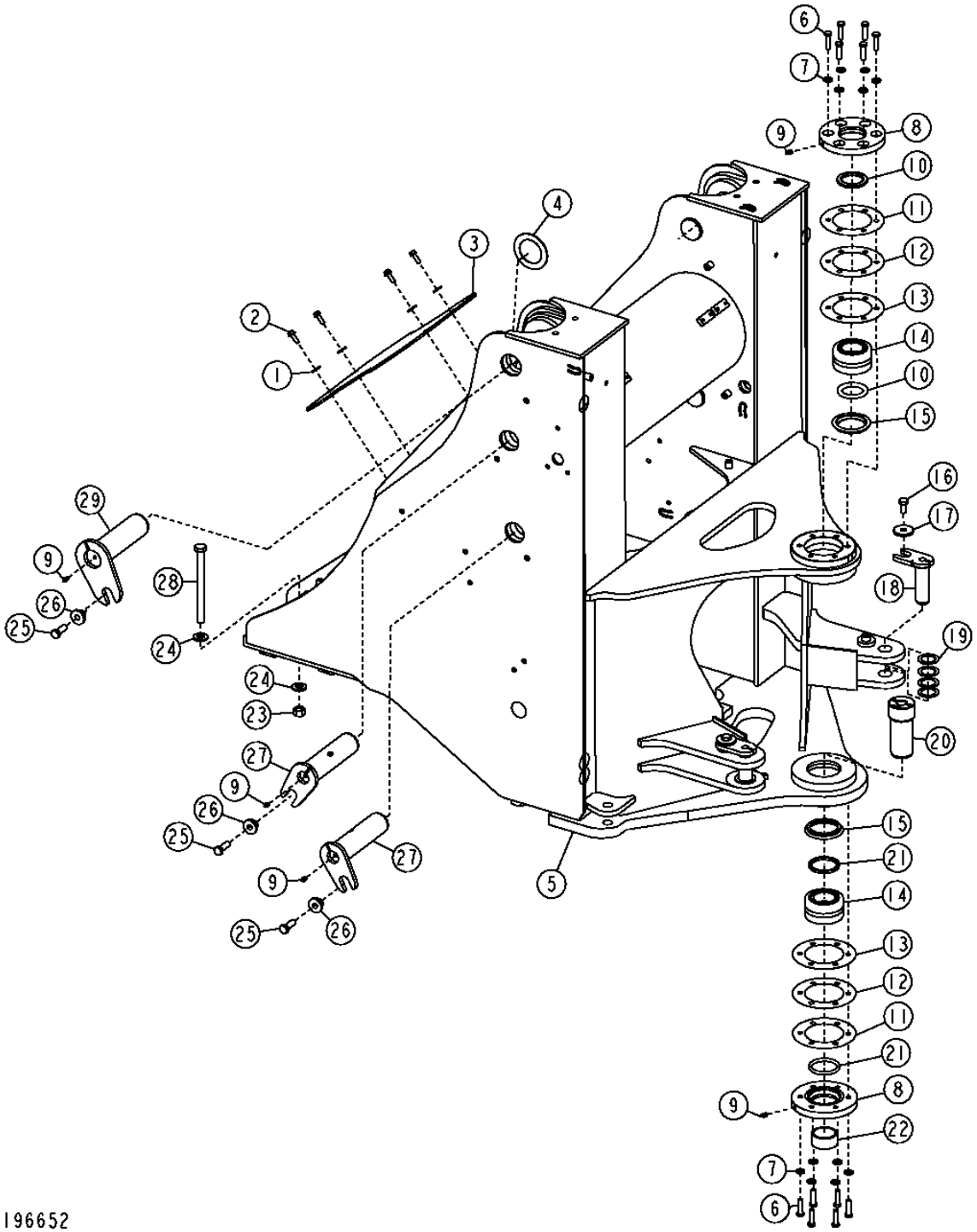

THIS PARTS LISTING IS CONTINUED

TOOL CARRIER FRAME
BATI PORTE-OUTILS
BASTIDOR DEL PORTAHERRAMIENTAS

KEY	PART NO.	PART NAME	QTY.	SERIAL NO.	REMARKS
1	24M7296	WASHER	4		10.500 X 30 X 2.500 MM
2	19M7786	SCREW	4		M10 X 30
3	T157234	COVER	1		
4	24H1240	WASHER	2		3-1/32" X 4-1/2" X 0.105"
5	.....	FRAME	1		(AT209139 NLA)
6	19M7496	CAP SCREW	12		M12 X 45
7	24M7240	WASHER	12		13 X 25 X 3 MM
8	T200888	COVER	2		
9	JD7759	LUBRICATION FITTING	8		
10	T157029	SEAL	2		0.127MM(0.005")
11	T130059	SHIM	2		0.127MM(0.005")
12	T130058	SHIM	2		0.254MM(0.010")
13	T130057	SHIM	4		0.508MM(0.020")
14	AT203483	BEARING	2		
15	T157030	SPACER	2		
16	19M8029	CAP SCREW	2		M16 X 30
17	T146246	WASHER	2		
18	AT203570	PIN	2		(STEERING CYLINDER)
19	24H1558	WASHER	6		1-41/64" X 2-3/8" X 0.075"
	24H1556	WASHER	2		1-41/64" X 2-3/8" X 0.048"
20	T182571	PIN	1		
21	T60752	SEAL	2		
22	T182265	BUSHING	1		
23	14M7277	NUT	8		M20
24	24M7242	WASHER	16		21.400 X 42 X 5 MM
25	19M7489	CAP SCREW	6		M16 X 45
26	T176064	BUSHING	6		
27	AT206738	PIN	4		
28	19M7779	CAP SCREW	8		M20 X 240
29	AT318927	PIN	2		(SUB FOR AT206736)

POWERLLEL™ LINKAGE FRAME
BATI TRINGLERIE POWERLLEL™
BASTIDOR DE VARILLAJE POWERLLEL™

TX1018354 -UN-

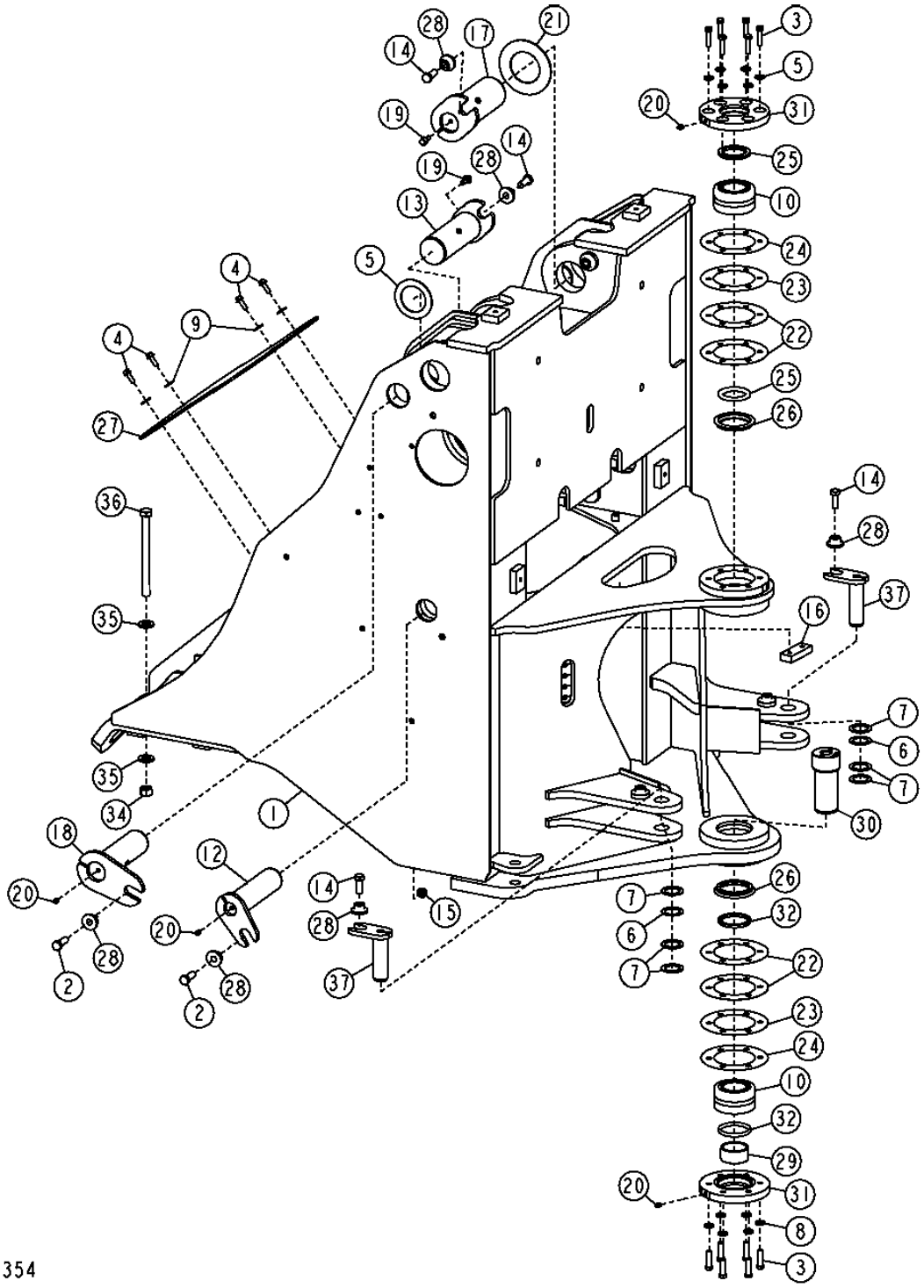

THIS PARTS LISTING IS CONTINUED

POWERLLEL™ LINKAGE FRAME
BATI TRINGLERIE POWERLLEL™
BASTIDOR DE VARILLAJE POWERLLEL™

KEY	PART NO.	PART NAME	QTY.	SERIAL NO.	REMARKS
1	AT304140	FRAME	1		(CA)
2	19M7489	CAP SCREW	4		M16 X 45
3	19M7496	CAP SCREW	12		M12 X 45
4	19M7786	SCREW	4		M10 X 30
5	24H1240	WASHER	2		76.987 X 114.300 X 2.667 MM
6	24H1556	WASHER	2		41.681 X 60.325 X 1.219 MM
7	24H1558	WASHER	6		41.681 X 60.325 X 1.905 MM
8	24M7240	WASHER	12		13 X 25 X 3 MM
9	24M7296	WASHER	4		10.500 X 30 X 2.500 MM
10	AT203483	BEARING	2		
11	AT133204	PIN FASTENER	1		
12	AT206738	PIN	2		
13	AT301717	PIN	1		
14	19M7488	CAP SCREW	5		
15	14M7443	FLANGE NUT	8		
16	T133290	STRAP	1		
17	AT307727	PIN	2		
18	AT318927	PIN FASTENER	2		
19	E53801	ELBOW FITTING	3		
20	JD7759	LUBRICATION FITTING	6		
21	T101480	WASHER	2		
22	T130057	SHIM	4		
23	T130058	SHIM	2		
24	T130059	SHIM	2		
25	T157029	SEAL	2		
26	T157030	SPACER	2		
27	T157234	COVER	1		
28	T176064	BUSHING	9		
29	T182265	BUSHING	1		
30	T182571	PIN	1		
31	T200888	COVER	2		
32	T60752	SEAL	2		
34	14M7277	NUT	1		M20
35	24M7242	WASHER	2		21.400 X 42 X 5 MM
36	19M7779	CAP SCREW	1		M20 X 240
37	AT203570	PIN	1		

LOADER BOOM
FLECHE CHARGEUR
AGUILON DE LA CARGADORA

TX1017214 -UN-10JAN07

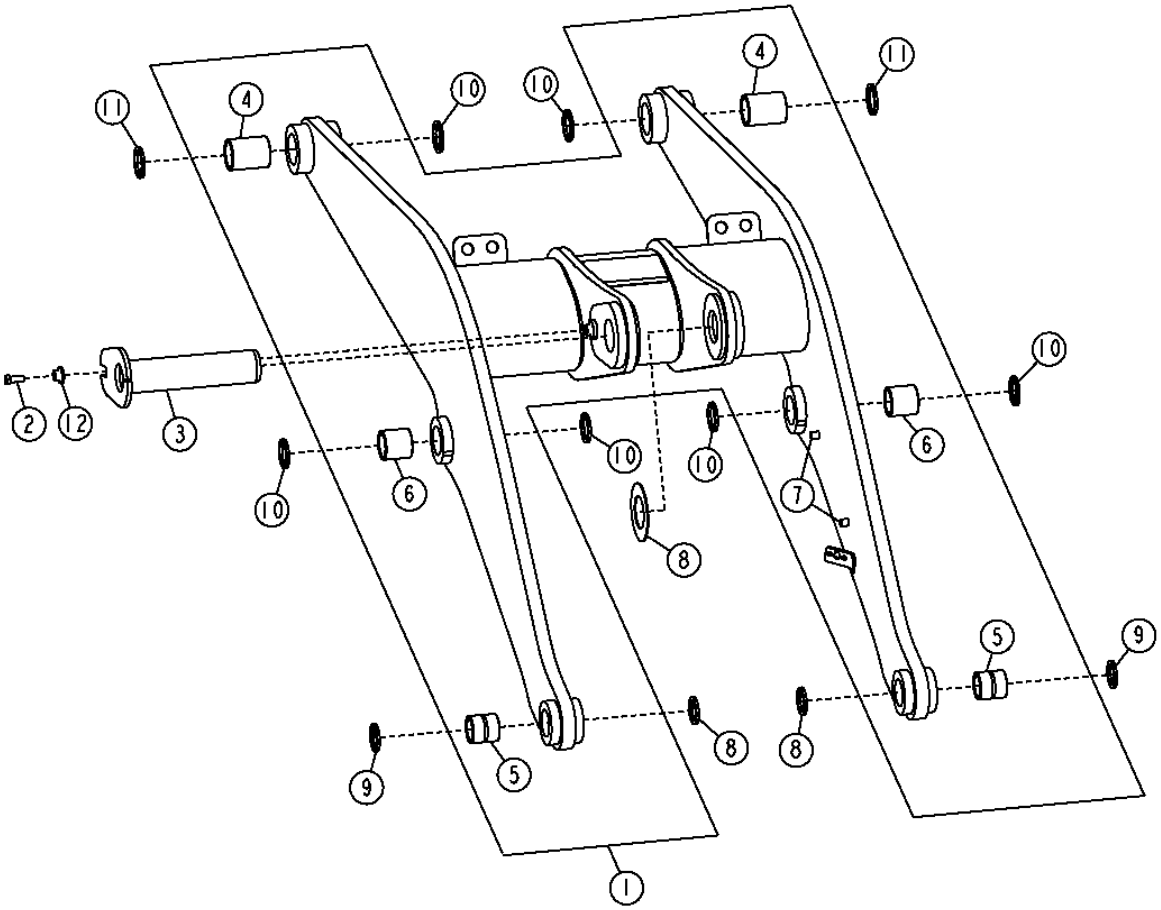

LOADER BOOM
FLECHE CHARGEUR
AGUILON DE LA CARGADORA

KEY	PART NO.	PART NAME	QTY.	SERIAL NO.	REMARKS
1	AT309045	LOADER BOOM	1		(CONVENIENCE ASSY) (INCLUDES (2) T125543, (2) T169284 AND (2) T169286)
	AT309000	**LOADER BOOM**	**1**		**(HIGH LIFT) (CONVIENENCE ASSY) (INCLUDES (2) T125543, (2) T169284 AND (2) T169286)**
2	19M7488	CAP SCREW	1		M16 X 40
3	AT207317	PIN	1		
4	T168121	BUSHING	2		69.780 X 85.130 X 108 MM
5	T168243	BUSHING	2		59.780 X 75.130 X 76 MM
6	T168245	BUSHING	2		64.780 X 80.130 X 76.500 MM
7	T72414	BUSHING	3		
8	T101480	WASHER	1		
9	T102135	SEAL	4		
10	T102136	SEAL	4		
11	T102206	SEAL	4		
12	T176064	BUSHING	1		

TOOL CARRIER BOOM
FLECHE PORTE-OUTILS
AGUILON DEL PORTAHERRAMIENTAS

TP60318 -UN-04APR98

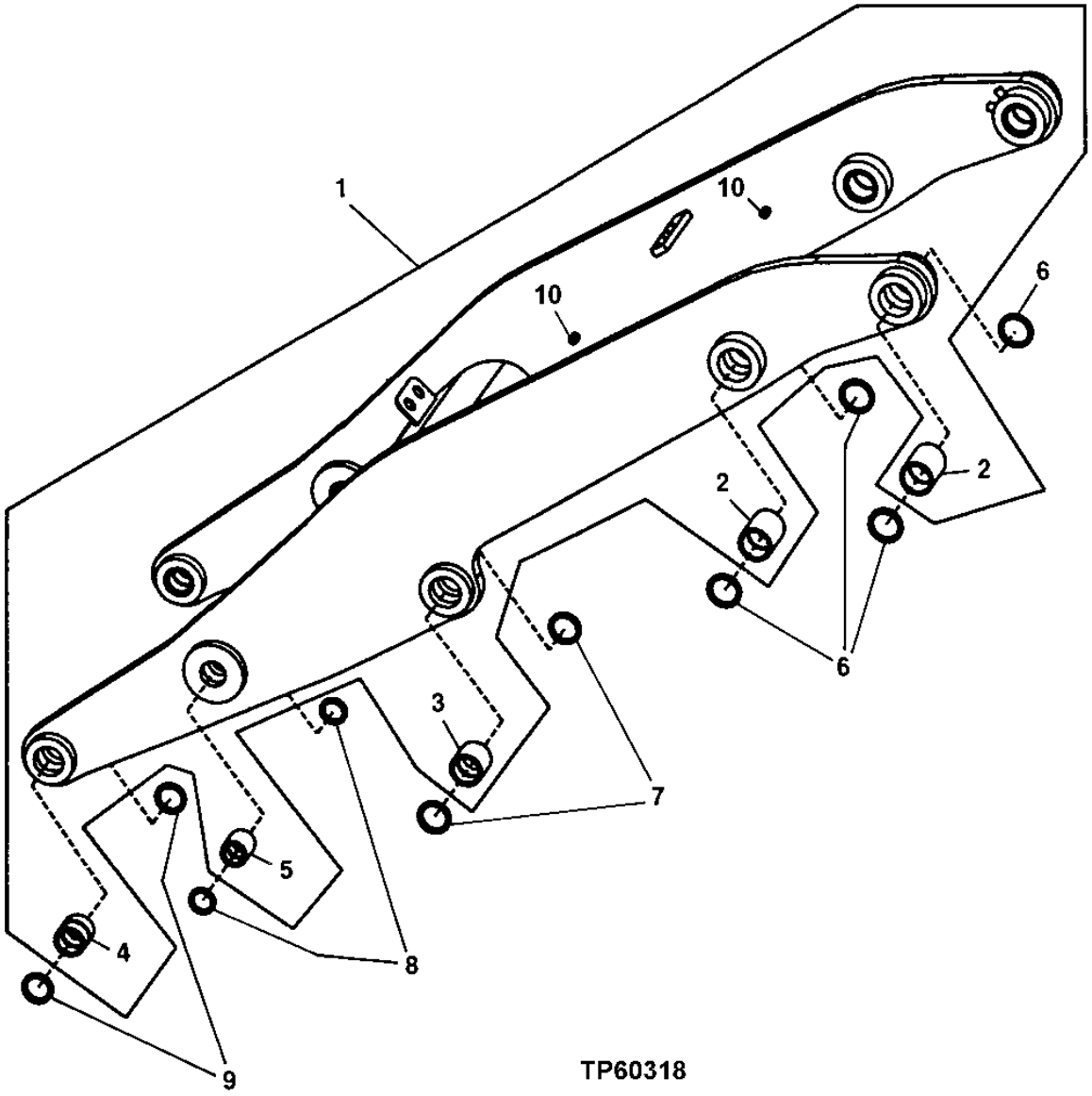

TP60318

TOOL CARRIER BOOM
FLECHE PORTE-OUTILS
AGUILON DEL PORTAHERRAMIENTAS

KEY	*PART NO.*	*PART NAME*	*QTY.*	*SERIAL NO.*	*REMARKS*
1	AT309404	LOADER BOOM	1		(CA)(TOOL CARRIER BOOM) (SUB FOR AT209035)
2	T168121	BUSHING	4		
3	T168245	BUSHING	2		
4	T168243	BUSHING	2		
5	T157248	BUSHING	2		
6	T102206	SEAL	8		
7	T102136	SEAL	4		
8	T102205	SEAL	4		
9	T102135	SEAL	4		
10	T72414	BUSHING	6		

POWERLLEL™ LINKAGE BOOM
FLECHE TRINGLERIE POWERLLEL™
AGUILON DE VARILLAJE POWERLLEL TMÙ

T201789 -UN-22JUL04

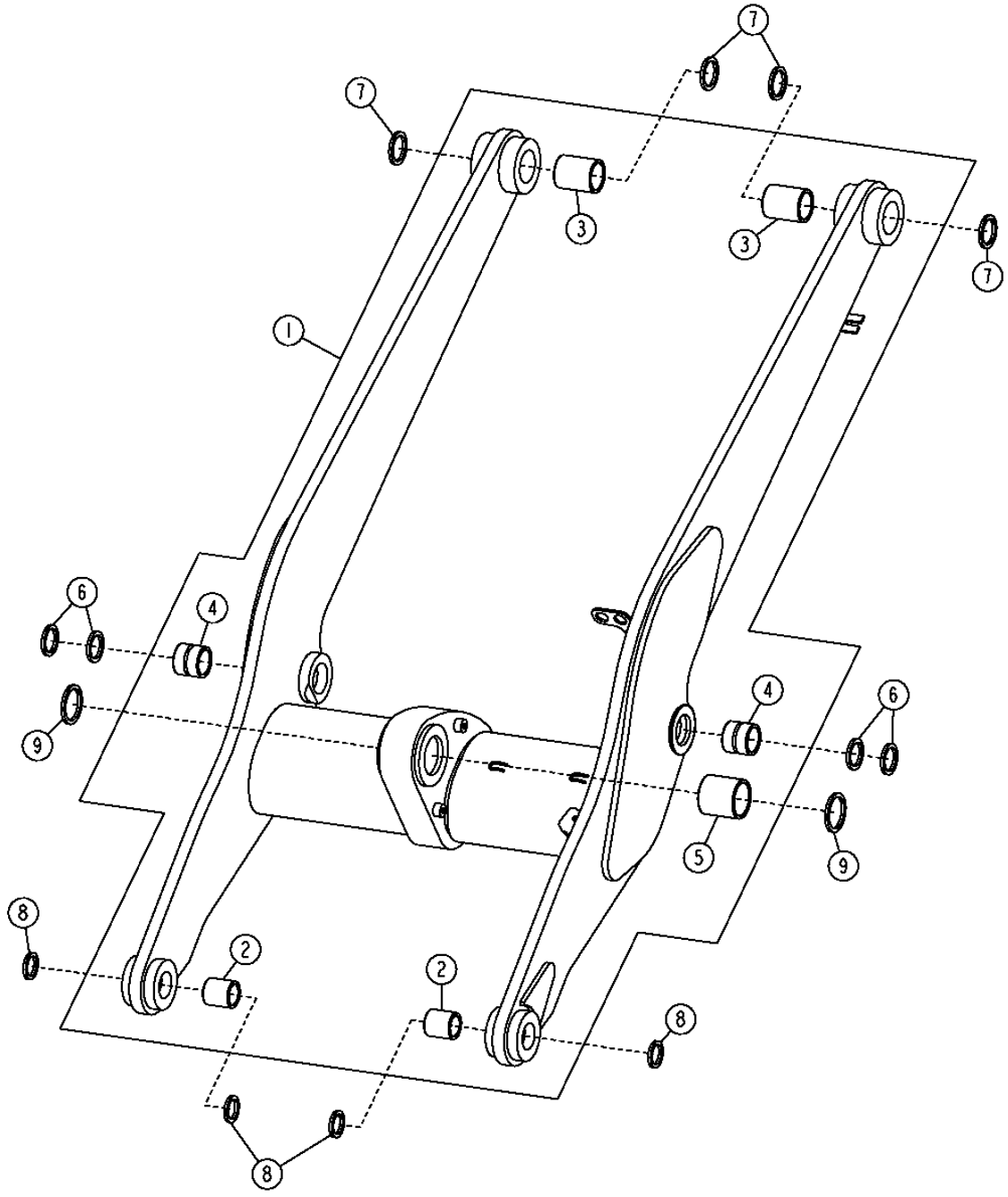

THIS PARTS LISTING IS CONTINUED

POWERLLEL™ LINKAGE BOOM
FLECHE TRINGLERIE POWERLLEL™
AGUILON DE VARILLAJE POWERLLEL™

KEY	PART NO.	PART NAME	QTY.	SERIAL NO.	REMARKS
1	AT301079	LOADER BOOM	1		(CA)
2	T205481	BUSHING	2		
3	T205482	BUSHING	2		
4	T205220	BUSHING	2		
5	T201041	BUSHING	1		
6	T102136	SEAL	4		
7	T102206	SEAL	4		
8	T102135	SEAL	4		
9	T102138	SEAL	2		

LOADER LINKAGE
TRINGLERIE CHARGEUR
VARILLAJE DE LA CARGADORA

TP60511 -UN-24SEP98

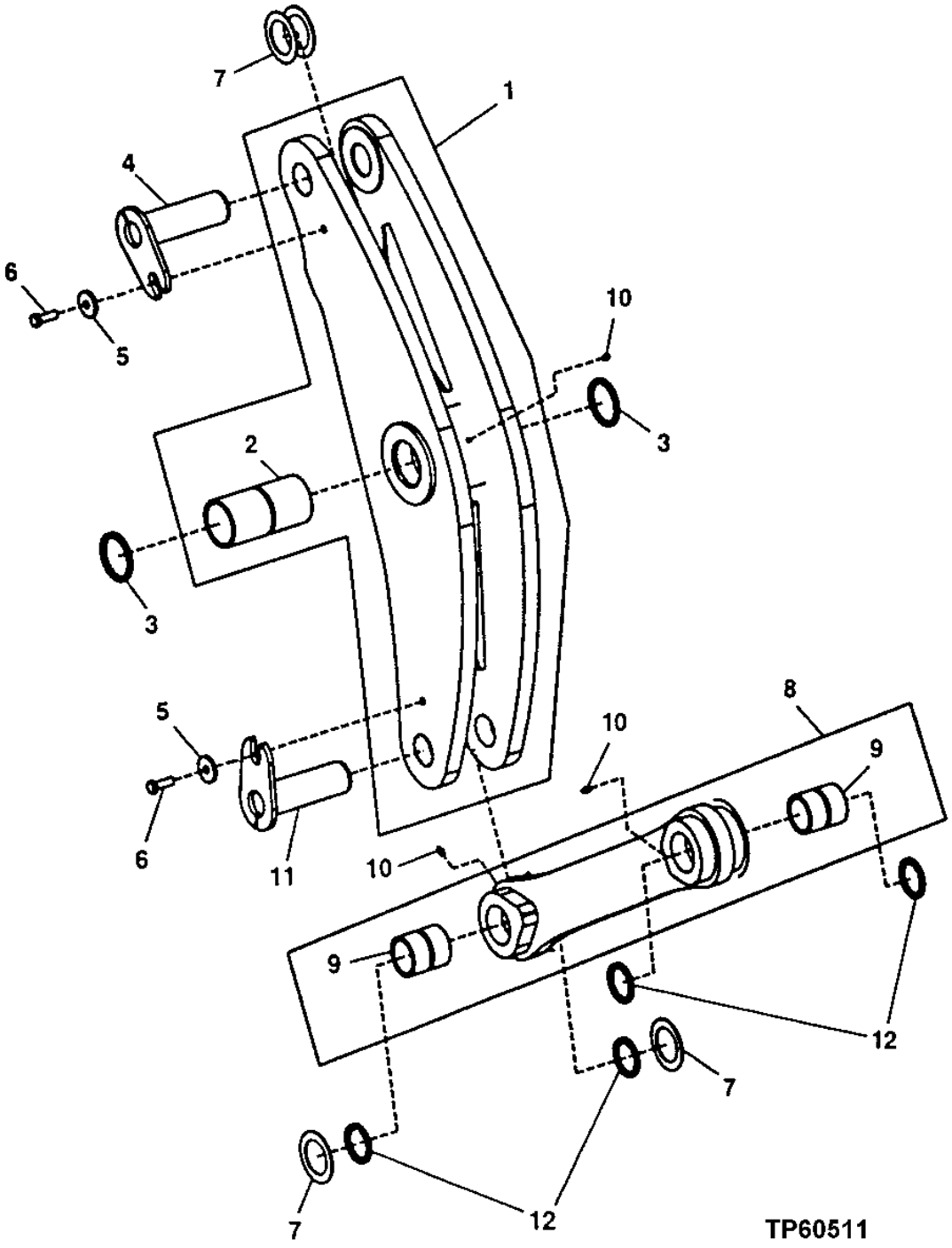

LOADER LINKAGE
TRINGLERIE CHARGEUR
VARILLAJE DE LA CARGADORA

KEY	PART NO.	PART NAME	QTY.	SERIAL NO.	REMARKS
1	AT307536	BELLCRANK	1		
2	T168555	BUSHING	1		
3	T102138	SEAL	2		
4	AT207321	PIN	1		
5	T176064	BUSHING	2		
6	19M7489	CAP SCREW	2		M16 X 45
7	24H1240	WASHER	4		3-1/32" X 4-1/2" X 0.105"
8	AT307535	LINK	1		
	AT311735	LINK	1		(SUB FOR AT307518) (HIGH LIFT) (NOT ILLIUSTRATED)
9	T171793	BUSHING	2		
10	JD7759	LUBRICATION FITTING	3		
11	AT207321	PIN	1		
12	T102206	SEAL	4		

TOOL CARRIER LINKAGE
TRINGLERIE PORTE-OUTILS
VARILLAJE DEL PORTAHERRAMIENTAS

TP60430 -UN-20JUL98

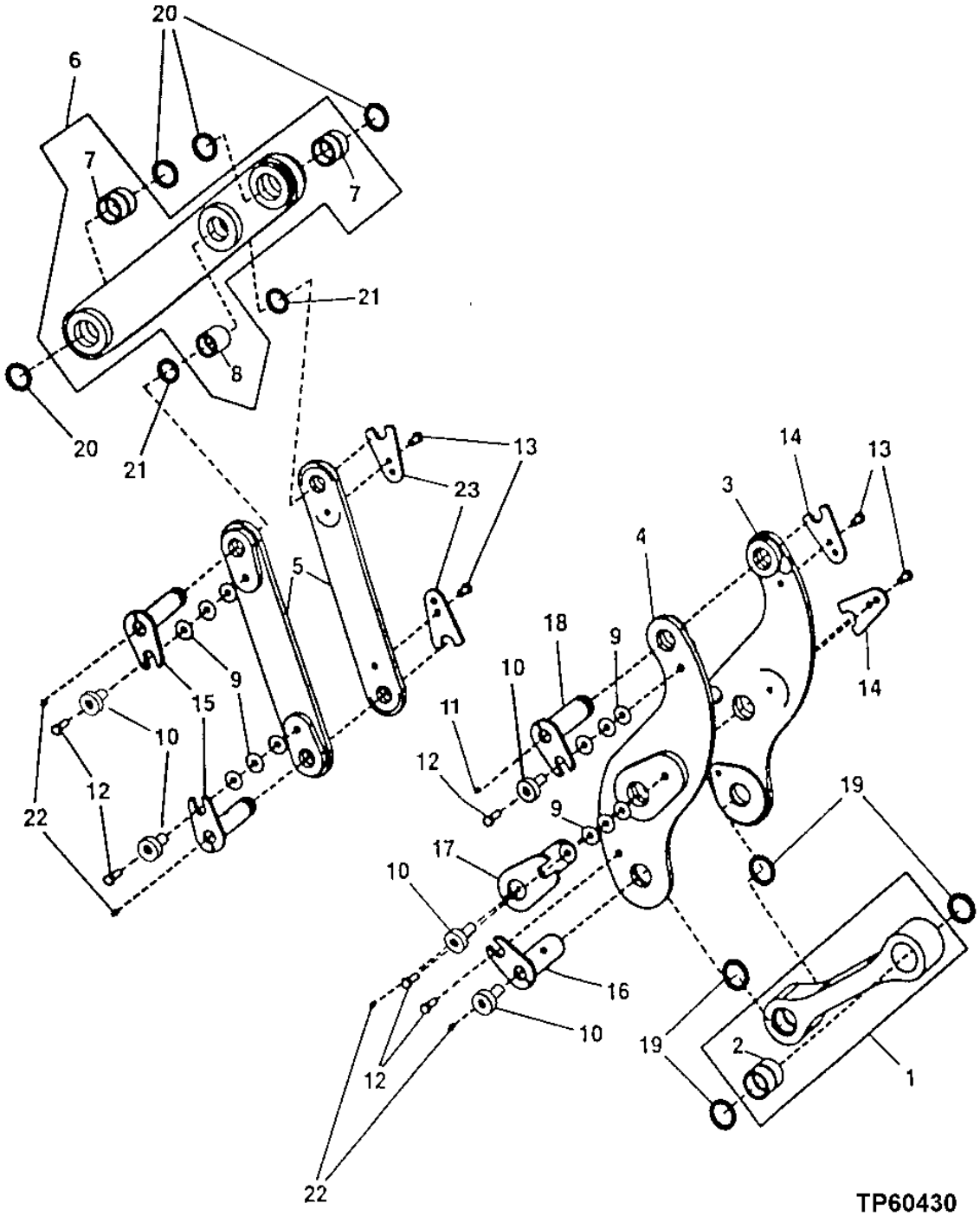

TOOL CARRIER LINKAGE
TRINGLERIE PORTE-OUTILS
VARILLAJE DEL PORTAHERRAMIENTAS

KEY	PART NO.	PART NAME	QTY.	SERIAL NO.	REMARKS
1	AT307523	LINK	2		
2	R85185	BUSHING	4		
3	AT307525	BELLCRANK	2		(LH)
4	AT307524	BELLCRANK	2		(RH)
5	AT307526	LINK	4		
6	AT307527	LINK	2		
7	T157250	BUSHING	4		
8	T157248	BUSHING	2		
9	24H1626	WASHER	26		21/32" X 2" X 0.060"
10	T176064	BUSHING	10		
11	JD7759	LUBRICATION FITTING	2		
12	19M7489	CAP SCREW	10		M16 X 45
13	19M8029	CAP SCREW	8		M16 X 30
14	T119549	RETAINER	4		
15	AT206828	PIN	4		
16	AT207052	PIN	2		
17	AT209044	PIN	2		
18	AT209040	PIN	2		
19	T102136	SEAL	8		
20	T102135	SEAL	8		
21	T102205	SEAL	4		
22	JD7759	LUBRICATION FITTING	8		
23	T119549	RETAINER	4		(SUB FOR T175863)

POWERLLEL™ LINKAGE
TRINGLERIE POWERLLEL™
VARILLAJE POWERLLEL™

TX1017217 -UN-10JAN07

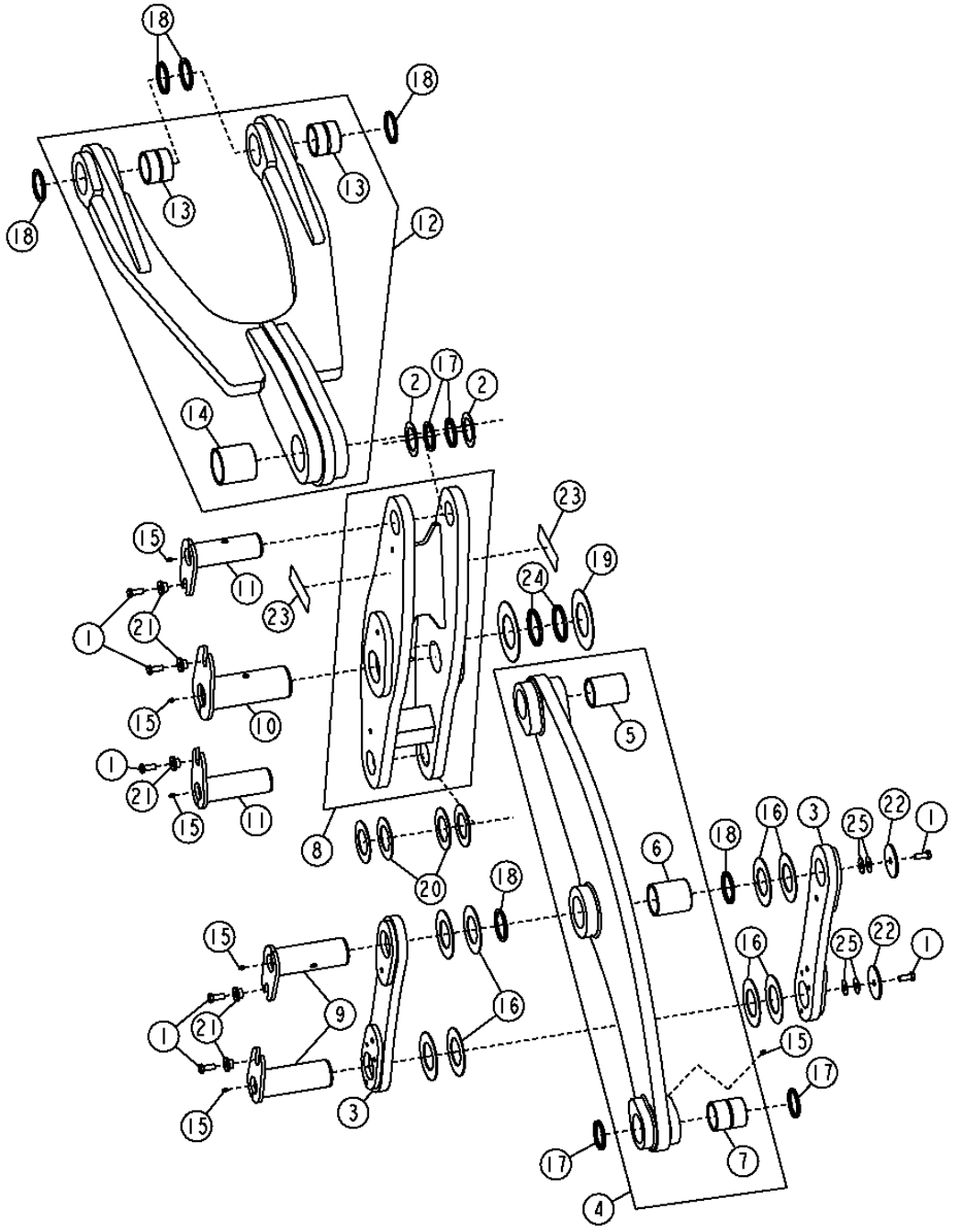

TX1017217

POWERLLEL™ LINKAGE
TRINGLERIE POWERLLEL™
VARILLAJE POWERLLEL™

KEY	PART NO.	PART NAME	QTY.	SERIAL NO.	REMARKS
1	19M7488	CAP SCREW	7		M16 X 40
2	24H1240	WASHER	2		3-1/32" X 4-1/2" X 0.105"
3	AT301029	LINK	2		
4	AT301035	LINK	1		
5	T200780	BUSHING	1		
6	T201041	BUSHING	1		
7	T205552	BUSHING	1		
8	**AT301081**	**BELLCRANK**	**1**		**(CA)**
9	AT301472	PIN FASTENER	2		
10	AT301477	PIN FASTENER	1		
11	AT301548	PIN FASTENER	2		
12	AT304613	LINK	1		
13	T200771	BUSHING	2		
14	T211840	BUSHING	1		
15	JD7759	LUBRICATION FITTING	6		
16	T101480	WASHER	8		3.602" X 6.299" X 0.118"
17	T102137	SEAL	4		
18	T102138	SEAL	6		
19	T102172	WASHER	2		
20	T171734	WASHER	4		3.327" X 5.512" X 0.128"
21	T176064	BUSHING	5		
22	T206578	PLATE	2		
23	T211390	SAFETY SIGN	2		
24	T211826	SEAL	2		
25	24H1626	WASHER	4		21/32" X 2" X 0.060"

BOOM CYLINDER LOCK
VERROUILLAGE DE VERIN DE FLECHE
BLOQUEO DEL CILINDRO DEL AGUILON

T192743 -UN-10JUL03

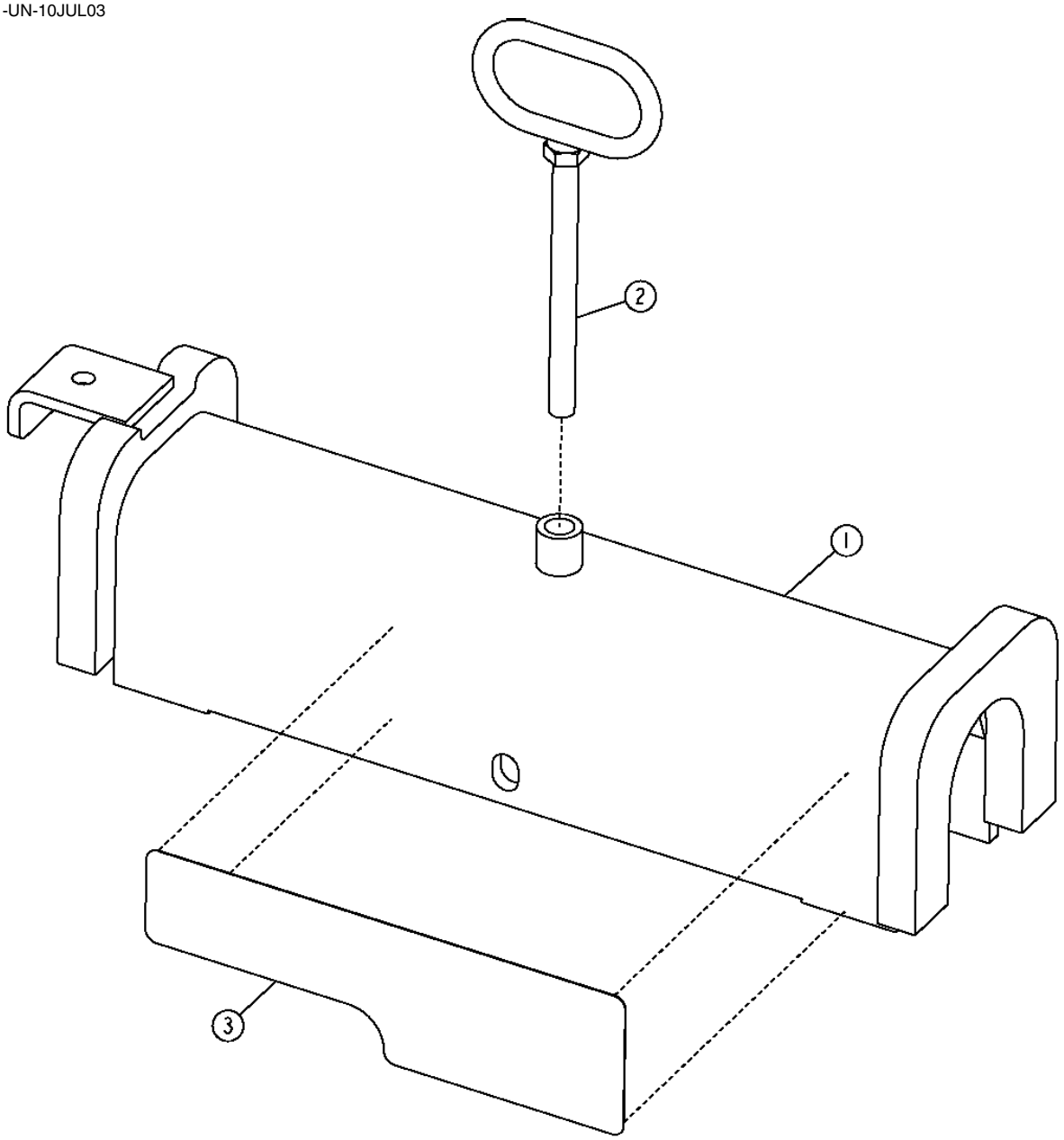

T192743

BOOM CYLINDER LOCK
VERROUILLAGE DE VERIN DE FLECHE
BLOQUEO DEL CILINDRO DEL AGUILON

KEY	PART NO.	PART NAME	QTY.	SERIAL NO.	REMARKS
1	AT225826	LOCK	1		
2	AT207287	HANDLE	1		
3	T182191	LABEL	2		

TWO SPOOL LOADER CONTROL VALVE (S.N. -594432)
DISTRIBUTEUR CHARGEUR DEUX TIROIRS (S.N. -594432)
VALVULA DE CONTROL DE LA CARGADORA DE DOS CARRETES (S.N. -594432)

T194439 -UN-02SEP03

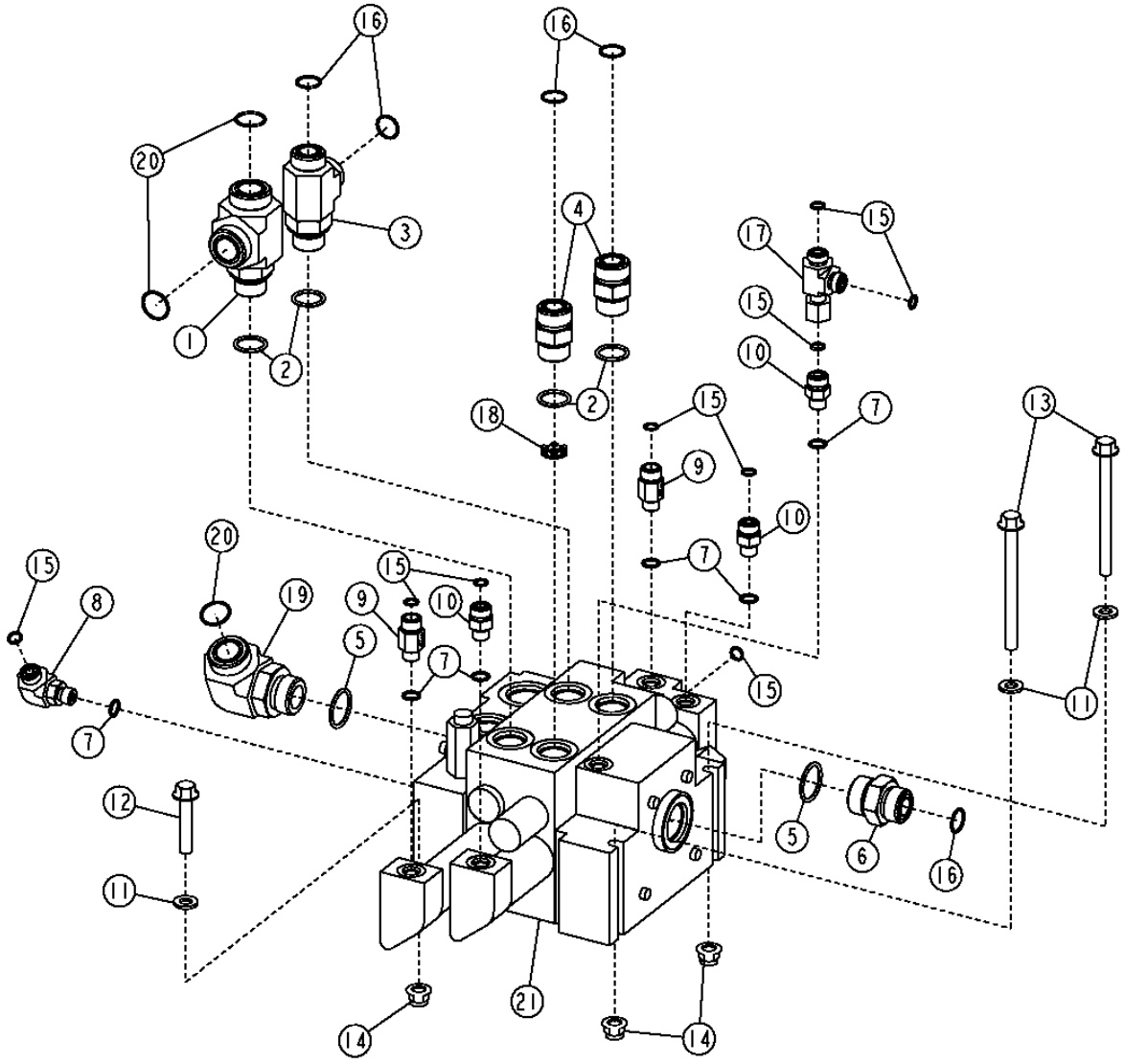

TWO SPOOL LOADER CONTROL VALVE (S.N. -594432)
DISTRIBUTEUR CHARGEUR DEUX TIROIRS (S.N. -594432)
VALVULA DE CONTROL DE LA CARGADORA DE DOS CARRETES (S.N. -594432)

KEY	PART NO.	PART NAME	QTY.	SERIAL NO.	REMARKS
1	38H1572	TEE FITTING	1		
2	U12547	O-RING	4		
3	38H1026	TEE FITTING	1		
4	38H1163	ADAPTER FITTING	2		
5	R29936	O-RING	2		
6	38H1194	ADAPTER FITTING	1		
7	R26448	O-RING	6		
8	38H1004	ELBOW FITTING	1		
9	AT220096	CHECK VALVE	2		
10	38H1160	ADAPTER FITTING	3		
11	24M7239	WASHER	3		10.700 X 21 X 2.500 MM
12	19M8528	SCREW	1		M10 X 55
13	19M7944	SCREW	2		M10 X 120
14	14M7400	LOCK NUT	3		M10
15	T77613	O-RING	9		
16	T77858	O-RING	5		
17	38H1030	TEE FITTING	1		
18	T176944	ORIFICE	1		
19	38H1037	ELBOW FITTING	1		
20	T76938	O-RING	3		
21	AT225784	SPOOL VALVE	1		

TWO SPOOL LOADER CONTROL VALVE (S.N. 594433-)
DISTRIBUTEUR CHARGEUR DEUX TIROIRS (S.N. 594433-)
VALVULA DE CONTROL DE LA CARGADORA DE DOS CARRETES (S.N. 594433-)

T201818 -UN-09AUG04

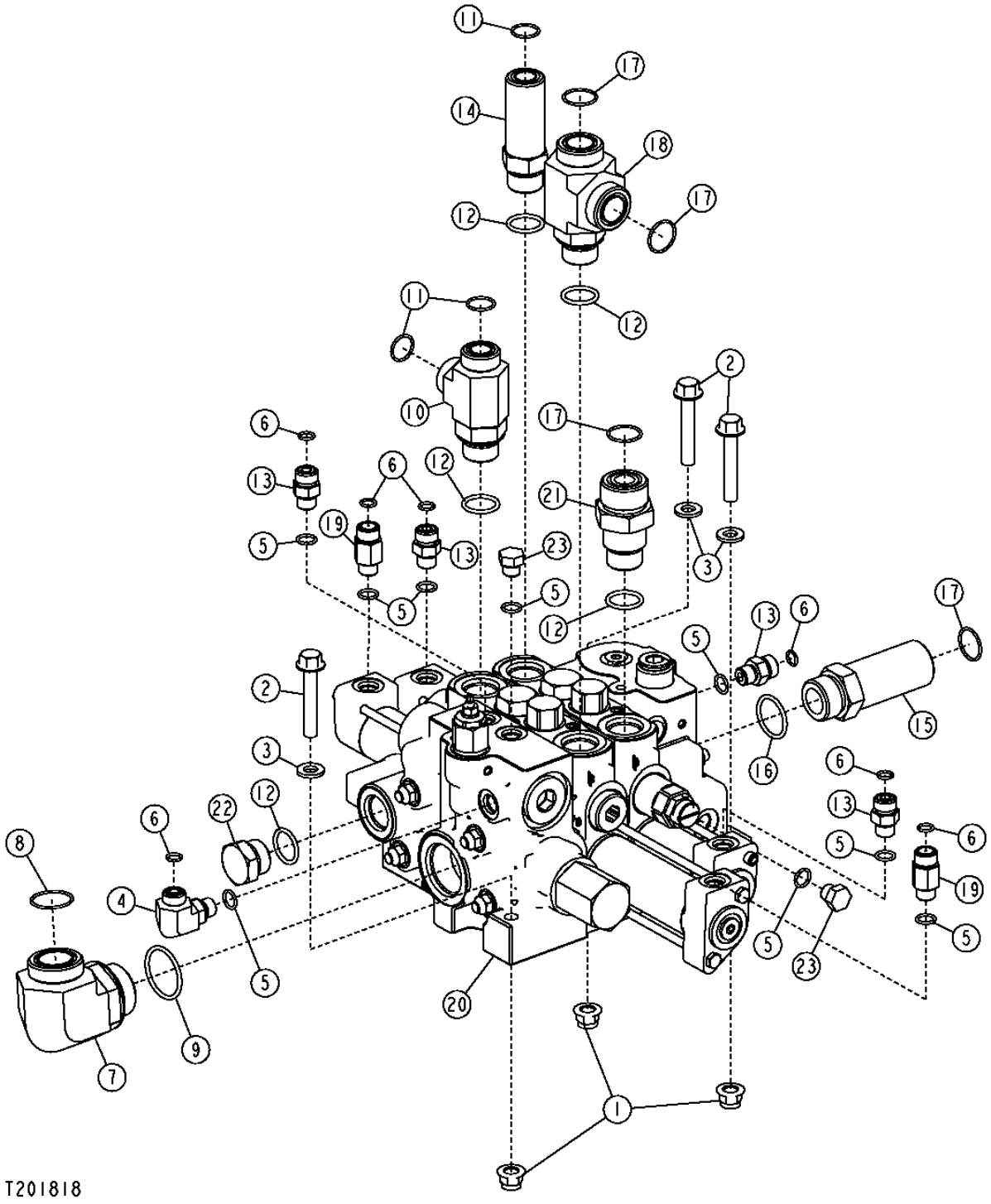

TWO SPOOL LOADER CONTROL VALVE (S.N. 594433-)
DISTRIBUTEUR CHARGEUR DEUX TIROIRS (S.N. 594433-)
VALVULA DE CONTROL DE LA CARGADORA DE DOS CARRETES (S.N. 594433-)

KEY	PART NO.	PART NAME	QTY.	SERIAL NO.	REMARKS
1	14M7400	LOCK NUT	3		M10
2	19M7807	SCREW	3		M10 X 60
3	24M7239	WASHER	3		10.700 X 21 X 2.500 MM
4	38H1004	ELBOW FITTING	1		
5	R26448	O-RING	9		0.468" X 5/64"
6	T77613	O-RING	7		0.364" X 0.070"
7	38H1008	ELBOW FITTING	1		
8	T78612	O-RING	1		1.176" X 0.070"
9	U13639	O-RING	1		1.475" X 0.118"
10	38H1026	TEE FITTING	1		
11	T77858	O-RING	3		0.739" X 0.070"
12	U12547	O-RING	5		
13	38H1160	ADAPTER FITTING	4		
14	38H1215	ADAPTER FITTING	1		
15	38H1216	ADAPTER FITTING	1		
16	R29936	O-RING	1		1.171" X 0.116"
17	T76938	O-RING	4		0.926" X 0.070"
18	38H1572	TEE FITTING	1		
19	AT220096	CHECK VALVE	2		
20	AT308386	HYD ACTUATED CONTROL VALVE	1		
21	T210479	FITTING	1		
22	R27175	DRAIN PLUG	1		
23	R27218	FITTING PLUG	2		
..	AT314048	ROD	1		(TWO SPOOL STUD ASSEMBLY) (NOT ILLUSTRATED)

TWO SPOOL TOOL CARRIER CONTROL VALVE
DISTRIBUTEUR PORTE-OUTILS DEUX TIROIRS
VALVULA DE CONTROL DEL PORTAHERRAMIENTAS DE DOS CARRETES

T194440 -UN-02SEP03

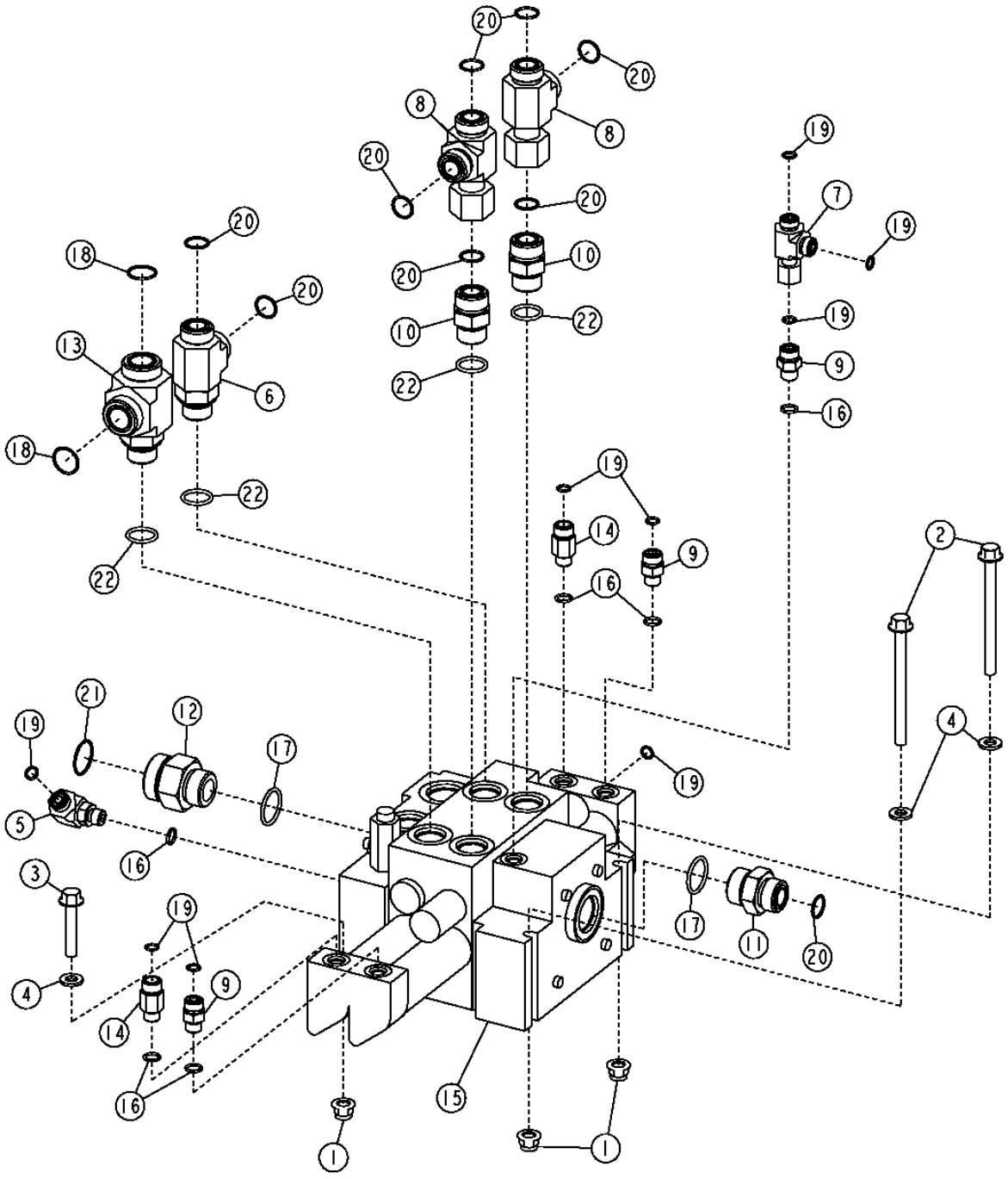

TI94440

TWO SPOOL TOOL CARRIER CONTROL VALVE
DISTRIBUTEUR PORTE-OUTILS DEUX TIROIRS
VALVULA DE CONTROL DEL PORTAHERRAMIENTAS DE DOS CARRETES

KEY	*PART NO.*	*PART NAME*	*QTY.*	*SERIAL NO.*	*REMARKS*
1	14M7400	LOCK NUT	3		M10
2	19M7944	SCREW	2		M10 X 120
3	19M8528	SCREW	1		M10 X 55
4	24M7239	WASHER	3		10.700 X 21 X 2.500 MM
5	38H1004	ELBOW FITTING	1		
6	38H1026	TEE FITTING	1		
7	38H1030	TEE FITTING	1		
8	38H1033	TEE FITTING	2		
9	38H1160	ADAPTER FITTING	3		
10	38H1163	ADAPTER FITTING	2		
11	38H1194	ADAPTER FITTING	1		
12	38H1196	ADAPTER FITTING	1		
13	38H1572	TEE FITTING	1		
14	AT220096	CHECK VALVE	2		
15	AT225787	SPOOL VALVE	1		
16	R26448	O-RING	6		
17	R29936	O-RING	2		
18	T76938	O-RING	2		
19	T77613	O-RING	9		
20	T77858	O-RING	9		
21	T78612	O-RING	1		
22	U12547	O-RING	4		

THREE SPOOL LOADER CONTROL VALVE (S.N. -594432)
DISTRIBUTEUR CHARGEUR TROIS TIROIRS (S.N. -594432)
VALVULA DE CONTROL DE LA CARGADORA DE TRES CARRETES (S.N. -594432)

T191335 -UN-24JUN03

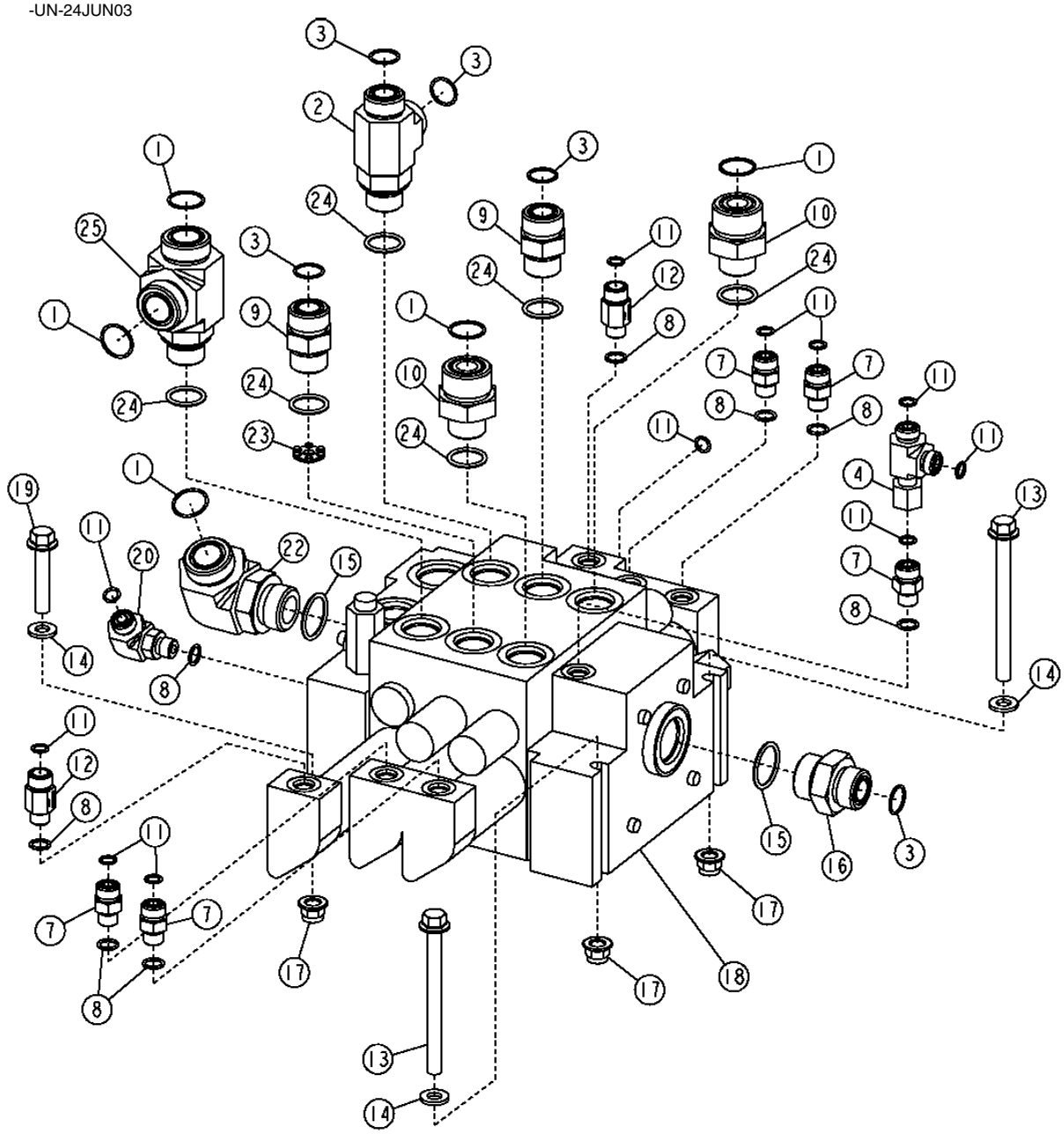

T191335

THREE SPOOL LOADER CONTROL VALVE (S.N. -594432)
DISTRIBUTEUR CHARGEUR TROIS TIROIRS (S.N. -594432)
VALVULA DE CONTROL DE LA CARGADORA DE TRES CARRETES (S.N. -594432)

KEY	PART NO.	PART NAME	QTY.	SERIAL NO.	REMARKS
1	T76938	O-RING	5		
2	38H1026	TEE FITTING	1		
3	T77858	O-RING	5		
4	38H1030	TEE FITTING	1		
7	38H1160	ADAPTER FITTING	5		
8	R26448	O-RING	8		
9	38H1163	ADAPTER FITTING	2		
10	38H1179	ADAPTER FITTING	2		
11	T77613	O-RING	11		
12	AT220096	CHECK VALVE	2		
13	19M7944	SCREW	2		M10 X 120
14	24M7239	WASHER	3		10.700 X 21 X 2.500 MM
15	R29936	O-RING	2		
16	38H1194	ADAPTER FITTING	1		
17	14M7400	LOCK NUT	3		M10
18	AT225785	SPOOL VALVE	1		
19	19M8528	SCREW	1		M10 X 55
20	38H1004	ELBOW FITTING	1		
22	38H1037	ELBOW FITTING	1		
23	T176944	ORIFICE	1		
24	U12547	O-RING	6		
25	38H1572	TEE FITTING	1		

THREE SPOOL LOADER CONTROL VALVE (S.N. 594433-)
DISTRIBUTEUR CHARGEUR TROIS TIROIRS (S.N. 594433-)
VALVULA DE CONTROL DE LA CARGADORA DE TRES CARRETES (S.N. 594433-)

T201862 -UN-11AUG04

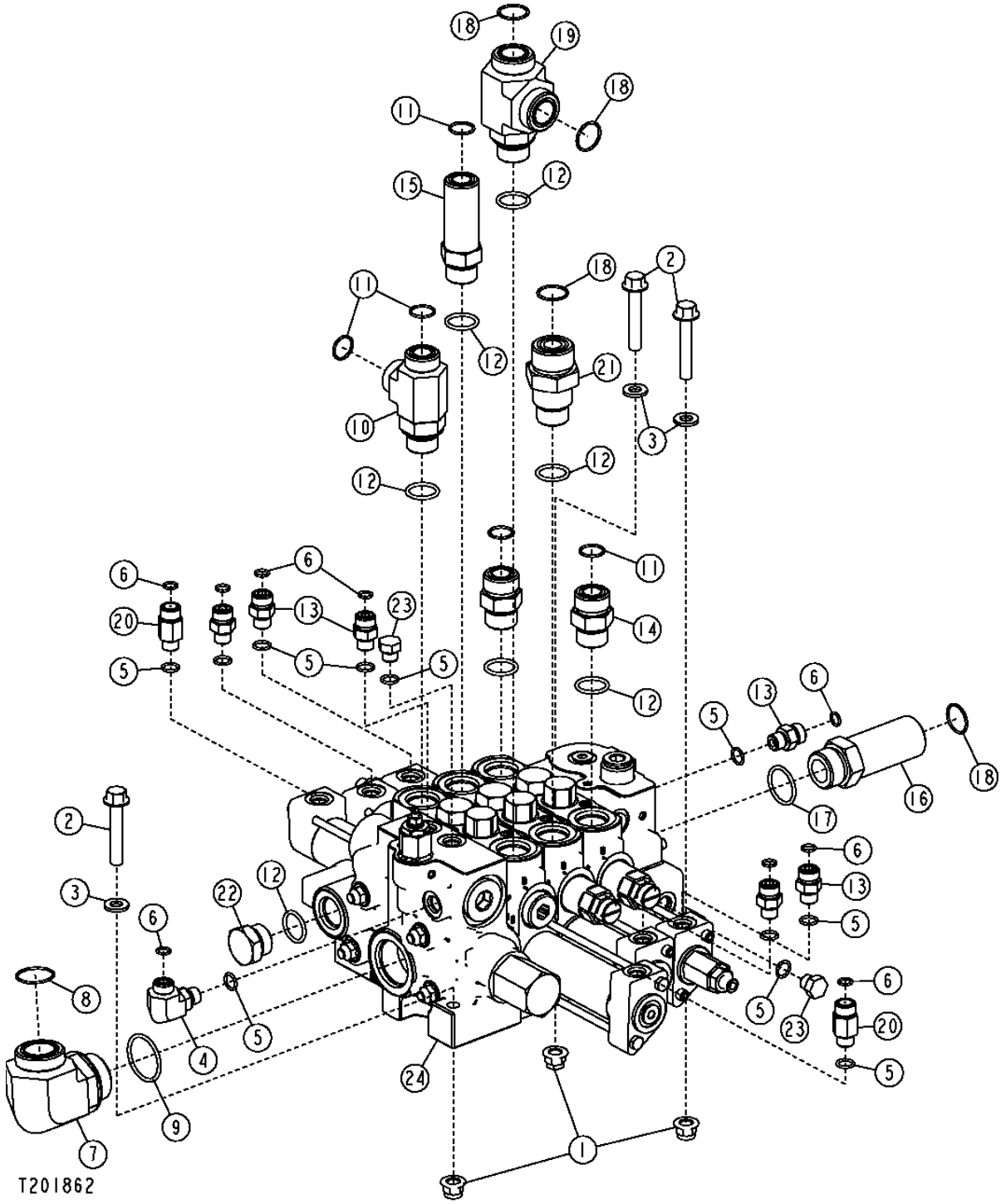

THREE SPOOL LOADER CONTROL VALVE (S.N. 594433-)
DISTRIBUTEUR CHARGEUR TROIS TIROIRS (S.N. 594433-)
VALVULA DE CONTROL DE LA CARGADORA DE TRES CARRETES (S.N. 594433-)

KEY	PART NO.	PART NAME	QTY.	SERIAL NO.	REMARKS
1	14M7400	LOCK NUT	3		M10
2	19M7807	SCREW	3		M10 X 60
3	24M7239	WASHER	3		10.700 X 21 X 2.500 MM
4	38H1004	ELBOW FITTING	1		
5	R26448	O-RING	11		
6	T77613	O-RING	9		
7	38H1008	ELBOW FITTING	1		
8	T78612	O-RING	1		
9	U13639	O-RING	1		
10	38H1026	TEE FITTING	1		
11	T77858	O-RING	5		
12	U12547	O-RING	7		
13	38H1160	ADAPTER FITTING	6		
14	38H1163	ADAPTER FITTING	2		
15	38H1215	ADAPTER FITTING	1		
16	38H1216	ADAPTER FITTING	1		
17	R29936	O-RING	1		
18	T76938	O-RING	4		
19	38H1572	TEE FITTING	1		
20	AT220096	CHECK VALVE	2		
21	T210479	FITTING	1		
22	R27175	DRAIN PLUG	1		
23	R27218	FITTING PLUG	2		
24	AT308388	HYD ACTUATED CONTROL VALVE	1		
..	AT105438	ROD	1		(THREE SPOOL STUD ASSEMBLY) (NOT ILLUSTRATED)

THREE SPOOL TOOL CARRIER CONTROL VALVE
DISTRIBUTEUR PORTE-OUTILS TROIS TIROIRS
VALVULA DE CONTROL DEL PORTAHERRAMIENTAS DE TRES CARRETES

T194453 -UN-03SEP03

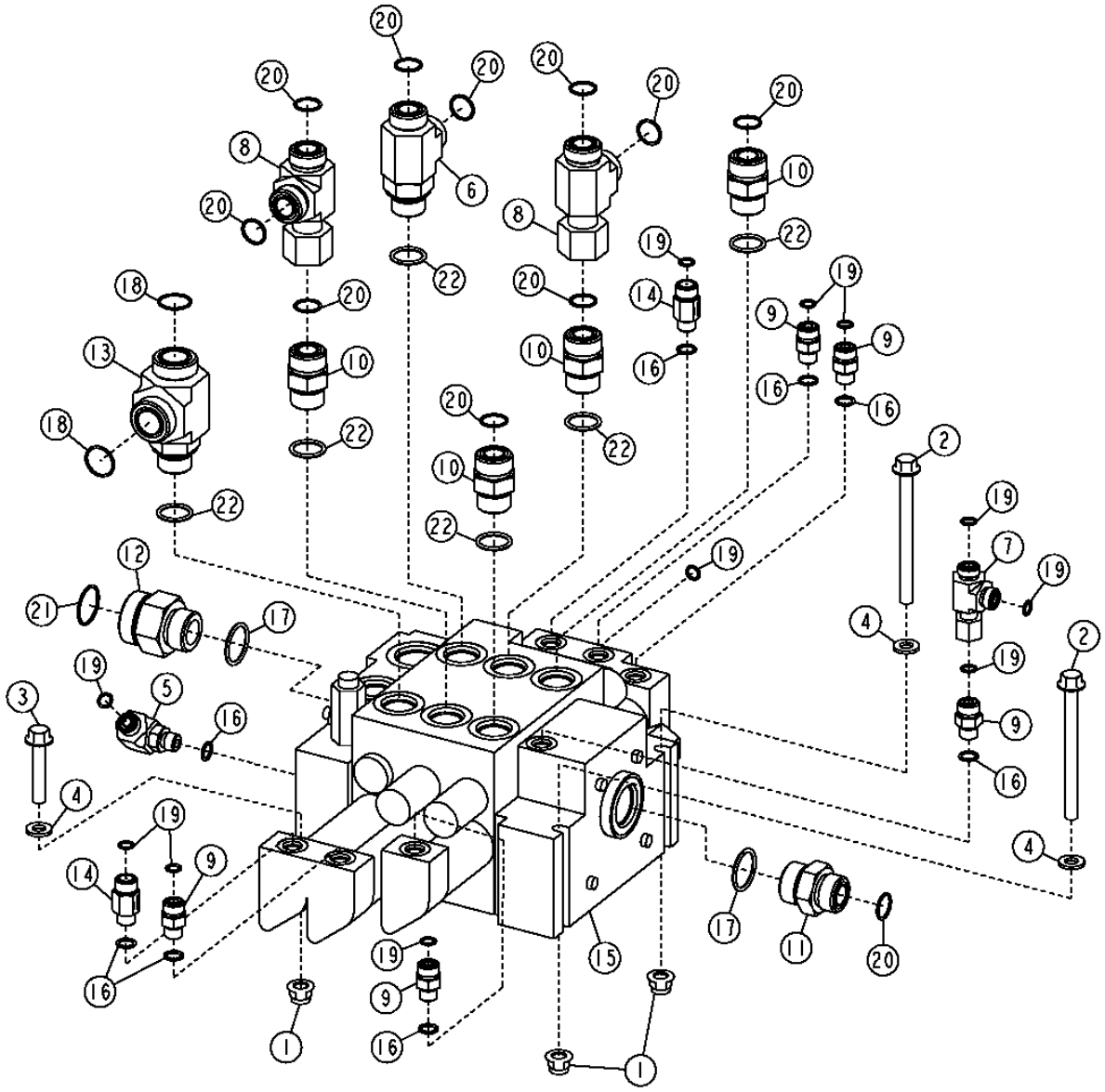

T194453

THREE SPOOL TOOL CARRIER CONTROL VALVE
DISTRIBUTEUR PORTE-OUTILS TROIS TIROIRS
VALVULA DE CONTROL DEL PORTAHERRAMIENTAS DE TRES CARRETES

KEY	PART NO.	PART NAME	QTY.	SERIAL NO.	REMARKS
1	14M7400	LOCK NUT	3		M10
2	19M7944	SCREW	2		M10 X 120
3	19M8528	SCREW	1		M10 X 55
4	24M7239	WASHER	3		10.700 X 21 X 2.500 MM
5	38H1004	ELBOW FITTING	1		
6	38H1026	TEE FITTING	1		
7	38H1030	TEE FITTING	1		
8	38H1033	TEE FITTING	2		
9	38H1160	ADAPTER FITTING	5		
10	38H1163	ADAPTER FITTING	4		
11	38H1194	ADAPTER FITTING	1		
12	38H1196	ADAPTER FITTING	1		
13	38H1572	TEE FITTING	1		
14	AT220096	CHECK VALVE	2		
15	AT225788	HYD ACTUATED CONTROL VALVE	1		
16	R26448	O-RING	8		
17	R29936	O-RING	2		
18	T76938	O-RING	2		
19	T77613	O-RING	11		
20	T77858	O-RING	11		
21	T78612	O-RING	1		
22	U12547	O-RING	6		

FOUR SPOOL LOADER CONTROL VALVE (S.N. -594432)
DISTRIBUTEUR CHARGEUR QUATRE TIROIRS (S.N. -594432)
VALVULA DE CONTROL DE LA CARGADORA DE CUATRO CARRETES (S.N. -594432)

T194464 -UN-02SEP03

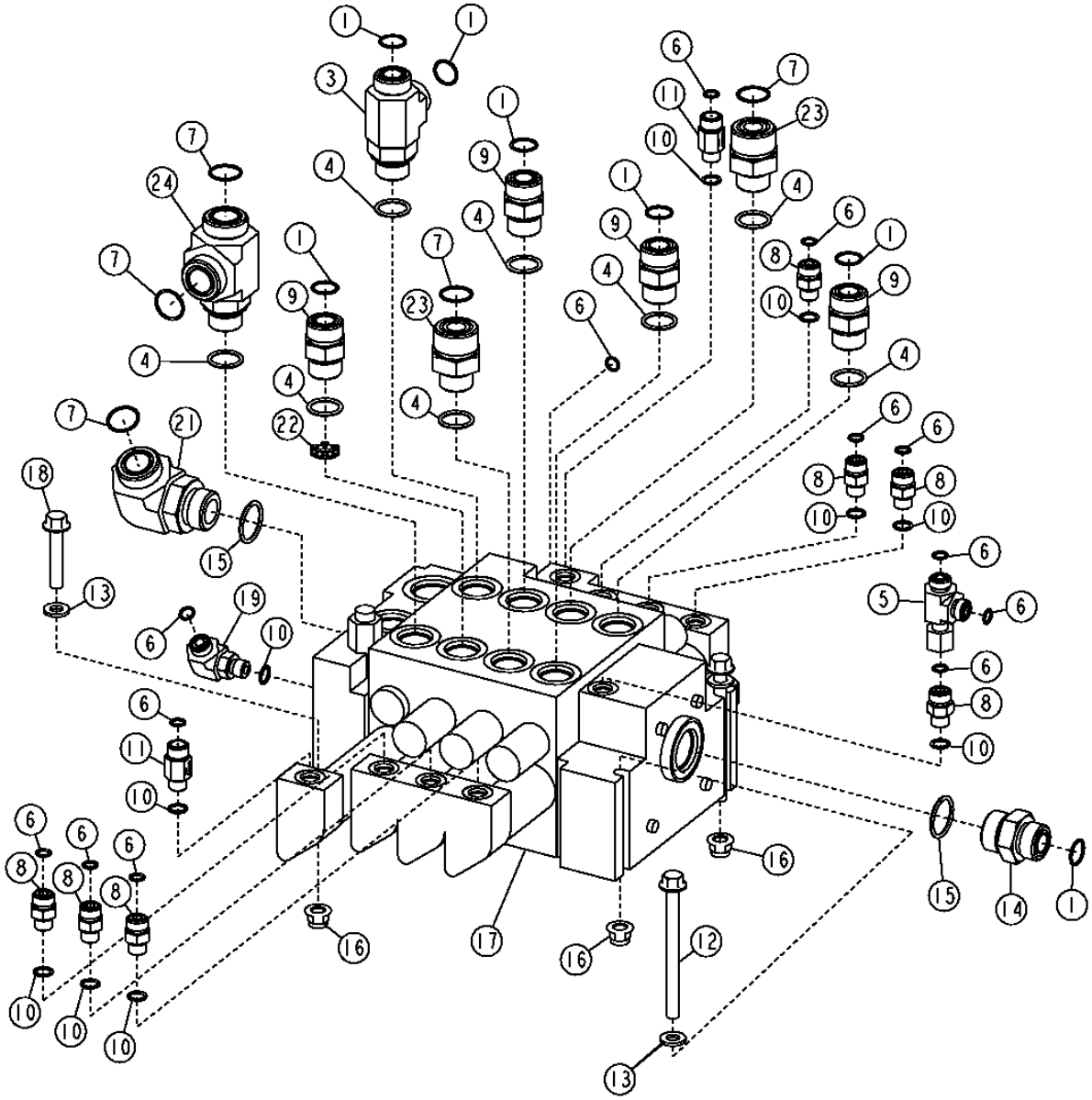

THIS PARTS LISTING IS CONTINUED

FOUR SPOOL LOADER CONTROL VALVE (S.N. -594432)
DISTRIBUTEUR CHARGEUR QUATRE TIROIRS (S.N. -594432)
VALVULA DE CONTROL DE LA CARGADORA DE CUATRO CARRETES (S.N. -594432)

KEY	PART NO.	PART NAME	QTY.	SERIAL NO.	REMARKS
1	T77858	O-RING	7		
3	38H1026	TEE FITTING	1		
4	U12547	O-RING	8		
5	38H1030	TEE FITTING	1		
6	T77613	O-RING	13		
7	T76938	O-RING	5		
8	38H1160	ADAPTER FITTING	7		
9	38H1163	ADAPTER FITTING	4		
10	R26448	O-RING	10		
11	AT220096	CHECK VALVE	2		
12	19M7944	SCREW	2		M10 X 120
13	24M7239	WASHER	3		10.700 X 21 X 2.500 MM
14	38H1194	ADAPTER FITTING	1		
15	R29936	O-RING	2		
16	14M7400	LOCK NUT	3		M10
17	AT225786	SPOOL VALVE	1		
18	19M8528	SCREW	1		M10 X 55
19	38H1004	ELBOW FITTING	1		
21	38H1037	ELBOW FITTING	1		
22	T176944	ORIFICE	1		
23	38H1179	ADAPTER FITTING	2		
24	38H1572	TEE FITTING	1		

FOUR SPOOL LOADER CONTROL VALVE (S.N. 594433-)
DISTRIBUTEUR CHARGEUR QUATRE TIROIRS (S.N. 594433-)
VALVULA DE CONTROL DE LA CARGADORA DE CUATRO CARRETES (S.N. 594433-)

T201863 -UN-09AUG04

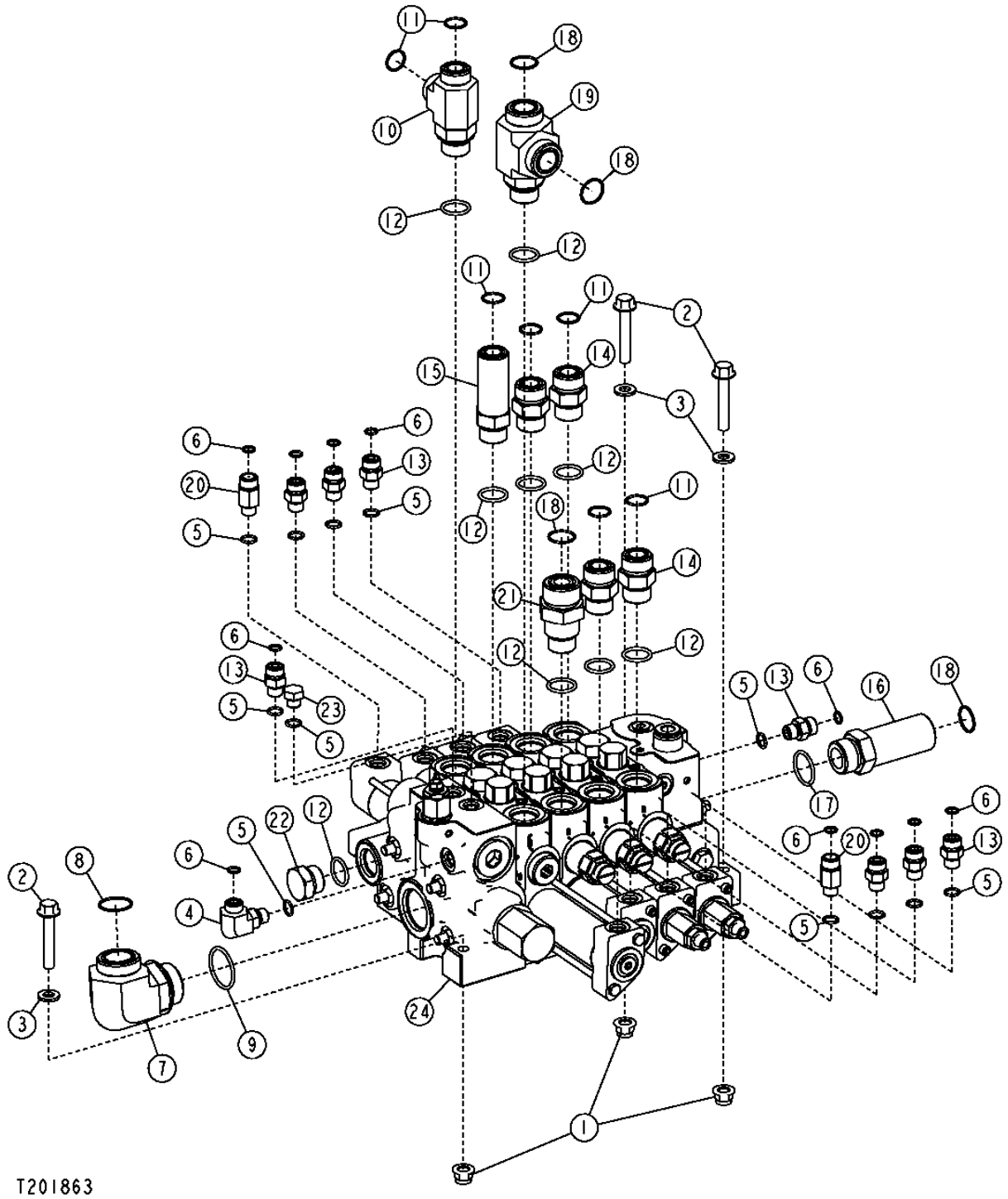

FOUR SPOOL LOADER CONTROL VALVE (S.N. 594433-)
DISTRIBUTEUR CHARGEUR QUATRE TIROIRS (S.N. 594433-)
VALVULA DE CONTROL DE LA CARGADORA DE CUATRO CARRETES (S.N. 594433-)

KEY	PART NO.	PART NAME	QTY.	SERIAL NO.	REMARKS
1	14M7400	LOCK NUT	3		M10
2	19M7807	SCREW	3		M10 X 60
3	24M7239	WASHER	3		10.700 X 21 X 2.500 MM
4	38H1004	ELBOW FITTING	1		
5	R26448	O-RING	12		0.468" X 5/64"
6	T77613	O-RING	11		0.364" X 0.070"
7	38H1008	ELBOW FITTING	1		
8	T78612	O-RING	1		1.176" X 0.070"
9	U13639	O-RING	1		1.475" X 0.118"
10	38H1026	TEE FITTING	1		
11	T77858	O-RING	7		
12	U12547	O-RING	9		
13	38H1160	ADAPTER FITTING	8		
14	38H1163	ADAPTER FITTING	4		
15	38H1215	ADAPTER FITTING	1		
16	38H1216	ADAPTER FITTING	1		
17	R29936	O-RING	1		
18	T76938	O-RING	3		
19	38H1572	TEE FITTING	1		
20	AT220096	CHECK VALVE	2		
21	T210479	FITTING	1		
22	R27175	DRAIN PLUG	1		
23	R27218	FITTING PLUG	1		
24	AT308389	HYD ACTUATED CONTROL VALVE	1		
..	AT314026	ROD	1		(FOUR SPOOL STUD ASSEMBLY) (NOT ILLUSTRATED)

FOUR SPOOL TOOL CARRIER CONTROL VALVE
DISTRIBUTEUR PORTE-OUTILS QUATRE TIROIRS
VALVULA DE CONTROL DE PORTAHERRAMIENTAS DE CUATRO CARRETES

T194465 -UN-04SEP03

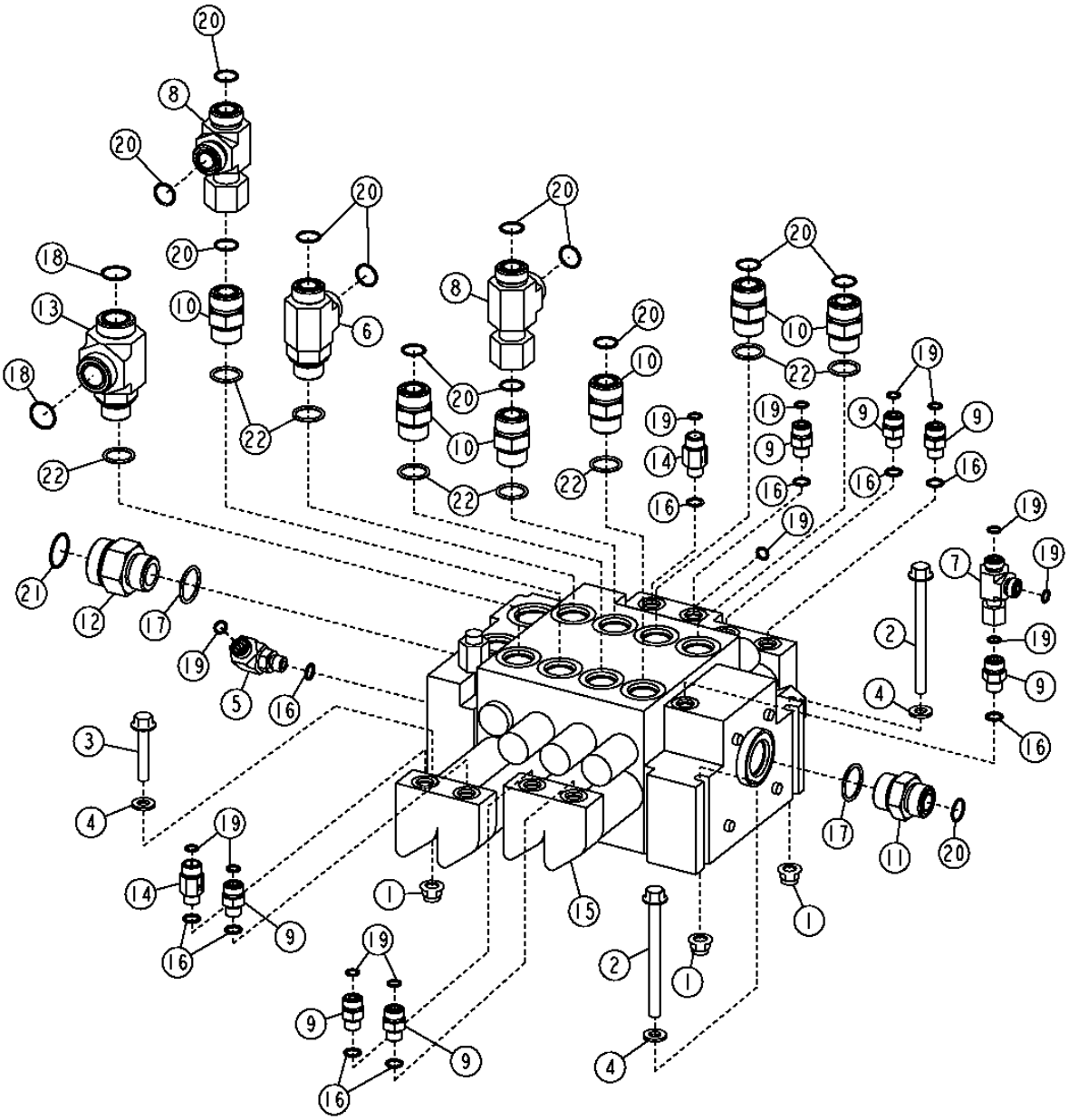

T194465

FOUR SPOOL TOOL CARRIER CONTROL VALVE
DISTRIBUTEUR PORTE-OUTILS QUATRE TIROIRS
VALVULA DE CONTROL DE PORTAHERRAMIENTAS DE CUATRO CARRETES

KEY	*PART NO.*	*PART NAME*	*QTY.*	*SERIAL NO.*	*REMARKS*
1	14M7400	LOCK NUT	3		M10
2	19M7944	SCREW	2		M10 X 120
3	19M8528	SCREW	1		M10 X 55
4	24M7239	WASHER	3		10.700 X 21 X 2.500 MM
5	38H1004	ELBOW FITTING	1		
6	38H1026	TEE FITTING	1		
7	38H1030	TEE FITTING	1		
8	38H1033	TEE FITTING	2		
9	38H1160	ADAPTER FITTING	7		
10	38H1163	ADAPTER FITTING	6		
11	38H1194	ADAPTER FITTING	1		
12	38H1196	ADAPTER FITTING	1		
13	38H1572	TEE FITTING	1		
14	AT220096	CHECK VALVE	2		
15	AT225789	SPOOL VALVE	1		
16	R26448	O-RING	10		
17	R29936	O-RING	2		
18	T76938	O-RING	2		
19	T77613	O-RING	13		
20	T77858	O-RING	13		
21	T78612	O-RING	1		
22	U12547	O-RING	8		

INLET VALVE SECTION WITH RELIEF VALVE (S.N. -594432)
SECTION DISTRIBUTEUR ENTREE AVEC CLAPET DECHARGE (S.N. -594432)
SECCION DE VALVULA DE ENTRADA CON VALVULA DE ALIVIO (S.N. -594432)

T195338 -UN-21OCT03

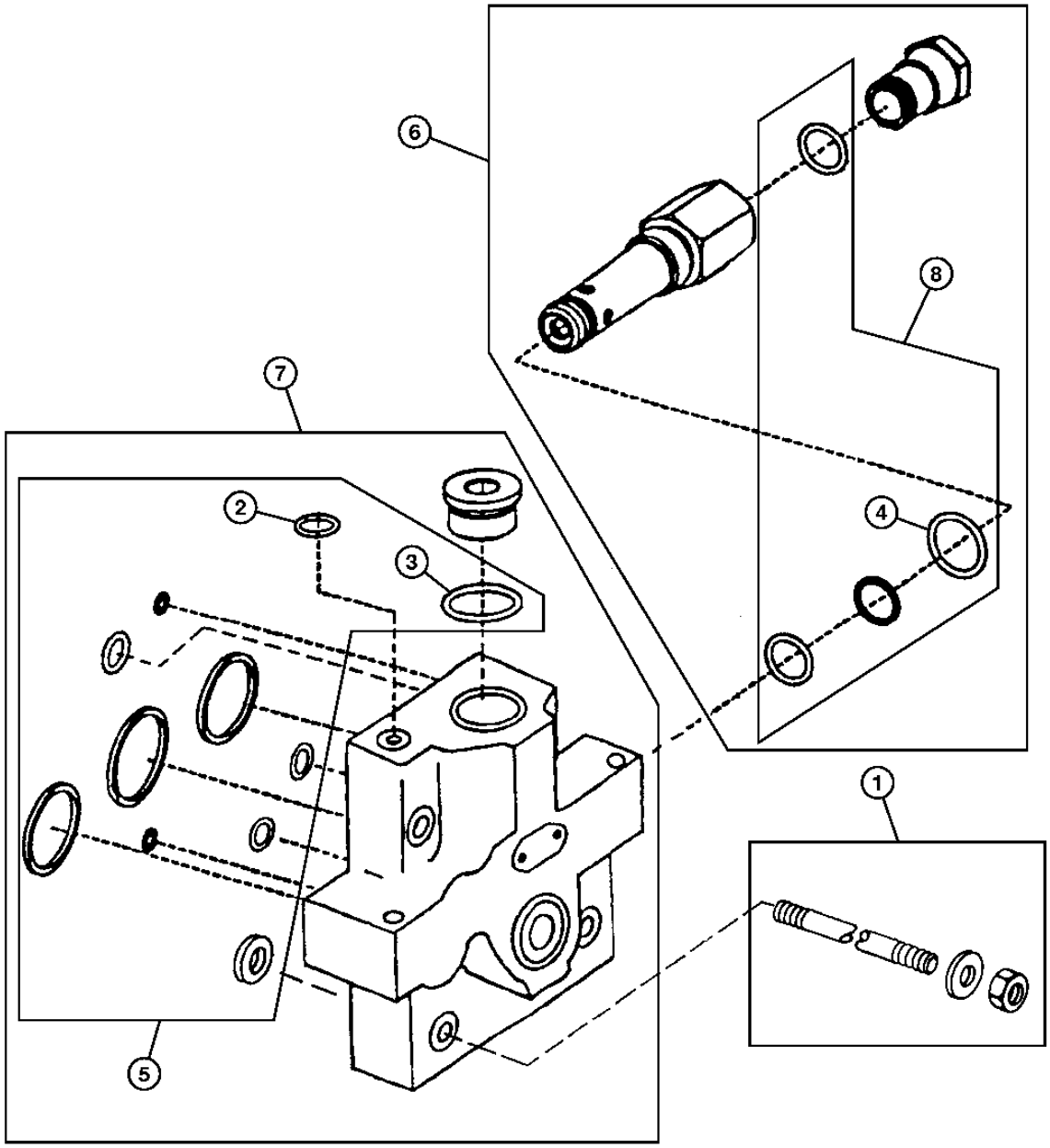

T195338

INLET VALVE SECTION WITH RELIEF VALVE (S.N. -594432)
SECTION DISTRIBUTEUR ENTREE AVEC CLAPET DECHARGE (S.N. -594432)
SECCION DE VALVULA DE ENTRADA CON VALVULA DE ALIVIO (S.N. -594432)

KEY	*PART NO.*	*PART NAME*	*QTY.*	*SERIAL NO.*	*REMARKS*
1	T161584	ROD	4		TWO SPOOL VALVE
	AT209751	ROD	4		THREE SPOOL VALVE
	AT105438	ROD	4		(SUB FOR AT209749) FOUR SPOOL VALVE
2	R26448	O-RING	1		
3	R29936	O-RING	1		
4	U12547	O-RING	1		
5	AT179936	SEAL KIT	1		INLET SECTION
6	AT209811	PRESSURE RELIEF VALVE	1		
7	AT209823	MANIFOLD	1		INLET SECTION
8	AT169157	SEAL KIT	1		(INCLUDES U12547) MAIN RELIEF VALVE

INLET VALVE SECTION WITH RELIEF VALVE (S.N. 594433-)
SECTION DISTRIBUTEUR ENTREE AVEC CLAPET DECHARGE (S.N. 594433-)
SECCION DE VALVULA DE ENTRADA CON VALVULA DE ALIVIO (S.N. 594433-)

T202329 -UN-26AUG04

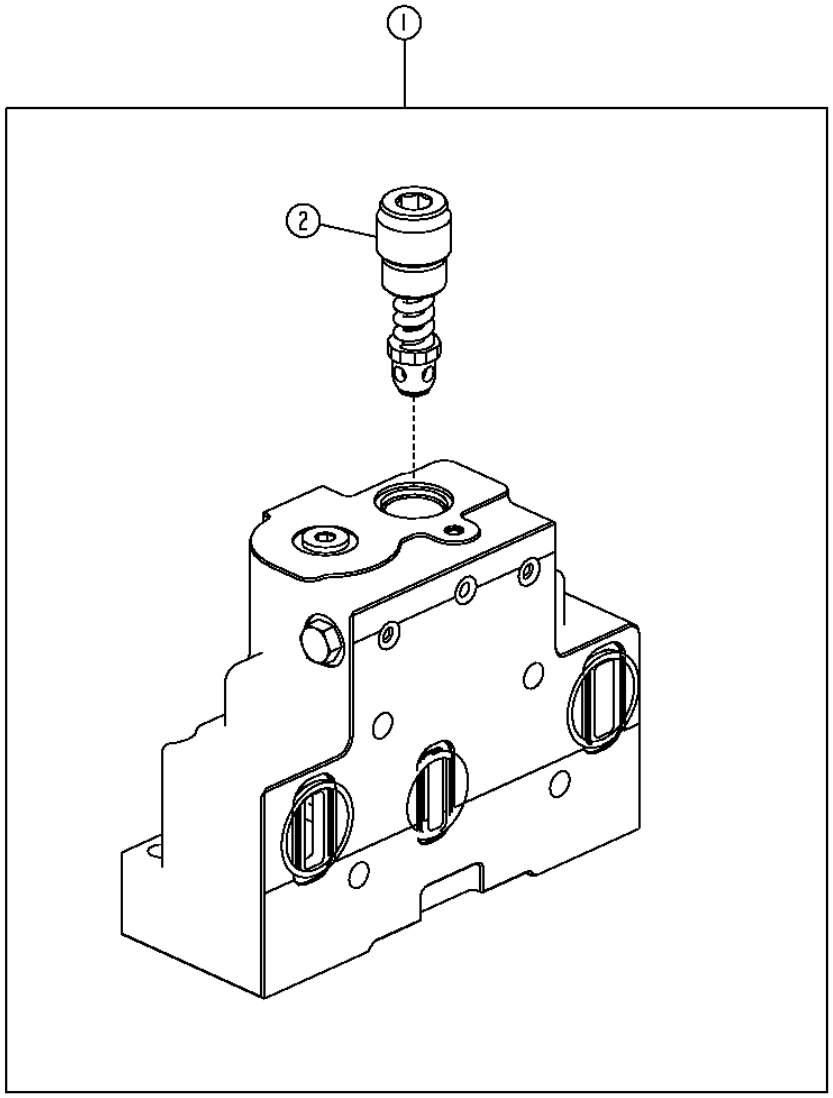

T202329

INLET VALVE SECTION WITH RELIEF VALVE (S.N. 594433-)
SECTION DISTRIBUTEUR ENTREE AVEC CLAPET DECHARGE (S.N. 594433-)
SECCION DE VALVULA DE ENTRADA CON VALVULA DE ALIVIO (S.N. 594433-)

KEY	*PART NO.*	*PART NAME*	*QTY.*	*SERIAL NO.*	*REMARKS*
1	AT314008	VALVE	1		
	AT314017	SEAL KIT	1		(INLET SECTION AND INTERFACE)
2	AT314015	PRESSURE RELIEF VALVE	1		
3	AT314016	ORIFICE	1		(NOT ILLUSTRATED)

ELECTRIC FIFTH FUNCTION
CINQUIEME FONCTION ELECTRIQUE
QUINTA FUNCION ELECTRICA

T213117A -UN-11AUG05

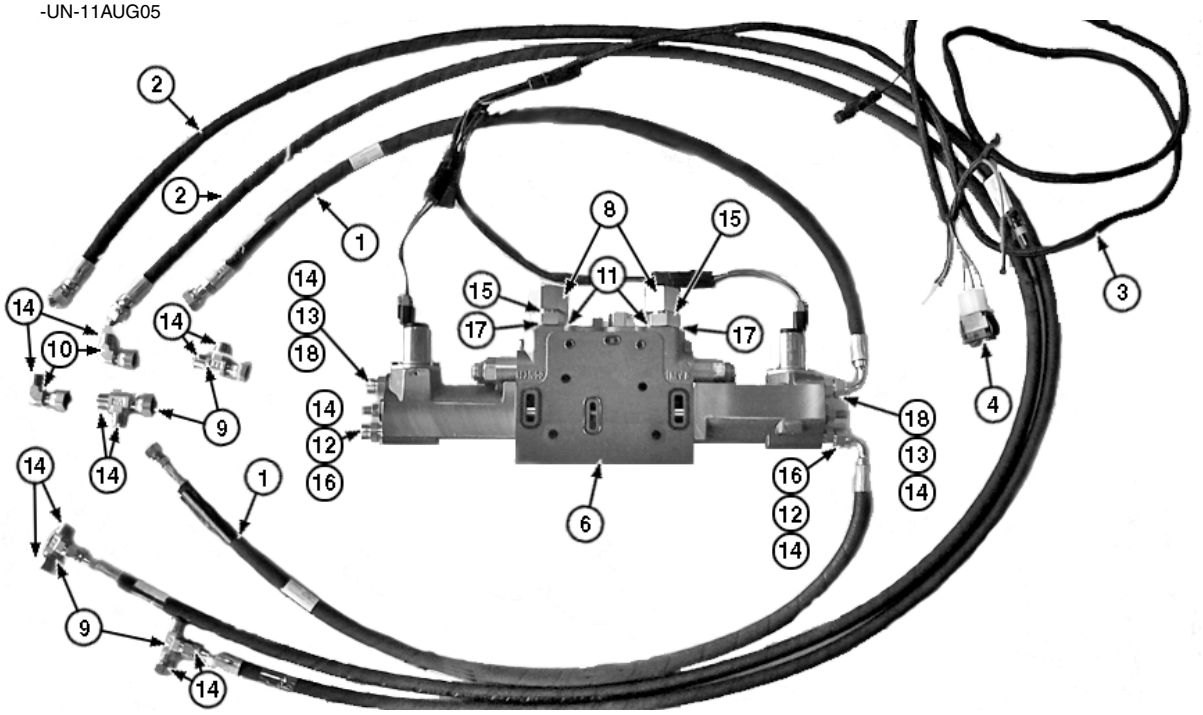

ELECTRIC FIFTH FUNCTION
CINQUIEME FONCTION ELECTRIQUE
QUINTA FUNCION ELECTRICA

KEY	*PART NO.*	*PART NAME*	*QTY.*	*SERIAL NO.*	*REMARKS*
1	AT166149	HYDRAULIC HOSE - FABRICATE	2		
2	AT207096	HYDRAULIC HOSE - FABRICATE	2		
3	AT211219	WIRING HARNESS	1		
4	AT219757	TOGGLE/ROCKER SWITCH	1		
	AT220526	SWITCH	1		
5	AT314013	SEAL KIT	1		(NOT ILLUSTRATED)
6	AT316315	SOLENOID VALVE	1		
7	AT318916	HYDRAULIC HOSE - FABRICATE	1		(NOT ILLUSTRATED)
8	38H1418	FITTING	2		
9	38H1030	TEE FITTING	4		
10	38H1094	ELBOW FITTING	2		
11	38H1163	ADAPTER FITTING	2		
12	38H1309	ADAPTER FITTING	2		
13	38H1160	ADAPTER FITTING	2		
14	T77613	O-RING	14		
15	T77858	O-RING	2		
16	R26448	O-RING	2		
17	U12547	O-RING	2		
18	R28782	O-RING	2		

BUCKET VALVE SECTION (S.N. -594432)
SECTION VERIN BENNE (S.N. -594432)
SECCION DE LA VALVULA DEL CUCHARON (S.N. -594432)

T194574 -UN-16OCT03

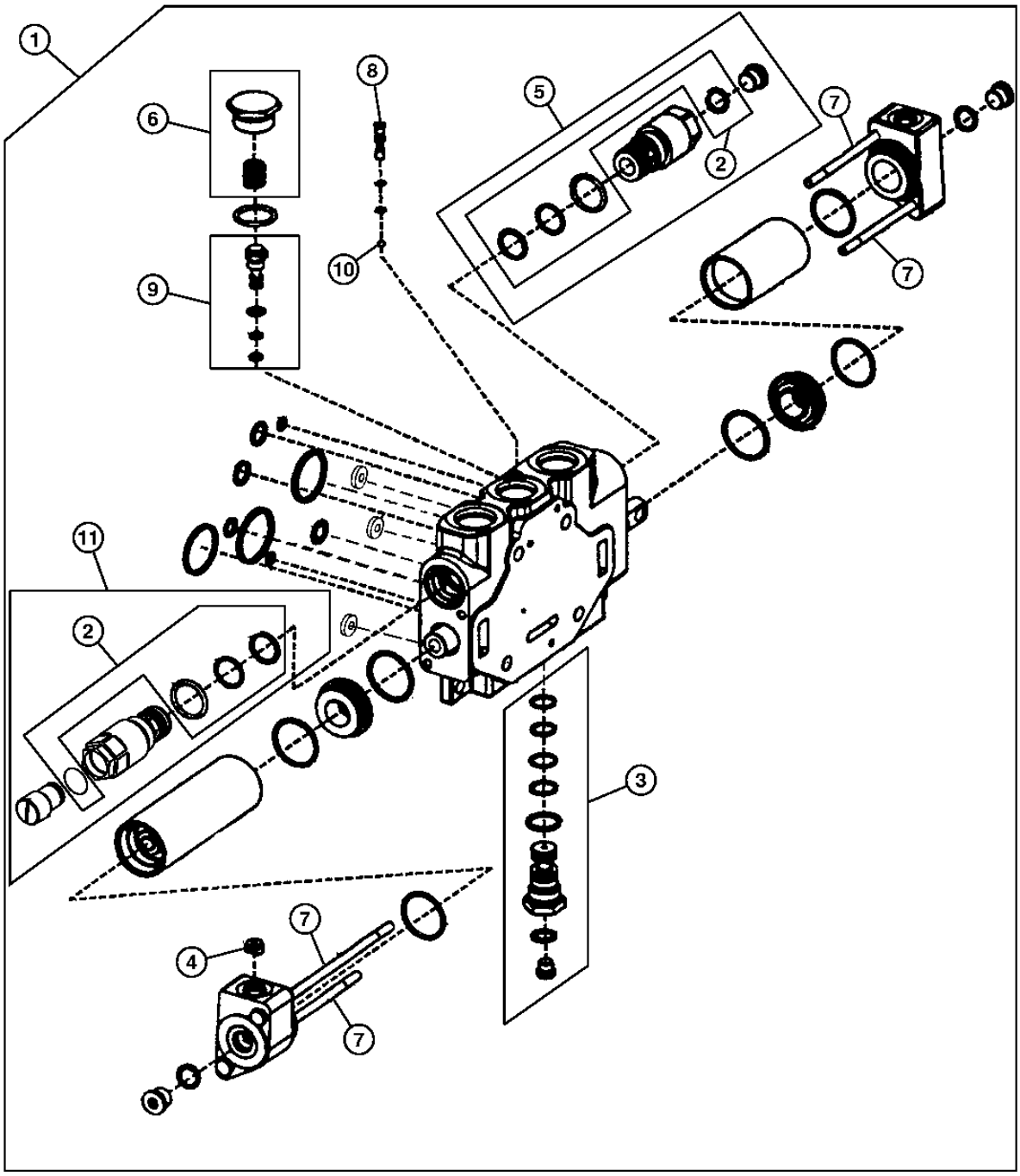

T194574

BUCKET VALVE SECTION (S.N. -594432)
SECTION VERIN BENNE (S.N. -594432)
SECCION DE LA VALVULA DEL CUCHARON (S.N. -594432)

KEY	PART NO.	PART NAME	QTY.	SERIAL NO.	REMARKS
1	AT221094	SPOOL VALVE	1		
	AT222964	SPOOL VALVE	1		(FOR USE WITH TOOL CARRIER ONLY)
	AT179941	SEAL KIT	1		(WORK SECTION)
	AT211574	SEAL KIT	1		(INTERFACE)
2	AT209748	SEAL KIT	2		(RELIEF VALVE)
3	AT209758	CHECK VALVE	1		
4	T169955	ORIFICE	1		
5	AT209750	PRESSURE RELIEF VALVE	1		
6	AT220830	HOSE KIT	1		(SPRING AND PLUG)
7	19H3724	SCREW	4		
8	T172562	CHECK VALVE	1		
9	AT220828	COMPENSATOR	1		
10	A4742R	BALL	1		
11	AT211547	PRESSURE RELIEF VALVE	1		(FOR USE WITH TOOL CARRIER ONLY) SUB AT209750 FOR NON TOOL CARRIER VALVE

BUCKET VALVE SECTION (S.N. 594433-)
SECTION VERIN BENNE (S.N. 594433-)
SECCION DE LA VALVULA DEL CUCHARON (S.N. 594433-)

T202330 -UN-26AUG04

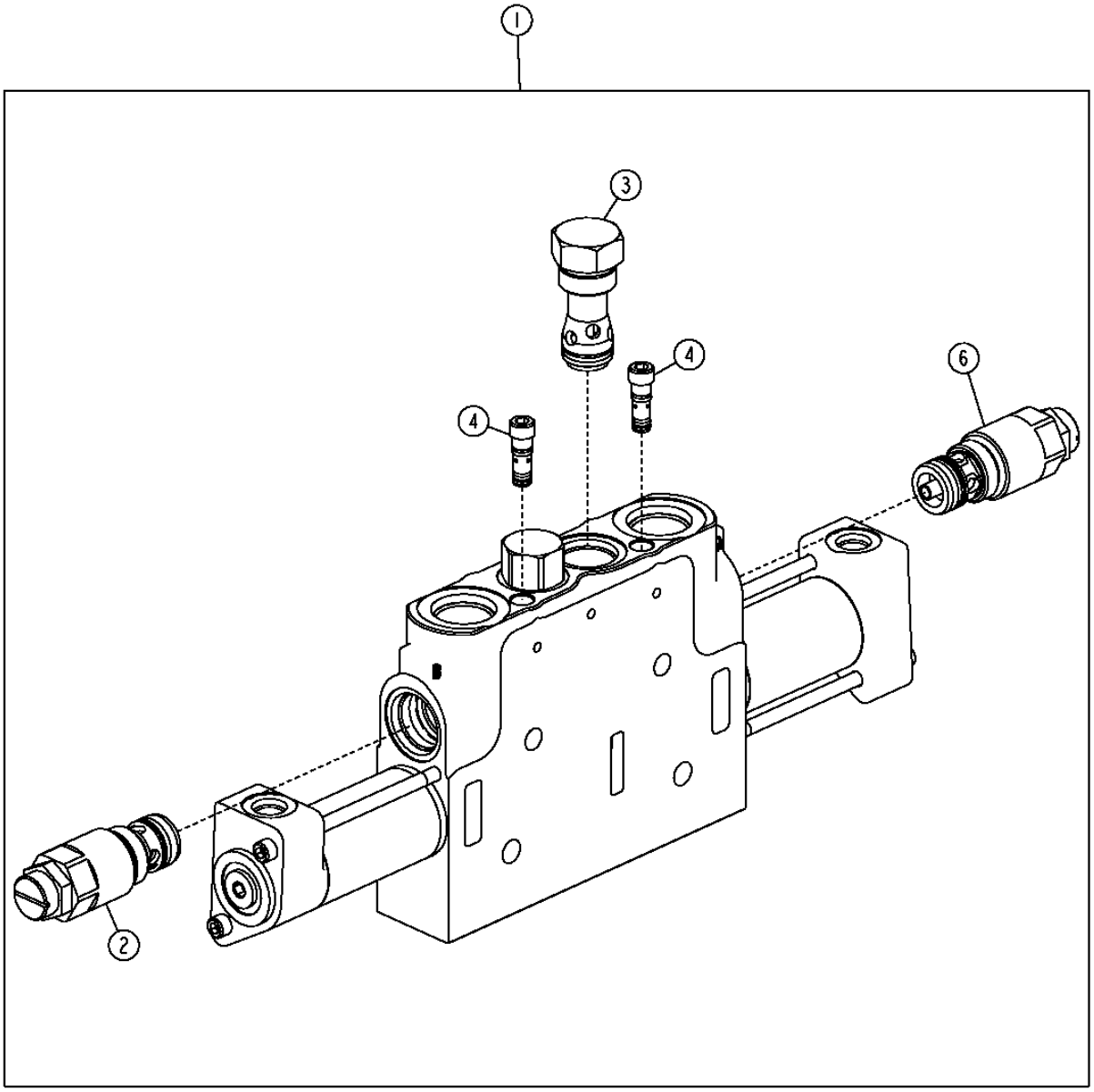

T202330

BUCKET VALVE SECTION (S.N. 594433-)
SECTION VERIN BENNE (S.N. 594433-)
SECCION DE LA VALVULA DEL CUCHARON (S.N. 594433-)

KEY	*PART NO.*	*PART NAME*	*QTY.*	*SERIAL NO.*	*REMARKS*
1	AT314009	VALVE	1		
	AT314013	SEAL KIT	1		(WORK SECTION AND INTERFACE)
2	AT314010	BALL COCK VALVE	1		
3	AT314011	VALVE	1		
4	AT314012	VALVE	2		
6	AT315331	PRESSURE RELIEF VALVE	1		
..	AT314014	HYDRAULIC CYLINDER CAP	1		(PILOT END CAP SEAL KIT)

BOOM VALVE SECTION (S.N. -594432)
SECTION VERIN FLECHE (S.N. -594432)
SECCION DE LA VALVULA DEL AGUILON (S.N. -594432)

T195459 -UN-13OCT03

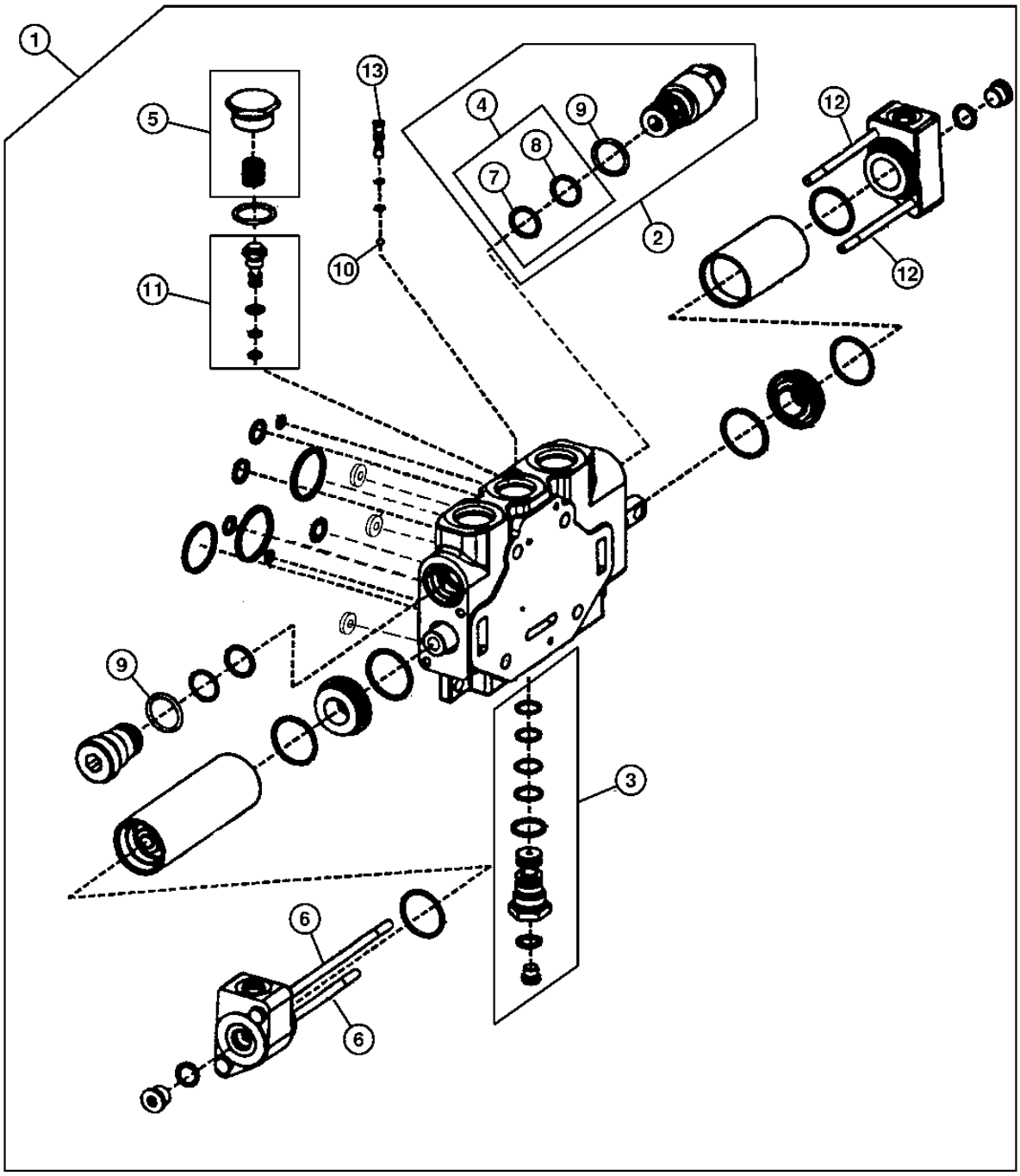

T195459

BOOM VALVE SECTION (S.N. -594432)
SECTION VERIN FLECHE (S.N. -594432)
SECCION DE LA VALVULA DEL AGUILON (S.N. -594432)

KEY	PART NO.	PART NAME	QTY.	SERIAL NO.	REMARKS
1	AT224135	SPOOL VALVE	1		
	AT179941	SEAL KIT	1		(WORK SECTION)
	AT211574	SEAL KIT	1		(INTERFACE)
2	AT221506	HYD ACTUATED CONTROL VALVE	1		
3	AT209758	CHECK VALVE	1		
4	AT170991	O-RING KIT	1		RELIEF EXTERNAL SEAL KIT, (CONTAINS U12547)
	U12547	O-RING	1		
5	AT220830	HOSE KIT	1		(SPRING AND PLUG KIT)
6	.....	CAP SCREW	2		(SUB 19H3724)
7	AT124574	O-RING	1		
8	T154187	BACK-UP RING	1		
9	U12547	O-RING	2		
10	A4742R	BALL	1		
11	AT220826	COMPENSATOR	1		
12	T171072	CAP SCREW	2		(SUB FOR 19H3724)
13	T172562	CHECK VALVE	1		

BOOM VALVE SECTION (S.N. 594433-)
SECTION VERIN FLECHE (S.N. 594433-)
SECCION DE LA VALVULA DEL AGUILON (S.N. 594433-)

T202331 -UN-26AUG04

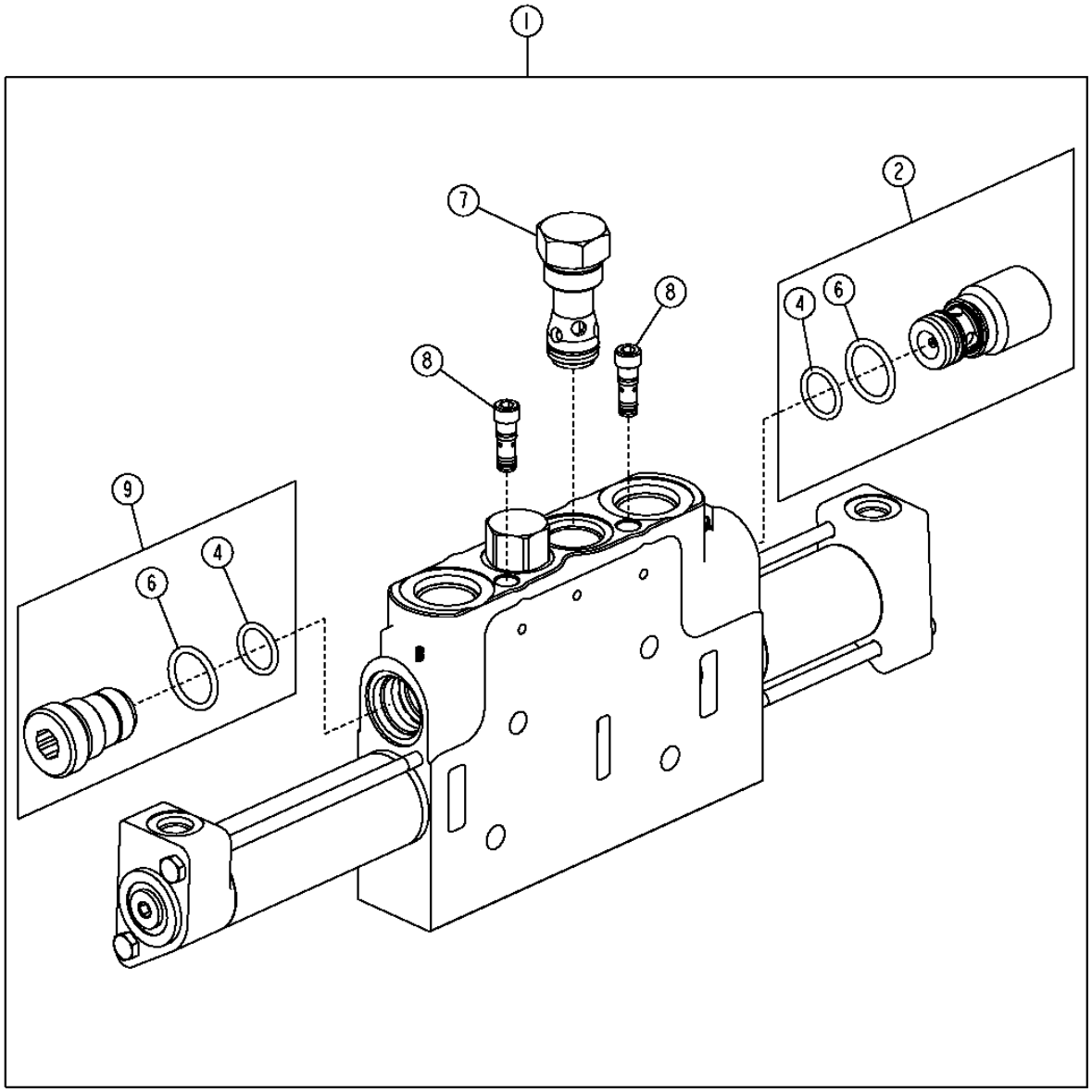

T202331

BOOM VALVE SECTION (S.N. 594433-)
SECTION VERIN FLECHE (S.N. 594433-)
SECCION DE LA VALVULA DEL AGUILON (S.N. 594433-)

KEY	PART NO.	PART NAME	QTY.	SERIAL NO.	REMARKS
1	AT314018	VALVE	1		
	AT314013	SEAL KIT	1		(WORK SECTION AND INTERFACE)
2	AT104051	POPPET	1		
	AT103440	KIT	1		(ANTI-CAVITY VALVE SEAL)
4	AT124574	O-RING	1		
6	U12547	O-RING	2		
7	AT314011	VALVE	1		
8	AT314012	VALVE	1		
9	AT314019	VALVE	2		
..	AT314020	HYDRAULIC CYLINDER CAP	1		(PILOT END CAP SEAL KIT)

AUXILIARY VALVE SECTION (S.N. -594432)
SECTION DISTRIBUTEUR AUXILIAIRE (S.N. -594432)
SECCION DE VALVULA AUXILIAR (S.N. -594432)

T195465 -UN-16OCT03

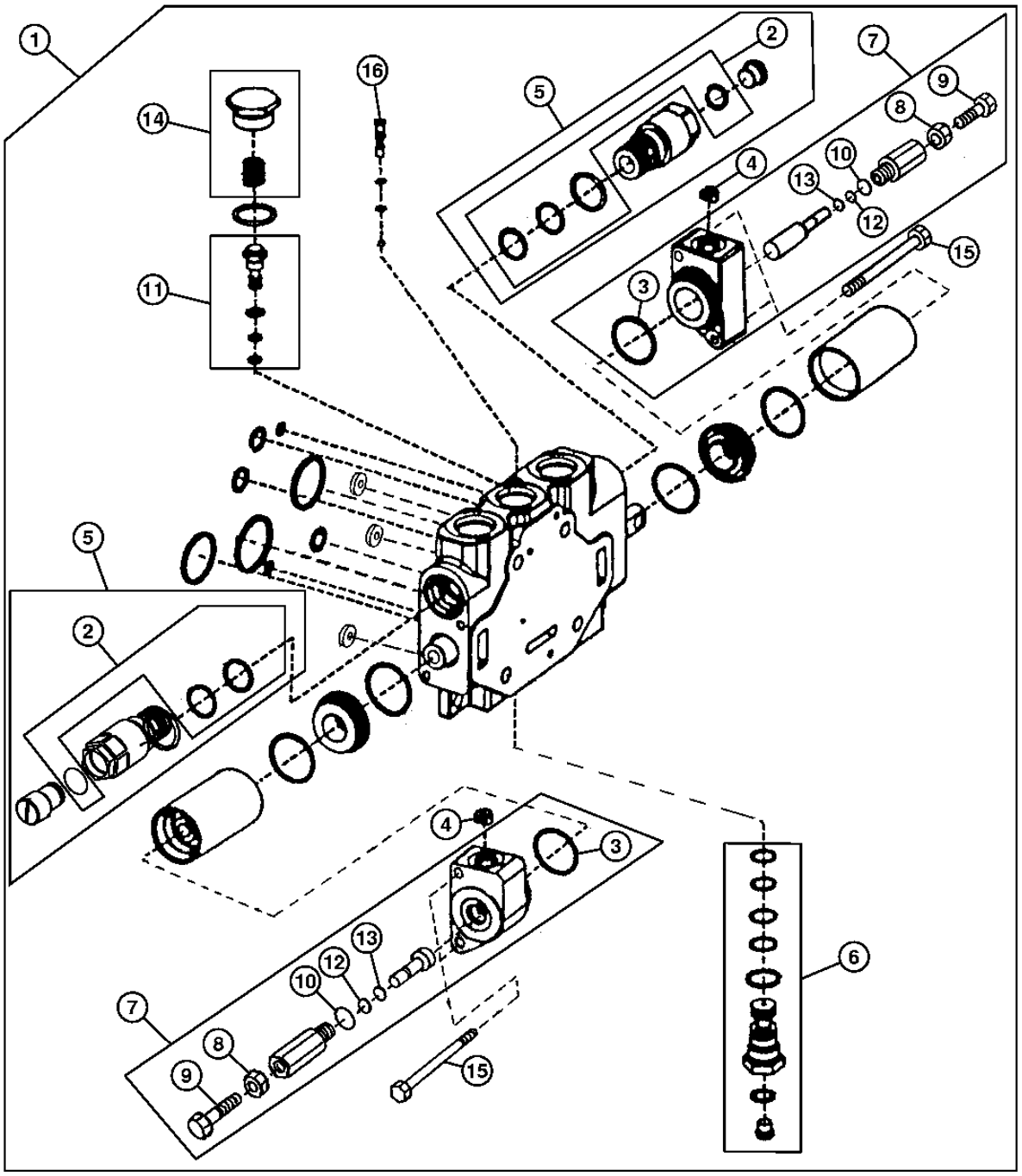

T195465

AUXILIARY VALVE SECTION (S.N. -594432)
SECTION DISTRIBUTEUR AUXILIAIRE (S.N. -594432)
SECCION DE VALVULA AUXILIAR (S.N. -594432)

KEY	*PART NO.*	*PART NAME*	*QTY.*	*SERIAL NO.*	*REMARKS*
1	AT220173	HYD ACTUATED CONTROL VALVE	1		
	AT179941	SEAL KIT	1		(WORK SECTION)
2	AT209748	SEAL KIT	2		(RELIEF VALVE)
3	H84318	O-RING	2		
4	T169955	ORIFICE	2		
5	AT209750	PRESSURE RELIEF VALVE	2		
6	AT209758	CHECK VALVE	1		
7	AT220035	HOSE KIT	1		
8	14H856	NUT	2		1/2"
9	22H1022	SET SCREW	2		1/2" X 1-1/2"
10	R26906	O-RING	2		
11	AT220826	COMPENSATOR	1		
12	R61463	BACK-UP RING	2		
13	T77814	O-RING	2		
14	AT220830	HOSE KIT	1		
15	19H3724	SCREW	8		
16	T172562	CHECK VALVE	1		

AUXILIARY VALVE SECTION (S.N. 594433-)
SECTION DISTRIBUTEUR AUXILIAIRE (S.N. 594433-)
SECCION DE VALVULA AUXILIAR (S.N. 594433-)

T202332 -UN-26AUG04

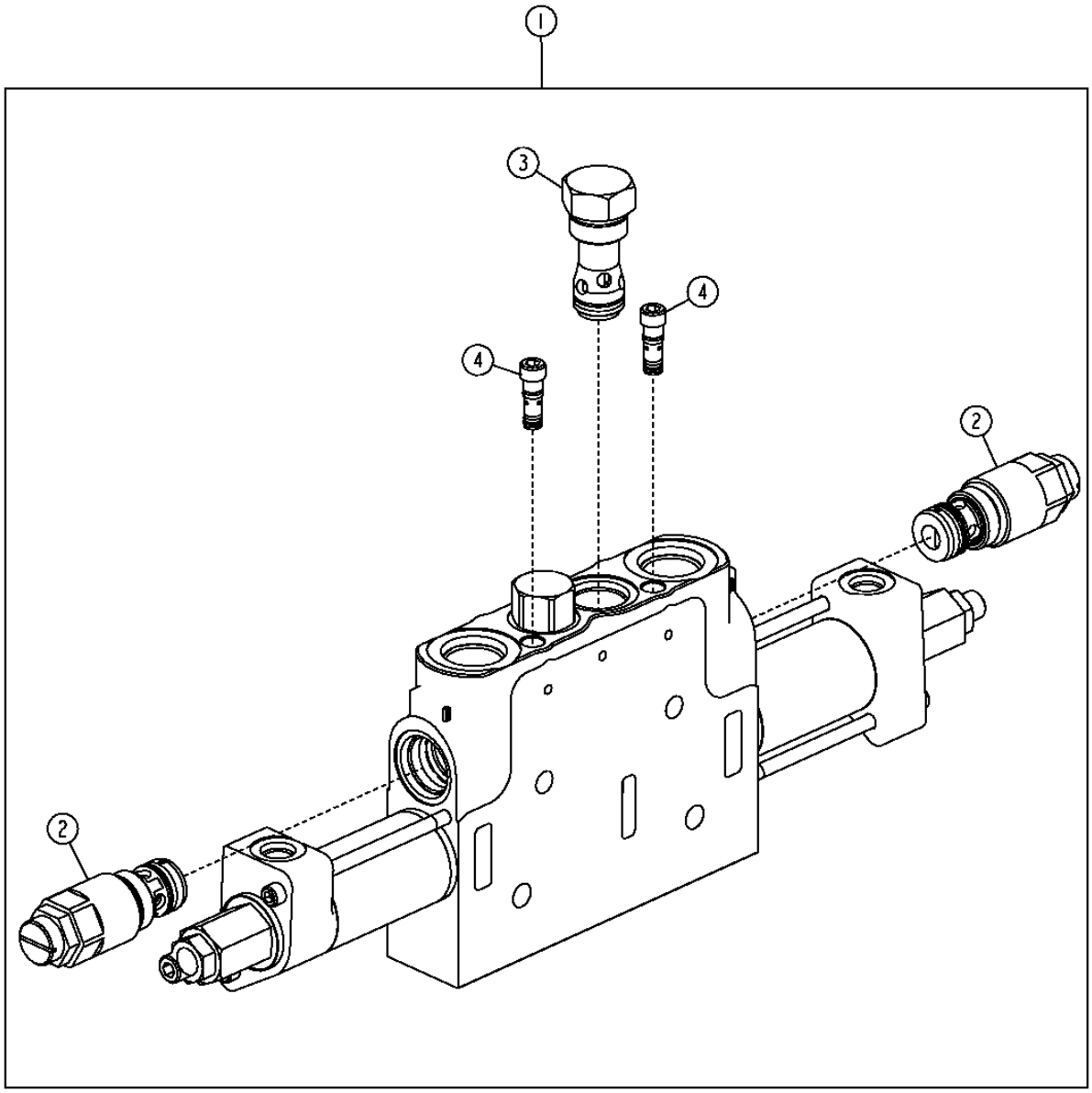

T202332

AUXILIARY VALVE SECTION (S.N. 594433-)
SECTION DISTRIBUTEUR AUXILIAIRE (S.N. 594433-)
SECCION DE VALVULA AUXILIAR (S.N. 594433-)

KEY	*PART NO.*	*PART NAME*	*QTY.*	*SERIAL NO.*	*REMARKS*
1	AT314046	VALVE	1		
	AT314013	SEAL KIT	1		(WORK SECTION AND INTERFACE)
2	AT209750	PRESSURE RELIEF VALVE	2		
	AT209748	SEAL KIT	2		(RELIEF VALVE)
3	AT314011	VALVE	1		
4	AT314012	VALVE	2		
..	AT314021	HYDRAULIC CYLINDER CAP	1		(PILOT CONTROL END CAP SEAL KIT) (NOT ILLUSTRATED)

OUTLET VALVE SECTION (S.N. -594432)
SECTION SOUPAPE SORTIE (S.N. -594432)
SECCION DE VALVULA DE SALIDA (S.N. -594432)

T195466 -UN-13OCT03

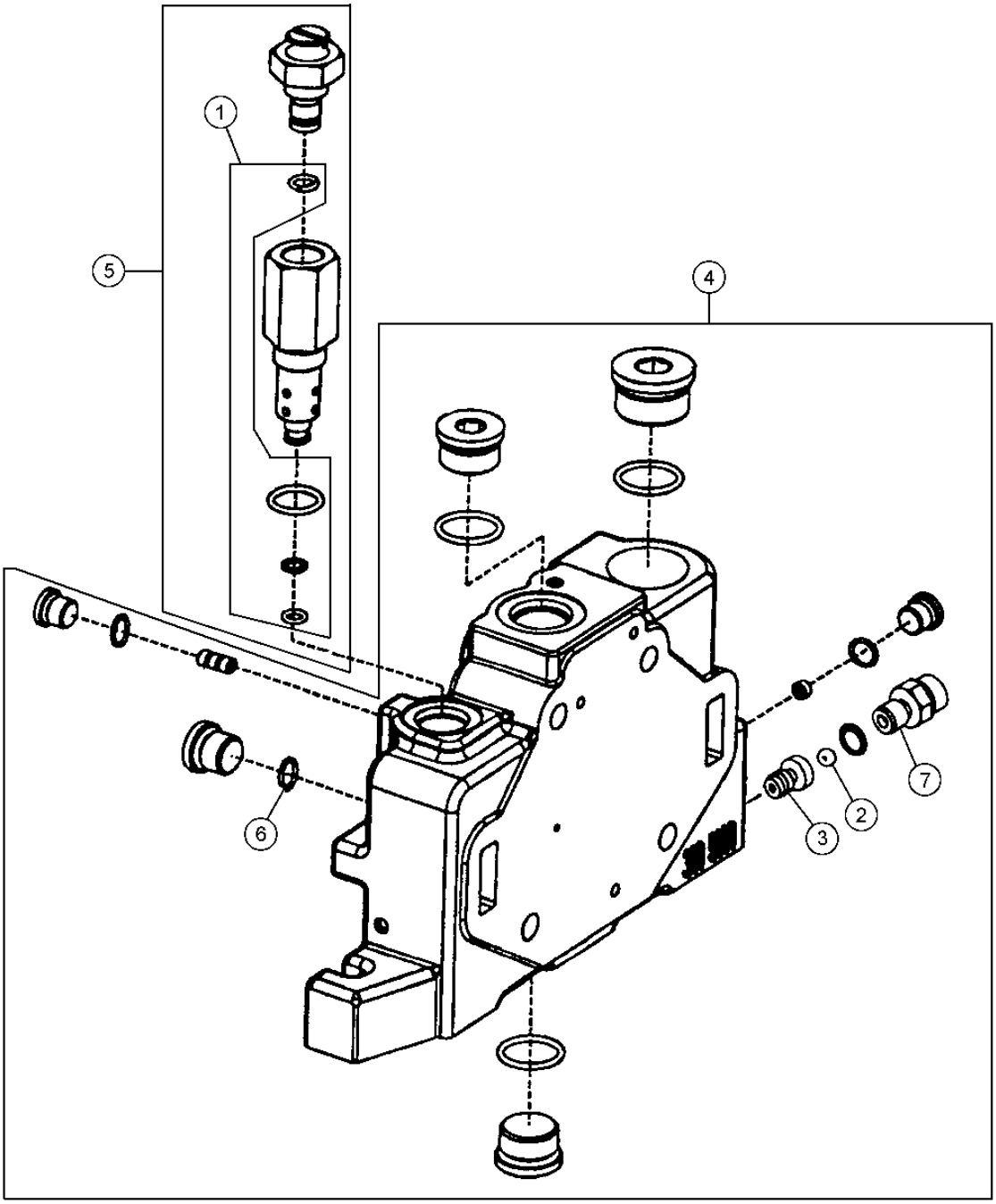

T195466

OUTLET VALVE SECTION (S.N. -594432)
SECTION SOUPAPE SORTIE (S.N. -594432)
SECCION DE VALVULA DE SALIDA (S.N. -594432)

KEY	*PART NO.*	*PART NAME*	*QTY.*	*SERIAL NO.*	*REMARKS*
1	AT179935	SEAL KIT	1		(LOAD SENSE RELIEF VALVE)
2	JD38714	BALL	1		
3	T172579	CHECK VALVE	1		
4	AT225798	ORIFICE	1		(OUTLET SECTION)
	AT179934	SEAL KIT	1		(OUTLET SECTION)
5	AT225800	FLOW CONTROL HYD. VALVE	1		(LOAD SENSE RELIEF VALVE)
6	R26448	O-RING	1		
7	T172712	FITTING	1		

OUTLET VALVE SECTION (S.N. 594433-)
SECTION SOUPAPE SORTIE (S.N. 594433-)
SECCION DE VALVULA DE SALIDA (S.N. 594433-)

T202333 -UN-26AUG04

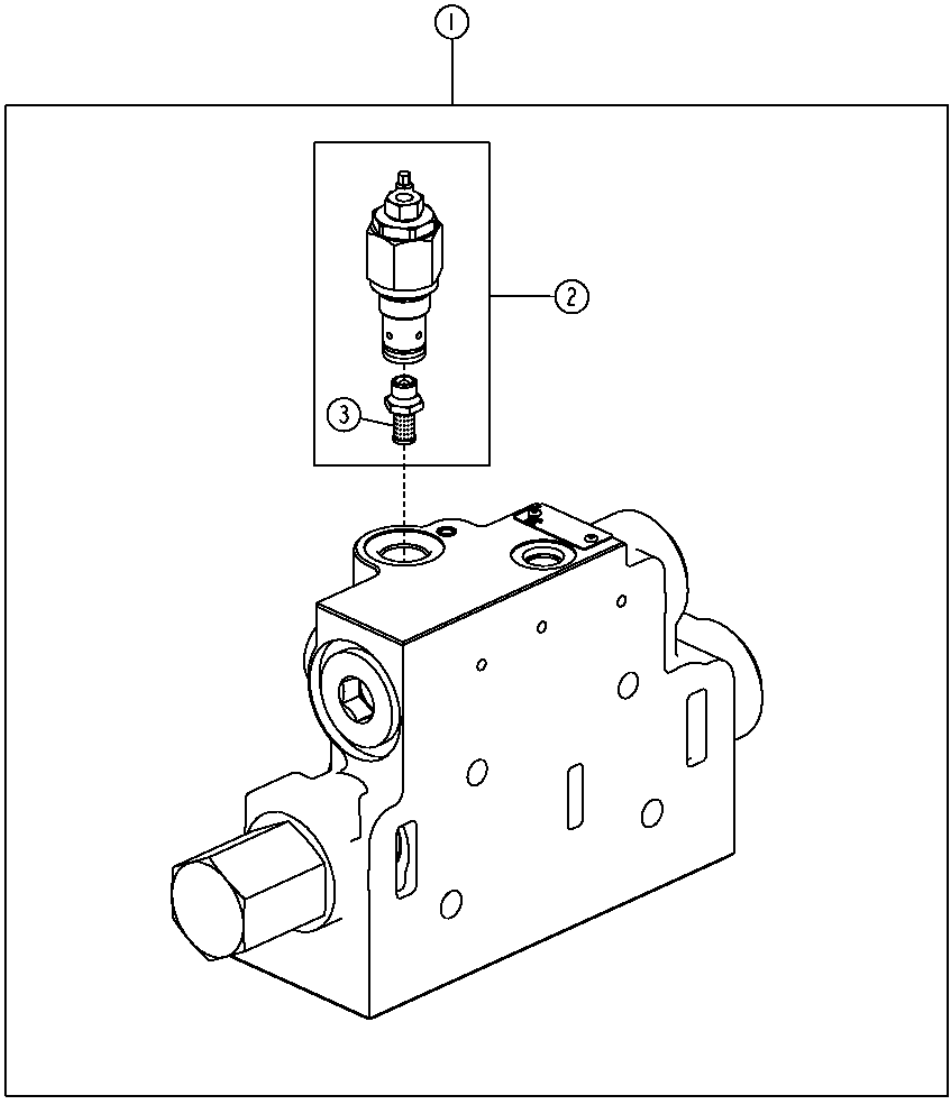

T202333

OUTLET VALVE SECTION (S.N. 594433-)
SECTION SOUPAPE SORTIE (S.N. 594433-)
SECCION DE VALVULA DE SALIDA (S.N. 594433-)

KEY	*PART NO.*	*PART NAME*	*QTY.*	*SERIAL NO.*	*REMARKS*
1	AT314022	FLOW CONTROL HYD. VALVE	1		
	AT314057	SEAL KIT	1		(OUTLET SECTION AND INTERFACE)
2	AT314023	PRESSURE RELIEF VALVE	1		
3	AT314025	SCREEN	1		

FIFTH FUNCTION VALVE SECTION (S.N. - XXXXXX)
SECTION SOUPAPE CINQUIEME FONCTION (S.N. - XXXXXX)
SECCION DE VALVULA DE QUINTA FUNCION (S.N. - XXXXXX)

TP62889 -UN-31AUG00

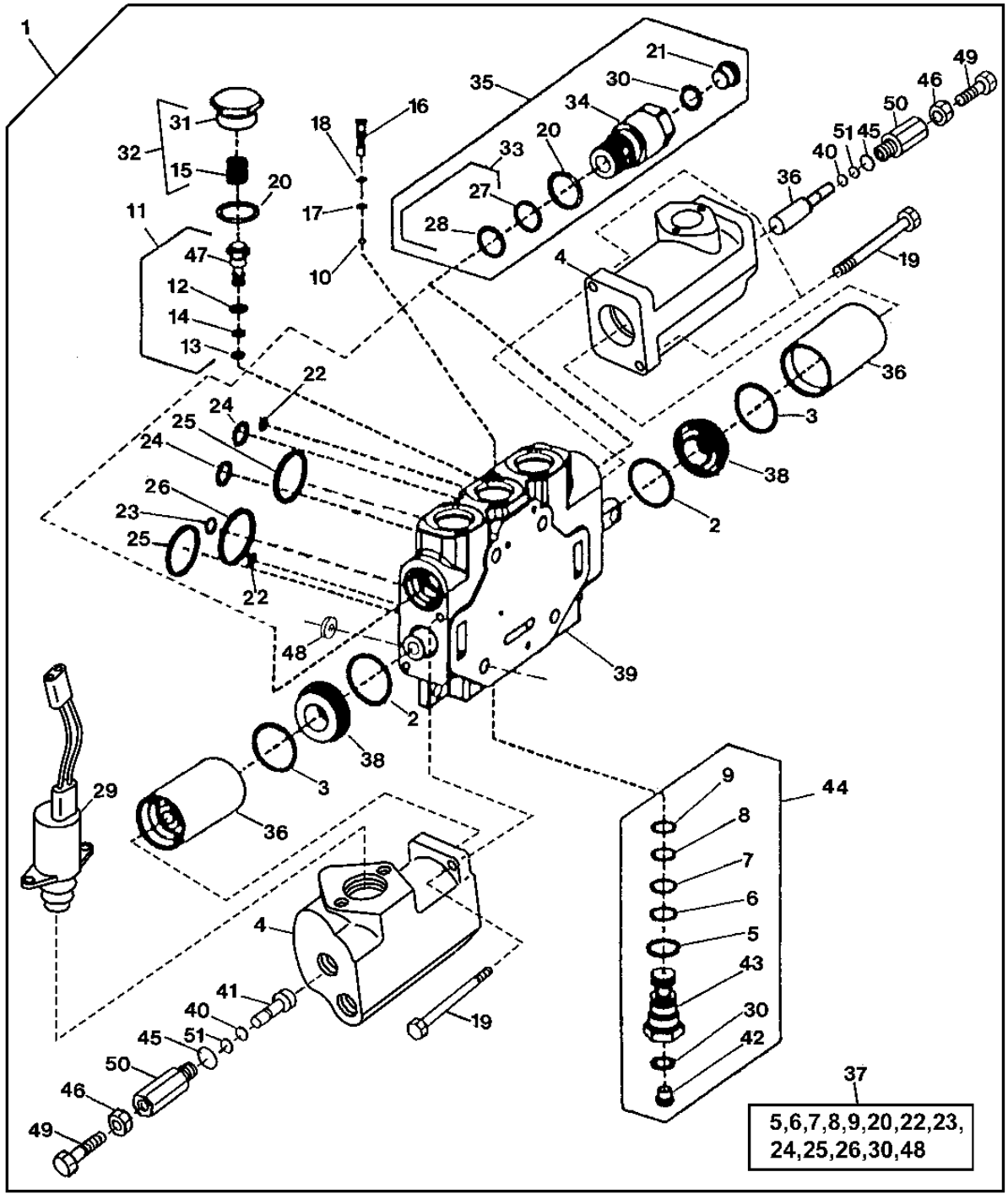

TP62889

FIFTH FUNCTION VALVE SECTION (S.N. - XXXXXX)
SECTION SOUPAPE CINQUIEME FONCTION (S.N. - XXXXXX)
SECCION DE VALVULA DE QUINTA FUNCION (S.N. - XXXXXX)

KEY	PART NO.	PART NAME	QTY.	SERIAL NO.	REMARKS
1	AT307771	FLOW CONTROL HYD. VALVE	1		(WHOLE GOODS) (FIFTH SECTION) (CONTAINS ALL COMPONENTS NECESSARY TO ADD FIFTH AUXILIARY FUNCTION)
2	M4125T	O-RING	2		
3	H84318	O-RING	2		
4	.....	CAP	2		(END)
5	.....	O-RING	1		
6	.....	BACK-UP RING	1		
7	.....	O-RING	1		
8	.....	O-RING	1		
9	.....	BACK-UP RING	1		
10	A4742R	BALL	1		
11	AT220827	COMPENSATOR	1		
12	.....	O-RING	1		
13	.....	O-RING	1		
14	.....	BACK-UP RING	1		
15	.....	SPRING	1		
16	T172562	CHECK VALVE	1		
17	.....	O-RING	1		
18	.....	BACK-UP RING	1		
19	19H3724	SCREW	4		1/4" X 4-1/2"
20	U12547	O-RING	2		
21	.....	PLUG	1		
22	U40962	O-RING	2		
23	.....	O-RING	1		
24	AT216573	O-RING	2		
25	T103465	SEAL	2		
26	AT216571	O-RING	1		
27	.....	BACK-UP RING	2		(SUB AT209750)
28	AT124574	O-RING	2		
29	AT224850	SOLENOID	2		(INCLUDES WIRING HARNESS AT326581)
30	R26287	O-RING	2		
31	.....	PLUG	1		
32	AT220831	HOSE KIT	1		
33	AT170991	O-RING KIT	2		
	U12547	O-RING	1		(INCLUDED IN AT170991 KIT)
34	.....	VALVE	1		
35	AT209750	PRESSURE RELIEF VALVE	2		
36	.....	PLUNGER	2		
	.....	BUSHING	2		
37	AT179941	SEAL KIT	AR		(SEAL FOR ONE SECTION JOINT)
38	.....	STRUCTURAL TUBING	2		
39	.....	HOUSING	1		(SUB AT316315) (AT219753 NLA)
40	T77814	O-RING	2		
41	.....	PLUNGER	2		
42	.....	PLUG	1		(SUB AT210686)
43	.....	SPOOL	1		(SUB AT210686)
44	AT210686	CHECK VALVE	1		
45	R26906	O-RING	2		
46	14H856	NUT	2		1/2"
47	.....	COMPENSATOR	4		
48	.....	SHIM	1		(ONE SHIM ON EACH TIE-BOLT)
49	22H1022	SET SCREW	2		
50	.....	RELIEF VALVE	2		(SUB AT220035)
51	R61463	BACK-UP RING	2		
53	AT325146	STUD	4		(TIE BOLT)
54	AT326581	MFWD SOLENOID WRG HARNESS	2	-594432	(AT300858 NLA)
	AT316315	SOLENOID VALVE	2	594433-	

FIFTH FUNCTION VALVE SECTION (S.N. XXXXXX -)
SECTION SOUPAPE CINQUIEME FONCTION (S.N. XXXXXX -)
SECCION DE VALVULA DE QUINTA FUNCION (S.N. XXXXXX -)

T212663 -UN-11JUL05

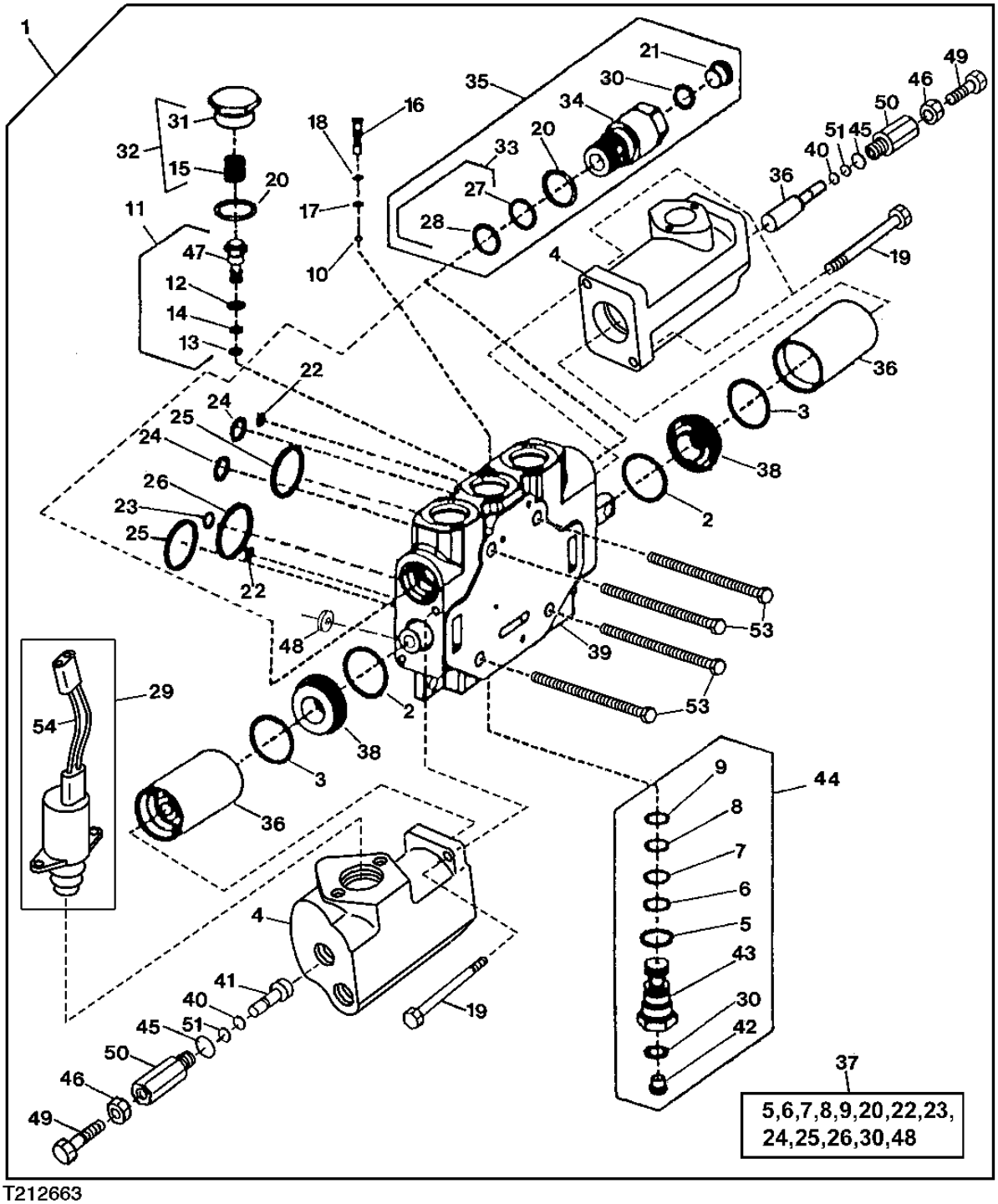

T212663

FIFTH FUNCTION VALVE SECTION (S.N. XXXXXX -)
SECTION SOUPAPE CINQUIEME FONCTION (S.N. XXXXXX -)
SECCION DE VALVULA DE QUINTA FUNCION (S.N. XXXXXX -)

KEY	PART NO.	PART NAME	QTY.	SERIAL NO.	REMARKS
1	AT307771	FLOW CONTROL HYD. VALVE	1		(WHOLE GOODS) (FIFTH SECTION) (CONTAINS ALL COMPONENTS NECESSARY TO ADD FIFTH AUXILIARY FUNCTION)
2	M4125T	O-RING	2		
3	H84318	O-RING	2		
4	.....	CAP	2		(END)
5	.....	O-RING	1		
6	.....	BACK-UP RING	1		
7	.....	O-RING	1		
8	.....	O-RING	1		
9	.....	BACK-UP RING	1		
10	A4742R	BALL	1		
11	AT220827	COMPENSATOR	1		
12	.....	O-RING	1		
13	.....	O-RING	1		
14	.....	BACK-UP RING	1		
15	.....	SPRING	1		
16	T172562	CHECK VALVE	1		
17	.....	O-RING	1		
18	.....	BACK-UP RING	1		
19	19H3724	SCREW	4		1/4" X 4-1/2"
20	U12547	O-RING	2		
21	.....	PLUG	1		
22	U40962	O-RING	2		
23	.....	O-RING	1		
24	AT216573	O-RING	2		
25	T103465	SEAL	2		
26	AT216571	O-RING	1		
27	.....	BACK-UP RING	2		(SUB AT209750)
28	AT124574	O-RING	2		
29	AT224850	SOLENOID	2		(INCLUDES WIRING HARNESS AT326581)
30	R26287	O-RING	2		
31	.....	PLUG	1		
32	AT220831	HOSE KIT	1		
33	AT170991	O-RING KIT	2		
	U12547	O-RING	1		(INCLUDED IN AT170991 KIT)
34	.....	VALVE	1		
35	AT209750	PRESSURE RELIEF VALVE	2		
36	.....	PLUNGER	2		
	.....	BUSHING	2		
37	AT179941	SEAL KIT	AR		(SEAL FOR ONE SECTION JOINT)
38	.....	STRUCTURAL TUBING	2		
39	AT316315	SOLENOID VALVE	1		
40	T77814	O-RING	2		
41	.....	PLUNGER	2		
42	.....	PLUG	1		(SUB AT210686)
43	.....	SPOOL	1		(SUB AT210686)
44	AT210686	CHECK VALVE	1		
45	R26906	O-RING	2		
46	14H856	NUT	2		1/2"
47	.....	COMPENSATOR	4		
48	.....	SHIM	1		(ONE SHIM ON EACH TIE-BOLT)
49	22H1022	SET SCREW	2		
50	.....	RELIEF VALVE	2		(SUB AT220035)
51	R61463	BACK-UP RING	2		
53	AT325146	STUD	4		(TIE BOLT)
54	AT326581	MFWD SOLENOID WRG HARNESS	2		

BOOM AND BUCKET CYLINDER HYDRAULICS (FOR USE WITH Z-BAR LINKAGE) (S.N. -594432)
CIRCUIT HYDRAULIQUE VERIN FLECHE ET BENNE (UTILISER AVEC TRINGLERIE CINEMATIQUE EN Z) (SN -594432)
SISTEMA HIDRAULICO CILINDRO DEL CUCHARON AGUILON (PARA USO CON VARILLAJE BARRA EN Z) (SN -594432)

T194793 -UN-24OCT03

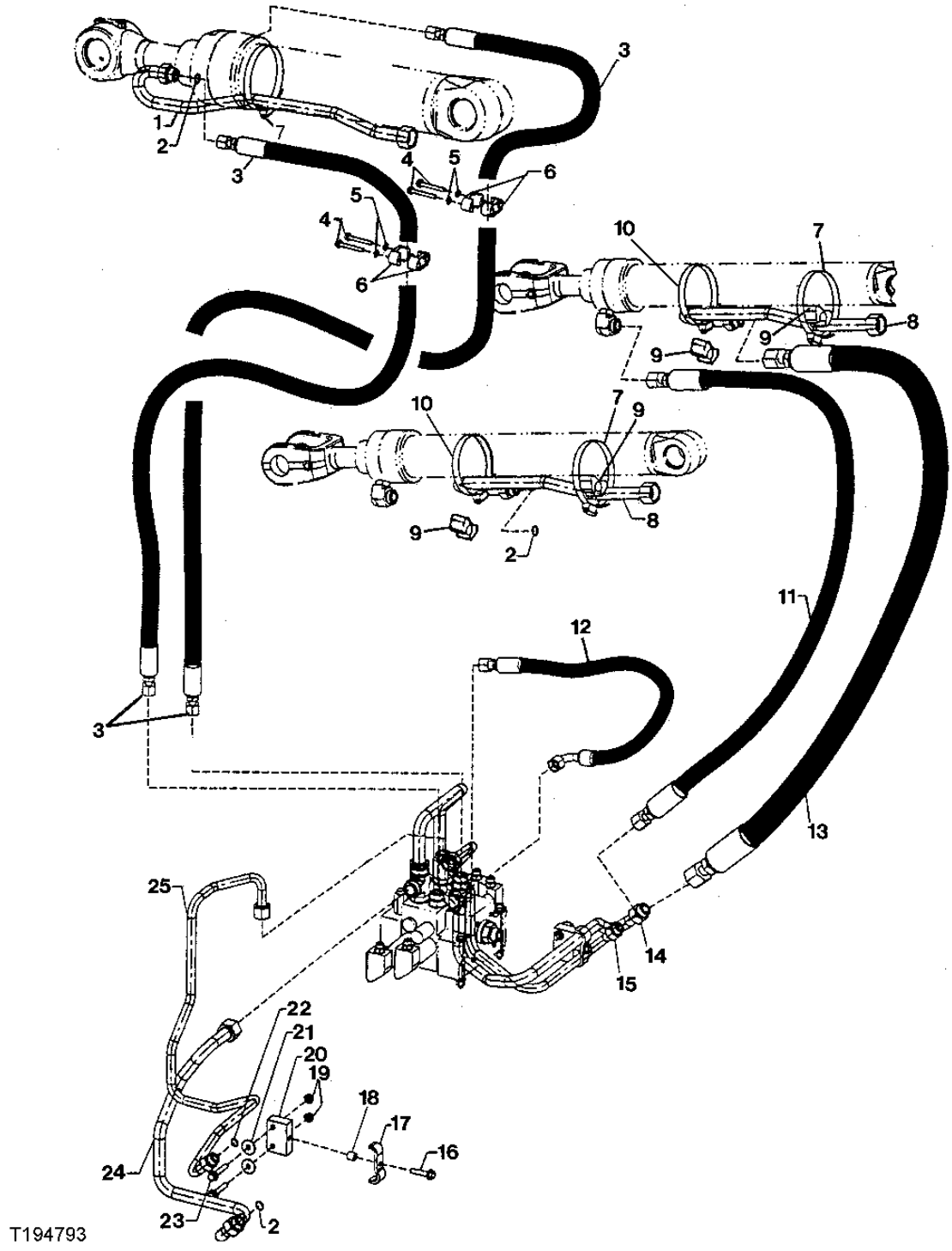

BOOM AND BUCKET CYLINDER HYDRAULICS (FOR USE WITH Z-BAR LINKAGE) (S.N. -594432)
CIRCUIT HYDRAULIQUE VERIN FLECHE ET BENNE (UTILISER AVEC TRINGLERIE CINEMATIQUE EN Z) (SN -594432)
SISTEMA HIDRAULICO CILINDRO DEL CUCHARON AGUILON (PARA USO CON VARILLAJE BARRA EN Z) (SN -594432)

KEY	PART NO.	PART NAME	QTY.	SERIAL NO.	REMARKS
1	AT224154	OIL LINE	1		
2	T77858	O-RING	5		
3	AT228194	HYDRAULIC HOSE - FABRICATE	2		(SUB FOR AT207923)
4	19M7801	SCREW	4		M8 X 60
5	24M7238	WASHER	4		8.700 X 17 X 2 MM
6	T147188	CLAMP	4		
7	AR89602	CLAMP	3		(SUB FOR AR85327, THIS APPLICATION)
8	AT206698	OIL LINE	2		
9	T105773	GUIDE	4		
10	AR85327	CLAMP	2		
11	AT207434	HYDRAULIC HOSE - FABRICATE	2		
12	AT167553	HYDRAULIC HOSE - FABRICATE	1		
13	AT223352	HYDRAULIC HOSE - FABRICATE	2		
14	AT210688	OIL LINE	1		
15	AT210690	OIL LINE	1		
16	19M7805	SCREW	2		M10 X 45
17	T167921	CLAMP	2		
18	28H3381	SPACER	2		
19	14M7296	FLANGE NUT	4		M10
20	AT224665	BRACKET	2		
21	24M7296	WASHER	4		(SUB FOR T148712)
22	T77932	O-RING	2		
23	19M7835	SCREW	4		
24	AT210689	OIL LINE	1		
25	AT210691	OIL LINE	1		

BOOM AND BUCKET CYLINDER HYDRAULICS (FOR USE WITH Z-BAR LINKAGE) (S.N. 594433-)
CIRCUIT HYDRAULIQUE VERIN FLECHE ET BENNE (UTILISER AVEC TRINGLERIE CINEMATIQUE EN Z) (SN 594433-)
SISTEMA HIDRAULICO CILINDRO DEL CUCHARON AGUILON (PARA USO CON VARILLAJE BARRA EN Z) (SN 594433-)

T208708 -UN-04MAR05

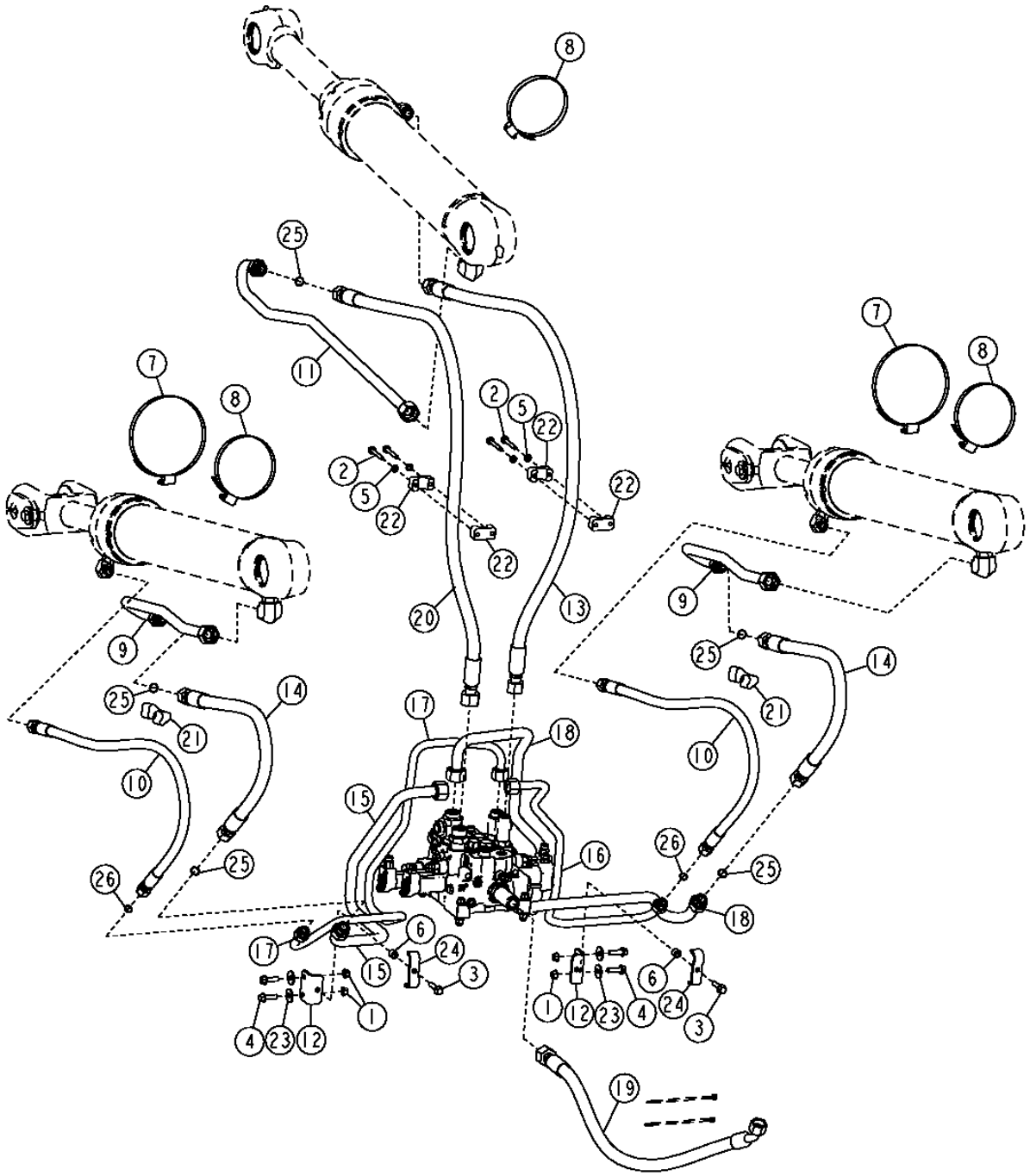

THIS PARTS LISTING IS CONTINUED

BOOM AND BUCKET CYLINDER HYDRAULICS (FOR USE WITH Z-BAR LINKAGE) (S.N. 594433-)
CIRCUIT HYDRAULIQUE VERIN FLECHE ET BENNE (UTILISER AVEC TRINGLERIE CINEMATIQUE EN Z) (SN 594433-)
SISTEMA HIDRAULICO CILINDRO DEL CUCHARON AGUILON (PARA USO CON VARILLAJE BARRA EN Z) (SN 594433-)

KEY	PART NO.	PART NAME	QTY.	SERIAL NO.	REMARKS
1	14M7296	FLANGE NUT	4		M10
2	19M7801	SCREW	4	-XXXXXX	M8 X 60
	19M7979	SCREW	4	XXXXXX-	M8 X 55
3	19M7805	SCREW	2		M10 X 45
4	19M7835	SCREW	4		M10 X 35
5	24M7238	WASHER	4	-XXXXXX	8.700 X 17 X 2 MM
6	28H3381	SPACER	2		
7	AR85327	CLAMP	2		
8	AR89602	CLAMP	3		
9	AT206698	OIL LINE	2		
10	AT207434	HYDRAULIC HOSE - FABRICATE	2		
11	AT224154	OIL LINE	1		
12	AT224665	BRACKET	2		
13	AT228194	HYDRAULIC HOSE - FABRICATE	1		
14	AT228197	HYDRAULIC HOSE - FABRICATE	2		
15	AT305111	OIL LINE	1		
16	AT305112	OIL LINE	1		
17	AT305113	OIL LINE	1		
18	AT305114	OIL LINE	1		
19	AT314334	HYDRAULIC HOSE - FABRICATE	1		
20	AT314944	HYDRAULIC HOSE - FABRICATE	1		
21	T105773	GUIDE	2		
22	T147188	CLAMP	4		
23	24M7296	WASHER	4		(SUB FOR T148712)
24	T167921	CLAMP	2		
25	T77858	O-RING	5		
26	T77932	O-RING	2		

THIRD FUNCTION AUXILIARY HYDRAULICS (FOR USE WITH Z-BAR LINKAGE) (S.N. -594432)
CIRCUIT HYDRAULIQUE AUXILIAIRE TROISIEME FONCTION (POUR TRINGLERIE CINEMATIQUE EN Z) (SN -594432)
SISTEMA HIDRAULICO AUXILIAR DE TERCERA FUNCION (PARA USO CON VARILLAJE DE BARRA EN Z) (SN -594432)

T194800 -UN-24OCT03

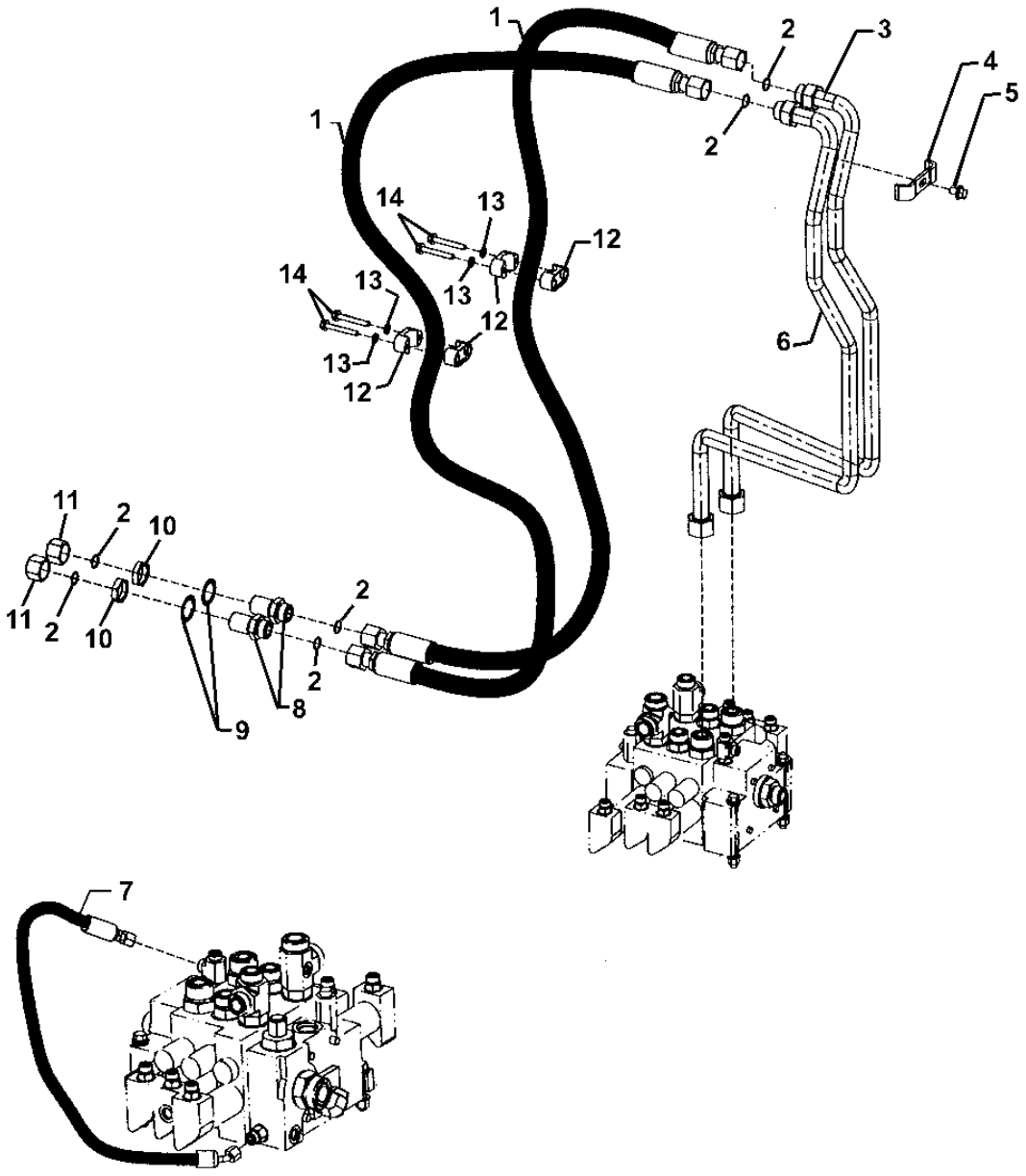

T194800

THIRD FUNCTION AUXILIARY HYDRAULICS (FOR USE WITH Z-BAR LINKAGE) (S.N. -594432)
CIRCUIT HYDRAULIQUE AUXILIAIRE TROISIEME FONCTION (POUR TRINGLERIE CINEMATIQUE EN Z) (SN -594432)
SISTEMA HIDRAULICO AUXILIAR DE TERCERA FUNCION (PARA USO CON VARILLAJE DE BARRA EN Z) (SN -594432)

KEY	*PART NO.*	*PART NAME*	*QTY.*	*SERIAL NO.*	*REMARKS*
1	AT191285	HYDRAULIC HOSE - FABRICATE	2		1-3/16" X 1 295 MM (51") X 1-3/16", (SUB FOR AT166041)
2	T77858	O-RING	11		
3	AT211352	OIL LINE	1		
4	T167979	CLAMP	1		
5	19M7784	SCREW	1		M10 X 20, (SUB FOR 19M7783)
6	AT211351	OIL LINE	1		
7	AT167553	HYDRAULIC HOSE - FABRICATE	1		11/16" X 630 MM (24-3/4") X 11/16"
8	38H1276	ADAPTER FITTING	2		
9	T174275	LOCK WASHER	2		
10	T78707	NUT	2		
11	38H1418	FITTING	2		
12	T147188	CLAMP	4		
13	24M7238	WASHER	4		8.700 X 17 X 2 MM
14	19M7801	SCREW	4		M8 X 60

FOURTH FUNCTION AUXILIARY HYDRAULICS (FOR USE WITH Z-BAR LINKAGE) (SN -594432)
CIRCUIT HYDRAULIQUE AUXILIAIRE 4EME FONCTION (POUR TRINGLERIE CINEMATIQUE EN Z) (SN -594432)
SISTEMA HIDRAULICO AUXILIAR DE CUARTA FUNCION (PARA USO CON VARILLAJE DE BARRA EN Z) (SN -594432)

T194802 -UN-24OCT03

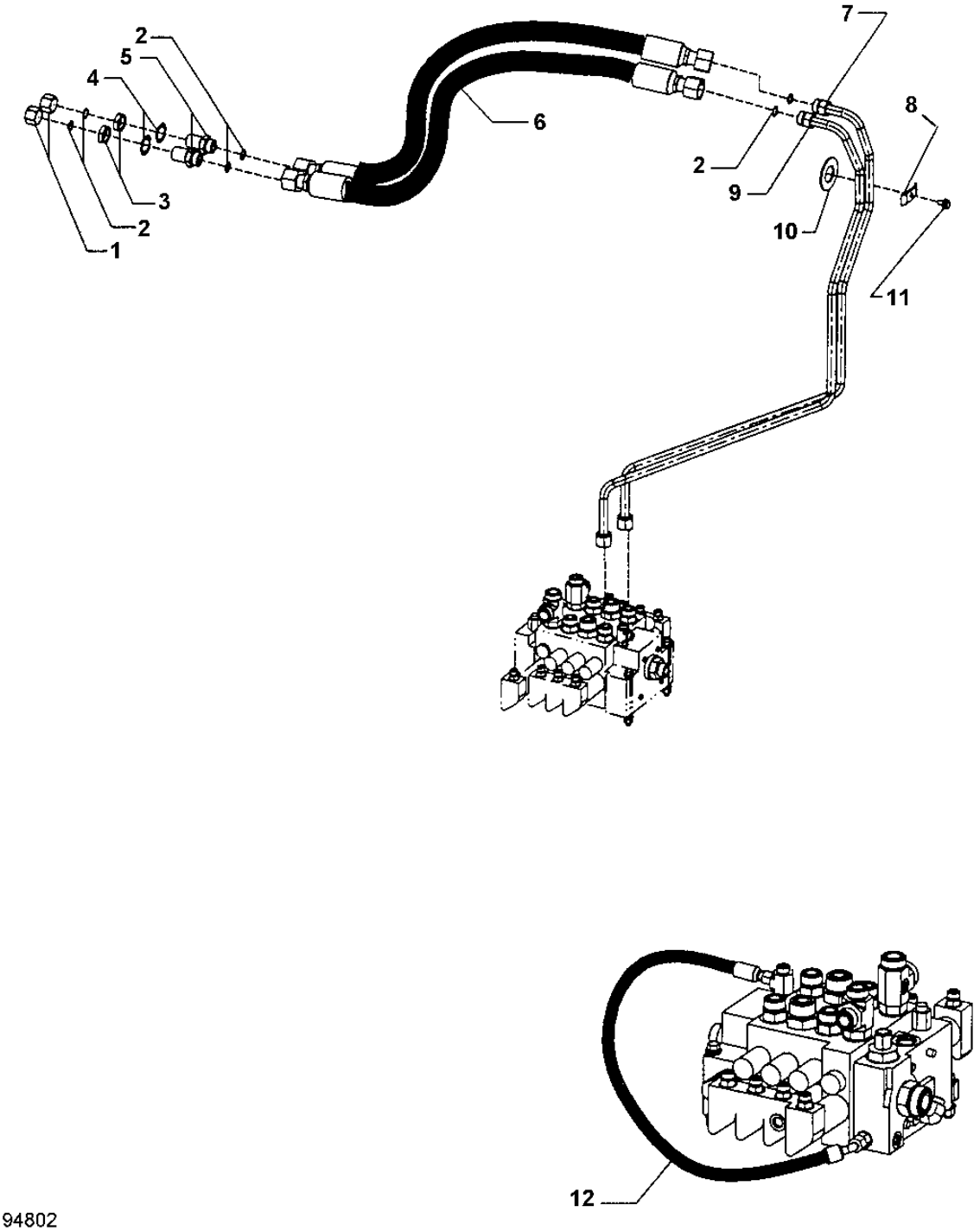

T194802

FOURTH FUNCTION AUXILIARY HYDRAULICS (FOR USE WITH Z-BAR LINKAGE) (SN -594432)
CIRCUIT HYDRAULIQUE AUXILIAIRE 4EME FONCTION (POUR TRINGLERIE CINEMATIQUE EN Z) (SN -594432)
SISTEMA HIDRAULICO AUXILIAR DE CUARTA FUNCION (PARA USO CON VARILLAJE DE BARRA EN Z) (SN -594432)

KEY	*PART NO.*	*PART NAME*	*QTY.*	*SERIAL NO.*	*REMARKS*
1	38H1418	FITTING	4		
2	T77858	O-RING	21		
3	T78707	NUT	4		
4	T174275	LOCK WASHER	4		
5	38H1276	ADAPTER FITTING	4		
6	AT191285	HYDRAULIC HOSE - FABRICATE	4		(SUB FOR AT166041)
7	AT211354	OIL LINE	1		
8	T176474	CLAMP	1		
9	AT211353	OIL LINE	1		
10	24H1545	WASHER	1		1-9/16" X 3" X 0.149"
11	19M7784	SCREW	2		M10 X 20, (SUB FOR 19M7783)
12	AT169886	HYDRAULIC HOSE - FABRICATE	1		(SUB FOR AT167553)

THIRD AND FOURTH FUNCTION AUXILIARY HYDRAULICS (SN 594433-) (SEE FOOTNOTE)
CIRCUIT HYDRAULIQUE AUXILIAIRE TROISIEME QUATRIEME FONCTION (SN 594433-) (VOIR APOSTILLE)
SISTEMA HIDRAULICO AUXILIAR DE TERCERA Y CUARTA FUNCION (SN 594433-) (CONSULTE NOTA AL PIE PAGINA)

T208707 -UN-04MAR05

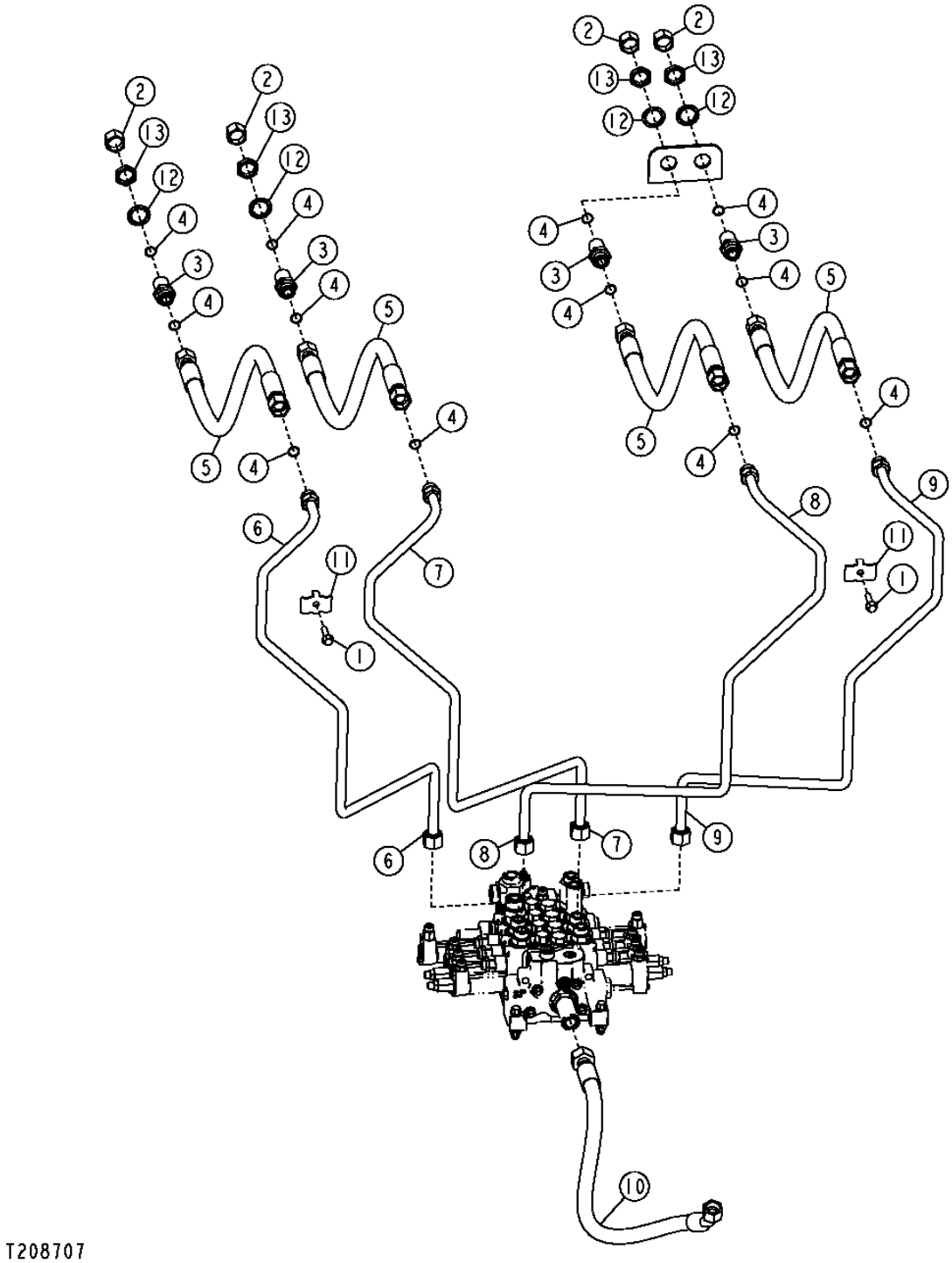

THIRD AND FOURTH FUNCTION AUXILIARY HYDRAULICS (SN 594433-) (SEE FOOTNOTE)
CIRCUIT HYDRAULIQUE AUXILIAIRE DE TROISIEME ET QUATRIEME FONCTION (SN 594433-) (VOIR APOSTILLE)
SISTEMA HIDRAULICO AUXILIAR DE TERCERA Y CUARTA FUNCION (SN 594433-)(CONSULTE NOTA AL PIE PAGINA)

KEY	*PART NO.*	*PART NAME*	*QTY.*	*SERIAL NO.*	*REMARKS*
1	19M7805	SCREW	2		M10 X 45
2	38H1418	FITTING	4		
3	38H1276	ADAPTER FITTING	4		
4	T77858	O-RING	12		
5	AT191285	HYDRAULIC HOSE - FABRICATE	4		
6	AT314959	OIL LINE	1		
7	AT314960	OIL LINE	1		
8	AT314961	OIL LINE	1		
9	AT314962	OIL LINE	1		
10	AT316332	HYDRAULIC HOSE - FABRICATE	1		
11	T160549	CLAMP	2		
12	T174275	LOCK WASHER	4		
13	T78707	NUT	4		

FOR USE WITH Z-BAR LINKAGE
A UTILISER AVEC TRINGLERIE CINEMATIQUE EN Z
PARA USO CON VARILLAJE DE BARRA EN Z

CONTROL VALVE TO BUCKET AND BOOM CYLINDER HYDRAULICS (FOR USE WITH POWERLLEL™ LINKAGE)
CIRCUIT HYDRAULIQUE DISTRIBUTEUR A VERIN BENNE ET FLECHE (A UTILISER AVEC TRINGLERIE POWERLLEL™)
VALVULA CONTROL CUCHARON SISTEMA HIDRAULICO CILINDRO AGUILON (UTILISER AVEC TRINGLERIE POWERLLEL_T

T209266 -UN-11MAR05

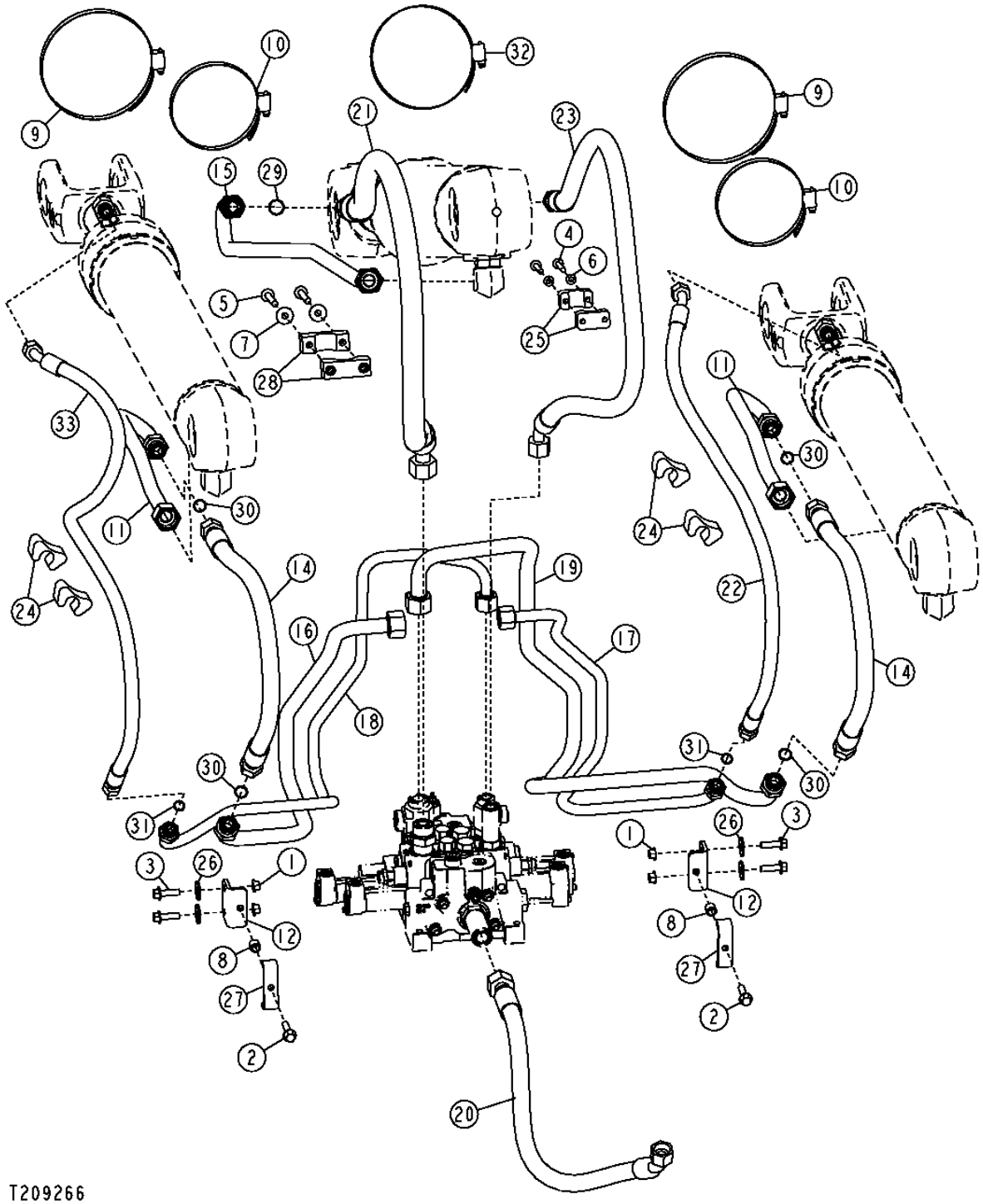

CONTROL VALVE TO BUCKET AND BOOM CYLINDER HYDRAULICS (FOR USE WITH POWERLLEL™ LINKAGE)
CIRCUIT HYDRAULIQUE DISTRIBUTEUR A VERIN BENNE ET FLECHE (A UTILISER AVEC TRINGLERIE POWERLLEL™)
VALVULA CONTROL CUCHARON SISTEMA HIDRAULICO CILINDRO AGUILON (PARA USO CON VARILLAJE POWERLLEL™)

KEY	*PART NO.*	*PART NAME*	*QTY.*	*SERIAL NO.*	*REMARKS*
1	14M7296	FLANGE NUT	4		M10
2	19M7805	SCREW	2		M10 X 45
3	19M7835	SCREW	4		M10 X 35
4	19M7979	SCREW	2		M8 X 55
5	19M7801	SCREW	2		M8 X 60
6	24M7238	WASHER	2		8.700 X 17 X 2 MM
7	24M7296	WASHER	2		10.500 X 30 X 2.500 MM
8	28H3381	SPACER	2		0.493" X 0.675" X 5/8"
9	AR85327	CLAMP	2		
10	TY22493	HOSE CLAMP	2		
11	AT206698	OIL LINE	2		
12	AT224665	BRACKET	2		
13	AT228193	HYDRAULIC HOSE - FABRICATE	2		
14	AT228197	HYDRAULIC HOSE - FABRICATE	2		(SUB FOR AT228195)
15	AT305050	OIL LINE	1		
16	AT305111	OIL LINE	1		
17	AT305112	OIL LINE	1		
18	AT305113	OIL LINE	1		
19	AT305114	OIL LINE	1		
20	AT314334	HYDRAULIC HOSE - FABRICATE	1		
21	AT314675	HYDRAULIC HOSE - FABRICATE	1		
22	AT314677	HYDRAULIC HOSE - FABRICATE	1		
23	AT315051	HYDRAULIC HOSE - FABRICATE	1		
24	T105773	GUIDE	4		
25	T147188	CLAMP	2		
26	24M7296	WASHER	4		(SUB FOR T148712)
27	T167921	CLAMP	2		
28	T67995	CLAMP	2		
29	T76938	O-RING	1		
30	T77858	O-RING	4		
31	T77932	O-RING	2		
32	TY22495	HOSE CLAMP	1		
33	AT320374	HYDRAULIC HOSE - FABRICATE	1		

THIRD AND FOURTH FUNCTION AUXILIARY HYDRAULICS (FOR USE WITH POWERLLEL™ LINKAGE)
CIRCUIT HYDRAULIQUE AUXILIAIRE TROISIEME QUATRIEME FONCTION (UTILISER AVEC TRINGLERIE POWERLLEL™
SISTEMA HIDRAULICO AUXILIAR DE TERCERA Y CUARTA FUNCION (PARA USO CON VARILLAJE POWERLLEL™)

T209267 -UN-11MAR05

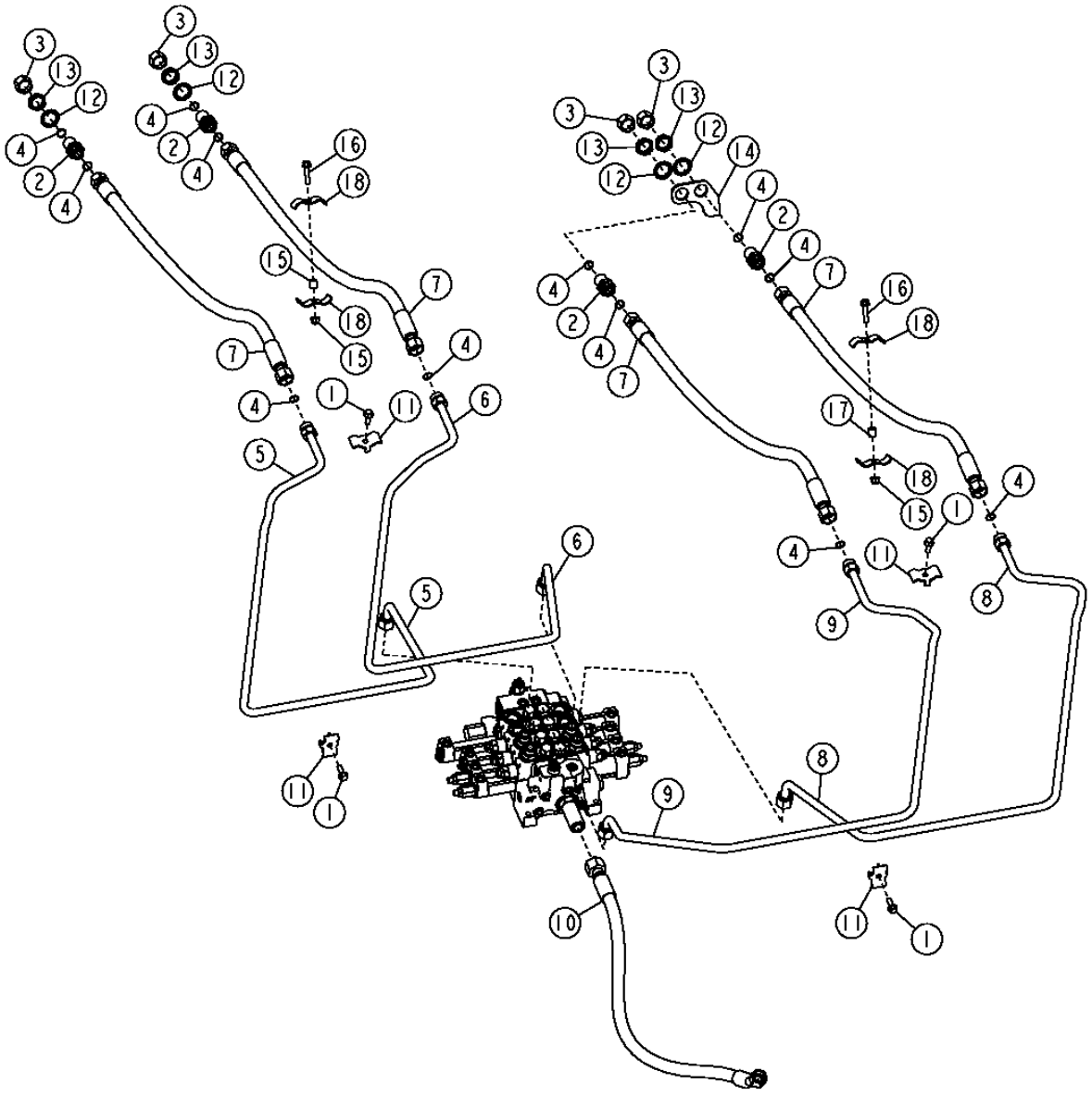

T209267

THIRD AND FOURTH FUNCTION AUXILIARY HYDRAULICS (FOR USE WITH POWERLLEL LINKAGE™)
CIRCUIT HYDRAULIQUE AUXILIAIRE TROISIEME QUATRIEME FONCTION (UTILISER AVEC TRINGLERIE POWERLLEL™
SISTEMA HIDRAULICO AUXILIAR DE TERCERA Y CUARTA FUNCION (PARA USO CON VARILLAJE POWERLLEL™)

KEY	*PART NO.*	*PART NAME*	*QTY.*	*SERIAL NO.*	*REMARKS*
1	19M7786	SCREW	4		M10 X 30
2	38H1276	ADAPTER FITTING	4		
3	38H1418	FITTING	4		
4	T77858	O-RING	12		
5	.....	OIL LINE	1	-598386	(SUB AT322446 AND AT322466) (ALSO ORDER AT323713) (AT307813 NLA)
	AT322446	OIL LINE	1	598387-	
6	.....	OIL LINE	1	-598386	(SUB AT322466 AND AT322446) (ALSO ORDER AT323713) (AT307814 NLA)
	AT322466	OIL LINE	1	598387-	
7	AT313424	HYDRAULIC HOSE - FABRICATE	4		
8	.....	OIL LINE	2	-598386	(SUB AT322501 AND AT322445) (ALSO ORDER AT323713) (AT314195 NLA)
	AT322501	OIL LINE	2	598387-	
9	.....	OIL LINE	4	-598386	(SUB AT322445 AND AT322501) (ALSO ORDER AT323713) (AT314196 NLA)
	AT322445	OIL LINE	4	598387-	
10	AT316332	HYDRAULIC HOSE - FABRICATE	1		
11	T215434	CLAMP	4		(SUB FOR KV22609)
12	T174275	LOCK WASHER	4		
13	T78707	NUT	4		
14	T210447	PLATE	2		
15	14M7400	LOCK NUT	2		
16	19M7805	SCREW	2		
17	28H3383	BUSHING	2		
18	U46753	HOSE CLAMP	4		
..	**AT323713**	**KIT**	**1**		**(WHOLE GOODS) (NOT ILLUSTRATED)**

CONTROL VALVE TO BUCKET AND BOOM CYLINDER HYDRAULICS (FOR USE WITH TOOL CARRIER)
CIRCUIT HYDRAULIQUE DISTRIBUTEUR A VERIN BENNE ET FLECHE (POUR PORTE-OUTILS)
VALVULA CONTROL A CUCHARON Y SISTEMA HIDRAULICO DEL CILINDRO AGUILON (USO CON PORTAHERRAMIENTAS)

T194796 -UN-24OCT03

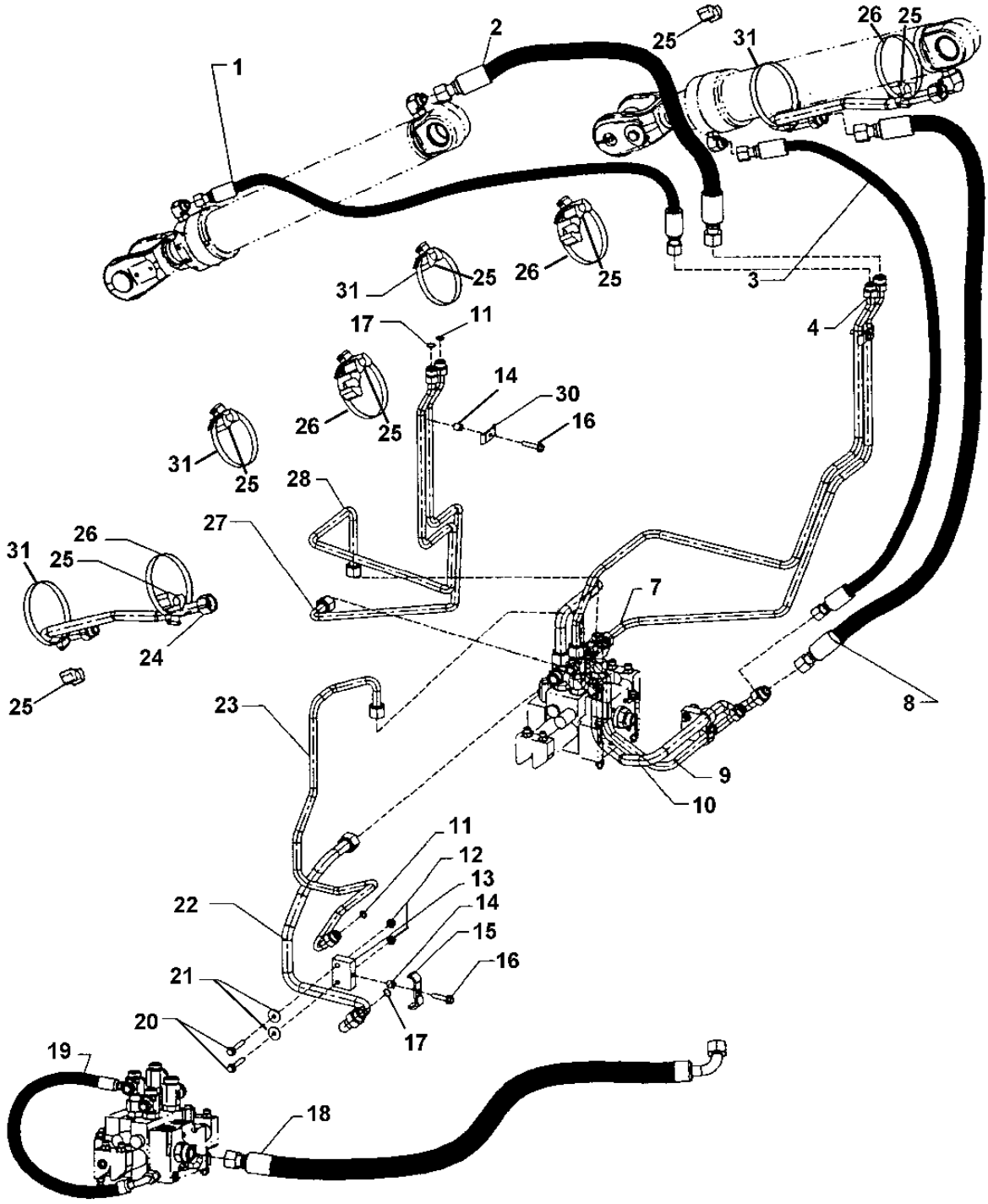

T194796

CONTROL VALVE TO BUCKET AND BOOM CYLINDER HYDRAULICS (FOR USE WITH TOOL CARRIER)
CIRCUIT HYDRAULIQUE DISTRIBUTEUR A VERIN BENNE ET FLECHE (POUR PORTE-OUTILS)
VALVULA CONTROL A CUCHARON Y SISTEMA HIDRAULICO DEL CILINDRO AGUILON (USO CON PORTAHERRAMIENTAS)

KEY	PART NO.	PART NAME	QTY.	SERIAL NO.	REMARKS
1	AT306599	HYDRAULIC HOSE - FABRICATE	2		
2	AT227539	HYDRAULIC HOSE - FABRICATE	2		
3	AT306597	HYDRAULIC HOSE - FABRICATE	2		
4	AT220907	OIL LINE	1		
7	AT225576	OIL LINE	1		
8	AT227538	HYDRAULIC HOSE - FABRICATE	2		
9	AT210690	OIL LINE	1		
10	AT210688	OIL LINE	1		
11	T77932	O-RING	4		
12	14M7296	FLANGE NUT	4		M10
13	AT224665	BRACKET	2		
14	28H3381	SPACER	4		0.493" X 0.675" X 5/8"
15	T167921	CLAMP	2		
16	19M7805	SCREW	4		M10 X 45
17	T77858	O-RING	6		
18	AT199396	HYDRAULIC HOSE - FABRICATE	1		(SUB FOR AT191282)
19	AT167553	HYDRAULIC HOSE - FABRICATE	1		
20	19M7835	SCREW	4		
21	24M7296	WASHER	4		(SUB FOR T148712)
22	AT210689	OIL LINE	1		
23	AT210691	OIL LINE	1		
24	AT206698	OIL LINE	2		
25	T105773	GUIDE	6		
26	AR89602	CLAMP	3		
27	AT219978	OIL LINE	1		
28	AT220906	OIL LINE	1		
30	T176474	CLAMP	2		
31	AR85327	CLAMP	4		

THIRD FUNCTION AUXILIARY HYDRAULICS (FOR USE WITH TOOL CARRIER)
CIRCUIT HYDRAULIQUE AUXILIAIRE TROISIEME FONCTION (POUR PORTE-OUTILS)
SISTEMA HIDRAULICO AUXILIAR DE TERCERA FUNCION (PARA USO CON PORTAHERRAMIENTAS)

T194801 -UN-24OCT03

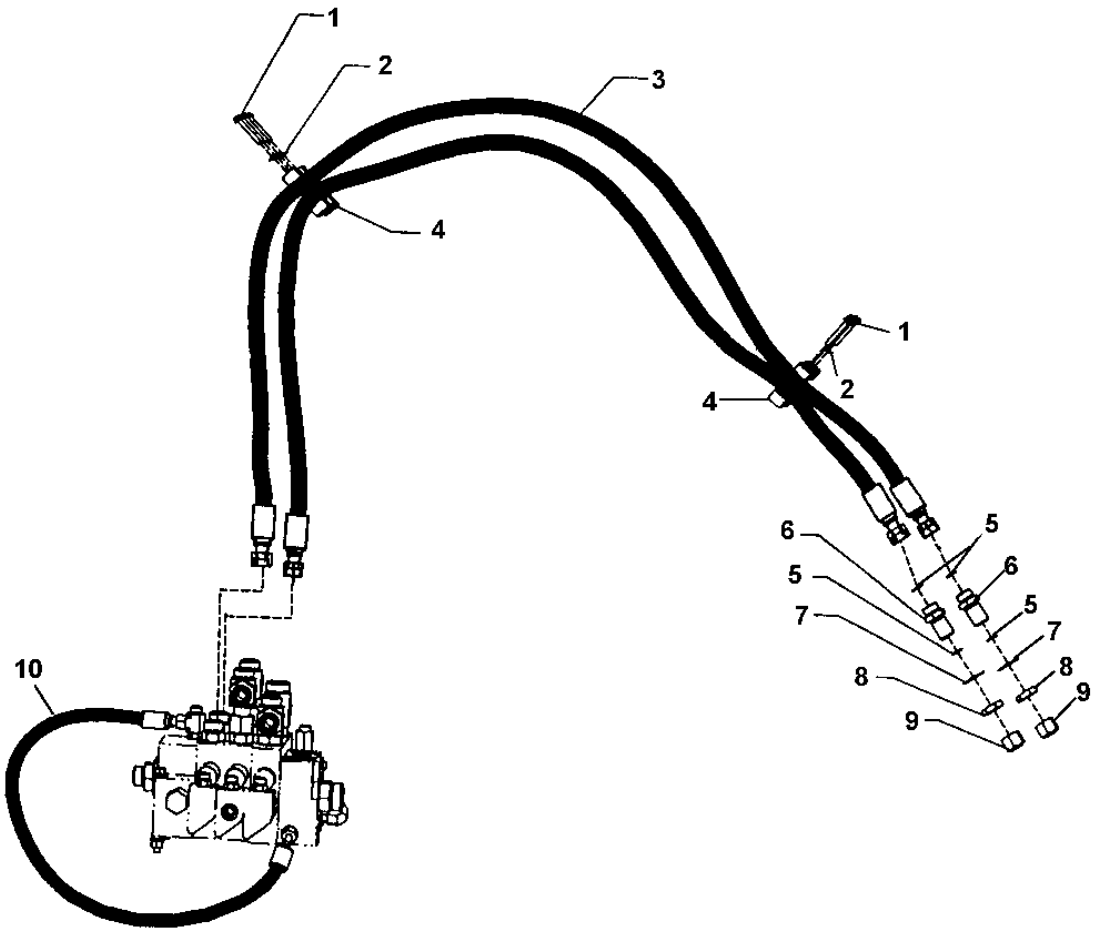

T194801

THIRD FUNCTION AUXILIARY HYDRAULICS (FOR USE WITH TOOL CARRIER)
CIRCUIT HYDRAULIQUE AUXILIAIRE TROISIEME FONCTION (POUR PORTE-OUTILS)
SISTEMA HIDRAULICO AUXILIAR DE TERCERA FUNCION (PARA USO CON PORTAHERRAMIENTAS)

KEY	*PART NO.*	*PART NAME*	*QTY.*	*SERIAL NO.*	*REMARKS*
1	19M7801	SCREW	8		M8 X 60
2	24M7238	WASHER	5		8.700 X 17 X 2 MM
3	AT199405	HYDRAULIC HOSE - FABRICATE	2		(SUB FOR AT191281)
4	T147188	CLAMP	8		
5	T77858	O-RING	10		
6	38H1276	ADAPTER FITTING	2		
7	T174275	LOCK WASHER	2		
8	T78707	NUT	2		
9	38H1418	FITTING	2		
10	AT167553	HYDRAULIC HOSE - FABRICATE	1		

FOURTH FUNCTION AUXILIARY HYDRAULICS (FOR USE WITH TOOL CARRIER)
CIRCUIT HYDRAULIQUE AUXILIAIRE 4EME FONCTION (POUR PORTE-OUTILS)
SISTEMA HIDRAULICO AUXILIAR DE CUARTA FUNCION (PARA USO CON PORTAHERRAMIENTAS)

T194804 -UN-24OCT03

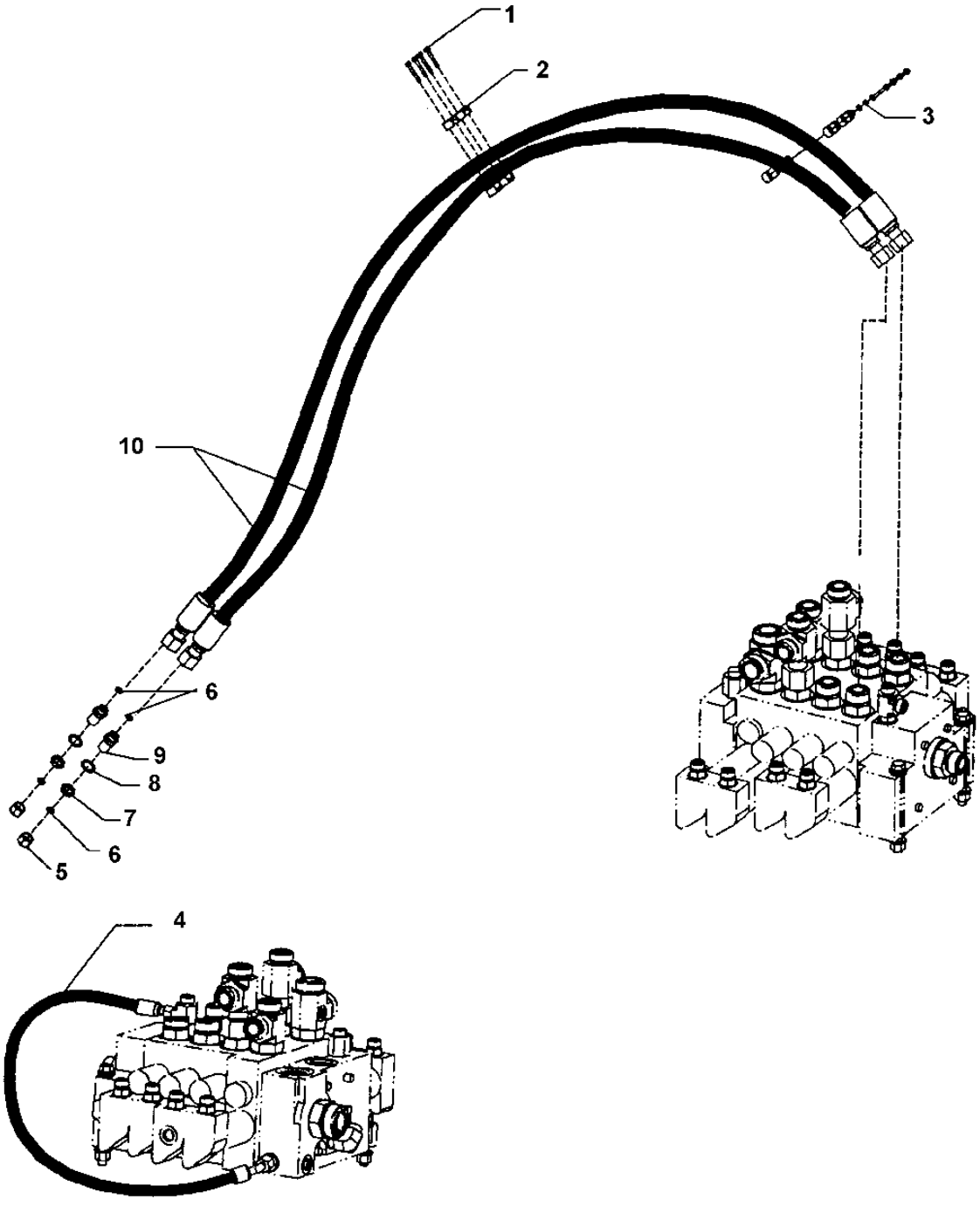

T194804

FOURTH FUNCTION AUXILIARY HYDRAULICS (FOR USE WITH TOOL CARRIER AND LOG LOADER)
CIRCUIT HYDRAULIQUE AUXILIAIRE 4EME FONCTION (A UTILISER AVEC PORTE-OUTILS ET GRAPPIN A RONDINS)
SISTEMA HIDRAULICO AUXILIAR DE CUARTA FUNCION (PARA USO CON PORTAHERRAMIENTAS CARGADORA TRONCOS)

KEY	*PART NO.*	*PART NAME*	*QTY.*	*SERIAL NO.*	*REMARKS*
1	19M7801	SCREW	16		M8 X 60
2	T147188	CLAMP	16		
3	24M7238	WASHER	8		8.700 X 17 X 2 MM
4	AT169886	HYDRAULIC HOSE - FABRICATE	1		(SUB FOR AT167553)
5	38H1418	FITTING	4		
6	T77858	O-RING	14		
7	T78707	NUT	4		
8	T174275	LOCK WASHER	4		
9	38H1276	ADAPTER FITTING	4		
10	AT166039	HYDRAULIC HOSE - FABRICATE	4		

TWO LEVER PILOT CONTROLLER
CONTROLEUR PILOTE DEUX LEVIERS
CONTROLADOR PILOTO DE DOS PALANCAS

TX1014774 -UN-18JAN07

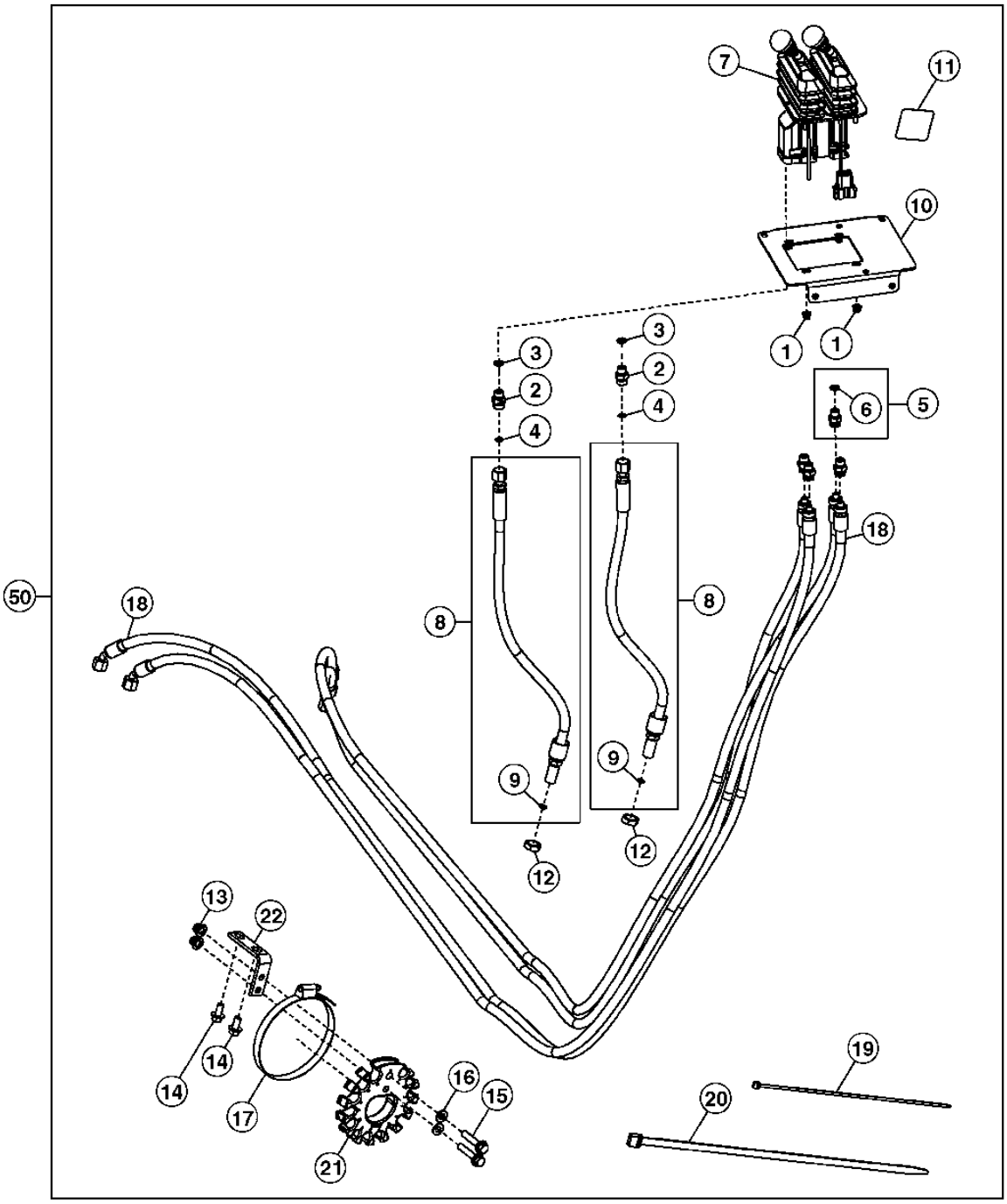

TX1014774

TWO LEVER PILOT CONTROLLER
CONTROLEUR PILOTE DEUX LEVIERS
CONTROLADOR PILOTO DE DOS PALANCAS

KEY	*PART NO.*	*PART NAME*	*QTY.*	*SERIAL NO.*	*REMARKS*
1	14M7397	LOCK NUT	4		M6
2	38H1160	ADAPTER FITTING	2		
3	R26448	O-RING	2		
4	T77613	O-RING	2		
5	63H1001	FITTING	4		
6	R26448	O-RING	4		
7	AT225425	HYDR./PILOT CONTROL VALVE	1		(COMPONENTS ON SEPERATE PAGE)
8	AT226454	HYDRAULIC HOSE - FABRICATE	2		
9	T77613	O-RING	2		
10	AT300936	PLATE	1		
11	T200729	LABEL	1		(FINGERTIP CONTROLS)
12	T81029	NUT	2		
13	14M7400	LOCK NUT	2		M10
14	19M7784	SCREW	2		M10 X 20
15	19M7806	SCREW	2		M10 X 50
16	24M7239	WASHER	2		10.700 X 21 X 2.500 MM
17	AR89602	CLAMP	1		
18	AT226615	HYDRAULIC HOSE - FABRICATE	4		
19	H77698	TIE BAND	6		
20	N189220	TIE BAND	4		
21	T154342	RETAINER	1		
22	T157443	ANGLE	1		
50	**AT305687**	**MOUNTING PARTS**	**1**		**(WHOLE GOODS) (JOYSTICK TO TWO LEVER CONVERSION KIT)**

TWO LEVER PILOT CONTROLLER COMPONENTS
COMPOSANTS DE CONTROLEUR PILOTE DEUX LEVIERS
COMPONENTES DEL CONTROLADOR PILOTO DE DOS PALANCAS

TX1003910 -UN-23FEB06

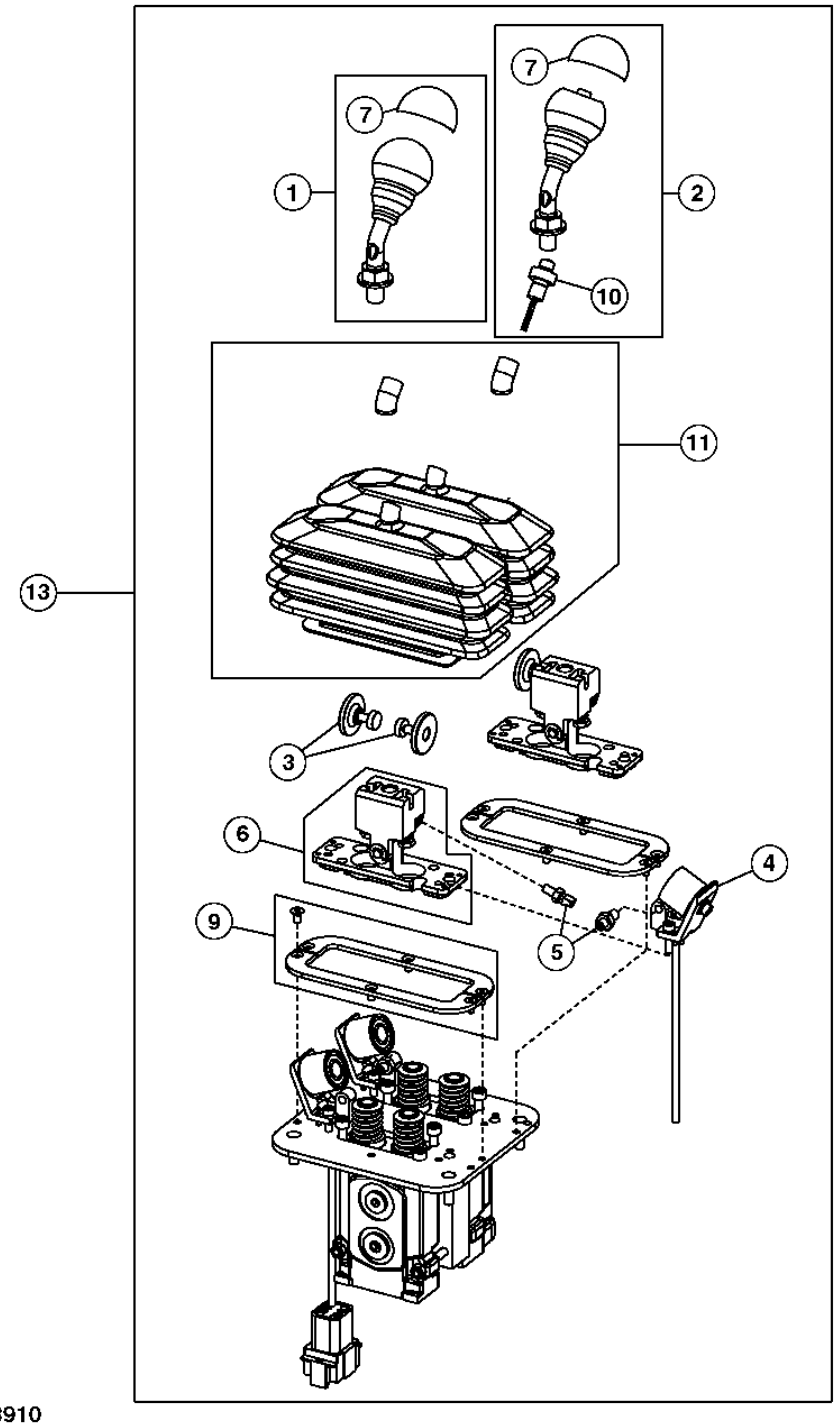

TX1003910

TWO LEVER PILOT CONTROLLER COMPONENTS
COMPOSANTS DE CONTROLEUR PILOTE DEUX LEVIERS
COMPONENTES DEL CONTROLADOR PILOTO DE DOS PALANCAS

KEY	*PART NO.*	*PART NAME*	*QTY.*	*SERIAL NO.*	*REMARKS*
1	AT227925	LEVER	1		
2	AT227926	LEVER	1		(FOR USE WITH KICKDOWN SWITCH)
3	AT227928	ARMATURE	2		
4	AT227927	SOLENOID	2		
5	AT227929	HYDR./PILOT CONTROL VALVE	4		
6	AT227930	PLATE	2		
7	AT318123	BOOT	2		(KNOB BOOT)
9	AT227933	PLATE	2		
10	AT226119	SWITCH	1		(KICKDOWN)
11	AT303619	KIT	1		(BOOT ASSEMBLY)
13	AT225425	HYDR./PILOT CONTROL VALVE	1		

TWO LEVER PILOT CONTROLLER WITH AUXILARY
CONTROLEUR PILOTE DEUX LEVIERS AVEC AUXILIAIRE
CONTROLADOR PILOTO DE DOS PALANCAS CON MANDO AUXILIAR

T194478 -UN-16SEP03

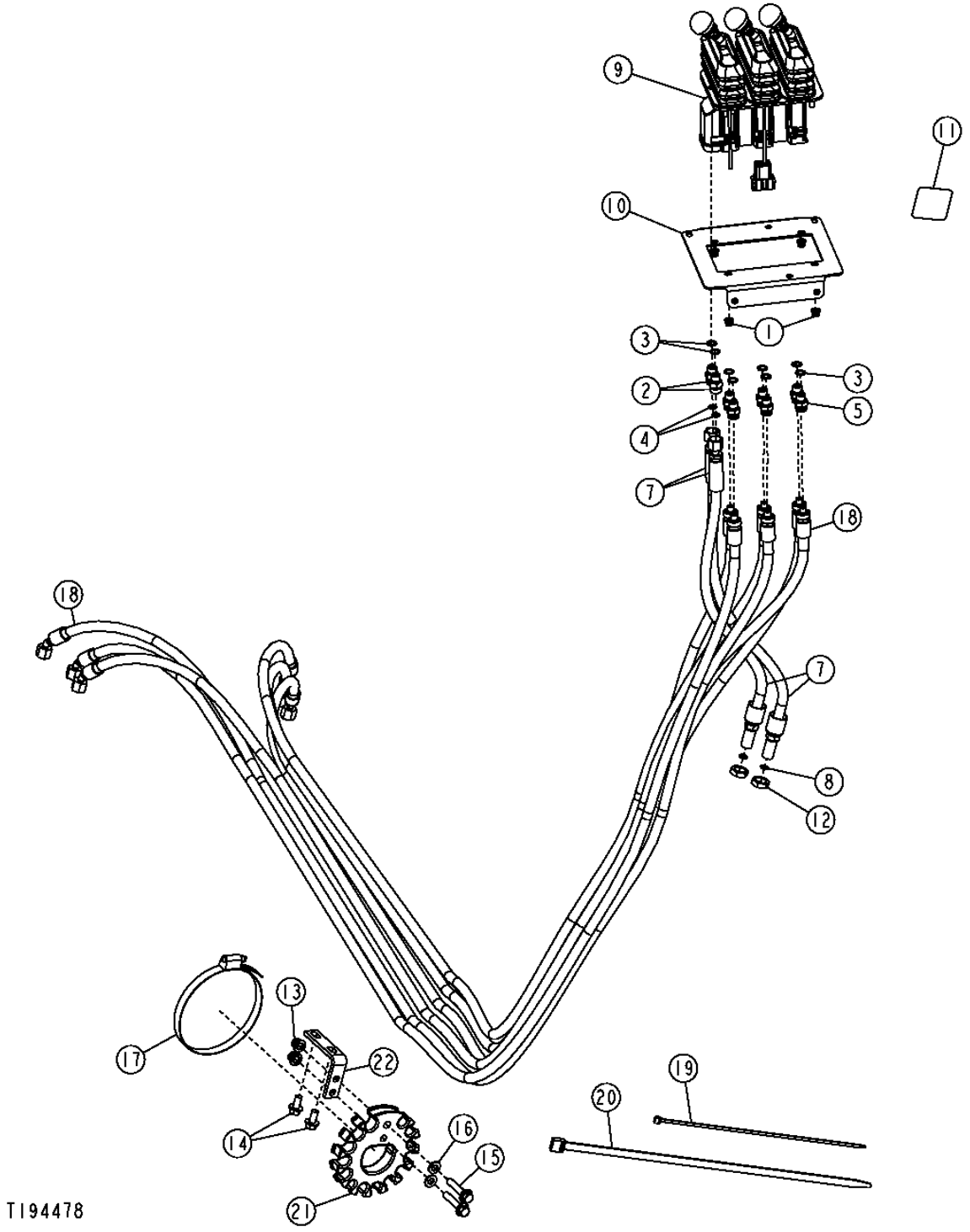

TWO LEVER PILOT CONTROLLER WITH AUXILIARY
CONTROLEUR PILOTE DEUX LEVIERS AVEC AUXILIAIRE
CONTROLADOR PILOTO DE DOS PALANCAS CON MANDO AUXILIAR

KEY	*PART NO.*	*PART NAME*	*QTY.*	*SERIAL NO.*	*REMARKS*
1	14M7397	LOCK NUT	4		M6
2	38H1160	ADAPTER FITTING	2		
3	T77613	O-RING	2		
4	R26448	O-RING	8		
5	63H1001	FITTING	6		
7	AT226454	HYDRAULIC HOSE - FABRICATE	1		
8	T77613	O-RING	2		
9	AT300154	HYDR./PILOT CONTROL VALVE	1		(COMPONENTS ON SEPERATE PAGE)
10	AT300156	PLATE	1		
11	T200729	LABEL	1		(FINGERTIP CONTROLS)
12	T81029	NUT	2		
13	14M7400	LOCK NUT	2		M10
14	19M7784	SCREW	2		M10 X 20
15	19M7806	SCREW	2		M10 X 50
16	24M7239	WASHER	2		10.700 X 21 X 2.500 MM
17	AR89602	CLAMP	1		
18	AT226615	HYDRAULIC HOSE - FABRICATE	6		
19	H77698	TIE BAND	6		
20	N189220	TIE BAND	4		
21	T154342	RETAINER	1		
22	T157443	ANGLE	1		
..	**AT305692**	**FIELD INSTALLATION KIT**	**1**		**(JOYSTICK WITH AUX. TO TWO LEVER WITH AUX. CONVERSION KIT)**
..	**AT307438**	**CONTROL LEVER**	**1**	**-594432**	**(WHOLE GOODS) (ADDITION OF AUXILIARY TO TWO LEVER CONTROLLER KIT)**
..	**AT316514**	**CONTROL LEVER**	**1**	**594433-**	**(WHOLE GOODS) (ADDITION OF AUXILIARY TO TWO LEVER CONTROLLER KIT)**
..	**AT314816**	**CONTROL LEVER**	**1**	**594433-**	**(WHOLE GOODS) (ADDITION OF AUXILIARY TO POWERLLEL™ LINKAGE TWO LEVER CONTROLLER KIT)**
..	**AT307585**	**CONTROL LEVER**	**1**		**(WHOLE GOODS) (ADDITION OF AUXILIARY TO TOOL CARRIER TWO LEVER CONTROLLER KIT)**

SINGLE AND DUAL AUXILIARY CONTROLLER COMPONENTS
COMPOSANTS CONTROLEUR AUXILIAIRE SIMPLE ET DOUBLE
COMPONENTES DE UNIDAD DE CONTROL AUXILIAR SIMPLE Y DOBLE

T212876 -UN-19JUL05

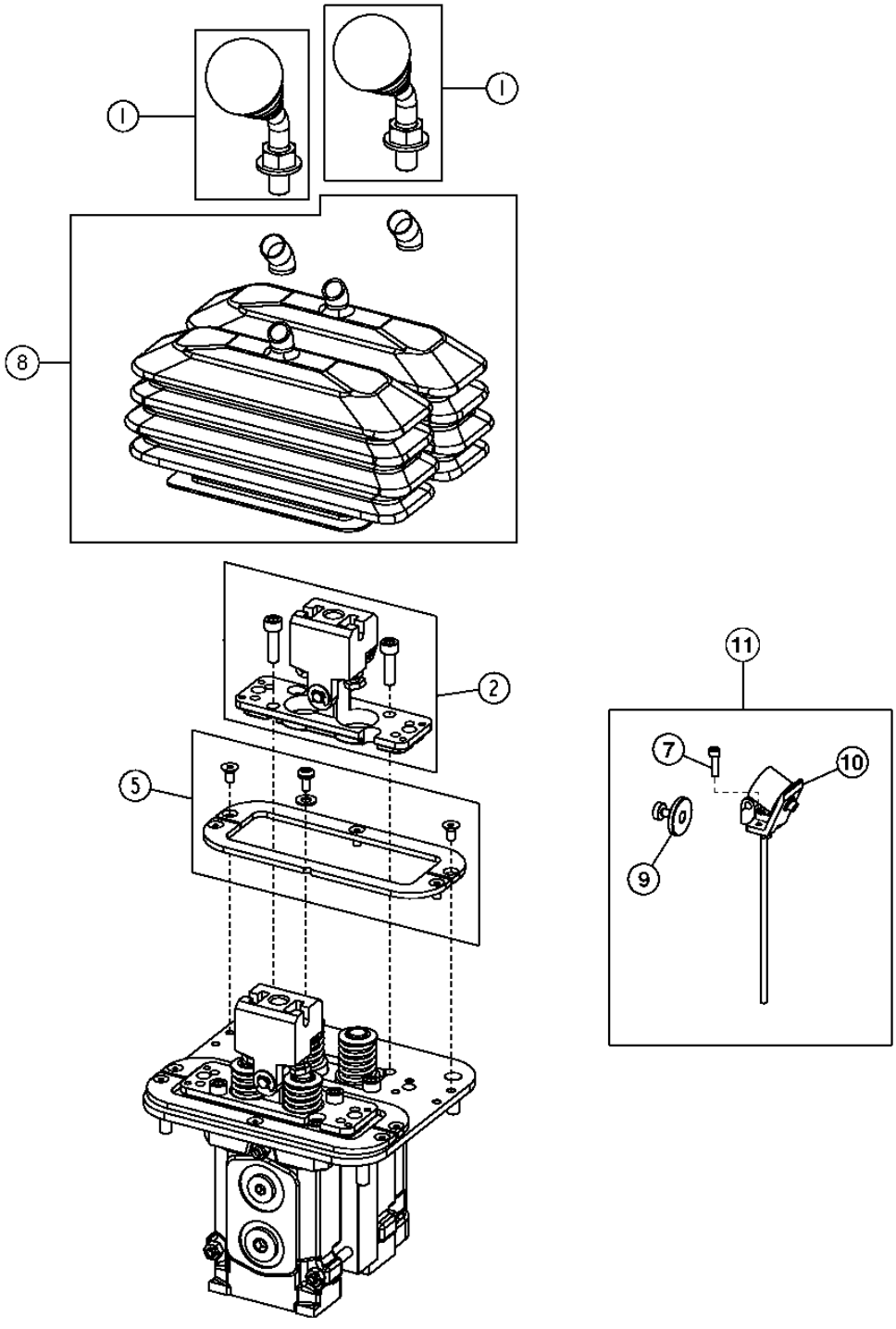

T212876

SINGLE AND DUAL AUXILIARY CONTROLLER COMPONENTS
COMPOSANTS CONTROLEUR AUXILIAIRE SIMPLE ET DOUBLE
COMPONENTES DE UNIDAD DE CONTROL AUXILIAR SIMPLE Y DOBLE

KEY	*PART NO.*	*PART NAME*	*QTY.*	*SERIAL NO.*	*REMARKS*
1	AT227925	LEVER	1		(WITHOUT SWITCH)
	AT227926	LEVER	1		(WITH SWITCH)
2	AT227930	PLATE	1		
3	AT226119	SWITCH	1		(KICKDOWN SWITCH) (NOT ILLUSTRATED)
5	AT227933	PLATE	1		
7	AT325612	BOLT	2		
8	AT303619	KIT	1		(BOOT ASSEMBLY)
9	AT227928	ARMATURE	1		
10	AT227927	SOLENOID	1		
11	.....	KIT	1		(SUB AT305603) AUXILIARY CONTROLLER DETENT KIT (AT227957 NLA)
..	**AT305603**	**FIELD INSTALLATION KIT**	**1**		**(INCLUDES AT227927, AT227928, (2) AT325612) (ADD DETENTS TO AUXILIARY KIT)**

JOYSTICK PILOT CONTROLLER
CONTROLEUR PILOTE MANCHE A BALAI
UNIDAD DE CONTROL PILOTO DE PALANCA

TX1008131 -UN-19MAY06

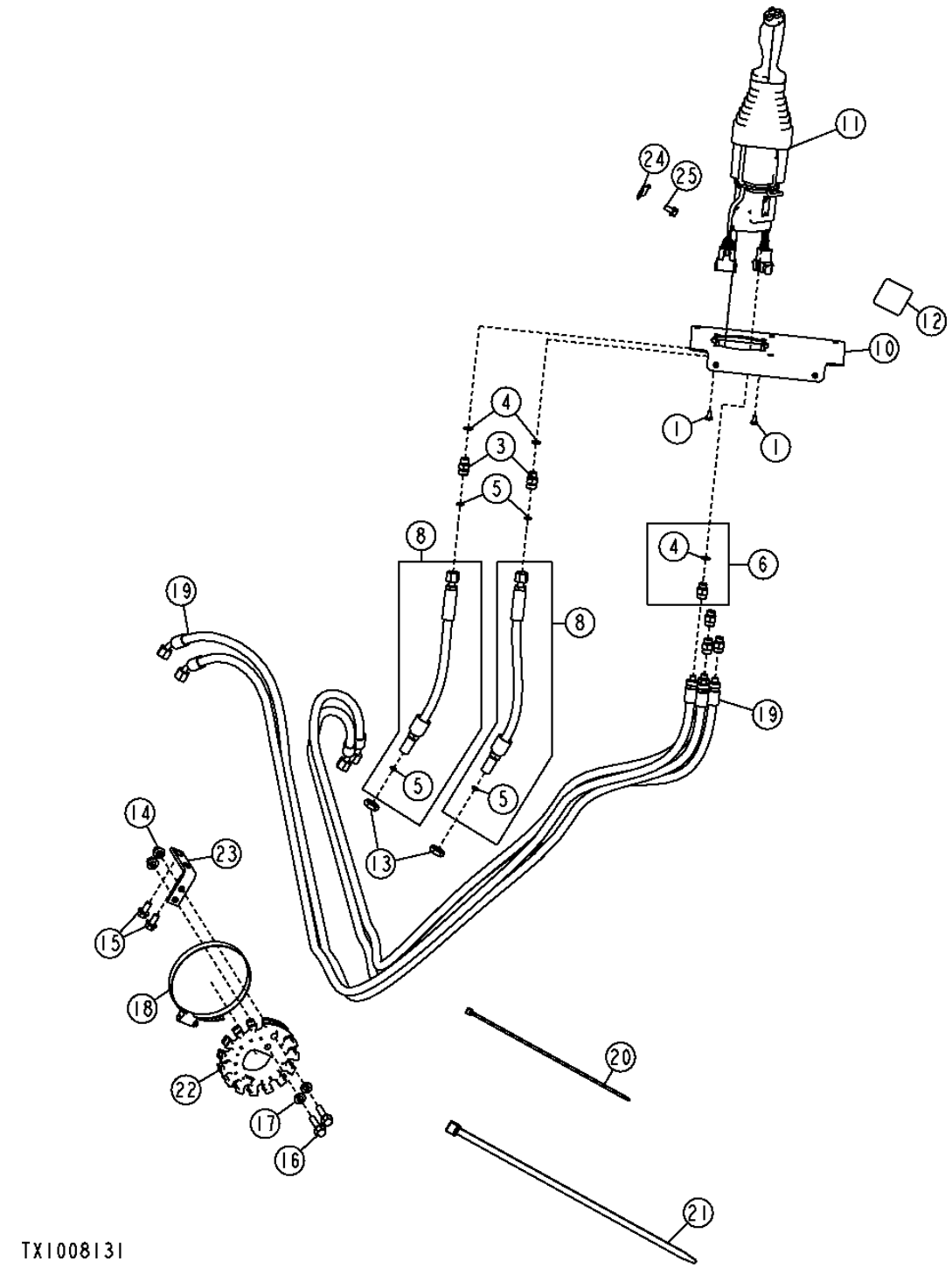

JOYSTICK PILOT CONTROLLER
CONTROLEUR PILOTE MANCHE A BALAI
UNIDAD DE CONTROL PILOTO DE PALANCA

KEY	PART NO.	PART NAME	QTY.	SERIAL NO.	REMARKS
1	21M7285	SCREW	4		M6 X 12
3	38H1160	ADAPTER FITTING	2		
4	R26448	O-RING	6		
5	T77613	O-RING	4		
6	63H1001	FITTING	4		
8	AT228703	HYDRAULIC HOSE - FABRICATE	2		
10	AT300662	PLATE	1		
11	AT315847	HYDR./PILOT CONTROL VALVE	1		(SUB FOR AT301458) (W/O FNR)
	AT315846	HYDR./PILOT CONTROL VALVE	1		(SUB FOR AT300664) (W/ FNR)
12	T203670	LABEL	1		(W/O FNR)
	T197182	LABEL	1		(W/ FNR)
13	T81029	NUT	2		
14	14M7400	LOCK NUT	2		M10
15	19M7784	SCREW	2		M10 X 20
16	19M7806	SCREW	2		M10 X 50
17	24M7239	WASHER	2		10.700 X 21 X 2.500 MM
18	TY22493	HOSE CLAMP	1		(SUB FOR AR89602)
19	AT226615	HYDRAULIC HOSE - FABRICATE	4		
20	H77698	TIE BAND	6		
21	N189220	TIE BAND	4		
22	T154342	RETAINER	1		
23	T157443	ANGLE	1		
24	57M8736	ELEC. CONNECTOR ACCESSORY	1		
25	19M7865	SCREW	1		M8 X 16
34	AT309843	WIRING HARNESS	1	-600915	(KICKDOWN HARNESS FOR CONTROLLER WITHOUT FNR) (NOT ILLUSTRATED)
..	**AT305690**	**FIELD INSTALLATION KIT**	**1**		**(WHOLE GOODS) (TWO LEVER TO JOYSTICK CONVERSION KIT WITH FNR)**
..	.....	FIELD INSTALLATION KIT	1		(WHOLE GOODS) (AT311817 NLA) (TWO LEVER TO JOYSTICK CONVERSION KIT WITH OUT FNR)

JOYSTICK PILOT CONTROLLER COMPONENTS
COMPOSANTS CONTROLEUR PILOTE MANCHE A BALAI
COMPONENTES DE UNIDAD DE CONTROL PILOTO DE PALANCA

T196147 -UN-13NOV03

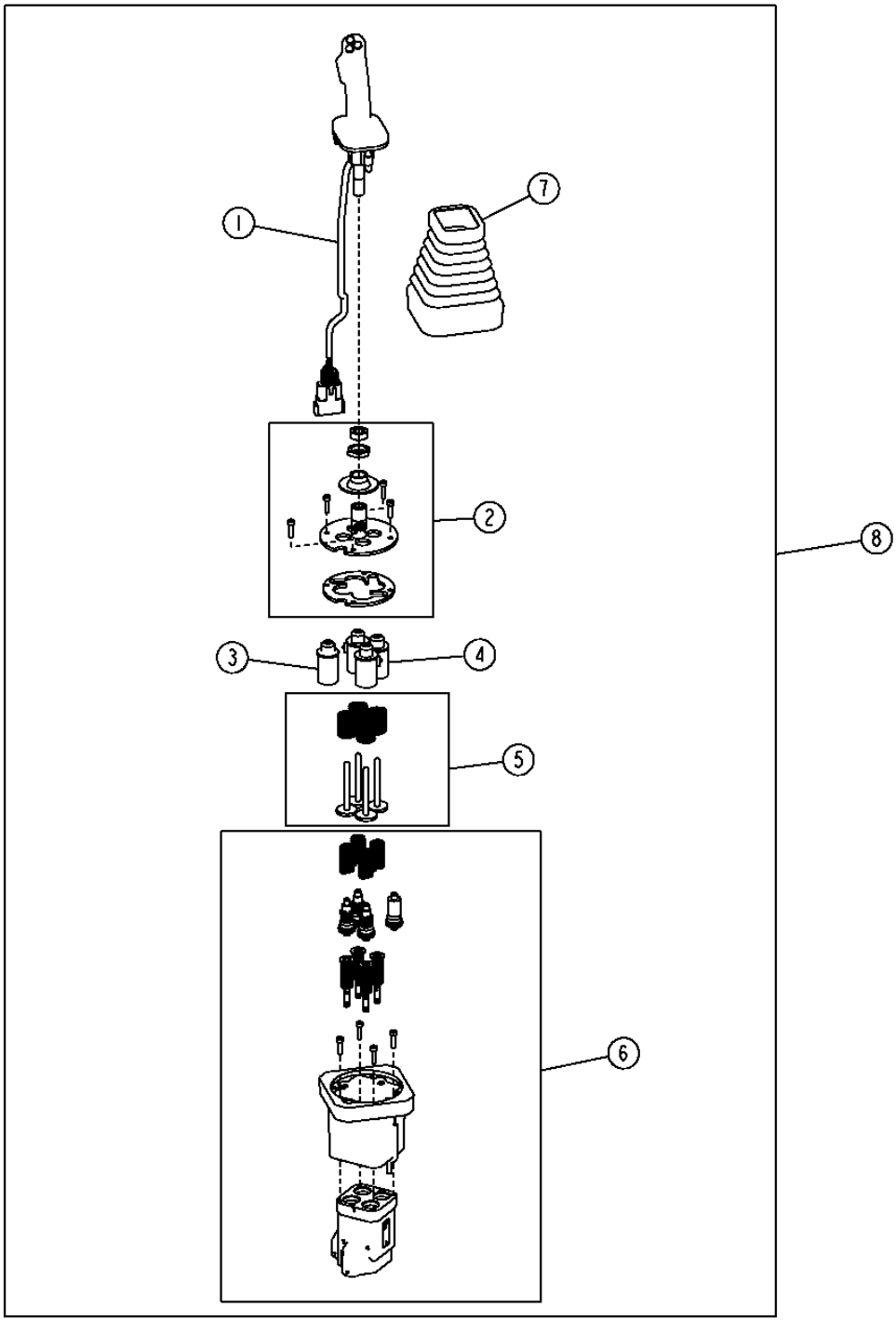

T196147

JOYSTICK PILOT CONTROLLER COMPONENTS
COMPOSANTS CONTROLEUR PILOTE MANCHE A BALAI
COMPONENTES DE UNIDAD DE CONTROL PILOTO DE PALANCA

KEY	*PART NO.*	*PART NAME*	*QTY.*	*SERIAL NO.*	*REMARKS*
1	AT315458	HANDLE	1		(SUB FOR AT302032) (W/O FNR)
	AT315459	HANDLE	1		(SUB FOR AT302031) (W/ FNR)
2	AT307636	UNIVERSAL JOINT	1		
3	AT307638	GUIDE	1		
4	AT307637	SOLENOID	3		THREE USES - ORDER AS REQUIRED
5	AT307640	PIN	1		
6	AT307641	OIL PRESSURE REG. VALVE	1		
7	T205941	BOOT	1		
8	AT315847	HYDR./PILOT CONTROL VALVE	1		(SUB FOR AT301458) (W/O FNR)
	AT315846	HYDR./PILOT CONTROL VALVE	1		(SUB FOR AT300664) (W/ FNR)
9	AT309843	WIRING HARNESS	1	-600915	(KICKDOWN HARNESS FOR CONTROLLER WITHOUT FNR) (NOT ILLUSTRATED)

JOYSTICK PILOT CONTROLLER WITH AUXILARY
CONTROLEUR PILOTE MANCHE BALAI AVEC AUXILIAIRE
UNIDAD DE CONTROL PILOTO DE LA PALANCA CON MANDO AUXILIAR

T194486 -UN-22SEP03

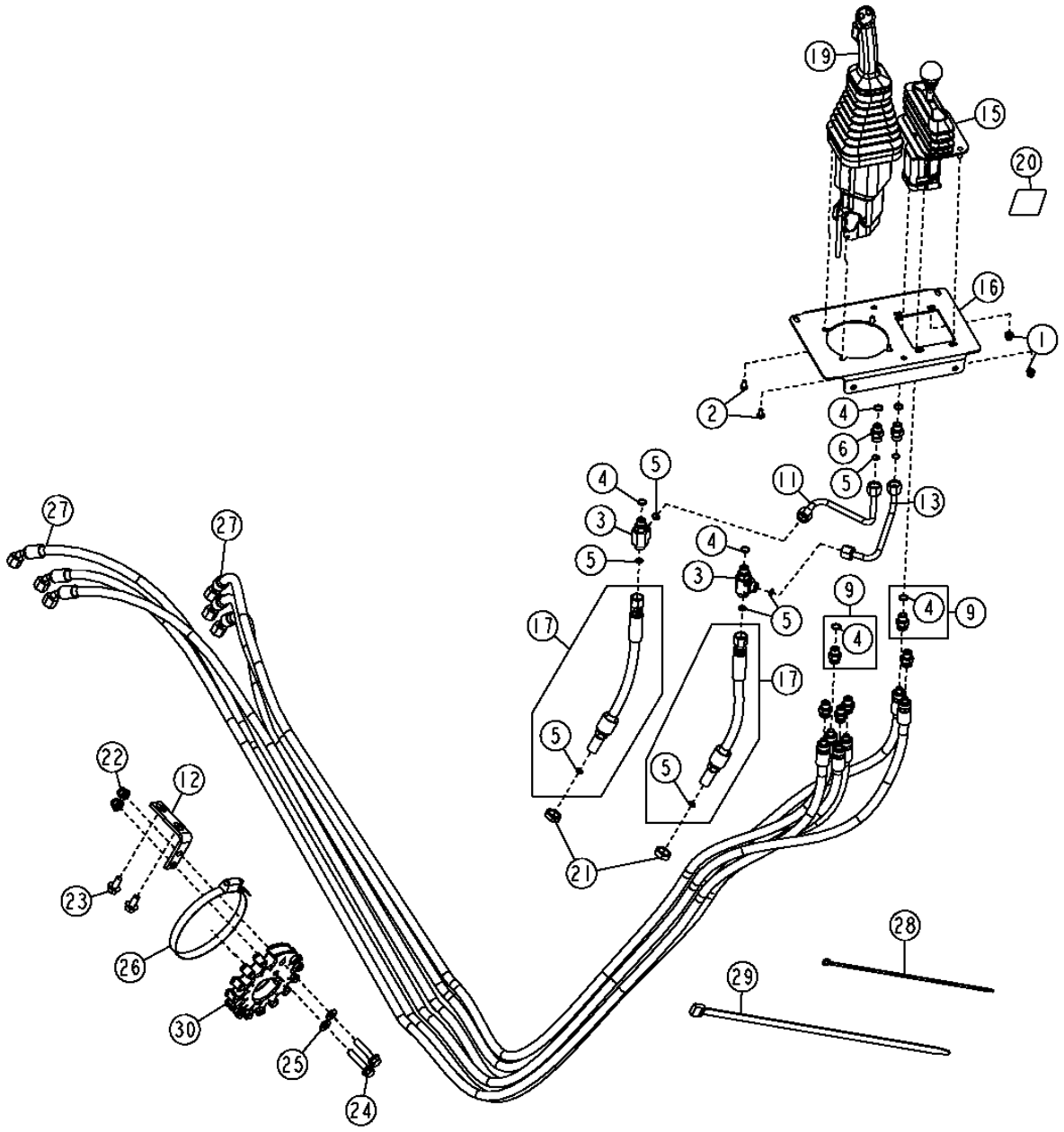

JOYSTICK PILOT CONTROLLER WITH AUXILARY
CONTROLEUR PILOTE MANCHE BALAI AVEC AUXILIAIRE
UNIDAD DE CONTROL PILOTO DE LA PALANCA CON MANDO AUXILIAR

KEY	*PART NO.*	*PART NAME*	*QTY.*	*SERIAL NO.*	*REMARKS*
1	14M7397	LOCK NUT	4		M6
2	21M7285	SCREW	4		M6 X 12
3	38H1023	TEE FITTING	2		
4	R26448	O-RING	10		
5	T77613	O-RING	8		
6	38H1160	ADAPTER FITTING	2		
9	63H1001	FITTING	6		
11	AT226132	OIL LINE	1		
12	T157443	ANGLE	1		
13	AT226133	OIL LINE	1		
15	AT228250	HYDR./PILOT CONTROL VALVE	1		
16	AT228261	PLATE	1		
17	AT228703	HYDRAULIC HOSE - FABRICATE	2		
19	AT315847	HYDR./PILOT CONTROL VALVE	1		(SUB FOR AT301458) (W/O FNR)
	AT315846	HYDR./PILOT CONTROL VALVE	1		(SUB FOR AT300664) (W/ FNR)
20	T203670	LABEL	1		(W/O FNR)
	T197182	LABEL	1		(W/ FNR)
21	T81029	NUT	2		
22	14M7400	LOCK NUT	2		M10
23	19M7784	SCREW	2		M10 X 20
24	19M7806	SCREW	2		M10 X 50
25	24M7239	WASHER	2		10.700 X 21 X 2.500 MM
26	TY22493	HOSE CLAMP	1		(SUB FOR AR89602)
27	AT226615	HYDRAULIC HOSE - FABRICATE	6		
28	H77698	TIE BAND	6		
29	N189220	TIE BAND	4		
30	T154342	RETAINER	1		
31	AT309843	WIRING HARNESS	1	-600915	(KICKDOWN HARNESS FOR CONTROLLER WITHOUT FNR) (NOT ILLUSTRATED)
..	**AT305693**	**FIELD INSTALLATION KIT**	**1**		**(TWO LEVER WITH AUX. TO JOYSTICK WITH AUX. CONVERSION KIT WITH FNR)**
..	.....	FIELD INSTALLATION KIT	1		(AT311818 NLA) (TWO LEVER WITH AUXILIARY TO JOYSTICK WITH AUXILIARY CONVERSION KIT WITHOUT FNR)
..	**AT307434**	**CONTROL LEVER**	**1**	**-594432**	**(WHOLE GOODS) (ADDITION OF AUXILIARY TO JOYSTICK CONTROLLER KIT)**
..	**AT316539**	**CONTROL LEVER**	**1**	**594433-**	**(WHOLE GOODS) (ADDITION OF AUXILIARY TO JOYSTICK CONTROLLER KIT)**
..	**AT314630**	**CONTROL LEVER**	**1**	**594433-**	**(WHOLE GOODS) (ADDITION OF AUXILIARY TO POWERLLEL™ LINKAGE JOYSTICK CONTROLLER KIT)**
..	**AT307656**	**CONTROL LEVER**	**1**		**(WHOLE GOODS) (ADDITION OF AUXILIARY TO TOOL CARRIER JOYSTICK CONTROLLER KIT)**

JOYSTICK FNR CONVERSION KIT
KIT CONVERSION SENS MARCHE MANCHE A BALAI
JUEGO DE CONVERSION DEL SELECTOR DE SENTIDO DE MARCHA DE PALANCA

T199696 -UN-05MAY04

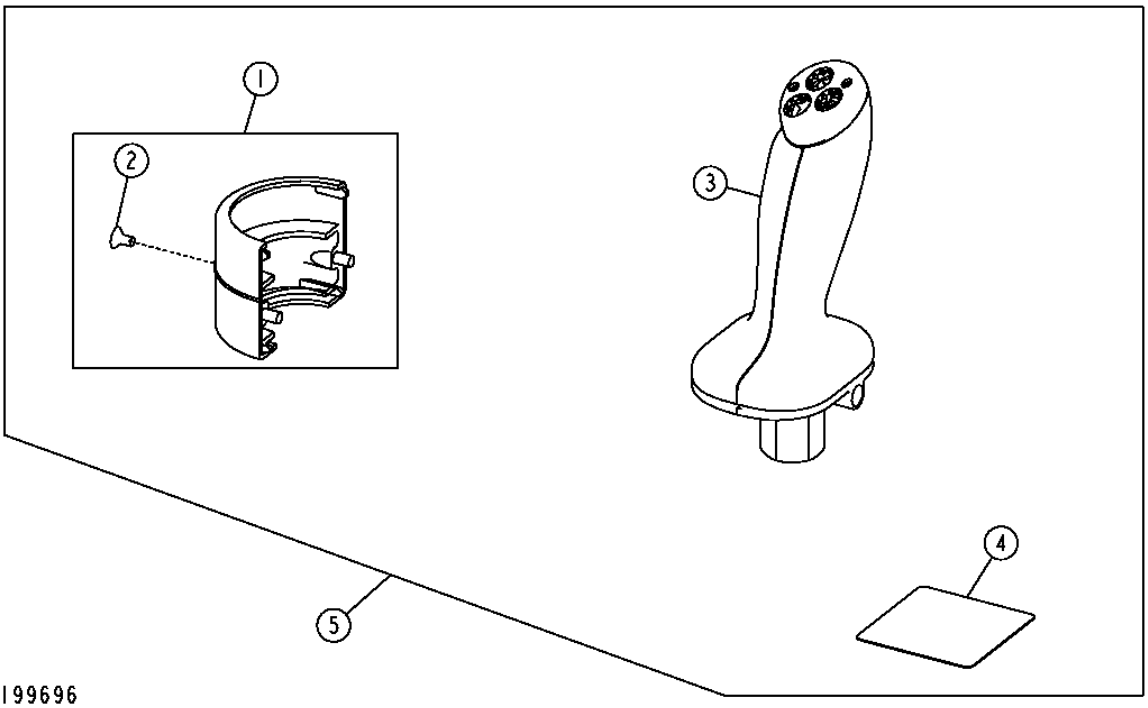

JOYSTICK FNR CONVERSION KIT
KIT CONVERSION SENS MARCHE MANCHE A BALAI
JUEGO DE CONVERSION DEL SELECTOR DE SENTIDO DE MARCHA DE PALANCA

KEY	PART NO.	PART NAME	QTY.	SERIAL NO.	REMARKS
1	AT300921	CLAMP	1		
2	21M7258	SCREW	1		
3	AT315459	HANDLE	1		
4	T197182	LABEL	1		
5	AT313087	FIELD INSTALLATION KIT	1		

DUAL JOYSTICK PILOT CONTROLLER
CONTROLEUR PILOTE MANCHE A BALAI DOUBLE
UNIDAD DE CONTROL PILOTO CON PALANCA DOBLE

T194488 -UN-19SEP03

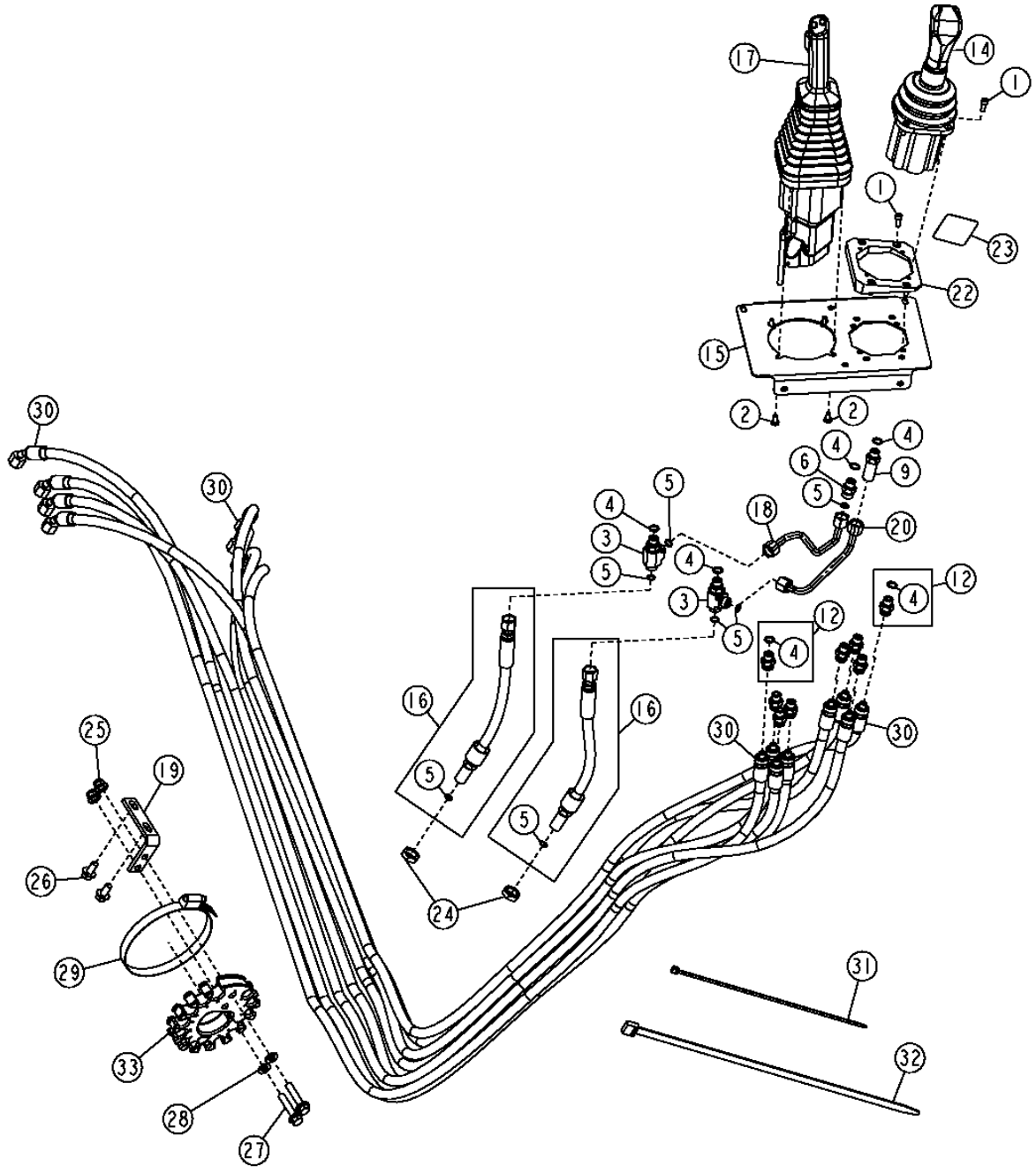

THIS PARTS LISTING IS CONTINUED

DUAL JOYSTICK PILOT CONTROLLER
CONTROLEUR PILOTE MANCHE A BALAI DOUBLE
UNIDAD DE CONTROL PILOTO CON PALANCA DOBLE

KEY	PART NO.	PART NAME	QTY.	SERIAL NO.	REMARKS
1	19M8553	SCREW	8		M6 X 16
2	21M7285	SCREW	4		M6 X 12
3	38H1023	TEE FITTING	2		
4	R26448	O-RING	12		
5	T77613	O-RING	8		
6	38H1160	ADAPTER FITTING	1		
9	38H1212	ADAPTER FITTING	1		
12	63H1001	FITTING	8		
14	AT208760	ELECTRONIC CONTROL UNIT	1		(COMPONENTS ON SEPERATE PAGE)
15	AT228260	PLATE	1		
16	AT228703	HYDRAULIC HOSE - FABRICATE	2		
17	AT315847	HYDR./PILOT CONTROL VALVE	1		(W/O FNR) (COMPONENTS ON SEPARATE PAGE) (SUB FOR AT301458)
	AT315846	HYDR./PILOT CONTROL VALVE	1		(W/ FNR) (COMPONENTS ON SEPARATE PAGE) (SUB FOR AT300664)
18	AT304880	OIL LINE	1		
19	T157443	ANGLE	1		
20	AT304881	OIL LINE	1		
22	T201887	SPACER	1		
23	T203670	LABEL	1		(JOYSTICK CONTROL) (W/O FNR)
24	T81029	NUT	2		
25	14M7400	LOCK NUT	2		M10
26	19M7784	SCREW	2		M10 X 20
27	19M7806	SCREW	2		M10 X 50
28	24M7239	WASHER	2		10.700 X 21 X 2.500 MM
29	TY22493	HOSE CLAMP	1		(SUB FOR AR89602)
30	AT226615	HYDRAULIC HOSE - FABRICATE	8		
31	H77698	TIE BAND	6		
32	N189220	TIE BAND	4		
33	T154342	RETAINER	1		
34	AT309843	WIRING HARNESS	1	-600915	(KICKDOWN HARNESS FOR CONTROLLER) (W/O FNR) (NOT ILLUSTRATED)
..	**AT307472**	**CONTROL LEVER**	**1**	**-594432**	**(WHOLE GOODS) (ADDITION OF AUXILIARY JOYSTICK TO JOYSTICK CONTROLLER KIT)**
..	**AT316540**	**CONTROL LEVER**	**1**	**594433-**	**(WHOLE GOODS) (ADDITION OF AUXILIARY JOYSTICK TO JOYSTICK CONTROLLER KIT)**
..	**AT314727**	**CONTROL LEVER**	**1**	**594433-**	**(WHOLE GOODS) (ADDITION OF AUXILIARY JOYSTICK TO POWERLLEL LINKAGE JOYSTICK CONTROLLER KIT)**
..	**AT307621**	**CONTROL LEVER**	**1**		**(WHOLE GOODS) (ADDITION OF JOYSTICK TO TOOL CARRIER JOYSTICK CONTROLLER KIT)**

AUXILIARY JOYSTICK PILOT CONTROLLER COMPONENTS
COMPOSANTS CONTROLEUR PILOTE MANCHE BALAI AUXILIAIRE
COMPONENTES DE LA UNIDAD DE CONTROL PILOTO DE LA PALANCA AUXILIAR

TX1006297 -UN-24APR06

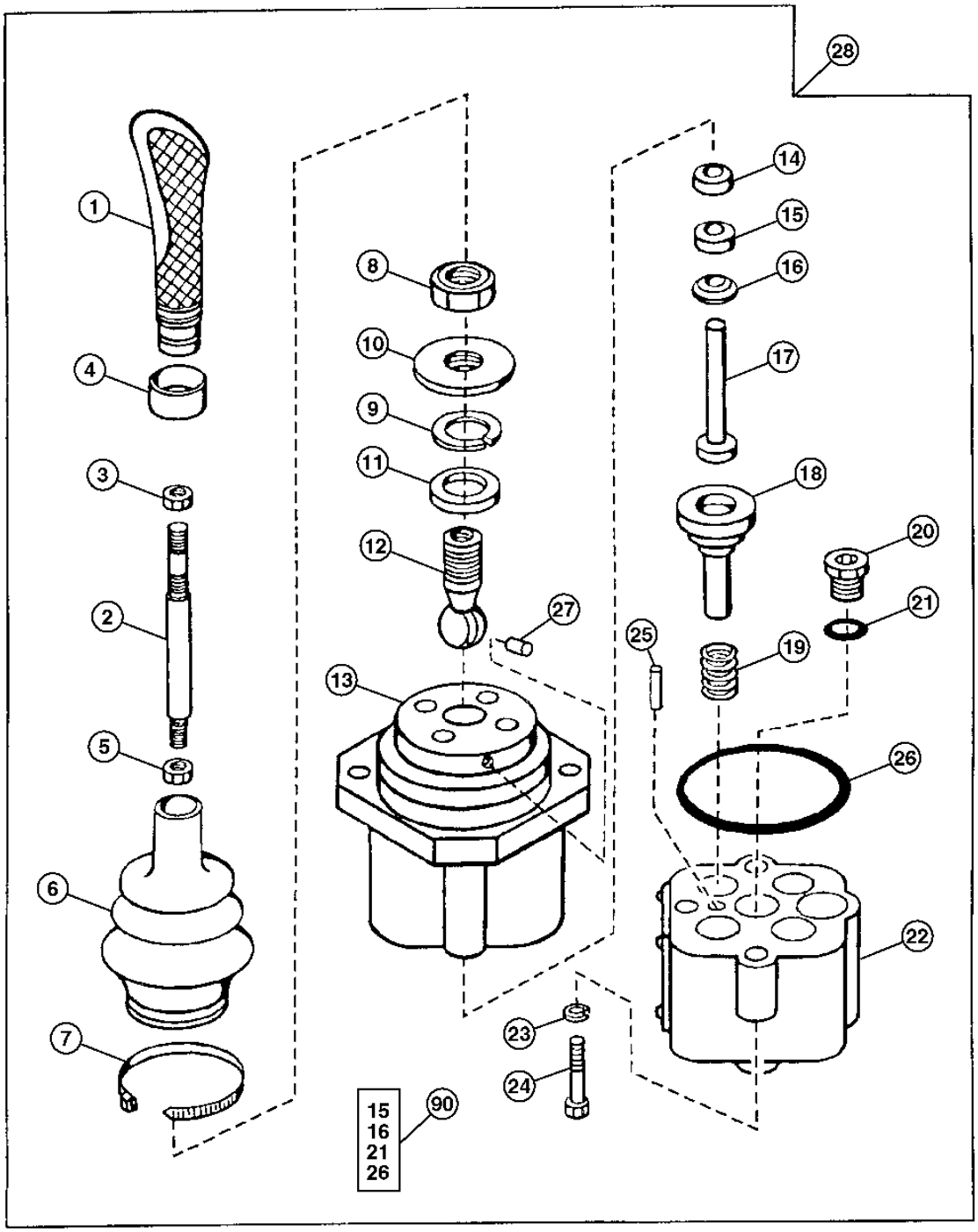

TX1006297

AUXILIARY JOYSTICK PILOT CONTROLLER COMPONENTS
COMPOSANTS CONTROLEUR PILOTE MANCHE BALAI AUXILIAIRE
COMPONENTES DE LA UNIDAD DE CONTROL PILOTO DE LA PALANCA AUXILIAR

KEY	*PART NO.*	*PART NAME*	*QTY.*	*SERIAL NO.*	*REMARKS*
1	AT172629	GRIP	1		(ALSO ORDER H77698 AND AT208911)
2	AT210145	LEVER	1		
3	T170269	NUT	1		
4	AT208911	RETAINER	1		
5	T172986	NUT	1		
6	T172988	BOOT	1		
7	H77698	TIE BAND	1		
8	T172985	NUT	1		
9	T172987	SNAP RING	1		
10	.....	PLATE	1		(AT119017 NLA)
11	.....	RETAINER	1		(AT119378 NLA)
12	.....	BALL	1		(AT119018 NLA)
13	.....	HOUSING	1		(SUB AT208760) UPPER
14	T131617	RING	4		
15	.....	RETAINER	4		(SUB AT210247)
16	.....	SEAL	4		(SUB AT210247)
17	T102958	PLUNGER	4		
18	.....	SPOOL	4		(SUB AT208760)
19	T131624	SPRING	4		
20	AT49216	FITTING PLUG	1		
21	R26448	O-RING	1		
22	.....	HOUSING	1		(SUB AT208760) LOWER
23	12M7133	LOCK WASHER	4		6 MM
24	19M7966	SCREW	4		M6 X 25
25	T102961	DOWEL PIN	1		
26	.....	SEAL	1		(SUB AT210247)
27	T102963	PIN FASTENER	1		ANTI-ROTATION
28	AT208760	ELECTRONIC CONTROL UNIT	1		
90	AT210247	SEAL KIT	1		

RIDE CONTROL AND HYDRAULIC HOSES (S.N. -594432)
COMMANDE DE SUSPENSION ET FLEXIBLES HYDRAULIQUES (S.N. -594432)
CONTROL DE SUSPENSION Y MANGUERAS HIDRAULICAS (S.N. -594432)

T157361 -UN-17JUL02

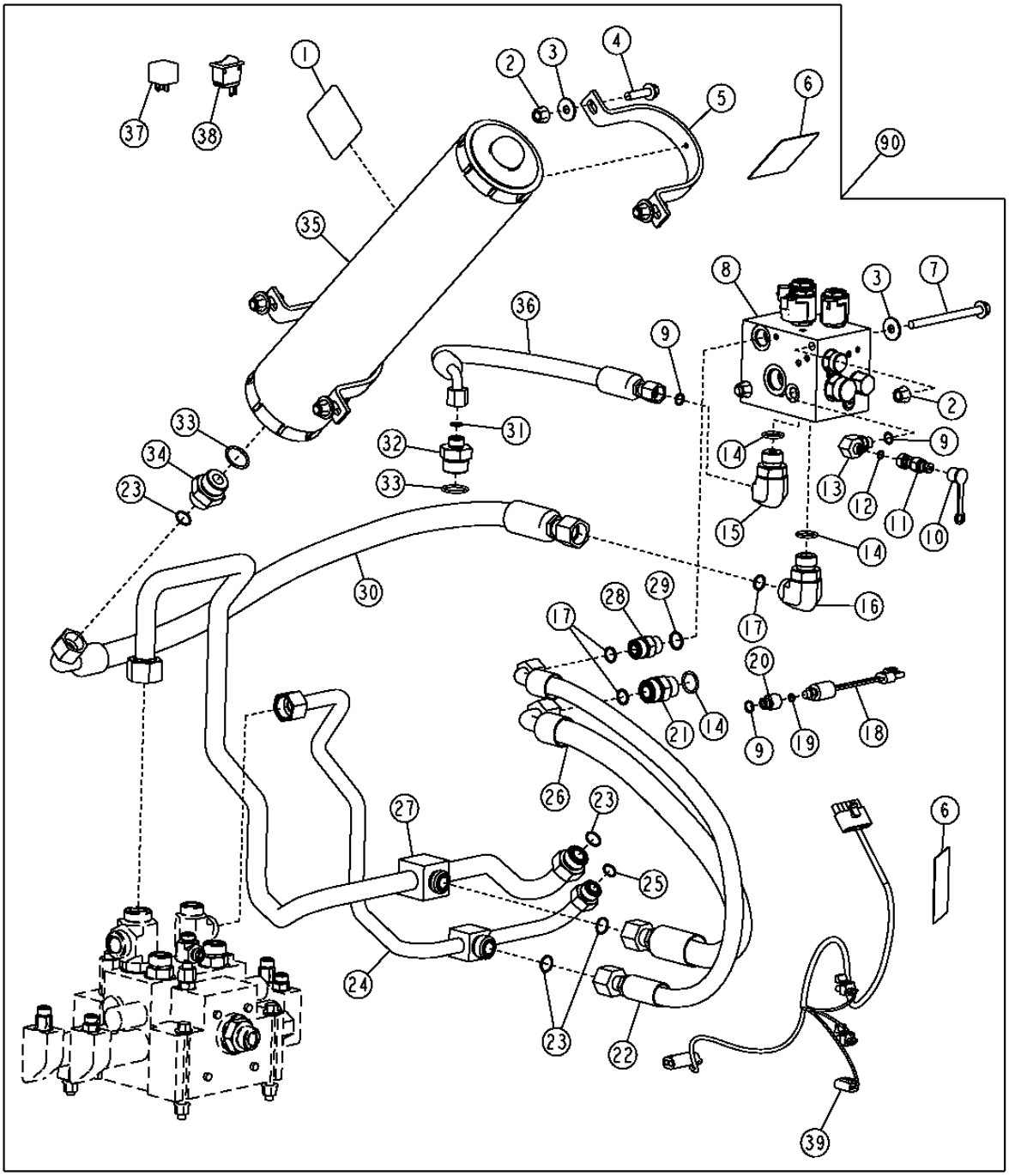

RIDE CONTROL AND HYDRAULIC HOSES (S.N. -594432)
COMMANDE DE SUSPENSION ET FLEXIBLES HYDRAULIQUES (S.N. -594432)
CONTROL DE SUSPENSION Y MANGUERAS HIDRAULICAS (S.N. -594432)

KEY	*PART NO.*	*PART NAME*	*QTY.*	*SERIAL NO.*	*REMARKS*
1	T180944	LABEL	1		
2	14M7400	LOCK NUT	6		
3	24M7296	WASHER	6		
4	19M7804	SCREW	4		
5	T146490	CLAMP	2		
6	T146792	SAFETY SIGN	2		
7	19M7898	SCREW	2		
8	.....	CONTROL VALVE	1		(SUB AT332291) (RIDE CONTROL VALVE) (AT224301 NLA)
9	R26448	O-RING	3		
10	R77175	COVER	5		
11	RE60700	DIAGNOSTIC COUPLING	1		
12	T77814	O-RING	1		
13	38H1009	ELBOW FITTING	1		
14	U12547	O-RING	3		
15	38H1013	ELBOW FITTING	1		
16	38H1007	ELBOW FITTING	1		
17	R26375	O-RING	3		
18	AT223535	PRESSURE SWITCH	1		(STD)
	AT222372	SWITCH	1		(HARSH ENVIRONMENT)
19	R26287	O-RING	1		
20	T158047	ADAPTER FITTING	2		
21	38H1163	ADAPTER FITTING	1		
22	AT225445	HYDRAULIC HOSE - FABRICATE	1		
23	T77858	O-RING	4		
24	AT210714	OIL LINE	1		
25	T77932	O-RING	1		
26	AT226808	HYDRAULIC HOSE - FABRICATE	1		
27	AT210713	OIL LINE	1		
28	38H1162	ADAPTER FITTING	1		
29	R26906	O-RING	5		
30	AT228189	HYDRAULIC HOSE - FABRICATE	1		
31	T77857	O-RING	1		
32	38H1176	ADAPTER FITTING	1		
33	R29936	O-RING	2		
34	38H1194	ADAPTER FITTING	1		
35	AT227717	HYDRAULIC ACCUMULATOR	1		(ALSO ORDER T180944) (PRECHARGE TO 285 PSI)
	AT196760	KIT	1		(GAS VALVE REPAIR)
36	AT207010	HYDRAULIC HOSE - FABRICATE	1		
37	AT162863	RELAY	1		
38	AT220517	SWITCH	1		
39	AT224600	WIRING HARNESS	1		(RIDE CONTROL HARNESS)
	AT225011	WIRING HARNESS	1		(RIDE CONTROL HARNESS) (HARSH ENVIRONMENT)
90	**AT220432**	**KIT**	**1**		**(WHOLEGOODS) (RIDE CONTROL)**

RIDE CONTROL AND HYDRAULIC HOSES (S.N. 594433-)
COMMANDE DE SUSPENSION ET FLEXIBLES HYDRAULIQUES (S.N. 594433-)
CONTROL DE SUSPENSION Y MANGUERAS HIDRAULICAS (S.N. 594433-)

TX1009730 -UN-12JUL06

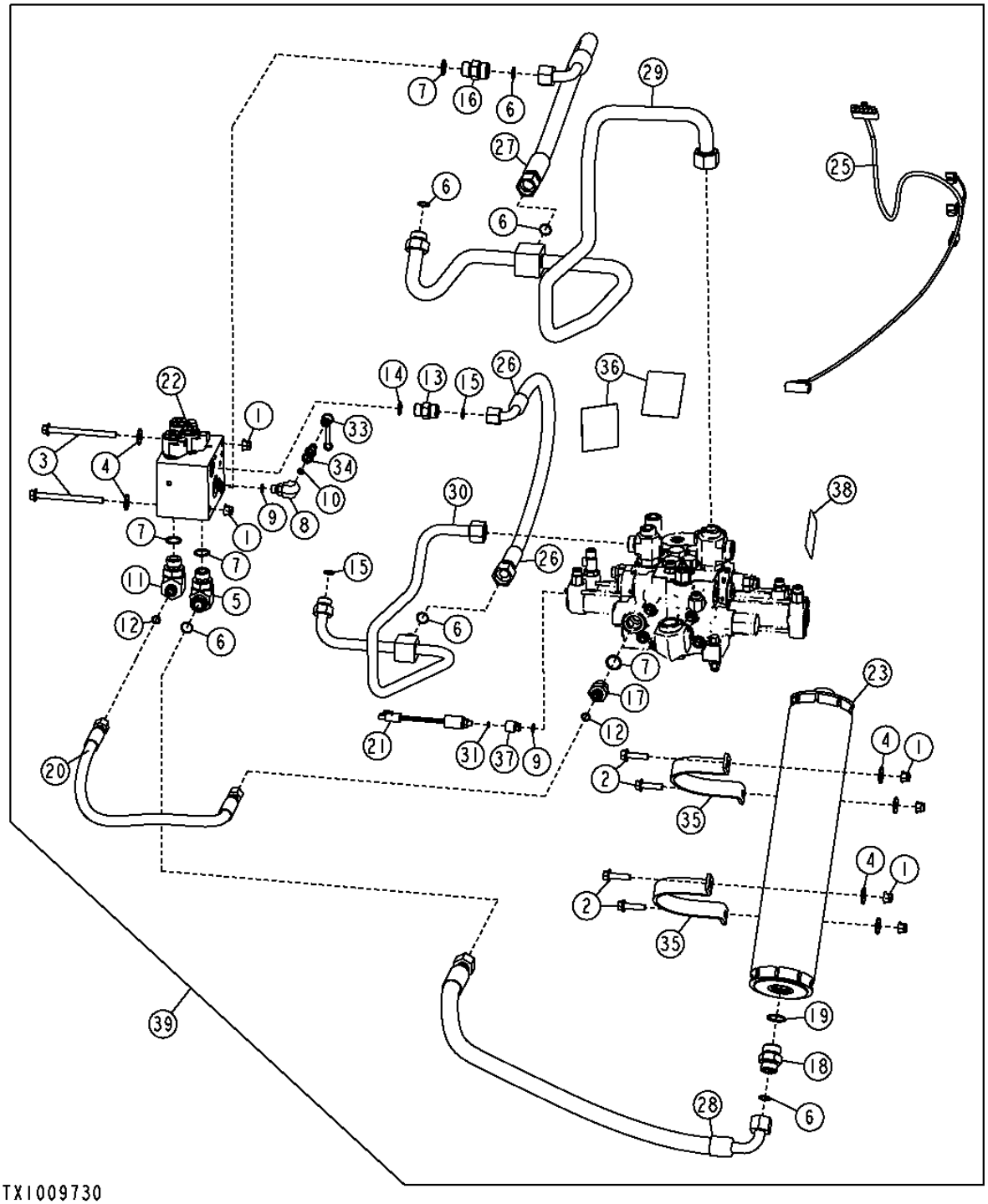

RIDE CONTROL AND HYDRAULIC HOSES (S.N. 594433-)
COMMANDE DE SUSPENSION ET FLEXIBLES HYDRAULIQUES (S.N. 594433-)
CONTROL DE SUSPENSION Y MANGUERAS HIDRAULICAS (S.N. 594433-)

KEY	PART NO.	PART NAME	QTY.	SERIAL NO.	REMARKS
1	14M7400	LOCK NUT	6		M10
2	19M7804	SCREW	4		M10 X 40
3	19M7898	SCREW	2		M10 X 130
4	24M7296	WASHER	6		10.500 X 30 X 2.500 MM
5	38H1007	ELBOW FITTING	1		
6	T77858	O-RING	6		
7	U12547	O-RING	5		
8	38H1009	ELBOW FITTING	1		
9	R26448	O-RING	2		
10	T77814	O-RING	1		
11	38H1013	ELBOW FITTING	1		
12	T77857	O-RING	2		
13	38H1162	ADAPTER FITTING	1		
14	R26906	O-RING	1		
15	T77932	O-RING	2		
16	38H1163	ADAPTER FITTING	1		
17	38H1175	ADAPTER FITTING	1		
18	38H1194	ADAPTER FITTING	1		
19	R29936	O-RING	1		
20	AT207010	HYDRAULIC HOSE - FABRICATE	1		13/16" X 711 MM X 13/16"
21	AT223535	PRESSURE SWITCH	1		
22	.....	CONTROL VALVE	1		(SUB AT332291) (RIDE CONTROL VALVE) (AT224301 NLA)
23	AT224493	HYDRAULIC ACCUMULATOR	1		
	AT196760	KIT	1		(ACCUMULATOR REPAIR)
25	AT224600	WIRING HARNESS	1	-600916	(RIDE CONTROL HARNESS)
	.....	WIRING HARNESS	1	600917-	(RIDE CONTROL HARNESS) (NLA)
26	AT225445	HYDRAULIC HOSE - FABRICATE	1		1-3/16" X 965 MM X 1"
27	AT226808	HYDRAULIC HOSE - FABRICATE	1		1-3/16" X 851 MM X 1-3/16"
28	AT228189	HYDRAULIC HOSE - FABRICATE	1		
29	AT301093	OIL LINE	1		
30	AT307661	OIL LINE	1		
31	R26287	O-RING	1		
33	R77175	COVER	1		
34	RE60700	DIAGNOSTIC COUPLING	1		
35	T146490	CLAMP	2		
36	T146792	SAFETY SIGN	2		
37	T158047	ADAPTER FITTING	1		
38	T180944	LABEL	1		
39	**AT314598**	**MOUNTING PARTS**	**1**		**(WHOLE GOODS)**

RIDE CONTROL VALVE
VANNE DE COMMANDE DE SUSPENSION
VALVULA DE CONTROL DE SUSPENSION

T195623 -UN-22OCT03

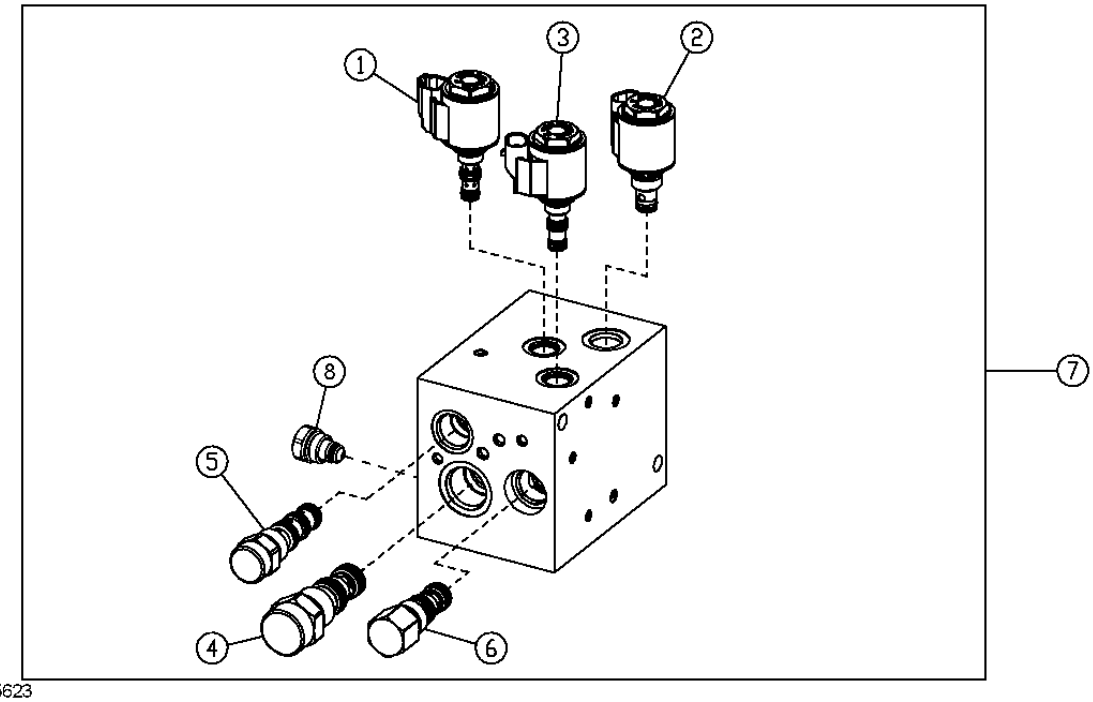

T195623

KEY	PART NO.	PART NAME	QTY.	SERIAL NO.	REMARKS
1	AT224866	SOLENOID VALVE	1		
	AT224706	SEAL KIT	1		
	AT224865	SOLENOID VALVE COIL	1		
	T181306	NUT	1		
2	AT224573	SOLENOID VALVE	1		
	AT224574	SOLENOID VALVE COIL	1		
	AT224862	SEAL KIT	1		
	T181306	NUT	1		
3	AT224705	FLOW CONTROL HYD. VALVE	1		
	AT224574	SOLENOID VALVE COIL	1		
	AT224706	SEAL KIT	1		
	T181306	NUT	1		
4	AT224867	FLOW CONTROL HYD. VALVE	1		
	AT224868	SEAL KIT	1		
5	AT225082	FLOW CONTROL HYD. VALVE	1		
	AT225083	SEAL KIT	1		
6	AT225084	FLOW CONTROL HYD. VALVE	1		
	AT225085	SEAL KIT	1		
	AT316532	KIT	1		(LOCKDOWN KIT)
7	.....	CONTROL VALVE	1		(SUB AT332291) (AT224301 NLA)
8	AN207183	CHECK VALVE	2		
	AN207184	SEAL KIT	1		

PIN AND AXLE DISCONNECT VALVE COMPONENTS
COMPOSANTS SOUPAPE RACCORD RAPIDE AXE ET ESSIEU
PASADOR Y COMPONENTES DE LA VALVULA DE DESCONEXION DEL EJE

T197201 -UN-07JAN04

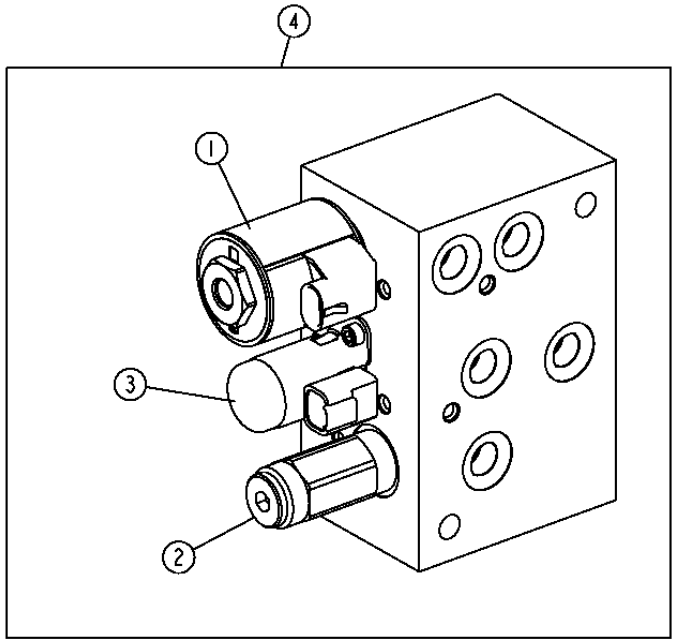

T197201

KEY	PART NO.	PART NAME	QTY.	SERIAL NO.	REMARKS
1	AT224703	SOLENOID VALVE COIL	1		
	AT226266	SOLENOID VALVE	1		
	AT225083	SEAL KIT	1		SOLENOID VALVE
2	AT226265	HYDRAULIC PRESSURE VALVE	1		
	AT225085	SEAL KIT	1		PRESSURE REDUCING VALVE
3	AT303799	VALVE	1		AXLE DISCONNECT CARTRIDGE
	AT224873	SEAL KIT	1		AXLE DISCONNECT CARTRIDGE VALVE
4	AT225529	HYD ACTUATED CONTROL VALVE	1		PIN AND AXLE DISCONNECT VALVE
	AT225530	HYD ACTUATED CONTROL VALVE	1		PIN DISCONNECT VALVE

PIN AND AXLE DISCONNECT VALVE AND HYDRAULIC HOSES (S.N. -594432)
FLEXIBLES HYDRAULIQUES ET SOUPAPE RACCORD RAPIDE AXE ET ESSIEU (S.N. -594432)
PASADOR, VALVULA DE DESCONEXION DEL EJE Y MANGUERAS HIDRAULICAS (S.N. -594432)

T198286 -UN-23MAR04

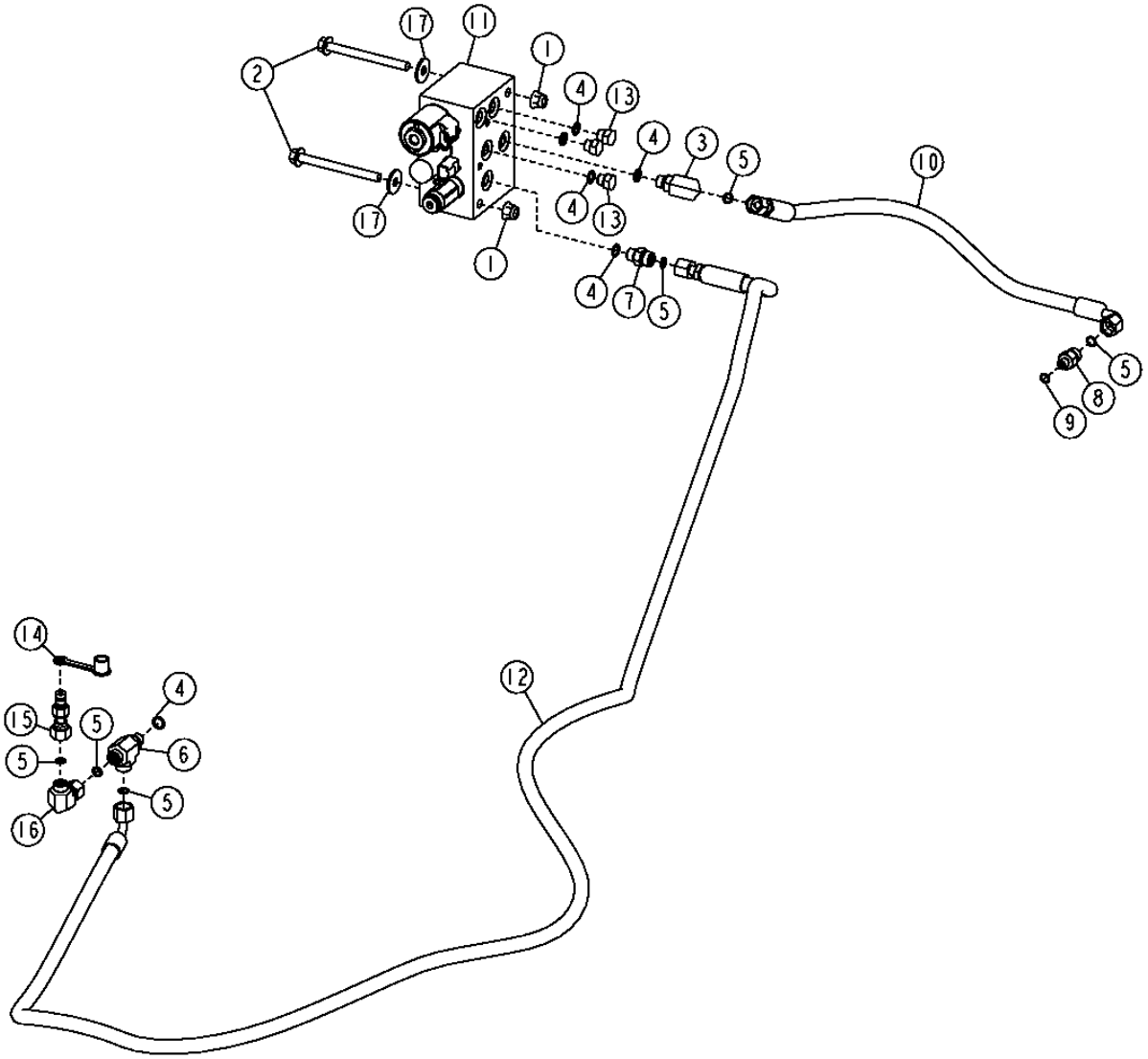

T198286

PIN AND AXLE DISCONNECT VALVE AND HYDRAULIC HOSES (S.N. -594432)
FLEXIBLES HYDRAULIQUES ET SOUPAPE RACCORD RAPIDE AXE ET ESSIEU (S.N. -594432)
PASADOR, VALVULA DE DESCONEXION DEL EJE Y MANGUERAS HIDRAULICAS (S.N. -594432)

KEY	PART NO.	PART NAME	QTY.	SERIAL NO.	REMARKS
1	14M7400	LOCK NUT	2		M10
2	19M7836	SCREW	2		M10 X 110
3	38H1004	ELBOW FITTING	1		
4	R26448	O-RING	6		
5	T77613	O-RING	6		
6	38H1023	TEE FITTING	1		
7	38H1160	ADAPTER FITTING	1		
8	38H1309	ADAPTER FITTING	1		
9	R28782	O-RING	1		
10	AT167553	HYDRAULIC HOSE - FABRICATE	1		
11	AT225529	HYD ACTUATED CONTROL VALVE	1		(COMPONENTS LISTED ON ANOTHER PAGE)
12	AT305171	HYDRAULIC HOSE - FABRICATE	1		
13	R27218	FITTING PLUG	3		
14	R77175	COVER	1		
15	RE60701	DIAGNOSTIC COUPLING	1		
16	38H1094	ELBOW FITTING	1		
17	24M7296	WASHER	2		10.500 X 30 X 2.500 MM (0.413" X 1.181" X 0.098")

PIN AND AXLE DISCONNECT VALVE AND HYDRAULIC HOSES (S.N. 594433-)
FLEXIBLES HYDRAULIQUES ET SOUPAPE RACCORD RAPIDE AXE ET ESSIEU (S.N. 594433-)
PASADOR, VALVULA DE DESCONEXION DEL EJE Y MANGUERAS HIDRAULICAS (S.N. 594433-)

T202068 -UN-12AUG04

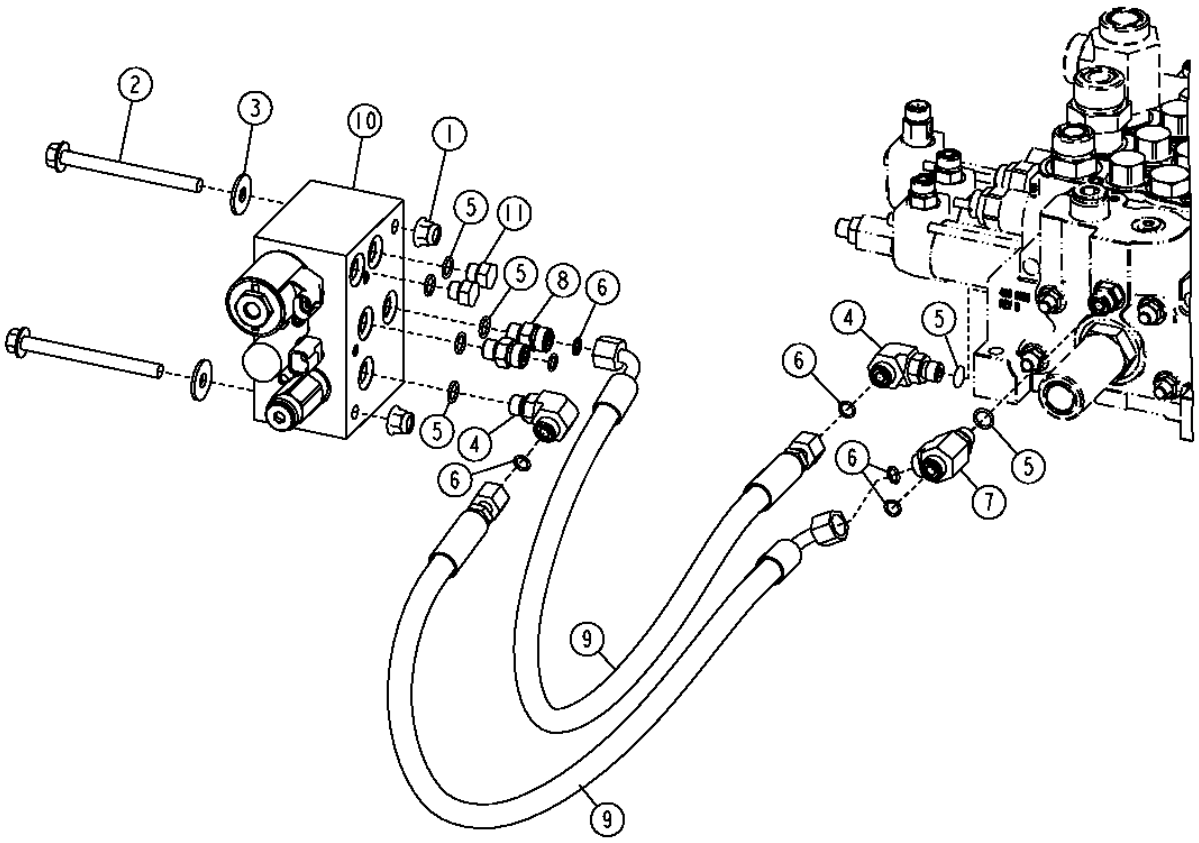

T202068

PIN AND AXLE DISCONNECT VALVE AND HYDRAULIC HOSES (S.N. 594433-)
FLEXIBLES HYDRAULIQUES ET SOUPAPE RACCORD RAPIDE AXE ET ESSIEU (S.N. 594433-)
PASADOR, VALVULA DE DESCONEXION DEL EJE Y MANGUERAS HIDRAULICAS (S.N. 594433-)

KEY	PART NO.	PART NAME	QTY.	SERIAL NO.	REMARKS
1	14M7400	LOCK NUT	2		M10
2	19M7836	SCREW	2		M10 X 110
3	24M7296	WASHER	2		10.500 X 30 X 2.500 MM
4	38H1004	ELBOW FITTING	2		
5	R26448	O-RING	9		
6	T77613	O-RING	7		
7	38H1023	TEE FITTING	1		
8	38H1160	ADAPTER FITTING	3		
9	AT167553	HYDRAULIC HOSE - FABRICATE	2		11/16" X 630 MM X 11/16"
10	AT225529	HYD ACTUATED CONTROL VALVE	1		(COMPONENTS LISTED ON ANOTHER PAGE)
11	R27218	FITTING PLUG	3		

PIN DISCONNECT HYDRAULIC LINES (FOR USE WITH TOOL CARRIER)
CONDUITES HYDRAULIQUES RACCORD RAPIDE AXE (POUR PORTE-OUTILS)
LINEAS HIDRAULICAS DE DESCONEXION DEL PASADOR (PARA USO CON PORTAHERRAMIENTAS)

T196636 -UN-25NOV03

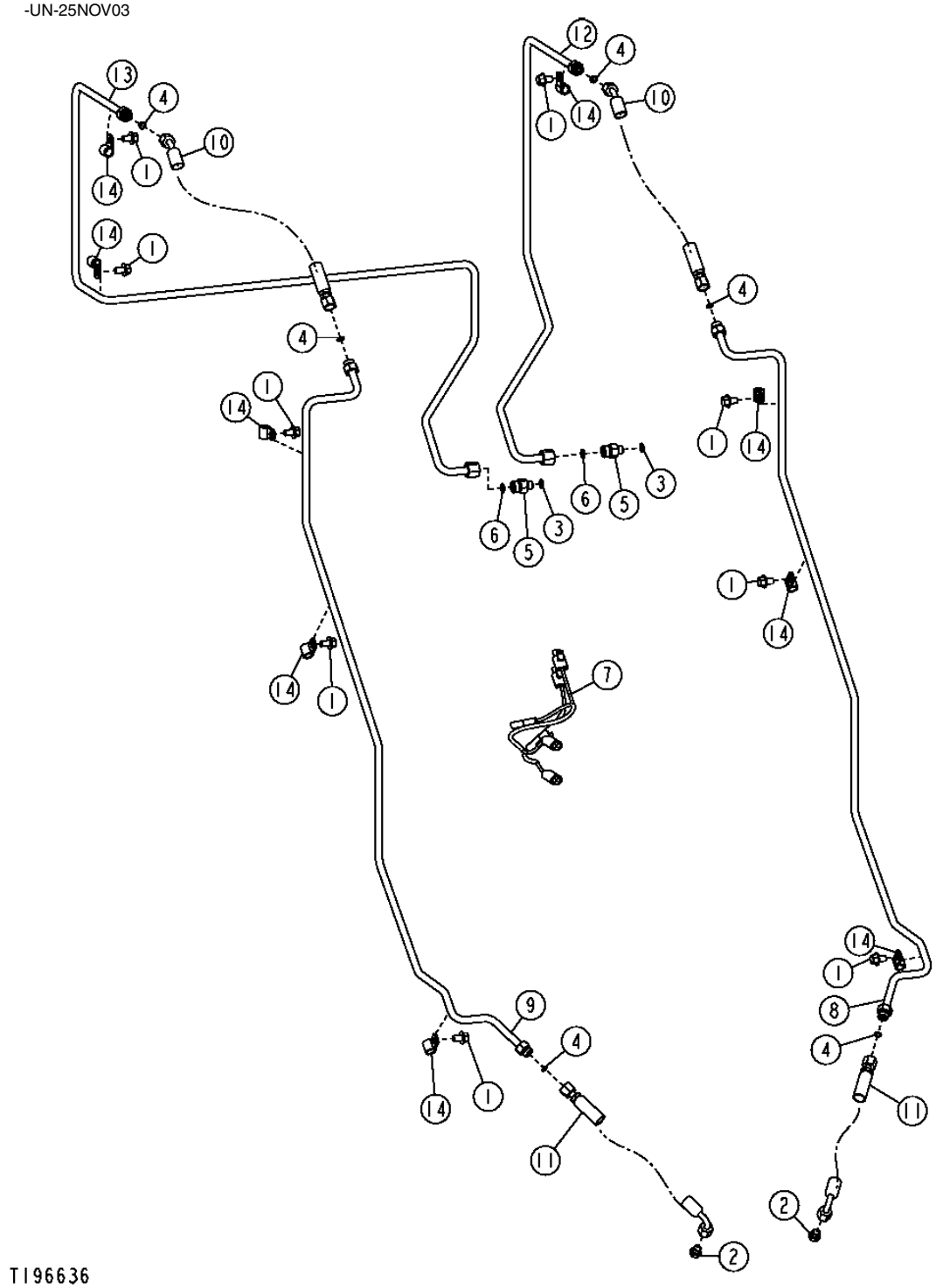

PIN DISCONNECT HYDRAULIC LINES (FOR USE WITH TOOL CARRIER)
CONDUITES HYDRAULIQUES RACCORD RAPIDE AXE (POUR PORTE-OUTILS)
LINEAS HIDRAULICAS DE DESCONEXION DEL PASADOR (PARA USO CON PORTAHERRAMIENTAS)

KEY	*PART NO.*	*PART NAME*	*QTY.*	*SERIAL NO.*	*REMARKS*
1	19M7784	SCREW	9		M10 X 20, (SUB FOR 19M7783)
2	R27218	FITTING PLUG	2		
3	R26448	O-RING	2		
4	T77613	O-RING	6		
5	38H1173	ADAPTER FITTING	2		
6	T77857	O-RING	2		
7	AT202824	WIRING HARNESS	1		
8	AT211270	OIL LINE	1		
9	AT211271	OIL LINE	1		
10	AT210667	HYDRAULIC HOSE - FABRICATE	2		
11	AT210666	HYDRAULIC HOSE - FABRICATE	2		
12	AT306991	OIL LINE	1		
13	AT306992	OIL LINE	1		
14	H75541	CLAMP	9		

PIN DISCONNECT HYDRAULIC LINES (FOR USE WITH Z-BAR LINKAGE) SN -594432
CONDUITES HYDRAULIQUES RACCORD RAPIDE AXE (A UTILISER AVEC TRINGLERIE CINEMATIQUE EN Z) SN -594432
LINEAS HIDRAULICAS DE DESCONEXION DEL PASADOR (PARA USO CON VARILLAJE DE BARRA EN Z) SN -594432

T198287 -UN-23MAR04

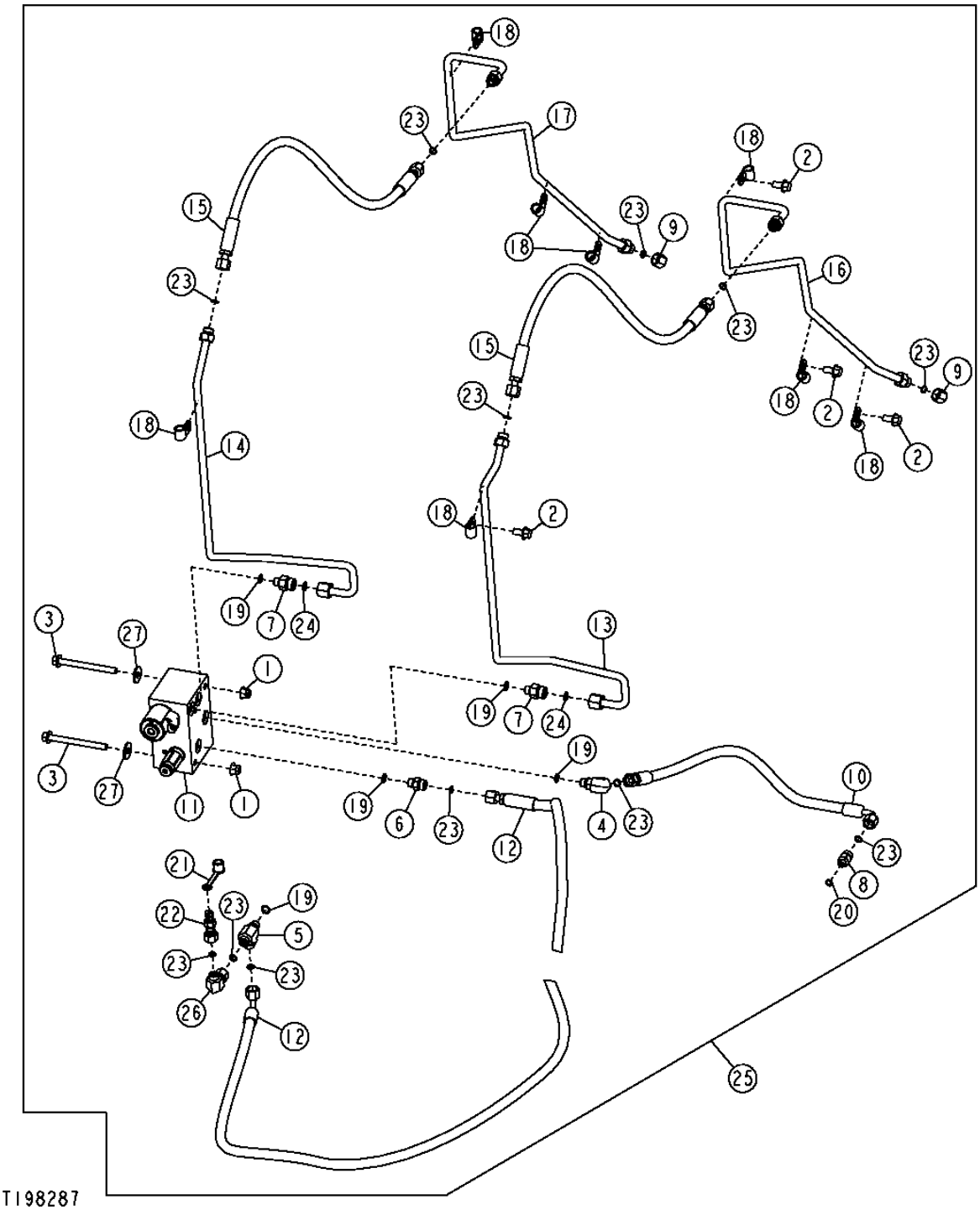

PIN DISCONNECT HYDRAULIC LINES (FOR USE WITH Z-BAR LINKAGE)(S.N. -594432)
CONDUITES HYDRAULIQUES RACCORD RAPIDE AXE (A UTILISER AVEC TRINGLERIE CINEMATIQUE EN Z) SN -594432
LINEAS HIDRAULICAS DE DESCONEXION DEL PASADOR (PARA USO CON VARILLAJE DE BARRA EN Z) SN -594432

KEY	PART NO.	PART NAME	QTY.	SERIAL NO.	REMARKS
1	14M7400	LOCK NUT	2		M10
2	19M7784	SCREW	4		M10 X 20
3	19M7836	SCREW	2		M10 X 110
	24M7296	WASHER	2		10.500 X 30 X 2.500 MM
4	38H1004	ELBOW FITTING	1		
5	38H1023	TEE FITTING	1		
6	38H1160	ADAPTER FITTING	1		
7	38H1173	ADAPTER FITTING	2		
8	38H1309	ADAPTER FITTING	1		
9	38H1415	FITTING	2		
10	AT167553	HYDRAULIC HOSE - FABRICATE	1		
11	AT225530	HYD ACTUATED CONTROL VALVE	1		(COMPONENTS LISTED ON ANOTHER PAGE)
12	AT305171	HYDRAULIC HOSE - FABRICATE	1		
13	AT305424	OIL LINE	1		
14	AT305425	OIL LINE	1		
15	AT301930	HYDRAULIC HOSE - FABRICATE	2		(SUB FOR AT305900)
16	AT308805	OIL LINE	1		
17	AT308806	OIL LINE	1		
18	H75541	CLAMP	8		
19	R26448	O-RING	5		
20	R28782	O-RING	1		
21	R77175	COVER	1		
22	RE60701	DIAGNOSTIC COUPLING	1		
23	T77613	O-RING	12		
24	T77857	O-RING	2		
25	**AT307822**	**MOUNTING PARTS**	**1**		**(WHOLE GOODS) (PIN DISCONNECT)**
26	38H1094	ELBOW FITTING	1		
27	24M7296	WASHER	2		10.500 X 30 X 2.500 MM (0.413" X 1.181" X 0.098")

PIN DISCONNECT HYDRAULIC LINES (FOR USE WITH Z-BAR LINKAGE) SN 594433-
CONDUITES HYDRAULIQUES RACCORD RAPIDE AXE (A UTILISER AVEC TRINGLERIE CINEMATIQUE EN Z) SN 594433-
LINEAS HIDRAULICAS DE DESCONEXION DEL PASADOR (PARA USO CON VARILLAJE DE BARRA EN Z) SN 594433-

T209419 -UN-11MAR05

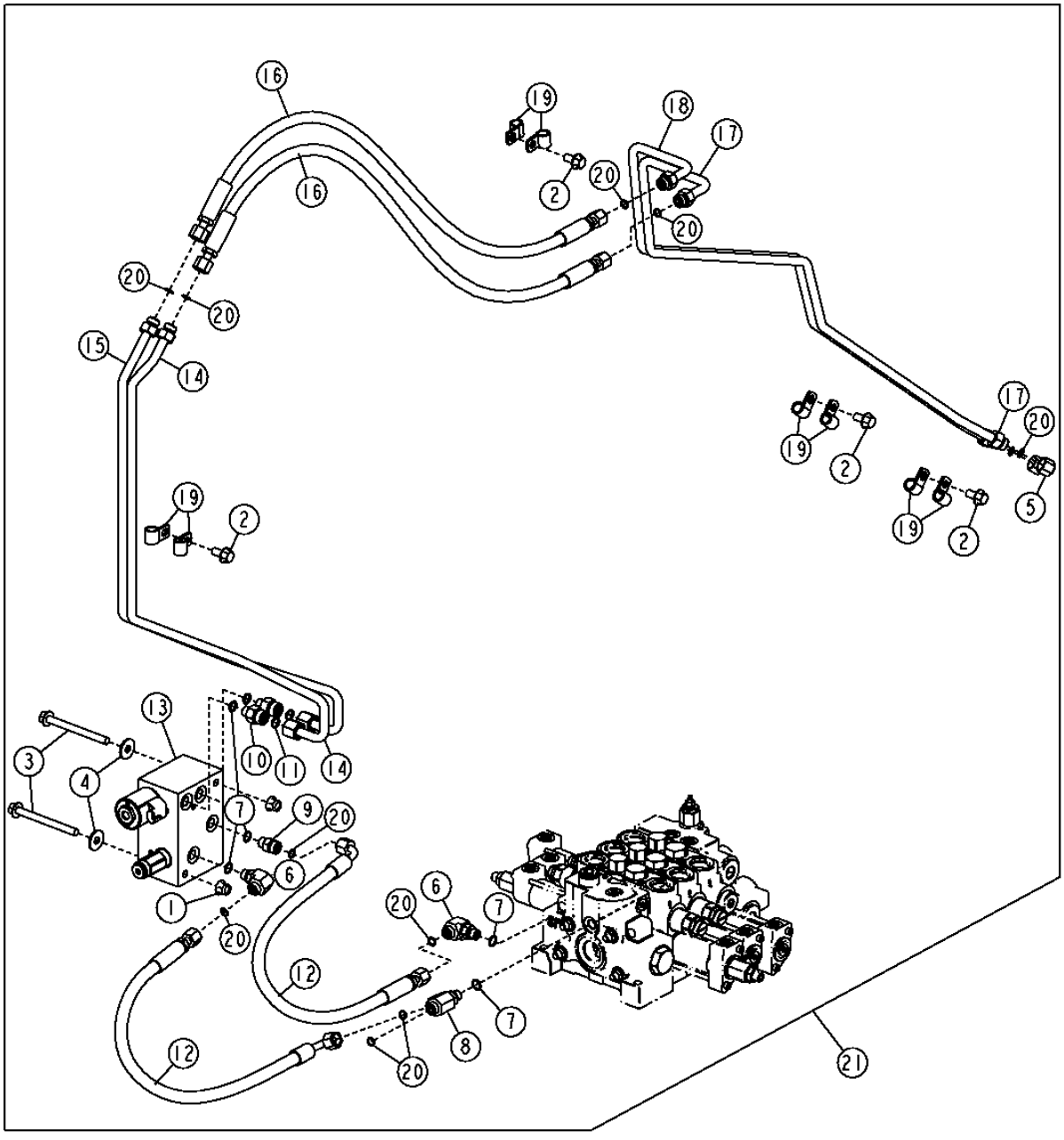

PIN DISCONNECT HYDRAULIC LINES (FOR USE WITH Z-BAR LINKAGE)(S.N. 594433-)
CONDUITES HYDRAULIQUES RACCORD RAPIDE AXE (A UTILISER AVEC TRINGLERIE CINEMATIQUE EN Z) SN 594433-
LINEAS HIDRAULICAS DE DESCONEXION DEL PASADOR (PARA USO CON VARILLAJE DE BARRA EN Z) SN 594433-

KEY	*PART NO.*	*PART NAME*	*QTY.*	*SERIAL NO.*	*REMARKS*
1	14M7400	LOCK NUT	2		M10
2	19M7784	SCREW	4		M10 X 20
3	19M7836	SCREW	2		M10 X 110
4	24M7296	WASHER	2		
5	38H1415	FITTING	2		
6	38H1004	ELBOW FITTING	1		
7	R26448	O-RING	6		
8	38H1023	TEE FITTING	1		
9	38H1160	ADAPTER FITTING	1		
10	38H1173	ADAPTER FITTING	2		
11	T77857	O-RING	2		
12	AT167553	HYDRAULIC HOSE - FABRICATE	2		
13	AT225530	HYD ACTUATED CONTROL VALVE	1		(COMPONENTS LISTED ON ANOTHER PAGE)
14	AT305424	OIL LINE	1		
15	AT305425	OIL LINE	1		
16	AT301930	HYDRAULIC HOSE - FABRICATE	2		(SUB FOR AT305900)
17	AT308805	OIL LINE	1		
18	AT308806	OIL LINE	1		
19	H75541	CLAMP	8		
20	T77613	O-RING	11		
21	**AT316770**	**MOUNTING PARTS**	**1**		**(WHOLE GOODS)**

BOOM TO COUPLER PIN DISCONNECT HYDRAULIC HOSES (Z-BAR LINKAGE)
FLEXIBLES HYDRAULIQUES DECONNEXION FLECHE AXE ACCOUPLEMENT (TRINGLERIE CINEMATIQUE EN Z)
AGUILON A MANGUERAS HIDRAULICAS DE DESCONEXION DEL PASADOR DEL ACOPLADOR (VARILLAJE DE BARRA EN Z)

T209838 -UN-30MAR05

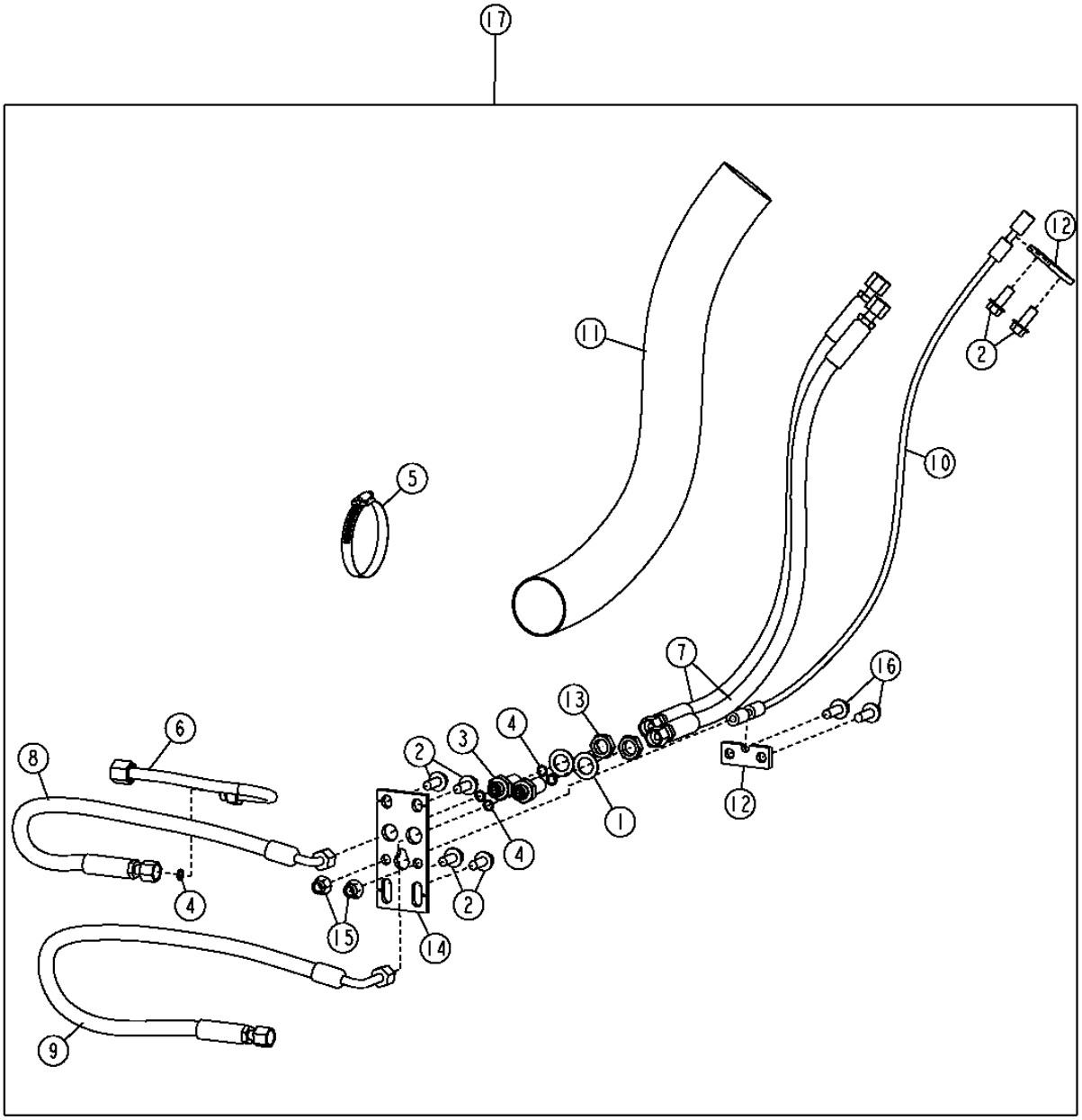

T209838

BOOM TO COUPLER PIN DISCONNECT HYDRAULIC HOSES (FOR USE WITH Z-BAR LINKAGE)
FLEXIBLES HYDRAULIQUES DECONNEXION FLECHE A AXE ACCOUPLEMENT (TRINGLERIE CINEMATIQUE EN Z)
AGUILON A MANGUERAS HIDRAULICAS DE DESCONEXION DEL PASADOR DEL ACOPLADOR (VARILLAJE DE BARRA EN Z)

KEY	*PART NO.*	*PART NAME*	*QTY.*	*SERIAL NO.*	*REMARKS*
1	12H327	LOCK WASHER	2		19.050 MM
2	19M7785	SCREW	6		M10 X 25
3	38H1285	UNION FITTING	2		
4	T77613	O-RING	5		
5	AR62936	CLAMP	1		
6	AT304895	OIL LINE	1		
7	AT311469	HYDRAULIC HOSE - FABRICATE	2		(SUB FOR AT305902)
	AT311468	HYDRAULIC HOSE - FABRICATE	2		(SUB FOR (2) AT305900) (HIGH LIFT)
8	AT305903	HYDRAULIC HOSE - FABRICATE	1		
9	AT305905	HYDRAULIC HOSE - FABRICATE	1		
10	AT305978	CABLE	1		
	AT309430	CABLE	1		(HIGH LIFT)
11	.....	HOSE GUARD	1		(FURNISH PARKER PG-188) (CTL 30")
	.....	HOSE GUARD	1		(HIGH LIFT) (FURNISH PARKER PG-188) (CTL 42")
12	T204315	PLATE	2		
13	T81029	NUT	2		
14	T206333	PLATE	1		
15	14M7400	LOCK NUT	2		M10
16	19M7786	SCREW	2		M10 X 30
17	**AT317574**	**KIT**	**1**		**(WHOLE GOODS)**
	AT317600	**KIT**	**1**		**(WHOLE GOODS) (FOR USE WITH HIGH LIFT MODELS ONLY)**

PIN DISCONNECT HYDRAULIC LINES (FOR USE WITH POWERLLEL™ LINKAGE)
CONDUITES HYDRAULIQUES RACCORD RAPIDE AXE (A UTILISER AVEC TRINGLERIE POWERLLEL™)
LINEAS HIDRAULICAS DE DESCONEXION DEL PASADOR (PARA USO CON VARILLAJE POWERLLEL™)

T204013 -UN-15OCT04

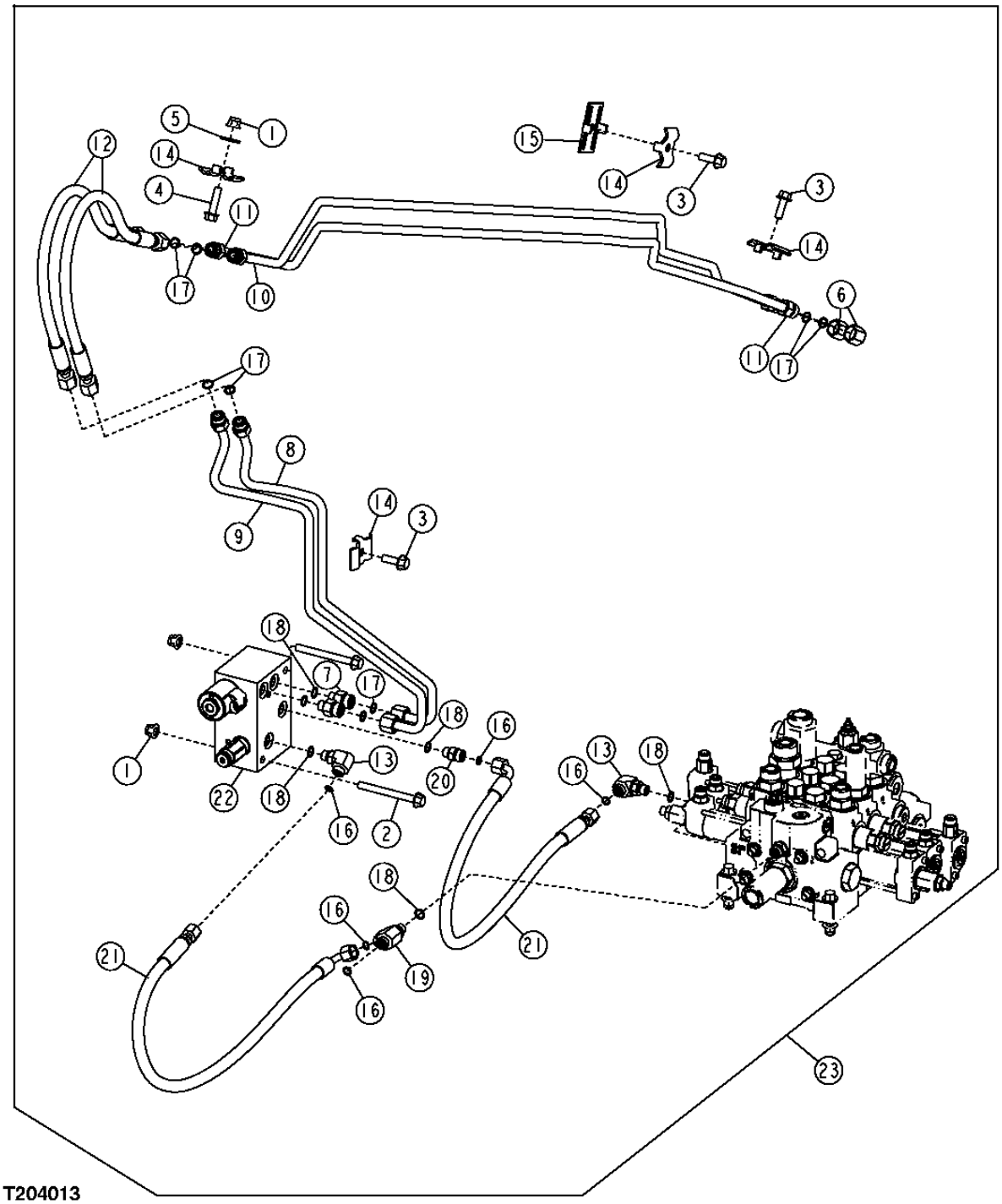

PIN DISCONNECT HYDRAULIC LINES (FOR USE WITH POWERLLEL™ LINKAGE)
CONDUITES HYDRAULIQUES RACCORD RAPIDE AXE (A UTILISER AVEC TRINGLERIE POWERLLEL™)
LINEAS HIDRAULICAS DE DESCONEXION DEL PASADOR (PARA USO CON VARILLAJE POWERLLEL™)

KEY	*PART NO.*	*PART NAME*	*QTY.*	*SERIAL NO.*	*REMARKS*
1	14M7400	LOCK NUT	3		M10
2	19M7812	SCREW	2		M10 X 100
3	19M7786	SCREW	3		M10 X 30
4	19M7804	SCREW	1		M10 X 40
5	24M7296	WASHER	1		10.500 X 30 X 2.500 MM
6	38H1416	FITTING	2		
7	38H1173	ADAPTER FITTING	2		
8	AT315926	OIL LINE	1		
9	AT315927	OIL LINE	1		
10	AT315831	OIL LINE	1		
11	AT315832	OIL LINE	1		
12	AT316050	HYDRAULIC HOSE - FABRICATE	2		
13	38H1004	ELBOW FITTING	2		
14	T159950	CLAMP	4		
15	T159956	CLAMP	1		
16	T77613	O-RING	5		
17	T77857	O-RING	8		
18	R26448	O-RING	3		
19	38H1023	TEE FITTING	1		
20	38H1160	ADAPTER FITTING	1		
21	AT167553	HYDRAULIC HOSE - FABRICATE	2		
22	AT225530	HYD ACTUATED CONTROL VALVE	1		(COMPONENTS LISTED ON ANOTHER PAGE)
23	**AT314615**	**KIT**	**1**		**(WHOLE GOODS)**

BOOM TO COUPLER PIN DISCONNECT HYDRAULIC HOSES (FOR USE WITH POWERLLEL™ LINKAGE)
FLEXIBLES HYDRAULIQUES DECONNEXION FLECHE A AXE ACCOUPLEMENT (UTILISER AVEC TRINGLERIE POWERLLEL_T
AGUILON MANGUERAS HIDRAULICAS DESCONEXION PASADOR DEL ACOPLADOR(PARA USO CON VARILLAJE POWERLLEL_T

T209840 -UN-30MAR05

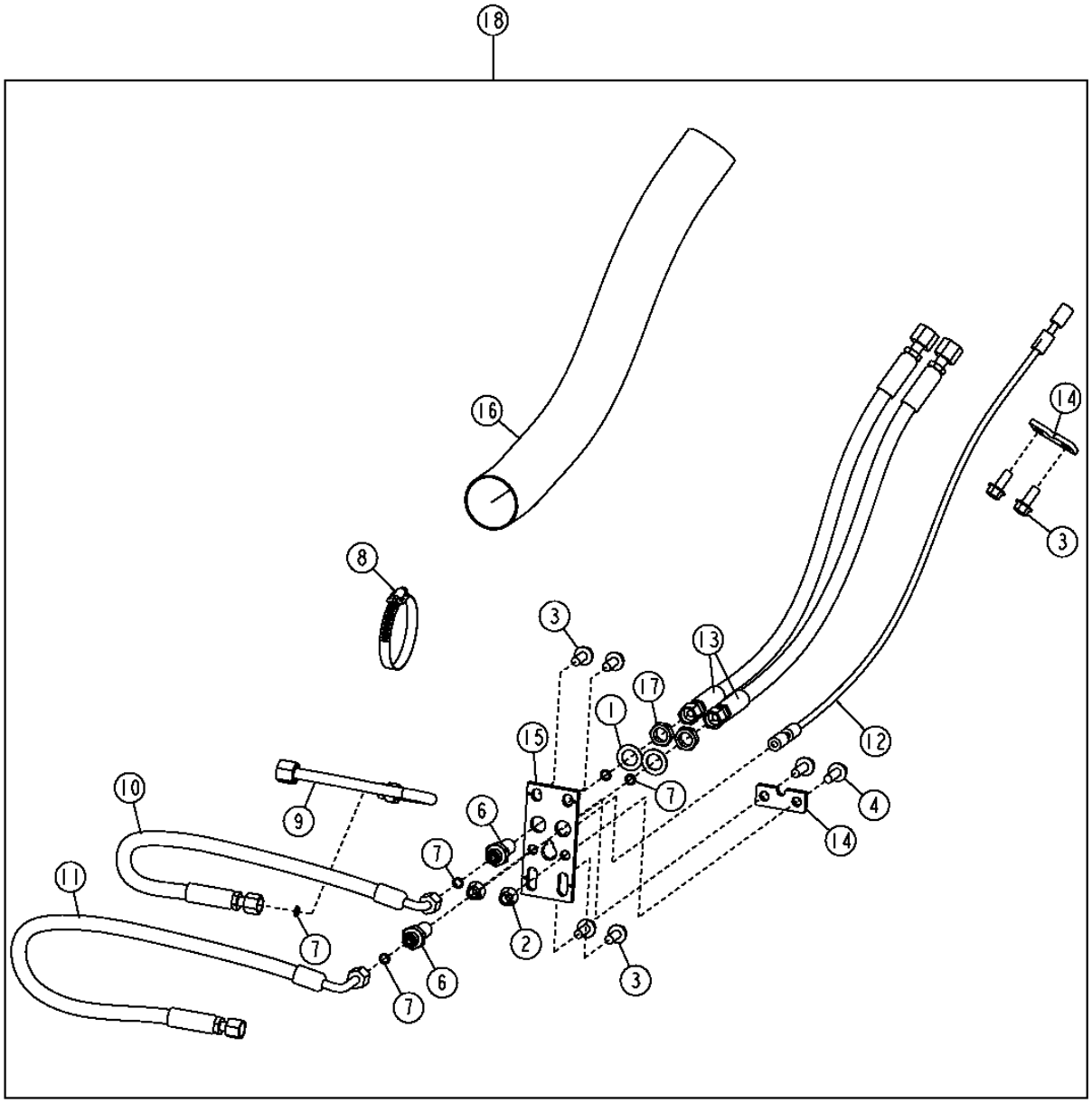

T209840

BOOM TO COUPLER PIN DISCONNECT HYDRAULIC HOSES (FOR USE WITH POWERLLEL™ LINKAGE)
FLEXIBLES HYDRAULIQUES DECONNEXION FLECHE A AXE ACCOUPLÈMENT (UTILISER AVEC TRINGLERIE POWERLLEL_T
AGUILON MANGUERAS HIDRAULICAS DESCONEXION PASADOR DEL ACOPLADOR(PARA USO CON VARILLAJE POWERLLEL_T

KEY	*PART NO.*	*PART NAME*	*QTY.*	*SERIAL NO.*	*REMARKS*
1	12H327	LOCK WASHER	2		19.050 MM
2	14M7400	LOCK NUT	2		M10
3	19M7785	SCREW	6		M10 X 25
4	19M7786	SCREW	2		M10 X 30
5	38H1416	FITTING	2		
6	38H1285	UNION FITTING	2		
7	T77613	O-RING	5		9.246 X 1.778 MM
8	AR62936	CLAMP	1		
9	AT304895	OIL LINE	1		
10	AT305903	HYDRAULIC HOSE - FABRICATE	1		11/16" X 686 MM X 11/16"
11	AT305905	HYDRAULIC HOSE - FABRICATE	1		11/16" X 838 MM X 11/16"
12	AT305978	CABLE	1		
13	AT311470	HYDRAULIC HOSE - FABRICATE	2		9/16" X 787 MM X 9/16"
14	T204315	PLATE	2		
15	T206333	PLATE	1		
16	.....	HOSE GUARD	1		(FURNISH PARKER PG-188) (CUT TO 30 INCHES)
17	T81029	NUT	2		17.475 MM
18	**AT317589**	**KIT**	**1**		**(WHOLEGOODS)**

HI-VIS COUPLER HYDRAULIC HOSES
FLEXIBLES HYDRAULIQUES COUPLEUR HI-VIS
MANGUERAS HIDRAULICAS DEL ACOPLADOR DE HI-VIS

TX1001427 -UN-24FEB06

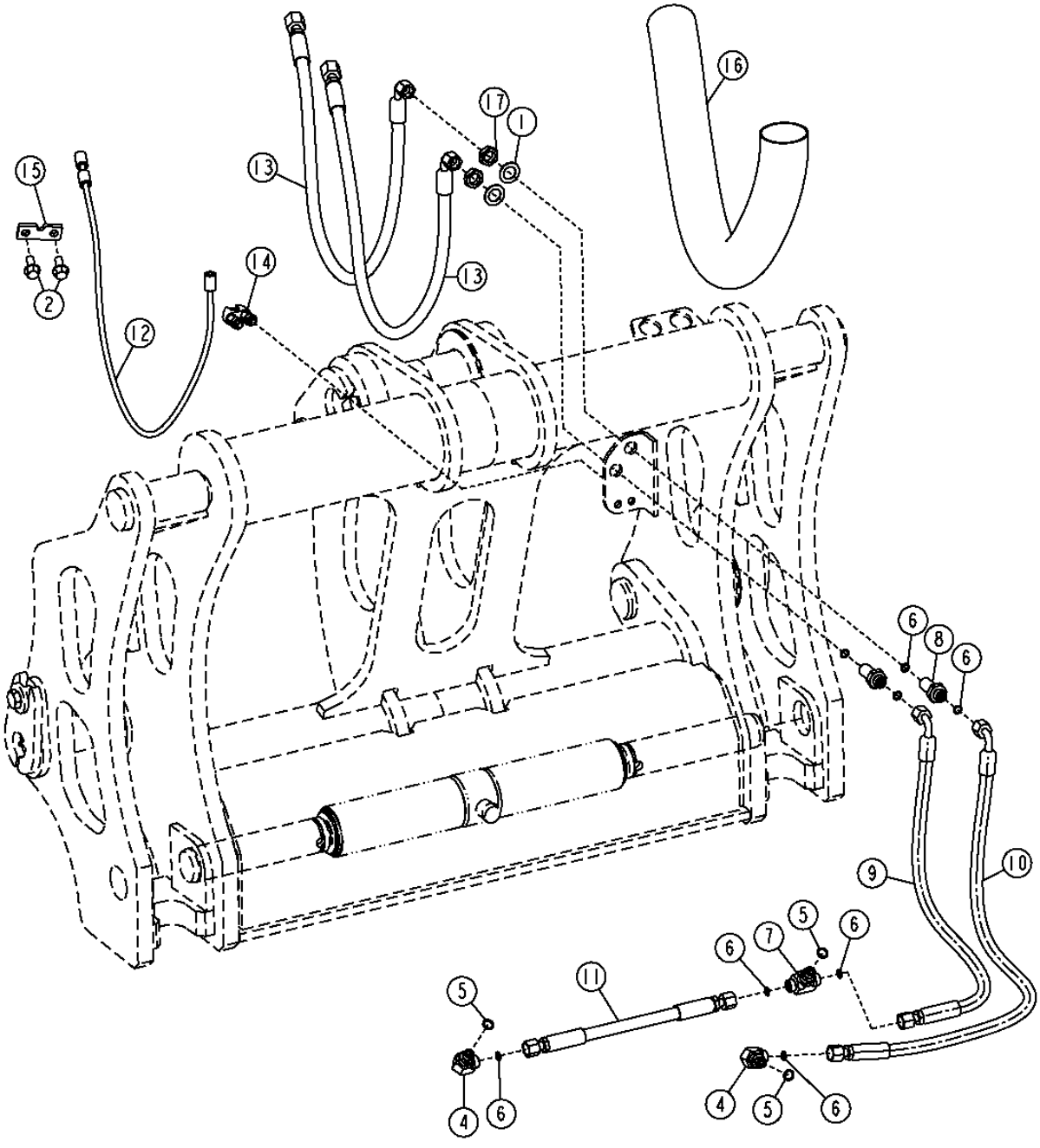

HI-VIS COUPLER HYDRAULIC HOSES
FLEXIBLES HYDRAULIQUES COUPLEUR HI-VIS
MANGUERAS HIDRAULICAS DEL ACOPLADOR DE HI-VIS

KEY	PART NO.	PART NAME	QTY.	SERIAL NO.	REMARKS
1	12H327	LOCK WASHER	2		3/4"
2	19M7785	SCREW	2		M10 X 25
4	38H1004	ELBOW FITTING	2		
5	R26448	O-RING	3		
6	T77613	O-RING	8		
7	38H1016	TEE FITTING	1		
8	38H1285	UNION FITTING	2		
9	AT323756	HYDRAULIC HOSE - FABRICATE	1		(SUB FOR AT324647)
10	AT323757	HYDRAULIC HOSE - FABRICATE	1		(SUB FOR AT324648)
11	AT323817	HYDRAULIC HOSE - FABRICATE	1		
12	AT324137	CABLE	1		(USE WITH AT330153 OR AT330154)
	AT325194	CABLE	1		(USE WITH AT330155)
13	AT327951	HYDRAULIC HOSE - FABRICATE	2		(USE WITH AT330153)
	AT324641	HYDRAULIC HOSE - FABRICATE	2		(USE WITH AT330154)
	AT325201	HYDRAULIC HOSE - FABRICATE	2		(USE WITH AT330155)
14	AT62123	CLAMP	1		
15	T204315	PLATE	1		
16	.....	HOSE GUARD	1		T217100 NLA (FURNISH PARKER PG-188) CUT TO 950.MM (37.4") (USE WITH AT330153 OR AT330154)
	.....	HOSE GUARD	1		T217474 NLA (FURNISH PARKER PG-188) CUT TO 1168.4MM (46.0") (USE WITH AT330155)
..	**AT330153**	**KIT**	**1**		**(WHOLEGOODS) USE WITH POWERLLEL™ LINKAGE, ALSO ORDER T223487 INSTALLATION INSTRUCTION**
..	**AT330154**	**KIT**	**1**		**(WHOLEGOODS) USE WITH Z-BAR LINKAGE, ALSO ORDER T223487 INSTALLATION INSTRUCTION**
..	**AT330155**	**KIT**	**1**		**(WHOLE GOODS) (WITH HIGH LIFT Z-BAR LINKAGE) (ALSO ORDER T223487)**

THIRD FUNCTION BOOM TO COUPLER PLUMBING (FOR USE WITH Z-BAR LINKAGE)
TUYAUTERIE FLECHE TROISIEME FONCTION A COUPLEUR (A UTILISER AVEC TRINGLERIE CINEMATIQUE EN Z)
AGUILON DE TERCERA FUNCION A LA TUBERIA DEL ACOPLADOR (PARA USE CON VARILLAJE DE BARRE EN Z)

T217559 -UN-30JAN06

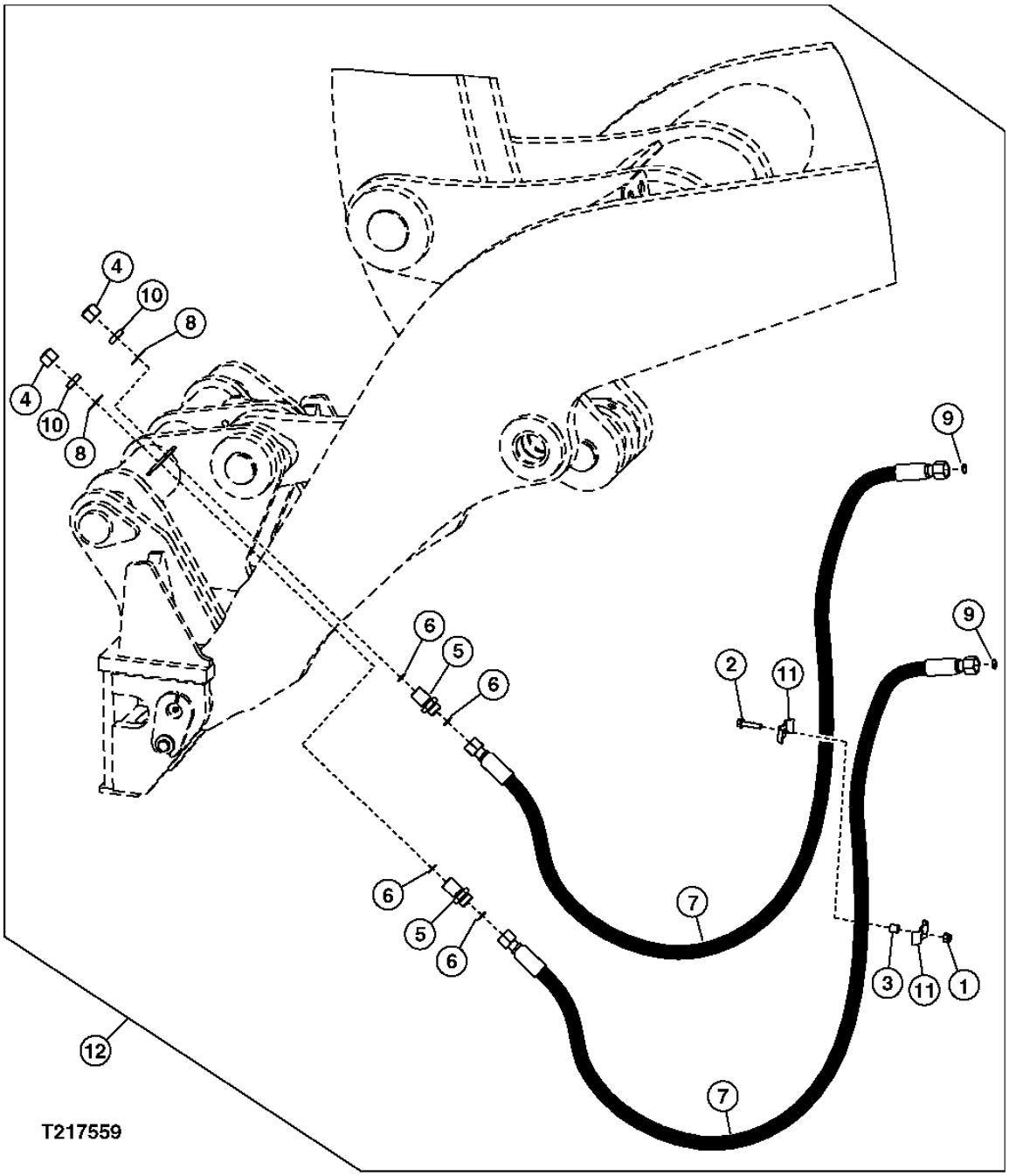

THIRD FUNCTION BOOM TO COUPLER PLUMBING (FOR USE WITH Z-BAR LINKAGE)
TUYAUTERIE FLECHE TROISIEME FONCTION A COUPLEUR (A UTILISER AVEC TRINGLERI CINEMATIQUE EN Z)
AGUILON DE TERCERA FUNCION A LA TUBERIA DEL ACOPLADOR (PARA USE CON VARILLAJE DE BARRE EN Z)

KEY	*PART NO.*	*PART NAME*	*QTY.*	*SERIAL NO.*	*REMARKS*
1	14M7400	LOCK NUT	1		(A) M10
2	19M7805	SCREW	1		(A) M10 X 45
3	28H3383	BUSHING	1		
4	38H1418	FITTING	2		
5	38H1276	ADAPTER FITTING	2		
6	T77858	O-RING	4		
7	AT317340	HYDRAULIC HOSE - FABRICATE	2		
	AT321387	HYDRAULIC HOSE - FABRICATE	2		(A)
8	T174275	LOCK WASHER	2		
9	T77858	O-RING	2		
10	T78707	NUT	2		
11	U46753	HOSE CLAMP	2		(A)
12	**AT322223**	**MOUNTING PARTS**	**1**		**(WHOLEGOODS)**
	AT322226	**MOUNTING PARTS**	**1**		**(A) (WHOLEGOODS)**

(A) FOR HIGH LIFT MODELS ONLY
(A) POUR MODELES A LEVAGE ELEVE SEULEMENT
(A) SOLO PARA MODELO DE LEVANTE EN ALTO

THIRD FUNCTION BOOM TO COUPLER PLUMBING (FOR USE WITH POWERLLEL™ LINKAGE)
TUYAUTERIE FLECHE TROISIEME FONCTION A COUPLEUR (A UTILISER AVEC TRINGLERIE POWERLLEL™)
AGUILON DE TERCERA FUNCION A LA TUBERIA DEL ACOPLADOR (PARA USE CON VARILLAJE POWERLLEL™)

T217560 -UN-30JAN06

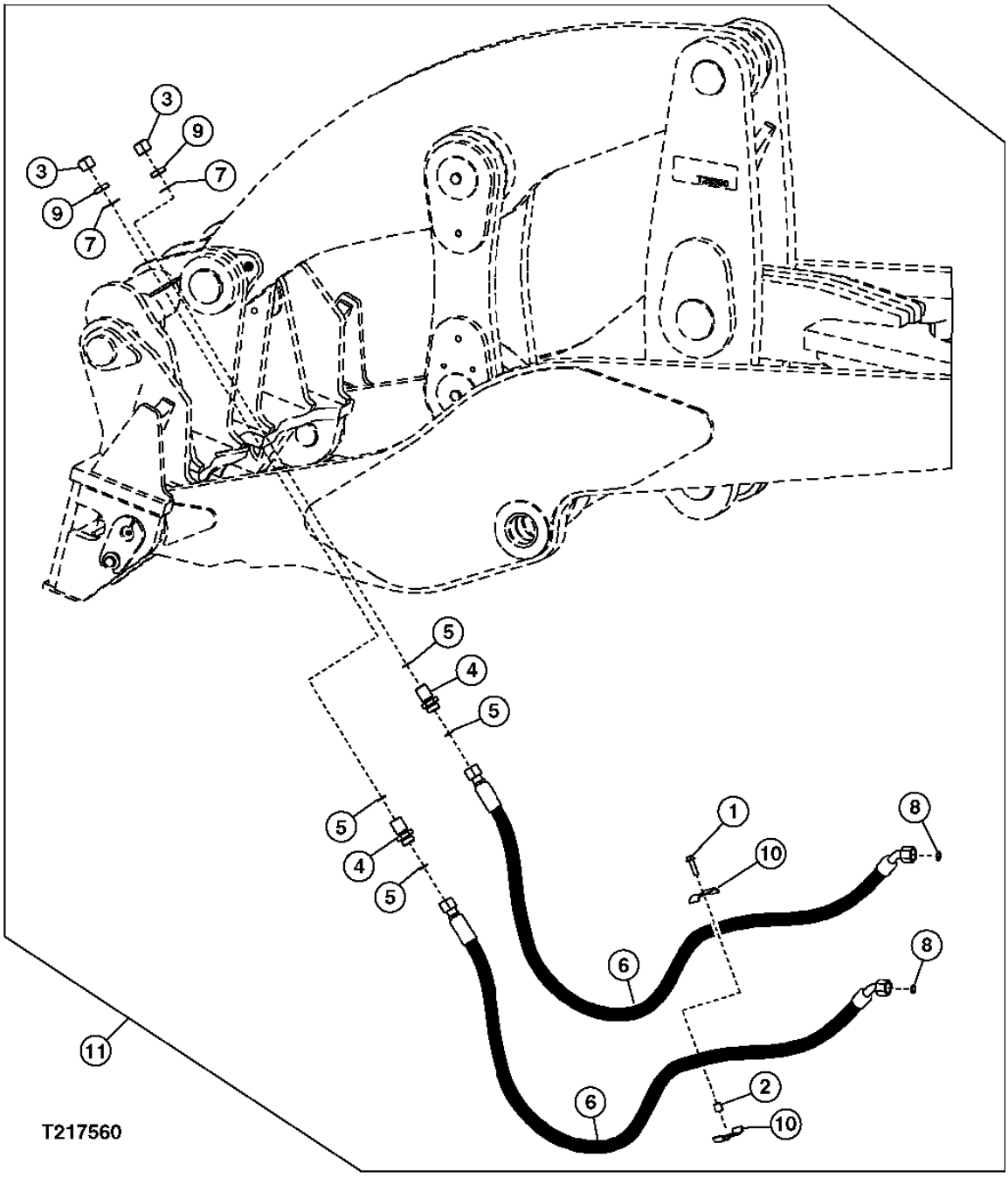

THIRD FUNCTION BOOM TO COUPLER PLUMBING (FOR USE WITH POWERLLEL™ LINKAGE)
TUYAUTERIE FLECHE TROISIEME FONCTION A COUPLEUR (A UTILISER AVEC TRINGLERIE POWERLLEL™)
AGUILON DE TERCERA FUNCION A LA TUBERIA DEL ACOPLADOR (PARA USE CON VARILLAJE POWERLLEL™)

KEY	*PART NO.*	*PART NAME*	*QTY.*	*SERIAL NO.*	*REMARKS*
1	19M8162	SCREW	1		M10 X 40
2	28H3383	BUSHING	1		
3	38H1418	FITTING	2		
4	38H1276	ADAPTER FITTING	2		
5	T77858	O-RING	4		
6	AT317239	HYDRAULIC HOSE - FABRICATE	2		
7	T174275	LOCK WASHER	2		
8	T77858	O-RING	2		
9	T78707	NUT	2		
10	U46753	HOSE CLAMP	2		
11	**AT322229**	**MOUNTING PARTS**	**1**		**(WHOLEGOODS)**

LOADER BUCKET AND BOOM CYLINDER PINS AND FITTINGS
AXES ET RACCORDS DE VERIN DE BENNE ET DE FLECHE DE CHARGEUR
CUCHARON DE CARGADORA Y PASADORES DEL CILINDRO DEL AGUILON Y ADAPTADORES

TX1006298 -UN-24APR06

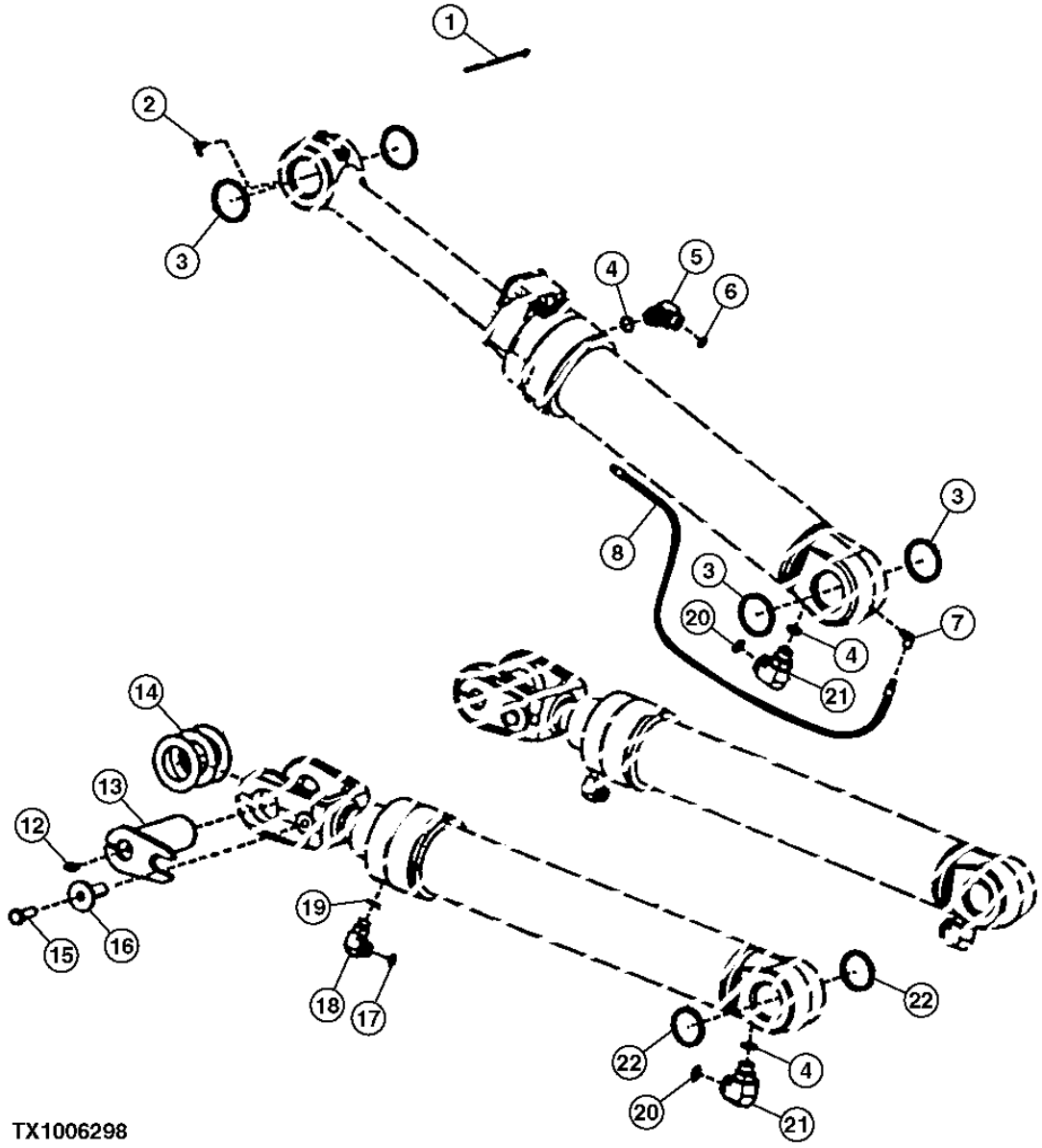

TX1006298

LOADER BUCKET AND BOOM CYLINDER PINS AND FITTINGS
AXES ET RACCORDS DE VERIN DE BENNE ET DE FLECHE DE CHARGEUR
CUCHARON DE CARGADORA Y PASADORES DEL CILINDRO DEL AGUILON Y ADAPTADORES

KEY	*PART NO.*	*PART NAME*	*QTY.*	*SERIAL NO.*	*REMARKS*
1	R44302	TIE BAND	2		
2	JD7781	LUBRICATION FITTING	1		
3	T157277	SEAL	4		
4	U12547	O-RING	4		
5	38H1007	ELBOW FITTING	1		
6	T77858	O-RING	1		
7	T56112	ELBOW FITTING	1		
8	AT103107	HYDRAULIC HOSE	1		
12	JD7763	LUBRICATION FITTING	2		
13	AT207052	PIN	2		
14	T102171	WASHER	6		
15	19M7489	CAP SCREW	2		M16 X 45
16	T176064	BUSHING	2		
17	T77932	O-RING	2		
18	38H1006	ELBOW FITTING	2		
19	R26906	O-RING	2		
20	T76938	O-RING	3		
21	38H1305	ELBOW FITTING	3		
22	TH100374	SEAL	4		

BOOM CYLINDER
VERIN DE FLECHE
CILINDRO DE AGUILON

TX1009513 -UN-17JUL06

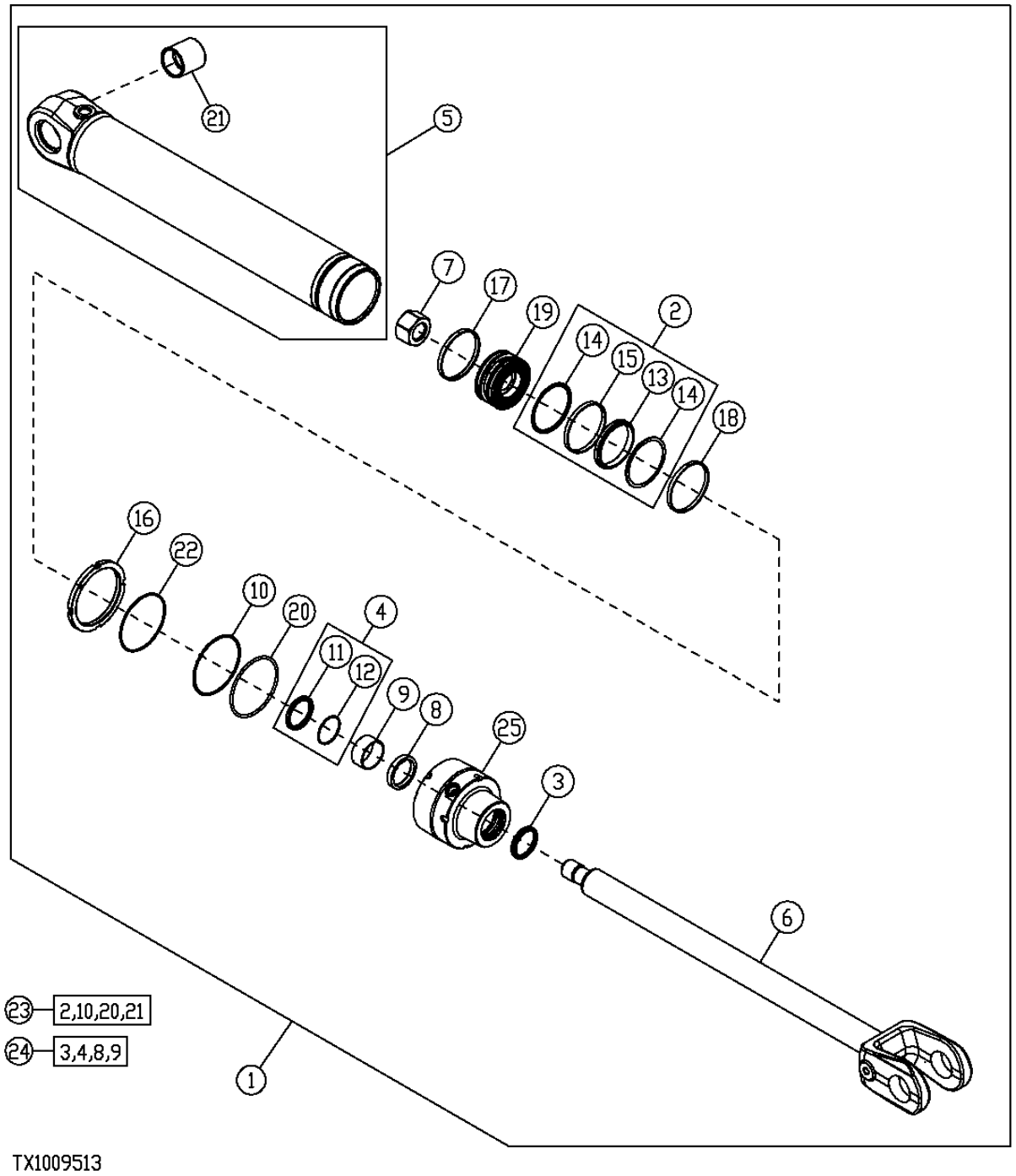

BOOM CYLINDER
VERIN DE FLECHE
CILINDRO DE AGUILON

KEY	PART NO.	PART NAME	QTY.	SERIAL NO.	REMARKS
1	AH206281	HYDRAULIC CYLINDER	1		
2	AH138083	SEAL	1		
3	AH146559	SEAL	1		
4	AH146563	SEAL	1		
5	AH208337	HYDRAULIC CYLINDER BARREL	1		
6	AH212348	ROD	1		
7	H151894	NUT	1		
8	H152205	SEAL	1		
9	H152796	WEAR RING	1		
10	H154898	BACK-UP RING	1		
11	.....	SEAL	1		(SUB AH149815)
12	.....	SEAL	1		(SUB AH149815)
13	.....	SEAL	1		(SUB AH149847)
14	.....	SEAL	2		(SUB AH149847)
15	.....	SEAL	1		(SUB AH149847)
16	H180433	NUT	1		
17	.....	SEAL	1		(SUB AH149847)
18	.....	SEAL	1		(SUB AH149847)
19	H208098	PISTON	1		
20	R77857	RING	1		
21	R85185	BUSHING	1		
22	T105469	O-RING	1		
23	AH149847	KIT	1		(BORE KIT)
24	AH149815	HYDRAULIC CYLINDER KIT	1		(ROD SEAL KIT)
25	H206629	HYDR. CYLINDER ROD GUIDE	1		

BUCKET CYLINDER
CYLINDRE DE GODET
CILINDRO DE CUCHARON

T195159 -UN-11NOV03

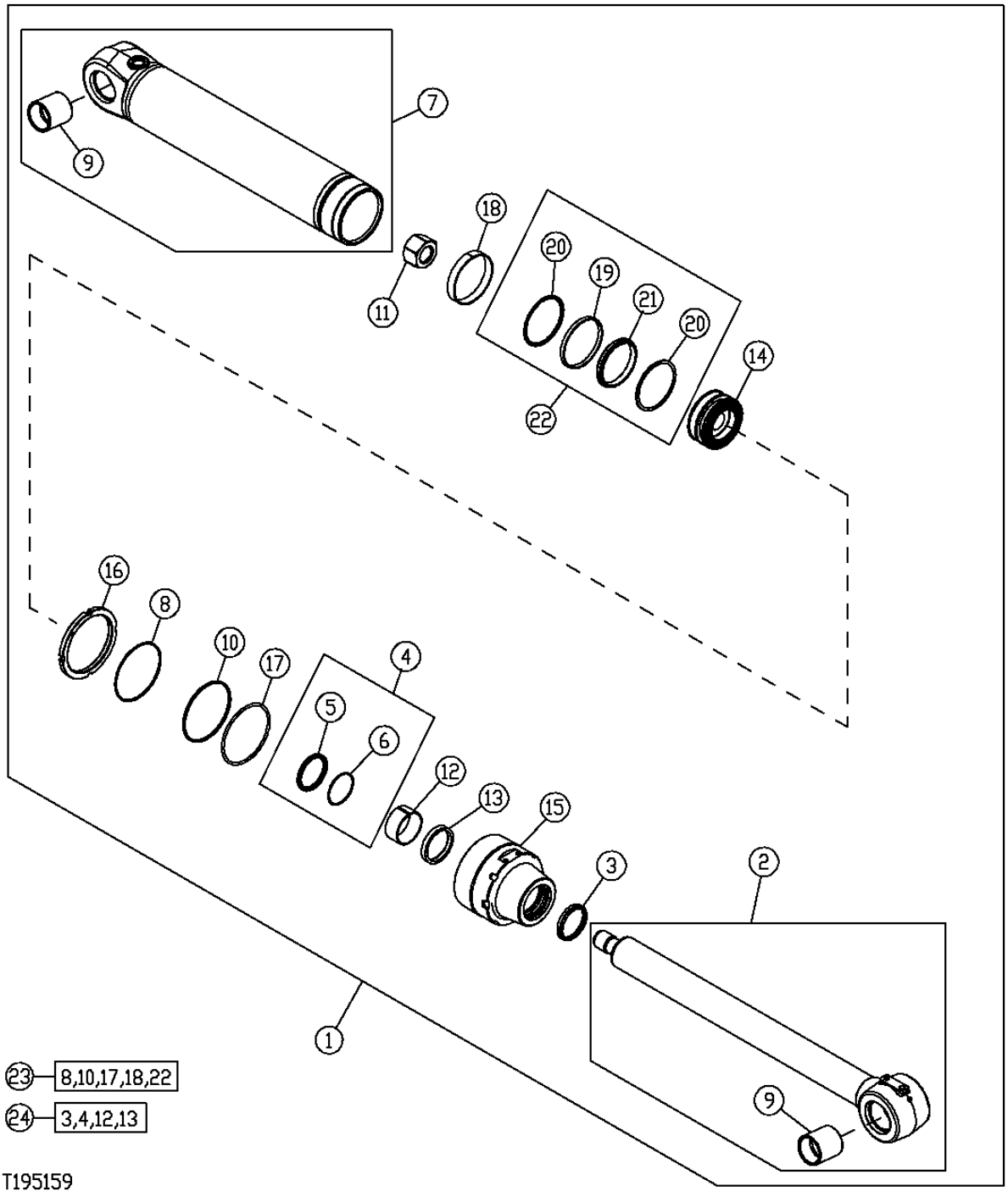

BUCKET CYLINDER
CYLINDRE DE GODET
CILINDRO DE CUCHARON

KEY	PART NO.	PART NAME	QTY.	SERIAL NO.	REMARKS
1	AH172986	HYDRAULIC CYLINDER	1		
2	AH151896	HYDRAULIC CYLINDER ROD	1		
3	AH153596	SEAL	1		
4	AH153597	SEAL	1		
5	.....	SEAL	1		(SUB AH153597)
6	.....	SEAL	1		(SUB AH153597)
7	AH153771	HYDRAULIC CYLINDER BARREL	1		
8	E52687	O-RING	1		
9	H151537	BUSHING	1		
10	H151890	BACK-UP RING	1		
11	H151894	NUT	1		
12	H159071	WEAR RING	1		
13	H159072	SEAL	1		
14	H159074	PISTON	1		
15	H178392	HYDR. CYLINDER ROD GUIDE	1		
16	H180324	NUT	1		
17	R72032	O-RING	1		
18	R90653	WEAR RING	1		
19	.....	SEAL	1		(SUB RE30162)
20	.....	SEAL	2		(SUB RE30162)
21	.....	SEAL	1		(SUB RE30162)
22	RE30162	SEAL	1		
23	AH149848	KIT	1		(BORE KIT)
24	AH154570	HYDRAULIC CYLINDER KIT	1		(ROD SEAL KIT)

TOOL CARRIER BOOM AND TILT CYLINDER PINS AND FITTINGS
FLECHE PORTE-OUTILS ET AXES ET RACCORDS VERIN INCLINAISON
AGUILON DEL PORTAHERRAMIENTAS, ADAPTADORES Y PASADORES DEL CILINDRO DE INCLINACION

TX1006299 -UN-24APR06

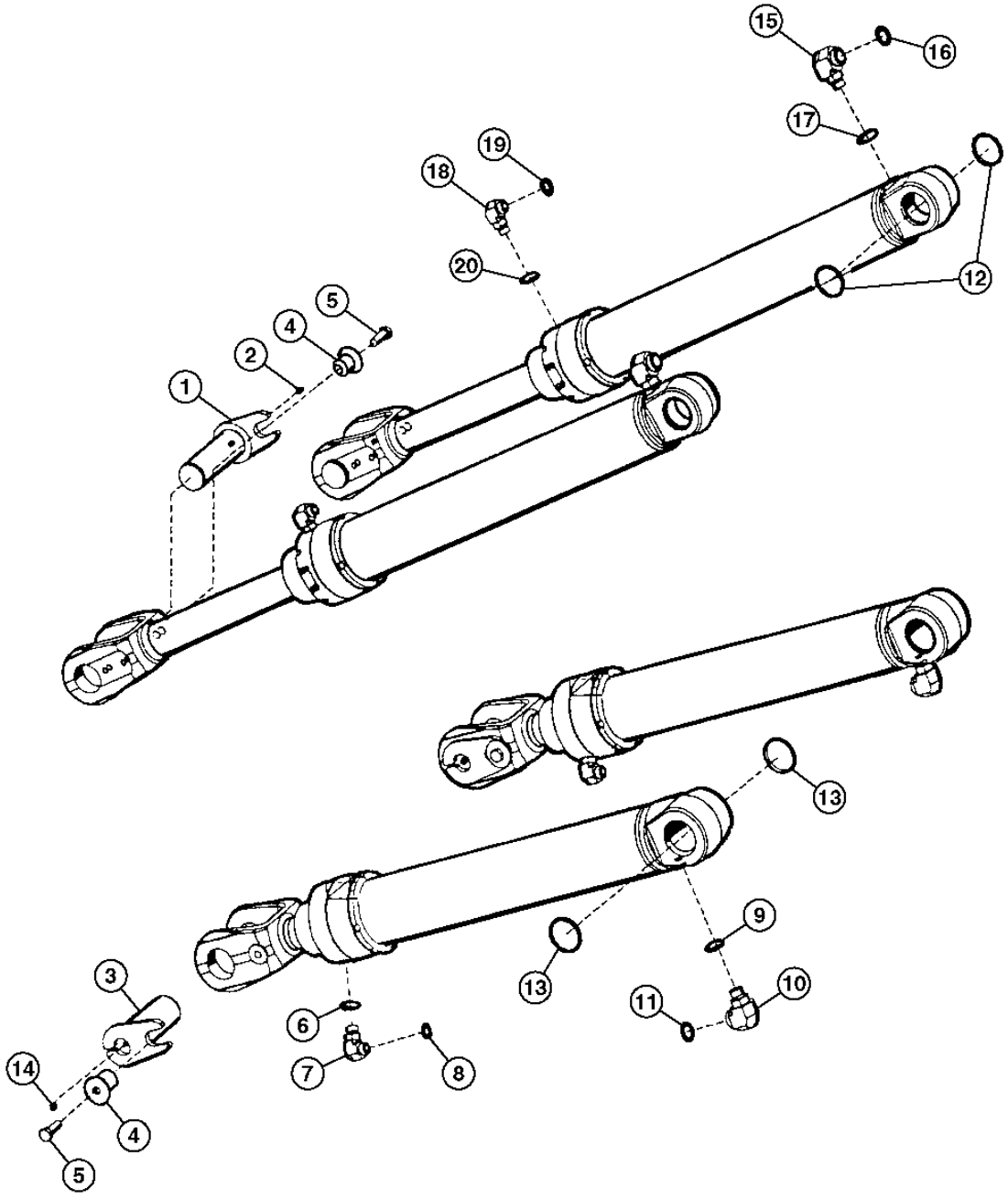

TX1006299

TOOL CARRIER BOOM AND TILT CYLINDER PINS AND FITTINGS
FLECHE PORTE-OUTILS ET AXES ET RACCORDS VERIN INCLINAISON
AGUILON DEL PORTAHERRAMIENTAS, ADAPTADORES Y PASADORES DEL CILINDRO DE INCLINACION

KEY	*PART NO.*	*PART NAME*	*QTY.*	*SERIAL NO.*	*REMARKS*
1	AT203562	PIN	2		
2	JD7759	LUBRICATION FITTING	2		
3	AT207052	PIN	2		
4	T176064	BUSHING	4		
5	19M7489	CAP SCREW	4		M16 X 45
6	R26906	O-RING	2		
7	38H1006	ELBOW FITTING	2		
8	T77932	O-RING	2		
9	U12547	O-RING	2		
10	38H1305	ELBOW FITTING	2		
11	T76938	O-RING	2		
12	T157275	SEAL	4		
13	T157276	SEAL	4		
14	JD7763	LUBRICATION FITTING	2		
15	38H1305	ELBOW FITTING	2		
16	T76938	O-RING	2		
17	U12547	O-RING	2		
18	38H1006	ELBOW FITTING	2		
19	T77932	O-RING	2		
20	R26906	O-RING	2		

TOOL CARRIER BOOM CYLINDER
VERIN FLECHE PORTE-OUTILS
CILINDRO DEL AGUILON DEL PORTAHERRAMIENTAS

T196275 -UN-18NOV03

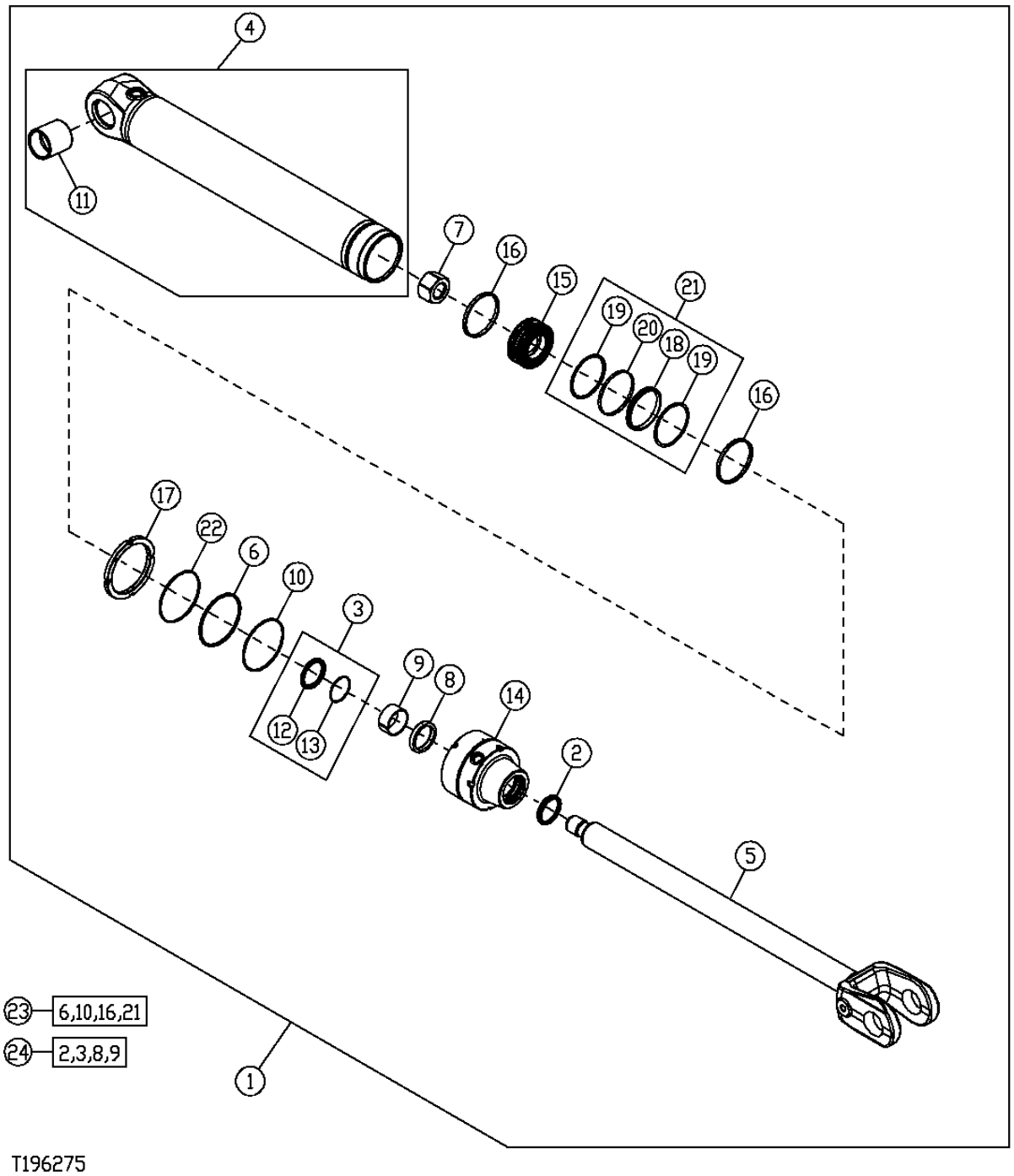

TOOL CARRIER BOOM CYLINDER
VERIN FLECHE PORTE-OUTILS
CILINDRO DEL AGUILON DEL PORTAHERRAMIENTAS

KEY	PART NO.	PART NAME	QTY.	SERIAL NO.	REMARKS
1	AH163629	HYDRAULIC CYLINDER	1		
2	AH146559	SEAL	1		
3	AH146563	SEAL	1		
4	AH149004	HYDRAULIC CYLINDER BARREL	1		
5	AH149005	HYDRAULIC CYLINDER ROD	1		
6	H151891	BACK-UP RING	1		
7	H151894	NUT	1		
8	H152205	SEAL	1		
9	H152796	WEAR RING	1		
10	T38485	O-RING	1		
11	H155143	BUSHING	1		
12	.....	SEAL	1		(SUB AH149815)
13	.....	SEAL	1		(SUB AH149815)
14	H155769	HYDR. CYLINDER ROD GUIDE	1		
15	H169745	PISTON	1		
16	H170138	WEAR RING	2		
17	H180432	NUT	1		
18	.....	SEAL	1		(SUB AH163671)
19	.....	SEAL	2		(SUB AH163671)
20	.....	SEAL	1		(SUB AH163671)
21	RE20809	SEAL	1		
22	T12275	O-RING	1		
23	AH163671	HYDRAULIC CYLINDER KIT	1		(BORE KIT)
24	AH149815	HYDRAULIC CYLINDER KIT	1		(ROD SEAL KIT)

TOOL CARRIER TILT CYLINDER
VERIN INCLINAISON PORTE-OUTILS
CILINDRO DEL INCLINACION DEL POERTAHERRAMIENTAS

T196494 -UN-26NOV03

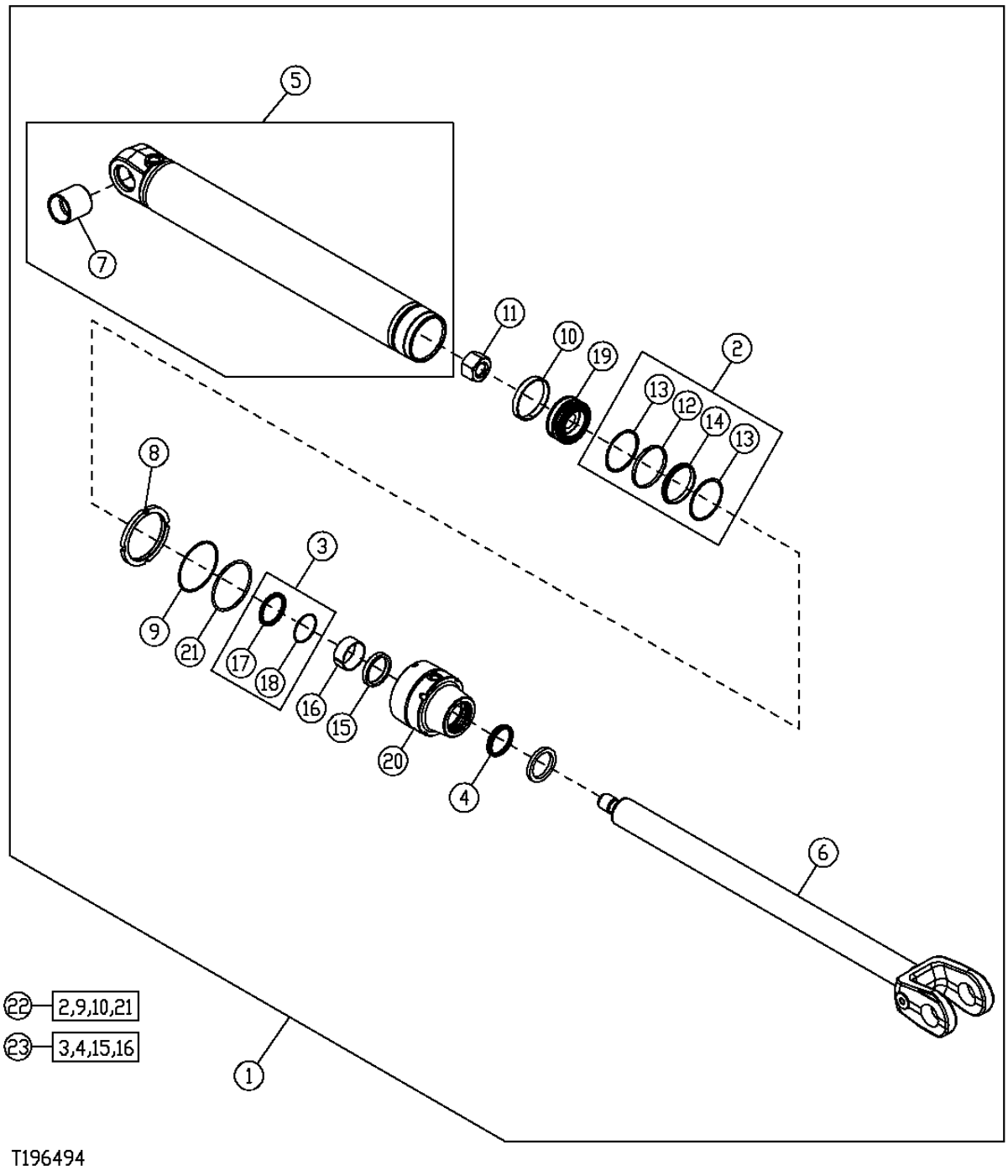

TOOL CARRIER TILT CYLINDER
VERIN INCLINAISON PORTE-OUTILS
CILINDRO DEL INCLINACION DEL PORTAHERRAMIENTAS

KEY	*PART NO.*	*PART NAME*	*QTY.*	*SERIAL NO.*	*REMARKS*
1	AH153921	HYDRAULIC CYLINDER	1		
2	AH138082	SEAL	1		
3	AH150932	SEAL	1		
4	AH150933	SEAL	1		
5	AH153923	HYDRAULIC CYLINDER BARREL	1		
6	AH158823	HYDRAULIC CYLINDER ROD	1		
7	H155147	BUSHING	1		
8	H180431	NUT	1		
9	H155540	BACK-UP RING	1		
10	H155543	SCRAPER RING	1		
11	H155561	NUT	1		
12	.....	SEAL	1		(SUB AH212585)
13	.....	SEAL	1		(SUB AH212585)
14	.....	SEAL	1		(SUB AH212585)
15	H158436	SEAL	1		
16	H158437	WEAR RING	1		
17	.....	SEAL	1		(SUB AH156466)
18	.....	SEAL	1		(SUB AH156466)
19	H160456	PISTON	1		
20	H173652	HYDR. CYLINDER ROD GUIDE	1		
21	T41356	O-RING	1		
22	AH212585	HYDRAULIC CYLINDER KIT	1		(BORE KIT)
23	AH156466	HYDRAULIC CYLINDER KIT	1		(ROD SEAL KIT)

POWERLLEL™ LINKAGE BOOM AND TILT CYLINDER PINS AND FITTINGS
AXES ET RACCORDS VERIN INCLINAISON ET FLECHE TRINGLERIE POWERLLEL™
AGUILON DE VARILLAJE POWERLLEL™, ADAPTADORES Y PASADORES DEL CILINDRO DE INCLINACION

T202192 -UN-19AUG04

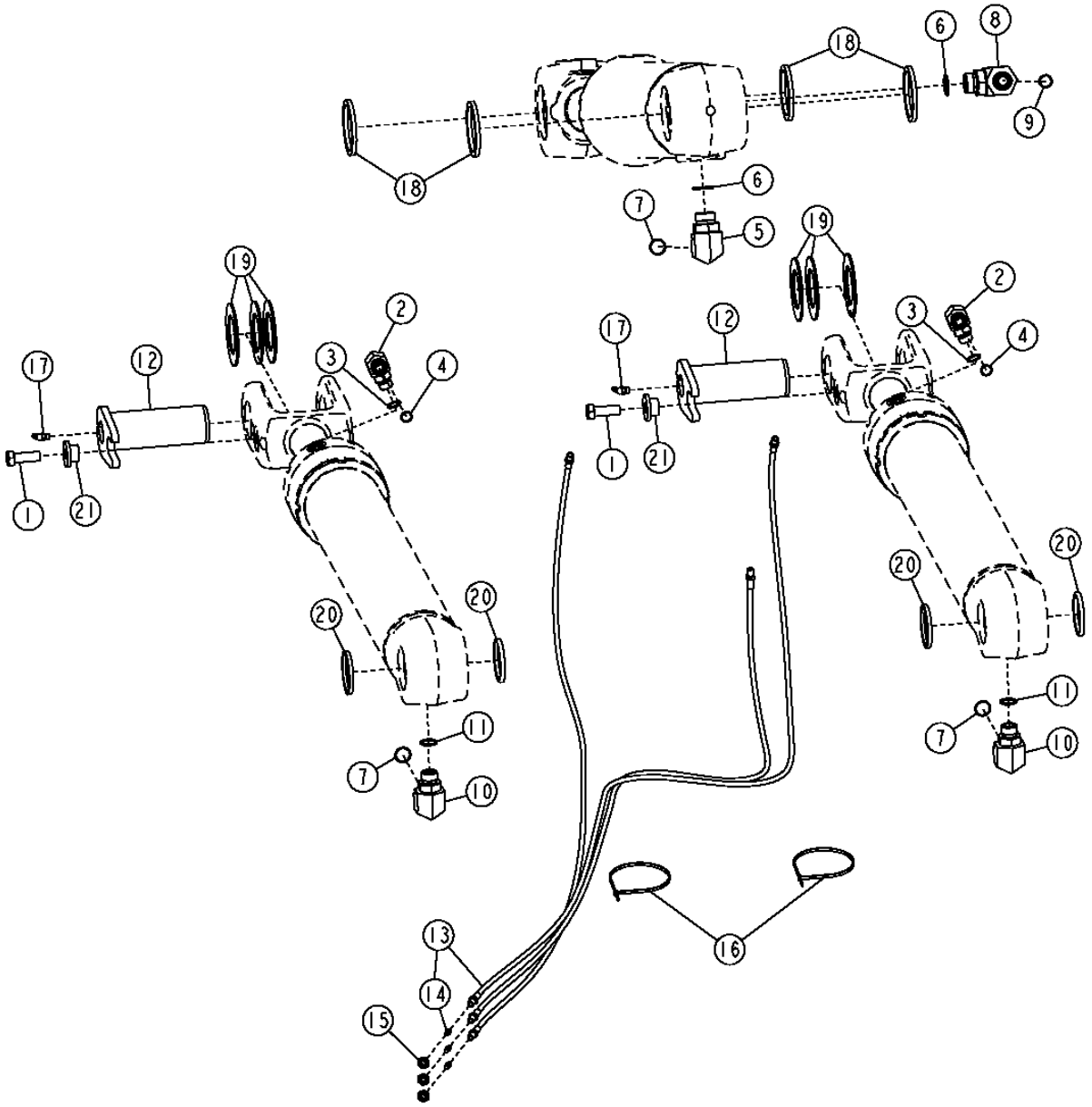

POWERLLEL™ LINKAGE BOOM AND TILT CYLINDER PINS AND FITTINGS
AXES ET RACCORDS VERIN INCLINAISON ET FLECHE TRINGLERIE POWERLLEL™
AGUILON DE VARILLAJE POWERLLEL™, ADAPTADORES Y PASADORES DEL CILINDRO DE INCLINACION

KEY	*PART NO.*	*PART NAME*	*QTY.*	*SERIAL NO.*	*REMARKS*
1	19M7489	CAP SCREW	2		M16 X 45
2	38H1006	ELBOW FITTING	2		
3	R26906	O-RING	2		
4	T77932	O-RING	2		
5	38H1037	ELBOW FITTING	1		
6	R29936	O-RING	2		
7	T76938	O-RING	3		
8	38H1052	ELBOW FITTING	1		
9	T77858	O-RING	1		
10	38H1305	ELBOW FITTING	2		
11	U12547	O-RING	2		
12	AT207052	PIN	2		
13	AT307996	HYDRAULIC HOSE	3		
14	JD7797	LUBRICATION FITTING	1		
15	E12379	NUT	3		
16	H77698	TIE BAND	2		
17	JD7763	LUBRICATION FITTING	2		
18	T102137	SEAL	4		
19	T102171	WASHER	6		
20	T157276	SEAL	4		
21	T176064	BUSHING	2		

POWERLLEL™ LINKAGE BOOM CYLINDER
VERIN FLECHE TRINGLERIE POWERLLEL™
CILINDRO DEL AGUILON DE VARILLAJE POWERLLEL™

T202193 -UN-25AUG04

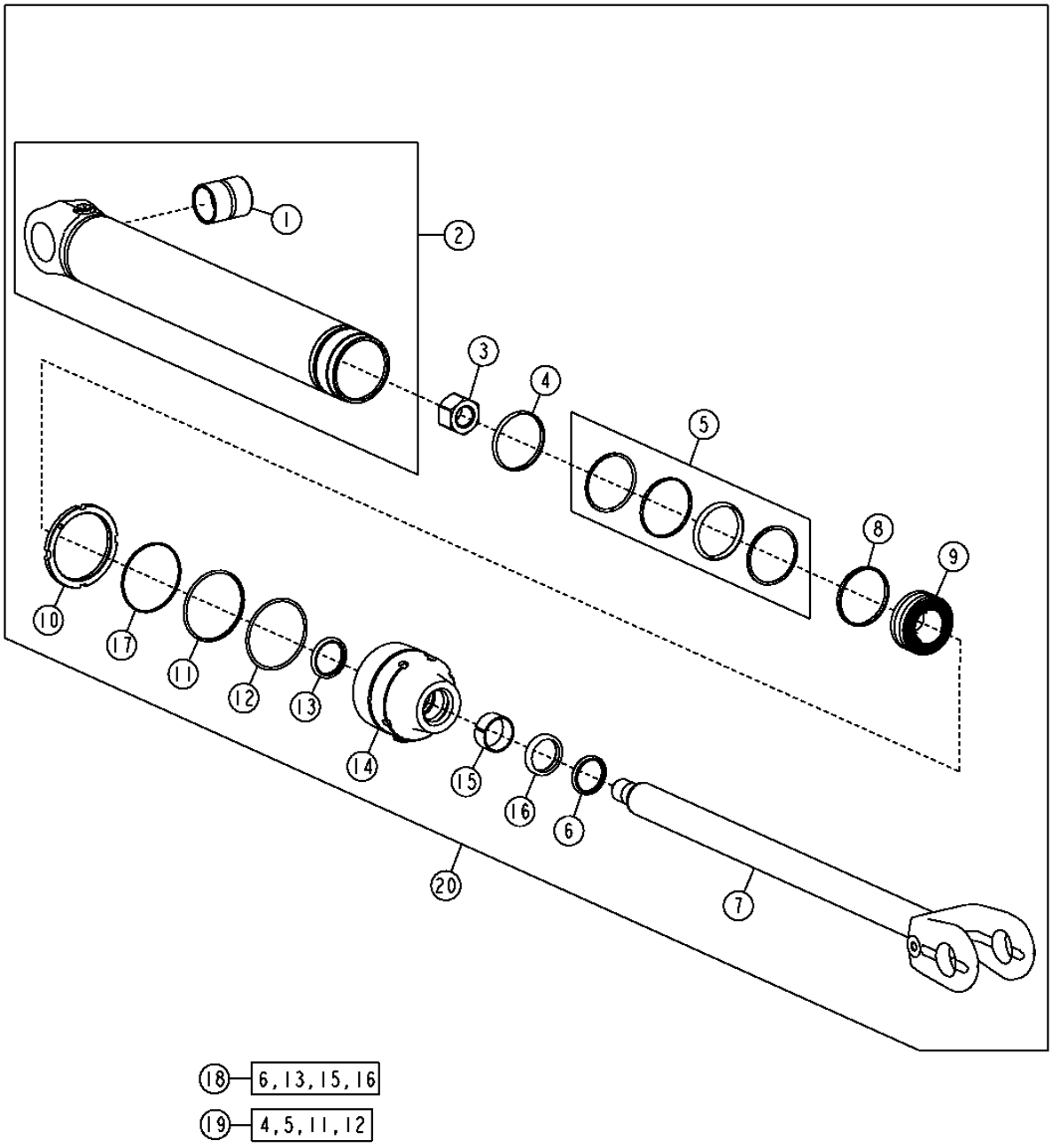

POWERLLEL™ LINKAGE BOOM CYLINDER
VERIN FLECHE TRINGLERIE POWERLLEL™
CILINDRO DEL AGUILON DE VARILLAJE POWERLLEL™

KEY	*PART NO.*	*PART NAME*	*QTY.*	*SERIAL NO.*	*REMARKS*
1	H155143	BUSHING	1		
2	AH208222	HYDRAULIC CYLINDER BARREL	1		
3	H151894	NUT	1		
4	H169750	WEAR RING	1		
5	RE20809	SEAL	1		
6	AH146559	SEAL	1		
7	AH214857	HYDRAULIC CYLINDER ROD	1		
8	H208703	SCRAPER RING	1		
9	H208707	PISTON	1		
10	H180432	NUT	1		
11	H151891	BACK-UP RING	1		
12	T38485	O-RING	1		
13	AH146563	SEAL	1		
14	H155769	HYDR. CYLINDER ROD GUIDE	1		
15	H152796	WEAR RING	1		
16	H152205	SEAL	1		
17	T12275	O-RING	1		
18	AH149815	HYDRAULIC CYLINDER KIT	1		(ROD SEAL KIT)
19	AH163671	HYDRAULIC CYLINDER KIT	1		(BORE SEAL KIT)
20	AH208215	HYDRAULIC CYLINDER	1		

POWERLLEL™ LINKAGE BUCKET CYLINDER
VERIN BENNE TRINGLERIE POWERLLEL™
CILINDRO DE CUCHARON DE VARILLAJE POWERLLEL™

T202194 -UN-24AUG04

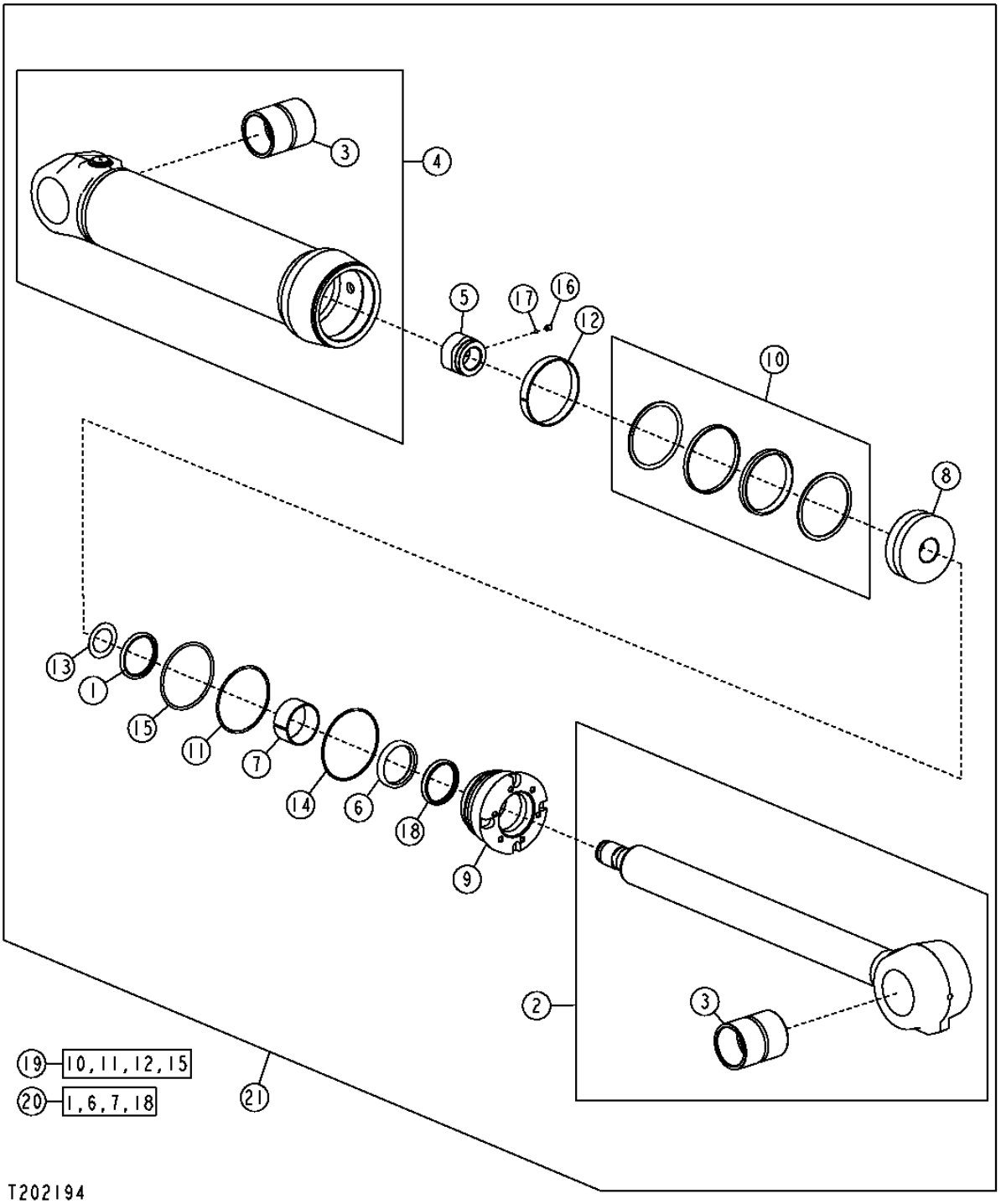

POWERLLEL™ LINKAGE BUCKET CYLINDER
VERIN BENNE TRINGLERIE POWERLLEL™
CILINDRO DE CUCHARON DE VARILLAJE POWERLLEL™

KEY	*PART NO.*	*PART NAME*	*QTY.*	*SERIAL NO.*	*REMARKS*
1	AH152446	SEAL	1		
2	AH224521	ROD	1		(SUB FOR AH211575)
3	H158397	BUSHING	1		
4	AH215586	HYDRAULIC CYLINDER BARREL	1		
5	H158175	NUT	1		
6	H159361	SEAL	1		
7	H159362	WEAR RING	1		
8	H163598	PISTON	1		
9	H209168	HYDR. CYLINDER ROD GUIDE	1		
10	RE25102	SEAL	1		
11	R78818	BACK-UP RING	1		
12	R85192	WEAR RING	1		
13	TH110253	SHIM	1		
14	T20779	RING	1		
15	T38485	O-RING	1		
16	22M7139	SET SCREW	1		
17	400R	BALL	1		
18	AH152445	SEAL	1		
19	AH216299	HYDRAULIC CYLINDER KIT	1		(BORE SEAL KIT)
20	AH156874	HYDRAULIC CYLINDER KIT	1		(ROD SEAL KIT)
21	AH225345	HYDRAULIC CYLINDER	1		(SUB FOR AH209027)

RETURN-TO-DIG ACTUATOR AND SENSOR (NOT FOR USE WITH TOOL CARRIER)
ACTIONNEUR ET CAPTEUR DE RETOUR EN POSITON DE CREUSEMENT (NE PAS UTILISER AVEC PORTE-OUTILS)
ACCIONADOR DE RETORNO PARA EXCAVAR Y SENSOR (NO PARA USO CON PORTAHERRAMIENTAS)

T153088 -UN-01APR02

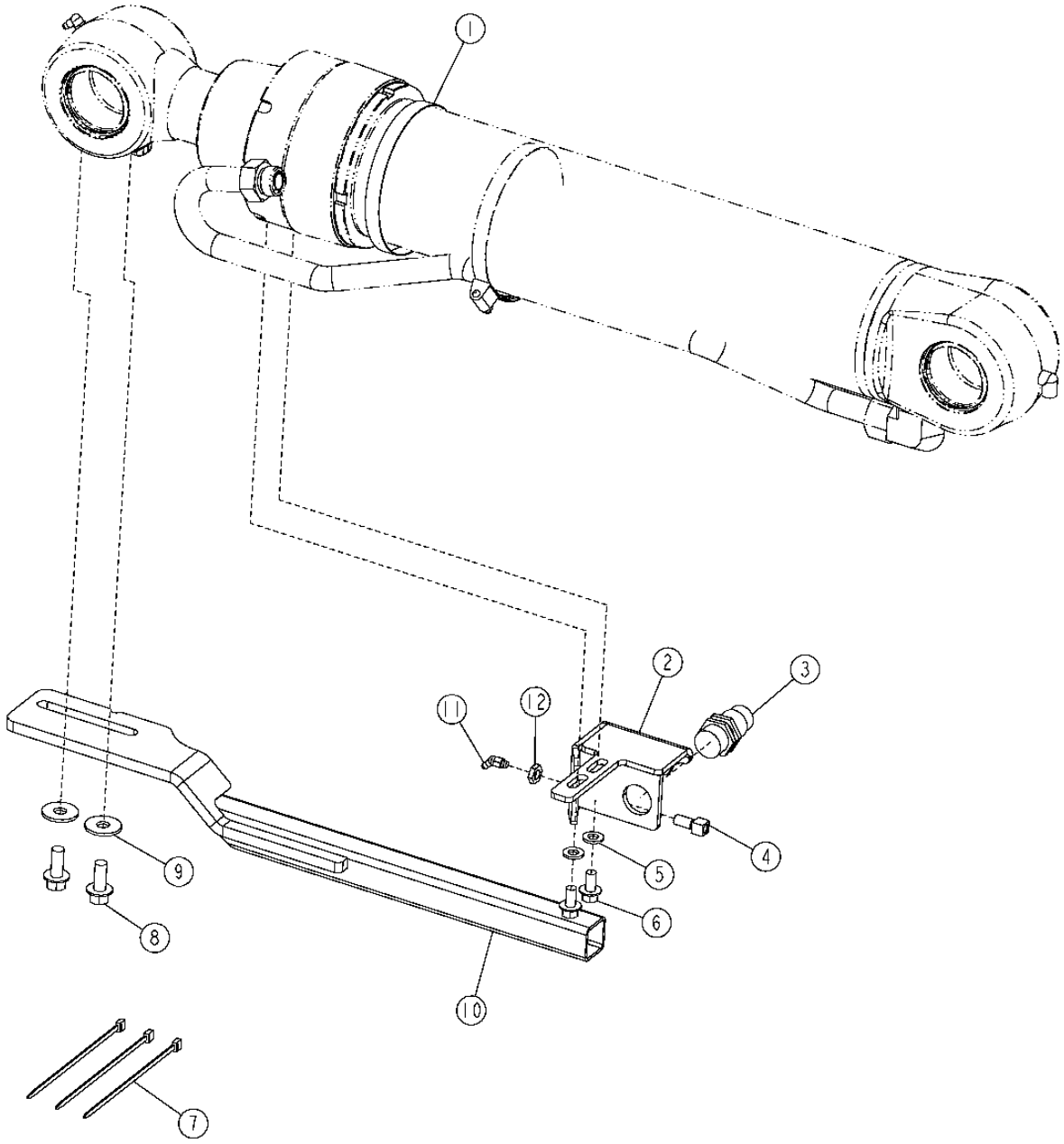

T153088

RETURN-TO-DIG ACTUATOR AND SENSOR (NOT FOR USE WITH TOOL CARRIER)
ACTIONNEUR ET CAPTEUR DE RETOUR EN POSITON DE CREUSEMENT (NE PAS UTILISER AVEC PORTE-OUTILS)
ACCIONADOR DE RETORNO PARA EXCAVAR Y SENSOR (NO PARA USO CON PORTAHERRAMIENTAS)

KEY	*PART NO.*	*PART NAME*	*QTY.*	*SERIAL NO.*	*REMARKS*
1	N189220	TIE BAND	1		
2	AT220865	BRACKET	1		
3	AT203130	SENSOR	1		(STD)
	AT222366	SWITCH	1		(HARSH ENVIRONMENT)
4	R36311	FITTING	1		
5	24M7239	WASHER	2		10.700 X 21 X 2.500 MM (0.421" X 0.827" X 0.098")
6	19M7784	SCREW	2		M10 X 20
7	R44302	TIE BAND	3		
8	19M7789	SCREW	2		M12 X 30
9	24M7180	WASHER	2		13 X 37 X 3 MM (0.512" X 1.457" X 0.118")
10	AT225020	ACTUATOR	1		
11	JD7788	LUBRICATION FITTING	1		45° X 20.574 MM LONG (0.810" LONG)
12	E12379	NUT	1		3.175 MM (1/8")

LOADER BOOM KICK OUT / RETURN TO CARRY SENSOR
CAPTEUR DESENGAGEMENT / RETOUR EN POSITION TRANSPORT FLECHE CHARGEUR
SENSOR DE DESENGANCHE DE ALTURA DEL AGUILON DE CARGADORA / RETORNO A POSICION DE ACARREO

T195071 -UN-05NOV03

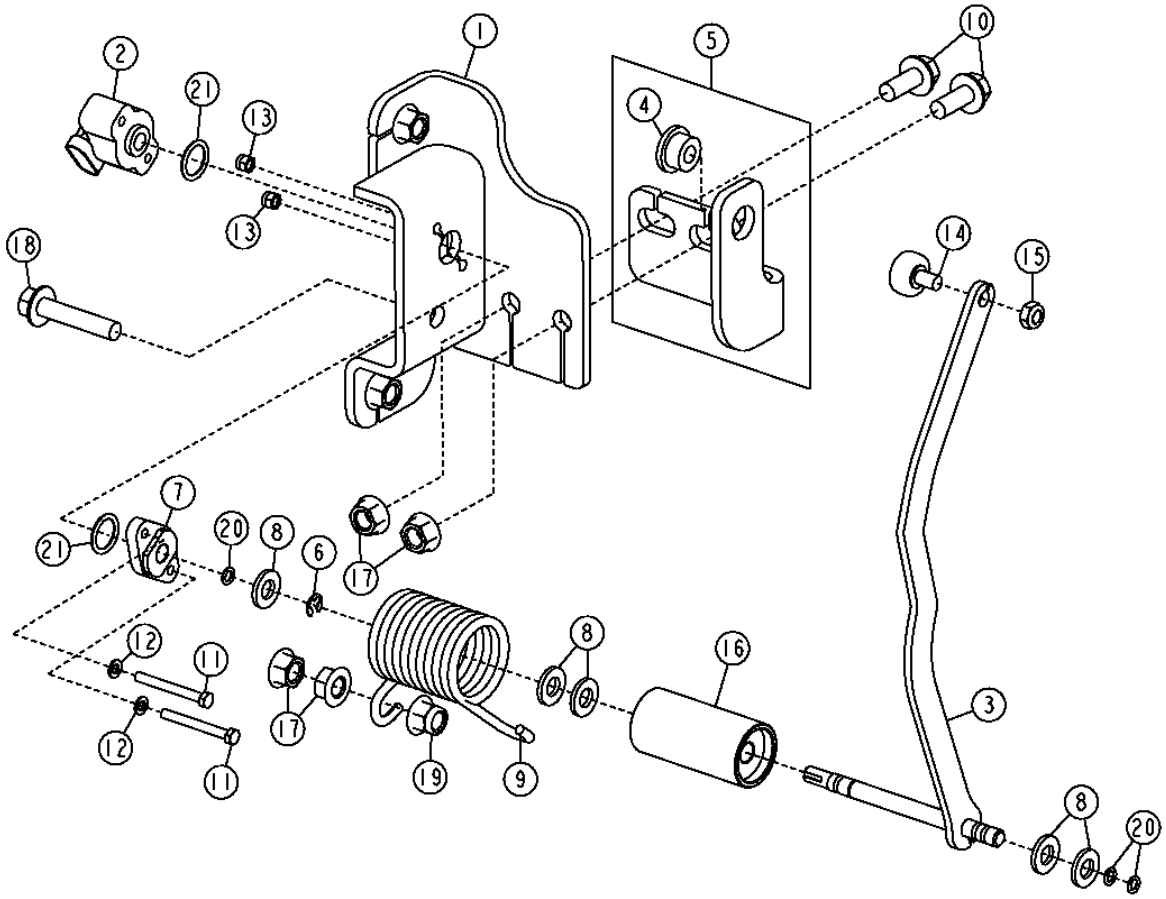

T195071

LOADER BOOM KICK OUT / RETURN TO CARRY SENSOR
CAPTEUR DESENGAGEMENT / RETOUR EN POSITION TRANSPORT FLECHE CHARGEUR
SENSOR DE DESENGANCHE DE ALTURA DEL AGUILON DE CARGADORA / RETORNO A POSICION DE ACARREO

KEY	*PART NO.*	*PART NAME*	*QTY.*	*SERIAL NO.*	*REMARKS*
1	AT227530	BRACKET	1		
2	RE56165	POTENTIOMETER	1		
3	AT332233	ACTUATOR	1		(SUB FOR AT227531)
4	T82861	BUSHING	1		
5	AT226542	BRACKET	1		
6	R72653	SNAP RING	1		
7	R86457	SUPPORT	1		
8	24M7239	WASHER	5		10.700 X 21 X 2.500 MM (0.421" X 0.827" X 0.098")
9	T195210	TORSION SPRING	1		
10	19M7785	SCREW	2		M10 X 25
11	19M8834	CAP SCREW	2		M5 X 45
12	24M7027	WASHER	2		5.300 X 10 X 1 MM (0.209" X 0.394" X 0.039")
13	14M7360	LOCK NUT	2		M5
14	AT45678	CAM FOLLOWER	1		
15	R11151	LOCK NUT	1		7.925 MM (5/16")
16	T197144	BUSHING	1		
17	14M7296	FLANGE NUT	4		M10
18	19M7806	SCREW	1		M10 X 50
19	14M7400	LOCK NUT	1		M10
20	A4365R	O-RING	3		6.071 X 1.778 MM (0.239" X 0.070")
21	P48347	O-RING	2		17.120 X 2.616 MM (0.674" X 0.103") (NOT ILLUSTRATED)

RETURN-TO-DIG ACTUATOR AND SENSOR (FOR USE WITH TOOL CARRIER)
ACTIONNEUR ET CAPTEUR DE RETOUR EN POSITON DE CREUSEMENT (A UTILISER AVEC PORTE-OUTILS)
ACCIONADOR DE RETORNO PARA EXCAVAR Y SENSOR (USAR CON PORTAHERRAMIENTAS)

TP60295 -UN-02APR98

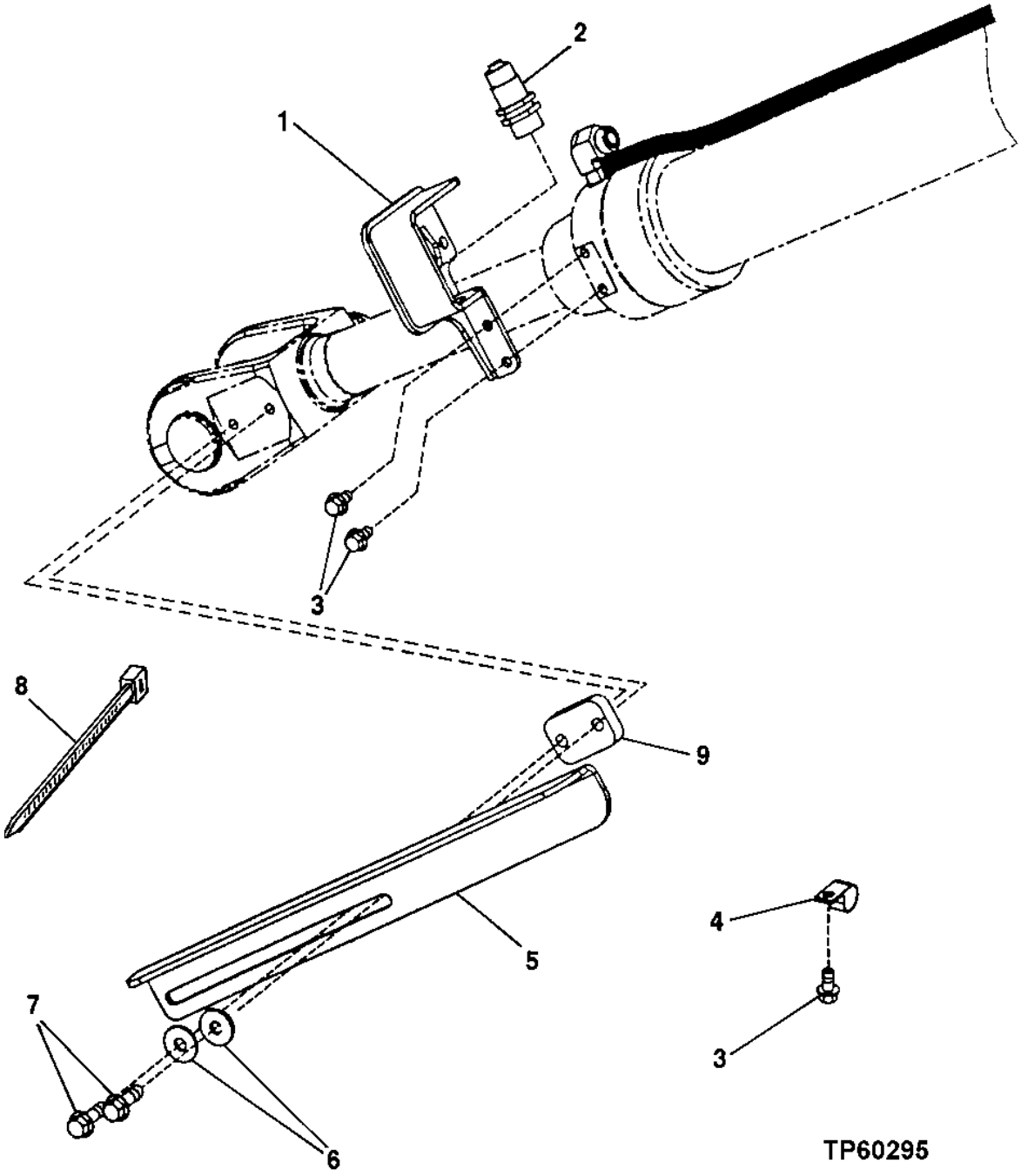

RETURN-TO-DIG ACTUATOR AND SENSOR (FOR USE WITH TOOL CARRIER)
ACTIONNEUR ET CAPTEUR DE RETOUR EN POSITON DE CREUSEMENT (A UTILISER AVEC PORTE-OUTILS)
ACCIONADOR DE RETORNO PARA EXCAVAR Y SENSOR (USAR CON PORTAHERRAMIENTAS)

KEY	*PART NO.*	*PART NAME*	*QTY.*	*SERIAL NO.*	*REMARKS*
1	AT207784	BRACKET	1		
2	AT209868	SENSOR	1		(STD)
	AT227909	SWITCH	1		(HARSH ENVIRONMENT)
3	19M7784	SCREW	3		M10 X 20
4	T102934	CLAMP	1		
5	T173744	ACTUATOR	1		
6	24M7180	WASHER	2		13 X 37 X 3 MM (0.512" X 1.457" X 0.118")
7	19M7791	BOLT	2		M12 X 40
8	R44302	TIE BAND	1		
9	T169507	STRAP	1		

BOOM KICKOUT / RETURN TO CARRY SENSOR (FOR USE WITH TOOL CARRIER)
CAPTEUR DE DESENGAGEMENT / RETOUR EN POSITION DE TRANSPORT DE FLECHE (UTILISER AVEC PORTE-OUTILS)
SENSOR DE DESENGANCHE DEL AGUILON/RETORNO A POSICION DE ACARREOL (USAR CON PORTAHERRAMIENTAS)

T197491 -UN-29JAN04

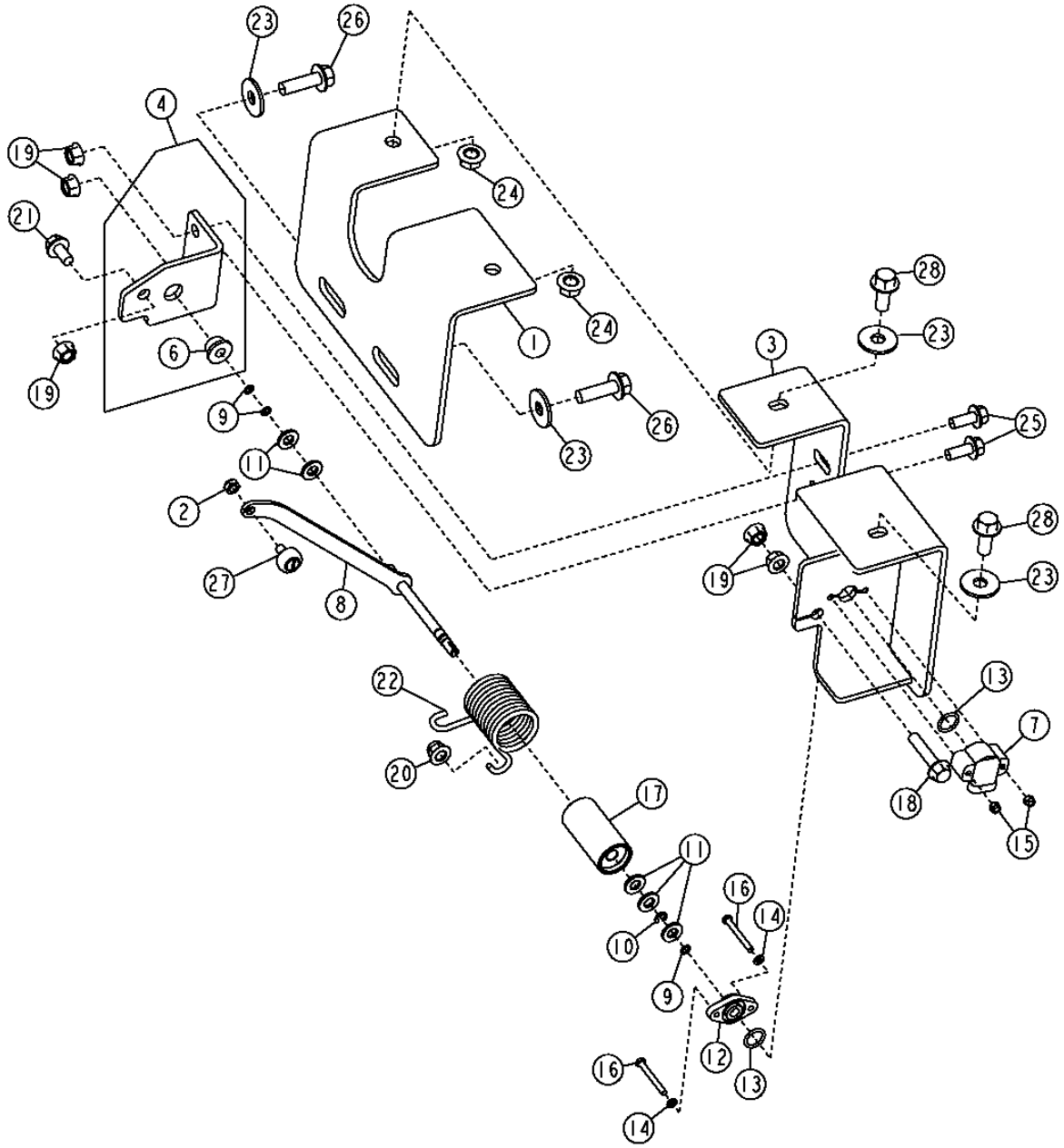

THIS PARTS LISTING IS CONTINUED

BOOM KICKOUT / RETURN TO CARRY SENSOR (FOR USE WITH TOOL CARRIER)
CAPTEUR DE DESENGAGEMENT / RETOUR EN POSITION DE TRANSPORT DE FLECHE (UTILISER AVEC PORTE-OUTILS)
SENSOR DE DESENGANCHE DEL AGUILON/RETORNO A POSICION DE ACARREOL (USAR CON PORTAHERRAMIENTAS)

KEY	PART NO.	PART NAME	QTY.	SERIAL NO.	REMARKS
1	T202813	BRACKET	1		
2	R11151	LOCK NUT	1		
3	AT304620	BRACKET	1		
4	AT304860	BRACKET	1		
6	T82861	BUSHING	1		
7	RE56165	POTENTIOMETER	1		
8	AT226301	ACTUATOR	1		(NOT ILLUSTRATED)
9	A4365R	O-RING	3		6.071 X 1.778 MM (0.239" X 0.070")
10	R72653	SNAP RING	1		
11	24M7239	WASHER	5		10.700 X 21 X 2.500 MM (0.421" X 0.827" X 0.098")
12	R86457	SUPPORT	1		
13	P48347	O-RING	2		17.120 X 2.616 MM (0.674" X 0.103") (NOT ILLUSTRATED)
14	24M7027	WASHER	2		5.300 X 10 X 1 MM (0.209" X 0.394" X 0.039")
15	14M7360	LOCK NUT	2		M5
16	19M8834	CAP SCREW	2		M5 X 45
17	T197144	BUSHING	1		
18	19M7806	SCREW	1		M10 X 50
19	14M7296	FLANGE NUT	5		M10
20	14M7400	LOCK NUT	1		M10
21	19M7784	SCREW	1		M10 X 20
22	T195210	TORSION SPRING	1		
23	24M7180	WASHER	2		13 X 37 X 3 MM
24	14M7299	FLANGE NUT	2		M12
25	19M7785	SCREW	2		M10 X 25
26	19M7791	BOLT	2		M12 X 40
27	AT45678	CAM FOLLOWER	1		
28	19M7789	SCREW	1		M12 X 30

LOADER RETURN-TO-DIG SENSOR (FOR USE WITH POWERLLEL™ LINKAGE)
CAPTEUR DE RETOUR EN POSITON DE CREUSEMENT DU CHARGEUR (A UTILISER AVEC TRINGLERIE POWERLLEL™)
SENSOR DE RETORNO PARA EXCAVAR DE LA CARGADORA (PARA USO CON VARILLAJE POWERLLEL™)

T205055 -UN-12JAN05

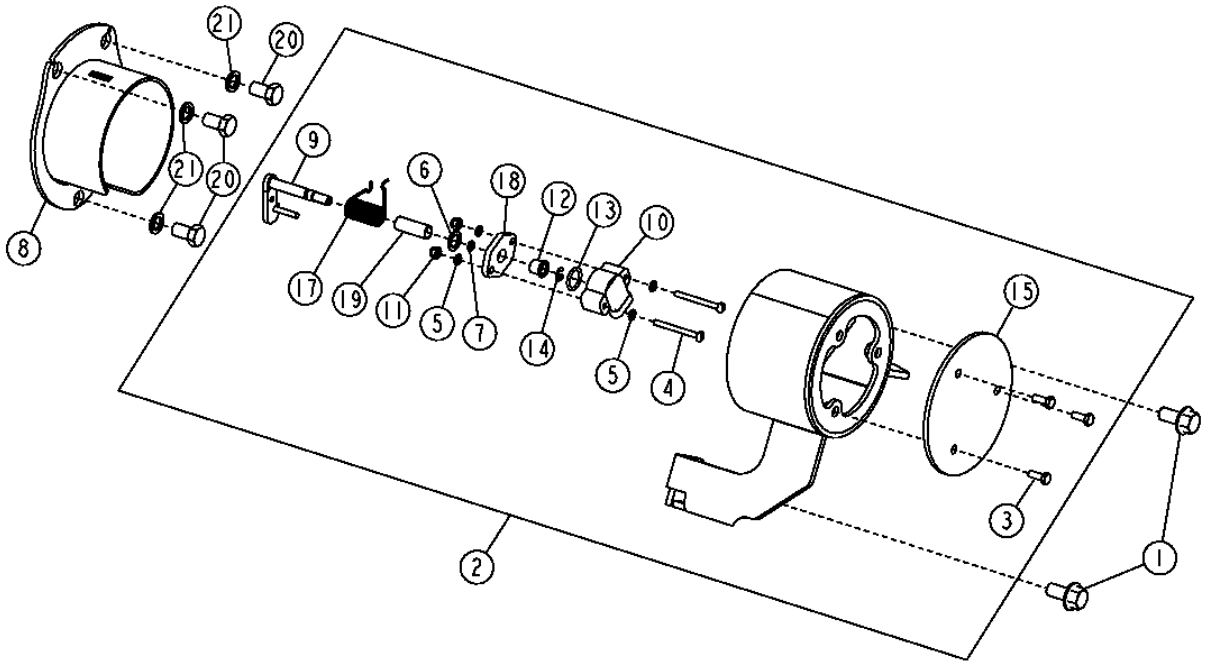

T205055

LOADER RETURN-TO-DIG SENSOR (FOR USE WITH POWERLLEL™ LINKAGE)
CAPTEUR DE RETOUR EN POSITON DE CREUSEMENT DU CHARGEUR (A UTILISER AVEC TR NGLERIE POWERLLEL™)
SENSOR DE RETORNO PARA EXCAVAR DE LA CARGADORA (PARA USO CON VARILLAJE POWELLEL™)

KEY	*PART NO.*	*PART NAME*	*QTY.*	*SERIAL NO.*	*REMARKS*
1	19M7788	SCREW	2		M12 X 25
2	AT312984	BRACKET	1		(STD)
3	19M7560	CAP SCREW	3		M6 X 16
4	21H1383	SCREW	2		0.190" X 2"
5	24M7027	WASHER	4		5.300 X 10 X 1 MM
6	24M7386	WASHER	1		13 X 19 X 1.500 MM
7	A4365R	O-RING	1		
8	AT312987	BRACKET	1		
9	AT312996	ARM	1		
10	AT313037	POTENTIOMETER	1		
11	14M7360	LOCK NUT	2		M5
12	M88102	BUSHING	1		
13	P48347	O-RING	1		
14	R72653	SNAP RING	1		
15	T210258	PLATE	1		
16	T206578	PLATE	1		
17	T211396	TORSION SPRING	1		
18	T211404	PLATE	1		
19	T211405	SPACER	1		
20	19M8017	CAP SCREW	3		M12 X 20
21	24M7240	WASHER	3		13 X 25 X 3 MM, (SUB FOR 24M7044, THIS APPLICATION)

LOADER BOOM KICKOUT / RETURN TO CARRY SENSOR (FOR USE WITH POWERLLEL™ LINKAGE)
CAPTEUR DESENGAGEMENT/RETOUR POSITION TRANSPORT FLECHE CHARGEUR (AVEC TRINGLERIE POWERLLEL™)
SENSOR DESENGANCHE ALTURA AGUILON CARGADORA/RETORNO POSICION ACARREO (CON VARILLAJE POWERLLEL™)

T202048 -UN-10AUG04

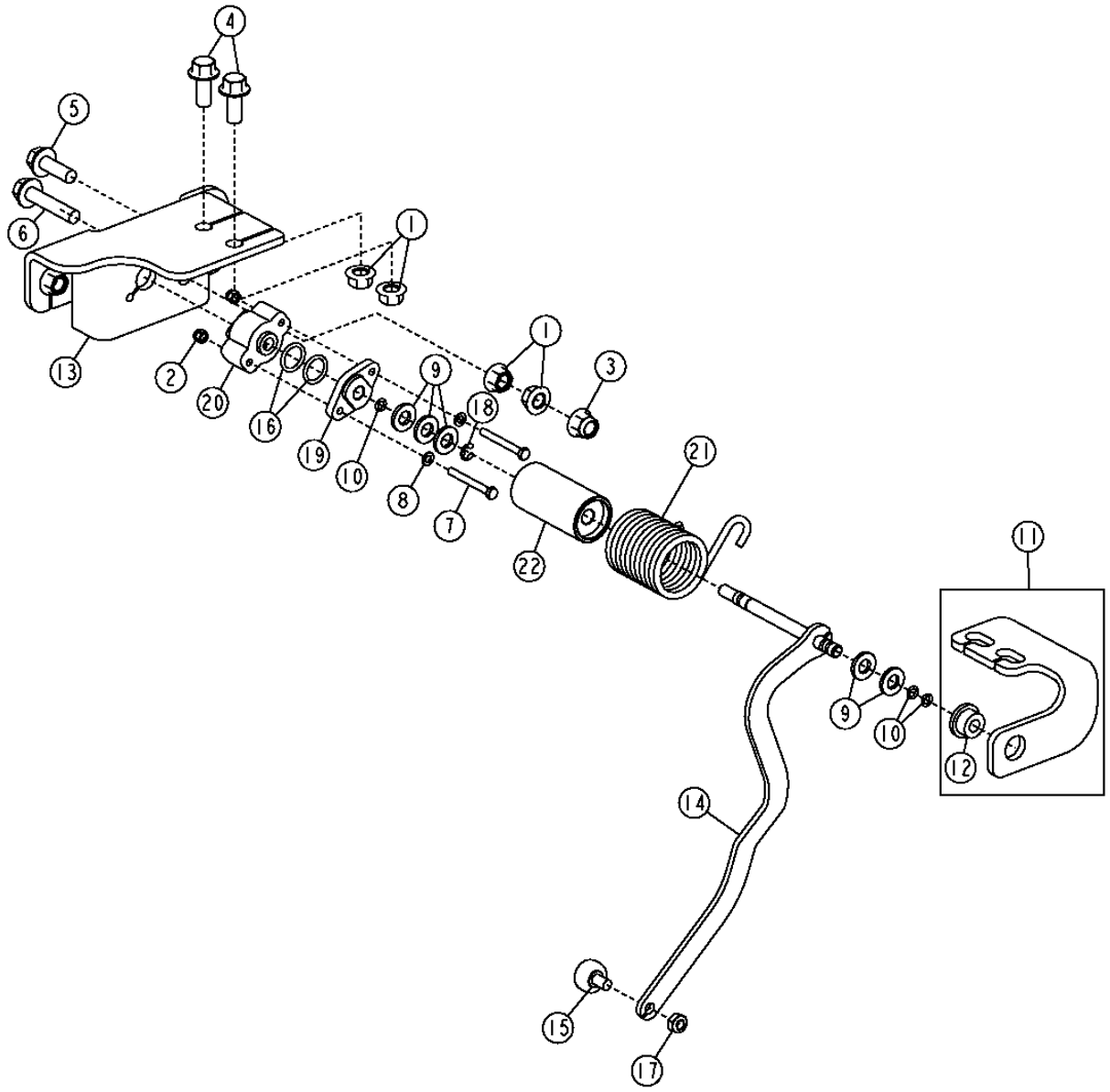

LOADER BOOM KICKOUT / RETURN TO CARRY SENSOR (FOR USE WITH POWERLLEL™ LINKAGE)
CAPTEUR DESENGAGEMENT/RETOUR POSITION TRANSPORT FLECHE CHARGEUR (AVEC TRINGLERIE POWERLLEL™)
SENSOR DESENGANCHE ALTURA AGUILON CARGADORA/RETORNO POSICION ACARREO (CON VARILLAJE POWERLLEL™)

KEY	PART NO.	PART NAME	QTY.	SERIAL NO.	REMARKS
1	14M7296	FLANGE NUT	4		M10
2	14M7360	LOCK NUT	2		M5
3	14M7400	LOCK NUT	1		M10
4	19M7785	SCREW	2		M10 X 25
5	19M7786	SCREW	1		M10 X 30
6	19M7806	SCREW	1		M10 X 50
7	19M8834	CAP SCREW	2		M5 X 45
8	24M7027	WASHER	2		5.300 X 10 X 1 MM
9	24M7239	WASHER	5		10.700 X 21 X 2.500 MM
10	A4365R	O-RING	3		6.071 X 1.778 MM
11	AT226542	BRACKET	1		
12	T82861	BUSHING	1		
13	AT227530	BRACKET	1		
14	AT307950	ACTUATOR	1		
15	AT45678	CAM FOLLOWER	1		
16	P48347	O-RING	2		
17	R11151	LOCK NUT	1		
18	R72653	SNAP RING	1		
19	R86457	SUPPORT	1		
20	RE56165	POTENTIOMETER	1		
21	T195210	TORSION SPRING	1		
22	T197144	BUSHING	1		

MEMORANDA
MEMORANDA
MEMORANDA

NUMERICAL INDEX

PART NO.	KEY	PAGE
AA21292	2	1520-3
AA21292	4	1913-2
AA21292	10	1927-9
AH108055	37	1060-3
AH121227	9	1810-7
AH125760	10	2160-11
AH138082	2	3165-13
AH138083	2	3165-5
AH138291	2	1672-5
AH142159	10	3104-15
AH142159	13	3104-17
AH142159	9	3104-19
AH144020	3	1830-5
AH146559	3	3165-5
AH146559	2	3165-11
AH146559	6	3165-17
AH146563	4	3165-5
AH146563	3	3165-11
AH146563	13	3165-17
AH147740	10	0960-11
AH148608	7	0960-11
AH148823	14	3104-15
AH148823	15	3104-17
AH149004	4	3165-11
AH149005	5	3165-11
AH149194	5	0960-11
AH149815	11	3165-5
AH149815	12	3165-5
AH149815	24	3165-5
AH149815	12	3165-11
AH149815	13	3165-11
AH149815	24	3165-11
AH149815	18	3165-17
AH149847	13	3165-5
AH149847	14	3165-5
AH149847	15	3165-5
AH149847	17	3165-5
AH149847	18	3165-5
AH149847	23	3165-5
AH149848	23	3165-7
AH150453	6	0960-11
AH150932	3	3165-13
AH150933	4	3165-13
AH151896	2	3165-7
AH152445	18	3165-19
AH152446	1	3165-19
AH153596	3	3165-7
AH153597	4	3165-7
AH153597	5	3165-7
AH153597	6	3165-7
AH153771	7	3165-7
AH153921	1	3165-13
AH153923	5	3165-13
AH154570	24	3165-7
AH156466	17	3165-13
AH156466	18	3165-13
AH156466	23	3165-13
AH156874	20	3165-19
AH158823	6	3165-13
AH159448	11B	0560-3
AH162914	33	0560-3
AH163629	1	3165-11
AH163671	18	3165-11
AH163671	19	3165-11
AH163671	20	3165-11
AH163671	23	3165-11
AH163671	19	3165-17
AH165079	29B	0560-3
AH165080	27B	0560-3
AH170895	19	0510-3
AH170895	38	0510-3B
AH170895	23A	2160-7
AH170895	23B	2160-7
AH172986	1	3165-7
AH206281	1	3165-5
AH208215	20	3165-17
AH208222	2	3165-17
AH208337	5	3165-5
AH209027	21	3165-19
AH211316	17	0960-11
AH211379	1	0960-11
AH211575	2	3165-19
AH212087	18	0960-11
AH212088	15	3104-15
AH212088	14	3104-17
AH212348	6	3165-5
AH212349	9A	3104-7
AH212349	10A	3104-9
AH212349	16	3104-15
AH212350	13	3104-15
AH212585	12	3165-13
AH212585	13	3165-13
AH212585	14	3165-13
AH212585	22	3165-13
AH214857	7	3165-17
AH215586	4	3165-19
AH216299	19	3165-19
AH217541	9B	3104-7
AH217541	10	3104-7
AH217541	10B	3104-9
AH217541	11	3104-9
AH217541	16	3104-17
AH222122	5	3104-11
AH222122	5	3104-13
AH222122	13	3104-19
AH224521	2	3165-19
AH225345	21	3165-19
AH64349	17	2160-7
AH75159	16	0510-3
AH75162	4	0360-5
AH75162	17	0510-3
AH75162	18	2160-7
AH77869	6	1671-3
AH89557	7	1674-3
AH89557	5	1674-5
AH89557	7	1674-5B
AH96708	15	0510-7
AH96708	19	0510-9
AH97280	6	1673-3
AH97280	9	1830-13
AL153660	3	1810-29
AL76568	1	1674-11
AL76568	24	1830-3
AL76568	6	1830-7
AM39653	19	2160-7
AN207183	8	3160-96
AN207184	8	3160-96
AP22660	9	1674-7
AR104516	23	2001-7
AR104516	23	2001-7B
AR104650	19	0420-5
AR21836	4	0360-3
AR21836	6	1060-11
AR21837	7	1060-11
AR21837	1	1369-3
AR21837	5	1746-3
AR21839	3	0360-3
AR21839	3	0360-5
AR21839	18	0510-3
AR21839	20	0510-7
AR21839	24	0510-9
AR21839	7	0560-3
AR21839	20	2160-7
AR21839	5	2160-13
AR21840	8	0560-3
AR21999	4	0505-3
AR21999	19	0510-3
AR48236	21	0510-3
AR50411	1	0505-6
AR62492	7	0505-6
AR62936	5	3160-117
AR62936	8	3160-123
AR65507	9	0403-2
AR85327	18	0520-3
AR85327	2	1746-6
AR85327	7	3160-49
AR85327	10	3160-49
AR85327	7	3160-51
AR85327	9	3160-61
AR85327	31	3160-67
AR85519	13	0420-5
AR89602	7	3160-49
AR89602	8	3160-51
AR89602	26	3160-67
AR89602	17	3160-73
AR89602	17	3160-77
AR89602	18	3160-81
AR89602	26	3160-85
AR89602	29	3160-89
AR91896	7	1810-3
AT103107	8	3165-3
AT103440	2	3160-35
AT103919	5	1810-38
AT104051	2	3160-35
AT105438	..	3160-11
AT105438	1	3160-21
AT106365	5	1810-25
AT106413	24	0510-3
AT116114	19	0930-3
AT116162	6	1060-7
AT116162	9	1810-51
AT116373	44	0930-3
AT116970	5	1810-27
AT116970	6	1810-29
AT119017	10	3160-91
AT119018	12	3160-91
AT119378	11	3160-91
AT120461	1	1810-36
AT124574	7	3160-33
AT124574	4	3160-35
AT124574	28	3160-45
AT124574	28	3160-47
AT129526	12	0360-5
AT133204	8	1740-3
AT133204	11	3140-7
AT135758	12	1673-3
AT135758	15	1673-3B
AT135758	3	1673-4
AT13740	4	0404-3
AT13740	22	0510-3
AT137920	7	1810-27

NUMERICAL INDEX - CONTINUED

PART NO.	KEY	PAGE
AT137921	9	1810-27
AT138180	13	1810-27
AT138180	7	1810-29
AT138215	12	1810-27
AT139694	6	1810-49
AT141527	20	0930-3
AT143577	2	1740-5
AT145341	9	0505-5
AT145341	25	1674-7
AT151931	8	1810-19
AT151931	8	1810-21
AT156896	6	1810-51
AT157226	1	1810-38
AT158098	11	2160-13
AT158103	14	2160-13
AT160480	1	1674-10
AT160662	18	1810-49
AT160704	3	1672-9
AT161549	5	0260-5
AT161638	37	2160-7
AT162114	6	1913-5
AT162719	14	1810-49
AT162848	4	1830-15
AT162863	37	3160-93
AT163156	12	1672-3
AT163872	19	1830-13
AT165288	7	0342-3
AT166039	10	3160-71
AT166041	1	3160-53
AT166041	6	3160-55
AT166149	1	3160-27
AT166459	23	0510-3
AT167553	4	0260-17
AT167553	3	1060-9
AT167553	12	3160-49
AT167553	7	3160-53
AT167553	12	3160-55
AT167553	19	3160-67
AT167553	10	3160-69
AT167553	4	3160-71
AT167553	10	3160-103
AT167553	9	3160-107
AT167553	10	3160-113
AT167553	12	3160-115
AT167553	21	3160-121
AT169157	8	3160-21
AT169849	5	1810-49
AT169886	12	3160-55
AT169886	4	3160-71
AT169939	5	0960-7
AT169939	5	0960-7B
AT170005	4	1810-23
AT170759	3	0505-3
AT170991	4	3160-33
AT170991	33	3160-45
AT170991	33	3160-47
AT171162	9	0505-3
AT171539	5	0505-3
AT171679	7	1821-7
AT172629	1	3160-91
AT173193	9	1810-25
AT173313	2	1821-5
AT173313	17	1821-5
AT173313	18	1821-5
AT173313	19	1821-5
AT173314	3	1821-5
AT173315	4	1821-5
AT173321	11	1821-5
AT173321	12	1821-5
AT173321	29	1821-5
AT173321	30	1821-5
AT173321	31	1821-5
AT173321	40	1821-5
AT173354	5	1673-9
AT173355	3	1810-15
AT174697	2	1830-17
AT175781	21	0930-3
AT176325	16	0960-3
AT176801	1	1674-8
AT177950	38	2160-7
AT179498	3	0350-33
AT179498	8	0350-35
AT179498	5	0350-37
AT179840	9	1910-7
AT179934	4	3160-41
AT179935	1	3160-41
AT179936	5	3160-21
AT179941	1	3160-29
AT179941	1	3160-33
AT179941	1	3160-37
AT179941	37	3160-45
AT179941	37	3160-47
AT181313	4	1060-3
AT182802	71	0510-3B
AT183222	6	0505-3
AT188759	8	2001-7
AT188759	8	2001-7B
AT188759	9	2001-7D
AT189390	20	1810-19
AT189390	20	1810-21
AT189487	21	1810-19
AT189487	21	1810-21
AT191281	3	3160-69
AT191282	18	3160-67
AT191285	1	3160-53
AT191285	6	3160-55
AT191285	5	3160-57
AT191487	16	1810-49
AT192956	13	2001-7
AT192957	13	2001-7
AT192958	13	2001-7
AT193500	4	1830-5
AT193500	3	1830-9
AT195301	10	1674-7
AT195302	11	1674-7
AT195441	7	1821-3
AT195442	8	1821-3
AT196427	1	1810-39B
AT196760	35	3160-93
AT196760	23	3160-95
AT196943	2	2160-11
AT199388	10	2001-7D
AT199396	18	3160-67
AT199405	3	3160-69
AT202726	15	1810-27
AT202784	11	1810-29
AT202786	12	1674-7
AT202789	5	1673-9
AT202824	7	3160-111
AT202827	1	1674-15
AT202842	10	0505-3
AT202934	2	1674-11
AT202934	15	1830-7
AT202955	14	0350-3
AT203130	3	3166-3
AT203137	6	1673-9
AT203180	43	0930-3
AT203247	15	3102-3
AT203457	6	1060-3
AT203483	16	3140-3
AT203483	14	3140-5
AT203483	10	3140-7
AT203492	22	0930-3
AT203533	4	1060-13
AT203562	1	3165-9
AT203566	10	0505-5
AT203570	24	3140-3
AT203570	18	3140-5
AT203570	37	3140-7
AT206698	8	3160-49
AT206698	9	3160-51
AT206698	11	3160-61
AT206698	24	3160-67
AT206721	27	1060-3
AT206735	21	3140-3
AT206736	30	3140-3
AT206736	29	3140-5
AT206738	28	3140-3
AT206738	27	3140-5
AT206738	12	3140-7
AT206751	2	1740-3
AT206784	5	0350-39
AT206794	16	0242-3
AT206811	5	1060-5
AT206818	11	0505-5
AT206828	15	3140-19
AT206861	9	0325-3
AT206878	7A	1673-3
AT206894	8	1746-5
AT206895	7	1746-5
AT206908	11	0540-3
AT206909	12	0540-3
AT206914	13	0540-3
AT206915	14	0540-3
AT207010	36	3160-93
AT207010	20	3160-95
AT207022	4	0242-3
AT207022	6	0960-9
AT207023	19	0242-3
AT207023	3	0260-18
AT207023	7	0960-9
AT207052	16	3140-19
AT207052	13	3165-3
AT207052	3	3165-9
AT207052	12	3165-15
AT207057	5	0242-5
AT207072	4	0960-7
AT207072	4	0960-7B
AT207096	2	3160-27
AT207144	1	1810-46
AT207287	2	3140-25
AT207292	5	0325-3
AT207293	7	0325-3
AT207294	8A	0325-3
AT207317	3	3140-9
AT207321	5	3140-3
AT207321	4	3140-17
AT207321	11	3140-17
AT207432	4	1746-5
AT207433	6	1746-5
AT207434	11	3160-49

NUMERICAL INDEX - CONTINUED

PART NO.	KEY	PAGE
AT207434	10	3160-51
AT207529	28	1060-3
AT207718	12	3104-9
AT207784	1	3166-7
AT207923	3	3160-49
AT207924	18	3104-3
AT207947	46	1060-3
AT207948	45	1060-3
AT207952	2	1672-5
AT207990	11	0325-3
AT208015	2	1060-9
AT208024	1	1674-15
AT208085	11	1060-3
AT208086	18	1060-3
AT208087	22	1060-3
AT208088	7	1060-3
AT208089	25	1060-3
AT208159	7	1910-5
AT208159	10	1910-7
AT208163	23	1060-3
AT208164	12A	2160-13
AT208166	60	1060-3
AT208167	12	1060-3
AT208411	6	1060-13
AT208435	3	1673-4
AT208435	6	1673-4
AT208483	5	1821-5
AT208484	6	1821-5
AT208485	7	1821-5
AT208486	8	1821-5
AT208487	9	1821-5
AT208487	20	1821-5
AT208487	21	1821-5
AT208487	22	1821-5
AT208487	23	1821-5
AT208487	24	1821-5
AT208488	15	1821-5
AT208488	36	1821-5
AT208488	37	1821-5
AT208490	10	1821-5
AT208490	25	1821-5
AT208490	26	1821-5
AT208490	27	1821-5
AT208490	28	1821-5
AT208491	11	1821-5
AT208491	32	1821-5
AT208531	30	1821-3
AT208531	1	1821-5
AT208541	15	1672-7
AT208630	3	1674-8
AT208630	1	1674-9
AT208725	23	0930-3
AT208760	14	3160-89
AT208760	13	3160-91
AT208760	18	3160-91
AT208760	22	3160-91
AT208760	28	3160-91
AT208776	5	1830-15
AT208833	5	3102-10
AT208834	14	3102-9
AT208911	1	3160-91
AT208911	4	3160-91
AT209020	9	1821-3
AT209021	10	1821-3
AT209022	15	1821-3
AT209024	17	1821-3
AT209025	19	1821-3
AT209026	21	1821-3
AT209035	1	3140-11
AT209040	18	3140-19
AT209044	17	3140-19
AT209139	5	3140-5
AT209141	8	0530-3
AT209155	5	3102-10
AT209156	14	3102-9
AT209163	14	3104-3
AT209163	1	3104-4
AT209221	6	0342-3
AT209225	23	1821-3
AT209469	13	1821-5
AT209469	33	1821-5
AT209469	34	1821-5
AT209469	35	1821-5
AT209496	7	1060-13
AT209537	24	0930-3
AT209576	15	3104-3
AT209661	4	0325-3
AT209668	14	1830-3
AT209668	13	1830-7
AT209698	1	1822-5
AT209748	2	3160-29
AT209748	2	3160-37
AT209748	2	3160-39
AT209749	1	3160-21
AT209750	5	3160-29
AT209750	11	3160-29
AT209750	5	3160-37
AT209750	2	3160-39
AT209750	27	3160-45
AT209750	35	3160-45
AT209750	27	3160-47
AT209750	35	3160-47
AT209751	1	3160-21
AT209758	3	3160-29
AT209758	3	3160-33
AT209758	6	3160-37
AT209811	6	3160-21
AT209823	7	3160-21
AT209868	2	3166-7
AT209907	1	1060-9
AT209908	11	1810-27
AT209908	9	1810-29
AT209909	10	1810-27
AT209910	4	1810-29
AT209912	3	1810-29
AT209947	1	1810-25
AT209996	10	0342-3
AT209997	9	0342-3
AT210086	5	1830-5
AT210092	27	0930-3
AT210093	28	0930-3
AT210101	13	0325-3
AT210145	2	3160-91
AT210155	29	0930-3
AT210207	30	0930-3
AT210229	44	1060-3
AT210246	11	1673-3
AT210246	9	1673-3B
AT210247	15	3160-91
AT210247	16	3160-91
AT210247	26	3160-91
AT210247	90	3160-91
AT210271	6	0325-3
AT210291	29	1060-3
AT210333	8	1673-3
AT210333	11	1673-3B
AT210334	13	1674-7
AT210399	31	0930-3
AT210490	10	1369-3
AT210561	15	1830-3
AT210606	18	0242-3
AT210666	11	3160-111
AT210667	6A	2160-13
AT210667	10	3160-111
AT210686	42	3160-45
AT210686	43	3160-45
AT210686	44	3160-45
AT210686	42	3160-47
AT210686	43	3160-47
AT210686	44	3160-47
AT210688	14	3160-49
AT210688	10	3160-67
AT210689	24	3160-49
AT210689	22	3160-67
AT210690	15	3160-49
AT210690	9	3160-67
AT210691	25	3160-49
AT210691	23	3160-67
AT210712	21B	0510-5
AT210713	27	3160-93
AT210714	24	3160-93
AT210773	1	0350-11
AT210877	34	1060-3
AT211041	18	1672-3
AT211041	16	1672-7
AT211219	3	3160-27
AT211270	8	3160-111
AT211271	9	3160-111
AT211296	8	1810-3
AT211296	3	1810-17
AT211351	6	3160-53
AT211352	3	3160-53
AT211353	9	3160-55
AT211354	7	3160-55
AT211547	11	3160-29
AT211574	1	3160-29
AT211574	1	3160-33
AT21574	26	0510-3
AT21574	21	2160-7
AT216571	26	3160-45
AT216571	26	3160-47
AT216573	24	3160-45
AT216573	24	3160-47
AT217448	1	1810-47
AT217448	5	1810-47
AT219753	39	3160-45
AT219757	4	3160-27
AT219778	7	1830-5
AT219778	5	1830-9
AT219792	19	0260-7
AT219974	8	1910-5
AT219974	15	1927-9B
AT219978	27	3160-67
AT220035	7	3160-37
AT220035	50	3160-45
AT220035	50	3160-47
AT220039	30	0350-19
AT220058	8	3104-3
AT220059	2	3104-3
AT220060	7	3104-3
AT220096	9	3160-3

NUMERICAL INDEX - CONTINUED

PART NO.	KEY	PAGE
AT220096	19	3160-5
AT220096	14	3160-7
AT220096	12	3160-9
AT220096	20	3160-11
AT220096	14	3160-13
AT220096	11	3160-15
AT220096	20	3160-17
AT220096	14	3160-19
AT220173	1	3160-37
AT220223	19	1810-49
AT220224	20	1810-49
AT220226	15	1810-49
AT220432	90	3160-93
AT220440	8	0530-3
AT220517	38	3160-93
AT220526	4	3160-27
AT220547	8B	0325-3
AT220733	25	0260-9
AT220733	4	0260-11
AT220735	26	0260-9
AT220735	5	0260-11
AT220826	11	3160-33
AT220826	11	3160-37
AT220827	11	3160-45
AT220827	11	3160-47
AT220828	9	3160-29
AT220830	6	3160-29
AT220830	5	3160-33
AT220830	14	3160-37
AT220831	32	3160-45
AT220831	32	3160-47
AT220832	15	0260-7
AT220865	2	3166-3
AT220906	28	3160-67
AT220907	4	3160-67
AT220925	27	0260-9
AT220925	6	0260-11
AT220953	17	1830-3
AT220953	14	1830-7
AT221015	25	1821-3
AT221016	26	1821-3
AT221017	28	1821-3
AT221019	25	1821-3
AT221020	26	1821-3
AT221021	28	1821-3
AT221094	1	3160-29
AT221332	9	1746-5
AT221452	28	1830-7
AT221452	1	1830-9
AT221506	2	3160-33
AT221583	7	0242-3
AT221628	1	1674-15
AT221696	8	1910-3
AT221696	11	1910-5
AT221696	7	1913-5
AT221897	24	2160-7
AT222005	21	0350-3
AT222012	3	1746-6
AT222153	2	1810-49
AT222163	7	2160-13
AT222210	6	1830-9
AT222365	7A	1673-3
AT222366	3	3166-3
AT222367	7	1060-5
AT222371	27	1060-3
AT222372	59	1060-3
AT222372	18	3160-93
AT222402	1	1810-45
AT222414	11	1060-7
AT222561	3	0960-7
AT222561	3	0960-7B
AT222597	9	0530-3
AT222964	1	3160-29
AT223173	23B	2160-13
AT223240	1	0350-37
AT223279	10	0350-12
AT223299	1	0350-31
AT223301	1	0350-33
AT223301	1	0350-35
AT223305	1	0350-27
AT223305	1	0350-29
AT223352	13	3160-49
AT223388	6	0960-3
AT223439	16	0960-3
AT223493	13A	0560-3
AT223493	37	0560-3
AT223531	1	1830-5
AT223535	59	1060-3
AT223535	18	3160-93
AT223535	21	3160-95
AT223538	7	1060-5
AT223584	6	0360-5
AT223648	34	0930-3
AT223658	25	2160-7
AT223728	16	0260-7
AT223768	12	1060-7
AT223805	16	0260-7
AT223807	4	1673-7
AT223815	13	2160-13
AT223870	1	2001-7
AT223870	1	2001-7B
AT223870	7	2001-7D
AT223897	2	2001-7
AT223897	2	2001-7B
AT223949	8	1060-11
AT223989	1	1822-3
AT224135	1	3160-33
AT224154	1	3160-49
AT224154	11	3160-51
AT224217	10	1810-29
AT224233	13	1810-15
AT224234	13	1810-15
AT224235	9	1810-19
AT224237	9	1810-21
AT224248	6	1821-3
AT224266	35	2160-7
AT224301	8	3160-93
AT224301	22	3160-95
AT224301	7	3160-96
AT224424	16	0510-7
AT224424	20	0510-9
AT224430	8	1060-7
AT224493	23	3160-95
AT224497	5	1060-5
AT224570	1	0510-10
AT224570	1	2160-11
AT224573	2	3160-96
AT224574	2	3160-96
AT224574	3	3160-96
AT224576	4	1060-5
AT224600	39	3160-93
AT224600	25	3160-95
AT224665	20	3160-49
AT224665	12	3160-51
AT224665	12	3160-61
AT224665	13	3160-67
AT224703	1	3160-97
AT224705	3	3160-96
AT224706	2	0510-10
AT224706	1	3160-96
AT224706	3	3160-96
AT224797	28	2160-7
AT224850	29	3160-45
AT224850	29	3160-47
AT224862	1	0510-10
AT224862	1	2160-11
AT224862	2	3160-96
AT224863	2	1060-5
AT224864	17	0510-7
AT224864	3	1060-5
AT224865	2	0510-10
AT224865	1	3160-96
AT224866	2	0510-10
AT224866	1	3160-96
AT224867	4	3160-96
AT224868	4	3160-96
AT224873	16	1060-5
AT224873	7	2160-11
AT224873	8	2160-11
AT224873	3	3160-97
AT224893	2	1674-12
AT224893	25	2001-7
AT224893	25	2001-7B
AT224893	12	2001-7D
AT224894	2	1674-13
AT224923	3	1810-15
AT224930	57	1830-5
AT224930	55	1830-9
AT224933	1	1810-17A
AT224989	9	1810-3
AT224989	4	1810-17
AT224990	10	1810-3
AT224991	11	1810-3
AT224991	5	1810-17
AT224994	21	1810-5
AT224994	1	1810-7
AT224995	10	1810-7
AT225011	39	3160-93
AT225020	10	3166-3
AT225082	5	3160-96
AT225083	5	3160-96
AT225083	1	3160-97
AT225084	6	3160-96
AT225085	6	3160-96
AT225085	2	3160-97
AT225086	12	1673-3
AT225159	8	1927-5
AT225160	9	1927-5
AT225189	12	0360-5
AT225275	1	0960-7
AT225275	1	0960-7B
AT225425	7	3160-73
AT225425	13	3160-75
AT225445	22	3160-93
AT225445	26	3160-95
AT225451	37	1830-5
AT225451	30	1830-9
AT225529	4	3160-97
AT225529	11	3160-103
AT225529	10	3160-107
AT225530	4	3160-97

NUMERICAL INDEX - CONTINUED

PART NO.	KEY	PAGE
AT225530	11	3160-113
AT225530	13	3160-115
AT225530	22	3160-121
AT225573	10	1060-7
AT225574	10	2160-9
AT225576	7	3160-67
AT225706	10	1810-19
AT225727	8	1060-13
AT225784	21	3160-3
AT225785	18	3160-9
AT225786	17	3160-15
AT225787	15	3160-7
AT225788	15	3160-13
AT225789	15	3160-19
AT225798	4	3160-41
AT225800	5	3160-41
AT225826	1	3140-25
AT225899	8	1830-5
AT226000	10	1810-5
AT226109	3	0510-10
AT226110	3	0510-10
AT226119	10	3160-75
AT226119	3	3160-79
AT226128	28	0510-3
AT226130	34	0510-3
AT226131	33	0510-3
AT226132	11	3160-85
AT226133	13	3160-85
AT226150	12	1910-7
AT226151	22	1810-5
AT226152	25	1810-5
AT226155	2	1913-2
AT226168	11	0510-5
AT226170	12A	0510-5
AT226176	27	1810-5
AT226229	9	1910-5
AT226249	18	1830-3
AT226265	2	3160-97
AT226266	1	3160-97
AT226273	22	1830-13
AT226276	35	0510-3
AT226282	2	1810-35
AT226301	8	3166-9
AT226309	12	1830-5
AT226334	8	1810-55
AT226338	6	1673-4
AT226372	12	1810-3
AT226377	6	1810-17
AT226400	1	1740-3
AT226454	8	3160-73
AT226454	7	3160-77
AT226495	26	1674-7
AT226542	5	3166-5
AT226542	11	3166-13
AT226573	29	0510-3
AT226578	1	1810-34
AT226614	8	2160-13
AT226615	18	3160-73
AT226615	18	3160-77
AT226615	19	3160-81
AT226615	27	3160-85
AT226615	30	3160-89
AT226676	14	1821-5
AT226676	38	1821-5
AT226676	39	1821-5
AT226676	41	1821-5
AT226676	42	1821-5
AT226676	43	1821-5
AT226715	6	1746-3
AT226716	7	1746-3
AT226727	90	0510-9
AT226789	7	1927-5
AT226791	4	1913-5
AT226808	10	0960-7
AT226808	10	0960-7B
AT226808	26	3160-93
AT226808	27	3160-95
AT226829	7	2160-3
AT226847	18	1910-5
AT226851	10	1910-5
AT226852	16	1910-5
AT226924	1	1672-11
AT226944	2	1674-10
AT227013	1	1810-34
AT227018	16	0510-7
AT227018	20	0510-9
AT227019	17	0510-7
AT227022	5	0510-10
AT227025	21	0510-9
AT227027	6	1910-3
AT227063	4	1821-7
AT227073	4	1913-3
AT227134	4	1674-8
AT227134	2	1674-9
AT227138	11	1674-3
AT227139	8	1674-3
AT227139	8	1674-5
AT227139	8	1674-5B
AT227170	65	1830-5
AT227170	50	1830-9
AT227248	10	0360-3
AT227260	12	1673-3
AT227279	5	0360-3
AT227279	40	2160-7
AT227491	41	2160-7
AT227508	25	0510-7
AT227508	4	0510-10
AT227530	1	3166-5
AT227530	13	3166-13
AT227531	3	3166-5
AT227532	10	0530-3
AT227538	8	3160-67
AT227539	2	3160-67
AT227544	14	1810-3
AT227545	15	1810-3
AT227549	2	1810-43
AT227576	8	0505-3
AT227579	13	0510-5
AT227603	7	0260-11
AT227604	8	0260-11
AT227644	43	2160-7
AT227651	6	0360-3
AT227668	2	1810-9
AT227668	3	1810-13
AT227669	3	1810-9
AT227710	15	0540-3
AT227717	35	3160-93
AT227738	3	1520-3
AT227754	23	1830-13
AT227755	24	1830-13
AT227782	4	0350-3
AT227794	10B	1810-55
AT227815	16	0540-3
AT227816	2	0520-5
AT227820	13A	0560-3
AT227821	14	0560-3
AT227835	3	0520-5
AT227909	2	3166-7
AT227925	1	3160-75
AT227925	1	3160-79
AT227926	2	3160-75
AT227926	1	3160-79
AT227927	4	3160-75
AT227927	10	3160-79
AT227927	..	3160-79
AT227928	3	3160-75
AT227928	9	3160-79
AT227928	..	3160-79
AT227929	5	3160-75
AT227930	6	3160-75
AT227930	2	3160-79
AT227933	9	3160-75
AT227933	5	3160-79
AT227936	15	0560-3
AT227957	11	3160-79
AT227965	4	1810-13
AT228112	28	0510-9
AT228138	13	2160-11
AT228158	22A	1910-7
AT228167	9	1674-5
AT228185	15	0350-5
AT228189	30	3160-93
AT228189	28	3160-95
AT228193	1	0960-7
AT228193	1	0960-7B
AT228193	13	3160-61
AT228194	3	3160-49
AT228194	13	3160-51
AT228195	14	3160-61
AT228197	14	3160-51
AT228197	14	3160-61
AT228206	14	0510-5
AT228217	12	1672-3
AT228224	30	0510-3
AT228240	6	1830-15
AT228250	15	3160-85
AT228253	9	1810-55
AT228260	15	3160-89
AT228261	16	3160-85
AT228285	21	0260-13
AT228289	9	1673-9
AT228311	14	1671-3
AT228312	8	1671-3
AT228313	11	1671-3
AT228319	15	0350-5
AT228405	23A	1910-7
AT228407	12	1671-3
AT228408	21	1910-7
AT228414	6	1749-3
AT228416	17	1910-7
AT228457	15	0260-9
AT228457	19	0260-9
AT228457	15	0260-13
AT228457	19	0260-13
AT228474	32	2160-7
AT228543	13	1910-5
AT228544	17	1910-5
AT228616	9	2160-13
AT228623	5	1913-5
AT228703	8	3160-81
AT228703	17	3160-85

NUMERICAL INDEX - CONTINUED

PART NO.	KEY	PAGE
AT228703	16	3160-89
AT228747	49	2160-7
AT228748	24A	1910-7
AT228809	7	1822-7
AT228843	7A	1910-3
AT228883	15	0530-3
AT25226	8	0110-3
AT280208	11	1910-5
AT280208	7	1913-5
AT280631	7	1830-15
AT280924	29	2160-7
AT300081	3	1913-3
AT300098	29	1674-7
AT300115	9	1821-7
AT300154	9	3160-77
AT300156	10	3160-77
AT300237	3	3103-3
AT300238	3	3103-3
AT300441	10A	1810-55
AT300487	5	0520-3
AT300488	6	0520-3
AT300489	10	0520-3
AT300493	7	0520-3
AT300524	21	1810-49
AT300537	30	1674-7
AT300662	10	3160-81
AT300664	11	3160-81
AT300664	8	3160-83
AT300664	19	3160-85
AT300664	17	3160-89
AT300676	15	1674-7
AT300858	54	3160-45
AT300921	4	1674-9
AT300921	1	3160-87
AT300936	10	3160-73
AT300956	10	3104-7
AT301026	9	1674-3
AT301026	10	1674-5
AT301026	9	1674-5B
AT301029	3	3140-21
AT301035	4	3140-21
AT301050	27	1322-7
AT301079	1	3140-13
AT301081	8	3140-21
AT301092	27	1322-9
AT301093	29	3160-95
AT301175	11	3104-9
AT301215	13	3104-7
AT301215	13	3104-9
AT301458	11	3160-81
AT301458	8	3160-83
AT301458	19	3160-85
AT301458	17	3160-89
AT301472	9	3140-21
AT301477	10	3140-21
AT301498	33	1674-7
AT301498	53	1674-7
AT301543	8	3102-3
AT301548	11	3140-21
AT301711	17	0510-5
AT301711	16	1927-9B
AT301717	13	3140-7
AT301777	3	1674-17
AT301819	11	1927-9
AT301820	13	1927-9
AT301913	3	1810-37
AT301914	7	1673-9
AT301914	4	1810-37
AT301930	15	3160-113
AT301930	16	3160-115
AT301992	6	3102-5
AT302031	1	3160-83
AT302032	1	3160-83
AT302056	6	3102-3
AT302057	6	3102-3
AT302059	6	3102-5
AT302060	6	3102-3
AT302061	6	3102-3
AT302066	6	3102-3
AT302067	6	3102-3
AT302089	7	1674-5
AT302144	7	2160-3
AT302145	7	2160-3
AT302829	12	0505-5
AT302845	4	0505-5
AT302954	33	1674-7
AT303014	34	1910-7
AT303273	2	0960-7
AT303273	2	0960-7B
AT303320	15	1672-7
AT303411	20	1810-3
AT303493	11	1810-7
AT303619	11	3160-75
AT303619	8	3160-79
AT303636	25	1910-7
AT303755	11	1927-5
AT303799	3	3160-97
AT303807	1	1674-15
AT304026	12	1674-7
AT304125	11	2160-13
AT304140	1	3140-7
AT304143	7	0260-3
AT304143	1	0260-5
AT304250	32	0510-3
AT304325	10	2160-13
AT304334	13	0505-5
AT304346	14	2160-13
AT304375	12A	1910-3
AT304406	29	0510-9
AT304418	1	0110-3
AT304421	2	0110-5
AT304613	12	3140-21
AT304620	3	3166-9
AT304633	4	1810-29
AT304860	4	3166-9
AT304880	18	3160-89
AT304881	20	3160-89
AT304895	6	3160-117
AT304895	9	3160-123
AT304897	15	2160-13
AT304899	16	2160-13
AT304901	8	0260-11
AT304909	8	0260-9
AT304909	8	0260-13
AT304910	9	0260-9
AT304910	9	0260-13
AT304911	10	0260-9
AT304912	11	0260-9
AT304912	10	0260-13
AT305050	15	3160-61
AT305111	15	3160-51
AT305111	16	3160-61
AT305112	16	3160-51
AT305112	17	3160-61
AT305113	17	3160-51
AT305113	18	3160-61
AT305114	18	3160-51
AT305114	19	3160-61
AT305126	36	1810-5
AT305126	37	1810-5
AT305126	38	1810-5
AT305130	33	1810-3
AT305130	34	1810-3
AT305130	7	1810-17
AT305130	8	1810-17
AT305165	12	0260-9
AT305165	11	0260-13
AT305171	12	3160-103
AT305171	12	3160-113
AT305389	9	1674-17
AT305405	59	1830-5
AT305405	51	1830-9
AT305424	13	3160-113
AT305424	14	3160-115
AT305425	14	3160-113
AT305425	15	3160-115
AT305572	15	1927-9
AT305573	16	1927-9
AT305574	17	1927-9
AT305575	18	1927-9
AT305603	11	3160-79
AT305603	..	3160-79
AT305660	4	0350-3
AT305673	36	0510-3B
AT305687	50	3160-73
AT305690	..	3160-81
AT305692	..	3160-77
AT305693	..	3160-85
AT305830	19	1927-9
AT305900	15	3160-113
AT305900	16	3160-115
AT305900	7	3160-117
AT305902	7	3160-117
AT305903	8	3160-117
AT305903	10	3160-123
AT305905	9	3160-117
AT305905	11	3160-123
AT305931	6	1673-4
AT305978	10	3160-117
AT305978	12	3160-123
AT306099	20	1927-9
AT306219	7	2160-3
AT306227	21	1927-9
AT306454	8	1927-5
AT306455	9	1927-5
AT306489	13	0260-9
AT306489	13	0260-13
AT306496	14	0260-9
AT306496	14	0260-13
AT306511	45	0930-3
AT306597	3	3160-67
AT306599	1	3160-67
AT306600	5	0242-7
AT306641	11	1674-3
AT306688	5	0520-5
AT306690	37	0510-3B
AT306690	11	1910-7
AT306702	1	0515-3
AT306703	3	0515-3
AT306736	8	1674-3
AT306828	4	1674-13

NUMERICAL INDEX - CONTINUED

PART NO.	KEY	PAGE
AT306829	24	2001-7
AT306829	24	2001-7B
AT306829	1	2001-7D
AT306830	24	2001-7
AT306830	24	2001-7B
AT306830	1	2001-7D
AT306831	24	2001-7
AT306831	24	2001-7B
AT306831	1	2001-7D
AT306890	12	0260-13
AT306912	15	1830-3
AT306913	16	1830-3
AT306930	18	0510-5
AT306931	19	0510-5
AT306991	12	3160-111
AT306992	13	3160-111
AT306999	9	2160-3
AT307000	8	2160-3
AT307045	29	2160-7
AT307090	16	1673-3
AT307090	16	1673-3B
AT307131	6	3102-3
AT307197	6	1830-5
AT307197	4	1830-9
AT307221	11	1674-3
AT307301	8	2160-11
AT307302	7	2160-11
AT307304	9	2160-11
AT307314	2	2160-11
AT307315	4	2160-11
AT307333	12	1674-3
AT307434	..	3160-85
AT307438	..	3160-77
AT307472	..	3160-89
AT307474	6	1821-3
AT307481	7	1672-11
AT307482	7	1672-11
AT307518	8	3140-17
AT307523	1	3140-19
AT307524	4	3140-19
AT307525	3	3140-19
AT307526	5	3140-19
AT307527	6	3140-19
AT307535	8	3140-17
AT307536	1	3140-17
AT307585	..	3160-77
AT307605	33	0510-3
AT307606	35	0510-3
AT307607	34	0510-3
AT307612	6	1830-15
AT307613	32	0510-3
AT307617	15	0260-9
AT307617	19	0260-9
AT307621	..	3160-89
AT307636	2	3160-83
AT307637	4	3160-83
AT307638	3	3160-83
AT307640	5	3160-83
AT307641	6	3160-83
AT307656	..	3160-85
AT307661	30	3160-95
AT307703	1	0505-5
AT307727	17	3140-7
AT307771	1	3160-45
AT307771	1	3160-47
AT307806	69	0510-3B
AT307813	5	3160-63
AT307814	6	3160-63
AT307822	25	3160-113
AT307911	31	0510-3
AT307928	10	0530-3
AT307934	26	2160-13
AT307950	14	3166-13
AT307996	13	3165-15
AT308024	12	3104-7
AT308024	7	3104-13
AT308029	9	3102-3
AT308031	9	3102-3
AT308065	1	3103-3
AT308066	1	3103-3
AT308067	1	3103-5
AT308199	3	1821-3
AT308232	12B	2160-13
AT308386	20	3160-5
AT308388	24	3160-11
AT308389	24	3160-17
AT308467	6	3102-3
AT308671	10	1674-3
AT308672	9	1674-3
AT308673	15	1674-7
AT308784	29	1927-9
AT308795	25	1821-3
AT308796	26	1821-3
AT308797	28	1821-3
AT308805	16	3160-113
AT308805	17	3160-115
AT308806	17	3160-113
AT308806	18	3160-115
AT308993	5	0350-39
AT309000	1	3140-9
AT309045	1	3140-9
AT309163	6	0960-3
AT309249	24	1927-9
AT309249	17	1927-9B
AT309404	1	3140-11
AT309430	10	3160-117
AT309494	3	2160-11
AT309530	28	1927-9
AT309530	18	1927-9B
AT309550	7A	1673-3
AT309550	7B	1673-3
AT309550	9	1673-3
AT309550	10	1673-3B
AT309843	34	3160-81
AT309843	9	3160-83
AT309843	31	3160-85
AT309843	34	3160-89
AT310020	33	1674-7
AT310056	14	1674-7
AT310060	2	3103-3
AT310412	10B	1810-55
AT310413	9	1810-55
AT310414	10A	1810-55
AT310435	6	1821-3
AT310495	8	1927-11
AT310555	21	0510-7
AT310555	25	0510-9
AT310556	22	0510-7
AT310556	26	0510-9
AT310557	23	0510-7
AT310557	27	0510-9
AT310561	15	2160-13
AT310702	24	1810-3
AT310759	7A	1910-3
AT310759	22B	1910-7
AT310760	7A	1910-3
AT310760	23B	1910-7
AT310761	7A	1910-3
AT310761	7B	1910-3
AT310761	22B	1910-7
AT310761	23B	1910-7
AT310761	24B	1910-7
AT310761	36	1910-7
AT310764	10	2160-13
AT310782	15	1830-3
AT310905	32	2160-7
AT311287	12B	0510-5
AT311387	24	3104-7
AT311468	7	3160-117
AT311469	7	3160-117
AT311470	13	3160-123
AT311735	8	3140-17
AT311817	..	3160-81
AT311818	..	3160-85
AT311823	22	1927-7
AT311902	26	1674-7
AT311905	29	1674-7
AT311918	30	1821-3
AT311918	1	1821-5
AT311919	6	1821-3
AT312053	9	1910-7
AT312110	14	1674-7
AT312131	34	1927-9
AT312131	90	1927-9B
AT312178	2	1674-10
AT312984	2	3166-11
AT312987	8	3166-11
AT312996	9	3166-11
AT313037	10	3166-11
AT313087	5	3160-87
AT313282	57	1830-5
AT313282	55	1830-9
AT313399	6	1821-5
AT313424	7	3160-63
AT313501	2	1674-10
AT313598	14	0510-5
AT313708	2	2160-11
AT314008	1	3160-23
AT314009	1	3160-31
AT314010	2	3160-31
AT314011	3	3160-31
AT314011	7	3160-35
AT314011	3	3160-39
AT314012	4	3160-31
AT314012	8	3160-35
AT314012	4	3160-39
AT314013	5	3160-27
AT314013	1	3160-31
AT314013	1	3160-35
AT314013	1	3160-39
AT314014	..	3160-31
AT314015	2	3160-23
AT314016	3	3160-23
AT314017	1	3160-23
AT314018	1	3160-35
AT314019	9	3160-35
AT314020	..	3160-35
AT314021	..	3160-39
AT314022	1	3160-43
AT314023	2	3160-43
AT314025	3	3160-43

NUMERICAL INDEX - CONTINUED

PART NO.	KEY	PAGE
AT314026	..	3160-17
AT314046	1	3160-39
AT314048	..	3160-5
AT314057	1	3160-43
AT314195	8	3160-63
AT314196	9	3160-63
AT314206	1	0210-3
AT314206	10	0210-25
AT314266	60	1060-3
AT314267	12	1060-3
AT314322	33	1674-7
AT314334	10	2160-13
AT314334	19	3160-51
AT314334	20	3160-61
AT314356	7	0520-3
AT314374	26	1674-7
AT314583	6	0520-3
AT314598	39	3160-95
AT314615	23	3160-121
AT314630	..	3160-85
AT314656	6	3102-3
AT314675	21	3160-61
AT314677	22	3160-61
AT314727	..	3160-89
AT314734	5	0960-7
AT314734	5	0960-7B
AT314816	..	3160-77
AT314844	7	2160-13
AT314847	6B	2160-13
AT314940	6	3102-3
AT314944	20	3160-51
AT314959	6	3160-57
AT314960	7	3160-57
AT314961	8	3160-57
AT314962	9	3160-57
AT314989	22	0510-7
AT314989	26	0510-9
AT314990	23	0510-7
AT314990	27	0510-9
AT315002	6	1520-3
AT315021	6	0360-3
AT315051	23	3160-61
AT315290	20	1810-3
AT315331	6	3160-31
AT315406	10	1674-3
AT315406	6	1674-5
AT315406	10	1674-5B
AT315412	10	1674-3
AT315446	12	1810-3
AT315458	1	3160-83
AT315459	1	3160-83
AT315459	3	3160-87
AT315715	7	1821-3
AT315761	8	1821-3
AT315831	10	3160-121
AT315832	11	3160-121
AT315846	11	3160-81
AT315846	8	3160-83
AT315846	19	3160-85
AT315846	17	3160-89
AT315847	11	3160-81
AT315847	8	3160-83
AT315847	19	3160-85
AT315847	17	3160-89
AT315871	1	3104-21
AT315926	8	3160-121
AT315927	9	3160-121
AT316050	12	3160-121
AT316140	6	0560-3
AT316249	6	0960-3B
AT316303	29	1674-7
AT316315	6	3160-27
AT316315	39	3160-45
AT316315	54	3160-45
AT316315	39	3160-47
AT316332	10	2160-13
AT316332	10	3160-57
AT316332	10	3160-63
AT316514	..	3160-77
AT316532	6	3160-96
AT316539	..	3160-85
AT316540	..	3160-89
AT316770	21	3160-115
AT317239	6	3163-7
AT317299	1	0110-3
AT317340	7	3163-5
AT317574	17	3160-117
AT317589	18	3160-123
AT317600	17	3160-117
AT317731	7	1520-3
AT317789	7	1520-3
AT317968	11	3104-9
AT317970	10	3104-7
AT318123	7	3160-75
AT318329	7	1674-5
AT318329	11	1674-5B
AT318345	6B	2160-13
AT318916	7	3160-27
AT318927	30	3140-3
AT318927	29	3140-5
AT318927	18	3140-7
AT318987	6	1830-5
AT318987	4	1830-9
AT320163	6	3104-11
AT320164	7	3104-11
AT320165	8	3104-11
AT320165	8	3104-13
AT320322	12	1910-7
AT320323	18	1910-5
AT320374	33	3160-61
AT320570	6	0960-3
AT320673	8	0530-3
AT320674	8	0530-3
AT320690	23	3104-9
AT320922	11	1674-3
AT321387	7	3163-5
AT321942	11	1830-3
AT321942	10	1830-7
AT322223	12	3163-5
AT322226	12	3163-5
AT322229	11	3163-7
AT322382	19	1927-9B
AT322383	20	1927-9B
AT322445	8	3160-63
AT322445	9	3160-63
AT322446	5	3160-63
AT322446	6	3160-63
AT322466	5	3160-63
AT322466	6	3160-63
AT322501	8	3160-63
AT322501	9	3160-63
AT322729	6	3104-13
AT322892	12	1674-3
AT322892	9	1674-5
AT322892	12	1674-5B
AT322982	64	1060-3
AT323120	4	3103-7
AT323285	6	0960-3B
AT323286	1	0960-5
AT323307	3	0515-3
AT323318	5	3103-7
AT323319	6	3103-7
AT323337	4	3103-7
AT323672	1	1822-3
AT323687	3	1913-3
AT323713	5	3160-63
AT323713	6	3160-63
AT323713	8	3160-63
AT323713	9	3160-63
AT323713	..	3160-63
AT323720	13A	0560-3
AT323720	13B	0560-3
AT323756	9	3163-3
AT323757	10	3163-3
AT323817	11	3163-3
AT323845	1	0960-5
AT324137	12	3163-3
AT324184	9	3104-11
AT324271	9	3104-13
AT324484	12	1673-3
AT324484	15	1673-3B
AT324641	13	3163-3
AT324647	9	3163-3
AT324648	10	3163-3
AT324668	28	0510-3
AT324681	12	1810-27
AT324849	10	1810-29
AT324881	6	0360-3
AT325146	53	3160-45
AT325146	53	3160-47
AT325194	12	3163-3
AT325201	13	3163-3
AT325611	12	0360-5
AT325612	7	3160-79
AT325612	..	3160-79
AT325643	1	1810-17A
AT325889	11	0960-7B
AT326184	3	3103-5
AT326190	2	3103-5
AT326203	3	3103-5
AT326581	29	3160-45
AT326581	54	3160-45
AT326581	29	3160-47
AT326581	54	3160-47
AT326640	2	3103-5
AT326784	17	3104-11
AT326785	16	3104-13
AT326789	1	3102-7
AT326790	1	3102-7
AT326792	4	3103-5
AT326793	4	3103-5
AT326794	4	3103-5
AT326795	4	3103-5
AT326970	65	1060-3
AT327499	7	1927-5
AT327502	8	1927-5
AT327503	9	1927-5
AT327518	21	1910-7
AT327519	17	1910-7
AT327522	13	1910-5
AT327523	17	1910-5

NUMERICAL INDEX - CONTINUED

PART NO.	KEY	PAGE
AT327529	10	1910-5
AT327530	16	1910-5
AT327535	5	1913-5
AT327621	7	1821-7
AT327951	13	3163-3
AT328356	21	1927-9B
AT328357	22	1927-9B
AT328366	23	1927-9B
AT328367	24	1927-9B
AT329720	28	1830-7
AT329720	1	1830-9
AT329721	6	1830-9
AT329722	1	1830-5
AT329723	8	1830-5
AT329811	41	2160-7
AT329819	1	3104-23
AT329958	7	0520-3
AT330153	12	3163-3
AT330153	13	3163-3
AT330153	16	3163-3
AT330153	..	3163-3
AT330154	12	3163-3
AT330154	13	3163-3
AT330154	16	3163-3
AT330154	..	3163-3
AT330155	12	3163-3
AT330155	13	3163-3
AT330155	16	3163-3
AT330155	..	3163-3
AT330639	2	3104-23
AT330806	16	0960-3
AT331208	44	1060-3
AT331638	1	0350-37
AT331639	1	0350-31
AT331640	1	0350-33
AT331640	1	0350-35
AT331641	1	0350-27
AT331641	1	0350-29
AT332233	3	3166-5
AT332291	8	3160-93
AT332291	22	3160-95
AT332291	7	3160-96
AT332401	4	3103-3
AT332441	1	0960-7
AT332441	1	0960-7B
AT333811	5	2160-11
AT333904	11	2160-9
AT334083	4	0960-7
AT334083	4	0960-7B
AT334451	10	0350-12
AT334453	24	2160-9
AT335172	7	0110-5
AT336601	29	1674-7
AT37476	11	0520-3
AT37476	50A	2160-7
AT37693	38	0510-3B
AT41188	15	1671-3
AT44188	14	1810-17
AT45678	14	3166-5
AT45678	27	3166-9
AT45678	15	3166-13
AT49216	20	3160-91
AT53439	12	0520-3
AT59892	2	1810-41
AT62123	14	3163-3
AT67275	7	0110-5
AT79195	61	2160-7
AT79195	4	2160-13
AT79576	9	1060-11
AT79708	3	0110-7
AT83105	12	1810-7
AU42978	18	0260-15
A364R	7	0417-3
A4365R	33	1060-3
A4365R	20	3166-5
A4365R	9	3166-9
A4365R	7	3166-11
A4365R	10	3166-13
A4742R	10	3160-29
A4742R	10	3160-33
A4742R	10	3160-45
A4742R	10	3160-47
A4827R	17	0452-3
B14604	19	1830-3
CD12569	23	1322-7
CD16284	7	0409-3
C15104	14	0960-3
E12379	1	0242-3
E12379	2	0960-9
E12379	15	3165-15
E12379	12	3166-3
E52687	8	3165-7
E53801	19	3140-7
E73240	34	1674-7
E73240	6	1674-8
E73240	6	1674-9
E80242	11	0530-3
F3171	17	0210-7
F3171R	11	0210-9
F3171R	17	0210-9
F3171R	17	0210-11
F3171R	17	0210-13
F3171R	5	0210-19
F3171R	5	0210-21
F3171R	18	0210-25
GX20510	40	1674-7
GY20126	3	1674-12
GY20126	3	1674-13
H110232	21	1810-3
H110232	9	1810-17
H114865	20	1830-3
H121681	28	1060-13
H126081	13	1810-7
H126082	14	1810-7
H131424	15	1810-7
H132922	16	1810-7
H138955	7	1322-5
H143405	11	0960-11
H144095	12	1672-3
H148166	39	2160-7
H151537	9	3165-7
H151890	10	3165-7
H151891	6	3165-11
H151891	11	3165-17
H151894	7	3165-5
H151894	11	3165-7
H151894	7	3165-11
H151894	3	3165-17
H152205	8	3165-5
H152205	8	3165-11
H152205	16	3165-17
H152796	9	3165-5
H152796	9	3165-11
H152796	15	3165-17
H154514	1	3104-15
H154514	1	3104-17
H154514	1	3104-19
H154898	10	3165-5
H155143	11	3165-11
H155143	1	3165-17
H155147	7	3165-13
H155358	4	0960-11
H155359	3	0960-11
H155540	9	3165-13
H155543	10	3165-13
H155561	11	3165-13
H155655	8	0960-11
H155769	14	3165-11
H155769	14	3165-17
H156058	2	3104-15
H156058	2	3104-17
H156058	2	3104-19
H156360	13	1810-55
H156586	3	3104-15
H156586	3	3104-17
H156586	3	3104-19
H157897	9	0960-11
H157947	9	0960-11
H158175	5	3165-19
H158192	21	0960-11
H158397	3	3165-19
H158436	15	3165-13
H158437	16	3165-13
H159071	12	3165-7
H159072	13	3165-7
H159074	14	3165-7
H159361	6	3165-19
H159362	7	3165-19
H160456	19	3165-13
H161156	6	3104-17
H163598	8	3165-19
H164982	12	0960-11
H164982	5	3104-15
H164982	7	3104-17
H164982	7	3104-19
H165169	6	3104-15
H169568	7	1749-3
H169745	15	3165-11
H169750	4	3165-17
H170138	16	3165-11
H170535	11	3104-15
H170535	5	3104-17
H170535	5	3104-19
H170536	19	0960-11
H171334	7	3104-15
H172014	30B	0560-3
H173652	20	3165-13
H174381	34	0560-3
H178392	15	3165-7
H180324	16	3165-7
H180431	8	3165-13
H180432	17	3165-11
H180432	10	3165-17
H180433	16	3165-5
H206629	25	3165-5
H206836	12	3104-15
H208098	19	3165-5
H208703	8	3165-17
H208707	9	3165-17
H209168	9	3165-19
H210874	10	3104-17

NUMERICAL INDEX - CONTINUED

PART NO.	KEY	PAGE
H210874	10	3104-19
H211093	14	0960-11
H211156	13	0960-11
H211156	8	3104-17
H211156	8	3104-19
H21259	1	1322-3
H219217	4	3104-19
H23125	1	0402-2
H23196	4	1369-3
H34597	6	1810-13
H63262	20	0960-11
H63262	11	3104-17
H63262	11	3104-19
H75541	14	3160-111
H75541	18	3160-113
H75541	19	3160-115
H77698	16	0260-9
H77698	16	0260-13
H77698	2	0260-18
H77698	5	0960-9
H77698	17	1671-3
H77698	13	1674-3
H77698	41	1674-7
H77698	7	1674-8
H77698	7	1674-9
H77698	21	1830-3
H77698	17	1830-7
H77698	19	2160-13
H77698	19	3160-73
H77698	19	3160-77
H77698	20	3160-81
H77698	28	3160-85
H77698	31	3160-89
H77698	1	3160-91
H77698	7	3160-91
H77698	16	3165-15
H81330	4	1810-9
H81330	1	1810-11
H81330	11	1810-19
H81330	11	1810-21
H81678	4	1673-4
H84318	3	3160-37
H84318	3	3160-45
H84318	3	3160-47
H85233	9	1910-3
H85233	12	1910-5
H85233	8	1913-5
H86981	8	1830-3
H86981	7	1830-7
H89151	20	3104-7
H89151	19	3104-9
H89151	10	3104-11
H89151	10	3104-13
H94158	10	1830-11
H95874	25	1810-7
JD38714	2	3160-41
JD5749	6	1322-3
JD5822	11	1322-5
JD5822	1	1322-11
JD5902	2	1322-3
JD5906	19	1322-3
JD5929	5	1810-37
JD7759	8	0960-9
JD7759	10	3102-3
JD7759	6	3104-3
JD7759	14	3104-7
JD7759	14	3104-9
JD7759	11	3104-11
JD7759	11	3104-13
JD7759	11	3140-3
JD7759	9	3140-5
JD7759	20	3140-7
JD7759	10	3140-17
JD7759	11	3140-19
JD7759	22	3140-19
JD7759	15	3140-21
JD7759	2	3165-9
JD7763	12	3165-3
JD7763	14	3165-9
JD7763	17	3165-15
JD7781	23	0242-3
JD7781	2	3165-3
JD7788	11	3166-3
JD7797	21	0242-3
JD7797	1	0960-9
JD7797	14	3165-15
JD7842	21	0242-3
JD7842	1	0960-9
JD8159	14	0210-17
JD8210	15	0210-17
JD8240	1	0210-4
JD8240	1	0210-5
JD8240	8	0210-25
JD8248	4	0210-19
JD8248	4	0210-21
JD8974	2	0210-4
JD8974	2	0210-5
JD8974	9	0210-25
JD9018	3	0210-19
JD9018	3	0210-21
JD9050	30	0210-15
JD9055	10	0210-19
JD9055	10	0210-21
JD9115	29	0210-15
JD9118	9	0210-19
JD9118	9	0210-21
J16931	40	0510-3B
J16931	27	1910-7
KV22121	14	3102-3
KV22121	7	3102-5
KV22609	11	3160-63
K1011176	21	0420-5
L102023	1	1810-40
L110729	7	0350-37
L40273	1	0350-12
L57881	22	1830-3
L77943	9	1830-5
L985T	16	1810-3
L985T	17	1810-3
M113243	4	0515-3
M113243	48	1060-3
M113243	14	1810-55
M114063	22	1810-3
M115279	42	1674-7
M115279	8	1674-8
M115279	8	1674-9
M148224	13	1910-3
M4125T	2	3160-45
M4125T	2	3160-47
M453T	24	1821-3
M45937	20	0242-3
M45937	4	0260-18
M45937	14	0960-9
M47887	4	1810-47
M67176	10	1830-5
M68628	18	1910-7
M72389	33	2160-7
M84972	7	1810-13
M84972	2	1810-15
M84972	15	1810-55
M87571	16	0360-3
M87571	9	1369-3
M87733	3	0416-1
M88102	12	3166-11
M89679	9	0520-3
N117290	8	1830-15
N119177	4	1674-11
N119177	29	1821-3
N189220	52	2160-7
N189220	20	3160-73
N189220	20	3160-77
N189220	21	3160-81
N189220	29	3160-85
N189220	32	3160-89
N189220	1	3166-3
N203905	49	1060-3
N218377	3	1810-47
N260556	8	3104-15
PG-188	16	3163-3
PM38655	24	0404-3
PM38655	19	0404-5
PT11778	10	1830-5
P40098	1	1674-14
P46051	31	2160-7
P48347	38	1060-3
P48347	21	3166-5
P48347	13	3166-9
P48347	13	3166-11
P48347	16	3166-13
RE12363	22	1830-13
RE151391	1	0210-19
RE151391	1	0210-21
RE151433	3	1674-14
RE157329	17	1830-5
RE158953	11	0560-3
RE158953	11A	0560-3
RE159198	4	0210-26
RE160141	6	0210-19
RE160141	6	0210-21
RE163170	7	0210-4
RE163170	7	0210-5
RE163170	15	0210-25
RE163174	8	0210-4
RE163174	16	0210-25
RE163175	8	0210-5
RE163175	16	0210-25
RE163874	8	0210-9
RE163874	1	0210-25
RE163875	12	0210-7
RE163875	1	0210-25
RE163878	12	0210-13
RE163878	1	0210-25
RE164422	8	0210-9
RE164422	20	0210-25
RE164424	20	0210-25
RE164425	20	0210-25
RE164427	20	0210-25
RE166220	24	0210-15
RE166242	9	0530-3
RE167207	4	1674-14
RE167464	25	0510-3

NUMERICAL INDEX - CONTINUED

PART NO.	KEY	PAGE
RE168454	21	2001-7
RE168454	21	2001-7B
RE16879	1	1810-27
RE174764	11	1830-5
RE179976	31	0560-3
RE190139	13	2001-7
RE190139	13	2001-7B
RE190139	16	2001-7D
RE190140	13	2001-7
RE190140	13	2001-7B
RE190140	16	2001-7D
RE190141	13	2001-7
RE190141	13	2001-7B
RE194040	12	0560-3
RE19797	7	0413-3
RE19800	9	0413-3
RE198074	3	1830-5
RE20809	21	3165-11
RE20809	5	3165-17
RE20901	8	0413-3
RE224279	27A	0560-3
RE227949	7	0505-6
RE227953	13	2001-7
RE227953	13	2001-7B
RE227953	16	2001-7D
RE234193	27B	0560-3
RE24391	25	0510-3
RE24468	41	1060-3
RE25102	10	3165-19
RE27205	2	0960-11
RE30162	19	3165-7
RE30162	20	3165-7
RE30162	21	3165-7
RE30162	22	3165-7
RE31617	13	0409-3
RE35704	42	1060-3
RE36133	18	1830-5
RE36133	46	1830-5
RE36133	14	1830-9
RE36133	39	1830-9
RE38310	56	2160-7
RE40049	2	1810-27
RE40049	5	1810-29
RE43497	6	1674-11
RE43497	19	1830-7
RE43637	3	0260-19
RE44574	6	0401-2
RE44574	3	0433-2
RE44574	18	0452-3
RE45312	1	0210-3
RE45312	10	0210-25
RE46534	1	0260-19
RE46684	6	0210-7
RE46684	4	0210-9
RE46684	6	0210-11
RE46684	6	0210-13
RE46684	6	0210-26
RE46684	23	0260-15
RE46684	7	0418-3
RE46684	12	0418-3
RE46685	9	0417-3
RE46685	7	0419-3
RE46686	6	0419-3
RE46686	6	0420-3
RE46686	9	0420-5
RE46742	25	1830-3
RE46742	20	1830-7
RE48786	16	0413-3
RE48838	14	1810-15
RE500250	12	0360-3
RE500398	2	0433-1
RE500576	12	0420-5
RE500608	3	0403-2
RE500612	3	0407-5
RE500614	3	0407-5
RE501060	7	0422-3
RE501150	4	0422-3
RE501150	7	0422-3
RE501150	15	0422-3
RE502669	21	0505-5
RE503027	5	0402-2
RE503211	7	0416-1
RE504122	3	0505-6
RE504122	4	0505-6
RE504233	5	0421-2
RE504543	4	0407-8
RE504562	3	0407-8
RE504638	3	0401-2
RE504836	6	0407-8
RE504914	2	0407-6
RE504914	3	0407-6
RE504914	4	0407-6
RE504914	5	0407-6
RE504914	6	0407-6
RE505264	2	0429-1
RE505264	18	1672-3
RE505264	16	1672-7
RE505501	26	0404-3
RE505501	27	0417-3
RE505515	9	0401-2
RE505515	19	0452-3
RE505981	10	0417-3
RE506380	1	0417-3
RE506380	14	0417-3
RE507149	1	0404-1
RE507598	2	0420-5
RE507609	10	0403-2
RE507766	13	0413-3
RE507850	7	0403-2
RE507850	8	0403-2
RE507850	10	0403-2
RE507852	6	0403-2
RE507950	5	0407-5
RE507950	7	1369-3
RE508185	22	0404-3
RE508317	9	0402-3
RE508566	13	0417-3
RE508716	15	0413-3
RE508847	4	0420-3
RE509032	13	0420-3
RE509036	9	0420-3
RE509036	10	0420-3
RE509540	10	0403-2
RE509794	14	0420-3
RE51234	1	1673-5
RE515228	1	0413-3
RE515229	2	0413-3
RE515230	3	0413-3
RE515231	4	0413-3
RE515232	5	0413-3
RE515233	6	0413-3
RE515314	29	0417-3
RE515512	8	0420-5
RE515815	2	0420-5
RE515978	2	0417-3
RE515978	28	0417-3
RE516340	9	0401-2
RE516340	22	0417-3
RE516340	19	0452-3
RE51649	15	0420-3
RE51649	18	0420-3
RE51650	10	0420-3
RE516510	1	0420-5
RE516512	17	0420-3
RE516553	17	0420-3
RE517180	9	0420-3
RE517180	10	0420-3
RE517370	26	0417-3
RE518088	12	0413-3
RE518527	3	0404-3
RE518527	1	0450-3
RE519144	31	0417-3
RE519144	4	0578-1
RE519775	36	1674-7
RE520229	4	1830-17
RE52034	20	0510-3
RE520540	6	0402-2
RE521560	2	0416-1
RE521561	2	0416-1
RE521822	12	0413-3
RE521823	12	0413-3
RE521824	12	0413-3
RE521825	12	0413-3
RE522076	3	0418-3
RE522109	12	0413-3
RE52242	1	0407-8
RE522529	36	1674-7
RE522821	2	0419-3
RE52346	9	0401-2
RE52346	19	0452-3
RE523460	1	0417-3
RE523460	14	0417-3
RE52454	16	1830-13
RE524676	3	0505-6
RE524676	4	0505-6
RE52504	22	0560-3
RE52506	17	1830-13
RE52507	22	1830-13
RE52508	19	1830-13
RE52509	22	1830-13
RE526673	12	0452-4
RE526673	17	0452-4
RE526834	4	0420-3
RE526834	14	0420-3
RE526834	15	0420-3
RE526834	18	0420-3
RE526965	31	0452-3
RE526966	10	0403-2
RE52702	50B	2160-7
RE52702	21	2160-13
RE52702	22	2160-13
RE52722	12	0418-3
RE52722	3	0578-1
RE527324	1	0450-5
RE531116	13	0413-3
RE54885	12	0416-1
RE55423	21	1830-13
RE55512	10	0403-2
RE56098	20	0510-3
RE56098	42	0510-3B
RE56109	22	1810-49

NUMERICAL INDEX - CONTINUED

PART NO.	KEY	PAGE
RE56165	2	3166-5
RE56165	7	3166-9
RE56165	20	3166-13
RE56313	6	0404-5
RE56369	14	0404-5
RE56690	2	0419-3
RE57489	14	0409-3
RE57489	15	0409-3
RE57836	25	0404-3
RE57836	4	0433-2
RE58614	28	1830-3
RE58614	23	1830-7
RE59355	2	0429-2
RE59810	9	0401-2
RE59810	19	0452-3
RE59811	1	0401-2
RE60005	3	0409-3
RE60029	12	0420-3
RE60029	11	0420-5
RE60030	19	0420-3
RE60037	7	0420-5
RE60071	3	0414-2
RE60700	16B	2160-3
RE60700	11	3160-93
RE60700	34	3160-95
RE60701	16A	2160-3
RE60701	15	3160-103
RE60701	22	3160-113
RE60854	16	0420-3
RE61191	3	0210-15
RE61191	3	0210-17
RE61651	22	2001-7
RE61651	22	2001-7B
RE61812	6	0414-2
RE61812	1	0578-1
RE65165	7	0401-2
RE65168	8	0401-2
RE65908	11	0403-2
RE65909	11	0403-2
RE65911	7	0401-2
RE65912	8	0401-2
RE65978	13	0416-1
RE66083	12	0452-4
RE66153	2	0421-2
RE67138	28	0260-15
RE67231	1	0419-3
RE67231	2	0419-3
RE67238	6	0407-3
RE67238	8	0407-8
RE67238	12	0419-3
RE67239	20	0417-3
RE67240	7	0407-3
RE67715	19	0210-15
RE67745	1	0210-19
RE67745	1	0210-21
RE67789	2	0210-3
RE68234	15	0416-1
RE68255	14	0520-3
RE68300	6	0210-19
RE68300	6	0210-21
RE68725	22	0210-15
RE68725	12	0260-15
RE68725	14	0260-15
RE68748	14	0413-3
RE68908	4	1830-17
RE69243	1	0407-7
RE69297	42	1060-3
RE70536	1	0429-1
RE70678	1	0422-3
RE70682	5	0422-3
RE70756	11	0422-3
RE71143	8	0407-5
RE71256	6	0422-3
R100369	6	0417-3
R100377	13	1672-3
R10093	13	0960-3
R10093	23	1830-3
R10093	9	1830-15
R101225	16	0404-5
R104558	6	0350-11
R104592	5	0404-3
R104592	5	0409-3
R104595	3	1810-25
R104595	6	1810-25
R105346	6	0452-3
R105346	6	0452-4
R105415	6	0360-3
R105415	13	0360-3
R107731	9	0402-3
R107731	11	0402-3
R109082	25	0210-15
R110531	41	0510-3B
R111137	10	0404-3
R11151	15	3166-5
R11151	2	3166-9
R11151	17	3166-13
R113050	25	1830-13
R113050	28	1830-13
R113562	4	0420-3
R113562	7	0420-3
R113562	14	0420-3
R113563	4	0420-3
R113563	8	0420-3
R113563	14	0420-3
R113565	4	0420-3
R113565	9	0420-3
R113565	11	0420-3
R113565	13	0420-3
R113565	14	0420-3
R113596	3	0401-2
R114082	2	0403-2
R114193	13	0404-5
R114194	15	0404-5
R114241	17	0404-3
R115350	42	0510-3B
R115390	15	0404-3
R115742	11	1830-13
R115743	19	1830-13
R116296	5	0407-3
R116366	20	0413-3
R116386	17	0404-5
R116466	12	0404-3
R116516	12	0409-3
R116516	8	0452-3
R116516	8	0452-4
R116801	18	0210-7
R116801	12	0210-9
R116801	18	0210-11
R116801	18	0210-13
R116801	7	0210-19
R116801	7	0210-21
R116933	29A	0560-3
R117721	13	1830-5
R117721	38	1830-5
R117721	62	1830-5
R117721	8	1830-9
R117721	31	1830-9
R117845	5	1810-9
R117845	2	1810-11
R119171	45	1830-5
R119171	38	1830-9
R119565	1	0450-3
R119874	6	0404-3
R120013	14	0416-1
R120233	30A	0560-3
R120236	20	0210-15
R120631	2	0401-2
R120636	14	0404-5
R120638	10	0407-6
R120641	5	0404-5
R120653	3	1810-25
R120653	6	1810-25
R120653	16	1810-27
R120653	3	1810-29
R120653	13	1810-29
R120653	14	1810-29
R121038	1	0417-4
R121043	9	0404-3
R121376	7	0407-6
R121411	17	0417-3
R121424	16	0417-3
R121465	9	1830-3
R121465	8	1830-7
R121608	14	0409-3
R121608	15	0409-3
R121635	4	0417-4
R121664	39	1830-5
R121664	63	1830-5
R121664	9	1830-9
R121664	32	1830-9
R121666	40	1830-5
R121666	33	1830-9
R121674	4	0402-2
R121805	3	0210-15
R121805	3	0210-17
R121897	3	0429-2
R123161	7	0402-3
R123174	4	0404-5
R123177	5	0403-2
R123226	5	0417-3
R123226	9	0418-3
R123226	4	0452-3
R123226	4	0452-4
R123271	5	0402-3
R123273	1	0421-2
R123273	20	0452-3
R123323	1	0418-3
R123324	11	0418-3
R123345	5	0452-3
R123345	5	0452-4
R123354	12	0452-3
R123354	13	0452-4
R123417	4	0417-3
R123417	21	0452-3
R123471	2	0419-3
R123471	5	0419-3
R123501	3	0419-3
R123501	23	0452-3
R123514	2	0402-3
R123525	25	0452-3
R123543	6	0402-2

NUMERICAL INDEX - CONTINUED

PART NO.	KEY	PAGE
R123543	1	0452-3
R123543	1	0452-4
R123558	1	0407-3
R123561	7	0401-2
R123562	7	0401-2
R123563	8	0401-2
R123564	8	0401-2
R123565	10	0402-3
R123570	16	0416-1
R123572	6	0416-1
R123572	11	0452-3
R123572	11	0452-4
R123574	2	0402-2
R123575	3	0402-2
R123575	7	0452-3
R123575	7	0452-4
R123584	10	0404-5
R123586	1	0408-1
R123593	14	0413-3
R123593	25	0413-3
R123593	5	0420-5
R123594	3	0420-5
R123616	22	0404-3
R125223	14	1830-5
R126033	4B	2001-7
R126033	4	2001-7B
R128859	2	1672-11
R129110	15	1830-5
R129110	10	1830-9
R129890	11	0210-19
R129890	11	0210-21
R130574	8	0401-2
R130575	8	0401-2
R130576	7	0401-2
R130577	7	0401-2
R131016	5	0418-3
R131182	21	0404-3
R131206	7	0404-5
R131283	12	0404-5
R131664	30	1927-9
R131769	6	0433-2
R131795	11	0210-7
R131795	16	0210-9
R131795	11	0210-11
R131795	8	0210-13
R132113	7	0210-9
R132113	11	0210-13
R132113	12	0210-13
R132114	13	0210-9
R132114	21	0210-13
R132186	20	0404-3
R132203	2	0410-2
R132403	2	0210-3
R132447	8	0210-5
R132449	8	0210-4
R132511	3	0210-26
R132518	7	0404-3
R132520	23	0210-15
R132520	11	0260-15
R132575	18	0210-15
R132576	21	0210-15
R132624	8	0210-19
R132679	24	0210-15
R132683	4	0210-15
R132737	14	0210-15
R132814	8	0210-9
R132825	11	0210-15
R132826	12	0210-15
R132827	6	0210-15
R132827	6	0210-17
R132828	7	0210-15
R132828	7	0210-17
R132829	13	0210-17
R132830	4	0210-17
R132831	11	0210-17
R132832	28	0210-15
R132836	9	0210-15
R132836	12	0210-17
R132857	10	0210-23
R132858	12	0210-23
R132874	27	0413-3
R132913	3	0423-2
R133037	1	0210-7
R133037	1	0210-9
R133037	1	0210-11
R133037	1	0210-13
R133038	2	0210-7
R133038	2	0210-9
R133038	2	0210-11
R133038	2	0210-13
R133110	31	0210-15
R133111	31	0210-15
R133112	31	0210-15
R133113	1	0210-15
R133113	1	0210-17
R133114	1	0210-15
R133114	1	0210-17
R133115	1	0210-15
R133115	1	0210-17
R133295	1	0429-2
R133334	8	0210-21
R133405	6	0421-2
R133643	14	1672-3
R133643	17	1672-7
R133893	17	0505-5
R134183	2	0210-15
R134183	2	0210-17
R134269	27	0210-15
R134270	26	0210-15
R134465	18	0510-7
R134465	22	0510-9
R134518	2	0404-5
R134526	1	0404-5
R134671	21	0260-15
R134672	17	0260-15
R134673	1	0260-15
R134674	7	0260-15
R134675	10	0260-15
R134676	15	0260-15
R134677	13	0260-15
R134726	10	0210-15
R134726	9	0210-17
R135118	8	0260-15
R135298	5	0260-15
R135509	2	0422-3
R135510	3	0422-3
R135757	2	0404-6
R135805	9	0260-15
R135918	8	0433-2
R136052	12	0422-3
R136110	12	0530-3
R136110	10	1830-13
R136314	6	0260-15
R136475	3	0404-5
R136495	4	0407-3
R136515	1	0417-3
R136515	22	0452-3
R136516	22	0452-3
R151933	3	0260-15
R152616	8	0210-9
R156899	2	0210-26
R156900	1	0210-26
R159757	21	0210-7
R159757	6	0210-9
R159757	21	0210-11
R159757	9	0210-13
R159757	17	0210-25
R159759	22A	0210-11
R160154	22	0210-11
R160155	28	0210-7
R160155	25	0210-11
R160155	27	0210-13
R160699	10	0210-7
R160699	14	0210-9
R160699	10	0210-11
R160699	22	0210-11
R160699	22A	0210-11
R160699	23	0210-13
R160699	19	0210-25
R160831	13	0210-9
R160831	12	0210-13
R160831	21	0210-13
R161759	8	0210-9
R161862	5	0210-26
R163177	8	0210-4
R163179	8	0210-5
R163180	5	0210-4
R163180	5	0210-5
R163180	2	0210-25
R163181	6	0210-4
R163181	6	0210-5
R163181	14	0210-25
R163182	6	0210-4
R163182	6	0210-5
R163182	12	0210-25
R163183	6	0210-4
R163183	6	0210-5
R163183	13	0210-25
R163333	4	0210-4
R163333	4	0210-5
R163333	3	0210-25
R184863	13A	0560-3
R184863	36	0560-3
R187539	10	1910-3
R193666	9	0560-3
R194311	10	0560-3
R203687	1	1830-3
R203687	18	1830-7
R216843	32	0560-3
R224278	28	0560-3
R26121	9	0403-2
R26125	4	0409-3
R26285	14	0210-19
R26285	14	0210-21
R26285	6	0210-23
R26286	5	0210-7
R26286	3	0210-9
R26286	5	0210-11
R26286	5	0210-13
R26286	24	0260-9
R26286	9	0260-11

NUMERICAL INDEX - CONTINUED

PART NO.	KEY	PAGE
R26286	2	1674-14
R26286	53	2160-7
R26287	50	1060-3
R26287	8	1060-5
R26287	30	3160-45
R26287	30	3160-47
R26287	19	3160-93
R26287	31	3160-95
R26375	6	0260-7
R26375	6	0260-9
R26375	10	0260-11
R26375	6	0260-13
R26375	25	0260-15
R26375	5	0510-7
R26375	14	0510-9
R26375	6	0930-3
R26375	5	0960-3
R26375	11	0960-3
R26375	5	0960-3B
R26375	9	0960-9
R26375	47	1060-3
R26375	51	1060-3
R26375	10	1060-5
R26375	9	1060-13
R26375	30	2160-7
R26375	17	3160-93
R26448	4	0260-3
R26448	4	0260-5
R26448	12	0260-7
R26448	5	0260-17
R26448	6	0510-9
R26448	40	0930-3
R26448	52	1060-3
R26448	4	1060-7
R26448	5	2160-3
R26448	34	2160-7
R26448	5	2160-9
R26448	11	3104-3
R26448	5	3104-7
R26448	6	3104-9
R26448	7	3160-3
R26448	5	3160-5
R26448	16	3160-7
R26448	8	3160-9
R26448	5	3160-11
R26448	16	3160-13
R26448	10	3160-15
R26448	5	3160-17
R26448	16	3160-19
R26448	2	3160-21
R26448	16	3160-27
R26448	6	3160-41
R26448	3	3160-73
R26448	6	3160-73
R26448	4	3160-77
R26448	4	3160-81
R26448	4	3160-85
R26448	4	3160-89
R26448	21	3160-91
R26448	9	3160-93
R26448	9	3160-95
R26448	4	3160-103
R26448	5	3160-107
R26448	3	3160-111
R26448	19	3160-113
R26448	7	3160-115
R26448	18	3160-121
R26448	5	3163-3
R26650	13	0404-3
R26773	26	2160-7
R26906	9	0260-7
R26906	6	0409-3
R26906	9	0510-9
R26906	13	0930-3
R26906	4	0960-5
R26906	54	2160-7
R26906	10	3160-37
R26906	45	3160-45
R26906	45	3160-47
R26906	29	3160-93
R26906	14	3160-95
R26906	19	3165-3
R26906	6	3165-9
R26906	20	3165-9
R26906	3	3165-15
R27094	15	0210-7
R27094	10	0210-9
R27094	15	0210-11
R27094	15	0210-13
R27175	18	0210-7
R27175	12	0210-9
R27175	17	0210-9
R27175	18	0210-13
R27175	7	0210-19
R27175	7	0210-21
R27175	44	2160-7
R27175	22	3160-5
R27175	22	3160-11
R27175	22	3160-17
R27180	1	1672-5
R27180	2	1672-9
R27218	55	2160-7
R27218	10	3104-3
R27218	23	3160-5
R27218	23	3160-11
R27218	23	3160-17
R27218	13	3160-103
R27218	11	3160-107
R27218	2	3160-111
R27390	27	0510-3
R27390	22	2160-7
R27583	7	0505-3
R28782	14	0510-7
R28782	15	0930-3
R28782	7	0960-3
R28782	7	0960-3B
R28782	7	0960-5
R28782	53	1060-3
R28782	12	2160-3
R28782	18	3160-27
R28782	9	3160-103
R28782	20	3160-113
R28811	1	0433-1
R29477	1	0110-5
R29479	6	0110-5
R29480	4	0110-5
R29936	5	0350-3
R29936	5	0360-5
R29936	43	0510-3B
R29936	19	0510-7
R29936	23	0510-9
R29936	42	0930-3
R29936	16	2160-7
R29936	2	2160-13
R29936	5	3160-3
R29936	16	3160-5
R29936	17	3160-7
R29936	15	3160-9
R29936	17	3160-11
R29936	17	3160-13
R29936	15	3160-15
R29936	17	3160-17
R29936	17	3160-19
R29936	3	3160-21
R29936	33	3160-93
R29936	19	3160-95
R29936	6	3165-15
R33259	67	1830-5
R33259	26	1830-13
R36311	2	0242-3
R36311	3	0960-9
R36311	4	3166-3
R36545	18	1671-3
R36943	24	0260-15
R38185	16	0260-15
R39112	10	1060-13
R41440	11	1830-9
R43409	9	0409-3
R43583	67	0510-3B
R44097	2	1673-5
R44165	3	1674-11
R44165	16	1830-7
R44302	18	0505-5
R44302	45	0510-3B
R44302	13	0520-3
R44302	21	0560-3
R44302	2	1369-3
R44302	19	1671-3
R44302	13	1673-3
R44302	17	1673-3B
R44302	14	1674-3
R44302	13	1674-5
R44302	13	1674-5B
R44302	35	1674-7
R44302	5	1674-11
R44302	4	1810-25
R44302	11	2001-7
R44302	11	2001-7B
R44302	13	2001-7D
R44302	20	2160-13
R44302	1	3165-3
R44302	7	3166-3
R44302	8	3166-7
R44342	27	1674-7
R44852	14A	2160-3
R45197	3	0210-4
R45197	3	0210-5
R45197	4	0210-25
R45198	3	0210-4
R45198	3	0210-5
R45198	5	0210-25
R45199	3	0210-4
R45199	3	0210-5
R45199	6	0210-25
R45200	3	0210-4
R45200	3	0210-5
R45200	7	0210-25
R47693	5	0505-6
R48685	5	0401-2
R48685	1	0404-3
R48733	4	0210-3

NUMERICAL INDEX - CONTINUED

PART NO.	KEY	PAGE
R48734	4	0210-3
R48734	2	0260-15
R48735	4	0210-3
R48767	9	0403-2
R48776	5	0210-3
R48808	15	1672-3
R500219	2	0433-1
R500270	4	0421-2
R500271	3	0421-2
R500335	3	0403-2
R500349	4	0407-5
R500374	32	0452-3
R500384	18	1672-7
R500390	17	0413-3
R500394	1	0414-2
R501124	1	0403-2
R501144	10	0418-3
R501373	9	0452-3
R501373	9	0452-4
R501428	8	0419-3
R501428	13	0452-3
R501459	22	0505-5
R501484	9	0407-8
R501486	16	1672-3
R501489	10	0401-2
R502076	26	0413-3
R502079	17	1672-3
R502079	19	1672-7
R502175	1	0404-7
R502329	2	0404-7
R502338	3	0407-8
R502513	5	0407-8
R502513	6	0407-8
R502604	3	0407-7
R502687	6	0407-6
R502725	2	0407-7
R502811	9	0419-3
R502814	4	0418-3
R502814	3	0452-3
R502814	3	0452-4
R502864	24	0452-3
R503450	1	0433-2
R503813	3	0429-1
R504191	33	1830-13
R504192	27	1830-13
R504507	19	0505-5
R504535	1	0404-1
R504694	2	0414-2
R504724	1	0417-3
R504724	2	0417-3
R504734	3	0417-3
R504734	13	0419-3
R504734	29	0452-3
R504859	17	0420-5
R505121	6	0404-5
R505472	11	0413-3
R505609	4	0401-2
R50770	16	1830-5
R50770	12	1830-9
R51936	14	0413-3
R51936	24	0413-3
R51936	6	0420-5
R520129	1	0417-3
R520129	2	0417-3
R520131	1	0417-3
R520131	2	0417-3
R520131	14	0417-3
R521439	3	0410-2
R521439	2	0452-3
R521439	2	0452-4
R522690	18	0510-7
R522690	22	0510-9
R53108	26	0452-3
R53296	3	1913-2
R53317	13	1060-3
R53528	9	2001-7
R53528	9	2001-7B
R53528	14	2001-7D
R54114	4	0403-2
R54123	2	0505-6
R54445	3	1810-25
R54445	6	1810-25
R54445	8	1810-27
R54565	1	0402-3
R55453	9	0403-2
R56171	9	1830-13
R57055	4	0210-23
R57254	5	0210-15
R59460	8	0210-15
R59460	8	0210-17
R61463	12	3160-37
R61463	51	3160-45
R61463	51	3160-47
R61467	1	0433-2
R61467	2	0433-2
R61871	9	0407-5
R61871	16	0452-3
R61871	16	0452-4
R62129	5	0210-17
R63249	9	0210-23
R63548	4	0416-1
R63667	14	1810-27
R63667	8	1810-29
R68904	26	2160-9
R70112	17	0210-15
R70112	17	0210-17
R70113	15	0210-15
R70113	16	0210-17
R70115	16	0210-15
R70115	18	0210-17
R71963	21	0413-3
R72032	17	3165-7
R72328	2	0408-1
R72328	27	0452-3
R72653	62	1060-3
R72653	6	3166-5
R72653	10	3166-9
R72653	14	3166-11
R72653	18	3166-13
R72654	39	1060-3
R72655	11	1821-3
R73599	7	0350-11
R74012	4	0420-5
R74657	11	1060-13
R75892	16	0404-3
R75892	14	0452-3
R75892	14	0452-4
R76695	29	2001-7
R77175	15	0350-3
R77175	15	2160-3
R77175	11	2160-11
R77175	10	3160-93
R77175	33	3160-95
R77175	14	3160-103
R77175	21	3160-113
R77857	20	3165-5
R78057	22	1830-13
R78059	22	1830-13
R78065	5	1060-5
R78818	11	3165-19
R79604	23	0413-3
R79605	22	0413-3
R80135	2	0407-3
R80136	3	0407-3
R81275	5	0414-2
R81275	10	0452-3
R81275	10	0452-4
R81275	20	0505-5
R85169	2	0325-3
R85185	2	3140-19
R85185	21	3165-5
R85192	12	3165-19
R85363	1	0409-3
R85687	8	0409-3
R86457	40	1060-3
R86457	7	3166-5
R86457	12	3166-9
R86457	19	3166-13
R87047	2	0210-23
R89581	6	0210-3
R89581	11	0210-25
R89944	5	0417-4
R89944	28	0452-3
R90653	18	3165-7
R90658	3	0410-2
R90692	10	0409-3
R91360	28	0413-3
R91889	2	0409-3
R92352	18	0413-3
R93172	7	0210-23
R93633	16	0960-11
R93633	4	3104-15
R93633	6	3104-17
R93633	6	3104-19
R93910	8	0409-3
R96703	9	0422-3
R97185	8	0407-6
R97185	15	0452-3
R97185	15	0452-4
R97332	41	1830-5
R97332	58	1830-5
R97332	7	1830-9
R97332	34	1830-9
R97336	42	1830-5
R97336	64	1830-5
R97336	13	1830-9
R97336	35	1830-9
R98062	11	0409-3
R98063	8	0409-3
R98335	8	0409-3
R99466	13	0210-15
R99466	10	0210-17
SE500827	16	0413-3
SE500831	13	0413-3
SE501094	3	0403-2
SE501101	16	0413-3
SE501103	13	0413-3
SE501146	1	0450-3
SE501236	12	0413-3
SE501346	15	1672-7
SE501348	15	1672-7

NUMERICAL INDEX - CONTINUED

PART NO.	KEY	PAGE
SE501362	12	1672-3
SE501406	15	0422-3
TCU14336	25	1810-3
TCU14336	35	1810-5
TCU14336	28	1810-7
TF1U3252L	4	3102-9
TH100374	22	3165-3
TH110253	13	3165-19
TY16004	1	1369-4
TY16005	2	1369-4
TY21741	7	1671-3
TY22324	66	0510-3B
TY22328	3	1830-17
TY22462	21	0510-3
TY22467	4	2160-13
TY22470	8	0560-3
TY22493	10	3160-61
TY22493	18	3160-81
TY22493	26	3160-85
TY22493	29	3160-89
TY22494	1	1746-6
TY22495	32	3160-61
TY22505	3	0408-1
TY24443	15	0422-3
TY24861	4	0520-5
TY25955	15	1672-7
TY26045	12	1672-3
TY6128	7	1671-3
TY6794	15	1672-7
TY6798	12	1672-3
T101090	11	1810-5
T101480	21	3140-7
T101480	8	3140-9
T101480	16	3140-21
T101731	3	0350-39
T101942	3	1322-3
T102135	9	3140-9
T102135	9	3140-11
T102135	8	3140-13
T102135	20	3140-19
T102136	10	3140-9
T102136	7	3140-11
T102136	6	3140-13
T102136	19	3140-19
T102137	17	3140-21
T102137	18	3165-15
T102138	9	3140-13
T102138	3	3140-17
T102138	18	3140-21
T102171	13	3102-3
T102171	1	3104-3
T102171	17	3104-7
T102171	16	3104-9
T102171	15	3104-11
T102171	15	3104-13
T102171	14	3165-3
T102171	19	3165-15
T102172	19	3140-21
T102205	8	3140-11
T102205	21	3140-19
T102206	11	3140-9
T102206	6	3140-11
T102206	7	3140-13
T102206	12	3140-17
T102618	8	1322-7
T102620	8	1322-9
T102934	15	1674-3
T102934	43	1674-7
T102934	4	3166-7
T102958	17	3160-91
T102961	25	3160-91
T102963	27	3160-91
T103238	14	0505-5
T103461	45	2160-7
T103465	25	3160-45
T103465	25	3160-47
T105469	22	3165-5
T105740	4	1821-3
T105773	9	3160-49
T105773	21	3160-51
T105773	24	3160-61
T105773	25	3160-67
T105891	14	1910-5
T106595	46	2160-7
T107117	10	1671-3
T107883	1	2160-3
T11234	4	1810-38
T113128	12	0325-3
T115030	7	1810-38
T115031	8	1810-38
T116416	16	0350-19
T116460	2	0350-21
T116481	8	0350-21
T116516	3	0350-5
T116604	17	0350-9
T116604	13	0360-3
T116604	3	1369-3
T116604	8	1369-3
T116613	1	0350-5
T116918	9	0350-9
T119549	14	3140-19
T119549	23	3140-19
T119564	2	1810-38
T119912	57	2160-7
T122075	2	0419-3
T122075	4	0419-3
T122075	30	0452-3
T12275	22	3165-11
T12275	17	3165-17
T122803	12	0350-17
T123707	9	0350-21
T125543	1	3140-9
T128437	9	1810-38
T130057	13	3140-3
T130057	13	3140-5
T130057	22	3140-7
T130058	14	3140-3
T130058	12	3140-5
T130058	23	3140-7
T130059	15	3140-3
T130059	11	3140-5
T130059	24	3140-7
T131617	14	3160-91
T131624	19	3160-91
T131980	1	1810-51
T132071	1	2160-3
T13254	20	0420-5
T13254	20	0560-3
T133290	16	3140-7
T133674	16	1810-55
T133674	4B	2001-7
T133674	26	2001-7
T133674	26	2001-7B
T134104	20	1671-3
T134874	9	1810-13
T134895	4	1810-15
T135583	23	1810-3
T13630	3	1810-49
T13814	14	0420-5
T141386	4	0350-21
T143169	29	1830-3
T143169	27	1830-13
T144370	12	0350-9
T144486	8	0350-19
T146097	2	1322-5
T146097	2	1322-11
T146098	9	1322-9
T146099	9	1322-7
T146102	10	0422-3
T146104	7	1322-7
T146106	7	1322-9
T146175	4	1322-3
T146178	5	1322-7
T146180	5	1322-9
T146246	3	1740-3
T146246	6	3140-3
T146246	32	3140-3
T146246	17	3140-5
T146436	5	1322-3
T146443	38	0930-3
T146490	5	3160-93
T146490	35	3160-95
T146494	6	1322-7
T146495	19	1322-7
T146496	4	1322-7
T146502	6	1322-9
T146503	19	1322-9
T146504	4	1322-9
T146605	7	1322-3
T146606	12	1322-9
T146607	12	1322-7
T146672	2	3102-10
T146792	6	3160-93
T146792	36	3160-95
T146908	13	1322-7
T146911	13	1322-9
T146933	2	3102-13
T146934	7	3102-9
T146934	3	3102-10
T147188	6	3160-49
T147188	22	3160-51
T147188	12	3160-53
T147188	25	3160-61
T147188	4	3160-69
T147188	2	3160-71
T147618	8	1810-25
T147891	16	1674-3
T147891	19	1910-5
T147891	21	1927-7
T148083	1	1322-5
T148083	3	1322-11
T148181	2	1674-15
T148181	51	2160-7
T148181	17	2160-13
T148181	18	2160-13
T148409	20	0510-5
T148410	46	0510-3B
T148411	47	0510-3B
T148712	21	3160-49
T148712	23	3160-51
T148712	26	3160-61

NUMERICAL INDEX - CONTINUED

PART NO.	KEY	PAGE
T148712	21	3160-67
T151797	5	0110-3
T151797	8	0110-5
T151797	2	0110-7
T152076	11	1749-3
T152230	44	1674-7
T153535	3	1810-23
T153680	20	1322-3
T154131	1	1810-49
T154187	8	3160-33
T154342	21	3160-73
T154342	21	3160-77
T154342	22	3160-81
T154342	30	3160-85
T154342	33	3160-89
T156256	7	1830-11
T156471	65	1830-5
T156599	5	3102-5
T156784	4	1810-53
T156995	1	1330-3
T157029	12	3140-3
T157029	10	3140-5
T157029	25	3140-7
T157030	17	3140-3
T157030	15	3140-5
T157030	26	3140-7
T157055	9	0242-3
T157056	13	0242-3
T157211	14	1060-3
T157212	8	1060-3
T157220	15	1060-3
T157223	26	1060-3
T157234	3	3140-3
T157234	3	3140-5
T157234	27	3140-7
T157248	5	3140-11
T157248	8	3140-19
T157250	7	3140-19
T157257	20	1060-3
T157258	9	1060-3
T157275	12	3165-9
T157276	13	3165-9
T157276	20	3165-15
T157277	3	3165-3
T157282	4	3102-3
T157282	4	3102-5
T157306	1	3102-9
T157311	4	3102-10
T157315	3	0242-5
T157315	2	0242-7
T157443	22	3160-73
T157443	22	3160-77
T157443	23	3160-81
T157443	12	3160-85
T157443	19	3160-89
T157457	5	3102-3
T157457	5	3102-5
T157465	4	3102-3
T157465	4	3102-5
T157492	4	3102-10
T157493	1	3102-9
T158047	20	3160-93
T158047	37	3160-95
T158424	10	1830-15
T158584	19	1672-3
T159028	8	1322-3
T159519	9	0350-27
T159519	9	0350-29
T159602	7	0350-19
T159950	14	3160-121
T159956	15	3160-121
T160549	11	3160-57
T160762	14	1322-7
T160769	14	1322-9
T161207	2	0350-19
T161208	2	0350-9
T161208	8	0350-17
T161584	1	3160-21
T162238	17	0260-9
T162238	17	0260-13
T162238	48	0510-3B
T162238	28	1910-7
T163334	12	1821-3
T163335	13	1821-3
T163336	14	1821-3
T163962	5	1821-3
T164203	35	0560-3
T165169	42	1830-5
T165169	35	1830-9
T167504	24	1810-3
T167505	26	1810-5
T167508	17	1810-7
T167514	28	1810-5
T167514	18	1810-7
T167519	39	1810-5
T167519	12	1810-17
T167527	29	1810-5
T167530	19	1810-7
T167546	30	1810-5
T167546	20	1810-7
T167593	12	1810-5
T167593	5	1810-43
T167594	12	1810-5
T167618	21	1810-7
T167630	31	1810-5
T167658	26	1810-3
T167659	13	1810-5
T167659	2	1810-34
T167676	30	1830-3
T167676	24	1830-7
T167679	10	1830-11
T167683	14	1810-5
T167754	7	1810-31
T167759	4	1830-11
T167764	6	1810-43
T167770	12	1810-19
T167771	13	1810-19
T167775	45	1674-7
T167837	6	0242-3
T167862	3	0242-7
T167921	17	3160-49
T167921	24	3160-51
T167921	27	3160-61
T167921	15	3160-67
T167924	8	0242-3
T167945	10	1830-3
T167945	9	1830-7
T167979	4	3160-53
T168119	15	1910-5
T168121	4	3140-9
T168121	2	3140-11
T168135	20	1910-5
T168135	29	1910-7
T168220	11	1830-3
T168220	10	1830-7
T168243	5	3140-9
T168243	4	3140-11
T168245	6	3140-9
T168245	3	3140-11
T168247	2	0242-5
T168276	4	1810-51
T168383	10	1060-11
T168393	7	1060-7
T168555	2	3140-17
T169035	5	0350-25
T169103	12	1060-13
T169104	13	1060-13
T169105	14	1060-13
T169107	15	1060-13
T169108	16	1060-13
T169109	17	1060-13
T169110	18	1060-13
T169113	20	1060-13
T169116	21	1060-13
T169128	4	3102-3
T169142	4	3102-3
T169281	25	1060-13
T169284	1	3140-9
T169286	1	3140-9
T169290	22	1060-13
T169329	12	0242-3
T169507	9	3166-7
T169607	6	0350-19
T169707	28	0350-19
T169711	27	0350-19
T169712	12	0350-19
T169766	11	0350-19
T169955	4	3160-29
T169955	4	3160-37
T170053	12	1830-3
T170053	11	1830-7
T170133	19	1830-5
T170133	15	1830-9
T170180	16	1060-3
T170181	17	1060-3
T170196	20	0350-19
T170269	3	3160-91
T171072	12	3160-33
T171082	2	1830-11
T171111	16	0350-9
T171112	6	0350-9
T171114	2	0350-7
T171115	7	0350-7
T171126	5	0350-7
T171126	5	0350-21
T171126	7	0350-21
T171126	5	0350-35
T171140	3	0350-25
T171153	5	0350-27
T171153	5	0350-29
T171153	11	0350-31
T171153	11	0350-33
T171153	4	0350-35
T171153	11	0350-37
T171156	2	0350-27
T171156	2	0350-29
T171156	8	0350-31
T171156	8	0350-33
T171156	6	0350-35
T171156	8	0350-37
T171178	3	0350-7

NUMERICAL INDEX - CONTINUED

PART NO.	KEY	PAGE
T171181	6	0350-21
T171206	10	0350-33
T171212	3	0350-35
T171213	10	0350-37
T171216	12	0350-37
T171217	4	0350-27
T171223	8	1322-5
T171224	4	0350-29
T171228	4	1322-5
T171228	5	1322-11
T171459	13	1830-3
T171459	12	1830-7
T17148	4	1810-49
T171552	9	3104-3
T171686	27	1821-3
T171734	11	3102-3
T171734	15	3104-9
T171734	12	3104-11
T171734	20	3140-21
T171750	20	1322-7
T171751	20	1322-9
T171756	21	1322-7
T171757	21	1322-9
T171793	9	3140-17
T171849	1	1810-43
T171957	27	0350-9
T171958	26	0350-9
T172094	22	0350-9
T172104	2	0350-31
T172115	3	0350-27
T172115	3	0350-29
T172115	9	0350-31
T172115	9	0350-33
T172115	2	0350-35
T172115	9	0350-37
T172118	1	0350-25
T172129	3	0350-31
T172130	4	0350-31
T172136	2	0350-33
T172136	7	0350-35
T172136	6	0350-37
T172138	4	0350-33
T172138	9	0350-35
T172138	4	0350-37
T172139	5	0350-33
T172139	10	0350-35
T172139	2	0350-37
T172274	43	1060-3
T172275	11	0350-35
T172276	3	0350-37
T172302	6	0350-27
T172302	6	0350-29
T172318	18	0350-3
T172562	8	3160-29
T172562	13	3160-33
T172562	16	3160-37
T172562	16	3160-45
T172562	16	3160-47
T172579	3	3160-41
T172652	3	1810-27
T172712	7	3160-41
T172732	12	0350-3
T172791	2	0350-15
T172795	8	0350-9
T172796	6	0350-7
T172812	10	0350-5
T172814	2	0350-13
T172816	10	0350-31
T172817	7	0350-27
T172817	7	0350-29
T172856	23	1060-13
T172927	5	0515-3
T172927	54	1060-3
T172933	21	1830-5
T172933	17	1830-9
T172934	22	1830-5
T172934	18	1830-9
T172985	8	3160-91
T172986	5	3160-91
T172987	9	3160-91
T172988	6	3160-91
T172991	4	1810-19
T172991	4	1810-21
T172992	5	1810-19
T172992	5	1810-21
T173036	7	0350-31
T173038	7	0350-33
T173063	7	0350-9
T173099	3	1810-53
T173100	2	1810-53
T173123	10	0350-17
T173125	14	0350-19
T173126	13	0350-19
T173128	18	0350-19
T173131	1	0350-19
T173138	3	0350-19
T173139	25	0350-19
T173145	1	0350-23
T173146	4	0350-23
T173216	19	0350-9
T173217	9	0350-11
T173230	24	1060-13
T173324	32	0930-3
T173396	6	0350-12
T173397	4	0350-12
T173398	5	0350-12
T173399	3	0350-12
T173400	2	0350-12
T173510	3	0350-21
T173511	29	0350-19
T173579	39	0930-3
T173593	26	1060-13
T173744	5	3166-7
T173768	1	1830-11
T173779	6	1822-3
T173779	5	1822-5
T173779	12	1927-7
T173819	20	0350-3
T173819	4	0350-9
T173870	9	0350-17
T173873	7	0350-17
T174107	1	0350-9
T174109	23	1830-5
T174109	19	1830-9
T174234	5	0350-15
T174236	8	0350-11
T174238	15	0350-9
T174239	8	0350-12
T174275	8	0960-7
T174275	9	3160-53
T174275	4	3160-55
T174275	12	3160-57
T174275	12	3160-63
T174275	7	3160-69
T174275	8	3160-71
T174275	8	3163-5
T174275	7	3163-7
T174298	6	1322-5
T174298	7	1322-11
T174299	18	1322-9
T174300	18	1322-7
T174393	9	0350-17
T174394	9	0350-17
T174396	26	0350-19
T174427	31	1830-3
T174463	24	0242-3
T174529	7	0350-25
T174530	21	1671-3
T174634	2	0515-3
T174634	10	1060-3
T174659	24	0510-7
T174659	30	0510-9
T174735	9	1322-5
T174886	4	1810-33
T174887	5	1810-33
T175015	3	1810-33
T175135	21	1322-3
T175222	2	3104-4
T175223	3	3104-4
T175224	4	3104-4
T175225	5	3104-4
T175236	21	1060-3
T175361	8	1749-3
T175744	9	1322-3
T175750	5	0350-11
T175855	3	1830-11
T175862	17	0350-19
T175863	23	3140-19
T176064	3	1740-3
T176064	12	3102-3
T176064	16	3104-3
T176064	15	3104-7
T176064	17	3104-9
T176064	13	3104-11
T176064	13	3104-13
T176064	6	3140-3
T176064	31	3140-3
T176064	26	3140-5
T176064	28	3140-7
T176064	12	3140-9
T176064	5	3140-17
T176064	10	3140-19
T176064	21	3140-21
T176064	16	3165-3
T176064	4	3165-9
T176064	21	3165-15
T176108	55	1060-3
T176111	56	1060-3
T176357	13	1927-7
T176357	22	1927-9
T176357	26	1927-9B
T176372	9	1673-3
T176455	3	0110-9
T176474	8	3160-55
T176474	30	3160-67
T176526	5	0350-23
T176527	3	0350-23
T176528	2	0350-23
T176796	4	0350-11
T176870	9	1822-3
T176870	8	1822-5

NUMERICAL INDEX - CONTINUED

PART NO.	KEY	PAGE
T176944	18	3160-3
T176944	23	3160-9
T176944	22	3160-15
T177219	15	0350-19
T177221	9	0350-19
T177503	7	1822-3
T177503	7	1822-5
T177505	27	1810-3
T177827	19	1810-5
T177909	21	1910-5
T177979	4	0350-17
T177997	19	0350-3
T178063	3	1822-3
T178063	2	1822-5
T178063	10	1927-5
T178112	17	1810-3
T178113	16	1810-3
T178114	18	1810-3
T178115	24	1830-5
T178116	25	1830-5
T178117	26	1830-5
T178117	20	1830-9
T178117	40	1830-9
T178118	27	1830-5
T178118	21	1830-9
T178118	41	1830-9
T178119	28	1830-5
T178119	22	1830-9
T178120	29	1830-5
T178120	23	1830-9
T178123	30	1830-5
T178124	31	1830-5
T178125	32	1830-5
T178126	33	1830-5
T178127	43	1830-5
T178127	36	1830-9
T178130	49	1830-5
T178130	42	1830-9
T178131	50	1830-5
T178131	43	1830-9
T178132	51	1830-5
T178132	44	1830-9
T178133	52	1830-5
T178133	45	1830-9
T178134	53	1830-5
T178134	46	1830-9
T178135	54	1830-5
T178135	47	1830-9
T178136	55	1830-5
T178136	48	1830-9
T178220	20	1810-5
T178221	15	1810-5
T178248	24	1830-9
T178249	25	1830-9
T178250	26	1830-9
T178251	44	1830-5
T178251	27	1830-9
T178251	37	1830-9
T178252	54	1830-9
T178368	7	1927-3
T178368	14	1927-7
T178534	16	1810-5
T178946	3	1673-7
T178947	1	1673-7
T178948	2	1673-7
T178971	34	1830-5
T179276	13	0350-5
T179468	20	1672-3
T179468	20	1672-7
T179510	3	0350-11
T179531	21	0350-19
T179532	21	0350-19
T179533	21	0350-19
T179594	6	0350-31
T179673	13	0350-9
T179691	23	0350-9
T179721	4	0350-19
T179944	4	0350-5
T180074	1	1673-7
T180075	3	1673-7
T180289	12	0960-3
T180290	15	0960-3
T180338	5	2001-7
T180338	5	2001-7B
T180338	17	2001-7D
T180408	14	1810-19
T180408	14	1810-21
T180418	9	1810-15
T180420	17	2001-7
T180420	17	2001-7B
T180420	18	2001-7D
T180459	6	0350-33
T180487	20	2001-7
T180487	20	2001-7B
T180529	7	0360-5
T180533	50	1674-7
T180533	10	1810-21
T180533	11	1810-55
T180573	4A	2001-7
T180884	14	0350-9
T180884	1	0350-17
T180921	11	1810-17
T180929	56	1830-5
T180929	49	1830-9
T180930	28	1810-3
T180944	1	3160-93
T180944	35	3160-93
T180944	38	3160-95
T181050	6	1810-15
T181201	27	2160-7
T181306	2	0510-10
T181306	1	3160-96
T181306	2	3160-96
T181306	3	3160-96
T181325	21	1672-7
T181412	2	1810-31
T181413	4	1810-31
T181474	3	0350-13
T181520	1	1810-15
T181524	61	1830-5
T181524	53	1830-9
T181535	4	0350-7
T181604	37	1674-7
T181605	38	1674-7
T181778	49	0510-3B
T181797	7	1810-47
T181908	1	1810-15
T181953	50	0510-3B
T182114	23A	2160-13
T182183	10	1322-5
T182191	10	1322-3
T182191	3	3140-25
T182192	1	1913-2
T182196	10	0350-19
T182254	5	0350-19
T182265	7	1740-3
T182265	20	3140-3
T182265	22	3140-5
T182265	29	3140-7
T182446	4	1740-3
T182462	21A	0510-5
T182554	51	0510-3B
T182571	18	3140-3
T182571	20	3140-5
T182571	30	3140-7
T182612	18	1810-55
T182695	32	1810-5
T182758	9	1910-5
T182795	12	1322-5
T182795	9	1322-11
T182852	32	1830-3
T182858	33	1830-3
T182858	25	1830-7
T182860	17	1810-19
T182860	2	1810-29
T182861	46	1674-7
T182861	10	1810-15
T182861	12	1810-15
T182862	47	1674-7
T182870	4	1674-11
T182870	10	1810-15
T182870	12	1810-15
T182870	29	1821-3
T182870	34	1830-3
T182870	7	2001-7
T182870	7	2001-7B
T182870	19	2001-7D
T182871	48	1674-7
T182871	12	1810-15
T182871	35	1830-3
T182871	18	2001-7
T182871	18	2001-7B
T182871	20	2001-7D
T182872	9	1830-11
T182874	5	1810-31
T182876	26	1830-7
T182877	27	1830-7
T182888	22	1810-21
T182888	10	2001-7
T182888	21	2001-7D
T182899	17	1810-5
T182899	22	1810-7
T182902	18	1810-5
T182903	1	1810-5
T182906	18	1810-19
T182906	36	1830-3
T182909	1	1810-29
T182909	12	2001-7
T182909	22	2001-7D
T182914	3	1673-5
T182919	6	1810-27
T182919	12	1810-29
T182920	4	1810-34
T182925	15	1810-17
T182927	2	1810-5
T182928	3	1810-5
T182952	13	1810-17
T182963	23	1810-7
T182967	24	1810-7
T182969	26	1810-7
T182972	27	1810-7

NUMERICAL INDEX - CONTINUED

PART NO.	KEY	PAGE
T184135	11	1810-5
T184892	11	1810-15
T184924	5	1830-17
T186776	6	1672-11
T186793	29	1810-3
T18891	2	0404-3
T190513	11	1830-15
T195052	21	0350-19
T195055	10	0350-17
T195188	18	1672-7
T195207	1	0350-7
T195210	9	3166-5
T195210	22	3166-9
T195210	21	3166-13
T195239	21	1672-3
T195240	5	0350-5
T195241	8	0350-5
T195242	6	0350-5
T195243	7	0350-5
T195244	22	1672-7
T195260	5	0350-31
T195270	6	0350-23
T195274	9	0350-17
T195275	24	0350-19
T195424	22	0510-5
T195558	26	1322-7
T195559	26	1322-9
T195579	23	0505-5
T195580	53	0510-3B
T195708	9	1913-5
T195710	15	1322-3
T195730	1	0360-5
T195731	2	0360-5
T195759	16	1322-7
T195760	16	1322-9
T195857	10	1322-7
T195858	10	1322-9
T195982	12	1749-3
T196084	61	0510-3B
T196085	62	0510-3B
T196129	28	1674-7
T196237	4	1810-5
T196309	19	1810-3
T196312	58	2160-7
T196464	11	0360-3
T196471	6	1810-9
T196474	24	0505-5
T196475	24	1322-9
T196476	24	1322-7
T196587	14	0360-3
T196621	3	1810-11
T196622	20B	1810-55
T196698	3	1830-10
T196711	10	1810-13
T196712	11	1810-13
T196733	18	0560-3
T196749	8	1369-3
T196792	16	0350-5
T197061	17	0260-7
T197100	30	1910-7
T197144	16	3166-5
T197144	17	3166-9
T197144	22	3166-13
T197153	17	0520-3
T197182	12	3160-81
T197182	20	3160-85
T197182	4	3160-87
T197186	13	1322-5
T197186	8	1322-11
T197300	16	1322-3
T197323	3	1322-7
T197324	3	1322-9
T197427	54	0510-3B
T197440	10	1749-3
T197442	8	1822-7
T197455	33	1810-5
T197456	34	1810-5
T197458	10	0350-9
T197459	1	0350-15
T197460	4	0350-15
T197467	22	1671-3
T197505	15	0360-3
T197520	22	1672-3
T197521	22	1672-3
T197553	8	0350-27
T197553	8	0350-29
T197569	11	1746-5
T197574	55	0510-3B
T197575	31	1910-7
T197667	10	1913-5
T198039	60	0510-3B
T198109	11	1910-3
T198178	14	1749-3
T198179	15	1749-3
T198187	22	1322-3
T200011	13	1322-3
T200055	11	1322-3
T200056	11	1322-7
T200057	11	1322-9
T200058	18	1322-3
T200059	17	1322-7
T200060	17	1322-9
T200079	17	1322-3
T200158	11	1821-7
T200159	12	1821-7
T200161	8	1821-7
T200267	20A	1810-55
T200278	8	0520-3
T200280	9	0520-3
T200281	15	0520-3
T200284	16	0520-3
T200363	31	1674-7
T200475	56	0510-3B
T200712	5	1322-5
T200712	6	1322-11
T200729	11	3160-73
T200729	11	3160-77
T200758	16A	3104-7
T200771	13	3140-21
T200780	5	3140-21
T200786	15	1322-7
T200791	2	1322-7
T200814	15	1322-9
T200818	2	1322-9
T200820	4	1830-10
T200888	10	3140-3
T200888	8	3140-5
T200888	31	3140-7
T201041	5	3140-13
T201041	6	3140-21
T201074	12	1322-3
T201075	1	1322-9
T201076	1	1322-7
T201521	7	2160-3
T201525	7	2160-3
T201546	18	0260-9
T201546	18	0260-13
T201546	23	0510-5
T201589	57	0510-3B
T20168	18	0404-3
T201708	30	1810-3
T201811	2	0350-25
T201812	6	0350-25
T201843	24	2160-13
T201869	13	0530-3
T201880	19	1910-7
T201887	22	3160-89
T202067	32	1910-7
T20217	10	1746-5
T202343	4	1810-27
T202637	58	0510-3B
T202813	1	3166-9
T202883	21	1810-55
T202884	3	1322-5
T202963	52	0510-3B
T203047	9	0960-5
T203075	15	1927-7
T203077	16	1927-7
T203128	22	1810-55
T203130	59	0510-3B
T20314	4	0402-3
T20316	3	0402-3
T203290	9	1749-3
T203450	10	0325-3
T203475	3	0325-3
T203554	2	0350-17
T203555	3	0350-17
T203614	31	1810-3
T203614	10	1810-17
T203615	32	1810-3
T203670	12	3160-81
T203670	20	3160-85
T203670	23	3160-89
T203671	4	1322-11
T203742	6	0350-17
T203767	23	0350-19
T203776	59	2160-7
T203965	26	1927-9
T203965	27	1927-9B
T204109	13	1749-3
T204315	12	3160-117
T204315	14	3160-123
T204315	15	3163-3
T204518	27	1927-9
T204518	31	1927-9
T204518	28	1927-9B
T204584	17	2160-3
T204624	20	1910-7
T204635	23	2001-7D
T204644	12	1927-9
T204644	29	1927-9B
T204701	17	1927-7
T204744	18	1927-7
T205033	46	2160-7
T205211	23	1322-3
T205220	4	3140-13
T205369	19	0350-19
T205471	8	1927-3
T205472	15	1810-19
T205481	2	3140-13
T205482	3	3140-13

NUMERICAL INDEX - CONTINUED

PART NO.	KEY	PAGE
T205552	7	3140-21
T205670	12	2160-11
T205718	25	1322-7
T205719	25	1322-9
T205941	7	3160-83
T205944	3	1672-11
T206155	5	1913-7
T206157	6	1913-7
T206158	7	1913-7
T206159	8	1913-7
T206160	9	1913-7
T206161	10	1913-7
T206162	11	1913-7
T206163	12	1913-7
T206164	13	1913-7
T206300	14	1913-7
T206301	15	1913-7
T206333	14	3160-117
T206333	15	3160-123
T206339	16	1913-7
T206348	17	1913-7
T206368	18	1913-7
T206578	22	3140-21
T206578	16	3166-11
T206624	40	1674-7
T206642	7	1927-11
T20758	1	0404-6
T207650	23	1927-9
T207669	3	1830-11
T207717	28	1674-7
T207741	15	1322-3
T207750	16	1322-7
T207751	16	1322-9
T207759	9	0350-12
T20779	14	3165-19
T207925	12	1810-55
T208039	7A	1910-3
T208039	36	1910-7
T208085	24	0505-5
T208086	24	1322-9
T208087	24	1322-7
T208097	24	0510-7
T208097	30	0510-9
T208317	7A	1910-3
T208317	12B	1910-3
T208352	7A	1910-3
T208352	24B	1910-7
T208362	24	1322-3
T208363	25	1322-3
T208364	14	1673-3
T208364	12	1673-3B
T208365	15	1673-3
T208365	13	1673-3B
T208374	28	1322-7
T208375	29	1322-7
T208376	28	1322-9
T208377	29	1322-9
T208695	30	1322-3
T208794	30	1322-7
T208795	30	1322-9
T208891	6	1672-11
T209094	13	1810-19
T209423	16A	3104-7
T209423	18A	3104-9
T209601	11	1821-7
T209602	12	1821-7
T210258	15	3166-11
T210426	19	1913-7
T210447	14	3160-63
T210479	21	3160-5
T210479	21	3160-11
T210479	21	3160-17
T210488	20	1913-7
T210489	21	1913-7
T210490	22	1913-7
T210510	23	1913-7
T210511	24	1913-7
T210522	25	1913-7
T210777	8	0520-3
T211353	2	1810-53
T211390	23	3140-21
T211396	17	3166-11
T211404	18	3166-11
T211405	19	3166-11
T211678	52	1674-7
T211826	24	3140-21
T211840	14	3140-21
T212452	4	0110-3
T212453	3	0110-3
T213143	14	3102-3
T213143	7	3102-5
T213440	22	3104-7
T213440	21	3104-9
T213441	23	3104-7
T213441	22	3104-9
T213442	16B	3104-7
T213442	18B	3104-9
T213560	15	1810-7
T214207	14	3104-11
T214207	14	3104-13
T215155	6	1322-5
T215155	7	1322-11
T215208	10	1322-5
T215434	11	3160-63
T216182	8	1369-3
T217100	16	3163-3
T217412	26	1322-3
T217427	8	1822-7
T217474	16	3163-3
T217625	2	3102-7
T218566	3	1322-3
T218567	8	1322-9
T218568	8	1322-7
T219672	2	0520-3
T221186	30	1927-9B
T222260	31	1927-9B
T223372	8	0520-3
T223487	..	3163-3
T223488	17	3104-11
T223488	16	3104-13
T223785	3	0242-7
T22381	5	1927-3
T22381	19	1927-7
T22381	14	1927-9
T22381	32	1927-9B
T224069	47	1674-7
T224462	33	1927-9B
T224463	34	1927-9B
T224498	35	1927-9B
T224529	36	1927-9B
T225025	12	1322-3
T225026	1	1322-7
T225027	1	1322-9
T225291	6	2160-11
T225397	26	1322-3
T225912	3	0350-21
T226561	69	0510-3B
T226802	25	1060-13
T23474	19	0404-3
T23914	5	1520-3
T24210	11	0350-3
T24472	19	0413-3
T25CA	2	3102-9
T25EA	6	3102-9
T27194	4	0110-3
T27260	63	0510-3B
T27260	33	1910-7
T27532	3	0110-3
T29342	17	1674-3
T29342	14	1674-5
T29342	14	1674-5B
T29747	11	0360-5
T29747	44	0510-3B
T3G9609	3	3102-9
T34354	19	0210-17
T34355	19	0210-17
T34356	19	0210-17
T38282	3	1060-3
T38485	10	3165-11
T38485	12	3165-17
T38485	15	3165-19
T39049	13	1810-49
T39155	47	2160-7
T41356	21	3165-13
T42170	11	0505-3
T42199	16	1671-3
T42977	1	0342-3
T42977	17	0540-3
T43514	24	0404-3
T44604	9	0210-7
T44604	5	0210-9
T44604	9	0210-11
T44604	10	0210-13
T46876	49	1674-7
T46876	9	1674-8
T46876	9	1674-9
T54474	17	3104-7
T54474	16	3104-9
T54474	15	3104-11
T54474	15	3104-13
T55224	16	1821-5
T56112	5	0242-3
T56112	4	0960-9
T56112	7	3165-3
T56238	4	0260-15
T58056	26	1910-7
T58056	25	1927-9
T58056	25	1927-9B
T58477	6	0409-3
T59933	2	0110-3
T59937	20	1830-5
T59937	16	1830-9
T60752	19	3140-3
T60752	21	3140-5
T60752	32	3140-7
T60811	6	1369-3
T60811	8	1746-3
T61226	21	3104-7
T61226	20	3104-9
T61226	16	3104-11
T61226	2	3104-13

NUMERICAL INDEX - CONTINUED

PART NO.	KEY	PAGE
T61861	22	1910-5
T63224	22	1322-7
T63225	22	1322-9
T63795	18	3104-7
T64217	23	1322-9
T64784	18	1674-3
T64784	15	1674-5
T64784	15	1674-5B
T64784	31	1830-13
T65643	12	1810-15
T66418	5	1810-13
T66419	39	0510-3B
T66862	2	0110-9
T67995	19	1674-3
T67995	16	1674-5
T67995	16	1674-5B
T67995	28	3160-61
T70154	10	1673-9
T72414	12	1740-3
T72414	7	3140-9
T72414	10	3140-11
T74412	20	1674-3
T74416	64	0510-3B
T74416	14	0530-3
T74416	21	1674-3
T74416	12	1674-5
T74416	17	1674-5B
T74416	39	1674-7
T74416	29	1830-13
T74552	11	0350-17
T75197	24	0560-3
T75197	8	1673-9
T75197	22	1674-3
T75197	17	1674-5
T75197	18	1674-5B
T75276	16	0505-5
T75276	25	0560-3
T75276	23	1674-3
T75276	18	1674-5
T75276	19	1674-5B
T76252	11	1060-11
T76252	29	1830-13
T76252	12	1830-15
T76938	8	0350-3
T76938	9	0360-5
T76938	22	2160-3
T76938	9	2160-7
T76938	25	2160-13
T76938	20	3160-3
T76938	17	3160-5
T76938	18	3160-7
T76938	1	3160-9
T76938	18	3160-11
T76938	18	3160-13
T76938	7	3160-15
T76938	18	3160-17
T76938	18	3160-19
T76938	29	3160-61
T76938	20	3165-3
T76938	11	3165-9
T76938	16	3165-9
T76938	7	3165-15
T77613	5	0260-3
T77613	3	0260-5
T77613	7	0260-7
T77613	7	0260-9
T77613	11	0260-11
T77613	7	0260-13
T77613	20	0260-13
T77613	3	0260-17
T77613	1	0350-3
T77613	8	0416-1
T77613	12	0510-7
T77613	7	0510-9
T77613	26	0560-3
T77613	16	0930-3
T77613	9	0960-3
T77613	9	0960-3B
T77613	6	0960-5
T77613	11	0960-9
T77613	57	1060-3
T77613	12	1060-5
T77613	2	1060-7
T77613	12	1060-11
T77613	29	1060-13
T77613	6	2160-3
T77613	60	2160-7
T77613	6	2160-9
T77613	3	3104-3
T77613	6	3104-7
T77613	7	3104-9
T77613	15	3160-3
T77613	6	3160-5
T77613	19	3160-7
T77613	11	3160-9
T77613	6	3160-11
T77613	19	3160-13
T77613	6	3160-15
T77613	6	3160-17
T77613	19	3160-19
T77613	14	3160-27
T77613	4	3160-73
T77613	9	3160-73
T77613	3	3160-77
T77613	8	3160-77
T77613	5	3160-81
T77613	5	3160-85
T77613	5	3160-89
T77613	5	3160-103
T77613	6	3160-107
T77613	4	3160-111
T77613	23	3160-113
T77613	20	3160-115
T77613	4	3160-117
T77613	16	3160-121
T77613	7	3160-123
T77613	6	3163-3
T77814	25	2160-3
T77814	13	3160-37
T77814	40	3160-45
T77814	40	3160-47
T77814	12	3160-93
T77814	10	3160-95
T77857	10	0260-7
T77857	22	0260-9
T77857	12	0260-11
T77857	6	0510-7
T77857	12	0510-9
T77857	16	0510-9
T77857	31	0510-9
T77857	7	0930-3
T77857	1	0960-3
T77857	1	0960-3B
T77857	12	0960-9
T77857	14	2160-7
T77857	3	2160-13
T77857	8	3104-7
T77857	9	3104-9
T77857	31	3160-93
T77857	12	3160-95
T77857	6	3160-111
T77857	24	3160-113
T77857	11	3160-115
T77857	17	3160-121
T77858	8	0510-7
T77858	10	0930-3
T77858	2	0960-3
T77858	2	0960-3B
T77858	3	0960-5
T77858	6	0960-7
T77858	9	1060-5
T77858	10	2160-3
T77858	11	2160-7
T77858	16	3160-3
T77858	11	3160-5
T77858	20	3160-7
T77858	3	3160-9
T77858	11	3160-11
T77858	20	3160-13
T77858	1	3160-15
T77858	11	3160-17
T77858	20	3160-19
T77858	15	3160-27
T77858	2	3160-49
T77858	25	3160-51
T77858	2	3160-53
T77858	2	3160-55
T77858	4	3160-57
T77858	30	3160-61
T77858	4	3160-63
T77858	17	3160-67
T77858	5	3160-69
T77858	6	3160-71
T77858	23	3160-93
T77858	6	3160-95
T77858	6	3163-5
T77858	9	3163-5
T77858	5	3163-7
T77858	8	3163-7
T77858	6	3165-3
T77858	9	3165-15
T77932	13	0350-3
T77932	10	0510-9
T77932	22	3160-49
T77932	26	3160-51
T77932	31	3160-61
T77932	11	3160-67
T77932	25	3160-93
T77932	15	3160-95
T77932	17	3165-3
T77932	8	3165-9
T77932	19	3165-9
T77932	4	3165-15
T78593	7	0505-3
T78612	8	3160-5
T78612	21	3160-7
T78612	8	3160-11
T78612	21	3160-13
T78612	8	3160-17
T78612	21	3160-19
T78707	7	0960-7

NUMERICAL INDEX - CONTINUED

PART NO.	KEY	PAGE
T78707	10	3160-53
T78707	3	3160-55
T78707	13	3160-57
T78707	13	3160-63
T78707	8	3160-69
T78707	7	3160-71
T78707	10	3163-5
T78707	9	3163-7
T78787	25	0505-5
T78974	30	1830-13
T79471	23	1671-3
T79477	19	0560-3
T81029	5	3104-3
T81029	12	3160-73
T81029	12	3160-77
T81029	13	3160-81
T81029	21	3160-85
T81029	24	3160-89
T81029	13	3160-117
T81029	17	3160-123
T81403	48	2160-7
T825110	3	3102-13
T825115	4	3102-13
T825116	5	3102-13
T82791	7	1810-9
T82791	4	1810-11
T82791	23	1810-55
T82792	8	1810-9
T82792	5	1810-11
T82792	24	1810-55
T82861	4	3166-5
T82861	6	3166-9
T82861	12	3166-13
T9J2258	5	3102-9
U10289	3	0210-3
U12167	27	1060-13
U12331	19	2160-3
U12547	28	0260-9
U12547	13	0260-11
U12547	65	0510-3B
U12547	9	0510-7
U12547	18	0510-9
U12547	11	0930-3
U12547	14	1060-5
U12547	30	1060-13
U12547	20	2160-3
U12547	12	2160-7
U12547	2	3160-3
U12547	12	3160-5
U12547	22	3160-7
U12547	24	3160-9
U12547	12	3160-11
U12547	22	3160-13
U12547	4	3160-15
U12547	12	3160-17
U12547	22	3160-19
U12547	4	3160-21
U12547	8	3160-21
U12547	17	3160-27
U12547	4	3160-33
U12547	9	3160-33
U12547	6	3160-35
U12547	20	3160-45
U12547	33	3160-45
U12547	20	3160-47
U12547	33	3160-47
U12547	14	3160-93
U12547	7	3160-95
U12547	4	3165-3
U12547	9	3165-9
U12547	17	3165-9
U12547	11	3165-15
U13461	15	0960-11
U13461	9	3104-15
U13461	12	3104-17
U13461	12	3104-19
U13639	23	0404-3
U13639	6	0505-6
U13639	11	2160-3
U13639	9	3160-5
U13639	9	3160-11
U13639	9	3160-17
U40962	22	3160-45
U40962	22	3160-47
U43961	5	0110-5
U44384	18	2160-3
U44537	10	1673-3
U44537	14	1673-3B
U46753	18	3160-63
U46753	11	3163-5
U46753	10	3163-7
W29909	9	1822-7
YZ120187	12	0210-7
YZ120190	8	0210-9
YZ120191	12	0210-11
YZ120191	1	0210-25
YZ120192	12	0210-13
YZ120416	1	0210-19
YZ120416	1	0210-21
YZ120431	3	0210-23
YZ120432	11	0210-23
YZ120433	8	0210-23
YZ120448	5	0210-23
YZ120452	2	0210-19
YZ120452	2	0210-21
YZ120569	10	0210-23
YZ120622	26	0210-15
YZ120623	27	0210-15
YZ120909	5	0210-23
YZ120909	13	0210-23
YZ121201	2	0210-19
YZ121201	2	0210-21
YZ18670	1	0210-2
YZ18671	1	0210-2
YZ18673	1	0210-2
YZ18674	1	0210-2
Z59685	19	1830-3
400R	12	0210-7
400R	17	3165-19
405R	12	0210-7
PART NO.	KEY	PAGE