CATERPILLAR®

SEBP4575-12
April 2007

RUTHZIL TRATOR COMERCIAL DE PEÇAS LTDA 11 97083-6812 ROLANDO

# Parts Manual

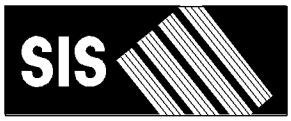


**See "General Information" for New Parts Manual Features.**

## 545C Wheel Skidder

**5451-Up (Machine)**
**KHX1-Up (Engine)**
**5MY1-Up (Transmission)**
**R1C1-Up (Transmission)**
**5WT1-Up (Torque Converter)**

**Powered By C7 Engine**
**This Parts Manual is also available in .PDF format on Compact Disc (CD-ROM) - Caterpillar Form No. SERP4575**

# Product and Dealer Information

Note: For product identification plate locations, see the section “Product Identification Information” in the Operation and Maintenance Manual.

**Delivery Date:** _____

## Product Information

Model: _____

Product Identification Number: _____

Engine Serial Number: _____

Transmission Serial Number: _____

Generator Serial Number: _____

Attachment Serial Numbers: _____

Attachment Information: _____

Customer Equipment Number: _____

Dealer Equipment Number: _____

## Dealer Information

Name: _____ Branch: _____

Address: _____

_____

_____

| | Dealer Contact | Phone Number | Hours |
|---|---|---|---|
| Sales: | _____ | _____ | _____ |
| Parts: | _____ | _____ | _____ |
| Service: | _____ | _____ | _____ |

# Informations produit et concessionnaire

Nota: Voir l'emplacement de la plaque signalétique du produit au chapitre "Informations produit" du guide d'utilisation et d'entretien.

**Date de livraison:** _____

## Informations produit

Modèle: _____

Numéro d'identification produit: _____

Numéro de série du moteur: _____

Numéro de série de la boîte de vitesses: _____

Numéro de série de l'alternateur: _____

Numéros de série d'équipement: _____

Informations sur l'équipement: _____

Numéro matériel client: _____

Numéro matériel concessionnaire: _____

## Informations concessionnaire

Nom: _____ Agence: _____

Adresse: _____

_____

_____

| | Contact concessionnaire | Numéro de téléphone | Heures |
|---|---|---|---|
| Ventes: | | | |
| Pièces: | | | |
| Service: | | | |

# Información del Producto/Distribuidor

Nota: Para saber la ubicación de las placas de identificación del producto, ver la sección “Información sobre identificación del producto” en el Manual de Operación y Mantenimiento.

**Fecha de entrega:** _____

## Información del producto

Modelo: _____

Número de identificación del producto: _____

Número de serie del motor: _____

Número de serie de la transmisión: _____

Número de serie del generador: _____

Números de serie de los accesorios: _____

Información sobre los accesorios: _____

Número del equipo del cliente: _____

Número del equipo del distribuidor: _____

## Información del distribuidor

Nombre: _____ Sucursal: _____

Dirección: _____

_____

_____

| Comunicación con el distribuidor | Número de teléfono | Horas |
|---|---|---|
| Ventas: _____ | _____ | _____ |
| Piezas: _____ | _____ | _____ |
| Servicio: _____ | _____ | _____ |

# Informações Sobre Produto e Revendedor

Nota: Para localizações da placa de identificação do produto, consulte a seção, “Informações Sobre Identificação do Produto” no Manual de Operação e Manutenção.

**Data de Entrega:** _____

## Informações Sobre o Produto

Modelo: _____

Número de Identificação do Produto: _____

Número de Série do Motor: _____

Número de Série da Transmissão: _____

Número de Série do Gerador: _____

Números de Série de Acessórios: _____

Informações Sobre Acessórios: _____

Número do Equipamento do Cliente: _____

Número do Equipamento do Revendedor: _____

## Informações Sobre o Revendedor

Nome: _____ Filial: _____

Endereço: _____

_____

_____

| | Contato do Revendedor | Telefone | Horas |
|---|---|---|---|
| Vendas: | _____ | _____ | _____ |
| Peças: | _____ | _____ | _____ |
| Serviço: | _____ | _____ | _____ |

# Produkt- und Händlerinformation

Anmerkung: Für die Lage der Produkt-Identnummer und Seriennummern siehe Abschnitt “Produkt-Identinformation” im Betriebs- und Wartungshandbuch.

**Lieferdatum:** _____

## Produkt-Identinformation

Modell: _____

Produkt-Identnummer: _____

Seriennummer des Motors: _____

Seriennummer des Getriebes: _____

Seriennummer des Generators: _____

Seriennummern der Arbeitsgeräte: _____

Arbeitsgeräteinformation: _____

Kundennummer: _____

Händlernummer: _____

## Händlerinformation

Name: _____ Niederlassung: _____

Adresse: _____

_____

_____

| | Kontaktperson beim Händler | Telefon | Dienststunden |
|---|---|---|---|
| Verkauf: | _____ | _____ | _____ |
| Ersatzteile: | _____ | _____ | _____ |
| Service: | _____ | _____ | _____ |

# MEMORANDA

# TABLE OF CONTENTS


| Name | Page |
|---|---|
| **GENERAL INFORMATION** | A23 |
| **REPAIR ALTERNATIVES** | A42 |
| **SUPPLEMENTAL COOLANT ADDITIVES** | A47 |
| **MAINTENANCE PARTS** | A52 |
| **INDEX** | A66 |
| **MACHINE ARRANGEMENT** | 1 |
| CHASSIS AR | 1 |
| COMMON AR | 1 |
| **ENGINE ARRANGEMENT** | 2 |
| ENGINE AR-COMPLETE | 2 |
| ENGINE AR-CORE | 3 |
| INSTALLATION AR-ENGINE | 4 |
| **BASIC ENGINE** | 5 |
| CAMSHAFT GP | 5 |
| CARRIER GP-SEAL | 6 |
| COVER GP-CYLINDER BLOCK | 7 |
| COVER GP-FRONT HOUSING | 10 |
| COVER GP-VALVE MECHANISM | 12 |
| CRANKSHAFT GP | 16 |
| CYLINDER BLOCK GP | 22 |
| CYLINDER HEAD AS | 26 |
| CYLINDER HEAD GP | 27 |
| DAMPER & PULLEY GP | 30 |
| DRAIN GP-ENGINE OIL | 31 |
| DRIVE GP-FAN | 33 |
| FASTENER GP-CYLINDER HEAD | 35 |
| FASTENER GP-DAMPER | 36 |
| FASTENER GP-FRONT COVER | 37 |
| FASTENER GP-FRONT HOUSING | 38 |
| FASTENER GP-LIFTING | 39 |
| FLYWHEEL GP | 40 |
| GEAR GP-FRONT | 41 |
| HOUSING GP-FLYWHEEL | 43 |
| HOUSING GP-FRONT | 44 |
| IDLER GP-BELT | 45 |
| LIFTER GP-VALVE | 46 |
| LIFTING GP-ENGINE | 47 |
| MOUNTING GP-ALTERNATOR | 48 |
| MOUNTING GP-ENGINE & TMSN | 49 |
| PAN GP-OIL | 51 |
| PISTON & ROD GP | 52 |
| PLUG GP-CYLINDER BLOCK | 53 |
| PLUG GP-ENGINE | 54 |
| PULLEY GP-ENGINE | 55 |
| ROCKER ARM GP | 56 |
| SEAL GP-CRANKSHAFT | 58 |
| SEAL GP-FLYWHEEL HOUSING | 59 |
| SUPPORT GP-ENGINE | 60 |
| VALVE MECHANISM GP | 61 |
| **LUBRICATION SYSTEM** | 66 |
| ADAPTER GP-OIL LINE | 66 |
| BREATHER GP | 67 |
| FILLER GP-ENGINE OIL | 68 |
| FILTER GP-ENGINE OIL | 69 |
| FUMES DISPOSAL GP | 70 |
| GAUGE GP-OIL LEVEL (DIPSTICK) | 71 |
| LINES GP-ENGINE OIL | 72 |
| LINES GP-TURBOCHARGER OIL | 73 |
| MANIFOLD GP-ENGINE OIL | 76 |
| PUMP GP-ENGINE OIL | 77 |
| **COOLING SYSTEM** | 79 |
| COOLER GP-ENGINE OIL | 79 |
| ELBOW GP-WATER | 80 |
| FAN GP-BLOWER | 81 |
| LINES GP-WATER | 82 |
| PUMP GP-WATER | 86 |
| RADIATOR & AFTERCOOLER GP | 88 |
| RADIATOR & MOUNTING GP | 90 |
| VALVE GP-COOLANT SAMPLING | 93 |
| **AIR INLET AND EXHAUST SYSTEM** | 94 |
| AIR CLEANER GP | 94 |
| COVER GP-AIR INLET | 96 |
| ELBOW GP-AIR INLET | 100 |
| GUARD GP-EXHAUST | 102 |
| INDICATOR GP-AIR FILTER CHANGE | 103 |
| LINES GP-AFTERCOOLER AIR | 104 |
| LINES GP-TURBOCHARGER AIR | 105 |
| MANIFOLD GP-EXHAUST | 106 |
| MUFFLER GP | 107 |
| PRECLEANER GP | 109 |
| TURBOCHARGER GP | 110 |
| **FUEL SYSTEM** | 114 |
| FILTER GP-WATER SEP & FUEL | 114 |
| INJECTOR GP-FUEL | 115 |
| LINES GP-FUEL | 118 |
| LINES GP-FUEL FILTER | 122 |
| LINES GP-INJECTOR HYD PUMP | 126 |
| PUMP & MTG GP-UNIT INJ HYD | 127 |
| PUMP GP-FILTER & FUEL TRANSFER | 128 |
| PUMP GP-FUEL INJECTION | 129 |
| PUMP GP-FUEL PRM & PRIM FILTER | 133 |
| PUMP GP-FUEL TRANSFER | 134 |
| REGULATOR GP-FUEL PRESSURE | 135 |
| TANK GP-FUEL | 136 |
| **ELECTRICAL AND STARTING SYSTEM** | 141 |
| ALARM GP | 141 |
| ALTERNATOR GP-CHARGING | 142 |
| BATTERY & WIRING GP | 146 |

# TABLE OF CONTENTS


| Name | Page |
|---|---|
| BLOCK GP-JUNCTION | 152 |
| CONTROL & MTG GP-ENGINE ELEK | 153 |
| CONVERTER GP-ELECTRICAL | 154 |
| ELECTRICAL AR | 155 |
| ELECTRONICS GP-MACHINE | 155 |
| LAMP GP-FLOOD | 156 |
| LIGHTING AR-FLOOD | 157 |
| LIGHTING GP-FLOOD | 158 |
| MOTOR GP-ELECTRIC | 161 |
| PANEL GP-CIRCUIT BREAKER | 162 |
| RECEPTACLE GP-AUXILIARY START | 165 |
| RESISTOR GP | 166 |
| SENSOR GP-ENGINE | 167 |
| SENSOR GP-POSITION | 169 |
| SENSOR GP-PRESSURE | 170 |
| SENSOR GP-SPEED | 178 |
| SENSOR GP-TEMPERATURE | 180 |
| STARTING AID GP-ETHER | 186 |
| STARTING MOTOR GP-ELECTRIC | 188 |
| SWITCH GP-DISCONNECT | 194 |
| SWITCH GP-MAGNETIC | 195 |
| SWITCH GP-PRESSURE | 198 |
| SWITCH GP-ROCKER | 199 |
| SWITCH GP-TRANSMISSION | 200 |
| VALVE GP-ETHER STARTING | 201 |
| WIRING GP-CAB | 202 |
| WIRING GP-ENGINE | 210 |
| WIRING GP-HEATER | 212 |
| WIRING GP-MACHINE | 213 |
| WIRING GP-SECONDARY STEERING | 230 |
| **POWER TRAIN** | 232 |
| AXLE AR-FIXED | 232 |
| AXLE AR-OSCILLATING | 232 |
| BRAKE & PLANETARY GP | 233 |
| CASE & PARTS GP-TRANSMISSION | 236 |
| CLUTCH GP | 248 |
| CONTROL GP-TRANSMISSION HYD | 254 |
| COVER GP-SHIPPING | 256 |
| DIFFERENTIAL GP | 258 |
| DRAIN GP-ECOLOGY | 262 |
| FILLER GP-POWER TRAIN OIL | 263 |
| FILTER & LINES GP-POWER TRAIN | 265 |
| FILTER GP-OIL | 269 |
| GEAR GP-BEVEL & PINION | 270 |
| GEAR GP-OUTPUT TRANSFER | 274 |
| HOUSING GP-FIXED AXLE | 280 |
| HOUSING GP-OSCILLATING AXLE | 282 |
| INPUT GP-TRANSMISSION | 284 |
| LINES GP-DIFFERENTIAL LOCK | 285 |
| LINES GP-TORQUE CONV COOLER | 287 |
| MOUNTING GP-RIM | 291 |
| POWER TRAIN AR | 292 |
| PUMP GP-TRANSMISSION | 293 |
| SHAFT GP-DRIVE | 294 |
| SUPPORT GP-FRONT AXLE | 297 |
| TIRE & RIM AR | 300 |
| TIRE & RIM GP | 301 |
| TORQUE CONVERTER GP | 303 |
| TRANSMISSION AR | 305 |
| VALVE GP-DUMP | 307 |
| VALVE GP-FLOW CONTROL | 308 |
| VALVE GP-MODULATING | 309 |
| VALVE GP-RELIEF | 310 |
| VALVE GP-SELECTOR & PRESS CONT | 312 |
| VALVE GP-SOLENOID | 314 |
| VALVE GP-TRANSMISSION CONTROL | 315 |
| **FRAME AND BODY** | 318 |
| FENDER GP | 318 |
| FLOORPLATE GP | 319 |
| FRAME AS-FRONT | 321 |
| FRAME AS-REAR | 325 |
| FRAME GP-FRONT | 326 |
| FRAME GP-REAR | 328 |
| GUARD GP-BOTTOM | 331 |
| GUARD GP-CAB | 333 |
| GUARD GP-FRAME | 335 |
| GUARD GP-FUEL TANK | 336 |
| GUARD GP-LINES | 338 |
| GUARD GP-RADIATOR | 347 |
| HARDWARE GP-REAR FRAME | 349 |
| HITCH GP-ARTICULATING | 350 |
| HOOD & GUARD GP | 352 |
| LINES GP-GREASE | 358 |
| LINK GP-STEERING FRAME LOCK | 359 |
| STEP GP | 360 |
| SWEEP GP | 361 |
| **BRAKING SYSTEM** | 362 |
| ACCUMULATOR GP-BRAKE | 362 |
| ACTUATOR GP-PARKING BRAKE | 367 |
| BRAKE GP-PARKING | 368 |
| CONTROL GP-FOOT BRAKE | 372 |
| CONTROL GP-PARKING BRAKE | 374 |
| CONTROL GP-SERVICE BRAKE | 376 |
| LINES GP-SERVICE BRAKE | 379 |
| MANIFOLD GP-CONTROL | 381 |
| VALVE GP-BRAKE CONTROL | 382 |
| **STEERING SYSTEM** | 383 |
| CONTROL GP-STEER & DECK BLADE | 383 |
| CYLINDER GP-STEERING | 385 |
| LINES GP-SECONDARY STEERING | 388 |
| LINES GP-STEERING | 394 |
| PUMP & MOTOR GP-SEC STEERING | 396 |
| PUMP & MTG GP-SECONDARY STEER | 397 |

# TABLE OF CONTENTS


| Name | Page |
|---|---|
| STEERING AR-SECONDARY | 398 |
| STEERING WHEEL GP | 399 |
| **HYDRAULIC SYSTEM** | 403 |
| ACCUMULATOR GP-PILOT OIL | 403 |
| COOLER GP-HYDRAULIC OIL | 405 |
| CYLINDER GP-ARCH | 406 |
| CYLINDER GP-BOOM | 410 |
| CYLINDER GP-GRAPPLE | 411 |
| CYLINDER GP-LIFT | 412 |
| CYLINDER GP-TONG | 413 |
| FILTER GP-OIL | 414 |
| HYDRAULIC AR | 416 |
| INDUSTRIAL AR-HYDRAULIC | 416 |
| LINES GP-DECKING BLADE | 417 |
| LINES GP-GRAPPLE | 419 |
| LINES GP-GRAPPLE HEAD | 422 |
| LINES GP-HYDRAULIC | 425 |
| LINES GP-PILOT | 429 |
| LINES GP-ROTATOR | 435 |
| MANIFOLD GP-CONTROL | 437 |
| PUMP & MTG GP-HYDRAULIC | 438 |
| PUMP GP-GEAR | 439 |
| PUMP GP-PISTON | 442 |
| ROTATING GP-PUMP | 444 |
| TANK & MTG GP-HYDRAULIC | 445 |
| TANK GP-HYDRAULIC | 447 |
| VALVE & LINES GP-GRAPPLE | 449 |
| VALVE GP-BANK 2 | 464 |
| VALVE GP-BANK 4 | 465 |
| VALVE GP-BANK 5 | 468 |
| VALVE GP-CHECK | 469 |
| VALVE GP-CONTROL | 470 |
| VALVE GP-DIVERTER | 486 |
| VALVE GP-PRIORITY | 487 |
| VALVE GP-PUMP CONTROL | 488 |
| VALVE GP-RELIEF | 489 |
| VALVE GP-SOLENOID | 490 |
| **WORK TOOLS** | 491 |
| ARCH AR | 491 |
| ARCH GP | 492 |
| BEARING & SEAL GP-ARCH | 493 |
| BEARING & SEAL GP-GRAPPLE | 494 |
| BLADE AR-DECKING | 496 |
| BLADE GP-DECKING | 497 |
| BRAKE GP-WINCH | 498 |
| CARRIER GP-PLANETARY | 501 |
| CASE GP-WINCH | 503 |
| CLUTCH & GEAR GP-WINCH | 505 |
| CLUTCH GP-WINCH | 506 |
| CONTROL GP-WINCH | 510 |
| COVER GP-WINCH | 515 |
| CYLINDER GP-BRAKE | 516 |
| DRIVE GP-WINCH | 517 |
| DRUM GP-WINCH | 519 |
| EDGE GP-CUTTING | 521 |
| FAIRLEAD GP-WINCH | 522 |
| FRAME GP-FAIRLEAD | 526 |
| FRAME GP-GRAPPLE | 528 |
| GEAR GP-WINCH INPUT | 530 |
| GEAR GP-WINCH OUTPUT | 532 |
| GRAPPLE AR | 534 |
| GUARD GP-WINCH | 535 |
| HEAD AR-GRAPPLE | 538 |
| HEAD GP-GRAPPLE | 539 |
| LINES GP-WINCH | 540 |
| MOTOR GP-PISTON | 549 |
| MOUNTING GP-WINCH | 550 |
| PIN GP-GRAPPLE | 554 |
| PLANETARY GP-WINCH | 557 |
| ROLLER GP-TOP | 558 |
| ROTATOR GP-HYDRAULIC | 559 |
| SNUBBER GP-GRAPPLE | 561 |
| TONG GP-GRAPPLE | 564 |
| VALVE GP-DRAIN | 566 |
| WINCH AR | 567 |
| WINCH GP | 569 |
| **OPERATOR STATION** | 573 |
| ACCUMULATOR GP-REFRIGERANT | 573 |
| AIR COMPRESSOR GP-SEAT | 575 |
| AIR CONDITIONER AR | 576 |
| AIR CONDITIONER GP | 577 |
| BLOWER GP-CAB | 583 |
| CAB AR-ENCLOSED ROPS | 587 |
| CAB AR-OPEN ROPS | 588 |
| COMPRESSOR & MTG GP-REFRIG | 590 |
| COMPRESSOR GP-REFRIGERANT | 591 |
| CONDENSER & MTG GP-REFRIGERANT | 592 |
| CONTROL GP-HANDLE | 593 |
| CONTROL GP-JOYSTICK | 595 |
| CONTROL GP-PILOT OPERATED HYD | 597 |
| CONTROL GP-STEERING | 601 |
| DOOR GP-CAB | 603 |
| FAN GP-DEFROSTER | 608 |
| GUARD GP-ENCLOSED ROPS | 610 |
| GUARD GP-OPEN ROPS | 611 |
| INSTALLATION GP-RADIO | 612 |
| LINES GP-AIR CONDITIONER | 614 |
| MIRROR GP-REAR VIEW | 617 |
| MODULE GP-DISPLAY | 618 |
| MOUNTING GP-ROPS | 619 |
| PANEL GP-ACCESS | 620 |
| PEDAL GP-GOVERNOR | 622 |
| RADIO GP | 623 |
| ROPS GP | 624 |
| SCREEN GP-CAB | 627 |

# TABLE OF CONTENTS


| Name | Page | Name | Page |
|---|---|---|---|
| SEAT GP | 632 | | |
| SEAT GP-SUSPENSION | 634 | | |
| SUSPENSION GP-SEAT | 637 | | |
| SWIVEL GP-SEAT | 640 | | |
| TANK GP-WINDOW WASHER | 642 | | |
| TRIM GP-CAB | 643 | | |
| TRIM GP-OPEN ROPS | 661 | | |
| VALVE GP-A/C & HEATER CONTROL | 675 | | |
| WINDOW GP | 676 | | |
| WIPER & WASHER GP-WINDOW | 680 | | |
| WIPER GP-WINDOW | 682 | | |
| **SERVICE EQUIPMENT AND SUPPLIES** | 684 | | |
| FILM GP | 684 | | |
| GUARD GP-WATER TANK | 687 | | |
| LINES GP-PRESSURIZED WATER | 688 | | |
| LITERATURE GP | 690 | | |
| PLATE & FILM GP | 691 | | |
| TANK AR-WATER | 696 | | |
| TANK GP-WATER | 697 | | |
| **PART NUMBER INDEX** | B1 | | |

# TABLE DES MATIÈRES


| Désignation | Page |
|---|---|
| **GÉNÉRALITÉS** | A26 |
| **OPTIONS DE RÉPARATION** | A43 |
| **ADDITIFS POUR LIQUIDE DE REFROIDISSEMENT** | A48 |
| **PIÈCES DE RECHANGE** | A54 |
| **INDEX** | A75 |
| **VERSION DE MACHINE** | 1 |
| VERSION DE CHASSIS | 1 |
| VERSION NORMALE | 1 |
| **VERSION DE MOTEUR** | 2 |
| VERSION DE MOTEUR COMPLET | 2 |
| MOTEUR - PARTIE CENTRALE (VERSION) | 3 |
| MONTAGE DE MOTEUR (VERSION) | 4 |
| **MOTEUR STANDARD** | 5 |
| ARBRE A CAMES (ASS) | 5 |
| CHÂSSIS-PORTEUR DE JOINT (ASS) | 6 |
| BLOC-CYLINDRES - COUVERCLE (ASS) | 7 |
| COUVERCLE DE CARTER AV (ASS) | 10 |
| CACHE-SOUPAPES (ASS) | 12 |
| VILEBREQUIN (ASS) | 16 |
| BLOC-CYLINDRES (ASS) | 22 |
| CULASSE (ENS) | 26 |
| CULASSE (ASS) | 27 |
| AMORTISSEUR DE VIBRATIONS ET POULIE (ASS) | 30 |
| VIDANGE-HUILE DE MOTEUR (ASS) | 31 |
| ENTRAÎNEMENT DE VENTILATEUR (ASS) | 33 |
| BOULONNERIE DE LA CULASSE (ASS) | 35 |
| AMORTISSEUR DE VIBRATIONS - BOULONNERIE (ASS) | 36 |
| COUVERCLE DE CARTER AV - BOULONNERIE (ASS) | 37 |
| BOULONNERIE DE CARTER AV (ASS) | 38 |
| LEVAGE - BOULONNERIE (ASS) | 39 |
| VOLANT MOTEUR (ASS) | 40 |
| PIGNONNERIE AV (ASS) | 41 |
| CARTER DE VOLANT (ASS) | 43 |
| CARTER AV (ASS) | 44 |
| COURROIE INTERMÉDIAIRE (ASS) | 45 |
| POUSSOIR DE SOUPAPE (ASS) | 46 |
| OEILLETONS DE LEVAGE MOTEUR (ASS) | 47 |
| MONTAGE D'ALTERNATEUR (ASS) | 48 |
| MONTAGE DE MOTEUR ET BOÎTE (ASS) | 49 |
| HUILE MOTEUR - CARTER (ASS) | 51 |
| PISTON ET BIELLE (ASS) | 52 |
| BOUCHON DE BLOC-CYLINDRES (ASS) | 53 |
| BOUCHON DE MOTEUR (ASS) | 54 |
| POULIE-MOTEUR (ASS) | 55 |
| AXE DE CULBUTEUR (ASS) | 56 |
| JOINT DE VILEBREQUIN (ASS) | 58 |
| JOINT DE CARTER DE VOLANT (ASS) | 59 |
| SUPPORT DE MOTEUR (ASS) | 60 |
| CULBUTERIE (ASS) | 61 |
| **CIRCUIT DE GRAISSAGE** | 66 |
| RACCORD DE CANALISATION D'HUILE (ASS) | 66 |
| RENIFLARD (ASS) | 67 |
| BOUCHON DE REMPLISSAGE D'HUILE MOTEUR (ASS) | 68 |
| FILTRE À HUILE MOTEUR (ASS) | 69 |
| DISPOSITIF D'EVACUATION DES VAPEURS DE CARTER | 70 |
| JAUGE D'HUILE MOTEUR (BAIONNETTE) (ASS) | 71 |
| CANALISATIONS D'HUILE MOTEUR (ASS) | 72 |
| CANALISATIONS D'HUILE DE TURBOCOMPRESSEUR (ASS) | 73 |
| COLLECTEUR (ASS)-HUILE MOTEUR | 76 |
| POMPE A HUILE MOTEUR (ASS) | 77 |
| **CIRCUIT DE REFROIDISSEMENT** | 79 |
| REFROIDISSEUR D'HUILE MOTEUR (ASS) | 79 |
| COUDE D'EAU (ASS) | 80 |
| VENTILATEUR SOUFFLANT (ASS) | 81 |
| CANALISATIONS D'EAU (ASS) | 82 |
| POMPE A EAU (ASS) | 86 |
| RADIATEUR ET REFROIDISSEUR (ASS) | 88 |
| RADIATEUR ET MONTAGE (ASS) | 90 |
| ROBINET DE PRÉLÈVEMENT D'ÉCHANTILLON D'HUILE (ASS) | 93 |
| **CIRCUIT D'ADMISSION D'AIR ET D'ÉCHAPPEMENT** | 94 |
| FILTRE A AIR (ASS) | 94 |
| COUVERCLE DE COLLECTEUR D'ADMISSION (ASS) | 96 |
| COUDE D'ADMISSION D'AIR (ASS) | 100 |


* TRADUCTION NON DISPONIBLE AU MOMENT DE LA PUBLICATION

# TABLE DES MATIÈRES


| Désignation | Page |
|---|---|
| PROTECTION D'ÉCHAPPEMENT (ASS) | 102 |
| INDICATEUR DE COLMATAGE DE FILTRE À AIR (ASS) | 103 |
| CANALISATIONS D'AIR DE REFROIDISSEUR D'ADMISSION (ASS) | 104 |
| CANALISATIONS D'AIR DE TURBOCOMPRESSEUR (ASS) | 105 |
| COLLECTEUR D'ÉCHAPPEMENT (ASS) | 106 |
| SILENCIEUX (ASS) | 107 |
| PREFILTRE (ASS) | 109 |
| TURBOCOMPRESSEUR (ASS) | 110 |
| **CIRCUIT DE CARBURANT** | 114 |
| FILTRE DE SÉPARATEUR D'EAU ET DE CARBURANT (ASS) | 114 |
| INJECTEUR DE CARBURANT (ASS) | 115 |
| CANALISATIONS DE CARBURANT (ASS) | 118 |
| CANALISATIONS DU FILTRE A CARBURANT (ASS) | 122 |
| CANALISATIONS - INJECTEURS-POMPES HYDRAULIQUES | 126 |
| POMPE D'INJECTEURS-POMPES HYDRAU. ET MONTAGE | 127 |
| *PUMP GP-FILTER & FUEL TRANSFER | 128 |
| POMPE D'INJECTION DE CARBURANT (ASS) | 129 |
| POMPE D'AMORÇAGE DE CARBURANT ET FILTRE PRINCIPAL | 133 |
| POMPE D'ALIMENTATION EN CARBURANT (ASS) | 134 |
| REGULATEUR DE PRESSION DE CARBURANT (ASS) | 135 |
| RÉSERVOIR DE CARBURANT (ASS) | 136 |
| **CIRCUIT ÉLECTRIQUE ET DE DÉMARRAGE** | 141 |
| AVERTISSEUR (ASS) | 141 |
| ALTERNATEUR DE CHARGE (ASS) | 142 |
| BATTERIE ET CÂBLAGE | 146 |
| BLOC DE BRANCHEMENT (ASS) | 152 |
| COMMANDE ET MONTAGE - MOTEUR | 153 |
| TRANSFORMATION ELECTRIQUE (ASS) | 154 |
| VERSION ÉLECTRIQUE | 155 |
| ÉLECTRONIQUE - MACHINE (ENS) | 155 |
| LAMPE - PHARE (ASS) | 156 |
| ÉCLAIRAGE-PROJECTEURS (VERSION) | 157 |
| ÉCLAIRAGE - PROJECTEURS (ASS) | 158 |
| MOTEUR ELECTRIQUE (ASS) | 161 |
| DISJONCTEUR DU PANNEAU DE COMMANDE (ASS) | 162 |
| PRISE DE BATTERIE AUXILIAIRE (ASS) | 165 |
| RESISTANCE (ASS) | 166 |
| CAPTEUR - MOTEUR (ASS) | 167 |
| SONDE - CIRCUIT DE CARBURANT | 169 |
| CAPTEUR DE PRESSION (ASS) | 170 |
| CAPTEUR DE VITESSE (ASS) | 178 |
| CAPTEUR DE TEMPERATURE (ASS) | 180 |
| AUXILIAIRE DE DÉMARRAGE À L'ÉTHER | 186 |
| DÉMARREUR ÉLECTRIQUE (ASS) | 188 |
| ROBINET DE BATTERIE (ASS) | 194 |
| CONTACTEUR MAGNETIQUE (ASS) | 195 |
| MANOCONTACT | 198 |
| INTERRUPTEUR À BASCULE (ASS) | 199 |
| INTERRUPTEUR DE BOITE DE VITESSES (ASS) | 200 |
| SOUPAPE DE DÉMARRAGE À L'ÉTHER (ASS) | 201 |
| CABLAGE DE CABINE (ASS) | 202 |
| CABLAGE DE MOTEUR (ASS) | 210 |
| CABLAGE DU CHAUFFAGE DE CABINE (ASS) | 212 |
| CABLAGE DE LA MACHINE (ASS) | 213 |
| CABLAGE DE DIRECTION AUXILIAIRE (ASS) | 230 |
| **TRANSMISSION** | 232 |
| ESSIEU FIXE (VERSION) | 232 |
| ESSIEU OSCILLANT (VERSION) | 232 |
| FREIN ET TRAINS PLANÉTAIRES (ASS) | 233 |
| CARTER ET PIECES DE BOITE (ASS) | 236 |
| EMBRAYAGE (ASS) | 248 |
| COMMANDE HYDRAULIQUE DE BOÎTE (ASS) | 254 |
| COUVERCLES D'EXPEDITION (ASS) | 256 |
| DIFFERENTIEL (ASS) | 258 |
| VIDANGE-ÉCOLOGIE (ASS) | 262 |
| GOULOTTE DE REMPLISSAGE D'HUILE DE TRANSMISSION | 263 |
| FILTRE ET CANALISATIONS DE TRANSMISSION (ASS) | 265 |
| FILTRE A HUILE (ASS) | 269 |
| COURONNE CONIQUE ET PIGNON | 270 |
| ENGRENAGE DE TRANSFERT DE RENDEMENT (ASS) | 274 |
| CARTER D'ESSIEU FIXE | 280 |
| CARTER D'ESSIEU OSCILLANT | 282 |


* TRADUCTION NON DISPONIBLE AU MOMENT DE LA PUBLICATION

# TABLE DES MATIÈRES


| Désignation | Page |
|---|---|
| ENTRÉE - BOÎTE POWERSHIFT (ASS) | 284 |
| CANALISATIONS DE VERROUILLAGE DE DIFFÉRENTIEL | 285 |
| CANALIS. DE REFROIDISSEMENT DU CONV. DE COUPLE | 287 |
| MONTAGE DE JANTE (ASS) | 291 |
| TRANSMISSION (VERSION) | 292 |
| POMPE DE BOÎTE DE VITESSES (ASS) | 293 |
| ARBRE D'ENTRAÎNEMENT (ASS) | 294 |
| SUPPORT D'ESSIEU AVANT (ASS) | 297 |
| PNEU ET JANTE (VERSION) | 300 |
| PNEU ET JANTE (ASS) | 301 |
| CONVERTISSEUR DE COUPLE (ASS) | 303 |
| BOÎTE DE VITESSES (VERSION) | 305 |
| VANNE DE DÉVERSEMENT (ASS) | 307 |
| DISTRIBUTEUR DE DÉBIT (ASS) | 308 |
| SOUPAPE DE MODULATION (ASS) | 309 |
| CLAPET DE DECHARGE (ASS) | 310 |
| SOUPAPE SELECTRICE ET REGULATRICE DE PRESSION | 312 |
| SOUPAPE - SOLÉNOÏDE (ASS) | 314 |
| DISTRIBUTEUR DE BOITE (ASS) | 315 |
| **CHÂSSIS ET BENNE** | 318 |
| GARDE-BOUE (ASS) | 318 |
| TÔLE DE PLANCHER (ASS) | 319 |
| BÂTI AV (ENS) | 321 |
| BÂTI AR (ENS) | 325 |
| CHÂSSIS AV (ASS) | 326 |
| BÂTI AR (ASS) | 328 |
| BLINDAGE INFÉRIEUR (ASS) | 331 |
| PROTECTION DE CABINE (ASS) | 333 |
| PROTECTION - CHASSIS (ASS) | 335 |
| PROTECTION DU RÉSERVOIR DE CARBURANT (ASS) | 336 |
| PROTECTEUR DES CANALISATIONS (ASS) | 338 |
| PROTÈGE-RADIATEUR (ASS) | 347 |
| BOULONNERIE DE BÂTI ARRIÈRE (ASS) | 349 |
| ATTELAGE D'ARTICULATION (ASS) | 350 |
| CAPOT ET PROTECTION (ASS) | 352 |
| CANALISATIONS DE GRAISSAGE (ASS) | 358 |
| LIAISON - VERROUILLAGE DE CHÂSSIS DE DIRECTION (ASS) | 359 |
| MARCHEPIED (ASS) | 360 |
| ARCEAUX DE DÉBARDAGE (ASS) | 361 |
| **CIRCUIT DE FREINAGE** | 362 |
| ACCUMULATEUR - FREIN | 362 |
| COMMANDE DE FREIN DE STATIONNEMENT (ASS) | 367 |
| FREIN DE STATIONNEMENT (ASS) | 368 |
| COMMANDE DE LA PÉDALE DE FREIN (ASS) | 372 |
| COMMANDE DE FREIN DE STATIONNEMENT (ASS) | 374 |
| FREIN DE MANOEUVRE - COMMANDE (ASS) | 376 |
| CANALISATIONS DU FREIN DE MANOEUVRE (ASS) | 379 |
| COLLECTEUR - COMMANDE (ASS) | 381 |
| DISTRIBUTEUR DE FREIN (ASS) | 382 |
| **CIRCUIT DE DIRECTION** | 383 |
| COMMANDE DE DIRECTION ET DE LAME DE TERRASSEMENT | 383 |
| VERIN DE DIRECTION (ASS) | 385 |
| CANALISATION DE DIRECTION AUXILIAIRE | 388 |
| CANALISATIONS DE DIRECTION (ASS) | 394 |
| POMPE DE DIRECTION AUXILIAIRE ET MONTAGE (ASS) | 396 |
| DIRECTION AUXILIAIRE (VERSION) | 398 |
| VOLANT DE DIRECTION (ASS) | 399 |
| **CIRCUIT HYDRAULIQUE** | 403 |
| ACCUMULATEUR - HUILE PILOTE (ASS) | 403 |
| REFROIDISSEUR D'HUILE HYDRAULIQUE (ASS) | 405 |
| VÉRIN DE LEVAGE - ARCHE (ASS) | 406 |
| VERIN DE FLECHE (ASS) | 410 |
| PINCE - VÉRIN (ASS) | 411 |
| VÉRIN DE LEVAGE (ASS) | 412 |
| VÉRIN - PINCE (ASS) | 413 |
| FILTRE A HUILE (ASS) | 414 |
| VERSION HYDRAULIQUE | 416 |
| INDUSTRIEL - HYDRAULIQUE (VERSION) | 416 |
| CANALISATIONS DE LAME POUR L'EMPILEMENT DE GRUMES | 417 |
| PINCE - CANALISATIONS (ASS) | 419 |
| CANALISATIONS DE TÊTE DE PINCE (ASS) | 422 |
| CANALISATIONS HYDRAULIQUES (ASS) | 425 |
| CANALISATIONS A COMMANDE PILOTE (ASS) | 429 |
| CANALISATIONS DE ROTATEUR (ASS) | 435 |
| COLLECTEUR - COMMANDE (ASS) | 437 |


* TRADUCTION NON DISPONIBLE AU MOMENT DE LA PUBLICATION

# TABLE DES MATIÈRES


| Désignation | Page |
|---|---|
| POMPE ET MONTAGE - HYDRAULIQUE (ASS) | 438 |
| POMPE A ENGRENAGES (ASS) | 439 |
| POMPE A PISTONS (ASS) | 442 |
| GROUPE DE ROTATION DE POMPE | 444 |
| RÉSERVOIR HYDRAULIQUE ET MONTAGE (ASS) | 445 |
| RÉSERVOIR HYDRAULIQUE (ASS) | 447 |
| SOUPAPE ET CANALISATIONS - PINCE (ASS) | 449 |
| DISTRIBUTEUR DOUBLE ÉLÉMENT (ASS) | 464 |
| DISTRIBUTEUR 4 ÉLÉMENTS (ASS) | 465 |
| DISTRIBUTEUR 5 ÉLÉMENTS (ASS) | 468 |
| CLAPET DE RETENUE (ENS) | 469 |
| DISTRIBUTEUR (ASS) | 470 |
| SOUPAPE DE DERIVATION (ASS) | 486 |
| SOUPAPE DE PRIORITE (ASS) | 487 |
| DISTRIBUTEUR DE POMPE (ASS) | 488 |
| CLAPET DE DECHARGE (ASS) | 489 |
| SOUPAPE - SOLÉNOÏDE (ASS) | 490 |
| **OUTILS DE TRAVAIL** | 491 |
| VERSION D'ARCHE | 491 |
| ARCHE (ASS) | 492 |
| PALIER ET JOINT - ARCHE (ASS) | 493 |
| PALIER ET JOINT DE PINCE (ASS) | 494 |
| LAME POUR L'EMPILAGE DE GRUMES (VERSION) | 496 |
| LAME POUR L'EMPILAGE DE GRUMES (ASS) | 497 |
| FREIN DE TREUIL (ASS) | 498 |
| PORTE-SATELLITES (ASS) | 501 |
| CARTER - TREUIL (ASS) | 503 |
| EMBRAYAGE ET ENGRENAGE - TREUIL (ASS) | 505 |
| EMBRAYAGE - TREUIL (ASS) | 506 |
| COMMANDE DE TREUIL (ASS) | 510 |
| COUVERCLE DE TREUIL (ASS) | 515 |
| FREIN - MAITRE-CYLINDRE (ASS) | 516 |
| ENTRAÎNEMENT DE TREUIL (ASS) | 517 |
| TAMBOUR - TREUIL (ASS) | 519 |
| LAME DE COUPE (ASS) | 521 |
| GUIDE-CABLE DE TREUIL (ASS) | 522 |
| CHÂSSIS GUIDE CABLE (ASS) | 526 |
| PINCE - BÂTI (ASS) | 528 |
| ENGRENAGE D'ENTRÉE DE TREUIL (ASS) | 530 |
| ENGRENAGE DE SORTIE DE TREUIL (ASS) | 532 |
| PINCE (VERSION) | 534 |
| PROTECTION DE TREUIL (ASS) | 535 |
| VERSION DE TÊTE DE PINCE | 538 |
| TÊTE DE PINCE (ASS) | 539 |
| CANALISATIONS DE TREUIL (ASS) | 540 |
| GROUPE DE MOTEUR A PISTONS | 549 |
| MONTAGE DE TREUIL (ASS) | 550 |
| AXE DE PINCE (ASS) | 554 |
| PLANÉTAIRE-TREUIL (ASS) | 557 |
| ROULEAU SUPÉRIEUR (ASS) | 558 |
| ROTATEUR HYDRAULIQUE (ASS) | 559 |
| FREIN DE FIN DE COURSE DE PINCE (ASS) | 561 |
| BRAS DE GRAPPIN (ASS) | 564 |
| SOUPAPE DE VIDANGE | 566 |
| TREUIL (VERSION) | 567 |
| TREUIL (ASS) | 569 |
| **POSTE DE CONDUITE** | 573 |
| ACCUMULATEUR - CLIMATISEUR (ASS) | 573 |
| SIÈGE - COMPRESSEUR D'AIR (ASS) | 575 |
| CLIMATISEUR (VERSION) | 576 |
| CLIMATISEUR (ASS) | 577 |
| VENTILATEUR SOUFFLANT DE CABINE (ASS) | 583 |
| CABINE ROPS FERMÉE (VERSION) | 587 |
| CABINE ROPS OUVERTE (VERSION) | 588 |
| COMPRESSEUR ET MONTAGE - RÉFRIGÉRANT (ASS) | 590 |
| COMPRESSEUR DE REFRIGERANT (ASS) | 591 |
| CONDENSATEUR ET MONTAGE (RÉFRIGÉRANT) | 592 |
| COMMANDE DE POIGNÉE (ASS) | 593 |
| PALONNIER - GROUPE DE COMMANDE (ASS) | 595 |
| COMMANDE HYDRAULIQUE PILOTE (ASS) | 597 |
| COMMANDE DE DIRECTION (ASS) | 601 |
| PORTIÈRE DE CABINE (ASS) | 603 |
| VENTILATEUR DÉGIVREUR (ASS) | 608 |
| PROTECTION DE CABINE ROPS FERMÉE (ASS) | 610 |
| PROTECTION DE CABINE ROPS OUVERTE (ASS) | 611 |
| MONTAGE DE RADIO (ASS) | 612 |
| CANALISATIONS DE CLIMATISEUR (ASS) | 614 |
| RÉTROVISEUR (ASS) | 617 |
| MODULE D'AFFICHAGE (ASS) | 618 |
| MONTAGE DU TOIT ROPS (ASS) | 619 |
| PANNEAU DE VISITE (ASS) | 620 |
| RÉGULATEUR - PÉDALE (ASS) | 622 |
| RADIO (ASS) | 623 |
| TOIT ROPS (ASS) | 624 |


* TRADUCTION NON DISPONIBLE AU MOMENT DE LA PUBLICATION

# TABLE DES MATIÈRES


| Désignation | Page |
|---|---|
| ÉCRAN DE CABINE (ASS) | 627 |
| SIÈGE (ASS) | 632 |
| SIÈGE AVEC SUSPENSION (ASS) | 634 |
| ORIENTATION-SIÈGE (ASS) | 640 |
| RÉSERVOIR - LAVE-GLACE (ASS) | 642 |
| GARNITURE POUR CABINE (ASS) | 643 |
| GARNITURE POUR BÂTI ROPS OUVERT (ASS) | 661 |
| SOUPAPE DE CLIMATISATION ET CHAUFFAGE (ASS) | 675 |
| VITRE (ASS) | 676 |
| ESSUIE-GLACE ET LAVE-GLACE | 680 |
| ESSUIE-GLACE (ASS) | 682 |
| **MATÉRIEL ET FOURNITURES D'ENTRETIEN** | 684 |
| PLAQUE SIGNALÉTIQUE (ASS) | 684 |
| PROTECTION DE RÉSERVOIR À EAU (ASS) | 687 |
| CANALISATIONS D'EAU SOUS PRESSION (ASS) | 688 |
| LITTÉRATURE (ASS) | 690 |
| PLAQUES SIGNALETIQUES ET AUTOCOLLANTS (ASS) | 691 |
| VERSION DE RÉSERVOIR D'EAU | 696 |
| RÉSERVOIR D'EAU (ASS) | 697 |
| **INDEX DE NUMÉROS DE PIÈCES** | B1 |


* TRADUCTION NON DISPONIBLE AU MOMENT DE LA PUBLICATION

# CONTENIDO


| Nombre | Página |
|---|---|
| **INFORMACIÓN GENERAL** | A30 |
| **ALTERNATIVAS DE REPARACIÓN** | A44 |
| **ADITIVOS DE REFRIGERANTE SUPLEMENTARIOS** | A49 |
| **PIEZAS DE MANTENIMIENTO** | A57 |
| **INDICE** | A86 |
| **CONFIGURACIÓN DE MÁQUINA** | 1 |
| CHASIS (CONFIG) | 1 |
| CONFIGURACIÓN COMÚN | 1 |
| **CONFIGURACIÓN DE MOTOR** | 2 |
| *ENGINE AR-COMPLETE | 2 |
| MOTOR - NÚCLEO (CONFIG) | 3 |
| CONFIGURACIÓN DE INSTALACIÓN DEL MOTOR | 4 |
| **MOTOR BÁSICO** | 5 |
| ÁRBOL DE LEVAS (GR) | 5 |
| SELLO DEL PORTADOR (GR) | 6 |
| TAPA DEL BLOQUE MOTOR (GR) | 7 |
| TAPA DE LA CAJA DELANTERA (GR) | 10 |
| TAPA DEL MECANISMO DE VÁLVULAS (GR) | 12 |
| CIGÜEÑAL (GR) | 16 |
| BLOQUE MOTOR (GR) | 22 |
| CULATA DE CILINDROS (CONJ) | 26 |
| CULATA DE CILINDROS (GR) | 27 |
| AMORTIGUADOR Y POLEA (GR) | 30 |
| DRENAJE DEL ACEITE DE MOTOR | 31 |
| IMPULSOR DE VENTILADOR (GR) | 33 |
| CULATA DE CILINDROS - TORNILLERÍA DE LA (GR) | 35 |
| TORNILLERÍA AMORTIGUADORA DE VIBRACIONES (GR) | 36 |
| TORNILLERÍA DE LA TAPA DELANTERA | 37 |
| CAJA DELANTERA - TORNILLERÍA DE LA (GR) | 38 |
| *FASTENER GP-LIFTING | 39 |
| VOLANTE (GR) | 40 |
| ENGRANAJE DELANTERO (GR) | 41 |
| VOLANTE - CAJA DE (GR) | 43 |
| CAJA DELANTERA (GR) | 44 |
| GRUPO DE GUIA, CORREA | 45 |
| VÁLVULA DE LEVANTAMIENTO (GR) | 46 |
| CÁNCAMOS DE LEVANTAMIENTO DEL MOTOR (GR) | 47 |
| MONTAJE DEL ALTERNADOR (GR) | 48 |
| MONTAJE DEL MOTOR Y LA TRANSMISIÓN (GR) | 49 |
| CÁRTER - COLECTOR DEL (GR) | 51 |
| PISTÓN Y BIELA (GR) | 52 |
| TAPÓN DEL BLOQUE MOTOR (GR) | 53 |
| TAPÓN DEL MOTOR (GR) | 54 |
| POLEA DE MOTOR (GR) | 55 |
| BALANCÍN (GR) | 56 |
| SELLO DE CIGÜEÑAL (GR) | 58 |
| SELLO DE LA CAJA DE VOLANTE (GR) | 59 |
| MOTOR - SOPORTE DEL (GR) | 60 |
| MECANISMO DE VÁLVULAS (GR) | 61 |
| **SISTEMA DE LUBRICACIÓN** | 66 |
| GRUPO ADAPTADOR-TUBERIA DE ACEITE | 66 |
| RESPIRADERO (GR) | 67 |
| TUBO DE LLENADO DE ACEITE (GR) | 68 |
| FILTRO DE ACEITE DEL MOTOR (GR) | 69 |
| ESCAPE DE GASES (GR) | 70 |
| INDICADOR DEL NIVEL DE ACEITE (VARILLA) (GR) | 71 |
| TUBERÍAS DE ACEITE DEL MOTOR (GR) | 72 |
| TURBOCOMPRESOR - TUBERÍAS DE ACEITE DEL (GR) | 73 |
| MULTIPLE DE ACEITE DE MOTOR (GR) | 76 |
| BOMBA DE ACEITE DEL MOTOR (GR) | 77 |
| **SISTEMA DE ENFRIAMIENTO** | 79 |
| ENFRIADOR DE ACEITE DEL MOTOR (GR) | 79 |
| *ELBOW GP-WATER | 80 |
| SOPLADOR - VENTILADOR (GR) | 81 |
| TUBERÍAS DEL AGUA (GR) | 82 |
| BOMBA DE AGUA (GR) | 86 |
| RADIADOR Y POSENFRIADOR (GR) | 88 |
| RADIADOR Y MONTAJE (GR) | 90 |
| VÁLVULA DE MUESTREO DE REFRIGERANTE (GR) | 93 |
| **SISTEMA DE ADMISIÓN Y ESCAPE DE AIRE** | 94 |
| FILTRO DE AIRE (GR) | 94 |
| TAPA DE ADMISIÓN DE AIRE (GR) | 96 |
| CODO DE ADMISIÓN DE AIRE (GR) | 100 |
| PROTECTOR DEL ESCAPE (GR) | 102 |
| INDICADOR DE CAMBIO DE FILTRO DE ACEITE (GR) | 103 |
| TUBERÍAS DE POSENFRIADOR DE AIRE (CONJ) | 104 |


* NO HAY TRADUCCION DISPONIBLE EN EL MOMENTO DE LA IMPRESION

# CONTENIDO


| Nombre | Página |
|---|---|
| GRUPO DE TUBERÍAS DE AIRE DEL TURBOCOMPRESOR | 105 |
| MÚLTIPLE DE ESCAPE (GR) | 106 |
| SILENCIADOR (GR) | 107 |
| ANTEFILTRO (GR) | 109 |
| TURBOCOMPRESOR (GR) | 110 |
| **SISTEMA DE COMBUSTIBLE** | 114 |
| FILTRO DE COMBUSTIBLE Y SEPARADOR DE AGUA (GR) | 114 |
| INYECTOR DE COMBUSTIBLE (GR) | 115 |
| TUBERÍAS DE COMBUSTIBLE (GR) | 118 |
| TUBERÍAS DEL FILTRO DE COMBUSTIBLE | 122 |
| TUBERÍAS DE BOMBA HIDRÁULICA DE INYECCIÓN (GR) | 126 |
| BOMBA HIDRÁULICA DEL INYECTOR UNITARIO Y MONTAJE | 127 |
| *PUMP GP-FILTER & FUEL TRANSFER | 128 |
| BOMBA DE INYECCIÓN DE COMBUSTIBLE (GR) | 129 |
| BOMBA DE CEBADO Y FILTRO PRIMARIO DE COMBUSTIBLE (GR) | 133 |
| BOMBA DE TRANSFERENCIA DE COMBUSTIBLE (GR) | 134 |
| REGULADOR DE LA PRESION DE COMBUSTIBLE (GR) | 135 |
| COMBUSTIBLE - TANQUE DE (GR) | 136 |
| **SISTEMA ELÉCTRICO Y DE ARRANQUE** | 141 |
| ALARMA (GR) | 141 |
| CARGA - ALTERNADOR DE (GR) | 142 |
| BATERÍA Y CABLES (GR) | 146 |
| BLOQUE DE EMPALME (GR) | 152 |
| CONTROL ELECTRÓNICO DEL MOTOR Y MONTAJE | 153 |
| CONVERTIDOR ELÉCTRICO (GR) | 154 |
| CONFIGURACIÓN ELÉCTRICA | 155 |
| ELECTRÓNICA DE LA MÁQUINA (GR) | 155 |
| REFLECTOR (GR) | 156 |
| REFLECTORES (CONFIG) | 157 |
| LUCES DE REFLECTOR (GR) | 158 |
| MOTOR ELÉCTRICO (GR) | 161 |
| PANEL DE DISYUNTORES (GR) | 162 |
| ENCHUFE DE ARRANQUE AUXILIAR (GR) | 165 |
| RESISTENCIA (GR) | 166 |
| SENSOR DEL MOTOR (GR) | 167 |
| DETECTOR DE POSICIÓN (SISTEMA DE COMBUST.) (GR) | 169 |
| SENSOR DE PRESIÓN (GR) | 170 |
| SENSOR DE VELOCIDAD (GR) | 178 |
| SENSOR DE TEMPERATURA (GR) | 180 |
| AUXILIAR DE ARRANQUE CON ÉTER (GR) | 186 |
| MOTOR DE ARRANQUE ELÉCTRICO (GR) | 188 |
| DISYUNTOR (GR) | 194 |
| INTERRUPTOR MAGNÉTICO (GR) | 195 |
| INTERRUPTOR DE PRESIÓN (GR) | 198 |
| INTERRUPTOR DE VOLQUETE (GR) | 199 |
| INTERRUPTOR DE TRANSMISION (GR) | 200 |
| GRUPO DE VÁLVULA-ARRANQUE CON ÉTER | 201 |
| CABLES DE LA CABINA (GR) | 202 |
| CABLES DEL MOTOR (GR) | 210 |
| CABLES DE CALEFACCIÓN (GR) | 212 |
| CABLES DE LA MÁQUINA (GR) | 213 |
| CABLES DE LA DIRECCIÓN SECUNDARIA | 230 |
| **TREN DE FUERZA** | 232 |
| EJE FIJO (CONFIG) | 232 |
| EJE OSCILANTE (CONFIG) | 232 |
| FRENO Y PLANETARIOS (GR) | 233 |
| CAJA Y PIEZAS DE LA TRANSMISIÓN (GR) | 236 |
| EMBRAGUE (GR) | 248 |
| CONTROL HIDRÁULICO DE LA TRANSMISIÓN (GR) | 254 |
| TAPAS PROTECTORAS DE EMBARQUE (GR) | 256 |
| DIFERENCIAL (GR) | 258 |
| DRENAJE DE SEGURIDAD ECOLÓGICA (GR) | 262 |
| TUBO DE LLENADO DE ACEITE DE LA TRANSMISIÓN (GR) | 263 |
| FILTRO Y TUBERIAS DE TREN DE FUERZA (GR) | 265 |
| FILTRO DE ACEITE (GR) | 269 |
| ENGRANAJE DE CORONA Y PIÑÓN (GR) | 270 |
| ENGRANAJE DE TRANSFERENCIA DE SALIDA | 274 |
| CAJA DEL EJE OSCILANTE (GR) | 280 |
| CAJA DE EJE OSCILANTE (GR) | 282 |
| ENTRADA - SERVOTRANSMISIÓN (GR) | 284 |
| TUBERÍAS DE TRABA DEL DIFERENCIAL (GR) | 285 |
| TUBERIAS DEL ENFRIADOR DEL CONVERTIDOR DE PAR | 287 |
| MONTAJE DE ARO | 291 |
| TREN DE FUERZA (CONFIG) | 292 |


* NO HAY TRADUCCION DISPONIBLE EN EL MOMENTO DE LA IMPRESION

# CONTENIDO


| Nombre | Página |
|---|---|
| BOMBA DE LA TRANSMISIÓN (GR) | 293 |
| EJE DE MANDO (GR) | 294 |
| SOPORTE DEL EJE DELANTERO (GR) | 297 |
| ARO Y RUEDA | 300 |
| ARO Y LLANTA (GR) | 301 |
| CONVERTIDOR DE PAR (GR) | 303 |
| TRANSMISION (CONFIG) | 305 |
| VÁLVULA DE DESCARGA (GR) | 307 |
| VÁLVULA DE CONTROL DE FLUJO (GR) | 308 |
| VÁLVULA DE MODULACIÓN (GR) | 309 |
| VÁLVULA DE ALIVIO (GR) | 310 |
| VÁLVULA SELECTORA Y DE CONTROL DE PRESIÓN (GR) | 312 |
| VÁLVULA DE SOLENOIDE (GR) | 314 |
| VÁLVULA DE CONTROL DE LA TRANSMISIÓN (GR) | 315 |
| **BASTIDOR Y CAJA** | 318 |
| GUARDABARROS (GR) | 318 |
| PLANCHA DEL PISO (GR) | 319 |
| BASTIDOR DELANTERO (CONJ) | 321 |
| BASTIDOR TRASERO (CONJ) | 325 |
| BASTIDOR DELANTERO (GR) | 326 |
| BASTIDOR TRASERO (GR) | 328 |
| PROTECTOR INFERIOR (GR) | 331 |
| PROTECTOR DE LA CABINA (GR) | 333 |
| *GUARD GP-FRAME | 335 |
| PROTECTOR DEL TANQUE DE COMBUSTIBLE (GR) | 336 |
| PROTECTOR DE LAS TUBERÍAS (GR) | 338 |
| PROTECTOR DEL RADIADOR (GR) | 347 |
| TORNILLERIA GR-BASTIDOR TRASERO | 349 |
| ENGANCHE ARTICULADO (GR) | 350 |
| CAPO Y PROTECTOR (GR) | 352 |
| TUBERÍAS DE ENGRASE (GR) | 358 |
| TIRANTE DE TRABA DEL BASTIDOR DE DIRECCIÓN (GR) | 359 |
| ESTRIBO DEL OPERADOR (GR) | 360 |
| PROTECTORES DE RAMAS (GR) | 361 |
| **SISTEMA DE FRENOS** | 362 |
| ACUMULADOR DEL FRENO (GR) | 362 |
| ACCIONADOR DEL FRENO DE ESTACIONAMIENTO (GR) | 367 |
| FRENO DE ESTACIONAMIENTO (GR) | 368 |
| CONTROL DEL PEDAL DE FRENO (GR) | 372 |
| CONTROL DEL FRENO DE ESTACIONAMIENTO | 374 |
| FRENO DE SERVICIO - CONTROL (GR) | 376 |
| TUBERÍAS DEL FRENO DE SERVICIO (GR) | 379 |
| CONTROL DEL MULTIPLE (GR) | 381 |
| VÁLVULA DE CONTROL DEL FRENO (GR) | 382 |
| **SISTEMA DE DIRECCIÓN** | 383 |
| CONTROL DE DIRECCIÓN Y HOJA DE PLATAFORMA (GR) | 383 |
| CILINDRO DE DIRECCIÓN (GR) | 385 |
| TUBERÍAS DE LA DIRECCIÓN SECUNDARIA (GR) | 388 |
| TUBERÍAS DE DIRECCIÓN (GR) | 394 |
| BOMBA Y MOTOR DE DIRECCION SECUNDARIA (GR) | 396 |
| BOMBA Y MONTAJE DE LA DIRECCIÓN SECUNDARIA (GR) | 397 |
| DIRECCIÓN SECUNDARIA (CONFIG) | 398 |
| VOLANTE DE DIRECCIÓN (GR) | 399 |
| **SISTEMA HIDRÁULICO** | 403 |
| ACUMULADOR DE ACEITE PILOTO (GR) | 403 |
| ENFRIADOR DEL ACEITE HIDRAULICO (GR) | 405 |
| CILINDRO DEL ARCO (GR) | 406 |
| CILINDRO DE LA PLUMA (GR) | 410 |
| CILINDRO DE GARFIO (GR) | 411 |
| CILINDRO DE LEVANTAMIENTO (GR) | 412 |
| GRUPO DE CILINDRO-TENAZAS | 413 |
| FILTRO DE ACEITE (GR) | 414 |
| HIDRÁULICA (CONFIG) | 416 |
| VÁLVULA HIDRÁULICA DE 4 VÍAS (CONFIG. IND.) | 416 |
| TUBERÍAS DE LA HOJA PARA MOVER TRONCOS (GR) | 417 |
| TUBERÍAS DEL GARFIO (GR) | 419 |
| *LINES GP-GRAPPLE HEAD | 422 |
| TUBERÍAS HIDRÁULICAS (GR) | 425 |
| TUBERÍAS CON SERVOMANDO (GR) | 429 |
| TUBERIAS DE ROTADOR (GR) | 435 |
| CONTROL DEL MULTIPLE (GR) | 437 |
| BOMBA HIDRÁULICA Y MONTAJE (GR) | 438 |
| BOMBA DE ENGRANAJES (GR) | 439 |
| BOMBA DE PISTONES (GR) | 442 |
| GRUPO GIRATORIO DE BOMBA | 444 |
| TANQUE HIDRÁULICO Y MONTAJE (GR) | 445 |
| TANQUE HIDRÁULICO (GR) | 447 |
| VÁLVULA Y TUBOS DEL GARFIO (GR) | 449 |


* NO HAY TRADUCCION DISPONIBLE EN EL MOMENTO DE LA IMPRESION

# CONTENIDO


| Nombre | Página |
|---|---|
| VÁLVULAS HIDRÁULICAS - GRUPO DE 2 | 464 |
| GRUPO DE 4 VÁLVULAS HIDRÁULICAS | 465 |
| BANCADA 5 (GR) | 468 |
| VÁLVULA DE RETENCIÓN (GR) | 469 |
| VÁLVULA DE CONTROL (GR) | 470 |
| VÁLVULA DE DERIVACIÓN (GR) | 486 |
| PRIORIDAD - VÁLVULA DE (GR) | 487 |
| VALVULA DE CONTROL DE LA BOMBA (GR) | 488 |
| VÁLVULA DE ALIVIO (GR) | 489 |
| VÁLVULA DE SOLENOIDE (GR) | 490 |
| **HERRAMIENTAS** | 491 |
| ARCO (CONFIG) | 491 |
| ARCO(GR) | 492 |
| COJINETE DE ARCO Y SELLO (GR) | 493 |
| GRUPO DESELLO Y COJINETE, GARFIO | 494 |
| HOJA PARA MOVER TRONCOS (CONFIG) | 496 |
| HOJA PARA MOVER TRONCOS (GR) | 497 |
| FRENO DEL CABRESTANTE | 498 |
| GRUPO DE CARGADOR PLANETARIO | 501 |
| CAJA DEL CABRESTANTE (GR) | 503 |
| EMBRAGUE Y ENGRANAJE DEL MALACATE (GR) | 505 |
| EMBRAGUE DEL MALACATE (GR) | 506 |
| CONTROL DEL MALACATE (GR) | 510 |
| *COVER GP-WINCH | 515 |
| FRENO DEL CILINDRO (GR) | 516 |
| MANDO DEL MALACATE (GR) | 517 |
| TAMBOR DEL MALACATE (GR) | 519 |
| CUCHILLA (GR) | 521 |
| GUIACABLE DEL MALACATE (GR) | 522 |
| BASTIDOR DE GUÍA DE CABLES (GR) | 526 |
| BASTIDOR DE GARFIO (GR) | 528 |
| ENGRANAJE DE ENTRADA DEL CABRESTANTE (GR) | 530 |
| ENGRANAJE DE SALIDA DEL CABRESTANTE (GR) | 532 |
| GARFIO (CONFIG) | 534 |
| PROTECTOR DEL CABRESTANTE(GR) | 535 |
| *HEAD AR-GRAPPLE | 538 |
| CABEZA DE GARFIO (GR) | 539 |
| TUBERÍAS DEL MALACATE (GR) | 540 |
| PISTONES DEL MOTOR (GR) | 549 |
| MONTAJE DEL MALACATE (GR) | 550 |
| GRUPO DE CLAVIJA, GARFIO | 554 |
| GRUPO PLANETARIO-CBRESTANTE | 557 |
| RODILLO SUPERIOR (GR) | 558 |
| ROTADOR HIDRAULICO (GR) | 559 |
| GRUPO DE AMORTIGUADOR, GARFIO | 561 |
| GRUPO TENZA-GARFIO | 564 |
| VÁLVULA DE DRENAJE (GR) | 566 |
| MALACATE (CONFIG) | 567 |
| MALACATE (GR) | 569 |
| **PUESTO DEL OPERADOR** | 573 |
| ACUMULADOR DEL ACONDICIONADOR DE AIRE (GR) | 573 |
| COMPRESOR DE AIRE DEL ASIENTO (GR) | 575 |
| ACONDICIONADOR DE AIRE (CONFIG) | 576 |
| ACONDICIONADOR DE AIRE (GR) | 577 |
| VENTILADOR SOPLADOR DE LA CABINA (GR) | 583 |
| SISTEMA ROPS DE CABINA CERRADA (CONFIG) | 587 |
| CABINA ROPS ABIERTA (CONFIG) | 588 |
| COMPRESOR DE REFRIGERANTE Y GRUPO DE MONTAJE | 590 |
| COMPRESOR DE REFRIGERANTE (GR) | 591 |
| CONDENSADOR DEL REFRIGERANTE Y MONTAJE (GR) | 592 |
| CONTROL DE MANIJA (GR) | 593 |
| PALANCA UNIVERSAL DE CONTROL (GR) | 595 |
| CONTROL HIDRÁULICO DE OPERACIÓN PILOTO (GR) | 597 |
| CONTROL DE DIRECCIÓN (GR) | 601 |
| PUERTA DE CABINA | 603 |
| VENTILADOR DESCONGELADOR (GR) | 608 |
| PROTECTOR DE LA ESTRUCTURA ROPS CERRADA (CONFIG) | 610 |
| PROTECTOR DE LA ESTRUCTURA ROPS ABIERTA (GR) | 611 |
| INSTALACIÓN DE RADIO (GR) | 612 |
| TUBERÍAS DE ACONDICIONADOR DE AIRE (GR) | 614 |
| RETROVISOR (GR) | 617 |
| MODULO DE LA PANTALLA (GR) | 618 |
| MONTAJE DE LA ESTRUCTURA ROPS (GR) | 619 |
| *PANEL GP-ACCESS | 620 |
| REGULADOR - PEDAL DEL (GR) | 622 |
| RADIO (GR) | 623 |
| ESTRUCTURA ROPS (GR) | 624 |
| REJILLA DE LA CABINA (GR) | 627 |


* NO HAY TRADUCCION DISPONIBLE EN EL MOMENTO DE LA IMPRESION

# CONTENIDO


| Nombre | Página | Nombre | Página |
|---|---|---|---|
| ASIENTO (GR) | 632 | | |
| SUSPENSIÓN - ASIENTO CON (GR) | 634 | | |
| ASIENTO CON SUSPENSIÓN (GR) | 637 | | |
| ASIENTO GIRATORIO (GR) | 640 | | |
| TANQUE DEL LAVAPARABRISAS (GR) | 642 | | |
| GUARNICIONES DE LA CABINA (GR) | 643 | | |
| ACCESORIOS DEL ROPS ABIERTOS (GR) | 661 | | |
| *VALVE GP-A/C & HEATER CONTROL | 675 | | |
| VENTANA (GR) | 676 | | |
| LIMPIA Y LAVAPARABRISAS (GR) | 680 | | |
| LIMPIAPARABRISAS DE LA VENTANA (GR) | 682 | | |
| **EQUIPOS Y SUMINISTRO DE SERVICIOS** | 684 | | |
| ETIQUETA DE ADVERTENCIA (GR) | 684 | | |
| PROTECTOR DE TANQUE DE AGUA (GR) | 687 | | |
| GRUPO DE TUBERIAS, AGUA A PRESIÓN | 688 | | |
| PUBLICACIONES (GR) | 690 | | |
| CALCOMANÍAS Y PLACAS DE IDENTIFICACIÓN (GR) | 691 | | |
| TANQUE DE AGUA (CONFIG) | 696 | | |
| TANQUE DEL AGUA (GR) | 697 | | |
| **INDICE DE NUMEROS DE PIEZA** | B1 | | |


* NO HAY TRADUCCION DISPONIBLE EN EL MOMENTO DE LA IMPRESION

# ÍNDICE


| Designação | Página |
|---|---|
| **INFORMAÇÃO GERAL** | A34 |
| **ALTERNATIVAS DE REPARO** | A45 |
| **ADITIVOS SUPLEMENTARES DO LÍQUIDO ARREFECEDOR** | A50 |
| **PEÇAS DE MANUTENÇÃO** | A60 |
| **ÍNDICE** | A97 |
| **MÁQUINA - ARRANJO** | 1 |
| CHASSI | 1 |
| ARRANJO BÁSICO | 1 |
| **MOTOR - ARRANJO** | 2 |
| MOTOR COMPLETO | 2 |
| MOTOR - NÚCLEO | 3 |
| GRUPO DE INSTALAÇÃO - MOTOR | 4 |
| **MOTOR BÁSICO** | 5 |
| EIXO-COMANDO DE VÁLVULA | 5 |
| SUPORTE DO RETENTOR | 6 |
| TAMPA - BLOCO DO MOTOR | 7 |
| TAMPA - CAIXA DIANTEIRA | 10 |
| TAMPA - MECANISMO DAS VÁLVULAS | 12 |
| VIRABREQUIM | 16 |
| BLOCO DO MOTOR | 22 |
| CABEÇOTE DO MOTOR | 26 |
| AMORTECEDOR DE VIBRAÇÕES E POLIA | 30 |
| DRENO - ÓLEO DO MOTOR | 31 |
| COMANDO DO VENTILADOR | 33 |
| FIXADORES - CABEÇOTE DO MOTOR | 35 |
| FIXADORES - AMORTECEDOR | 36 |
| FIXADORES - TAMPA DIANTEIRA | 37 |
| FIXADORES - CAIXA DIANTEIRA | 38 |
| FIXADORES DE LEVANTAMENTO | 39 |
| VOLANTE DO MOTOR | 40 |
| ENGRENAGENS DE DISTRIBUIÇÃO | 41 |
| CAIXA DO VOLANTE DO MOTOR | 43 |
| CAIXA DIANTEIRA | 44 |
| RODA-GUIA - CORREIA | 45 |
| TUCHO DA VÁLVULA | 46 |
| LEVANTAMENTO DO MOTOR | 47 |
| MONTAGEM - ALTERNADOR | 48 |
| MONTAGEM - MOTOR E TRANSMISSÃO | 49 |
| CÁRTER DO ÓLEO DO MOTOR | 51 |
| PISTÃO E BIELA | 52 |
| BUJÃO DO BLOCO DO CILINDRO | 53 |
| BUJÃO DO MOTOR | 54 |
| POLIA DO MOTOR | 55 |
| BALANCIM | 56 |
| RETENTOR DO VIRABREQUIM | 58 |
| RETENTOR - CAIXA DO VOLANTE | 59 |
| SUPORTE DO MOTOR | 60 |
| MECANISMO DAS VÁLVULAS | 61 |
| **SISTEMA DE LUBRIFICAÇÃO** | 66 |
| ADAPTADOR-TUBULAÇÃO DE ÓLEO | 66 |
| RESPIRO | 67 |
| BOCAL DE ENCHIMENTO DE ÓLEO DO MOTOR | 68 |
| FILTRO - ÓLEO DO MOTOR | 69 |
| ELIMINAÇÃO DE VAPORES DO CÁRTER | 70 |
| INDICADOR - NÍVEL DO ÓLEO (VARETA) | 71 |
| TUBOS - ÓLEO DO MOTOR | 72 |
| TUBOS - ÓLEO DO TURBOALIMENTADOR | 73 |
| COLETOR - ÓLEO DO MOTOR | 76 |
| BOMBA DE ÓLEO - MOTOR | 77 |
| **SISTEMA DE ARREFECIMENTO** | 79 |
| ARREFECEDOR - ÓLEO DO MOTOR | 79 |
| COTOVELO D'ÁGUA | 80 |
| VENTILADOR DE SOPRO | 81 |
| TUBOS - ÁGUA | 82 |
| BOMBA DE ÁGUA | 86 |
| RADIADOR E PÓS-ARREFECEDOR | 88 |
| RADIADOR E MONTAGEM | 90 |
| VÁLVULA DE TIRAR AMOSTRAS DO LÍQUIDO ARREFECEDOR | 93 |
| **SISTEMA DA ADMISSÃO DE AR E DE ESCAPE** | 94 |
| PURIFICADOR DE AR | 94 |
| TAMPA - ADMISSÃO DE AR | 96 |
| COTOVELO DE ADMISSÃO DE AR | 100 |
| PROTETOR - TUBO DE ESCAPE | 102 |
| INDICADOR - TROCA DO FILTRO DE AR | 103 |
| TUBULAÇÕES - AR DO PÓS-ARREFECEDOR | 104 |
| TUBULAÇÕES - AR DO TURBOALIMENTADOR | 105 |
| COLETOR DE ESCAPE | 106 |
| SILENCIADOR | 107 |
| PRÉ-PURIFICADOR | 109 |
| TURBOALIMENTADOR | 110 |


* TRADUÇÃO NÃO DISPONÍVEL NO MOMENTO DA IMPRESSÃO

# ÍNDICE


| Designação | Página |
|---|---|
| **SISTEMA DE COMBUSTÍVEL** | 114 |
| FILTRO DE COMBUSTÍVEL E SEPARADOR DE ÁGUA | 114 |
| INJETOR DE COMBUSTÍVEL | 115 |
| TUBOS - COMBUSTÍVEL | 118 |
| TUBOS - FILTRO DO COMBUSTÍVEL | 122 |
| TUBOS - INJETOR DA BOMBA HIDRÁULICA | 126 |
| BOMBA HIDRÁULICA E MONTAGEM - UNIDADE INJETORA | 127 |
| *PUMP GP-FILTER & FUEL TRANSFER | 128 |
| BOMBA DE INJEÇÃO DO COMBUSTÍVEL | 129 |
| BOMBA DE ESCORVA DO COMBUSTÍVEL E DO FILTRO PRIMÁRIO | 133 |
| BOMBA DE TRANSFERÊNCIA DO COMBUSTÍVEL | 134 |
| REGULADOR DE PRESSÃO DO COMBUSTÍVEL | 135 |
| TANQUE DE COMBUSTÍVEL | 136 |
| **SISTEMA ELÉTRICO E DE PARTIDA** | 141 |
| ALARME | 141 |
| ALTERNADOR DE CORRENTE | 142 |
| BATERIA E CABOS / FIOS ELÉTRICOS | 146 |
| BLOCO DE JUNÇÃO | 152 |
| CONTROLE ELETRÔNICO E MONTAGEM - MOTOR | 153 |
| CONVERSOR ELÉTRICO | 154 |
| SISTEMA ELÉTRICO | 155 |
| SISTEMA ELETRÔNICO - MÁQUINA | 155 |
| LÂMPADA - FAROL | 156 |
| SISTEMA DE ILUMINAÇÃO - FARÓIS | 157 |
| MOTOR ELÉTRICO | 161 |
| PAINEL - DISJUNTOR ELÉTRICO AUTOMÁTICO | 162 |
| RECEPTÁCULO-PARTIDA AUXILIAR | 165 |
| RESISTOR - GRUPO | 166 |
| SENSOR DO MOTOR | 167 |
| EMISSOR - POSIÇÃO | 169 |
| SENSOR - PRESSÃO | 170 |
| SENSOR DE VELOCIDADE | 178 |
| SENSOR - TEMPERATURA | 180 |
| AUXILIAR DE PARTIDA A ÉTER | 186 |
| MOTOR ELÉTRICO DE PARTIDA | 188 |
| CHAVE GERAL | 194 |
| INTERRUPTOR - MAGNÉTICO | 195 |
| INTERRUPTOR - PRESSÃO | 198 |
| INTERRUPTOR - BALANCIM | 199 |
| INTERRUPTOR - TRANSMISSÃO | 200 |
| VALVULA - PARTIDA A ETER | 201 |
| CABOS/FIOS ELÉTRICOS - CABINE | 202 |
| CABOS/FIOS ELÉTRICOS - MOTOR | 210 |
| CABOS/FIOS ELÉTRICOS - AQUECEDOR | 212 |
| CABOS/FIOS ELÉTRICOS - MÁQUINA | 213 |
| CABOS/FIOS ELÉTRICOS - DIREÇÃO SECUNDÁRIA | 230 |
| **TREM DE FORÇA** | 232 |
| EIXO FIXO | 232 |
| EIXO OSCILANTE | 232 |
| FREIOS E ENGRENAGENS PLANETARIAS | 233 |
| CAIXA E COMPONENTES - TRANSMISSÃO | 236 |
| EMBREAGEM | 248 |
| CONTROLE HIDRÁULICO DA TRANSMISSÃO | 254 |
| TAMPA - EMBARQUE | 256 |
| DIFERENCIAL | 258 |
| DRENO - ECOLOGIA | 262 |
| BOCAL DE ENCHIMENTO DE ÓLEO DO TREM DE FORÇA | 263 |
| FILTRO E TUBOS-TREM DE FORÇA | 265 |
| FILTRO - ÓLEO | 269 |
| ENGRENAGEM-COROA E PINHÃO | 270 |
| ENGRENAGENS DE SAÍDA DE TRANSFERÊNCIA | 274 |
| CAIXA - EIXO FIXO | 280 |
| CAIXA - EIXO OSCILANTE | 282 |
| ENTRADA - TRANSMISSÃO | 284 |
| TUBOS - TRAVA DO DIFERENCIAL | 285 |
| TUBOS - ARREFECEDOR DO CONVERSOR DE TORQUE | 287 |
| MONTAGEM - ARO | 291 |
| TREM DE FORÇA | 292 |
| BOMBA DA TRANSMISSÃO | 293 |
| EIXO DE TRANSMISSÃO | 294 |
| SUPORTE - EIXO DIANTEIRO | 297 |
| PNEU E ARO | 300 |
| CONVERSOR DE TORQUE | 303 |
| TRANSMISSÃO | 305 |
| VÁLVULA DE DESPEJO | 307 |
| VÁLVULA DE CONTROLE - FLUXO | 308 |
| VÁLVULA DE MODULAÇÃO | 309 |
| VÁLVULA DE ALÍVIO | 310 |
| VÁLVULA SELETORA E CONTROLE DE PRESSÃO | 312 |
| VÁLVULA SOLENÓIDE | 314 |
| VÁLVULA DE CONTROLE - TRANSMISSÃO | 315 |
| **CHASSI TRASEIRO** | 318 |
| PÁRA-LAMA | 318 |


* TRADUÇÃO NÃO DISPONÍVEL NO MOMENTO DA IMPRESSÃO

# ÍNDICE


| Designação | Página |
|---|---|
| CHAPA DO PISO | 319 |
| ARMAÇÃO DIANTEIRA | 321 |
| CHASSI TRASEIRO | 325 |
| CHASSI DIANTEIRO | 326 |
| CHASSI TRASEIRO | 328 |
| PROTETOR INFERIOR | 331 |
| PROTETOR DA CABINE | 333 |
| PROTETOR DO CHASSI | 335 |
| PROTETOR - TANQUE DE COMBUSTÍVEL | 336 |
| PROTETOR - TUBOS | 338 |
| PROTETOR - RADIADOR | 347 |
| FERRAGEM - CHASSI TRASEIRO | 349 |
| ENGATE - ARTICULAÇÃO | 350 |
| CAPÔ E PROTETOR | 352 |
| TUBOS - GRAXA | 358 |
| ELO - TRAVA DA ARMAÇÃO DA DIREÇÃO | 359 |
| DEGRAU | 360 |
| BARRAS DE PROTEÇÃO DO CAPÔ | 361 |
| **SISTEMA DE FREIO** | 362 |
| ACUMULADOR - FREIO | 362 |
| ACIONADOR DO FREIO DE ESTACIONAMENTO | 367 |
| FREIO DE ESTACIONAMENTO | 368 |
| CONTROLE DO PEDAL DO FREIO | 372 |
| CONTROLE DO FREIO DE ESTACIONAMENTO | 374 |
| CONTROLE DO FREIO DE SERVIÇO | 376 |
| TUBOS - FREIO DE SERVIÇO | 379 |
| COLETOR - CONTROLE | 381 |
| VÁLVULA DE CONTROLE DOS FREIOS | 382 |
| **SISTEMA DE DIREÇÃO** | 383 |
| CONTROLE - DIREÇÃO E LÂMINA EMPURRADORA DE TRONCOS | 383 |
| CILINDRO DA DIREÇÃO | 385 |
| TUBOS - DIREÇÃO SECUNDÁRIA | 388 |
| TUBOS - DIREÇÃO | 394 |
| BOMBA DE DIREÇÃO SECUNDÁRIA E MOTOR | 396 |
| BOMBA DA DIREÇÃO SECUNDÁRIA E MONTAGEM | 397 |
| DIREÇÃO SECUNDÁRIA | 398 |
| VOLANTE | 399 |
| **SISTEMA HIDRÁULICO** | 403 |
| ACUMULADOR D ÓLEO - PILOTO | 403 |
| ARREFECEDOR DO ÓLEO HIDRÁULICO | 405 |
| CILINDRO DO ARCO | 406 |
| CILINDRO DA LANÇA | 410 |
| CILINDRO DA GARRA | 411 |
| CILINDRO DE LEVANTAMENTO | 412 |
| CILINDRO - PINÇA | 413 |
| FILTRO - ÓLEO | 414 |
| COMANDO HIDRÁULICO | 416 |
| ARRANJO HIDRÁULICO INDUSTRIAL | 416 |
| TUBOS - LÂMINA DE EMPUXO | 417 |
| TUBOS - GARRA | 419 |
| TUBULAÇÕES-CABEÇOTE DA GARRA | 422 |
| TUBOS - ÓLEO HIDRÁULICO | 425 |
| TUBOS - CIRCUITO PILOTO | 429 |
| TUBOS - GIRADOR | 435 |
| COLETOR - CONTROLE | 437 |
| BOMBA HIDRÁULICA E MONTAGEM | 438 |
| BOMBA DE ENGRENAGENS | 439 |
| BOMBA DE PISTÃO | 442 |
| GRUPO ROTATIVO DA BOMBA | 444 |
| TANQUE DE ÓLEO HIDRÁULICO E MONTAGEM | 445 |
| TANQUE HIDRÁULICO | 447 |
| VÁLVULA E TUBOS - GARRA | 449 |
| GRUPO DE VÁLVULAS DE CONTROLE - DUPLO | 464 |
| GRUPO DE VÁLVULAS DE CONTROLE - QUÁDRUPLO | 465 |
| GRUPO DE VÁLVULAS DE CONTROLE - CINCO | 468 |
| VÁLVULA DE RETENÇÃO | 469 |
| VÁLVULA DE CONTROLE | 470 |
| VÁLVULA DESVIADORA | 486 |
| VÁLVULA DE PRIORIDADE | 487 |
| VÁLVULA DE CONTROLE DA BOMBA | 488 |
| VÁLVULA DE ALÍVIO | 489 |
| VÁLVULA SOLENÓIDE | 490 |
| **FERRAMENTAS DE TRABALHO** | 491 |
| ARCO | 491 |
| ROLAMENTO E RETENTOR - ARCO | 493 |
| MANCAL E RETENTOR - GARRA | 494 |
| LÂMINA DE EMPUXO | 496 |
| LÂMINA EMPURRADORA DE TRONCOS | 497 |
| FREIO DO GUINCHO | 498 |
| SUPORTE-PLANETÁRIO | 501 |
| CAIXA - GUINCHO | 503 |
| EMBREAGEM E ENGRENAGEM - GUINCHO | 505 |
| EMBREAGEM - GUINCHO | 506 |
| CONTROLE DO GUINCHO | 510 |
| TAMPA-GUINCHO | 515 |
| CILINDRO DO FREIO | 516 |


* TRADUÇÃO NÃO DISPONÍVEL NO MOMENTO DA IMPRESSÃO

# ÍNDICE


| Designação | Página |
|---|---|
| COMANDO DO GUINCHO | 517 |
| TAMBOR - GUINCHO | 519 |
| BORDA CORTANTE | 521 |
| ROLDANAS DE GUIA DO GUINCHO | 522 |
| ARMAÇÃO DE GUIA DO CABO | 526 |
| ARMAÇÃO DA GARRA | 528 |
| ENGRENAGEM DE ENTRADA - GUINCHO | 530 |
| ENGRENAGEM DE SAÍDA DO GUINCHO | 532 |
| GARRA | 534 |
| PROTETOR - GUINCHO | 535 |
| CABEÇOTE-GARRA | 538 |
| CABEÇA - GARRA | 539 |
| TUBOS - GUINCHO | 540 |
| MOTOR - PISTÃO | 549 |
| MONTAGEM - GUINCHO | 550 |
| PINO - GARRA | 554 |
| PLANETÁRIO - GUINCHO | 557 |
| ROLETE SUPERIOR | 558 |
| GIRADOR HIDRÁULICO | 559 |
| AMORTECEDOR DE CHOQUE DA DIREÇÃO - GARRA | 561 |
| PINÇA DA GARRA | 564 |
| VÁLVULA DE DRENAGEM | 566 |
| GUINCHO | 567 |
| **ESTAÇÃO DO OPERADOR** | 573 |
| ACUMULADOR - AR CONDICIONADO | 573 |
| COMPRESSOR DE AR - ASSENTO | 575 |
| CONDICIONADOR DE AR | 576 |
| VENTILADOR DA CABINE | 583 |
| CABINE - ESTRUTURA ROPS COBERTA | 587 |
| CABINE - ESTRUTURA ROPS ABERTA | 588 |
| COMPRESSOR DE REFRIGERANTE E MONTAGEM | 590 |
| COMPRESSOR DE REFRIGERANTE | 591 |
| CONDENSADOR DO REFRIGERANTE E MONTAGEM | 592 |
| CONTROLE-CABO | 593 |
| CONTROLE - ALAVANCA | 595 |
| CONTROLE HIDRÁULICO DE OPERAÇÃO PILOTO | 597 |
| CONTROLE DE DIREÇÃO | 601 |
| PORTA DA CABINE | 603 |
| DESCONGELADOR | 608 |
| PROTETOR - ESTRUTURA ROPS COBERTA | 610 |
| PROTETOR - ESTRUTURA ROPS ABERTA | 611 |
| INSTALAÇÃO DO RÁDIO | 612 |
| TUBOS - AR CONDICIONADO | 614 |
| ESPELHO RETROVISOR | 617 |
| MÓDULO DO VISOR | 618 |
| MONTAGEM - ESTRUTURA ROPS | 619 |
| PAINEL - ACESSO | 620 |
| PEDAL DO GOVERNADOR | 622 |
| RÁDIO | 623 |
| ESTRUTURA ROPS | 624 |
| TELA DA CABINE | 627 |
| ASSENTO | 632 |
| ASSENTO COM SUSPENSÃO | 634 |
| SUSPENSÃO - ASSENTO | 637 |
| ASSENTO GIRATÓRIO | 640 |
| TANQUE - LAVADOR DE JANELA | 642 |
| LISTRA DA CABINE | 643 |
| LISTRA - ESTRUTURA ROPS ABERTA | 661 |
| VÁLVULA-CONTROLE DO A/C E AQUECEDOR | 675 |
| VIDRO | 676 |
| LIMPADOR E LAVADOR - JANELA | 680 |
| LIMPADOR DO VIDRO | 682 |
| **EQUIPAMENTOS DE SERVIÇO E SUPRIMENTOS** | 684 |
| DECALQUE | 684 |
| PROTETOR - TANQUE DE ÁGUA | 687 |
| TUBULAÇÕES - AR PRESSURIZADO | 688 |
| PUBLICAÇÃO | 690 |
| PLACA E DECALQUE | 691 |
| TANQUE DE ÁGUA | 696 |
| **ÍNDICE DE NÚMERO DE PEÇA** | B1 |


* TRADUÇÃO NÃO DISPONÍVEL NO MOMENTO DA IMPRESSÃO

# INHALTSVERZEICHNIS


| Bezeichnung | Seite |
|---|---|
| **ALLGEMEINE HINWEISE** | A38 |
| **REPARATURALTERNATIVEN** | A46 |
| **KÜHLMITTELZUSATZ** | A51 |
| **WARTUNGSTEILE** | A63 |
| **STICHWORTVERZEICHNIS** | A107 |
| **MASCHINE** | 1 |
| FAHRWERK | 1 |
| GRUNDAUSFÜHRUNG | 1 |
| **MOTOR** | 2 |
| MOTOR, KOMPLETT | 2 |
| MOTORKÜHLERBLOCK | 3 |
| MOTOR-EINBAUSATZ | 4 |
| **MOTOR (GRUNDAUSFÜHRUNG)** | 5 |
| NOCKENWELLE | 5 |
| DICHTUNGSTRÄGER | 6 |
| MOTORBLOCKDECKEL | 7 |
| STIRNRADGEHÄUSEDECKEL | 10 |
| VENTILDECKEL | 12 |
| KURBELWELLE | 16 |
| MOTORBLOCK | 22 |
| ZYLINDERKOPF | 26 |
| DÄMPFER UND RIEMENSCHEIBE | 30 |
| MOTORÖLABLASS | 31 |
| LÜFTERANTRIEB | 33 |
| ZYLINDERKOPF-HALTETEILE | 35 |
| DÄMPFER-HALTETEILE | 36 |
| STIRNRADGEHÄUSE-HALTETEILE | 37 |
| HUBÖSEN-HALTETEILE | 39 |
| SCHWUNGRAD | 40 |
| STIRNRAD | 41 |
| SCHWUNGRADGEHÄUSE | 43 |
| STIRNRADGEHÄUSE | 44 |
| LEITRAD - RIEMEN | 45 |
| HUBVENTIL | 46 |
| MOTORHUBÖSE | 47 |
| DREHSTROMGENERATOR - BEFESTIGUNG | 48 |
| MOTOR- UND GETRIEBEAUFLAGER | 49 |
| ÖLWANNE | 51 |
| PLEUELSTANGE UND KOLBEN | 52 |
| ZYLINDERBLOCKSCHRAUBE | 53 |
| MOTORSTOPFEN | 54 |
| MOTORRIEMENSCHEIBE | 55 |
| VENTILKIPPHEBEL | 56 |
| KURBELWELLENDICHTUNG | 58 |
| SCHWUNGRADGEHÄUSEDICHTUNG | 59 |
| MOTORAUFHÄNGUNG | 60 |
| VENTILSTEUERUNG | 61 |
| **SCHMIERSYSTEM** | 66 |
| ADAPTER - ÖLLEITUNG | 66 |
| ENTLÜFTER | 67 |
| MOTORÖLEINFÜLLSTUTZEN | 68 |
| ÖLFILTER | 69 |
| ENTDUNSTER | 70 |
| ÖLMESSSTAB | 71 |
| MOTORÖLLEITUNGEN | 72 |
| TURBOLADERÖLLEITUNGEN | 73 |
| MOTORÖLKRÜMMER | 76 |
| SCHMIERPUMPE | 77 |
| **KÜHLSYSTEM** | 79 |
| MOTORÖLKÜHLER | 79 |
| WASSERKNIESTÜCK | 80 |
| DRUCKLÜFTER | 81 |
| KÜHLWASSERLEITUNGEN | 82 |
| KÜHLWASSERPUMPE | 86 |
| KÜHLER U. LADELUFTKÜHLER | 88 |
| KÜHLER U. BEFESTIGUNG | 90 |
| KÜHLMITTELPROBEENTNAHMEVENTIL | 93 |
| **LUFTANSAUG- UND ABGASSYSTEM** | 94 |
| LUFTREINIGER | 94 |
| LUFTEINLASSDECKEL | 96 |
| LUFTEINLASSBOGEN | 100 |
| AUSPUFFVERKLEIDUNG | 102 |
| LUFTFILTERWARTUNGSANZEIGE | 103 |
| LADELUFTKÜHLERLEITUNGEN | 104 |
| TURBOLADERLUFTLEITUNGEN | 105 |
| AUSPUFFKRÜMMER | 106 |
| SCHALLDÄMPFER | 107 |
| VORREINIGER | 109 |
| TURBOLADER | 110 |
| **KRAFTSTOFFSYSTEM** | 114 |
| WASSERABSCHEIDER- U. KRAFTSTOFFILTER | 114 |
| KRAFTSTOFFEINSPRITZDÜSE | 115 |
| KRAFTSTOFFLEITUNGEN | 118 |
| KRAFTSTOFFILTERLEITUNGEN | 122 |
| EINSPRITZLEITUNGEN - HYDRAULIKPUMPE | 126 |
| PUMPE UND BEFESTIGUNGSTEILE | 127 |
| *PUMP GP-FILTER & FUEL TRANSFER | 128 |
| KRAFTSTOFFEINSPRITZPUMPE | 129 |
| KRAFTSTOFFENTLÜFTUNGSPUMPE UND -HAUPTFILTER | 133 |


* ÜBERSETZUNG ZUM ZEITPUNKT DER DRUCKLEGUNG NICHT VORHANDEN

# INHALTSVERZEICHNIS


| Bezeichnung | Seite |
|---|---|
| KRAFTSTOFFÖRDERPUMPE | 134 |
| KRAFTSTOFFDRUCKREGLER | 135 |
| KRAFTSTOFFTANK | 136 |
| **ELEKTRISCHE ANLAGE UND STARTSYSTEM** | 141 |
| WARNVORRICHTUNG | 141 |
| DREHSTROMGENERATOR | 142 |
| BATTERIE UND VERDRAHTUNG | 146 |
| KLEMMLEISTE | 152 |
| STEUERUNGSEINHEIT, ELEKTRON. FÜR MOTOR UND BEFEST. | 153 |
| ELEKTR. UMFORMER | 154 |
| ELEKTR. ANLAGE | 155 |
| ELEKTRONIK - MASCHINE | 155 |
| ARBEITSLEUCHTEN | 156 |
| MOTOR, ELEKTR. | 161 |
| UNTERBRECHER - INSTRUMENTENTAFEL | 162 |
| STARTHILFEANSCHLUSS | 165 |
| WIDERSTAND | 166 |
| MOTORSENSOR | 167 |
| STELLUNGSSENSOR | 169 |
| DRUCKSENSOR | 170 |
| DREHZAHLSENSOR | 178 |
| TEMPERATURSENSOR | 180 |
| ÄTHERSTARTHILFE | 186 |
| STARTERMOTOR | 188 |
| TRENNSCHALTER | 194 |
| MAGNETSCHALTER | 195 |
| DRUCKSCHALTER | 198 |
| KIPPSCHALTER | 199 |
| GETRIEBESCHALTER | 200 |
| ÄTHERSTARTVENTIL | 201 |
| FAHRERHAUSVERDRAHTUNG | 202 |
| MOTORVERDRAHTUNG | 210 |
| HEIZUNGSVERDRAHTUNG | 212 |
| MASCHINENVERDRAHTUNG | 213 |
| NOTLENKUNGSVERDRAHTUNG | 230 |
| **KRAFTÜBERTRAGUNG** | 232 |
| STARRACHSE | 232 |
| PENDELACHSE | 232 |
| BREMSE UND PLANETENGETRIEBE | 233 |
| GETRIEBEGEHÄUSE UND TEILE | 236 |
| KUPPLUNG | 248 |
| GETRIEBEHYDRAULIK | 254 |
| VERSANDDECKEL | 256 |
| DIFFERENTIAL | 258 |
| ABLASS (UMWELTFREUNDLICH) | 262 |
| GETRIEBEÖLFÜLLSTUTZEN | 263 |
| FILTER U. LEITUNGEN - KRAFTÜBERTRAGUNG | 265 |
| ÖLFILTER | 269 |
| TELLER- UND KEGELRAD | 270 |
| VERTEILERGETRIEBEANTRIEB | 274 |
| GEHÄUSE - STARRACHSE | 280 |
| GEHÄUSE - PENDELACHSE | 282 |
| GETRIEBEANTRIEBSWELLE | 284 |
| DIFFERENTIALSPERRENLEITUNGEN | 285 |
| DREHMOMENTWANDLER-KÜHLERLEITUNGEN | 287 |
| FELGENAUFHÄNGUNG | 291 |
| KRAFTÜBERTRAGUNG | 292 |
| GETRIEBEPUMPE | 293 |
| ANTRIEBSWELLE | 294 |
| VORDERACHSAUFHÄNGUNG | 297 |
| REIFEN UND FELGE | 300 |
| DREHMOMENTWANDLER | 303 |
| GETRIEBE | 305 |
| KIPPVENTIL | 307 |
| ZUFLUSSREGULIERVENTIL | 308 |
| MODULATORVENTIL | 309 |
| ÜBERDRUCKVENTIL | 310 |
| VENTIL - SCHALT- UND DRUCKSTEUERUNG | 312 |
| MAGNETVENTIL | 314 |
| GETRIEBESTEUERVENTIL | 315 |
| **RAHMEN UND FAHRGESTELL** | 318 |
| SCHUTZBLECHE | 318 |
| BODENBLECH | 319 |
| VORDERRAHMEN | 321 |
| HINTERRAHMEN | 325 |
| VORDERRAHMEN | 326 |
| RAHMEN, HINTEN | 328 |
| PANZERWANNE | 331 |
| FAHRERHAUSVERKLEIDUNG | 333 |
| RAHMENVERKLEIDUNG | 335 |
| KRAFTSTOFFTANKVERKLEIDUNG | 336 |
| LEITUNGSVERKLEIDUNG | 338 |
| KÜHLERSCHUTZ | 347 |
| HARDWARE, HINTERRAHMEN | 349 |
| KNICKGELENK-ANHÄNGUNG | 350 |
| MOTORHAUBE UND VERKLEIDUNG | 352 |
| SCHMIERLEITUNGEN | 358 |
| KNICKGELENKSPERRE | 359 |
| STEIGLEITER | 360 |
| SCHUTZBÜGEL | 361 |
| **BREMSSYSTEM** | 362 |
| BREMSDRUCKSPEICHER | 362 |
| FESTSTELLBREMSBETÄTIGUNG | 367 |
| FESTSTELLBREMSE | 368 |
| FUSSBREMSGESTÄNGE | 372 |


* ÜBERSETZUNG ZUM ZEITPUNKT DER DRUCKLEGUNG NICHT VORHANDEN

# INHALTSVERZEICHNIS


| Bezeichnung | Seite |
|---|---|
| FESTSTELLBREMSGESTÄNGE | 374 |
| BREMSGESTÄNGE | 376 |
| BETRIEBSBREMSLEITUNGEN | 379 |
| STEUERKRÜMMER | 381 |
| BREMSSTEUERVENTIL | 382 |
| **LENKSYSTEM** | 383 |
| LENK- U. AUFSCHIEBERSTEUERUNG | 383 |
| LENKZYLINDER | 385 |
| NOTLENKUNGSLEITUNGEN | 388 |
| LENKÖLLEITUNGEN | 394 |
| NOTLENKUNGSPUMPE UND -MOTOR | 396 |
| NOTLENKUNGSPUMPE UND BEFESTIGUNGSTEILE | 397 |
| NOTLENKUNG | 398 |
| LENKRAD | 399 |
| **HYDRAULIKSYSTEM** | 403 |
| VORSTEUERÖLDRUCKSAMMLER | 403 |
| HYDRAULIKÖLKÜHLER | 405 |
| HUBBOGENZYLINDER | 406 |
| AUSLEGERZYLINDER | 410 |
| GREIFERZYLINDER | 411 |
| HUBZYLINDER | 412 |
| ZANGENZYLINDER | 413 |
| ÖLFILTER | 414 |
| HYDRAULIKSYSTEM | 416 |
| INDUSTRIEHYDRAULIK | 416 |
| PLANIERSCHILDLEITUNGEN | 417 |
| GREIFERLEITUNGEN | 419 |
| GREIFERKOPFLEITUNGEN | 422 |
| HYDRAULIKLEITUNGEN | 425 |
| VORSTEUERLEITUNGEN | 429 |
| DREHVORRICHTUNGSLEITUNGEN | 435 |
| STEUERKRÜMMER | 437 |
| HYDRAULIKPUMPE UND BEFESTIGUNGSTEILE | 438 |
| ZAHNRADPUMPE | 439 |
| KOLBENPUMPE | 442 |
| KOLBENPUMPENUMLAUFSATZ | 444 |
| HYDRAULIKTANK UND BEFESTIGUNGSTEILE | 445 |
| HYDRAULIKTANK | 447 |
| GREIFERVENTIL U. -LEITUNGEN | 449 |
| VENTILSATZ (2-VENTIL) | 464 |
| VENTILSATZ (4-VENTIL) | 465 |
| VENTILSATZ (5-VENTIL) | 468 |
| SPERRVENTIL | 469 |
| STEUERVENTIL | 470 |
| UMLEITVENTIL | 486 |
| VORRANGVENTIL | 487 |
| PUMPENSTEUERVENTIL | 488 |
| ÜBERDRUCKVENTIL | 489 |
| MAGNETVENTIL | 490 |
| **ARBEITSGERÄTE** | 491 |
| GREIFERRAHMEN | 491 |
| AUSLEGERLAGER UND DICHTUNG | 493 |
| GREIFERLAGER U. DICHTUNG | 494 |
| PLANIERSCHILD | 496 |
| SEILWINDENBREMSE | 498 |
| PLANETENTRÄGER | 501 |
| WINDENGEHÄUSE | 503 |
| KUPPLUNG U. ANTRIEB - WINDE | 505 |
| WINDENKUPPLUNG | 506 |
| WINDENSTEUERUNG | 510 |
| WINDENABDECKUNG | 515 |
| BREMSZYLINDER | 516 |
| SEILWINDENANTRIEB | 517 |
| WINDENTROMMEL | 519 |
| SCHNEIDMESSER | 521 |
| ROLLENTURM | 522 |
| ROLLENTURMRAHMEN | 526 |
| GREIFERRAHMEN | 528 |
| WINDENANTRIEBSRAD | 530 |
| WINDENABTRIEBSRAD | 532 |
| GREIFER | 534 |
| SEILWINDENSCHUTZ | 535 |
| GREIFERKOPF | 538 |
| WINDEN-ÖLLEITUNGEN | 540 |
| KOLBENMOTOR | 549 |
| SEILWINDENAUFHÄNGUNG | 550 |
| GREIFERBOLZEN | 554 |
| WINDENPLANETENGRUPPE | 557 |
| OBERE ROLLE | 558 |
| DREHVORRICHTUNG, HYDRAULISCH | 559 |
| GREIFERDÄMPFER | 561 |
| GREIFERARM | 564 |
| ABLASSVENTIL | 566 |
| WINDE | 567 |
| **FAHRERHAUS** | 573 |
| KLIMAANLAGENDRUCKSPEICHER | 573 |
| LUFTKOMPRESSORSITZ | 575 |
| KLIMAANLAGE | 576 |
| FAHRERHAUS-DRUCKLÜFTER | 583 |
| FAHRERHAUS MIT ÜBERROLLSCHUTZ | 587 |
| FAHRERHAUS - OFFEN MIT ÜBERROLLSCHUTZ | 588 |
| KÄLTEMITTELKOMPRESSOR U. BEFESTIGUNG | 590 |
| KÄLTEMITTELKOMPRESSOR | 591 |


* ÜBERSETZUNG ZUM ZEITPUNKT DER DRUCKLEGUNG NICHT VORHANDEN

# INHALTSVERZEICHNIS


| Bezeichnung | Seite |
|---|---|
| KÄLTEMITTELKONDENSATOR U. BEFESTIGUNGSTEILE | 592 |
| STEUERHEBEL | 593 |
| JOYSTICK -STEUERUNG | 595 |
| HYDRAULIKBEDIENUNG (MIT VORSTEUERUNG) | 597 |
| LENKBETÄTIGUNG | 601 |
| FAHRERHAUSTÜR | 603 |
| ENTFROSTERGEBLÄSE | 608 |
| ÜBERROLLSCHUTZ, GESCHLOSSEN - VERKLEIDUNG | 610 |
| VERKLEIDUNG - OFFENES FAHRERHAUS MIT ÜBERROLLSCHUTZ | 611 |
| RADIOEINBAUSATZ | 612 |
| KLIMAANLAGENLEITUNGEN | 614 |
| RÜCKSPIEGEL | 617 |
| ANZEIGEMODUL | 618 |
| ÜBERROLLSCHUTZAUFLAGER | 619 |
| ZUGANGSTAFEL | 620 |
| GASPEDAL | 622 |
| RADIO | 623 |
| ÜBERROLLSCHUTZ | 624 |
| FAHRERHAUSSIEB | 627 |
| FAHRERSITZ | 632 |
| SCHWINGSITZ | 634 |
| FAHRERSITZFEDERUNG | 637 |
| SITZSCHWENKVORRICHTUNG | 640 |
| SCHEIBENWASCHMITTELBEHÄLTER | 642 |
| FAHRERHAUS - HALTETEILE | 643 |
| ÜBERROLLSCHUTZ, OFFENES FAHRERHAUS - HALTETEILE | 661 |
| *VALVE GP-A/C & HEATER CONTROL | 675 |
| FAHRERHAUSFENSTER | 676 |
| SCHEIBENWISCHER UND -WASCHANLAGE | 680 |
| SCHEIBENWISCHER | 682 |
| **WARTUNGSAUSRÜSTUNG UND -ZUBEHÖR** | 684 |
| AUFKLEBER | 684 |
| WASSERTANKVERKLEIDUNG | 687 |
| DRUCKWASSERLEITUNGN | 688 |
| DOKUMENTATION | 690 |
| SCHILD UND AUFKLEBER | 691 |
| WASSERTANK | 696 |
| **ERSATZTEILNUMMERNINDEX** | B1 |


* ÜBERSETZUNG ZUM ZEITPUNKT DER DRUCKLEGUNG NICHT VORHANDEN

# GENERAL INFORMATION

## 1. MACHINE IDENTIFICATION

Caterpillar machines are identified by Product Identification Numbers (PIN). Some components included in a machine may be identified by Serial Numbers (S/N). Typical components that will be serialized include engines, transmissions, bulldozers, and rippers. The machine and engine are further identified by arrangement numbers and in some cases modification numbers. These numbers are shown on the product identification plate(s) and on the master plate in the operator's compartment.

Caterpillar dealers need all of these numbers to determine accurate parts identification.

SIS *New Feature*

Effective First Quarter 2001 the Caterpillar Product Identification Number (PIN) changed from 8 to 17 characters. In an effort to provide uniform equipment identification, Caterpillar and other construction equipment manufacturers are moving to comply with the latest version of the product identification numbering standard. Non-road machine PINs are defined by ISO 10261. The new PIN format will apply to all Caterpillar machines and generator sets. The PIN plates and frame marking will display the 17 character PIN. The new format will look like the following:

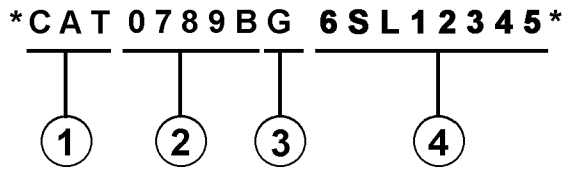


Where:

1. Caterpillar's World Manufacturing Code (characters 1-3)

2. Machine Descriptor (characters 4-8)

3. Check Character (character 9)

4. Machine Indicator Section (MIS) or Product Sequence Number (characters 10-17). These were previously referred to as the Serial Number.

Machines and generator sets produced before First Quarter 2001 will maintain their 8 character PIN format.

Components such as engines, transmissions, axles, etc. and work tools will continue to use an 8 character Serial Number (S/N).

## 2. ORDERING PARTS

**WARNING**

**When replacement parts are required for this product Caterpillar recommends using Caterpillar replacement parts or parts with equivalent specifications including, but not limited to, physical dimensions, type, strength and material.**

**Failure to heed this warning can lead to premature failures, product damage, personal injury or death.**

Quality Caterpillar replacement parts are available from Caterpillar dealers throughout the world. Their parts inventories are up to date and include all parts normally required to protect your investment in Caterpillar machines. Dealers may offer repair kits or remanufactured parts to allow selection of the most effective repair alternative for a particular situation. When ordering parts, your order should specify the quantity, part number, part name, and the serial number/product identification number of the machine for which the parts are needed.

## 3. PARTS MANUAL ORGANIZATION

Product information in this manual is presented as "information elements" that represent all of the components for the specific model. Engine Arrangement and Seat Group are examples of information elements. The information elements are organized alphabetically by part name and secondarily by part number within each major section of the manual.

## 4. TABLE OF CONTENTS

A table of contents (TOC) is found at the beginning of the manual. The TOC lists each section of the manual with a complete list of all information elements organized as they appear in the manual. Page numbers are provided for quick reference to detailed parts identification illustrations and serviceable consist lists.

## 5. MAINTENANCE PARTS INDEX

The Maintenance Parts Index, located near the beginning of the manual, references most frequently used maintenance part numbers, providing description, quantity, usage and page number. This information is organized alphabetically by part description.

**6. INDEX**

The index located near the front of the manual is an alphabetical listing of all information elements included in the manual. Page numbers are provided for quick reference to detailed parts identification illustrations and serviceable consist lists.

**7. PART NUMBER INDEX**

A numerical index listing all part numbers and the corresponding page number(s) appears at the back of the manual.

**8. CAPTIONS**

Captions located at the beginning of each information element identify the part number and part name along with additional descriptive information. PIN and S/N information found in each caption should be used to select correct information for a specific machine. Field replacement options, identification of optional attachment components, and where used ("part of") information is also provided.

The first line of a caption is shown in larger type font to indicate the beginning of an information element. Captions for additional pages that may be required to illustrate an information element will be shown in standard type font and will include the term *(contd.)* .

**9. NON-SERVICED PARTS**

In some instances it is necessary to display non-serviced parts that are a link to a lower level serviceable consist lists. These non-serviced part numbers are shown in *italic* type indicating that they are not available.

**10. PARTS LIST REFERENCE NUMBERS**

Numbers shown in the Ref No column correspond to numbers used in the associated graphic(s). An alphabetic suffix may be added to a reference number to identify lower level consist items. Numbers shown in the Graphic Ref column refer to the graphic number identifier displayed in the lower left corner of each illustration. The Graphic Ref number may be used in combination with the item Ref No to determine the correct part number. There may be intentional omission of a Ref No in a consist list as information is updated to reflect the latest serviceable part numbers.

**11. INDENTED PART NAMES**

When a part name is indented in a parts list, it is part of (included in) the group or assembly under which it is indented.

**12. ILLUSTRATION REFERENCE LETTERS**

When necessary, illustrations contain reference letters (A, B, C etc.) that are intended to track lines and harnesses from one point to another. They are also used to show where to reconnect illustrations that have been separated.

**13. ABBREVIATIONS AND SYMBOLS**

**O.D.** – Outside Diameter
**I.D.** – Inside Diameter
**A** – Not Part Of This Group
**B** – Use As Required
**C** – Change From Previous Type
**D** – Order By The Meter
**E** – Order By The Centimeter
**F** – Not Shown
**G** – Order By The Inch
**I** – Refer To Hydraulic Information System
**M** – Metric Part
**R** – Remfg Part May Be Available
**Y** – Separate Illustration
**Z** – Not Serviced Separately

SIS *New Feature*

**14. DESCRIPTION OF TYPE CHANGES**

Type - A type is defined as any configuration change that requires an additional Information Element for an Arrangement, Group, or Assembly. If serial number breaks for types are not available, a type # ( Type 1, Type 2, etc.) will be displayed in the caption. These "type" changes are identified with a "C" note (change from previous type) in the Parts List. Only the "types" that apply to this Parts Manual will be included. Additional types may exist causing "C" notes to appear on an Information Element when no other types are shown.

**15.<END>**

This symbol indicates the end of an information element.

**NOTE:**

**Continuing improvement and advancement of product design may cause changes to your machine which may not be included in this publication. Whenever a question arises regarding your caterpillar product or this publication, please consult your caterpillar dealer for the latest available information.**

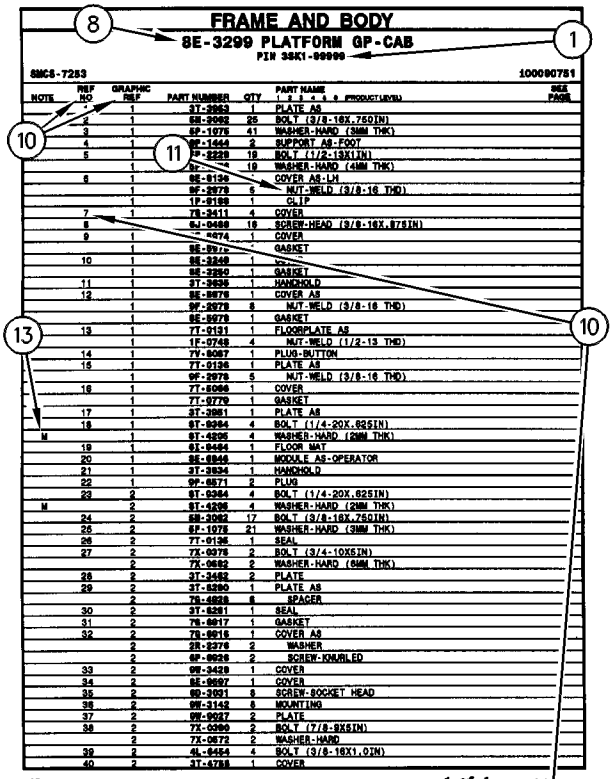
FRAME AND BODY
8E-3299 PLATFORM GP-CAB
PIN 3SK1-99999
SMCS-7283
100090751
NOTE REF NO GRAPHIC REF PART NUMBER QTY PART NAME SEE PAGE
1 1 3T-2953 1 PLATE AS
2 1 6E-2062 25 BOLT (3/8-16X.750IN)
3 1 6P-1076 41 WASHER-HARD (38MM THK)
4 1 9F-1444 2 SUPPORT AS-FOOT
5 1 7P-2229 18 BOLT (1/2-13X1IN)
1 19 WASHER-HARD (41MM THK)
6 1 6E-6136 COVER AS-LH
1 9F-2978 6 NUT-WELD (3/8-16 THD)
1 1P-0189 1 CLIP
7 1 7B-2411 4 COVER
8 9J-0498 18 SCREW-HEAD (3/8-16X.875IN)
9 1 4474 1 COVER
1 GASKET
10 1 6E-3249 1
1 6E-3250 1 GASKET
11 1 3T-2636 1 HANDHOLD
12 1 6E-6078 1 COVER AS
1 9F-2978 8 NUT-WELD (3/8-16 THD)
1 6E-6079 1 GASKET
13 1 7T-0131 1 FLOORPLATE AS
1 1F-0748 4 NUT-WELD (1/2-13 THD)
14 1 7V-6067 1 PLUG-BUTTON
15 1 7T-0136 1 PLATE AS
1 9F-2978 5 NUT-WELD (3/8-16 THD)
16 1 7T-6066 1 COVER
1 7T-0779 1 GASKET
17 1 3T-3951 1 PLATE AS
18 1 6T-0364 4 BOLT (1/4-20X.625IN)
M 1 9T-4295 4 WASHER-HARD (20MM THK)
19 1 6L-6494 1 FLOOR MAT
20 1 6E-6846 1 MODULE AS-OPERATOR
21 1 3T-3834 1 HANDHOLD
22 1 9P-6571 2 PLUG
23 2 6T-0364 4 BOLT (1/4-20X.625IN)
M 2 9T-4295 4 WASHER-HARD (20MM THK)
24 2 6E-3062 17 BOLT (3/8-16X.750IN)
25 2 6P-1076 21 WASHER-HARD (38MM THK)
26 2 7T-0135 1 SEAL
27 2 7X-0078 2 BOLT (3/4-10X5IN)
2 7X-0682 2 WASHER-HARD (64MM THK)
28 2 3T-3452 2 PLATE
29 2 3T-6290 1 PLATE AS
2 7B-4828 8 SPACER
30 2 3T-6281 1 SEAL
31 2 7B-6817 1 GASKET
32 2 7B-6815 1 COVER AS
2 2R-3276 2 WASHER
2 6P-6926 2 SCREW-KNURLED
33 2 9W-3429 1 COVER
34 2 6E-6697 1 COVER
35 2 6D-3031 8 SCREW-SOCKET HEAD
36 2 9W-3142 8 MOUNTING
37 2 9W-6027 2 PLATE
38 2 7X-0090 2 BOLT (7/8-9X5IN)
2 7X-0672 2 WASHER-HARD
39 2 4L-6454 4 BOLT (3/8-16X1.0IN)
40 2 3T-4788 1 COVER
12 FRAME AND BODY
1 of 4
SELP4570-01

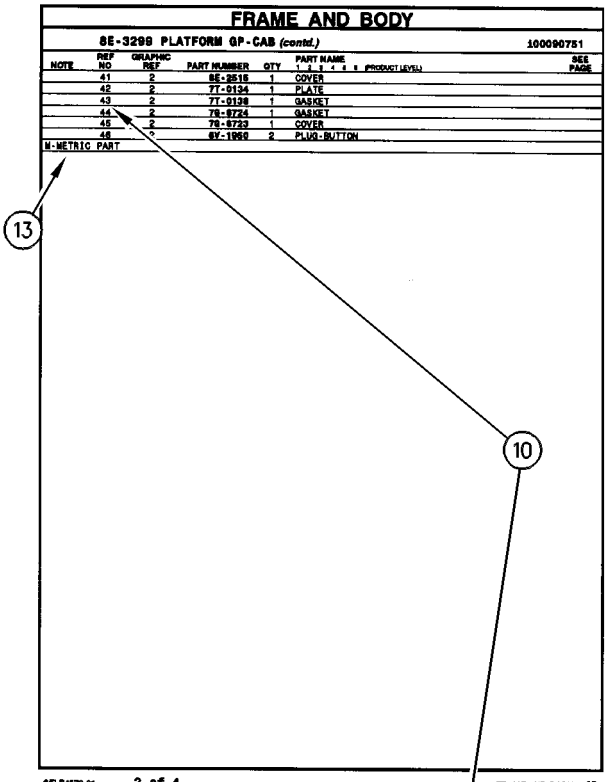
FRAME AND BODY
8E-3299 PLATFORM GP-CAB (contd.)
100090751
NOTE REF NO GRAPHIC REF PART NUMBER QTY PART NAME SEE PAGE
41 2 6E-2516 1 COVER
42 2 7T-0134 1 PLATE
43 2 7T-0138 1 GASKET
44 2 7B-6724 1 GASKET
45 2 7B-6723 1 COVER
46 2 6V-1950 2 PLUG-BUTTON
M-METRIC PART
SELP4570-01
2 of 4
FRAME AND BODY 13

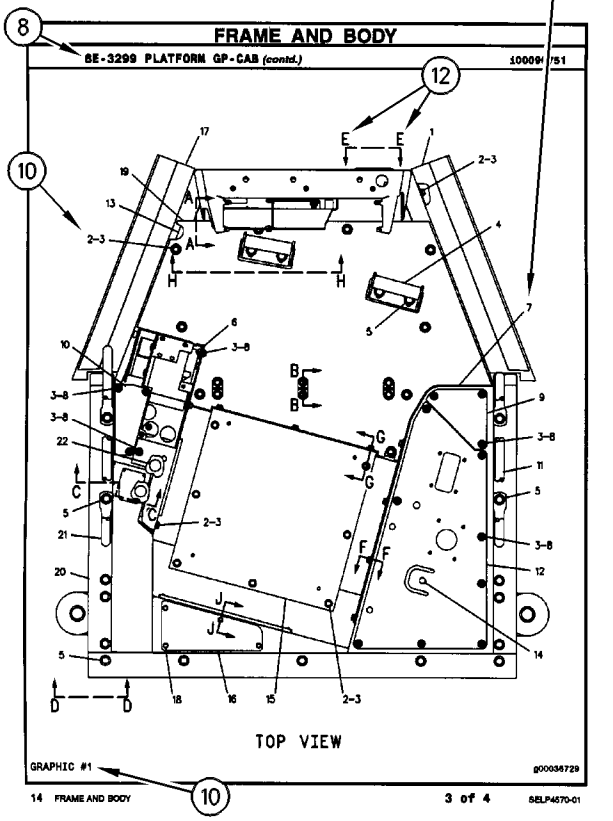
FRAME AND BODY
8E-3299 PLATFORM GP-CAB (contd.)
100090751
TOP VIEW
GRAPHIC #1
g00036729
14 FRAME AND BODY
3 of 4
SELP4570-01

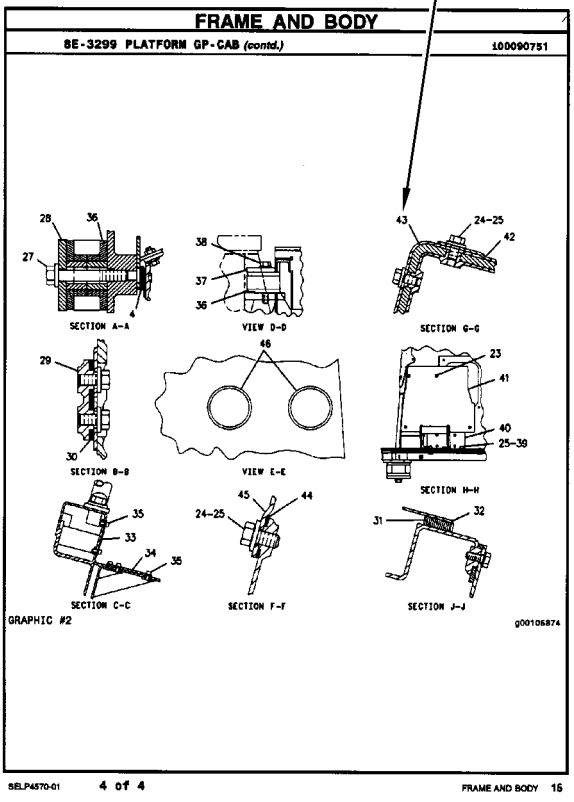
FRAME AND BODY
8E-3299 PLATFORM GP-CAB (contd.)
100090751
SECTION A-A
VIEW D-D
SECTION G-G
SECTION B-B
VIEW E-E
SECTION H-H
SECTION C-C
SECTION F-F
SECTION J-J
GRAPHIC #2
g00105874
SELP4570-01
4 of 4
FRAME AND BODY 15

# GÉNÉRALITÉS

## 1. IDENTIFICATION DE LA MACHINE

Toutes les machines Caterpillar portent un numéro d'identification (PIN). Certains composants des machines peuvent porter des numéros de série (S/N). En général, parmi les composants qui portent des numéros de série il y a les moteurs, les transmissions, les bulldozers et les rippers. En plus, la machine et le moteur peuvent recevoir des numéros de version, et dans certains cas, de modification. Ces numéros figurent sur les plaques de numéro de série et sur la plaque signalétique principale qui se trouve dans le poste de conduite.

Les concessionnaires Caterpillar doivent connaître tous ces numéros pour identifier correctement les pièces.

SIS *Nouvelle Caractéristique*

À partir du premier trimestre 2001, le numéro d'identification produit (PIN) Caterpillar passe de 8 à 17 caractères. Afin de permettre une identification uniforme des matériels, Caterpillar et d'autres constructeurs de machines de travaux publics s'efforcent de se conformer à la norme la plus récente portant sur les numéros d'identification des produits. Les numéros d'identification (PIN) de machines de chantier sont définis par la norme ISO 10261. Le nouveau format du numéro d'identification est valable pour toutes les machines et tous les groupes électrogènes Caterpillar. Le numéro d'identification produit (PIN) figurant sur la plaque et sur le châssis se composera de 17 caractères. Le nouveau format ressemblera à ceci:

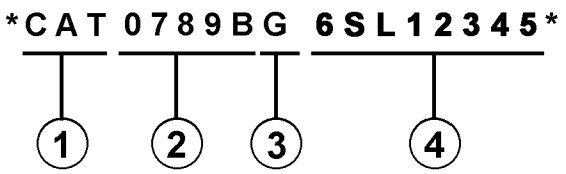


Il se décomposera de la façon suivante:

1. Code international de fabrication de Caterpillar (caractères 1 à 3)

2. Descriptif de la machine (caractères 4 à 8)

3. Contrôle (caractère 9)

4. Indicateur machine (MIS) ou numéro de séquence produit (caractères 10 à 17). Ceux-ci étaient auparavant désignés sous le terme de numéro de série.

Les machines et les groupes électrogènes construits avant le premier trimestre 2001 garderont le format à 8 caractères du numéro d'identification produit (PIN).

Les organes tels que les moteurs, les boîtes de vitesses, les essieux, etc., continueront d'être désignés par un numéro de série (S/N) à 8 caractères.

## 2. COMMANDE DE PIÈCES

**⚠ DANGER**

**Lorsqu'il faut remplacer des pièces de rechange pour ce produit Caterpillar recommande d'utiliser les pièces de rechange Caterpillar ou les pièces qui ont des spécifications équivalentes dont les dimensions physiques, le type, la force et le matériau. Ces équivalences ne se limitent pas à l'énoncé précédent.**

**L'inobservation de cette mise en garde peut entraîner des défaillances prématurées, des dommages au produit, des blessures ou même la mort.**

Les concessionnaires Caterpillar fournissent dans le monde entier des pièces de rechange de qualité Caterpillar. Leurs stocks de pièces sont constamment réapprovisionnés et comptent toutes les pièces nécessaires pour assurer la bonne marche de vos machines Caterpillar. Certains concessionnaires proposent également des kits de réparation ou des pièces rénovées, ce qui permet de choisir la solution la plus économique dans une situation donnée. Lors des commandes de pièces, mentionner la quantité, le numéro et la désignation des pièces ainsi que le numéro de série ou le numéro d'identification (PIN) de la machine pour laquelle ces pièces sont requises.

## 3. ORGANISATION DU CATALOGUE DE PIÈCES

Les renseignements sur les produits sont présentés sous forme de "Information element" (élément d'information) représentant tous les composants d'un modèle donné. "Engine Arrangement" (version de moteur) et "Seat Group" (assemblage de siège)" sont des exemples d'éléments d'information. Les éléments d'information sont classés par ordre alphabétique par la désignation standard des pièces et par numéros de pièces dans chaque partie importante du manuel.

### 4. TABLE DES MATIÈRES

SIS *Nouvelle Caractéristique*

La table des matières se trouve au début du manuel. La table des matières fournit la liste de tous les chapitres du manuel avec une liste complète de tous les éléments d'information classés par ordre d'apparition dans le manuel. Les numéros de page sont fournis afin que l'utilisateur puisse trouver rapidement les illustrations détaillées concernant l'identification des pièces et les listes des pièces d'entretien.

### 5. INDEX DES PIÈCES D'ENTRETIEN

La rubrique "Index des pièces d'entretien" qui se trouve au début du manuel renvoie aux pièces d'entretien les plus fréquemment utilisées en précisant la désignation, la quantité, là où la pièce est utilisée et le numéro de page. Ces pièces sont classés par ordre alphabétique.

### 6. INDEX

L'index qui se trouve vers le début du manuel est une liste alphabétique de tous les éléments d'information du manuel. Les numéros de page sont fournis afin que l'utilisateur puisse trouver rapidement les illustrations détaillées concernant l'identification des pièces et les listes des pièces d'entretien.

### 7. INDEX DES NUMÉROS DE PIÈCES

Une liste numérique de tous les numéros de pièces et des pages correspondantes se trouve à la fin du manuel.

### 8. LÉGENDES

Les légendes qui se trouvent en haut de chaque page de chaque élément d'information fournissent le numéro de pièce, la désignation ainsi que des renseignements supplémentaires sur les pièces. Les renseignements concernant les numéros de série (S/N) qui se trouvent dans chaque légende doivent être utilisés pour sélectionner les informations correctes pour un moteur donné. Les informations concernant les options de remplacement sur le chantier, l'identification des composants des équipements offerts en option et les lieux d'application sont aussi fournies.

SIS *Nouvelle Caractéristique*

Les lettres de la première ligne d'une légende sont présentées en police plus grande afin d'indiquer le début d'une unité d'information. Les légendes qui pourraient être requises pour des pages supplémentaires afin d'illustrer une unité d'information seront présentées en police standard et comprendront le terme (à suivre).

### 9. PIÈCES NON FOURNIES

SIS *Nouvelle Caractéristique*

Dans certains cas, il est nécessaire d'indiquer les pièces non fournies qui sont en aval de la liste des pièces d'entretien. Les numéros des pièces non fournies dans la liste des pièces et les légendes seront en italique pour signaler qu'ils ne sont pas disponibles.

### 10. NUMÉROS DE RÉFÉRENCE DE LA LISTE DES PIÈCES

SIS *Nouvelle Caractéristique*

Les numéros indiqués dans la colonne des numéros de références correspondent aux numéros utilisés dans les illustrations auxquelles ils sont associés. Un suffixe alphabétique peut être ajouté à un numéro de référence pour identifier la liste des articles en aval. Les numéros indiqués dans la colonne de référence de l'illustration renvoient à l'identification du numéro affiché dans le coin inférieur gauche de chaque illustration. Le numéro de référence de l'illustration pourrait être utilisé avec le numéro de référence de l'article pour déterminer le numéro de pièce correct. Il peut y avoir une omission intentionnelle d'un numéro de référence dans une liste de pièces suite à la mise à jour des informations en vue de refléter les numéros de pièces les plus récentes.

### 11. DÉSIGNATIONS DE PIÈCES EN RETRAIT

Lorsqu'une désignation de pièce est en retrait, cela veut dire que l'article en regard fait partie de l'ensemble sous lequel il figure.

### 12. LETTRES DE RÉFÉRENCE DES ILLUSTRATIONS

Quand cela est nécessaire, les illustrations comportent des lettres de référence (A, B, C, etc.) pour montrer le trajet des canalisations et faisceaux de câbles d'un point à l'autre. Elles sont utilisées également pour indiquer où relier les illustrations séparées auparavant.

### 13. ABRÉVIATIONS ET SYMBOLES

**O.D.** – Diamètre extérieur
**I.D.** – Diamètre intérieur
**A** – Ne fait pas partie de ce groupe
**B** – Utiliser selon besoin
**C** – Modification
**D** – Commander par mètre
**E** – Commander par centimètre
**F** – Non représenté
**G** – Commander par pouce
**I** – Voir "Hydraulic Information System"
**M** – Pièce métrique
**R** – Pièce rénovée éventuellement disponible
**Y** – Illustration séparée
**Z** – Non fourni séparément

**NOTA:**

En raison du progrès technique et des améliorations continuelles apportées au matériel, votre machine comporte peut-être des modifications qui n'apparaissent pas dans la présente publication. En cas de doute sur un détail de votre machine Caterpillar ou sur le texte de la présente publication, adressez-vous à votre concessionnaire Caterpillar.

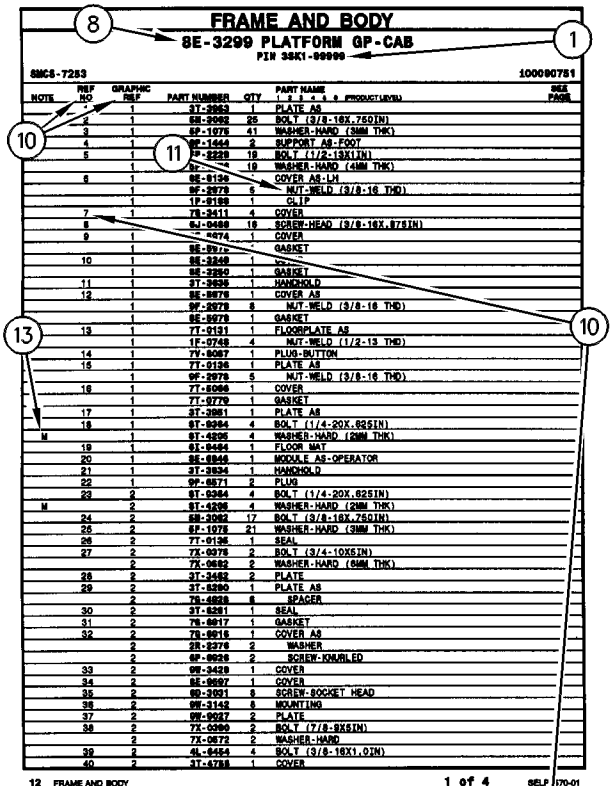

FRAME AND BODY

8E-3299 PLATFORM GP-CAB

PIN 3SK1-99999

SMCS-7253 100090751

| NOTE | REF NO | GRAPHIC REF | PART NUMBER | QTY | PART NAME 1 2 3 4 5 (PRODUCT LEVEL) | SEE PAGE |
|---|---|---|---|---|---|---|
| | | 1 | 3T-2953 | 1 | PLATE AS | |
| | 2 | 1 | 5B-2062 | 25 | BOLT (3/8-16X.750IN) | |
| | 3 | 1 | 6P-1075 | 41 | WASHER-HARD (38MM THK) | |
| | 4 | 1 | 9W-1444 | 2 | SUPPORT AS-FOOT | |
| | 5 | 1 | 7P-2229 | 18 | BOLT (1/2-13X1IN) | |
| | | 1 | 6P- | 18 | WASHER-HARD (41MM THK) | |
| | 6 | 1 | 8E-6136 | 1 | COVER AS-LH | |
| | | 1 | 9F-2978 | 6 | NUT-WELD (3/8-16 THD) | |
| | | 1 | 1P-0169 | 1 | CLIP | |
| | 7 | 1 | 7B-2411 | 4 | COVER | |
| | 8 | 1 | 9J-0498 | 18 | SCREW-HEAD (3/8-16X.875IN) | |
| | 9 | 1 | 4474 | 1 | COVER | |
| | | 1 | 8E-897 | 1 | GASKET | |
| | 10 | 1 | 8E-3248 | 1 | | |
| | | 1 | 8E-3250 | 1 | GASKET | |
| | 11 | 1 | 3T-2636 | 1 | HANDHOLD | |
| | 12 | 1 | 8E-8878 | 1 | COVER AS | |
| | | 1 | 9F-2978 | 8 | NUT-WELD (3/8-16 THD) | |
| | | 1 | 8E-8878 | 1 | GASKET | |
| | 13 | 1 | 7T-0131 | 1 | FLOORPLATE AS | |
| | | 1 | 1F-0748 | 4 | NUT-WELD (1/2-13 THD) | |
| | 14 | 1 | 7V-8087 | 1 | PLUG-BUTTON | |
| | 15 | 1 | 7T-0136 | 1 | PLATE AS | |
| | | 1 | 9F-2978 | 5 | NUT-WELD (3/8-16 THD) | |
| | 16 | 1 | 7T-8066 | 1 | COVER | |
| | | 1 | 7T-8779 | 1 | GASKET | |
| | 17 | 1 | 3T-3951 | 1 | PLATE AS | |
| | 18 | 1 | 6T-8364 | 4 | BOLT (1/4-20X.625IN) | |
| M | | 1 | 9T-4295 | 4 | WASHER-HARD (20MM THK) | |
| | 19 | 1 | 6L-8494 | 1 | FLOOR MAT | |
| | 20 | 1 | 8E-8846 | 1 | MODULE AS-OPERATOR | |
| | 21 | 1 | 3T-3834 | 1 | HANDHOLD | |
| | 22 | 1 | 9P-8671 | 2 | PLUG | |
| | 23 | 2 | 6T-8364 | 4 | BOLT (1/4-20X.625IN) | |
| M | | 2 | 9T-4295 | 4 | WASHER-HARD (20MM THK) | |
| | 24 | 2 | 5B-2062 | 17 | BOLT (3/8-16X.750IN) | |
| | 25 | 2 | 6P-1075 | 21 | WASHER-HARD (38MM THK) | |
| | 26 | 2 | 7T-0135 | 1 | SEAL | |
| | 27 | 2 | 7X-0078 | 2 | BOLT (3/4-10X5IN) | |
| | | 2 | 7X-0662 | 2 | WASHER-HARD (64MM THK) | |
| | 28 | 2 | 3T-3452 | 2 | PLATE | |
| | 29 | 2 | 3T-8290 | 1 | PLATE AS | |
| | | 2 | 7B-4828 | 8 | SPACER | |
| | 30 | 2 | 3T-8281 | 1 | SEAL | |
| | 31 | 2 | 7B-8817 | 1 | GASKET | |
| | 32 | 2 | 7B-8815 | 1 | COVER AS | |
| | | 2 | 2R-2276 | 2 | WASHER | |
| | | 2 | 6P-8926 | 2 | SCREW-KNURLED | |
| | 33 | 2 | 9W-3429 | 1 | COVER | |
| | 34 | 2 | 8E-8897 | 1 | COVER | |
| | 35 | 2 | 6D-3031 | 8 | SCREW-SOCKET HEAD | |
| | 36 | 2 | 9W-3142 | 8 | MOUNTING | |
| | 37 | 2 | 9W-8027 | 2 | PLATE | |
| | 38 | 2 | 7X-0090 | 2 | BOLT (7/8-9X8IN) | |
| | | 2 | 7X-0672 | 2 | WASHER-HARD | |
| | 39 | 2 | 4L-8454 | 4 | BOLT (3/8-16X1.0IN) | |
| | 40 | 2 | 3T-4788 | 1 | COVER | |

12 FRAME AND BODY 1 of 4 SELP4570-01

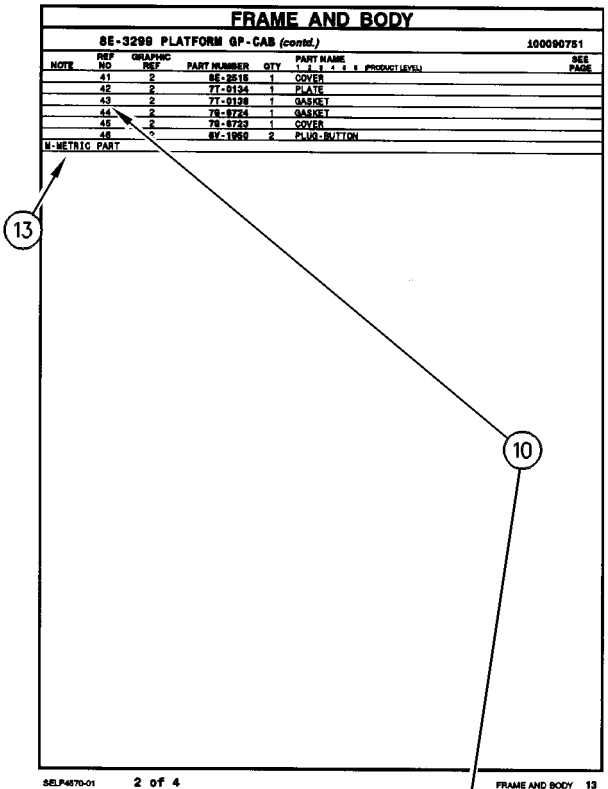

FRAME AND BODY

8E-3299 PLATFORM GP-CAB (contd.) 100090751

| NOTE | REF NO | GRAPHIC REF | PART NUMBER | QTY | PART NAME 1 2 3 4 5 (PRODUCT LEVEL) | SEE PAGE |
|---|---|---|---|---|---|---|
| | 41 | 2 | 8E-3516 | 1 | COVER | |
| | 42 | 2 | 7T-0134 | 1 | PLATE | |
| | 43 | 2 | 7T-0138 | 1 | GASKET | |
| | 44 | 2 | 7B-8724 | 1 | GASKET | |
| | 45 | 2 | 7B-8723 | 1 | COVER | |
| | 46 | 2 | 6V-1950 | 2 | PLUG-BUTTON | |

M-METRIC PART

SELP4570-01 2 of 4 FRAME AND BODY 13

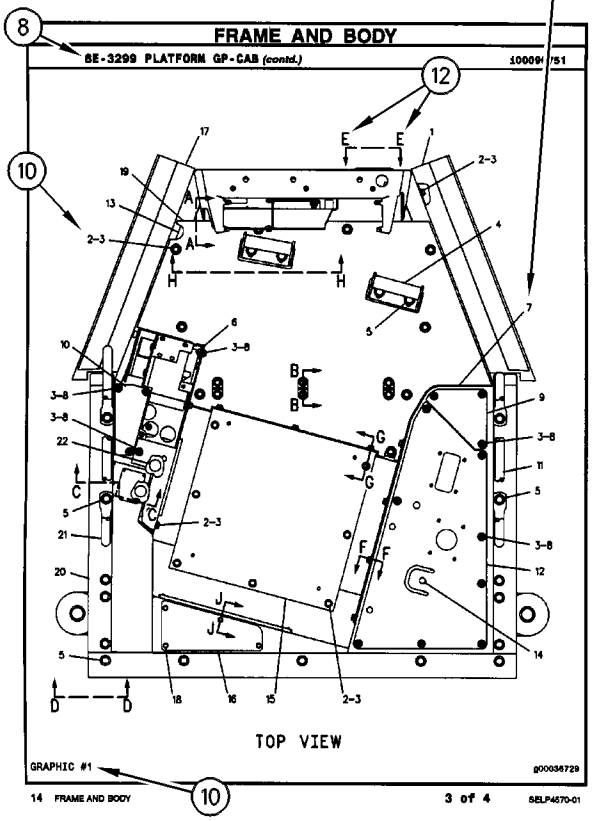

FRAME AND BODY

8E-3299 PLATFORM GP-CAB (contd.) 100090751

TOP VIEW

GRAPHIC #1 g00036729

14 FRAME AND BODY 3 of 4 SELP4570-01

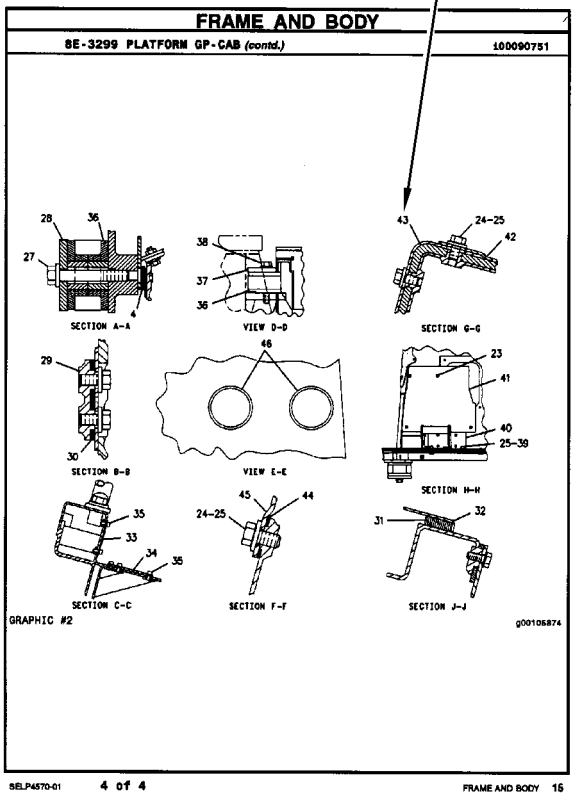

FRAME AND BODY

8E-3299 PLATFORM GP-CAB (contd.) 100090751

SECTION A-A

VIEW D-D

SECTION G-G

SECTION B-B

VIEW E-E

SECTION H-H

SECTION C-C

SECTION F-F

SECTION J-J

GRAPHIC #2 g00105874

SELP4570-01 4 of 4 FRAME AND BODY 16

# INFORMACIÓN GENERAL

## 1. MÁQUINAS

Las máquinas Caterpillar se identifican con Números de Identificación del Producto (PIN). Algunos componentes incluídos en la máquina pueden estar identificados con Números de Serie (N/S). Los componentes que tienen típicamente esta identificación incluyen motores, transmisiones, hojas topadoras y desgarradores. La máquina y el motor se identifican además con Números de Configuración y en algunos casos, Números de Modificación. Estos números están en las placas de identificación del producto o en la placa principal en la cabina del operador.

Los distribuidores Caterpillar necesitan estos números para identificar con exactitud los números de piezas de repuesto.

SIS *Nueva Característica*

A partir del primer trimestre del 2001, el Número de Identificación de Producto (PIN) de Caterpillar cambió de 8 a 17 caracteres. Para hacer más uniforme el método de identificación de equipos, Caterpillar y otros fabricantes de equipo de construcción han tomado medidas para cumplir con la versión más reciente de la norma de numeración de identificación de productos. Los Números de Identificación de Producto para máquinas que no se operan en carreteras son definidos por la norma ISO 10261. El nuevo formato PIN corresponderá a todas las máquinas y grupos electrógenos Caterpillar. Las placas y los caracteres PIN estampados en el bastidor mostrarán el PIN de 17 caracteres. El nuevo formato tendrá la apariencia siguiente:

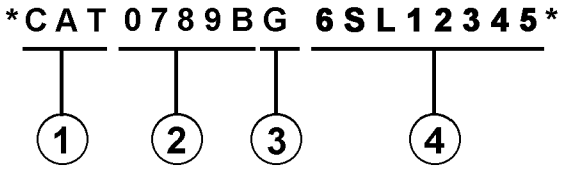


Significado de los caracteres:

1. Código de Fabricación Mundial de Caterpillar (caracteres 1-3)

2. Sección Descriptor de la Máquina (caracteres 4-8)

3. Carácter de Verificación (carácter 9)

4. Sección Indicador de la Máquina (MIS) o Número de Secuencia de Producto (caracteres 10-17). Anteriormente, estos caracteres constituían el Número de Serie.

Las máquinas y grupos electrógenos producidos antes del primer semestre del 2001 mantendrán su formato PIN de 8 caracteres.

Los componentes como motores, transmisiones, ejes, herramientas de trabajo, etc., continuarán usando un Número de Serie (S/N) de 8 caracteres.

## 2. COMO PEDIR REPUESTOS

**⚠ ADVERTENCIA**

**Cuando se necesiten piezas de repuesto para este producto, Caterpillar recomienda usar piezas de repuesto Caterpillar o piezas que tengan especificaciones equivalentes incluyendo, pero sin estar limitadas a, dimensiones físicas, tipo, fortaleza y material.**

**El no hacer caso de esta advertencia puede llevar a fallas prematuras, daños al producto y lesiones graves o mortales.**

Las piezas de repuesto Caterpillar de calidad están a la disposición de los distribuidores Caterpillar en todo el mundo. Sus existencias actualizadas incluyen todas las piezas normalmente requeridas para proteger su inversión en máquinas Caterpillar. Los distribuidores pueden tener juegos de reparación o piezas remanufacturadas para permitir la selección de la mejor alternativa de reparación en un caso en particular. Al pedir piezas de repuesto, especifique en su pedido la cantidad, el número de pieza, el nombre de la pieza y el número de serie/número de identificación del producto, de la máquina para la cual se necesitan estas piezas.

## 3. ORGANIZACION DEL MANUAL DE PIEZAS

La información sobre el producto, se presenta en este manual, como "elementos de información" que representan todos los componentes de un modelo específico. Las configuraciones de motores y los grupos de asientos son ejemplos de elementos de información. Los elementos de información están organizados primeramente por nombres de piezas en orden alfabético y en segundo lugar, por el número de pieza dentro de cada sección principal del manual.

**4. CONTENIDO**

La página de Contenido se encuentra al principio del manual. El Contenido indica cada sección del manual con una lista completa de todos los elementos de información organizados en el orden que aparecen en el manual. Los números de página proporcionan una referencia rápida a las ilustraciones detalladas de identificación de piezas y a las listas de componentes de repuesto de dichas piezas.

**5. ÍNDICE DE PIEZAS DE MANTENIMIENTO**

Al principio de este catálogo se encuentra un índice de los números de piezas utilizadas más frecuentemente para el mantenimiento, que incluye descripción, cantidad necesaria, lugar de utilización y número de página. Esta información está organizada alfabéticamente, por descripción de la pieza.

**6. ÍNDICE**

El Índice, ubicado cerca del principio del manual, es una lista en orden alfabético de todos los elementos de información incluídos en el manual. Los números de página proporcionan una referencia rápida a las ilustraciones detalladas de identificación de piezas y a las listas de componentes de repuesto de dichas piezas.

**7. INDICE NUMÉRICO DE PIEZAS**

Un índice numérico de piezas con el correspondiente número de página aparece al final de este catálogo.

**8. TÍTULOS**

Los títulos ubicados al principio de cada elemento de información identifican el número y el nombre de la pieza junto con información descriptiva. Se debe usar información sobre los Números de Identificación de Pieza (PIN) y los números de serie (S/N) para seleccionar la información que corresponda a una máquina en particular. También se suministra información sobre las opciones de reparación en el campo, la identificación de componentes de accesorios optativos y el lugar de ubicación de la pieza ("es parte de").

La primera línea del título se muestra con un tipo de letra más grande para indicar el comienzo de un elemento de información. Si se requieren páginas adicionales para ilustrar un elemento de información, los títulos se muestran con un tipo de letra normal y la continuación se indica entre paréntesis.

**9. PIEZAS QUE NO SE SUMINISTRAN COMO REPUESTO**

En algunos casos es necesario indicar piezas que no se suministran como repuesto pero que pueden estar conectadas a listas de componentes de otras piezas de repuesto. En tal caso, dichas piezas se muestran en cursiva para indicar que no son piezas disponibles.

**10. NÚMEROS DE REFERENCIA**

Los números en la columna de No. de Referencia corresponden a los números indicados en la ilustración que pertenece a ese número de pieza. Los números que tienen un sufijo alfabético identifican artículos de las listas de componentes de piezas. Los números en la columna de Referencia de la ilustración se identifican en la esquina inferior izquierda de cada ilustración. Para determinar el número de pieza correcto se puede utilizar tanto el No. de Referencia de la ilustración como el No. de Referencia del artículo. A medida que se actualiza la información para indicar los más recientes números de piezas de repuesto, puede omitirse intencionalmente un No. de Referencia en una lista de componentes de piezas.

**11. NOMBRES DE PIEZA SANGRADOS**

Cuando el nombre de una pieza está sangrado en una lista, significa que esta pieza forma parte del grupo o conjunto del renglón inmediatamente superior.

**12. LETRAS DE REFERENCIA DE ILUSTRACIONES**

Las ilustraciones contienen algunas veces letras de referencia (A, B, C etc.) cuyo propósito es seguir el trayecto de líneas y mazos de cables de un punto a otro. También se utilizan para mostrar dónde volver a unir ilustraciones que se habían separado.

**13. ABREVIATURAS Y SIMBOLOS**

**O.D.** – Diámetro exterior
**I.D.** – Diámetro interior
**A** – No es pieza de este grupo
**B** – Utilizado según la demanda
**C** – Indica cambio
**D** – Se pide por metro
**E** – Se pide por centímetro
**F** – No se muestra
**G** – Se pide por pulgada
**I** – Consulte el sistema de información hidráulica
**M** – Pieza métrica
**R** – Puede estar disponible como pieza remanufacturada
**Y** – Ilustración separada
**Z** – No se suministra por separado

SIS *Nueva Característica*

**14. DESCRIPCIÓN DE LOS CAMBIOS DE TIPO**

Tipo – Un tipo se define como cualquier cambio de configuración que requiere un Elemento de información adicional de una Configuración, Grupo o Conjunto. Si el número de serie se clasifica por tipos que no están disponibles, se mostrará un número de tipo (Tipo 1,Tipo 2,etc.) en el comentario de la fotografía. Estos cambios de "tipo" se identifican con una nota "C" (cambio con respecto al tipo anterior) en la Lista de Piezas. Se incluirían sólo los "tipos" que aplican a este Manual de Piezas. Es posible que haya tipos adicionales que causen la aparición de notas "C" en el Elemento de Información cuando no se muestran otros tipos."

**15.<END>**

Este símbolo indica el final de un elemento de información.

**NOTA:**

**Las contínuas mejoras y adelantos en diseño podrían originar cambios a su máquina que no se incluyen en esta publicación. Cuando tenga alguna pregunta acerca de su producto Caterpillar o de esta publicación, consulte al distribuidor Caterpillar para obtener la información más reciente.**

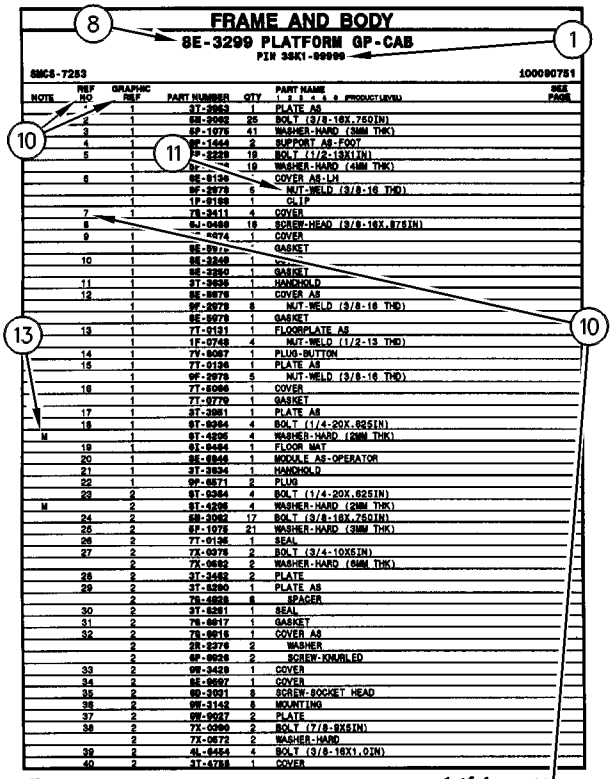
FRAME AND BODY
8E-3299 PLATFORM GP-CAB
PIN 3SK1-99999
SMCS-7253
100090751
NOTE | REF NO | GRAPHIC REF | PART NUMBER | QTY | PART NAME (1 2 3 4 5 6 PRODUCT LEVEL) | SEE PAGE
1 | 1 | 3T-2953 | PLATE AS
2 | 1 | 5E-2062 | BOLT (3/8-16X.750IN)
3 | 1 | 8P-1076 | WASHER-HARD (38MM THK)
4 | 1 | 9F-1444 | SUPPORT AS-FOOT
5 | 1 | 7P-2229 | BOLT (1/2-13X1IN)
 | 1 | 8P- | WASHER-HARD (41MM THK)
6 | 1 | 8E-6136 | COVER AS-LH
 | 1 | 9F-2978 | NUT-WELD (3/8-16 THD)
 | 1 | 1P-0169 | CLIP
7 | 1 | 7S-2411 | COVER
8 | 9J-0498 | SCREW-HEAD (3/8-16X.875IN)
9 | 1 | 4474 | COVER
 | 1 | 8E-8976 | GASKET
10 | 1 | 8E-3248 | 
 | 1 | 8E-3250 | GASKET
11 | 1 | 3T-2636 | HANDHOLD
12 | 1 | 8E-8978 | COVER AS
 | 1 | 9F-2978 | NUT-WELD (3/8-16 THD)
 | 1 | 8E-8979 | GASKET
13 | 1 | 7T-0131 | FLOORPLATE AS
 | 1 | 1F-0748 | NUT-WELD (1/2-13 THD)
14 | 1 | 7V-8087 | PLUG-BUTTON
15 | 1 | 7T-0136 | PLATE AS
 | 1 | 9F-2978 | NUT-WELD (3/8-16 THD)
16 | 1 | 7T-8986 | COVER
 | 1 | 7T-9779 | GASKET
17 | 1 | 3T-3951 | PLATE AS
18 | 1 | 6T-0364 | BOLT (1/4-20X.625IN)
M | 1 | 9T-4295 | WASHER-HARD (28MM THK)
19 | 1 | 6L-8494 | FLOOR MAT
20 | 1 | 8E-8946 | MODULE AS-OPERATOR
21 | 1 | 3T-3934 | HANDHOLD
22 | 1 | 9P-8571 | PLUG
23 | 2 | 6T-0364 | BOLT (1/4-20X.625IN)
M | 2 | 9T-4295 | WASHER-HARD (28MM THK)
24 | 2 | 5E-2062 | BOLT (3/8-16X.750IN)
25 | 2 | 8P-1076 | WASHER-HARD (38MM THK)
26 | 2 | 7T-0135 | SEAL
27 | 2 | 7X-0078 | BOLT (3/4-10X5IN)
 | 2 | 7X-0682 | WASHER-HARD (64MM THK)
28 | 2 | 3T-3452 | PLATE
29 | 2 | 3T-8290 | PLATE AS
 | 2 | 7S-4828 | SPACER
30 | 2 | 3T-8281 | SEAL
31 | 2 | 7S-8817 | GASKET
32 | 2 | 7S-8815 | COVER AS
 | 2 | 2S-3276 | WASHER
 | 2 | 9P-8926 | SCREW-KNURLED
33 | 2 | 9W-3429 | COVER
34 | 2 | 8E-8697 | COVER
35 | 2 | 9D-3931 | SCREW-SOCKET HEAD
36 | 2 | 9W-3142 | MOUNTING
37 | 2 | 9W-8027 | PLATE
38 | 2 | 7X-0390 | BOLT (7/8-9X5IN)
 | 2 | 7X-0672 | WASHER-HARD
39 | 2 | 4L-8454 | BOLT (3/8-16X1.0IN)
40 | 2 | 3T-4788 | COVER
12 FRAME AND BODY
1 of 4
SELP4570-01

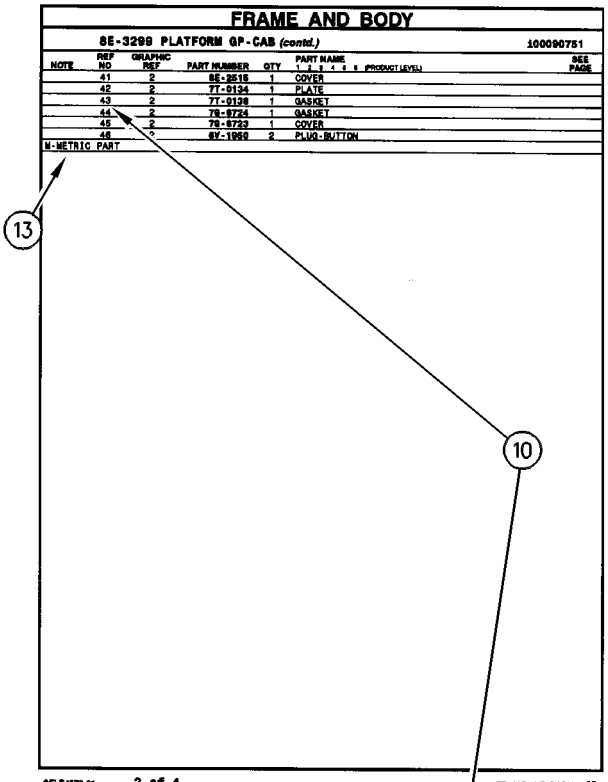
FRAME AND BODY
8E-3299 PLATFORM GP-CAB (contd.)
100090751
NOTE | REF NO | GRAPHIC REF | PART NUMBER | QTY | PART NAME (1 2 3 4 5 6 PRODUCT LEVEL) | SEE PAGE
41 | 2 | 8E-2516 | 1 | COVER
42 | 2 | 7T-0134 | 1 | PLATE
43 | 2 | 7T-0138 | 1 | GASKET
44 | 2 | 7S-8724 | 1 | GASKET
45 | 2 | 7S-8723 | 1 | COVER
46 | 2 | 8V-1950 | 2 | PLUG-BUTTON
M-METRIC PART
SELP4570-01
2 of 4
FRAME AND BODY 13

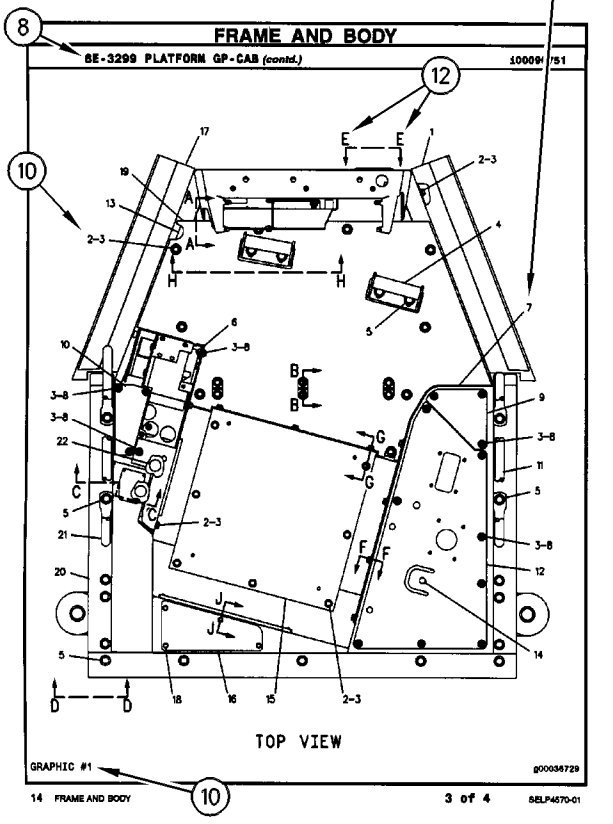
FRAME AND BODY
8E-3299 PLATFORM GP-CAB (contd.)
TOP VIEW
GRAPHIC #1
14 FRAME AND BODY
3 of 4
SELP4570-01

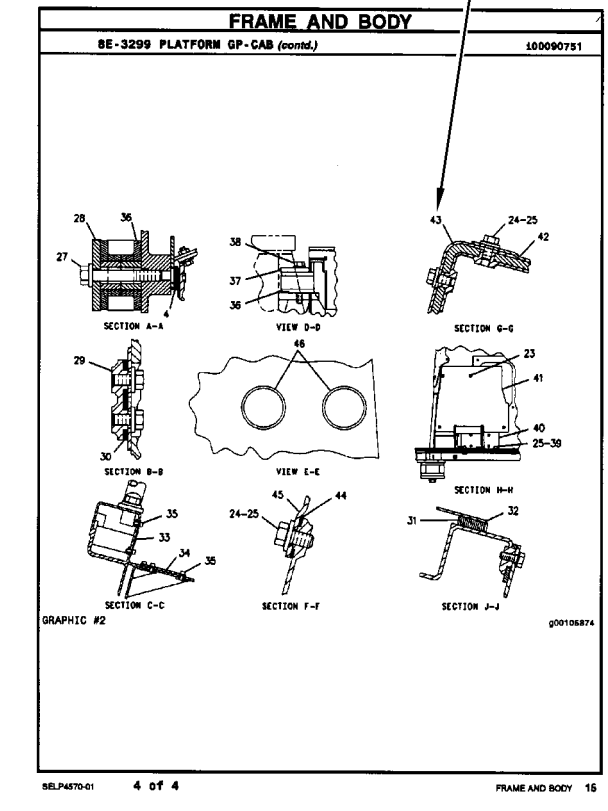
FRAME AND BODY
8E-3299 PLATFORM GP-CAB (contd.)
100090751
SECTION A-A
VIEW D-D
SECTION G-G
SECTION B-B
VIEW E-E
SECTION H-H
SECTION C-C
SECTION F-F
SECTION J-J
GRAPHIC #2
SELP4570-01
4 of 4
FRAME AND BODY 15

# INFORMAÇÃO GERAL

## 1. IDENTIFICAÇÃO DA MÁQUINA

As máquinas Caterpillar são identificadas pelos Números de Informação do Produto (PIN). Alguns componentes incluídos numa máquina podem ser identificados por Números de Série (S/N). Componentes típicos que serão enumerados com números de série incluem motores, transmissões, lâminas e ríperes. Além do número de série, a máquina e o motor são ainda identificados por números de arranjo e, em alguns casos, números de modificações. Tais números encontram-se na(s) placa(s) de identificação do produto e na placa mestre no compartimento do operador.

SIS *Novidades*

A partir do primeiro trimestre de 2001 o Número de Identificação de Produto da Caterpillar (PIN) precisa ser mudado de 8 para 17 caracteres. Esforçando-se para fornecer uma identificação uniforme de equipamentos, a Caterpillar e outros fabricantes de equipamento de construção estão mudando para atender a versão mais atualizada do padrão de identificação de produtos. Os números de PIN para produtos de aplicações não rodoviárias são definidos pela ISO 10261. O novo formato de número PIN será adotado em todas as máquinas e grupos geradores Caterpillar. As placas e as marcações do chassi mostrarão os 17 dígitos de PIN. O novo formato terá a seguinte disposição:

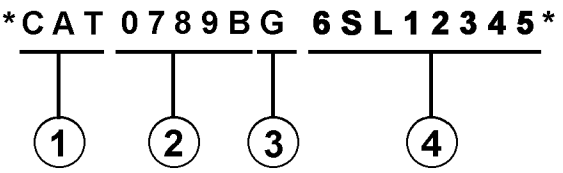


Onde:

1. Código de Fabricação Mundial da Caterpillar (dígitos 1-3)

2. Descrição da Máquina (dígitos 4-8)

3. Dígito de Verificação (dígito 9)

4. Seção de Indicador da Máquina (MIS) ou Número de Seqüência de Produto (dígitos 10-17). Estes eram anteriormente chamados de Número de Série.

Máquinas e grupos geradores produzidos antes do primeiro trimestre de 2001 manterão o formato de 8 caracteres de PIN.

Componentes como motores, transmissões, eixos, ferramentas de trabalho, etc. continuarão a usar Número de Série (S/N) com oito caracteres.

## 2. COMO OBTER PEÇAS

**⚠ CUIDADO**

**Quando peças de substituição são exigidas para este produto, a Caterpillar recomenda a utilização de peças de substituição Caterpillar ou peças com as especificações equivalentes incluindo, mas não limitadas, à dimensões físicas, tipos, resistência e materiais.**

**A inobservância desta advertência poderá resultar em falhas prematuras, danos ao produto, ferimentos ou morte.**

As Peças de Reposição de Qualidade Caterpillar encontram-se disponíveis nos revendedores Caterpillar no mundo inteiro. Seus estoques de peças são atualizados e incluem todas as peças normalmente necessárias para proteger seu investimento em máquinas Caterpillar. Alguns revendedores podem oferecer jogos de reparo ou peças de troca/remanufaturadas disponíveis como uma opção da alternativa de reparo mais eficaz para uma situação específica. Ao encomendar peças, seu pedido deve especificar a quantidade, o número e o nome da peça e o número de série/número de identificação do produto referentes à máquina para a qual as peças se destinam.

## 3. ORGANIZAÇÃO DO MANUAL DE PEÇAS

A informação do produto neste manual é apresentada em forma de "elementos de informação" que representam todos os componentes para o modelo específico. Arranjo de Motor e Grupo de Assento são exemplos de elementos de informação. Os elementos de informação são organizados em ordem alfabética por nome de peça ou secundariamente, por número de peça incluído em cada seção principal do manual.

## 4. LISTA DE CONTEÚDOS

A Lista de Conteúdos (TOC) se encontra no princípio do manual. A Lista de Conteúdos (TOC) relaciona em cada seção do manual uma lista completa com todos os elementos de informação organizados conforme aparecem no manual. Números de página são fornecidos para que se tenha referência rápida de ilustrações de peças detalhadas e listas de conteúdos que podem receber serviço de manutenção.

### 5. ÍNDICE DE PEÇAS DE MANUTENÇÃO

O Índice de Peças de Manutenção, localizado perto do princípio do manual, faz referência aos números de peça de manutenção usados com maior frequência, fornecendo uma descrição, a quantidade, o uso e o número de página. Esta informação é organizada com a descrição da peça em ordem alfabética.

### 6. ÍNDICE

O Índice localizado perto do princípio do manual, consiste de uma lista em ordem alfabética de todos os elementos de informação incluídos no manual. Números de página são fornecidos para que se tenha referência rápida de ilustrações de peças detalhadas e listas de conteúdos que podem receber serviço de manutenção.

### 7. ÍNDICE DE NÚMERO DE PEÇA

Um índice numérico relacionando todos os números de peça e a(s) página(s) correspondentes, aparece no final do manual.

### 8. LEGENDAS

As legendas localizadas no início de cada elemento de informação identificam o número e o nome de peça, juntamente com informação descritiva adicional. Informações sobre o Número de Informação do Produto (PIN) e o Número de Série (S/N) encontradas em cada legenda devem ser usadas para selecionar a informação correta sobre uma máquina específica. Opções de substituição no campo, identificação de componentes de acessórios opcionais e informações sobre onde são utilizados ("parte de") são também fornecidas.

A primeira linha de uma legenda é indicada em tipo maior para indicar o princípio de um elemento de informação. Legendas para páginas adicionais que podem ser necessárias para ilustrar um elemento de informação serão apresentadas em tipo padrão e incluirão o termo *(continua)* .

### 9. NÃO DISPONÍVEL SEPARADAMENTE

Em alguns casos, é necessário mostrar peças não disponíveis separadamente que têm uma ligação com listas de conteúdos de nível inferior que podem receber serviço de manutenção. Os números de peça destes componentes não disponíveis aparecerão em *itálico* , a fim de indicar que não estão disponíveis.

### 10. NÙMEROS DE REFERÊNCIA À LISTA DE PEÇAS

Os números indicados na coluna Ref No (No. de Referência) correspondem-se aos números usados no(s) gráfico(s) correspondente(s). Um sufixo com letras pode ser acrescentado a um número de referência para identificar itens de conteúdo de nível inferior. Os números indicados na coluna Graphic Ref (Referência de Gráfico) referem-se ao identificador de número de gráfico presente no canto esquerdo inferior de cada ilustração. O número de Referência de Gráfico pode ser usado em combinação com o item Ref No para determinar-se o número de peça correto. Poderá haver omissão intencional de um número de referência (Ref No) de uma lista de conteúdos uma vez que as informações são atualizadas para refletir os números de peça mais recentes que podem receber serviço de manutenção.

### 11. NOMES DE PEÇAS DESALINHADOS

Quando um nome de peça encontra-se desalinhado numa lista de peças, significa que tal item faz parte do (está incluído no) grupo ou conjunto sob o qual está relacionado.

### 12. LETRAS DE REFERÊNCIA NAS ILUSTRAÇÕES

Quando necessário, as ilustrações contêm letras de referência (A, B, C, etc.) que são utilizadas para seguir tubulações e cabos elétricos de um ponto a outro. Também foram utilizadas para indicar onde se pode reconectar as ilustrações que foram separadas.

### 13. ABREVIAÇÕES E SÍMBOLOS

**O.D.** – "Outside Diameter" (Diâmetro Externo)
**I.D.** – "Inside Diameter" (Diâmetro Interno)
**A** – Não faz parte deste grupo
**B** – Use conforme necessário
**C** – Indica modificação
**D** – Vendido por metro
**E** – Vendido por centímetro
**F** – Não ilustrado
**G** – Vendido por polegada
**I** – Consultar o Sistema de Informações Hidráulicas
**M** – Peça métrica
**R** – Peça remanufaturada pode estar disponível; consulte o seu revendedor Cat
**Y** – Ilustração separada
**Z** – Não disponível separadamente

SIS *Novidades*

### 14. <END>

Este símbolo indica o final de um elemento de informação.

**NOTA:**

**Os contínuos aperfeiçoamentos e avanços no projeto do produto podem ocasionar modificações em sua máquina que talvez ainda não estejam incluídas nesta publicação. Sempre que surgirem dúvidas quanto a um produto Caterpillar ou quanto à presente publicação, consulte o seu revendedor Caterpillar para obter as informações mais recentes disponíveis**.

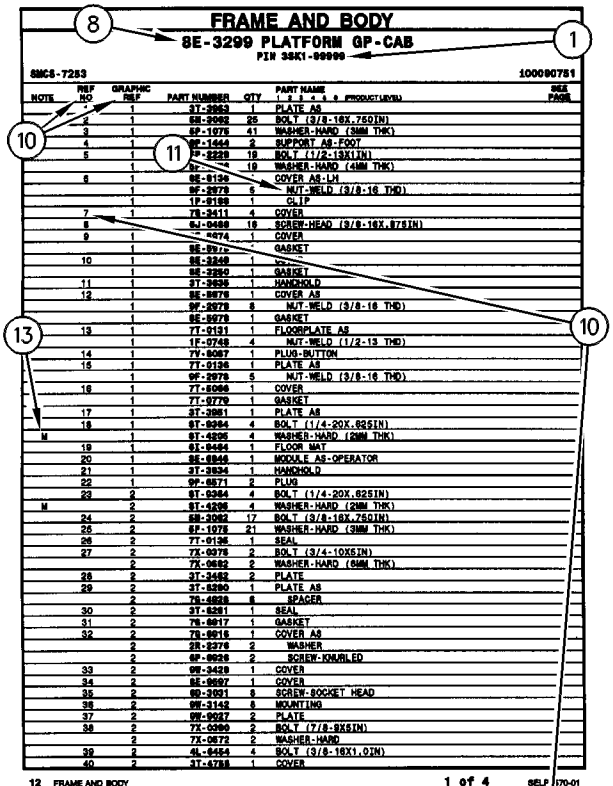

FRAME AND BODY

8E-3299 PLATFORM GP-CAB

PIN 3SK1-99999

SMCS-7253 100090751

| NOTE | REF NO | GRAPHIC REF | PART NUMBER | QTY | PART NAME 1 2 3 4 5 6 (PRODUCT LEVEL) | SEE PAGE |
|---|---|---|---|---|---|---|
| | * | 1 | 3T-2863 | 1 | PLATE AS | |
| | 2 | 1 | 6B-2062 | 25 | BOLT (3/8-16X.750IN) | |
| | 3 | 1 | 6F-1076 | 41 | WASHER-HARD (3MM THK) | |
| | 4 | 1 | 9F-1444 | 2 | SUPPORT AS-FOOT | |
| | 5 | 1 | 7P-2229 | 18 | BOLT (1/2-13X1IN) | |
| | | 1 | 6F- | 18 | WASHER-HARD (4MM THK) | |
| | 6 | 1 | 8E-6136 | * | COVER AS-LH | |
| | | 1 | 9F-2978 | 5 | NUT-WELD (3/8-16 THD) | |
| | | 1 | 1P-0188 | 1 | CLIP | |
| | 7 | 1 | 7S-2411 | 4 | COVER | |
| | 8 | 1 | 9J-0498 | 18 | SCREW-HEAD (3/8-16X.875IN) | |
| | 9 | 1 | 4474 | 1 | COVER | |
| | | 1 | 8E-9976 | * | GASKET | |
| | 10 | 1 | 8E-3249 | 1 | * | |
| | | 1 | 8E-3250 | 1 | GASKET | |
| | 11 | 1 | 3T-2636 | 1 | HANDHOLD | |
| | 12 | 1 | 8E-9979 | 1 | COVER AS | |
| | | 1 | 9F-2978 | 8 | NUT-WELD (3/8-16 THD) | |
| | | 1 | 8E-9978 | 1 | GASKET | |
| | 13 | 1 | 7T-0131 | 1 | FLOORPLATE AS | |
| | | 1 | 1F-0748 | 4 | NUT-WELD (1/2-13 THD) | |
| | 14 | 1 | 7V-8087 | 1 | PLUG-BUTTON | |
| | 15 | 1 | 7T-0136 | 1 | PLATE AS | |
| | | 1 | 9F-2978 | 5 | NUT-WELD (3/8-16 THD) | |
| | 16 | 1 | 7T-8066 | 1 | COVER | |
| | | 1 | 7T-9779 | 1 | GASKET | |
| | 17 | 1 | 3T-3861 | 1 | PLATE AS | |
| | 18 | 1 | 6T-8364 | 4 | BOLT (1/4-20X.625IN) | |
| M | | 1 | 9T-4205 | 4 | WASHER-HARD (2MM THK) | |
| | 19 | 1 | 6L-8494 | 1 | FLOOR MAT | |
| | 20 | 1 | 8E-8846 | 1 | MODULE AS-OPERATOR | |
| | 21 | 1 | 3T-3834 | 1 | HANDHOLD | |
| | 22 | 1 | 9P-8671 | 2 | PLUG | |
| | 23 | 2 | 6T-8364 | 4 | BOLT (1/4-20X.625IN) | |
| M | | 2 | 9T-4205 | 4 | WASHER-HARD (2MM THK) | |
| | 24 | 2 | 6B-2062 | 17 | BOLT (3/8-16X.750IN) | |
| | 25 | 2 | 6F-1076 | 21 | WASHER-HARD (3MM THK) | |
| | 26 | 2 | 7T-0135 | 1 | SEAL | |
| | 27 | 2 | 7X-0078 | 2 | BOLT (3/4-10X5IN) | |
| | | 2 | 7X-0682 | 2 | WASHER-HARD (6MM THK) | |
| | 28 | 2 | 3T-3452 | 2 | PLATE | |
| | 29 | 2 | 3T-8290 | 1 | PLATE AS | |
| | | 2 | 7S-4828 | 8 | SPACER | |
| | 30 | 2 | 3T-8281 | 1 | SEAL | |
| | 31 | 2 | 7S-8817 | 1 | GASKET | |
| | 32 | 2 | 7S-8815 | 1 | COVER AS | |
| | | 2 | 2R-3276 | 2 | WASHER | |
| | | 2 | 6P-8926 | 2 | SCREW-KNURLED | |
| | 33 | 2 | 9W-3429 | 1 | COVER | |
| | 34 | 2 | 8E-8697 | 1 | COVER | |
| | 35 | 2 | 6D-3031 | 8 | SCREW-SOCKET HEAD | |
| | 36 | 2 | 9W-3142 | 8 | MOUNTING | |
| | 37 | 2 | 9W-9027 | 2 | PLATE | |
| | 38 | 2 | 7X-0090 | 2 | BOLT (7/8-9X8IN) | |
| | | 2 | 7X-0672 | 2 | WASHER-HARD | |
| | 39 | 2 | 4L-8454 | 4 | BOLT (3/8-16X1.0IN) | |
| | 40 | 2 | 3T-4788 | 1 | COVER | |

12 FRAME AND BODY 1 of 4 SELP4570-01

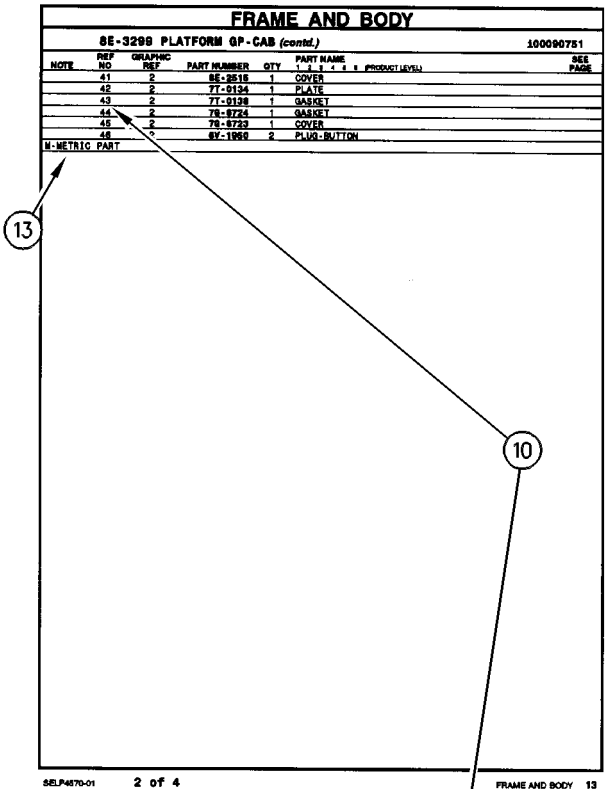

FRAME AND BODY

8E-3299 PLATFORM GP-CAB (contd.) 100090751

| NOTE | REF NO | GRAPHIC REF | PART NUMBER | QTY | PART NAME 1 2 3 4 5 6 (PRODUCT LEVEL) | SEE PAGE |
|---|---|---|---|---|---|---|
| | 41 | 2 | 8E-2516 | 1 | COVER | |
| | 42 | 2 | 7T-0134 | 1 | PLATE | |
| | 43 | 2 | 7T-0138 | 1 | GASKET | |
| | 44 | 2 | 7S-8724 | 1 | GASKET | |
| | 45 | 2 | 7S-8723 | 1 | COVER | |
| | 46 | 2 | 6V-1950 | 2 | PLUG-BUTTON | |

M-METRIC PART

SELP4570-01 2 of 4 FRAME AND BODY 13

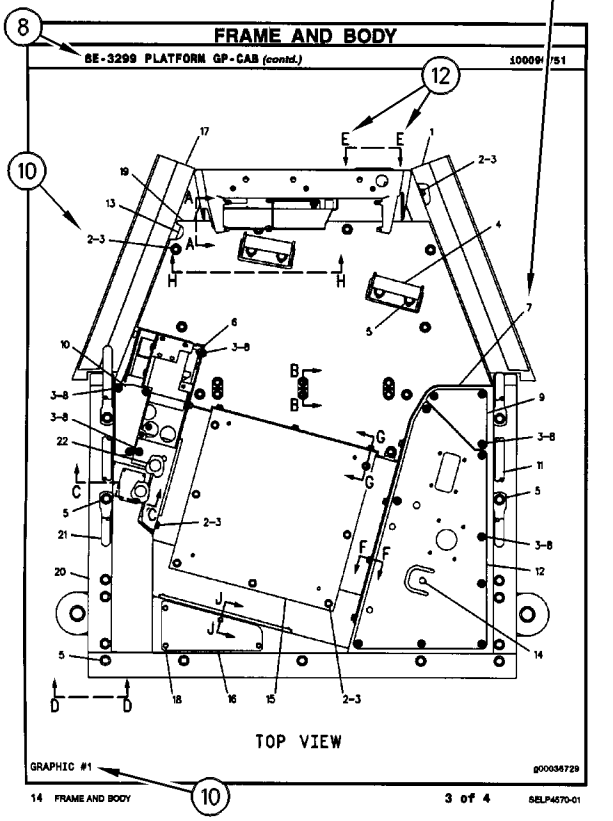

FRAME AND BODY

8E-3299 PLATFORM GP-CAB (contd.) 100090751

TOP VIEW

GRAPHIC #1 g00036729

14 FRAME AND BODY 3 of 4 SELP4570-01

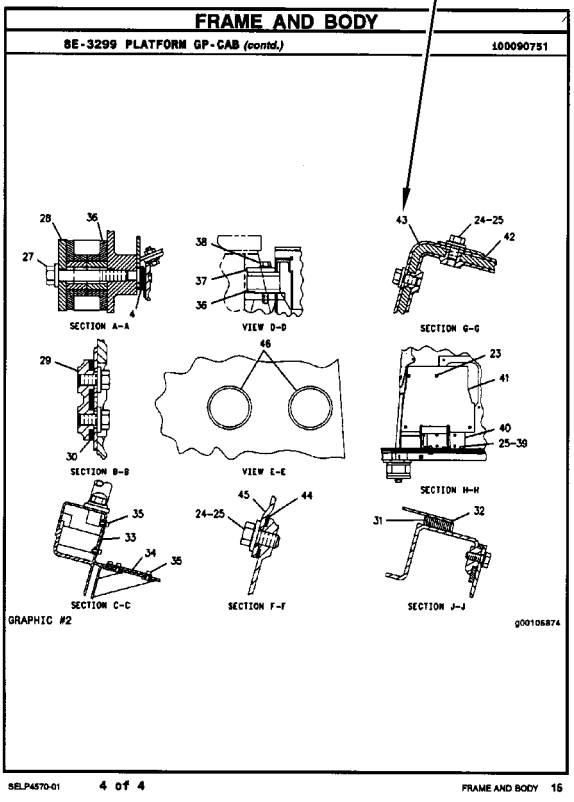

FRAME AND BODY

8E-3299 PLATFORM GP-CAB (contd.) 100090751

SECTION A-A

VIEW D-D

SECTION G-G

SECTION B-B

VIEW E-E

SECTION H-H

SECTION C-C

SECTION F-F

SECTION J-J

GRAPHIC #2 g00105874

SELP4570-01 4 of 4 FRAME AND BODY 16

# ALLGEMEINE HINWEISE

## 1. MASCHINENKENNZEICHNUNG

Caterpillar-Maschinen sind mit PRODUCT IDENTIFICATION NUMBERS (PIN) (Produkt-Identnummern) gekennzeichnet. Einige Baugruppen, z.B. Motoren, Getriebe, Planierschilde und Aufreißer, sind mit SERIAL NUMBERS (S/N) (Seriennummern) gekennzeichnet. An der Maschine und am Motor befinden sich außerdem ARRANGEMENT NUMBERS (Ausrüstungsnummern) sowie in einigen Fällen MODIFICATION NUMBERS (Änderungsnummern). Sie befinden sich auf den PIN-Schildern und auf dem Typenschild im Fahrerhaus.

Bei Ersatzteilbestellungen müssen dem Händler alle diese Nummern zur Verfügung gestellt werden.

SIS *Neu im Parts Manual*

Vom ersten Quartal 2001 ab wurde die Caterpillar Produkt-Identnummer (PIN) von 8 auf 17 Zeichen geändert. Um zur Standardisierung der Produkt-Identnummer beizutragen, sind Caterpillar und andere Baumaschinenhersteller bestrebt, die aktuellste Norm zur Produkt-Identnummerierung einzuführen. Produkt-Identnummern für Baumaschinen sind durch ISO 10261 definiert. Das neue Format der Produkt-Identnummern gilt für alle Caterpillar-Maschinen und -Stromaggregate. Die Produkt-Identschilder und -Identrahmenmarkierung enthalten die aus 17 Zeichen bestehende Identnummer. Das neue Format hat folgende Abschnitte:

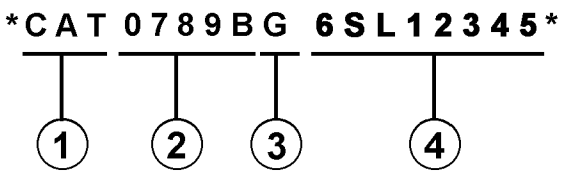


Abschnitte:

1. Caterpillars weltweiter Herstellungscode (Zeichen 1-3)

2. Modell (Zeichen 4-8)

3. Kontrollzeichen (Zeichen 9)

4. Maschinenspezifische Kennung (MIS) oder Produktsequenznummer (Zeichen 10-17). Diese wurde früher als Seriennummer bezeichnet.

Für vor dem ersten Quartal 2001 hergestellte Maschinen und Stromaggregate wird das aus 8 Zeichen bestehende PIN-Format beibehalten.

Bauteile wie z.B. Motoren, Getriebe, Achsen sowie Arbeitsgeräte werden weiterhin eine aus 8 Zeichen bestehende Seriennummer (S/N) aufweisen.

## 2. BESTELLEN VON ERSATZTEILEN

**⚠ WARNUNG**

**Wenn für diese Maschine Ersatzteile benötigt werden, empfiehlt Caterpillar, ausschließlich Caterpillar-Ersatzteile oder solche zu verwenden, die die gleichen technischen Merkmale hinsichtlich Typ, Festigkeit, Werkzeugeigenschaften und die gleichen Maße aufweisen.**

**Bei Nichtbeachtung dieser Warnung besteht Verletzungs- oder sogar Lebensgefahr! Ferner kann Nichtbeachtung vorzeitige Ausfälle der Teile und Beschädigung der Maschine zur Folge haben.**

Original Caterpillar-Ersatzteile können weltweit bei jedem Caterpillar-Händlern bestellt werden. Die umfangreichen Händlerlager enthalten normalerweise alle Teile, die Sie für Ihre Caterpillar-Maschine benötigen. Einige Händler bieten Reparatursätze, Austausch- oder werküberholte Teile an, so daß Sie eine Auswahl unter verschiedenen Reparaturmöglichkeiten treffen können. Ihre Bestellung muß folgende Angaben enthalten: Anzahl der benötigten Teile, Bestellnummer, Bezeichnung des Teils, Serien-Nr./Produkt-Ident-Nr., Ausrüstungs-Nr. und Änderungs-Nr. der Maschine, für die diese Teile benötigt werden.

## 3. AUFBAU DES PARTS MANUAL

Die Produktinformationen für alle Komponenten eines bestimmten Modells sind in INFORMATION ELEMENTS (Informationseinheiten) gegliedert. ENGINE ARRANGEMENT (Motorausführung) und SEAT GROUP (Fahrersitz) sind Beispiele für solche Informationseinheiten. Sie sind innerhalb jeder Gruppe alphabetisch, entsprechend der Ersatzteilbezeichnung, und zusätzlich numerisch, entsprechend der Ersatzteilnummer, geordnet.

## 4. INHALTSVERZEICHNIS

Das Inhaltsverzeichnis befindet sich am Anfang des Buches. Im Inhaltsverzeichnis werden die einzelnen Abschnitte des Buches aufgeführt. Die Abschnitte enthalten eine vollständige Aufstellung aller Informationseinheiten. Diese sind entsprechend ihrem Erscheinen im Buch geordnet. Das Inhaltsverzeichnis enthält Seitenangaben für Schnellverweise auf detaillierte Abbildungen und Teillisten.

# ALLGEMEINE HINWEISE

### 5. INDEX FÜR WARTUNGSTEILE

Der Index für Wartungsteile vorn im Buch enthält die Bestellnummern, Seitenangaben, Mengenangaben und Informationen über den Einsatzbereich für die am häufigsten benötigten Ersatzteile. Die Angaben sind alphabetisch entsprechend der Teilebezeichnung geordnet.

### 6. INDEX

Der Index vorn im Buch enthält eine alphabetische Liste aller Informationseinheiten. Er enthält Seitenangaben für Schnellverweise auf detaillierte Abbildungen und Teillisten.

### 7. INDEX FÜR BESTELLNUMMERN

Hinten im Buch befindet sich ein numerischer Index, mit allen Bestellnummern und dem Hinweis auf die Seite, auf der sich die betreffende Abbildung befindet.

### 8. ÜBERSCHRIFTEN

Die Überschriften, die sich am Anfang jeder der Informationseinheiten befinden, enthalten Bestellnummern, Ersatzteilbezeichnungen und zusätzliche beschreibende Informationen. Produkt-Ident- und Seriennummern in den Überschriften sollten zur Auswahl der richtigen Informationen für die betreffende Maschine verwendet werden. Die Überschriften enthalten außerdem Informationen über möglichen Außendienstersatz, mögliche Baugerätekomponenten und die Baugruppe, zu der das Teil gehört.

Die erste Zeile einer Überschrift erscheint in einer größeren Schriftart, um den Anfang einer Informationseinheit zu kennzeichnen. Überschriften für zusätzliche Seiten, die zur Erläuterung einer Informationseinheit notwendig sind, erscheinen in normaler Schriftart und enthalten den Begriff "(contd.)".

### 9. NICHT EINZELN LIEFERBARE TEILE

In einigen Fällen ist es notwendig nicht lieferbare Teile, die selbst mit einer eigenen Teilliste im Buch vertreten sind, aufzuführen. Die Bestellnummern dieser nicht einzeln lieferbaren Teile erscheinen kursiv, wodurch angezeigt wird, daß sie nur in Verbindung mit anderen Teilen lieferbar sind.

### 10. REFERENZNUMMER FÜR ERSATZTEILE

Die Zahlen, die in der Spalte "Ref No" aufgeführt sind, stimmen mit den Zahlen in den beigefügten Abbildungen überein. Ein Buchstaben-Suffix kann zu einer Referenznummer hinzugefügt werden, um zu kennzeichnen, daß das Teil mit einer eigenen Teilliste im Buch aufgeführt ist. Die in der Spalte "Graphic Ref" angeführten Zahlen verweisen auf die Identifikationsnummer der Abbildung, die sich in der linken unteren Ecke der Abbildung befindet. Diese Nummer kann zusammen mit der Referenznummer des Teils angegeben werden, um die richtige Ersatzteilnummer zu ermitteln. Referenznummern können absichtlich weggelassen werden, da die Nummern der lieferbaren Ersatzteile ständig aktualisiert werden.

### 11. EINGERÜCKTE BEZEICHNUNGEN

Wenn eine Bezeichnung eingerückt ist, wird dadurch angezeigt, daß das Teil zu einer Baugruppe gehört, unter deren Bezeichnung es eingerückt ist.

### 12. REFERENZBUCHSTABEN

Falls erforderlich sind in den Abbildungen Referenzbuchstaben enthalten (z.B. A, B, C, usw.), die Leitungen und Kabelbäume von einem Punkt zum anderen verfolgen. Außerdem geben sie die Stelle an, an der getrennte Abbildungen fortgesetzt werden.

### 13. ABKÜRZUNGEN UND SYMBOLE

**O.D.** – Außendurchmesser
**I.D.** – Innendurchmesser
**A** – kein Teil dieser Gruppe
**B** – nach Bedarf verwenden
**C** – Hinweis auf eine Änderung
**D** – in Meter-Länge bestellen
**E** – in Zentimeter-Länge bestellen
**F** – nicht gezeigt
**G** – in Zoll-Länge bestellen
**I** – siehe Hydraulikinformationssystem
**M** – metrisches Teil
**R** – werküberholtes Teil unter Umständen lieferbar
**Y** – separate Abbildung
**Z** – nicht einzeln lieferbar

SIS *Neu im Parts Manual*

**14. BESCHREIBUNG DER TYPENÄNDERUNGEN**

Typ-A bezieht sich auf alle Konfigurationsänderungen, die ein zusätzliches Informationselement für Ausführung, Gruppe oder Einheit benötigen. Wenn kein Seriennummernumbruch für Typen erhältlich ist, wird in der Überschrift eine Typennummer (Typ 1, Typ 2, etc.) angegeben. Diese "Typenänderungen" sind in der Teileliste mit der Anmerkung "C" (Änderung des vorherigen Typs) versehen. Es werden nur die für dieses Ersatzteilhandbuch relevanten "Typen" angegeben. Es können zusätzliche Typen vorhanden sein, was zu "C" Anmerkungen zu einem Informationselement führen kann, wenn keine anderen Typen angegeben werden.

**15. <END>**

Dieses Symbol zeigt das Ende eines Informationselements an.

**ANMERKUNG:**

**Ständig vorgenommene Verbesserungen und Weiterentwicklungen an Ihrer Maschine können Änderungen verursachen, die in der vorliegenden Ausgabe noch nicht berücksichtigt sind. Fragen zu Ihrer Caterpillar-Maschine oder diesem Ersatzteilbuch beantwortet Ihr Caterpillar-Händler.**

# ALLGEMEINE HINWEISE

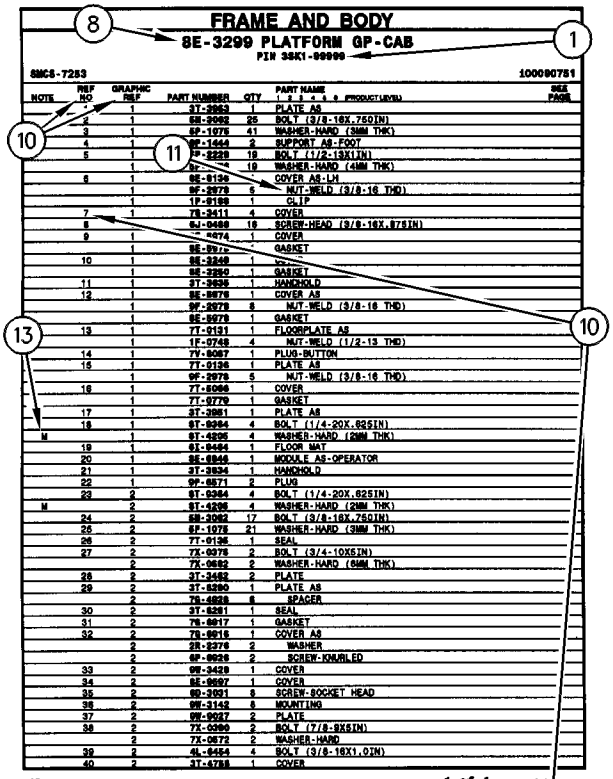


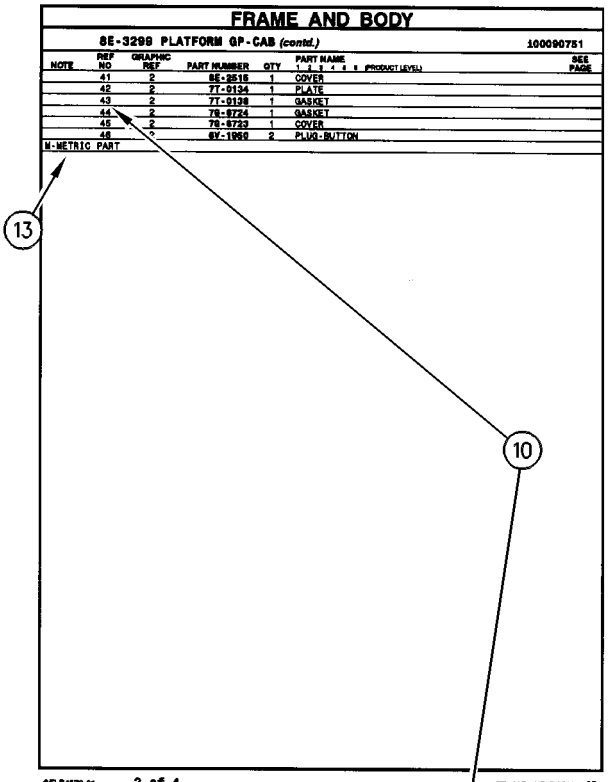


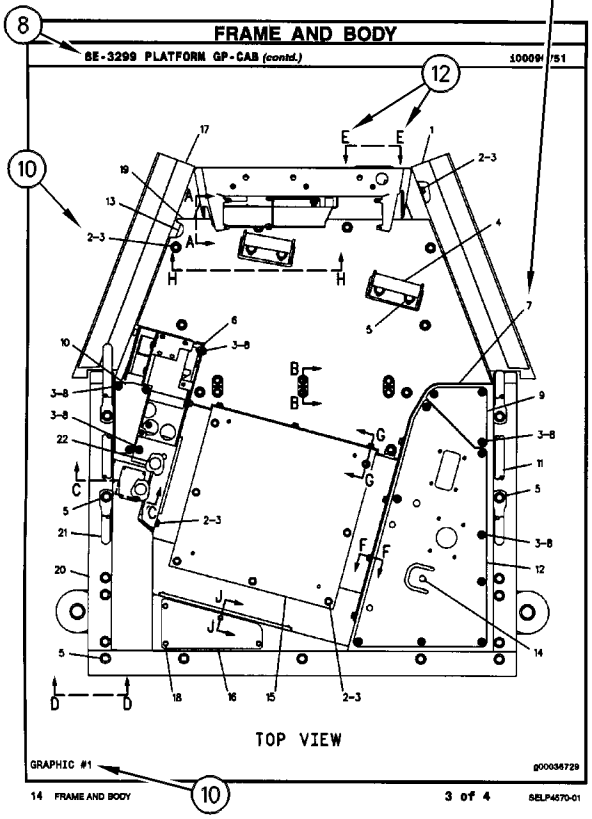


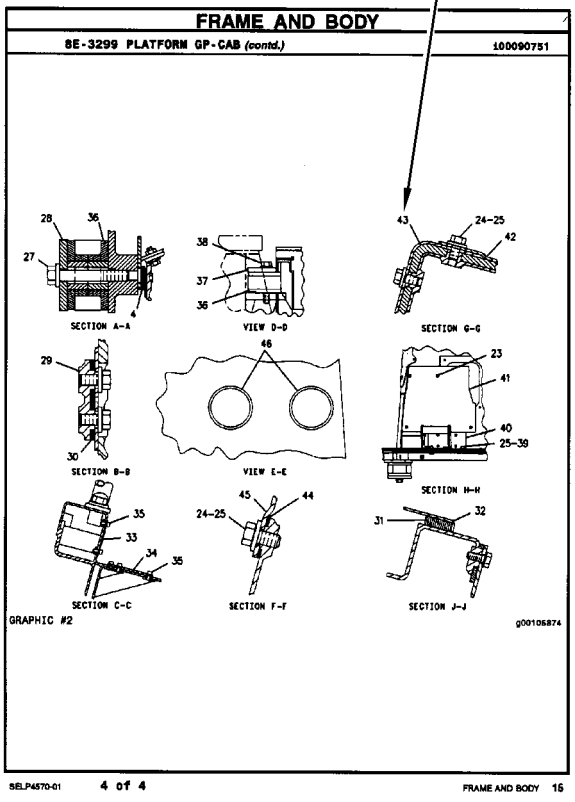

# REPAIR ALTERNATIVES

**REMANUFACTURED COMPONENTS**

As an option when making repairs consider Caterpillar Remanufactured Components. Components that are available through the Caterpillar Remanufactured Program are identified three ways in the parts book:

- with the letter R in the note field of the parts list
- with an R* at the beginning of the first line of the caption
- with an *R at the end of the first line of the caption

Typical components included in the Remanufacturing Program include:

ALTERNATORS
CONNECTING RODS
CRANKSHAFTS - UNDERSIZE
CRANKSHAFTS - UPGRADE TO NEW
CYLINDER HEADS
ELECTRONIC CONTROL MODULES (ECM)
ELECTRONIC SENSORS
FUEL INJECTORS
FUEL NOZZLES
FUEL PUMPS
GOVERNORS
OIL PUMPS
PISTONS
SHORT BLOCKS
STARTERS
TURBOCHARGERS - COMPLETE
TURBOCHARGER CARTRIDGES
WATER PUMPS

Caterpillar Remanufactured engines for many engine arrangements are also available.

# OPTIONS DE RÉPARATION

**COMPOSANTS RÉNOVÉS**

Comme option de réparation, considérer les composants rénovés Caterpillar. Les composants disponibles dans le cadre du programme Caterpillar de composants rénovés sont identifiés de trois façons dans le catalogue de pièces:

- avec la lettre "R" dans l'espace note de la liste des pièces
- avec R* au début de la première ligne des légendes
- avec *R à la fin de la première ligne des légendes

Les composants suivants figurent parmi les composants typiques du programme de rénovation:

ALTERNATEURS
BIELLES
VILEBREQUINS - SOUS-DIMENSIONNÉS
VILEBREQUINS - REMIS À NEUF
CULASSES
MODULES DE COMMANDE ÉLECTRONIQUE (ECM)
CAPTEURS ÉLECTRONIQUES
INJECTEURS
TÊTES D'INJECTEURS
POMPES À CARBURANT
RÉGULATEURS
POMPES À HUILE
PISTONS
BLOCS EMBIELLÉS
DÉMARREURS
TURBOCOMPRESSEURS - COMPLETS
CARTOUCHES DE TURBOCOMPRESSEUR
POMPES À EAU

Des moteurs rénovés sont aussi disponibles pour plusieurs versions de moteur.

# ALTERNATIVAS DE REPARACIÓN

**COMPONENTES REMANUFACTURADOS**

Al hacer reparaciones, tenga en cuenta la opción de Componentes Remanufacturados Caterpillar. Los componentes que están disponibles por medio del programa de Productos Remanufacturados Caterpillar se identifican de tres maneras en el manual de piezas:

- con la letra R en el espacio de Nota de la lista de piezas
- con una R* al comienzo de la primera línea de la leyenda
- con una *R al final de la primera línea de la leyenda

Los componentes que se incluyen típicamente en el Programa de Productos Remanufacturados son:

ALTERNADORES
BIELAS
CIGÜEÑALES - BAJOMEDIDA
CIGÜEÑALES - REMANUFACTURADOS A NUEVO
CULATAS
MÓDULOS DE CONTROL ELECTRÓNICO (ECM)
SENSORES ELECTRONICOS
INYECTORES
BOQUILLAS
BOMBAS DE COMBUSTIBLE
REGULADORES
BOMBAS DE ACEITE
PISTONES
MONOBLOQUES
MOTORES DE ARRANQUE
TURBOCOMPRESORES - COMPLETOS
NÚCLEOS DE TURBOCOMPRESOR
BOMBAS DE AGUA

También hay disponibles motores Remanufacturados Caterpillar para muchas de las configuraciones de motores.

# ALTERNATIVAS DE REPARO

**COMPONENTES REMANUFATURADOS**

Considere o uso de Componentes Remanufaturados Caterpillar ao efetuar reparos. Os componentes disponíveis através do Programa de Remanufatura Caterpillar são identificados de três formas no manual de peças:

- com um R na área da nota da lista de peças
- com um R* no princípio da primeira linha da legenda
- com um *R no final da primeira linha da legenda

Os componentes típicos que constam no Programa de Remanufatura incluem:

ALTERNADORES
BIELAS
VIRABREQUINS - SUBMEDIDAS
VIRABREQUINS - ATUALIZAÇÃO
CABEÇOTES
MÓDULOS DE CONTROLE ELETRÔNICO (ECM)
SENSORES ELETRÔNICOS
INJETORES DE COMBUSTÍVEL
BICOS DE ABASTECIMENTO DE COMBUSTÍVEL
BOMBAS DE COMBUSTÍVEL
GOVERNADORES
BOMBAS DE ÓLEO
PISTÕES
BLOCOS BÁSICOS DO MOTOR
MOTORES DE PARTIDA
TURBOALIMENTADORES - COMPLETOS
CARTUCHOS DE TURBOALIMENTADORES
BOMBAS D'ÁGUA

Motores Remanufaturados Caterpillar também encontram-se disponíveis para diversos arranjos de motor.

# REPARATURALTERNATIVEN

**WERKÜBERHOLTE AT-PRODUKTE**

Bei Reparaturen sollten werküberholte AT-Produkte von Caterpillar in Betracht gezogen werden. Die durch das AT-Programm von Caterpillar erhältlichen Teile sind im Parts Book auf drei verschiedene Arten gekennzeichnet:

- mit dem Buchstaben R in der Spalte NOTE der Ersatzteilliste
- mit einem R* am Anfang der ersten Zeile der Überschrift
- mit einem *R am Ende der ersten Zeile der Überschrift

Das AT-Programm umfaßt u.a. folgende Produkte:

DREHSTROMGENERATOREN
PLEUELSTANGEN
KURBELWELLEN - MIT UNTERMASS
KURBELWELLEN - MIT ORIGINALMASS
ZYLINDERKÖPFE
ELEKTRONISCHE STEUEREINHEITEN (EMC)
ELEKTRONISCHE SENSOREN
PUMPENDÜSEN
EINSPRITZDÜSEN
KRAFTSTOFFPUMPEN
DREHZAHLREGLER
ÖLPUMPEN
KOLBEN
TEILMOTOREN
ANLASSER
TURBOLADER - KOMPLETT
TURBOLADERLAUFZEUGE
KÜHLWASSERPUMPEN

Viele Motoren können durch werküberholte AT-Motoren von Caterpillar ersetzt werden.

# SUPPLEMENTAL COOLANT ADDITIVES

**CUSTOMER BENEFITS:**

Protects against cavitation, foam, erosion, corrosion, and scale buildup in cooling systems.

- Provides measured coolant conditioner.

**DESCRIPTION:**

Additives deplete from the coolant with normal operation. For this reason, Supplemental Coolant Additives (SCA) must be added to all heavy duty coolants at regular intervals. In addition, when not using a fully formulated, pre-charged antifreeze, like Caterpillar's DEAC, an initial charge of SCA must be added to the cooling system. The amount of SCA added to the system is dependent on the capacity of the system.

The SCA for initial fill is provided as a liquid. SCA's for maintenance intervals are available in liquid form and as a spin-on element. (No Spin-on available for 3600 Family of Engines)

**NOTE:**

The amount of SCA added at initial fill is not the same as the amount added at maintenance intervals.

The coolant additive elements can be used with any ethylene or propylene glycol type antifreeze which meets ASTM D4985 or ASTM D5345 Specifications.

**NOTE:**

For use with standard heavy duty coolant only, not for use with Extended Life Coolant.

**PARTS NEEDED:**

| Cooling System Capacity | | Liquid SCA at Initial Fill | Liquid SCA at Maintenance* | Spin-on SCA Maintenance Element* |
|---|---|---|---|---|
| Liters | Gallons | | | |
| 22-30 | (6-8) | 3P-2044 (1) | 6V-3542 (1) | 111-2370 (1) |
| 30-38 | (8-10) | 3P-2044 (1)<br>6V-3542 (1) | 111-2372 (1) | 111-2369 (1) |
| 38-49 | (10-13) | 3P-2044 (1)<br>8T-1589 (1) | 111-2372 (1) | 111-2369 (1) |
| 49-64 | (13-17) | 3P-2044 (2) | 8T-1589 (1) | 9N-3368 (1) |
| 64-83 | (17-22) | 3P-2044 (2)<br>8T-1589 (1) | 111-2372 (1)<br>6V-3542 (1) | 111-2371 (1) |
| 83-114 | (22-30) | 3P-2044 (3)<br>8T-1589 (1) | 3P-2044 (1) | 9N-3718 (1) |
| 114-163 | (30-43) | 3P-2044 (5) | 3P-2044 (1)<br>6V-3542 (1) | 111-2371 (2) |
| 163-242 | (43-64) | 3P-2044 (8) | 3P-2044 (2) | 9N-3718 (2) |

** Normal maintenance period is 250 hrs. See your Operation and Maintenance Manual for complete coolant maintenance instructions.*

( ) Indicates quantity required.

# ADDITIFS POUR LIQUIDE DE REFROIDISSEMENT

**AVANTAGES POUR LE CLIENT**

L'additif protège contre la cavitation, la mousse, l'érosion, la corrosion et l'accumulation de dépôts dans le circuit de refroidissement.

- L'additif complémentaire fournit une quantité mesurée d'additif.

**DESCRIPTION:**

Les additifs s'épuisent pendant l'utilisation du moteur. C'est pourquoi l'on doit ajouter de l'additif au liquide de refroidissement/antigel pour moteurs diesel à intervalles réguliers. En plus, si l'on n'utilise pas de l'antigel entièrement formulé et pré-chargé comme le liquide de refroidissement/antigel Caterpillar pour moteurs diesel, une quantité initiale d'additif doit être ajoutée au circuit de refroidissement. La quantité d'additif à ajouter au circuit dépend de la contenance du circuit.

L'additif pour le remplissage initial est fourni sous forme liquide. L'additif pour l'entretien ultérieur est disponible sous forme liquide et sous forme d'élément à visser. (Il n'y a pas d'élément à visser pour les moteurs de la famille 3600).

**NOTA:**

La quantité d'additif à ajouter au remplissage initial diffère de la quantité à ajouter aux intervalles d'entretien.

Les éléments d'additif peuvent être utilisés avec tout antigel de type éthylène ou propylène-glycol conforme à la norme ASTM D4985 ou ASTM D5345.

**NOTA:**

A utiliser uniquement avec du liquide de refroidissement pour moteurs diesel et non avec le liquide de refroidissement longue durée.

**PIÈCES NÉCESSAIRES:**

| Contenance du circuit de refroidissement | | Additif liquide au remplissage initial | Additif liquide aux intervalles d'entretien* | Elément d'additif à visser aux intervalles d'entretien* |
|---|---|---|---|---|
| Litres | Gallons U.S. | | | |
| 22-30 | (6-8) | 3P-2044 (1) | 6V-3542 (1) | 111-2370 (1) |
| 30-38 | (8-10) | 3P-2044 (1)<br>6V-3542 (1) | 111-2372 (1) | 111-2369 (1) |
| 38-49 | (10-13) | 3P-2044 (1)<br>8T-1589 (1) | 111-2372 (1) | 111-2369 (1) |
| 49-64 | (13-17) | 3P-2044 (2) | 8T-1589 (1) | 9N-3368 (1) |
| 64-83 | (17-22) | 3P-2044 (2)<br>8T-1589 (1) | 111-2372 (1)<br>6V-3542 (1) | 111-2371 (1) |
| 83-114 | (22-30) | 3P-2044 (3)<br>8T-1589 (1) | 3P-2044 (1) | 9N-3718 (1) |
| 114-163 | (30-43) | 3P-2044 (5) | 3P-2044 (1)<br>6V-3542 (1) | 111-2371 (2) |
| 163-242 | (43-64) | 3P-2044 (8) | 3P-2044 (2) | 9N-3718 (2) |

** L'intervalle d'entretien normal est de 250 heures-service. Voir le Guide d'utilisation et d'entretien pour de plus amples renseignements concernant l'entretien du circuit de refroidissement.*

( ) Indique la quantité exigée.

# ADITIVOS DE REFRIGERANTE SUPLEMENTARIOS

**VENTAJAS PARA EL USUARIO:**

Protegen contra la cavitación, la formación de espuma, la corrosión y la acumulación de escamas en los sistemas de enfriamiento.

- Suministra un acondicionador dosificado de refrigerante.

**DESCRIPCIÓN:**

Los aditivos en el refrigerante se agotan con la operación normal. Por esta razón, se debe agregar Aditivo de refrigerante suplementario (SCA) a todos los refrigerantes para servicio pesado, a intervalos regulares. Además, cuando no se usa un anticongelante de precarga completo, tal como el DEAC de Caterpillar, es necesario agregar una cantidad de aditivo de refrigerante suplementario inicial al sistema de enfriamiento. La cantidad de aditivo que se debe agregar depende de la capacidad del sistema.

El SCA de llenado inicial es líquido. El que se usa para el mantenimiento está disponible tanto en líquido como en un elemento enroscable. (No hay elemento enroscable disponible para la Familia de Motores 3600).

**NOTA:**

La cantidad de aditivo de llenado inicial no es la misma que se agrega en los intervalos de mantenimiento.

Los elementos de aditivo de refrigerante se pueden usar con cualquier anticongelante de tipo glicol etilénico o propílico que esté de acuerdo con las especificaciones de las normas ASTM D4985 o ASTM D5345.

**NOTA:**

Se debe utilizar únicamente con refrigerante estándar para servicio pesado; no se debe usar con Refrigerante de Larga Duración.

**PIEZAS NECESARIAS:**

| Capacidad del Sistema de Enfriamiento | | SCA líquido de llenado inicial | SCA líquido de mantenimiento* | Elemento de mantenimiento enroscable* |
|---|---|---|---|---|
| litros | gal EE.UU. | | | |
| 22-30 | 6-8 | 3P-2044 (1) | 6V-3542 (1) | 111-2370 (1) |
| 30-38 | 8-10 | 3P-2044 (1)<br>6V-3542 (1) | 111-2372 (1) | 111-2369 (1) |
| 38-49 | 10-13 | 3P-2044 (1)<br>8T-1589 (1) | 111-2372 (1) | 111-2369 (1) |
| 49-64 | 13-17 | 3P-2044 (2) | 8T-1589 (1) | 9N-3368 (1) |
| 64-83 | 17-22 | 3P-2044 (2)<br>8T-1589 (1) | 111-2372 (1)<br>6V-3542 (1) | 111-2371 (1) |
| 83-114 | 22-30 | 3P-2044 (3)<br>8T-1589 (1) | 3P-2044 (1) | 9N-3718 (1) |
| 114-163 | 30-43 | 3P-2044 (5) | 3P-2044 (1)<br>6V-3542 (1) | 111-2371 (2) |
| 163-242 | 43-64 | 3P-2044 (8) | 3P-2044 (2) | 9N-3718 (2) |

** El período normal de mantenimiento es de 250 horas. Para ver las instrucciones completas sobre el mantenimiento del refrigerante, consulte el Manual de Operación y Mantenimiento.*

( ) Indica la cantidad necesaria.

# ADITIVOS SUPLEMENTARES DO LÍQUIDO ARREFECEDOR

**BENEFÍCIOS PARA O CLIENTE:**

Protege contra cavitação, espuma, erosão, corrosão e acúmulo de crostas nos sistemas de arrefecimento.

- Fornece uma quantidade pré-determinada de condicionador de arrefecimento.

**DESCRIÇÃO:**

Com a operação normal, os aditivos se esgotam do líquido arrefecedor. Por isso, Aditivos Suplementares do Líquido Arrefecedor (SCA) devem ser acrescentados a todos os líquidos arrefecedores para serviço pesado em intervalos regulares. Além disso, quando um anticongelante pré-carregado, totalmente formulado não for usado, como o DEAC Caterpillar, uma carga inicial de SCA deve ser acrescentada ao sistema de arrefecimento. A quantidade de SCA acrescentada ao sistema depende da capacidade do sistema.

O SCA para abastecimento inicial é fornecido em forma de líquido. Os aditivos suplementares (SCA) para intervalos de manutenção estão à disposição em forma líquida e como um elemento com roscas. (Exceto os Motores da Família 3600)

**NOTA:**

A quantidade de SCA adicionada no abastecimento inicial não é a mesma que a acrescentada nos intervalos de manutenção.

Os elementos do aditivo do líquido arrefecedor podem ser usados com qualquer tipo de anticongelante etileno ou propileno que satisfaz as Especificações ASTM D4985 ou ASTM D5345.

**NOTA:**

Para uso apenas com líquido arrefecedor para serviço pesado padrão, não deve ser usado com Líquido Arrefecedor de Vida Longa.

**PEÇAS NECESSÁRIAS:**

| Capacidade do Sistema de Arrefecimento | | Líquido SCA Durante Abastecimento Inicial | Líquido SCA Durante Manutenção* | Elemento de Manutenção de SCA com Roscas* |
|---|---|---|---|---|
| Litros | Galões | | | |
| 22-30 | 6-8 | 3P-2044 (1) | 6V-3542 (1) | 111-2370 (1) |
| 30-38 | 8-10 | 3P-2044 (1)<br>6V-3542 (1) | 111-2372 (1) | 111-2369 (1) |
| 38-49 | 10-13 | 3P-2044 (1)<br>8T-1589 (1) | 111-2372 (1) | 111-2369 (1) |
| 49-64 | 13-17 | 3P-2044 (2) | 8T-1589 (1) | 9N-3368 (1) |
| 64-83 | 17-22 | 3P-2044 (2)<br>8T-1589 (1) | 111-2372 (1)<br>6V-3542 (1) | 111-2371 (1) |
| 83-114 | 22-30 | 3P-2044 (3)<br>8T-1589 (1) | 3P-2044 (1) | 9N-3718 (1) |
| 114-163 | 30-43 | 3P-2044 (5) | 3P-2044 (1)<br>6V-3542 (1) | 111-2371 (2) |
| 163-242 | 43-64 | 3P-2044 (8) | 3P-2044 (2) | 9N-3718 (2) |

** O período normal de manutenção é de 250 horas. Consulte o Manual de Operação e Manutenção para obter instruções completas quanto à manutenção do líquido arrefecedor.*

( ) Indica a quantidade exigida.

# KÜHLMITTELZUSATZ

**VORTEILE FÜR DEN KUNDEN:**

Schutz gegen Kavitation, Schaumbildung, Erosion, Korrosion und Kesselsteinbildung in Kühlsystemen.

- Richtig dosierter Kühlmittelzusatz

**BESCHREIBUNG:**

Additive erschöpfen sich während des Motorbetriebs. Deshalb muß allen HD-Kühlmitteln regelmäßig Kühlmittelzusatz beigefügt werden. Wenn bei Erstfüllung kein vollwertiges Fertigkühlmittel, wie das Frostschutz- und Kühlmittel für Dieselmotoren von Caterpiller (DEAC), verwendet wird, muß bei Erstfüllung Kühlmittelzusatz beigefügt werden. Wieviel Kühlmittelzusatz beigefügt werden muß, hängt vom Inhalt des Kühlsystems ab.

Für Erstfüllung ist Kühlmittelzusatz nur in flüssiger Form erhältlich. Für Wartungsintervalle ist Kühlmittelzusatz in flüssiger Form und als Zusatzelement erhältlich. (Für die Motorbaureihe 3600 sind keine Zusatzelemente erhältlich.)

**ANMERKUNG:**

Die Kühlmittelmenge bei Erstfüllung ist nicht die gleiche Menge, die bei Wartungsintervallen beigefügt werden muß.

Die Kühlmittelzusatzelemente können mit allen Frostschutzmitteln auf Ethylen- oder Propylenglykolbasis verwendet werden, die den Standards nach ASTM D4985 oder ASTM D5345 entsprechen.

**ANMERKUNG:**

Den Kühlmittelzusatz nicht mit Langzeitkühlmittel (ELC) von Caterpillar verwenden. Der Kühlmittelzusatz ist nur für HD-Kühlmittel bestimmt.

**TEILEBEZEICHNUNG:**

| Kühlsysteminhalt | | Kühlmittelzusatz bei Erstfüllung | Flüssiger Kühlmittelzusatz bei Wartung* | Kühlmittelzusatzelement bei Wartung* |
|---|---|---|---|---|
| Liter | US-Gall. | | | |
| 22-30 | (6-8) | 3P-2044 (1) | 6V-3542 (1) | 111-2370 (1) |
| 30-38 | (8-10) | 3P-2044 (1)<br>6V-3542 (1) | 111-2372 (1) | 111-2369 (1) |
| 38-49 | (10-13) | 3P-2044 (1)<br>8T-1589 (1) | 111-2372 (1) | 111-2369 (1) |
| 49-64 | (13-17) | 3P-2044 (2) | 8T-1589 (1) | 9N-3368 (1) |
| 64-83 | (17-22) | 3P-2044 (2)<br>8T-1589 (1) | 111-2372 (1)<br>6V-3542 (1) | 111-2371 (1) |
| 83-114 | (22-30) | 3P-2044 (3)<br>8T-1589 (1) | 3P-2044 (1) | 9N-3718 (1) |
| 114-163 | (30-43) | 3P-2044 (5) | 3P-2044 (1)<br>6V-3542 (1) | 111-2371 (2) |
| 163-242 | (43-64) | 3P-2044 (8) | 3P-2044 (2) | 9N-3718 (2) |

** Der normale Wartungsintervall beträgt 250 Betriebsstunden. Für vollständige Anweisungen zur Wartung des Kühlsystems, siehe Betriebs- und Wartungshandbuch.*

( ) Erforderliche Anzahl

# MAINTENANCE PARTS

| DESCRIPTION | PART NUMBER | QTY | WHERE USED | PAGE |
|---|---|---|---|---|
| **AIR INLET AND EXHAUST SYSTEM** | | | | |
| CAP-AIR CLEANER | 9L-0749 | 1 | AIR CLEANER GP | 95 |
| FILTER ELEMENT AS-AIR (PRIMARY) | 245-6375 | 1 | AIR CLEANER GP | 94 |
| FILTER ELEMENT AS-AIR (SECONDARY) | 245-6376 | 1 | AIR CLEANER GP | 94 |
| **BASIC ENGINE** | | | | |
| BELT-SERPENTINE (PULLEY) | 245-4628 | 1 | PULLEY GP-ENGINE | 55 |
| PLUG-DRAIN (ENGINE OIL PAN) | 113-5335 | 1 | DRAIN GP-ENGINE OIL | 31 |
| PLUG-MAGNETIC (ENGINE OIL PAN) | 118-3619 | 1 | DRAIN GP-ENGINE OIL | 31 |
| SEAL-VALVE COVER (VALVE COVER) | 272-0388 | 1 | COVER GP-VALVE MECHANISM | 14 |
| **COOLING SYSTEM** | | | | |
| CAP AS (COOLANT FILL) | 204-0920 | 1 | RADIATOR & MOUNTING GP | 90 |
| CAP AS (COOLANT OVERFLOW) | 171-3370 | 1 | RADIATOR & MOUNTING GP | 90 |
| CAP-RADIATOR | 141-0052 | 1 | RADIATOR & AFTERCOOLER GP | 88 |
| GASKET (TEMPERATURE REGULATOR HOUSING) | 222-5915 | 1 | LINES GP-WATER | 82 |
| | | 1 | LINES GP-WATER | 84 |
| REGULATOR-WATER TEMPERATURE (94-DEG C) (COOLANT) | 119-3075 | 2 | LINES GP-WATER | 84 |
| REGULATOR-WATER TEMPERATURE (97-DEG C) (COOLANT) | 115-4223 | 2 | LINES GP-WATER | 82 |
| **ELECTRICAL AND STARTING SYSTEM** | | | | |
| BATTERY GP (12-VOLT, MAINTENANCE FREE, WET) | 115-2422 | 2 | BATTERY & WIRING GP | 146 |
| | | 2 | BATTERY & WIRING GP | 149 |
| CIRCUIT BREAKER AS (105-AMPERE) (ALTERNATOR) | 171-2212 | 1 | PANEL GP-CIRCUIT BREAKER | 162 |
| CIRCUIT BREAKER AS (105-AMPERE) (MAIN) | 171-2212 | 1 | PANEL GP-CIRCUIT BREAKER | 162 |
| CIRCUIT BREAKER AS (20-AMPERE) (MACHINE CONTROL) | 6T-3644 | 1 | PANEL GP-CIRCUIT BREAKER | 162 |
| CIRCUIT BREAKER AS (80-AMPERE) (AIR INLET HEATER) | 171-2210 | 1 | PANEL GP-CIRCUIT BREAKER | 162 |
| KEY (BATTERY DISCONNECT) | 8H-5306 | 1 | SWITCH GP-DISCONNECT | 194 |
| LAMP-HALOGEN (24-VOLT, 65-WATT) | 9X-3463 | 1 | LAMP GP-FLOOD | 156 |
| **FUEL SYSTEM** | | | | |
| BREATHER AS (FUEL TANK) | 183-3873 | 1 | TANK GP-FUEL | 136 |
| CAP AS-FILLER (FUEL TANK) | 7X-7700 | 1 | TANK GP-FUEL | 139 |
| FILTER AS-FUEL (ADVANCED EFFICIENCY) (SECONDARY) | 1R-0762 | 1 | LINES GP-FUEL FILTER | 122 |
| | | 1 | LINES GP-FUEL FILTER | 124 |
| FILTER AS-WATER SEP & FUEL (PRIMARY) | 1R-0770 | 1 | FILTER GP-WATER SEP & FUEL | 114 |
| STRAINER-FUEL | 9P-7121 | 1 | TANK GP-FUEL | 136 |

# MAINTENANCE PARTS

| DESCRIPTION | PART NUMBER | QTY | WHERE USED | PAGE |
|---|---|---|---|---|
| **HYDRAULIC SYSTEM** | | | | |
| CAP-FILLER (HYDRAULIC TANK) | 7H-1447 | 1 | TANK GP-HYDRAULIC | 447 |
| FILTER | 4T-4520 | 1 | VALVE GP-CONTROL | 470 |
| FILTER AS-OIL (ADVANCED EFFICIENCY) | 201-0875 | 1 | LINES GP-HYDRAULIC | 425 |
| FILTER AS-OIL (ADVANCED EFFICIENCY) (HYDRAULIC) | 1G-8878 | 1 | FILTER GP-OIL | 414 |
| | 152-6902 | 1 | FILTER GP-OIL | 415 |
| SCREEN | 6E-5066 | 1 | MANIFOLD GP-CONTROL | 437 |
| SCREEN-SUCTION (HYDRAULIC TANK) | 142-8929 | 1 | TANK GP-HYDRAULIC | 447 |
| STRAINER AS | 160-3448 | 1 | TANK GP-HYDRAULIC | 447 |
| STRAINER AS-OIL (HYDRAULIC TANK) | 5D-7927 | 1 | TANK GP-HYDRAULIC | 447 |
| **LUBRICATION SYSTEM** | | | | |
| BREATHER AS (CRANKCASE) | 164-0210 | 1 | BREATHER GP | 67 |
| CAP AS-FILLER (ENGINE OIL) | 5L-2952 | 1 | FILLER GP-ENGINE OIL | 68 |
| FILTER AS-ENGINE OIL | 1R-1807 | 1 | FILTER GP-ENGINE OIL | 69 |
| **OPERATOR STATION** | | | | |
| BELT-SERPENTINE (A/C COMPRESSOR) | 249-8740 | 1 | COMPRESSOR & MTG GP-REFRIG | 590 |
| BLADE AS-WIPER | 6V-5849 | 2 | WIPER GP-WINDOW | 682 |
| BLADE AS-WIPER (REAR) | 5C-8811 | 1 | WIPER & WASHER GP-WINDOW | 680 |
| CAP (WINDOW WASHER TANK FILL) | 3W-6398 | 1 | TANK GP-WINDOW WASHER | 642 |
| FILTER-CAB AIR | 121-2761 | 1 | AIR CONDITIONER GP | 577 |
| | | 1 | AIR CONDITIONER GP | 580 |
| FILTER-FRESH AIR | 223-3694 | 1 | AIR CONDITIONER GP | 577 |
| | | 1 | AIR CONDITIONER GP | 580 |
| SEAT BELT GP | 8Y-4030 | 1 | SEAT GP-SUSPENSION | 635 |
| | | 1 | SEAT GP-SUSPENSION | 636 |
| **POWER TRAIN** | | | | |
| BREATHER AS (POWER TRAIN TANK) | 9G-5127 | 1 | FILTER & LINES GP-POWER TRAIN | 265 |
| | | 1 | FILTER & LINES GP-POWER TRAIN | 267 |
| FILTER AS-OIL (ADVANCED EFFICIENCY) (POWER TRAIN) | 1G-8878 | 1 | FILTER GP-OIL | 269 |
| PLUG-DRAIN | 175-4966 | 1 | CASE & PARTS GP-TRANSMISSION | 242 |
| PLUG-DRAIN (ECOLOGY) | 175-4966 | 1 | DRAIN GP-ECOLOGY | 262 |
| SCREEN-SUCTION | 4S-8598 | 1 | CASE & PARTS GP-TRANSMISSION | 237 |
| | | 1 | CASE & PARTS GP-TRANSMISSION | 243 |
| **SERVICE EQUIPMENT AND SUPPLIES** | | | | |
| GAUGE GP-PRESSURE (WATER) | 8T-0853 | 1 | LINES GP-PRESSURIZED WATER | 688 |
| **WORK TOOLS** | | | | |
| PLUG | 179-9492 | 2 | CASE GP-WINCH | 503 |
| PLUG (DRAIN) | 179-9492 | 1 | VALVE GP-DRAIN | 566 |

# PIÈCES DE RECHANGE

| DESCRIPTION | NUMÉRO DE PIECÈS | QTÉ | DOMAINE D'APPLICATION | PAGE |
|---|---|---|---|---|
| **CIRCUIT D'ADMISSION D'AIR ET D'ÉCHAPPEMENT** | | | | |
| CHAPEAU DE FILTRE A AIR | 9L-0749 | 1 | FILTRE A AIR (ASS) | 95 |
| ÉLÉMENT DE FILTRE À AIR (ENS) (PRINCIPAL) | 245-6375 | 1 | FILTRE A AIR (ASS) | 94 |
| ÉLÉMENT DE FILTRE À AIR (ENS) (SECONDAIRE) | 245-6376 | 1 | FILTRE A AIR (ASS) | 94 |
| **CIRCUIT DE CARBURANT** | | | | |
| BOUCHON DE GOULOTTE DE REMPLISSAGE (ENS) (RÉSERVOIR DE CARBURANT) | 7X-7700 | 1 | RÉSERVOIR DE CARBURANT (ASS) | 139 |
| FILTRE - SÉPARATEUR D'EAU ET DE CARBURANT (ENS) (PRINCIPAL) | 1R-0770 | 1 | FILTRE DE SÉPARATEUR D'EAU ET DE CARBURANT (ASS) | 114 |
| FILTRE À CARBURANT | 9P-7121 | 1 | RÉSERVOIR DE CARBURANT (ASS) | 136 |
| FILTRE A CARBURANT (ENS) (EFFICACITÉ AVANCÉE) (AUXILIAIRE) | 1R-0762 | 1 | CANALISATIONS DU FILTRE A CARBURANT (ASS) | 122 |
| | | 1 | CANALISATIONS DU FILTRE A CARBURANT (ASS) | 124 |
| RENIFLARD (ENS) (RESERVOIR DE CARBURANT) | 183-3873 | 1 | RÉSERVOIR DE CARBURANT (ASS) | 136 |
| **CIRCUIT DE GRAISSAGE** | | | | |
| BOUCHON DE GOULOTTE DE REMPLISSAGE (ENS) (HUILE MOTEUR) | 5L-2952 | 1 | BOUCHON DE REMPLISSAGE D'HUILE MOTEUR (ASS) | 68 |
| FILTRE A HUILE MOTEUR (ENS) | 1R-1807 | 1 | FILTRE À HUILE MOTEUR (ASS) | 69 |
| RENIFLARD (ENS) (CARTER) | 164-0210 | 1 | RENIFLARD (ASS) | 67 |
| **CIRCUIT DE REFROIDISSEMENT** | | | | |
| CHAPEAU - RADIATEUR | 141-0052 | 1 | RADIATEUR ET REFROIDISSEUR (ASS) | 88 |
| CHAPEAU (ENS) (REMPLISSAGE DE LIQUIDE DE REFROIDISSEMENT) | 204-0920 | 1 | RADIATEUR ET MONTAGE (ASS) | 90 |
| CHAPEAU (ENS) (TROP-PLEIN DE LIQUIDE DE REFROIDISSEMENT) | 171-3370 | 1 | RADIATEUR ET MONTAGE (ASS) | 90 |
| JOINT PLAT (BOÎTIER DE RÉGULATEUR DE TEMPÉRATURE) | 222-5915 | 1 | CANALISATIONS D'EAU (ASS) | 82 |
| | | 1 | CANALISATIONS D'EAU (ASS) | 84 |
| THERMOSTAT-TEMPÉRATURE D'EAU (94-DEG C) (LIQUIDE DE REFROIDISSEMENT) | 119-3075 | 2 | CANALISATIONS D'EAU (ASS) | 84 |
| THERMOSTAT-TEMPÉRATURE D'EAU (97-DEG C) (LIQUIDE DE REFROIDISSEMENT) | 115-4223 | 2 | CANALISATIONS D'EAU (ASS) | 82 |

# PIÈCES DE RECHANGE

| DESCRIPTION | NUMÉRO DE PIECÈS | QTÉ | DOMAINE D'APPLICATION | PAGE |
|---|---|---|---|---|
| **CIRCUIT ÉLECTRIQUE ET DE DÉMARRAGE** | | | | |
| BATTERIE (ASS) (12V, SANS ENTRETIEN, À BAIN D'HUILE) | 115-2422 | 2 | BATTERIE ET CÂBLAGE | 146 |
| | | 2 | BATTERIE ET CÂBLAGE | 149 |
| CLÉ (COUPE-BATTERIE) | 8H-5306 | 1 | ROBINET DE BATTERIE (ASS) | 194 |
| DISJONCTEUR (ENS) (105A) (ALTERNATEUR) | 171-2212 | 1 | DISJONCTEUR DU PANNEAU DE COMMANDE (ASS) | 162 |
| DISJONCTEUR (ENS) (105A) (PRINCIPAL) | 171-2212 | 1 | DISJONCTEUR DU PANNEAU DE COMMANDE (ASS) | 162 |
| DISJONCTEUR (ENS) (20A) (COMMANDE DE LA MACHINE) | 6T-3644 | 1 | DISJONCTEUR DU PANNEAU DE COMMANDE (ASS) | 162 |
| DISJONCTEUR (ENS) (80A) (RÉCHAUFFEUR D'ADMISSION D'AIR) | 171-2210 | 1 | DISJONCTEUR DU PANNEAU DE COMMANDE (ASS) | 162 |
| LAMPE HALOGÈNE (24V, 65W) | 9X-3463 | 1 | LAMPE - PHARE (ASS) | 156 |
| **CIRCUIT HYDRAULIQUE** | | | | |
| BOUCHON DE GOULOTTE DE REMPLISSAGE (RÉSERVOIR HYDRAULIQUE) | 7H-1447 | 1 | RÉSERVOIR HYDRAULIQUE (ASS) | 447 |
| CREPINE (ENS) | 160-3448 | 1 | RÉSERVOIR HYDRAULIQUE (ASS) | 447 |
| ÉCRAN | 6E-5066 | 1 | COLLECTEUR - COMMANDE (ASS) | 437 |
| FILTRE | 4T-4520 | 1 | DISTRIBUTEUR (ASS) | 470 |
| FILTRE À HUILE (ENS) (EFFICACITÉ AVANCÉE) | 201-0875 | 1 | CANALISATIONS HYDRAULIQUES (ASS) | 425 |
| FILTRE À HUILE (ENS) (EFFICACITÉ AVANCÉE) (HYDRAULIQUE) | 1G-8878 | 1 | FILTRE A HUILE (ASS) | 414 |
| | 152-6902 | 1 | FILTRE A HUILE (ASS) | 415 |
| FILTRE À HUILE (ENS) (RÉSERVOIR HYDRAULIQUE) | 5D-7927 | 1 | RÉSERVOIR HYDRAULIQUE (ASS) | 447 |
| TAMIS D'ASPIRATION (RÉSERVOIR HYDRAULIQUE) | 142-8929 | 1 | RÉSERVOIR HYDRAULIQUE (ASS) | 447 |
| **MATÉRIEL ET FOURNITURES D'ENTRETIEN** | | | | |
| MANOMETRE (ASS) (EAU) | 8T-0853 | 1 | CANALISATIONS D'EAU SOUS PRESSION (ASS) | 688 |
| **MOTEUR STANDARD** | | | | |
| BOUCHON AIMANTÉ (CARTER D'HUILE MOTEUR) | 118-3619 | 1 | VIDANGE-HUILE DE MOTEUR (ASS) | 31 |
| BOUCHON DE VIDANGE (CARTER D'HUILE MOTEUR) | 113-5335 | 1 | VIDANGE-HUILE DE MOTEUR (ASS) | 31 |
| COURROIE MULTIPLE (POULIE) | 245-4628 | 1 | POULIE-MOTEUR (ASS) | 55 |
| JOINT DE CACHE-SOUPAPES (CACHE-SOUPAPES) | 272-0388 | 1 | CACHE-SOUPAPES (ASS) | 14 |
| **OUTILS DE TRAVAIL** | | | | |
| BOUCHON FILETÉ | 179-9492 | 2 | CARTER - TREUIL (ASS) | 503 |
| BOUCHON FILETÉ (VIDANGE) | 179-9492 | 1 | SOUPAPE DE VIDANGE | 566 |

# PIÈCES DE RECHANGE

| DESCRIPTION | NUMÉRO DE PIECÈS | QTÉ | DOMAINE D'APPLICATION | PAGE |
|---|---|---|---|---|
| **POSTE DE CONDUITE** | | | | |
| BALAI D'ESSUIE-GLACE (ENS) | 6V-5849 | 2 | ESSUIE-GLACE (ASS) | 682 |
| BALAI D'ESSUIE-GLACE (ENS) (ARRIÈRE) | 5C-8811 | 1 | ESSUIE-GLACE ET LAVE-GLACE | 680 |
| CEINTURE DE SECURITE (ASS) | 8Y-4030 | 1 | SIÈGE AVEC SUSPENSION (ASS) | 635 |
| | | 1 | SIÈGE AVEC SUSPENSION (ASS) | 636 |
| CHAPEAU (REMPLISSAGE DE RÉSERVOIR DE LAVE-GLACE DE VITRE) | 3W-6398 | 1 | RÉSERVOIR - LAVE-GLACE (ASS) | 642 |
| COURROIE MULTIPLE (COMPRESSEUR DE CLIMATISEUR) | 249-8740 | 1 | COMPRESSEUR ET MONTAGE - RÉFRIGÉRANT (ASS) | 590 |
| FILTRE À AIR DE CABINE | 121-2761 | 1 | CLIMATISEUR (ASS) | 577 |
| | | 1 | CLIMATISEUR (ASS) | 580 |
| FILTRE D'AIR FRAIS | 223-3694 | 1 | CLIMATISEUR (ASS) | 577 |
| | | 1 | CLIMATISEUR (ASS) | 580 |
| **TRANSMISSION** | | | | |
| BOUCHON DE VIDANGE | 175-4966 | 1 | CARTER ET PIECES DE BOITE (ASS) | 242 |
| BOUCHON DE VIDANGE (ÉCOLOGIE) | 175-4966 | 1 | VIDANGE-ÉCOLOGIE (ASS) | 262 |
| FILTRE À HUILE (ENS) (EFFICACITÉ AVANCÉE) (TRANSMISSION) | 1G-8878 | 1 | FILTRE A HUILE (ASS) | 269 |
| RENIFLARD (ENS) (RÉSERVOIR DE GROUPE MOTO-PROPULSEUR) | 9G-5127 | 1 | FILTRE ET CANALISATIONS DE TRANSMISSION (ASS) | 265 |
| | | 1 | FILTRE ET CANALISATIONS DE TRANSMISSION (ASS) | 267 |
| TAMIS D'ASPIRATION | 4S-8598 | 1 | CARTER ET PIECES DE BOITE (ASS) | 237 |
| | | 1 | CARTER ET PIECES DE BOITE (ASS) | 243 |

# PIEZAS DE MANTENIMIENTO

| DESCRIPCION | NUMERO DE PIEZA | CANT | SE UTILIZA EN | PAGINA |
|---|---|---|---|---|
| **EQUIPOS Y SUMINISTRO DE SERVICIOS** | | | | |
| MANÓMETRO (GR) (AGUA) | 8T-0853 | 1 | GRUPO DE TUBERIAS, AGUA A PRESIÓN | 688 |
| **HERRAMIENTAS** | | | | |
| TAPÓN | 179-9492 | 2 | CAJA DEL CABRESTANTE (GR) | 503 |
| TAPÓN (DRENAJE) | 179-9492 | 1 | VÁLVULA DE DRENAJE (GR) | 566 |
| **MOTOR BÁSICO** | | | | |
| CORREA-SERPENTIN (POLEA) | 245-4628 | 1 | POLEA DE MOTOR (GR) | 55 |
| *SEAL-VALVE COVER (TAPA DE VÁLVULA) | 272-0388 | 1 | TAPA DEL MECANISMO DE VÁLVULAS (GR) | 14 |
| TAPÓN DE DRENAJE (COLECTOR DE ACEITE DEL MOTOR) | 113-5335 | 1 | DRENAJE DEL ACEITE DE MOTOR | 31 |
| TAPÓN MAGNÉTICO (COLECTOR DE ACEITE DEL MOTOR) | 118-3619 | 1 | DRENAJE DEL ACEITE DE MOTOR | 31 |
| **PUESTO DEL OPERADOR** | | | | |
| CINTURÓN DE SEGURIDAD (GR) | 8Y-4030 | 1 | SUSPENSIÓN - ASIENTO CON (GR) | 635 |
| | | 1 | SUSPENSIÓN - ASIENTO CON (GR) | 636 |
| CORREA-SERPENTIN (COMPRESOR DEL ACONDICIONADOR DE AIRE) | 249-8740 | 1 | COMPRESOR DE REFRIGERANTE Y GRUPO DE MONTAJE | 590 |
| FILTRO DE AIRE | 223-3694 | 1 | ACONDICIONADOR DE AIRE (GR) | 577 |
| | | 1 | ACONDICIONADOR DE AIRE (GR) | 580 |
| FILTRO DE AIRE DE CABINA | 121-2761 | 1 | ACONDICIONADOR DE AIRE (GR) | 577 |
| | | 1 | ACONDICIONADOR DE AIRE (GR) | 580 |
| HOJA DE LIMPIAPARABRISAS (CONJ) | 6V-5849 | 2 | LIMPIAPARABRISAS DE LA VENTANA (GR) | 682 |
| HOJA DE LIMPIAPARABRISAS (CONJ) (PARTE TRASERA) | 5C-8811 | 1 | LIMPIA Y LAVAPARABRISAS (GR) | 680 |
| TAPA (LLENADO DE TANQUE DE LIMPIAPARABRISA) | 3W-6398 | 1 | TANQUE DEL LAVAPARABRISAS (GR) | 642 |
| **SISTEMA DE ADMISIÓN Y ESCAPE DE AIRE** | | | | |
| ELEMENTO DEL FILTRO DE AIRE (CONJ) (PRIMARIO) | 245-6375 | 1 | FILTRO DE AIRE (GR) | 94 |
| ELEMENTO DEL FILTRO DE AIRE (CONJ) (SECUNDARIO) | 245-6376 | 1 | FILTRO DE AIRE (GR) | 94 |
| TAPA DEL FILTRO DE AIRE | 9L-0749 | 1 | FILTRO DE AIRE (GR) | 95 |

* NO HAY TRADUCCION DISPONIBLE EN EL MOMENTO DE LA IMPRESION

# PIEZAS DE MANTENIMIENTO

| DESCRIPCION | NUMERO DE PIEZA | CANT | SE UTILIZA EN | PAGINA |
|---|---|---|---|---|
| **SISTEMA DE COMBUSTIBLE** | | | | |
| COLADOR DE COMBUSTIBLE | 9P-7121 | 1 | COMBUSTIBLE - TANQUE DE (GR) | 136 |
| FILTRO DE COMBUSTIBLE (CONJ) (EFICIENCIA AVANZADA) (SECUNDARIO(A)) | 1R-0762 | 1 | TUBERÍAS DEL FILTRO DE COMBUSTIBLE | 122 |
| | | 1 | TUBERÍAS DEL FILTRO DE COMBUSTIBLE | 124 |
| FILTRO DE COMBUSTIBLE Y SEPARADOR DE AGUA (CONJ) (PRIMARIO) | 1R-0770 | 1 | FILTRO DE COMBUSTIBLE Y SEPARADOR DE AGUA (GR) | 114 |
| RESPIRADERO (CONJ) (TANQUE DE COMBUSTIBLE) | 183-3873 | 1 | COMBUSTIBLE - TANQUE DE (GR) | 136 |
| TAPA DE LLENADO (CONJ) (TANQUE DE COMBUSTIBLE) | 7X-7700 | 1 | COMBUSTIBLE - TANQUE DE (GR) | 139 |
| **SISTEMA DE ENFRIAMIENTO** | | | | |
| EMPAQUETADURA (CAJA DEL REGULADOR DE TEMPERATURA) | 222-5915 | 1 | TUBERÍAS DEL AGUA (GR) | 82 |
| | | 1 | TUBERÍAS DEL AGUA (GR) | 84 |
| REGULADOR DE TEMPERATURA DEL AGUA (94-GRADOS C) (REFRIGERANTE) | 119-3075 | 2 | TUBERÍAS DEL AGUA (GR) | 84 |
| REGULADOR DE TEMPERATURA DEL AGUA (97 GRADOS C) (REFRIGERANTE) | 115-4223 | 2 | TUBERÍAS DEL AGUA (GR) | 82 |
| TAPA DEL RADIADOR | 141-0052 | 1 | RADIADOR Y POSENFRIADOR (GR) | 88 |
| TAPÓN (CONJ) (LLENADO DE REFRIGERANTE) | 204-0920 | 1 | RADIADOR Y MONTAJE (GR) | 90 |
| TAPÓN (CONJ) (REFRIGERANTE REBOSADO) | 171-3370 | 1 | RADIADOR Y MONTAJE (GR) | 90 |
| **SISTEMA DE LUBRICACIÓN** | | | | |
| FILTRO DE ACEITE DEL MOTOR (CONJ) | 1R-1807 | 1 | FILTRO DE ACEITE DEL MOTOR (GR) | 69 |
| RESPIRADERO (CONJ) (CÁRTER DEL MOTOR) | 164-0210 | 1 | RESPIRADERO (GR) | 67 |
| TAPA DE LLENADO (CONJ) (ACEITE DEL MOTOR) | 5L-2952 | 1 | TUBO DE LLENADO DE ACEITE (GR) | 68 |

* NO HAY TRADUCCION DISPONIBLE EN EL MOMENTO DE LA IMPRESION

# PIEZAS DE MANTENIMIENTO

| DESCRIPCION | NUMERO DE PIEZA | CANT | SE UTILIZA EN | PAGINA |
|---|---|---|---|---|
| **SISTEMA ELÉCTRICO Y DE ARRANQUE** | | | | |
| BATERÍA (GR) (12 VOLTIOS, LIBRE DE MANTENIMIENTO, HUMEDO) | 115-2422 | 2 | BATERÍA Y CABLES (GR) | 146 |
| | | 2 | BATERÍA Y CABLES (GR) | 149 |
| DISYUNTOR (CONJ) (105 AMPERIOS) (ALTERNADOR) | 171-2212 | 1 | PANEL DE DISYUNTORES (GR) | 162 |
| DISYUNTOR (CONJ) (105 AMPERIOS) (PRINCIPAL) | 171-2212 | 1 | PANEL DE DISYUNTORES (GR) | 162 |
| DISYUNTOR (CONJ) (20-AMPERIOS) (CONTROL DE MAQUINA) | 6T-3644 | 1 | PANEL DE DISYUNTORES (GR) | 162 |
| DISYUNTOR (CONJ) (80 AMPERIOS) (AIRE DE ADMISIÓN DE LA CALEFACCIÓN) | 171-2210 | 1 | PANEL DE DISYUNTORES (GR) | 162 |
| LLAVE (INTERRUPTOR GENERAL) | 8H-5306 | 1 | DISYUNTOR (GR) | 194 |
| LUCES DE ALÓGENO (24 VOLTIOS, 65 VATIOS) | 9X-3463 | 1 | REFLECTOR (GR) | 156 |
| **SISTEMA HIDRÁULICO** | | | | |
| COLADOR (CONJ) | 160-3448 | 1 | TANQUE HIDRÁULICO (GR) | 447 |
| FILTRO | 4T-4520 | 1 | VÁLVULA DE CONTROL (GR) | 470 |
| FILTRO DE ACEITE (CONJ) (EFICIENCIA AVANZADA) | 201-0875 | 1 | TUBERÍAS HIDRÁULICAS (GR) | 425 |
| FILTRO DE ACEITE (CONJ) (EFICIENCIA AVANZADA) (HIDRÁULICO) | 1G-8878 | 1 | FILTRO DE ACEITE (GR) | 414 |
| | 152-6902 | 1 | FILTRO DE ACEITE (GR) | 415 |
| REJILLA | 6E-5066 | 1 | CONTROL DEL MULTIPLE (GR) | 437 |
| REJILLA DE SUCCIÓN (TANQUE HIDRÁULICO) | 142-8929 | 1 | TANQUE HIDRÁULICO (GR) | 447 |
| *STRAINER AS-OIL (TANQUE HIDRÁULICO) | 5D-7927 | 1 | TANQUE HIDRÁULICO (GR) | 447 |
| TAPA DEL TUBO DE LLENADO (TANQUE HIDRÁULICO) | 7H-1447 | 1 | TANQUE HIDRÁULICO (GR) | 447 |
| **TREN DE FUERZA** | | | | |
| FILTRO DE ACEITE (CONJ) (EFICIENCIA AVANZADA) (TREN DE FUERZA) | 1G-8878 | 1 | FILTRO DE ACEITE (GR) | 269 |
| REJILLA DE SUCCIÓN | 4S-8598 | 1 | CAJA Y PIEZAS DE LA TRANSMISIÓN (GR) | 237 |
| | | 1 | CAJA Y PIEZAS DE LA TRANSMISIÓN (GR) | 243 |
| RESPIRADERO (CONJ) (TANQUE DE TREN DE FUERZA) | 9G-5127 | 1 | FILTRO Y TUBERIAS DE TREN DE FUERZA (GR) | 265 |
| | | 1 | FILTRO Y TUBERIAS DE TREN DE FUERZA (GR) | 267 |
| TAPÓN DE DRENAJE | 175-4966 | 1 | CAJA Y PIEZAS DE LA TRANSMISIÓN (GR) | 242 |
| TAPÓN DE DRENAJE (DE SEG. ECOLÓGICA) | 175-4966 | 1 | DRENAJE DE SEGURIDAD ECOLÓGICA (GR) | 262 |

* NO HAY TRADUCCION DISPONIBLE EN EL MOMENTO DE LA IMPRESION

# PEÇAS DE MANUTENÇÃO

| DESCRIÇÃO | NÚMERO DE PEÇA | QUANT | UTILIZADA EM | PÁGINA |
|---|---|---|---|---|
| **EQUIPAMENTOS DE SERVIÇO E SUPRIMENTOS** | | | | |
| MANÔMETRO (ÁGUA) | 8T-0853 | 1 | TUBULAÇÕES - AR PRESSURIZADO | 688 |
| **ESTAÇÃO DO OPERADOR** | | | | |
| CINTO DE SEGURANÇA | 8Y-4030 | 1 | ASSENTO COM SUSPENSÃO | 635 |
| | | 1 | ASSENTO COM SUSPENSÃO | 636 |
| CORREIA- SERPENTINA (COMPRESSOR DO CONDICIONADOR DE AR) | 249-8740 | 1 | COMPRESSOR DE REFRIGERANTE E MONTAGEM | 590 |
| FILTRO DE AR DE CABINA | 121-2761 | 1 | CONDICIONADOR DE AR | 577 |
| | | 1 | CONDICIONADOR DE AR | 580 |
| FILTRO DE AR FRESCO | 223-3694 | 1 | CONDICIONADOR DE AR | 577 |
| | | 1 | CONDICIONADOR DE AR | 580 |
| LÂMINA DO LIMPADOR DE PÁRA-BRISA | 6V-5849 | 2 | LIMPADOR DO VIDRO | 682 |
| LÂMINA DO LIMPADOR DE PÁRA-BRISA (TRASEIRO) | 5C-8811 | 1 | LIMPADOR E LAVADOR - JANELA | 680 |
| TAMPA (ENCHIMENTO DO TANQUE DO LAVADOR DE VIDROS) | 3W-6398 | 1 | TANQUE - LAVADOR DE JANELA | 642 |
| **FERRAMENTAS DE TRABALHO** | | | | |
| TAMPÃO | 179-9492 | 2 | CAIXA - GUINCHO | 503 |
| TAMPÃO (DRENO) | 179-9492 | 1 | VÁLVULA DE DRENAGEM | 566 |
| **MOTOR BÁSICO** | | | | |
| BUJÃO DO DRENO (CÁRTER DE ÓLEO DO MOTOR) | 113-5335 | 1 | DRENO - ÓLEO DO MOTOR | 31 |
| BUJÃO MAGNÉTICO (CÁRTER DE ÓLEO DO MOTOR) | 118-3619 | 1 | DRENO - ÓLEO DO MOTOR | 31 |
| CORREIA- SERPENTINA (POLIA) | 245-4628 | 1 | POLIA DO MOTOR | 55 |
| RETENTOR - TAMPA DA VÁLVULA (MECANISMO DAS VÁLVULAS - TAMPA) | 272-0388 | 1 | TAMPA - MECANISMO DAS VÁLVULAS | 14 |
| **SISTEMA DA ADMISSÃO DE AR E DE ESCAPE** | | | | |
| ELEMENTO DO FILTRO DE AR (PRIMÁRIO) | 245-6375 | 1 | PURIFICADOR DE AR | 94 |
| ELEMENTO DO FILTRO DE AR (SECUNDÁRIO) | 245-6376 | 1 | PURIFICADOR DE AR | 94 |
| TAMPA - PURIFICADOR DE AR | 9L-0749 | 1 | PURIFICADOR DE AR | 95 |

# PEÇAS DE MANUTENÇÃO

| DESCRIÇÃO | NÚMERO DE PEÇA | QUANT | UTILIZADA EM | PÁGINA |
|---|---|---|---|---|
| **SISTEMA DE ARREFECIMENTO** | | | | |
| JUNTA (ALOJAMENTO DO REGULADOR DE TEMPERATURA) | 222-5915 | 1 | TUBOS - ÁGUA | 82 |
| | | 1 | TUBOS - ÁGUA | 84 |
| REGULADOR DE TEMPERATURA DA ÁGUA (94 GRAUS C) (LÍQUIDO ARREFECEDOR) | 119-3075 | 2 | TUBOS - ÁGUA | 84 |
| REGULADOR DE TEMPERATURA DA ÁGUA (97 GRAUS C) (LÍQUIDO ARREFECEDOR) | 115-4223 | 2 | TUBOS - ÁGUA | 82 |
| TAMPA - RADIADOR | 141-0052 | 1 | RADIADOR E PÓS-ARREFECEDOR | 88 |
| TAMPA (ENCHIMENTO DO LÍQUIDO ARREFECEDOR) | 204-0920 | 1 | RADIADOR E MONTAGEM | 90 |
| TAMPA (EXCESSO DE FLUXO DO LÍQUIDO ARREFECEDOR) | 171-3370 | 1 | RADIADOR E MONTAGEM | 90 |
| **SISTEMA DE COMBUSTÍVEL** | | | | |
| FILTRO - COMBUSTÍVEL | 9P-7121 | 1 | TANQUE DE COMBUSTÍVEL | 136 |
| FILTRO - COMBUSTÍVEL (EFICIÊNCIA AVANÇADA) (SECUNDÁRIO) | 1R-0762 | 1 | TUBOS - FILTRO DO COMBUSTÍVEL | 122 |
| | | 1 | TUBOS - FILTRO DO COMBUSTÍVEL | 124 |
| FILTRO - SEPARADOR DE ÁGUA E COMBUSTÍVEL (PRIMÁRIO) | 1R-0770 | 1 | FILTRO DE COMBUSTÍVEL E SEPARADOR DE ÁGUA | 114 |
| RESPIRO (TANQUE DE COMBUSTÍVEL) | 183-3873 | 1 | TANQUE DE COMBUSTÍVEL | 136 |
| TAMPA - BOCAL DE ENCHIMENTO (TANQUE DE COMBUSTÍVEL) | 7X-7700 | 1 | TANQUE DE COMBUSTÍVEL | 139 |
| **SISTEMA DE LUBRIFICAÇÃO** | | | | |
| FILTRO - ÓLEO DO MOTOR | 1R-1807 | 1 | FILTRO - ÓLEO DO MOTOR | 69 |
| RESPIRO (CÁRTER DO MOTOR) | 164-0210 | 1 | RESPIRO | 67 |
| TAMPA - BOCAL DE ENCHIMENTO (ÓLEO DO MOTOR) | 5L-2952 | 1 | BOCAL DE ENCHIMENTO DE ÓLEO DO MOTOR | 68 |
| **SISTEMA ELÉTRICO E DE PARTIDA** | | | | |
| BATERIA (12 VOLTS, ISENTA DE MANUTENÇÃO, ÚMIDA) | 115-2422 | 2 | BATERIA E CABOS / FIOS ELÉTRICOS | 146 |
| | | 2 | BATERIA E CABOS / FIOS ELÉTRICOS | 149 |
| CHAVE (DESCONEXÃO DA BATERIA) | 8H-5306 | 1 | CHAVE GERAL | 194 |
| DISJUNTOR AUTOMÁTICO DE CIRCUITO (105 AMPERES) (ALTERNADOR) | 171-2212 | 1 | PAINEL - DISJUNTOR ELÉTRICO AUTOMÁTICO | 162 |
| DISJUNTOR AUTOMÁTICO DE CIRCUITO (105 AMPERES) (PRINCIPAL) | 171-2212 | 1 | PAINEL - DISJUNTOR ELÉTRICO AUTOMÁTICO | 162 |
| DISJUNTOR AUTOMÁTICO DE CIRCUITO (20-AMPERES) (CONTROLE DA MÁQUINA) | 6T-3644 | 1 | PAINEL - DISJUNTOR ELÉTRICO AUTOMÁTICO | 162 |
| DISJUNTOR AUTOMÁTICO DE CIRCUITO (80 AMPERES) (AQUECEDOR DE ADMISSÃO DE AR) | 171-2210 | 1 | PAINEL - DISJUNTOR ELÉTRICO AUTOMÁTICO | 162 |
| LÂMPADA - HALOGÊNEO (24 VOLTS, 65 WATTS) | 9X-3463 | 1 | LÂMPADA - FAROL | 156 |

# PEÇAS DE MANUTENÇÃO

| DESCRIÇÃO | NÚMERO DE PEÇA | QUANT | UTILIZADA EM | PÁGINA |
|---|---|---|---|---|
| **SISTEMA HIDRÁULICO** | | | | |
| FILTRO | 4T-4520 | 1 | VÁLVULA DE CONTROLE | 470 |
| FILTRO - ÓLEO (EFICIÊNCIA AVANÇADA) | 201-0875 | 1 | TUBOS - ÓLEO HIDRÁULICO | 425 |
| FILTRO - ÓLEO (EFICIÊNCIA AVANÇADA) (HIDRÁULICO) | 1G-8878 | 1 | FILTRO - ÓLEO | 414 |
| | 152-6902 | 1 | FILTRO - ÓLEO | 415 |
| TAMPA - BOCAL DE ENCHIMENTO (TANQUE HIDRÁULICO) | 7H-1447 | 1 | TANQUE HIDRÁULICO | 447 |
| TELA DE SUCÇÃO (TANQUE HIDRÁULICO) | 142-8929 | 1 | TANQUE HIDRÁULICO | 447 |
| TELA FILTRANTE | 6E-5066 | 1 | COLETOR - CONTROLE | 437 |
| | 160-3448 | 1 | TANQUE HIDRÁULICO | 447 |
| TELA FILTRANTE-ÓLEO (TANQUE HIDRÁULICO) | 5D-7927 | 1 | TANQUE HIDRÁULICO | 447 |
| **TREM DE FORÇA** | | | | |
| BUJÃO DO DRENO | 175-4966 | 1 | CAIXA E COMPONENTES - TRANSMISSÃO | 242 |
| BUJÃO DO DRENO (ECOLOGIA) | 175-4966 | 1 | DRENO - ECOLOGIA | 262 |
| FILTRO - ÓLEO (EFICIÊNCIA AVANÇADA) (TREM DE FORÇA) | 1G-8878 | 1 | FILTRO - ÓLEO | 269 |
| RESPIRO (TANQUE DO TREM DE FORÇA) | 9G-5127 | 1 | FILTRO E TUBOS-TREM DE FORÇA | 265 |
| | | 1 | FILTRO E TUBOS-TREM DE FORÇA | 267 |
| TELA DE SUCÇÃO | 4S-8598 | 1 | CAIXA E COMPONENTES - TRANSMISSÃO | 237 |
| | | 1 | CAIXA E COMPONENTES - TRANSMISSÃO | 243 |

# WARTUNGSTEILE

| BESCHREIBUNG | ERSATZTEIL-NUMMER | MENGE | VERWENDET IN | SEITE |
|---|---|---|---|---|
| **ARBEITSGERÄTE** | | | | |
| SCHRAUBE | 179-9492 | 2 | WINDENGEHÄUSE | 503 |
| SCHRAUBE (ABLASSEN) | 179-9492 | 1 | ABLASSVENTIL | 566 |
| **ELEKTRISCHE ANLAGE UND STARTSYSTEM** | | | | |
| BATTERIE (12 V, WARTUNGSFREI, NASS) | 115-2422 | 2 | BATTERIE UND VERDRAHTUNG | 146 |
| | | 2 | BATTERIE UND VERDRAHTUNG | 149 |
| HALOGENSCHINWERFER (24V)(65W) | 9X-3463 | 1 | ARBEITSLEUCHTEN | 156 |
| SCHLÜSSEL (ELEKTRISCHER HAUPTSCHALTER) | 8H-5306 | 1 | TRENNSCHALTER | 194 |
| UNTERBRECHER (105 A) (DREH-STROMGENERATOR) | 171-2212 | 1 | UNTERBRECHER - INSTRUMENTEN-TAFEL | 162 |
| UNTERBRECHER (105 A) (HAUPTUN-TERBRECHER) | 171-2212 | 1 | UNTERBRECHER - INSTRUMENTEN-TAFEL | 162 |
| UNTERBRECHER (20 A) (MASCHINEN-STEUERUNG) | 6T-3644 | 1 | UNTERBRECHER - INSTRUMENTEN-TAFEL | 162 |
| UNTERBRECHER (80 A) (ANSAUG-LUFT-VORWÄRMANLAGE) | 171-2210 | 1 | UNTERBRECHER - INSTRUMENTEN-TAFEL | 162 |
| **FAHRERHAUS** | | | | |
| FAHRERHAUSLUFTFILTER | 121-2761 | 1 | KLIMAANLAGE | 577 |
| | | 1 | KLIMAANLAGE | 580 |
| FRISCHLUFTFILTER | 223-3694 | 1 | KLIMAANLAGE | 577 |
| | | 1 | KLIMAANLAGE | 580 |
| KAPPE (SCHEIBENWASCHMITTELBE-HÄLTER FÜLLEN) | 3W-6398 | 1 | SCHEIBENWASCHMITTELBEHÄLTER | 642 |
| SCHEIBENWISCHERBLATT | 6V-5849 | 2 | SCHEIBENWISCHER | 682 |
| SCHEIBENWISCHERBLATT (HINTEN) | 5C-8811 | 1 | SCHEIBENWISCHER UND -WASCHANLAGE | 680 |
| SERPENTINENFÖRMIGER RIEMEN (KLIMAANLAGEN-KOMPRESSOR) | 249-8740 | 1 | KÄLTEMITTELKOMPRESSOR U. BEFESTIGUNG | 590 |
| SICHERHEITSGURT | 8Y-4030 | 1 | SCHWINGSITZ | 635 |
| | | 1 | SCHWINGSITZ | 636 |
| **HYDRAULIKSYSTEM** | | | | |
| ANSAUGSIEB (HYDRAULIKTANK) | 142-8929 | 1 | HYDRAULIKTANK | 447 |
| EINFÜLLSTUTZENKAPPE (HYDRAU-LIKTANK) | 7H-1447 | 1 | HYDRAULIKTANK | 447 |
| FILTER | 4T-4520 | 1 | STEUERVENTIL | 470 |
| FILTERSIEB | 160-3448 | 1 | HYDRAULIKTANK | 447 |
| ÖLFILTER (HOCHLEISTUNG) | 201-0875 | 1 | HYDRAULIKLEITUNGEN | 425 |
| ÖLFILTER (HOCHLEISTUNG) (HYDRAULIK) | 1G-8878 | 1 | ÖLFILTER | 414 |
| | 152-6902 | 1 | ÖLFILTER | 415 |
| ÖLSIEB (HYDRAULIKTANK) | 5D-7927 | 1 | HYDRAULIKTANK | 447 |
| SCREEN | 6E-5066 | 1 | STEUERKRÜMMER | 437 |

# WARTUNGSTEILE

| BESCHREIBUNG | ERSATZTEIL-NUMMER | MENGE | VERWENDET IN | SEITE |
|---|---|---|---|---|
| **KRAFTSTOFFSYSTEM** | | | | |
| EINFÜLLKAPPE (KRAFTSTOFFTANK) | 7X-7700 | 1 | KRAFTSTOFFTANK | 139 |
| ENTLÜFTER (KRAFTSTOFFTANK) | 183-3873 | 1 | KRAFTSTOFFTANK | 136 |
| KRAFTSTOFFILTER (HOCHLEISTUNG) (AUSFALLSCHUTZ) | 1R-0762 | 1 | KRAFTSTOFFILTERLEITUNGEN | 122 |
| | | 1 | KRAFTSTOFFILTERLEITUNGEN | 124 |
| KRAFTSTOFFSIEB | 9P-7121 | 1 | KRAFTSTOFFTANK | 136 |
| WASSERABSCHEIDER UND KRAFTSTOFFILTER (HAUPTELEMENT) | 1R-0770 | 1 | WASSERABSCHEIDER- U. KRAFTSTOFFILTER | 114 |
| **KRAFTÜBERTRAGUNG** | | | | |
| ABLASSSTOPFEN | 175-4966 | 1 | GETRIEBEGEHÄUSE UND TEILE | 242 |
| ABLASSSTOPFEN (UMWELTFREUNDLICH) | 175-4966 | 1 | ABLASS (UMWELTFREUNDLICH) | 262 |
| ANSAUGSIEB | 4S-8598 | 1 | GETRIEBEGEHÄUSE UND TEILE | 237 |
| | | 1 | GETRIEBEGEHÄUSE UND TEILE | 243 |
| ENTLÜFTER (KRAFTÜBERTRAGUNGSTANK) | 9G-5127 | 1 | FILTER U. LEITUNGEN - KRAFTÜBERTRAGUNG | 265 |
| | | 1 | FILTER U. LEITUNGEN - KRAFTÜBERTRAGUNG | 267 |
| ÖLFILTER (HOCHLEISTUNG) (KRAFTÜBERTRAGUNG) | 1G-8878 | 1 | ÖLFILTER | 269 |
| **KÜHLSYSTEM** | | | | |
| DICHTUNG (TEMPERATURREGELGEHÄUSE) | 222-5915 | 1 | KÜHLWASSERLEITUNGEN | 82 |
| | | 1 | KÜHLWASSERLEITUNGEN | 84 |
| KAPPE (KÜHLMITTEL FÜLLEN) | 204-0920 | 1 | KÜHLER U. BEFESTIGUNG | 90 |
| KAPPE (KÜHLMITTEL ÜBERFLUSS) | 171-3370 | 1 | KÜHLER U. BEFESTIGUNG | 90 |
| KÜHLERKAPPE | 141-0052 | 1 | KÜHLER U. LADELUFTKÜHLER | 88 |
| WASSERTEMPERATURREGLER (94 GRAD CELSIUS) (KÜHLMITTEL) | 119-3075 | 2 | KÜHLWASSERLEITUNGEN | 84 |
| WASSERTEMPERATURREGLER (97 GRAD CELSIUS) (KÜHLMITTEL) | 115-4223 | 2 | KÜHLWASSERLEITUNGEN | 82 |
| **LUFTANSAUG- UND ABGASSYSTEM** | | | | |
| LUFTFILTER (HAUPTELEMENT) | 245-6375 | 1 | LUFTREINIGER | 94 |
| LUFTFILTER (HILFSELEMENT) | 245-6376 | 1 | LUFTREINIGER | 94 |
| LUFTREINIGERKAPPE | 9L-0749 | 1 | LUFTREINIGER | 95 |
| **MOTOR (GRUNDAUSFÜHRUNG)** | | | | |
| ABLASSSTOPFEN (MOTORÖLWANNE) | 113-5335 | 1 | MOTORÖLABLASS | 31 |
| MAGNETSTOPFEN (MOTORÖLWANNE) | 118-3619 | 1 | MOTORÖLABLASS | 31 |
| SERPENTINENFÖRMIGER RIEMEN (RIEMENSCHEIBE) | 245-4628 | 1 | MOTORRIEMENSCHEIBE | 55 |
| VENTILDECKELDICHTUNG (VENTILDECKEL) | 272-0388 | 1 | VENTILDECKEL | 14 |
| **SCHMIERSYSTEM** | | | | |
| EINFÜLLKAPPE (MOTORÖL) | 5L-2952 | 1 | MOTORÖLEINFÜLLSTUTZEN | 68 |
| ENTLÜFTER (KURBELGEHÄUSE) | 164-0210 | 1 | ENTLÜFTER | 67 |
| ÖLFILTER | 1R-1807 | 1 | ÖLFILTER | 69 |

# WARTUNGSTEILE

| BESCHREIBUNG | ERSATZTEIL-NUMMER | MENGE | VERWENDET IN | SEITE |
|---|---|---|---|---|
| **WARTUNGSAUSRÜSTUNG UND -ZUBEHÖR** | | | | |
| DRUCKANZEIGE (WASSER) | 8T-0853 | 1 | DRUCKWASSERLEITUNGN | 688 |

# INDEX


| Name | Page |
|---|---|

## A

ACCUMULATOR GP-BRAKE–CHARGED–FRONT . . . . . 363
ACCUMULATOR GP-BRAKE–CHARGED–REAR . . . . . 364
ACCUMULATOR GP-BRAKE–UNCHARGED–FRONT . . . . . 362
ACCUMULATOR GP-BRAKE–UNCHARGED–REAR . . . . . 365
ACCUMULATOR GP-BRAKE–UNCHARGED, COLD WEATHER . . . . . 366
ACCUMULATOR GP-PILOT OIL–CHARGED–DEAD ENGINE LOWER, ARCH, BOOM . . . . . 403
ACCUMULATOR GP-PILOT OIL–UNCHARGED–DEAD ENGINE LOWER, ARCH, BOOM . . . . . 404
ACCUMULATOR GP-REFRIGERANT–WITH DESICCANT . . . . . 573, 574
ACTUATOR GP-PARKING BRAKE . . . . . 367
ADAPTER GP . . . . . 388, 391
ADAPTER GP-OIL LINE–UNIT INJECTOR HYD PUMP . . . . . 66
AIR CLEANER GP . . . . . 94, 95
AIR COMPRESSOR GP-SEAT . . . . . 575, 637
AIR CONDITIONER AR . . . . . 576
AIR CONDITIONER GP . . . . . 577, 580
ALARM AS . . . . . 226
ALARM AS (TRAVEL) . . . . . 213, 219
ALARM GP–ACTION . . . . . 141
ALTERNATOR GP-CHARGING . . . . . 142, 144
ARCH AR–CABLE MACHINE . . . . . 491
ARCH GP . . . . . 492
ARCH GP (GRAPPLE) . . . . . 528
ARM GP-WINDOW WIPER . . . . . 682
AXLE AR-FIXED–REAR . . . . . 232
AXLE AR-OSCILLATING–FRONT . . . . . 232

## B

BATTERY & WIRING GP . . . . . 146, 149
BATTERY GP (12-VOLT, MAINTENANCE FREE, WET) . . . . . 146, 149
BEARING & SEAL GP-ARCH–CABLE MACHINE . . . . . 493
BEARING & SEAL GP-GRAPPLE . . . . . 495
BEARING & SEAL GP-GRAPPLE–DUAL FUNCTION . . . . . 494
BEARING GP-MAIN (CRANKSHAFT) . . . . . 16, 18, 20
BELT-SERPENTINE (A/C COMPRESSOR) . . . . . 590
BELT-SERPENTINE (PULLEY) . . . . . 55
BLADE AR-DECKING–WIDE . . . . . 496
BLADE AS-WIPER . . . . . 682
BLADE AS-WIPER (REAR) . . . . . 680
BLADE GP-DECKING–WIDE . . . . . 497
BLOCK GP-JUNCTION–BATTERY . . . . . 152
BLOWER GP-CAB–LH . . . . . 583, 585
BLOWER GP-CAB–RH . . . . . 584, 586
BRAKE & PLANETARY GP . . . . . 233, 234
BRAKE GP-PARKING . . . . . 368, 369, 370
BRAKE GP-WINCH . . . . . 498, 500, 569
BREATHER AS (CRANKCASE) . . . . . 67
BREATHER AS (FUEL TANK) . . . . . 136
BREATHER AS (POWER TRAIN TANK) . . . . . 265, 267
BREATHER GP–CRANKCASE . . . . . 67

## C

CAB AR-ENCLOSED ROPS . . . . . 587
CAB AR-ENCLOSED ROPS–CABLE MACHINE . . . . . 588
CAB AR-ENCLOSED ROPS–GRAPPLE MACHINE . . . . . 587
CAB AR-OPEN ROPS–CABLE MACHINE . . . . . 589
CAB AR-OPEN ROPS–GRAPPLE MACHINE . . . . 588
CAMSHAFT GP . . . . . 5
CAP-AIR CLEANER . . . . . 95
CAP AS (COOLANT FILL) . . . . . 90
CAP AS (COOLANT OVERFLOW) . . . . . 90
CAP AS-FILLER (ENGINE OIL) . . . . . 68
CAP AS-FILLER (FUEL TANK) . . . . . 139
CAP-FILLER (HYDRAULIC TANK) . . . . . 447
CAP-RADIATOR . . . . . 88
CAP (WINDOW WASHER TANK FILL) . . . . . 642
CARRIER GP-PLANETARY–WINCH OUTPUT . . . 502
CARRIER GP-PLANETARY–WINCH, PRIMARY . . . . . 501
CARRIER GP-SEAL . . . . . 6
CARTRIDGE GP-TURBOCHARGER . . . . . 111
CASE & PARTS GP-TRANSMISSION . . . . . 236, 242

# INDEX


| Name | Page |
|---|---|
| CASE GP-WINCH | 503 |
| CHASSIS AR | 1 |
| CIRCUIT BREAKER AS (105-AMPERE) (ALTERNATOR) | 162 |
| CIRCUIT BREAKER AS (105-AMPERE) (MAIN) | 162 |
| CIRCUIT BREAKER AS (20-AMPERE) (MACHINE CONTROL) | 162 |
| CIRCUIT BREAKER AS (80-AMPERE) (AIR INLET HEATER) | 162 |
| CLUTCH & GEAR GP-WINCH | 505 |
| CLUTCH GP–FIRST, THIRD | 252 |
| CLUTCH GP– FORWARD HIGH, FORWARD LOW | 248 |
| CLUTCH GP–REVERSE, SECOND | 250 |
| CLUTCH GP-WINCH | 506 |
| | 508 |
| COMMON AR | 1 |
| COMPRESSOR & MTG GP-REFRIG | 590 |
| COMPRESSOR GP-REFRIGERANT | 591 |
| CONDENSER & MTG GP-REFRIGERANT | 592 |
| CONTROL & MTG GP-ENGINE ELEK | 153 |
| CONTROL GP-FOOT BRAKE | 372 |
| CONTROL GP-HANDLE– GRAPPLE CONTROL | 593 |
| | 594 |
| CONTROL GP-HANDLE (WINCH) | 513 |
| CONTROL GP-JOYSTICK– GRAPPLE CONTROL | 595 |
| | 596 |
| CONTROL GP-PARKING BRAKE | 374 |
| CONTROL GP-PILOT OPERATED HYD– JOYSTICK, DUAL FUNCTION GRAPPLE | 597 |
| | 599 |
| CONTROL GP-SERVICE BRAKE | 376 |
| CONTROL GP-STEER & DECK BLADE | 383 |
| CONTROL GP-STEERING | 601 |
| CONTROL GP-TRANSMISSION HYD | 254 |
| CONTROL GP-UNPROGRAMMED (MACHINE) | 202 |
| CONTROL GP-WINCH | 510 |
| | 511 |
| | 513 |
| CONVERTER GP-ELECTRICAL | 154 |
| CONVERTER GP-ELECTRICAL (24-VOLT TO 12-VOLT) | 612 |
| CONVERTER-POWER (24-VOLT TO 12-VOLT) | 154 |
| COOLER GP-ENGINE OIL | 79 |
| COOLER GP-HYDRAULIC OIL | 405 |
| CORE AS-AFTERCOOLER | 88 |
| CORE AS-CONDENSER | 592 |
| CORE AS-ENGINE OIL COOLER | 79 |
| CORE AS-HYDRAULIC OIL COOLER | 405 |
| CORE AS-POWER TRAIN OIL COOLER | 88 |
| COVER GP-AIR INLET– STARTING AID HEATER | 96 |
| | 97 |
| | 98 |
| | 99 |
| COVER GP-CYLINDER BLOCK | 7 |
| | 9 |
| COVER GP-FRONT HOUSING | 10 |
| | 11 |
| COVER GP-SHIPPING | 256 |
| COVER GP-VALVE MECHANISM | 12 |
| | 13 |
| | 14 |
| COVER GP-WINCH | 515 |
| CRANKSHAFT GP | 16 |
| | 18 |
| | 20 |
| CYLINDER BLOCK GP | 22 |
| | 23 |
| | 24 |
| CYLINDER GP-ARCH–LH | 408 |
| CYLINDER GP-ARCH–RH | 406 |
| CYLINDER GP-BOOM | 410 |
| CYLINDER GP-BRAKE–WINCH | 516 |
| CYLINDER GP-GRAPPLE | 411 |
| CYLINDER GP-LIFT–DECKING BLADE | 412 |
| CYLINDER GP-STEERING–LH | 385 |
| CYLINDER GP-STEERING–RH | 387 |
| CYLINDER GP-TONG | 413 |
| CYLINDER HEAD AS | 26 |
| CYLINDER HEAD GP | 27 |
| | 28 |
| | 29 |


## D


| | |
|---|---|
| DAMPER & PULLEY GP | 30 |
| DIFFERENTIAL GP | 260 |
| DIFFERENTIAL GP–LOCKING | 258 |
| DOOR GP-ACCESS (BREAKERS, 24-VOLT OUTLET) | 621 |
| DOOR GP-CAB | 603 |
| DOOR GP-CAB–LH | 606 |
| DOOR GP-CAB–RH | 604 |
| DRAIN GP-ECOLOGY | 242 |
| | 280 |
| | 282 |
| DRAIN GP-ECOLOGY– TRANSMISSION CASE | 262 |
| DRAIN GP-ENGINE OIL | 31 |
| | 32 |
| DRIVE GP-FAN | 33 |
| | 34 |
| DRIVE GP-WINCH | 517 |
| DRUM GP-WINCH | 519 |

# INDEX


| Name | Page |
|---|---|
| DUCT GP-CAB AIR (KIT) | 577, 580 |
| **E** | |
| EDGE GP-CUTTING | 521 |
| ELBOW GP-AIR INLET | 100 |
| ELBOW GP-WATER | 80 |
| ELECTRICAL AR | 155 |
| ELECTRONICS GP-MACHINE | 155 |
| ENGINE AR-COMPLETE | 2 |
| ENGINE AR-CORE | 3 |
| **F** | |
| FAIRLEAD GP-WINCH–CABLE MACHINE | 522 |
| FAIRLEAD GP-WINCH–DUAL FUNCTION FRAME | 524, 525 |
| FAN GP-BLOWER | 81 |
| FAN GP-DEFROSTER | 608 |
| FASTENER GP-CYLINDER HEAD | 35 |
| FASTENER GP-DAMPER | 36 |
| FASTENER GP-FRONT COVER | 37 |
| FASTENER GP-FRONT HOUSING | 38 |
| FASTENER GP-LIFTING–ENGINE, REAR | 39 |
| FENDER GP | 318 |
| FILLER GP-ENGINE OIL | 68 |
| FILLER GP-POWER TRAIN OIL | 263 |
| FILM | 661, 664, 667, 671 |
| FILM-CONTROL | 597, 599 |
| FILM GP | 684, 685 |
| FILM-IDENTIFICATION (CAT) | 685 |
| FILM-IDENTIFICATION (CAT, ARCH, BOOM) | 684 |
| FILM-IDENTIFICATION (CAT, ARCH, BOOM) | 685 |
| FILM-IDENTIFICATION (CATERPILLAR, RADIATOR GRILL) | 684, 685 |
| FILM-IDENTIFICATION (CIRCUIT PANEL) | 162 |
| FILM-INFORMATION (AIR CONDITIONER, HEATER) | 643, 648, 653, 657 |
| FILM-INFORMATION (24-VOLT) | 693 |
| FILM-INSTRUCTION (SEAT ADJUSTMENT) | 637 |
| FILM-NOTICE (RADIO) | 612 |
| FILM-NOTICE (WINCH FREESPOOL) | 567 |
| FILM-STRIPE (HOOD, LH) | 685 |
| FILM-STRIPE (HOOD, RH) | 685 |
| FILM-WARNING (ACCUMULATOR) | 403, 404 |
| FILM-WARNING (CRUSH HAZARD, READ MANUAL) | 691, 693 |
| FILM-WARNING (CRUSH HAZARD, STAY BACK) | 691 |
| FILM-WARNING (DO NOT USE ETHER) | 693 |
| FILM-WARNING (HIGH PRESSURE, READ OMM) | 362 |
| FILM-WARNING (HIGH PRESSURE, READ OMM, INTL) | 695 |
| FILM-WARNING (HIGH PRESSURE, READ OMM, U.S.) | 691 |
| FILM-WARNING (HOT FLUID UNDER PRESSURE, U.S.) | 691 |
| FILM-WARNING (JUMP START, READ OMM, U.S.) | 693 |
| FILM-WARNING (RECOIL SPRING) | 691, 693, 695 |
| FILM-WARNING (SEAT BELT) | 695 |
| FILM-WARNING (UNIVERSAL) | 691, 693 |
| FILM-WINCH CONTROL | 513 |
| FILM (0.16-M EACH) | 678 |
| FILTER | 470 |
| FILTER & LINES GP-POWER TRAIN | 265, 267 |
| FILTER AS-ENGINE OIL | 69 |
| FILTER AS-FUEL (ADVANCED EFFICIENCY) (SECONDARY) | 122, 124 |
| FILTER AS-OIL (ADVANCED EFFICIENCY) | 425 |
| FILTER AS-OIL (ADVANCED EFFICIENCY) (HYDRAULIC) | 414, 415 |
| FILTER AS-OIL (ADVANCED EFFICIENCY) (POWER TRAIN) | 269 |
| FILTER AS-WATER SEP & FUEL (PRIMARY) | 114 |
| FILTER-CAB AIR | 577, 580 |
| FILTER ELEMENT AS-AIR (PRIMARY) | 94 |
| FILTER ELEMENT AS-AIR (SECONDARY) | 94 |
| FILTER-FRESH AIR | 577, 580 |
| FILTER GP-ENGINE OIL | 69 |
| FILTER GP-OIL–HYDRAULIC | 415 |
| FILTER GP-OIL–POWER TRAIN | 269 |
| FILTER GP-OIL–WINCH | 414 |
| FILTER GP-OIL (HYDRAULIC) | 425 |
| FILTER GP-WATER SEP & FUEL–PRIMARY | 114 |
| FLOOR MAT | 319 |
| FLOORPLATE GP | 319 |
| FLYWHEEL GP | 40 |

# INDEX


| Name | Page |
|---|---|
| FRAME AS-FRONT | 321, 323 |
| FRAME AS-REAR | 325 |
| FRAME GP-FAIRLEAD–CABLE MACHINE | 526 |
| FRAME GP-FRONT | 326 |
| FRAME GP-GRAPPLE–DUAL FUNCTION | 528 |
| FRAME GP-REAR | 328 |
| FRAME GP-REAR–CABLE MACHINE | 330 |
| FRAME GP-REAR–GRAPPLE MACHINE | 329 |
| FUMES DISPOSAL GP | 70 |


## G


| Name | Page |
|---|---|
| GASKET (TEMPERATURE REGULATOR HOUSING) | 82, 84 |
| GAUGE AS-OIL LEVEL (DIPSTICK) | 280, 282 |
| GAUGE GP-OIL LEVEL (DIPSTICK)–ENGINE | 71 |
| GAUGE GP-PRESSURE (WATER) | 688 |
| GAUGE-OIL LEVEL (DIPSTICK) | 263 |
| GAUGE-SIGHT | 447, 503 |
| GAUGE-SIGHT (WINCH) | 569 |
| GEAR GP-BEVEL & PINION | 270, 272 |
| GEAR GP-FRONT | 41 |
| GEAR GP-OUTPUT TRANSFER | 274, 276, 278 |
| GEAR GP-WINCH INPUT–PINION | 530 |
| GEAR GP-WINCH OUTPUT | 532 |
| GRAPPLE AR–DUAL FUNCTION | 534 |
| GUARD GP-BOTTOM–FRONT FRAME | 331 |
| GUARD GP-BOTTOM–REAR FRAME | 332 |
| GUARD GP-CAB | 333, 334 |
| GUARD GP-ENCLOSED ROPS | 610 |
| GUARD GP-EXHAUST | 102 |
| GUARD GP-FRAME | 335 |
| GUARD GP-FUEL TANK | 336 |
| GUARD GP-LINES–ARTICULATED HITCH | 338 |
| GUARD GP-LINES– FRONT FRAME, LIFT CYLINDERS | 341 |
| GUARD GP-LINES–REAR FRAME, GRAPPLE | 339 |
| GUARD GP-LINES–REAR FRAME, GRAPPLE | 343, 345 |
| GUARD GP-OPEN ROPS | 611 |
| GUARD GP-RADIATOR | 347 |
| GUARD GP-WATER TANK | 687 |
| GUARD GP-WINCH | 535, 536, 537 |


## H


| Name | Page |
|---|---|
| HARDWARE GP-REAR FRAME | 349 |
| HARNESS AS-CAB (MAIN) | 202 |
| HARNESS AS-ENGINE | 213, 219, 226 |
| HARNESS AS-ENGINE (ELECTRONIC CONTROL MODULE) | 210 |
| HARNESS AS-ENGINE (FUEL INJECTION) | 210 |
| HARNESS AS-HEATER & AIR COND | 577, 580 |
| HARNESS AS-HYDRAULIC TANK | 213, 219, 226 |
| HARNESS AS-LIGHTING (FRONT CAB FLOODLIGHTS) | 159 |
| HARNESS AS-LIGHTING (REAR CAB FLOODLIGHTS) | 159 |
| HARNESS AS-PANEL (CIRCUIT BREAKER) | 162 |
| HARNESS AS-RADIO | 623 |
| HARNESS AS-RADIO (SPEAKERS) | 202 |
| HARNESS AS-STEERING (COLUMN, WHEEL) | 399, 401 |
| HARNESS AS-STEERING (SECONDARY) | 230 |
| HARNESS AS-TRANSMISSION | 213, 219 |
| HARNESS AS-VALVE (SEAT AIR COMPRESSOR) | 637 |
| HARNESS AS-WIRING (FUEL PRESSURE) | 122, 124 |
| HARNESS AS-WORK TOOL (GRAPPLE, WINCH) | 213, 219, 226 |
| HARNESS AS-WORK TOOL (WINCH) | 513 |
| HEAD AR-GRAPPLE | 538 |
| HEAD GP-GRAPPLE | 539 |
| HITCH GP-ARTICULATING | 350 |
| HOOD & GUARD GP | 352, 355 |
| HOUSING GP-FIXED AXLE | 280 |
| HOUSING GP-FLYWHEEL | 43 |
| HOUSING GP-FRONT | 44 |
| HOUSING GP-MOTOR | 559 |
| HOUSING GP-OSCILLATING AXLE | 282 |
| HYDRAULIC AR | 416 |


## I


| Name | Page |
|---|---|
| IDLER GP-BELT–ALTERNATOR, REFRIGERANT COMPRESSOR | 45 |
| INDICATOR GP-AIR FILTER CHANGE | 103 |

# INDEX


| Name | Page |
|---|---|
| INDUSTRIAL AR-HYDRAULIC–WITHOUT GRAPPLE | 416 |
| INJECTOR GP-FUEL | 115, 116, 117, 130 |
| INPUT GP-TRANSMISSION | 284 |
| INSTALLATION AR-ENGINE | 4 |
| INSTALLATION GP-RADIO | 612 |

## K

| | |
|---|---|
| KEY (BATTERY DISCONNECT) | 194 |
| KIT-BEARING (STARTING MOTOR) | 188 |
| KIT-BRAKE LINING | 368, 369 |
| KIT-BRUSH (STARTING MOTOR) | 188, 192 |
| KIT-BUSHING (STARTING MOTOR) | 192 |
| KIT-HARDWARE (STARTING MOTOR) | 188 |
| KIT-INSULATOR (STARTING MOTOR) | 192 |
| KIT-LEVER (STARTING MOTOR) | 192 |
| KIT-RECEPTACLE (12-PIN) | 399 |
| KIT-SEAL | 382 |
| KIT-SEAL (FLOW DIVIDER VALVE) | 486 |
| KIT-SEAL (RELIEF VALVE) | 489 |
| KIT-SLIDER BLOCK (SUSPENSION SEAT) | 635 |
| KIT-STARTING MOTOR PIN | 188 |
| KIT-STARTING MOTOR SEAL | 188 |
| KIT-WASHER (STARTING MOTOR) | 188 |

## L

| | |
|---|---|
| LAMP GP-DOME (24-VOLT) | 202 |
| LAMP GP-FLOOD | 156 |
| LAMP-HALOGEN (24-VOLT, 65-WATT) | 156 |
| LIFTER GP-VALVE–MECHANISM | 46 |
| LIFTING GP-ENGINE | 47 |
| LIGHTING AR-FLOOD | 157 |
| LIGHTING GP-FLOOD–CAB | 158, 159 |
| LINES GP-AFTERCOOLER AIR | 104 |
| LINES GP-AIR CONDITIONER | 614 |
| LINES GP-DECKING BLADE | 417 |
| LINES GP-DIFFERENTIAL LOCK | 285 |
| LINES GP-ENGINE OIL | 72 |
| LINES GP-FUEL | 118, 120 |
| LINES GP-FUEL FILTER | 122, 124 |
| LINES GP-GRAPPLE–DUAL FUNCTION | 419 |
| LINES GP-GRAPPLE HEAD | 422 |
| LINES GP-GREASE | 358 |
| LINES GP-HYDRAULIC | 425 |
| LINES GP-INJECTOR HYD PUMP | 126 |
| LINES GP-PILOT | 429, 432 |
| LINES GP-PRESSURIZED WATER | 688 |
| LINES GP-ROTATOR–DUAL FUNCTION GRAPPLE | 435 |
| LINES GP-SECONDARY STEERING | 388, 391 |
| LINES GP-SERVICE BRAKE | 379 |
| LINES GP-STEERING | 394 |
| LINES GP-TORQUE CONV COOLER | 287, 289 |
| LINES GP-TURBOCHARGER AIR | 105 |
| LINES GP-TURBOCHARGER OIL | 73, 74 |
| LINES GP-WATER–ENGINE | 82, 84 |
| LINES GP-WINCH | 540, 541, 544, 546 |
| LINK GP-STEERING FRAME LOCK | 359 |
| LITERATURE GP | 690 |
| LOCK GP-CYLINDER (DOOR ACCESS) | 621 |

## M

| | |
|---|---|
| MANIFOLD GP-CONTROL–PARKING BRAKE | 381 |
| MANIFOLD GP-CONTROL–PILOT, DIFFERENTIAL LOCK | 437 |
| MANIFOLD GP-ENGINE OIL | 76 |
| MANIFOLD GP-EXHAUST–DRY | 106 |
| MIRROR GP-REAR VIEW | 617 |
| MODULE GP-DISPLAY–GAUGE CLUSTER | 618 |
| MOTOR GP-ELECTRIC–SECONDARY STEERING | 161 |
| MOTOR GP-PISTON–WINCH | 549 |
| MOTOR GP-WINDOW WIPER (24-VOLT, 2-SPEED) (FRONT) | 682 |
| MOUNTING GP-ALTERNATOR | 48 |
| MOUNTING GP-BANK VALVE (GRAPPLE) | 461 |
| MOUNTING GP-ENGINE & TMSN | 49 |
| MOUNTING GP-RIM | 291 |
| MOUNTING GP-ROPS | 619 |
| MOUNTING GP-WINCH | 550, 552, 553 |
| MUFFLER GP | 107 |

## P

| | |
|---|---|
| PADLOCK GP | 136 |
| PADLOCK GP (LITERATURE COMPARTMENT) | 690 |
| PAN GP-OIL–ENGINE | 51 |
| PANEL GP-ACCESS–ROPS, LH | 621 |

# INDEX


| Name | Page |
|---|---|
| PANEL GP-ACCESS–ROPS, RH | 620 |
| PANEL GP-CIRCUIT BREAKER | 162 |
| PEDAL GP-GOVERNOR | 622 |
| PIN GP-GRAPPLE | 554, 556 |
| PISTON & ROD GP | 52 |
| PLANETARY GP-WINCH | 557 |
| PLATE & FILM GP | 691, 693, 695 |
| PLATE-INSTRUCTION (BATTERY) | 146, 149 |
| PLATE-SERIAL NUMBER (TRANSMISSION) | 236, 242 |
| PLUG | 503 |
| PLUG (DRAIN) | 566 |
| PLUG-DRAIN | 242 |
| PLUG-DRAIN (ECOLOGY) | 262 |
| PLUG-DRAIN (ENGINE OIL PAN) | 31 |
| PLUG GP-CYLINDER BLOCK | 53 |
| PLUG GP-ENGINE | 54 |
| PLUG-MAGNETIC (ENGINE OIL PAN) | 31 |
| POWER TRAIN AR | 292 |
| PRECLEANER GP | 109 |
| PULLEY GP-ENGINE | 55 |
| PUMP & MOTOR GP-SEC STEERING | 396 |
| PUMP & MTG GP-HYDRAULIC | 438 |
| PUMP & MTG GP-SECONDARY STEER | 397 |
| PUMP & MTG GP-UNIT INJ HYD | 127 |
| PUMP GP-ENGINE OIL | 77, 78 |
| PUMP GP-FILTER & FUEL TRANSFER–PRIMARY | 128 |
| PUMP GP-FUEL INJECTION | 129, 130, 131, 132 |
| PUMP GP-FUEL PRM & PRIM FILTER | 133 |
| PUMP GP-FUEL TRANSFER | 134 |
| PUMP GP-GEAR–PILOT | 439 |
| PUMP GP-GEAR–PILOT, WINCH | 441 |
| PUMP GP-PISTON–IMPLEMENT, STEERING, BRAKE | 442 |
| PUMP GP-TRANSMISSION | 293 |
| PUMP GP-WATER–COOLANT | 86, 87 |
| REGULATOR AS-VOLTAGE (24-VOLT) (ALTERNATOR) | 142 |
| REGULATOR GP-FUEL PRESSURE | 135 |
| REGULATOR-PRESSURE (FUEL TRANSFER PUMP) | 134 |
| REGULATOR-WATER TEMPERATURE (94-DEG C) (COOLANT) | 84 |
| REGULATOR-WATER TEMPERATURE (97-DEG C) (COOLANT) | 82 |
| RELAY AS (24-VOLT) (DECKING BLADE RETURN) | 202 |
| RELAY AS (24-VOLT) (FUEL TRANSFER PUMP) | 202 |
| RELAY AS (24-VOLT) (GRAPPLE RETURN) | 202 |
| RELAY AS (24-VOLT) (LIGHTS) | 202 |
| RELAY AS (24-VOLT) (SECONDARY STEER INTERMEDIATE) | 202 |
| RELAY AS (24-VOLT) (WINCH FREESPOOL) | 202 |
| RELAY AS (24-VOLT) (WINCH REEL IN) | 202 |
| RELAY AS (24-VOLT) (WINCH REEL OUT) | 202 |
| RELAY AS (24-VOLT) (WINCH SOLENOID RETURN) | 202 |
| RESISTOR GP | 166 |
| ROCKER ARM GP–EXHAUST | 56 |
| ROCKER ARM GP–INLET | 57 |
| ROCKER ARM GP (EXHAUST) | 63 |
| ROCKER ARM GP (INLET) | 63 |
| ROLLER GP-TOP | 558 |
| ROPS GP | 624 |
| ROTATING GP-PUMP–IMPLEMENT, STEERING, BRAKE | 444 |
| ROTATOR GP-HYDRAULIC | 559 |
| RADIATOR & AFTERCOOLER GP–WITH TRANSMISSION OIL COOLER | 88 |
| RADIATOR & MOUNTING GP | 90 |
| RADIO GP–AM/FM/WB CD PLAYER | 623 |
| RADIO GP (AM/FM CD PLAYER) | 623 |
| RECEPTACLE GP-AUXILIARY START | 165 |
| SCREEN | 437 |
| SCREEN GP-CAB | 627, 629 |
| SCREEN GP-MAGNETIC | 243 |
| SCREEN GP-MAGNETIC (TRANSMISSION) | 237 |
| SCREEN-SUCTION | 237, 243 |
| SCREEN-SUCTION (HYDRAULIC TANK) | 447 |
| SEAL GP-CRANKSHAFT | 58 |
| SEAL GP-DUO-CONE | 280, 282 |
| SEAL GP-FLYWHEEL HOUSING | 59 |
| SEAL-VALVE COVER (VALVE COVER) | 14 |
| SEAT BELT GP | 635, 636 |
| SEAT GP–CLOTH | 633 |
| SEAT GP–VINYL | 632 |
| SEAT GP-SUSPENSION | 634, 635, 636 |


## R

## S

# INDEX


| Name | Page |
|---|---|
| SENDER AS-FUEL LEVEL | 139 |
| SENSOR AS-TEMPERATURE (HYDRAULIC OIL) | 213, 226 |
| SENSOR GP-ENGINE | 167 |
| SENSOR GP-POSITION | 169 |
| SENSOR GP-PRESSURE | 170, 171, 172, 173, 174, 175, 176, 177 |
| SENSOR GP-PRESSURE (ATMOSPHERIC) | 167 |
| SENSOR GP-PRESSURE (BOOST) | 167 |
| SENSOR GP-PRESSURE (ENGINE OIL) | 167 |
| SENSOR GP-PRESSURE (GRAPPLE OIL) | 419 |
| SENSOR GP-PRESSURE (INJECTION ACTUATION) | 167 |
| SENSOR GP-PRESSURE (SECONDARY STEERING OIL) | 388, 391 |
| SENSOR GP-SPEED | 178, 179 |
| SENSOR GP-SPEED (ENGINE TIMING) | 167 |
| SENSOR GP-SPEED (TORQUE CONVERTER OUTPUT) | 254 |
| SENSOR GP-SPEED (TRANSMISSION OUTPUT 1) | 254 |
| SENSOR GP-SPEED (TRANSMISSION OUTPUT 2) | 254 |
| SENSOR GP-TEMPERATURE | 180, 181, 184, 185 |
| SENSOR GP-TEMPERATURE–AIR INLET MANIFOLD | 182, 183 |
| SENSOR GP-TEMPERATURE (AIR INLET MANIFOLD) | 167, 182, 183 |
| SENSOR GP-TEMPERATURE (COOLANT, WATER) | 184, 185 |
| SENSOR GP-TEMPERATURE (HYDRAULIC OIL) | 219 |
| SENSOR GP-TEMPERATURE (TORQUE CONVERTER OIL) | 213, 219, 226 |
| SENSOR GP-TEMPERATURE (TRANSMISSION OIL) | 317 |
| SENSOR GP-TEMPERATURE (WATER, COOLANT) | 167 |
| SHAFT GP-DRIVE | 294, 295, 296 |
| SLIP JOINT GP | 294, 295 |
| SNUBBER GP-GRAPPLE | 561 |
| SOFTWARE GP-POWER TRAIN | 155 |
| SOLENOID AS (24-VOLT) (STARTING MOTOR) | 188, 192 |
| STARTING AID GP-ETHER | 186 |
| STARTING MOTOR GP-ELECTRIC | 188, 190, 191, 192 |
| STEERING AR-SECONDARY | 398 |
| STEERING WHEEL GP | 399, 401 |
| STEP GP | 360 |
| STRAINER AS | 447 |
| STRAINER AS-OIL (HYDRAULIC TANK) | 447 |
| STRAINER-FUEL | 136 |
| STRAP-CABLE | 614 |
| SUPPORT GP-ENGINE | 60 |
| SUPPORT GP-FRONT AXLE | 297 |
| SUSPENSION GP-SEAT–AIR | 637 |
| SUSPENSION GP-SEAT–SWIVEL, SLIDE | 639 |
| SWASHPLATE GP | 442 |
| SWEEP GP | 361 |
| SWITCH AS-PRESSURE (AIR CONDITIONER, HIGH SIDE) | 614 |
| SWITCH AS-PRESSURE (BRAKE ACCUMULATOR CHARGE) | 376 |
| SWITCH AS-PRESSURE (PARKING BRAKE OIL) | 374 |
| SWITCH AS-PRESSURE (SECONDARY STEERING OIL) | 230 |
| SWITCH AS-PUSH BUTTON (TRANSMISSION DOWNSHIFT) | 200 |
| SWITCH AS-PUSH BUTTON (TRANSMISSION UPSHIFT) | 200 |
| SWITCH AS-ROCKER (AIR CONDITIONER ON, OFF) | 577, 675 |
| SWITCH AS-ROCKER (DIFFERENTIAL LOCK) | 202 |
| SWITCH AS-ROCKER (FAN BLOWER SPEED) | 608 |
| SWITCH AS-ROCKER (FRONT FLOODLIGHTS) | 202 |
| SWITCH AS-ROCKER (FRONT, REAR WASHER) | 680 |
| SWITCH AS-ROCKER (FRONT WIPER) | 680 |

# INDEX


| Name | Page |
|---|---|
| SWITCH AS-ROCKER (MODE SELECT) | 202 |
| SWITCH AS-ROCKER (PARKING BRAKE ON, OFF) | 202 |
| SWITCH AS-ROCKER (REAR FLOODLIGHTS) | 202 |
| SWITCH AS-ROCKER (REAR WIPER) | 680 |
| SWITCH AS-ROCKER (SECONDARY STEERING) | 230 |
| SWITCH AS-ROCKER (TORQUE CONVERTER LOCKUP CLUTCH) | 202 |
| SWITCH AS-ROTARY (AIR CONDITIONER CONTROL) | 675 |
| SWITCH AS-ROTARY (FAN SPEED) | 577 |
| SWITCH AS-TEMPERATURE (AIR CONDITIONER) | 577<br>580 |
| SWITCH GP-DISCONNECT–BATTERY | 194 |
| SWITCH GP-DISCONNECT (BATTERY) | 146<br>149 |
| SWITCH GP-MAGNETIC | 195 |
| SWITCH GP-MAGNETIC–MAIN RELAY | 197 |
| SWITCH GP-MAGNETIC–SECONDARY STEERING RELAY | 196 |
| SWITCH GP-PRESSURE–FUEL | 198 |
| SWITCH GP-PRESSURE (OIL FILTER BYPASS) (POWER TRAIN) | 269 |
| SWITCH GP-ROCKER | 416 |
| SWITCH GP-ROCKER–TRANSMISSION DIRECTION | 199 |
| SWITCH GP-START (KEY) | 202 |
| SWITCH GP-TOGGLE (GROUND LEVEL SHUTDOWN) | 213<br>219<br>226 |
| SWITCH GP-TRANSMISSION | 200<br>399<br>401 |
| SWITCH (GRAPPLE AUTO GRAB TRIGGER) | 594 |
| SWITCH (GRAPPLE AUTO GRAB, TRIGGER) | 593 |
| SWITCH (GRAPPLE ROTATION CCW) | 594 |
| SWITCH (GRAPPLE ROTATION, CCW) | 593 |
| SWITCH (GRAPPLE ROTATION CW) | 594 |
| SWITCH (GRAPPLE ROTATION, CW) | 593 |
| SWITCH (GRAPPLE TONG CLOSE) | 593<br>594 |
| SWITCH (GRAPPLE TONG OPEN) | 593<br>594 |
| SWIVEL GP-SEAT | 640 |


## T


| Name | Page |
|---|---|
| TANK & MTG GP-HYDRAULIC | 445 |
| TANK AR-WATER | 696 |
| TANK GP-FUEL | 136<br>139 |
| TANK GP-HYDRAULIC | 447 |
| TANK GP-WATER | 697 |
| TANK GP-WINDOW WASHER | 642 |
| TIRE & RIM AR | 300<br>301 |
| TIRE & RIM GP | 301<br>302 |
| TONG GP-GRAPPLE | 564<br>565 |
| TORQUE CONVERTER GP–LOCKUP | 303 |
| TRANSMISSION AR | 305<br>306 |
| TRIM GP-CAB–CABLE MACHINE | 653<br>657 |
| TRIM GP-CAB–GRAPPLE MACHINE | 643<br>648 |
| TRIM GP-OPEN ROPS–CABLE MACHINE | 667<br>671 |
| TRIM GP-OPEN ROPS–GRAPPLE MACHINE | 661<br>664 |
| TURBOCHARGER GP | 110<br>111<br>112<br>113 |


## U


| Name | Page |
|---|---|
| UNIVERSAL JOINT GP | 296 |
| UNIVERSAL JOINT GP (BASIC) | 294<br>295 |


## V


| Name | Page |
|---|---|
| VALVE & LINES GP-GRAPPLE–DUAL FUNCTION | 449<br>452<br>455<br>458<br>461 |
| VALVE & MTG GP-SOLENOID (WINCH FREESPOOL BRAKE RELEASE) | 541<br>546 |
| VALVE AS-FLUID SAMPLING (HYDRAULIC OIL) | 425 |
| VALVE AS-FLUID SAMPLING (POWER TRAIN OIL) | 267 |
| VALVE AS-RELIEF | 505 |
| VALVE-FLOW DIVIDER | 486 |
| VALVE GP-A/C & HEATER CONTROL | 675 |
| VALVE GP-ACCUMULATOR CHARGING (BRAKE) | 376 |
| VALVE GP-BANK 2–DECKING BLADE, STEERING CONTROL | 464 |
| VALVE GP-BANK 4–GRAPPLE CONTROL | 465<br>467 |

# INDEX


| Name | Page |
|---|---|
| VALVE GP-BANK 5–GRAPPLE, WINCH CONTROL | 468 |
| VALVE GP-BRAKE CONTROL–SERVICE | 382 |
| VALVE GP-CHECK | 474, 480 |
| VALVE GP-CHECK–PILOT, DIFFERENTIAL LOCK OIL | 469 |
| VALVE GP-CHECK (BLADE LIFT) | 478 |
| VALVE GP-CHECK (HYDRAULIC OIL COOLER BYPASS) | 405 |
| VALVE GP-CHECK (MAIN PUMP LINE) | 388, 391 |
| VALVE GP-CHECK (PILOT) | 425 |
| VALVE GP-CHECK (PRIMARY RESOLVER) | 472, 476, 478, 482, 484 |
| VALVE GP-CHECK (PRIMARY RESOLVER) | 470 |
| VALVE GP-CONTROL–DECKING BLADE | 478 |
| VALVE GP-CONTROL–GRAPPLE ARCH, GRAPPLE BOOM | 474, 480 |
| VALVE GP-CONTROL–GRAPPLE ROTATION | 472, 482 |
| VALVE GP-CONTROL–GRAPPLE TONG | 476 |
| VALVE GP-CONTROL–STEERING | 470 |
| VALVE GP-CONTROL–WINCH | 484 |
| VALVE GP-COOLANT SAMPLING | 93 |
| VALVE GP-DIVERTER–GRAPPLE HEAD | 486 |
| VALVE GP-DRAIN–WINCH | 566 |
| VALVE GP-DUMP–TRANSMISSION | 307 |
| VALVE GP-DUMP (TRANSMISSION) | 315 |
| VALVE GP-ETHER STARTING | 201 |
| VALVE GP-FLOW CONTROL–TRANSMISSION | 308 |
| VALVE GP-MODULATING–TC LOCKUP CLUTCH, TMSN CLUTCH | 309 |
| VALVE GP-PRIORITY–BRAKE | 487 |
| VALVE GP-PUMP CONTROL–PRESSURE, FLOW COMPENSATOR–IMPLEMENT, STEERING, BRAKE | 488 |
| VALVE GP-RELIEF–PILOT, DIFFERENTIAL LOCK | 489 |
| VALVE GP-RELIEF–TRANSMISSION HYDRAULIC CONTROL | 310 |
| VALVE GP-RELIEF (LINE) | 474, 480 |
| VALVE GP-RELIEF (LINE) (GRAPPLE TONG-OPEN, CLOSE) | 476 |
| VALVE GP-RELIEF (LINE) (LINE, WINCH) | 484 |
| VALVE GP-RELIEF (LINE) (STEERING CYLINDER CROSSOVER) | 470 |
| VALVE GP-RELIEF (REFRIGERANT COMPRESSOR) | 591 |
| VALVE GP-RELIEF (SECONDARY STEERING) | 487 |
| VALVE GP-SELECTOR & PRESS CONT–TRANSMISSION | 312 |
| VALVE GP-SOLENOID | 314, 490 |
| VALVE GP-SOLENOID (BLADE LIFT) | 478 |
| VALVE GP-SOLENOID (BLADE LOWER) | 478 |
| VALVE GP-SOLENOID (DIFFERENTIAL LOCK) | 437 |
| VALVE GP-SOLENOID (PARKING BRAKE CONTROL) | 381 |
| VALVE GP-SOLENOID (WINCH FREESPOOL BRAKE RELEASE) | 541, 546 |
| VALVE GP-SOLENOID (24-VOLT DC) (TRANSMISSION CLUTCH) | 312 |
| VALVE GP-TRANSMISSION CONTROL | 315, 317 |
| VALVE MECHANISM GP | 61, 62, 63, 65 |


## W


| Name | Page |
|---|---|
| WINCH AR–CABLE MACHINE | 567 |
| WINCH AR–GRAPPLE MACHINE | 567 |
| WINCH AR–WITHOUT GRAPPLE | 568 |
| WINCH GP–CABLE MACHINE | 572 |
| WINCH GP–GRAPPLE MACHINE | 569 |
| WINDOW GP | 678 |
| WINDOW GP–LH | 677 |
| WINDOW GP–RH | 676 |
| WIPER & WASHER GP-WINDOW | 680 |
| WIPER GP-WINDOW–FRONT | 682 |
| WIRING GP-CAB | 202 |
| WIRING GP-ENGINE | 210 |
| WIRING GP-HEATER–STARTING AID | 212 |
| WIRING GP-MACHINE | 213, 219, 226 |
| WIRING GP-SECONDARY STEERING | 230 |

# INDEX


| Désignation | Page |
|---|---|

## A

| | |
|---|---|
| ACCUMULATEUR - CLIMATISEUR (ASS) | 573, 574 |
| ACCUMULATEUR - FREIN | 362, 363, 364, 365, 366 |
| ACCUMULATEUR - HUILE PILOTE (ASS) | 403 |
| ACCUMULATEUR - HUILE PILOTE (ASS) | 404 |
| ACCUMULATEUR DE CHARGE - SOUPAPE (FREIN) | 376 |
| ADAPTATEUR (ASS) | 388, 391 |
| ALARME (ENS) | 226 |
| ALARME (ENS) (TRANSLATION) | 213, 219 |
| ALTERNATEUR DE CHARGE (ASS) | 144 |
| ALTERNATEUR DE CHARGE (ASS) | 142 |
| AMORTISSEUR DE VIBRATIONS - BOULONNERIE (ASS) | 36 |
| AMORTISSEUR DE VIBRATIONS ET POULIE (ASS) | 30 |
| ARBRE A CAMES (ASS) | 5 |
| ARBRE D'ENTRAÎNEMENT (ASS) | 294, 295, 296 |
| ARCEAUX DE DÉBARDAGE (ASS) | 361 |
| ARCHE (ASS) | 492 |
| ARCHE (ASS) (PINCE) | 528 |
| ATTELAGE D'ARTICULATION (ASS) | 350 |
| AUTOCOLLANT | 661, 664, 667, 671 |
| AUTOCOLLANT- COMMANDE DE TREUIL | 513 |
| AUTOCOLLANT-COMMANDE | 597, 599 |
| AUTOCOLLANT DE MISE EN GARDE (ACCUMULATEUR) | 403, 404 |
| AUTOCOLLANT DE MISE EN GARDE (CEINTURE DE SÉCURITÉ) | 695 |
| AUTOCOLLANT DE MISE EN GARDE (DÉMARRAGE CABLE VOLANT, LIRE LE GUIDE D'UTILISATION ET D'ENTRETIEN, ÉTATS-UNIS) | 693 |
| AUTOCOLLANT DE MISE EN GARDE (HAUTE PRESSION, LIRE LE GUIDE D'UTILISATION ET D'ENTRETIEN) | 362 |
| AUTOCOLLANT DE MISE EN GARDE (HAUTE PRESSION, LIRE LE GUIDE D'UTILISATION ET D'ENTRETIEN, INTERNATIONAL) | 695 |
| AUTOCOLLANT DE MISE EN GARDE (LIQUIDE CHAUD SOUS PRESSION, ÉTATS-UNIS) | 691 |
| AUTOCOLLANT DE MISE EN GARDE (NE PAS UTILISER D'ÉTHER) | 693 |
| AUTOCOLLANT DE MISE EN GARDE (PRESSION ÉLEVÉE, LIRE LE GUIDE D'UTILISATION ET D'ENTRETIEN, ÉTATS-UNIS) | 691 |
| AUTOCOLLANT DE MISE EN GARDE (RESSORT AMORTISSEUR) | 693, 695 |
| AUTOCOLLANT DE MISE EN GARDE (RESSORT AMORTISSEUR) | 691 |
| AUTOCOLLANT DE MISE EN GARDE (RISQUE D'ÉCRASEMENT, LIRE LE MANUEL) | 693 |
| AUTOCOLLANT DE MISE EN GARDE (RISQUE D'ÉCRASEMENT, LIRE LE MANUEL) | 691 |
| AUTOCOLLANT DE MISE EN GARDE (RISQUE D'ÉCRASEMENT, RESTER À L'ÉCART) | 691 |
| AUTOCOLLANT DE MISE EN GARDE (UNIVERSEL) | 691, 693 |
| AUTOCOLLANT D'IDENTIFICATION (CAT) | 685 |
| AUTOCOLLANT D'IDENTIFICATION (CAT, ARCHE, FLÈCHE) | 685 |
| AUTOCOLLANT D'IDENTIFICATION (CAT, ARCHE, FLÈCHE) | 684 |
| AUTOCOLLANT D'IDENTIFICATION (CATERPILLAR, GRILLE DE RADIATEUR) | 685 |
| AUTOCOLLANT D'IDENTIFICATION (CATERPILLAR, GRILLE DE RADIATEUR) | 684 |
| AUTOCOLLANT D'IDENTIFICATION (PANNEAU DE DISJONCTEUR) | 162 |
| AUTOCOLLANT-INFORMATION (CLIMATISATION, CHAUFFAGE) | 643, 648, 653, 657 |
| AUTOCOLLANT-INFORMATION (24 VOLTS) | 693 |
| AUTOCOLLANT (0,16-M CHACUN) | 678 |
| AUXILIAIRE DE DÉMARRAGE À L'ÉTHER | 186 |
| AVERTISSEUR (ASS) | 141 |
| AXE DE CULBUTEUR (ASS) | 56, 57 |
| AXE DE CULBUTEUR (ASS) (ADMISSION) | 63 |
| AXE DE CULBUTEUR (ASS) (ÉCHAPPEMENT) | 63 |
| AXE DE PINCE (ASS) | 554, 556 |

## B

| | |
|---|---|
| BALAI D'ESSUIE-GLACE (ENS) | 682 |


* TRADUCTION NON DISPONIBLE AU MOMENT DE LA PUBLICATION

# INDEX


| Désignation | Page |
|---|---|
| BALAI D'ESSUIE-GLACE (ENS) (ARRIÈRE) | 680 |
| BANDE AUTOCOLLANTE (CAPOT, CÔTÉ DROIT) | 685 |
| BANDE AUTOCOLLANTE (CAPOT, CÔTÉ GAUCHE) | 685 |
| BÂTI AR (ASS) | 328, 329, 330 |
| BÂTI AR (ENS) | 325 |
| BÂTI AV (ENS) | 321, 323 |
| BATTERIE (ASS) (12V, SANS ENTRETIEN, À BAIN D'HUILE) | 146, 149 |
| BATTERIE ET CÂBLAGE | 146, 149 |
| BLINDAGE INFÉRIEUR (ASS) | 331, 332 |
| BLOC-CYLINDRES - COUVERCLE (ASS) | 7, 9 |
| BLOC-CYLINDRES (ASS) | 22, 23, 24 |
| BLOC DE BRANCHEMENT (ASS) | 152 |
| BOÎTE DE VITESSES (VERSION) | 305, 306 |
| BOUCHON AIMANTÉ (CARTER D'HUILE MOTEUR) | 31 |
| BOUCHON DE BLOC-CYLINDRES (ASS) | 53 |
| BOUCHON DE GOULOTTE DE REMPLISSAGE (ENS) (HUILE MOTEUR) | 68 |
| BOUCHON DE GOULOTTE DE REMPLISSAGE (ENS) (RÉSERVOIR DE CARBURANT) | 139 |
| BOUCHON DE GOULOTTE DE REMPLISSAGE (RÉSERVOIR HYDRAULIQUE) | 447 |
| BOUCHON DE MOTEUR (ASS) | 54 |
| BOUCHON DE REMPLISSAGE D'HUILE MOTEUR (ASS) | 68 |
| BOUCHON DE VIDANGE | 242 |
| BOUCHON DE VIDANGE (CARTER D'HUILE MOTEUR) | 31 |
| BOUCHON DE VIDANGE (ÉCOLOGIE) | 262 |
| BOUCHON FILETÉ | 503 |
| BOUCHON FILETÉ (VIDANGE) | 566 |
| BOULONNERIE DE BÂTI ARRIÈRE (ASS) | 349 |
| BOULONNERIE DE CARTER AV (ASS) | 38 |
| BOULONNERIE DE LA CULASSE (ASS) | 35 |
| BRAS DE GRAPPIN (ASS) | 564, 565 |
| BRAS D'ESSUIE-GLACE (ASS) | 682 |


## C


| Désignation | Page |
|---|---|
| CABINE-FAISCEAU DE CÂBLES (ENS) (PRINCIPAL) | 202 |
| CABINE ROPS FERMÉE (VERSION) | 587, 588 |
| CABINE ROPS OUVERTE (VERSION) | 588, 589 |
| CABLAGE DE CABINE (ASS) | 202 |
| CABLAGE DE DIRECTION AUXILIAIRE (ASS) | 230 |
| CABLAGE DE LA MACHINE (ASS) | 213 |
| CABLAGE DE LA MACHINE (ASS) | 219, 226 |
| CABLAGE DE MOTEUR (ASS) | 210 |
| CABLAGE DU CHAUFFAGE DE CABINE (ASS) | 212 |
| CABLAGE MOTEUR (ENS) | 213, 219, 226 |
| CABLAGE MOTEUR (ENS) (INJECTION DE CARBURANT) | 210 |
| CABLAGE MOTEUR (ENS) (MODULE DE COMMANDE ÉLECTRONIQUE) | 210 |
| CÂBLE DE COURROIE | 614 |
| CACHE-SOUPAPES (ASS) | 12, 13, 14 |
| CADENAS (ASS) | 136 |
| CADENAS (ASS) (COMPARTIMENT POUR LA DOCUMENTATION) | 690 |
| CANALIS. DE REFROIDISSEMENT DU CONV. DE COUPLE | 287, 289 |
| CANALISATION DE DIRECTION AUXILIAIRE | 388, 391 |
| CANALISATIONS - INJECTEURS-POMPES HYDRAULIQUES | 126 |
| CANALISATIONS A COMMANDE PILOTE (ASS) | 429, 432 |
| CANALISATIONS D'AIR DE REFROIDISSEUR D'ADMISSION (ASS) | 104 |
| CANALISATIONS D'AIR DE TURBOCOMPRESSEUR (ASS) | 105 |
| CANALISATIONS DE CARBURANT (ASS) | 118, 120 |
| CANALISATIONS DE CLIMATISEUR (ASS) | 614 |
| CANALISATIONS DE DIRECTION (ASS) | 394 |
| CANALISATIONS DE GRAISSAGE (ASS) | 358 |
| CANALISATIONS DE LAME POUR L'EMPILEMENT DE GRUMES | 417 |
| CANALISATIONS DE ROTATEUR (ASS) | 435 |
| CANALISATIONS DE TÊTE DE PINCE (ASS) | 422 |
| CANALISATIONS DE TREUIL (ASS) | 540 |


* TRADUCTION NON DISPONIBLE AU MOMENT DE LA PUBLICATION

# INDEX


| Désignation | Page |
|---|---|
| | 541 |
| CANALISATIONS DE TREUIL (ASS) | 544 |
| | 546 |
| CANALISATIONS DE VERROUILLAGE DE DIFFÉRENTIEL | 285 |
| CANALISATIONS D'EAU (ASS) | 84 |
| CANALISATIONS D'EAU (ASS) | 82 |
| CANALISATIONS D'EAU SOUS PRESSION (ASS) | 688 |
| CANALISATIONS D'HUILE DE TURBOCOMPRESSEUR (ASS) | 73 |
| | 74 |
| CANALISATIONS D'HUILE MOTEUR (ASS) | 72 |
| CANALISATIONS DU FILTRE A CARBURANT (ASS) | 122 |
| | 124 |
| CANALISATIONS DU FREIN DE MANOEUVRE (ASS) | 379 |
| CANALISATIONS HYDRAULIQUES (ASS) | 425 |
| CAPOT ET PROTECTION (ASS) | 352 |
| | 355 |
| CAPTEUR - MOTEUR (ASS) | 167 |
| CAPTEUR DE PRESSION (ASS) | 170 |
| | 171 |
| | 172 |
| | 173 |
| | 174 |
| | 175 |
| | 176 |
| | 177 |
| CAPTEUR DE PRESSION (ASS) (ATMOSPHÉRIQUE) | 167 |
| CAPTEUR DE PRESSION (ASS) (COMMANDE D'INJECTION) | 167 |
| CAPTEUR DE PRESSION (ASS) (HUILE DE DIRECTION AUXILIAIRE) | 388 |
| | 391 |
| CAPTEUR DE PRESSION (ASS) (HUILE DE PINCE) | 419 |
| CAPTEUR DE PRESSION (ASS) (HUILE MOTEUR) | 167 |
| CAPTEUR DE PRESSION (ASS) (SURALIMENTATION) | 167 |
| CAPTEUR DE TEMPERATURE (ASS) | 180 |
| | 181 |
| | 182 |
| | 183 |
| | 184 |
| | 185 |
| CAPTEUR DE TEMPERATURE (ASS) (COLLECTEUR D'ADMISSION D'AIR) | 167 |
| CAPTEUR DE TEMPERATURE (ASS) (COLLECTEUR D'ADMISSION D'AIR) | 182 |
| | 183 |
| CAPTEUR DE TEMPERATURE (ASS) (EAU DE REFROIDISSEMENT) | 184 |
| | 185 |
| CAPTEUR DE TEMPERATURE (ASS) (EAU, LIQUIDE DE REFROIDISSEMENT) | 167 |
| CAPTEUR DE TEMPERATURE (ASS) (HUILE DE BOÎTE) | 317 |
| CAPTEUR DE TEMPERATURE (ASS) (HUILE DU CONV. DE COUPLE) | 219 |
| | 226 |
| CAPTEUR DE TEMPERATURE (ASS) (HUILE DU CONV. DE COUPLE) | 213 |
| CAPTEUR DE TEMPERATURE (ASS) (HUILE HYDRAULIQUE) | 219 |
| CAPTEUR DE TEMPÉRATURE (ENS) (HUILE HYDRAULIQUE) | 213 |
| | 226 |
| CAPTEUR DE VITESSE (ASS) | 178 |
| | 179 |
| CAPTEUR DE VITESSE (ASS) (CALAGE DU MOTEUR) | 167 |
| CAPTEUR DE VITESSE (ASS) (SORTIE DU CONVERTISSEUR DE COUPLE) | 254 |
| CAPTEUR DE VITESSE (ASS) (SORTIE 1 DE BOÎTE) | 254 |
| CAPTEUR DE VITESSE (ASS) (SORTIE 2 DE BOÎTE) | 254 |
| CARDAN COULISSANT (ASS) | 294 |
| | 295 |
| CARTER - TREUIL (ASS) | 503 |
| CARTER AV (ASS) | 44 |
| CARTER DE MOTEUR (ASS) | 559 |
| CARTER DE VOLANT (ASS) | 43 |
| CARTER D'ESSIEU FIXE | 280 |
| CARTER D'ESSIEU OSCILLANT | 282 |
| CARTER ET PIECES DE BOITE (ASS) | 236 |
| | 242 |
| CEINTURE DE SECURITE (ASS) | 635 |
| | 636 |
| CHAPEAU - RADIATEUR | 88 |
| CHAPEAU DE FILTRE A AIR | 95 |
| CHAPEAU (ENS) (REMPLISSAGE DE LIQUIDE DE REFROIDISSEMENT) | 90 |
| CHAPEAU (ENS) (TROP-PLEIN DE LIQUIDE DE REFROIDISSEMENT) | 90 |
| CHAPEAU (REMPLISSAGE DE RÉSERVOIR DE LAVE-GLACE DE VITRE) | 642 |
| CHÂSSIS AV (ASS) | 326 |
| CHÂSSIS GUIDE CABLE (ASS) | 526 |
| CHÂSSIS-PORTEUR DE JOINT (ASS) | 6 |
| CLAPET DE DECHARGE | 505 |
| CLAPET DE DECHARGE (ASS) | 310 |


* TRADUCTION NON DISPONIBLE AU MOMENT DE LA PUBLICATION

# INDEX


| Désignation | Page |
|---|---|
| | 489 |
| CLAPET DE DECHARGE (ASS) (CANALISATION) | 474 |
| CLAPET DE DECHARGE (ASS) (CANALISATION) | 480 |
| CLAPET DE DECHARGE (ASS) (CANALISATION) (BRAS DE PINCE-OUVERTURE, FERMETURE) | 476 |
| CLAPET DE DECHARGE (ASS) (CANALISATION) (CANALISATION DE TREUIL) | 484 |
| CLAPET DE DECHARGE (ASS) (CANALISATION) (DOUBLE ALIMENTATION DE VÉRIN DE DIRECTION) | 470 |
| CLAPET DE DECHARGE (ASS) (COMPRESSEUR DE RÉFRIGÉRANT) | 591 |
| CLAPET DE DECHARGE (ASS) (DIRECTION AUXILIAIRE) | 487 |
| CLAPET DE RETENUE (ENS) | 469 |
| CLAPET DE RETENUE (ENS) | 474 |
| | 480 |
| CLAPET DE RETENUE (ENS) (CANALISATION DE POMPE PRINCIPALE) | 388 |
| | 391 |
| CLAPET DE RETENUE (ENS) (DÉRIVATION DE REFROIDISSEUR D'HUILE HYDRAULIQUE) | 405 |
| CLAPET DE RETENUE (ENS) (LEVAGE DE LAME) | 478 |
| CLAPET DE RETENUE (ENS) (PILOTE) | 425 |
| CLAPET DE RETENUE (ENS) (PILOTE) | 425 |
| CLAPET DE RETENUE (ENS) (RÉPARTITEUR PRINCIPAL) | 470 |
| | 472 |
| | 476 |
| | 478 |
| | 482 |
| | 484 |
| CLÉ (COUPE-BATTERIE) | 194 |
| CLIMATISEUR (ASS) | 577 |
| | 580 |
| CLIMATISEUR (VERSION) | 576 |
| COLLECTEUR - COMMANDE (ASS) | 381 |
| | 437 |
| COLLECTEUR (ASS)-HUILE MOTEUR | 76 |
| COLLECTEUR D'ÉCHAPPEMENT (ASS) | 106 |
| COMMANDE DE DIRECTION (ASS) | 601 |
| COMMANDE DE DIRECTION ET DE LAME DE TERRASSEMENT | 383 |
| COMMANDE DE FREIN DE STATIONNEMENT (ASS) | 367 |
| COMMANDE DE FREIN DE STATIONNEMENT (ASS) | 374 |
| COMMANDE DE LA PÉDALE DE FREIN (ASS) | 372 |
| COMMANDE DE POIGNÉE (ASS) | 593 |
| COMMANDE DE POIGNÉE (ASS) | 594 |
| COMMANDE DE POIGNÉE (ASS) (TREUIL) | 513 |
| COMMANDE DE TREUIL (ASS) | 510 |
| | 511 |
| | 513 |
| COMMANDE ET MONTAGE - MOTEUR | 153 |
| COMMANDE HYDRAULIQUE DE BOÎTE (ASS) | 254 |
| COMMANDE HYDRAULIQUE PILOTE (ASS) | 597 |
| | 599 |
| COMMANDE NON PROGRAMMEE (ASS) (MACHINE) | 202 |
| COMPRESSEUR DE REFRIGERANT (ASS) | 591 |
| COMPRESSEUR ET MONTAGE - RÉFRIGÉRANT (ASS) | 590 |
| CONDENSATEUR ET MONTAGE (RÉFRIGÉRANT) | 592 |
| CONTACTEUR MAGNETIQUE (ASS) | 195 |
| | 196 |
| | 197 |
| CONVERTISSEUR DE COUPLE (ASS) | 303 |
| COUDE D'ADMISSION D'AIR (ASS) | 100 |
| COUDE D'EAU (ASS) | 80 |
| COURONNE CONIQUE ET PIGNON | 270 |
| | 272 |
| COURROIE INTERMÉDIAIRE (ASS) | 45 |
| COURROIE MULTIPLE (COMPRESSEUR DE CLIMATISEUR) | 590 |
| COURROIE MULTIPLE (POULIE) | 55 |
| COUVERCLE DE CARTER AV - BOULONNERIE (ASS) | 37 |
| COUVERCLE DE CARTER AV (ASS) | 10 |
| | 11 |
| COUVERCLE DE COLLECTEUR D'ADMISSION (ASS) | 96 |
| | 97 |
| | 98 |
| | 99 |
| COUVERCLE DE TREUIL (ASS) | 515 |
| COUVERCLES D'EXPEDITION (ASS) | 256 |
| CREPINE (ENS) | 447 |
| CULASSE (ASS) | 27 |
| | 28 |
| | 29 |
| CULASSE (ENS) | 26 |
| CULBUTERIE (ASS) | 61 |
| | 62 |
| | 63 |
| CULBUTERIE (ASS) | 65 |


* TRADUCTION NON DISPONIBLE AU MOMENT DE LA PUBLICATION

# INDEX


| Désignation | Page |
|---|---|

## D

| | |
|---|---|
| DÉMARREUR ÉLECTRIQUE (ASS) | 190<br>191<br>192 |
| DÉMARREUR ÉLECTRIQUE (ASS) | 188 |
| DIFFERENTIEL (ASS) | 258<br>260 |
| DIRECTION AUXILIAIRE (VERSION) | 398 |
| DISJONCTEUR DU PANNEAU DE COMMANDE (ASS) | 162 |
| DISJONCTEUR (ENS) (105A) (ALTERNATEUR) | 162 |
| DISJONCTEUR (ENS) (105A) (PRINCIPAL) | 162 |
| DISJONCTEUR (ENS) (20A) (COMMANDE DE LA MACHINE) | 162 |
| DISJONCTEUR (ENS) (80A) (RÉCHAUFFEUR D'ADMISSION D'AIR) | 162 |
| DISPOSITIF D'EVACUATION DES VAPEURS DE CARTER | 70 |
| DISTRIBUTEUR (ASS) | 470<br>480 |
| DISTRIBUTEUR (ASS) | 472<br>474<br>476<br>478<br>482<br>484 |
| DISTRIBUTEUR DE BOITE (ASS) | 317 |
| DISTRIBUTEUR DE BOITE (ASS) | 315 |
| DISTRIBUTEUR DE DÉBIT (ASS) | 308 |
| DISTRIBUTEUR DE FREIN (ASS) | 382 |
| DISTRIBUTEUR DE POMPE (ASS) | 488 |
| DISTRIBUTEUR DOUBLE ÉLÉMENT (ASS) | 464 |
| DISTRIBUTEUR 4 ÉLÉMENTS (ASS) | 465<br>467 |
| DISTRIBUTEUR 5 ÉLÉMENTS (ASS) | 468 |

## E

| | |
|---|---|
| ÉCLAIRAGE - PROJECTEURS (ASS) | 158<br>159 |
| ÉCLAIRAGE-PROJECTEURS (VERSION) | 157 |
| ÉCRAN | 437 |
| ÉCRAN DE CABINE (ASS) | 627<br>629 |
| ÉCRAN MAGNÉTIQUE (ASS) | 243 |
| ÉCRAN MAGNÉTIQUE (ASS) (BOÎTE DE VITESSES) | 237 |
| ÉLECTRONIQUE - MACHINE (ENS) | 155 |
| ÉLÉMENT DE FILTRE À AIR (ENS) (PRINCIPAL) | 94 |
| ÉLÉMENT DE FILTRE À AIR (ENS) (SECONDAIRE) | 94 |

| Désignation | Page |
|---|---|
| EMBRAYAGE - TREUIL (ASS) | 506<br>508 |
| EMBRAYAGE (ASS) | 248<br>250<br>252 |
| EMBRAYAGE ET ENGRENAGE - TREUIL (ASS) | 505 |
| ENGRENAGE DE SORTIE DE TREUIL (ASS) | 532 |
| ENGRENAGE DE TRANSFERT DE RENDEMENT (ASS) | 274<br>276<br>278 |
| ENGRENAGE D'ENTRÉE DE TREUIL (ASS) | 530 |
| ENTRAÎNEMENT DE TREUIL (ASS) | 517 |
| ENTRAÎNEMENT DE VENTILATEUR (ASS) | 33<br>34 |
| ENTRÉE - BOÎTE POWERSHIFT (ASS) | 284 |
| ESSIEU FIXE (VERSION) | 232 |
| ESSIEU OSCILLANT (VERSION) | 232 |
| ESSUIE-GLACE (ASS) | 682 |
| ESSUIE-GLACE ET LAVE-GLACE | 680 |

## F

| | |
|---|---|
| FAISCEAU-BOÎTE DE TRANSMISSION | 213<br>219 |
| FAISCEAU DE CABLES (ENS) (PRESSION DU CARBURANT) | 122<br>124 |
| FAISCEAU DE CHAUFFAGE ET CLIMATISATION | 577<br>580 |
| FAISCEAU DE CONDENSEUR (ENS) | 592 |
| FAISCEAU DE DIRECTION (ENS) (COLONNE, VOLANT) | 399<br>401 |
| FAISCEAU DE DIRECTION (ENS) (SECONDAIRE) | 230 |
| FAISCEAU DE RADIO (ENS) | 623 |
| FAISCEAU DE RADIO (ENS) (HAUTS-PARLEURS) | 202 |
| FAISCEAU DE REFROIDISSEUR D'ADMISSION (ENS) | 88 |
| FAISCEAU DE REFROIDISSEUR D'HUILE DE TRANSMISSION (ENS) | 88 |
| FAISCEAU DE REFROIDISSEUR D'HUILE HYDRAULIQUE (ENS) | 405 |
| FAISCEAU DE REFROIDISSEUR D'HUILE MOTEUR (ENS) | 79 |
| FAISCEAU DE RÉSERVOIR HYDRAULIQUE (ENS) | 213<br>219<br>226 |


* TRADUCTION NON DISPONIBLE AU MOMENT DE LA PUBLICATION

# INDEX


| Désignation | Page |
|---|---|
| FAISCEAU DE SOUPAPE (ENS) (COMPRESSEUR PNEUMATIQUE DE SIÈGE) | 637 |
| FAISCEAU D'ÉCLAIRAGE (ENS) (PROJECTEURS DE CABINE ARRIÈRE) | 159 |
| FAISCEAU D'ÉCLAIRAGE (ENS) (PROJECTEURS DE CABINE AVANT) | 159 |
| FAISCEAU D'OUTIL DE TRAVAIL (ENS) (PINCE, TREUIL) | 213<br>219<br>226 |
| FAISCEAU D'OUTIL DE TRAVAIL (ENS) (TREUIL) | 513 |
| FILTRE | 470 |
| FILTRE - SÉPARATEUR D'EAU ET DE CARBURANT (ENS) (PRINCIPAL) | 114 |
| FILTRE A AIR (ASS) | 94<br>95 |
| FILTRE À AIR DE CABINE | 577<br>580 |
| FILTRE À CARBURANT | 136 |
| FILTRE A CARBURANT (ENS) (EFFICACITÉ AVANCÉE) (AUXILIAIRE) | 122<br>124 |
| FILTRE A HUILE (ASS) | 269 |
| FILTRE A HUILE (ASS) | 414<br>415 |
| FILTRE A HUILE (ASS) (HYDRAULIQUE) | 425 |
| FILTRE À HUILE (ENS) (EFFICACITÉ AVANCÉE) | 425 |
| FILTRE À HUILE (ENS) (EFFICACITÉ AVANCÉE) (HYDRAULIQUE) | 414<br>415 |
| FILTRE À HUILE (ENS) (EFFICACITÉ AVANCÉE) (TRANSMISSION) | 269 |
| FILTRE À HUILE (ENS) (RÉSERVOIR HYDRAULIQUE) | 447 |
| FILTRE À HUILE MOTEUR (ASS) | 69 |
| FILTRE A HUILE MOTEUR (ENS) | 69 |
| FILTRE D'AIR FRAIS | 577<br>580 |
| FILTRE DE SÉPARATEUR D'EAU ET DE CARBURANT (ASS) | 114 |
| FILTRE ET CANALISATIONS DE TRANSMISSION (ASS) | 265<br>267 |
| FREIN - MAITRE-CYLINDRE (ASS) | 516 |
| FREIN DE FIN DE COURSE DE PINCE (ASS) | 561 |
| FREIN DE MANOEUVRE - COMMANDE (ASS) | 376 |
| FREIN DE STATIONNEMENT (ASS) | 368<br>369<br>370 |
| FREIN DE TREUIL (ASS) | 498<br>500 |
| FREIN DE TREUIL (ASS) | 569 |
| FREIN ET TRAINS PLANÉTAIRES (ASS) | 233<br>234 |


## G


| | |
|---|---|
| GAINE D'AIR (ASS) (KIT) | 577<br>580 |
| GARDE-BOUE (ASS) | 318 |
| GARNITURE POUR BÂTI ROPS OUVERT (ASS) | 661<br>664<br>667<br>671 |
| GARNITURE POUR CABINE (ASS) | 643<br>648<br>653<br>657 |
| GOULOTTE DE REMPLISSAGE D'HUILE DE TRANSMISSION | 263 |
| GROUPE DE MOTEUR A PISTONS | 549 |
| GROUPE DE ROTATION DE POMPE | 444 |
| GUIDE-CABLE DE TREUIL (ASS) | 522<br>524<br>525 |


## H


| | |
|---|---|
| HUILE MOTEUR - CARTER (ASS) | 51 |


## I


| | |
|---|---|
| INDICATEUR DE COLMATAGE DE FILTRE À AIR (ASS) | 103 |
| INDUSTRIEL - HYDRAULIQUE (VERSION) | 416 |
| INJECTEUR DE CARBURANT (ASS) | 115<br>116<br>117<br>130 |
| INTERRUPTEUR - BOUTON-POUSSOIR (ENS) (MONTÉE EN VITESSE DE LA BOÎTE) | 200 |
| INTERRUPTEUR - BOUTON-POUSSOIR (ENS) (RETROGRADATION) | 200 |
| INTERRUPTEUR - CONTACTEUR (DÉCLENCHEMENT DE SAISIE AUTOMATIQUE DE LA PINCE) | 593 |
| INTERRUPTEUR - CONTACTEUR (FERMETURE DE PINCE DE BRAS) | 594 |
| INTERRUPTEUR - CONTACTEUR (FERMETURE DE PINCE DE BRAS) | 593 |


* TRADUCTION NON DISPONIBLE AU MOMENT DE LA PUBLICATION

# INDEX


| Désignation | Page |
|---|---|
| INTERRUPTEUR - CONTACTEUR (GÂCHETTE DE POIGNÉE AUTOMATIQUE DE GRAPPIN) | 594 |
| INTERRUPTEUR - CONTACTEUR (OUVERTURE DE PINCE DE BRAS) | 594 |
| INTERRUPTEUR - CONTACTEUR (OUVERTURE DE PINCE DE BRAS) | 593 |
| INTERRUPTEUR - CONTACTEUR (ROTATION DE LA PINCE, SENS D'HORLOGE) | 593 |
| INTERRUPTEUR - CONTACTEUR (ROTATION DE LA PINCE, SENS INVERSE D'HORLOGE) | 593 |
| INTERRUPTEUR - CONTACTEUR (ROTATION EN SENS D'HORLOGE DU GRAPPIN) | 594 |
| INTERRUPTEUR - CONTACTEUR (ROTATION EN SENS INVERSE D'HORLOGE DU GRAPPIN) | 594 |
| INTERRUPTEUR À BASCULE (ASS) | 199<br>416 |
| INTERRUPTEUR À BASCULE (ASS) (ARRÊT DEPUIS LE SOL) | 213<br>219<br>226 |
| INTERRUPTEUR BALANCIER (ENS) (DIRECTION AUXILIAIRE) | 230 |
| INTERRUPTEUR BALANCIER (ENS) (EMBRAYAGE DE VERROUILLAGE DE CONVERTISSEUR DE COUPLE) | 202 |
| INTERRUPTEUR BALANCIER (ENS) (ESSUIE-GLACE ARRIÈRE) | 680 |
| INTERRUPTEUR BALANCIER (ENS) (ESSUIE-GLACE AVANT) | 680 |
| INTERRUPTEUR BALANCIER (ENS) (LAVE-GLACE AVANT, ARRIÈRE) | 680 |
| INTERRUPTEUR BALANCIER (ENS) (MARCHE, ARRÊT DE CLIMATISEUR) | 577 |
| INTERRUPTEUR BALANCIER (ENS) (MARCHE, ARRÊT DE CLIMATISEUR) | 675 |
| INTERRUPTEUR BALANCIER (ENS) (PROJECTEURS ARRIÈRE) | 202 |
| INTERRUPTEUR BALANCIER (ENS) (PROJECTEURS AVANT) | 202 |
| INTERRUPTEUR BALANCIER (ENS) (SÉLECTION DE MODE) | 202 |
| INTERRUPTEUR BALANCIER (ENS) (SERRAGE, DESSERRAGE DES FREINS DE STATIONNEMENT) | 202 |
| INTERRUPTEUR BALANCIER (ENS) (VERROUILLAGE DE DIFFÉRENTIEL) | 202 |
| INTERRUPTEUR BALANCIER (ENS) (VITESSE DU VENTILATEUR SOUFFLANT) | 608 |
| INTERRUPTEUR DE BOITE DE VITESSES (ASS) | 200<br>399<br>401 |
| INTERRUPTEUR DE DÉMARRAGE (ASS) (CLAVETTE) | 202 |
| INTERRUPTEUR ROTATIF (ENS) (COMMANDE DE CLIMATISEUR) | 675 |
| INTERRUPTEUR ROTATIF (ENS) (VITESSE DU VENTILATEUR) | 577 |


## J


| | |
|---|---|
| JAUGE D'HUILE MOTEUR (BAÏONNETTE) | 263 |
| JAUGE D'HUILE MOTEUR (BAIONNETTE) (ASS) | 71 |
| JAUGE D'HUILE MOTEUR (BAÏONNETTE) (ENS) | 280<br>282 |
| JOINT DE CACHE-SOUPAPES (CACHE-SOUPAPES) | 14 |
| JOINT DE CARTER DE VOLANT (ASS) | 59 |
| JOINT DE VILEBREQUIN (ASS) | 58 |
| JOINT DUO-CONE (ASS) | 280<br>282 |
| JOINT PLAT (BOÎTIER DE RÉGULATEUR DE TEMPÉRATURE) | 82<br>84 |
| JOINT UNIVERSEL (ASS) | 296 |
| JOINT UNIVERSEL (ASS) (DE BASE) | 294<br>295 |


## K


| | |
|---|---|
| KIT DE BAGUE (DÉMARREUR) | 192 |
| KIT DE BALAIS (DÉMARREUR) | 192 |
| KIT DE BALAIS (DÉMARREUR) | 188 |
| KIT DE BLOC COULISSANT (SIÈGE À SUSPENSION) | 635 |
| KIT DE BOULONNERIE (DÉMARREUR) | 188 |
| KIT DE BROCHE DE DÉMARREUR | 188 |
| KIT DE COUSSINET (DÉMARREUR) | 188 |
| KIT DE GARNITURE DE FREIN | 368<br>369 |
| KIT DE JOINT DE DÉMARREUR | 188 |
| KIT DE JOINTS (CLAPET DE DÉCHARGE) | 489 |
| KIT DE JOINTS (RÉPARTITEUR DE DÉBIT) | 486 |
| KIT DE LEVIER (DÉMARREUR) | 192 |
| KIT DE PRISE FEMELLE (12 BROCHES) | 399 |
| KIT DE RONDELLE (DÉMARREUR) | 188 |
| KIT D'ISOLANT (DÉMARREUR) | 192 |
| *KIT-SEAL | 382 |


* TRADUCTION NON DISPONIBLE AU MOMENT DE LA PUBLICATION

# INDEX


| Désignation | Page |
|---|---|

## L

LAME DE COUPE (ASS) . . . . . 521
LAME POUR L'EMPILAGE DE GRUMES (ASS) . . . . . 497
LAME POUR L'EMPILAGE DE GRUMES (VERSION) . . . . . 496
LAMPE - PHARE (ASS) . . . . . 156
LAMPE HALOGÈNE (24V, 65W) . . . . . 156
LEVAGE - BOULONNERIE (ASS) . . . . . 39
LIAISON - VERROUILLAGE DE CHÂSSIS DE DIRECTION (ASS) . . . . . 359
LITTÉRATURE (ASS) . . . . . 690
LITTÉRATURE (ASS) . . . . . 690
LOGICIEL - TRANSMISSION (ENS) . . . . . 155

## M

MANOCONTACT . . . . . 198
MANOCONTACT (DÉRIVATION DU FILTRE À HUILE) (TRANSMISSION) . . . . . 269
MANOCONTACT (ENS) (CHARGE D'ACCUMULATEUR DE FREIN) . . . 376
MANOCONTACT (ENS) (CLIMATISEUR, CÔTÉ HAUT) . . . . . 614
MANOCONTACT (ENS) (HUILE DE DIRECTION AUXILIAIRE) . . . . . 230
MANOCONTACT (ENS) (HUILE DE FREIN DE STATIONNEMENT) . . . . 374
MANOMETRE (ASS) (EAU) . . . . . 688
MARCHEPIED (ASS) . . . . . 360
MODULE D'AFFICHAGE (ASS) . . . . . 618
MONTAGE D'ALTERNATEUR (ASS) . . . . . 48
MONTAGE DE JANTE (ASS) . . . . . 291
MONTAGE DE MOTEUR ET BOÎTE (ASS) . . . . . 49
MONTAGE DE MOTEUR (VERSION) . . . . . 4
MONTAGE DE RADIO (ASS) . . . . . 612
MONTAGE DE TREUIL (ASS) . . . . . 550
552
553
MONTAGE-DISTRIBUTEUR (ASS) (GRAPPIN) . . . . . 461
MONTAGE DU TOIT ROPS (ASS) . . . . . 619
MOTEUR - PARTIE CENTRALE (VERSION) . . . . . 3
MOTEUR D'ESSUIE-GLACE (ASS) (24V, 2 VITESSES) (AVANT) . . . . . 682
MOTEUR ELECTRIQUE (ASS) . . . . . 161

## O

OEILLETONS DE LEVAGE MOTEUR (ASS) . . . . . 47
ORIENTATION-SIÈGE (ASS) . . . . . 640

## P

PALIER ET JOINT - ARCHE (ASS) . . . . . 493
PALIER ET JOINT DE PINCE (ASS) . . . . . 494
495
PALIER PRINCIPAL (ASS) (VILEBREQUIN) . . . . . 16
18
20
PALONNIER - GROUPE DE COMMANDE (ASS) . . . . . 595
596
PANNEAU DE FAISCEAU (ENS) (DISJONCTEUR) . . . . . 162
PANNEAU DE VISITE (ASS) . . . . . 620
621
PIGNONNERIE AV (ASS) . . . . . 41
PINCE - BÂTI (ASS) . . . . . 528
PINCE - CANALISATIONS (ASS) . . . . . 419
PINCE - VÉRIN (ASS) . . . . . 411
PINCE (VERSION) . . . . . 534
PISTON ET BIELLE (ASS) . . . . . 52
PLAFONNIER (ASS) (24 VOLTS) . . . . . 202
PLANÉTAIRE-TREUIL (ASS) . . . . . 557
PLAQUE DE NUMÉRO DE SÉRIE (BOITE DE VITESSE) . . . . . 236
242
PLAQUE D'INSTRUCTIONS (BATTERIE) . . . . . 146
149
PLAQUE SIGNALÉTIQUE (ASS) . . . . . 685
PLAQUE SIGNALÉTIQUE (ASS) . . . . . 684
PLAQUE SIGNALÉTIQUE (REMARQUE) (RADIO) . . . . . 612
PLAQUE SIGNALÉTIQUE (REMARQUE) (TAMBOUR LIBRE DU TREUIL) . . . . . 567
PLAQUES SIGNALETIQUES ET AUTOCOLLANTS (ASS) . . . . . 691
693
695
PLATEAU OSCILLANT (ASS) . . . . . 442
PNEU ET JANTE (ASS) . . . . . 301
302
PNEU ET JANTE (VERSION) . . . . . 300
301
POMPE A EAU (ASS) . . . . . 86
87
POMPE A ENGRENAGES (ASS) . . . . . 439
441
POMPE A HUILE MOTEUR (ASS) . . . . . 77
78
POMPE A PISTONS (ASS) . . . . . 442
POMPE D'ALIMENTATION EN CARBURANT (ASS) . . . . . 134
POMPE D'AMORÇAGE DE CARBURANT ET FILTRE PRINCIPAL . . . . . 133


* TRADUCTION NON DISPONIBLE AU MOMENT DE LA PUBLICATION

# INDEX


| Désignation | Page |
|---|---|
| POMPE DE BOÎTE DE VITESSES (ASS) | 293 |
| POMPE DE DIRECTION AUXILIAIRE ET MONTAGE (ASS) | 396, 397 |
| POMPE D'INJECTEURS-POMPES HYDRAU. ET MONTAGE | 127 |
| POMPE D'INJECTION DE CARBURANT (ASS) | 129, 130, 131, 132 |
| POMPE ET MONTAGE - HYDRAULIQUE (ASS) | 438 |
| PORTE DE VISITE (ASS) (DISJONCTEURS, SORTIE 24V) | 621 |
| PORTE-SATELLITES (ASS) | 501, 502 |
| PORTIÈRE DE CABINE (ASS) | 603, 604, 606 |
| POULIE-MOTEUR (ASS) | 55 |
| POUSSOIR DE SOUPAPE (ASS) | 46 |
| PREFILTRE (ASS) | 109 |
| PRISE DE BATTERIE AUXILIAIRE (ASS) | 165 |
| PROTECTEUR DES CANALISATIONS (ASS) | 338, 339, 341, 343, 345 |
| PROTECTION - CHASSIS (ASS) | 335 |
| PROTECTION DE CABINE (ASS) | 333, 334 |
| PROTECTION DE CABINE ROPS FERMÉE (ASS) | 610 |
| PROTECTION DE CABINE ROPS OUVERTE (ASS) | 611 |
| PROTECTION DE RÉSERVOIR À EAU (ASS) | 687 |
| PROTECTION DE TREUIL (ASS) | 535, 536, 537 |
| PROTECTION D'ÉCHAPPEMENT (ASS) | 102 |
| PROTECTION DU RÉSERVOIR DE CARBURANT (ASS) | 336 |
| PROTÈGE-RADIATEUR (ASS) | 347 |
| *PUMP GP-FILTER & FUEL TRANSFER | 128 |


## R


| Désignation | Page |
|---|---|
| RACCORD DE CANALISATION D'HUILE (ASS) | 66 |
| RADIATEUR ET MONTAGE (ASS) | 90 |
| RADIATEUR ET REFROIDISSEUR (ASS) | 88 |
| RADIO (ASS) | 623 |
| RADIO (ASS) (AM/FM LECTEUR DE CD) | 623 |
| REFROIDISSEUR D'HUILE HYDRAULIQUE (ASS) | 405 |
| REFROIDISSEUR D'HUILE MOTEUR (ASS) | 79 |
| REGARD DE NIVEAU | 447, 503 |
| REGARD DE NIVEAU (TREUIL) | 569 |
| RÉGULATEUR - PÉDALE (ASS) | 622 |
| REGULATEUR DE LA TENSION (ENS) (24 VOLTS) (ALTERNATEUR) | 142 |
| REGULATEUR DE PRESSION DE CARBURANT (ASS) | 135 |
| RÉGULATEUR-PRESSION (POMPE D'ALIMENTATION EN CARBURANT) | 134 |
| RELAIS (ENS) (24 VOLTS) (DÉVIDAGE DE TREUIL) | 202 |
| RELAIS (ENS) (24 VOLTS) (DIRECTION SECONDAIRE INTERMÉDIAIRE) | 202 |
| RELAIS (ENS) (24 VOLTS) (ÉCLAIRAGE) | 202 |
| RELAIS (ENS) (24 VOLTS) (ENROULEMENT DE TREUIL) | 202 |
| RELAIS (ENS) (24 VOLTS) (POMPE D'ALIMENTATION EN CARBURANT) | 202 |
| RELAIS (ENS) (24 VOLTS) (RETOUR DE LAME D'EMPILAGE) | 202 |
| RELAIS (ENS) (24 VOLTS) (RETOUR DE PINCE) | 202 |
| RELAIS (ENS) (24 VOLTS) (RETOUR DE SOLÉNOÏDE DE TREUIL) | 202 |
| RELAIS (ENS) (24 VOLTS) (TAMBOUR LIBRE DE TREUIL) | 202 |
| RENIFLARD (ASS) | 67 |
| RENIFLARD (ENS) (CARTER) | 67 |
| RENIFLARD (ENS) (RESERVOIR DE CARBURANT) | 136 |
| RENIFLARD (ENS) (RÉSERVOIR DE GROUPE MOTO-PROPULSEUR) | 265, 267 |
| RÉSERVOIR - LAVE-GLACE (ASS) | 642 |
| RÉSERVOIR DE CARBURANT (ASS) | 136, 139 |
| RÉSERVOIR D'EAU (ASS) | 697 |
| RÉSERVOIR HYDRAULIQUE (ASS) | 447 |
| RÉSERVOIR HYDRAULIQUE ET MONTAGE (ASS) | 445 |
| RESISTANCE (ASS) | 166 |
| RÉTROVISEUR (ASS) | 617 |
| ROBINET DE BATTERIE (ASS) | 194 |
| ROBINET DE BATTERIE (ASS) (BATTERIE) | 146 |
| ROBINET DE BATTERIE (ASS) (BATTERIE) | 149 |
| ROBINET DE PRÉLÈVEMENT D'ÉCHANTILLON D'HUILE (ASS) | 93 |


* TRADUCTION NON DISPONIBLE AU MOMENT DE LA PUBLICATION

# INDEX


| Désignation | Page |
|---|---|
| ROBINET-ÉCHANTILLON DE LIQUIDE (ENS) (HUILE DE TRANSMISSION) | 267 |
| ROBINET-ÉCHANTILLON DE LIQUIDE (ENS) (HUILE HYDRAULIQUE) | 425 |
| ROTATEUR HYDRAULIQUE (ASS) | 559 |
| ROTATION DE LA ROUE DU VENTILATEUR SOUFFLANT (RÉGLAGE DU SIÈGE) | 637 |
| ROULEAU SUPÉRIEUR (ASS) | 558 |

## S

| | |
|---|---|
| SIÈGE - COMPRESSEUR D'AIR (ASS) | 575 |
| SIÈGE - COMPRESSEUR D'AIR (ASS) | 637 |
| SIÈGE (ASS) | 632 |
| | 633 |
| SIÈGE AVEC SUSPENSION (ASS) | 634 |
| | 635 |
| | 637 |
| SIÈGE AVEC SUSPENSION (ASS) | 639 |
| SIÈGE AVEC SUSPENSION (ASS) | 636 |
| SILENCIEUX (ASS) | 107 |
| SOLÉNOÏDE (ENS) (24 VOLTS) (DÉMARREUR) | 188 |
| | 192 |
| SONDE - CIRCUIT DE CARBURANT | 169 |
| SONDE - NIVEAU DE CARBURANT (ENS) | 139 |
| SOUPAPE - SOLÉNOÏDE (ASS) | 314 |
| | 490 |
| SOUPAPE - SOLÉNOÏDE (ASS) (ABAISSEMENT DE LAME) | 478 |
| SOUPAPE - SOLÉNOÏDE (ASS) (COMMANDE DE FREIN DE STATIONNEMENT) | 381 |
| SOUPAPE - SOLÉNOÏDE (ASS) (DESSERRAGE DES FREINS DU TAMBOUR LIBRE DU TREUIL) | 541 |
| | 546 |
| SOUPAPE - SOLÉNOÏDE (ASS) (LEVAGE DE LAME) | 478 |
| SOUPAPE - SOLÉNOÏDE (ASS) (VERROUILLAGE DE DIFFÉRENTIEL) | 437 |
| SOUPAPE - SOLÉNOÏDE (ASS) (24 V CC) (EMBRAYAGE DE BOÎTE) | 312 |
| SOUPAPE DE CLIMATISATION ET CHAUFFAGE (ASS) | 675 |
| SOUPAPE DE DÉMARRAGE À L'ÉTHER (ASS) | 201 |
| SOUPAPE DE DERIVATION (ASS) | 486 |
| SOUPAPE DE MODULATION (ASS) | 309 |
| SOUPAPE DE PRIORITE (ASS) | 487 |
| SOUPAPE DE VIDANGE | 566 |
| SOUPAPE ET CANALISATIONS - PINCE (ASS) | 449 |
| | 452 |
| | 455 |
| | 458 |
| | 461 |
| SOUPAPE ET MONTAGE - SOLÉNOÏDE (DESSERRAGE DES FREINS DU TAMBOUR LIBRE DU TREUIL) | 541 |
| | 546 |
| SOUPAPE RÉPARTITRICE DE DÉBIT | 486 |
| SOUPAPE SELECTRICE ET REGULATRICE DE PRESSION | 312 |
| SUPPORT DE MOTEUR (ASS) | 60 |
| SUPPORT D'ESSIEU AVANT (ASS) | 297 |

## T

| | |
|---|---|
| TAMBOUR - TREUIL (ASS) | 519 |
| TAMIS D'ASPIRATION | 237 |
| | 243 |
| TAMIS D'ASPIRATION (RÉSERVOIR HYDRAULIQUE) | 447 |
| TAPIS DE PLANCHER | 319 |
| TÊTE DE PINCE (ASS) | 539 |
| THERMOCONTACT (ENS) (CLIMATISEUR) | 577 |
| THERMOCONTACT (ENS) (CLIMATISEUR) | 580 |
| THERMOSTAT-TEMPÉRATURE D'EAU (94-DEG C) (LIQUIDE DE REFROIDISSEMENT) | 84 |
| THERMOSTAT-TEMPÉRATURE D'EAU (97-DEG C) (LIQUIDE DE REFROIDISSEMENT) | 82 |
| TOIT ROPS (ASS) | 624 |
| TÔLE DE PLANCHER (ASS) | 319 |
| TRANSFORMATEUR DE PUISSANCE (24-VOLTS À 12-VOLTS) | 154 |
| TRANSFORMATION ELECTRIQUE (ASS) | 154 |
| TRANSFORMATION ELECTRIQUE (ASS) (24-VOLTS À 12-VOLTS) | 612 |
| TRANSMISSION (VERSION) | 292 |
| TREUIL (ASS) | 569 |
| | 572 |
| TREUIL (VERSION) | 567 |
| | 568 |
| TURBOCOMPRESSEUR - CARTOUCHE (ASS) | 111 |
| TURBOCOMPRESSEUR (ASS) | 110 |
| | 111 |
| | 112 |
| | 113 |

## V

| | |
|---|---|
| VANNE DE DÉVERSEMENT (ASS) | 307 |


* TRADUCTION NON DISPONIBLE AU MOMENT DE LA PUBLICATION

# INDEX


| Désignation | Page | Désignation | Page |
|---|---|---|---|
| VANNE DE DÉVERSEMENT (ASS) (BOITE DE VITESSE) | 315 | | |
| VENTILATEUR DÉGIVREUR (ASS) | 608 | | |
| VENTILATEUR SOUFFLANT (ASS) | 81 | | |
| VENTILATEUR SOUFFLANT DE CABINE (ASS) | 583 | | |
| | 584 | | |
| | 585 | | |
| | 586 | | |
| VÉRIN - PINCE (ASS) | 413 | | |
| VERIN DE DIRECTION (ASS) | 385 | | |
| | 387 | | |
| VERIN DE FLECHE (ASS) | 410 | | |
| VÉRIN DE LEVAGE - ARCHE (ASS) | 406 | | |
| | 408 | | |
| VÉRIN DE LEVAGE (ASS) | 412 | | |
| VERROUILLAGE DE VÉRIN (ASS) (ACCÈS À LA PORTE) | 621 | | |
| VERSION D'ARCHE | 491 | | |
| VERSION DE CHASSIS | 1 | | |
| VERSION DE MOTEUR COMPLET | 2 | | |
| VERSION DE RÉSERVOIR D'EAU | 696 | | |
| VERSION DE TÊTE DE PINCE | 538 | | |
| VERSION ÉLECTRIQUE | 155 | | |
| VERSION HYDRAULIQUE | 416 | | |
| VERSION NORMALE | 1 | | |
| VIDANGE-ÉCOLOGIE (ASS) | 242 | | |
| | 280 | | |
| | 282 | | |
| VIDANGE-ÉCOLOGIE (ASS) | 262 | | |
| VIDANGE-HUILE DE MOTEUR (ASS) | 31 | | |
| | 32 | | |
| VILEBREQUIN (ASS) | 16 | | |
| | 18 | | |
| | 20 | | |
| VITRE (ASS) | 676 | | |
| | 677 | | |
| | 678 | | |
| VOLANT DE DIRECTION (ASS) | 401 | | |
| VOLANT DE DIRECTION (ASS) | 399 | | |
| VOLANT MOTEUR (ASS) | 40 | | |


* TRADUCTION NON DISPONIBLE AU MOMENT DE LA PUBLICATION

# INDICE


| Nombre | Página |
|---|---|

## A

ACCESORIOS DEL ROPS ABIERTOS (GR) . . . . . 661, 664, 667, 671
ACCIONADOR DEL FRENO DE ESTACIONAMIENTO (GR) . . . . . 367
ACONDICIONADOR DE AIRE (CONFIG) . . . . . 576
ACONDICIONADOR DE AIRE (GR) . . . . . 577
ACONDICIONADOR DE AIRE (GR) . . . . . 580
ACUMULADOR DE ACEITE PILOTO (GR) . . . . . 403, 404
ACUMULADOR DEL ACONDICIONADOR DE AIRE (GR) . . . . . 573, 574
ACUMULADOR DEL FRENO (GR) . . . . . 362
ACUMULADOR DEL FRENO (GR) . . . . . 363, 364, 365, 366
ADAPTADOR (GR) . . . . . 388, 391
ALARMA (CONJ) . . . . . 226
ALARMA (CONJ) (DESPLAZAMIENTO) . . . . . 213, 219
ALARMA (GR) . . . . . 141
ALFOMBRILLA DEL PISO . . . . . 319
AMORTIGUADOR Y POLEA (GR) . . . . . 30
ANTEFILTRO (GR) . . . . . 109
ÁRBOL DE LEVAS (GR) . . . . . 5
ARCO (CONFIG) . . . . . 491
ARCO(GR) . . . . . 492
ARCO(GR) (GARRA) . . . . . 528
ARO Y LLANTA (GR) . . . . . 301, 302
ARO Y RUEDA . . . . . 300, 301
ARRANQUE - INTERRUPTOR DE (GR) (LLAVE) . . . . . 202
ASIENTO CON SUSPENSIÓN (GR) . . . . . 637, 639
ASIENTO GIRATORIO (GR) . . . . . 640
ASIENTO (GR) . . . . . 632, 633
AUXILIAR DE ARRANQUE CON ÉTER (GR) . . . . 186

## B

BALANCÍN (GR) . . . . . 56, 57
BALANCÍN (GR) (ADMISIÓN) . . . . . 63
BALANCÍN (GR) (ESCAPE) . . . . . 63
BANCADA 5 (GR) . . . . . 468
BASTIDOR DE GARFIO (GR) . . . . . 528
BASTIDOR DE GUÍA DE CABLES (GR) . . . . . 526
BASTIDOR DELANTERO (CONJ) . . . . . 321, 323
BASTIDOR DELANTERO (GR) . . . . . 326
BASTIDOR TRASERO (CONJ) . . . . . 325
BASTIDOR TRASERO (GR) . . . . . 328, 329, 330
BATERÍA (GR) (12 VOLTIOS, LIBRE DE MANTENIMIENTO, HUMEDO) . . . . . 146, 149
BATERÍA Y CABLES (GR) . . . . . 149
BATERÍA Y CABLES (GR) . . . . . 146
BLOQUE DE EMPALME (GR) . . . . . 152
BLOQUE DESLIZANTE-JUEGO (ASIENTO DE SUSPENSIÓN) . . . . . 635
BLOQUE MOTOR (GR) . . . . . 22, 23, 24
BOMBA DE ACEITE DEL MOTOR (GR) . . . . . 77, 78
BOMBA DE AGUA (GR) . . . . . 86, 87
BOMBA DE CEBADO Y FILTRO PRIMARIO DE COMBUSTIBLE (GR) . . . . . 133
BOMBA DE ENGRANAJES (GR) . . . . . 439, 441
BOMBA DE INYECCIÓN DE COMBUSTIBLE (GR) . . . . . 129, 130, 131, 132
BOMBA DE LA TRANSMISIÓN (GR) . . . . . 293
BOMBA DE PISTONES (GR) . . . . . 442
BOMBA DE TRANSFERENCIA DE COMBUSTIBLE (GR) . . . . . 134
BOMBA HIDRÁULICA DEL INYECTOR UNITARIO Y MONTAJE . . . . . 127
BOMBA HIDRÁULICA Y MONTAJE (GR) . . . . . 438
BOMBA Y MONTAJE DE LA DIRECCIÓN SECUNDARIA (GR) . . . . . 397
BOMBA Y MOTOR DE DIRECCION SECUNDARIA (GR) . . . . . 396
BRAZO DE LIMPIAPARABRISAS (GR) . . . . . 682

## C

CABEZA DE GARFIO (GR) . . . . . 539
CABINA - MAZO DE CABLES DE LA (PRINCIPAL) . . . . . 202
CABINA ROPS ABIERTA (CONFIG) . . . . . 588, 589


* NO HAY TRADUCCION DISPONIBLE EN EL MOMENTO DE LA IMPRESION

# INDICE


| Nombre | Página |
|---|---|
| CABLES CONJ. - TANQUE HIDRÁULICO | 213, 219, 226 |
| CABLES DE CALEFACCIÓN (GR) | 212 |
| CABLES DE LA CABINA (GR) | 202 |
| CABLES DE LA DIRECCIÓN SECUNDARIA | 230 |
| CABLES DE LA MÁQUINA (GR) | 219 |
| CABLES DE LA MÁQUINA (GR) | 226 |
| CABLES DE LA MÁQUINA (GR) | 213 |
| CABLES DEL MOTOR (GR) | 210 |
| CAJA DE EJE OSCILANTE (GR) | 282 |
| CAJA DE MOTOR (GR) | 559 |
| CAJA DEL CABRESTANTE (GR) | 503 |
| CAJA DEL EJE OSCILANTE (GR) | 280 |
| CAJA DELANTERA - TORNILLERÍA DE LA (GR) | 38 |
| CAJA DELANTERA (GR) | 44 |
| CAJA Y PIEZAS DE LA TRANSMISIÓN (GR) | 242 |
| CAJA Y PIEZAS DE LA TRANSMISIÓN (GR) | 236 |
| CALCOMANÍA | 661, 664, 667, 671 |
| CALCOMANÍA DE ADVERTENCIA (ACUMULADOR) | 403, 404 |
| CALCOMANÍA DE ADVERTENCIA (ALTA PRESIÓN, LEER OMM, INTL) | 695 |
| CALCOMANÍA DE ADVERTENCIA (ASIENTO AJUSTABLE) | 637 |
| CALCOMANÍA DE ADVERTENCIA (CARRETE LIBRE DE CABRESTANTE) | 567 |
| CALCOMANÍA DE ADVERTENCIA (CINTURÓN DE SEGURIDAD) | 695 |
| CALCOMANÍA DE ADVERTENCIA (*CRUSH HAZARD, READ MANUAL) | 691, 693 |
| CALCOMANÍA DE ADVERTENCIA (*DO NOT USE ETHER) | 693 |
| CALCOMANÍA DE ADVERTENCIA (FLUIDO CALIENTE BAJO PRESIÓN, EE.UU.) | 691 |
| CALCOMANÍA DE ADVERTENCIA (*JUMP START, READ OMM, U.S.) | 693 |
| CALCOMANÍA DE ADVERTENCIA (PELIGRO DE APLASTAMIENTO, MANTENGASE DETRAS DE ESTE LUGAR) | 691 |
| CALCOMANÍA DE ADVERTENCIA (PRESIÓN ALTA, LEA EL OMM) | 362 |
| CALCOMANÍA DE ADVERTENCIA (PRESIÓN ALTA, LEER OMM, EE.UU.) | 691 |
| CALCOMANÍA DE ADVERTENCIA (RADIO) | 612 |
| CALCOMANÍA DE ADVERTENCIA (RESORTE DE AMORTIGUACION) | 691, 695 |
| CALCOMANÍA DE ADVERTENCIA (RESORTE DE AMORTIGUACION) | 693 |
| CALCOMANÍA DE ADVERTENCIA (UNIVERSAL) | 691, 693 |
| CALCOMANÍA DE IDENTIFICACIÓN (CAT) | 685 |
| CALCOMANÍA DE IDENTIFICACIÓN (*CAT, ARCH, BOOM) | 684, 685 |
| CALCOMANÍA DE IDENTIFICACIÓN (*CATERPILLAR, RADIATOR GRILL) | 685 |
| CALCOMANÍA DE IDENTIFICACIÓN (*CATERPILLAR, RADIATOR GRILL) | 684 |
| CALCOMANÍA DE IDENTIFICACIÓN (TABLERO DE CIRCUITO) | 162 |
| CALCOMANÍA DE RAYAS (*HOOD, LH) | 685 |
| CALCOMANÍA DE RAYAS (*HOOD, RH) | 685 |
| CALCOMANÍA (*0.16-M EACH) | 678 |
| CALCOMANÍAS Y PLACAS DE IDENTIFICACIÓN (GR) | 691, 693, 695 |
| CALCOMANÍAS Y PLACAS DE IDENTIFICACIÓN (GR) | 695 |
| CÁNCAMOS DE LEVANTAMIENTO DEL MOTOR (GR) | 47 |
| CANDADO (GR) | 136 |
| CANDADO (GR) (COMPARTIMENTO PARA LA LITERATURA) | 690 |
| CAPO Y PROTECTOR (GR) | 352, 355 |
| CARGA - ALTERNADOR DE (GR) | 142, 144 |
| CÁRTER - COLECTOR DEL (GR) | 51 |
| CHASIS (CONFIG) | 1 |
| CIGÜEÑAL (GR) | 16, 18, 20 |
| CILINDRO DE DIRECCIÓN (GR) | 385, 387 |
| CILINDRO DE GARFIO (GR) | 411 |
| CILINDRO DE LA PLUMA (GR) | 410 |
| CILINDRO DE LEVANTAMIENTO (GR) | 412 |
| CILINDRO DEL ARCO (GR) | 406, 408 |
| CINTURÓN DE SEGURIDAD (GR) | 635, 636 |
| CODO DE ADMISIÓN DE AIRE (GR) | 100 |
| COJINETE DE ARCO Y SELLO (GR) | 493 |
| COLADOR (CONJ) | 447 |
| COLADOR DE COMBUSTIBLE | 136 |
| COMBUSTIBLE - TANQUE DE (GR) | 136 |


* NO HAY TRADUCCION DISPONIBLE EN EL MOMENTO DE LA IMPRESION

# INDICE


| Nombre | Página |
|---|---|
| | 139 |
| COMPRESOR DE AIRE DEL ASIENTO (GR) | 575 637 |
| COMPRESOR DE REFRIGERANTE (GR) | 591 |
| COMPRESOR DE REFRIGERANTE Y GRUPO DE MONTAJE | 590 |
| CONDENSADOR DEL REFRIGERANTE Y MONTAJE (GR) | 592 |
| CONDUCTO DE AIRE (GR) (JUEGO) | 577 580 |
| CONFIGURACIÓN COMÚN | 1 |
| CONFIGURACIÓN DE CABLERIA, CALENTADOR Y ACONDICIONADOR DE AIRE | 577 580 |
| CONFIGURACIÓN DE INSTALACIÓN DEL MOTOR | 4 |
| CONFIGURACIÓN ELÉCTRICA | 155 |
| CONJUNTO DE CABLERIA, RADIO | 623 |
| CONJUNTO DE CABLERIA, RADIO (ALTAVOCES) | 202 |
| CONJUNTO DE CABLES, VÁLVULA (COMPRESOR DE AIRE DEL ASIENTO) | 637 |
| CONJUNTO DE NÚCLEO-CONDENSADOR | 592 |
| CONTROL DE DIRECCIÓN (GR) | 601 |
| CONTROL DE DIRECCIÓN Y HOJA DE PLATAFORMA (GR) | 383 |
| CONTROL DE MANIJA (GR) | 593 594 |
| CONTROL DE MANIJA (GR) (CABRESTANTE) | 513 |
| CONTROL DEL FRENO DE ESTACIONAMIENTO | 374 |
| CONTROL DEL MALACATE (GR) | 510 511 513 |
| CONTROL DEL MULTIPLE (GR) | 381 437 |
| CONTROL DEL PEDAL DE FRENO (GR) | 372 |
| CONTROL ELECTRÓNICO DEL MOTOR Y MONTAJE | 153 |
| CONTROL HIDRÁULICO DE LA TRANSMISIÓN (GR) | 254 |
| CONTROL HIDRÁULICO DE OPERACIÓN PILOTO (GR) | 597 599 |
| CONTROL NO PROGRAMADO (GR) (MAQUINA) | 202 |
| CONVERTIDOR DE PAR (GR) | 303 |
| CONVERTIDOR DE VOLTAJE (24 VOLTIOS A 12 VOLTIOS) | 154 |
| CONVERTIDOR ELÉCTRICO (GR) | 154 |
| CONVERTIDOR ELÉCTRICO (GR) (24 VOLTIOS A 12 VOLTIOS) | 612 |
| CORREA PARA CABLES | 614 |
| CORREA-SERPENTIN (COMPRESOR DEL ACONDICIONADOR DE AIRE) | 590 |
| CORREA-SERPENTIN (POLEA) | 55 |
| *COVER GP-WINCH | 515 |
| CUCHILLA (GR) | 521 |
| CULATA DE CILINDROS - TORNILLERÍA DE LA (GR) | 35 |
| CULATA DE CILINDROS (CONJ) | 26 |
| CULATA DE CILINDROS (GR) | 27 28 29 |


## D


| | |
|---|---|
| DETECTOR DE NIVEL DEL COMBUSTIBLE | 139 |
| DETECTOR DE POSICIÓN (SISTEMA DE COMBUST.) (GR) | 169 |
| DIFERENCIAL (GR) | 258 260 |
| DIRECCIÓN SECUNDARIA (CONFIG) | 398 |
| DISYUNTOR (CONJ) (105 AMPERIOS) (ALTERNADOR) | 162 |
| DISYUNTOR (CONJ) (105 AMPERIOS) (PRINCIPAL) | 162 |
| DISYUNTOR (CONJ) (20-AMPERIOS) (CONTROL DE MAQUINA) | 162 |
| DISYUNTOR (CONJ) (80 AMPERIOS) (AIRE DE ADMISIÓN DE LA CALEFACCIÓN) | 162 |
| DISYUNTOR (GR) | 194 |
| DISYUNTOR (GR) (BATERÍA) | 146 149 |
| DRENAJE DE SEGURIDAD ECOLÓGICA (GR) | 242 262 280 282 |
| DRENAJE DEL ACEITE DE MOTOR | 31 32 |


## E


| | |
|---|---|
| EJE DE MANDO (GR) | 294 295 296 |
| EJE FIJO (CONFIG) | 232 |
| EJE OSCILANTE (CONFIG) | 232 |
| *ELBOW GP-WATER | 80 |
| ELECTRÓNICA DE LA MÁQUINA (GR) | 155 |
| ELEMENTO DEL FILTRO DE AIRE (CONJ) (PRIMARIO) | 94 |


* NO HAY TRADUCCION DISPONIBLE EN EL MOMENTO DE LA IMPRESION

# INDICE


| Nombre | Página |
|---|---|
| ELEMENTO DEL FILTRO DE AIRE (CONJ) (SECUNDARIO) | 94 |
| EMBRAGUE DEL MALACATE (GR) | 506 508 |
| EMBRAGUE (GR) | 248 250 252 |
| EMBRAGUE Y ENGRANAJE DEL MALACATE (GR) | 505 |
| EMPAQUETADURA (CAJA DEL REGULADOR DE TEMPERATURA) | 82 84 |
| ENCHUFE DE ARRANQUE AUXILIAR (GR) | 165 |
| ENFRIADOR DE ACEITE DEL MOTOR (GR) | 79 |
| ENFRIADOR DEL ACEITE HIDRAULICO (GR) | 405 |
| ENGANCHE ARTICULADO (GR) | 350 |
| *ENGINE AR-COMPLETE | 2 |
| ENGRANAJE DE CORONA Y PIÑÓN (GR) | 270 272 |
| ENGRANAJE DE ENTRADA DEL CABRESTANTE (GR) | 530 |
| ENGRANAJE DE SALIDA DEL CABRESTANTE (GR) | 532 |
| ENGRANAJE DE TRANSFERENCIA DE SALIDA | 274 276 278 |
| ENGRANAJE DELANTERO (GR) | 41 |
| ENTRADA - SERVOTRANSMISIÓN (GR) | 284 |
| ESCAPE DE GASES (GR) | 70 |
| ESTRIBO DEL OPERADOR (GR) | 360 |
| ESTRUCTURA ROPS (GR) | 624 |
| ETIQUETA DE ADVERTENCIA (GR) | 684 |
| ETIQUETA DE ADVERTENCIA (GR) | 685 |


## F


| Nombre | Página |
|---|---|
| *FASTENER GP-LIFTING | 39 |
| *FILM-WINCH CONTROL | 513 |
| FILTRO | 470 |
| FILTRO DE ACEITE (CONJ) (EFICIENCIA AVANZADA) | 425 |
| FILTRO DE ACEITE (CONJ) (EFICIENCIA AVANZADA) (HIDRÁULICO) | 414 415 |
| FILTRO DE ACEITE (CONJ) (EFICIENCIA AVANZADA) (TREN DE FUERZA) | 269 |
| FILTRO DE ACEITE DEL MOTOR (CONJ) | 69 |
| FILTRO DE ACEITE DEL MOTOR (GR) | 69 |
| FILTRO DE ACEITE (GR) | 269 414 415 |
| FILTRO DE ACEITE (GR) (HIDRAULICO) | 425 |
| FILTRO DE AIRE | 577 580 |
| FILTRO DE AIRE DE CABINA | 577 580 |
| FILTRO DE AIRE (GR) | 94 95 |
| FILTRO DE COMBUSTIBLE (CONJ) (EFICIENCIA AVANZADA) (SECUNDARIO(A)) | 122 124 |
| FILTRO DE COMBUSTIBLE Y SEPARADOR DE AGUA (CONJ) (PRIMARIO) | 114 |
| FILTRO DE COMBUSTIBLE Y SEPARADOR DE AGUA (GR) | 114 |
| FILTRO Y TUBERIAS DE TREN DE FUERZA (GR) | 265 267 |
| FRENO DE ESTACIONAMIENTO (GR) | 368 369 370 |
| FRENO DE SERVICIO - CONTROL (GR) | 376 |
| FRENO DEL CABRESTANTE | 498 500 569 |
| FRENO DEL CILINDRO (GR) | 516 |
| FRENO Y PLANETARIOS (GR) | 233 234 |


## G


| Nombre | Página |
|---|---|
| GARFIO (CONFIG) | 534 |
| GRUPO ADAPTADOR-TUBERIA DE ACEITE | 66 |
| GRUPO DE AMORTIGUADOR, GARFIO | 561 |
| GRUPO DE CARGADOR PLANETARIO | 501 502 |
| GRUPO DE CILINDRO-TENAZAS | 413 |
| GRUPO DE CLAVIJA, GARFIO | 554 556 |
| GRUPO DE COJINETES DE BANCADA (CIGÜEÑAL) | 16 18 20 |
| GRUPO DE GUIA, CORREA | 45 |
| GRUPO DE TRABA-CILINDRO (*DOOR ACCESS) | 621 |
| GRUPO DE TUBERIAS, AGUA A PRESIÓN | 688 |
| GRUPO DE TUBERÍAS DE AIRE DEL TURBOCOMPRESOR | 105 |
| GRUPO DE VÁLVULA-ARRANQUE CON ÉTER | 201 |
| GRUPO DE 4 VÁLVULAS HIDRÁULICAS | 465 467 |


* NO HAY TRADUCCION DISPONIBLE EN EL MOMENTO DE LA IMPRESION

# INDICE


| Nombre | Página |
|---|---|
| GRUPO DESELLO Y COJINETE, GARFIO | 494, 495 |
| GRUPO GIRATORIO DE BOMBA | 444 |
| GRUPO PLANETARIO-CBRESTANTE | 557 |
| GRUPO TENZA-GARFIO | 564, 565 |
| *GUARD GP-FRAME | 335 |
| GUARDABARROS (GR) | 318 |
| GUARNICIONES DE LA CABINA (GR) | 643, 648, 653, 657 |
| GUIACABLE DEL MALACATE (GR) | 522, 524, 525 |


## H


| | |
|---|---|
| *HEAD AR-GRAPPLE | 538 |
| HIDRÁULICA (CONFIG) | 416 |
| HOJA DE LIMPIAPARABRISAS (CONJ) | 682 |
| HOJA DE LIMPIAPARABRISAS (CONJ) (PARTE TRASERA) | 680 |
| HOJA PARA MOVER TRONCOS (CONFIG) | 496 |
| HOJA PARA MOVER TRONCOS (GR) | 497 |


## I


| | |
|---|---|
| IMPULSOR DE VENTILADOR (GR) | 33, 34 |
| INDICADOR DE CAMBIO DE FILTRO DE ACEITE (GR) | 103 |
| INDICADOR DE NIVEL DEL ACEITE (VARILLA) | 263 |
| INDICADOR DEL NIVEL DE ACEITE (VARILLA) (GR) | 71 |
| INDICADOR DEL NIVEL DEL ACEITE (VARILLA) (CONJ) | 280, 282 |
| INSTALACIÓN DE RADIO (GR) | 612 |
| INTERRUPTOR DE PRESIÓN (CONJ) (ACEITE DE FRENO DE ESTACIONAMIENTO) | 374 |
| INTERRUPTOR DE PRESIÓN (CONJ) (ACEITE DE LA DIRECCION SECUNDARIA) | 230 |
| INTERRUPTOR DE PRESIÓN (CONJ) (ACONDICIONADOR DE AIRE, LUGAR ALTO) | 614 |
| INTERRUPTOR DE PRESIÓN (CONJ) (CARGA DEL ACUMULADOR DEL FRENO) | 376 |
| INTERRUPTOR DE PRESIÓN (GR) | 198 |
| INTERRUPTOR DE PRESIÓN (GR) (DERIVADOR DE FILTRO DE ACEITE) (TREN DE FUERZA) | 269 |
| INTERRUPTOR DE TEMPERATURA (CONJ) (AIRE ACONDICIONADO) | 580 |
| INTERRUPTOR DE TEMPERATURA (CONJ) (AIRE ACONDICIONADO) | 577 |
| INTERRUPTOR DE TRANSMISION (GR) | 399 |
| INTERRUPTOR DE TRANSMISION (GR) | 401 |
| INTERRUPTOR DE TRANSMISION (GR) | 200 |
| INTERRUPTOR DE VOLQUETE (CONJ) (ACONDICIONADOR DE AIRE ACTIVO, INACTIVO) | 675 |
| INTERRUPTOR DE VOLQUETE (CONJ) (ACONDICIONADOR DE AIRE ACTIVO, INACTIVO) | 577 |
| INTERRUPTOR DE VOLQUETE (CONJ) (DIRECCIÓN SECUNDARIA) | 230 |
| INTERRUPTOR DE VOLQUETE (CONJ) (EMBRAGUE DE TRABA DE CONVERTIDOR DE PAR) | 202 |
| INTERRUPTOR DE VOLQUETE (CONJ) (FRENOS DE ESTACIONAMIENTO ACTIVO, INACTIVO) | 202 |
| INTERRUPTOR DE VOLQUETE (CONJ) (*FRONT, REAR WASHER) | 680 |
| INTERRUPTOR DE VOLQUETE (CONJ) (LIMPIAPARABRISAS DELANTERO) | 680 |
| INTERRUPTOR DE VOLQUETE (CONJ) (LIMPIAPARABRISAS TRASERO) | 680 |
| INTERRUPTOR DE VOLQUETE (CONJ) (REFLECTORES DELANTEROS) | 202 |
| INTERRUPTOR DE VOLQUETE (CONJ) (REFLECTORES TRASEROS) | 202 |
| INTERRUPTOR DE VOLQUETE (CONJ) (SELECCIÓN DE MODALIDAD) | 202 |
| INTERRUPTOR DE VOLQUETE (CONJ) (TRABA DE DIFERENCIAL) | 202 |
| INTERRUPTOR DE VOLQUETE (CONJ) (VELOCIDAD DEL VENTILADOR SOPLADOR) | 608 |
| INTERRUPTOR DE VOLQUETE (GR) | 199 |
| INTERRUPTOR DE VOLQUETE (GR) | 416 |
| INTERRUPTOR DE VOLQUETE (GR) (APAGADO A NIVEL DEL SUELO) | 213, 219, 226 |
| INTERRUPTOR (*GRAPPLE AUTO GRAB TRIGGER) | 594 |
| INTERRUPTOR (*GRAPPLE AUTO GRAB, TRIGGER) | 593 |
| INTERRUPTOR (*GRAPPLE ROTATION CCW) | 594 |
| INTERRUPTOR (*GRAPPLE ROTATION, CCW) | 593 |
| INTERRUPTOR (*GRAPPLE ROTATION CW) | 594 |


* NO HAY TRADUCCION DISPONIBLE EN EL MOMENTO DE LA IMPRESION

# INDICE


| Nombre | Página |
|---|---|
| INTERRUPTOR (*GRAPPLE ROTATION, CW) | 593 |
| INTERRUPTOR (*GRAPPLE TONG CLOSE) | 593, 594 |
| INTERRUPTOR (*GRAPPLE TONG OPEN) | 593, 594 |
| INTERRUPTOR MAGNÉTICO (GR) | 195, 196, 197 |
| INTERRUPTOR PULSADOR (CONJ) (CAMBIO ASCENDENTE DE TRANSMISION) | 200 |
| INTERRUPTOR PULSADOR (CONJ) (CAMBIO DESCENDENTE DE LA TRANSMISION) | 200 |
| INTERRUPTOR ROTATIVO (CONJ) (CONTROL DEL ACONDICIONADOR DE AIRE) | 675 |
| INTERRUPTOR ROTATIVO (CONJ) (VELOCIDAD DEL VENTILADOR) | 577 |
| INYECTOR DE COMBUSTIBLE (GR) | 115, 116, 117, 130 |


## J


| Nombre | Página |
|---|---|
| JUEGO (AISLADOR) (MOTOR DE ARRANQUE) | 192 |
| JUEGO DE ARANDELA (MOTOR DE ARRANQUE) | 188 |
| JUEGO DE BUJES (MOTOR DE ARRANQUE) | 192 |
| JUEGO DE COJINETES (MOTOR DE ARRANQUE) | 188 |
| JUEGO DE ESCOBILLAS (MOTOR DE ARRANQUE) | 188, 192 |
| JUEGO DE PALANCA (MOTOR DE ARRANQUE) | 192 |
| JUEGO DE PASADOR DEL MOTOR DE ARRANQUE | 188 |
| JUEGO DE RECEPTÁCULO (12-CLAVIJAS) | 399 |
| JUEGO DE REVESTIMIENTO DE FRENO | 368, 369 |
| JUEGO DE SELLO DEL MOTOR DE ARRANQUE | 188 |
| JUEGO DE SELLOS (VALVULA DE ALIVIO) | 489 |
| JUEGO DE SELLOS (VÁLVULA DIVISORA DE FLUJO) | 486 |
| JUEGO DE TORNILLERÍA (MOTOR DE ARRANQUE) | 188 |
| JUNTA DESLIZANTE (GR) | 294, 295 |
| JUNTA UNIVERSAL (GR) | 296 |
| JUNTA UNIVERSAL (GR) (*BASIC) | 294, 295 |


## K


| Nombre | Página |
|---|---|
| *KIT-SEAL | 382 |


## L


| Nombre | Página |
|---|---|
| LÁMPARA DEL TECHO (GR) (24 VOLTIOS) | 202 |
| LIMPIA Y LAVAPARABRISAS (GR) | 680 |
| LIMPIAPARABRISAS DE LA VENTANA (GR) | 682 |
| *LINES GP-GRAPPLE HEAD | 422 |
| LLAVE (INTERRUPTOR GENERAL) | 194 |
| LUCES DE ALÓGENO (24 VOLTIOS, 65 VATIOS) | 156 |
| LUCES DE REFLECTOR (GR) | 158, 159 |


## M


| Nombre | Página |
|---|---|
| MALACATE (CONFIG) | 567, 568 |
| MALACATE (GR) | 569, 572 |
| MANDO DEL MALACATE (GR) | 517 |
| MANÓMETRO (GR) (AGUA) | 688 |
| MAZO DE CABLES (CONJ) (PRESION DE COMBUSTIBLE) | 124 |
| MAZO DE CABLES (CONJ) (PRESION DE COMBUSTIBLE) | 122 |
| MAZO DE CABLES DE DIRECCION (CONJ) (COLUMNA, VOLANTE) | 401 |
| MAZO DE CABLES DE DIRECCION (CONJ) (COLUMNA, VOLANTE) | 399 |
| MAZO DE CABLES DE DIRECCION (CONJ) (SECUNDARIO) | 230 |
| MAZO DE CABLES DE LA HERRAMIENTA (CABRESTANTE) | 513 |
| MAZO DE CABLES DE LA HERRAMIENTA (*GRAPPLE, WINCH) | 213, 219, 226 |
| MAZO DE CABLES DE LA TRANSMISION | 213, 219 |
| MAZO DE CABLES DEL MOTOR (CONJ) | 213, 226 |
| MAZO DE CABLES DEL MOTOR (CONJ) | 219 |
| MAZO DE CABLES DEL MOTOR (CONJ) (INYECCIÓN DE COMBUSTIBLE) | 210 |
| MAZO DE CABLES DEL MOTOR (CONJ) (MODULO DE CONTROL ELECTRONICO) | 210 |
| MAZO DE CABLES DEL TABLERO (CONJ) (DISYUNTOR) | 162 |
| MAZO DE CABLES, LUCES (*FRONT CAB FLOODLIGHTS) | 159 |


* NO HAY TRADUCCION DISPONIBLE EN EL MOMENTO DE LA IMPRESION

# INDICE


| Nombre | Página |
|---|---|
| MAZO DE CABLES, LUCES (*REAR CAB FLOODLIGHTS) | 159 |
| MECANISMO DE VÁLVULAS (GR) | 61 |
| | 62 |
| | 63 |
| | 65 |
| MIRILLA | 447 |
| | 503 |
| MIRILLA (MALACATE) | 569 |
| MODULO DE LA PANTALLA (GR) | 618 |
| MONTAJE DE ARO | 291 |
| MONTAJE DE LA ESTRUCTURA ROPS (GR) | 619 |
| MONTAJE DEL ALTERNADOR (GR) | 48 |
| MONTAJE DEL MALACATE (GR) | 550 |
| | 552 |
| | 553 |
| MONTAJE DEL MOTOR Y LA TRANSMISIÓN (GR) | 49 |
| MOTOR - NÚCLEO (CONFIG) | 3 |
| MOTOR - SOPORTE DEL (GR) | 60 |
| MOTOR DE ARRANQUE ELÉCTRICO (GR) | 188 |
| | 190 |
| | 191 |
| | 192 |
| MOTOR ELÉCTRICO (GR) | 161 |
| MOTOR-LIMPIAPARABRISAS (GR) (24 VOLTIOS, 2 VELOCIDADES) (DELANTERO) | 682 |
| *MOUNTING GP-BANK VALVE (*GRAPPLE) | 461 |
| MULTIPLE DE ACEITE DE MOTOR (GR) | 76 |
| MÚLTIPLE DE ESCAPE (GR) | 106 |


## N


| | |
|---|---|
| NÚCLEO CONJ.-ENFRIADOR DE ACEITE DE TREN DE FUERZA | 88 |
| NUCLEO DE ENFRIADOR DE ACEITE DE MOTOR (CONJ) | 79 |
| NÚCLEO DE TURBOCOMPRESOR (GR) | 111 |
| NÚCLEO DEL POSENFRIADOR (CONJ) | 88 |


## P


| | |
|---|---|
| PALANCA UNIVERSAL DE CONTROL (GR) | 595 |
| | 596 |
| PANEL DE DISYUNTORES (GR) | 162 |
| *PANEL GP-ACCESS | 620 |
| | 621 |
| PISTÓN Y BIELA (GR) | 52 |
| PISTONES DEL MOTOR (GR) | 549 |
| PLACA DE CONTROL | 597 |
| | 599 |
| PLACA DE INFORMACION (ACONDICIONADOR DE AIRE, CALENTADOR) | 643 |
| | 648 |
| | 653 |
| | 657 |
| PLACA DE INFORMACION (24 VOLTIOS) | 693 |
| PLACA DE INSTRUCCIONES (BATERÍA) | 149 |
| PLACA DE INSTRUCCIONES (BATERÍA) | 146 |
| PLACA DEL NÚMERO DE SERIE (TRANSMISION) | 236 |
| | 242 |
| PLANCHA DEL PISO (GR) | 319 |
| PLATO OSCILANTE (GR) | 442 |
| POLEA DE MOTOR (GR) | 55 |
| PRIORIDAD - VÁLVULA DE (GR) | 487 |
| PROTECTOR DE LA CABINA (GR) | 333 |
| | 334 |
| PROTECTOR DE LA ESTRUCTURA ROPS ABIERTA (GR) | 611 |
| PROTECTOR DE LA ESTRUCTURA ROPS CERRADA (CONFIG) | 610 |
| PROTECTOR DE LAS TUBERÍAS (GR) | 338 |
| | 339 |
| | 341 |
| | 343 |
| | 345 |
| PROTECTOR DE TANQUE DE AGUA (GR) | 687 |
| PROTECTOR DEL CABRESTANTE(GR) | 535 |
| | 536 |
| | 537 |
| PROTECTOR DEL ESCAPE (GR) | 102 |
| PROTECTOR DEL RADIADOR (GR) | 347 |
| PROTECTOR DEL TANQUE DE COMBUSTIBLE (GR) | 336 |
| PROTECTOR INFERIOR (GR) | 331 |
| | 332 |
| PROTECTORES DE RAMAS (GR) | 361 |
| PUBLICACIONES (GR) | 690 |
| PUBLICACIONES (GR) | 690 |
| PUERTA DE ACCESO (GR) (*BREAKERS, 24-VOLT OUTLET) | 621 |
| PUERTA DE CABINA | 603 |
| | 604 |
| | 606 |
| *PUMP GP-FILTER & FUEL TRANSFER | 128 |


## R


| | |
|---|---|
| RADIADOR Y MONTAJE (GR) | 90 |
| RADIADOR Y POSENFRIADOR (GR) | 88 |
| RADIO (GR) | 623 |
| RADIO (GR) (*AM/FM CD PLAYER) | 623 |
| REFLECTOR (GR) | 156 |


* NO HAY TRADUCCION DISPONIBLE EN EL MOMENTO DE LA IMPRESION

# INDICE


| Nombre | Página |
|---|---|
| REFLECTORES (CONFIG) | 157 |
| REFRIGERANTE DE ACEITE, NÚCLEO (CONJ) | 405 |
| REGULADOR - PEDAL DEL (GR) | 622 |
| REGULADOR DE LA PRESION DE COMBUSTIBLE (GR) | 135 |
| REGULADOR DE PRESION (BOMBA DE TRANSFERENCIA DE COMBUSTIBLE) | 134 |
| REGULADOR DE TEMPERATURA DEL AGUA (94-GRADOS C) (REFRIGERANTE) | 84 |
| REGULADOR DE TEMPERATURA DEL AGUA (97 GRADOS C) (REFRIGERANTE) | 82 |
| REGULADOR DE VOLTAJE (24 VOLTIOS) (ALTERNADOR) | 142 |
| REJILLA | 437 |
| REJILLA DE LA CABINA (GR) | 627 |
| | 629 |
| REJILLA DE SUCCIÓN | 237 |
| | 243 |
| REJILLA DE SUCCIÓN (TANQUE HIDRÁULICO) | 447 |
| REJILLA MAGNÉTICA (GR) | 243 |
| REJILLA MAGNÉTICA (GR) (TRANSMISION) | 237 |
| RELÉ (CONJ) (24 VOLTIOS) (BOMBA DE TRANSFERENCIA DE COMBUSTIBLE) | 202 |
| RELÉ (CONJ) (24 VOLTIOS) (*DECKING BLADE RETURN) | 202 |
| RELÉ (CONJ) (24 VOLTIOS) (*GRAPPLE RETURN) | 202 |
| RELÉ (CONJ) (24 VOLTIOS) (LUCES) | 202 |
| RELÉ (CONJ) (24 VOLTIOS) (*SECONDARY STEER INTERMEDIATE) | 202 |
| RELÉ (CONJ) (24 VOLTIOS) (*WINCH FREESPOOL) | 202 |
| RELÉ (CONJ) (24 VOLTIOS) (*WINCH REEL IN) | 202 |
| RELÉ (CONJ) (24 VOLTIOS) (*WINCH REEL OUT) | 202 |
| RELÉ (CONJ) (24 VOLTIOS) (*WINCH SOLENOID RETURN) | 202 |
| RESISTENCIA (GR) | 166 |
| RESPIRADERO (CONJ) (CÁRTER DEL MOTOR) | 67 |
| RESPIRADERO (CONJ) (TANQUE DE COMBUSTIBLE) | 136 |
| RESPIRADERO (CONJ) (TANQUE DE TREN DE FUERZA) | 265 |
| | 267 |
| RESPIRADERO (GR) | 67 |
| RETROVISOR (GR) | 617 |
| RODILLO SUPERIOR (GR) | 558 |
| ROTADOR HIDRAULICO (GR) | 559 |


## S


| Nombre | Página |
|---|---|
| *SEAL-VALVE COVER (TAPA DE VÁLVULA) | 14 |
| SELLO DE CIGÜEÑAL (GR) | 58 |
| SELLO DE LA CAJA DE VOLANTE (GR) | 59 |
| SELLO DEL PORTADOR (GR) | 6 |
| SELLO DUOCONE (GR) | 280 |
| | 282 |
| SENSOR DE PRESIÓN (GR) | 170 |
| | 171 |
| | 172 |
| | 173 |
| | 174 |
| | 175 |
| | 176 |
| | 177 |
| SENSOR DE PRESIÓN (GR) (ACCIONAMIENTO DE INYECCION) | 167 |
| SENSOR DE PRESIÓN (GR) (ACEITE DE GARFIO) | 419 |
| SENSOR DE PRESIÓN (GR) (ACEITE DE LA DIRECCION SECUNDARIA) | 388 |
| | 391 |
| SENSOR DE PRESIÓN (GR) (ACEITE DEL MOTOR) | 167 |
| SENSOR DE PRESIÓN (GR) (ATMOSFERICA) | 167 |
| SENSOR DE PRESIÓN (GR) (REFUERZO) | 167 |
| SENSOR DE TEMPERATURA (CONJ) (ACEITE HIDRÁULICO) | 213 |
| | 226 |
| SENSOR DE TEMPERATURA (GR) | 180 |
| | 181 |
| | 182 |
| | 183 |
| | 184 |
| | 185 |
| SENSOR DE TEMPERATURA (GR) (ACEITE DE CONVERTIDOR DE PAR) | 213 |
| | 219 |
| | 226 |
| SENSOR DE TEMPERATURA (GR) (ACEITE DE LA TRANSMISIÓN) | 317 |
| SENSOR DE TEMPERATURA (GR) (ACEITE HIDRÁULICO) | 219 |
| SENSOR DE TEMPERATURA (GR) (MÚLTIPLE DE ADMISIÓN DE AIRE) | 167 |
| | 182 |
| | 183 |
| SENSOR DE TEMPERATURA (GR) (REFRIGERANTE, AGUA) | 167 |
| | 184 |
| | 185 |
| SENSOR DE VELOCIDAD (GR) | 178 |


* NO HAY TRADUCCION DISPONIBLE EN EL MOMENTO DE LA IMPRESION

# INDICE


| Nombre | Página |
|---|---|
| | 179 |
| SENSOR DE VELOCIDAD (GR) (SALIDA DE TRANSMISIÓN 1) | 254 |
| SENSOR DE VELOCIDAD (GR) (SALIDA DE TRANSMISIÓN 2) | 254 |
| SENSOR DE VELOCIDAD (GR) (SALIDA DEL CONVERTIDOR DE PAR) | 254 |
| SENSOR DE VELOCIDAD (GR) (SINCRONIZACIÓN DE MOTOR) | 167 |
| SENSOR DEL MOTOR (GR) | 167 |
| SILENCIADOR (GR) | 107 |
| SISTEMA ROPS DE CABINA CERRADA (CONFIG) | 587 |
| | 588 |
| SOFTWARE DEL TREN DE FUERZA (GR) | 155 |
| SOLENOIDE (CONJ) (24 VOLTIOS) (MOTOR DE ARRANQUE) | 188 |
| | 192 |
| SOPLADOR - VENTILADOR (GR) | 81 |
| SOPORTE DEL EJE DELANTERO (GR) | 297 |
| *STRAINER AS-OIL (TANQUE HIDRÁULICO) | 447 |
| SUSPENSIÓN - ASIENTO CON (GR) | 634 |
| | 635 |
| | 636 |

## T

| | |
|---|---|
| TAMBOR DEL MALACATE (GR) | 519 |
| TANQUE DE AGUA (CONFIG) | 696 |
| TANQUE DEL AGUA (GR) | 697 |
| TANQUE DEL LAVAPARABRISAS (GR) | 642 |
| TANQUE HIDRÁULICO (GR) | 447 |
| TANQUE HIDRÁULICO Y MONTAJE (GR) | 445 |
| TAPA DE ADMISIÓN DE AIRE (GR) | 96 |
| | 97 |
| | 98 |
| | 99 |
| TAPA DE LA CAJA DELANTERA (GR) | 10 |
| | 11 |
| TAPA DE LLENADO (CONJ) (ACEITE DEL MOTOR) | 68 |
| TAPA DE LLENADO (CONJ) (TANQUE DE COMBUSTIBLE) | 139 |
| TAPA DEL BLOQUE MOTOR (GR) | 7 |
| | 9 |
| TAPA DEL FILTRO DE AIRE | 95 |
| TAPA DEL MECANISMO DE VÁLVULAS (GR) | 12 |
| | 13 |
| | 14 |
| TAPA DEL RADIADOR | 88 |
| TAPA DEL TUBO DE LLENADO (TANQUE HIDRÁULICO) | 447 |
| TAPA (LLENADO DE TANQUE DE LIMPIAPARABRISA) | 642 |
| TAPAS PROTECTORAS DE EMBARQUE (GR) | 256 |
| TAPÓN | 503 |
| TAPÓN (CONJ) (LLENADO DE REFRIGERANTE) | 90 |
| TAPÓN (CONJ) (REFRIGERANTE REBOSADO) | 90 |
| TAPÓN DE DRENAJE | 242 |
| TAPÓN DE DRENAJE (COLECTOR DE ACEITE DEL MOTOR) | 31 |
| TAPÓN DE DRENAJE (DE SEG. ECOLÓGICA) | 262 |
| TAPÓN DEL BLOQUE MOTOR (GR) | 53 |
| TAPÓN DEL MOTOR (GR) | 54 |
| TAPÓN (DRENAJE) | 566 |
| TAPÓN MAGNÉTICO (COLECTOR DE ACEITE DEL MOTOR) | 31 |
| TIRANTE DE TRABA DEL BASTIDOR DE DIRECCIÓN (GR) | 359 |
| TORNILLERÍA AMORTIGUADORA DE VIBRACIONES (GR) | 36 |
| TORNILLERÍA DE LA TAPA DELANTERA | 37 |
| TORNILLERIA GR-BASTIDOR TRASERO | 349 |
| TRANSMISION (CONFIG) | 305 |
| | 306 |
| TREN DE FUERZA (CONFIG) | 292 |
| TUBERÍAS CON SERVOMANDO (GR) | 429 |
| | 432 |
| TUBERÍAS DE ACEITE DEL MOTOR (GR) | 72 |
| TUBERÍAS DE ACONDICIONADOR DE AIRE (GR) | 614 |
| TUBERÍAS DE BOMBA HIDRÁULICA DE INYECCIÓN (GR) | 126 |
| TUBERÍAS DE COMBUSTIBLE (GR) | 118 |
| | 120 |
| TUBERÍAS DE DIRECCIÓN (GR) | 394 |
| TUBERÍAS DE ENGRASE (GR) | 358 |
| TUBERÍAS DE LA DIRECCIÓN SECUNDARIA (GR) | 388 |
| | 391 |
| TUBERÍAS DE LA HOJA PARA MOVER TRONCOS (GR) | 417 |
| TUBERÍAS DE POSENFRIADOR DE AIRE (CONJ) | 104 |
| TUBERIAS DE ROTADOR (GR) | 435 |
| TUBERÍAS DE TRABA DEL DIFERENCIAL (GR) | 285 |
| TUBERÍAS DEL AGUA (GR) | 82 |
| | 84 |
| TUBERIAS DEL ENFRIADOR DEL CONVERTIDOR DE PAR | 287 |
| | 289 |


* NO HAY TRADUCCION DISPONIBLE EN EL MOMENTO DE LA IMPRESION

# INDICE


| Nombre | Página |
|---|---|
| TUBERÍAS DEL FILTRO DE COMBUSTIBLE | 122, 124 |
| TUBERÍAS DEL FRENO DE SERVICIO (GR) | 379 |
| TUBERÍAS DEL GARFIO (GR) | 419 |
| TUBERÍAS DEL MALACATE (GR) | 540, 541, 544, 546 |
| TUBERÍAS HIDRÁULICAS (GR) | 425 |
| TUBO DE LLENADO DE ACEITE DE LA TRANSMISIÓN (GR) | 263 |
| TUBO DE LLENADO DE ACEITE (GR) | 68 |
| TURBOCOMPRESOR - TUBERÍAS DE ACEITE DEL (GR) | 73, 74 |
| TURBOCOMPRESOR (GR) | 112, 113 |
| TURBOCOMPRESOR (GR) | 110, 111 |


## V


| Nombre | Página |
|---|---|
| *VALVE GP-A/C & HEATER CONTROL | 675 |
| VALVULA | 505 |
| VÁLVULA DE ALIVIO (GR) | 310, 489 |
| VÁLVULA DE ALIVIO (GR) (COMPRESOR DEL REFRIGERANTE) | 591 |
| VÁLVULA DE ALIVIO (GR) (DIRECCIÓN SECUNDARIA) | 487 |
| VÁLVULA DE ALIVIO (GR) (TUBERIA) | 474, 480 |
| VÁLVULA DE ALIVIO (GR) (TUBERIA) (CRUCE DEL CILINDRO DE DIRECCION) | 470 |
| VÁLVULA DE ALIVIO (GR) (TUBERIA) (*GRAPPLE TONG-OPEN, CLOSE) | 476 |
| VÁLVULA DE ALIVIO (GR) (TUBERIA) (*LINE, WINCH) | 484 |
| VÁLVULA DE CARGA DEL ACUMULADOR (GR) (FRENO) | 376 |
| VÁLVULA DE CONTROL DE FLUJO (GR) | 308 |
| VALVULA DE CONTROL DE LA BOMBA (GR) | 488 |
| VÁLVULA DE CONTROL DE LA TRANSMISIÓN (GR) | 315, 317 |
| VÁLVULA DE CONTROL DEL FRENO (GR) | 382 |
| VÁLVULA DE CONTROL (GR) | 470, 472, 474, 476, 478, 480, 482, 484 |
| VÁLVULA DE DERIVACIÓN (GR) | 486 |
| VÁLVULA DE DESCARGA (GR) | 307 |
| VÁLVULA DE DESCARGA (GR) (TRANSMISION) | 315 |
| VÁLVULA DE DRENAJE (GR) | 566 |
| VÁLVULA DE LEVANTAMIENTO (GR) | 46 |
| VÁLVULA DE MODULACIÓN (GR) | 309 |
| VALVULA DE MUESTRA DE FLUIDO (CONJ) (ACEITE DEL TREN DE FUERZA) | 267 |
| VALVULA DE MUESTRA DE FLUIDO (CONJ) (ACEITE HIDRÁULICO) | 425 |
| VÁLVULA DE MUESTREO DE REFRIGERANTE (GR) | 93 |
| VÁLVULA DE RETENCIÓN (GR) | 469 |
| VÁLVULA DE RETENCIÓN (GR) | 474, 480 |
| VÁLVULA DE RETENCIÓN (GR) (HOJA DE LEVANTAMIENTO) | 478 |
| VÁLVULA DE RETENCIÓN (GR) (*HYDRAULIC OIL COOLER BYPASS) | 405 |
| VÁLVULA DE RETENCIÓN (GR) (*MAIN PUMP LINE) | 388, 391 |
| VÁLVULA DE RETENCIÓN (GR) (PILOTO) | 425 |
| VÁLVULA DE RETENCIÓN (GR) (PILOTO) | 425 |
| VÁLVULA DE RETENCIÓN (GR) (*PRIMARY RESOLVER) | 472, 476, 478, 482, 484 |
| VÁLVULA DE RETENCIÓN (GR) (*PRIMARY RESOLVER) | 470 |
| VÁLVULA DE SOLENOIDE (GR) | 314, 490 |
| VÁLVULA DE SOLENOIDE (GR) (*BLADE LOWER) | 478 |
| VÁLVULA DE SOLENOIDE (GR) (HOJA DE LEVANTAMIENTO) | 478 |
| VÁLVULA DE SOLENOIDE (GR) (*PARKING BRAKE CONTROL) | 381 |
| VÁLVULA DE SOLENOIDE (GR) (TRABA DE DIFERENCIAL) | 437 |
| VÁLVULA DE SOLENOIDE (GR) (*WINCH FREESPOOL BRAKE RELEASE) | 541, 546 |
| VÁLVULA DE SOLENOIDE (GR) (24 VOLTIOS CC) (EMBRAGUE DE TRANSMISION) | 312 |
| VALVULA DE SOLENOIDE Y MONTAJE (GR (*WINCH FREESPOOL BRAKE RELEASE) | 546 |


* NO HAY TRADUCCION DISPONIBLE EN EL MOMENTO DE LA IMPRESION

# INDICE


| Nombre | Página |
|---|---|
| VALVULA DE SOLENOIDE Y MONTAJE (GR (*WINCH FREESPOOL BRAKE RELEASE) | 541 |
| VALVULA DIVISORA DE FLUJO | 486 |
| VÁLVULA HIDRÁULICA DE 4 VÍAS (CONFIG. IND.) | 416 |
| VÁLVULA SELECTORA Y DE CONTROL DE PRESIÓN (GR) | 312 |
| VÁLVULA Y TUBOS DEL GARFIO (GR) | 449 |
| | 452 |
| | 455 |
| | 458 |
| | 461 |
| VÁLVULAS HIDRÁULICAS - GRUPO DE 2 | 464 |
| VENTANA (GR) | 676 |
| | 677 |
| | 678 |
| VENTILADOR DESCONGELADOR (GR) | 608 |
| VENTILADOR SOPLADOR DE LA CABINA (GR) | 583 |
| | 584 |
| | 585 |
| | 586 |
| VOLANTE - CAJA DE (GR) | 43 |
| VOLANTE DE DIRECCIÓN (GR) | 399 |
| | 401 |
| VOLANTE (GR) | 40 |


* NO HAY TRADUCCION DISPONIBLE EN EL MOMENTO DE LA IMPRESION

# ÍNDICE


| Designação | Página |
|---|---|

## A

ACIONADOR DO FREIO DE ESTACIONAMENTO . . . . . 367
ACUMULADOR - AR CONDICIONADO . . . . . 573
574
ACUMULADOR - FREIO . . . . . 362
363
364
365
366
ACUMULADOR D ÓLEO - PILOTO . . . . . 403
404
ADAPTADOR . . . . . 388
391
ADAPTADOR-TUBULAÇÃO DE ÓLEO . . . . . 66
ADESIVO-CONTROLE DO GUINCHO . . . . . 513
ALARME . . . . . 141
226
ALARME (PERCURSO) . . . . . 213
219
ALOJAMENTO - MOTOR . . . . . 559
ALTERNADOR DE CORRENTE . . . . . 142
144
AMORTECEDOR DE CHOQUE DA DIREÇÃO - GARRA . . . . . 561
AMORTECEDOR DE VIBRAÇÕES E POLIA . . . . 30
ARCO . . . . . 491
492
ARCO (GARRA) . . . . . 528
ARMAÇÃO DA GARRA . . . . . 528
ARMAÇÃO DE GUIA DO CABO . . . . . 526
ARMAÇÃO DIANTEIRA . . . . . 321
323
ARRANJO BÁSICO . . . . . 1
ARRANJO HIDRÁULICO INDUSTRIAL . . . . . 416
ARREFECEDOR - ÓLEO DO MOTOR . . . . . 79
ARREFECEDOR DO ÓLEO HIDRÁULICO . . . . . 405
ASSENTO . . . . . 632
633
ASSENTO COM SUSPENSÃO . . . . . 634
635
636
ASSENTO GIRATÓRIO . . . . . 640
AUXILIAR DE PARTIDA A ÉTER . . . . . 186

## B

BALANCIM . . . . . 56
57
BALANCIM (ENTRADA) . . . . . 63
BALANCIM (ESCAPE) . . . . . 63
BARRAS DE PROTEÇÃO DO CAPÔ . . . . . 361
BATERIA E CABOS / FIOS ELÉTRICOS . . . . . 146
149
BATERIA (12 VOLTS, ISENTA DE MANUTENÇÃO, ÚMIDA) . . . . . 146
149
BLOCO DE JUNÇÃO . . . . . 152
BLOCO DO MOTOR . . . . . 22
23
24
BOCAL DE ENCHIMENTO DE ÓLEO DO MOTOR . . . . . 68
BOCAL DE ENCHIMENTO DE ÓLEO DO TREM DE FORÇA . . . . . 263
BOMBA DA DIREÇÃO SECUNDÁRIA E MONTAGEM . . . . . 397
BOMBA DA TRANSMISSÃO . . . . . 293
BOMBA DE ÁGUA . . . . . 86
87
BOMBA DE DIREÇÃO SECUNDÁRIA E MOTOR . . . . . 396
BOMBA DE ENGRENAGENS . . . . . 439
441
BOMBA DE ESCORVA DO COMBUSTÍVEL E DO FILTRO PRIMÁRIO . . . . . 133
BOMBA DE INJEÇÃO DO COMBUSTÍVEL . . . . . 129
130
131
132
BOMBA DE ÓLEO - MOTOR . . . . . 77
78
BOMBA DE PISTÃO . . . . . 442
BOMBA DE TRANSFERÊNCIA DO COMBUSTÍVEL . . . . . 134
BOMBA HIDRÁULICA E MONTAGEM . . . . . 438
BOMBA HIDRÁULICA E MONTAGEM - UNIDADE INJETORA . . . . . 127
BORDA CORTANTE . . . . . 521
BRAÇO DO LIMPADOR . . . . . 682
BUJÃO DO BLOCO DO CILINDRO . . . . . 53
BUJÃO DO DRENO . . . . . 242
BUJÃO DO DRENO (CÁRTER DE ÓLEO DO MOTOR) . . . . . 31
BUJÃO DO DRENO (ECOLOGIA) . . . . . 262
BUJÃO DO MOTOR . . . . . 54
BUJÃO MAGNÉTICO (CÁRTER DE ÓLEO DO MOTOR) . . . . . 31

## C

CABEÇA - GARRA . . . . . 539
CABEÇOTE DO MOTOR . . . . . 26
27
28
29


* TRADUÇÃO NÃO DISPONÍVEL NO MOMENTO DA IMPRESSÃO

# ÍNDICE


| Designação | Página |
|---|---|
| CABEÇOTE-GARRA | 538 |
| CABINE - ESTRUTURA ROPS ABERTA | 588, 589 |
| CABINE - ESTRUTURA ROPS COBERTA | 587, 588 |
| CABOS/FIOS ELÉTRICOS - AQUECEDOR | 212 |
| CABOS/FIOS ELÉTRICOS - CABINE | 202 |
| CABOS/FIOS ELÉTRICOS - DIREÇÃO SECUNDÁRIA | 230 |
| CABOS/FIOS ELÉTRICOS - MÁQUINA | 213, 219, 226 |
| CABOS/FIOS ELÉTRICOS - MOTOR | 210 |
| CADEADO | 136 |
| CADEADO (COMPARTIMENTO PARA PUBLICAÇÕES) | 690 |
| CAIXA - EIXO FIXO | 280 |
| CAIXA - EIXO OSCILANTE | 282 |
| CAIXA - GUINCHO | 503 |
| CAIXA DIANTEIRA | 44 |
| CAIXA DO VOLANTE DO MOTOR | 43 |
| CAIXA E COMPONENTES - TRANSMISSÃO | 236, 242 |
| CAPÔ E PROTETOR | 352, 355 |
| CÁRTER DO ÓLEO DO MOTOR | 51 |
| CARTUCHO DO TURBOALIMENTADOR | 111 |
| CHAPA DO PISO | 319 |
| CHASSI | 1 |
| CHASSI DIANTEIRO | 326 |
| CHASSI TRASEIRO | 325, 328, 329, 330 |
| CHAVE (DESCONEXÃO DA BATERIA) | 194 |
| CHAVE GERAL | 194 |
| CHAVE GERAL (BATERIA) | 146, 149 |
| CHICOTE - CABINE (PRINCIPAL) | 202 |
| CHICOTE - CABOS ELÉTRICOS (PRESSÃO DO COMBUSTÍVEL) | 124 |
| CHICOTE - CABOS ELÉTRICOS (PRESSÃO DO COMBUSTÍVEL) | 122 |
| CHICOTE - ILUMINAÇÃO (HOLOFOTES DIANTEIROS DA CABINE) | 159 |
| CHICOTE - ILUMINAÇÃO (HOLOFOTES TRASEIROS DA CABINE) | 159 |
| CHICOTE - MOTOR | 213, 219, 226 |
| CHICOTE - MOTOR (INJEÇÃO DE COMBUSTÍVEL) | 210 |
| CHICOTE - MOTOR (MÓDULO DE CONTROLE ELETRÔNICO) | 210 |
| CHICOTE - TRANSMISSÃO | 213, 219 |
| CHICOTE - VÁLVULA (COMPRESSOR DE AR DO ASSENTO) | 637 |
| CHICOTE-DIREÇÃO (COLUNA, RODA) | 399, 401 |
| CHICOTE-DIREÇÃO (SECUNDÁRIO) | 230 |
| CILINDRO - PINÇA | 413 |
| CILINDRO DA DIREÇÃO | 385, 387 |
| CILINDRO DA GARRA | 411 |
| CILINDRO DA LANÇA | 410 |
| CILINDRO DE LEVANTAMENTO | 412 |
| CILINDRO DO ARCO | 406, 408 |
| CILINDRO DO FREIO | 516 |
| CINTO DE SEGURANÇA | 635, 636 |
| COLETOR - CONTROLE | 381, 437 |
| COLETOR - ÓLEO DO MOTOR | 76 |
| COLETOR DE ESCAPE | 106 |
| COLMÉIA - ARREFECEDOR DE ÓLEO HIDRÁULICO | 405 |
| COLMÉIA-ARREFECEDOR DE ÓLEO DO MOTOR | 79 |
| COLMÉIA-ARREFECEDOR DO ÓLEO DO TREM DE FORÇA | 88 |
| COLMEIA DO CONDENSADOR | 592 |
| COLMEIA-PÓS-ARREFECEDOR | 88 |
| COMANDO DO GUINCHO | 517 |
| COMANDO DO VENTILADOR | 33, 34 |
| COMANDO HIDRÁULICO | 416 |
| COMPRESSOR DE AR - ASSENTO | 575, 637 |
| COMPRESSOR DE REFRIGERANTE | 591 |
| COMPRESSOR DE REFRIGERANTE E MONTAGEM | 590 |
| CONDENSADOR DO REFRIGERANTE E MONTAGEM | 592 |
| CONDICIONADOR DE AR | 576, 577, 580 |
| CONTROLE - ALAVANCA | 595, 596 |
| CONTROLE - DIREÇÃO E LÂMINA EMPURRADORA DE TRONCOS | 383 |
| CONTROLE - NÃO PROGRAMADO (MÁQUINA) | 202 |
| CONTROLE-CABO | 593 |


* TRADUÇÃO NÃO DISPONÍVEL NO MOMENTO DA IMPRESSÃO

# ÍNDICE


| Designação | Página |
|---|---|
| | 594 |
| CONTROLE-CABO (GUINCHO) | 513 |
| CONTROLE DE DIREÇÃO | 601 |
| CONTROLE DO FREIO DE ESTACIONAMENTO | 374 |
| CONTROLE DO FREIO DE SERVIÇO | 376 |
| CONTROLE DO GUINCHO | 510 |
| | 511 |
| | 513 |
| CONTROLE DO PEDAL DO FREIO | 372 |
| CONTROLE ELETRÔNICO E MONTAGEM - MOTOR | 153 |
| CONTROLE HIDRÁULICO DA TRANSMISSÃO | 254 |
| CONTROLE HIDRÁULICO DE OPERAÇÃO PILOTO | 597 |
| | 599 |
| CONVERSOR DE POTÊNCIA (24-VOLTS A 12-VOLTS) | 154 |
| CONVERSOR DE TORQUE | 303 |
| CONVERSOR ELÉTRICO | 154 |
| CONVERSOR ELÉTRICO (24-VOLTS A 12-VOLTS) | 612 |
| CORREIA- SERPENTINA (COMPRESSOR DO CONDICIONADOR DE AR) | 590 |
| CORREIA- SERPENTINA (POLIA) | 55 |
| COTOVELO D'ÁGUA | 80 |
| COTOVELO DE ADMISSÃO DE AR | 100 |

## D

| | |
|---|---|
| DECALQUE | 661 |
| | 664 |
| | 667 |
| | 671 |
| | 684 |
| | 685 |
| DECALQUE - ADVERTÊNCIA (ACUMULADOR) | 403 |
| | 404 |
| DECALQUE - ADVERTÊNCIA (ALTA PRESSÃO, CONSULTAR OMM) | 362 |
| DECALQUE - ADVERTÊNCIA (ALTA PRESSÃO, CONSULTAR OMM, EUA) | 691 |
| DECALQUE - ADVERTÊNCIA (ALTA PRESSÃO, CONSULTAR OMM, INTERNACIONAL) | 695 |
| DECALQUE - ADVERTÊNCIA (CINTO DE SEGURANÇA) | 695 |
| DECALQUE - ADVERTÊNCIA (FLUIDO QUENTE SOB PRESSÃO, EUA) | 691 |
| DECALQUE - ADVERTÊNCIA (MOLA TENSORA) | 691 |
| | 693 |
| | 695 |
| DECALQUE - ADVERTÊNCIA (NÃO USE ÉTER) | 693 |
| DECALQUE - ADVERTÊNCIA (PARTIDA COM CABO AUXILIAR DE PARTIDA, CONSULTAR OMM, EUA) | 693 |
| DECALQUE - ADVERTÊNCIA (PERIGO DE ESMAGAMENTO, CONSULTAR MANUAL) | 691 |
| | 693 |
| DECALQUE - ADVERTÊNCIA (PERIGO DE ESMAGAMENTO, MANTENHA DISTÂNCIA) | 691 |
| DECALQUE - ADVERTÊNCIA (UNIVERSAL) | 691 |
| | 693 |
| DECALQUE - AVISO (CARRETEL LIVRE DO GUINCHO) | 567 |
| DECALQUE - AVISO (RÁDIO) | 612 |
| DECALQUE - CONTROLE | 597 |
| | 599 |
| DECALQUE - IDENTIFICAÇÃO (CAT, ARCO, LANÇA) | 684 |
| DECALQUE - IDENTIFICAÇÃO (CAT, ARCO, LANÇA) | 685 |
| DECALQUE - IDENTIFICAÇÃO (CATERPILLAR) | 685 |
| DECALQUE - IDENTIFICAÇÃO (CATERPILLAR, GRADE DO RADIADOR) | 685 |
| DECALQUE - IDENTIFICAÇÃO (CATERPILLAR, GRADE DO RADIADOR) | 684 |
| DECALQUE - IDENTIFICAÇÃO (PAINEL DE CIRCUITO) | 162 |
| DECALQUE - INFORMAÇÕES (CONDICIONADOR DE AR, AQUECEDOR) | 643 |
| | 648 |
| | 653 |
| | 657 |
| DECALQUE - INFORMAÇÕES (24 VOLTS) | 693 |
| DECALQUE - INSTRUÇÃO (AJUSTE DO ASSENTO) | 637 |
| DECALQUE - TIRA (CAPO, DIREITO) | 685 |
| DECALQUE - TIRA (CAPO, ESQUERDO) | 685 |
| DECALQUE (0,16 M CADA) | 678 |
| DEGRAU | 360 |
| DESCONGELADOR | 608 |
| DIFERENCIAL | 258 |
| | 260 |
| DIREÇÃO SECUNDÁRIA | 398 |
| DISJUNTOR AUTOMÁTICO DE CIRCUITO (105 AMPERES) (ALTERNADOR) | 162 |
| DISJUNTOR AUTOMÁTICO DE CIRCUITO (105 AMPERES) (PRINCIPAL) | 162 |


* TRADUÇÃO NÃO DISPONÍVEL NO MOMENTO DA IMPRESSÃO

# ÍNDICE


| Designação | Página |
|---|---|
| DISJUNTOR AUTOMÁTICO DE CIRCUITO (20-AMPERES) (CONTROLE DA MÁQUINA) | 162 |
| DISJUNTOR AUTOMÁTICO DE CIRCUITO (80 AMPERES) (AQUECEDOR DE ADMISSÃO DE AR) | 162 |
| DRENO - ECOLOGIA | 242 262 280 282 |
| DRENO - ÓLEO DO MOTOR | 31 32 |
| DUCTO DE AR (JOGO) | 577 580 |

## E

| | |
|---|---|
| EIXO-COMANDO DE VÁLVULA | 5 |
| EIXO DE TRANSMISSÃO | 294 295 296 |
| EIXO FIXO | 232 |
| EIXO OSCILANTE | 232 |
| ELEMENTO DO FILTRO DE AR (PRIMÁRIO) | 94 |
| ELEMENTO DO FILTRO DE AR (SECUNDÁRIO) | 94 |
| ELIMINAÇÃO DE VAPORES DO CÁRTER | 70 |
| ELO - TRAVA DA ARMAÇÃO DA DIREÇÃO | 359 |
| EMBREAGEM | 248 250 252 |
| EMBREAGEM - GUINCHO | 506 508 |
| EMBREAGEM E ENGRENAGEM - GUINCHO | 505 |
| EMISSOR - NÍVEL DO COMBUSTÍVEL | 139 |
| EMISSOR - POSIÇÃO | 169 |
| ENGATE - ARTICULAÇÃO | 350 |
| ENGRENAGEM-COROA E PINHÃO | 270 272 |
| ENGRENAGEM DE ENTRADA - GUINCHO | 530 |
| ENGRENAGEM DE SAÍDA DO GUINCHO | 532 |
| ENGRENAGENS DE DISTRIBUIÇÃO | 41 |
| ENGRENAGENS DE SAÍDA DE TRANSFERÊNCIA | 274 276 278 |
| ENTRADA - TRANSMISSÃO | 284 |
| ESPELHO RETROVISOR | 617 |
| ESTRUTURA ROPS | 624 |

## F

| | |
|---|---|
| FERRAGEM - CHASSI TRASEIRO | 349 |
| FIAÇÃO - AQUECEDOR E AR CONDICIONADO | 577 580 |
| FIAÇÃO - FERRAMENTA DE TRABALHO (GARRA, GUINCHO) | 213 219 226 |
| FIAÇÃO - FERRAMENTA DE TRABALHO (GUINCHO) | 513 |
| FIAÇÃO - PAINEL (DISJUNTOR) | 162 |
| FIAÇÃO-RÁDIO | 623 |
| FIAÇÃO-RÁDIO (ALTO-FALANTES) | 202 |
| FIAÇÃO-TANQUE HIDRÁULICO | 213 219 226 |
| FILTRO | 470 |
| FILTRO - COMBUSTÍVEL | 136 |
| FILTRO - COMBUSTÍVEL (EFICIÊNCIA AVANÇADA) (SECUNDÁRIO) | 122 124 |
| FILTRO - MAGNÉTICO | 243 |
| FILTRO - MAGNÉTICO (TRANSMISSÃO) | 237 |
| FILTRO - ÓLEO | 269 414 415 |
| FILTRO - ÓLEO DO MOTOR | 69 |
| FILTRO - ÓLEO (EFICIÊNCIA AVANÇADA) | 425 |
| FILTRO - ÓLEO (EFICIÊNCIA AVANÇADA) (HIDRÁULICO) | 414 415 |
| FILTRO - ÓLEO (EFICIÊNCIA AVANÇADA) (TREM DE FORÇA) | 269 |
| FILTRO - ÓLEO (HIDRÁULICO) | 425 |
| FILTRO - SEPARADOR DE ÁGUA E COMBUSTÍVEL (PRIMÁRIO) | 114 |
| FILTRO DE AR DE CABINA | 577 580 |
| FILTRO DE AR FRESCO | 577 580 |
| FILTRO DE COMBUSTÍVEL E SEPARADOR DE ÁGUA | 114 |
| FILTRO E TUBOS-TREM DE FORÇA | 265 267 |
| FIXADORES - AMORTECEDOR | 36 |
| FIXADORES - CABEÇOTE DO MOTOR | 35 |
| FIXADORES - CAIXA DIANTEIRA | 38 |
| FIXADORES - TAMPA DIANTEIRA | 37 |
| FIXADORES DE LEVANTAMENTO | 39 |
| FREIO DE ESTACIONAMENTO | 368 369 370 |
| FREIO DO GUINCHO | 498 500 |


* TRADUÇÃO NÃO DISPONÍVEL NO MOMENTO DA IMPRESSÃO

# ÍNDICE


| Designação | Página |
|---|---|
| | 569 |
| FREIOS E ENGRENAGENS PLANETARIAS | 233 |
| | 234 |

## G

| | |
|---|---|
| GARRA | 534 |
| GIRADOR HIDRÁULICO | 559 |
| GRUPO DE INSTALAÇÃO - MOTOR | 4 |
| GRUPO DE VÁLVULAS DE CONTROLE - CINCO | 468 |
| GRUPO DE VÁLVULAS DE CONTROLE - DUPLO | 464 |
| GRUPO DE VÁLVULAS DE CONTROLE - QUÁDRUPLO | 465 |
| | 467 |
| GRUPO ROTATIVO DA BOMBA | 444 |
| GUINCHO | 567 |
| | 568 |
| | 569 |
| | 572 |

## I

| | |
|---|---|
| INDICADOR - NÍVEL DO ÓLEO (VARETA) | 71 |
| INDICADOR - TROCA DO FILTRO DE AR | 103 |
| INDICADOR - VARETA DO NÍVEL DE ÓLEO | 280 |
| | 282 |
| INDICADOR DE NÍVEL DE ÓLEO (VARETA) | 263 |
| INJETOR DE COMBUSTÍVEL | 115 |
| | 116 |
| | 117 |
| | 130 |
| INSTALAÇÃO DO RÁDIO | 612 |
| INTERRUPTOR - BALANCIM | 199 |
| | 416 |
| INTERRUPTOR - BALANCIM (CONDICIONADOR DE AR, LIGAR-DESLIGAR) | 577 |
| | 675 |
| INTERRUPTOR - BALANCIM (DIREÇÃO SECUNDÁRIA) | 230 |
| INTERRUPTOR - BALANCIM (EMBREAGEM DE TRAVA DO CONVERSOR DE TORQUE) | 202 |
| INTERRUPTOR - BALANCIM (FARÓIS DIANTEIROS) | 202 |
| INTERRUPTOR - BALANCIM (FARÓIS TRASEIROS) | 202 |
| INTERRUPTOR - BALANCIM (FREIO DE ESTACIONAMENTO - LIGAR-DESLIGAR) | 202 |
| INTERRUPTOR - BALANCIM (LAVADOR DIANTEIRO, TRASEIRO) | 680 |
| INTERRUPTOR - BALANCIM (LIMPADOR DIANTEIRO) | 680 |
| INTERRUPTOR - BALANCIM (LIMPADOR TRASEIRO) | 680 |
| INTERRUPTOR - BALANCIM (PARADA A NÍVEL DO SOLO) | 213 |
| | 219 |
| | 226 |
| INTERRUPTOR - BALANCIM (SELEÇÃO DE MODO) | 202 |
| INTERRUPTOR - BALANCIM (TRAVA DO DIFERENCIAL) | 202 |
| INTERRUPTOR - BALANCIM (VELOCIDADE DO VENTILADOR) | 608 |
| INTERRUPTOR - BOTÃO (REDUÇÃO DE MARCHA) | 200 |
| INTERRUPTOR - BOTÃO (TRANSMISSÃO - MUDANÇA DE MARCHAS ACIMA) | 200 |
| INTERRUPTOR - MAGNÉTICO | 195 |
| | 196 |
| | 197 |
| INTERRUPTOR - PARTIDA (CHAVE) | 202 |
| INTERRUPTOR - PRESSÃO | 198 |
| INTERRUPTOR - PRESSÃO (CARGA DO ACUMULADOR DO FREIO) | 376 |
| INTERRUPTOR - PRESSÃO (CONDICIONADOR DE AR, LADO ALTO) | 614 |
| INTERRUPTOR - PRESSÃO (DERIVAÇÃO DO FILTRO DO ÓLEO) (TREM DE FORÇA) | 269 |
| INTERRUPTOR - PRESSÃO (ÓLEO DA DIREÇÃO SECUNDÁRIA) | 230 |
| INTERRUPTOR - PRESSÃO (ÓLEO DO FREIO DE ESTACIONAMENTO) | 374 |
| INTERRUPTOR - ROTATIVO (CONTROLE DO CONDICIONADOR DE AR) | 675 |
| INTERRUPTOR - ROTATIVO (VELOCIDADE DO VENTILADOR) | 577 |
| INTERRUPTOR - TEMPERATURA (AR CONDICIONADO) | 577 |
| INTERRUPTOR - TEMPERATURA (AR CONDICIONADO) | 580 |
| INTERRUPTOR - TRANSMISSÃO | 200 |
| | 399 |
| | 401 |
| INTERRUPTOR (ABRIR PINÇA DA GARRA) | 593 |
| | 594 |
| INTERRUPTOR (ACIONADOR DE AGARRAMENTO AUTOMÁTICO DA GARRA) | 594 |
| INTERRUPTOR (AGARRAMENTO AUTOMÁTICO DA GARRA, ACIONADOR) | 593 |
| INTERRUPTOR (FECHAR PINÇA DA GARRA) | 593 |
| | 594 |


* TRADUÇÃO NÃO DISPONÍVEL NO MOMENTO DA IMPRESSÃO

# ÍNDICE


| Designação | Página |
|---|---|
| INTERRUPTOR (ROTAÇÃO DA GARRA - SENTIDO ANTI-HORÁRIO) | 594 |
| INTERRUPTOR (ROTAÇÃO DA GARRA - SENTIDO HORÁRIO) | 594 |
| INTERRUPTOR (ROTAÇÃO DA GARRA, SENTIDO ANTI-HORÁRIO) | 593 |
| INTERRUPTOR (ROTAÇÃO DA GARRA, SENTIDO HORÁRIO) | 593 |

## J

| | |
|---|---|
| JOGO DE ALAVANCA (MOTOR DE PARTIDA) | 192 |
| JOGO DE ARRUELA (MOTOR DE PARTIDA) | 188 |
| JOGO DE BLOCO DESLIZADOR (ASSENTO DE SUSPENSÃO) | 635 |
| JOGO DE BUCHA (MOTOR DE PARTIDA) | 192 |
| JOGO DE ESCOVA (MOTOR DE PARTIDA) | 188<br>192 |
| JOGO DE FIXADORES (MOTOR DE PARTIDA) | 188 |
| JOGO DE ISOLADOR (MOTOR DE PARTIDA) | 192 |
| JOGO DE LONA DO FREIO | 368<br>369 |
| JOGO DE MANCAL (MOTOR DE PARTIDA) | 188 |
| JOGO DE PINO DO MOTOR DE PARTIDA | 188 |
| JOGO DE RECEPTÁCULO (12 PINOS) | 399 |
| JOGO DE RETENTOR DO MOTOR DE PARTIDA | 188 |
| JOGO DE RETENTOR (VALVULA DE ALIVIO) | 489 |
| JOGO DE RETENTOR (VÁLVULA DIVISORA DE FLUXO) | 486 |
| JUNTA (ALOJAMENTO DO REGULADOR DE TEMPERATURA) | 82<br>84 |
| JUNTA CORREDIÇA | 294<br>295 |
| JUNTA UNIVERSAL | 296 |
| JUNTA UNIVERSAL (BÁSICO) | 294<br>295 |

## K

| | |
|---|---|
| *KIT-SEAL | 382 |

## L

| | |
|---|---|
| LÂMINA DE EMPUXO | 496 |
| LÂMINA DO LIMPADOR DE PÁRA-BRISA | 682 |
| LÂMINA DO LIMPADOR DE PÁRA-BRISA (TRASEIRO) | 680 |
| LÂMINA EMPURRADORA DE TRONCOS | 497 |
| LÂMPADA - FAROL | 156 |
| LÂMPADA - HALOGÊNEO (24 VOLTS, 65 WATTS) | 156 |
| LÂMPADA - TETO (24 VOLTS) | 202 |
| LEVANTAMENTO DO MOTOR | 47 |
| LIMPADOR DO VIDRO | 682 |
| LIMPADOR E LAVADOR - JANELA | 680 |
| LISTRA - ESTRUTURA ROPS ABERTA | 661<br>664<br>667<br>671 |
| LISTRA DA CABINE | 643<br>648<br>653<br>657 |

## M

| | |
|---|---|
| MANCAL - PRINCIPAL (VIRABREQUIM) | 16<br>18<br>20 |
| MANCAL E RETENTOR - GARRA | 494<br>495 |
| MANÔMETRO (ÁGUA) | 688 |
| MECANISMO DAS VÁLVULAS | 61<br>62<br>63<br>65 |
| MÓDULO DO VISOR | 618 |
| MONTAGEM - ALTERNADOR | 48 |
| MONTAGEM - ARO | 291 |
| MONTAGEM - BANCO DE VÁLVULAS (GARRA) | 461 |
| MONTAGEM - ESTRUTURA ROPS | 619 |
| MONTAGEM - GUINCHO | 550<br>552<br>553 |
| MONTAGEM - MOTOR E TRANSMISSÃO | 49 |
| MOTOR - LIMPADOR DO VIDRO (24 VOLTS, 2 VELOCIDADES) (DIANTEIRO) | 682 |
| MOTOR - NÚCLEO | 3 |
| MOTOR - PISTÃO | 549 |
| MOTOR COMPLETO | 2 |
| MOTOR ELÉTRICO | 161 |
| MOTOR ELÉTRICO DE PARTIDA | 188<br>190<br>191<br>192 |

## P

| | |
|---|---|
| PAINEL - ACESSO | 620<br>621 |


* TRADUÇÃO NÃO DISPONÍVEL NO MOMENTO DA IMPRESSÃO

# ÍNDICE


| Designação | Página |
|---|---|
| PAINEL - DISJUNTOR ELÉTRICO AUTOMÁTICO | 162 |
| PÁRA-LAMA | 318 |
| PEDAL DO GOVERNADOR | 622 |
| PINÇA DA GARRA | 564<br>565 |
| PINO - GARRA | 554<br>556 |
| PISTÃO E BIELA | 52 |
| PLACA - NÚMERO DE SÉRIE (TRANSMISSÃO) | 236<br>242 |
| PLACA BASCULANTE | 442 |
| PLACA DE INSTRUÇÃO (BATERIA) | 146<br>149 |
| PLACA E DECALQUE | 691<br>693<br>695 |
| PLANETÁRIO - GUINCHO | 557 |
| PNEU E ARO | 300<br>301<br>302 |
| POLIA DO MOTOR | 55 |
| PORTA DA CABINE | 603<br>604<br>606 |
| PORTA DE ACESSO (DISJUNTORES, TOMADA DE 24 VOLTS) | 621 |
| PRÉ-PURIFICADOR | 109 |
| PROTETOR - ESTRUTURA ROPS ABERTA | 611 |
| PROTETOR - ESTRUTURA ROPS COBERTA | 610 |
| PROTETOR - GUINCHO | 535<br>536<br>537 |
| PROTETOR - RADIADOR | 347 |
| PROTETOR - TANQUE DE ÁGUA | 687 |
| PROTETOR - TANQUE DE COMBUSTÍVEL | 336 |
| PROTETOR - TUBO DE ESCAPE | 102 |
| PROTETOR - TUBOS | 338<br>339<br>341<br>343<br>345 |
| PROTETOR DA CABINE | 333<br>334 |
| PROTETOR DO CHASSI | 335 |
| PROTETOR INFERIOR | 331<br>332 |
| PUBLICAÇÃO | 690 |
| *PUMP GP-FILTER & FUEL TRANSFER | 128 |
| PURIFICADOR DE AR | 94<br>95 |

## R

| Designação | Página |
|---|---|
| RADIADOR E MONTAGEM | 90 |
| RADIADOR E PÓS-ARREFECEDOR | 88 |
| RÁDIO | 623 |
| RÁDIO (RÁDIO AM/FM TOCA CD) | 623 |
| RECEPTÁCULO-PARTIDA AUXILIAR | 165 |
| REGULADOR DE PRESSÃO (BOMBA DE TRANSFERÊNCIA DE COMBUSTÍVEL) | 134 |
| REGULADOR DE PRESSÃO DO COMBUSTÍVEL | 135 |
| REGULADOR DE TEMPERATURA DA ÁGUA (94 GRAUS C) (LÍQUIDO ARREFECEDOR) | 84 |
| REGULADOR DE TEMPERATURA DA ÁGUA (97 GRAUS C) (LÍQUIDO ARREFECEDOR) | 82 |
| REGULADOR DE VOLTAGEM (24 VOLTS) (ALTERNADOR) | 142 |
| RELÉ (CONJ) (24 VOLTS) (BOMBA DE TRANSFERÊNCIA DE COMBUSTÍVEL) | 202 |
| RELÉ (CONJ) (24 VOLTS) (CARRETEL DO GUINCHO ESTENDIDO) | 202 |
| RELÉ (CONJ) (24 VOLTS) (CARRETEL DO GUINCHO RETRAÍDO) | 202 |
| RELÉ (CONJ) (24 VOLTS) (CARRETEL LIVRE DO GUINCHO) | 202 |
| RELÉ (CONJ) (24 VOLTS) (DIREÇÃO SECUNDÁRIA INTERMEDIÁRIA) | 202 |
| RELÉ (CONJ) (24 VOLTS) (LUZES) | 202 |
| RELÉ (CONJ) (24 VOLTS) (RETORNO DA GARRA) | 202 |
| RELÉ (CONJ) (24 VOLTS) (RETORNO DA LÂMINA EMPURRADORA DE TRONCOS) | 202 |
| RELÉ (CONJ) (24 VOLTS) (RETORNO DO SOLENÓIDE DO GUINCHO) | 202 |
| RESISTOR - GRUPO | 166 |
| RESPIRO | 67 |
| RESPIRO (CÁRTER DO MOTOR) | 67 |
| RESPIRO (TANQUE DE COMBUSTÍVEL) | 136 |
| RESPIRO (TANQUE DO TREM DE FORÇA) | 265<br>267 |
| RETENTOR - CAIXA DO VOLANTE | 59 |
| RETENTOR - TAMPA DA VÁLVULA (MECANISMO DAS VÁLVULAS - TAMPA) | 14 |
| RETENTOR DO VIRABREQUIM | 58 |
| RETENTOR DUO-CONE | 280<br>282 |
| RODA-GUIA - CORREIA | 45 |
| ROLAMENTO E RETENTOR - ARCO | 493 |
| ROLDANAS DE GUIA DO GUINCHO | 522<br>524<br>525 |
| ROLETE SUPERIOR | 558 |


* TRADUÇÃO NÃO DISPONÍVEL NO MOMENTO DA IMPRESSÃO

# ÍNDICE


| Designação | Página |
|---|---|

## S

SENSOR - PRESSÃO . . . . . 170 171 172 173 174 175 176 177
SENSOR - PRESSÃO (ACIONAMENTO DA INJEÇÃO) . . . . . 167
SENSOR - PRESSÃO (ATMOSFÉRICA) . . . . . 167
SENSOR - PRESSÃO (ÓLEO DA DIREÇÃO SECUNDÁRIA) . . . . . 388 391
SENSOR - PRESSÃO (ÓLEO DA GARRA) . . . . . 419
SENSOR - PRESSÃO (ÓLEO DO MOTOR) . . . . . 167
SENSOR - PRESSÃO (REFORÇAR) . . . . . 167
SENSOR - TEMPERATURA . . . . . 180 181 182 183 184 185
SENSOR - TEMPERATURA (ÁGUA, LÍQUIDO ARREFECEDOR) . . . . . 167
SENSOR - TEMPERATURA (COLETOR DA ADMISSÃO DE AR) . . . . . 167
SENSOR - TEMPERATURA (COLETOR DA ADMISSÃO DE AR) . . . . . 182 183
SENSOR - TEMPERATURA (LÍQUIDO ARREFECEDOR, ÁGUA) . . . . . 184 185
SENSOR - TEMPERATURA (ÓLEO DA TRANSMISSÃO) . . . . . 317
SENSOR - TEMPERATURA (ÓLEO DO CONVERSOR DE TORQUE) . . . . . 213 219 226
SENSOR - TEMPERATURA (ÓLEO HIDRÁULICO) . . . . . 219
SENSOR DE TEMPERATURA (ÓLEO HIDRÁULICO) . . . . . 213 226
SENSOR DE VELOCIDADE . . . . . 178 179
SENSOR DE VELOCIDADE (REGULAGEM DO MOTOR) . . . . . 167
SENSOR DE VELOCIDADE (SAÍDA DA TRANSMISSÃO 1) . . . . . 254
SENSOR DE VELOCIDADE (SAÍDA DA TRANSMISSÃO 2) . . . . . 254
SENSOR DE VELOCIDADE (SAÍDA DO CONVERSOR DE TORQUE) . . . . . 254
SENSOR DO MOTOR . . . . . 167
SILENCIADOR . . . . . 107
SISTEMA DE ILUMINAÇÃO - FARÓIS . . . . . 157 158 159
SISTEMA ELÉTRICO . . . . . 155
SISTEMA ELETRÔNICO - MÁQUINA . . . . . 155
SOFTWARE - TREM DE FORÇA . . . . . 155
SOLENÓIDE (24 VOLTS) (MOTOR DE PARTIDA) . . . . . 188 192
*STRAP-CABLE . . . . . 614
SUPORTE - EIXO DIANTEIRO . . . . . 297
SUPORTE DO MOTOR . . . . . 60
SUPORTE DO RETENTOR . . . . . 6
SUPORTE-PLANETÁRIO . . . . . 501 502
SUSPENSÃO - ASSENTO . . . . . 637 639

## T

TAMBOR - GUINCHO . . . . . 519
TAMPA - ADMISSÃO DE AR . . . . . 96 97 98 99
TAMPA - BLOCO DO MOTOR . . . . . 7 9
TAMPA - BOCAL DE ENCHIMENTO (ÓLEO DO MOTOR) . . . . . 68
TAMPA - BOCAL DE ENCHIMENTO (TANQUE DE COMBUSTÍVEL) . . . . . 139
TAMPA - BOCAL DE ENCHIMENTO (TANQUE HIDRÁULICO) . . . . . 447
TAMPA - CAIXA DIANTEIRA . . . . . 10 11
TAMPA - EMBARQUE . . . . . 256
TAMPA - MECANISMO DAS VÁLVULAS . . . . . 12 13 14
TAMPA - PURIFICADOR DE AR . . . . . 95
TAMPA - RADIADOR . . . . . 88
TAMPA (ENCHIMENTO DO LÍQUIDO ARREFECEDOR) . . . . . 90
TAMPA (ENCHIMENTO DO TANQUE DO LAVADOR DE VIDROS) . . . . . 642
TAMPA (EXCESSO DE FLUXO DO LÍQUIDO ARREFECEDOR) . . . . . 90
TAMPA-GUINCHO . . . . . 515
TAMPÃO . . . . . 503


* TRADUÇÃO NÃO DISPONÍVEL NO MOMENTO DA IMPRESSÃO

# ÍNDICE


| Designação | Página |
|---|---|
| TAMPÃO (DRENO) | 566 |
| TANQUE - LAVADOR DE JANELA | 642 |
| TANQUE DE ÁGUA | 696 |
| | 697 |
| TANQUE DE COMBUSTÍVEL | 136 |
| | 139 |
| TANQUE DE ÓLEO HIDRÁULICO E MONTAGEM | 445 |
| TANQUE HIDRÁULICO | 447 |
| TAPETE | 319 |
| TELA DA CABINE | 627 |
| | 629 |
| TELA DE SUCÇÃO | 237 |
| | 243 |
| TELA DE SUCÇÃO (TANQUE HIDRÁULICO) | 447 |
| TELA FILTRANTE | 437 |
| | 447 |
| TELA FILTRANTE-ÓLEO (TANQUE HIDRÁULICO) | 447 |
| TRANSMISSÃO | 305 |
| | 306 |
| TRAVA-CILINDRO (ACESSO À PORTA) | 621 |
| TREM DE FORÇA | 292 |
| TUBOS - ÁGUA | 82 |
| | 84 |
| TUBOS - AR CONDICIONADO | 614 |
| TUBOS - ARREFECEDOR DO CONVERSOR DE TORQUE | 287 |
| | 289 |
| TUBOS - CIRCUITO PILOTO | 429 |
| | 432 |
| TUBOS - COMBUSTÍVEL | 118 |
| | 120 |
| TUBOS - DIREÇÃO | 394 |
| TUBOS - DIREÇÃO SECUNDÁRIA | 388 |
| | 391 |
| TUBOS - FILTRO DO COMBUSTÍVEL | 122 |
| | 124 |
| TUBOS - FREIO DE SERVIÇO | 379 |
| TUBOS - GARRA | 419 |
| TUBOS - GIRADOR | 435 |
| TUBOS - GRAXA | 358 |
| TUBOS - GUINCHO | 540 |
| | 541 |
| | 544 |
| | 546 |
| TUBOS - INJETOR DA BOMBA HIDRÁULICA | 126 |
| TUBOS - LÂMINA DE EMPUXO | 417 |
| TUBOS - ÓLEO DO MOTOR | 72 |
| TUBOS - ÓLEO DO TURBOALIMENTADOR | 73 |
| | 74 |
| TUBOS - ÓLEO HIDRÁULICO | 425 |
| TUBOS - TRAVA DO DIFERENCIAL | 285 |
| TUBULAÇÕES - AR DO PÓS-ARREFECEDOR | 104 |
| TUBULAÇÕES - AR DO TURBOALIMENTADOR | 105 |
| TUBULAÇÕES - AR PRESSURIZADO | 688 |
| TUBULAÇÕES-CABEÇOTE DA GARRA | 422 |
| TUCHO DA VÁLVULA | 46 |
| TURBOALIMENTADOR | 110 |
| | 111 |
| | 112 |
| | 113 |


## V


| | |
|---|---|
| VÁLVULA - AMOSTRA DE FLUIDOS (ÓLEO DO TREM DE FORÇA) | 267 |
| VÁLVULA - AMOSTRA DE FLUIDOS (ÓLEO HIDRÁULICO) | 425 |
| VALVULA - PARTIDA A ETER | 201 |
| VÁLVULA-CONTROLE DO A/C E AQUECEDOR | 675 |
| VÁLVULA DE ALÍVIO | 310 |
| | 489 |
| | 505 |
| VÁLVULA DE ALÍVIO (COMPRESSOR DO REFRIGERANTE) | 591 |
| VÁLVULA DE ALÍVIO (DIREÇÃO SECUNDÁRIA) | 487 |
| VÁLVULA DE ALÍVIO (TUBULAÇÃO) | 474 |
| | 480 |
| VÁLVULA DE ALÍVIO (TUBULAÇÃO) (CILINDRO DE DIREÇÃO - DUAS DIREÇÕES) | 470 |
| VÁLVULA DE ALÍVIO (TUBULAÇÃO) (PINÇA DA GARRA-ABRIR, FECHAR) | 476 |
| VÁLVULA DE ALÍVIO (TUBULAÇÃO) (TUBULAÇÃO, GUINCHO) | 484 |
| VÁLVULA DE CARGA DO ACUMULADOR (FREIO) | 376 |
| VÁLVULA DE CONTROLE | 470 |
| | 472 |
| | 474 |
| | 476 |
| | 478 |
| | 480 |
| | 482 |
| | 484 |
| VÁLVULA DE CONTROLE - FLUXO | 308 |
| VÁLVULA DE CONTROLE - TRANSMISSÃO | 315 |
| | 317 |
| VÁLVULA DE CONTROLE DA BOMBA | 488 |
| VÁLVULA DE CONTROLE DOS FREIOS | 382 |
| VÁLVULA DE DESPEJO | 307 |
| VÁLVULA DE DESPEJO (TRANSMISSÃO) | 315 |


* TRADUÇÃO NÃO DISPONÍVEL NO MOMENTO DA IMPRESSÃO

# ÍNDICE


| Designação | Página |
|---|---|
| VÁLVULA DE DRENAGEM | 566 |
| VÁLVULA DE MODULAÇÃO | 309 |
| VÁLVULA DE PRIORIDADE | 487 |
| VÁLVULA DE RETENÇÃO | 469 |
| | 474 |
| | 480 |
| VÁLVULA DE RETENÇÃO (CILINDRO ENROLADOR PRIMÁRIO) | 470 |
| | 472 |
| | 476 |
| | 478 |
| | 482 |
| | 484 |
| VÁLVULA DE RETENÇÃO (DERIVAÇÃO DO ARREFECEDOR DE ÓLEO HIDRÁULICO) | 405 |
| VÁLVULA DE RETENÇÃO (LEVANTAMENTO DA LÂMINA) | 478 |
| VÁLVULA DE RETENÇÃO (PILOTO) | 425 |
| VÁLVULA DE RETENÇÃO (PILOTO) | 425 |
| VÁLVULA DE RETENÇÃO (TUBULAÇÃO PRINCIPAL DA BOMBA) | 388 |
| | 391 |
| VÁLVULA DE TIRAR AMOSTRAS DO LÍQUIDO ARREFECEDOR | 93 |
| VÁLVULA DESVIADORA | 486 |
| VÁLVULA DIVISORA DE FLUXO | 486 |
| VALVULA DO SOLENOIDE E MONTAGEM (DESENGATE DO FREIO DO CARRETEL LIVRE DO GUINCHO) | 541 |
| | 546 |
| VÁLVULA E TUBOS - GARRA | 449 |
| | 452 |
| | 455 |
| | 458 |
| | 461 |
| VÁLVULA SELETORA E CONTROLE DE PRESSÃO | 312 |
| VÁLVULA SOLENÓIDE | 314 |
| | 490 |
| VÁLVULA SOLENÓIDE (ABAIXAR LÂMINA) | 478 |
| VÁLVULA SOLENÓIDE (CONTROLE DO FREIO DE ESTACIONAMENTO) | 381 |
| VÁLVULA SOLENÓIDE (DESENGATE DO FREIO DO CARRETEL LIVRE DO GUINCHO) | 541 |
| | 546 |
| VÁLVULA SOLENÓIDE (LEVANTAMENTO DA LÂMINA) | 478 |
| VÁLVULA SOLENÓIDE (TRAVA DO DIFERENCIAL) | 437 |
| VÁLVULA SOLENÓIDE (24 VOLTS CC) (EMBREAGEM DA TRANSMISSÃO) | 312 |
| VENTILADOR DA CABINE | 583 |
| | 584 |
| | 585 |
| | 586 |
| VENTILADOR DE SOPRO | 81 |
| VIDRO | 676 |
| | 677 |
| | 678 |
| VIGIA | 447 |
| | 503 |
| VIGIA (GUINCHO) | 569 |
| VIRABREQUIM | 16 |
| | 18 |
| | 20 |
| VOLANTE | 399 |
| | 401 |
| VOLANTE DO MOTOR | 40 |


* TRADUÇÃO NÃO DISPONÍVEL NO MOMENTO DA IMPRESSÃO

# STICHWORTVERZEICHNIS


| Bezeichnung | Seite |
|---|---|
| **A** | |
| ABLASS (UMWELTFREUNDLICH) | 242, 262 |
| ABLASS (UMWELTFREUNDLICH) | 280, 282 |
| ABLASSSTOPFEN | 242 |
| ABLASSSTOPFEN (MOTORÖLWANNE) | 31 |
| ABLASSSTOPFEN (UMWELTFREUNDLICH) | 262 |
| ABLASSVENTIL | 566 |
| ADAPTER - ÖLLEITUNG | 66 |
| ALARM | 226 |
| ALARM (FAHRREGELUNG) | 213, 219 |
| ANSAUGSIEB | 237, 243 |
| ANSAUGSIEB (HYDRAULIKTANK) | 447 |
| ANSCHLUSS | 388, 391 |
| ANTRIEBSWELLE | 294, 295, 296 |
| ANTRIEBSWELLEN-KEILVERZAHNUNG | 294, 295 |
| ANZEIGEMODUL | 618 |
| ARBEITSLEUCHTEN | 156, 157, 158, 159 |
| ÄTHERSTARTHILFE | 186 |
| ÄTHERSTARTVENTIL | 201 |
| AUFKLEBER | 661, 664, 667, 671, 684, 685 |
| AUFKLEBER - INFORMATION (KLIMAANLAGE, HEIZUNG) | 643, 648, 653, 657 |
| AUFKLEBER - INFORMATION (24 V) | 693 |
| AUFKLEBER (*HOOD, LH) | 685 |
| AUFKLEBER (*HOOD, RH) | 685 |
| AUFKLEBER (KONTROLLE) | 597, 599 |
| AUFKLEBER (RADIO) | 612 |
| AUFKLEBER (WINDENFREILAUF) | 567 |
| AUFKLEBER (*0.16-M EACH) | 678 |
| AUSLEGERLAGER UND DICHTUNG | 493 |
| AUSLEGERZYLINDER | 410 |
| AUSPUFFKRÜMMER | 106 |
| AUSPUFFVERKLEIDUNG | 102 |
| **B** | |
| BATTERIE UND VERDRAHTUNG | 146, 149 |
| BATTERIE (12 V, WARTUNGSFREI, NASS) | 146, 149 |
| BEFESTIGUNGSTEILE (STARTERMOTOR) | 188 |
| BEILAGSCHEIBEN-SATZ (STARTERMOTOR) | 188 |
| BELEUCHTUNGSKABELSTRANG (ARBEITSSCHEINWERFER - FAHRERHAUS, HINTEN) | 159 |
| BELEUCHTUNGSKABELSTRANG (ARBEITSSCHEINWERFER, FAHRERHAUS, VORN) | 159 |
| BETRIEBSBREMSLEITUNGEN | 379 |
| BODENBLECH | 319 |
| BREMSBELAG-EINBAUSATZ | 368, 369 |
| BREMSDRUCKSPEICHER | 362, 363, 364, 365, 366 |
| BREMSE UND PLANETENGETRIEBE | 233, 234 |
| BREMSGESTÄNGE | 376 |
| BREMSSTEUERVENTIL | 382 |
| BREMSZYLINDER | 516 |
| BUCHSEN-EINBAUSATZ (STARTERMOTOR) | 192 |
| BÜRSTEN-EINBAUSATZ (STARTERMOTOR) | 188, 192 |
| **D** | |
| DÄMPFER-HALTETEILE | 36 |
| DÄMPFER UND RIEMENSCHEIBE | 30 |
| DICHTUNG (TEMPERATURREGELGEHÄUSE) | 82, 84 |
| DICHTUNGSSATZ (AUSGELEICHSVENTIL) | 489 |
| DICHTUNGSSATZ (STROMTEILERVENTIL) | 486 |
| DICHTUNGSTRÄGER | 6 |
| DIFFERENTIAL | 258, 260 |
| DIFFERENTIALSPERRENLEITUNGEN | 285 |
| DOKUMENTATION | 690 |
| DREHKNOPFSCHALTER (GEBLÄSEGESCHWINDIGKEIT) | 577 |
| DREHKNOPFSCHALTER (KLIMAANLAGENSTEUERUNG) | 675 |
| DREHMOMENTWANDLER | 303 |
| DREHMOMENTWANDLER-KÜHLERLEITUNGEN | 287, 289 |
| DREHSTROMGENERATOR | 142 |


* ÜBERSETZUNG ZUM ZEITPUNKT DER DRUCKLEGUNG NICHT VORHANDEN

# STICHWORTVERZEICHNIS


| Bezeichnung | Seite |
|---|---|
| | 144 |
| DREHSTROMGENERATOR - BEFESTIGUNG | 48 |
| DREHVORRICHTUNG, HYDRAULISCH | 559 |
| DREHVORRICHTUNGSLEITUNGEN | 435 |
| DREHZAHLSENSOR | 178 |
| | 179 |
| DREHZAHLSENSOR (DREHMOMENTWANDLERAUSGANG) | 254 |
| DREHZAHLSENSOR (GETRIEBEAUSGANG 1) | 254 |
| DREHZAHLSENSOR (GETRIEBEAUSGANG 2) | 254 |
| DREHZAHLSENSOR (MOTOREINSTELLUNG) | 167 |
| DRUCKANZEIGE (WASSER) | 688 |
| DRUCKBEGRENZUNGSVENTIL | 505 |
| DRUCKKNOPFSCHALTER (GETRIEBE-HERUNTERSCHALTUNG) | 200 |
| DRUCKKNOPFSCHALTER (GETRIEBE HOCHSCHALTEN) | 200 |
| DRUCKLÜFTER | 81 |
| DRUCKREGLER (KRAFTSTOFFFÖRDERPUMPE) | 134 |
| DRUCKSCHALTER | 198 |
| DRUCKSCHALTER (BREMSDRUCKSPEICHER - DRUCKBEAUFSCHLAGUNG) | 376 |
| DRUCKSCHALTER (FESTSTELLBREMSÖL) | 374 |
| DRUCKSCHALTER (KLIMAANLAGE, HOHE SEITE) | 614 |
| DRUCKSCHALTER (NOTLENKUNGSÖL) | 230 |
| DRUCKSCHALTER (ÖLFILTERUMGEHUNG) (KRAFTÜBERTRAGUNG) | 269 |
| DRUCKSENSOR | 170 |
| | 171 |
| | 172 |
| | 173 |
| | 174 |
| | 175 |
| | 176 |
| | 177 |
| DRUCKSENSOR (ATMOSPHÄRISCH) | 167 |
| DRUCKSENSOR (EINSPRITZBETÄTIGUNG) | 167 |
| DRUCKSENSOR (GREIFERÖL) | 419 |
| DRUCKSENSOR (LADUNG) | 167 |
| DRUCKSENSOR (MOTORÖL) | 167 |
| DRUCKSENSOR (NOTLENKUNGSÖL) | 388 |
| | 391 |
| DRUCKSPEICHERLADEVENTIL (BREMSE) | 376 |
| DRUCKWASSERLEITUNGN | 688 |


## E


| Bezeichnung | Seite |
|---|---|
| EINFÜLLKAPPE (KRAFTSTOFFTANK) | 139 |
| EINFÜLLKAPPE (MOTORÖL) | 68 |
| EINFÜLLSTUTZENKAPPE (HYDRAULIKTANK) | 447 |
| EINSPRITZLEITUNGEN - HYDRAULIKPUMPE | 126 |
| ELEKTR. ANLAGE | 155 |
| ELEKTR. UMFORMER | 154 |
| ELEKTR. UMFORMER (24V - 24V) | 154 |
| | 612 |
| ELEKTRONIK - MASCHINE | 155 |
| ENTDUNSTER | 70 |
| ENTFROSTERGEBLÄSE | 608 |
| ENTLÜFTER | 67 |
| ENTLÜFTER (KRAFTSTOFFTANK) | 136 |
| ENTLÜFTER (KRAFTÜBERTRAGUNGSTANK) | 265 |
| | 267 |
| ENTLÜFTER (KURBELGEHÄUSE) | 67 |


## F


| Bezeichnung | Seite |
|---|---|
| FAHRERHAUS - HALTETEILE | 643 |
| | 648 |
| | 653 |
| | 657 |
| FAHRERHAUS - OFFEN MIT ÜBERROLLSCHUTZ | 588 |
| | 589 |
| FAHRERHAUS-DRUCKLÜFTER | 583 |
| | 584 |
| | 585 |
| | 586 |
| FAHRERHAUS-KABELBAUM (HAUPT) | 202 |
| FAHRERHAUS MIT ÜBERROLLSCHUTZ | 587 |
| | 588 |
| FAHRERHAUSBELEUCHTUNG (24 V) | 202 |
| FAHRERHAUSFENSTER | 676 |
| | 677 |
| | 678 |
| FAHRERHAUSLUFTFILTER | 577 |
| | 580 |
| FAHRERHAUSSIEB | 627 |
| | 629 |
| FAHRERHAUSTÜR | 603 |
| | 604 |
| | 606 |
| FAHRERHAUSVERDRAHTUNG | 202 |
| FAHRERHAUSVERKLEIDUNG | 333 |
| | 334 |
| FAHRERSITZ | 632 |
| | 633 |
| FAHRERSITZFEDERUNG | 637 |
| | 639 |


* ÜBERSETZUNG ZUM ZEITPUNKT DER DRUCKLEGUNG NICHT VORHANDEN

# STICHWORTVERZEICHNIS


| Bezeichnung | Seite |
|---|---|
| FAHRWERK | 1 |
| FELGENAUFHÄNGUNG | 291 |
| FESTSTELLBREMSBETÄTIGUNG | 367 |
| FESTSTELLBREMSE | 368 |
| | 369 |
| | 370 |
| FESTSTELLBREMSGESTÄNGE | 374 |
| *FILM-WINCH CONTROL | 513 |
| FILTER | 470 |
| FILTER U. LEITUNGEN - KRAFTÜBERTRAGUNG | 265 |
| | 267 |
| FILTERSIEB | 447 |
| FRISCHLUFTFILTER | 577 |
| | 580 |
| FUSSBREMSGESTÄNGE | 372 |
| FUSSMATTE | 319 |

## G

| | |
|---|---|
| GASPEDAL | 622 |
| GEHÄUSE - PENDELACHSE | 282 |
| GEHÄUSE - STARRACHSE | 280 |
| GETRIEBE | 305 |
| | 306 |
| GETRIEBE-KABELBAUM | 213 |
| | 219 |
| GETRIEBEANTRIEBSWELLE | 284 |
| GETRIEBEGEHÄUSE UND TEILE | 236 |
| | 242 |
| GETRIEBEHYDRAULIK | 254 |
| GETRIEBEÖLFÜLLSTUTZEN | 263 |
| GETRIEBEPUMPE | 293 |
| GETRIEBESCHALTER | 200 |
| | 399 |
| | 401 |
| GETRIEBESTEUERVENTIL | 315 |
| | 317 |
| GLEITRINGDICHTUNG | 280 |
| | 282 |
| GLEITSCHIENENBLOCK-EINBAUSATZ (SCHWINGSITZ) | 635 |
| GREIFER | 534 |
| GREIFERARM | 564 |
| | 565 |
| GREIFERBOLZEN | 554 |
| | 556 |
| GREIFERDÄMPFER | 561 |
| GREIFERKOPF | 538 |
| | 539 |
| GREIFERKOPFLEITUNGEN | 422 |
| GREIFERLAGER U. DICHTUNG | 494 |
| | 495 |
| GREIFERLEITUNGEN | 419 |
| GREIFERRAHMEN | 491 |
| | 492 |
| | 528 |
| GREIFERRAHMEN (GREIFER) | 528 |
| GREIFERVENTIL U. -LEITUNGEN | 449 |
| | 452 |
| | 455 |
| | 458 |
| | 461 |
| GREIFERZYLINDER | 411 |
| GRUNDAUSFÜHRUNG | 1 |

## H

| | |
|---|---|
| HALOGENSCHINWERFER (24V)(65W) | 156 |
| HARDWARE, HINTERRAHMEN | 349 |
| HAUPTLAGER (KURBELWELLE) | 16 |
| | 18 |
| | 20 |
| HEBEL-EINBAUSATZ (STARTERMOTOR) | 192 |
| HEIZUNGSVERDRAHTUNG | 212 |
| HINTERRAHMEN | 325 |
| HUBBOGENZYLINDER | 406 |
| | 408 |
| HUBÖSEN-HALTETEILE | 39 |
| HUBVENTIL | 46 |
| HUBZYLINDER | 412 |
| HYDRAULIKBEDIENUNG (MIT VORSTEUERUNG) | 597 |
| | 599 |
| HYDRAULIKLEITUNGEN | 425 |
| HYDRAULIKÖLKÜHLER | 405 |
| HYDRAULIKÖLKÜHLERBLOCK | 405 |
| HYDRAULIKPUMPE UND BEFESTIGUNGSTEILE | 438 |
| HYDRAULIKSYSTEM | 416 |
| HYDRAULIKTANK | 447 |
| HYDRAULIKTANK-KABELSTRANG | 213 |
| | 219 |
| | 226 |
| HYDRAULIKTANK UND BEFESTIGUNGSTEILE | 445 |

## I

| | |
|---|---|
| IDENTIFIZIERUNGS-AUFKLEBER (CAT) | 685 |
| IDENTIFIZIERUNGS-AUFKLEBER (CAT, BOGEN, AUSLEGER) | 685 |
| IDENTIFIZIERUNGS-AUFKLEBER (CAT, BOGEN, AUSLEGER) | 684 |
| IDENTIFIZIERUNGS-AUFKLEBER (*CATERPILLAR, RADIATOR GRILL) | 684 |


* ÜBERSETZUNG ZUM ZEITPUNKT DER DRUCKLEGUNG NICHT VORHANDEN

# STICHWORTVERZEICHNIS


| Bezeichnung | Seite |
|---|---|
| | 685 |
| IDENTIFIZIERUNGS-AUFKLEBER (SCHUTZ-SCHALTERTAFEL) | 162 |
| INDUSTRIEHYDRAULIK | 416 |
| INSTRUKTIONS-AUFKLEBER (FÜR SITZVERSTELLUNG) | 637 |
| INSTRUKTONSSCHILD (BATTERIE) | 146 |
| | 149 |
| INSTRUMENTENTAFEL-KABELSTRANG (SCHUTZSCHALTER) | 162 |
| ISOLATOR-EINBAUSATZ (STARTERMOTOR) | 192 |

## J

| | |
|---|---|
| JOYSTICK -STEUERUNG | 595 |
| | 596 |

## K

| | |
|---|---|
| KABELBINDER | 614 |
| KABELSTRANG - ARBEITSGERÄT (GREIFER, WINDE) | 213 |
| | 219 |
| | 226 |
| KABELSTRANG - ARBEITSGERÄT (WINDE) | 513 |
| KABELSTRANG - HEIZUNG U. KLIMAANLAGE | 577 |
| | 580 |
| KABELSTRANG - LENKUNG (HILFSELEMENT) | 230 |
| KABELSTRANG - LENKUNG (SÄULE, RAD) | 399 |
| | 401 |
| KÄLTEMITTELKOMPRESSOR | 591 |
| KÄLTEMITTELKOMPRESSOR U. BEFESTIGUNG | 590 |
| KÄLTEMITTELKONDENSATOR U. BEFESTIGUNGSTEILE | 592 |
| KAPPE (KÜHLMITTEL FÜLLEN) | 90 |
| KAPPE (KÜHLMITTEL ÜBERFLUSS) | 90 |
| KAPPE (SCHEIBENWASCHMITTELBEHÄLTER FÜLLEN) | 642 |
| KIPPSCHALTER | 199 |
| | 416 |
| KIPPSCHALTER (ABSTELLUNG AUF STANDEBENE) | 219 |
| | 226 |
| KIPPSCHALTER (ABSTELLUNG AUF STANDEBENE) | 213 |
| KIPPSCHALTER (BETRIEBSART WÄHLEN) | 202 |
| KIPPSCHALTER (DIFFERENTIALSPERRE) | 202 |
| KIPPSCHALTER (DREHMOMENTWANDLER-ÜBERBRÜCKUNGSKUPPLUNG) | 202 |
| KIPPSCHALTER (FESTSTELLBREMSE EIN/AUS) | 202 |
| KIPPSCHALTER (GEBLÄSEGESCHWINDIGKEIT) | 608 |
| KIPPSCHALTER (HINTERE ARBEITSLEUCHTEN) | 202 |
| KIPPSCHALTER (HINTERER SCHEIBENWISCHER) | 680 |
| KIPPSCHALTER (KLIMAANLAGE EIN/AUS) | 577 |
| | 675 |
| KIPPSCHALTER (NOTLENKUNG) | 230 |
| KIPPSCHALTER (VORDERE ARBEITSLEUCHTEN) | 202 |
| KIPPSCHALTER (VORDERER, HINTERER WASCHER) | 680 |
| KIPPSCHALTER (VORDERER SCHEIBENWISCHER) | 680 |
| KIPPVENTIL | 307 |
| KIPPVENTIL (GETRIEBE) | 315 |
| *KIT-SEAL | 382 |
| KLEMMLEISTE | 152 |
| KLIMAANLAGE | 576 |
| | 577 |
| | 580 |
| KLIMAANLAGENDRUCKSPEICHER | 573 |
| | 574 |
| KLIMAANLAGENLEITUNGEN | 614 |
| KNICKGELENK-ANHÄNGUNG | 350 |
| KNICKGELENKSPERRE | 359 |
| KOLBENMOTOR | 549 |
| KOLBENPUMPE | 442 |
| KOLBENPUMPENUMLAUFSATZ | 444 |
| KONDENSATORBLOCK | 592 |
| KRAFTSTOFFDRUCKREGLER | 135 |
| KRAFTSTOFFEINSPRITZDÜSE | 115 |
| | 116 |
| | 117 |
| | 130 |
| KRAFTSTOFFEINSPRITZPUMPE | 129 |
| | 130 |
| | 131 |
| | 132 |
| KRAFTSTOFFENTLÜFTUNGSPUMPE UND -HAUPTFILTER | 133 |
| KRAFTSTOFFILTER (HOCHLEISTUNG) (AUSFALLSCHUTZ) | 122 |
| | 124 |
| KRAFTSTOFFILTERLEITUNGEN | 122 |
| | 124 |
| KRAFTSTOFFLEITUNGEN | 118 |
| | 120 |
| KRAFTSTOFFÖRDERPUMPE | 134 |
| KRAFTSTOFFSIEB | 136 |


* ÜBERSETZUNG ZUM ZEITPUNKT DER DRUCKLEGUNG NICHT VORHANDEN

# STICHWORTVERZEICHNIS


| Bezeichnung | Seite |
|---|---|
| KRAFTSTOFFSTANDGEBER | 139 |
| KRAFTSTOFFTANK | 136 |
| | 139 |
| KRAFTSTOFFTANKVERKLEIDUNG | 336 |
| KRAFTÜBERTRAGUNG | 292 |
| KRAFTÜBERTRAGUNGSÖLKÜHLERBLOCK | 88 |
| KREUZGELENK | 296 |
| KREUZGELENK (*BASIC) | 294 |
| | 295 |
| KÜHLER U. BEFESTIGUNG | 90 |
| KÜHLER U. LADELUFTKÜHLER | 88 |
| KÜHLERKAPPE | 88 |
| KÜHLERSCHUTZ | 347 |
| KÜHLMITTELPROBEENTNAHMEVENTIL | 93 |
| KÜHLWASSERLEITUNGEN | 82 |
| | 84 |
| KÜHLWASSERPUMPE | 86 |
| | 87 |
| KUPPLUNG | 248 |
| | 250 |
| | 252 |
| KUPPLUNG U. ANTRIEB - WINDE | 505 |
| KURBELWELLE | 16 |
| | 18 |
| | 20 |
| KURBELWELLENDICHTUNG | 58 |

## L

| | |
|---|---|
| LADELUFTKÜHLERBLOCK | 88 |
| LADELUFTKÜHLERLEITUNGEN | 104 |
| LAGERSATZ (STARTERMOTOR) | 188 |
| LEITRAD - RIEMEN | 45 |
| LEITUNGSVERKLEIDUNG | 338 |
| | 339 |
| | 341 |
| | 343 |
| | 345 |
| LENK- U. AUFSCHIEBERSTEUERUNG | 383 |
| LENKBETÄTIGUNG | 601 |
| LENKÖLLEITUNGEN | 394 |
| LENKRAD | 399 |
| | 401 |
| LENKZYLINDER | 385 |
| | 387 |
| LUFTEINLASSBOGEN | 100 |
| LUFTEINLASSDECKEL | 96 |
| | 97 |
| | 98 |
| | 99 |
| LÜFTERANTRIEB | 33 |
| | 34 |
| LUFTFILTER (HAUPTELEMENT) | 94 |
| LUFTFILTER (HILFSELEMENT) | 94 |
| LUFTFILTERWARTUNGSANZEIGE | 103 |
| LUFTKANAL (SATZ) | 577 |
| | 580 |
| LUFTKOMPRESSORSITZ | 575 |
| | 637 |
| LUFTREINIGER | 94 |
| | 95 |
| LUFTREINIGERKAPPE | 95 |

## M

| | |
|---|---|
| MAGNETSCHALTER | 195 |
| | 196 |
| | 197 |
| MAGNETSIEB | 243 |
| MAGNETSIEB (GETRIEBE) | 237 |
| MAGNETSPULE (24 V) (STARTERMOTOR) | 188 |
| | 192 |
| MAGNETSTOPFEN (MOTORÖLWANNE) | 31 |
| MAGNETVENTIL | 314 |
| | 490 |
| MAGNETVENTIL (*BLADE LOWER) | 478 |
| MAGNETVENTIL (DIFFERENTIALSPERRE) | 437 |
| MAGNETVENTIL (*PARKING BRAKE CONTROL) | 381 |
| MAGNETVENTIL (SCHARHUB) | 478 |
| MAGNETVENTIL (WINDENFREILAUF, BREMSFREIGABE) | 541 |
| | 546 |
| MAGNETVENTIL (24 V DC) (GETRIEBEKUPPLUNG) | 312 |
| MASCHINENVERDRAHTUNG | 213 |
| | 219 |
| | 226 |
| MODULATORVENTIL | 309 |
| MOTOR- UND GETRIEBEAUFLAGER | 49 |
| MOTOR-EINBAUSATZ | 4 |
| MOTOR, ELEKTR. | 161 |
| MOTOR, KOMPLETT | 2 |
| MOTORAUFHÄNGUNG | 60 |
| MOTORBLOCK | 22 |
| | 23 |
| | 24 |
| MOTORBLOCKDECKEL | 7 |
| | 9 |
| MOTORGEHÄUSE | 559 |
| MOTORHAUBE UND VERKLEIDUNG | 352 |
| | 355 |
| MOTORHUBÖSE | 47 |
| MOTORKABELSTRANG | 213 |
| | 219 |
| | 226 |


* ÜBERSETZUNG ZUM ZEITPUNKT DER DRUCKLEGUNG NICHT VORHANDEN

# STICHWORTVERZEICHNIS


| Bezeichnung | Seite |
|---|---|
| MOTORKABELSTRANG (ELEKTRON. STEUERMODUL) | 210 |
| MOTORKABELSTRANG (KRAFTSTOFFEIN-SPRITZUNG) | 210 |
| MOTORKÜHLERBLOCK | 3 |
| MOTORÖLABLASS | 31<br>32 |
| MOTORÖLEINFÜLLSTUTZEN | 68 |
| MOTORÖLKRÜMMER | 76 |
| MOTORÖLKÜHLER | 79 |
| MOTORÖLKÜHLERBLOCK | 79 |
| MOTORÖLLEITUNGEN | 72 |
| MOTORRIEMENSCHEIBE | 55 |
| MOTORSENSOR | 167 |
| MOTORSTOPFEN | 54 |
| MOTORVERDRAHTUNG | 210 |
| **N** | |
| NOCKENWELLE | 5 |
| NOTLENKUNG | 398 |
| NOTLENKUNGSLEITUNGEN | 388<br>391 |
| NOTLENKUNGSPUMPE UND -MOTOR | 396 |
| NOTLENKUNGSPUMPE UND BEFESTIGUNGS-TEILE | 397 |
| NOTLENKUNGSVERDRAHTUNG | 230 |
| **O** | |
| OBERE ROLLE | 558 |
| ÖLFILTER | 69<br>269<br>414<br>415 |
| ÖLFILTER (HOCHLEISTUNG) | 425 |
| ÖLFILTER (HOCHLEISTUNG) (HYDRAULIK) | 414<br>415 |
| ÖLFILTER (HOCHLEISTUNG) (KRAFTÜBER-TRAGUNG) | 269 |
| ÖLFILTER (HYDRAULISCH) | 425 |
| ÖLMESSSTAB | 71<br>280<br>282 |
| ÖLSIEB (HYDRAULIKTANK) | 447 |
| ÖLSTANDSANZEIGE (MESSSTAB) | 263 |
| ÖLWANNE | 51 |
| **P** | |
| PANZERWANNE | 331<br>332 |
| PENDELACHSE | 232 |
| PLANETENTRÄGER | 501<br>502 |
| PLANIERSCHILD | 496<br>497 |
| PLANIERSCHILDLEITUNGEN | 417 |
| PLEUELSTANGE UND KOLBEN | 52 |
| PROBEENTNAHMEVENTIL F. WARTUNGSFL. (HYDRAULIKÖL) | 425 |
| PROBEENTNAHMEVENTIL F. WARTUNGSFL. (KRAFTÜBERTRAGUNGSÖL) | 267 |
| *PUMP GP-FILTER & FUEL TRANSFER | 128 |
| PUMPE UND BEFESTIGUNGSTEILE | 127 |
| PUMPENSTEUERVENTIL | 488 |
| **R** | |
| RADIO | 623 |
| RADIO - KABELSTRANG | 623 |
| RADIO - KABELSTRANG (LAUTSPRECHER) | 202 |
| RADIO (AM/FM CD SPIELER) | 623 |
| RADIOEINBAUSATZ | 612 |
| RAHMEN, HINTEN | 328<br>329<br>330 |
| RAHMENVERKLEIDUNG | 335 |
| REIFEN UND FELGE | 300<br>301<br>302 |
| RELAIS (24 V) (GREIFERRÜCKFÜHRUNG) | 202 |
| RELAIS (24 V) (KRAFTSTOFFFÖRDERPUM-PE) | 202 |
| RELAIS (24 V) (LEUCHTEN) | 202 |
| RELAIS (24 V) (NOTLENKUNG) | 202 |
| RELAIS (24 V) (POLTERSCHILD-RÜCKFÜH-RUNG) | 202 |
| RELAIS (24 V) (WINDE FREILAUF) | 202 |
| RELAIS (24 V) (WINDENSOLENOID RÜCKFÜHRUNG) | 202 |
| RELAIS (24 V) (WINDENTROMMEL ABROLLEN) | 202 |
| RELAIS (24 V) (WINDENTROMMEL EINROLLEN) | 202 |
| ROLLENTURM | 522<br>524<br>525 |
| ROLLENTURMRAHMEN | 526 |
| RÜCKSPIEGEL | 617 |
| **S** | |
| SCHALLDÄMPFER | 107 |
| SCHALTER (GREIFER AUTO GREIFERAUSLÖ-SER) | 594 |


* ÜBERSETZUNG ZUM ZEITPUNKT DER DRUCKLEGUNG NICHT VORHANDEN

# STICHWORTVERZEICHNIS


| Bezeichnung | Seite |
|---|---|
| SCHALTER (GREIFER, AUTOM. GREIF., AUSLÖSER) | 593 |
| SCHALTER (GREIFERDREHUNG, NACH RECHTS) | 594 |
| SCHALTER (GREIFERDREHUNG, NACK LINKS) | 594 |
| SCHALTER (GREIFERROTATION, NACH LINKS) | 593 |
| SCHALTER (GREIFERROTATION, NACH RECHTS) | 593 |
| SCHALTER (GREIFERZANGE SCHLIESSEN) | 593<br>594 |
| SCHALTER (GRIEFERZANGE ÖFFNEN) | 593<br>594 |
| SCHAUGLAS | 447<br>503 |
| SCHAUGLAS (SEILWINDE) | 569 |
| SCHEIBENWASCHMITTELBEHÄLTER | 642 |
| SCHEIBENWISCHER | 682 |
| SCHEIBENWISCHER UND -WASCHANLAGE | 680 |
| SCHEIBENWISCHERARM | 682 |
| SCHEIBENWISCHERBLATT | 682 |
| SCHEIBENWISCHERBLATT (HINTEN) | 680 |
| SCHEIBENWISCHERMOTOR (24V, 2 GESCHWINDIGKEITEN) (VORNE) | 682 |
| SCHILD UND AUFKLEBER | 691<br>693<br>695 |
| SCHLÜSSEL (ELEKTRISCHER HAUPTSCHALTER) | 194 |
| SCHMIERLEITUNGEN | 358 |
| SCHMIERPUMPE | 77<br>78 |
| SCHNEIDMESSER | 521 |
| SCHRAUBE | 503 |
| SCHRAUBE (ABLASSEN) | 566 |
| SCHUTZBLECHE | 318 |
| SCHUTZBÜGEL | 361 |
| SCHWENKSCHEIBE | 442 |
| SCHWINGSITZ | 634<br>635<br>636 |
| SCHWUNGRAD | 40 |
| SCHWUNGRADGEHÄUSE | 43 |
| SCHWUNGRADGEHÄUSEDICHTUNG | 59 |
| SCREEN | 437 |
| SEILWINDENANTRIEB | 517 |
| SEILWINDENAUFHÄNGUNG | 550<br>552<br>553 |
| SEILWINDENBREMSE | 498<br>500<br>569 |
| SEILWINDENSCHUTZ | 535<br>536<br>537 |
| SERIENNUMMERNSCHILD (GETRIEBE) | 236<br>242 |
| SERPENTINENFÖRMIGER RIEMEN (KLIMAANLAGEN-KOMPRESSOR) | 590 |
| SERPENTINENFÖRMIGER RIEMEN (RIEMENSCHEIBE) | 55 |
| SICHERHEITSGURT | 635<br>636 |
| SITZSCHWENKVORRICHTUNG | 640 |
| SOFTWARE - KRAFTÜBERTRAGUNG | 155 |
| SOLENOIDVENTIL U. BEFESTIGUNGSTEILE (WINDENFREILAUF, BREMSFREIGABE) | 541<br>546 |
| SPANNUNGSREGLER (24 V) (DREHSTROMGENERATOR) | 142 |
| SPERRVENTIL | 469<br>474<br>480 |
| SPERRVENTIL (HAUPTPUMPENLEITUNG) | 388<br>391 |
| SPERRVENTIL (HAUPTRESOLVER) | 470<br>472<br>476<br>478<br>482<br>484 |
| SPERRVENTIL (HYDRAULIKÖLNEBENSTROM) | 405 |
| SPERRVENTIL (SCHARHUB) | 478 |
| SPERRVENTIL (VORSTEUERUNG) | 425 |
| STARRACHSE | 232 |
| STARTERMOTOR | 188<br>190<br>191<br>192 |
| STARTERMOTOR-DICHTUNGSSATZ | 188 |
| STARTERMOTOR-STIFTEINBAUSATZ | 188 |
| STARTHILFEANSCHLUSS | 165 |
| STARTSCHALTER (TASTE) | 202 |
| STECKDOSEN - EINBAUSATZ (12 STIFTE) | 399 |
| STEIGLEITER | 360 |
| STELLUNGSSENSOR | 169 |
| STEUERHEBEL | 593<br>594 |
| STEUERHEBEL (WINDE) | 513 |
| STEUERKRÜMMER | 381<br>437 |
| STEUERUNG - NICHT PROGRAMMIERT (MASCHINE) | 202 |


* ÜBERSETZUNG ZUM ZEITPUNKT DER DRUCKLEGUNG NICHT VORHANDEN

# STICHWORTVERZEICHNIS


| Bezeichnung | Seite |
|---|---|
| STEUERUNGSEINHEIT, ELEKTRON. FÜR MOTOR UND BEFEST. | 153 |
| STEUERVENTIL | 470 |
| | 472 |
| | 474 |
| | 476 |
| | 478 |
| | 480 |
| | 482 |
| | 484 |
| STIRNRAD | 41 |
| STIRNRADGEHÄUSE | 44 |
| STIRNRADGEHÄUSE-HALTETEILE | 37 |
| | 38 |
| STIRNRADGEHÄUSEDECKEL | 10 |
| | 11 |
| STROMTEILERVENTIL | 486 |

## T

| | |
|---|---|
| TELLER- UND KEGELRAD | 270 |
| | 272 |
| TEMPERATURSCHALTER (KLIMAANLAGE) | 577 |
| | 580 |
| TEMPERATURSENSOR | 180 |
| | 181 |
| | 182 |
| | 183 |
| | 184 |
| | 185 |
| TEMPERATURSENSOR (DREHMOMENT-WANDLERÖL) | 213 |
| | 219 |
| | 226 |
| TEMPERATURSENSOR (GETRIEBEÖL) | 317 |
| TEMPERATURSENSOR (HYDRAULIKÖL) | 213 |
| | 219 |
| | 226 |
| TEMPERATURSENSOR (KÜHLMITTEL, WASSER) | 184 |
| | 185 |
| TEMPERATURSENSOR (LUFTEINLASSKRÜMMER) | 167 |
| TEMPERATURSENSOR (LUFTEINLASSKRÜMMER) | 182 |
| | 183 |
| TEMPERATURSENSOR (WASSER, KÜHLMITTEL) | 167 |
| TRENNSCHALTER | 194 |
| TRENNSCHALTER (BATTERIE) | 146 |
| | 149 |
| TURBOLADER | 110 |
| | 111 |
| | 112 |
| | 113 |
| TURBOLADEREINSATZ | 111 |
| TURBOLADERLUFTLEITUNGEN | 105 |
| TURBOLADERÖLLEITUNGEN | 73 |
| | 74 |

## U

| | |
|---|---|
| ÜBERDRUCKVENTIL | 310 |
| | 489 |
| ÜBERDRUCKVENTIL (KÄLTEMITTELKOMPRESSOR) | 591 |
| ÜBERDRUCKVENTIL (LEITUNG) | 474 |
| ÜBERDRUCKVENTIL (LEITUNG) | 480 |
| ÜBERDRUCKVENTIL (LEITUNG) (GREIFERZANGE, ÖFFNEN, SCHLIESSEN) | 476 |
| ÜBERDRUCKVENTIL (LEITUNG) (*LINE, WINCH) | 484 |
| ÜBERDRUCKVENTIL (LEITUNG) (*STEERING CYLINDER CROSSOVER) | 470 |
| ÜBERDRUCKVENTIL (NOTLENKUNG) | 487 |
| ÜBERROLLSCHUTZ | 624 |
| ÜBERROLLSCHUTZ, GESCHLOSSEN - VERKLEIDUNG | 610 |
| ÜBERROLLSCHUTZ, OFFENES FAHRERHAUS - HALTETEILE | 661 |
| | 664 |
| | 667 |
| | 671 |
| ÜBERROLLSCHUTZAUFLAGER | 619 |
| UMLEITVENTIL | 486 |
| UNTERBRECHER - INSTRUMENTENTAFEL | 162 |
| UNTERBRECHER (105 A) (DREHSTROMGENERATOR) | 162 |
| UNTERBRECHER (105 A) (HAUPTUNTERBRECHER) | 162 |
| UNTERBRECHER (20 A) (MASCHINENSTEUERUNG) | 162 |
| UNTERBRECHER (80 A) (ANSAUGLUFT-VORWÄRMANLAGE) | 162 |

## V

| | |
|---|---|
| *VALVE GP-A/C & HEATER CONTROL | 675 |
| VENTIL - SCHALT- UND DRUCKSTEUERUNG | 312 |
| VENTILANORDNUNGS-BEFESTIGUNGSSATZ (GREIFER) | 461 |
| VENTILDECKEL | 12 |
| | 13 |
| | 14 |


* ÜBERSETZUNG ZUM ZEITPUNKT DER DRUCKLEGUNG NICHT VORHANDEN

# STICHWORTVERZEICHNIS


| Bezeichnung | Seite |
|---|---|
| VENTILDECKELDICHTUNG (VENTILDECKEL) | 14 |
| VENTILKABELSTRANG (SITZ LUFTKOMPRESSOR) | 637 |
| VENTILKIPPHEBEL | 56, 57 |
| VENTILKIPPHEBEL (AUSLASS) | 63 |
| VENTILKIPPHEBEL (EINLASS) | 63 |
| VENTILSATZ (2-VENTIL) | 464 |
| VENTILSATZ (4-VENTIL) | 465, 467 |
| VENTILSATZ (5-VENTIL) | 468 |
| VENTILSTEUERUNG | 61, 62, 63, 65 |
| VERDRAHTUNGSKABELBAUM (KRAFTSTOFFDRUCK) | 122, 124 |
| VERKLEIDUNG - OFFENES FAHRERHAUS MIT ÜBERROLLSCHUTZ | 611 |
| VERSANDDECKEL | 256 |
| VERTEILERGETRIEBEANTRIEB | 274, 276, 278 |
| VORDERACHSAUFHÄNGUNG | 297 |
| VORDERRAHMEN | 321, 323, 326 |
| VORHÄNGESCHLOSS | 136 |
| VORHÄNGESCHLOSS (LTERATURFACH) | 690 |
| VORRANGVENTIL | 487 |
| VORREINIGER | 109 |
| VORSTEUERLEITUNGEN | 429, 432 |
| VORSTEUERÖLDRUCKSAMMLER | 403, 404 |


## W


| Bezeichnung | Seite |
|---|---|
| WARNAUFKLEBER (*CRUSH HAZARD, READ MANUAL) | 693 |
| WARNAUFKLEBER (*CRUSH HAZARD, READ MANUAL) | 691 |
| WARNAUFKLEBER (DRUCKSPEICHER) | 403, 404 |
| WARNAUFKLEBER (FREMDSTART, HANDBUCH LESEN, US) | 693 |
| WARNAUFKLEBER (HEISSE FLÜSSIGKEIT UNTER DRUCK, U.S.) | 691 |
| WARNAUFKLEBER (HOCHDRUCK, HANDBICH LESEN, INTL) | 695 |
| WARNAUFKLEBER (HOCHDRUCK, HANDBICH LESEN, US) | 691 |
| WARNAUFKLEBER (HOCHDRUCK, HANDBUCH LESEN) | 362 |
| WARNAUFKLEBER (KEINER ÄTHER VERWENDEN) | 693 |
| WARNAUFKLEBER (KETTENSPANNFEDER) | 691, 693, 695 |
| WARNAUFKLEBER (QUETSCHGEFAHR, NICHT BETRETEN) | 691 |
| WARNAUFKLEBER (SICHERHEITSGURT) | 695 |
| WARNAUFKLEBER (UNIVERSAL) | 691, 693 |
| WARNVORRICHTUNG | 141 |
| WASSERABSCHEIDER- U. KRAFTSTOFFILTER | 114 |
| WASSERABSCHEIDER UND KRAFTSTOFFILTER (HAUPTELEMENT) | 114 |
| WASSERKNIESTÜCK | 80 |
| WASSERTANK | 696, 697 |
| WASSERTANKVERKLEIDUNG | 687 |
| WASSERTEMPERATURREGLER (94 GRAD CELSIUS) (KÜHLMITTEL) | 84 |
| WASSERTEMPERATURREGLER (97 GRAD CELSIUS) (KÜHLMITTEL) | 82 |
| WIDERSTAND | 166 |
| WINDE | 567, 568, 569, 572 |
| WINDEN-ÖLLEITUNGEN | 540, 541, 544, 546 |
| WINDENABDECKUNG | 515 |
| WINDENABTRIEBSRAD | 532 |
| WINDENANTRIEBSRAD | 530 |
| WINDENGEHÄUSE | 503 |
| WINDENKUPPLUNG | 506, 508 |
| WINDENPLANETENGRUPPE | 557 |
| WINDENSTEUERUNG | 510, 511, 513 |
| WINDENTROMMEL | 519 |


## Z


| Bezeichnung | Seite |
|---|---|
| ZAHNRADPUMPE | 439, 441 |
| ZANGENZYLINDER | 413 |


* ÜBERSETZUNG ZUM ZEITPUNKT DER DRUCKLEGUNG NICHT VORHANDEN

# STICHWORTVERZEICHNIS


| Bezeichnung | Seite |
|---|---|
| ZUFLUSSREGULIERVENTIL | 308 |
| ZUGANGSKLAPPE (SCHUTZSCHALTER, 24 V AUSGANG) | 621 |
| ZUGANGSTAFEL | 620 |
| | 621 |
| ZYLINDER - SPERRVORRICHTUNG (*DOOR ACCESS) | 621 |
| ZYLINDERBLOCKSCHRAUBE | 53 |
| ZYLINDERKOPF | 26 |
| | 27 |
| | 28 |
| | 29 |
| ZYLINDERKOPF-HALTETEILE | 35 |


* ÜBERSETZUNG ZUM ZEITPUNKT DER DRUCKLEGUNG NICHT VORHANDEN

# MACHINE ARRANGEMENT

## *245-9460* CHASSIS AR

**S/N: 5451-UP**

**PART OF 245-9457 COMMON AR**

**SMCS-7000** **i02462011**

| NOTE | PART NUMBER | QTY | PART NAME 1 2 3 4 5 6 (PRODUCT LEVEL) | SEE PAGE |
|---|---|---|---|---|
| Y | *284-3711* | 1 | DRAIN GP-ENGINE OIL | 32 |
| Y | *246-5996* | 1 | FRAME GP-FRONT | 326 |
| Y | *246-5998* | 1 | GUARD GP-BOTTOM (FRONT FRAME) | 331 |
| Y | *246-6007* | 1 | GUARD GP-BOTTOM (REAR FRAME) | 332 |
| Y | *270-2433* | 1 | GUARD GP-FRAME | 335 |
| Y | *143-1386* | 1 | GUARD GP-LINES (ARTICULATED HITCH) | 338 |
| Y | *249-6699* | 1 | GUARD GP-RADIATOR | 347 |
| Y | *246-6006* | 1 | HARDWARE GP-REAR FRAME | 349 |
| Y | *246-6008* | 1 | HITCH GP-ARTICULATING | 350 |
| Y | *249-8137* | 1 | HOOD & GUARD GP | 352 |
| Y | *253-0556* | 1 | INDICATOR GP-AIR FILTER CHANGE | 103 |
| Y | *251-1323* | 1 | LINES GP-FUEL | 118 |
| Y | *252-6553* | 1 | LINES GP-GREASE | 358 |
| Y | *253-6259* | 1 | LINK GP-STEERING FRAME LOCK | 359 |
| Y | *6V-1971* | 1 | LITERATURE GP (MACHINE) | 690 |
| Y | *255-8899* | 1 | MOUNTING GP-ENGINE & TMSN | 49 |
| Y | *248-0062* | 1 | PLATE & FILM GP | 691 |
| Y | *251-1325* | 1 | RADIATOR & MOUNTING GP | 90 |
| Y | *228-9922* | 1 | STEP GP | 360 |
| Y | *251-9707* | 1 | SUPPORT GP-FRONT AXLE | 297 |
| Y | *248-0059* | 1 | SWEEP GP | 361 |
| Y | *252-6551* | 1 | TANK GP-FUEL | 136 |

Y-SEPARATE ILLUSTRATION

**<END>**

## *245-9457* COMMON AR

**S/N: 5451-UP**

**SMCS-7000** **i02701984**

| NOTE | PART NUMBER | QTY | PART NAME 1 2 3 4 5 6 (PRODUCT LEVEL) | SEE PAGE |
|---|---|---|---|---|
| Y | *245-9460* | 1 | CHASSIS AR | 1 |
| Y | *245-9469* | 1 | ELECTRICAL AR | 155 |
| | | | S/N: 5451-377 | |
| Y | *285-2280* | 1 | ELECTRICAL AR | 155 |
| | | | S/N: 545378-UP | |
| Y | **235-1497** | 1 | ENGINE AR-COMPLETE | 2 |
| Y | *245-9466* | 1 | HYDRAULIC AR | 416 |
| Y | *248-4224* | 1 | INSTALLATION AR-ENGINE | 4 |
| Y | *245-9463* | 1 | POWER TRAIN AR | 292 |
| | | | S/N: 5451-377 | |
| Y | *284-7040* | 1 | POWER TRAIN AR | 292 |
| | | | S/N: 545378-UP | |

Y-SEPARATE ILLUSTRATION

**<END>**

# ENGINE ARRANGEMENT

## 235-1497 ENGINE AR-COMPLETE

**S/N: KHX1-UP**

**PART OF 245-9457 COMMON AR**

**SMCS-1000** **i02472413**

| NOTE | PART NUMBER | QTY | PART NAME 1 2 3 4 5 6 (PRODUCT LEVEL) | SEE PAGE |
|---|---|---|---|---|
| Y | *222-5946* | 1 | BREATHER GP | 67 |
| Y | *4W-3462* | 1 | CARRIER GP-SEAL | 6 |
| Y | **246-9345** | 1 | CONTROL & MTG GP-ENGINE ELEK | 153 |
| Y | *189-8780* | 1 | COVER GP-AIR INLET (STARTING AID HEATER) | 96 |
| Y | *222-5947* | 1 | COVER GP-CYLINDER BLOCK | 7 |
| Y | *247-5716* | 1 | COVER GP-FRONT HOUSING | 11 |
| Y | *261-3721* | 1 | COVER GP-VALVE MECHANISM | 13 |
| Y | *165-4557* | 1 | DAMPER & PULLEY GP | 30 |
| Y | *166-0534* | 1 | DRAIN GP-ENGINE OIL | 31 |
| Y | *253-9892* | 1 | DRIVE GP-FAN | 33 |
| Y | *260-3059* | 1 | ELBOW GP-AIR INLET | 100 |
| Y | *231-6361* | 1 | ELBOW GP-WATER | 80 |
| Y | *235-1496* | 1 | ENGINE AR-CORE | 3 |
| Y | *218-0859* | 1 | FASTENER GP-DAMPER & PULLEY | 36 |
| Y | *260-3217* | 1 | FASTENER GP-FRONT COVER | 37 |
| Y | *116-4556* | 1 | FASTENER GP-FRONT HOUSING | 38 |
| Y | *113-6170* | 1 | FASTENER GP-LIFTING | 39 |
| Y | *258-8723* | 1 | FASTENER GP-CYLINDER HEAD | 35 |
| Y | *7W-8798* | 1 | FILLER GP-ENGINE OIL | 68 |
| Y | *189-5433* | 1 | FILTER GP-ENGINE OIL | 69 |
| Y | *7E-0712* | 1 | FLYWHEEL GP | 40 |
| Y | *220-1194* | 1 | FUMES DISPOSAL GP | 70 |
| Y | *238-8178* | 1 | GAUGE GP-OIL LEVEL (DIPSTICK) (ENGINE) | 71 |
| Y | *255-9264* | 1 | HOUSING GP-FLYWHEEL | 43 |
| Y | *153-5417* | 1 | LIFTING GP-ENGINE | 47 |
| Y | *4W-2914* | 1 | LINES GP-ENGINE OIL | 72 |
| Y | *238-8185* | 1 | LINES GP-FUEL FILTER | 122 |
| Y | *187-6279* | 1 | LINES GP-TURBOCHARGER OIL | 73 |
| Y | *206-4228* | 1 | LINES GP-WATER (ENGINE) | 82 |
| | | | S/N: KHX1-523 | |
| Y | *238-4802* | 1 | LINES GP-WATER (ENGINE) | 84 |
| | | | S/N: KHX524-UP | |
| Y | *237-8063* | 1 | MANIFOLD GP-ENGINE OIL | 76 |
| Y | *183-6845* | 1 | MANIFOLD GP-EXHAUST (DRY) | 106 |
| Y | *215-6982* | 1 | MOUNTING GP-ALTERNATOR | 48 |
| Y | *196-0077* | 1 | PAN GP-OIL | 51 |
| Y | *159-0303* | 1 | PLUG GP-CYLINDER BLOCK | 53 |
| | | | S/N: KHX1-523 | |
| Y | *267-2741* | 1 | VALVE GP-COOLANT SAMPLING | 93 |
| | | | S/N: KHX524-UP | |
| Y | *162-8068* | 1 | PLUG GP-ENGINE | 54 |
| Y | *209-4600* | 1 | PUMP GP-WATER | 86 |
| Y | *115-4210* | 1 | SEAL GP-CRANKSHAFT | 58 |
| Y | *7C-1770* | 1 | SEAL GP-FLYWHEEL HOUSING | 59 |
| Y | *231-1977* | 1 | SENSOR GP-ENGINE | 167 |
| Y | *179-6023* | 1 | SUPPORT GP-ENGINE | 60 |
| Y | *198-2714* | 1 | WIRING GP-ENGINE | 210 |
| Y | *253-9886* | 1 | WIRING GP-HEATER (STARTING AID) | 212 |
| | | | | |
| | | | PLEASE USE THE GASKET KIT LINK IN SIS OR CONTACT YOUR LOCAL DEALER FOR THE LATEST GASKET KIT INFORMATION | |

Y-SEPARATE ILLUSTRATION

# ENGINE ARRANGEMENT

## *235-1496* ENGINE AR-CORE

**S/N: KHX1-UP**

**PART OF 235-1497 ENGINE AR-COMPLETE**

**SMCS-1000** **i02552456**

| NOTE | PART NUMBER | QTY | PART NAME 1 2 3 4 5 6 (PRODUCT LEVEL) | SEE PAGE |
|---|---|---|---|---|
| Y | *212-4289* | 1 | CAMSHAFT GP | 5 |
| Y | *117-3643* | 1 | COOLER GP-ENGINE OIL | 79 |
| Y | *211-9120* | 1 | COVER GP-FRONT HOUSING | 10 |
| Y | *210-5590* | 1 | CRANKSHAFT GP | 16 |
| Y | *221-4482* | 1 | CYLINDER BLOCK GP | 22 |
| Y | *219-5849* | 1 | CYLINDER HEAD GP | 29 |
| Y | *205-1321* | 1 | GEAR GP-FRONT | 41 |
| Y | *165-4446* | 1 | HOUSING GP-FRONT | 44 |
| Y | *191-0461* | 1 | LINES GP-INJECTOR HYD PUMP | 126 |
| Y | *212-3652* | 6 | PISTON & ROD GP | 52 |
| Y | *254-0095* | 1 | PUMP & MTG GP-UNIT INJ HYD | 127 |
| Y | *192-2981* | 1 | PUMP GP-ENGINE OIL | 77 |
| Y | *222-5958* | 6 | PUMP GP-FUEL INJECTION | 129 |
| | | | —OR— | |
| Y | *268-1839* | 6 | PUMP GP-FUEL INJECTION | 131 |
| Y | *185-1145* | 1 | TURBOCHARGER GP | 110 |
| | | | —OR— | |
| Y | *258-2403* | 1 | TURBOCHARGER GP | 113 |
| Y | *232-3717* | 1 | VALVE MECHANISM GP | 61 |
| | *251-3573* | 1 | ELECTRONICS GP-ENGINE RATINGS | |

Y-SEPARATE ILLUSTRATION

# ENGINE ARRANGEMENT

## *248-4224* INSTALLATION AR-ENGINE

**S/N: 5451-UP**

**PART OF 245-9457 COMMON AR**

**SMCS-1000** **i02464780**

| NOTE | PART NUMBER | QTY | PART NAME 1 2 3 4 5 6 (PRODUCT LEVEL) | SEE PAGE |
|---|---|---|---|---|
| Y | *250-6161* | 1 | AIR CLEANER GP | 95 |
| Y | *250-6158* | 1 | ALTERNATOR GP-CHARGING | 144 |
| Y | *250-7563* | 1 | FAN GP-BLOWER | 81 |
| Y | *248-0055* | 1 | LINES GP-AFTERCOOLER AIR | 104 |
| Y | *254-4516* | 1 | LINES GP-TURBOCHARGER AIR | 105 |
| Y | *250-6162* | 1 | MUFFLER GP | 107 |
| Y | *250-7564* | 1 | PULLEY GP-ENGINE | 55 |
| Y | *166-1238* | 1 | STARTING MOTOR GP-ELECTRIC | 190 |

Y-SEPARATE ILLUSTRATION

# *212-4289* CAMSHAFT GP

**S/N: KHX1-UP**

**PROVIDES A CAMSHAFT WITH 48 MINUS 1 TIMING MARKS**

**PART OF 235-1496 ENGINE AR-CORE**

**SMCS-1210, 1211, 1212** **i02168423**

| NOTE | REF NO | GRAPHIC REF | PART NUMBER | QTY | PART NAME 1 2 3 4 5 6 (PRODUCT LEVEL) | SEE PAGE |
|---|---|---|---|---|---|---|
| | 1 | 1 | **107-7694** | 1 | PLATE-THRUST | |
| | 2 | 1 | **212-4288** | 1 | CAMSHAFT AS | |
| | 2A | 1 | **1B-8705** | 1 | KEY-WOODRUFF | |
| | 2B | 1 | **224-3247** | 1 | GEAR (100-TEETH) | |
| M | 3 | 1 | **6V-3940** | 2 | BOLT (M8X1.25X25-MM) | |

M-METRIC PART

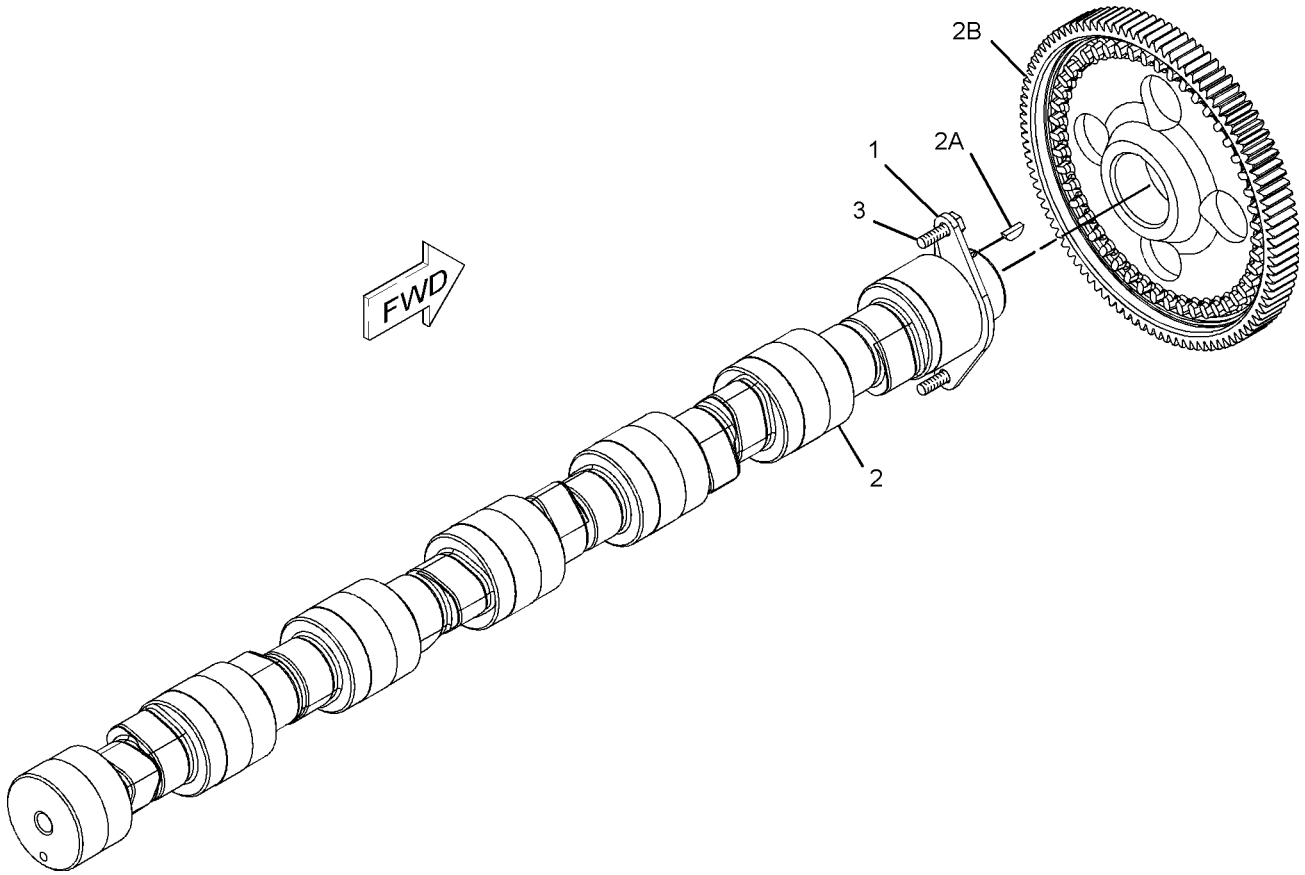


GRAPHIC #1 **<END>** g01099239

# BASIC ENGINE

## *4W-3462* CARRIER GP-SEAL

**S/N: KHX1-UP**

**PART OF 235-1497 ENGINE AR-COMPLETE**

**SMCS-1160, 1161** **i02482078**

| NOTE | REF NO | GRAPHIC REF | PART NUMBER | QTY | PART NAME 1 2 3 4 5 6 (PRODUCT LEVEL) | SEE PAGE |
|---|---|---|---|---|---|---|
| | 1 | 1 | **2W-6546** | 1 | COVER | |
| | 2 | 1 | **247-1876** | 1 | SEAL | |
| | 3 | 1 | **239-0583** | 1 | GASKET | |
| | 4 | 1 | **6V-3538** | 2 | DOWEL | |
| M | 5 | 1 | **6V-3940** | 8 | BOLT (M8X1.25X25-MM) | |
| | 6 | 1 | **9M-1974** | 8 | WASHER-HARD (8.8X16X2-MM THK) | |
| | | | | | | |
| BF | | 1 | **4C-9612** | | SEALANT-SILICONE | |

B-USE AS REQUIRED
F-NOT SHOWN
M-METRIC PART

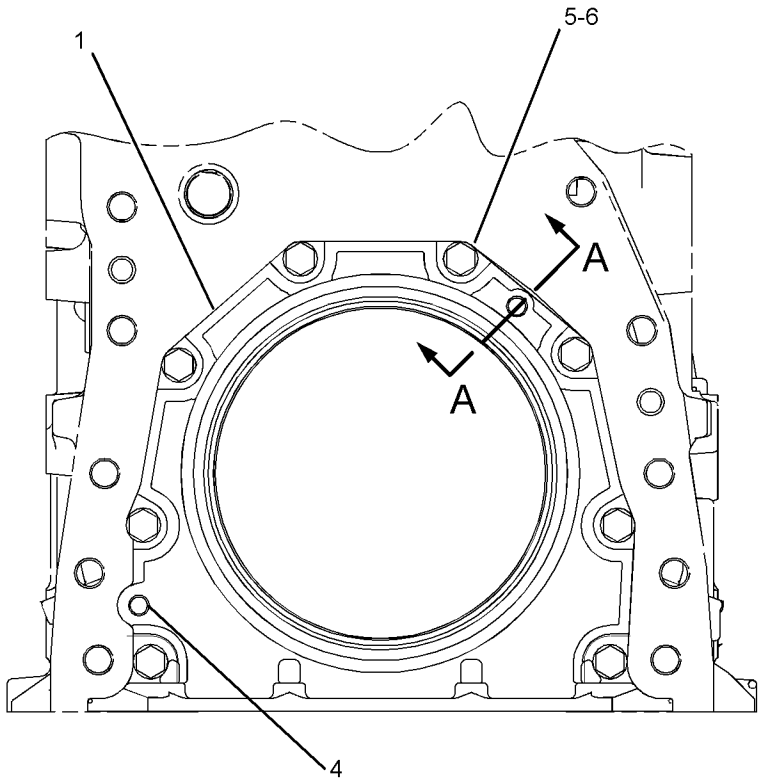


FRONT VIEW

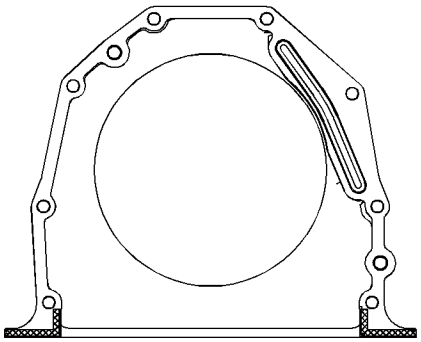

REAR VIEW

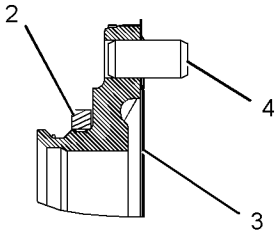


SECTION A-A

GRAPHIC #1 **<END>** g01239787

# *222-5947* COVER GP-CYLINDER BLOCK

**S/N: KHX1-UP**

**PROVIDES BLOCK COVER GP WITH REAR STUD AND SIDE COVER BREATHER**

**PART OF 235-1497 ENGINE AR-COMPLETE**

**TYPE 1**

**SMCS-1201** **i01885364**

| NOTE | REF NO | GRAPHIC REF | PART NUMBER | QTY | PART NAME 1 2 3 4 5 6 (PRODUCT LEVEL) | SEE PAGE |
|---|---|---|---|---|---|---|
| | 1 | 1 | **2W-6544** | 1 | COVER | |
| | 2 | 1 | **4P-5918** | 3 | CLIP | |
| | 3 | 1 | **4Y-9652** | 3 | GASKET | |
| | 4 | 1 | **7W-3871** | 2 | COVER-SIDE | |
| | 5 | 1 | **7W-3872** | 6 | SLEEVE | |
| M | 6 | 1 | **9X-2099** | 1 | STUD (M8X1.25-THD) | |
| | 7 | 1 | **110-7618** | 3 | BOLT AS | |
| | 8 | 1 | **175-1367** | 8 | SPACER (8.8X16X10-MM THK) | |
| | 9 | 1 | **222-5893** | 1 | COVER AS | |
| M | | 1 | **6V-5698** | 2 | SCREW-BUTTON HEAD (M4X0.7X10-MM) | |
| | 10 | 1 | **210-3321** | 1 | STUD (M8X1.25-THD) | |
| M | 11 | 1 | **5C-7261** | 1 | NUT (M8X1.25-THD) | |
| M | 12 | 1 | **6V-2317** | 23 | BOLT (M8X1.25X30-MM) | |
| | 13 | 1 | **8T-4224** | 1 | WASHER-HARD (8.8X16X2-MM THK) | |
| | 14 | 1 | **9M-1974** | 14 | WASHER-HARD (8.8X16X2-MM THK) | |
| B | 15 | 1 | **1U-8846** | | SEALANT-GASKET | |

B-USE AS REQUIRED
M-METRIC PART

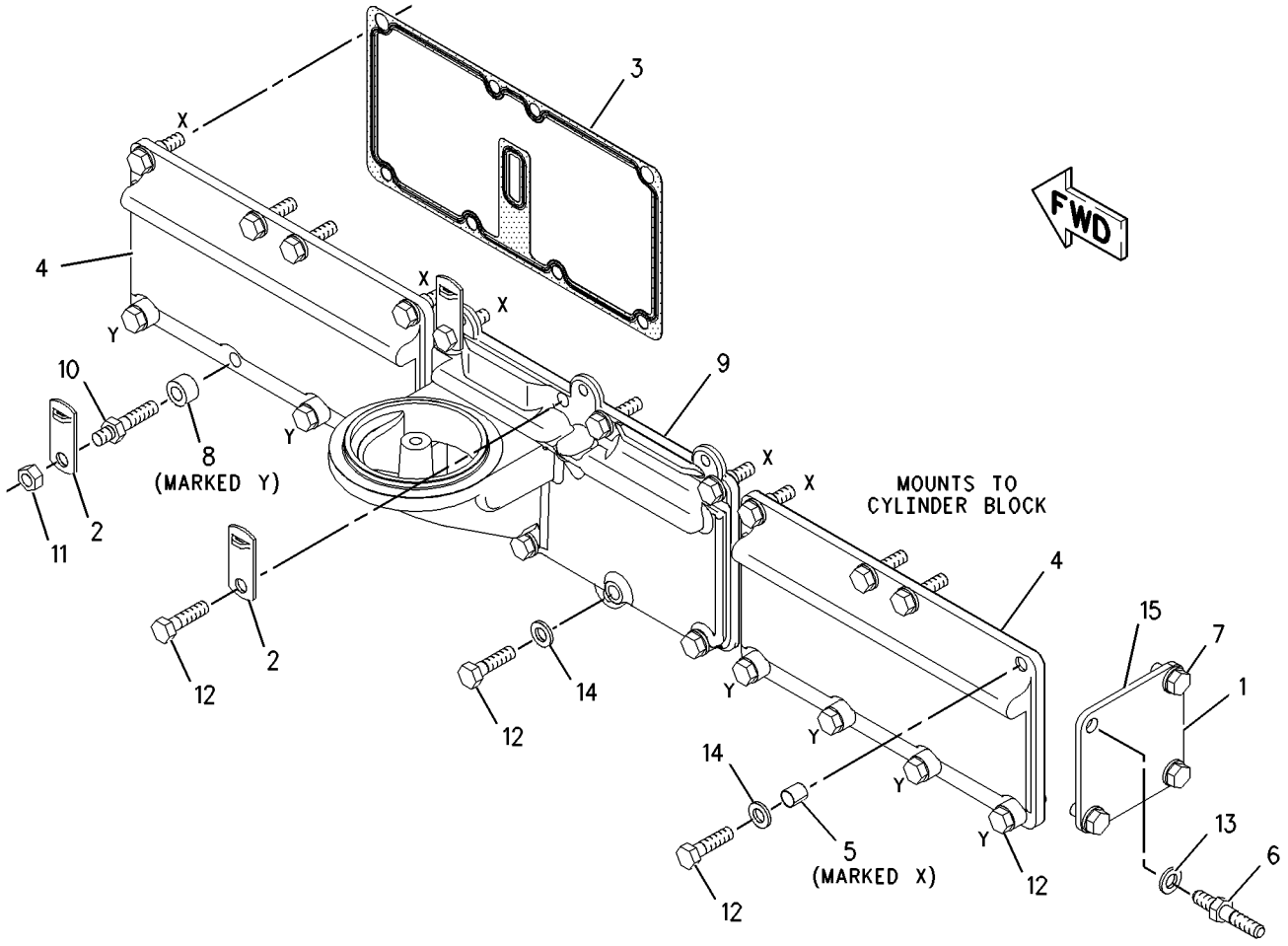


GRAPHIC #1 **<END>** g00947019

# 222-5947 COVER GP-CYLINDER BLOCK

**S/N: KHX1-UP**
**PROVIDES BLOCK COVER GP WITH REAR STUD AND SIDE COVER BREATHER**
**PART OF 235-1497 ENGINE AR-COMPLETE**
**TYPE 2**

**SMCS-1201** **i02690533**

| NOTE | REF NO | GRAPHIC REF | PART NUMBER | QTY | PART NAME 1 2 3 4 5 6 (PRODUCT LEVEL) | SEE PAGE |
|---|---|---|---|---|---|---|
| | 1 | 1 | **2W-6544** | 1 | COVER | |
| | 2 | 1 | **4P-5918** | 3 | CLIP | |
| | 3 | 1 | **4Y-9652** | 3 | GASKET | |
| C | 4 | 1 | **277-4421** | 2 | COVER-SIDE | |
| | 5 | 1 | **7W-3872** | 6 | SLEEVE | |
| M | 6 | 1 | **9X-2099** | 1 | STUD (M8X1.25-THD) | |
| | 7 | 1 | **110-7618** | 3 | BOLT AS | |
| | 9 | 1 | **222-5893** | 1 | COVER AS | |
| M | | 1 | **6V-5698** | 2 | SCREW-BUTTON HEAD (M4X0.7X10-MM) | |
| | 10 | 1 | **210-3321** | 1 | STUD (M8X1.25-THD) | |
| M | 11 | 1 | **5C-7261** | 1 | NUT (M8X1.25-THD) | |
| M | 12 | 1 | **6V-2317** | 23 | BOLT (M8X1.25X30-MM) | |
| | 13 | 1 | **8T-4224** | 1 | WASHER-HARD (8.8X16X2-MM THK) | |
| C | 14 | 1 | **9M-1974** | 22 | WASHER-HARD (8.8X16X2-MM THK) | |
| B | 15 | 1 | **1U-8846** | | SEALANT-GASKET | |

B-USE AS REQUIRED
C-CHANGE FROM PREVIOUS TYPE
M-METRIC PART

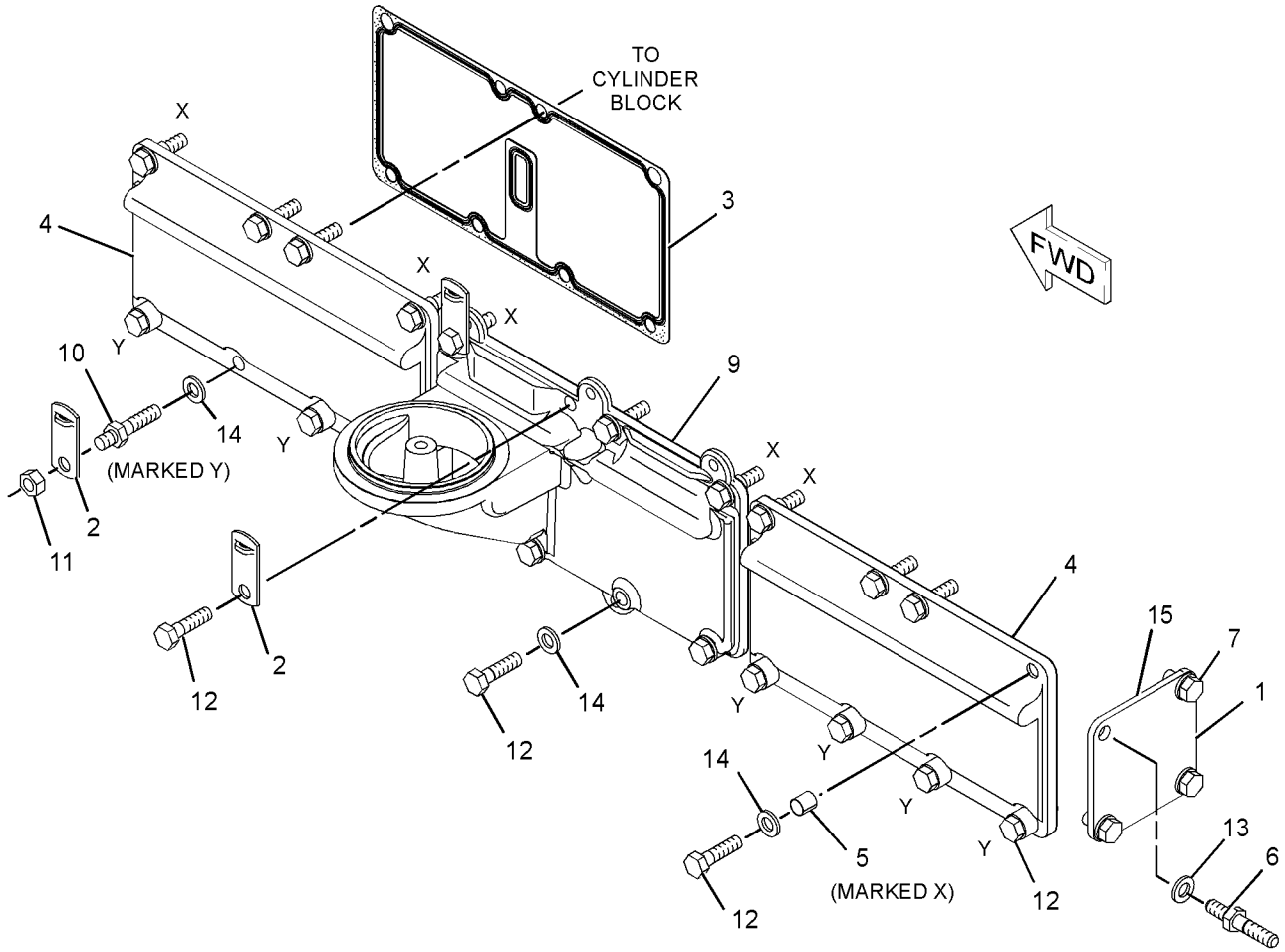


GRAPHIC #1 **<END>** g01352930

# *211-9120* COVER GP-FRONT HOUSING

**S/N: KHX1-UP**
**PART OF 235-1496 ENGINE AR-CORE**
**FOR USE WITH OIL FILLER**

**SMCS-1151, 1162, 1166** **i01622046**

| NOTE | REF NO | GRAPHIC REF | PART NUMBER | QTY | PART NAME 1 2 3 4 5 6 (PRODUCT LEVEL) | SEE PAGE |
|---|---|---|---|---|---|---|
| | 1 | 1 | **166-1776** | 1 | COVER AS-FRONT | |
| | 1A | 1 | **126-1757** | 2 | WASHER | |
| | 1B | 1 | **136-0822** | 2 | STUD | |
| | 2 | 1 | **166-1781** | 1 | GASKET | |

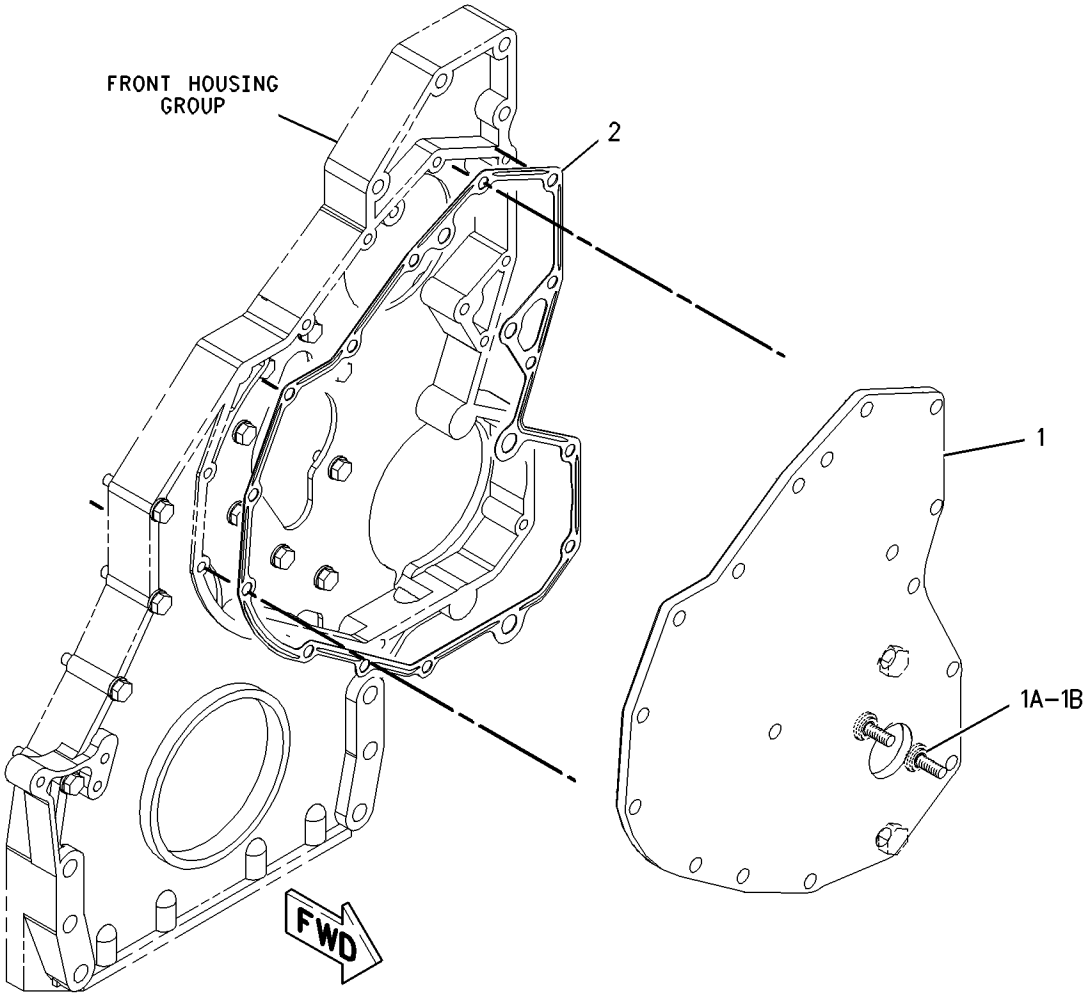


GRAPHIC #1 **<END>** g00849279

# *247-5716* COVER GP-FRONT HOUSING

**S/N: KHX1-UP**

**PART OF 235-1497 ENGINE AR-COMPLETE**

**SMCS-1151, 1162, 1166** **i02171786**

| NOTE | REF NO | GRAPHIC REF | PART NUMBER | QTY | PART NAME 1 2 3 4 5 6 (PRODUCT LEVEL) | SEE PAGE |
|---|---|---|---|---|---|---|
| | 1 | 1 | **7C-1445** | 1 | COVER | |
| | 2 | 1 | **061-9455** | 1 | SEAL-O-RING | |
| M | 3 | 1 | **5C-7261** | 2 | NUT (M8X1.25-THD) | |
| M | 4 | 1 | **6V-2317** | 7 | BOLT (M8X1.25X30-MM) | |
| M | 5 | 1 | **8T-0100** | 1 | BOLT (M8X1.25X60-MM) | |
| | 6 | 1 | **8T-4224** | 2 | WASHER-HARD (8.8X16X2-MM THK) | |

M-METRIC PART

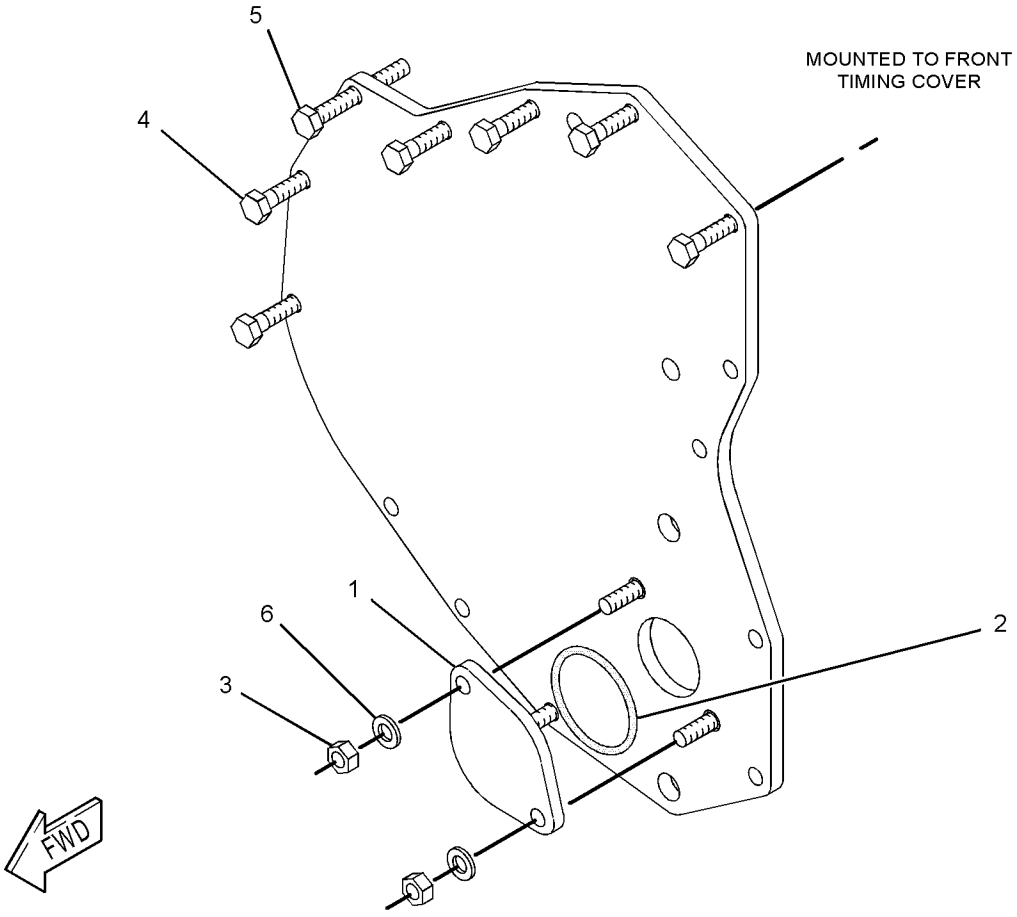


GRAPHIC #1 **<END>** g01100949

# *242-2411* COVER GP-VALVE MECHANISM

**S/N: KHX1-UP**

**PART OF 261-3721 COVER GP-VALVE MECHANISM**

**SMCS-1107, 1120** **i02579667**

| NOTE | REF NO | GRAPHIC REF | PART NUMBER | QTY | PART NAME 1 2 3 4 5 6 (PRODUCT LEVEL) | SEE PAGE |
|---|---|---|---|---|---|---|
| L | 1 | 1 | **217-5701** | | SEAL-BULK (21-DM)(VALVE MECHANISM COVER) | |

L-ORDER BY THE DECIMETER

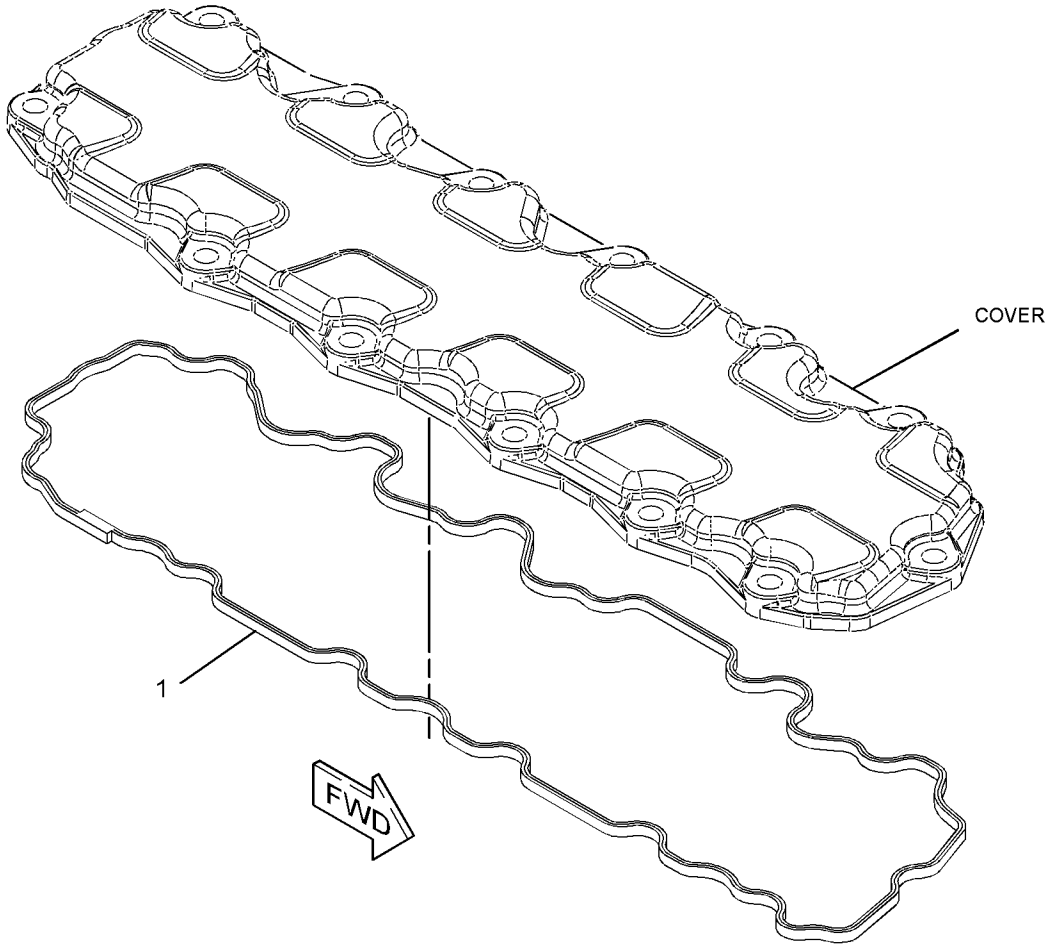


GRAPHIC #1 **<END>** g01228298

# 261-3721 COVER GP-VALVE MECHANISM

**S/N: KHX1-UP**
**PART OF 235-1497 ENGINE AR-COMPLETE**
**TYPE 1**

**SMCS-1107, 1120** **i02549683**

| NOTE | REF NO | GRAPHIC REF | PART NUMBER | QTY | PART NAME 1 2 3 4 5 6 (PRODUCT LEVEL) | SEE PAGE |
|---|---|---|---|---|---|---|
| Y | 1 | 1 | **242-2411** | 1 | COVER GP-VALVE MECHANISM | 12 |
| | 2 | 1 | **246-5083** | 13 | SLEEVE-SPACER | |
| | 3 | 1 | **271-2417** | 1 | COVER GP-VALVE MECHANISM (BASE) | |
| | 3A | 1 | **244-4486** | 1 | SEAL-COVER (VALVE COVER BASE) | |
| M | 4 | 1 | **099-3649** | 13 | BOLT (M8X1.25X40-MM) | |
| | 5 | 1 | **8T-4224** | 13 | WASHER-HARD (8.8X16X2-MM THK) | |
| B | 6 | 1 | **4C-9612** | | SEALANT-SILICONE | |

B-USE AS REQUIRED
M-METRIC PART
Y-SEPARATE ILLUSTRATION

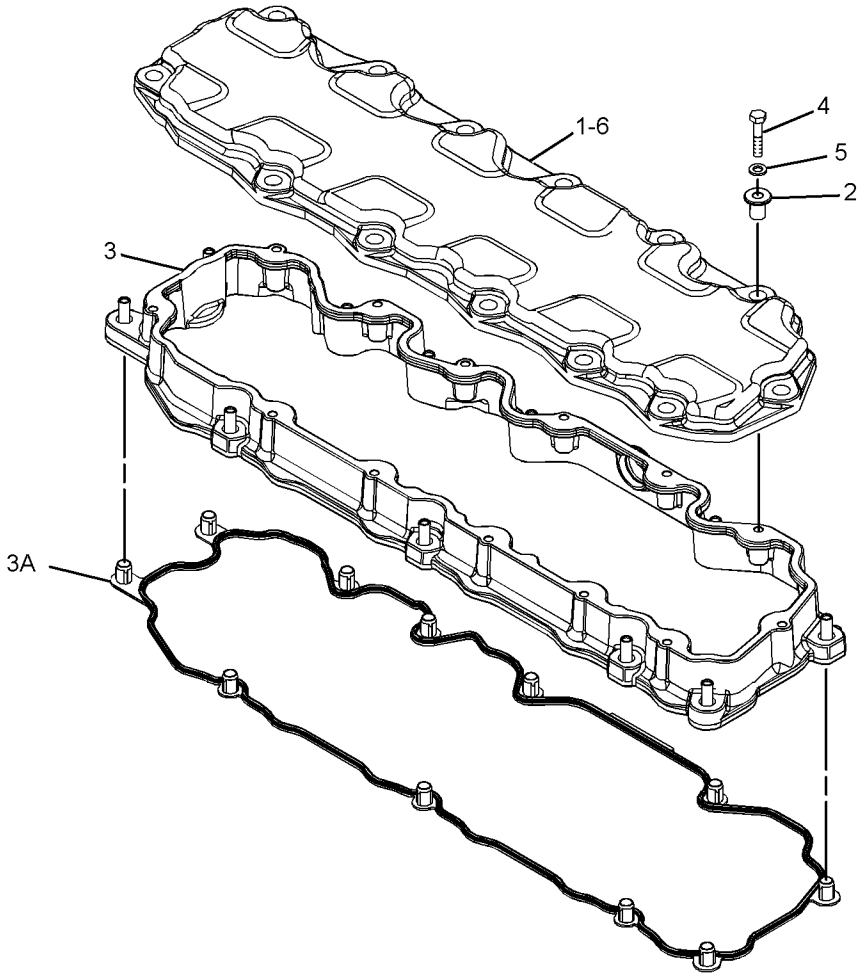


GRAPHIC #1 **<END>** g01254079

# BASIC ENGINE

## *261-3721* COVER GP-VALVE MECHANISM

**S/N: KHX1-UP**

**PART OF 235-1497 ENGINE AR-COMPLETE**

**TYPE 2**

**SMCS-1107, 1120** **i02549558**

| NOTE | REF NO | GRAPHIC REF | PART NUMBER | QTY | PART NAME 1 2 3 4 5 6 (PRODUCT LEVEL) | SEE PAGE |
|---|---|---|---|---|---|---|
| | 1 | 1 | **271-2417** | 1 | COVER GP-VALVE MECHANISM (BASE) | |
| | 1A | 1 | **244-4486** | 1 | SEAL-COVER (VALVE COVER BASE) | |
| | | 1 | **245-6796** | 1 | COVER AS-BASE | |
| C | 2 | 1 | **273-2838** | 13 | SLEEVE-SPACER | |
| C | 3 | 1 | **288-9175** | 1 | COVER GP-VALVE MECHANISM | |
| | 3A | 1 | **272-0388** | 1 | SEAL-VALVE COVER (VALVE COVER) | |
| M | 4 | 1 | **099-3649** | 13 | BOLT (M8X1.25X40-MM) | |
| | 5 | 1 | **8T-4224** | 13 | WASHER-HARD (8.8X16X2-MM THK) | |

C-CHANGE FROM PREVIOUS TYPE
M-METRIC PART

*261-3721* **COVER GP-VALVE MECHANISM** *(contd.)* **i02549558**

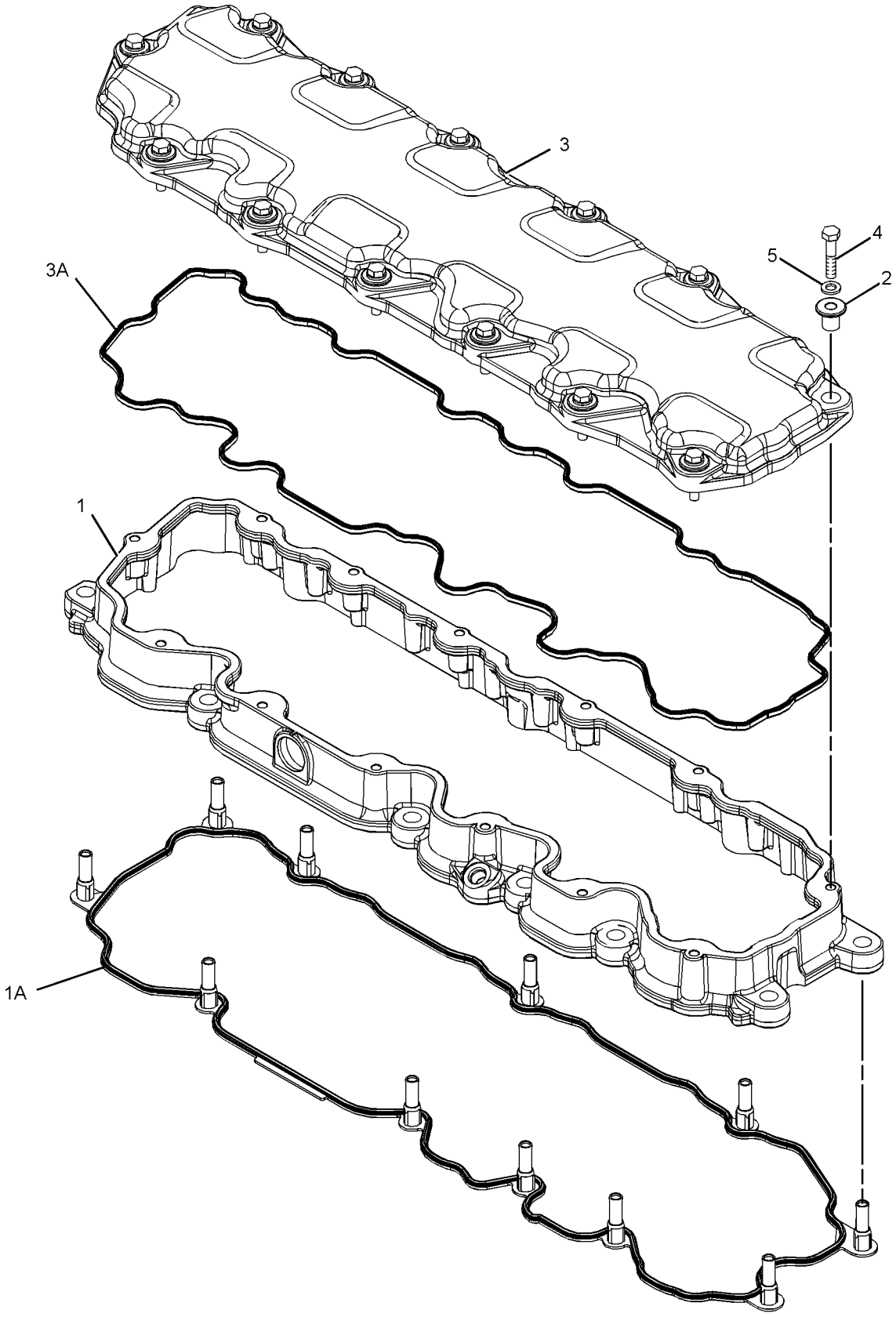


GRAPHIC #1 **<END>** g01272220

# BASIC ENGINE

## *210-5590* CRANKSHAFT GP

**S/N: KHX1-5002**

**PART OF 235-1496 ENGINE AR-CORE**

**SMCS-1202** **i02557873**

| NOTE | REF NO | GRAPHIC REF | PART NUMBER | QTY | PART NAME 1 2 3 4 5 6 (PRODUCT LEVEL) | SEE PAGE |
|---|---|---|---|---|---|---|
| | 1 | 1 | **271-5658** | 1 | CRANKSHAFT AS | |
| | 1A | 1 | **1B-8705** | 1 | KEY-WOODRUFF | |
| | 1B | 1 | **2W-8147** | 1 | GEAR (50-TEETH) | |
| J | 2 | 1 | **212-4893** | 1 | BEARING-THRUST (STANDARD) | |
| AB | | 1 | **229-5153** | | BEARING-THRUST (0.25-MM US) | |
| AB | | 1 | **229-5154** | | BEARING-THRUST (0.5-MM US) | |
| AB | | 1 | **229-5155** | | BEARING-THRUST (0.5-MM OS) | |
| AB | | 1 | **229-5156** | | BEARING-THRUST (0.5-MM US - 0.5-MM OS) | |
| J | 3 | 1 | **107-7708** | 6 | BEARING-MAIN (STANDARD) | |
| AB | | 1 | **145-0168** | | BEARING-MAIN (0.5-MM OS) | |
| AB | | 1 | **145-0170** | | BEARING-MAIN (0.5-MM US - 0.5-MM OS) | |
| AB | | 1 | **145-0162** | | BEARING-MAIN (0.25-MM US) | |
| AB | | 1 | **145-0164** | | BEARING-MAIN (0.5-MM US) | |
| | | | | | | |
| ABF | | 1 | **7C-7980** | 1 | SLEEVE-OIL SEAL | |
| | | | | | (THIS WEAR SLEEVE IS USED ONLY TO SALVAGE (REPAIR) THE REAR SEAL SURFACE OF THE CRANKSHAFT) | |
| | | | | | AVAILABLE REPAIR KIT(S): | |
| AJ | | | **196-9519** | | BEARING GP-MAIN (CRANKSHAFT) | |

A-NOT PART OF THIS GROUP
B-USE AS REQUIRED
F-NOT SHOWN
J-KIT MARKED J SERVICES PARTS MARKED J

*210-5590* **CRANKSHAFT GP** *(contd.)* **i02557873**

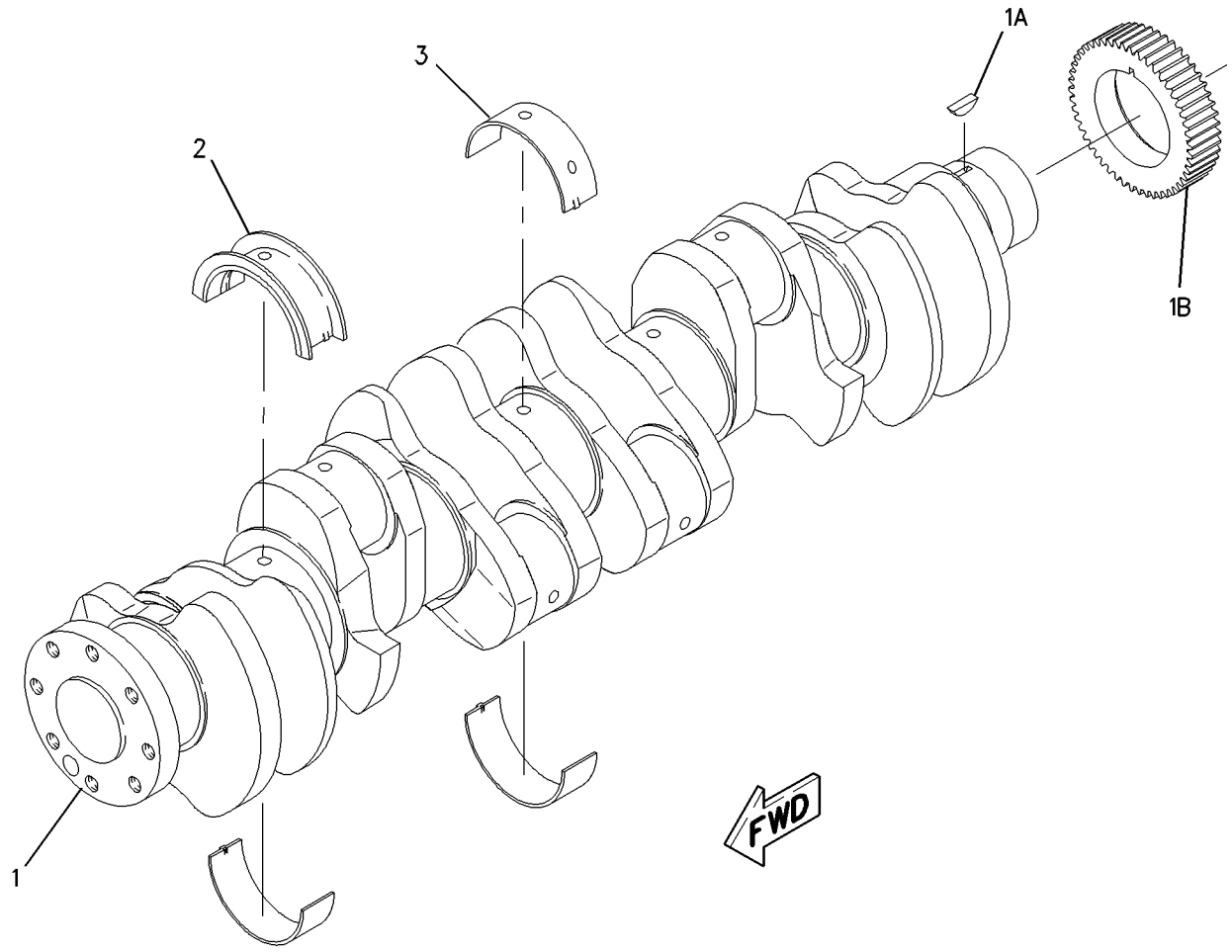


GRAPHIC #1 **<END>** g00977492

# BASIC ENGINE

## *210-5590* CRANKSHAFT GP

**S/N: KHX5003-5022**

**PART OF 235-1496 ENGINE AR-CORE**

**SMCS-1202** **i02682424**

| NOTE | REF NO | GRAPHIC REF | PART NUMBER | QTY | PART NAME 1 2 3 4 5 6 (PRODUCT LEVEL) | SEE PAGE |
|---|---|---|---|---|---|---|
| C | 1 | 1 | **227-5480** | 1 | CRANKSHAFT AS | |
| | 1A | 1 | **1B-8705** | 1 | KEY-WOODRUFF | |
| | 1B | 1 | **2W-8147** | 1 | GEAR (50-TEETH) | |
| J | 2 | 1 | **212-4893** | 1 | BEARING-THRUST (STANDARD) | |
| AB | | 1 | **229-5153** | | BEARING-THRUST (0.25-MM US) | |
| AB | | 1 | **229-5154** | | BEARING-THRUST (0.5-MM US) | |
| AB | | 1 | **229-5155** | | BEARING-THRUST (0.5-MM OS) | |
| AB | | 1 | **229-5156** | | BEARING-THRUST (0.5-MM US - 0.5-MM OS) | |
| J | 3 | 1 | **107-7708** | 6 | BEARING-MAIN (STANDARD) | |
| AB | | 1 | **145-0168** | | BEARING-MAIN (0.5-MM OS) | |
| AB | | 1 | **145-0170** | | BEARING-MAIN (0.5-MM US - 0.5-MM OS) | |
| AB | | 1 | **145-0162** | | BEARING-MAIN (0.25-MM US) | |
| AB | | 1 | **145-0164** | | BEARING-MAIN (0.5-MM US) | |
| | | | | | | |
| ABF | | 1 | **7C-7980** | 1 | SLEEVE-OIL SEAL | |
| | | | | | (THIS WEAR SLEEVE IS USED ONLY TO SALVAGE (REPAIR) THE REAR SEAL SURFACE OF THE CRANKSHAFT) | |
| | | | | | AVAILABLE REPAIR KIT(S): | |
| AJ | | | **196-9519** | | BEARING GP-MAIN (CRANKSHAFT) | |

A-NOT PART OF THIS GROUP
B-USE AS REQUIRED
C-CHANGE FROM PREVIOUS TYPE
F-NOT SHOWN
J-KIT MARKED J SERVICES PARTS MARKED J

*210-5590* **CRANKSHAFT GP** *(contd.)* **i02682424**

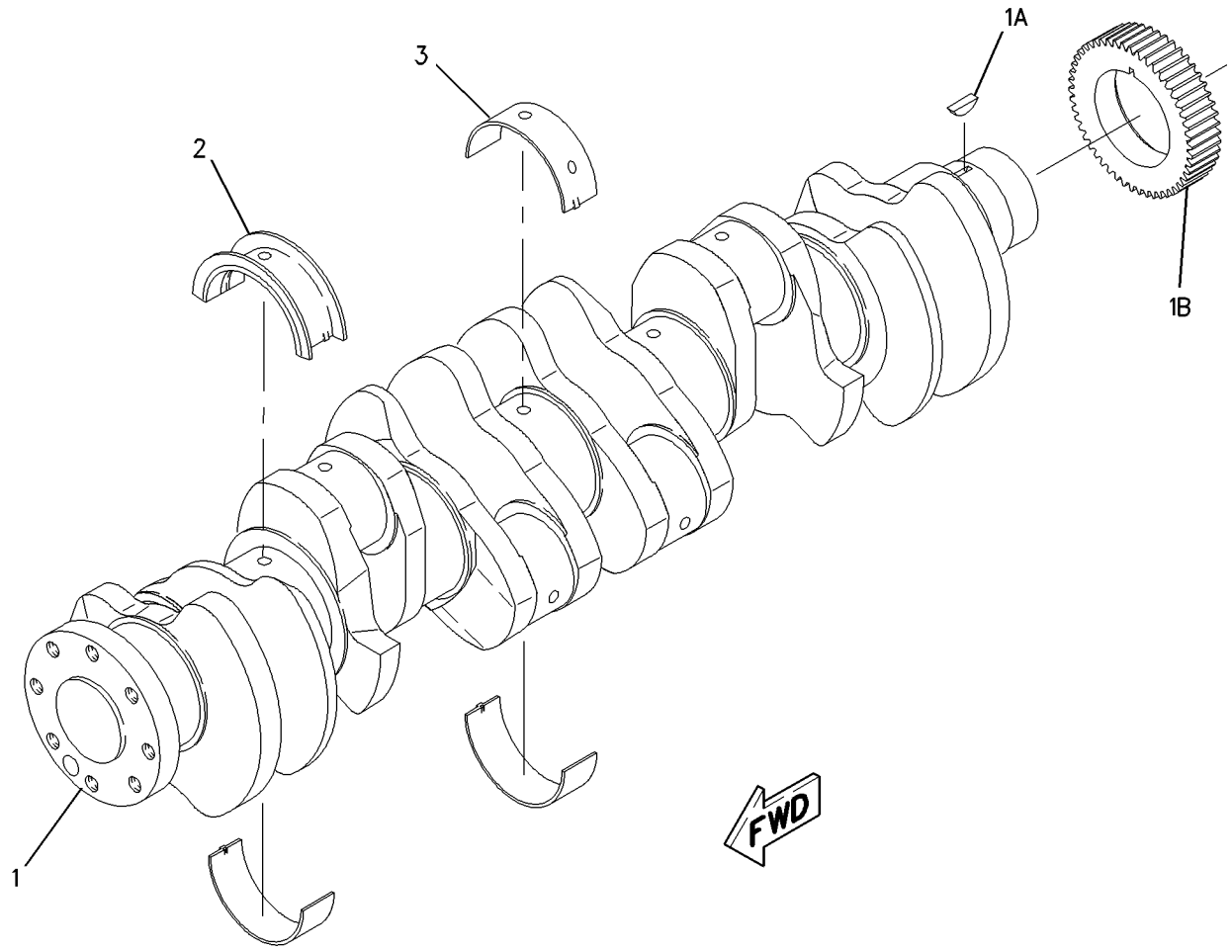


GRAPHIC #1 **<END>** g00977492

# BASIC ENGINE

## *210-5590* CRANKSHAFT GP

**S/N: KHX5023-UP**

**PART OF 235-1496 ENGINE AR-CORE**

**SMCS-1202** **i02682428**

| NOTE | REF NO | GRAPHIC REF | PART NUMBER | QTY | PART NAME 1 2 3 4 5 6 (PRODUCT LEVEL) | SEE PAGE |
|---|---|---|---|---|---|---|
| C | 1 | 1 | **271-5658** | 1 | CRANKSHAFT AS | |
| | 1A | 1 | **1B-8705** | 1 | KEY-WOODRUFF | |
| | 1B | 1 | **2W-8147** | 1 | GEAR (50-TEETH) | |
| J | 2 | 1 | **212-4893** | 1 | BEARING-THRUST (STANDARD) | |
| AB | | 1 | **229-5153** | | BEARING-THRUST (0.25-MM US) | |
| AB | | 1 | **229-5154** | | BEARING-THRUST (0.5-MM US) | |
| AB | | 1 | **229-5155** | | BEARING-THRUST (0.5-MM OS) | |
| AB | | 1 | **229-5156** | | BEARING-THRUST (0.5-MM US - 0.5-MM OS) | |
| J | 3 | 1 | **107-7708** | 6 | BEARING-MAIN (STANDARD) | |
| AB | | 1 | **145-0168** | | BEARING-MAIN (0.5-MM OS) | |
| AB | | 1 | **145-0170** | | BEARING-MAIN (0.5-MM US - 0.5-MM OS) | |
| AB | | 1 | **145-0162** | | BEARING-MAIN (0.25-MM US) | |
| AB | | 1 | **145-0164** | | BEARING-MAIN (0.5-MM US) | |
| | | | | | | |
| ABF | | 1 | **7C-7980** | 1 | SLEEVE-OIL SEAL | |
| | | | | | (THIS WEAR SLEEVE IS USED ONLY TO SALVAGE (REPAIR) THE REAR SEAL SURFACE OF THE CRANKSHAFT) | |
| | | | | | AVAILABLE REPAIR KIT(S): | |
| AJ | | | **196-9519** | | BEARING GP-MAIN (CRANKSHAFT) | |

A-NOT PART OF THIS GROUP
B-USE AS REQUIRED
C-CHANGE FROM PREVIOUS TYPE
F-NOT SHOWN
J-KIT MARKED J SERVICES PARTS MARKED J

*210-5590* **CRANKSHAFT GP** *(contd.)* **i02682428**

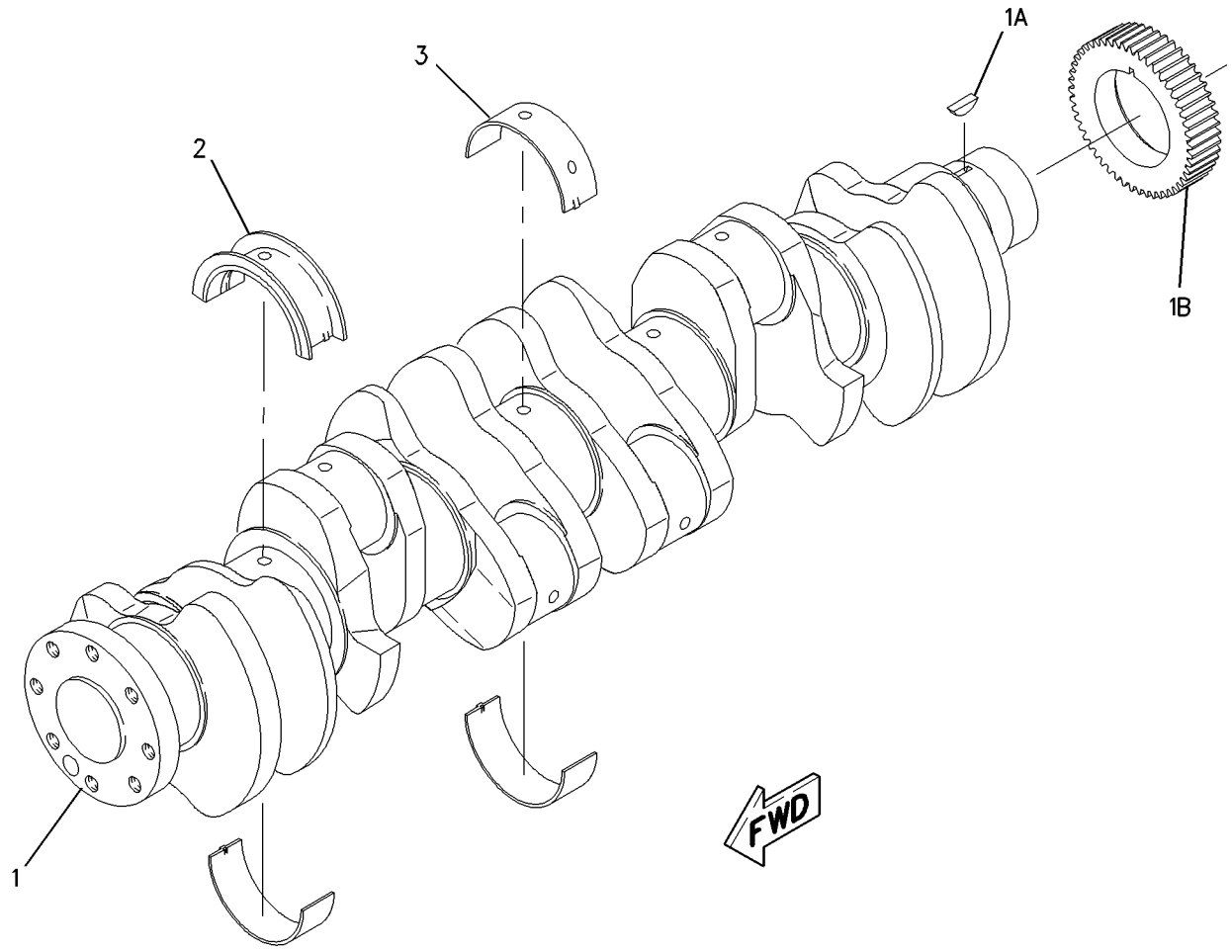


GRAPHIC #1 **<END>** g00977492

# BASIC ENGINE

## *221-4482* CYLINDER BLOCK GP

**S/N: KHX1-UP**

**PART OF 235-1496 ENGINE AR-CORE**

**SMCS-1201** **i02690901**

| NOTE | REF NO | GRAPHIC REF | PART NUMBER | QTY | PART NAME 1 2 3 4 5 6 (PRODUCT LEVEL) | SEE PAGE |
|---|---|---|---|---|---|---|
| CY | 1 | 1 | **305-8141** | 1 | CYLINDER BLOCK GP | 24 |
| | 2 | 1 | **7N-5683** | 2 | DOWEL | |
| | 3 | 1 | **1W-8407** | 2 | SLEEVE | |
| | 4 | 1 | **6V-3538** | 2 | DOWEL | |

C-CHANGE FROM PREVIOUS TYPE
Y-SEPARATE ILLUSTRATION

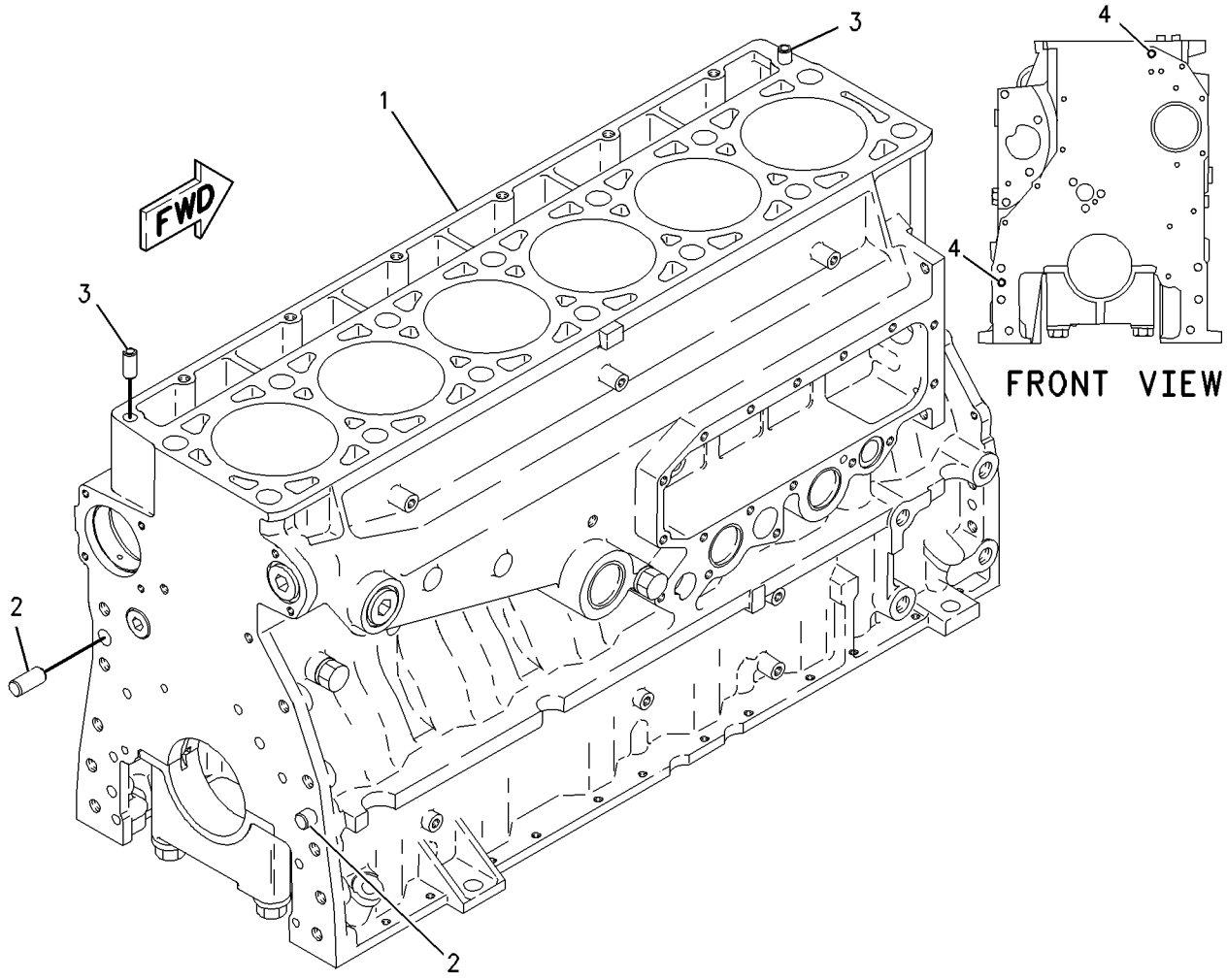


GRAPHIC #1 **<END>** g00800849

# *263-3774* CYLINDER BLOCK GP

**S/N: KHX1-UP**

**PART OF 305-8141 CYLINDER BLOCK GP**

**SMCS-1201** **i02347180**

| NOTE | REF NO | GRAPHIC REF | PART NUMBER | QTY | PART NAME 1 2 3 4 5 6 (PRODUCT LEVEL) | SEE PAGE |
|---|---|---|---|---|---|---|
| | 2 | 1 | **7E-2968** | 7 | CAP-CRANKSHAFT BEARING | |
| M | 3 | 1 | **9X-8916** | 14 | BOLT (M16X2X140-MM) | |
| | 4 | 1 | **5P-8247** | 14 | WASHER-HARD (17X32X3.5-MM THK) | |

M-METRIC PART

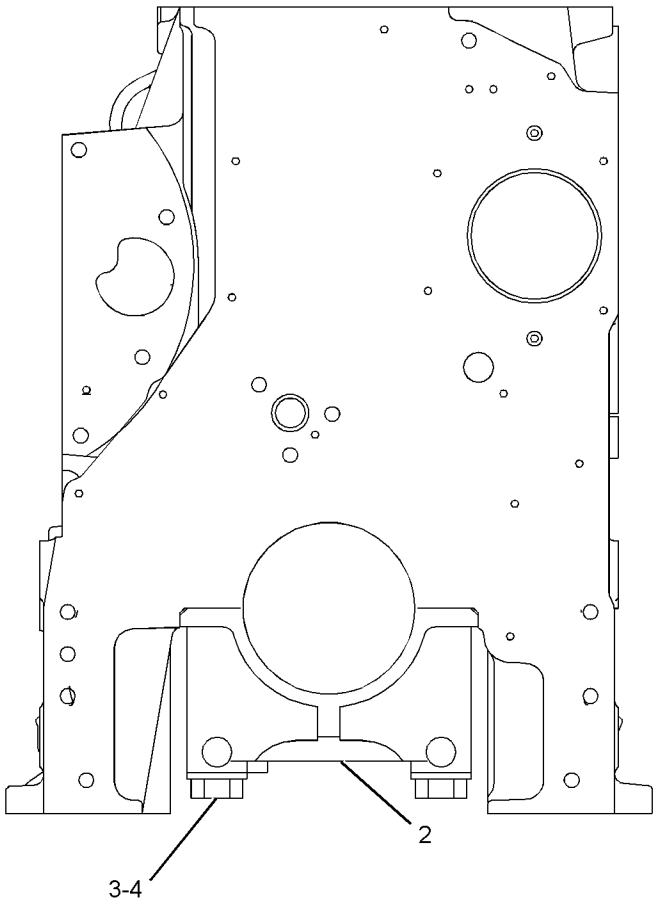


FRONT VIEW

GRAPHIC #1

**<END>**

g01175397

# BASIC ENGINE

## *305-8141* CYLINDER BLOCK GP

**S/N: KHX1-UP**

**PART OF 221-4482 CYLINDER BLOCK GP**

**SMCS-1201** **i02690923**

| NOTE | REF NO | GRAPHIC REF | PART NUMBER | QTY | PART NAME 1 2 3 4 5 6 (PRODUCT LEVEL) | SEE PAGE |
|---|---|---|---|---|---|---|
| Y | 1 | 1 | *263-3774* | 1 | CYLINDER BLOCK GP | 23 |
| | 2 | 1 | **2M-6471** | 2 | PLUG-CUP | |
| | 3 | 1 | **3H-5552** | 1 | PLUG-CUP | |
| | 4 | 1 | **9S-8006** | 1 | PLUG-O-RING | |
| | 5 | 1 | **2M-9780** | 1 | SEAL-O-RING | |
| | 6 | 1 | **216-5586** | 1 | BEARING-SLEEVE (CAMSHAFT) | |
| | 7 | 1 | **2W-7213** | 6 | BEARING-SLEEVE (CAMSHAFT) | |

Y-SEPARATE ILLUSTRATION

*305-8141* **CYLINDER BLOCK GP** *(contd.)* **i02690923**

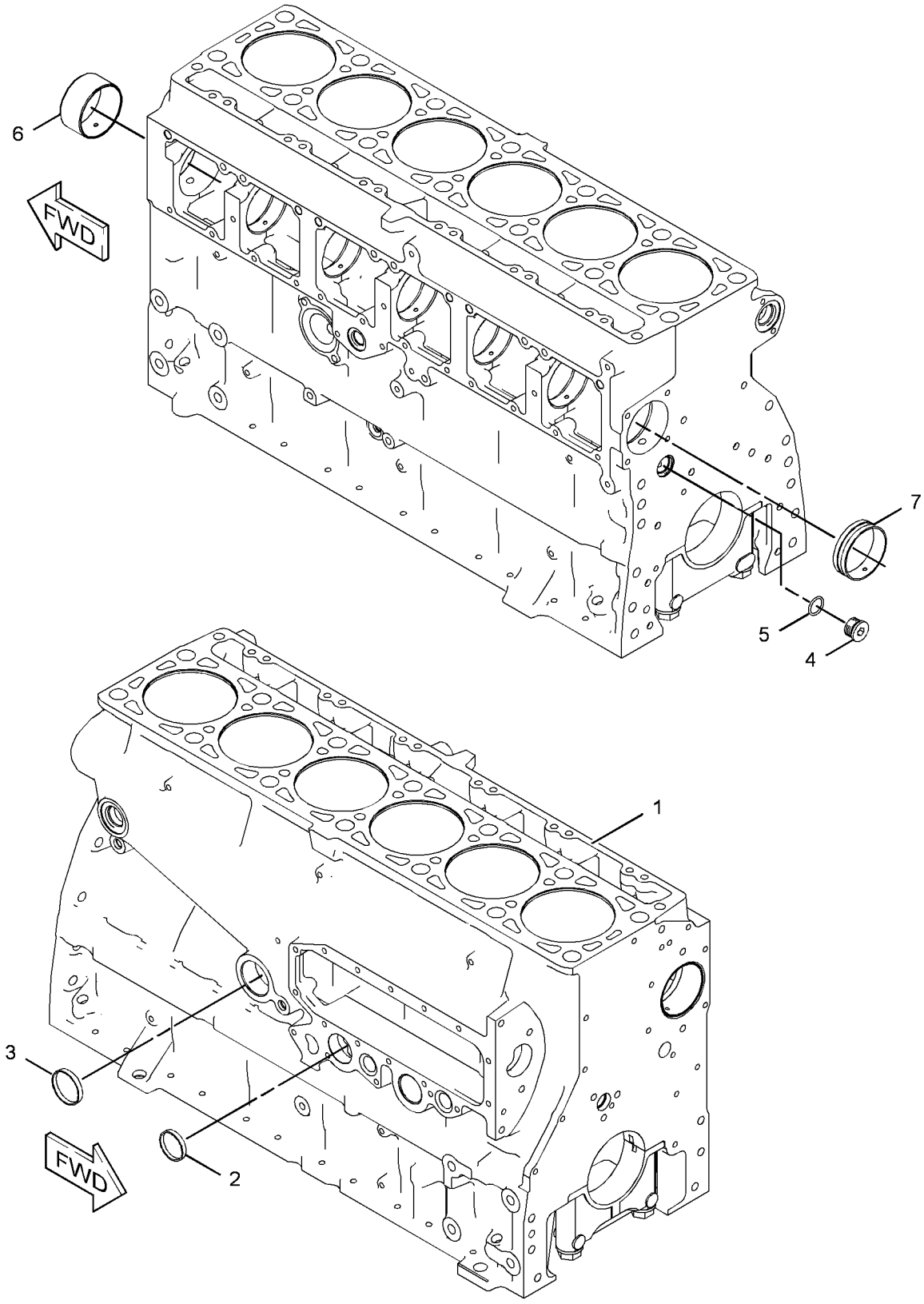


GRAPHIC #1 **<END>** g01348114

# *219-5844* CYLINDER HEAD AS

**S/N: KHX1-UP**

**PART OF 219-5846 CYLINDER HEAD GP**

**SMCS-1100, 1101** **i01858481**

| NOTE | REF NO | GRAPHIC REF | PART NUMBER | QTY | PART NAME 1 2 3 4 5 6 (PRODUCT LEVEL) | SEE PAGE |
|---|---|---|---|---|---|---|
| | 2 | 1 | **8M-5860** | 12 | PLUG-CUP | |
| | 3 | 1 | **4F-5695** | 2 | PLUG-CUP | |
| | 4 | 1 | **227-1200** | 6 | SLEEVE-INJECTOR | |
| | 5 | 1 | **217-5213** | 12 | INSERT-VALVE SEAT (INLET) | |
| | 6 | 1 | **147-8218** | 6 | INSERT-VALVE SEAT (EXHAUST) | |
| | 7 | 1 | **8C-0563** | 12 | SEAL-O-RING | |
| | 8 | 1 | **9S-9334** | 1 | PLUG | |
| | 9 | 1 | **9X-7712** | 1 | SEAL-O-RING | |

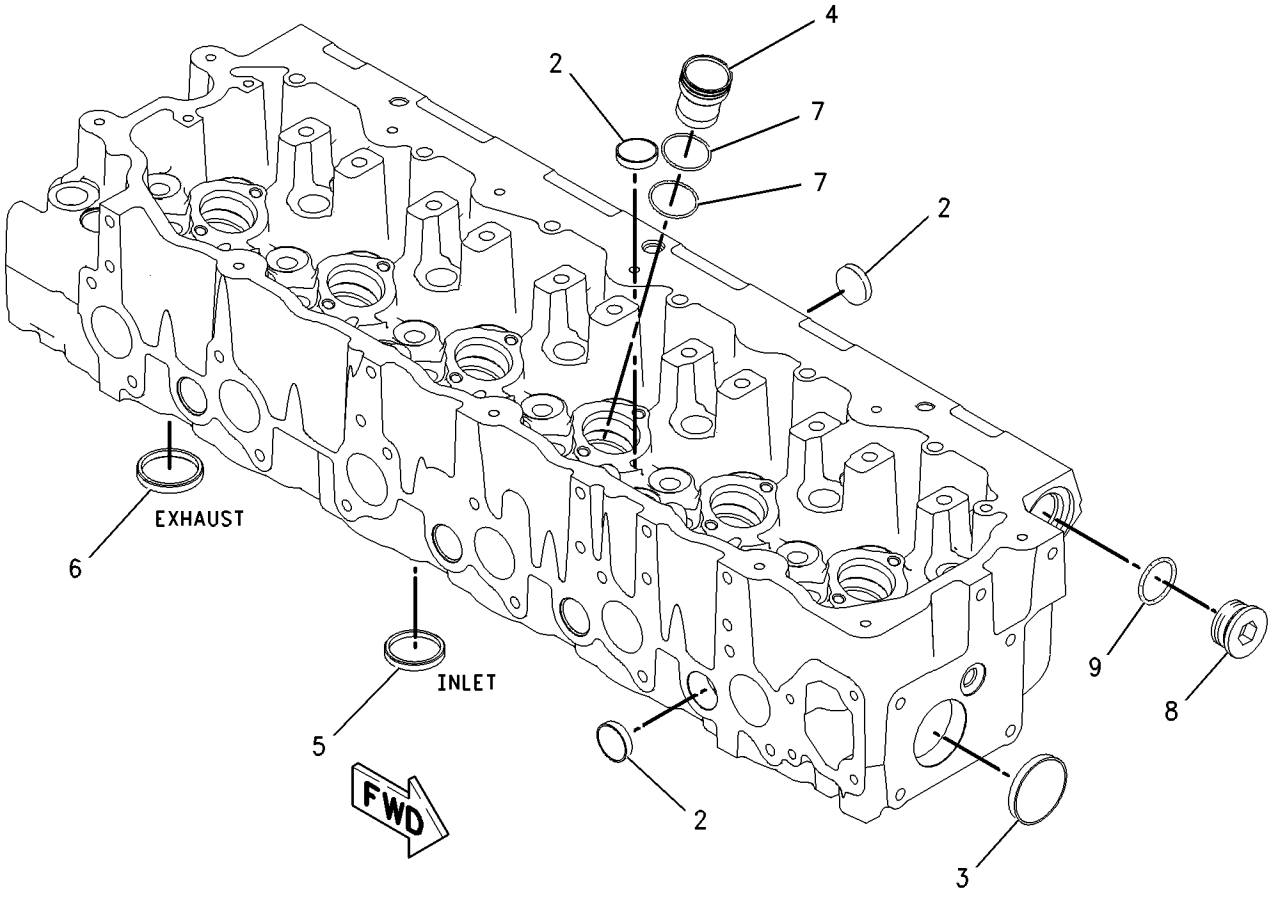


GRAPHIC #1 **<END>** g00948980

# *219-5846* CYLINDER HEAD GP

**S/N: KHX1-UP**

**PART OF 219-5847 CYLINDER HEAD GP**

**SMCS-1100** **i01877679**

| NOTE | REF NO | GRAPHIC REF | PART NUMBER | QTY | PART NAME 1 2 3 4 5 6 (PRODUCT LEVEL) | SEE PAGE |
|---|---|---|---|---|---|---|
| Y | 1 | 1 | *219-5844* | 1 | CYLINDER HEAD AS | 26 |
| | 2 | 1 | **145-7390** | 12 | VALVE-INLET | |
| | 3 | 1 | **147-8211** | 6 | VALVE-EXHAUST | |
| | 4 | 1 | **1W-2715** | 24 | LOCK-RETAINER | |
| | 5 | 1 | **7E-7779** | 12 | RETAINER-SPRING | |
| | 6 | 1 | **147-8214** | 12 | SEAL-VALVE STEM | |
| | 7 | 1 | **140-9670** | 12 | GUIDE-VALVE | |
| | 8 | 1 | **137-6718** | 6 | SPRING-VALVE | |
| | 9 | 1 | **140-6188** | 12 | SPRING-VALVE | |
| | 10 | 1 | **2A-4429** | 12 | LOCK-RETAINER | |
| | 11 | 1 | **134-4483** | 6 | RETAINER-SPRING | |
| | 12 | 1 | **147-8220** | 6 | GUIDE-VALVE | |
| | 13 | 1 | **163-2478** | 6 | SEAL-VALVE STEM | |
| | 14 | 1 | **137-6715** | 6 | SEAT-VALVE SPRING | |

Y-SEPARATE ILLUSTRATION

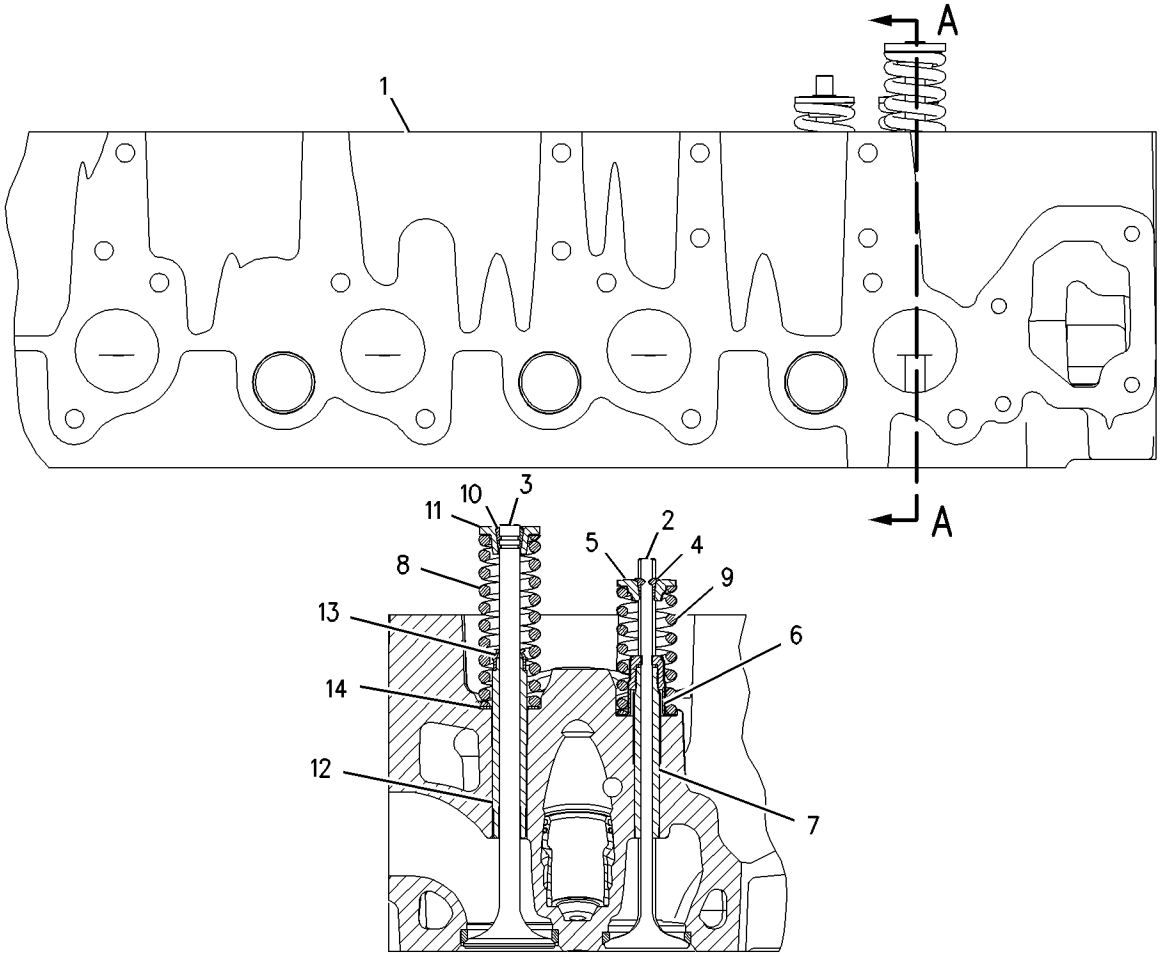


SECTION A-A

GRAPHIC #1 **<END>** g00947786

# BASIC ENGINE

## *219-5847* CYLINDER HEAD GP*R

**S/N: KHX1-UP**

**PART OF 219-5849 CYLINDER HEAD GP**

**SMCS-1100** **i01877684**

| NOTE | REF NO | GRAPHIC REF | PART NUMBER | QTY | PART NAME 1 2 3 4 5 6 (PRODUCT LEVEL) | SEE PAGE |
|---|---|---|---|---|---|---|
| YR | 1 | 1 | **219-5846** | 1 | CYLINDER HEAD GP | 27 |
| | 2 | 1 | **1N-5999** | 2 | PLUG | |
| | 3 | 1 | **2M-9780** | 1 | SEAL-O-RING | |
| | 4 | 1 | **3J-1907** | 2 | SEAL-O-RING | |
| | 5 | 1 | **6V-5048** | 6 | SEAL-O-RING | |
| | 6 | 1 | **7J-0204** | 2 | SEAL-O-RING | |
| | 7 | 1 | **9S-8002** | 6 | PLUG-O-RING | |
| | 8 | 1 | **9S-8004** | 2 | PLUG-O-RING | |
| | 9 | 1 | **9S-8006** | 1 | PLUG-O-RING | |
| | 10 | 1 | **9S-9334** | 1 | PLUG | |
| | 11 | 1 | **9X-7712** | 1 | SEAL-O-RING | |

R-REMFG PART MAY BE AVAILABLE
Y-SEPARATE ILLUSTRATION

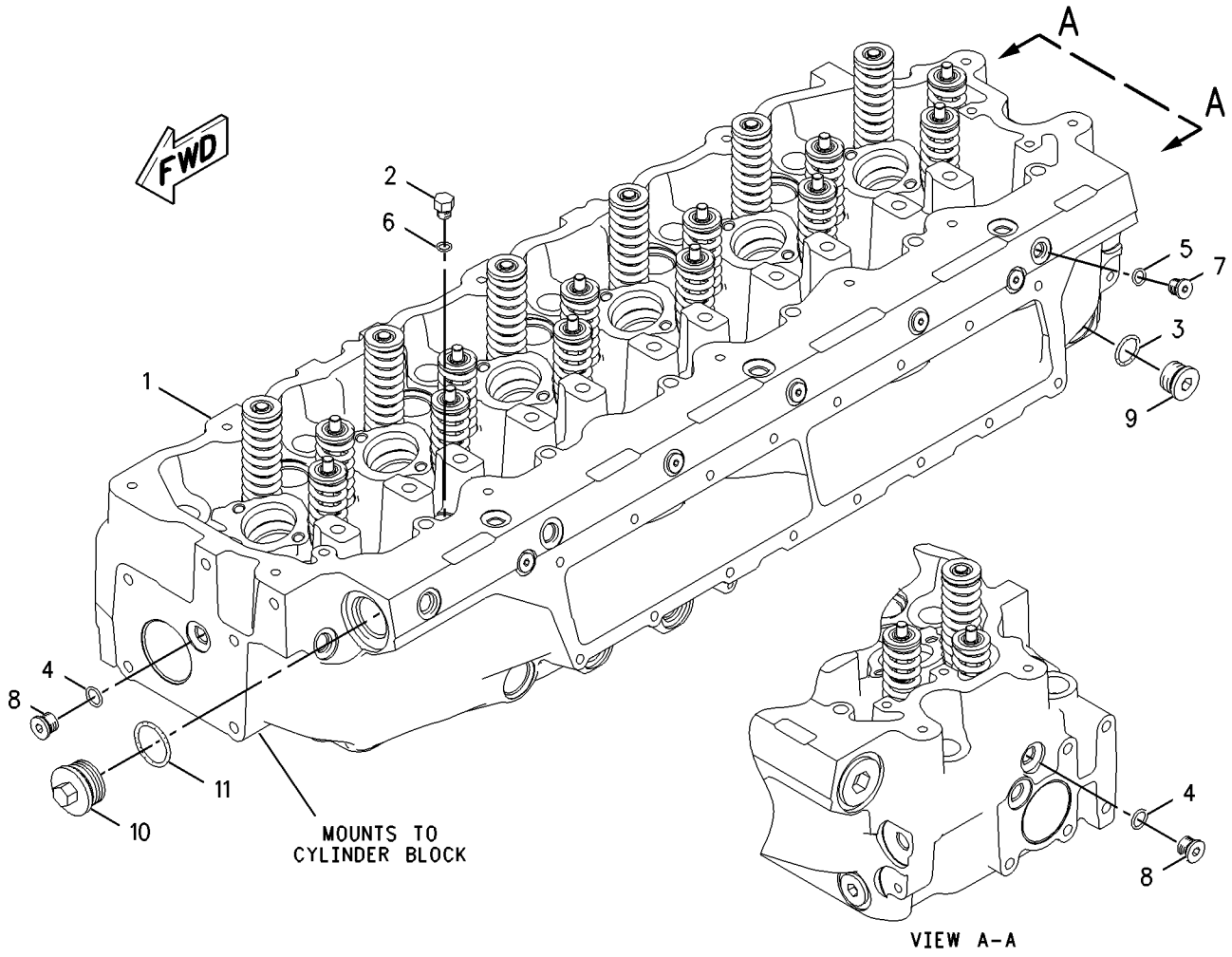


GRAPHIC #1 **<END>** g00947578

# *219-5849* CYLINDER HEAD GP

**S/N: KHX1-UP**

**PART OF 235-1496 ENGINE AR-CORE**

**SMCS-1100** **i02485235**

| NOTE | REF NO | GRAPHIC REF | PART NUMBER | QTY | PART NAME 1 2 3 4 5 6 (PRODUCT LEVEL) | SEE PAGE |
|---|---|---|---|---|---|---|
| Y | 1 | 1 | *219-5847* | 1 | CYLINDER HEAD GP | 28 |
| | 2 | 1 | **133-4995** | 1 | GASKET-CYLINDER HEAD | |
| | 3 | 1 | **138-3252** | 14 | BOLT-12 POINT HEAD | |
| | | 1 | **8T-3282** | 14 | WASHER-HARD (22X35X3.5-MM THK) | |
| M | 4 | 1 | **8T-7950** | 6 | BOLT (M10X1.5X180-MM) | |
| | 5 | 1 | **6V-5839** | 6 | WASHER (11X21X2.5-MM THK) | |

M-METRIC PART
Y-SEPARATE ILLUSTRATION

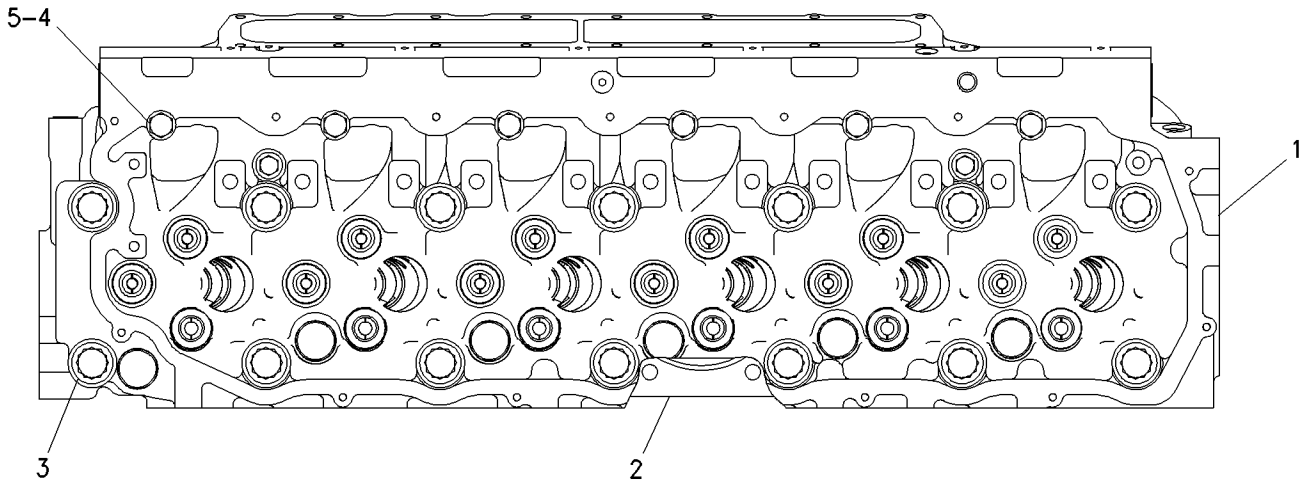


TOP VIEW

GRAPHIC #1 **<END>** g00760746

# BASIC ENGINE

## *165-4557* DAMPER & PULLEY GP

**S/N: KHX1-UP**

**PROVIDES VISCOUS DAMPER WITH 8-GROOVE POLY-RIB PULLEY**

**PART OF 235-1497 ENGINE AR-COMPLETE**

**SMCS-1205** **i01457178**

| NOTE | REF NO | GRAPHIC REF | PART NUMBER | QTY | PART NAME 1 2 3 4 5 6 (PRODUCT LEVEL) | SEE PAGE |
|---|---|---|---|---|---|---|
| | 1 | 1 | **2W-7381** | 1 | WASHER | |
| | 2 | 1 | **167-8121** | 1 | DAMPER AS | |
| | 3 | 1 | **153-1036** | 1 | PULLEY-CRANKSHAFT | |
| M | 4 | 1 | **8T-3666** | 4 | BOLT (M14X60-MM) | |

M-METRIC PART

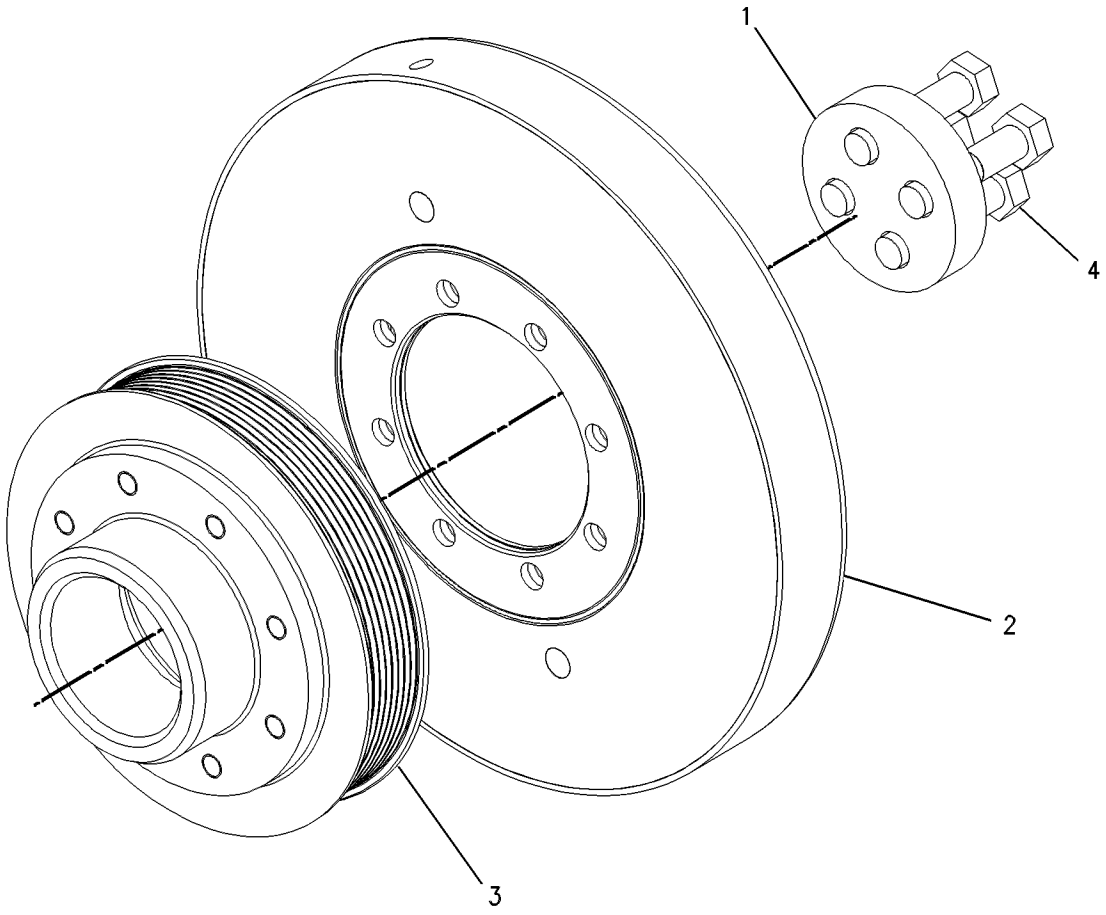


GRAPHIC #1 **<END>** g00585853

# *166-0534* DRAIN GP-ENGINE OIL

**S/N: KHX1-UP**

**PART OF 235-1497 ENGINE AR-COMPLETE**

**SMCS-1302** **i02496726**

| NOTE | REF NO | GRAPHIC REF | PART NUMBER | QTY | PART NAME 1 2 3 4 5 6 (PRODUCT LEVEL) | SEE PAGE |
|---|---|---|---|---|---|---|
| | 1 | 1 | **8N-6854** | 1 | GASKET (ENGINE OIL) | |
| | 2 | 1 | **284-1429** | 1 | ADAPTER AS-DRAIN (ENGINE OIL) | |
| | | 1 | **113-5335** | 1 | PLUG-DRAIN (ENGINE OIL PAN) | |
| | | 1 | **275-3600** | 1 | ADAPTER-DRAIN | |
| | 3 | 1 | **118-3619** | 1 | PLUG-MAGNETIC (ENGINE OIL PAN) | |
| | 4 | 1 | **3K-0360** | 1 | SEAL-O-RING | |
| | 5 | 1 | **5P-4116** | 2 | WASHER-HARD (8.8X20.5X2-MM THK) (PIPE) | |
| M | 6 | 1 | **6V-9804** | 2 | BOLT (M8X1.25X75-MM) | |

M-METRIC PART

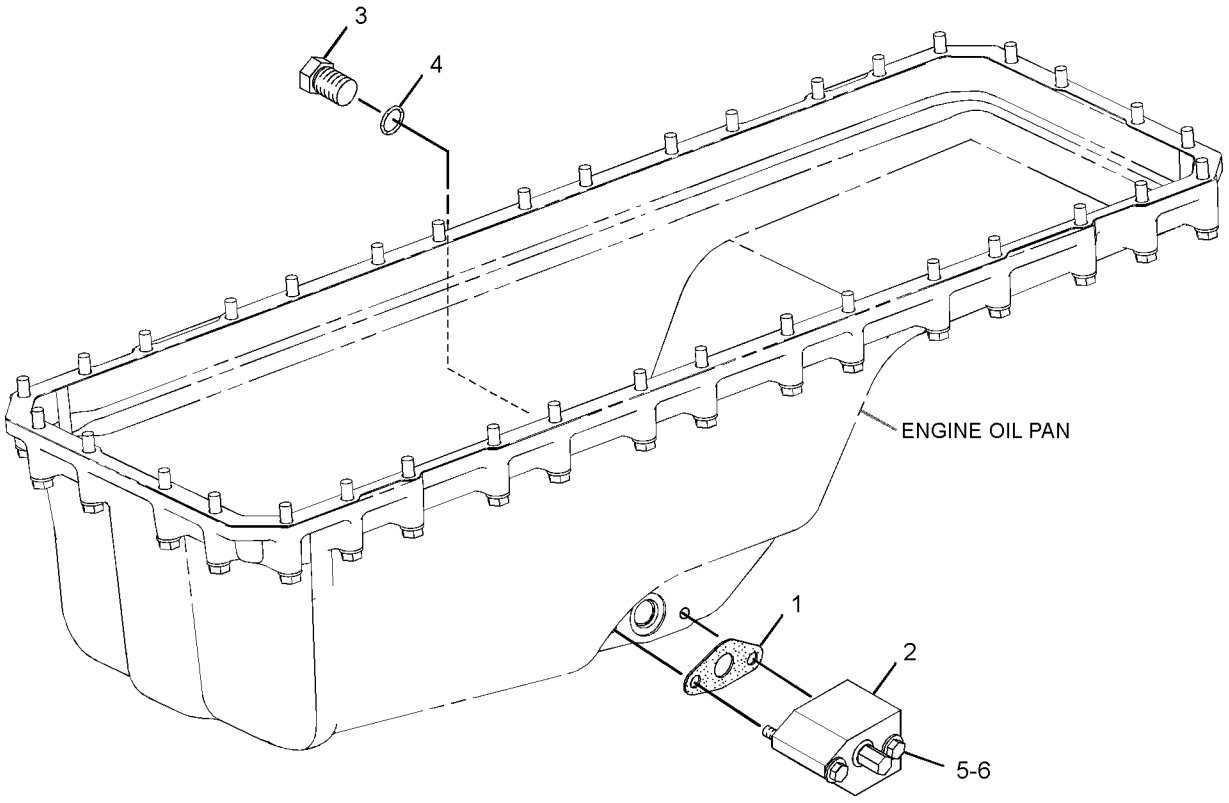


GRAPHIC #1 **<END>** g01288279

# *284-3711* DRAIN GP-ENGINE OIL

**S/N: 5451-UP**

**PART OF 245-9460 CHASSIS AR**

**SMCS-1302** **i02461768**

| NOTE | REF NO | GRAPHIC REF | PART NUMBER | QTY | PART NAME 1 2 3 4 5 6 (PRODUCT LEVEL) | SEE PAGE |
|---|---|---|---|---|---|---|
| | 1 | 1 | **262-0494** | 1 | CLAMP | |
| | 2 | 1 | **3D-2824** | 1 | SEAL-O-RING | |
| | 3 | 1 | **3E-4075** | 1 | FITTING | |
| E | 4 | 1 | **262-8088** | | HOSE (85-CM) | |

E-ORDER BY THE CENTIMETER

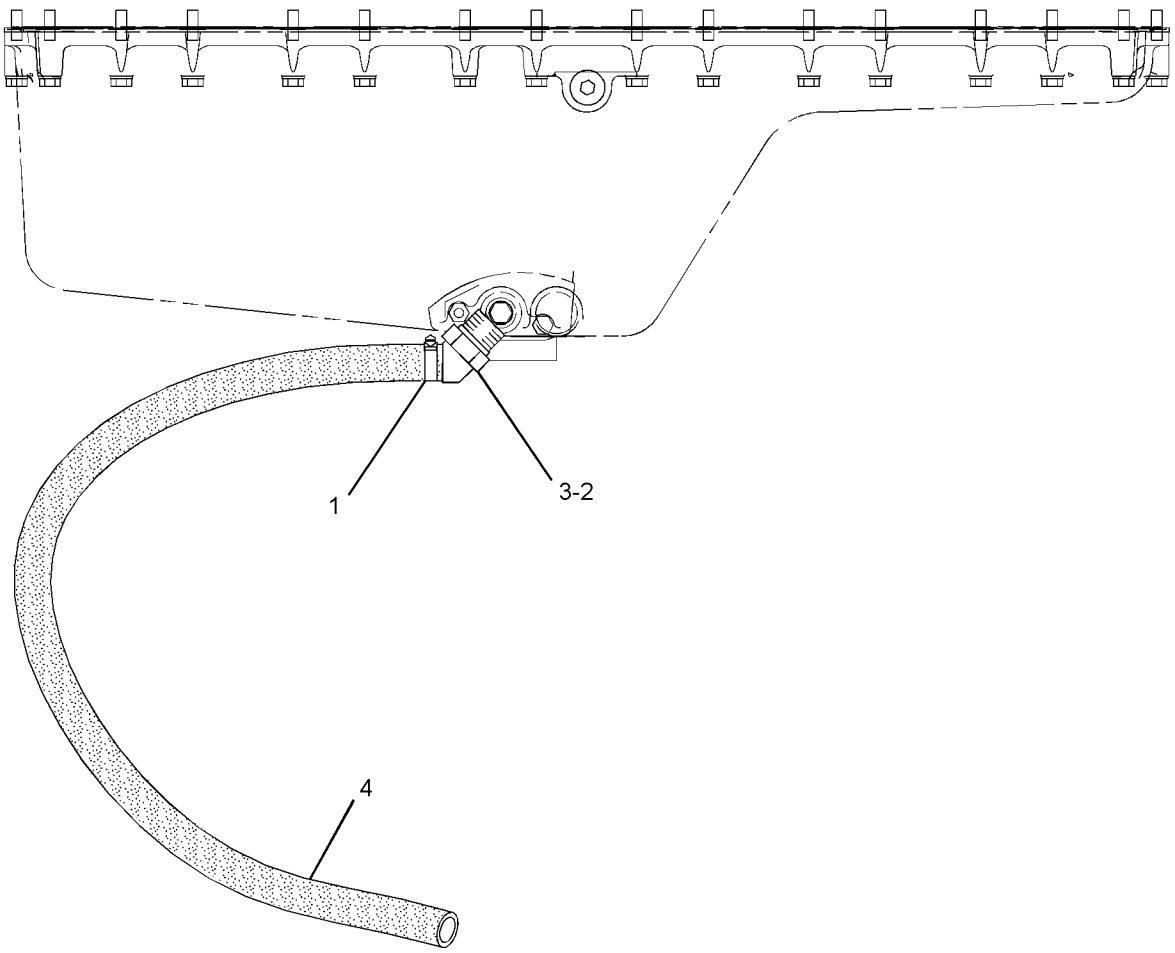


LEFT SIDE VIEW

GRAPHIC #1 **<END>** g01237215

# 253-9892 DRIVE GP-FAN

**S/N: KHX1-UP**

**PART OF 235-1497 ENGINE AR-COMPLETE**

**SMCS-1359** **i02194338**

| NOTE | REF NO | GRAPHIC REF | PART NUMBER | QTY | PART NAME 1 2 3 4 5 6 (PRODUCT LEVEL) | SEE PAGE |
|---|---|---|---|---|---|---|
| Y | 1 | 1 | **253-9893** | 1 | DRIVE GP-FAN | 34 |
| | 2 | 1 | **8T-4121** | 4 | WASHER-HARD (11X21X2.5-MM THK) | |
| M | 3 | 1 | **8T-4186** | 4 | BOLT (M10X1.5X40-MM) | |

M-METRIC PART
Y-SEPARATE ILLUSTRATION

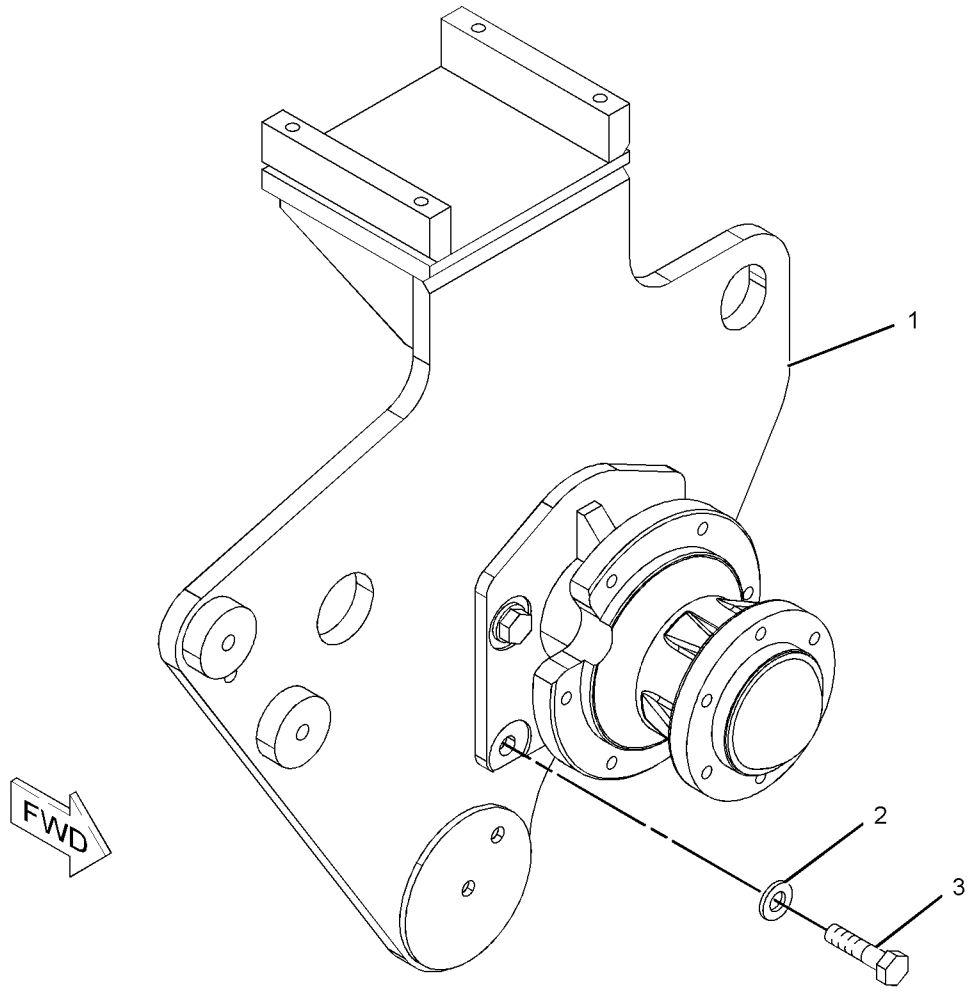


GRAPHIC #1 **<END>** g01108946

# BASIC ENGINE

## *253-9893* DRIVE GP-FAN

**S/N: KHX1-UP**

**PART OF 253-9892 DRIVE GP-FAN**

**SMCS-1359** **i02195389**

| NOTE | REF NO | GRAPHIC REF | PART NUMBER | QTY | PART NAME 1 2 3 4 5 6 (PRODUCT LEVEL) | SEE PAGE |
|---|---|---|---|---|---|---|
| | 1 | 1 | **4W-1203** | 2 | CUP-BEARING | |
| | 2 | 1 | **4W-1204** | 2 | CONE-BEARING | |
| | 3 | 1 | **4W-2042** | 1 | SPACER (35.3X45.5X38.331-MM THK) | |
| | 4 | 1 | **6V-9748** | 1 | SEAL-LIP TYPE | |
| | 5 | 1 | **7C-8369** | 1 | HUB | |
| | 6 | 1 | **7C-8370** | 1 | CAP-DUST | |
| | 7 | 1 | **7C-8634** | 1 | PLATE | |
| | 8 | 1 | **253-9947** | 1 | BRACKET AS | |
| | 9 | 1 | **5S-9062** | 1 | SPACER (35.032X50.8X15.88-MM THK) | |
| M | 10 | 1 | **6V-8004** | 1 | BOLT (M12X1.75X120-MM) | |

M-METRIC PART

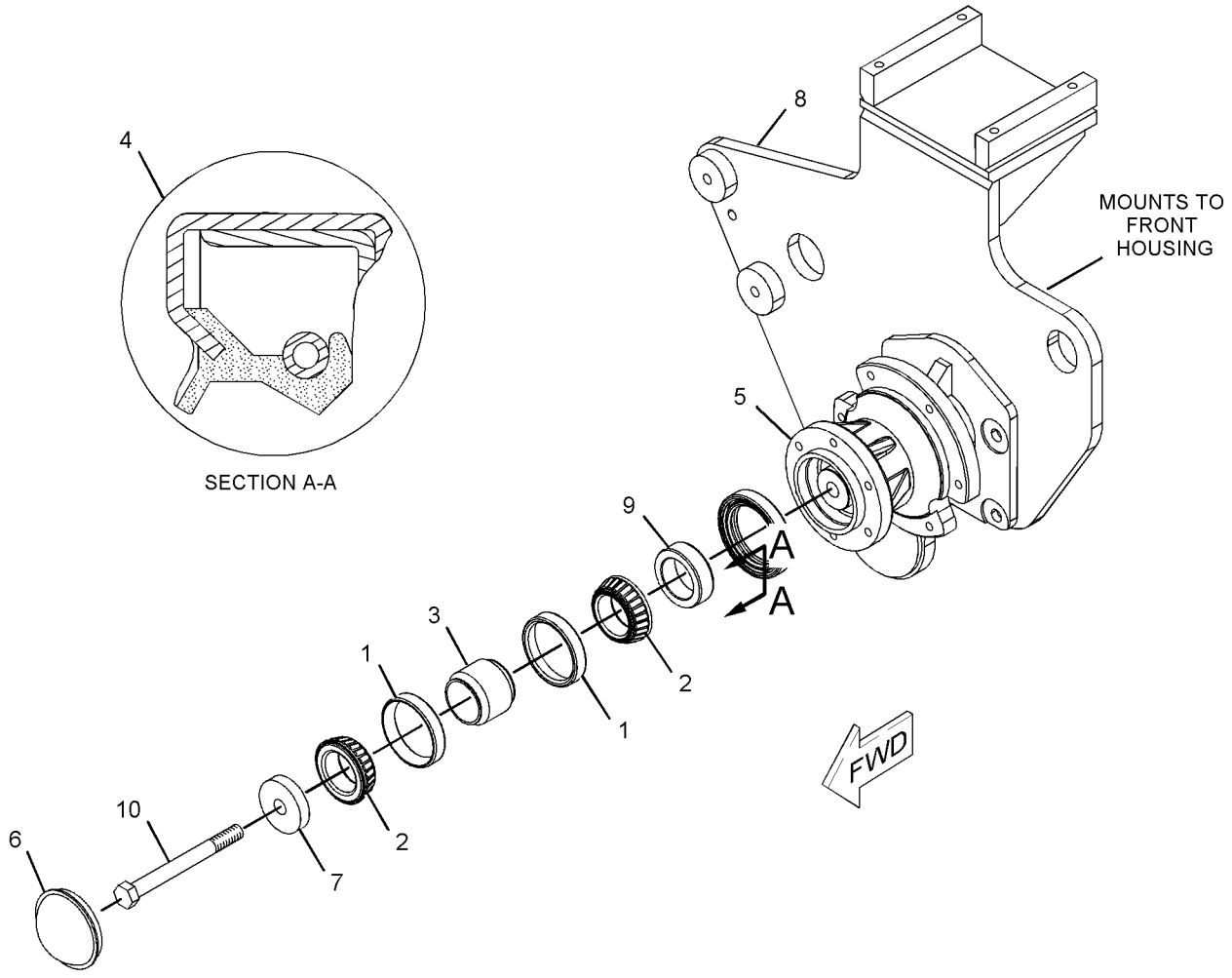


GRAPHIC #1 **<END>** g01108914

# *258-8723* FASTENER GP-CYLINDER HEAD

**S/N: KHX1-UP**

**PART OF 235-1497 ENGINE AR-COMPLETE**

**SMCS-1100** **i02227744**

| NOTE | REF NO | GRAPHIC REF | PART NUMBER | QTY | PART NAME 1 2 3 4 5 6 (PRODUCT LEVEL) | SEE PAGE |
|---|---|---|---|---|---|---|
| | 1 | 1 | **229-8844** | 3 | CLIP | |
| | 2 | 1 | **244-4500** | 11 | SPRING | |
| M | 3 | 1 | **8T-0100** | 11 | BOLT (M8X1.25X60-MM) | |
| | 4 | 1 | **9N-0869** | 11 | WASHER-HARD (8.8X25.5X2-MM THK) | |

M-METRIC PART

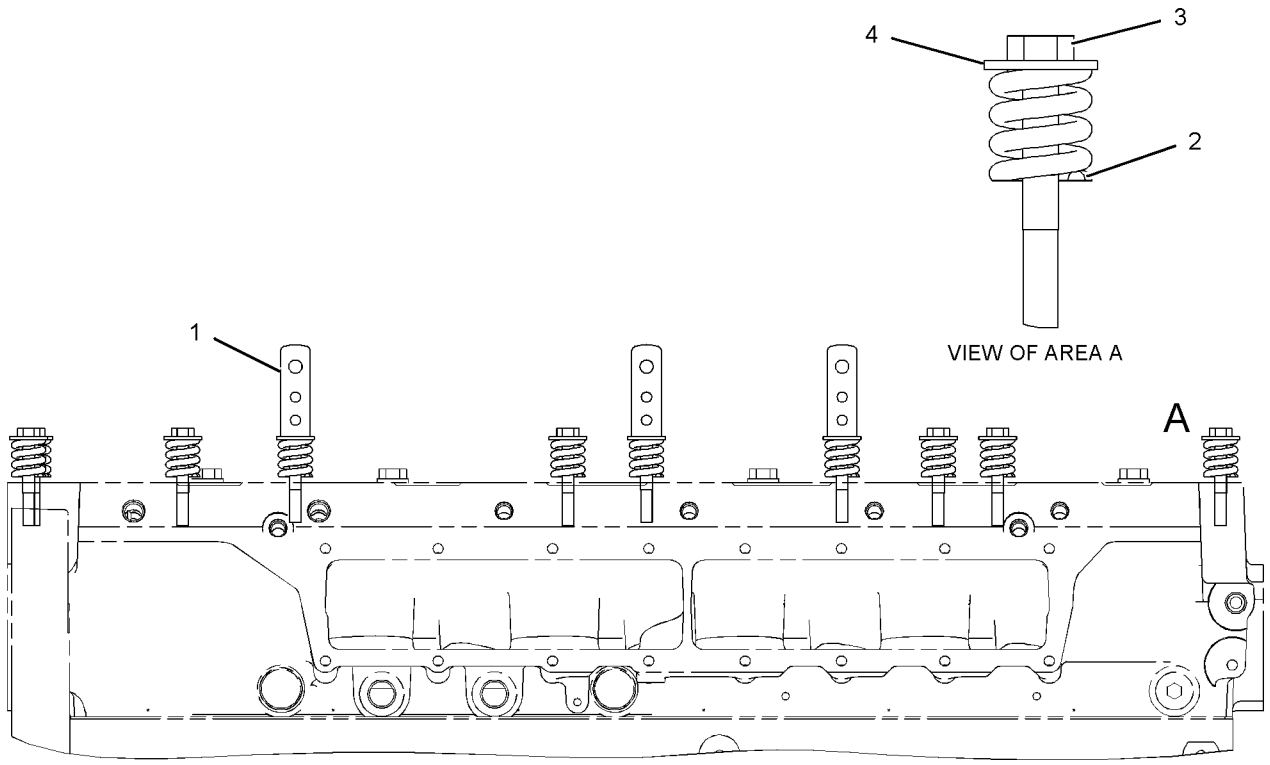


VIEW OF AREA A

RIGHT SIDE VIEW

GRAPHIC #1 **<END>** g01125046

# *218-0859* FASTENER GP-DAMPER

**S/N: KHX1-UP**

**PART OF 235-1497 ENGINE AR-COMPLETE**

**SMCS-1205, 7553** **i02094267**

| NOTE | REF NO | GRAPHIC REF | PART NUMBER | QTY | PART NAME 1 2 3 4 5 6 (PRODUCT LEVEL) | SEE PAGE |
|---|---|---|---|---|---|---|
| | 1 | 1 | **228-3621** | 1 | SPACER | |
| M | 2 | 1 | **6V-4249** | 8 | BOLT (M10X1.5X50-MM) | |

M-METRIC PART

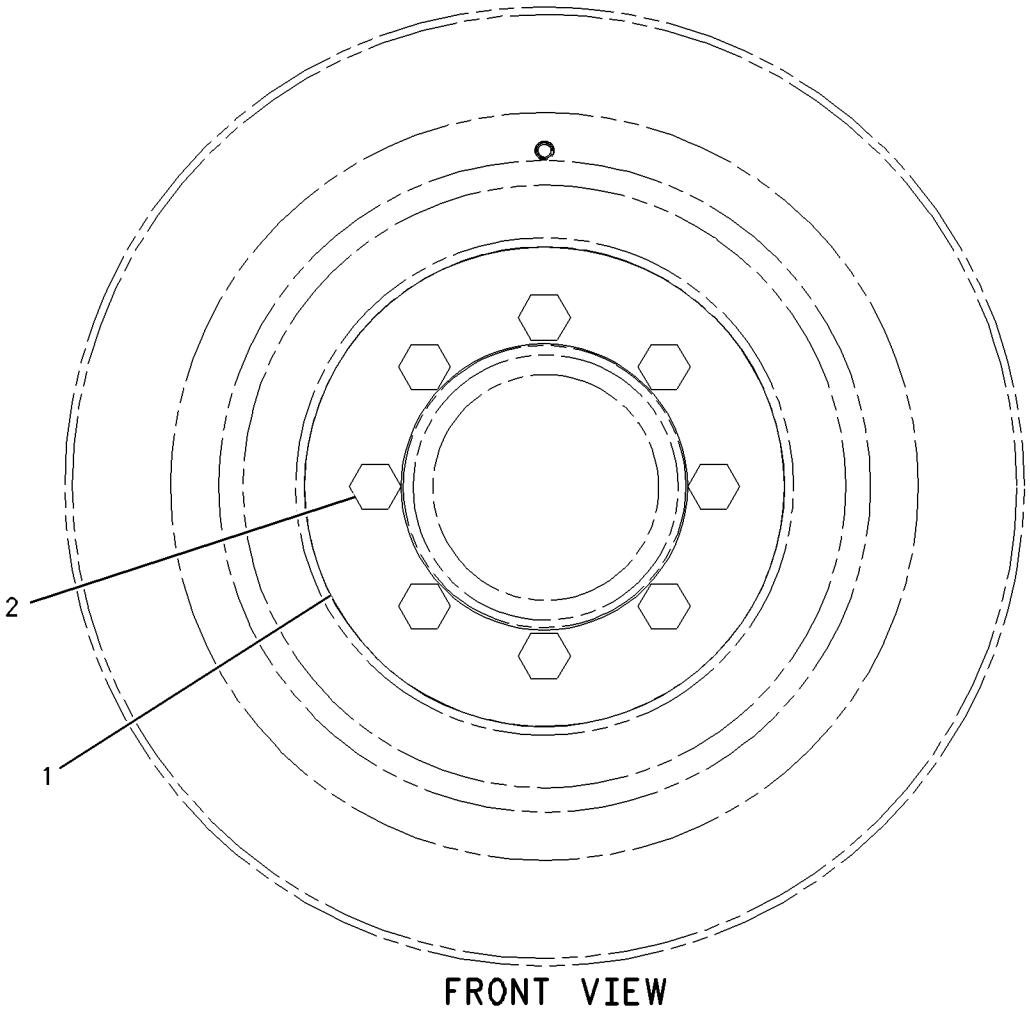


GRAPHIC #1 **<END>** g00919524

# 260-3217 FASTENER GP-FRONT COVER

**S/N: KHX1-UP**

**PART OF 235-1497 ENGINE AR-COMPLETE**

**SMCS-1151, 1166** **i02194437**

| NOTE | REF NO | GRAPHIC REF | PART NUMBER | QTY | PART NAME 1 2 3 4 5 6 (PRODUCT LEVEL) | SEE PAGE |
|---|---|---|---|---|---|---|
| M | 1 | 1 | **6V-2317** | 5 | BOLT (M8X1.25X30-MM) | |
| M | 2 | 1 | **8T-0100** | 1 | BOLT (M8X1.25X60-MM) | |

M-METRIC PART

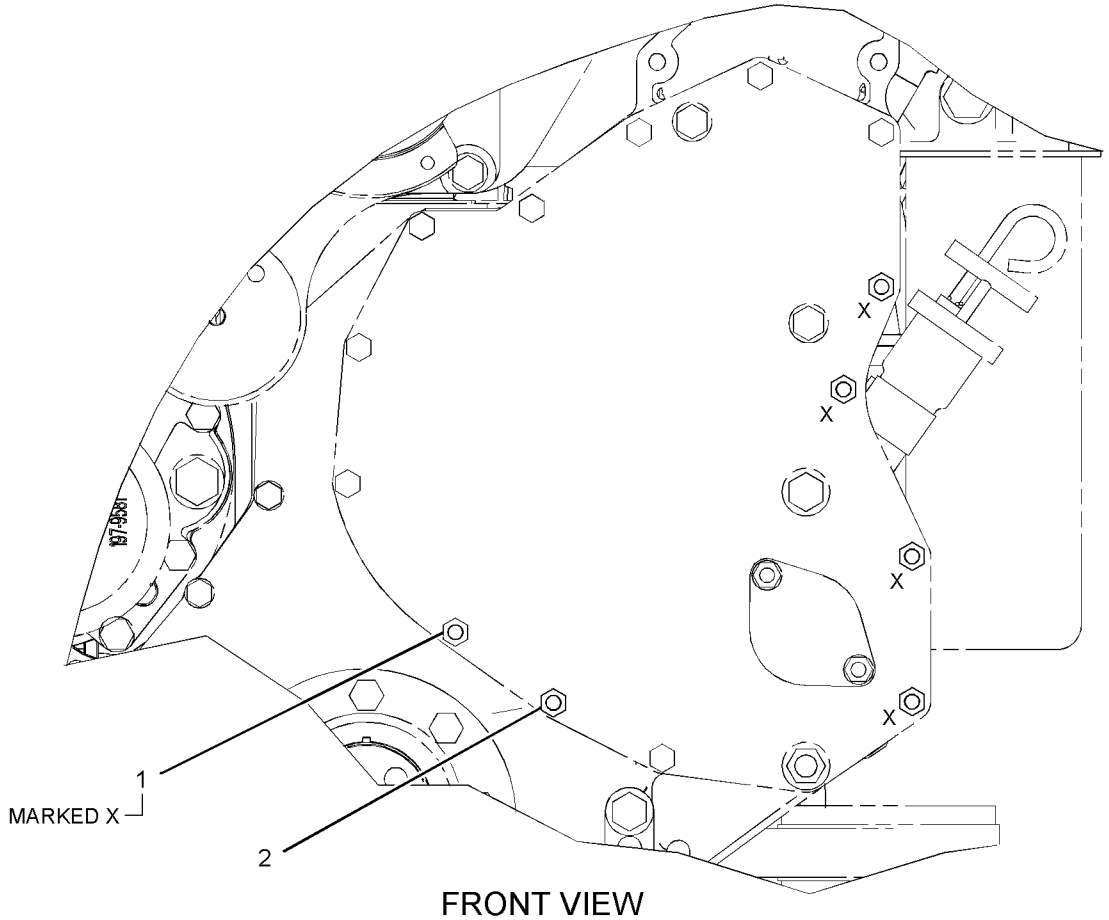


FRONT VIEW

GRAPHIC #1 **<END>** g01108912

# *116-4556* FASTENER GP-FRONT HOUSING

**S/N: KHX1-UP**
**PART OF 235-1497 ENGINE AR-COMPLETE**
**CANNOT BE USED WITH FRONT ENGINE SUPPORT**

**SMCS-1151** **i01427276**

| NOTE | REF NO | GRAPHIC REF | PART NUMBER | QTY | PART NAME 1 2 3 4 5 6 (PRODUCT LEVEL) | SEE PAGE |
|---|---|---|---|---|---|---|
| M | 1 | 1 | **6V-8336** | 6 | BOLT (M12X1.75X70-MM) | |
| | | 1 | **5P-8245** | 6 | WASHER-HARD (13.5X25.5X3-MM THK) | |

M-METRIC PART

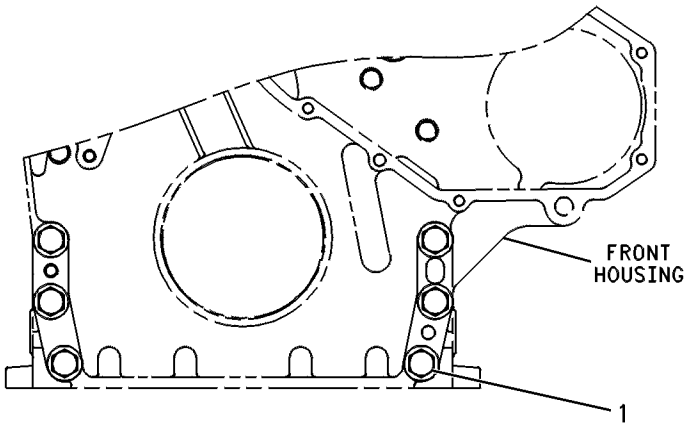


FRONT VIEW

GRAPHIC #1 **<END>** g00244671

## *113-6170* FASTENER GP-LIFTING—ENGINE, REAR

**S/N: KHX1-UP**
**PART OF 235-1497 ENGINE AR-COMPLETE**
**CANNOT BE USED WITH REMOTE FUEL FILTER**

**SMCS-1122** **i01569044**

| NOTE | REF NO | GRAPHIC REF | PART NUMBER | QTY | PART NAME 1 2 3 4 5 6 (PRODUCT LEVEL) | SEE PAGE |
|---|---|---|---|---|---|---|
| | 1 | 1 | **8T-4121** | 3 | WASHER-HARD (11X21X2.5-MM THK) | |
| M | 2 | 1 | **8T-4136** | 3 | BOLT (M10X1.5X25-MM) | |

M-METRIC PART

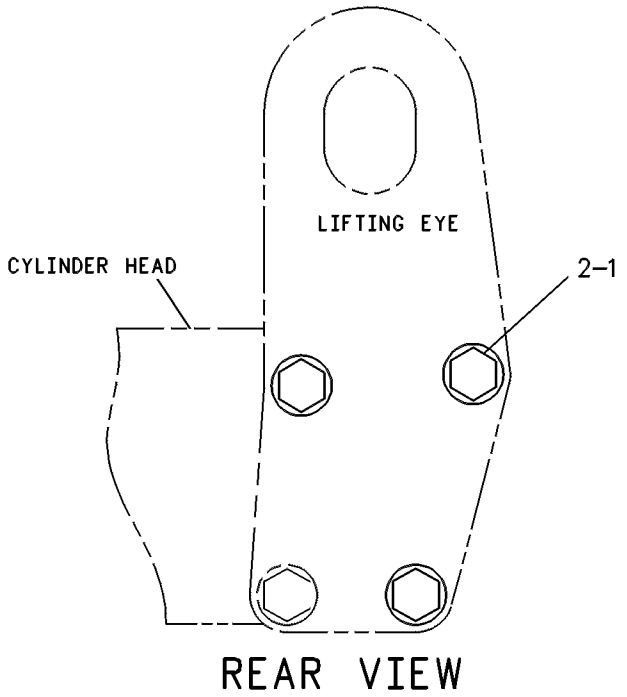


GRAPHIC #1 **<END>** g00246972

# *7E-0712* FLYWHEEL GP

**S/N: KHX1-UP**

**PART OF 235-1497 ENGINE AR-COMPLETE**

**SMCS-1156** **i01814766**

| NOTE | REF NO | GRAPHIC REF | PART NUMBER | QTY | PART NAME 1 2 3 4 5 6 (PRODUCT LEVEL) | SEE PAGE |
|---|---|---|---|---|---|---|
| M | 1 | 1 | **7X-3350** | 8 | BOLT-LOCKING (M12X1.75X35-MM) | |
| | 2 | 1 | **5P-8245** | 8 | WASHER-HARD (13.5X25.5X3-MM THK) | |
| | 3 | 1 | **7E-0711** | 1 | FLYWHEEL AS | |
| | 4 | 1 | **7W-5095** | 1 | GEAR-FLYWHEEL (134-TEETH) | |

M-METRIC PART

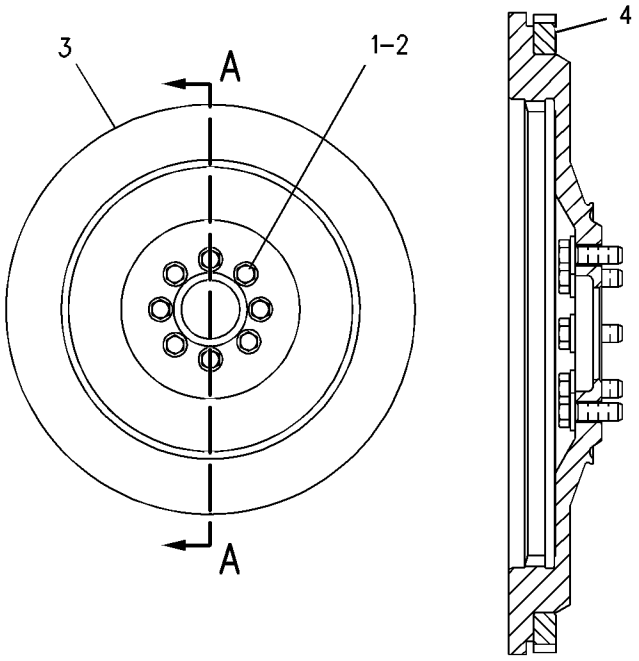


GRAPHIC #1 **<END>** g00926539

# BASIC ENGINE

## *205-1321* GEAR GP-FRONT

**S/N: KHX1-UP**

**PART OF 235-1496 ENGINE AR-CORE**

**SMCS-1151, 1162, 1206** **i02593035**

| NOTE | REF NO | GRAPHIC REF | PART NUMBER | QTY | PART NAME 1 2 3 4 5 6 (PRODUCT LEVEL) | SEE PAGE |
|---|---|---|---|---|---|---|
| | 1 | 1 | **113-6069** | 1 | PLATE-THRUST | |
| | 2 | 1 | **115-4219** | 1 | PLATE-RETAINING | |
| | 3 | 1 | **200-4495** | 1 | SHAFT-IDLER | |
| | 4 | 1 | **205-1320** | 1 | GEAR AS-IDLER (50-TEETH) | |
| | 4A | 1 | **115-4072** | 1 | BEARING | |
| M | 5 | 1 | **136-4183** | 1 | BOLT-12 POINT HEAD (M10X1.5X30-MM) | |
| M | 6 | 1 | **6V-5843** | 2 | BOLT (M10X1.5X45-MM) | |

M-METRIC PART

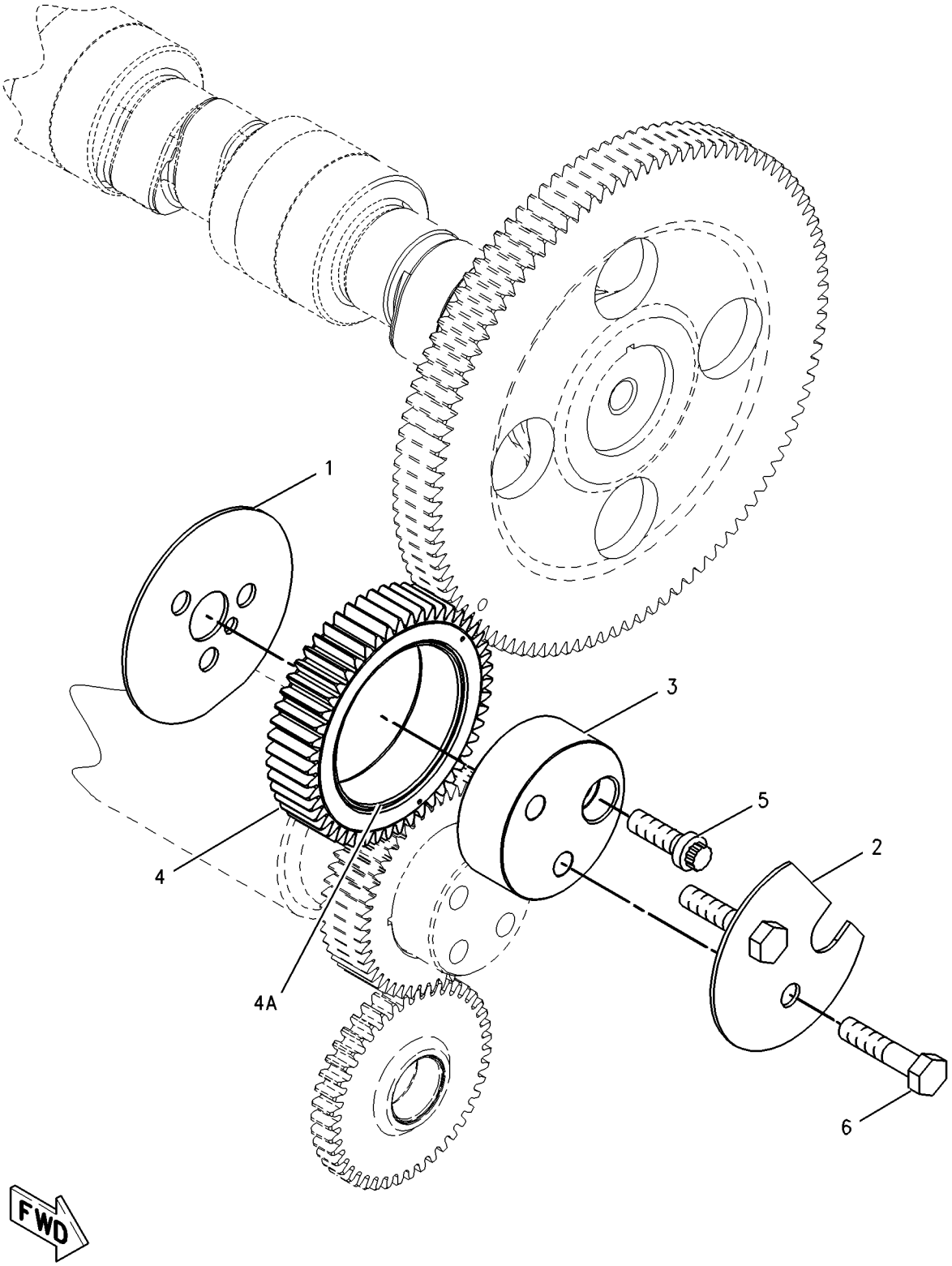


GRAPHIC #1 **<END>** g00870175

# 255-9264 HOUSING GP-FLYWHEEL

**S/N: KHX1-UP**

**PART OF 235-1497 ENGINE AR-COMPLETE**

**SMCS-1157** **i02194492**

| NOTE | REF NO | GRAPHIC REF | PART NUMBER | QTY | PART NAME 1 2 3 4 5 6 (PRODUCT LEVEL) | SEE PAGE |
|---|---|---|---|---|---|---|
| | 1 | 1 | **255-9263** | 1 | HOUSING-FLYWHEEL | |
| | 3 | 1 | **2P-1294** | 1 | PLUG-SEAL | |
| M | 4 | 1 | **6V-5842** | 2 | BOLT (M10X1.5X40-MM) | |
| M | 5 | 1 | **8T-0226** | 10 | BOLT (M14X2X45-MM) | |
| | 6 | 1 | **9S-4182** | 1 | PLUG-O-RING | |
| | 7 | 1 | **9S-4183** | 1 | PLUG-O-RING | |

M-METRIC PART

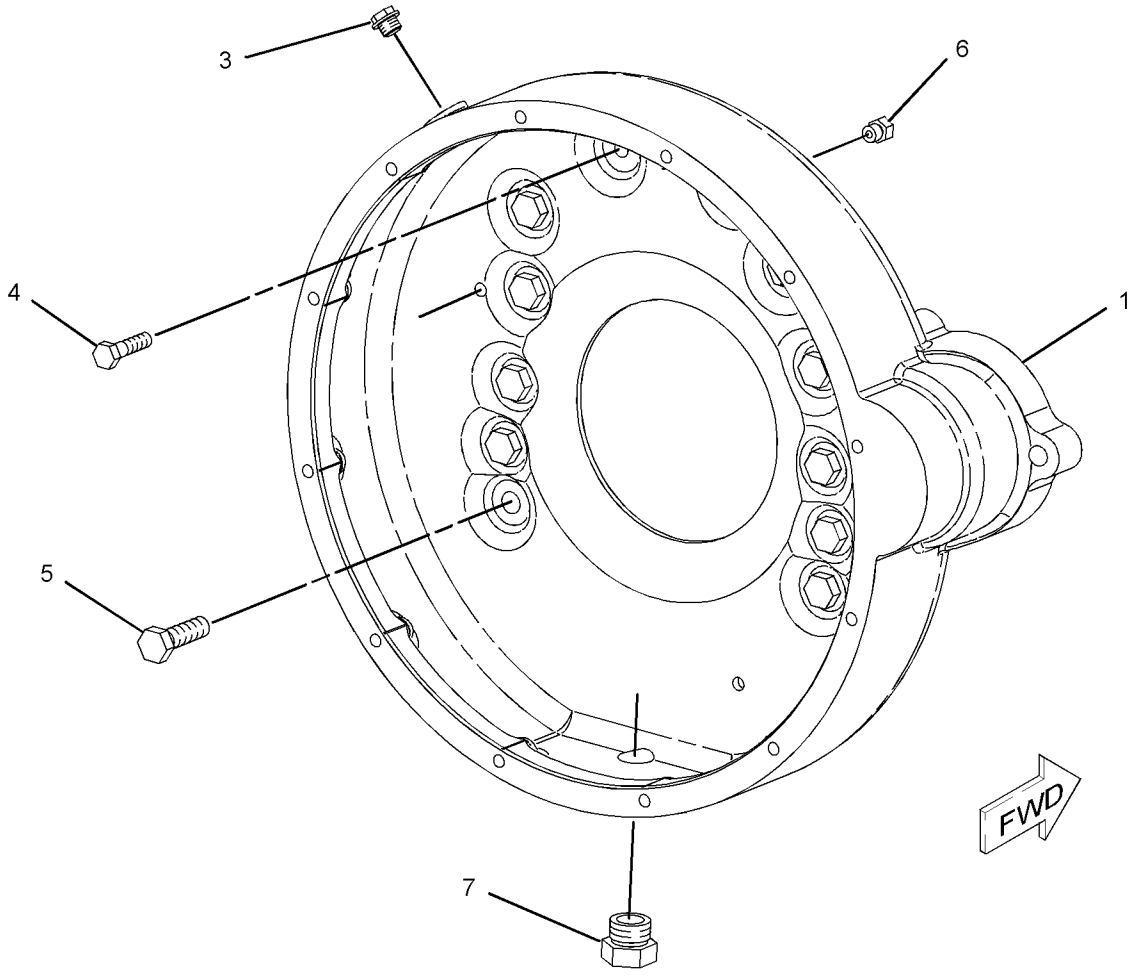


GRAPHIC #1 **<END>** g01109141

# *165-4446* HOUSING GP-FRONT

**S/N: KHX1-UP**

**PART OF 235-1496 ENGINE AR-CORE**

**SMCS-1151, 1162, 1206** **i02665761**

| NOTE | REF NO | GRAPHIC REF | PART NUMBER | QTY | PART NAME 1 2 3 4 5 6 (PRODUCT LEVEL) | SEE PAGE |
|---|---|---|---|---|---|---|
| C | 1 | 1 | **245-3259** | 1 | HOUSING-FRONT | |
| M | 2 | 1 | **6V-3918** | 4 | BOLT (M8X1.25X50-MM) | |
| M | 3 | 1 | **6V-5217** | 8 | BOLT (M8X1.25X20-MM) | |
| | 4 | 1 | **9M-1974** | 12 | WASHER-HARD (8.8X16X2-MM THK) | |
| B | 5 | 1 | **1U-8846** | | SEALANT-GASKET | |

B-USE AS REQUIRED
C-CHANGE FROM PREVIOUS TYPE
M-METRIC PART

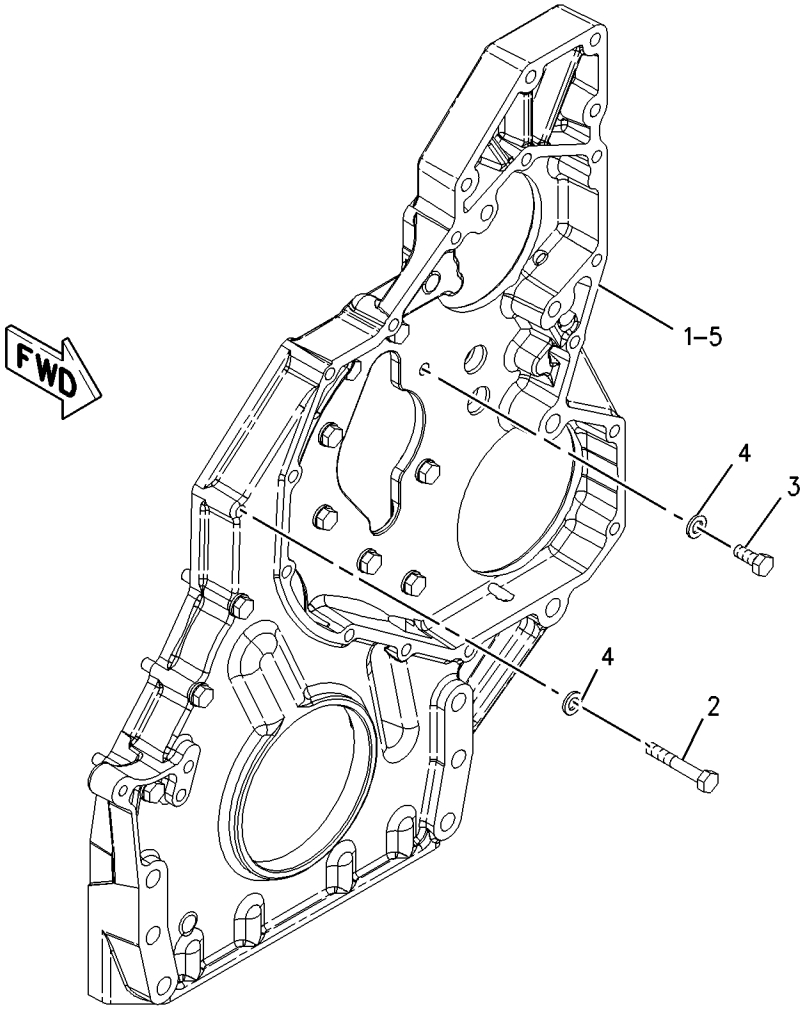


GRAPHIC #1 **<END>** g01005394

# 192-1563 IDLER GP-BELT–ALTERNATOR, REFRIGERANT COMPRESSOR

**S/N: 5451-UP**

**PART OF 251-1549 COMPRESSOR & MTG GP-REFRIG**

**AN ATTACHMENT**

**SMCS-1358, 1397, 1802** **i02045201**

| NOTE | REF NO | GRAPHIC REF | PART NUMBER | QTY | PART NAME 1 2 3 4 5 6 (PRODUCT LEVEL) | SEE PAGE |
|---|---|---|---|---|---|---|
| | 1 | 1 | **151-2898** | 1 | SPACER (10.4X38.1X20-MM THK) | |
| | 2 | 1 | **144-5611** | 1 | PULLEY AS-IDLER | |
| | 3 | 1 | **145-2901** | 1 | COVER-DUST | |
| | 4 | 1 | **151-2900** | 1 | BOLT (M10X1.5X54.25-MM) | |
| | 5 | 1 | **6V-9027** | 1 | SEAL-O-RING | |

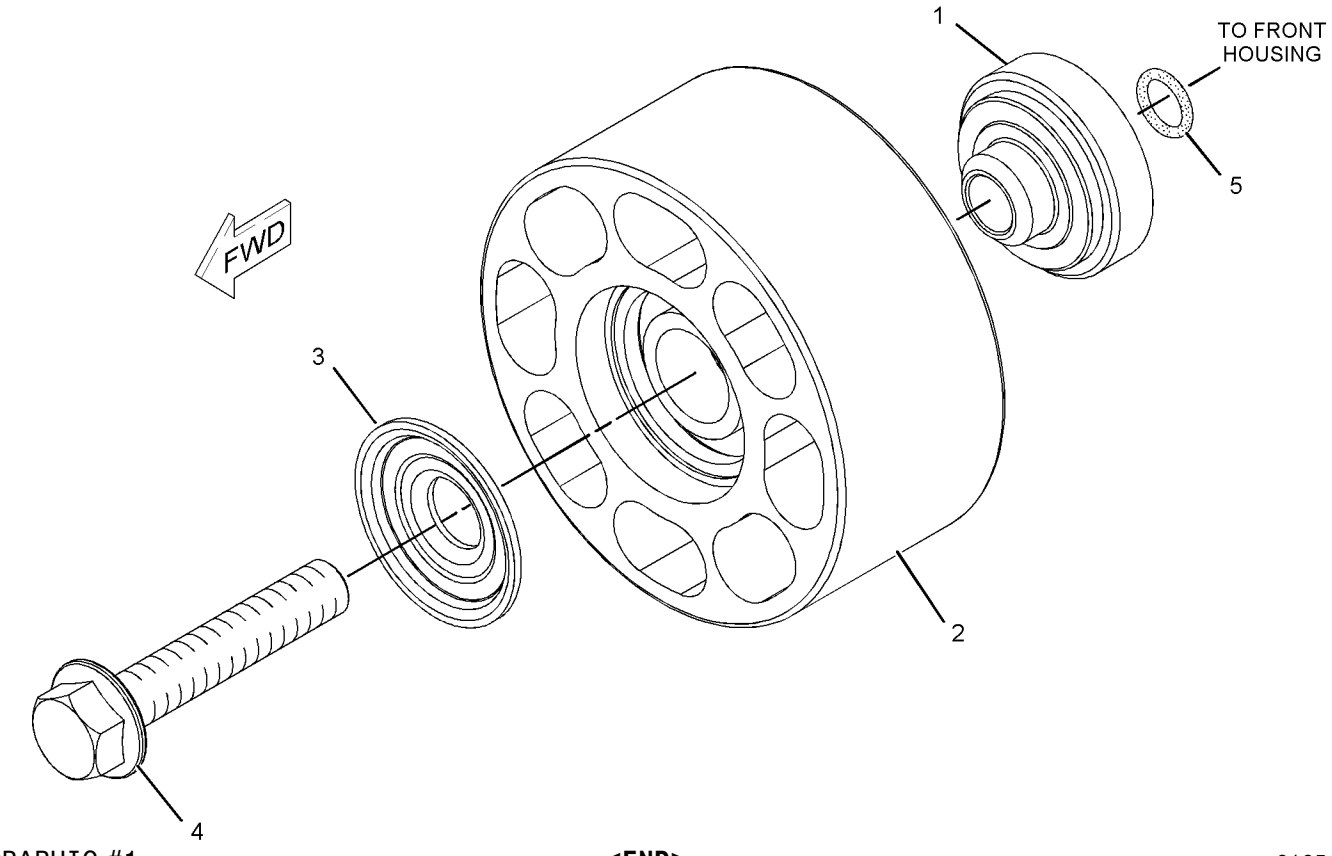


GRAPHIC #1 **<END>** g01051933

## *139-4081* LIFTER GP-VALVE—MECHANISM

**S/N: KHX1-UP**

**PART OF 232-3717 VALVE MECHANISM GP**

**SMCS-1209** **i00827973**

| NOTE | REF NO | GRAPHIC REF | PART NUMBER | QTY | PART NAME 1 2 3 4 5 6 (PRODUCT LEVEL) | SEE PAGE |
|---|---|---|---|---|---|---|
| | 1 | 1 | **139-9476** | 1 | SHAFT AS-LIFTER | |
| | | 1 | **2D-6642** | 2 | BALL | |
| | 2 | 1 | **7E-6794** | 4 | ARM AS-INJECTOR | |
| | 3 | 1 | **139-4084** | 2 | SPACER | |

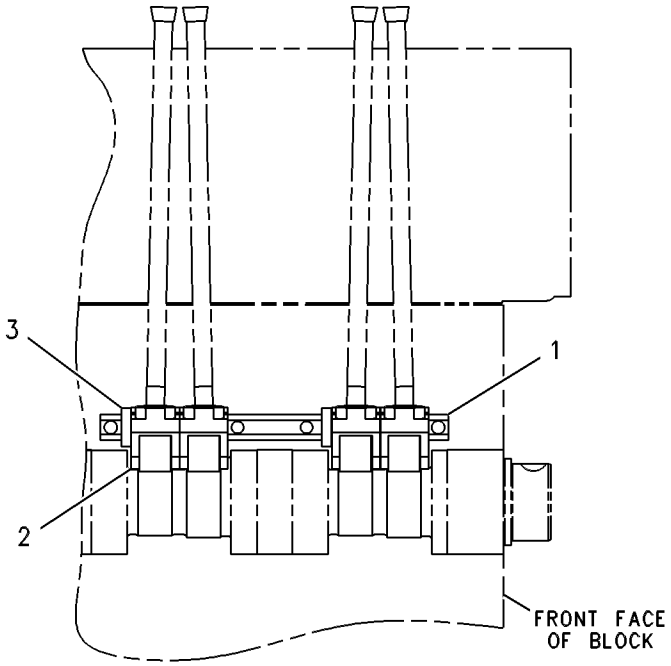


RIGHT SIDE VIEW

GRAPHIC #1 **<END>** g00288708

# *153-5417* LIFTING GP-ENGINE

**S/N: KHX1-UP**
**REAR**
**PART OF 235-1497 ENGINE AR-COMPLETE**
**FOR USE WITH REMOTE FUEL FILTER, 113-6170—PAGE 39**

**SMCS-1122** **i00864444**

| NOTE | REF NO | GRAPHIC REF | PART NUMBER | QTY | PART NAME 1 2 3 4 5 6 (PRODUCT LEVEL) | SEE PAGE |
|---|---|---|---|---|---|---|
| M | 1 | 1 | **8T-4136** | 1 | BOLT (M10X1.5X25-MM) | |
| | 2 | 1 | **8T-4121** | 1 | WASHER-HARD (11X21X2.5-MM THK) | |
| | 3 | 1 | **154-0896** | 1 | PLATE-LIFTING | |

M-METRIC PART

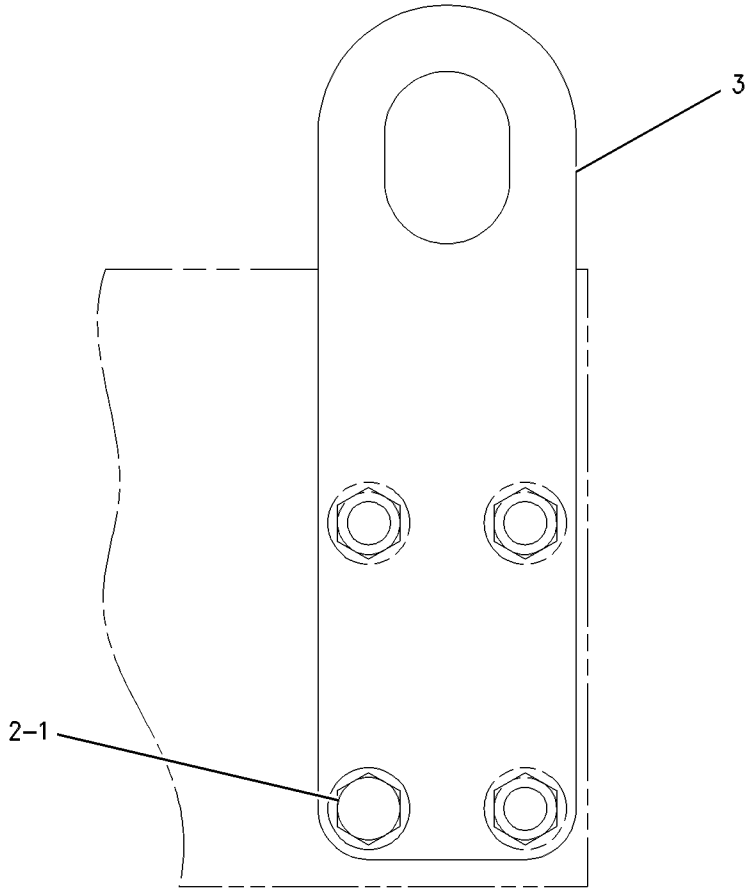


REAR VIEW

GRAPHIC #1 **<END>** g00441547

# *215-6982* MOUNTING GP-ALTERNATOR

**S/N: KHX1-UP**

**PART OF 235-1497 ENGINE AR-COMPLETE**

**SMCS-1405** **i02194526**

| NOTE | REF NO | GRAPHIC REF | PART NUMBER | QTY | PART NAME 1 2 3 4 5 6 (PRODUCT LEVEL) | SEE PAGE |
|---|---|---|---|---|---|---|
| | 1 | 1 | **211-2101** | 2 | SLEEVE | |
| | 2 | 1 | **215-6981** | 1 | BRACKET-MOUNTING | |
| M | 3 | 1 | **8T-4137** | 1 | BOLT (M10X1.5X20-MM) | |
| M | 4 | 1 | **8T-4195** | 2 | BOLT (M10X1.5X30-MM) | |

M-METRIC PART

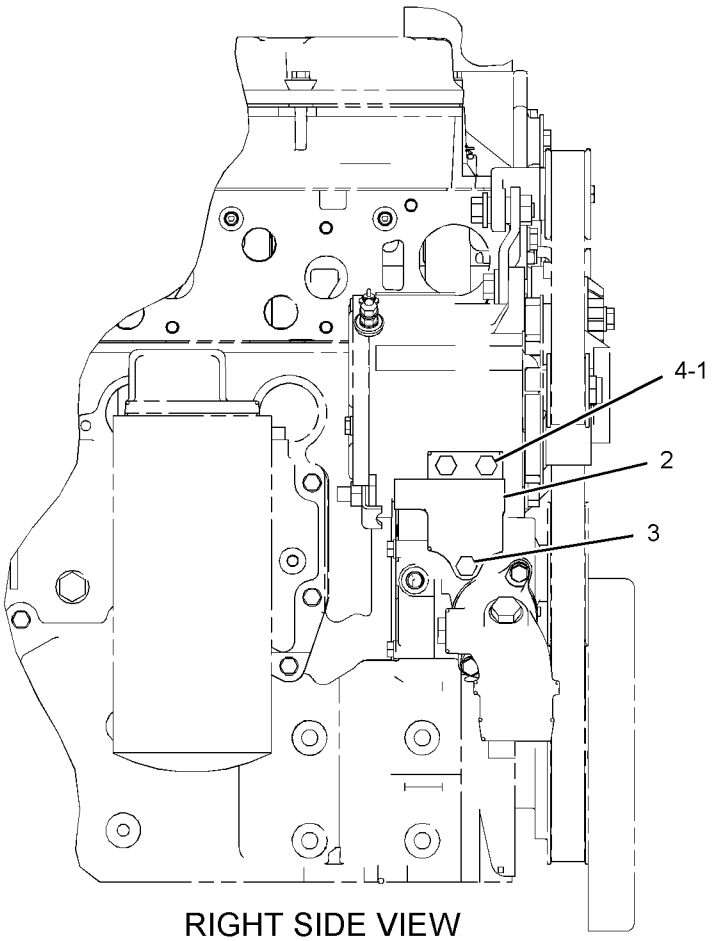


RIGHT SIDE VIEW

GRAPHIC #1 **<END>** g01108789

# *255-8899* MOUNTING GP-ENGINE & TMSN

**S/N: 5451-UP**

**PART OF 245-9460 CHASSIS AR**

**SMCS-1152, 1153, 1154** **i02634463**

| NOTE | REF NO | GRAPHIC REF | PART NUMBER | QTY | PART NAME 1 2 3 4 5 6 (PRODUCT LEVEL) | SEE PAGE |
|---|---|---|---|---|---|---|
| | 1 | 1 | **9W-7385** | 2 | SLEEVE | |
| | 2 | 1 | **9W-9920** | 2 | MOUNT AS | |
| | 3 | 1 | **155-9412** | 2 | MOUNT AS | |
| | 4 | 1 | **226-7927** | 2 | BRACKET AS | |
| | 5 | 1 | **8T-4121** | 12 | WASHER-HARD (11X21X2.5-MM THK) | |
| | 6 | 1 | **8T-4123** | 2 | WASHER (22X35X3.5-MM THK) | |
| | 7 | 1 | **8T-4167** | 2 | WASHER-HARD (26X44X4-MM THK) | |
| M | 8 | 1 | **8T-4193** | 8 | BOLT (M16X2X50-MM) | |
| M | 9 | 1 | **8T-4195** | 12 | BOLT (M10X1.5X30-MM) | |
| M | 10 | 1 | **8C-3290** | 2 | BOLT (M24X3X150-MM) | |
| M | 11 | 1 | **7X-2532** | 2 | BOLT (M20X2.5X130-MM) | |
| | 12 | 1 | **9W-6582** | 2 | SLEEVE | |
| | 13 | 1 | **9W-6584** | 2 | WASHER (20.5X114X10-MM THK) | |
| | 14 | 1 | **9W-7388** | 2 | WASHER (26X144X12-MM THK) | |
| | 15 | 1 | **9X-8257** | 8 | WASHER (17.5X30X3.5-MM THK) | |

M-METRIC PART

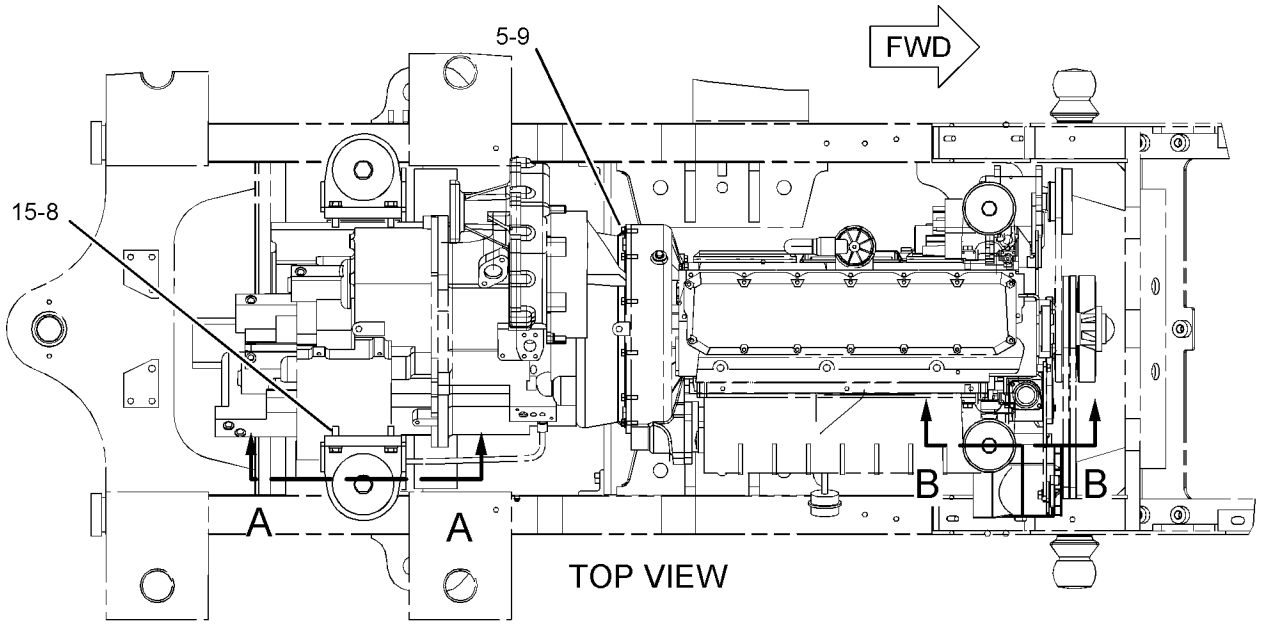


TOP VIEW

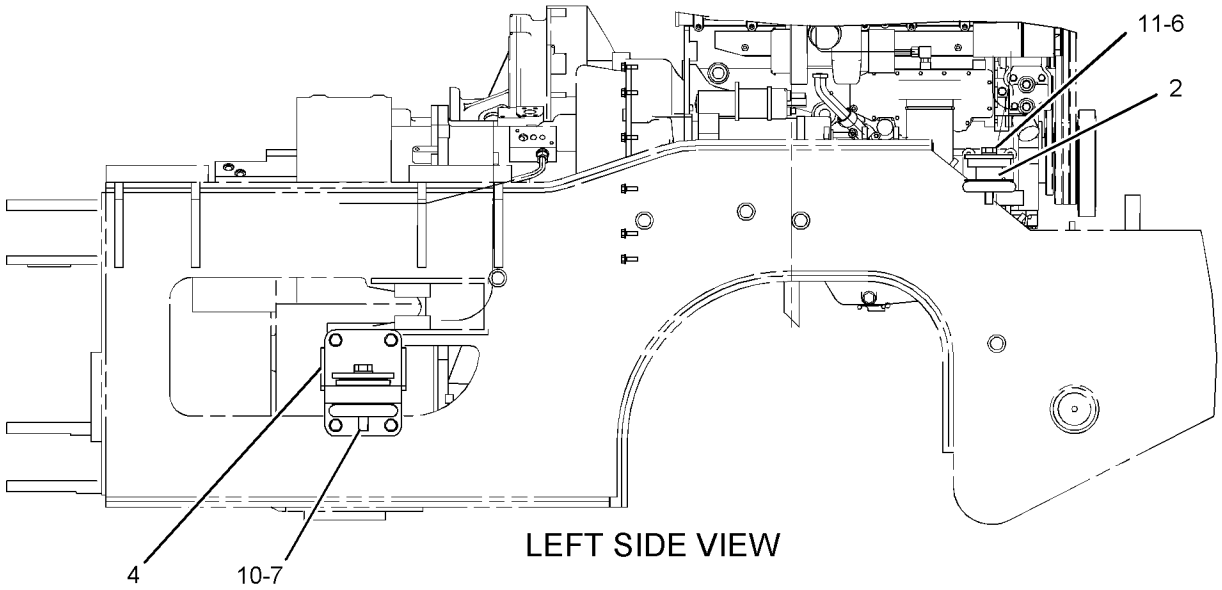


LEFT SIDE VIEW

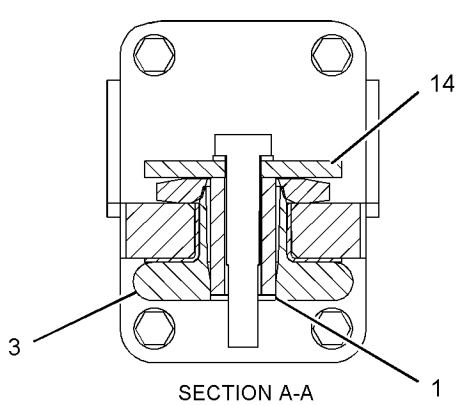


SECTION A-A

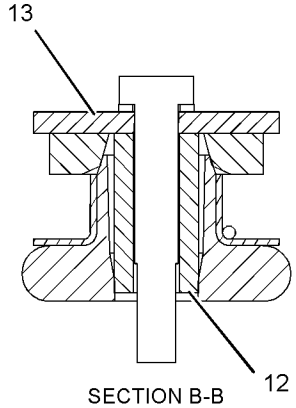


SECTION B-B

GRAPHIC #1

**<END>**

g01108479

## *196-0077* PAN GP-OIL—ENGINE

**S/N: KHX1-UP**

**PART OF 235-1497 ENGINE AR-COMPLETE**

**SMCS-1302** **i02194591**

| NOTE | REF NO | GRAPHIC REF | PART NUMBER | QTY | PART NAME 1 2 3 4 5 6 (PRODUCT LEVEL) | SEE PAGE |
|---|---|---|---|---|---|---|
| | 1 | 1 | **157-8371** | 1 | PAN-OIL | |
| | 2 | 1 | **166-2905** | 1 | SEAL-INTEGRAL | |
| | 3 | 1 | **2M-9780** | 1 | SEAL-O-RING | |
| M | 4 | 1 | **6V-3918** | 36 | BOLT (M8X1.25X50-MM) | |
| | 5 | 1 | **9M-1974** | 36 | WASHER-HARD (8.8X16X2-MM THK) | |
| | 6 | 1 | **9S-8006** | 1 | PLUG-O RING | |
| B | 7 | 1 | **230-6262** | | SEALANT | |

B-USE AS REQUIRED
M-METRIC PART

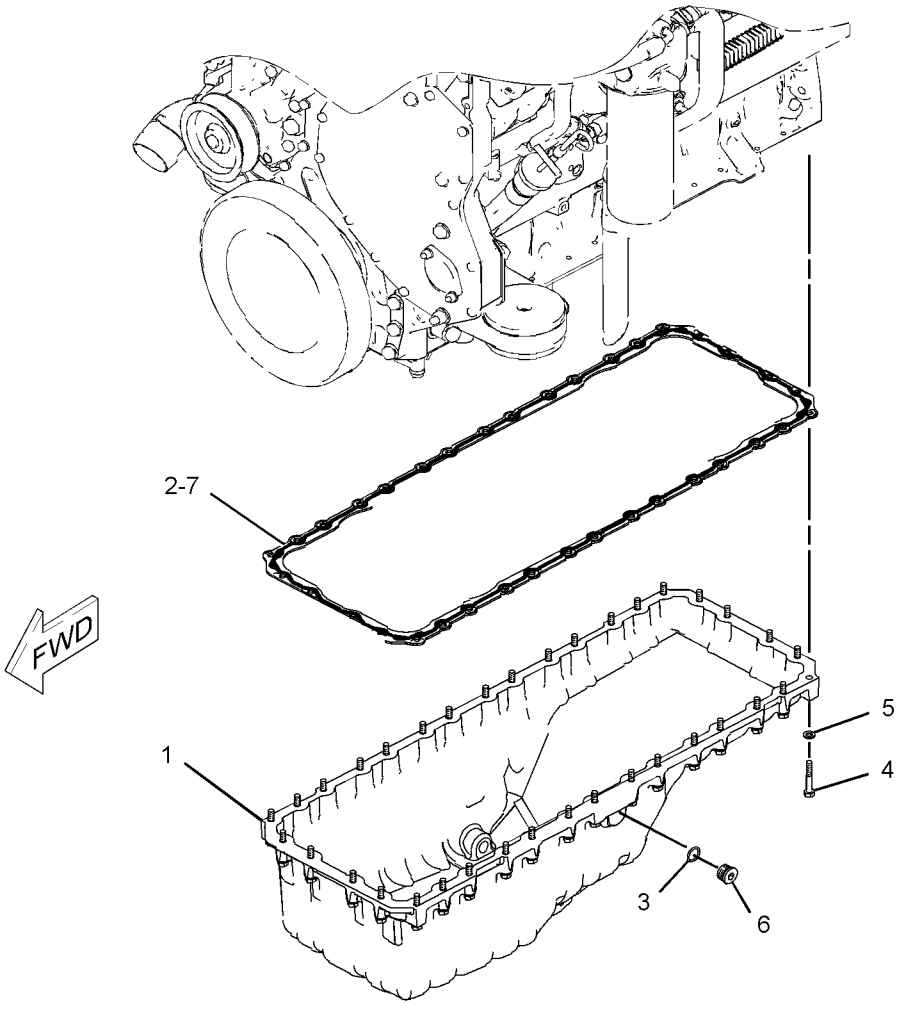


GRAPHIC #1 **<END>** g01109013

# BASIC ENGINE

## *212-3652* PISTON & ROD GP

**S/N: KHX1-UP**
**16.5:1 RATIO**
**PART OF 235-1496 ENGINE AR-CORE**

**SMCS-1225** **i02421067**

| NOTE | REF NO | GRAPHIC REF | PART NUMBER | QTY | PART NAME 1 2 3 4 5 6 (PRODUCT LEVEL) | SEE PAGE |
|---|---|---|---|---|---|---|
| R | 1 | 1 | **213-3193** | 1 | ROD AS-CONNECTING (NON-DRILLED) | |
| | 1A | 1 | **2W-0027** | 1 | BEARING (EYE END) | |
| | 1B | 1 | **195-0321** | 2 | BOLT | |
| | 2 | 1 | **224-6638** | 1 | BEARING-CONNECTING ROD (STANDARD) | |
| AB | | 1 | **7C-6976** | | BEARING-CONNECTING ROD (0.25-MM US) | |
| AB | | 1 | **7C-6977** | | BEARING-CONNECTING ROD (0.5-MM US) | |
| | 3 | 1 | **238-2706** | 1 | RING-PISTON-OIL | |
| | 4 | 1 | **197-9353** | 1 | RING-PISTON (INTERMEDIATE) | |
| | 5 | 1 | **197-9386** | 1 | RING-PISTON-TOP | |
| | 6 | 1 | **197-9371** | 1 | PIN-PISTON | |
| | 7 | 1 | **280-2748** | 1 | TUBE AS-OIL JET | |
| | 8 | 1 | **238-2720** | 1 | BODY AS-PISTON | |
| M | 9 | 1 | **6V-3940** | 1 | BOLT (M8X1.25X25-MM) | |
| | 10 | 1 | **197-9372** | 2 | RETAINER-PIN | |

A-NOT PART OF THIS GROUP
B-USE AS REQUIRED
M-METRIC PART
R-REMFG PART MAY BE AVAILABLE

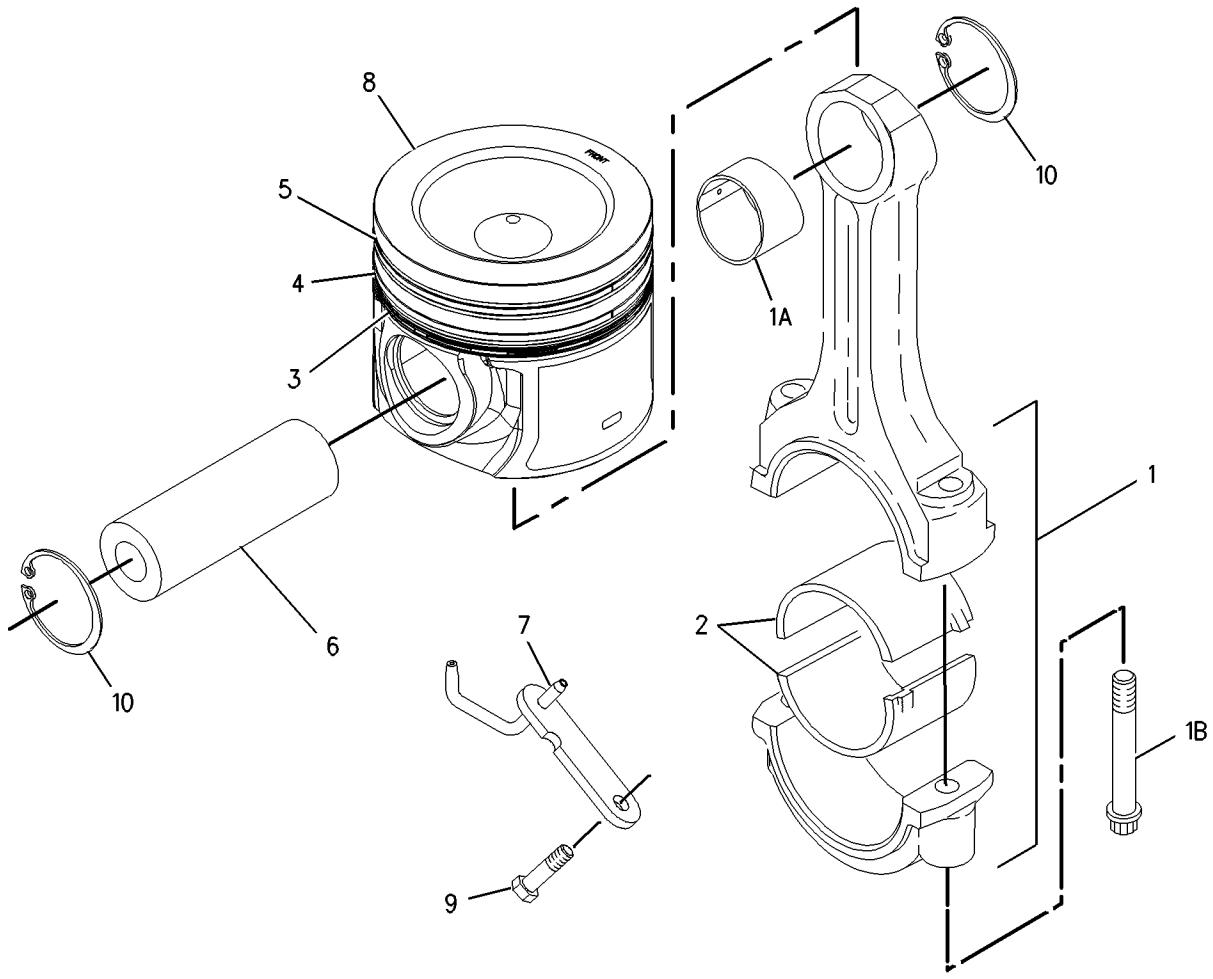


GRAPHIC #1 **<END>** g00903037

# *159-0303* PLUG GP-CYLINDER BLOCK

**S/N: KHX1-523**

**REQUIRED WHEN REMOTE MOUNT COOLANT CONDITIONER IS NOT USED**

**PART OF 235-1497 ENGINE AR-COMPLETE**

**SMCS-1201** **i01972327**

| NOTE | REF NO | GRAPHIC REF | PART NUMBER | QTY | PART NAME 1 2 3 4 5 6 (PRODUCT LEVEL) | SEE PAGE |
|---|---|---|---|---|---|---|
| M | 1 | 1 | **8T-0293** | 1 | BOLT (M12X1.75X20-MM) | |
| | 2 | 1 | **6F-7062** | 1 | WASHER (12.7X19.05X1.83-MM THK) | |
| | 3 | 1 | **9S-8008** | 2 | PLUG-O RING | |
| | 4 | 1 | **3D-2824** | 2 | SEAL-O-RING | |

M-METRIC PART

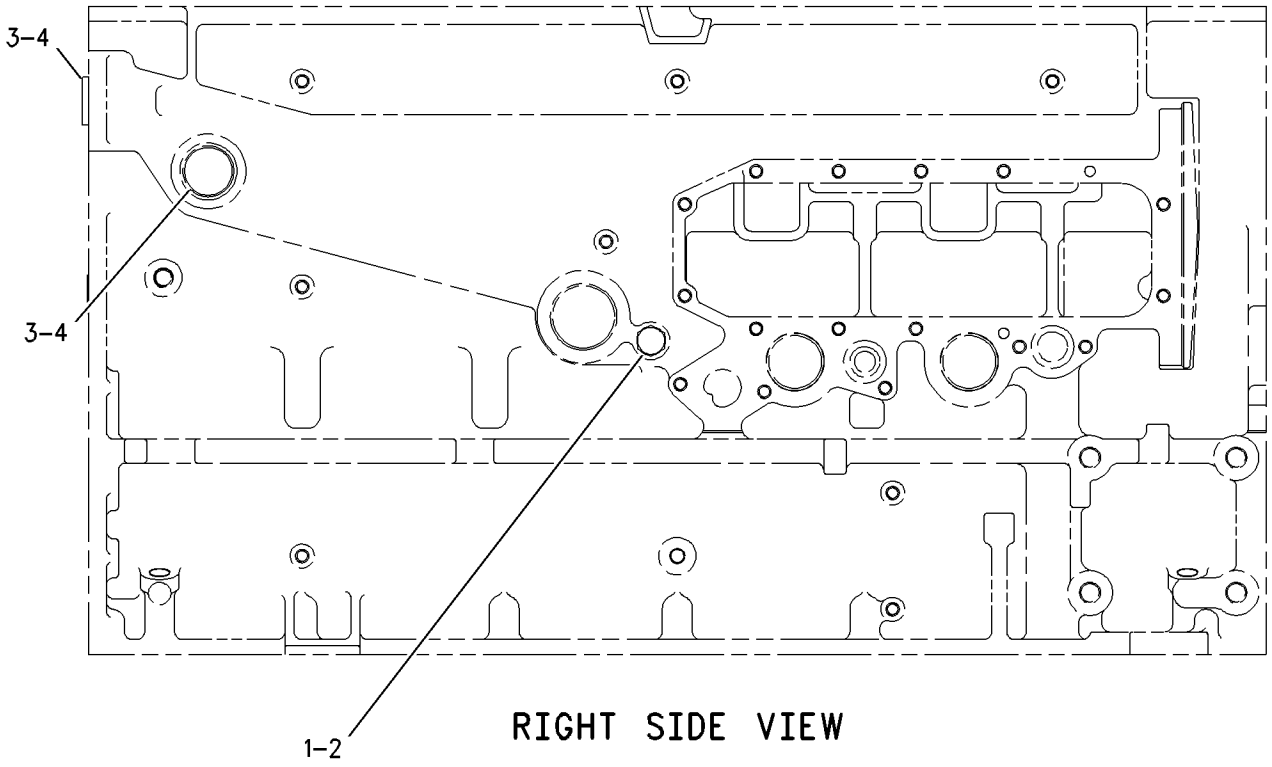


RIGHT SIDE VIEW

GRAPHIC #1 **<END>** g00677138

# BASIC ENGINE

## *162-8068* PLUG GP-ENGINE

**S/N: KHX1-UP**
**PART OF 235-1497 ENGINE AR-COMPLETE**
**FOR USE WITH GM ENGINES ONLY**

**SMCS-1000, 1201** **i01828029**

| NOTE | REF NO | GRAPHIC REF | PART NUMBER | QTY | PART NAME 1 2 3 4 5 6 (PRODUCT LEVEL) | SEE PAGE |
|---|---|---|---|---|---|---|
| | 1 | 1 | **9S-8005** | 1 | PLUG-O RING | |
| | 2 | 1 | **3K-0360** | 1 | SEAL-O-RING | |

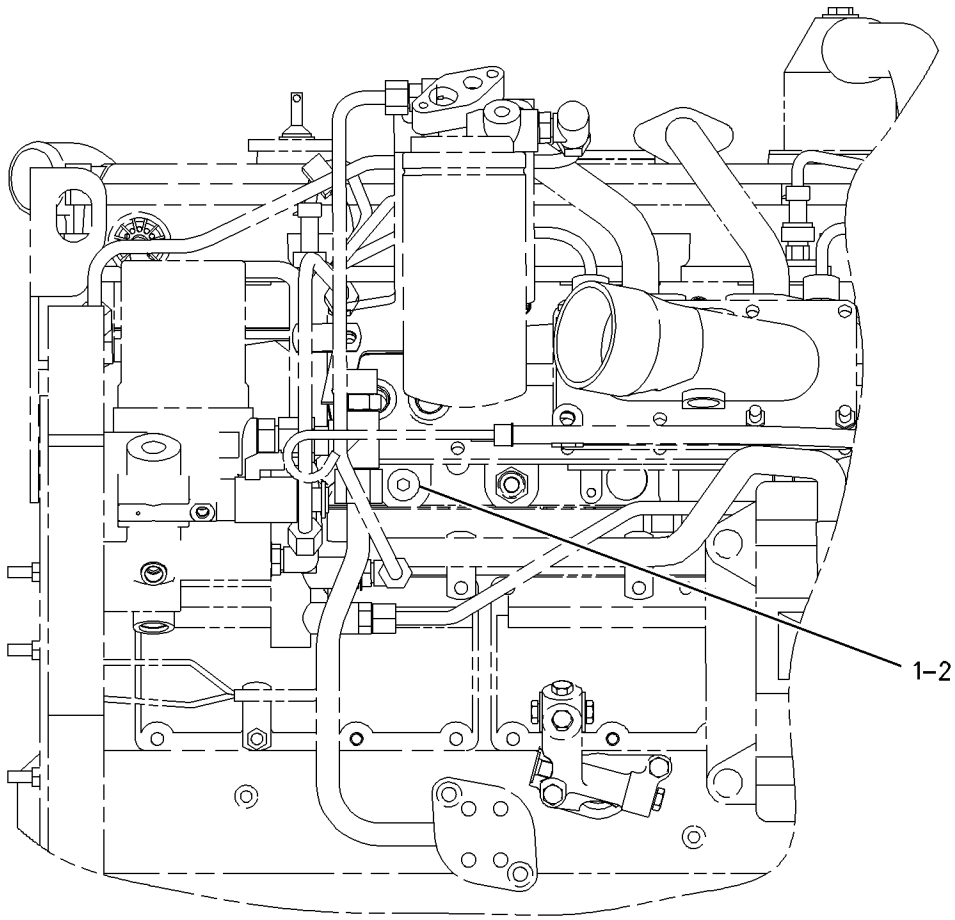


LEFT SIDE VIEW

GRAPHIC #1 **<END>** g00932414

# *250-7564* PULLEY GP-ENGINE

**S/N: 5451-UP**

**PART OF 248-4224 INSTALLATION AR-ENGINE**

**SMCS-1358, 1384** **i02485266**

| NOTE | REF NO | GRAPHIC REF | PART NUMBER | QTY | PART NAME 1 2 3 4 5 6 (PRODUCT LEVEL) | SEE PAGE |
|---|---|---|---|---|---|---|
| | 1 | 1 | **222-2880** | 1 | BELT TENSIONER | |
| | 2 | 1 | **245-4628** | 1 | BELT-SERPENTINE (PULLEY) | |
| | 3 | 1 | **251-9627** | 1 | PULLEY-FAN | |
| | 4 | 1 | **8T-4121** | 1 | WASHER-HARD (11X21X2.5-MM THK) | |
| M | 5 | 1 | **8T-4172** | 1 | BOLT (M10X1.5X80-MM) | |
| | 6 | 1 | **8T-4224** | 6 | WASHER-HARD (8.8X16X2-MM THK) | |
| M | 7 | 1 | **8T-4908** | 6 | BOLT (M8X1.25X25-MM) | |

M-METRIC PART

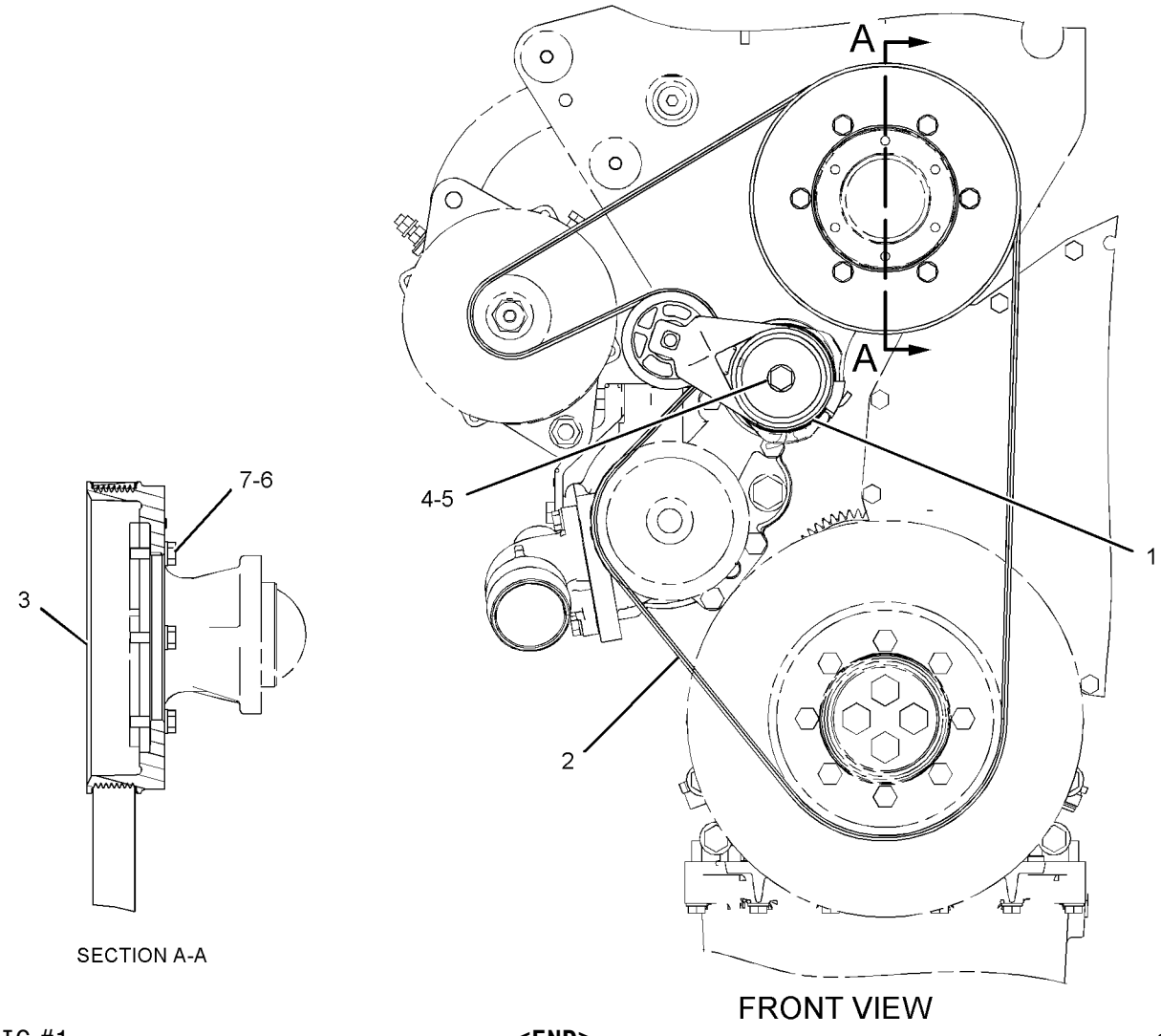


GRAPHIC #1 **<END>** g01103146

# BASIC ENGINE

## *256-3831* ROCKER ARM GP–EXHAUST

**S/N: KHX2463-UP**

**PART OF 256-3830 VALVE MECHANISM GP**

**SMCS-1123** **i02589721**

| NOTE | REF NO | GRAPHIC REF | PART NUMBER | QTY | PART NAME 1 2 3 4 5 6 (PRODUCT LEVEL) | SEE PAGE |
|---|---|---|---|---|---|---|
| R | 1 | 1 | **256-3832** | 1 | ROCKER ARM AS (EXHAUST) | |
| | 2 | 1 | **260-7524** | 1 | SCREW-VALVE ADJUSTMENT | |
| M | 3 | 1 | **2Y-5829** | 1 | NUT (M10X1.15-THD) | |

M-METRIC PART
R-REMFG PART MAY BE AVAILABLE

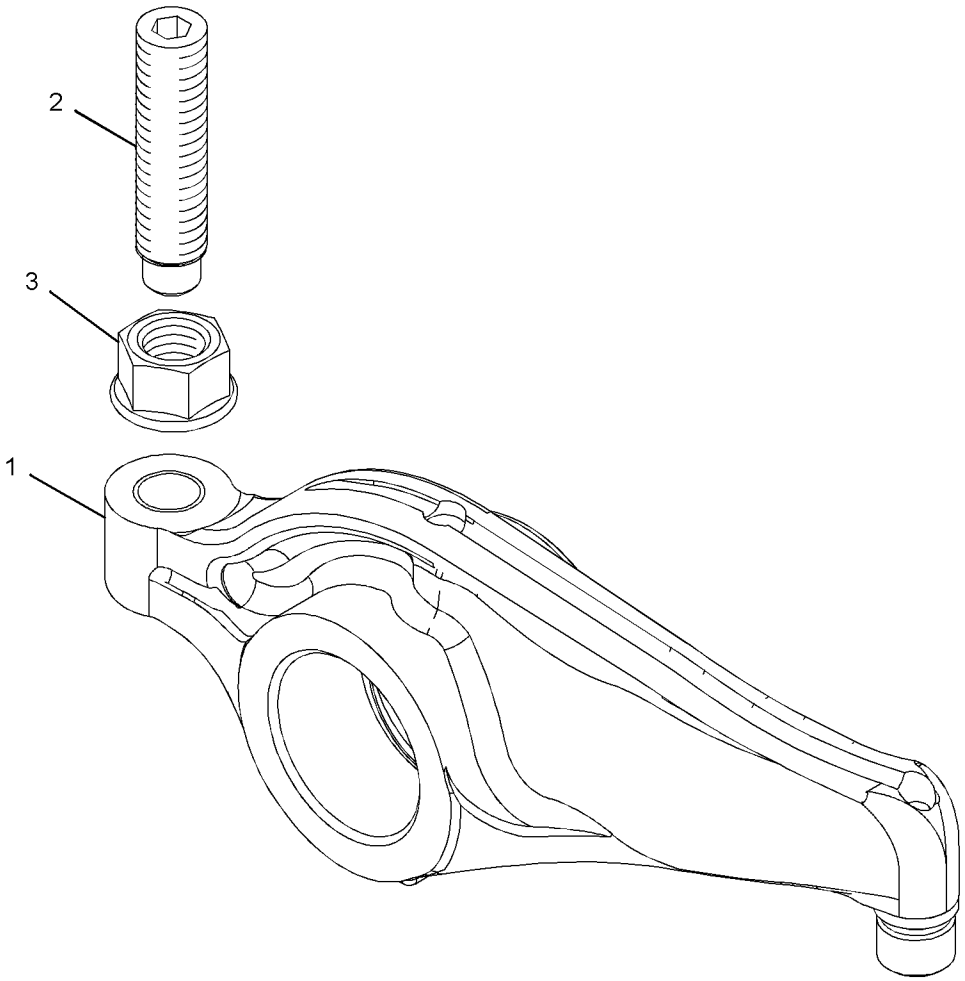


GRAPHIC #1 **<END>** g01293346

# 256-3834 ROCKER ARM GP–INLET

**S/N: KHX2463-UP**

**PART OF 256-3830 VALVE MECHANISM GP**

**SMCS-1123** **i02589757**

| NOTE | REF NO | GRAPHIC REF | PART NUMBER | QTY | PART NAME 1 2 3 4 5 6 (PRODUCT LEVEL) | SEE PAGE |
|---|---|---|---|---|---|---|
| | 1 | 1 | **260-7524** | 1 | SCREW-VALVE ADJUSTMENT | |
| | 2 | 1 | **256-3835** | 1 | ROCKER ARM AS (INLET) | |
| M | 3 | 1 | **2Y-5829** | 1 | NUT (M10X1.15-THD) | |

M-METRIC PART

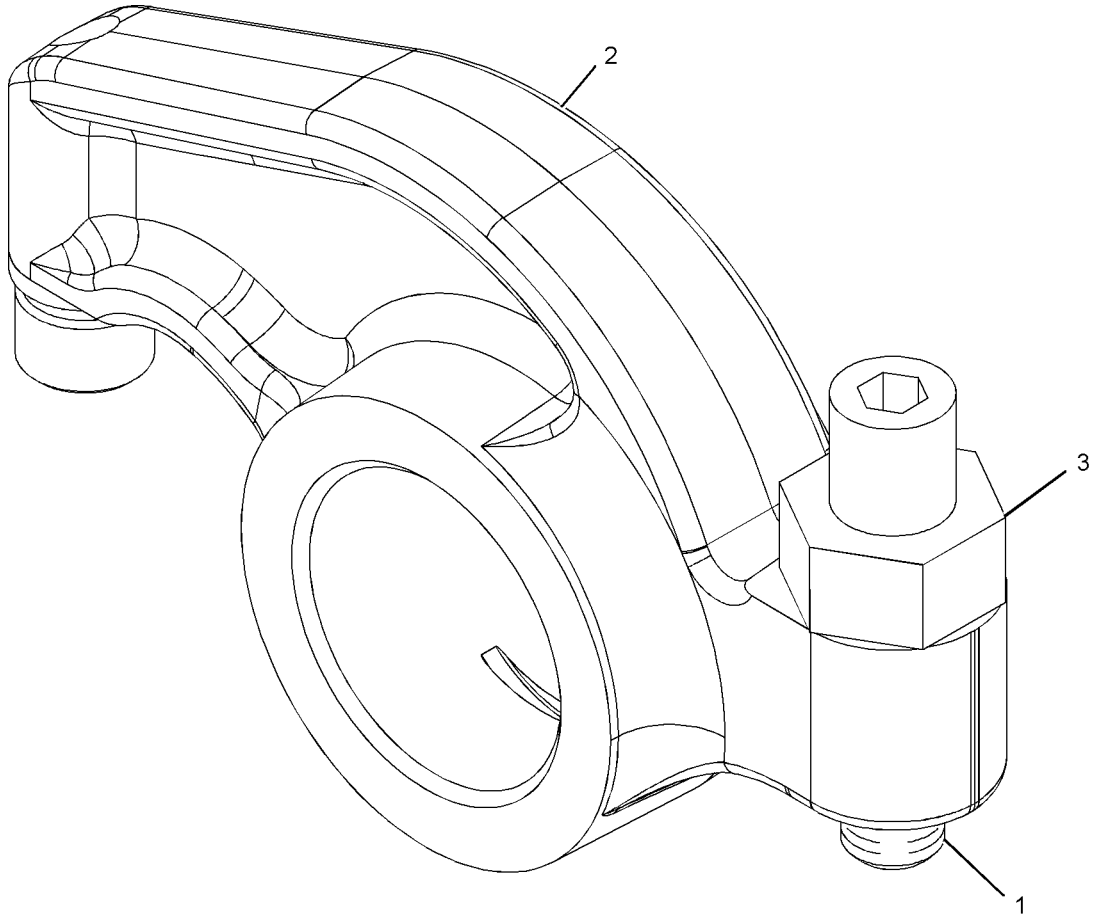


GRAPHIC #1 **<END>** g01056688

# BASIC ENGINE

## *115-4210* SEAL GP-CRANKSHAFT

**S/N: KHX1-UP**

**PART OF 235-1497 ENGINE AR-COMPLETE**

**SMCS-1160, 1161** **i02513824**

| NOTE | REF NO | GRAPHIC REF | PART NUMBER | QTY | PART NAME 1 2 3 4 5 6 (PRODUCT LEVEL) | SEE PAGE |
|---|---|---|---|---|---|---|
| | 1 | 1 | **222-3910** | 1 | SEAL GP-CRANKSHAFT (REAR) | |
| | 2 | 1 | **245-7339** | 1 | SEAL-CRANKSHAFT (FRONT) | |
| | 3 | 1 | **4R-9999** | 1 | EXCLUDER-CRANKSHAFT SEAL | |

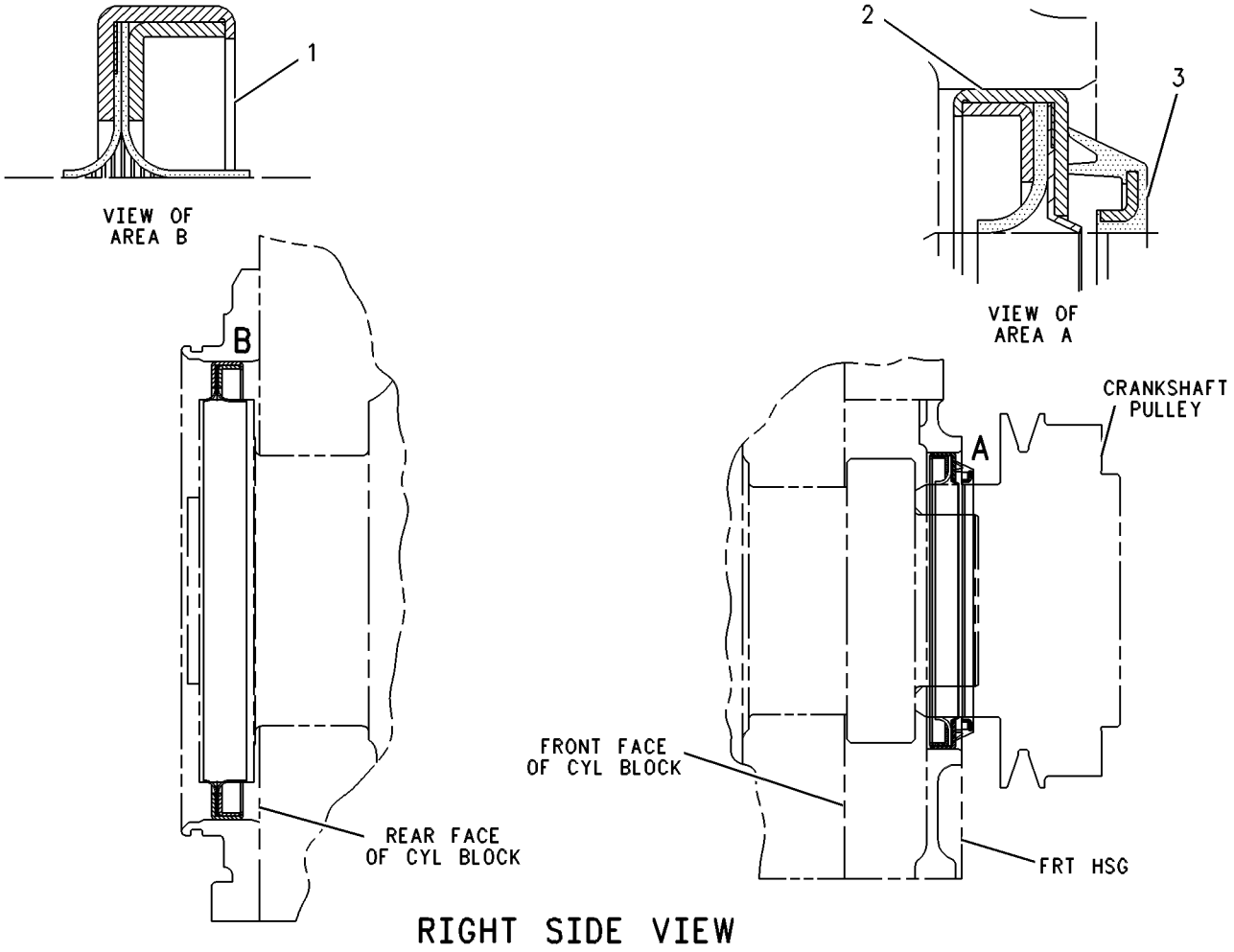


RIGHT SIDE VIEW

GRAPHIC #1 **<END>** g00109240

# 7C-1770 SEAL GP-FLYWHEEL HOUSING

**S/N: KHX1-UP**

**PART OF 235-1497 ENGINE AR-COMPLETE**

**SMCS-1157** **i01099524**

| NOTE | REF NO | GRAPHIC REF | PART NUMBER | QTY | PART NAME 1 2 3 4 5 6 (PRODUCT LEVEL) | SEE PAGE |
|---|---|---|---|---|---|---|
| B | 1 | 1 | **1U-8846** | | SEALANT-GASKET | |
| | 2 | 1 | **3J-7354** | 1 | SEAL-O-RING | |
| B | 3 | 1 | **3D-2824** | 1 | SEAL-O-RING | |

B-USE AS REQUIRED

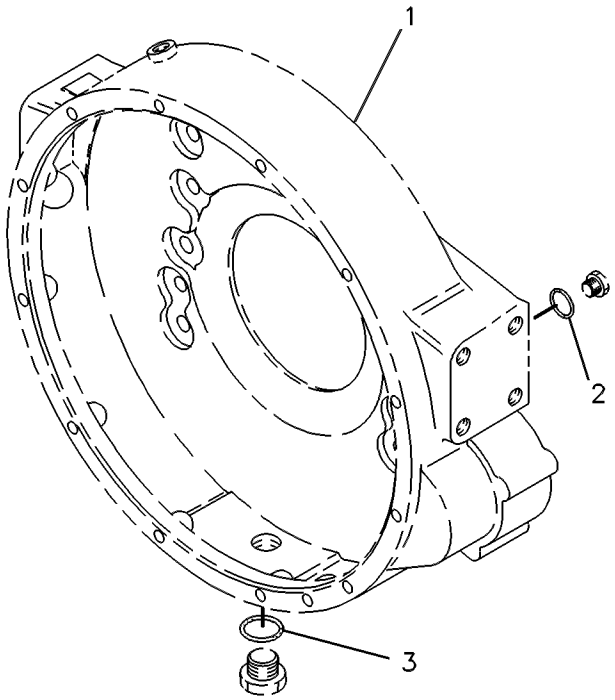


GRAPHIC #1 **<END>** g00108872

# *179-6023* SUPPORT GP-ENGINE

**S/N: KHX1-UP**

**PART OF 235-1497 ENGINE AR-COMPLETE**

**SMCS-1152, 1153, 1154** **i01238893**

| NOTE | REF NO | GRAPHIC REF | PART NUMBER | QTY | PART NAME 1 2 3 4 5 6 (PRODUCT LEVEL) | SEE PAGE |
|---|---|---|---|---|---|---|
| | 1 | 1 | **7C-1675** | 2 | SUPPORT | |
| | 3 | 1 | **7X-0510** | 8 | WASHER-HARD (3MM THK) | |
| M | 4 | 1 | **8C-6855** | 8 | BOLT (M14X2 THD) | |

M-METRIC PART

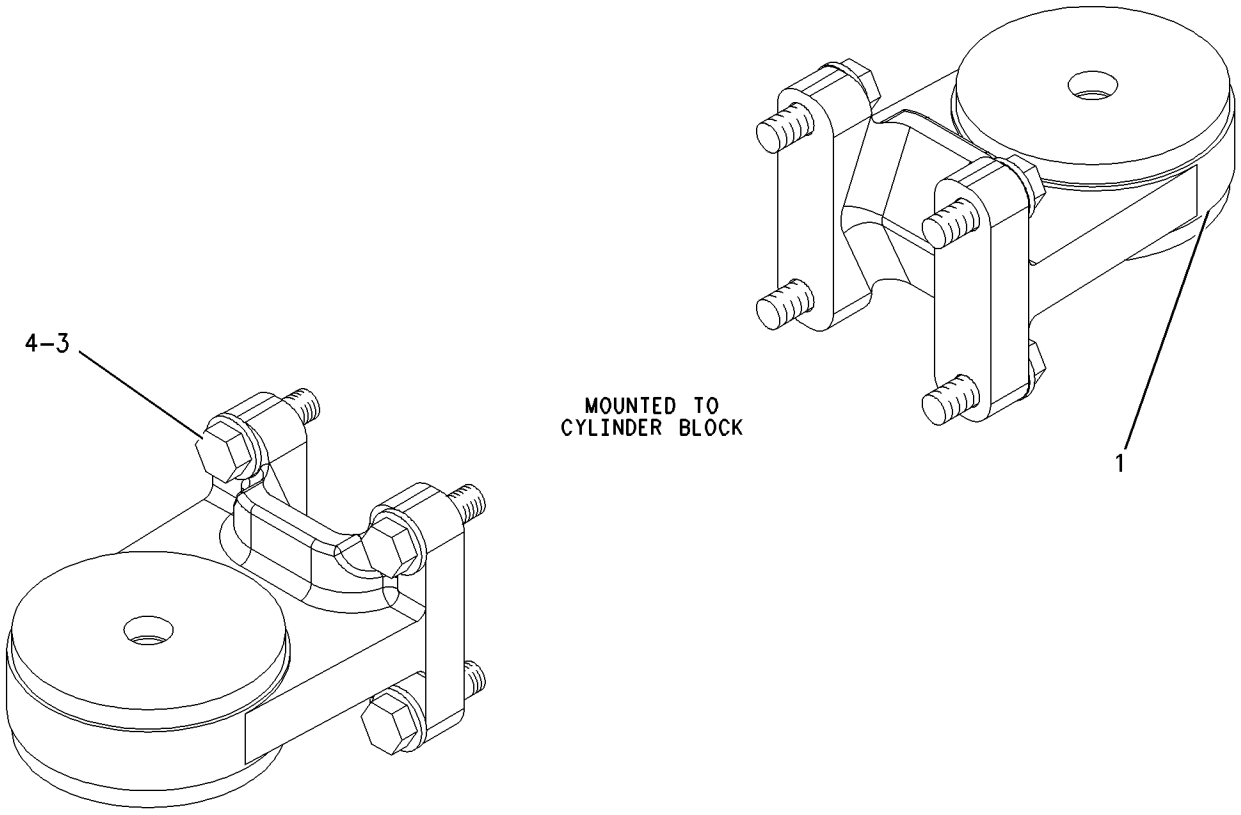


GRAPHIC #1 **<END>** g00664824

# *232-3717* VALVE MECHANISM GP

**S/N: KHX1-2462**

**PART OF 235-1496 ENGINE AR-CORE**

**SMCS-1102, 1121, 1123** **i02665771**

| NOTE | REF NO | GRAPHIC REF | PART NUMBER | QTY | PART NAME 1 2 3 4 5 6 (PRODUCT LEVEL) | SEE PAGE |
|---|---|---|---|---|---|---|
| | 1 | 1 | **133-6379** | 12 | ROD-VALVE PUSH | |
| | 2 | 1 | **219-3309** | 6 | BRIDGE-VALVE | |
| Y | 3 | 1 | *139-4081* | 3 | LIFTER GP-VALVE | 46 |
| M | 4 | 1 | **8T-8442** | 12 | BOLT-SOCKET HEAD (M6X1X30-MM) | |
| | 5 | 1 | **3E-9412** | 6 | DOWEL | |
| CY | 6 | 1 | *235-5528* | 1 | VALVE MECHANISM GP | 63 |
| M | 7 | 1 | **6V-5696** | 11 | BOLT (M12X1.75X80-MM) | |
| | 8 | 1 | **9M-1974** | 2 | WASHER-HARD (8.8X16X2-MM THK) | |
| C | 9 | 1 | **3H-7654** | 9 | WASHER-HARD (13.5X22.5X3-MM THK) | |
| M | 10 | 1 | **8T-0100** | 2 | BOLT (M8X1.25X60-MM) | |
| | 11 | 1 | **232-1754** | 1 | CLIP | |

C-CHANGE FROM PREVIOUS TYPE
M-METRIC PART
Y-SEPARATE ILLUSTRATION

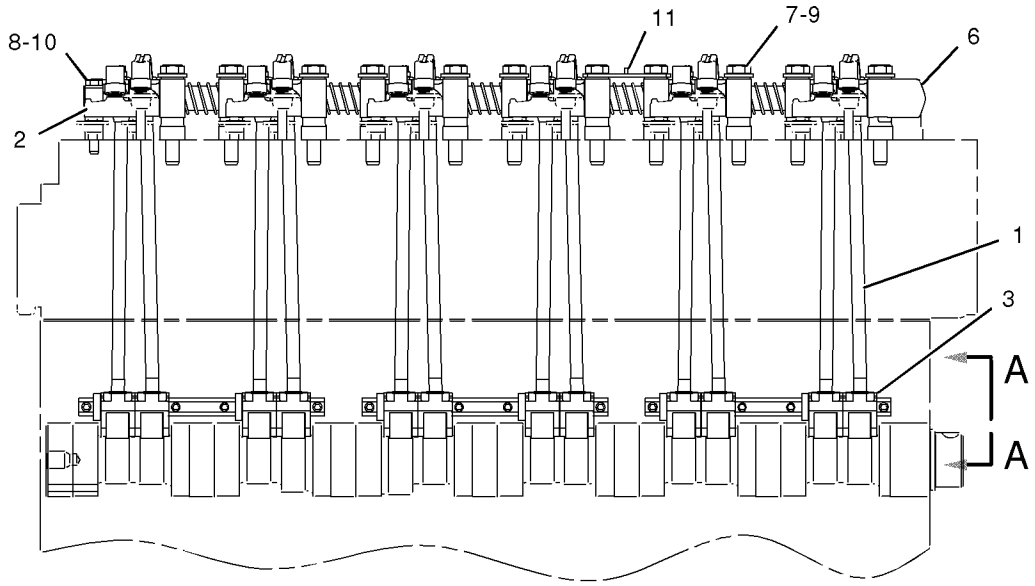


RIGHT SIDE VIEW

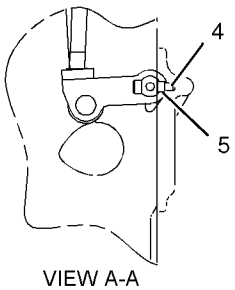


VIEW A-A

GRAPHIC #1 **<END>** g01028897

# BASIC ENGINE

## *232-3717* VALVE MECHANISM GP

**S/N: KHX2463-UP**

**PART OF 235-1496 ENGINE AR-CORE**

**SMCS-1102, 1121, 1123** **i02554851**

| NOTE | REF NO | GRAPHIC REF | PART NUMBER | QTY | PART NAME 1 2 3 4 5 6 (PRODUCT LEVEL) | SEE PAGE |
|---|---|---|---|---|---|---|
| C | 1 | 1 | **264-6156** | 12 | ROD-VALVE PUSH | |
| | 2 | 1 | **219-3309** | 6 | BRIDGE-VALVE | |
| Y | 3 | 1 | *139-4081* | 3 | LIFTER GP-VALVE | 46 |
| M | 4 | 1 | **8T-8442** | 12 | BOLT-SOCKET HEAD (M6X1X30-MM) | |
| | 5 | 1 | **3E-9412** | 6 | DOWEL | |
| CY | 6 | 1 | **256-3830** | 1 | VALVE MECHANISM GP | 65 |
| M | 7 | 1 | **6V-5696** | 11 | BOLT (M12X1.75X80-MM) | |
| | 8 | 1 | **9M-1974** | 2 | WASHER-HARD (8.8X16X2-MM THK) | |
| | 9 | 1 | **3H-7654** | 9 | WASHER-HARD (13.5X22.5X3-MM THK) | |
| M | 10 | 1 | **8T-0100** | 2 | BOLT (M8X1.25X60-MM) | |
| | 11 | 1 | **232-1754** | 1 | CLIP | |

C-CHANGE FROM PREVIOUS TYPE
M-METRIC PART
Y-SEPARATE ILLUSTRATION

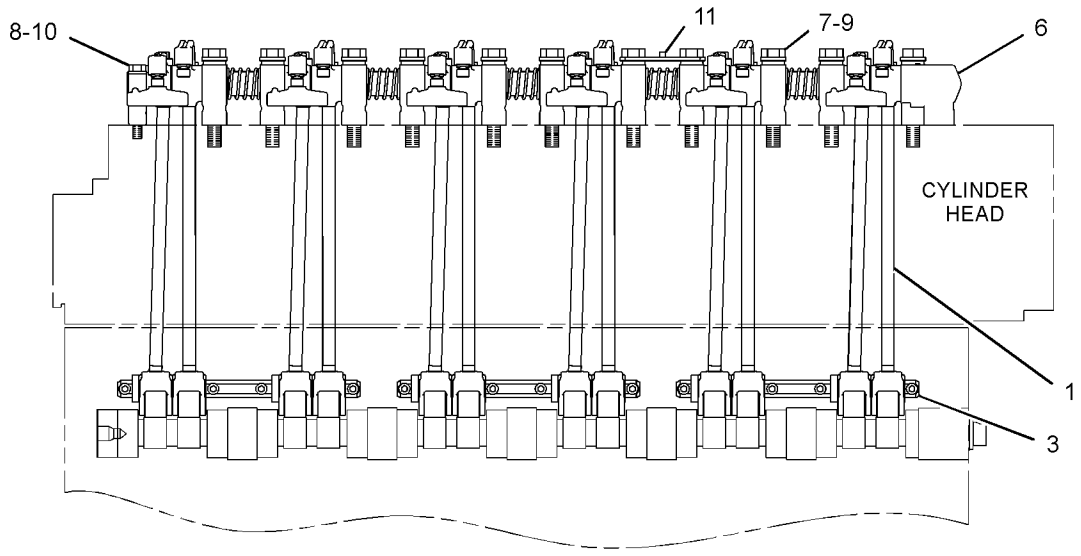


RIGHT SIDE VIEW

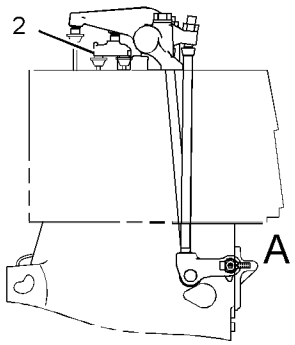


FRONT VIEW

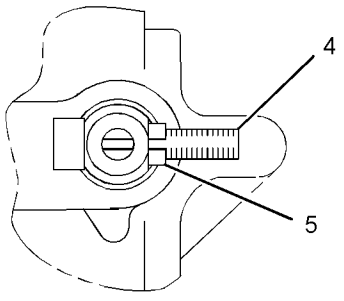


VIEW OF AREA A

GRAPHIC #1 **<END>** g01279672

# *235-5528* VALVE MECHANISM GP

**S/N: KHX1-2462**

**PART OF 232-3717 VALVE MECHANISM GP**

**SMCS-1102, 1121, 1123** **i02582117**

| NOTE | REF NO | GRAPHIC REF | PART NUMBER | QTY | PART NAME 1 2 3 4 5 6 (PRODUCT LEVEL) | SEE PAGE |
|---|---|---|---|---|---|---|
| | 1 | 1 | **137-6717** | 5 | SPRING | |
| | 2 | 1 | *222-1185* | 6 | ROCKER ARM GP (INLET) | |
| | | | | | (EACH INCLUDES) | |
| M | 2A | 1 | **2Y-5829** | 1 | NUT (M10X1.15-THD) | |
| M | | 1 | **183-4365** | 1 | SCREW-ADJUSTMENT (M10X1.15-THD) | |
| R | 2B | 1 | **153-8467** | 1 | ROCKER ARM AS | |
| | 2C | 1 | **173-5549** | 1 | SEAL-O-RING | |
| | 2D | 1 | **145-7376** | 1 | INSERT | |
| | 2E | 1 | **145-7385** | 1 | SOCKET | |
| | 3 | 1 | **138-8403** | 1 | STAND | |
| | 4 | 1 | *222-1186* | 6 | ROCKER ARM GP (EXHAUST) | |
| | | | | | (EACH INCLUDES) | |
| M | 4A | 1 | **2Y-5829** | 1 | NUT (M10X1.15-THD) | |
| M | | 1 | **183-4365** | 1 | SCREW-ADJUSTMENT (M10X1.15-THD) | |
| R | 4B | 1 | **153-8470** | 1 | ROCKER ARM AS | |
| | 4C | 1 | **173-5549** | 1 | SEAL-O-RING | |
| | 4D | 1 | **145-7376** | 1 | INSERT | |
| | 4E | 1 | **145-7385** | 1 | SOCKET | |
| | 5 | 1 | **235-5527** | 10 | STAND | |
| | 6 | 1 | **138-8402** | 1 | STAND (END) | |
| | 7 | 1 | **138-9868** | 1 | RING-RETAINING | |
| | 8 | 1 | **8H-5244** | 1 | DOWEL | |
| | 9 | 1 | **138-7198** | 1 | SHAFT AS | |
| | | 1 | **5B-1866** | 1 | PLUG-CUP | |

M-METRIC PART
R-REMFG PART MAY BE AVAILABLE

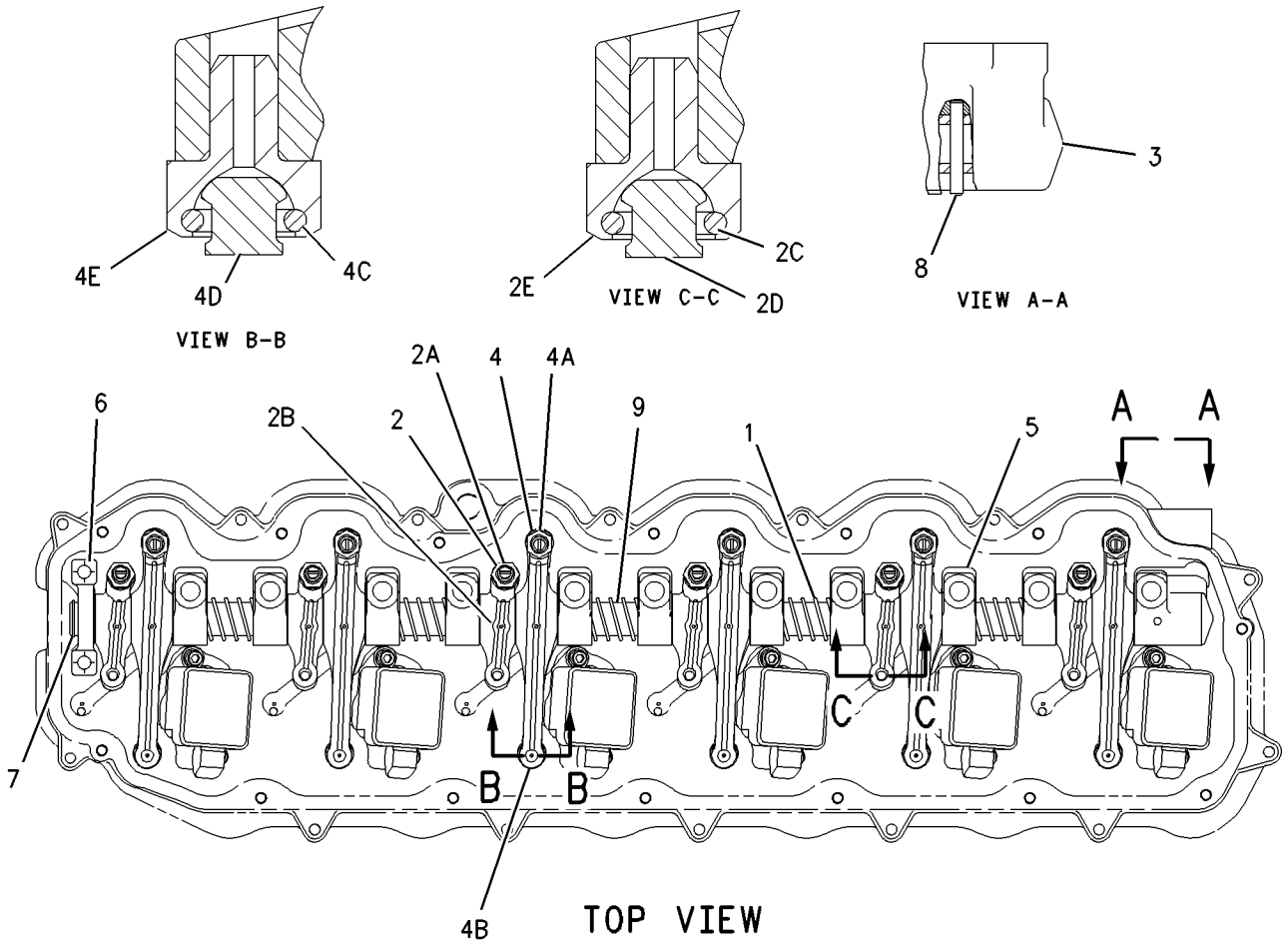


GRAPHIC #1 **<END>** g00901133

# *256-3830* VALVE MECHANISM GP

**S/N: KHX2463-UP**

**PART OF 232-3717 VALVE MECHANISM GP**

**SMCS-1102, 1121, 1123** **i02347810**

| NOTE | REF NO | GRAPHIC REF | PART NUMBER | QTY | PART NAME 1 2 3 4 5 6 (PRODUCT LEVEL) | SEE PAGE |
|---|---|---|---|---|---|---|
| | 1 | 1 | **137-6717** | 5 | SPRING | |
| Y | 2 | 1 | **256-3834** | 6 | ROCKER ARM GP (INLET) | 57 |
| | 3 | 1 | **138-8403** | 1 | STAND | |
| Y | 4 | 1 | **256-3831** | 6 | ROCKER ARM GP (EXHAUST) | 56 |
| | 5 | 1 | **235-5527** | 10 | STAND | |
| | 6 | 1 | **138-8402** | 1 | STAND | |
| | 7 | 1 | **138-9868** | 1 | RING-RETAINING | |
| | 8 | 1 | **8H-5244** | 1 | DOWEL | |
| | 9 | 1 | **138-7198** | 1 | SHAFT AS | |
| | | 1 | **5B-1866** | 1 | PLUG-CUP | |

Y-SEPARATE ILLUSTRATION

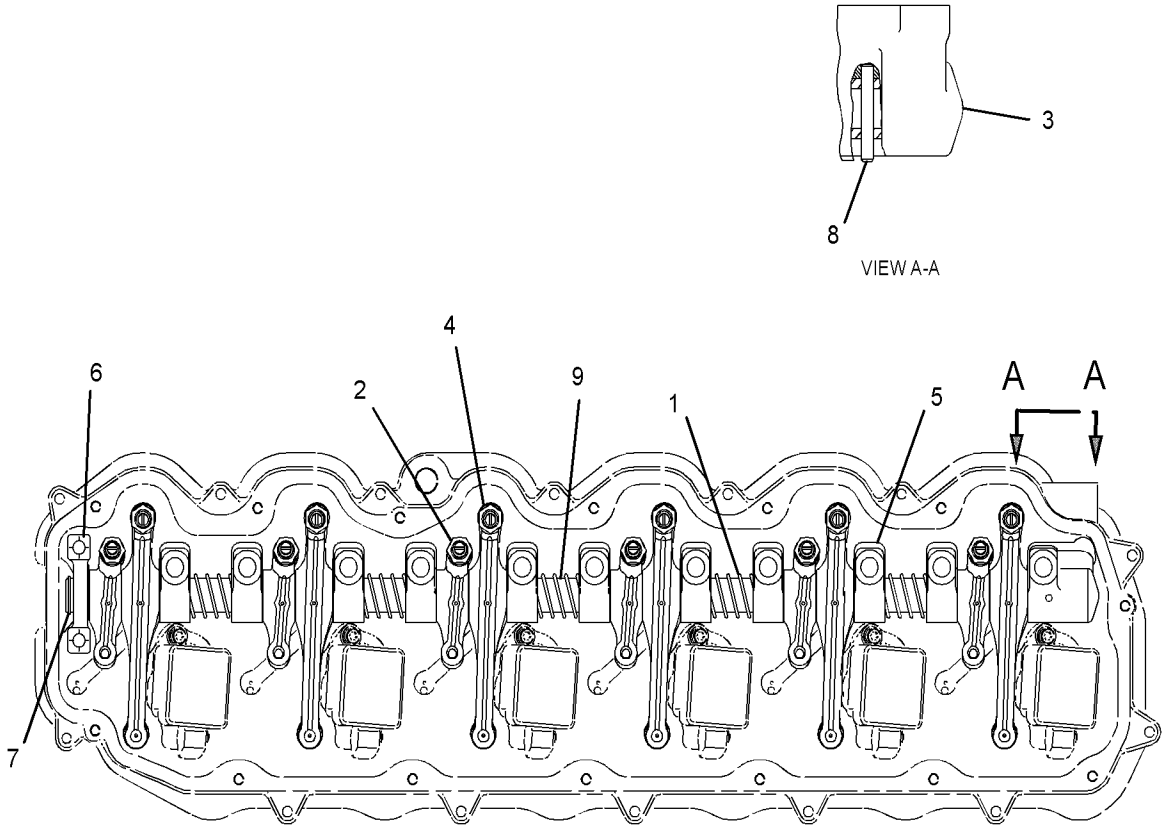


TOP VIEW

GRAPHIC #1 **<END>** g01175038

# *191-0523* ADAPTER GP-OIL LINE–UNIT INJECTOR HYD PUMP

**S/N: KHX1-UP**

**PART OF 191-0461 LINES GP-INJECTOR HYD PUMP**

**SMCS-1307** **i02304307**

| NOTE | REF NO | GRAPHIC REF | PART NUMBER | QTY | PART NAME 1 2 3 4 5 6 (PRODUCT LEVEL) | SEE PAGE |
|---|---|---|---|---|---|---|
| | 1 | 1 | **191-0522** | 1 | ADAPTER | |
| | 2 | 1 | **033-6027** | 1 | SEAL-O-RING | |

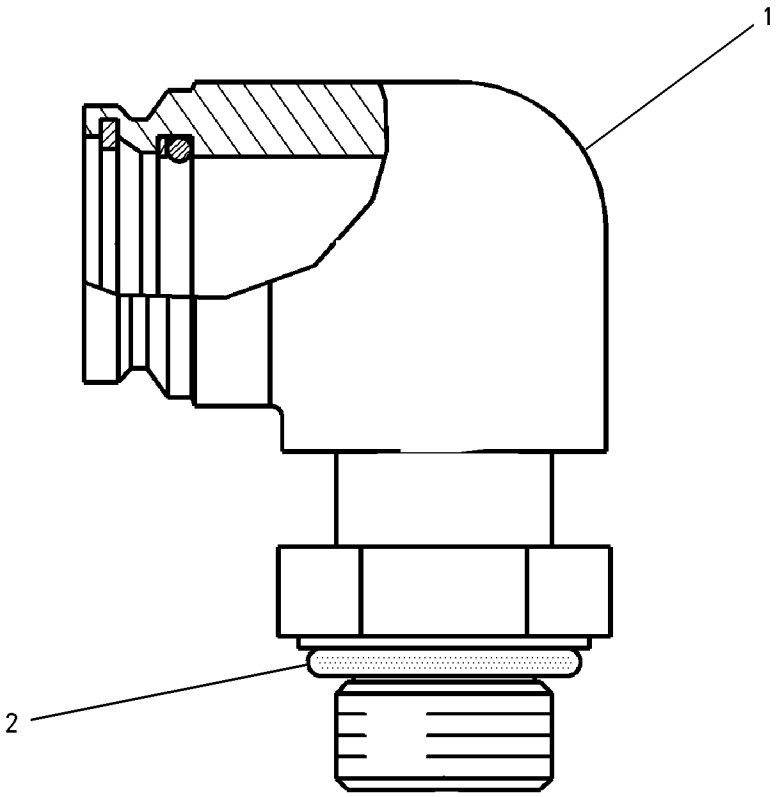


GRAPHIC #1 **<END>** g00807476

## *222-5946* BREATHER GP–CRANKCASE

**S/N: KHX1-UP**

**PART OF 235-1497 ENGINE AR-COMPLETE**

**SMCS-1317** **i02249883**

| NOTE | REF NO | GRAPHIC REF | PART NUMBER | QTY | PART NAME 1 2 3 4 5 6 (PRODUCT LEVEL) | SEE PAGE |
|---|---|---|---|---|---|---|
| | 1 | 1 | **164-0210** | 1 | BREATHER AS (CRANKCASE) | |
| M | 2 | 1 | **143-4654** | 1 | BOLT (M8X1.25X105-MM) | |
| | 3 | 1 | **8H-2046** | 1 | SEAL-O-RING (CRANKCASE BREATHER) | |
| | 4 | 1 | **9N-0869** | 1 | WASHER-HARD (8.8X25.5X2-MM THK) | |

M-METRIC PART

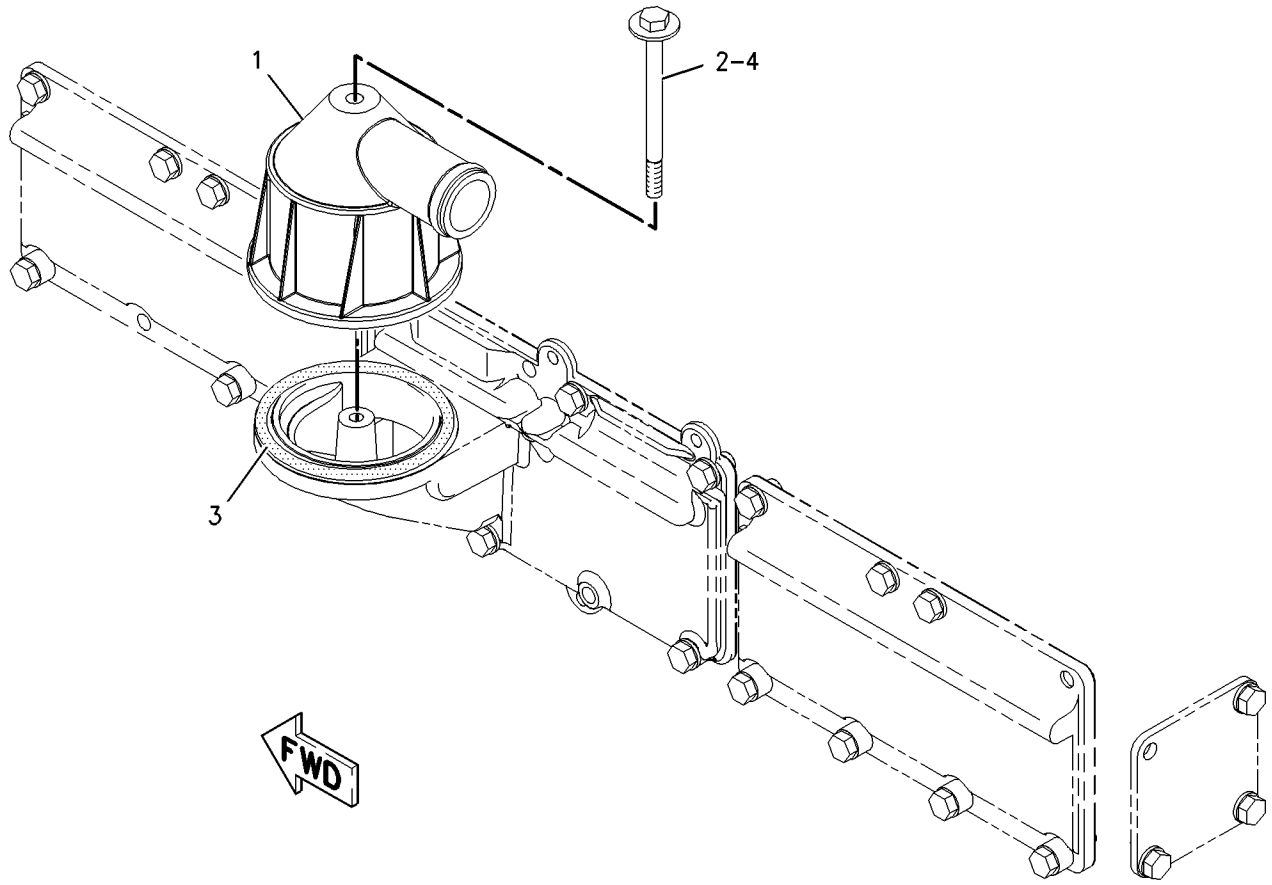


GRAPHIC #1 **<END>** g00947923

# LUBRICATION SYSTEM

## *7W-8798* FILLER GP-ENGINE OIL

**S/N: KHX1-UP**
**LOW FRONT, LEFT SIDE**
**PART OF 235-1497 ENGINE AR-COMPLETE**

**SMCS-1316** **i02195369**

| NOTE | REF NO | GRAPHIC REF | PART NUMBER | QTY | PART NAME 1 2 3 4 5 6 (PRODUCT LEVEL) | SEE PAGE |
|---|---|---|---|---|---|---|
| | 1 | 1 | **5L-2952** | 1 | CAP AS-FILLER (ENGINE OIL) | |
| | 2 | 1 | **6L-2609** | 1 | SEAL-RUBBER | |
| | 3 | 1 | **7C-0714** | 1 | TUBE AS-FILLER | |
| M | 4 | 1 | **6V-8336** | 2 | BOLT (M12X1.75X70-MM) | |
| | 5 | 1 | **5P-8245** | 4 | WASHER-HARD (13.5X25.5X3-MM THK) | |
| M | 6 | 1 | **6V-8149** | 2 | NUT (M12X1.75-THD) | |
| | 7 | 1 | **135-9819** | 1 | SEAL-INTEGRAL | |

M-METRIC PART

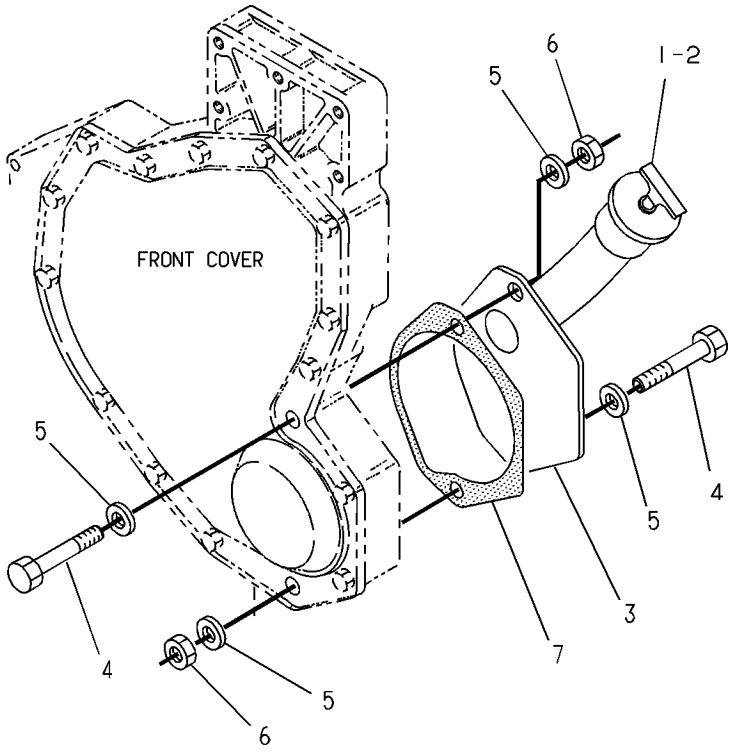


GRAPHIC #1 **<END>** g00125700

# *189-5433* FILTER GP-ENGINE OIL

**S/N: KHX1-UP**

**PART OF 235-1497 ENGINE AR-COMPLETE**

**SMCS-1308** **i02195486**

| NOTE | REF NO | GRAPHIC REF | PART NUMBER | QTY | PART NAME 1 2 3 4 5 6 (PRODUCT LEVEL) | SEE PAGE |
|---|---|---|---|---|---|---|
| | 1 | 1 | **7C-1493** | 2 | VALVE AS-BYPASS (ENGINE OIL FILTER) | |
| | 2 | 1 | **8C-3445** | 1 | CAP-DUST | |
| | 3 | 1 | **068-9526** | 2 | CAP-TUBE | |
| | 4 | 1 | **201-9774** | 1 | BASE AS-OIL FILTER | |
| | 4A | 1 | **2P-2537** | 1 | STUD-HOLLOW | |
| | 5 | 1 | **1R-1807** | 1 | FILTER AS-ENGINE OIL | |
| | 6 | 1 | **2M-9780** | 2 | SEAL-O-RING | |
| | 7 | 1 | **3J-7354** | 1 | SEAL-O-RING | |
| | 8 | 1 | **3P-1932** | 1 | ADAPTER | |
| M | 9 | 1 | **5P-8196** | 2 | PLUG | |
| M | 10 | 1 | **6V-2317** | 10 | BOLT (M8X1.25X30-MM) | |
| | 11 | 1 | **233-7654** | 1 | GASKET | |
| | 12 | 1 | **8C-3446** | 1 | VALVE-FLUID SAMPLING (ENGINE OIL) | |
| | 13 | 1 | **8L-2786** | 1 | SEAL-O-RING | |
| M | 14 | 1 | **8T-0276** | 3 | BOLT (M8X1.25X45-MM) | |
| | 15 | 1 | **242-3864** | 2 | SPRING | |
| | 16 | 1 | **9M-1974** | 15 | WASHER-HARD (8.8X16X2-MM THK) | |
| M | 17 | 1 | **9X-2098** | 2 | STUD-TAPERLOCK (BOLT) | |

M-METRIC PART

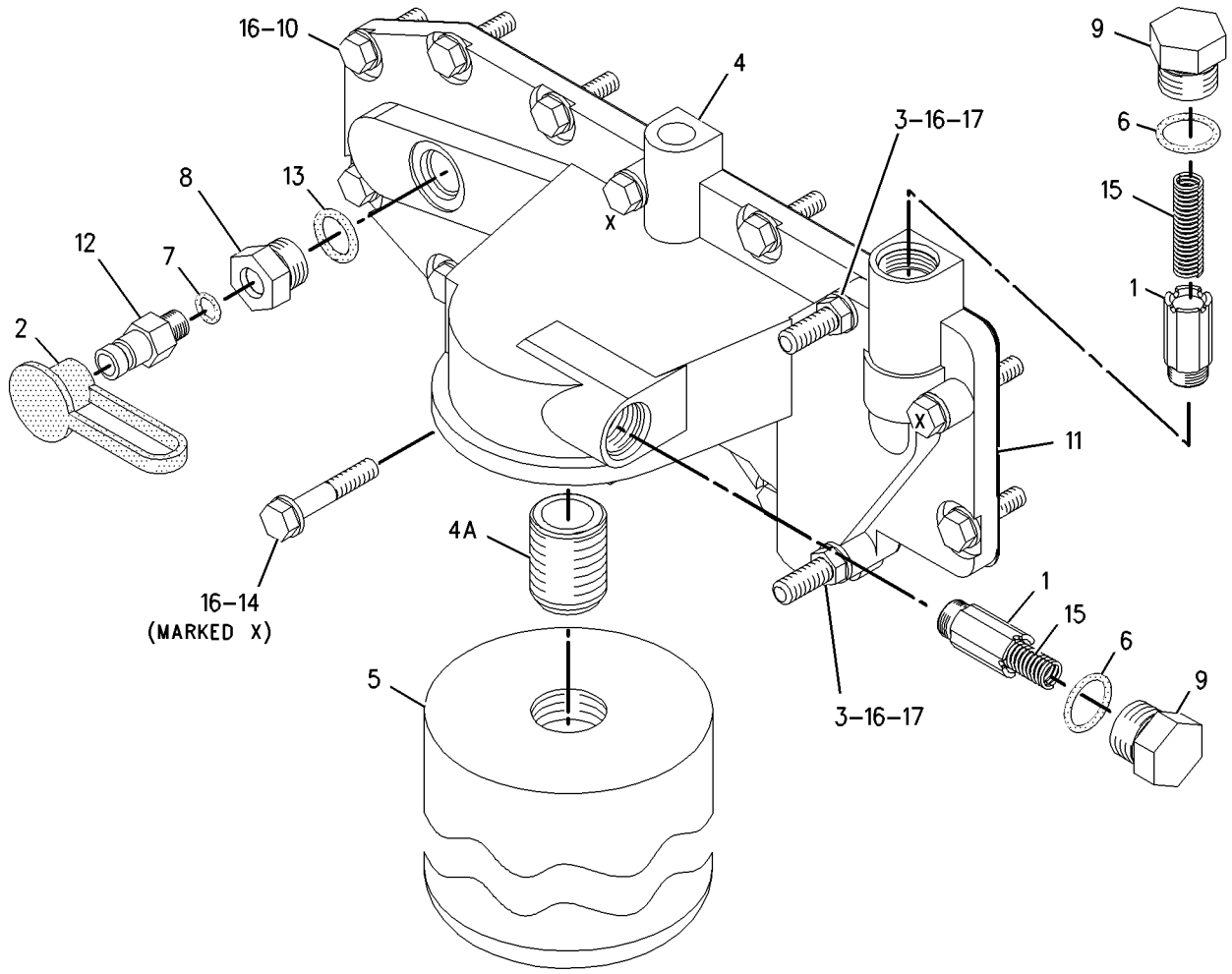


GRAPHIC #1 **<END>** g00943879

# *220-1194* FUMES DISPOSAL GP

**S/N: KHX1-UP**

**PROVIDES FUMES DISPOSAL GP FOR SIDE MOUNTED BREATHER LOCATION**

**PART OF 235-1497 ENGINE AR-COMPLETE**

**FOR USE WITH 222-5946–PAGE 67, 222-5947–PAGE 7**

**SMCS-1317** **i02485075**

| NOTE | REF NO | GRAPHIC REF | PART NUMBER | QTY | PART NAME 1 2 3 4 5 6 (PRODUCT LEVEL) | SEE PAGE |
|---|---|---|---|---|---|---|
| | 1 | 1 | **4P-4369** | 1 | SPACER (12X19X23.5-MM THK) | |
| | 2 | 1 | **9M-2904** | 1 | CLAMP-HOSE | |
| | 3 | 1 | **228-8510** | 1 | HOSE-DISPOSAL (FUMES) | |
| | 4 | 1 | **2S-2053** | 1 | CLIP | |
| | 5 | 1 | **3E-4352** | 1 | WASHER-HARD (8.8X20.5X2.5-MM THK) | |
| | 6 | 1 | **162-3148** | 1 | STUD (M8X1.25X62.75-MM) | |

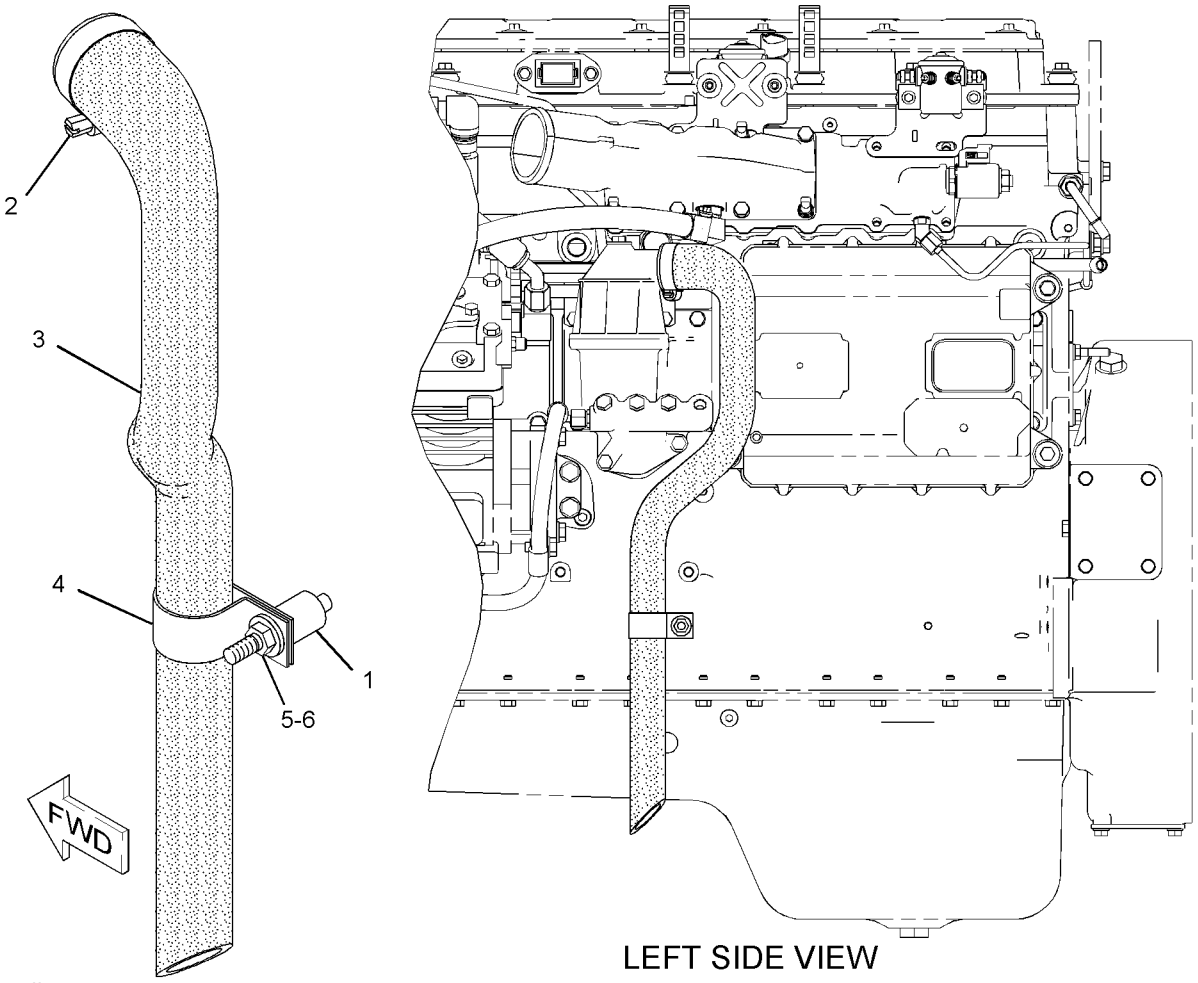


LEFT SIDE VIEW

GRAPHIC #1

**<END>**

g01095248

# *238-8178* GAUGE GP-OIL LEVEL (DIPSTICK)—ENGINE

**S/N: KHX1-UP**

**PART OF 235-1497 ENGINE AR-COMPLETE**

**SMCS-1326** **i02194485**

| NOTE | REF NO | GRAPHIC REF | PART NUMBER | QTY | PART NAME 1 2 3 4 5 6 (PRODUCT LEVEL) | SEE PAGE |
|---|---|---|---|---|---|---|
| J | 1 | 1 | **1S-2563** | 3 | PLUG | |
| | 2 | 1 | **238-8181** | 1 | TUBE AS | |
| | 3 | 1 | **176-9394** | 1 | GAUGE-OIL LEVEL (DIPSTICK) | |
| | 4 | 1 | **2S-2053** | 1 | CLIP | |
| | 5 | 1 | **8T-4121** | 2 | WASHER-HARD (11X21X2.5-MM THK) | |
| M | 6 | 1 | **8T-4133** | 1 | NUT (M10X1.5-THD) | |
| M | 7 | 1 | **8T-4136** | 1 | BOLT (M10X1.5X25-MM) | |
| | 8 | 1 | **9S-1350** | 1 | CLIP | |

J-USE TO PLUG OPTIONAL DIPSTICK LOCATIONS
M-METRIC PART

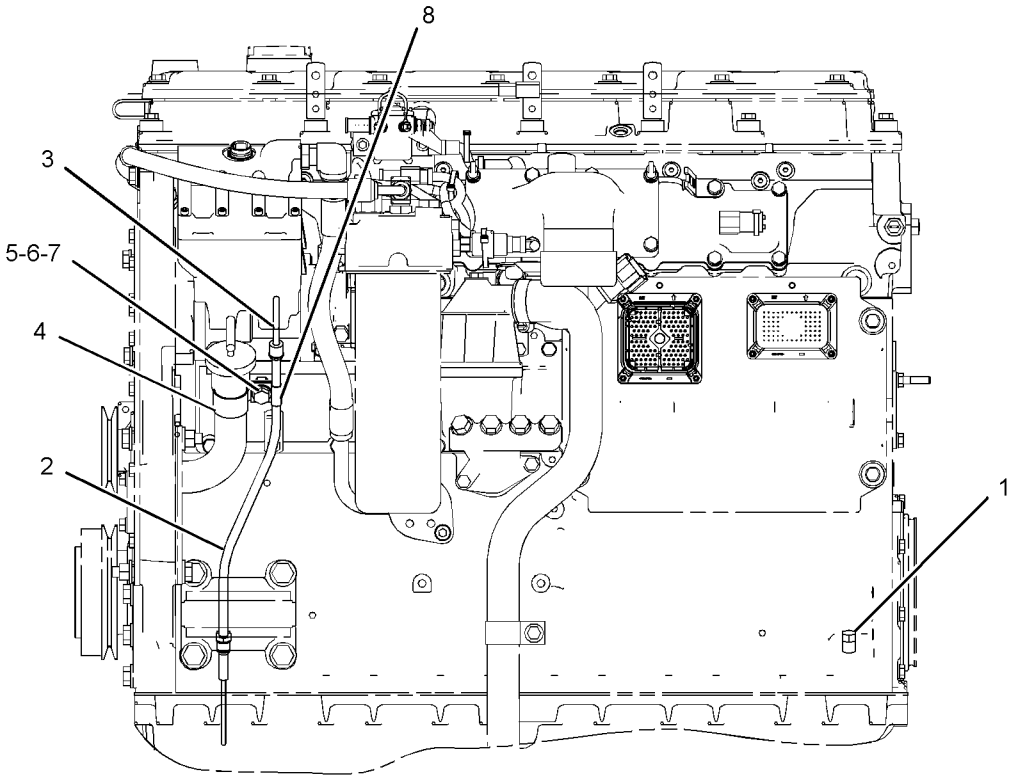


LEFT SIDE VIEW

GRAPHIC #1 **<END>** g01108916

# LUBRICATION SYSTEM

## *4W-2914* LINES GP-ENGINE OIL

**S/N: KHX1-UP**

**PART OF 235-1497 ENGINE AR-COMPLETE**

**SMCS-1307** **i01930754**

| NOTE | REF NO | GRAPHIC REF | PART NUMBER | QTY | PART NAME 1 2 3 4 5 6 (PRODUCT LEVEL) | SEE PAGE |
|---|---|---|---|---|---|---|
| | 1 | 1 | **7W-5341** | 1 | TUBE AS | |
| M | 2 | 1 | **6V-3822** | 1 | BOLT (M10X1.5X35-MM) | |
| | | 1 | **9M-4136** | 1 | SPACER (0.438X0.75X0.5-IN THK) | |
| | | | | | -OR- | |
| M | | 1 | **6V-4248** | 1 | BOLT (M10X1.5X25-MM) | |
| | 3 | 1 | **7W-5340** | 1 | GASKET | |
| M | 4 | 1 | **6V-3940** | 4 | BOLT (M8X1.25X25-MM) | |
| | 5 | 1 | **9M-1974** | 2 | WASHER-HARD (8.8X16X2-MM THK) | |
| | 6 | 1 | **4W-2232** | 1 | ELBOW-OUTLET | |
| | 7 | 1 | **3P-1156** | 2 | SEAL-O-RING | |
| | 8 | 1 | **6V-5839** | 1 | WASHER (11X21X2.5-MM THK) | |

M-METRIC PART

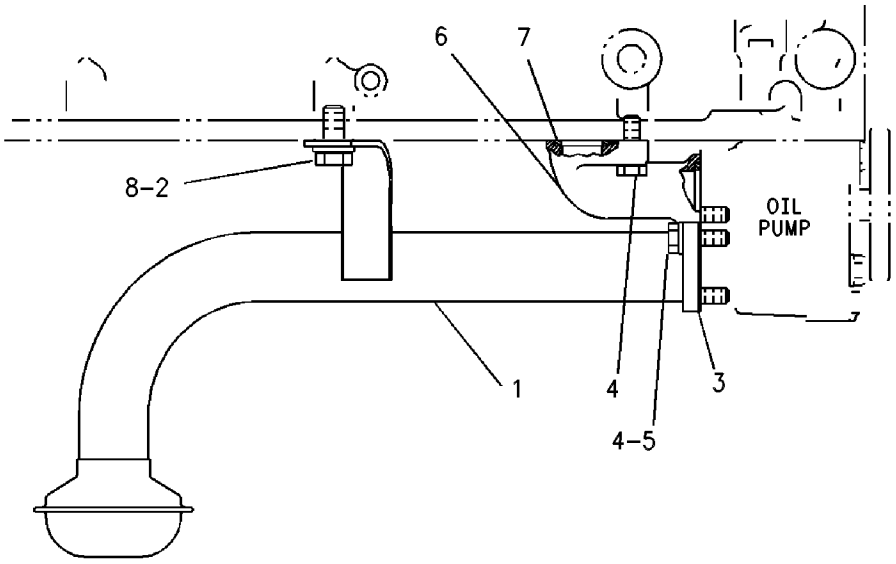


GRAPHIC #1 **<END>** g00605541

## *187-6279* LINES GP-TURBOCHARGER OIL

**S/N: KHX1-542**

**PART OF 235-1497 ENGINE AR-COMPLETE**

**SMCS-1052, 1307** **i01884840**

| NOTE | REF NO | GRAPHIC REF | PART NUMBER | QTY | PART NAME 1 2 3 4 5 6 (PRODUCT LEVEL) | SEE PAGE |
|---|---|---|---|---|---|---|
| | 1 | 1 | **183-3399** | 1 | CONNECTOR AS | |
| | 1A | 1 | **214-7568** | 1 | SEAL-O-RING (11.89MM ID) | |
| | 1B | 1 | **221-3494** | 1 | SEAL-O-RING (12.83MM OD) | |
| | 2 | 1 | **228-4709** | 1 | HOSE AS | |
| | 3 | 1 | **187-6294** | 1 | HOSE AS-OIL SUPPLY | |
| | 4 | 1 | **6V-8724** | 1 | ELBOW | |
| | 4A | 1 | **3J-1907** | 1 | SEAL-O-RING (11.89MM ID) | |
| | 4B | 1 | **6V-8397** | 1 | SEAL-O-RING (12.83MM OD) | |
| | 5 | 1 | **3P-1156** | 1 | SEAL-O-RING (21.82MM ID) | |
| | 6 | 1 | **5P-8066** | 1 | SEAL-O-RING (32.92MM ID) | |
| M | 7 | 1 | **9X-2099** | 2 | STUD (M8X1.25-THD) | |
| | 8 | 1 | **8T-4224** | 4 | WASHER-HARD (8.8X16X2-MM THK) | |
| M | 9 | 1 | **8T-7547** | 2 | BOLT (M8X1.25X30-MM) | |

M-METRIC PART

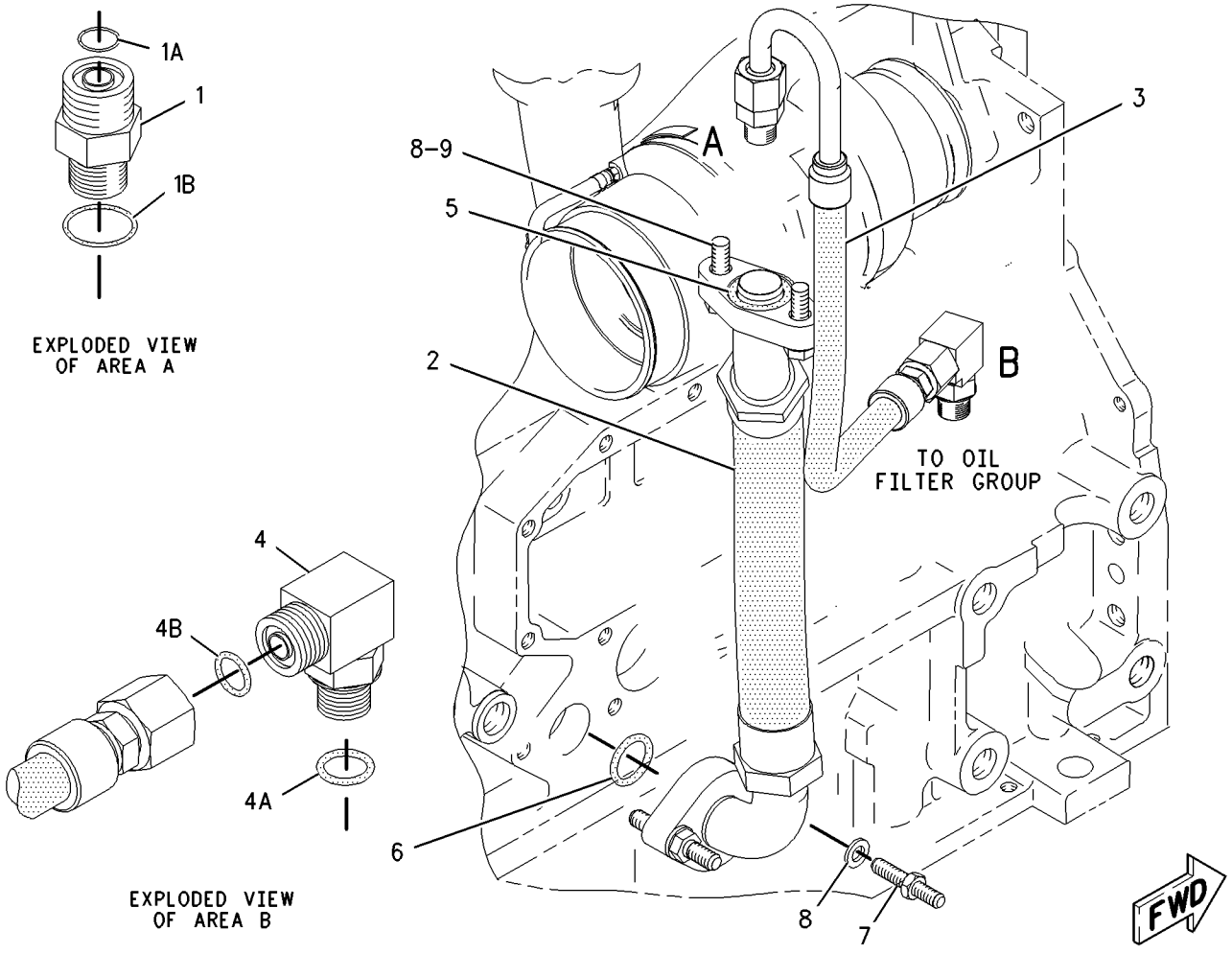


GRAPHIC #1 **<END>** g00993616

# LUBRICATION SYSTEM

## *187-6279* LINES GP-TURBOCHARGER OIL

**S/N: KHX543-2454**

**PART OF 235-1497 ENGINE AR-COMPLETE**

**SMCS-1052, 1307** **i02628088**

| NOTE | REF NO | GRAPHIC REF | PART NUMBER | QTY | PART NAME 1 2 3 4 5 6 (PRODUCT LEVEL) | SEE PAGE |
|---|---|---|---|---|---|---|
| | 1 | 1 | *183-3399* | 1 | CONNECTOR AS | |
| | | 1 | **6V-8636** | 1 | CONNECTOR | |
| | | 1 | **214-7568** | 1 | SEAL-O-RING (11.89MM ID) | |
| | | 1 | **221-3494** | 1 | SEAL-O-RING (12.83MM OD) | |
| C | 2 | 1 | **246-6036** | 1 | HOSE | |
| | 3 | 1 | **187-6294** | 1 | HOSE AS-OIL SUPPLY | |
| | 4 | 1 | *148-8378* | 1 | ELBOW AS | |
| | | 1 | **6V-8724** | 1 | ELBOW | |
| | | 1 | **3J-1907** | 1 | SEAL-O-RING (11.89MM ID) | |
| | | 1 | **6V-8397** | 1 | SEAL-O-RING (12.83MM OD) | |
| C | 5 | 1 | **197-8419** | 1 | GASKET (TURBOCHARGER OIL) (21.82MM ID) | |
| C | 6 | 1 | **210-9246** | 1 | SEAL-O-RING (32.92MM ID) | |
| M | 7 | 1 | **9X-2099** | 2 | STUD (M8X1.25-THD) | |
| | 8 | 1 | **8T-4224** | 4 | WASHER-HARD (8.8X16X2-MM THK) | |
| CM | 9 | 1 | **7X-2537** | 2 | BOLT (M8X1.25X35-MM) | |
| C | 10 | 1 | **260-8630** | 1 | TUBE AS-DRAIN | |
| C | 11 | 1 | **260-8631** | 1 | TUBE AS-DRAIN | |
| C | 12 | 1 | **269-8788** | 2 | CLAMP-BAND | |
| M | 13 | 1 | **2Y-5829** | 1 | NUT (M10X1.15-THD) | |
| M | 14 | 1 | **6V-4248** | 1 | BOLT (M10X1.5X25-MM) | |
| | 15 | 1 | **6V-5839** | 2 | WASHER (11X21X2.5-MM THK) | |
| | 16 | 1 | **7C-4354** | 1 | CLIP | |
| | 17 | 1 | **033-8248** | 1 | CLIP | |

C-CHANGE FROM PREVIOUS TYPE
M-METRIC PART

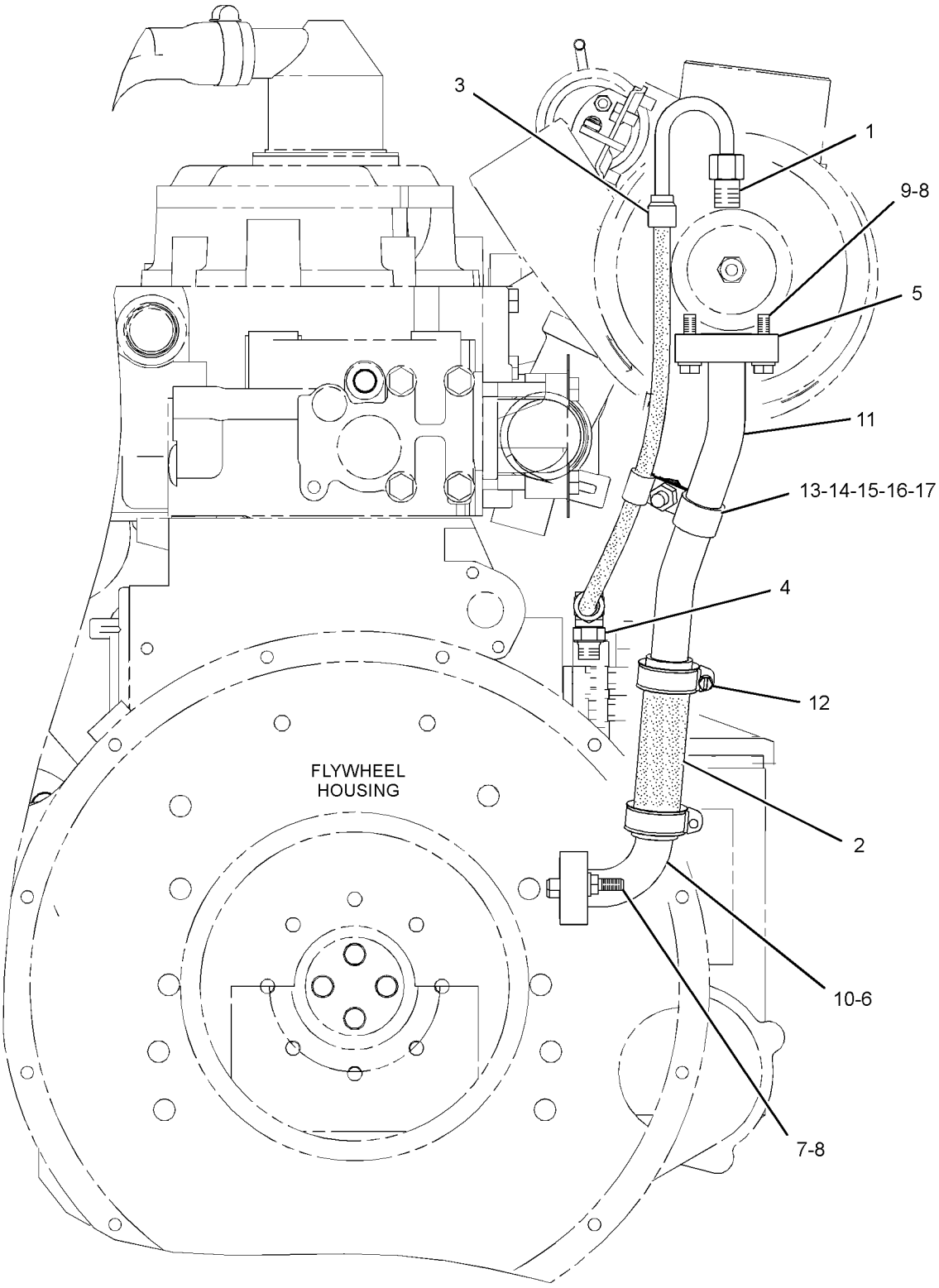


REAR VIEW OF ENGINE

GRAPHIC #1 **<END>** g01319683

# LUBRICATION SYSTEM

## *237-8063* MANIFOLD GP-ENGINE OIL

**S/N: KHX1-UP**

**PART OF 235-1497 ENGINE AR-COMPLETE**

**SMCS-1307** **i02164916**

| NOTE | REF NO | GRAPHIC REF | PART NUMBER | QTY | PART NAME 1 2 3 4 5 6 (PRODUCT LEVEL) | SEE PAGE |
|---|---|---|---|---|---|---|
| | 1 | 1 | **226-8696** | 1 | MANIFOLD-OIL (ENGINE) | |
| | 2 | 1 | **3J-1907** | 4 | SEAL-O-RING | |
| | 3 | 1 | **4F-9029** | 1 | SEAL | |
| M | 4 | 1 | **6V-5219** | 2 | BOLT (M8X1.25X40-MM) | |
| | 5 | 1 | **9S-4191** | 4 | PLUG-O RING | |

M-METRIC PART

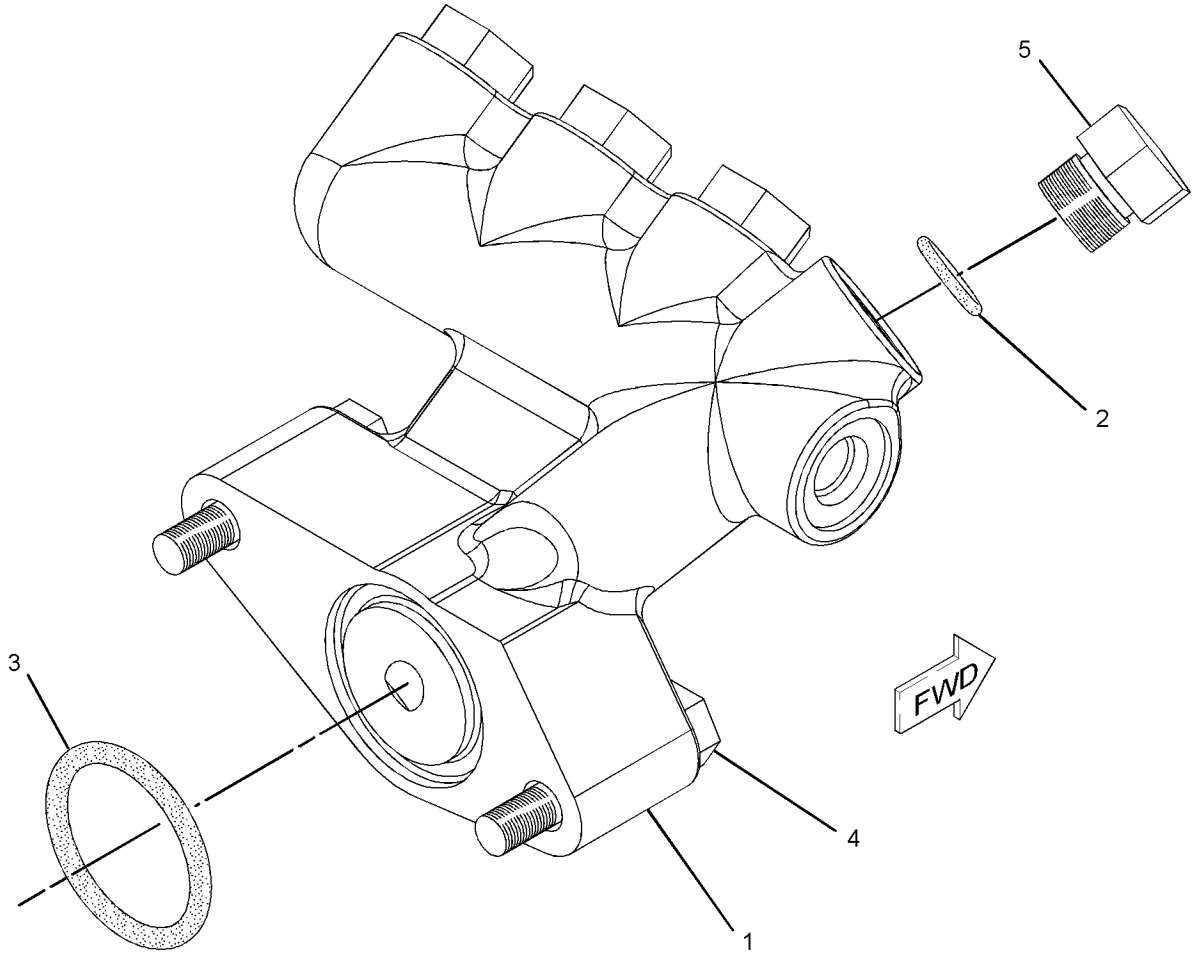


GRAPHIC #1 **<END>** g01099259

# *192-2981* PUMP GP-ENGINE OIL

**S/N: KHX1-UP**
**GEROTOR OIL PUMP, DROP IN DESIGN**
**PART OF 235-1496 ENGINE AR-CORE**

**SMCS-1304, 1315** **i01507774**

| NOTE | REF NO | GRAPHIC REF | PART NUMBER | QTY | PART NAME 1 2 3 4 5 6 (PRODUCT LEVEL) | SEE PAGE |
|---|---|---|---|---|---|---|
| Y | 1 | 1 | *200-4497* | 1 | PUMP GP-ENGINE OIL | 78 |
| M | 2 | 1 | **6V-5815** | 2 | BOLT (M10X1.5X75MM) | |
| | 3 | 1 | **6V-5839** | 2 | WASHER (11X21X2.5MM THK) | |

M-METRIC PART
Y-SEPARATE ILLUSTRATION

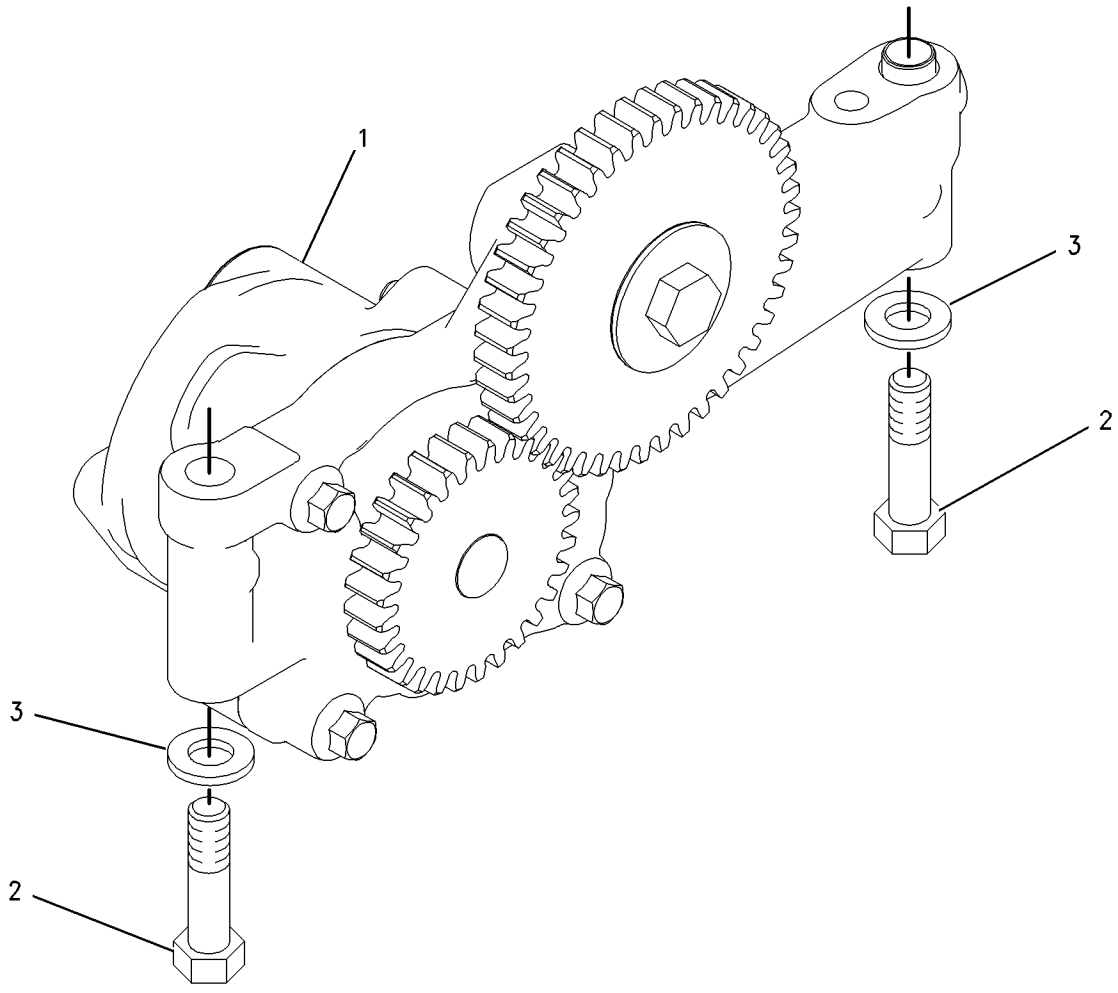


GRAPHIC #1 **<END>** g00775811

## *200-4497* PUMP GP-ENGINE OIL

**S/N: KHX1-UP**

**PART OF 192-2981 PUMP GP-ENGINE OIL**

**SMCS-1304, 1315** **i02162882**

| NOTE | REF NO | GRAPHIC REF | PART NUMBER | QTY | PART NAME 1 2 3 4 5 6 (PRODUCT LEVEL) | SEE PAGE |
|---|---|---|---|---|---|---|
| | 1 | 1 | **7W-9737** | 1 | SHAFT | |
| | 2 | 1 | **7W-9738** | 1 | WASHER (10.5X38X1.6-MM THK) | |
| | 3 | 1 | **7W-9740** | 1 | GEAR AS-IDLER (43-TEETH) | |
| | 3A | 1 | **7W-9930** | 1 | BEARING-SLEEVE | |
| M | 4 | 1 | **9X-2305** | 1 | BOLT-LOCKING (M10X1.5X50-MM) | |
| | 5 | 1 | **189-8777** | 1 | PUMP GP-ENGINE OIL | |

M-METRIC PART

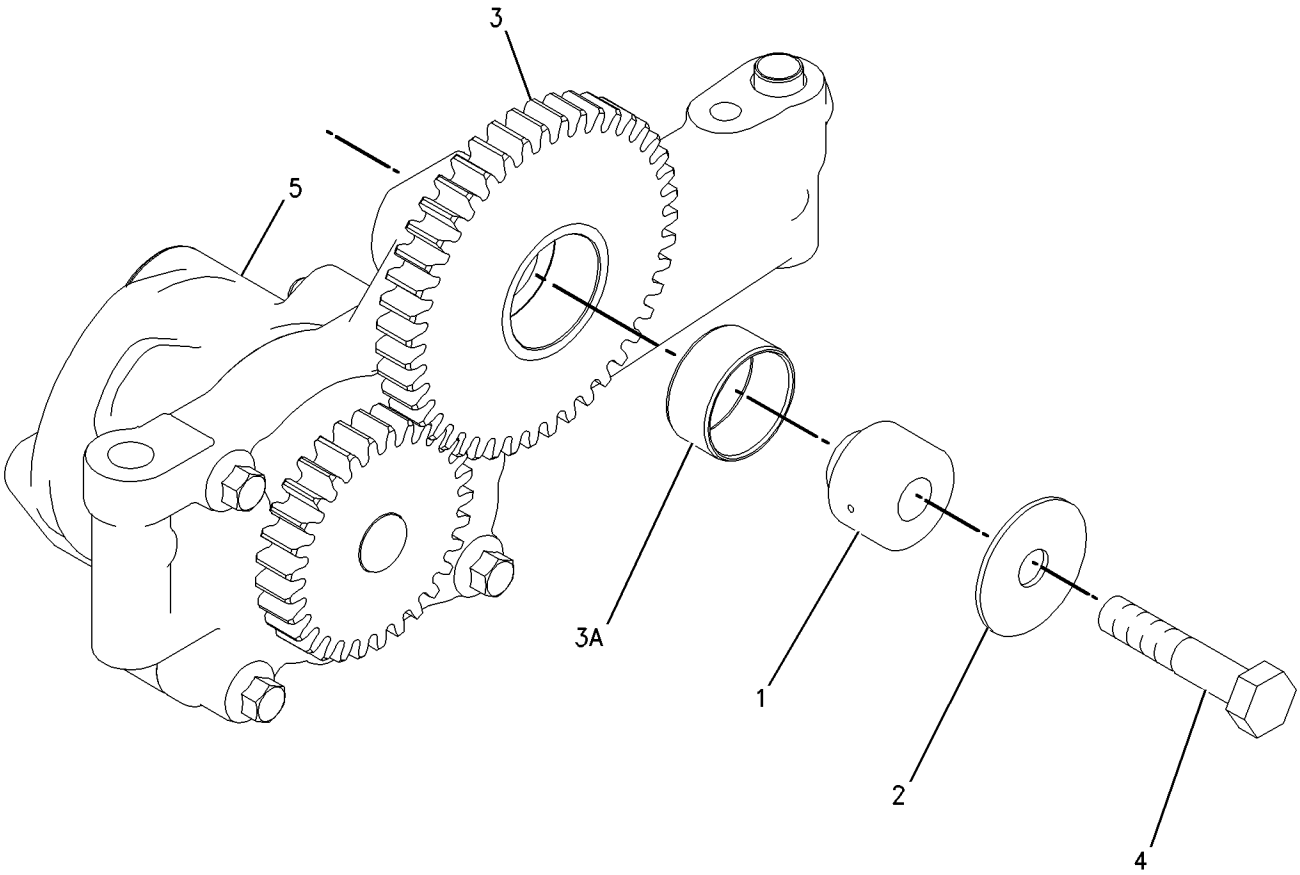


GRAPHIC #1 **<END>** g00775788

# *117-3643* COOLER GP-ENGINE OIL

**S/N: KHX1-UP**
**RH MOUNTED**
**PART OF 235-1496 ENGINE AR-CORE**

**SMCS-1378** **i02482410**

| NOTE | REF NO | GRAPHIC REF | PART NUMBER | QTY | PART NAME 1 2 3 4 5 6 (PRODUCT LEVEL) | SEE PAGE |
|---|---|---|---|---|---|---|
| | 1 | 1 | **267-4743** | 1 | CORE AS-ENGINE OIL COOLER | |
| | 2 | 1 | **233-7655** | 1 | GASKET | |
| | 3 | 1 | **3P-1156** | 2 | SEAL-O-RING | |

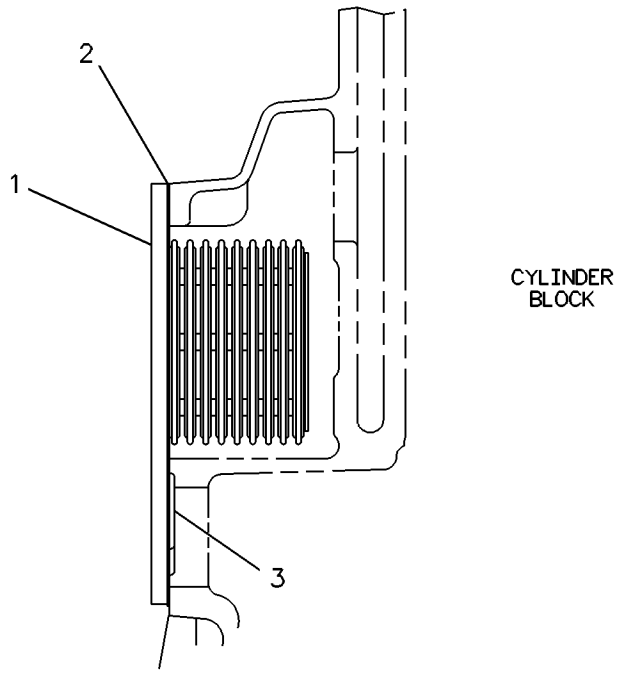


GRAPHIC #1 **<END>** g00117316

# *231-6361* ELBOW GP-WATER

**S/N: KHX1-UP**

**PART OF 235-1497 ENGINE AR-COMPLETE**

**SMCS-1380** **i02695988**

| NOTE | REF NO | GRAPHIC REF | PART NUMBER | QTY | PART NAME 1 2 3 4 5 6 (PRODUCT LEVEL) | SEE PAGE |
|---|---|---|---|---|---|---|
| | 1 | 1 | **195-7386** | 1 | ELBOW | |
| | 2 | 1 | **200-2258** | 1 | GASKET | |
| | 3 | 1 | *148-8411* | 1 | PLUG AS | |
| | | 1 | **9S-4185** | 1 | PLUG-O-RING | |
| | | 1 | **3K-0360** | 1 | SEAL-O-RING | |
| M | 4 | 1 | **6V-3940** | 2 | BOLT (M8X1.25X25-MM) | |
| | 5 | 1 | **9M-1974** | 2 | WASHER-HARD (8.8X16X2-MM THK) | |

M-METRIC PART

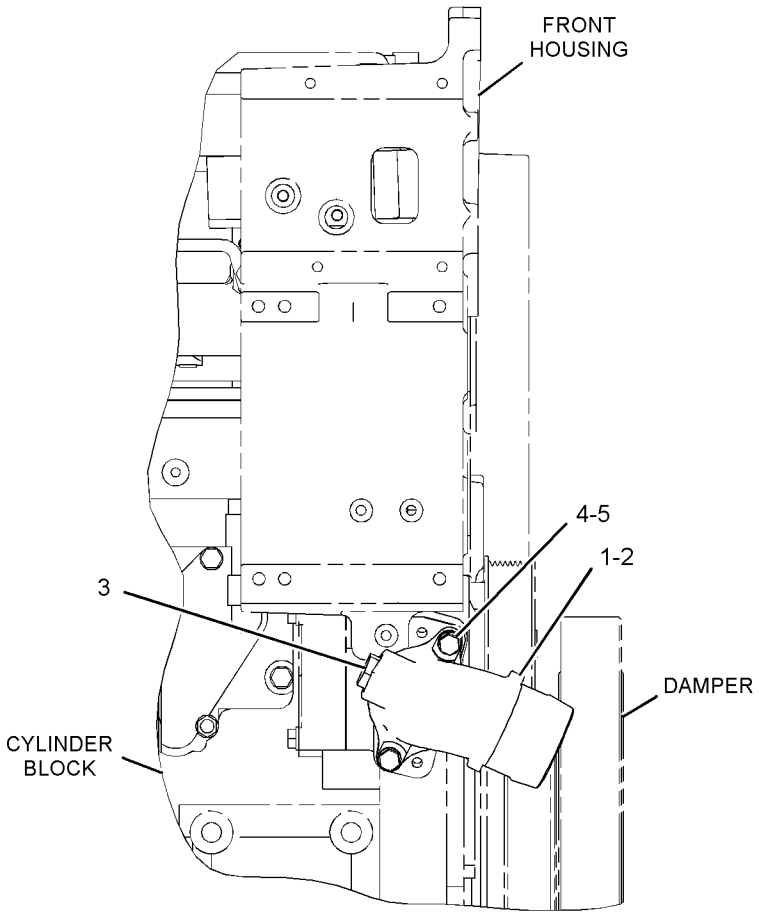


RIGHT SIDE VIEW OF ENGINE

GRAPHIC #1 **<END>** g01352429

# COOLING SYSTEM

## *250-7563* FAN GP-BLOWER

**S/N: 5451-UP**

**PART OF 248-4224 INSTALLATION AR-ENGINE**

**SMCS-1356, 1360** **i02358408**

| NOTE | REF NO | GRAPHIC REF | PART NUMBER | QTY | PART NAME 1 2 3 4 5 6 (PRODUCT LEVEL) | SEE PAGE |
|---|---|---|---|---|---|---|
| | 1 | 1 | **126-8503** | 2 | GUARD AS | |
| | | | | | (EACH INCLUDES) | |
| M | | 1 | **8T-3490** | 1 | NUT-WELD (M10X1.5-THD) | |
| | 2 | 1 | **270-1744** | 1 | ADAPTER-FAN | |
| | 3 | 1 | **254-2308** | 1 | FAN (9-BLADE) | |
| M | 4 | 1 | **7X-0818** | 6 | BOLT (M8X1.25X45-MM) | |
| | 5 | 1 | **8T-4121** | 16 | WASHER-HARD (11X21X2.5-MM THK) | |
| M | 6 | 1 | **8T-4136** | 8 | BOLT (M10X1.5X25-MM) | |
| M | 7 | 1 | **8T-4137** | 8 | BOLT (M10X1.5X20-MM) | |
| | 8 | 1 | **8T-4224** | 6 | WASHER-HARD (8.8X16X2-MM THK) | |

M-METRIC PART

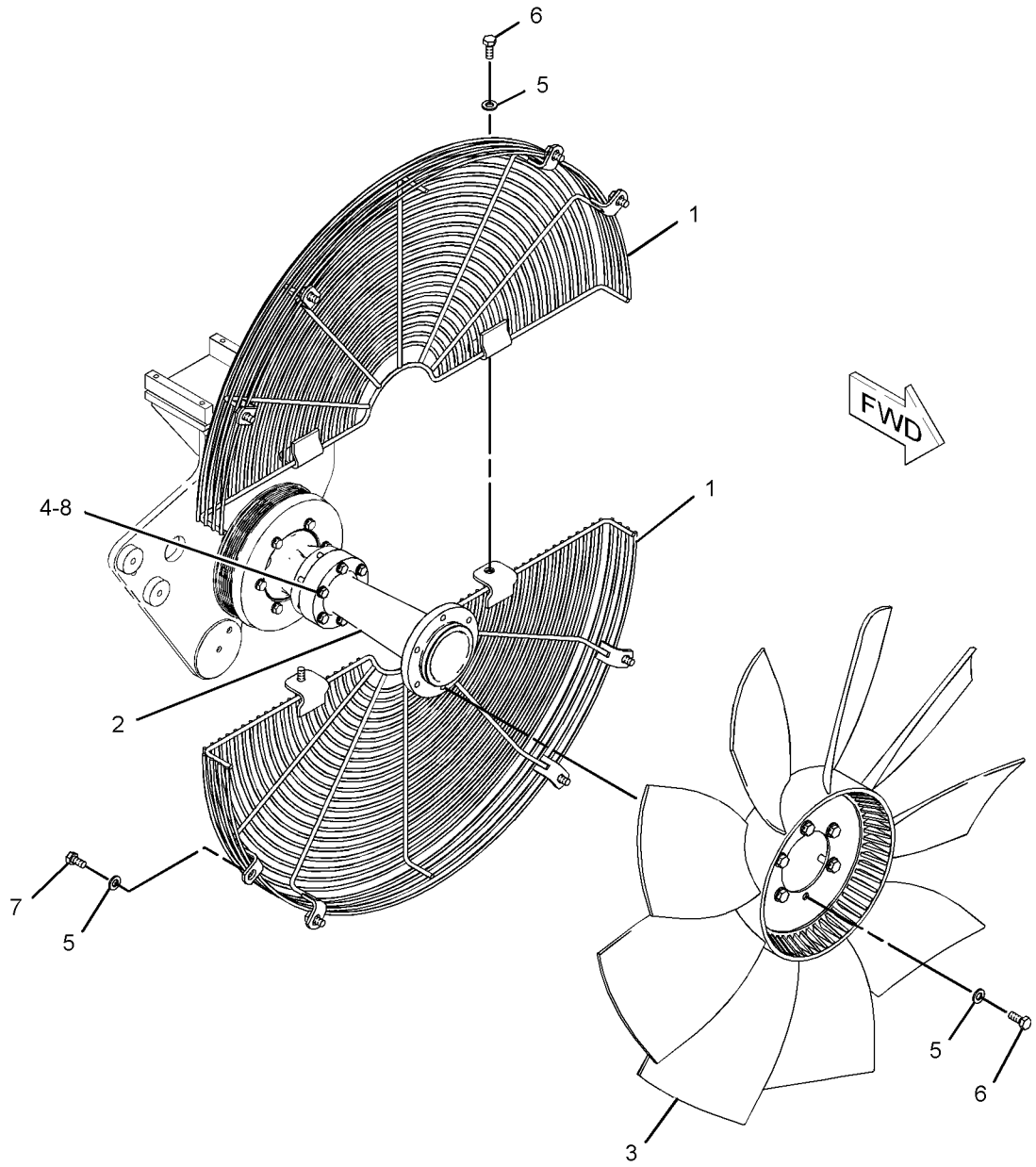


GRAPHIC #1 **<END>** g01102598

## *206-4228* LINES GP-WATER—ENGINE

**S/N: KHX1-523**

**PART OF 235-1497 ENGINE AR-COMPLETE**

**SMCS-1355, 1380, 1393** **i02165077**

| NOTE | REF NO | GRAPHIC REF | PART NUMBER | QTY | PART NAME 1 2 3 4 5 6 (PRODUCT LEVEL) | SEE PAGE |
|---|---|---|---|---|---|---|
| | 1 | 1 | **7E-0759** | 1 | HOSE | |
| | 3 | 1 | **115-4223** | 2 | REGULATOR-WATER TEMPERATURE (97-DEG C) (COOLANT) | |
| | 4 | 1 | **126-5466** | 1 | GASKET | |
| | 5 | 1 | **157-0670** | 1 | CAP-DUST | |
| | 6 | 1 | **160-5131** | 1 | PIPE (OUTLET) | |
| | 7 | 1 | *217-9060* | 1 | VALVE AS-FLUID SAMPLING (ENGINE COOLANT) | |
| | 7A | 1 | **3J-7354** | 1 | SEAL-O-RING | |
| | 7B | 1 | **154-9023** | 1 | VALVE-SAMPLING (ENGINE COOLANT) | |
| | 8 | 1 | **222-5915** | 1 | GASKET (TEMPERATURE REGULATOR HOUSING) | |
| | 9 | 1 | **227-5942** | 1 | HOUSING-WATER REGULATOR | |
| | 10 | 1 | **237-5176** | 2 | CLAMP-BAND | |
| | 11 | 1 | **3K-0360** | 1 | SEAL-O-RING | |
| M | 12 | 1 | **5P-8347** | 2 | BOLT (M8X1.25X70-MM) | |
| | 13 | 1 | **5P-9617** | 1 | ADAPTER | |
| | 14 | 1 | **6V-3250** | 1 | SEAL-O-RING | |
| M | 15 | 1 | **6V-3940** | 6 | BOLT (M8X1.25X25-MM) | |
| M | 16 | 1 | **6V-5223** | 1 | BOLT (M8X1.25X100-MM) | |
| | 17 | 1 | **6V-6609** | 3 | SEAL-O-RING | |
| | 18 | 1 | **6V-9027** | 1 | SEAL-O-RING | |
| | 19 | 1 | **9M-1974** | 6 | WASHER-HARD (8.8X16X2-MM THK) | |
| | 20 | 1 | **9S-4182** | 1 | PLUG-O RING | |
| | 21 | 1 | **9S-4185** | 3 | PLUG-O RING | |
| | 22 | 1 | **9S-8005** | 1 | PLUG-O RING | |

M-METRIC PART

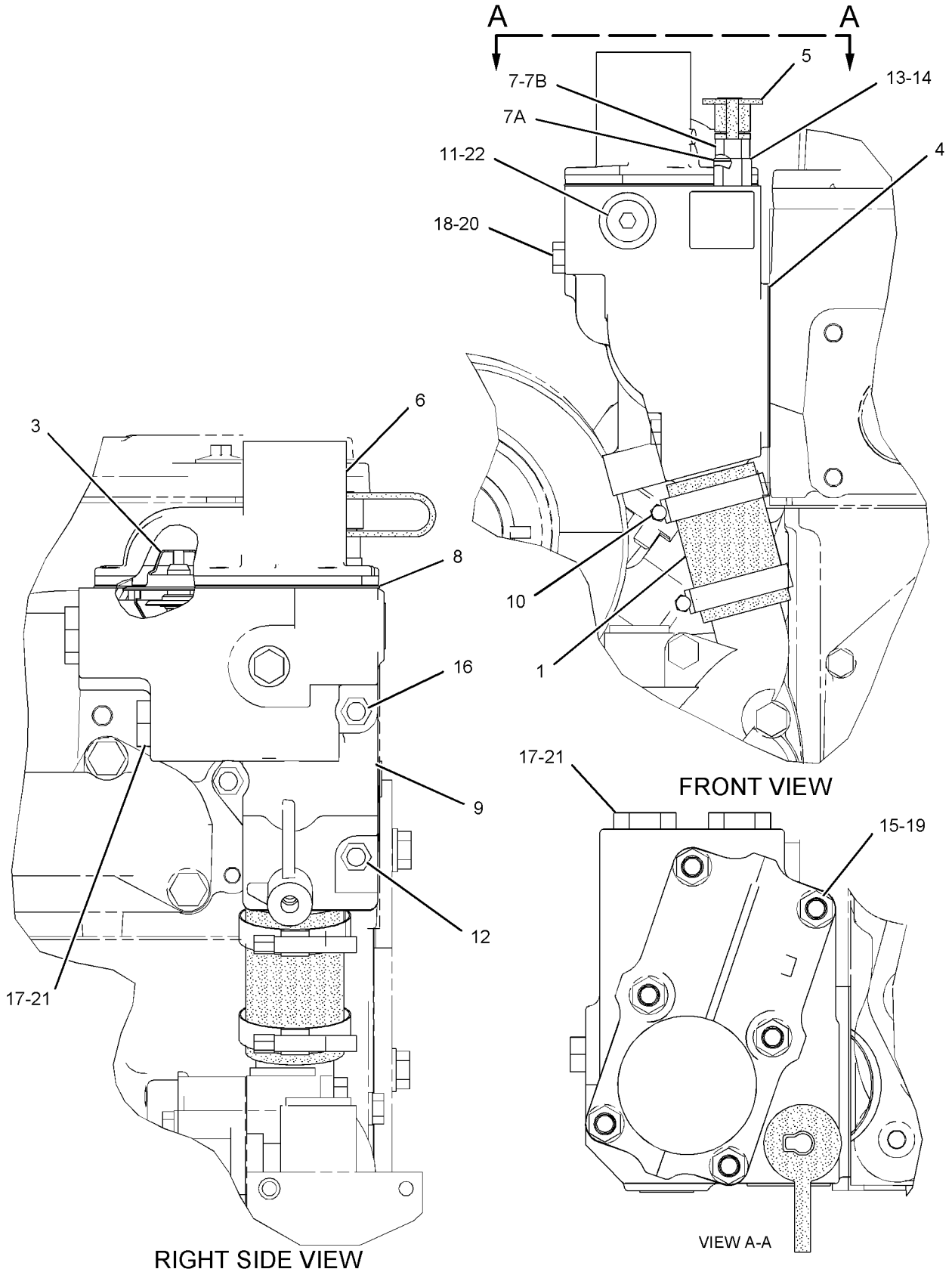


GRAPHIC #1 **<END>** g01099572

## *238-4802* LINES GP-WATER—ENGINE

**S/N: KHX524-UP**

**PART OF 235-1497 ENGINE AR-COMPLETE**

**SMCS-1355, 1380, 1393** **i02375322**

| NOTE | REF NO | GRAPHIC REF | PART NUMBER | QTY | PART NAME 1 2 3 4 5 6 (PRODUCT LEVEL) | SEE PAGE |
|---|---|---|---|---|---|---|
| | 1 | 1 | **7E-0759** | 1 | HOSE | |
| | 3 | 1 | **237-5176** | 2 | CLAMP-BAND | |
| | 4 | 1 | **119-3075** | 2 | REGULATOR-WATER TEMPERATURE (94-DEG C) (COOLANT) | |
| | 5 | 1 | **126-5466** | 1 | GASKET | |
| | 6 | 1 | **222-5915** | 1 | GASKET (TEMPERATURE REGULATOR HOUSING) | |
| | 7 | 1 | **160-5131** | 1 | PIPE (OUTLET) | |
| | 8 | 1 | **227-5942** | 1 | HOUSING-WATER REGULATOR | |
| | 9 | 1 | *148-8395* | 1 | PLUG AS | |
| | 9A | 1 | **3K-0360** | 1 | SEAL-O-RING | |
| | | 1 | **9S-8005** | 1 | PLUG-O-RING | |
| | 10 | 1 | *148-8411* | 3 | PLUG AS | |
| | | | | | (EACH INCLUDES) | |
| | 10A | 1 | **3K-0360** | 1 | SEAL-O-RING | |
| | | 1 | **9S-4185** | 1 | PLUG-O-RING | |
| | 11 | 1 | *155-3624* | 1 | PLUG AS | |
| | 11A | 1 | **3J-7354** | 1 | SEAL-O-RING | |
| | | 1 | **9S-4182** | 1 | PLUG-O-RING | |
| | 12 | 1 | *162-0177* | 1 | PLUG AS | |
| | 12A | 1 | **3J-1907** | 1 | SEAL-O-RING | |
| | | 1 | **9S-8004** | 1 | PLUG-O-RING | |
| M | 13 | 1 | **5P-8347** | 2 | BOLT (M8X1.25X70-MM) | |
| M | 14 | 1 | **6V-3940** | 6 | BOLT (M8X1.25X25-MM) | |
| M | 15 | 1 | **6V-5223** | 1 | BOLT (M8X1.25X100-MM) | |
| | 16 | 1 | **9M-1974** | 6 | WASHER-HARD (8.8X16X2-MM THK) | |

M-METRIC PART

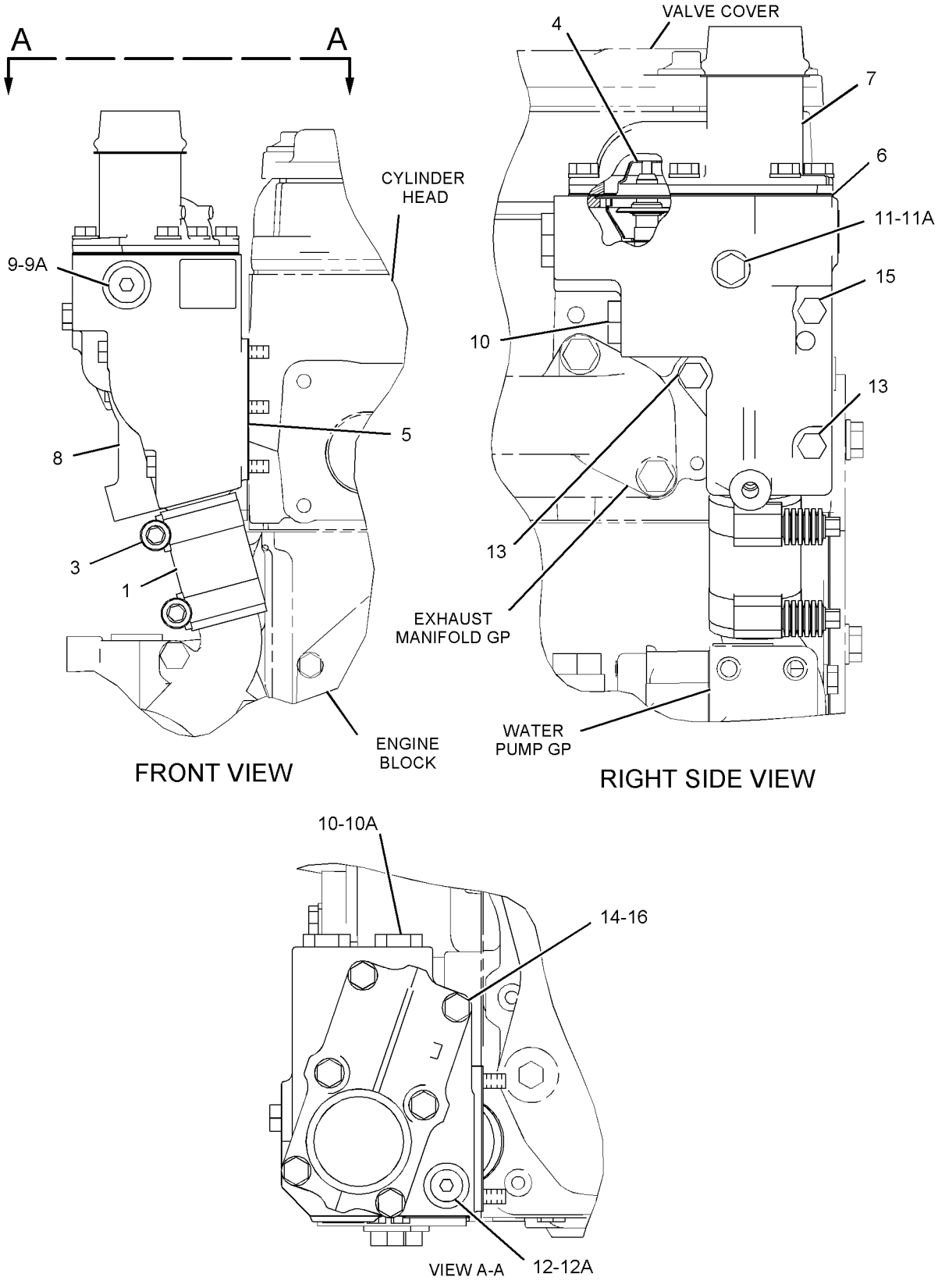


GRAPHIC #1 **<END>** g01118619

## *209-4600* PUMP GP-WATER–COOLANT

**S/N: KHX1-UP**

**PART OF 235-1497 ENGINE AR-COMPLETE**

**SMCS-1361** **i02571178**

| NOTE | REF NO | GRAPHIC REF | PART NUMBER | QTY | PART NAME 1 2 3 4 5 6 (PRODUCT LEVEL) | SEE PAGE |
|---|---|---|---|---|---|---|
| YR | 1 | 1 | **227-4299** | 1 | PUMP GP-WATER | 87 |
| | 2 | 1 | *148-8407* | 1 | PLUG AS | |
| | | 1 | **3J-1907** | 1 | SEAL-O-RING | |
| | | 1 | **9S-4191** | 1 | PLUG-O-RING | |
| | 3 | 1 | *148-8409* | 1 | PLUG AS | |
| | | 1 | **3D-2824** | 1 | SEAL-O-RING | |
| | | 1 | **9S-8008** | 1 | PLUG-O-RING (WATER LINES GROUP) | |
| | 4 | 1 | **2M-4453** | 1 | SEAL-O-RING | |
| | 5 | 1 | **4J-0525** | 1 | SEAL-O-RING | |
| M | 6 | 1 | **8T-0644** | 4 | BOLT (M10X1.5X90-MM) | |
| | 7 | 1 | **3K-0360** | 1 | SEAL-O-RING | |
| | 8 | 1 | **9S-4185** | 1 | PLUG-O-RING | |

M-METRIC PART
R-REMFG PART MAY BE AVAILABLE
Y-SEPARATE ILLUSTRATION

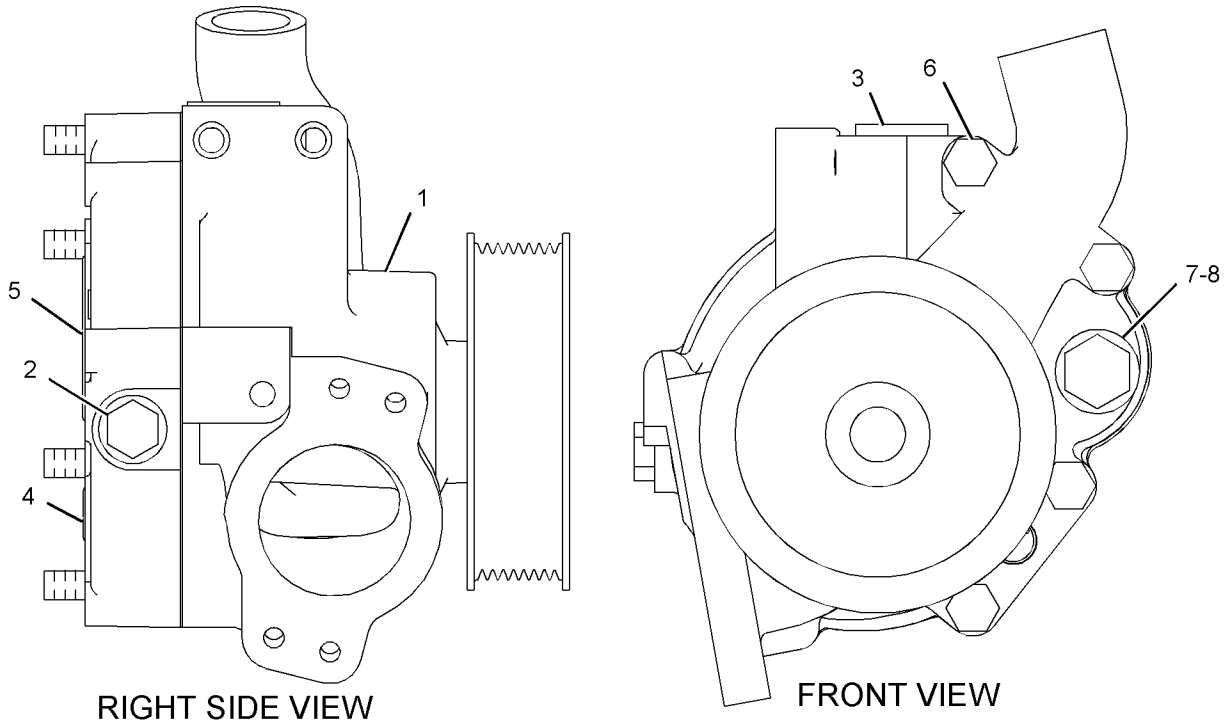


GRAPHIC #1 **<END>** g01142678

## *227-4299* PUMP GP-WATER–COOLANT

**S/N: KHX1-UP**

**PART OF 209-4600 PUMP GP-WATER**

**SMCS-1361** **i02608715**

| NOTE | REF NO | GRAPHIC REF | PART NUMBER | QTY | PART NAME 1 2 3 4 5 6 (PRODUCT LEVEL) | SEE PAGE |
|---|---|---|---|---|---|---|
| | 1 | 1 | *227-4301* | 1 | PUMP AS-WATER | |
| | 1A | 1 | **203-6093** | 1 | HOUSING (WATER PUMP) | |
| | 1B | 1 | **177-1052** | 1 | SHAFT AS | |
| | 1C | 1 | **177-1058** | 1 | PLUG | |
| | 1D | 1 | **197-9581** | 1 | PULLEY | |
| | 1E | 1 | **226-6039** | 1 | IMPELLER | |
| | 1F | 1 | **147-5088** | 1 | SEAL AS-WATER PUMP | |
| | 2 | 1 | **226-6051** | 1 | COVER | |
| | 3 | 1 | **197-9580** | 1 | GASKET | |
| | 4 | 1 | *183-2931* | 3 | BOLT AS | |
| | | | | | (EACH INCLUDES) | |
| M | | 1 | **6V-3918** | 1 | BOLT (M8X1.25X50-MM) | |
| | | 1 | **9M-1974** | 1 | WASHER-HARD (8.8X16X2-MM THK) | |

M-METRIC PART

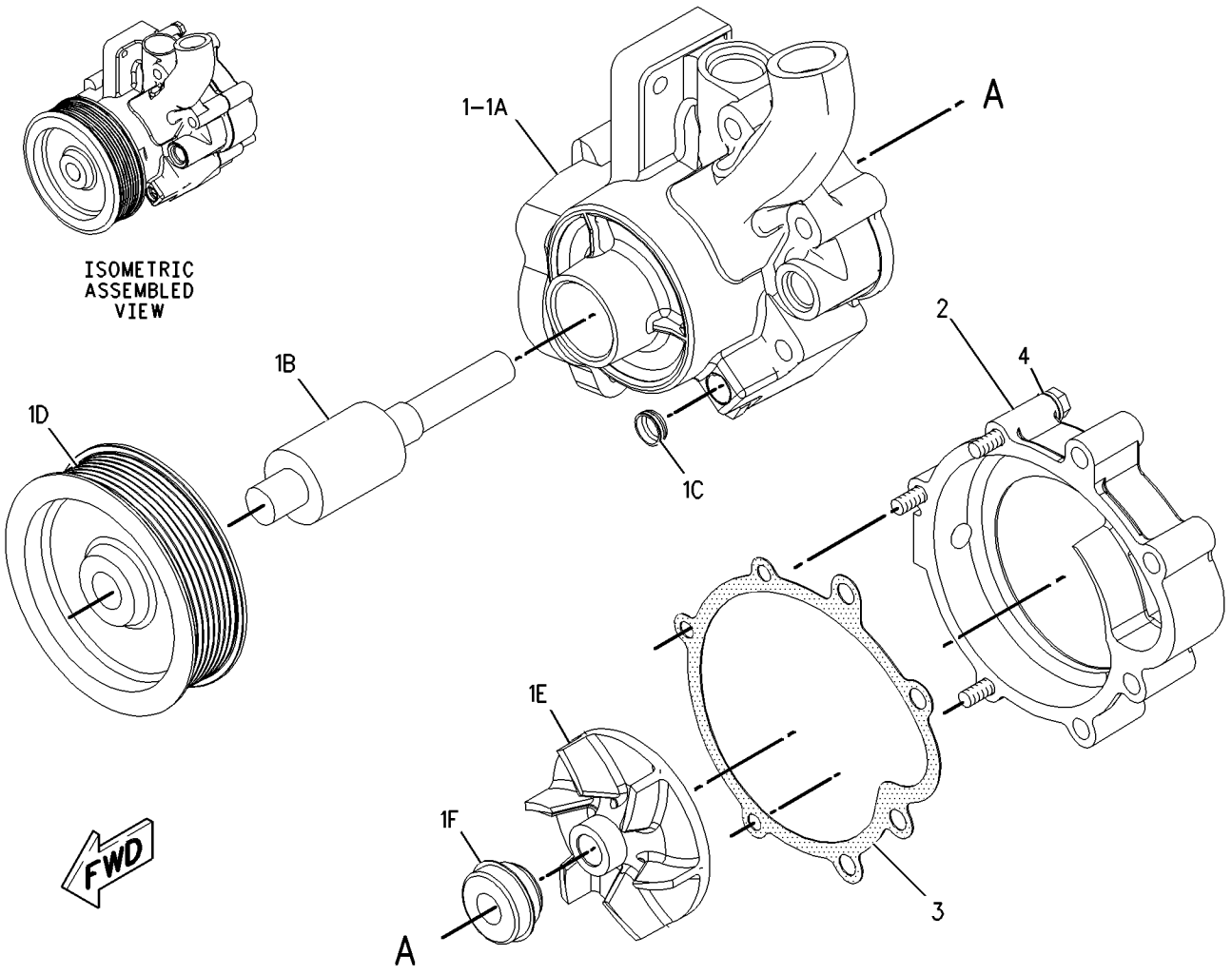


GRAPHIC #1 **<END>** g00949232

# *254-7027* RADIATOR & AFTERCOOLER GP–

**WITH TRANSMISSION OIL COOLER**

**S/N: 5451-UP**

**PART OF 251-1325 RADIATOR & MOUNTING GP**

**SMCS-1063, 1353, 1375** **i02394413**

| NOTE | REF NO | GRAPHIC REF | PART NUMBER | QTY | PART NAME 1 2 3 4 5 6 (PRODUCT LEVEL) | SEE PAGE |
|---|---|---|---|---|---|---|
| | 1 | 1 | **2P-7846** | 1 | HOSE | |
| | 2 | 1 | **8T-4121** | 16 | WASHER-HARD (11X21X2.5-MM THK) | |
| | 3 | 1 | **263-6401** | 1 | CHANNEL AS | |
| | 4 | 1 | **263-6402** | 1 | CORE AS-POWER TRAIN OIL COOLER | |
| | 5 | 1 | **263-6403** | 2 | PLATE | |
| | 6 | 1 | **263-6404** | 1 | SHROUD AS | |
| | 7 | 1 | **263-6405** | 1 | CHANNEL AS | |
| | 8 | 1 | **263-6406** | 1 | RADIATOR GP | |
| | | 1 | **141-0052** | 1 | CAP-RADIATOR | |
| | 9 | 1 | **263-6407** | 1 | CHANNEL AS | |
| | 10 | 1 | **263-6408** | 1 | CORE AS-AFTERCOOLER | |
| | 11 | 1 | **216-4983** | 2 | CLAMP | |
| M | 12 | 1 | **8T-0389** | 4 | LOCKNUT (M10X1.15-THD) | |
| M | 13 | 1 | **8T-4136** | 8 | BOLT (M10X1.5X25-MM) | |
| M | 14 | 1 | **8T-4189** | 12 | BOLT (M8X1.25X20-MM) | |
| M | 15 | 1 | **8T-4195** | 4 | BOLT (M10X1.5X30-MM) | |
| | 16 | 1 | **8T-4224** | 12 | WASHER-HARD (8.8X16X2-MM THK) | |
| D | 17 | 1 | **101-8375** | | DAMPER-VIBRATION (100-M) | |
| BE | 18 | 1 | **263-6409** | | SEAL | |

B-USE AS REQUIRED
D-ORDER BY THE METER
E-ORDER BY THE CENTIMETER
M-METRIC PART

*254-7027* **RADIATOR & AFTERCOOLER GP** *(contd.)* **i02394413**

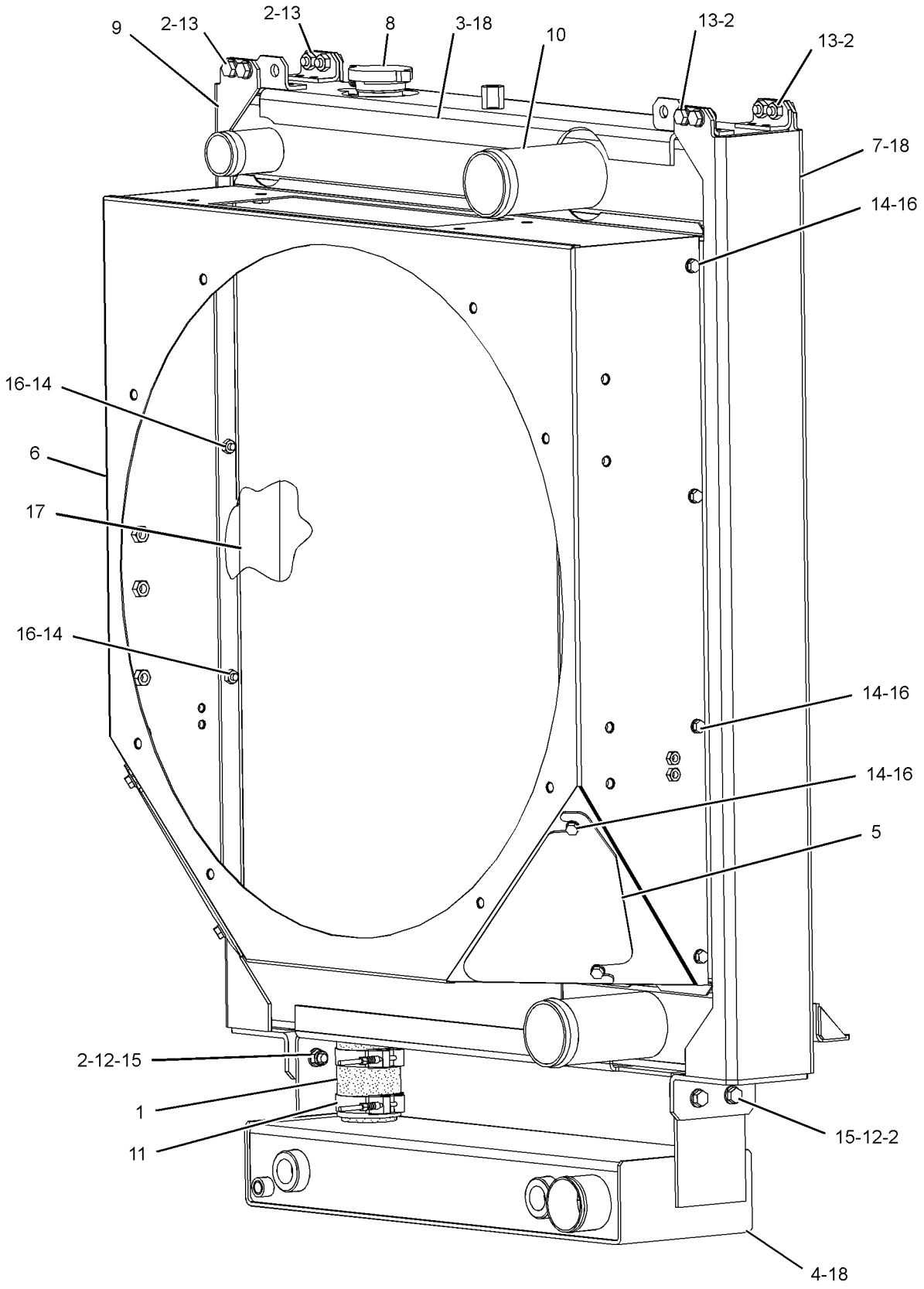


GRAPHIC #1 **<END>** g01188988

# COOLING SYSTEM

## *251-1325* RADIATOR & MOUNTING GP

**S/N: 5451-UP**

**PART OF 245-9460 CHASSIS AR**

**SMCS-1353, 1380** **i02590680**

| NOTE | REF NO | GRAPHIC REF | PART NUMBER | QTY | PART NAME 1 2 3 4 5 6 (PRODUCT LEVEL) | SEE PAGE |
|---|---|---|---|---|---|---|
| | 1 | 2 | **161-6963** | 2 | CLAMP | |
| | 2 | 1 | **5D-1026** | 1 | CLAMP-HOSE | |
| | 3 | 1 | **8F-8151** | 1 | VALVE AS-SHUTOFF | |
| | 4 | 2 | **109-9436** | 1 | TANK AS-COOLANT | |
| | | 2 | **171-3370** | 1 | CAP AS (COOLANT OVERFLOW) | |
| | | 2 | **204-0920** | 1 | CAP AS (COOLANT FILL) | |
| | 5 | 1 | **254-6043** | 1 | HOSE | |
| | 6 | 1 | **254-6044** | 1 | HOSE | |
| Y | 7 | 1 | **254-7027** | 1 | RADIATOR & AFTERCOOLER GP (WITH TRANSMISSION OIL COOLER) | 88 |
| | 8 | 2 | **255-0872** | 1 | BRACKET | |
| | 9 | 1 | **209-4573** | 2 | CLAMP-V BAND | |
| | 10 | 1 | **217-6885** | 2 | CLAMP | |
| | 11 | 2 | **3P-9847** | 1 | CLIP | |
| | 13 | 1,2 | **5P-9299** | 3 | CLIP | |
| | 14 | 1 | **6V-5386** | 1 | CLIP | |
| | 15 | 1,2 | **8T-4121** | 7 | WASHER-HARD (11X21X2.5-MM THK) | |
| M | 16 | 1 | **8T-4133** | 1 | NUT (M10X1.5-THD) | |
| M | 17 | 1,2 | **8T-4137** | 6 | BOLT (M10X1.5X20-MM) | |
| M | 18 | 1 | **8T-4139** | 2 | BOLT (M12X1.75X30-MM) | |
| M | 19 | 2 | **8T-4192** | 2 | BOLT (M12X1.75X25-MM) | |
| | 20 | 1,2 | **8T-4223** | 4 | WASHER-HARD (13.5X25.5X3-MM THK) | |
| | 21 | 2 | **9D-3768** | 1 | GROMMET | |
| E | 22 | 1 | **5P-0767** | | HOSE (60-CM) | |
| E | 23 | 1 | **8C-3681** | | HOSE (88.8-CM) | |
| E | 23A | 2 | **8C-3681** | | HOSE (95.2-CM) | |
| D | 24 | 2 | **5P-9909** | | SEAL (0.8-M EACH) | |
| D | 24A | 2 | **5P-9909** | | SEAL (1-M EACH) | |

D-ORDER BY THE METER
E-ORDER BY THE CENTIMETER
M-METRIC PART
Y-SEPARATE ILLUSTRATION

REFER TO ALL ILLUSTRATIONS OF
THIS GROUP FOR AUXILIARY VIEWS

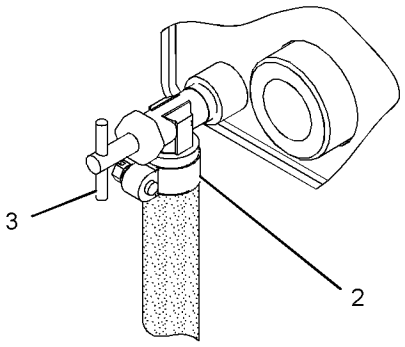


VIEW OF AREA A

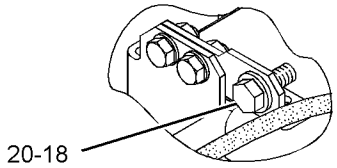


VIEW OF AREA B

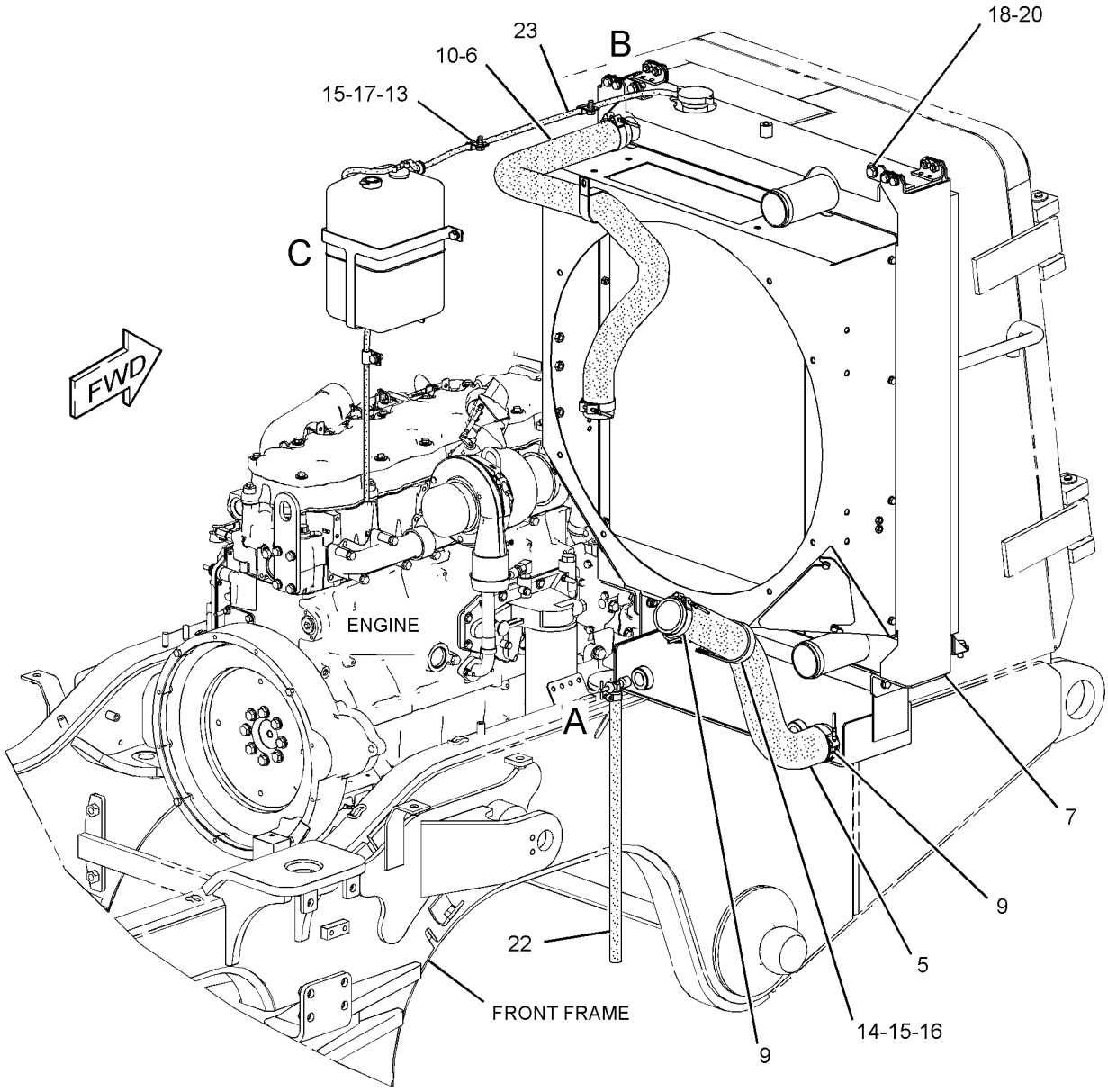


GRAPHIC #1

g01353886

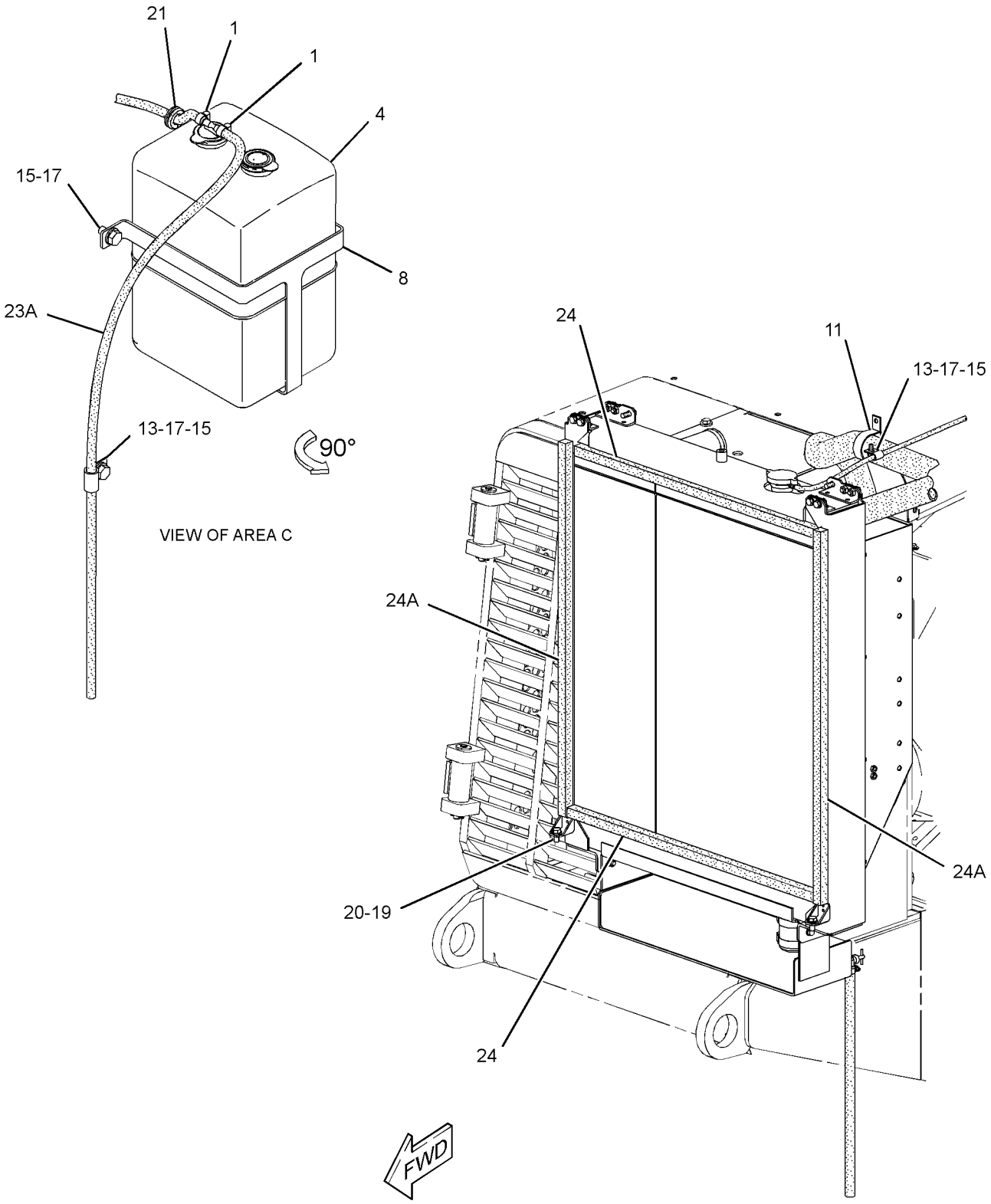


GRAPHIC #2 **<END>** g01353887

# *267-2741* VALVE GP-COOLANT SAMPLING

**S/N: KHX524-UP**

**PART OF 235-1497 ENGINE AR-COMPLETE**

**SMCS-1380, 7542** **i02388870**

| NOTE | REF NO | GRAPHIC REF | PART NUMBER | QTY | PART NAME 1 2 3 4 5 6 (PRODUCT LEVEL) | SEE PAGE |
|---|---|---|---|---|---|---|
| | 1 | 1 | **157-0670** | 1 | CAP-DUST | |
| | 2 | 1 | *217-9060* | 1 | VALVE AS-FLUID SAMPLING (COOLANT) | |
| | | 1 | **3J-7354** | 1 | SEAL-O-RING | |
| | | 1 | **154-9023** | 1 | VALVE-SAMPLING | |
| | 3 | 1 | **260-9232** | 1 | ADAPTER AS | |
| | | 1 | **6P-4975** | 1 | ADAPTER | |
| | | 1 | **6V-5063** | 1 | SEAL-O-RING | |
| | 4 | 1 | *148-8409* | 1 | PLUG AS | |
| | | 1 | **3D-2824** | 1 | SEAL-O-RING | |
| | | 1 | **9S-8008** | 1 | PLUG-O RING | |
| | 5 | 1 | **6F-7062** | 1 | WASHER (12.7X19.05X1.83-MM THK) | |
| M | 6 | 1 | **8T-0293** | 1 | BOLT (M12X1.75X20-MM) | |

M-METRIC PART

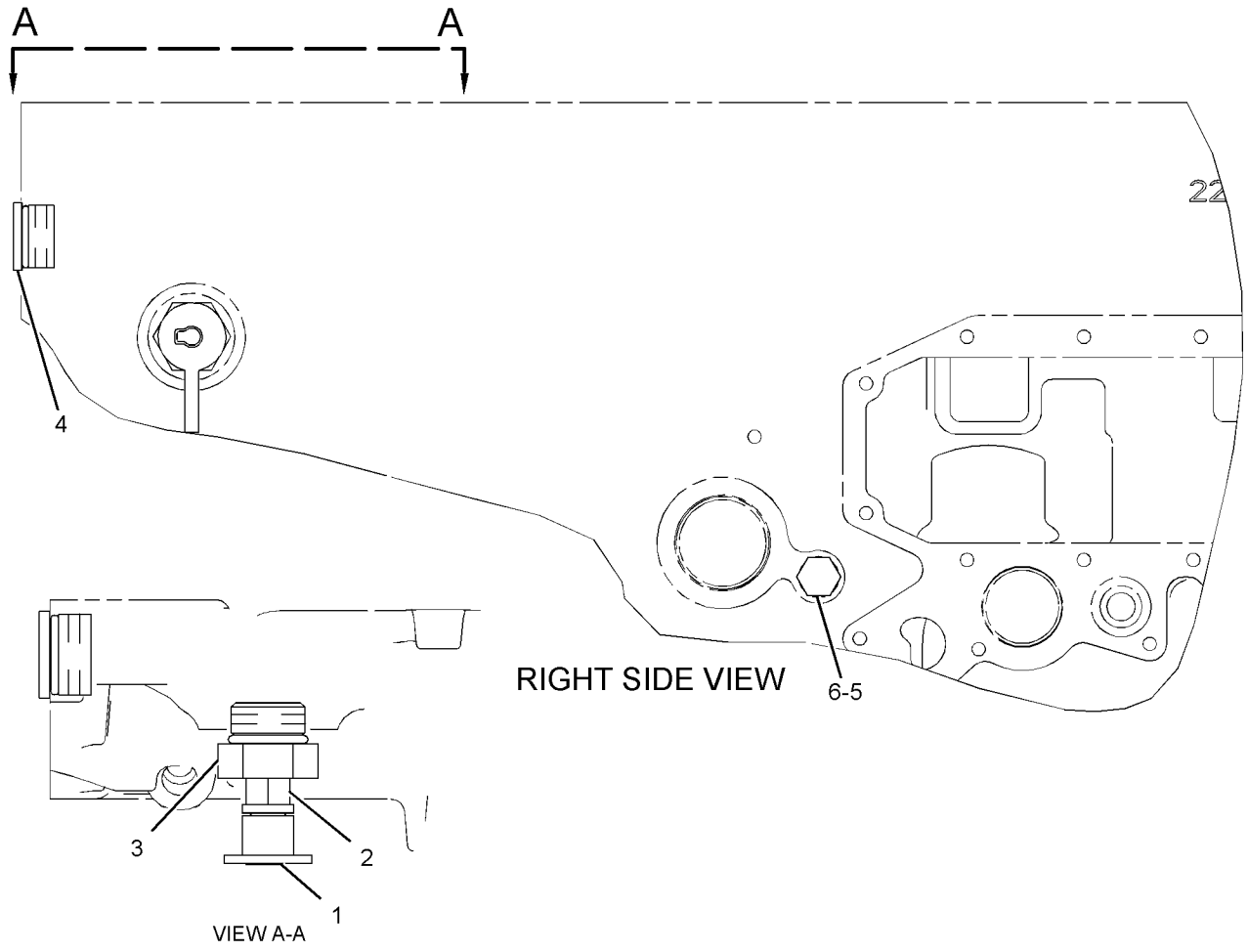


GRAPHIC #1 **<END>** g01193645

# AIR INLET AND EXHAUST SYSTEM

## 244-0357 AIR CLEANER GP

**S/N: 5451-UP**

**PART OF 250-6161 AIR CLEANER GP**

**SMCS-1051, 1054** **i02430602**

| NOTE | REF NO | GRAPHIC REF | PART NUMBER | QTY | PART NAME 1 2 3 4 5 6 (PRODUCT LEVEL) | SEE PAGE |
|---|---|---|---|---|---|---|
| | 1 | 1 | **245-6375** | 1 | FILTER ELEMENT AS-AIR (PRIMARY) | |
| | 2 | 1 | **245-6376** | 1 | FILTER ELEMENT AS-AIR (SECONDARY) | |
| | 3 | 1 | **246-4612** | 1 | VALVE-AIR CLEANER DUST | |
| | 4 | 1 | **246-4614** | 1 | COVER AS | |
| | 5 | 1 | **246-4615** | 2 | BRACKET AS | |

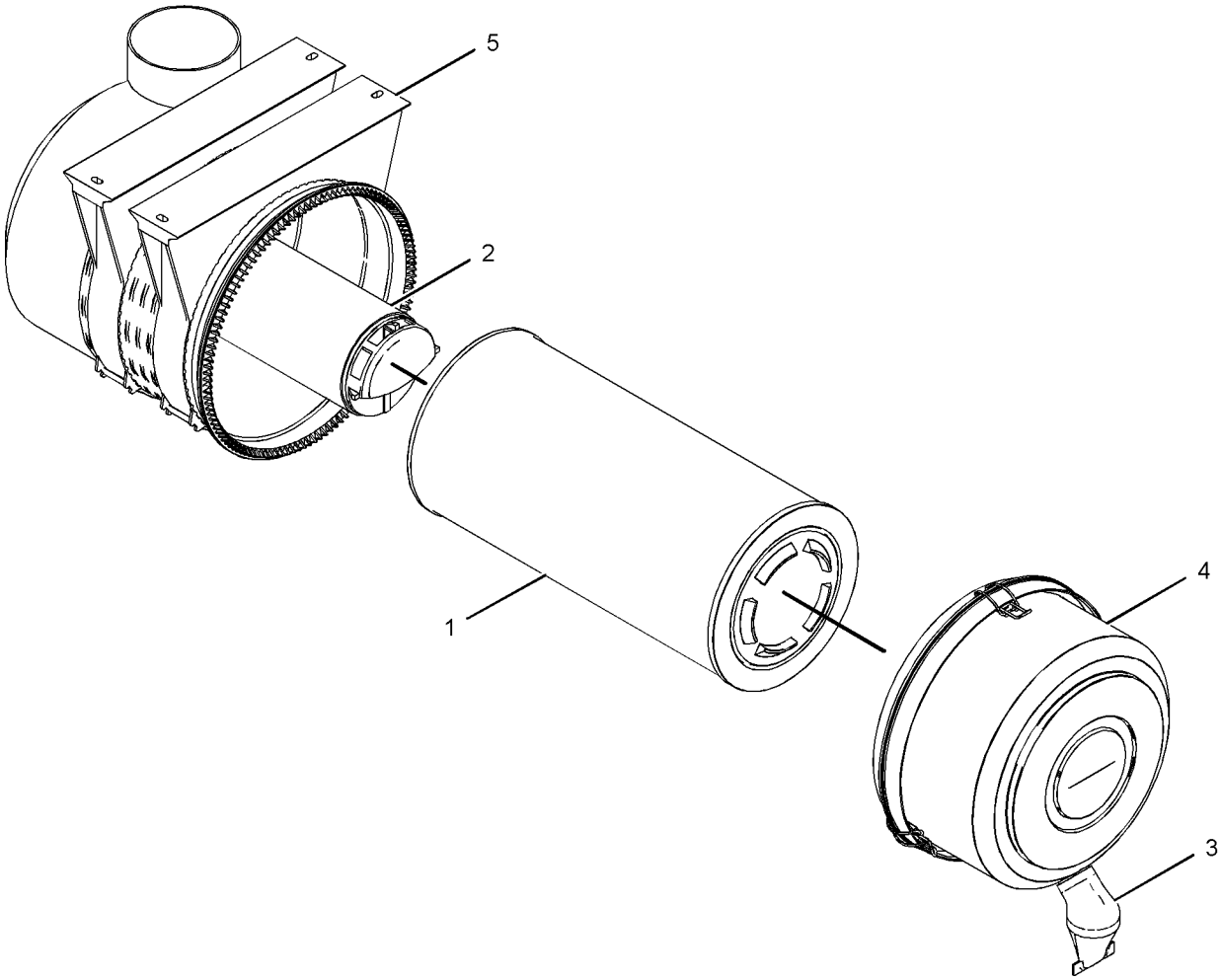


GRAPHIC #1 **<END>** g01102727

# AIR INLET AND EXHAUST SYSTEM

## *250-6161* AIR CLEANER GP

**S/N: 5451-UP**

**PART OF 248-4224 INSTALLATION AR-ENGINE**

**SMCS-1051, 1054** **i02464778**

| NOTE | REF NO | GRAPHIC REF | PART NUMBER | QTY | PART NAME 1 2 3 4 5 6 (PRODUCT LEVEL) | SEE PAGE |
|---|---|---|---|---|---|---|
| | 1 | 1 | **9L-0749** | 1 | CAP-AIR CLEANER | |
| Y | 2 | 1 | **244-0357** | 1 | AIR CLEANER GP | 94 |
| | 3 | 1 | **282-5415** | 1 | PIPE-EXTENSION | |
| | 4 | 1 | **219-0314** | 1 | CLAMP | |
| | 5 | 1 | **7X-0579** | 4 | WASHER-HARD (8.8X25.5X2-MM THK) | |
| M | 6 | 1 | **7X-2537** | 4 | BOLT (M8X1.25X35-MM) | |
| | 7 | 1 | **7X-7729** | 3 | WASHER (11X25X3-MM THK) | |
| M | 8 | 1 | **8T-4137** | 3 | BOLT (M10X1.5X20-MM) | |

M-METRIC PART
Y-SEPARATE ILLUSTRATION

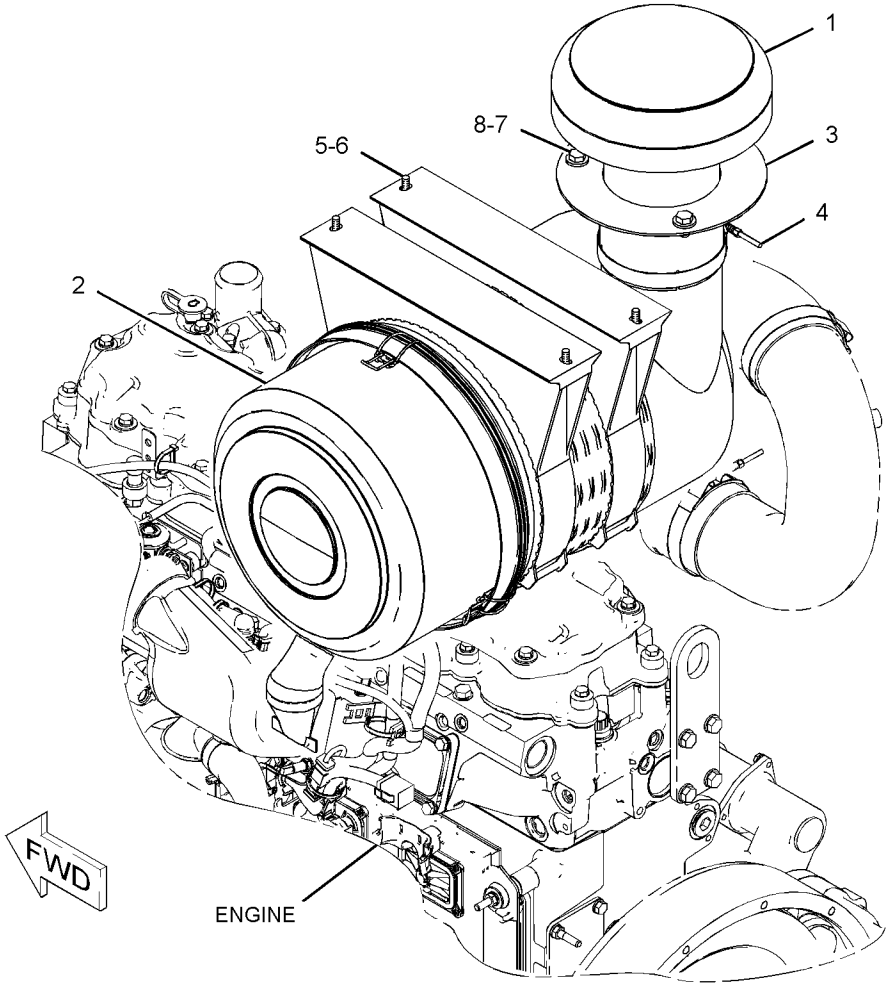


GRAPHIC #1 **<END>** g01236501

# AIR INLET AND EXHAUST SYSTEM

## *189-8780* COVER GP-AIR INLET—STARTING AID HEATER

**S/N: KHX1-4776**
**24 VOLT**
**PART OF 235-1497 ENGINE AR-COMPLETE**

**SMCS-1087** **i02691679**

| NOTE | REF NO | GRAPHIC REF | PART NUMBER | QTY | PART NAME 1 2 3 4 5 6 (PRODUCT LEVEL) | SEE PAGE |
|---|---|---|---|---|---|---|
| Y | 1 | 1 | **288-0973** | 1 | COVER GP-AIR INLET (STARTING AID HEATER) | 98 |
| BC | 2 | 1 | **1U-8846** | | SEALANT-GASKET | |

B-USE AS REQUIRED
C-CHANGE FROM PREVIOUS TYPE
Y-SEPARATE ILLUSTRATION

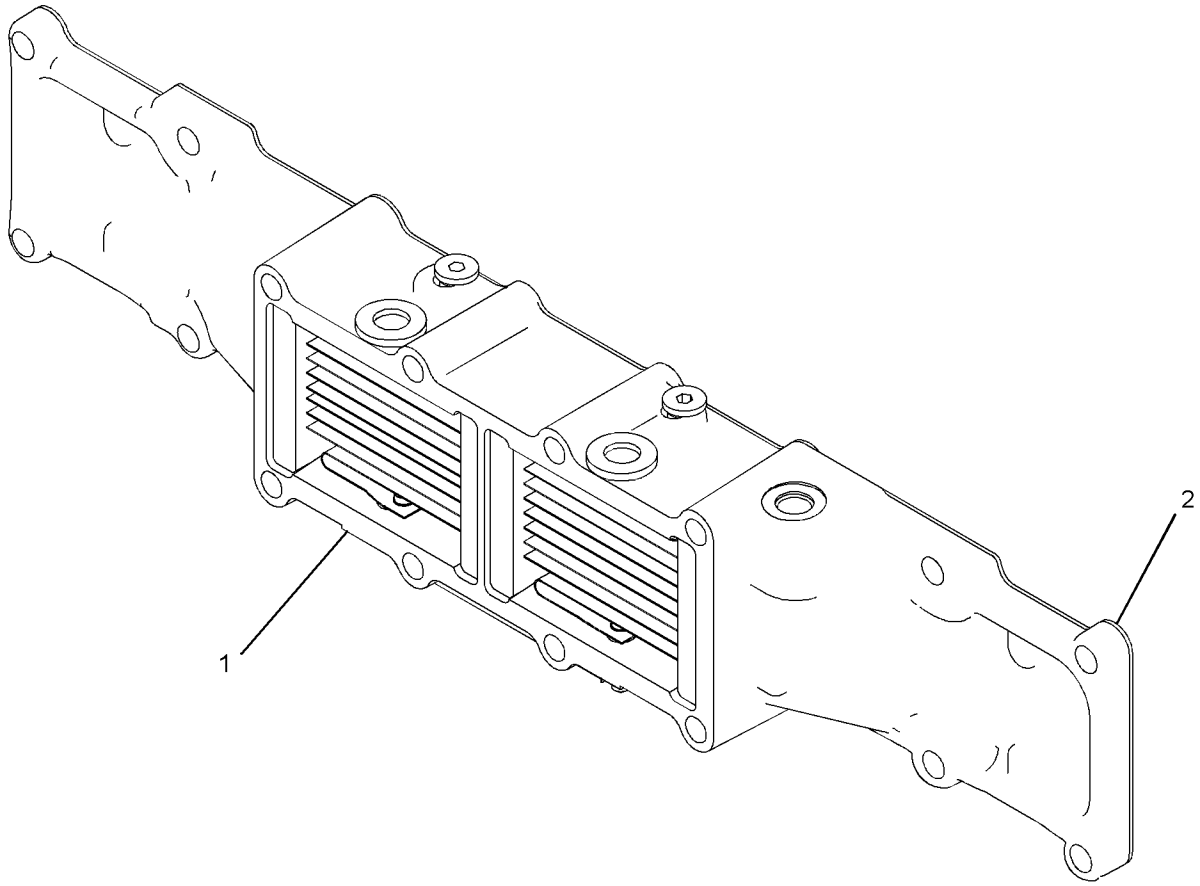


GRAPHIC #1 **<END>** g01350893

## *189-8780* COVER GP-AIR INLET—STARTING AID HEATER

**S/N: KHX4777-UP**
**24 VOLT**
**PART OF 235-1497 ENGINE AR-COMPLETE**

**SMCS-1087** **i02691378**

| NOTE | REF NO | GRAPHIC REF | PART NUMBER | QTY | PART NAME 1 2 3 4 5 6 (PRODUCT LEVEL) | SEE PAGE |
|---|---|---|---|---|---|---|
| CY | 1 | 1 | **294-7675** | 1 | COVER GP-AIR INLET (STARTING AID HEATER) | 99 |
| B | 2 | 1 | **1U-8846** | | SEALANT-GASKET | |

B-USE AS REQUIRED
C-CHANGE FROM PREVIOUS TYPE
Y-SEPARATE ILLUSTRATION

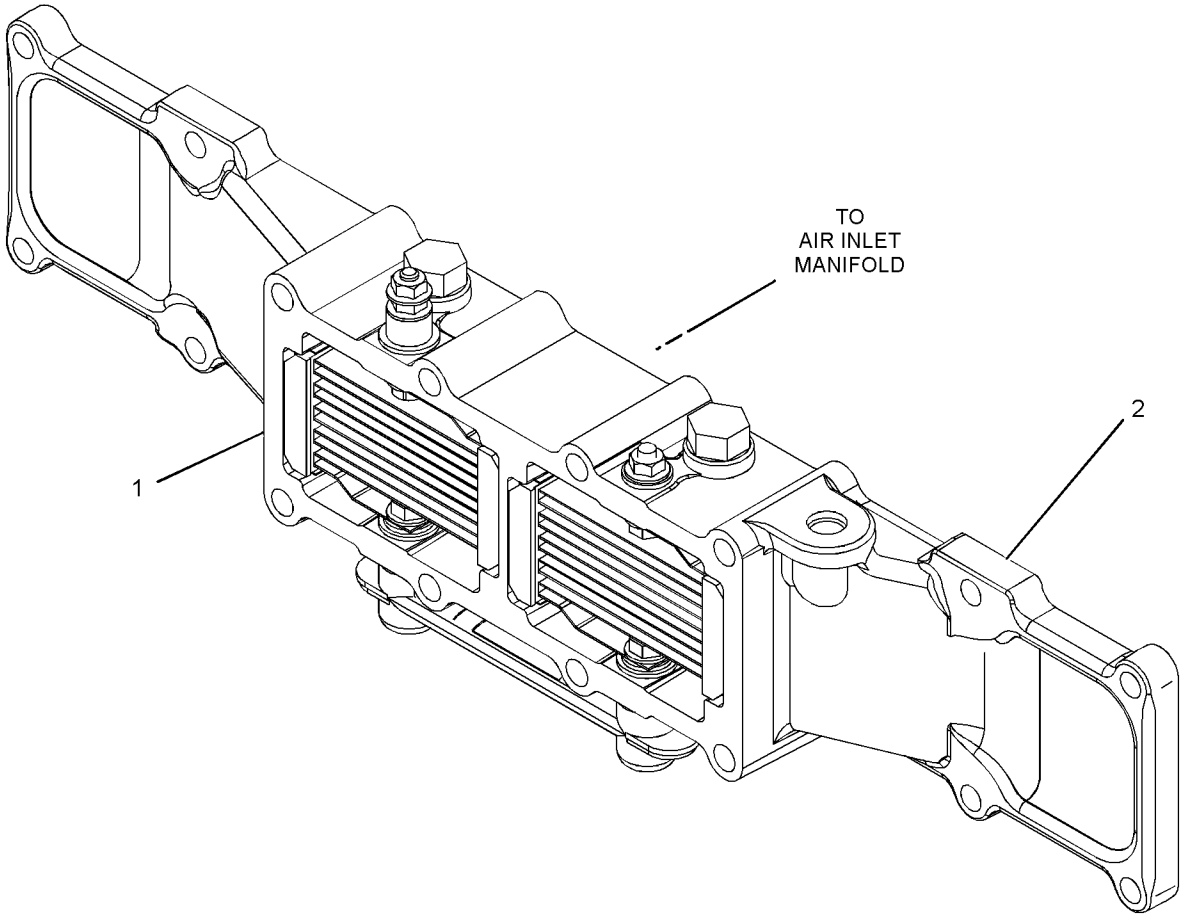


GRAPHIC #1 **<END>** g01350757

## *288-0973* COVER GP-AIR INLET—STARTING AID HEATER

**S/N: KHX1-4776**
**24-VOLT**
**PART OF 189-8780 COVER GP-AIR INLET**

**SMCS-1087** **i02493739**

| NOTE | REF NO | GRAPHIC REF | PART NUMBER | QTY | PART NAME 1 2 3 4 5 6 (PRODUCT LEVEL) | SEE PAGE |
|---|---|---|---|---|---|---|
| | 1 | 1 | **9S-4191** | 2 | PLUG-O RING | |
| | 2 | 1 | **3J-1907** | 2 | SEAL-O-RING | |
| | 3 | 1 | **245-6795** | 1 | INSULATOR | |

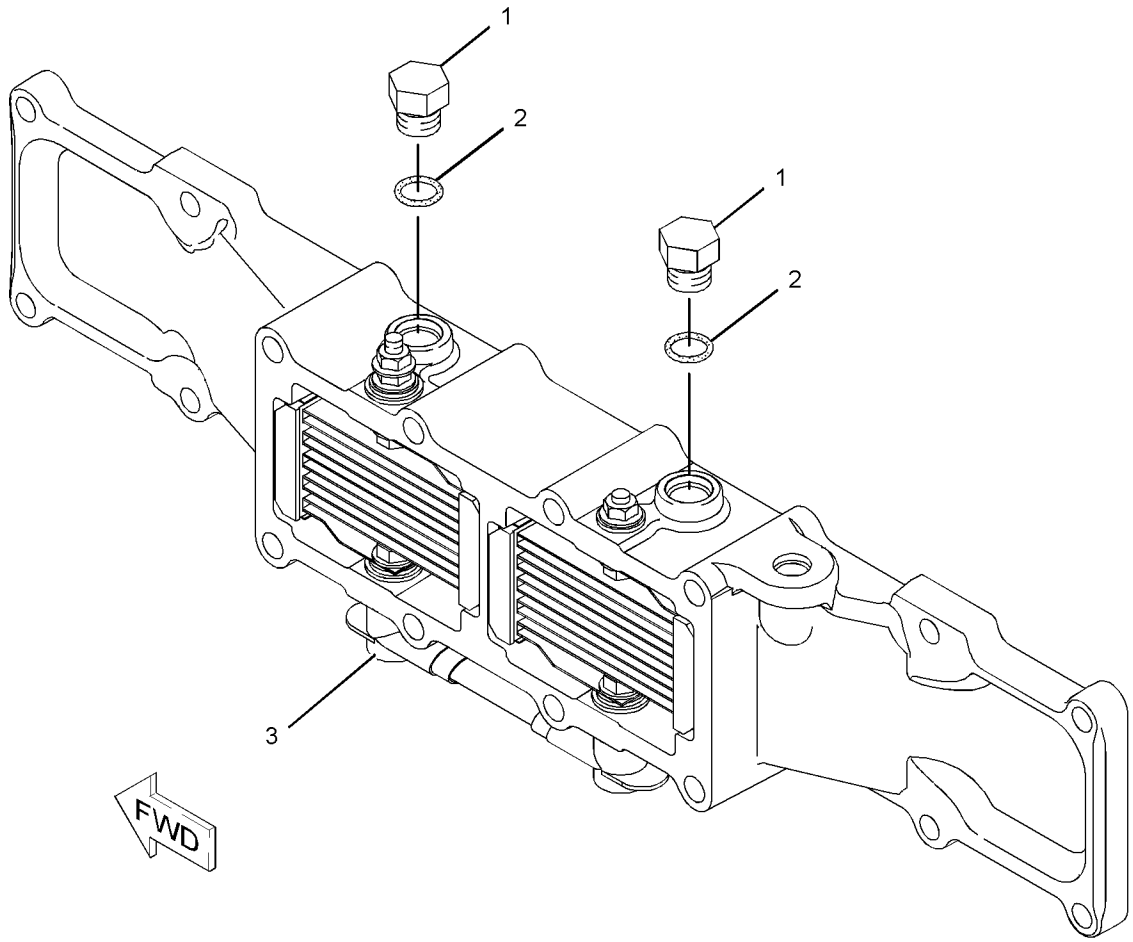


GRAPHIC #1 **<END>** g01071181

# 294-7675 COVER GP-AIR INLET—STARTING AID HEATER

**S/N: KHX4777-UP**

**PART OF 189-8780 COVER GP-AIR INLET**

**SMCS-1087** **i02734972**

| NOTE | REF NO | GRAPHIC REF | PART NUMBER | QTY | PART NAME 1 2 3 4 5 6 (PRODUCT LEVEL) | SEE PAGE |
|---|---|---|---|---|---|---|
| | 1 | 1 | **9S-4191** | 2 | PLUG-O-RING | |
| | 2 | 1 | **3J-1907** | 2 | SEAL-O-RING | |
| | 3 | 1 | **245-6795** | 1 | INSULATOR | |

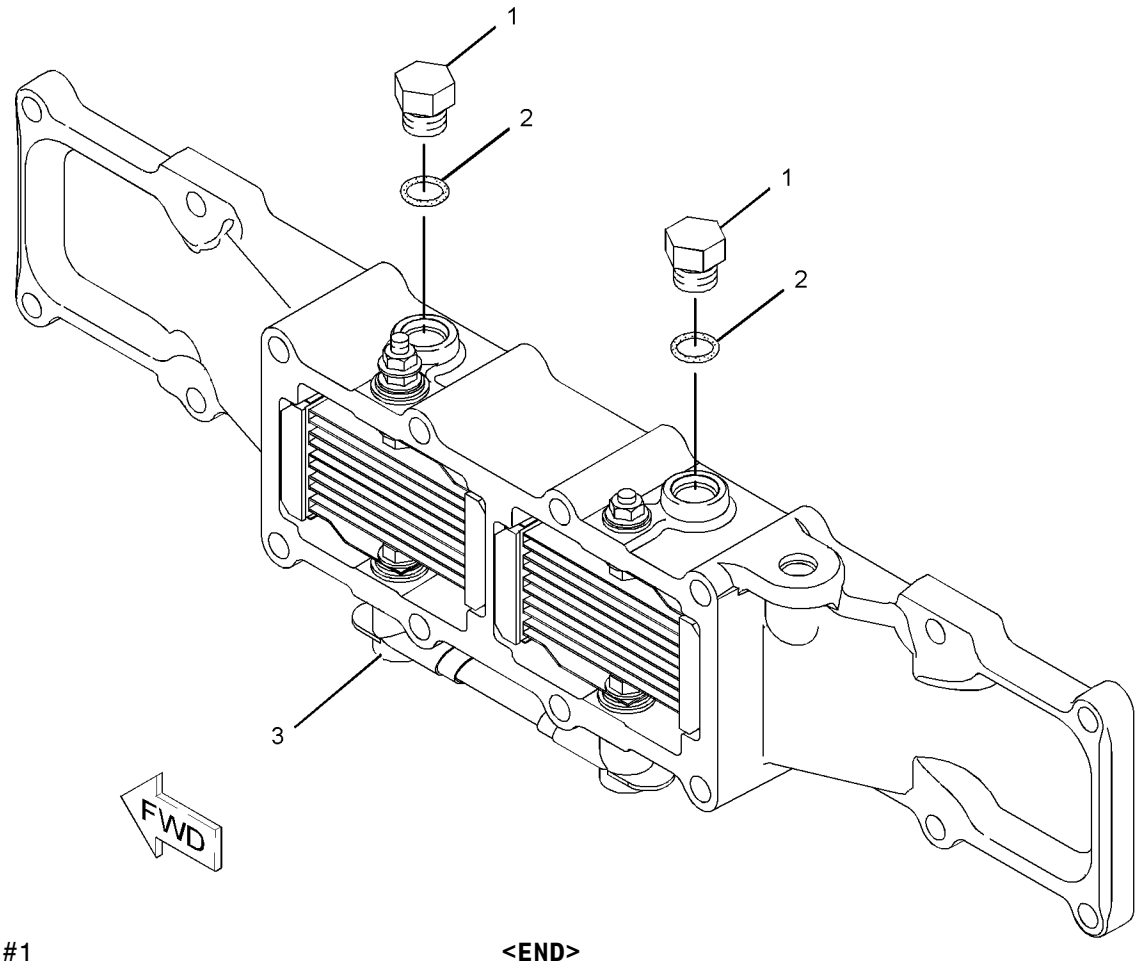


GRAPHIC #1 **<END>** g01071181

# AIR INLET AND EXHAUST SYSTEM

## *260-3059* ELBOW GP-AIR INLET

**S/N: KHX1-UP**

**PART OF 235-1497 ENGINE AR-COMPLETE**

**SMCS-1058, 1087** **i02194340**

| NOTE | REF NO | GRAPHIC REF | PART NUMBER | QTY | PART NAME 1 2 3 4 5 6 (PRODUCT LEVEL) | SEE PAGE |
|---|---|---|---|---|---|---|
| B | 1 | 1 | **1U-8846** | | SEALANT-GASKET | |
| M | 2 | 1 | **192-4594** | 3 | STUD | |
| | 3 | 1 | **213-1578** | 1 | ELBOW | |
| | 4 | 1 | **3E-4352** | 2 | WASHER-HARD (8.8X20.5X2.5-MM THK) | |
| | 5 | 1 | **3K-0360** | 1 | SEAL-O-RING | |
| M | 6 | 1 | **6V-5221** | 5 | BOLT (M8X1.25X80-MM) | |
| | 7 | 1 | **9M-1974** | 6 | WASHER-HARD (8.8X16X2-MM THK) | |
| | 8 | 1 | **9S-8005** | 1 | PLUG-O RING | |

B-USE AS REQUIRED
M-METRIC PART

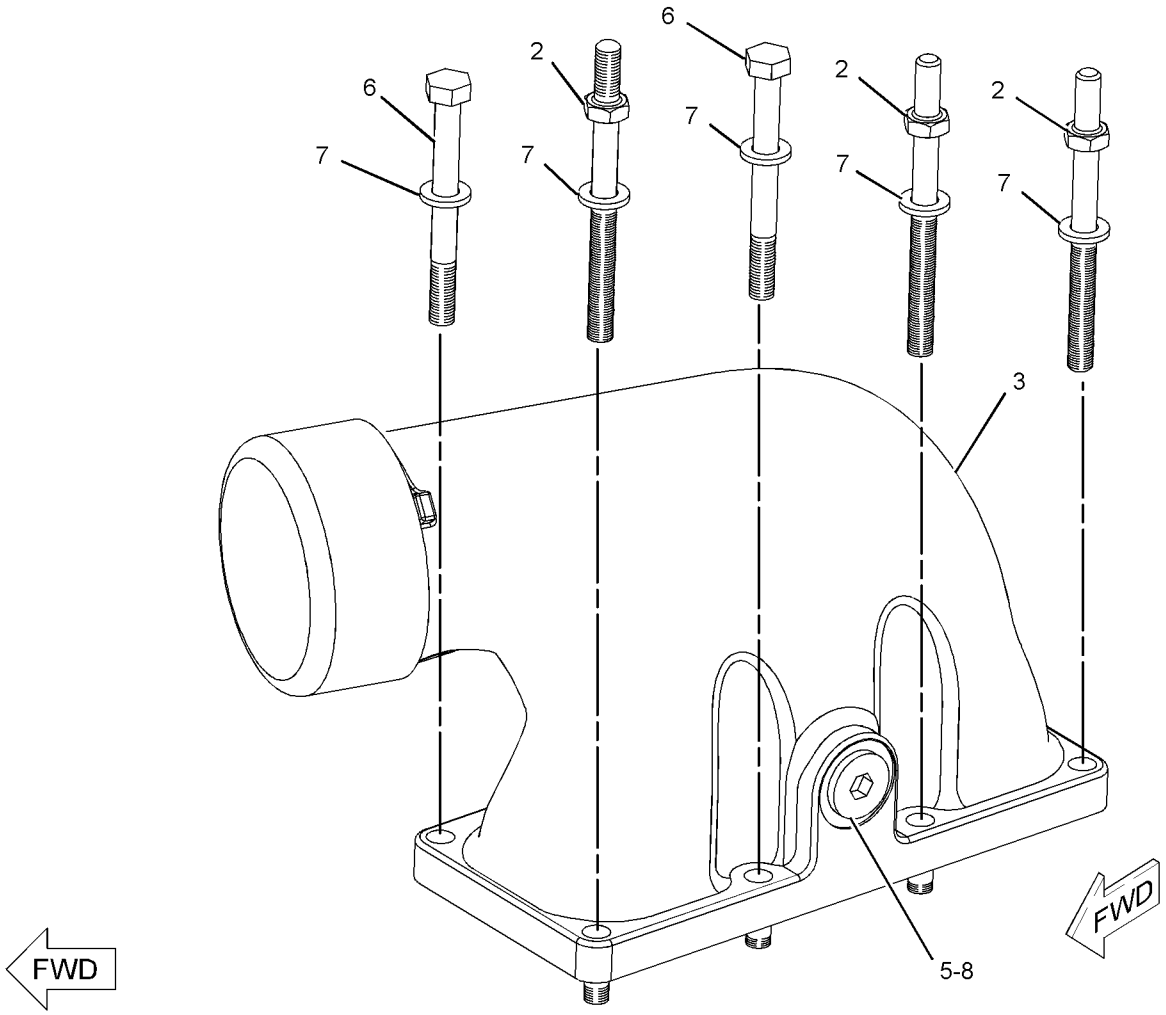


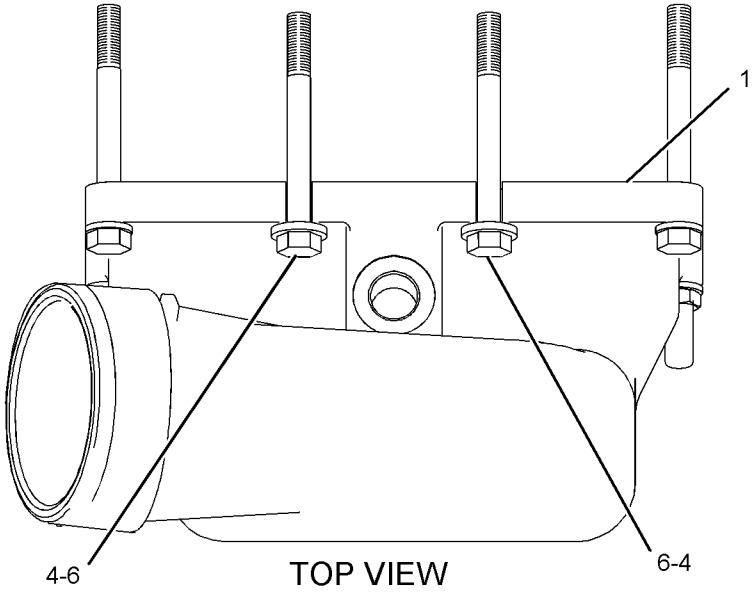


GRAPHIC #1 **<END>** g01108969

# AIR INLET AND EXHAUST SYSTEM

## *268-3287* GUARD GP-EXHAUST

**S/N: 5451-UP**
**PART OF 268-6622 LIGHTING AR-FLOOD**
**AN ATTACHMENT**

**SMCS-1061, 1067** **i02360066**

| NOTE | REF NO | GRAPHIC REF | PART NUMBER | QTY | PART NAME 1 2 3 4 5 6 (PRODUCT LEVEL) | SEE PAGE |
|---|---|---|---|---|---|---|
| | 1 | 1 | **268-2970** | 1 | GUARD AS-EXHAUST | |
| | 2 | 1 | **8T-4121** | 2 | WASHER-HARD (11X21X2.5-MM THK) | |
| M | 3 | 1 | **8T-4136** | 2 | BOLT (M10X1.5X25-MM) | |

M-METRIC PART

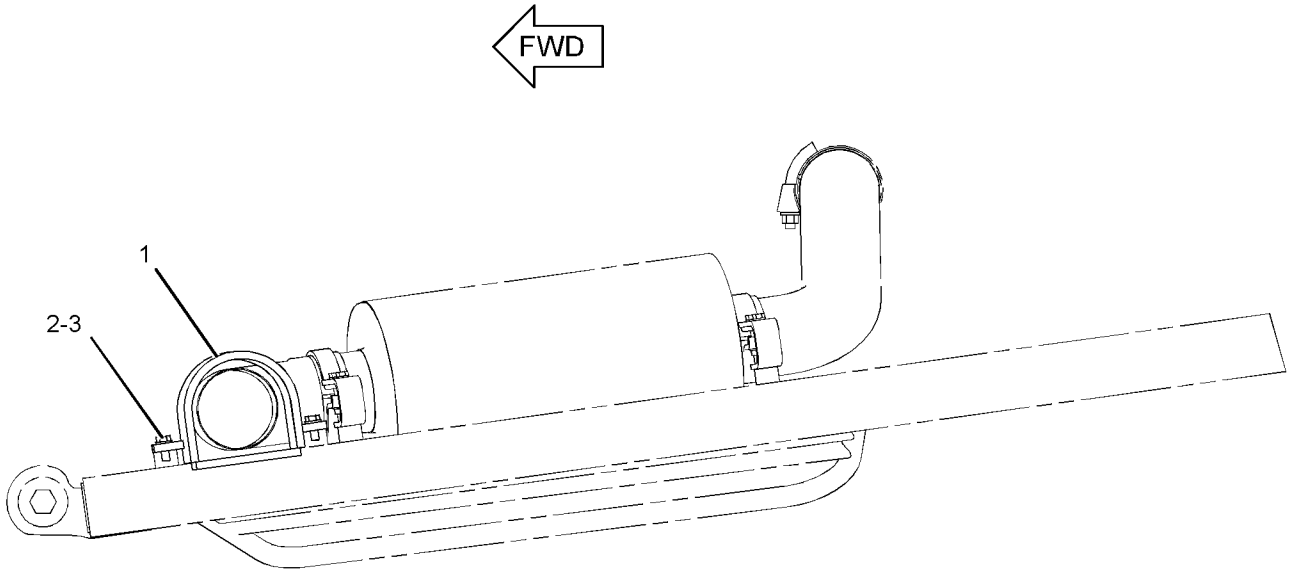


TOP VIEW

GRAPHIC #1 **<END>** g01180689

# AIR INLET AND EXHAUST SYSTEM

## *253-0556* INDICATOR GP-AIR FILTER CHANGE

**S/N: 5451-UP**

**PART OF 245-9460 CHASSIS AR**

**SMCS-7452** **i02300306**

| NOTE | REF NO | GRAPHIC REF | PART NUMBER | QTY | PART NAME 1 2 3 4 5 6 (PRODUCT LEVEL) | SEE PAGE |
|---|---|---|---|---|---|---|
| | 1 | 1 | **5L-3233** | 1 | FITTING | |
| | 2 | 1 | **5P-2948** | 1 | FITTING AS | |
| | | 1 | **4K-9821** | 1 | SLEEVE | |
| | | 1 | **4K-9822** | 1 | NUT (5/16-24-THD) | |
| | 3 | 1 | **5P-2949** | 1 | CONNECTOR AS | |
| | | 1 | **4K-9821** | 1 | SLEEVE | |
| | | 1 | **4K-9822** | 1 | NUT (5/16-24-THD) | |
| | 4 | 1 | **8N-2694** | 1 | INDICATOR GP-AIR FILTER CHANGE | |
| | 5 | 1 | **118-4702** | 1 | BLOCK | |
| | 6 | 1 | **4M-8973** | 1 | ELBOW | |
| | 7 | 1 | **5K-5068** | 1 | FITTING | |
| | 8 | 1 | **7D-1728** | 1 | CLIP | |
| | 9 | 1 | **7X-7729** | 2 | WASHER (11X25X3-MM THK) | |
| M | 10 | 1 | **8T-4133** | 1 | NUT (M10X1.5-THD) | |
| M | 11 | 1 | **8T-4185** | 1 | BOLT (M10X1.5X50-MM) | |
| D | 12 | 1 | **5P-5630** | | TUBE (12-DM) | |

D-ORDER BY THE METER
M-METRIC PART

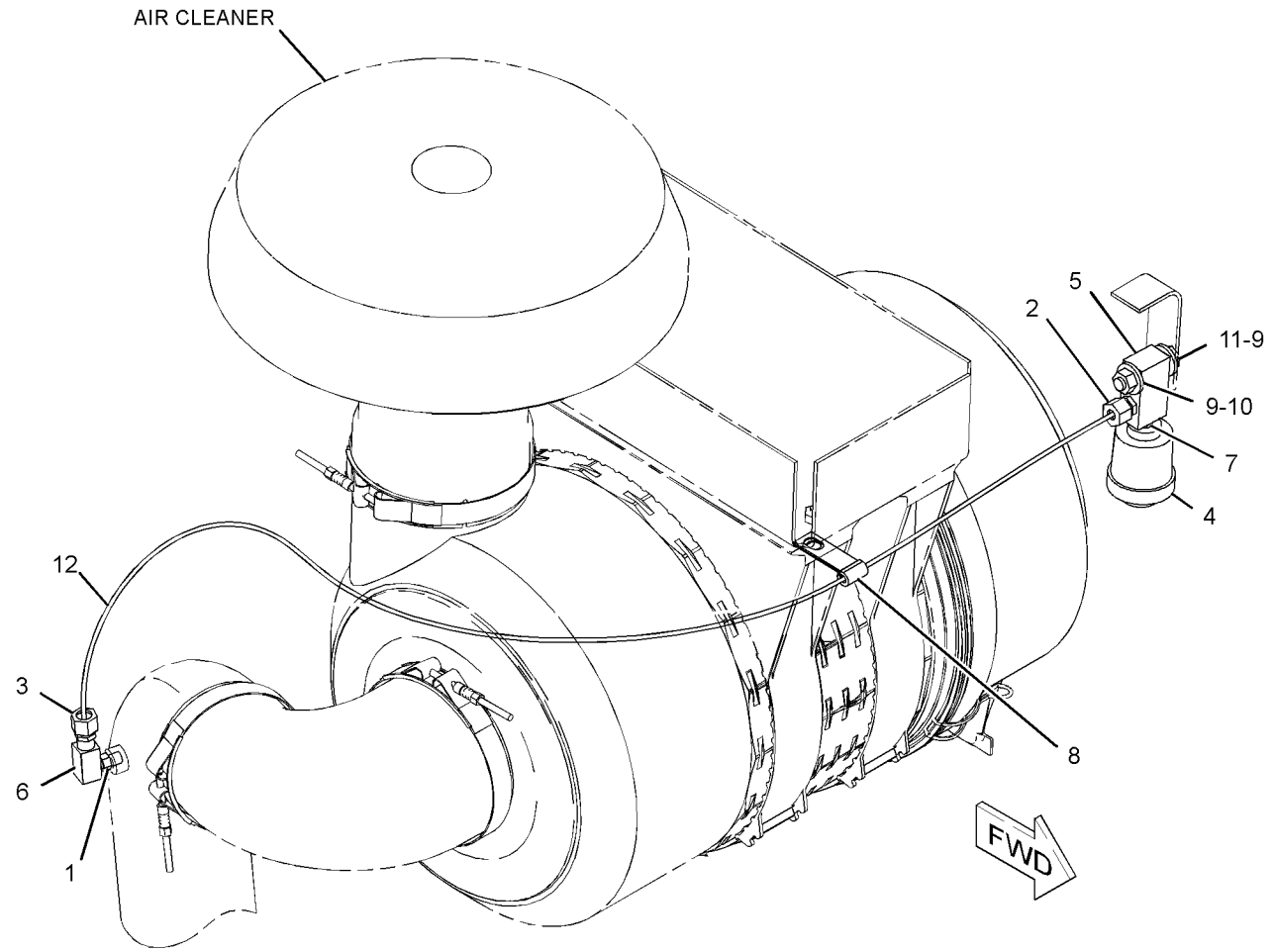


GRAPHIC #1 **<END>** g01152694

# AIR INLET AND EXHAUST SYSTEM

## *248-0055* LINES GP-AFTERCOOLER AIR

**S/N: 5451-UP**

**PART OF 248-4224 INSTALLATION AR-ENGINE**

**SMCS-1063, 1071** **i02485055**

| NOTE | REF NO | GRAPHIC REF | PART NUMBER | QTY | PART NAME 1 2 3 4 5 6 (PRODUCT LEVEL) | SEE PAGE |
|---|---|---|---|---|---|---|
| | 1 | 1 | **202-7935** | 1 | HOSE | |
| | 2 | 1 | **248-0066** | 1 | TUBE | |
| | 3 | 1 | **254-6033** | 1 | HOSE-AIR | |
| | 4 | 1 | **254-6034** | 1 | HOSE-ELBOW | |
| | 5 | 1 | **120-5867** | 1 | CLIP | |
| | 6 | 1 | **209-4578** | 4 | CLAMP | |
| | 7 | 1 | **209-4580** | 2 | CLAMP | |
| | 8 | 1 | **8T-4121** | 1 | WASHER-HARD (11X21X2.5-MM THK) | |
| M | 9 | 1 | **8T-4195** | 1 | BOLT (M10X1.5X30-MM) | |

M-METRIC PART

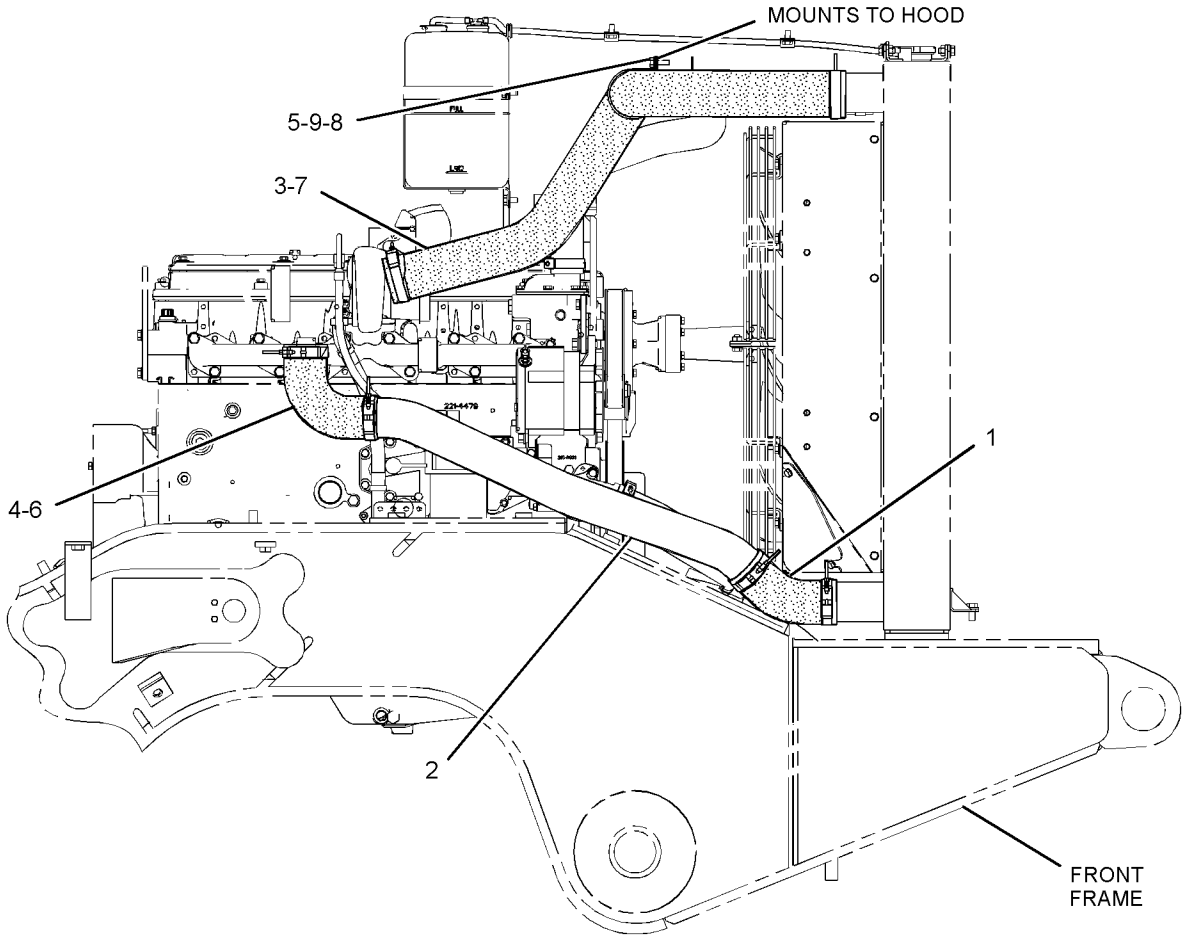


RIGHT SIDE VIEW

GRAPHIC #1 **<END>** g01229651

# AIR INLET AND EXHAUST SYSTEM

## *254-4516* LINES GP-TURBOCHARGER AIR

**S/N: 5451-UP**

**PART OF 248-4224 INSTALLATION AR-ENGINE**

**SMCS-1052, 1071** **i02683893**

| NOTE | REF NO | GRAPHIC REF | PART NUMBER | QTY | PART NAME 1 2 3 4 5 6 (PRODUCT LEVEL) | SEE PAGE |
|---|---|---|---|---|---|---|
| | 1 | 1 | **1W-2431** | 1 | CLAMP-BAND | |
| | 2 | 1 | **290-2949** | 1 | HOSE-REDUCER | |
| | 3 | 1 | **7E-8630** | 1 | HOSE-AIR INLET | |
| | 4 | 1 | **135-6259** | 1 | CLAMP | |
| | 5 | 1 | **254-7001** | 1 | TUBE AS | |
| | 6 | 1 | **269-3407** | 1 | PIPE | |
| | 7 | 1 | **208-7448** | 2 | CLAMP | |
| | 8 | 1 | **219-0314** | 1 | CLAMP | |

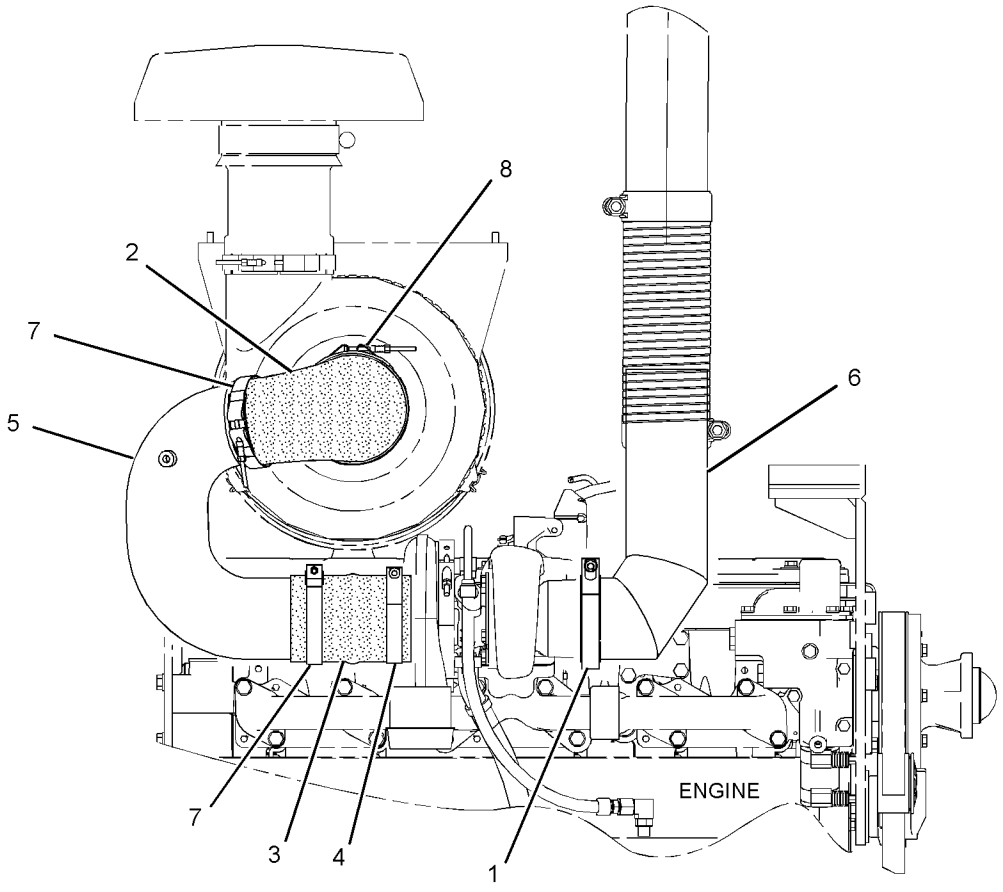


RIGHT SIDE VIEW

GRAPHIC #1 **<END>** g01179927

# AIR INLET AND EXHAUST SYSTEM

## *183-6845* MANIFOLD GP-EXHAUST–DRY

**S/N: KHX1-UP**

**FOR USE WITH FRONT TURBO EXHAUST OR REAR EXHAUST, HIGH MOUNT**

**PART OF 235-1497 ENGINE AR-COMPLETE**

**SMCS-1059** **i02419840**

| NOTE | REF NO | GRAPHIC REF | PART NUMBER | QTY | PART NAME 1 2 3 4 5 6 (PRODUCT LEVEL) | SEE PAGE |
|---|---|---|---|---|---|---|
| M | 1 | 1 | **8T-7044** | 4 | STUD-TAPERLOCK (M10X1.5X40-MM) | |
| | 2 | 1 | **272-1956** | 6 | GASKET | |
| M | 3 | 1 | **172-6298** | 8 | BOLT-FLANGE HEAD (M10) | |
| | 4 | 1 | **183-6854** | 1 | MANIFOLD-EXHAUST (CENTER) | |
| | 5 | 1 | **183-6856** | 2 | MANIFOLD-EXHAUST (END) | |
| | 6 | 1 | **189-8772** | 8 | SPACER (11X16X35-MM THK) | |
| | 7 | 1 | **203-3768** | 4 | SPACER (11X16X60-MM THK) | |
| | 8 | 1 | **210-7722** | 4 | BOLT-FLANGE HEAD (M10) | |

M-METRIC PART

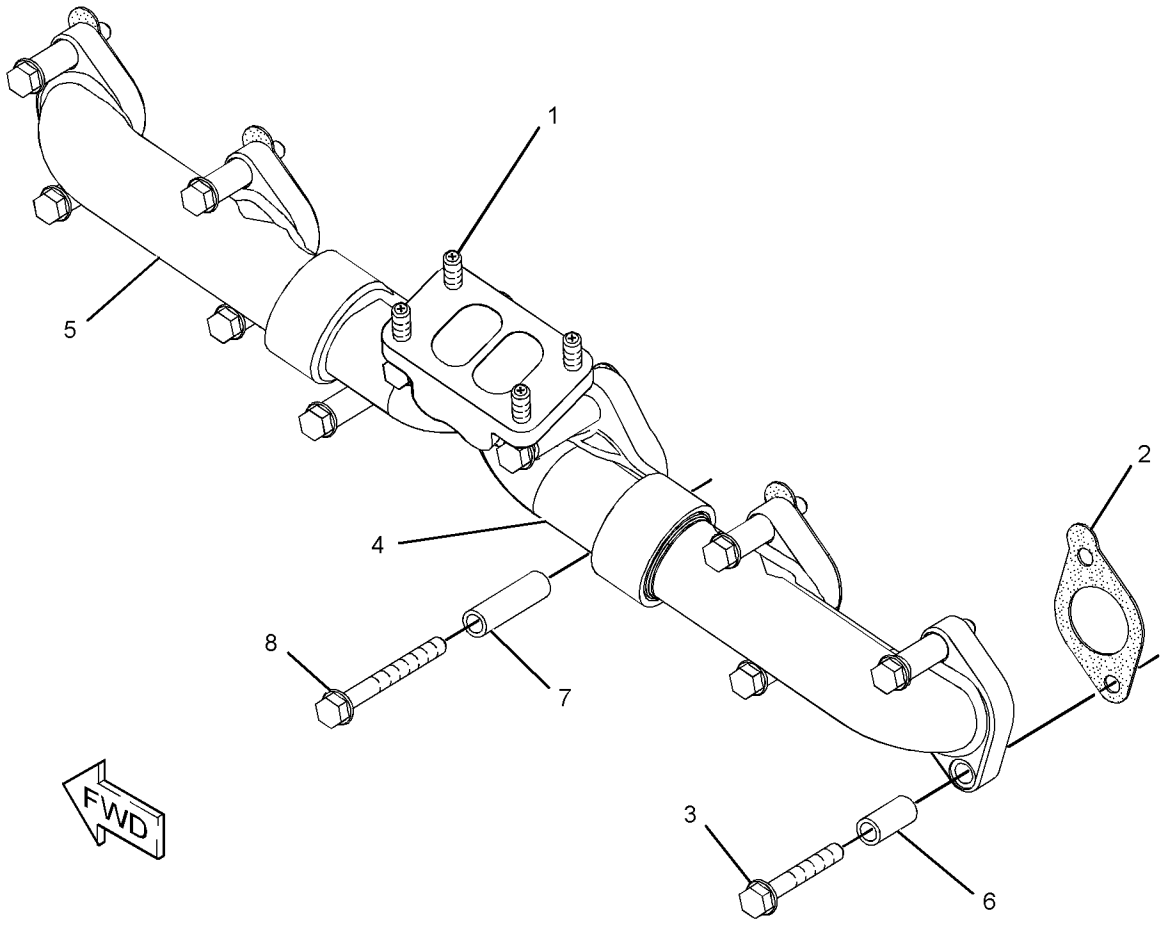


GRAPHIC #1 **<END>** g01211596

# AIR INLET AND EXHAUST SYSTEM

## *250-6162* MUFFLER GP

**S/N: 5451-UP**

**PART OF 248-4224 INSTALLATION AR-ENGINE**

**SMCS-1062** **i02358409**

| NOTE | REF NO | GRAPHIC REF | PART NUMBER | QTY | PART NAME 1 2 3 4 5 6 (PRODUCT LEVEL) | SEE PAGE |
|---|---|---|---|---|---|---|
| | 1 | 1 | **1P-8521** | 2 | BRACKET | |
| | 2 | 1 | **9S-8068** | 1 | CLAMP | |
| | 3 | 1 | **9S-8071** | 1 | CLAMP | |
| | 4 | 1 | **149-2719** | 1 | PIPE | |
| | 5 | 1 | **216-7325** | 1 | MUFFLER | |
| | 6 | 1 | **247-5010** | 1 | PIPE | |
| | 7 | 1 | **247-5011** | 2 | CLAMP-PIPE | |
| | 8 | 1 | **254-5027** | 1 | TUBE | |
| M | 9 | 1 | **5C-7261** | 4 | NUT (M8X1.25-THD) | |
| | 10 | 1 | **8T-4121** | 2 | WASHER-HARD (11X21X2.5-MM THK) | |
| M | 11 | 1 | **8T-4136** | 2 | BOLT (M10X1.5X25-MM) | |
| | 12 | 1 | **8T-4224** | 8 | WASHER-HARD (8.8X16X2-MM THK) | |
| M | 13 | 1 | **8T-4908** | 2 | BOLT (M8X1.25X25-MM) | |
| M | 14 | 1 | **8T-6869** | 2 | BOLT (M8X1.25X60-MM) | |

M-METRIC PART

*250-6162* **MUFFLER GP** *(contd.)* **i02358409**

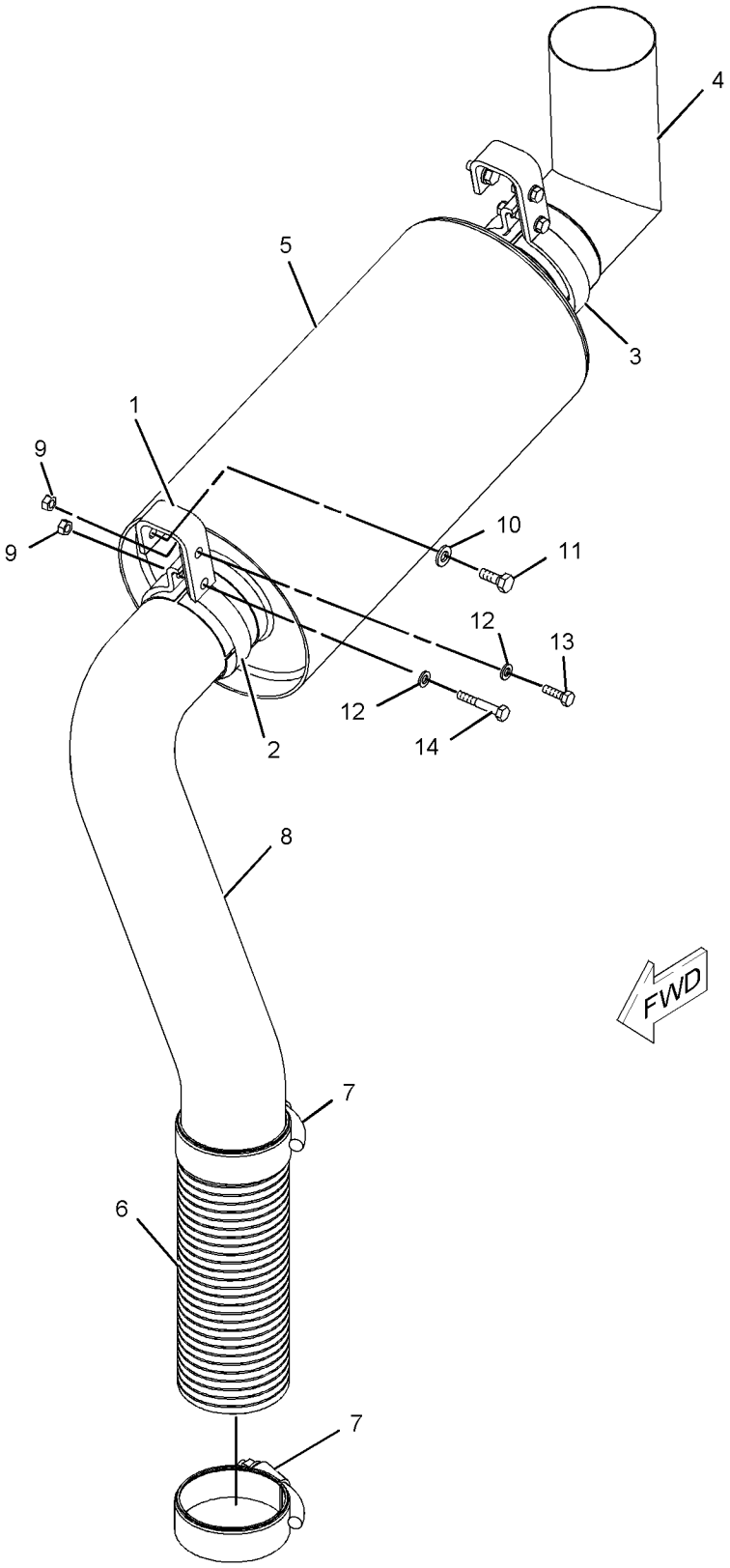


GRAPHIC #1 **<END>** g01103550

# AIR INLET AND EXHAUST SYSTEM

## *279-8927* PRECLEANER GP

**S/N: 5451-UP**

**AN ATTACHMENT**

**SMCS-1055** **i02471240**

| NOTE | REF NO | GRAPHIC REF | PART NUMBER | QTY | PART NAME 1 2 3 4 5 6 (PRODUCT LEVEL) | SEE PAGE |
|---|---|---|---|---|---|---|
| | 1 | 1 | *200-7138* | 1 | PRECLEANER AS | |
| | | 1 | **116-2659** | 1 | DAMPER | |
| | | 1 | **130-3280** | 1 | PRECLEANER AS | |
| | | 1 | **174-5415** | 1 | CLAMP | |

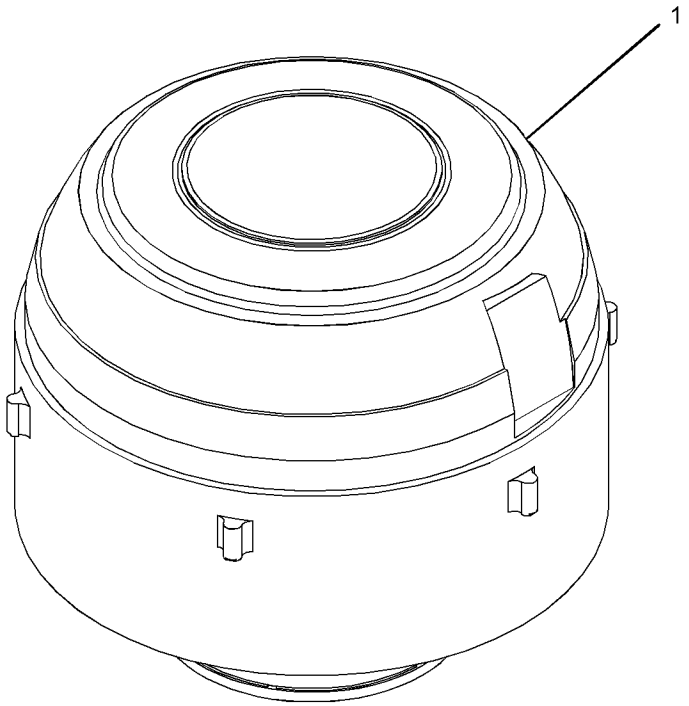


GRAPHIC #1 **<END>** g01236322

# AIR INLET AND EXHAUST SYSTEM

## *185-1145* TURBOCHARGER GP

**S/N: KHX1-523**

**PART OF 235-1496 ENGINE AR-CORE**

**SMCS-1052, 1053** **i01691439**

| NOTE | REF NO | GRAPHIC REF | PART NUMBER | QTY | PART NAME 1 2 3 4 5 6 (PRODUCT LEVEL) | SEE PAGE |
|---|---|---|---|---|---|---|
| YR | 1 | 1 | **185-8016** | 1 | TURBOCHARGER GP | 111 |
| M | 2 | 1 | **3E-8017** | 4 | LOCKNUT (M10X1.5) | |
| | 3 | 1 | **7C-7431** | 1 | GASKET-TURBOCHARGER | |

M-METRIC PART
R-REMFG PART MAY BE AVAILABLE
Y-SEPARATE ILLUSTRATION

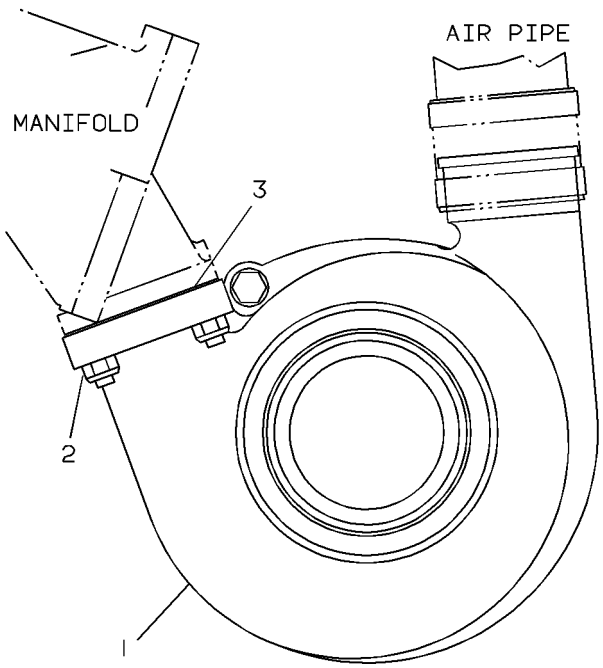


GRAPHIC #1 **<END>** g00108333

# AIR INLET AND EXHAUST SYSTEM

## 185-8016 TURBOCHARGER GP*R

**S/N: KHX1-UP**

**PART OF 185-1145 TURBOCHARGER GP**

**SMCS-1052, 1053** **i02196616**

| NOTE | REF NO | GRAPHIC REF | PART NUMBER | QTY | PART NAME 1 2 3 4 5 6 (PRODUCT LEVEL) | SEE PAGE |
|---|---|---|---|---|---|---|
| | 1 | 1 | **161-6963** | 2 | CLAMP | |
| | 2 | 1 | **5P-4536** | 1 | ELBOW | |
| | 3 | 1 | **179-0091** | 1 | HOSE | |
| M | 4 | 1 | **7C-6670** | 4 | BOLT (M8X12.5-MM) | |
| | 5 | 1 | **206-6465** | 1 | HOUSING AS-TURBINE | |
| | 6 | 1 | **7C-6672** | 2 | PLATE-CLAMP (TURBINE) | |
| | 7 | 1 | **7M-9918** | 1 | LOCKNUT (1/4-28-THD) | |
| | 8 | 1 | **158-6072** | 1 | CLAMP AS (COMPRESSOR) | |
| | 9 | 1 | **196-0351** | 1 | COVER-COMPRESSOR | |
| | 10 | 1 | **196-0268** | 1 | CARTRIDGE GP-TURBOCHARGER | |

M-METRIC PART

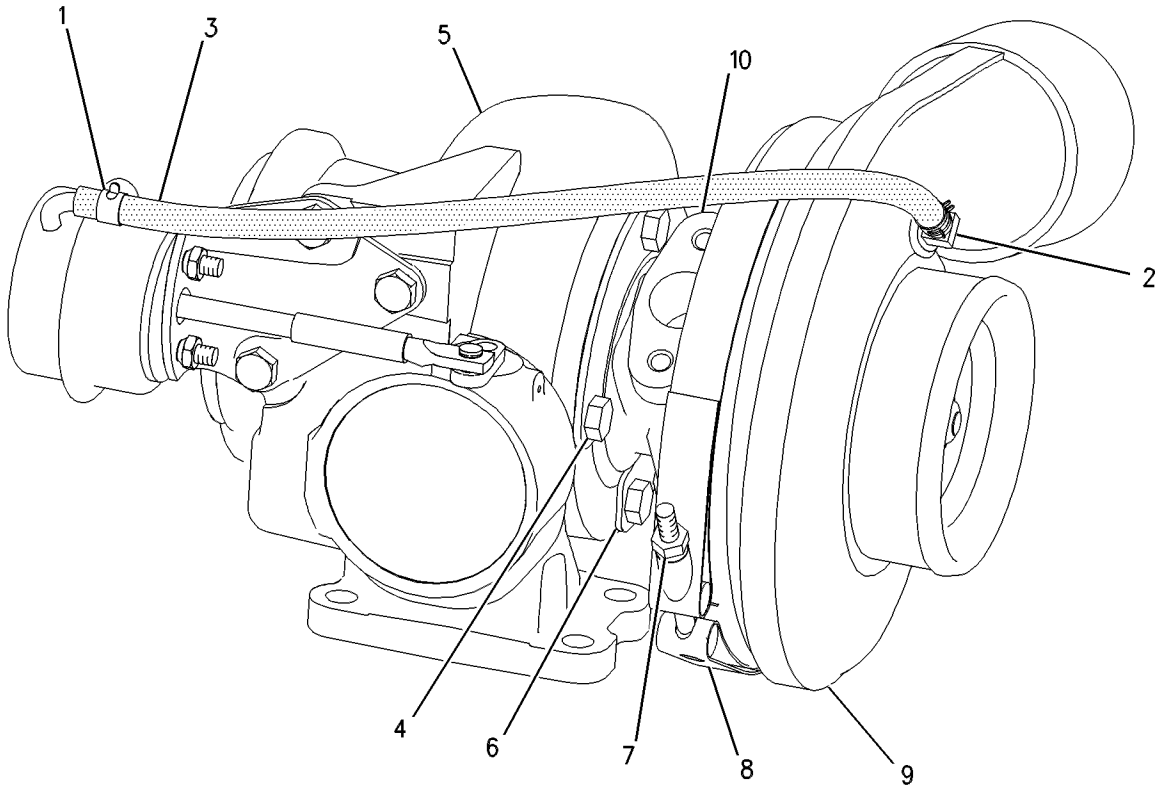


GRAPHIC #1 **<END>** g00606204

# AIR INLET AND EXHAUST SYSTEM

## 250-0841 TURBOCHARGER GP

**S/N: KHX1-UP**

**PART OF 258-2403 TURBOCHARGER GP**

**SMCS-1052, 1053** **i02722529**

| NOTE | REF NO | GRAPHIC REF | PART NUMBER | QTY | PART NAME 1 2 3 4 5 6 (PRODUCT LEVEL) | SEE PAGE |
|---|---|---|---|---|---|---|
| | 1 | 1 | **137-1602** | 1 | CLAMP AS (TURBINE) | |
| | | 1 | **7M-9918** | 1 | LOCKNUT (1/4-28-THD) | |
| | 2 | 1 | **158-6072** | 1 | CLAMP AS (COMPRESSOR) | |
| | 3 | 1 | **161-6963** | 2 | CLAMP | |
| | 4 | 1 | **261-9287** | 1 | CARTRIDGE GP-TURBOCHARGER | |
| | 5 | 1 | **5P-4536** | 1 | ELBOW | |
| | 6 | 1 | **242-3360** | | HOSE (44-CM) | |

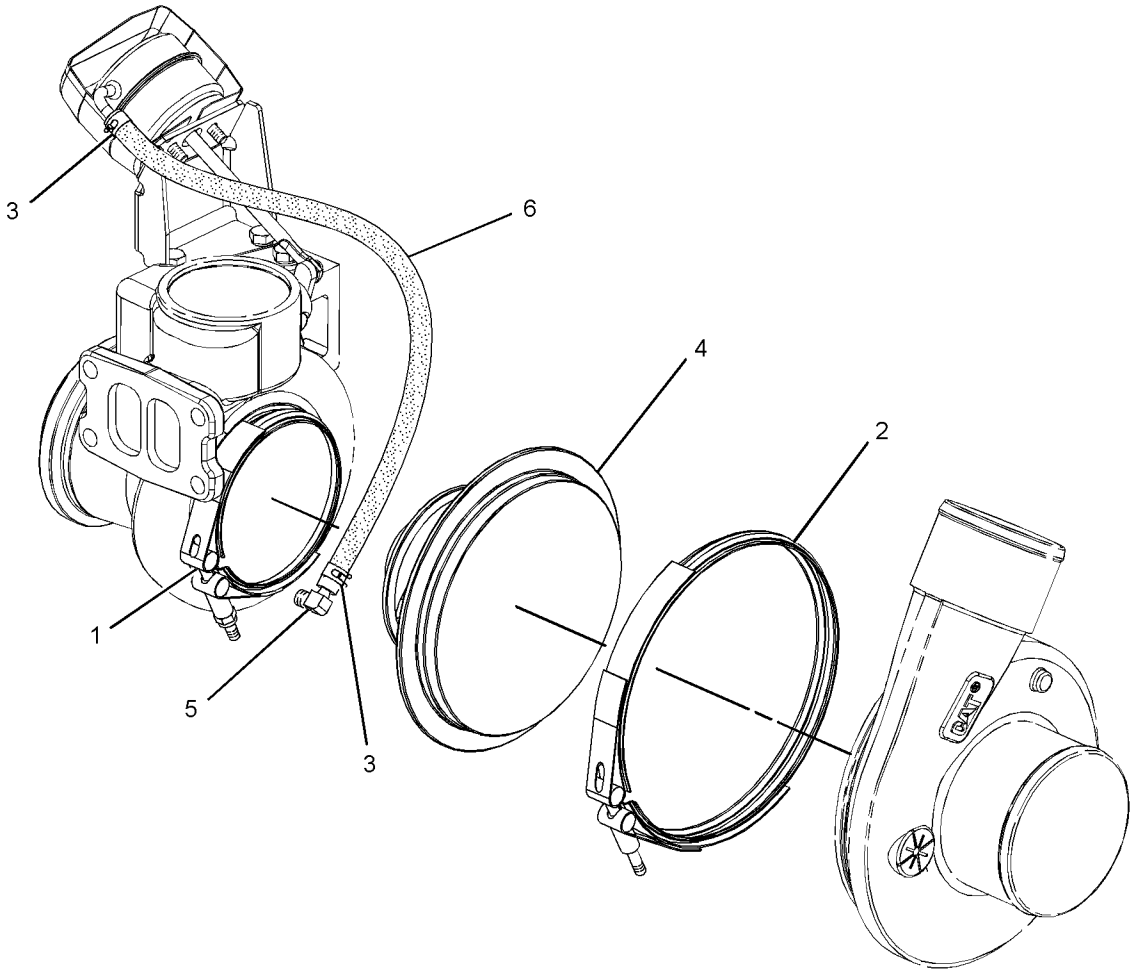


GRAPHIC #1 **<END>** g01370583

# AIR INLET AND EXHAUST SYSTEM

## *258-2403* TURBOCHARGER GP

**S/N: KHX1-UP**

**PART OF 235-1496 ENGINE AR-CORE**

**SMCS-1052, 1053** **i02241845**

| NOTE | REF NO | GRAPHIC REF | PART NUMBER | QTY | PART NAME 1 2 3 4 5 6 (PRODUCT LEVEL) | SEE PAGE |
|---|---|---|---|---|---|---|
| | 1 | 1 | **7C-7431** | 1 | GASKET | |
| M | 2 | 1 | **3E-8017** | 4 | LOCKNUT (M10X1.5-MM THD) | |
| Y | 3 | 1 | *250-0841* | 1 | TURBOCHARGER GP | 112 |

M-METRIC PART
Y-SEPARATE ILLUSTRATION

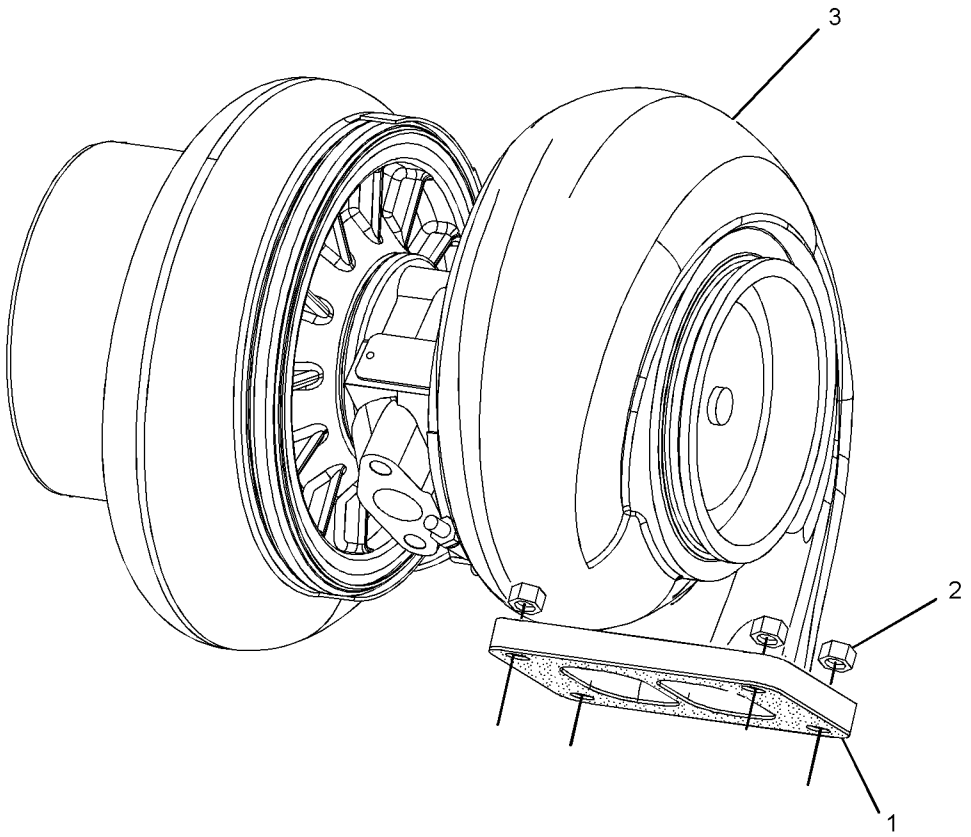


GRAPHIC #1 **<END>** g01130701

# *174-9570* FILTER GP-WATER SEP & FUEL–PRIMARY

**S/N: 5451-UP**

**PART OF 235-8725 PUMP GP-FILTER & FUEL TRANSFER**

**SMCS-1261, 1263** **i02408424**

| NOTE | REF NO | GRAPHIC REF | PART NUMBER | QTY | PART NAME 1 2 3 4 5 6 (PRODUCT LEVEL) | SEE PAGE |
|---|---|---|---|---|---|---|
| | 1 | 1 | **1R-0770** | 1 | FILTER AS-WATER SEP & FUEL (PRIMARY) | |
| | 1A | 1 | **220-8678** | 1 | SEAL-RING (FUEL, WATER SEPARATOR) | |
| | 2 | 1 | **270-5320** | 1 | BOWL AS (FUEL, WATER SEPARATOR) | |

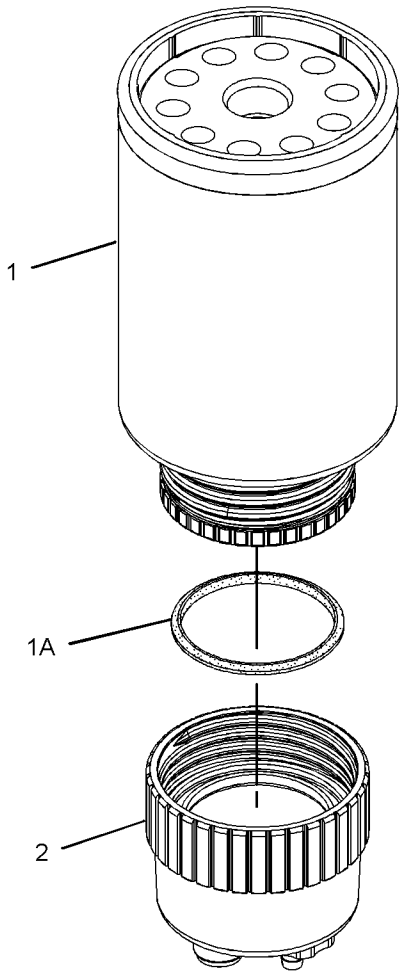


GRAPHIC #1

**<END>**

g01179858

# 268-1835 INJECTOR GP-FUEL

**S/N: KHX1-3171**

**PART OF 268-1839 PUMP GP-FUEL INJECTION**

**SMCS-1251, 1254, 1290, 1713** **i02290971**

| NOTE | REF NO | GRAPHIC REF | PART NUMBER | QTY | PART NAME 1 2 3 4 5 6 (PRODUCT LEVEL) | SEE PAGE |
|---|---|---|---|---|---|---|
| | 1 | 1 | **149-5240** | 1 | RING-BACKUP | |
| | 2 | 1 | **169-3104** | 1 | RING-BACKUP | |
| | 3 | 1 | **169-8598** | 1 | SEAL-O-RING | |
| | 5 | 1 | **109-3207** | 1 | SEAL-O-RING | |
| | 6 | 1 | **148-2903** | 1 | SEAL-O-RING | |
| | 7 | 1 | **169-8586** | 1 | RING-BACKUP | |

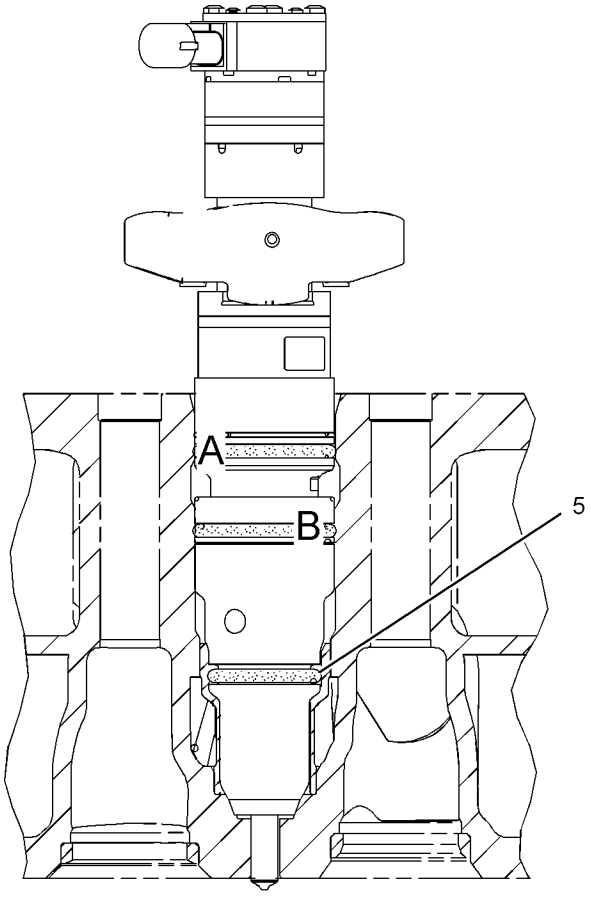


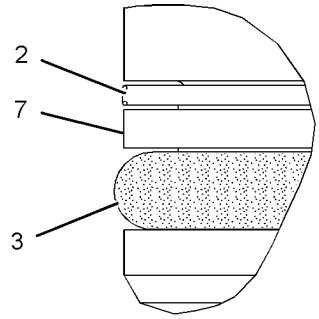


VIEW OF AREA A

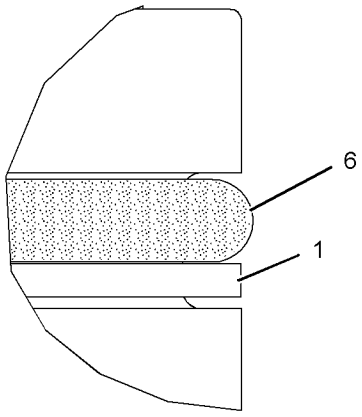


VIEW OF AREA B

GRAPHIC #1 **<END>** g01032697

# 295-1410 INJECTOR GP-FUEL*R

**S/N: KHX1-UP**
**PART OF 222-5958 PUMP GP-FUEL INJECTION**
**FOR USE WITH HIGH HP ENGINES**

**SMCS-1251, 1254, 1290, 1713** **i02583306**

| NOTE | REF NO | GRAPHIC REF | PART NUMBER | QTY | PART NAME 1 2 3 4 5 6 (PRODUCT LEVEL) | SEE PAGE |
|---|---|---|---|---|---|---|
| | 1 | 1 | **149-5240** | 1 | RING-BACKUP | |
| | 3 | 1 | **293-0730** | 1 | RING-BACKUP | |
| | 4 | 1 | **109-3207** | 1 | SEAL-O-RING | |
| | 5 | 1 | **148-2903** | 2 | SEAL-O-RING | |

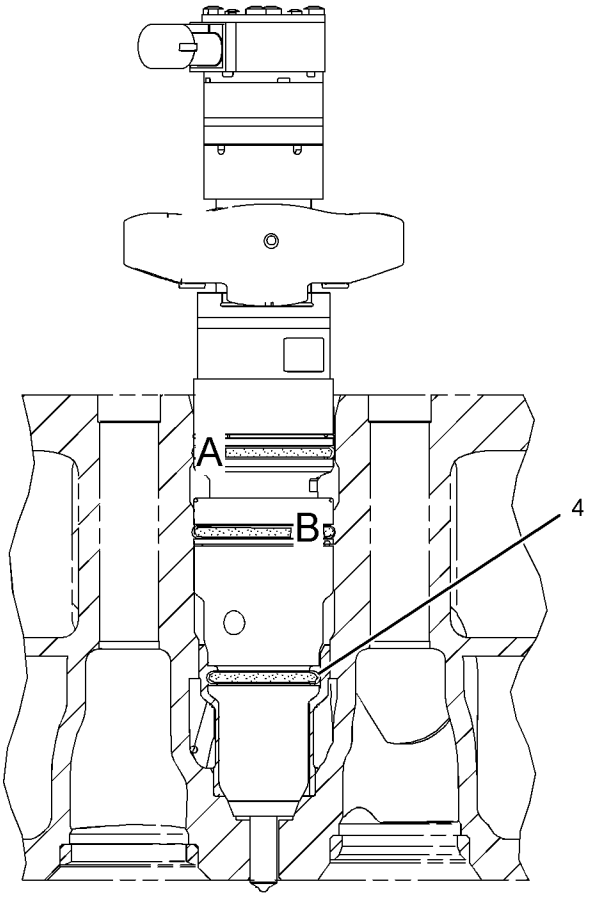


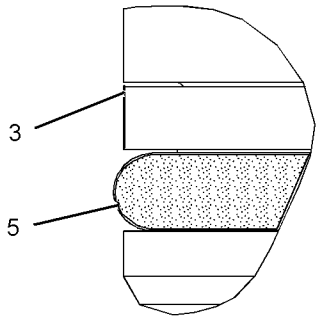

VIEW OF AREA A

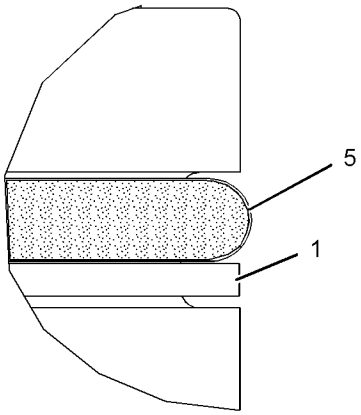

VIEW OF AREA B

GRAPHIC #1 **<END>** g01293959

# 295-1411 INJECTOR GP-FUEL

**S/N: KHX3172-UP**

**PART OF 268-1839 PUMP GP-FUEL INJECTION**

**SMCS-1251, 1254, 1290, 1713** **i02605280**

| NOTE | REF NO | GRAPHIC REF | PART NUMBER | QTY | PART NAME 1 2 3 4 5 6 (PRODUCT LEVEL) | SEE PAGE |
|---|---|---|---|---|---|---|
| | 1 | 1 | **149-5240** | 1 | RING-BACKUP | |
| | 2 | 1 | **293-0730** | 1 | RING-BACKUP | |
| | 3 | 1 | **109-3207** | 1 | SEAL-O-RING | |
| | 4 | 1 | **148-2903** | 2 | SEAL-O-RING | |

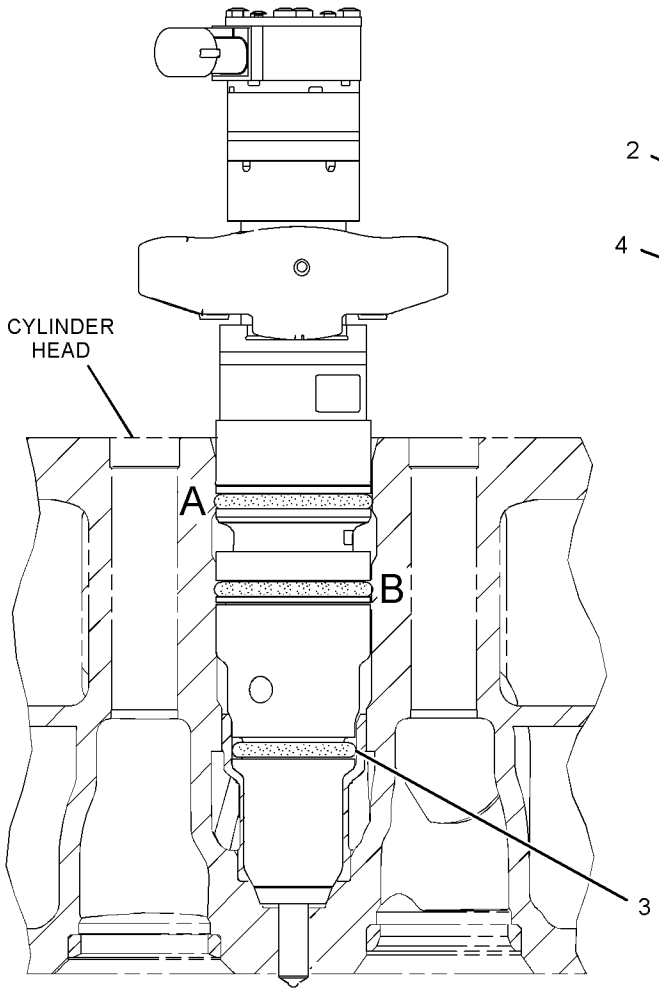


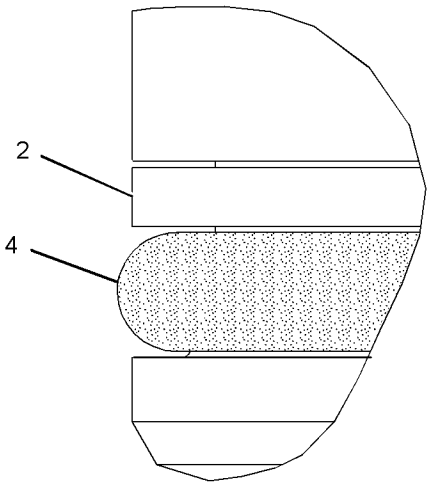


VIEW OF AREA A

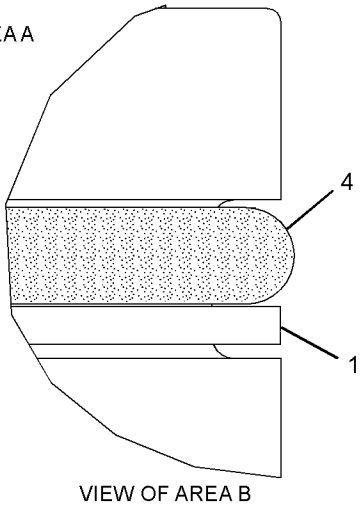


VIEW OF AREA B

GRAPHIC #1 **<END>** g01290525

# FUEL SYSTEM

## *251-1323* LINES GP-FUEL

**S/N: 5451-344**

**PART OF 245-9460 CHASSIS AR**

**SMCS-1274** **i02509626**

| NOTE | REF NO | GRAPHIC REF | PART NUMBER | QTY | PART NAME 1 2 3 4 5 6 (PRODUCT LEVEL) | SEE PAGE |
|---|---|---|---|---|---|---|
| | 1 | 1 | **1P-4278** | 1 | CLAMP-HOSE | |
| Y | 2 | 1 | *190-1105* | 1 | PUMP GP-FUEL PRM & PRIM FILTER | 133 |
| | 3 | 1 | **263-2596** | 1 | HOSE AS | |
| I | 4 | 1 | **263-2597** | 1 | HOSE AS | |
| | 5 | 1 | **289-2473** | 1 | HOSE AS | |
| | 6 | 1 | *148-8340* | 1 | CONNECTOR AS | |
| | | 1 | **6V-8639** | 1 | CONNECTOR | |
| | | 1 | **3K-0360** | 1 | SEAL-O-RING | |
| | | 1 | **6V-8398** | 1 | SEAL-O-RING | |
| | 7 | 1 | *148-8345* | 1 | CONNECTOR AS | |
| | | 1 | **6V-8638** | 1 | CONNECTOR | |
| | | 1 | **2M-9780** | 1 | SEAL-O-RING | |
| | | 1 | **6V-8398** | 1 | SEAL-O-RING | |
| | 8 | 1 | *148-8365* | 1 | ELBOW AS | |
| | | 1 | **8T-6876** | 1 | ELBOW | |
| | | 1 | **3J-1907** | 1 | SEAL-O-RING | |
| | | 1 | **6V-8398** | 1 | SEAL-O-RING | |
| | 9 | 1 | *148-8370* | 1 | ELBOW AS | |
| | | 1 | **6V-9851** | 1 | ELBOW | |
| | | 1 | **6V-8398** | 1 | SEAL-O-RING | |
| | 10 | 1 | *148-8372* | 1 | ELBOW AS | |
| | | 1 | **6V-8721** | 1 | ELBOW | |
| | | 1 | **2M-9780** | 1 | SEAL-O-RING | |
| | | 1 | **6V-8398** | 1 | SEAL-O-RING | |
| | 11 | 1 | *148-8378* | 2 | ELBOW AS | |
| | | | | | (EACH INCLUDES) | |
| | | 1 | **6V-8397** | 1 | SEAL-O-RING | |
| | | 1 | **3J-1907** | 1 | SEAL-O-RING | |
| | | 1 | **6V-8724** | 1 | ELBOW | |
| | 12 | 1 | **1S-0994** | 1 | CLIP | |
| | 13 | 1 | **5K-5338** | 3 | CLIP | |
| | 14 | 1 | **8M-2773** | 1 | CLIP | |
| | 15 | 1 | **8T-4121** | 4 | WASHER-HARD (11X21X2.5-MM THK) | |
| M | 16 | 1 | **8T-4137** | 4 | BOLT (M10X1.5X20-MM) | |
| E | 17 | 1 | **8C-6959** | | HOSE (62-CM) | |

E-ORDER BY THE CENTIMETER
I-REFER TO HYDRAULIC INFORMATION SYSTEM
M-METRIC PART
Y-SEPARATE ILLUSTRATION

*251 - 1323* **LINES GP - FUEL** *(contd. )* **i02509626**

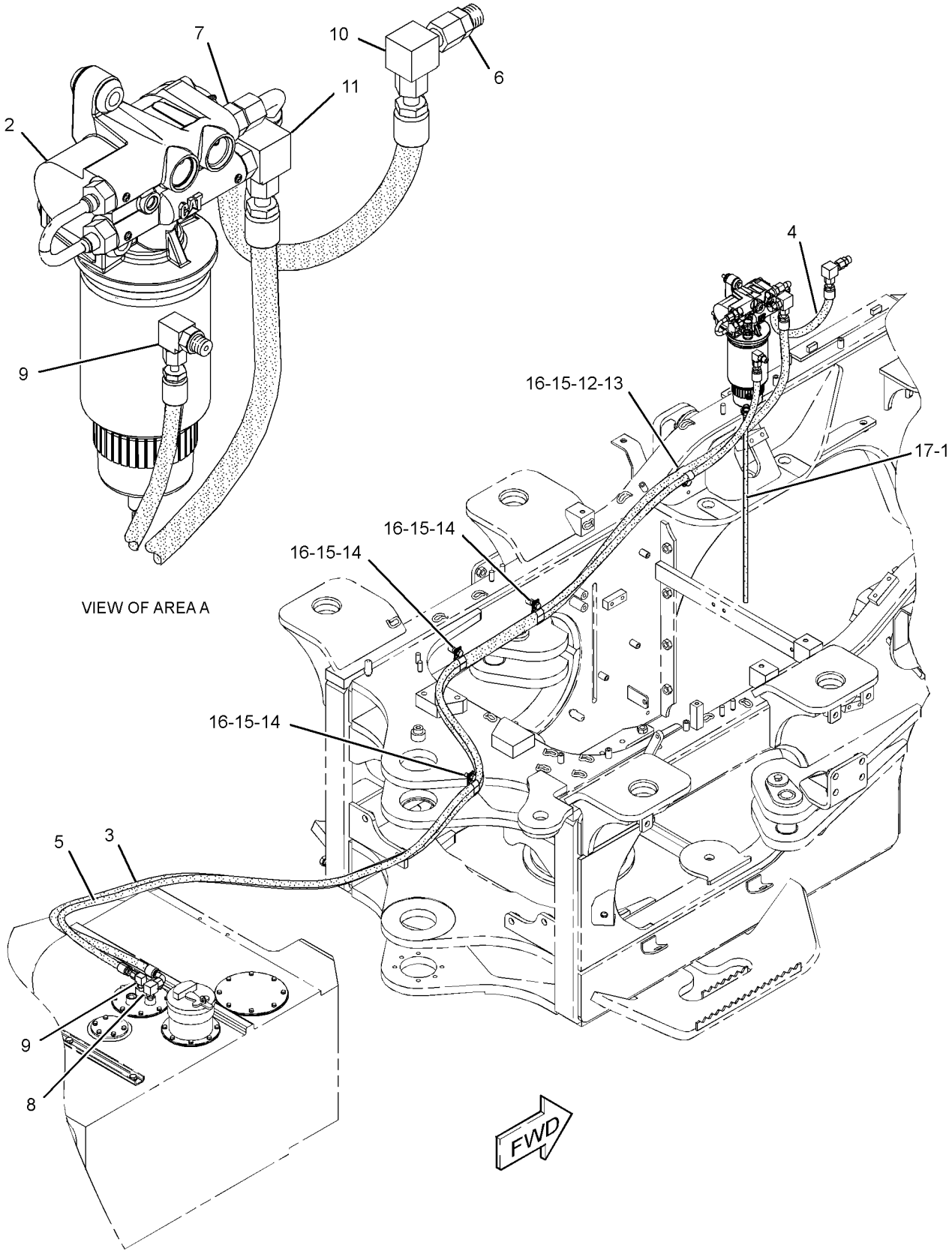


GRAPHIC #1 **<END>** g01259033

# FUEL SYSTEM

## *251-1323* LINES GP-FUEL

**S/N: 545345-UP**

**PART OF 245-9460 CHASSIS AR**

**SMCS-1274** **i02637652**

| NOTE | REF NO | GRAPHIC REF | PART NUMBER | QTY | PART NAME 1 2 3 4 5 6 (PRODUCT LEVEL) | SEE PAGE |
|---|---|---|---|---|---|---|
| | 1 | 1 | **1P-4278** | 1 | CLAMP-HOSE | |
| Y | 2 | 1 | *190-1105* | 1 | PUMP GP-FUEL PRM & PRIM FILTER | 133 |
| | 3 | 1 | **263-2596** | 1 | HOSE AS | |
| I | 4 | 1 | **263-2597** | 1 | HOSE AS | |
| | 5 | 1 | **289-2473** | 1 | HOSE AS | |
| | 6 | 1 | *148-8340* | 1 | CONNECTOR AS | |
| | | 1 | **6V-8639** | 1 | CONNECTOR | |
| | | 1 | **3K-0360** | 1 | SEAL-O-RING | |
| | | 1 | **6V-8398** | 1 | SEAL-O-RING | |
| | 7 | 1 | *148-8345* | 1 | CONNECTOR AS | |
| | | 1 | **6V-8638** | 1 | CONNECTOR | |
| | | 1 | **2M-9780** | 1 | SEAL-O-RING | |
| | | 1 | **6V-8398** | 1 | SEAL-O-RING | |
| | 8 | 1 | *148-8365* | 1 | ELBOW AS | |
| | | 1 | **8T-6876** | 1 | ELBOW | |
| | | 1 | **3J-1907** | 1 | SEAL-O-RING | |
| | | 1 | **6V-8398** | 1 | SEAL-O-RING | |
| | 9 | 1 | *148-8370* | 1 | ELBOW AS | |
| | | 1 | **6V-9851** | 1 | ELBOW | |
| | | 1 | **6V-8398** | 1 | SEAL-O-RING | |
| | 10 | 1 | *148-8372* | 1 | ELBOW AS | |
| | | 1 | **6V-8721** | 1 | ELBOW | |
| | | 1 | **2M-9780** | 1 | SEAL-O-RING | |
| | | 1 | **6V-8398** | 1 | SEAL-O-RING | |
| | 11 | 1 | *148-8378* | 2 | ELBOW AS | |
| | | | | | (EACH INCLUDES) | |
| | | 1 | **6V-8397** | 1 | SEAL-O-RING | |
| | | 1 | **3J-1907** | 1 | SEAL-O-RING | |
| | | 1 | **6V-8724** | 1 | ELBOW | |
| | 12 | 1 | **1S-0994** | 1 | CLIP | |
| C | 13 | 1 | **6D-4247** | 3 | CLIP | |
| | 14 | 1 | **8M-2773** | 1 | CLIP | |
| | 15 | 1 | **8T-4121** | 4 | WASHER-HARD (11X21X2.5-MM THK) | |
| CM | 16 | 1 | **8T-4137** | 3 | BOLT (M10X1.5X20-MM) | |
| E | 17 | 1 | **8C-6959** | | HOSE (62-CM) | |
| C | 18 | 1 | **121-1340** | 1 | ANGLE AS | |
| M | | 1 | **8T-3490** | 1 | NUT-WELD (M10X1.5-THD) | |
| CM | 19 | 1 | **8T-4136** | 1 | BOLT (M10X1.5X25-MM) | |
| C | 20 | 1 | **8T-4223** | 1 | WASHER-HARD (13.5X25.5X3-MM THK) | |

C-CHANGE FROM PREVIOUS TYPE
E-ORDER BY THE CENTIMETER
I-REFER TO HYDRAULIC INFORMATION SYSTEM
M-METRIC PART
Y-SEPARATE ILLUSTRATION

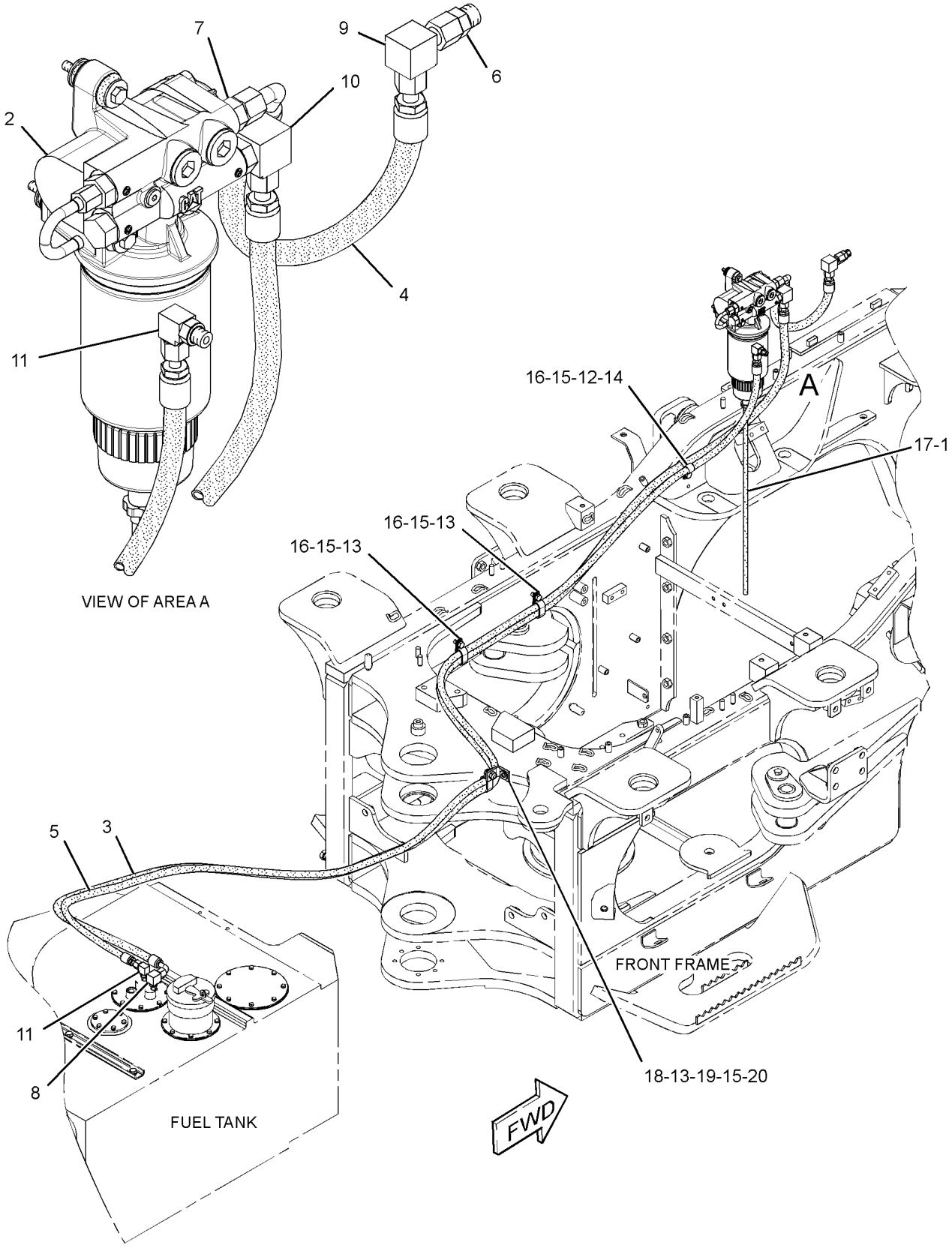


GRAPHIC #1 **<END>** g01341305

# FUEL SYSTEM

## *238-8185* LINES GP-FUEL FILTER

**S/N: KHX1-614**

**PART OF 235-1497 ENGINE AR-COMPLETE**

**SMCS-1261, 1274** **i02525546**

| NOTE | REF NO | GRAPHIC REF | PART NUMBER | QTY | PART NAME 1 2 3 4 5 6 (PRODUCT LEVEL) | SEE PAGE |
|---|---|---|---|---|---|---|
| | 1 | 1 | **3S-2093** | 2 | STRAP-CABLE | |
| | 2 | 1 | **115-5411** | 1 | ELBOW | |
| | 3 | 1 | *183-3406* | 1 | PLUG AS | |
| | | 1 | **6V-5049** | 1 | SEAL-O-RING | |
| | | 1 | **9S-4191** | 1 | PLUG-O-RING | |
| Y | 4 | 1 | **194-6725** | 1 | SENSOR GP-PRESSURE (FUEL) | 170 |
| | 5 | 1 | **206-1345** | 1 | STRAP-CABLE | |
| Y | 6 | 1 | *232-0343* | 1 | REGULATOR GP-FUEL PRESSURE | 135 |
| | 7 | 1 | **235-3596** | 1 | ADAPTER AS | |
| | | 1 | **235-3595** | 1 | ADAPTER | |
| | | 1 | **6V-5048** | 1 | SEAL-O-RING | |
| | | 1 | **8L-2786** | 1 | SEAL-O-RING | |
| | 8 | 1 | **237-9308** | 1 | BASE AS | |
| | | 1 | **9S-4167** | 1 | STUD-HOLLOW (1-14X1.47-IN) | |
| | 9 | 1 | **260-4861** | 1 | HARNESS AS-WIRING (FUEL PRESSURE) | |
| | | | **102-8803** | 1 | KIT-RECEPTACLE (3-PIN) | |
| | | | | | (INCLUDES RECEPTACLE AS AND WEDGE) | |
| | | | **102-8806** | 1 | KIT-RECEPTACLE (8-PIN) | |
| | | | | | (INCLUDES RECEPTACLE AS AND WEDGE) | |
| | | | **155-2270** | 1 | KIT-CONNECTING PLUG (2-PIN) | |
| | | | | | (INCLUDES PLUG AS AND WEDGE) | |
| I | 10 | 1 | **253-8307** | 1 | HOSE AS | |
| Y | 11 | 1 | **258-0883** | 1 | SWITCH GP-PRESSURE (FUEL) | 198 |
| | 12 | 1 | *148-8336* | 2 | CONNECTOR AS | |
| | | | | | (EACH INCLUDES) | |
| | | 1 | **3J-1907** | 1 | SEAL-O-RING | |
| | | 1 | **6V-8397** | 1 | SEAL-O-RING | |
| | | 1 | **6V-8636** | 1 | CONNECTOR | |
| | 13 | 1 | *148-8411* | 4 | PLUG AS | |
| | | | | | (EACH INCLUDES) | |
| | | 1 | **3K-0360** | 1 | SEAL-O-RING | |
| | | 1 | **9S-4185** | 1 | PLUG-O-RING | |
| | 14 | 1 | **1R-0762** | 1 | FILTER AS-FUEL (ADVANCED EFFICIENCY) (SECONDARY) | |
| | 15 | 1 | **3K-0360** | 1 | SEAL-O-RING | |
| M | 16 | 1 | **6V-3822** | 2 | BOLT (M10X1.5X35-MM) | |
| | 17 | 1 | **6V-5839** | 2 | WASHER (11X21X2.5-MM THK) | |
| | 18 | 1 | **8M-2773** | 1 | CLIP | |
| | 19 | 1 | **8T-4121** | 1 | WASHER-HARD (11X21X2.5-MM THK) | |
| M | 20 | 1 | **8T-4137** | 1 | BOLT (M10X1.5X20-MM) | |

I-REFER TO HYDRAULIC INFORMATION SYSTEM
M-METRIC PART
Y-SEPARATE ILLUSTRATION

*238-8185* **LINES GP-FUEL FILTER** *(contd.)* **i02525546**

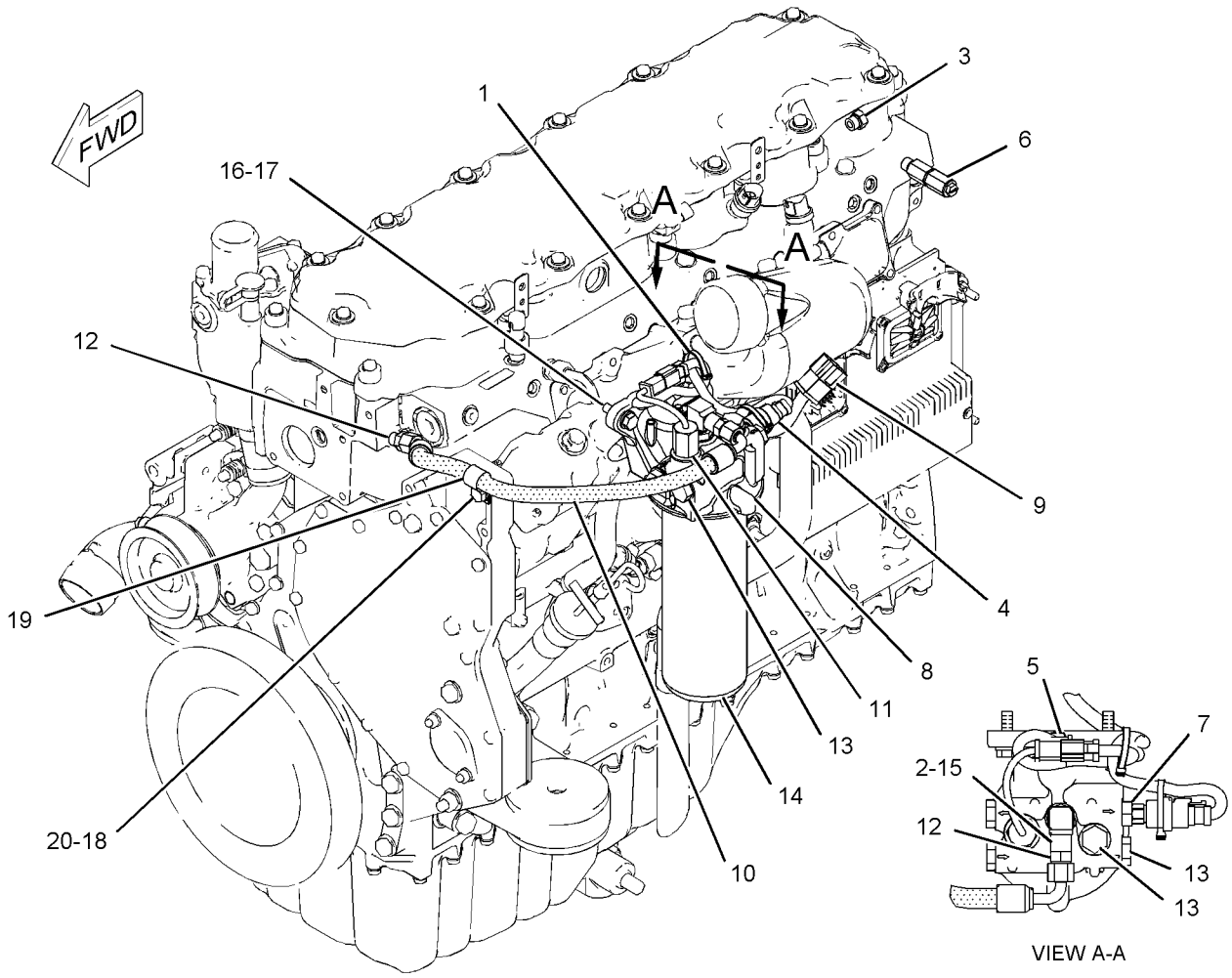


GRAPHIC #1 **<END>** g01109011

# FUEL SYSTEM

## *238-8185* LINES GP-FUEL FILTER

**S/N: KHX615-UP**

**PART OF 235-1497 ENGINE AR-COMPLETE**

**SMCS-1261, 1274** **i02553413**

| NOTE | REF NO | GRAPHIC REF | PART NUMBER | QTY | PART NAME 1 2 3 4 5 6 (PRODUCT LEVEL) | SEE PAGE |
|---|---|---|---|---|---|---|
| | 1 | 1 | **3S-2093** | 2 | STRAP-CABLE | |
| C | 2 | 1 | **6V-8723** | 1 | ELBOW (FACE SEAL) | |
| | 3 | 1 | *183-3406* | 1 | PLUG AS | |
| | | 1 | **6V-5049** | 1 | SEAL-O-RING | |
| | | 1 | **9S-4191** | 1 | PLUG-O-RING | |
| Y | 4 | 1 | **194-6725** | 1 | SENSOR GP-PRESSURE (FUEL) | 170 |
| | 5 | 1 | **206-1345** | 1 | STRAP-CABLE | |
| Y | 6 | 1 | *232-0343* | 1 | REGULATOR GP-FUEL PRESSURE | 135 |
| | 7 | 1 | *235-3596* | 1 | ADAPTER AS | |
| | | 1 | **235-3595** | 1 | ADAPTER | |
| | | 1 | **6V-5048** | 1 | SEAL-O-RING | |
| | | 1 | **8L-2786** | 1 | SEAL-O-RING | |
| | 8 | 1 | **237-9308** | 1 | BASE AS | |
| | | 1 | **9S-4167** | 1 | STUD-HOLLOW (1-14X1.47-IN) | |
| | 9 | 1 | **260-4861** | 1 | HARNESS AS-WIRING (FUEL PRESSURE) | |
| | | 1 | **102-8803** | 1 | KIT-RECEPTACLE (3-PIN) | |
| | | | | | (INCLUDES RECEPTACLE AS & WEDGE) | |
| | | 1 | **102-8806** | 1 | KIT-RECEPTACLE (8-PIN) | |
| | | | | | (INCLUDES RECEPTACLE AS & WEDGE) | |
| | | 1 | **155-2270** | 1 | KIT-CONNECTING PLUG (2-PIN) | |
| | | | | | (INCLUDES PLUG AS,WEDGE & INTERFACE SEAL) | |
| I | 10 | 1 | **253-8307** | 1 | HOSE AS | |
| Y | 11 | 1 | **258-0883** | 1 | SWITCH GP-PRESSURE (FUEL) | 198 |
| C | 12 | 1 | *148-8336* | 1 | CONNECTOR AS | |
| | | 1 | **3J-1907** | 1 | SEAL-O-RING | |
| | | 1 | **6V-8397** | 1 | SEAL-O-RING | |
| | | 1 | **6V-8636** | 1 | CONNECTOR | |
| | 13 | 1 | *148-8411* | 4 | PLUG AS | |
| | | | | | (EACH INCLUDES) | |
| | | 1 | **3K-0360** | 1 | SEAL-O-RING | |
| | | 1 | **9S-4185** | 1 | PLUG-O-RING | |
| | 14 | 1 | **1R-0762** | 1 | FILTER AS-FUEL (ADVANCED EFFICIENCY) (SECONDARY) | |
| | 15 | 1 | **3K-0360** | 1 | SEAL-O-RING | |
| M | 16 | 1 | **6V-3822** | 2 | BOLT (M10X1.5X35-MM) | |
| | 17 | 1 | **6V-5839** | 2 | WASHER (11X21X2.5-MM THK) | |
| | 18 | 1 | **8M-2773** | 1 | CLIP | |
| | 19 | 1 | **8T-4121** | 1 | WASHER-HARD (11X21X2.5-MM THK) | |
| M | 20 | 1 | **8T-4137** | 1 | BOLT (M10X1.5X20-MM) | |
| C | 21 | 1 | **6V-8397** | 1 | SEAL-O-RING | |

C-CHANGE FROM PREVIOUS TYPE
I-REFER TO HYDRAULIC INFORMATION SYSTEM
M-METRIC PART
Y-SEPARATE ILLUSTRATION

*238-8185* **LINES GP-FUEL FILTER** *(contd.)* **i02553413**

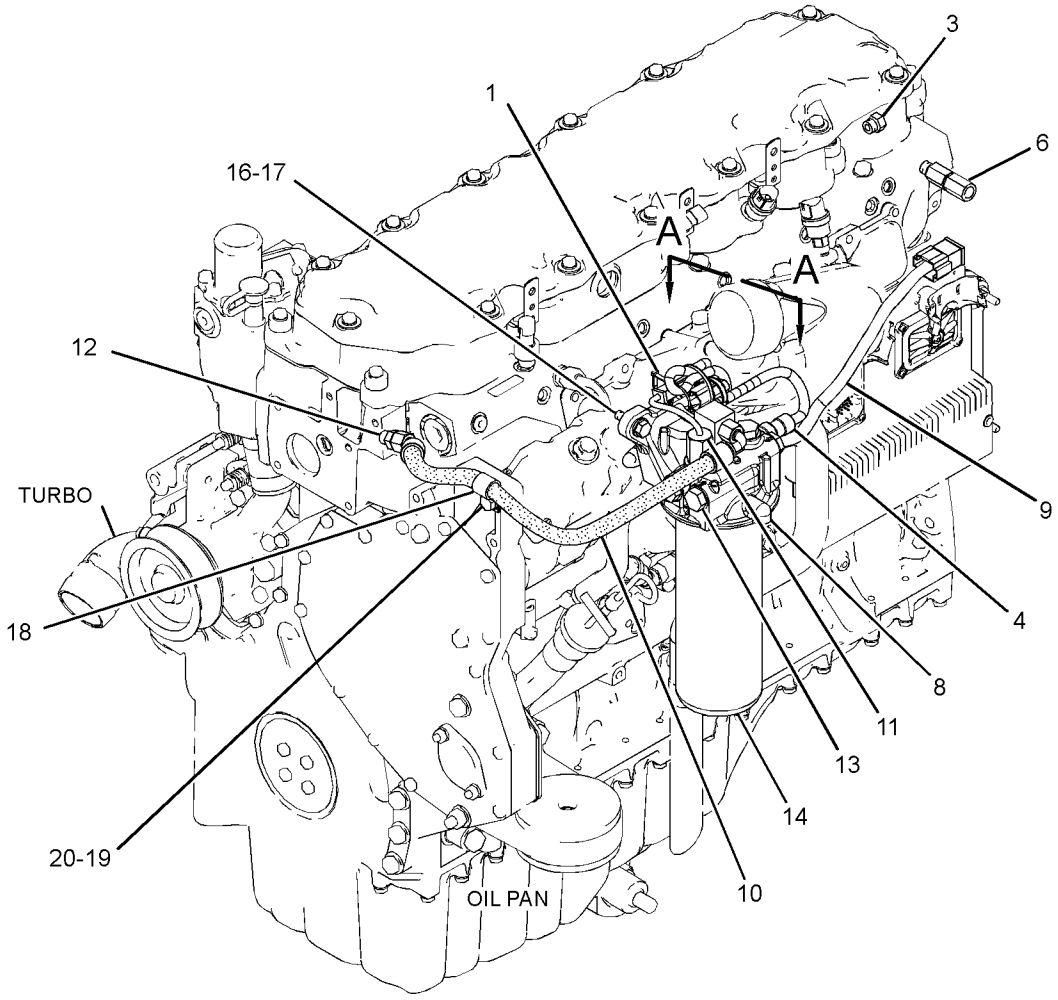


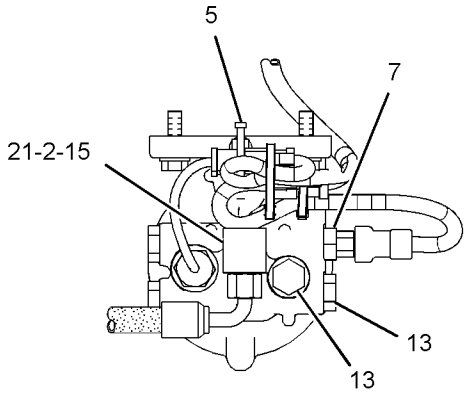


VIEW A-A

GRAPHIC #1 **<END>** g01319796

# *191-0461* LINES GP-INJECTOR HYD PUMP

**S/N: KHX1-UP**

**PART OF 235-1496 ENGINE AR-CORE**

**SMCS-1307, 1714** **i01749244**

| NOTE | REF NO | GRAPHIC REF | PART NUMBER | QTY | PART NAME 1 2 3 4 5 6 (PRODUCT LEVEL) | SEE PAGE |
|---|---|---|---|---|---|---|
| | 1 | 1 | **6V-8636** | 2 | CONNECTOR | |
| | | 1 | **214-7568** | 2 | SEAL-O-RING | |
| | | 1 | **221-3494** | 2 | SEAL-O-RING | |
| Y | 2 | 1 | *191-0523* | 1 | ADAPTER GP-OIL LINE | 66 |
| | 3 | 1 | **205-1280** | 1 | HOSE AS | |
| | 4 | 1 | **212-3706** | 1 | TUBE AS | |
| | 5 | 1 | **3V-2431** | 2 | WASHER (10.2X16X2-MM THK) | |
| | 6 | 1 | **4F-9653** | 1 | SEAL-O-RING | |
| M | 7 | 1 | **8T-1159** | 2 | BOLT-SOCKET HEAD (M10X1.5X25-MM) | |

M-METRIC PART
Y-SEPARATE ILLUSTRATION

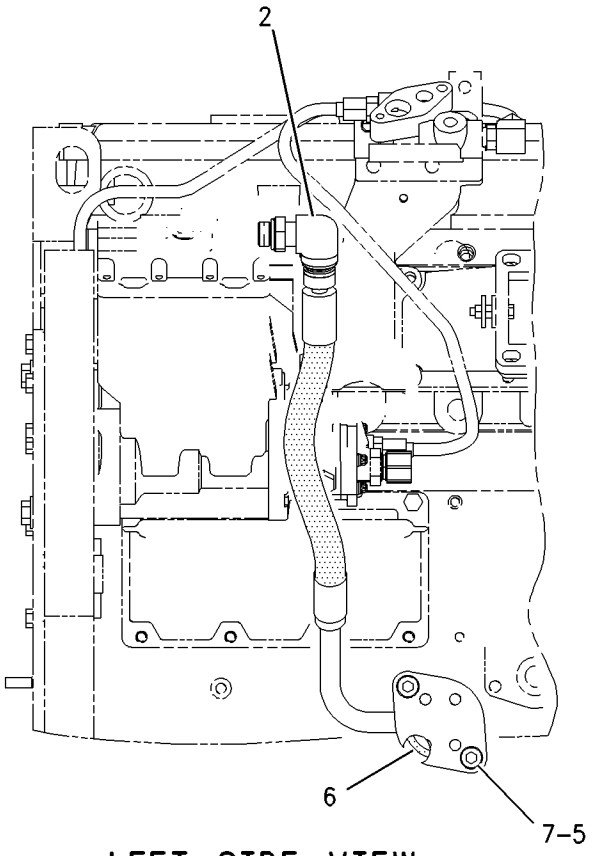


LEFT SIDE VIEW

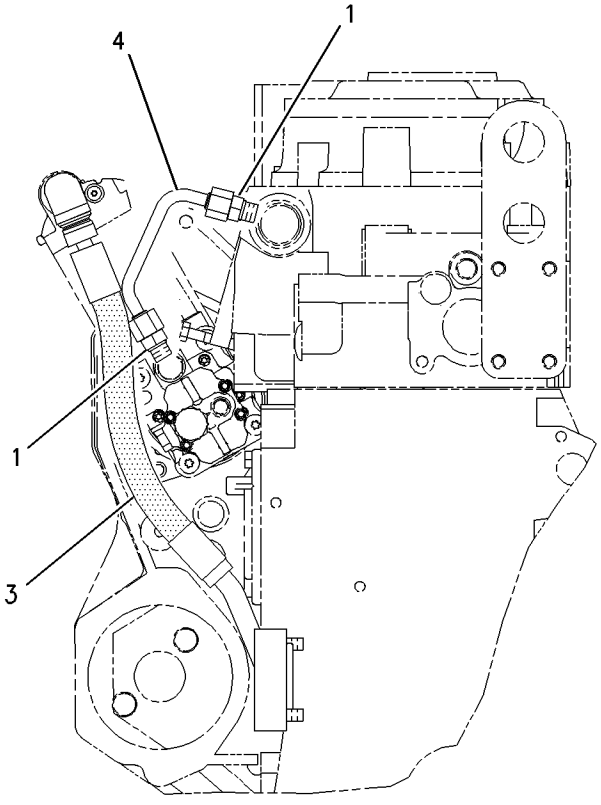


REAR VIEW

GRAPHIC #1 **<END>** g00881566

# *254-0095* PUMP & MTG GP-UNIT INJ HYD

**S/N: KHX1-UP**

**PART OF 235-1496 ENGINE AR-CORE**

**SMCS-1714** **i02731249**

| NOTE | REF NO | GRAPHIC REF | PART NUMBER | QTY | PART NAME 1 2 3 4 5 6 (PRODUCT LEVEL) | SEE PAGE |
|---|---|---|---|---|---|---|
| | 1 | 1 | **214-7568** | 2 | SEAL-O-RING | |
| | 2 | 1 | **227-5904** | 1 | SEAL-O-RING (UNIT INJECTION HYD PUMP) | |
| | 3 | 1 | **304-0607** | 1 | PUMP GP-UNIT INJECTOR HYD | |
| | 4 | 1 | **3E-9412** | 1 | DOWEL | |
| | 5 | 1 | **6V-5839** | 2 | WASHER (11X21X2.5-MM THK) | |
| M | 6 | 1 | **6V-7981** | 2 | BOLT (M10X1.5X70-MM) | |
| | 7 | 1 | **9S-8004** | 2 | PLUG-O-RING | |

M-METRIC PART

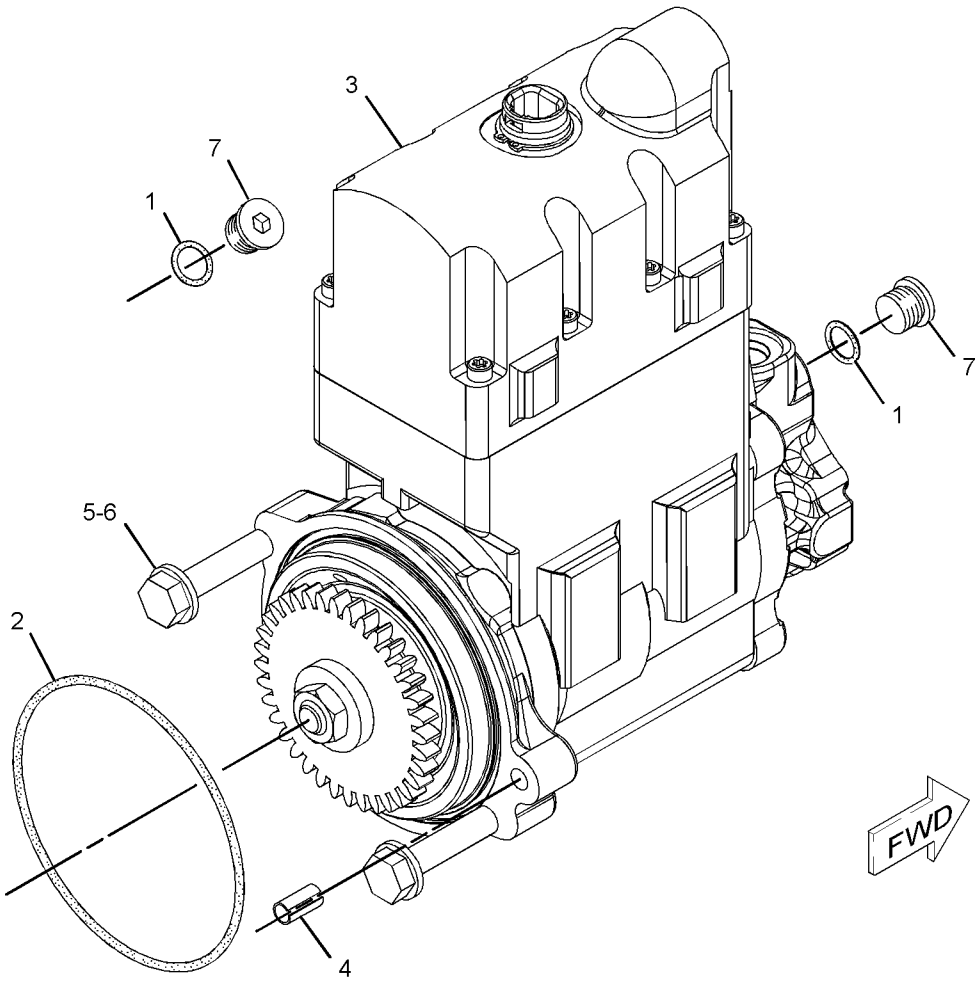


GRAPHIC #1 **<END>** g01108902

# 235-8725 PUMP GP-FILTER & FUEL TRANSFER—PRIMARY

**S/N: 5451-UP**

**PART OF 256-6915 PUMP GP-FUEL TRANSFER**

**SMCS-1256, 1260, 1261** **i02188717**

| NOTE | REF NO | GRAPHIC REF | PART NUMBER | QTY | PART NAME 1 2 3 4 5 6 (PRODUCT LEVEL) | SEE PAGE |
|---|---|---|---|---|---|---|
| Y | 1 | 1 | *174-9570* | 1 | FILTER GP-WATER SEP & FUEL (PRIMARY) | 114 |
| | 2 | 1 | **235-8724** | 1 | BASE AS-FUEL TRANSFER PUMP | |

Y-SEPARATE ILLUSTRATION

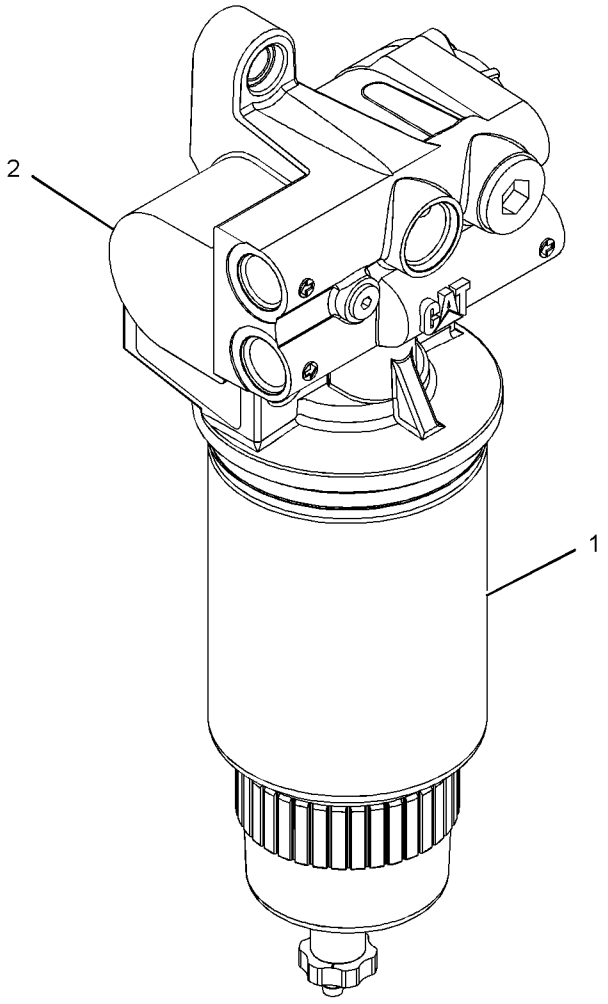


GRAPHIC #1 **<END>** g01107471

# *222-5958* PUMP GP-FUEL INJECTION

**S/N: KHX1-UP**
**PART OF 235-1496 ENGINE AR-CORE**
**FOR USE WITH HIGH HP ENGINES**

**SMCS-1251, 1290** **i02583289**

| NOTE | REF NO | GRAPHIC REF | PART NUMBER | QTY | PART NAME 1 2 3 4 5 6 (PRODUCT LEVEL) | SEE PAGE |
|---|---|---|---|---|---|---|
| | 1 | 1 | **235-9651** | 2 | BOLT-SOCKET HEAD (M8X1.25X65-MM) | |
| CY | 2 | 1 | **295-1410** | 1 | INJECTOR GP-FUEL | 116 |

C-CHANGE FROM PREVIOUS TYPE
Y-SEPARATE ILLUSTRATION

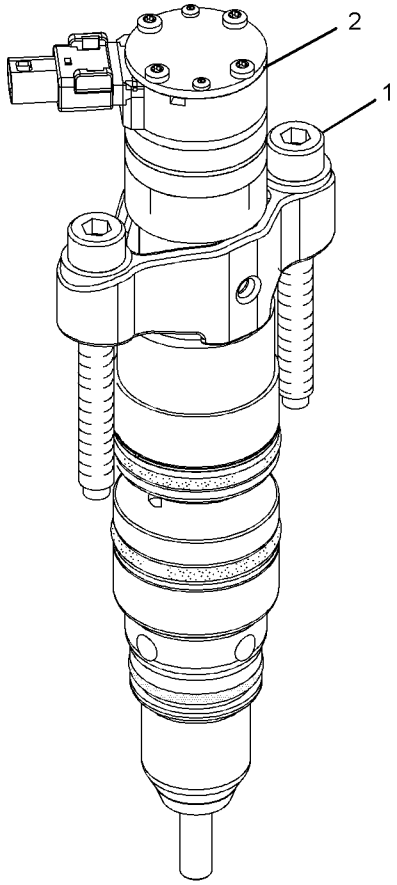


ISOMETRIC VIEW

GRAPHIC #1 **<END>** g01038652

# FUEL SYSTEM

## *222-5958* PUMP GP-FUEL INJECTION

**S/N: KHX1-523**
**PART OF 235-1496 ENGINE AR-CORE**
**FOR USE WITH HIGH HP ENGINES**

**SMCS-1251, 1290** **i01878878**

| NOTE | REF NO | GRAPHIC REF | PART NUMBER | QTY | PART NAME 1 2 3 4 5 6 (PRODUCT LEVEL) | SEE PAGE |
|---|---|---|---|---|---|---|
| M | 1 | 1 | **191-0920** | 2 | BOLT-SOCKET HEAD (M8X1.25X63-MM) | |
| | 2 | 1 | **222-5962** | 1 | INJECTOR GP-FUEL | |
| | 2A | 1 | **169-8598** | 1 | SEAL-O-RING | |
| | 2B | 1 | **109-3207** | 1 | SEAL-O-RING | |
| | 2C | 1 | **148-2903** | 1 | SEAL-O-RING | |
| | 2D | 1 | **169-8586** | 1 | RING-BACKUP | |
| | 2E | 1 | **149-5240** | 1 | RING-BACKUP | |
| | 2F | 1 | **169-3104** | 1 | RING-BACKUP | |

M-METRIC PART

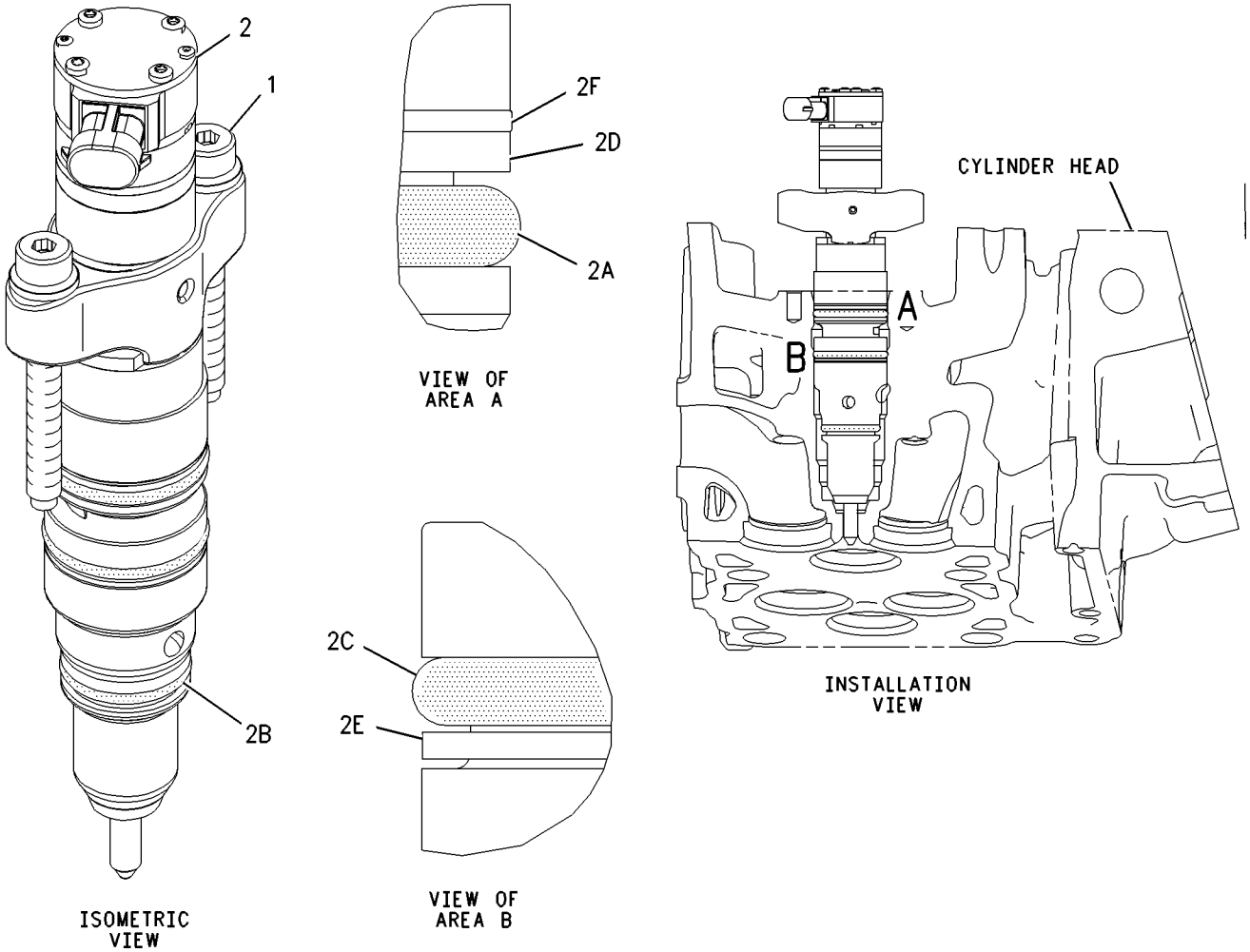


GRAPHIC #1 **<END>** g00956211

# *268-1839* PUMP GP-FUEL INJECTION

**S/N: KHX1-3171**

**PART OF 235-1496 ENGINE AR-CORE**

**SMCS-1251, 1290** **i02290960**

| NOTE | REF NO | GRAPHIC REF | PART NUMBER | QTY | PART NAME 1 2 3 4 5 6 (PRODUCT LEVEL) | SEE PAGE |
|---|---|---|---|---|---|---|
| | 1 | 1 | **235-9651** | 2 | BOLT-SOCKET HEAD (M8X1.25X65-MM) | |
| Y | 2 | 1 | **268-1835** | 1 | INJECTOR GP-FUEL | 115 |

Y-SEPARATE ILLUSTRATION

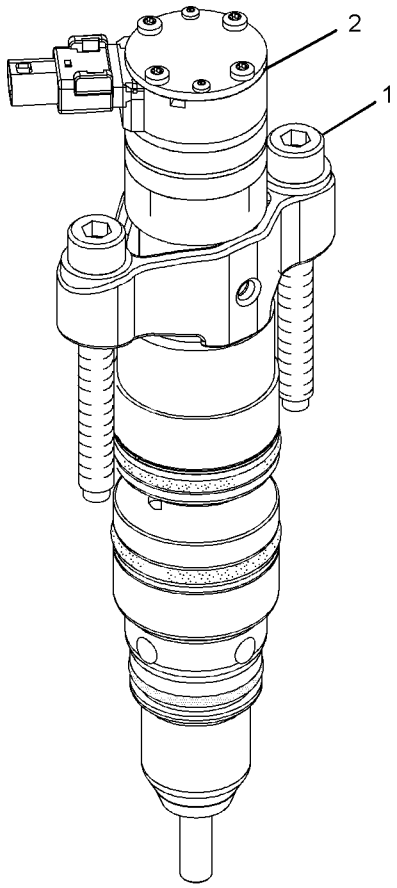


ISOMETRIC VIEW

GRAPHIC #1

**<END>**

g01038652

# *268-1839* PUMP GP-FUEL INJECTION

**S/N: KHX3172-UP**

**PART OF 235-1496 ENGINE AR-CORE**

**SMCS-1251, 1290** **i02572523**

| NOTE | REF NO | GRAPHIC REF | PART NUMBER | QTY | PART NAME 1 2 3 4 5 6 (PRODUCT LEVEL) | SEE PAGE |
|---|---|---|---|---|---|---|
| | 1 | 1 | **235-9651** | 2 | BOLT-SOCKET HEAD (M8X1.25X65-MM) | |
| Y | 2 | 1 | **295-1411** | 1 | INJECTOR GP-FUEL | 117 |

Y-SEPARATE ILLUSTRATION

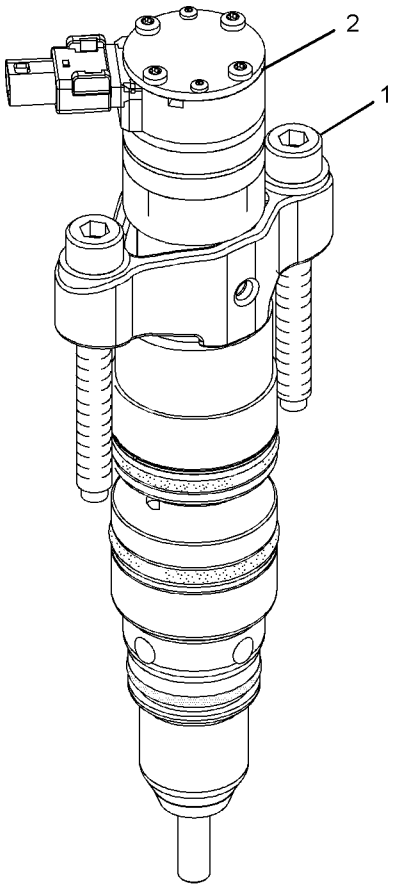


ISOMETRIC VIEW

GRAPHIC #1

**<END>**

g01038652

# *190-1105* PUMP GP-FUEL PRM & PRIM FILTER

**S/N: 5451-UP**

**PART OF 251-1323 LINES GP-FUEL**

**SMCS-1258, 1260, 1261** **i02188669**

| NOTE | REF NO | GRAPHIC REF | PART NUMBER | QTY | PART NAME 1 2 3 4 5 6 (PRODUCT LEVEL) | SEE PAGE |
|---|---|---|---|---|---|---|
| | 1 | 1 | **8T-9655** | 6 | MOUNT-ISOLATION | |
| Y | 2 | 1 | **256-6915** | 1 | PUMP GP-FUEL TRANSFER | 134 |
| | 3 | 1 | **191-1782** | 1 | SPACER (8.5X12.7X38.2-MM THK) | |
| | 4 | 1 | **191-1783** | 2 | SPACER (8.5X12.7X87.3-MM THK) | |
| M | 5 | 1 | **7X-2539** | 2 | BOLT (M8X1.25X110-MM) | |
| M | 6 | 1 | **8T-6869** | 1 | BOLT (M8X1.25X60-MM) | |
| | 7 | 1 | **9N-0869** | 6 | WASHER-HARD (8.8X25.5X2-MM THK) | |

M-METRIC PART
Y-SEPARATE ILLUSTRATION

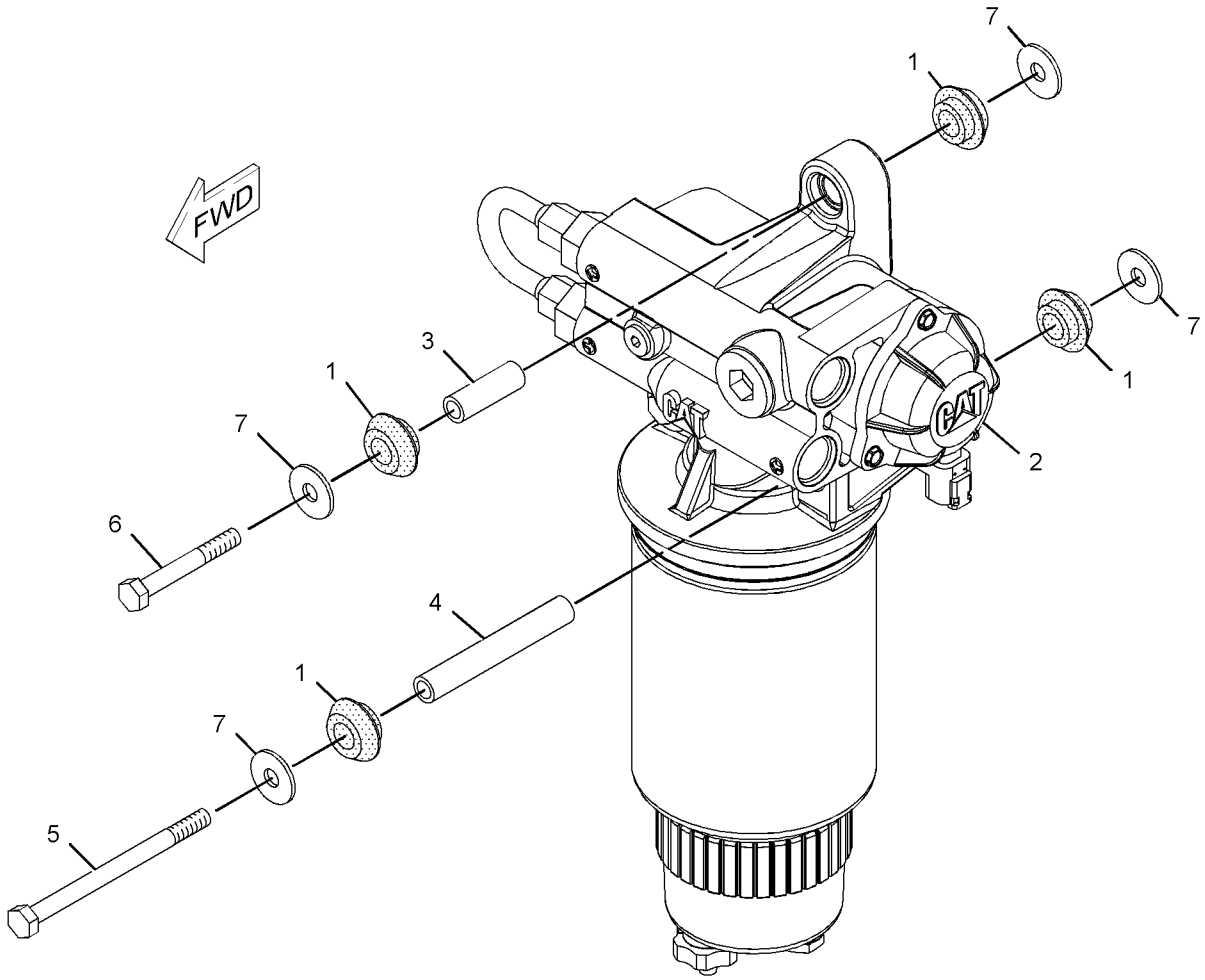


GRAPHIC #1 **<END>** g01107461

# *256-6915* PUMP GP-FUEL TRANSFER

**S/N: 5451-UP**

**PART OF 190-1105 PUMP GP-FUEL PRM & PRIM FILTER**

**SMCS-1256** **i02593250**

| NOTE | REF NO | GRAPHIC REF | PART NUMBER | QTY | PART NAME 1 2 3 4 5 6 (PRODUCT LEVEL) | SEE PAGE |
|---|---|---|---|---|---|---|
| Y | 1 | 1 | **235-8725** | 1 | PUMP GP-FILTER & FUEL TRANSFER (PRIMARY) | 128 |
| | 2 | 1 | **209-9234** | 1 | REGULATOR-PRESSURE (FUEL TRANSFER PUMP) | |
| | 3 | 1 | **211-7730** | 1 | TUBE AS | |
| | 4 | 1 | **030-8194** | 1 | CONNECTOR | |
| | 5 | 1 | **136-7227** | 2 | SEAL-O-RING | |

Y-SEPARATE ILLUSTRATION

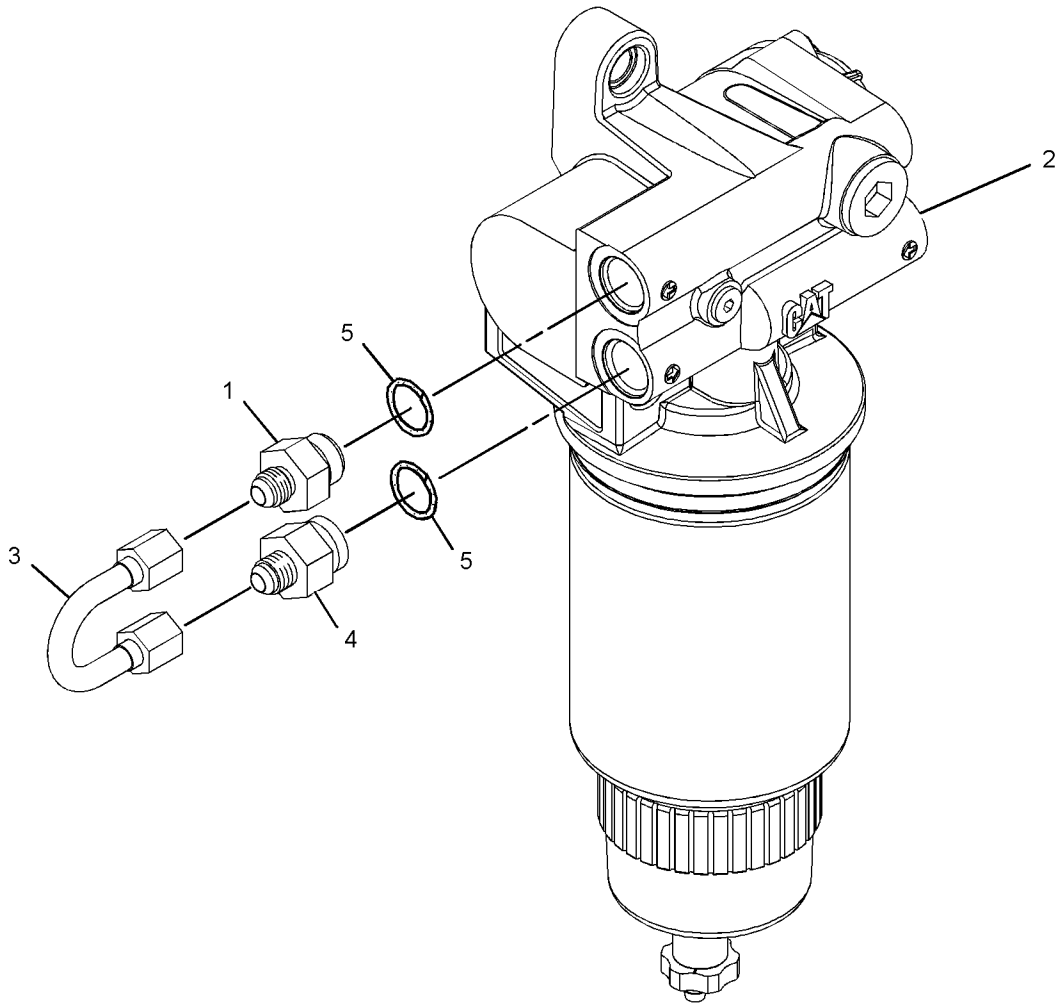


GRAPHIC #1 **<END>** g01297851

# *232-0343* REGULATOR GP-FUEL PRESSURE

**S/N: KHX1-UP**

**PART OF 238-8185 LINES GP-FUEL FILTER**

**SMCS-1715** **i02676267**

| NOTE | REF NO | GRAPHIC REF | PART NUMBER | QTY | PART NAME 1 2 3 4 5 6 (PRODUCT LEVEL) | SEE PAGE |
|---|---|---|---|---|---|---|
| | 1 | 1 | **6V-5049** | 1 | SEAL-O-RING | |
| | 2 | 1 | **294-8620** | 1 | REGULATOR AS (FUEL PRESSURE) | |

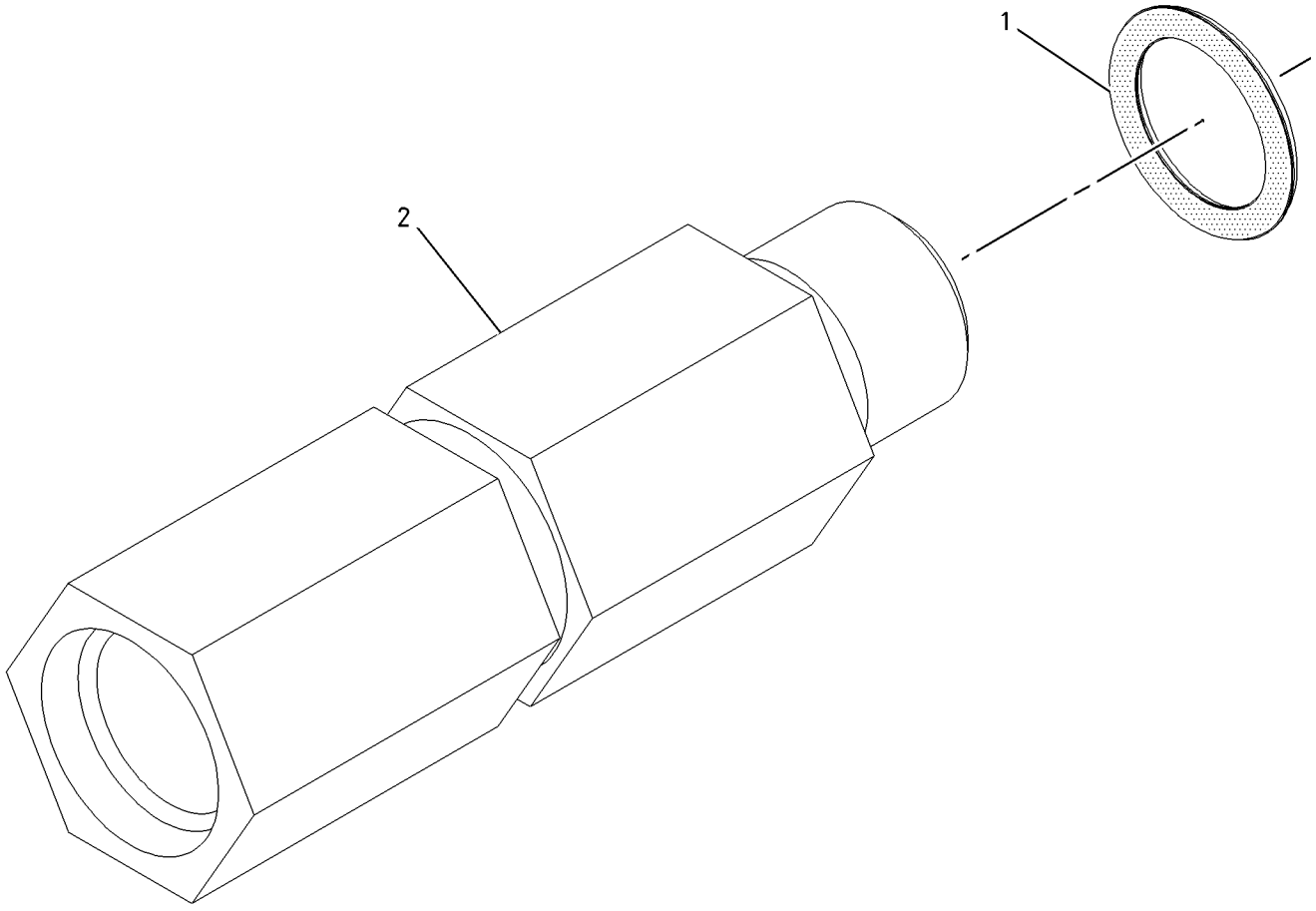


GRAPHIC #1 **<END>** g01004480

# FUEL SYSTEM

## *252-6551* TANK GP-FUEL

**S/N: 5451-UP**

**PART OF 245-9460 CHASSIS AR**

**SMCS-1273** **i02565470**

| NOTE | REF NO | GRAPHIC REF | PART NUMBER | QTY | PART NAME 1 2 3 4 5 6 (PRODUCT LEVEL) | SEE PAGE |
|---|---|---|---|---|---|---|
| | 1 | 1 | **246-2641** | 1 | PADLOCK GP | |
| I | 2 | 1 | **6D-5364** | 1 | HOSE AS | |
| | 3 | 1 | **8T-5464** | 1 | VALVE-BALL | |
| | 4 | 1 | **9P-7121** | 1 | STRAINER-FUEL | |
| | 5 | 1 | **106-2105** | 1 | ELBOW | |
| I | 6 | 1 | **129-5127** | 1 | HOSE AS | |
| | 7 | 2 | **148-2336** | 1 | PLATE (FUEL TANK GUARD) | |
| I | 8 | 2 | **198-7667** | 1 | HOSE AS | |
| I | 9 | 1 | **152-0648** | 1 | HOSE AS | |
| | 10 | 1 | **160-5773** | 2 | PLATE AS | |
| | 11 | 1 | **183-3873** | 1 | BREATHER AS (FUEL TANK) | |
| | 12 | 1 | **253-3895** | 1 | PLATE AS | |
| Y | 13 | 1 | **255-4514** | 1 | TANK GP-FUEL | 139 |
| | 14 | 1 | *148-8340* | 1 | CONNECTOR AS | |
| | | 1 | **6V-8639** | 1 | CONNECTOR | |
| | | 1 | **3K-0360** | 1 | SEAL-O-RING | |
| | | 1 | **6V-8398** | 1 | SEAL-O-RING | |
| | 15 | 2 | *148-8444* | 1 | TEE AS-SWIVEL | |
| | | 2 | **6V-9837** | 1 | TEE-SWIVEL | |
| | | 2 | **6V-8398** | 2 | SEAL-O-RING | |
| | 16 | 1 | *150-3072* | 1 | PLUG AS | |
| | | 1 | **6V-9509** | 1 | PLUG (13/16-16-THD) | |
| | | 1 | **6V-8398** | 1 | SEAL-O-RING | |
| | 17 | 1,2 | **1S-0994** | 6 | CLIP | |
| | 18 | 1 | **3B-6767** | 1 | ELBOW | |
| | 19 | 1 | **3J-1907** | 1 | SEAL-O-RING | |
| | 20 | 1,2 | **6V-8398** | 2 | SEAL-O-RING | |
| | 21 | 1,2 | **7X-7729** | 8 | WASHER (11X25X3-MM THK) | |
| M | 22 | 1 | **8T-0389** | 3 | LOCKNUT (M10X1.15-THD) | |
| | 23 | 1 | **8T-1899** | 1 | CLIP (SLOT) | |
| | 24 | 1 | **8T-1900** | 1 | CLIP (TAB) | |
| | 25 | 1,2 | **8T-4121** | 9 | WASHER-HARD (11X21X2.5-MM THK) | |
| M | 26 | 1,2 | **8T-4137** | 8 | BOLT (M10X1.5X20-MM) | |
| M | 27 | 1 | **8T-4186** | 1 | BOLT (M10X1.5X40-MM) | |
| M | 28 | 1,2 | **8T-4191** | 6 | BOLT (M10X1.5X16-MM) | |

I-REFER TO HYDRAULIC INFORMATION SYSTEM
M-METRIC PART
Y-SEPARATE ILLUSTRATION

*252-6551* **TANK GP-FUEL** *(contd.)* **i02565470**

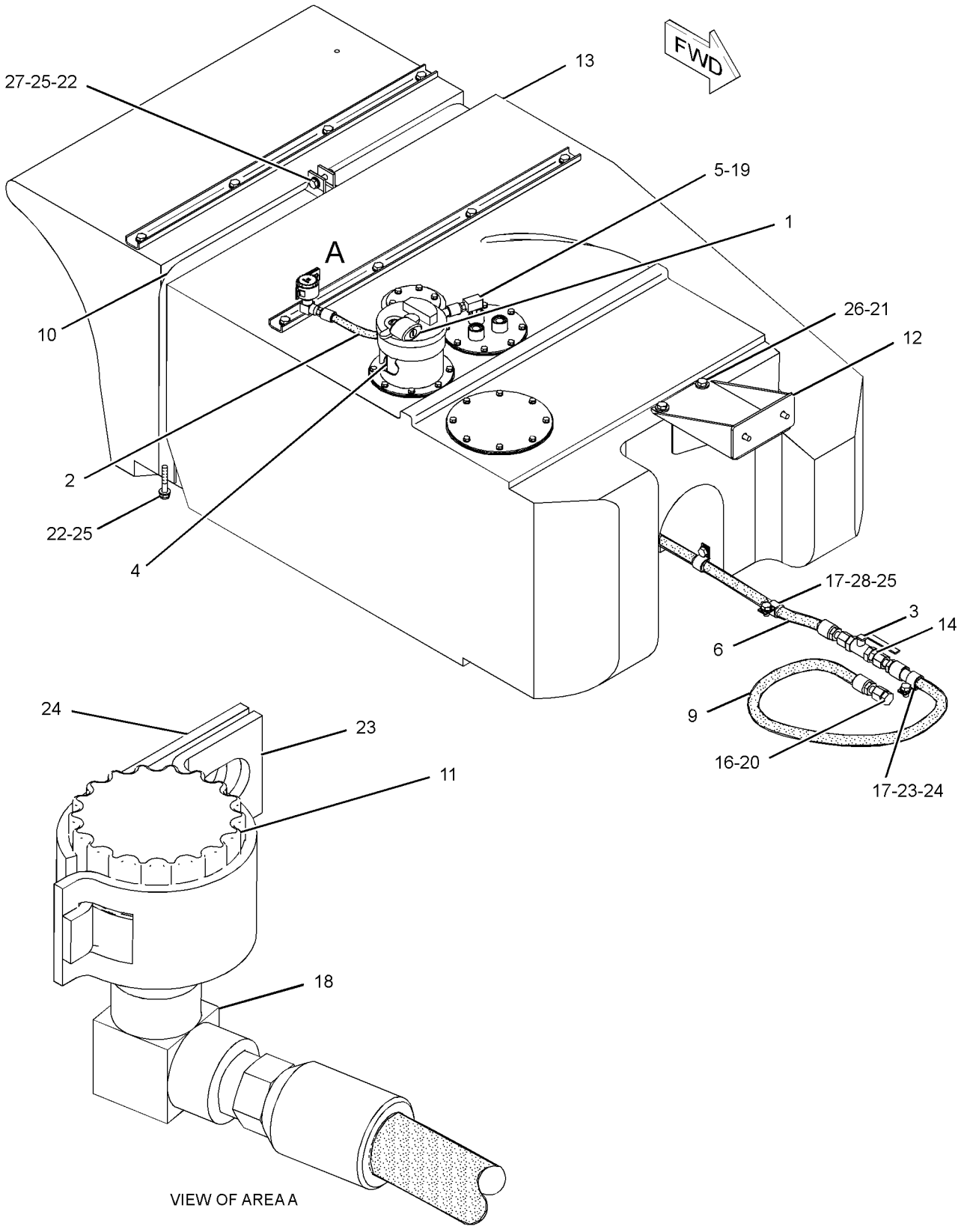


GRAPHIC #1 g01151538

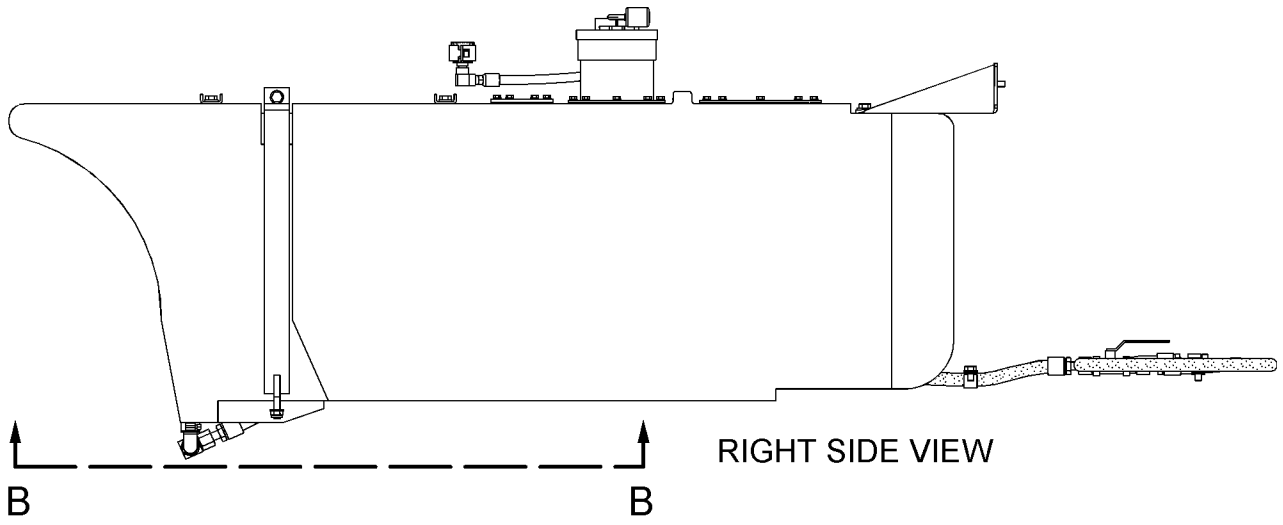


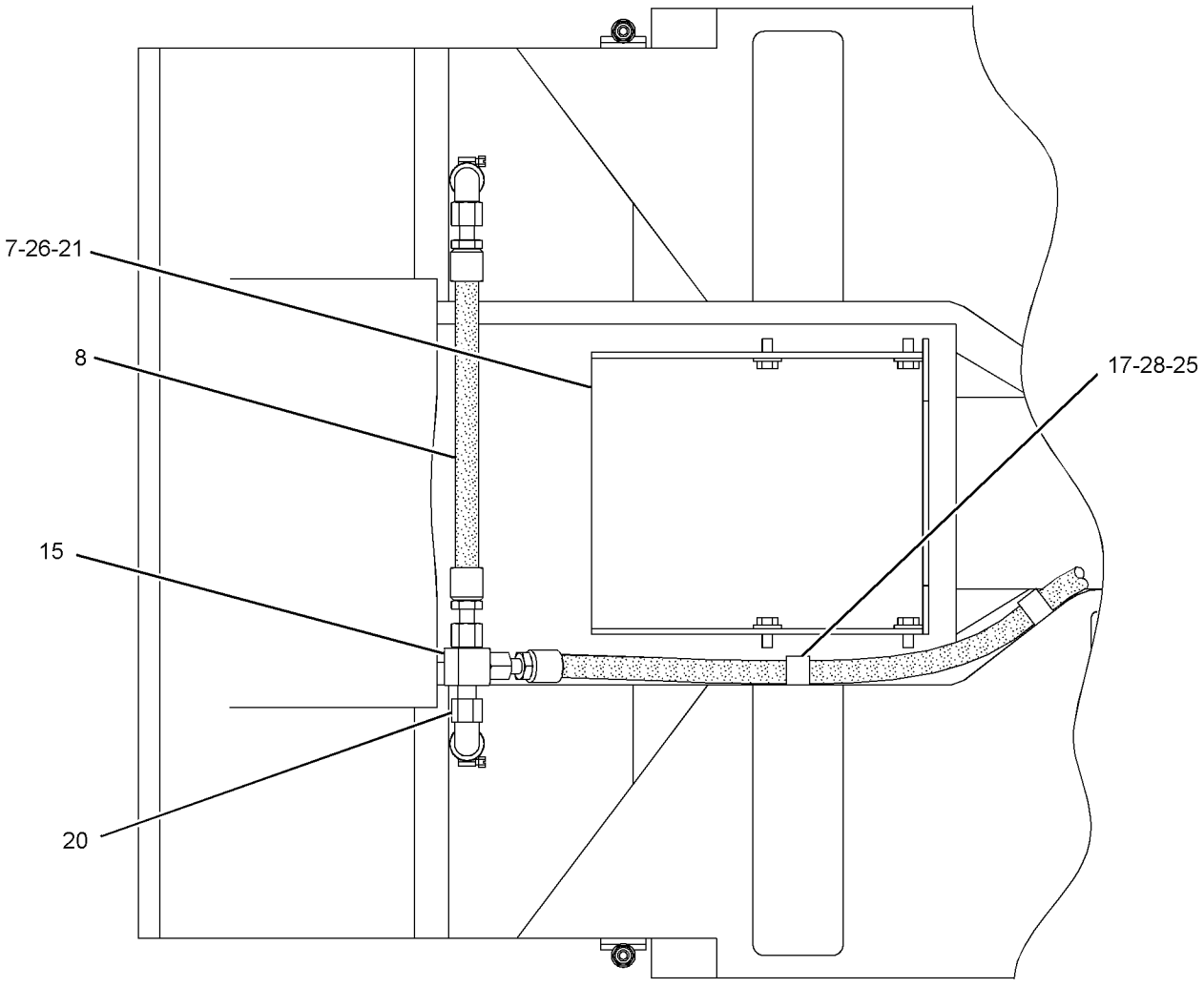


VIEW B-B

GRAPHIC #2

**<END>**

g01103230

# FUEL SYSTEM

## *255-4514* TANK GP-FUEL

**S/N: 5451-UP**

**PART OF 252-6551 TANK GP-FUEL**

**SMCS-1273** **i02177714**

| NOTE | REF NO | GRAPHIC REF | PART NUMBER | QTY | PART NAME 1 2 3 4 5 6 (PRODUCT LEVEL) | SEE PAGE |
|---|---|---|---|---|---|---|
| | 1 | 1 | **2T-1922** | 2 | ELBOW | |
| | 2 | 1 | **6C-3060** | 1 | GASKET | |
| | 3 | 1 | **7X-7700** | 1 | CAP AS-FILLER (FUEL TANK) | |
| | | 1 | **9X-2205** | 1 | KIT-CAP FILTER (FUEL TANK VENT) | |
| | | 1 | **9X-8600** | 1 | SEAL-O-RING | |
| | 4 | 1 | **9M-7958** | 2 | CLAMP-HOSE | |
| | 5 | 1 | **150-2995** | 1 | SENDER AS-FUEL LEVEL | |
| | | 1 | **138-0444** | 1 | KIT-REPAIR (FUEL LEVEL GAUGE) | |
| | | | | | (INCLUDES SENSOR AS, SCREW, PIN, WEDGE, AND RECEPTACLE KIT) | |
| | 6 | 1 | **160-7100** | 1 | GASKET | |
| | 7 | 1 | **165-1518** | 2 | PLATE | |
| | 8 | 1 | **253-3876** | 1 | PLATE | |
| | 9 | 1 | **253-3894** | 2 | GASKET | |
| | 10 | 1 | **253-3898** | 1 | FILLER AS-FUEL | |
| | | 1 | **9X-2206** | 1 | ADAPTER AS-FUEL | |
| | 11 | 1 | **253-3899** | 1 | PICKUP AS | |
| | 12 | 1 | **255-4510** | 1 | TANK AS-FUEL | |
| M | 13 | 1 | **5C-9553** | 30 | BOLT (M6X1X16-MM) | |
| | 14 | 1 | **8T-4121** | 8 | WASHER-HARD (11X21X2.5-MM THK) | |
| M | 15 | 1 | **8T-4191** | 8 | BOLT (M10X1.5X16-MM) | |
| | 16 | 1 | **9X-8256** | 30 | WASHER (6.6X12X2-MM THK) | |

M-METRIC PART

*255-4514* **TANK GP-FUEL** *(contd.)* **i02177714**

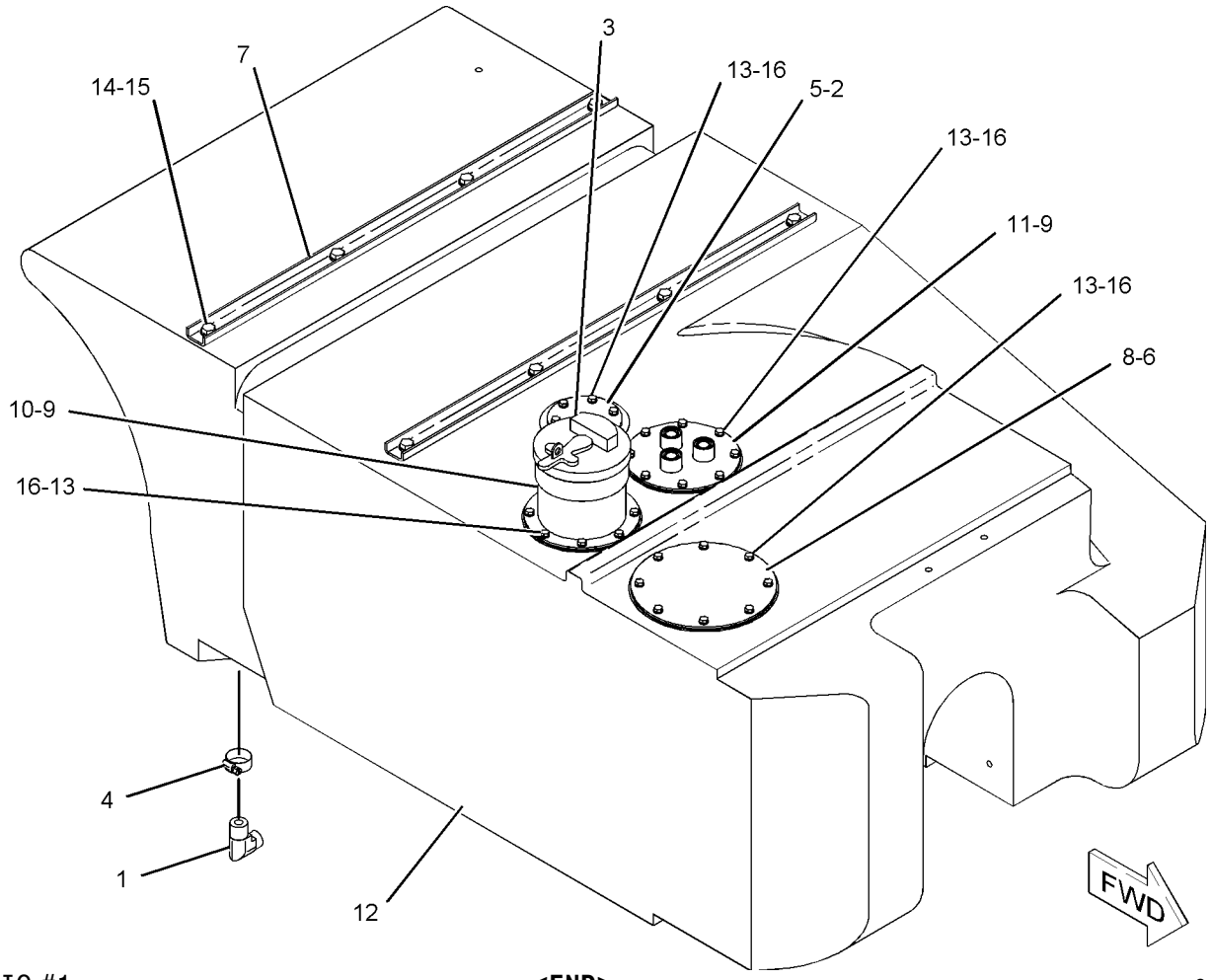


GRAPHIC #1 **<END>** g01102852

# 3E-6328 ALARM GP–ACTION

**S/N: 5451-UP**
**24-VOLT**
**PART OF 255-8102 WIRING GP-CAB**

**SMCS-7400, 7402, 7407** **i02610072**

| NOTE | REF NO | GRAPHIC REF | PART NUMBER | QTY | PART NAME 1 2 3 4 5 6 (PRODUCT LEVEL) | SEE PAGE |
|---|---|---|---|---|---|---|
| | 1 | 1 | **102-8802** | 1 | KIT-RECEPTACLE (2-PIN) | |
| | | | | | (INCLUDES RECEPTACLE AS & WEDGE) | |
| | 2 | 1 | **186-3735** | 2 | PIN-CONNECTOR (16-GA TO 18-GA) | |
| | 3 | 1 | **3E-3365** | 1 | WEDGE-RECEPTACLE LOCK (2-PIN) | |

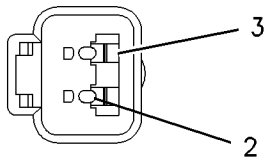


VIEW A–A

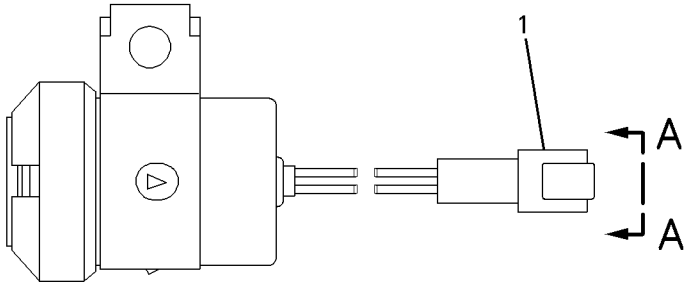


GRAPHIC #1 **<END>** g00826023

# 177-9953 ALTERNATOR GP-CHARGING*R

**S/N: 5451-UP**
**24-VOLT, 80-AMPERE**
**PART OF 250-6158 ALTERNATOR GP-CHARGING**

**SMCS-1405** **i02643421**

| NOTE | REF NO | GRAPHIC REF | PART NUMBER | QTY | PART NAME 1 2 3 4 5 6 (PRODUCT LEVEL) | SEE PAGE |
|---|---|---|---|---|---|---|
| | 1 | 1 | **185-2653** | 1 | FRAME | |
| | 2 | 1 | **5S-7349** | 1 | BOLT (1/4-20X0.5-IN) | |
| | 3 | 1 | **185-2639** | 1 | FAN AS (ALTERNATOR) | |
| | 4 | 1 | **1H-3244** | 1 | LOCKWASHER | |
| | 5 | 1 | **185-2645** | 1 | FRAME | |
| | 6 | 1 | **2K-4821** | 1 | LOCKNUT (5/8-18-THD) | |
| | 7 | 1 | **5P-8247** | 1 | WASHER-HARD (17X32X3.5-MM THK) | |
| | 8 | 1 | **185-2651** | 1 | COVER | |
| | 9 | 1 | **8T-4205** | 1 | WASHER-HARD (7.2X14.5X2-MM THK) | |
| | 10 | 1 | **185-2647** | 1 | GROMMET | |
| | 11 | 1 | **9L-6770** | 1 | CAP | |
| | 12 | 1 | **185-2643** | 1 | STATOR AS (ALTERNATOR) | |
| | 13 | 1 | **185-2638** | 2 | COLLAR | |
| | 14 | 1 | **185-2654** | 1 | PLATE | |
| | 15 | 1 | **185-2650** | 1 | ROTOR AS (ALTERNATOR) | |
| | 16 | 1 | **185-2644** | 1 | COIL AS | |
| | 17 | 1 | **185-2648** | 1 | REGULATOR AS-VOLTAGE (24-VOLT) (ALTERNATOR) | |
| J | 18 | 1 | **6V-8189** | 1 | NUT (5/16-18-THD) | |
| J | 19 | 1 | **8T-4224** | 1 | WASHER-HARD (8.8X16X2-MM THK) | |
| J | 20 | 1 | **3F-9556** | 1 | LOCKWASHER | |
| | | | | | AVAILABLE REPAIR KIT(S): | |
| J | | | **199-7891** | 1 | KIT-TERMINAL (ALTERNATOR) | |
| | | | | | (INCLUDES INSULATORS, WASHERS, NUT & STEP NUT) | |
| | | | **185-2655** | 1 | KIT-BEARING (ALTERNATOR) | |
| | | | | | (INCLUDES 3 BEARINGS) | |
| | | | **199-8436** | 1 | KIT-TERMINAL (ALTERNATOR) | |
| | | | | | (INCLUDES HOLDER AS, PLATE, INSULATOR, PIN, BOLT, GROMMET & NUT) | |
| | | | **185-2658** | 1 | KIT-HARDWARE (ALTERNATOR) | |
| | | | | | (INCLUDES BOLTS) | |

J-KIT MARKED J SERVICES PARTS MARKED J

**177-9953 ALTERNATOR GP-CHARGING** *(contd. )* **i02643421**

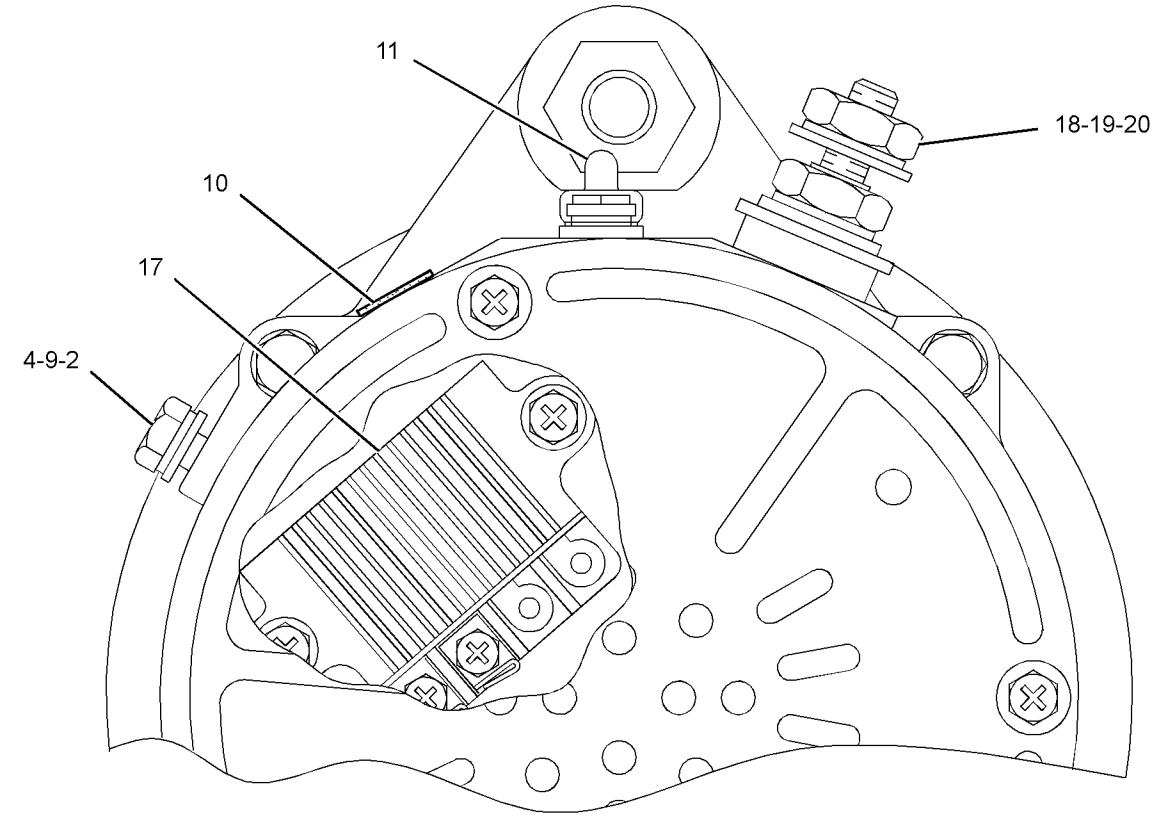


GRAPHIC #1

**<END>**

g01151601

# *250-6158* ALTERNATOR GP-CHARGING

**S/N: 5451-UP**

**PART OF 248-4224 INSTALLATION AR-ENGINE**

**SMCS-1405** **i02358413**

| NOTE | REF NO | GRAPHIC REF | PART NUMBER | QTY | PART NAME 1 2 3 4 5 6 (PRODUCT LEVEL) | SEE PAGE |
|---|---|---|---|---|---|---|
| | 1 | 1 | **9S-1240** | 1 | BRACKET AS | |
| | 2 | 1 | **129-5096** | 1 | PULLEY-ALTERNATOR | |
| | 3 | 1 | **176-7075** | 1 | GUARD | |
| YR | 4 | 1 | **177-9953** | 1 | ALTERNATOR GP-CHARGING (24-VOLT, 80-AMPERE) | 142 |
| | 5 | 1 | **238-1074** | 1 | BRACKET | |
| | 6 | 1 | **7X-0338** | 1 | BOLT (1/2-13X6-IN) | |
| | 7 | 1 | **8T-4121** | 1 | WASHER-HARD (11X21X2.5-MM THK) | |
| M | 8 | 1 | **8T-4196** | 1 | BOLT (M10X1.5X35-MM) | |
| | 9 | 1 | **8T-4223** | 2 | WASHER-HARD (13.5X25.5X3-MM THK) | |
| | 10 | 1 | **8T-8919** | 1 | BOLT (1/2-13X1.75-IN) | |
| | 11 | 1 | **9S-2396** | 1 | BUSHING-TERMINAL | |

M-METRIC PART
R-REMFG PART MAY BE AVAILABLE
Y-SEPARATE ILLUSTRATION

*250-6158* **ALTERNATOR GP-CHARGING** *(contd.)* **i02358413**

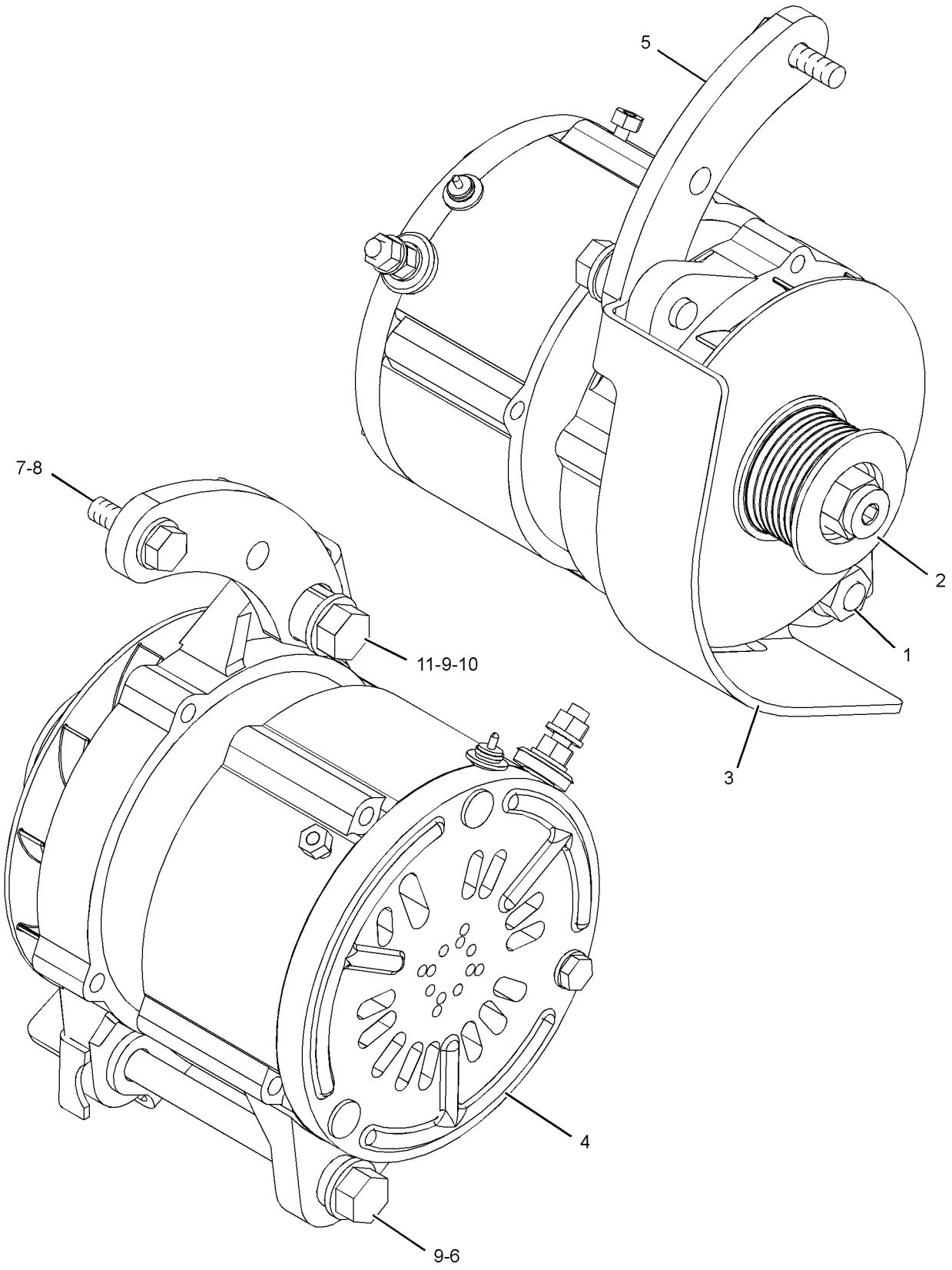


GRAPHIC #1 **<END>** g01183666

# ELECTRICAL AND STARTING SYSTEM

## *255-8094* BATTERY & WIRING GP

**S/N: 5451-330**

**PART OF 245-9469 ELECTRICAL AR**

**SMCS-1401, 1402, 1408** **i02738461**

| NOTE | REF NO | GRAPHIC REF | PART NUMBER | QTY | PART NAME 1 2 3 4 5 6 (PRODUCT LEVEL) | SEE PAGE |
|---|---|---|---|---|---|---|
| | 1 | 2 | **3E-8320** | 1 | PLATE-INSTRUCTION (BATTERY) | |
| | 2 | 1 | **6T-1847** | 3 | ROD-RETAINING | |
| Y | 3 | 2 | **7N-0718** | 1 | SWITCH GP-DISCONNECT (BATTERY) | 194 |
| | 4 | 2 | **8C-6358** | 1 | BLOCK GP-JUNCTION (BATTERY) | |
| | 5 | 2 | **8T-3518** | 6 | NUT-FULL (1/2-13-THD) | |
| | 6 | 1 | **124-0378** | 1 | CABLE AS | |
| | | 1 | **1M-6119** | 2 | BOLT (5/16-18X1.375-IN) | |
| | | 1 | **1M-6120** | 2 | NUT (5/16-18-THD) | |
| BE | | 1 | **5P-0761** | | CABLE (00-GA, RED) (12-CM) | |
| | | 1 | **9G-0003** | 1 | COVER-TERMINAL (BLACK) | |
| | | 1 | **9G-0004** | 1 | COVER-TERMINAL (RED) | |
| | 7 | 1 | **173-8458** | 2 | ANGLE AS | |
| | 8 | 1 | **255-8090** | 1 | CABLE AS | |
| | | 1 | **1S-7251** | 2 | TERMINAL-RING (FOR 1/2-IN BOLT) | |
| BE | | 1 | **5P-0761** | | CABLE (00-GA, RED) | |
| | | 1 | **8N-0869** | 2 | COVER-TERMINAL (RED) (134-CM) | |
| | 9 | 1 | **255-8091** | 1 | CABLE AS | |
| | | 1 | **1S-7251** | 1 | TERMINAL-RING (FOR 1/2-IN BOLT) | |
| BE | | 1 | **5P-0761** | | CABLE (00-GA, RED) (68-CM) | |
| | | 1 | **8N-0869** | 1 | COVER-TERMINAL (RED) | |
| | | 1 | **9G-0002** | 1 | COVER-TERMINAL (RED) | |
| | 10 | 1 | **255-8092** | 1 | CABLE AS | |
| | | 1 | **1S-7252** | 1 | TERMINAL-RING (FOR 3/8-IN BOLT) | |
| BE | | 1 | **5P-0747** | | CABLE (00-GA, BLACK) | |
| | | 1 | **9G-0005** | 1 | COVER-TERMINAL (BLACK) | |
| | | 1 | **9G-8909** | 1 | COVER-TERMINAL (BLACK) | |
| | 11 | 1 | **255-8100** | 1 | CABLE AS | |
| | | 1 | **1S-7251** | 2 | TERMINAL-RING (FOR 1/2-IN BOLT) (92-CM) | |
| BE | | 1 | **5P-0747** | | CABLE (00-GA, BLACK) (124-CM) | |
| | | 1 | **9G-8909** | 2 | COVER-TERMINAL (BLACK) | |
| | 12 | 2 | **270-4428** | 1 | BRACKET AS | |
| | 13 | 2 | **274-8380** | 1 | BRACKET AS | |
| | 14 | 1 | **031-4155** | 3 | LOCKNUT (5/16-18-THD) | |
| | 15 | 1 | **115-2422** | 2 | BATTERY GP (12-VOLT, MAINTENANCE FREE, WET) | |
| | | | | | (EACH INCLUDES) | |
| | | 1 | **123-1373** | 6 | PLUG AS | |
| | 16 | 2 | **7F-0560** | 6 | WASHER (0.516X0.938X0.101-IN THK) | |
| | 17 | 1,2 | **8T-4121** | 11 | WASHER-HARD (11X21X2.5-MM THK) | |
| M | 18 | 1,2 | **8T-4137** | 11 | BOLT (M10X1.5X20-MM) | |
| M | 19 | 1 | **8T-4179** | 2 | BOLT (M12X1.75X20-MM) | |
| M | 20 | 1,2 | **8T-4192** | 2 | BOLT (M12X1.75X25-MM) | |
| | 21 | 1,2 | **8T-4223** | 5 | WASHER-HARD (13.5X25.5X3-MM THK) | |
| | 22 | 1 | **8T-4224** | 3 | WASHER-HARD (8.8X16X2-MM THK) | |
| M | 23 | 2 | **8T-4244** | 1 | NUT (M12X1.75-THD) | |
| | 24 | 1,2 | **9M-8406** | 9 | CLIP | |

B-USE AS REQUIRED
E-ORDER BY THE CENTIMETER
M-METRIC PART
Y-SEPARATE ILLUSTRATION

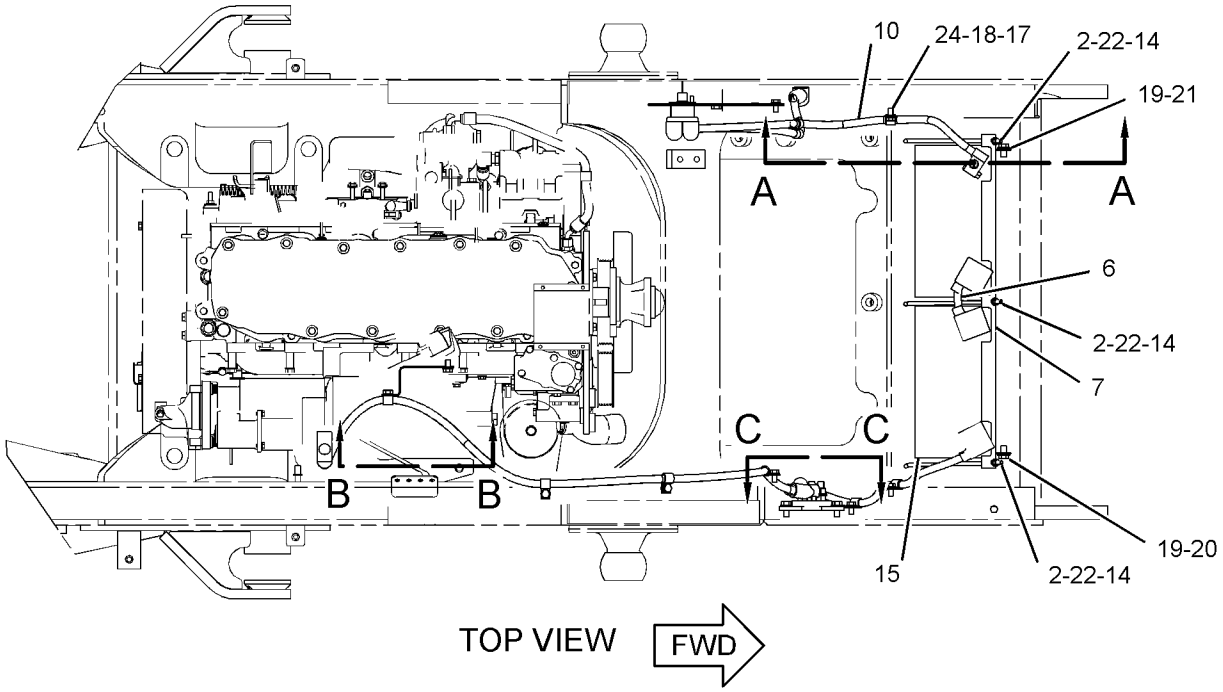


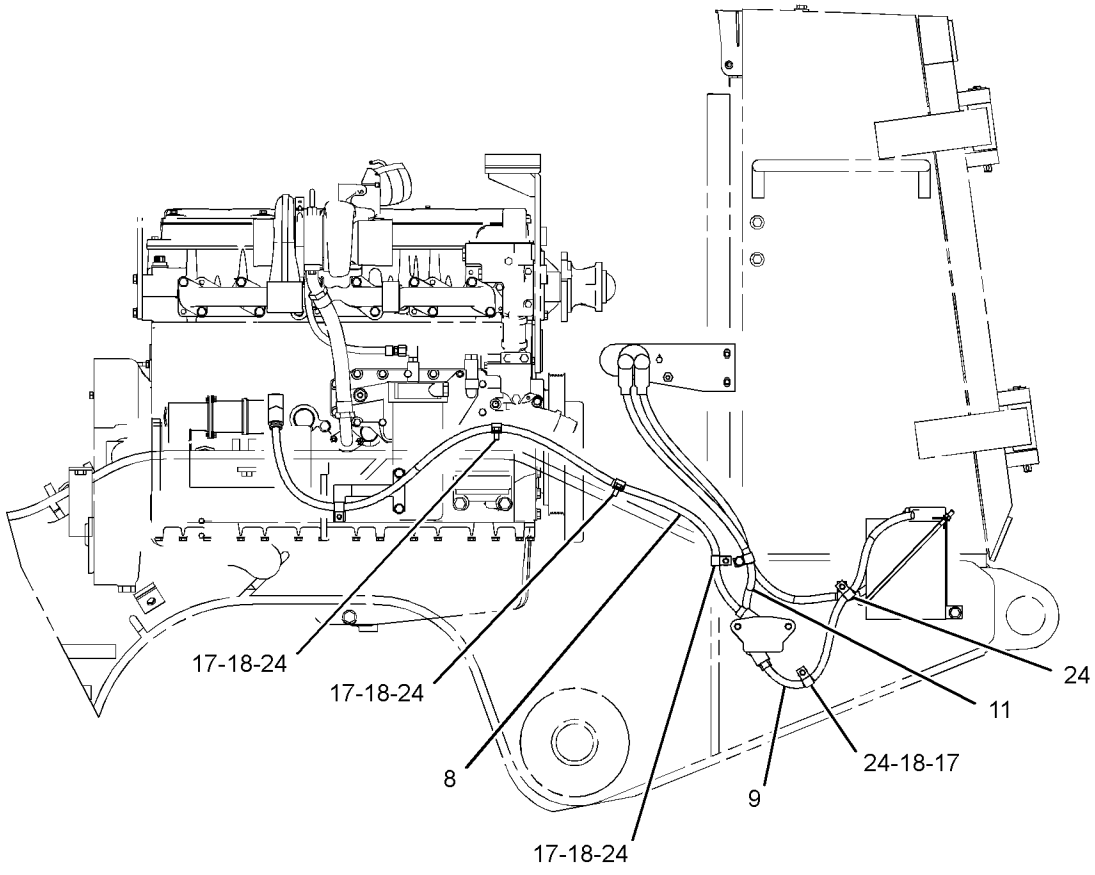


GRAPHIC #1 g01236792

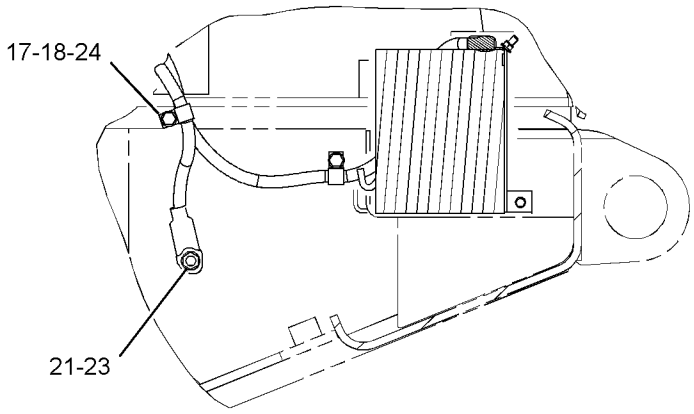


SECTION A-A

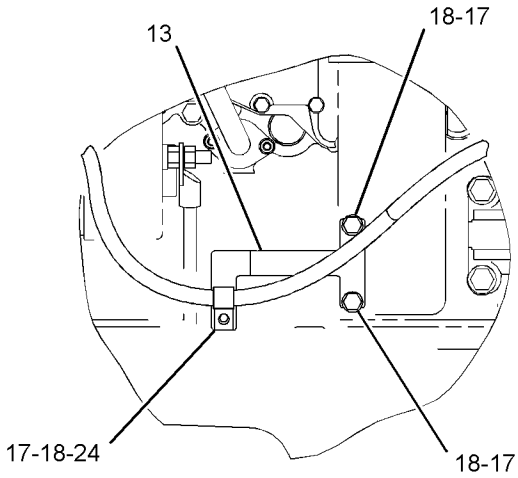


VIEW B-B

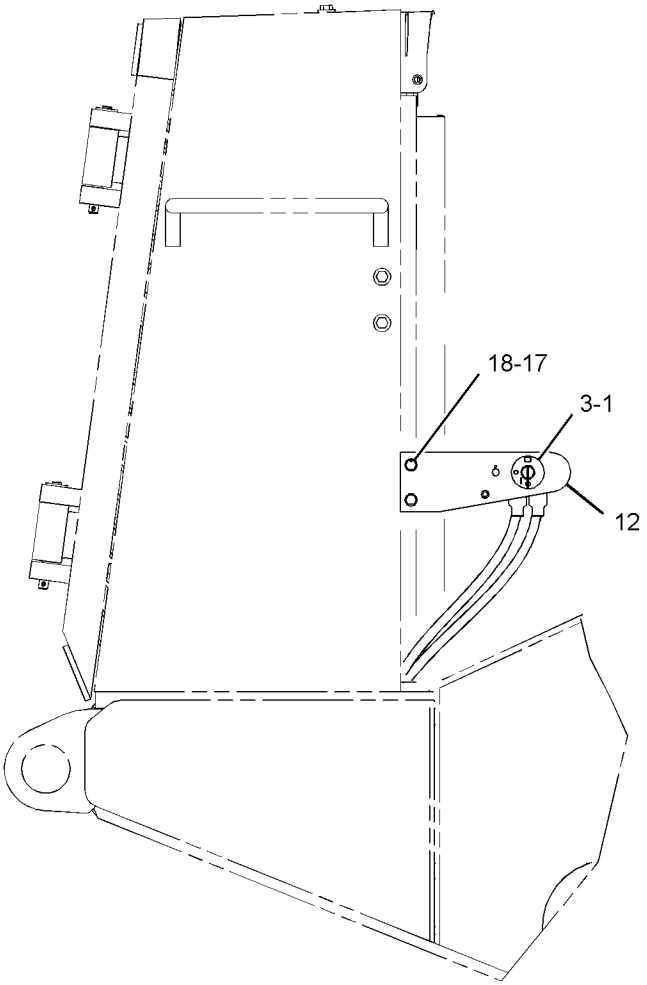


LEFT SIDE VIEW

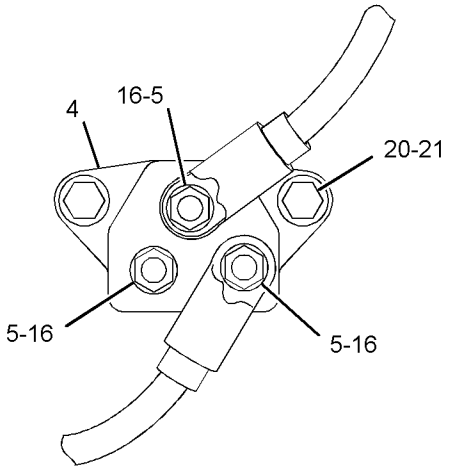


VIEW C-C

GRAPHIC #2 **<END>** g01236795

# ELECTRICAL AND STARTING SYSTEM

## *255-8094* BATTERY & WIRING GP

**S/N: 5451-UP**

**PART OF 245-9469, 285-2280 ELECTRICAL AR**

**SMCS-1401, 1402, 1408** **i02738450**

| NOTE | REF NO | GRAPHIC REF | PART NUMBER | QTY | PART NAME 1 2 3 4 5 6 (PRODUCT LEVEL) | SEE PAGE |
|---|---|---|---|---|---|---|
| | 1 | 2 | **3E-8320** | 1 | PLATE-INSTRUCTION (BATTERY) | |
| | 2 | 1,1 | **6T-1847** | 3 | ROD-RETAINING | |
| Y | 3 | 2 | **7N-0718** | 1 | SWITCH GP-DISCONNECT (BATTERY) | 194 |
| CY | 4 | 2 | **9W-0742** | 1 | BLOCK GP-JUNCTION (BATTERY) | 152 |
| | 6 | 1 | **124-0378** | 1 | CABLE AS | |
| | | 1 | **1M-6119** | 2 | BOLT (5/16-18X1.375-IN) | |
| | | 1 | **1M-6120** | 2 | NUT (5/16-18-THD) | |
| E | | 1 | **5P-0761** | | CABLE (00-GA, RED) (12-CM) | |
| | | 1 | **9G-0003** | 1 | COVER-TERMINAL (BLACK) | |
| | | 1 | **9G-0004** | 1 | COVER-TERMINAL (RED) | |
| | 7 | 1 | **173-8458** | 2 | ANGLE AS | |
| | 8 | 1 | **255-8090** | 1 | CABLE AS | |
| | | 1 | **1S-7251** | 2 | TERMINAL-RING (FOR 1/2-IN BOLT) | |
| E | | 1 | **5P-0761** | | CABLE (00-GA, RED) (157-CM) | |
| | | 1 | **8N-0869** | 2 | COVER-TERMINAL (RED) (134-CM) | |
| | 9 | 1 | **255-8091** | 1 | CABLE AS | |
| | | 1 | **1S-7251** | 1 | TERMINAL-RING (FOR 1/2-IN BOLT) | |
| E | | 1 | **5P-0761** | | CABLE (00-GA, RED) (68-CM) | |
| | | 1 | **8N-0869** | 1 | COVER-TERMINAL (RED) | |
| | | 1 | **9G-0002** | 1 | COVER-TERMINAL (RED) | |
| | 10 | 1 | **255-8092** | 1 | CABLE AS | |
| | | 1 | **1S-7252** | 1 | TERMINAL-RING (FOR 3/8-IN BOLT) | |
| E | | 1 | **5P-0747** | | CABLE (00-GA, BLACK) (106-CM) | |
| | | 1 | **9G-0005** | 1 | COVER-TERMINAL (BLACK) | |
| | | 1 | **9G-8909** | 1 | COVER-TERMINAL (BLACK) | |
| | 11 | 1 | **255-8100** | 1 | CABLE AS | |
| | | 1 | **1S-7251** | 2 | TERMINAL-RING (FOR 1/2-IN BOLT) (92-CM) | |
| E | | 1 | **5P-0747** | | CABLE (00-GA, BLACK) (124-CM) | |
| | | 1 | **9G-8909** | 2 | COVER-TERMINAL (BLACK) | |
| | 12 | 2 | **270-4428** | 1 | BRACKET AS | |
| | 13 | 2 | **274-8380** | 1 | BRACKET AS | |
| C | 14 | 1 | **6V-8189** | 3 | NUT (5/16-18-THD) | |
| | 15 | 1 | **115-2422** | 2 | BATTERY GP (12-VOLT, MAINTENANCE FREE, WET) | |
| | | | | | (EACH INCLUDES) | |
| | | 1 | **123-1373** | 6 | PLUG AS | |
| C | 17 | 1,2 | **8T-4121** | 15 | WASHER-HARD (11X21X2.5-MM THK) | |
| CM | 18 | 1,2 | **8T-4137** | 13 | BOLT (M10X1.5X20-MM) | |
| CM | 20 | 2 | **8T-4195** | 2 | BOLT (M10X1.5X30-MM) | |
| C | 21 | 2 | **8T-4223** | 2 | WASHER-HARD (13.5X25.5X3-MM THK) | |
| | 22 | 1 | **8T-4224** | 3 | WASHER-HARD (8.8X16X2-MM THK) | |
| M | 23 | 2 | **8T-4244** | 1 | NUT (M12X1.75-THD) | |
| | 24 | 1,2 | **9M-8406** | 9 | CLIP | |

C-CHANGE FROM PREVIOUS TYPE
E-ORDER BY THE CENTIMETER
M-METRIC PART
Y-SEPARATE ILLUSTRATION

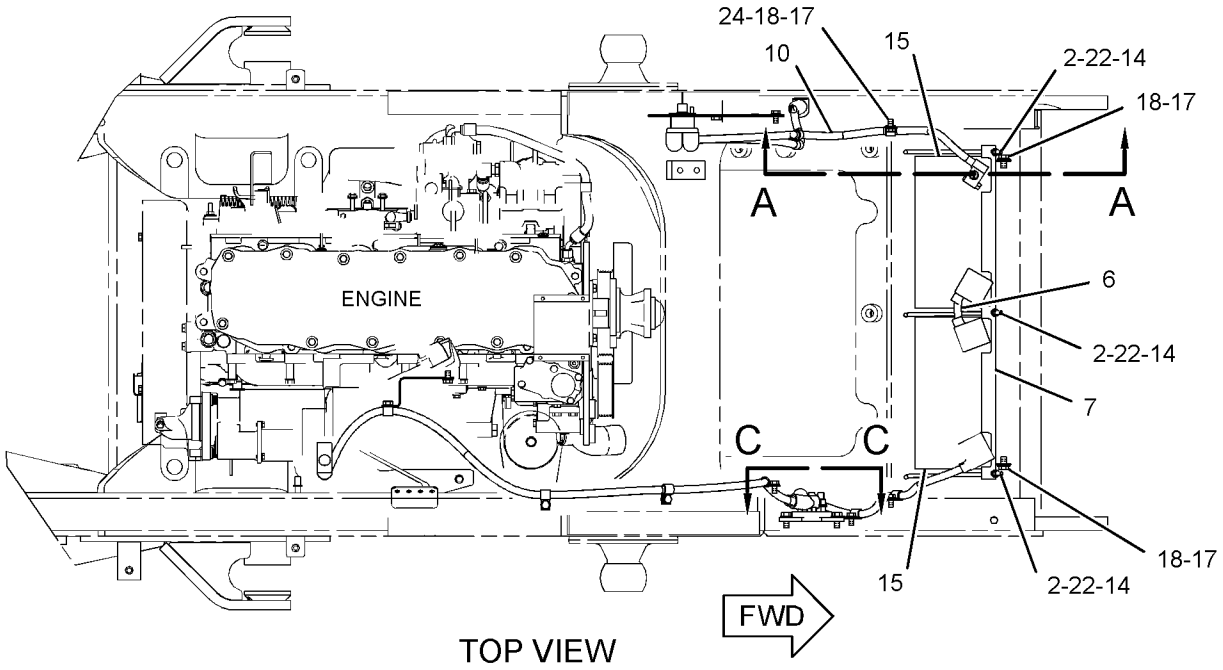


TOP VIEW

REFER TO ALL ILLUSTRATIONS OF
THIS GROUP FOR AUXILIARY VIEWS

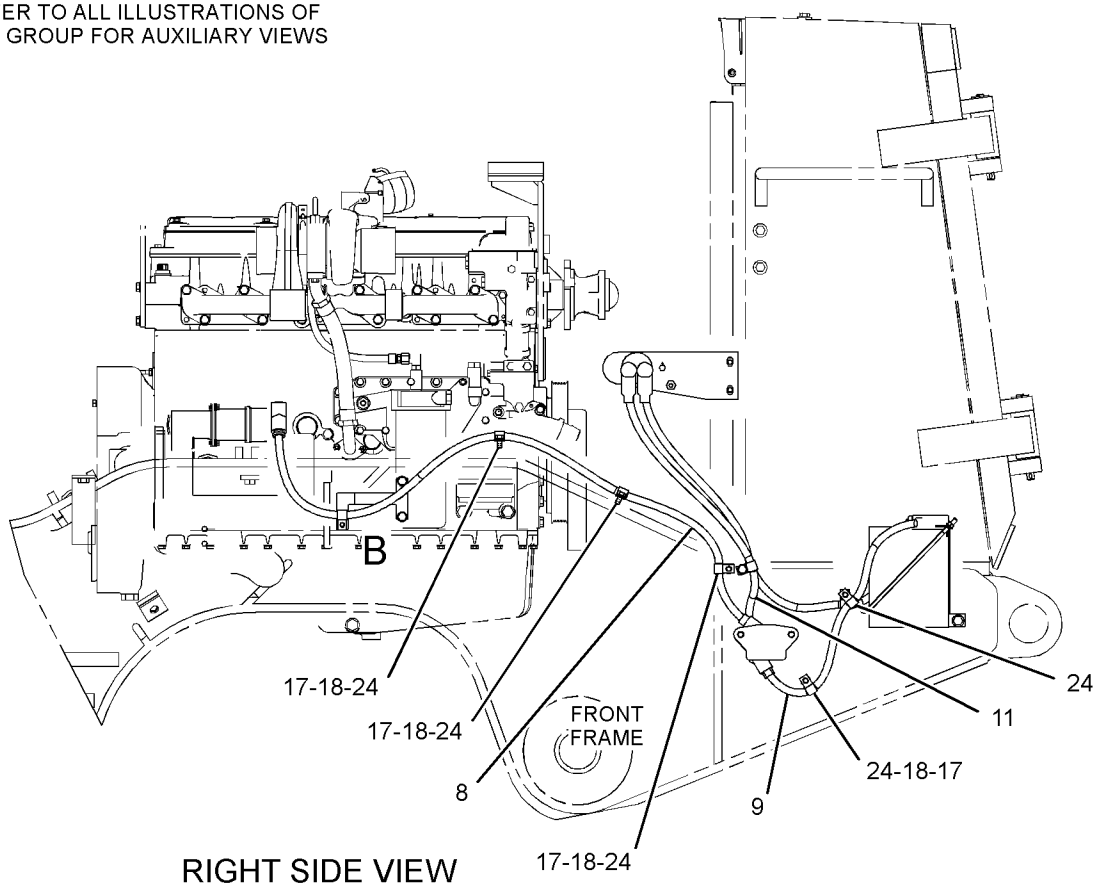


RIGHT SIDE VIEW

GRAPHIC #1

g01301442

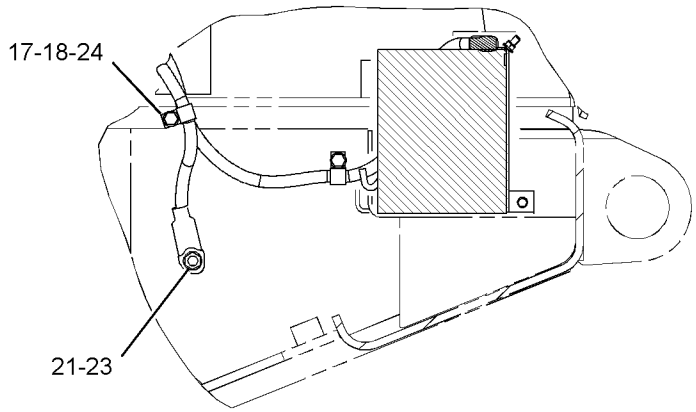


SECTION A-A

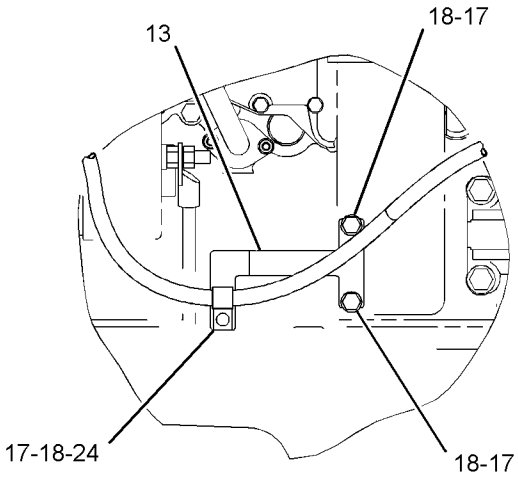


VIEW OF AREA B

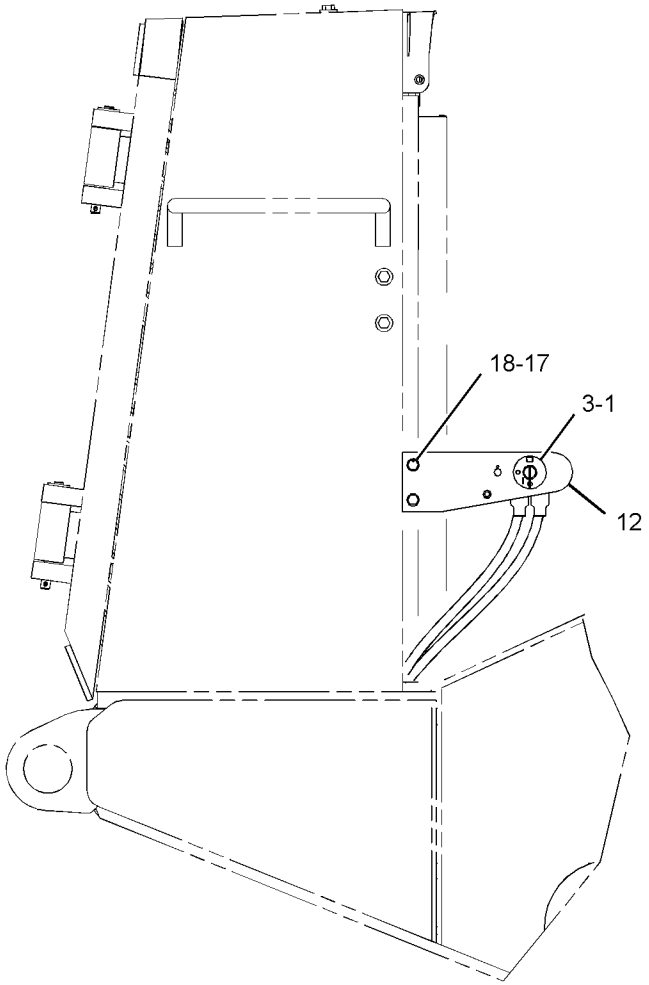


LEFT SIDE VIEW

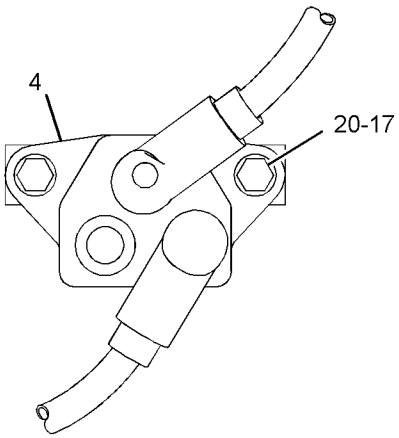


VIEW C-C

GRAPHIC #2 **<END>** g01301444

# *9W-0742* BLOCK GP-JUNCTION–BATTERY

**S/N: 545331-UP**

**PART OF 255-8094 BATTERY & WIRING GP**

**SMCS-1408, 7426** **i02388218**

| NOTE | REF NO | GRAPHIC REF | PART NUMBER | QTY | PART NAME 1 2 3 4 5 6 (PRODUCT LEVEL) | SEE PAGE |
|---|---|---|---|---|---|---|
| | 1 | 1 | **8C-6358** | 1 | BLOCK GP-JUNCTION (BATTERY) | |
| | 1A | 1 | **8T-3519** | 3 | BOLT-BRONZE (1/2-13X2-IN) | |
| BD | 2 | 1 | **6V-2722** | | TUBE-HEAT SHRINK (25.4-MM DIA) | |
| | 3 | 1 | **7F-0560** | 6 | WASHER (0.516X0.938X0.101-IN THK) | |
| | 4 | 1 | **8T-3518** | 6 | NUT-FULL (1/2-13-THD) | |

B-USE AS REQUIRED
D-ORDER BY THE METER

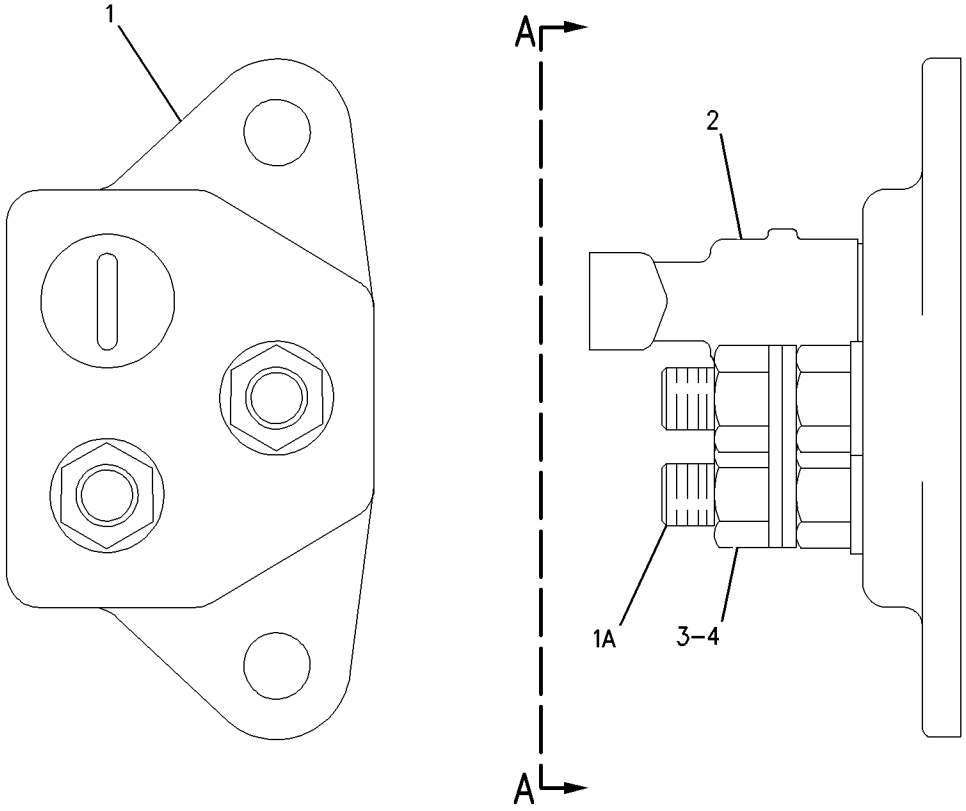


VIEW A-A

GRAPHIC #1 **<END>** g00650721

## *246-9345* CONTROL & MTG GP-ENGINE ELEK

**S/N: KHX1-UP**

**PART OF 235-1497 ENGINE AR-COMPLETE**

**SMCS-1901, 7620** **i02590953**

| NOTE | REF NO | GRAPHIC REF | PART NUMBER | QTY | PART NAME 1 2 3 4 5 6 (PRODUCT LEVEL) | SEE PAGE |
|---|---|---|---|---|---|---|
| | 1 | 1 | **8T-9655** | 8 | MOUNT-ISOLATION | |
| | 2 | 1 | **101-3128** | 4 | SPACER-SPECIAL (12.7X26X28.7-MM THK) | |
| M | 3 | 1 | **143-9392** | 4 | STUD (M8X1.25-THD) | |
| | 4 | 1 | **255-5284** | 1 | CONTROL GP-UNPROGRAMMED (ENGINE) | |
| | 6 | 1 | **244-3168** | 1 | BRACKET AS (HARNESS) | |
| | 7 | 1 | **233-0891** | 1 | BRACKET AS (HARNESS) | |
| | 8 | 1 | **9M-1974** | 4 | WASHER-HARD (8.8X16X2-MM THK) | |
| | 9 | 1 | **9N-0869** | 4 | WASHER-HARD (8.8X25.5X2-MM THK) | |

M-METRIC PART

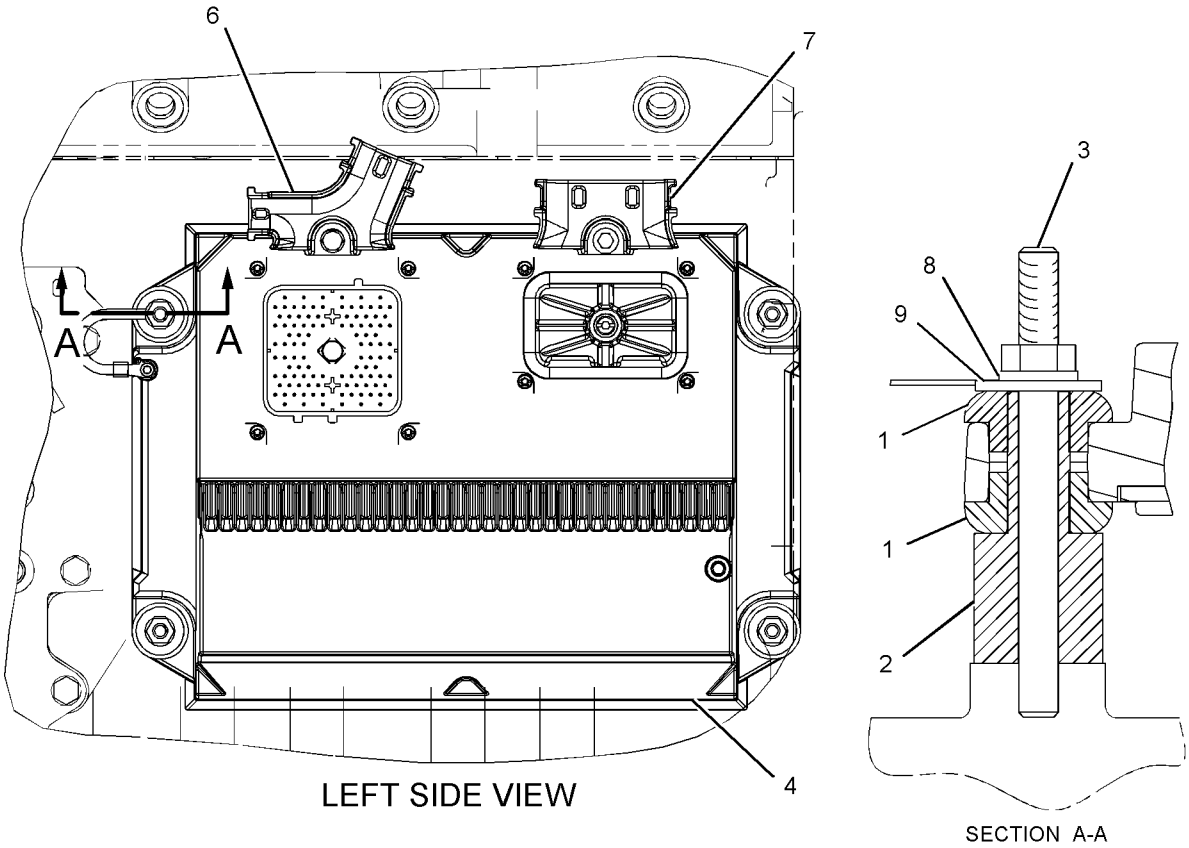


LEFT SIDE VIEW

SECTION A-A

GRAPHIC #1 **<END>** g01093182

## *219-1956* CONVERTER GP-ELECTRICAL

**S/N: 5451-UP**

**AN ATTACHMENT**

**SMCS-1421** **i02393928**

| NOTE | REF NO | GRAPHIC REF | PART NUMBER | QTY | PART NAME 1 2 3 4 5 6 (PRODUCT LEVEL) | SEE PAGE |
|---|---|---|---|---|---|---|
| | 1 | 1 | **209-0381** | 1 | CONVERTER-POWER (24-VOLT TO 12-VOLT) | |
| M | 2 | 1 | **7X-3332** | 2 | SCREW-HEX FLANGE (M4X0.7X8-MM) | |

M-METRIC PART

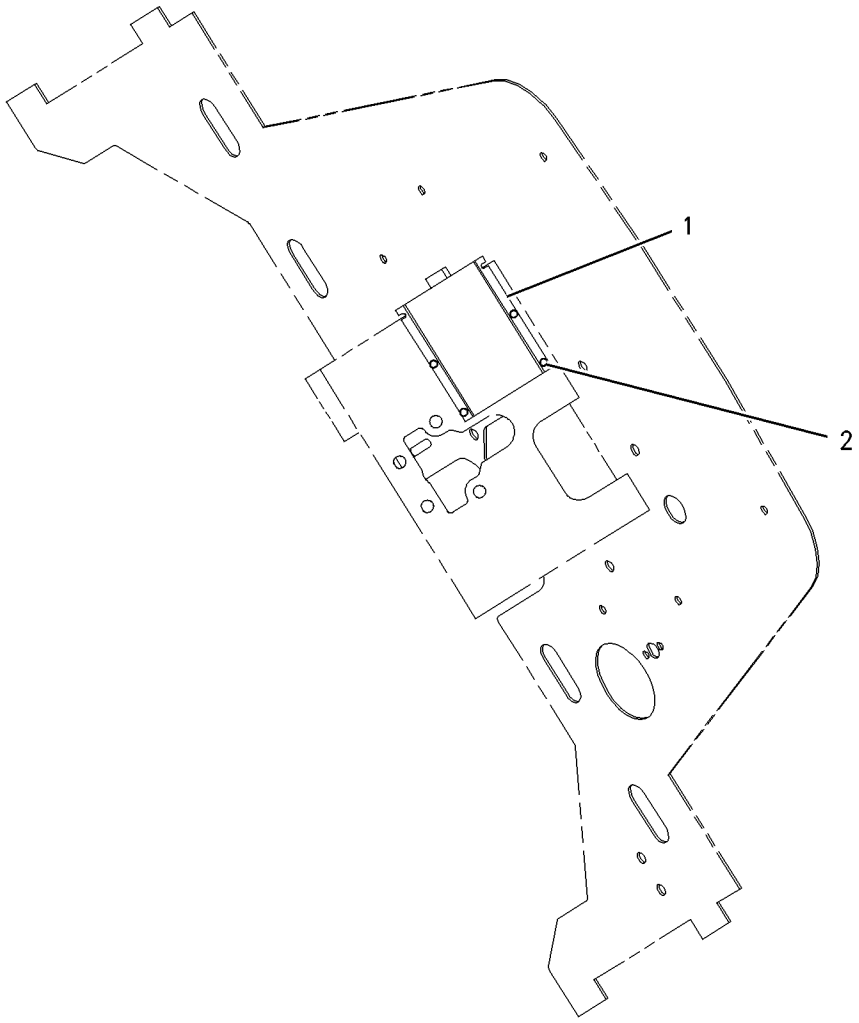


GRAPHIC #1 **<END>** g00915453

## *245-9469* ELECTRICAL AR

**S/N: 5451-377**

**PART OF 245-9457 COMMON AR**

**SMCS-1400, 1408, 1429, 7402** **i02178073**

| NOTE | PART NUMBER | QTY | PART NAME 1 2 3 4 5 6 (PRODUCT LEVEL) | SEE PAGE |
|---|---|---|---|---|
| Y | *255-8094* | 1 | BATTERY & WIRING GP | 146 |
| Y | *256-0733* | 1 | ELECTRONICS GP-MACHINE | 155 |
| Y | *255-8102* | 1 | WIRING GP-CAB | 202 |
| Y | *255-8096* | 1 | WIRING GP-MACHINE | 213 |

Y-SEPARATE ILLUSTRATION

**<END>**

## *285-2280* ELECTRICAL AR

**S/N: 545378-UP**

**PART OF 245-9457 COMMON AR**

**SMCS-1400, 1408, 1429, 7402** **i02525695**

| NOTE | PART NUMBER | QTY | PART NAME 1 2 3 4 5 6 (PRODUCT LEVEL) | SEE PAGE |
|---|---|---|---|---|
| Y | *255-8094* | 1 | BATTERY & WIRING GP | 146 |
| Y | *255-8102* | 1 | WIRING GP-CAB | 202 |
| Y | *282-5089* | 1 | WIRING GP-MACHINE | 226 |
| | | | | |
| | *285-2269* | 1 | SOFTWARE GP-POWER TRAIN | |

Y-SEPARATE ILLUSTRATION

**<END>**

## *256-0733* ELECTRONICS GP-MACHINE

**S/N: 5451-378**

**PART OF 245-9469 ELECTRICAL AR**

**SMCS-7610, 7620** **i02396523**

| NOTE | PART NUMBER | QTY | PART NAME 1 2 3 4 5 6 (PRODUCT LEVEL) | SEE PAGE |
|---|---|---|---|---|
| | **256-5702** | 1 | SOFTWARE GP-MACHINE | |
| | | | (SOFTWARE ONLY) | |
| | | | -OR- | |
| | | | (OPTIONAL SERVICE REPLACEMENT) | |
| | **256-5703** | 1 | SERVICE GP-MACHINE | |
| | | | (INCLUDES CONTROL GP & SOFTWARE) | |

**<END>**

# 234-4325 LAMP GP-FLOOD

**S/N: 5451-UP**
**24-VOLT**
**PART OF 215-3128, 220-1864 LIGHTING GP-FLOOD**
**AN ATTACHMENT**

**SMCS-1434** **i02492287**

| NOTE | REF NO | GRAPHIC REF | PART NUMBER | QTY | PART NAME 1 2 3 4 5 6 (PRODUCT LEVEL) | SEE PAGE |
|---|---|---|---|---|---|---|
| | 1 | 1 | **9X-3463** | 1 | LAMP-HALOGEN (24-VOLT, 65-WATT) | |
| M | 2 | 1 | **8T-0389** | 1 | LOCKNUT (M10X1.15-THD) | |
| | 3 | 1 | **9X-4244** | 2 | SCREW-SPECIAL | |
| | 4 | 1 | **202-6614** | 1 | LENS AS (FLOODLIGHT) | |
| | 5 | 1 | **234-7730** | 1 | BODY AS | |
| | 6 | 1 | **164-7556** | 1 | CLIP (LAMP RETAINING) | |
| | 7 | 1 | **234-7731** | 1 | BRACKET AS | |
| | 8 | 1 | **8T-4121** | 1 | WASHER-HARD (11X21X2.5-MM THK) | |

M-METRIC PART

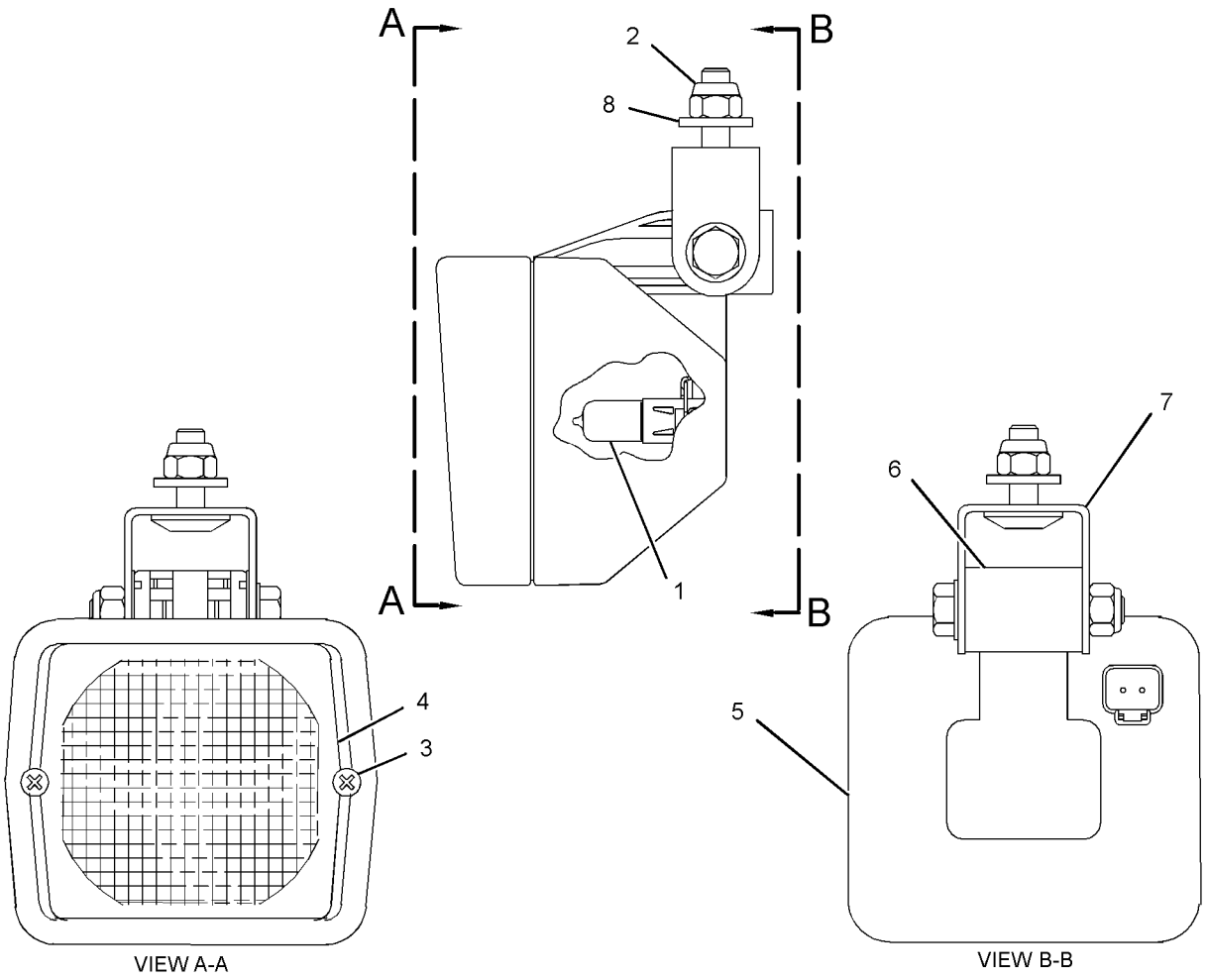


GRAPHIC #1 **<END>** g01246703

## *221-4035* LIGHTING AR-FLOOD

**S/N: 5451-UP**

**FOR USE WITH ANY CAB. CANNOT BE USED WITH 221-4037 LIGHTING AR-FLOOD**

**AN ATTACHMENT**

**SMCS-1434** **i02195115**

| NOTE | PART NUMBER | QTY | PART NAME 1 2 3 4 5 6 (PRODUCT LEVEL) | SEE PAGE |
|---|---|---|---|---|
| Y | *215-3128* | 1 | LIGHTING GP-FLOOD (4-LAMP, CAB) | 158 |
| Y-SEPARATE ILLUSTRATION | | | | |

**<END>**

## *221-4037* LIGHTING AR-FLOOD

**S/N: 5451-UP**

**FOR USE WITH FOR USE WITH ANY ANY CAB. CANNOT BE USED WITH 221-4035 LIGHTING AR-FLOOD**

**AN ATTACHMENT**

**SMCS-1434** **i02195119**

| NOTE | PART NUMBER | QTY | PART NAME 1 2 3 4 5 6 (PRODUCT LEVEL) | SEE PAGE |
|---|---|---|---|---|
| Y | *215-3128* | 1 | LIGHTING GP-FLOOD (4-LAMP, CAB) | 158 |
| Y | *220-1864* | 1 | LIGHTING GP-FLOOD (8-LAMP, CAB) | 159 |
| Y-SEPARATE ILLUSTRATION | | | | |

**<END>**

## *268-6622* LIGHTING AR-FLOOD

**S/N: 5451-UP**

**CANNOT BE USED WITH 221-4035—PAGE 157**

**AN ATTACHMENT**

**SMCS-1434** **i02469942**

| NOTE | PART NUMBER | QTY | PART NAME 1 2 3 4 5 6 (PRODUCT LEVEL) | SEE PAGE |
|---|---|---|---|---|
| Y | *268-3287* | 1 | GUARD GP-EXHAUST | 102 |
| Y | *220-1864* | 1 | LIGHTING GP-FLOOD (8-LAMP, CAB) | 159 |
| Y-SEPARATE ILLUSTRATION | | | | |

**<END>**

# *215-3128* LIGHTING GP-FLOOD–CAB

**S/N: 5451-UP**

**PART OF 252-1415, 252-1720 CAB AR-ENCLOSED ROPS, 252-1722, 252-1728 CAB AR-OPEN ROPS, 221-4035, 221-4037 LIGHTING AR-FLOOD AN ATTACHMENT**

**SMCS-1434** **i02195126**

| NOTE | REF NO | GRAPHIC REF | PART NUMBER | QTY | PART NAME 1 2 3 4 5 6 (PRODUCT LEVEL) | SEE PAGE |
|---|---|---|---|---|---|---|
| CY | 1 | 1 | **234-4325** | 4 | LAMP GP-FLOOD (24-VOLT, SUSPENDED MOUNT) | 156 |
| | 3 | 1 | **8T-4121** | 4 | WASHER-HARD (11X21X2.5-MM THK) | |

C-CHANGE FROM PREVIOUS TYPE
Y-SEPARATE ILLUSTRATION

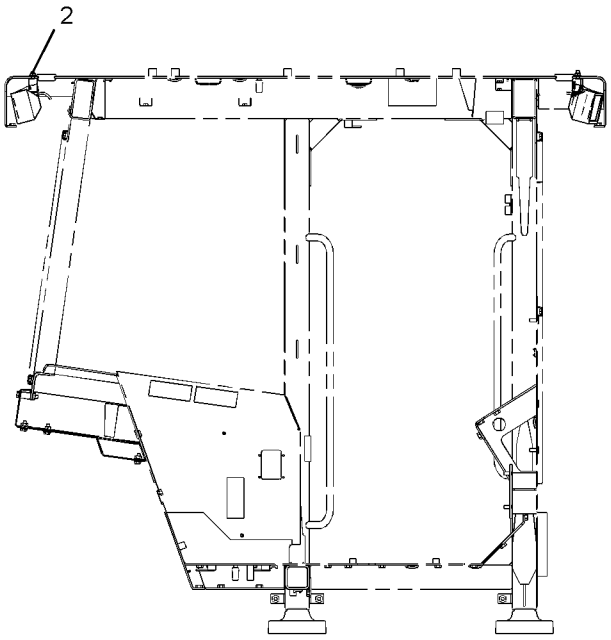


SECTION A-A

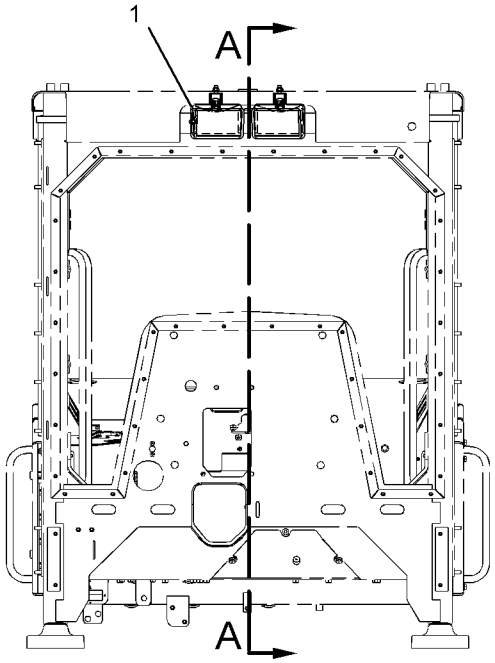


FRONT VIEW

GRAPHIC #1 **<END>** g01108557

## *220-1864* LIGHTING GP-FLOOD—CAB

**S/N: 5451-UP**
**PART OF 221-4037, 268-6622 LIGHTING AR-FLOOD**
**AN ATTACHMENT**

**SMCS-1434** **i02344767**

| NOTE | REF NO | GRAPHIC REF | PART NUMBER | QTY | PART NAME 1 2 3 4 5 6 (PRODUCT LEVEL) | SEE PAGE |
|---|---|---|---|---|---|---|
| | 1 | 1 | **3S-2093** | 9 | STRAP-CABLE | |
| Y | 2 | 1 | **234-4325** | 8 | LAMP GP-FLOOD (24-VOLT) | 156 |
| | 3 | 1 | **220-8427** | 2 | SHEET AS | |
| | | | | | (EACH INCLUDES) | |
| | | 1 | **7T-1099** | 5 | LINK | |
| | 4 | 1 | **220-8436** | 2 | SHEET AS | |
| | | | | | (EACH INCLUDES) | |
| M | | 1 | **8T-3490** | 4 | NUT-WELD (M10X1.5-THD) | |
| | 5 | 1 | **220-8437** | 2 | SHEET AS | |
| | | | | | (EACH INCLUDES) | |
| M | | 1 | **8T-3490** | 4 | NUT-WELD (M10X1.5-THD) | |
| | 6 | 1 | **221-5341** | 1 | HARNESS AS-LIGHTING (REAR CAB FLOODLIGHTS) | |
| | | 1 | **102-8803** | 1 | KIT-RECEPTACLE (3-PIN) | |
| | | | | | (INCLUDES RECEPTACLE AS & WEDGE) | |
| | | 1 | **155-2270** | 1 | KIT-CONNECTING PLUG (2-PIN) | |
| | | | | | (INCLUDES PLUG AS & WEDGE) | |
| | 7 | 1 | **221-5342** | 1 | HARNESS AS-LIGHTING (FRONT CAB FLOODLIGHTS) | |
| | | 1 | **102-8803** | 1 | KIT-RECEPTACLE (3-PIN) | |
| | | | | | (INCLUDES RECEPTACLE AS & WEDGE) | |
| | | 1 | **155-2270** | 1 | KIT-CONNECTING PLUG (2-PIN) | |
| | | | | | (INCLUDES PLUG AS & WEDGE) | |
| | 8 | 1 | **155-2270** | 4 | KIT-CONNECTING PLUG (2-PIN) | |
| | | | | | (EACH INCLUDES PLUG AS AND WEDGE) | |
| | 9 | 1 | **8T-4121** | 40 | WASHER-HARD (11X21X2.5-MM THK) | |
| M | 10 | 1 | **8T-4137** | 32 | BOLT (M10X1.5X20-MM) | |

M-METRIC PART
Y-SEPARATE ILLUSTRATION

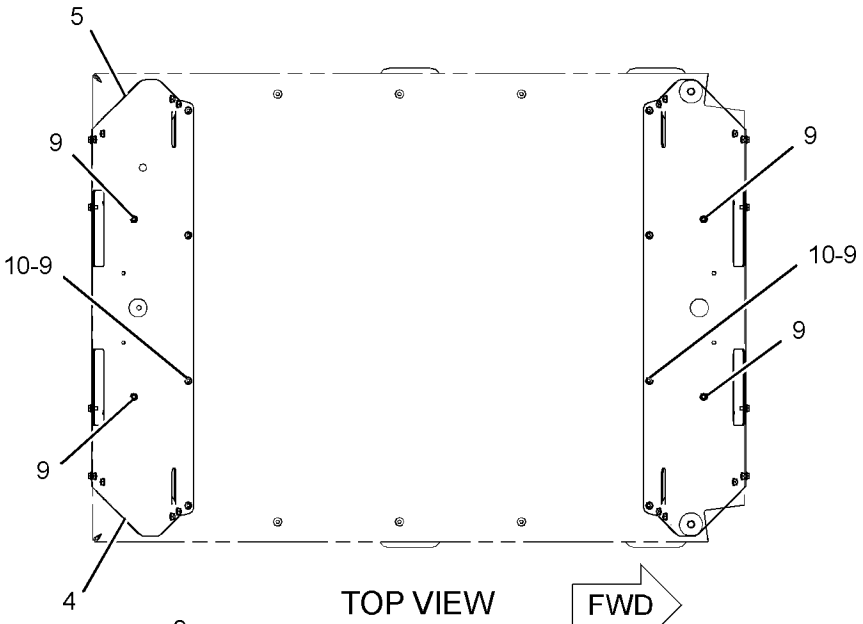


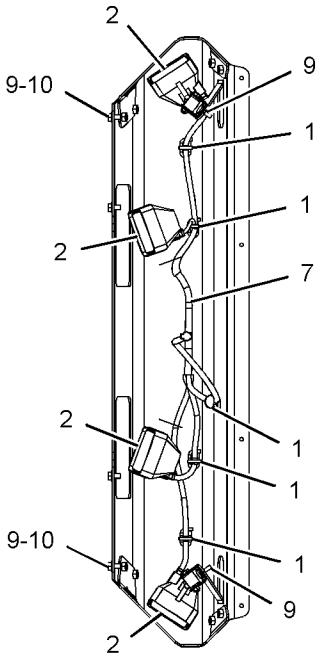


VIEW A-A

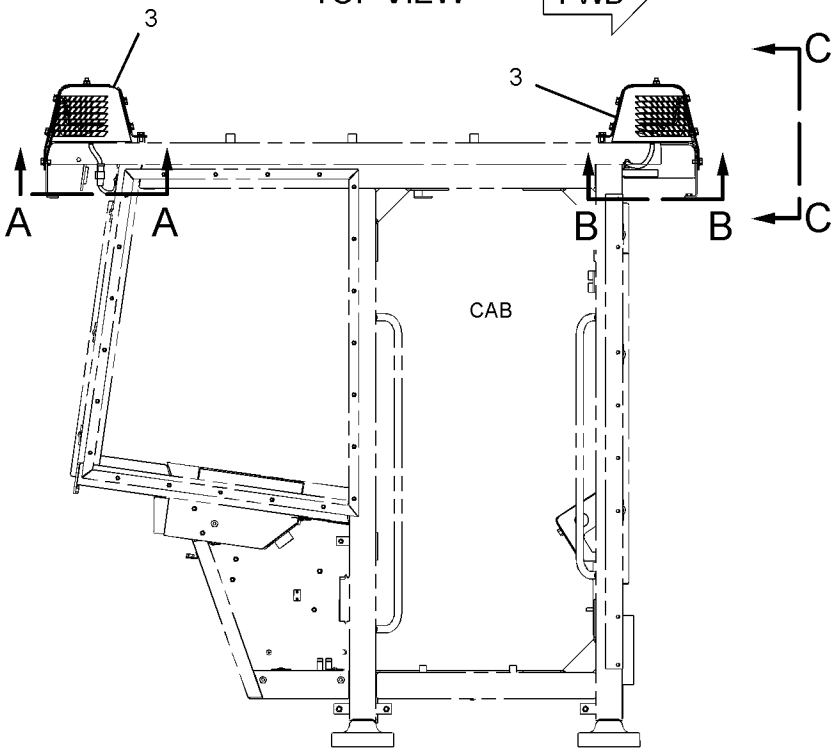


RIGHT SIDE VIEW

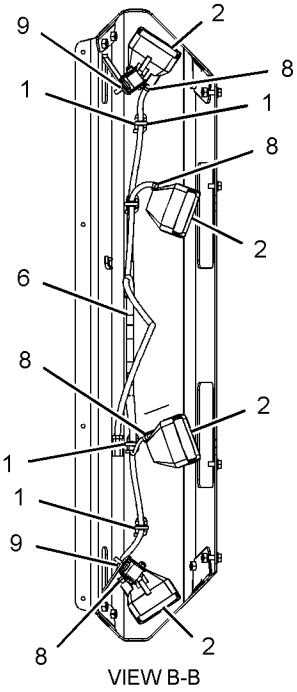


VIEW B-B

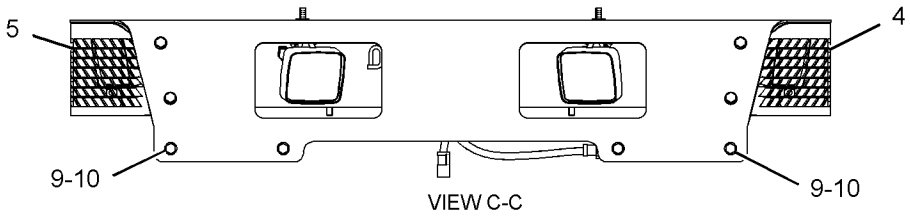


VIEW C-C

GRAPHIC #1

**<END>**

g01176750

# *117-3915* MOTOR GP-ELECTRIC–SECONDARY STEERING

**S/N: 5451-UP**
**24-VOLT**
**PART OF 177-9742 PUMP & MOTOR GP-SEC STEERING**
**AN ATTACHMENT**

**SMCS-1469, 5703, 5927** **i01441397**

| NOTE | REF NO | GRAPHIC REF | PART NUMBER | QTY | PART NAME 1 2 3 4 5 6 (PRODUCT LEVEL) | SEE PAGE |
|---|---|---|---|---|---|---|
| | 1 | 1 | **6V-8801** | 2 | NUT (3/8-16 THD) | |
| | 2 | 1 | **7X-0608** | 2 | WASHER-HARD (10.2X16X2-MM THK) | |

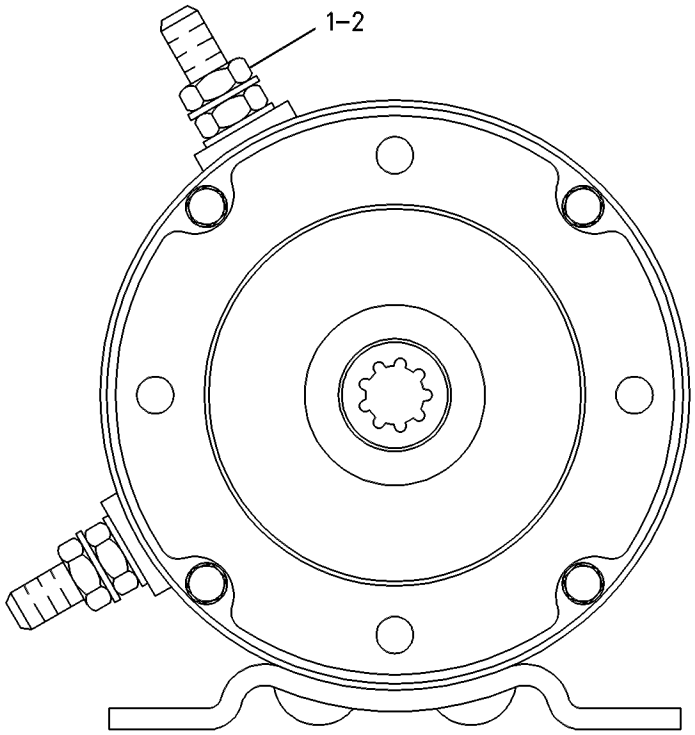


GRAPHIC #1 **<END>** g00085784

# ELECTRICAL AND STARTING SYSTEM

## *282-4220* PANEL GP-CIRCUIT BREAKER

**S/N: 5451-UP**

**PART OF 255-8096, 282-5089 WIRING GP-MACHINE**

**SMCS-1417** **i02540079**

| NOTE | REF NO | GRAPHIC REF | PART NUMBER | QTY | PART NAME 1 2 3 4 5 6 (PRODUCT LEVEL) | SEE PAGE |
|---|---|---|---|---|---|---|
| | 1 | 1 | **6T-3644** | 1 | CIRCUIT BREAKER AS (20-AMPERE) (MACHINE CONTROL) | |
| | | 1 | **6V-8376** | 2 | SCREW-MACHINE (8-32X0.25-IN) | |
| | | 1 | **9B-7233** | 2 | LOCKWASHER | |
| Y | 2 | 1 | **125-1302** | 1 | SWITCH GP-MAGNETIC (24-VOLT) (START RELAY) | 195 |
| | 3 | 1 | **171-2210** | 1 | CIRCUIT BREAKER AS (80-AMPERE) (AIR INLET HEATER) | |
| | | 1 | **253-2111** | 2 | LOCKWASHER | |
| | | 1 | **6V-8187** | 2 | NUT (1/4-28-THD) | |
| | | 1 | **8T-4205** | 2 | WASHER-HARD (7.2X14.5X2-MM THK) | |
| | 4 | 1 | **171-2212** | 1 | CIRCUIT BREAKER AS (105-AMPERE) (ALTERNATOR) | |
| | | 1 | **253-2111** | 2 | LOCKWASHER | |
| | | 1 | **6V-8187** | 2 | NUT (1/4-28-THD) | |
| | | 1 | **8T-4205** | 2 | WASHER-HARD (7.2X14.5X2-MM THK) | |
| | 5 | 1 | **171-2212** | 1 | CIRCUIT BREAKER AS (105-AMPERE) (MAIN) | |
| | | 1 | **253-2111** | 2 | LOCKWASHER | |
| | | 1 | **6V-8187** | 2 | NUT (1/4-28-THD) | |
| | | 1 | **8T-4205** | 2 | WASHER-HARD (7.2X14.5X2-MM THK) | |
| | 6 | 1 | **257-5124** | 1 | WIRE AS | |
| | 7 | 1 | **257-7147** | 1 | WIRE AS | |
| | 8 | 1 | **273-1741** | 1 | COVER | |
| | 9 | 1 | **273-1743** | 1 | PANEL AS | |
| | 10 | 1 | **273-1750** | 1 | STRAP | |
| | 11 | 1 | **276-9535** | 1 | FILM-IDENTIFICATION (CIRCUIT PANEL) | |
| | 12 | 1 | **030-1193** | 6 | SCREW-MACHINE (10-32X19.05-MM) | |
| | 13 | 1 | **4B-4863** | 2 | WASHER (4.7X11X1.2-MM THK) | |
| M | 14 | 1 | **5C-9553** | 2 | BOLT (M6X1X16-MM) | |
| | 15 | 1 | **5P-8394** | 2 | SCREW-MACHINE (8-32X0.75-IN) | |
| | 16 | 1 | **7K-1181** | 2 | STRAP-CABLE | |
| | 17 | 1 | **8T-0328** | 6 | WASHER-HARD (5.5X10X1-MM THK) | |
| M | 18 | 1 | **8T-4200** | 4 | BOLT (M8X1.25X16-MM) | |
| | 19 | 1 | **8T-4224** | 4 | WASHER-HARD (8.8X16X2-MM THK) | |
| | 20 | 1 | **9X-8256** | 2 | WASHER (6.6X12X2-MM THK) | |
| | 21 | 1 | **255-8098** | 1 | HARNESS AS-PANEL (CIRCUIT BREAKER) | |
| | | 1 | **2L-8065** | 1 | TERMINAL (10-GA TO 12-GA) | |
| | | 1 | **3L-6513** | 1 | TERMINAL (FOR 1/2-IN BOLT) | |
| E | | 1 | **6V-9023** | | TUBE-HEAT SHRINK (12.7-MM DIA) (3-CM) | |
| E | | 1 | **125-7874** | | TUBE-HEAT SHRINK (5.72-MM DIA) (5-CM) | |
| E | | 1 | **125-7875** | | TUBE-HEAT SHRINK (7.44-MM DIA) (5-CM) | |
| | | 1 | **127-5483** | 1 | PLUG AS-CONNECTOR (1-PIN) | |
| | | 1 | **9G-4343** | 2 | TERMINAL (4-GA) | |
| | | 1 | **2L-8050** | 2 | TERMINAL-RING (6-GA, 1/4-IN) | |
| | | 1 | **2L-8081** | 2 | TERMINAL (14-GA TO 16-GA) | |
| | | 1 | **9X-6772** | 1 | STRAP-CABLE | |
| E | | 1 | **114-8843** | | SLEEVE-PLASTIC (32-MM DIA) (120-CM) | |
| E | | 1 | **119-3662** | | TUBE-HEAT SHRINK (10.85-MM DIA) (7-CM) | |
| E | | 1 | **114-8845** | | SLEEVE-PLASTIC (80-MM DIA) (20-CM) | |
| | | 1 | **155-2255** | 1 | KIT-CONNECTING PLUG (12-PIN) | |
| | | 1 | **155-2270** | 5 | KIT-CONNECTING PLUG (2-PIN) | |
| | | 1 | **155-2271** | 1 | KIT-CONNECTING PLUG (4-PIN) | |
| | | 1 | **155-2265** | 1 | KIT-CONNECTING PLUG (8-PIN) | |
| | | | | | (EACH PLUG KIT INCLUDES PLUG AS & WEDGE) | |
| | | 1 | **102-8806** | 1 | KIT-RECEPTACLE (8-PIN) | |
| | | | | | (INCLUDES RECEPTACLE AS & WEDGE) | |
| | | 1 | **110-6845** | 1 | PLUG AS-CONNECTOR (40-PIN) | |
| E | | 1 | **8C-3056** | | CABLE (02-GA, RED) (155-CM) | |

## *282-4220* **PANEL GP-CIRCUIT BREAKER** *(contd.)* **i02540079**

| NOTE | REF NO | GRAPHIC REF | PART NUMBER | QTY | PART NAME 1 2 3 4 5 6 (PRODUCT LEVEL) | SEE PAGE |
|---|---|---|---|---|---|---|
| | | 1 | **8N-0869** | 1 | COVER-TERMINAL (RED) | |
| | | 1 | **8N-1521** | 1 | BELL AS-END (2-GA) | |
| | | 1 | **8N-1517** | 1 | RECEPTACLE AS-CONNECTOR (25-PIN) | |
| | | 1 | **8N-1523** | 1 | LOCKWASHER | |
| | | 1 | **030-1712** | 1 | TERMINAL-RING (2-GA, 6.35-MM) | |

E-ORDER BY THE CENTIMETER
M-METRIC PART
Y-SEPARATE ILLUSTRATION

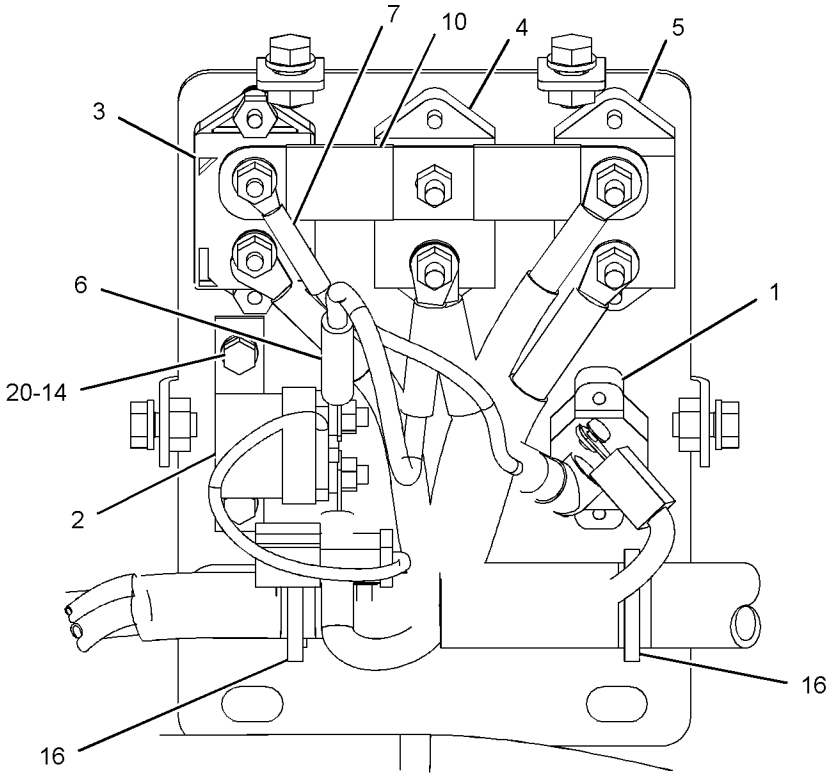


LEFT SIDE VIEW
(COVER REMOVED FOR CLARITY)

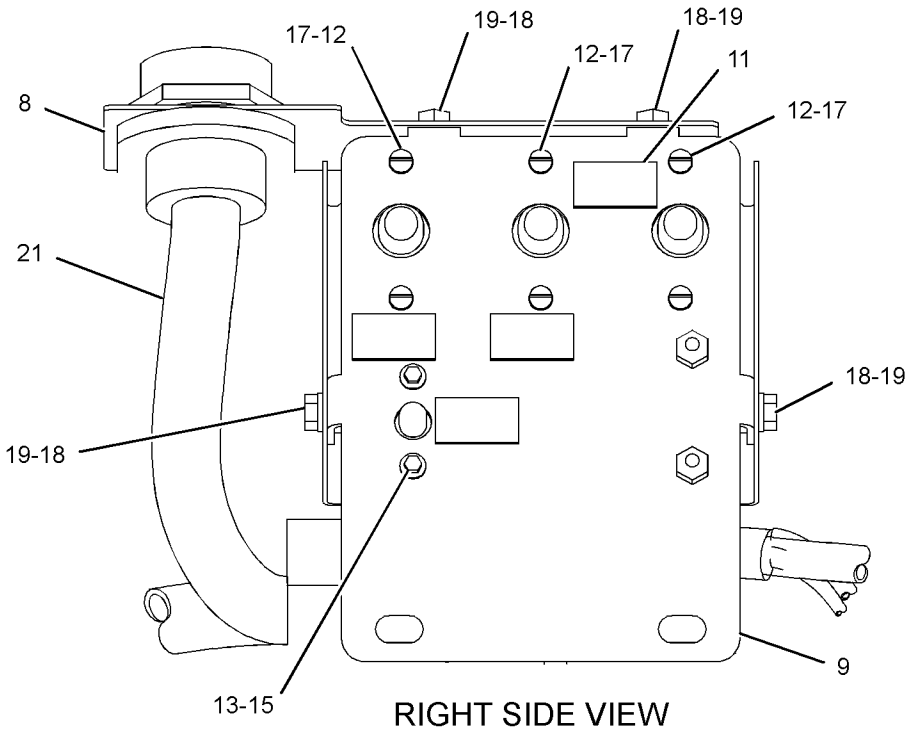


RIGHT SIDE VIEW

GRAPHIC #1

**<END>**

g01273702

## *282-3835* RECEPTACLE GP-AUXILIARY START

**S/N: 5451-UP**
**AN ATTACHMENT**

**SMCS-1463** **i02471251**

| NOTE | REF NO | GRAPHIC REF | PART NUMBER | QTY | PART NAME 1 2 3 4 5 6 (PRODUCT LEVEL) | SEE PAGE |
|---|---|---|---|---|---|---|
| | 1 | 1 | **8S-2634** | 1 | COVER AS | |
| | | 1 | **2P-2975** | 2 | SEAL-O-RING | |
| | 2 | 1 | **121-7848** | 2 | PLATE | |
| | 3 | 1 | **146-6747** | 1 | FILM-INFORMATION (24-VOLT) | |
| | 4 | 1 | **225-0313** | 1 | FILM-WARNING (JUMP START, READ OMM, U.S.) | |
| | 5 | 1 | *282-3836* | 1 | RECEPTACLE AS | |
| | | 1 | **1S-7251** | 2 | TERMINAL-RING (FOR 1/2-IN BOLT) | |
| | | 1 | **8N-0869** | 1 | COVER-TERMINAL (RED) | |
| | | 1 | **9G-8909** | 1 | COVER-TERMINAL (BLACK) | |
| E | | 1 | **159-8049** | | CABLE (OO-GA, RED) (72-CM) | |
| E | | 1 | **159-8050** | | CABLE (OO-GA, BLACK) (78-CM) | |
| | 6 | 1 | **282-3837** | 1 | BRACKET | |
| | 7 | 1 | **8T-4121** | 3 | WASHER-HARD (11X21X2.5-MM THK) | |
| M | 8 | 1 | **8T-4137** | 3 | BOLT (M10X1.5X20-MM) | |
| | 9 | 1 | **8T-4223** | 1 | WASHER-HARD (13.5X25.5X3-MM THK) | |
| | 10 | 1 | **8T-4224** | 4 | WASHER-HARD (8.8X16X2-MM THK) | |
| M | 11 | 1 | **8T-4244** | 1 | NUT (M12X1.75-THD) | |
| M | 12 | 1 | **8T-4908** | 4 | BOLT (M8X1.25X25-MM) | |
| | 13 | 1 | **9M-8406** | 2 | CLIP | |

E-ORDER BY THE CENTIMETER
M-METRIC PART

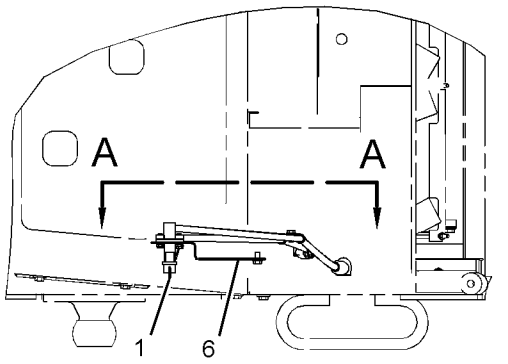


TOP VIEW FWD

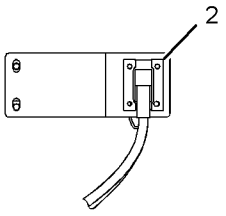


VIEW A-A

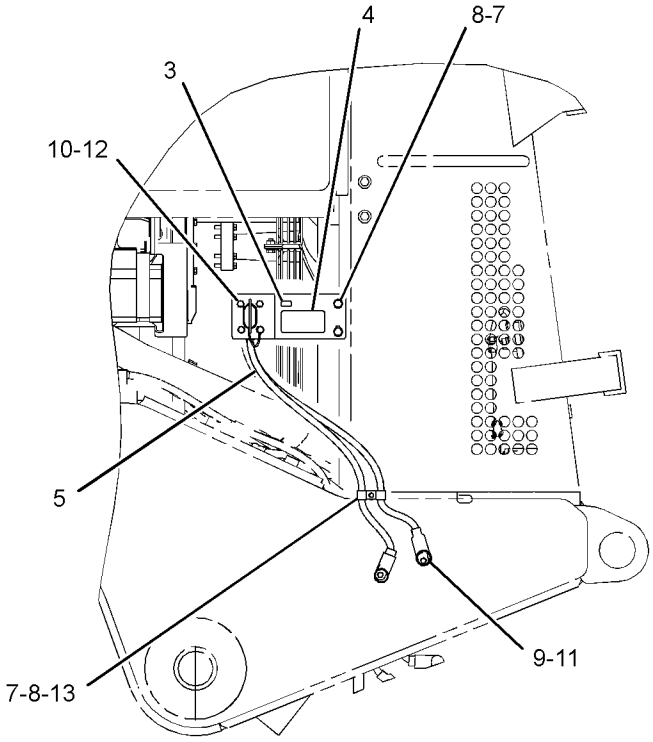


RIGHT SIDE VIEW

GRAPHIC #1 **<END>** g01238573

# *267-8561* RESISTOR GP

**S/N: 5451-UP**
**PART OF 252-1414 AIR CONDITIONER GP**
**AN ATTACHMENT**

**SMCS-1437** **i02565367**

| NOTE | REF NO | GRAPHIC REF | PART NUMBER | QTY | PART NAME 1 2 3 4 5 6 (PRODUCT LEVEL) | SEE PAGE |
|---|---|---|---|---|---|---|
| | 1 | 1 | **6T-6708** | 2 | WASHER (7X28.6X4.1-MM THK) | |
| | 2 | 1 | **7T-4567** | 1 | BRACKET | |
| | 3 | 1 | **125-9740** | 1 | RESISTOR | |
| M | 4 | 1 | **129-3178** | 1 | LOCKNUT (M6X1-THD) | |
| M | 5 | 1 | **141-9784** | 1 | BOLT (M6X1X190-MM) | |
| | 6 | 1 | **6V-1668** | 2 | WASHER (6.5X29.1X3-MM THK) | |
| | 7 | 1 | **9X-8256** | 2 | WASHER (6.6X12X2-MM THK) | |

M-METRIC PART

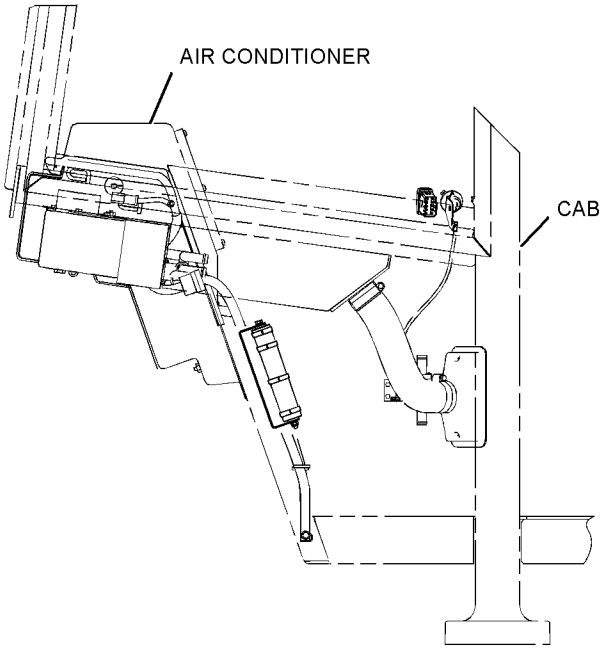


RIGHT SIDE VIEW

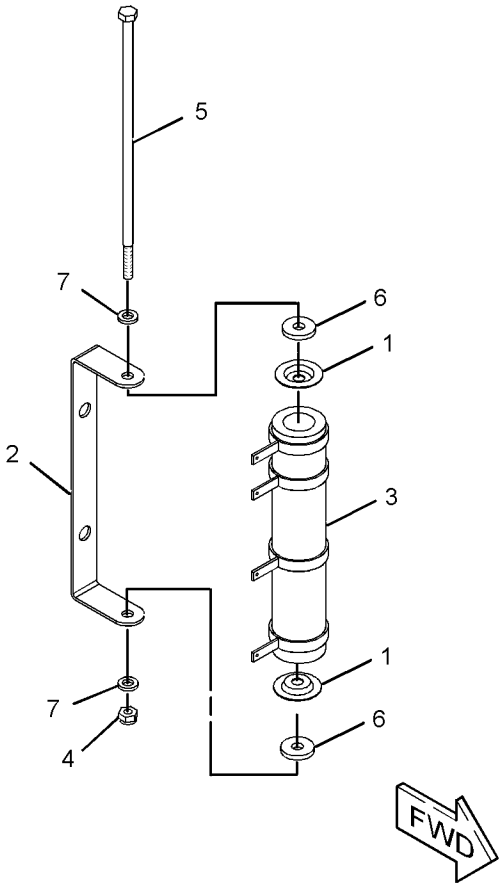


GRAPHIC #1 **<END>** g01301565

## *231-1977* SENSOR GP-ENGINE

**S/N: KHX1-UP**

**PART OF 235-1497 ENGINE AR-COMPLETE**

**SMCS-1718, 1906, 1907, 1912, 1917, 1923, 1924, 1925, 1928, 1929**

**i02698123**

| NOTE | REF NO | GRAPHIC REF | PART NUMBER | QTY | PART NAME 1 2 3 4 5 6 (PRODUCT LEVEL) | SEE PAGE |
|---|---|---|---|---|---|---|
| | 1 | 1 | **9X-0262** | 1 | ADAPTER | |
| | 2 | 1 | **9X-8403** | 1 | ELBOW | |
| Y | 3 | 1 | *197-8391* | 1 | SENSOR GP-TEMPERATURE (AIR INLET MANIFOLD) | 182 |
| Y | 4 | 1 | *197-8392* | 1 | SENSOR GP-TEMPERATURE (WATER, COOLANT) | 184 |
| Y | 5 | 1 | *197-8393* | 1 | SENSOR GP-PRESSURE (ATMOSPHERIC) | 171 |
| Y | 6 | 1 | *197-8394* | 1 | SENSOR GP-PRESSURE (ENGINE OIL) | 172 |
| Y | 7 | 1 | *210-1747* | 1 | SENSOR GP-PRESSURE (BOOST) | 173 |
| Y | 8 | 1 | *236-6220* | 1 | SENSOR GP-PRESSURE (INJECTION ACTUATION) | 176 |
| Y | 9 | 1 | *236-6221* | 1 | SENSOR GP-SPEED (ENGINE TIMING) | 179 |
| | 10 | 1 | *169-5861* | 1 | PLUG AS | |
| | | 1 | **3K-8460** | 1 | PLUG | |
| | | 1 | **5P-7814** | 1 | SEAL-O-RING | |
| | 11 | 1 | *183-3406* | 1 | PLUG AS | |
| | | 1 | **6V-5049** | 1 | SEAL-O-RING | |
| | | 1 | **9S-4191** | 1 | PLUG-O-RING | |
| | 12 | 1 | *183-7263* | 1 | PLUG AS | |
| | | 1 | **3J-7354** | 1 | SEAL-O-RING | |
| | | 1 | **9S-8002** | 1 | PLUG-O-RING | |
| | 13 | 1 | **3E-4352** | 1 | WASHER-HARD (8.8X20.5X2.5-MM THK) | |
| M | 14 | 1 | **6V-3940** | 1 | BOLT (M8X1.25X25-MM) | |
| | 15 | 1 | **6V-5048** | 2 | SEAL-O-RING | |
| | 16 | 1 | **6V-5049** | 1 | SEAL-O-RING | |
| | 17 | 1 | **8T-2353** | 1 | ADAPTER | |

M-METRIC PART
Y-SEPARATE ILLUSTRATION

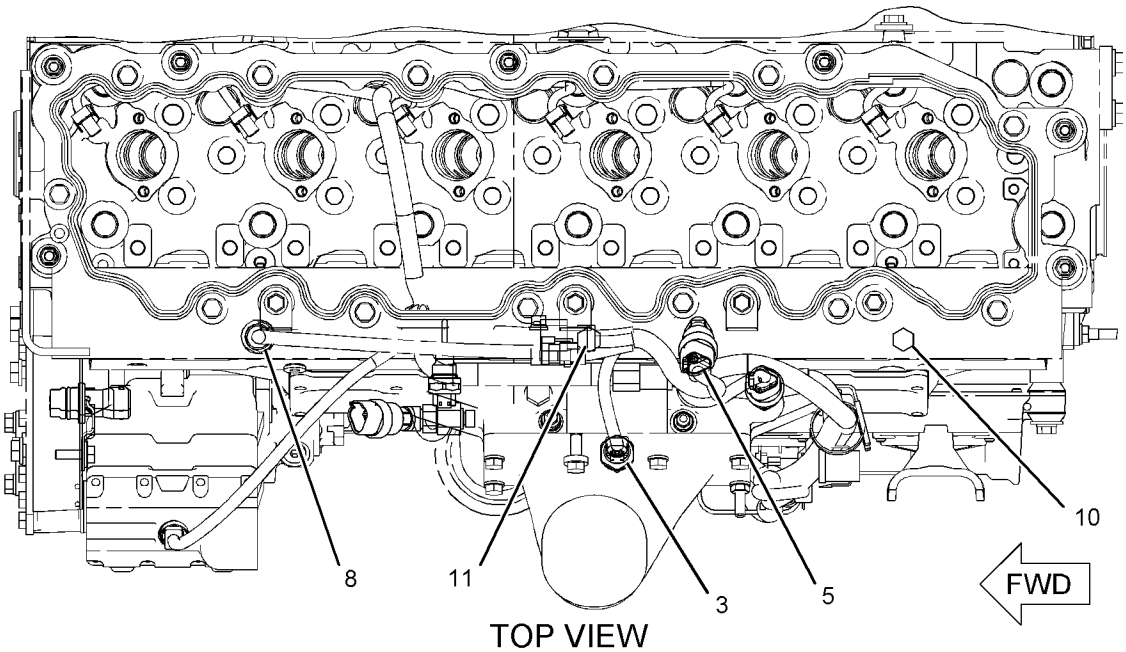


TOP VIEW

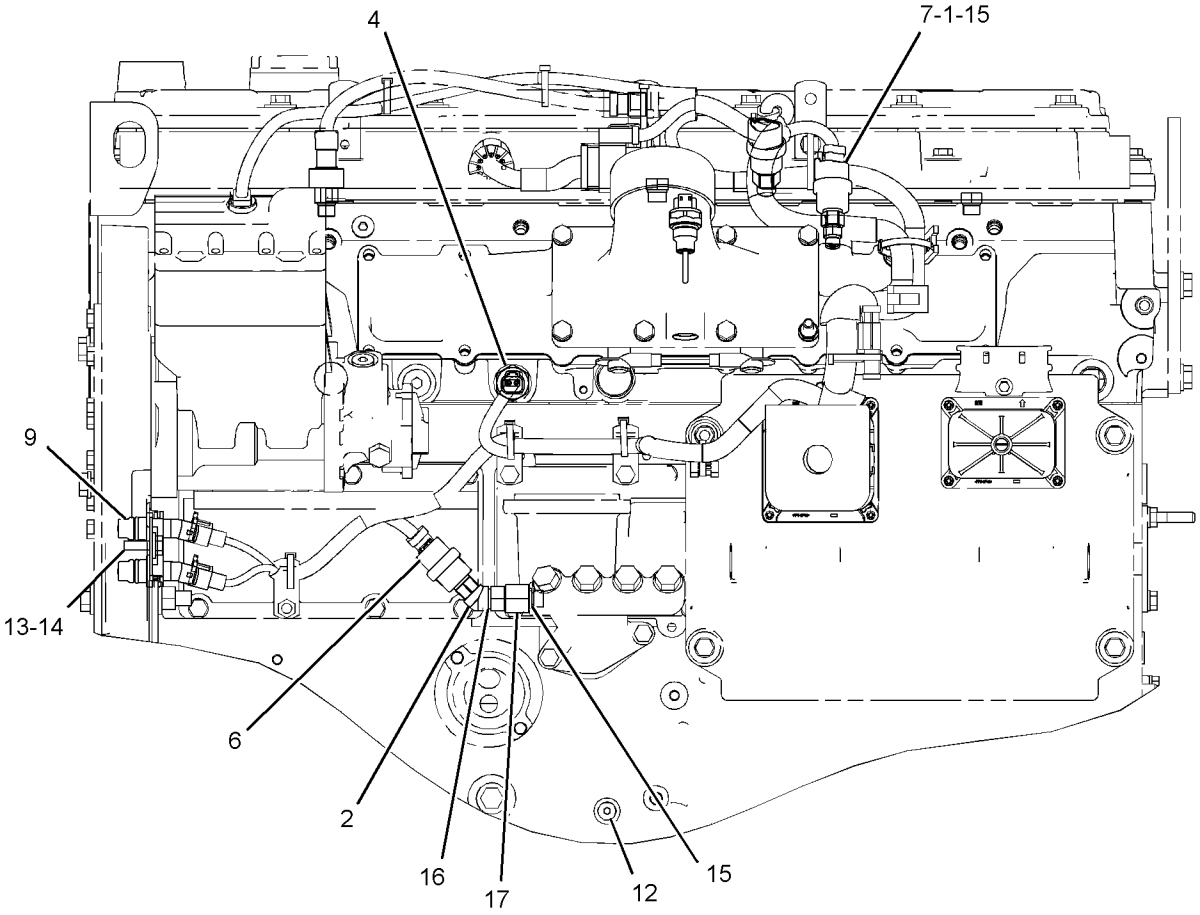


LEFT SIDE VIEW

GRAPHIC #1

**<END>**

g01098956

# *204-7949* SENSOR GP-POSITION

**S/N: 5451-UP**
**72-DEGREE**
**PART OF 130-8176 PEDAL GP-GOVERNOR**

**SMCS-1913** **i02582120**

| NOTE | REF NO | GRAPHIC REF | PART NUMBER | QTY | PART NAME 1 2 3 4 5 6 (PRODUCT LEVEL) | SEE PAGE |
|---|---|---|---|---|---|---|
| | 1 | 1 | **102-8803** | 1 | KIT-RECEPTACLE (3-PIN) | |
| | | | | | (INCLUDES RECEPTACLE AS AND WEDGE) | |
| | 2 | 1 | **3E-3371** | 1 | WEDGE-RECEPTACLE LOCK (3-PIN) | |
| | 3 | 1 | **186-3735** | 3 | PIN-CONNECTOR (16-GA TO 18-GA) | |

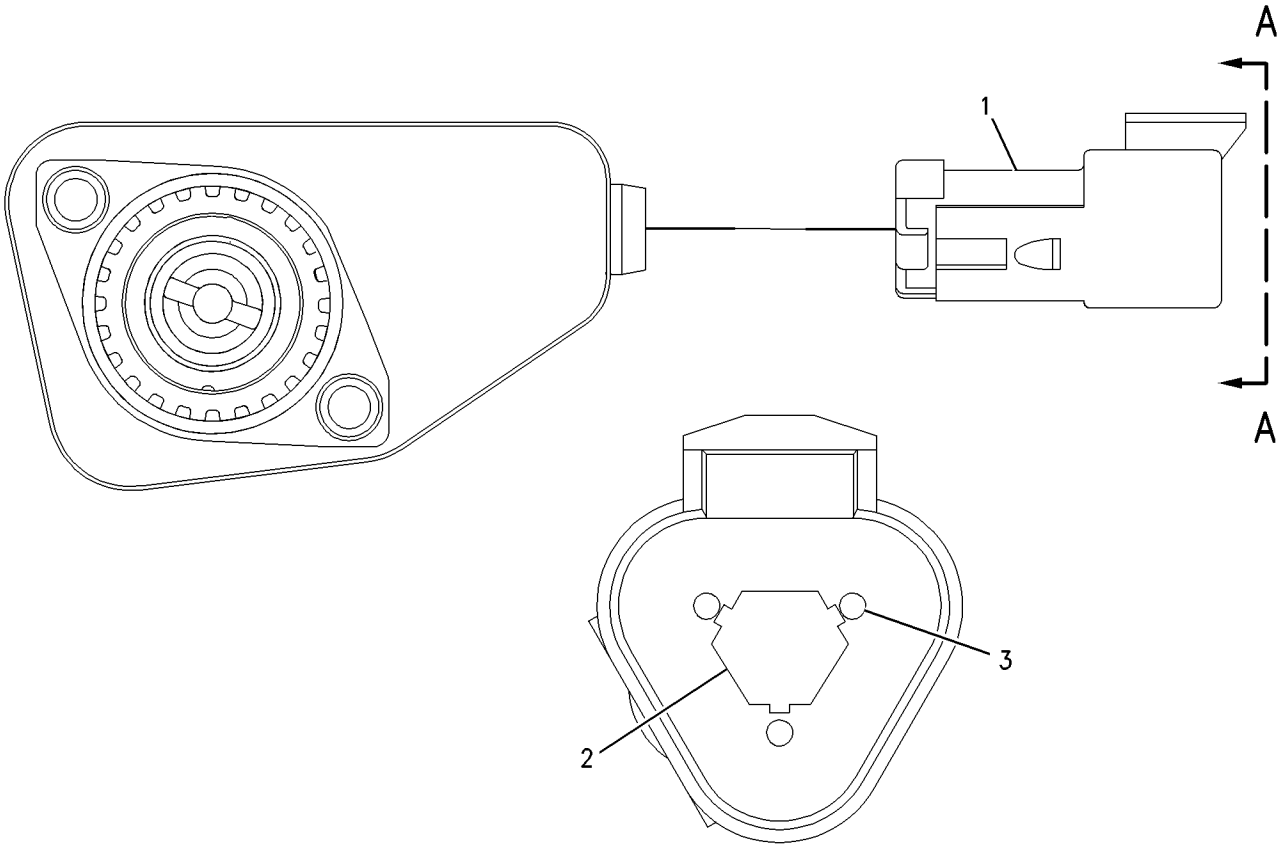


VIEW A-A

GRAPHIC #1 **<END>** g00925280

# *194-6725* SENSOR GP-PRESSURE

**S/N: KHX1-UP**

**PART OF 238-8185 LINES GP-FUEL FILTER**

**SMCS-1408** **i02502898**

| NOTE | REF NO | GRAPHIC REF | PART NUMBER | QTY | PART NAME 1 2 3 4 5 6 (PRODUCT LEVEL) | SEE PAGE |
|---|---|---|---|---|---|---|
| E | 1 | 1 | **9X-1813** | | SLEEVE (34-CM) | |
| | 2 | 1 | **155-2260** | 1 | KIT-CONNECTING PLUG (3-PIN) | |
| | | | | | (INCLUDES PLUG AS, INTERFACE SEAL,& WEDGE) | |
| | 3 | 1 | **194-5226** | 3 | WIRE AS-HARNESS (16-GA TO 18-GA) | |
| | 4 | 1 | **3E-3368** | 1 | WEDGE-PLUG LOCK (3-PIN) | |

E-ORDER BY THE CENTIMETER

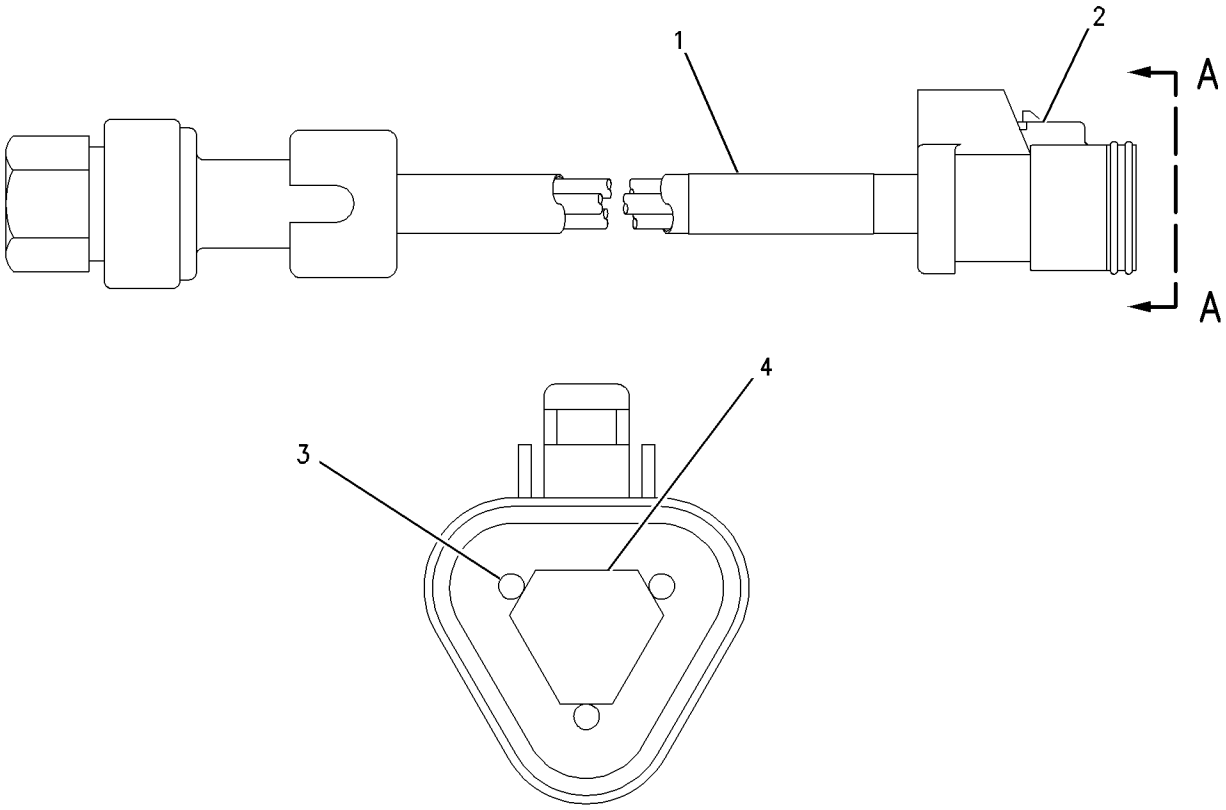


VIEW A-A

GRAPHIC #1 **<END>** g00851220

# *197-8393* SENSOR GP-PRESSURE

**S/N: KHX1-UP**

**PART OF 231-1977 SENSOR GP-ENGINE**

**SMCS-1408** **i02353392**

| NOTE | REF NO | GRAPHIC REF | PART NUMBER | QTY | PART NAME 1 2 3 4 5 6 (PRODUCT LEVEL) | SEE PAGE |
|---|---|---|---|---|---|---|
| | 1 | 1 | **161-1703** | 1 | SENSOR GP-PRESSURE | |
| | 2 | 1 | **6V-5049** | 1 | SEAL-O-RING | |

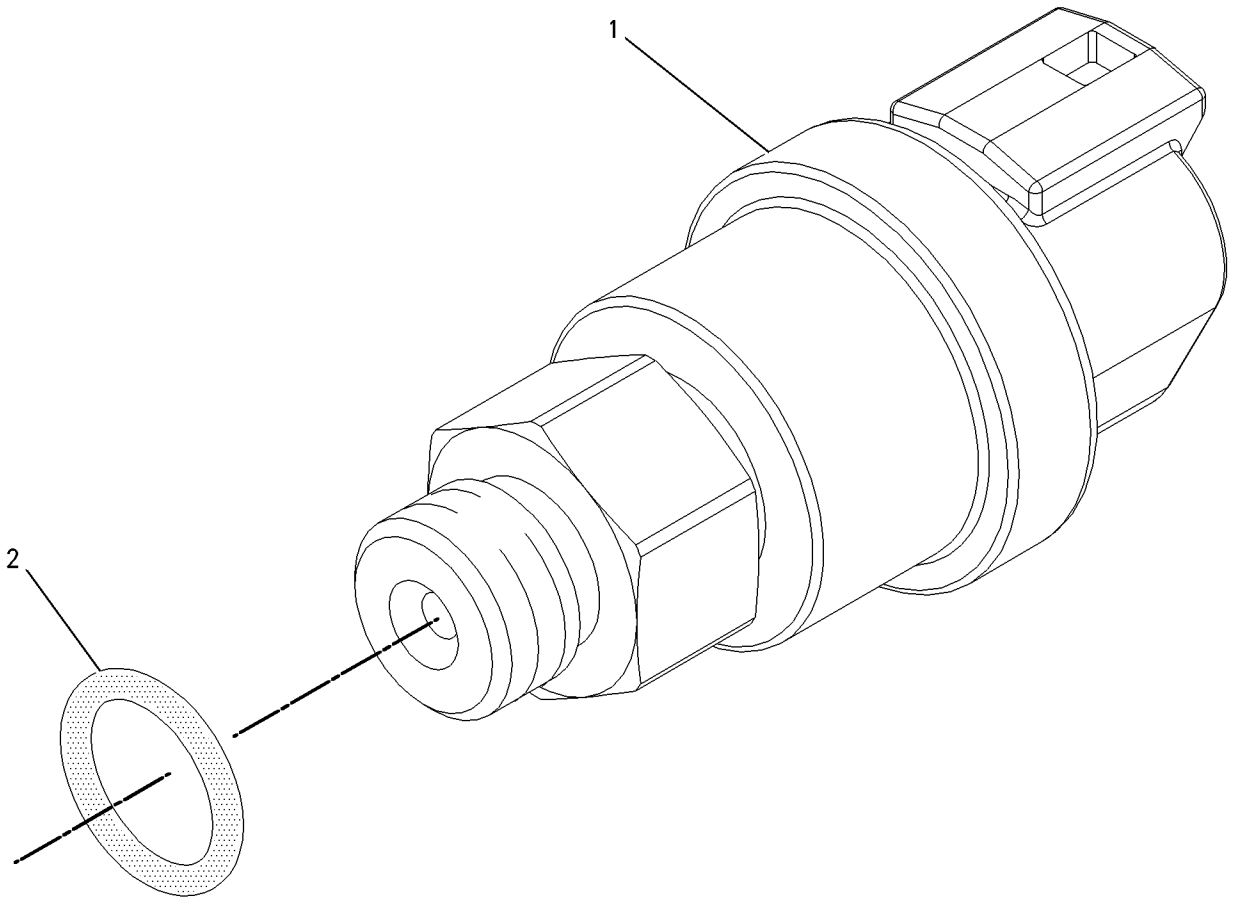


GRAPHIC #1 **<END>** g00855973

# *197-8394* SENSOR GP-PRESSURE

**S/N: KHX1-UP**

**PART OF 231-1977 SENSOR GP-ENGINE**

**SMCS-1408** **i02290153**

| NOTE | REF NO | GRAPHIC REF | PART NUMBER | QTY | PART NAME 1 2 3 4 5 6 (PRODUCT LEVEL) | SEE PAGE |
|---|---|---|---|---|---|---|
| | 1 | 1 | **161-1705** | 1 | SENSOR AS-PRESSURE | |
| | 2 | 1 | **6V-5048** | 1 | SEAL-O-RING | |

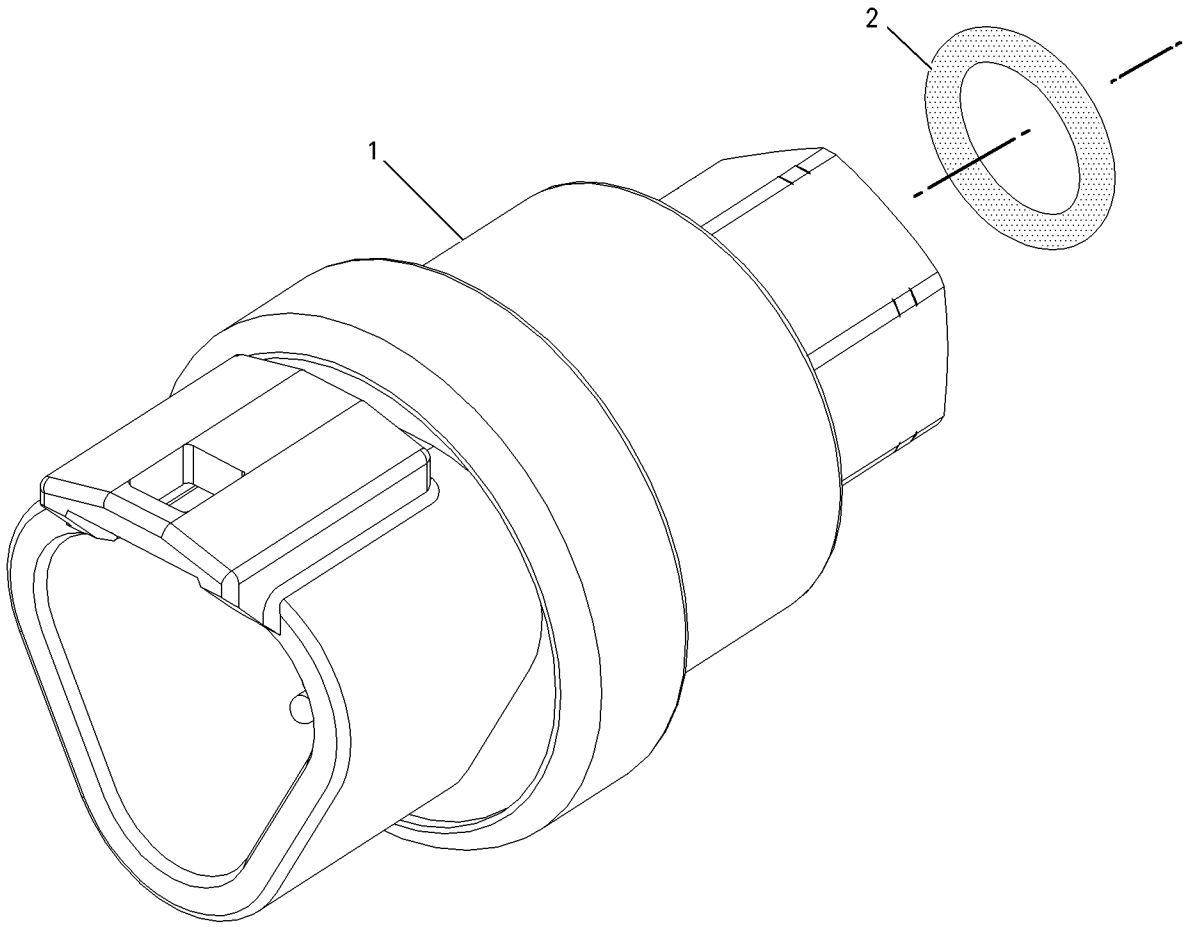


GRAPHIC #1 **<END>** g00856107

# *210-1747* SENSOR GP-PRESSURE

**S/N: KHX1-UP**

**PART OF 231-1977 SENSOR GP-ENGINE**

**SMCS-1408** **i02304547**

| NOTE | REF NO | GRAPHIC REF | PART NUMBER | QTY | PART NAME 1 2 3 4 5 6 (PRODUCT LEVEL) | SEE PAGE |
|---|---|---|---|---|---|---|
| | 1 | 1 | **161-1704** | 1 | SENSOR GP-PRESSURE | |
| | 2 | 1 | **6V-5048** | 1 | SEAL-O-RING | |

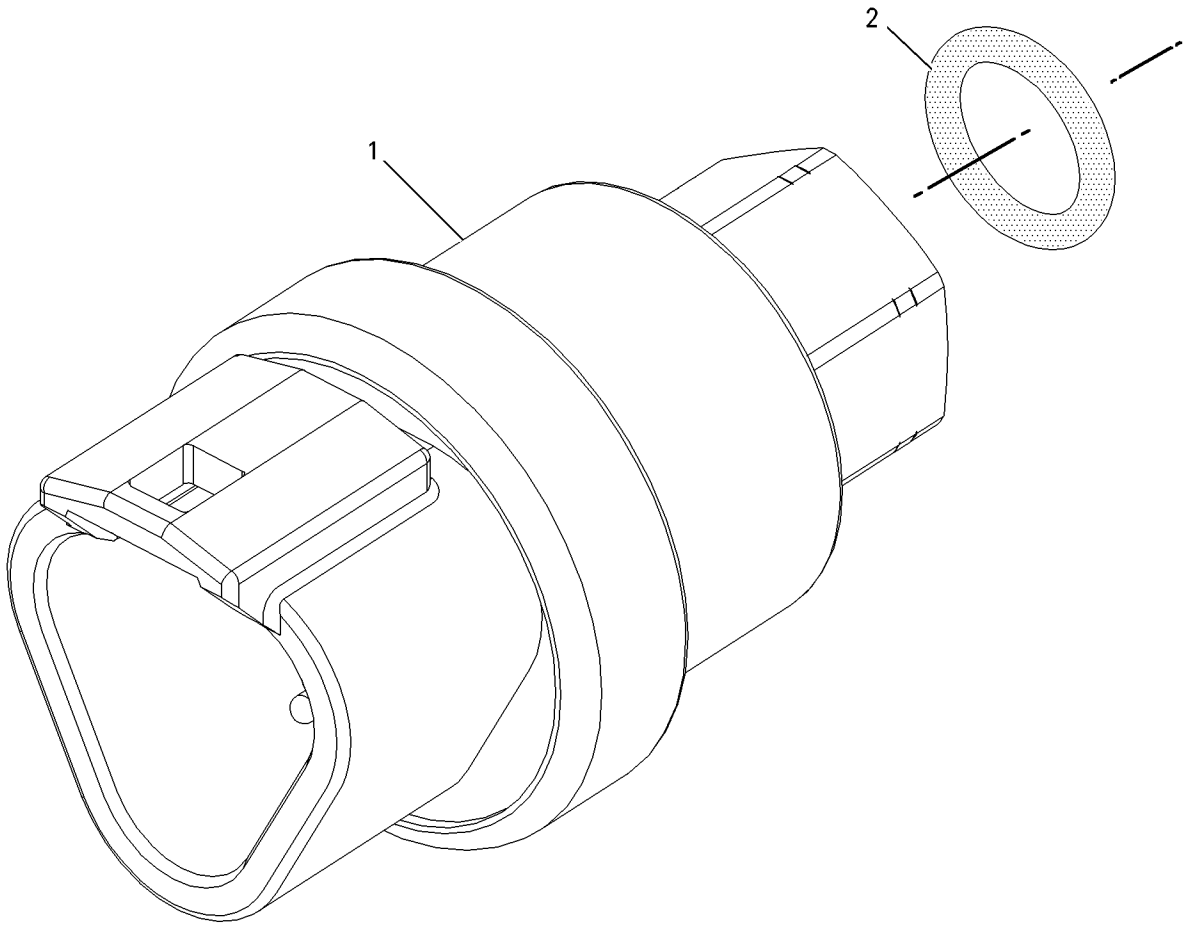


GRAPHIC #1 **<END>** g00856107

# *221-3417* SENSOR GP-PRESSURE

**S/N: 5451-UP**

**PART OF 255-4515 LINES GP-SECONDARY STEERING**

**AN ATTACHMENT**

**SMCS-1408** **i01990844**

| NOTE | REF NO | GRAPHIC REF | PART NUMBER | QTY | PART NAME 1 2 3 4 5 6 (PRODUCT LEVEL) | SEE PAGE |
|---|---|---|---|---|---|---|
| | 1 | 1 | **155-2260** | 1 | KIT-CONNECTING PLUG (3-PIN) | |
| | | | | | (INCLUDES PLUG AS & WEDGE) | |
| | 2 | 1 | **194-5226** | 3 | WIRE AS-HARNESS (16-GA TO 18-GA) | |
| | 3 | 1 | **155-2276** | 1 | WEDGE-PLUG LOCK (3-PIN) | |

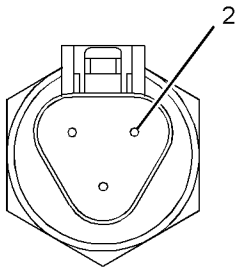


VIEW A-A

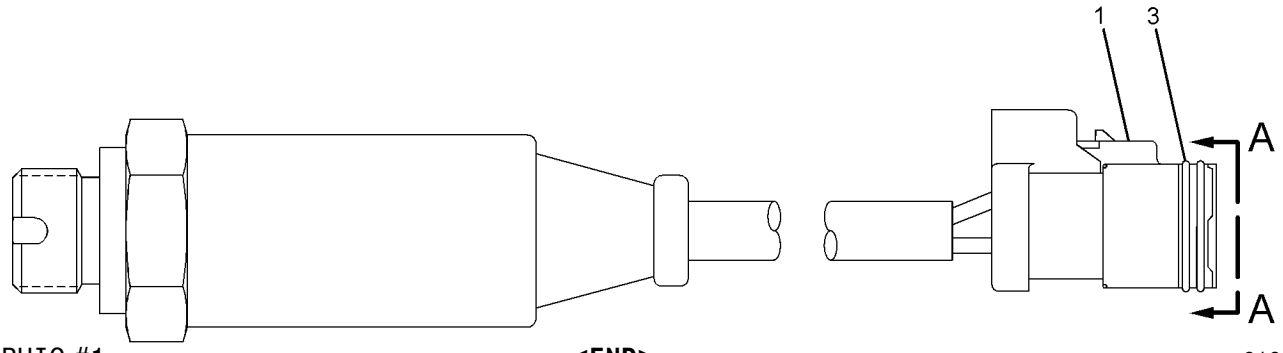


GRAPHIC #1 **<END>** g01060815

# *224-4536* SENSOR GP-PRESSURE

**S/N: KHX1-UP**

**PART OF 236-6220 SENSOR GP-PRESSURE**

**SMCS-1408** **i02294161**

| NOTE | REF NO | GRAPHIC REF | PART NUMBER | QTY | PART NAME 1 2 3 4 5 6 (PRODUCT LEVEL) | SEE PAGE |
|---|---|---|---|---|---|---|
| E | 1 | 1 | **9X-1813** | | SLEEVE (35-CM) | |
| | 2 | 1 | **155-2260** | 1 | KIT-CONNECTING PLUG (3-PIN) | |
| | | | | | (INCLUDES PLUG AS, WEDGES & INTERFACE SEAL) | |
| | 3 | 1 | **194-5226** | 3 | WIRE AS-HARNESS (16-GA TO 18-GA) | |
| | | | | | —OR— | |
| | | 1 | **194-5227** | 3 | WIRE AS-HARNESS (14-GA WIRE) | |
| | 4 | 1 | **155-2276** | 1 | WEDGE-PLUG LOCK (3-PIN) | |

E-ORDER BY THE CENTIMETER

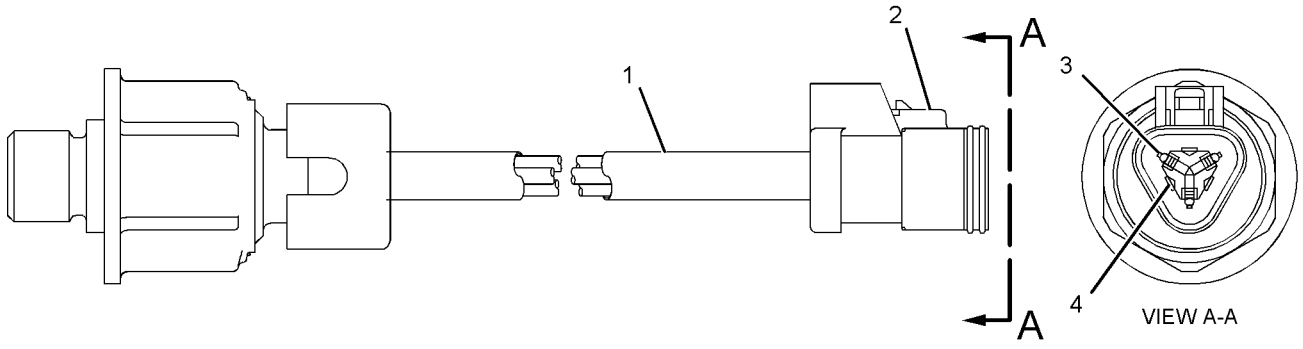


GRAPHIC #1 **<END>** g01040301

## *236-6220* SENSOR GP-PRESSURE

**S/N: KHX1-UP**

**PART OF 231-1977 SENSOR GP-ENGINE**

**SMCS-1408** **i02582173**

| NOTE | REF NO | GRAPHIC REF | PART NUMBER | QTY | PART NAME 1 2 3 4 5 6 (PRODUCT LEVEL) | SEE PAGE |
|---|---|---|---|---|---|---|
| | 1 | 1 | **214-7567** | 1 | SEAL-O-RING | |
| Y | 2 | 1 | **224-4536** | 1 | SENSOR GP-PRESSURE (INJECTION ACTUATION) | 175 |

Y-SEPARATE ILLUSTRATION

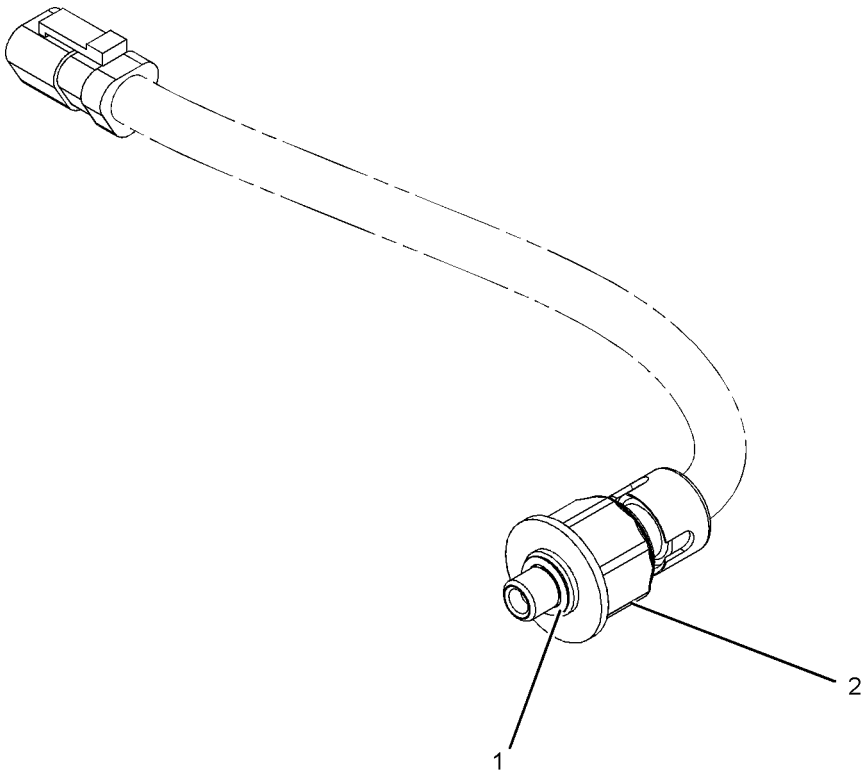


GRAPHIC #1 **<END>** g01054528

# 237-0957 SENSOR GP-PRESSURE

**S/N: 5451-UP**
**PART OF 278-9823 LINES GP-GRAPPLE**
**AN ATTACHMENT**

**SMCS-1408** **i02700028**

| NOTE | REF NO | GRAPHIC REF | PART NUMBER | QTY | PART NAME 1 2 3 4 5 6 (PRODUCT LEVEL) | SEE PAGE |
|---|---|---|---|---|---|---|
| BE | 1 | 1 | **9X-1813** | | SLEEVE | |
| | 2 | 1 | **155-2260** | 1 | KIT-CONNECTING PLUG (3-PIN) | |
| | | | | | (INCLUDES PLUG AS & WEDGE) | |

B-USE AS REQUIRED
E-ORDER BY THE CENTIMETER

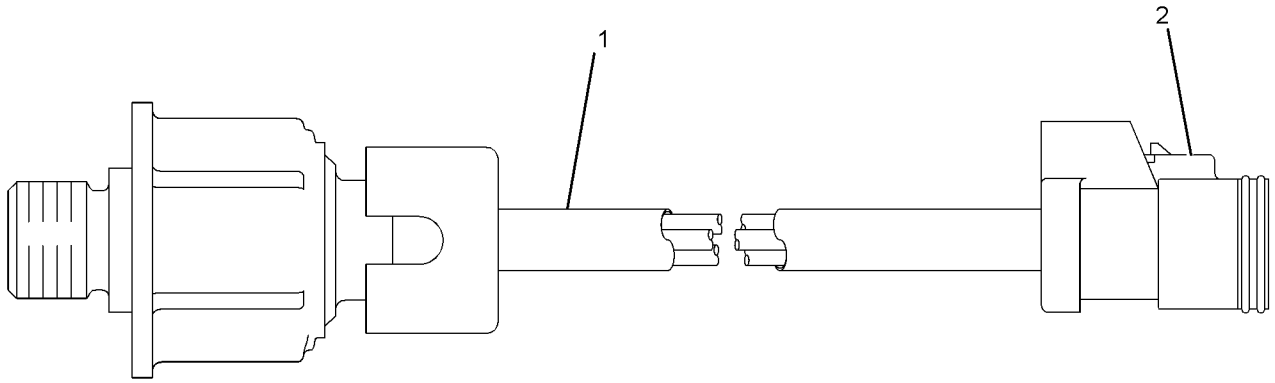


GRAPHIC #1 **<END>** g01131622

# 193-0421 SENSOR GP-SPEED

**S/N: 5MY1-UP**

**PART OF 277-8579 CASE & PARTS GP-TRANSMISSION**

**SMCS-3175** **i02667480**

| NOTE | REF NO | GRAPHIC REF | PART NUMBER | QTY | PART NAME 1 2 3 4 5 6 (PRODUCT LEVEL) | SEE PAGE |
|---|---|---|---|---|---|---|
| | 1 | 1 | **171-5349** | 1 | STRAP-MARKER | |
| | 2 | 1 | **102-8802** | 1 | KIT-RECEPTACLE (2-PIN) | |
| | 3 | 1 | **186-3735** | 2 | PIN-CONNECTOR (16-GA TO 18-GA) | |
| | 4 | 1 | **3E-3365** | 1 | WEDGE-RECEPTACLE LOCK (2-PIN) | |
| BE | 5 | 1 | **9X-1386** | | SLEEVE | |

B-USE AS REQUIRED
E-ORDER BY THE CENTIMETER

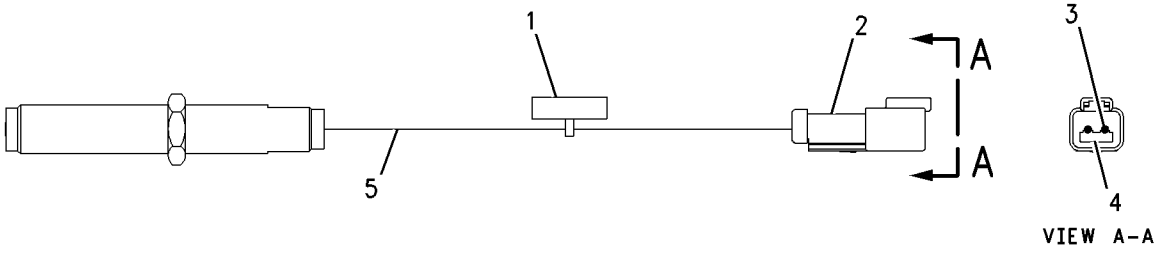


GRAPHIC #1 **<END>** g00766837

# *236-6221* SENSOR GP-SPEED

**S/N: KHX1-UP**

**PART OF 231-1977 SENSOR GP-ENGINE**

**SMCS-3175** **i02496557**

| NOTE | REF NO | GRAPHIC REF | PART NUMBER | QTY | PART NAME 1 2 3 4 5 6 (PRODUCT LEVEL) | SEE PAGE |
|---|---|---|---|---|---|---|
| | 1 | 1 | **203-3940** | 2 | SEAL-O-RING | |
| | 2 | 1 | **245-4630** | 1 | SENSOR GP-SPEED (ENGINE TIMING) | |

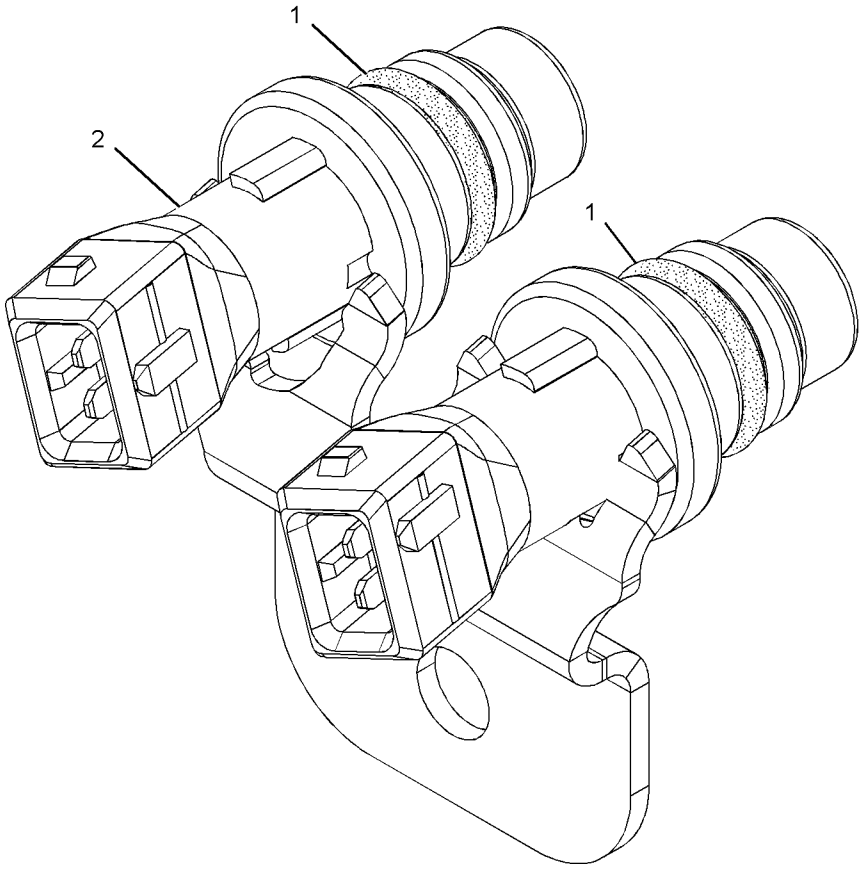


GRAPHIC #1 **<END>** g01013894

# *130-9811* SENSOR GP-TEMPERATURE

**S/N: 5451-UP**

**PART OF 255-8096 WIRING GP-MACHINE**

**SMCS-1408, 1906** **i02643468**

| NOTE | REF NO | GRAPHIC REF | PART NUMBER | QTY | PART NAME 1 2 3 4 5 6 (PRODUCT LEVEL) | SEE PAGE |
|---|---|---|---|---|---|---|
| | | | | | (NO SERVICED PARTS) | |

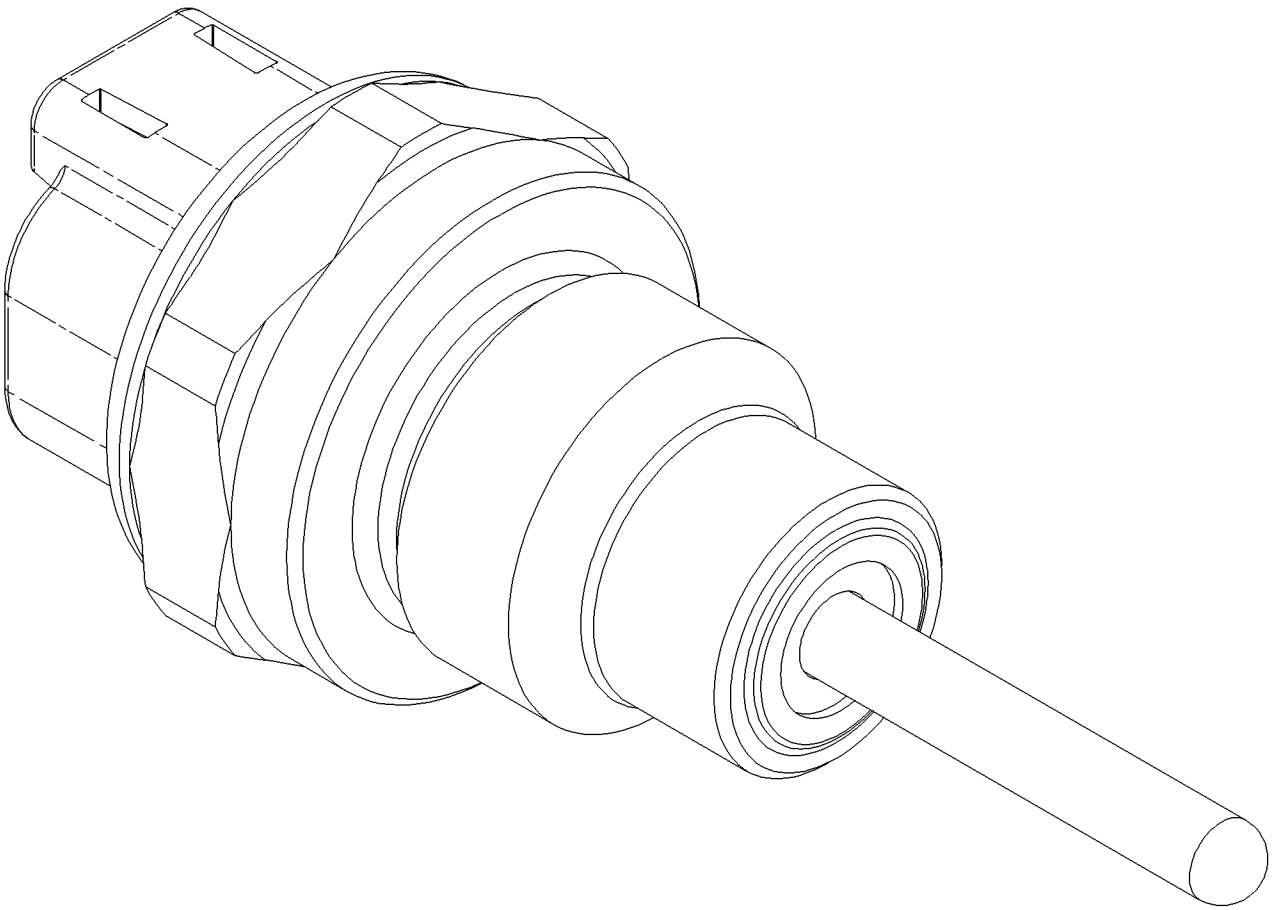

GRAPHIC #1 **<END>** g00945099

# 145-7028 SENSOR GP-TEMPERATURE

**S/N: 5451-UP; R1C1-UP**

**PART OF 287-2126 VALVE GP-TRANSMISSION CONTROL, 255-8096, 282-5089 WIRING GP-MACHINE**

**SMCS-1408, 1906** **i02430737**

| NOTE | REF NO | GRAPHIC REF | PART NUMBER | QTY | PART NAME 1 2 3 4 5 6 (PRODUCT LEVEL) | SEE PAGE |
|---|---|---|---|---|---|---|
| | 1 | 1 | **102-8802** | 1 | KIT-RECEPTACLE (2-PIN) | |
| | | | | | (INCLUDES RECEPTACLE AS AND WEDGE) | |
| J | 2 | 1 | **153-5043** | | SLEEVE (3-DM) | |
| | 3 | 1 | **8T-8729** | 2 | PIN-CONNECTOR | |
| | 4 | 1 | **3E-3365** | 1 | WEDGE-RECEPTACLE LOCK (2-PIN) | |
| J-ORDER BY THE DECIMETER | | | | | | |

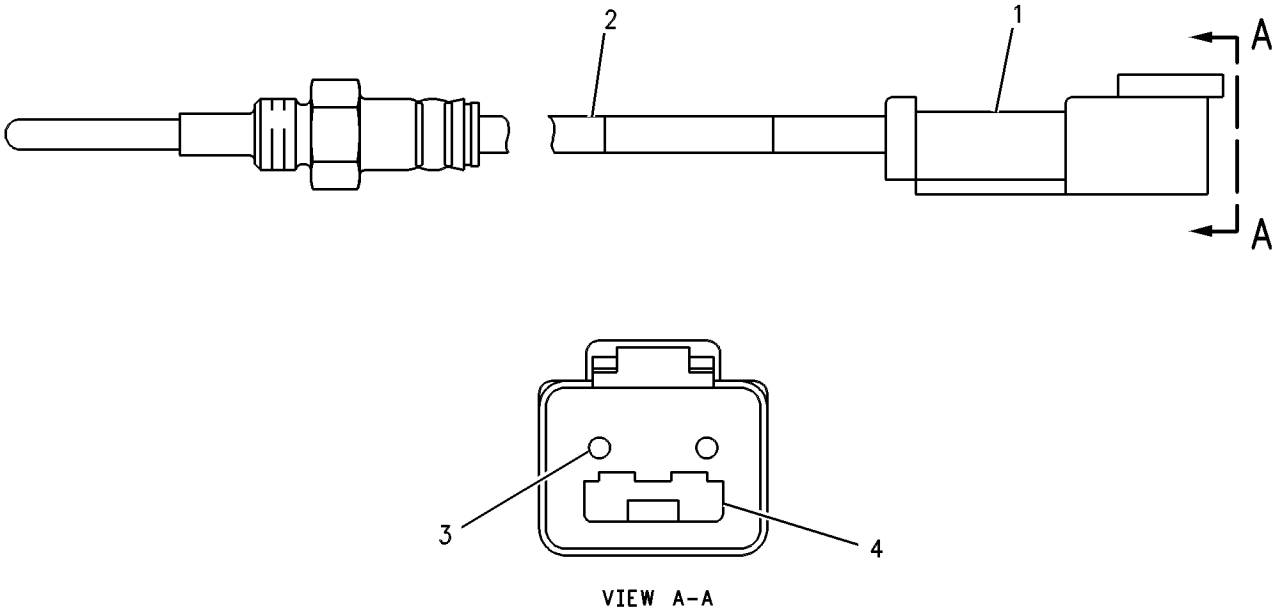


VIEW A-A

GRAPHIC #1 **<END>** g00334570

# *197-8391* SENSOR GP-TEMPERATURE–AIR INLET MANIFOLD

**S/N: KHX1-UP**

**PART OF 231-1977 SENSOR GP-ENGINE**

**TYPE 1**

**SMCS-1408, 1906** **i02713596**

| NOTE | REF NO | GRAPHIC REF | PART NUMBER | QTY | PART NAME 1 2 3 4 5 6 (PRODUCT LEVEL) | SEE PAGE |
|---|---|---|---|---|---|---|
| | 1 | 1 | **130-9811** | 1 | SENSOR GP-TEMPERATURE (AIR INLET MANIFOLD) | |
| | 2 | 1 | **8L-2786** | 1 | SEAL-O-RING | |

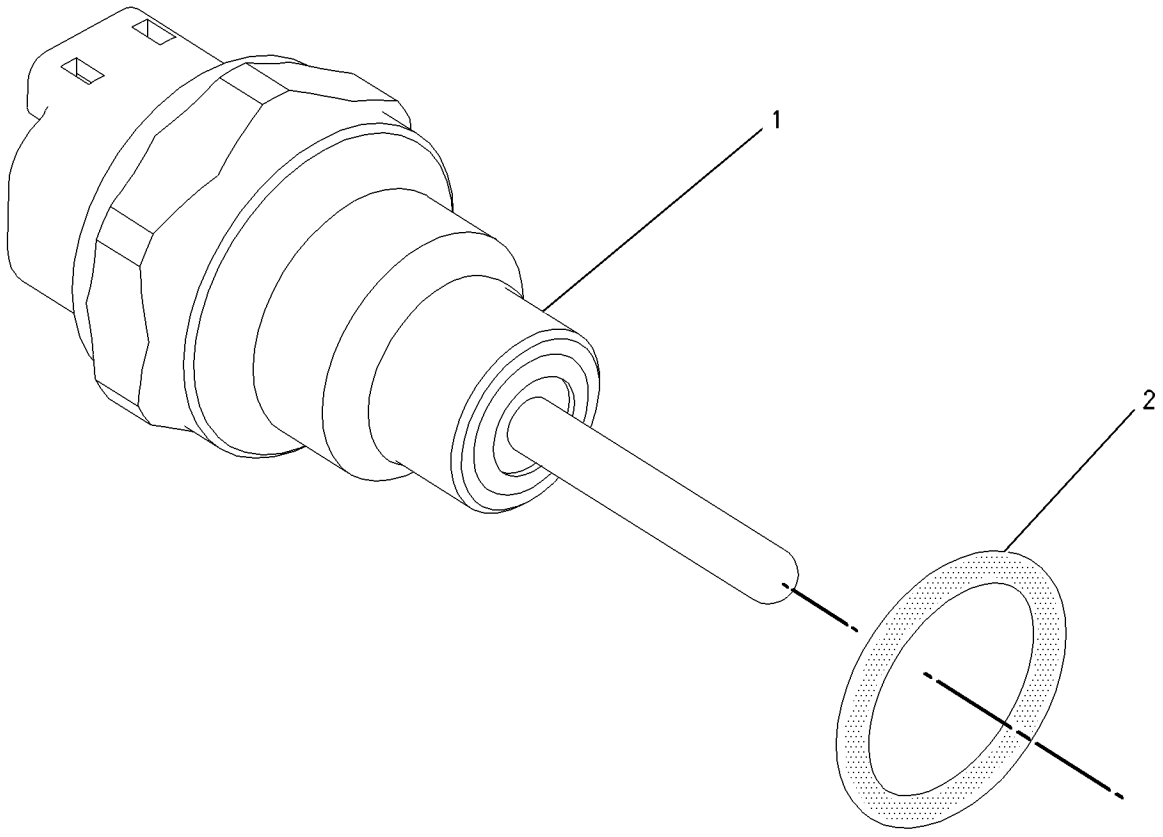


GRAPHIC #1 **<END>** g00856011

# *197-8391* SENSOR GP-TEMPERATURE–AIR INLET MANIFOLD

**S/N: KHX1-UP**

**PART OF 231-1977 SENSOR GP-ENGINE**

**TYPE 2**

**SMCS-1408, 1906** **i02713588**

| NOTE | REF NO | GRAPHIC REF | PART NUMBER | QTY | PART NAME 1 2 3 4 5 6 (PRODUCT LEVEL) | SEE PAGE |
|---|---|---|---|---|---|---|
| C | 1 | 1 | **264-4297** | 1 | SENSOR GP-TEMPERATURE (AIR INLET MANIFOLD) | |
| | | 1 | **137-6645** | | PAD | |
| | 2 | 1 | **8L-2786** | 1 | SEAL-O-RING | |

C-CHANGE FROM PREVIOUS TYPE

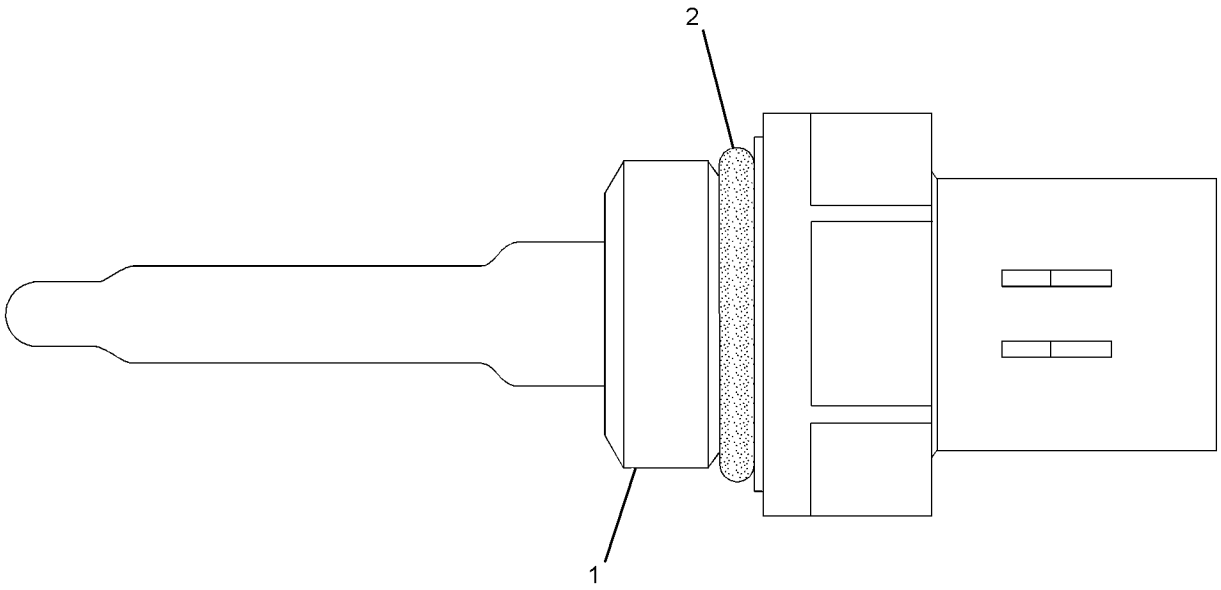


GRAPHIC #1 **<END>** g01164268

# *197-8392* SENSOR GP-TEMPERATURE

**S/N: KHX1-UP**

**PART OF 231-1977 SENSOR GP-ENGINE**

**TYPE 1**

**SMCS-1408, 1906** **i02713599**

| NOTE | REF NO | GRAPHIC REF | PART NUMBER | QTY | PART NAME 1 2 3 4 5 6 (PRODUCT LEVEL) | SEE PAGE |
|---|---|---|---|---|---|---|
| | 1 | 1 | **130-9811** | 1 | SENSOR GP-TEMPERATURE (COOLANT, WATER) | |
| | 2 | 1 | **6V-6609** | 1 | SEAL-O-RING | |

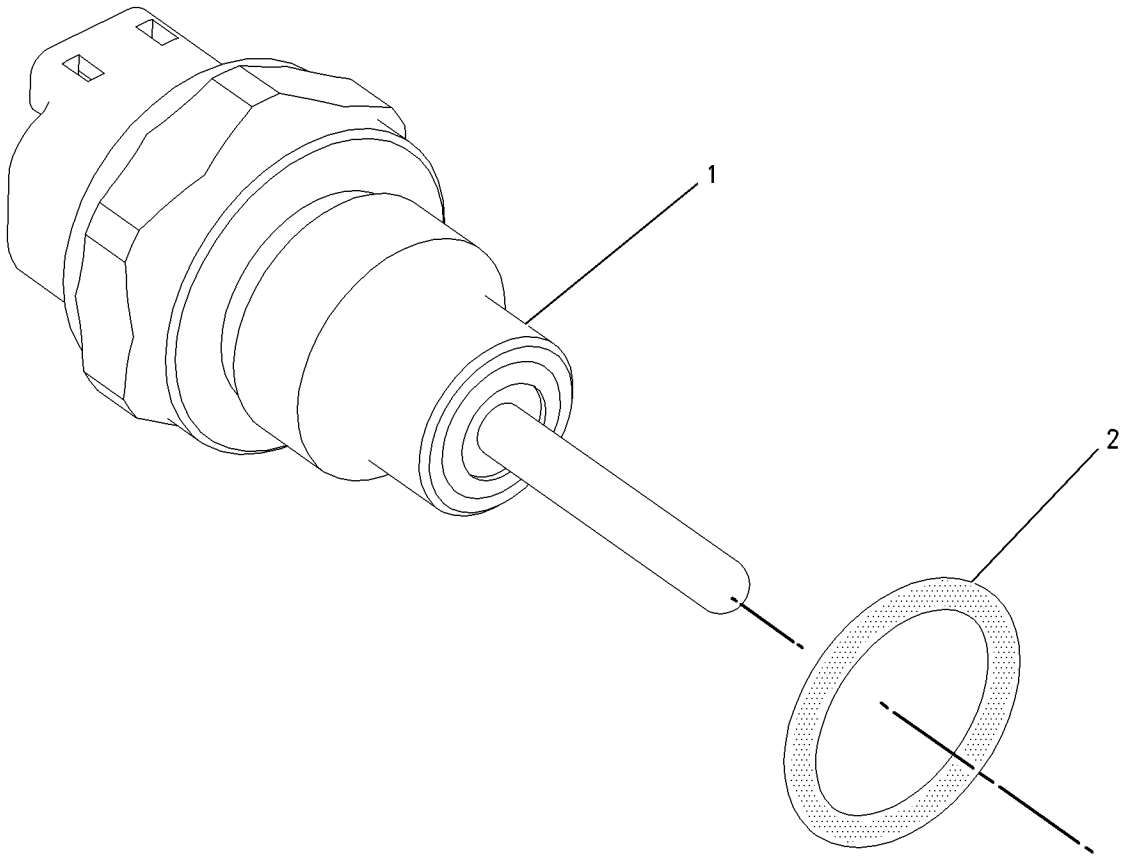


GRAPHIC #1 **<END>** g00856005

# *197-8392* SENSOR GP-TEMPERATURE

**S/N: KHX1-UP**

**PART OF 231-1977 SENSOR GP-ENGINE**

**TYPE 2**

**SMCS-1408, 1906** **i02713601**

| NOTE | REF NO | GRAPHIC REF | PART NUMBER | QTY | PART NAME 1 2 3 4 5 6 (PRODUCT LEVEL) | SEE PAGE |
|---|---|---|---|---|---|---|
| C | 1 | 1 | **264-4297** | 1 | SENSOR GP-TEMPERATURE (COOLANT, WATER) | |
| | | 1 | **137-6645** | 1 | PAD | |
| | 2 | 1 | **6V-6609** | 1 | SEAL-O-RING | |

C-CHANGE FROM PREVIOUS TYPE

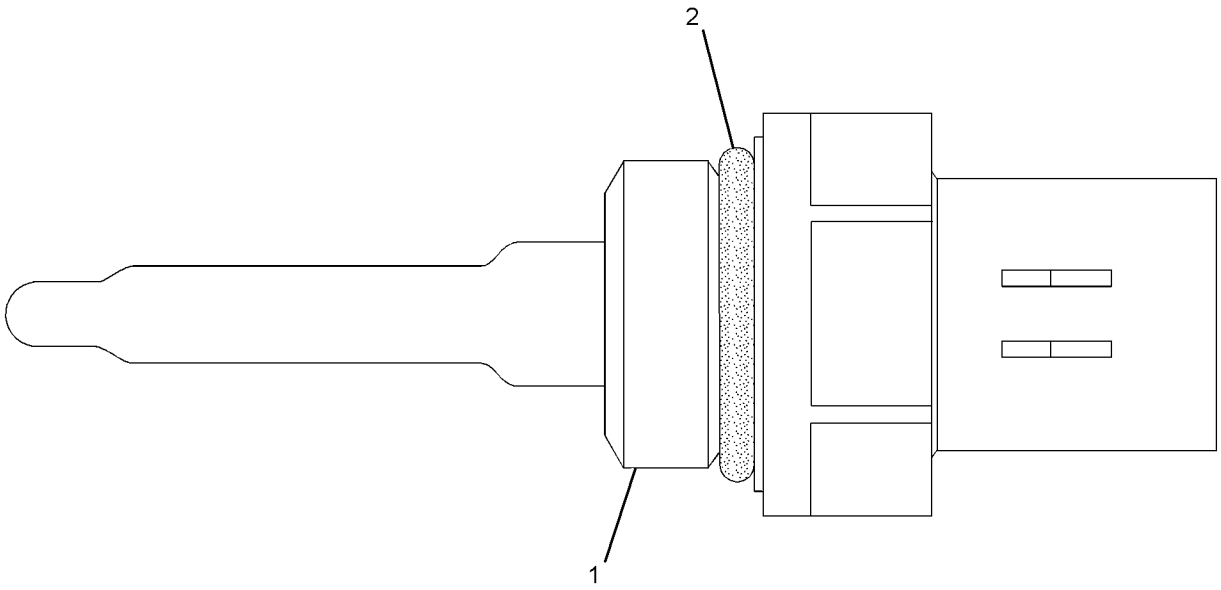


GRAPHIC #1 **<END>** g01164268

# ELECTRICAL AND STARTING SYSTEM

## *255-5440* STARTING AID GP-ETHER

**S/N: 5451-UP**

**AN ATTACHMENT**

**SMCS-1456** **i02702663**

| NOTE | REF NO | GRAPHIC REF | PART NUMBER | QTY | PART NAME 1 2 3 4 5 6 (PRODUCT LEVEL) | SEE PAGE |
|---|---|---|---|---|---|---|
| D | 1 | 1 | **5P-5630** | 1 | TUBE (8-DM) | |
| | 2 | 1 | **8T-4224** | 4 | WASHER-HARD (8.8X16X2-MM THK) | |
| | 3 | 1 | **7N-2059** | 1 | CLAMP AS (CYLINDER) | |
| | 4 | 1 | **9T-6635** | 1 | PLUG | |
| Y | 5 | 1 | **239-1134** | 1 | VALVE GP-ETHER STARTING (24-VOLT) | 201 |
| | 6 | 1 | **241-4194** | 1 | FITTING AS (CONTROL) (CONTROL) | |
| | 7 | 1 | **7K-1181** | 1 | STRAP-CABLE | |
| | 8 | 1 | **258-7492** | 1 | ATOMIZER AS-ETHER | |
| | 9 | 1 | **4P-7581** | 1 | CLIP (LADDER) | |
| | 10 | 1 | **8L-2786** | 1 | SEAL-O-RING | |
| M | 11 | 1 | **8T-4200** | 4 | BOLT (M8X1.25X16-MM) | |

D-ORDER BY THE METER
M-METRIC PART
Y-SEPARATE ILLUSTRATION

*255-5440* **STARTING AID GP-ETHER** *(contd.)* **i02702663**

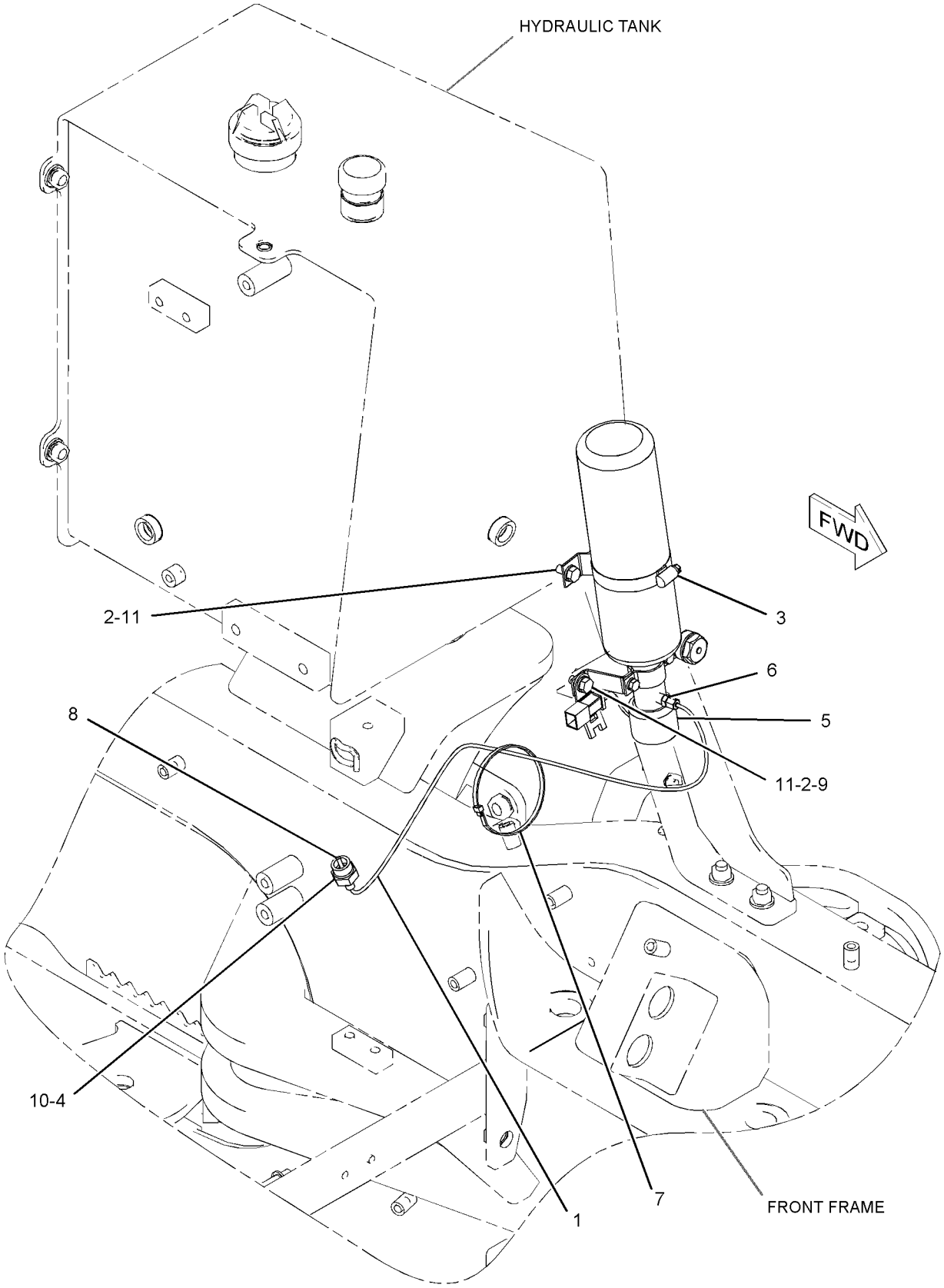


GRAPHIC #1 **<END>** g01356332

# *6V-5538* STARTING MOTOR GP-ELECTRIC

**S/N: 5451-UP**
**24-VOLT**
**PART OF 207-1560 STARTING MOTOR GP-ELECTRIC**
**FIELD REPLACEMENT ORDER 207-1560—PAGE 191**

**SMCS-1453** **i02214669**

| NOTE | REF NO | GRAPHIC REF | PART NUMBER | QTY | PART NAME 1 2 3 4 5 6 (PRODUCT LEVEL) | SEE PAGE |
|---|---|---|---|---|---|---|
| | 1 | 1 | **6V-8188** | 3 | NUT (1/2-13-THD) | |
| | 2 | 1 | **7X-0562** | 3 | WASHER-HARD (13.5X19X0.8-MM THK) | |
| | 3 | 1 | **4B-2049** | 1 | NUT (10-32-THD) | |
| | 4 | 1 | **8F-1434** | 1 | LOCKWASHER | |
| | 5 | 1 | **8T-0328** | 1 | WASHER-HARD (5.5X10X1-MM THK) | |
| M | 6 | 1 | **8T-4133** | 1 | NUT (M10X1.5-THD) | |
| | 7 | 1 | **8T-4121** | 1 | WASHER-HARD (11X21X2.5-MM THK) | |
| | 8 | 1 | **3E-0142** | 1 | HOUSING AS | |
| | 9 | 1 | **3E-0141** | 1 | STOP-STARTING MOTOR | |
| | 10 | 1 | **4N-7521** | 1 | RING-LOCK | |
| | 11 | 1 | **3E-0143** | 1 | DRIVE AS-STARTING MOTOR | |
| | 12 | 1 | **3E-0144** | 1 | HOUSING AS | |
| | 13 | 1 | **3E-0140** | 1 | LEVER AS-STARTING MOTOR | |
| | 14 | 1 | **3E-0138** | 1 | ARMATURE AS (24-VOLT) | |
| | 15 | 1 | **3E-0137** | 1 | HOLDER AS-BRUSH (STARTING MOTOR) | |
| | 16 | 1 | **3E-0135** | 1 | SOLENOID AS (24-VOLT) (STARTING MOTOR) | |
| | 17 | 1 | **3E-0125** | 1 | COVER AS-STARTING MOTOR | |
| | 18 | 1 | **3E-0139** | 1 | HOUSING AS | |
| | 19 | 1 | **3E-0136** | 1 | HOUSING AS | |
| | 20 | 1 | **3E-0132** | 1 | CONNECTOR | |
| | 21 | 1 | **3E-0133** | 1 | WIRE AS-STARTING MOTOR | |
| | 22 | 1 | **3E-0134** | 1 | COVER-PLUNGER | |
| | | | | | AVAILABLE REPAIR KIT(S): | |
| | | | **3E-0128** | 1 | KIT-BRUSH (STARTING MOTOR) | |
| | | | | | (INCLUDES O-RINGS, SCREW, SPRING, AND BRUSH) | |
| | | | **3E-0131** | 1 | KIT-WASHER (STARTING MOTOR) | |
| | | | | | (INCLUDES WASHERS) | |
| | | | **3E-0127** | 1 | KIT-BEARING (STARTING MOTOR) | |
| | | | | | (INCLUDES BEARINGS, SEAL, AND BUSHING) | |
| | | | **3E-0129** | 1 | KIT-HARDWARE (STARTING MOTOR) | |
| | | | | | (INCLUDES WASHERS, BOLTS, LOCKWASHERS, NUTS, BUSHINGS, AND PLATE) | |
| | | | **3E-0130** | 1 | KIT-STARTING MOTOR SEAL | |
| | | | | | (INCLUDES SEALS AND O-RINGS) | |
| | | | **3E-0145** | 1 | KIT-STARTING MOTOR PIN | |
| | | | | | (INCLUDES O-RINGS, SHAFT, AND RING) | |

M-METRIC PART

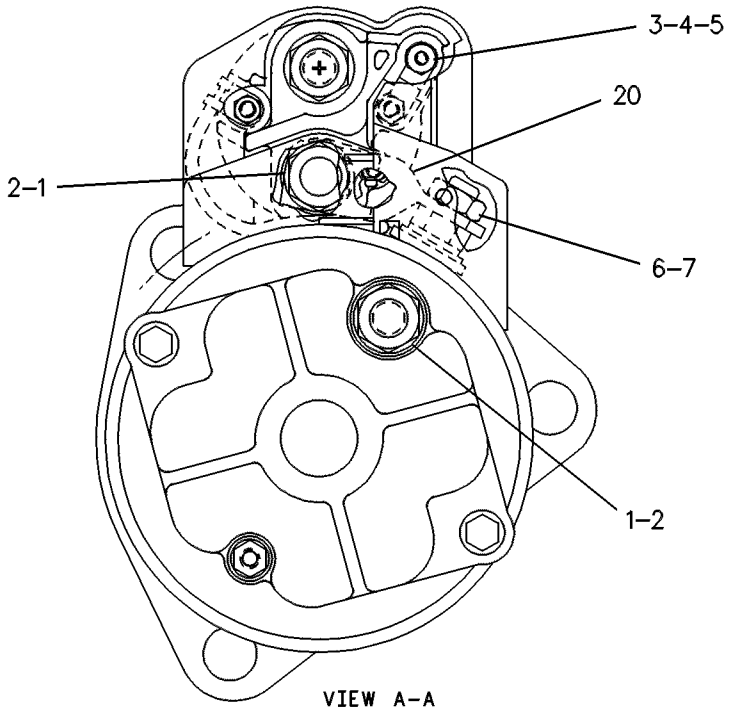


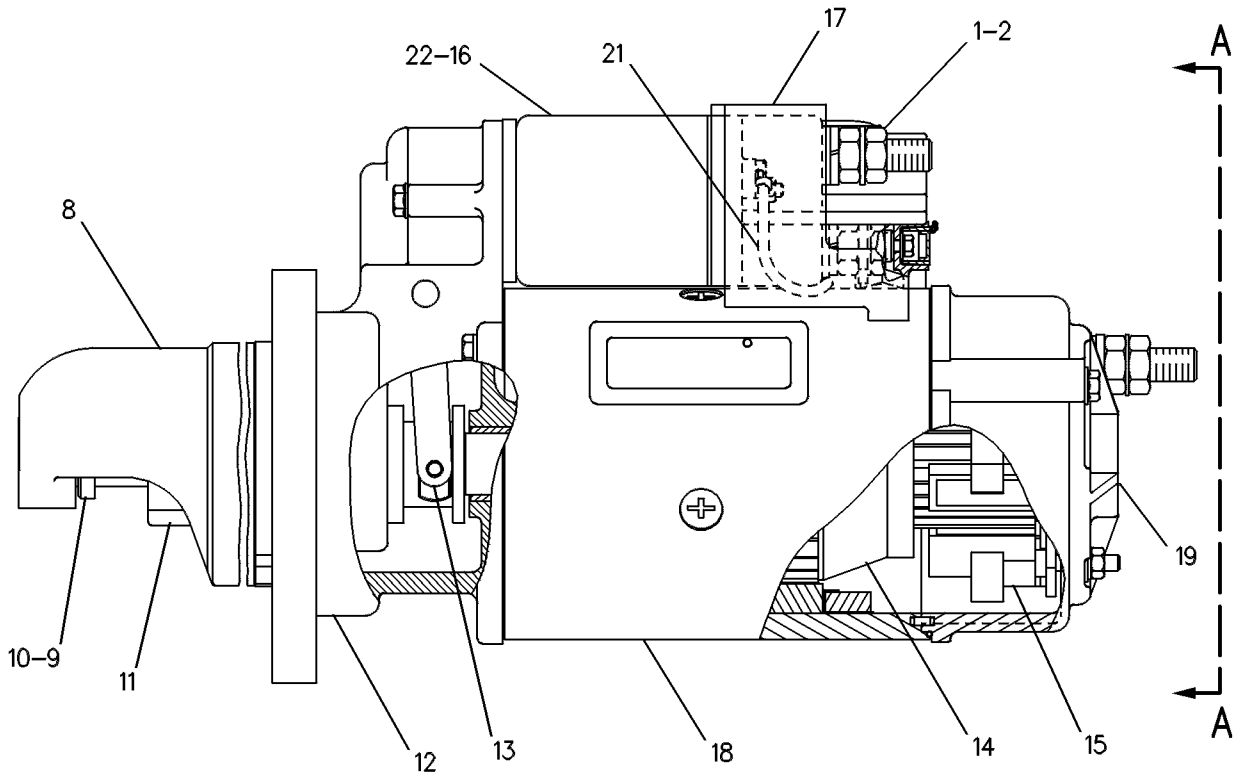


GRAPHIC #1 **<END>** g00108496

# *166-1238* STARTING MOTOR GP-ELECTRIC

**S/N: 5451-UP**
**24 VOLT**
**PART OF 248-4224 INSTALLATION AR-ENGINE**

**SMCS-1453** **i02464768**

| NOTE | REF NO | GRAPHIC REF | PART NUMBER | QTY | PART NAME 1 2 3 4 5 6 (PRODUCT LEVEL) | SEE PAGE |
|---|---|---|---|---|---|---|
| | 1 | 1 | **4H-7869** | 1 | GASKET | |
| CYR | 2 | 1 | **207-1560** | 1 | STARTING MOTOR GP-ELECTRIC | 191 |
| | 3 | 1 | **8R-5846** | 1 | CABLE AS | |
| | | 1 | **1S-7251** | 2 | TERMINAL-RING (FOR 1/2-IN BOLT) | |
| E | | 1 | **5P-0747** | | CABLE (00-GA, BLACK) (30 CM) | |
| | 4 | 1 | **8S-2332** | 3 | BOLT-12 POINT HEAD (5/8-11X1.75-IN) | |
| | 5 | 1 | **8T-4121** | 1 | WASHER-HARD (11X21X2.5-MM THK) | |
| M | 6 | 1 | **8T-4137** | 1 | BOLT (M10X1.5X20-MM) | |

C-CHANGE FROM PREVIOUS TYPE
E-ORDER BY THE CENTIMETER
M-METRIC PART
R-REMFG PART MAY BE AVAILABLE
Y-SEPARATE ILLUSTRATION

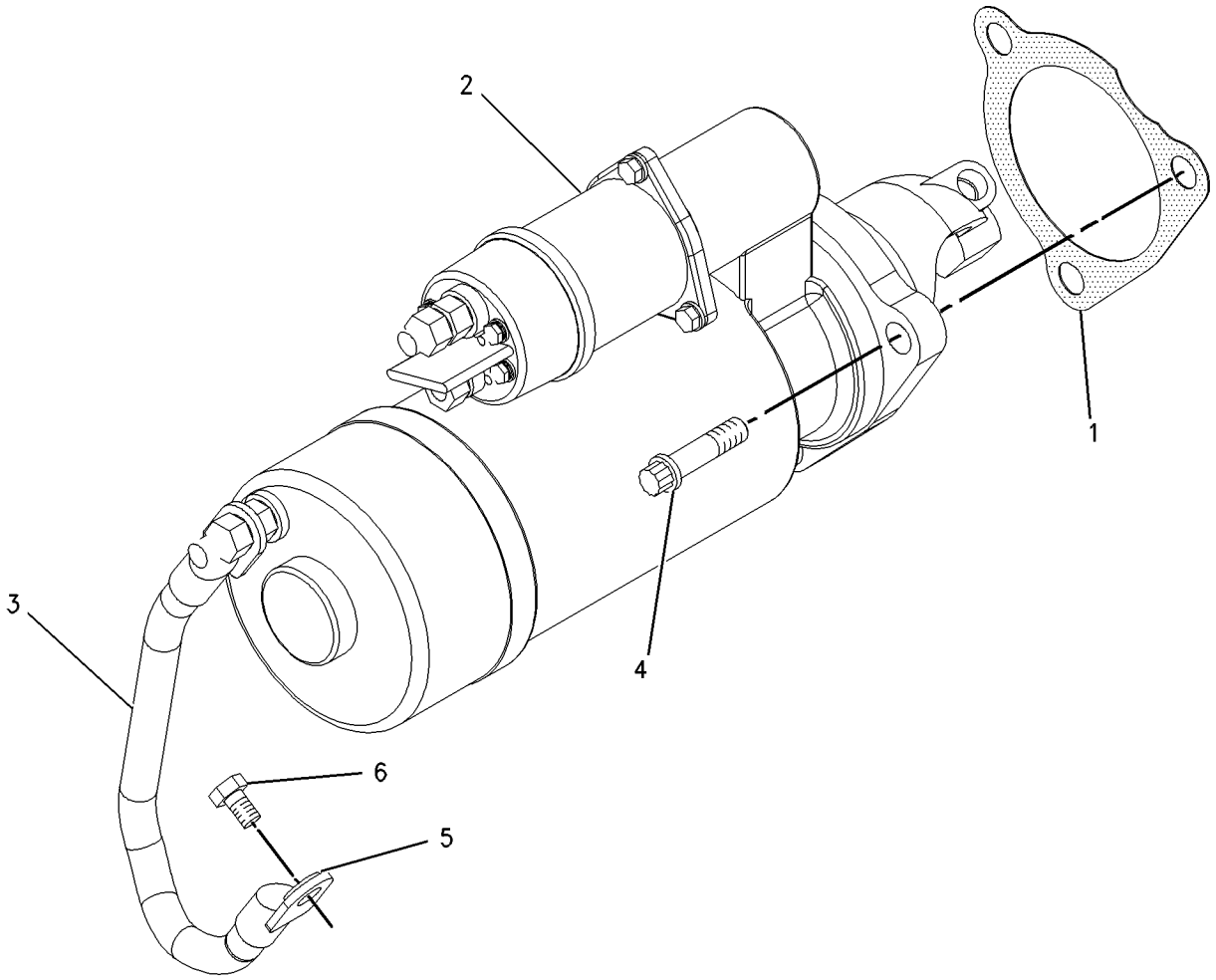


GRAPHIC #1 **<END>** g00665277

# *207-1560* STARTING MOTOR GP-ELECTRIC*R

**S/N: 5451-UP**

**24-VOLT**

**PART OF 166-1238 STARTING MOTOR GP-ELECTRIC**

**FIELD REPLACEMENT FOR 207-1561—PAGE 192: FOR 6V-5538—PAGE 188**

**SMCS-1453** **i02355545**

| NOTE | PART NUMBER | QTY | PART NAME 1 2 3 4 5 6 (PRODUCT LEVEL) | SEE PAGE |
|---|---|---|---|---|
| Y | *6V-5538* | 1 | STARTING MOTOR GP-ELECTRIC (24-VOLT) | 188 |
| | | | —OR— | |
| Y | *207-1561* | 1 | STARTING MOTOR GP-ELECTRIC (24-VOLT) | 192 |

Y-SEPARATE ILLUSTRATION

**<END>**

# *207-1561* STARTING MOTOR GP-ELECTRIC

**S/N: 5451-UP**
**24-VOLT**
**PART OF 207-1560 STARTING MOTOR GP-ELECTRIC**
**FIELD REPLACEMENT ORDER 207-1560—PAGE 191**

**SMCS-1453** **i02219257**

| NOTE | REF NO | GRAPHIC REF | PART NUMBER | QTY | PART NAME 1 2 3 4 5 6 (PRODUCT LEVEL) | SEE PAGE |
|---|---|---|---|---|---|---|
| | 1 | 1 | **3T-3434** | 6 | PLUG | |
| | 2 | 1 | **7T-3279** | 1 | HOUSING AS | |
| | 3 | 1 | **8T-8566** | 1 | TERMINAL AS | |
| | 4 | 1 | **6V-8188** | 4 | NUT (1/2-13-THD) | |
| | 5 | 1 | **7X-0562** | 4 | WASHER-HARD (13.5X19X0.8-MM THK) | |
| | 6 | 1 | **3T-3422** | 1 | WIRE AS | |
| | 7 | 1 | **7T-3278** | 1 | HOLDER AS-BRUSH | |
| | 8 | 1 | **7T-3277** | 1 | COIL AS-FIELD | |
| | 9 | 1 | **7T-3454** | 1 | INSULATOR | |
| | 10 | 1 | **7T-3271** | 1 | CONNECTOR | |
| | 11 | 1 | **7T-3451** | 1 | INSULATOR-TERMINAL | |
| | 12 | 1 | **8T-8569** | 1 | INSULATOR-TERMINAL | |
| | 13 | 1 | **5S-7349** | 4 | BOLT (1/4-20X0.5-IN) | |
| | 14 | 1 | **8T-4205** | 4 | WASHER-HARD (7.2X14.5X2-MM THK) | |
| | 15 | 1 | **8H-1141** | 4 | SHOE-POLE | |
| | 16 | 1 | **3F-0379** | 8 | SCREW-POLE SHOE (3/8-24-THD) | |
| | 17 | 1 | **7T-3276** | 1 | ARMATURE AS (24-VOLT) | |
| | 18 | 1 | **3E-7775** | 1 | HOUSING AS | |
| | 19 | 1 | **4M-1831** | 1 | PLUG-LEVER HOUSING | |
| | 20 | 1 | **7L-2894** | 1 | GASKET | |
| | 21 | 1 | **036-9823** | 5 | BOLT (1/4-28X1-IN) | |
| | 22 | 1 | **6N-3827** | 1 | DRIVE AS-MOTOR | |
| | 23 | 1 | **7T-3974** | 1 | HOUSING AS-DRIVE | |
| | 24 | 1 | **7X-3373** | 6 | BOLT (5/16-18X0.88-IN) | |
| | 25 | 1 | **193-8570** | 1 | SOLENOID AS (24-VOLT) (STARTING MOTOR) | |
| | 26 | 1 | **6V-8378** | 2 | NUT (10-32-THD) | |
| | 27 | 1 | **8F-1434** | 2 | LOCKWASHER | |
| | 28 | 1 | **8T-0328** | 2 | WASHER-HARD (5.5X10X1-MM THK) | |
| | 29 | 1 | **9X-4824** | 2 | COVER-STARTING MOTOR | |
| | | | | | AVAILABLE REPAIR KIT(S): | |
| | | | **7T-3267** | 1 | KIT-BUSHING (STARTING MOTOR) | |
| | | | | | (INCLUDES BUSHINGS, WICKS, CUPS, SEALS, SCREW ASSEMBLIES, WASHERS, SPACER, AND NUT) | |
| | | | **7T-3268** | 1 | KIT-LEVER (STARTING MOTOR) | |
| | | | | | (INCLUDES LEVER AS, SEALS, NUT, GASKET, AND RETAINER) | |
| | | | **8C-3655** | 1 | KIT-BRUSH (STARTING MOTOR) | |
| | | | | | (INCLUDES BRUSHES, SPRINGS, SCREWS, SEAL AND SCREW AS) | |
| | | | **8T-9884** | 1 | KIT-INSULATOR (STARTING MOTOR) | |
| | | | | | (INCLUDES INSULATORS AND BUSHING) | |

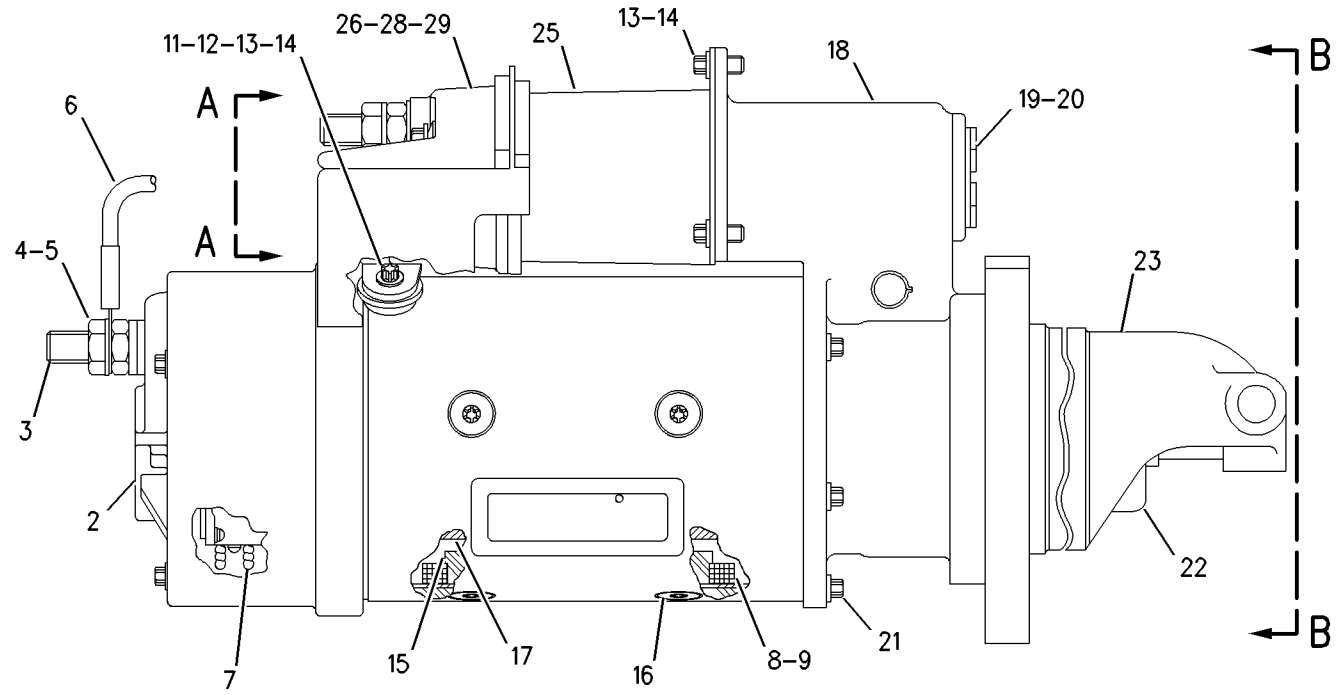


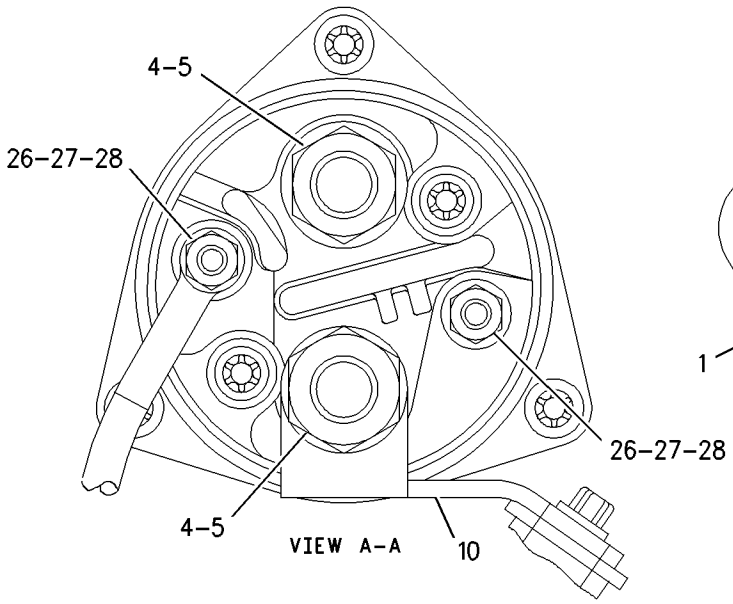


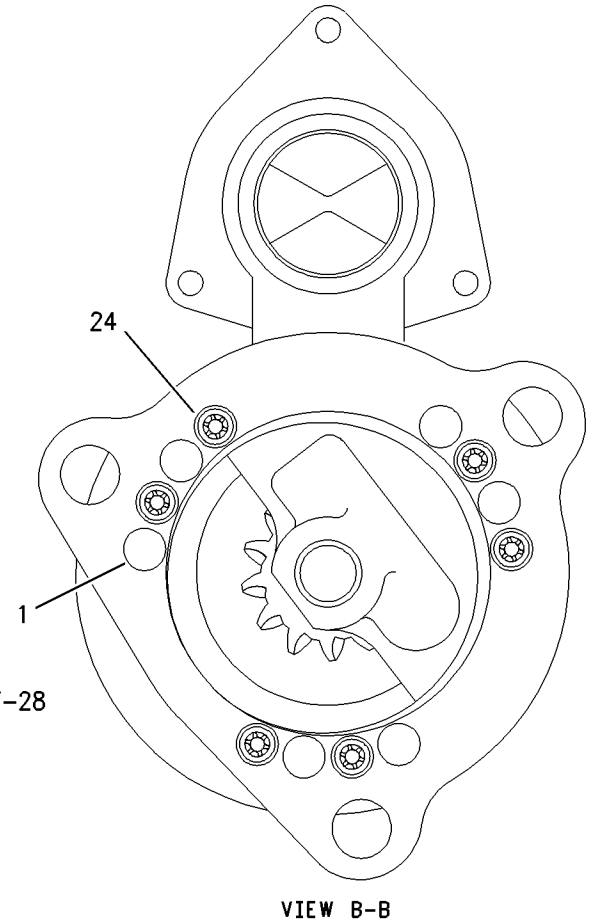


GRAPHIC #1 **<END>** g00846214

# *7N-0718* SWITCH GP-DISCONNECT–BATTERY

**S/N: 5451-UP**

**12-VOLT**

**PART OF 255-8094 BATTERY & WIRING GP**

**SMCS-1411** **i02459121**

| NOTE | REF NO | GRAPHIC REF | PART NUMBER | QTY | PART NAME 1 2 3 4 5 6 (PRODUCT LEVEL) | SEE PAGE |
|---|---|---|---|---|---|---|
| | 1 | 1 | **8H-5306** | 1 | KEY (BATTERY DISCONNECT) | |
| | 2 | 1 | **8H-5303** | 1 | NUT (3/4-16-THD) | |
| | 3 | 1 | **2H-3922** | 2 | LOCKWASHER | |
| | 4 | 1 | **9F-5644** | 2 | LOCKWASHER | |
| | 5 | 1 | **6F-7045** | 2 | NUT-FULL (3/8-24-THD) | |

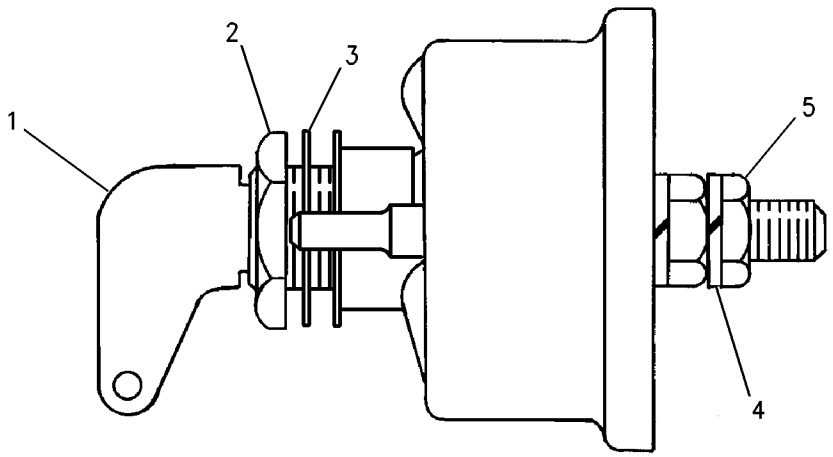


GRAPHIC #1 **<END>** g00715584

# *125-1302* SWITCH GP-MAGNETIC

**S/N: 5451-UP**
**24-VOLT**
**PART OF 282-4220 PANEL GP-CIRCUIT BREAKER**

**SMCS-7499** **i02415548**

| NOTE | REF NO | GRAPHIC REF | PART NUMBER | QTY | PART NAME 1 2 3 4 5 6 (PRODUCT LEVEL) | SEE PAGE |
|---|---|---|---|---|---|---|
| | 1 | 1 | **102-8802** | 1 | KIT-RECEPTACLE (2-PIN) | |
| | | | | | (INCLUDES RECEPTACLE AS & WEDGE) | |
| | 2 | 1 | **186-3735** | 2 | PIN-CONNECTOR (16-GA TO 18-GA) | |
| | 3 | 1 | **1H-3338** | 2 | LOCKWASHER | |
| | 4 | 1 | **012-0380** | 2 | LOCKWASHER | |
| M | 5 | 1 | **5C-2890** | 2 | NUT (M6X1-THD) | |
| E | 6 | 1 | **9X-1813** | | SLEEVE (16-CM) | |

E-ORDER BY THE CENTIMETER
M-METRIC PART

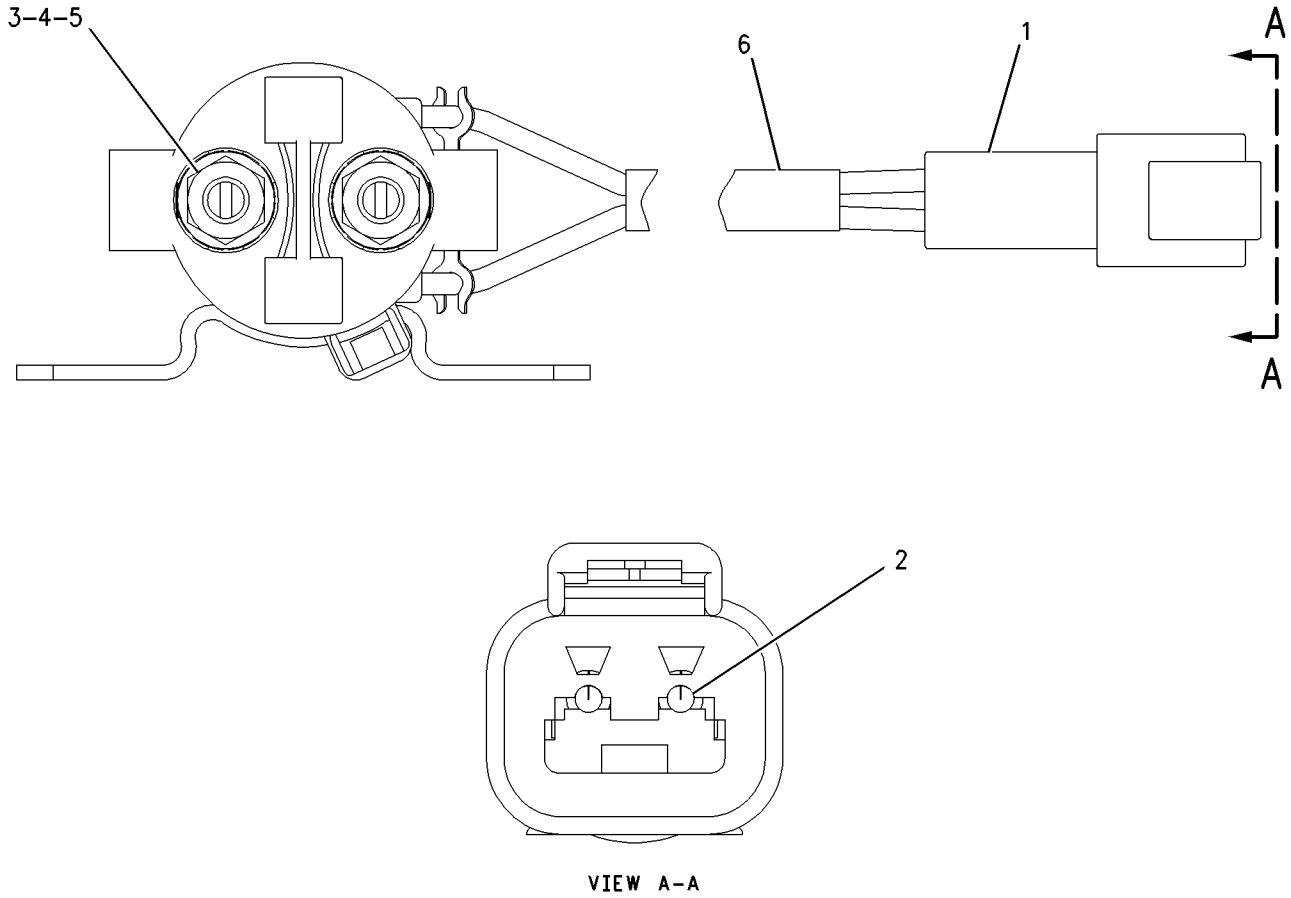


VIEW A–A

GRAPHIC #1 **<END>** g00988001

## *179-0006* SWITCH GP-MAGNETIC—SECONDARY STEERING RELAY

**S/N: 5451-UP**
**24-VOLT, 32-VOLT**
**PART OF 255-8106 WIRING GP-SECONDARY STEERING**
**AN ATTACHMENT**

**SMCS-7499** **i02605913**

| NOTE | REF NO | GRAPHIC REF | PART NUMBER | QTY | PART NAME 1 2 3 4 5 6 (PRODUCT LEVEL) | SEE PAGE |
|---|---|---|---|---|---|---|
| | 1 | 1 | **7X-0620** | 2 | WASHER-HARD (5.5X13X1.6-MM THK) | |
| | 2 | 1 | **8F-1434** | 2 | LOCKWASHER | |
| | 3 | 1 | **6V-8378** | 2 | NUT (10-32-THD) | |
| | 4 | 1 | **4L-6499** | 2 | WASHER (0.38X0.88X0.06-IN THK) | |
| | 5 | 1 | **4D-1326** | 2 | LOCKWASHER | |
| | 6 | 1 | **1B-2578** | 2 | NUT (3/8-16-THD) | |

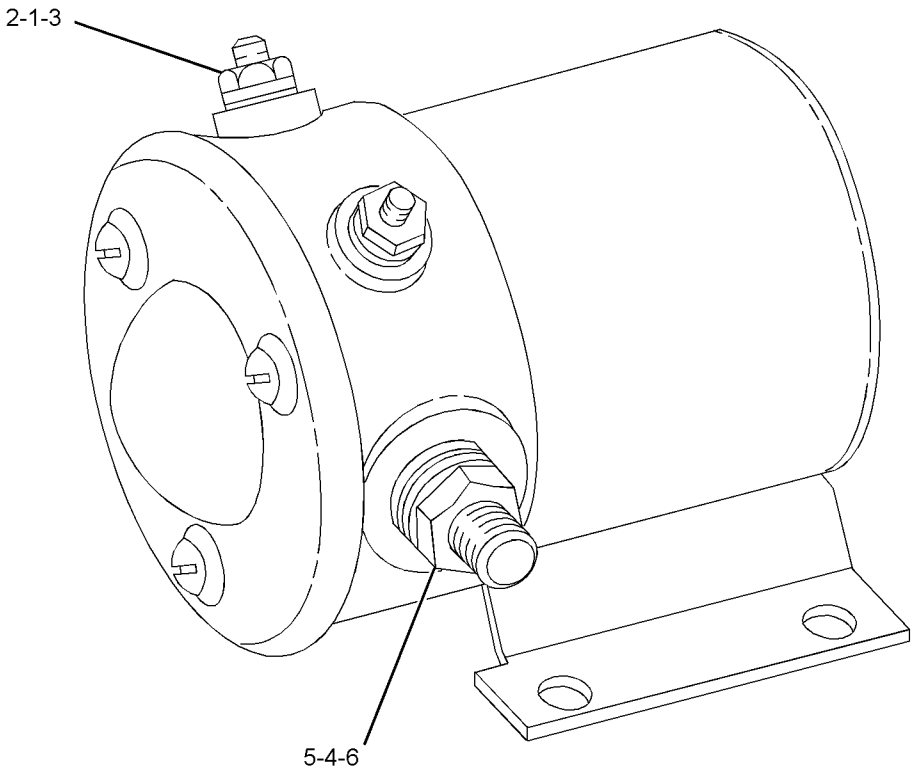


GRAPHIC #1 **<END>** g01132022

# *241-8368* SWITCH GP-MAGNETIC—MAIN RELAY

**S/N: 5451-UP**
**24-VOLT**
**PART OF 255-8102 WIRING GP-CAB**

**SMCS-7499** **i02325242**

| NOTE | REF NO | GRAPHIC REF | PART NUMBER | QTY | PART NAME 1 2 3 4 5 6 (PRODUCT LEVEL) | SEE PAGE |
|---|---|---|---|---|---|---|
| | 1 | 1 | **155-2270** | 1 | KIT-CONNECTING PLUG (2-PIN) | |
| | | | | | (INCLUDES PLUG AS, WEDGE & INTERFACE SEAL) | |
| | 2 | 1 | **4F-2294** | 2 | NUT-JAM (5/16-24-THD) | |
| | 3 | 1 | **186-3736** | 2 | SOCKET-CONNECTOR (16-GA TO 18-GA) | |

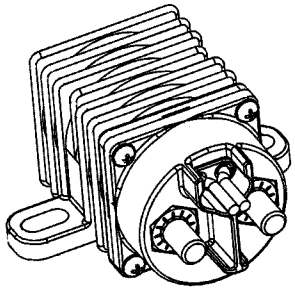

ISOMETRIC VIEW

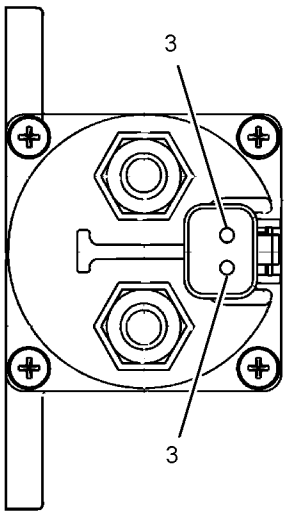


VIEW A-A

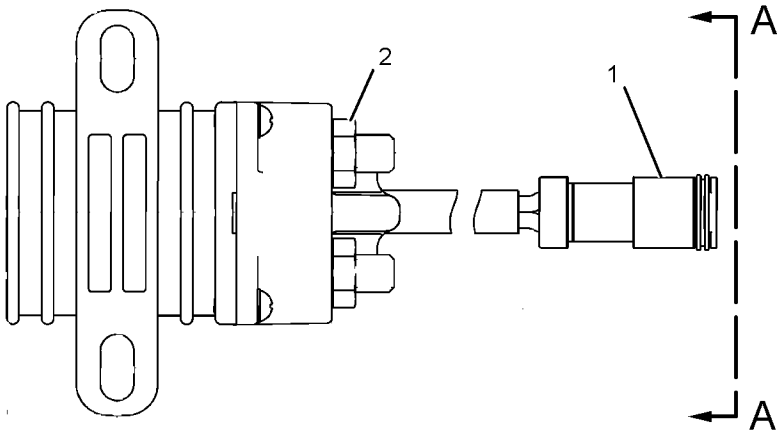


GRAPHIC #1 **<END>** g01077362

# 258-0883 SWITCH GP-PRESSURE–FUEL

**S/N: KHX1-UP**

**PART OF 238-8185 LINES GP-FUEL FILTER**

**SMCS-1435** **i02657100**

| NOTE | REF NO | GRAPHIC REF | PART NUMBER | QTY | PART NAME 1 2 3 4 5 6 (PRODUCT LEVEL) | SEE PAGE |
|---|---|---|---|---|---|---|
| | 1 | 1 | **102-8802** | 1 | KIT-RECEPTACLE (2-PIN) | |
| | | | | | (INCLUDES RECEPTACLE AS & WEDGE) | |
| | 2 | 1 | **3E-3365** | 1 | WEDGE-RECEPTACLE LOCK (2-PIN) | |
| | 3 | 1 | **186-3735** | 2 | PIN-CONNECTOR (16-GA TO 18-GA) | |
| E | 4 | 1 | **9X-1813** | | SLEEVE (14-CM) | |
| | 5 | 1 | **6V-4589** | 1 | SEAL-O-RING | |
| | 6 | 1 | **7L-9061** | 1 | SEAL-O-RING | |

E-ORDER BY THE CENTIMETER

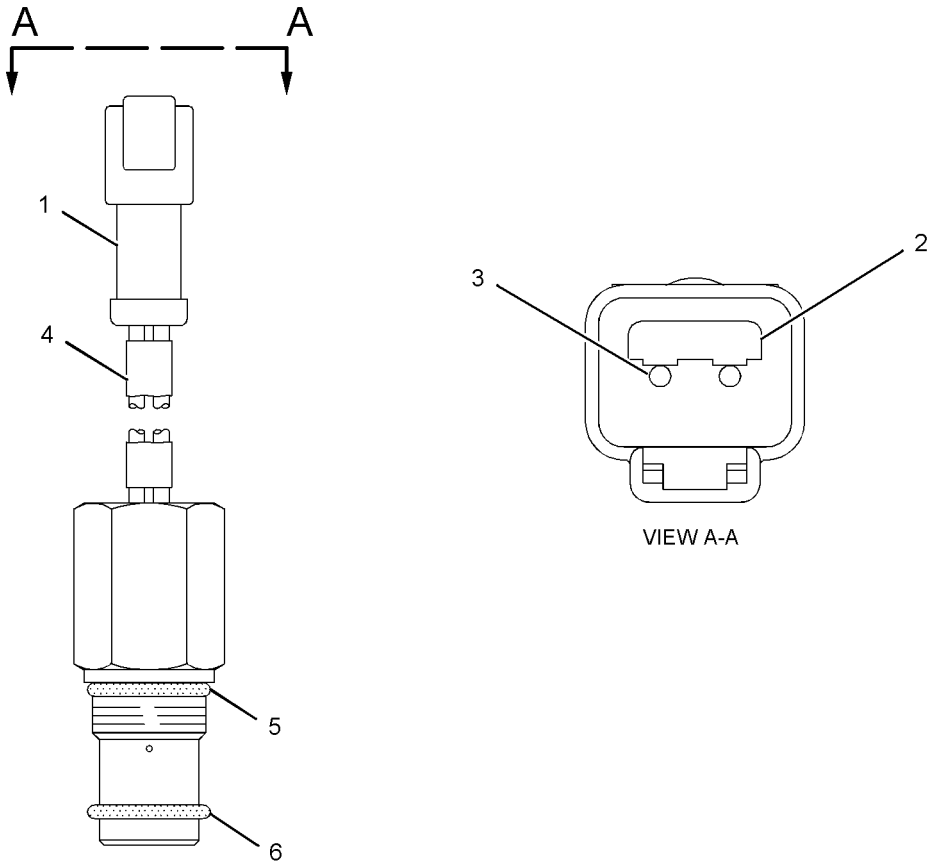


GRAPHIC #1 **<END>** g01072091

## *177-2373* SWITCH GP-ROCKER–TRANSMISSION DIRECTION

**S/N: 5451-UP**

**PART OF 251-9350 SWITCH GP-TRANSMISSION**

**AN ATTACHMENT**

**SMCS-1435, 7332** **i01548854**

| NOTE | REF NO | GRAPHIC REF | PART NUMBER | QTY | PART NAME 1 2 3 4 5 6 (PRODUCT LEVEL) | SEE PAGE |
|---|---|---|---|---|---|---|
| | 1 | 1 | **105-8029** | 1 | ACTUATOR | |
| | 2 | 1 | **8T-8729** | 3 | PIN-CONNECTOR | |
| | 3 | 1 | **9X-8917** | 2 | SCREW-MACHINE | |
| | 4 | 1 | **5S-4246** | 2 | LOCKWASHER | |
| | 5 | 1 | **096-5962** | 2 | WASHER-HARD (3.4X7X0.8MM THK) | |

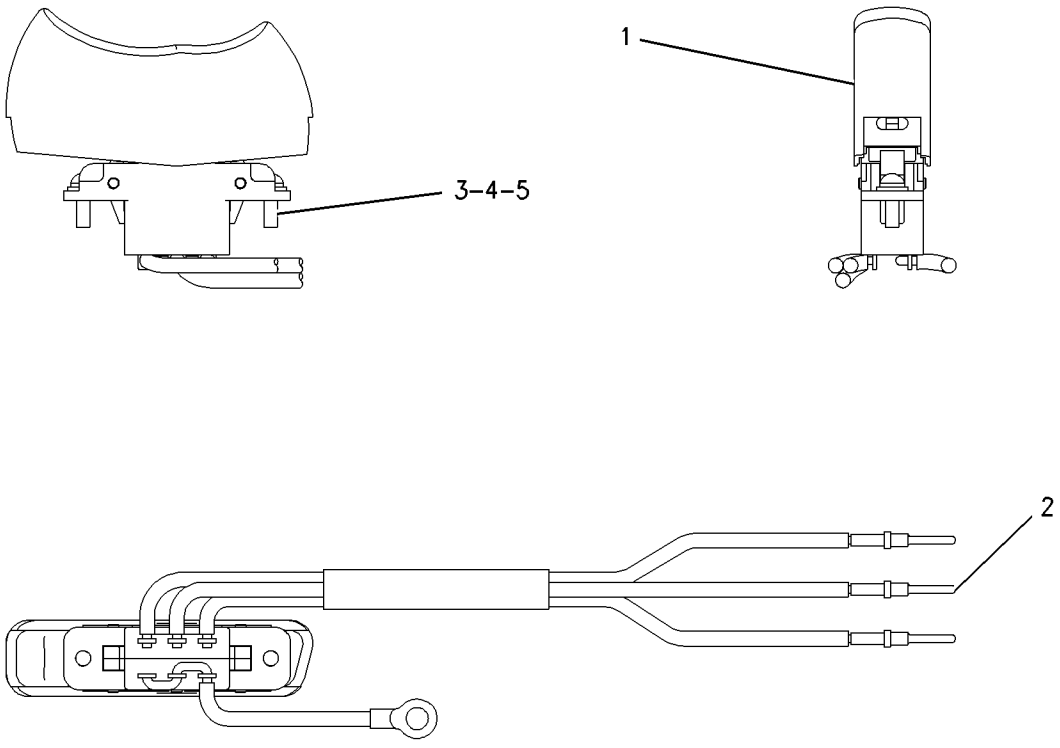


GRAPHIC #1 **<END>** g00805404

# *251-9350* SWITCH GP-TRANSMISSION

**S/N: 5451-UP**
**PART OF 123-7406 STEERING WHEEL GP**
**AN ATTACHMENT**

**SMCS-1611, 3065, 4309** **i02172506**

| NOTE | REF NO | GRAPHIC REF | PART NUMBER | QTY | PART NAME 1 2 3 4 5 6 (PRODUCT LEVEL) | SEE PAGE |
|---|---|---|---|---|---|---|
| | 1 | 1 | **146-0209** | 1 | HOUSING | |
| Y | 2 | 1 | **177-2373** | 1 | SWITCH GP-ROCKER (TRANSMISSION DIRECTION) | 199 |
| | 3 | 1 | **251-9553** | 1 | SWITCH AS-PUSH BUTTON (TRANSMISSION UPSHIFT) | |
| | 4 | 1 | **251-9554** | 1 | SWITCH AS-PUSH BUTTON (TRANSMISSION DOWNSHIFT) | |

Y-SEPARATE ILLUSTRATION

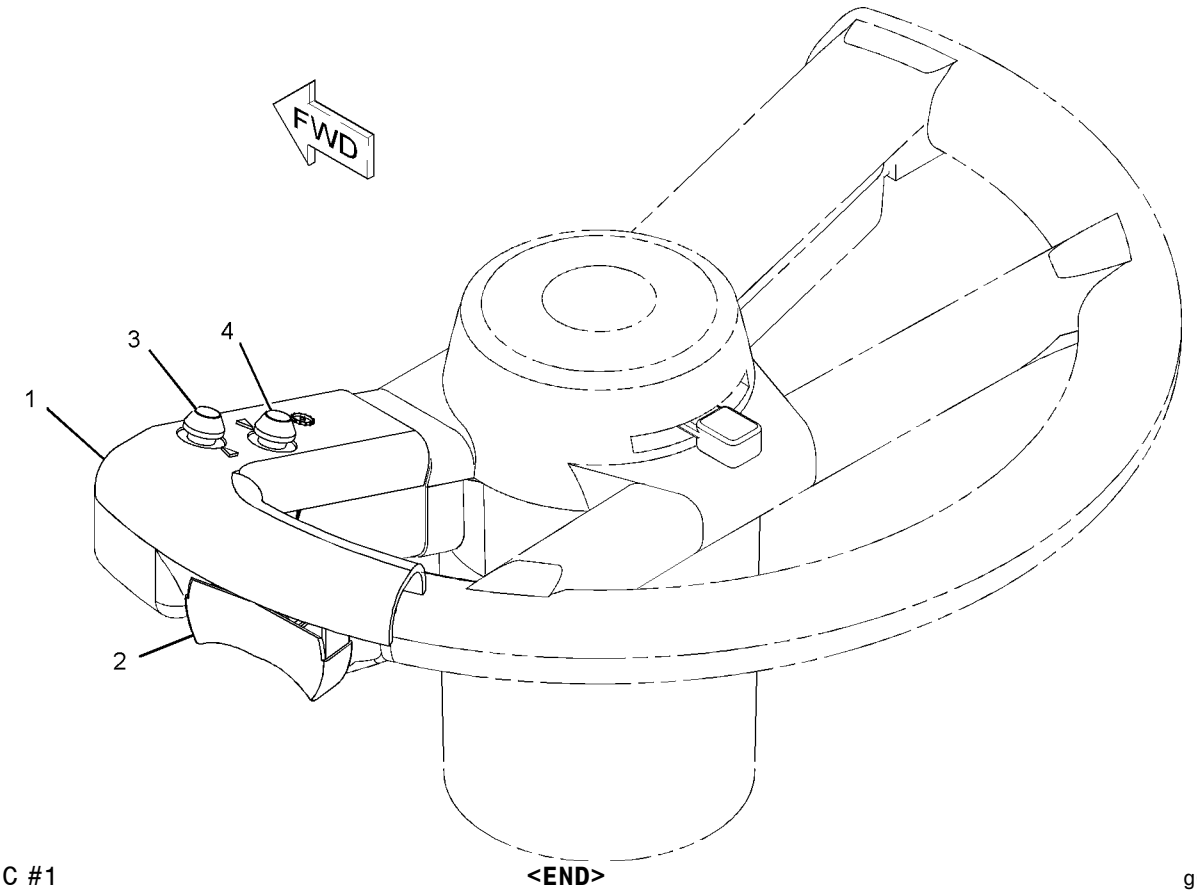


GRAPHIC #1 **<END>** g01101880

# *239-1134* VALVE GP-ETHER STARTING

**S/N: 5451-UP**
**24-VOLT**
**PART OF 255-5440 STARTING AID GP-ETHER**
**AN ATTACHMENT**

**SMCS-1456** **i02145416**

| NOTE | REF NO | GRAPHIC REF | PART NUMBER | QTY | PART NAME 1 2 3 4 5 6 (PRODUCT LEVEL) | SEE PAGE |
|---|---|---|---|---|---|---|
| | 1 | 1 | **3E-3365** | 1 | WEDGE-RECEPTACLE LOCK (2-PIN) | |
| | 2 | 1 | **7N-9801** | 1 | GASKET | |
| | 3 | 1 | **102-8802** | 1 | KIT-RECEPTACLE (2-PIN) | |
| | | | | | (KIT INCLUDES RECEPTACLE AS & WEDGE) | |
| | 4 | 1 | **186-3735** | 2 | PIN-CONNECTOR (16-GA TO 18-GA) | |

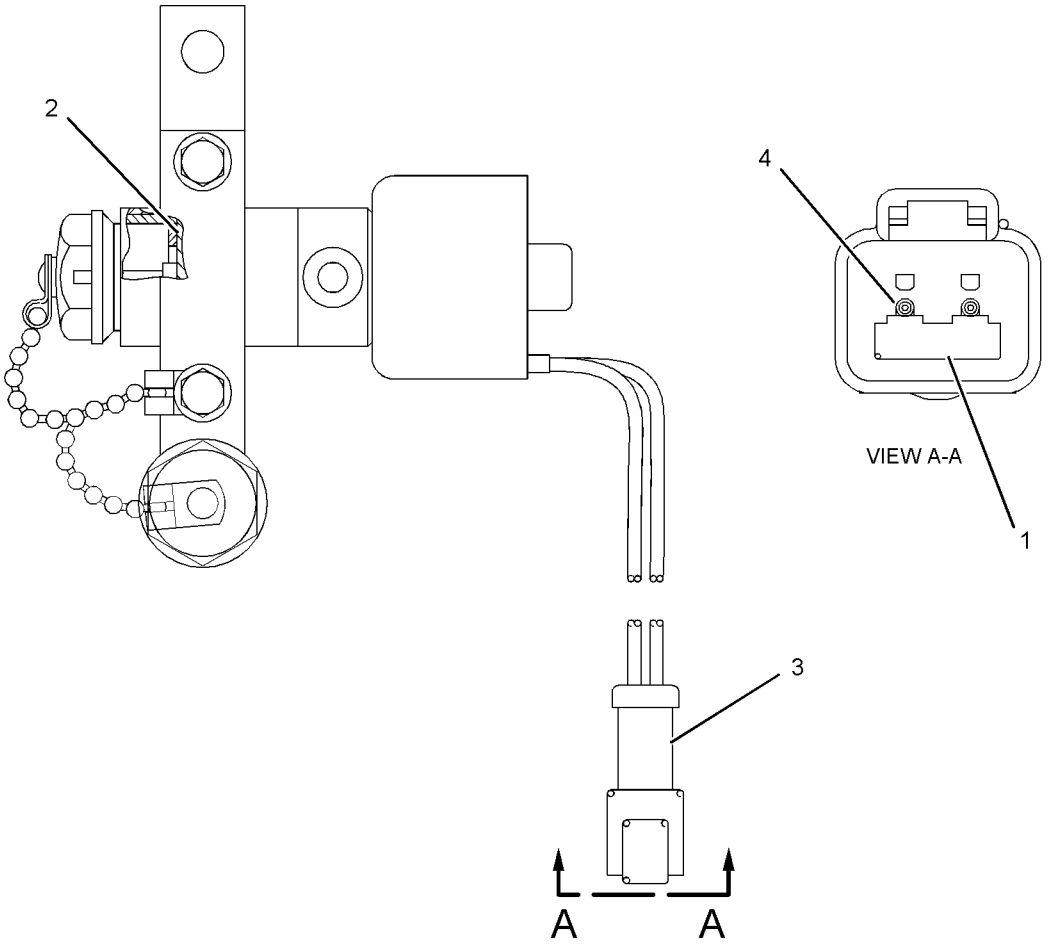


GRAPHIC #1 **<END>** g01053000

# ELECTRICAL AND STARTING SYSTEM

## *255-8102* WIRING GP-CAB

**S/N: 5451-UP**

**PART OF 245-9469, 285-2280 ELECTRICAL AR**

**SMCS-1408, 7301** **i02547516**

| NOTE | REF NO | GRAPHIC REF | PART NUMBER | QTY | PART NAME 1 2 3 4 5 6 (PRODUCT LEVEL) | SEE PAGE |
|---|---|---|---|---|---|---|
| | 1 | 1 | **3E-5239** | 1 | RELAY AS (24-VOLT) (DECKING BLADE RETURN) | |
| | 1A | 1 | **3E-5239** | 1 | RELAY AS (24-VOLT) (SECONDARY STEER INTERMEDIATE) | |
| | 1B | 1 | **3E-5239** | 1 | RELAY AS (24-VOLT) (FUEL TRANSFER PUMP) | |
| | 1C | 1 | **3E-5239** | 1 | RELAY AS (24-VOLT) (GRAPPLE RETURN) | |
| | 1D | 1 | **3E-5239** | 1 | RELAY AS (24-VOLT) (WINCH REEL IN) | |
| | 1E | 1 | **3E-5239** | 1 | RELAY AS (24-VOLT) (WINCH FREESPOOL) | |
| | 1F | 1 | **3E-5239** | 1 | RELAY AS (24-VOLT) (WINCH SOLENOID RETURN) | |
| | 1G | 1 | **3E-5239** | 1 | RELAY AS (24-VOLT) (WINCH REEL OUT) | |
| | 1H | 5 | **3E-5239** | 3 | RELAY AS (24-VOLT) (LIGHTS) | |
| Y | 2 | 3 | **3E-6328** | 1 | ALARM GP (24-VOLT) (ACTION) | 141 |
| | 3 | 4 | **6I-1418** | 4 | SPACER (8.2X12.7X28.7-MM THK) | |
| | 4 | 1 | **6Y-6584** | 1 | STRAP AS-GROUND | |
| | 5 | 4 | **8T-9655** | 8 | MOUNT-ISOLATION | |
| | 6 | 5 | **107-6032** | 1 | LAMP GP-DOME (24-VOLT) | |
| | 7 | 3 | **110-7887** | 1 | SWITCH GP-START (KEY) | |
| | | 3 | **7T-6799** | 1 | NUT-MOUNTING (1-32-THD) | |
| | | 3 | **102-8804** | 1 | KIT-RECEPTACLE (4-PIN) | |
| | | | | | (INCLUDES RECEPTACLE AS & WEDGE) | |
| | | 3 | **186-3735** | 4 | PIN-CONNECTOR (16-GA TO 18-GA) | |
| | 8 | 5 | **123-3726** | 1 | HARNESS AS-RADIO (SPEAKERS) | |
| | | 5 | **102-8805** | 1 | KIT-RECEPTACLE (6-PIN) | |
| | | | | | (INCLUDES RECEPTACLE AS & WEDGE) | |
| | | 5 | **006-2884** | 4 | TERMINAL-BLADE | |
| | | 5 | **5P-4571** | 2 | TERMINAL-BLADE (14-GA) | |
| | 9 | 3 | **128-6157** | 1 | PLATE | |
| Y | 10 | 3 | **130-8176** | 1 | PEDAL GP-GOVERNOR | 622 |
| | 11 | 2 | **153-4173** | 1 | PLATE AS | |
| M | | 2 | **6V-9632** | 2 | NUT-WELD (M6X1-THD) | |
| | 12 | 3 | **180-9900** | 1 | CAP AS | |
| | | 3 | **5P-7958** | 1 | SLEEVE-CABLE SPLICE | |
| | | 3 | **8C-6354** | 1 | CAP-RECEPTACLE | |
| | | 3 | **179-9392** | 1 | LANYARD | |
| | 13 | 3 | **222-7890** | 1 | SWITCH AS-ROCKER (PARKING BRAKE ON, OFF) | |
| | 14 | 3 | **236-4608** | 1 | SWITCH AS-ROCKER (MODE SELECT) | |
| Y | 15 | 5 | **241-8368** | 1 | SWITCH GP-MAGNETIC (24-VOLT) (MAIN RELAY) | 197 |
| Y | 16 | 3 | **245-1339** | 1 | MODULE GP-DISPLAY (GAUGE CLUSTER) | 618 |
| | 17 | 5 | **251-1195** | 1 | SWITCH AS-ROCKER (FRONT FLOODLIGHTS) | |
| | 18 | 3 | **251-2029** | 1 | SWITCH AS-ROCKER (TORQUE CONVERTER LOCKUP CLUTCH) | |
| | 19 | 5 | **251-4339** | 1 | SWITCH AS-ROCKER (REAR FLOODLIGHTS) | |
| | 20 | 4 | **252-4559** | 1 | CONTROL GP-HANDLE (WINCH) | |
| | | 4 | **151-9274** | 1 | KIT-RECEPTACLE (4-PIN) | |
| | | | | | (INCLUDES RECEPTACLE AS & WEDGE) | |
| | | 4 | **278-8965** | 1 | BOOT | |
| | | 4 | **278-8967** | 1 | RETAINER-BOOT | |
| M | | 4 | **278-8970** | 4 | SCREW (M3X10X6-MM) | |
| | | 4 | **278-8974** | 1 | KNOB | |
| | 21 | 4 | **253-6139** | 1 | SWITCH AS-ROCKER (DIFFERENTIAL LOCK) | |
| | 22 | 3 | **257-9472** | 1 | BRACKET AS | |
| | 23 | 1 | **258-7540** | 1 | BRACKET AS | |
| R | 24 | 4 | **262-1408** | 1 | CONTROL GP-UNPROGRAMMED (MACHINE) | |
| | 25 | 4 | **265-7025** | 1 | PLATE | |
| | 26 | 5 | **268-3289** | 1 | BRACKET AS | |
| | 27 | 1 | **269-3130** | 1 | HARNESS AS-CAB (MAIN) | |
| | | 1 | **102-8801** | 2 | KIT-RECEPTACLE (12-PIN) | |

*255-8102* **WIRING GP-CAB** ***(contd.)*** **i02547516**

| NOTE | REF NO | GRAPHIC REF | PART NUMBER | QTY | PART NAME 1 2 3 4 5 6 (PRODUCT LEVEL) | SEE PAGE |
|---|---|---|---|---|---|---|
| | | 1 | **102-8802** | 3 | KIT-RECEPTACLE (2-PIN) | |
| | | 1 | **102-8803** | 2 | KIT-RECEPTACLE (3-PIN) | |
| | | 1 | **102-8804** | 2 | KIT-RECEPTACLE (4-PIN) | |
| | | 1 | **102-8805** | 4 | KIT-RECEPTACLE (6-PIN) | |
| | | 1 | **102-8806** | 3 | KIT-RECEPTACLE (8-PIN) | |
| | | | | | (EACH KIT INCLUDES RECEPTACLE AS & WEDGE) | |
| | | 1 | **155-2255** | 5 | KIT-CONNECTING PLUG (12-PIN) | |
| | | | | | (INCLUDES PLUG AS, WEDGE & INTERFACE SEAL) | |
| | | 1 | **9X-6772** | 4 | STRAP-CABLE | |
| | | 1 | **113-0580** | 1 | RECEPTACLE AS-CONNECTOR (40-PIN) | |
| | | 1 | **134-2540** | 1 | RECEPTACLE AS (120-OHM) | |
| | | 1 | **7X-6222** | 1 | PLUG AS-CONNECTOR (24-PIN) | |
| | | 1 | **147-1445** | 1 | PLUG AS-CONNECTOR (70-PIN) | |
| | | 1 | **147-1446** | 1 | PLUG AS-CONNECTOR (70-PIN) | |
| | | 1 | **5P-4571** | 2 | TERMINAL-BLADE (14-GA) | |
| | | 1 | **9X-0196** | 1 | TERMINAL AS | |
| | | 1 | **9W-1951** | 1 | RECEPTACLE-CONNECTOR (9-PIN) | |
| | | 1 | **9W-2032** | 3 | TERMINAL-BLADE | |
| | | 1 | **9W-2033** | 15 | TERMINAL-BLADE | |
| | | 1 | **9X-4814** | 1 | RECEPTACLE AS-CONNECTOR (6-PIN) | |
| | | 1 | **100-5041** | 36 | TERMINAL-RECEPTACLE | |
| E | | 1 | **119-3662** | | TUBE-HEAT SHRINK (10.85-MM DIA) (143-CM) | |
| E | | 1 | **125-7874** | | TUBE-HEAT SHRINK (5.72-MM DIA) (105-CM) | |
| E | | 1 | **125-7875** | | TUBE-HEAT SHRINK (7.44-MM DIA) (50-CM) | |
| | | 1 | **9X-1056** | 8 | TERMINAL-RECEPTACLE | |
| | | 1 | **126-1774** | 2 | COVER-CONNECTOR | |
| | | 1 | **127-5484** | 1 | RECEPTACLE AS-CONNECTOR (1-PIN) | |
| | | 1 | **5P-4571** | 8 | TERMINAL-BLADE (14-GA) | |
| | | 1 | **9G-4343** | 1 | TERMINAL (4-GA) | |
| | | 1 | **5P-3454** | 2 | TERMINAL (4-GA) | |
| | | 1 | **131-1488** | 1 | TERMINAL AS (6-GA TO 8-GA) | |
| | | 1 | **131-1489** | 1 | TERMINAL AS (6-GA TO 8-GA) | |
| | | 1 | **131-1490** | 1 | TERMINAL AS | |
| | | 1 | **2L-8069** | 4 | TERMINAL (2-GA TO 10-GA) | |
| | | 1 | **2L-8071** | 1 | TERMINAL (10-GA TO 12-GA, 1/2-IN SCREW) | |
| | | 1 | **2L-8079** | 1 | TERMINAL (14-GA TO 16-GA) | |
| | | 1 | **2L-8081** | 1 | TERMINAL (14-GA TO 16-GA) | |
| | 28 | 3 | **096-6166** | 4 | WASHER-HARD (4.5X9X1-MM THK) | |
| | 29 | 5 | **132-5789** | 1 | CLIP | |
| | 30 | 1 | **193-4623** | 4 | SCREW-BUTTON HEAD (10-32X11.11-MM) | |
| | 31 | 3 | **228-6089** | 1 | PLUG | |
| | 32 | 3 | **3S-9557** | 4 | SCREW-PAN HEAD (4-40X0.5-IN) | |
| | 33 | 4 | **4H-2558** | 1 | GROMMET | |
| M | 34 | 5 | **5C-2890** | 3 | NUT (M6X1-THD) | |
| M | 35 | 1,2 | **5C-9553** | 3 | BOLT (M6X1X16-MM) | |
| | 36 | 2 | **5S-4245** | 4 | SCREW-MACHINE (4-40X0.5-IN) | |
| | 37 | 2 | **6B-4540** | 4 | NUT (4-40-THD) | |
| | 38 | 1,2,3, 4,5 | **7K-1181** | 93 | STRAP-CABLE | |
| | 39 | 4 | **7M-3361** | 1 | GROMMET | |
| | 40 | 1 | **7T-7388** | 4 | GUIDE | |
| | 41 | 4 | **7X-0613** | 4 | WASHER-HARD (8.8X25.5X5-MM THK) | |
| M | 42 | 4 | **7X-0818** | 4 | BOLT (M8X1.25X45-MM) | |
| | 43 | 5 | **7Y-8169** | 4 | GROMMET | |
| | 44 | 2 | **8C-9660** | 8 | WASHER (4.6X7.9X0.8-MM THK) | |
| | 45 | 4 | **8D-1470** | 2 | GROMMET | |
| | 46 | 1,3,4,5 | **8T-4121** | 9 | WASHER-HARD (11X21X2.5-MM THK) | |
| M | 47 | 3,4,5 | **8T-4133** | 5 | NUT (M10X1.5-THD) | |
| M | 48 | 1 | **8T-4137** | 3 | BOLT (M10X1.5X20-MM) | |
| M | 49 | 4,5 | **8T-4138** | 4 | BOLT (M6X1X20-MM) | |

*255-8102* **WIRING GP-CAB** ***(contd.)*** **i02547516**

| NOTE | REF NO | GRAPHIC REF | PART NUMBER | QTY | PART NAME 1 2 3 4 5 6 (PRODUCT LEVEL) | SEE PAGE |
|---|---|---|---|---|---|---|
| M | 50 | 1 | **8T-4171** | 7 | BOLT (M6X1X12-MM) | |
| M | 51 | 5 | **8T-4191** | 1 | BOLT (M10X1.5X16-MM) | |
| | 52 | 1 | **8T-4223** | 1 | WASHER-HARD (13.5X25.5X3-MM THK) | |
| | 53 | 3 | **8T-4224** | 6 | WASHER-HARD (8.8X16X2-MM THK) | |
| M | 54 | 1 | **8T-4244** | 1 | NUT (M12X1.75-THD) | |
| M | 55 | 3 | **8T-4908** | 6 | BOLT (M8X1.25X25-MM) | |
| M | 56 | 4 | **9X-2045** | 4 | SCREW-TRUSS HEAD (M6X1X20-MM) | |
| | 57 | 4 | **9X-7345** | 1 | GROMMET | |
| | 58 | 1,2,4,5 | **9X-8256** | 17 | WASHER (6.6X12X2-MM THK) | |
| M | 59 | 3 | **9X-1046** | 12 | SCREW (M4X0.7X18-MM) | |

E-ORDER BY THE CENTIMETER
M-METRIC PART
R-REMFG PART MAY BE AVAILABLE
Y-SEPARATE ILLUSTRATION

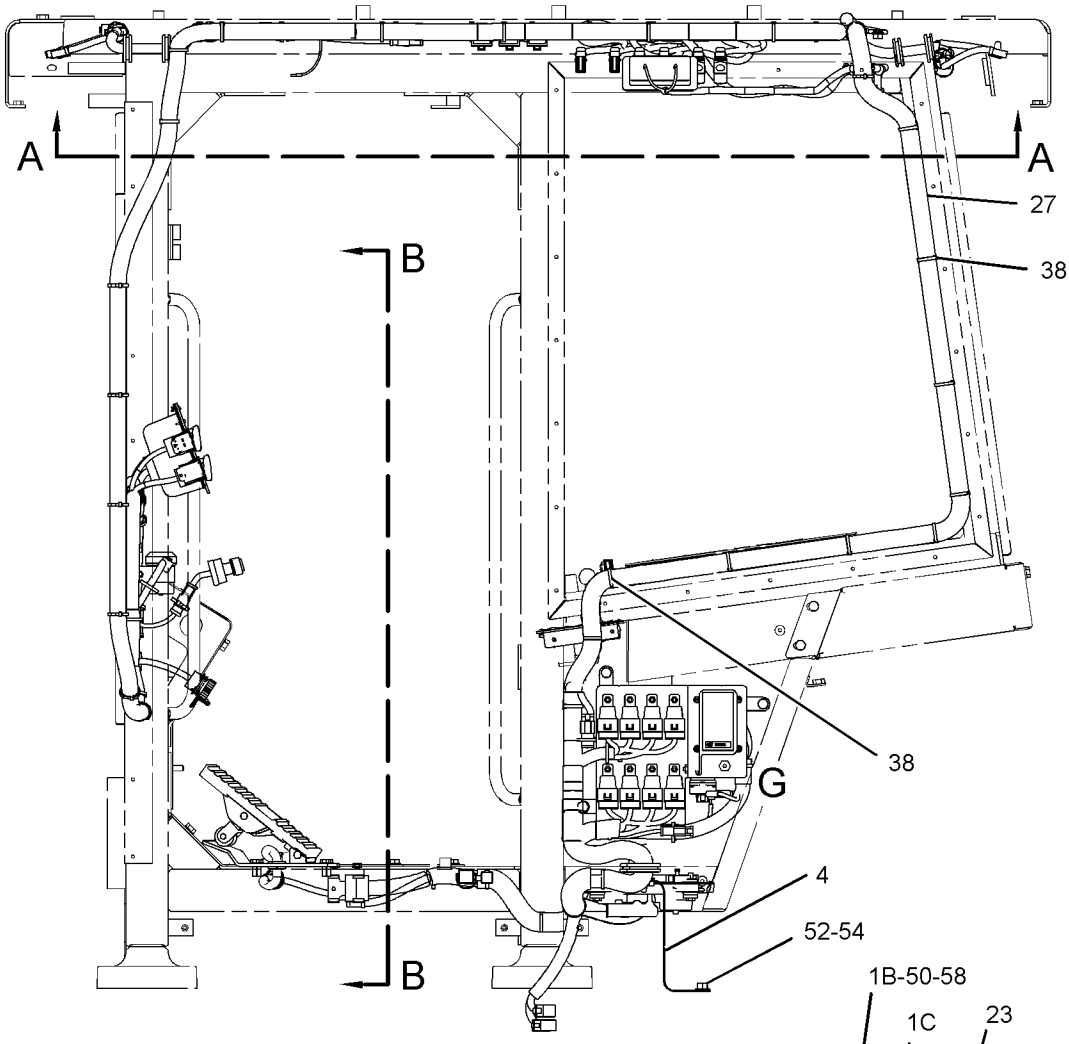


LEFT SIDE VIEW

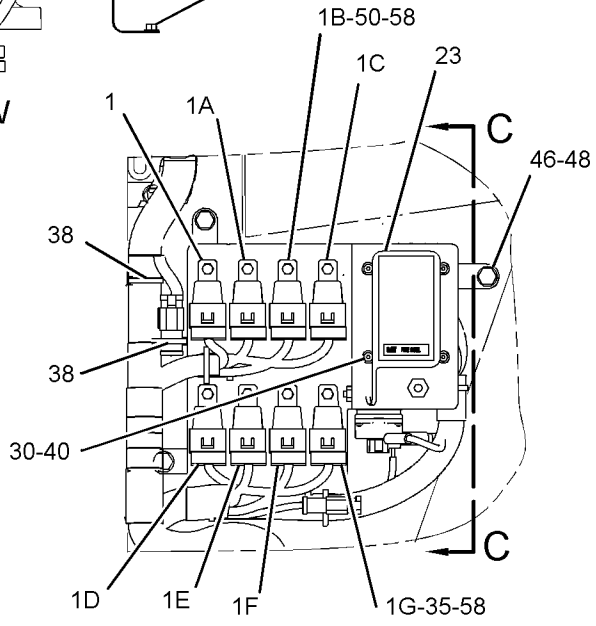


VIEW OF AREA G

REFER TO ALL ILLUSTRATIONS OF THIS GROUP FOR AUXILIARY VIEWS

GRAPHIC #1

g01191042

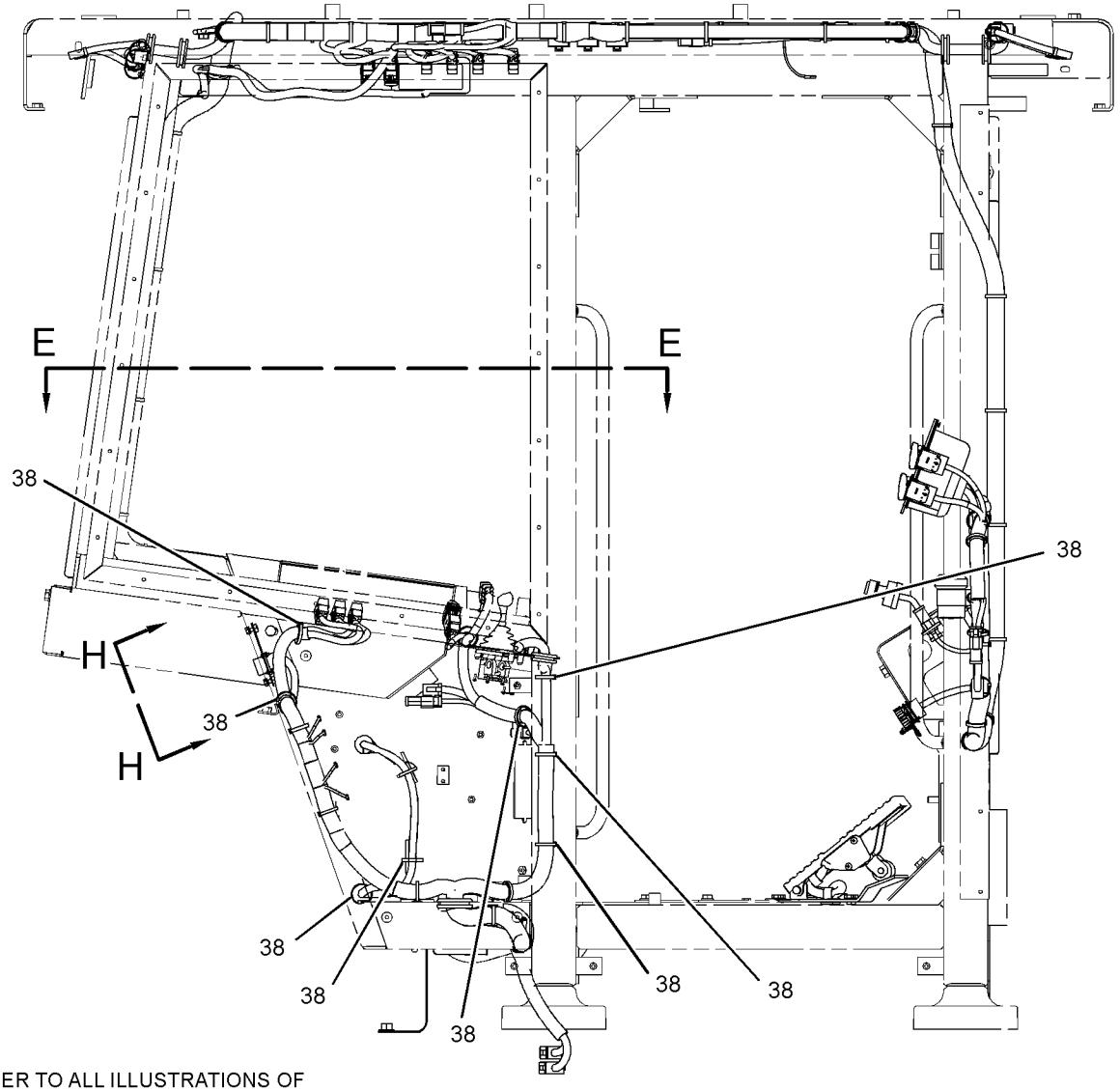


REFER TO ALL ILLUSTRATIONS OF
THIS GROUP FOR AUXILIARY VIEWS

RIGHT SIDE VIEW

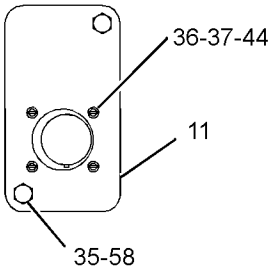


VIEW H-H

GRAPHIC #2 g01191045

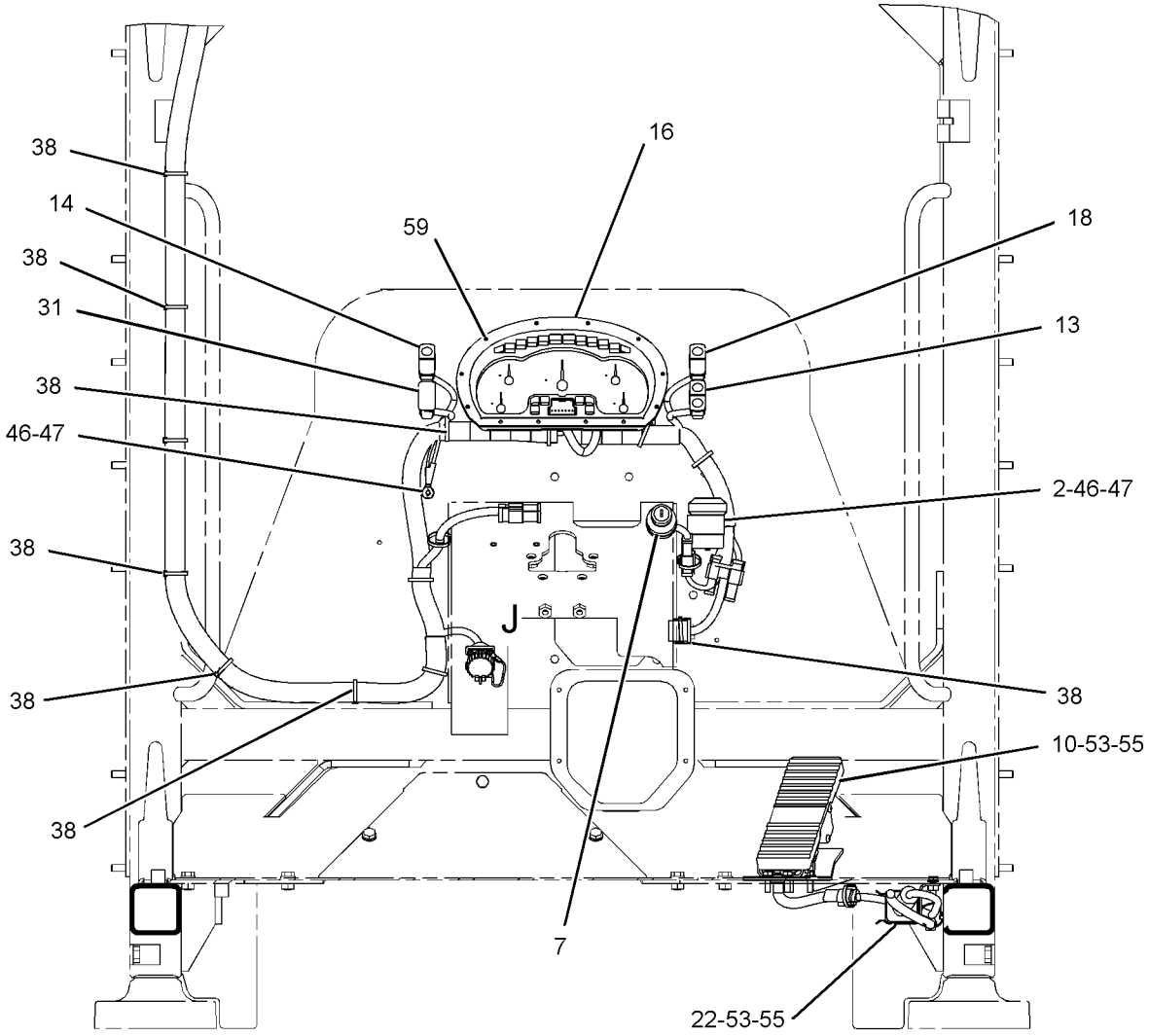


SECTION B-B

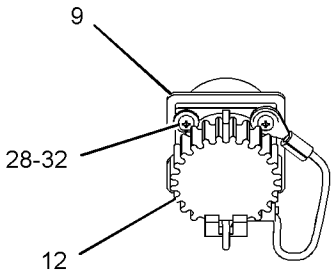


VIEW OF AREA J

GRAPHIC #3 g01335271

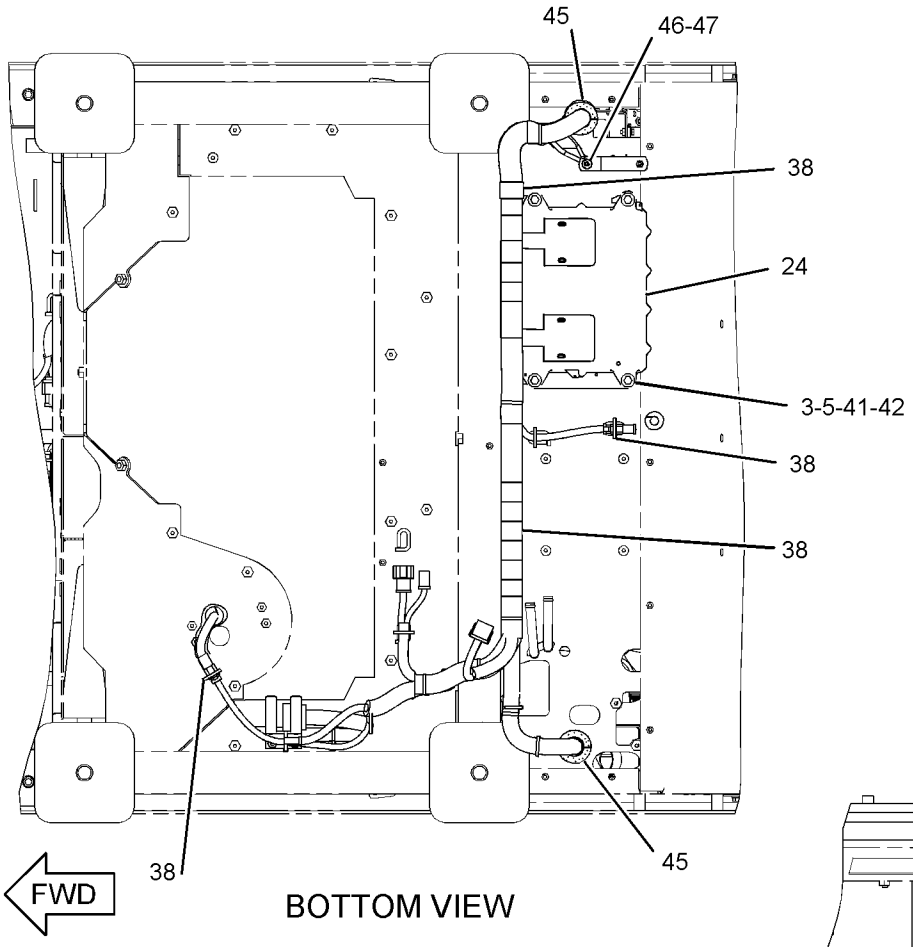


BOTTOM VIEW

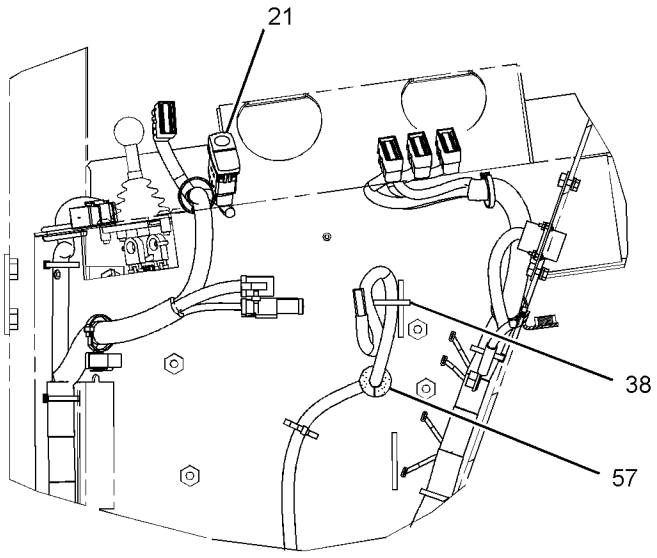


SECTION F-F

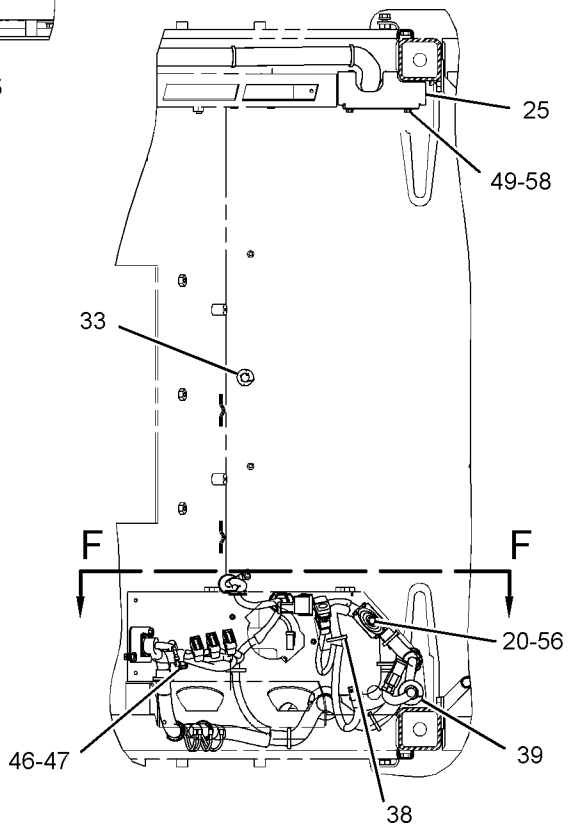


SECTION E-E

GRAPHIC #4 g01191047

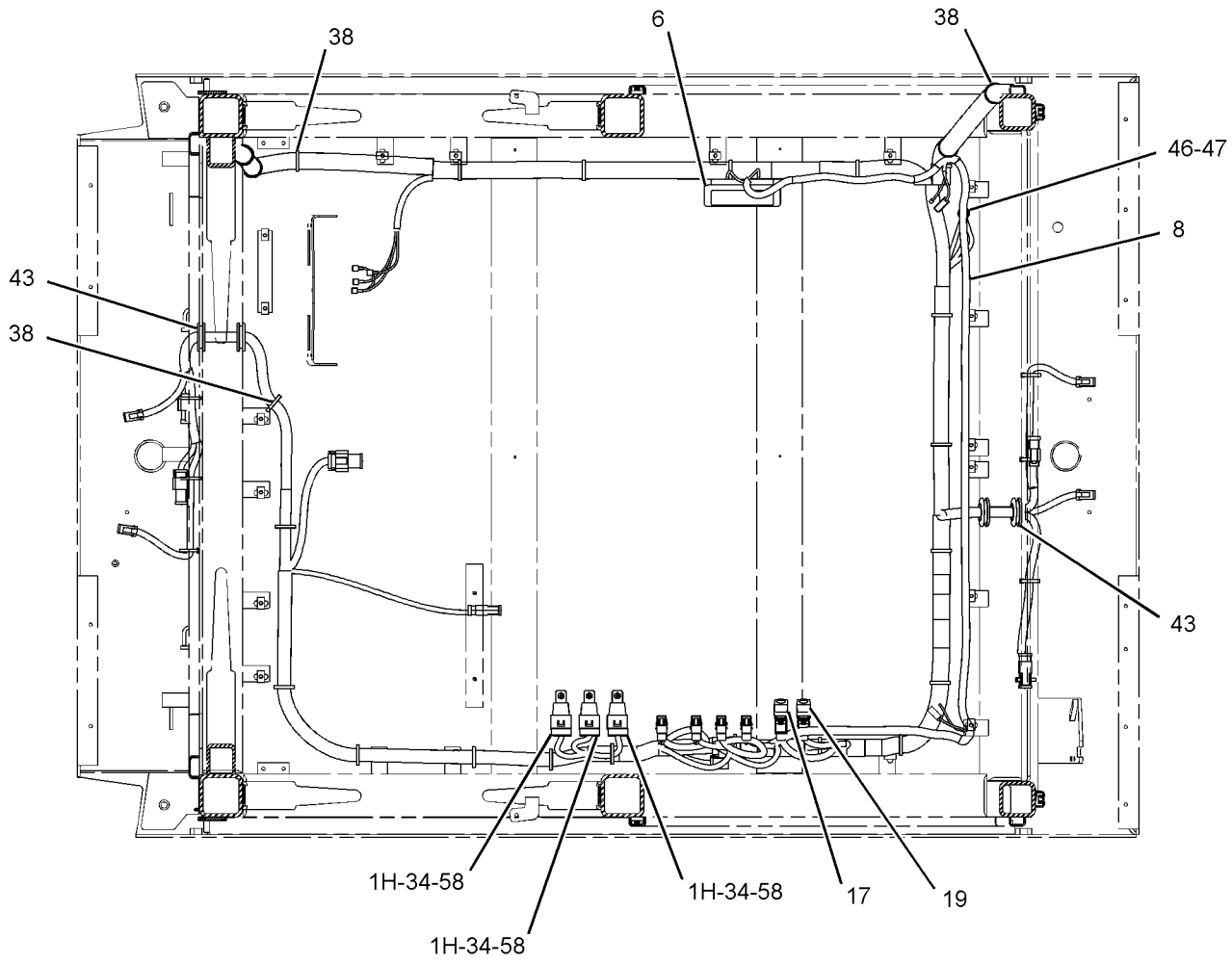


SECTION A-A

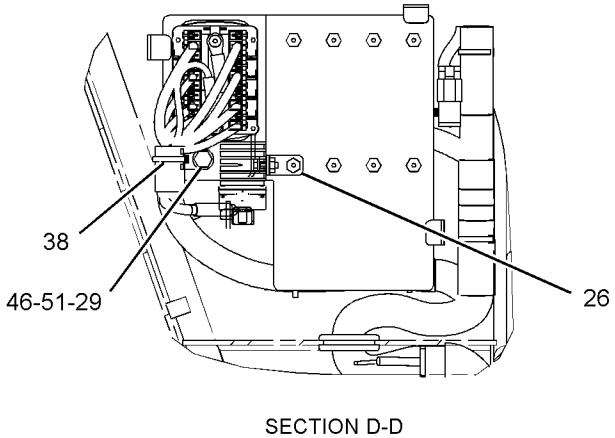


SECTION D-D

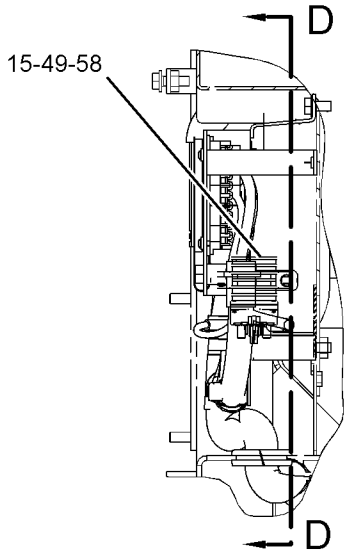


SECTION C-C

GRAPHIC #5 **<END>** g01191048

# *198-2714* WIRING GP-ENGINE

**S/N: KHX1-UP**

**PART OF 235-1497 ENGINE AR-COMPLETE**

**SMCS-1403, 1408** **i02352073**

| NOTE | REF NO | GRAPHIC REF | PART NUMBER | QTY | PART NAME 1 2 3 4 5 6 (PRODUCT LEVEL) | SEE PAGE |
|---|---|---|---|---|---|---|
| | 1 | 1 | **3S-2093** | 18 | STRAP-CABLE | |
| | 2 | 1 | **4P-5918** | 1 | CLIP | |
| | 3 | 1 | **105-1797** | 7 | MOUNT | |
| | 4 | 1 | **198-2713** | 1 | HARNESS AS-ENGINE (ELECTRONIC CONTROL MODULE) | |
| | | 1 | **102-8802** | 1 | KIT-RECEPTACLE (2-PIN) | |
| | | 1 | **102-8803** | 1 | KIT-RECEPTACLE (3-PIN) | |
| | | 1 | **102-8801** | 1 | KIT-RECEPTACLE (12-PIN) | |
| | | | | | (EACH KIT RECEPTACLE INCLUDES RECEPTACLE AS AND WEDGE) | |
| | | 1 | **8T-8737** | 77 | PLUG-SEAL | |
| | | 1 | **100-3320** | 1 | PLUG AS-CONNECTOR (2-PIN) | |
| | | 1 | **126-5011** | 1 | SEAL-CONNECTOR | |
| | | 1 | **111-2416** | 1 | PLUG AS-CONNECTOR (2-PIN) | |
| | | 1 | **126-5011** | 1 | SEAL-CONNECTOR | |
| | | 1 | **155-2265** | 1 | KIT-CONNECTING PLUG (8-PIN) | |
| | | 1 | **155-2260** | 3 | KIT-CONNECTING PLUG (3-PIN) | |
| | | 1 | **155-2270** | 5 | KIT-CONNECTING PLUG (2-PIN) | |
| | | | | | (EACH KIT CONNECTING PLUG INCLUDES PLUG AS AND WEDGE) | |
| | | 1 | **227-4002** | 1 | PLUG AS-CONNECTOR (108-PIN) | |
| | 5 | 1 | **206-1345** | 2 | STRAP-CABLE | |
| | 6 | 1 | **222-5917** | 1 | HARNESS AS-ENGINE (FUEL INJECTION) | |
| | | 1 | **6N-7523** | 1 | WASHER (6.48X11.9X1.57-MM THK) | |
| | | 1 | **135-5975** | 1 | GROMMET-WIRING | |
| | | 1 | **155-2255** | 1 | KIT-CONNECTING PLUG (12-PIN) | |
| | | | | | (INCLUDES PLUG AS AND WEDGE) | |
| | 7 | 1 | **4P-8134** | 1 | CLIP | |
| M | 8 | 1 | **6V-2317** | 1 | BOLT (M8X1.25X30-MM) | |
| | 9 | 1 | **9M-1974** | 1 | WASHER-HARD (8.8X16X2-MM THK) | |

M-METRIC PART

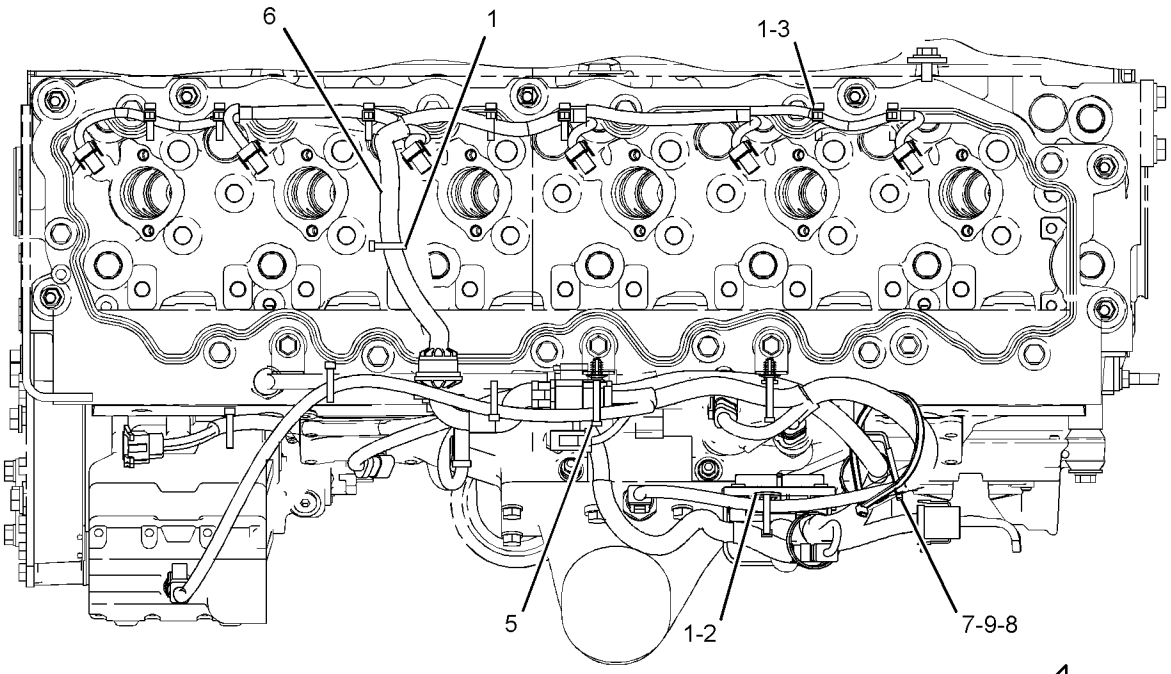


TOP VIEW

FWD

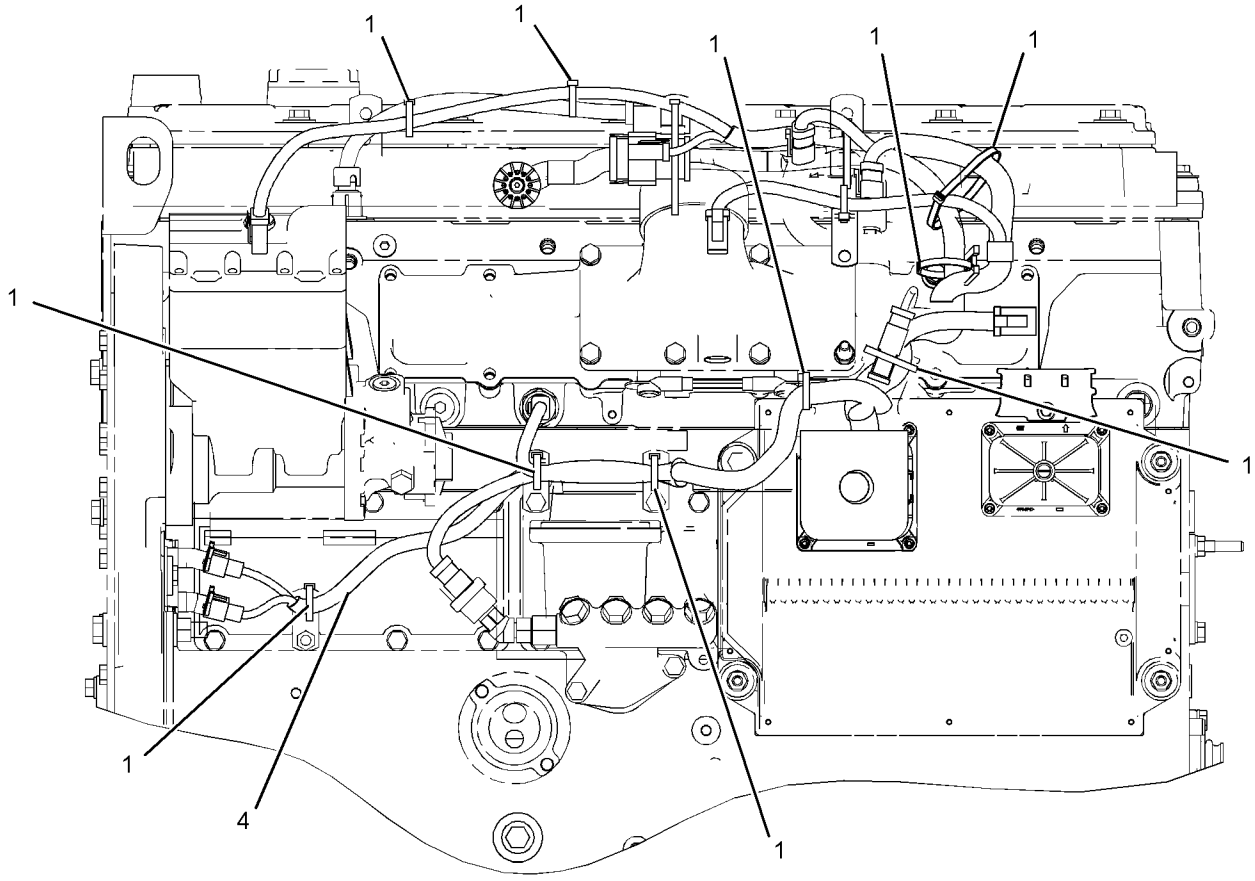


LEFT SIDE VIEW

GRAPHIC #1

**<END>**

g01175334

# *253-9886* WIRING GP-HEATER–STARTING AID

**S/N: KHX1-UP**

**PART OF 235-1497 ENGINE AR-COMPLETE**

**SMCS-1408** **i02525611**

| NOTE | REF NO | GRAPHIC REF | PART NUMBER | QTY | PART NAME 1 2 3 4 5 6 (PRODUCT LEVEL) | SEE PAGE |
|---|---|---|---|---|---|---|
| M | 1 | 1 | **208-9282** | 3 | BOLT (M8X1.25X25-MM) | |
| | 2 | 1 | **229-8851** | 1 | CABLE AS | |
| | | 1 | **6V-9023** | 3 | TUBE-HEAT SHRINK (12.7-MM DIA) | |
| | | 1 | **030-1712** | 2 | TERMINAL-RING (2-GA, 6.35-MM) | |
| | | 1 | **135-2543** | 1 | BOOT | |
| | 3 | 1 | **253-2682** | 1 | BRACKET AS | |
| M | | 1 | **8T-3490** | 2 | NUT-WELD (M10X1.5-THD) | |
| | 4 | 1 | **283-1224** | 1 | BRACKET AS | |
| M | 5 | 1 | **122-3151** | 1 | BOLT (M8X1.25X35-MM) (AIR INLET HEATER RELAY) | |
| | 6 | 1 | **208-9277** | 2 | BOLT-FLANGE HEAD (M8X1X25-MM) | |
| M | 7 | 1 | **208-9284** | 3 | BOLT-FLANGE HEAD (M8X1.25X35-MM) | |
| | 8 | 1 | **209-5582** | 1 | SWITCH GP-MAGNETIC (24-VOLT) (AIR INLET HEATER) | |
| | | 1 | **3F-9556** | 2 | LOCKWASHER | |
| | | 1 | **6V-9186** | 2 | SETSCREW | |
| | | 1 | **6V-8378** | 2 | NUT (10-32-THD) | |
| | | 1 | **8F-1434** | 2 | LOCKWASHER | |
| | | 1 | **186-3735** | 2 | PIN-CONNECTOR (16-GA TO 18-GA) | |
| | | 1 | **102-8802** | 1 | KIT-RECEPTACLE (2-PIN) | |
| | | | | | (INCLUDES RECEPTACLE AS & WEDGE) | |
| | 9 | 1 | **9M-1974** | 1 | WASHER-HARD (8.8X16X2-MM THK) | |

M-METRIC PART

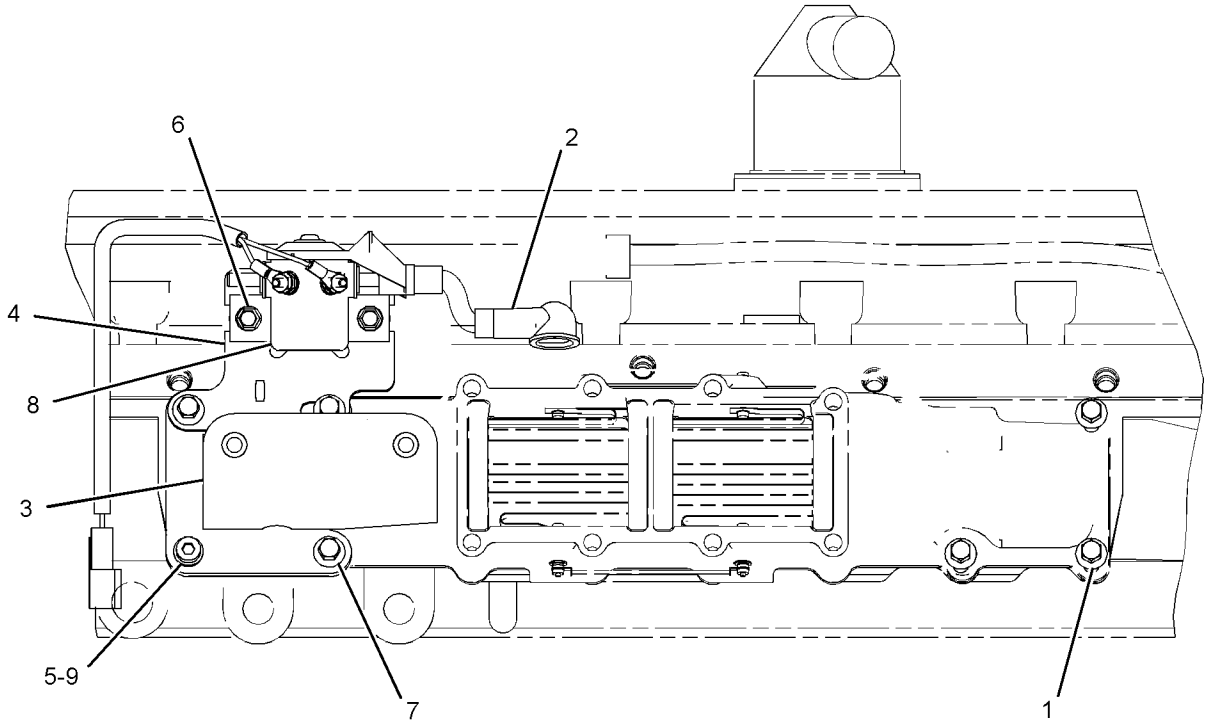


LEFT SIDE VIEW

GRAPHIC #1 **<END>** g01236391

## *255-8096* WIRING GP-MACHINE

**S/N: 5451-UP**

**PART OF 245-9469 ELECTRICAL AR**

**SMCS-1408** **i02503721**

| NOTE | REF NO | GRAPHIC REF | PART NUMBER | QTY | PART NAME 1 2 3 4 5 6 (PRODUCT LEVEL) | SEE PAGE |
|---|---|---|---|---|---|---|
| | 1 | 2 | **3E-5169** | 1 | GUARD-SWITCH | |
| | 2 | 2,4 | **4H-1225** | 1 | WASHER (11X22X6-MM THK) | |
| | 3 | 2 | **4P-7751** | 1 | WIRE AS | |
| | 4 | 2,4 | **124-3019** | 2 | BRACKET AS | |
| | | | | | (EACH INCLUDES) | |
| M | | 2,4 | **8T-3490** | 1 | NUT-WELD (M10X1.5-THD) | |
| | 5 | 2 | **127-9323** | 1 | BRACKET AS | |
| M | | 2 | **8T-3490** | 1 | NUT-WELD (M10X1.5-THD) | |
| | 6 | 2 | **131-0359** | 1 | PLATE-CONTROL (ENGINE STOP, RUN) | |
| Y | 7 | 3 | **145-7028** | 1 | SENSOR GP-TEMPERATURE (TORQUE CONVERTER OIL) | 181 |
| | 8 | 2 | **158-6634** | 1 | SWITCH GP-TOGGLE (GROUND LEVEL SHUTDOWN) | |
| | | 2 | **6T-3631** | 2 | NUT-HEX (15/32-32-THD) | |
| | | 2 | **6T-3632** | 1 | LOCKWASHER | |
| | | 2 | **6T-3633** | 1 | RING-LOCKING | |
| | | 2 | **186-3735** | 3 | PIN-CONNECTOR (16-GA TO 18-GA) | |
| | | 2 | **9G-3695** | 1 | PLUG (GROMMET SEALING) | |
| | | 2 | **102-8804** | 1 | KIT-RECEPTACLE (4-PIN) | |
| | | | | | (INCLUDES RECETACLE AS & WEDGE) | |
| | 9 | 1 | **163-1201** | 1 | HORN AS (24-VOLT, LOW TONE) | |
| | 10 | 2 | **213-9100** | 1 | ALARM AS (TRAVEL) | |
| | | 2 | **102-8802** | 1 | KIT-RECEPTACLE (2-PIN) | |
| | | | | | (INCLUDES RECEPTACLE AS & WEDGE) | |
| BD | | 2 | **5P-5623** | | WIRE-ELECTRICAL (16-GA, BLACK) (0.4-M) | |
| | | 2 | **186-3735** | 2 | PIN-CONNECTOR (16-GA TO 18-GA) | |
| BE | | 2 | **9X-1813** | | SLEEVE (31-CM) | |
| | 11 | 3 | **255-8099** | 1 | HARNESS AS-TRANSMISSION | |
| | | 3 | **102-8801** | 1 | KIT-RECEPTACLE (12-PIN) | |
| | | | | | (INCLUDES RECEPTACLE AS & WEDGE) | |
| BE | | 3 | **125-7874** | | TUBE-HEAT SHRINK (5.72-MM DIA) (5-CM) | |
| BE | | 3 | **125-7875** | | TUBE-HEAT SHRINK (7.44-MM DIA) (5-CM) | |
| | | 3 | **155-2270** | 9 | KIT-CONNECTING PLUG (2-PIN) | |
| | | | | | (EACH PLUG KIT INCLUDES PLUG AS & WEDGE) | |
| | 12 | 2 | **255-8110** | 1 | HARNESS AS-WORK TOOL (GRAPPLE, WINCH) | |
| | | 2 | **102-8802** | 5 | KIT-RECEPTACLE (2-PIN) | |
| | | 2 | **102-8803** | 1 | KIT-RECEPTACLE (3-PIN) | |
| | | 2 | **102-8805** | 1 | KIT-RECEPTACLE (6-PIN) | |
| | | 2 | **102-8806** | 1 | KIT-RECEPTACLE (8-PIN) | |
| | | 2 | **102-8801** | 1 | KIT-RECEPTACLE (12-PIN) | |
| | | | | | (EACH RECEPTACLE KIT INCLUDES RECEPTACLE AS & WEDGE) | |
| BE | | 2 | **5P-0765** | | HOSE (272-CM) | |
| BE | | 2 | **125-7875** | | TUBE-HEAT SHRINK (7.44-MM DIA) (10-CM) | |
| | | 2 | **155-2260** | 1 | KIT-CONNECTING PLUG (3-PIN) | |
| | | | | | (INCLUDES PLUG AS & WEDGES) | |
| | | 2 | **155-2270** | 1 | KIT-CONNECTING PLUG (2-PIN) | |
| | | 2 | **155-2274** | 1 | KIT-CONNECTING PLUG (6-PIN) | |
| | | | | | (EACH PLUG KIT INCLUDES PLUG AS & WEDGE) | |
| | 13 | 4 | **256-6007** | 1 | HARNESS AS-HYDRAULIC TANK | |
| | | 4 | **102-8801** | 1 | KIT-RECEPTACLE (12-PIN) | |
| | | | | | (INCLUDES RECEPTACLE AS & WEDGE) | |
| BE | | 4 | **125-7874** | | TUBE-HEAT SHRINK (5.72-MM DIA) (10-CM) | |
| | | 4 | **155-2260** | 2 | KIT-CONNECTING PLUG (3-PIN) | |
| | | 4 | **155-2270** | 3 | KIT-CONNECTING PLUG (2-PIN) | |
| | | | | | (EACH PLUG KIT INCLUDES PLUG AS & WEDGE) | |
| | 14 | 4 | **256-6453** | 1 | SENSOR AS-TEMPERATURE (HYDRAULIC OIL) | |
| | 15 | 2 | **273-5789** | 1 | HARNESS AS-ENGINE | |

*255-8096* **WIRING GP-MACHINE** ***(contd.)*** **i02503721**

| NOTE | REF NO | GRAPHIC REF | PART NUMBER | QTY | PART NAME 1 2 3 4 5 6 (PRODUCT LEVEL) | SEE PAGE |
|---|---|---|---|---|---|---|
| | | 2 | **160-7689** | 1 | PLUG AS-CONNECTOR (70-PIN) | |
| | | 2 | **159-9322** | 1 | SEAL-O-RING | |
| | | 2 | **135-2543** | 2 | BOOT | |
| | | 2 | **8N-1521** | 1 | BELL AS-END (2-GA) | |
| | | 2 | **9X-6772** | 3 | STRAP-CABLE | |
| | | 2 | **155-2260** | 1 | KIT-CONNECTING PLUG (3-PIN) | |
| | | 2 | **155-2270** | 4 | KIT-CONNECTING PLUG (2-PIN) | |
| | | | | | (EACH PLUG KIT INCLUDES PLUG AS & WEGDE) | |
| BE | | 2 | **119-3662** | | TUBE-HEAT SHRINK (10.85-MM DIA) (20-CM) | |
| | | 2 | **102-8804** | 4 | KIT-RECEPTACLE (4-PIN) | |
| | | | | | (EACH KIT INCLUDES RECEPTACLE AS & WEDGE) | |
| | | 2 | **3T-4688** | 1 | TERMINAL (4-GA) | |
| | | 2 | **9X-0196** | 2 | TERMINAL AS | |
| | | 2 | **110-8769** | 1 | WIRE AS | |
| E | | 2 | **114-8845** | | SLEEVE-PLASTIC (80-MM DIA) (20-CM) | |
| BE | | 2 | **119-3662** | | TUBE-HEAT SHRINK (10.85-MM DIA) (20-CM) | |
| BE | | 2 | **125-7874** | | TUBE-HEAT SHRINK (5.72-MM DIA) (20-CM) | |
| | | 2 | **126-1774** | 1 | COVER-CONNECTOR | |
| | | 2 | **8N-1518** | | PLUG AS-CONNECTOR (25-PIN) | |
| Y | 16 | 1 | *282-4220* | 1 | PANEL GP-CIRCUIT BREAKER | 162 |
| | 17 | 2 | **130-5300** | 2 | CLIP | |
| | 18 | 1 | **132-5789** | 3 | CLIP | |
| | 19 | 3 | **3K-0360** | 1 | SEAL-O-RING | |
| | 20 | 1 | **4K-8864** | 1 | CLIP | |
| | 21 | 2,4 | **4P-7428** | 2 | CLIP (LADDER) | |
| | 22 | 1,2,3,4 | **4P-7581** | 16 | CLIP | |
| | 23 | 3 | **4P-8134** | 4 | CLIP | |
| | 24 | 2 | **4S-1936** | 1 | CLIP | |
| | 25 | 2,3 | **4S-1962** | 2 | CLIP | |
| M | 26 | 1 | **5C-7261** | 1 | NUT (M8X1.25-THD) | |
| | 27 | 2 | **6D-4244** | 1 | CLIP | |
| | 28 | 3 | **7J-0204** | 1 | SEAL-O-RING | |
| | 29 | 1,2,3,4 | **7K-1181** | 74 | STRAP-CABLE | |
| | 30 | 2 | **8M-2769** | 3 | CLIP | |
| | 31 | 1 | **8M-2773** | 5 | CLIP | |
| | 32 | 1,2,3,4 | **8T-4121** | 26 | WASHER-HARD (11X21X2.5-MM THK) | |
| M | 33 | 2 | **8T-4133** | 3 | NUT (M10X1.5-THD) | |
| M | 34 | 1,2,3,4 | **8T-4137** | 22 | BOLT (M10X1.5X20-MM) | |
| M | 35 | 2 | **8T-4189** | 2 | BOLT (M8X1.25X20-MM) | |
| M | 36 | 2 | **8T-4195** | 1 | BOLT (M10X1.5X30-MM) | |
| | 37 | 1 | **8T-4223** | 1 | WASHER-HARD (13.5X25.5X3-MM THK) | |
| | 38 | 1,2,4 | **8T-4224** | 6 | WASHER-HARD (8.8X16X2-MM THK) | |
| M | 39 | 1 | **8T-4244** | 1 | NUT (M12X1.75-THD) | |
| M | 40 | 1,2,4 | **8T-4908** | 3 | BOLT (M8X1.25X25-MM) | |

B-USE AS REQUIRED
D-ORDER BY THE METER
E-ORDER BY THE CENTIMETER
M-METRIC PART
Y-SEPARATE ILLUSTRATION

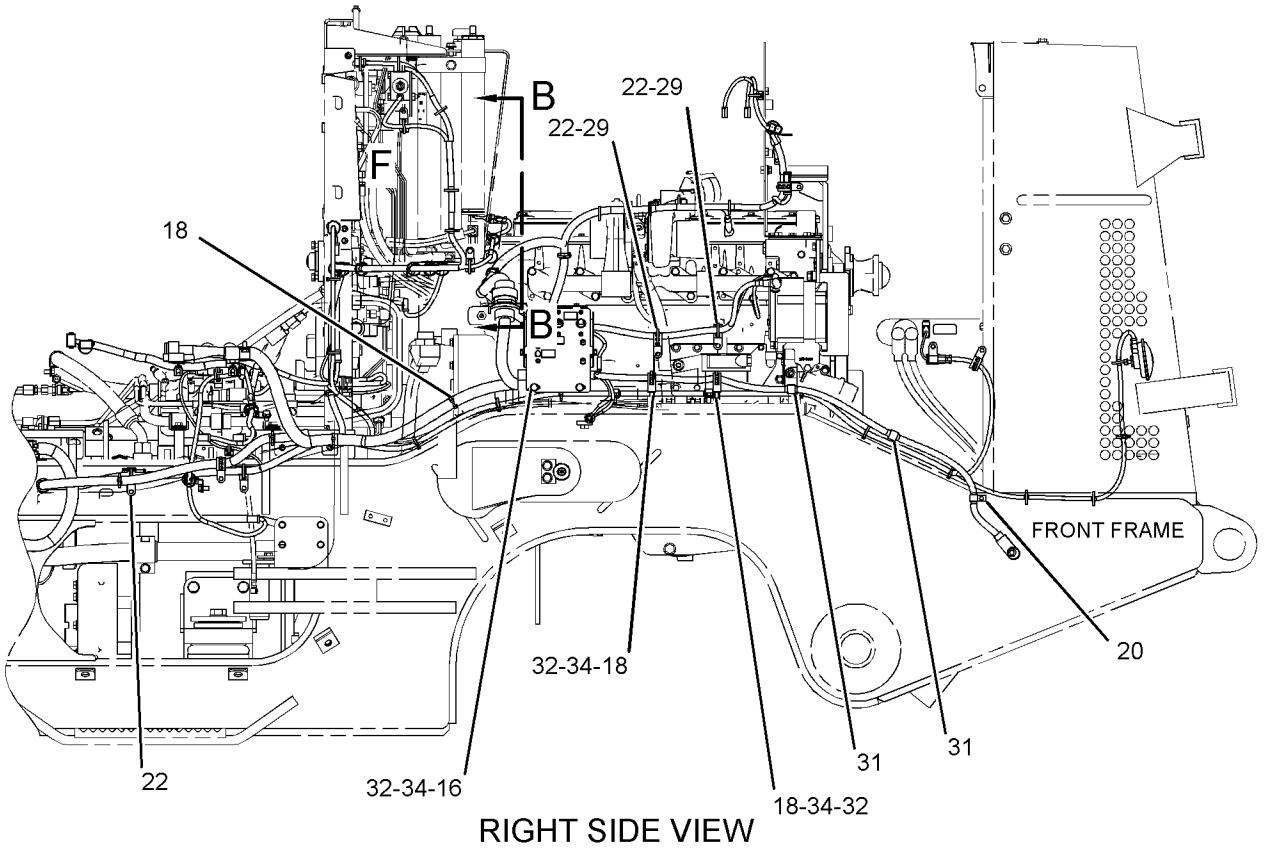


RIGHT SIDE VIEW

REFER TO ALL ILLUSTRATIONS OF
THIS GROUP FOR AUXILIARY VIEWS

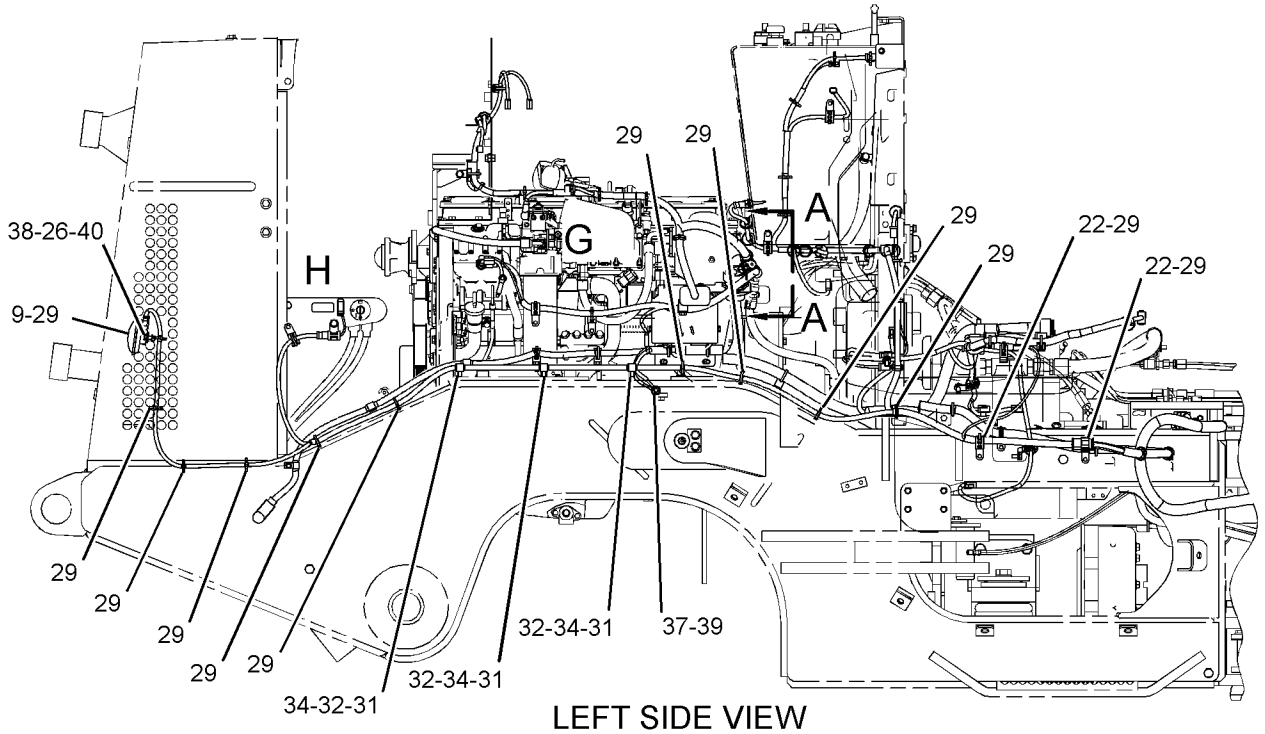


LEFT SIDE VIEW

GRAPHIC #1

g01235992

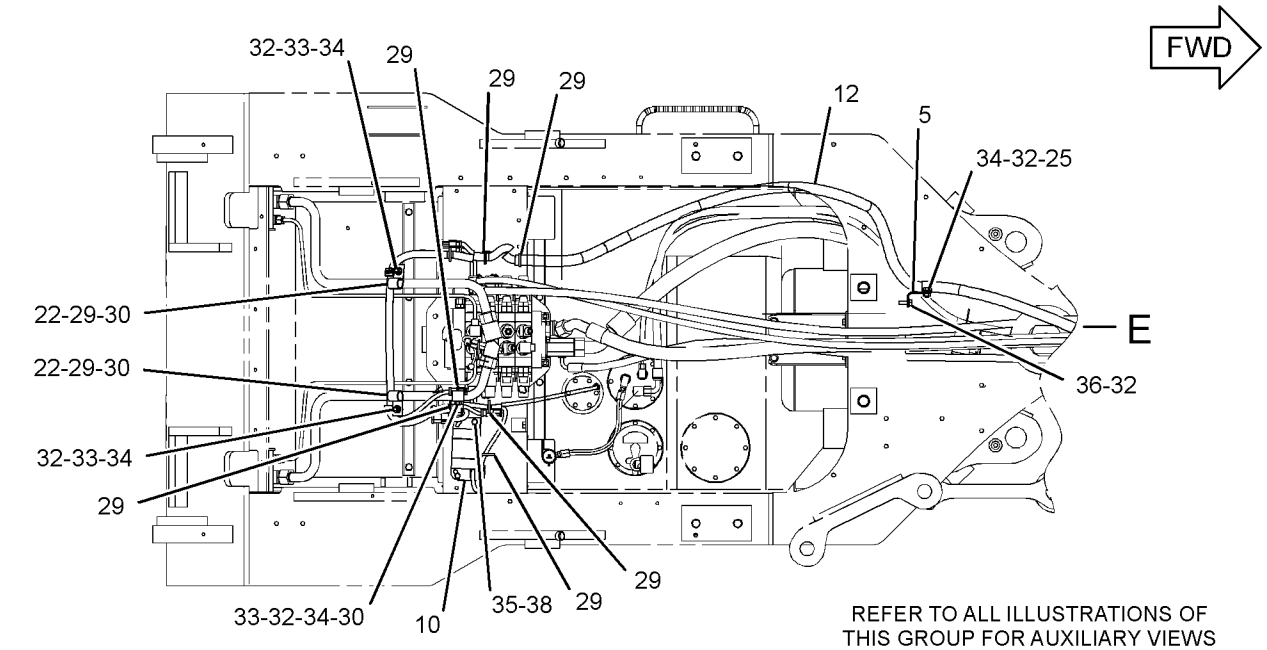


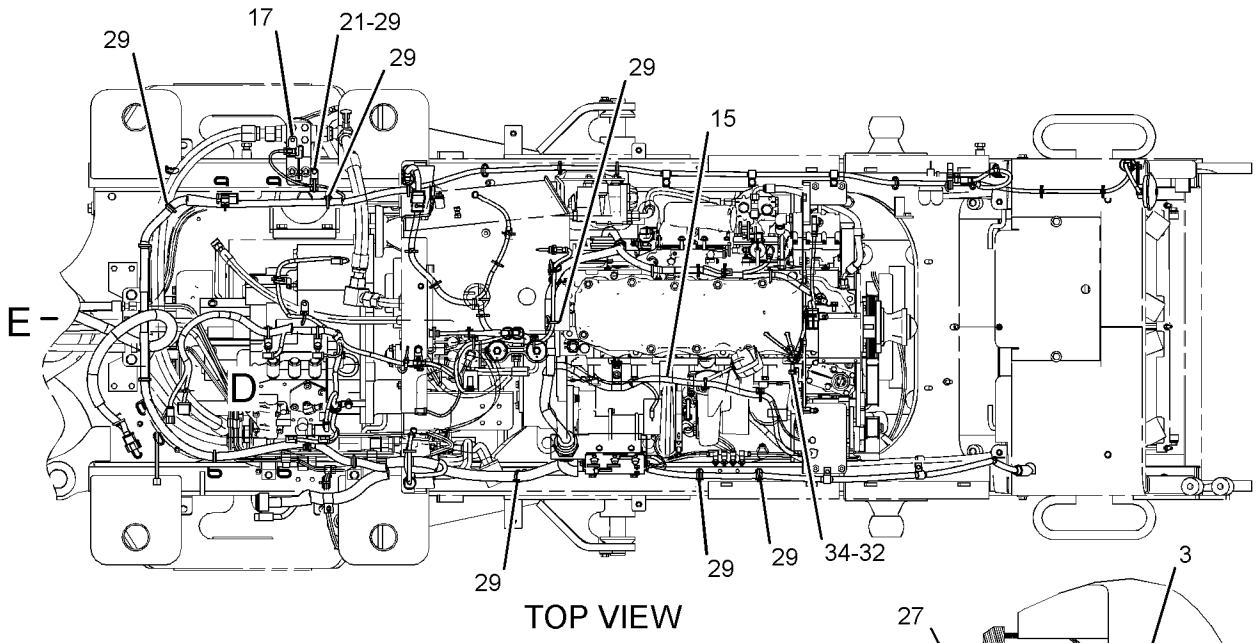


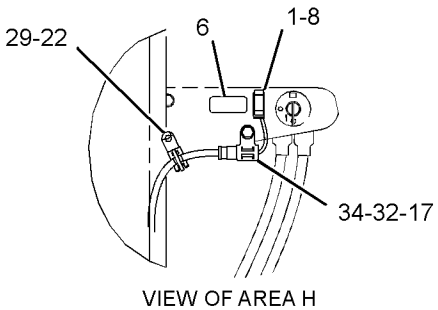


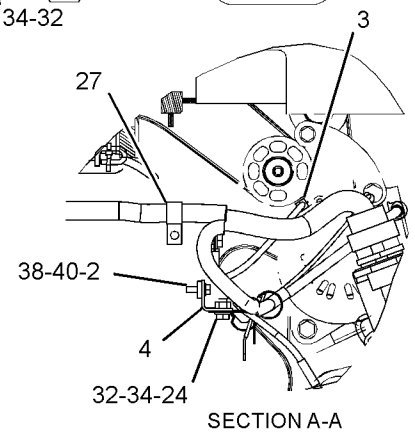


GRAPHIC #2

g01237125

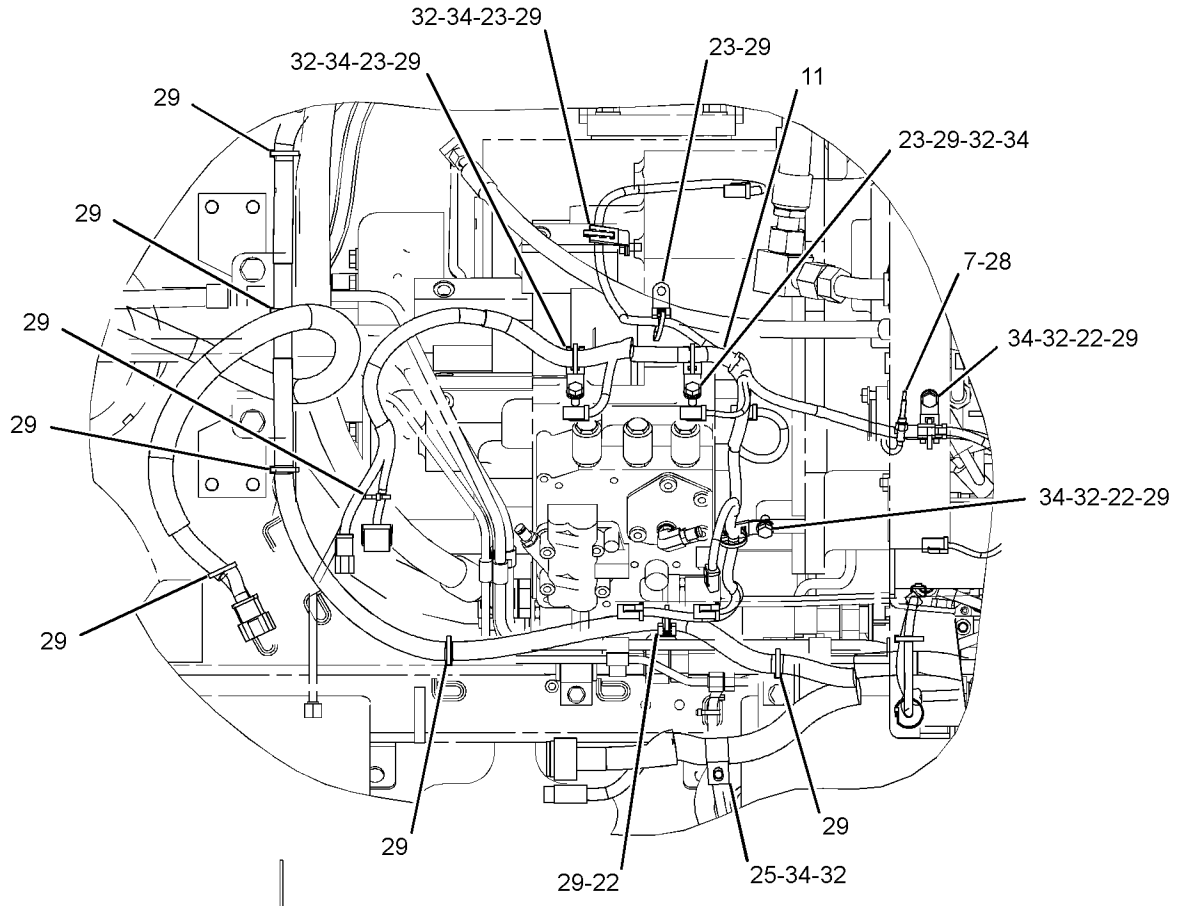


VIEW OF AREA D

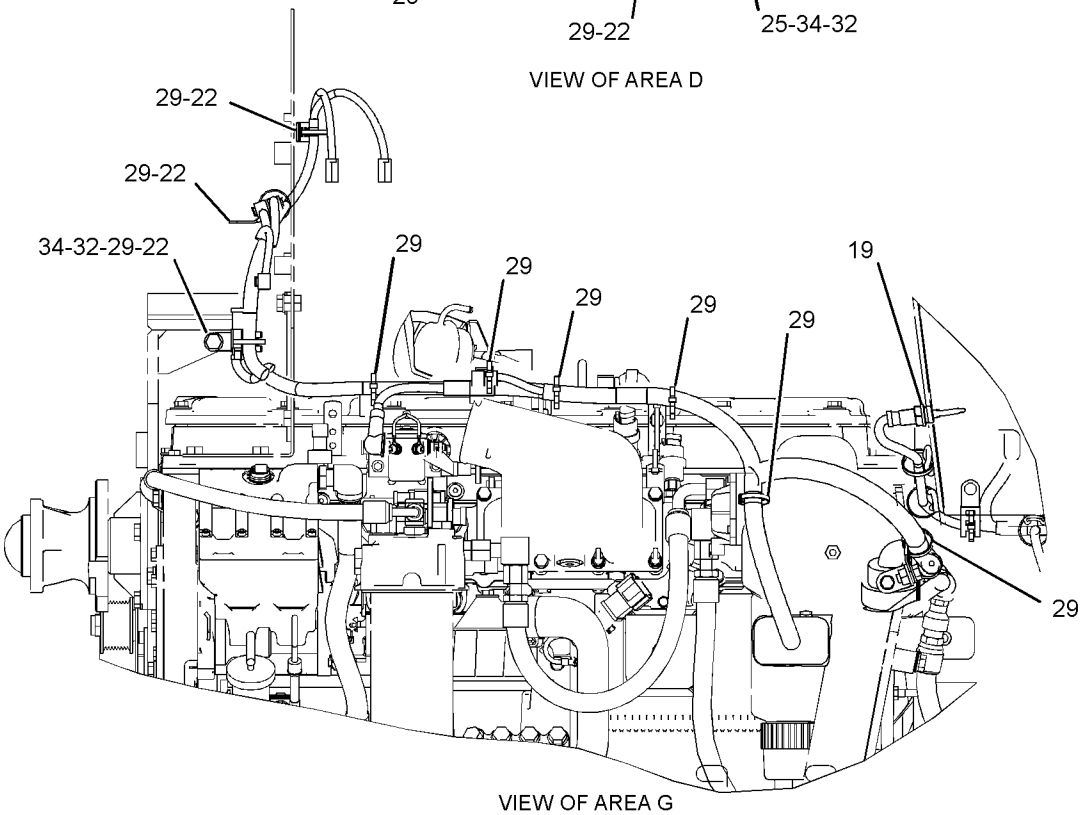


VIEW OF AREA G

GRAPHIC #3

g01237126

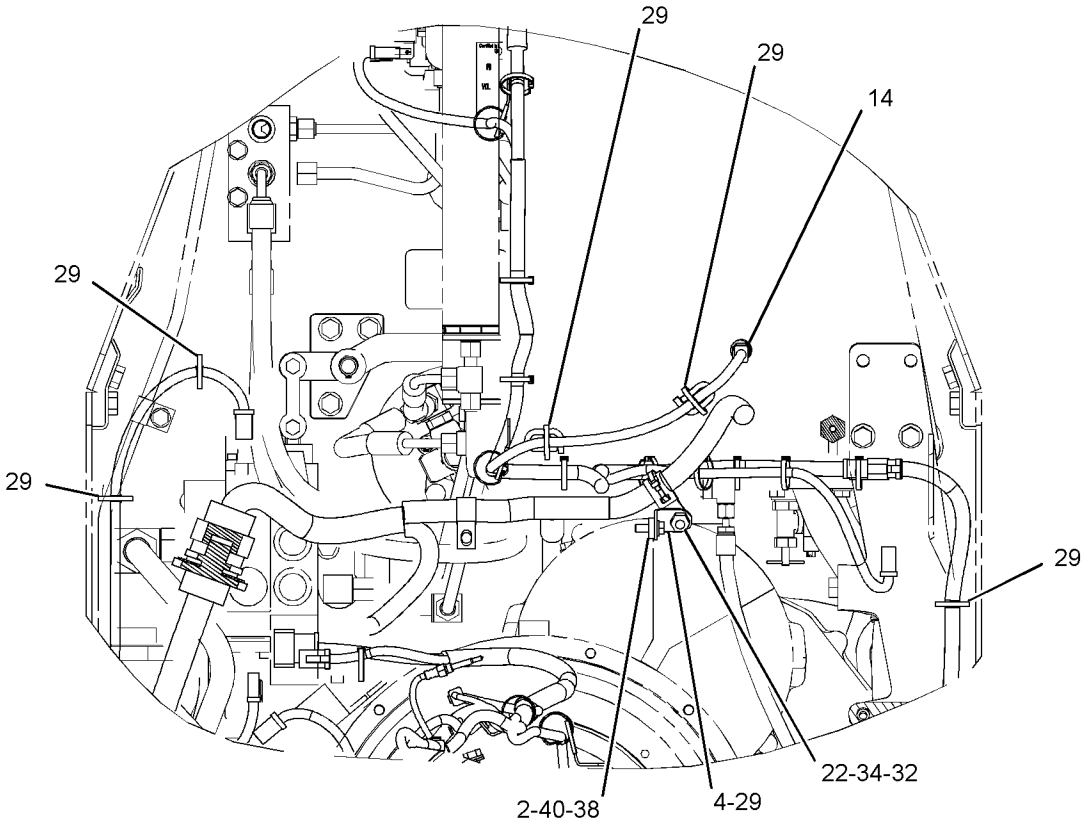


SECTION B-B

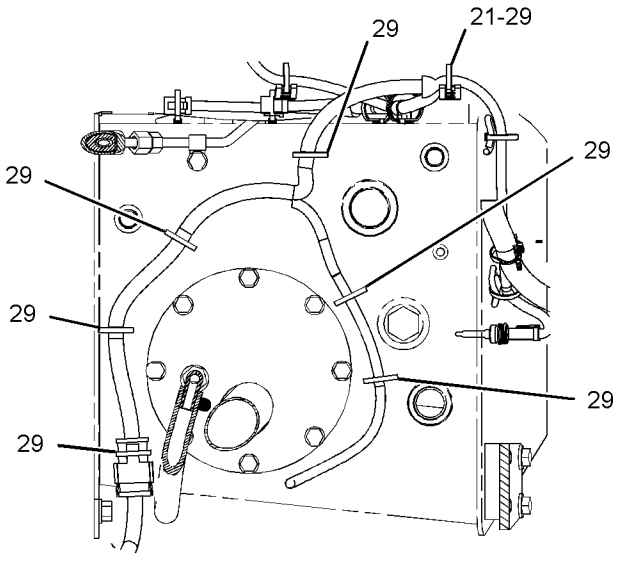


SECTION J-J

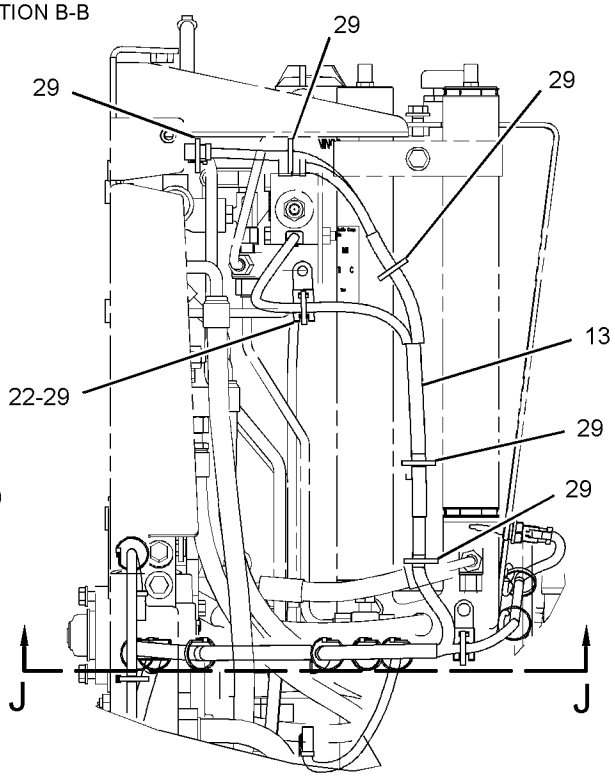


VIEW OF AREA F

GRAPHIC #4 **<END>** g01237127

## *255-8096* WIRING GP-MACHINE

**S/N: 5451-377**

**PART OF 245-9469 ELECTRICAL AR**

**SMCS-1408** **i02568741**

| NOTE | REF NO | GRAPHIC REF | PART NUMBER | QTY | PART NAME 1 2 3 4 5 6 (PRODUCT LEVEL) | SEE PAGE |
|---|---|---|---|---|---|---|
| | 1 | 4 | **3E-5169** | 1 | GUARD-SWITCH | |
| C | 2 | 5 | **4H-1225** | 1 | WASHER (11X22X6-MM THK) | |
| | 3 | 4 | **4P-7751** | 1 | WIRE AS | |
| C | 4 | 5 | **124-3019** | 1 | BRACKET AS | |
| M | | 5 | **8T-3490** | 1 | NUT-WELD (M10X1.5-THD) | |
| | 5 | 3 | **127-9323** | 1 | BRACKET AS | |
| M | | 3 | **8T-3490** | 1 | NUT-WELD (M10X1.5-THD) | |
| | 6 | 4 | **131-0359** | 1 | PLATE-CONTROL (ENGINE STOP, RUN) | |
| C | 7 | 1 | **140-0860** | 1 | STRAP AS-GROUND | |
| Y | 8 | 4 | **145-7028** | 1 | SENSOR GP-TEMPERATURE (TORQUE CONVERTER OIL) | 181 |
| | 9 | 4 | **158-6634** | 1 | SWITCH GP-TOGGLE (GROUND LEVEL SHUTDOWN) | |
| | | 4 | **6T-3631** | 2 | NUT-HEX (15/32-32-THD) | |
| | | 4 | **6T-3632** | 1 | LOCKWASHER | |
| | | 4 | **6T-3633** | 1 | RING-LOCKING | |
| | | 4 | **186-3735** | 3 | PIN-CONNECTOR (16-GA TO 18-GA) | |
| | | 4 | **9G-3695** | 1 | PLUG (GROMMET SEALING) | |
| | | 4 | **102-8804** | 1 | KIT-RECEPTACLE (4-PIN) | |
| | | | | | (INCLUDES RECETACLE AS & WEDGE) | |
| | 10 | 1 | **163-1201** | 1 | HORN AS (24-VOLT, LOW TONE) | |
| | 11 | 3 | **213-9100** | 1 | ALARM AS (TRAVEL) | |
| | | 3 | **102-8802** | 1 | KIT-RECEPTACLE (2-PIN) | |
| | | | | | (INCLUDES RECEPTACLE AS & WEDGE) | |
| BD | | 3 | **5P-5623** | | WIRE-ELECTRICAL (16-GA, BLACK) (0.8-M) | |
| | | 3 | **186-3735** | 2 | PIN-CONNECTOR (16-GA TO 18-GA) | |
| BE | | 3 | **9X-1813** | | SLEEVE (31-CM) | |
| | 12 | 4 | **255-8099** | 1 | HARNESS AS-TRANSMISSION | |
| | | 4 | **102-8801** | 1 | KIT-RECEPTACLE (12-PIN) | |
| | | | | | (INCLUDES RECEPTACLE AS & WEDGE) | |
| BE | | 4 | **125-7874** | | TUBE-HEAT SHRINK (5.72-MM DIA) (5-CM) | |
| BE | | 4 | **125-7875** | | TUBE-HEAT SHRINK (7.44-MM DIA) (5-CM) | |
| | | 4 | **155-2270** | 9 | KIT-CONNECTING PLUG (2-PIN) | |
| | | | | | (EACH PLUG KIT INCLUDES PLUG AS & WEDGE) | |
| | 13 | 3 | **255-8110** | 1 | HARNESS AS-WORK TOOL (GRAPPLE, WINCH) | |
| | | 3 | **102-8802** | 5 | KIT-RECEPTACLE (2-PIN) | |
| | | 3 | **102-8803** | 1 | KIT-RECEPTACLE (3-PIN) | |
| | | 3 | **102-8805** | 1 | KIT-RECEPTACLE (6-PIN) | |
| | | 3 | **102-8806** | 1 | KIT-RECEPTACLE (8-PIN) | |
| | | 3 | **102-8801** | 1 | KIT-RECEPTACLE (12-PIN) | |
| | | | | | (EACH RECEPTACLE KIT INCLUDES RECEPTACLE AS & WEDGE) | |
| BE | | 3 | **5P-0765** | | HOSE (272-CM) | |
| BE | | 3 | **125-7875** | | TUBE-HEAT SHRINK (7.44-MM DIA) (10-CM) | |
| | | 3 | **155-2260** | 1 | KIT-CONNECTING PLUG (3-PIN) | |
| | | | | | (INCLUDES PLUG AS & WEDGES) | |
| | | 3 | **155-2270** | 1 | KIT-CONNECTING PLUG (2-PIN) | |
| | | 3 | **155-2274** | 1 | KIT-CONNECTING PLUG (6-PIN) | |
| | | | | | (EACH PLUG KIT INCLUDES PLUG AS & WEDGE) | |
| | 14 | 3 | **256-6007** | 1 | HARNESS AS-HYDRAULIC TANK | |
| | | 3 | **102-8801** | 1 | KIT-RECEPTACLE (12-PIN) | |
| | | | | | (INCLUDES RECEPTACLE AS & WEDGE) | |
| BE | | 3 | **125-7874** | | TUBE-HEAT SHRINK (5.72-MM DIA) (10-CM) | |
| | | 3 | **155-2260** | 2 | KIT-CONNECTING PLUG (3-PIN) | |
| | | 3 | **155-2270** | 3 | KIT-CONNECTING PLUG (2-PIN) | |
| | | | | | (EACH PLUG KIT INCLUDES PLUG AS & WEDGE) | |
| CY | 15 | 5 | **130-9811** | 1 | SENSOR GP-TEMPERATURE (HYDRAULIC OIL) | 180 |
| | 16 | 2 | **273-5789** | 1 | HARNESS AS-ENGINE | |

*255-8096* **WIRING GP-MACHINE** ***(contd.)*** **i02568741**

| NOTE | REF NO | GRAPHIC REF | PART NUMBER | QTY | PART NAME 1 2 3 4 5 6 (PRODUCT LEVEL) | SEE PAGE |
|---|---|---|---|---|---|---|
| | | 2 | **160-7689** | 1 | PLUG AS-CONNECTOR (70-PIN) | |
| | | 2 | **159-9322** | 1 | SEAL-O-RING | |
| | | 2 | **135-2543** | 2 | BOOT | |
| | | 2 | **8N-1521** | 1 | BELL AS-END (2-GA) | |
| | | 2 | **9X-6772** | 3 | STRAP-CABLE | |
| | | 2 | **155-2260** | 1 | KIT-CONNECTING PLUG (3-PIN) | |
| | | 2 | **155-2270** | 4 | KIT-CONNECTING PLUG (2-PIN) | |
| | | | | | (EACH PLUG KIT INCLUDES PLUG AS & WEGDE) | |
| BE | | 2 | **119-3662** | | TUBE-HEAT SHRINK (10.85-MM DIA) (20-CM) | |
| | | 2 | **102-8802** | 4 | KIT-RECEPTACLE (2-PIN) | |
| | | | | | (EACH KIT INCLUDES RECEPTACLE AS & WEDGE) | |
| | | 2 | **3T-4688** | 1 | TERMINAL (4-GA) | |
| | | 2 | **9X-0196** | 2 | TERMINAL AS | |
| | | 2 | **110-8769** | 1 | WIRE AS | |
| E | | 2 | **114-8845** | | SLEEVE-PLASTIC (80-MM DIA) (20-CM) | |
| BE | | 2 | **119-3662** | | TUBE-HEAT SHRINK (10.85-MM DIA) (20-CM) | |
| BE | | 2 | **125-7874** | | TUBE-HEAT SHRINK (5.72-MM DIA) (20-CM) | |
| | | 2 | **126-1774** | 1 | COVER-CONNECTOR | |
| | | 2 | **8N-1518** | 1 | PLUG AS-CONNECTOR (25-PIN) | |
| Y | 17 | 1 | *282-4220* | 1 | PANEL GP-CIRCUIT BREAKER | 162 |
| C | 18 | 2 | **033-8248** | 3 | CLIP | |
| | 19 | 2,4 | **130-5300** | 2 | CLIP | |
| | 20 | 1 | **132-5789** | 3 | CLIP | |
| C | 21 | 1,4 | **1B-5964** | 2 | SPACER | |
| | 22 | 5 | **3K-0360** | 1 | SEAL-O-RING | |
| C | 23 | 1 | **4K-8864** | 3 | CLIP | |
| C | 24 | 2,3,5 | **4P-7428** | 3 | CLIP (LADDER) | |
| | 25 | 1,3,4,5 | **4P-7581** | 16 | CLIP | |
| C | 26 | 1,4 | **4P-8134** | 6 | CLIP | |
| | 27 | 3,4 | **4S-1962** | 2 | CLIP | |
| M | 28 | 1 | **5C-7261** | 1 | NUT (M8X1.25-THD) | |
| | 29 | 4 | **6D-4244** | 1 | CLIP | |
| | 30 | 4 | **7J-0204** | 1 | SEAL-O-RING | |
| C | 31 | 1,2,3, 4,5 | **7K-1181** | 76 | STRAP-CABLE | |
| CM | 32 | 1,4,5 | **7X-2537** | 3 | BOLT (M8X1.25X35-MM) | |
| | 33 | 3 | **8M-2769** | 3 | CLIP | |
| C | 34 | 1,2,3, 4,5 | **8T-4121** | 25 | WASHER-HARD (11X21X2.5-MM THK) | |
| M | 35 | 3 | **8T-4133** | 3 | NUT (M10X1.5-THD) | |
| CM | 36 | 1,2,3, 4,5 | **8T-4137** | 21 | BOLT (M10X1.5X20-MM) | |
| M | 37 | 3 | **8T-4189** | 2 | BOLT (M8X1.25X20-MM) | |
| M | 38 | 3 | **8T-4195** | 1 | BOLT (M10X1.5X30-MM) | |
| | 39 | 1 | **8T-4223** | 1 | WASHER-HARD (13.5X25.5X3-MM THK) | |
| C | 40 | 1,3,4,5 | **8T-4224** | 7 | WASHER-HARD (8.8X16X2-MM THK) | |
| M | 41 | 1 | **8T-4244** | 1 | NUT (M12X1.75-THD) | |
| CM | 42 | 1 | **8T-4908** | 1 | BOLT (M8X1.25X25-MM) | |

B-USE AS REQUIRED
C-CHANGE FROM PREVIOUS TYPE
D-ORDER BY THE METER
E-ORDER BY THE CENTIMETER
M-METRIC PART
Y-SEPARATE ILLUSTRATION

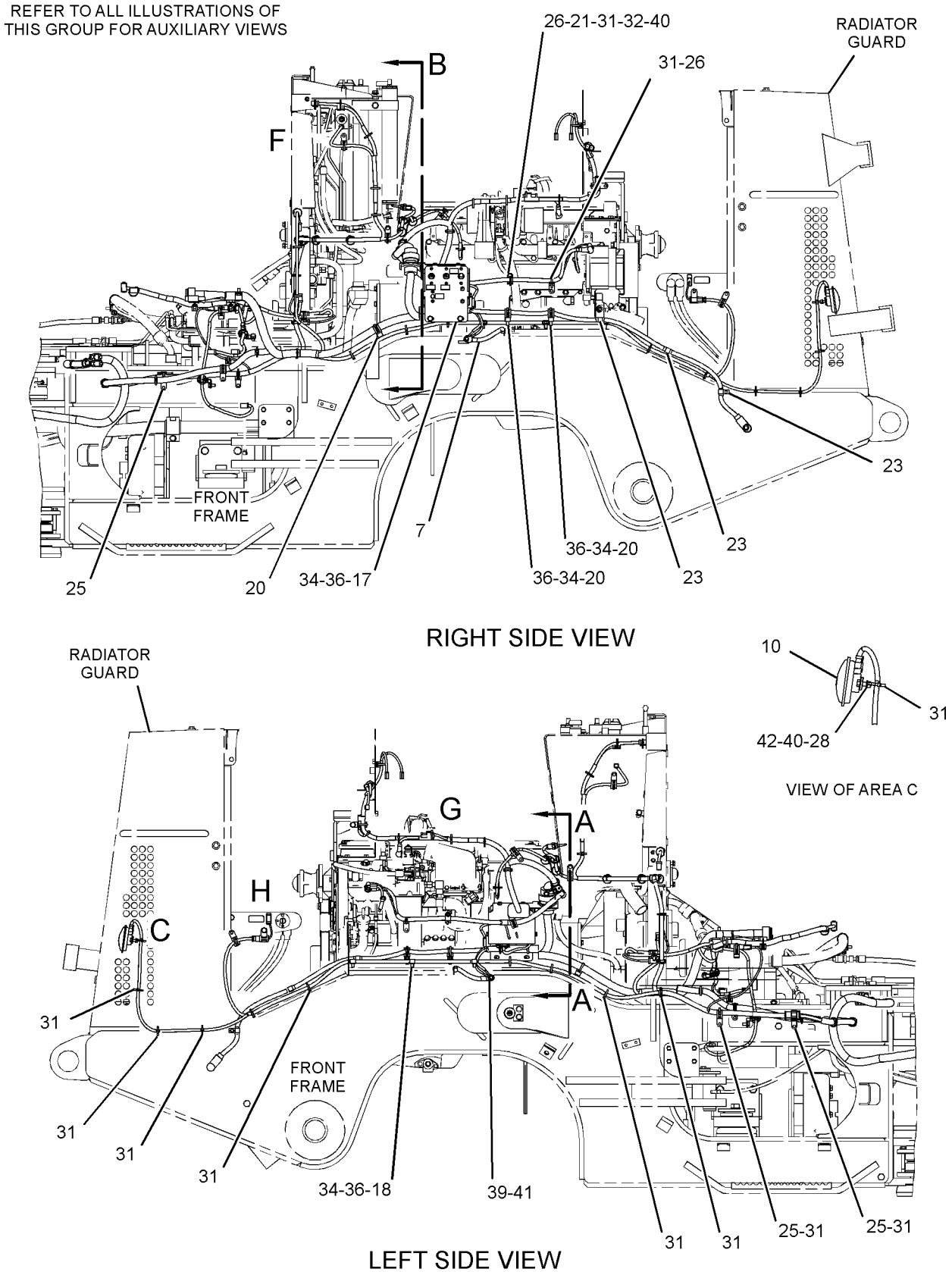


GRAPHIC #1 g01319273

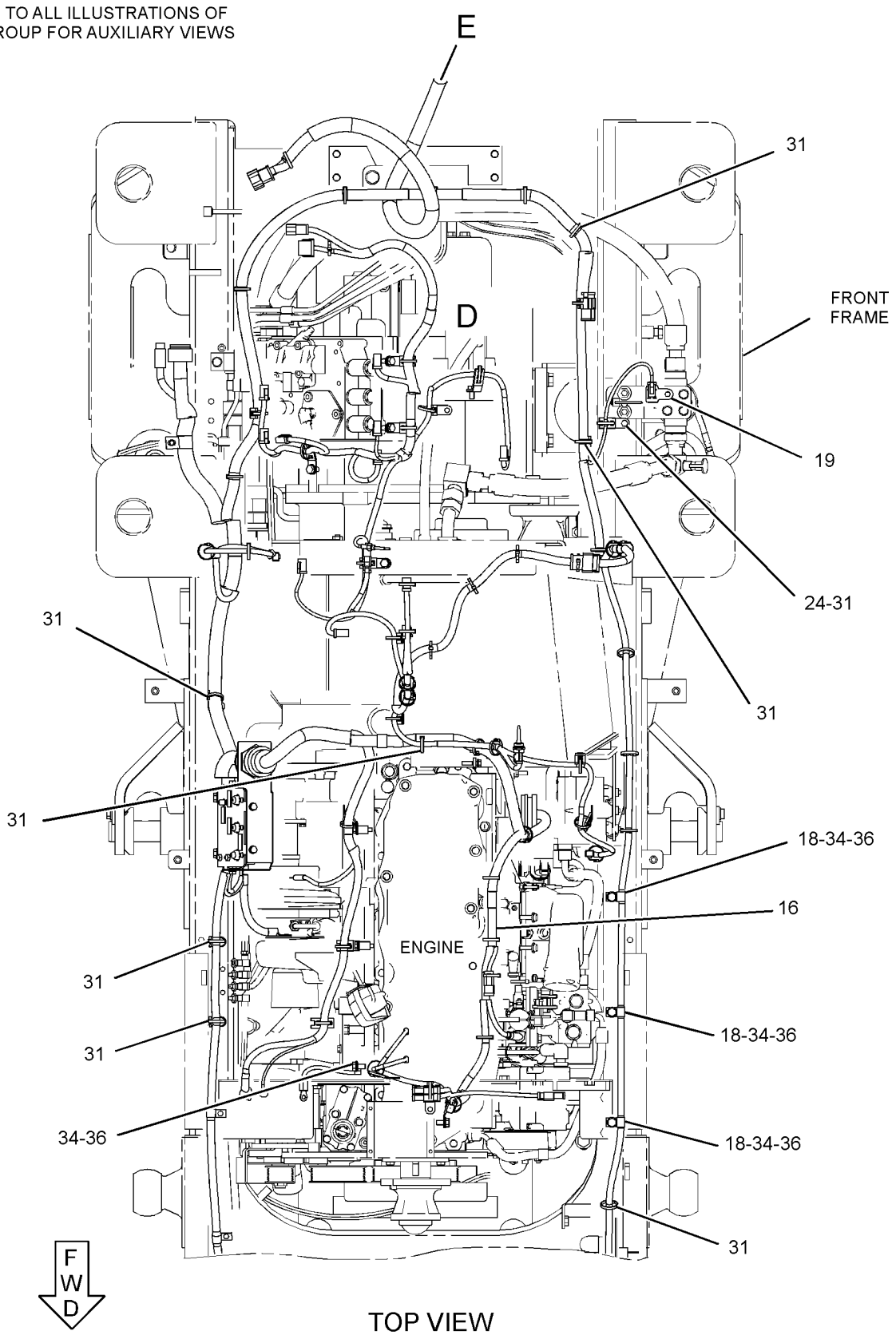


GRAPHIC #2

g01319274

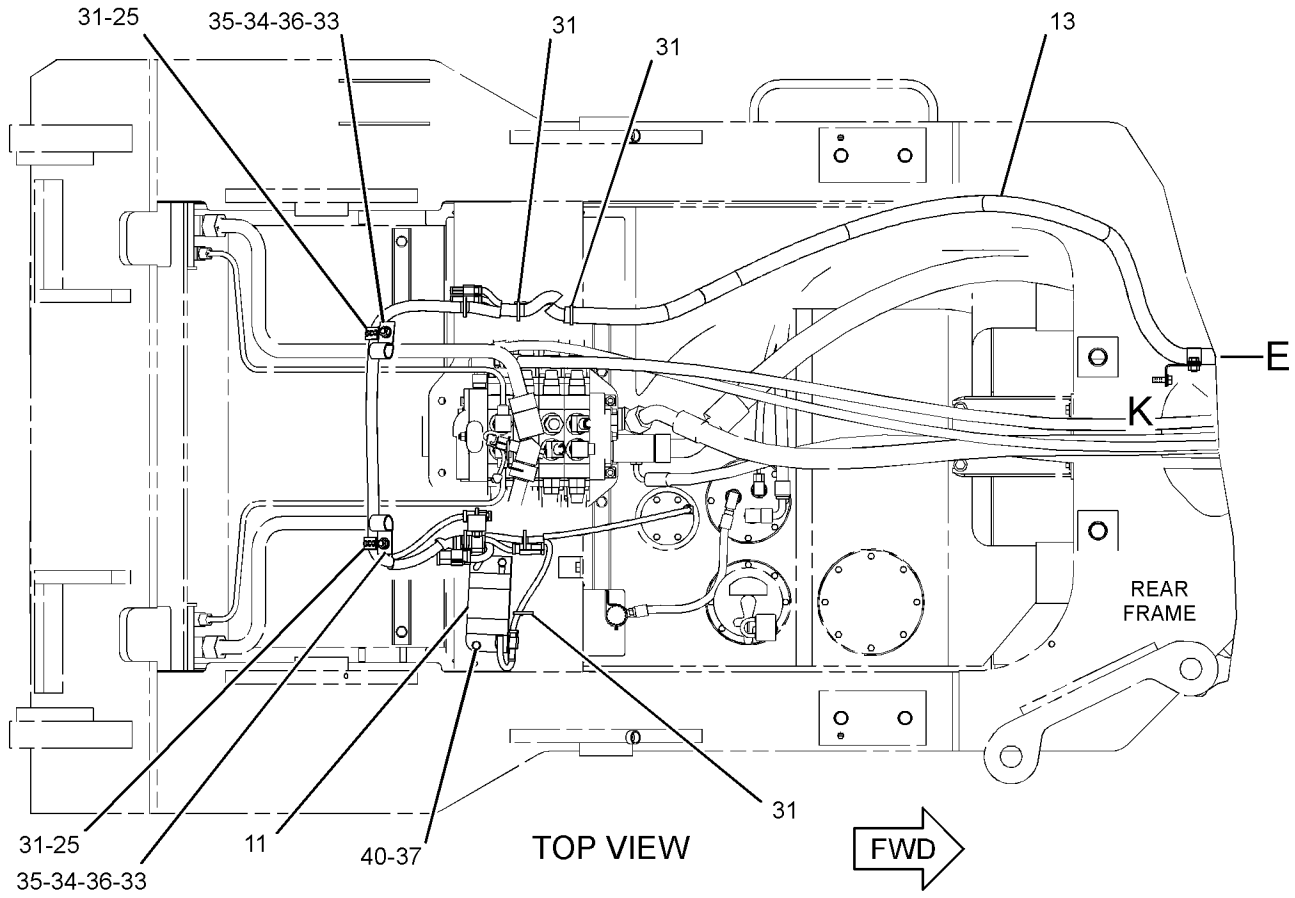


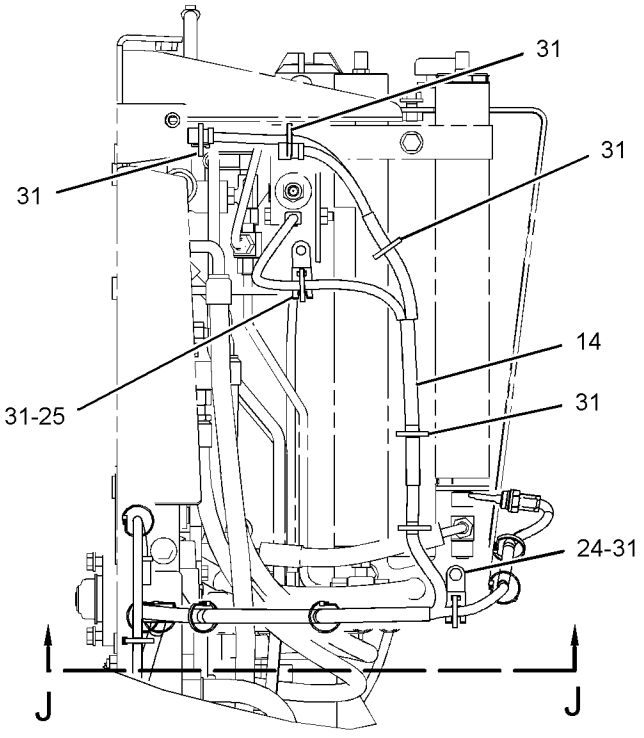


VIEW OF AREA F

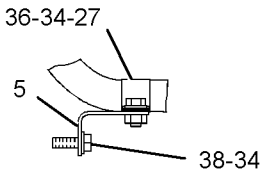


VIEW OF AREA K

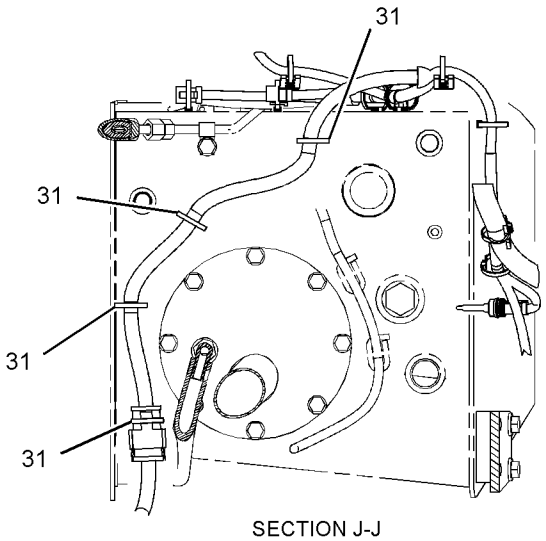


SECTION J-J

GRAPHIC #3

g01356567

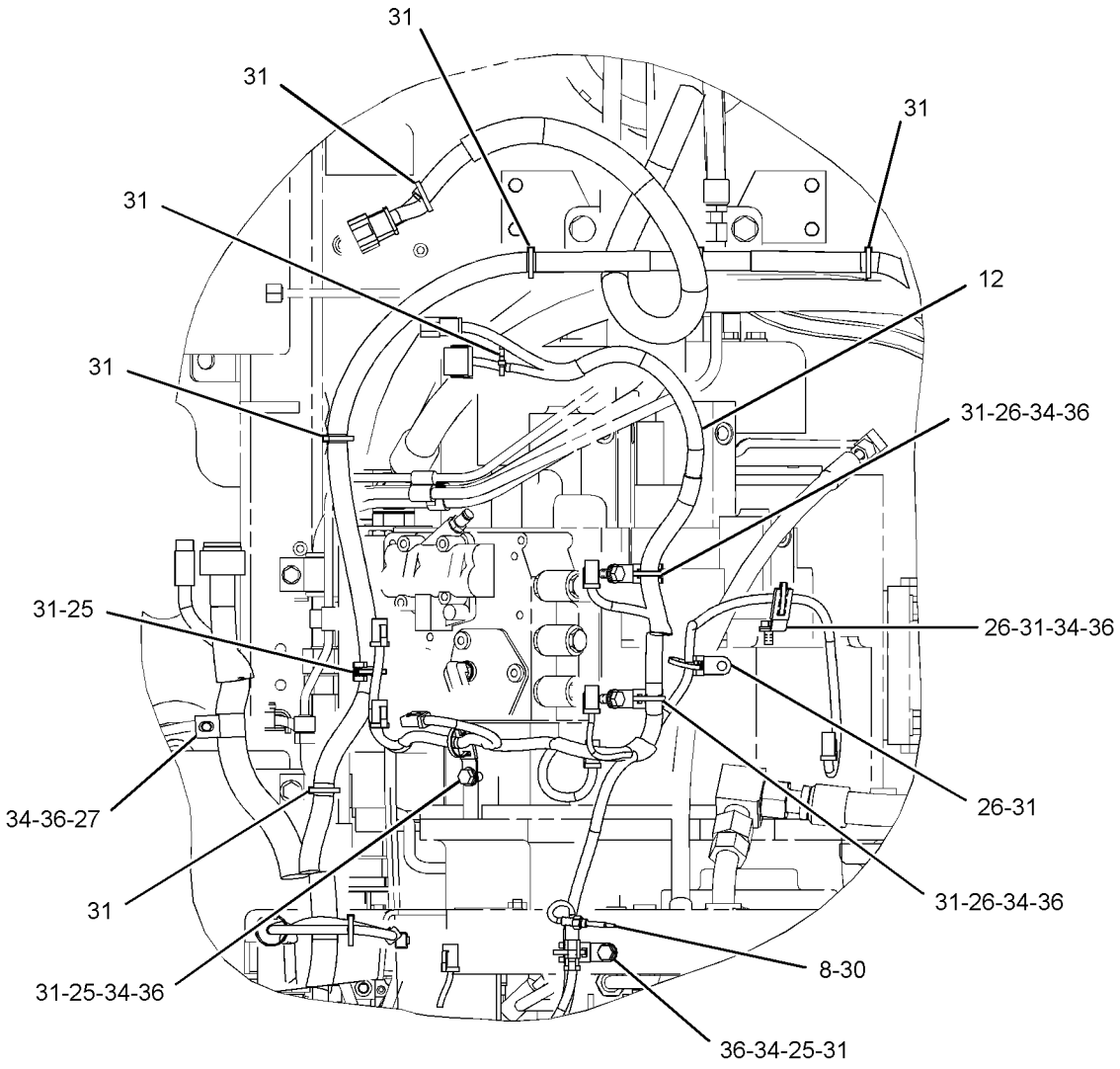


VIEW OF AREA D

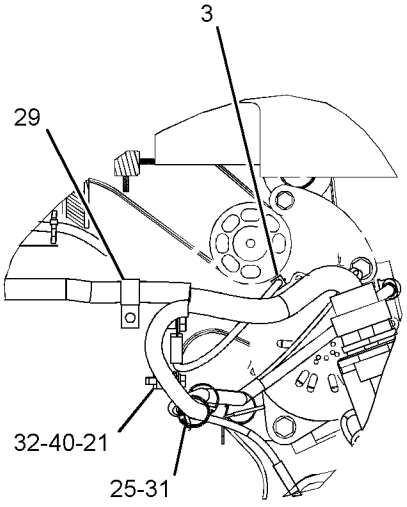


SECTION A-A

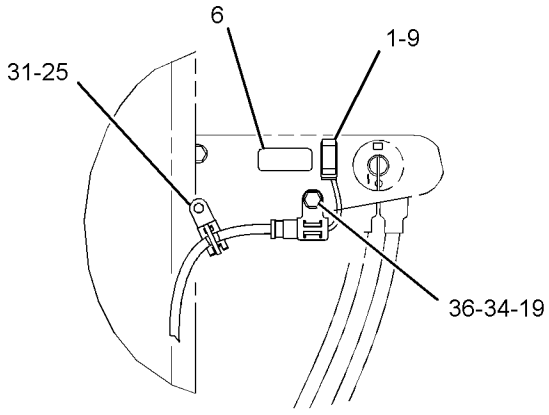


VIEW OF AREA H

GRAPHIC #4 g01356569

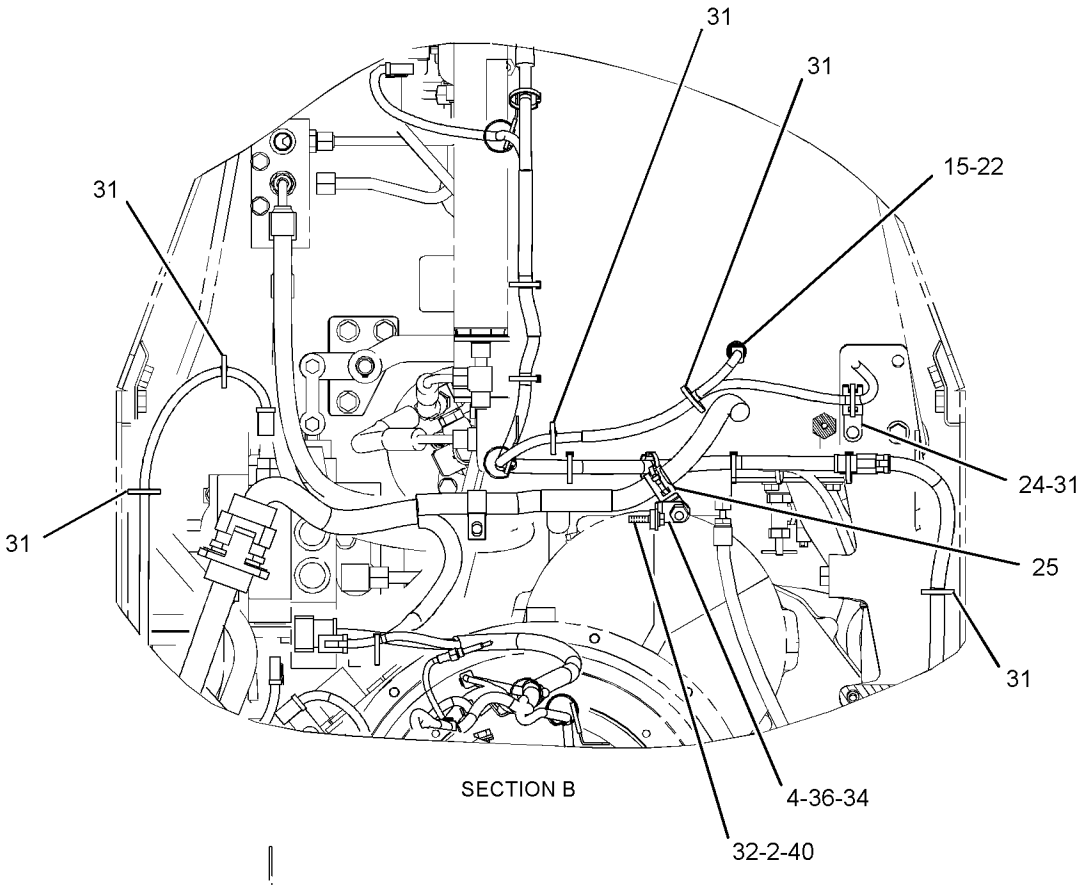


SECTION B

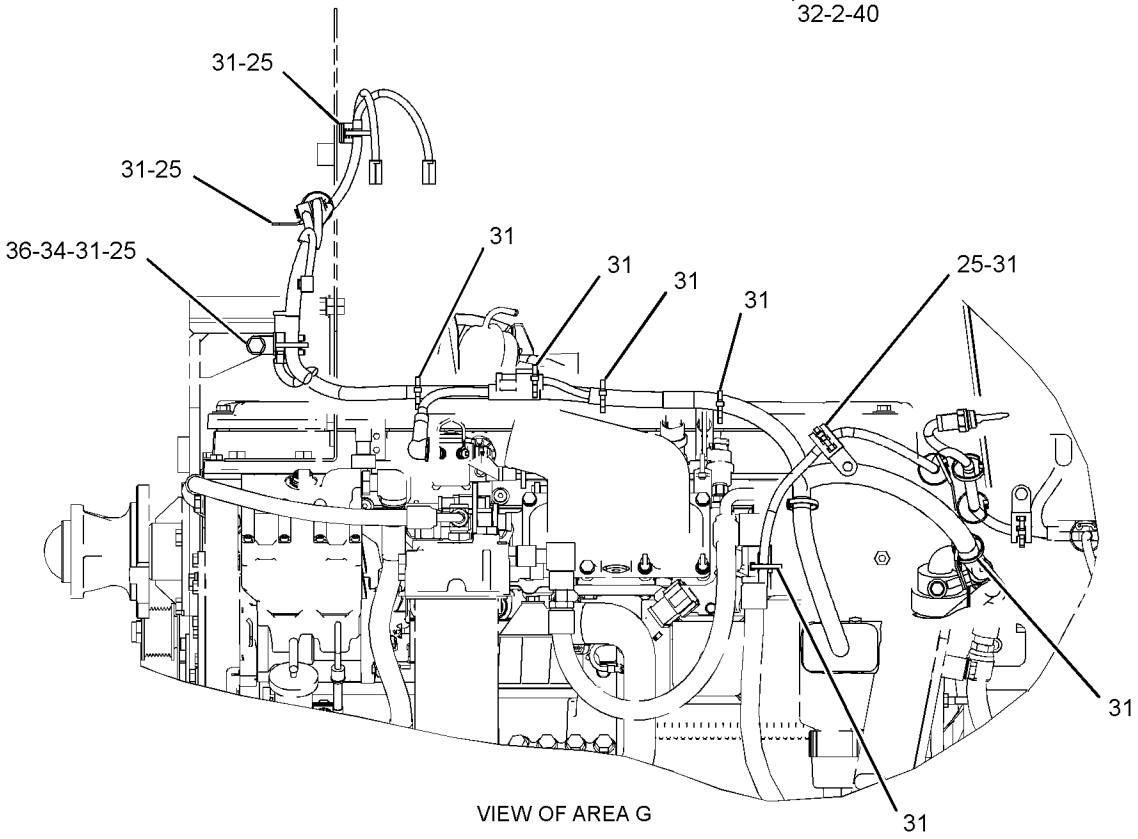


VIEW OF AREA G

GRAPHIC #5 **<END>** g01356573

# ELECTRICAL AND STARTING SYSTEM

## *282-5089* WIRING GP-MACHINE

**S/N: 5451-UP**

**PART OF 285-2280 ELECTRICAL AR**

**SMCS-1408** **i02525698**

| NOTE | REF NO | GRAPHIC REF | PART NUMBER | QTY | PART NAME 1 2 3 4 5 6 (PRODUCT LEVEL) | SEE PAGE |
|---|---|---|---|---|---|---|
| | 1 | 1 | **3E-5169** | 1 | GUARD-SWITCH (GROUND LEVEL SHUTDOWN) | |
| | 2 | 2 | **4H-1225** | 2 | WASHER (11X22X6-MM THK) | |
| | 3 | 1 | **4P-7751** | 1 | WIRE AS | |
| | 4 | 2 | **124-3019** | 2 | BRACKET AS | |
| | 5 | 1 | **127-9323** | 1 | BRACKET AS | |
| | | | | | (EACH BRACKET AS INCLUDES) | |
| M | | 1 | **8T-3490** | 1 | NUT-WELD (M10X1.5-THD) | |
| | 6 | 1 | **131-0359** | 1 | PLATE-CONTROL (ENGINE STOP, RUN) | |
| Y | 7 | 1 | **145-7028** | 1 | SENSOR GP-TEMPERATURE (TORQUE CONVERTER OIL) | 181 |
| | 8 | 1 | **158-6634** | 1 | SWITCH GP-TOGGLE (GROUND LEVEL SHUTDOWN) | |
| | | 1 | **6T-3631** | 2 | NUT-HEX (15/32-32-THD) | |
| | | 1 | **6T-3632** | 1 | LOCKWASHER | |
| | | 1 | **6T-3633** | 1 | RING-LOCKING | |
| | | 1 | **186-3735** | 3 | PIN-CONNECTOR (16-GA TO 18-GA) | |
| | | 1 | **9G-3695** | 1 | PLUG (GROMMET SEALING) | |
| | | 1 | **102-8804** | 1 | KIT-RECEPTACLE (4-PIN) | |
| | | | | | (INCLUDES RECEPTACLE AS & WEDGE) | |
| | 9 | 1 | **163-1201** | 1 | HORN AS (24-VOLT, LOW TONE) | |
| | 10 | 2 | **213-9100** | 1 | ALARM AS | |
| D | | 2 | **5P-5623** | | WIRE-ELECTRICAL (16-GA, BLACK) (4-DM EACH) | |
| | | 2 | **102-8802** | 1 | KIT-RECEPTACLE (2-PIN) | |
| | | | | | (INCLUDES RECEPTACLE AS & WEDGE) | |
| | | 2 | **186-3735** | 2 | PIN-CONNECTOR (16-GA TO 18-GA) | |
| E | | 2 | **9X-1813** | | SLEEVE (31-CM) | |
| | 11 | 1 | **255-8110** | 1 | HARNESS AS-WORK TOOL (GRAPPLE, WINCH) | |
| | | 1 | **102-8802** | 5 | KIT-RECEPTACLE (2-PIN) | |
| | | 1 | **102-8803** | 1 | KIT-RECEPTACLE (3-PIN) | |
| | | 1 | **102-8805** | 1 | KIT-RECEPTACLE (6-PIN) | |
| | | 1 | **102-8806** | 1 | KIT-RECEPTACLE (8-PIN) | |
| | | 1 | **102-8801** | 1 | KIT-RECEPTACLE (12-PIN) | |
| | | | | | (EACH RECEPTACLE KIT INCLUDES RECEPTACLE AS & WEDGE) | |
| E | | 1 | **125-7875** | | TUBE-HEAT SHRINK (7.44-MM DIA) (10-CM) | |
| | | 1 | **155-2260** | 1 | KIT-CONNECTING PLUG (3-PIN) | |
| | | | | | (INCLUDES PLUG AS, WEDGES & INTERFACE SEAL) | |
| | | 1 | **155-2270** | 7 | KIT-CONNECTING PLUG (2-PIN) | |
| | | 1 | **155-2274** | 1 | KIT-CONNECTING PLUG (6-PIN) | |
| | | | | | (EACH PLUG KIT INCLUDES PLUG AS, WEDGE & INTERFACE SEAL) | |
| | 12 | 1 | **256-6007** | 1 | HARNESS AS-HYDRAULIC TANK | |
| | | 1 | **102-8801** | 1 | KIT-RECEPTACLE (12-PIN) | |
| | | | | | (INCLUDES RECEPTACLE AS & WEDGE) | |
| E | | 1 | **114-8843** | | SLEEVE-PLASTIC (32-MM DIA) (100-CM) | |
| E | | 1 | **125-7874** | | TUBE-HEAT SHRINK (5.72-MM DIA) (10-CM) | |
| | | 1 | **155-2260** | 2 | KIT-CONNECTING PLUG (3-PIN) | |
| | | | | | (EACH INCLUDES PLUG AS, WEDGES & INTERFACE SEAL) | |
| | | 1 | **155-2270** | 3 | KIT-CONNECTING PLUG (2-PIN) | |
| | | | | | (EACH INCLUDES PLUG AS, WEGDE & INTERFACE SEAL) | |
| | 13 | 2 | **256-6453** | 1 | SENSOR AS-TEMPERATURE (HYDRAULIC OIL) | |
| | 14 | 1 | **273-5789** | 1 | HARNESS AS-ENGINE | |
| | | 1 | **102-8802** | 4 | KIT-RECEPTACLE (2-PIN) | |
| | | | | | (EACH INCLUDES RECEPTACLE AS & WEDGE) | |
| | | 1 | **8N-1518** | 1 | PLUG AS-CONNECTOR (25-PIN) | |
| | | 1 | **8N-1521** | 1 | BELL AS-END (2-GA) | |
| | | 1 | **9X-6772** | 3 | STRAP-CABLE | |

*282-5089* **WIRING GP-MACHINE** *(contd.)* **i02525698**

| NOTE | REF NO | GRAPHIC REF | PART NUMBER | QTY | PART NAME 1 2 3 4 5 6 (PRODUCT LEVEL) | SEE PAGE |
|---|---|---|---|---|---|---|
| E | | 1 | **114-8845** | | SLEEVE-PLASTIC (80-MM DIA) (20-CM) | |
| E | | 1 | **119-3662** | | TUBE-HEAT SHRINK (10.85-MM DIA) (20-CM) | |
| E | | 1 | **125-7874** | | TUBE-HEAT SHRINK (5.72-MM DIA) (20-CM) | |
| | | 1 | **126-1774** | 1 | COVER-CONNECTOR | |
| | | 1 | **134-2540** | 1 | RECEPTACLE AS (120-OHM) | |
| | | 1 | **135-2543** | 2 | BOOT | |
| | | 1 | **155-2260** | 1 | KIT-CONNECTING PLUG (3-PIN) | |
| | | 1 | **155-2270** | 5 | KIT-CONNECTING PLUG (2-PIN) | |
| | | | | | (EACH KIT CONNECTING PLUG INCLUDES PLUG AS, WEDGE & INTERFACE SEAL) | |
| | | 1 | **160-7689** | 1 | PLUG AS-CONNECTOR (70-PIN) | |
| | | 1 | **159-9322** | 1 | SEAL-O-RING | |
| | | 1 | **3S-2093** | 1 | STRAP-CABLE | |
| | | 1 | **112-3587** | 1 | BOOT (40-PIN) | |
| Y | 15 | 2 | *282-4220* | 1 | PANEL GP-CIRCUIT BREAKER | 162 |
| | 16 | 1 | **130-5300** | 2 | CLIP | |
| | 17 | 1 | **132-5789** | 3 | CLIP | |
| | 18 | 2 | **3K-0360** | 1 | SEAL-O-RING | |
| | 19 | 1 | **4K-8864** | 1 | CLIP | |
| | 20 | 1,2 | **4P-7428** | 2 | CLIP (LADDER) | |
| | 21 | 1,2 | **4P-7581** | 14 | CLIP | |
| | 22 | 2 | **4S-1936** | 1 | CLIP | |
| | 23 | 1 | **4S-1962** | 2 | CLIP | |
| M | 24 | 1,2 | **5C-7261** | 1 | NUT (M8X1.25-THD) | |
| | 25 | 2 | **6D-4244** | 1 | CLIP | |
| | 26 | 1 | **7J-0204** | 1 | SEAL-O-RING | |
| | 27 | 1,2 | **7K-1181** | 67 | STRAP-CABLE | |
| | 28 | 2 | **8M-2769** | 3 | CLIP | |
| | 29 | 1 | **8M-2773** | 4 | CLIP | |
| | 30 | 1,2 | **8T-4121** | 21 | WASHER-HARD (11X21X2.5-MM THK) | |
| M | 31 | 2 | **8T-4133** | 3 | NUT (M10X1.5-THD) | |
| M | 32 | 1,2 | **8T-4137** | 17 | BOLT (M10X1.5X20-MM) | |
| M | 33 | 2 | **8T-4189** | 2 | BOLT (M8X1.25X20-MM) | |
| M | 34 | 1 | **8T-4195** | 1 | BOLT (M10X1.5X30-MM) | |
| | 35 | 2 | **8T-4223** | 1 | WASHER-HARD (13.5X25.5X3-MM THK) | |
| | 36 | 1,2 | **8T-4224** | 6 | WASHER-HARD (8.8X16X2-MM THK) | |
| M | 37 | 2 | **8T-4244** | 1 | NUT (M12X1.75-THD) | |
| M | 38 | 1,2 | **8T-4908** | 3 | BOLT (M8X1.25X25-MM) | |

D-ORDER BY THE METER
E-ORDER BY THE CENTIMETER
M-METRIC PART
Y-SEPARATE ILLUSTRATION

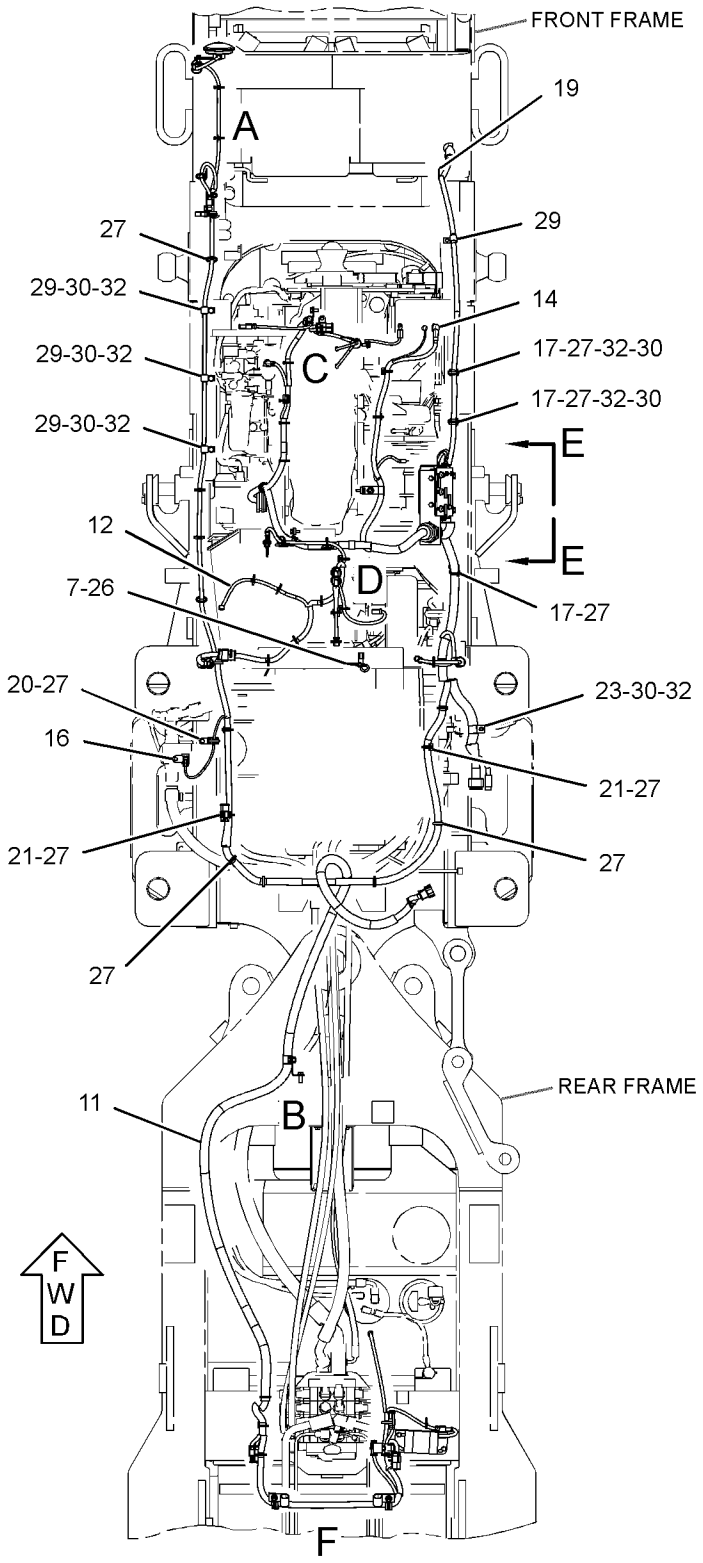


TOP VIEW

REFER TO ALL ILLUSTRATIONS OF THIS GROUP FOR AUXILIARY VIEWS

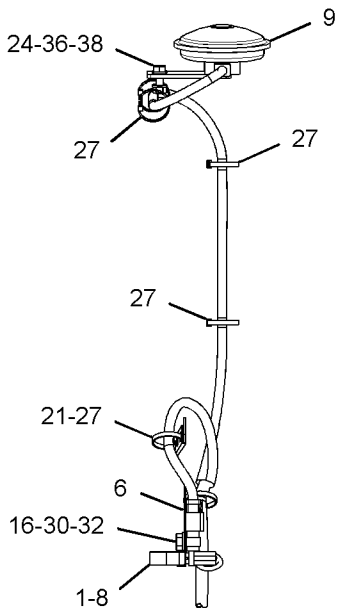


VIEW OF AREA A

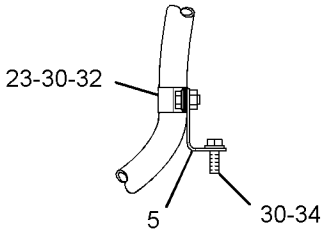


VIEW OF AREA B

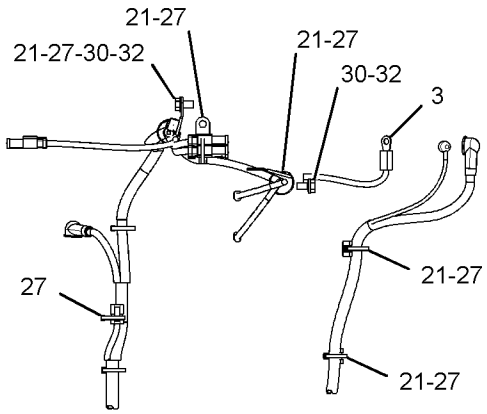


VIEW OF AREA C

GRAPHIC #1

g01373207

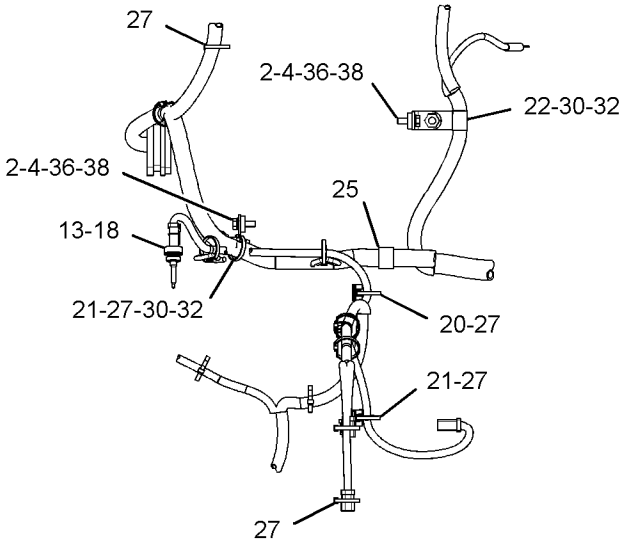


VIEW OF AREA D

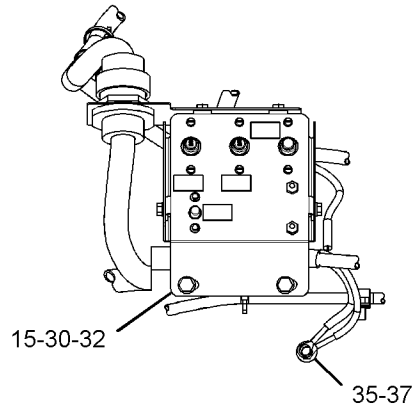


VIEW E-E

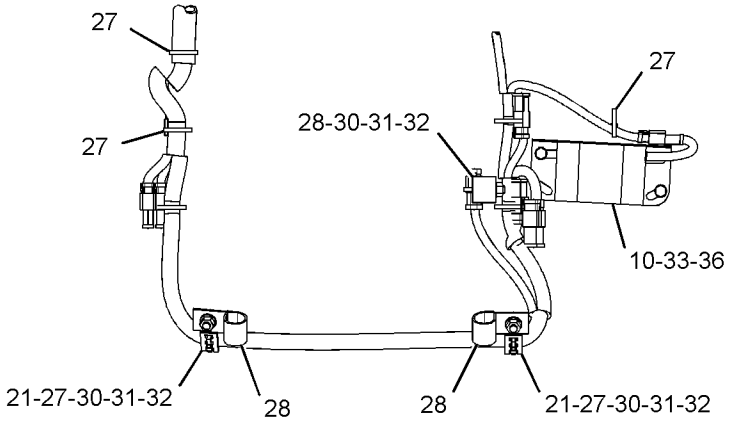


VIEW OF AREA F

GRAPHIC #2 **<END>** g01373229

# ELECTRICAL AND STARTING SYSTEM

## *255-8106* WIRING GP-SECONDARY STEERING

**S/N: 5451-UP**

**PART OF 253-2142 STEERING AR-SECONDARY**

**AN ATTACHMENT**

**SMCS-1408, 4334** **i02738509**

| NOTE | REF NO | GRAPHIC REF | PART NUMBER | QTY | PART NAME 1 2 3 4 5 6 (PRODUCT LEVEL) | SEE PAGE |
|---|---|---|---|---|---|---|
| | 1 | 1 | **6Y-6584** | 1 | STRAP AS-GROUND | |
| Y | 2 | 1 | **179-0006** | 1 | SWITCH GP-MAGNETIC (24-VOLT TO 32-VOLT) (SECONDARY STEERING RELAY) | 196 |
| | 3 | 1 | **255-8107** | 1 | HARNESS AS-STEERING (SECONDARY) | |
| | | 1 | **102-8806** | 1 | KIT-RECEPTACLE (8-PIN) | |
| | | 1 | **102-8803** | 1 | KIT-RECEPTACLE (3-PIN) | |
| | | | | | (EACH RECEPTACLE KIT INCLUDES RECEPTACLE AS & WEDGE) | |
| | | 1 | **155-2260** | 1 | KIT-CONNECTING PLUG (3-PIN) | |
| | | | | | (INCLUDES PLUG AS, WEDGE & INTERFACE SEAL) | |
| | 4 | 1 | **255-8108** | 1 | CABLE AS | |
| | | 1 | **3L-6513** | 1 | TERMINAL (FOR 1/2-IN BOLT) | |
| E | | 1 | **5P-0760** | | CABLE (00-GA, RED) (318-CM) | |
| | | 1 | **8N-0869** | 1 | COVER-TERMINAL (RED) | |
| | | 1 | **030-1707** | 1 | TERMINAL-RING (FOR 3/8-IN BOLT) | |
| | 5 | 1 | **255-8109** | 1 | CABLE AS | |
| E | | 1 | **5P-0760** | | CABLE (00-GA, RED) (32-CM) | |
| | | 1 | **8N-0869** | 1 | COVER-TERMINAL (RED) | |
| | | 1 | **9X-0195** | 1 | TERMINAL (FOR 3/8-IN BOLT) | |
| | | 1 | **9X-9120** | 1 | BOOT (RED) | |
| | | 1 | **030-1707** | 1 | TERMINAL-RING (FOR 3/8-IN BOLT) | |
| | 6 | 1 | **258-7613** | 1 | BRACKET AS | |
| | 7 | 1 | **4K-8864** | 4 | CLIP | |
| | 8 | 1 | **4P-7581** | 2 | CLIP | |
| M | 9 | 1 | **7I-2272** | 4 | BOLT (M5X0.8X12-MM) | |
| | 10 | 1 | **7K-1181** | 9 | STRAP-CABLE | |
| | 11 | 1 | **8T-0328** | 4 | WASHER-HARD (5.5X10X1-MM THK) | |
| | 12 | 1 | **8T-4121** | 3 | WASHER-HARD (11X21X2.5-MM THK) | |
| M | 13 | 1 | **8T-4133** | 1 | NUT (M10X1.5-THD) | |
| M | 14 | 1 | **8T-4137** | 2 | BOLT (M10X1.5X20-MM) | |
| | 15 | 1 | **236-4615** | 1 | SWITCH AS-ROCKER (SECONDARY STEERING) | |
| | 16 | 1 | **3E-7808** | 1 | SWITCH AS-PRESSURE (SECONDARY STEERING OIL) | |
| | | 1 | **102-8803** | 1 | KIT-RECEPTACLE (3-PIN) | |
| | | | | | (INCLUDES RECEPTACLE AS & WEDGE) | |
| | | 1 | **186-3735** | 3 | PIN-CONNECTOR (16-GA TO 18-GA) | |
| | 17 | 1 | **4K-8302** | 2 | CLIP | |
| | 18 | 1 | **8T-4223** | 2 | WASHER-HARD (13.5X25.5X3-MM THK) | |
| M | 19 | 1 | **8T-4244** | 2 | NUT (M12X1.75-THD) | |

E-ORDER BY THE CENTIMETER
M-METRIC PART
Y-SEPARATE ILLUSTRATION

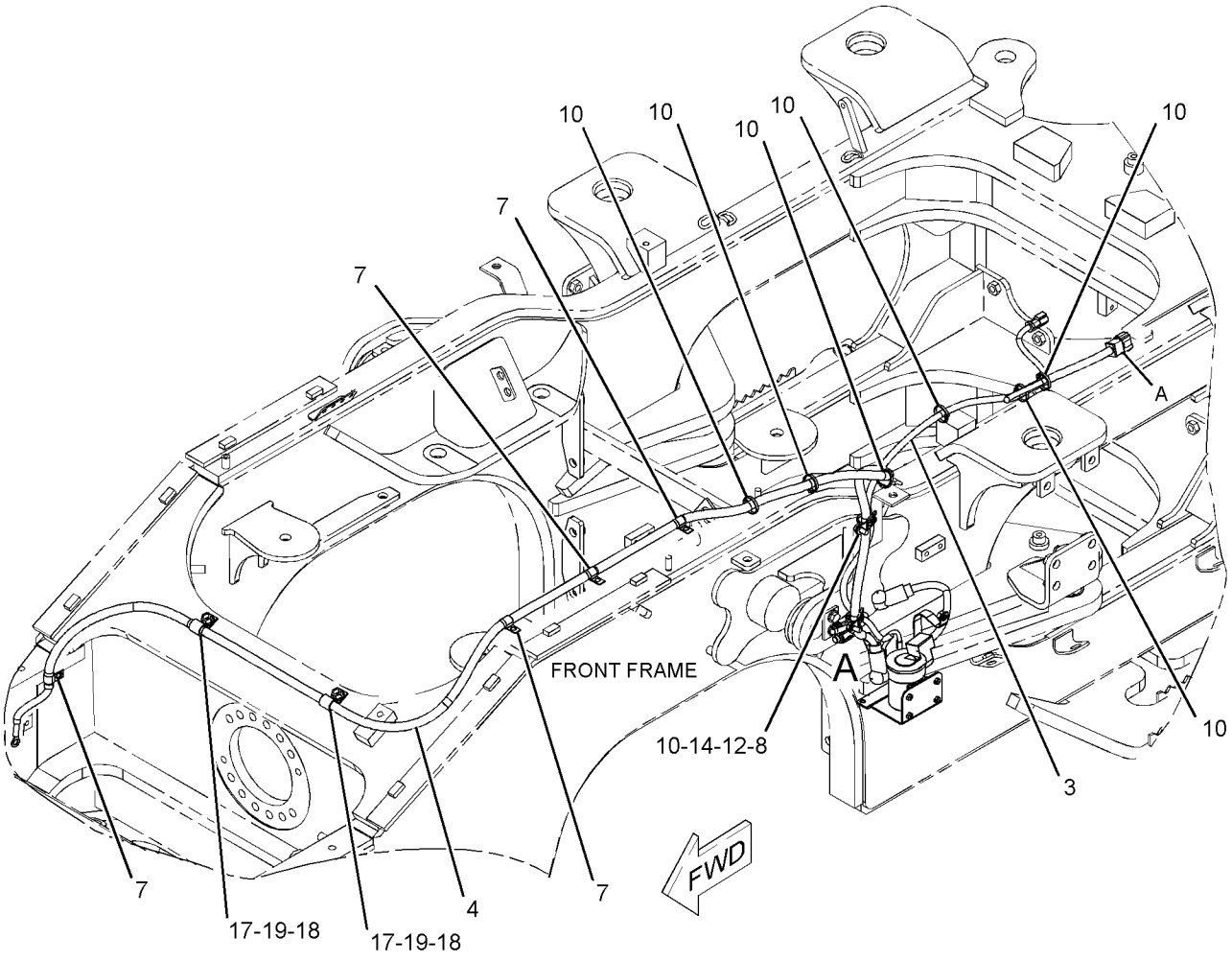


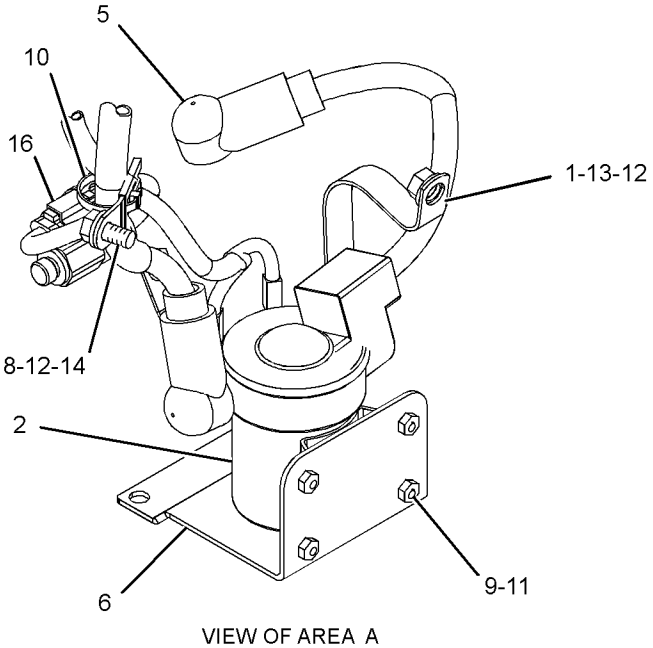


VIEW OF AREA A

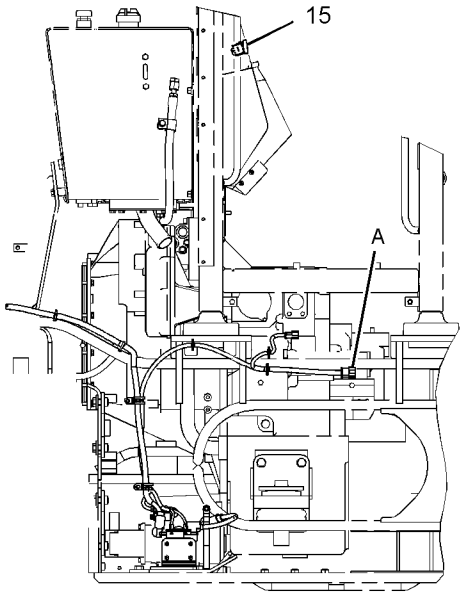


LEFT SIDE VIEW

GRAPHIC #1 **<END>** g01302425

## *273-0105* AXLE AR-FIXED—REAR

**S/N: 5451-UP**

**PART OF 245-9463, 284-7040 POWER TRAIN AR**

**SMCS-3278** **i02463238**

| NOTE | PART NUMBER | QTY | PART NAME 1 2 3 4 5 6 (PRODUCT LEVEL) | SEE PAGE |
|---|---|---|---|---|
| Y | *141-6773* | 2 | BRAKE & PLANETARY GP | 234 |
| Y | **184-3588** | 1 | DIFFERENTIAL GP | 260 |
| Y | *141-6765* | 1 | GEAR GP-BEVEL & PINION | 272 |
| Y | *273-0104* | 1 | HOUSING GP-FIXED AXLE | 280 |

Y-SEPARATE ILLUSTRATION

**<END>**

## *273-0128* AXLE AR-OSCILLATING—FRONT

**S/N: 5451-UP**

**PART OF 245-9463, 284-7040 POWER TRAIN AR**

**SMCS-3278** **i02463208**

| NOTE | PART NUMBER | QTY | PART NAME 1 2 3 4 5 6 (PRODUCT LEVEL) | SEE PAGE |
|---|---|---|---|---|
| Y | *139-4126* | 2 | BRAKE & PLANETARY GP | 233 |
| Y | **184-3587** | 1 | DIFFERENTIAL GP (LOCKING) | 258 |
| Y | *139-4183* | 1 | GEAR GP-BEVEL & PINION | 270 |
| Y | *273-0125* | 1 | HOUSING GP-OSCILLATING AXLE | 282 |

Y-SEPARATE ILLUSTRATION

**<END>**

# *139-4126* BRAKE & PLANETARY GP

**S/N: 5451-UP**

**PART OF 273-0128 AXLE AR-OSCILLATING**

**SMCS-4011, 4255** **i02163067**

| NOTE | REF NO | GRAPHIC REF | PART NUMBER | QTY | PART NAME 1 2 3 4 5 6 (PRODUCT LEVEL) | SEE PAGE |
|---|---|---|---|---|---|---|
| | 1 | 1 | **8T-2925** | 3 | PIN-SPRING | |
| | 2 | 1 | **138-1645** | 3 | PIN-SPRING | |
| | 3 | 1 | **143-7155** | 1 | PISTON | |
| | 4 | 1 | **143-7156** | 1 | PLATE-REACTION | |
| | 5 | 1 | **143-7157** | 1 | CARRIER-PLANETARY | |
| | 6 | 1 | **143-7345** | 1 | SEAL | |
| | 7 | 1 | **143-7352** | 1 | SEAL | |
| | 8 | 1 | **143-7508** | 6 | WASHER-THRUST | |
| | 9 | 1 | **143-7509** | 3 | SHAFT-PLANETARY | |
| | 10 | 1 | **143-7510** | 3 | BEARING-SLEEVE | |
| | 11 | 1 | **133-4952** | 4 | DOWEL | |
| | 12 | 1 | **139-4130** | 1 | GEAR-SUN (15-TEETH) | |
| | 13 | 1 | **139-4131** | 1 | GEAR-RING (66-TEETH) | |
| | 14 | 1 | **143-7154** | 3 | GEAR-PLANETARY (24-TEETH) | |
| | 15 | 1 | **143-7415** | 1 | DISC-FRICTION | |
| | 16 | 1 | **3P-7832** | 4 | DOWEL | |
| | 17 | 1 | **9C-9844** | 4 | SPRING | |

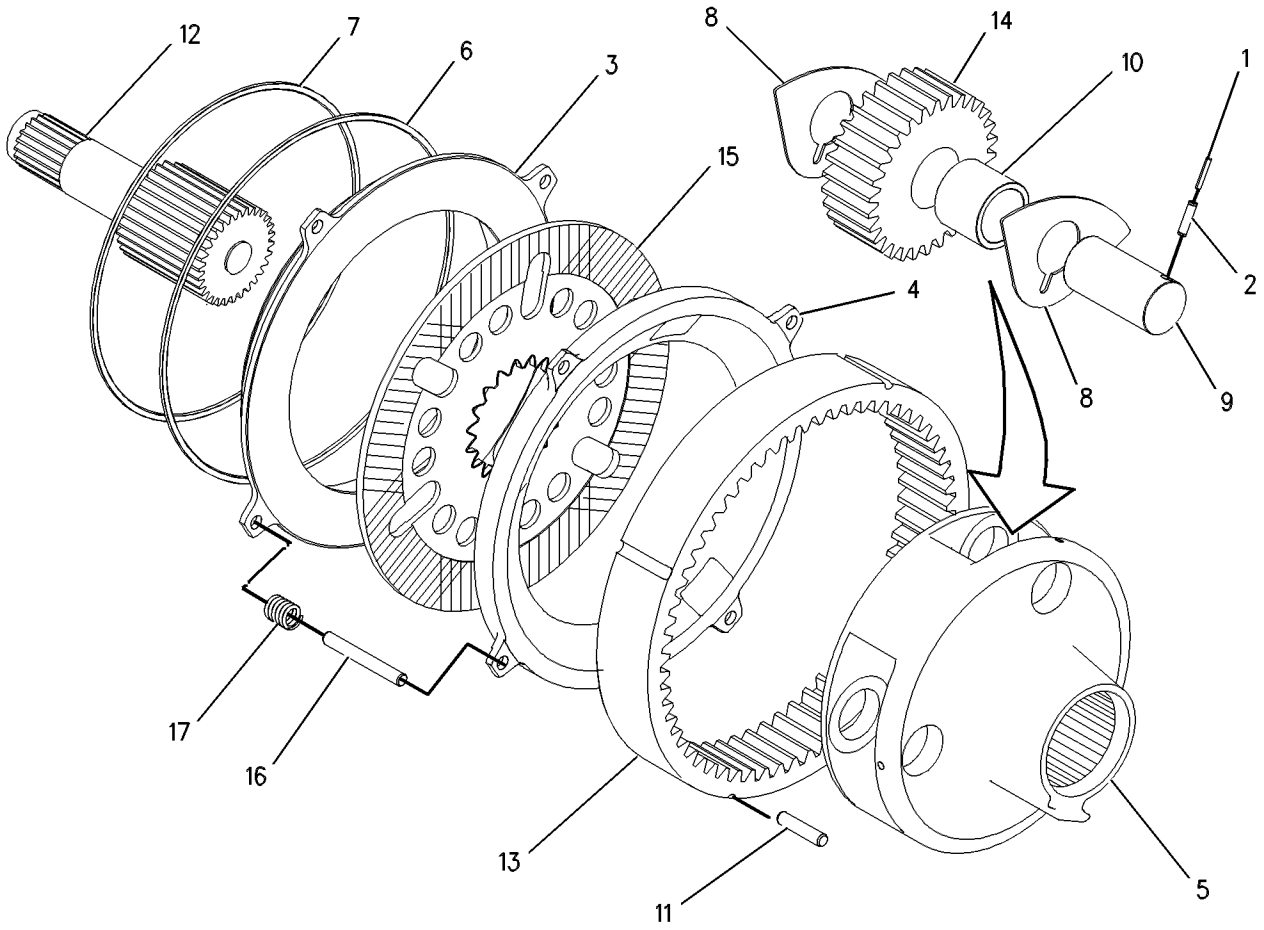


GRAPHIC #1 **<END>** g00481361

## *141-6773* BRAKE & PLANETARY GP

**S/N: 5451-UP**

**PART OF 273-0105 AXLE AR-FIXED**

**SMCS-4011, 4255** **i00914930**

| NOTE | REF NO | GRAPHIC REF | PART NUMBER | QTY | PART NAME 1 2 3 4 5 6 (PRODUCT LEVEL) | SEE PAGE |
|---|---|---|---|---|---|---|
| | 1 | 1 | **6I-8030** | 1 | DISC-FRICTION | |
| | 2 | 1 | **8T-2925** | 3 | PIN-SPRING | |
| | 3 | 1 | **138-1645** | 3 | PIN-SPRING | |
| | 4 | 1 | **141-6777** | 1 | GEAR-SUN (18 TEETH) | |
| | 5 | 1 | **141-6778** | 1 | CARRIER-PLANETARY | |
| | 6 | 1 | **141-6779** | 3 | GEAR-PLANETARY (30 TEETH) | |
| | 7 | 1 | **141-6780** | 3 | SHAFT-PLANETARY | |
| | 8 | 1 | **141-6781** | 3 | BEARING-PLANETARY | |
| | 9 | 1 | **141-6782** | 6 | WASHER-THRUST | |
| | 10 | 1 | **141-6783** | 1 | GEAR-RING | |
| | 11 | 1 | **143-7354** | 1 | PISTON | |
| | 12 | 1 | **143-7355** | 3 | SPRING | |
| | 13 | 1 | **143-7357** | 1 | SEAL | |
| | 14 | 1 | **143-7358** | 1 | SEAL | |
| | 15 | 1 | **143-7360** | 1 | PLATE | |
| | 16 | 1 | **145-3252** | 1 | PLATE-REACTION | |
| | 17 | 1 | **1S-9989** | 4 | DOWEL-REACTION | |
| | 18 | 1 | **3P-7832** | 3 | DOWEL | |

*141-6773* **BRAKE & PLANETARY GP** *(contd.)* **i00914930**

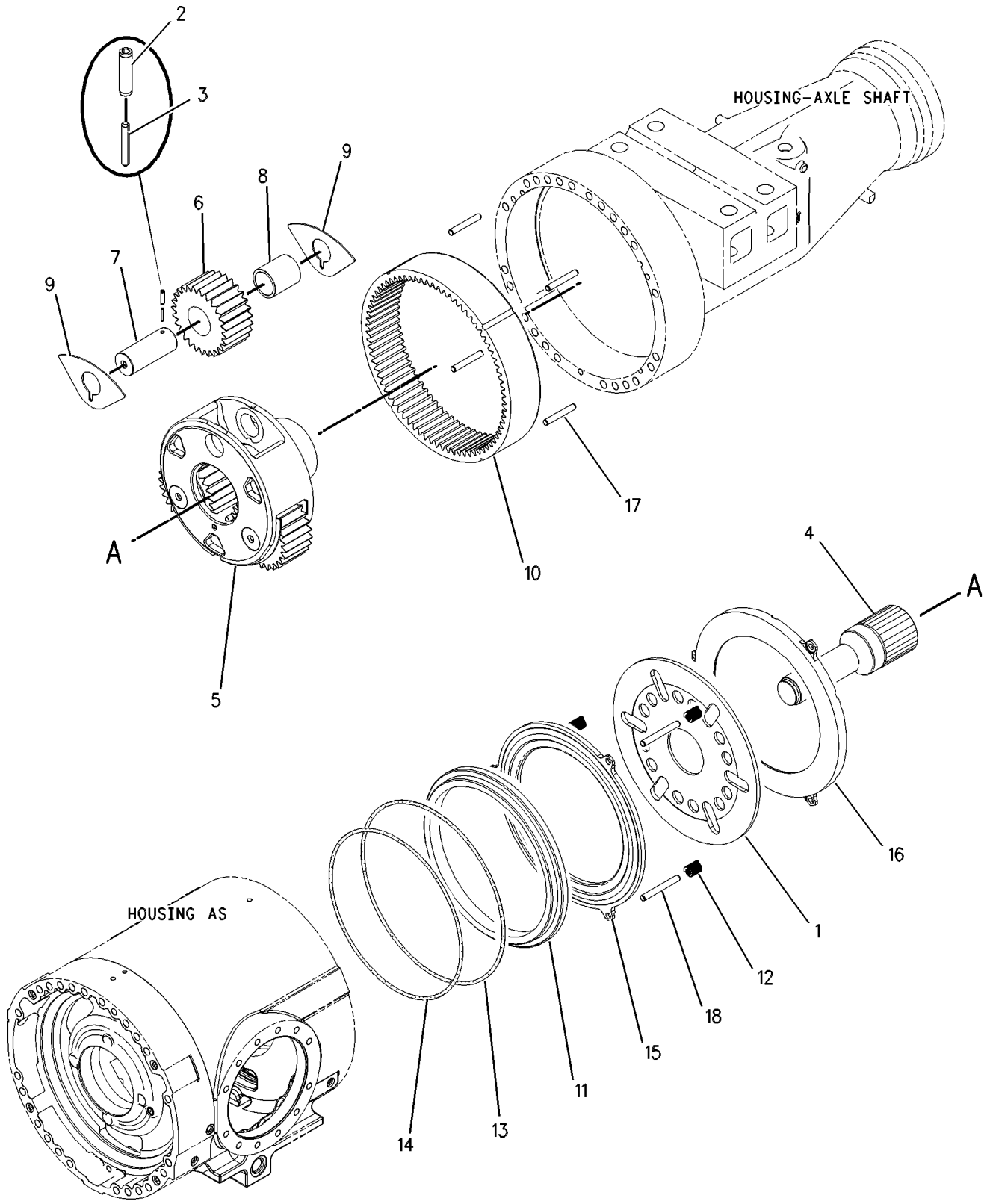


GRAPHIC #1 **<END>** g00504153

# POWER TRAIN

## *277-8579* CASE & PARTS GP-TRANSMISSION

**S/N: 5MY1-UP**

**PART OF 147-5653 TRANSMISSION AR**

**SMCS-3064** **i02525720**

| NOTE | REF NO | GRAPHIC REF | PART NUMBER | QTY | PART NAME 1 2 3 4 5 6 (PRODUCT LEVEL) | SEE PAGE |
|---|---|---|---|---|---|---|
| M | 1 | 1 | **6V-1820** | 9 | BOLT (M10X1.5X30-MM) | |
| M | 2 | 1,3 | **6V-4248** | 7 | BOLT (M10X1.5X25-MM) | |
| M | 3 | 1,2 | **6V-5842** | 29 | BOLT (M10X1.5X40-MM) | |
| M | 4 | 1 | **6V-5218** | 5 | BOLT (M8X1.25X35-MM) | |
| M | 5 | 1 | **6A-5591** | 4 | BOLT (M12X1.75X25-MM) | |
| | 6 | 1 | **6V-1720** | 1 | PLATE-SERIAL NUMBER (TRANSMISSION) | |
| M | 7 | 1 | **6V-3668** | 10 | BOLT (M12X1.75X30-MM) | |
| | 8 | 1 | **5P-8245** | 10 | WASHER-HARD (13.5X25.5X3-MM THK) | |
| | 9 | 1 | **3K-8460** | 2 | PLUG | |
| | 10 | 1 | **1J-9671** | 2 | SEAL-O-RING | |
| | 11 | 1,3 | **1P-3707** | 2 | SEAL-RECTANGULAR | |
| M | 12 | 2 | **6V-5217** | 3 | BOLT (M8X1.25X20-MM) | |
| | 13 | 2 | **8C-5176** | 1 | SEAL-O-RING | |
| M | 14 | 1,2,3 | **6V-8212** | 6 | BOLT (M10X1.5X16-MM) | |
| | 15 | 4 | **4D-9986** | 1 | SEAL-O-RING | |
| | 16 | 1,4 | **2S-4078** | 2 | SEAL-O-RING | |
| | 17 | 3,4 | **1U-8846** | 1 | SEALANT-GASKET | |
| | 18 | 3 | **147-5659** | 1 | COVER AS | |
| | | 3 | **9W-0719** | 1 | PLUG | |
| | 19 | 3 | **9U-8025** | 1 | HOUSING AS-TMSN PUMP DRIVE | |
| | | 3 | **8T-5353** | 4 | DOWEL | |
| | 20 | 3 | **139-3231** | 1 | COVER | |
| | 21 | 3 | **282-2973** | 1 | CASE AS-TRANSMISSION | |
| | | 3 | **3S-2708** | 2 | PIN-SPRING | |
| | | 3 | **6Y-0869** | 2 | PLUG | |
| | | 3 | **8T-5353** | 2 | DOWEL | |
| | | 3 | **9W-7226** | 13 | PLUG | |
| | | 3 | **278-9798** | 1 | CASE | |
| | 22 | 2 | **2P-8986** | 1 | CUP-BEARING | |
| | 23 | 2 | **193-2200** | 1 | SEAL-LIP TYPE | |
| | 24 | 3 | **9U-9576** | 1 | TUBE AS | |
| Y | 25 | 1 | **176-0629** | 1 | VALVE GP-FLOW CONTROL (TRANSMISSION) | 308 |
| | 26 | 1 | **6V-6228** | 2 | SEAL-O-RING | |
| | 27 | 4 | **9P-9150** | 40 | WASHER (8.25X18X0.84-MM THK) | |
| | 28 | 4 | **1T-0738** | 20 | WASHER (8.4X19X1.83-MM THK) | |
| | 29 | 4 | **8E-5380** | 5 | BEARING-ROLLER | |
| | 30 | 4 | **170-1807** | 1 | BEARING-SPECIAL RACE | |
| | 31 | 4 | **2N-7006** | 1 | COVER | |
| | 32 | 4 | **2N-7007** | 1 | GASKET | |
| | 33 | 4 | **9U-8027** | 1 | SHAFT | |
| | 34 | 4 | **9U-8029** | 1 | GEAR | |
| M | 35 | 4 | **6V-6317** | 12 | BOLT (M10X1.5X20-MM) | |
| | 36 | 4 | **4B-3665** | 2 | BALL BEARING | |
| | 37 | 4 | **2J-7550** | 2 | RING-RETAINING | |
| | 38 | 4 | **9U-8028** | 1 | GEAR (58-TEETH) | |
| | 39 | 4 | **144-7175** | 1 | SPACER | |
| | 40 | 4 | **144-7176** | 1 | SHAFT | |
| | 41 | 4 | **9S-4191** | 3 | PLUG-O-RING | |
| | 42 | 4 | **3J-1907** | 3 | SEAL-O-RING | |
| | 43 | 4 | **143-9956** | 1 | RACE-ROLLER BEARING | |
| | 44 | 4 | **7H-7107** | 1 | SEAL-LIP TYPE | |
| | 45 | 4 | **9U-8023** | 1 | COVER-INPUT SHAFT | |
| | 46 | 4 | **8E-5261** | 1 | SHIM PACK (INCLUDES 24-SHIMS) | |
| | 47 | 4 | **2H-6184** | 1 | SEAL-O-RING | |
| | 48 | 4 | **8E-9254** | 1 | CAGE-BEARING | |
| | 49 | 4 | **7J-8209** | 2 | CUP-BEARING | |

## *277-8579* CASE & PARTS GP-TRANSMISSION *(contd.)* i02525720

| NOTE | REF NO | GRAPHIC REF | PART NUMBER | QTY | PART NAME 1 2 3 4 5 6 (PRODUCT LEVEL) | SEE PAGE |
|---|---|---|---|---|---|---|
| M | 50 | 4 | **8T-0643** | 6 | BOLT (M10X1.5X80-MM) | |
| | 51 | 4 | **5P-9806** | 1 | SEAL-O-RING | |
| | 52 | 4 | **1T-1639** | 1 | RING | |
| | 53 | 2 | **8H-7521** | 1 | SEAL-O-RING | |
| | 54 | 2 | **4S-8603** | 1 | SCREEN GP-MAGNETIC (TRANSMISSION) | |
| | 55 | 2 | **4S-8598** | 1 | SCREEN-SUCTION | |
| | 56 | 2 | **6Y-0809** | 1 | COVER | |
| | 57 | 4 | **148-1928** | 1 | VALVE-RELIEF | |
| | 58 | 4 | **9X-4609** | 1 | SEAL-O-RING | |
| M | 59 | 4 | **6V-3821** | 4 | BOLT (M8X1.25X110-MM) | |
| M | 60 | 4 | **6V-5223** | 9 | BOLT (M8X1.25X100-MM) | |
| M | 61 | 4 | **6V-3918** | 3 | BOLT (M8X1.25X50-MM) | |
| | 62 | 4 | **146-3801** | 1 | GEAR | |
| Y | 63 | 2 | **244-3114** | 1 | VALVE GP-MODULATING (24-VOLT) (TORQUE CONVERTER LOCKUP CLUTCH) | 309 |
| | 64 | 1 | **3K-0360** | 1 | SEAL-O-RING | |
| | 65 | 1 | **154-3159** | 1 | ADAPTER | |
| M | 66 | 1 | **5P-8347** | 4 | BOLT (M8X1.25X70-MM) | |
| | 67 | 1,2 | **9M-1974** | 6 | WASHER-HARD (8.8X16X2-MM THK) | |
| M | 68 | 2 | **8T-0100** | 2 | BOLT (M8X1.25X60-MM) | |
| | 69 | 1 | **276-7036** | 1 | TUBE AS | |
| | 70 | 4 | **9S-8010** | 1 | PLUG (STRAIGHT THREAD O-RING) | |
| M | 71 | 3 | **6V-8837** | 1 | BOLT (M6X1X16-MM) | |
| | 72 | 3 | **5P-0537** | 1 | WASHER-HARD (7.2X14.5X2-MM THK) | |
| | 73 | 3 | **142-4431** | 1 | SHIM PACK (INCLUDES 19-SHIMS) | |
| M | 74 | 4 | **7X-0870** | 4 | BOLT (M8X1.25X140-MM) | |
| | 75 | 1 | **6V-8639** | 1 | CONNECTOR | |
| | 76 | 1,2,3 | **124-9402** | 7 | CLIP AS | |
| | | | | | (EACH INCLUDES) | |
| | | 1,2,3 | **8C-3334** | 1 | RIVET-TUBULAR | |
| | | 1,2,3 | **124-9401** | 1 | CLIP | |
| Y | 77 | 3 | **193-0421** | 1 | SENSOR GP-SPEED (TRANSMISSION OUTPUT) | 178 |
| | 78 | 3 | **5P-8247** | 1 | WASHER-HARD (17X32X3.5-MM THK) | |
| | 79 | 3 | **1V-6341** | 1 | SEAL | |
| | 80 | 1 | **6V-8398** | 1 | SEAL-O-RING | |
| | 81 | 2 | **8S-0768** | 1 | SEAL-O-RING | |
| | 82 | 2 | **6V-0852** | 1 | CAP-DUST | |
| M | 83 | 1 | **8T-9515** | 1 | BOLT-SOCKET HEAD (M10X1.5X40-MM) | |
| | 84 | 1,4 | **132-5789** | 3 | CLIP | |
| M | 85 | 1 | **8T-0341** | 1 | BOLT-SOCKET HEAD (M10X1.5X60-MM) | |
| | 86 | 2 | **4P-7581** | 1 | CLIP | |
| M | 87 | 1 | **8T-4137** | 1 | BOLT (M10X1.5X20-MM) | |
| | 88 | 1 | **8T-4121** | 1 | WASHER-HARD (11X21X2.5-MM THK) | |
| | 89 | 2 | *148-8364* | 1 | ELBOW AS | |
| | | 2 | **3K-0360** | 1 | SEAL-O-RING | |
| | | 2 | **6V-8398** | 1 | SEAL-O-RING | |
| | | 2 | **6V-8625** | 1 | ELBOW | |
| Y | 90 | 2 | *163-0397* | 1 | DRAIN GP-ECOLOGY (TRANSMISSION CASE) | 262 |

M-METRIC PART
Y-SEPARATE ILLUSTRATION

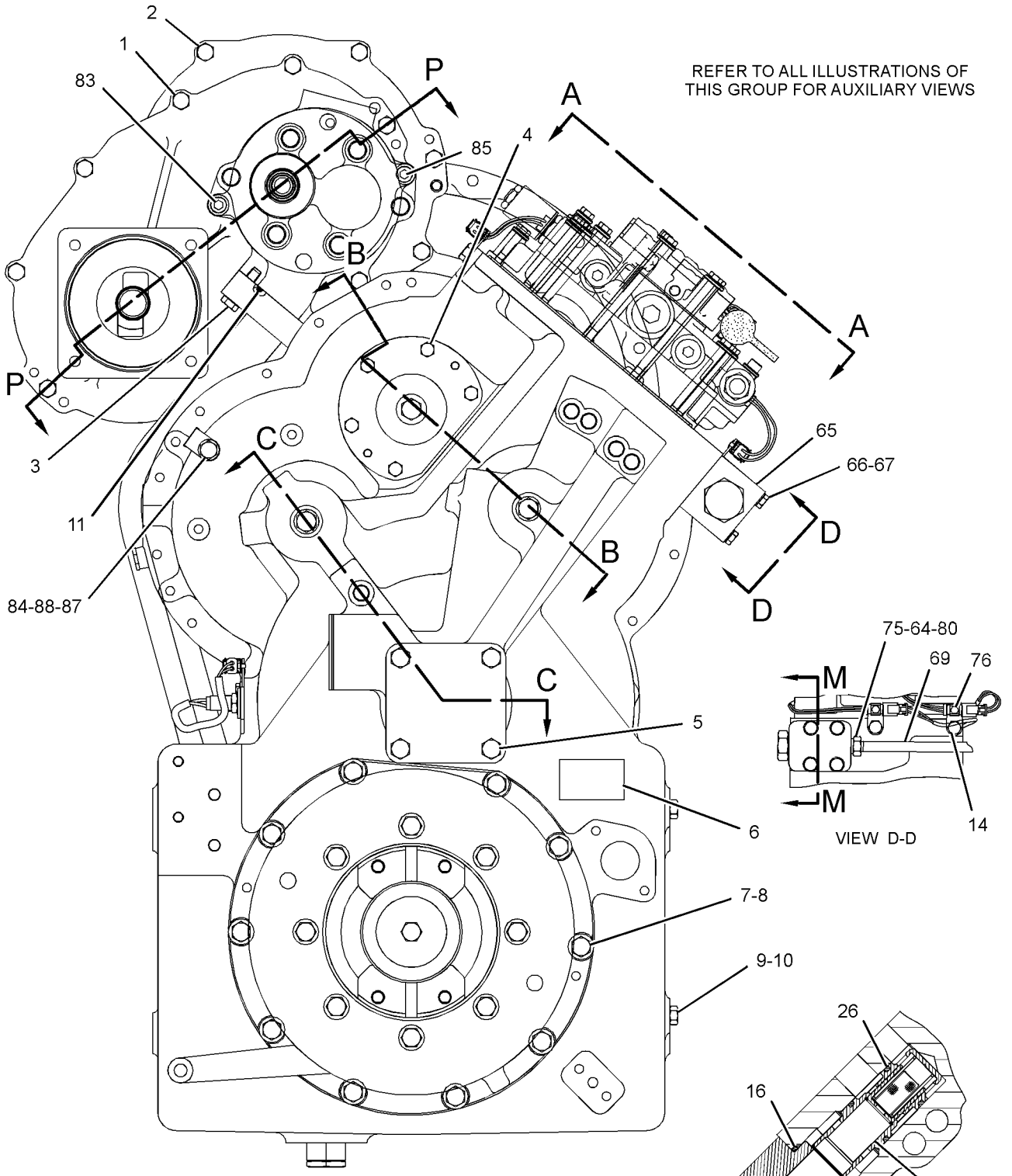


GRAPHIC #1

g01236841

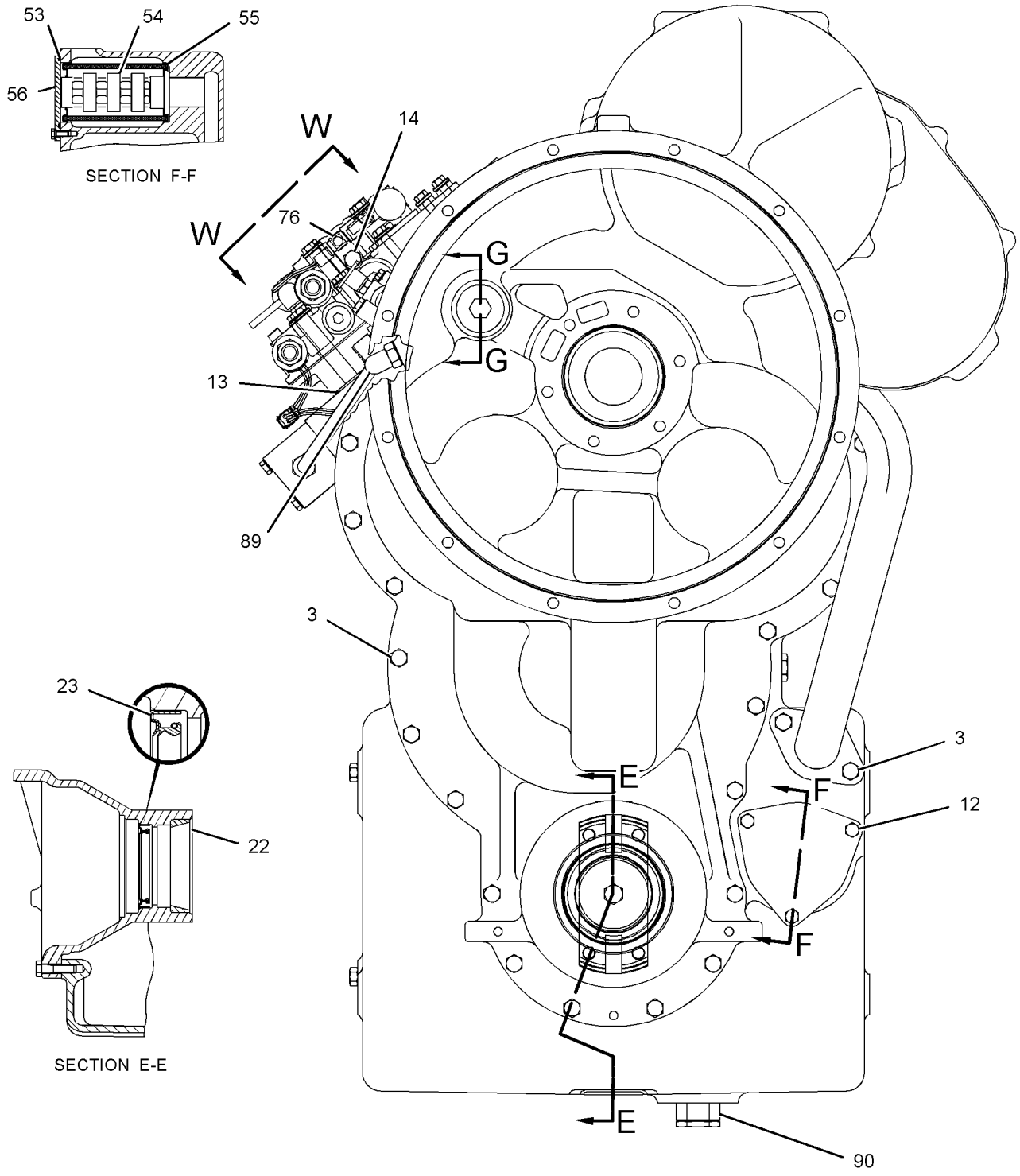


REFER TO ALL ILLUSTRATIONS OF THIS GROUP FOR AUXILIARY VIEWS

GRAPHIC #2

g01237009

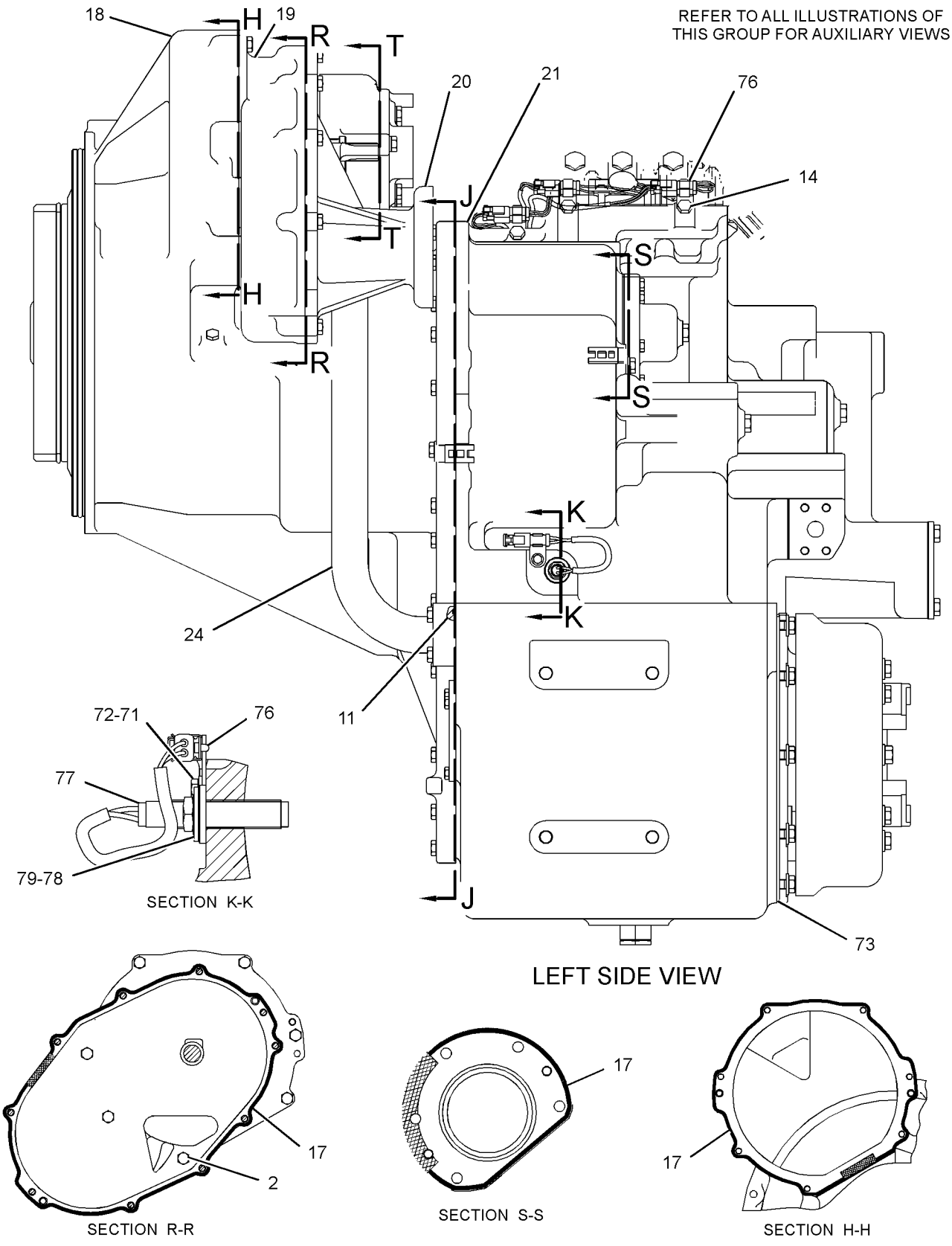


GRAPHIC #3

g01237049

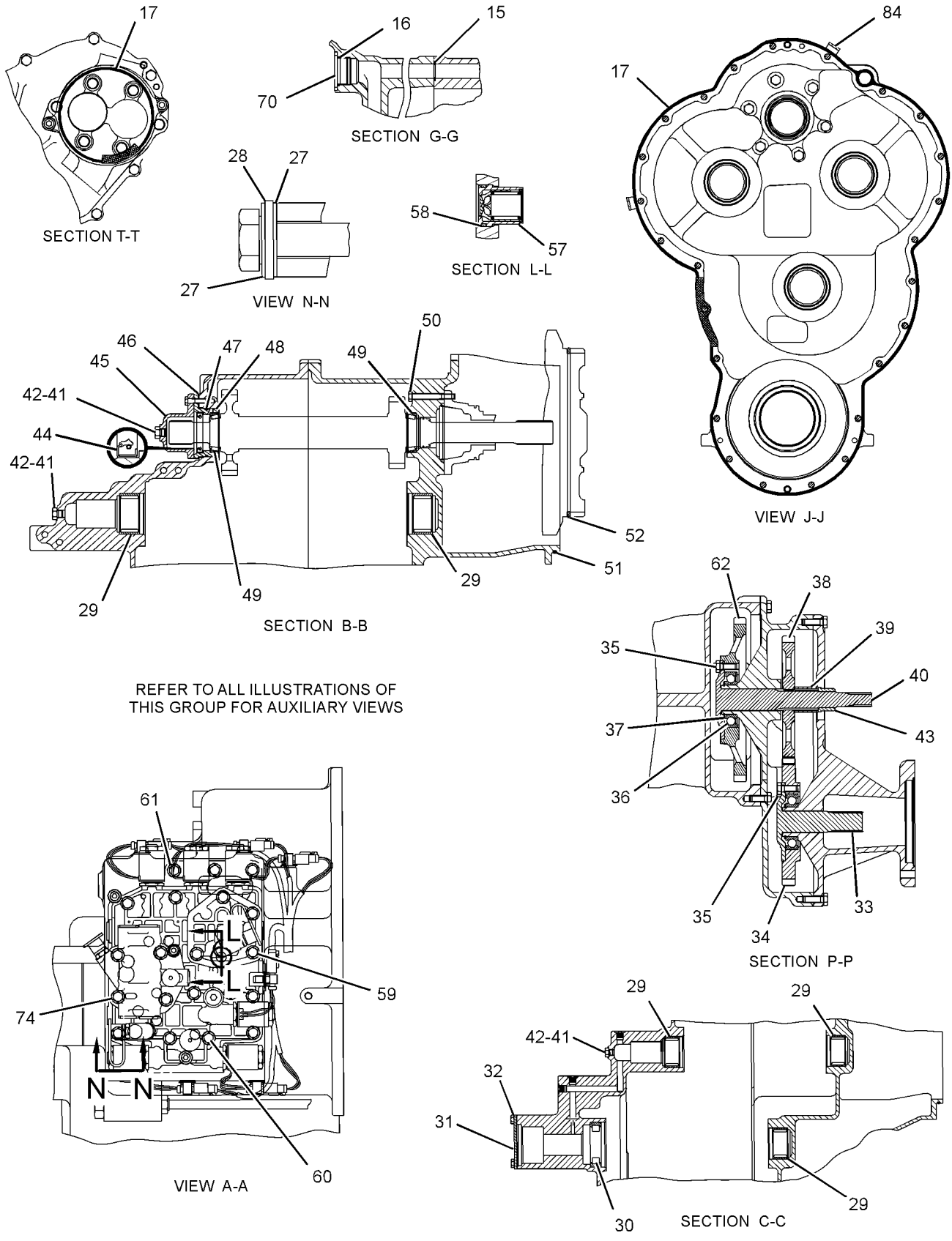


REFER TO ALL ILLUSTRATIONS OF THIS GROUP FOR AUXILIARY VIEWS

GRAPHIC #4 **<END>** g01237076

# POWER TRAIN

## *282-2970* CASE & PARTS GP-TRANSMISSION

**S/N: R1C1-UP**

**PART OF 282-2969 TRANSMISSION AR**

**SMCS-3064** **i02733049**

| NOTE | REF NO | GRAPHIC REF | PART NUMBER | QTY | PART NAME 1 2 3 4 5 6 (PRODUCT LEVEL) | SEE PAGE |
|---|---|---|---|---|---|---|
| M | 1 | 2 | **6V-1820** | 9 | BOLT (M10X1.5X30-MM) | |
| M | 2 | 2,4 | **6V-4248** | 7 | BOLT (M10X1.5X25-MM) | |
| M | 3 | 1,2 | **6V-5842** | 29 | BOLT (M10X1.5X40-MM) | |
| M | 4 | 2 | **6V-5218** | 5 | BOLT (M8X1.25X35-MM) | |
| M | 5 | 2 | **6A-5591** | 4 | BOLT (M12X1.75X25-MM) | |
| | 6 | 2 | **6V-1720** | 1 | PLATE-SERIAL NUMBER (TRANSMISSION) | |
| M | 7 | 2 | **6V-3668** | 10 | BOLT (M12X1.75X30-MM) | |
| | 8 | 2 | **5P-8245** | 10 | WASHER-HARD (13.5X25.5X3-MM THK) | |
| | 9 | 2 | **3K-8460** | 2 | PLUG | |
| | 10 | 2 | **1J-9671** | 2 | SEAL-O-RING | |
| | 11 | 2,4 | **1P-3707** | 2 | SEAL-RECTANGULAR | |
| M | 12 | 1 | **6V-5217** | 3 | BOLT (M8X1.25X20-MM) | |
| | 13 | 1 | **4D-9986** | 1 | SEAL-O-RING | |
| | 14 | 1 | **2S-4078** | 1 | SEAL-O-RING | |
| | 15 | 4 | **1U-8846** | 1 | SEALANT-GASKET | |
| | 16 | 4 | **285-5784** | 1 | COVER AS | |
| | | 4 | **3K-0360** | 1 | SEAL-O-RING | |
| | | 4 | **9S-8005** | 1 | PLUG-O-RING | |
| | | 4 | **9W-0719** | 1 | PLUG | |
| | 17 | 4 | **9U-8025** | 1 | HOUSING AS-TMSN PUMP DRIVE | |
| | | 4 | **8T-5353** | 4 | DOWEL | |
| | 18 | 4 | **139-3231** | 1 | COVER | |
| | 19 | 4 | **286-9127** | 1 | CASE AS-TRANSMISSION | |
| | | 4 | **6Y-0869** | 2 | PLUG | |
| | | 4 | **7M-8485** | 1 | SEAL-O-RING | |
| | | 4 | **8T-5353** | 2 | DOWEL | |
| | | 4 | **9W-7226** | 13 | PLUG | |
| | | 4 | **173-0566** | 1 | DRAIN GP-ECOLOGY | |
| | | 4 | **2K-8199** | 1 | SEAL-O-RING | |
| | | 4 | **5L-4759** | 1 | SEAL-O-RING | |
| | | 4 | **175-4966** | 1 | PLUG-DRAIN | |
| | 20 | 1 | **2P-8986** | 1 | CUP-BEARING | |
| | 21 | 1 | **193-2200** | 1 | SEAL-LIP TYPE | |
| | 22 | 4 | **9U-9576** | 1 | TUBE AS | |
| | 23 | 3 | **8E-5380** | 5 | BEARING-ROLLER | |
| | 24 | 3 | **170-1807** | 1 | BEARING-SPECIAL RACE | |
| | 25 | 3 | **2N-7006** | 1 | COVER | |
| | 26 | 3 | **2N-7007** | 1 | GASKET | |
| | 27 | 3 | **9U-8027** | 1 | SHAFT | |
| | 28 | 3 | **9U-8029** | 1 | GEAR | |
| M | 29 | 3 | **6V-6317** | 12 | BOLT (M10X1.5X20-MM) | |
| | 30 | 3 | **4B-3665** | 2 | BALL BEARING | |
| | 31 | 3 | **2J-7550** | 2 | RING-RETAINING | |
| | 32 | 3 | **9U-8028** | 1 | GEAR (58-TEETH) | |
| | 33 | 3 | **144-7175** | 1 | SPACER | |
| | 34 | 3 | **144-7176** | 1 | SHAFT | |
| | 35 | 3 | **9S-4191** | 3 | PLUG-O-RING | |
| | 36 | 3 | **3J-1907** | 3 | SEAL-O-RING | |
| | 37 | 3 | **143-9956** | 1 | RACE-ROLLER BEARING | |
| | 38 | 3 | **7H-7107** | 1 | SEAL-LIP TYPE | |
| | 39 | 3 | **9U-8023** | 1 | COVER-INPUT SHAFT | |
| | 40 | 3 | **8E-5261** | 1 | SHIM PACK (INCLUDES 24-SHIMS) | |
| | 41 | 3 | **2H-6184** | 1 | SEAL-O-RING | |
| | 42 | 3 | **8E-9254** | 1 | CAGE-BEARING | |
| | 43 | 3 | **7J-8209** | 2 | CUP-BEARING | |
| M | 44 | 3 | **8T-0643** | 6 | BOLT (M10X1.5X80-MM) | |

## *282-2970* **CASE & PARTS GP-TRANSMISSION** *(contd.)* **i02733049**

| NOTE | REF NO | GRAPHIC REF | PART NUMBER | QTY | PART NAME 1 2 3 4 5 6 (PRODUCT LEVEL) | SEE PAGE |
|---|---|---|---|---|---|---|
| | 45 | 3 | **5P-9806** | 1 | SEAL-O-RING | |
| | 46 | 3 | **1T-1639** | 1 | RING | |
| | 47 | 1 | **8H-7521** | 1 | SEAL-O-RING | |
| | 48 | 1 | **4S-8603** | 1 | SCREEN GP-MAGNETIC | |
| | 49 | 1 | **4S-8598** | 1 | SCREEN-SUCTION | |
| | 50 | 1 | **6Y-0809** | 1 | COVER | |
| | 51 | 4 | **148-1928** | 1 | VALVE-RELIEF (PLANETARY CASE) | |
| | 52 | 4 | **9X-4609** | 1 | SEAL-O-RING | |
| | 53 | 3 | **146-3801** | 1 | GEAR | |
| | 54 | 2 | **3K-0360** | 3 | SEAL-O-RING | |
| | 55 | 2 | **282-2971** | 1 | ADAPTER | |
| M | 56 | 2 | **5P-8347** | 4 | BOLT (M8X1.25X70-MM) | |
| | 57 | 2 | **9M-1974** | 4 | WASHER-HARD (8.8X16X2-MM THK) | |
| | 58 | 2 | **282-2972** | 1 | TUBE AS | |
| | 59 | 1 | **9S-8010** | 1 | PLUG (STRAIGHT THREAD O-RING) | |
| | 60 | 4 | **142-4431** | 1 | SHIM PACK (INCLUDES 19-SHIMS) | |
| | 61 | 2 | **6V-8639** | 1 | CONNECTOR | |
| | 62 | 2 | **6V-8398** | 1 | SEAL-O-RING | |
| M | 63 | 2 | **8T-9515** | 1 | BOLT-SOCKET HEAD (M10X1.5X40-MM) | |
| M | 64 | 2 | **8T-0341** | 1 | BOLT-SOCKET HEAD (M10X1.5X60-MM) | |
| | 65 | 1 | *148-8364* | 1 | ELBOW AS | |
| | | 1 | **3K-0360** | 1 | SEAL-O-RING | |
| | | 1 | **6V-8398** | 1 | SEAL-O-RING | |
| | | 1 | **6V-8625** | 1 | ELBOW | |
| Y | 66 | 1 | *163-0397* | 1 | DRAIN GP-ECOLOGY | 262 |
| | 67 | 2 | **9S-8005** | 2 | PLUG-O-RING | |
| | 68 | 2 | **3E-6787** | 1 | SEAL-O-RING | |

M-METRIC PART
Y-SEPARATE ILLUSTRATION

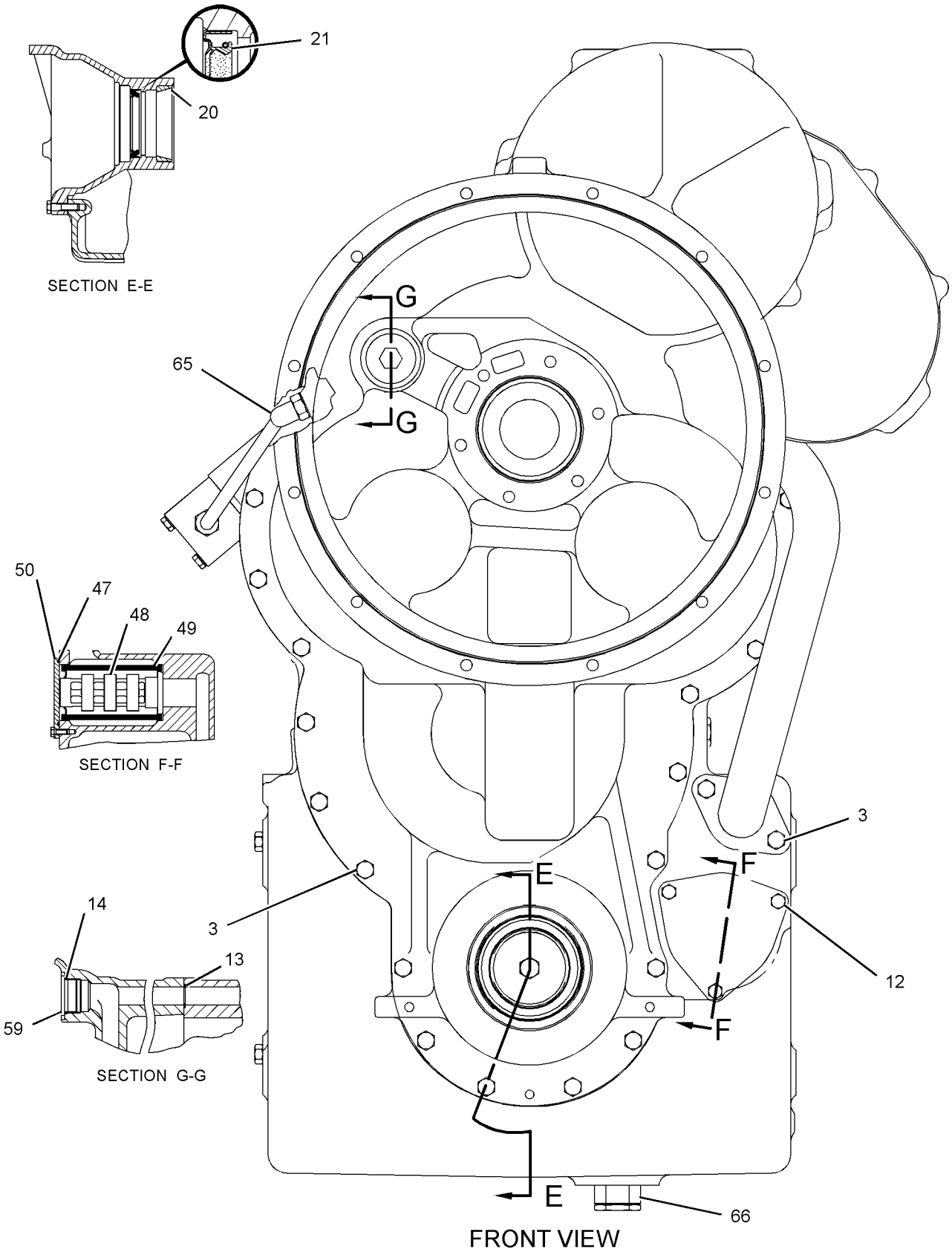


GRAPHIC #1

g01280632

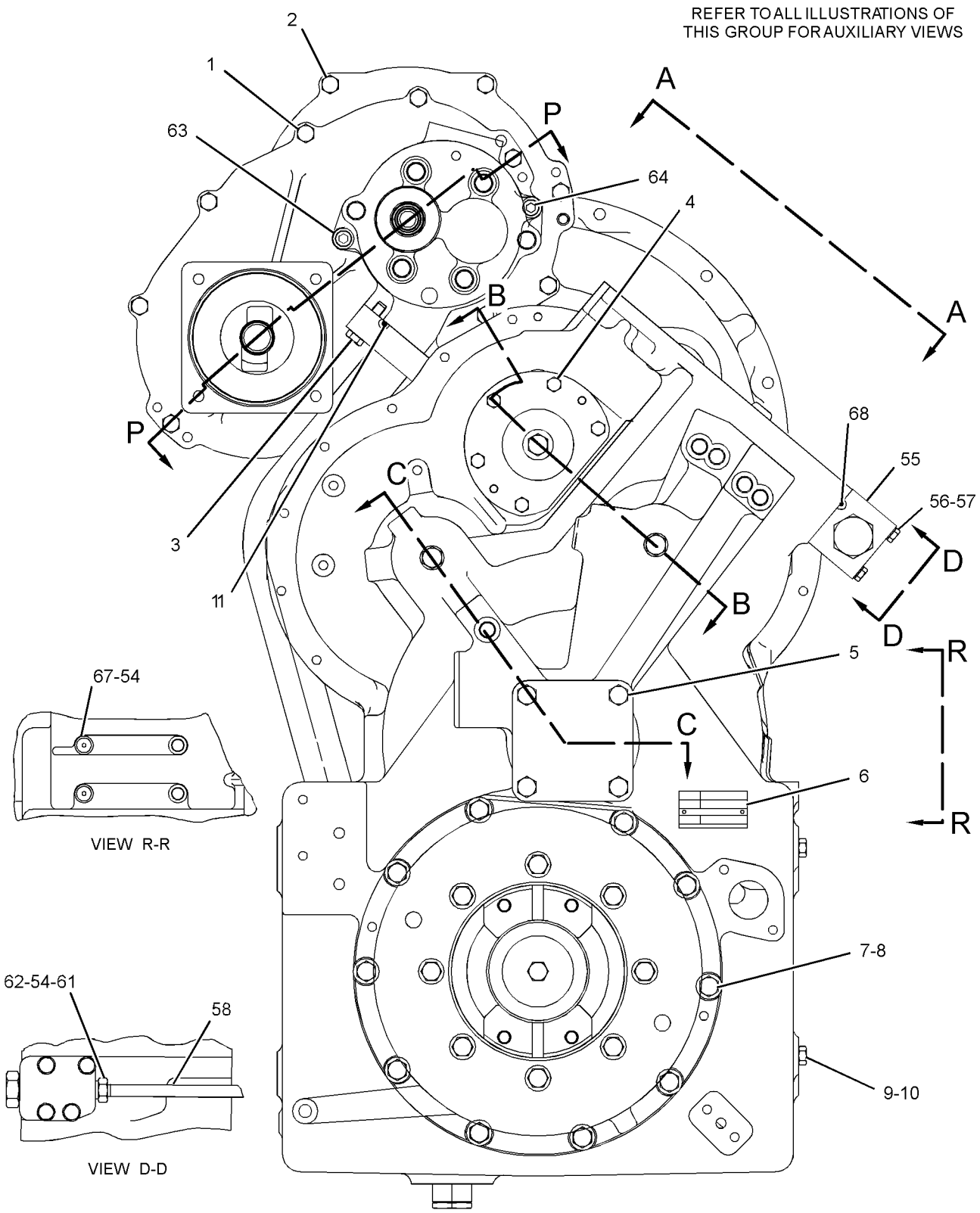


GRAPHIC #2

g01281009

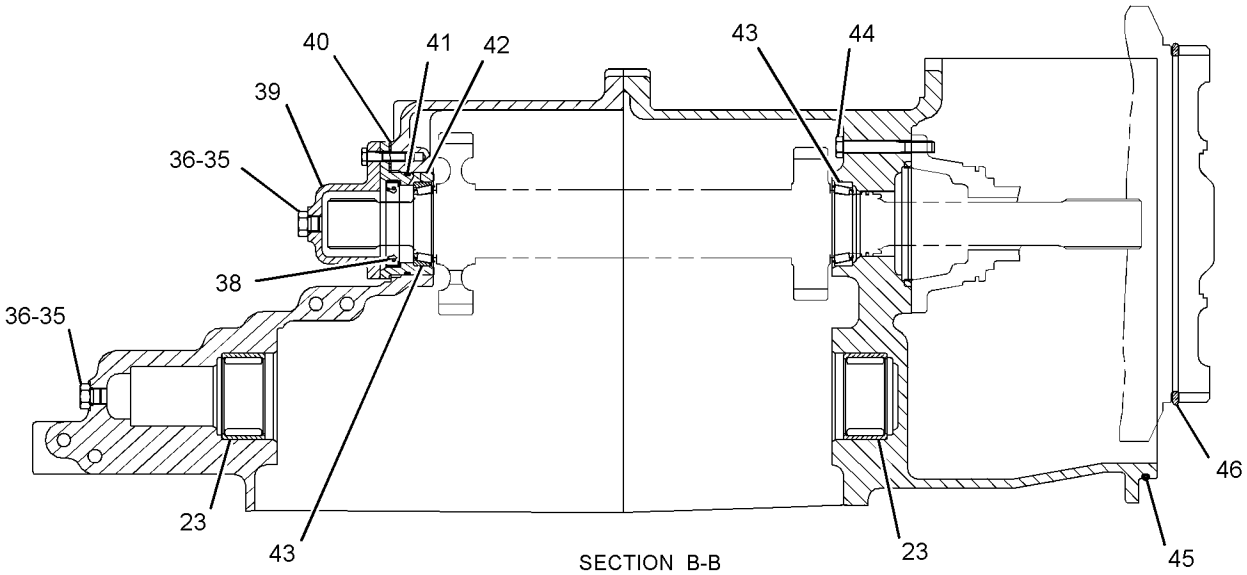


SECTION B-B

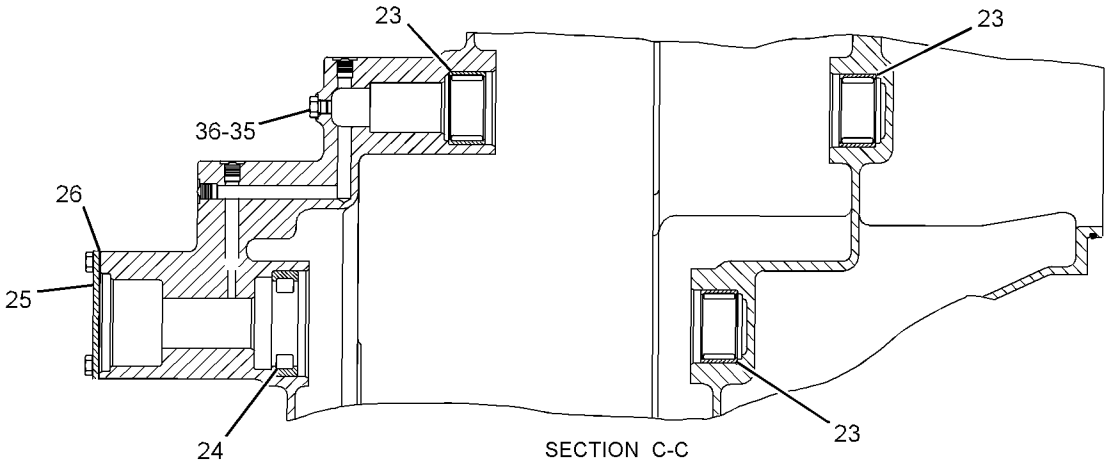


SECTION C-C

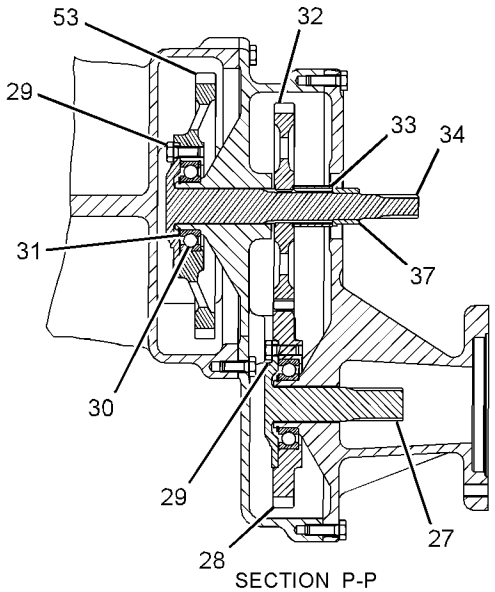


SECTION P-P

GRAPHIC #3

g01281010

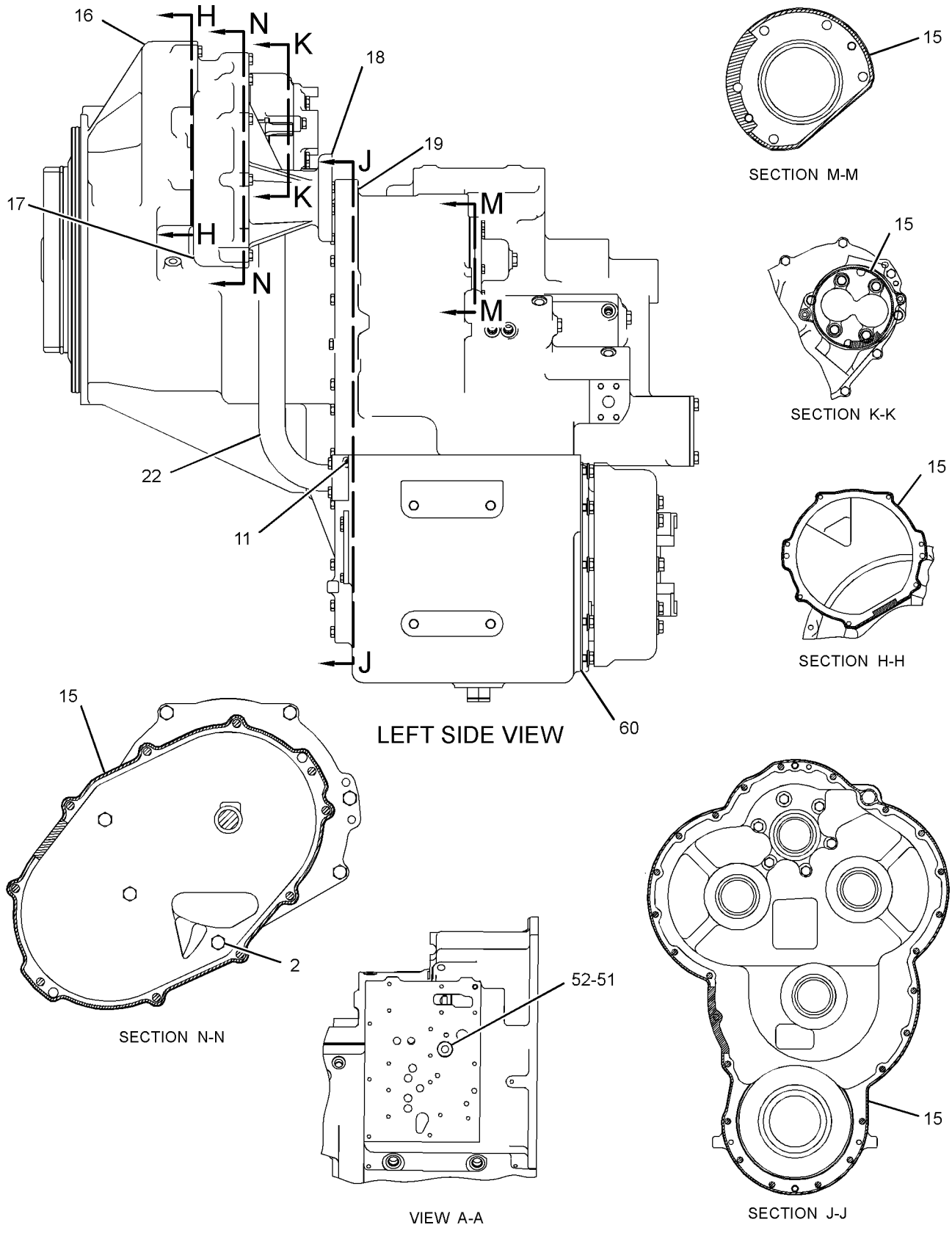


GRAPHIC #4 **<END>** g01281011

## *147-5655* CLUTCH GP–FORWARD HIGH, FORWARD LOW

**S/N: R1C1-UP; 5MY1-UP**

**PART OF 147-5653, 282-2969 TRANSMISSION AR**

**SMCS-3063, 3155, 3169, 3170** **i02462308**

| NOTE | REF NO | GRAPHIC REF | PART NUMBER | QTY | PART NAME 1 2 3 4 5 6 (PRODUCT LEVEL) | SEE PAGE |
|---|---|---|---|---|---|---|
| | 1 | 1 | **173-7437** | 1 | SHAFT AS | |
| | | 1 | **9W-0719** | 2 | PLUG | |
| | 2 | 1 | **8T-0251** | 6 | RING-RETAINING | |
| | 3 | 1 | **8E-8654** | 2 | DISC-THRUST | |
| | 4 | 1 | **6V-2394** | 1 | RING-RETAINING | |
| | 5 | 1 | **145-8397** | 1 | GEAR (53-TEETH) | |
| | 6 | 1 | **173-7430** | 1 | HUB AS | |
| | | 1 | **8E-3416** | 1 | BEARING-SLEEVE | |
| | 7 | 1 | **236-2541** | 2 | RING-RETAINING | |
| | 8 | 1 | **6Y-8514** | 2 | PLATE-END | |
| | 9 | 1 | **6Y-8512** | 12 | PLATE-CLUTCH | |
| | 10 | 1 | **251-9335** | 2 | SPRING-WAVE | |
| | 11 | 1 | **114-1071** | 2 | PISTON | |
| | 12 | 1 | **163-0342** | 12 | DISC-FRICTION | |
| | 13 | 1 | **148-6550** | 1 | GEAR AS (45-TEETH) | |
| | | 1 | **8E-3416** | 1 | BEARING-SLEEVE | |
| | | 1 | **8E-3435** | 1 | BEARING-SLEEVE | |
| | 14 | 1 | **6Y-8285** | 3 | RING-SEAL | |
| | 15 | 1 | **8E-8317** | 2 | DISC-THRUST | |
| | 16 | 1 | **9W-9278** | 2 | RETAINER | |
| | 17 | 1 | **6Y-8265** | 2 | SEAL AS-BALANCE | |
| | 18 | 1 | **9W-9436** | 2 | RING-SEAL | |
| | 19 | 1 | **9W-9399** | 2 | RING-SEAL | |

*147-5655* **CLUTCH GP** *(contd.)* **i02462308**

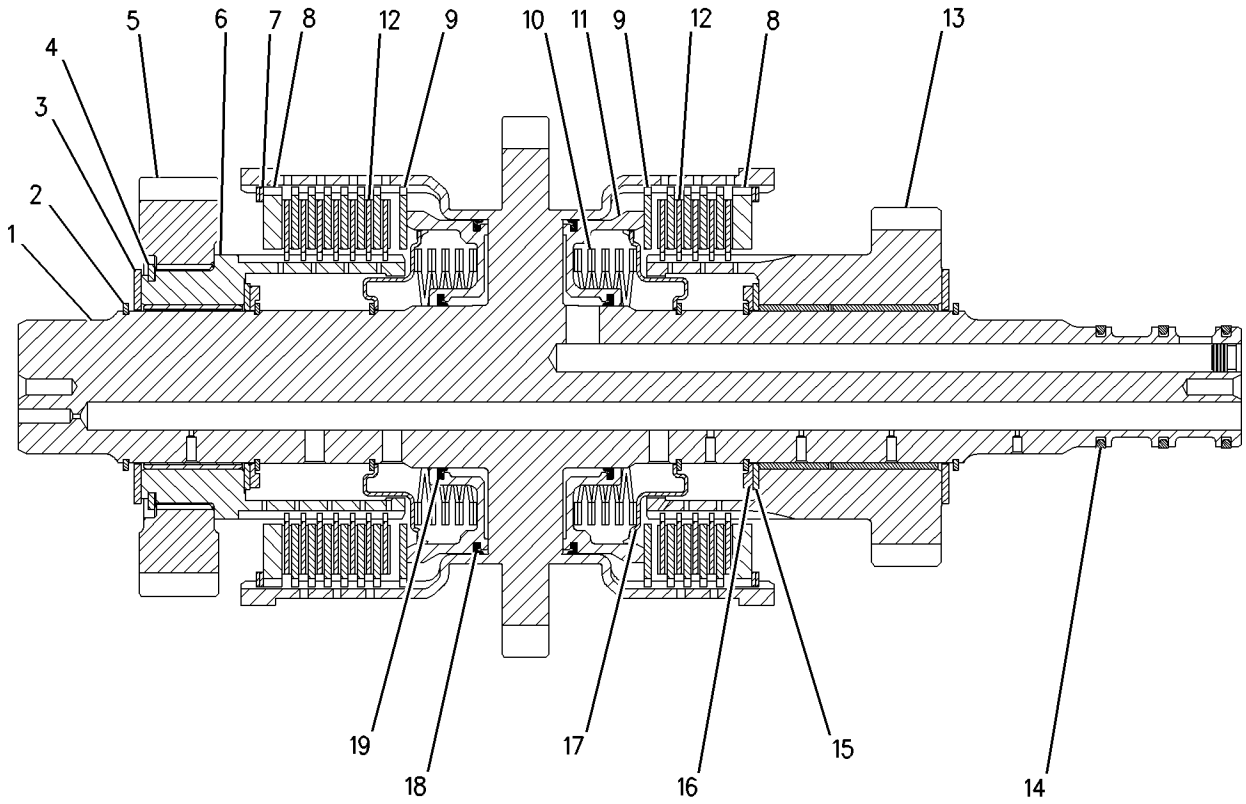


GRAPHIC #1 **<END>** g00669339

## *147-5656* CLUTCH GP–REVERSE, SECOND

**S/N: R1C1-UP; 5MY1-UP**

**PART OF 147-5653, 282-2969 TRANSMISSION AR**

**SMCS-3063, 3155, 3169, 3170** **i02462364**

| NOTE | REF NO | GRAPHIC REF | PART NUMBER | QTY | PART NAME 1 2 3 4 5 6 (PRODUCT LEVEL) | SEE PAGE |
|---|---|---|---|---|---|---|
| | 1 | 1 | **173-7438** | 1 | SHAFT AS | |
| | | 1 | **9W-0719** | 2 | PLUG | |
| | 2 | 1 | **8T-0251** | 6 | RING-RETAINING | |
| | 3 | 1 | **8E-8654** | 2 | DISC-THRUST | |
| | 4 | 1 | **6V-2394** | 2 | RING-RETAINING | |
| | 5 | 1 | **145-8397** | 1 | GEAR (53-TEETH) | |
| | 6 | 1 | **173-7430** | 1 | HUB AS | |
| | 6A | 1 | **8E-3416** | 1 | BEARING-SLEEVE | |
| | 7 | 1 | **236-2541** | 2 | RING-RETAINING | |
| | 8 | 1 | **6Y-8514** | 2 | PLATE-END | |
| | 9 | 1 | **6Y-8512** | 12 | PLATE-CLUTCH | |
| | 10 | 1 | **251-9335** | 2 | SPRING-WAVE | |
| | 11 | 1 | **114-1071** | 2 | PISTON | |
| | 12 | 1 | **163-0342** | 12 | DISC-FRICTION | |
| | 13 | 1 | **173-7431** | 1 | HUB AS | |
| | 13A | 1 | **8E-3416** | 1 | BEARING-SLEEVE | |
| | 14 | 1 | **7T-8682** | 1 | GEAR (49-TEETH) | |
| | 15 | 1 | **6Y-8278** | 1 | SPACER AS | |
| | 16 | 1 | **170-1840** | 1 | GEAR (29-TEETH) | |
| | 17 | 1 | **6Y-8285** | 3 | RING-SEAL | |
| | 18 | 1 | **8E-8653** | 1 | DISC-THRUST | |
| | 19 | 1 | **9W-9271** | 1 | WASHER | |
| | 20 | 1 | **8E-8317** | 2 | DISC-THRUST | |
| | 21 | 1 | **9W-9278** | 2 | RETAINER | |
| | 22 | 1 | **6Y-8265** | 2 | SEAL AS-BALANCE | |
| | 23 | 1 | **9W-9399** | 2 | RING-SEAL | |
| | 24 | 1 | **9W-9436** | 2 | RING-SEAL | |

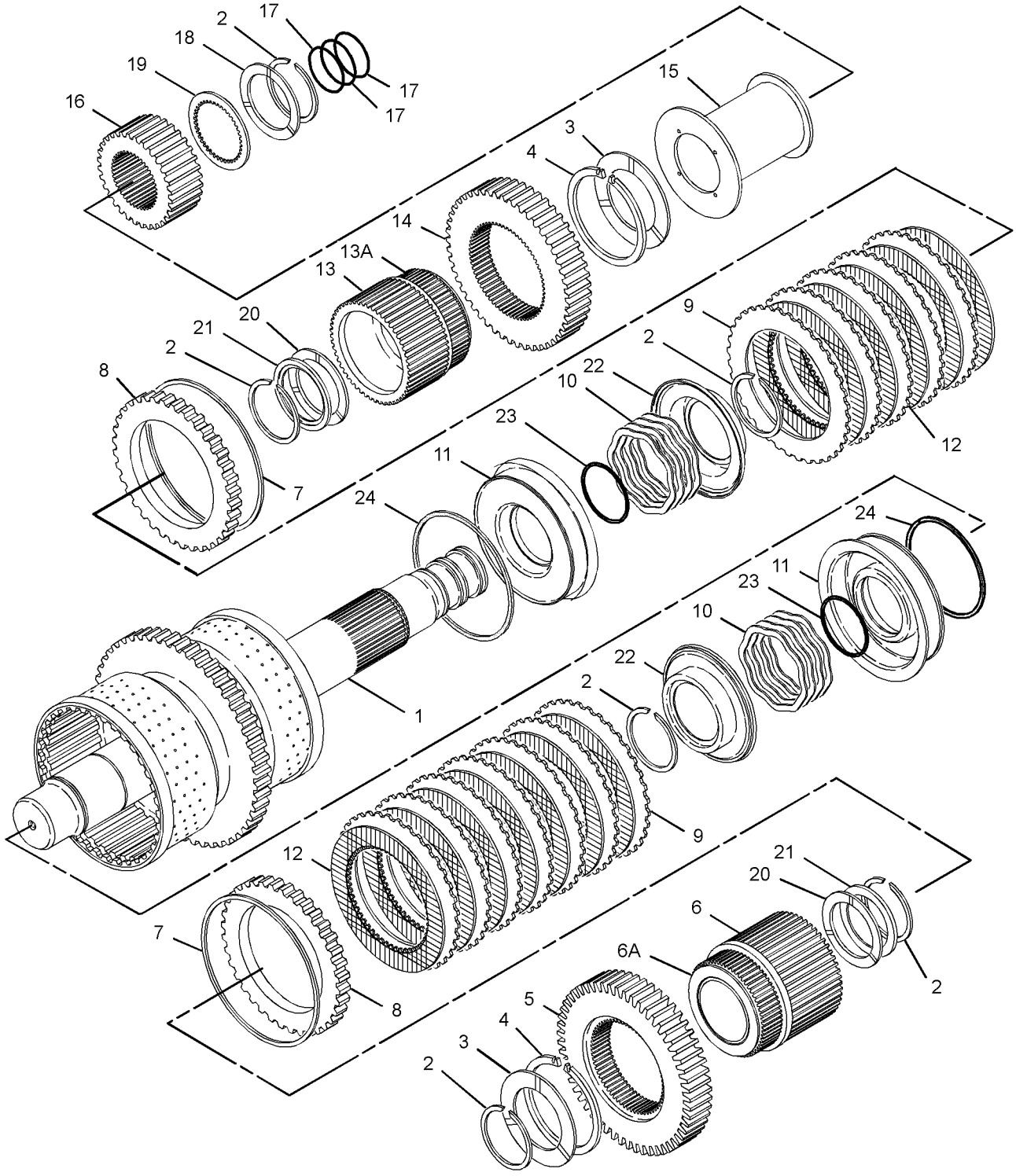


GRAPHIC #1 **<END>** g01229470

## *147-5657* CLUTCH GP–FIRST, THIRD

**S/N: R1C1-UP; 5MY1-UP**

**PART OF 147-5653, 282-2969 TRANSMISSION AR**

**SMCS-3063, 3155, 3169, 3170** **i02462386**

| NOTE | REF NO | GRAPHIC REF | PART NUMBER | QTY | PART NAME 1 2 3 4 5 6 (PRODUCT LEVEL) | SEE PAGE |
|---|---|---|---|---|---|---|
| | 1 | 1 | **173-7439** | 1 | SHAFT AS | |
| | | 1 | **9W-0719** | 3 | PLUG | |
| | 2 | 1 | **8T-0251** | 3 | RING-RETAINING | |
| | 3 | 1 | **8E-8654** | 1 | DISC-THRUST | |
| | 4 | 1 | **6V-2394** | 1 | RING-RETAINING | |
| | 5 | 1 | **6Y-1758** | 1 | GEAR (46-TEETH) | |
| | 6 | 1 | **236-2541** | 1 | RING-RETAINING | |
| | 7 | 1 | **6Y-8514** | 1 | PLATE-END | |
| | 8 | 1 | **163-0342** | 5 | DISC-FRICTION | |
| | 9 | 1 | **6Y-8512** | 5 | PLATE-CLUTCH | |
| | 10 | 1 | **251-9335** | 1 | SPRING-WAVE | |
| | 11 | 1 | **114-1071** | 1 | PISTON | |
| | 12 | 1 | **8E-5737** | 1 | RING-SEAL | |
| | 13 | 1 | **6Y-8286** | 1 | PISTON | |
| | 14 | 1 | **8E-5735** | 1 | RING-SEAL | |
| | 15 | 1 | **6Y-5632** | 8 | PLATE-CLUTCH | |
| | 16 | 1 | **163-0343** | 8 | DISC-FRICTION | |
| | 17 | 1 | **9W-9272** | 1 | PLATE-END | |
| | 18 | 1 | **9U-9322** | 1 | RING-RETAINING | |
| | 19 | 1 | **8E-8321** | 2 | DISC-THRUST | |
| | 20 | 1 | **8C-3979** | 1 | RING-RETAINING | |
| | 21 | 1 | **6Y-8285** | 4 | RING-SEAL | |
| | 22 | 1 | **3T-6572** | 1 | GEAR (33-TEETH) | |
| | 23 | 1 | **6Y-8289** | 1 | HUB AS | |
| | | 1 | **8E-3433** | 1 | BEARING-SLEEVE | |
| | 24 | 1 | **8C-8550** | 1 | RING-RETAINING | |
| | 25 | 1 | **170-1841** | 1 | GEAR (81-TEETH) | |
| | 26 | 1 | **8E-8652** | 1 | DISC-THRUST | |
| | 27 | 1 | **6Y-0373** | 1 | RETAINER-RING | |
| | 28 | 1 | **104-7336** | 2 | RING-RETAINING | |
| | 29 | 1 | **6Y-8288** | 1 | PISTON-BALANCE | |
| | 30 | 1 | **8E-5742** | 1 | RING-SEAL | |
| | 31 | 1 | **8E-1279** | 1 | SPRING-WAVE | |
| | 32 | 1 | **6Y-8265** | 1 | SEAL AS-BALANCE | |
| | 33 | 1 | **9W-9278** | 1 | RETAINER | |
| | 34 | 1 | **8E-8317** | 1 | DISC-THRUST | |
| | 35 | 1 | **173-7431** | 1 | HUB AS | |
| | | 1 | **8E-3416** | 1 | BEARING-SLEEVE | |
| | 36 | 1 | **9W-9436** | 1 | RING-SEAL | |
| | 37 | 1 | **9W-9399** | 1 | RING-SEAL | |

*147-5657* **CLUTCH GP** *(contd.)* **i02462386**

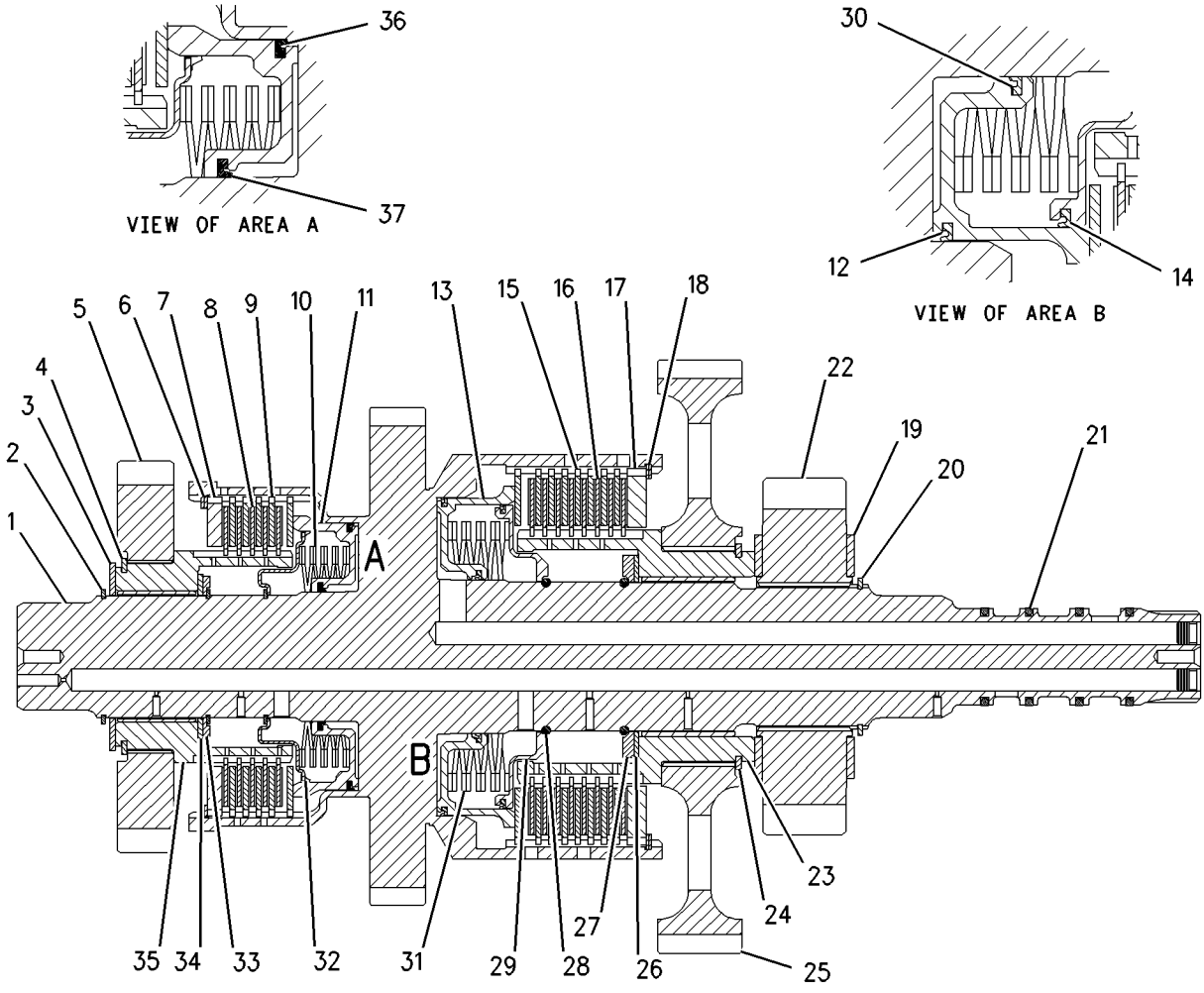


GRAPHIC #1 **<END>** g00669345

## *282-2974* CONTROL GP-TRANSMISSION HYD

**S/N: R1C1-UP**

**PART OF 282-2969 TRANSMISSION AR**

**SMCS-3073, 3167** **i02565706**

| NOTE | REF NO | GRAPHIC REF | PART NUMBER | QTY | PART NAME 1 2 3 4 5 6 (PRODUCT LEVEL) | SEE PAGE |
|---|---|---|---|---|---|---|
| | 1 | 1 | **3S-2093** | 12 | STRAP-CABLE | |
| | 2 | 1 | **6V-0852** | 2 | CAP-DUST | |
| | 3 | 1 | **8S-0768** | 1 | SEAL-O-RING | |
| | 4 | 1 | **9L-9068** | 2 | DOWEL | |
| | 5 | 1 | **9M-1974** | 26 | WASHER-HARD (8.8X16X2-MM THK) | |
| | 6 | 1 | **201-3321** | 1 | SEAL-O-RING | |
| Y | 7 | 1 | **244-3114** | 1 | VALVE GP-MODULATING (24-VOLT) (TORQUE CONVERTER LOCKUP CLUTCH) | 309 |
| | 8 | 1 | **282-5090** | 1 | HARNESS AS-TRANSMISSION | |
| | | 1 | **102-8802** | 1 | KIT-RECEPTACLE (2-PIN) | |
| | | 1 | **102-8801** | 1 | KIT-RECEPTACLE (12-PIN) | |
| | | | | | (EACH RECEPTACLE KIT INCLUDES RECEPTACLE AS & WEDGE) | |
| E | | 1 | **114-8843** | | SLEEVE-PLASTIC (32-MM DIA) (240-CM) | |
| E | | 1 | **125-7874** | | TUBE-HEAT SHRINK (5.72-MM DIA) (10-CM) | |
| E | | 1 | **125-7875** | | TUBE-HEAT SHRINK (7.44-MM DIA) (5-CM) | |
| | | 1 | **155-2255** | 1 | KIT-CONNECTING PLUG (12-PIN) | |
| | | 1 | **155-2270** | 12 | KIT-CONNECTING PLUG (2-PIN) | |
| | | | | | (EACH PLUG KIT INCLUDES PLUG AS, WEDGE & INTERFACE SEAL) | |
| Y | 9 | 1 | *287-2126* | 1 | VALVE GP-TRANSMISSION CONTROL | 317 |
| | 10 | 1 | **130-5300** | 2 | CLIP | |
| | 11 | 1 | **132-5789** | 6 | CLIP | |
| | 12 | 1 | **3K-0360** | 3 | SEAL-O-RING | |
| | 13 | 1 | **4P-7581** | 6 | CLIP | |
| M | 14 | 1 | **6V-2317** | 5 | BOLT (M8X1.25X30-MM) | |
| M | 15 | 1 | **6V-3821** | 1 | BOLT (M8X1.25X110-MM) | |
| M | 16 | 1 | **6V-5215** | 4 | BOLT (M8X1.25X16-MM) | |
| M | 17 | 1 | **6V-5223** | 10 | BOLT (M8X1.25X100-MM) | |
| | 18 | 1 | **8M-5251** | 8 | SEAL-O-RING | |
| M | 19 | 1 | **8T-0100** | 2 | BOLT (M8X1.25X60-MM) | |
| M | 20 | 1 | **8T-0276** | 4 | BOLT (M8X1.25X45-MM) | |
| | 21 | 1 | **196-1185** | 1 | SENSOR GP-SPEED (TORQUE CONVERTER OUTPUT) | |
| | 22 | 1 | **196-1185** | 1 | SENSOR GP-SPEED (TRANSMISSION OUTPUT 1) | |
| | 23 | 1 | **196-1185** | 1 | SENSOR GP-SPEED (TRANSMISSION OUTPUT 2) | |
| | | | | | (EACH SENSOR GP INCLUDES) | |
| | | 1 | **102-8802** | 1 | KIT-RECEPTACLE (2-PIN) | |
| | | | | | (INCLUDES RECEPTACLE AS & WEDGE) | |
| | | 1 | **186-3735** | 2 | PIN-CONNECTOR (16-GA TO 18-GA) | |
| E | | 1 | **9X-1813** | | SLEEVE (14-CM) | |
| | | 1 | **171-5349** | 1 | STRAP-MARKER | |

E-ORDER BY THE CENTIMETER
M-METRIC PART
Y-SEPARATE ILLUSTRATION

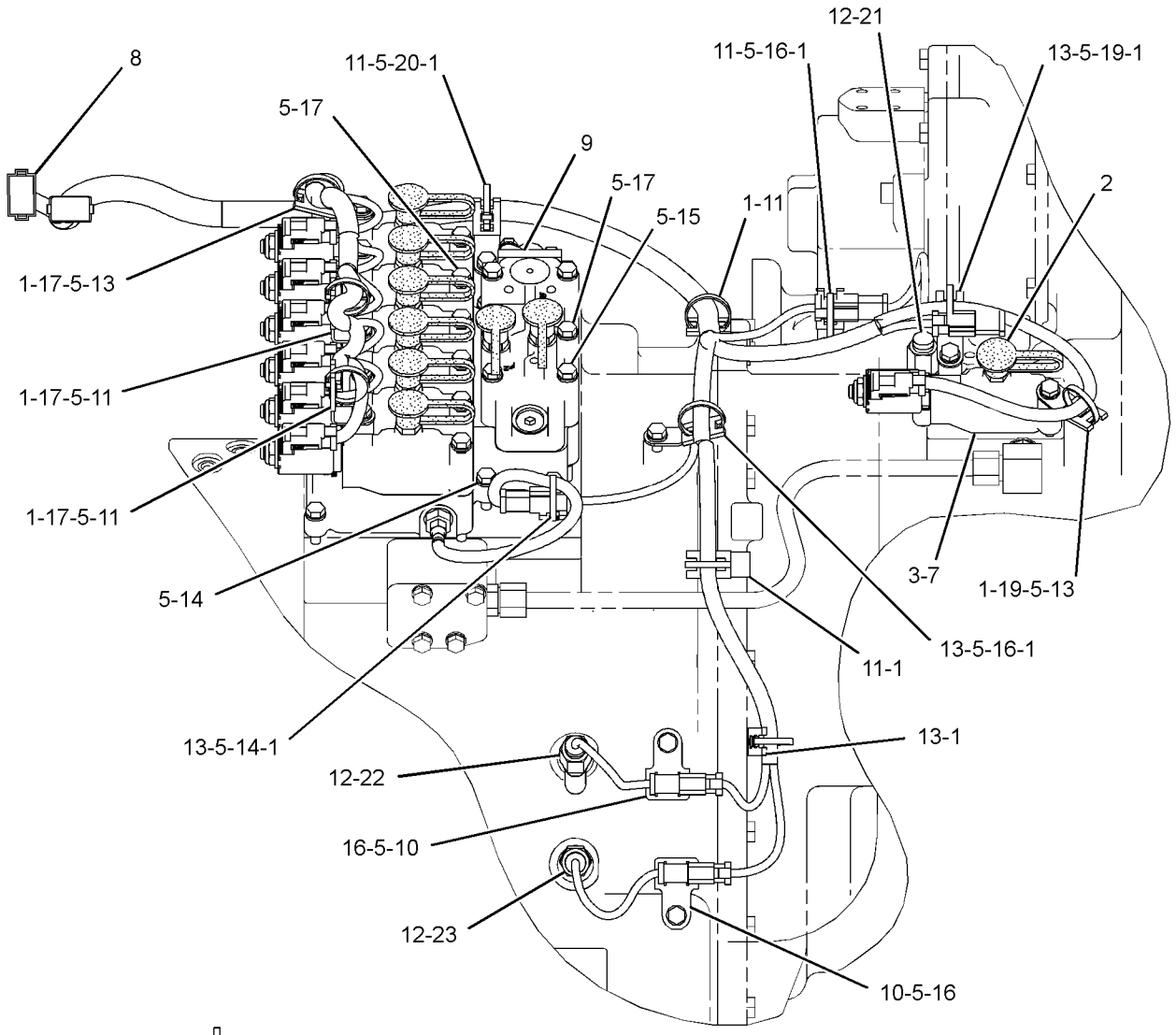


RIGHT SIDE VIEW

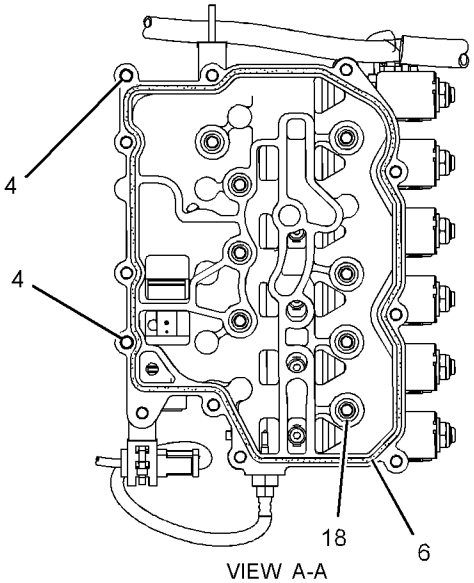


VIEW A-A

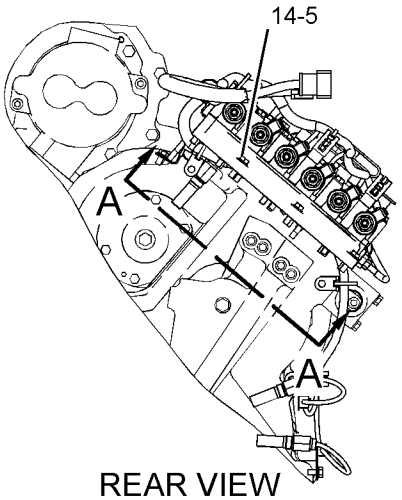


REAR VIEW

GRAPHIC #1 **<END>** g01281036

# *154-3951* COVER GP-SHIPPING

**S/N: 5MY1-UP**

**PART OF 147-5653 TRANSMISSION AR**

**SMCS-3064** **i02195175**

| NOTE | REF NO | GRAPHIC REF | PART NUMBER | QTY | PART NAME 1 2 3 4 5 6 (PRODUCT LEVEL) | SEE PAGE |
|---|---|---|---|---|---|---|
| | 1 | 1 | **7G-2132** | 1 | COVER | |
| M | 2 | 1 | **8T-6466** | 6 | BOLT (M10X1.5X60-MM) | |
| | 3 | 1 | **8T-4121** | 6 | WASHER-HARD (11X21X2.5-MM THK) | |
| M | 4 | 1 | **8T-4133** | 6 | NUT (M10X1.5-THD) | |
| | 5 | 1 | **7J-3554** | 3 | COVER | |
| | 6 | 1 | **2D-0094** | 3 | GASKET | |
| M | 7 | 1 | **6V-8212** | 8 | BOLT (M10X1.5X16-MM) | |
| M | 8 | 1 | **6V-6317** | 2 | BOLT (M10X1.5X20-MM) | |
| | 9 | 1 | **7C-1113** | 1 | COVER | |
| | 10 | 1 | **3F-5792** | 1 | SEAL-O-RING | |
| M | 11 | 1 | **6V-3668** | 4 | BOLT (M12X1.75X30-MM) | |
| | 12 | 1 | **5M-3154** | 1 | COVER | |
| | 13 | 1 | **1S-6595** | 1 | GASKET-OIL SUPPLY | |
| | 14 | 1 | **4S-5971** | 1 | COVER | |
| | 15 | 1 | **7F-8268** | 1 | SEAL-O-RING | |
| | 16 | 1 | **155-2270** | 8 | KIT-CONNECTING PLUG (2-PIN) | |
| | 17 | 1 | **8T-8737** | 16 | PLUG-SEAL | |
| | 18 | 1 | **9S-4181** | 1 | PLUG-O RING | |
| | 19 | 1 | **7M-8485** | 1 | SEAL-O-RING | |

M-METRIC PART

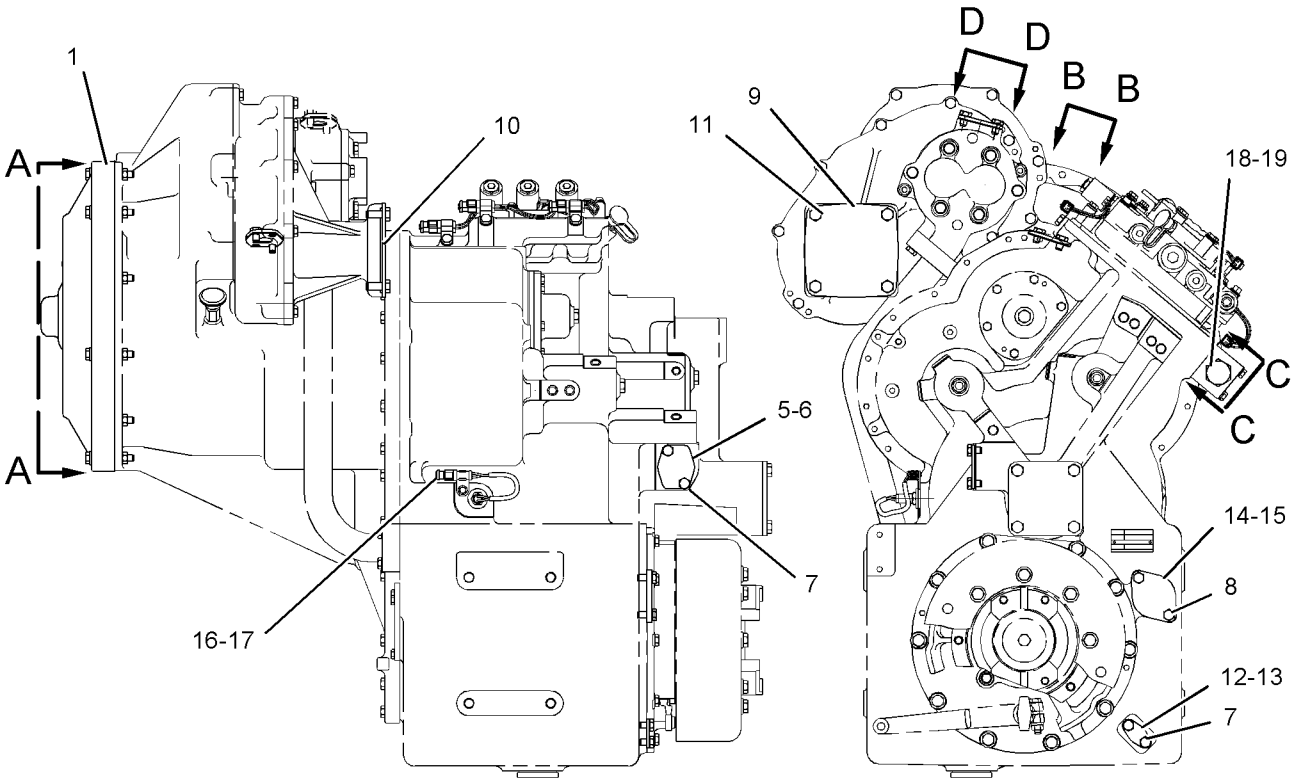


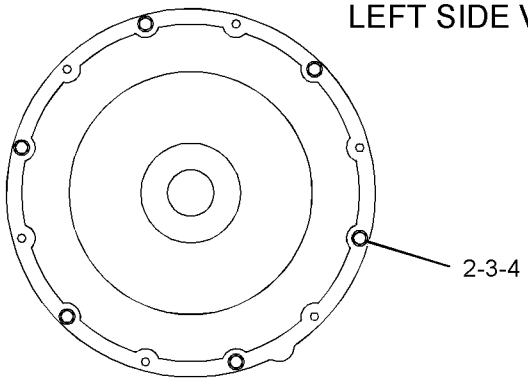


VIEW A-A

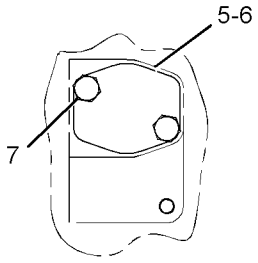


VIEW B-B

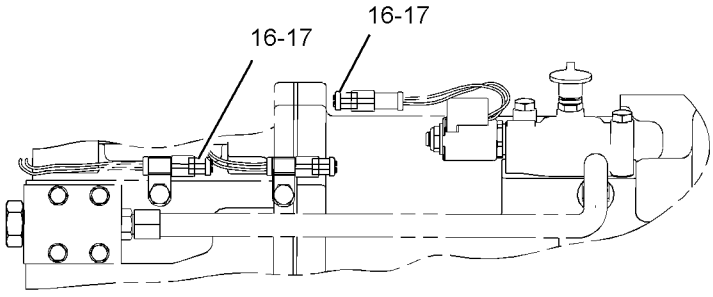


VIEW C-C

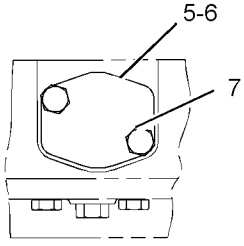


VIEW D-D

GRAPHIC #1 **<END>** g01108595

# 184-3587 DIFFERENTIAL GP–LOCKING

**S/N: 5451-UP**

**PART OF 273-0128 AXLE AR-OSCILLATING**

**SMCS-3258** **i02571527**

| NOTE | REF NO | GRAPHIC REF | PART NUMBER | QTY | PART NAME 1 2 3 4 5 6 (PRODUCT LEVEL) | SEE PAGE |
|---|---|---|---|---|---|---|
| | 1 | 1 | **149-8125** | 1 | CASE AS-DIFFERENTIAL (WITH DIFFERENTIAL LOCK) | |
| | | 1 | **5P-8245** | 16 | WASHER-HARD (13.5X25.5X3-MM THK) | |
| | | 1 | **5P-8247** | 8 | WASHER-HARD (17X32X3.5-MM THK) | |
| M | | 1 | **6V-3668** | 16 | BOLT (M12X1.75X30-MM) | |
| M | | 1 | **8T-0650** | 8 | BOLT (M16X2X160-MM) | |
| | 2 | 1 | **4V-5392** | 1 | SPIDER | |
| | 3 | 1 | **6Y-7954** | 6 | DISC-FRICTION (DIFFERENTIAL LOCK CLUTCH) | |
| | 4 | 1 | **7D-8185** | 7 | DISC (DIFFERENTIAL LOCK CLUTCH) | |
| | 5 | 1 | **217-3681** | 4 | WASHER-THRUST | |
| | 6 | 1 | **9C-6016** | 4 | PINION-DIFFERENTIAL BEVEL (11-TEETH) | |
| | 7 | 1 | **193-3068** | 1 | GEAR-DIFFERENTIAL BEVEL (16-TEETH) | |
| M | 8 | 1 | **127-1960** | 8 | SCREW-FLAT HEAD (M6X1X16-MM) | |
| | 9 | 1 | **139-4128** | 1 | GEAR-BEVEL (DIFFERENTIAL LOCK, 16-TEETH) | |
| | 10 | 1 | **144-0496** | 4 | SPRING | |
| | 11 | 1 | **193-3067** | 1 | WASHER-THRUST | |
| | 12 | 1 | **217-3252** | 1 | BEARING-NEEDLE | |
| | 13 | 1 | **151-4809** | 4 | BEARING-SLEEVE | |
| | 14 | 1 | **184-3582** | 1 | RING-THRUST (DIFFERENTIAL LOCK) | |
| | 15 | 1 | **184-3586** | 1 | PISTON-ACTUATOR (DIFFERENTIAL LOCK) | |
| | 16 | 1 | **185-6619** | 1 | PLATE-CLUTCH (DIFFERENTIAL LOCK) | |
| | 17 | 1 | **185-8779** | 1 | PLATE-RETAINER (DIFFERENTIAL LOCK) | |
| | 18 | 1 | **129-2342** | 1 | WASHER-THRUST | |
| | 19 | 1 | **156-5198** | 1 | SEAL-O-RING | |
| | 20 | 1 | **5P-8428** | 1 | SEAL-O-RING | |
| M | 21 | 1 | **8C-7562** | 4 | SCREW-FLAT HEAD (M8X1.25X20-MM) | |
| | 22 | 1 | **8K-1207** | 2 | DOWEL | |

M-METRIC PART

**184-3587 DIFFERENTIAL GP** *(contd. )* **i02571527**

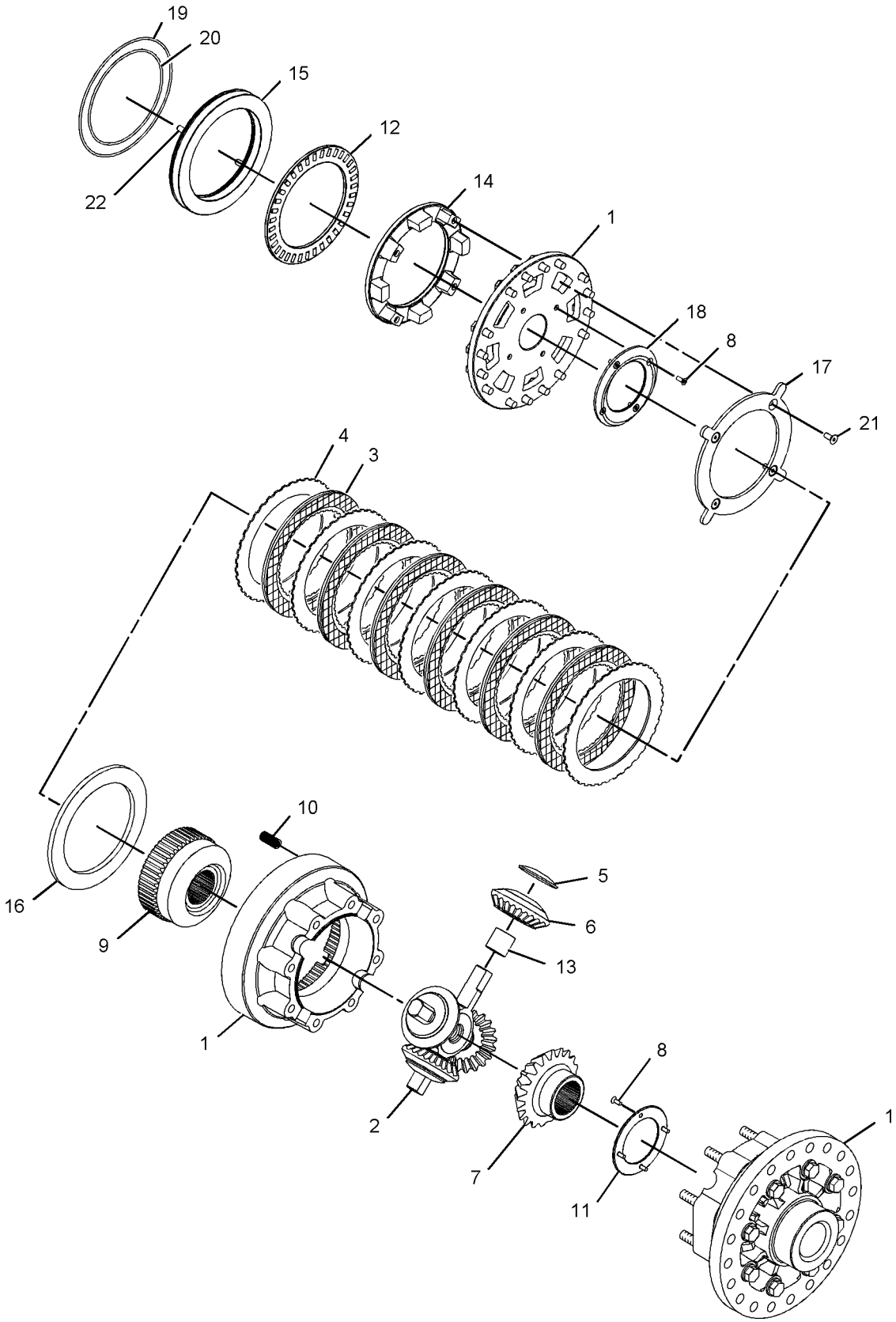


GRAPHIC #1 **<END>** g01056609

# 184-3588 DIFFERENTIAL GP

**S/N: 5451-UP**

**PART OF 273-0105 AXLE AR-FIXED**

**SMCS-3258** **i02559927**

| NOTE | REF NO | GRAPHIC REF | PART NUMBER | QTY | PART NAME 1 2 3 4 5 6 (PRODUCT LEVEL) | SEE PAGE |
|---|---|---|---|---|---|---|
| | 1 | 1 | **149-8128** | 1 | CASE AS-DIFFERENTIAL (WITH DIFFERENTIAL LOCK) | |
| | | 1 | **5P-8245** | 16 | WASHER-HARD (13.5X25.5X3-MM THK) | |
| | | 1 | **5P-8247** | 12 | WASHER-HARD (17X32X3.5-MM THK) | |
| M | | 1 | **6V-3668** | 16 | BOLT (M12X1.75X30-MM) | |
| M | | 1 | **8T-0650** | 12 | BOLT (M16X2X160-MM) | |
| | 2 | 1 | **6Y-7954** | 8 | DISC-FRICTION (DIFFERENTIAL LOCK CLUTCH) | |
| | 3 | 1 | **7D-8185** | 9 | DISC (DIFFERENTIAL LOCK CLUTCH) | |
| M | 4 | 1 | **127-1960** | 8 | SCREW-FLAT HEAD (M6X1X16-MM) | |
| | 5 | 1 | **141-6766** | 1 | GEAR-BEVEL (DIFFERENTIAL LOCK, 18-TEETH) | |
| | 6 | 1 | **144-0496** | 4 | SPRING | |
| | 7 | 1 | **217-3252** | 1 | BEARING-NEEDLE | |
| | 8 | 1 | **217-3682** | 4 | WASHER-THRUST | |
| | 9 | 1 | **151-4464** | 4 | BEARING-SLEEVE | |
| | 10 | 1 | **184-3582** | 1 | RING-THRUST (DIFFERENTIAL LOCK) | |
| | 11 | 1 | **184-3586** | 1 | PISTON-ACTUATOR (DIFFERENTIAL LOCK) | |
| | 12 | 1 | **185-6619** | 1 | PLATE-CLUTCH (DIFFERENTIAL LOCK) | |
| | 13 | 1 | **185-8779** | 1 | PLATE-RETAINER (DIFFERENTIAL LOCK) | |
| | 14 | 1 | **129-2339** | 1 | SPIDER | |
| | 15 | 1 | **129-2341** | 1 | GEAR-DIFFERENTIAL BEVEL (18-TEETH) | |
| | 16 | 1 | **129-2342** | 2 | WASHER-THRUST | |
| | 17 | 1 | **156-5198** | 1 | SEAL-O-RING | |
| | 18 | 1 | **5P-8428** | 1 | SEAL-O-RING | |
| M | 19 | 1 | **8C-7562** | 4 | SCREW-FLAT HEAD (M8X1.25X20-MM) | |
| | 20 | 1 | **8K-1207** | 2 | DOWEL | |
| | 21 | 1 | **9C-6023** | 4 | PINION-DIFFERENTIAL BEVEL (10-TEETH) | |

M-METRIC PART

**184-3588 DIFFERENTIAL GP** *(contd. )* **i02559927**

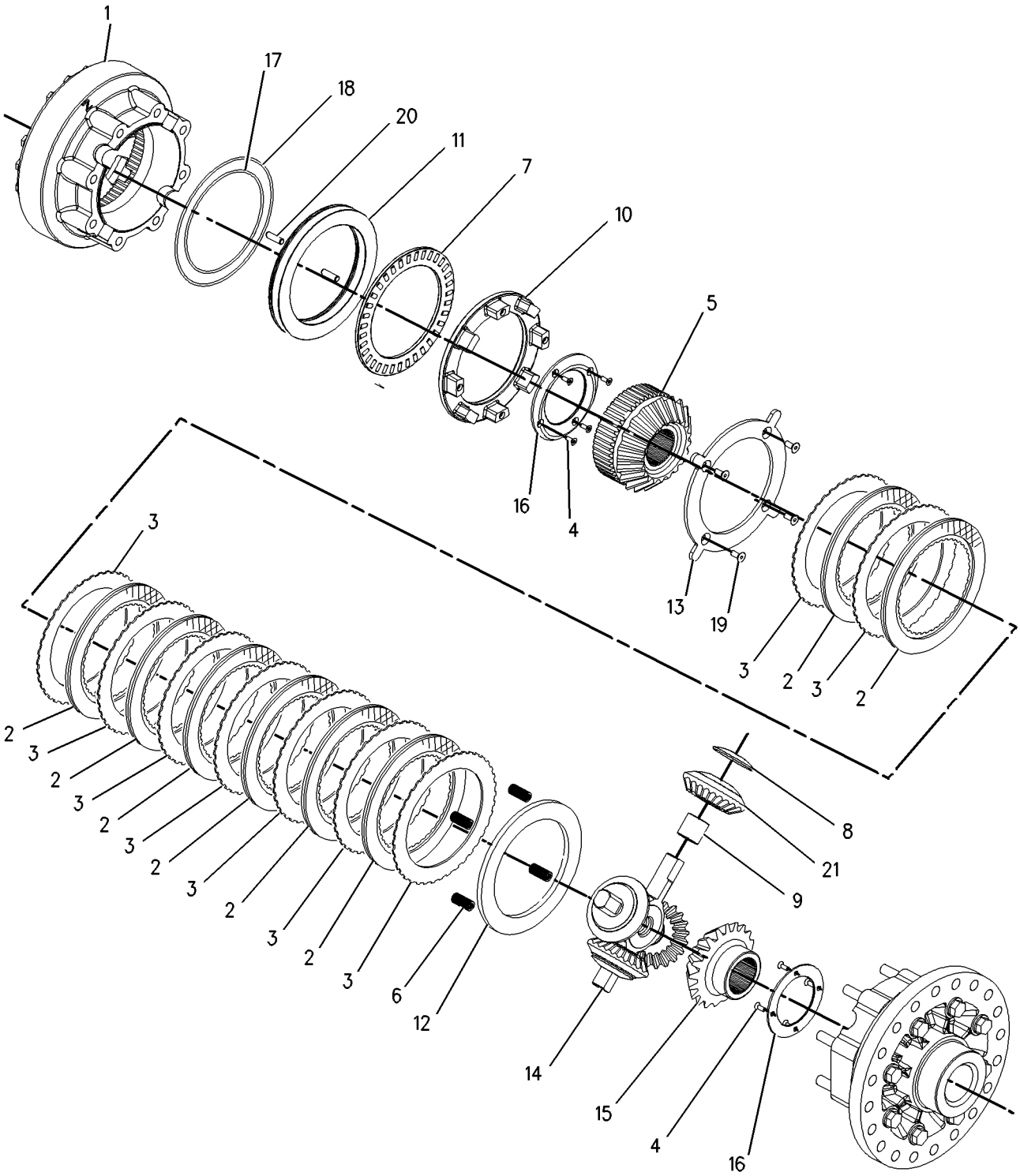


GRAPHIC #1 **<END>** g00711543

## *163-0397* DRAIN GP-ECOLOGY–TRANSMISSION CASE

**S/N: R1C1-UP; 5MY1-UP**

**PART OF 277-8579, 282-2970 CASE & PARTS GP-TRANSMISSION**

**SMCS-3064** **i02485077**

| NOTE | REF NO | GRAPHIC REF | PART NUMBER | QTY | PART NAME 1 2 3 4 5 6 (PRODUCT LEVEL) | SEE PAGE |
|---|---|---|---|---|---|---|
| | 1 | 1 | **173-0566** | 1 | DRAIN GP-ECOLOGY | |
| | 1A | 1 | **2K-8199** | 1 | SEAL-O-RING | |
| | 1B | 1 | **077-3241** | 1 | SEAL-O-RING | |
| | 1C | 1 | **175-4966** | 1 | PLUG-DRAIN (ECOLOGY) | |
| Z | 1D | 1 | | 1 | BODY | |
| | 2 | 1 | **7M-8485** | 1 | SEAL-O-RING | |

Z-NOT SERVICED SEPARATELY

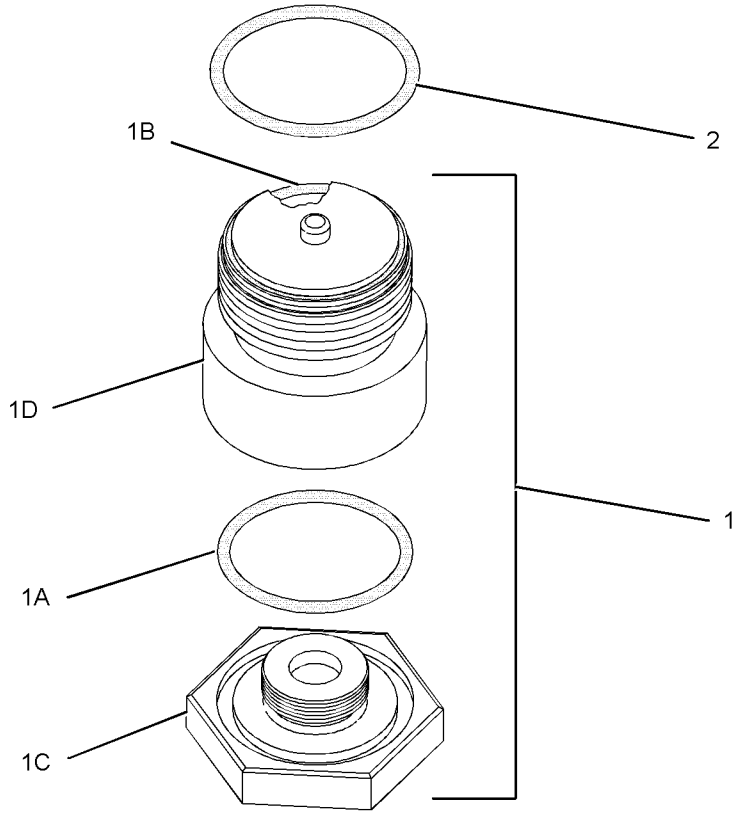


GRAPHIC #1 **<END>** g01123990

# *252-6556* FILLER GP-POWER TRAIN OIL

**S/N: 5451-UP**

**PART OF 245-9463, 284-7040 POWER TRAIN AR**

**SMCS-3005, 3081** **i02590500**

| NOTE | REF NO | GRAPHIC REF | PART NUMBER | QTY | PART NAME 1 2 3 4 5 6 (PRODUCT LEVEL) | SEE PAGE |
|---|---|---|---|---|---|---|
| | 1 | 1 | **2G-8898** | 1 | GAUGE-OIL LEVEL (DIPSTICK) | |
| | 2 | 1 | **3K-6905** | 1 | VALVE-BREATHER | |
| | 3 | 1 | **4K-5537** | 1 | GASKET | |
| | 4 | 1 | **9M-0164** | 2 | CLAMP-HOSE | |
| | 5 | 1 | **162-0123** | 1 | PLATE AS | |
| M | | 1 | **8T-3490** | 4 | NUT-WELD (M10X1.5-THD) | |
| | 6 | 1 | **164-2748** | 1 | TUBE AS | |
| | 7 | 1 | **178-5210** | 1 | ELBOW | |
| | 8 | 1 | **253-3900** | 1 | FILLER AS | |
| | 9 | 1 | **1B-5964** | 1 | SPACER | |
| | 10 | 1 | **4D-9517** | 1 | CLIP | |
| | 11 | 1 | **5B-2301** | 1 | SPACER (2 1/16-IN LG) | |
| M | 12 | 1 | **5C-7261** | 1 | NUT (M8X1.25-THD) | |
| | 13 | 1 | **5H-2730** | 1 | GASKET | |
| | 14 | 1 | **8T-4121** | 5 | WASHER-HARD (11X21X2.5-MM THK) | |
| M | 15 | 1 | **8T-4137** | 1 | BOLT (M10X1.5X20-MM) | |
| M | 16 | 1 | **8T-4178** | 2 | BOLT (M10X1.5X90-MM) | |
| M | 17 | 1 | **8T-4186** | 2 | BOLT (M10X1.5X40-MM) | |
| | 18 | 1 | **5P-4116** | 2 | WASHER-HARD (8.8X20.5X2-MM THK) | |
| M | 19 | 1 | **8T-7547** | 1 | BOLT (M8X1.25X30-MM) | |
| E | 20 | 1 | **5P-1256** | | HOSE (21-CM) | |

E-ORDER BY THE CENTIMETER
M-METRIC PART

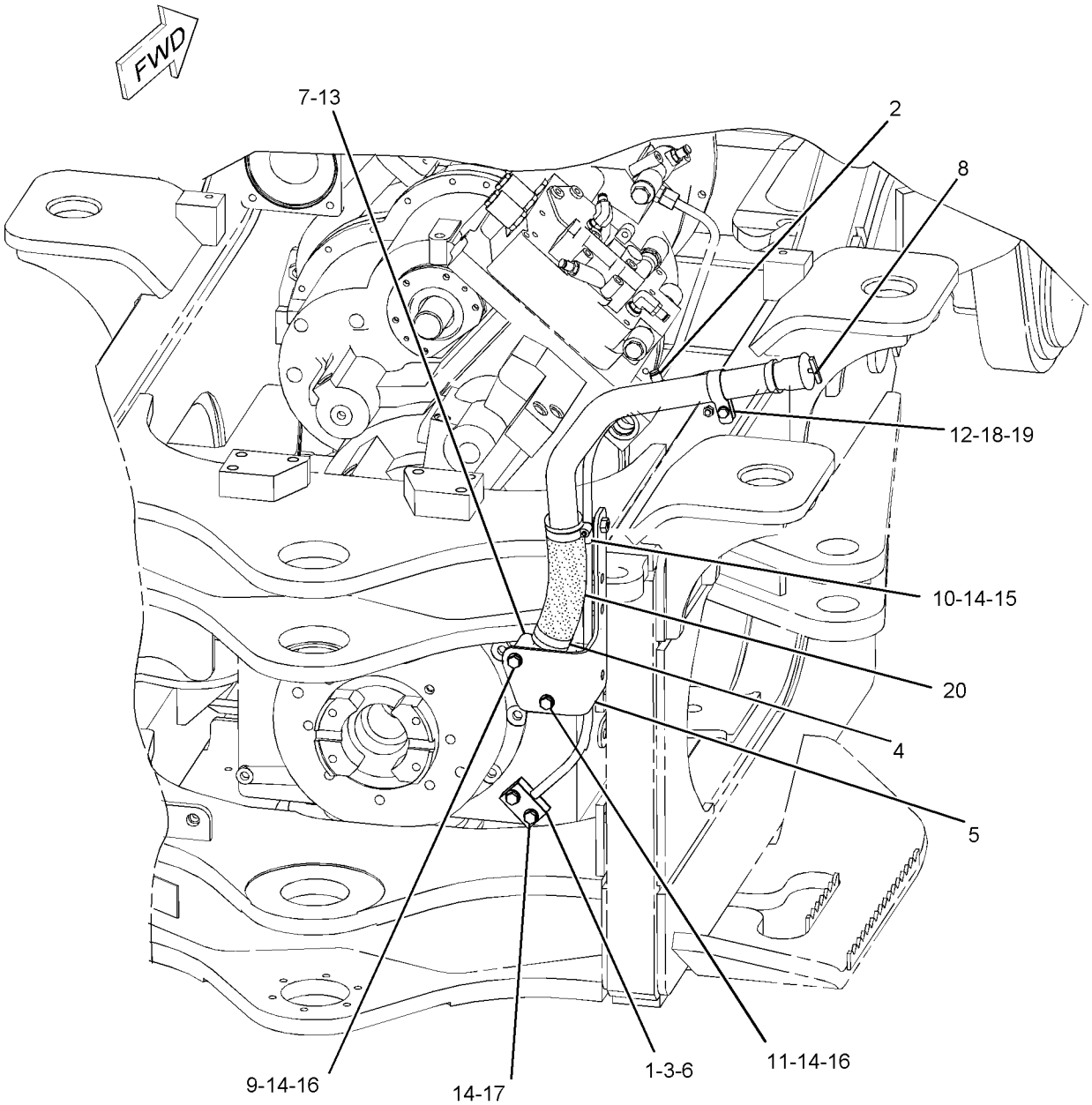


GRAPHIC #1 **<END>** g01102652

# *252-6543* FILTER & LINES GP-POWER TRAIN

**S/N: 5451-377**

**PART OF 245-9463 POWER TRAIN AR**

**SMCS-3004, 3067, 3154** **i02517657**

| NOTE | REF NO | GRAPHIC REF | PART NUMBER | QTY | PART NAME 1 2 3 4 5 6 (PRODUCT LEVEL) | SEE PAGE |
|---|---|---|---|---|---|---|
| I | 1 | 1 | **2D-8926** | 1 | HOSE AS | |
| | 2 | 1 | **7C-6921** | 2 | SPACER (11X20X22.8-MM THK) | |
| | 3 | 1 | **8C-3447** | 1 | CAP-DUST | |
| | 4 | 1 | **9G-5127** | 1 | BREATHER AS (POWER TRAIN TANK) | |
| I | 5 | 1 | **128-1693** | 1 | HOSE AS | |
| | 6 | 1 | **161-8290** | 1 | TUBE AS | |
| | 7 | 1 | *164-5590* | 1 | VALVE AS-FLUID SAMPLING (POWER TRAIN OIL) | |
| | | 1 | **3J-7354** | 1 | SEAL-O-RING | |
| | | 1 | **8C-3446** | 1 | VALVE-FLUID SAMPLING (POWER TRAIN OIL) | |
| I | 8 | 1 | **208-7047** | 1 | HOSE AS | |
| Y | 9 | 1 | **222-5806** | 1 | FILTER GP-OIL (POWER TRAIN) | 269 |
| | 10 | 1 | **263-2543** | 1 | ELBOW | |
| | 11 | 1 | **263-6963** | 1 | BRACKET | |
| | 12 | 1 | **280-9661** | 1 | BRACKET AS | |
| | 13 | 1 | **030-8370** | 1 | ADAPTER-PIPE | |
| | 14 | 1 | **032-3506** | 1 | ADAPTER-PIPE | |
| | 15 | 1 | *148-8305* | 1 | ADAPTER AS | |
| | | 1 | **3J-1907** | 1 | SEAL-O-RING | |
| | | 1 | **5P-9617** | 1 | ADAPTER | |
| | 16 | 1 | *148-8335* | 2 | CONNECTOR AS | |
| | | | | | (EACH INCLUDES) | |
| | | 1 | **5K-9090** | 1 | SEAL-O-RING | |
| | | 1 | **6V-8635** | 1 | CONNECTOR | |
| | | 1 | **7M-8485** | 1 | SEAL-O-RING | |
| | 17 | 1 | *148-8352* | 1 | ELBOW AS | |
| | | 1 | **5K-9090** | 1 | SEAL-O-RING | |
| | | 1 | **6V-9854** | 1 | ELBOW (SWIVEL) | |
| | 18 | 1 | *148-8357* | 1 | ELBOW AS | |
| | | 1 | **5K-9090** | 1 | SEAL-O-RING | |
| | | 1 | **6V-9008** | 1 | ELBOW | |
| | | 1 | **7M-8485** | 1 | SEAL-O-RING | |
| | 19 | 1 | *183-3406* | 1 | PLUG AS | |
| | | 1 | **6V-5049** | 1 | SEAL-O-RING | |
| | | 1 | **9S-4191** | 1 | PLUG-O-RING | |
| | 20 | 1 | **3B-6775** | 1 | COUPLING | |
| | 21 | 1 | **4D-7388** | 1 | CLIP | |
| | 22 | 1 | **4J-0520** | 1 | SEAL-O-RING | |
| | 23 | 1 | **5K-9090** | 2 | SEAL-O-RING | |
| | 24 | 1 | **5P-1076** | 2 | WASHER-HARD (13.5X30X4-MM THK) | |
| | 25 | 1 | **7C-4354** | 1 | CLIP | |
| | 26 | 1 | **8T-4121** | 10 | WASHER-HARD (11X21X2.5-MM THK) | |
| M | 27 | 1 | **8T-4136** | 5 | BOLT (M10X1.5X25-MM) | |
| M | 28 | 1 | **8T-4137** | 1 | BOLT (M10X1.5X20-MM) | |
| M | 29 | 1 | **8T-4185** | 4 | BOLT (M10X1.5X50-MM) | |
| M | 30 | 1 | **8T-4244** | 2 | NUT (M12X1.75-THD) | |

I-REFER TO HYDRAULIC INFORMATION SYSTEM
M-METRIC PART
Y-SEPARATE ILLUSTRATION

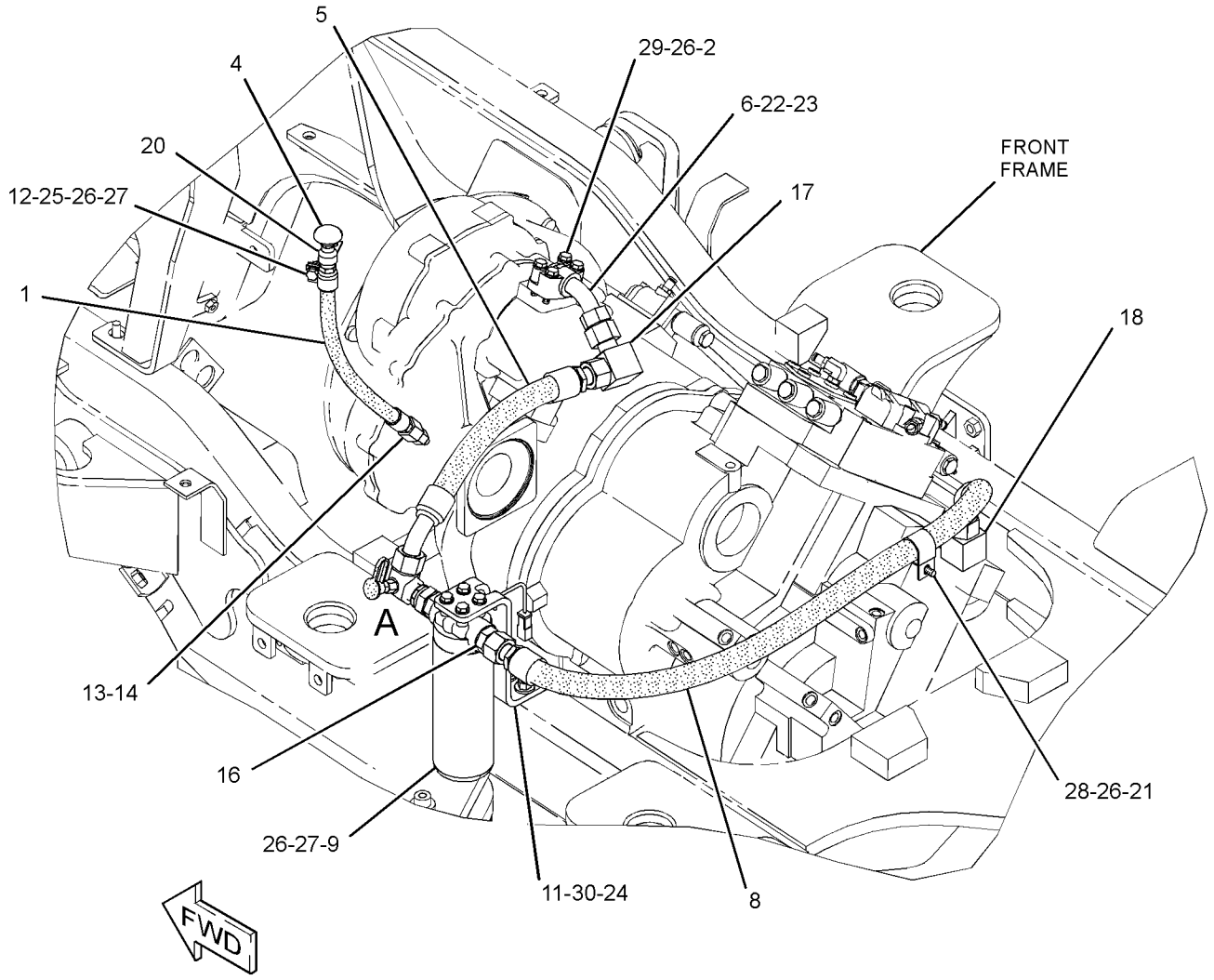


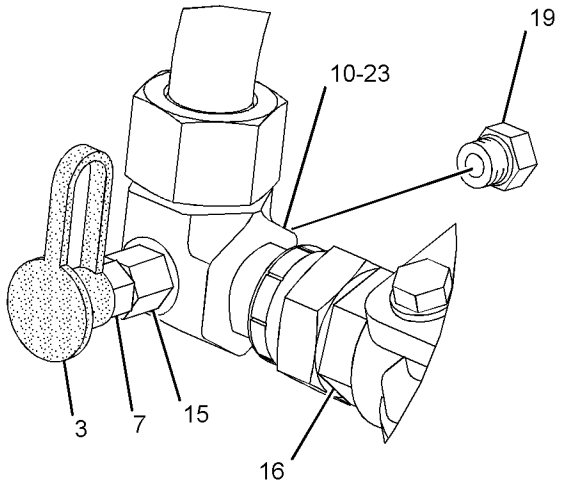


VIEW OF AREA A

GRAPHIC #1 **<END>** g01345776

# *252-6543* FILTER & LINES GP-POWER TRAIN

**S/N: 545378-UP**

**PART OF 284-7040 POWER TRAIN AR**

**SMCS-3004, 3067, 3154** **i02738449**

| NOTE | REF NO | GRAPHIC REF | PART NUMBER | QTY | PART NAME 1 2 3 4 5 6 (PRODUCT LEVEL) | SEE PAGE |
|---|---|---|---|---|---|---|
| I | 1 | 1 | **2D-8926** | 1 | HOSE AS | |
| | 2 | 1 | **7C-6921** | 2 | SPACER (11X20X22.8-MM THK) | |
| | 3 | 1 | **8C-3447** | 1 | CAP-DUST | |
| | 4 | 1 | **9G-5127** | 1 | BREATHER AS (POWER TRAIN TANK) | |
| I | 5 | 1 | **128-1693** | 1 | HOSE AS | |
| | 6 | 1 | **161-8290** | 1 | TUBE AS | |
| | 7 | 1 | *164-5590* | 1 | VALVE AS-FLUID SAMPLING (POWER TRAIN OIL) | |
| | | 1 | **3J-7354** | 1 | SEAL-O-RING | |
| | | 1 | **8C-3446** | 1 | VALVE-FLUID SAMPLING (POWER TRAIN OIL) | |
| I | 8 | 1 | **208-7047** | 1 | HOSE AS | |
| Y | 9 | 1 | **222-5806** | 1 | FILTER GP-OIL (POWER TRAIN) | 269 |
| | 10 | 1 | **263-2543** | 1 | ELBOW | |
| | 11 | 1 | **263-6963** | 1 | BRACKET | |
| | 12 | 1 | **280-9661** | 1 | BRACKET AS | |
| | 13 | 1 | **030-8370** | 1 | ADAPTER-PIPE | |
| | 14 | 1 | **032-3506** | 1 | ADAPTER-PIPE | |
| | 15 | 1 | *148-8305* | 1 | ADAPTER AS | |
| | | 1 | **3J-1907** | 1 | SEAL-O-RING | |
| | | 1 | **5P-9617** | 1 | ADAPTER | |
| C | 16 | 1 | *148-8335* | 3 | CONNECTOR AS | |
| | | | | | (EACH INCLUDES) | |
| | | 1 | **5K-9090** | 1 | SEAL-O-RING | |
| | | 1 | **6V-8635** | 1 | CONNECTOR | |
| | | 1 | **7M-8485** | 1 | SEAL-O-RING | |
| | 17 | 1 | *148-8352* | 1 | ELBOW AS | |
| | | 1 | **5K-9090** | 1 | SEAL-O-RING | |
| | | 1 | **6V-9854** | 1 | ELBOW (SWIVEL) | |
| | 19 | 1 | *183-3406* | 1 | PLUG AS | |
| | | 1 | **6V-5049** | 1 | SEAL-O-RING | |
| | | 1 | **9S-4191** | 1 | PLUG-O-RING | |
| | 20 | 1 | **3B-6775** | 1 | COUPLING | |
| | 21 | 1 | **4D-7388** | 1 | CLIP | |
| | 22 | 1 | **4J-0520** | 1 | SEAL-O-RING | |
| | 23 | 1 | **5K-9090** | 2 | SEAL-O-RING | |
| | 24 | 1 | **5P-1076** | 2 | WASHER-HARD (13.5X30X4-MM THK) | |
| | 25 | 1 | **7C-4354** | 1 | CLIP | |
| | 26 | 1 | **8T-4121** | 10 | WASHER-HARD (11X21X2.5-MM THK) | |
| M | 27 | 1 | **8T-4136** | 5 | BOLT (M10X1.5X25-MM) | |
| M | 28 | 1 | **8T-4137** | 1 | BOLT (M10X1.5X20-MM) | |
| M | 29 | 1 | **8T-4185** | 4 | BOLT (M10X1.5X50-MM) | |
| M | 30 | 1 | **8T-4244** | 2 | NUT (M12X1.75-THD) | |

C-CHANGE FROM PREVIOUS TYPE
I-REFER TO HYDRAULIC INFORMATION SYSTEM
M-METRIC PART
Y-SEPARATE ILLUSTRATION

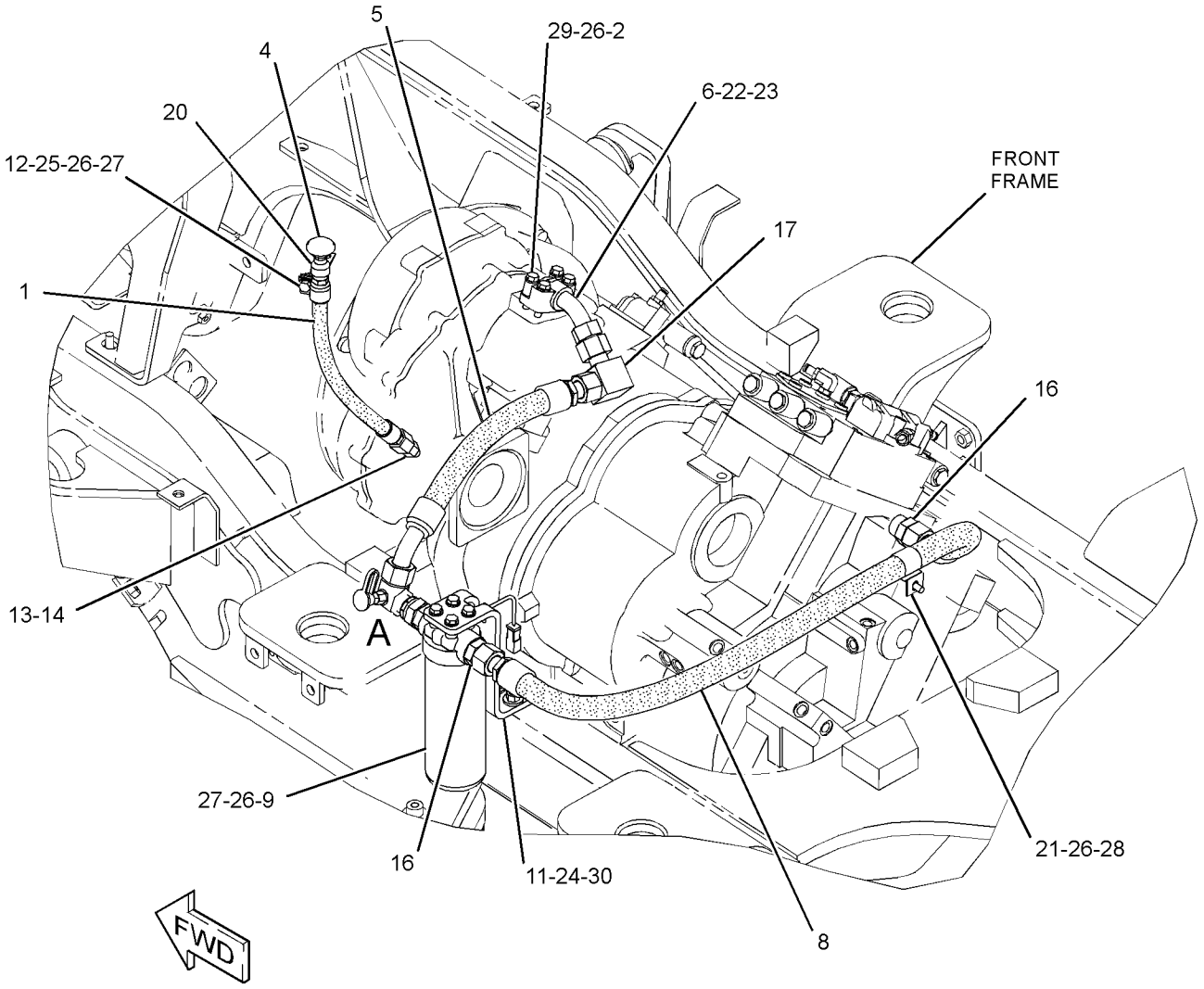


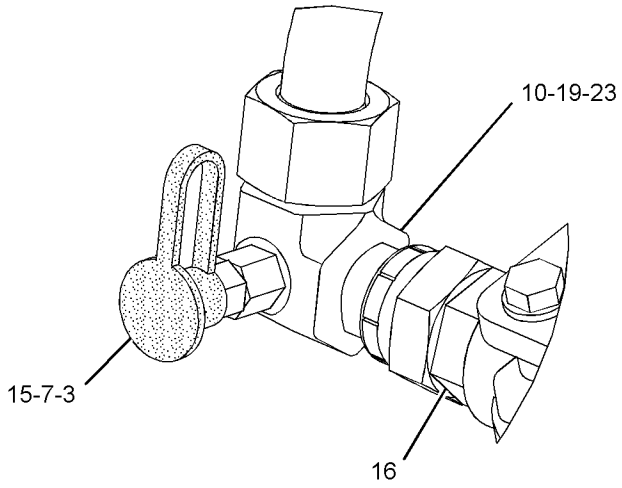


VIEW OF AREA A

GRAPHIC #1 **<END>** g01371893

# 222-5806 FILTER GP-OIL—POWER TRAIN

**S/N: 5451-UP**

**PART OF 252-6543 FILTER & LINES GP-POWER TRAIN**

**SMCS-3004, 3067** **i02503728**

| NOTE | REF NO | GRAPHIC REF | PART NUMBER | QTY | PART NAME 1 2 3 4 5 6 (PRODUCT LEVEL) | SEE PAGE |
|---|---|---|---|---|---|---|
| | 1 | 1 | **5F-9144** | 1 | SEAL-O-RING | |
| | 2 | 1 | **227-6744** | 1 | SWITCH GP-PRESSURE (OIL FILTER BYPASS) (POWER TRAIN) | |
| | | 1 | **102-8802** | 1 | KIT-RECEPTACLE (2-PIN) | |
| | | | | | (INCLUDES RECEPTACLE AND WEDGE) | |
| | 3 | 1 | **1G-8878** | 1 | FILTER AS-OIL (ADVANCED EFFICIENCY) (POWER TRAIN) | |
| | 4 | 1 | **3J-1907** | 1 | SEAL-O-RING | |

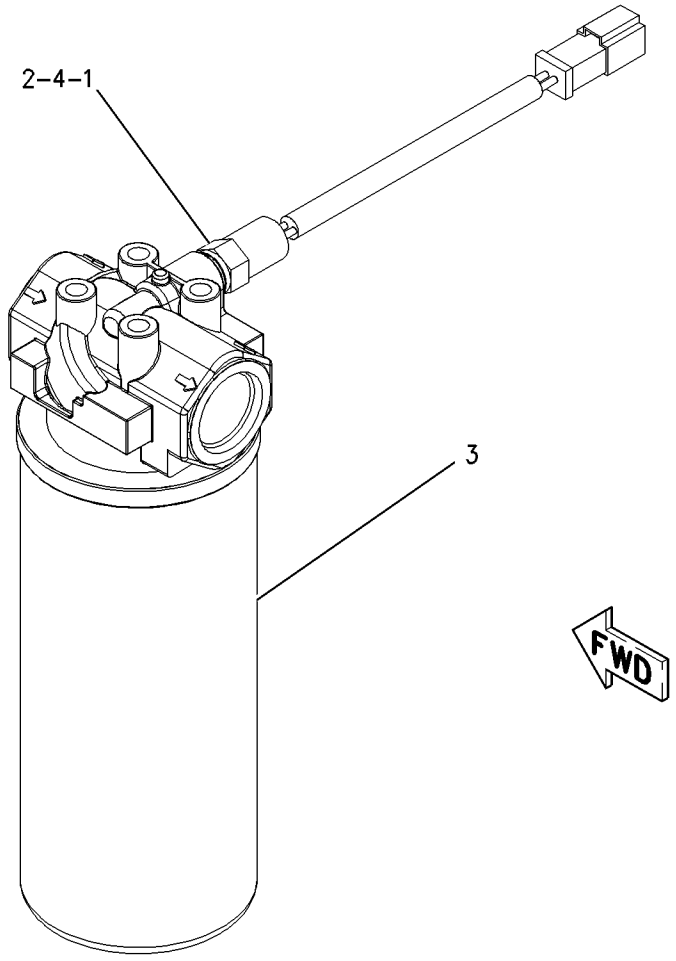


GRAPHIC #1 **<END>** g01005546

# *139-4183* GEAR GP-BEVEL & PINION

**S/N: 5451-UP**

**PART OF 273-0128 AXLE AR-OSCILLATING**

**SMCS-3254, 3256** **i02163075**

| NOTE | REF NO | GRAPHIC REF | PART NUMBER | QTY | PART NAME 1 2 3 4 5 6 (PRODUCT LEVEL) | SEE PAGE |
|---|---|---|---|---|---|---|
| | 1 | 1 | **1J-2860** | 1 | CUP-BEARING | |
| | 2 | 1 | **4E-3645** | 1 | NUT-ADJUSTMENT | |
| M | 3 | 1 | **4E-3896** | 2 | BOLT (M6X1X14-MM) | |
| | 4 | 1 | **4E-3897** | 2 | LOCK | |
| | 5 | 1 | **4E-4030** | 1 | NUT-ADJUSTMENT (M160X2 SPL-THD) | |
| | 6 | 1 | **6W-1638** | 1 | WASHER (5-MM THK) | |
| M | 7 | 1 | **9C-8287** | 1 | LOCKNUT-STAKE (M70X1.5-THD) | |
| | 8 | 1 | **9U-1913** | 1 | SLEEVE AS | |
| | 8A | 1 | **030-0060** | 1 | CUP-BEARING | |
| | 9 | 1 | **119-1084** | 1 | SLEEVE AS | |
| | 9A | 1 | **119-3388** | 1 | CUP-SPECIAL TAPERED | |
| | 10 | 1 | **132-6596** | 1 | CONE-BEARING | |
| | 11 | 1 | **139-4117** | 1 | SHAFT-BEVEL PINION | |
| | 11A | 1 | **139-4118** | 1 | GEAR-BEVEL | |
| | 12 | 1 | **030-0061** | 1 | CONE-BEARING | |
| | 13 | 1 | **1J-4757** | 1 | CONE-BEARING | |
| | 14 | 1 | **2D-9454** | 1 | CUP-BEARING | |
| | 15 | 1 | **2D-9455** | 1 | CONE-BEARING | |
| | 16 | 1 | **4E-4031** | 2 | PIN | |
| | 17 | 1 | **5P-8247** | 20 | WASHER-HARD (17X32X3.5-MM THK) | |
| M | 18 | 1 | **8T-0375** | 20 | BOLT (M16X2X45-MM) | |

M-METRIC PART

*139-4183* **GEAR GP-BEVEL & PINION** *(contd.)* **i02163075**

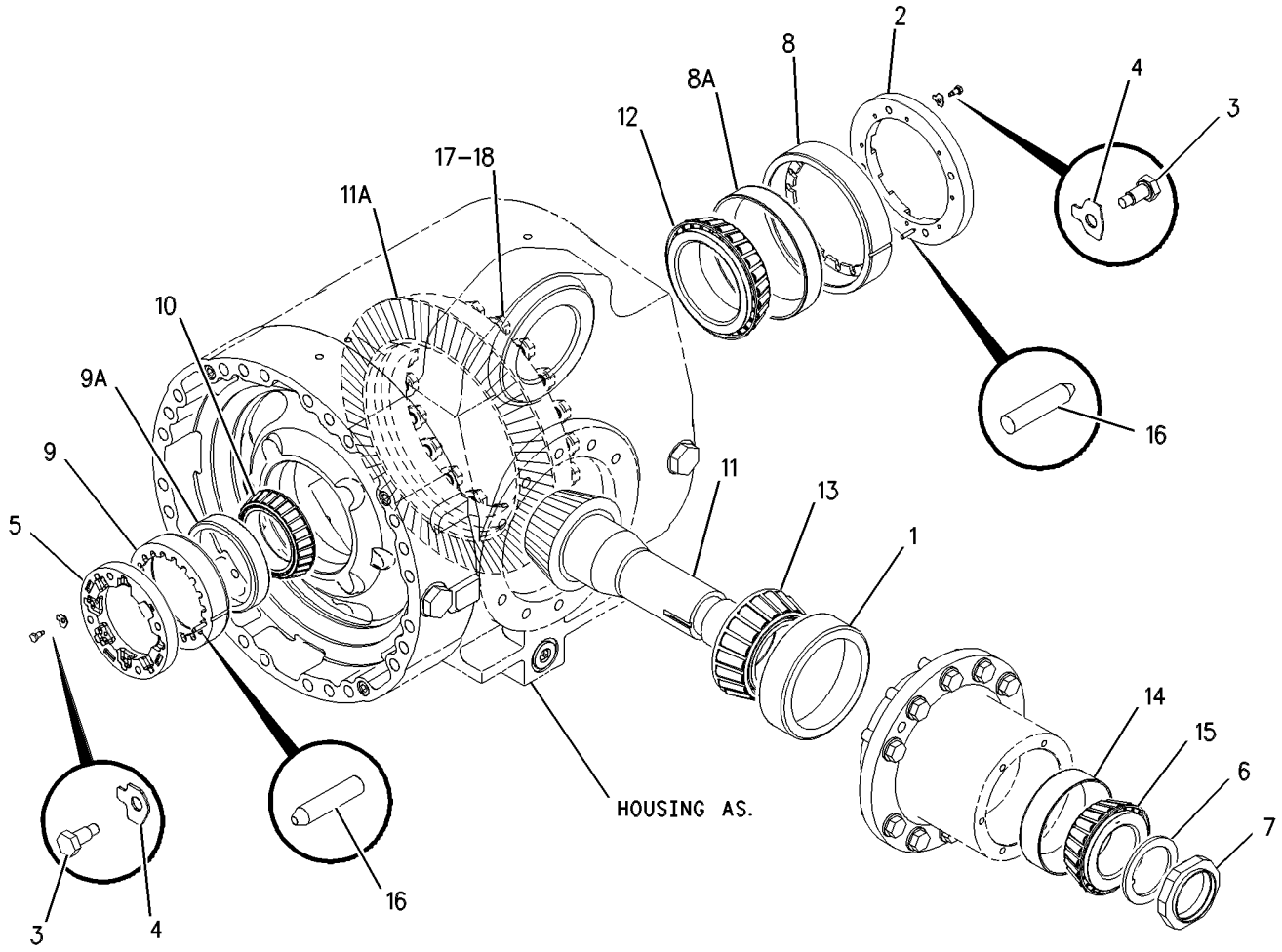


GRAPHIC #1 **<END>** g00502023

# *141-6765* GEAR GP-BEVEL & PINION

**S/N: 5451-UP**

**PART OF 273-0105 AXLE AR-FIXED**

**SMCS-3254, 3256** **i01327224**

| NOTE | REF NO | GRAPHIC REF | PART NUMBER | QTY | PART NAME 1 2 3 4 5 6 (PRODUCT LEVEL) | SEE PAGE |
|---|---|---|---|---|---|---|
| | 1 | 1 | **1J-2860** | 1 | CUP-BEARING | |
| | 2 | 1 | **1L-7518** | 1 | CONE-BEARING | |
| M | 3 | 1 | **4E-3896** | 2 | BOLT (M6X1X14-MM) | |
| | 4 | 1 | **4E-3897** | 2 | LOCK | |
| | 5 | 1 | **4E-4030** | 1 | NUT-ADJUSTMENT (M160X2 SPL-THD) | |
| | 6 | 1 | **8R-0934** | 1 | WASHER | |
| M | 7 | 1 | **8R-0935** | 1 | NUT-STAKE (M70X1.5-THD) | |
| | 8 | 1 | **9U-1913** | 1 | SLEEVE AS | |
| | 8A | 1 | **030-0060** | 1 | CUP-BEARING | |
| | 9 | 1 | **132-6598** | 1 | CUP-BEARING | |
| | 10 | 1 | **133-3605** | 1 | SLEEVE AS | |
| | 10A | 1 | **6B-4370** | 1 | CUP-BEARING | |
| | 11 | 1 | **142-9654** | 1 | SHAFT-BEVEL PINION (12-TEETH) | |
| | 11A | 1 | **142-9655** | 1 | GEAR-BEVEL (46-TEETH) | |
| | 12 | 1 | **030-0061** | 1 | CONE-BEARING | |
| | 13 | 1 | **173-7502** | 1 | NUT-ADJUSTMENT | |
| | 14 | 1 | **2K-5103** | 1 | CONE-BEARING | |
| | 15 | 1 | **4E-4031** | 2 | PIN | |
| | 16 | 1 | **5P-8247** | 24 | WASHER-HARD (17X32X3.5-MM THK) | |
| | 17 | 1 | **8F-4452** | 1 | CONE-BEARING | |
| M | 18 | 1 | **8T-0375** | 24 | BOLT (M16X2X45-MM) | |

M-METRIC PART

*141-6765* **GEAR GP-BEVEL & PINION** *(contd.)* **i01327224**

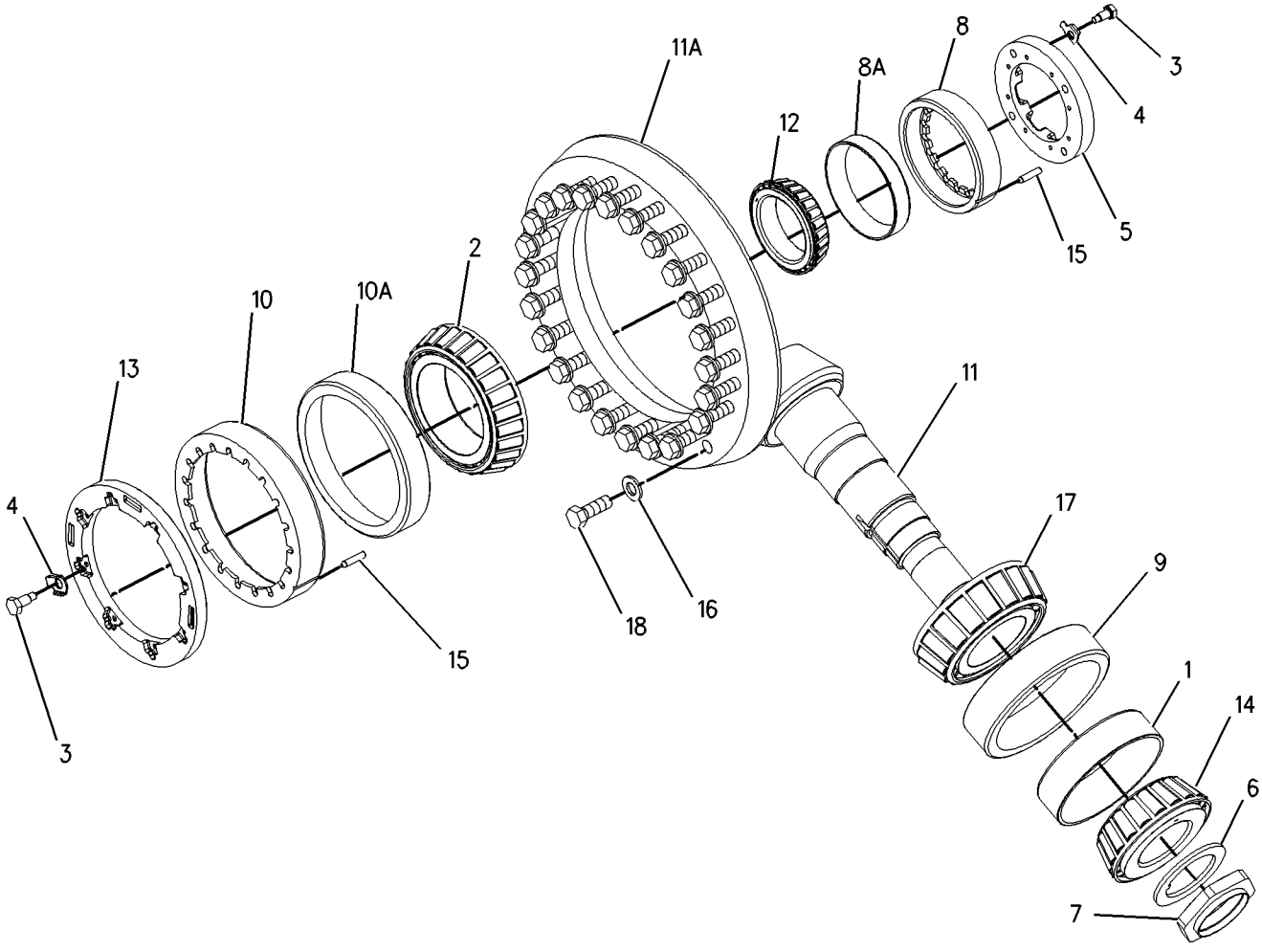


GRAPHIC #1 **<END>** g00702764

# *147-5658* GEAR GP-OUTPUT TRANSFER

**S/N: R1C1-UP**

**PART OF 282-2969 TRANSMISSION AR**

**SMCS-3075, 3159** **i01412745**

| NOTE | REF NO | GRAPHIC REF | PART NUMBER | QTY | PART NAME 1 2 3 4 5 6 (PRODUCT LEVEL) | SEE PAGE |
|---|---|---|---|---|---|---|
| | 1 | 1 | **2H-3088** | 2 | SEAL-O-RING | |
| M | 2 | 1 | **6V-5696** | 1 | BOLT (M12X1.75X80-MM) | |
| | 3 | 1 | **4S-5824** | 1 | RETAINER | |
| | 4 | 1 | **2P-8987** | 2 | CONE-BEARING | |
| | 5 | 1 | **6Y-8293** | 1 | SHAFT-OUTPUT | |
| | 6 | 1 | **6V-5839** | 1 | WASHER (11X21X2.5-MM THK) | |
| | 7 | 1 | **2P-8986** | 1 | CUP-BEARING | |
| | 8 | 1 | **6V-7991** | 1 | SEAL-O-RING | |
| | 9 | 1 | **9X-7743** | 1 | SEAL-LIP TYPE | |
| | 10 | 1 | **150-3087** | 1 | DRUM | |
| Y | 11 | 1 | **118-2291** | 1 | BRAKE GP-PARKING | 368 |
| M | 12 | 1 | **6V-8201** | 4 | BOLT-SOCKET HEAD (M16X2X45-MM) | |
| | 13 | 1 | **5P-8245** | 8 | WASHER-HARD (13.5X25.5X3-MM THK) | |
| M | 14 | 1 | **6V-3668** | 8 | BOLT (M12X1.75X30-MM) | |
| | 15 | 1 | **142-4247** | 1 | CAGE-BEARING | |
| | 16 | 1 | **8E-9550** | 1 | SPACER (61X75X9.85-MM THK) | |
| | 17 | 1 | **6Y-4873** | 1 | LEVER | |
| | 18 | 1 | **145-7229** | 1 | YOKE-BRAKE | |
| | 19 | 1 | **179-1971** | 1 | YOKE AS | |
| | | 1 | **179-1967** | 1 | GUARD | |
| M | 20 | 1 | **6V-4249** | 1 | BOLT (M10X1.5X50-MM) | |
| M | 21 | 1 | **2Y-5829** | 1 | NUT (M10X1.5-THD) | |
| M | 22 | 1 | **8T-0372** | 1 | BOLT (M12X1.75X90-MM) | |
| | 23 | 1 | **169-6538** | 1 | RETAINER | |
| | 24 | 1 | **9X-8268** | 4 | WASHER (17.5X30X3.5-MM THK) | |
| | 25 | 1 | **3T-6573** | 1 | GEAR (52-TEETH) | |

M-METRIC PART
Y-SEPARATE ILLUSTRATION

*147-5658* **GEAR GP-OUTPUT TRANSFER** *(contd.)* **i01412745**

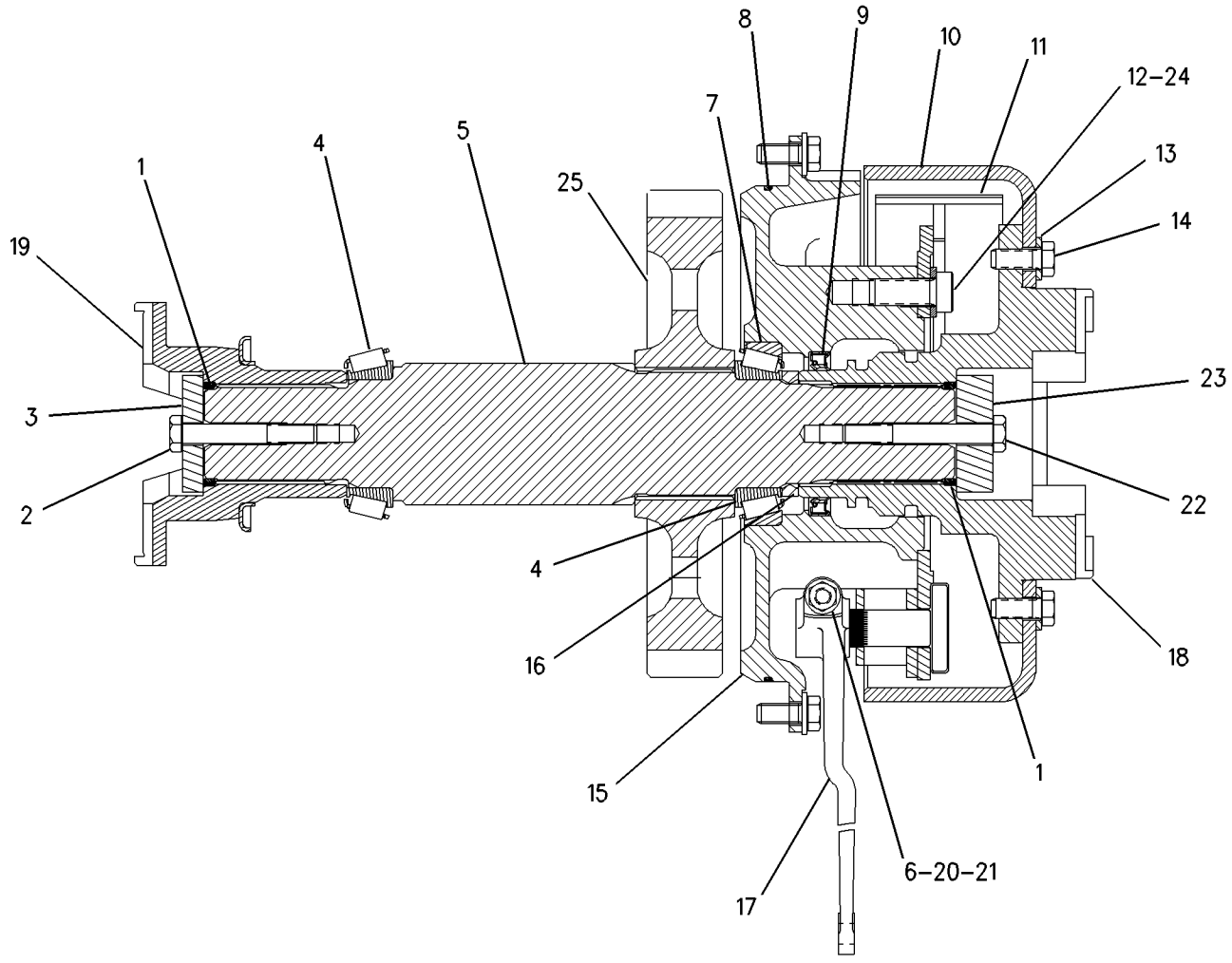


GRAPHIC #1 **<END>** g00738876

# *147-5658* GEAR GP-OUTPUT TRANSFER

**S/N: 5MY1-UP**
**PART OF 147-5653 TRANSMISSION AR**
**TYPE 1**

**SMCS-3075, 3159** **i02194978**

| NOTE | REF NO | GRAPHIC REF | PART NUMBER | QTY | PART NAME 1 2 3 4 5 6 (PRODUCT LEVEL) | SEE PAGE |
|---|---|---|---|---|---|---|
| | 1 | 1 | **2H-3088** | 2 | SEAL-O-RING | |
| M | 2 | 1 | **6V-5696** | 1 | BOLT (M12X1.75X80-MM) | |
| | 3 | 1 | **4S-5824** | 1 | RETAINER | |
| | 4 | 1 | **2P-8987** | 2 | CONE-BEARING | |
| | 5 | 1 | **6Y-8293** | 1 | SHAFT-OUTPUT | |
| | 6 | 1 | **6V-5839** | 1 | WASHER (11X21X2.5-MM THK) | |
| | 7 | 1 | **2P-8986** | 1 | CUP-BEARING | |
| | 8 | 1 | **6V-7991** | 1 | SEAL-O-RING | |
| | 9 | 1 | **193-2200** | 1 | SEAL-LIP TYPE | |
| | 10 | 1 | **150-3087** | 1 | DRUM | |
| CY | 11 | 1 | **200-1315** | 1 | BRAKE GP-PARKING | 369 |
| M | 12 | 1 | **6V-8201** | 4 | BOLT-SOCKET HEAD (M16X2X45-MM) | |
| | 13 | 1 | **5P-8245** | 8 | WASHER-HARD (13.5X25.5X3-MM THK) | |
| M | 14 | 1 | **6V-3668** | 8 | BOLT (M12X1.75X30-MM) | |
| | 15 | 1 | **142-4247** | 1 | CAGE-BEARING | |
| | 16 | 1 | **8E-9550** | 1 | SPACER (61X75X9.85-MM THK) | |
| | 17 | 1 | **6Y-4873** | 1 | LEVER | |
| | 18 | 1 | **145-7229** | 1 | YOKE-BRAKE | |
| | 19 | 1 | **179-1971** | 1 | YOKE AS | |
| | | 1 | **179-1967** | 1 | GUARD | |
| M | 20 | 1 | **6V-5843** | 1 | BOLT (M10X1.5X45-MM) | |
| M | 21 | 1 | **2Y-5829** | 1 | NUT (M10X1.5-THD) | |
| M | 22 | 1 | **8T-0372** | 1 | BOLT (M12X1.75X90-MM) | |
| | 23 | 1 | **169-6538** | 1 | RETAINER | |
| | 24 | 1 | **9X-8268** | 4 | WASHER (17.5X30X3.5-MM THK) | |
| | 25 | 1 | **3T-6573** | 1 | GEAR (52-TEETH) | |

C-CHANGE FROM PREVIOUS TYPE
M-METRIC PART
Y-SEPARATE ILLUSTRATION

*147-5658* **GEAR GP-OUTPUT TRANSFER** *(contd.)* **i02194978**

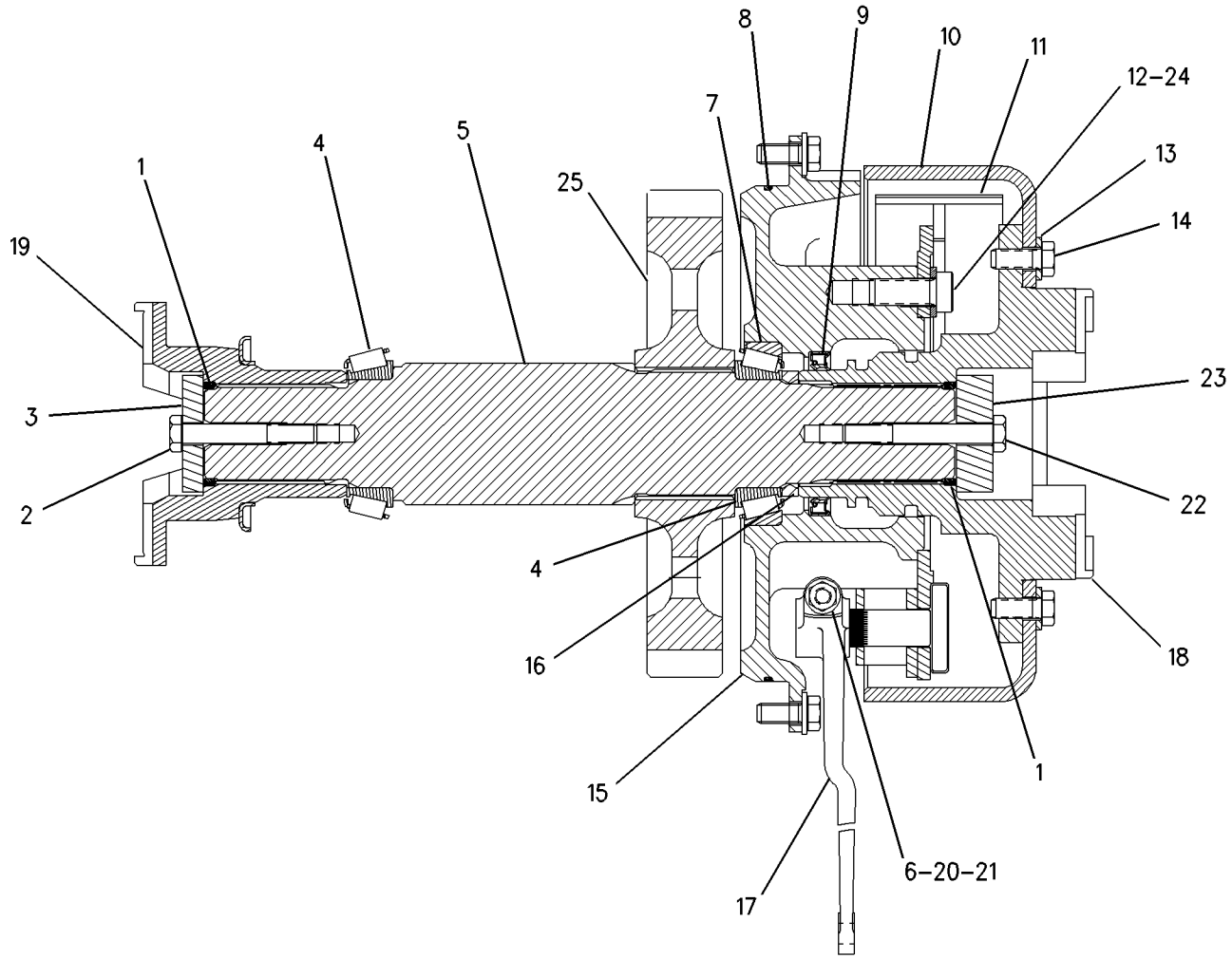


GRAPHIC #1 **<END>** g00738876

# POWER TRAIN

## *147-5658* GEAR GP-OUTPUT TRANSFER

**S/N: 5MY1-UP**

**PART OF 147-5653 TRANSMISSION AR**

**TYPE 2**

**SMCS-3075, 3159** **i02581658**

| NOTE | REF NO | GRAPHIC REF | PART NUMBER | QTY | PART NAME 1 2 3 4 5 6 (PRODUCT LEVEL) | SEE PAGE |
|---|---|---|---|---|---|---|
| | 1 | 1 | **2H-3088** | 2 | SEAL-O-RING | |
| M | 2 | 1 | **6V-5696** | 1 | BOLT (M12X1.75X80-MM) | |
| | 3 | 1 | **4S-5824** | 1 | RETAINER | |
| | 4 | 1 | **2P-8987** | 2 | CONE-BEARING | |
| | 5 | 1 | **6Y-8293** | 1 | SHAFT-OUTPUT | |
| | 6 | 1 | **6V-5839** | 1 | WASHER (11X21X2.5-MM THK) | |
| | 7 | 1 | **2P-8986** | 1 | CUP-BEARING | |
| | 8 | 1 | **6V-7991** | 1 | SEAL-O-RING | |
| | 9 | 1 | **193-2200** | 1 | SEAL-LIP TYPE | |
| | 10 | 1 | **150-3087** | 1 | DRUM | |
| CY | 11 | 1 | **283-9977** | 1 | BRAKE GP-PARKING | 370 |
| M | 12 | 1 | **6V-8201** | 4 | BOLT-SOCKET HEAD (M16X2X45-MM) | |
| | 13 | 1 | **5P-8245** | 8 | WASHER-HARD (13.5X25.5X3-MM THK) | |
| M | 14 | 1 | **6V-3668** | 8 | BOLT (M12X1.75X30-MM) | |
| | 15 | 1 | **142-4247** | 1 | CAGE-BEARING | |
| | 16 | 1 | **8E-9550** | 1 | SPACER (61X75X9.85-MM THK) | |
| | 17 | 1 | **6Y-4873** | 1 | LEVER | |
| | 18 | 1 | **145-7229** | 1 | YOKE-BRAKE | |
| | 19 | 1 | **179-1971** | 1 | YOKE AS | |
| M | 20 | 1 | **6V-5843** | 1 | BOLT (M10X1.5X45-MM) | |
| M | 21 | 1 | **2Y-5829** | 1 | NUT (M10X1.15-THD) | |
| M | 22 | 1 | **8T-0372** | 1 | BOLT (M12X1.75X90-MM) | |
| | 23 | 1 | **169-6538** | 1 | RETAINER | |
| | 24 | 1 | **9X-8268** | 4 | WASHER (17.5X30X3.5-MM THK) | |
| | 25 | 1 | **3T-6573** | 1 | GEAR (52-TEETH) | |

C-CHANGE FROM PREVIOUS TYPE
M-METRIC PART
Y-SEPARATE ILLUSTRATION

*147-5658* **GEAR GP-OUTPUT TRANSFER** *(contd.)* **i02581658**

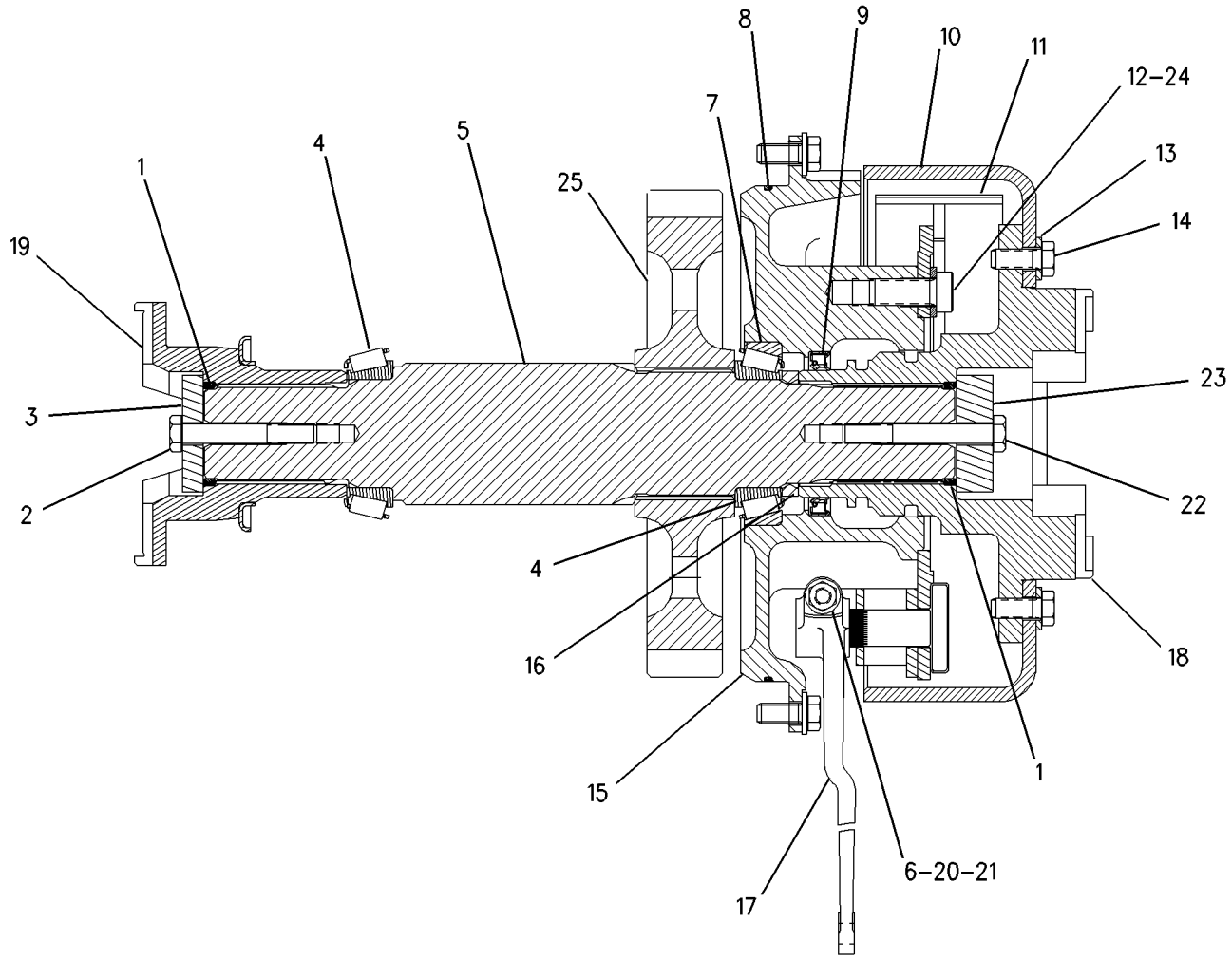


GRAPHIC #1 **<END>** g00738876

# *273-0104* HOUSING GP-FIXED AXLE

**S/N: 5451-UP**

**PART OF 273-0105 AXLE AR-FIXED**

**SMCS-3260** **i02485088**

| NOTE | REF NO | GRAPHIC REF | PART NUMBER | QTY | PART NAME 1 2 3 4 5 6 (PRODUCT LEVEL) | SEE PAGE |
|---|---|---|---|---|---|---|
| | 1 | 1 | **2H-3088** | 1 | SEAL-O-RING | |
| | 2 | 1 | **4E-2240** | 2 | NUT-BEARING | |
| | 3 | 1 | **4E-6986** | 1 | RETAINER | |
| | 4 | 1 | **4E-8535** | 1 | RETAINER-SEAL | |
| | 5 | 1 | **5H-3701** | 2 | SCREW-PURGE (7/16-20-THD) | |
| | 6 | 1 | **5H-5012** | 2 | RING-RETAINING | |
| | 7 | 1 | **6B-4370** | 2 | CUP-BEARING | |
| | 8 | 1 | **6T-2815** | 2 | SEAL GP-DUO-CONE | |
| | | | | | (EACH INCLUDES) | |
| | | 1 | **5P-1606** | 2 | RING-TORIC | |
| | 9 | 1 | **8R-0931** | 1 | HOUSING-PINION | |
| | 10 | 1 | **8R-0932** | 1 | SHIM PACK (INCLUDES 15-SHIMS) | |
| | 11 | 1 | **8T-0336** | 1 | FITTING-PRESSURE RELIEF | |
| | 12 | 1 | **123-4003** | 1 | SEAL-LIP TYPE | |
| M | 13 | 1 | **126-1499** | 24 | BOLT (M16X2X250-MM) | |
| | 14 | 1 | **141-6763** | 2 | HOUSING-AXLE SHAFT | |
| | 15 | 1 | **234-4380** | 2 | SHAFT-AXLE | |
| | 16 | 1 | **248-0833** | 1 | DRAIN GP-ECOLOGY | |
| | | 1 | **3S-9233** | 1 | SEAL-O-RING | |
| | | 1 | **5L-4759** | 1 | SEAL-O-RING | |
| | | 1 | **259-7138** | 1 | PLUG | |
| | 17 | 1 | **260-3964** | 1 | YOKE AS | |
| | | 1 | **4E-9413** | 1 | GUARD | |
| | | 1 | **260-3965** | 1 | YOKE AS | |
| | 18 | 1 | **276-0738** | 1 | HOUSING AS-AXLE | |
| | | 1 | **7J-0204** | 1 | SEAL-O-RING | |
| | | 1 | **9S-8007** | 1 | PLUG | |
| M | | 1 | **095-9804** | 4 | BOLT-SOCKET HEAD (M12X1.75X110-MM) | |
| | 19 | 1 | **2D-9453** | 2 | CONE-BEARING | |
| | 20 | 1 | **3B-0551** | 1 | PLUG-PIPE | |
| | 21 | 1 | **4K-6804** | 1 | SEAL-O-RING | |
| | 22 | 1 | **5P-8247** | 60 | WASHER-HARD (17X32X3.5-MM THK) | |
| M | 23 | 1 | **6V-5686** | 12 | BOLT (M16X2X50-MM) | |
| M | 24 | 1 | **6V-7732** | 6 | BOLT (M10X1.5X25-MM) | |
| M | 25 | 1 | **6V-8154** | 24 | BOLT (M16X2X150-MM) | |
| | 26 | 1 | **6Y-2546** | 2 | CONE-BEARING | |
| | 27 | 1 | **6Y-2547** | 2 | CUP-BEARING | |
| | 28 | 1 | **7M-8485** | 3 | SEAL-O-RING | |
| M | 29 | 1 | **8T-0372** | 1 | BOLT (M12X1.75X90-MM) | |
| | 30 | 1 | **9C-6041** | 3 | DOWEL | |
| | 31 | 1 | **9C-6327** | 1 | GAUGE AS-OIL LEVEL (DIPSTICK) | |
| | 32 | 1 | **9S-4181** | 2 | PLUG-O RING | |
| | 33 | 1 | **9X-2027** | 6 | WASHER (11X18X2-MM THK) | |
| | 34 | 1 | **1U-8846** | 1 | SEALANT-GASKET | |

M-METRIC PART

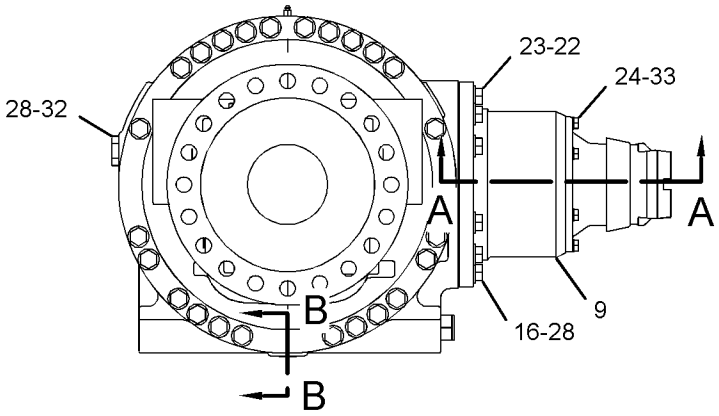


LEFT SIDE VIEW

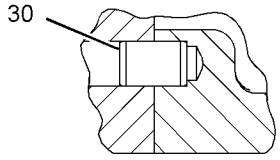


SECTION B-B

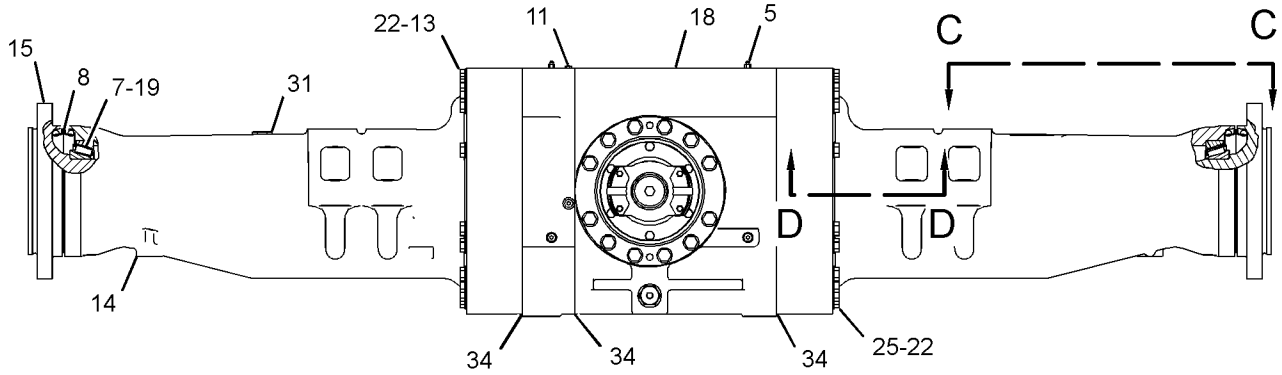


REAR VIEW

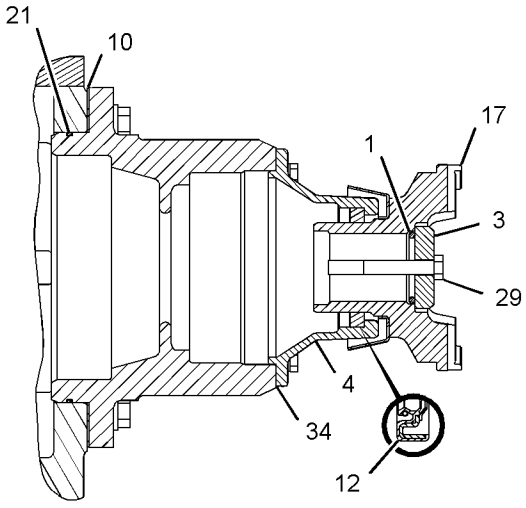


SECTION A-A

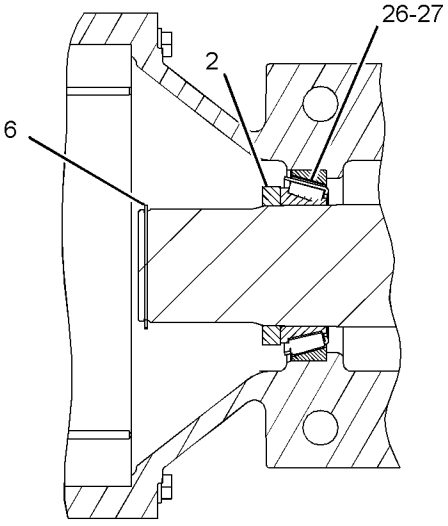


SECTION D-D

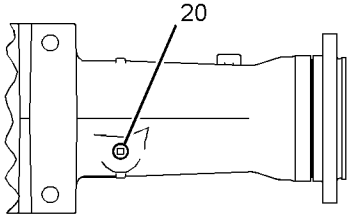


VIEW C-C

GRAPHIC #1 **<END>** g01236885

# *273-0125* HOUSING GP-OSCILLATING AXLE

**S/N: 5451-UP**

**PART OF 273-0128 AXLE AR-OSCILLATING**

**SMCS-3260** **i02485091**

| NOTE | REF NO | GRAPHIC REF | PART NUMBER | QTY | PART NAME 1 2 3 4 5 6 (PRODUCT LEVEL) | SEE PAGE |
|---|---|---|---|---|---|---|
| | 1 | 1 | **4E-6986** | 1 | RETAINER | |
| | 2 | 1 | **5H-3701** | 2 | SCREW-PURGE (7/16-20-THD) | |
| | 3 | 1 | **8T-0336** | 1 | FITTING-PRESSURE RELIEF | |
| | 4 | 1 | **226-2684** | 1 | SHIM PACK (INCLUDES 11-SHIMS) | |
| | 5 | 1 | **123-4003** | 1 | SEAL-LIP TYPE | |
| | 6 | 1 | **144-0329** | 1 | RETAINER-SEAL | |
| | 7 | 1 | **168-4527** | 2 | HOUSING AS-AXLE SHAFT | |
| | | | | | (EACH INCLUDES) | |
| | | 1 | **2B-0858** | 6 | PLUG-PIPE | |
| | 8 | 1 | **248-0833** | 1 | DRAIN GP-ECOLOGY | |
| | | 1 | **3S-9233** | 1 | SEAL-O-RING | |
| | | 1 | **5L-4759** | 1 | SEAL-O-RING | |
| | | 1 | **259-7138** | 1 | PLUG | |
| | 9 | 1 | **250-1799** | 2 | SHAFT-AXLE | |
| | 10 | 1 | **260-3963** | 1 | YOKE AS | |
| | | 1 | **4E-9413** | 1 | GUARD | |
| | 11 | 1 | **276-0739** | 1 | HOUSING AS | |
| | | 1 | **7J-0204** | 1 | SEAL-O-RING | |
| | | 1 | **9S-8007** | 1 | PLUG | |
| M | | 1 | **095-9804** | 4 | BOLT-SOCKET HEAD (M12X1.75X110-MM) | |
| | 12 | 1 | **2H-3088** | 1 | SEAL-O-RING | |
| | 13 | 1 | **2P-1373** | 2 | CUP-BEARING | |
| | 14 | 1 | **3B-0551** | 3 | PLUG-PIPE | |
| | 15 | 1 | **3T-6541** | 2 | SEAL GP-DUO-CONE | |
| | 16 | 1 | **4H-6520** | 1 | SEAL-O-RING | |
| | 17 | 1 | **5P-3119** | 2 | RING-RETAINING | |
| | 18 | 1 | **5P-8247** | 58 | WASHER-HARD (17X32X3.5-MM THK) | |
| M | 19 | 1 | **6V-5686** | 10 | BOLT (M16X2X50-MM) | |
| M | 20 | 1 | **6V-7732** | 6 | BOLT (M10X1.5X25-MM) | |
| | 21 | 1 | **6Y-2538** | 2 | CONE-BEARING | |
| | 22 | 1 | **7M-8485** | 3 | SEAL-O-RING | |
| | 23 | 1 | **8B-6342** | 2 | CONE-BEARING | |
| | 24 | 1 | **8B-6343** | 2 | CUP-BEARING | |
| M | 25 | 1 | **8T-0282** | 24 | BOLT (M16X2X120-MM) | |
| M | 26 | 1 | **8T-0372** | 1 | BOLT (M12X1.75X90-MM) | |
| M | 27 | 1 | **8T-7013** | 24 | BOLT (M16X2X220-MM) | |
| | 28 | 1 | **9C-6041** | 4 | DOWEL | |
| | 29 | 1 | **9C-6327** | 1 | GAUGE AS-OIL LEVEL (DIPSTICK) | |
| | 30 | 1 | **9C-8419** | 2 | NUT-BEARING | |
| | 31 | 1 | **9C-9194** | 1 | HOUSING-PINION | |
| | 32 | 1 | **9S-4181** | 2 | PLUG-O RING | |
| | 33 | 1 | **9X-2027** | 6 | WASHER (11X18X2-MM THK) | |
| | 34 | 1 | **1U-8846** | 1 | SEALANT-GASKET | |

M-METRIC PART

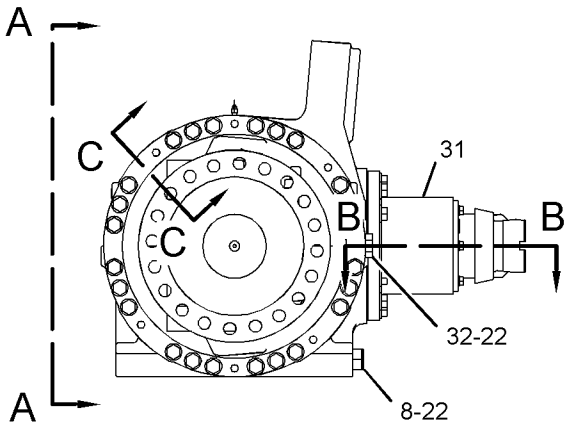


RIGHT SIDE VIEW

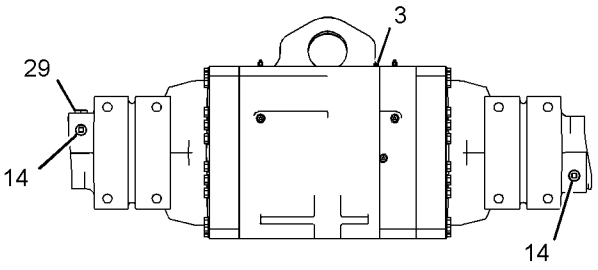


VIEW A-A

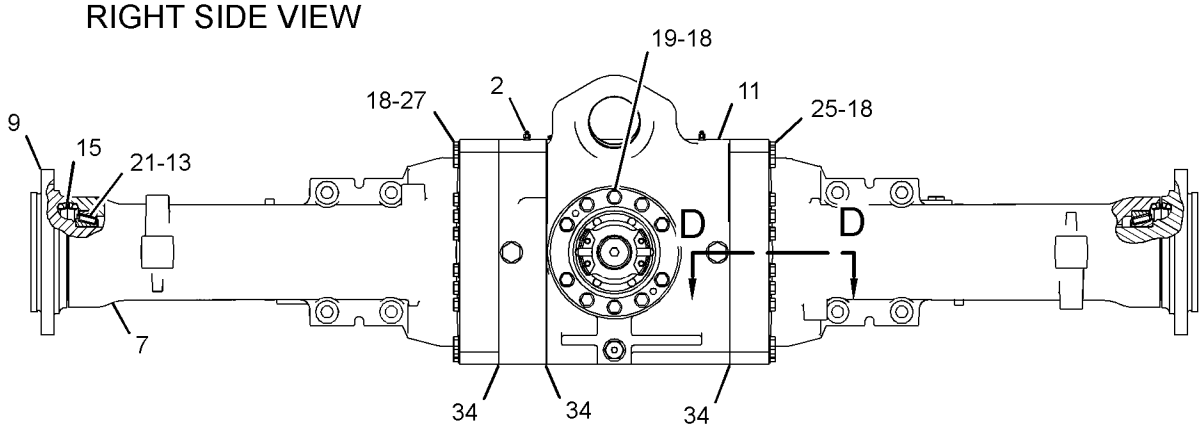


FRONT VIEW

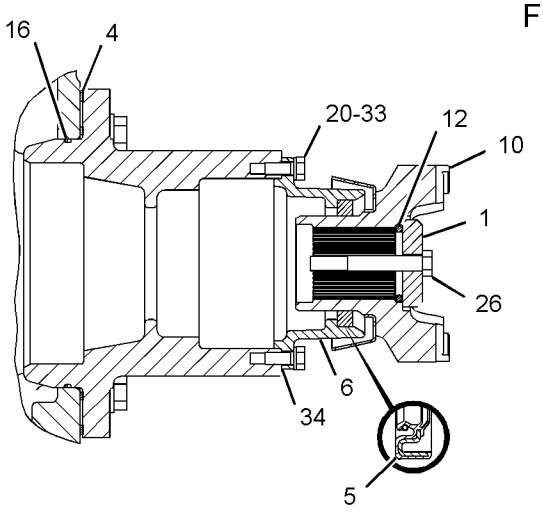


SECTION B-B

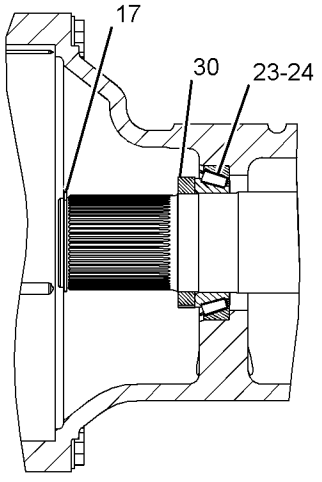


SECTION D-D

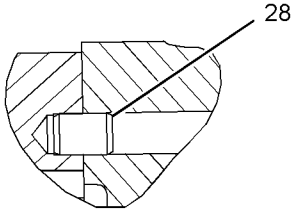


SECTION C-C

GRAPHIC #1

**<END>**

g01236457

# *147-5654* INPUT GP-TRANSMISSION

**S/N: R1C1-UP; 5MY1-UP**

**PART OF 147-5653, 282-2969 TRANSMISSION AR**

**SMCS-3063, 3159** **i00916959**

| NOTE | REF NO | GRAPHIC REF | PART NUMBER | QTY | PART NAME 1 2 3 4 5 6 (PRODUCT LEVEL) | SEE PAGE |
|---|---|---|---|---|---|---|
| | 1 | 1 | **147-1690** | 1 | SHAFT | |
| | 2 | 1 | **147-1689** | 1 | CARRIER-SEAL | |
| | 3 | 1 | **9M-2008** | 2 | RING-METAL SEAL | |
| | 4 | 1 | **145-8396** | 1 | GEAR (41 TEETH) | |
| | 5 | 1 | **7T-8836** | 1 | GEAR (49 TEETH) | |
| | 6 | 1 | **7J-8210** | 2 | CONE-ROLLER BEARING | |
| | 7 | 1 | **1P-9252** | 1 | RING-SEAL | |

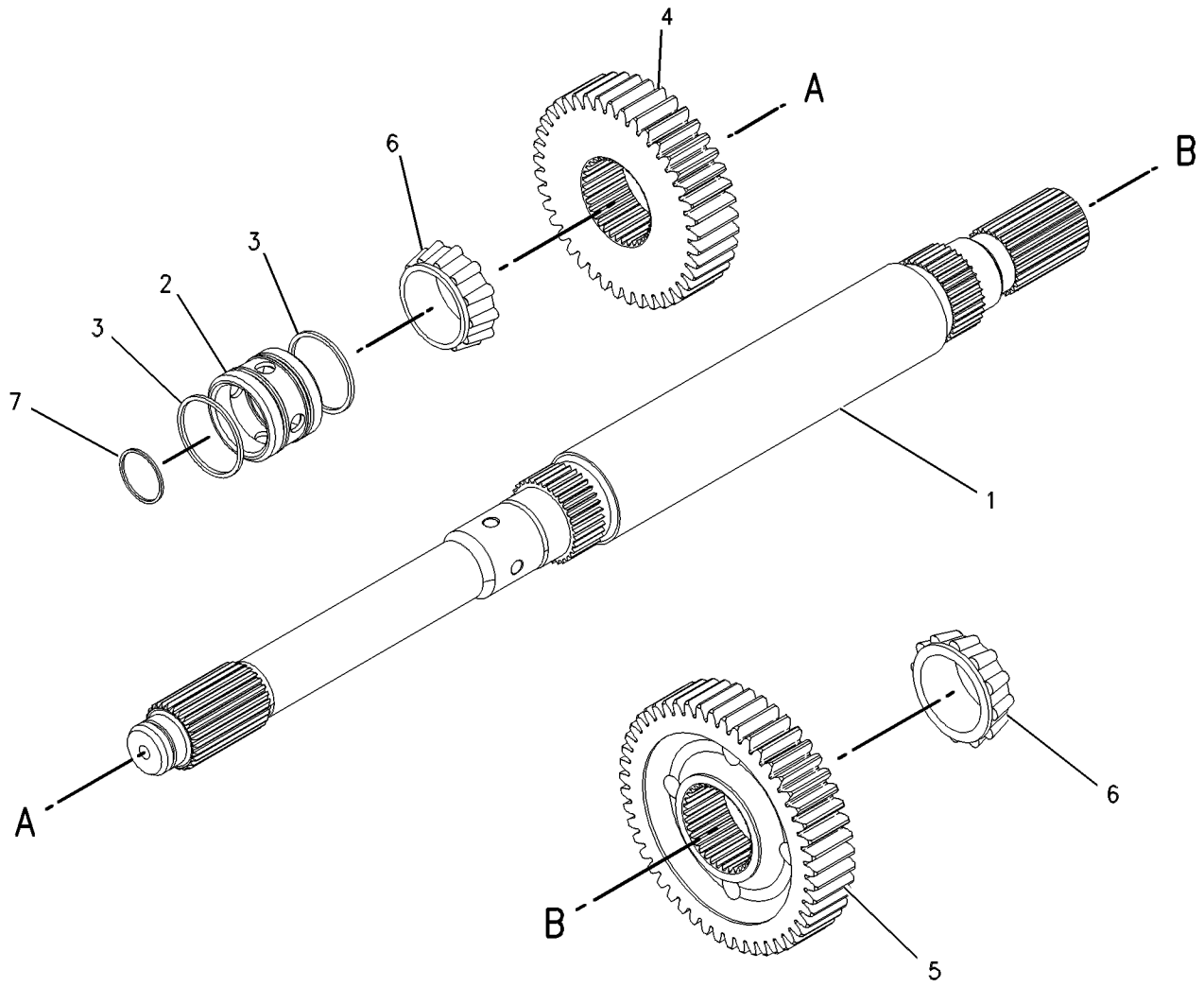


GRAPHIC #1 **<END>** g00504966

## *252-6545* LINES GP-DIFFERENTIAL LOCK

**S/N: 5451-UP**

**PART OF 245-9463, 284-7040 POWER TRAIN AR**

**SMCS-3016, 3264** **i02607491**

| NOTE | REF NO | GRAPHIC REF | PART NUMBER | QTY | PART NAME 1 2 3 4 5 6 (PRODUCT LEVEL) | SEE PAGE |
|---|---|---|---|---|---|---|
| | 1 | 1 | **6V-0852** | 1 | CAP-DUST | |
| | 2 | 1 | *148-8424* | 1 | TEE AS | |
| | | 1 | **6V-8397** | 1 | SEAL-O-RING | |
| | | 1 | **8T-8902** | 1 | TEE | |
| I | 3 | 1 | **164-5753** | 1 | HOSE AS | |
| | 4 | 1 | *164-5567* | 1 | FITTING AS (QUICK DISCONNECT, MALE) | |
| | | 1 | **6V-3965** | 1 | FITTING-COUPLER | |
| | | 1 | **3J-1907** | 1 | SEAL-O-RING | |
| | 5 | 1 | **275-3591** | 1 | HOSE AS | |
| I | 6 | 1 | **178-9029** | 1 | HOSE AS | |
| | 7 | 1 | **252-6574** | 1 | TUBE AS | |
| | 8 | 1 | *148-8336* | 3 | CONNECTOR AS | |
| | | | | | (EACH INCLUDES) | |
| | | 1 | **3J-1907** | 1 | SEAL-O-RING | |
| | | 1 | **6V-8397** | 1 | SEAL-O-RING | |
| | | 1 | **6V-8636** | 1 | CONNECTOR | |
| | 9 | 1 | *148-8363* | 1 | ELBOW AS | |
| | | 1 | **3K-0360** | 1 | SEAL-O-RING | |
| | | 1 | **6V-8397** | 1 | SEAL-O-RING | |
| | | 1 | **6V-9876** | 1 | ELBOW | |
| | 10 | 1 | **148-8367** | 1 | ELBOW AS | |
| | | 1 | **6V-8397** | 1 | SEAL-O-RING | |
| | | 1 | **6V-9850** | 1 | ELBOW | |
| | 11 | 1 | *148-8378* | 1 | ELBOW AS | |
| | | 1 | **3J-1907** | 1 | SEAL-O-RING | |
| | | 1 | **6V-8397** | 1 | SEAL-O-RING | |
| | | 1 | **6V-8724** | 1 | ELBOW | |
| | 12 | 1 | *148-8434* | 1 | TEE AS | |
| | | 1 | **6V-8397** | 2 | SEAL-O-RING | |
| | | 1 | **6V-9843** | 1 | TEE-SWIVEL | |
| | 13 | 1 | *153-6246* | 1 | TEE AS | |
| | | 1 | **6V-8397** | 3 | SEAL-O-RING | |
| | | 1 | **7X-0820** | 1 | TEE-UNION | |
| M | 14 | 1 | **8T-4137** | 1 | BOLT (M10X1.5X20-MM) | |
| | 15 | 1 | **6V-9168** | 1 | NUT (11/16-16-THD) | |
| | 16 | 1 | **8M-2773** | 2 | CLIP | |
| | 17 | 1 | **8T-4121** | 1 | WASHER-HARD (11X21X2.5-MM THK) | |

I-REFER TO HYDRAULIC INFORMATION SYSTEM
M-METRIC PART

## *252-6545* **LINES GP-DIFFERENTIAL LOCK** *(contd. )* **i02607491**

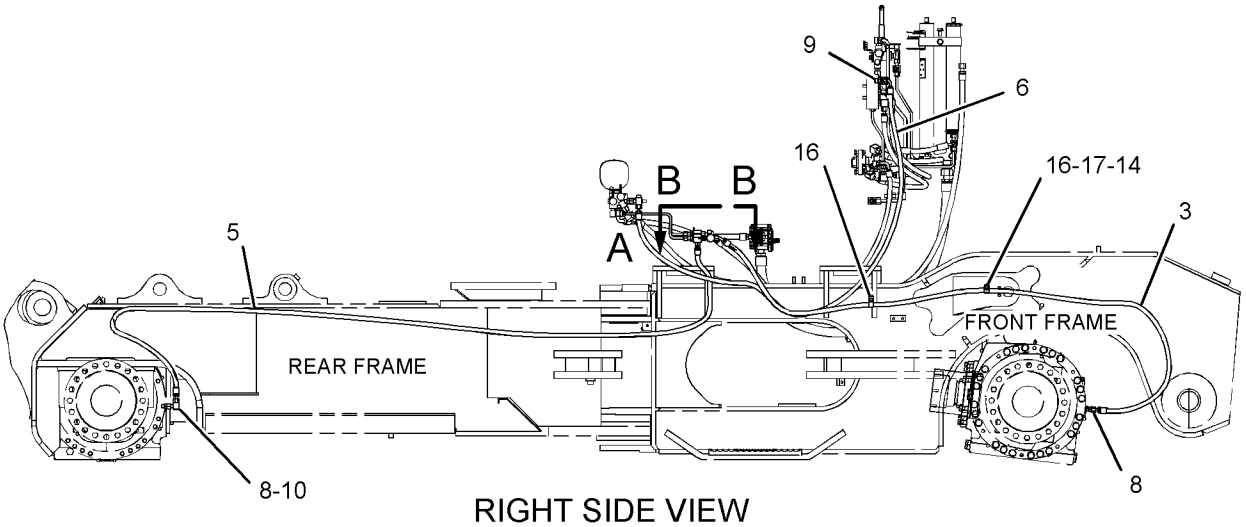


RIGHT SIDE VIEW

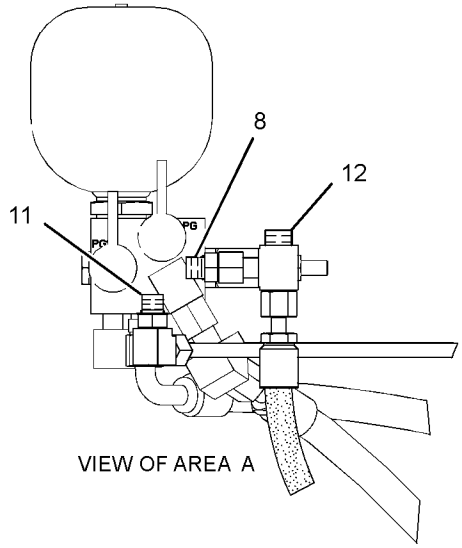


VIEW OF AREA A

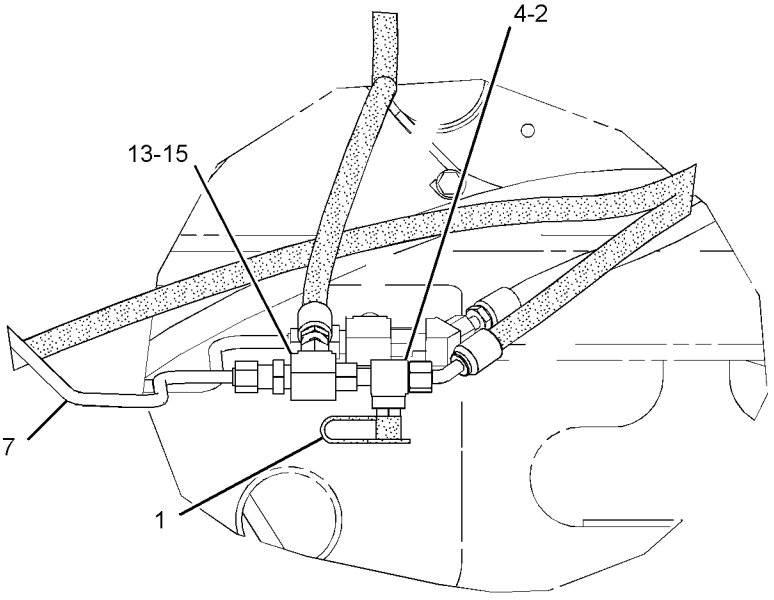


VIEW B-B

GRAPHIC #1 **<END>** g01236657

# *252-6540* LINES GP-TORQUE CONV COOLER

**S/N: 5451-UP**

**PART OF 245-9463 POWER TRAIN AR**

**TYPE 1**

**SMCS-1375, 1376, 3103** **i02485165**

| NOTE | REF NO | GRAPHIC REF | PART NUMBER | QTY | PART NAME 1 2 3 4 5 6 (PRODUCT LEVEL) | SEE PAGE |
|---|---|---|---|---|---|---|
| | 1 | 1 | **6V-0852** | 1 | CAP-DUST | |
| | 2 | 1 | **7Y-3731** | 1 | FLANGE | |
| I | 3 | 1 | **141-1289** | 1 | HOSE AS | |
| | 4 | 1 | **164-3651** | 1 | ADAPTER | |
| | 5 | 1 | *164-5567* | 1 | FITTING AS (QUICK DISCONNECT, MALE) | |
| | | 1 | **3J-1907** | 1 | SEAL-O-RING | |
| | | 1 | **6V-3965** | 1 | FITTING-COUPLER | |
| | 6 | 1 | **263-2543** | 2 | ELBOW | |
| I | 7 | 1 | **263-2545** | 1 | HOSE AS | |
| | 8 | 1 | *148-8335* | 1 | CONNECTOR AS | |
| | | 1 | **5K-9090** | 1 | SEAL-O-RING | |
| | | 1 | **6V-8635** | 1 | CONNECTOR | |
| | | 1 | **7M-8485** | 1 | SEAL-O-RING | |
| | 9 | 1 | *155-7328* | 1 | ELBOW AS | |
| | | 1 | **5P-7701** | 1 | SEAL-O-RING | |
| | | 1 | **6V-9008** | 1 | ELBOW | |
| | | 1 | **8C-3093** | 1 | SEAL-O-RING | |
| | 10 | 1 | **183-3406** | 2 | PLUG AS | |
| | | | | | (EACH INCLUDES) | |
| | | 1 | **6V-5049** | 1 | SEAL-O-RING | |
| | | 1 | **9S-4191** | 1 | PLUG-O-RING | |
| | 11 | 1 | **1P-3703** | 1 | SEAL-RECTANGULAR | |
| | 12 | 1 | **1P-4577** | 2 | FLANGE-HALF | |
| | 13 | 1 | **3J-1907** | 1 | SEAL-O-RING | |
| | 14 | 1 | **4D-7388** | 3 | CLIP | |
| | 15 | 1 | **4J-0520** | 1 | SEAL-O-RING | |
| | 16 | 1 | **5K-9090** | 3 | SEAL-O-RING | |
| | 17 | 1 | **5P-7468** | 1 | CLIP (SLOT) | |
| | 18 | 1 | **5P-7469** | 1 | CLIP (TAB) | |
| | 19 | 1 | **7G-5984** | 1 | CLIP (TAB) | |
| | 20 | 1 | **7G-5985** | 1 | CLIP (SLOT) | |
| | 21 | 1 | **8T-4121** | 9 | WASHER-HARD (11X21X2.5-MM THK) | |
| M | 22 | 1 | **8T-4139** | 3 | BOLT (M12X1.75X30-MM) | |
| M | 23 | 1 | **8T-4186** | 4 | BOLT (M10X1.5X40-MM) | |
| M | 24 | 1 | **8T-4195** | 5 | BOLT (M10X1.5X30-MM) | |
| | 25 | 1 | **8T-4223** | 3 | WASHER-HARD (13.5X25.5X3-MM THK) | |
| | 26 | 1 | **8T-7087** | 1 | GROMMET | |
| | 27 | 1 | **8T-7088** | 1 | GROMMET | |

I-REFER TO HYDRAULIC INFORMATION SYSTEM
M-METRIC PART

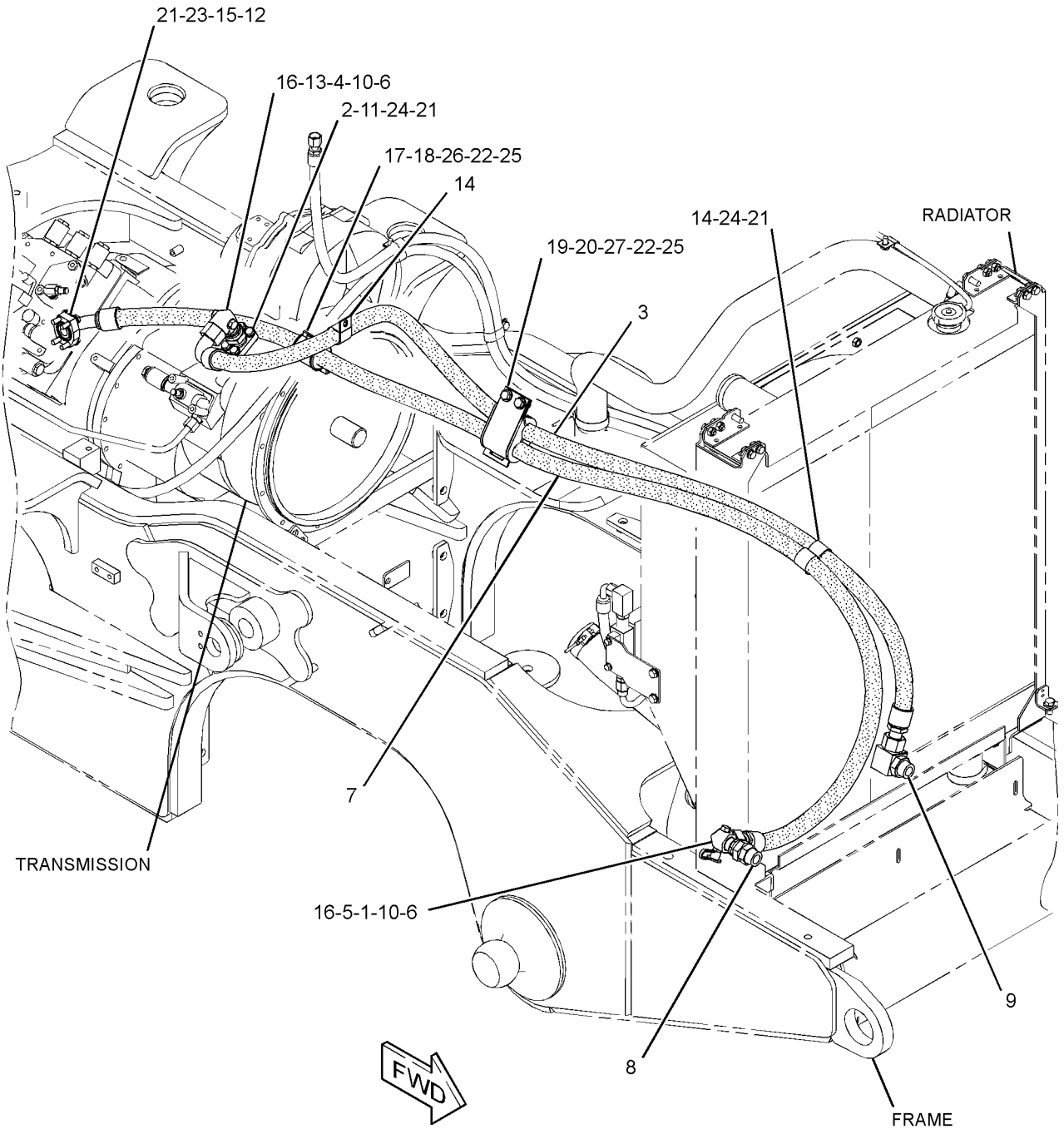


GRAPHIC #1 **<END>** g01236527

# *252-6540* LINES GP-TORQUE CONV COOLER

**S/N: 5451-UP**

**PART OF 245-9463, 284-7040 POWER TRAIN AR**

**TYPE 2**

**SMCS-1375, 1376, 3103** **i02568756**

| NOTE | REF NO | GRAPHIC REF | PART NUMBER | QTY | PART NAME 1 2 3 4 5 6 (PRODUCT LEVEL) | SEE PAGE |
|---|---|---|---|---|---|---|
| | 1 | 1 | **6V-0852** | 1 | CAP-DUST | |
| | 2 | 1 | **7Y-3731** | 1 | FLANGE | |
| I | 3 | 1 | **141-1289** | 1 | HOSE AS | |
| | 4 | 1 | **164-3651** | 1 | ADAPTER | |
| | 5 | 1 | *164-5567* | 1 | FITTING AS (QUICK DISCONNECT, MALE) | |
| | | 1 | **3J-1907** | 1 | SEAL-O-RING | |
| | | 1 | **6V-3965** | 1 | FITTING-COUPLER | |
| | 6 | 1 | **263-2543** | 2 | ELBOW | |
| I | 7 | 1 | **263-2545** | 1 | HOSE AS | |
| | 8 | 1 | *148-8335* | 1 | CONNECTOR AS | |
| | | 1 | **5K-9090** | 1 | SEAL-O-RING | |
| | | 1 | **6V-8635** | 1 | CONNECTOR | |
| | | 1 | **7M-8485** | 1 | SEAL-O-RING | |
| | 9 | 1 | *155-7328* | 1 | ELBOW AS | |
| | | 1 | **5P-7701** | 1 | SEAL-O-RING | |
| | | 1 | **6V-9008** | 1 | ELBOW | |
| | | 1 | **8C-3093** | 1 | SEAL-O-RING | |
| | 10 | 1 | **183-3406** | 2 | PLUG AS | |
| | | | | | (EACH INCLUDES) | |
| | | 1 | **6V-5049** | 1 | SEAL-O-RING | |
| | | 1 | **9S-4191** | 1 | PLUG-O-RING | |
| | 11 | 1 | **1P-3703** | 1 | SEAL-RECTANGULAR | |
| | 12 | 1 | **1P-4577** | 2 | FLANGE-HALF | |
| | 13 | 1 | **3J-1907** | 1 | SEAL-O-RING | |
| | 14 | 1 | **4D-7388** | 3 | CLIP | |
| | 15 | 1 | **4J-0520** | 1 | SEAL-O-RING | |
| | 16 | 1 | **5K-9090** | 3 | SEAL-O-RING | |
| | 17 | 1 | **5P-7468** | 1 | CLIP (SLOT) | |
| | 18 | 1 | **5P-7469** | 1 | CLIP (TAB) | |
| | 19 | 1 | **7G-5984** | 1 | CLIP (TAB) | |
| | 20 | 1 | **7G-5985** | 1 | CLIP (SLOT) | |
| C | 21 | 1 | **8T-4121** | 11 | WASHER-HARD (11X21X2.5-MM THK) | |
| M | 22 | 1 | **8T-4139** | 3 | BOLT (M12X1.75X30-MM) | |
| M | 23 | 1 | **8T-4186** | 4 | BOLT (M10X1.5X40-MM) | |
| CM | 24 | 1 | **8T-4195** | 4 | BOLT (M10X1.5X30-MM) | |
| | 25 | 1 | **8T-4223** | 3 | WASHER-HARD (13.5X25.5X3-MM THK) | |
| C | 26 | 1 | **5P-8444** | 1 | GROMMET | |
| | 27 | 1 | **8T-7088** | 1 | GROMMET | |
| CM | 28 | 1 | **8T-4137** | 3 | BOLT (M10X1.5X20-MM) | |

C-CHANGE FROM PREVIOUS TYPE
I-REFER TO HYDRAULIC INFORMATION SYSTEM
M-METRIC PART

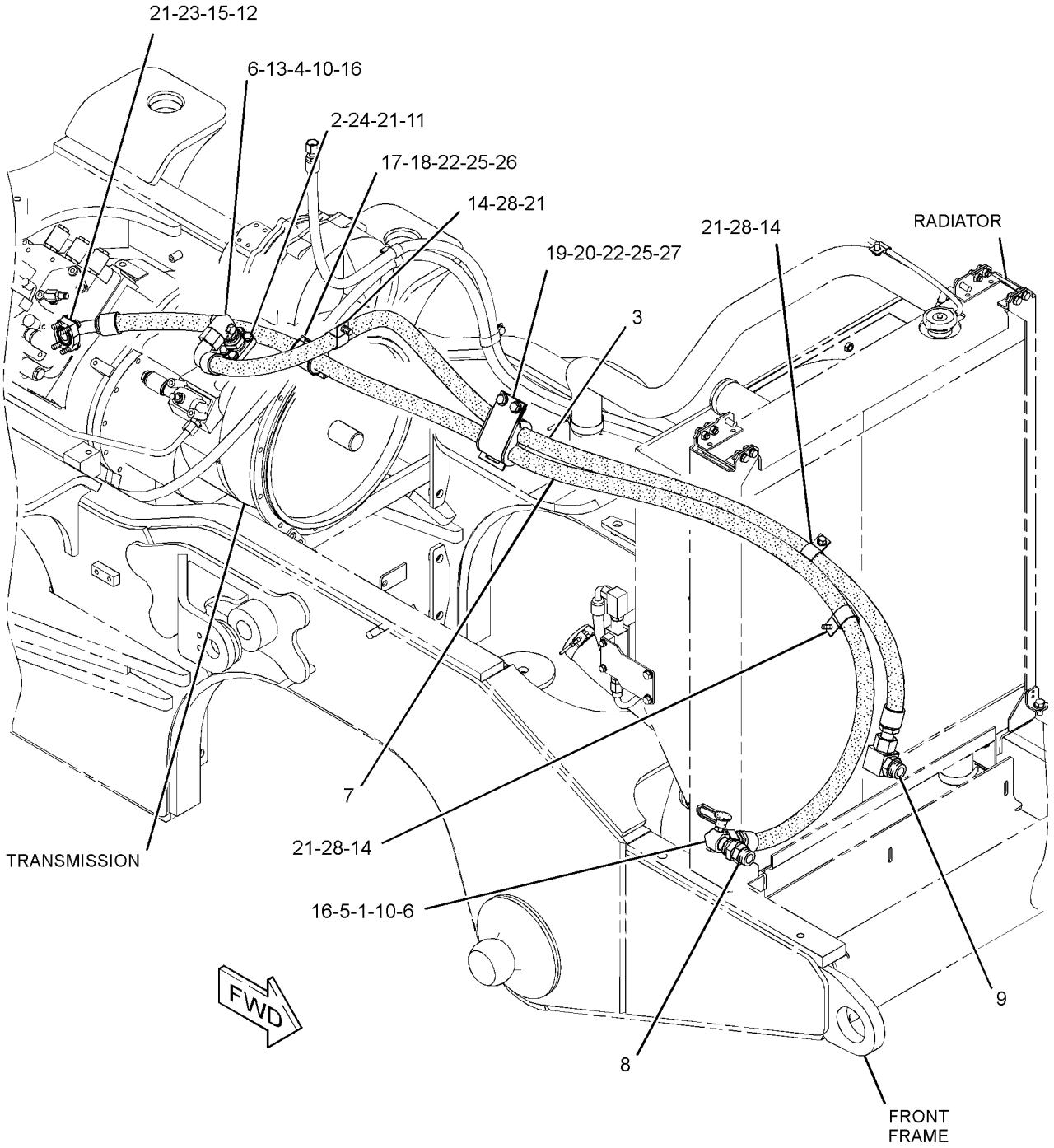


GRAPHIC #1 **<END>** g01299098

# *213-6311* MOUNTING GP-RIM

**S/N: 5451-UP**

**PART OF 245-9463, 284-7040 POWER TRAIN AR**

**SMCS-4202, 4208, 4209** **i01941807**

| NOTE | REF NO | GRAPHIC REF | PART NUMBER | QTY | PART NAME 1 2 3 4 5 6 (PRODUCT LEVEL) | SEE PAGE |
|---|---|---|---|---|---|---|
| | 1 | 1 | **145-9269** | 80 | STUD | |
| | 2 | 1 | **5P-8249** | 80 | WASHER-HARD (24X41.5X4MM THK) | |
| | 3 | 1 | **2J-3505** | 80 | NUT-FULL (7/8-9 THD) | |

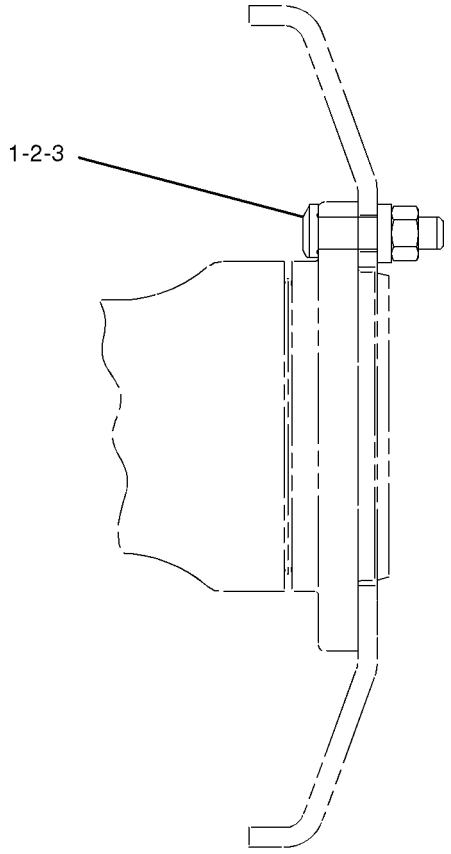


GRAPHIC #1 **<END>** g01010508

# POWER TRAIN

## *245-9463* POWER TRAIN AR

**S/N: 5451-377**

**PART OF 245-9457 COMMON AR**

**SMCS-3000, 4000** **i02463413**

| NOTE | PART NUMBER | QTY | PART NAME 1 2 3 4 5 6 (PRODUCT LEVEL) | SEE PAGE |
|---|---|---|---|---|
| Y | **147-5653** | 1 | TRANSMISSION AR | 305 |
| Y | **273-0105** | 1 | AXLE AR-FIXED (REAR) | 232 |
| Y | *273-0128* | 1 | AXLE AR-OSCILLATING (FRONT) | 232 |
| | | | | |
| Y | *143-1413* | 1 | ACTUATOR GP-PARKING BRAKE | 367 |
| Y | *252-6556* | 1 | FILLER GP-POWER TRAIN OIL | 263 |
| Y | *252-6543* | 1 | FILTER & LINES GP-POWER TRAIN | 265 |
| Y | *252-6545* | 1 | LINES GP-DIFFERENTIAL LOCK | 285 |
| Y | *252-6548* | 1 | LINES GP-SERVICE BRAKE | 379 |
| Y | *252-6540* | 1 | LINES GP-TORQUE CONV COOLER | 287 |
| Y | *213-6311* | 1 | MOUNTING GP-RIM | 291 |
| Y | *253-5269* | 1 | SHAFT GP-DRIVE | 294 |

Y-SEPARATE ILLUSTRATION

**<END>**

## *284-7040* POWER TRAIN AR

**S/N: 545378-UP**

**PART OF 245-9457 COMMON AR**

**SMCS-3000, 4000** **i02582229**

| NOTE | PART NUMBER | QTY | PART NAME 1 2 3 4 5 6 (PRODUCT LEVEL) | SEE PAGE |
|---|---|---|---|---|
| Y | *143-1413* | 1 | ACTUATOR GP-PARKING BRAKE | 367 |
| Y | *273-0105* | 1 | AXLE AR-FIXED (REAR) | 232 |
| Y | *273-0128* | 1 | AXLE AR-OSCILLATING (FRONT) | 232 |
| Y | *252-6556* | 1 | FILLER GP-POWER TRAIN OIL | 263 |
| Y | *252-6543* | 1 | FILTER & LINES GP-POWER TRAIN | 265 |
| Y | *252-6545* | 1 | LINES GP-DIFFERENTIAL LOCK | 285 |
| Y | *252-6548* | 1 | LINES GP-SERVICE BRAKE | 379 |
| Y | *252-6540* | 1 | LINES GP-TORQUE CONV COOLER | 287 |
| Y | *213-6311* | 1 | MOUNTING GP-RIM | 291 |
| Y | *253-5269* | 1 | SHAFT GP-DRIVE | 294 |
| Y | **282-2969** | 1 | TRANSMISSION AR | 306 |

Y-SEPARATE ILLUSTRATION

**<END>**

# 145-7266 PUMP GP-TRANSMISSION

**S/N: R1C1-UP; 5MY1-UP**

**PART OF 147-5653, 282-2969 TRANSMISSION AR**

**SMCS-3066** **i01802152**

| NOTE | REF NO | GRAPHIC REF | PART NUMBER | QTY | PART NAME 1 2 3 4 5 6 (PRODUCT LEVEL) | SEE PAGE |
|---|---|---|---|---|---|---|
| | 1 | 1 | **147-4512** | 1 | BODY AS-OIL PUMP | |
| | | 1 | **3T-2094** | 2 | BEARING-SLEEVE | |
| | | 1 | **5M-4987** | 2 | DOWEL | |
| | 2 | 1 | **147-4511** | 1 | COVER AS | |
| | | 1 | **3T-2094** | 2 | BEARING-SLEEVE | |
| | 3 | 1 | **145-7268** | 1 | GEAR AS-OIL PUMP (17 TEETH) | |
| | | 1 | **2B-9373** | 1 | KEY-WOODRUFF | |
| | 4 | 1 | **6Y-4620** | 1 | GEAR AS-OIL PUMP (17 TEETH) | |
| | | 1 | **2B-9373** | 1 | KEY-WOODRUFF | |
| | 5 | 1 | **5H-3252** | 1 | SEAL-O-RING | |
| M | 6 | 1 | **6V-5842** | 6 | BOLT (M10X1.50X40MM) | |
| | 7 | 1 | **3S-0004** | 6 | WASHER (0.406X0.728X0.09 IN THK) | |
| | 9 | 1 | **6I-9269** | 1 | BEARING | |

M-METRIC PART

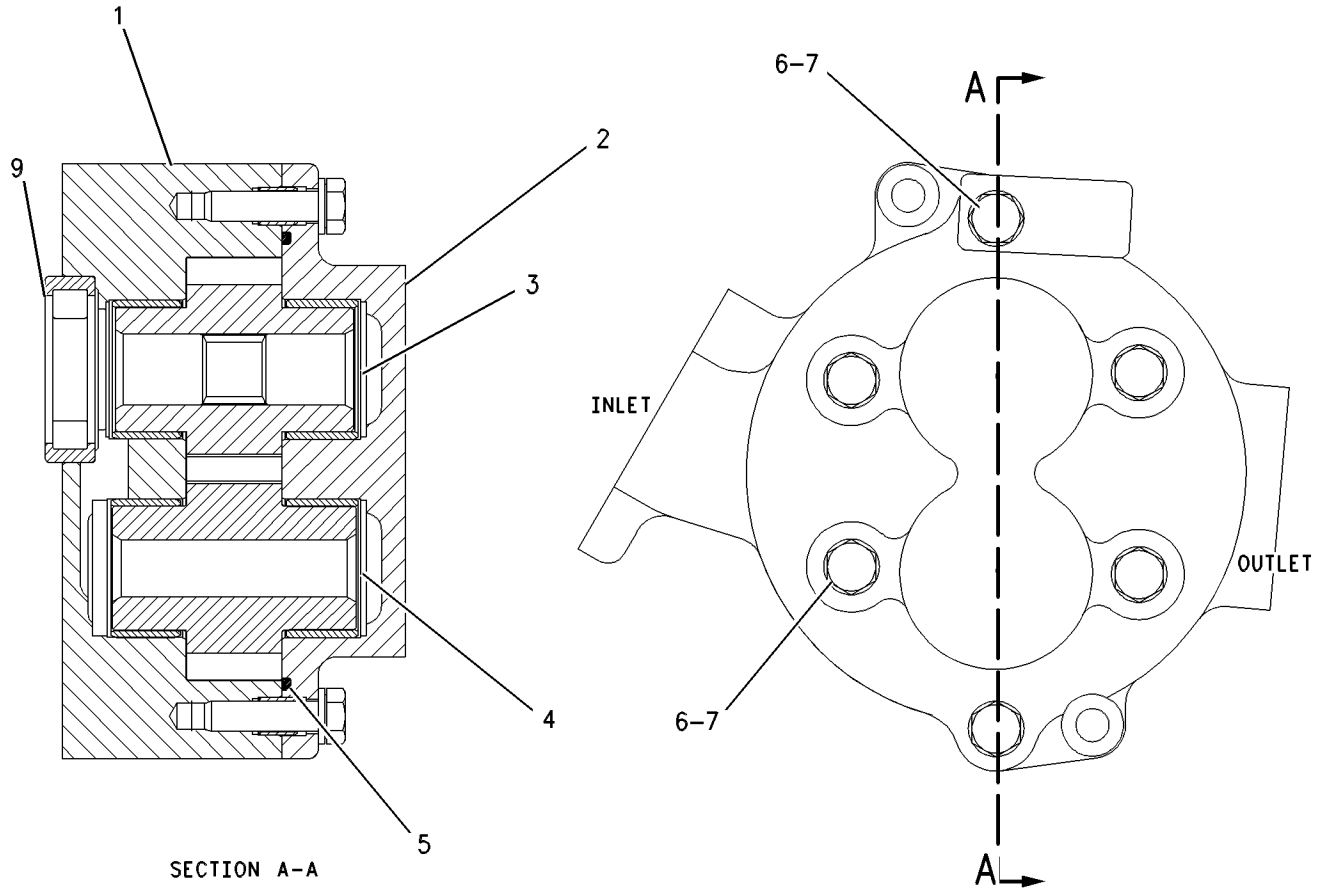


GRAPHIC #1 **<END>** g00535425

## *253-5269* SHAFT GP-DRIVE

**S/N: 5451-376**

**PART OF 245-9463 POWER TRAIN AR**

**SMCS-3253** **i02739921**

| NOTE | REF NO | GRAPHIC REF | PART NUMBER | QTY | PART NAME 1 2 3 4 5 6 (PRODUCT LEVEL) | SEE PAGE |
|---|---|---|---|---|---|---|
| | 1 | 1 | **294-8634** | 1 | SLIP JOINT GP | |
| | | 1 | **2T-3013** | 2 | SPIDER & BEARING GP | |
| | | 1 | **290-7514** | 8 | BOLT (M12X1.75X60-MM) | |
| Y | 2 | 1 | **266-9932** | 1 | SHAFT GP-DRIVE | 296 |
| | 3 | 1 | **266-9934** | 1 | UNIVERSAL JOINT GP (BASIC) | |
| | | 1 | **290-7514** | 8 | BOLT (M12X1.75X60-MM) | |
| | | 1 | **9P-0356** | 2 | SPIDER & BEARING AS | |
| M | 4 | 1 | **7X-3343** | 20 | BOLT-LOCKING (M12X1.75X60-MM) | |
| | 5 | 1 | **8T-4123** | 2 | WASHER (22X35X3.5-MM THK) | |
| M | 6 | 1 | **8T-4141** | 2 | BOLT (M20X2.5X70-MM) | |

M-METRIC PART
Y-SEPARATE ILLUSTRATION

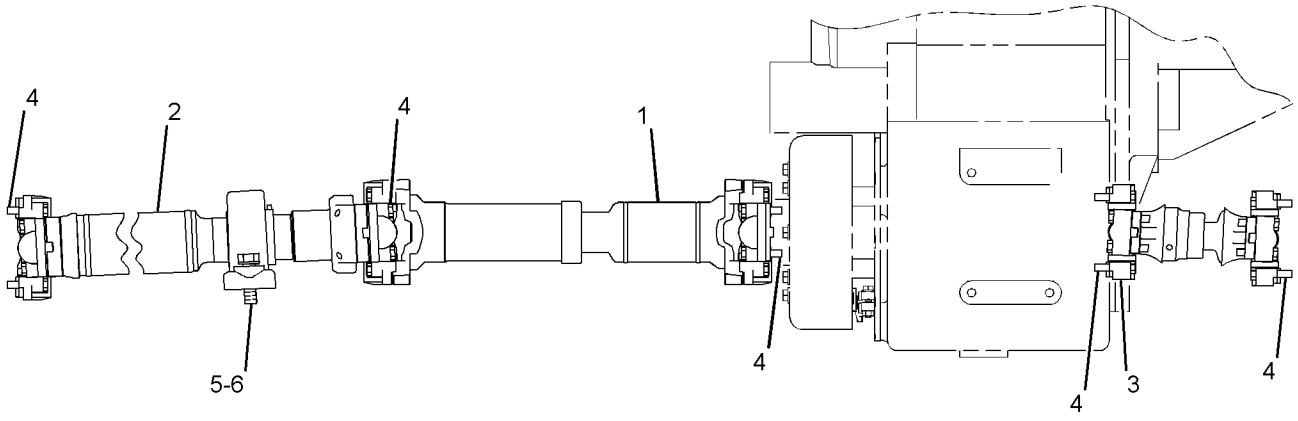


RIGHT SIDE VIEW

GRAPHIC #1 **<END>** g01236716

# 253-5269 SHAFT GP-DRIVE

**S/N: 545377-UP**

**PART OF 245-9463, 284-7040 POWER TRAIN AR**

**SMCS-3253** **i02739922**

| NOTE | REF NO | GRAPHIC REF | PART NUMBER | QTY | PART NAME 1 2 3 4 5 6 (PRODUCT LEVEL) | SEE PAGE |
|---|---|---|---|---|---|---|
| C | 1 | 1 | **294-8634** | 1 | SLIP JOINT GP | |
| | | 1 | **2T-3013** | 2 | SPIDER & BEARING GP | |
| | | 1 | **290-7514** | 8 | BOLT (M12X1.75X60-MM) | |
| Y | 2 | 1 | **266-9932** | 1 | SHAFT GP-DRIVE | 296 |
| | 3 | 1 | **266-9934** | 1 | UNIVERSAL JOINT GP (BASIC) | |
| | | 1 | **290-7514** | 8 | BOLT (M12X1.75X60-MM) | |
| | | 1 | **9P-0356** | 2 | SPIDER & BEARING AS | |
| C | 4 | 1 | **290-7514** | 20 | BOLT (M12X1.75X60-MM) | |
| | 5 | 1 | **8T-4123** | 2 | WASHER (22X35X3.5-MM THK) | |
| M | 6 | 1 | **8T-4141** | 2 | BOLT (M20X2.5X70-MM) | |

C-CHANGE FROM PREVIOUS TYPE
M-METRIC PART
Y-SEPARATE ILLUSTRATION

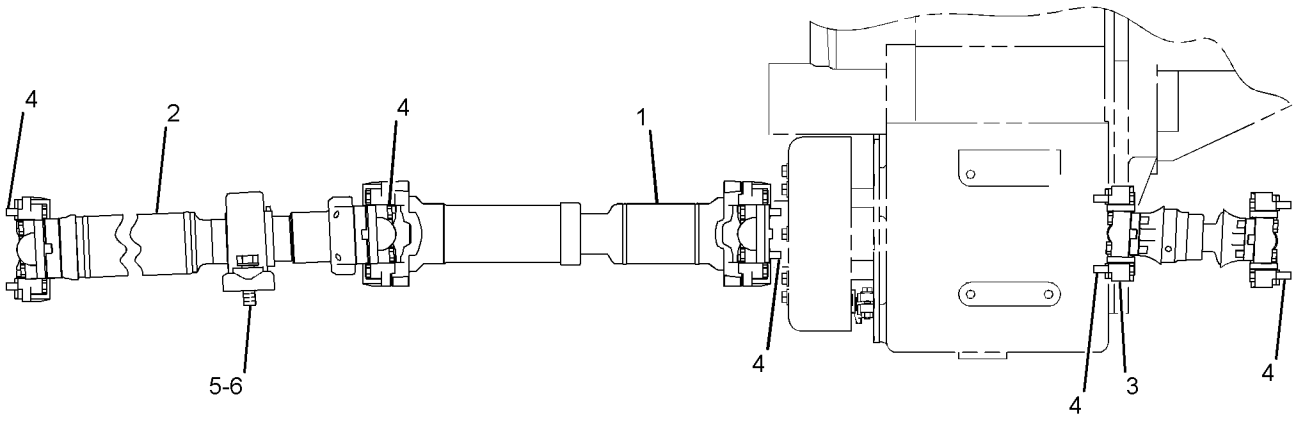


RIGHT SIDE VIEW

GRAPHIC #1 **<END>** g01236716

# 266-9932 SHAFT GP-DRIVE

**S/N: 5451-UP**

**PART OF 253-5269 SHAFT GP-DRIVE**

**SMCS-3253** **i02462931**

| NOTE | REF NO | GRAPHIC REF | PART NUMBER | QTY | PART NAME 1 2 3 4 5 6 (PRODUCT LEVEL) | SEE PAGE |
|---|---|---|---|---|---|---|
| | 1 | 1 | **174-6133** | 1 | BEARING AS-PILLOW BLOCK | |
| | 2 | 1 | **267-6614** | 1 | UNIVERSAL JOINT GP | |
| | | 1 | **2T-3013** | 1 | SPIDER & BEARING GP | |
| M | | 1 | **6V-3823** | 4 | BOLT (M12X1.75X60-MM) | |
| | 3 | 1 | **267-6615** | 1 | YOKE | |
| | 4 | 1 | **4E-6986** | 1 | RETAINER | |
| M | 5 | 1 | **8T-0372** | 1 | BOLT (M12X1.75X90-MM) | |

M-METRIC PART

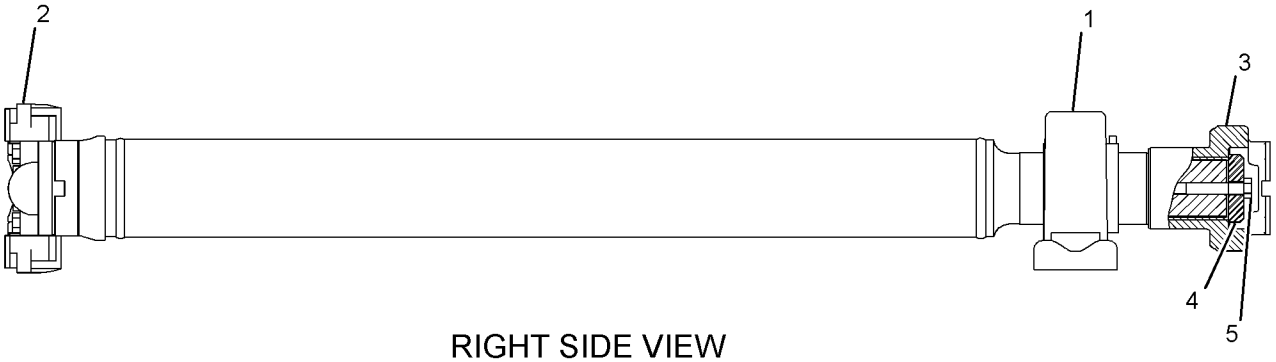


RIGHT SIDE VIEW

GRAPHIC #1 **<END>** g01236799

# *251-9707* SUPPORT GP-FRONT AXLE

**S/N: 5451-UP**

**PART OF 245-9460 CHASSIS AR**

**SMCS-3268** **i02177680**

| NOTE | REF NO | GRAPHIC REF | PART NUMBER | QTY | PART NAME 1 2 3 4 5 6 (PRODUCT LEVEL) | SEE PAGE |
|---|---|---|---|---|---|---|
| | 1 | 2 | **2D-1683** | 1 | FITTING | |
| | 2 | 2 | **8G-4513** | 1 | SPACER | |
| | 3 | 2 | **155-5916** | 1 | TRUNNION | |
| | 4 | 2 | **155-6611** | 1 | PLATE-THRUST | |
| | 5 | 2 | **159-2905** | 1 | COVER | |
| | 6 | 2 | **175-3726** | 1 | PIN AS | |
| | 7 | 2 | **203-6128** | 1 | BEARING | |
| | 8 | 1 | **229-0666** | 1 | PLATE AS | |
| | 9 | 1 | **229-7253** | 1 | PLATE AS | |
| | 10 | 2 | **229-7290** | 1 | PLATE AS | |
| | 11 | 2 | **229-7292** | 1 | PLATE AS | |
| | 12 | 1 | **233-4862** | 1 | PLATE | |
| | 13 | 1 | **233-6660** | 2 | DOWEL | |
| | 14 | 2 | **255-0732** | 1 | PLATE AS | |
| M | 15 | 1 | **173-9683** | 4 | BOLT (M30X3.5X90-MM) | |
| | 16 | 2 | **3E-9411** | 1 | WASHER-HARD (17.5X38X6-MM THK) | |
| | 17 | 2 | **5J-8775** | 2 | WASHER-THRUST (5.1X7.5X32-MM THK) | |
| | 18 | 2 | **5L-4751** | 2 | RING-RETAINING | |
| | 19 | 2 | **6K-2430** | 1 | SEAL-LIP TYPE | |
| M | 20 | 1 | **7X-2465** | 8 | BOLT (M24X3X180-MM) | |
| M | 21 | 1 | **7X-2562** | 11 | BOLT (M20X2.5X45-MM) | |
| | 22 | 2 | **8J-7424** | 1 | BEARING-SLEEVE | |
| | 23 | 1 | **8T-4123** | 11 | WASHER (22X35X3.5-MM THK) | |
| | 24 | 1 | **8T-4167** | 8 | WASHER-HARD (26X44X4-MM THK) | |
| M | 25 | 2 | **8T-4175** | 6 | BOLT (M16X2X90-MM) | |
| M | 26 | 1,2 | **8T-4193** | 19 | BOLT (M16X2X50-MM) | |
| | 27 | 1,2 | **9X-8257** | 24 | WASHER (17.5X30X3.5-MM THK) | |
| | 28 | 1 | **9X-8258** | 4 | WASHER (33X56X6-MM THK) | |
| M | 29 | 2 | **9X-8906** | 8 | BOLT (M20X2.5X50-MM) | |

M-METRIC PART

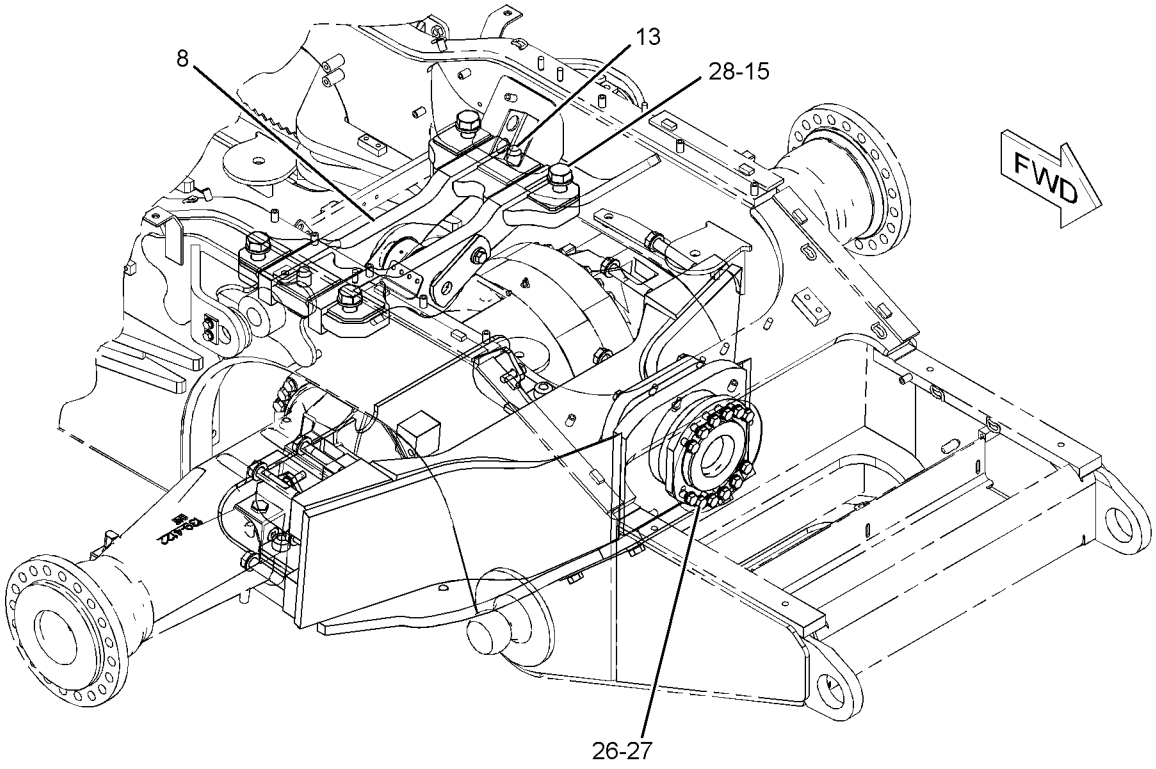


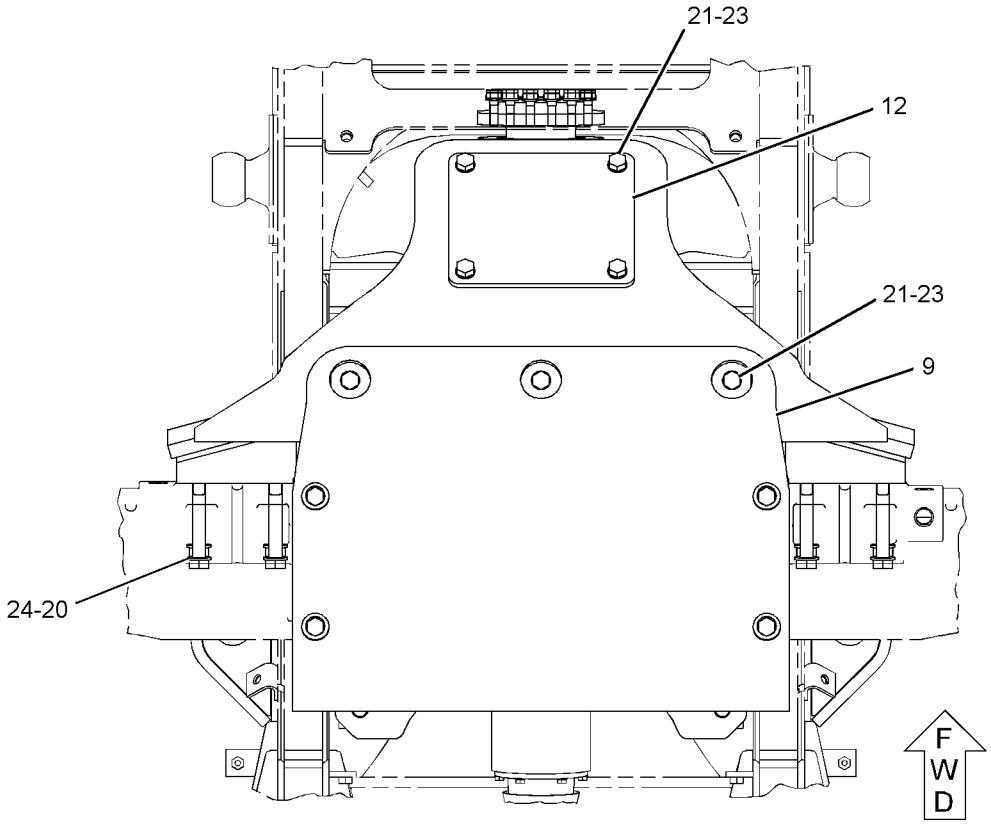


BOTTOM VIEW

GRAPHIC #1

g01103114

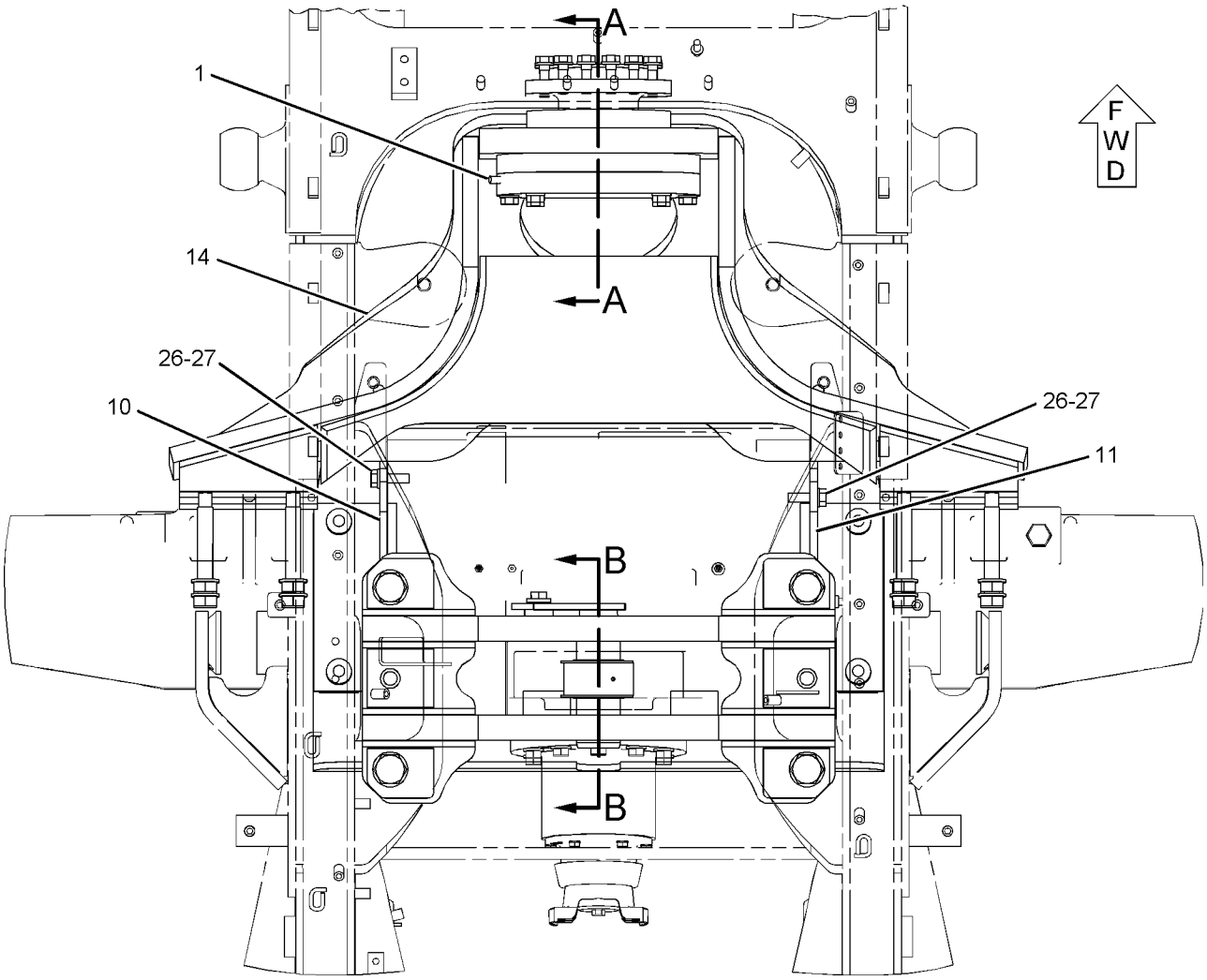


TOP VIEW

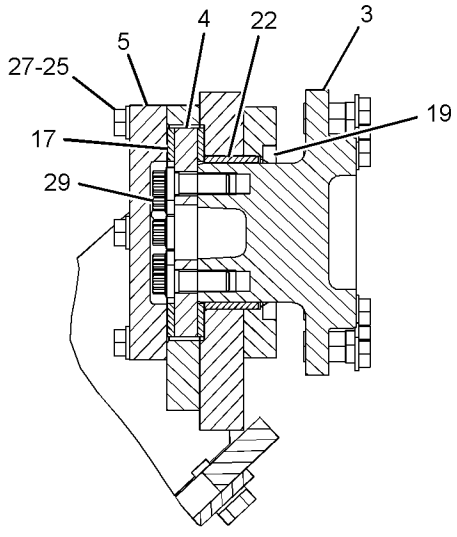


SECTION A-A

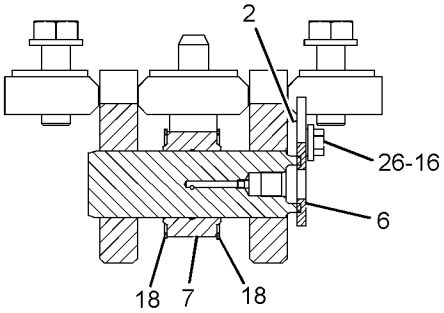


SECTION B-B

GRAPHIC #2 **<END>** g01103115

## *149-8372* TIRE & RIM AR

**S/N: 5451-UP**

**AN ATTACHMENT**

**SMCS-4202** **i00915060**

| NOTE | PART NUMBER | QTY | PART NAME 1 2 3 4 5 6 (PRODUCT LEVEL) | SEE PAGE |
|---|---|---|---|---|
| Y | *149-8364* | 4 | TIRE & RIM GP | 301 |
| Y-SEPARATE ILLUSTRATION | | | | |

**<END>**

## *149-8373* TIRE & RIM AR

**S/N: 5451-UP**

**AN ATTACHMENT**

**SMCS-4202** **i00915058**

| NOTE | PART NUMBER | QTY | PART NAME 1 2 3 4 5 6 (PRODUCT LEVEL) | SEE PAGE |
|---|---|---|---|---|
| Y | *149-8363* | 4 | TIRE & RIM GP | 301 |
| Y-SEPARATE ILLUSTRATION | | | | |

**<END>**

## *204-5309* TIRE & RIM AR

**S/N: 5451-UP**

**CANNOT BE USED WITH 166-2038 AXLE AR**

**AN ATTACHMENT**

**SMCS-4202** **i01897938**

| NOTE | PART NUMBER | QTY | PART NAME 1 2 3 4 5 6 (PRODUCT LEVEL) | SEE PAGE |
|---|---|---|---|---|
| Y | *204-5308* | 4 | TIRE & RIM GP | 301 |
| Y-SEPARATE ILLUSTRATION | | | | |

**<END>**

## *205-7342* TIRE & RIM AR

**S/N: 5451-UP**

**AN ATTACHMENT**

**SMCS-4202** **i01523228**

| NOTE | PART NUMBER | QTY | PART NAME 1 2 3 4 5 6 (PRODUCT LEVEL) | SEE PAGE |
|---|---|---|---|---|
| Y | *205-7341* | 4 | TIRE & RIM GP | 302 |
| Y-SEPARATE ILLUSTRATION | | | | |

**<END>**

## *205-7345* TIRE & RIM AR

**S/N: 5451-UP**
**CANNOT BE USED WITH 174-3232 FRAME AS-REAR, 195-2328 FRAME AS-REAR**
**AN ATTACHMENT**

**SMCS-4202** **i01523185**

| NOTE | PART NUMBER | QTY | PART NAME 1 2 3 4 5 6 (PRODUCT LEVEL) | SEE PAGE |
|---|---|---|---|---|
| Y | *205-7343* | 4 | TIRE & RIM GP | 302 |
| Y-SEPARATE ILLUSTRATION | | | | |

**<END>**

## *149-8363* TIRE & RIM GP

**S/N: 5451-UP**
**PART OF 149-8373 TIRE & RIM AR**
**AN ATTACHMENT**

**SMCS-4202** **i02198956**

| NOTE | PART NUMBER | QTY | PART NAME 1 2 3 4 5 6 (PRODUCT LEVEL) | SEE PAGE |
|---|---|---|---|---|
| | **2L-6055** | 1 | CAP-PIPE | |
| | **149-8347** | 1 | RIM AS | |
| | *149-8362* | 1 | TIRE (35.5-32) | |

**<END>**

## *149-8364* TIRE & RIM GP

**S/N: 5451-UP**
**PART OF 149-8372 TIRE & RIM AR**
**AN ATTACHMENT**

**SMCS-4202** **i02198961**

| NOTE | PART NUMBER | QTY | PART NAME 1 2 3 4 5 6 (PRODUCT LEVEL) | SEE PAGE |
|---|---|---|---|---|
| | **2L-6055** | 1 | CAP-PIPE | |
| | **149-8346** | 1 | RIM AS | |
| | *131-9180* | 1 | TIRE & TUBE GP (30.5-32) | |

**<END>**

## *204-5308* TIRE & RIM GP

**S/N: 5451-UP**
**PART OF 204-5309 TIRE & RIM AR**
**AN ATTACHMENT**

**SMCS-4202** **i02198944**

| NOTE | PART NUMBER | QTY | PART NAME 1 2 3 4 5 6 (PRODUCT LEVEL) | SEE PAGE |
|---|---|---|---|---|
| | **2L-6055** | 1 | CAP-PIPE | |
| | **239-3639** | 1 | RIM AS | |
| | *149-8362* | 1 | TIRE (35.5-32) | |

**<END>**

## *205-7341* TIRE & RIM GP

**S/N: 5451-UP**
**PART OF 205-7342 TIRE & RIM AR**
**AN ATTACHMENT**

**SMCS-4202** **i02293629**

| NOTE | PART NUMBER | QTY | PART NAME 1 2 3 4 5 6 (PRODUCT LEVEL) | SEE PAGE |
|---|---|---|---|---|
| | **2L-6055** | 1 | CAP-PIPE | |
| | **205-6406** | 1 | RIM AS | |
| | *131-9180* | 1 | TIRE & TUBE GP (30.5-32) | |

**<END>**

## *205-7343* TIRE & RIM GP

**S/N: 5451-UP**
**PART OF 205-7345 TIRE & RIM AR**
**CANNOT BE USED WITH 174-3232 FRAME AS-REAR, 195-2328 FRAME AS-REAR**
**AN ATTACHMENT**

**SMCS-4202** **i02198971**

| NOTE | PART NUMBER | QTY | PART NAME 1 2 3 4 5 6 (PRODUCT LEVEL) | SEE PAGE |
|---|---|---|---|---|
| | **2L-6055** | 1 | CAP-PIPE | |
| | **205-6407** | 1 | RIM AS | |
| | *149-8362* | 1 | TIRE (35.5-32) | |

**<END>**

# 144-7659 TORQUE CONVERTER GP–LOCKUP

**S/N: 5WT1-UP**

**PART OF 147-5653, 282-2969 TRANSMISSION AR**

**SMCS-3101** **i01592973**

| NOTE | REF NO | GRAPHIC REF | PART NUMBER | QTY | PART NAME 1 2 3 4 5 6 (PRODUCT LEVEL) | SEE PAGE |
|---|---|---|---|---|---|---|
| | 1 | 1 | **144-0812** | 1 | HOUSING-ROTATING | |
| | 2 | 1 | **144-2253** | 1 | PLATE | |
| M | 3 | 1 | **6V-1820** | 26 | BOLT (M10X1.5X30-MM) | |
| | 4 | 1 | **6V-5839** | 34 | WASHER (11X21X2.5-MM THK) | |
| | 5 | 1 | **8E-9972** | 1 | IMPELLER-CONVERTER | |
| | 6 | 1 | **144-0781** | 1 | GEAR-DRIVE (82-TEETH) | |
| | 7 | 1 | **119-5727** | 1 | BALL BEARING | |
| | 8 | 1 | **1T-1621** | 1 | RING-SEAL | |
| | 9 | 1 | **144-7656** | 1 | CARRIER AS | |
| | 9A | 1 | **4S-8541** | 1 | DOWEL | |
| M | 10 | 1 | **6V-7673** | 8 | BOLT (M12X1.75X50-MM) | |
| | 11 | 1 | **141-0752** | 1 | SPACER | |
| | 12 | 1 | **5P-6414** | 2 | RING-RETAINING | |
| | 13 | 1 | **194-4411** | 2 | WASHER-THRUST | |
| | 14 | 1 | **141-1236** | 1 | RACE-FREEWHEEL | |
| | 15 | 1 | **8P-7857** | 9 | ROLLER-FREEWHEEL | |
| | 16 | 1 | **8P-7858** | 9 | SPRING-FREEWHEEL | |
| | 17 | 1 | **7G-8430** | 1 | CAM-FREEWHEEL | |
| | 18 | 1 | **6Y-1090** | 1 | STATOR-CONVERTER | |
| | 19 | 1 | **6Y-1089** | 1 | TURBINE-CONVERTER | |
| | 20 | 1 | **6Y-7951** | 1 | DISC-FRICTION | |
| | 21 | 1 | **144-4534** | 1 | PISTON-CLUTCH | |
| | 22 | 1 | **144-0780** | 1 | PLATE-SPLINED | |
| M | 23 | 1 | **6V-4248** | 8 | BOLT (M10X1.5X25-MM) | |
| M | 24 | 1 | **6V-3822** | 16 | BOLT (M10X1.5X35-MM) | |
| | 25 | 1 | **191-8720** | 1 | PLATE-SPLINED | |
| | 26 | 1 | **6V-8128** | 1 | RING-RETAINING | |
| | 27 | 1 | **157-4317** | 1 | HUB AS | |
| | 27A | 1 | **4S-8541** | 1 | DOWEL | |
| | 28 | 1 | **144-2252** | 1 | COVER | |
| | 29 | 1 | **064-3843** | 1 | RING-SNAP | |
| | 30 | 1 | **8E-6648** | 1 | SPACER (60.2X80X3-MM THK) | |
| | 31 | 1 | **8E-5247** | 1 | BALL BEARING | |
| | 32 | 1 | **125-9794** | 1 | SEAL-O-RING | |
| | 33 | 1 | **4S-5816** | 1 | RING-SEAL | |
| | 34 | 1 | **6Y-2982** | 1 | RING-SEAL | |

M-METRIC PART

## 144-7659 TORQUE CONVERTER GP *(contd. )* i01592973

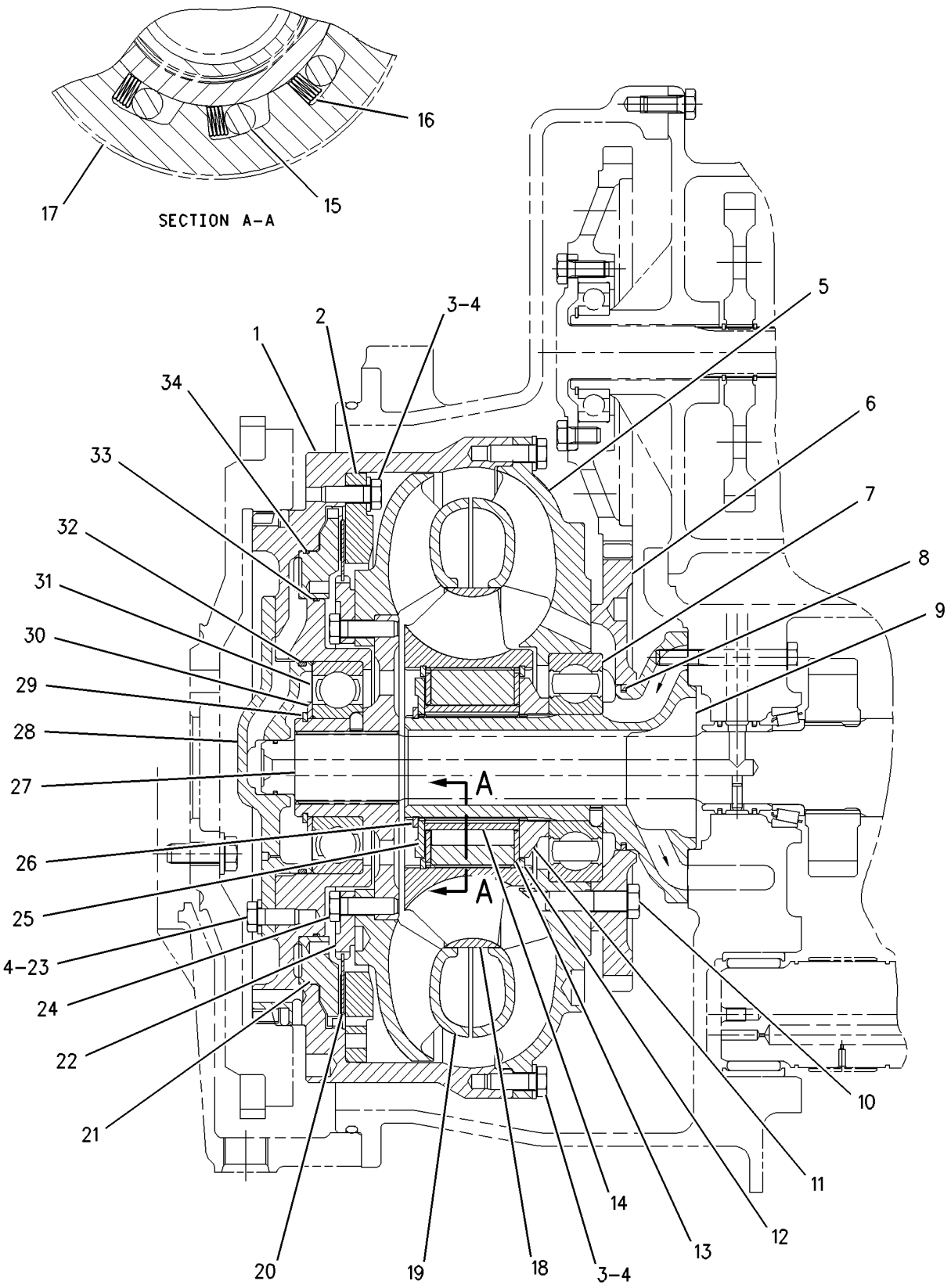


GRAPHIC #1 **<END>** g00827730

# *147-5653* TRANSMISSION AR

**S/N: 5MY1-UP**

**PART OF 245-9463 POWER TRAIN AR**

**SMCS-3030** **i02503729**

| NOTE | REF NO | GRAPHIC REF | PART NUMBER | QTY | PART NAME 1 2 3 4 5 6 (PRODUCT LEVEL) | SEE PAGE |
|---|---|---|---|---|---|---|
| Y | 1 | 1 | **144-7659** | 1 | TORQUE CONVERTER GP (LOCKUP) | 303 |
| Y | 2 | 1 | *154-3951* | 1 | COVER GP-SHIPPING | 256 |
| Y | 3 | 1 | **145-7266** | 1 | PUMP GP-TRANSMISSION | 293 |
| Y | 4 | 1 | *277-8579* | 1 | CASE & PARTS GP-TRANSMISSION | 236 |
| Y | 5 | 1 | *165-5942* | 1 | VALVE GP-TRANSMISSION CONTROL | 315 |
| Y | 6 | 1 | *147-5654* | 1 | INPUT GP-TRANSMISSION | 284 |
| Y | 7 | 1 | *147-5655* | 1 | CLUTCH GP (FORWARD HIGH, FORWARD LOW) | 248 |
| Y | 8 | 1 | *147-5656* | 1 | CLUTCH GP (REVERSE, SECOND) | 250 |
| Y | 9 | 1 | *147-5657* | 1 | CLUTCH GP (FIRST, THIRD) | 252 |
| Y | 10 | 1 | *147-5658* | 1 | GEAR GP-OUTPUT TRANSFER | 274 |

Y-SEPARATE ILLUSTRATION

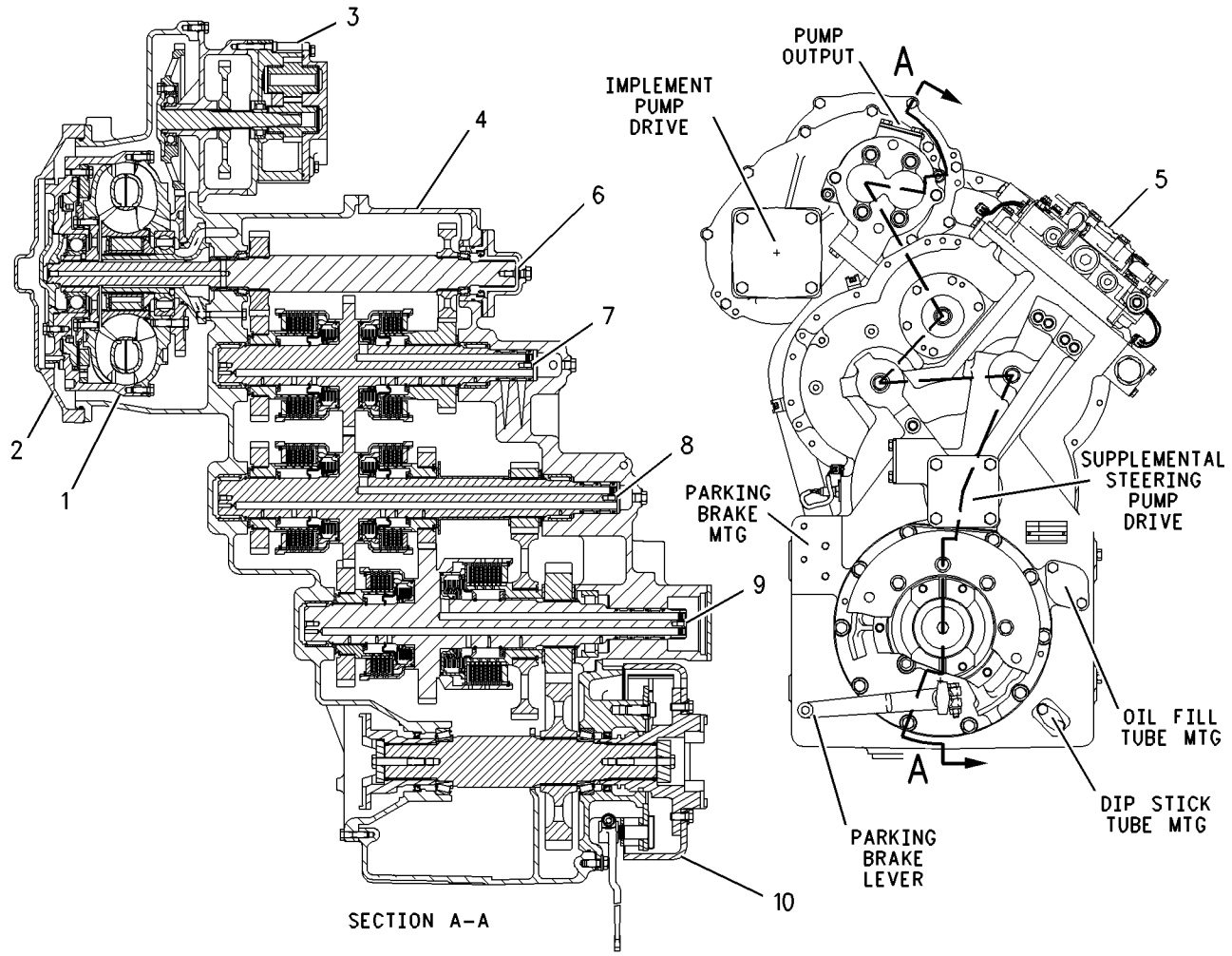


GRAPHIC #1 **<END>** g00722716

# POWER TRAIN

## 282-2969 TRANSMISSION AR

**S/N: R1C1-UP**

**PART OF 284-7040 POWER TRAIN AR**

**SMCS-3030** **i02557975**

| NOTE | REF NO | GRAPHIC REF | PART NUMBER | QTY | PART NAME 1 2 3 4 5 6 (PRODUCT LEVEL) | SEE PAGE |
|---|---|---|---|---|---|---|
| Y | 1 | 1 | **144-7659** | 1 | TORQUE CONVERTER GP (LOCKUP) | 303 |
| Y | 2 | 1 | *282-2970* | 1 | CASE & PARTS GP-TRANSMISSION | 242 |
| Y | 3 | 1 | **145-7266** | 1 | PUMP GP-TRANSMISSION | 293 |
| Y | 4 | 1 | *282-2974* | 1 | CONTROL GP-TRANSMISSION HYD | 254 |
| Y | 5 | 1 | *147-5654* | 1 | INPUT GP-TRANSMISSION | 284 |
| Y | 6 | 1 | *147-5655* | 1 | CLUTCH GP (FORWARD HIGH, FORWARD LOW) | 248 |
| Y | 7 | 1 | *147-5656* | 1 | CLUTCH GP (REVERSE, SECOND) | 250 |
| Y | 8 | 1 | *147-5657* | 1 | CLUTCH GP (FIRST, THIRD) | 252 |
| Y | 9 | 1 | *147-5658* | 1 | GEAR GP-OUTPUT TRANSFER | 274 |

Y-SEPARATE ILLUSTRATION

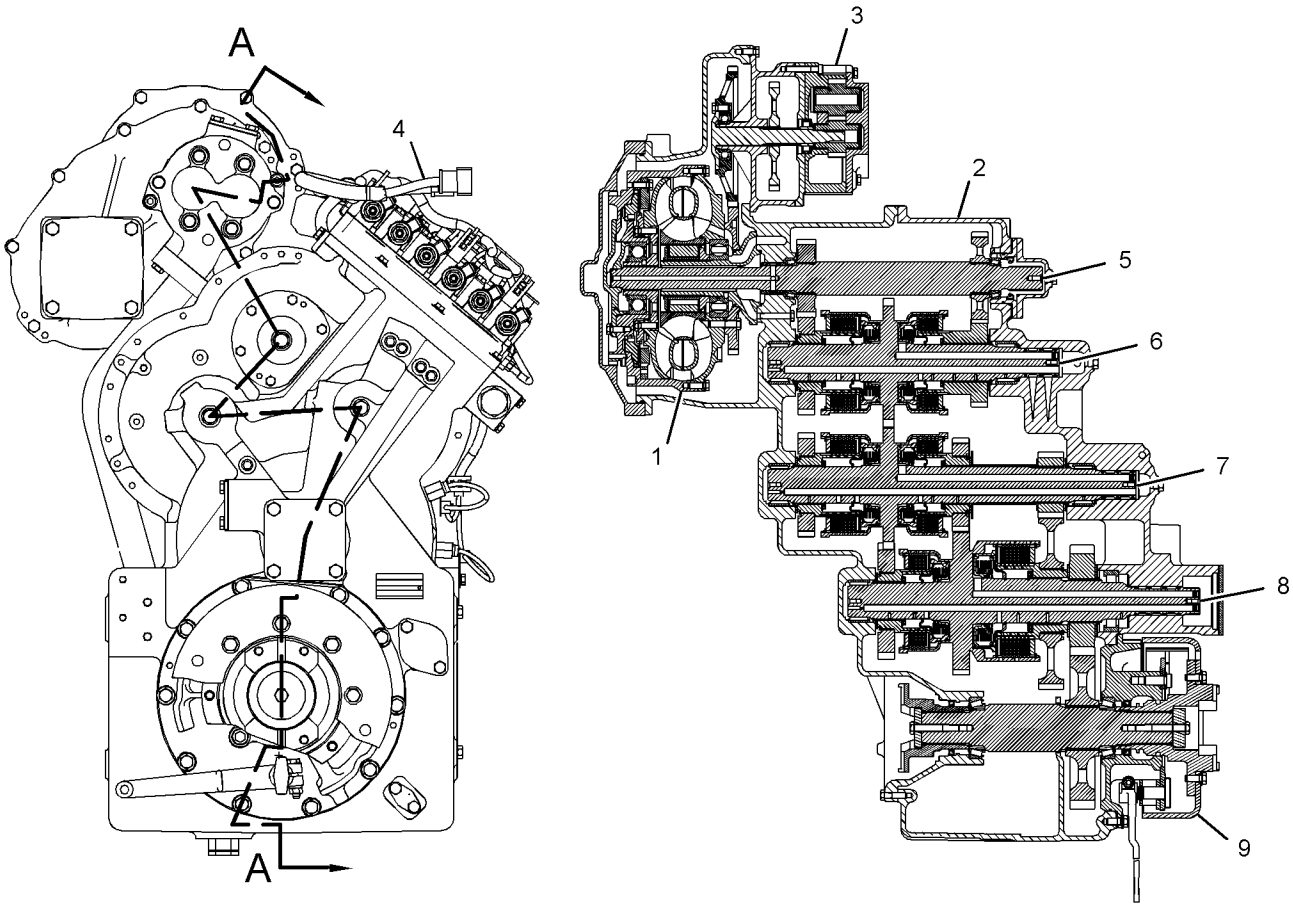


REAR VIEW

SECTION A-A

GRAPHIC #1 **<END>** g01281074

# 8E-5523 VALVE GP-DUMP–TRANSMISSION

**S/N: 5MY1-UP**
**LOAD PISTON**
**PART OF 165-5942 VALVE GP-TRANSMISSION CONTROL**

**SMCS-3073** **i01246096**

| NOTE | REF NO | GRAPHIC REF | PART NUMBER | QTY | PART NAME 1 2 3 4 5 6 (PRODUCT LEVEL) | SEE PAGE |
|---|---|---|---|---|---|---|
| | 1 | 1 | **8E-4884** | 1 | BODY | |
| | 2 | 1 | **9S-8006** | 2 | PLUG-O-RING | |
| | 3 | 1 | **2M-9780** | 2 | SEAL-O-RING | |
| | 4 | 1 | **9S-8005** | 2 | PLUG-O-RING | |
| | 5 | 1 | **3K-0360** | 2 | SEAL-O-RING | |
| | 6 | 1 | **8E-4959** | 1 | SLUG | |
| | 7 | 1 | **8E-4958** | 1 | SPOOL | |
| | 8 | 1 | **9S-8004** | 1 | PLUG-O-RING | |
| | 9 | 1 | **3J-1907** | 1 | SEAL-O-RING | |
| | 10 | 1 | **6Y-7582** | 1 | PISTON | |
| | 11 | 1 | **9L-9188** | 1 | SPRING-VALVE | |
| | 12 | 1 | **8P-0346** | 1 | SPRING | |
| | 13 | 1 | **8E-6051** | 1 | PLUG-ORIFICE | |
| | 14 | 1 | **4J-7533** | 1 | SEAL-O-RING | |
| | 15 | 1 | **6Y-7621** | 1 | SPOOL | |

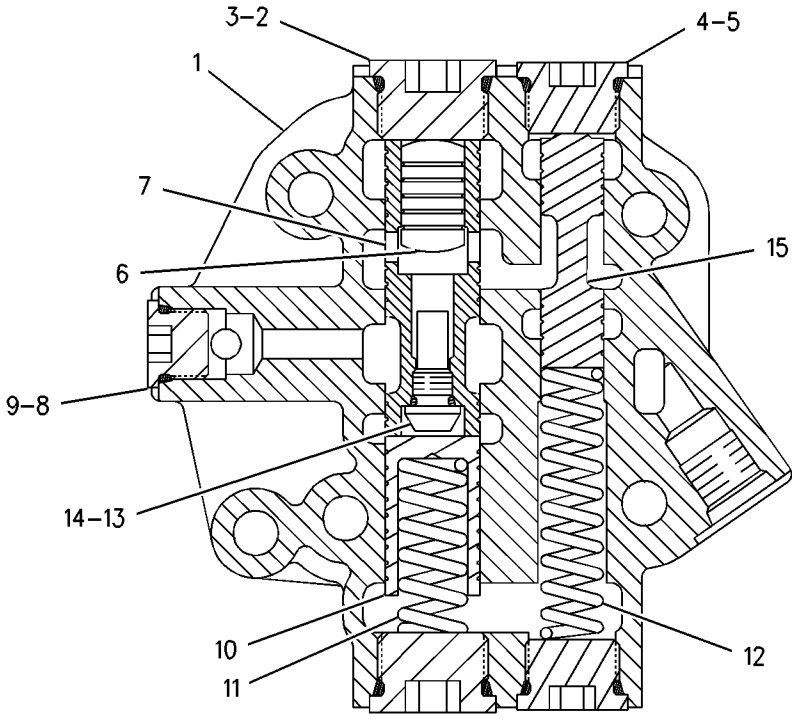


GRAPHIC #1 **<END>** g00664878

# *176-0629* VALVE GP-FLOW CONTROL—TRANSMISSION

**S/N: 5MY1-UP**

**PART OF 277-8579 CASE & PARTS GP-TRANSMISSION**

**SMCS-3073** **i01949440**

| NOTE | REF NO | GRAPHIC REF | PART NUMBER | QTY | PART NAME 1 2 3 4 5 6 (PRODUCT LEVEL) | SEE PAGE |
|---|---|---|---|---|---|---|
| | 1 | 1 | **6I-9395** | 1 | SCREEN | |
| | 2 | 1 | **9W-0884** | 1 | PISTON | |
| | 3 | 1 | **4M-7945** | 1 | SPRING | |
| | 4 | 1 | **2L-6726** | 1 | RING-RETAINING | |

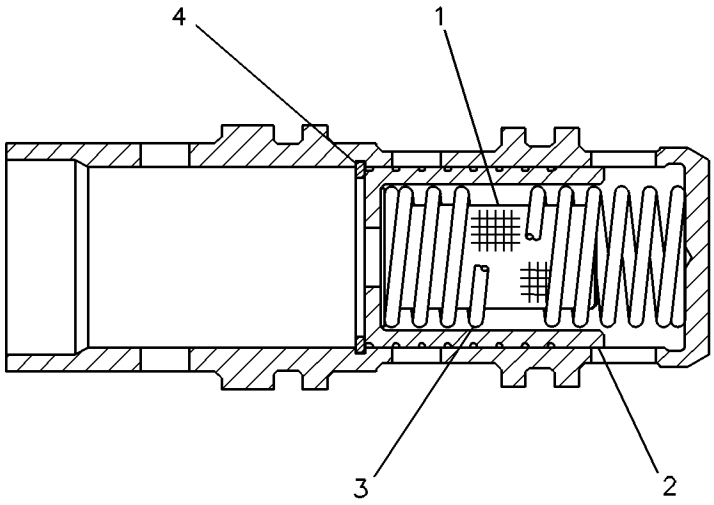


GRAPHIC #1 **<END>** g00119445

# *244-3114* VALVE GP-MODULATING–

**TC LOCKUP CLUTCH, TMSN CLUTCH**

**S/N: R1C1-UP; 5MY1-UP**

**24-VOLT**

**PART OF 277-8579 CASE & PARTS GP-TRANSMISSION, 282-2974 CONTROL GP-TRANSMISSION HYD, 287-2126 VALVE GP-TRANSMISSION CONTROL**

**SMCS-3139** **i02681336**

| NOTE | REF NO | GRAPHIC REF | PART NUMBER | QTY | PART NAME 1 2 3 4 5 6 (PRODUCT LEVEL) | SEE PAGE |
|---|---|---|---|---|---|---|
| | 1 | 1 | **6V-3965** | 1 | FITTING-COUPLER | |
| | 2 | 1 | **226-9622** | 1 | COIL AS (24-VOLT) | |
| | 3 | 1 | **3J-1907** | 1 | SEAL-O-RING | |
| | 4 | 1 | **164-2108** | 1 | WASHER (13.03X25.4X2.38-MM THK) | |
| | 5 | 1 | **167-9524** | 1 | NUT-SELF-LOCKING (1/2-28-THD) | |
| | | | | | | |
| | | | | | PARTS SHOWN IN GRAPHIC(S) WITHOUT A REFERENCE NUMBER ARE NOT SERVICED SEPARATELY | |

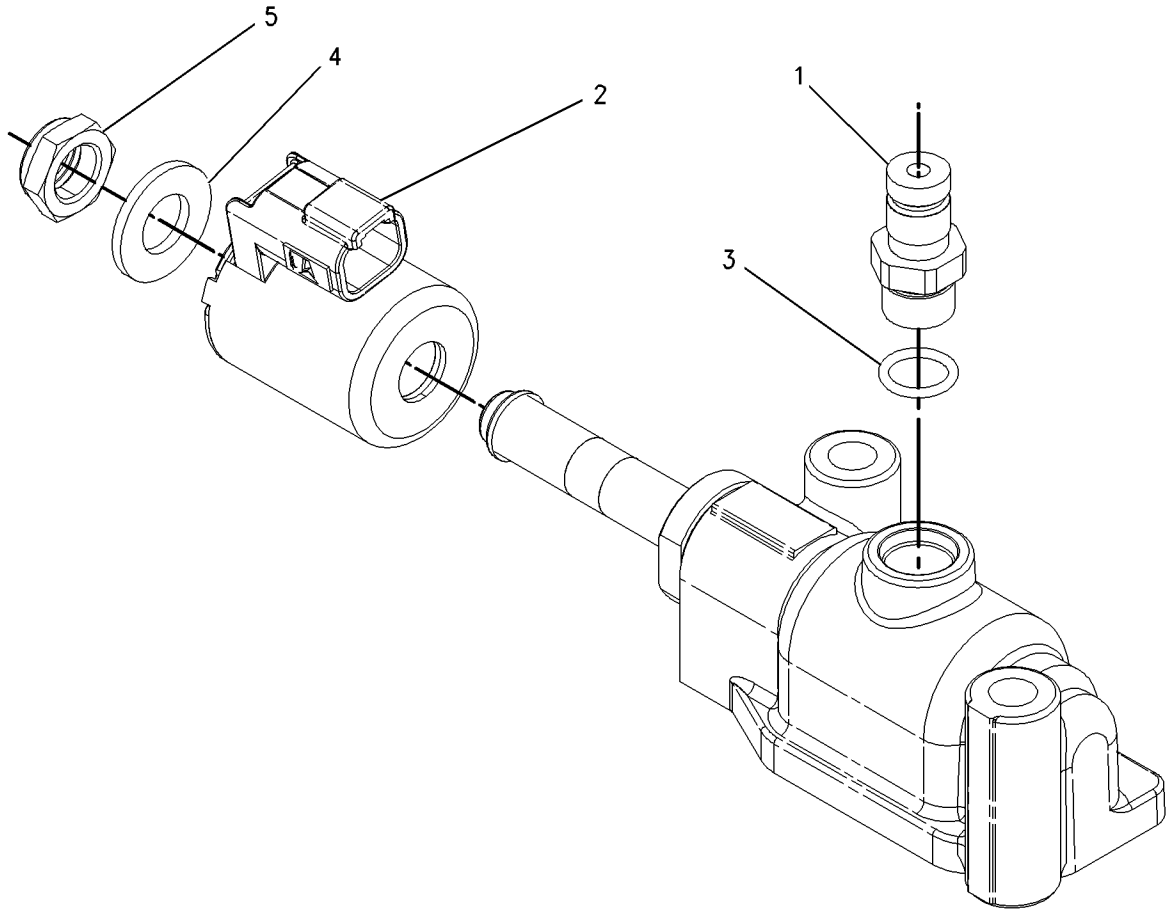


GRAPHIC #1 **<END>** g00919065

## 287-2125 VALVE GP-RELIEF—TRANSMISSION HYDRAULIC CONTROL

**S/N: R1C1-UP**

**PART OF 287-2126 VALVE GP-TRANSMISSION CONTROL**

**SMCS-3133, 3182, 3272** **i02558128**

| NOTE | REF NO | GRAPHIC REF | PART NUMBER | QTY | PART NAME 1 2 3 4 5 6 (PRODUCT LEVEL) | SEE PAGE |
|---|---|---|---|---|---|---|
| | 1 | 1 | **2S-4663** | 1 | SEAL-O-RING | |
| | 2 | 1 | **2S-5835** | 1 | PISTON-LOAD | |
| | 3 | 1 | **3J-1907** | 2 | SEAL-O-RING | |
| | 4 | 1 | **3K-0360** | 1 | SEAL-O-RING | |
| | 5 | 1 | **4M-5905** | 1 | SCREW-ADJUSTMENT (5/16-18X1-IN) | |
| | 6 | 1 | **6V-0852** | 2 | CAP-DUST | |
| | 7 | 1 | **7B-3028** | 1 | SCREW-DRIVE (NO 4X3/16-IN) | |
| | 8 | 1 | **8E-1143** | 1 | SLUG | |
| | 9 | 1 | **8M-5253** | 1 | SEAL-O-RING | |
| | 10 | 1 | **9M-2110** | 1 | COVER-ADJUSTMENT | |
| | 11 | 1 | **115-4550** | 1 | COVER | |
| | 12 | 1 | **172-7966** | 1 | BODY | |
| | 13 | 1 | **172-7968** | 1 | SPOOL AS | |
| | | 1 | **3D-8317** | 1 | RING-RETAINING | |
| | | 1 | **4B-9880** | 1 | BALL (0.31-IN DIA) | |
| | | 1 | **4M-2381** | 1 | SPRING | |
| | | 1 | **9U-8669** | 1 | RETAINER | |
| | 14 | 1 | **174-7449** | 1 | SPRING | |
| | 15 | 1 | **241-6205** | 1 | PLUG | |
| | 16 | 1 | **9M-1974** | 2 | WASHER-HARD (8.8X16X2-MM THK) | |
| M | 17 | 1 | **6V-3940** | 2 | BOLT (M8X1.25X25-MM) | |
| | 18 | 1 | **6V-3965** | 2 | FITTING-COUPLER | |
| M | 19 | 1 | **6V-5218** | 2 | BOLT (M8X1.25X35-MM) | |

M-METRIC PART

**287-2125 VALVE GP-RELIEF** *(contd. )* **i02558128**

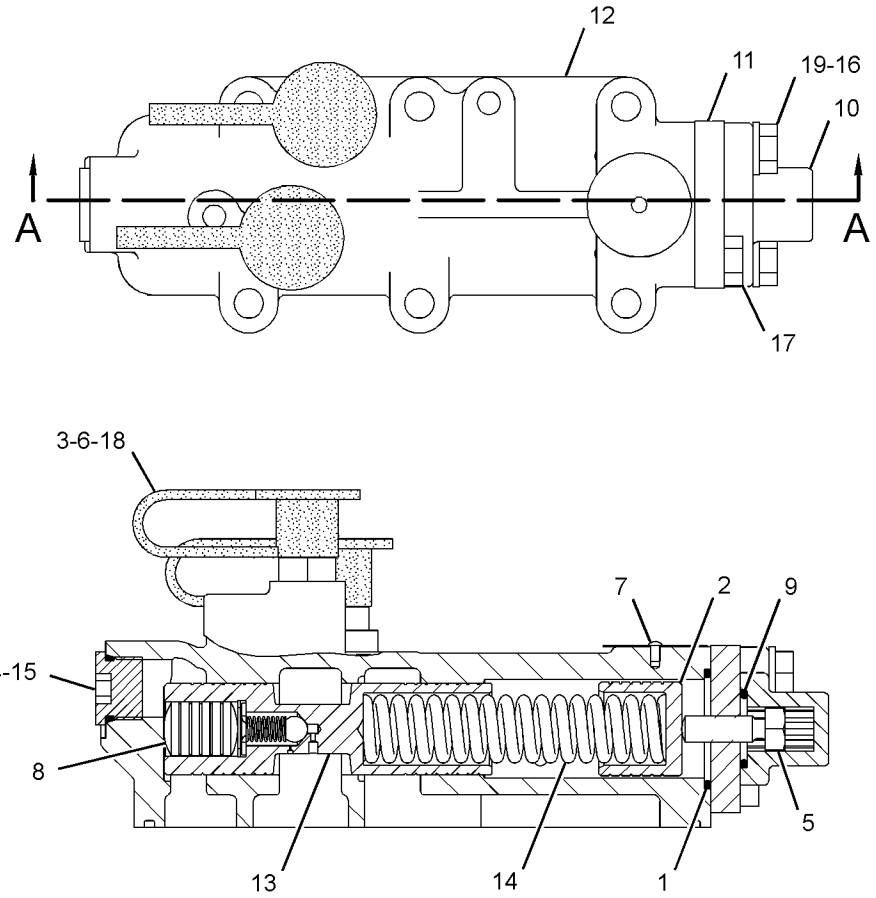


SECTION A-A

GRAPHIC #1 **<END>** g01281862

# 6I-8723 VALVE GP-SELECTOR & PRESS CONT–TRANSMISSION

**S/N: 5MY1-UP**

**PART OF 165-5942 VALVE GP-TRANSMISSION CONTROL**

**SMCS-3083** **i02088033**

| NOTE | REF NO | GRAPHIC REF | PART NUMBER | QTY | PART NAME 1 2 3 4 5 6 (PRODUCT LEVEL) | SEE PAGE |
|---|---|---|---|---|---|---|
| | 1 | 1 | **6Y-1763** | 1 | BODY | |
| | 2 | 1 | **7T-7679** | 4 | PLUG | |
| | 3 | 1 | **2M-9780** | 4 | SEAL-O-RING | |
| | 4 | 1 | **6Y-0871** | 2 | SPRING | |
| | 5 | 1 | **6Y-4638** | 2 | PLUG-HEX SOCKET (1-5/16-12-2A-THD) | |
| | 6 | 1 | **7M-8485** | 2 | SEAL-O-RING | |
| | 7 | 1 | **8E-1143** | 1 | SLUG | |
| | 8 | 1 | **8E-3674** | 1 | SPOOL | |
| | 9 | 1 | **8E-1142** | 1 | SLUG | |
| | 10 | 1 | **8E-3675** | 1 | SPOOL | |
| | 11 | 1 | **7T-8797** | 1 | SPACER (2-MM THK) | |
| | 12 | 1 | **8J-2283** | 1 | RING-SNAP | |
| | 13 | 1 | **7T-8803** | 1 | PLUG-SCREEN | |
| | 14 | 1 | **4J-7533** | 1 | SEAL-O-RING | |
| | 15 | 1 | **9W-8279** | 1 | PISTON | |
| | 16 | 1 | **8E-1139** | 1 | SPRING | |
| | 17 | 1 | **9U-9328** | 1 | SPRING | |
| | 18 | 1 | **9W-6096** | 6 | SLUG | |
| | 19 | 1 | **9W-6097** | 6 | SPOOL-SELECTOR | |
| CY | 20 | 1 | **186-1526** | 6 | VALVE GP-SOLENOID (24-VOLT DC) (TRANSMISSION CLUTCH) | 314 |

C-CHANGE FROM PREVIOUS TYPE
Y-SEPARATE ILLUSTRATION

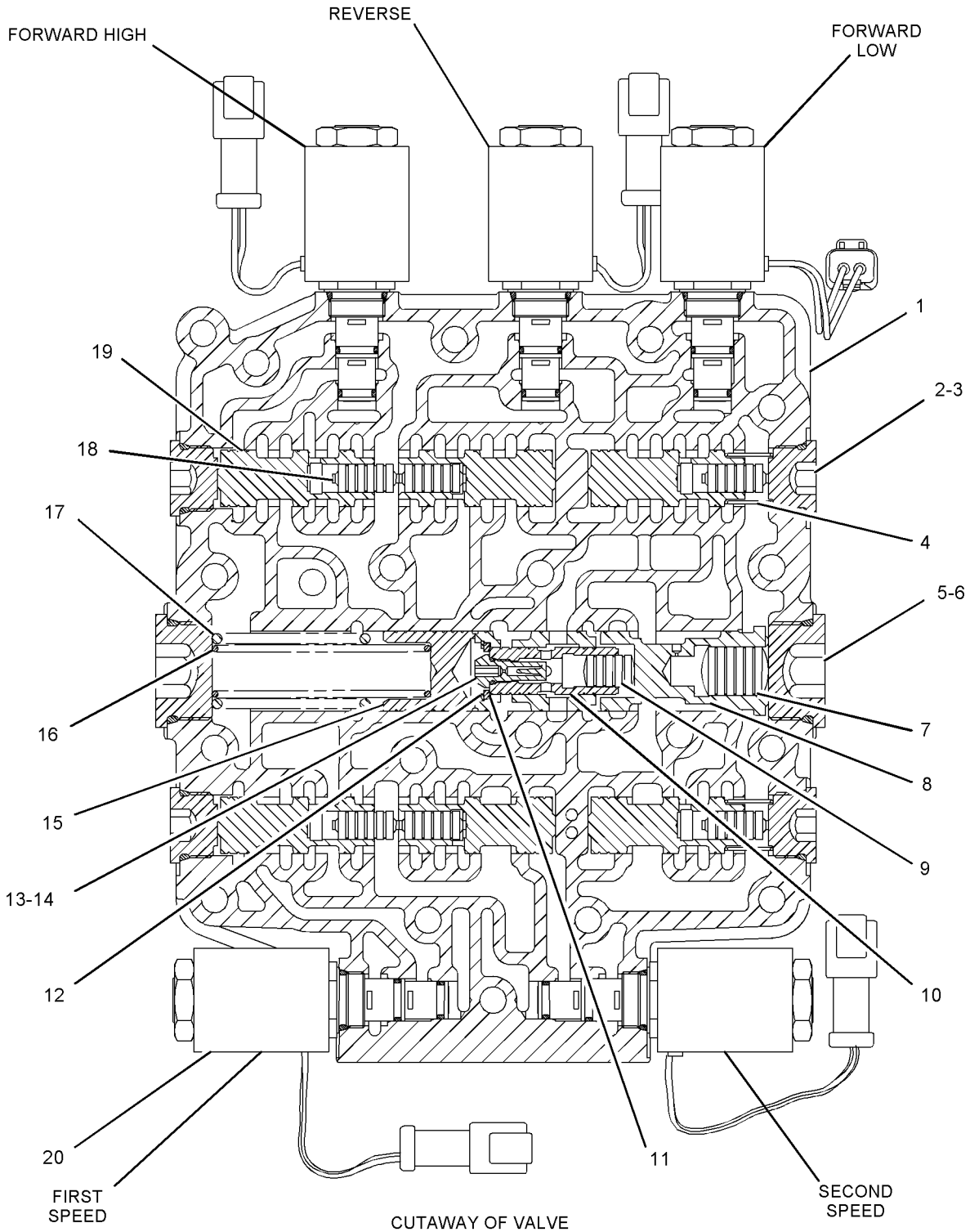


CUTAWAY OF VALVE

GRAPHIC #1

**<END>**

g01064812

# 186-1526 VALVE GP-SOLENOID

**S/N: 5MY1-UP**

**PART OF 6I-8723 VALVE GP-SELECTOR & PRESS CONT**

**SMCS-3174** **i02128800**

| NOTE | REF NO | GRAPHIC REF | PART NUMBER | QTY | PART NAME 1 2 3 4 5 6 (PRODUCT LEVEL) | SEE PAGE |
|---|---|---|---|---|---|---|
| J | 1 | 1 | **234-6666** | 1 | CARTRIDGE AS-VALVE | |
| | 2 | 1 | **104-3947** | 1 | LOCKNUT (5/8-11-THD) | |
| | 3 | 1 | **240-6822** | 1 | COIL AS | |
| | 4 | 1 | **1S-9593** | 2 | STRAP-CABLE | |
| | 5 | 1 | **102-8802** | 1 | KIT-RECEPTACLE (2-PIN) | |
| | | | | | (INCLUDES RECEPTACLE AS & WEDGE) | |
| | 6 | 1 | **3E-3365** | 1 | WEDGE-RECEPTACLE LOCK (2-PIN) | |
| | 7 | 1 | **186-3735** | 2 | PIN-CONNECTOR (16-GA TO 18-GA) | |
| | | | | | AVAILABLE REPAIR KIT(S): | |
| J | | | **7T-4515** | | KIT-SEAL | |
| | | | | | (INCLUDES SEAL-O-RINGS) | |

J-KIT MARKED J SERVICES PART MARKED J

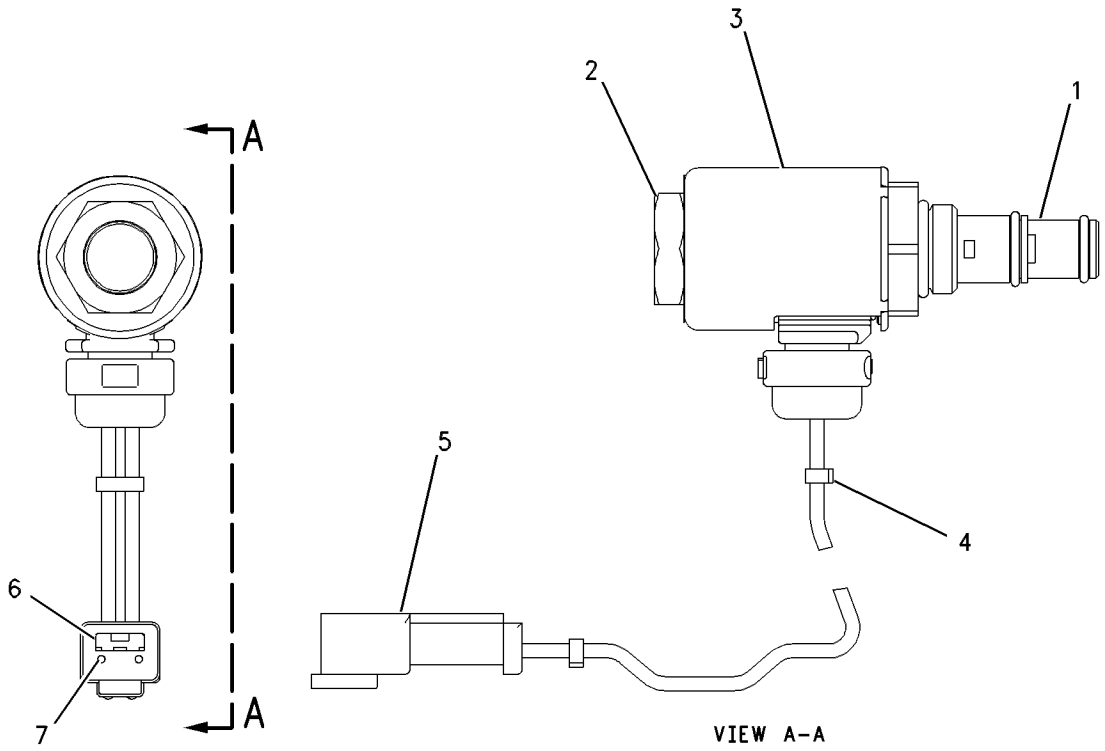


GRAPHIC #1 **<END>** g00661740

# *165-5942* VALVE GP-TRANSMISSION CONTROL

**S/N: 5MY1-UP**

**PART OF 147-5653 TRANSMISSION AR**

**SMCS-3073, 3167** **i02525738**

| NOTE | REF NO | GRAPHIC REF | PART NUMBER | QTY | PART NAME 1 2 3 4 5 6 (PRODUCT LEVEL) | SEE PAGE |
|---|---|---|---|---|---|---|
| M | 1 | 1 | **8T-9535** | 2 | BOLT-SOCKET HEAD (M8X1.25X60-MM) | |
| | 2 | 1 | **1T-0738** | 2 | WASHER (8.4X19X1.83-MM THK) | |
| | 3 | 1 | **9P-9150** | 4 | WASHER (8.25X18X0.84-MM THK) | |
| | 4 | 1 | **3J-1907** | 5 | SEAL-O-RING | |
| | 5 | 1 | **6V-0852** | 3 | CAP-DUST | |
| | 6 | 1 | **6V-3965** | 3 | FITTING-COUPLER | |
| M | 7 | 1 | **6V-5195** | 1 | BOLT-SOCKET HEAD (M8X1.25X50-MM) | |
| | 8 | 1 | **9M-1974** | 1 | WASHER-HARD (8.8X16X2-MM THK) | |
| | 9 | 1 | **4D-1322** | 1 | RING-RETAINING | |
| | 10 | 1 | **6Y-2584** | 1 | RETAINER | |
| | 11 | 1 | **3J-6956** | 1 | SPRING | |
| | 12 | 1 | **142-1767** | 1 | POPPET | |
| | 13 | 1 | **9S-8005** | 1 | PLUG-O-RING | |
| | 14 | 1 | **3K-0360** | 1 | SEAL-O-RING | |
| | 15 | 1 | **6Y-2522** | 1 | SPRING | |
| | 16 | 1 | **7T-8810** | 1 | PLUNGER | |
| | 17 | 1 | **9L-9068** | 4 | DOWEL | |
| Y | 18 | 1 | **6I-8723** | 1 | VALVE GP-SELECTOR & PRESS CONT (TRANSMISSION) | 312 |
| | 19 | 1 | **6Y-7623** | 1 | PLATE-SEPARATOR | |
| Y | 20 | 1 | **8E-5523** | 1 | VALVE GP-DUMP (TRANSMISSION) | 307 |
| | 21 | 1 | **8C-5176** | 2 | SEAL-O-RING | |
| | 22 | 1 | **6Y-9692** | 1 | PLATE | |
| | 23 | 1 | **179-6377** | 1 | MANIFOLD | |
| | 24 | 1 | **4J-2506** | 2 | SEAL-O-RING | |
| | 25 | 1 | **4F-4097** | 2 | SEAL-O-RING | |
| M | 26 | 1 | **6V-8212** | 1 | BOLT (M10X1.5X16-MM) | |
| | 28 | 1 | **6V-0484** | 2 | ADAPTER-O-RING | |

M-METRIC PART
Y-SEPARATE ILLUSTRATION

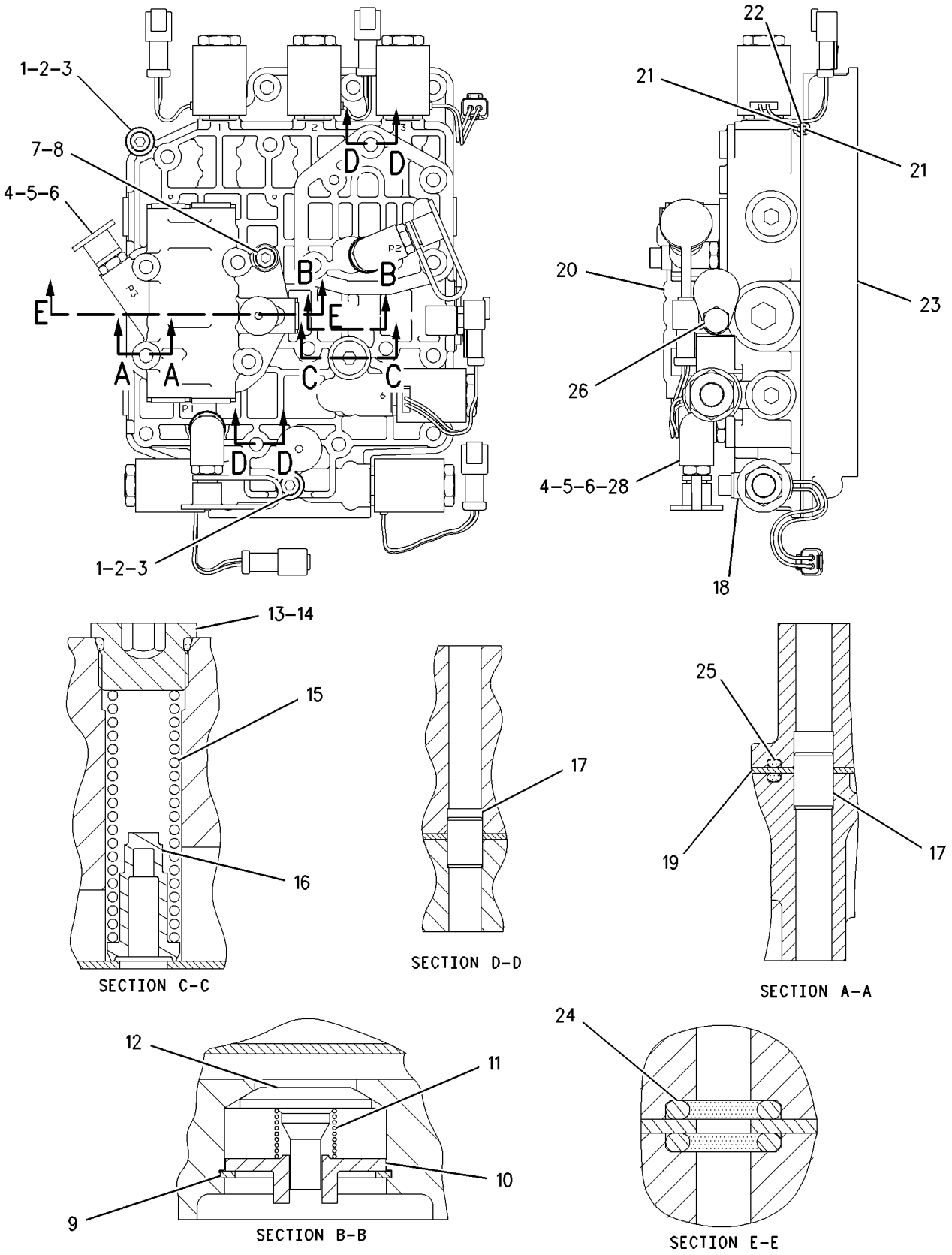


GRAPHIC #1 **<END>** g00792542

# 287-2126 VALVE GP-TRANSMISSION CONTROL

**S/N: R1C1-UP**

**PART OF 282-2974 CONTROL GP-TRANSMISSION HYD**

**SMCS-3073, 3167** **i02735047**

| NOTE | REF NO | GRAPHIC REF | PART NUMBER | QTY | PART NAME 1 2 3 4 5 6 (PRODUCT LEVEL) | SEE PAGE |
|---|---|---|---|---|---|---|
| | 1 | 1 | **6V-0852** | 6 | CAP-DUST | |
| | 2 | 1 | **7J-0204** | 1 | SEAL-O-RING | |
| | 3 | 1 | **8S-0768** | 6 | SEAL-O-RING | |
| | 4 | 1 | **9L-9068** | 1 | DOWEL | |
| Y | 5 | 1 | **145-7028** | 1 | SENSOR GP-TEMPERATURE (TRANSMISSION OIL) | 181 |
| | 6 | 1 | **200-2050** | 1 | MANIFOLD (TRANSMISSION CONTROL VALVE) | |
| Y | 7 | 1 | **244-3114** | 6 | VALVE GP-MODULATING (24-VOLT) (TRANSMISSION CLUTCH) | 309 |
| Y | 8 | 1 | **287-2125** | 1 | VALVE GP-RELIEF (TRANSMISSION HYDRAULIC CONTROL) | 310 |
| | 9 | 1 | **164-3651** | 1 | ADAPTER | |
| | 10 | 1 | **3J-1907** | 1 | SEAL-O-RING | |
| | 11 | 1 | **5J-3886** | 1 | SEAL-O-RING | |
| M | 12 | 1 | **5P-8347** | 5 | BOLT (M8X1.25X70-MM) | |
| M | 13 | 1 | **6V-5221** | 2 | BOLT (M8X1.25X80-MM) | |
| | 14 | 1 | **9M-1974** | 7 | WASHER-HARD (8.8X16X2-MM THK) | |

M-METRIC PART
Y-SEPARATE ILLUSTRATION

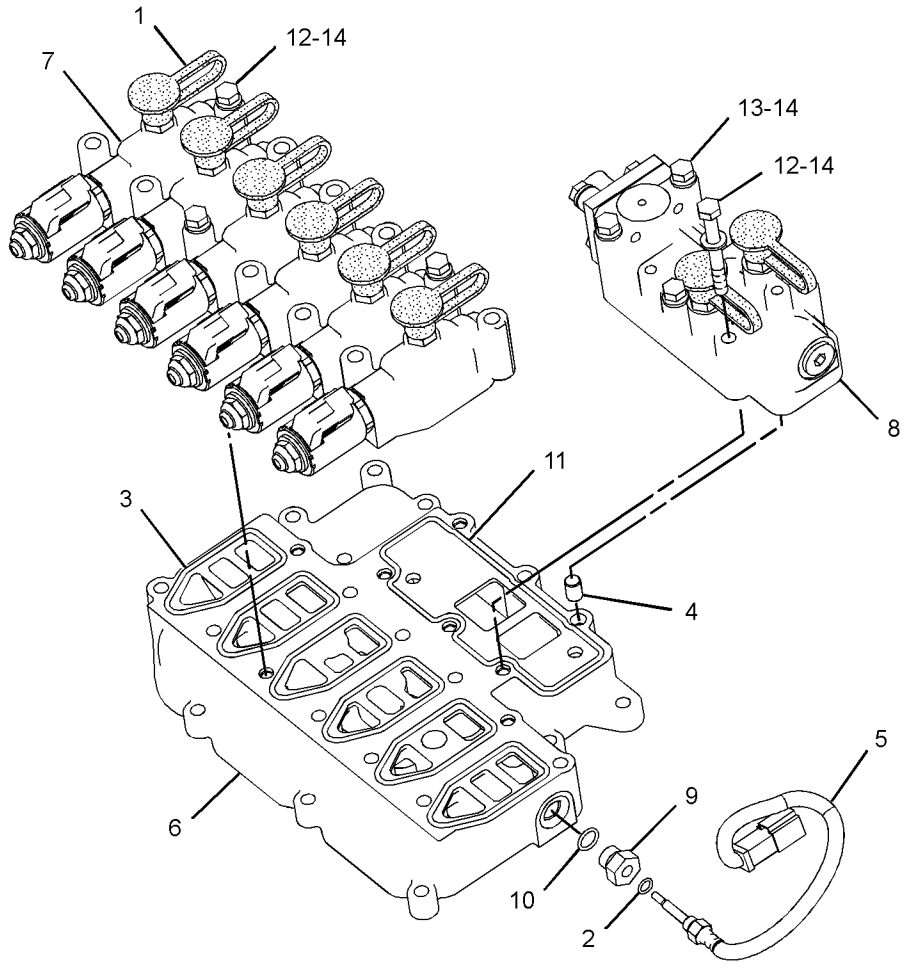


GRAPHIC #1 **<END>** g01281026

# FRAME AND BODY

## *260-9661* FENDER GP

**S/N: 5451-UP**

**FIELD INSTALLATION**

**SMCS-7252** **i02347162**

| NOTE | PART NUMBER | QTY | PART NAME 1 2 3 4 5 6 (PRODUCT LEVEL) | SEE PAGE |
|---|---|---|---|---|
| | **204-7057** | 1 | ANGLE | |

**<END>**

# *252-1417* FLOORPLATE GP

**S/N: 5451-UP**

**PART OF 252-1415, 252-1720 CAB AR-ENCLOSED ROPS, 252-1722, 252-1728 CAB AR-OPEN ROPS**

**AN ATTACHMENT**

**SMCS-7265** **i02614027**

| NOTE | REF NO | GRAPHIC REF | PART NUMBER | QTY | PART NAME 1 2 3 4 5 6 (PRODUCT LEVEL) | SEE PAGE |
|---|---|---|---|---|---|---|
| | 1 | 1 | **123-4626** | 1 | INSULATION | |
| | 2 | 1 | **123-7032** | 2 | TREAD | |
| | 3 | 1 | **257-5157** | 1 | PLATE | |
| | 4 | 1 | **257-5158** | 1 | FLOOR MAT | |
| | 5 | 1 | **257-5159** | 1 | INSULATION | |
| | 6 | 1 | **257-5160** | 1 | INSULATION | |
| M | 7 | 1 | **9X-2041** | 4 | SCREW-TRUSS HEAD (M10X1.5X20-MM) | |
| | 8 | 1 | **8T-4121** | 15 | WASHER-HARD (11X21X2.5-MM THK) | |
| M | 9 | 1 | **8T-4137** | 15 | BOLT (M10X1.5X20-MM) | |

M-METRIC PART

*252-1417* **FLOORPLATE GP** *(contd.)* **i02614027**

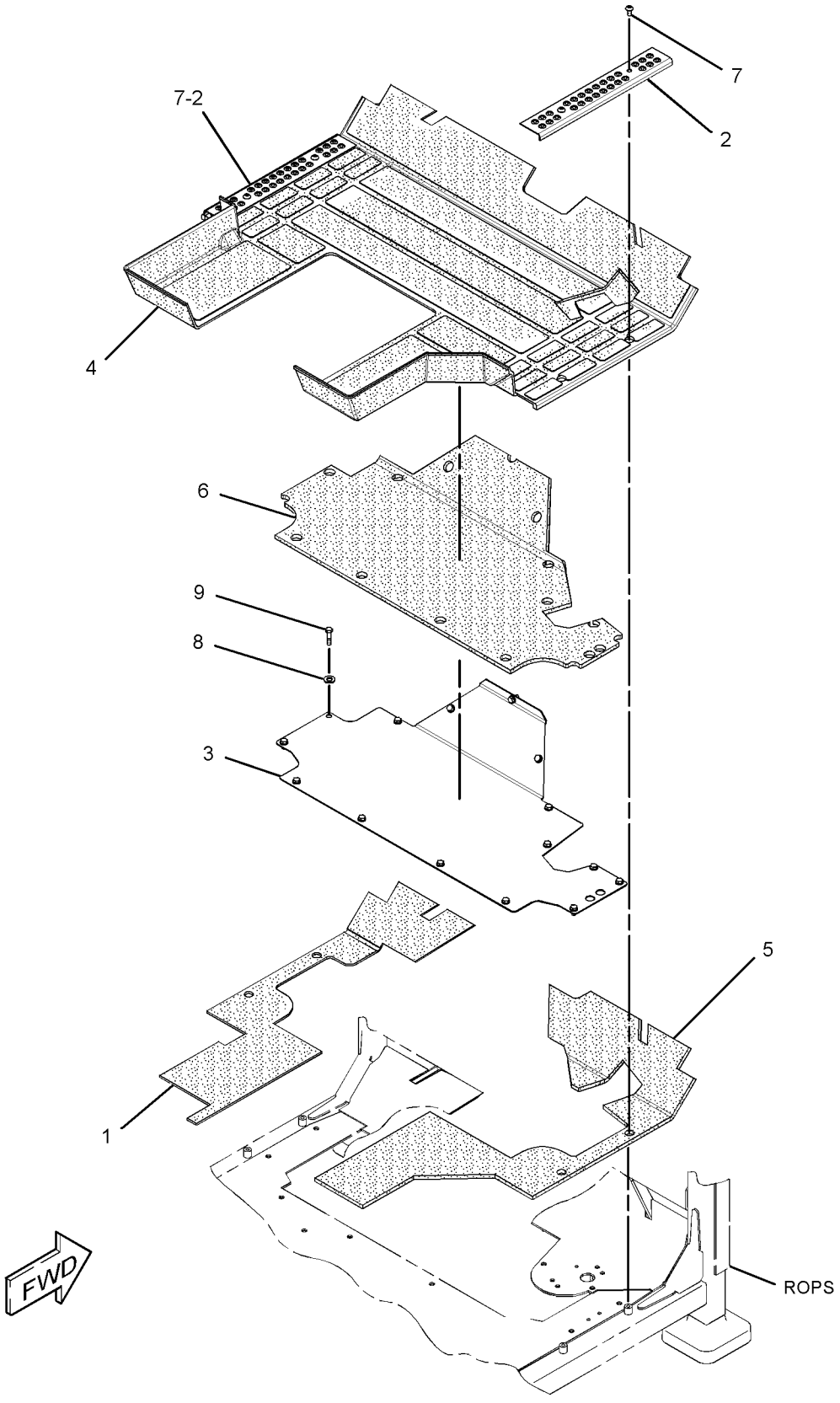


GRAPHIC #1 **<END>** g01341281

## 251-9734 FRAME AS-FRONT

**S/N: 5451-344**

**PART OF 246-5996 FRAME GP-FRONT**

**SMCS-7051** **i02546778**

| NOTE | REF NO | GRAPHIC REF | PART NUMBER | QTY | PART NAME 1 2 3 4 5 6 (PRODUCT LEVEL) | SEE PAGE |
|---|---|---|---|---|---|---|
| | 1 | 1 | **3W-9117** | 1 | BAR | |
| | 2 | 1 | *8X-4718* | 1 | ANGLE AS | |
| M | | 1 | **8T-3490** | 1 | NUT-WELD (M10X1.5-THD) | |
| | 3 | 1 | *171-2170* | 2 | PLATE AS | |
| | | | | | (EACH INCLUDES) | |
| M | | 1 | **9X-6269** | 1 | NUT-WELD (M16X2X13-MM OAL) | |
| | 4 | 1 | *230-3246* | 2 | BRACKET AS | |
| | | | | | (EACH INCLUDES) | |
| M | | 1 | **8T-3597** | 1 | NUT-WELD (M12X1.75-THD) | |
| | 5 | 1 | *230-3250* | 8 | PLATE AS | |
| | | | | | (EACH INCLUDES) | |
| M | | 1 | **8T-3597** | 1 | NUT-WELD (M12X1.75-THD) | |
| M | 6 | 1 | **9R-2640** | 2 | BOSS (M12X1.75X25-MM) | |
| | 7 | 1 | **275-5149** | 1 | PLATE AS | |
| M | | 1 | **8T-3490** | 2 | NUT-WELD (M10X1.5-THD) | |
| M | 8 | 1 | **110-2023** | 1 | STUD-WELD (M10X1.5X25-MM) | |
| M | 9 | 1 | **112-9073** | 12 | STUD-WELD (M12X1.75X21.1-MM) | |
| | 10 | 1 | **7T-1099** | 30 | LINK | |
| M | 11 | 1 | **8R-7783** | 2 | BOSS (M12X45-MM) | |
| M | 12 | 1 | **8T-3635** | 5 | STUD-WELD (M12X1.75X34.93-MM OAL) | |
| M | 13 | 1 | **8T-3851** | 21 | BOSS-WELD (M10X1.5X17.5-MM) | |
| M | 14 | 1 | **8T-4935** | 4 | BOSS-WELD (M10X1.5X45-MM) | |
| M | 15 | 1 | **8T-4967** | 2 | STUD-WELD (M10X1.5X23-MM OAL) | |
| | 16 | 1 | **9C-4935** | 1 | PLATE | |
| | 17 | 1 | **9C-6809** | 4 | BLOCK | |
| M | 18 | 1 | **8T-6462** | 2 | BOSS-WELD (M10X1.5X25-MM OAL) | |

M-METRIC PART

**251-9734 FRAME AS-FRONT** *(contd. )* **i02546778**

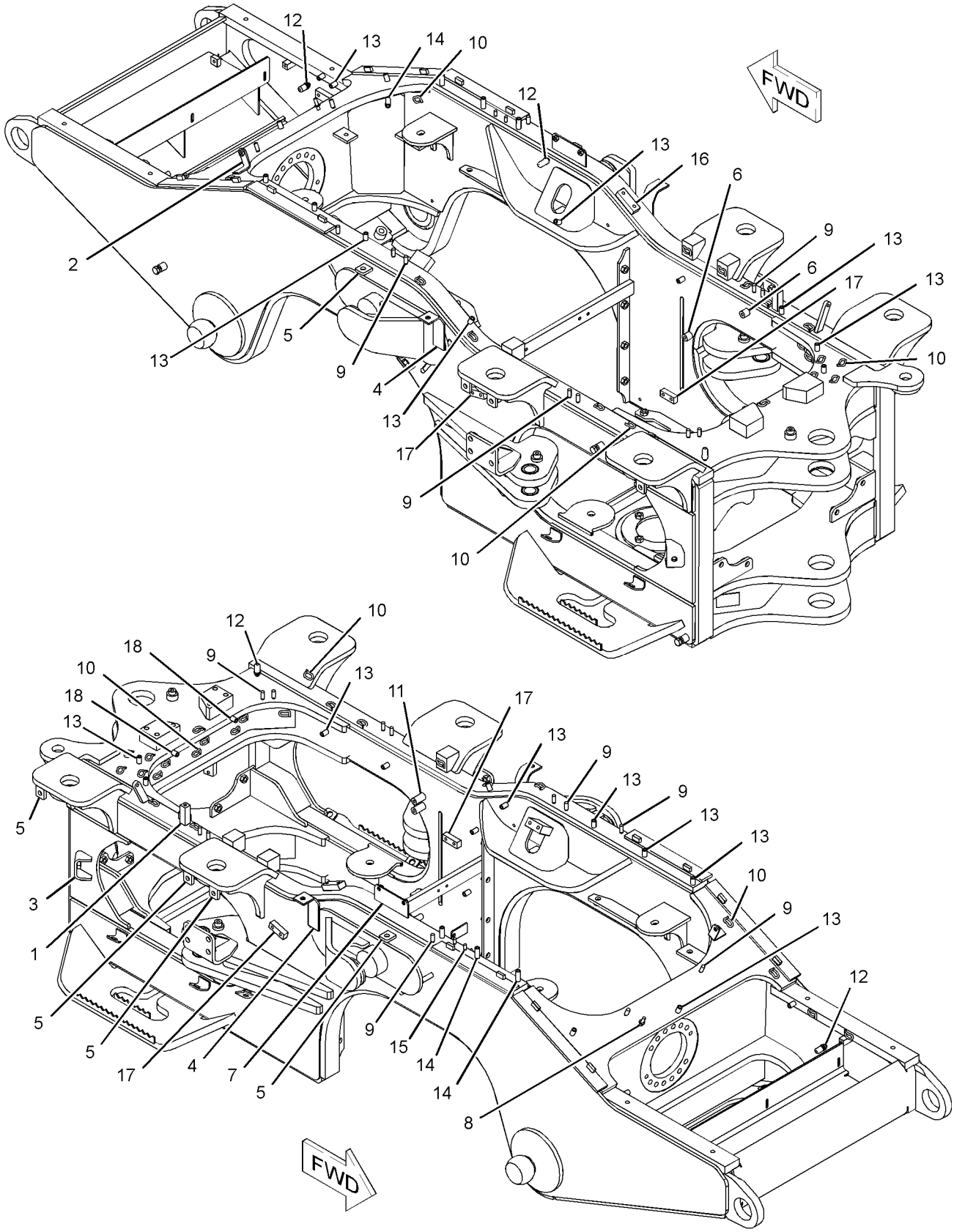


GRAPHIC #1 **<END>** g01303301

# FRAME AND BODY

## *251-9734* FRAME AS-FRONT

**S/N: 545345-UP**

**PART OF 246-5996 FRAME GP-FRONT**

**SMCS-7051** **i02708002**

| NOTE | REF NO | GRAPHIC REF | PART NUMBER | QTY | PART NAME 1 2 3 4 5 6 (PRODUCT LEVEL) | SEE PAGE |
|---|---|---|---|---|---|---|
| | 1 | 1 | **3W-9117** | 1 | BAR | |
| | 2 | 1 | *8X-4718* | 1 | ANGLE AS | |
| M | | 1 | **8T-3490** | 1 | NUT-WELD (M10X1.5-THD) | |
| | 3 | 1 | *171-2170* | 2 | PLATE AS | |
| | | | | | (EACH INCLUDES) | |
| M | | 1 | **9X-6269** | 1 | NUT-WELD (M16X2X13-MM OAL) | |
| | 4 | 1 | *230-3246* | 2 | BRACKET AS | |
| | | | | | (EACH INCLUDES) | |
| M | | 1 | **8T-3597** | 1 | NUT-WELD (M12X1.75-THD) | |
| | 5 | 1 | *230-3250* | 8 | PLATE AS | |
| | | | | | (EACH INCLUDES) | |
| M | | 1 | **8T-3597** | 1 | NUT-WELD (M12X1.75-THD) | |
| M | 6 | 1 | **9R-2640** | 2 | BOSS (M12X1.75X25-MM) | |
| | 7 | 1 | **275-5149** | 1 | PLATE AS | |
| M | | 1 | **8T-3490** | 2 | NUT-WELD (M10X1.5-THD) | |
| M | 8 | 1 | **110-2023** | 1 | STUD-WELD (M10X1.5X25-MM) | |
| M | 9 | 1 | **112-9073** | 12 | STUD-WELD (M12X1.75X21.1-MM) | |
| C | 10 | 1 | **7T-1099** | 34 | LINK | |
| CM | 11 | 1 | **8R-7783** | 1 | BOSS (M12X45-MM) | |
| M | 12 | 1 | **8T-3635** | 5 | STUD-WELD (M12X1.75X34.93-MM OAL) | |
| CM | 13 | 1 | **8T-3851** | 20 | BOSS-WELD (M10X1.5X17.5-MM) | |
| CM | 14 | 1 | **8T-4935** | 2 | BOSS-WELD (M10X1.5X45-MM) | |
| M | 15 | 1 | **8T-4967** | 2 | STUD-WELD (M10X1.5X23-MM OAL) | |
| | 16 | 1 | **9C-4935** | 1 | PLATE | |
| | 17 | 1 | **9C-6809** | 4 | BLOCK | |
| M | 18 | 1 | **8T-6462** | 2 | BOSS-WELD (M10X1.5X25-MM OAL) | |

C-CHANGE FROM PREVIOUS TYPE
M-METRIC PART

*251-9734* **FRAME AS-FRONT** *(contd.)* **i02708002**

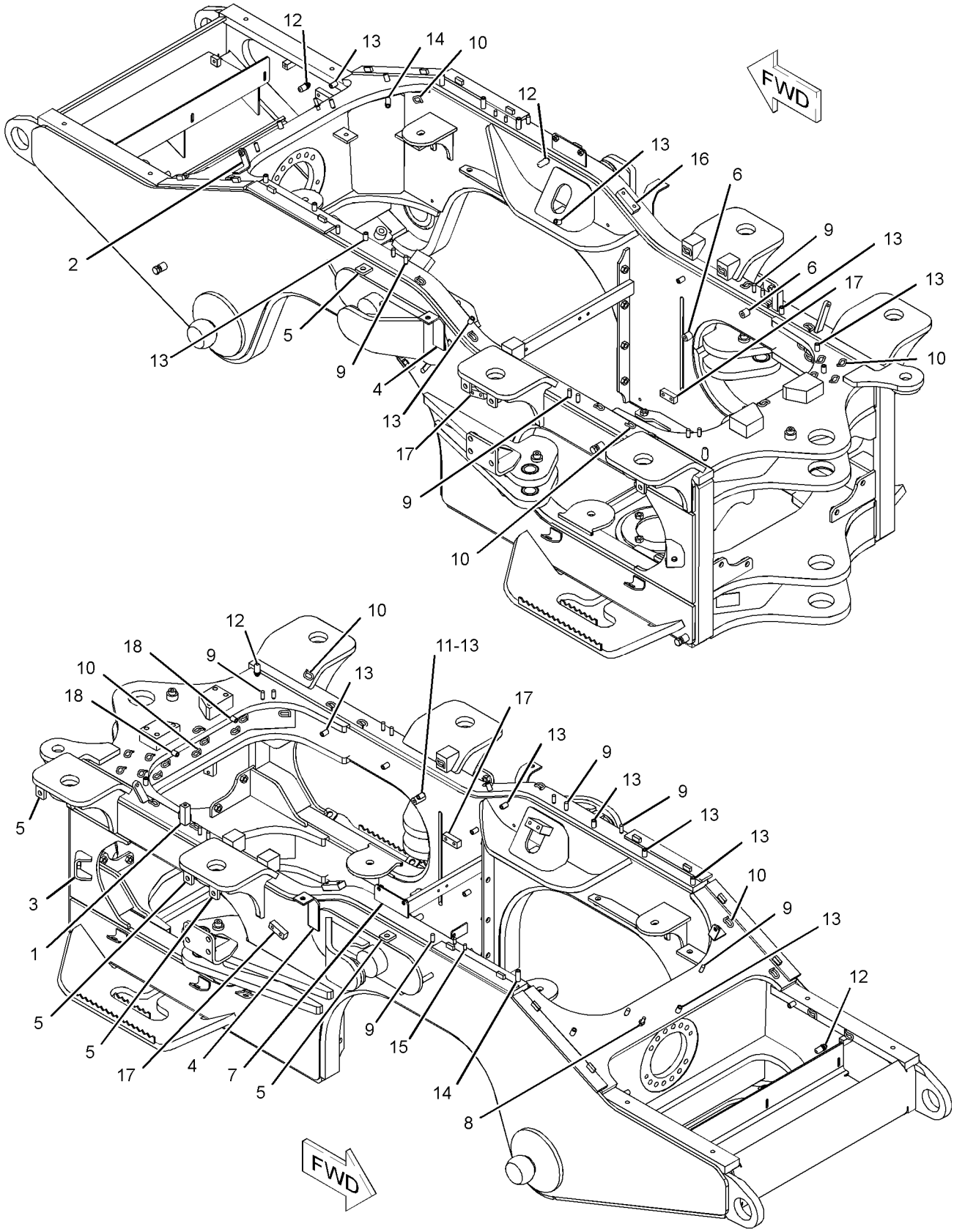


GRAPHIC #1 **<END>** g01361641

# FRAME AND BODY

## *246-6003* FRAME AS-REAR

**S/N: 5451-UP**
**PART OF 253-3885 FRAME GP-REAR**
**AN ATTACHMENT**

**SMCS-7050, 7051** **i02181271**

| NOTE | REF NO | GRAPHIC REF | PART NUMBER | QTY | PART NAME 1 2 3 4 5 6 (PRODUCT LEVEL) | SEE PAGE |
|---|---|---|---|---|---|---|
| | 1 | 1 | **251-4320** | 1 | FRAME AS-REAR | |
| | | 1 | *251-7800* | 1 | PLATE AS | |
| | | 1 | **8X-4903** | 1 | BLOCK (140-MM LONG) | |
| | | 1 | **151-1402** | 1 | BLOCK | |
| | | 1 | **151-1402** | 1 | BLOCK | |

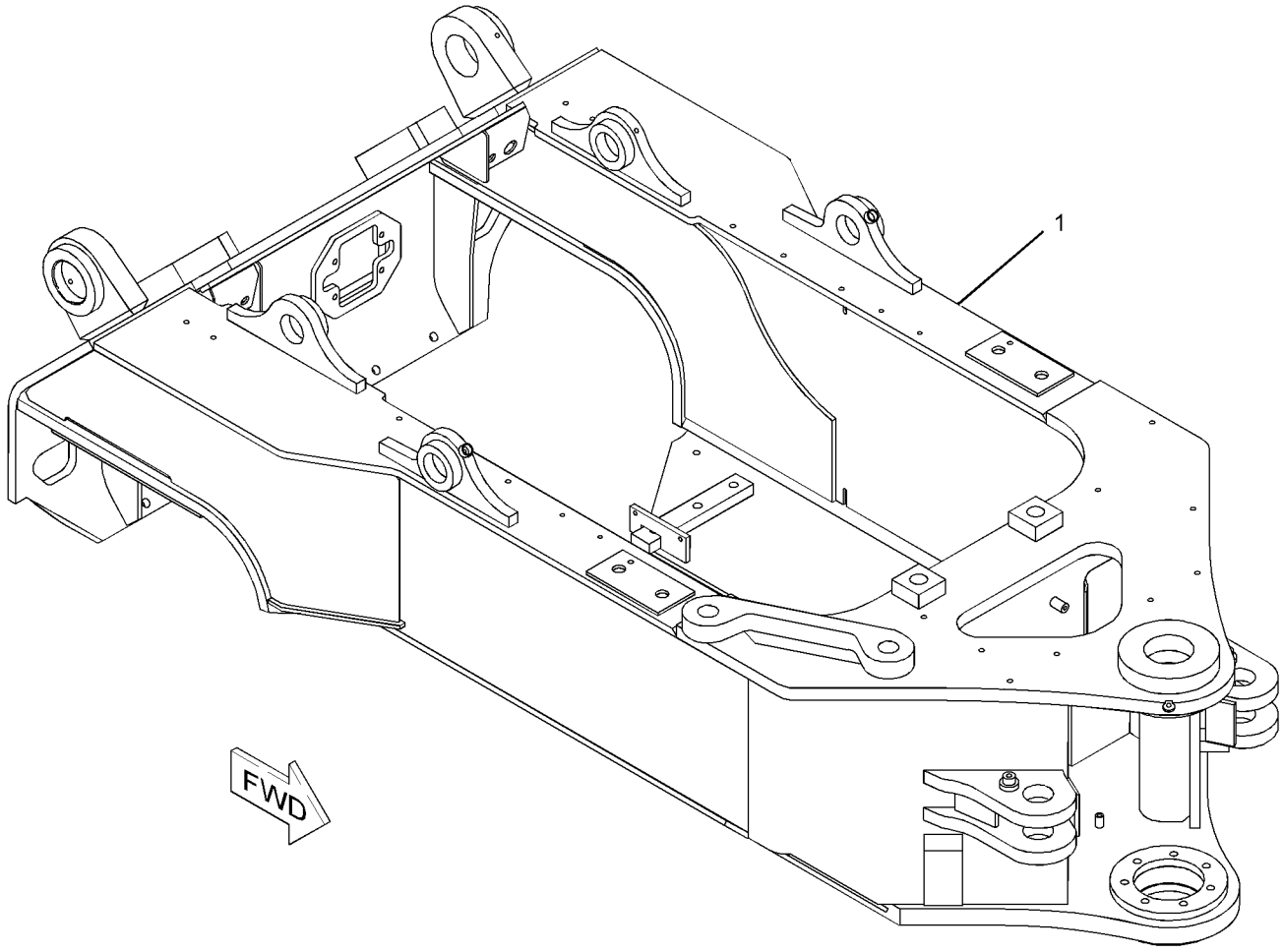


GRAPHIC #1 **<END>** g01104398

## *246-5996* FRAME GP-FRONT

**S/N: 5451-UP**

**PART OF 245-9460 CHASSIS AR**

**SMCS-7051, 7158** **i02655808**

| NOTE | REF NO | GRAPHIC REF | PART NUMBER | QTY | PART NAME 1 2 3 4 5 6 (PRODUCT LEVEL) | SEE PAGE |
|---|---|---|---|---|---|---|
| | 1 | 1 | **2K-0703** | 2 | BAR | |
| Y | 2 | 1 | **251-9734** | 1 | FRAME AS-FRONT | 321 |
| | 3 | 1 | **252-8757** | 2 | PIN AS | |
| | 4 | 1 | **284-9505** | 2 | PIN | |
| | 5 | 1 | **7G-8839** | 2 | SPACER (13.5X57X6-MM THK) | |
| M | 6 | 1 | **8T-4139** | 4 | BOLT (M12X1.75X30-MM) | |
| M | 7 | 1 | **8T-4192** | 2 | BOLT (M12X1.75X25-MM) | |
| | 8 | 1 | **8T-4223** | 4 | WASHER-HARD (13.5X25.5X3-MM THK) | |

M-METRIC PART
Y-SEPARATE ILLUSTRATION

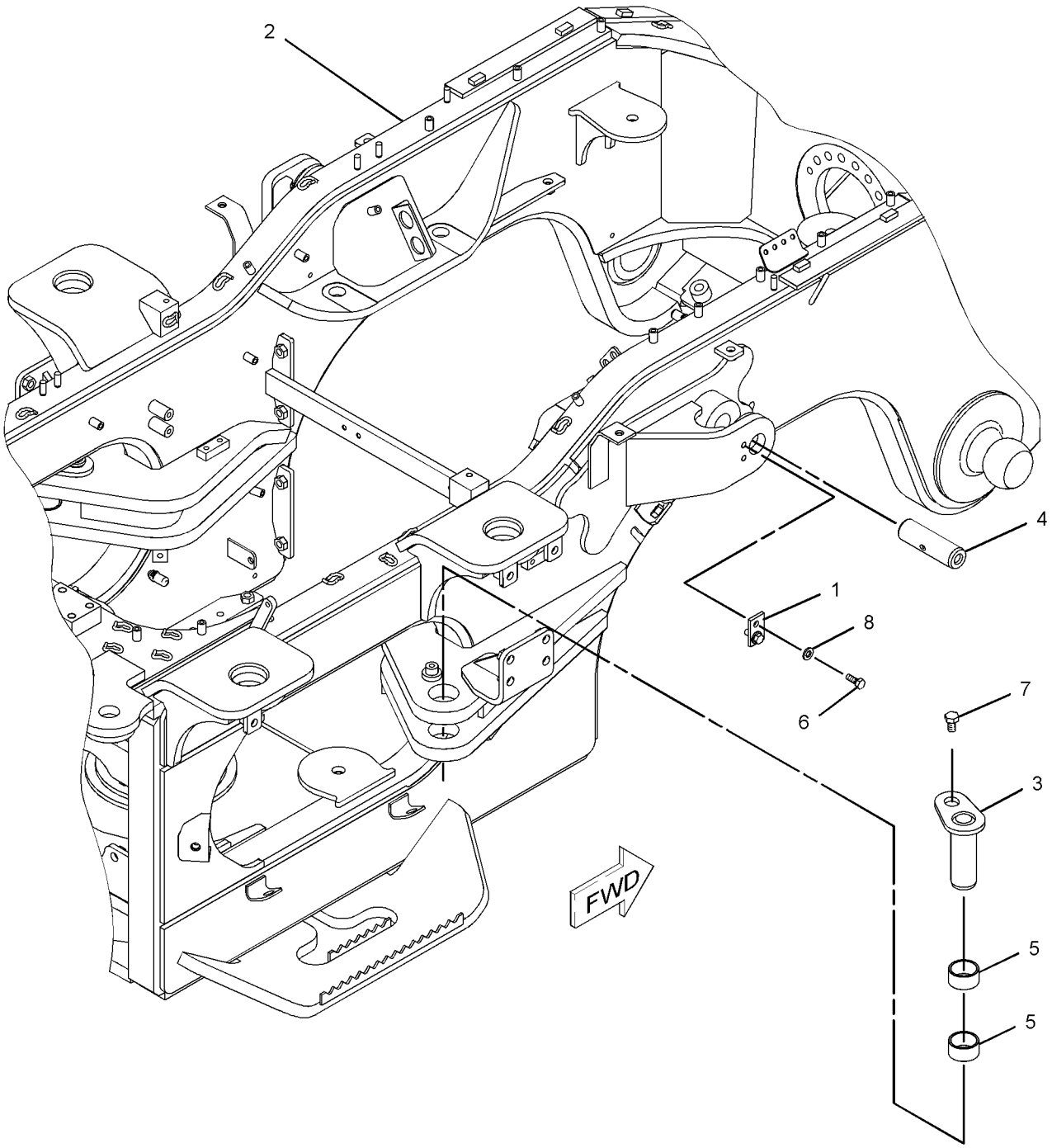


GRAPHIC #1 **<END>** g01334070

## *253-3885* FRAME GP-REAR

**S/N: 5451-UP**

**AN ATTACHMENT**

**SMCS-7051** **i02180421**

| NOTE | PART NUMBER | QTY | PART NAME 1 2 3 4 5 6 (PRODUCT LEVEL) | SEE PAGE |
|---|---|---|---|---|
| Y | *246-6003* | 1 | FRAME AS-REAR | 325 |

Y-SEPARATE ILLUSTRATION

**<END>**

# FRAME AND BODY

## *253-3886* FRAME GP-REAR—GRAPPLE MACHINE

**S/N: 5451-UP**
**AN ATTACHMENT**

**SMCS-7051** **i02325377**

| NOTE | REF NO | GRAPHIC REF | PART NUMBER | QTY | PART NAME 1 2 3 4 5 6 (PRODUCT LEVEL) | SEE PAGE |
|---|---|---|---|---|---|---|
| | 1 | 1 | **246-6004** | 1 | FRAME AS (GRAPPLE MACHINE) | |
| | 1A | 1 | **204-7057** | 1 | ANGLE | |
| | 1B | 1 | *251-7800* | 1 | PLATE AS | |
| | | 1 | **8X-4903** | 1 | BLOCK (140-MM LONG) | |
| M | | 1 | **8T-3851** | 1 | BOSS-WELD (M10X1.5X17.5-MM) | |
| | | 1 | **151-1402** | 1 | BLOCK | |

M-METRIC PART

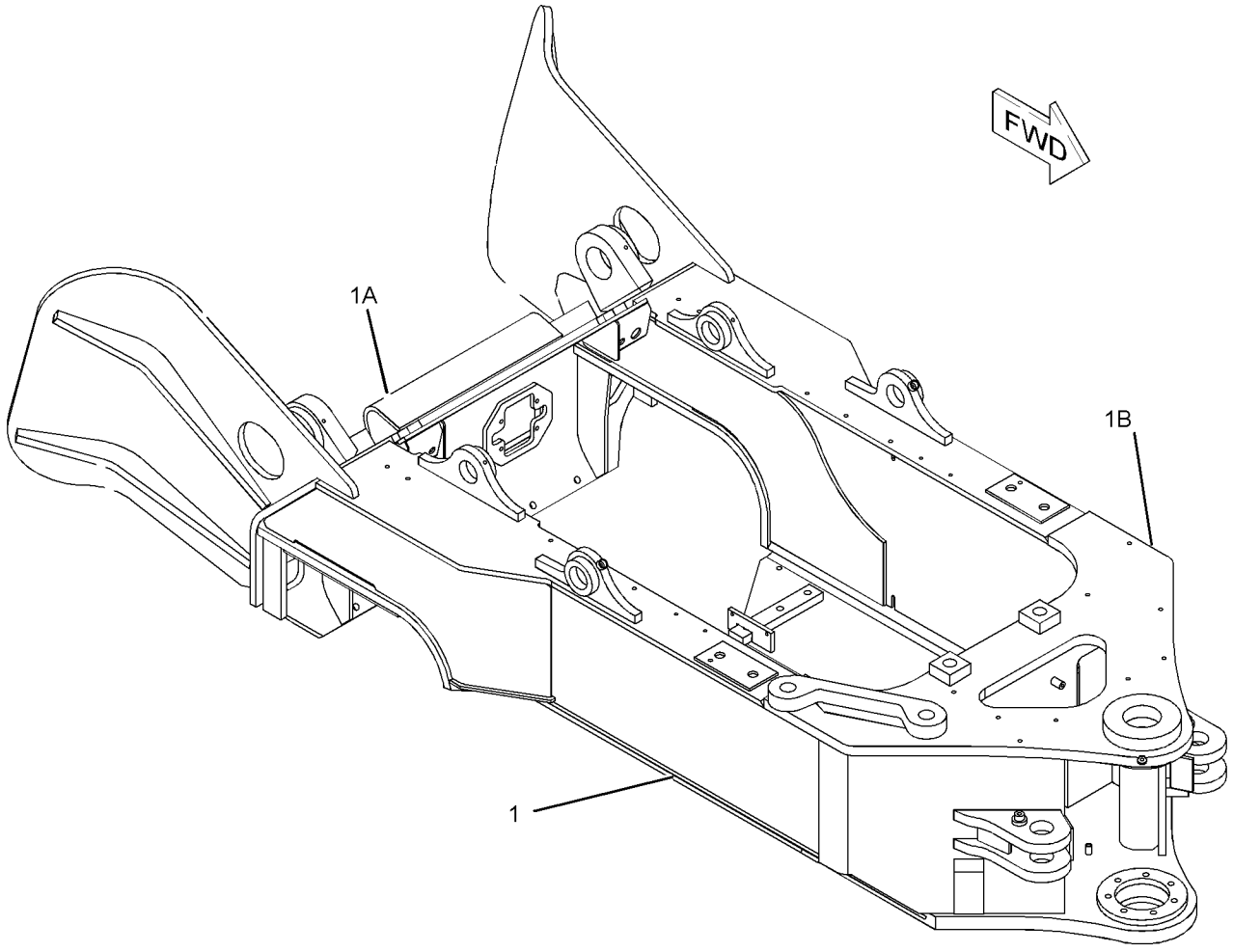


GRAPHIC #1 **<END>** g01162440

# FRAME AND BODY

## *253-3887* FRAME GP-REAR–CABLE MACHINE

**S/N: 5451-UP**

**AN ATTACHMENT**

**SMCS-7051** **i02180423**

| NOTE | REF NO | GRAPHIC REF | PART NUMBER | QTY | PART NAME 1 2 3 4 5 6 (PRODUCT LEVEL) | SEE PAGE |
|---|---|---|---|---|---|---|
| | 1 | 1 | **246-6005** | 1 | FRAME AS-REAR (CABLE MACHINE) | |
| | 1A | 1 | **111-9758** | 1 | PLATE | |
| | 1B | 1 | *251-7800* | 1 | PLATE AS | |
| | | 1 | **8X-4903** | 1 | BLOCK (140-MM LONG) | |
| M | | 1 | **8T-3851** | 1 | BOSS-WELD (M10X1.5X17.5-MM) | |
| | | 1 | **151-1402** | 1 | BLOCK | |

M-METRIC PART

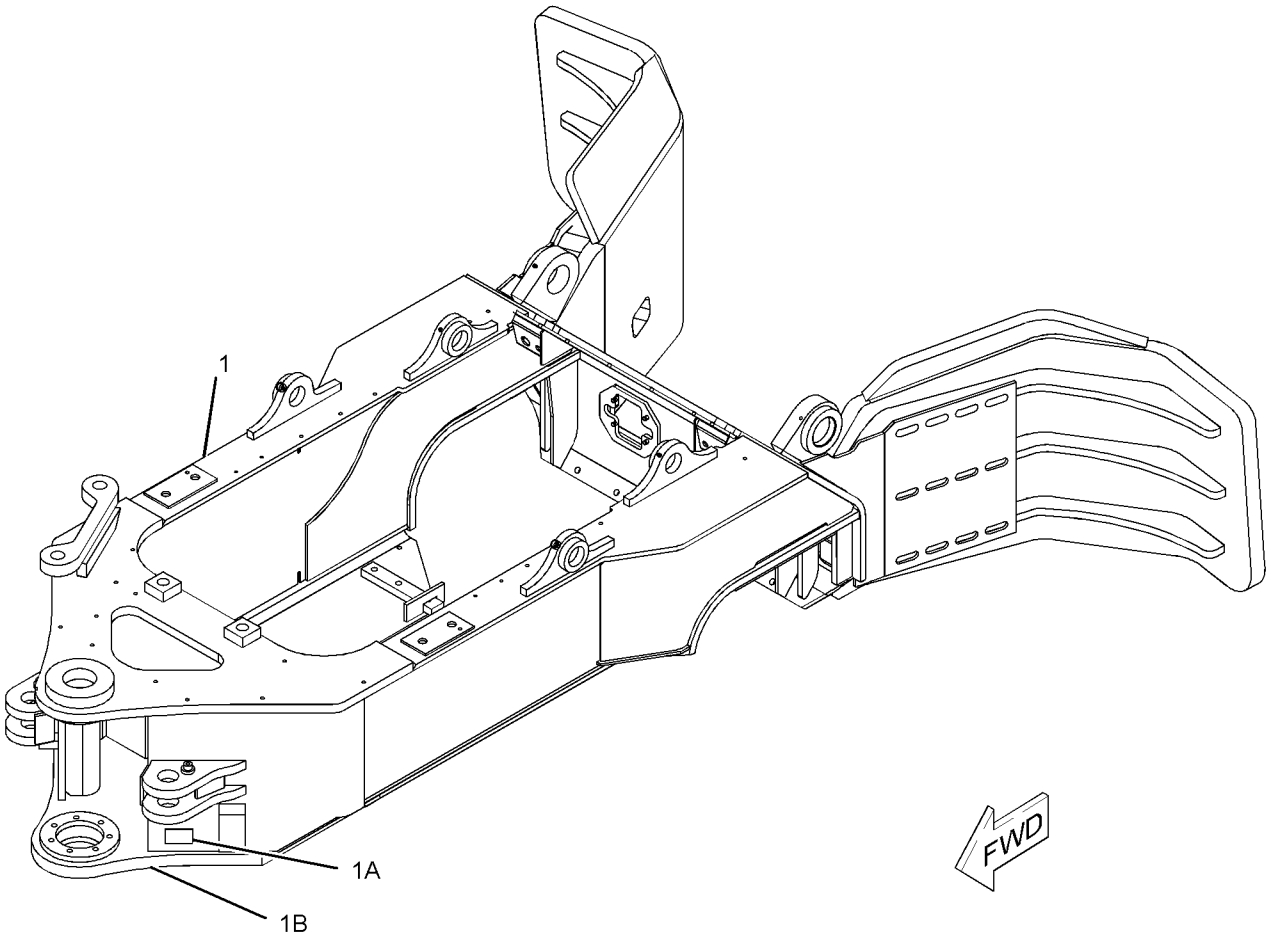


GRAPHIC #1 **<END>** g01104209

## *246-5998* GUARD GP-BOTTOM–FRONT FRAME

**S/N: 5451-UP**

**PART OF 245-9460 CHASSIS AR**

**SMCS-7153** **i02291617**

| NOTE | REF NO | GRAPHIC REF | PART NUMBER | QTY | PART NAME 1 2 3 4 5 6 (PRODUCT LEVEL) | SEE PAGE |
|---|---|---|---|---|---|---|
| | 1 | 1 | **170-1259** | 1 | PLATE | |
| | 2 | 1 | **170-3503** | 1 | GUARD AS-ENGINE | |
| M | | 1 | **8T-3490** | 1 | NUT-WELD (M10X1.5-THD) | |
| | | 1 | **170-1259** | 1 | PLATE | |
| | 3 | 1 | **222-8632** | 1 | PLATE AS | |
| | 4 | 1 | **222-8635** | 1 | PLATE AS | |
| | 5 | 1 | **222-8636** | 1 | PLATE AS | |
| | 6 | 1 | **223-3645** | 1 | PLATE | |
| | 7 | 1 | **229-5424** | 2 | PLATE | |
| | 8 | 1 | **251-9735** | 1 | PLATE AS | |
| | 9 | 1 | **254-6827** | 1 | PLATE AS | |
| | | 1 | **148-8562** | 4 | BOSS | |
| | 10 | 1 | **7X-0515** | 17 | WASHER-HARD (17X35X5-MM THK) | |
| | 11 | 1 | **7X-0583** | 8 | WASHER-HARD (17X45X6-MM THK) | |
| M | 12 | 1 | **7X-2553** | 17 | BOLT (M16X2X40-MM) | |
| M | 13 | 1 | **7X-2563** | 9 | BOLT (M20X2.5X60-MM) | |
| M | 14 | 1 | **8T-4779** | 8 | BOLT (M16X2X35-MM) | |
| | 15 | 1 | **8T-5439** | 9 | WASHER-HARD (21.5X45X6-MM THK) | |

M-METRIC PART

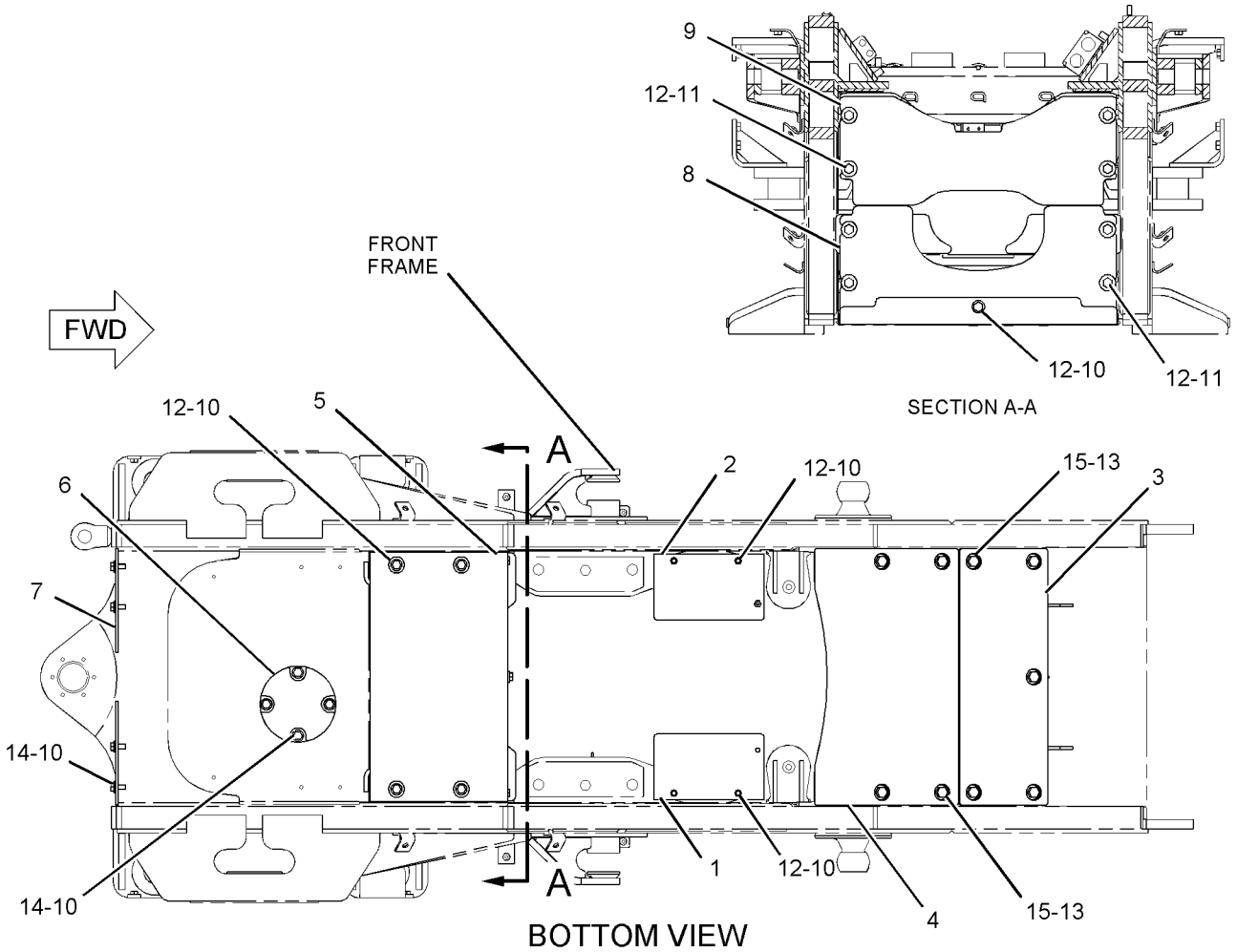


GRAPHIC #1

**<END>**

g01103001

# FRAME AND BODY

## *246-6007* GUARD GP-BOTTOM–REAR FRAME

**S/N: 5451-UP**

**PART OF 245-9460 CHASSIS AR**

**SMCS-7153** **i02177701**

| NOTE | REF NO | GRAPHIC REF | PART NUMBER | QTY | PART NAME 1 2 3 4 5 6 (PRODUCT LEVEL) | SEE PAGE |
|---|---|---|---|---|---|---|
| | 1 | 1 | **144-8440** | 1 | GUARD AS | |
| | | 1 | **144-8442** | 2 | PLATE | |
| | 2 | 1 | **151-0837** | 2 | PLATE | |
| | 3 | 1 | **253-3368** | 1 | PLATE AS | |
| | 4 | 1 | **5P-1076** | 8 | WASHER-HARD (13.5X30X4-MM THK) | |
| M | 5 | 1 | **7X-2562** | 8 | BOLT (M20X2.5X45-MM) | |
| M | 6 | 1 | **8T-4192** | 8 | BOLT (M12X1.75X25-MM) | |
| | 7 | 1 | **8T-5439** | 14 | WASHER-HARD (21.5X45X6-MM THK) | |
| M | 8 | 1 | **8T-6430** | 6 | BOLT (M20X2.5X50-MM) | |

M-METRIC PART

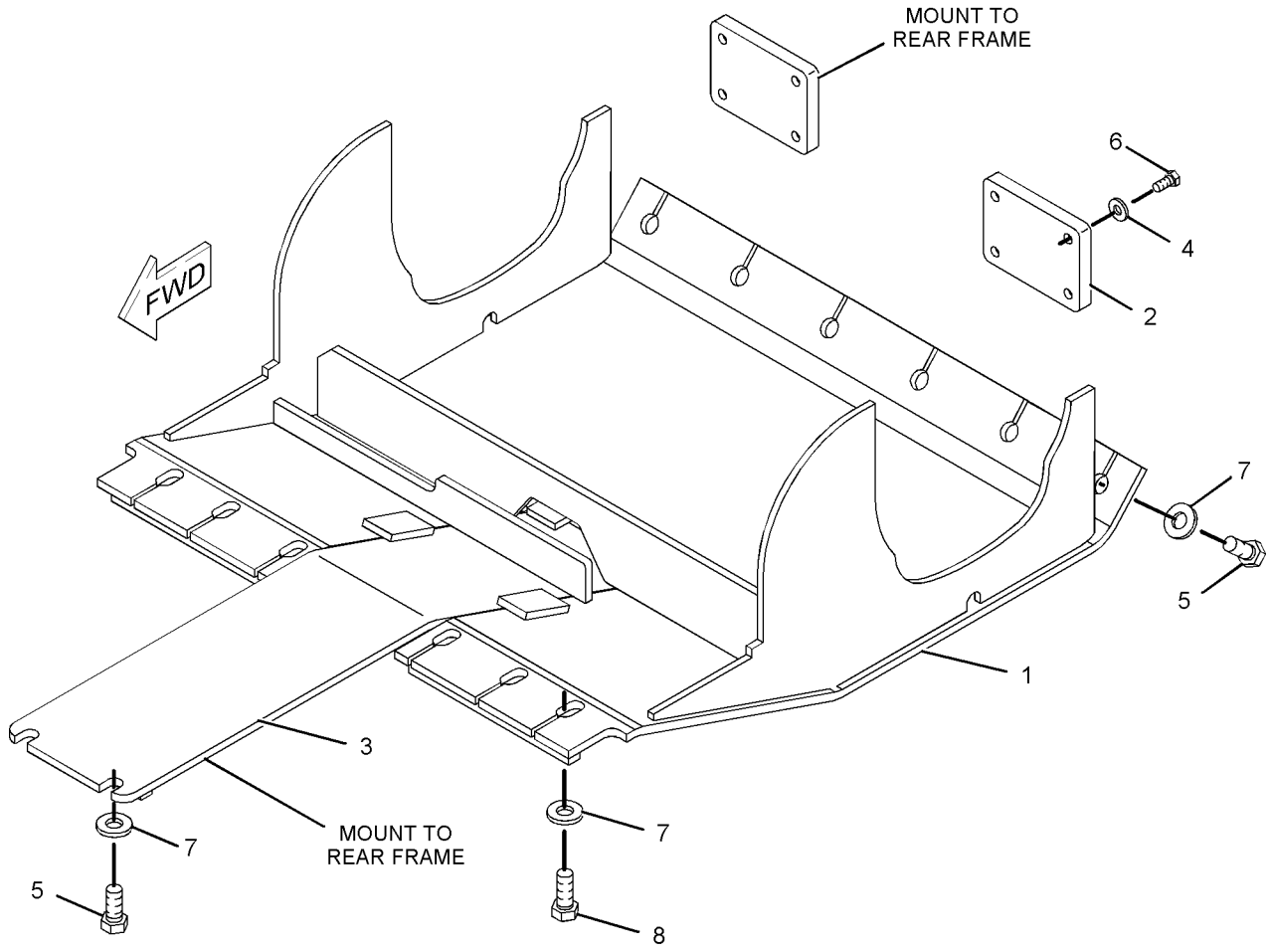


GRAPHIC #1 **<END>** g01103046

# *180-9186* GUARD GP-CAB

**S/N: 5451-UP**

**PART OF 252-1720 CAB AR-ENCLOSED ROPS, 252-1728 CAB AR-OPEN ROPS AN ATTACHMENT**

**SMCS-7158** **i01794372**

| NOTE | REF NO | GRAPHIC REF | PART NUMBER | QTY | PART NAME 1 2 3 4 5 6 (PRODUCT LEVEL) | SEE PAGE |
|---|---|---|---|---|---|---|
| | 1 | 1 | **160-1762** | 1 | SHEET | |
| C | 2 | 1 | **212-7426** | 1 | PLATE AS | |
| C | 3 | 1 | **212-7427** | 1 | PLATE AS | |
| | | | | | (EACH PLATE AS INCLUDES) | |
| M | | 1 | **8T-3490** | 4 | NUT-WELD (M10X1.5 THD) | |
| | 4 | 1 | **8T-4121** | 10 | WASHER-HARD (11X21X2.5-MM THK) | |
| M | 5 | 1 | **8T-4136** | 10 | BOLT (M10X1.5X25-MM) | |
| | 6 | 1 | **5P-1076** | 2 | WASHER-HARD (13.5X30X4-MM THK) | |
| M | 7 | 1 | **8T-4192** | 2 | BOLT (M12X1.75X25-MM) | |

C-CHANGE FROM PREVIOUS TYPE
M-METRIC PART

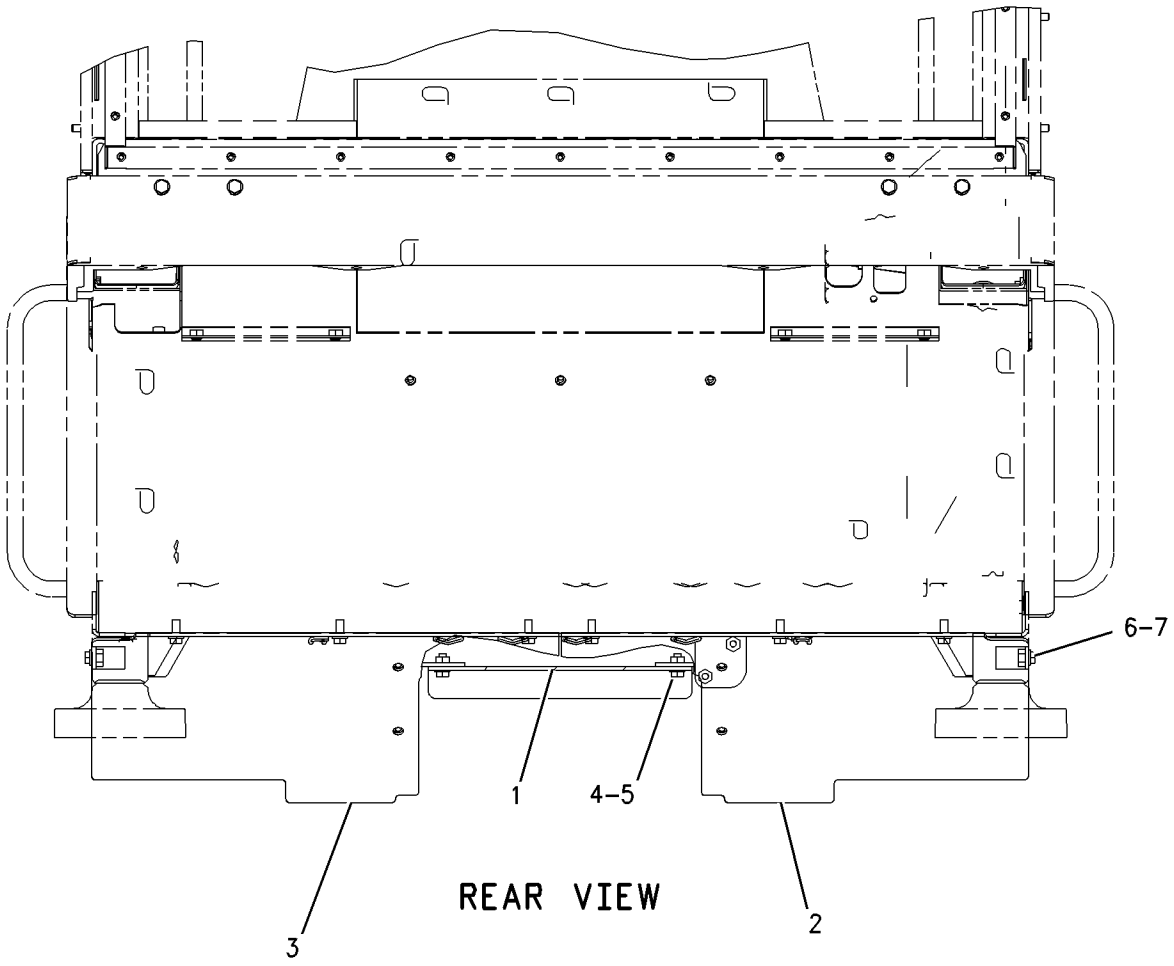


GRAPHIC #1 **<END>** g00672909

# FRAME AND BODY

## *270-0612* GUARD GP-CAB

**S/N: 5451-UP**

**PART OF 252-1415 CAB AR-ENCLOSED ROPS, 252-1722 CAB AR-OPEN ROPS**

**AN ATTACHMENT**

**SMCS-7158** **i02358896**

| NOTE | REF NO | GRAPHIC REF | PART NUMBER | QTY | PART NAME 1 2 3 4 5 6 (PRODUCT LEVEL) | SEE PAGE |
|---|---|---|---|---|---|---|
| | 1 | 1 | **270-0613** | 1 | GUARD AS (LH) | |
| | 2 | 1 | **270-0614** | 1 | GUARD AS (RH) | |
| | 3 | 1 | **5P-1076** | 2 | WASHER-HARD (13.5X30X4-MM THK) | |
| | 4 | 1 | **8T-4121** | 6 | WASHER-HARD (11X21X2.5-MM THK) | |
| M | 5 | 1 | **8T-4136** | 6 | BOLT (M10X1.5X25-MM) | |
| M | 6 | 1 | **8T-4192** | 2 | BOLT (M12X1.75X25-MM) | |

M-METRIC PART

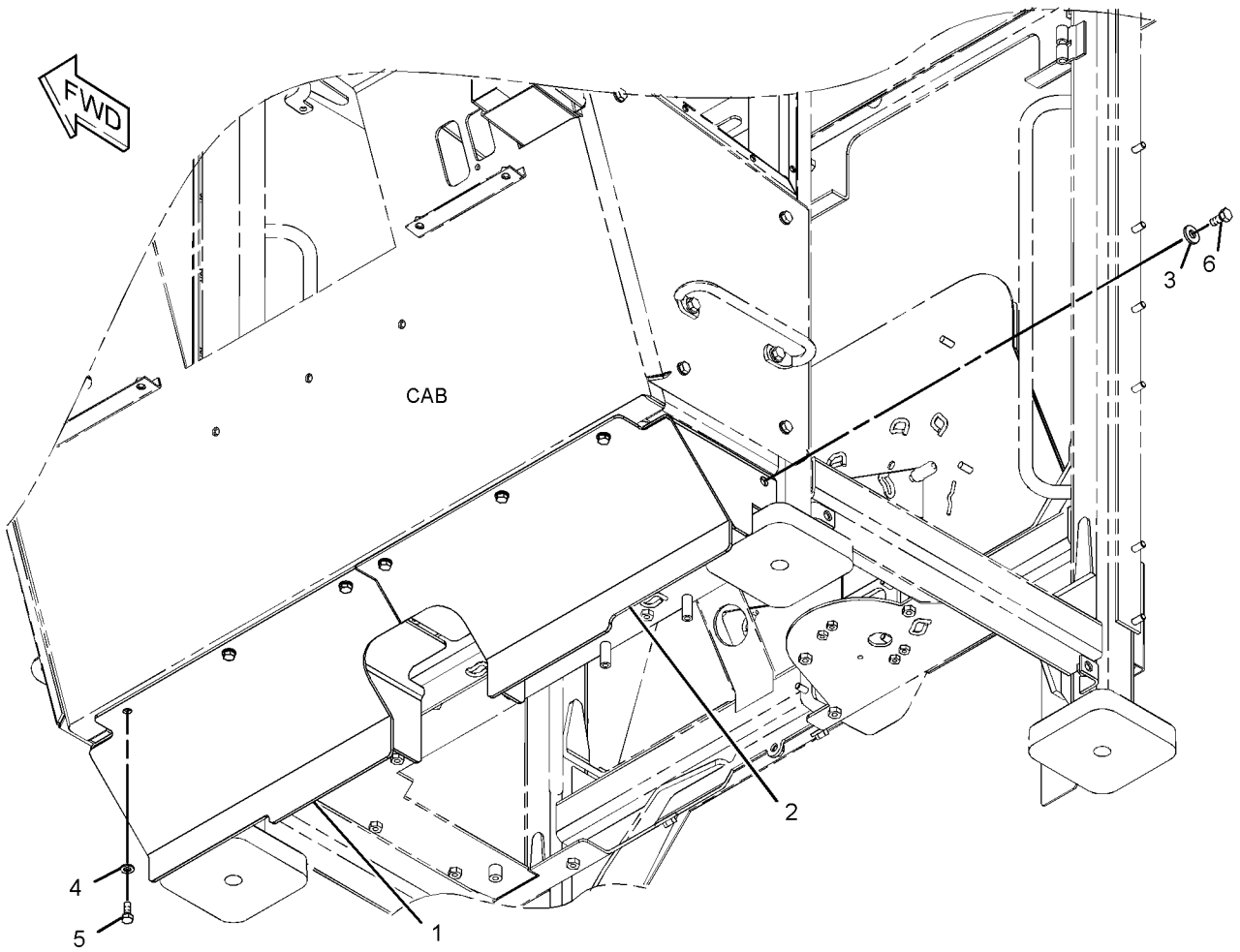


GRAPHIC #1 **<END>** g01189015

# *270-2433* GUARD GP-FRAME

**S/N: 5451-UP**

**PART OF 245-9460 CHASSIS AR**

**SMCS-7150** **i02359384**

| NOTE | REF NO | GRAPHIC REF | PART NUMBER | QTY | PART NAME 1 2 3 4 5 6 (PRODUCT LEVEL) | SEE PAGE |
|---|---|---|---|---|---|---|
| | 1 | 1 | **2G-8767** | 10 | WASHER (10.5X60X3-MM THK) | |
| | 2 | 1 | **6F-6405** | 10 | SPACER (0.438X0.75X0.375-IN THK) | |
| | 3 | 1 | **261-1872** | 1 | BAFFLE | |
| | 4 | 1 | **261-1874** | 1 | BAFFLE | |
| | 5 | 1 | **261-1876** | 1 | PLATE AS | |
| | 6 | 1 | **261-1877** | 1 | PLATE AS | |
| | 7 | 1 | **270-2434** | 1 | BAFFLE | |
| | 8 | 1 | **7X-0515** | 2 | WASHER-HARD (17X35X5-MM THK) | |
| M | 9 | 1 | **7X-2553** | 2 | BOLT (M16X2X40-MM) | |
| M | 10 | 1 | **8T-4182** | 2 | BOLT (M10X1.5X45-MM) | |
| M | 11 | 1 | **8T-4196** | 8 | BOLT (M10X1.5X35-MM) | |

M-METRIC PART

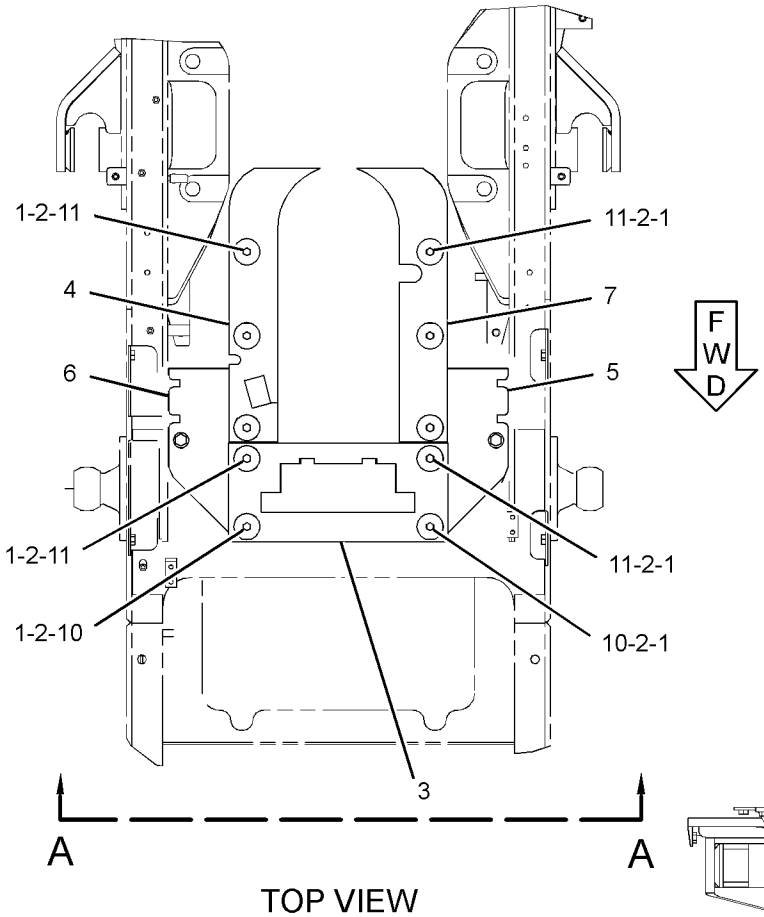


TOP VIEW

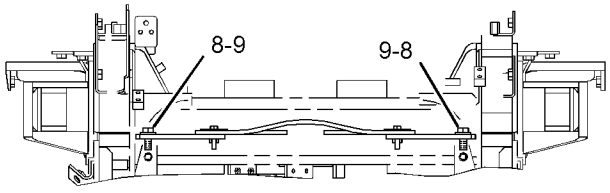


VIEW A-A

GRAPHIC #1 **<END>** g01238384

# FRAME AND BODY

## *281-4200* GUARD GP-FUEL TANK

**S/N: 5451-UP**
**PART OF 272-5920 ARCH AR**
**AN ATTACHMENT**

**SMCS-1273, 7150** **i02470173**

| NOTE | REF NO | GRAPHIC REF | PART NUMBER | QTY | PART NAME 1 2 3 4 5 6 (PRODUCT LEVEL) | SEE PAGE |
|---|---|---|---|---|---|---|
| | 1 | 1 | **1K-8850** | 1 | SPRING | |
| | 2 | 1 | **5V-3854** | 1 | BUMPER | |
| | 3 | 1 | **6N-6984** | 2 | MOUNT-RUBBER | |
| | 4 | 1 | **162-8797** | 1 | COVER AS | |
| | 5 | 1 | **185-7650** | 1 | PLATE AS | |
| M | | 1 | **8T-3597** | 3 | NUT-WELD (M12X1.75-THD) | |
| | 6 | 1 | **185-7659** | 1 | PLATE AS | |
| M | | 1 | **8T-3597** | 3 | NUT-WELD (M12X1.75-THD) | |
| | 7 | 1 | **281-4201** | 1 | GUARD AS | |
| | | 1 | **281-4197** | 1 | PLATE | |
| | | 1 | **281-4198** | 1 | PLATE | |
| | | 1 | **281-4199** | 1 | PLATE | |
| | 8 | 1 | **281-4315** | 1 | DOOR AS-ACCESS | |
| | | 1 | **4K-8501** | 2 | CLIP | |
| M | | 1 | **8T-3490** | 2 | NUT-WELD (M10X1.5-THD) | |
| | | 1 | **9V-3659** | 1 | HINGE | |
| | | 1 | **281-4316** | 1 | PLATE | |
| | 9 | 1 | **5P-1076** | 14 | WASHER-HARD (13.5X30X4-MM THK) | |
| | 10 | 1 | **7X-7729** | 2 | WASHER (11X25X3-MM THK) | |
| | 11 | 1 | **8T-4121** | 2 | WASHER-HARD (11X21X2.5-MM THK) | |
| M | 12 | 1 | **8T-4137** | 4 | BOLT (M10X1.5X20-MM) | |
| M | 13 | 1 | **8T-4139** | 14 | BOLT (M12X1.75X30-MM) | |

M-METRIC PART

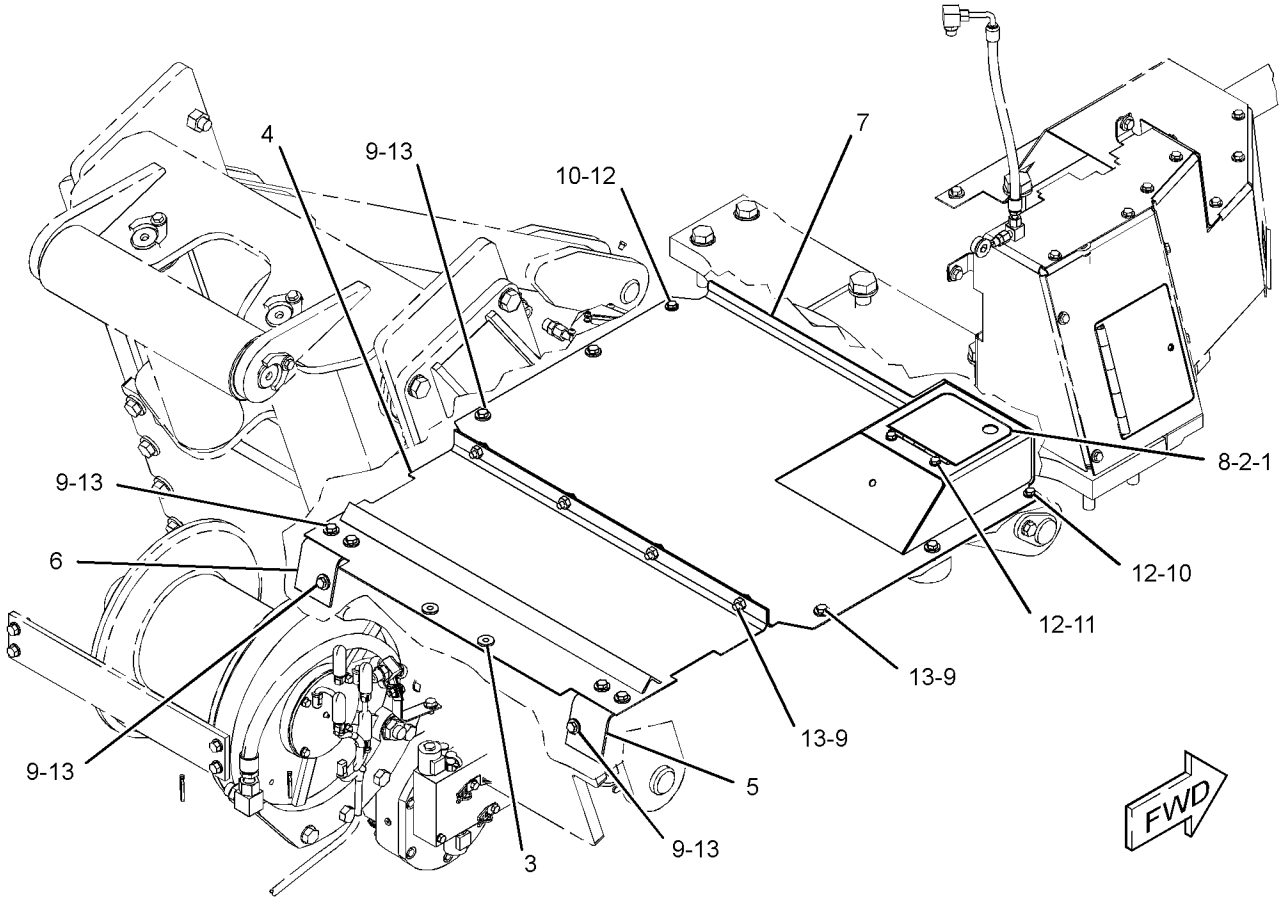


GRAPHIC #1 **<END>** g01238411

## *143-1386* GUARD GP-LINES–ARTICULATED HITCH

**S/N: 5451-UP**

**PART OF 245-9460 CHASSIS AR**

**SMCS-7167** **i01315088**

| NOTE | REF NO | GRAPHIC REF | PART NUMBER | QTY | PART NAME 1 2 3 4 5 6 (PRODUCT LEVEL) | SEE PAGE |
|---|---|---|---|---|---|---|
| | 1 | 1 | **104-2050** | 4 | PLATE | |
| | 2 | 1 | **190-1094** | 1 | PLATE | |
| | 3 | 1 | **104-5381** | 2 | STRAP | |
| | 4 | 1 | **136-1122** | 1 | BUSHING | |
| | 5 | 1 | **160-9354** | 1 | CHANNEL AS | |
| M | | 1 | **6V-9632** | 4 | NUT-WELD (M6X1-THD) | |
| M | 6 | 1 | **6V-3668** | 2 | BOLT (M12X1.75X30-MM) | |
| | 7 | 1 | **7X-0590** | 1 | WASHER-HARD (13.5X44.5X6-MM THK) | |
| M | 8 | 1 | **8T-4183** | 1 | BOLT (M12X1.75X40-MM) | |
| M | 9 | 1 | **8T-4971** | 8 | BOLT (M6X1X30-MM) | |

M-METRIC PART

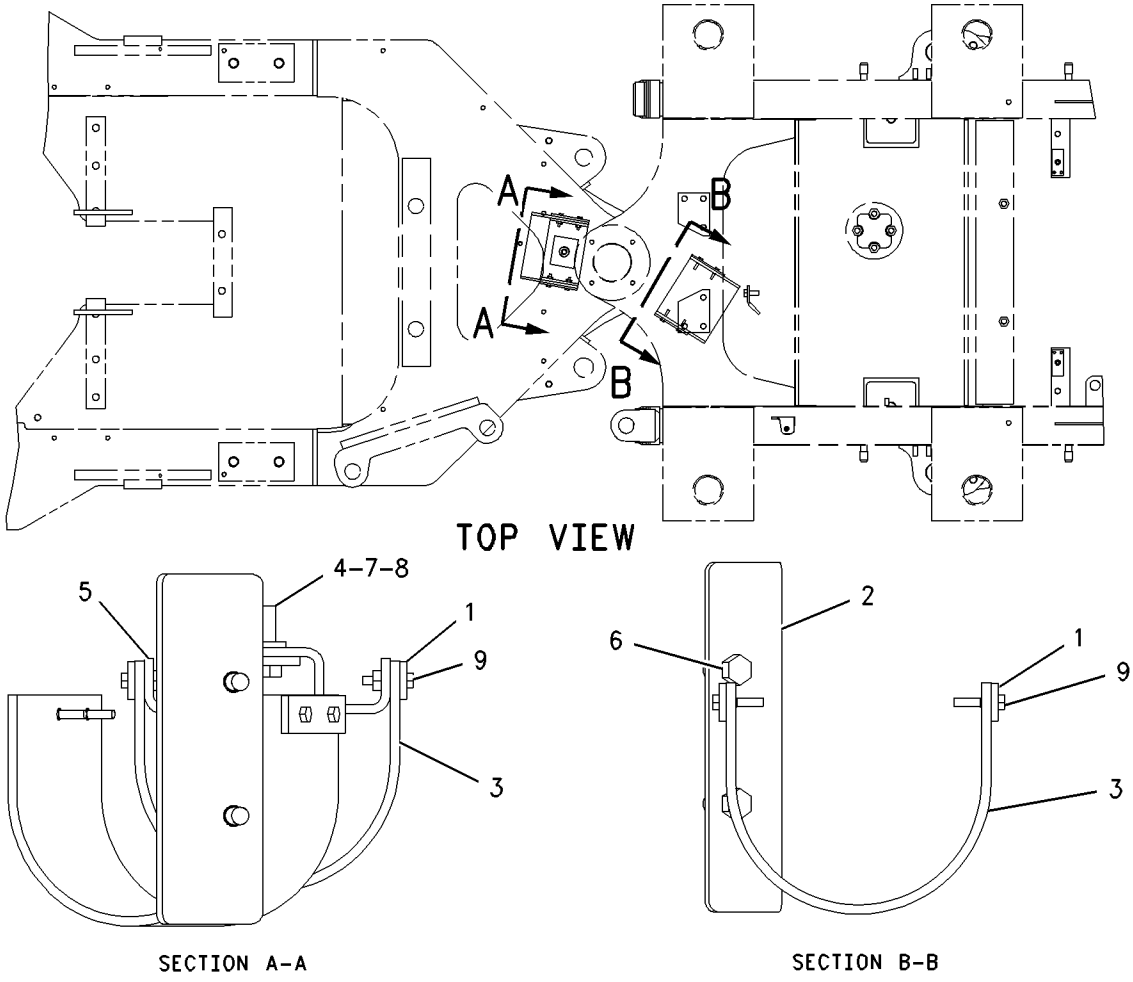


GRAPHIC #1 **<END>** g00696205

## *253-4116* GUARD GP-LINES–REAR FRAME, GRAPPLE

**S/N: 5451-UP**
**PART OF 295-8464 WINCH AR**
**AN ATTACHMENT**

**SMCS-7167** **i02645476**

| NOTE | REF NO | GRAPHIC REF | PART NUMBER | QTY | PART NAME 1 2 3 4 5 6 (PRODUCT LEVEL) | SEE PAGE |
|---|---|---|---|---|---|---|
| M | 3 | 1 | **8T-4195** | 6 | BOLT (M10X1.5X30-MM) | |
| | 4 | 1 | **200-7871** | 1 | PLATE | |
| | 5 | 1 | **200-7872** | 1 | PLATE | |
| | 6 | 1 | **200-8457** | 1 | PLATE AS | |
| M | | 1 | **8T-3490** | 1 | NUT-WELD (M10X1.5-THD) | |
| | 7 | 1 | **200-8458** | 1 | PLATE AS | |
| M | | 1 | **8T-3490** | 1 | NUT-WELD (M10X1.5-THD) | |
| | 8 | 1 | **258-8753** | 1 | PLATE | |
| | 9 | 1 | **258-8754** | 1 | GUARD AS | |
| | 10 | 1 | **258-8755** | 1 | ANGLE AS | |
| | 11 | 1 | **5P-1076** | 4 | WASHER-HARD (13.5X30X4-MM THK) | |
| | 12 | 1 | **7X-7729** | 23 | WASHER (11X25X3-MM THK) | |
| M | 13 | 1 | **8T-4179** | 4 | BOLT (M12X1.75X20-MM) | |
| M | 14 | 1 | **8T-4136** | 17 | BOLT (M10X1.5X25-MM) | |

M-METRIC PART

*253-4116* **GUARD GP-LINES** *(contd.)* **i02645476**

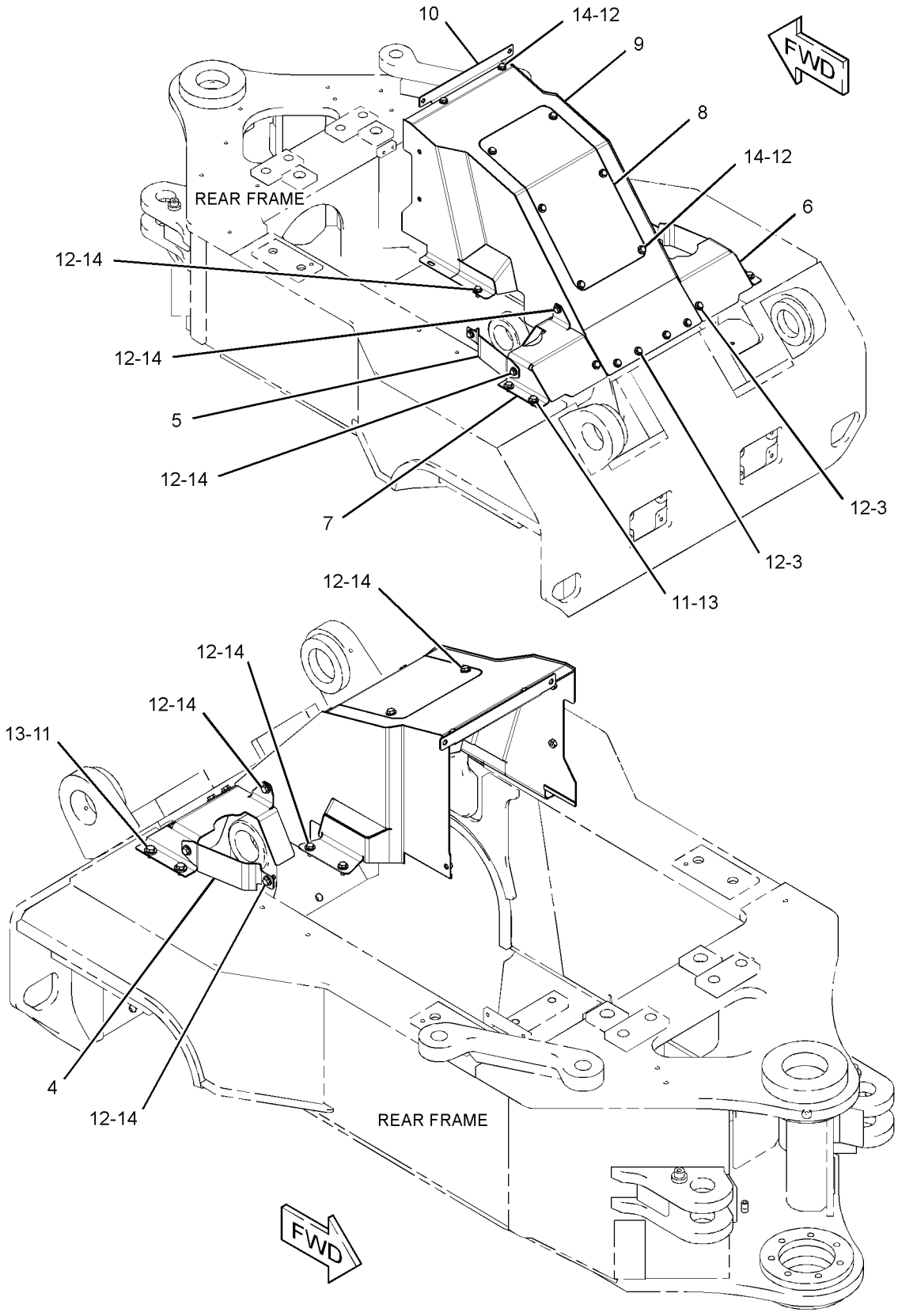


GRAPHIC #1 **<END>** g01333815

## *255-8833* GUARD GP-LINES—FRONT FRAME, LIFT CYLINDERS

**S/N: 5451-UP**
**PART OF 253-3881 BLADE AR-DECKING**
**AN ATTACHMENT**

**SMCS-7167** **i02179214**

| NOTE | REF NO | GRAPHIC REF | PART NUMBER | QTY | PART NAME 1 2 3 4 5 6 (PRODUCT LEVEL) | SEE PAGE |
|---|---|---|---|---|---|---|
| | 1 | 1 | **173-7469** | 2 | PLATE AS | |
| | 2 | 1 | **255-8894** | 1 | GUARD AS (LH) | |
| | 3 | 1 | **255-8895** | 1 | GUARD AS (RH) | |
| | 4 | 1 | **5P-1076** | 6 | WASHER-HARD (13.5X30X4-MM THK) | |
| | 5 | 1 | **7X-0515** | 6 | WASHER-HARD (17X35X5-MM THK) | |
| M | 6 | 1 | **8T-4139** | 6 | BOLT (M12X1.75X30-MM) | |
| M | 7 | 1 | **8T-4179** | 8 | BOLT (M12X1.75X20-MM) | |
| | 8 | 1 | **8T-4223** | 8 | WASHER-HARD (13.5X25.5X3-MM THK) | |
| M | 9 | 1 | **8T-4779** | 6 | BOLT (M16X2X35-MM) | |

M-METRIC PART

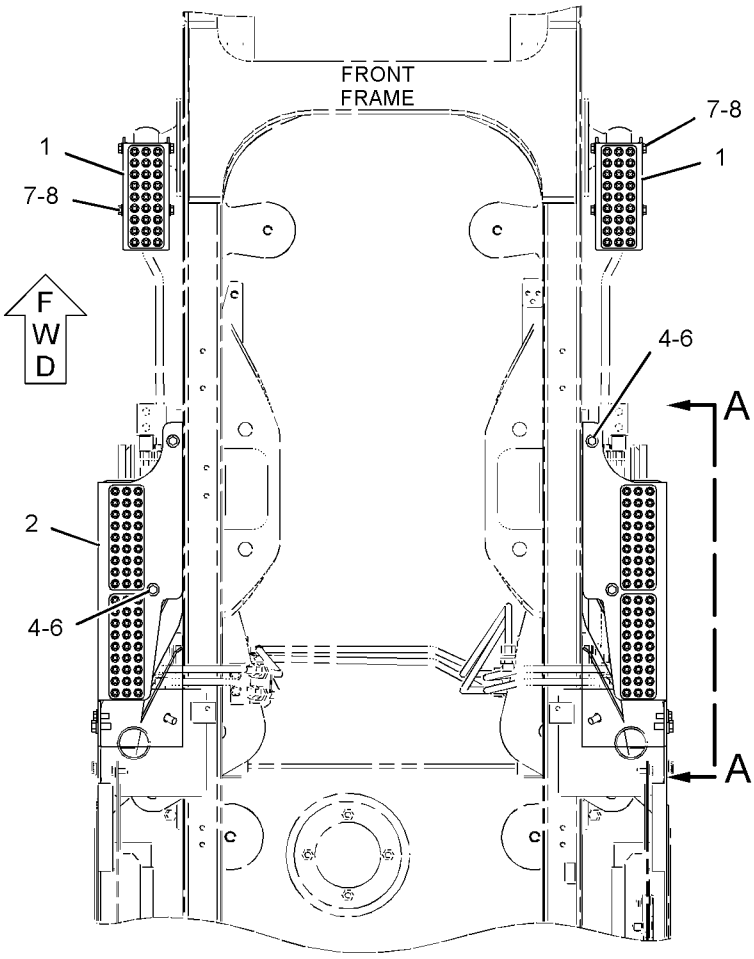


TOP VIEW

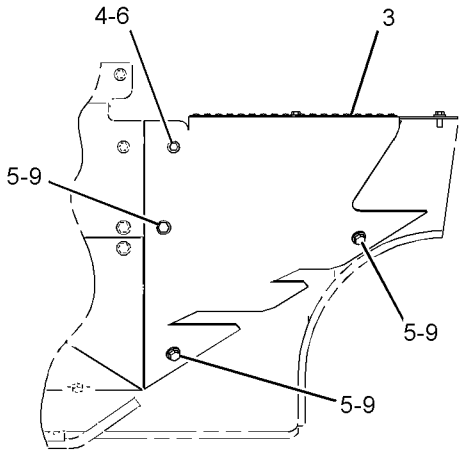


VIEW A-A

GRAPHIC #1 **<END>** g01104704

## *277-9999* GUARD GP-LINES—REAR FRAME, GRAPPLE

**S/N: 5451-UP**
**PART OF 253-2518 GRAPPLE AR**
**AN ATTACHMENT**

**SMCS-7167** **i02468890**

| NOTE | REF NO | GRAPHIC REF | PART NUMBER | QTY | PART NAME 1 2 3 4 5 6 (PRODUCT LEVEL) | SEE PAGE |
|---|---|---|---|---|---|---|
| | 1 | 1 | **1K-8850** | 1 | SPRING | |
| | 2 | 1 | **5V-3854** | 1 | BUMPER | |
| | 3 | 1 | **209-5786** | 1 | GUARD AS | |
| M | | 1 | **8T-3490** | 1 | NUT-WELD (M10X1.5-THD) | |
| | 4 | 1 | **209-5787** | 1 | GUARD AS | |
| M | | 1 | **8T-3490** | 1 | NUT-WELD (M10X1.5-THD) | |
| | 5 | 1 | **278-6144** | 1 | DOOR AS-ACCESS | |
| | | 1 | **4K-8501** | 2 | CLIP | |
| M | | 1 | **8T-3490** | 2 | NUT-WELD (M10X1.5-THD) | |
| | | 1 | **9V-3659** | 1 | HINGE | |
| | 6 | 1 | **278-6150** | 1 | GUARD AS | |
| | 7 | 1 | **278-6151** | 1 | GUARD AS | |
| | 8 | 1 | **278-6155** | 1 | PLATE | |
| | 9 | 1 | **7X-7729** | 25 | WASHER (11X25X3-MM THK) | |
| | 10 | 1 | **8T-4121** | 2 | WASHER-HARD (11X21X2.5-MM THK) | |
| M | 11 | 1 | **8T-4136** | 27 | BOLT (M10X1.5X25-MM) | |
| M | 12 | 1 | **8T-4139** | 4 | BOLT (M12X1.75X30-MM) | |
| | 13 | 1 | **8T-4223** | 4 | WASHER-HARD (13.5X25.5X3-MM THK) | |

M-METRIC PART

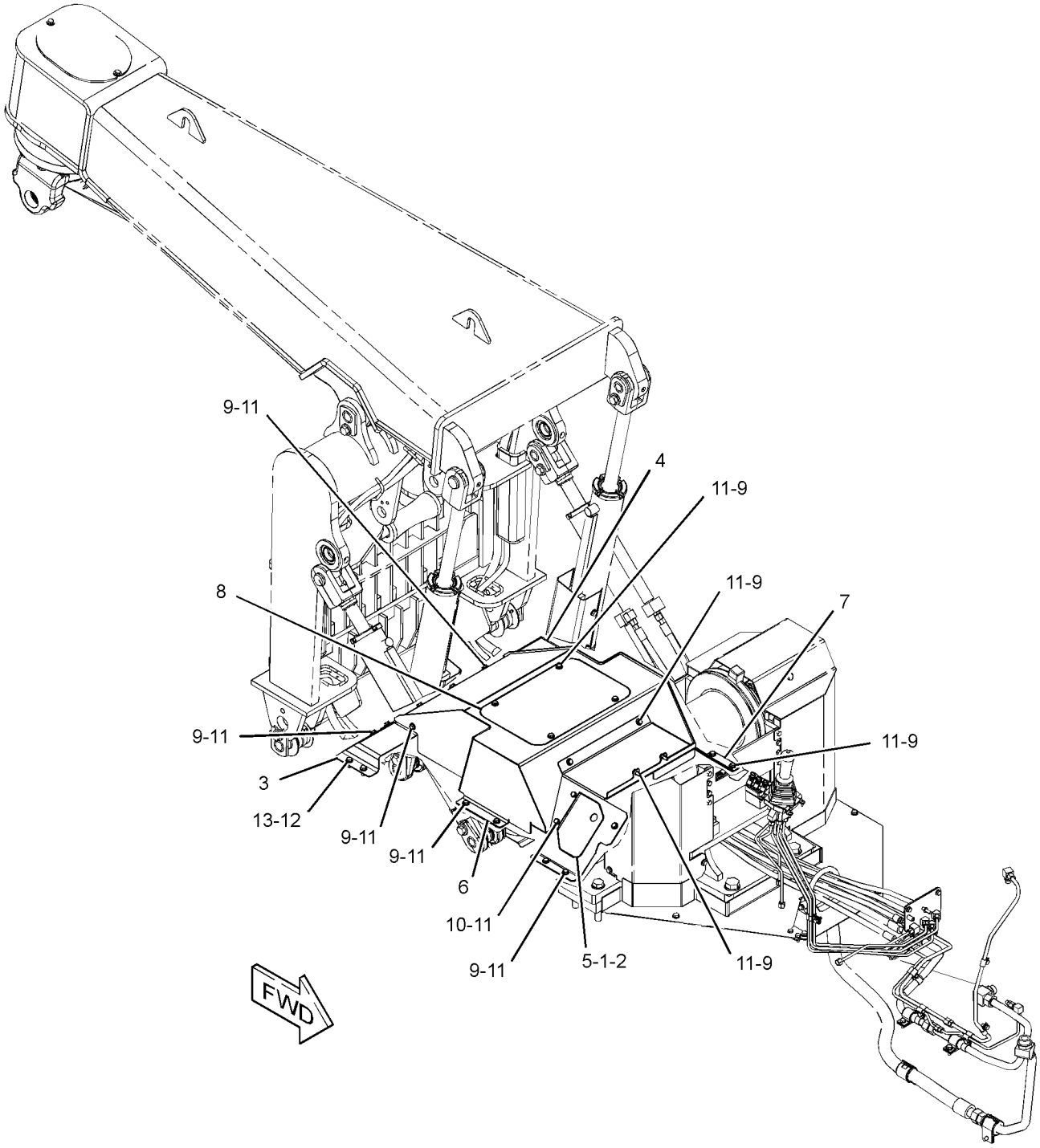


GRAPHIC #1 **<END>** g01239164

## *278-0000* GUARD GP-LINES—REAR FRAME, GRAPPLE

**S/N: 5451-UP**

**PART OF 253-2515 GRAPPLE AR, 272-6512 INDUSTRIAL AR-HYDRAULIC AN ATTACHMENT**

**SMCS-7167** **i02468887**

| NOTE | REF NO | GRAPHIC REF | PART NUMBER | QTY | PART NAME 1 2 3 4 5 6 (PRODUCT LEVEL) | SEE PAGE |
|---|---|---|---|---|---|---|
| | 1 | 1 | **1K-8850** | 1 | SPRING | |
| | 2 | 1 | **5V-3854** | 1 | BUMPER | |
| | 3 | 1 | **209-5786** | 1 | GUARD AS | |
| M | | 1 | **8T-3490** | 1 | NUT-WELD (M10X1.5-THD) | |
| | 4 | 1 | **209-5787** | 1 | GUARD AS | |
| M | | 1 | **8T-3490** | 1 | NUT-WELD (M10X1.5-THD) | |
| | 5 | 1 | **278-6144** | 1 | DOOR AS-ACCESS | |
| | | 1 | **4K-8501** | 2 | CLIP | |
| M | | 1 | **8T-3490** | 2 | NUT-WELD (M10X1.5-THD) | |
| | | 1 | **9V-3659** | 1 | HINGE | |
| | 6 | 1 | **278-6149** | 1 | GUARD AS | |
| | 7 | 1 | **278-6150** | 1 | GUARD AS | |
| | 8 | 1 | **278-6155** | 1 | PLATE | |
| | 9 | 1 | **278-6160** | 1 | GUARD AS | |
| | 10 | 1 | **7X-7729** | 32 | WASHER (11X25X3-MM THK) | |
| | 11 | 1 | **8T-4121** | 2 | WASHER-HARD (11X21X2.5-MM THK) | |
| M | 12 | 1 | **8T-4136** | 34 | BOLT (M10X1.5X25-MM) | |
| M | 13 | 1 | **8T-4139** | 4 | BOLT (M12X1.75X30-MM) | |
| | 14 | 1 | **8T-4223** | 4 | WASHER-HARD (13.5X25.5X3-MM THK) | |

M-METRIC PART

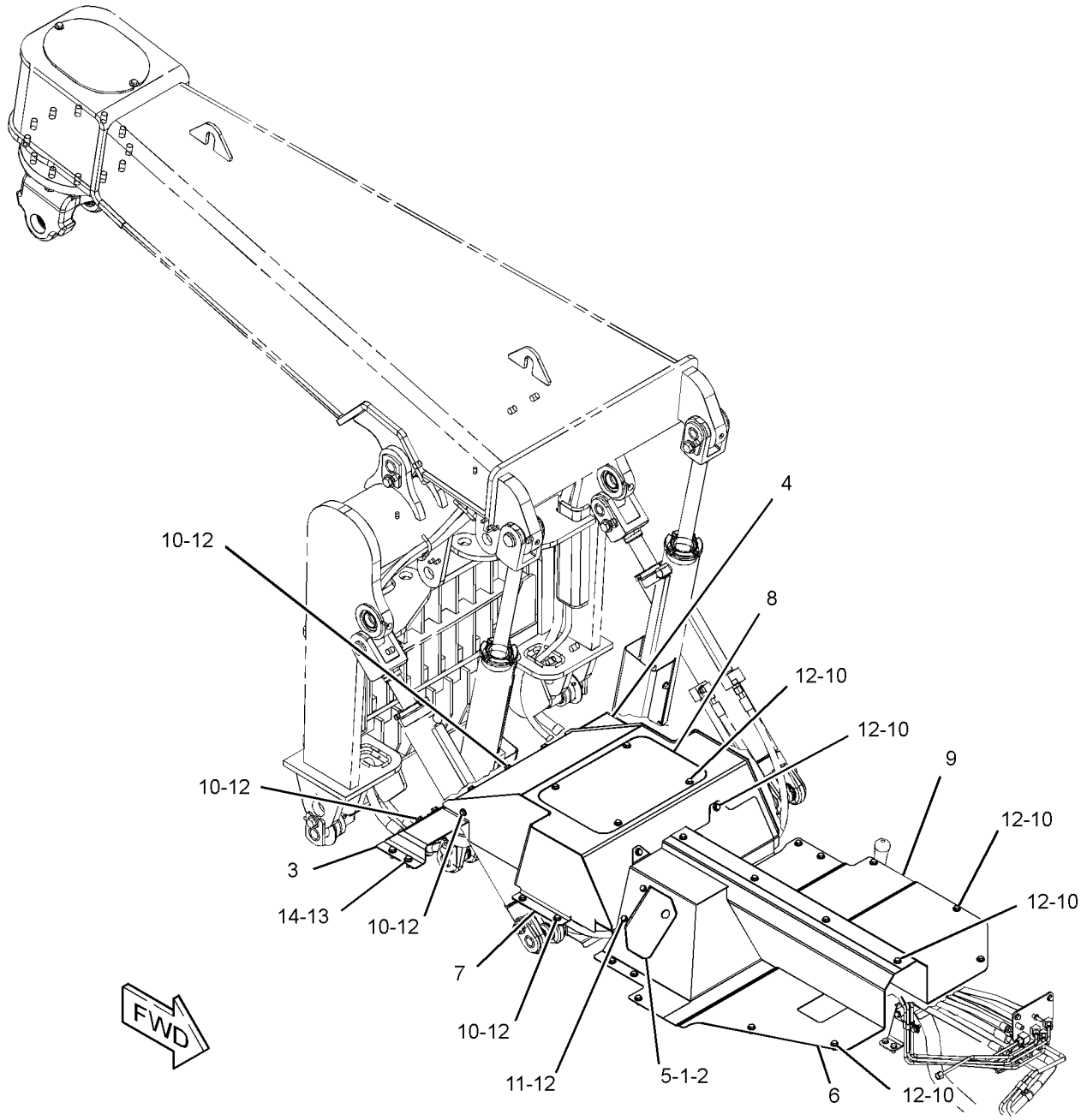


GRAPHIC #1 **<END>** g01238483

## *249-6699* GUARD GP-RADIATOR

**S/N: 5451-UP**

**PART OF 245-9460 CHASSIS AR**

**SMCS-7155** **i02291680**

| NOTE | REF NO | GRAPHIC REF | PART NUMBER | QTY | PART NAME 1 2 3 4 5 6 (PRODUCT LEVEL) | SEE PAGE |
|---|---|---|---|---|---|---|
| | 1 | 1 | **249-6698** | 1 | GUARD AS | |
| | 2 | 1 | **249-6708** | 1 | GRILL AS | |
| | 3 | 1 | **249-6716** | 1 | PLATE AS | |
| | 4 | 1 | **251-0029** | 2 | PIN | |
| | 5 | 1 | **3B-4628** | 2 | PIN-COTTER | |
| | 6 | 1 | **5P-1076** | 10 | WASHER-HARD (13.5X30X4-MM THK) | |
| M | 7 | 1 | **8T-4139** | 8 | BOLT (M12X1.75X30-MM) | |
| M | 8 | 1 | **8T-4176** | 2 | BOLT (M12X1.75X90-MM) | |
| M | 9 | 1 | **8T-4779** | 4 | BOLT (M16X2X35-MM) | |
| | 10 | 1 | **9X-8257** | 4 | WASHER (17.5X30X3.5-MM THK) | |

M-METRIC PART

*249-6699* **GUARD GP-RADIATOR** *(contd. )* **i02291680**

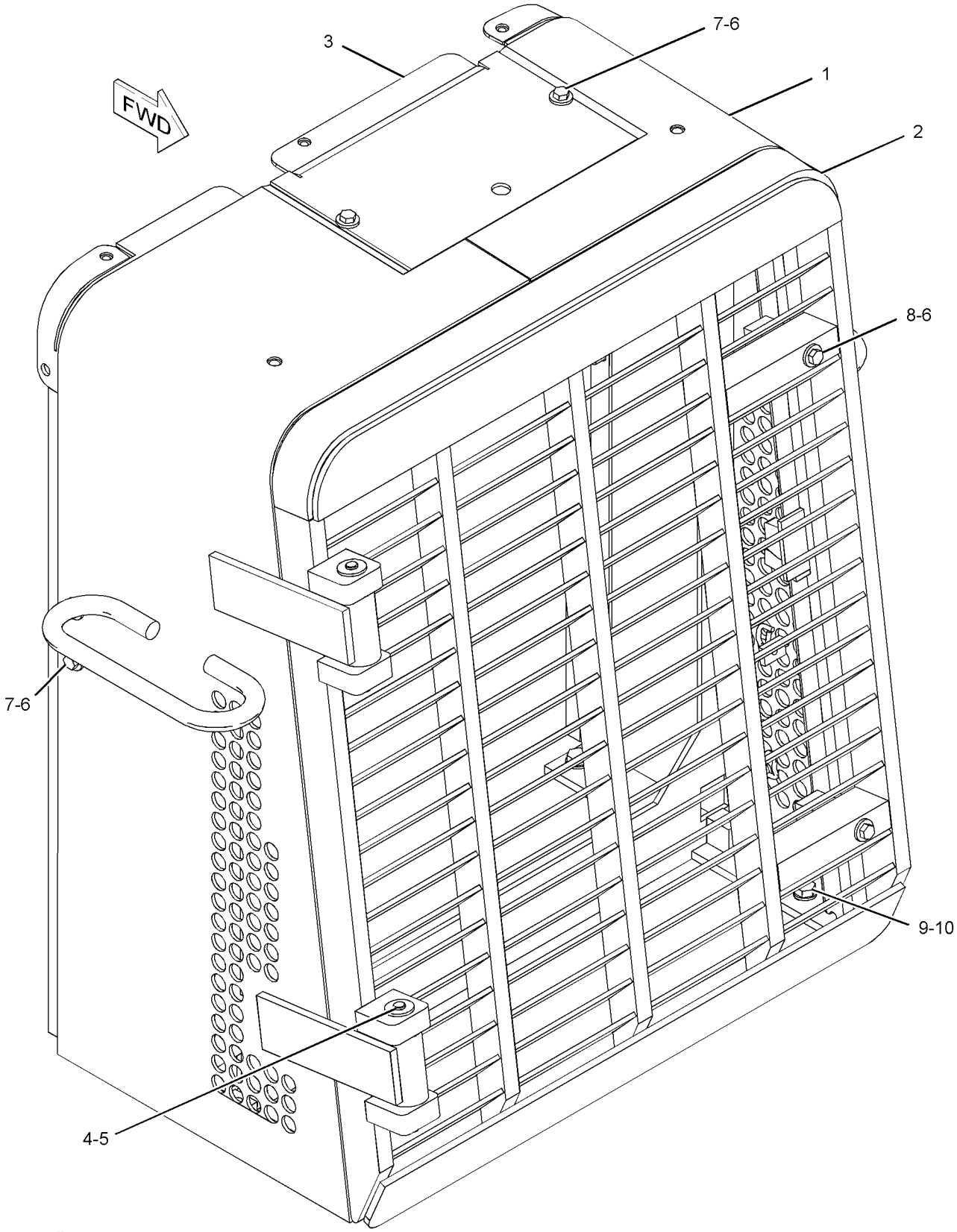


GRAPHIC #1 **<END>** g01102949

# *246-6006* HARDWARE GP-REAR FRAME

**S/N: 5451-UP**

**PART OF 245-9460 CHASSIS AR**

**SMCS-7051, 7553** **i02658794**

| NOTE | REF NO | GRAPHIC REF | PART NUMBER | QTY | PART NAME 1 2 3 4 5 6 (PRODUCT LEVEL) | SEE PAGE |
|---|---|---|---|---|---|---|
| | 1 | 1 | **252-8757** | 2 | PIN AS | |
| | 2 | 1 | **264-7800** | 4 | BEARING-SLEEVE | |
| | 3 | 1 | **6V-6563** | 2 | WASHER (13.5X40X5-MM THK) | |
| M | 4 | 1 | **7Y-5231** | 8 | BOLT (M30X3.5X260-MM) | |
| M | 5 | 1 | **8T-4192** | 2 | BOLT (M12X1.75X25-MM) | |
| | 6 | 1 | **9X-8258** | 8 | WASHER (33X56X6-MM THK) | |

M-METRIC PART

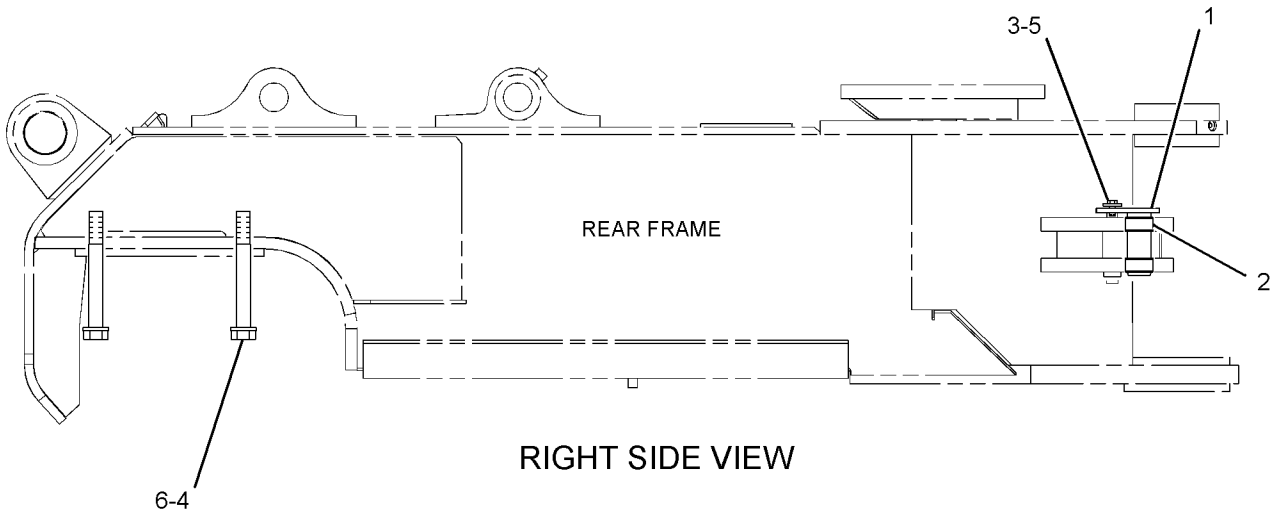


RIGHT SIDE VIEW

GRAPHIC #1 **<END>** g01337511

# FRAME AND BODY

## *246-6008* HITCH GP-ARTICULATING

**S/N: 5451-UP**

**PART OF 245-9460 CHASSIS AR**

**SMCS-7057, 7100** **i02634517**

| NOTE | REF NO | GRAPHIC REF | PART NUMBER | QTY | PART NAME 1 2 3 4 5 6 (PRODUCT LEVEL) | SEE PAGE |
|---|---|---|---|---|---|---|
| | 1 | 1 | **143-7356** | 1 | BEARING-TAPERED ROLLER | |
| | 2 | 1 | **3B-8485** | 2 | FITTING-GREASE | |
| | 4 | 1 | **7P-2288** | 1 | PIN AS | |
| | 5 | 1 | **7V-8632** | 1 | SPACER | |
| | 6 | 1 | **7V-8633** | 1 | SPACER | |
| | 7 | 1 | **118-8271** | 1 | PIN | |
| | 8 | 1 | **118-8272** | 1 | CAP (UPPER) | |
| | 9 | 1 | **118-8273** | 1 | CAP (LOWER) | |
| B | 10 | 1 | **118-8275** | 1 | SHIM PACK (INCLUDES 18-SHIMS) | |
| B | 11 | 1 | **118-8276** | 1 | SHIM PACK (INCLUDES 20-SHIMS) | |
| | 12 | 1 | **134-3079** | 1 | PLATE | |
| | 13 | 1 | **250-3522** | 1 | BEARING-SLEEVE | |
| | 14 | 1 | **257-8529** | 2 | BOLT (M20X2.5X60-MM) | |
| | 15 | 1 | **4K-7463** | 2 | SEAL-LIP TYPE | |
| | 16 | 1 | **5K-0983** | 2 | SEAL-LIP TYPE | |
| | 17 | 1 | **5K-0984** | 2 | BEARING-SLEEVE | |
| | 18 | 1 | **7G-8839** | 1 | SPACER (13.5X57X6-MM THK) | |
| M | 19 | 1 | **7X-2550** | 7 | BOLT (M12X1.75X110-MM) | |
| | 20 | 1 | **8T-4123** | 2 | WASHER (22X35X3.5-MM THK) | |
| M | 21 | 1 | **8T-4139** | 1 | BOLT (M12X1.75X30-MM) | |
| M | 22 | 1 | **8T-4183** | 6 | BOLT (M12X1.75X40-MM) | |
| | 23 | 1 | **8T-4223** | 13 | WASHER-HARD (13.5X25.5X3-MM THK) | |

B-USE AS REQUIRED
M-METRIC PART

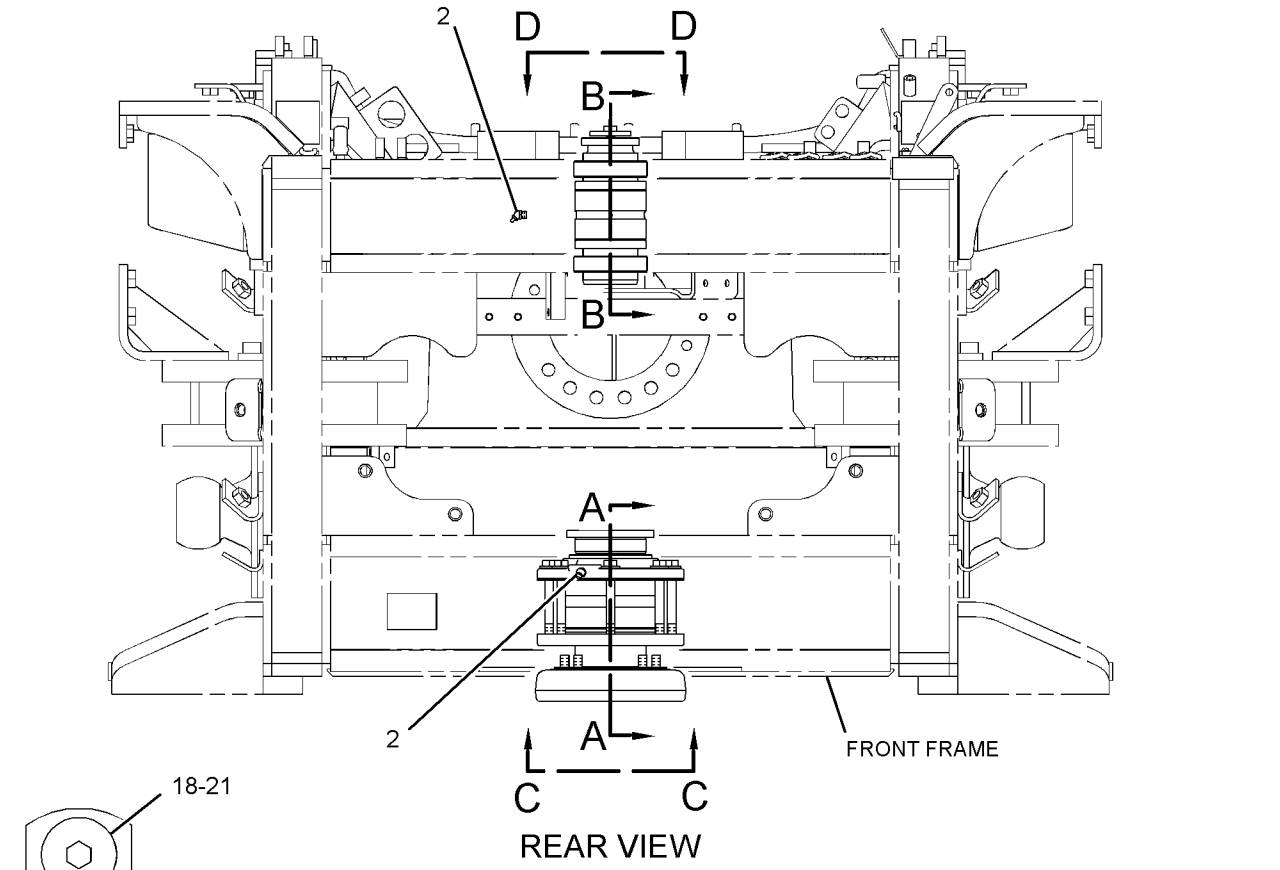


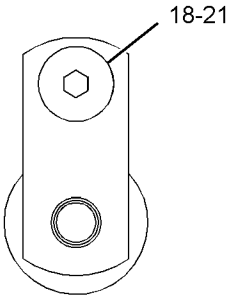


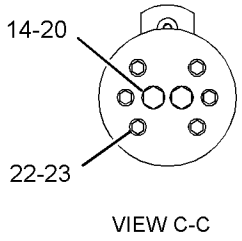


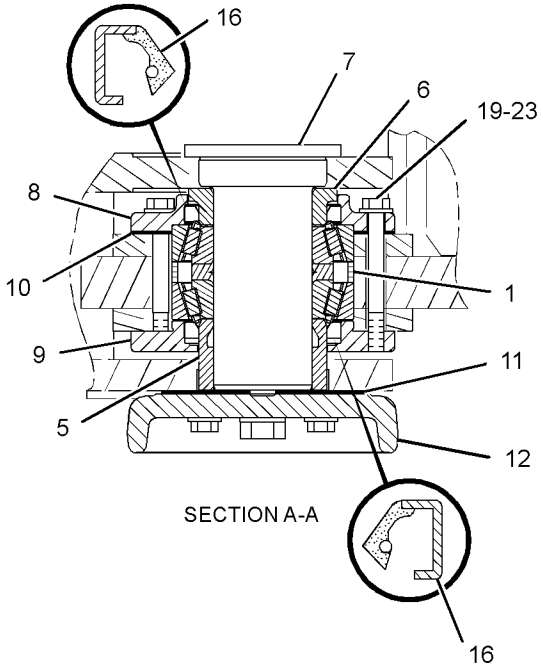


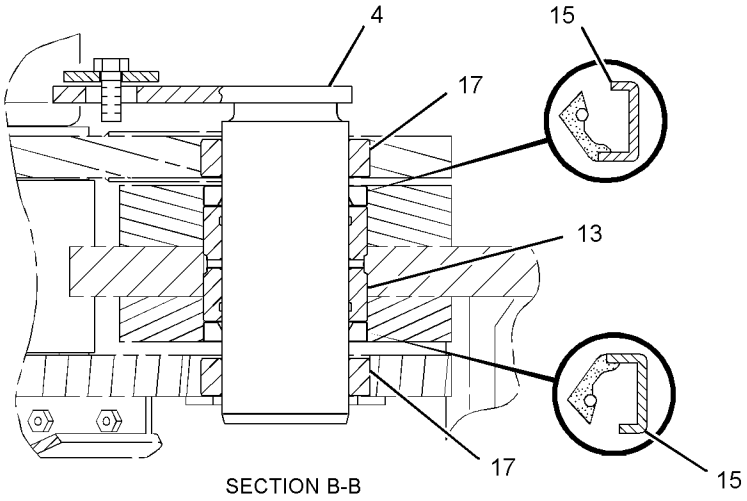


GRAPHIC #1 **<END>** g01343007

# FRAME AND BODY

## *249-8137* HOOD & GUARD GP

**S/N: 5451-UP**
**PART OF 245-9460 CHASSIS AR**
**TYPE 1**

**SMCS-7251** **i02299831**

| NOTE | REF NO | GRAPHIC REF | PART NUMBER | QTY | PART NAME 1 2 3 4 5 6 (PRODUCT LEVEL) | SEE PAGE |
|---|---|---|---|---|---|---|
| | 1 | 1,2 | **281-7744** | 2 | LATCH AS | |
| | 2 | 1 | **4I-3953** | 1 | GROMMET | |
| | 3 | 1 | **7X-7729** | 4 | WASHER (11X25X3-MM THK) | |
| | 4 | 1,2 | **281-7745** | 2 | LATCH AS | |
| | 5 | 1,2 | **282-0583** | 4 | PAWL | |
| | 6 | 1 | **249-8139** | 1 | HOOD AS | |
| | 7 | 2 | **249-8720** | 1 | SUPPORT AS | |
| | 8 | 2 | **249-9113** | 1 | SUPPORT AS | |
| | 9 | 1 | **249-9180** | 1 | SHEET (HOOD SIDE, FRONT, LH) | |
| | 10 | 2 | **249-9215** | 1 | SHEET (HOOD SIDE, FRONT, RH) | |
| | 11 | 2 | **249-9283** | 1 | SHEET | |
| | 12 | 1 | **249-9245** | 1 | SHEET | |
| | 13 | 2 | **250-0187** | 1 | DOOR AS-ACCESS (HOOD SIDE, LH) | |
| | | 2 | **249-9421** | 1 | HINGE | |
| M | | 2 | **8T-3597** | 4 | NUT-WELD (M12X1.75-THD) | |
| | 14 | 2 | **250-0216** | 1 | DOOR AS-ACCESS (HOOD SIDE, RH) | |
| | | 2 | **249-9421** | 1 | HINGE | |
| M | | 2 | **8T-3597** | 4 | NUT-WELD (M12X1.75-THD) | |
| | 15 | 1 | **250-0220** | 1 | PLATE AS | |
| | 16 | 1 | **250-1899** | 1 | PLATE | |
| | 17 | 2 | **250-3554** | 2 | STRIP | |
| | 18 | 1 | **251-5887** | 1 | PLATE | |
| | 19 | 1 | **254-7025** | 1 | PLATE AS | |
| M | 20 | 2 | **8T-8549** | 2 | LOCKNUT (M12X1.75-THD) | |
| | 21 | 1,2 | **5P-4116** | 26 | WASHER-HARD (8.8X20.5X2-MM THK) | |
| B | 22 | 2 | **255-0879** | 1 | SEAL | |
| | 23 | 2 | **255-0927** | 1 | PLATE | |
| | 24 | 1 | **256-3893** | 2 | STRIP | |
| M | 25 | 1,2 | **5C-7261** | 24 | NUT (M8X1.25-THD) | |
| | 26 | 1,2 | **5P-1076** | 29 | WASHER-HARD (13.5X30X4-MM THK) | |
| M | 27 | 2 | **8T-4179** | 8 | BOLT (M12X1.75X20-MM) | |
| | 28 | 2 | **8T-4121** | 5 | WASHER-HARD (11X21X2.5-MM THK) | |
| M | 29 | 1 | **8T-4133** | 4 | NUT (M10X1.5-THD) | |
| M | 30 | 2 | **8T-4137** | 5 | BOLT (M10X1.5X20-MM) | |
| | 31 | 2 | **8T-4223** | 4 | WASHER-HARD (13.5X25.5X3-MM THK) | |
| M | 32 | 1,2 | **8T-4139** | 27 | BOLT (M12X1.75X30-MM) | |
| M | 33 | 2 | **8T-4244** | 4 | NUT (M12X1.75-THD) | |

B-USE AS REQUIRED
M-METRIC PART

*249-8137* **HOOD & GUARD GP** *(contd.)* **i02299831**

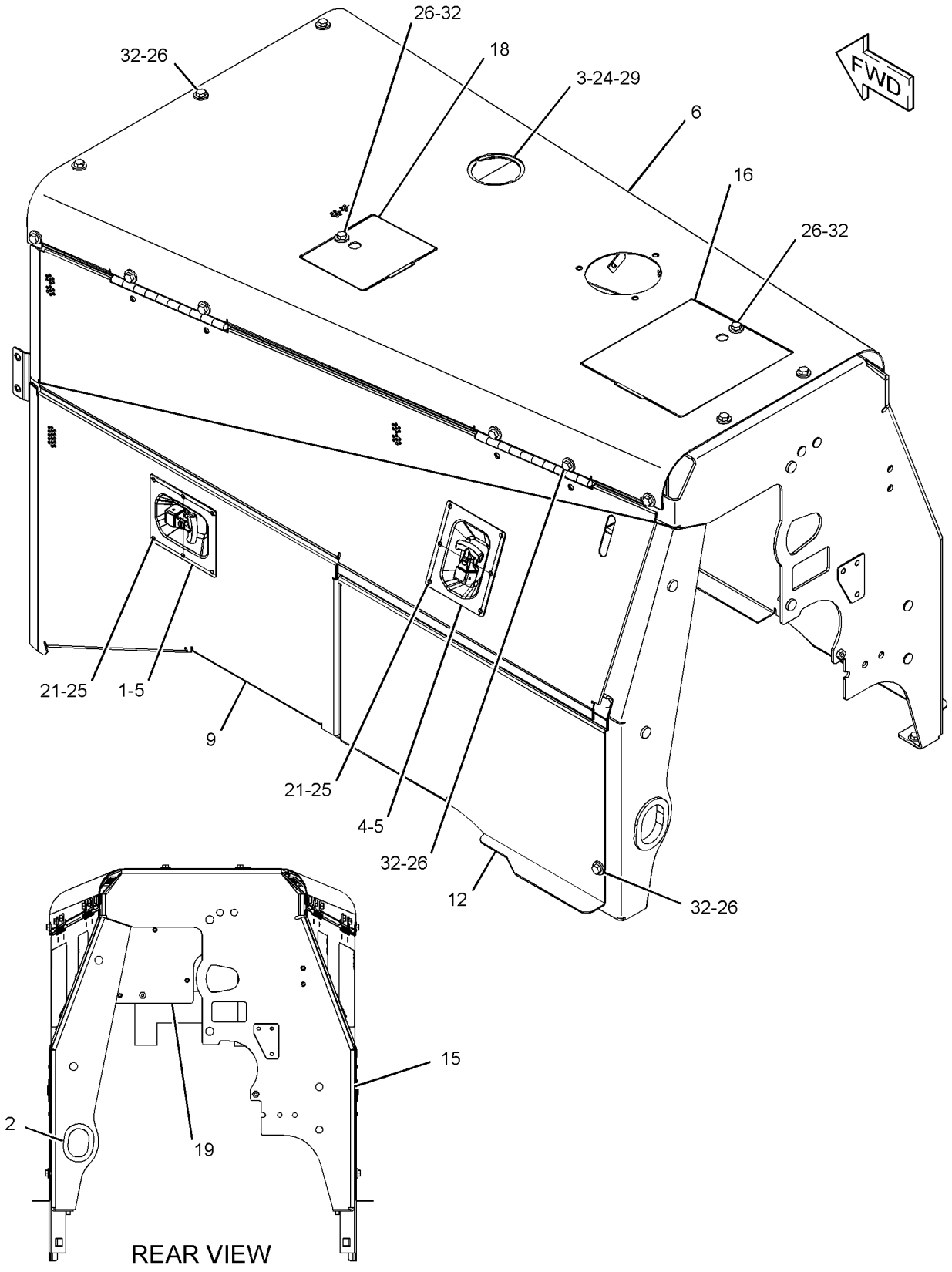


GRAPHIC #1 g01237268

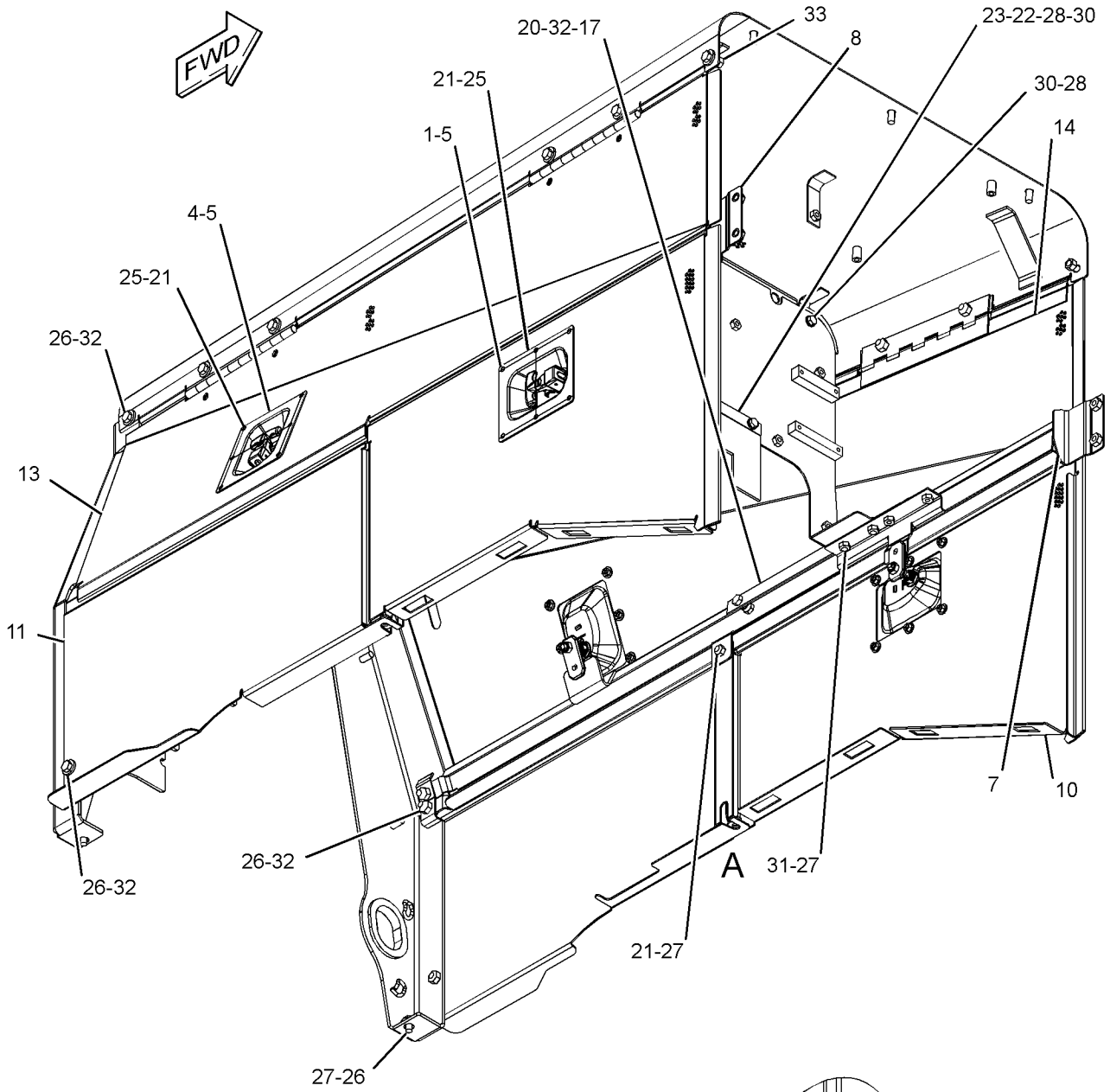


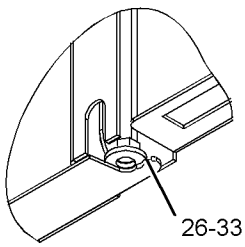


VIEW OF AREA A

GRAPHIC #2 **<END>** g01237269

# *249-8137* HOOD & GUARD GP

**S/N: 5451-UP**
**PART OF 245-9460 CHASSIS AR**
**TYPE 2**

**SMCS-7251** **i02707945**

| NOTE | REF NO | GRAPHIC REF | PART NUMBER | QTY | PART NAME 1 2 3 4 5 6 (PRODUCT LEVEL) | SEE PAGE |
|---|---|---|---|---|---|---|
| | 1 | 1,2 | **281-7744** | 2 | LATCH AS | |
| | 2 | 1 | **4I-3953** | 1 | GROMMET | |
| | 3 | 1 | **7X-7729** | 4 | WASHER (11X25X3-MM THK) | |
| | 4 | 1,2 | **281-7745** | 2 | LATCH AS | |
| | 5 | 1,2 | **282-0583** | 4 | PAWL | |
| | 6 | 1 | **249-8139** | 1 | HOOD AS (TOP) | |
| | 7 | 2 | **249-8720** | 1 | SUPPORT AS | |
| | 8 | 2 | **249-9113** | 1 | SUPPORT AS | |
| | 9 | 1 | **249-9180** | 1 | SHEET (HOOD SIDE, FRONT, LH) | |
| | 10 | 2 | **249-9215** | 1 | SHEET (HOOD SIDE, FRONT, RH) | |
| | 11 | 2 | **249-9283** | 1 | SHEET | |
| | 12 | 1 | **249-9245** | 1 | SHEET | |
| | 13 | 1 | **250-0187** | 1 | DOOR AS-ACCESS (HOOD SIDE, LH) | |
| | | 1 | **249-9421** | 1 | HINGE | |
| M | | 1 | **8T-3597** | 4 | NUT-WELD (M12X1.75-THD) | |
| | 14 | 2 | **250-0216** | 1 | DOOR AS-ACCESS (HOOD SIDE, RH) | |
| | | 2 | **249-9421** | 1 | HINGE | |
| M | | 2 | **8T-3597** | 4 | NUT-WELD (M12X1.75-THD) | |
| | 15 | 1 | **250-0220** | 1 | PLATE AS | |
| | 16 | 1 | **250-1899** | 1 | PLATE | |
| | 17 | 2 | **250-3554** | 2 | STRIP | |
| | 18 | 1 | **251-5887** | 1 | PLATE | |
| | 19 | 1 | **254-7025** | 1 | PLATE AS | |
| M | 20 | 2 | **8T-8549** | 2 | LOCKNUT (M12X1.75-THD) | |
| | 21 | 1,2 | **5P-4116** | 26 | WASHER-HARD (8.8X20.5X2-MM THK) | |
| B | 22 | 1 | **255-0879** | 1 | SEAL | |
| | 23 | 2 | **255-0927** | 1 | PLATE | |
| | 24 | 1 | **256-3893** | 2 | STRIP | |
| M | 25 | 1,2 | **5C-7261** | 24 | NUT (M8X1.25-THD) | |
| | 26 | 1,2 | **5P-1076** | 29 | WASHER-HARD (13.5X30X4-MM THK) | |
| M | 27 | 2 | **8T-4179** | 8 | BOLT (M12X1.75X20-MM) | |
| C | 28 | 1,2 | **8T-4121** | 7 | WASHER-HARD (11X21X2.5-MM THK) | |
| M | 29 | 1 | **8T-4133** | 4 | NUT (M10X1.5-THD) | |
| CM | 30 | 1,2 | **8T-4137** | 7 | BOLT (M10X1.5X20-MM) | |
| | 31 | 2 | **8T-4223** | 4 | WASHER-HARD (13.5X25.5X3-MM THK) | |
| M | 32 | 1,2 | **8T-4139** | 27 | BOLT (M12X1.75X30-MM) | |
| M | 33 | 2 | **8T-4244** | 4 | NUT (M12X1.75-THD) | |
| C | 34 | 1 | **305-7989** | 1 | SEAL | |

B-USE AS REQUIRED
C-CHANGE FROM PREVIOUS TYPE
M-METRIC PART

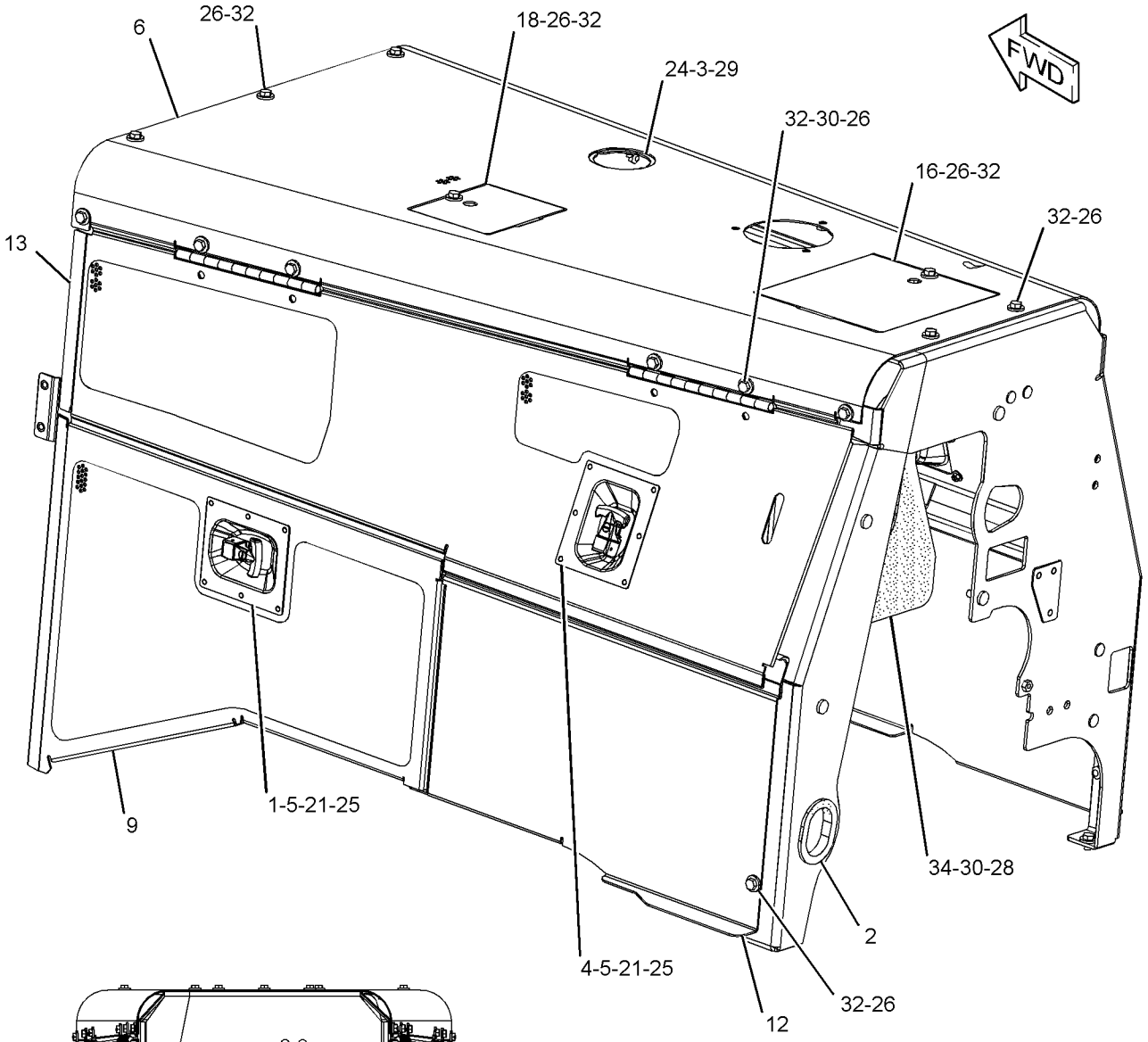


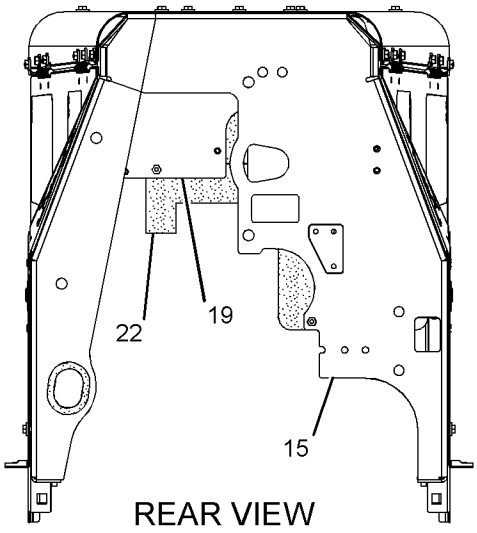


GRAPHIC #1 g01369830

*249-8137* **HOOD & GUARD GP** *(contd.)* **i02707945**

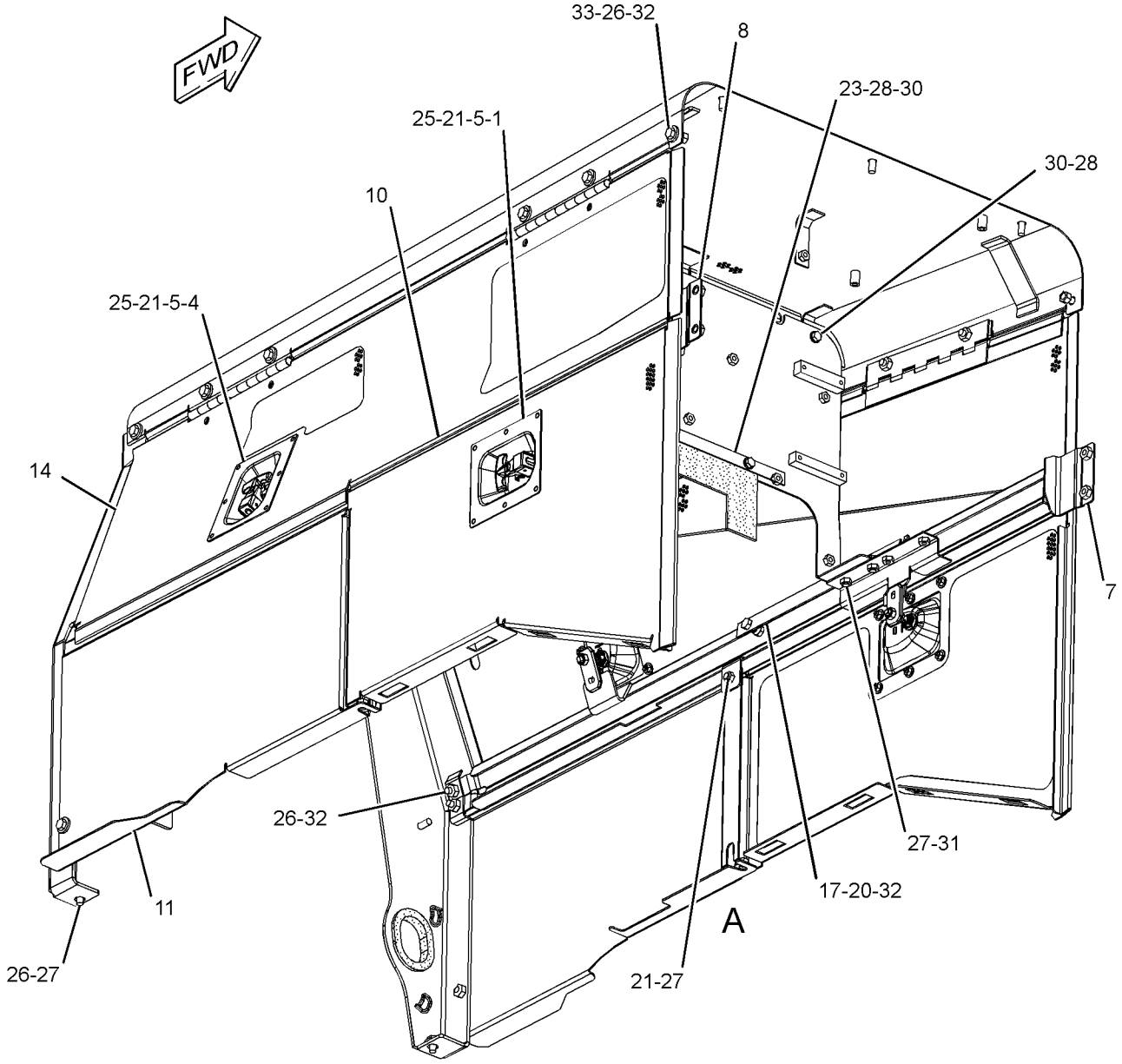


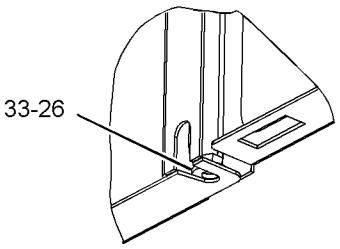


VIEW OF AREA A

GRAPHIC #2 **<END>** g01369831

# FRAME AND BODY

## *252-6553* LINES GP-GREASE

**S/N: 5451-UP**

**PART OF 245-9460 CHASSIS AR**

**SMCS-7510** **i02570137**

| NOTE | REF NO | GRAPHIC REF | PART NUMBER | QTY | PART NAME 1 2 3 4 5 6 (PRODUCT LEVEL) | SEE PAGE |
|---|---|---|---|---|---|---|
| | 1 | 1 | **2D-1683** | 3 | FITTING | |
| | 2 | 1 | **3B-6552** | 2 | ELBOW | |
| | 3 | 1 | **3S-2093** | 8 | STRAP-CABLE | |
| | 4 | 1 | **5B-0935** | 4 | FITTING-GREASE | |
| | 5 | 1 | **5P-5461** | 4 | NUT (1/8-27-THD) | |
| | 6 | 1 | **5P-5463** | 4 | ADAPTER-LUBRICATION | |
| | 7 | 1 | **253-3888** | 1 | HOSE AS | |
| | 8 | 1 | **253-3889** | 1 | HOSE AS | |
| | 9 | 1 | **253-3890** | 1 | HOSE AS | |
| | 10 | 1 | **253-3891** | 1 | HOSE AS | |
| | 12 | 1 | **8B-4884** | 1 | ELBOW | |
| | 13 | 1 | **8L-5008** | 3 | ELBOW-PIPE | |
| | 14 | 1 | **8T-4121** | 2 | WASHER-HARD (11X21X2.5-MM THK) | |
| M | 15 | 1 | **8T-4133** | 2 | NUT (M10X1.5-THD) | |
| | 16 | 1 | **9S-1812** | 1 | FITTING (NIPPLE-PIPE) | |

M-METRIC PART

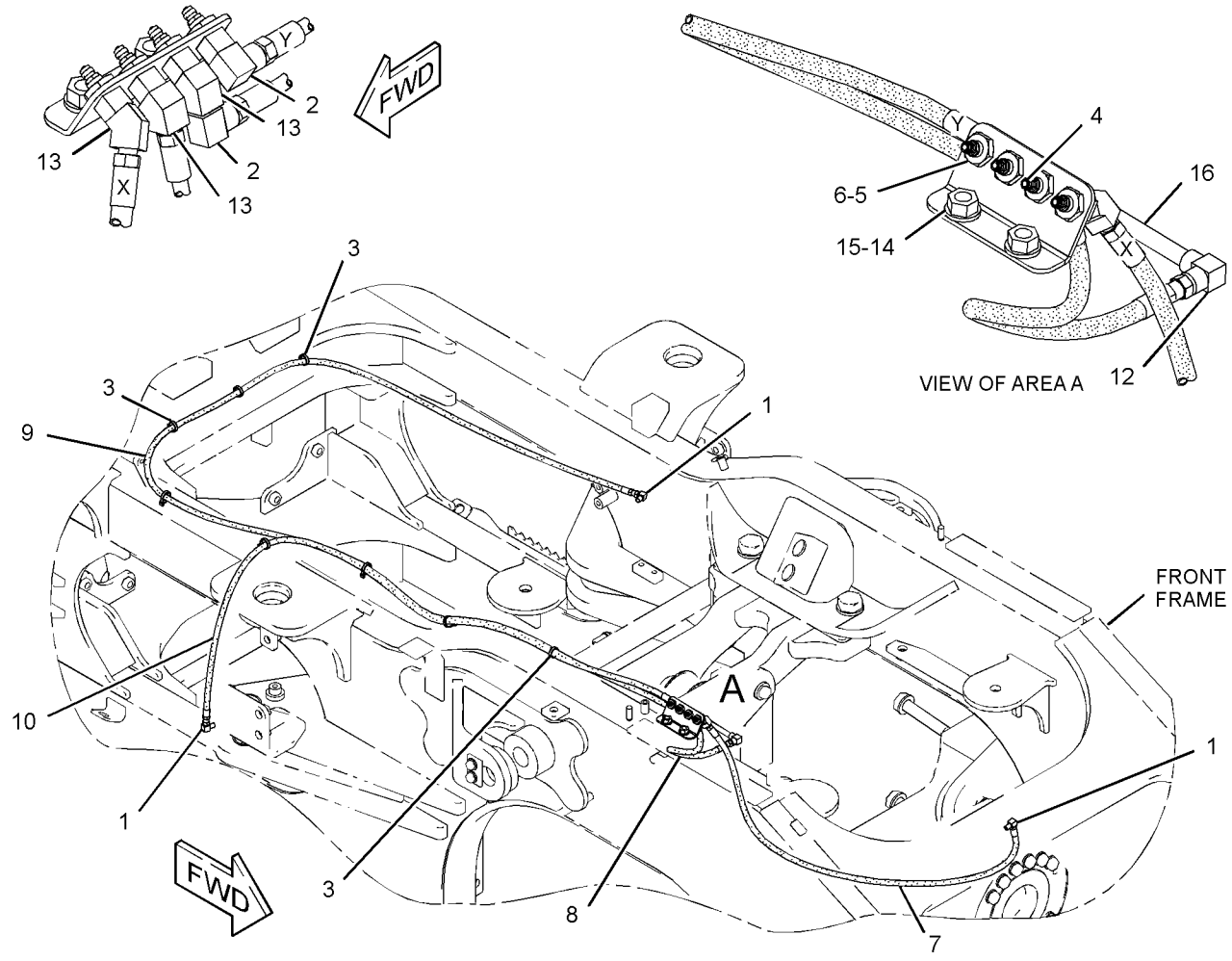


GRAPHIC #1 **<END>** g01347853

# FRAME AND BODY

## *253-6259* LINK GP-STEERING FRAME LOCK

**S/N: 5451-UP**

**PART OF 245-9460 CHASSIS AR**

**SMCS-7506** **i02600637**

| NOTE | REF NO | GRAPHIC REF | PART NUMBER | QTY | PART NAME 1 2 3 4 5 6 (PRODUCT LEVEL) | SEE PAGE |
|---|---|---|---|---|---|---|
| | 1 | 1 | **5V-6380** | 2 | PIN | |
| | 2 | 1 | **255-9324** | 1 | PLATE AS | |
| M | 3 | 1 | **8T-4133** | 2 | NUT (M10X1.5-THD) | |
| M | 4 | 1 | **8T-6466** | 2 | BOLT (M10X1.5X60-MM) | |

M-METRIC PART

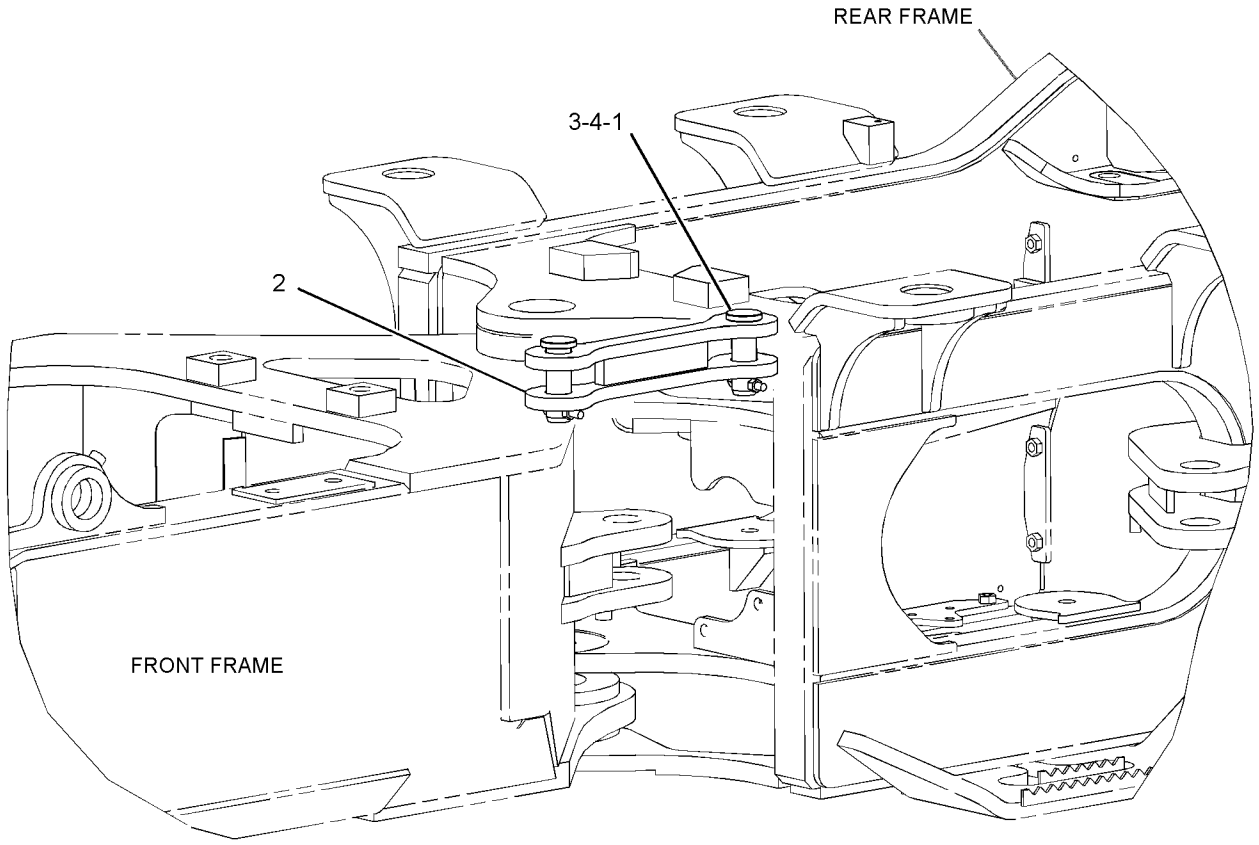


LEFT SIDE VIEW
(UPPER FRONT)

GRAPHIC #1 **<END>** g01335813

# FRAME AND BODY

## *228-9922* STEP GP

**S/N: 5451-UP**

**PART OF 245-9460 CHASSIS AR**

**SMCS-7254** **i02112703**

| NOTE | REF NO | GRAPHIC REF | PART NUMBER | QTY | PART NAME 1 2 3 4 5 6 (PRODUCT LEVEL) | SEE PAGE |
|---|---|---|---|---|---|---|
| | 1 | 1 | **170-1877** | 1 | COVER | |
| | 2 | 1 | **170-1880** | 1 | COVER AS | |
| | 2A | 1 | **7M-6492** | 1 | HINGE | |
| | 2B | 1 | **8Y-4804** | 1 | LOCK AS-CYLINDER | |
| | 2C | 1 | **186-2562** | 1 | LATCH AS | |
| | 3 | 1 | **243-2760** | 1 | STEP AS (MID, LH) | |
| M | | 1 | **9X-6269** | 2 | NUT-WELD | |
| | 4 | 1 | **243-2759** | 1 | STEP AS (MID, RH) | |
| M | | 1 | **9X-6269** | 2 | NUT-WELD | |
| | 5 | 1 | **243-2757** | 1 | STEP AS (TOP, RH) | |
| | 6 | 1 | **243-2758** | 1 | STEP AS (TOP, LH) | |
| | 7 | 1 | **5P-1076** | 10 | WASHER-HARD (13.5X30X4-MM THK) | |
| | 8 | 1 | **7X-0515** | 10 | WASHER-HARD (17X35X5-MM THK) | |
| M | 9 | 1 | **7X-2553** | 4 | BOLT (M16X2X40-MM) | |
| M | 10 | 1 | **8T-4139** | 10 | BOLT (M12X1.75X30-MM) | |
| M | 11 | 1 | **8T-4779** | 6 | BOLT (M16X2X35-MM) | |

M-METRIC PART

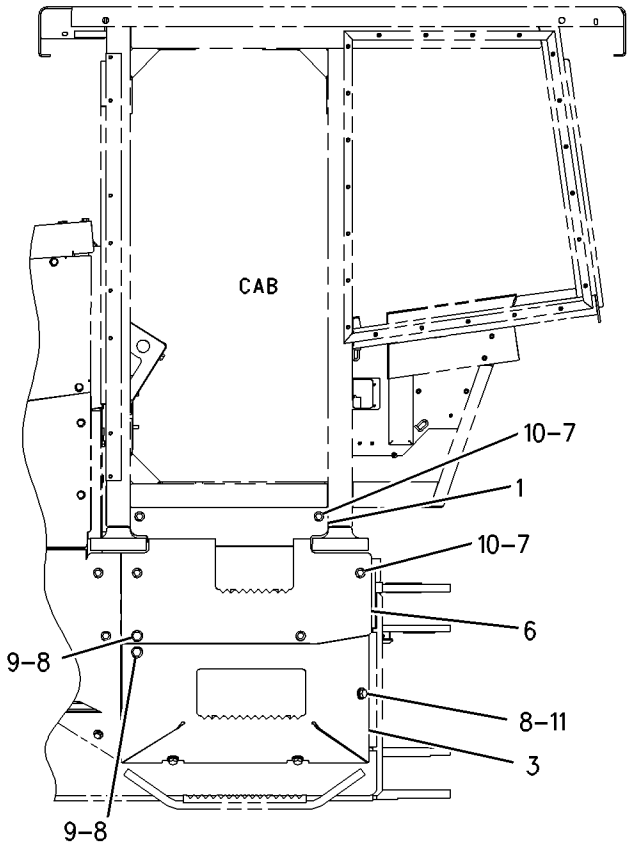


LEFT SIDE VIEW

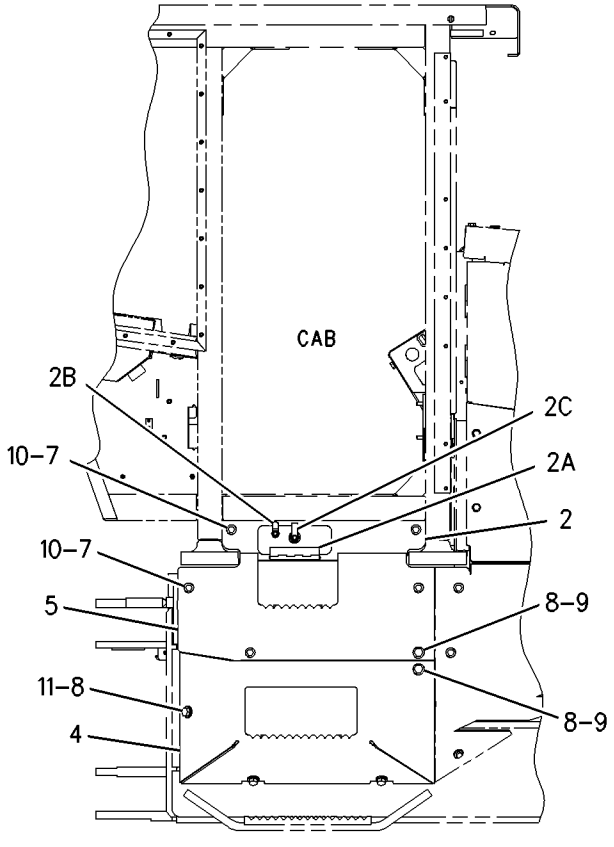


RIGHT SIDE VIEW

GRAPHIC #1 **<END>** g00997925

# FRAME AND BODY

## *248-0059* SWEEP GP

**S/N: 5451-UP**

**PART OF 245-9460 CHASSIS AR**

**SMCS-7162** **i02176597**

| NOTE | REF NO | GRAPHIC REF | PART NUMBER | QTY | PART NAME 1 2 3 4 5 6 (PRODUCT LEVEL) | SEE PAGE |
|---|---|---|---|---|---|---|
| | 1 | 1 | **7W-8327** | 2 | MOUNT AS | |
| | 2 | 1 | **220-3450** | 1 | SWEEP AS | |
| | | 1 | **124-7436** | 2 | HANDLE | |
| | 3 | 1 | **220-3458** | 2 | PLATE | |
| | 4 | 1 | **252-9530** | 1 | SWEEP AS | |
| | | 1 | **124-7436** | 1 | HANDLE | |
| | | 1 | **142-0245** | 1 | HANDLE AS | |
| M | 5 | 1 | **176-5311** | 2 | LOCKNUT (M16X2-THD) | |
| | 6 | 1 | **7X-0555** | 2 | WASHER-HARD (20X65X5-MM THK) | |
| M | 7 | 1 | **7X-2553** | 2 | BOLT (M16X2X40-MM) | |
| M | 8 | 1 | **7X-2557** | 2 | BOLT (M16X2X140-MM) | |
| M | 9 | 1 | **7X-2564** | 2 | BOLT (M20X2.5X90-MM) | |
| | 10 | 1 | **8T-5439** | 6 | WASHER-HARD (21.5X45X6-MM THK) | |

M-METRIC PART

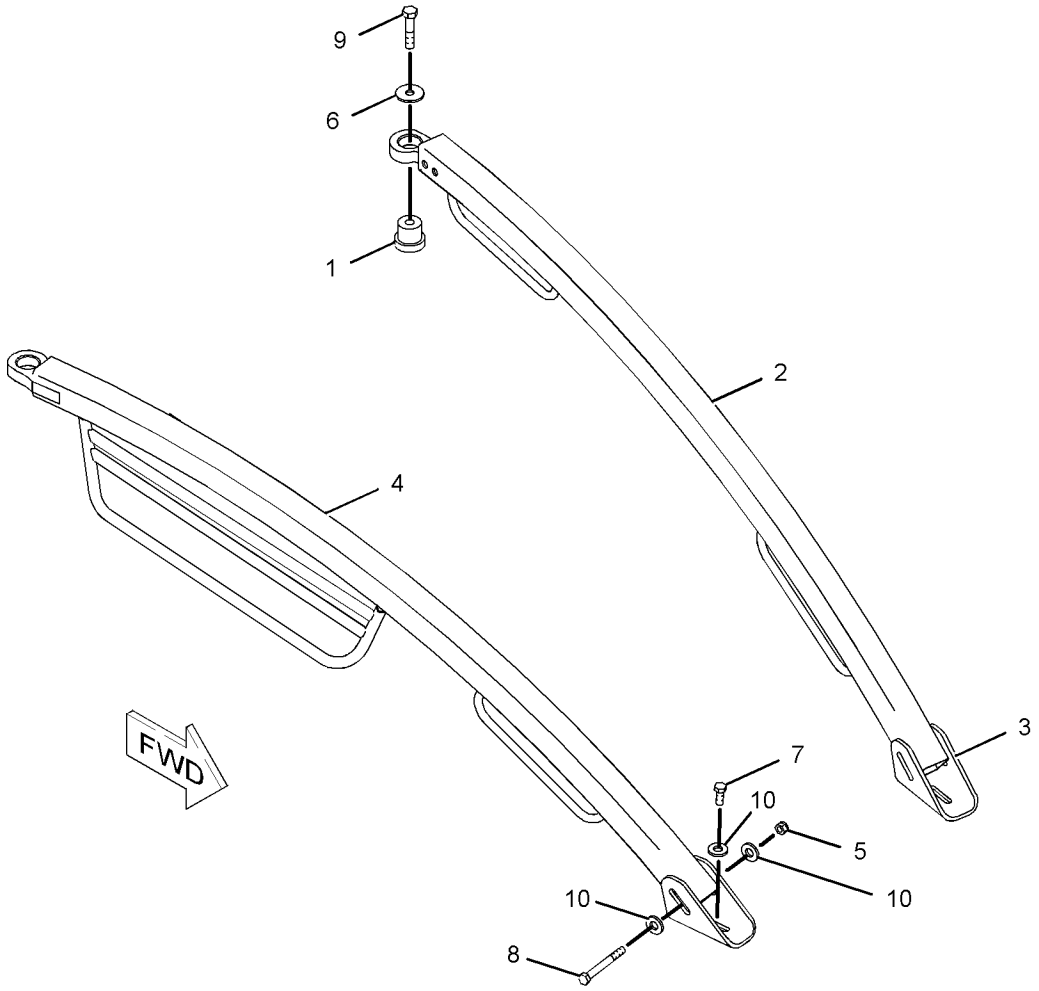


GRAPHIC #1 **<END>** g01103100

## 223-3917 ACCUMULATOR GP-BRAKE–UNCHARGED–FRONT

**S/N: 5451-UP**

**FIELD REPLACEMENT FOR 238-8232–PAGE 363**

**SMCS-4263, 4264, 4293** **i02559623**

| NOTE | REF NO | GRAPHIC REF | PART NUMBER | QTY | PART NAME 1 2 3 4 5 6 (PRODUCT LEVEL) | SEE PAGE |
|---|---|---|---|---|---|---|
| | 1 | 1 | **224-5132** | 1 | CAP | |
| | 2 | 1 | **224-5152** | 1 | VALVE-GAS | |
| | 3 | 1 | **3J-7354** | 1 | SEAL-O-RING | |
| | 4 | 1 | **1J-9671** | 1 | SEAL-O-RING | |
| | 5 | 1 | **241-0037** | 2 | FILM-WARNING (HIGH PRESSURE, READ OMM) | |

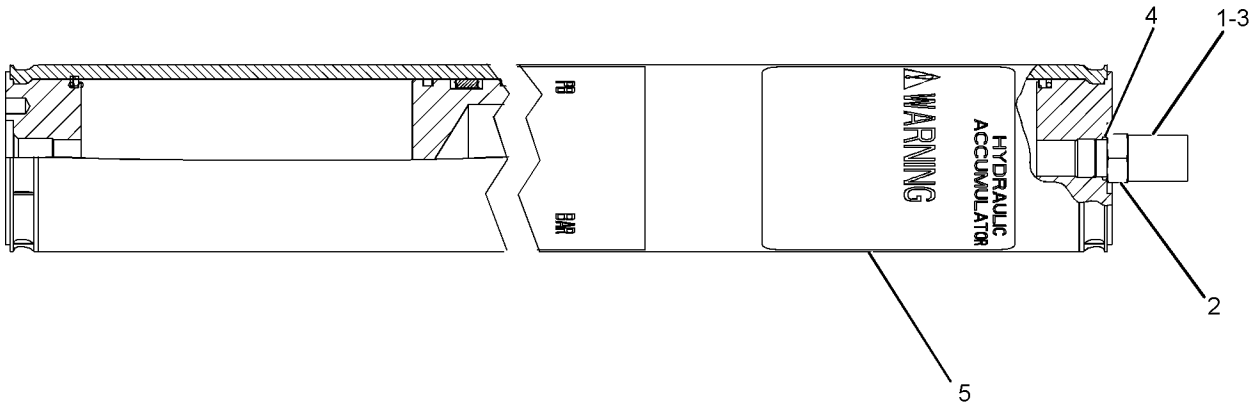


GRAPHIC #1 **<END>** g01109996

# *238-8232* ACCUMULATOR GP-BRAKE–CHARGED–FRONT

**S/N: 5451-UP**

**PART OF 252-6536 CONTROL GP-SERVICE BRAKE**

**FIELD REPLACEMENT ORDER 223-3917–PAGE 362**

**SMCS-4263, 4264, 4293** **i02198973**

| NOTE | REF NO | GRAPHIC REF | PART NUMBER | QTY | PART NAME 1 2 3 4 5 6 (PRODUCT LEVEL) | SEE PAGE |
|---|---|---|---|---|---|---|
| | 1 | 1 | **224-5132** | 1 | CAP | |
| | 2 | 1 | **224-5152** | 1 | VALVE-GAS | |
| | 3 | 1 | **3J-7354** | 1 | SEAL-O-RING | |
| | 4 | 1 | **1J-9671** | 1 | SEAL-O-RING | |

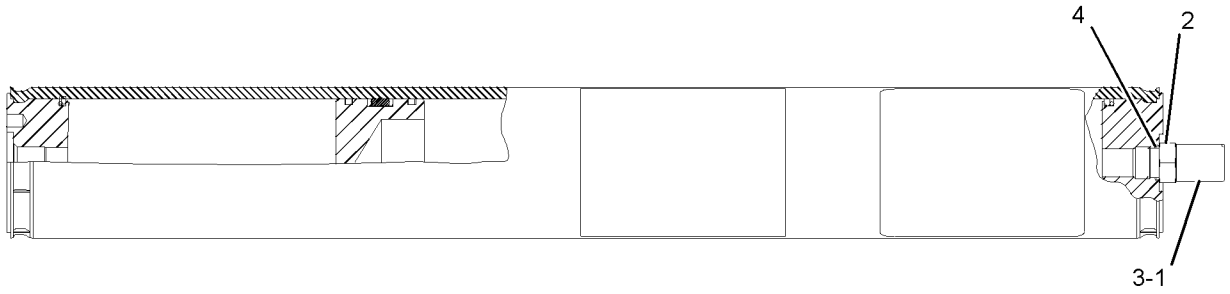


GRAPHIC #1 **<END>** g01040064

## *239-9941* ACCUMULATOR GP-BRAKE—CHARGED—REAR

**S/N: 5451-UP**

**PART OF 252-6536 CONTROL GP-SERVICE BRAKE**

**FIELD REPLACEMENT ORDER 240-5972—PAGE 365**

**SMCS-4263, 4264, 4293** **i02124287**

| NOTE | REF NO | GRAPHIC REF | PART NUMBER | QTY | PART NAME 1 2 3 4 5 6 (PRODUCT LEVEL) | SEE PAGE |
|---|---|---|---|---|---|---|
| | 1 | 1 | **224-5132** | 1 | CAP | |
| | 2 | 1 | **224-5152** | 1 | VALVE-GAS | |
| | 3 | 1 | **3J-7354** | 1 | SEAL-O-RING | |
| | 4 | 1 | **1J-9671** | 1 | SEAL-O-RING | |

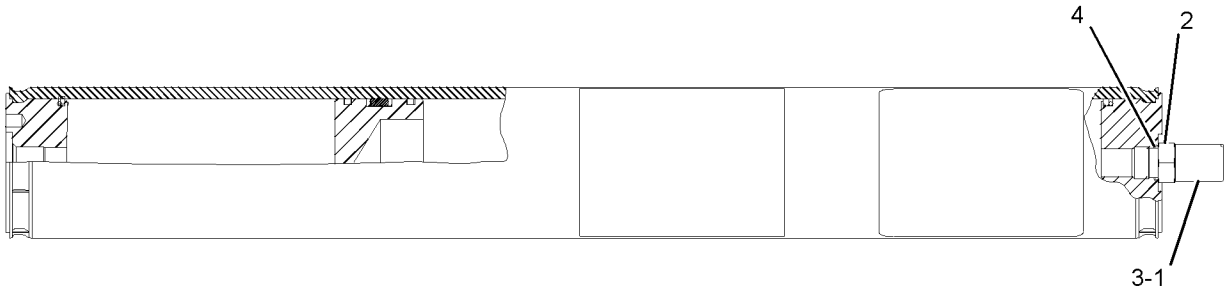


GRAPHIC #1 **<END>** g01040064

# 240-5972 ACCUMULATOR GP-BRAKE–UNCHARGED–REAR

**S/N: 5451-UP**

**FIELD REPLACEMENT FOR 239-9941–PAGE 364**

**SMCS-4263, 4264, 4293** **i02115899**

| NOTE | REF NO | GRAPHIC REF | PART NUMBER | QTY | PART NAME 1 2 3 4 5 6 (PRODUCT LEVEL) | SEE PAGE |
|---|---|---|---|---|---|---|
| | 1 | 1 | **224-5132** | 1 | CAP | |
| | 2 | 1 | **224-5152** | 1 | VALVE-GAS | |
| | 3 | 1 | **3J-7354** | 1 | SEAL-O-RING | |
| | 4 | 1 | **1J-9671** | 1 | SEAL-O-RING | |
| | 5 | 1 | **5P-3779** | 1 | TAG-NOTICE (CYLINDER PRESSURE) | |

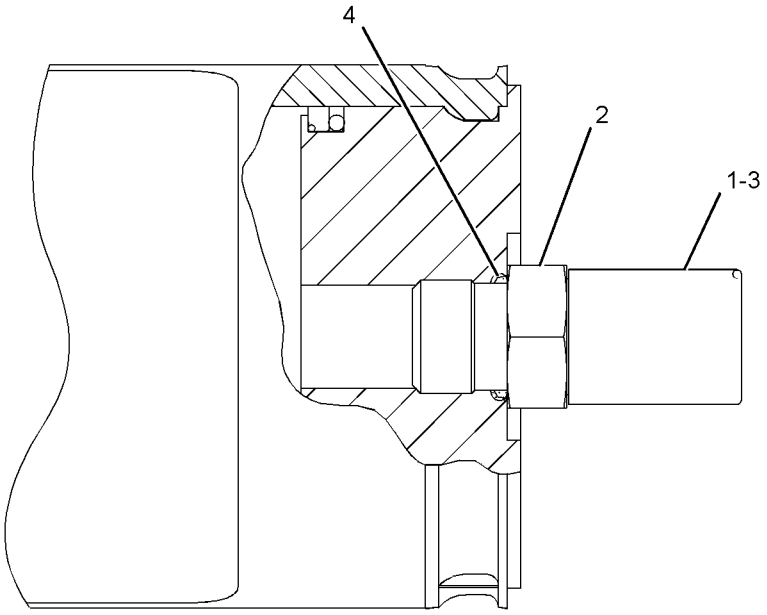


VIEW OF AREA A

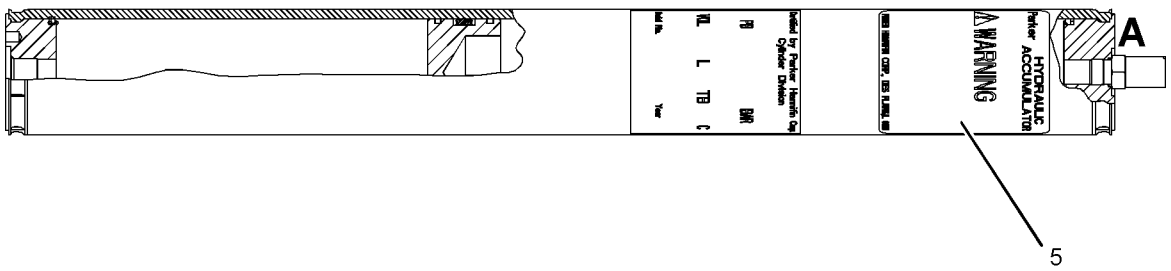


GRAPHIC #1 **<END>** g01083683

# 259-0617 ACCUMULATOR GP-BRAKE–UNCHARGED, COLD WEATHER

**S/N: 5451-UP**

**FIELD INSTALLATION**

**SMCS-4263, 4264, 4293** **i02325357**

| NOTE | REF NO | GRAPHIC REF | PART NUMBER | QTY | PART NAME 1 2 3 4 5 6 (PRODUCT LEVEL) | SEE PAGE |
|---|---|---|---|---|---|---|
| | 1 | 1 | **224-5132** | 1 | CAP | |
| | 2 | 1 | **224-5152** | 1 | VALVE-GAS | |
| | 3 | 1 | **3J-7354** | 1 | SEAL-O-RING | |
| | 4 | 1 | **1J-9671** | 1 | SEAL-O-RING | |

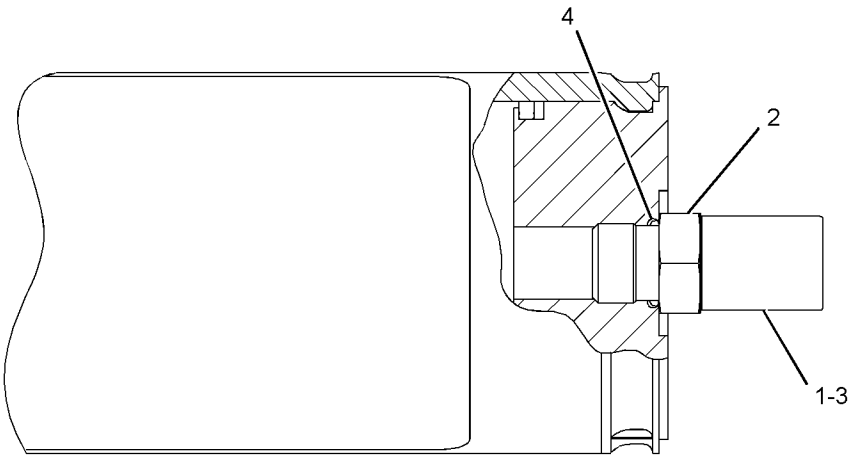


VIEW OF AREA A

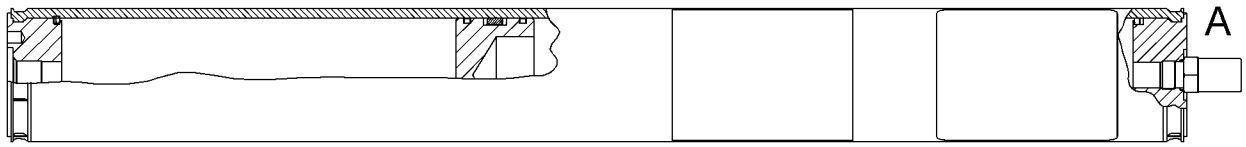


GRAPHIC #1 **<END>** g01161848

# *143-1413* ACTUATOR GP-PARKING BRAKE

**S/N: 5451-UP**

**PART OF 245-9463, 284-7040 POWER TRAIN AR**

**SMCS-4262, 4267** **i00934663**

| NOTE | REF NO | GRAPHIC REF | PART NUMBER | QTY | PART NAME 1 2 3 4 5 6 (PRODUCT LEVEL) | SEE PAGE |
|---|---|---|---|---|---|---|
| | 1 | 1 | **7I-3759** | 1 | ACTUATOR GP-PARKING BRAKE | |
| | 2 | 1 | **145-0152** | 1 | ROD AS | |
| | 3 | 1 | **150-4381** | 1 | BRACKET AS | |
| | 4 | 1 | **0S-0175** | 1 | PIN-CLEVIS | |
| | 5 | 1 | **3B-4617** | 1 | PIN-COTTER | |
| | 6 | 1 | **6V-8397** | 1 | SEAL-O-RING | |
| | 7 | 1 | **8T-4121** | 2 | WASHER-HARD (11X21X2.5-MM THK) | |
| M | 8 | 1 | **8T-4196** | 2 | BOLT (M10X1.5X35-MM) | |
| | 9 | 1 | **8T-4223** | 5 | WASHER-HARD (13.5X25.5X3-MM THK) | |
| M | 10 | 1 | **8T-4244** | 2 | NUT (M12X1.75-THD) | |
| M | 11 | 1 | **8T-4956** | 2 | BOLT (M12X1.75X35-MM) | |

M-METRIC PART

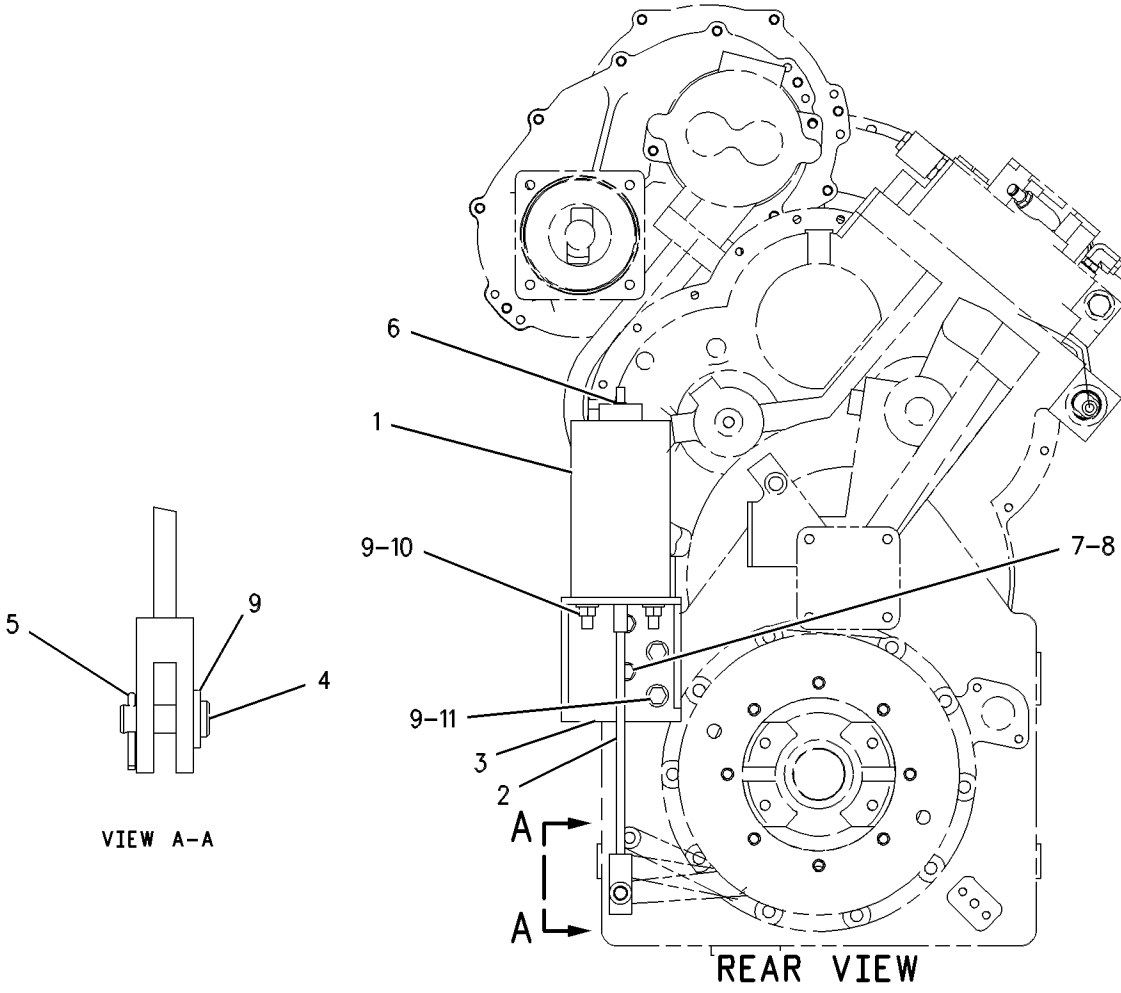


GRAPHIC #1 **<END>** g00497857

# 118-2291 BRAKE GP-PARKING

**S/N: R1C1-UP**

**PART OF 147-5658 GEAR GP-OUTPUT TRANSFER**

**SMCS-4267** **i00900381**

| NOTE | REF NO | GRAPHIC REF | PART NUMBER | QTY | PART NAME 1 2 3 4 5 6 (PRODUCT LEVEL) | SEE PAGE |
|---|---|---|---|---|---|---|
| | 1 | 1 | **7F-9579** | 1 | SOCKET | |
| | 2 | 1 | **7F-9571** | 1 | SCREW-ADJUSTMENT | |
| | 3 | 1 | **7F-9572** | 1 | NUT | |
| | 4 | 1 | **7F-9578** | 1 | SPRING | |
| | 5 | 1 | **9M-5138** | 2 | PIN-ANCHOR | |
| | 6 | 1 | **9M-5137** | 1 | BRACE-ANCHOR PIN | |
| | 7 | 1 | **5D-1242** | 1 | BRACKET | |
| | 8 | 1 | **6V-8182** | 2 | NUT (3/4-10 THD) | |
| | 9 | 1 | **3B-4512** | 2 | LOCKWASHER | |
| | 10 | 1 | **9M-5139** | 2 | SPRING | |
| | 11 | 1 | **8W-8673** | 2 | SHOE AS-BRAKE | |
| | 12 | 1 | **9M-5140** | 1 | PLATE AS | |
| | 13 | 1 | **5D-1241** | 1 | CAMSHAFT | |
| | | | | | AVAILABLE REPAIR KIT(S): | |
| | | | **8W-8674** | | KIT-BRAKE LINING | |
| | | | | | (CONSISTS OF A COMPLETE SET OF LININGS AND RIVETS FOR ONE BRAKE) | |

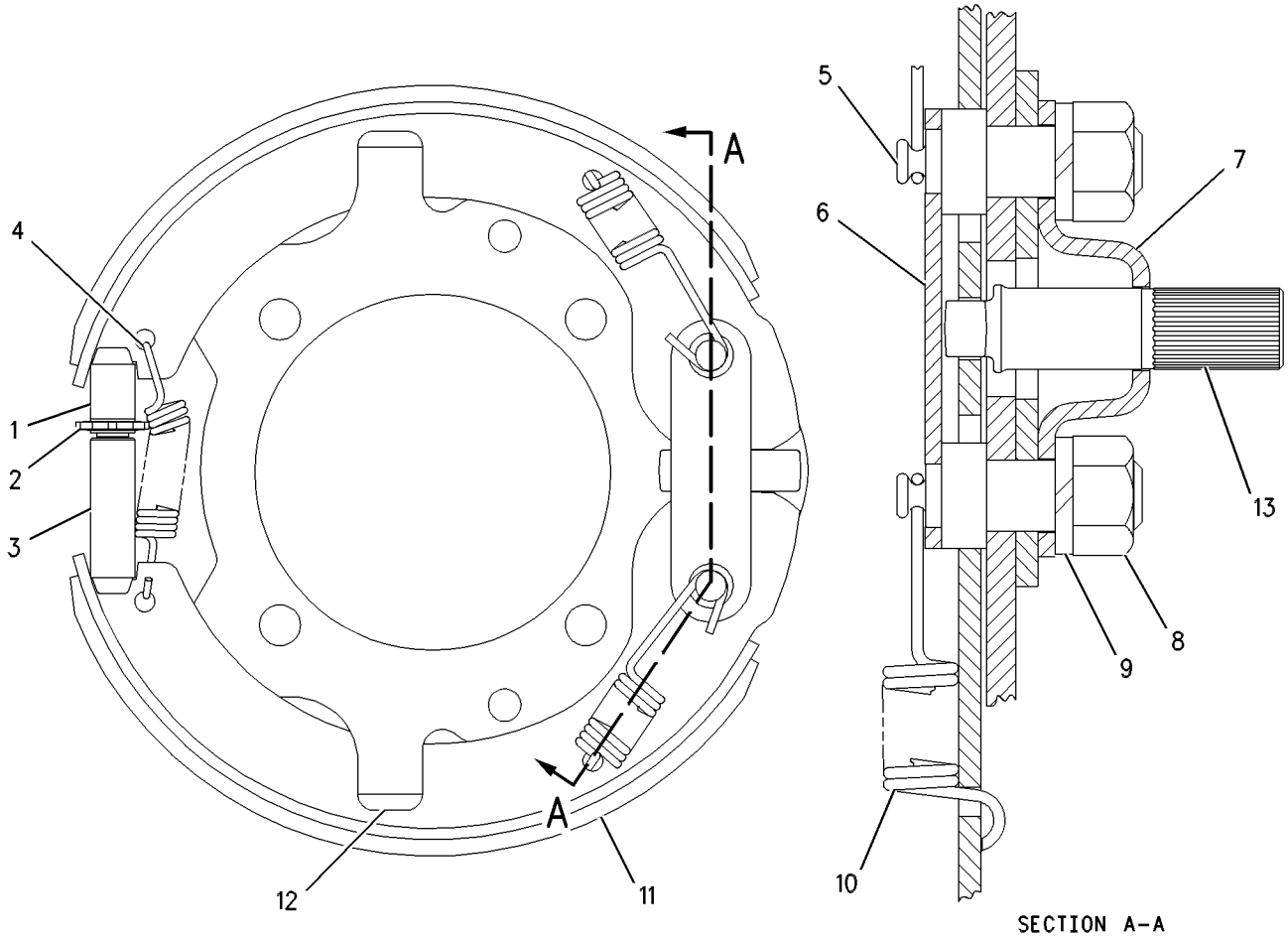


GRAPHIC #1 **<END>** g00460027

# *200-1315* BRAKE GP-PARKING

**S/N: 5MY1-UP**

**PART OF 147-5658 GEAR GP-OUTPUT TRANSFER**

**SMCS-4267** **i02485291**

| NOTE | REF NO | GRAPHIC REF | PART NUMBER | QTY | PART NAME 1 2 3 4 5 6 (PRODUCT LEVEL) | SEE PAGE |
|---|---|---|---|---|---|---|
| | 1 | 1 | **7F-9579** | 1 | SOCKET | |
| | 2 | 1 | **7F-9571** | 1 | SCREW-ADJUSTMENT | |
| | 3 | 1 | **7F-9572** | 1 | NUT | |
| | 4 | 1 | **7F-9578** | 1 | SPRING | |
| | 5 | 1 | **9M-5138** | 2 | PIN-ANCHOR | |
| | 6 | 1 | **9M-5137** | 1 | BRACE-ANCHOR PIN | |
| | 7 | 1 | **5D-1242** | 1 | BRACKET | |
| | 8 | 1 | **6V-8182** | 2 | NUT (3/4-10-THD) | |
| | 9 | 1 | **3B-4512** | 2 | LOCKWASHER | |
| | 10 | 1 | **9M-5139** | 2 | SPRING | |
| | 11 | 1 | **8W-8673** | 2 | SHOE AS-BRAKE | |
| | 12 | 1 | **9M-5140** | 1 | PLATE AS | |
| | 13 | 1 | **200-1316** | 1 | CAMSHAFT | |
| | | | | | AVAILABLE REPAIR KIT(S): | |
| | | | **8W-8674** | | KIT-BRAKE LINING | |
| | | | | | (KIT INCLUDES COMPLETE SET OF LININGS AND RIVETS FOR ONE BRAKE) | |

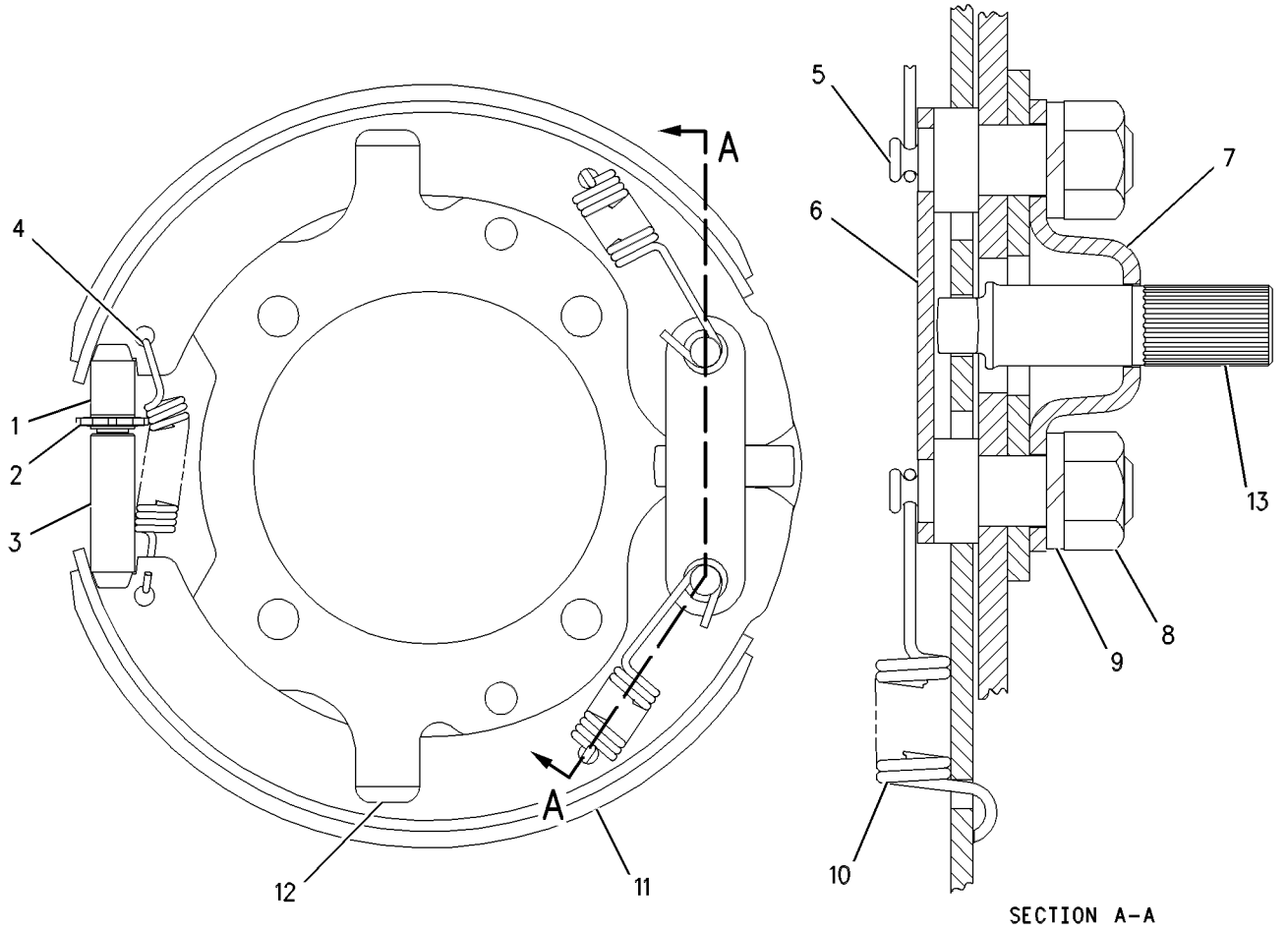


GRAPHIC #1 **<END>** g00391420

# BRAKING SYSTEM

## 283-9977 BRAKE GP-PARKING

**S/N: 5MY1-UP**

**PART OF 147-5658 GEAR GP-OUTPUT TRANSFER**

**SMCS-4267** **i02548572**

| NOTE | REF NO | GRAPHIC REF | PART NUMBER | QTY | PART NAME 1 2 3 4 5 6 (PRODUCT LEVEL) | SEE PAGE |
|---|---|---|---|---|---|---|
| | 1 | 1 | **5D-1242** | 1 | BRACKET | |
| | 2 | 1 | **7F-9571** | 1 | SCREW-ADJUSTMENT | |
| | 3 | 1 | **7F-9572** | 1 | NUT | |
| | 4 | 1 | **7F-9578** | 1 | SPRING | |
| | 5 | 1 | **7F-9579** | 1 | SOCKET | |
| | 6 | 1 | **9M-5137** | 1 | BRACE-ANCHOR PIN | |
| | 7 | 1 | **9M-5138** | 2 | PIN-ANCHOR | |
| | 8 | 1 | **9M-5139** | 2 | SPRING | |
| | 9 | 1 | **9M-5140** | 1 | PLATE AS | |
| | 10 | 1 | **200-1316** | 1 | CAMSHAFT | |
| | 11 | 1 | **283-9978** | 2 | SHOE AS-BRAKE | |
| | 12 | 1 | **3B-4512** | 2 | LOCKWASHER | |
| | 13 | 1 | **6B-6682** | 2 | NUT-FULL (3/4-16-THD) | |
| | | | | | AVAILABLE REPAIR KIT(S): | |
| | | | **283-9979** | 1 | KIT-BRAKE LINING | |
| | | | | | (KIT INCLUDES LINING AND RIVET) | |

**283-9977 BRAKE GP-PARKING** *(contd. )* **i02548572**

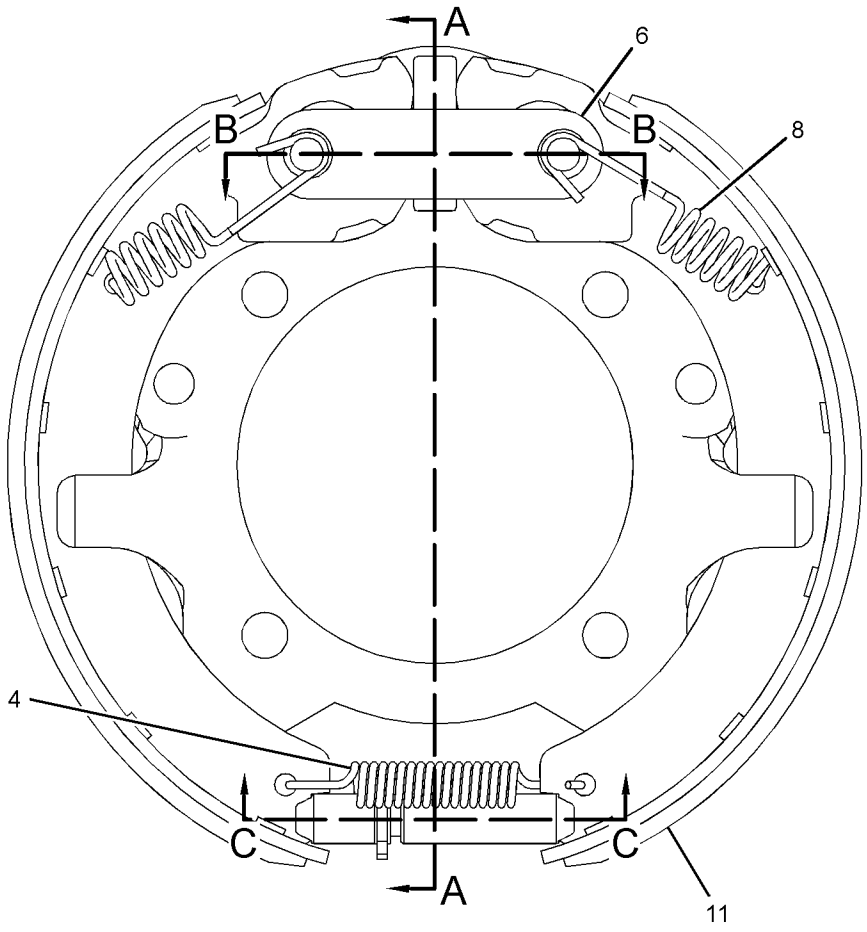


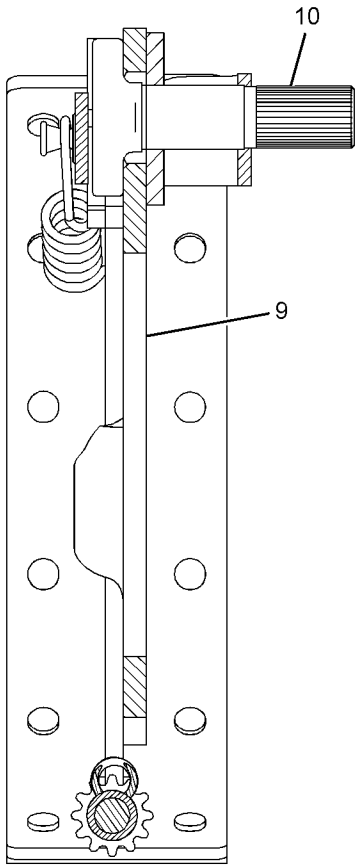


SECTION A-A

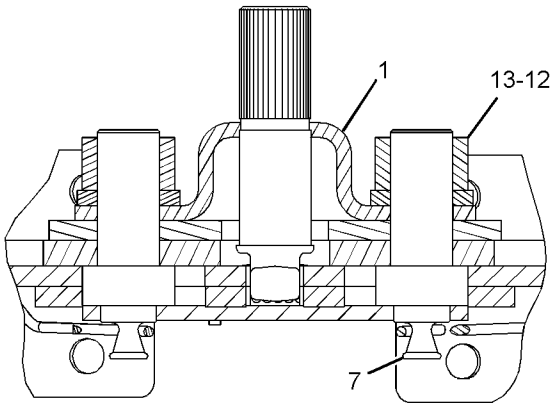


SECTION B-B

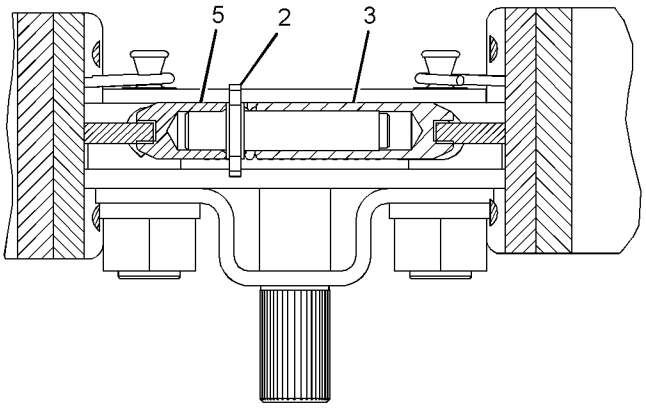


SECTION C-C

GRAPHIC #1 **<END>** g01278105

# BRAKING SYSTEM

## *260-1921* CONTROL GP-FOOT BRAKE

**S/N: 5451-UP**

**PART OF 252-1415, 252-1720 CAB AR-ENCLOSED ROPS, 252-1722, 252-1728 CAB AR-OPEN ROPS**

**AN ATTACHMENT**

**SMCS-4265, 4269** **i02178549**

| NOTE | REF NO | GRAPHIC REF | PART NUMBER | QTY | PART NAME 1 2 3 4 5 6 (PRODUCT LEVEL) | SEE PAGE |
|---|---|---|---|---|---|---|
| | 1 | 1 | **183-4184** | 1 | ROLLER | |
| | 2 | 1 | **3B-4621** | 1 | PIN-COTTER | |
| | 3 | 1 | **6V-3545** | 2 | BEARING-ROLLER | |
| | 4 | 1 | **9P-9185** | 1 | SPRING | |
| B | 5 | 1 | **9X-1481** | 4 | WASHER (13X25.4X1.6-MM THK) | |
| | 6 | 1 | **110-7595** | 1 | PIN-SPRING | |
| | 7 | 1 | **260-1923** | 1 | PLATE AS | |
| M | | 1 | **6V-9632** | 4 | NUT-WELD (M6X1-THD) | |
| M | | 1 | **8T-3490** | 2 | NUT-WELD (M10X1.5-THD) | |
| | 8 | 1 | **183-4216** | 1 | PEDAL AS | |
| | 9 | 1 | **183-4183** | 1 | SHAFT | |
| | 10 | 1 | **148-0775** | 1 | SHAFT | |
| | 11 | 1 | **148-0776** | 1 | PLATE | |
| | 12 | 1 | **150-1147** | 1 | LINER | |
| | 13 | 1 | **150-1148** | 1 | PLATE | |
| | 14 | 1 | **8T-4121** | 6 | WASHER-HARD (11X21X2.5-MM THK) | |
| M | 15 | 1 | **8T-4133** | 6 | NUT (M10X1.5-THD) | |
| M | 17 | 1 | **8T-4138** | 6 | BOLT (M6X1X20-MM) | |
| M | 18 | 1 | **8T-4186** | 4 | BOLT (M10X1.5X40-MM) | |
| | 19 | 1 | **9X-8256** | 6 | WASHER (6.6X12X2-MM THK) | |

B-USE AS REQUIRED
M-METRIC PART

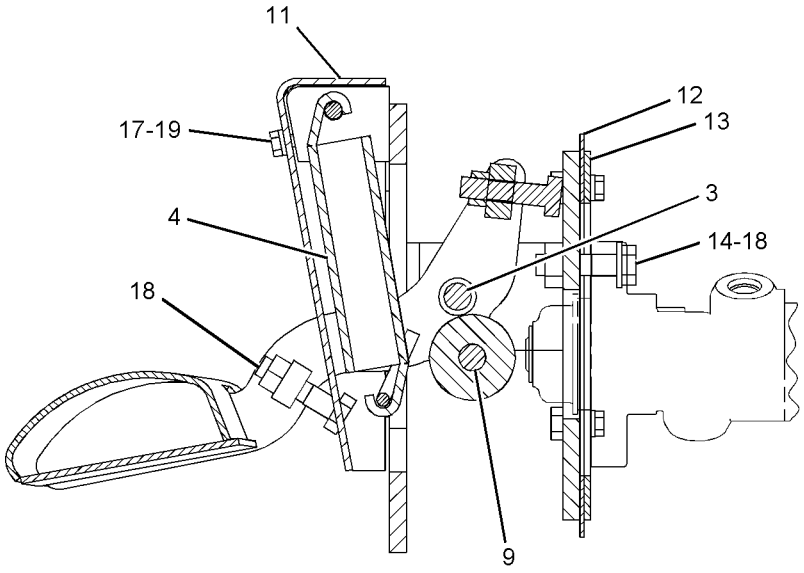


SECTION A-A

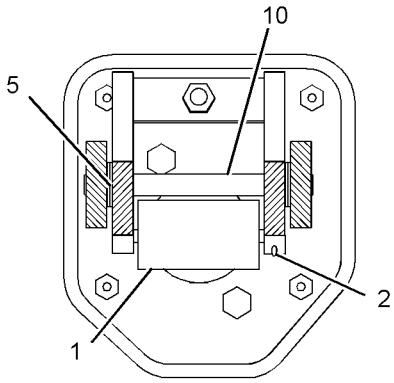


SECTION B-B

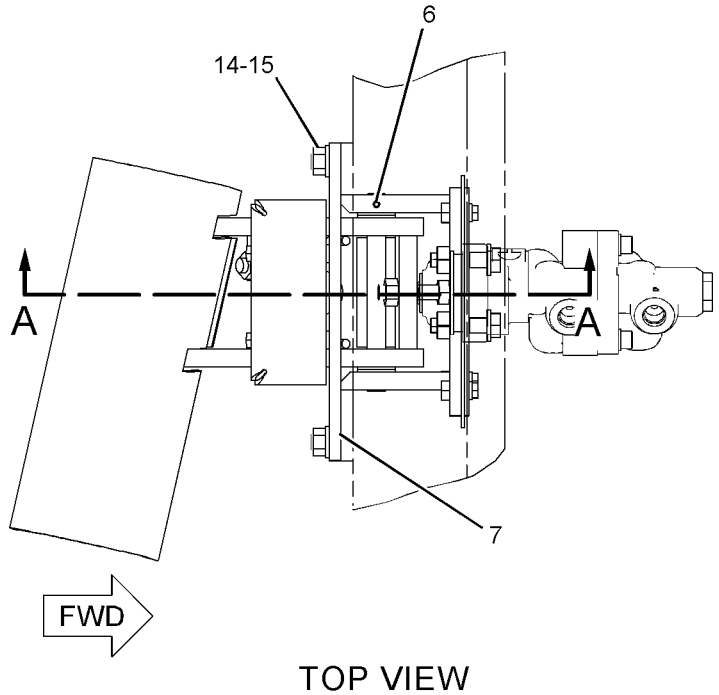


TOP VIEW

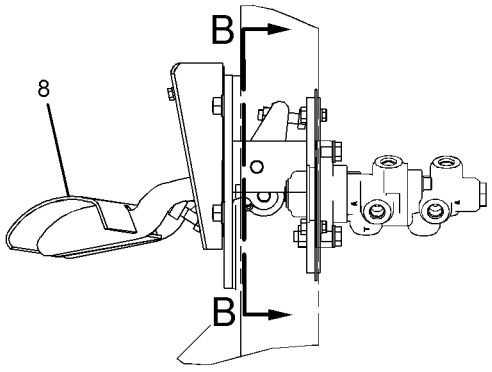


RIGHT SIDE VIEW

GRAPHIC #1 **<END>** g01102871

# BRAKING SYSTEM

## *252-6538* CONTROL GP-PARKING BRAKE

**S/N: 5451-UP**

**PART OF 245-9466 HYDRAULIC AR**

**SMCS-4282, 4284** **i02308559**

| NOTE | REF NO | GRAPHIC REF | PART NUMBER | QTY | PART NAME 1 2 3 4 5 6 (PRODUCT LEVEL) | SEE PAGE |
|---|---|---|---|---|---|---|
| I | 1 | 1 | **171-2014** | 1 | HOSE AS | |
| | 2 | 1 | **174-4312** | 1 | SWITCH AS-PRESSURE (PARKING BRAKE OIL) | |
| | | 1 | **102-8803** | 1 | KIT-RECEPTACLE (3-PIN) | |
| | | | | | (INCLUDES RECEPTACLE AS AND WEDGE) | |
| Y | 3 | 1 | **252-0742** | 1 | MANIFOLD GP-CONTROL (PARKING BRAKE CONTROL) | 381 |
| | 4 | 1 | **252-7105** | 1 | TUBE AS | |
| | 5 | 1 | **252-7106** | 1 | TUBE AS | |
| | 6 | 1 | **252-7107** | 1 | TUBE AS | |
| | 7 | 1 | **255-6497** | 1 | PLATE AS | |
| M | | 1 | **8T-3490** | 2 | NUT-WELD (M10X1.5-THD) | |
| | 8 | 1 | *148-8313* | 1 | ADAPTER AS | |
| | | 1 | **3K-0360** | 1 | SEAL-O-RING | |
| | | 1 | **5P-6944** | 1 | ADAPTER | |
| | 9 | 1 | *148-8318* | 3 | CONNECTOR AS | |
| | | | | | (EACH INCLUDES) | |
| | | 1 | **3K-0360** | 1 | SEAL-O-RING | |
| | | 1 | **6V-8397** | 1 | SEAL-O-RING | |
| | | 1 | **6V-8634** | 1 | CONNECTOR | |
| | 10 | 1 | *148-8371* | 1 | ELBOW AS | |
| | | 1 | **6V-8397** | 1 | SEAL-O-RING | |
| | | 1 | **8C-8988** | 1 | ELBOW | |
| | 11 | 1 | *148-8378* | 1 | ELBOW AS | |
| | | 1 | **3J-1907** | 1 | SEAL-O-RING | |
| | | 1 | **6V-8397** | 1 | SEAL-O-RING | |
| | | 1 | **6V-8724** | 1 | ELBOW | |
| | 12 | 1 | **4D-7794** | 2 | CLIP | |
| | 13 | 1 | **8T-4121** | 4 | WASHER-HARD (11X21X2.5-MM THK) | |
| M | 14 | 1 | **8T-4136** | 2 | BOLT (M10X1.5X25-MM) | |
| M | 15 | 1 | **8T-4191** | 2 | BOLT (M10X1.5X16-MM) | |
| M | 16 | 1 | **8T-5005** | 2 | BOLT (M10X1.5X70-MM) | |
| | 17 | 1 | **3J-1907** | 1 | SEAL-O-RING | |

I-REFER TO HYDRAULIC INFORMATION SYSTEM
M-METRIC PART
Y-SEPARATE ILLUSTRATION

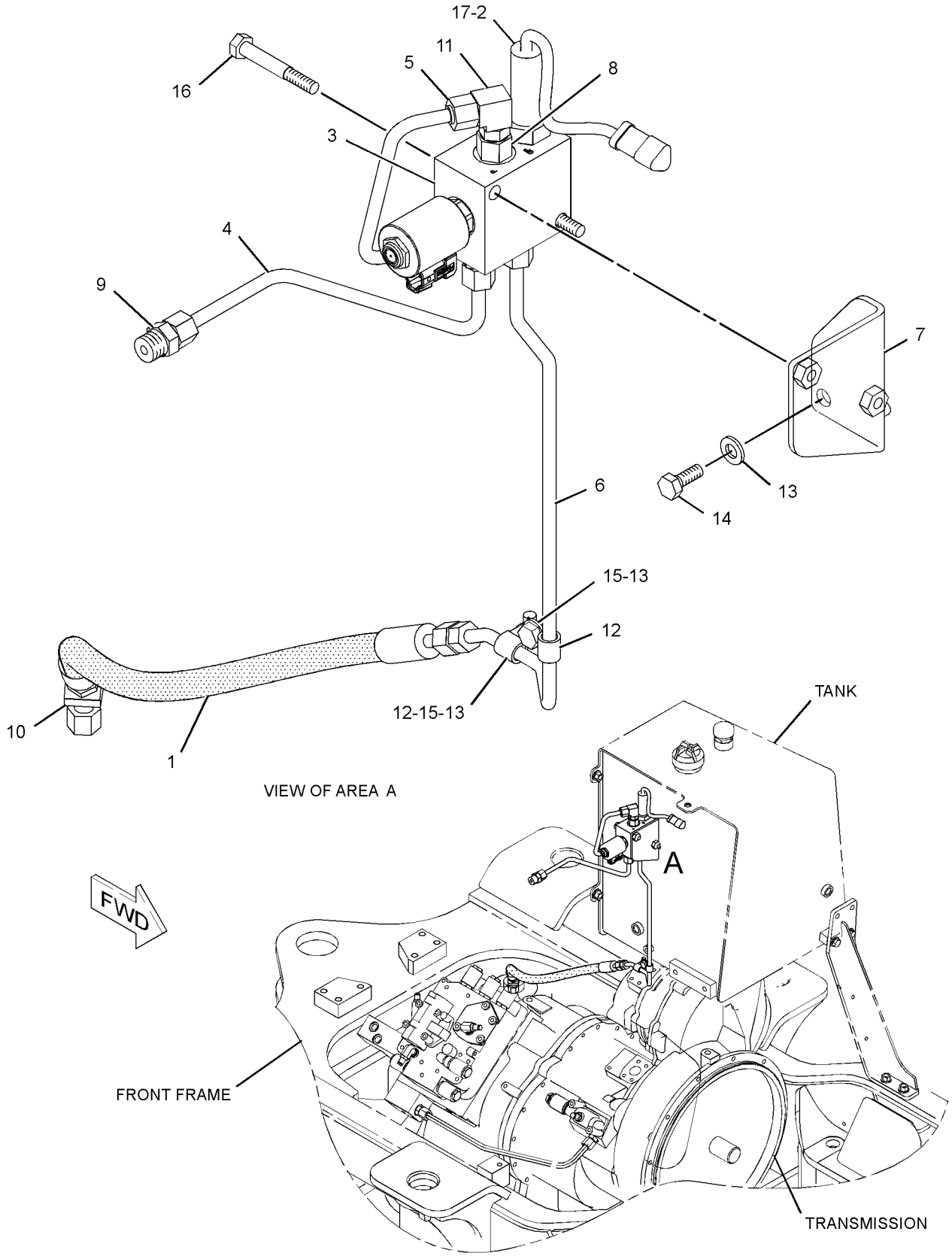


GRAPHIC #1

**<END>**

g01160663

# BRAKING SYSTEM

## *252-6536* CONTROL GP-SERVICE BRAKE

**S/N: 5451-UP**

**PART OF 245-9466 HYDRAULIC AR**

**SMCS-4257, 4263, 4264, 4265, 4269, 4280** **i02463516**

| NOTE | REF NO | GRAPHIC REF | PART NUMBER | QTY | PART NAME 1 2 3 4 5 6 (PRODUCT LEVEL) | SEE PAGE |
|---|---|---|---|---|---|---|
| | 1 | 1 | **3E-7806** | 1 | SWITCH AS-PRESSURE (BRAKE ACCUMULATOR CHARGE) | |
| | | 1 | **102-8803** | 1 | KIT-RECEPTACLE (3-PIN) | |
| | | | | | (INCLUDES RECEPTACLE AS AND WEDGE) | |
| | 2 | 1 | **6V-0852** | 2 | CAP-DUST | |
| | 3 | 1 | **9U-2886** | 1 | VALVE GP-ACCUMULATOR CHARGING (BRAKE) | |
| | 4 | 1 | *148-8443* | 2 | TEE AS | |
| | | | | | (EACH INCLUDES) | |
| | | 1 | **3J-1907** | 1 | SEAL-O-RING | |
| | | 1 | **6V-8397** | 1 | SEAL-O-RING | |
| | | 1 | **7X-2459** | 1 | TEE-O-RING | |
| I | 5 | 1 | **161-6861** | 1 | HOSE AS | |
| | 6 | 1 | *164-5567* | 2 | FITTING AS (QUICK DISCONNECT, MALE) | |
| | | | | | (EACH INCLUDES) | |
| | | 1 | **3J-1907** | 1 | SEAL-O-RING | |
| | | 1 | **6V-3965** | 1 | FITTING-COUPLER | |
| I | 7 | 1 | **149-7155** | 1 | HOSE AS | |
| I | 8 | 1 | **183-8562** | 1 | HOSE AS | |
| Y | 9 | 1 | **215-3685** | 1 | VALVE GP-BRAKE CONTROL (SERVICE) | 382 |
| Y | 10 | 1 | *238-8232* | 1 | ACCUMULATOR GP-BRAKE (CHARGED) (FRONT) | 363 |
| Y | 11 | 1 | *239-9941* | 1 | ACCUMULATOR GP-BRAKE (CHARGED) (REAR) | 364 |
| I | 12 | 1 | **252-7096** | 1 | HOSE AS | |
| | 13 | 1 | **252-7097** | 1 | TUBE AS | |
| | 14 | 1 | **252-7098** | 1 | TUBE AS | |
| | 15 | 1 | **252-7099** | 1 | TUBE AS | |
| | 16 | 1 | **252-7100** | 1 | TUBE AS | |
| | 17 | 1 | **252-7101** | 1 | TUBE AS | |
| | 18 | 1 | **252-7102** | 1 | BRACKET | |
| | 19 | 1 | **252-7103** | 1 | BRACKET | |
| | 20 | 1 | **252-7104** | 1 | MANIFOLD | |
| | 21 | 1 | *148-8313* | 1 | ADAPTER AS | |
| | | 1 | **3K-0360** | 1 | SEAL-O-RING | |
| | | 1 | **5P-6944** | 1 | ADAPTER | |
| | 22 | 1 | *148-8318* | 1 | CONNECTOR AS | |
| | | 1 | **3K-0360** | 1 | SEAL-O-RING | |
| | | 1 | **6V-8397** | 1 | SEAL-O-RING | |
| | | 1 | **6V-8634** | 1 | CONNECTOR | |
| | 23 | 1 | *148-8336* | 2 | CONNECTOR AS | |
| | | | | | (EACH INCLUDES) | |
| | | 1 | **3J-1907** | 1 | SEAL-O-RING | |
| | | 1 | **6V-8397** | 1 | SEAL-O-RING | |
| | | 1 | **6V-8636** | 1 | CONNECTOR | |
| | 24 | 1 | *148-8340* | 1 | CONNECTOR AS | |
| | | 1 | **3K-0360** | 1 | SEAL-O-RING | |
| | | 1 | **6V-8398** | 1 | SEAL-O-RING | |
| | | 1 | **6V-8639** | 1 | CONNECTOR | |
| | 25 | 1 | *148-8363* | 1 | ELBOW AS | |
| | | 1 | **3K-0360** | 1 | SEAL-O-RING | |
| | | 1 | **6V-8397** | 1 | SEAL-O-RING | |
| | | 1 | **6V-9876** | 1 | ELBOW | |
| | 26 | 1 | *148-8365* | 1 | ELBOW AS | |
| | | 1 | **3J-1907** | 1 | SEAL-O-RING | |
| | | 1 | **6V-8398** | 1 | SEAL-O-RING | |
| | | 1 | **8T-6876** | 1 | ELBOW | |
| | 27 | 1 | *148-8370* | 2 | ELBOW AS | |
| | | | | | (EACH INCLUDES) | |
| | | 1 | **6V-8398** | 1 | SEAL-O-RING | |

## *252-6536* **CONTROL GP-SERVICE BRAKE** *(contd.)* **i02463516**

| NOTE | REF NO | GRAPHIC REF | PART NUMBER | QTY | PART NAME 1 2 3 4 5 6 (PRODUCT LEVEL) | SEE PAGE |
|---|---|---|---|---|---|---|
| | | 1 | **6V-9851** | 1 | ELBOW | |
| | 28 | 1 | *148-8374* | 4 | ELBOW AS | |
| | | | | | (EACH INCLUDES) | |
| | | 1 | **3K-0360** | 1 | SEAL-O-RING | |
| | | 1 | **6V-8397** | 1 | SEAL-O-RING | |
| | | 1 | **6V-8723** | 1 | ELBOW (FACE SEAL) | |
| | 29 | 1 | *148-8433* | 2 | TEE AS | |
| | | | | | (EACH INCLUDES) | |
| | | 1 | **6V-8397** | 2 | SEAL-O-RING | |
| | | 1 | **6V-9836** | 1 | TEE-SWIVEL | |
| | 30 | 1 | *148-8434* | 1 | TEE AS | |
| | | 1 | **6V-8397** | 2 | SEAL-O-RING | |
| | | 1 | **6V-9843** | 1 | TEE-SWIVEL | |
| | 31 | 1 | *150-4043* | 3 | CONNECTOR AS | |
| | | | | | (EACH INCLUDES) | |
| | | 1 | **3J-1907** | 1 | SEAL-O-RING | |
| | | 1 | **6V-8398** | 1 | SEAL-O-RING | |
| | | 1 | **6V-9873** | 1 | CONNECTOR | |
| | 32 | 1 | **3J-1907** | 1 | SEAL-O-RING | |
| | 33 | 1 | **5M-3062** | 2 | BOLT (3/8-16X0.75-IN) | |
| | 34 | 1 | **5S-0581** | 1 | WASHER-HARD (17X38X8-MM THK) | |
| | 35 | 1 | **6D-8305** | 2 | CLAMP | |
| | 36 | 1 | **8T-4121** | 8 | WASHER-HARD (11X21X2.5-MM THK) | |
| M | 37 | 1 | **8T-4133** | 4 | NUT (M10X1.5-THD) | |
| M | 38 | 1 | **8T-4186** | 2 | BOLT (M10X1.5X40-MM) | |
| M | 39 | 1 | **8T-4192** | 3 | BOLT (M12X1.75X25-MM) | |
| | 40 | 1 | **8T-4223** | 4 | WASHER-HARD (13.5X25.5X3-MM THK) | |
| | 41 | 1 | **8T-4896** | 2 | WASHER-HARD (10.2X18.5X2.5-MM THK) | |
| M | 42 | 1 | **8T-4910** | 1 | BOLT (M12X1.75X60-MM) | |
| M | 43 | 1 | **8T-5005** | 2 | BOLT (M10X1.5X70-MM) | |
| | 44 | 1 | *164-5624* | 1 | ELBOW AS | |
| | | 1 | **3J-1907** | 1 | SEAL-O-RING | |
| | | 1 | **6V-8398** | 1 | SEAL-O-RING | |
| | | 1 | **9X-2085** | 1 | ELBOW | |
| | 45 | 1 | *148-8367* | 1 | ELBOW AS | |
| | | 1 | **6V-8397** | 1 | SEAL-O-RING | |
| | | 1 | **6V-9850** | 1 | ELBOW | |

I-REFER TO HYDRAULIC INFORMATION SYSTEM
M-METRIC PART
Y-SEPARATE ILLUSTRATION

*252-6536* **CONTROL GP-SERVICE BRAKE** *(contd. )* **i02463516**

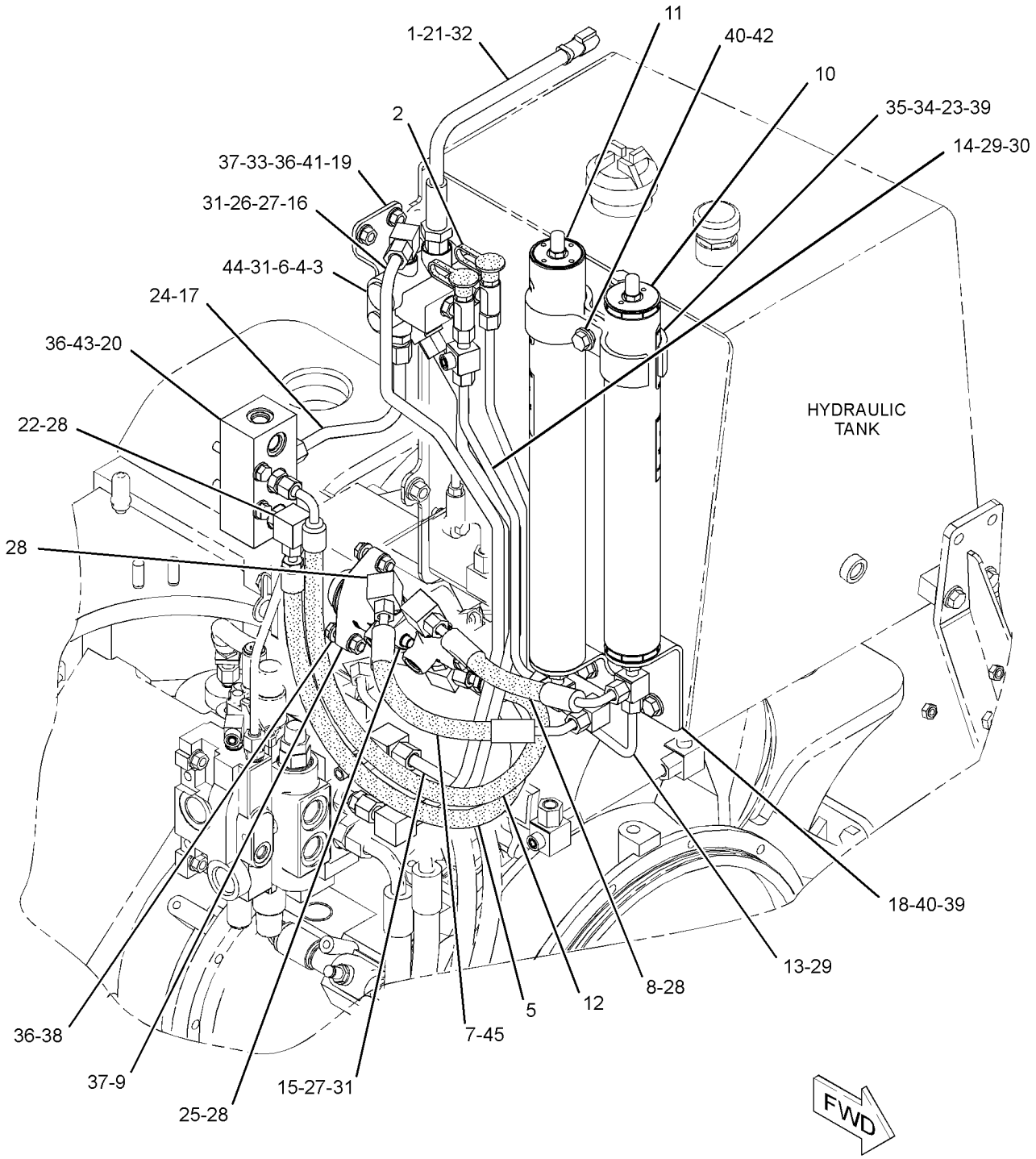


GRAPHIC #1 **<END>** g01236639

## *252-6548* LINES GP-SERVICE BRAKE

**S/N: 5451-UP**

**PART OF 245-9463, 284-7040 POWER TRAIN AR**

**SMCS-4257** **i02336772**

| NOTE | REF NO | GRAPHIC REF | PART NUMBER | QTY | PART NAME 1 2 3 4 5 6 (PRODUCT LEVEL) | SEE PAGE |
|---|---|---|---|---|---|---|
| | 1 | 1 | **6V-0852** | 2 | CAP-DUST | |
| | 2 | 1 | **8C-6416** | 2 | FITTING | |
| I | 3 | 1 | **237-4147** | 1 | HOSE AS | |
| I | 4 | 1 | **275-3590** | 1 | HOSE AS | |
| | 5 | 1 | **151-3832** | 1 | TUBE AS | |
| | 6 | 1 | **151-4590** | 1 | TUBE AS | |
| I | 7 | 1 | **227-2004** | 1 | HOSE AS | |
| I | 8 | 1 | **194-5444** | 1 | HOSE AS | |
| | 9 | 1 | **263-3477** | 1 | PLATE | |
| | 10 | 1 | *148-8363* | 2 | ELBOW AS | |
| | | | | | (EACH INCLUDES) | |
| | | 1 | **3K-0360** | 1 | SEAL-O-RING | |
| | | 1 | **6V-8397** | 1 | SEAL-O-RING | |
| | | 1 | **6V-9876** | 1 | ELBOW | |
| | 11 | 1 | *148-8367* | 1 | ELBOW AS | |
| | | 1 | **6V-8397** | 1 | SEAL-O-RING | |
| | | 1 | **6V-9850** | 1 | ELBOW | |
| | 12 | 1 | *148-8371* | 1 | ELBOW AS | |
| | | 1 | **6V-8397** | 1 | SEAL-O-RING | |
| | | 1 | **8C-8988** | 1 | ELBOW | |
| | 13 | 1 | *148-8378* | 2 | ELBOW AS | |
| | | | | | (EACH INCLUDES) | |
| | | 1 | **3J-1907** | 1 | SEAL-O-RING | |
| | | 1 | **6V-8397** | 1 | SEAL-O-RING | |
| | | 1 | **6V-8724** | 1 | ELBOW | |
| | 14 | 1 | *148-8434* | 2 | TEE AS | |
| | | | | | (EACH INCLUDES) | |
| | | 1 | **6V-8397** | 2 | SEAL-O-RING | |
| | | 1 | **6V-9843** | 1 | TEE-SWIVEL | |
| | 15 | 1 | *148-8435* | 1 | TEE AS | |
| | | 1 | **3J-1907** | 1 | SEAL-O-RING | |
| | | 1 | **6V-8397** | 2 | SEAL-O-RING | |
| | | 1 | **6V-8781** | 1 | TEE-FACE SEAL | |
| | 16 | 1 | *148-8439* | 1 | TEE AS | |
| | | 1 | **3J-1907** | 1 | SEAL-O-RING | |
| | | 1 | **6V-8397** | 2 | SEAL-O-RING | |
| | | 1 | **6V-8774** | 1 | TEE | |
| | 17 | 1 | *185-3365* | 2 | UNION AS | |
| | | | | | (EACH INCLUDES) | |
| | | 1 | **6V-8397** | 1 | SEAL-O-RING | |
| | | 1 | **6V-8398** | 1 | SEAL-O-RING | |
| | | 1 | **8T-0129** | 1 | UNION | |
| | 18 | 1 | **1S-0994** | 1 | CLIP | |
| | 19 | 1 | **6V-8554** | 2 | NUT (13/16-16-THD) | |
| | 20 | 1 | **6V-9169** | 2 | NUT-BULKHEAD (13/16-16-THD) | |
| | 21 | 1 | **8T-4121** | 4 | WASHER-HARD (11X21X2.5-MM THK) | |
| M | 22 | 1 | **8T-4136** | 3 | BOLT (M10X1.5X25-MM) | |
| M | 23 | 1 | **8T-4137** | 1 | BOLT (M10X1.5X20-MM) | |
| | 24 | 1 | **5K-5338** | 1 | CLIP | |

I-REFER TO HYDRAULIC INFORMATION SYSTEM
M-METRIC PART

*252-6548* **LINES GP-SERVICE BRAKE** *(contd.)* **i02336772**

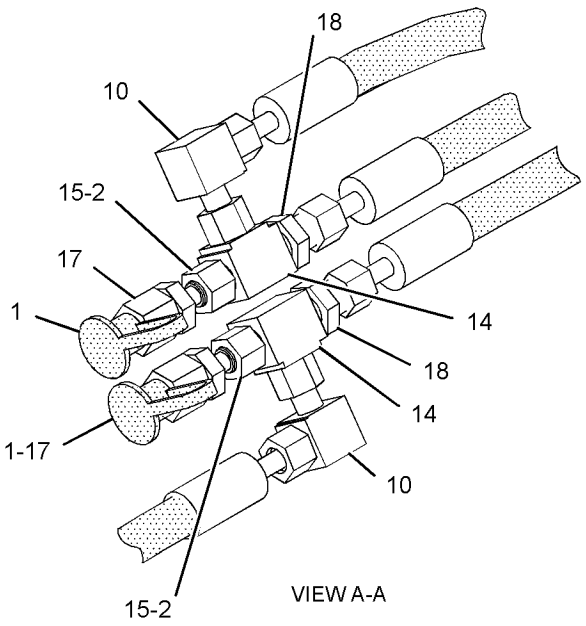


VIEW A-A

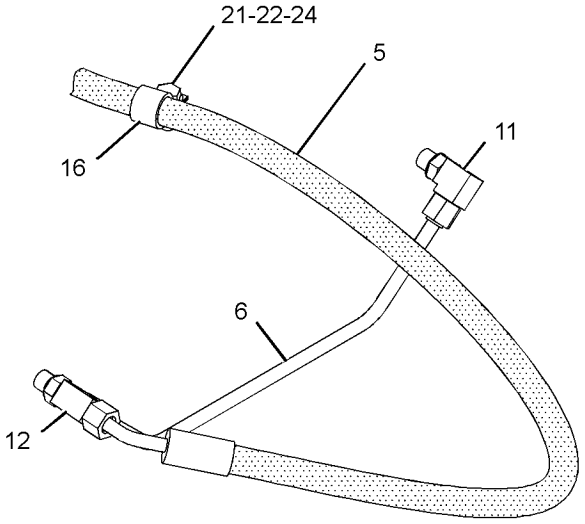


VIEW OF AREA B

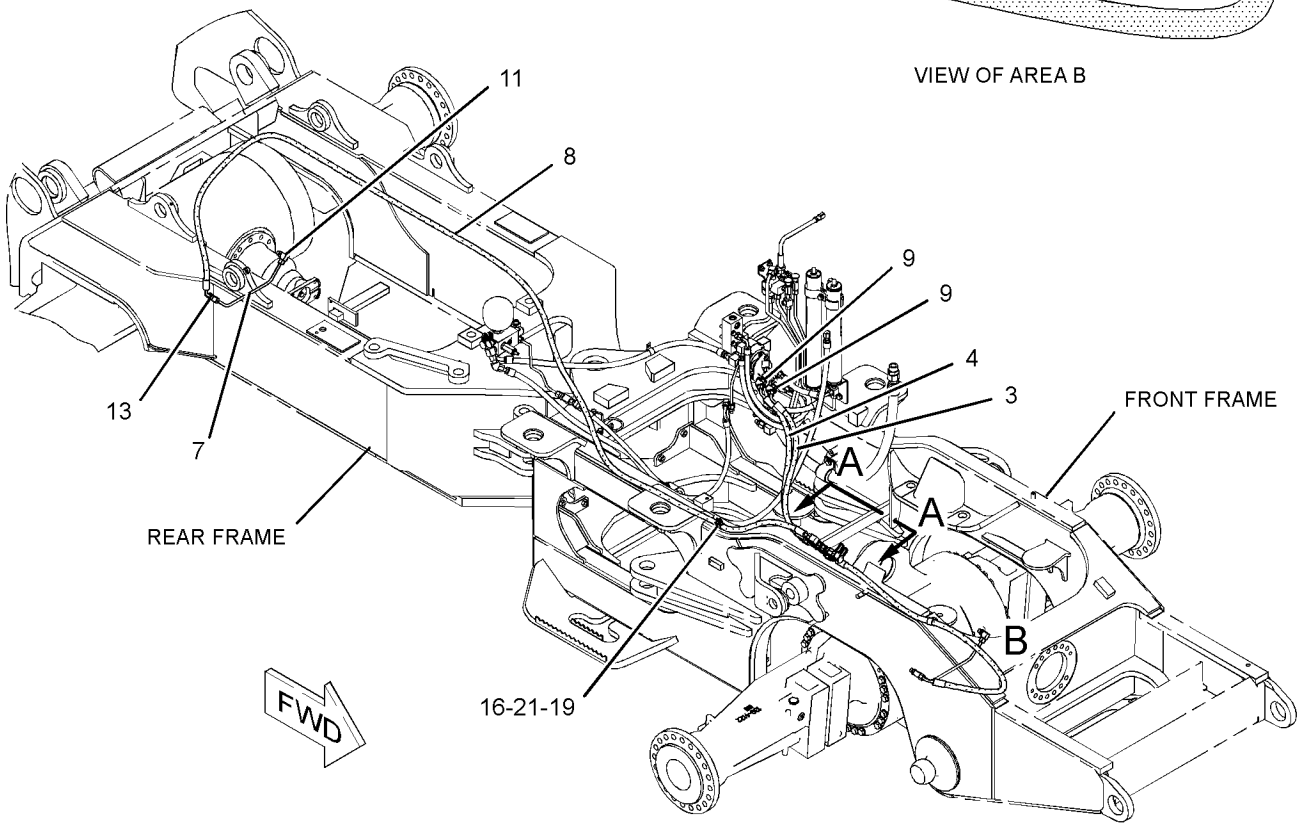


GRAPHIC #1 **<END>** g01235552

# 252-0742 MANIFOLD GP-CONTROL—PARKING BRAKE

**S/N: 5451-UP**

**PART OF 252-6538 CONTROL GP-PARKING BRAKE**

**SMCS-4284** **i02394926**

| NOTE | REF NO | GRAPHIC REF | PART NUMBER | QTY | PART NAME 1 2 3 4 5 6 (PRODUCT LEVEL) | SEE PAGE |
|---|---|---|---|---|---|---|
| | 1 | 1 | **252-0741** | 1 | VALVE GP-SOLENOID (PARKING BRAKE CONTROL) | |
| | | 1 | **156-5970** | 1 | NUT (1/2-20-2B-THD) | |
| | | 1 | **252-0745** | 1 | COIL AS | |

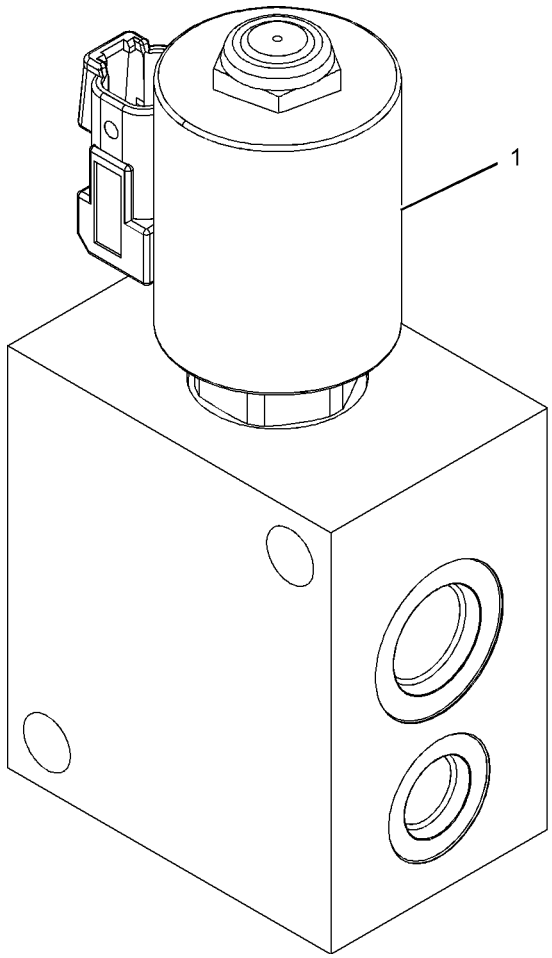


GRAPHIC #1 **<END>** g01103126

# 215-3685 VALVE GP-BRAKE CONTROL–SERVICE

**S/N: 5451-UP**

**PART OF 252-6536 CONTROL GP-SERVICE BRAKE**

**SMCS-4265, 4282** **i01784645**

| NOTE | REF NO | GRAPHIC REF | PART NUMBER | QTY | PART NAME 1 2 3 4 5 6 (PRODUCT LEVEL) | SEE PAGE |
|---|---|---|---|---|---|---|
| | 1 | 1 | **117-7799** | 1 | KIT-SEAL | |
| | 2 | 1 | **117-7798** | 1 | BOOT | |

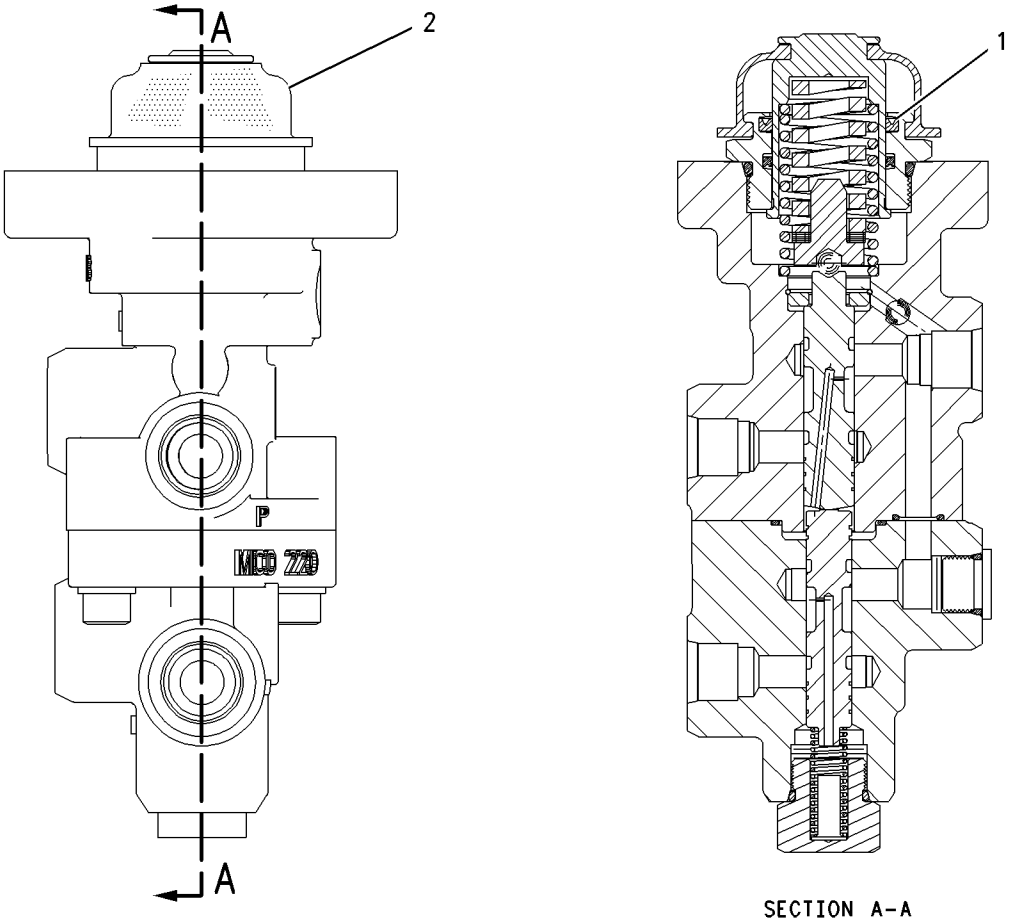


GRAPHIC #1 **<END>** g00921246

## *252-6555* CONTROL GP-STEER & DECK BLADE

**S/N: 5451-UP**

**PART OF 245-9466 HYDRAULIC AR**

**SMCS-4305, 4343, 5051, 5063** **i02604936**

| NOTE | REF NO | GRAPHIC REF | PART NUMBER | QTY | PART NAME 1 2 3 4 5 6 (PRODUCT LEVEL) | SEE PAGE |
|---|---|---|---|---|---|---|
| | 1 | 1 | **3K-6060** | 4 | LOCKNUT (3/8-16-THD) | |
| | 2 | 1 | **3S-2713** | 2 | NUT-FULL (3/8-24-THD) | |
| | 3 | 1 | **3K-2366** | 1 | ROD-CONTROL | |
| | 4 | 1 | **6D-5974** | 2 | BEARING-ROLLER | |
| M | 5 | 1 | **7I-8479** | 1 | BOLT-SOCKET HEAD (M10X1.5X40-MM) | |
| | 6 | 1 | **8T-6393** | 2 | ROD END | |
| | 7 | 1 | **9F-6655** | 1 | WASHER (0.766X1.5X0.125-IN) | |
| | 8 | 1 | **9U-4623** | 1 | LINK AS | |
| | 9 | 1 | **149-0021** | 1 | LEVER AS | |
| | 10 | 1 | **252-7123** | 1 | SHAFT AS | |
| Y | 11 | 1 | **299-9532** | 1 | VALVE GP-BANK 2 (DECKING BLADE, STEERING CONT) | 464 |
| | 12 | 1 | *148-8407* | 1 | PLUG AS | |
| | | 1 | **3J-1907** | 1 | SEAL-O-RING | |
| | | 1 | **9S-4191** | 1 | PLUG-O-RING | |
| | 13 | 1 | **2J-6356** | 1 | RING-RETAINING | |
| | 14 | 1 | **4L-9337** | 4 | BOLT (3/8-16X1.5-IN) | |
| | 15 | 1 | **8T-4121** | 3 | WASHER-HARD (11X21X2.5-MM THK) | |
| M | 16 | 1 | **8T-4133** | 2 | NUT (M10X1.5-THD) | |
| M | 17 | 1 | **8T-4192** | 3 | BOLT (M12X1.75X25-MM) | |
| | 18 | 1 | **8T-4223** | 3 | WASHER-HARD (13.5X25.5X3-MM THK) | |
| | 19 | 1 | **8T-4896** | 4 | WASHER-HARD (10.2X18.5X2.5-MM THK) | |

M-METRIC PART
Y-SEPARATE ILLUSTRATION

*252-6555* **CONTROL GP-STEER & DECK BLADE** *(contd.)* **i02604936**

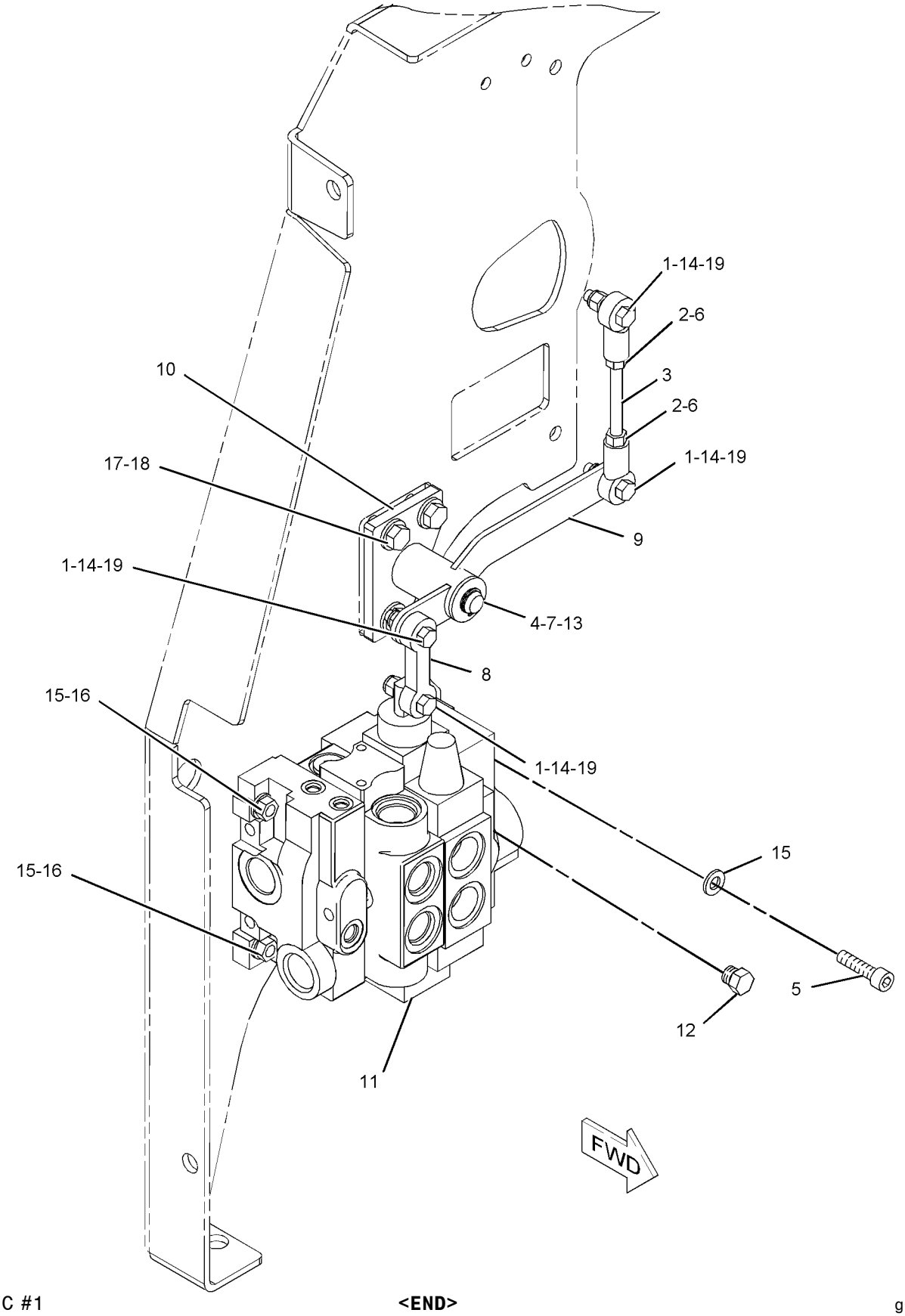


GRAPHIC #1 **<END>** g01103049

# 252-5871 CYLINDER GP-STEERING–LH

**S/N: 5451-UP**
**88.9-MM BORE X 437.5-MM STROKE**
**PART OF 245-9466 HYDRAULIC AR**

**SMCS-4303** **i02358404**

| NOTE | REF NO | GRAPHIC REF | PART NUMBER | QTY | PART NAME 1 2 3 4 5 6 (PRODUCT LEVEL) | SEE PAGE |
|---|---|---|---|---|---|---|
| | 1 | 1 | **4M-5912** | 1 | SPRING | |
| | 2 | 1 | **6E-3772** | 1 | SPRING | |
| | 3 | 1 | **6E-4974** | 1 | HEAD | |
| M | 4 | 1 | **179-4324** | 1 | LOCKNUT (M5X0.8-THD) | |
| | 5 | 1 | **192-6406** | 1 | VALVE | |
| | 6 | 1 | **252-5864** | 1 | PISTON | |
| | 7 | 1 | **252-5867** | 1 | CYLINDER AS | |
| | 7A | 1 | **6E-1497** | 1 | BOSS | |
| | 7B | 1 | **148-2591** | 1 | BRACKET AS | |
| | 7C | 1 | **1K-6985** | 2 | RING-RETAINING | |
| | 7D | 1 | **9M-1328** | 1 | BEARING | |
| | 8 | 1 | **252-5870** | 1 | ROD AS | |
| | 8A | 1 | **1K-6985** | 2 | RING-RETAINING | |
| | 8B | 1 | **9M-1328** | 1 | BEARING | |
| | 9 | 1 | **253-0931** | 1 | BOLT (M30X3.5X90-MM) | |
| | 10 | 1 | **167-2195** | 1 | SEAL AS-BUFFER | |
| | 11 | 1 | **167-2304** | 1 | SEAL-U-CUP | |
| | 12 | 1 | **175-7898** | 1 | SEAL-O-RING | |
| | 13 | 1 | **229-9382** | 1 | SEAL-WIPER | |
| | 14 | 1 | **4J-9224** | 1 | RING-BACKUP | |
| | 15 | 1 | **4T-5613** | 1 | RING-WEAR | |
| | 16 | 1 | **4T-8054** | 1 | SEAL AS | |
| | 17 | 1 | **7J-9885** | 1 | RING-WEAR | |
| | 18 | 1 | **9X-8399** | 1 | WASHER (33X56X6-MM THK) | |

M-METRIC PART

## 252-5871 CYLINDER GP-STEERING *(contd. )* i02358404

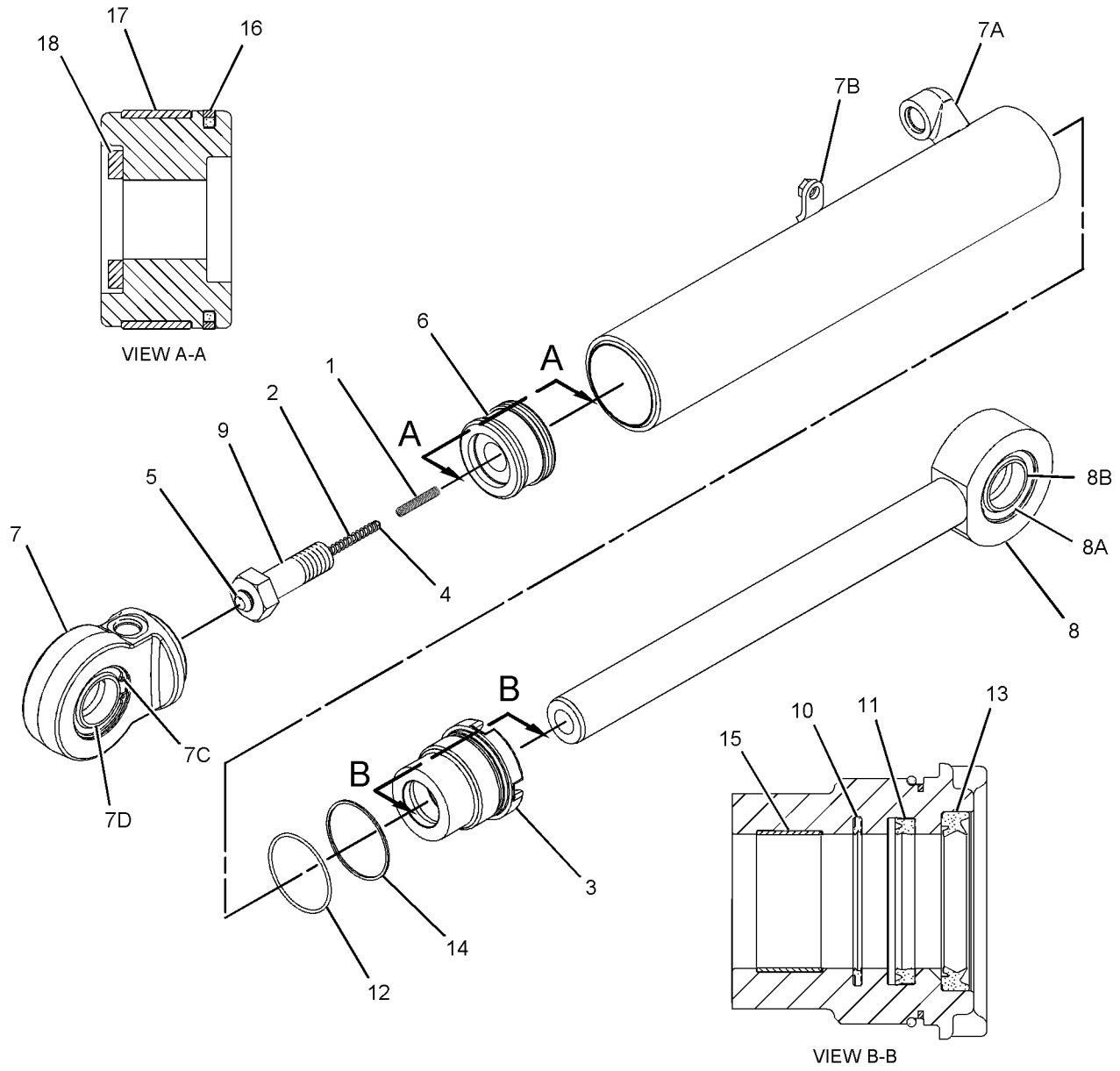


GRAPHIC #1 **<END>** g01103127

# 252-5872 CYLINDER GP-STEERING–RH

**S/N: 5451-UP**
**88.9-MM BORE X 437.5-MM STROKE**
**PART OF 245-9466 HYDRAULIC AR**

**SMCS-4303** **i02640092**

| NOTE | REF NO | GRAPHIC REF | PART NUMBER | QTY | PART NAME 1 2 3 4 5 6 (PRODUCT LEVEL) | SEE PAGE |
|---|---|---|---|---|---|---|
| | 1 | 1 | **4M-5912** | 1 | SPRING | |
| | 2 | 1 | **6E-3772** | 1 | SPRING | |
| | 3 | 1 | **6E-4974** | 1 | HEAD | |
| M | 4 | 1 | **179-4324** | 1 | LOCKNUT (M5X0.8-THD) | |
| | 5 | 1 | **192-6406** | 1 | VALVE | |
| | 6 | 1 | **252-5864** | 1 | PISTON | |
| | 7 | 1 | **252-5868** | 1 | CYLINDER AS | |
| | | 1 | **1K-6985** | 2 | RING-RETAINING | |
| | | 1 | **9M-1328** | 1 | BEARING | |
| | | 1 | **6E-1497** | 1 | BOSS | |
| | | 1 | **148-2591** | 1 | BRACKET AS | |
| | 8 | 1 | **252-5870** | 1 | ROD AS | |
| | | 1 | **1K-6985** | 2 | RING-RETAINING | |
| | | 1 | **9M-1328** | 1 | BEARING | |
| | 9 | 1 | **253-0931** | 1 | BOLT (M30X3.5X90-MM) | |
| | 10 | 1 | **167-2195** | 1 | SEAL AS-BUFFER | |
| | 11 | 1 | **167-2304** | 1 | SEAL-U-CUP | |
| | 12 | 1 | **175-7898** | 1 | SEAL-O-RING | |
| | 13 | 1 | **229-9382** | 1 | SEAL-WIPER | |
| | 14 | 1 | **4J-9224** | 1 | RING-BACKUP | |
| | 15 | 1 | **4T-5613** | 1 | RING-WEAR | |
| | 16 | 1 | **4T-8054** | 1 | SEAL AS | |
| | 17 | 1 | **7J-9885** | 1 | RING-WEAR | |
| | 18 | 1 | **9X-8399** | 1 | WASHER (33X56X6-MM THK) | |

M-METRIC PART

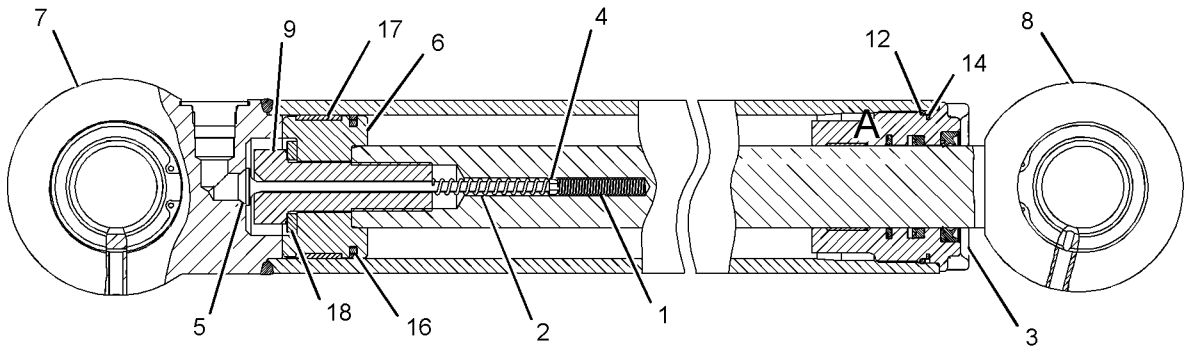


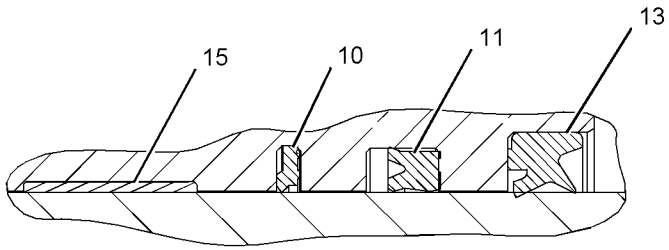


VIEW OF AREA A

GRAPHIC #1 **<END>** g01103118

# STEERING SYSTEM

## *255-4515* LINES GP-SECONDARY STEERING

**S/N: 5451-341**

**PART OF 253-2142 STEERING AR-SECONDARY**

**AN ATTACHMENT**

**SMCS-4304** **i02738530**

| NOTE | REF NO | GRAPHIC REF | PART NUMBER | QTY | PART NAME 1 2 3 4 5 6 (PRODUCT LEVEL) | SEE PAGE |
|---|---|---|---|---|---|---|
| | 1 | 1 | **3E-7423** | 1 | CONNECTOR | |
| | 2 | 1 | **6V-0852** | 2 | CAP-DUST | |
| | 3 | 1 | **8C-6416** | 1 | FITTING | |
| | 4 | 1 | **9T-1013** | 1 | VALVE AS-CHECK (SECONDARY STEERING) | |
| I | 5 | 1 | **118-1031** | 1 | HOSE AS | |
| I | 6 | 1 | **118-4639** | 1 | HOSE AS | |
| | 7 | 1 | *161-9916* | 1 | ADAPTER GP | |
| | | 1 | **2M-9780** | 1 | SEAL-O-RING | |
| | | 1 | **6V-7420** | 1 | ADAPTER (STRAIGHT THREAD O-RING) | |
| | 8 | 1 | *164-5576* | 1 | ADAPTER AS | |
| | | 1 | **6V-8926** | 1 | ADAPTER | |
| | | 1 | **8T-7876** | 1 | SEAL-O-RING | |
| I | 9 | 1 | **183-7512** | 1 | HOSE AS | |
| | 10 | 1 | **183-9322** | 1 | VALVE GP-CHECK (MAIN PUMP LINE) | |
| I | 11 | 1 | **189-8369** | 1 | HOSE AS | |
| | 12 | 1 | *194-2903* | 1 | ELBOW AS | |
| | | 1 | **3K-0360** | 1 | SEAL-O-RING | |
| | | 1 | **8T-0119** | 1 | ELBOW | |
| | 13 | 1 | *196-2036* | 1 | TEE AS | |
| | | 1 | **3K-0360** | 1 | SEAL-O-RING | |
| | | 1 | **6V-8398** | 1 | SEAL-O-RING | |
| | | 1 | **9X-2492** | 1 | TEE-O-RING | |
| | 14 | 1 | **200-6345** | 1 | MOUNT (DUAL SWIVEL) | |
| | 15 | 1 | **204-2281** | 2 | STRAP-TIE | |
| | 16 | 1 | *217-5293* | 1 | TEE AS | |
| | | 1 | **3J-1907** | 1 | SEAL-O-RING | |
| | | 1 | **6V-1625** | 1 | TEE-O-RING | |
| Y | 17 | 1 | **221-3417** | 1 | SENSOR GP-PRESSURE (SECONDARY STEERING OIL) | 174 |
| I | 18 | 1 | **255-6477** | 1 | HOSE AS | |
| | 19 | 1 | **255-6478** | 1 | TUBE AS | |
| | 20 | 1 | **255-6480** | 1 | PLATE | |
| | 21 | 1 | *148-8313* | 1 | ADAPTER AS | |
| | | 1 | **3K-0360** | 1 | SEAL-O-RING | |
| | | 1 | **5P-6944** | 1 | ADAPTER | |
| | 22 | 1 | *148-8327* | 1 | CONNECTOR AS | |
| | | 1 | **3D-2824** | 1 | SEAL-O-RING | |
| | | 1 | **6V-8637** | 1 | CONNECTOR | |
| | | 1 | **6V-9746** | 1 | SEAL-O-RING | |
| | 23 | 1 | *148-8335* | 1 | CONNECTOR AS | |
| | | 1 | **5K-9090** | 1 | SEAL-O-RING | |
| | | 1 | **6V-8635** | 1 | CONNECTOR | |
| | | 1 | **7M-8485** | 1 | SEAL-O-RING | |
| | 24 | 1 | *148-8347* | 1 | ELBOW AS | |
| | | 1 | **3D-2824** | 1 | SEAL-O-RING | |
| | | 1 | **6V-9007** | 1 | ELBOW | |
| | | 1 | **6V-9746** | 1 | SEAL-O-RING | |
| | 25 | 1 | *148-8352* | 1 | ELBOW AS | |
| | | 1 | **5K-9090** | 1 | SEAL-O-RING | |
| | | 1 | **6V-9854** | 1 | ELBOW (SWIVEL) | |
| | 26 | 1 | *148-8372* | 1 | ELBOW AS | |
| | | 1 | **2M-9780** | 1 | SEAL-O-RING | |
| | | 1 | **6V-8398** | 1 | SEAL-O-RING | |
| | | 1 | **6V-8721** | 1 | ELBOW | |
| | 27 | 1 | *148-8444* | 1 | TEE AS-SWIVEL | |
| | | 1 | **6V-8398** | 2 | SEAL-O-RING | |

## *255-4515* LINES GP-SECONDARY STEERING *(contd.)* i02738530

| NOTE | REF NO | GRAPHIC REF | PART NUMBER | QTY | PART NAME 1 2 3 4 5 6 (PRODUCT LEVEL) | SEE PAGE |
|---|---|---|---|---|---|---|
| | | 1 | **6V-9837** | 1 | TEE-SWIVEL | |
| | 28 | 1 | *150-4037* | 1 | TEE AS | |
| | | 1 | **6V-8398** | 2 | SEAL-O-RING | |
| | | 1 | **6V-9844** | 1 | TEE-SWIVEL | |
| | 29 | 1 | *153-6241* | 1 | ELBOW AS | |
| | | 1 | **6V-8398** | 1 | SEAL-O-RING | |
| | | 1 | **8C-8989** | 1 | ELBOW | |
| | 30 | 1 | *153-6258* | 1 | CONNECTOR AS | |
| | | 1 | **3J-1907** | 1 | SEAL-O-RING | |
| | | 1 | **6V-8398** | 1 | SEAL-O-RING | |
| | | 1 | **8T-5050** | 1 | CONNECTOR | |
| | 31 | 1 | *164-5548* | 1 | COUPLING AS | |
| | | 1 | **4I-6141** | 1 | COUPLING AS | |
| | | 1 | **7M-8485** | 1 | SEAL-O-RING | |
| | 32 | 1 | *164-5567* | 1 | FITTING AS (QUICK DISCONNECT, MALE) | |
| | | 1 | **3J-1907** | 1 | SEAL-O-RING | |
| | | 1 | **6V-3965** | 1 | FITTING-COUPLER | |
| | 33 | 1 | *164-5577* | 1 | ELBOW AS | |
| | | 1 | **5K-9090** | 2 | SEAL-O-RING | |
| | | 1 | **6V-8984** | 1 | ELBOW | |
| | 34 | 1 | **1S-0994** | 2 | CLIP | |
| | 35 | 1 | **3J-1907** | 1 | SEAL-O-RING | |
| | 36 | 1 | **6V-1889** | 2 | CLIP | |
| | 37 | 1 | **6V-8398** | 1 | SEAL-O-RING | |
| | 38 | 1 | **6V-8554** | 1 | NUT (13/16-16-THD) | |
| | 39 | 1 | **6V-9172** | 1 | NUT (1-7/16-12-THD) | |
| | 40 | 1 | **8T-1885** | 2 | CLIP (SLOT) | |
| | 41 | 1 | **8T-1886** | 2 | CLIP (TAB) | |
| | 42 | 1 | **8T-4121** | 4 | WASHER-HARD (11X21X2.5-MM THK) | |
| M | 43 | 1 | **8T-4195** | 4 | BOLT (M10X1.5X30-MM) | |
| | 44 | 1 | **8T-4223** | 2 | WASHER-HARD (13.5X25.5X3-MM THK) | |
| M | 45 | 1 | **8T-4244** | 2 | NUT (M12X1.75-THD) | |

I-REFER TO HYDRAULIC INFORMATION SYSTEM
M-METRIC PART
Y-SEPARATE ILLUSTRATION

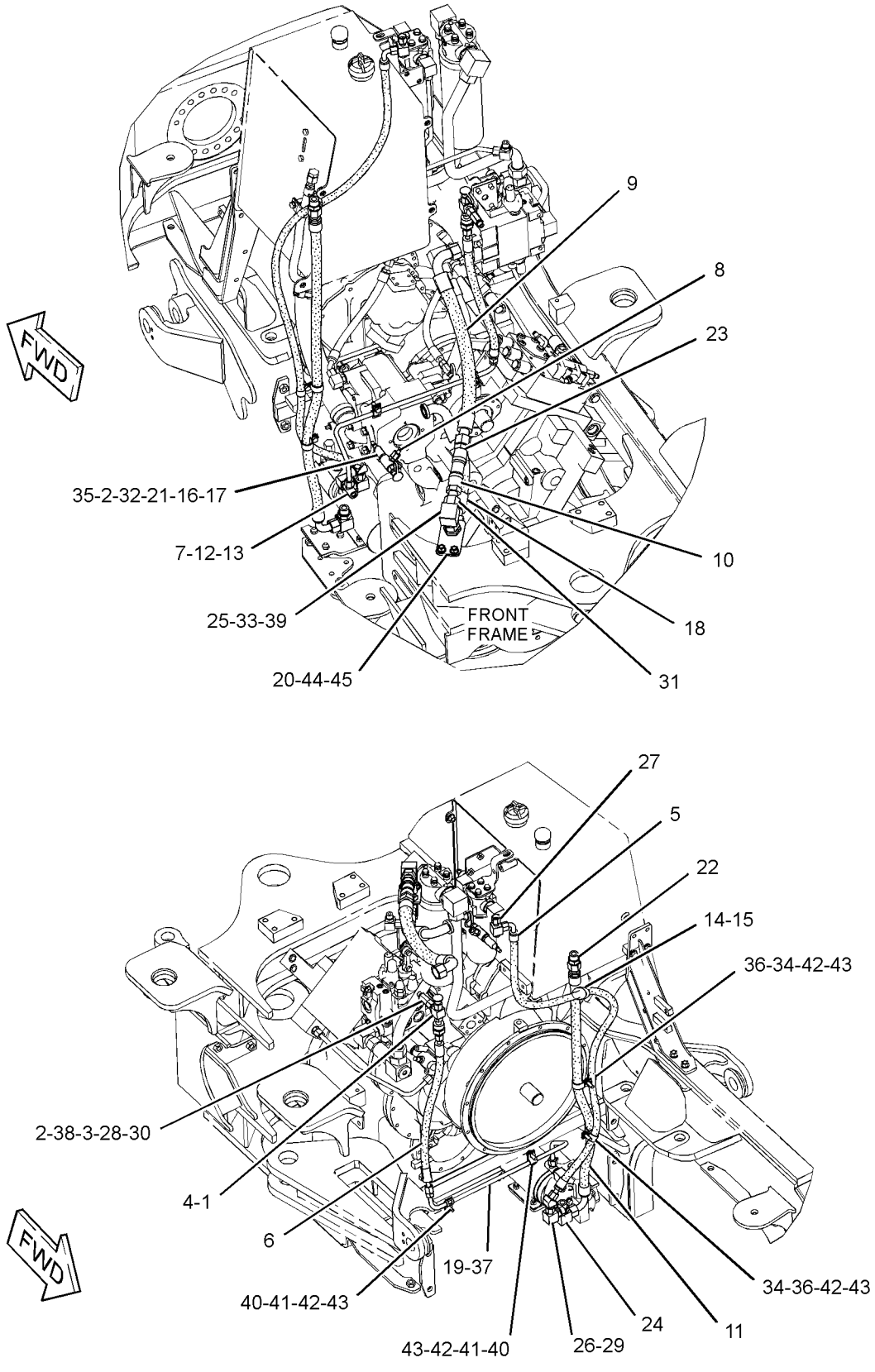


GRAPHIC #1 **<END>** g01163144

# STEERING SYSTEM

## *255-4515* LINES GP-SECONDARY STEERING

**S/N: 545342-UP**

**PART OF 253-2142 STEERING AR-SECONDARY**

**AN ATTACHMENT**

**SMCS-4304** **i02738531**

| NOTE | REF NO | GRAPHIC REF | PART NUMBER | QTY | PART NAME 1 2 3 4 5 6 (PRODUCT LEVEL) | SEE PAGE |
|---|---|---|---|---|---|---|
| | 1 | 1 | **3E-7423** | 1 | CONNECTOR | |
| | 2 | 1 | **6V-0852** | 2 | CAP-DUST | |
| | 3 | 1 | **8C-6416** | 1 | FITTING | |
| | 4 | 1 | **9T-1013** | 1 | VALVE AS-CHECK (SECONDARY STEERING) | |
| I | 5 | 1 | **118-1031** | 1 | HOSE AS | |
| I | 6 | 1 | **118-4639** | 1 | HOSE AS | |
| | 7 | 1 | *161-9916* | 1 | ADAPTER GP | |
| | | 1 | **2M-9780** | 1 | SEAL-O-RING | |
| | | 1 | **6V-7420** | 1 | ADAPTER (STRAIGHT THREAD O-RING) | |
| | 8 | 1 | *164-5576* | 1 | ADAPTER AS | |
| | | 1 | **6V-8926** | 1 | ADAPTER | |
| | | 1 | **8T-7876** | 1 | SEAL-O-RING | |
| I | 9 | 1 | **183-7512** | 1 | HOSE AS | |
| | 10 | 1 | **183-9322** | 1 | VALVE GP-CHECK (MAIN PUMP LINE) | |
| I | 11 | 1 | **189-8369** | 1 | HOSE AS | |
| | 12 | 1 | *194-2903* | 1 | ELBOW AS | |
| | | 1 | **3K-0360** | 1 | SEAL-O-RING | |
| | | 1 | **8T-0119** | 1 | ELBOW | |
| | 13 | 1 | *196-2036* | 1 | TEE AS | |
| | | 1 | **3K-0360** | 1 | SEAL-O-RING | |
| | | 1 | **6V-8398** | 1 | SEAL-O-RING | |
| | | 1 | **9X-2492** | 1 | TEE-O-RING | |
| | 14 | 1 | **200-6345** | 1 | MOUNT (DUAL SWIVEL) | |
| | 15 | 1 | **204-2281** | 2 | STRAP-TIE | |
| | 16 | 1 | *217-5293* | 1 | TEE AS | |
| | | 1 | **3J-1907** | 1 | SEAL-O-RING | |
| | | 1 | **6V-1625** | 1 | TEE-O-RING | |
| Y | 17 | 1 | **221-3417** | 1 | SENSOR GP-PRESSURE (SECONDARY STEERING OIL) | 174 |
| I | 18 | 1 | **255-6477** | 1 | HOSE AS | |
| | 19 | 1 | **255-6478** | 1 | TUBE AS | |
| | 20 | 1 | **255-6480** | 1 | PLATE | |
| | 21 | 1 | *148-8313* | 1 | ADAPTER AS | |
| | | 1 | **3K-0360** | 1 | SEAL-O-RING | |
| | | 1 | **5P-6944** | 1 | ADAPTER | |
| | 22 | 1 | *148-8327* | 1 | CONNECTOR AS | |
| | | 1 | **3D-2824** | 1 | SEAL-O-RING | |
| | | 1 | **6V-8637** | 1 | CONNECTOR | |
| | | 1 | **6V-9746** | 1 | SEAL-O-RING | |
| | 23 | 1 | *148-8335* | 1 | CONNECTOR AS | |
| | | 1 | **5K-9090** | 1 | SEAL-O-RING | |
| | | 1 | **6V-8635** | 1 | CONNECTOR | |
| | | 1 | **7M-8485** | 1 | SEAL-O-RING | |
| | 24 | 1 | *148-8347* | 1 | ELBOW AS | |
| | | 1 | **3D-2824** | 1 | SEAL-O-RING | |
| | | 1 | **6V-9007** | 1 | ELBOW | |
| | | 1 | **6V-9746** | 1 | SEAL-O-RING | |
| | 25 | 1 | *148-8352* | 1 | ELBOW AS | |
| | | 1 | **5K-9090** | 1 | SEAL-O-RING | |
| | | 1 | **6V-9854** | 1 | ELBOW (SWIVEL) | |
| | 26 | 1 | *148-8372* | 1 | ELBOW AS | |
| | | 1 | **2M-9780** | 1 | SEAL-O-RING | |
| | | 1 | **6V-8398** | 1 | SEAL-O-RING | |
| | | 1 | **6V-8721** | 1 | ELBOW | |
| | 27 | 1 | *148-8444* | 1 | TEE AS-SWIVEL | |
| | | 1 | **6V-8398** | 2 | SEAL-O-RING | |

## *255-4515* LINES GP-SECONDARY STEERING *(contd.)* i02738531

| NOTE | REF NO | GRAPHIC REF | PART NUMBER | QTY | PART NAME 1 2 3 4 5 6 (PRODUCT LEVEL) | SEE PAGE |
|---|---|---|---|---|---|---|
| | | 1 | **6V-9837** | 1 | TEE-SWIVEL | |
| | 28 | 1 | *150-4037* | 1 | TEE AS | |
| | | 1 | **6V-8398** | 2 | SEAL-O-RING | |
| | | 1 | **6V-9844** | 1 | TEE-SWIVEL | |
| | 29 | 1 | *153-6241* | 1 | ELBOW AS | |
| | | 1 | **6V-8398** | 1 | SEAL-O-RING | |
| | | 1 | **8C-8989** | 1 | ELBOW | |
| | 30 | 1 | *153-6258* | 1 | CONNECTOR AS | |
| | | 1 | **3J-1907** | 1 | SEAL-O-RING | |
| | | 1 | **6V-8398** | 1 | SEAL-O-RING | |
| | | 1 | **8T-5050** | 1 | CONNECTOR | |
| | 31 | 1 | *164-5548* | 1 | COUPLING AS | |
| | | 1 | **4I-6141** | 1 | COUPLING AS | |
| | | 1 | **7M-8485** | 1 | SEAL-O-RING | |
| | 32 | 1 | *164-5567* | 1 | FITTING AS (QUICK DISCONNECT, MALE) | |
| | | 1 | **3J-1907** | 1 | SEAL-O-RING | |
| | | 1 | **6V-3965** | 1 | FITTING-COUPLER | |
| | 33 | 1 | *164-5577* | 1 | ELBOW AS | |
| | | 1 | **5K-9090** | 2 | SEAL-O-RING | |
| | | 1 | **6V-8984** | 1 | ELBOW | |
| | 34 | 1 | **1S-0994** | 2 | CLIP | |
| | 35 | 1 | **3J-1907** | 1 | SEAL-O-RING | |
| | 36 | 1 | **6V-1889** | 2 | CLIP | |
| | 37 | 1 | **6V-8398** | 1 | SEAL-O-RING | |
| | 38 | 1 | **6V-8554** | 1 | NUT (13/16-16-THD) | |
| | 39 | 1 | **6V-9172** | 1 | NUT (1-7/16-12-THD) | |
| | 40 | 1 | **8T-1885** | 2 | CLIP (SLOT) | |
| | 41 | 1 | **8T-1886** | 2 | CLIP (TAB) | |
| | 42 | 1 | **8T-4121** | 4 | WASHER-HARD (11X21X2.5-MM THK) | |
| M | 43 | 1 | **8T-4195** | 4 | BOLT (M10X1.5X30-MM) | |
| | 44 | 1 | **8T-4223** | 2 | WASHER-HARD (13.5X25.5X3-MM THK) | |
| M | 45 | 1 | **8T-4244** | 2 | NUT (M12X1.75-THD) | |
| C | 46 | 1 | *148-8370* | 1 | ELBOW AS | |
| | | 1 | **6V-8398** | 1 | SEAL-O-RING | |
| | | 1 | **6V-9851** | 1 | ELBOW | |

C-CHANGE FROM PREVIOUS TYPE
I-REFER TO HYDRAULIC INFORMATION SYSTEM
M-METRIC PART
Y-SEPARATE ILLUSTRATION

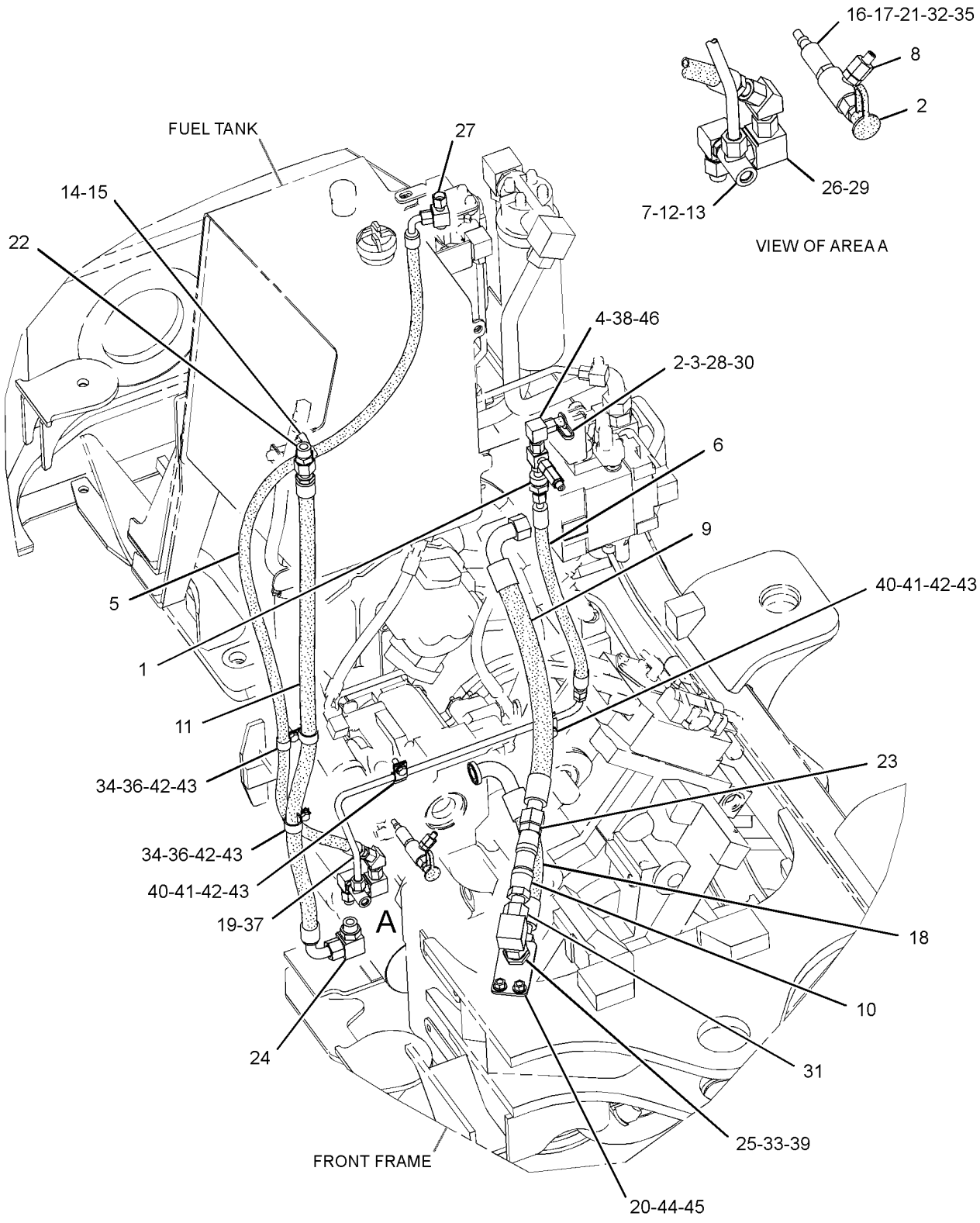


REAR VIEW
(UPPER LEFT)

GRAPHIC #1 **<END>** g01353191

# STEERING SYSTEM

## *252-6539* LINES GP-STEERING

**S/N: 5451-UP**

**PART OF 245-9466 HYDRAULIC AR**

**SMCS-4304** **i02178123**

| NOTE | REF NO | GRAPHIC REF | PART NUMBER | QTY | PART NAME 1 2 3 4 5 6 (PRODUCT LEVEL) | SEE PAGE |
|---|---|---|---|---|---|---|
| I | 1 | 1 | **147-5607** | 1 | HOSE AS | |
| | 2 | 1 | *164-6859* | 2 | UNION AS | |
| | | | | | (EACH INCLUDES) | |
| | | 1 | **6V-8398** | 1 | SEAL-O-RING | |
| | | 1 | **6V-9353** | 1 | UNION | |
| | | 1 | **7J-9108** | 1 | SEAL-O-RING | |
| | 3 | 1 | *169-7391* | 2 | TEE GP | |
| | | | | | (EACH INCLUDES) | |
| | | 1 | **6V-8398** | 1 | SEAL-O-RING | |
| | | 1 | **6V-9352** | 1 | TEE-BULKHEAD | |
| | | 1 | **7J-9108** | 2 | SEAL-O-RING | |
| | 4 | 1 | **229-3604** | 1 | TUBE AS | |
| | 5 | 1 | **229-3614** | 1 | TUBE AS | |
| I | 6 | 1 | **229-3623** | 1 | HOSE AS | |
| I | 7 | 1 | **229-8343** | 1 | HOSE AS | |
| I | 8 | 1 | **229-8344** | 2 | HOSE AS | |
| | 9 | 1 | **255-1582** | 1 | BRACKET | |
| | 10 | 1 | **255-1583** | 1 | BRACKET | |
| I | 11 | 1 | **255-6488** | 1 | HOSE AS | |
| | 12 | 1 | *148-8328* | 4 | CONNECTOR AS | |
| | | | | | (EACH INCLUDES) | |
| | | 1 | **3D-2824** | 1 | SEAL-O-RING | |
| | | 1 | **6V-8398** | 1 | SEAL-O-RING | |
| | | 1 | **6V-8633** | 1 | CONNECTOR | |
| | 13 | 1 | *148-8341* | 2 | CONNECTOR AS | |
| | | | | | (EACH INCLUDES) | |
| | | 1 | **3D-2824** | 1 | SEAL-O-RING | |
| | | 1 | **6V-8713** | 1 | CONNECTOR | |
| | | 1 | **7J-9108** | 1 | SEAL-O-RING | |
| | 14 | 1 | **6V-9169** | 4 | NUT-BULKHEAD (13/16-16-THD) | |
| | 15 | 1 | **7X-7729** | 4 | WASHER (11X25X3-MM THK) | |
| | 16 | 1 | **8T-4121** | 4 | WASHER-HARD (11X21X2.5-MM THK) | |
| M | 17 | 1 | **8T-4136** | 8 | BOLT (M10X1.5X25-MM) | |
| | 18 | 1 | **9X-8250** | 4 | CLIP | |

I-REFER TO HYDRAULIC INFORMATION SYSTEM
M-METRIC PART

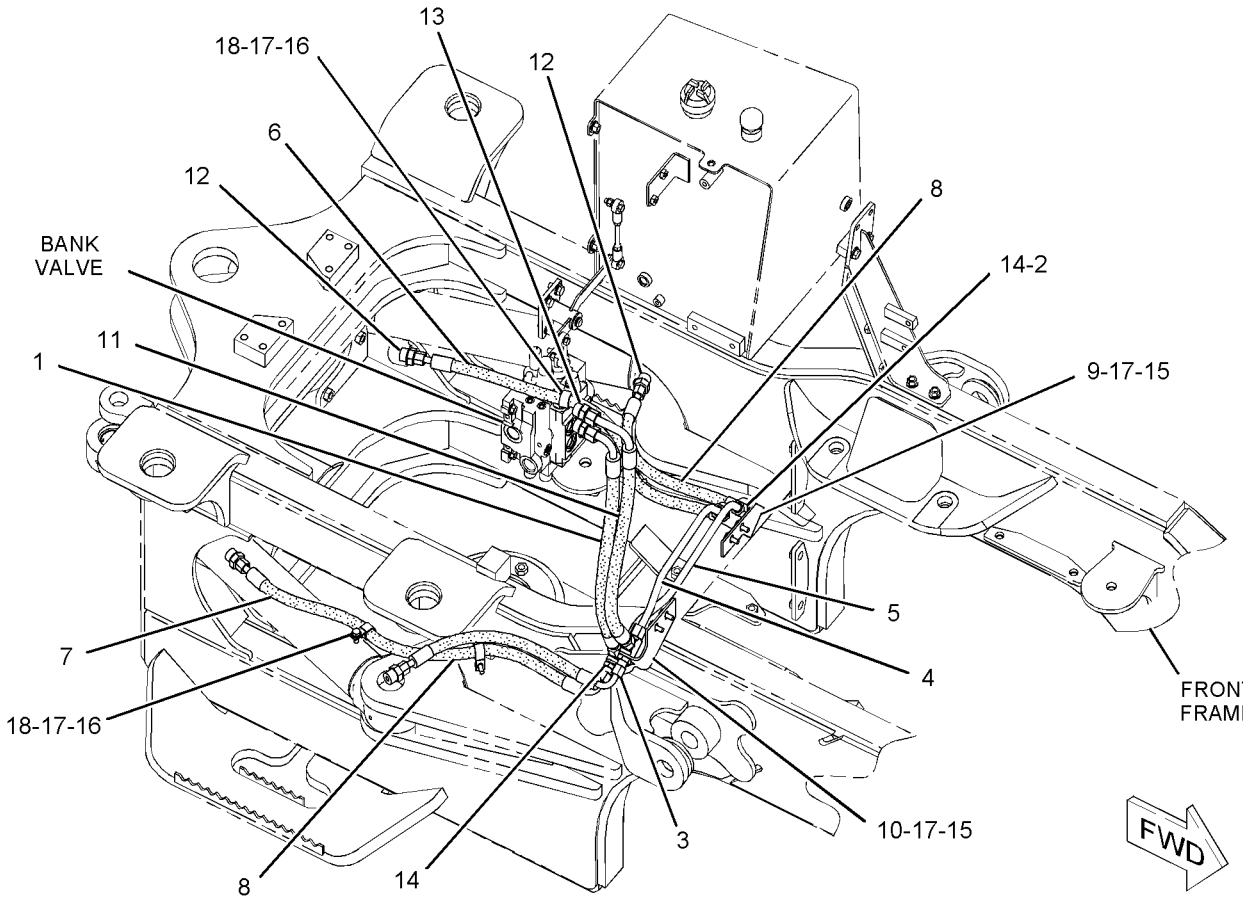


GRAPHIC #1 **<END>** g01103692

## *177-9742* PUMP & MOTOR GP-SEC STEERING

**S/N: 5451-UP**

**PART OF 228-9898 PUMP & MTG GP-SECONDARY STEER**

**AN ATTACHMENT**

**SMCS-4324, 4325** **i02199002**

| NOTE | REF NO | GRAPHIC REF | PART NUMBER | QTY | PART NAME 1 2 3 4 5 6 (PRODUCT LEVEL) | SEE PAGE |
|---|---|---|---|---|---|---|
| Y | 1 | 1 | **117-3915** | 1 | MOTOR GP-ELECTRIC (SECONDARY STEERING) | 161 |
| | 2 | 1 | **177-9743** | 1 | PUMP GP-GEAR (SECONDARY STEERING) | |
| | 3 | 1 | **1A-2209** | 2 | BOLT (3/8-24X1.25-IN) | |
| | 4 | 1 | **5Y-0254** | 2 | LOCKWASHER | |

Y-SEPARATE ILLUSTRATION

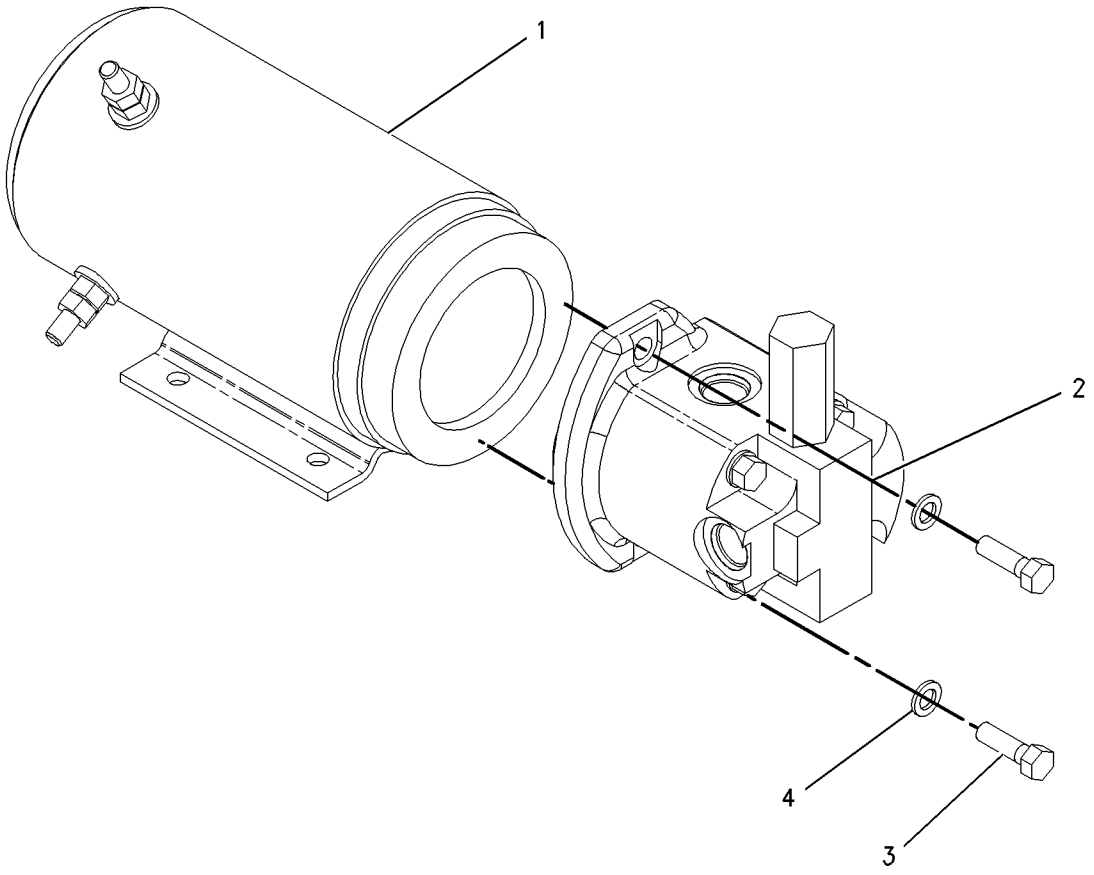


GRAPHIC #1 **<END>** g00668325

# *228-9898* PUMP & MTG GP-SECONDARY STEER

**S/N: 5451-UP**
**PART OF 253-2142 STEERING AR-SECONDARY**
**AN ATTACHMENT**

**SMCS-4324, 4325** **i02687263**

| NOTE | REF NO | GRAPHIC REF | PART NUMBER | QTY | PART NAME 1 2 3 4 5 6 (PRODUCT LEVEL) | SEE PAGE |
|---|---|---|---|---|---|---|
| Y | 1 | 1 | **177-9742** | 1 | PUMP & MOTOR GP-SEC STEERING | 396 |
| | 2 | 1 | **229-0080** | 1 | PLATE AS | |
| M | | 1 | **8T-3490** | 3 | NUT-WELD (M10X1.5-THD) | |
| | 3 | 1 | **7X-7729** | 3 | WASHER (11X25X3-MM THK) | |
| | 4 | 1 | **8T-4121** | 4 | WASHER-HARD (11X21X2.5-MM THK) | |
| M | 5 | 1 | **8T-4133** | 4 | NUT (M10X1.5-THD) | |
| M | 6 | 1 | **8T-4195** | 7 | BOLT (M10X1.5X30-MM) | |

M-METRIC PART
Y-SEPARATE ILLUSTRATION

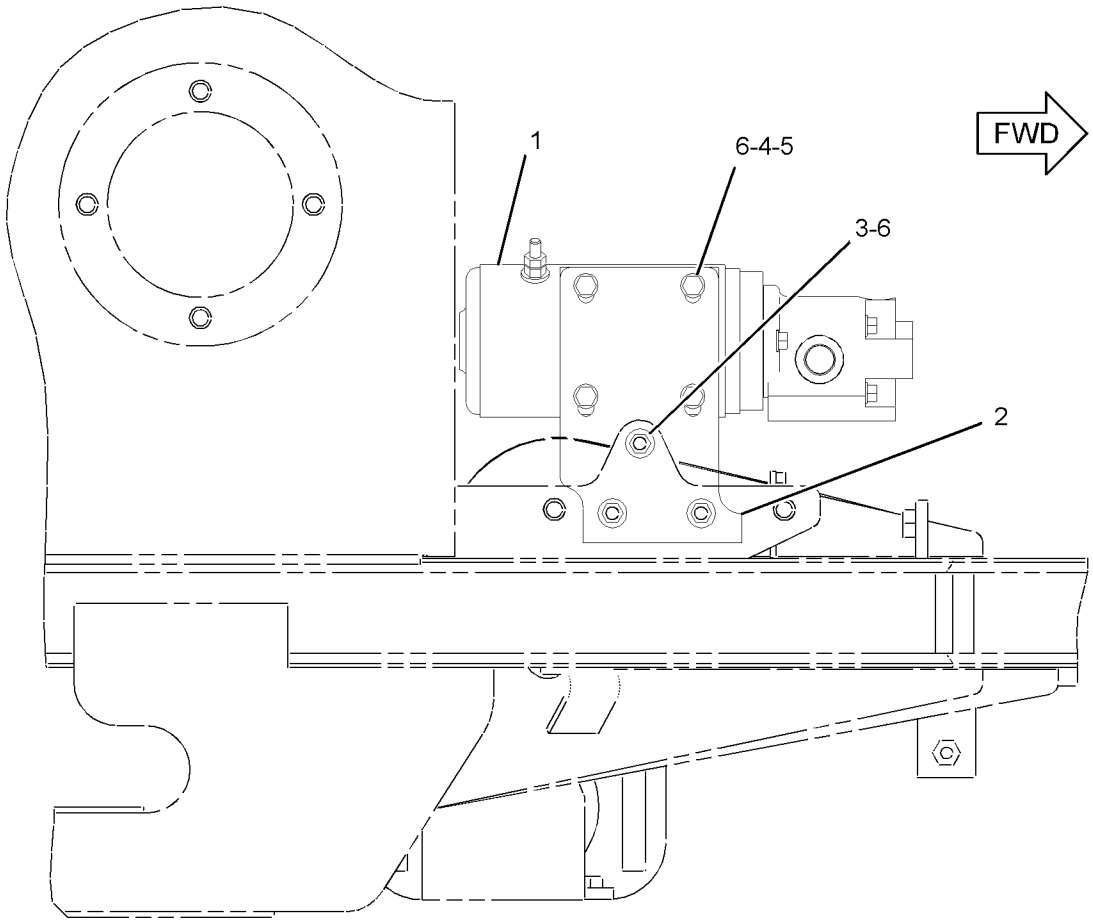


BOTTOM VIEW

GRAPHIC #1 **<END>** g01354636

# STEERING SYSTEM

## *253-2142* STEERING AR-SECONDARY

**S/N: 5451-UP**

**AN ATTACHMENT**

**SMCS-4300** **i02178881**

| NOTE | PART NUMBER | QTY | PART NAME 1 2 3 4 5 6 (PRODUCT LEVEL) | SEE PAGE |
|---|---|---|---|---|
| Y | *255-4515* | 1 | LINES GP-SECONDARY STEERING | 388 |
| Y | *228-9898* | 1 | PUMP & MTG GP-SECONDARY STEER | 397 |
| Y | *255-8106* | 1 | WIRING GP-SECONDARY STEERING | 230 |

Y-SEPARATE ILLUSTRATION

**<END>**

# *123-7406* STEERING WHEEL GP

**S/N: 5451-UP**
**PART OF 264-2256 CONTROL GP-STEERING**
**AN ATTACHMENT**
**TYPE 1**

**SMCS-4309** **i02169902**

| NOTE | REF NO | GRAPHIC REF | PART NUMBER | QTY | PART NAME 1 2 3 4 5 6 (PRODUCT LEVEL) | SEE PAGE |
|---|---|---|---|---|---|---|
| | 1 | 1 | **112-9705** | 1 | WHEEL | |
| | 2 | 1 | **112-9714** | 1 | INSERT-SPLINED | |
| | 4 | 1 | **118-2943** | 1 | HARNESS AS-STEERING (COLUMN, WHEEL) | |
| | | 1 | **102-8801** | 1 | KIT-RECEPTACLE (12-PIN) | |
| | | | | | (INCLUDES RECEPTACLE AS AND WEDGE) | |
| | 5 | 1 | **2V-3216** | 1 | CLIP | |
| C | 6 | 1 | **8T-4205** | 1 | WASHER-HARD (7.2X14.5X2-MM THK) | |
| M | 7 | 1 | **6V-5683** | 1 | BOLT (M6X1X16-MM) | |
| Y | 8 | 1 | **251-9350** | 1 | SWITCH GP-TRANSMISSION | 200 |
| C | 9 | 1 | **112-9707** | 1 | COVER-BACK | |
| M | 10 | 1 | **153-8003** | 1 | BOLT-SOCKET HEAD (M4X0.7X30-MM) | |
| M | 11 | 1 | **153-8002** | 1 | BOLT-SOCKET HEAD (M4X0.7X25-MM) | |
| M | 12 | 1 | **107-3786** | 2 | BOLT (M4X0.7X12-MM) | |
| | 13 | 1 | **166-7389** | 1 | COVER | |
| M | 14 | 1 | **153-8004** | 3 | BOLT-SOCKET HEAD (M4X0.7X35-MM) | |
| M | 15 | 1 | **153-8001** | 1 | BOLT-SOCKET HEAD | |
| | 16 | 1 | **2T-3360** | 1 | BUTTON AS-HORN | |
| | 17 | 1 | **112-9715** | 1 | LEVER | |
| M | 19 | 1 | **153-9301** | 2 | BOLT-SOCKET HEAD (M4X0.7X10-MM) | |

C-CHANGE FROM PREVIOUS TYPE
M-METRIC PART
Y-SEPARATE ILLUSTRATION

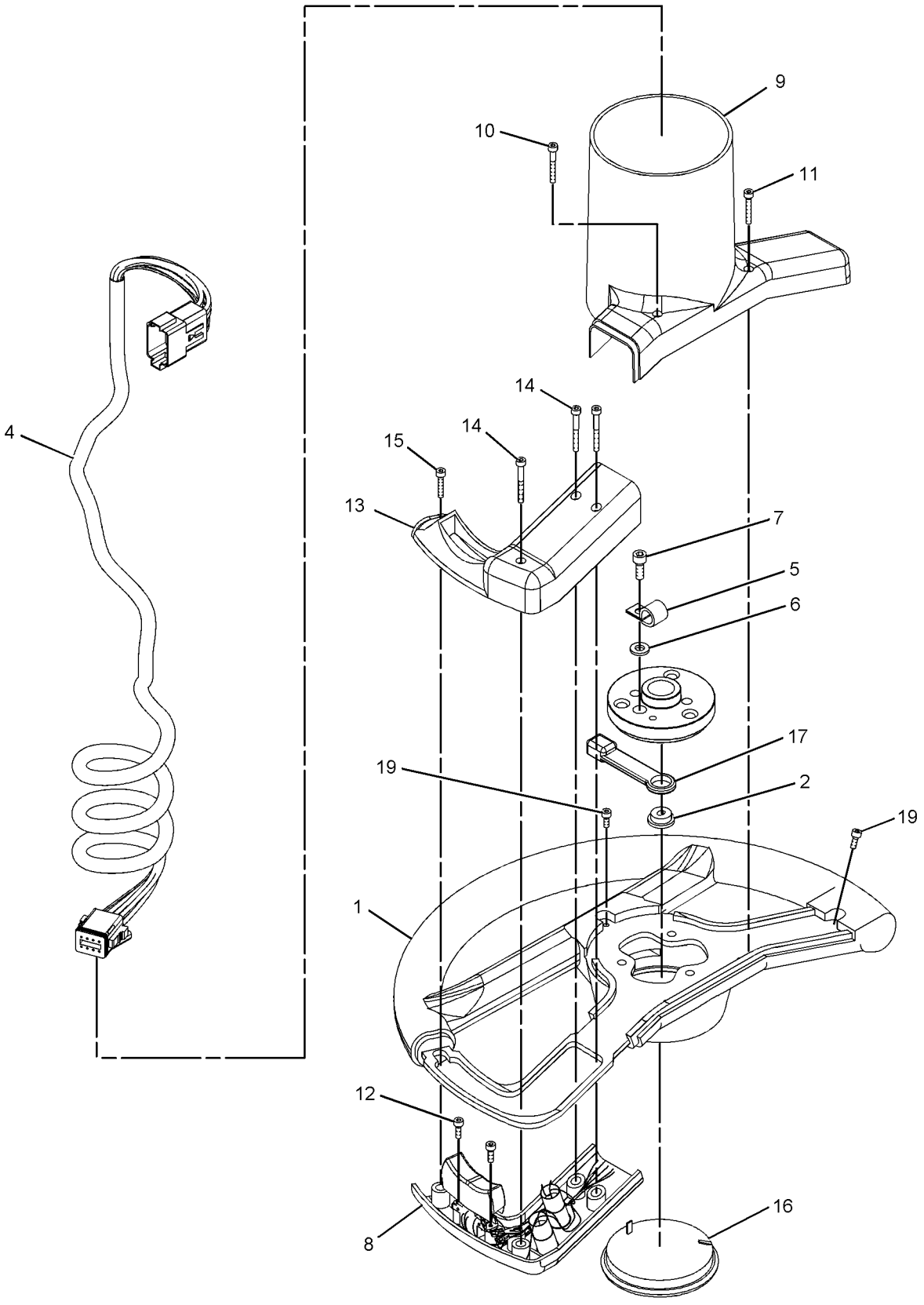


GRAPHIC #1 **<END>** g01102271

# *123-7406* STEERING WHEEL GP

**S/N: 5451-UP**
**PART OF 264-2256 CONTROL GP-STEERING**
**AN ATTACHMENT**
**TYPE 2**

**SMCS-4309** **i02738551**

| NOTE | REF NO | GRAPHIC REF | PART NUMBER | QTY | PART NAME 1 2 3 4 5 6 (PRODUCT LEVEL) | SEE PAGE |
|---|---|---|---|---|---|---|
| | 1 | 1 | **2T-3360** | 1 | BUTTON AS-HORN | |
| | 2 | 1 | **112-9705** | 1 | WHEEL | |
| | 3 | 1 | **112-9714** | 1 | INSERT-SPLINED | |
| | 4 | 1 | **112-9715** | 1 | LEVER | |
| C | 5 | 1 | **283-3367** | 1 | HARNESS AS-STEERING (COLUMN, WHEEL) | |
| | | 1 | **102-8801** | 1 | KIT-RECEPTACLE (12-PIN) | |
| | | | | | (INCLUDES RECEPTACLE AS AND WEDGE) | |
| | | 1 | **155-2265** | 1 | KIT-CONNECTING PLUG (8-PIN) | |
| | | | | | (INCLUDES RECEPTACLE AS AND WEDGE) | |
| | 6 | 1 | **166-7389** | 1 | COVER | |
| Y | 7 | 1 | **251-9350** | 1 | SWITCH GP-TRANSMISSION | 200 |
| M | 8 | 1 | **107-3786** | 2 | BOLT (M4X0.7X12-MM) | |
| | 9 | 1 | **112-9707** | 1 | COVER-BACK | |
| M | 10 | 1 | **153-8001** | 1 | BOLT-SOCKET HEAD | |
| M | 11 | 1 | **153-8002** | 1 | BOLT-SOCKET HEAD (M4X0.7X25-MM) | |
| M | 12 | 1 | **153-8003** | 1 | BOLT-SOCKET HEAD (M4X0.7X30-MM) | |
| M | 13 | 1 | **153-8004** | 3 | BOLT-SOCKET HEAD (M4X0.7X35-MM) | |
| M | 14 | 1 | **153-9301** | 2 | BOLT-SOCKET HEAD (M4X0.7X10-MM) | |
| | 15 | 1 | **2V-3216** | 1 | CLIP | |
| M | 16 | 1 | **6V-5683** | 1 | BOLT (M6X1X16-MM) | |
| | 17 | 1 | **8T-4205** | 1 | WASHER-HARD (7.2X14.5X2-MM THK) | |

C-CHANGE FROM PREVIOUS TYPE
M-METRIC PART
Y-SEPARATE ILLUSTRATION

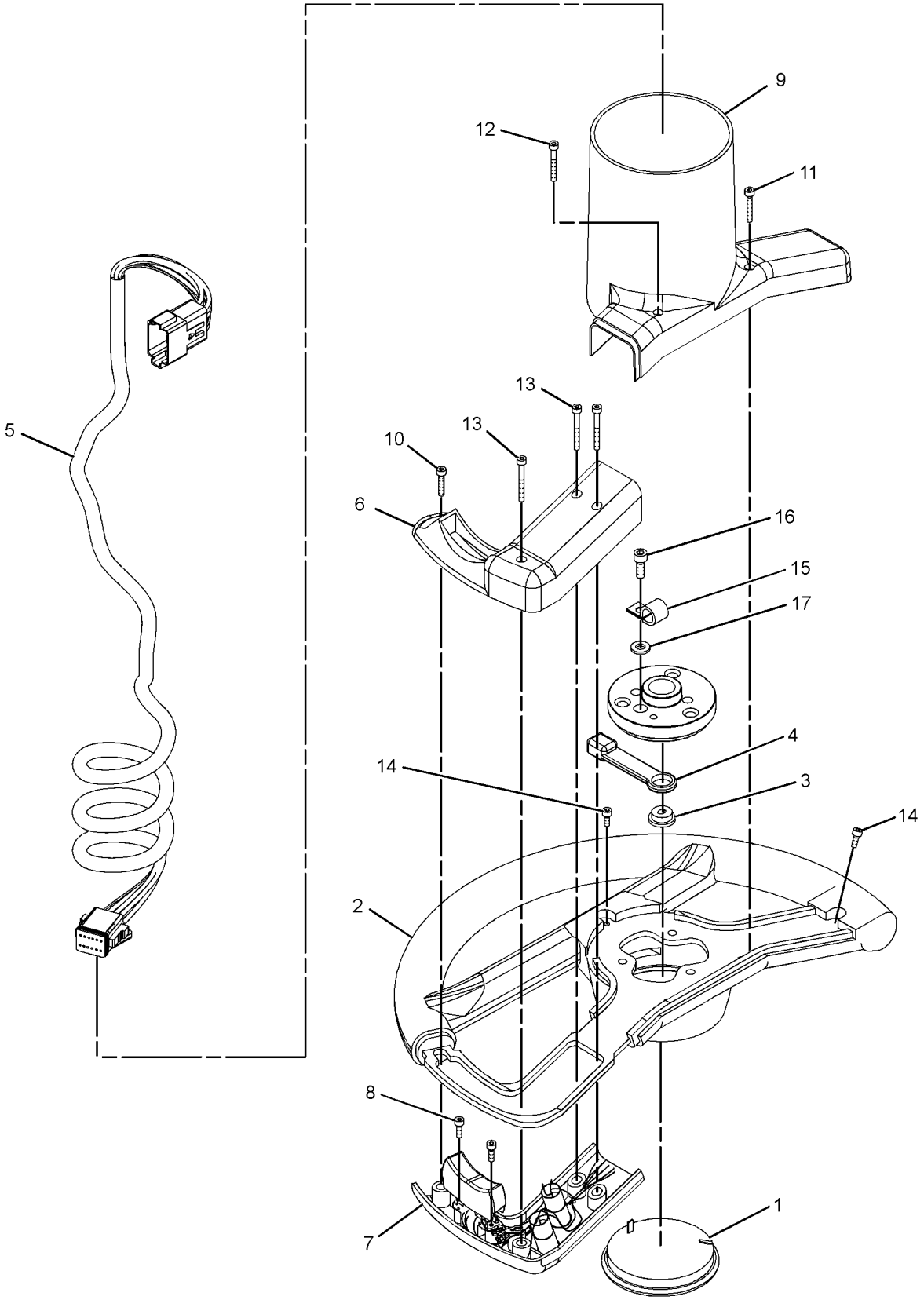


GRAPHIC #1

**<END>**

g01346901

# *170-8531* ACCUMULATOR GP-PILOT OIL–CHARGED–

**DEAD ENGINE LOWER, ARCH, BOOM**

**S/N: 5451-UP**

**PART OF 252-6537 LINES GP-PILOT**

**FIELD REPLACEMENT ORDER 179-9387–PAGE 404**

**SMCS-5077** **i02681618**

| NOTE | REF NO | GRAPHIC REF | PART NUMBER | QTY | PART NAME 1 2 3 4 5 6 (PRODUCT LEVEL) | SEE PAGE |
|---|---|---|---|---|---|---|
| | 1 | 1 | **204-8758** | 2 | FILM-WARNING (ACCUMULATOR) | |

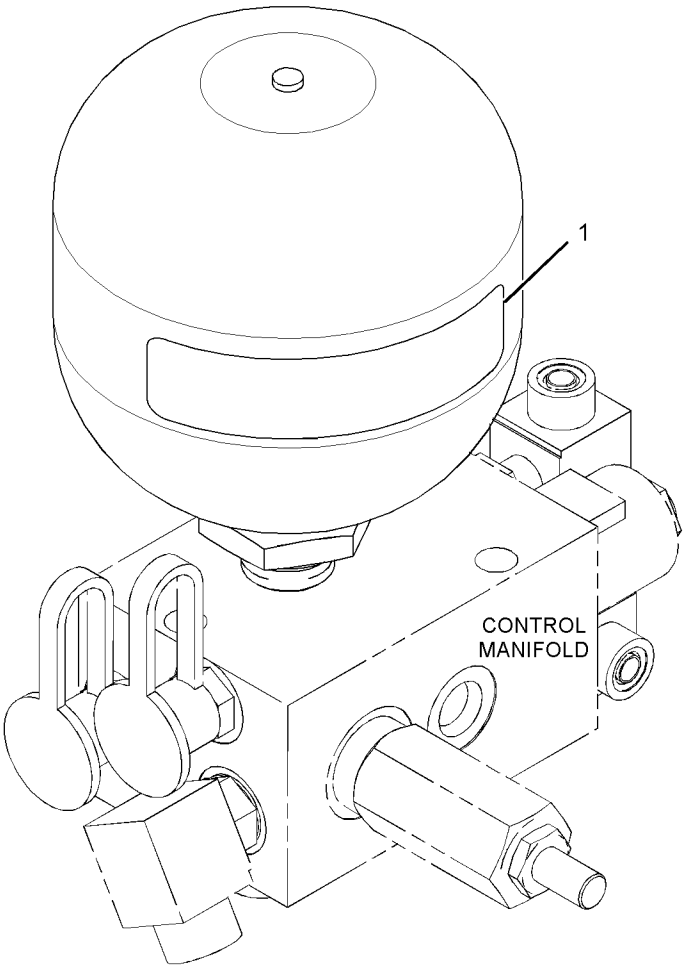


GRAPHIC #1 **<END>** g01352253

## *179-9387* ACCUMULATOR GP-PILOT OIL–UNCHARGED–

**DEAD ENGINE LOWER, ARCH, BOOM**

**S/N: 5451-UP**

**FIELD REPLACEMENT FOR 170-8531–PAGE 403**

**SMCS-5077** **i01929992**

| NOTE | REF NO | GRAPHIC REF | PART NUMBER | QTY | PART NAME 1 2 3 4 5 6 (PRODUCT LEVEL) | SEE PAGE |
|---|---|---|---|---|---|---|
| | 1 | 1 | **204-8758** | 2 | FILM-WARNING (ACCUMULATOR) | |

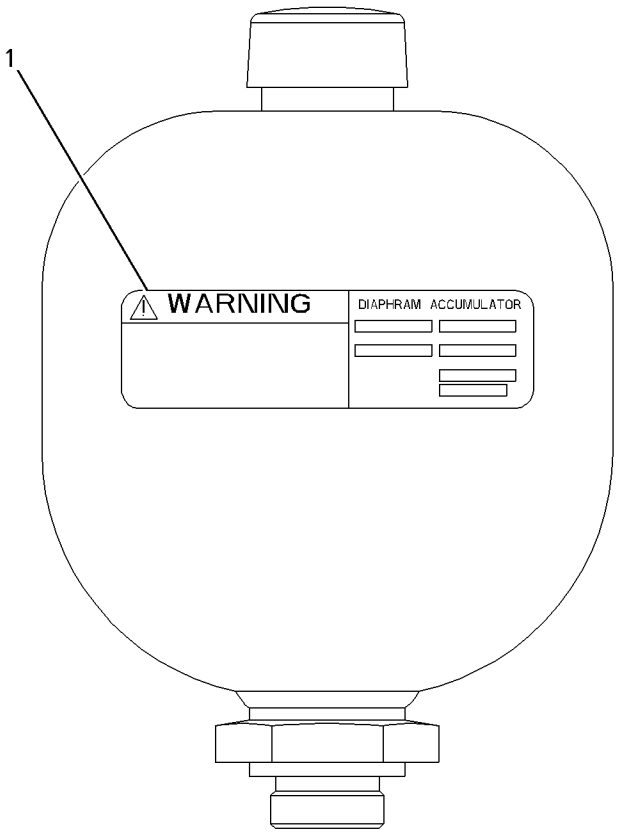


GRAPHIC #1 **<END>** g01004085

# HYDRAULIC SYSTEM

## *252-6567* COOLER GP-HYDRAULIC OIL

**S/N: 5451-UP**

**PART OF 245-9466 HYDRAULIC AR**

**SMCS-1374, 5071** **i02546781**

| NOTE | REF NO | GRAPHIC REF | PART NUMBER | QTY | PART NAME 1 2 3 4 5 6 (PRODUCT LEVEL) | SEE PAGE |
|---|---|---|---|---|---|---|
| | 1 | 1 | **127-2228** | 1 | VALVE GP-CHECK (HYDRAULIC OIL COOLER BYPASS) | |
| I | 2 | 1 | **189-7726** | 1 | HOSE AS | |
| | 3 | 1 | **259-4795** | 2 | TUBE AS | |
| | 4 | 1 | **260-7601** | 1 | CORE AS-HYDRAULIC OIL COOLER | |
| | 5 | 1 | **280-9661** | 1 | BRACKET AS | |
| I | 6 | 1 | **281-2502** | 1 | HOSE AS | |
| | 7 | 1 | *148-8428* | 2 | TEE AS | |
| | | | | | (EACH INCLUDES) | |
| | | 1 | **3K-0360** | 1 | SEAL-O-RING | |
| | | 1 | **6V-8398** | 2 | SEAL-O-RING | |
| | | 1 | **6V-8782** | 1 | TEE | |
| | 8 | 1 | **1S-0994** | 8 | CLIP | |
| | 9 | 1 | **6D-4247** | 1 | CLIP | |
| | 10 | 1 | **8T-4121** | 9 | WASHER-HARD (11X21X2.5-MM THK) | |
| M | 11 | 1 | **8T-4137** | 7 | BOLT (M10X1.5X20-MM) | |
| E | 12 | 1 | **122-2228** | | SEAL (45-CM EACH) | |
| M | 13 | 1 | **8T-4191** | 2 | BOLT (M10X1.5X16-MM) | |

E-ORDER BY THE CENTIMETER
I-REFER TO HYDRAULIC INFORMATION SYSTEM
M-METRIC PART

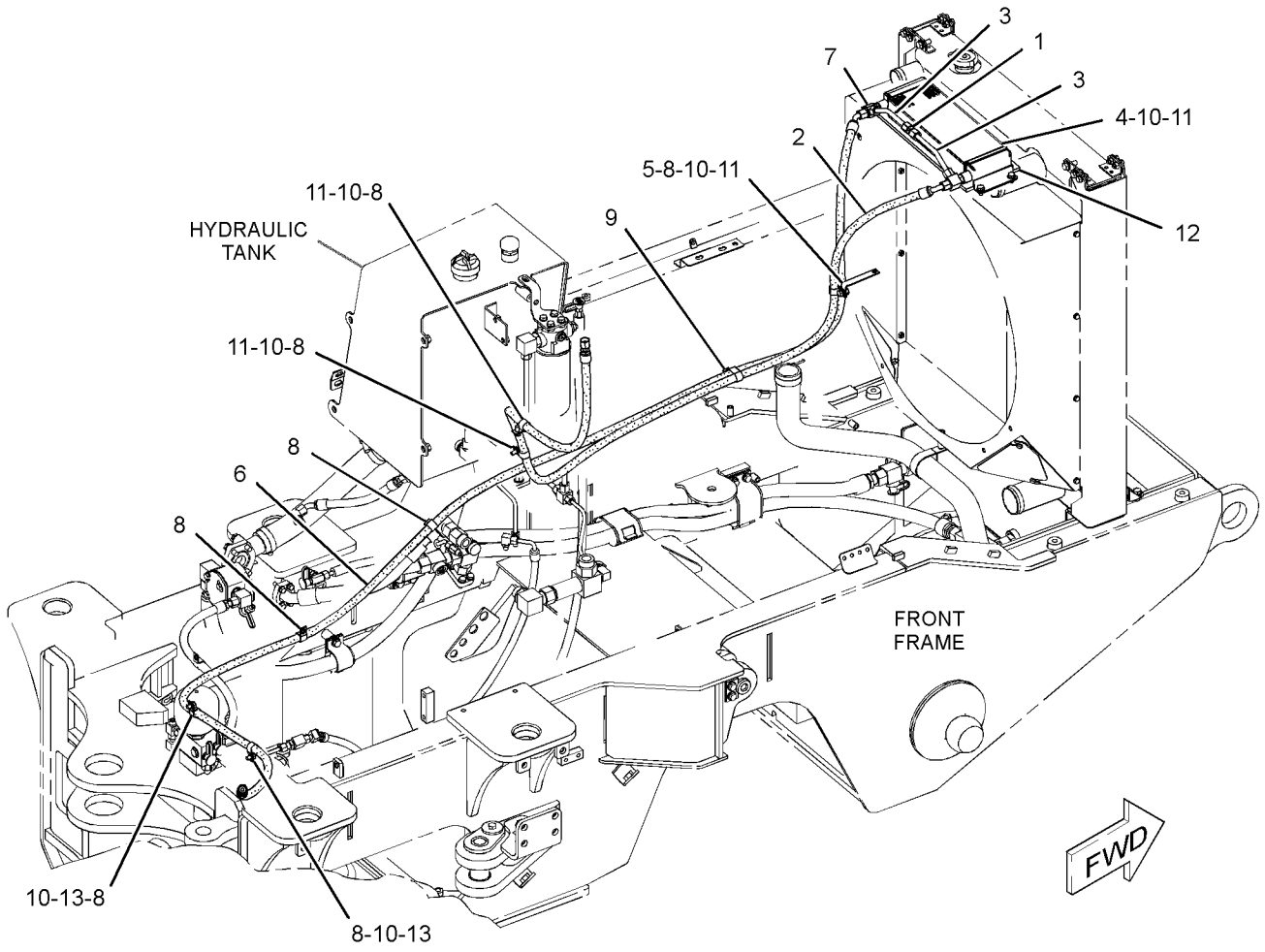


GRAPHIC #1 **<END>** g01302402

# HYDRAULIC SYSTEM

## 200-3202 CYLINDER GP-ARCH–RH

**S/N: 5451-UP**
**101.6 MM BORE X 590.6 STROKE**
**PART OF 253-2515, 253-2518 GRAPPLE AR**
**AN ATTACHMENT**

**SMCS-5557** **i02014522**

| NOTE | REF NO | GRAPHIC REF | PART NUMBER | QTY | PART NAME 1 2 3 4 5 6 (PRODUCT LEVEL) | SEE PAGE |
|---|---|---|---|---|---|---|
| | 1 | 1 | **133-8780** | 1 | PISTON | |
| | 2 | 1 | **206-5157** | 1 | CYLINDER AS | |
| | 3 | 1 | **206-5158** | 1 | ROD AS | |
| | 4 | 1 | **167-2195** | 1 | SEAL AS-BUFFER | |
| | 5 | 1 | **167-2304** | 1 | SEAL-U-CUP | |
| | 6 | 1 | **229-9382** | 1 | SEAL-WIPER | |
| M | 7 | 1 | **173-9683** | 1 | BOLT (M30X3.5X90-MM) | |
| | 8 | 1 | **201-4826** | 1 | HEAD | |
| | 9 | 1 | **2K-6830** | 1 | RING-BACKUP | |
| | 10 | 1 | **4T-5613** | 1 | RING-WEAR | |
| | 11 | 1 | **6J-2797** | 1 | RING-WEAR | |
| | 12 | 1 | **8C-9160** | 1 | SEAL AS | |
| | 13 | 1 | **8H-7521** | 1 | SEAL-O-RING | |
| | 14 | 1 | **9X-4611** | 1 | SEAL-O-RING | |
| | 15 | 1 | **9X-8399** | 1 | WASHER (33X56X6-MM THK) | |

M-METRIC PART

**200-3202 CYLINDER GP-ARCH** *(contd. )* **i02014522**

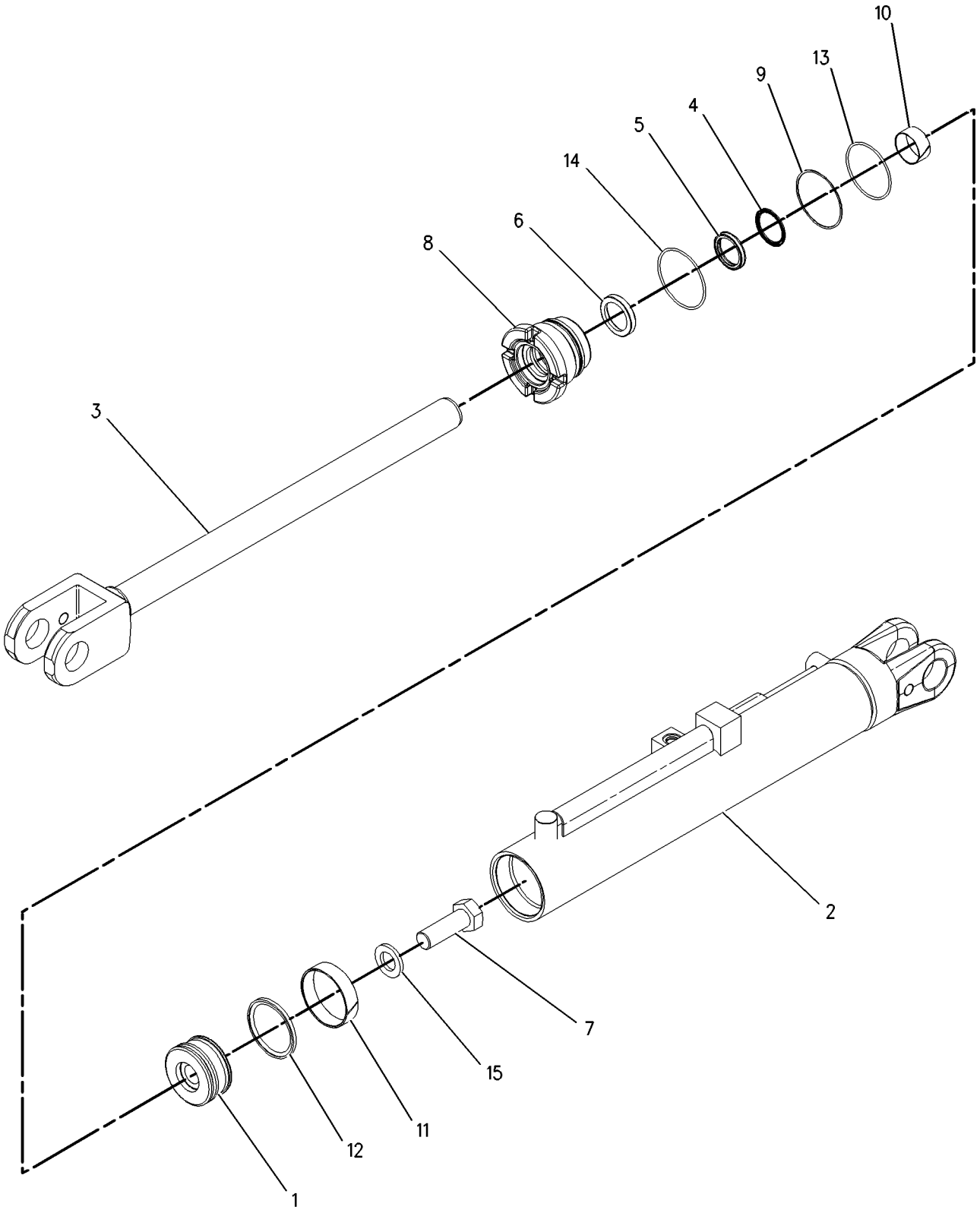


GRAPHIC #1 **<END>** g00856910

# 200-3204 CYLINDER GP-ARCH–LH

**S/N: 5451-UP**
**101.6 MM BORE X 590.6 MM STROKE**
**PART OF 253-2515, 253-2518 GRAPPLE AR**
**AN ATTACHMENT**

**SMCS-5557** **i02014520**

| NOTE | REF NO | GRAPHIC REF | PART NUMBER | QTY | PART NAME 1 2 3 4 5 6 (PRODUCT LEVEL) | SEE PAGE |
|---|---|---|---|---|---|---|
| | 1 | 1 | **133-8780** | 1 | PISTON | |
| | 2 | 1 | **206-5158** | 1 | ROD AS | |
| | 3 | 1 | **206-6998** | 1 | CYLINDER AS | |
| | 4 | 1 | **167-2195** | 1 | SEAL AS-BUFFER | |
| | 5 | 1 | **167-2304** | 1 | SEAL-U-CUP | |
| | 6 | 1 | **229-9382** | 1 | SEAL-WIPER | |
| M | 7 | 1 | **173-9683** | 1 | BOLT (M30X3.5X90-MM) | |
| | 8 | 1 | **201-4826** | 1 | HEAD | |
| | 9 | 1 | **2K-6830** | 1 | RING-BACKUP | |
| | 10 | 1 | **4T-5613** | 1 | RING-WEAR | |
| | 11 | 1 | **6J-2797** | 1 | RING-WEAR | |
| | 12 | 1 | **8C-9160** | 1 | SEAL AS | |
| | 13 | 1 | **8H-7521** | 1 | SEAL-O-RING | |
| | 14 | 1 | **9X-4611** | 1 | SEAL-O-RING | |
| | 15 | 1 | **9X-8399** | 1 | WASHER (33X56X6-MM THK) | |

M-METRIC PART

**200-3204 CYLINDER GP-ARCH** *(contd. )* **i02014520**

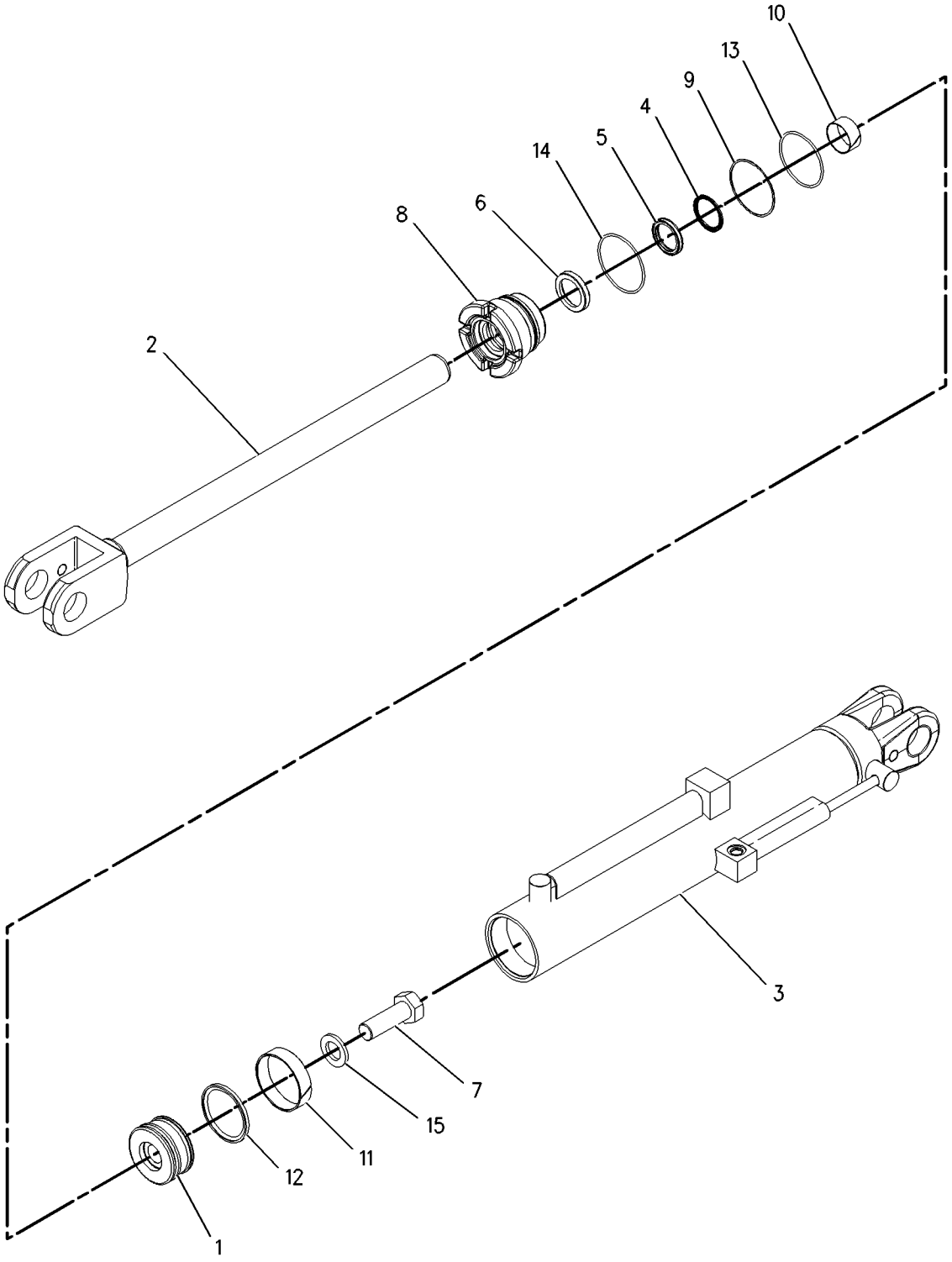


GRAPHIC #1 **<END>** g00856975

# 200-3195 CYLINDER GP-BOOM

**S/N: 5451-UP**
**101.6MM BORE X 654.05MM STROKE**
**PART OF 253-2515, 253-2518 GRAPPLE AR**
**AN ATTACHMENT**

**SMCS-5456** **i01948850**

| NOTE | REF NO | GRAPHIC REF | PART NUMBER | QTY | PART NAME 1 2 3 4 5 6 (PRODUCT LEVEL) | SEE PAGE |
|---|---|---|---|---|---|---|
| | 1 | 1 | **133-8780** | 1 | PISTON | |
| | 2 | 1 | **201-1566** | 1 | CYLINDER AS | |
| | 3 | 1 | **203-2744** | 1 | ROD AS | |
| | 4 | 1 | **167-2195** | 1 | SEAL AS-BUFFER | |
| | 5 | 1 | **167-2304** | 1 | SEAL-U-CUP | |
| | 6 | 1 | **229-9382** | 1 | SEAL-WIPER | |
| M | 7 | 1 | **173-9683** | 1 | BOLT (M30X3.5X90-MM) | |
| | 8 | 1 | **201-4826** | 1 | HEAD | |
| | 9 | 1 | **2K-6830** | 1 | RING-BACKUP | |
| | 10 | 1 | **4T-5613** | 1 | RING-WEAR | |
| | 11 | 1 | **6J-2797** | 1 | RING-WEAR | |
| | 12 | 1 | **8C-9160** | 1 | SEAL AS | |
| | 13 | 1 | **8H-7521** | 1 | SEAL-O-RING | |
| | 14 | 1 | **9X-4611** | 1 | SEAL-O-RING | |
| | 15 | 1 | **9X-8399** | 1 | WASHER (33X56X6-MM THK) | |

M-METRIC PART

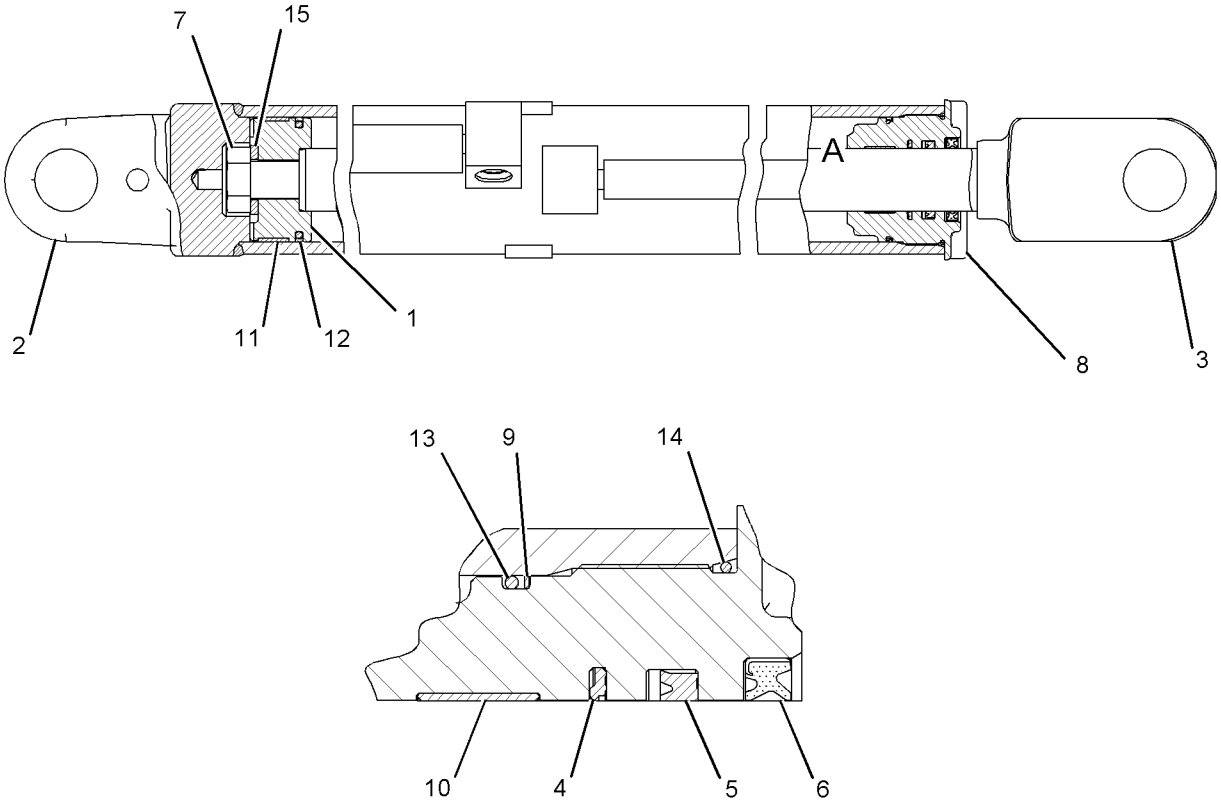


VIEW OF AREA A

GRAPHIC #1 **<END>** g01061301

# 298-2525 CYLINDER GP-GRAPPLE

**S/N: 5451-UP**
**AN ATTACHMENT**

**SMCS-5555** **i02610281**

| NOTE | REF NO | GRAPHIC REF | PART NUMBER | QTY | PART NAME 1 2 3 4 5 6 (PRODUCT LEVEL) | SEE PAGE |
|---|---|---|---|---|---|---|
| | 1 | 1 | **133-8780** | 1 | PISTON | |
| | 2 | 1 | **201-4826** | 1 | HEAD | |
| | 3 | 1 | **206-5158** | 1 | ROD AS | |
| | 4 | 1 | **298-2526** | 1 | CYLINDER AS-HYDRAULIC | |
| | 5 | 1 | **167-2195** | 1 | SEAL AS-BUFFER | |
| | 6 | 1 | **167-2304** | 1 | SEAL-U-CUP | |
| M | 7 | 1 | **173-9683** | 1 | BOLT (M30X3.5X90-MM) | |
| | 8 | 1 | **229-9382** | 1 | SEAL-WIPER | |
| | 9 | 1 | **2K-6830** | 1 | RING-BACKUP | |
| | 10 | 1 | **4T-5613** | 1 | RING-WEAR | |
| | 11 | 1 | **6J-2797** | 1 | RING-WEAR | |
| | 12 | 1 | **8C-9160** | 1 | SEAL AS | |
| | 13 | 1 | **8H-7521** | 1 | SEAL-O-RING | |
| | 14 | 1 | **9X-4611** | 1 | SEAL-O-RING | |
| | 15 | 1 | **9X-8399** | 1 | WASHER (33X56X6-MM THK) | |

M-METRIC PART

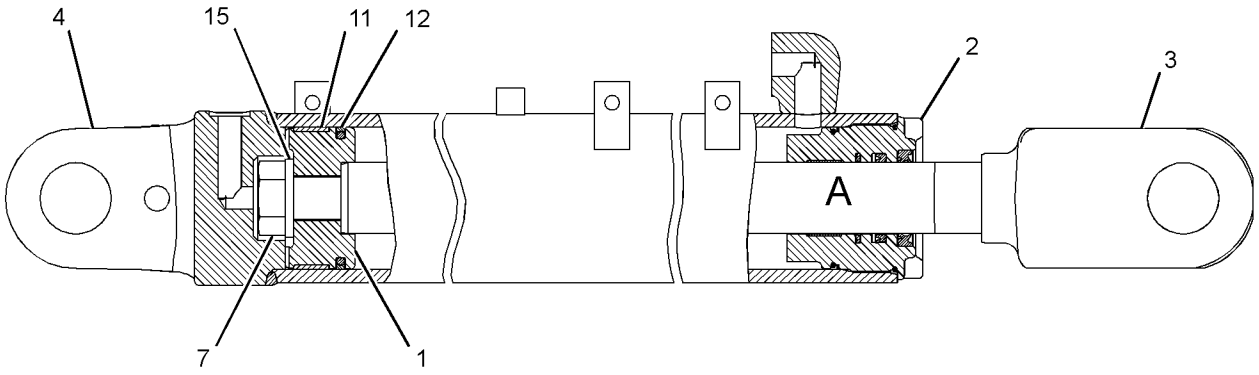


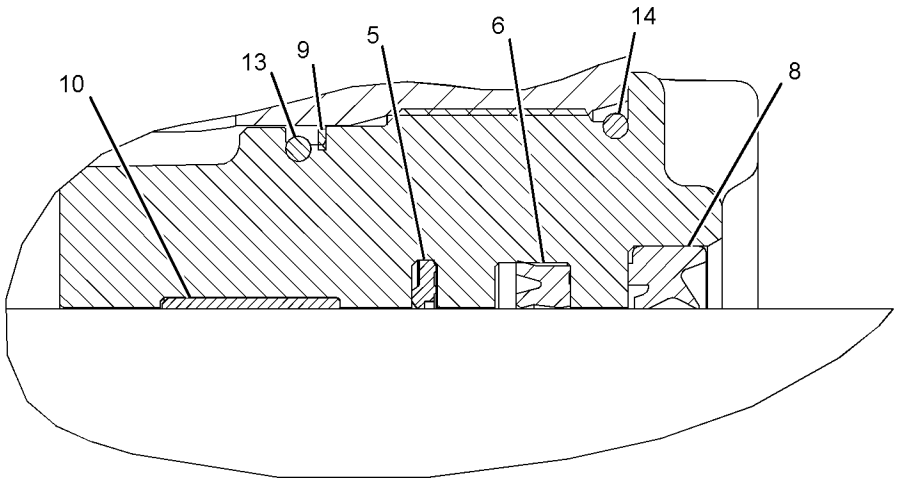


VIEW OF AREA A

GRAPHIC #1 **<END>** g01312284

# 160-0492 CYLINDER GP-LIFT–DECKING BLADE

**S/N: 5451-UP**
**101.6 (4.00 IN) BORE X 470MM (18.5 IN) STROKE**
**PART OF 253-3881 BLADE AR-DECKING**
**AN ATTACHMENT**

**SMCS-5102** **i02195210**

| NOTE | REF NO | GRAPHIC REF | PART NUMBER | QTY | PART NAME 1 2 3 4 5 6 (PRODUCT LEVEL) | SEE PAGE |
|---|---|---|---|---|---|---|
| | 1 | 1 | **174-4797** | 1 | CYLINDER AS | |
| | | 1 | **8J-0278** | 1 | BEARING-SLEEVE | |
| | 2 | 1 | **1J-2921** | 1 | BOLT (1-1/2-12X3.75-IN) | |
| | 3 | 1 | **3S-6162** | 1 | WASHER-HARD (40.5X67X6-MM THK) | |
| | 4 | 1 | **6J-2797** | 1 | RING-WEAR | |
| | 5 | 1 | **8C-9160** | 1 | SEAL AS | |
| | 6 | 1 | **149-3472** | 1 | PISTON | |
| | 7 | 1 | **175-7900** | 1 | SEAL-O-RING | |
| | 8 | 1 | **2K-6830** | 1 | RING-BACKUP | |
| | 9 | 1 | **6E-4977** | 1 | HEAD | |
| | 10 | 1 | **149-3471** | 1 | ROD AS | |
| | 11 | 1 | **8T-4958** | 1 | RING-WEAR | |
| | 12 | 1 | **231-3538** | 1 | SEAL-WIPER | |
| | 13 | 1 | **167-2307** | 1 | SEAL-U-CUP | |
| | 14 | 1 | **167-2200** | 1 | SEAL AS | |

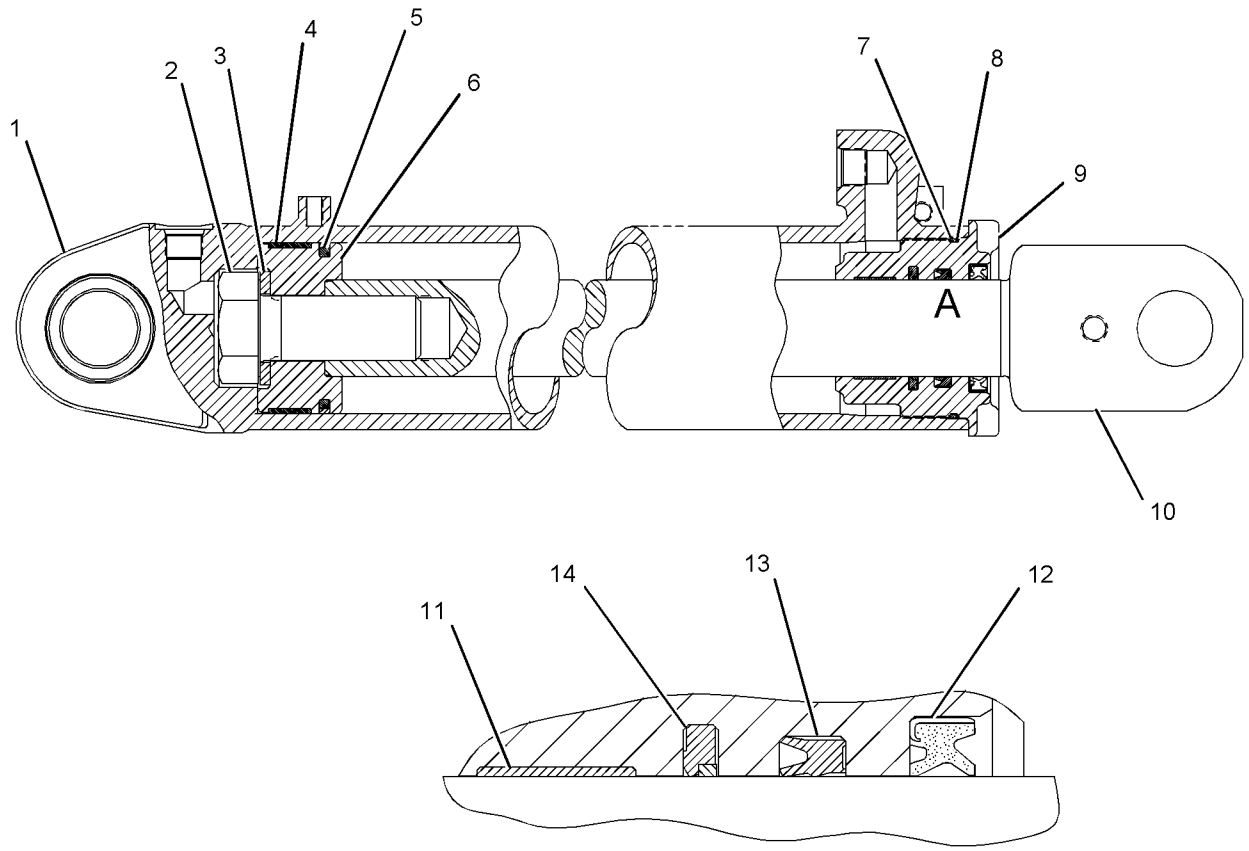


VIEW OF AREA A

GRAPHIC #1 **<END>** g01108629

# 276-1947 CYLINDER GP-TONG

**S/N: 5451-UP**

**PART OF 276-1934, 276-1935 HEAD AR-GRAPPLE AN ATTACHMENT**

**SMCS-5555** **i02541268**

| NOTE | REF NO | GRAPHIC REF | PART NUMBER | QTY | PART NAME 1 2 3 4 5 6 (PRODUCT LEVEL) | SEE PAGE |
|---|---|---|---|---|---|---|
| | 1 | 1 | **3B-8489** | 2 | FITTING-GREASE | |
| | 2 | 1 | **214-3222** | 1 | PISTON | |
| | 3 | 1 | **214-3225** | 1 | KIT-SEAL | |
| | | | | | (INCLUDES SEALS, RINGS, O-RINGS & WIPER) | |
| | 4 | 1 | **214-3221** | 1 | HEAD-CYLINDER | |
| | 5 | 1 | **288-6755** | 1 | BUSHING | |
| | 6 | 1 | **228-0830** | 1 | BUSHING | |
| | 7 | 1 | **288-6761** | 1 | ROD AS | |
| | 8 | 1 | **288-6758** | 1 | CYLINDER AS | |
| | 9 | 1 | **278-9895** | 1 | TUBE-STOP | |
| | 10 | 1 | **010-2571** | 2 | SETSCREW-SOCKET (1/4-20X0.31-IN) | |
| | 11 | 1 | **3H-8430** | 1 | SETSCREW (3/8-16X0.75-IN) | |

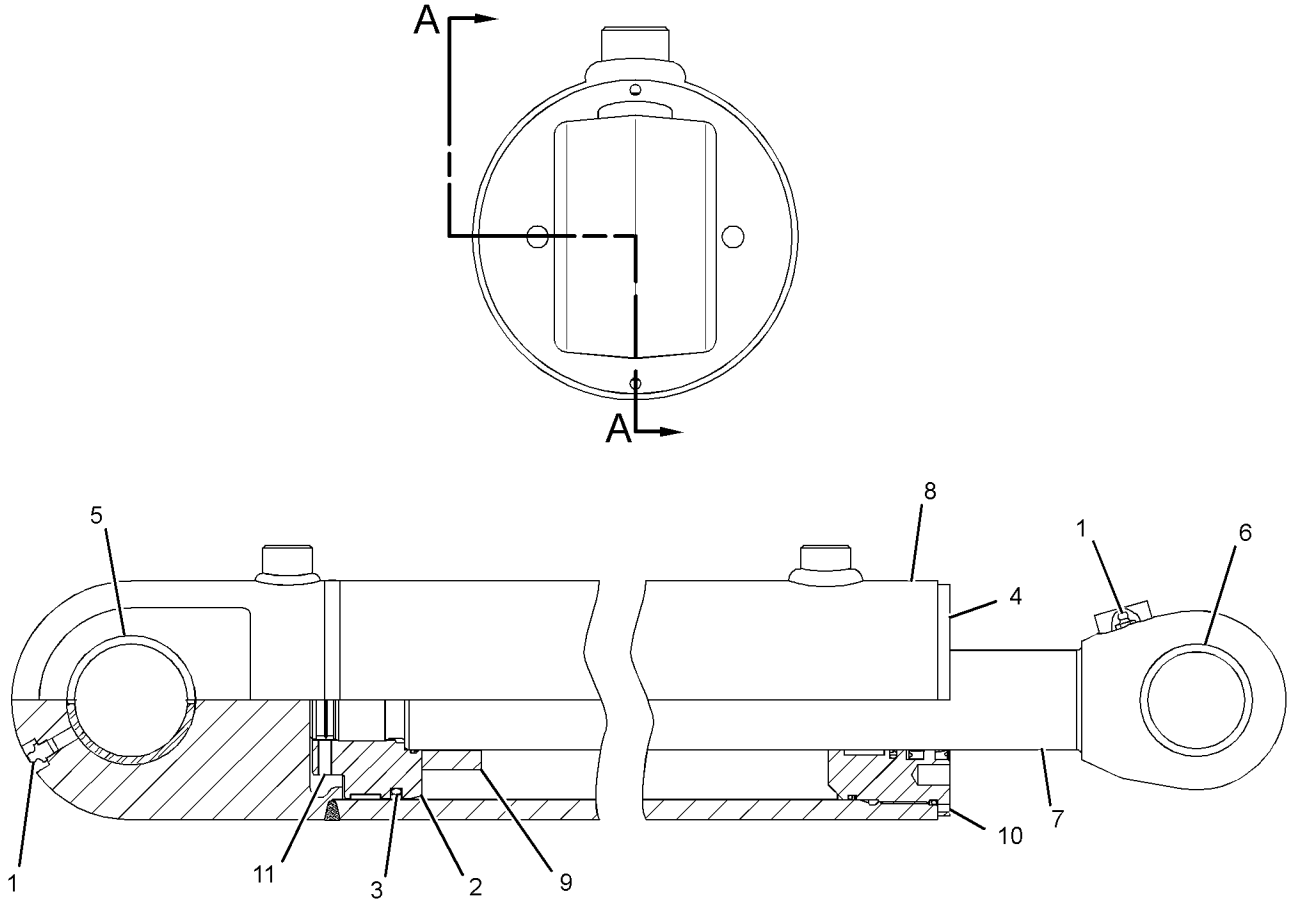


SECTION A-A

GRAPHIC #1 **<END>** g01305380

# HYDRAULIC SYSTEM

## 147-0178 FILTER GP-OIL–WINCH

**S/N: 5451-UP**
**PART OF 271-9086 LINES GP-WINCH**
**AN ATTACHMENT**

**SMCS-5068, 5177** **i02393945**

| NOTE | REF NO | GRAPHIC REF | PART NUMBER | QTY | PART NAME 1 2 3 4 5 6 (PRODUCT LEVEL) | SEE PAGE |
|---|---|---|---|---|---|---|
| | 1 | 1 | **1G-8878** | 1 | FILTER AS-OIL (ADVANCED EFFICIENCY) (HYDRAULIC) | |

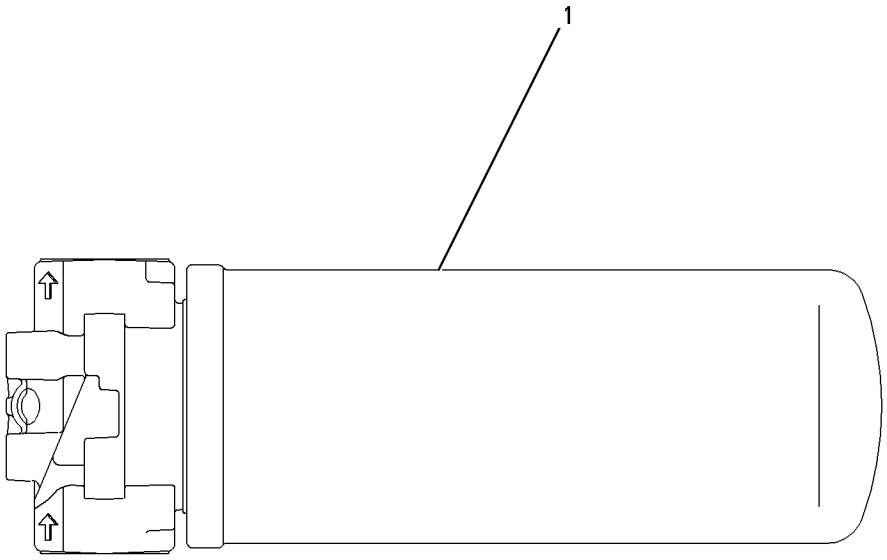


GRAPHIC #1 **<END>** g00578273

# 214-6589 FILTER GP-OIL–HYDRAULIC

**S/N: 5451-UP**

**PART OF 252-6534 LINES GP-HYDRAULIC**

**SMCS-5068, 5177** **i01900413**

| NOTE | REF NO | GRAPHIC REF | PART NUMBER | QTY | PART NAME 1 2 3 4 5 6 (PRODUCT LEVEL) | SEE PAGE |
|---|---|---|---|---|---|---|
| | 1 | 1 | **152-6902** | 1 | FILTER AS-OIL (ADVANCED EFFICIENCY) (HYDRAULIC) | |

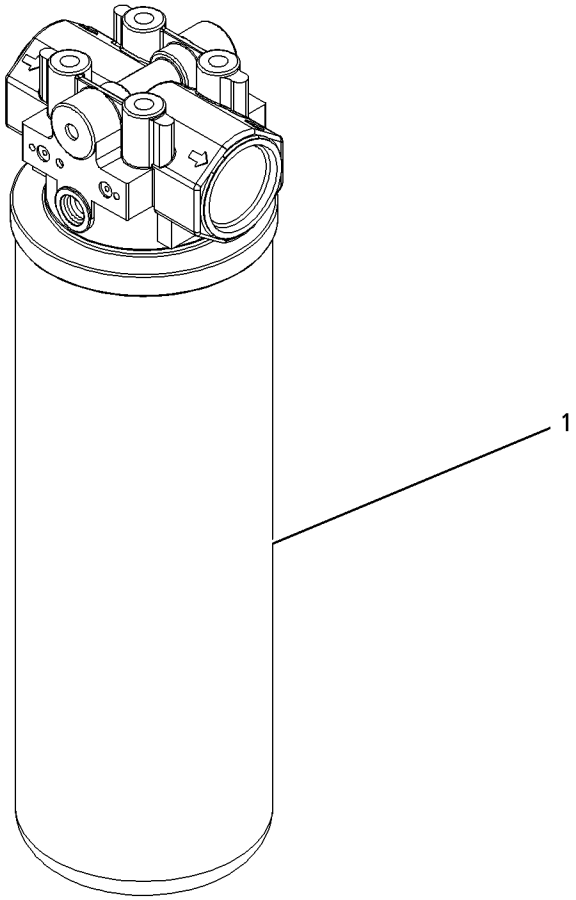


GRAPHIC #1 **<END>** g00988505

# HYDRAULIC SYSTEM

## *245-9466* HYDRAULIC AR

**S/N: 5451-UP**

**PART OF 245-9457 COMMON AR**

**SMCS-5051, 5115** **i02464517**

| NOTE | PART NUMBER | QTY | PART NAME 1 2 3 4 5 6 (PRODUCT LEVEL) | SEE PAGE |
|---|---|---|---|---|
| Y | *252-6538* | 1 | CONTROL GP-PARKING BRAKE | 374 |
| Y | *252-6536* | 1 | CONTROL GP-SERVICE BRAKE | 376 |
| Y | *252-6555* | 1 | CONTROL GP-STEER & DECK BLADE | 383 |
| Y | *252-6567* | 1 | COOLER GP-HYDRAULIC OIL | 405 |
| Y | **252-5871** | 1 | CYLINDER GP-STEERING (LH) | 385 |
| Y | **252-5872** | 1 | CYLINDER GP-STEERING (RH) | 387 |
| Y | *252-6534* | 1 | LINES GP-HYDRAULIC | 425 |
| Y | *252-6537* | 1 | LINES GP-PILOT | 429 |
| Y | *252-6539* | 1 | LINES GP-STEERING | 394 |
| Y | *143-1450* | 1 | PUMP & MTG GP-HYDRAULIC | 438 |
| Y | *249-3824* | 1 | TANK & MTG GP-HYDRAULIC | 445 |

Y-SEPARATE ILLUSTRATION

**<END>**

## *272-6512* INDUSTRIAL AR-HYDRAULIC—WITHOUT GRAPPLE

**S/N: 5451-UP**

**AN ATTACHMENT**

**SMCS-5051** **i02613580**

| NOTE | PART NUMBER | QTY | PART NAME 1 2 3 4 5 6 (PRODUCT LEVEL) | SEE PAGE |
|---|---|---|---|---|
| Y | *279-0204* | 1 | CONTROL GP-PILOT OPERATED HYD (JOYSTICK, DUAL FCTN GRAPPLE) | 599 |
| Y | *278-0000* | 1 | GUARD GP-LINES (REAR FRAME, GRAPPLE) | 345 |
| Y | *279-4337* | 1 | VALVE & LINES GP-GRAPPLE (DUAL FUNCTION) | 449 |
| | | | | |
| | *297-9657* | 1 | SWITCH GP-ROCKER | |
| | **253-6140** | 1 | SWITCH AS-ROCKER (WINCH FREESPOOL) | |
| | **253-6141** | 1 | SWITCH AS-ROCKER (WINCH REEL IN) | |
| | **243-0767** | 1 | SWITCH AS-ROCKER (WINCH REEL OUT) | |
| | | | | |
| | **6V-9829** | 1 | CAP AS | |
| | **6V-9830** | 1 | CAP AS | |
| | *148-8408* | 10 | PLUG AS | |
| | | | (EACH INCLUDES) | |
| | **3D-2824** | 1 | SEAL-O-RING | |
| | **9S-4183** | 1 | PLUG-O-RING | |

Y-SEPARATE ILLUSTRATION

**<END>**

# HYDRAULIC SYSTEM

## *255-6490* LINES GP-DECKING BLADE

**S/N: 5451-UP**

**PART OF 253-3881 BLADE AR-DECKING**

**AN ATTACHMENT**

**SMCS-5057, 5115** **i02469418**

| NOTE | REF NO | GRAPHIC REF | PART NUMBER | QTY | PART NAME 1 2 3 4 5 6 (PRODUCT LEVEL) | SEE PAGE |
|---|---|---|---|---|---|---|
| | 1 | 1 | **8K-9176** | 4 | CLAMP | |
| I | 2 | 1 | **8R-2991** | 1 | HOSE AS | |
| I | 3 | 1 | **109-5836** | 1 | HOSE AS | |
| | 4 | 1 | **151-5163** | 1 | TUBE AS | |
| | 5 | 1 | **151-5337** | 1 | TUBE AS | |
| | 6 | 1 | *164-6864* | 4 | ELBOW AS | |
| | | | | | (EACH INCLUDES) | |
| | | 1 | **6V-8398** | 1 | SEAL-O-RING | |
| | | 1 | **7J-9108** | 1 | SEAL-O-RING | |
| | | 1 | **8T-1810** | 1 | ELBOW | |
| I | 7 | 1 | **175-1375** | 4 | HOSE AS | |
| | 8 | 1 | **257-8483** | 2 | PLATE | |
| | 9 | 1 | **8T-4223** | 2 | WASHER-HARD (13.5X25.5X3-MM THK) | |
| | 10 | 1 | **229-6701** | 1 | ANGLE | |
| | 11 | 1 | **255-6481** | 1 | TUBE AS | |
| | 12 | 1 | **255-6482** | 1 | TUBE AS | |
| | 13 | 1 | **255-6483** | 1 | TUBE AS | |
| | 14 | 1 | **255-6484** | 1 | TUBE AS | |
| | 15 | 1 | **255-6485** | 1 | TUBE AS | |
| | 16 | 1 | **255-6486** | 1 | TUBE AS | |
| | 17 | 1 | **255-6487** | 1 | PLATE | |
| | 18 | 1 | *148-8322* | 2 | CONNECTOR AS | |
| | | | | | (EACH INCLUDES) | |
| | | 1 | **2M-9780** | 1 | SEAL-O-RING | |
| | | 1 | **6V-8640** | 1 | CONNECTOR | |
| | | 1 | **6V-9746** | 1 | SEAL-O-RING | |
| | 19 | 1 | *148-8341* | 2 | CONNECTOR AS | |
| | | | | | (EACH INCLUDES) | |
| | | 1 | **3D-2824** | 1 | SEAL-O-RING | |
| | | 1 | **6V-8713** | 1 | CONNECTOR | |
| | | 1 | **7J-9108** | 1 | SEAL-O-RING | |
| | 20 | 1 | *148-8372* | 2 | ELBOW AS | |
| | | | | | (EACH INCLUDES) | |
| | | 1 | **2M-9780** | 1 | SEAL-O-RING | |
| | | 1 | **6V-8398** | 1 | SEAL-O-RING | |
| | | 1 | **6V-8721** | 1 | ELBOW | |
| | 21 | 1 | *148-8393* | 2 | ELBOW AS | |
| | | | | | (EACH INCLUDES) | |
| | | 1 | **6V-9852** | 1 | ELBOW (SWIVEL) | |
| | | 1 | **7J-9108** | 1 | SEAL-O-RING | |
| | 22 | 1 | *164-6860* | 2 | TEE AS | |
| | | | | | (EACH INCLUDES) | |
| | | 1 | **6V-9350** | 1 | TEE-BULKHEAD | |
| | | 1 | **7J-9108** | 3 | SEAL-O-RING | |
| | 23 | 1 | *169-7409* | 2 | UNION AS | |
| | | | | | (EACH INCLUDES) | |
| | | 1 | **6V-8996** | 1 | UNION | |
| | | 1 | **7J-9108** | 2 | SEAL-O-RING | |
| | 24 | 1 | **4K-8302** | 2 | CLIP | |
| | 25 | 1 | **6V-8398** | 2 | SEAL-O-RING | |
| | 26 | 1 | **6V-9169** | 4 | NUT-BULKHEAD (13/16-16-THD) | |
| | 27 | 1 | **6V-9170** | 4 | NUT-BULKHEAD (1-14-THD) | |
| | 28 | 1 | **7X-7729** | 14 | WASHER (11X25X3-MM THK) | |
| M | 29 | 1 | **8T-4133** | 3 | NUT (M10X1.5-THD) | |
| M | 30 | 1 | **8T-4136** | 8 | BOLT (M10X1.5X25-MM) | |

## *255-6490* **LINES GP-DECKING BLADE** *(contd.)* **i02469418**

| NOTE | REF NO | GRAPHIC REF | PART NUMBER | QTY | PART NAME 1 2 3 4 5 6 (PRODUCT LEVEL) | SEE PAGE |
|---|---|---|---|---|---|---|
| M | 31 | 1 | **8T-4195** | 4 | BOLT (M10X1.5X30-MM) | |
| M | 32 | 1 | **8T-4196** | 1 | BOLT (M10X1.5X35-MM) | |

I-REFER TO HYDRAULIC INFORMATION SYSTEM
M-METRIC PART

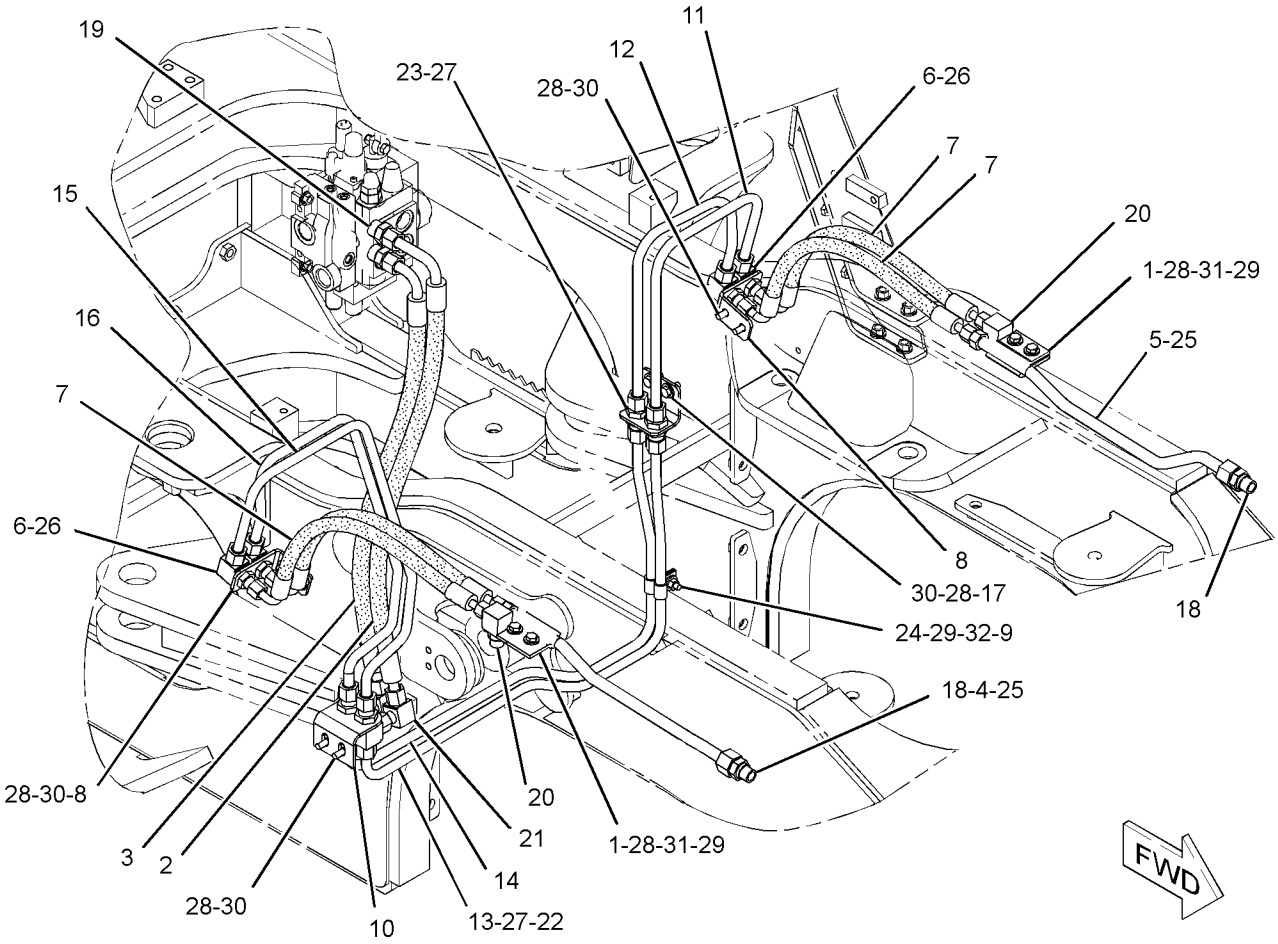


GRAPHIC #1 **<END>** g01236234

# HYDRAULIC SYSTEM

## *278-9823* LINES GP-GRAPPLE—DUAL FUNCTION

**S/N: 5451-UP**

**PART OF 253-2515, 253-2518 GRAPPLE AR**

**AN ATTACHMENT**

**SMCS-5057, 6307** **i02486340**

| NOTE | REF NO | GRAPHIC REF | PART NUMBER | QTY | PART NAME 1 2 3 4 5 6 (PRODUCT LEVEL) | SEE PAGE |
|---|---|---|---|---|---|---|
| I | 1 | 1 | **125-7325** | 1 | HOSE AS | |
| | 2 | 1 | **153-6248** | 1 | ADAPTER AS | |
| | | 1 | **6V-8397** | 1 | SEAL-O-RING | |
| | | 1 | **8T-6663** | 1 | ADAPTER-PORT | |
| | 3 | 1 | **164-6871** | 1 | ADAPTER AS | |
| | | 1 | **6V-8397** | 1 | SEAL-O-RING | |
| | | 1 | **122-2222** | 1 | ADAPTER | |
| | 4 | 1 | *205-2357* | 3 | CONNECTOR AS | |
| | | | | | (EACH INCLUDES) | |
| | | 1 | **3D-2824** | 1 | SEAL-O-RING | |
| | | 1 | **6V-8398** | 1 | SEAL-O-RING | |
| | | 1 | **8T-7968** | 1 | CONNECTOR | |
| Y | 5 | 1 | **237-0957** | 1 | SENSOR GP-PRESSURE (GRAPPLE OIL) | 177 |
| | 6 | 1 | **263-2543** | 1 | ELBOW | |
| | 7 | 1 | **278-9752** | 1 | TUBE AS | |
| | 8 | 1 | **278-9753** | 1 | TUBE AS | |
| | 9 | 1 | **278-9754** | 1 | TUBE AS | |
| | 10 | 1 | **278-9755** | 1 | TUBE AS | |
| I | 11 | 1 | **279-0200** | 4 | HOSE AS | |
| I | 14 | 1 | **279-0203** | 4 | HOSE AS | |
| | 15 | 1 | **124-0195** | 2 | ELBOW | |
| | 16 | 1 | *148-8312* | 1 | ADAPTER AS | |
| | | 1 | **3D-2824** | 1 | SEAL-O-RING | |
| | | 1 | **3T-4965** | 1 | ADAPTER-O-RING | |
| | 17 | 1 | *148-8317* | 2 | CONNECTOR AS | |
| | | | | | (EACH INCLUDES) | |
| | | 1 | **3D-2824** | 1 | SEAL-O-RING | |
| | | 1 | **5K-9090** | 1 | SEAL-O-RING | |
| | | 1 | **6V-8714** | 1 | CONNECTOR | |
| | 18 | 1 | *148-8328* | 1 | CONNECTOR AS | |
| | | 1 | **3D-2824** | 1 | SEAL-O-RING | |
| | | 1 | **6V-8398** | 1 | SEAL-O-RING | |
| | | 1 | **6V-8633** | 1 | CONNECTOR | |
| | 19 | 1 | *148-8336* | 1 | CONNECTOR AS | |
| | | 1 | **3J-1907** | 1 | SEAL-O-RING | |
| | | 1 | **6V-8397** | 1 | SEAL-O-RING | |
| | | 1 | **6V-8636** | 1 | CONNECTOR | |
| | 20 | 1 | *148-8340* | 2 | CONNECTOR AS | |
| | | | | | (EACH INCLUDES) | |
| | | 1 | **3K-0360** | 1 | SEAL-O-RING | |
| | | 1 | **6V-8398** | 1 | SEAL-O-RING | |
| | | 1 | **6V-8639** | 1 | CONNECTOR | |
| | 21 | 1 | *148-8352* | 1 | ELBOW AS | |
| | | 1 | **5K-9090** | 1 | SEAL-O-RING | |
| | | 1 | **6V-9854** | 1 | ELBOW (SWIVEL) | |
| | 22 | 1 | *148-8364* | 6 | ELBOW AS | |
| | | | | | (EACH INCLUDES) | |
| | | 1 | **3K-0360** | 1 | SEAL-O-RING | |
| | | 1 | **6V-8398** | 1 | SEAL-O-RING | |
| | | 1 | **6V-8625** | 1 | ELBOW | |
| | 23 | 1 | *148-8366* | 2 | ELBOW AS | |
| | | | | | (EACH INCLUDES) | |
| | | 1 | **6V-8397** | 2 | SEAL-O-RING | |
| | | 1 | **6V-8987** | 1 | ELBOW | |
| | 24 | 1 | *148-8370* | 1 | ELBOW AS | |

*278-9823* **LINES GP-GRAPPLE** *(contd.)* **i02486340**

| NOTE | REF NO | GRAPHIC REF | PART NUMBER | QTY | PART NAME 1 2 3 4 5 6 (PRODUCT LEVEL) | SEE PAGE |
|---|---|---|---|---|---|---|
| | | 1 | **6V-8398** | 1 | SEAL-O-RING | |
| | | 1 | **6V-9851** | 1 | ELBOW | |
| | 25 | 1 | *148-8374* | 2 | ELBOW AS | |
| | | | | | (EACH INCLUDES) | |
| | | 1 | **3K-0360** | 1 | SEAL-O-RING | |
| | | 1 | **6V-8397** | 1 | SEAL-O-RING | |
| | | 1 | **6V-8723** | 1 | ELBOW (FACE SEAL) | |
| | 26 | 1 | *150-4037* | 4 | TEE AS | |
| | | | | | (EACH INCLUDES) | |
| | | 1 | **6V-8398** | 2 | SEAL-O-RING | |
| | | 1 | **6V-9844** | 1 | TEE-SWIVEL | |
| | 27 | 1 | *153-6241* | 2 | ELBOW AS | |
| | | | | | (EACH INCLUDES) | |
| | | 1 | **6V-8398** | 1 | SEAL-O-RING | |
| | | 1 | **8C-8989** | 1 | ELBOW | |
| | 28 | 1 | *155-7321* | 2 | ADAPTER AS | |
| | | | | | (EACH INCLUDES) | |
| | | 1 | **3D-2824** | 1 | SEAL-O-RING | |
| | | 1 | **6V-1722** | 1 | ADAPTER-O-RING | |
| | 29 | 1 | *183-3406* | 1 | PLUG AS | |
| | | 1 | **6V-5049** | 1 | SEAL-O-RING | |
| | | 1 | **9S-4191** | 1 | PLUG-O-RING | |
| | 31 | 1 | **2P-1293** | 2 | LOCKNUT (1-3/16-12-THD) | |
| | 32 | 1 | **5K-9090** | 3 | SEAL-O-RING | |
| | 33 | 1 | **6V-9168** | 2 | NUT (11/16-16-THD) | |
| | 34 | 1 | **6V-9746** | 2 | SEAL-O-RING | |
| | 38 | 1 | **1S-0994** | 1 | CLIP | |
| | 39 | 1 | **205-3079** | 1 | ADAPTER | |
| | 40 | 1 | **6M-5062** | 1 | SEAL-O-RING | |
| | 41 | 1 | **6V-5758** | 1 | SEAL-O-RING | |
| | 42 | 1 | **8T-4121** | 2 | WASHER-HARD (11X21X2.5-MM THK) | |
| M | 43 | 1 | **8T-4133** | 1 | NUT (M10X1.5-THD) | |
| M | 44 | 1 | **8T-4136** | 1 | BOLT (M10X1.5X25-MM) | |
| | 45 | 1 | **9X-8250** | 1 | CLIP | |

I-REFER TO HYDRAULIC INFORMATION SYSTEM
M-METRIC PART
Y-SEPARATE ILLUSTRATION

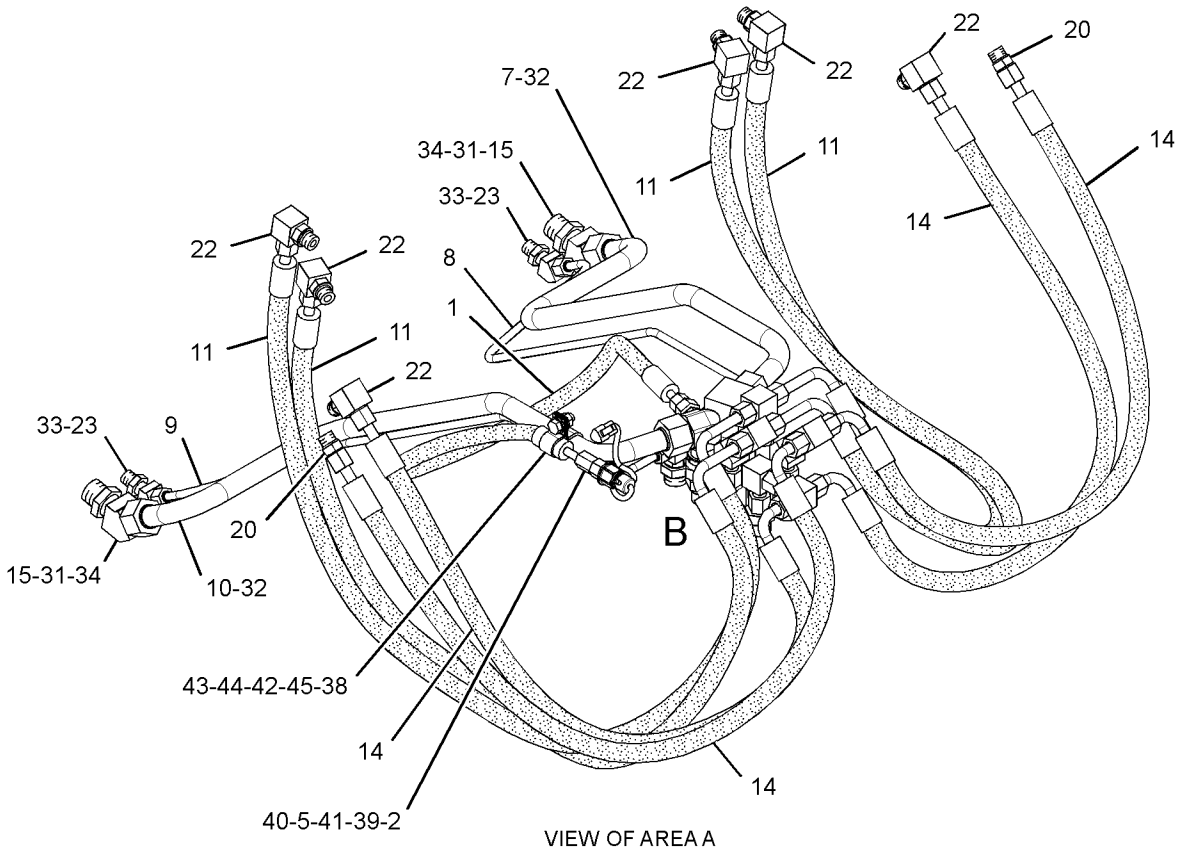


VIEW OF AREA A

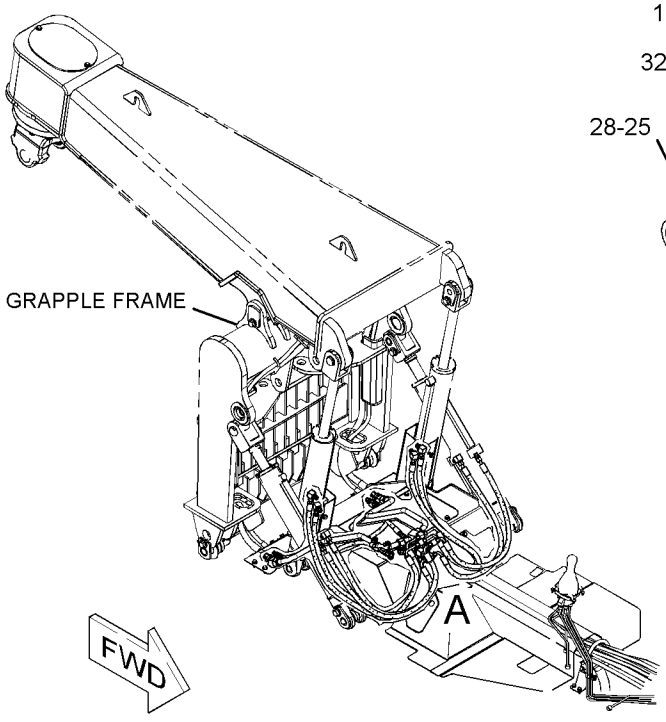


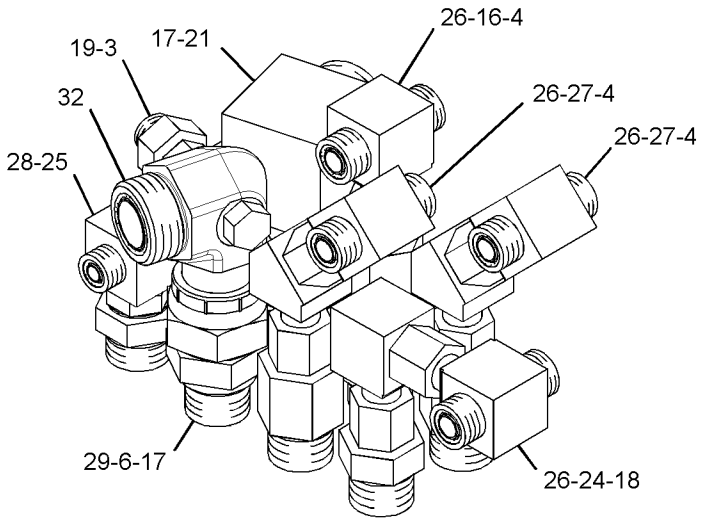


VIEW OF AREA B
(HOSES REMOVED FOR CLARITY)

GRAPHIC #1 **<END>** g01347625

# HYDRAULIC SYSTEM

## *276-1937* LINES GP-GRAPPLE HEAD

**S/N: 5451-UP**

**PART OF 276-1934, 276-1935 HEAD AR-GRAPPLE**

**AN ATTACHMENT**

**SMCS-5057, 6307** **i02500495**

| NOTE | REF NO | GRAPHIC REF | PART NUMBER | QTY | PART NAME 1 2 3 4 5 6 (PRODUCT LEVEL) | SEE PAGE |
|---|---|---|---|---|---|---|
| | 1 | 2 | **3B-8489** | 1 | FITTING-GREASE | |
| | 2 | 1 | **164-6862** | 1 | TEE AS | |
| | | 1 | **6V-9160** | 1 | TEE-FACE SEAL | |
| | | 1 | **6V-9746** | 3 | SEAL-O-RING | |
| I | 3 | 2 | **276-1960** | 1 | HOSE AS | |
| I | 4 | 2 | **276-1961** | 1 | HOSE AS | |
| I | 5 | 2 | **288-4797** | 1 | HOSE AS | |
| I | 6 | 2 | **288-4796** | 1 | HOSE AS | |
| I | 7 | 2 | **288-4795** | 1 | HOSE AS | |
| I | 8 | 2 | **276-1965** | 1 | HOSE AS | |
| | 9 | 2 | **276-2031** | 1 | PLATE AS | |
| | 10 | 1 | **287-5787** | 1 | PLATE AS | |
| Y | 11 | 1 | **276-5034** | 1 | VALVE GP-DIVERTER (GRAPPLE HEAD) | 486 |
| | 12 | 1 | *148-8341* | 1 | CONNECTOR AS | |
| | | 1 | **3D-2824** | 1 | SEAL-O-RING | |
| | | 1 | **6V-8713** | 1 | CONNECTOR | |
| | | 1 | **7J-9108** | 1 | SEAL-O-RING | |
| | 13 | 1 | *148-8360* | 1 | ELBOW AS | |
| | | 1 | **6V-9182** | 1 | ELBOW (FACE SEAL) | |
| | | 1 | **6V-9746** | 1 | SEAL-O-RING | |
| | | 1 | **7M-8485** | 1 | SEAL-O-RING | |
| | 14 | 1 | **148-8382** | 1 | ELBOW AS | |
| | | 1 | **3D-2824** | 1 | SEAL-O-RING | |
| | | 1 | **7J-9108** | 1 | SEAL-O-RING | |
| | | 1 | **8T-0404** | 1 | ELBOW | |
| | 15 | 1,2 | *148-8390* | 4 | ELBOW AS | |
| | | | | | (EACH INCLUDES) | |
| | | 1,2 | **2M-9780** | 1 | SEAL-O-RING | |
| | | 1,2 | **6V-8626** | 1 | ELBOW | |
| | | 1,2 | **7J-9108** | 1 | SEAL-O-RING | |
| | 16 | 1 | *148-8392* | 1 | ELBOW AS | |
| | | 1 | **6V-9746** | 1 | SEAL-O-RING | |
| | | 1 | **6V-9853** | 1 | ELBOW | |
| | 17 | 1 | *148-8393* | 1 | ELBOW AS | |
| | | 1 | **6V-9852** | 1 | ELBOW (SWIVEL) | |
| | | 1 | **7J-9108** | 1 | SEAL-O-RING | |
| | 18 | 1,2 | *148-8414* | 3 | REDUCER AS | |
| | | | | | (EACH INCLUDES) | |
| | | 1,2 | **6V-8943** | 1 | REDUCER | |
| | | 1,2 | **7J-9108** | 1 | SEAL-O-RING | |
| | 19 | 1 | *165-4927* | 2 | CONNECTOR AS | |
| | | | | | (EACH INCLUDES) | |
| | | 1 | **2T-2991** | 1 | CONNECTOR | |
| | | 1 | **4K-1388** | 1 | SEAL-O-RING | |
| | | 1 | **6V-9746** | 1 | SEAL-O-RING | |
| | 20 | 2 | **2P-1293** | 1 | LOCKNUT (1-3/16-12-THD) | |
| | 21 | 1 | **8T-4121** | 2 | WASHER-HARD (11X21X2.5-MM THK) | |
| M | 22 | 1 | **8T-4136** | 2 | BOLT (M10X1.5X25-MM) | |
| | 23 | 1 | **8T-4224** | 2 | WASHER-HARD (8.8X16X2-MM THK) | |
| M | 24 | 2 | **8T-4779** | 4 | BOLT (M16X2X35-MM) | |
| M | 25 | 1 | **8T-6870** | 2 | BOLT (M8X1.25X70-MM) | |
| | 26 | 2 | **9X-8257** | 4 | WASHER (17.5X30X3.5-MM THK) | |

I-REFER TO HYDRAULIC INFORMATION SYSTEM
M-METRIC PART
Y-SEPARATE ILLUSTRATION

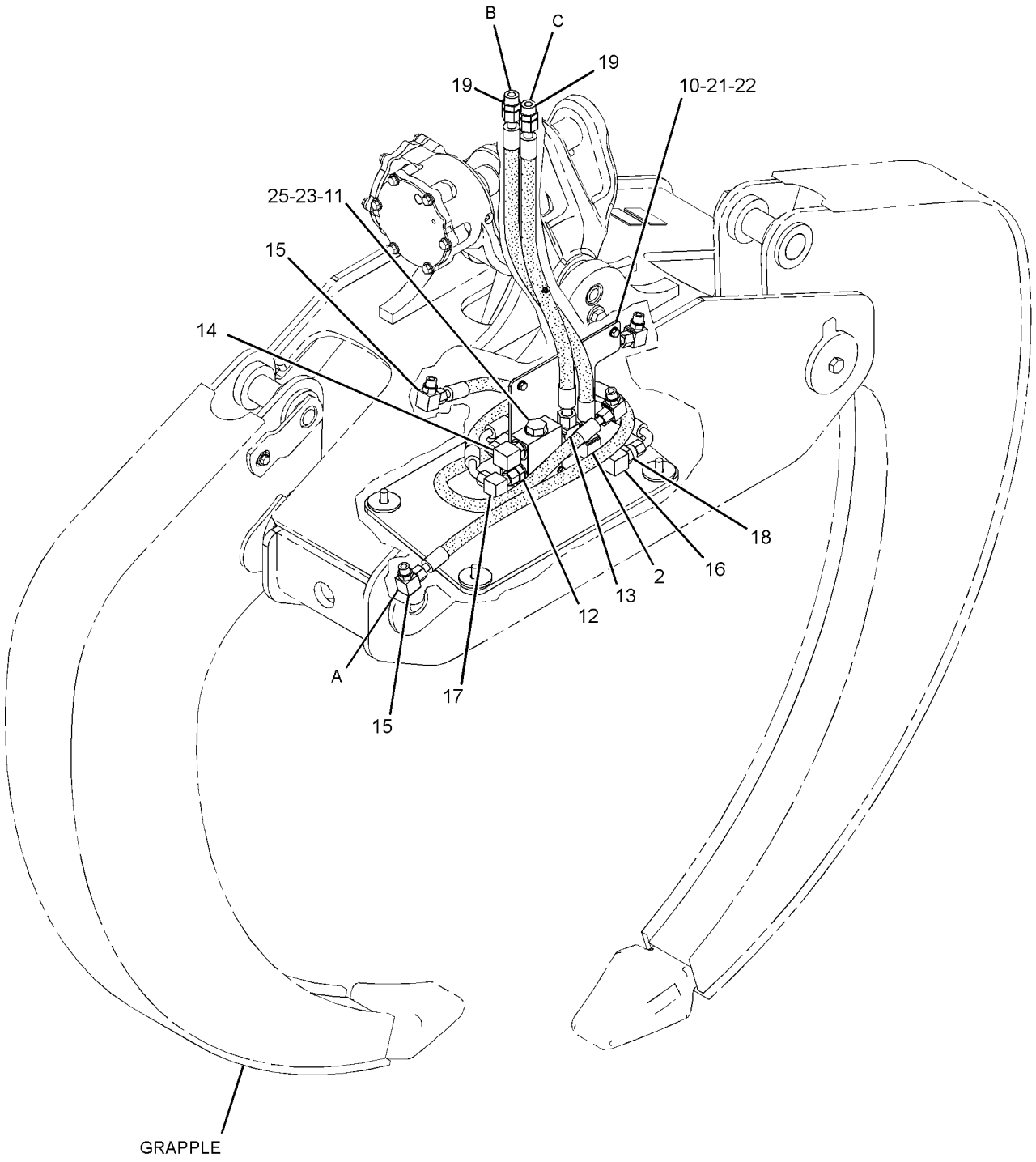


GRAPHIC #1 g01370045

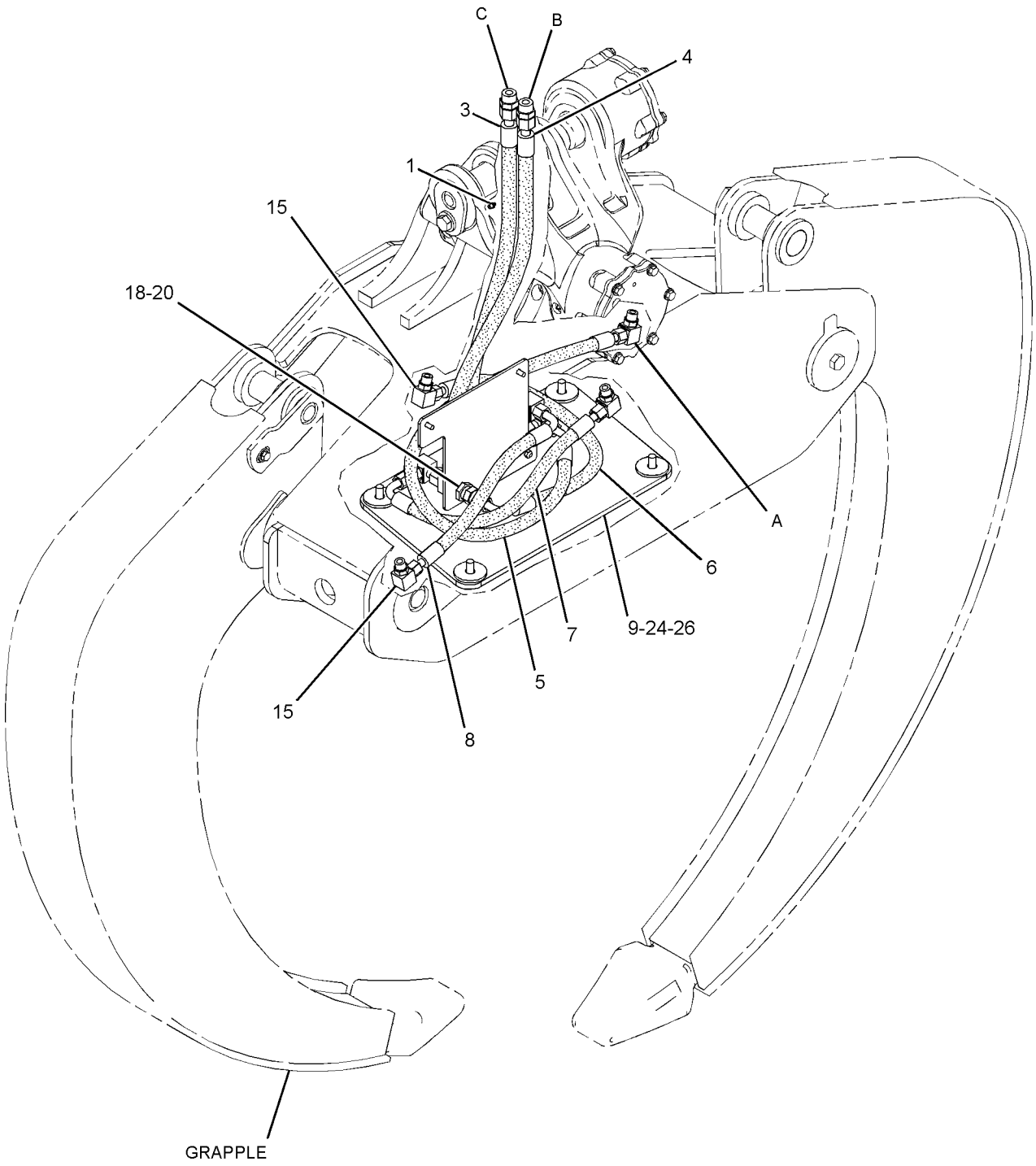


GRAPHIC #2 **<END>** g01370046

# HYDRAULIC SYSTEM

## *252-6534* LINES GP-HYDRAULIC

**S/N: 5451-UP**

**PART OF 245-9466 HYDRAULIC AR**

**SMCS-5057** **i02730935**

| NOTE | REF NO | GRAPHIC REF | PART NUMBER | QTY | PART NAME 1 2 3 4 5 6 (PRODUCT LEVEL) | SEE PAGE |
|---|---|---|---|---|---|---|
| | 1 | 1,2 | **6V-0852** | 2 | CAP-DUST | |
| | 2 | 2 | **8T-4984** | 2 | CLAMP-HOSE | |
| | 3 | 1 | **9U-4098** | 1 | ELBOW | |
| | 4 | 2 | **132-1204** | 1 | VALVE GP-CHECK (PILOT) | |
| | | 2 | **3J-1907** | 1 | SEAL-O-RING | |
| | | 2 | **6V-8397** | 1 | SEAL-O-RING | |
| | 5 | 2 | *148-8443* | 1 | TEE AS | |
| | | 2 | **3J-1907** | 1 | SEAL-O-RING | |
| | | 2 | **6V-8397** | 1 | SEAL-O-RING | |
| | | 2 | **7X-2459** | 1 | TEE-O-RING | |
| I | 6 | 1 | **149-7136** | 1 | HOSE AS | |
| | 7 | 1,2 | *164-5567* | 2 | FITTING AS (QUICK DISCONNECT, MALE) | |
| | | | | | (EACH INCLUDES) | |
| | | 1,2 | **3J-1907** | 1 | SEAL-O-RING | |
| | | 1,2 | **6V-3965** | 1 | FITTING-COUPLER | |
| | 8 | 2 | *164-5576* | 1 | ADAPTER AS | |
| | | 2 | **6V-8926** | 1 | ADAPTER | |
| | | 2 | **8T-7876** | 1 | SEAL-O-RING | |
| | 9 | 2 | *164-5590* | 1 | VALVE AS-FLUID SAMPLING (HYDRAULIC OIL) | |
| | | 2 | **3J-7354** | 1 | SEAL-O-RING | |
| | | 2 | **8C-3446** | 1 | VALVE-FLUID SAMPLING | |
| I | 10 | 1 | **164-7005** | 1 | HOSE AS | |
| | 11 | 2 | *172-5761* | 1 | TEE AS | |
| | | 2 | **3K-0360** | 1 | SEAL-O-RING | |
| | | 2 | **6V-8398** | 1 | SEAL-O-RING | |
| | | 2 | **126-8306** | 1 | TEE-O-RING | |
| I | 12 | 1 | **191-4904** | 1 | HOSE AS | |
| | 13 | 2 | **192-2684** | 1 | VALVE AS-CHECK (PILOT) | |
| Y | 14 | 2 | **214-6589** | 1 | FILTER GP-OIL (HYDRAULIC) | 415 |
| | 15 | 2 | **240-3454** | 1 | PLATE | |
| | 16 | 2 | *241-6215* | 1 | ELBOW AS (90-DEG) | |
| | | 2 | **3J-1907** | 1 | SEAL-O-RING | |
| | | 2 | **6V-8076** | 1 | ELBOW | |
| | 17 | 1 | **252-6576** | 1 | TUBE AS | |
| | 18 | 1 | **252-6577** | 1 | TUBE AS | |
| | 19 | 2 | **252-6578** | 1 | TUBE AS | |
| | 20 | 2 | **252-6579** | 1 | TUBE AS | |
| | 21 | 2 | **252-6580** | 1 | TUBE AS | |
| | 22 | 1 | **252-7125** | 1 | TUBE AS | |
| | 23 | 1 | **253-7537** | 1 | VALVE GP-CHECK (PILOT) | |
| | | 1 | **2S-4078** | 1 | SEAL-O-RING | |
| | | 1 | **6V-8400** | 1 | SEAL-O-RING | |
| | 24 | 2 | *260-9189* | 1 | ELBOW AS-SWIVEL | |
| | | 2 | **7M-8485** | 1 | SEAL-O-RING | |
| | | 2 | **124-8333** | 1 | ELBOW | |
| | 25 | 1 | *260-9190* | 1 | TEE AS | |
| | | 1 | **5K-9090** | 1 | SEAL-O-RING | |
| | | 1 | **252-6575** | 1 | TEE-RETURN | |
| | 26 | 2 | *266-8954* | 1 | FILTER GP-OIL (HYDRAULIC) | |
| | | 2 | **201-0875** | 1 | FILTER AS-OIL (ADVANCED EFFICIENCY) | |
| | 27 | 2 | *148-8305* | 1 | ADAPTER AS | |
| | | 2 | **3J-1907** | 1 | SEAL-O-RING | |
| | | 2 | **5P-9617** | 1 | ADAPTER | |
| | 28 | 1 | *148-8353* | 1 | ELBOW AS | |
| | | 1 | **3J-1907** | 1 | SEAL-O-RING | |
| | | 1 | **6V-8397** | 1 | SEAL-O-RING | |

*252-6534* **LINES GP-HYDRAULIC** ***(contd.)*** **i02730935**

| NOTE | REF NO | GRAPHIC REF | PART NUMBER | QTY | PART NAME 1 2 3 4 5 6 (PRODUCT LEVEL) | SEE PAGE |
|---|---|---|---|---|---|---|
| | | 1 | **6V-9001** | 1 | ELBOW | |
| | 29 | 2 | *148-8352* | 1 | ELBOW AS | |
| | | 2 | **5K-9090** | 1 | SEAL-O-RING | |
| | | 2 | **6V-9854** | 1 | ELBOW (SWIVEL) | |
| | 30 | 1 | *148-8354* | 1 | ELBOW AS | |
| | | 1 | **3K-0360** | 1 | SEAL-O-RING | |
| | | 1 | **6V-8398** | 1 | SEAL-O-RING | |
| | | 1 | **6V-9002** | 1 | ELBOW (45-DEG) | |
| | 31 | 1 | *148-8356* | 3 | ELBOW AS | |
| | | | | | (EACH INCLUDES) | |
| | | 1 | **2S-4078** | 1 | SEAL-O-RING | |
| | | 1 | **6V-8400** | 1 | SEAL-O-RING | |
| | | 1 | **6V-9009** | 1 | ELBOW | |
| | 32 | 1 | *148-8364* | 3 | ELBOW AS | |
| | | | | | (EACH INCLUDES) | |
| | | 1 | **3K-0360** | 1 | SEAL-O-RING | |
| | | 1 | **6V-8398** | 1 | SEAL-O-RING | |
| | | 1 | **6V-8625** | 1 | ELBOW | |
| GI | 33 | 2 | **122-6909** | | HOSE-HYDRAULIC (18.11-IN) | |
| | 34 | 2 | *148-8370* | 1 | ELBOW AS | |
| | | 2 | **6V-8398** | 1 | SEAL-O-RING | |
| | | 2 | **6V-9851** | 1 | ELBOW | |
| | 35 | 1 | *148-8381* | 1 | ELBOW AS | |
| | | 1 | **3D-2824** | 1 | SEAL-O-RING | |
| | | 1 | **6V-8398** | 1 | SEAL-O-RING | |
| | | 1 | **8T-5429** | 1 | ELBOW (90-DEG) | |
| | 36 | 1 | *148-8406* | 1 | PLUG AS | |
| | | 1 | **7M-8485** | 1 | SEAL-O-RING | |
| | | 1 | **9S-9334** | 1 | PLUG | |
| | 37 | 2 | *148-8452* | 1 | TEE AS | |
| | | 2 | **6V-8397** | 1 | SEAL-O-RING | |
| | | 2 | **6V-8398** | 2 | SEAL-O-RING | |
| | | 2 | **8T-2363** | 1 | TEE-UNION | |
| | 38 | 2 | *155-7321* | 1 | ADAPTER AS | |
| | | 2 | **3D-2824** | 1 | SEAL-O-RING | |
| | | 2 | **6V-1722** | 1 | ADAPTER-O-RING | |
| | 39 | 1 | *164-5594* | 1 | CONNECTOR AS | |
| | | 1 | **5K-9090** | 1 | SEAL-O-RING | |
| | | 1 | **7M-8485** | 1 | SEAL-O-RING | |
| | | 1 | **8C-5723** | 1 | CONNECTOR | |
| | 40 | 1 | **1P-4577** | 2 | FLANGE-HALF | |
| | 41 | 1 | **4J-0520** | 1 | SEAL-O-RING | |
| | 42 | 1 | **4J-0527** | 1 | SEAL-O-RING | |
| | 43 | 1 | **5S-7382** | 4 | BOLT (3/8-16X1.375-IN) | |
| | 44 | 2 | **6V-5839** | 8 | WASHER (11X21X2.5-MM THK) | |
| | 45 | 1 | **7X-0325** | 2 | BOLT (1/2-13X2.5-IN) | |
| | 46 | 2 | **8C-3451** | 1 | CAP-DUST | |
| | 47 | 1 | **8C-4436** | 2 | BOLT (1/2-13X1.375-IN) | |
| M | 48 | 2 | **8T-4137** | 8 | BOLT (M10X1.5X20-MM) | |
| | 49 | 1 | **8T-4223** | 4 | WASHER-HARD (13.5X25.5X3-MM THK) | |
| | 50 | 1 | **8T-4896** | 4 | WASHER-HARD (10.2X18.5X2.5-MM THK) | |

G-ORDER BY THE INCH
I-REFER TO HYDRAULIC INFORMATION SYSTEM
M-METRIC PART
Y-SEPARATE ILLUSTRATION

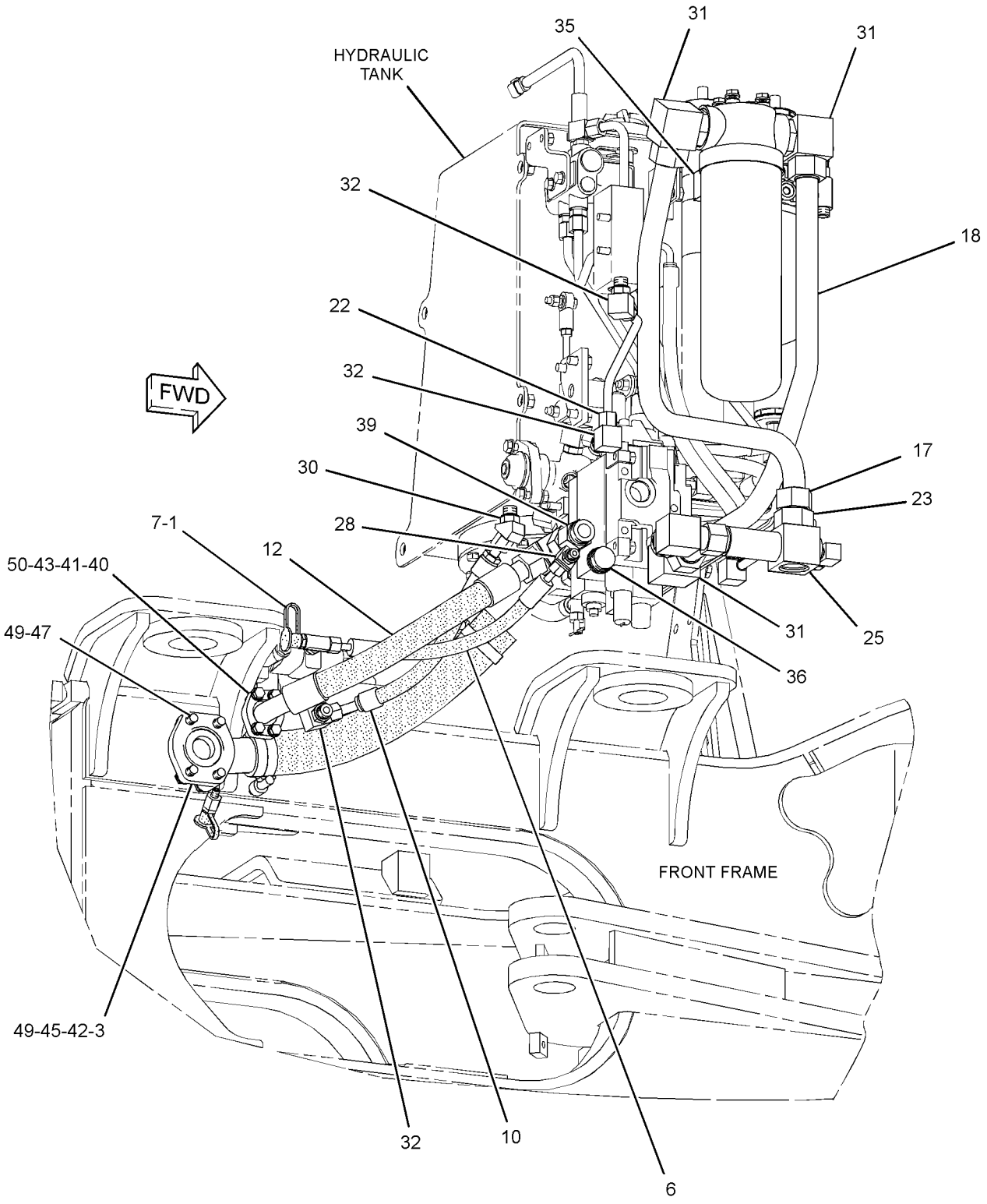


GRAPHIC #1 g01348415

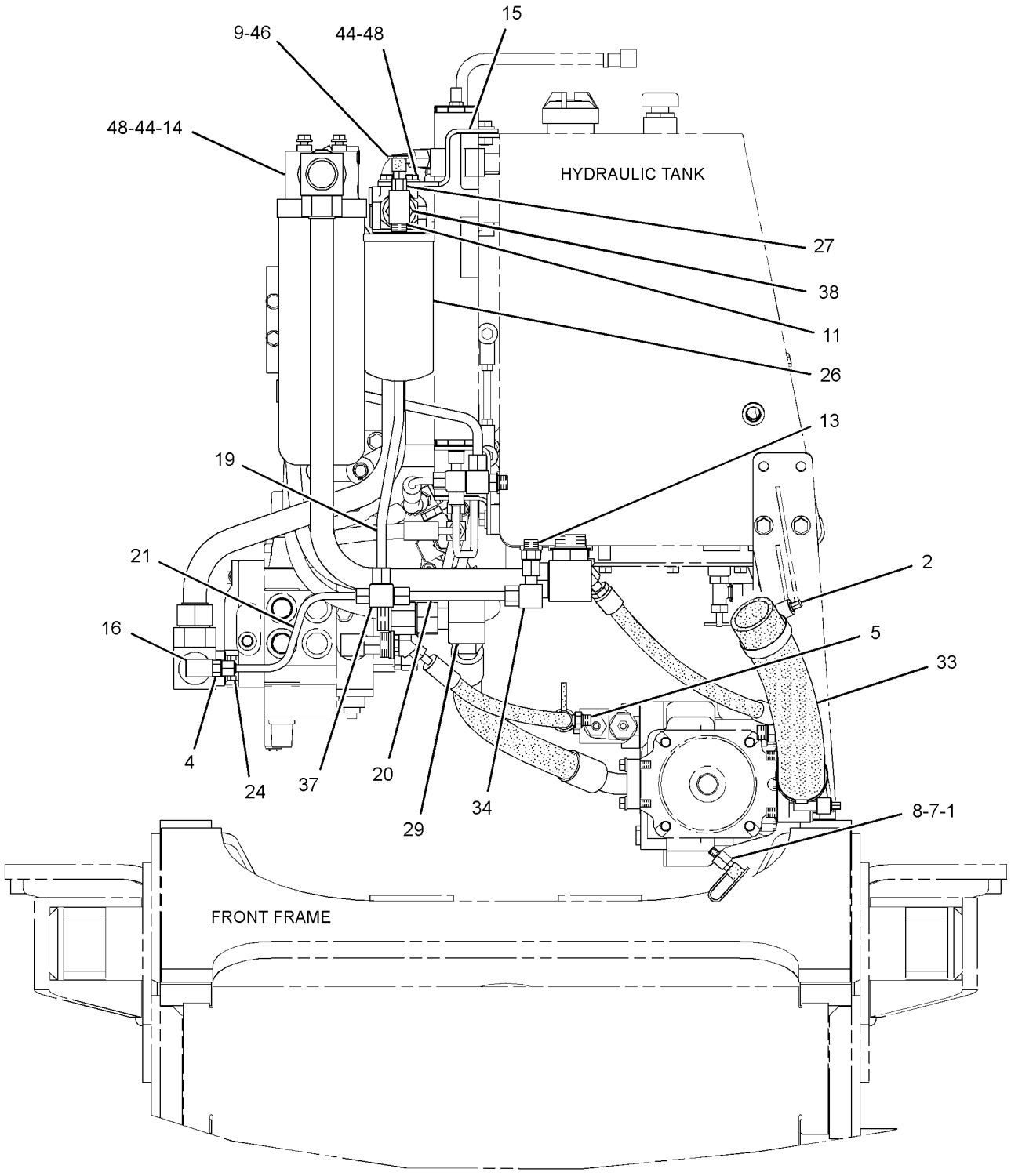


FRONT VIEW

GRAPHIC #2 **<END>** g01348416

# HYDRAULIC SYSTEM

## *252-6537* LINES GP-PILOT

**S/N: 5451-UP**
**PART OF 245-9466 HYDRAULIC AR**
**TYPE 1**

**SMCS-5057, 5059** **i02525770**

| NOTE | REF NO | GRAPHIC REF | PART NUMBER | QTY | PART NAME 1 2 3 4 5 6 (PRODUCT LEVEL) | SEE PAGE |
|---|---|---|---|---|---|---|
| | 1 | 1 | **6V-0852** | 2 | CAP-DUST | |
| | 2 | 1 | **8T-4223** | 1 | WASHER-HARD (13.5X25.5X3-MM THK) | |
| I | 3 | 1 | **130-9473** | 1 | HOSE AS | |
| | 4 | 1 | *164-5567* | 2 | FITTING AS (QUICK DISCONNECT, MALE) | |
| | | | | | (EACH INCLUDES) | |
| | | 1 | **3J-1907** | 1 | SEAL-O-RING | |
| | | 1 | **6V-3965** | 1 | FITTING-COUPLER | |
| Y | 5 | 1 | *170-8531* | 1 | ACCUMULATOR GP-PILOT OIL (CHARGED) (DEAD ENGINE LOWER, ARCH, BOOM) | 403 |
| I | 6 | 1 | **214-0736** | 1 | HOSE AS | |
| Y | 7 | 1 | **251-4315** | 1 | PUMP GP-GEAR (PILOT) | 439 |
| I | 8 | 1 | **190-4372** | 1 | HOSE AS | |
| | 9 | 1 | **252-7109** | 1 | TUBE AS | |
| | 10 | 1 | **252-7110** | 1 | TUBE AS | |
| Y | 11 | 1 | **253-4603** | 1 | MANIFOLD GP-CONTROL (PILOT, DIFFERENTIAL LOCK) | 437 |
| | 12 | 1 | **9B-7237** | 2 | BOLT (3/8-16X1.25-IN) | |
| | 13 | 1 | *148-8326* | 2 | CONNECTOR AS | |
| | | | | | (EACH INCLUDES) | |
| | | 1 | **3J-7354** | 1 | SEAL-O-RING | |
| | | 1 | **6V-8397** | 1 | SEAL-O-RING | |
| | | 1 | **6V-9872** | 1 | CONNECTOR | |
| | 14 | 1 | *148-8335* | 1 | CONNECTOR AS | |
| | | 1 | **5K-9090** | 1 | SEAL-O-RING | |
| | | 1 | **6V-8635** | 1 | CONNECTOR | |
| | | 1 | **7M-8485** | 1 | SEAL-O-RING | |
| | 15 | 1 | *148-8336* | 1 | CONNECTOR AS | |
| | | 1 | **3J-1907** | 1 | SEAL-O-RING | |
| | | 1 | **6V-8397** | 1 | SEAL-O-RING | |
| | | 1 | **6V-8636** | 1 | CONNECTOR | |
| | 16 | 1 | **100-5151** | 1 | COUPLING-SHAFT | |
| | 17 | 1 | *148-8362* | 1 | ELBOW AS | |
| | | 1 | **3D-2824** | 1 | SEAL-O-RING | |
| | | 1 | **5K-9090** | 1 | SEAL-O-RING | |
| | | 1 | **8T-6684** | 1 | ELBOW | |
| | 18 | 1 | *148-8365* | 1 | ELBOW AS | |
| | | 1 | **3J-1907** | 1 | SEAL-O-RING | |
| | | 1 | **6V-8398** | 1 | SEAL-O-RING | |
| | | 1 | **8T-6876** | 1 | ELBOW | |
| | 19 | 1 | *148-8367* | 2 | ELBOW AS | |
| | | | | | (EACH INCLUDES) | |
| | | 1 | **6V-8397** | 1 | SEAL-O-RING | |
| | | 1 | **6V-9850** | 1 | ELBOW | |
| | 20 | 1 | *148-8371* | 1 | ELBOW AS | |
| | | 1 | **6V-8397** | 1 | SEAL-O-RING | |
| | | 1 | **8C-8988** | 1 | ELBOW | |
| | 21 | 1 | *148-8372* | 1 | ELBOW AS | |
| | | 1 | **2M-9780** | 1 | SEAL-O-RING | |
| | | 1 | **6V-8398** | 1 | SEAL-O-RING | |
| | | 1 | **6V-8721** | 1 | ELBOW | |
| | 22 | 1 | *148-8374* | 1 | ELBOW AS | |
| | | 1 | **3K-0360** | 1 | SEAL-O-RING | |
| | | 1 | **6V-8397** | 1 | SEAL-O-RING | |
| | | 1 | **6V-8723** | 1 | ELBOW (FACE SEAL) | |
| | 23 | 1 | *148-8434* | 1 | TEE AS | |
| | | 1 | **6V-8397** | 2 | SEAL-O-RING | |

*252-6537* **LINES GP-PILOT** ***(contd.)*** **i02525770**

| NOTE | REF NO | GRAPHIC REF | PART NUMBER | QTY | PART NAME 1 2 3 4 5 6 (PRODUCT LEVEL) | SEE PAGE |
|---|---|---|---|---|---|---|
| | | 1 | **6V-9843** | 1 | TEE-SWIVEL | |
| | 24 | 1 | *150-4043* | 1 | CONNECTOR AS | |
| | | 1 | **3J-1907** | 1 | SEAL-O-RING | |
| | | 1 | **6V-8398** | 1 | SEAL-O-RING | |
| | | 1 | **6V-9873** | 1 | CONNECTOR | |
| | 25 | 1 | *153-6241* | 1 | ELBOW AS | |
| | | 1 | **6V-8398** | 1 | SEAL-O-RING | |
| | | 1 | **8C-8989** | 1 | ELBOW | |
| | 26 | 1 | *153-6246* | 1 | TEE AS | |
| | | 1 | **6V-8397** | 3 | SEAL-O-RING | |
| | | 1 | **7X-0820** | 1 | TEE-UNION | |
| | 27 | 1 | **1S-0994** | 1 | CLIP | |
| | 28 | 1 | **3D-2824** | 1 | SEAL-O-RING | |
| | 29 | 1 | **8C-3089** | 1 | SEAL-O-RING | |
| M | 30 | 1 | **8T-4172** | 2 | BOLT (M10X1.5X80-MM) | |
| | 31 | 1 | **8T-4896** | 2 | WASHER-HARD (10.2X18.5X2.5-MM THK) | |
| | 32 | 1 | **6V-1867** | 1 | CLIP (SLOT) | |
| | 33 | 1 | **6V-1868** | 1 | CLIP (TAB) | |
| | 34 | 1 | **6V-1869** | 1 | GROMMET | |
| | 35 | 1 | **6V-9168** | 1 | NUT (11/16-16-THD) | |
| | 36 | 1 | **8T-4121** | 2 | WASHER-HARD (11X21X2.5-MM THK) | |
| M | 37 | 1 | **8T-4139** | 1 | BOLT (M12X1.75X30-MM) | |

I-REFER TO HYDRAULIC INFORMATION SYSTEM
M-METRIC PART
Y-SEPARATE ILLUSTRATION

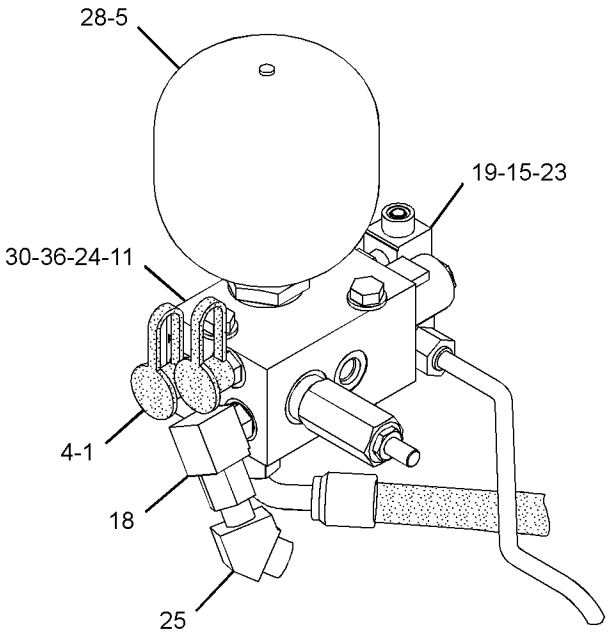


VIEW OF AREA A

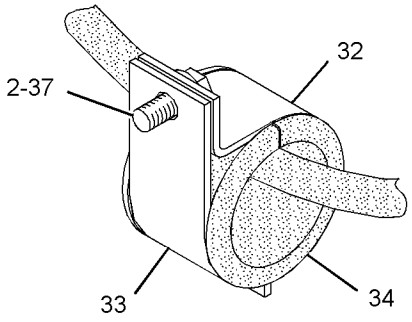


VIEW OF ARE B

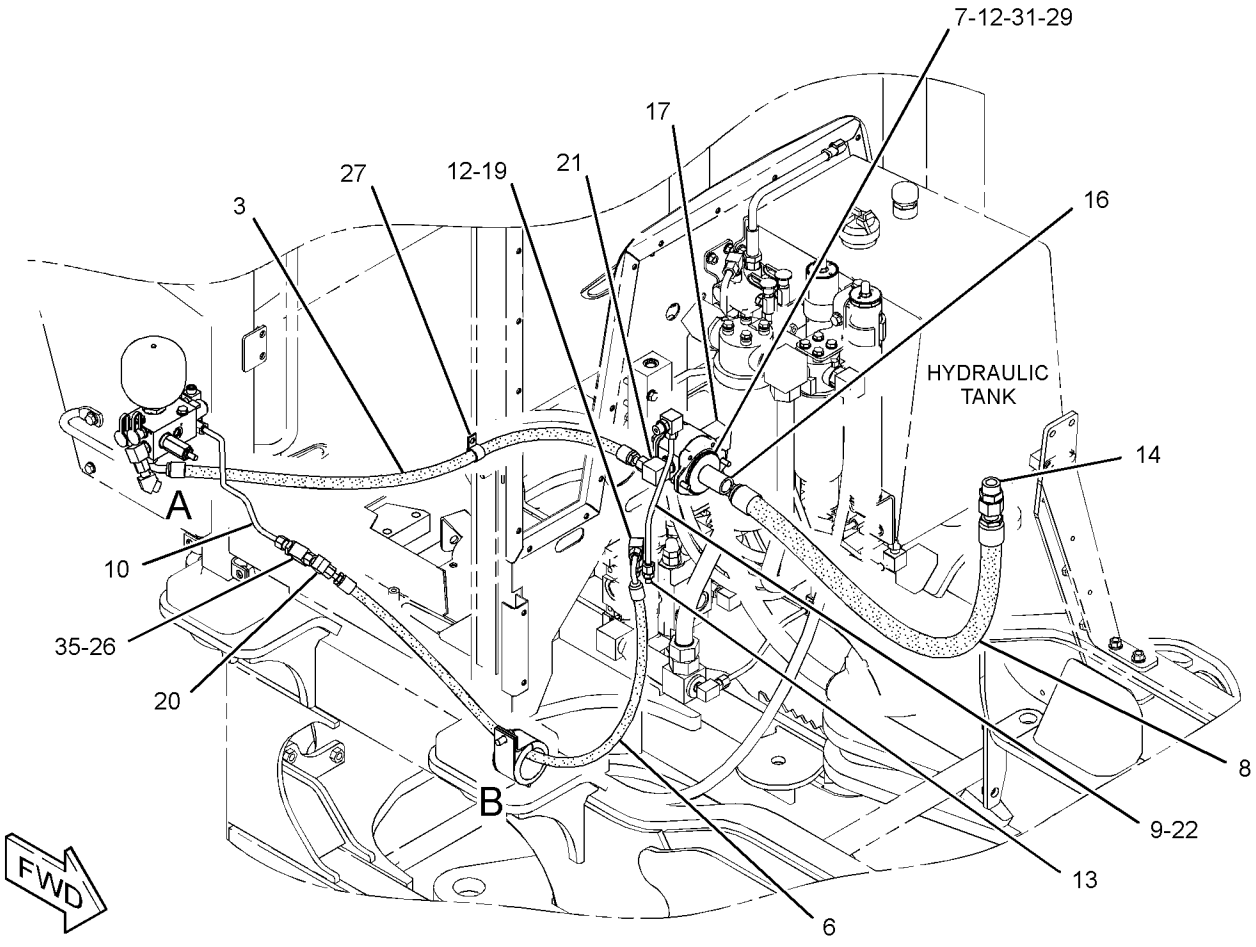


GRAPHIC #1 **<END>** g01236469

# HYDRAULIC SYSTEM

## *252-6537* LINES GP-PILOT

**S/N: 5451-UP**
**PART OF 245-9466 HYDRAULIC AR**
**TYPE 2**

**SMCS-5057, 5059** **i02575791**

| NOTE | REF NO | GRAPHIC REF | PART NUMBER | QTY | PART NAME 1 2 3 4 5 6 (PRODUCT LEVEL) | SEE PAGE |
|---|---|---|---|---|---|---|
| | 1 | 1 | **6V-0852** | 2 | CAP-DUST | |
| | 2 | 1 | **8T-4223** | 1 | WASHER-HARD (13.5X25.5X3-MM THK) | |
| I | 3 | 1 | **130-9473** | 1 | HOSE AS | |
| | 4 | 1 | *164-5567* | 2 | FITTING AS (QUICK DISCONNECT, MALE) | |
| | | | | | (EACH INCLUDES) | |
| | | 1 | **3J-1907** | 1 | SEAL-O-RING | |
| | | 1 | **6V-3965** | 1 | FITTING-COUPLER | |
| Y | 5 | 1 | *170-8531* | 1 | ACCUMULATOR GP-PILOT OIL (CHARGED) (DEAD ENGINE LOWER, ARCH, BOOM) | 403 |
| I | 6 | 1 | **214-0736** | 1 | HOSE AS | |
| Y | 7 | 1 | **251-4315** | 1 | PUMP GP-GEAR (PILOT) | 439 |
| I | 8 | 1 | **190-4372** | 1 | HOSE AS | |
| | 9 | 1 | **252-7109** | 1 | TUBE AS | |
| | 10 | 1 | **252-7110** | 1 | TUBE AS | |
| Y | 11 | 1 | **253-4603** | 1 | MANIFOLD GP-CONTROL (PILOT, DIFFERENTIAL LOCK) | 437 |
| | 12 | 1 | **9B-7237** | 2 | BOLT (3/8-16X1.25-IN) | |
| | 13 | 1 | *148-8326* | 2 | CONNECTOR AS | |
| | | | | | (EACH INCLUDES) | |
| | | 1 | **3J-7354** | 1 | SEAL-O-RING | |
| | | 1 | **6V-8397** | 1 | SEAL-O-RING | |
| | | 1 | **6V-9872** | 1 | CONNECTOR | |
| | 14 | 1 | *148-8335* | 1 | CONNECTOR AS | |
| | | 1 | **5K-9090** | 1 | SEAL-O-RING | |
| | | 1 | **6V-8635** | 1 | CONNECTOR | |
| | | 1 | **7M-8485** | 1 | SEAL-O-RING | |
| | 15 | 1 | *148-8336* | 1 | CONNECTOR AS | |
| | | 1 | **3J-1907** | 1 | SEAL-O-RING | |
| | | 1 | **6V-8397** | 1 | SEAL-O-RING | |
| | | 1 | **6V-8636** | 1 | CONNECTOR | |
| | 16 | 1 | **100-5151** | 1 | COUPLING-SHAFT | |
| | 17 | 1 | *148-8362* | 1 | ELBOW AS | |
| | | 1 | **3D-2824** | 1 | SEAL-O-RING | |
| | | 1 | **5K-9090** | 1 | SEAL-O-RING | |
| | | 1 | **8T-6684** | 1 | ELBOW | |
| | 18 | 1 | *148-8365* | 1 | ELBOW AS | |
| | | 1 | **3J-1907** | 1 | SEAL-O-RING | |
| | | 1 | **6V-8398** | 1 | SEAL-O-RING | |
| | | 1 | **8T-6876** | 1 | ELBOW | |
| C | 19 | 1 | *148-8367* | 3 | ELBOW AS | |
| | | | | | (EACH INCLUDES) | |
| | | 1 | **6V-8397** | 1 | SEAL-O-RING | |
| | | 1 | **6V-9850** | 1 | ELBOW | |
| | 21 | 1 | *148-8372* | 1 | ELBOW AS | |
| | | 1 | **2M-9780** | 1 | SEAL-O-RING | |
| | | 1 | **6V-8398** | 1 | SEAL-O-RING | |
| | | 1 | **6V-8721** | 1 | ELBOW | |
| | 22 | 1 | *148-8374* | 1 | ELBOW AS | |
| | | 1 | **3K-0360** | 1 | SEAL-O-RING | |
| | | 1 | **6V-8397** | 1 | SEAL-O-RING | |
| | | 1 | **6V-8723** | 1 | ELBOW (FACE SEAL) | |
| | 23 | 1 | *148-8434* | 1 | TEE AS | |
| | | 1 | **6V-8397** | 2 | SEAL-O-RING | |
| | | 1 | **6V-9843** | 1 | TEE-SWIVEL | |
| | 24 | 1 | *150-4043* | 1 | CONNECTOR AS | |
| | | 1 | **3J-1907** | 1 | SEAL-O-RING | |

*252-6537* **LINES GP-PILOT** ***(contd.)*** **i02575791**

| NOTE | REF NO | GRAPHIC REF | PART NUMBER | QTY | PART NAME 1 2 3 4 5 6 (PRODUCT LEVEL) | SEE PAGE |
|---|---|---|---|---|---|---|
| | | 1 | **6V-8398** | 1 | SEAL-O-RING | |
| | | 1 | **6V-9873** | 1 | CONNECTOR | |
| | 25 | 1 | *153-6241* | 1 | ELBOW AS | |
| | | 1 | **6V-8398** | 1 | SEAL-O-RING | |
| | | 1 | **8C-8989** | 1 | ELBOW | |
| | 26 | 1 | *153-6246* | 1 | TEE AS | |
| | | 1 | **6V-8397** | 3 | SEAL-O-RING | |
| | | 1 | **7X-0820** | 1 | TEE-UNION | |
| | 27 | 1 | **1S-0994** | 1 | CLIP | |
| | 28 | 1 | **3D-2824** | 1 | SEAL-O-RING | |
| | 29 | 1 | **8C-3089** | 1 | SEAL-O-RING | |
| M | 30 | 1 | **8T-4172** | 2 | BOLT (M10X1.5X80-MM) | |
| | 31 | 1 | **8T-4896** | 2 | WASHER-HARD (10.2X18.5X2.5-MM THK) | |
| | 32 | 1 | **6V-1867** | 1 | CLIP (SLOT) | |
| | 33 | 1 | **6V-1868** | 1 | CLIP (TAB) | |
| | 34 | 1 | **6V-1869** | 1 | GROMMET | |
| | 35 | 1 | **6V-9168** | 1 | NUT (11/16-16-THD) | |
| C | 36 | 1 | **8T-4121** | 3 | WASHER-HARD (11X21X2.5-MM THK) | |
| M | 37 | 1 | **8T-4139** | 1 | BOLT (M12X1.75X30-MM) | |
| C | 38 | 1 | **8M-2773** | 1 | CLIP | |
| CM | 39 | 1 | **8T-4137** | 1 | BOLT (M10X1.5X20-MM) | |

C-CHANGE FROM PREVIOUS TYPE
I-REFER TO HYDRAULIC INFORMATION SYSTEM
M-METRIC PART
Y-SEPARATE ILLUSTRATION

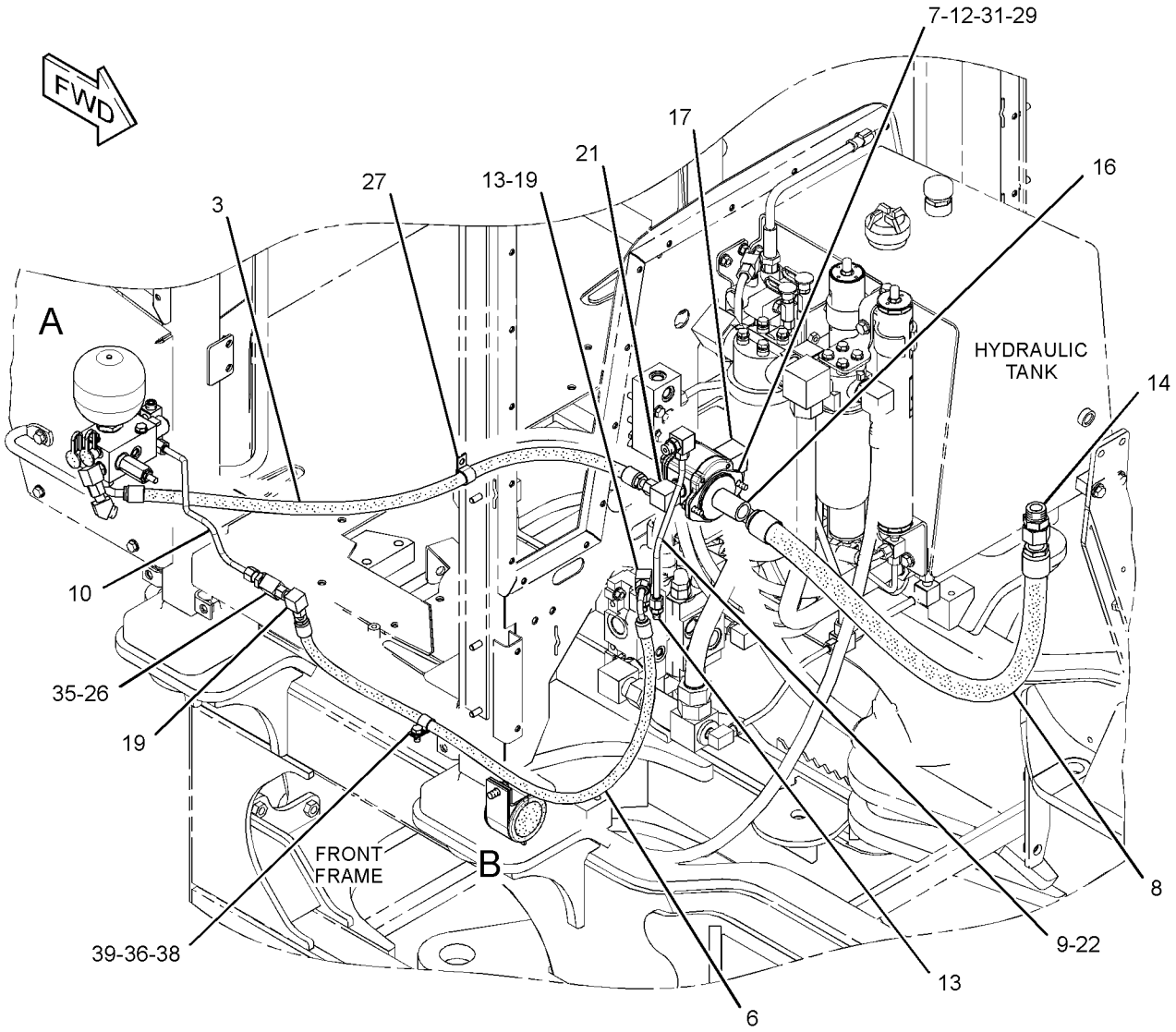


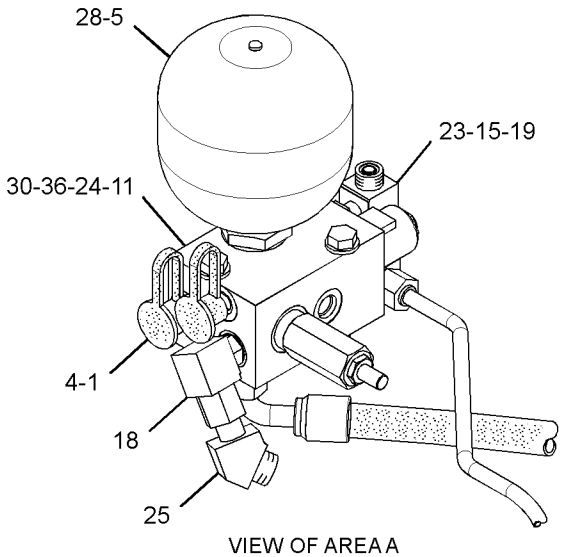


VIEW OF AREA A

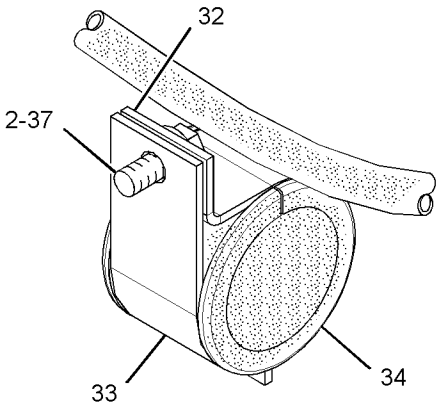


VIEW OF AREA B

GRAPHIC #1 **<END>** g01322522

# *276-2045* LINES GP-ROTATOR—DUAL FUNCTION GRAPPLE

**S/N: 5451-UP**

**PART OF 276-2042 FRAME GP-GRAPPLE**

**AN ATTACHMENT**

**SMCS-5057, 6326** **i02468841**

| NOTE | REF NO | GRAPHIC REF | PART NUMBER | QTY | PART NAME 1 2 3 4 5 6 (PRODUCT LEVEL) | SEE PAGE |
|---|---|---|---|---|---|---|
| | 1 | 1 | *148-8424* | 2 | TEE AS | |
| | | | | | (EACH INCLUDES) | |
| | | 1 | **6V-8397** | 1 | SEAL-O-RING | |
| | | 1 | **8T-8902** | 1 | TEE | |
| | 2 | 1 | *148-8430* | 1 | TEE AS | |
| | | 1 | **6V-9746** | 1 | SEAL-O-RING | |
| | | 1 | **7X-0873** | 1 | TEE | |
| I | 3 | 1 | **276-2048** | 2 | HOSE AS | |
| I | 4 | 1 | **276-2049** | 2 | HOSE AS | |
| | 5 | 1 | *148-8327* | 2 | CONNECTOR AS | |
| | | | | | (EACH INCLUDES) | |
| | | 1 | **3D-2824** | 1 | SEAL-O-RING | |
| | | 1 | **6V-8637** | 1 | CONNECTOR | |
| | | 1 | **6V-9746** | 1 | SEAL-O-RING | |
| | 6 | 1 | *150-4044* | 2 | CONNECTOR AS | |
| | | | | | (EACH INCLUDES) | |
| | | 1 | **3J-1907** | 1 | SEAL-O-RING | |
| | | 1 | **6V-8397** | 1 | SEAL-O-RING | |
| | | 1 | **8T-1779** | 1 | CONNECTOR | |
| | 7 | 1 | *164-5567* | 3 | FITTING AS (QUICK DISCONNECT, MALE) | |
| | | | | | (EACH INCLUDES) | |
| | | 1 | **3J-1907** | 1 | SEAL-O-RING | |
| | | 1 | **6V-3965** | 1 | FITTING-COUPLER | |
| | 8 | 1 | **6V-0852** | 3 | CAP-DUST | |

I-REFER TO HYDRAULIC INFORMATION SYSTEM

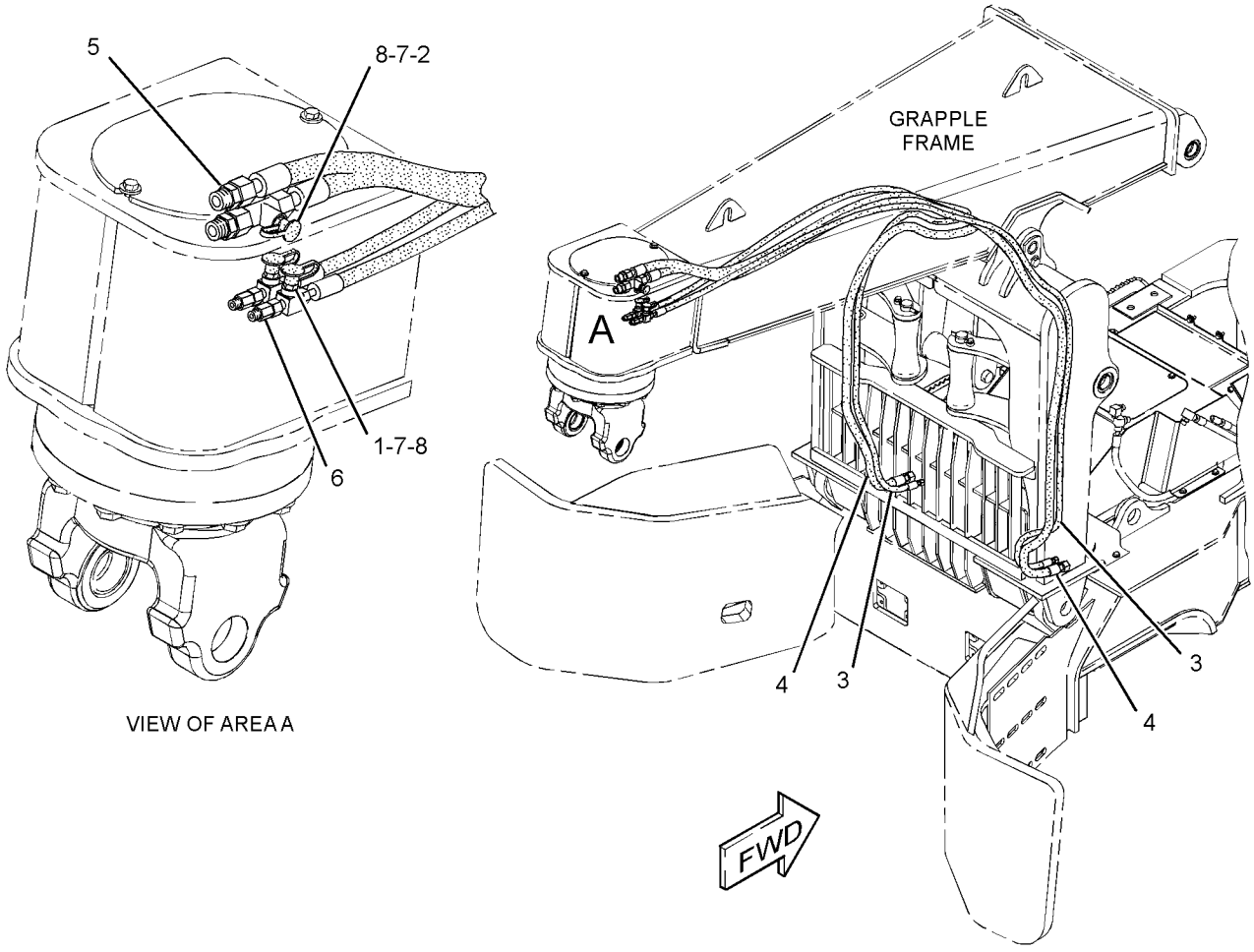


GRAPHIC #1 **<END>** g01236247

# 253-4603 MANIFOLD GP-CONTROL–PILOT, DIFFERENTIAL LOCK

**S/N: 5451-UP**

**PART OF 252-6537 LINES GP-PILOT**

**SMCS-5072, 5264, 5479** **i02485059**

| NOTE | REF NO | GRAPHIC REF | PART NUMBER | QTY | PART NAME 1 2 3 4 5 6 (PRODUCT LEVEL) | SEE PAGE |
|---|---|---|---|---|---|---|
| Y | 1 | 1 | **158-9956** | 1 | VALVE GP-CHECK (PILOT, DIFFERENTIAL LOCK OIL) | 469 |
| | 2 | 1 | **241-5895** | 1 | VALVE GP-SOLENOID (DIFFERENTIAL LOCK) | |
| | | 1 | **250-6148** | 1 | COIL AS (24-VOLT) | |
| Y | 3 | 1 | **277-0701** | 1 | VALVE GP-RELIEF (PILOT, DIFFERENTIAL LOCK) | 489 |
| | 4 | 1 | **6E-5066** | 1 | SCREEN | |
| | 5 | 1 | **9S-8004** | 1 | PLUG-O-RING | |
| | 6 | 1 | **4J-7533** | 1 | SEAL-O-RING | |

Y-SEPARATE ILLUSTRATION

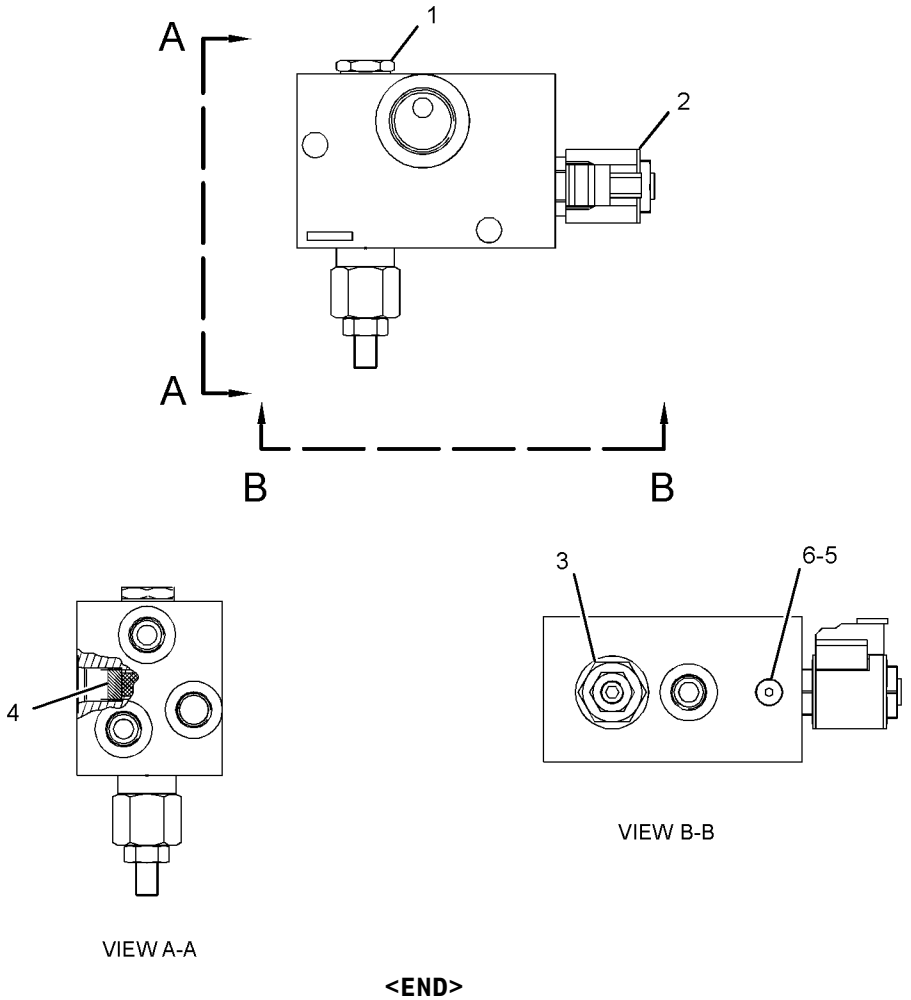


GRAPHIC #1 **<END>** g01236488

# HYDRAULIC SYSTEM

## *143-1450* PUMP & MTG GP-HYDRAULIC

**S/N: 5451-UP**

**PART OF 245-9466 HYDRAULIC AR**

**SMCS-5070, 5084** **i02322107**

| NOTE | REF NO | GRAPHIC REF | PART NUMBER | QTY | PART NAME 1 2 3 4 5 6 (PRODUCT LEVEL) | SEE PAGE |
|---|---|---|---|---|---|---|
| YR | 1 | 1 | **161-5715** | 1 | PUMP GP-PISTON (IMPLEMENT, STEERING, BRAKE) | 442 |
| | 2 | 1 | **5F-3106** | 1 | SEAL-O-RING | |
| | 3 | 1 | **100-8123** | 1 | COUPLING | |
| M | 4 | 1 | **8T-4183** | 4 | BOLT (M12X1.75X40-MM) | |
| | 5 | 1 | **5P-1076** | 4 | WASHER-HARD (13.5X30X4-MM THK) | |

M-METRIC PART
R-REMFG PART MAY BE AVAILABLE
Y-SEPARATE ILLUSTRATION

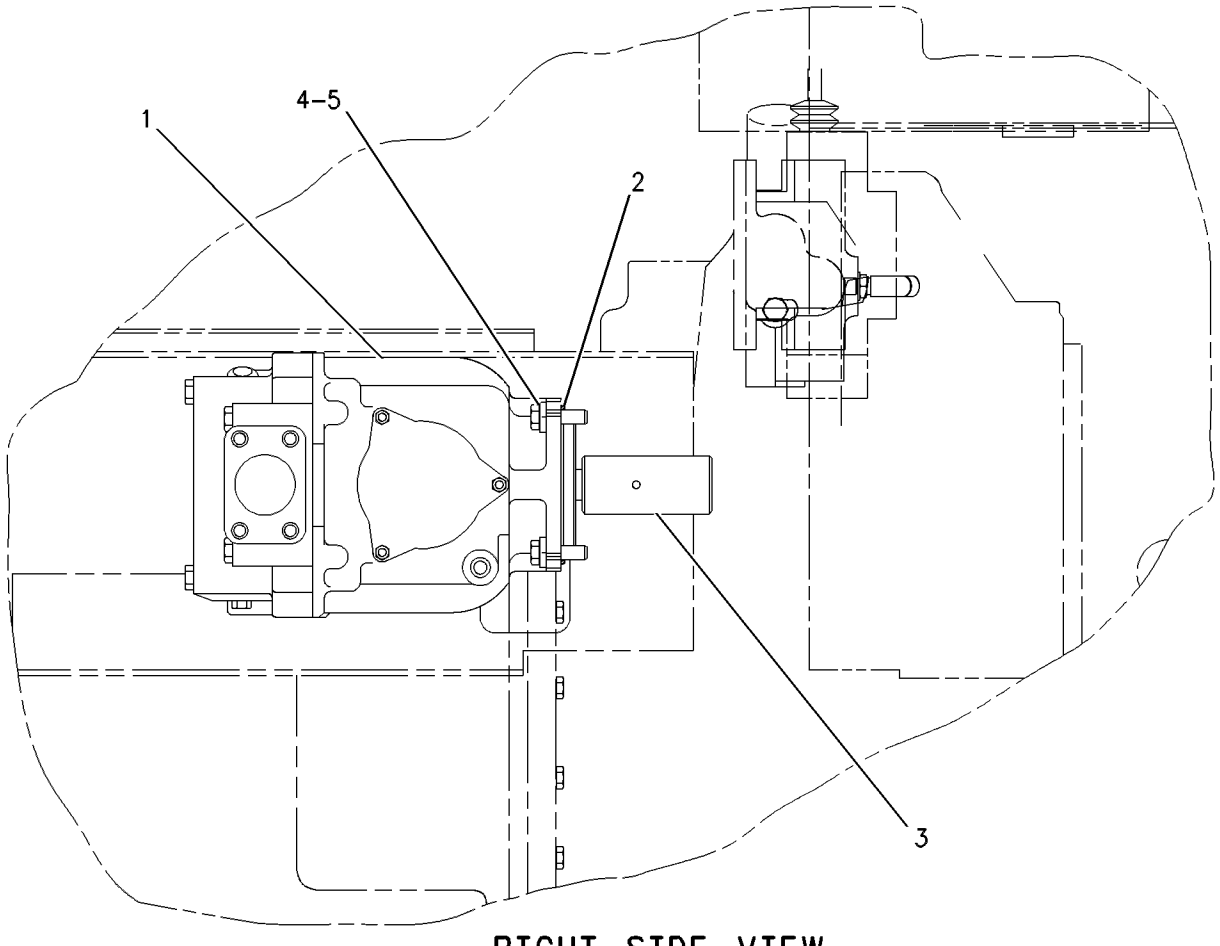


RIGHT SIDE VIEW

GRAPHIC #1 **<END>** g00481287

# 251-4315 PUMP GP-GEAR–PILOT

**S/N: 5451-UP**

**PART OF 252-6537 LINES GP-PILOT**

**SMCS-5073** **i02176893**

| NOTE | REF NO | GRAPHIC REF | PART NUMBER | QTY | PART NAME 1 2 3 4 5 6 (PRODUCT LEVEL) | SEE PAGE |
|---|---|---|---|---|---|---|
| | 1 | 1 | **177-4255** | 1 | SEAL-SHAFT | |
| | 2 | 1 | **145-6899** | 1 | FLANGE | |
| | 3 | 1 | **099-3095** | 4 | DOWEL | |
| | 4 | 1 | **199-4322** | 1 | COVER | |
| M | 5 | 1 | **160-8492** | 4 | BOLT (M10X1.5X85-MM) | |
| | 6 | 1 | **256-6151** | 1 | KIT-SEAL | |
| | | | | | (INCLUDES BACKUP RINGS, O-RINGS, AND RETAINING RING) | |

M-METRIC PART

**251-4315 PUMP GP-GEAR** *(contd.)* **i02176893**

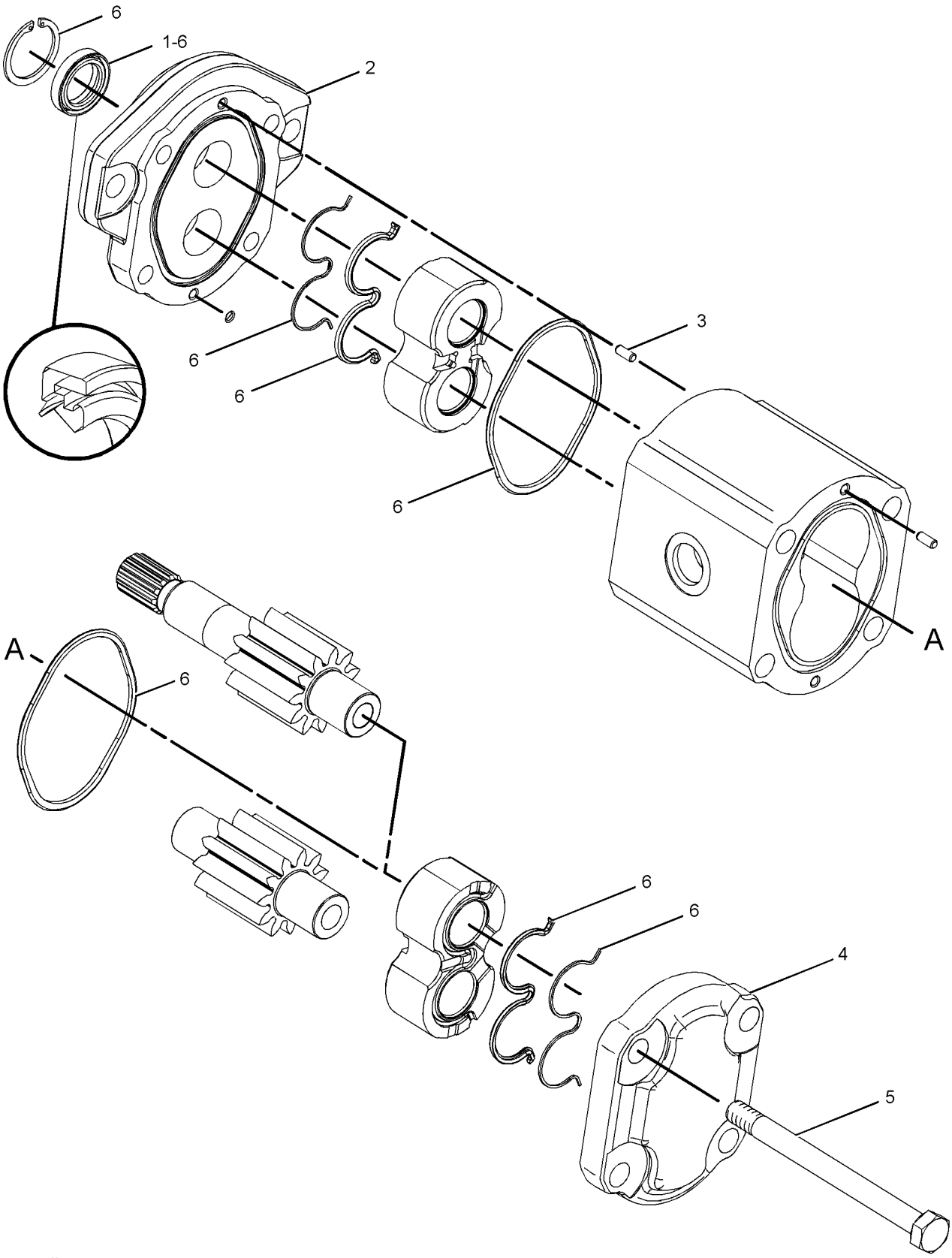


GRAPHIC #1 **<END>** g01102635

# 252-0796 PUMP GP-GEAR–PILOT, WINCH

**S/N: 5451-UP**
**PART OF 271-9086 LINES GP-WINCH**
**AN ATTACHMENT**

**SMCS-5073** **i02308926**

| NOTE | REF NO | GRAPHIC REF | PART NUMBER | QTY | PART NAME 1 2 3 4 5 6 (PRODUCT LEVEL) | SEE PAGE |
|---|---|---|---|---|---|---|
| J | 1 | 1 | **177-4255** | 1 | SEAL-SHAFT | |
| | 2 | 1 | **145-6899** | 1 | FLANGE | |
| | 3 | 1 | **154-3028** | 1 | COUPLING | |
| J | 4 | 1 | **154-3031** | 2 | SEAL | |
| | 5 | 1 | **154-3029** | 1 | PLATE | |
| | 6 | 1 | **219-8899** | 1 | PLUG-SCREEN | |
| | 7 | 1 | **199-4322** | 1 | COVER | |
| | 8 | 1 | **258-5664** | 4 | BOLT | |
| | 9 | 1 | **099-3095** | 8 | DOWEL | |
| | | | | | AVAILABLE REPAIR KIT(S): | |
| J | | | **257-3447** | 1 | KIT-SEAL | |

J-KIT MARKED J INCLUDES PART(S) MARKED J

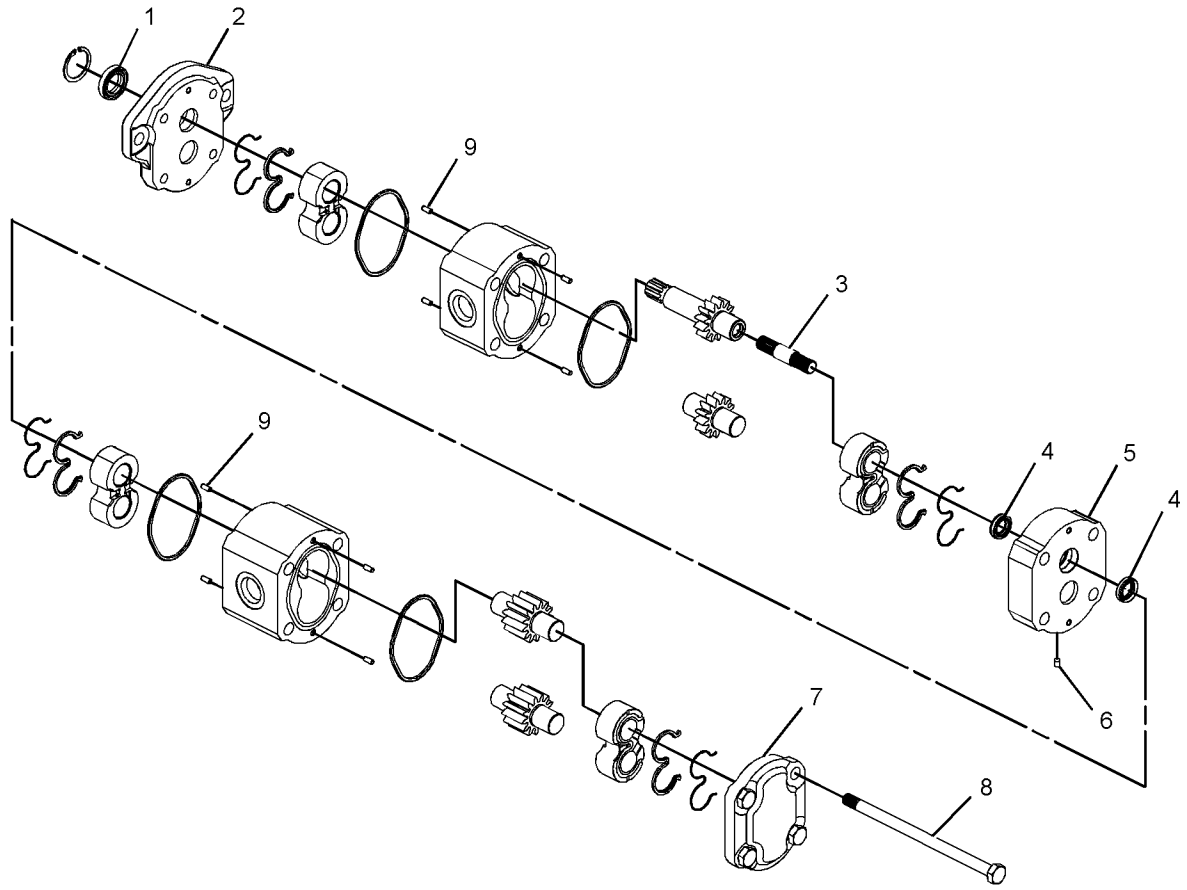


GRAPHIC #1 **<END>** g01161876

# HYDRAULIC SYSTEM

## 161-5715 PUMP GP-PISTON–IMPLEMENT, STEERING, BRAKE*R

**S/N: 5451-UP**

**PART OF 143-1450 PUMP & MTG GP-HYDRAULIC**

**SMCS-5070** **i00942754**

| NOTE | REF NO | GRAPHIC REF | PART NUMBER | QTY | PART NAME 1 2 3 4 5 6 (PRODUCT LEVEL) | SEE PAGE |
|---|---|---|---|---|---|---|
| | 1 | 1 | **6E-6594** | 1 | BEARING-SWASH | |
| | 2 | 1 | **6E-4224** | 1 | PLUG-SWASHPLATE | |
| | 3 | 1 | **033-6036** | 1 | SEAL-O-RING | |
| | 4 | 1 | **100-5154** | 1 | HEAD-PUMP | |
| | 5 | 1 | **9T-1699** | 1 | SPRING | |
| | 6 | 1 | **9T-1710** | 1 | POPPET | |
| | 7 | 1 | **9T-1636** | 1 | SEAT | |
| | 8 | 1 | **6E-6596** | 1 | COVER-TRUNNION | |
| | 9 | 1 | **6V-3834** | 1 | SEAL-O-RING | |
| M | 10 | 1 | **3E-4302** | 2 | SCREW-FLAT HEAD (M4X0.7X10-MM) | |
| M | 11 | 1 | **6V-8214** | 3 | BOLT (M6X1X20-MM) | |
| | 12 | 1 | **6E-6597** | 1 | BEARING-SWASH | |
| M | 13 | 1 | **6V-8004** | 2 | BOLT (M12X1.75X120-MM) | |
| M | 14 | 1 | **8T-0372** | 4 | BOLT (M12X1.75X90-MM) | |
| Y | 15 | 1 | **100-6741** | 1 | VALVE GP-PUMP CONTROL (PRESSURE, FLOW COMPENSATOR) | 488 |
| | 16 | 1 | **8T-5039** | 3 | SEAL-O-RING | |
| M | 17 | 1 | **6V-8337** | 4 | BOLT-SOCKET HEAD (M8X1.25X35-MM) | |
| | 18 | 1 | **095-0888** | 2 | PIN-SPRING | |
| | 19 | 1 | **100-5147** | 1 | SHAFT-PUMP | |
| | 20 | 1 | **6E-6598** | 1 | HOUSING-PUMP | |
| | 21 | 1 | **006-8663** | 1 | RING | |
| | 22 | 1 | **8T-4750** | 1 | SEAL-LIP TYPE | |
| | 23 | 1 | **6E-6599** | 1 | KIT-BIAS PISTON | |
| | 24 | 1 | **6E-6600** | 1 | SPRING-BIAS | |
| Y | 25 | 1 | **105-2154** | 1 | ROTATING GP-PUMP | 444 |
| | 26 | 1 | **6E-6601** | 1 | GASKET | |
| | 27 | 1 | **7L-9061** | 2 | SEAL-O-RING | |
| | 28 | 1 | **3E-7417** | 2 | PLUG | |
| | 29 | 1 | **8T-7876** | 2 | SEAL-O-RING | |
| | 30 | 1 | **148-4472** | 1 | PLATE-VALVE | |
| B | 31 | 1 | **9T-2197** | 1 | SHIM PACK (INCLUDES 17-SHIMS) | |
| | 32 | 1 | **1P-6872** | 1 | CUP-BEARING | |
| | 33 | 1 | **004-9040** | 1 | CONE-BEARING | |
| | 34 | 1 | **9T-1652** | 1 | PIN | |
| | 35 | 1 | **6E-6602** | 1 | KIT-PISTON CONTROL | |
| | 36 | 1 | **6E-6603** | 1 | SWASHPLATE GP | |
| | | 1 | **8F-7219** | 2 | SEAL-O-RING | |
| | | 1 | **139-0532** | 2 | BLOCK-STOP | |
| | 37 | 1 | **7T-8273** | 1 | CUP-BEARING | |
| | 38 | 1 | **7T-8272** | 1 | CONE-BEARING | |
| | 39 | 1 | **3K-0360** | 1 | SEAL-O-RING | |
| | 40 | 1 | **9S-4185** | 1 | PLUG-O-RING | |

B-USE AS REQUIRED
M-METRIC PART
Y-SEPARATE ILLUSTRATION

**161-5715 PUMP GP-PISTON** *(contd. )* **i00942754**

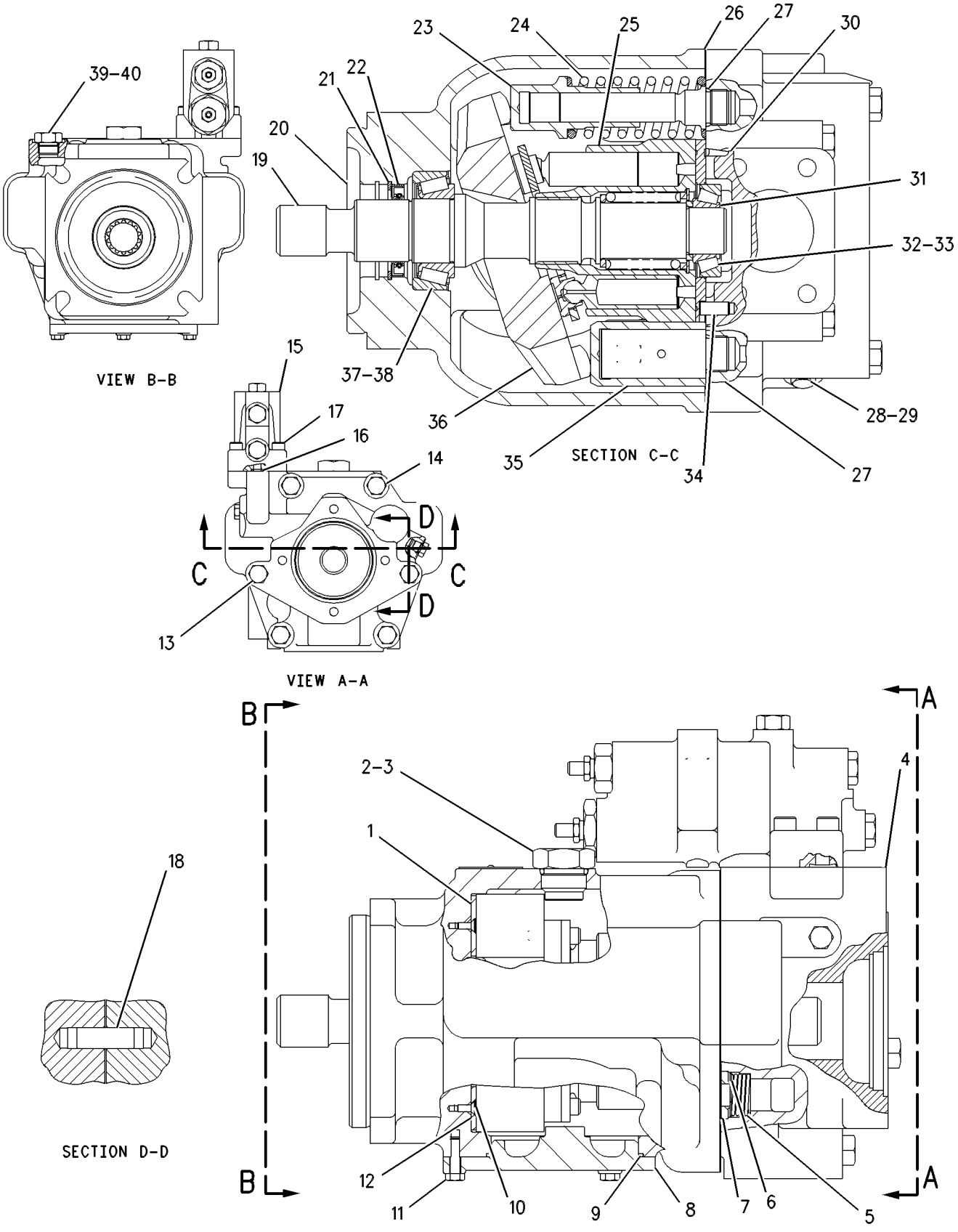


GRAPHIC #1 **<END>** g00483370

# 105-2154 ROTATING GP-PUMP–IMPLEMENT, STEERING, BRAKE

**S/N: 5451-UP**

**PART OF 161-5715 PUMP GP-PISTON**

**SMCS-5070** **i00458661**

| NOTE | REF NO | GRAPHIC REF | PART NUMBER | QTY | PART NAME 1 2 3 4 5 6 (PRODUCT LEVEL) | SEE PAGE |
|---|---|---|---|---|---|---|
| | 1 | 1 | **6E-6604** | 2 | PLATE-SPACER | |
| | 2 | 1 | **6E-6605** | 2 | PLATE-LIMITER | |
| M | 3 | 1 | **3T-0849** | 4 | BOLT-SOCKET HEAD (M6X1X25-MM) | |
| | 4 | 1 | **9T-7755** | 1 | SPRING | |
| | 5 | 1 | **009-2069** | 1 | RING | |
| | 6 | 1 | **9T-7754** | 1 | GUIDE-OUTER | |
| | 7 | 1 | **116-5305** | 1 | BARREL-CYLINDER | |
| | 8 | 1 | **9T-7756** | 1 | GUIDE-INNER | |
| | 9 | 1 | **104-3123** | 1 | PLATE-RETAINING | |
| | 10 | 1 | **116-5298** | 9 | PISTON AS-PUMP | |

M-METRIC PART

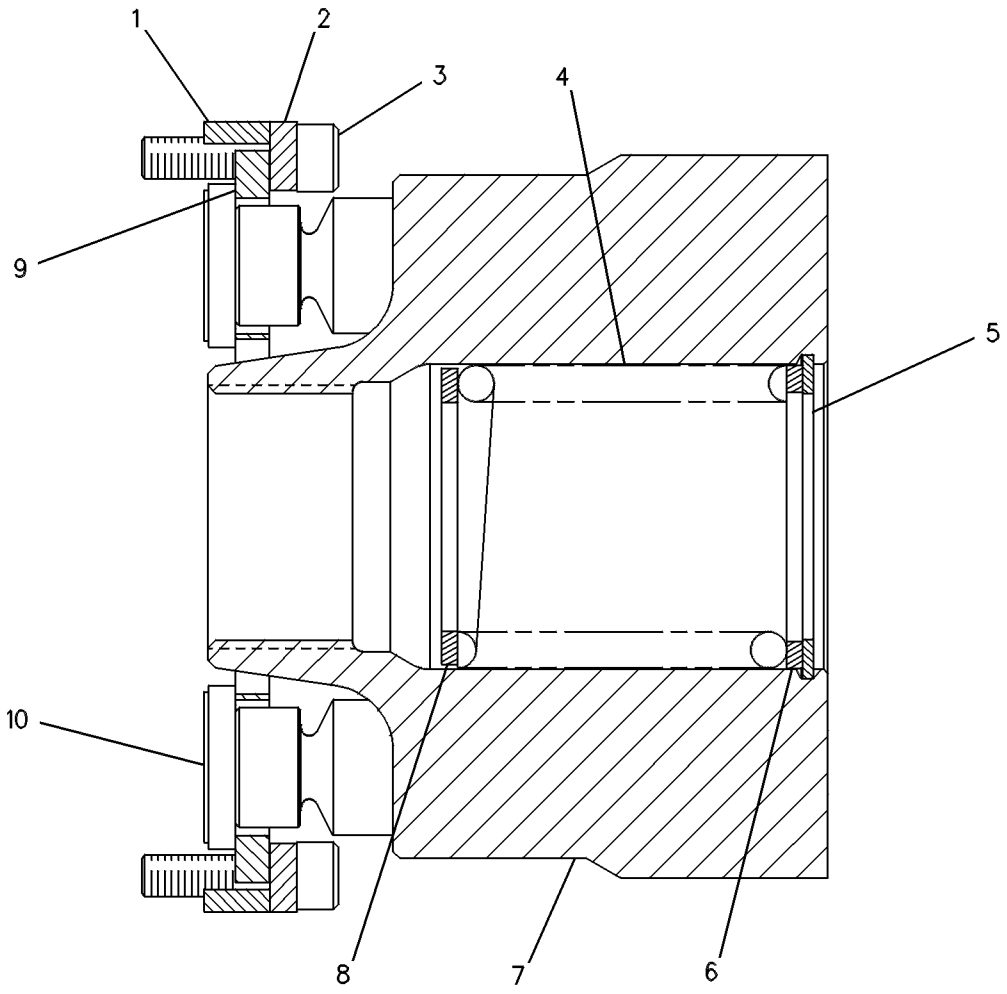


GRAPHIC #1 **<END>** g00131172

# HYDRAULIC SYSTEM

## *249-3824* TANK & MTG GP-HYDRAULIC

**S/N: 5451-UP**

**PART OF 245-9466 HYDRAULIC AR**

**SMCS-5056** **i02291687**

| NOTE | REF NO | GRAPHIC REF | PART NUMBER | QTY | PART NAME 1 2 3 4 5 6 (PRODUCT LEVEL) | SEE PAGE |
|---|---|---|---|---|---|---|
| | 1 | 1 | **9X-2488** | 1 | CLAMP-HOSE | |
| I | 2 | 1 | **263-7783** | 1 | HOSE AS | |
| Y | 3 | 1 | **249-3441** | 1 | TANK GP-HYDRAULIC | 447 |
| | 4 | 1 | **263-1154** | 1 | PLATE AS | |
| | 5 | 1 | *165-2273* | 1 | VALVE AS-SHUTOFF (HYDRAULIC TANK DRAIN) | |
| | | 1 | **3K-0360** | 1 | SEAL-O-RING | |
| | | 1 | **6V-7238** | 1 | VALVE-SHUTOFF | |
| | 6 | 1 | *165-4935* | 1 | PLUG AS | |
| | | 1 | **6V-9510** | 1 | PLUG (1-14-THD) | |
| | | 1 | **7J-9108** | 1 | SEAL-O-RING | |
| | 7 | 1 | **9X-8250** | 1 | CLIP | |
| | 8 | 1 | **8T-4121** | 1 | WASHER-HARD (11X21X2.5-MM THK) | |
| M | 9 | 1 | **8T-4137** | 1 | BOLT (M10X1.5X20-MM) | |
| M | 10 | 1 | **8T-4139** | 2 | BOLT (M12X1.75X30-MM) | |
| | 11 | 1 | **8T-4223** | 8 | WASHER-HARD (13.5X25.5X3-MM THK) | |
| M | 12 | 1 | **8T-4244** | 6 | NUT (M12X1.75-THD) | |

I-REFER TO HYDRAULIC INFORMATION SYSTEM
M-METRIC PART
Y-SEPARATE ILLUSTRATION

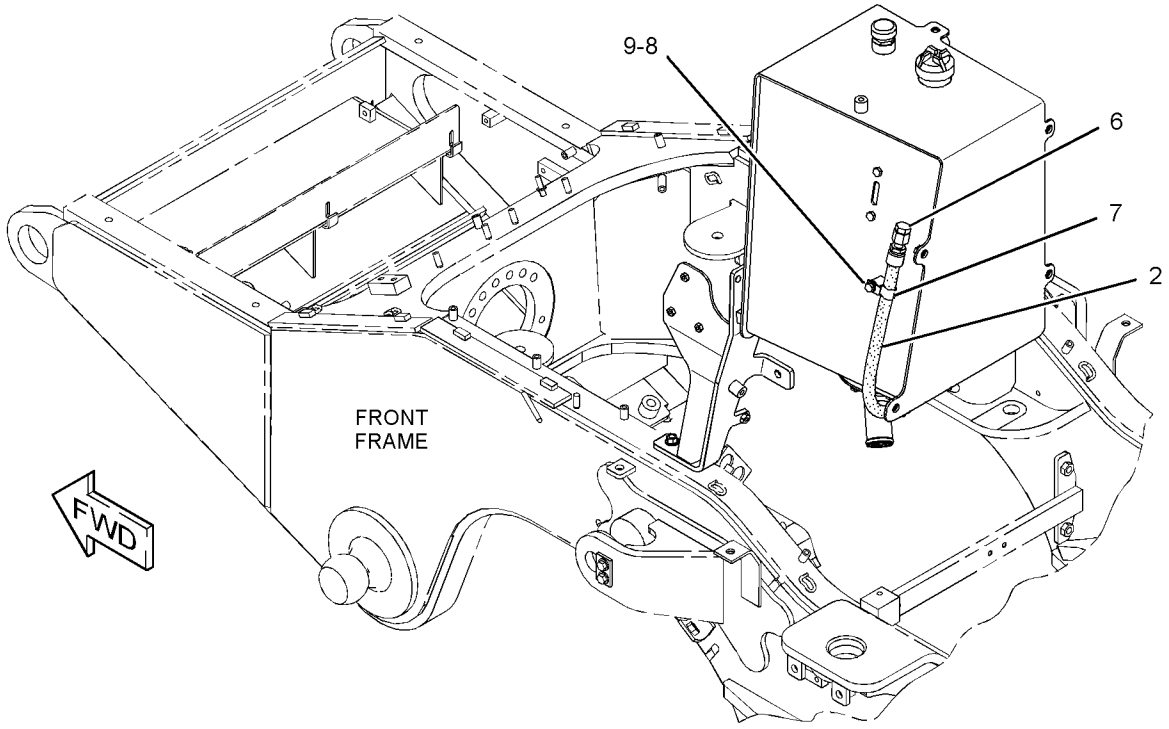


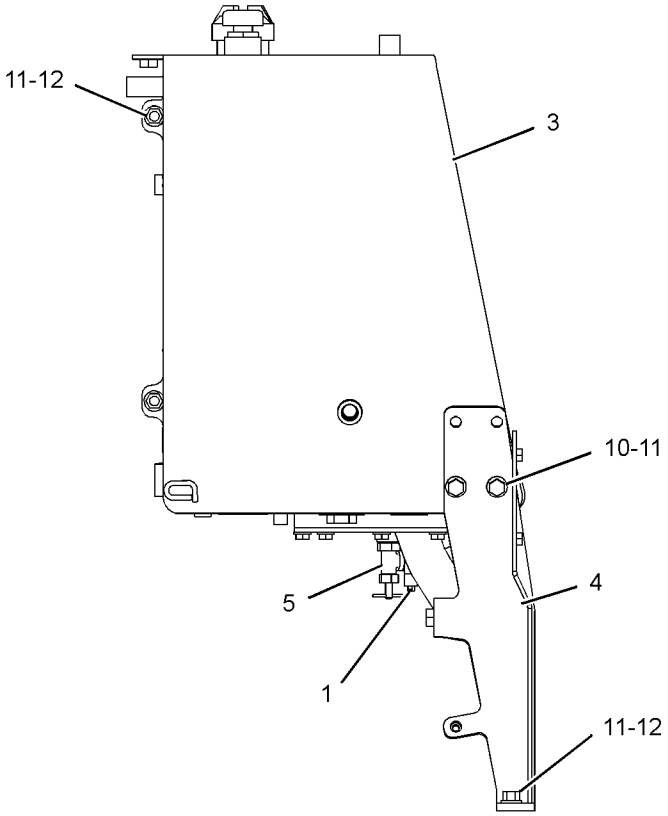


FRONT VIEW

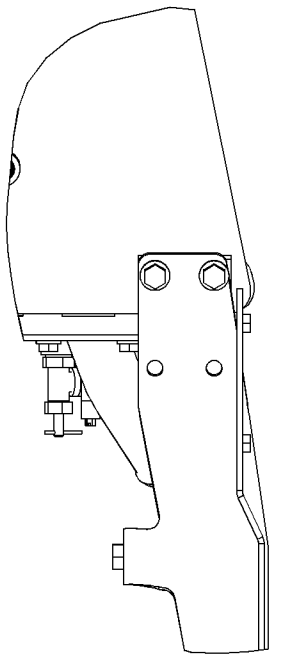

OPTIONAL MOUNTING
FOR 525C

GRAPHIC #1 **<END>** g01185587

# *249-3441* TANK GP-HYDRAULIC

**S/N: 5451-UP**

**PART OF 249-3824 TANK & MTG GP-HYDRAULIC**

**SMCS-5056** **i02485072**

| NOTE | REF NO | GRAPHIC REF | PART NUMBER | QTY | PART NAME 1 2 3 4 5 6 (PRODUCT LEVEL) | SEE PAGE |
|---|---|---|---|---|---|---|
| | 1 | 1 | **2D-4202** | 1 | PLATE | |
| | 2 | 1 | **3G-5980** | 1 | PLATE | |
| | 3 | 1 | **4J-8251** | 1 | GROMMET | |
| | 4 | 1 | **4J-8252** | 1 | GAUGE-SIGHT | |
| | 5 | 1 | **4T-4145** | 1 | VALVE-BREAKER RELIEF | |
| | 6 | 1 | **5D-7927** | 1 | STRAINER AS-OIL (HYDRAULIC TANK) | |
| | | 1 | **5F-3488** | 1 | END-STRAINER | |
| | 7 | 1 | **7H-1447** | 1 | CAP-FILLER (HYDRAULIC TANK) | |
| | 8 | 1 | **8T-2275** | 1 | BALL | |
| | 9 | 1 | **9H-6454** | 1 | GASKET | |
| | 10 | 1 | **9R-2630** | 1 | RETAINER | |
| | 11 | 1 | **142-8929** | 1 | SCREEN-SUCTION (HYDRAULIC TANK) | |
| | 12 | 1 | **160-3448** | 1 | STRAINER AS | |
| | 13 | 1 | **249-3442** | 1 | TANK AS-HYDRAULIC | |
| | 14 | 1 | **250-6743** | 1 | TUBE AS | |
| | 15 | 1 | *148-8408* | 1 | PLUG AS | |
| | | 1 | **3D-2824** | 1 | SEAL-O-RING | |
| | | 1 | **9S-4183** | 1 | PLUG-O-RING | |
| | 16 | 1 | **3D-2824** | 1 | SEAL-O-RING | |
| | 17 | 1 | **5H-6005** | 2 | SEAL-O-RING | |
| | 18 | 1 | **6H-9361** | 1 | RING-RETAINING | |
| | 19 | 1 | **6V-5839** | 2 | WASHER (11X21X2.5-MM THK) | |
| M | 20 | 1 | **6V-7744** | 2 | LOCKNUT (M10X1.15-THD) | |
| | 21 | 1 | **8J-1665** | 1 | SEAL-O-RING | |
| | 22 | 1 | **8T-4121** | 8 | WASHER-HARD (11X21X2.5-MM THK) | |
| M | 23 | 1 | **8T-4137** | 8 | BOLT (M10X1.5X20-MM) | |
| M | 24 | 1 | **9X-2125** | 2 | BOLT-LOCKING (M10X1.5X25-MM) | |

M-METRIC PART

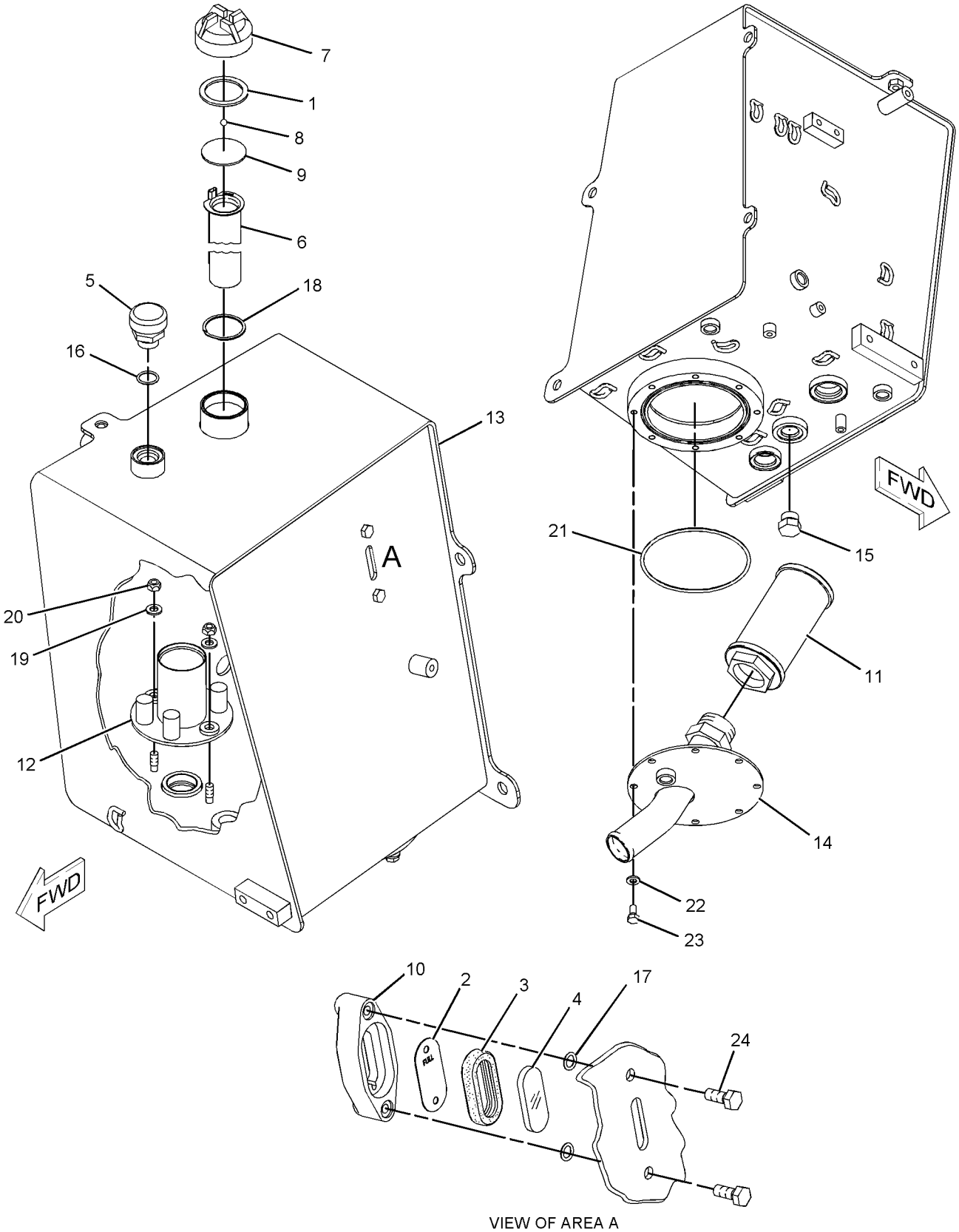


VIEW OF AREA A
(EXPLODED)

GRAPHIC #1 **<END>** g01103477

# HYDRAULIC SYSTEM

## *279-4337* VALVE & LINES GP-GRAPPLE–DUAL FUNCTION

**S/N: 5451-377**

**PART OF 253-2518 GRAPPLE AR, 272-6512 INDUSTRIAL AR-HYDRAULIC AN ATTACHMENT**

**SMCS-5057, 5568** **i02701962**

| NOTE | REF NO | GRAPHIC REF | PART NUMBER | QTY | PART NAME 1 2 3 4 5 6 (PRODUCT LEVEL) | SEE PAGE |
|---|---|---|---|---|---|---|
| Y | 1 | 1 | **299-9531** | 1 | VALVE GP-BANK 5 (GRAPPLE, WINCH CONTROL) | 468 |
| | 2 | 1 | **276-5657** | 1 | TUBE AS | |
| | 3 | 1 | **276-5658** | 1 | TUBE AS | |
| | 4 | 1 | **276-5659** | 1 | TUBE AS | |
| | 5 | 1 | **276-5660** | 1 | TUBE AS | |
| | 6 | 1 | **276-5661** | 1 | TUBE AS | |
| | 7 | 1 | **276-5662** | 1 | TUBE AS | |
| | 8 | 1 | **276-5663** | 1 | TUBE AS | |
| | 9 | 1 | **276-5670** | 1 | PLATE AS | |
| | 10 | 1 | **276-5673** | 1 | BRACKET AS | |
| | 11 | 1 | **276-5675** | 1 | BAR AS | |
| | 12 | 1 | **279-4144** | 1 | HOSE AS | |
| | 13 | 1 | **279-4145** | 1 | HOSE AS | |
| I | 14 | 1 | **279-4146** | 1 | HOSE AS | |
| I | 15 | 1 | **279-4147** | 1 | HOSE AS | |
| I | 16 | 1 | **279-4148** | 1 | HOSE AS | |
| | 17 | 1 | **279-4149** | 1 | TUBE AS | |
| | 18 | 1 | **279-4150** | 1 | PLATE AS | |
| | 19 | 1 | **101-0052** | 1 | TEE-UNION | |
| | 20 | 1 | *148-8326* | 2 | CONNECTOR AS | |
| | | | | | (EACH INCLUDES) | |
| | | 1 | **3J-7354** | 1 | SEAL-O-RING | |
| | | 1 | **6V-8397** | 1 | SEAL-O-RING | |
| | | 1 | **6V-9872** | 1 | CONNECTOR | |
| | 21 | 1 | *148-8336* | 2 | CONNECTOR AS | |
| | | | | | (EACH INCLUDES) | |
| | | 1 | **3J-1907** | 1 | SEAL-O-RING | |
| | | 1 | **6V-8397** | 1 | SEAL-O-RING | |
| | | 1 | **6V-8636** | 1 | CONNECTOR | |
| | 22 | 1 | *164-5594* | 1 | CONNECTOR AS | |
| | | 1 | **5K-9090** | 1 | SEAL-O-RING | |
| | | 1 | **7M-8485** | 1 | SEAL-O-RING | |
| | | 1 | **8C-5723** | 1 | CONNECTOR | |
| | 23 | 1 | *148-8364* | 1 | ELBOW AS | |
| | | 1 | **3K-0360** | 1 | SEAL-O-RING | |
| | | 1 | **6V-8398** | 1 | SEAL-O-RING | |
| | | 1 | **6V-8625** | 1 | ELBOW | |
| | 24 | 1 | *148-8366* | 1 | ELBOW AS | |
| | | 1 | **6V-8397** | 2 | SEAL-O-RING | |
| | | 1 | **6V-8987** | 1 | ELBOW | |
| | 25 | 1 | *148-8367* | 2 | ELBOW AS | |
| | | | | | (EACH INCLUDES) | |
| | | 1 | **6V-8397** | 1 | SEAL-O-RING | |
| | | 1 | **6V-9850** | 1 | ELBOW | |
| | 26 | 1 | *148-8370* | 1 | ELBOW AS | |
| | | 1 | **6V-8398** | 1 | SEAL-O-RING | |
| | | 1 | **6V-9851** | 1 | ELBOW | |
| | 27 | 1 | *148-8433* | 1 | TEE AS | |
| | | 1 | **6V-8397** | 2 | SEAL-O-RING | |
| | | 1 | **6V-9836** | 1 | TEE-SWIVEL | |
| | 28 | 1 | *148-8457* | 1 | UNION AS | |
| | | 1 | **6V-8398** | 2 | SEAL-O-RING | |
| | | 1 | **6V-8995** | 1 | UNION | |
| | 29 | 1 | *149-5452* | 1 | UNION AS | |
| | | 1 | **6V-8397** | 2 | SEAL-O-RING | |

## *279-4337* VALVE & LINES GP-GRAPPLE *(contd.)* i02701962

| NOTE | REF NO | GRAPHIC REF | PART NUMBER | QTY | PART NAME 1 2 3 4 5 6 (PRODUCT LEVEL) | SEE PAGE |
|---|---|---|---|---|---|---|
| | | 1 | **6V-8994** | 1 | UNION | |
| | 30 | 1 | *153-6238* | 1 | ELBOW AS | |
| | | 1 | **2S-4078** | 1 | SEAL-O-RING | |
| | | 1 | **6V-8400** | 1 | SEAL-O-RING | |
| | | 1 | **6V-9006** | 1 | ELBOW | |
| | 31 | 1 | *155-2026* | 1 | UNION AS | |
| | | 1 | **5K-9090** | 2 | SEAL-O-RING | |
| | | 1 | **6V-8998** | 1 | UNION | |
| | 32 | 1 | *155-7328* | 1 | ELBOW AS | |
| | | 1 | **5P-7701** | 1 | SEAL-O-RING | |
| | | 1 | **6V-9008** | 1 | ELBOW | |
| | | 1 | **8C-3093** | 1 | SEAL-O-RING | |
| | 33 | 1 | **5K-9090** | 1 | SEAL-O-RING | |
| | 34 | 1 | **5P-7464** | 2 | CLIP (SLOT) | |
| | 35 | 1 | **5P-7465** | 2 | CLIP (TAB) | |
| | 36 | 1 | **5P-7468** | 2 | CLIP (SLOT) | |
| | 37 | 1 | **5P-7469** | 2 | CLIP (TAB) | |
| | 38 | 1 | **5P-9297** | 3 | CLIP | |
| | 39 | 1 | **5P-9299** | 5 | CLIP | |
| | 40 | 1 | **6V-0545** | 1 | GROMMET | |
| | 41 | 1 | **6V-1874** | 1 | GROMMET | |
| | 42 | 1 | **6V-7359** | 2 | GROMMET | |
| | 43 | 1 | **6V-8397** | 1 | SEAL-O-RING | |
| | 44 | 1 | **6V-8398** | 3 | SEAL-O-RING | |
| | 45 | 1 | **6V-8400** | 2 | SEAL-O-RING | |
| | 46 | 1 | **6V-9168** | 2 | NUT (11/16-16-THD) | |
| | 47 | 1 | **6V-9169** | 1 | NUT-BULKHEAD (13/16-16-THD) | |
| | 48 | 1 | **6V-9172** | 1 | NUT (1-7/16-12-THD) | |
| | 49 | 1 | **7C-4354** | 3 | CLIP | |
| | 50 | 1 | **7M-8485** | 1 | SEAL-O-RING | |
| M | 51 | 1 | **7X-2552** | 2 | BOLT (M16X2X30-MM) | |
| | 52 | 1 | **8T-4121** | 21 | WASHER-HARD (11X21X2.5-MM THK) | |
| M | 53 | 1 | **8T-4133** | 7 | NUT (M10X1.5-THD) | |
| M | 54 | 1 | **8T-4136** | 8 | BOLT (M10X1.5X25-MM) | |
| M | 55 | 1 | **8T-4137** | 2 | BOLT (M10X1.5X20-MM) | |
| M | 56 | 1 | **8T-4139** | 7 | BOLT (M12X1.75X30-MM) | |
| M | 57 | 1 | **8T-4182** | 4 | BOLT (M10X1.5X45-MM) | |
| M | 58 | 1 | **8T-4195** | 4 | BOLT (M10X1.5X30-MM) | |
| | 59 | 1 | **8T-4223** | 7 | WASHER-HARD (13.5X25.5X3-MM THK) | |
| | 60 | 1 | **161-8021** | 1 | CONNECTOR | |
| | 61 | 1 | **9X-8257** | 2 | WASHER (17.5X30X3.5-MM THK) | |

I-REFER TO HYDRAULIC INFORMATION SYSTEM
M-METRIC PART
Y-SEPARATE ILLUSTRATION

## *279-4337* VALVE & LINES GP-GRAPPLE *(contd.)* i02701962

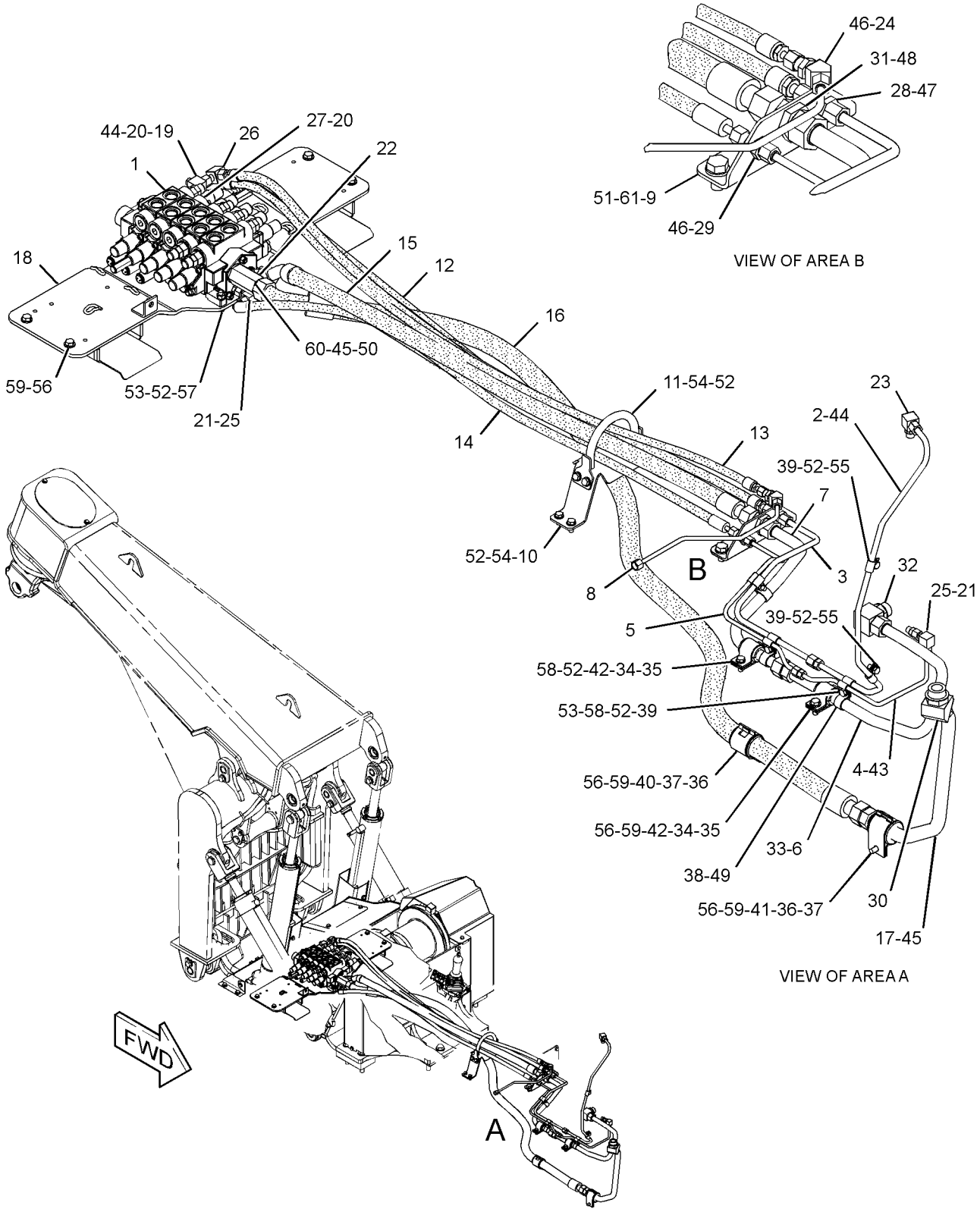


GRAPHIC #1 **<END>** g01238997

# HYDRAULIC SYSTEM

## *279-4337* VALVE & LINES GP-GRAPPLE—DUAL FUNCTION

**S/N: 545378-UP**

**PART OF 253-2518 GRAPPLE AR, 272-6512 INDUSTRIAL AR-HYDRAULIC AN ATTACHMENT**

**SMCS-5057, 5568** **i02725068**

| NOTE | REF NO | GRAPHIC REF | PART NUMBER | QTY | PART NAME 1 2 3 4 5 6 (PRODUCT LEVEL) | SEE PAGE |
|---|---|---|---|---|---|---|
| Y | 1 | 1 | **299-9531** | 1 | VALVE GP-BANK 5 (GRAPPLE, WINCH CONTROL) | 468 |
| | 2 | 1 | **276-5657** | 1 | TUBE AS | |
| C | 3 | 1 | **296-7518** | 1 | TUBE AS | |
| | 4 | 1 | **276-5659** | 1 | TUBE AS | |
| C | 5 | 1 | **296-7517** | 1 | TUBE AS | |
| | 6 | 1 | **276-5661** | 1 | TUBE AS | |
| C | 7 | 1 | **295-1906** | 1 | TUBE AS | |
| | 8 | 1 | **276-5663** | 1 | TUBE AS | |
| | 9 | 1 | **276-5670** | 1 | PLATE AS | |
| | 10 | 1 | **276-5673** | 1 | BRACKET AS | |
| | 11 | 1 | **276-5675** | 1 | BAR AS | |
| | 12 | 1 | **279-4144** | 1 | HOSE AS | |
| | 13 | 1 | **279-4145** | 1 | HOSE AS | |
| I | 14 | 1 | **279-4146** | 1 | HOSE AS | |
| I | 15 | 1 | **279-4147** | 1 | HOSE AS | |
| I | 16 | 1 | **279-4148** | 1 | HOSE AS | |
| | 17 | 1 | **279-4149** | 1 | TUBE AS | |
| | 18 | 1 | **279-4150** | 1 | PLATE AS | |
| | 19 | 1 | **101-0052** | 1 | TEE-UNION | |
| | 20 | 1 | *148-8326* | 2 | CONNECTOR AS | |
| | | | | | (EACH INCLUDES) | |
| | | 1 | **3J-7354** | 1 | SEAL-O-RING | |
| | | 1 | **6V-8397** | 1 | SEAL-O-RING | |
| | | 1 | **6V-9872** | 1 | CONNECTOR | |
| | 21 | 1 | *148-8336* | 2 | CONNECTOR AS | |
| | | | | | (EACH INCLUDES) | |
| | | 1 | **3J-1907** | 1 | SEAL-O-RING | |
| | | 1 | **6V-8397** | 1 | SEAL-O-RING | |
| | | 1 | **6V-8636** | 1 | CONNECTOR | |
| | 22 | 1 | *164-5594* | 1 | CONNECTOR AS | |
| | | 1 | **5K-9090** | 1 | SEAL-O-RING | |
| | | 1 | **7M-8485** | 1 | SEAL-O-RING | |
| | | 1 | **8C-5723** | 1 | CONNECTOR | |
| | 23 | 1 | *148-8364* | 1 | ELBOW AS | |
| | | 1 | **3K-0360** | 1 | SEAL-O-RING | |
| | | 1 | **6V-8398** | 1 | SEAL-O-RING | |
| | | 1 | **6V-8625** | 1 | ELBOW | |
| | 24 | 1 | *148-8366* | 1 | ELBOW AS | |
| | | 1 | **6V-8397** | 2 | SEAL-O-RING | |
| | | 1 | **6V-8987** | 1 | ELBOW | |
| | 25 | 1 | *148-8367* | 2 | ELBOW AS | |
| | | | | | (EACH INCLUDES) | |
| | | 1 | **6V-8397** | 1 | SEAL-O-RING | |
| | | 1 | **6V-9850** | 1 | ELBOW | |
| | 26 | 1 | *148-8370* | 1 | ELBOW AS | |
| | | 1 | **6V-8398** | 1 | SEAL-O-RING | |
| | | 1 | **6V-9851** | 1 | ELBOW | |
| | 27 | 1 | *148-8433* | 1 | TEE AS | |
| | | 1 | **6V-8397** | 2 | SEAL-O-RING | |
| | | 1 | **6V-9836** | 1 | TEE-SWIVEL | |
| | 28 | 1 | *148-8457* | 1 | UNION AS | |
| | | 1 | **6V-8398** | 2 | SEAL-O-RING | |
| | | 1 | **6V-8995** | 1 | UNION | |
| | 29 | 1 | *149-5452* | 1 | UNION AS | |
| | | 1 | **6V-8397** | 2 | SEAL-O-RING | |

## *279-4337* VALVE & LINES GP-GRAPPLE *(contd.)* i02725068

| NOTE | REF NO | GRAPHIC REF | PART NUMBER | QTY | PART NAME 1 2 3 4 5 6 (PRODUCT LEVEL) | SEE PAGE |
|---|---|---|---|---|---|---|
| | | 1 | **6V-8994** | 1 | UNION | |
| | 30 | 1 | *153-6238* | 1 | ELBOW AS | |
| | | 1 | **2S-4078** | 1 | SEAL-O-RING | |
| | | 1 | **6V-8400** | 1 | SEAL-O-RING | |
| | | 1 | **6V-9006** | 1 | ELBOW | |
| | 31 | 1 | *155-2026* | 1 | UNION AS | |
| | | 1 | **5K-9090** | 2 | SEAL-O-RING | |
| | | 1 | **6V-8998** | 1 | UNION | |
| | 32 | 1 | *155-7328* | 1 | ELBOW AS | |
| | | 1 | **5P-7701** | 1 | SEAL-O-RING | |
| | | 1 | **6V-9008** | 1 | ELBOW | |
| | | 1 | **8C-3093** | 1 | SEAL-O-RING | |
| | 33 | 1 | **5K-9090** | 1 | SEAL-O-RING | |
| | 34 | 1 | **5P-7464** | 2 | CLIP (SLOT) | |
| | 35 | 1 | **5P-7465** | 2 | CLIP (TAB) | |
| | 36 | 1 | **5P-7468** | 2 | CLIP (SLOT) | |
| | 37 | 1 | **5P-7469** | 2 | CLIP (TAB) | |
| C | 38 | 1 | **5P-9297** | 2 | CLIP | |
| C | 39 | 1 | **5P-9299** | 4 | CLIP | |
| | 40 | 1 | **6V-0545** | 1 | GROMMET | |
| | 41 | 1 | **6V-1874** | 1 | GROMMET | |
| | 42 | 1 | **6V-7359** | 2 | GROMMET | |
| | 43 | 1 | **6V-8397** | 1 | SEAL-O-RING | |
| | 44 | 1 | **6V-8398** | 3 | SEAL-O-RING | |
| | 45 | 1 | **6V-8400** | 2 | SEAL-O-RING | |
| | 46 | 1 | **6V-9168** | 2 | NUT (11/16-16-THD) | |
| | 47 | 1 | **6V-9169** | 1 | NUT-BULKHEAD (13/16-16-THD) | |
| | 48 | 1 | **6V-9172** | 1 | NUT (1-7/16-12-THD) | |
| C | 49 | 1 | **7C-4354** | 2 | CLIP | |
| | 50 | 1 | **7M-8485** | 1 | SEAL-O-RING | |
| M | 51 | 1 | **7X-2552** | 2 | BOLT (M16X2X30-MM) | |
| C | 52 | 1 | **8T-4121** | 19 | WASHER-HARD (11X21X2.5-MM THK) | |
| CM | 53 | 1 | **8T-4133** | 6 | NUT (M10X1.5-THD) | |
| M | 54 | 1 | **8T-4136** | 8 | BOLT (M10X1.5X25-MM) | |
| M | 55 | 1 | **8T-4137** | 2 | BOLT (M10X1.5X20-MM) | |
| M | 56 | 1 | **8T-4139** | 7 | BOLT (M12X1.75X30-MM) | |
| M | 57 | 1 | **8T-4182** | 4 | BOLT (M10X1.5X45-MM) | |
| CM | 58 | 1 | **8T-4195** | 3 | BOLT (M10X1.5X30-MM) | |
| | 59 | 1 | **8T-4223** | 7 | WASHER-HARD (13.5X25.5X3-MM THK) | |
| | 60 | 1 | **161-8021** | 1 | CONNECTOR (O-RING) | |
| | 61 | 1 | **9X-8257** | 2 | WASHER (17.5X30X3.5-MM THK) | |

C-CHANGE FROM PREVIOUS TYPE
I-REFER TO HYDRAULIC INFORMATION SYSTEM
M-METRIC PART
Y-SEPARATE ILLUSTRATION

## *279-4337* VALVE & LINES GP-GRAPPLE *(contd.)* i02725068

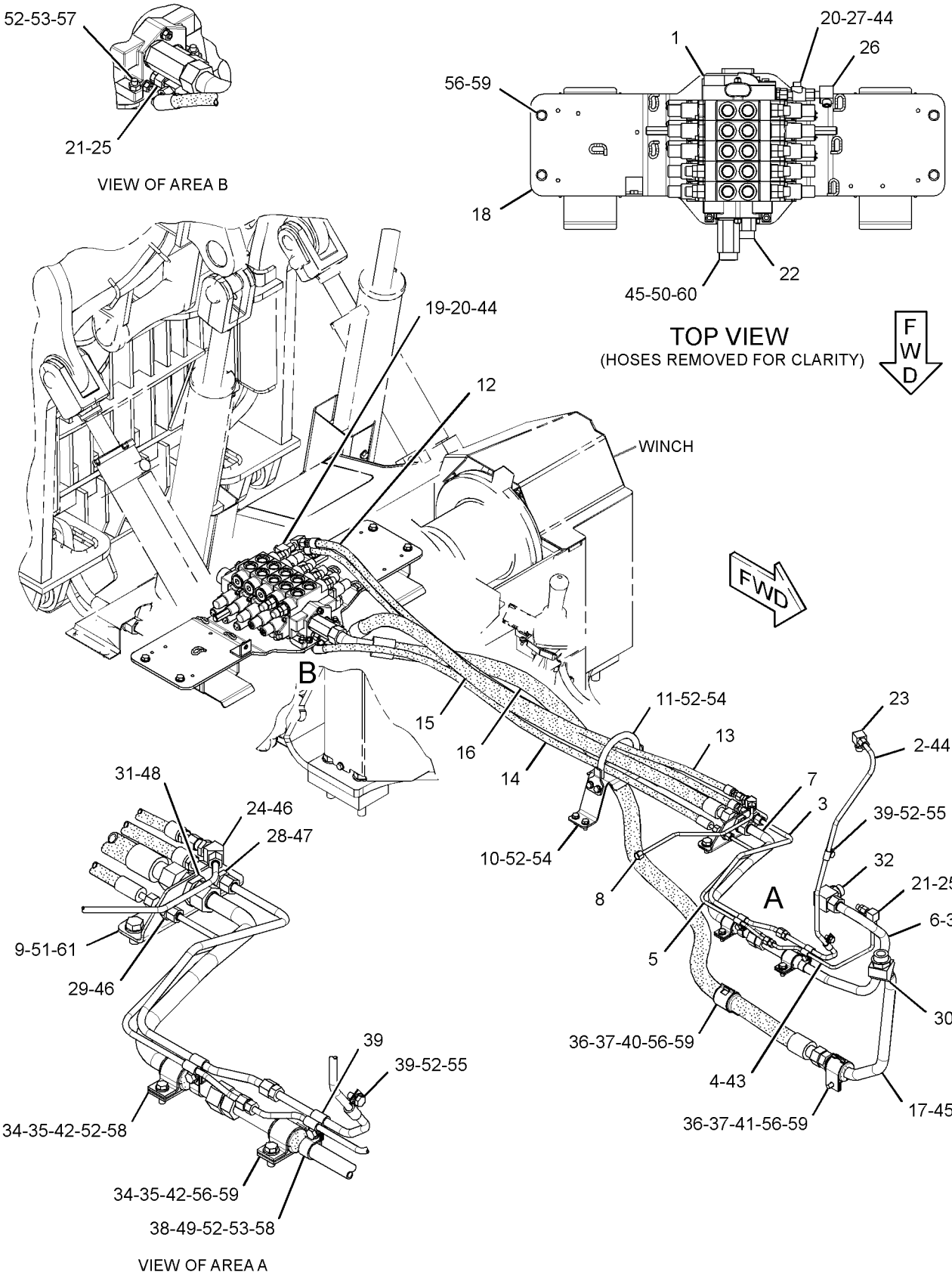


GRAPHIC #1 **<END>** g01369303

## *279-7321* VALVE & LINES GP-GRAPPLE–DUAL FUNCTION

**S/N: 5451-377**
**PART OF 253-2515 GRAPPLE AR**
**AN ATTACHMENT**

**SMCS-5057, 5568** **i02468891**

| NOTE | REF NO | GRAPHIC REF | PART NUMBER | QTY | PART NAME 1 2 3 4 5 6 (PRODUCT LEVEL) | SEE PAGE |
|---|---|---|---|---|---|---|
| Y | 1 | 1 | **195-0821** | 1 | VALVE GP-BANK 4 (GRAPPLE CONTROL) | 465 |
| | 2 | 1 | **276-5657** | 1 | TUBE AS | |
| | 3 | 1 | **276-5658** | 1 | TUBE AS | |
| | 4 | 1 | **276-5659** | 1 | TUBE AS | |
| | 5 | 1 | **276-5660** | 1 | TUBE AS | |
| | 6 | 1 | **276-5661** | 1 | TUBE AS | |
| | 7 | 1 | **276-5662** | 1 | TUBE AS | |
| | 8 | 1 | **276-5663** | 1 | TUBE AS | |
| | 9 | 1 | **276-5670** | 1 | PLATE AS | |
| | 10 | 1 | **276-5673** | 1 | BRACKET AS | |
| | 11 | 1 | **276-5675** | 1 | BAR AS | |
| I | 12 | 1 | **279-4146** | 1 | HOSE AS | |
| I | 13 | 1 | **279-4147** | 1 | HOSE AS | |
| I | 14 | 1 | **279-4148** | 1 | HOSE AS | |
| | 15 | 1 | **279-4149** | 1 | TUBE AS | |
| | 16 | 1 | **279-4150** | 1 | PLATE AS | |
| | 17 | 1 | **279-7353** | 1 | HOSE AS | |
| | 18 | 1 | **279-7354** | 1 | HOSE AS | |
| | 19 | 1 | *148-8326* | 2 | CONNECTOR AS | |
| | | | | | (EACH INCLUDES) | |
| | | 1 | **3J-7354** | 1 | SEAL-O-RING | |
| | | 1 | **6V-8397** | 1 | SEAL-O-RING | |
| | | 1 | **6V-9872** | 1 | CONNECTOR | |
| | 20 | 1 | *148-8336* | 2 | CONNECTOR AS | |
| | | | | | (EACH INCLUDES) | |
| | | 1 | **3J-1907** | 1 | SEAL-O-RING | |
| | | 1 | **6V-8397** | 1 | SEAL-O-RING | |
| | | 1 | **6V-8636** | 1 | CONNECTOR | |
| | 21 | 1 | *148-8355* | 1 | ELBOW AS | |
| | | 1 | **5K-9090** | 1 | SEAL-O-RING | |
| | | 1 | **6V-9005** | 1 | ELBOW | |
| | | 1 | **7M-8485** | 1 | SEAL-O-RING | |
| | 22 | 1 | *148-8364* | 1 | ELBOW AS | |
| | | 1 | **3K-0360** | 1 | SEAL-O-RING | |
| | | 1 | **6V-8398** | 1 | SEAL-O-RING | |
| | | 1 | **6V-8625** | 1 | ELBOW | |
| | 23 | 1 | *148-8366* | 1 | ELBOW AS | |
| | | 1 | **6V-8397** | 2 | SEAL-O-RING | |
| | | 1 | **6V-8987** | 1 | ELBOW | |
| | 24 | 1 | *148-8367* | 3 | ELBOW AS | |
| | | | | | (EACH INCLUDES) | |
| | | 1 | **6V-8397** | 1 | SEAL-O-RING | |
| | | 1 | **6V-9850** | 1 | ELBOW | |
| | 25 | 1 | *148-8371* | 1 | ELBOW AS | |
| | | 1 | **6V-8397** | 1 | SEAL-O-RING | |
| | | 1 | **8C-8988** | 1 | ELBOW | |
| | 26 | 1 | *148-8457* | 1 | UNION AS | |
| | | 1 | **6V-8398** | 2 | SEAL-O-RING | |
| | | 1 | **6V-8995** | 1 | UNION | |
| | 27 | 1 | *149-5452* | 1 | UNION AS | |
| | | 1 | **6V-8397** | 2 | SEAL-O-RING | |
| | | 1 | **6V-8994** | 1 | UNION | |
| | 28 | 1 | *153-6238* | 1 | ELBOW AS | |
| | | 1 | **2S-4078** | 1 | SEAL-O-RING | |
| | | 1 | **6V-8400** | 1 | SEAL-O-RING | |

## *279-7321* VALVE & LINES GP-GRAPPLE *(contd.)* i02468891

| NOTE | REF NO | GRAPHIC REF | PART NUMBER | QTY | PART NAME 1 2 3 4 5 6 (PRODUCT LEVEL) | SEE PAGE |
|---|---|---|---|---|---|---|
| | | 1 | **6V-9006** | 1 | ELBOW | |
| | 29 | 1 | *155-2026* | 1 | UNION AS | |
| | | 1 | **5K-9090** | 2 | SEAL-O-RING | |
| | | 1 | **6V-8998** | 1 | UNION | |
| | 30 | 1 | *155-7328* | 1 | ELBOW AS | |
| | | 1 | **5P-7701** | 1 | SEAL-O-RING | |
| | | 1 | **6V-9008** | 1 | ELBOW | |
| | | 1 | **8C-3093** | 1 | SEAL-O-RING | |
| | 31 | 1 | **5K-9090** | 1 | SEAL-O-RING | |
| | 32 | 1 | **5P-7464** | 2 | CLIP (SLOT) | |
| | 33 | 1 | **5P-7465** | 2 | CLIP (TAB) | |
| | 34 | 1 | **5P-7468** | 2 | CLIP (SLOT) | |
| | 35 | 1 | **5P-7469** | 2 | CLIP (TAB) | |
| | 36 | 1 | **5P-9297** | 3 | CLIP | |
| | 37 | 1 | **5P-9299** | 5 | CLIP | |
| | 38 | 1 | **6V-0545** | 1 | GROMMET | |
| | 39 | 1 | **6V-1874** | 1 | GROMMET | |
| | 40 | 1 | **6V-7359** | 2 | GROMMET | |
| | 41 | 1 | **6V-8397** | 1 | SEAL-O-RING | |
| | 42 | 1 | **6V-8398** | 1 | SEAL-O-RING | |
| | 43 | 1 | **6V-8400** | 2 | SEAL-O-RING | |
| | 44 | 1 | **6V-9168** | 2 | NUT (11/16-16-THD) | |
| | 45 | 1 | **6V-9169** | 1 | NUT-BULKHEAD (13/16-16-THD) | |
| | 46 | 1 | **6V-9172** | 1 | NUT (1-7/16-12-THD) | |
| | 47 | 1 | **7C-4354** | 3 | CLIP | |
| | 48 | 1 | **7M-8485** | 1 | SEAL-O-RING | |
| M | 49 | 1 | **7X-2552** | 2 | BOLT (M16X2X30-MM) | |
| | 50 | 1 | **8T-4121** | 21 | WASHER-HARD (11X21X2.5-MM THK) | |
| M | 51 | 1 | **8T-4133** | 7 | NUT (M10X1.5-THD) | |
| M | 52 | 1 | **8T-4136** | 8 | BOLT (M10X1.5X25-MM) | |
| M | 53 | 1 | **8T-4137** | 2 | BOLT (M10X1.5X20-MM) | |
| M | 54 | 1 | **8T-4139** | 7 | BOLT (M12X1.75X30-MM) | |
| M | 55 | 1 | **8T-4182** | 4 | BOLT (M10X1.5X45-MM) | |
| M | 56 | 1 | **8T-4195** | 4 | BOLT (M10X1.5X30-MM) | |
| | 57 | 1 | **8T-4223** | 7 | WASHER-HARD (13.5X25.5X3-MM THK) | |
| | 58 | 1 | **8T-7927** | 1 | CONNECTOR | |
| | 59 | 1 | **9X-8257** | 2 | WASHER (17.5X30X3.5-MM THK) | |

I-REFER TO HYDRAULIC INFORMATION SYSTEM
M-METRIC PART
Y-SEPARATE ILLUSTRATION

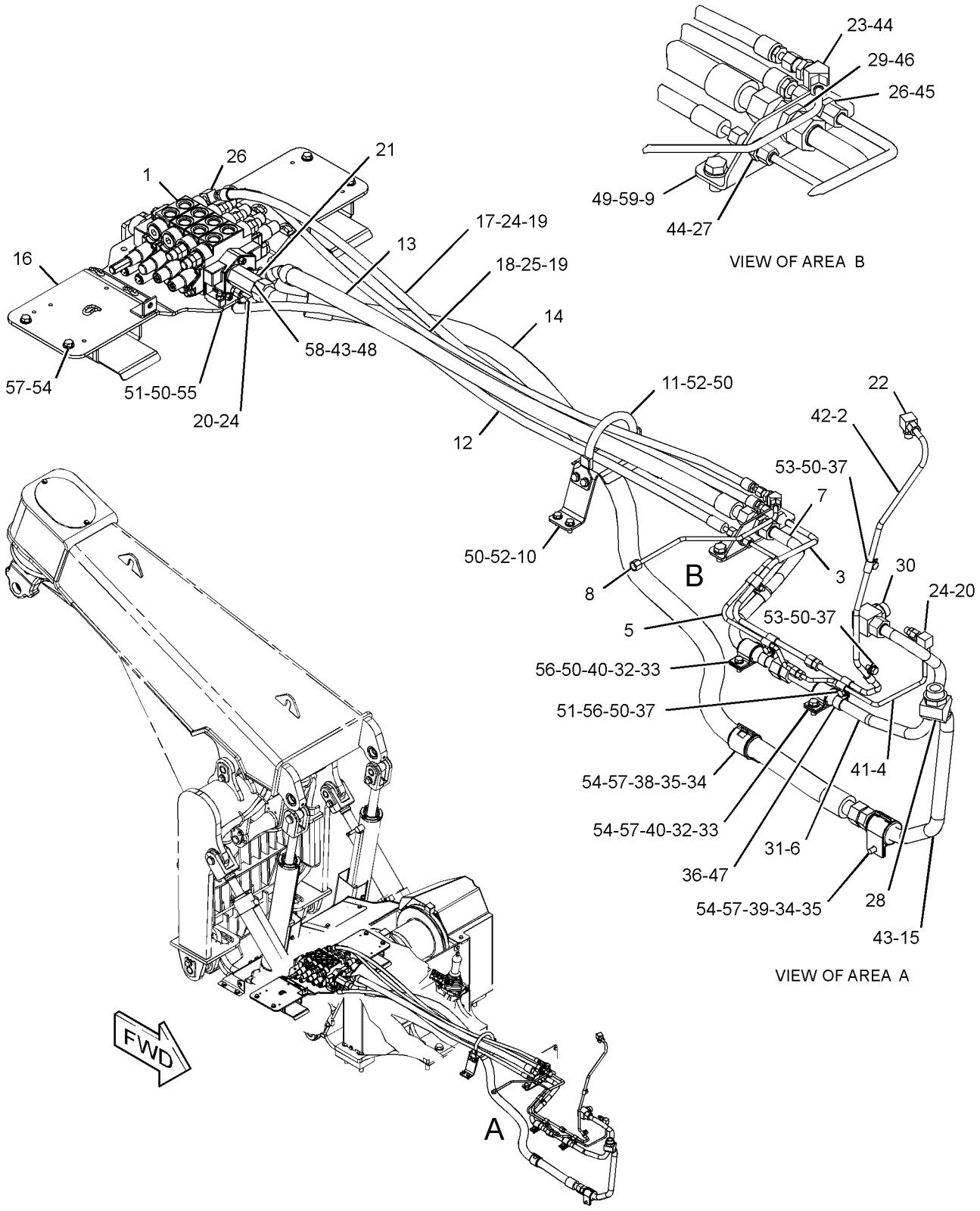


GRAPHIC #1 **<END>** g01239019

# HYDRAULIC SYSTEM

## *279-7321* VALVE & LINES GP-GRAPPLE–DUAL FUNCTION

**S/N: 545300-UP**
**PART OF 253-2515 GRAPPLE AR**
**AN ATTACHMENT**

**SMCS-5057, 5568** **i02725119**

| NOTE | REF NO | GRAPHIC REF | PART NUMBER | QTY | PART NAME 1 2 3 4 5 6 (PRODUCT LEVEL) | SEE PAGE |
|---|---|---|---|---|---|---|
| Y | 1 | 1 | **299-9530** | 1 | VALVE GP-BANK 4 (GRAPPLE CONTROL) | 467 |
| | 2 | 1 | **276-5657** | 1 | TUBE AS | |
| | 3 | 1 | **296-7518** | 1 | TUBE AS | |
| | 4 | 1 | **276-5659** | 1 | TUBE AS | |
| | 5 | 1 | **296-7517** | 1 | TUBE AS | |
| | 6 | 1 | **276-5661** | 1 | TUBE AS | |
| | 7 | 1 | **295-1906** | 1 | TUBE AS | |
| | 8 | 1 | **276-5663** | 1 | TUBE AS | |
| | 9 | 1 | **276-5670** | 1 | PLATE AS | |
| | 10 | 1 | **276-5673** | 1 | BRACKET AS | |
| | 11 | 1 | **276-5675** | 1 | BAR AS | |
| I | 12 | 1 | **279-4146** | 1 | HOSE AS | |
| I | 13 | 1 | **279-4147** | 1 | HOSE AS | |
| I | 14 | 1 | **279-4148** | 1 | HOSE AS | |
| | 15 | 1 | **279-4149** | 1 | TUBE AS | |
| | 16 | 1 | **279-4150** | 1 | PLATE AS | |
| | 17 | 1 | **279-7353** | 1 | HOSE AS | |
| | 18 | 1 | **279-7354** | 1 | HOSE AS | |
| | 19 | 1 | *148-8326* | 2 | CONNECTOR AS | |
| | | | | | (EACH INCLUDES) | |
| | | 1 | **3J-7354** | 1 | SEAL-O-RING | |
| | | 1 | **6V-8397** | 1 | SEAL-O-RING | |
| | | 1 | **6V-9872** | 1 | CONNECTOR | |
| | 20 | 1 | *148-8336* | 2 | CONNECTOR AS | |
| | | | | | (EACH INCLUDES) | |
| | | 1 | **3J-1907** | 1 | SEAL-O-RING | |
| | | 1 | **6V-8397** | 1 | SEAL-O-RING | |
| | | 1 | **6V-8636** | 1 | CONNECTOR | |
| C | 21 | 1 | *164-5594* | 1 | CONNECTOR AS | |
| | | 1 | **5K-9090** | 1 | SEAL-O-RING | |
| | | 1 | **8C-5723** | 1 | CONNECTOR | |
| | | 1 | **7M-8485** | 1 | SEAL-O-RING | |
| | 22 | 1 | *148-8364* | 1 | ELBOW AS | |
| | | 1 | **3K-0360** | 1 | SEAL-O-RING | |
| | | 1 | **6V-8398** | 1 | SEAL-O-RING | |
| | | 1 | **6V-8625** | 1 | ELBOW | |
| | 23 | 1 | *148-8366* | 1 | ELBOW AS | |
| | | 1 | **6V-8397** | 2 | SEAL-O-RING | |
| | | 1 | **6V-8987** | 1 | ELBOW | |
| C | 24 | 1 | *148-8367* | 2 | ELBOW AS | |
| | | | | | (EACH INCLUDES) | |
| | | 1 | **6V-8397** | 1 | SEAL-O-RING | |
| | | 1 | **6V-9850** | 1 | ELBOW | |
| | 25 | 1 | *148-8371* | 1 | ELBOW AS | |
| | | 1 | **6V-8397** | 1 | SEAL-O-RING | |
| | | 1 | **8C-8988** | 1 | ELBOW | |
| | 26 | 1 | *148-8457* | 1 | UNION AS | |
| | | 1 | **6V-8398** | 2 | SEAL-O-RING | |
| | | 1 | **6V-8995** | 1 | UNION | |
| | 27 | 1 | *149-5452* | 1 | UNION AS | |
| | | 1 | **6V-8397** | 2 | SEAL-O-RING | |
| | | 1 | **6V-8994** | 1 | UNION | |
| | 28 | 1 | *153-6238* | 1 | ELBOW AS | |
| | | 1 | **2S-4078** | 1 | SEAL-O-RING | |
| | | 1 | **6V-8400** | 1 | SEAL-O-RING | |

## *279-7321* VALVE & LINES GP-GRAPPLE *(contd.)* i02725119

| NOTE | REF NO | GRAPHIC REF | PART NUMBER | QTY | PART NAME 1 2 3 4 5 6 (PRODUCT LEVEL) | SEE PAGE |
|---|---|---|---|---|---|---|
| | | 1 | **6V-9006** | 1 | ELBOW | |
| | 29 | 1 | *155-2026* | 1 | UNION AS | |
| | | 1 | **5K-9090** | 2 | SEAL-O-RING | |
| | | 1 | **6V-8998** | 1 | UNION | |
| | 30 | 1 | *155-7328* | 1 | ELBOW AS | |
| | | 1 | **5P-7701** | 1 | SEAL-O-RING | |
| | | 1 | **6V-9008** | 1 | ELBOW | |
| | | 1 | **8C-3093** | 1 | SEAL-O-RING | |
| | 31 | 1 | **5K-9090** | 1 | SEAL-O-RING | |
| | 32 | 1 | **5P-7464** | 2 | CLIP (SLOT) | |
| | 33 | 1 | **5P-7465** | 2 | CLIP (TAB) | |
| | 34 | 1 | **5P-7468** | 2 | CLIP (SLOT) | |
| | 35 | 1 | **5P-7469** | 2 | CLIP (TAB) | |
| | 36 | 1 | **5P-9297** | 2 | CLIP | |
| | 37 | 1 | **5P-9299** | 4 | CLIP | |
| | 38 | 1 | **6V-0545** | 1 | GROMMET | |
| | 39 | 1 | **6V-1874** | 1 | GROMMET | |
| | 40 | 1 | **6V-7359** | 2 | GROMMET | |
| | 41 | 1 | **6V-8397** | 1 | SEAL-O-RING | |
| | 42 | 1 | **6V-8398** | 1 | SEAL-O-RING | |
| | 43 | 1 | **6V-8400** | 2 | SEAL-O-RING | |
| | 44 | 1 | **6V-9168** | 2 | NUT (11/16-16-THD) | |
| | 45 | 1 | **6V-9169** | 1 | NUT-BULKHEAD (13/16-16-THD) | |
| | 46 | 1 | **6V-9172** | 1 | NUT (1-7/16-12-THD) | |
| | 47 | 1 | **7C-4354** | 2 | CLIP | |
| | 48 | 1 | **7M-8485** | 1 | SEAL-O-RING | |
| M | 49 | 1 | **7X-2552** | 2 | BOLT (M16X2X30-MM) | |
| | 50 | 1 | **8T-4121** | 19 | WASHER-HARD (11X21X2.5-MM THK) | |
| M | 51 | 1 | **8T-4133** | 6 | NUT (M10X1.5-THD) | |
| M | 52 | 1 | **8T-4136** | 8 | BOLT (M10X1.5X25-MM) | |
| M | 53 | 1 | **8T-4137** | 2 | BOLT (M10X1.5X20-MM) | |
| M | 54 | 1 | **8T-4139** | 7 | BOLT (M12X1.75X30-MM) | |
| M | 55 | 1 | **8T-4182** | 4 | BOLT (M10X1.5X45-MM) | |
| M | 56 | 1 | **8T-4195** | 3 | BOLT (M10X1.5X30-MM) | |
| | 57 | 1 | **8T-4223** | 7 | WASHER-HARD (13.5X25.5X3-MM THK) | |
| C | 58 | 1 | **161-8021** | 1 | CONNECTOR (O-RING) | |
| | 59 | 1 | **9X-8257** | 2 | WASHER (17.5X30X3.5-MM THK) | |
| C | 60 | 1 | *164-5544* | 1 | ELBOW AS | |
| | | 1 | **3E-2333** | 1 | ELBOW | |
| | | 1 | **6V-8398** | 1 | SEAL-O-RING | |

C-CHANGE FROM PREVIOUS TYPE
I-REFER TO HYDRAULIC INFORMATION SYSTEM
M-METRIC PART
Y-SEPARATE ILLUSTRATION

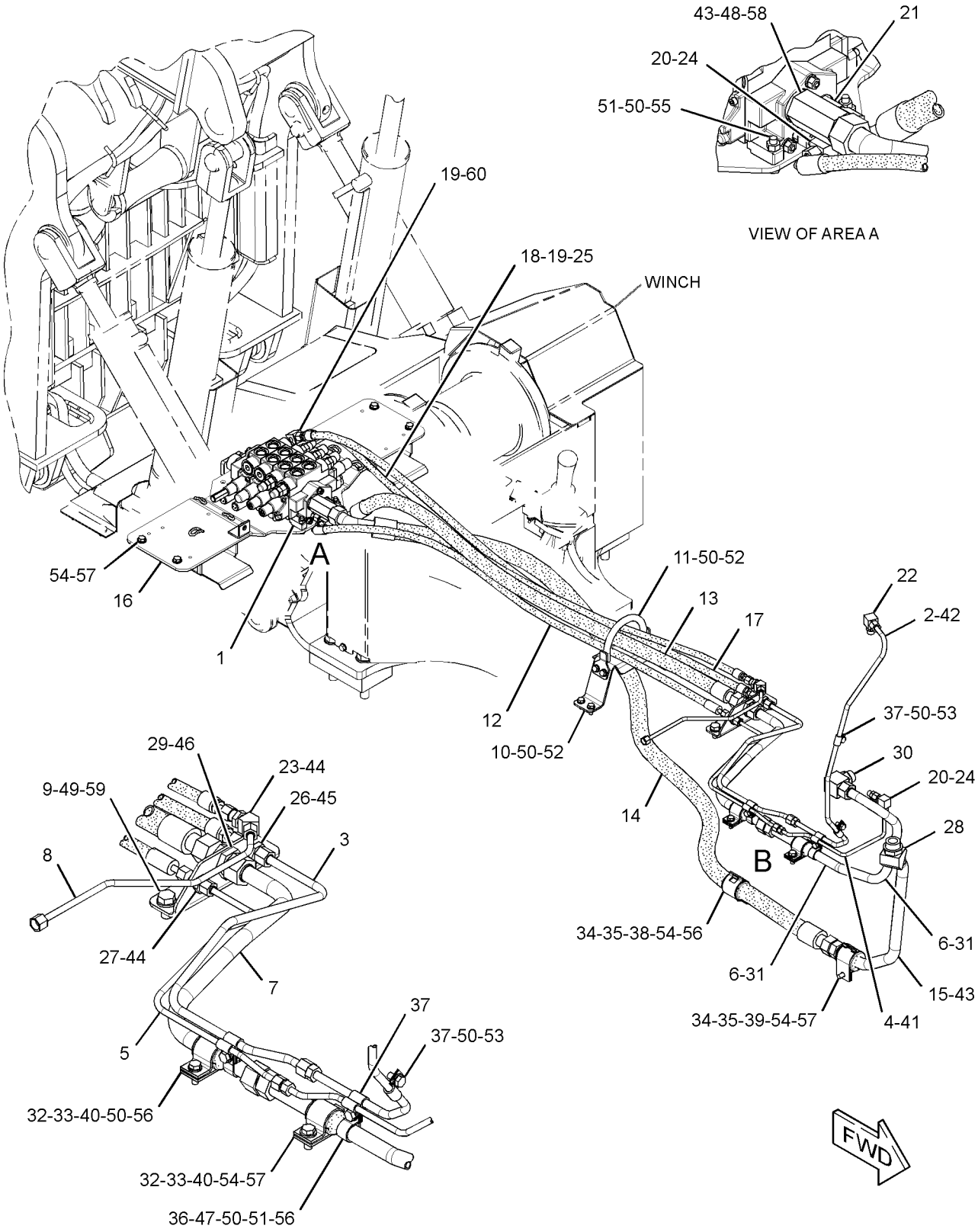


GRAPHIC #1 **<END>** g01371982

## *280-8999* VALVE & LINES GP-GRAPPLE–DUAL FUNCTION

**S/N: 5451-UP**
**PART OF 295-8464 WINCH AR**
**AN ATTACHMENT**

**SMCS-5057, 5568** **i02572965**

| NOTE | REF NO | GRAPHIC REF | PART NUMBER | QTY | PART NAME 1 2 3 4 5 6 (PRODUCT LEVEL) | SEE PAGE |
|---|---|---|---|---|---|---|
| | 1 | 1 | **127-9323** | 1 | BRACKET AS | |
| M | | 1 | **8T-3490** | 1 | NUT-WELD (M10X1.5-THD) | |
| I | 2 | 1 | **159-5901** | 1 | HOSE AS | |
| | 3 | 1 | **207-6069** | 2 | PLATE | |
| Y | 4 | 1 | **299-9531** | 1 | VALVE GP-BANK 5 (GRAPPLE, WINCH CONTROL) | 468 |
| I | 5 | 1 | **258-8861** | 1 | HOSE AS | |
| | 6 | 1 | **258-8870** | 1 | MOUNTING GP-BANK VALVE (GRAPPLE) | |
| | | 1 | **7T-1099** | 1 | LINK | |
| M | | 1 | **8T-3490** | 14 | NUT-WELD (M10X1.5-THD) | |
| I | 7 | 1 | **269-1892** | 1 | HOSE AS | |
| | 8 | 1 | **276-5657** | 1 | TUBE AS | |
| | 9 | 1 | **276-5658** | 1 | TUBE AS | |
| | 10 | 1 | **276-5659** | 1 | TUBE AS | |
| | 11 | 1 | **276-5660** | 1 | TUBE AS | |
| | 12 | 1 | **276-5661** | 1 | TUBE AS | |
| | 13 | 1 | **276-5662** | 1 | TUBE AS | |
| | 14 | 1 | **276-5663** | 1 | TUBE AS | |
| I | 15 | 1 | **276-5666** | 1 | HOSE AS | |
| I | 16 | 1 | **276-5667** | 1 | HOSE AS | |
| I | 17 | 1 | **276-5668** | 1 | HOSE AS | |
| I | 18 | 1 | **276-5669** | 1 | HOSE AS | |
| | 19 | 1 | **276-5670** | 1 | PLATE AS | |
| | 20 | 1 | **276-5673** | 1 | BRACKET AS | |
| | 21 | 1 | **276-5675** | 1 | BAR AS | |
| | 22 | 1 | **279-4149** | 1 | TUBE AS | |
| | 23 | 1 | *148-8326* | 2 | CONNECTOR AS | |
| | | | | | (EACH INCLUDES) | |
| | | 1 | **3J-7354** | 1 | SEAL-O-RING | |
| | | 1 | **6V-8397** | 1 | SEAL-O-RING | |
| | | 1 | **6V-9872** | 1 | CONNECTOR | |
| | 24 | 1 | *148-8330* | 1 | CONNECTOR AS | |
| | | 1 | **5K-9090** | 1 | SEAL-O-RING | |
| | | 1 | **7M-8485** | 1 | SEAL-O-RING | |
| | | 1 | **8T-0198** | 1 | CONNECTOR | |
| | 25 | 1 | *148-8333* | 1 | CONNECTOR AS | |
| | | 1 | **6V-8400** | 1 | SEAL-O-RING | |
| | | 1 | **7M-8485** | 1 | SEAL-O-RING | |
| | | 1 | **8T-7927** | 1 | CONNECTOR | |
| | 26 | 1 | *148-8336* | 2 | CONNECTOR AS | |
| | | | | | (EACH INCLUDES) | |
| | | 1 | **3J-1907** | 1 | SEAL-O-RING | |
| | | 1 | **6V-8397** | 1 | SEAL-O-RING | |
| | | 1 | **6V-8636** | 1 | CONNECTOR | |
| | 27 | 1 | *148-8364* | 1 | ELBOW AS | |
| | | 1 | **3K-0360** | 1 | SEAL-O-RING | |
| | | 1 | **6V-8398** | 1 | SEAL-O-RING | |
| | | 1 | **6V-8625** | 1 | ELBOW | |
| | 28 | 1 | *148-8366* | 1 | ELBOW AS | |
| | | 1 | **6V-8397** | 2 | SEAL-O-RING | |
| | | 1 | **6V-8987** | 1 | ELBOW | |
| | 29 | 1 | *148-8367* | 3 | ELBOW AS | |
| | | | | | (EACH INCLUDES) | |
| | | 1 | **6V-8397** | 1 | SEAL-O-RING | |
| | | 1 | **6V-9850** | 1 | ELBOW | |
| | 30 | 1 | *148-8371* | 1 | ELBOW AS | |

## *280-8999* **VALVE & LINES GP-GRAPPLE** *(contd.)* **i02572965**

| NOTE | REF NO | GRAPHIC REF | PART NUMBER | QTY | PART NAME 1 2 3 4 5 6 (PRODUCT LEVEL) | SEE PAGE |
|---|---|---|---|---|---|---|
| | | 1 | **6V-8397** | 1 | SEAL-O-RING | |
| | | 1 | **8C-8988** | 1 | ELBOW | |
| | 31 | 1 | *148-8457* | 1 | UNION AS | |
| | | 1 | **6V-8398** | 2 | SEAL-O-RING | |
| | | 1 | **6V-8995** | 1 | UNION | |
| | 32 | 1 | *149-5452* | 1 | UNION AS | |
| | | 1 | **6V-8397** | 2 | SEAL-O-RING | |
| | | 1 | **6V-8994** | 1 | UNION | |
| | 33 | 1 | *153-6238* | 1 | ELBOW AS | |
| | | 1 | **2S-4078** | 1 | SEAL-O-RING | |
| | | 1 | **6V-8400** | 1 | SEAL-O-RING | |
| | | 1 | **6V-9006** | 1 | ELBOW | |
| | 34 | 1 | *153-6241* | 1 | ELBOW AS | |
| | | 1 | **6V-8398** | 1 | SEAL-O-RING | |
| | | 1 | **8C-8989** | 1 | ELBOW | |
| | 35 | 1 | *155-2026* | 1 | UNION AS | |
| | | 1 | **5K-9090** | 2 | SEAL-O-RING | |
| | | 1 | **6V-8998** | 1 | UNION | |
| | 36 | 1 | *155-7328* | 1 | ELBOW AS | |
| | | 1 | **5P-7701** | 1 | SEAL-O-RING | |
| | | 1 | **6V-9008** | 1 | ELBOW | |
| | | 1 | **8C-3093** | 1 | SEAL-O-RING | |
| | 37 | 1 | **4P-8134** | 2 | CLIP | |
| | 38 | 1 | **5K-9090** | 1 | SEAL-O-RING | |
| | 39 | 1 | **5P-7464** | 2 | CLIP (SLOT) | |
| | 40 | 1 | **5P-7465** | 2 | CLIP (TAB) | |
| | 41 | 1 | **5P-7468** | 2 | CLIP (SLOT) | |
| | 42 | 1 | **5P-7469** | 2 | CLIP (TAB) | |
| | 43 | 1 | **5P-9297** | 3 | CLIP | |
| | 44 | 1 | **5P-9299** | 5 | CLIP | |
| | 45 | 1 | **6V-0545** | 1 | GROMMET | |
| | 46 | 1 | **6V-1874** | 1 | GROMMET | |
| | 47 | 1 | **6V-7359** | 2 | GROMMET | |
| | 48 | 1 | **6V-8397** | 1 | SEAL-O-RING | |
| | 49 | 1 | **6V-8398** | 1 | SEAL-O-RING | |
| | 50 | 1 | **6V-8400** | 1 | SEAL-O-RING | |
| | 51 | 1 | **6V-9168** | 2 | NUT (11/16-16-THD) | |
| | 52 | 1 | **6V-9172** | 1 | NUT (1-7/16-12-THD) | |
| | 53 | 1 | **7C-4354** | 3 | CLIP | |
| M | 54 | 1 | **7X-2552** | 2 | BOLT (M16X2X30-MM) | |
| | 55 | 1 | **8T-4121** | 23 | WASHER-HARD (11X21X2.5-MM THK) | |
| M | 56 | 1 | **8T-4133** | 7 | NUT (M10X1.5-THD) | |
| M | 57 | 1 | **8T-4136** | 12 | BOLT (M10X1.5X25-MM) | |
| M | 58 | 1 | **8T-4137** | 4 | BOLT (M10X1.5X20-MM) | |
| M | 59 | 1 | **8T-4139** | 7 | BOLT (M12X1.75X30-MM) | |
| M | 60 | 1 | **8T-4182** | 3 | BOLT (M10X1.5X45-MM) | |
| M | 61 | 1 | **8T-4185** | 1 | BOLT (M10X1.5X50-MM) | |
| M | 62 | 1 | **8T-4195** | 4 | BOLT (M10X1.5X30-MM) | |
| | 63 | 1 | **8T-4223** | 7 | WASHER-HARD (13.5X25.5X3-MM THK) | |
| | 64 | 1 | **9X-8257** | 2 | WASHER (17.5X30X3.5-MM THK) | |
| | 65 | 1 | **6V-9169** | 1 | NUT-BULKHEAD (13/16-16-THD) | |

I-REFER TO HYDRAULIC INFORMATION SYSTEM
M-METRIC PART
Y-SEPARATE ILLUSTRATION

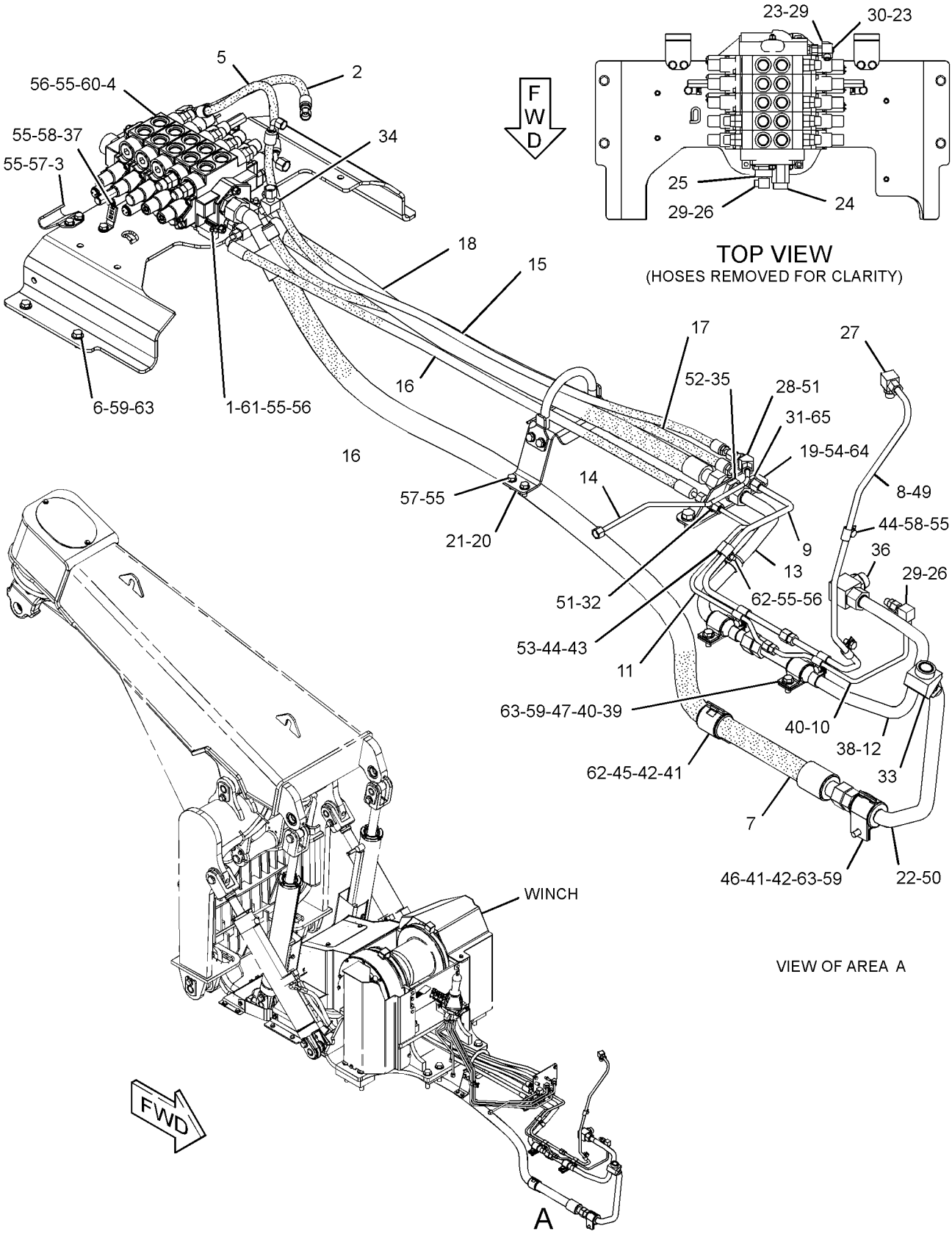


GRAPHIC #1 **<END>** g01326127

# 299-9532 VALVE GP-BANK 2–DECKING BLADE, STEERING CONTROL

**S/N: 5451-UP**

**PART OF 252-6555 CONTROL GP-STEER & DECK BLADE**

**SMCS-5051** **i02604992**

| NOTE | REF NO | GRAPHIC REF | PART NUMBER | QTY | PART NAME 1 2 3 4 5 6 (PRODUCT LEVEL) | SEE PAGE |
|---|---|---|---|---|---|---|
| | 1 | 1 | **4D-9986** | 6 | SEAL-O-RING | |
| | 2 | 1 | **4J-5140** | 3 | SEAL-O-RING | |
| | 3 | 1 | **4J-5267** | 3 | SEAL-O-RING | |
| B | 4 | 1 | **4T-2723** | 9 | SHIM (0.076-MM THK) | |
| | 5 | 1 | **253-1764** | 1 | VALVE GP-PRESSURE REDUCING (GRAPPLE) | |
| Y | 6 | 1 | **300-0135** | 1 | VALVE GP-CONTROL (DECKING BLADE) | 478 |
| Y | 7 | 1 | **109-5388** | 1 | VALVE GP-CONTROL (STEERING) | 470 |
| Y | 8 | 1 | **183-1410** | 1 | VALVE GP-PRIORITY (BRAKE) | 487 |
| | 9 | 1 | **4T-4538** | 3 | STUD (3/8-16-THD) | |
| | 10 | 1 | **6V-8801** | 3 | NUT (3/8-16-THD) | |
| | 11 | 1 | **8T-4896** | 3 | WASHER-HARD (10.2X18.5X2.5-MM THK) | |

B-USE AS REQUIRED
Y-SEPARATE ILLUSTRATION

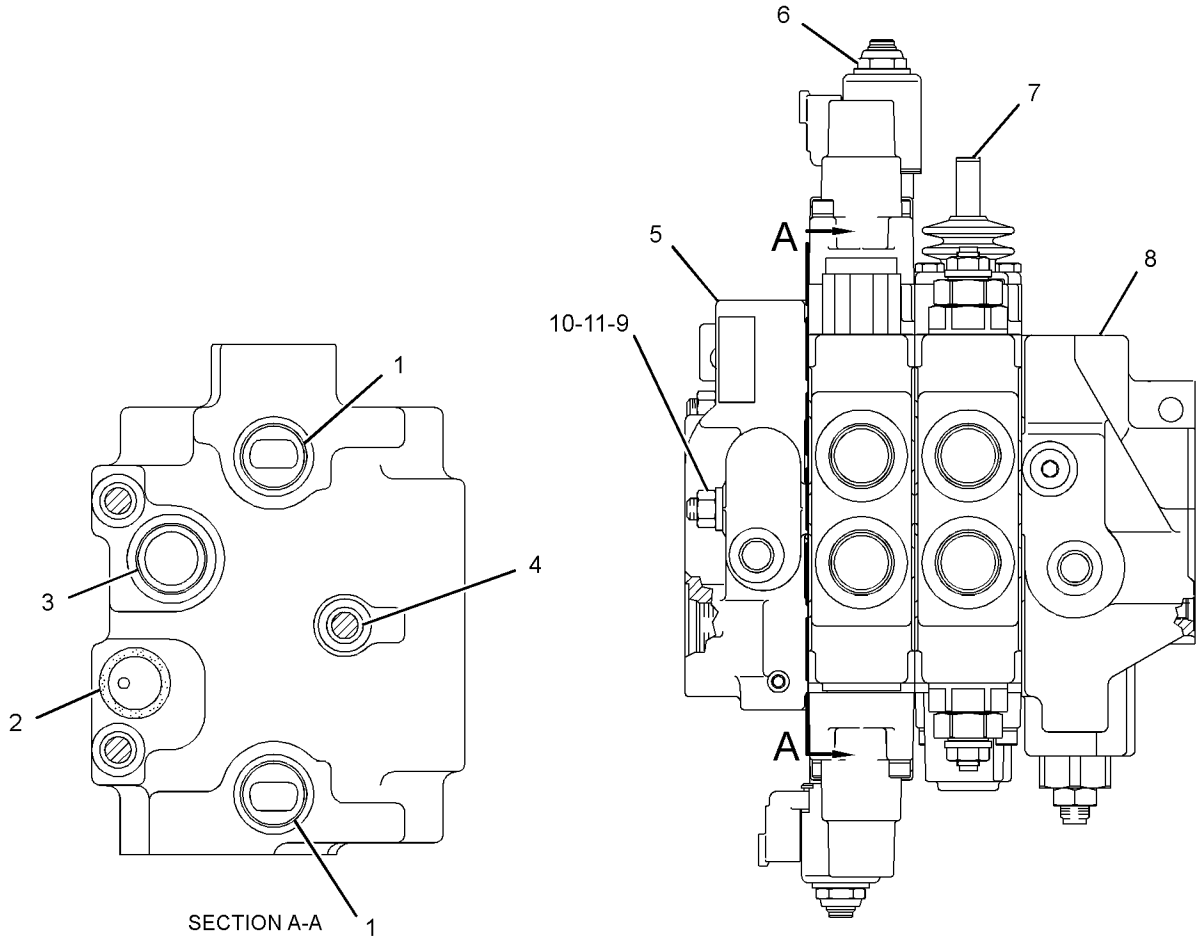


GRAPHIC #1 **<END>** g01311824

## *195-0821* VALVE GP-BANK 4—GRAPPLE CONTROL

**S/N: 5451-UP**

**PART OF 279-7321 VALVE & LINES GP-GRAPPLE**

**AN ATTACHMENT**

**SMCS-5051** **i02529555**

| NOTE | REF NO | GRAPHIC REF | PART NUMBER | QTY | PART NAME 1 2 3 4 5 6 (PRODUCT LEVEL) | SEE PAGE |
|---|---|---|---|---|---|---|
| | 1 | 1 | **109-5383** | 1 | COVER | |
| Y | 2 | 1 | **265-9110** | 1 | VALVE GP-CONTROL (GRAPPLE BOOM) | 474 |
| Y | 3 | 1 | **195-5033** | 1 | VALVE GP-CONTROL (GRAPPLE ROTATION) | 472 |
| Y | 4 | 1 | **272-1880** | 1 | VALVE GP-CONTROL (GRAPPLE TONG) | 476 |
| | 5 | 1 | **4T-4218** | 3 | STUD | |
| | 6 | 1 | **9S-8752** | 6 | NUT-FULL (3/8-16-THD) | |
| | 7 | 1 | **5M-2894** | 6 | WASHER-HARD (10.2X18.5X2.5-MM THK) | |
| B | 8 | 1 | **4T-2723** | 15 | SHIM (0.076-MM THK) | |
| | 9 | 1 | **4D-9986** | 10 | SEAL-O-RING | |
| | 10 | 1 | **4J-5267** | 5 | SEAL-O-RING | |
| | 11 | 1 | **4J-5140** | 5 | SEAL-O-RING | |
| | 12 | 1 | **126-7575** | 1 | COVER AS-END | |
| | 13 | 1 | **6V-5722** | 8 | SEAL-O-RING | |
| Y | 14 | 1 | **265-9110** | 1 | VALVE GP-CONTROL (GRAPPLE ARCH) | 474 |

B-USE AS REQUIRED
Y-SEPARATE ILLUSTRATION

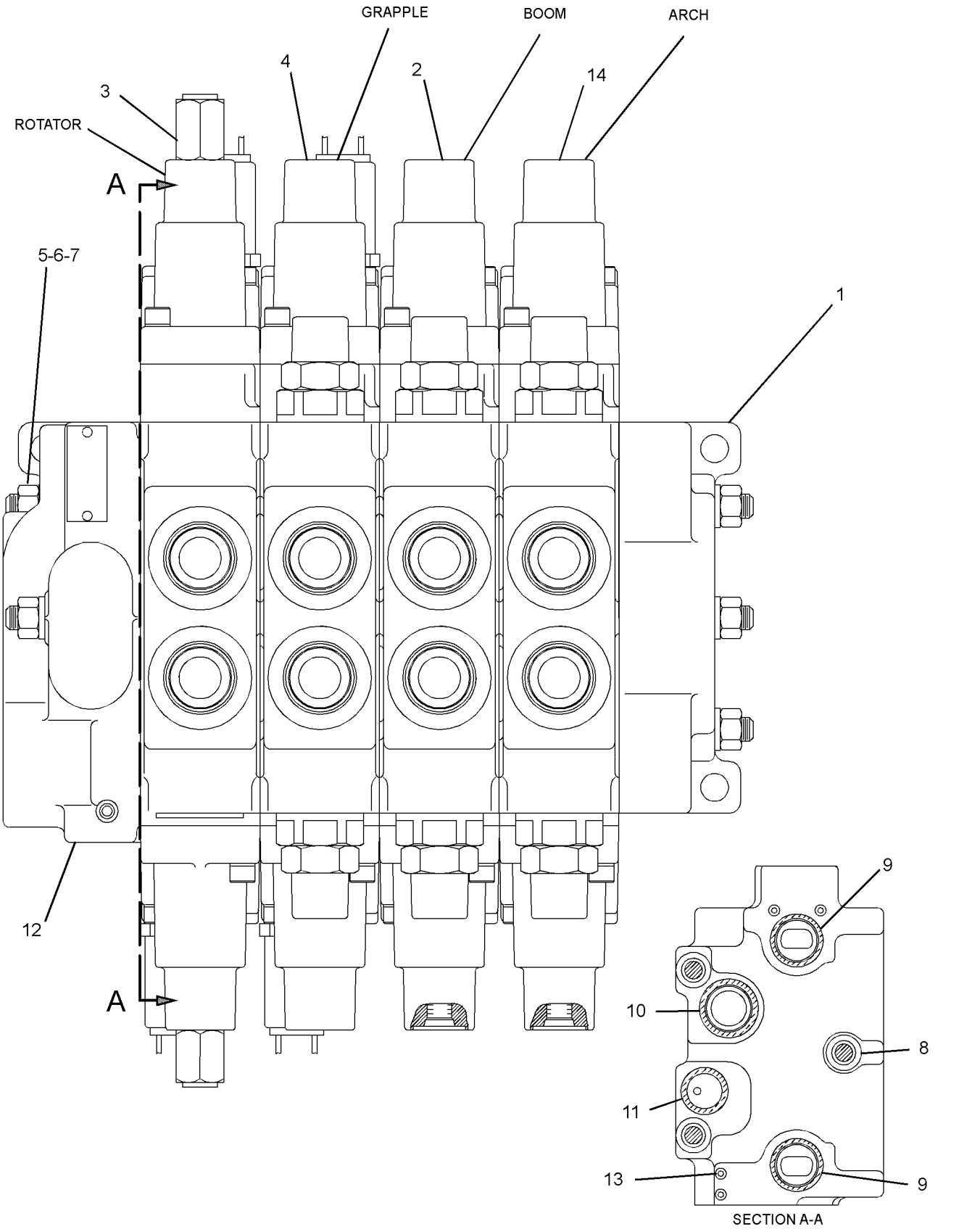


GRAPHIC #1

**<END>**

g01265726

# 299-9530 VALVE GP-BANK 4—GRAPPLE CONTROL

**S/N: 5451-UP**

**PART OF 279-7321 VALVE & LINES GP-GRAPPLE**

**AN ATTACHMENT**

**SMCS-5051** **i02738668**

| NOTE | REF NO | GRAPHIC REF | PART NUMBER | QTY | PART NAME 1 2 3 4 5 6 (PRODUCT LEVEL) | SEE PAGE |
|---|---|---|---|---|---|---|
| | 1 | 1 | **109-5383** | 1 | COVER | |
| Y | 2 | 1 | **300-0136** | 1 | VALVE GP-CONTROL (GRAPPLE ARCH) | 480 |
| Y | 2A | 1 | **300-0136** | 1 | VALVE GP-CONTROL (GRAPPLE BOOM) | 480 |
| Y | 3 | 1 | **300-0137** | 1 | VALVE GP-CONTROL (GRAPPLE ROTATION) | 482 |
| Y | 4 | 1 | **272-1880** | 1 | VALVE GP-CONTROL (GRAPPLE TONG) | 476 |
| | 5 | 1 | **4T-4218** | 3 | STUD | |
| | 6 | 1 | **9S-8752** | 6 | NUT-FULL (3/8-16-THD) | |
| | 7 | 1 | **5M-2894** | 6 | WASHER-HARD (10.2X18.5X2.5-MM THK) | |
| B | 8 | 1 | **4T-2723** | 15 | SHIM (0.076-MM THK) | |
| | 9 | 1 | **4D-9986** | 10 | SEAL-O-RING | |
| | 10 | 1 | **4J-5267** | 5 | SEAL-O-RING | |
| | 11 | 1 | **4J-5140** | 5 | SEAL-O-RING | |
| | 12 | 1 | **126-7575** | 1 | COVER AS-END | |
| | 13 | 1 | **6V-5722** | 8 | SEAL-O-RING | |

B-USE AS REQUIRED
Y-SEPARATE ILLUSTRATION

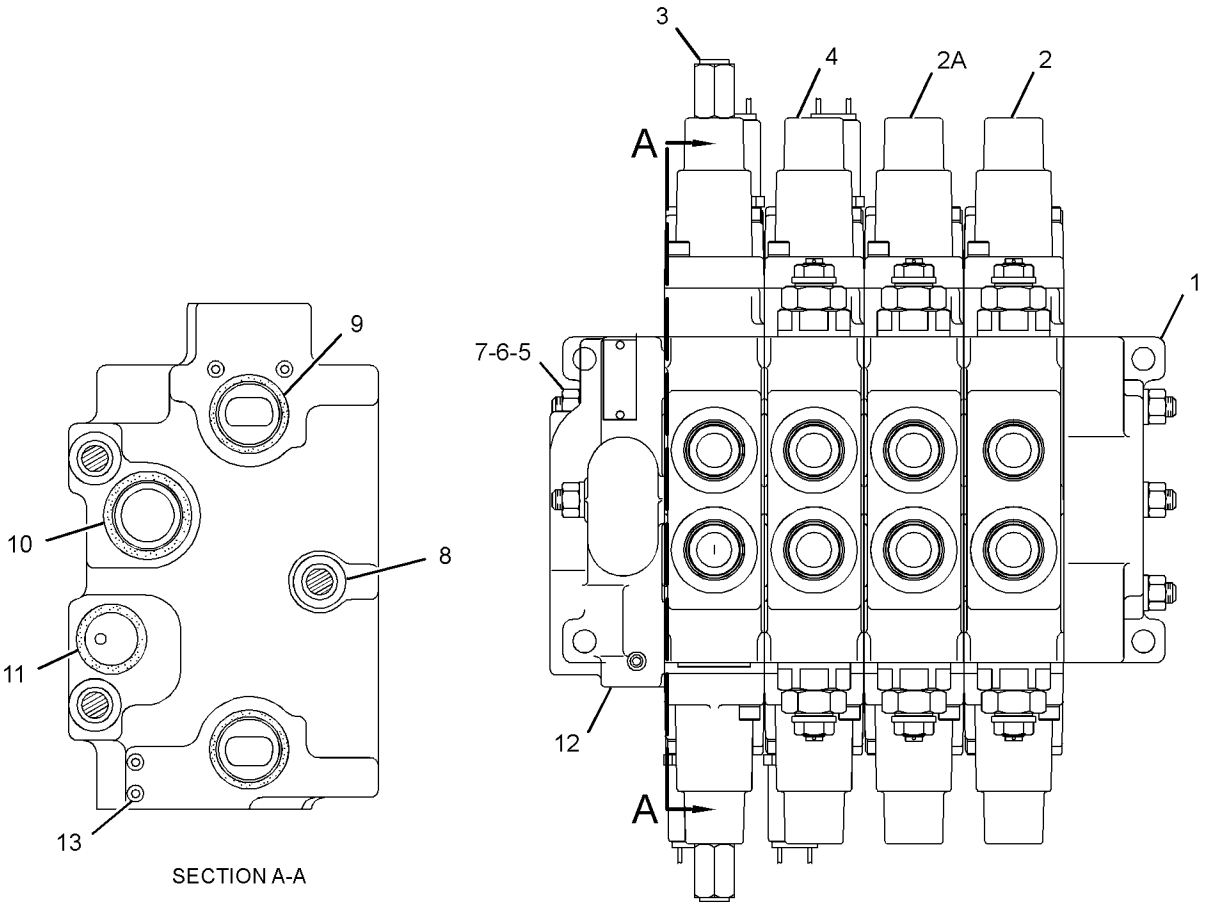


GRAPHIC #1 **<END>** g01372872

# 299-9531 VALVE GP-BANK 5—GRAPPLE, WINCH CONTROL

**S/N: 5451-UP**

**PART OF 279-4337, 280-8999 VALVE & LINES GP-GRAPPLE**

**AN ATTACHMENT**

**SMCS-5051** **i02738726**

| NOTE | REF NO | GRAPHIC REF | PART NUMBER | QTY | PART NAME 1 2 3 4 5 6 (PRODUCT LEVEL) | SEE PAGE |
|---|---|---|---|---|---|---|
| | 1 | 1 | **109-5383** | 1 | COVER | |
| Y | 2 | 1 | **300-0136** | 1 | VALVE GP-CONTROL (GRAPPLE ARCH) | 480 |
| Y | 2A | 1 | **300-0136** | 1 | VALVE GP-CONTROL (GRAPPLE BOOM) | 480 |
| Y | 3 | 1 | **272-1880** | 1 | VALVE GP-CONTROL (GRAPPLE TONG) | 476 |
| Y | 4 | 1 | **300-0137** | 1 | VALVE GP-CONTROL (GRAPPLE ROTATION) | 482 |
| Y | 5 | 1 | **300-0138** | 1 | VALVE GP-CONTROL (WINCH) | 484 |
| | 6 | 1 | **126-7575** | 1 | COVER AS-END | |
| | 7 | 1 | **107-8117** | 3 | STUD (3/8-16-THD) | |
| | 8 | 1 | **9S-8752** | 6 | NUT-FULL (3/8-16-THD) | |
| | 9 | 1 | **5M-2894** | 6 | WASHER-HARD (10.2X18.5X2.5-MM THK) | |
| | 10 | 1 | **4D-9986** | 12 | SEAL-O-RING | |
| | 11 | 1 | **4J-5140** | 6 | SEAL-O-RING | |
| | 12 | 1 | **4J-5267** | 6 | SEAL-O-RING | |
| B | 13 | 1 | **4T-2723** | 18 | SHIM (0.076-MM THK) | |

B-USE AS REQUIRED
Y-SEPARATE ILLUSTRATION

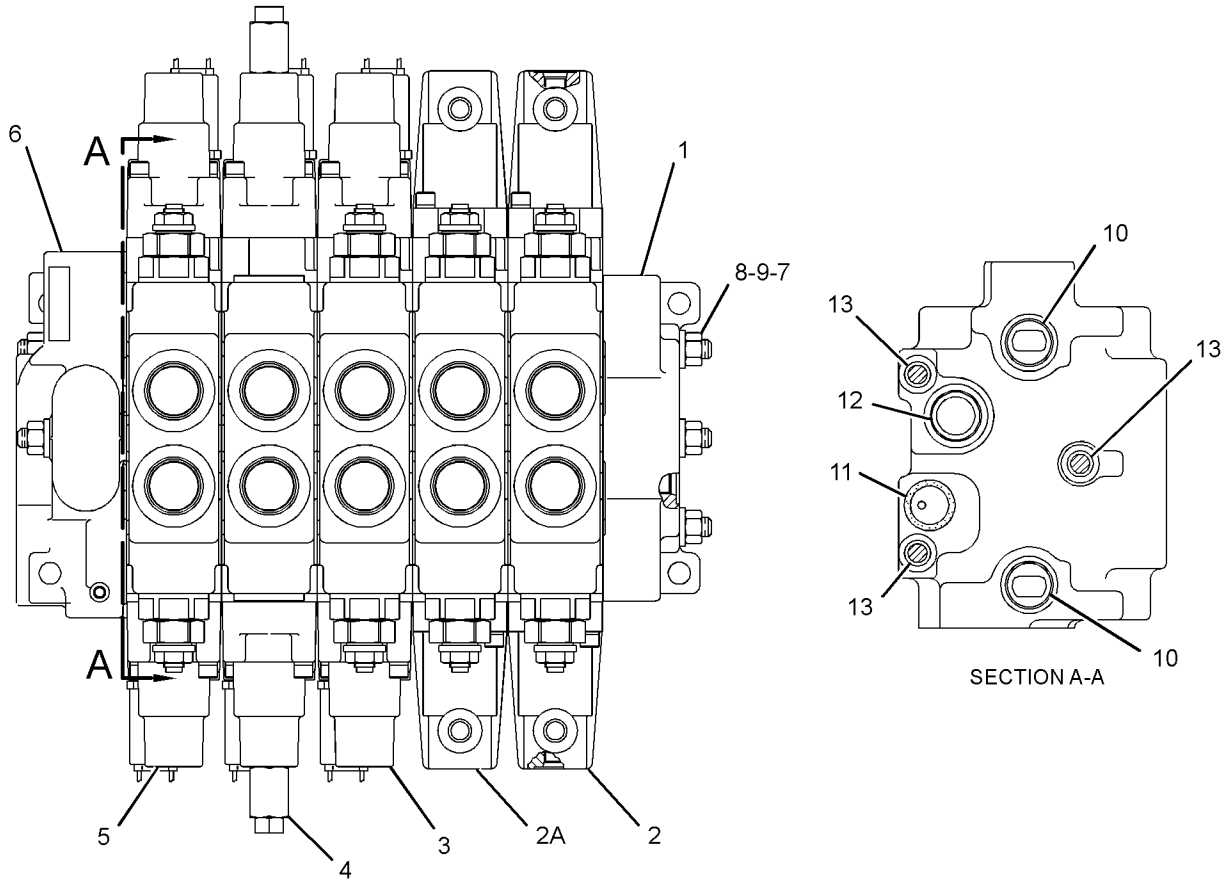


GRAPHIC #1 **<END>** g01372878

## *158-9956* VALVE GP-CHECK–PILOT, DIFFERENTIAL LOCK OIL

**S/N: 5451-UP**

**PART OF 253-4603 MANIFOLD GP-CONTROL**

**SMCS-5067** **i01950824**

| NOTE | REF NO | GRAPHIC REF | PART NUMBER | QTY | PART NAME 1 2 3 4 5 6 (PRODUCT LEVEL) | SEE PAGE |
|---|---|---|---|---|---|---|
| | 1 | 1 | **3K-0360** | 1 | SEAL-O-RING | |
| | 2 | 1 | **161-6154** | 1 | SEAL-O-RING | |
| | 3 | 1 | **6E-0381** | 1 | RING-BACKUP | |

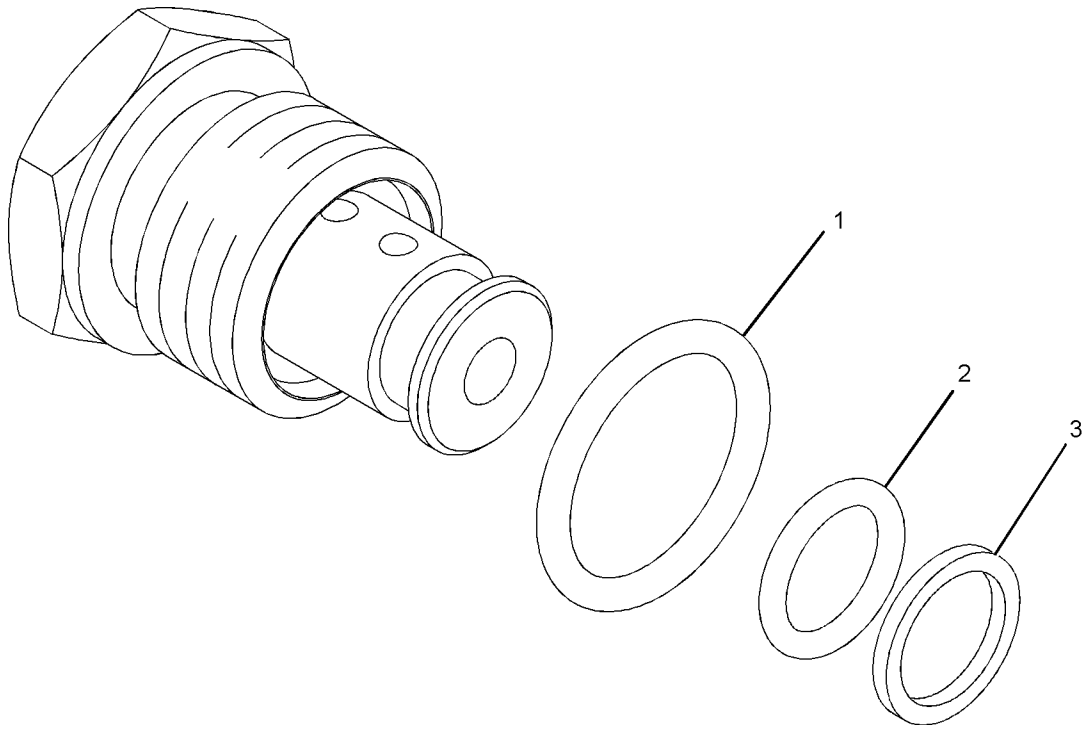


GRAPHIC #1 **<END>** g01016882

# HYDRAULIC SYSTEM

## 109-5388 VALVE GP-CONTROL–STEERING

**S/N: 5451-UP**

**PART OF 299-9532 VALVE GP-BANK 2**

**SMCS-5051** **i02738556**

| NOTE | REF NO | GRAPHIC REF | PART NUMBER | QTY | PART NAME 1 2 3 4 5 6 (PRODUCT LEVEL) | SEE PAGE |
|---|---|---|---|---|---|---|
| | 1 | 1 | **4T-4524** | 1 | GUARD-DUST | |
| | 2 | 1 | **031-0214** | 2 | BOLT-LOCKING (1/4-20X0.5-IN) | |
| | 3 | 1 | **9T-0704** | 2 | VALVE GP-RELIEF (LINE) (STEERING CYLINDER CROSSOVER) | |
| | | | | | (EACH INCLUDES) | |
| | | 1 | **4K-1388** | 1 | SEAL-O-RING | |
| | | 1 | **6E-0358** | 1 | RING-BACKUP | |
| | | 1 | **5K-9090** | 1 | SEAL-O-RING | |
| | 4 | 1 | **4T-4516** | 1 | SPRING | |
| | 5 | 1 | **031-5085** | 1 | BOLT-LOCKING (1/4-20X1-IN) | |
| | 6 | 1 | **167-6768** | 1 | HOUSING | |
| | 7 | 1 | **4T-4521** | 2 | RETAINER | |
| | 8 | 1 | **7F-8607** | 2 | SEAL-O-RING | |
| | 9 | 1 | **6E-4317** | 1 | SPRING | |
| | 10 | 1 | **2M-9780** | 1 | SEAL-O-RING | |
| | 11 | 1 | **9S-8006** | 1 | PLUG-O-RING | |
| | 12 | 1 | **4T-4520** | 1 | FILTER | |
| | 13 | 1 | **4T-4528** | 1 | RETAINER | |
| | 14 | 1 | **126-5476** | 1 | SEAT AS-SHUTTLE | |
| | | 1 | **4T-7807** | 1 | RING-BACKUP | |
| | | 1 | **7J-0204** | 1 | SEAL-O-RING | |
| | | 1 | **8T-2360** | 1 | SEAL-O-RING | |
| | 15 | 1 | **7J-0204** | 1 | SEAL-O-RING | |
| | 16 | 1 | **8T-2360** | 1 | SEAL-O-RING | |
| | 17 | 1 | **5B-9318** | 1 | BALL | |
| | 18 | 1 | **8T-2361** | 1 | SEAL-O-RING | |
| | 19 | 1 | **1P-7363** | 1 | SEAL-O-RING | |
| | 20 | 1 | **3J-7354** | 1 | SEAL-O-RING | |
| | 21 | 1 | **126-5796** | 1 | VALVE GP-CHECK (PRIMARY RESOLVER) | |
| | | 1 | **1P-7363** | 1 | SEAL-O-RING | |
| | | 1 | **3J-7354** | 1 | SEAL-O-RING | |
| | | 1 | **8T-2361** | 1 | SEAL-O-RING | |
| | | 1 | **126-5984** | 1 | RING-BACKUP | |
| | | 1 | **126-5985** | 1 | RING-BACKUP | |
| | 22 | 1 | **8B-2377** | 2 | BOLT (1/4-20X2-IN) | |
| | 23 | 1 | **5P-0537** | 2 | WASHER-HARD (7.2X14.5X2-MM THK) | |
| | 24 | 1 | **4T-4533** | 1 | SPACER (7.1X17.3X1.5-MM THK) | |

**109-5388 VALVE GP-CONTROL** *(contd.)* **i02738556**

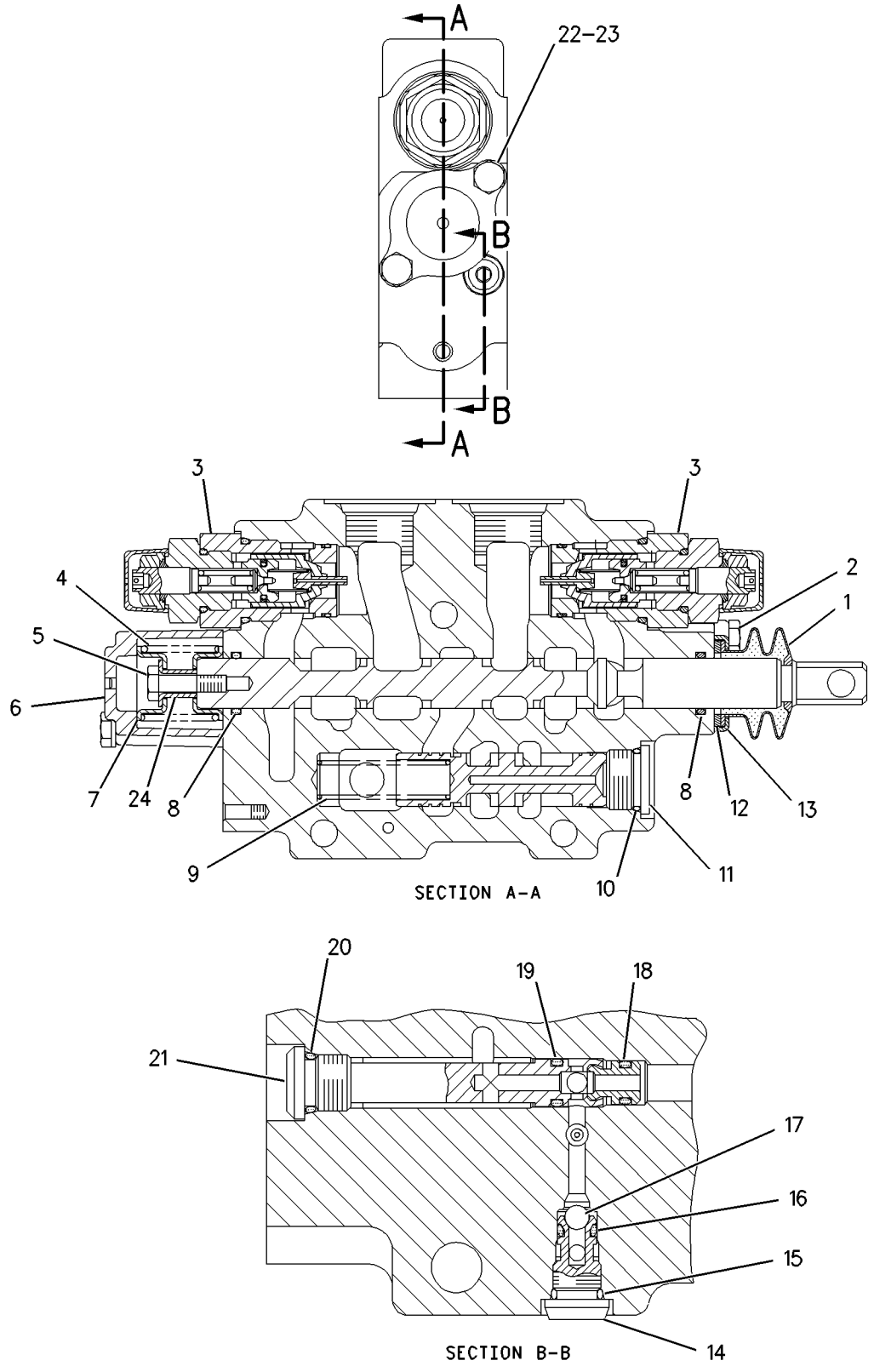


GRAPHIC #1 **<END>** g00919694

# HYDRAULIC SYSTEM

## 195-5033 VALVE GP-CONTROL–GRAPPLE ROTATION

**S/N: 5451-UP**

**PART OF 195-0821 VALVE GP-BANK 4**

**AN ATTACHMENT**

**SMCS-5051** **i02301850**

| NOTE | REF NO | GRAPHIC REF | PART NUMBER | QTY | PART NAME 1 2 3 4 5 6 (PRODUCT LEVEL) | SEE PAGE |
|---|---|---|---|---|---|---|
| | 2 | 1 | **114-1972** | 1 | COUPLING | |
| | 3 | 1 | **5S-0003** | 2 | NUT (5/16-18-THD) | |
| | 6 | 1 | **126-5476** | 1 | SEAT AS-SHUTTLE | |
| | | 1 | **7J-0204** | 1 | SEAL-O-RING | |
| | | 1 | **4T-7807** | 1 | RING-BACKUP | |
| | | 1 | **8T-2360** | 1 | SEAL-O-RING | |
| | 7 | 1 | **114-3906** | 4 | RETAINER | |
| | 8 | 1 | **9S-8006** | 1 | PLUG-O-RING | |
| | 9 | 1 | **2M-9780** | 1 | SEAL-O-RING | |
| | 11 | 1 | **4K-4986** | 2 | SEAL-O-RING | |
| | 12 | 1 | **126-7968** | 2 | SPRING | |
| | 13 | 1 | **196-3836** | 1 | HOUSING AS-SOLENOID | |
| | | 1 | **3J-7354** | 1 | SEAL-O-RING | |
| | | 1 | **5H-6005** | 1 | SEAL-O-RING | |
| | | 1 | **5P-9684** | 1 | SETSCREW-SOCKET | |
| | | 1 | **9S-8002** | 1 | PLUG-O-RING | |
| | 14 | 1 | **196-3837** | 1 | HOUSING AS-SOLENOID | |
| | | 1 | **3J-7354** | 1 | SEAL-O-RING | |
| | | 1 | **5H-6005** | 1 | SEAL-O-RING | |
| | | 1 | **5P-9684** | 1 | SETSCREW-SOCKET | |
| | | 1 | **9S-8002** | 1 | PLUG-O-RING | |
| | 15 | 1 | **4T-4531** | 2 | PLUG | |
| | 16 | 1 | **5B-9318** | 1 | BALL (SECONDARY RESOLVER) | |
| | 17 | 1 | **4K-1388** | 2 | SEAL-O-RING | |
| | 18 | 1 | **5K-9090** | 2 | SEAL-O-RING | |
| | 19 | 1 | **9T-4518** | 2 | RING-BACKUP | |
| | 20 | 1 | **5L-9018** | 5 | BOLT-SOCKET HEAD (1/4-20X1.75-IN) | |
| | 21 | 1 | **6V-5722** | 2 | SEAL-O-RING | |
| Y | 22 | 1 | **126-7971** | 1 | VALVE GP-SOLENOID (GRAPPLE ROTATION, CW) | 490 |
| Y | 22A | 1 | **126-7971** | 1 | VALVE GP-SOLENOID (GRAPPLE ROTATION, CCW) | 490 |
| | 23 | 1 | **3H-0442** | 2 | SEAL-O-RING | |
| | 24 | 1 | **114-1973** | 1 | COUPLING | |
| | 25 | 1 | **155-9836** | 1 | VALVE GP-CHECK (PRIMARY RESOLVER) | |
| | 26 | 1 | **6E-4317** | 1 | SPRING | |

Y-SEPARATE ILLUSTRATION

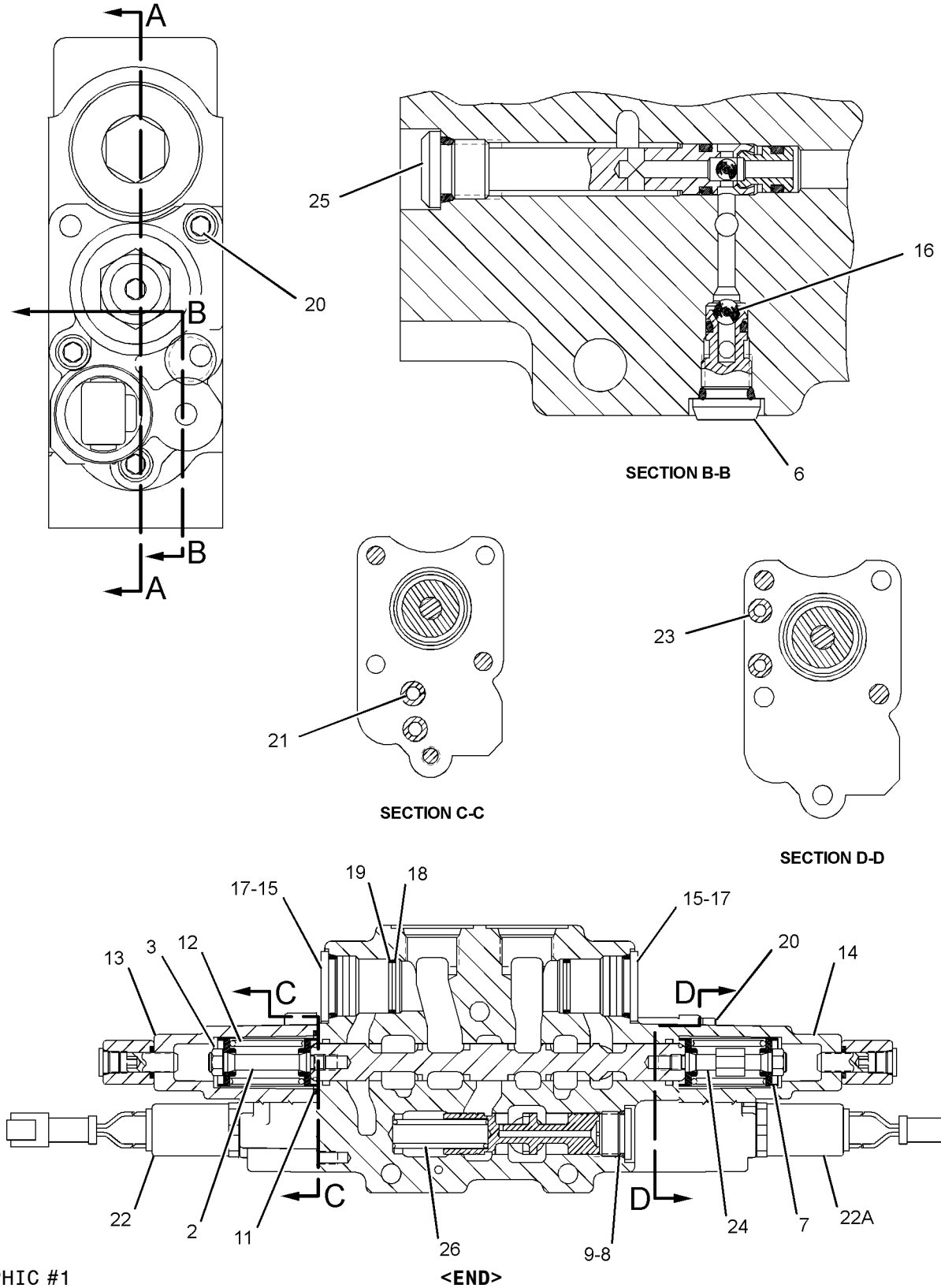


GRAPHIC #1

**<END>**

g01152687

# HYDRAULIC SYSTEM

## 265-9110 VALVE GP-CONTROL–GRAPPLE ARCH, GRAPPLE BOOM

**S/N: 5451-UP**

**PART OF 195-0821 VALVE GP-BANK 4**

**AN ATTACHMENT**

**SMCS-5051** **i02468285**

| NOTE | REF NO | GRAPHIC REF | PART NUMBER | QTY | PART NAME 1 2 3 4 5 6 (PRODUCT LEVEL) | SEE PAGE |
|---|---|---|---|---|---|---|
| | 1 | 1 | **8H-0707** | 4 | BOLT (1/4-20X1-IN) | |
| | 2 | 1 | **114-1972** | 1 | COUPLING | |
| | 3 | 1 | **5S-0003** | 2 | NUT (5/16-18-THD) | |
| | 4 | 1 | **114-4232** | 2 | SPRING | |
| | 5 | 1 | **9T-0704** | 2 | VALVE GP-RELIEF (LINE) | |
| | | | | | (EACH INCLUDES) | |
| | | 1 | **4K-1388** | 1 | SEAL-O-RING | |
| | | 1 | **5K-9090** | 1 | SEAL-O-RING | |
| | | 1 | **6E-0358** | 1 | RING-BACKUP | |
| | 6 | 1 | **5P-0537** | 4 | WASHER-HARD (7.2X14.5X2-MM THK) | |
| | 7 | 1 | **114-1973** | 1 | COUPLING | |
| | 8 | 1 | **197-3578** | 2 | HOUSING AS | |
| | 9 | 1 | **114-3906** | 1 | RETAINER | |
| | 10 | 1 | **9S-8006** | 1 | PLUG-O RING | |
| | 11 | 1 | **2M-9780** | 1 | SEAL-O-RING | |
| | 12 | 1 | **6E-4317** | 1 | SPRING | |
| | 14 | 1 | **4K-4986** | 2 | SEAL-O-RING | |
| | 15 | 1 | **155-9836** | 1 | VALVE GP-CHECK | |
| | | 1 | **1P-7363** | 1 | SEAL-O-RING | |
| | | 1 | **3J-7354** | 1 | SEAL-O-RING | |
| | | 1 | **8T-2361** | 1 | SEAL-O-RING | |
| | | 1 | **126-5984** | 1 | RING-BACKUP | |
| | | 1 | **126-5985** | 1 | RING-BACKUP | |
| | 16 | 1 | **3J-7354** | 1 | SEAL-O-RING | |
| | 17 | 1 | **1P-7363** | 1 | SEAL-O-RING | |
| | 18 | 1 | **8T-2361** | 1 | SEAL-O-RING | |
| | 19 | 1 | **5B-9318** | 1 | BALL | |
| | 20 | 1 | **8T-2360** | 1 | SEAL-O-RING | |
| | 21 | 1 | **7J-0204** | 1 | SEAL-O-RING | |
| | 22 | 1 | **126-5476** | 1 | SEAT AS-SHUTTLE | |
| | | 1 | **4T-7807** | 1 | RING-BACKUP | |
| | | 1 | **7J-0204** | 1 | SEAL-O-RING | |
| | | 1 | **8T-2360** | 1 | SEAL-O-RING | |

**265-9110 VALVE GP-CONTROL** *(contd. )* **i02468285**

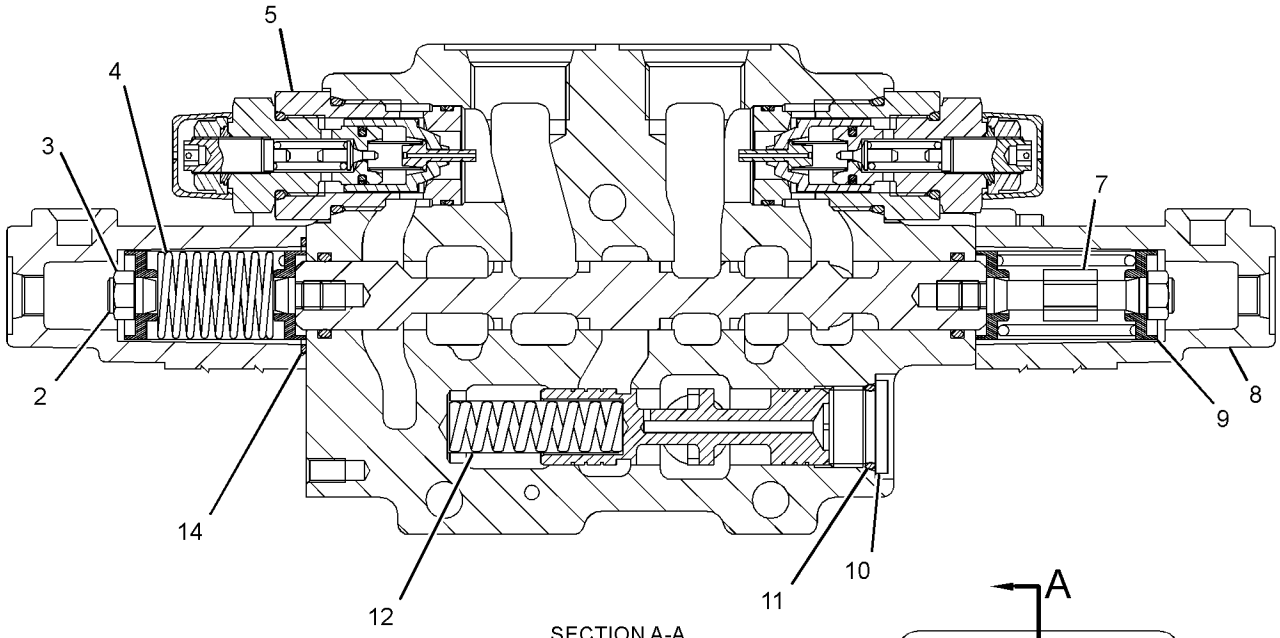


SECTION A-A

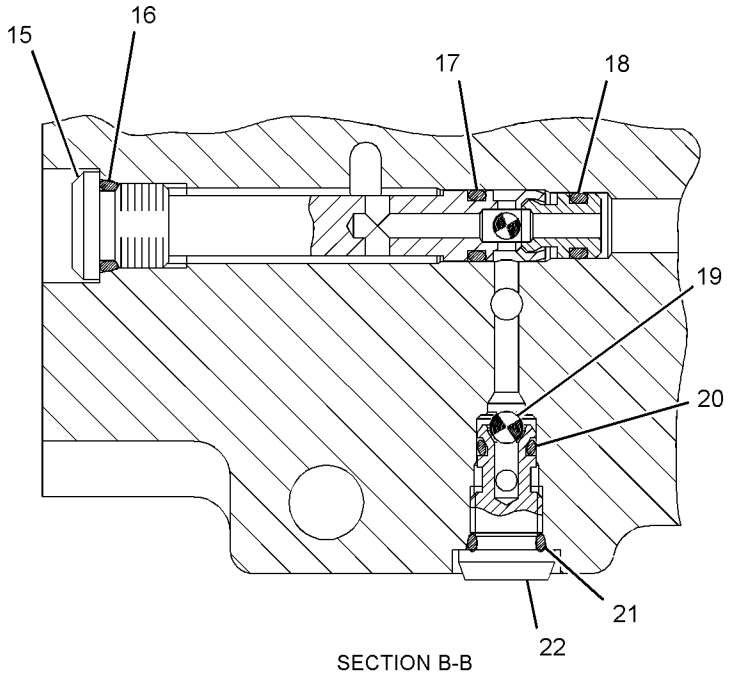


SECTION B-B

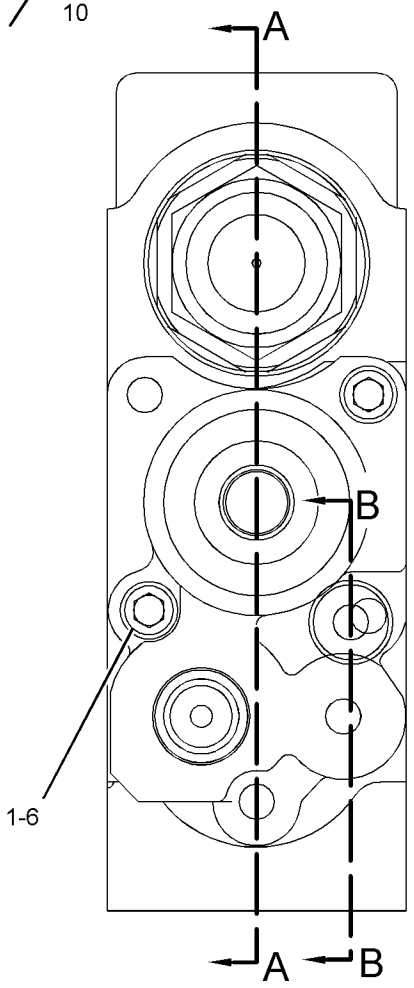


GRAPHIC #1 **<END>** g01236443

# HYDRAULIC SYSTEM

## 272-1880 VALVE GP-CONTROL–GRAPPLE TONG

**S/N: 5451-UP**

**PART OF 195-0821, 299-9530 VALVE GP-BANK 4, 299-9531 VALVE GP-BANK 5**

**AN ATTACHMENT**

**SMCS-5051** **i02504657**

| NOTE | REF NO | GRAPHIC REF | PART NUMBER | QTY | PART NAME 1 2 3 4 5 6 (PRODUCT LEVEL) | SEE PAGE |
|---|---|---|---|---|---|---|
| | 1 | 1 | **156-1592** | 1 | HOUSING AS | |
| | 2 | 1 | **114-1972** | 1 | COUPLING | |
| | 3 | 1 | **5S-0003** | 2 | NUT (5/16-18-THD) | |
| | 4 | 1 | **126-5796** | 1 | VALVE GP-CHECK (PRIMARY RESOLVER) | |
| | | 1 | **1P-7363** | 1 | SEAL-O-RING | |
| | | 1 | **3J-7354** | 1 | SEAL-O-RING | |
| | | 1 | **8T-2361** | 1 | SEAL-O-RING | |
| | | 1 | **126-5984** | 1 | RING-BACKUP | |
| | | 1 | **126-5985** | 1 | RING-BACKUP | |
| | 5 | 1 | **9T-0704** | 2 | VALVE GP-RELIEF (LINE) (GRAPPLE TONG-OPEN, CLOSE) | |
| | | | | | (EACH INCLUDES) | |
| | | 1 | **4K-1388** | 1 | SEAL-O-RING | |
| | | 1 | **5K-9090** | 1 | SEAL-O-RING | |
| | | 1 | **6E-0358** | 1 | RING-BACKUP | |
| | 6 | 1 | **114-1973** | 1 | COUPLING | |
| | 7 | 1 | **126-5476** | 1 | SEAT AS-SHUTTLE | |
| | | 1 | **4T-7807** | 1 | RING-BACKUP | |
| | | 1 | **7J-0204** | 1 | SEAL-O-RING | |
| | | 1 | **8T-2360** | 1 | SEAL-O-RING | |
| | 8 | 1 | **114-3906** | 4 | RETAINER | |
| | 9 | 1 | **9S-8006** | 1 | PLUG-O-RING | |
| | 10 | 1 | **2M-9780** | 1 | SEAL-O-RING | |
| | 11 | 1 | **6E-4317** | 1 | SPRING | |
| | 12 | 1 | **4K-4986** | 2 | SEAL-O-RING | |
| | 13 | 1 | **126-7968** | 2 | SPRING | |
| | 14 | 1 | **5B-9318** | 1 | BALL | |
| Y | 15 | 1 | **126-7971** | 1 | VALVE GP-SOLENOID (GRAPPLE TONG OPEN) | 490 |
| Y | 15A | 1 | **126-7971** | 1 | VALVE GP-SOLENOID (GRAPPLE TONG CLOSE) | 490 |
| | 16 | 1 | **5L-9018** | 5 | BOLT-SOCKET HEAD (1/4-20X1.75-IN) | |
| | 17 | 1 | **6V-5722** | 2 | SEAL-O-RING | |
| | 18 | 1 | **3H-0442** | 2 | SEAL-O-RING | |
| | 19 | 1 | **156-4321** | 5 | WASHER | |
| | 20 | 1 | **156-1596** | 1 | HOUSING AS | |

Y-SEPARATE ILLUSTRATION

## 272-1880 VALVE GP-CONTROL *(contd. )* i02504657

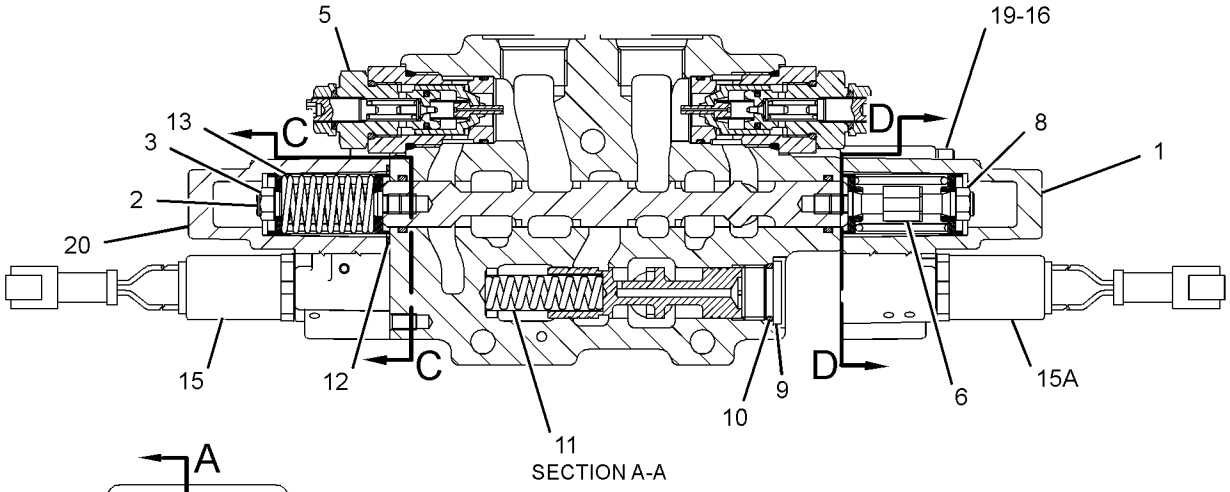


SECTION A-A

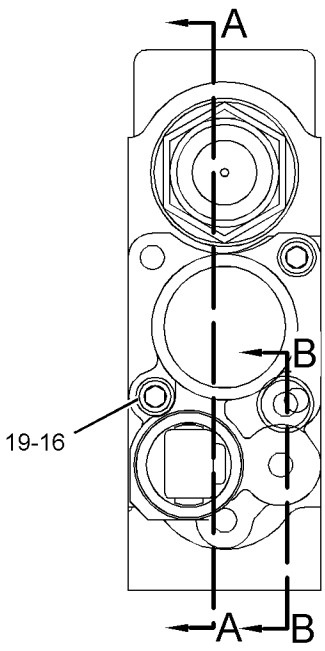


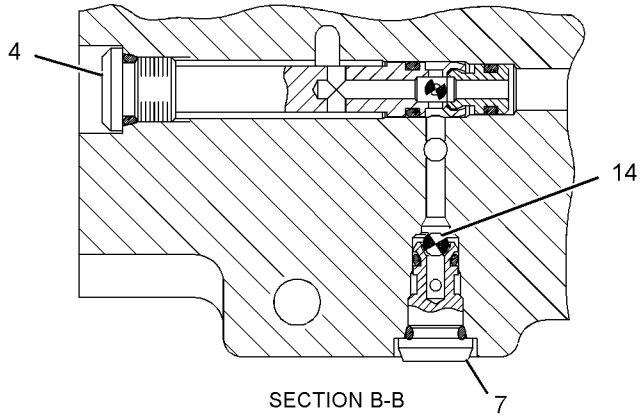


SECTION B-B

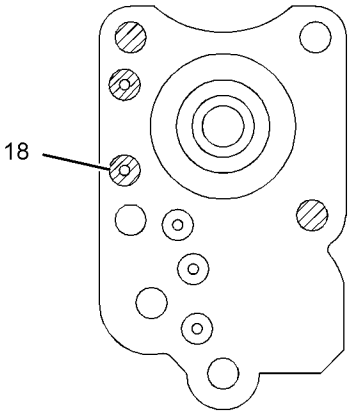


SECTION D-D

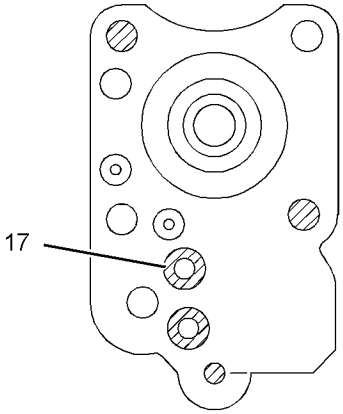


SECTION C-C

GRAPHIC #1 **<END>** g01236418

# HYDRAULIC SYSTEM

## 300-0135 VALVE GP-CONTROL—DECKING BLADE

**S/N: 5451-UP**

**PART OF 299-9532 VALVE GP-BANK 2**

**SMCS-5051** **i02738744**

| NOTE | REF NO | GRAPHIC REF | PART NUMBER | QTY | PART NAME 1 2 3 4 5 6 (PRODUCT LEVEL) | SEE PAGE |
|---|---|---|---|---|---|---|
| | 1 | 1 | **1U-2744** | 1 | VALVE GP-CHECK (BLADE LIFT) | |
| | | 1 | **3D-2824** | 1 | SEAL-O-RING | |
| | | 1 | **4K-1388** | 1 | SEAL-O-RING | |
| | 2 | 1 | **3H-0442** | 2 | SEAL-O-RING | |
| | 3 | 1 | **4K-4986** | 2 | SEAL-O-RING | |
| | 4 | 1 | **9S-8006** | 1 | PLUG-O-RING | |
| | 5 | 1 | **6V-5722** | 2 | SEAL-O-RING | |
| | 6 | 1 | **6E-4317** | 1 | SPRING | |
| | 7 | 1 | **155-9836** | 1 | VALVE GP-CHECK (PRIMARY RESOLVER) | |
| | | 1 | **1P-7363** | 1 | SEAL-O-RING | |
| | | 1 | **3J-7354** | 1 | SEAL-O-RING | |
| | | 1 | **8T-2361** | 1 | SEAL-O-RING | |
| | | 1 | **126-5984** | 1 | RING-BACKUP | |
| | | 1 | **126-5985** | 1 | RING-BACKUP | |
| | 8 | 1 | **5B-9318** | 1 | BALL | |
| | 9 | 1 | **126-5476** | 1 | SEAT AS-SHUTTLE | |
| | | 1 | **4T-7807** | 1 | RING-BACKUP | |
| | | 1 | **7J-0204** | 1 | SEAL-O-RING | |
| | | 1 | **8T-2360** | 1 | SEAL-O-RING | |
| | 10 | 1 | **4T-4531** | 1 | PLUG | |
| | 11 | 1 | **156-4321** | 5 | WASHER | |
| | 12 | 1 | **114-4232** | 2 | SPRING | |
| | 13 | 1 | **156-1267** | 2 | RETAINER | |
| | 14 | 1 | **156-1592** | 1 | HOUSING AS | |
| | 15 | 1 | **2H-3764** | 1 | BOLT-SOCKET HEAD (1/4-20X1.5-IN) | |
| | 16 | 1 | **114-1973** | 1 | COUPLING | |
| | 17 | 1 | **114-3906** | 2 | RETAINER | |
| | 18 | 1 | **114-1972** | 1 | COUPLING | |
| | 19 | 1 | **5S-0003** | 1 | NUT (5/16-18-THD) | |
| | 20 | 1 | **156-1596** | 1 | HOUSING AS | |
| | 21 | 1 | **189-8898** | 1 | VALVE GP-SOLENOID (BLADE LOWER) | |
| | 21A | 1 | **189-8898** | 1 | VALVE GP-SOLENOID (BLADE LIFT) | |
| | | | | | (EACH INCLUDES) | |
| | | 1 | **164-2108** | 1 | WASHER (13.03X25.4X2.38-MM THK) | |
| | | 1 | **218-2373** | 1 | NUT (1/2-28-THD) | |
| | | 1 | **226-9622** | 1 | COIL AS (24-VOLT) | |
| | 22 | 1 | **3K-0360** | 1 | SEAL-O-RING | |
| | 23 | 1 | **4K-1388** | 1 | SEAL-O-RING | |
| | 24 | 1 | **5K-9090** | 1 | SEAL-O-RING | |
| | 25 | 1 | **9T-4518** | 1 | RING-BACKUP | |

**300-0135 VALVE GP-CONTROL** *(contd. )* **i02738744**

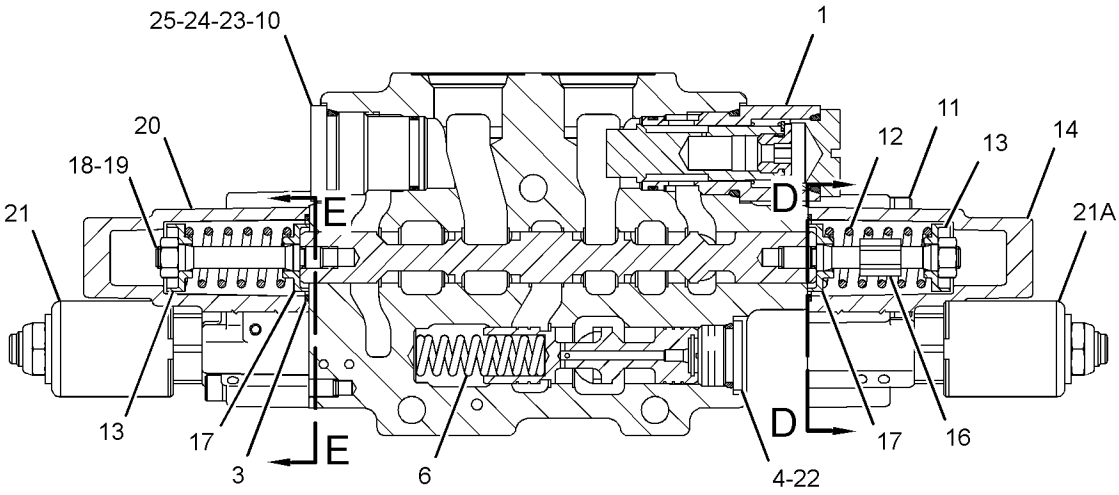


SECTION A-A

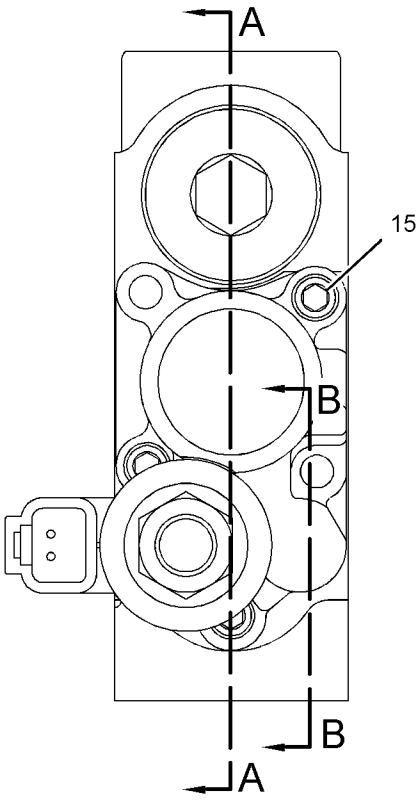


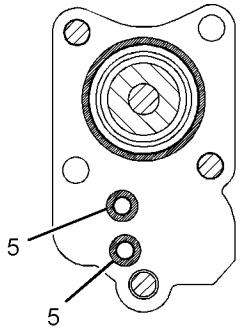


SECTION E-E

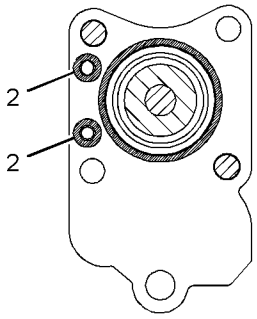


SECTION D-D

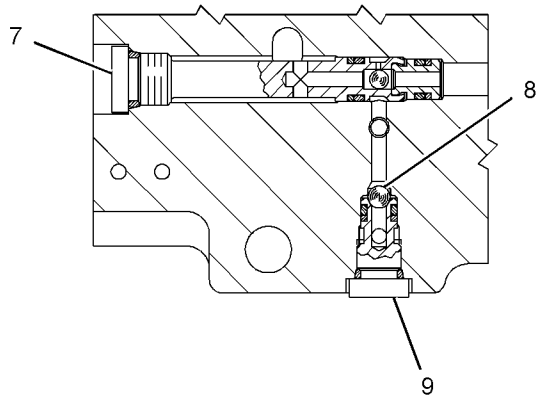


SECTION B-B

GRAPHIC #1 **<END>** g01372882

# HYDRAULIC SYSTEM

## 300-0136 VALVE GP-CONTROL–GRAPPLE ARCH, GRAPPLE BOOM

**S/N: 5451-UP**

**PART OF 299-9530 VALVE GP-BANK 4, 299-9531 VALVE GP-BANK 5**

**AN ATTACHMENT**

**SMCS-5051** **i02609038**

| NOTE | REF NO | GRAPHIC REF | PART NUMBER | QTY | PART NAME 1 2 3 4 5 6 (PRODUCT LEVEL) | SEE PAGE |
|---|---|---|---|---|---|---|
| | 1 | 1 | **8H-0707** | 4 | BOLT (1/4-20X1-IN) | |
| | 2 | 1 | **114-1972** | 1 | COUPLING | |
| | 3 | 1 | **5S-0003** | 2 | NUT (5/16-18-THD) | |
| | 4 | 1 | **114-4232** | 2 | SPRING | |
| | 5 | 1 | **9T-0704** | 2 | VALVE GP-RELIEF (LINE) | |
| | | | | | (EACH INCLUDES) | |
| | | 1 | **4K-1388** | 1 | SEAL-O-RING | |
| | | 1 | **5K-9090** | 1 | SEAL-O-RING | |
| | | 1 | **6E-0358** | 1 | RING-BACKUP | |
| | 6 | 1 | **5P-0537** | 4 | WASHER-HARD (7.2X14.5X2-MM THK) | |
| | 7 | 1 | **114-1973** | 1 | COUPLING | |
| | 8 | 1 | **197-3578** | 2 | HOUSING AS | |
| | | 1 | **1P-7363** | 1 | SEAL-O-RING | |
| | | 1 | **3J-7354** | 1 | SEAL-O-RING | |
| | | 1 | **8T-2361** | 1 | SEAL-O-RING | |
| | | 1 | **126-5984** | 1 | RING-BACKUP | |
| | | 1 | **126-5985** | 1 | RING-BACKUP | |
| | 9 | 1 | **114-3906** | 1 | RETAINER | |
| | 10 | 1 | **9S-8006** | 1 | PLUG-O-RING | |
| | 11 | 1 | **2M-9780** | 1 | SEAL-O-RING | |
| | 12 | 1 | **6E-4317** | 1 | SPRING | |
| | 14 | 1 | **4K-4986** | 2 | SEAL-O-RING | |
| | 15 | 1 | **155-9836** | 1 | VALVE GP-CHECK | |
| | | 1 | **1P-7363** | 1 | SEAL-O-RING | |
| | | 1 | **3J-7354** | 1 | SEAL-O-RING | |
| | | 1 | **8T-2361** | 1 | SEAL-O-RING | |
| | | 1 | **126-5984** | 1 | RING-BACKUP | |
| | | 1 | **126-5985** | 1 | RING-BACKUP | |
| | 16 | 1 | **3J-7354** | 1 | SEAL-O-RING | |
| | 17 | 1 | **1P-7363** | 1 | SEAL-O-RING | |
| | 18 | 1 | **8T-2361** | 1 | SEAL-O-RING | |
| | 19 | 1 | **5B-9318** | 1 | BALL | |
| | 20 | 1 | **8T-2360** | 1 | SEAL-O-RING | |
| | 21 | 1 | **7J-0204** | 1 | SEAL-O-RING | |
| | 22 | 1 | **126-5476** | 1 | SEAT AS-SHUTTLE | |
| | | 1 | **4T-7807** | 1 | RING-BACKUP | |
| | | 1 | **7J-0204** | 1 | SEAL-O-RING | |
| | | 1 | **8T-2360** | 1 | SEAL-O-RING | |

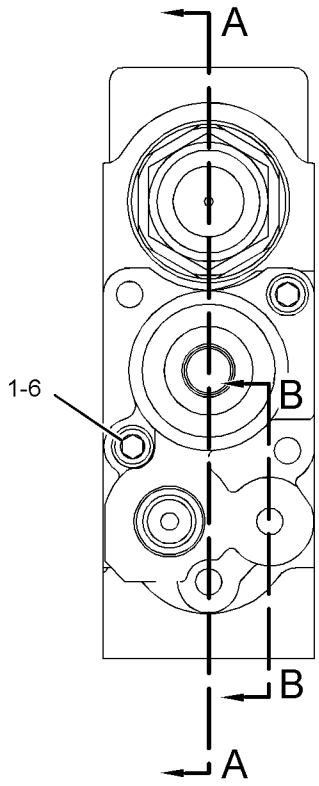


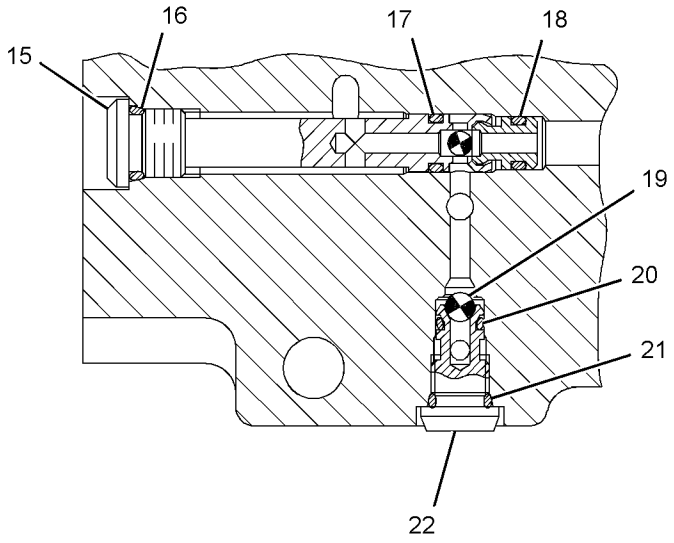


SECTION B-B

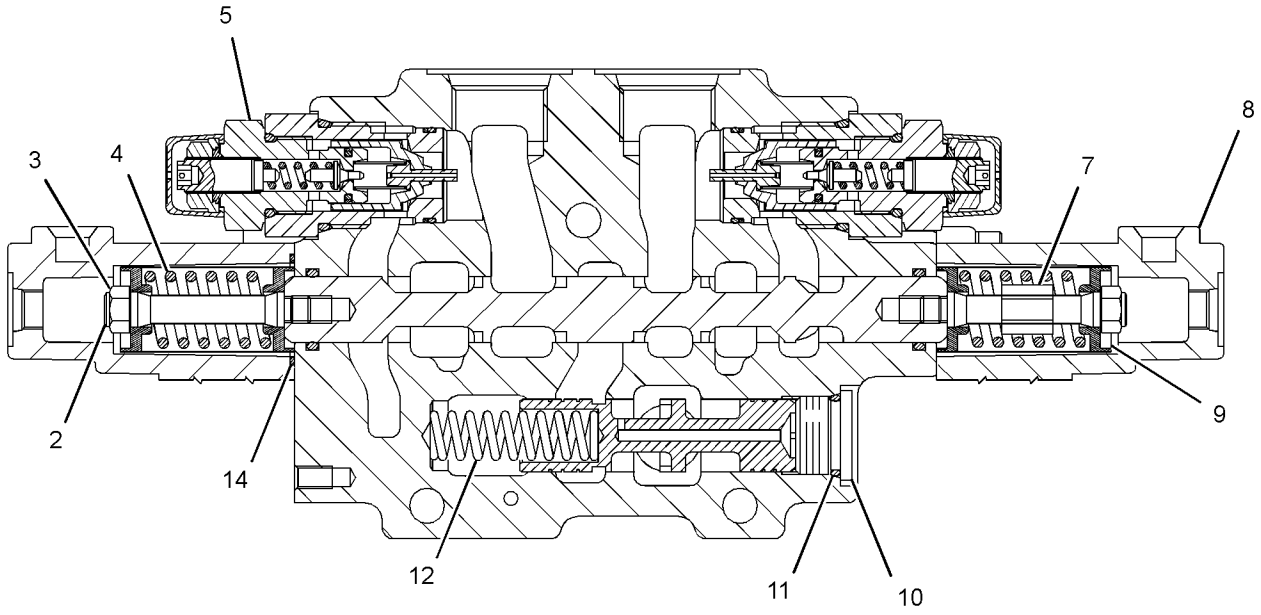


SECTION A-A

GRAPHIC #1 **<END>** g01312668

# HYDRAULIC SYSTEM

## 300-0137 VALVE GP-CONTROL–GRAPPLE ROTATION

**S/N: 5451-UP**

**PART OF 299-9530 VALVE GP-BANK 4, 299-9531 VALVE GP-BANK 5**

**AN ATTACHMENT**

**SMCS-5051** **i02738559**

| NOTE | REF NO | GRAPHIC REF | PART NUMBER | QTY | PART NAME 1 2 3 4 5 6 (PRODUCT LEVEL) | SEE PAGE |
|---|---|---|---|---|---|---|
| | 1 | 1 | **3H-0442** | 2 | SEAL-O-RING | |
| | 2 | 1 | **114-1972** | 1 | COUPLING | |
| | 3 | 1 | **5S-0003** | 2 | NUT (5/16-18-THD) | |
| | 4 | 1 | **155-9836** | 1 | VALVE GP-CHECK (PRIMARY RESOLVER) | |
| | | 1 | **1P-7363** | 1 | SEAL-O-RING | |
| | | 1 | **3J-7354** | 1 | SEAL-O-RING | |
| | | 1 | **8T-2361** | 1 | SEAL-O-RING | |
| | | 1 | **126-5984** | 1 | RING-BACKUP | |
| | | 1 | **126-5985** | 1 | RING-BACKUP | |
| | 5 | 1 | **114-1973** | 1 | COUPLING | |
| | 6 | 1 | **126-5476** | 1 | SEAT AS-SHUTTLE | |
| | | 1 | **4T-7807** | 1 | RING-BACKUP | |
| | | 1 | **7J-0204** | 1 | SEAL-O-RING | |
| | | 1 | **8T-2360** | 1 | SEAL-O-RING | |
| | 7 | 1 | **114-3906** | 4 | RETAINER | |
| | 8 | 1 | **9S-8006** | 1 | PLUG-O-RING | |
| | 9 | 1 | **2M-9780** | 1 | SEAL-O-RING | |
| | 10 | 1 | **6E-4317** | 1 | SPRING | |
| | 11 | 1 | **4K-4986** | 2 | SEAL-O-RING | |
| | 12 | 1 | **126-7968** | 2 | SPRING | |
| | 13 | 1 | **196-3836** | 1 | HOUSING AS-SOLENOID | |
| | | 1 | **3J-7354** | 1 | SEAL-O-RING | |
| | | 1 | **5H-6005** | 1 | SEAL-O-RING | |
| | | 1 | **5P-9684** | 1 | SETSCREW-SOCKET | |
| | | 1 | **9S-4182** | 1 | PLUG-O-RING | |
| | | 1 | **256-0129** | 1 | HOUSING | |
| | 14 | 1 | **196-3837** | 1 | HOUSING AS-SOLENOID | |
| | | 1 | **3J-7354** | 1 | SEAL-O-RING | |
| | | 1 | **5H-6005** | 1 | SEAL-O-RING | |
| | | 1 | **5P-9684** | 1 | SETSCREW-SOCKET | |
| | | 1 | **9S-4182** | 1 | PLUG-O-RING | |
| | | 1 | **256-0129** | 1 | HOUSING | |
| | 15 | 1 | **4T-4531** | 2 | PLUG | |
| | 16 | 1 | **5B-9318** | 1 | BALL | |
| | 17 | 1 | **4K-1388** | 2 | SEAL-O-RING | |
| | 18 | 1 | **5K-9090** | 2 | SEAL-O-RING | |
| | 19 | 1 | **9T-4518** | 2 | RING-BACKUP | |
| | 20 | 1 | **5L-9018** | 5 | BOLT-SOCKET HEAD (1/4-20X1.75-IN) | |
| | 21 | 1 | **6V-5722** | 2 | SEAL-O-RING | |
| Y | 22 | 1 | **126-7971** | 2 | VALVE GP-SOLENOID (GRAPPLE ROTATION) | 490 |

Y-SEPARATE ILLUSTRATION

**300-0137 VALVE GP-CONTROL** *(contd. )* **i02738559**

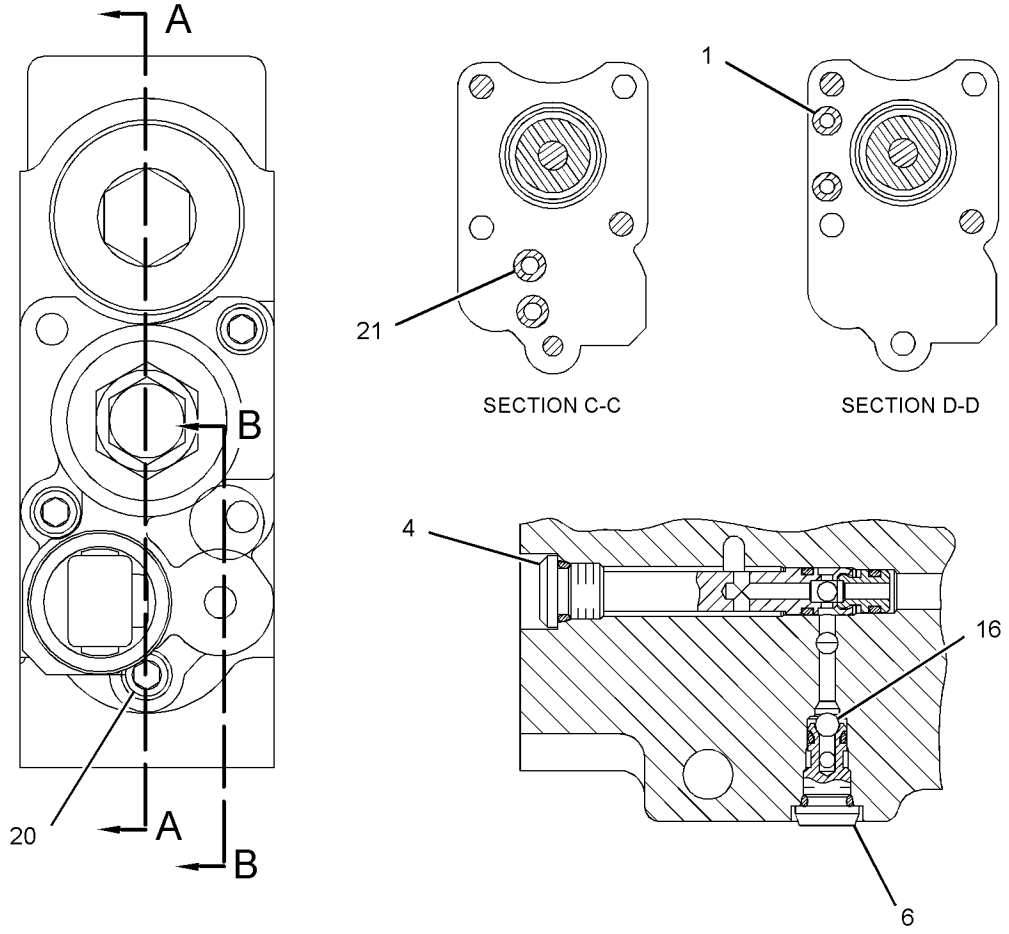


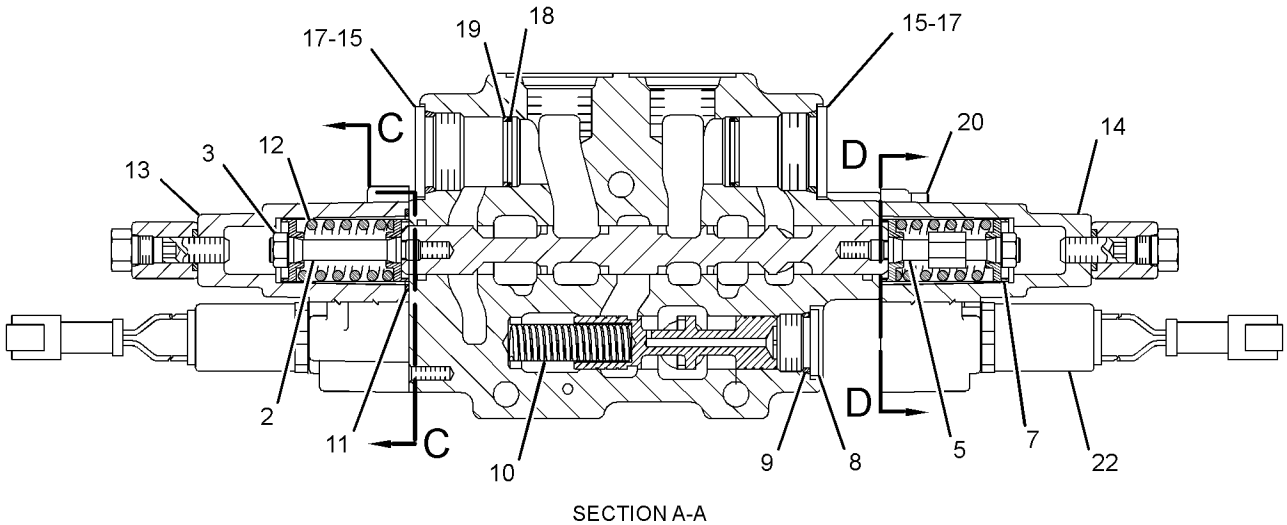


GRAPHIC #1 **<END>** g01312254

# HYDRAULIC SYSTEM

## 300-0138 VALVE GP-CONTROL–WINCH

**S/N: 5451-UP**

**PART OF 299-9531 VALVE GP-BANK 5**

**AN ATTACHMENT**

**SMCS-5051** **i02738562**

| NOTE | REF NO | GRAPHIC REF | PART NUMBER | QTY | PART NAME 1 2 3 4 5 6 (PRODUCT LEVEL) | SEE PAGE |
|---|---|---|---|---|---|---|
| | 1 | 1 | **156-1596** | 2 | HOUSING AS | |
| | 2 | 1 | **114-1972** | 1 | COUPLING | |
| | 3 | 1 | **5S-0003** | 2 | NUT (5/16-18-THD) | |
| | 4 | 1 | **155-9836** | 1 | VALVE GP-CHECK (PRIMARY RESOLVER) | |
| | | 1 | **1P-7363** | 1 | SEAL-O-RING | |
| | | 1 | **3J-7354** | 1 | SEAL-O-RING | |
| | | 1 | **8T-2361** | 1 | SEAL-O-RING | |
| | | 1 | **126-5984** | 1 | RING-BACKUP | |
| | | 1 | **126-5985** | 1 | RING-BACKUP | |
| | 5 | 1 | **9T-0704** | 2 | VALVE GP-RELIEF (LINE) (LINE, WINCH) | |
| | | 1 | **5K-9090** | 1 | SEAL-O-RING | |
| | 6 | 1 | **114-1973** | 1 | COUPLING | |
| | 7 | 1 | **126-5476** | 1 | SEAT AS-SHUTTLE | |
| | | 1 | **4T-7807** | 1 | RING-BACKUP | |
| | | 1 | **7J-0204** | 1 | SEAL-O-RING | |
| | | 1 | **8T-2360** | 1 | SEAL-O-RING | |
| | 8 | 1 | **114-3906** | 4 | RETAINER | |
| | 9 | 1 | **9S-8006** | 1 | PLUG-O-RING | |
| | 10 | 1 | **2M-9780** | 1 | SEAL-O-RING | |
| | 11 | 1 | **6E-4317** | 1 | SPRING | |
| | 12 | 1 | **4K-4986** | 2 | SEAL-O-RING | |
| | 13 | 1 | **126-7968** | 2 | SPRING | |
| | 14 | 1 | **5B-9318** | 1 | BALL | |
| Y | 15 | 1 | **126-7971** | 2 | VALVE GP-SOLENOID (WINCH CONTROL) | 490 |
| | 16 | 1 | **2H-3764** | 5 | BOLT-SOCKET HEAD (1/4-20X1.5-IN) | |
| | 17 | 1 | **6V-5722** | 2 | SEAL-O-RING | |
| | 18 | 1 | **3H-0442** | 2 | SEAL-O-RING | |
| | 19 | 1 | **156-4321** | 5 | WASHER | |

Y-SEPARATE ILLUSTRATION

**300-0138 VALVE GP-CONTROL** *(contd.)* **i02738562**

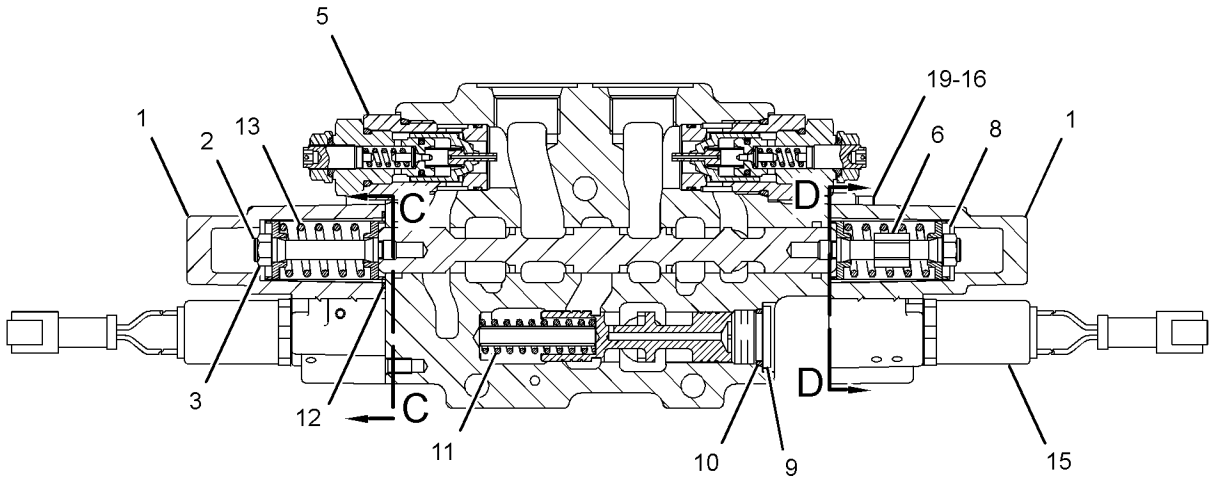


SECTION A-A

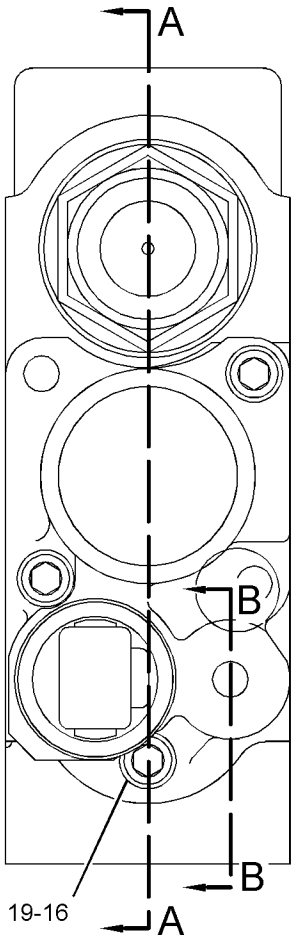


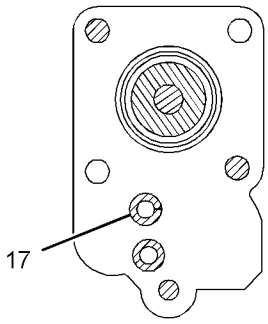


SECTION C-C

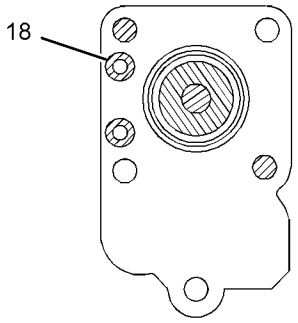


SECTION D-D

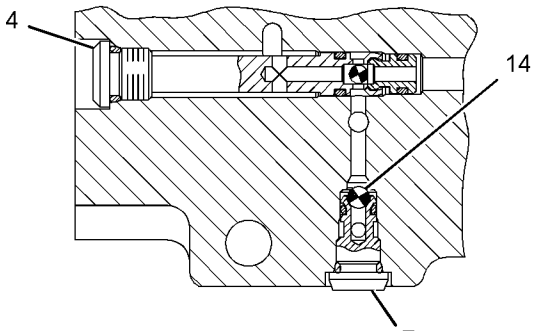


SECTION B-B

GRAPHIC #1 **<END>** g01313273

# *276-5034* VALVE GP-DIVERTER–GRAPPLE HEAD

**S/N: 5451-UP**
**PART OF 276-1937 LINES GP-GRAPPLE HEAD**
**AN ATTACHMENT**

**SMCS-5066** **i02471163**

| NOTE | REF NO | GRAPHIC REF | PART NUMBER | QTY | PART NAME 1 2 3 4 5 6 (PRODUCT LEVEL) | SEE PAGE |
|---|---|---|---|---|---|---|
| | 1 | 1 | **245-9865** | 1 | VALVE-FLOW DIVIDER | |
| | 2 | 1 | **1T-0936** | 1 | PLUG-PIPE | |
| | 3 | 1 | **9S-8003** | 1 | PLUG | |
| | 4 | 1 | **3J-7354** | 1 | SEAL-O-RING | |
| | | | | | | |
| | | | | | PARTS SHOWN IN GRAPHIC(S) WITHOUT A REFERENCE NUMBER ARE NOT SERVICED SEPARATELY | |
| | | | | | AVAILABLE REPAIR KIT(S): | |
| | | | **245-9848** | 1 | KIT-SEAL (FLOW DIVIDER VALVE) | |
| | | | | | (INCLUDES SEALS & RINGS) | |

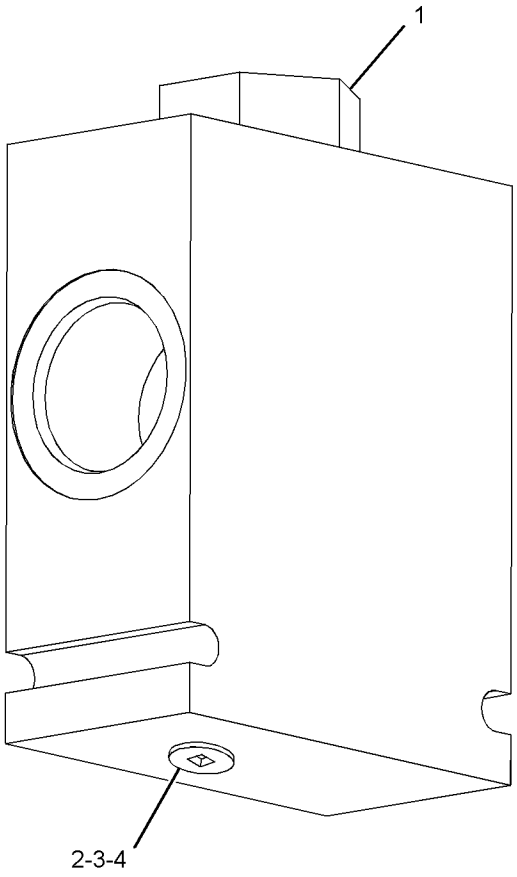


GRAPHIC #1 **<END>** g01236379

# 183-1410 VALVE GP-PRIORITY–BRAKE

**S/N: 5451-UP**

**PART OF 299-9532 VALVE GP-BANK 2**

**SMCS-5137** **i02394469**

| NOTE | REF NO | GRAPHIC REF | PART NUMBER | QTY | PART NAME 1 2 3 4 5 6 (PRODUCT LEVEL) | SEE PAGE |
|---|---|---|---|---|---|---|
| | 1 | 1 | **103-4754** | 1 | SPRING | |
| | 2 | 1 | **126-5476** | 1 | SEAT AS-SHUTTLE | |
| | | 1 | **4T-7807** | 1 | RING-BACKUP | |
| | | 1 | **7J-0204** | 1 | SEAL-O-RING | |
| | | 1 | **8T-2360** | 1 | SEAL-O-RING | |
| | 3 | 1 | **2M-9780** | 1 | SEAL-O-RING | |
| | 4 | 1 | **3J-1907** | 1 | SEAL-O-RING | |
| | 5 | 1 | **5B-9318** | 1 | BALL | |
| | 6 | 1 | **9S-8004** | 1 | PLUG-O-RING | |
| | 7 | 1 | **9S-8006** | 1 | PLUG-O-RING | |
| | 8 | 1 | **9T-0655** | 1 | VALVE GP-RELIEF (SECONDARY STEERING) | |
| | | 1 | **1S-8947** | 1 | SEAL-O-RING | |
| | | 1 | **3D-2824** | 1 | SEAL-O-RING | |
| | | 1 | **9T-0656** | 1 | RING | |

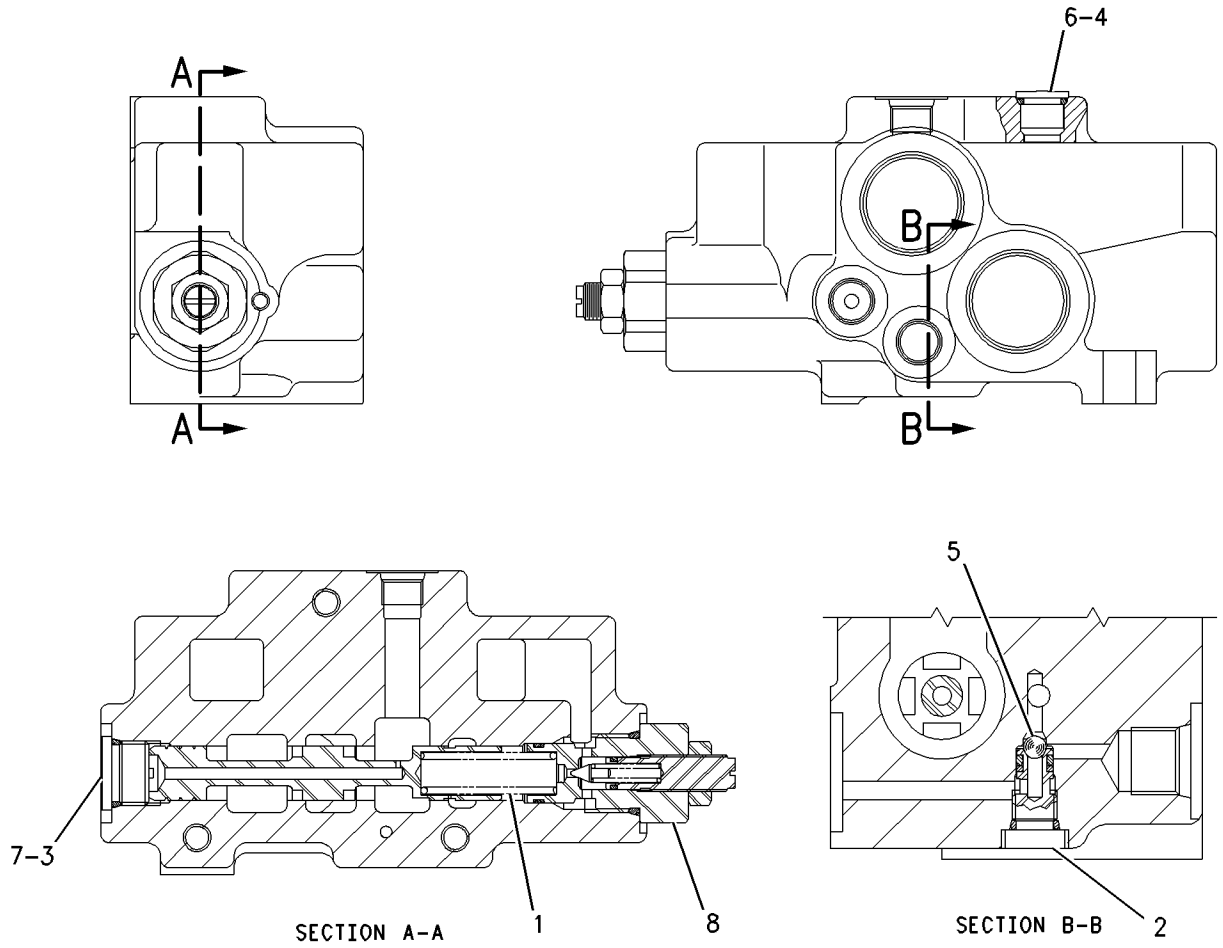


GRAPHIC #1 **<END>** g00736629

# 100-6741 VALVE GP-PUMP CONTROL–
## PRESSURE, FLOW COMPENSATOR–IMPLEMENT, STEERING, BRAKE
**S/N: 5451-UP**
**PART OF 161-5715 PUMP GP-PISTON**

**SMCS-5455** **i01194439**

| NOTE | REF NO | GRAPHIC REF | PART NUMBER | QTY | PART NAME 1 2 3 4 5 6 (PRODUCT LEVEL) | SEE PAGE |
|---|---|---|---|---|---|---|
| | 1 | 1 | **9S-4191** | 1 | PLUG-O RING | |
| | 2 | 1 | **3J-1907** | 3 | SEAL-O-RING | |
| | 3 | 1 | **6E-4241** | 1 | SPOOL-MARGIN | |
| | 4 | 1 | **9T-2186** | 2 | PLUG | |
| | 5 | 1 | **6E-4239** | 1 | SPOOL-CUTOFF | |
| | 6 | 1 | **6E-4230** | 2 | GUIDE-SPRING | |
| | 7 | 1 | **6E-4228** | 1 | SPRING | |
| | 8 | 1 | **6E-6140** | 1 | PLUG-COMPENSATOR | |
| | | 1 | **033-6036** | 1 | SEAL-O-RING | |
| M | 9 | 1 | **129-7632** | 2 | SCREW-ADJUSTMENT | |
| | 10 | 1 | **6E-6142** | 1 | PLUG-MARGIN | |
| | | 1 | **033-6027** | 1 | SEAL-O-RING | |
| | 11 | 1 | **6E-4246** | 1 | SPRING-MARGIN | |
| | 12 | 1 | **6E-4318** | 1 | PIN-SPRING STOP | |
| | 13 | 1 | **6E-4242** | 2 | GUIDE-SPRING | |
| | 14 | 1 | **6E-6141** | 2 | LOCKNUT-SEALING | |
| | 15 | 1 | **108-4814** | 1 | BODY-COMPENSATOR | |
| | 16 | 1 | **6E-6420** | 1 | VALVE-NEEDLE | |
| | 17 | 1 | **6E-6419** | 1 | RING | |
| | 18 | 1 | **9X-7680** | 1 | SEAL-O-RING | |

M-METRIC PART

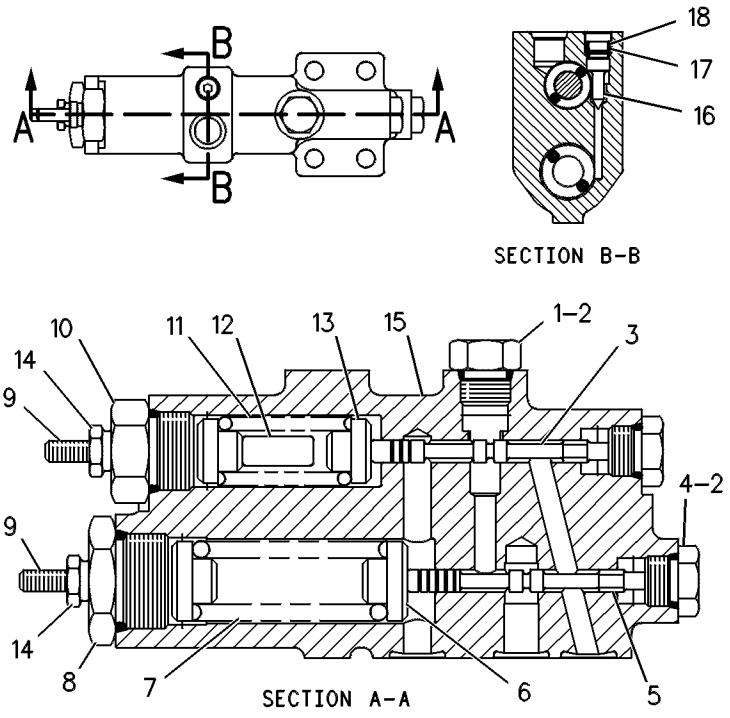


GRAPHIC #1

**<END>**

g00120113

## *277-0701* VALVE GP-RELIEF–PILOT, DIFFERENTIAL LOCK

**S/N: 5451-UP**

**PART OF 253-4603 MANIFOLD GP-CONTROL**

**SMCS-5069, 5117** **i02463552**

| NOTE | REF NO | GRAPHIC REF | PART NUMBER | QTY | PART NAME 1 2 3 4 5 6 (PRODUCT LEVEL) | SEE PAGE |
|---|---|---|---|---|---|---|
| J | 1 | 1 | **2M-9780** | 1 | SEAL-O-RING | |
| J | 2 | 1 | **161-6149** | 1 | SEAL-O-RING | |
| J | 3 | 1 | **161-6161** | 2 | RING-BACKUP | |
| | | | | | AVAILABLE REPAIR KIT(S): | |
| J | | | **133-5545** | 1 | KIT-SEAL (RELIEF VALVE) | |
| J-KIT(S) MARKED J AVAILABLE FOR PART(S) MARKED J | | | | | | |

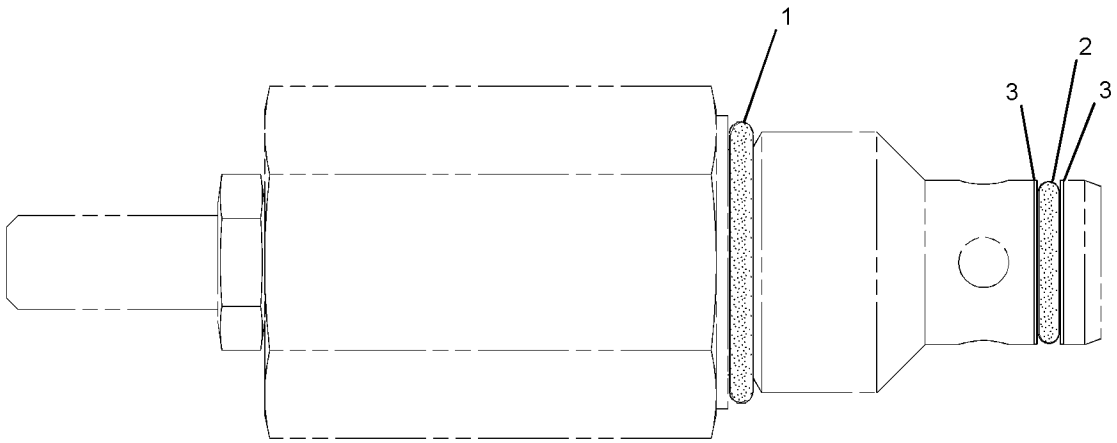


GRAPHIC #1 **<END>** g01236475

# 126-7971 VALVE GP-SOLENOID

**S/N: 5451-UP**

**PART OF 195-5033, 272-1880, 300-0137, 300-0138 VALVE GP-CONTROL**

**AN ATTACHMENT**

**SMCS-5479** **i01353736**

| NOTE | REF NO | GRAPHIC REF | PART NUMBER | QTY | PART NAME 1 2 3 4 5 6 (PRODUCT LEVEL) | SEE PAGE |
|---|---|---|---|---|---|---|
| | 1 | 1 | **033-5879** | 1 | SEAL-O-RING | |
| | 2 | 1 | **123-2341** | 1 | SEAL-O-RING | |
| | 3 | 1 | **102-8802** | 1 | KIT-RECEPTACLE (2-PIN) | |
| | | | | | (INCLUDES RECEPTACLE AS AND WEDGE) | |
| | 4 | 1 | **3E-3365** | 1 | WEDGE-RECEPTACLE LOCK (2-PIN) | |
| | 5 | 1 | **3E-6749** | 1 | SEAL-O-RING | |

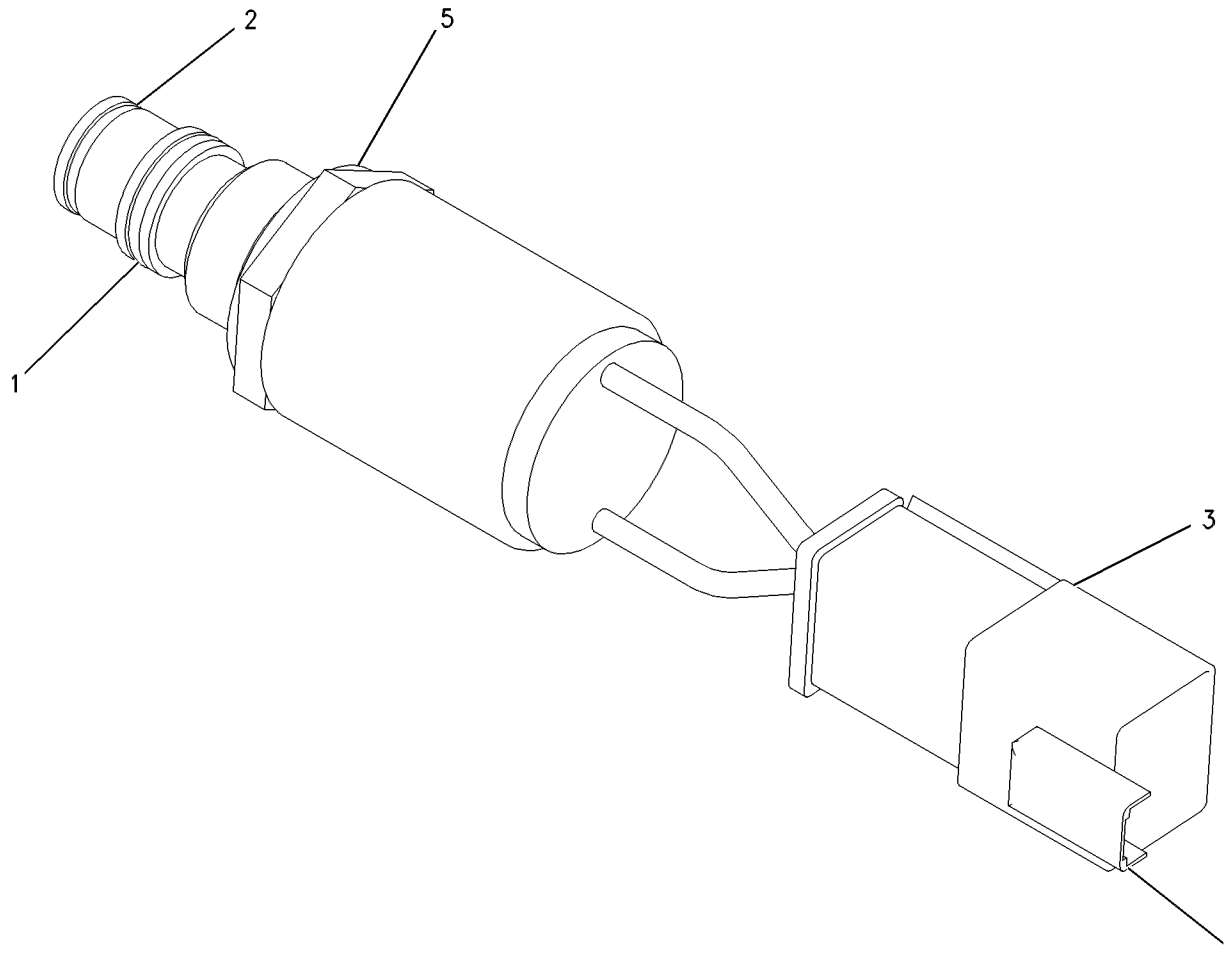


GRAPHIC #1 **<END>** g00532215

# WORK TOOLS

## *272-5920* ARCH AR—CABLE MACHINE

**S/N: 5451-UP**

**AN ATTACHMENT**

**SMCS-6308** **i02709304**

| NOTE | PART NUMBER | QTY | PART NAME 1 2 3 4 5 6 (PRODUCT LEVEL) | SEE PAGE |
|---|---|---|---|---|
| Y | *271-9081* | 1 | WINCH AR (CABLE MACHINE) | 567 |
| | | | | |
| Y | *292-5939* | 1 | BEARING & SEAL GP-ARCH (CABLE MACHINE) | 493 |
| Y | *257-8495* | 1 | COVER GP-WINCH | 515 |
| Y | *161-6642* | 1 | FAIRLEAD GP-WINCH (CABLE MACHINE) | 522 |
| Y | *184-1155* | 1 | FRAME GP-FAIRLEAD (CABLE MACHINE) | 526 |
| Y | *281-4200* | 1 | GUARD GP-FUEL TANK | 336 |
| Y | *161-6641* | 1 | ROLLER GP-TOP | 558 |

Y-SEPARATE ILLUSTRATION

**<END>**

# WORK TOOLS

## *277-8039* ARCH GP

**S/N: 5451-UP**
**PART OF 276-2042 FRAME GP-GRAPPLE**
**AN ATTACHMENT**

**SMCS-6308** **i02549117**

| NOTE | REF NO | GRAPHIC REF | PART NUMBER | QTY | PART NAME 1 2 3 4 5 6 (PRODUCT LEVEL) | SEE PAGE |
|---|---|---|---|---|---|---|
| | 1 | 1 | **248-4874** | 1 | PIN | |
| | 2 | 1 | **277-8040** | 1 | ARCH AS | |
| | 3 | 1 | **277-8045** | 1 | PLATE AS | |
| | 4 | 1 | **288-8636** | 2 | SPACER | |
| | 5 | 1 | **2H-3775** | 1 | PIN-COTTER | |
| M | 6 | 1 | **8T-4139** | 1 | BOLT (M12X1.75X30-MM) | |
| M | 7 | 1 | **8T-4141** | 2 | BOLT (M20X2.5X70-MM) | |
| | 8 | 1 | **8T-4223** | 1 | WASHER-HARD (13.5X25.5X3-MM THK) | |
| | 9 | 1 | **8T-5439** | 2 | WASHER-HARD (21.5X45X6-MM THK) | |

M-METRIC PART

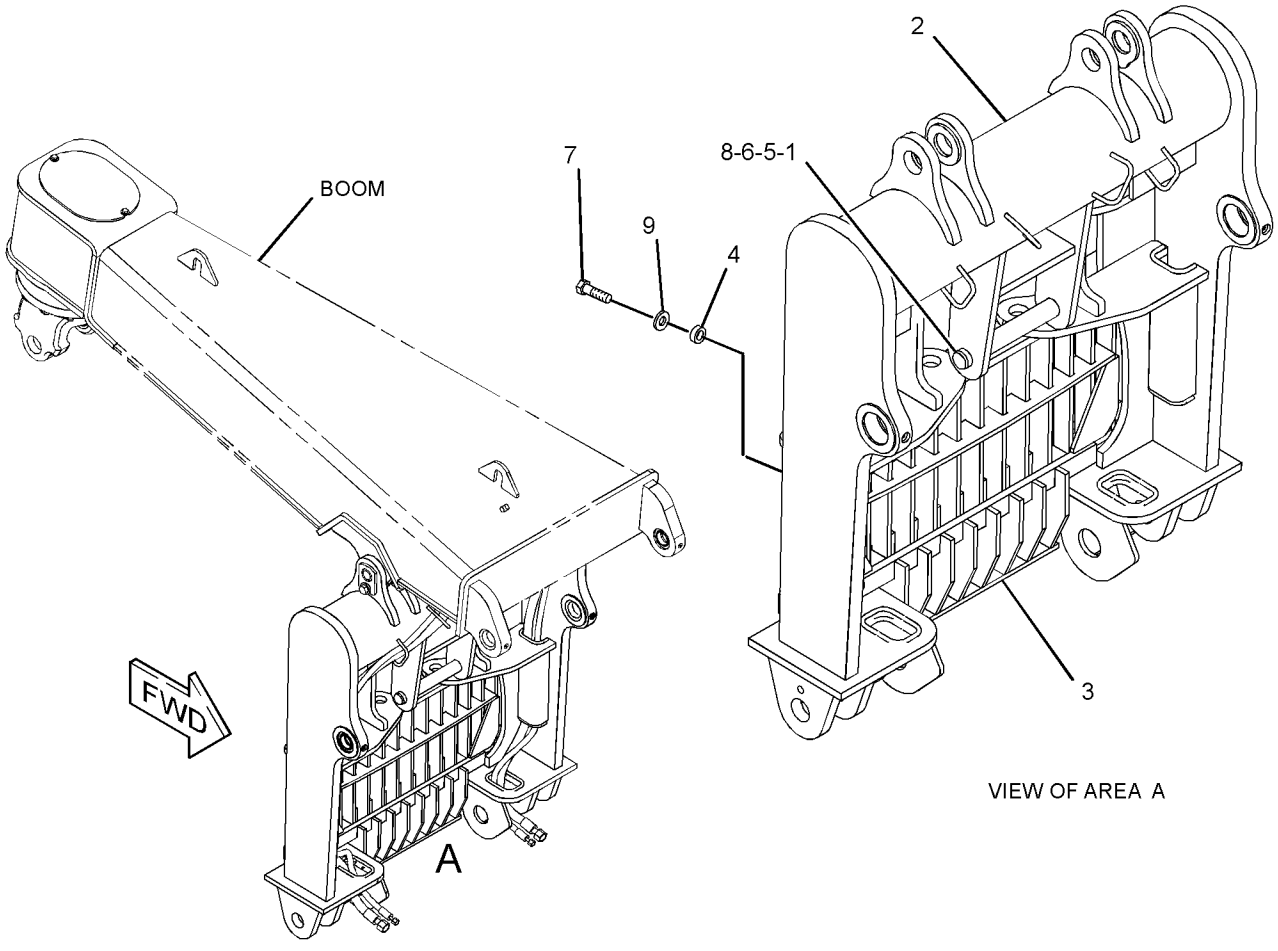


GRAPHIC #1 **<END>** g01276168

# 292-5939 BEARING & SEAL GP-ARCH–CABLE MACHINE

**S/N: 5451-UP**
**PART OF 272-5920 ARCH AR**
**AN ATTACHMENT**

**SMCS-6308** **i02659949**

| NOTE | REF NO | GRAPHIC REF | PART NUMBER | QTY | PART NAME 1 2 3 4 5 6 (PRODUCT LEVEL) | SEE PAGE |
|---|---|---|---|---|---|---|
| | 1 | 1 | **2G-8793** | 2 | BEARING-SLEEVE | |
| | 2 | 1 | **5P-0093** | 4 | SEAL-LIP TYPE | |
| | 3 | 1 | **131-1768** | 2 | WASHER (60X120X1.6-MM THK) | |
| | 4 | 1 | **131-1769** | 2 | WASHER (60X120X3.1-MM THK) | |
| | 5 | 1 | **203-6127** | 2 | BEARING-SPECIAL | |
| | 6 | 1 | **1J-6472** | 4 | RING-RETAINING | |
| | 7 | 1 | **5M-6214** | 4 | PLUG-PIPE | |

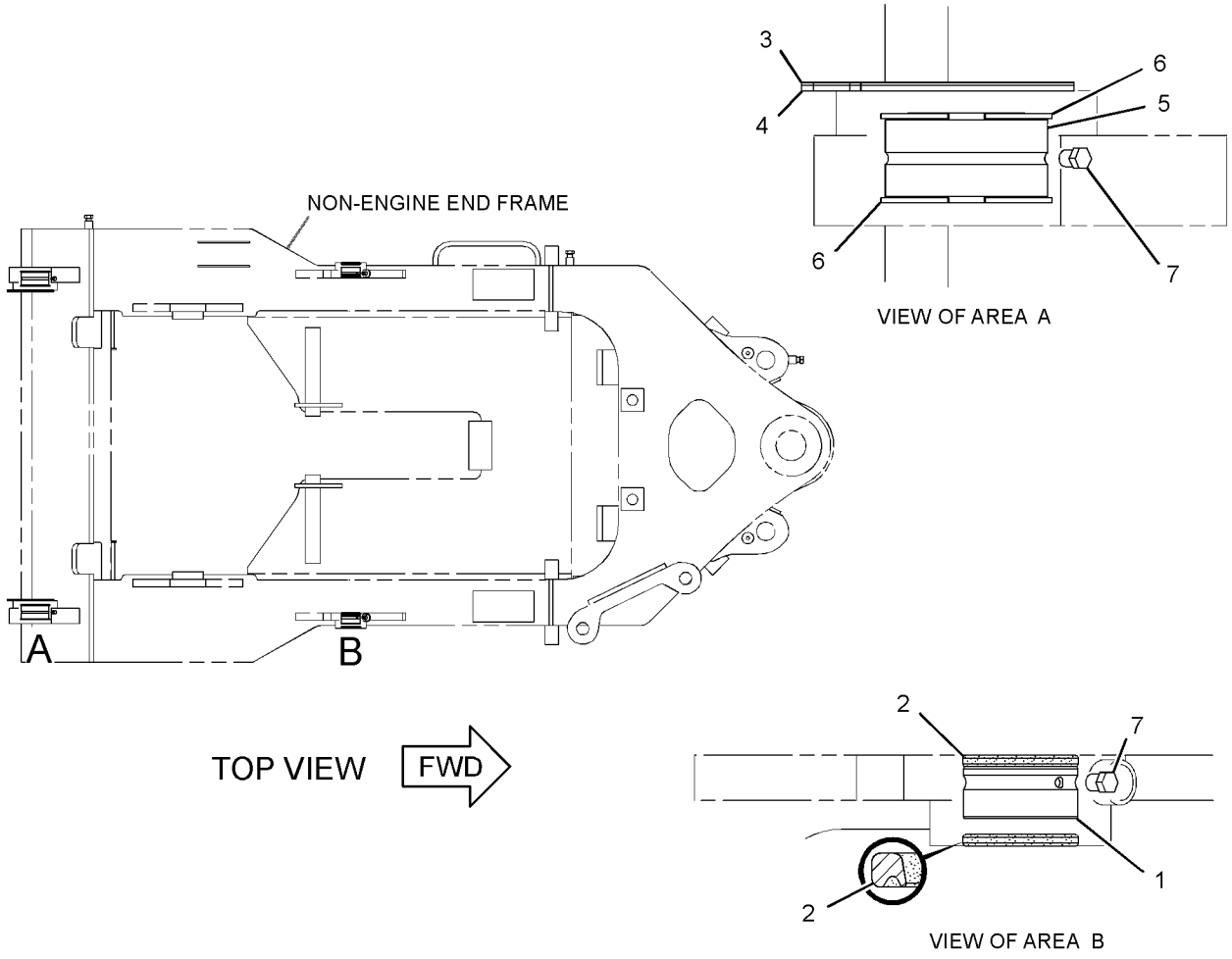


GRAPHIC #1 **<END>** g01336717

# *161-1512* BEARING & SEAL GP-GRAPPLE–DUAL FUNCTION

**S/N: 5451-299**
**PART OF 253-2515, 253-2518 GRAPPLE AR**
**AN ATTACHMENT**

**SMCS-6307** **i02468835**

| NOTE | REF NO | GRAPHIC REF | PART NUMBER | QTY | PART NAME 1 2 3 4 5 6 (PRODUCT LEVEL) | SEE PAGE |
|---|---|---|---|---|---|---|
| | 1 | 1 | **2G-8793** | 4 | BEARING-SLEEVE | |
| | 2 | 1 | **3B-8488** | 2 | FITTING-GREASE | |
| | 3 | 1 | **3B-8489** | 4 | FITTING-GREASE | |
| | 4 | 1 | **5P-0093** | 8 | SEAL-LIP TYPE | |
| B | 5 | 1 | **131-1768** | 4 | WASHER (60X120X1.6-MM THK) | |
| B | 6 | 1 | **131-1769** | 2 | WASHER (60X120X3.1-MM THK) | |
| | 7 | 1 | **203-6127** | 2 | BEARING-SPECIAL | |
| | 8 | 1 | **264-7723** | 4 | SPACER (77.9X88.9X16.5-MM THK) | |

B-USE AS REQUIRED

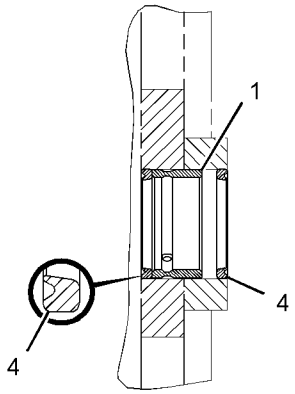


SECTION A-A

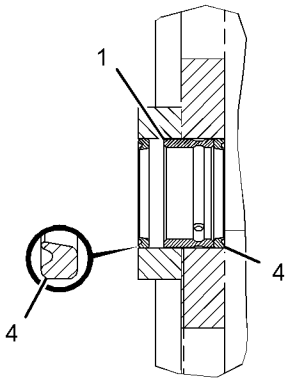


SECTION B-B

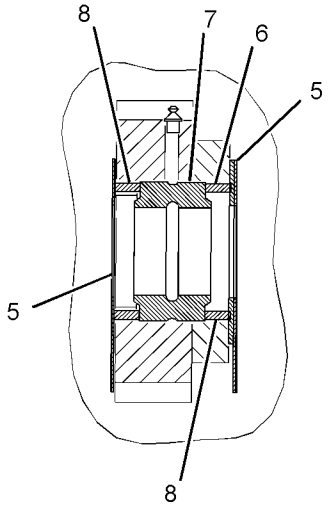


SECTION C-C

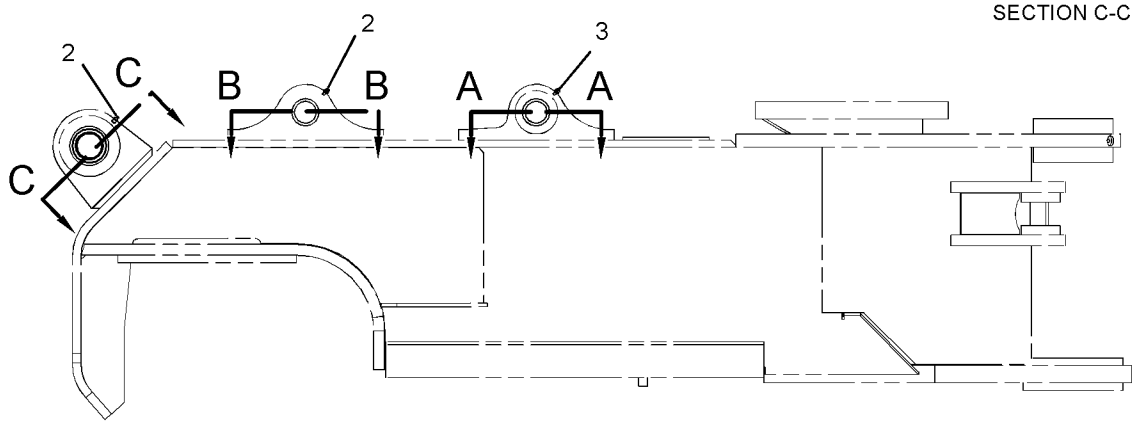


RIGHT SIDE VIEW

GRAPHIC #1 **<END>** g01231949

# 292-5937 BEARING & SEAL GP-GRAPPLE

**S/N: 545300-UP**
**PART OF 253-2515, 253-2518 GRAPPLE AR**
**AN ATTACHMENT**

**SMCS-6307** **i02659948**

| NOTE | REF NO | GRAPHIC REF | PART NUMBER | QTY | PART NAME 1 2 3 4 5 6 (PRODUCT LEVEL) | SEE PAGE |
|---|---|---|---|---|---|---|
| | 1 | 1 | **2G-8793** | 4 | BEARING-SLEEVE | |
| | 2 | 1 | **3B-8488** | 2 | FITTING-GREASE | |
| | 3 | 1 | **3B-8489** | 4 | FITTING-GREASE | |
| | 4 | 1 | **5P-0093** | 8 | SEAL-LIP TYPE | |
| | 5 | 1 | **131-1768** | 2 | WASHER (60X120X1.6-MM THK) | |
| | 6 | 1 | **131-1769** | 2 | WASHER (60X120X3.1-MM THK) | |
| | 7 | 1 | **203-6127** | 2 | BEARING-SPECIAL | |
| | 8 | 1 | **1J-6472** | 4 | RING-RETAINING | |

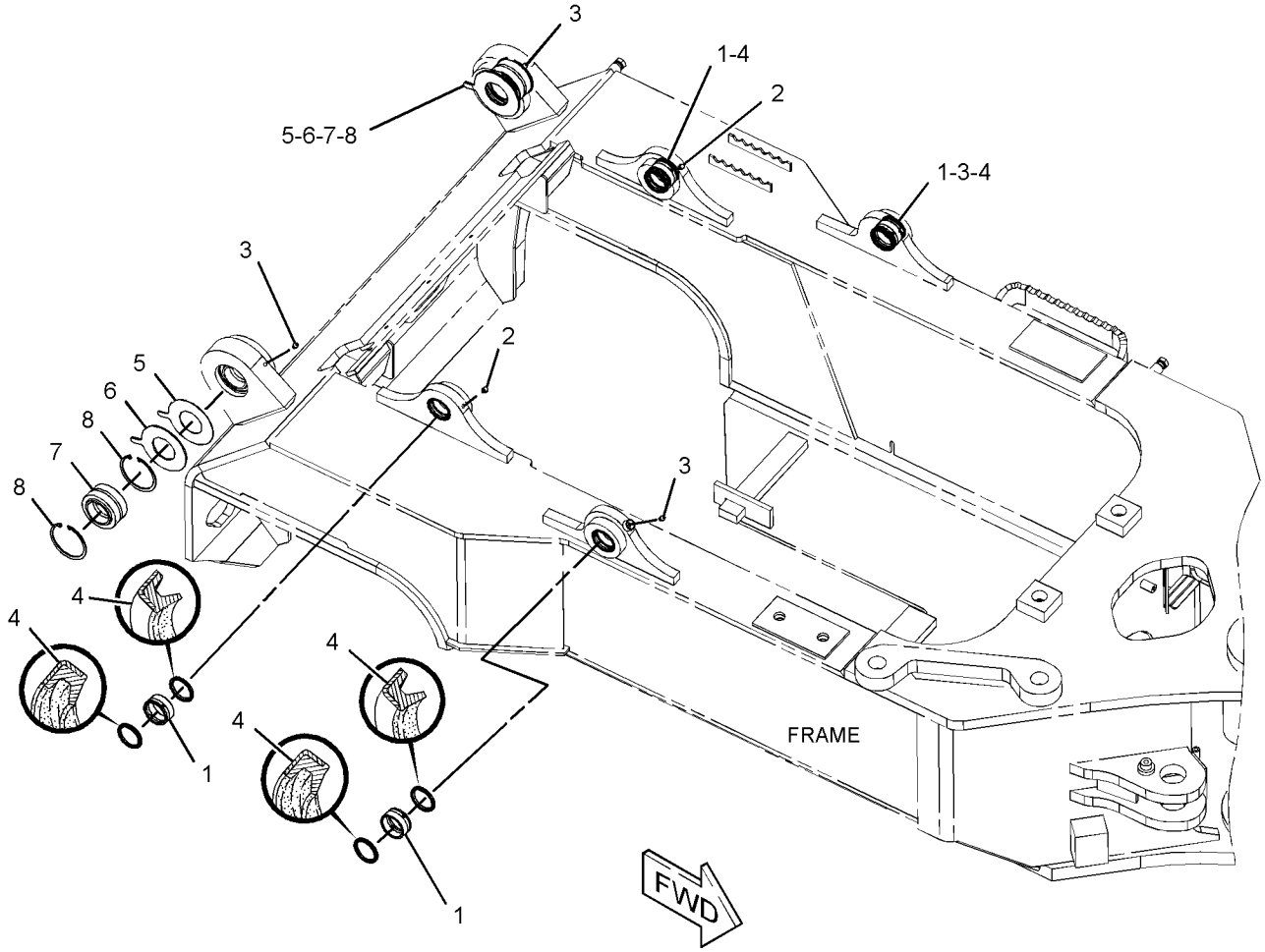


GRAPHIC #1 **<END>** g01336566

## *253-3881* BLADE AR-DECKING—WIDE

**S/N: 5451-UP**

**AN ATTACHMENT**

**SMCS-6060** **i02180420**

| NOTE | PART NUMBER | QTY | PART NAME 1 2 3 4 5 6 (PRODUCT LEVEL) | SEE PAGE |
|---|---|---|---|---|
| Y | *143-1430* | 1 | BLADE GP-DECKING (WIDE) | 497 |
| Y | **160-0492** | 2 | CYLINDER GP-LIFT (DECKING BLADE) | 412 |
| Y | *255-8833* | 1 | GUARD GP-LINES (FRONT FRAME, LIFT CYLINDERS) | 341 |
| Y | *255-6490* | 1 | LINES GP-DECKING BLADE | 417 |

Y-SEPARATE ILLUSTRATION

**<END>**

# *143-1430* BLADE GP-DECKING—WIDE

**S/N: 5451-UP**
**PART OF 253-3881 BLADE AR-DECKING**
**AN ATTACHMENT**

**SMCS-6060** **i02291181**

| NOTE | REF NO | GRAPHIC REF | PART NUMBER | QTY | PART NAME 1 2 3 4 5 6 (PRODUCT LEVEL) | SEE PAGE |
|---|---|---|---|---|---|---|
| | 1 | 1 | **3J-5190** | 2 | CAP-BEARING | |
| | 2 | 1 | **4J-9118** | 2 | RETAINER | |
| | 3 | 1 | **255-8030** | 2 | PIN | |
| B | 4 | 1 | **8E-5818** | 28 | SHIM (0.8-MM THK) | |
| | 5 | 1 | **8J-0278** | 2 | BEARING-SLEEVE | |
| | 6 | 1 | **143-5472** | 1 | BLADE AS-DECKING | |
| | | 1 | **8P-9770** | 1 | PLATE-INFORMATION | |
| | | 1 | **263-1772** | 2 | BEARING | |
| | | 1 | **161-5797** | 1 | CHANNEL | |
| Y | 7 | 1 | *160-1577* | 1 | EDGE GP-CUTTING | 521 |
| M | 8 | 1 | **7X-2552** | 2 | BOLT (M16X2X30-MM) | |
| M | 9 | 1 | **8T-4175** | 8 | BOLT (M16X2X90-MM) | |
| | 10 | 1 | **9X-8257** | 10 | WASHER (17.5X30X3.5-MM THK) | |

B-USE AS REQUIRED
M-METRIC PART
Y-SEPARATE ILLUSTRATION

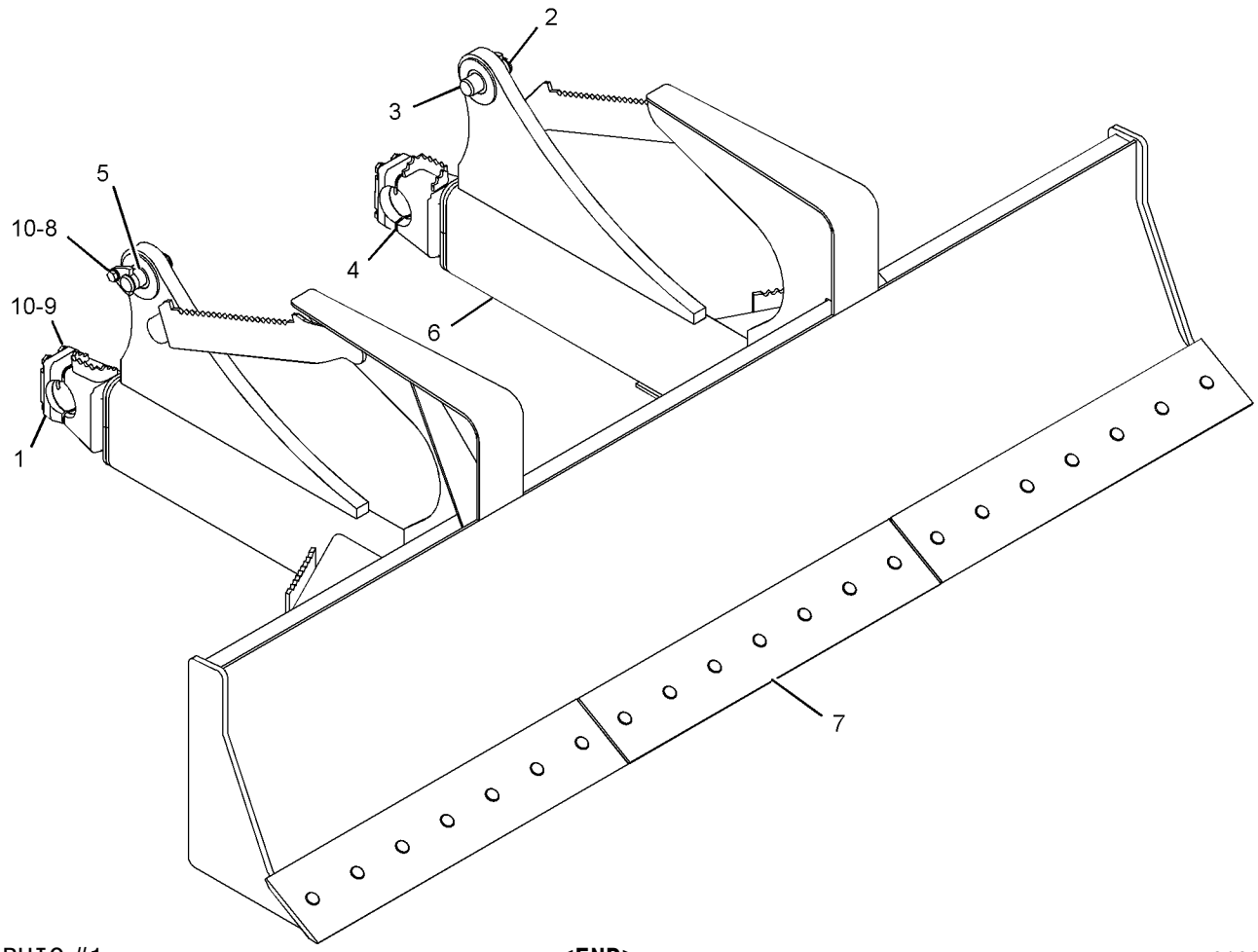


GRAPHIC #1 **<END>** g01090893

# WORK TOOLS

## *161-6407* BRAKE GP-WINCH

**S/N: 5451-UP**

**PART OF 166-2910 BRAKE GP-WINCH**

**AN ATTACHMENT**

**SMCS-5173** **i01934960**

| NOTE | REF NO | GRAPHIC REF | PART NUMBER | QTY | PART NAME 1 2 3 4 5 6 (PRODUCT LEVEL) | SEE PAGE |
|---|---|---|---|---|---|---|
| | 1 | 1 | **119-1534** | 1 | RING | |
| | 2 | 1 | **119-2167** | 2 | SPRING | |
| | 3 | 1 | **126-4003** | 1 | SEAL-O-RING | |
| | 4 | 1 | **161-6430** | 1 | PISTON-BRAKE | |
| | 5 | 1 | **161-6433** | 1 | SPACER | |
| | 6 | 1 | **161-6434** | 7 | PLATE-BRAKE | |
| | 7 | 1 | **161-6435** | 6 | DISC-FRICTION | |
| | 8 | 1 | **161-6436** | 1 | RETAINER-BRAKE | |
| | 9 | 1 | **164-3961** | 1 | RING-BACKUP | |
| | 10 | 1 | **162-9997** | 1 | SEAL-O-RING | |
| | 11 | 1 | **173-4532** | 1 | HOUSING-BRAKE | |
| | 12 | 1 | **173-4533** | 1 | COVER-BRAKE | |
| B | 13 | 1 | **173-9877** | 1 | SHIM | |
| | 14 | 1 | **0S-1588** | 2 | BOLT (3/8-16X1.25-IN) | |
| | 15 | 1 | **5J-6444** | 1 | RING-BACKUP | |
| | 16 | 1 | **3J-7354** | 1 | SEAL-O-RING | |
| | 17 | 1 | **5M-2894** | 2 | WASHER-HARD (10.2X18.5X2.5-MM THK) | |
| | 18 | 1 | **8C-3086** | 3 | SEAL-O-RING | |
| | 19 | 1 | **8F-9516** | 1 | SEAL-O-RING | |
| | 20 | 1 | **9S-8002** | 1 | PLUG-O-RING | |

B-USE AS REQUIRED

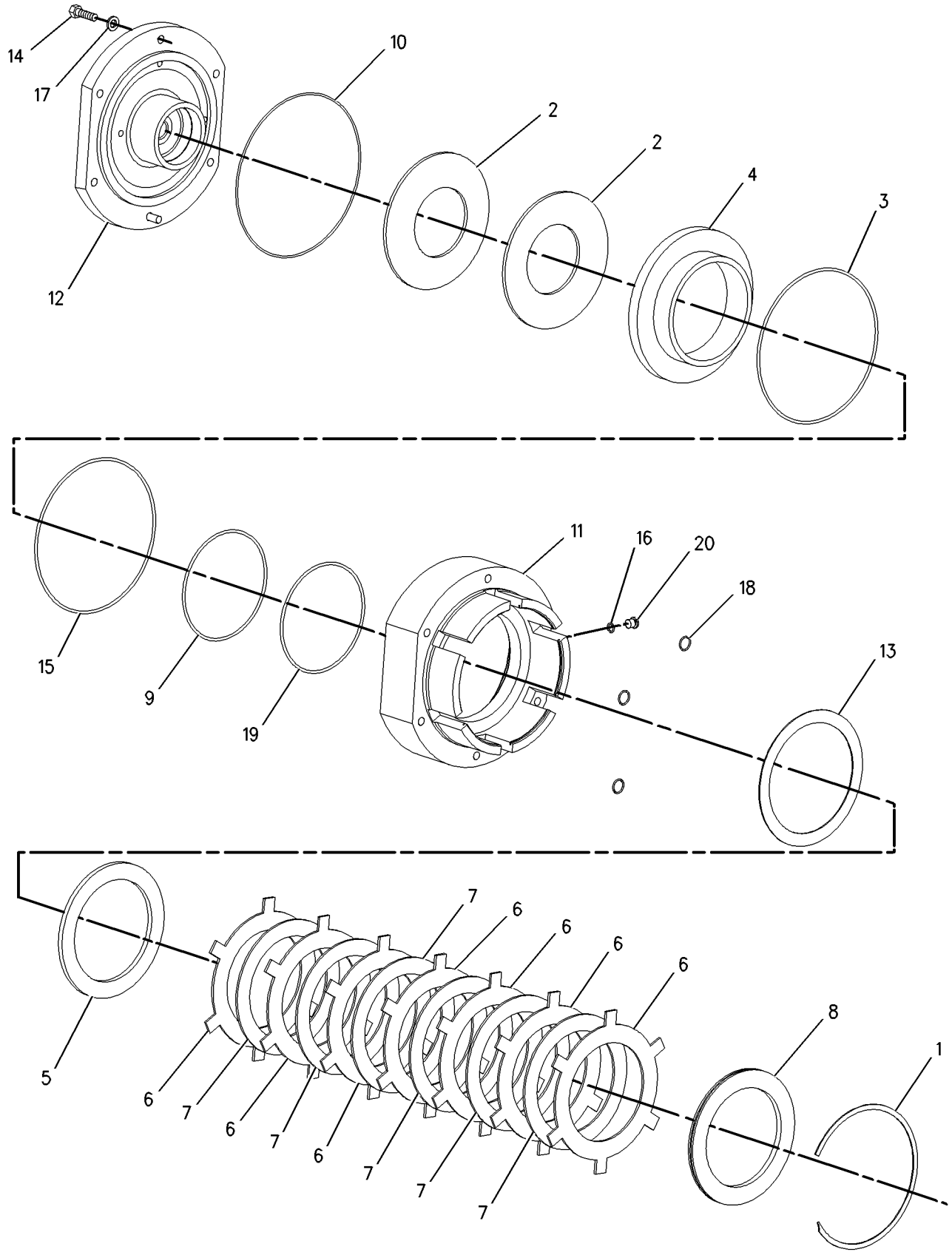


GRAPHIC #1 **<END>** g00881387

# WORK TOOLS

## *166-2910* BRAKE GP-WINCH

**S/N: 5451-UP**
**PART OF 271-9085 WINCH GP**
**AN ATTACHMENT**

**SMCS-5173** **i01340755**

| NOTE | REF NO | GRAPHIC REF | PART NUMBER | QTY | PART NAME 1 2 3 4 5 6 (PRODUCT LEVEL) | SEE PAGE |
|---|---|---|---|---|---|---|
| | 1 | 1 | **119-1590** | 1 | SEAL | |
| Y | 2 | 1 | *161-6407* | 1 | BRAKE GP-WINCH | 498 |
| | 3 | 1 | **161-6432** | 1 | SEAL-CARRIER | |
| | 4 | 1 | **162-2775** | 2 | RING | |
| | 5 | 1 | **4K-2039** | 1 | SEAL-O-RING | |
| | 6 | 1 | **5M-2894** | 4 | WASHER-HARD (10.2X18.5X2.5-MM THK) | |
| | 7 | 1 | **7X-0290** | 4 | BOLT (3/8-16X3.5-IN) | |
| F | | 1 | **7J-9108** | 1 | SEAL-O-RING | |

F-NOT SHOWN
Y-SEPARATE ILLUSTRATION

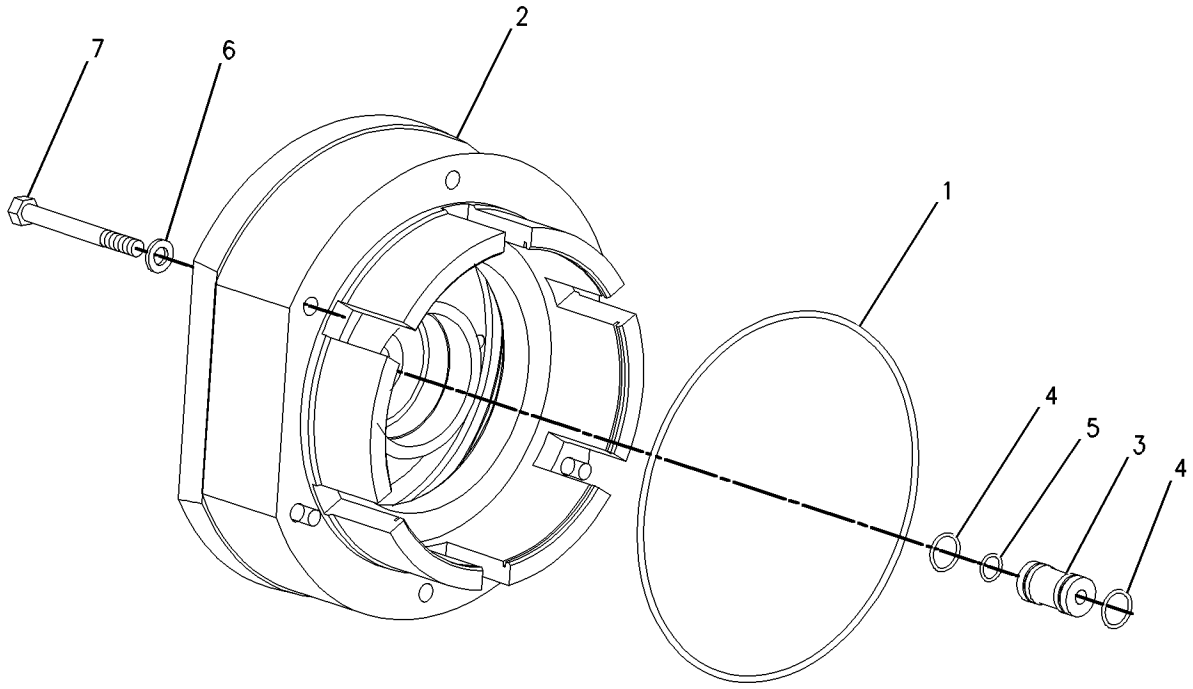


GRAPHIC #1 **<END>** g00712744

# *270-5168* CARRIER GP-PLANETARY—WINCH, PRIMARY

**S/N: 5451-UP**
**PART OF 252-5206 WINCH GP**
**AN ATTACHMENT**

**SMCS-5165** **i02560066**

| NOTE | REF NO | GRAPHIC REF | PART NUMBER | QTY | PART NAME 1 2 3 4 5 6 (PRODUCT LEVEL) | SEE PAGE |
|---|---|---|---|---|---|---|
| | 1 | 1 | **5H-8985** | 3 | PIN-SPRING | |
| | 2 | 1 | **270-5169** | 1 | CARRIER-PLANETARY | |
| | 3 | 1 | **270-5170** | 3 | GEAR-PLANETARY (21-TEETH) | |
| | 4 | 1 | **270-5171** | 1 | SHAFT-GEAR | |
| | 5 | 1 | **270-5172** | 1 | BEARING-ROLLER | |
| | 6 | 1 | **270-5173** | 1 | WASHER-THRUST (0.699X1.181X0.039-MM THK) | |
| | 7 | 1 | **270-5174** | 1 | WASHER-THRUST (1.4X.175-MM THK) | |

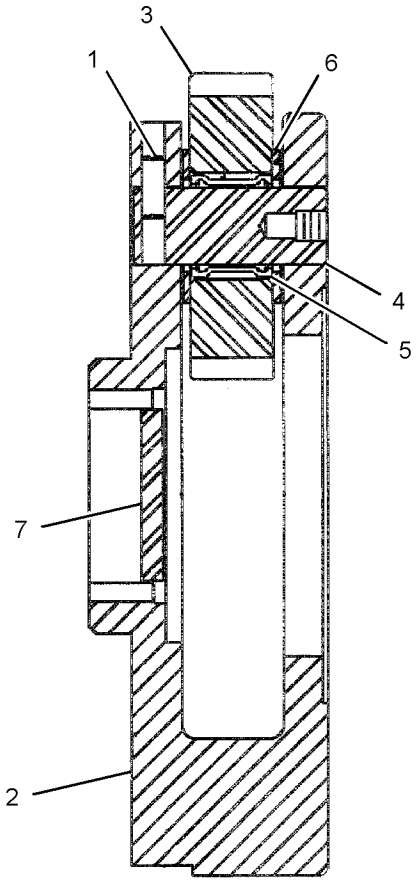


GRAPHIC #1 **<END>** g01298804

# *270-5175* CARRIER GP-PLANETARY—WINCH OUTPUT

**S/N: 5451-UP**
**PART OF 252-5206 WINCH GP**
**AN ATTACHMENT**

**SMCS-5165** **i02560070**

| NOTE | REF NO | GRAPHIC REF | PART NUMBER | QTY | PART NAME 1 2 3 4 5 6 (PRODUCT LEVEL) | SEE PAGE |
|---|---|---|---|---|---|---|
| | 1 | 1 | **4H-8380** | 1 | PIN-SPRING | |
| | 2 | 1 | **129-7286** | 6 | BEARING | |
| | 3 | 1 | **129-7307** | 6 | RACE | |
| | 4 | 1 | **211-9023** | 3 | SPACER-BEARING | |
| | 5 | 1 | **211-9024** | 3 | SHAFT | |
| | 6 | 1 | **270-5176** | 1 | CARRIER-PLANETARY | |
| | 7 | 1 | **270-5177** | 3 | GEAR-PLANETARY | |
| | 8 | 1 | **270-5178** | 1 | WASHER-THRUST | |

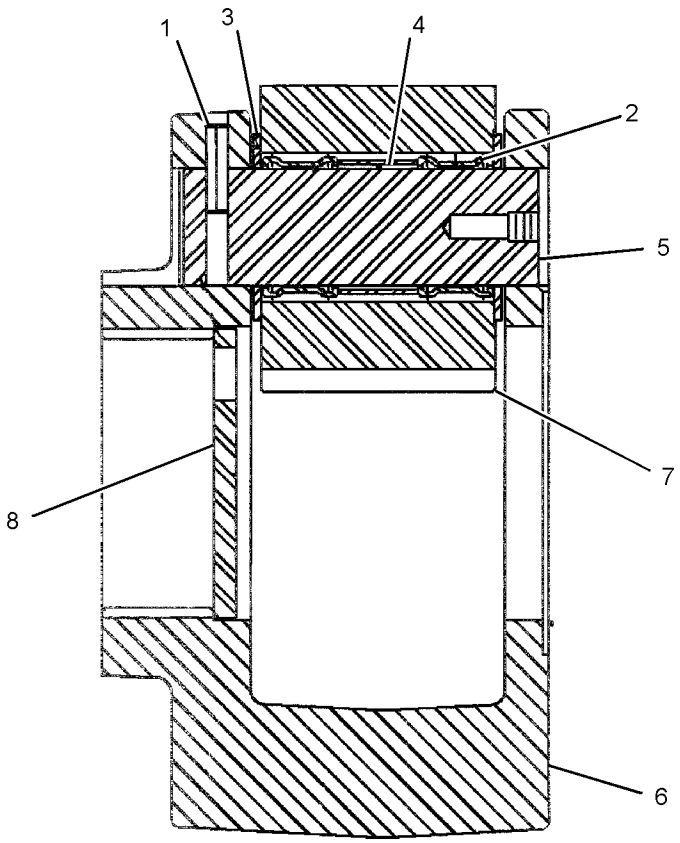


GRAPHIC #1 **<END>** g01298726

# WORK TOOLS

## *193-7417* CASE GP-WINCH

**S/N: 5451-UP**
**PART OF 271-9085 WINCH GP**
**AN ATTACHMENT**

**SMCS-5165** **i02738572**

| NOTE | REF NO | GRAPHIC REF | PART NUMBER | QTY | PART NAME 1 2 3 4 5 6 (PRODUCT LEVEL) | SEE PAGE |
|---|---|---|---|---|---|---|
| | 1 | 1 | **9Y-9236** | 1 | GAUGE-SIGHT | |
| | 2 | 1 | **106-8186** | 1 | VALVE AS-DRAIN (ECOLOGY) (WINCH) | |
| | 3 | 1 | **119-2164** | 1 | STRAINER | |
| | 4 | 1 | **138-2456** | 1 | PLATE | |
| | 5 | 1 | **161-6466** | 1 | COVER-TOP | |
| | 6 | 1 | **161-6467** | 1 | GASKET-COVER | |
| | 7 | 1 | **161-6468** | 1 | COVER-STRAINER | |
| | 8 | 1 | **172-0320** | 1 | TUBE AS-SUCTION | |
| | 9 | 1 | **179-9492** | 2 | PLUG | |
| | 10 | 1 | **193-7418** | 1 | CASE | |
| | 11 | 1 | **0S-1588** | 6 | BOLT (3/8-16X1.25-IN) | |
| | 12 | 1 | **0S-1594** | 4 | BOLT (3/8-16X1-IN) | |
| | 13 | 1 | **5P-9436** | 1 | PLUG-THREADED O-RING | |
| | 14 | 1 | **4V-3962** | 1 | SEAL-O-RING | |
| | 15 | 1 | **5M-2894** | 10 | WASHER-HARD (10.2X18.5X2.5-MM THK) | |
| | 16 | 1 | **6V-8997** | 1 | UNION | |
| | 17 | 1 | **7H-4543** | 4 | SCREW-TAPPING (NO 10X0.375-IN) | |
| | 18 | 1 | **7M-8485** | 2 | SEAL-O-RING | |

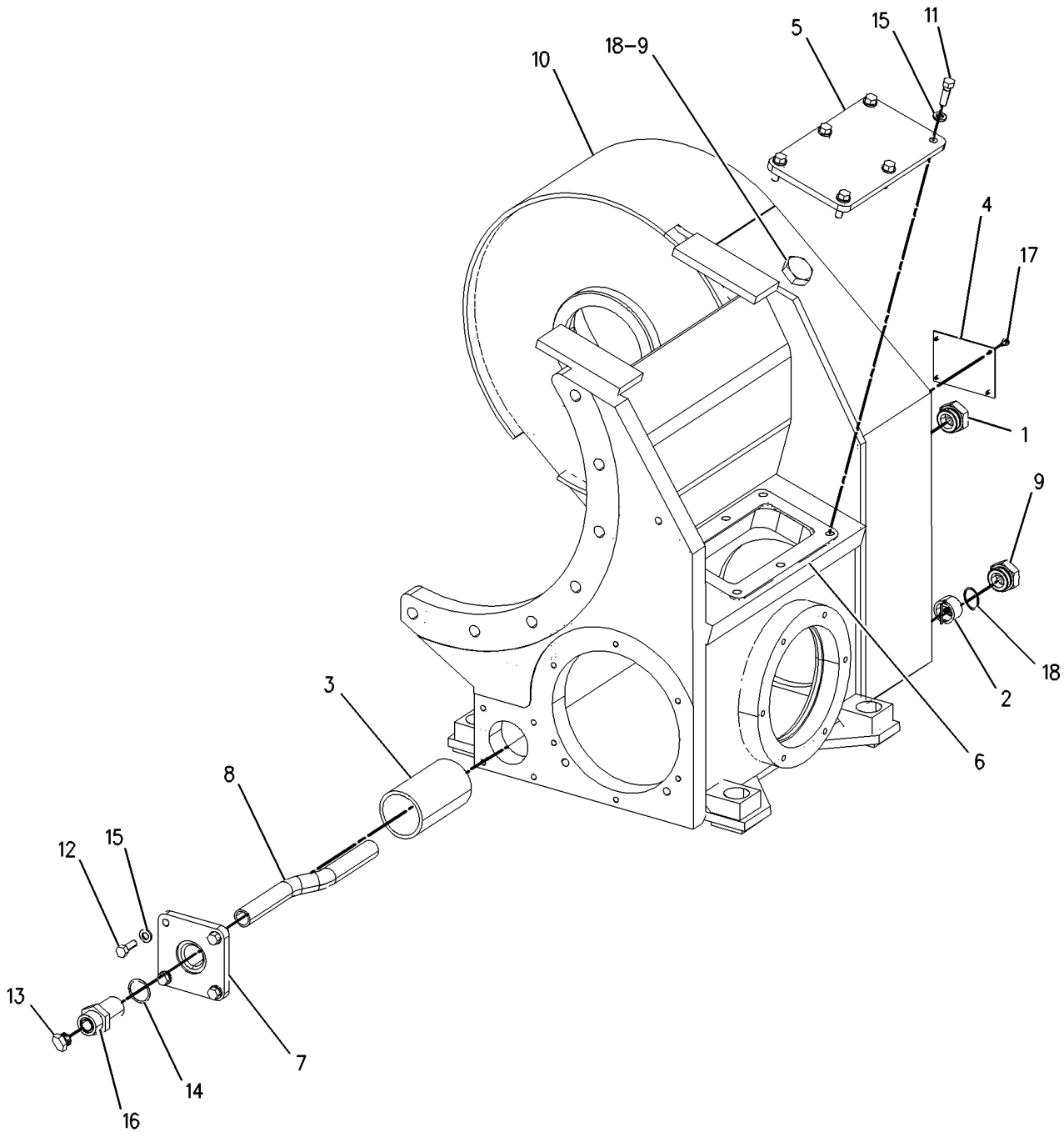


GRAPHIC #1 **<END>** g00913529

# *161-6405* CLUTCH & GEAR GP-WINCH

**S/N: 5451-UP**
**PART OF 271-9085 WINCH GP**
**AN ATTACHMENT**

**SMCS-5167** **i01710664**

| NOTE | REF NO | GRAPHIC REF | PART NUMBER | QTY | PART NAME 1 2 3 4 5 6 (PRODUCT LEVEL) | SEE PAGE |
|---|---|---|---|---|---|---|
| | 1 | 1 | **6U-1989** | 1 | VALVE AS-RELIEF | |
| | 2 | 1 | **9S-8002** | 1 | PLUG-O-RING | |
| | 3 | 1 | **161-6419** | 1 | COVER-GEAR | |
| | 4 | 1 | **161-6420** | 1 | GASKET | |
| | 5 | 1 | **161-6422** | 1 | CLUTCH-FREESPOOL | |
| | 6 | 1 | **162-0175** | 1 | SPRING | |
| | 7 | 1 | **162-2766** | 1 | RING-BACKUP | |
| | 8 | 1 | **172-0307** | 1 | PISTON AS | |
| | 10 | 1 | **9B-7237** | 14 | BOLT (3/8-16X1.25-IN) | |
| | 11 | 1 | **3B-8822** | 1 | ELBOW | |
| | 12 | 1 | **4K-2039** | 1 | SEAL-O-RING | |
| | 13 | 1 | **8T-4896** | 14 | WASHER-HARD (10.2X18.5X2.5-MM THK) | |
| | 14 | 1 | **8M-4986** | 1 | SEAL-O-RING | |

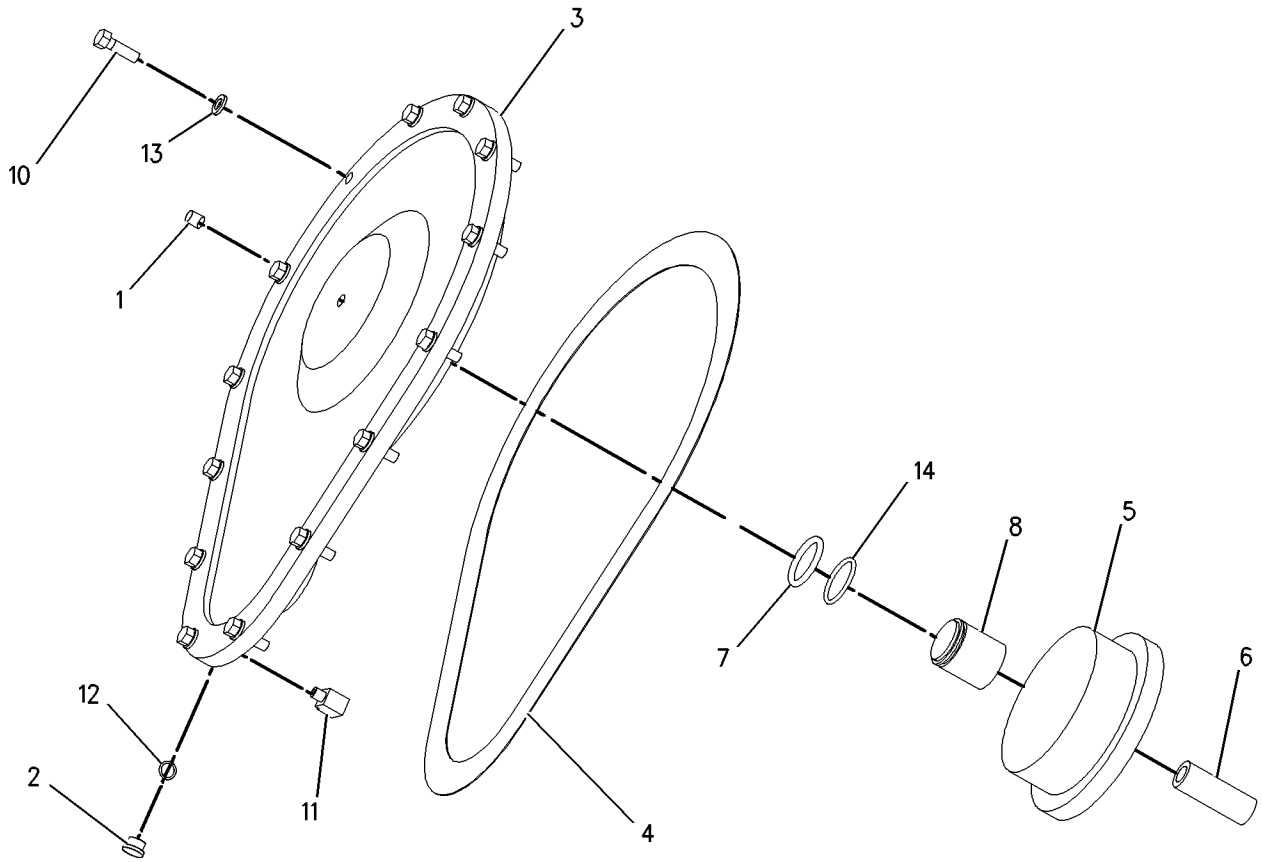


GRAPHIC #1 **<END>** g00691230

# WORK TOOLS

## *173-9881* CLUTCH GP-WINCH

**S/N: 5451-UP**
**CABLE**
**PART OF 271-9085 WINCH GP**
**AN ATTACHMENT**

**SMCS-5167** **i01712737**

| NOTE | REF NO | GRAPHIC REF | PART NUMBER | QTY | PART NAME 1 2 3 4 5 6 (PRODUCT LEVEL) | SEE PAGE |
|---|---|---|---|---|---|---|
| | 1 | 1 | **6V-2200** | 2 | CUP-BEARING | |
| | 2 | 1 | **7K-5448** | 1 | CUP-BEARING | |
| | 3 | 1 | **7K-5449** | 1 | CONE-BEARING | |
| | 4 | 1 | **9S-3581** | 1 | CUP-BEARING | |
| | 5 | 1 | **003-7501** | 2 | CONE-BEARING | |
| | 6 | 1 | **161-6445** | 1 | SHAFT-CLUTCH | |
| | 7 | 1 | **161-6446** | 1 | GEAR-PINION | |
| B | 8 | 1 | **161-6448** | 4 | SHIM (0.5-MM THK) | |
| B | 9 | 1 | **161-6449** | 2 | SHIM (0.18-MM THK) | |
| B | 10 | 1 | **161-6450** | 2 | SHIM (0.13-MM THK) | |
| | 11 | 1 | **161-6451** | 1 | COVER-GEAR | |
| | 12 | 1 | **162-0122** | 1 | GEAR-BEVEL (38 TEETH) | |
| | 13 | 1 | **162-0182** | 1 | CONE | |
| | 14 | 1 | **162-0183** | 1 | BALL BEARING | |
| | 15 | 1 | **162-0184** | 2 | NUT-BEARING | |
| | 16 | 1 | **166-2914** | 1 | HUB-BRAKE | |
| | 17 | 1 | **166-2915** | 1 | SPACER | |
| | 18 | 1 | **172-0309** | 1 | SLEEVE-OIL | |
| | 19 | 1 | **172-0311** | 1 | RING-RETAINING | |
| | 20 | 1 | **172-0312** | 1 | CONTAINER | |
| Y | 21 | 1 | **173-9882** | 1 | CLUTCH GP-WINCH | 508 |
| | 22 | 1 | **0S-1588** | 7 | BOLT (3/8-16X1.25-IN) | |
| | 23 | 1 | **0S-1619** | 3 | BOLT (3/8-16X3-IN) | |
| | 24 | 1 | **2H-9247** | 1 | SEAL-O-RING | |
| | 25 | 1 | **2R-1236** | 2 | RING-RETAINING | |
| | 26 | 1 | **4K-2039** | 3 | SEAL-O-RING | |
| | 27 | 1 | **4V-3962** | 1 | SEAL-O-RING | |
| | 28 | 1 | **5M-2894** | 10 | WASHER-HARD (10.2X18.5X2.5-MM THK) | |

B-USE AS REQUIRED
Y-SEPARATE ILLUSTRATION

*173-9881* **CLUTCH GP-WINCH** *(contd.)* **i01712737**

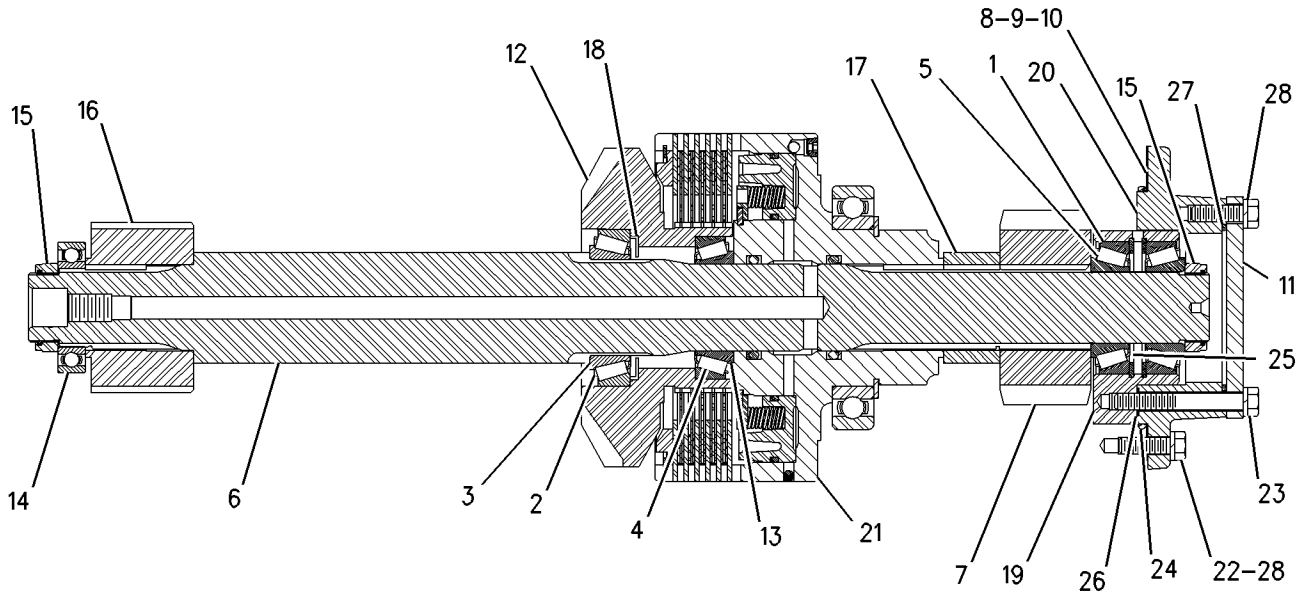


GRAPHIC #1 **<END>** g00881874

# 173-9882 CLUTCH GP-WINCH

**S/N: 5451-UP**
**CABLE**
**PART OF 173-9881 CLUTCH GP-WINCH**
**AN ATTACHMENT**

**SMCS-5167** **i02601328**

| NOTE | REF NO | GRAPHIC REF | PART NUMBER | QTY | PART NAME 1 2 3 4 5 6 (PRODUCT LEVEL) | SEE PAGE |
|---|---|---|---|---|---|---|
| | 1 | 1 | **118-5849** | 1 | VALVE | |
| | 2 | 1 | **295-1797** | 1 | RETAINER | |
| | 3 | 1 | **119-1534** | 1 | RING | |
| | 4 | 1 | **119-2195** | 1 | RING | |
| | 5 | 1 | **161-6434** | 6 | PLATE-BRAKE | |
| | 6 | 1 | **161-6435** | 5 | DISC-FRICTION | |
| | 7 | 1 | **161-6436** | 1 | RETAINER-BRAKE | |
| | 8 | 1 | **161-6439** | 1 | PISTON-CLUTCH | |
| | 9 | 1 | **162-0178** | 1 | BALL BEARING | |
| | 10 | 1 | **162-2753** | 1 | SEAL-BACKUP | |
| | 11 | 1 | **162-2754** | 1 | RING-BACKUP | |
| | 12 | 1 | **172-3548** | 2 | RING-BACKUP | |
| | 13 | 1 | **173-9883** | 1 | HOUSING-CLUTCH | |
| | 14 | 1 | **211-1640** | 8 | SPRING | |
| | 15 | 1 | **1H-6227** | 1 | SEAL-O-RING | |
| | 16 | 1 | **3Y-9267** | 2 | BALL | |
| | 17 | 1 | **5K-5959** | 2 | SEAL-O-RING | |
| | 18 | 1 | **6J-3473** | 1 | RING-SNAP | |
| | 19 | 1 | **9F-1399** | 1 | SEAL-O-RING | |
| | 20 | 1 | **9S-8002** | 2 | PLUG-O-RING | |

**173-9882 CLUTCH GP-WINCH** *(contd. )* **i02601328**

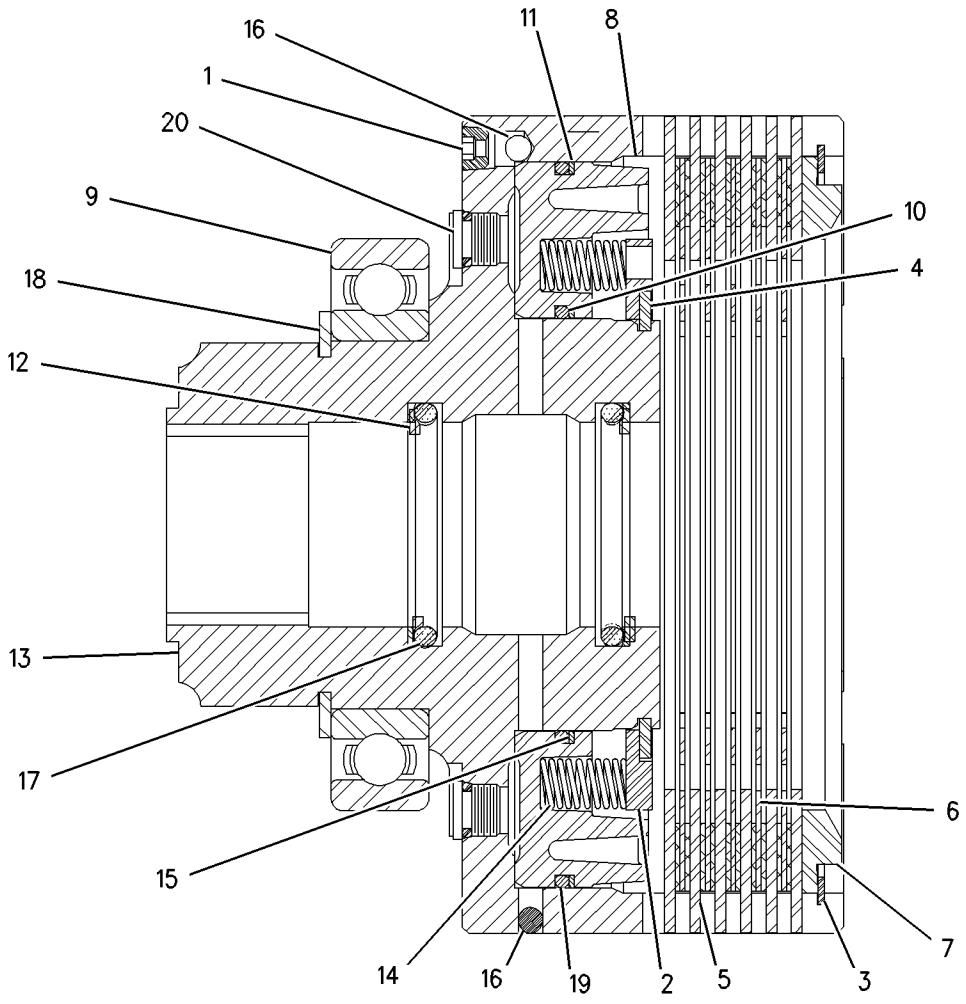


GRAPHIC #1 **<END>** g00882535

# WORK TOOLS

## *252-5200* CONTROL GP-WINCH

**S/N: 5451-UP**
**PART OF 252-5196 WINCH AR**
**AN ATTACHMENT**

**SMCS-5161, 5170** **i02308560**

| NOTE | REF NO | GRAPHIC REF | PART NUMBER | QTY | PART NAME 1 2 3 4 5 6 (PRODUCT LEVEL) | SEE PAGE |
|---|---|---|---|---|---|---|
| | 1 | 1 | **7K-1181** | 5 | STRAP-CABLE | |
| | 2 | 1 | **243-0767** | 1 | SWITCH AS-ROCKER (WINCH REEL OUT) | |
| | 3 | 1 | **253-6140** | 1 | SWITCH AS-ROCKER (WINCH FREESPOOL) | |
| | 4 | 1 | **253-6141** | 1 | SWITCH AS-ROCKER (WINCH REEL IN) | |
| | 5 | 1 | **255-8111** | 1 | HARNESS AS-WORK TOOL (WINCH) | |
| | | 1 | **102-8805** | 1 | KIT-RECEPTACLE (6-PIN) | |
| | | | | | (INCLUDES RECEPTACLE AS AND WEDGE) | |
| | | 1 | **106-8704** | 3 | SUPPRESSOR AS-ARC | |
| | | | | | (EACH INCLUDES) | |
| | | 1 | **102-8802** | 1 | KIT-RECEPTACLE (2-PIN) | |
| | | | | | (INCLUDES RECEPTACLE AS AND WEDGE) | |
| | | 1 | **155-2270** | 7 | KIT-CONNECTING PLUG (2-PIN) | |
| | | | | | (EACH INCLUDES PLUG AS AND WEDGE) | |
| | 6 | 1 | **4P-7428** | 3 | CLIP (LADDER) | |
| | 7 | 1 | **4P-7581** | 1 | CLIP | |
| | 8 | 1 | **8T-4121** | 1 | WASHER-HARD (11X21X2.5-MM THK) | |
| M | 9 | 1 | **8T-4137** | 1 | BOLT (M10X1.5X20-MM) | |

M-METRIC PART

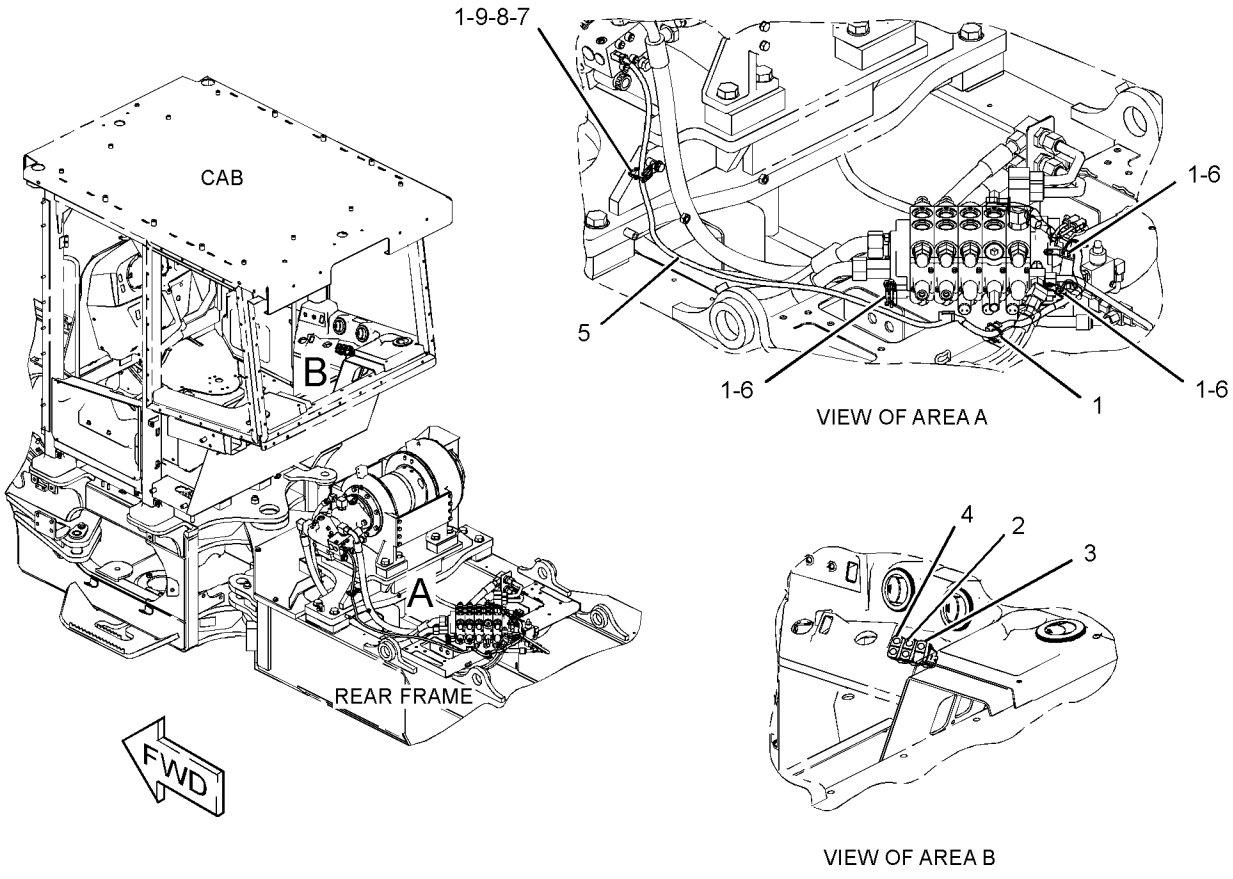


GRAPHIC #1 **<END>** g01162471

# WORK TOOLS

## *252-5201* CONTROL GP-WINCH

**S/N: 5451-UP**
**PART OF 252-5197 WINCH AR**
**AN ATTACHMENT**

**SMCS-5161, 5170** **i02686247**

| NOTE | REF NO | GRAPHIC REF | PART NUMBER | QTY | PART NAME 1 2 3 4 5 6 (PRODUCT LEVEL) | SEE PAGE |
|---|---|---|---|---|---|---|
| | 1 | 1 | **243-0767** | 1 | SWITCH AS-ROCKER (WINCH REEL OUT) | |
| | 2 | 1 | **253-6140** | 1 | SWITCH AS-ROCKER (WINCH FREESPOOL) | |
| | 3 | 1 | **253-6141** | 1 | SWITCH AS-ROCKER (WINCH REEL IN) | |
| | 4 | 1 | **260-9622** | 1 | HARNESS AS-WORK TOOL (WINCH) | |
| | | 1 | **102-8805** | 1 | KIT-RECEPTACLE (6-PIN) | |
| | | | | | (INCLUDES RECEPTACLE AS AND WEDGE) | |
| | | 1 | **155-2270** | 1 | KIT-CONNECTING PLUG (2-PIN) | |
| | | | | | (INCLUDES PLUG AS AND WEDGE) | |
| | 5 | 1 | **106-8704** | 3 | SUPPRESSOR AS-ARC | |

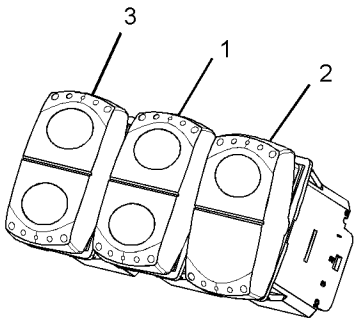


VIEW OF AREA A

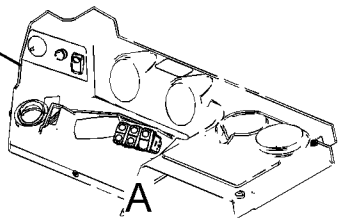


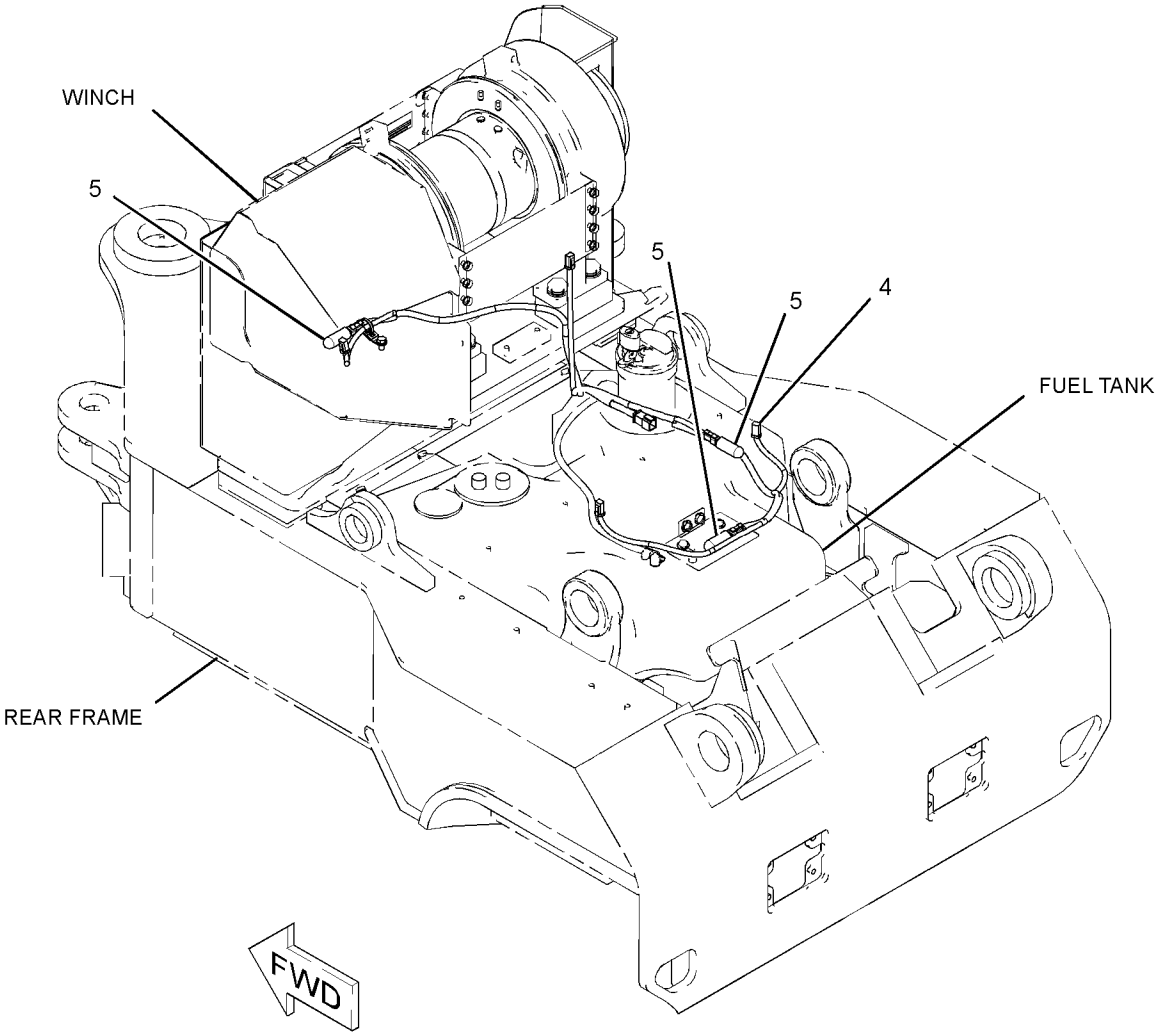


GRAPHIC #1 **<END>** g01354563

# *271-9088* CONTROL GP-WINCH

**S/N: 5451-UP**
**PART OF 271-9081 WINCH AR**
**AN ATTACHMENT**

**SMCS-5161, 5170** **i02738548**

| NOTE | REF NO | GRAPHIC REF | PART NUMBER | QTY | PART NAME 1 2 3 4 5 6 (PRODUCT LEVEL) | SEE PAGE |
|---|---|---|---|---|---|---|
| | 1 | 1 | **106-8704** | 3 | SUPPRESSOR AS-ARC | |
| | | | | | (EACH INCLUDES) | |
| | | 1 | **102-8802** | 1 | KIT-RECEPTACLE (2-PIN) | |
| | | | | | (INCLUDES RECEPTACLE AS & WEDGE) | |
| | | 1 | **186-3735** | 2 | PIN-CONNECTOR (16-GA TO 18-GA) | |
| | 2 | 1 | **252-4558** | 1 | CONTROL GP-HANDLE (WINCH) | |
| | | 1 | **278-8965** | 1 | BOOT | |
| | | 1 | **278-8967** | 1 | RETAINER-BOOT | |
| M | | 1 | **278-8970** | 4 | SCREW (M3X10X6-MM) | |
| | | 1 | **278-8974** | 1 | KNOB | |
| | | 1 | **151-9274** | 1 | KIT-RECEPTACLE (4-PIN) | |
| | | | | | (INCLUDES RECEPTACLE AS & WEDGE) | |
| | 3 | 1 | **257-7889** | 1 | PLATE | |
| | 4 | 1 | **273-0145** | 1 | SEAL | |
| | 5 | 1 | **292-8687** | 1 | FILM-WINCH CONTROL | |
| | 6 | 1 | **294-0007** | 1 | HARNESS AS-WORK TOOL (WINCH) | |
| E | | 1 | **125-7875** | | TUBE-HEAT SHRINK (7.44-MM DIA) (15-CM) | |
| E | | 1 | **125-7874** | | TUBE-HEAT SHRINK (5.72-MM DIA) (15-CM) | |
| | | 1 | **102-8805** | 1 | KIT-RECEPTACLE (6-PIN) | |
| | | | | | (INCLUDES RECEPTACLE AS & WEDGE) | |
| | | 1 | **155-2270** | 7 | KIT-CONNECTING PLUG (2-PIN) | |
| | | | | | (EACH INCLUDES PLUG AS, WEDGE, & INTERFACE SEAL) | |
| M | 7 | 1 | **9X-2045** | 8 | SCREW-TRUSS HEAD (M6X1X20-MM) | |

E-ORDER BY THE CENTIMETER
M-METRIC PART

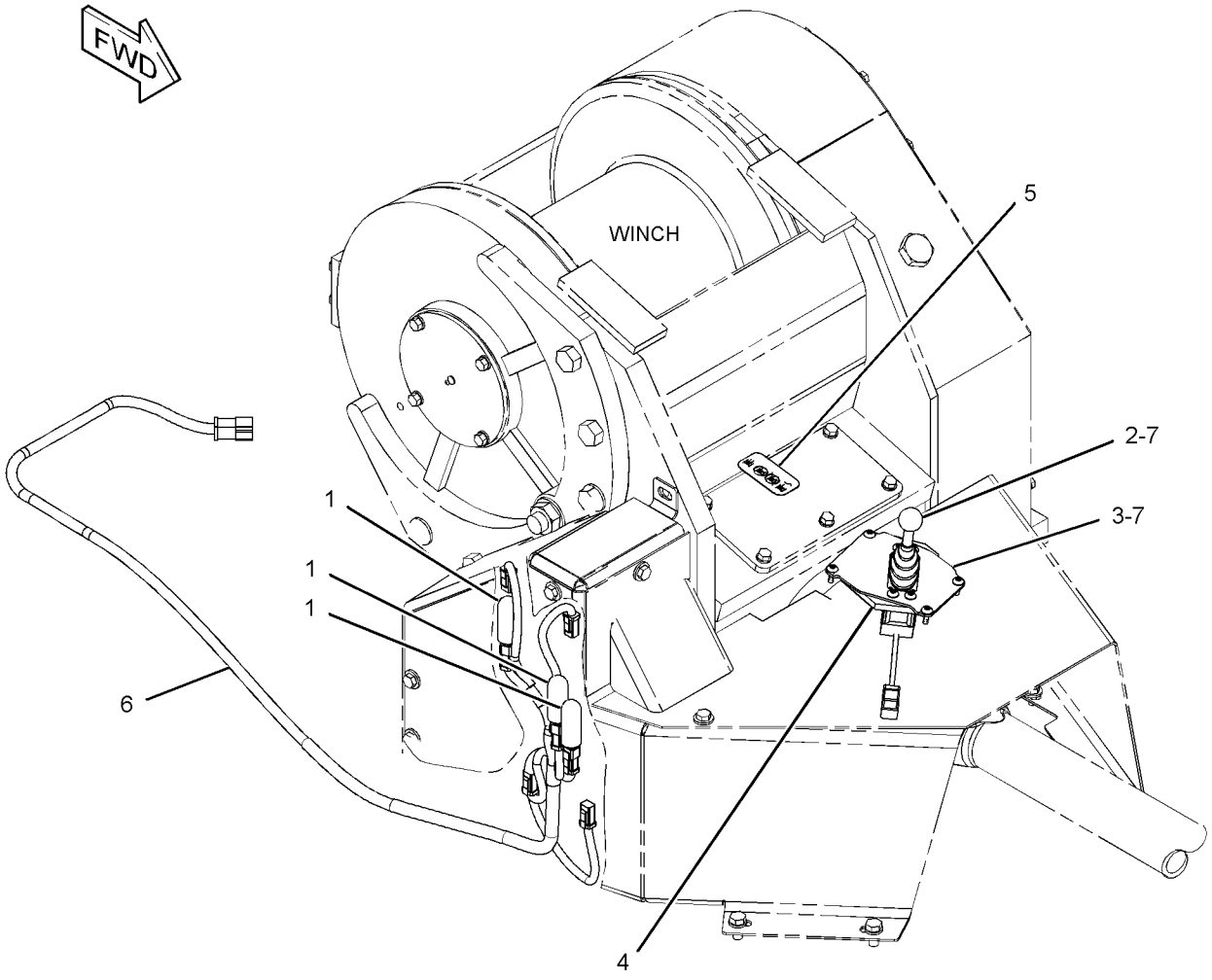


GRAPHIC #1 **<END>** g01325783

# WORK TOOLS

## *257-8495* COVER GP-WINCH

**S/N: 5451-UP**

**PART OF 272-5920 ARCH AR, 253-2515 GRAPPLE AR**

**AN ATTACHMENT**

**SMCS-5163** **i02179283**

| NOTE | PART NUMBER | QTY | PART NAME 1 2 3 4 5 6 (PRODUCT LEVEL) | SEE PAGE |
|---|---|---|---|---|
| | **228-6089** | 3 | PLUG | |

**<END>**

# WORK TOOLS

## *270-5165* CYLINDER GP-BRAKE–WINCH

**S/N: 5451-UP**
**PART OF 252-5206 WINCH GP**
**AN ATTACHMENT**

**SMCS-5163, 5173** **i02594333**

| NOTE | REF NO | GRAPHIC REF | PART NUMBER | QTY | PART NAME 1 2 3 4 5 6 (PRODUCT LEVEL) | SEE PAGE |
|---|---|---|---|---|---|---|
| | 1 | 1 | **3E-4210** | 1 | SEAL-POLYPAK | |
| | 2 | 1 | **6J-5541** | 1 | SEAL-O-RING | |
| M | 3 | 1 | **6V-8200** | 4 | BOLT-SOCKET HEAD (M12X1.75X35-MM) | |
| | 4 | 1 | **129-7292** | 1 | SPRING | |
| | 5 | 1 | **129-7293** | 1 | SPACER | |
| | 6 | 1 | **129-7294** | 1 | SEAL-O-RING | |
| | 7 | 1 | **129-7319** | 1 | PLATE | |
| | 8 | 1 | **129-7320** | 1 | RING | |
| | 9 | 1 | **129-7321** | 1 | DISC-FRICTION | |
| | 10 | 1 | **203-6623** | 1 | DISC-BRAKE | |
| | 11 | 1 | **270-5166** | 1 | CYLINDER-BRAKE | |
| | 12 | 1 | **270-5167** | 1 | SUPPORT-MOTOR | |

M-METRIC PART

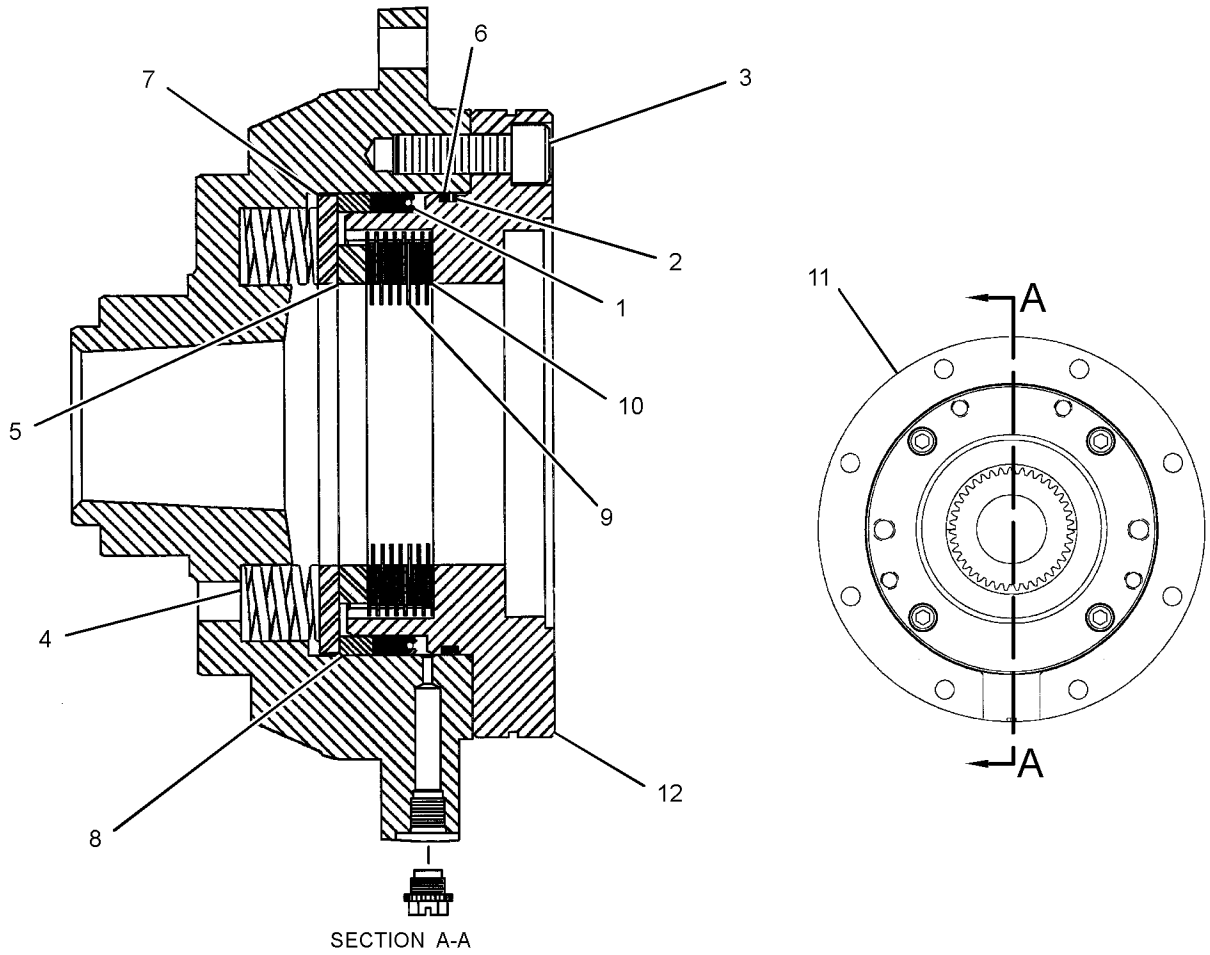


SECTION A-A

GRAPHIC #1 **<END>** g01298747

# *143-2064* DRIVE GP-WINCH

**S/N: 5451-UP**
**PART OF 271-9081 WINCH AR**
**AN ATTACHMENT**

**SMCS-5178** **i02453901**

| NOTE | REF NO | GRAPHIC REF | PART NUMBER | QTY | PART NAME 1 2 3 4 5 6 (PRODUCT LEVEL) | SEE PAGE |
|---|---|---|---|---|---|---|
| | 1 | 1 | **3B-8488** | 1 | FITTING-GREASE | |
| | 2 | 1 | **5D-8269** | 8 | BOLT-12 POINT HEAD (5/16-24X0.75-IN) | |
| | 3 | 1 | **5S-4408** | 2 | SEAL-LIP TYPE | |
| | 4 | 1 | **5V-2545** | 4 | STRAP | |
| | 5 | 1 | **7K-5448** | 2 | CUP-BEARING | |
| | 6 | 1 | **7K-5449** | 2 | CONE-BEARING | |
| B | 7 | 1 | **8K-8518** | 2 | SHIM PACK (INCLUDES 20-SHIMS) | |
| | 9 | 1 | **8R-7756** | 1 | YOKE | |
| | 10 | 1 | **9U-4894** | 1 | SUPPORT AS | |
| | 11 | 1 | **115-3201** | 1 | YOKE-SHAFT | |
| | 12 | 1 | **149-7647** | 1 | SLIP JOINT AS | |
| | | 1 | **8R-7752** | 2 | SPIDER & BEARING AS | |
| C | 13 | 1 | **233-7486** | 1 | SHAFT GP-DRIVE | |
| | | 1 | **9R-2994** | 2 | SPIDER AS | |
| | 14 | 1 | **0S-1587** | 1 | BOLT (1/2-13X1.75-IN) | |
| | 15 | 1 | **2S-1654** | 1 | WASHER (3.5X44.5X6-MM THK) | |
| M | 16 | 1 | **6V-3940** | 5 | BOLT (M8X1.25X25-MM) | |
| M | 17 | 1 | **7X-2553** | 6 | BOLT (M16X2X40-MM) | |
| | 18 | 1 | **9X-8257** | 6 | WASHER (17.5X30X3.5-MM THK) | |

B-USE AS REQUIRED
C-CHANGE FROM PREVIOUS TYPE
M-METRIC PART

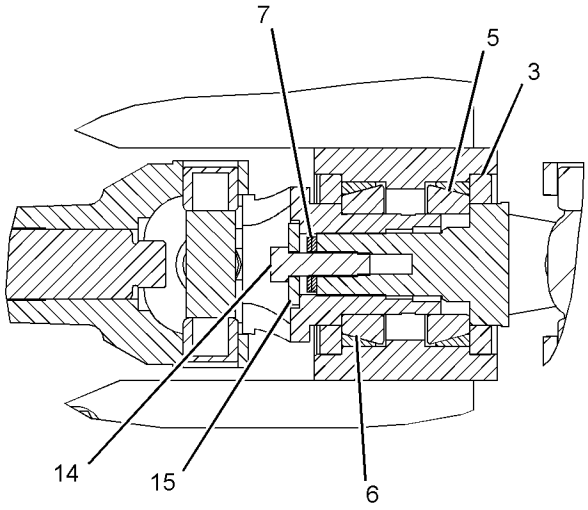


SECTION A-A

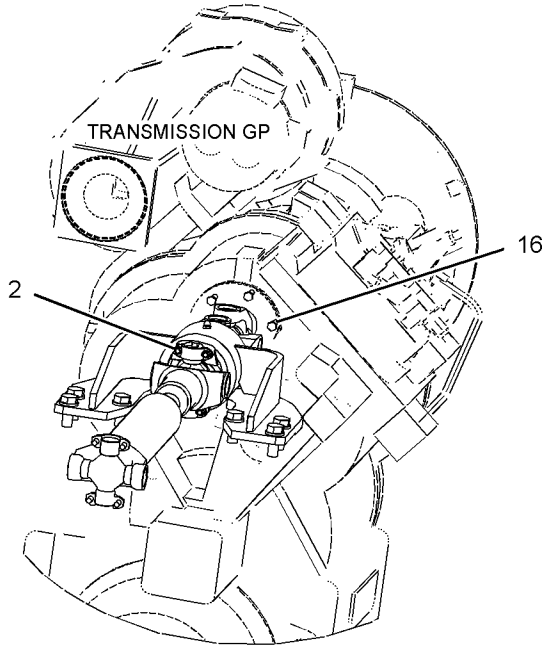


REAR VIEW

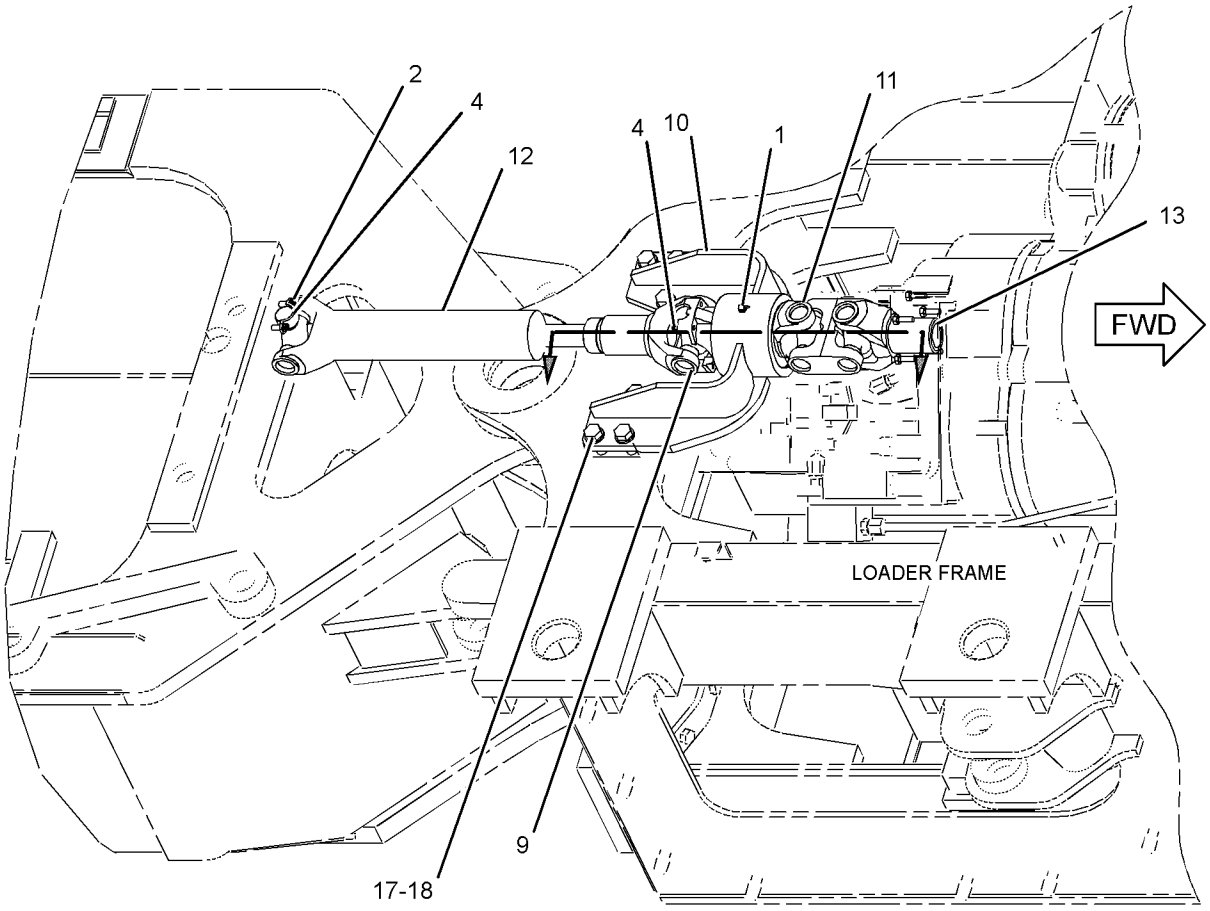


GRAPHIC #1 **<END>** g01184245

# WORK TOOLS

## *179-7064* DRUM GP-WINCH

**S/N: 5451-UP**
**CABLE**
**PART OF 271-9085 WINCH GP**
**AN ATTACHMENT**

**SMCS-5159** **i01820718**

| NOTE | REF NO | GRAPHIC REF | PART NUMBER | QTY | PART NAME 1 2 3 4 5 6 (PRODUCT LEVEL) | SEE PAGE |
|---|---|---|---|---|---|---|
| | 1 | 1 | **1P-3934** | 2 | CUP-BEARING | |
| | 2 | 1 | **1P-3935** | 2 | CONE-BEARING | |
| | 3 | 1 | **2H-3786** | 1 | NUT-JAM (1-14-THD) | |
| | 4 | 1 | **8T-4994** | 7 | WASHER-HARD (20X36.5X3.5-MM THK) | |
| | 5 | 1 | **3B-8489** | 1 | FITTING-GREASE | |
| | 6 | 1 | **224-3418** | 1 | NUT | |
| | 7 | 1 | **161-6416** | 1 | COVER | |
| | 8 | 1 | **161-6417** | 1 | DISC-BRAKE | |
| | 9 | 1 | **162-0174** | 1 | SPRING | |
| | 10 | 1 | **162-2762** | 1 | SCREW | |
| | 11 | 1 | **175-1444** | 1 | SHAFT-DRUM | |
| | 12 | 1 | **175-1445** | 1 | DRUM-CABLE | |
| | 13 | 1 | **224-3419** | 1 | WASHER | |
| | 14 | 1 | **176-0029** | 2 | GASKET | |
| | 15 | 1 | **176-7091** | 1 | NUT | |
| | 16 | 1 | **119-2195** | 1 | RING | |
| | 17 | 1 | **184-8067** | 1 | COVER-DRUM | |
| | 18 | 1 | **184-8068** | 1 | BAR | |
| | 19 | 1 | **061-7706** | 2 | PIN-DOWEL | |
| | 20 | 1 | **0S-1594** | 4 | BOLT (3/8-16X1-IN) | |
| | 21 | 1 | **1J-4034** | 1 | SEAL-LIP TYPE | |
| | 22 | 1 | **5M-2894** | 5 | WASHER-HARD (10.2X18.5X2.5-MM THK) | |
| | 23 | 1 | **5P-8250** | 1 | WASHER (28X49X5-MM THK) | |
| | 24 | 1 | **8T-4223** | 4 | WASHER-HARD (13.5X25.5X3-MM THK) | |
| | 25 | 1 | **0S-1585** | 4 | BOLT (1/2-13X1.5-IN) | |
| | 26 | 1 | **9X-7713** | 1 | SEAL-LIP TYPE | |
| | 27 | 1 | **8T-9399** | 7 | BOLT (3/4-10X2.25-IN) | |
| | 28 | 1 | **5M-3062** | 1 | BOLT (3/8-16X0.75-IN) | |
| | 29 | 1 | **219-7935** | 1 | PLATE | |
| | 30 | 1 | **211-0394** | 1 | BOLT (5/16-18X0.4-IN) | |

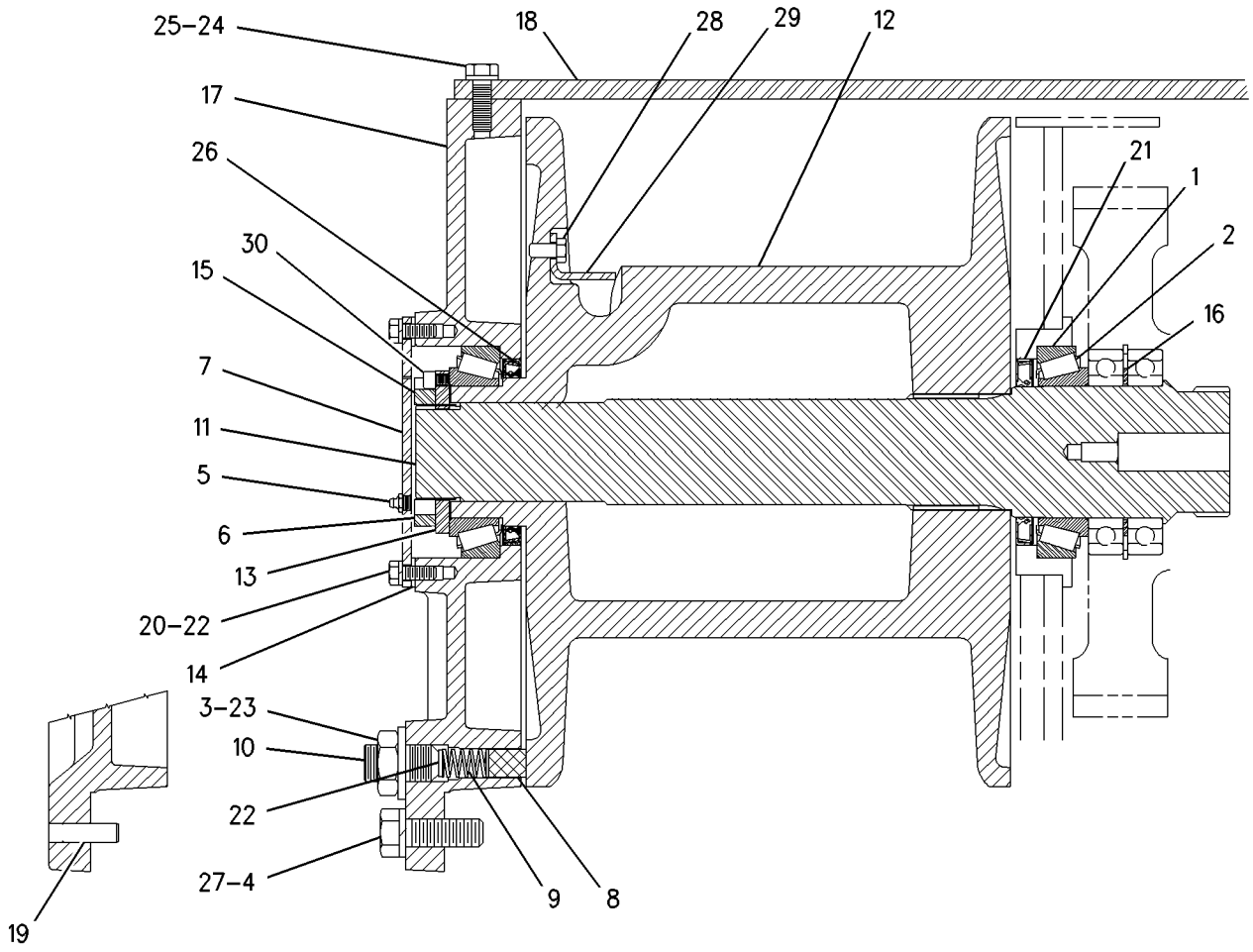


GRAPHIC #1 **<END>** g00933721

# WORK TOOLS

## *160-1577* EDGE GP-CUTTING

**S/N: 5451-UP**
**PART OF 143-1430 BLADE GP-DECKING**
**AN ATTACHMENT**

**SMCS-6801** **i00914717**

| NOTE | PART NUMBER | QTY | PART NAME 1 2 3 4 5 6 (PRODUCT LEVEL) | SEE PAGE |
|---|---|---|---|---|
| | **5J-4773** | 21 | BOLT-PLOW (3/4-10X2.5IN) | |
| | **8E-9377** | 3 | EDGE-CUTTING | |
| | **2J-3506** | 21 | NUT-FULL (3/4-10 THD) | |
| | **5P-8248** | 21 | WASHER-HARD (3.5MM THK) | |

**<END>**

# *161-6642* FAIRLEAD GP-WINCH–CABLE MACHINE

**S/N: 5451-UP**
**PART OF 272-5920 ARCH AR**
**AN ATTACHMENT**

**SMCS-6305** **i01351301**

| NOTE | REF NO | GRAPHIC REF | PART NUMBER | QTY | PART NAME 1 2 3 4 5 6 (PRODUCT LEVEL) | SEE PAGE |
|---|---|---|---|---|---|---|
| | 1 | 1 | **1V-3283** | 4 | SPACER | |
| | 2 | 1 | **1V-3287** | 2 | SHAFT AS | |
| | 3 | 1 | **1V-3289** | 2 | ROLLER | |
| | 4 | 1 | **2B-7557** | 2 | CORK | |
| B | 5 | 1 | **2V-8314** | 2 | SHIM PACK (INCLUDES 9-SHIMS) | |
| B | 6 | 1 | **2V-8369** | 4 | SHIM PACK (INCLUDES 4-SHIMS) (INCL 4 SHIMS) | |
| | 7 | 1 | **4V-9490** | 2 | PLATE | |
| | 8 | 1 | **4V-9497** | 2 | SPACER | |
| | 9 | 1 | **5P-1610** | 4 | BALL BEARING | |
| | 10 | 1 | **5P-5293** | 2 | BALL BEARING | |
| | 11 | 1 | **9V-7251** | 1 | ROLLER | |
| | 12 | 1 | **161-4121** | 1 | SHAFT | |
| | 13 | 1 | **5P-1076** | 2 | WASHER-HARD (13.5X30X4-MM THK) | |
| | 14 | 1 | **8T-4121** | 2 | WASHER-HARD (11X21X2.5-MM THK) | |
| M | 15 | 1 | **8T-4183** | 4 | BOLT (M12X1.75X40-MM) | |
| M | 16 | 1 | **8T-4195** | 2 | BOLT (M10X1.5X30-MM) | |
| | 17 | 1 | **8T-4223** | 4 | WASHER-HARD (13.5X25.5X3-MM THK) | |
| M | 18 | 1 | **8T-4956** | 2 | BOLT (M12X1.75X35-MM) | |

B-USE AS REQUIRED
M-METRIC PART

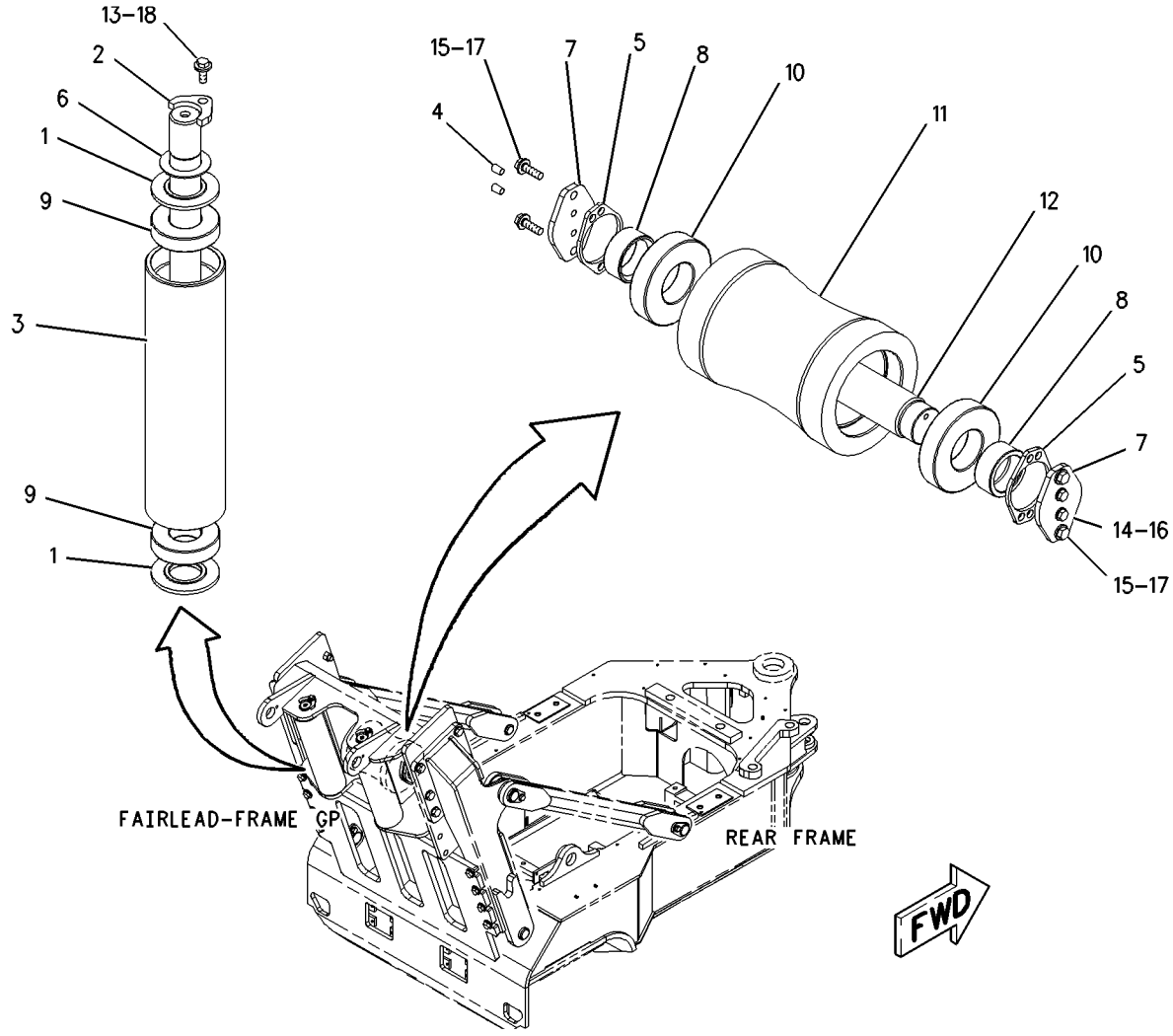


GRAPHIC #1 **<END>** g00713067

## *281-1704* FAIRLEAD GP-WINCH—DUAL FUNCTION FRAME

**S/N: 545300-UP**

**PART OF 253-2518 GRAPPLE AR**

**AN ATTACHMENT**

**SMCS-6305** **i02547967**

| NOTE | REF NO | GRAPHIC REF | PART NUMBER | QTY | PART NAME 1 2 3 4 5 6 (PRODUCT LEVEL) | SEE PAGE |
|---|---|---|---|---|---|---|
| | 1 | 1 | **248-4874** | 2 | PIN | |
| | 2 | 1 | **248-4876** | 3 | ROLLER | |
| | 3 | 1 | **2H-3775** | 2 | PIN-COTTER | |
| | 4 | 1 | **7J-9884** | 6 | BEARING | |
| | 5 | 1 | **7X-7740** | 2 | WASHER (45X78X8-MM THK) | |
| M | 6 | 1 | **8T-4139** | 2 | BOLT (M12X1.75X30-MM) | |
| | 7 | 1 | **8T-4223** | 2 | WASHER-HARD (13.5X25.5X3-MM THK) | |

M-METRIC PART

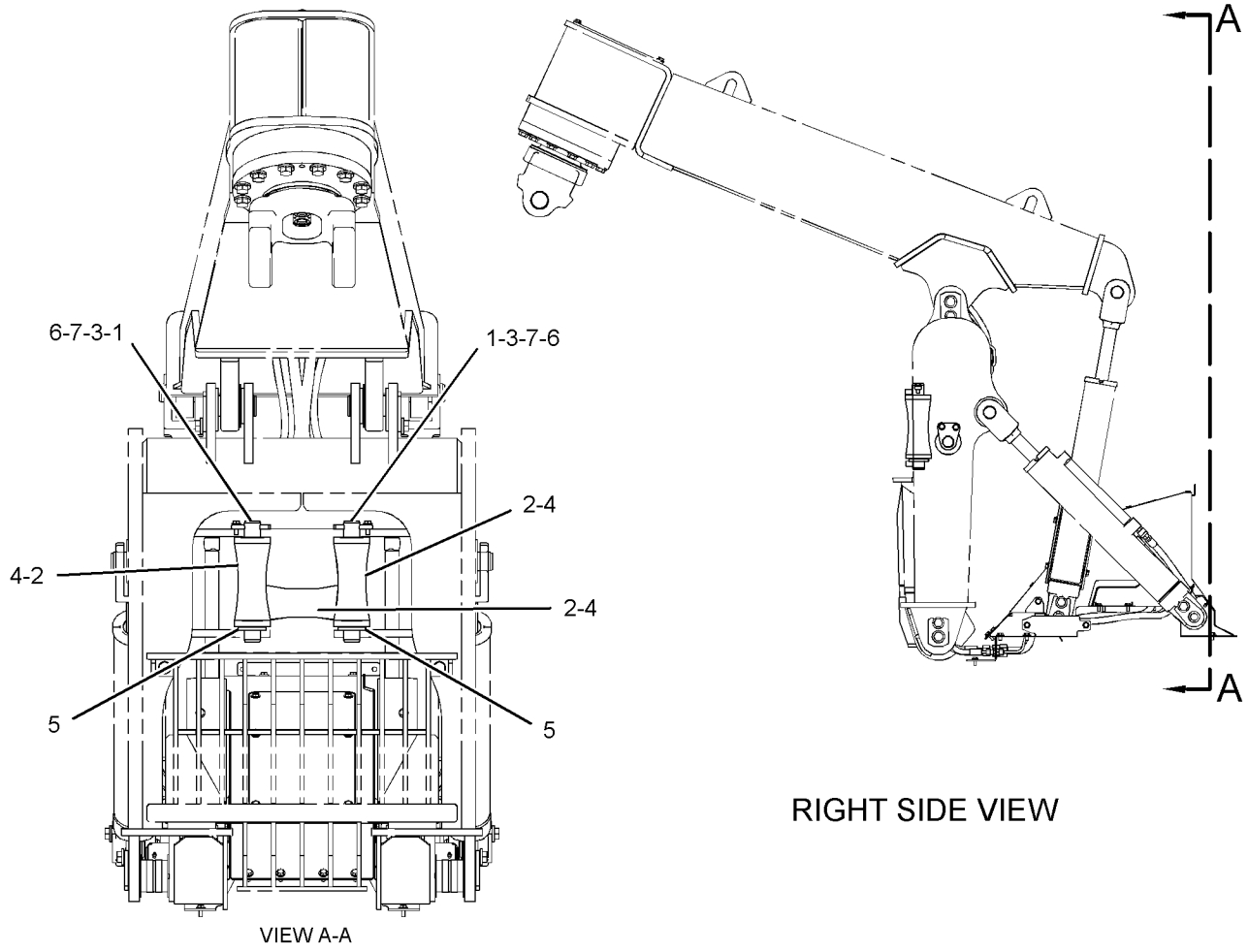


GRAPHIC #1 **<END>** g01290623

# *281-1705* FAIRLEAD GP-WINCH—DUAL FUNCTION FRAME

**S/N: 5451-299**
**PART OF 253-2518 GRAPPLE AR**
**AN ATTACHMENT**

**SMCS-6305** **i02468895**

| NOTE | REF NO | GRAPHIC REF | PART NUMBER | QTY | PART NAME 1 2 3 4 5 6 (PRODUCT LEVEL) | SEE PAGE |
|---|---|---|---|---|---|---|
| | 1 | 1 | **248-4874** | 3 | PIN | |
| | 2 | 1 | **248-4876** | 3 | ROLLER | |
| | 3 | 1 | **2H-3775** | 3 | PIN-COTTER | |
| | 4 | 1 | **7J-9884** | 6 | BEARING | |
| | 5 | 1 | **7X-7740** | 2 | WASHER (45X78X8-MM THK) | |
| M | 6 | 1 | **8T-4139** | 3 | BOLT (M12X1.75X30-MM) | |
| | 7 | 1 | **8T-4223** | 3 | WASHER-HARD (13.5X25.5X3-MM THK) | |

M-METRIC PART

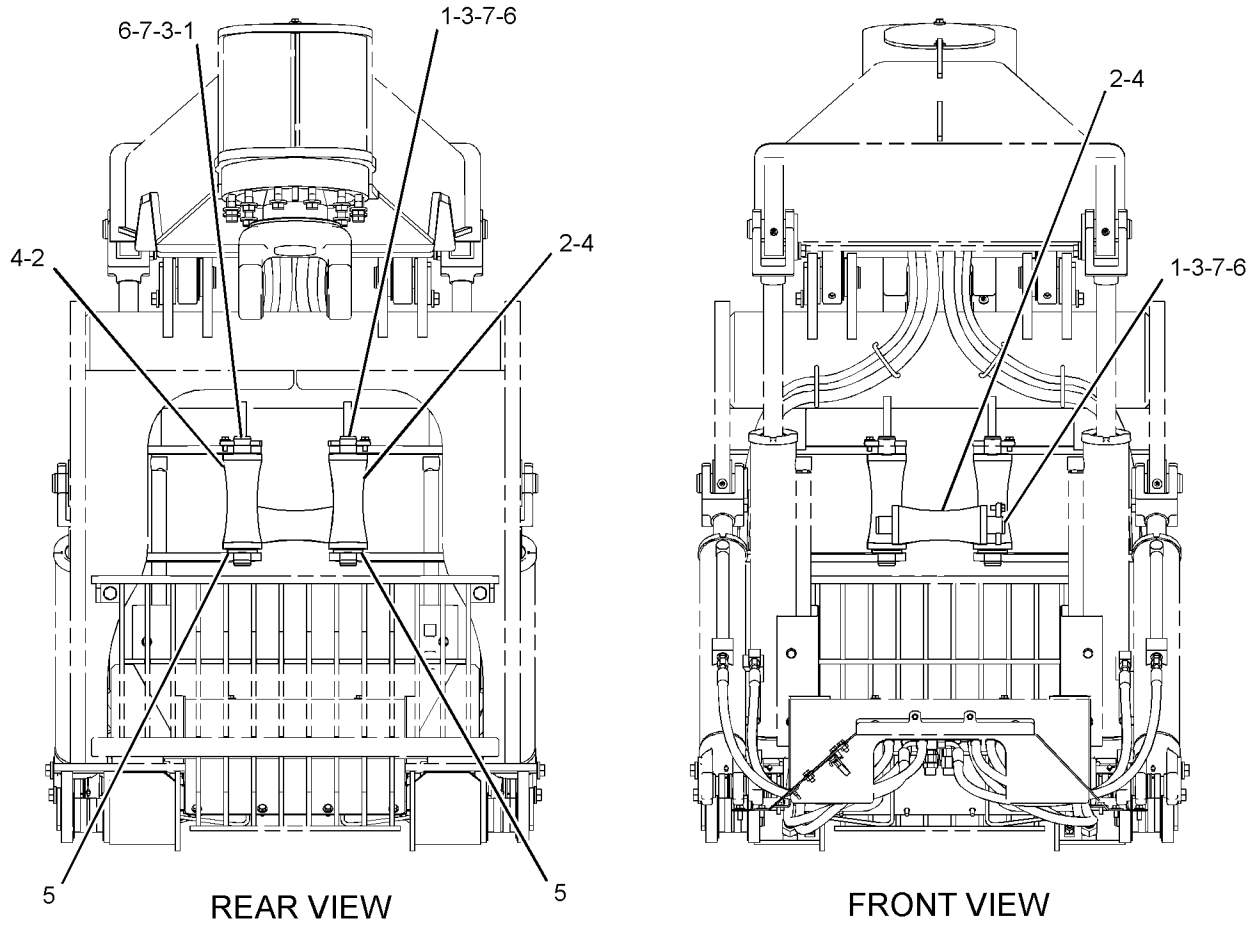


GRAPHIC #1 **<END>** g01236233

## *184-1155* FRAME GP-FAIRLEAD–CABLE MACHINE

**S/N: 5451-UP**
**PART OF 272-5920 ARCH AR**
**AN ATTACHMENT**

**SMCS-6305** **i01270788**

| NOTE | REF NO | GRAPHIC REF | PART NUMBER | QTY | PART NAME 1 2 3 4 5 6 (PRODUCT LEVEL) | SEE PAGE |
|---|---|---|---|---|---|---|
| | 1 | 1 | **127-2849** | 2 | PIN AS | |
| | 2 | 1 | **127-2851** | 4 | PIN AS | |
| | 3 | 1 | **155-0551** | 1 | FRAME AS | |
| | 4 | 1 | **155-1497** | 2 | SUPPORT AS-ARM | |
| | 5 | 1 | **155-2815** | 1 | SUPPORT AS | |
| | 6 | 1 | **155-2817** | 1 | SUPPORT AS | |
| | 7 | 1 | **184-1156** | 1 | GUARD AS | |
| M | 8 | 1 | **7X-2552** | 6 | BOLT (M16X2X30-MM) | |
| M | 9 | 1 | **7X-2577** | 12 | BOLT (M24X3X90-MM) | |
| M | 10 | 1 | **8T-4001** | 12 | NUT (M24X3-THD) | |
| | 11 | 1 | **8T-4167** | 12 | WASHER-HARD (26X44X4-MM THK) | |
| M | 12 | 1 | **8T-4187** | 8 | BOLT (M20X2.5X80-MM) | |
| | 13 | 1 | **8T-5439** | 8 | WASHER-HARD (21.5X45X6-MM THK) | |
| | 14 | 1 | **9X-8257** | 6 | WASHER (17.5X30X3.5-MM THK) | |

M-METRIC PART

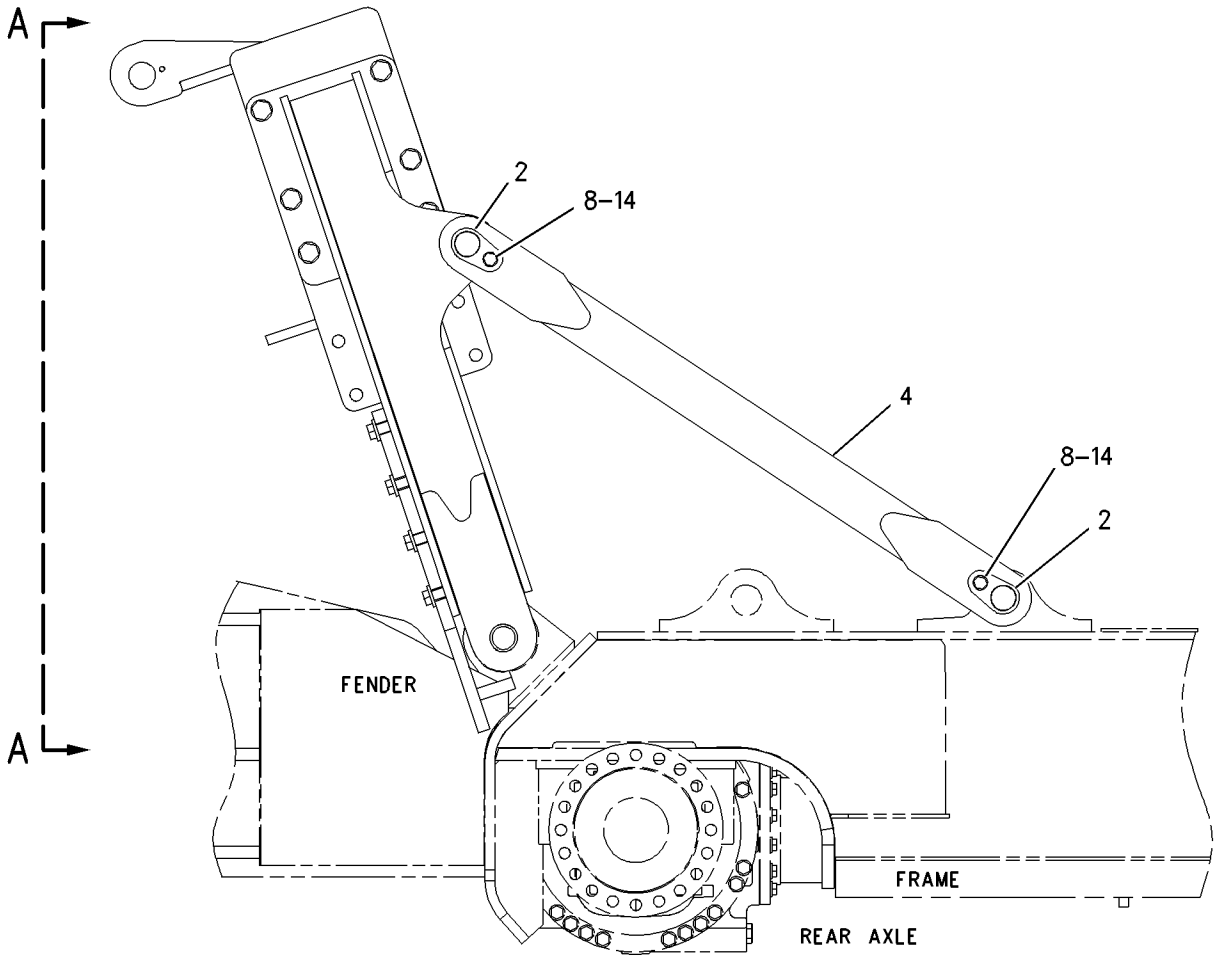


RIGHT SIDE VIEW

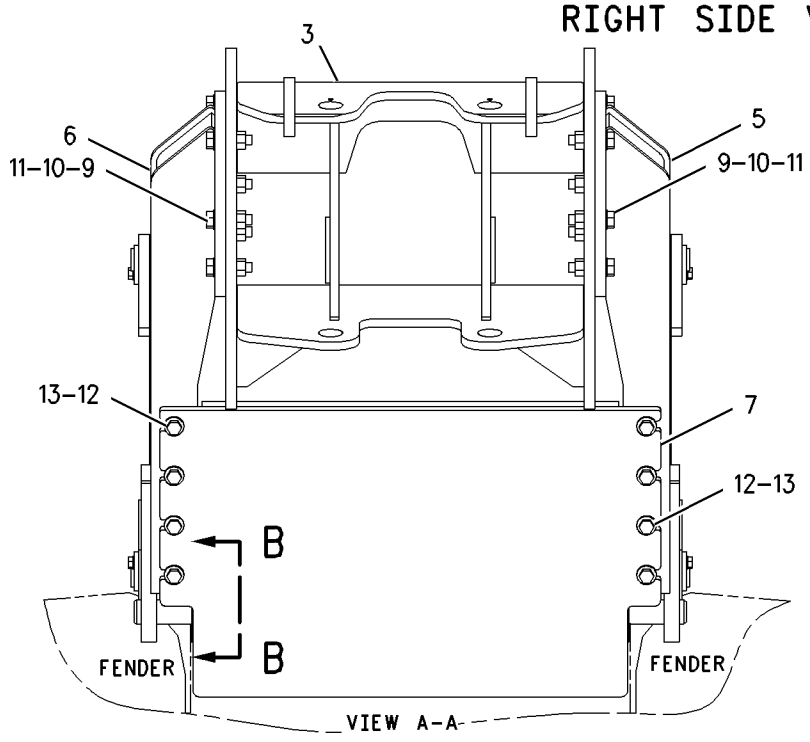


VIEW A-A

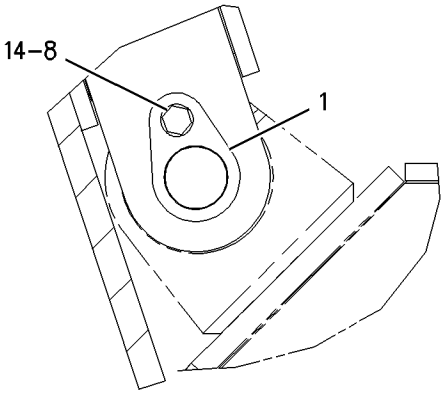


SECTION B-B

GRAPHIC #1 **<END>** g00680440

# WORK TOOLS

## *276-2042* FRAME GP-GRAPPLE–DUAL FUNCTION

**S/N: 5451-UP**
**PART OF 253-2515, 253-2518 GRAPPLE AR**
**AN ATTACHMENT**

**SMCS-6302, 6307** **i02725009**

| NOTE | REF NO | GRAPHIC REF | PART NUMBER | QTY | PART NAME 1 2 3 4 5 6 (PRODUCT LEVEL) | SEE PAGE |
|---|---|---|---|---|---|---|
| | 1 | 1 | **3B-8489** | 7 | FITTING-GREASE | |
| | 2 | 1 | **6V-5002** | 4 | BEARING-ALIGNING | |
| | 3 | 1 | **6V-5003** | 2 | BEARING | |
| | 4 | 1 | **224-4111** | 2 | PIN AS | |
| | 5 | 1 | **224-4977** | 1 | BUSHING | |
| | 6 | 1 | **225-0287** | 2 | SPACER (22X31X12-MM THK) | |
| Y | 7 | 1 | **225-9457** | 1 | ROTATOR GP-HYDRAULIC | 559 |
| | 8 | 1 | **264-5194** | 1 | BOOM AS | |
| | 9 | 1 | **264-5247** | 1 | PLATE-COVER | |
| | 10 | 1 | **264-5254** | 4 | DOWEL | |
| B | 11 | 1 | **264-5285** | 2 | KIT-SHIM (GRAPPLE) | |
| | | | | | (EACH INCLUDES WASHERS) | |
| Y | 12 | 1 | *276-2045* | 1 | LINES GP-ROTATOR (DUAL FUNCTION GRAPPLE) | 435 |
| Y | 13 | 1 | *277-8039* | 1 | ARCH GP (GRAPPLE) | 492 |
| | 14 | 1 | **5P-1076** | 2 | WASHER-HARD (13.5X30X4-MM THK) | |
| M | 15 | 1 | **8T-4141** | 12 | BOLT (M20X2.5X70-MM) | |
| M | 16 | 1 | **8T-4184** | 2 | BOLT (M12X1.75X45-MM) | |
| | 17 | 1 | **8T-5439** | 14 | WASHER-HARD (21.5X45X6-MM THK) | |
| M | 18 | 1 | **8T-5460** | 2 | BOLT (M20X2.5X40-MM) | |
| | 19 | 1 | **1K-6985** | 2 | RING-RETAINING | |
| | 20 | 1 | **8J-9823** | 2 | RING-RETAINING | |
| | 21 | 1 | **302-6453** | 2 | ADAPTER | |

B-USE AS REQUIRED
M-METRIC PART
Y-SEPARATE ILLUSTRATION

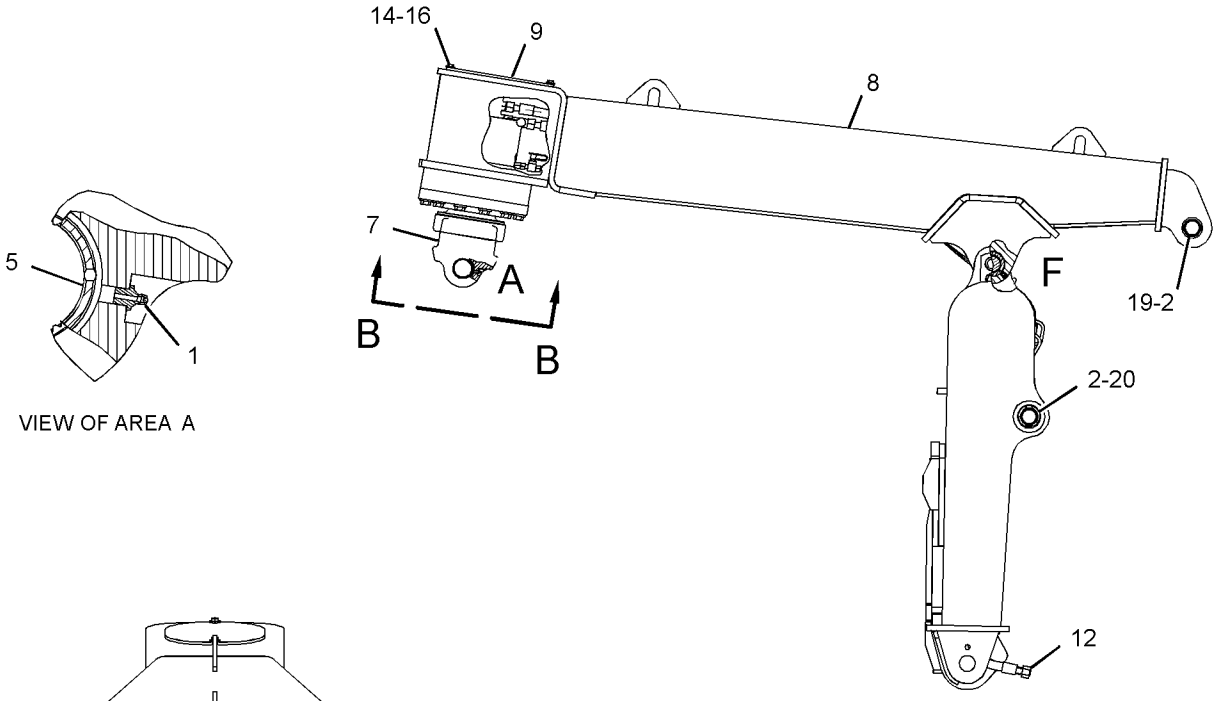


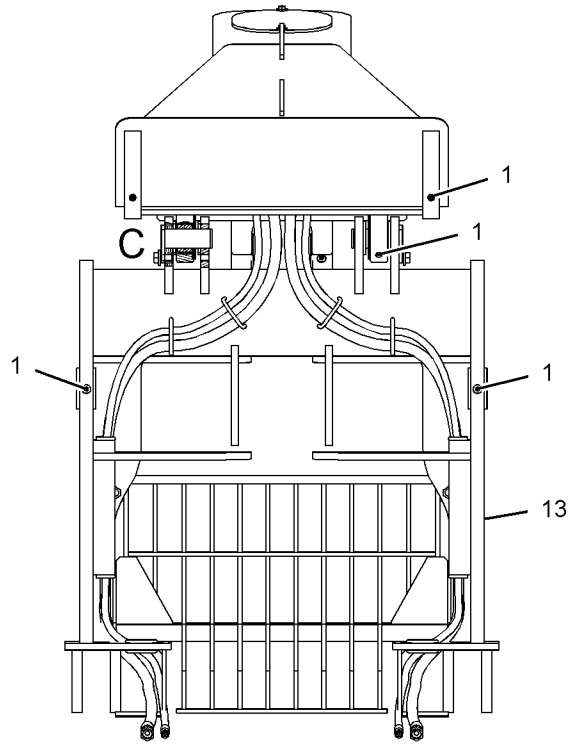


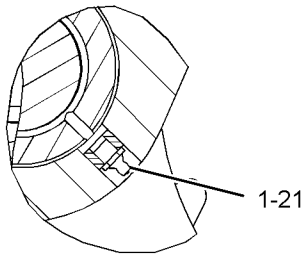


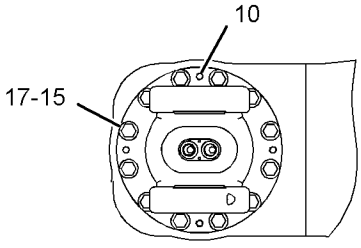


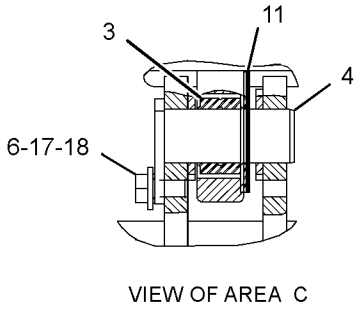


GRAPHIC #1 **<END>** g01368102

# *162-0119* GEAR GP-WINCH INPUT—PINION

**S/N: 5451-UP**
**CABLE**
**PART OF 271-9085 WINCH GP**
**AN ATTACHMENT**

**SMCS-5165** **i01710828**

| NOTE | REF NO | GRAPHIC REF | PART NUMBER | QTY | PART NAME 1 2 3 4 5 6 (PRODUCT LEVEL) | SEE PAGE |
|---|---|---|---|---|---|---|
| | 1 | 1 | **179-7304** | 1 | GEAR-BEVEL (18-TEETH) | |
| | 2 | 1 | **7K-5448** | 1 | CUP-BEARING | |
| | 3 | 1 | **7K-5449** | 1 | CONE-BEARING | |
| | 4 | 1 | **3N-6408** | 1 | CUP-BEARING (TAPERED ROLLER) | |
| | 5 | 1 | **7T-6653** | 1 | CONE-BEARING (TAPERED ROLLER) | |
| | 6 | 1 | **162-0185** | 1 | SEAL | |
| | 7 | 1 | **032-9882** | 1 | SEAL-O-RING | |
| | 8 | 1 | **162-2760** | 1 | RETAINER | |
| C | 9 | 1 | **203-7632** | 1 | YOKE AS | |
| | 10 | 1 | **0S-1587** | 1 | BOLT (1/2-13X1.75-IN) | |
| | 11 | 1 | **161-6453** | 1 | HOUSING-INPUT | |
| | 12 | 1 | **1S-4974** | 1 | SEAL-O-RING | |
| B | 13 | 1 | **161-6454** | 2 | SHIM-INPUT | |
| B | 14 | 1 | **161-6455** | 2 | SHIM-INPUT | |
| B | 15 | 1 | **161-6456** | 2 | SHIM-INPUT | |
| | 16 | 1 | **0S-1588** | 6 | BOLT (3/8-16X1.25-IN) | |
| | 17 | 1 | **5M-2894** | 6 | WASHER-HARD (10.2X18.5X2.5-MM THK) | |
| | 18 | 1 | **8M-4791** | 1 | WASHER-HARD | |
| | 19 | 1 | **5P-6300** | 1 | SEAL-O-RING | |
| B | 20 | 1 | **166-3541** | 2 | SHIM | |
| B | 21 | 1 | **166-3542** | 2 | SHIM | |
| B | 22 | 1 | **166-3543** | 2 | SHIM | |
| | 23 | 1 | **172-0313** | 1 | SPACER | |

B-USE AS REQUIRED
C-CHANGE FROM PREVIOUS TYPE

*162-0119* **GEAR GP-WINCH INPUT** *(contd.)* **i01710828**

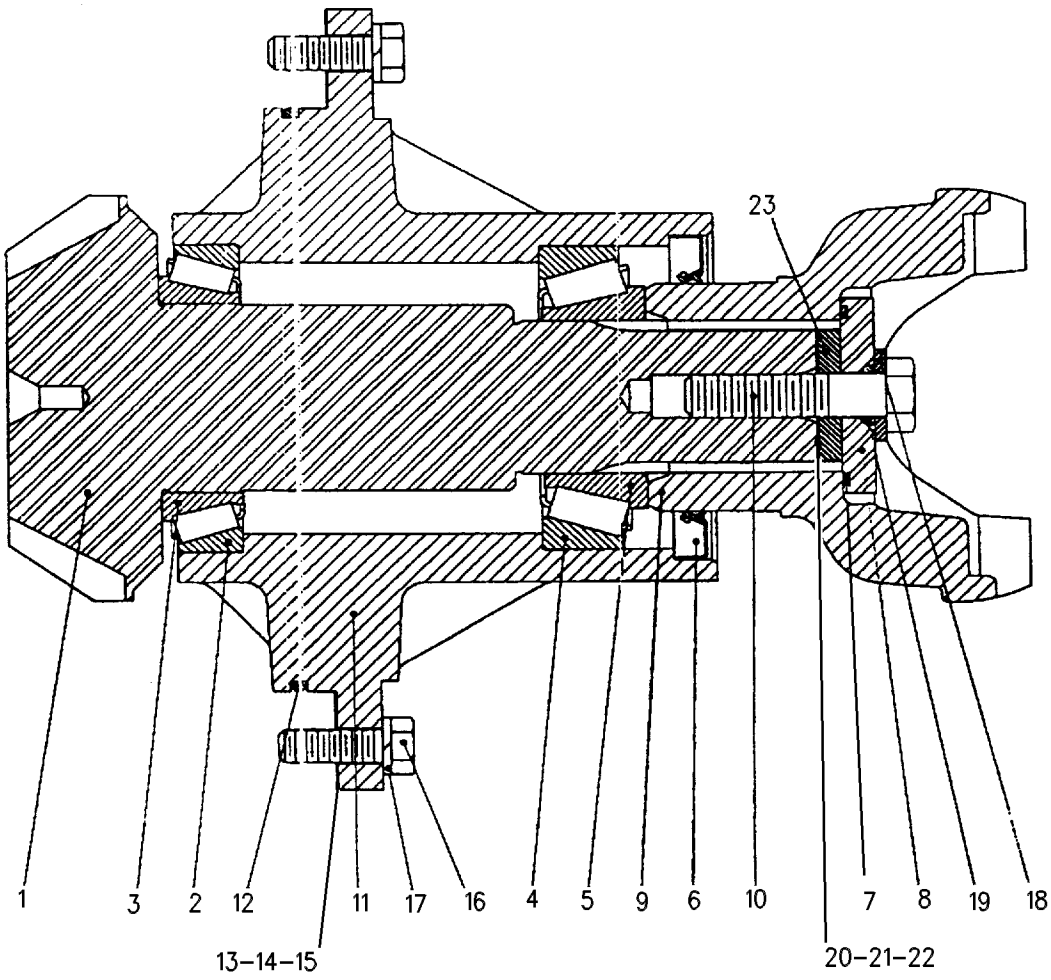


GRAPHIC #1 **<END>** g00572596

# WORK TOOLS

## *161-6406* GEAR GP-WINCH OUTPUT

**S/N: 5451-UP**
**PART OF 271-9085 WINCH GP**
**AN ATTACHMENT**

**SMCS-5167** **i01710672**

| NOTE | REF NO | GRAPHIC REF | PART NUMBER | QTY | PART NAME 1 2 3 4 5 6 (PRODUCT LEVEL) | SEE PAGE |
|---|---|---|---|---|---|---|
| | 1 | 1 | **161-6424** | 1 | GEAR-BULL | |
| | 2 | 1 | **162-0178** | 2 | BALL BEARING | |
| | 3 | 1 | **162-0179** | 1 | RING | |
| | 4 | 1 | **162-0180** | 1 | RING | |
| | 6 | 1 | **161-6425** | 1 | GEAR | |
| | 7 | 1 | **161-6426** | 1 | GEAR | |
| | 8 | 1 | **5S-6174** | 3 | BEARING | |
| B | 9 | 1 | **123-4410** | 2 | SHIM | |
| | 10 | 1 | **161-6427** | 1 | GEAR | |
| | 11 | 1 | **162-2772** | 1 | RING | |
| | 12 | 1 | **119-1616** | 1 | RING | |
| | 13 | 1 | **9B-7237** | 2 | BOLT (3/8-16X1.25-IN) | |
| | 14 | 1 | **8T-4896** | 2 | WASHER-HARD (10.2X18.5X2.5-MM THK) | |
| | 15 | 1 | **161-8041** | 1 | WASHER | |
| | 16 | 1 | **129-7301** | 1 | SEAL-O-RING | |
| | 17 | 1 | **172-2437** | 1 | BEARING AS-NEEDLE | |
| | 18 | 1 | **1M-7914** | 1 | RING-RETAINING | |

B-USE AS REQUIRED

*161-6406* **GEAR GP-WINCH OUTPUT** *(contd.)* **i01710672**

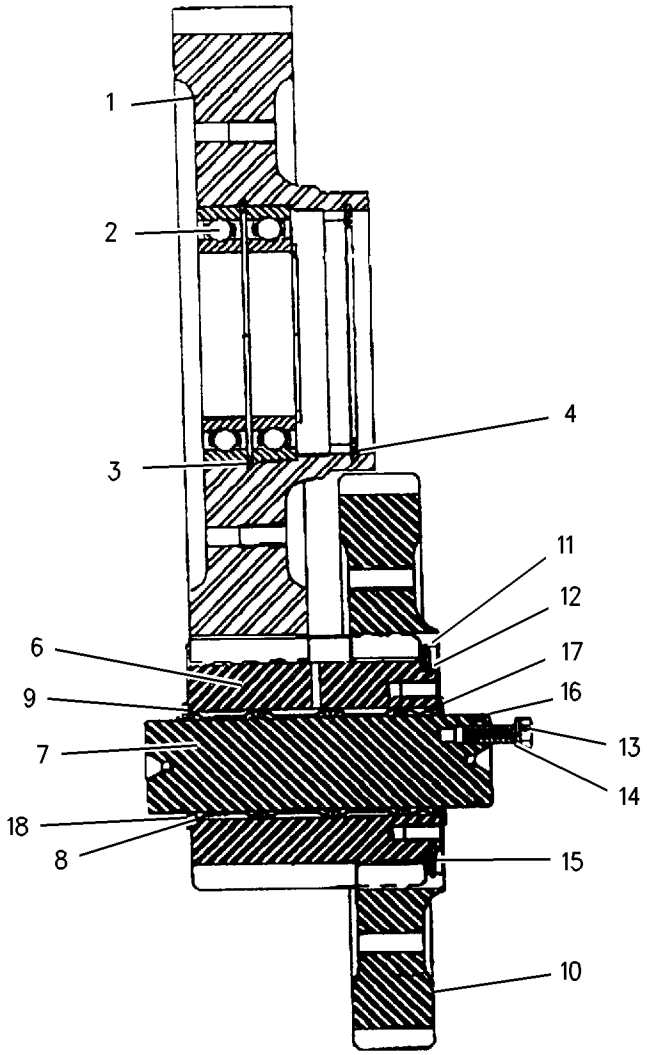


GRAPHIC #1 **<END>** g00871816

# WORK TOOLS

## *253-2515* GRAPPLE AR—DUAL FUNCTION

**S/N: 5451-UP**

**AN ATTACHMENT**

**SMCS-6307** **i02628596**

| NOTE | PART NUMBER | QTY | PART NAME 1 2 3 4 5 6 (PRODUCT LEVEL) | SEE PAGE |
|---|---|---|---|---|
| Y | *161-1512* | 1 | BEARING & SEAL GP-GRAPPLE (DUAL FUNCTION) | 494 |
| | | | S/N: 5451-299 | |
| Y | *292-5937* | 1 | BEARING & SEAL GP-GRAPPLE | 495 |
| | | | S/N: 545300-UP | |
| Y | *279-0204* | 1 | CONTROL GP-PILOT OPERATED HYD (JOYSTICK, DUAL FCTN GRAPPLE) | 599 |
| Y | *257-8495* | 1 | COVER GP-WINCH | 515 |
| | | | S/N: 545300-UP | |
| Y | **200-3202** | 1 | CYLINDER GP-ARCH (RH) | 406 |
| Y | **200-3204** | 1 | CYLINDER GP-ARCH (LH) | 408 |
| Y | **200-3195** | 2 | CYLINDER GP-BOOM | 410 |
| Y | *276-2042* | 1 | FRAME GP-GRAPPLE (DUAL FUNCTION) | 528 |
| Y | *278-0000* | 1 | GUARD GP-LINES (REAR FRAME, GRAPPLE) | 345 |
| Y | *278-9823* | 1 | LINES GP-GRAPPLE (DUAL FUNCTION) | 419 |
| Y | *225-8031* | 1 | PIN GP-GRAPPLE | 554 |
| Y | *279-7321* | 1 | VALVE & LINES GP-GRAPPLE (DUAL FUNCTION) | 455 |

Y-SEPARATE ILLUSTRATION

**<END>**

## *253-2518* GRAPPLE AR—DUAL FUNCTION

**S/N: 5451-UP**

**AN ATTACHMENT**

**SMCS-6307** **i02532392**

| NOTE | PART NUMBER | QTY | PART NAME 1 2 3 4 5 6 (PRODUCT LEVEL) | SEE PAGE |
|---|---|---|---|---|
| Y | *161-1512* | 1 | BEARING & SEAL GP-GRAPPLE (DUAL FUNCTION) | 494 |
| | | | S/N: 5451-299 | |
| Y | *292-5937* | 1 | BEARING & SEAL GP-GRAPPLE | 495 |
| | | | S/N: 545300-UP | |
| Y | *279-0204* | 1 | CONTROL GP-PILOT OPERATED HYD (JOYSTICK, DUAL FCTN GRAPPLE) | 599 |
| Y | **200-3202** | 1 | CYLINDER GP-ARCH (RH) | 406 |
| Y | **200-3204** | 1 | CYLINDER GP-ARCH (LH) | 408 |
| Y | **200-3195** | 2 | CYLINDER GP-BOOM | 410 |
| Y | *281-1705* | 1 | FAIRLEAD GP-WINCH (DUAL FUNCTION FRAME) | 525 |
| | | | S/N: 5451-299 | |
| Y | *281-1704* | 1 | FAIRLEAD GP-WINCH (DUAL FUNCTION FRAME) | 524 |
| | | | S/N: 545300-UP | |
| Y | *276-2042* | 1 | FRAME GP-GRAPPLE (DUAL FUNCTION) | 528 |
| Y | *277-9999* | 1 | GUARD GP-LINES (REAR FRAME, GRAPPLE) | 343 |
| Y | *278-9823* | 1 | LINES GP-GRAPPLE (DUAL FUNCTION) | 419 |
| Y | *225-8031* | 1 | PIN GP-GRAPPLE | 554 |
| Y | *279-4337* | 1 | VALVE & LINES GP-GRAPPLE (DUAL FUNCTION) | 449 |
| Y | *252-5196* | 1 | WINCH AR (GRAPPLE MACHINE) | 567 |

Y-SEPARATE ILLUSTRATION

**<END>**

# WORK TOOLS

## *159-2821* GUARD GP-WINCH

**S/N: 5451-UP**
**PART OF 271-9081 WINCH AR**
**AN ATTACHMENT**

**SMCS-5163** **i01394276**

| NOTE | REF NO | GRAPHIC REF | PART NUMBER | QTY | PART NAME 1 2 3 4 5 6 (PRODUCT LEVEL) | SEE PAGE |
|---|---|---|---|---|---|---|
| | 1 | 1 | **162-2446** | 1 | SHEET AS | |
| M | | 1 | **8T-3490** | 3 | NUT-WELD (M10X1.5-THD) | |
| | 2 | 1 | **162-2448** | 1 | SHEET AS | |
| M | | 1 | **8T-3490** | 5 | NUT-WELD (M10X1.5-THD) | |
| | 3 | 1 | **162-2449** | 1 | SHEET AS | |
| | | 1 | **3V-7089** | 1 | HINGE | |
| M | | 1 | **8T-3490** | 2 | NUT-WELD (M10X1.5-THD) | |
| M | | 1 | **9R-2821** | 1 | BOSS (M10X1.5X15-MM) | |
| | | 1 | **162-2447** | 1 | DOOR AS | |
| | | 1 | **1V-6755** | 1 | LATCH AS | |
| | | 1 | **7G-1831** | 1 | BAR | |
| | 4 | 1 | **169-2894** | 1 | SHEET | |
| | 5 | 1 | **5P-1076** | 7 | WASHER-HARD (13.5X30X4-MM THK) | |
| | 6 | 1 | **7X-7729** | 12 | WASHER (11X25X3-MM THK) | |
| M | 7 | 1 | **8T-4137** | 12 | BOLT (M10X1.5X20-MM) | |
| M | 8 | 1 | **8T-4179** | 7 | BOLT (M12X1.75X20-MM) | |

M-METRIC PART

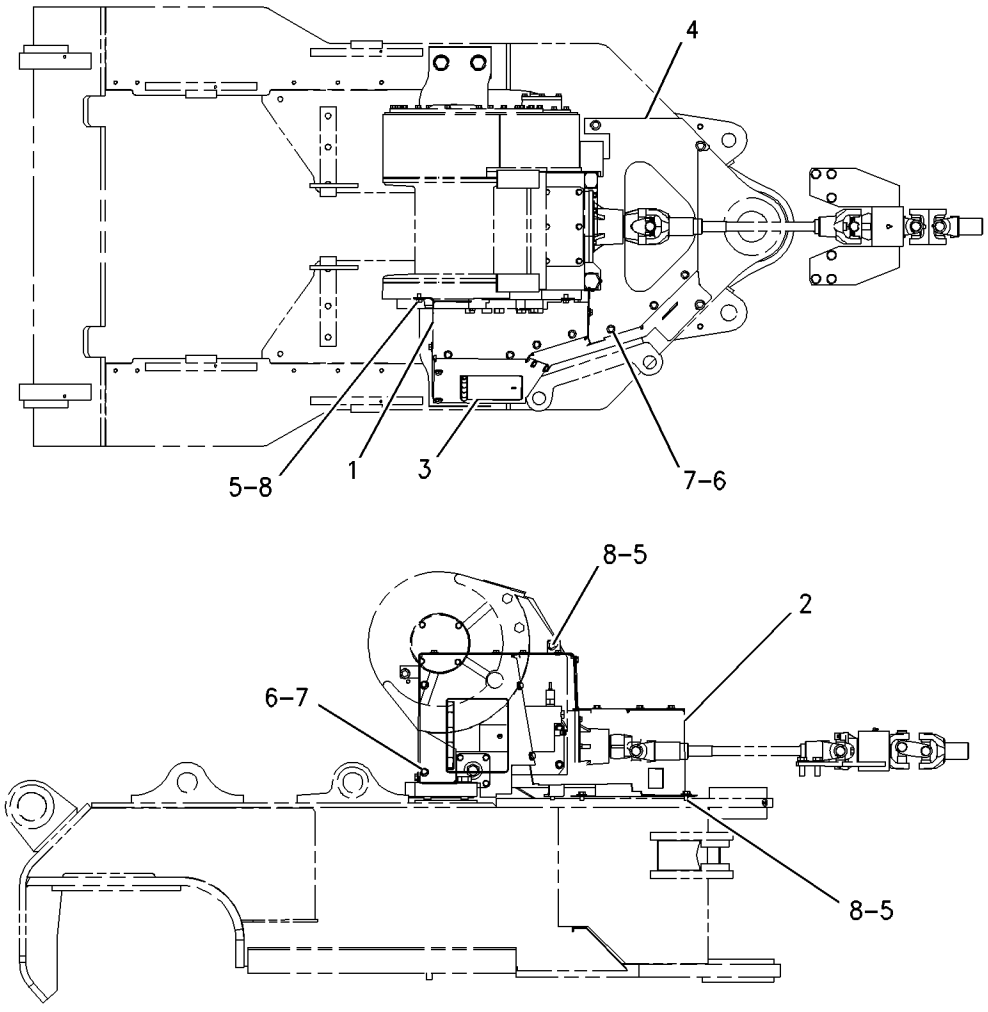


GRAPHIC #1 **<END>** g00735639

# WORK TOOLS

## *252-5202* GUARD GP-WINCH

**S/N: 5451-UP**
**PART OF 252-5196 WINCH AR**
**AN ATTACHMENT**

**SMCS-5163** **i02596408**

| NOTE | REF NO | GRAPHIC REF | PART NUMBER | QTY | PART NAME 1 2 3 4 5 6 (PRODUCT LEVEL) | SEE PAGE |
|---|---|---|---|---|---|---|
| | 1 | 1 | **255-6279** | 1 | GUARD AS | |
| | 2 | 1 | **255-6282** | 1 | GUARD AS | |
| | 3 | 1 | **7X-7729** | 5 | WASHER (11X25X3-MM THK) | |
| M | 4 | 1 | **8T-4137** | 5 | BOLT (M10X1.5X20-MM) | |
| | 5 | 1 | **263-8596** | 1 | COVER AS | |
| M | 6 | 1 | **8T-4192** | 2 | BOLT (M12X1.75X25-MM) | |
| | 7 | 1 | **8T-4223** | 2 | WASHER-HARD (13.5X25.5X3-MM THK) | |

M-METRIC PART

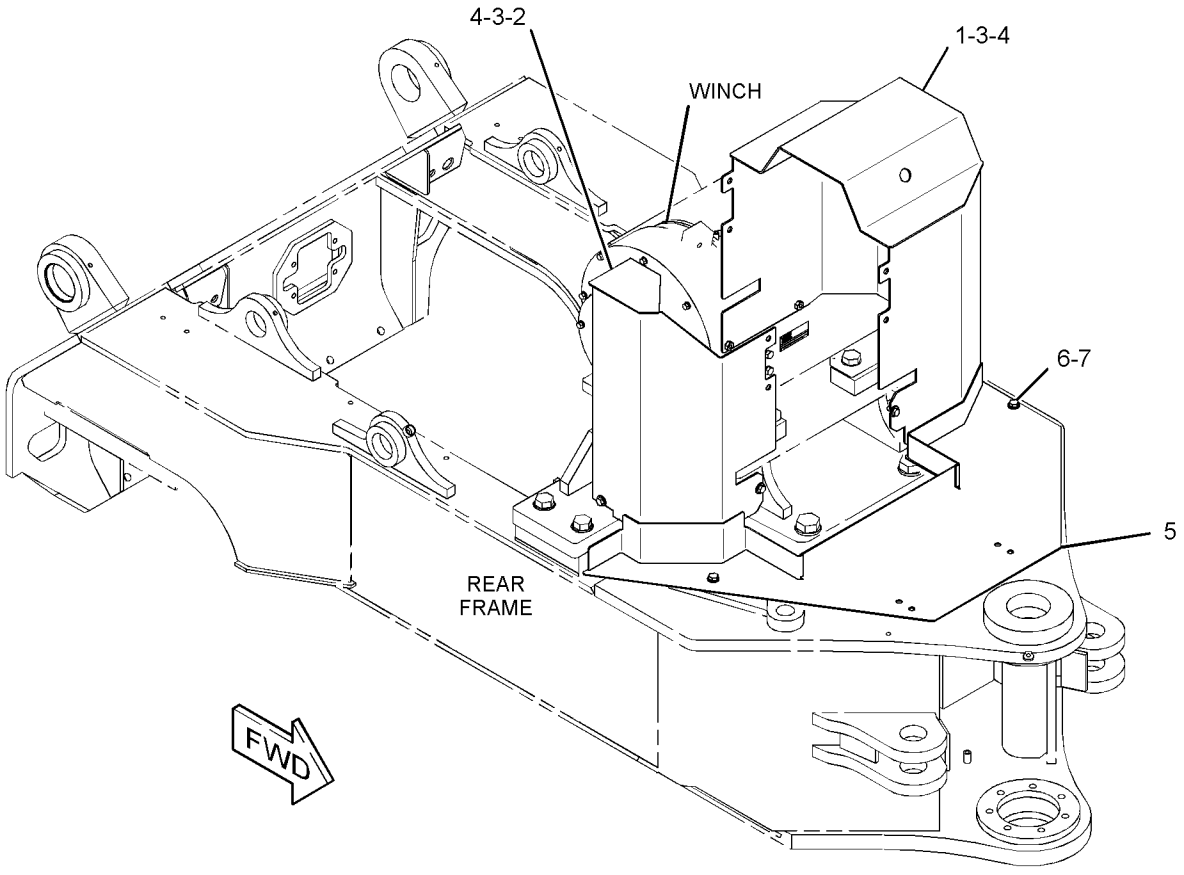


GRAPHIC #1 **<END>** g01346645

# WORK TOOLS

## *252-5203* GUARD GP-WINCH

**S/N: 5451-UP**
**PART OF 252-5197 WINCH AR**
**AN ATTACHMENT**

**SMCS-5163** **i02309040**

| NOTE | REF NO | GRAPHIC REF | PART NUMBER | QTY | PART NAME 1 2 3 4 5 6 (PRODUCT LEVEL) | SEE PAGE |
|---|---|---|---|---|---|---|
| | 1 | 1 | **259-0933** | 1 | GUARD AS | |
| | 2 | 1 | **259-0934** | 1 | GUARD AS | |
| | 3 | 1 | **259-0935** | 1 | GUARD AS | |
| | 4 | 1 | **8T-4121** | 12 | WASHER-HARD (11X21X2.5-MM THK) | |
| M | 5 | 1 | **8T-4137** | 12 | BOLT (M10X1.5X20-MM) | |
| | 6 | 1 | **270-4315** | 1 | PLATE | |

M-METRIC PART

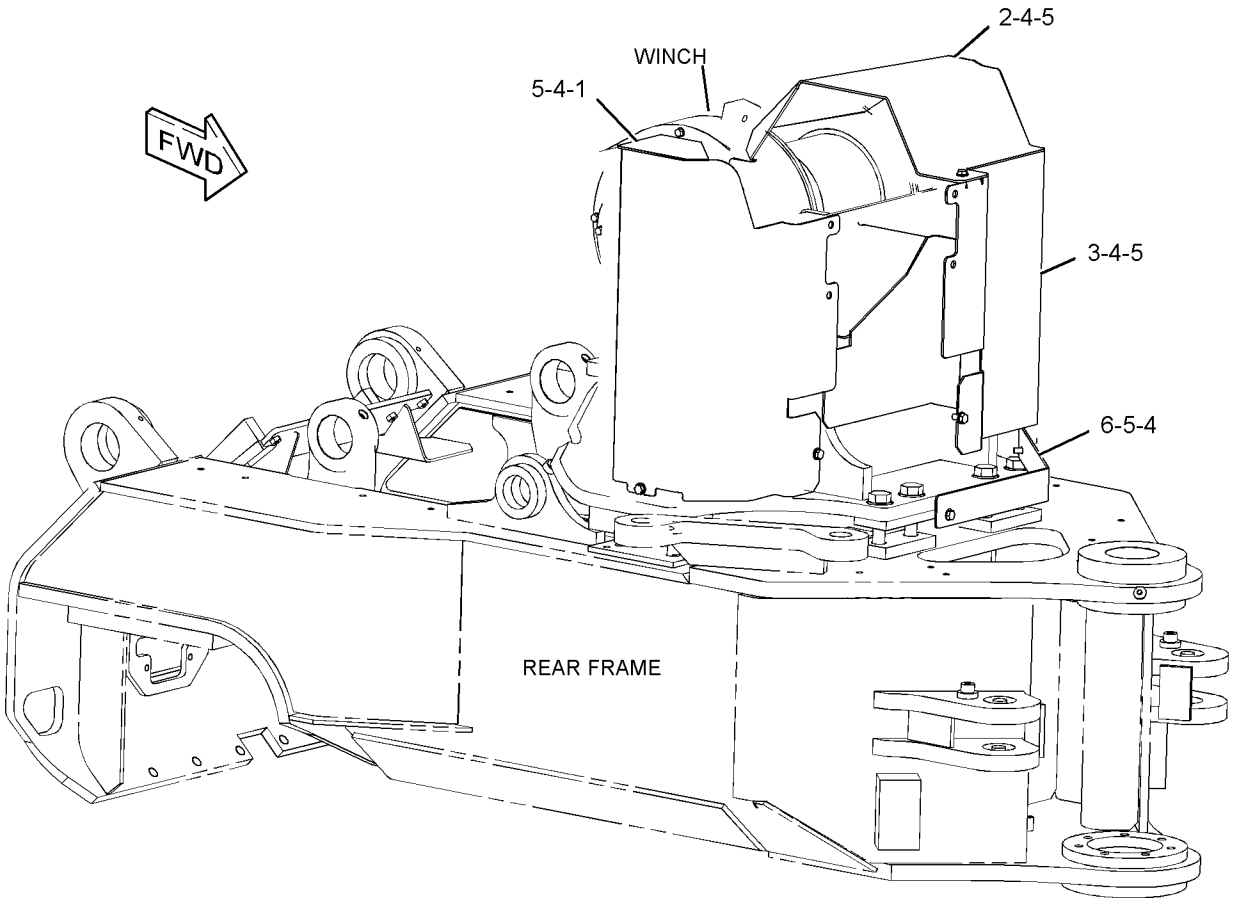


GRAPHIC #1 **<END>** g01162458

# WORK TOOLS

## *276-1934* HEAD AR-GRAPPLE

**S/N: 5451-UP**
**16.6-SQ FEET**
**AN ATTACHMENT**

**SMCS-6307** **i02503757**

| NOTE | PART NUMBER | QTY | PART NAME 1 2 3 4 5 6 (PRODUCT LEVEL) | SEE PAGE |
|---|---|---|---|---|
| Y | *276-1947* | 2 | CYLINDER GP-TONG | 413 |
| Y | *276-1953* | 1 | HEAD GP-GRAPPLE | 539 |
| Y | *276-1937* | 1 | LINES GP-GRAPPLE HEAD | 422 |
| Y | *276-1932* | 1 | PIN GP-GRAPPLE | 556 |
| Y | *264-5222* | 1 | SNUBBER GP-GRAPPLE | 561 |
| Y | *276-1940* | 2 | TONG GP-GRAPPLE | 564 |
| Y-SEPARATE ILLUSTRATION | | | | |

**<END>**

## *276-1935* HEAD AR-GRAPPLE

**S/N: 5451-UP**
**19.0-SQ FEET**
**AN ATTACHMENT**

**SMCS-6307** **i02503758**

| NOTE | PART NUMBER | QTY | PART NAME 1 2 3 4 5 6 (PRODUCT LEVEL) | SEE PAGE |
|---|---|---|---|---|
| Y | *276-1947* | 2 | CYLINDER GP-TONG | 413 |
| Y | *276-1953* | 1 | HEAD GP-GRAPPLE | 539 |
| Y | *276-1937* | 1 | LINES GP-GRAPPLE HEAD | 422 |
| Y | *276-1932* | 1 | PIN GP-GRAPPLE | 556 |
| Y | *264-5222* | 1 | SNUBBER GP-GRAPPLE | 561 |
| Y | *276-1941* | 2 | TONG GP-GRAPPLE | 565 |
| Y-SEPARATE ILLUSTRATION | | | | |

**<END>**

# WORK TOOLS

## *276-1953* HEAD GP-GRAPPLE

**S/N: 5451-UP**

**PART OF 276-1934, 276-1935 HEAD AR-GRAPPLE**

**AN ATTACHMENT**

**SMCS-6307** **i02471227**

| NOTE | REF NO | GRAPHIC REF | PART NUMBER | QTY | PART NAME 1 2 3 4 5 6 (PRODUCT LEVEL) | SEE PAGE |
|---|---|---|---|---|---|---|
| | 1 | 1 | **111-9758** | 2 | PLATE | |
| | 2 | 1 | **272-1890** | 1 | BUSHING | |
| | 3 | 1 | **276-1997** | 1 | HEAD AS-GRAPPLE | |

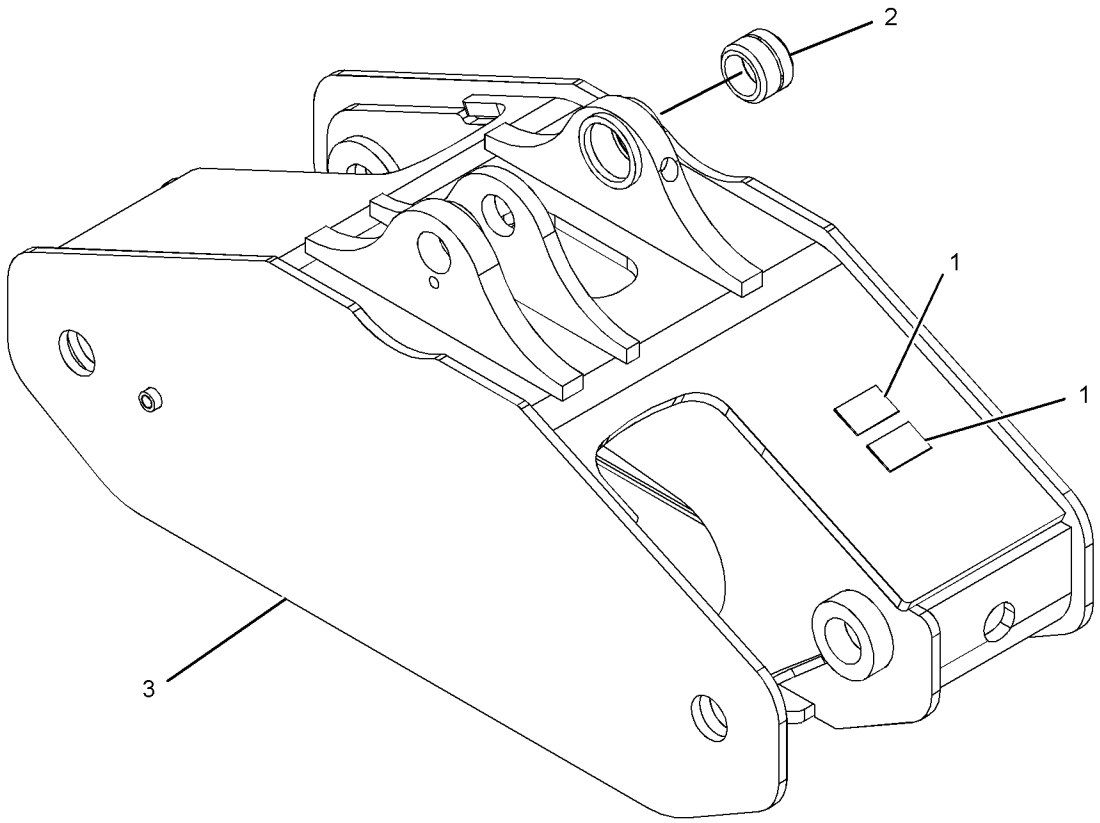


GRAPHIC #1 **<END>** g01238403

# WORK TOOLS

## *166-3545* LINES GP-WINCH

**S/N: 5451-UP**
**PART OF 271-9085 WINCH GP**
**AN ATTACHMENT**

**SMCS-5179** **i01246113**

| NOTE | REF NO | GRAPHIC REF | PART NUMBER | QTY | PART NAME 1 2 3 4 5 6 (PRODUCT LEVEL) | SEE PAGE |
|---|---|---|---|---|---|---|
| | 1 | 1 | **7K-4129** | 3 | UNION-FLARED | |
| I | 2 | 1 | **9D-5296** | 3 | HOSE AS | |
| | 3 | 1 | **2P-1278** | 2 | UNION | |
| | 4 | 1 | **6K-9194** | 2 | ELBOW-FLARED | |
| | 5 | 1 | **030-7962** | 1 | ELBOW | |
| FI | | | **2W-4332** | 1 | HOSE AS | |

F-NOT SHOWN
I-REFER TO HYDRAULIC INFORMATION SYSTEM

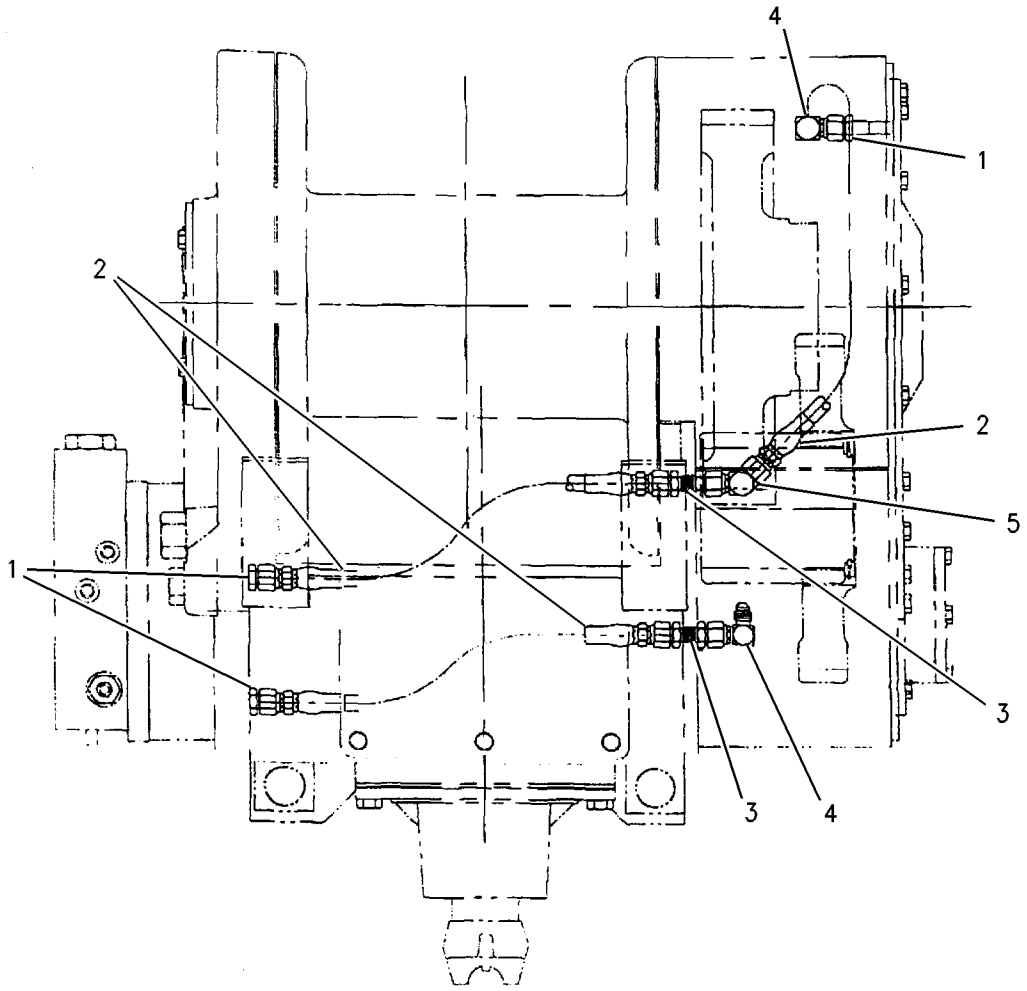


GRAPHIC #1 **<END>** g00664864

# WORK TOOLS

## *252-5205* LINES GP-WINCH

**S/N: 5451-UP**
**PART OF 252-5197 WINCH AR**
**AN ATTACHMENT**

**SMCS-5179** **i02178846**

| NOTE | REF NO | GRAPHIC REF | PART NUMBER | QTY | PART NAME 1 2 3 4 5 6 (PRODUCT LEVEL) | SEE PAGE |
|---|---|---|---|---|---|---|
| | 1 | 1 | **6V-0852** | 1 | CAP-DUST | |
| | 2 | 1 | *148-8424* | 1 | TEE AS | |
| | | 1 | **6V-8397** | 1 | SEAL-O-RING | |
| | | 1 | **8T-8902** | 1 | TEE | |
| | 3 | 1 | **257-6364** | 1 | VALVE & MTG GP-SOLENOID (WINCH FREESPOOL BRAKE RELEASE) | |
| | | 1 | **241-5895** | 1 | VALVE GP-SOLENOID (WINCH FREESPOOL BRAKE RELEASE) | |
| | | 1 | **250-6148** | 1 | COIL AS (24-VOLT) | |
| | 4 | 1 | **258-8979** | 1 | TUBE AS | |
| | 5 | 1 | **258-8980** | 1 | TUBE AS | |
| | 6 | 1 | **258-8981** | 1 | TUBE AS | |
| | 7 | 1 | **258-8982** | 1 | TUBE AS | |
| | 8 | 1 | **258-8984** | 1 | PLATE AS | |
| M | | 1 | **6V-9632** | 2 | NUT-WELD (M6X1-THD) | |
| M | | 1 | **8T-3490** | 2 | NUT-WELD (M10X1.5-THD) | |
| | 9 | 1 | *148-8327* | 2 | CONNECTOR AS | |
| | | 1 | **3D-2824** | 1 | SEAL-O-RING | |
| | | 1 | **6V-8637** | 1 | CONNECTOR | |
| | | 1 | **6V-9746** | 1 | SEAL-O-RING | |
| | 10 | 1 | *148-8347* | 1 | ELBOW AS | |
| | | 1 | **3D-2824** | 1 | SEAL-O-RING | |
| | | 1 | **6V-9007** | 1 | ELBOW | |
| | | 1 | **6V-9746** | 1 | SEAL-O-RING | |
| | 11 | 1 | *148-8360* | 1 | ELBOW AS | |
| | | 1 | **6V-9182** | 1 | ELBOW (FACE SEAL) | |
| | | 1 | **6V-9746** | 1 | SEAL-O-RING | |
| | | 1 | **7M-8485** | 1 | SEAL-O-RING | |
| | 12 | 1 | *148-8371* | 2 | ELBOW AS | |
| | | | | | (EACH INCLUDES) | |
| | | 1 | **6V-8397** | 1 | SEAL-O-RING | |
| | | 1 | **8C-8988** | 1 | ELBOW | |
| | 13 | 1 | *148-8378* | 2 | ELBOW AS | |
| | | | | | (EACH INCLUDES) | |
| | | 1 | **3J-1907** | 1 | SEAL-O-RING | |
| | | 1 | **6V-8397** | 1 | SEAL-O-RING | |
| | | 1 | **6V-8724** | 1 | ELBOW | |
| | 14 | 1 | *148-8381* | 1 | ELBOW AS | |
| | | 1 | **3D-2824** | 1 | SEAL-O-RING | |
| | | 1 | **6V-8398** | 1 | SEAL-O-RING | |
| | | 1 | **8T-5429** | 1 | ELBOW (90-DEG) | |
| | 15 | 1 | *148-8435* | 1 | TEE AS | |
| | | 1 | **3J-1907** | 1 | SEAL-O-RING | |
| | | 1 | **6V-8397** | 2 | SEAL-O-RING | |
| | | 1 | **6V-8781** | 1 | TEE-FACE SEAL | |
| | 16 | 1 | *148-8444* | 2 | TEE AS-SWIVEL | |
| | | | | | (EACH INCLUDES) | |
| | | 1 | **6V-8398** | 2 | SEAL-O-RING | |
| | | 1 | **6V-9837** | 1 | TEE-SWIVEL | |
| | 17 | 1 | *150-4043* | 1 | CONNECTOR AS | |
| | | 1 | **3J-1907** | 1 | SEAL-O-RING | |
| | | 1 | **6V-8398** | 1 | SEAL-O-RING | |
| | | 1 | **6V-9873** | 1 | CONNECTOR | |
| | 18 | 1 | *164-5567* | 1 | FITTING AS (QUICK DISCONNECT, MALE) | |
| | | 1 | **3J-1907** | 1 | SEAL-O-RING | |

## *252-5205* **LINES GP-WINCH** *(contd.)* **i02178846**

| NOTE | REF NO | GRAPHIC REF | PART NUMBER | QTY | PART NAME 1 2 3 4 5 6 (PRODUCT LEVEL) | SEE PAGE |
|---|---|---|---|---|---|---|
| | | 1 | **6V-3965** | 1 | FITTING-COUPLER | |
| | 19 | 1 | **6D-4246** | 2 | CLIP | |
| | 20 | 1 | **6V-3265** | 1 | CLIP | |
| | 21 | 1 | **8T-4121** | 4 | WASHER-HARD (11X21X2.5-MM THK) | |
| M | 22 | 1 | **8T-4137** | 3 | BOLT (M10X1.5X20-MM) | |
| M | 23 | 1 | **8T-4195** | 1 | BOLT (M10X1.5X30-MM) | |
| M | 24 | 1 | **9X-2480** | 2 | BOLT (M6X1X45-MM) | |
| | 25 | 1 | **9X-8256** | 2 | WASHER (6.6X12X2-MM THK) | |

M-METRIC PART

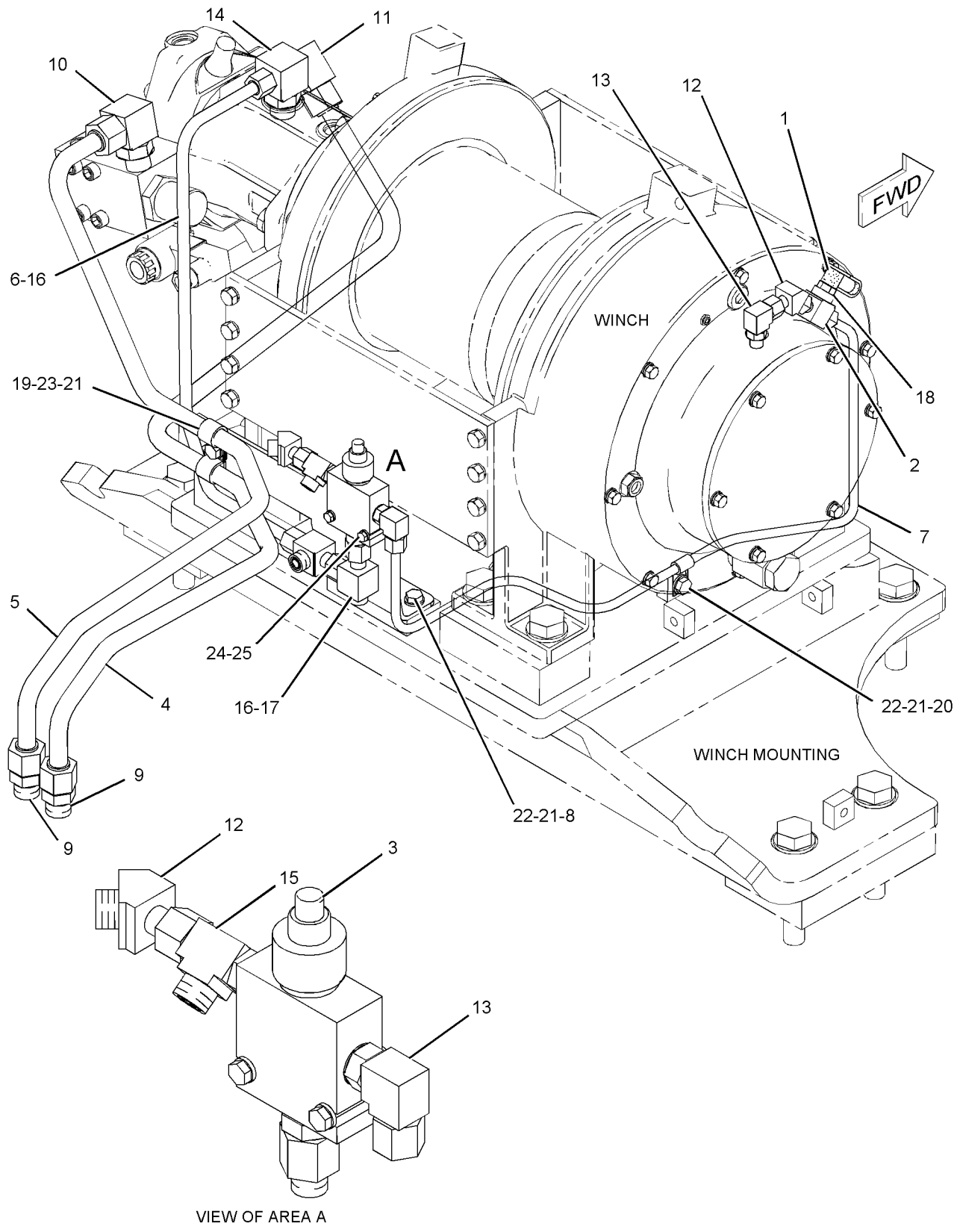


GRAPHIC #1 **<END>** g01105475

# WORK TOOLS

## *271-9086* LINES GP-WINCH

**S/N: 5451-UP**
**PART OF 271-9081 WINCH AR**
**AN ATTACHMENT**

**SMCS-5179** **i02508968**

| NOTE | REF NO | GRAPHIC REF | PART NUMBER | QTY | PART NAME 1 2 3 4 5 6 (PRODUCT LEVEL) | SEE PAGE |
|---|---|---|---|---|---|---|
| I | 1 | 1 | **104-8598** | 1 | HOSE AS | |
| Y | 2 | 1 | **147-0178** | 1 | FILTER GP-OIL (WINCH) | 414 |
| I | 3 | 1 | **152-9074** | 1 | HOSE AS | |
| | 4 | 1 | **229-0105** | 1 | BRACKET | |
| | 5 | 1 | **230-8871** | 1 | ANGLE | |
| Y | 6 | 1 | **252-0796** | 1 | PUMP GP-GEAR (PILOT, WINCH) | 441 |
| | 7 | 1 | **271-9089** | 1 | HOSE AS | |
| | 8 | 1 | **271-9090** | 1 | HOSE AS | |
| | 9 | 1 | *148-8336* | 1 | CONNECTOR AS | |
| | | 1 | **3J-1907** | 1 | SEAL-O-RING | |
| | | 1 | **6V-8397** | 1 | SEAL-O-RING | |
| | | 1 | **6V-8636** | 1 | CONNECTOR | |
| | 10 | 1 | *148-8345* | 1 | CONNECTOR AS | |
| | | 1 | **2M-9780** | 1 | SEAL-O-RING | |
| | | 1 | **6V-8398** | 1 | SEAL-O-RING | |
| | | 1 | **6V-8638** | 1 | CONNECTOR | |
| | 11 | 1 | *148-8347* | 2 | ELBOW AS | |
| | | | | | (EACH INCLUDES) | |
| | | 1 | **3D-2824** | 1 | SEAL-O-RING | |
| | | 1 | **6V-9007** | 1 | ELBOW | |
| | | 1 | **6V-9746** | 1 | SEAL-O-RING | |
| | 12 | 1 | *148-8358* | 1 | ELBOW AS | |
| | | 1 | **2M-9780** | 1 | SEAL-O-RING | |
| | | 1 | **6V-8398** | 1 | SEAL-O-RING | |
| | | 1 | **6V-8624** | 1 | ELBOW | |
| | 13 | 1 | *148-8367* | 1 | ELBOW AS | |
| | | 1 | **6V-8397** | 1 | SEAL-O-RING | |
| | | 1 | **6V-9850** | 1 | ELBOW | |
| | 14 | 1 | *148-8374* | 1 | ELBOW AS | |
| | | 1 | **3K-0360** | 1 | SEAL-O-RING | |
| | | 1 | **6V-8397** | 1 | SEAL-O-RING | |
| | | 1 | **6V-8723** | 1 | ELBOW (FACE SEAL) | |
| | 15 | 1 | *148-8381* | 2 | ELBOW AS | |
| | | | | | (EACH INCLUDES) | |
| | | 1 | **3D-2824** | 1 | SEAL-O-RING | |
| | | 1 | **6V-8398** | 1 | SEAL-O-RING | |
| | | 1 | **8T-5429** | 1 | ELBOW (90-DEG) | |
| M | 16 | 1 | **8T-4244** | 2 | NUT (M12X1.75-THD) | |
| | 17 | 1 | **154-0273** | 1 | CLIP | |
| | 18 | 1 | *164-5616* | 1 | PLUG AS | |
| | | 1 | **2S-4078** | 1 | SEAL-O-RING | |
| | | 1 | **9S-6130** | 1 | PLUG | |
| | 19 | 1 | **1S-0994** | 1 | CLIP | |
| | 20 | 1 | **5P-1076** | 2 | WASHER-HARD (13.5X30X4-MM THK) | |
| | 21 | 1 | **6V-1889** | 1 | CLIP | |
| | 22 | 1 | **6V-9829** | 1 | CAP AS | |
| | 23 | 1 | **8T-4121** | 5 | WASHER-HARD (11X21X2.5-MM THK) | |
| M | 24 | 1 | **8T-4133** | 1 | NUT (M10X1.5-THD) | |
| M | 25 | 1 | **8T-4136** | 1 | BOLT (M10X1.5X25-MM) | |
| M | 26 | 1 | **8T-4137** | 4 | BOLT (M10X1.5X20-MM) | |
| M | 27 | 1 | **8T-4179** | 1 | BOLT (M12X1.75X20-MM) | |
| | 28 | 1 | **8T-4223** | 2 | WASHER-HARD (13.5X25.5X3-MM THK) | |

I-REFER TO HYDRAULIC INFORMATION SYSTEM
M-METRIC PART
Y-SEPARATE ILLUSTRATION

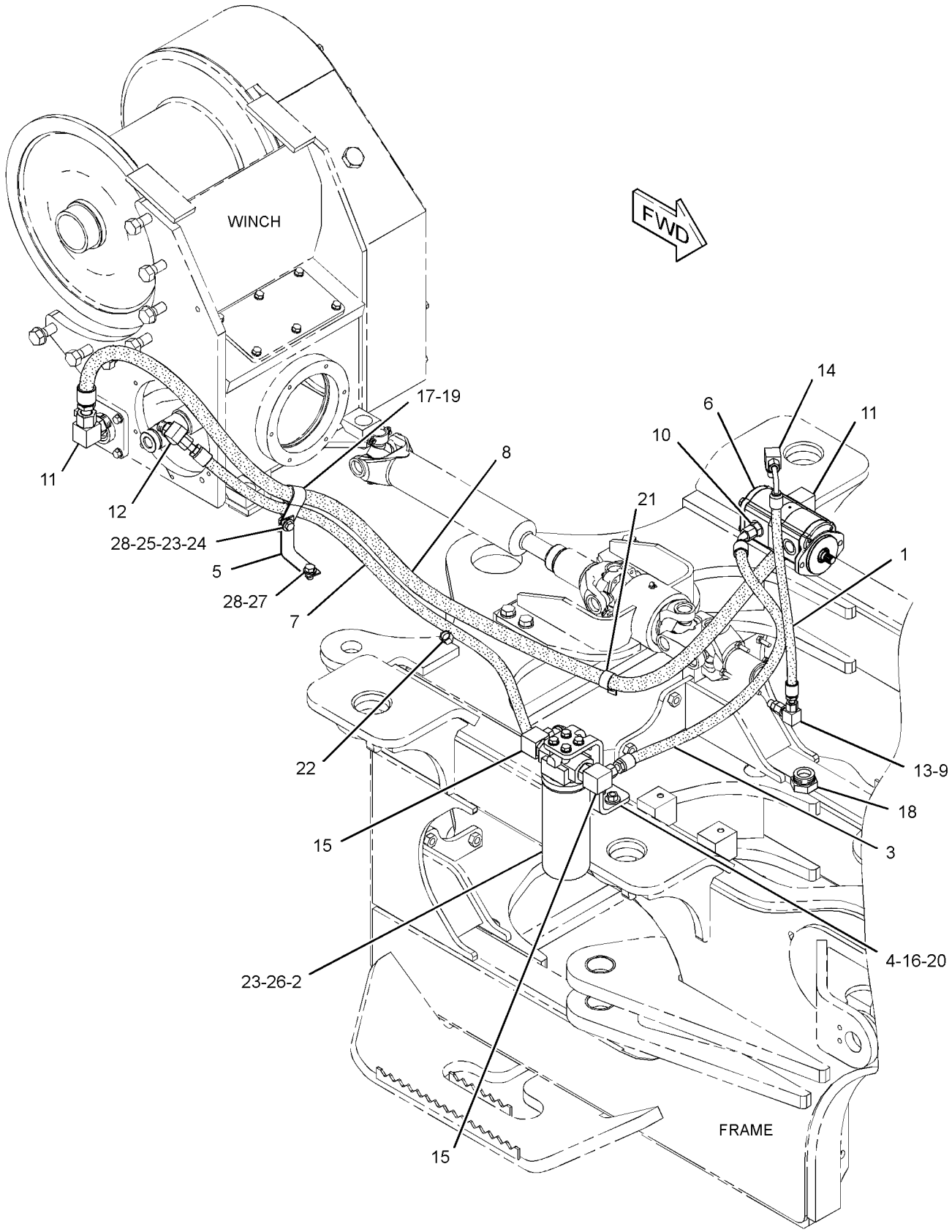


GRAPHIC #1 **<END>** g01270087

# WORK TOOLS

## *278-8842* LINES GP-WINCH

**S/N: 5451-UP**
**PART OF 252-5196 WINCH AR**
**AN ATTACHMENT**

**SMCS-5179** **i02503751**

| NOTE | REF NO | GRAPHIC REF | PART NUMBER | QTY | PART NAME 1 2 3 4 5 6 (PRODUCT LEVEL) | SEE PAGE |
|---|---|---|---|---|---|---|
| I | 1 | 1 | **5I-8544** | 1 | HOSE AS | |
| | 2 | 1 | **6V-0852** | 1 | CAP-DUST | |
| I | 3 | 1 | **112-9488** | 1 | HOSE AS | |
| I | 4 | 1 | **113-6377** | 1 | HOSE AS | |
| | 5 | 1 | *148-8424* | 1 | TEE AS | |
| | | 1 | **6V-8397** | 1 | SEAL-O-RING | |
| | | 1 | **8T-8902** | 1 | TEE | |
| I | 6 | 1 | **231-5899** | 1 | HOSE AS | |
| | 7 | 1 | **257-6364** | 1 | VALVE & MTG GP-SOLENOID (WINCH FREESPOOL BRAKE RELEASE) | |
| | | 1 | **241-5895** | 1 | VALVE GP-SOLENOID (WINCH FREESPOOL BRAKE RELEASE) | |
| | | 1 | **250-6148** | 1 | COIL AS (24-VOLT) | |
| | 8 | 1 | **278-8369** | 1 | TUBE AS | |
| | 9 | 1 | **278-8370** | 1 | TUBE AS | |
| | 10 | 1 | **278-8371** | 1 | TUBE AS | |
| | 11 | 1 | **278-8372** | 1 | TUBE AS | |
| | 12 | 1 | **278-8763** | 1 | PLATE | |
| | 13 | 1 | *148-8327* | 2 | CONNECTOR AS | |
| | | | | | (EACH INCLUDES) | |
| | | 1 | **3D-2824** | 1 | SEAL-O-RING | |
| | | 1 | **6V-8637** | 1 | CONNECTOR | |
| | | 1 | **6V-9746** | 1 | SEAL-O-RING | |
| | 14 | 1 | *148-8336* | 2 | CONNECTOR AS | |
| | | | | | (EACH INCLUDES) | |
| | | 1 | **3J-1907** | 1 | SEAL-O-RING | |
| | | 1 | **6V-8397** | 1 | SEAL-O-RING | |
| | | 1 | **6V-8636** | 1 | CONNECTOR | |
| | 15 | 1 | *148-8347* | 1 | ELBOW AS | |
| | | 1 | **3D-2824** | 1 | SEAL-O-RING | |
| | | 1 | **6V-9007** | 1 | ELBOW | |
| | | 1 | **6V-9746** | 1 | SEAL-O-RING | |
| | 16 | 1 | *148-8360* | 1 | ELBOW AS | |
| | | 1 | **6V-9182** | 1 | ELBOW (FACE SEAL) | |
| | | 1 | **6V-9746** | 1 | SEAL-O-RING | |
| | | 1 | **7M-8485** | 1 | SEAL-O-RING | |
| | 17 | 1 | *148-8365* | 1 | ELBOW AS | |
| | | 1 | **3J-1907** | 1 | SEAL-O-RING | |
| | | 1 | **6V-8398** | 1 | SEAL-O-RING | |
| | | 1 | **8T-6876** | 1 | ELBOW | |
| | 18 | 1 | *148-8371* | 1 | ELBOW AS | |
| | | 1 | **6V-8397** | 1 | SEAL-O-RING | |
| | | 1 | **8C-8988** | 1 | ELBOW | |
| | 19 | 1 | *148-8378* | 1 | ELBOW AS | |
| | | 1 | **3J-1907** | 1 | SEAL-O-RING | |
| | | 1 | **6V-8397** | 1 | SEAL-O-RING | |
| | | 1 | **6V-8724** | 1 | ELBOW | |
| | 20 | 1 | *148-8381* | 1 | ELBOW AS | |
| | | 1 | **3D-2824** | 1 | SEAL-O-RING | |
| | | 1 | **6V-8398** | 1 | SEAL-O-RING | |
| | | 1 | **8T-5429** | 1 | ELBOW (90-DEG) | |
| | 21 | 1 | *148-8444* | 1 | TEE AS-SWIVEL | |
| | | 1 | **6V-8398** | 2 | SEAL-O-RING | |
| | | 1 | **6V-9837** | 1 | TEE-SWIVEL | |

## *278-8842* **LINES GP-WINCH** *(contd.)* **i02503751**

| NOTE | REF NO | GRAPHIC REF | PART NUMBER | QTY | PART NAME 1 2 3 4 5 6 (PRODUCT LEVEL) | SEE PAGE |
|---|---|---|---|---|---|---|
| | 22 | 1 | *148-8455* | 2 | UNION AS | |
| | | | | | (EACH INCLUDES) | |
| | | 1 | **6V-8997** | 1 | UNION | |
| | | 1 | **6V-9746** | 2 | SEAL-O-RING | |
| | 23 | 1 | *153-6241* | 1 | ELBOW AS | |
| | | 1 | **6V-8398** | 1 | SEAL-O-RING | |
| | | 1 | **8C-8989** | 1 | ELBOW | |
| | 24 | 1 | *164-5567* | 1 | FITTING AS (QUICK DISCONNECT, MALE) | |
| | | 1 | **3J-1907** | 1 | SEAL-O-RING | |
| | | 1 | **6V-3965** | 1 | FITTING-COUPLER | |
| | 25 | 1 | **2P-1293** | 2 | LOCKNUT (1-3/16-12-THD) | |
| M | 26 | 1 | **8C-8451** | 2 | BOLT (M6X1X40-MM) | |
| | 27 | 1 | **8T-4121** | 2 | WASHER-HARD (11X21X2.5-MM THK) | |
| M | 28 | 1 | **8T-4137** | 2 | BOLT (M10X1.5X20-MM) | |
| | 29 | 1 | **9X-8256** | 2 | WASHER (6.6X12X2-MM THK) | |

I-REFER TO HYDRAULIC INFORMATION SYSTEM
M-METRIC PART

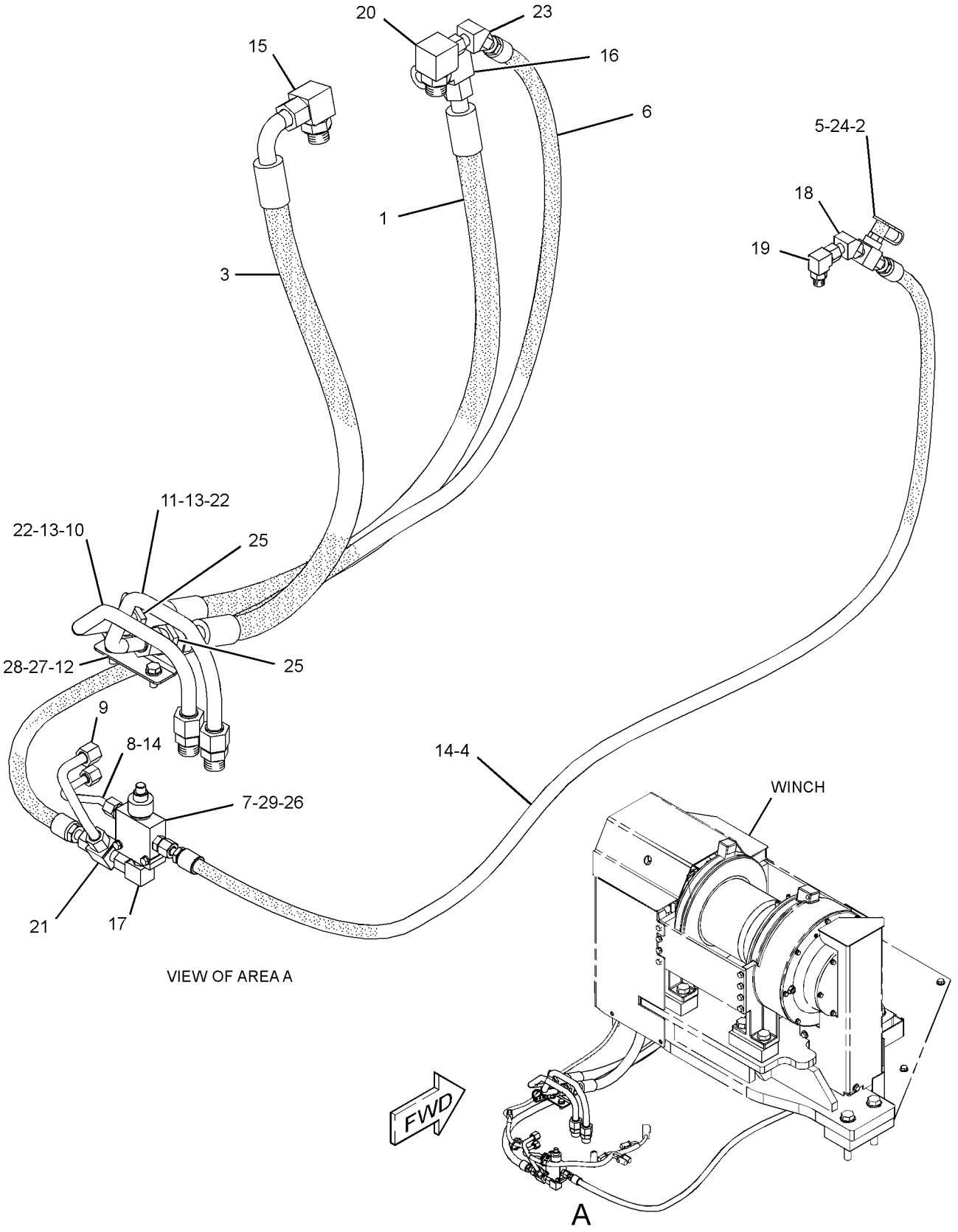


GRAPHIC #1 **<END>** g01236046

## *270-5260* MOTOR GP-PISTON—WINCH

**S/N: 5451-UP**
**PART OF 252-5206 WINCH GP**
**AN ATTACHMENT**

**SMCS-5410** **i02594418**

| NOTE | PART NUMBER | QTY | PART NAME 1 2 3 4 5 6 (PRODUCT LEVEL) | SEE PAGE |
|---|---|---|---|---|
| | *169-7393* | 1 | CONNECTOR AS | |
| | **3J-7352** | 1 | CONNECTOR | |
| | **3J-7354** | 1 | SEAL-O-RING | |
| I | **2Y-4785** | 2 | HOSE AS | |
| | **270-5261** | 1 | MOTOR AS (WINCH) | |
| | **288-8091** | 1 | VALVE GP-SOLENOID (WINCH) | |
| | *183-7263* | 1 | PLUG AS | |
| | **3J-7354** | 1 | SEAL-O-RING | |
| | **9S-8002** | 1 | PLUG-O-RING | |
| | | | | |
| | **7B-7525** | 4 | BOLT-SOCKET HEAD (7/16-14X1.25-IN) | |
| | **270-6951** | 4 | SCREW-HEX SOCKET (7/16X3.75-IN) | |
| | **270-5264** | 1 | COVER | |
| | **270-5263** | 1 | MANIFOLD | |
| | **4F-7391** | 2 | SEAL-O-RING | |
| | **4S-5898** | 1 | SEAL-O-RING | |
| | **2N-8142** | 1 | TEE-SWIVEL | |
| | **270-5262** | 1 | VALVE-BRAKE (WINCH) | |

I-REFER TO HYDRAULIC INFORMATION SYSTEM

**<END>**

# WORK TOOLS

## *143-2074* MOUNTING GP-WINCH

**S/N: 5451-UP**
**PART OF 271-9081 WINCH AR**
**AN ATTACHMENT**

**SMCS-5163** **i01107491**

| NOTE | REF NO | GRAPHIC REF | PART NUMBER | QTY | PART NAME 1 2 3 4 5 6 (PRODUCT LEVEL) | SEE PAGE |
|---|---|---|---|---|---|---|
| | 1 | 1 | **162-2450** | 1 | PLATE AS | |
| | 2 | 1 | **8T-4167** | 4 | WASHER (4.0MM THK) | |
| M | 3 | 1 | **7X-2581** | 2 | BOLT (M30X3.5X100MM) | |
| M | 4 | 1 | **107-3953** | 2 | BOLT (M30X3.5X150MM) | |
| M | 5 | 1 | **7X-2454** | 4 | BOLT (M24X3.0X110MM) | |
| | 6 | 1 | **9X-8258** | 4 | WASHER (6MM THK) | |

M-METRIC PART

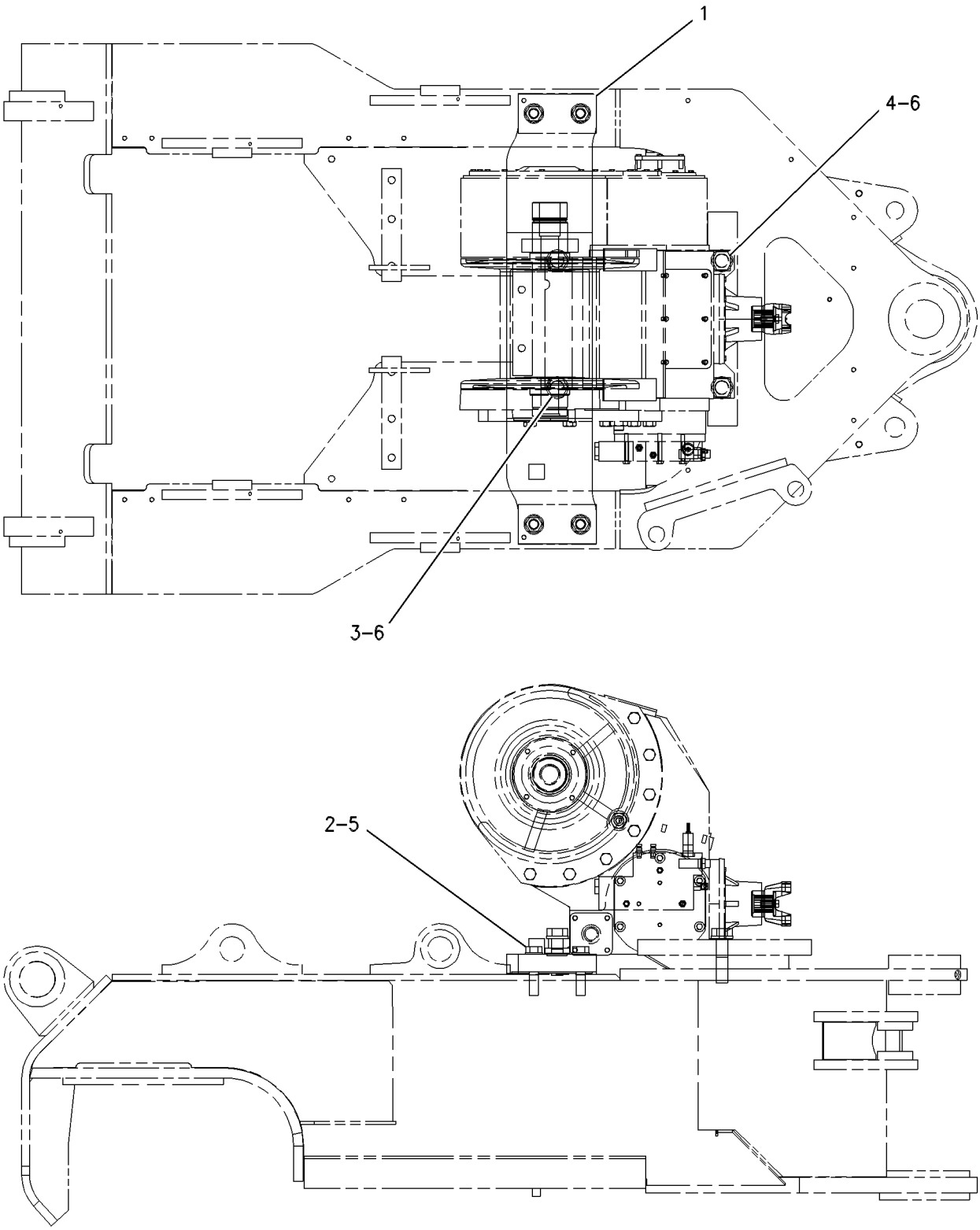


GRAPHIC #1 **<END>** g00503579

# WORK TOOLS

## *252-5198* MOUNTING GP-WINCH

**S/N: 5451-UP**
**PART OF 252-5196 WINCH AR**
**AN ATTACHMENT**

**SMCS-5163** **i02185324**

| NOTE | REF NO | GRAPHIC REF | PART NUMBER | QTY | PART NAME 1 2 3 4 5 6 (PRODUCT LEVEL) | SEE PAGE |
|---|---|---|---|---|---|---|
| | 1 | 1 | **253-4034** | 1 | MOUNT AS | |
| M | | 1 | **8T-3490** | 1 | NUT-WELD (M10X1.5-THD) | |
| M | | 1 | **8T-3851** | 2 | BOSS-WELD (M10X1.5X17.5-MM) | |
| M | 2 | 1 | **7X-2567** | 4 | BOLT (M24X3X160-MM) | |
| M | 3 | 1 | **7X-2575** | 8 | BOLT (M24X3X60-MM) | |
| M | 4 | 1 | **7X-2583** | 2 | BOLT (M30X3.5X120-MM) | |
| | 5 | 1 | **8T-4167** | 12 | WASHER-HARD (26X44X4-MM THK) | |
| | 6 | 1 | **9X-8258** | 2 | WASHER (33X56X6-MM THK) | |

M-METRIC PART

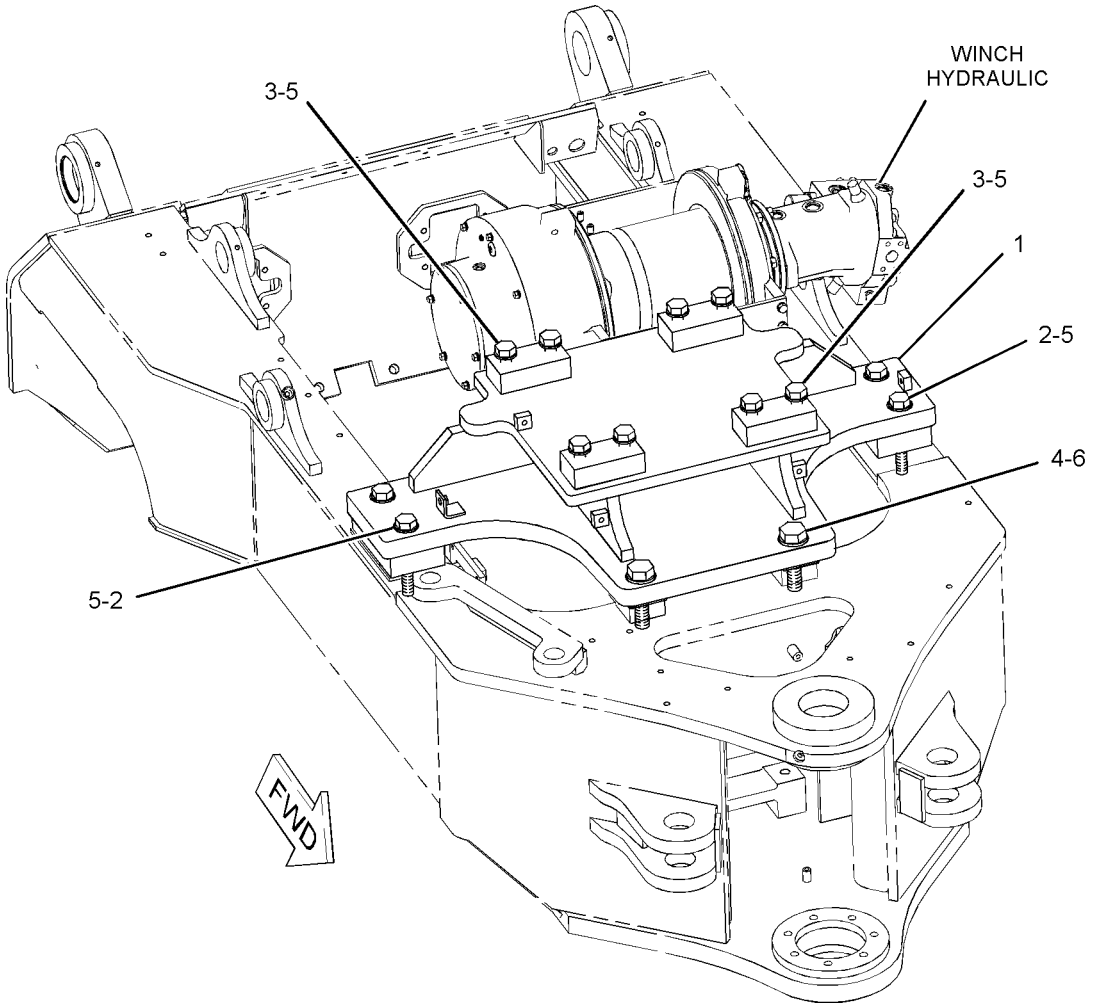


GRAPHIC #1 **<END>** g01105234

# 252-5199 MOUNTING GP-WINCH

**S/N: 5451-UP**
**PART OF 252-5197 WINCH AR**
**AN ATTACHMENT**

**SMCS-5163** **i02702772**

| NOTE | REF NO | GRAPHIC REF | PART NUMBER | QTY | PART NAME 1 2 3 4 5 6 (PRODUCT LEVEL) | SEE PAGE |
|---|---|---|---|---|---|---|
| | 1 | 1 | **257-4949** | 1 | MOUNT AS | |
| M | | 1 | **9R-2613** | 1 | BOSS-WELD (M10X1.5X25-MM OAL) | |
| M | 2 | 1 | **7X-2489** | 4 | BOLT (M24X3X100-MM) | |
| M | 3 | 1 | **7X-2575** | 8 | BOLT (M24X3X60-MM) | |
| | 4 | 1 | **8T-4167** | 16 | WASHER-HARD (26X44X4-MM THK) | |
| M | 5 | 1 | **8T-6380** | 4 | BOLT (M24X3X130-MM) | |

M-METRIC PART

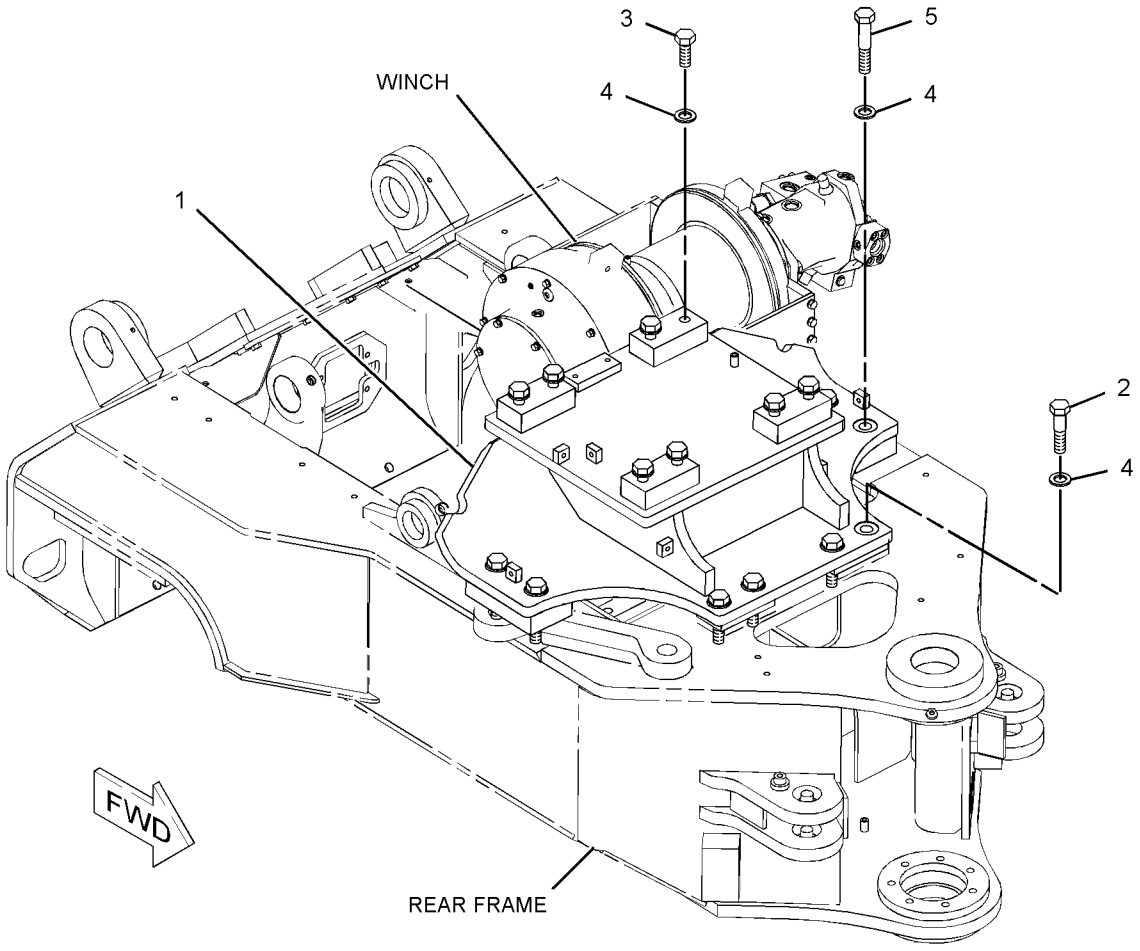


GRAPHIC #1 **<END>** g01104609

# WORK TOOLS

## *225-8031* PIN GP-GRAPPLE

**S/N: 5451-UP**
**PART OF 253-2515, 253-2518 GRAPPLE AR**
**AN ATTACHMENT**

**SMCS-6307** **i01801808**

| NOTE | REF NO | GRAPHIC REF | PART NUMBER | QTY | PART NAME 1 2 3 4 5 6 (PRODUCT LEVEL) | SEE PAGE |
|---|---|---|---|---|---|---|
| | 1 | 1 | **209-7194** | 2 | GUARD | |
| | 2 | 1 | **224-3362** | 8 | PIN AS | |
| | | | | | (EACH INCLUDES) | |
| | | 1 | **224-3364** | 1 | PLATE | |
| | 3 | 1 | **224-3386** | 2 | PIN AS | |
| | | | | | (EACH INCLUDES) | |
| | | 1 | **224-3388** | 1 | PLATE | |
| | 4 | 1 | **225-0287** | 10 | SPACER (22X31X12-MM THK) | |
| M | 5 | 1 | **8T-4179** | 8 | BOLT (M12X1.75X20-MM) | |
| | 6 | 1 | **8T-4223** | 8 | WASHER-HARD (13.5X25.5X3-MM THK) | |
| | 7 | 1 | **8T-5439** | 10 | WASHER-HARD (21.5X45X6-MM THK) | |
| M | 8 | 1 | **8T-5460** | 10 | BOLT (M20X2.5X40-MM) | |

M-METRIC PART

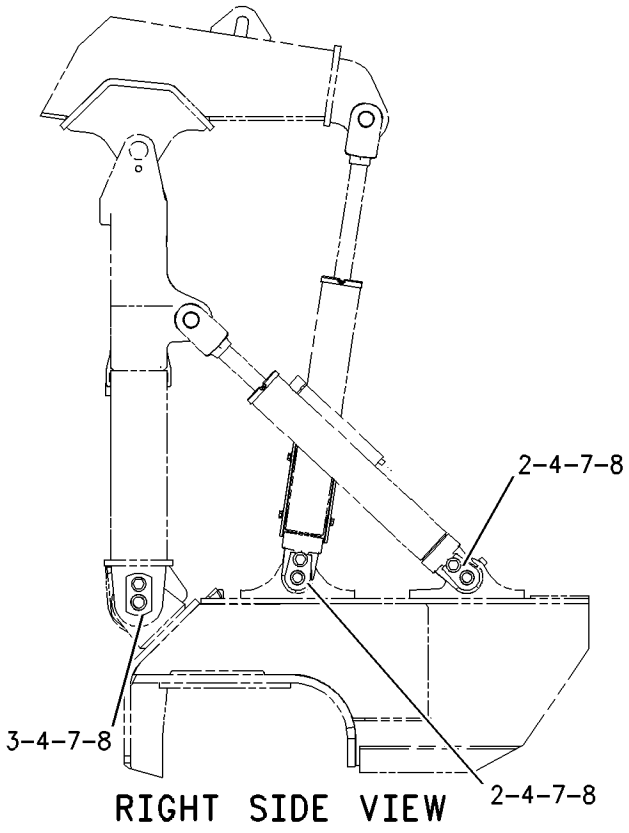


RIGHT SIDE VIEW

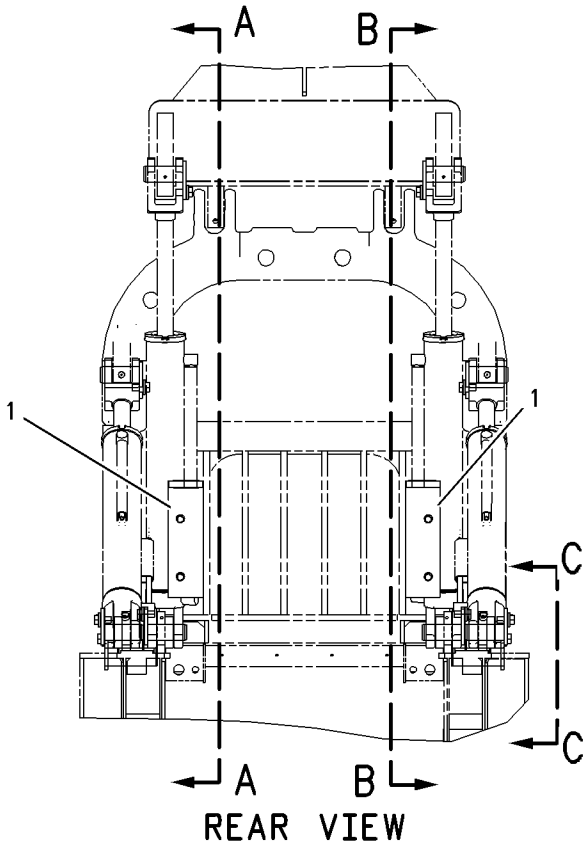


REAR VIEW

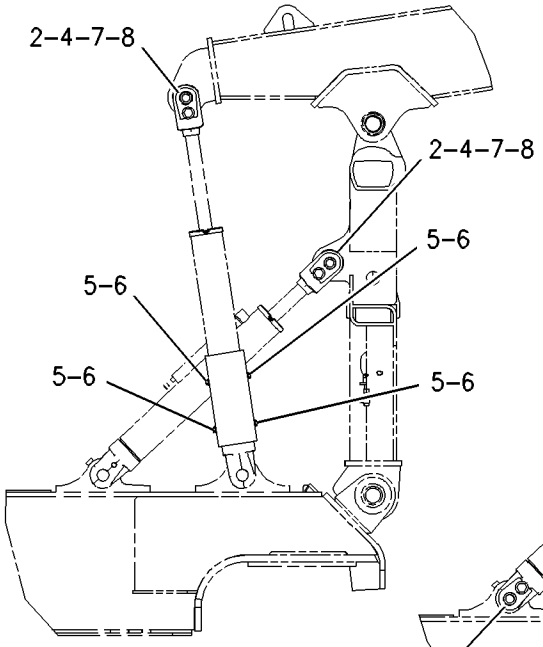


VIEW A-A

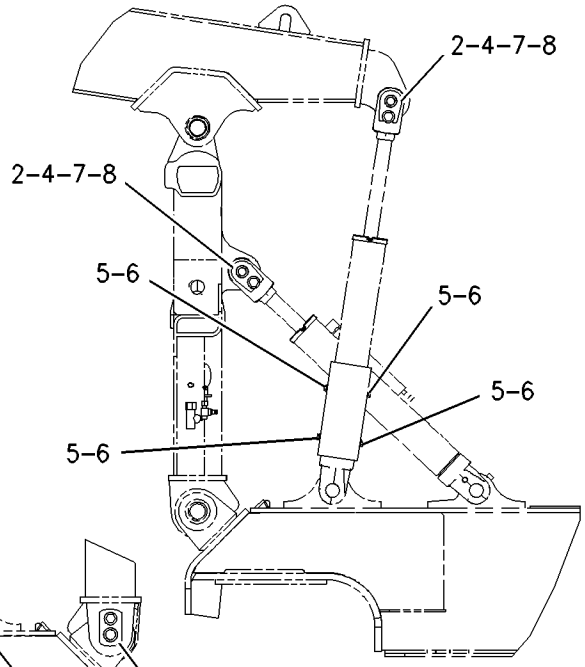


VIEW B-B

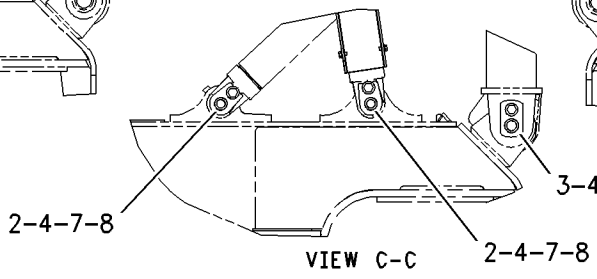


VIEW C-C

GRAPHIC #1 **<END>** g00921188

# WORK TOOLS

## *276-1932* PIN GP-GRAPPLE

**S/N: 5451-UP**
**PART OF 276-1934, 276-1935 HEAD AR-GRAPPLE**
**AN ATTACHMENT**

**SMCS-6307** **i02590596**

| NOTE | REF NO | GRAPHIC REF | PART NUMBER | QTY | PART NAME 1 2 3 4 5 6 (PRODUCT LEVEL) | SEE PAGE |
|---|---|---|---|---|---|---|
| | 1 | 1 | **204-4476** | 2 | PIN AS | |
| B | 2 | 1 | **264-5246** | 10 | SHIM (1.6-MM THK) | |
| B | 3 | 1 | **264-5253** | 2 | SHIM (2.5-MM THK) | |
| | 4 | 1 | **276-2038** | 2 | PLATE | |
| | 5 | 1 | **277-5765** | 2 | PIN AS | |
| | 6 | 1 | **5P-1076** | 2 | WASHER-HARD (13.5X30X4-MM THK) | |
| M | 7 | 1 | **7X-2562** | 4 | BOLT (M20X2.5X45-MM) | |
| M | 8 | 1 | **8T-4179** | 2 | BOLT (M12X1.75X20-MM) | |
| | 9 | 1 | **8T-5439** | 2 | WASHER-HARD (21.5X45X6-MM THK) | |

B-USE AS REQUIRED
M-METRIC PART

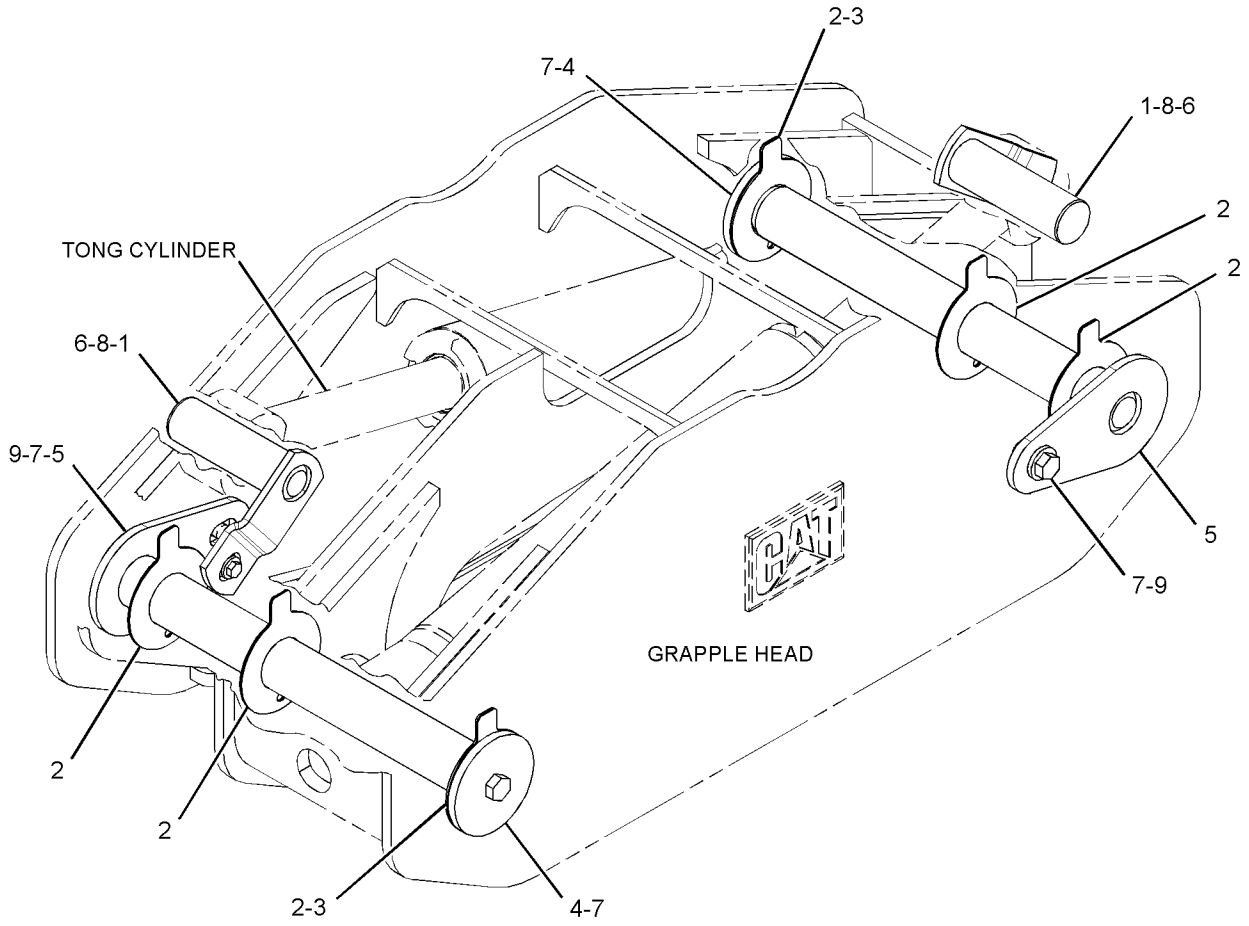


GRAPHIC #1 **<END>** g01335267

# WORK TOOLS

## *270-5200* PLANETARY GP-WINCH

**S/N: 5451-UP**
**PART OF 252-5206 WINCH GP**
**AN ATTACHMENT**

**SMCS-5165** **i02560072**

| NOTE | REF NO | GRAPHIC REF | PART NUMBER | QTY | PART NAME 1 2 3 4 5 6 (PRODUCT LEVEL) | SEE PAGE |
|---|---|---|---|---|---|---|
| | 1 | 1 | **6V-7700** | 3 | RING-RETAINING | |
| | 2 | 1 | **270-5201** | 3 | GEAR-PLANETARY (31-TEETH) | |
| | 3 | 1 | **270-5202** | 3 | BEARING-ROLLER | |
| | 4 | 1 | **270-5203** | 6 | SPACER-THRUST | |
| | 5 | 1 | **270-5204** | 1 | CARRIER-PLANETARY | |
| | 6 | 1 | **270-5205** | 6 | RING-RETAINING | |
| | 7 | 1 | **270-5207** | 1 | SPACER-THRUST (2.27X5.59X.25-MM THK) | |

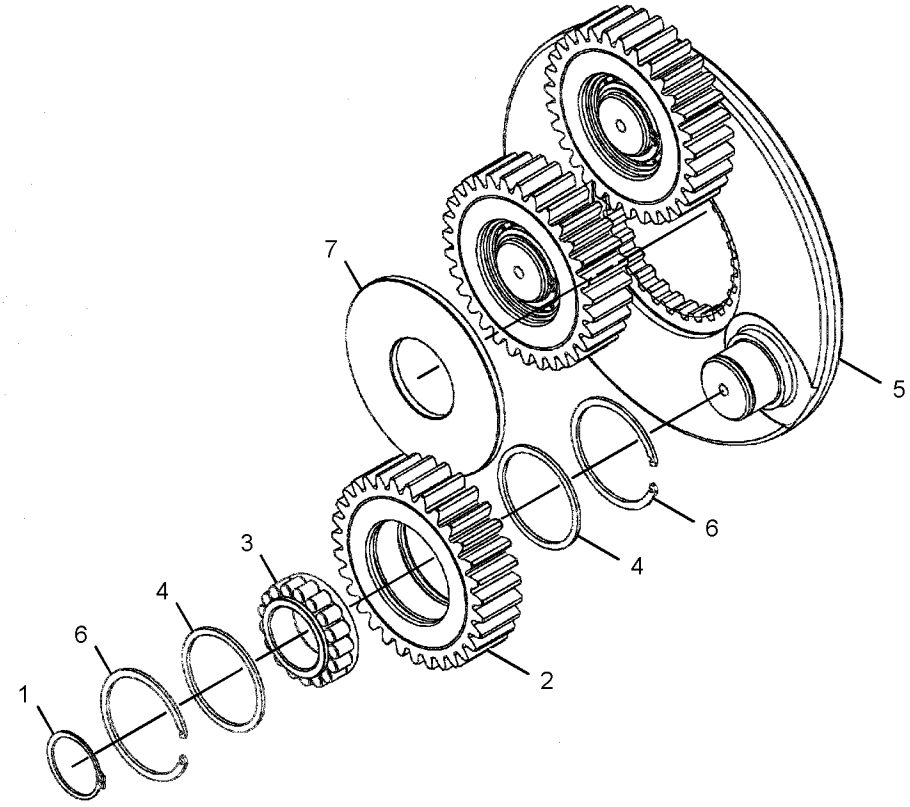


GRAPHIC #1 **<END>** g01298736

# WORK TOOLS

## *161-6641* ROLLER GP-TOP

**S/N: 5451-UP**
**PART OF 272-5920 ARCH AR**
**AN ATTACHMENT**

**SMCS-6306** **i01361743**

| NOTE | REF NO | GRAPHIC REF | PART NUMBER | QTY | PART NAME 1 2 3 4 5 6 (PRODUCT LEVEL) | SEE PAGE |
|---|---|---|---|---|---|---|
| | 1 | 1 | **1V-3283** | 2 | SPACER | |
| | 2 | 1 | **1V-3287** | 1 | SHAFT AS | |
| | 3 | 1 | **1V-3289** | 1 | ROLLER | |
| B | 4 | 1 | **2V-8369** | 2 | SHIM PACK (INCLUDES 4 SHIMS) | |
| | 5 | 1 | **5P-1610** | 2 | BALL BEARING | |
| | 6 | 1 | **5P-1076** | 1 | WASHER-HARD (4MM THK) | |
| M | 7 | 1 | **8T-4956** | 1 | BOLT (M12X1.75X35MM) | |

B-USE AS REQUIRED
M-METRIC PART

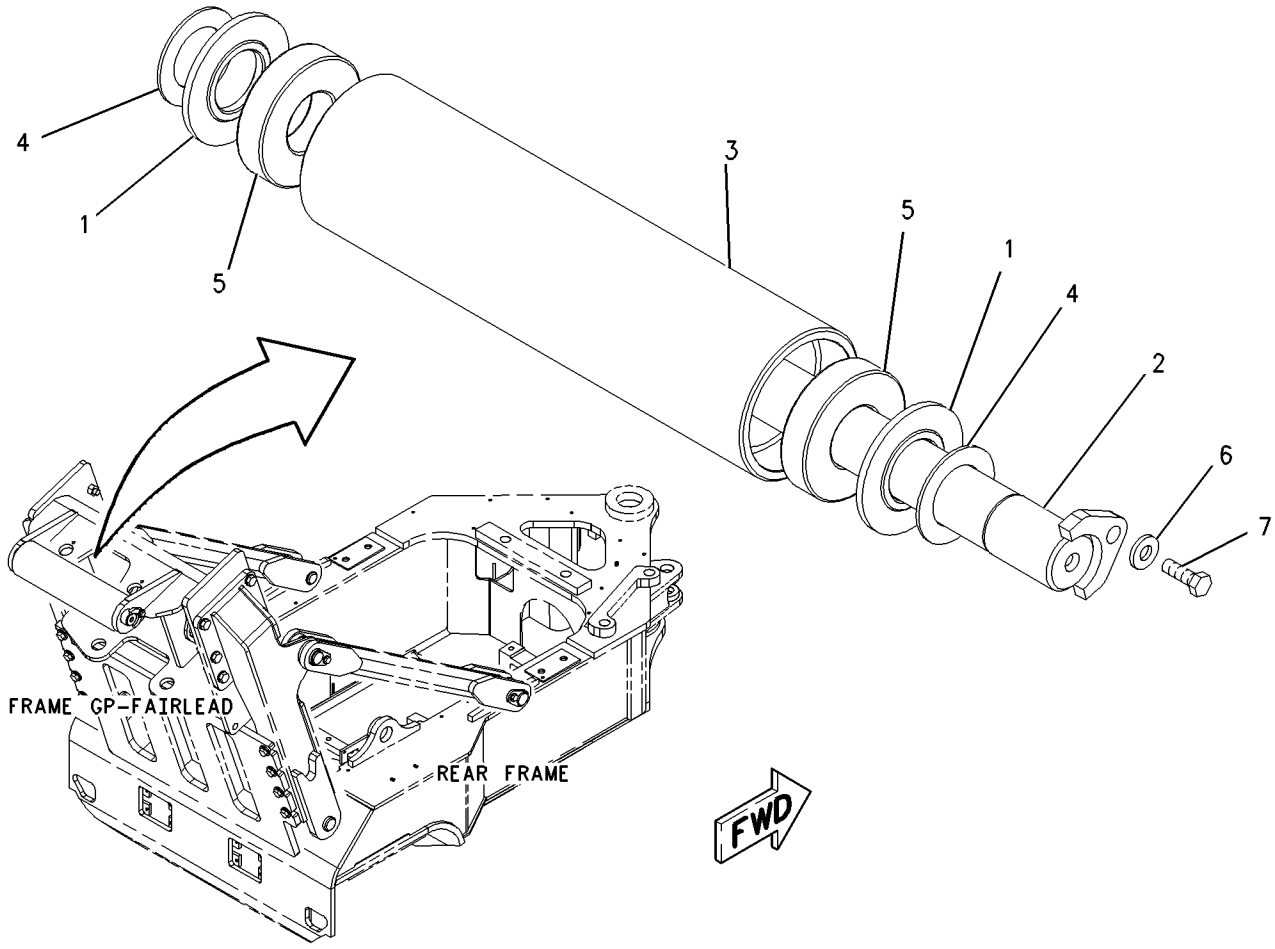


GRAPHIC #1 **<END>** g00647960

# WORK TOOLS

## *225-9457* ROTATOR GP-HYDRAULIC

**S/N: 5451-UP**

**PART OF 276-2042 FRAME GP-GRAPPLE**

**AN ATTACHMENT**

**SMCS-6307, 6326** **i02680531**

| NOTE | REF NO | GRAPHIC REF | PART NUMBER | QTY | PART NAME 1 2 3 4 5 6 (PRODUCT LEVEL) | SEE PAGE |
|---|---|---|---|---|---|---|
| M | 1 | 1 | **9X-2158** | 7 | BOLT-SOCKET HEAD (M10X1.5X90-MM) | |
| | 2 | 1 | **228-3717** | 1 | BLOCK | |
| | 3 | 1 | **5W-2817** | 3 | FITTING-GREASE | |
| | 4 | 1 | **150-4561** | 6 | PIN-ROLL | |
| | 5 | 1 | **306-2669** | 1 | PLUG AS | |
| | 6 | 1 | **228-3718** | 1 | BLOCK | |
| | 7 | 1 | **203-3338** | 1 | TUBE | |
| | 8 | 1 | **228-3720** | 1 | TUBE (SWIVEL) | |
| | 9 | 1 | **150-4563** | 10 | SCREW | |
| | 10 | 1 | **228-3714** | 1 | COVER (MOTOR) | |
| | 11 | 1 | **228-3726** | 1 | SHAFT (CLEVIS) | |
| | 12 | 1 | **172-9906** | 9 | VANE | |
| | 13 | 1 | **150-4559** | 27 | SPRING | |
| | 14 | 1 | **150-4557** | 1 | MOTOR-SHAFT | |
| | 15 | 1 | **219-3560** | 2 | VALVE | |
| | 16 | 1 | **228-3716** | 1 | FRAME-STATOR | |
| | 17 | 1 | **228-3715** | 1 | COVER | |
| | 18 | 1 | **150-4562** | 2 | SCREW | |
| | 19 | 1 | **150-4538** | 1 | LOCKNUT | |
| | 20 | 1 | **5D-7453** | 1 | CONE-BEARING | |
| | 21 | 1 | **228-3722** | 1 | HOUSING GP-MOTOR | |
| | 21A | 1 | **1P-4695** | 1 | CUP-BEARING | |
| | 21B | 1 | **5D-7449** | 1 | CUP-BEARING | |
| | 22 | 1 | **1P-4696** | 1 | CONE-BEARING | |
| | 23 | 1 | **228-3725** | 1 | SPACER | |
| | 24 | 1 | **228-3737** | 1 | SEAL-LIP TYPE | |
| | | | | | | |
| | | | | | PARTS SHOWN IN GRAPHIC(S) WITHOUT A REFERENCE NUMBER ARE NOT SERVICED SEPARATELY | |
| | | | | | AVAILABLE REPAIR KIT(S): | |
| | | | **204-0347** | 1 | KIT-SEAL (GRAPPLE ROTATOR) | |
| | | | | | (INCLUDES SEALS & O-RINGS) | |
| | | | **225-6557** | 1 | KIT-SEAL (MOTOR) | |
| | | | | | (INCLUDES GLIDE RINGS & O-RINGS) | |

M-METRIC PART

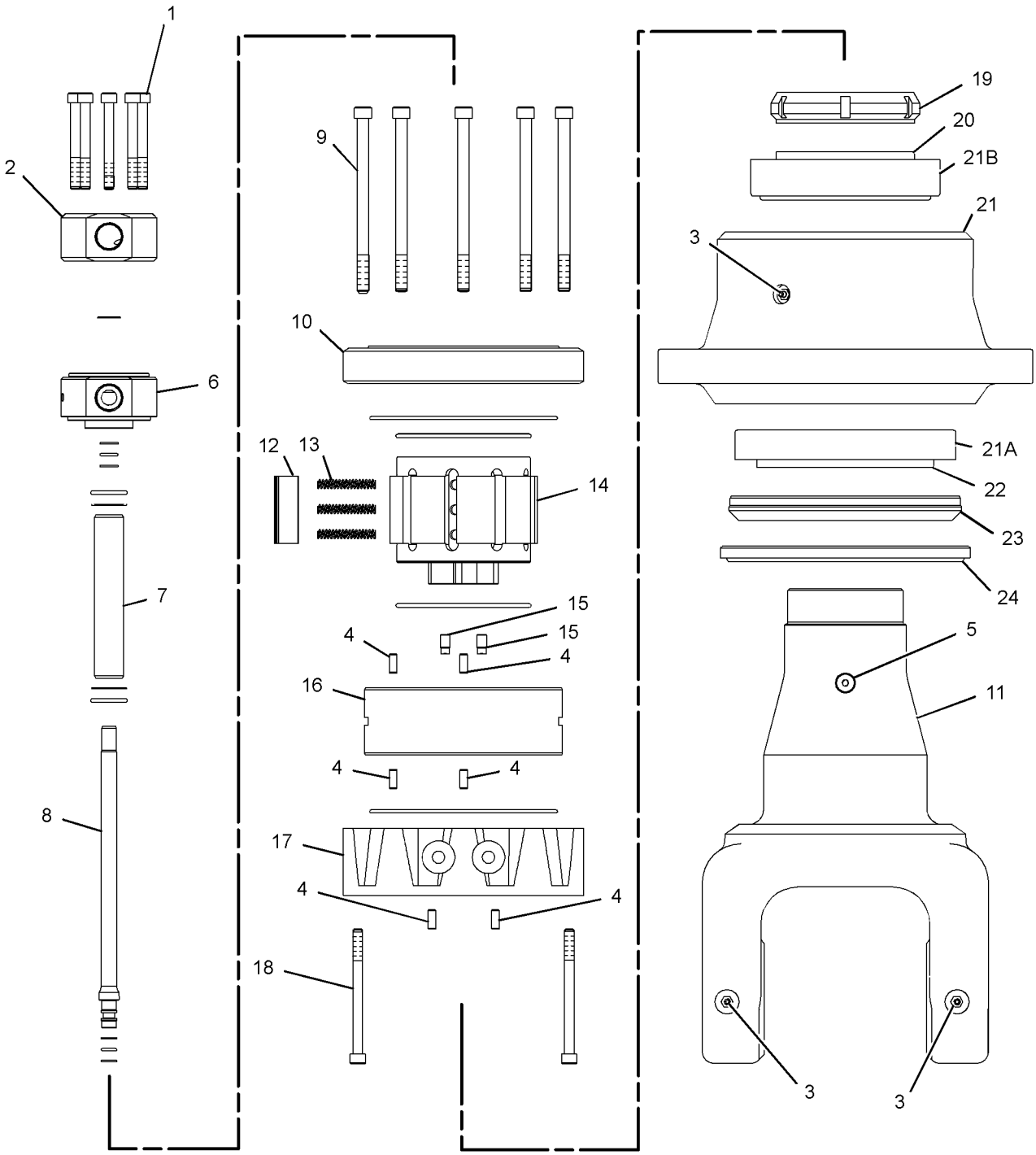


GRAPHIC #1 **<END>** g01346572

# 264-5222 SNUBBER GP-GRAPPLE

**S/N: 5451-UP**
**PART OF 276-1934, 276-1935 HEAD AR-GRAPPLE**
**AN ATTACHMENT**

**SMCS-5569** **i02470731**

| NOTE | REF NO | GRAPHIC REF | PART NUMBER | QTY | PART NAME 1 2 3 4 5 6 (PRODUCT LEVEL) | SEE PAGE |
|---|---|---|---|---|---|---|
| | 1 | 1,2 | **3B-8489** | 9 | FITTING-GREASE | |
| | 2 | 1 | **203-3953** | 2 | PIN AS | |
| | 3 | 2 | **219-0643** | 2 | BUSHING | |
| | 4 | 1 | **224-4977** | 1 | BUSHING | |
| | 5 | 2 | **224-4978** | 2 | BUSHING | |
| | 6 | 1 | **225-0287** | 2 | SPACER (22X31X12-MM THK) | |
| | 7 | 1 | **264-5276** | 1 | LINK | |
| B | 8 | 2 | **264-5279** | 24 | SHIM | |
| | 9 | 2 | **264-5281** | 12 | PLATE-REACTION | |
| | 10 | 2 | **264-5283** | 2 | CAP | |
| | 11 | 2 | **264-5284** | 4 | SPRING | |
| | 12 | 2 | **264-5287** | 10 | PLATE | |
| | 13 | 2 | **278-0403** | 2 | PIN | |
| | 14 | 2 | **095-0930** | 4 | RING-RETAINING | |
| | 15 | 2 | **2K-2939** | 2 | SEAL-O-RING | |
| | 16 | 2 | **5P-0072** | 2 | SEAL-LIP TYPE | |
| M | 17 | 2 | **8T-4183** | 12 | BOLT (M12X1.75X40-MM) | |
| | 18 | 2 | **8T-4223** | 12 | WASHER-HARD (13.5X25.5X3-MM THK) | |
| | 19 | 1 | **8T-5439** | 2 | WASHER-HARD (21.5X45X6-MM THK) | |
| M | 20 | 1 | **8T-5460** | 2 | BOLT (M20X2.5X40-MM) | |
| B | 21 | 1 | **264-5249** | 2 | SHIM (1.6-MM THK) | |
| B | 22 | 1 | **264-5251** | 2 | SHIM (2.5-MM THK) | |

B-USE AS REQUIRED
M-METRIC PART

REFER TO ALL ILLUSTRATIONS OF
THIS GROUP FOR AUXILIARY VIEWS

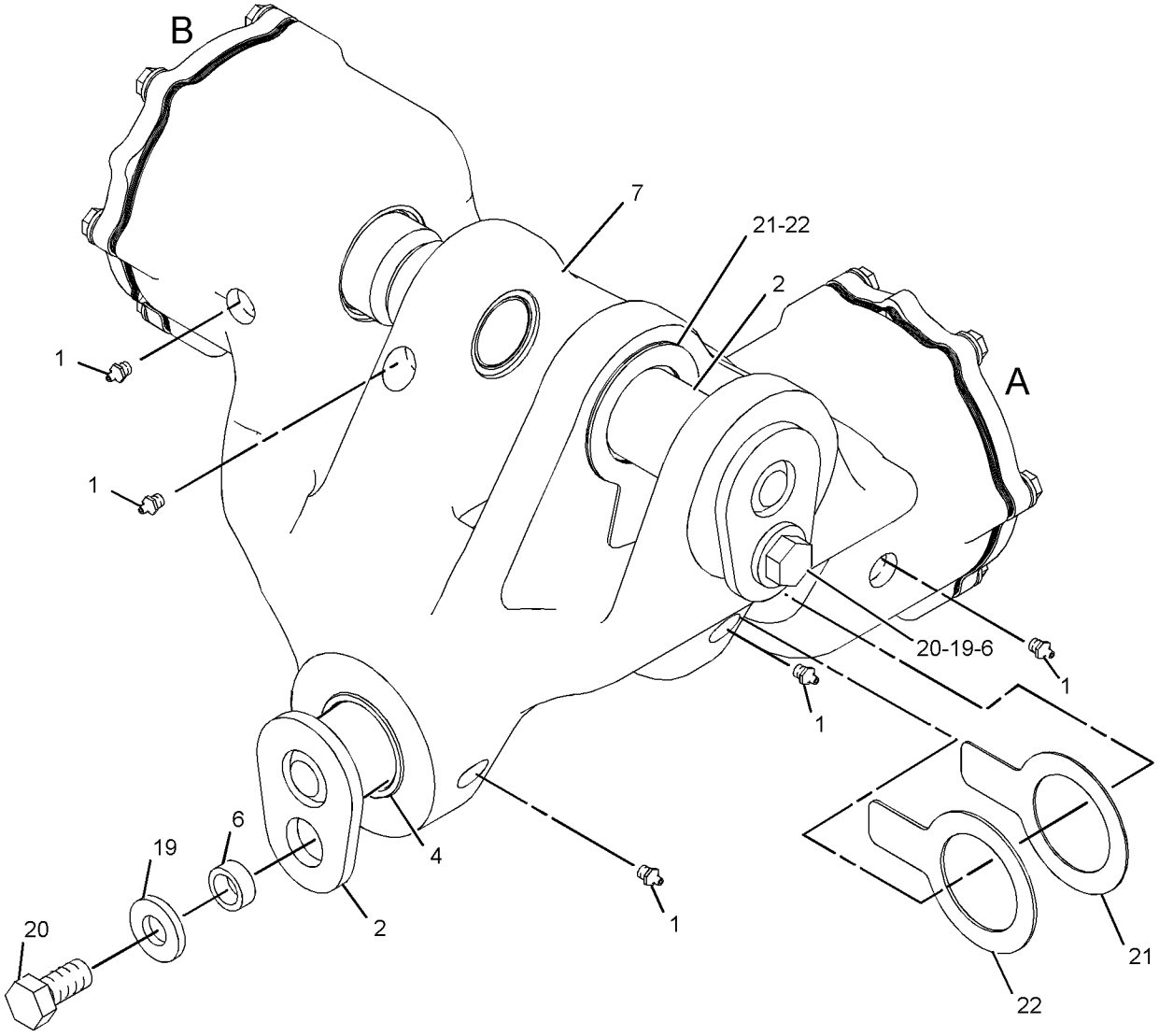


GRAPHIC #1

g01191863

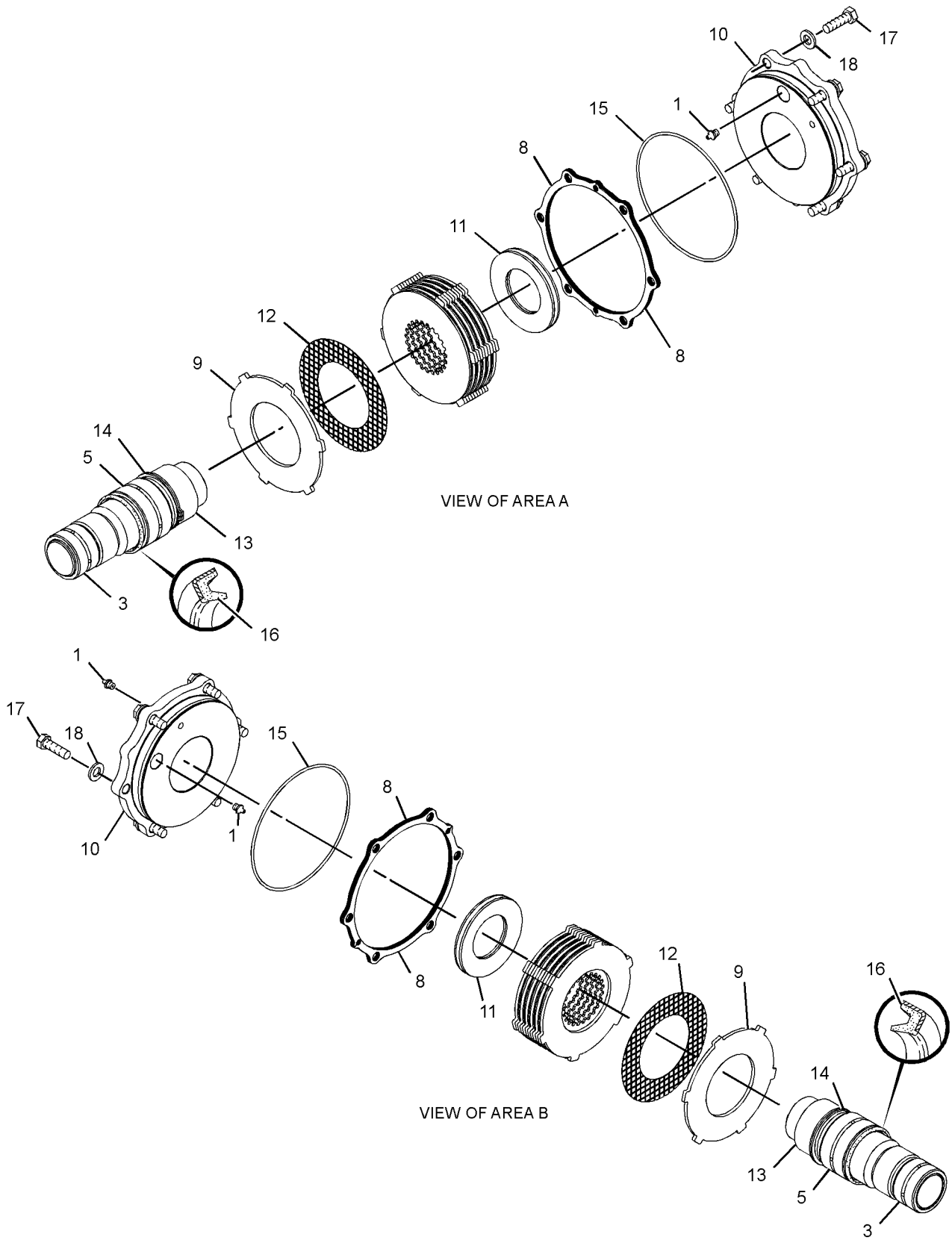


GRAPHIC #2 **<END>** g01191864

# *276-1940* TONG GP-GRAPPLE

**S/N: 5451-UP**
**PART OF 276-1934 HEAD AR-GRAPPLE**
**AN ATTACHMENT**

**SMCS-6307, 6322** **i02471090**

| NOTE | REF NO | GRAPHIC REF | PART NUMBER | QTY | PART NAME 1 2 3 4 5 6 (PRODUCT LEVEL) | SEE PAGE |
|---|---|---|---|---|---|---|
| | 1 | 1 | **3B-8489** | 1 | FITTING-GREASE | |
| | 2 | 1 | **236-1879** | 2 | BUSHING | |
| | 3 | 1 | **276-1967** | 1 | ARM AS | |
| | 4 | 1 | **5P-0072** | 2 | SEAL-LIP TYPE | |

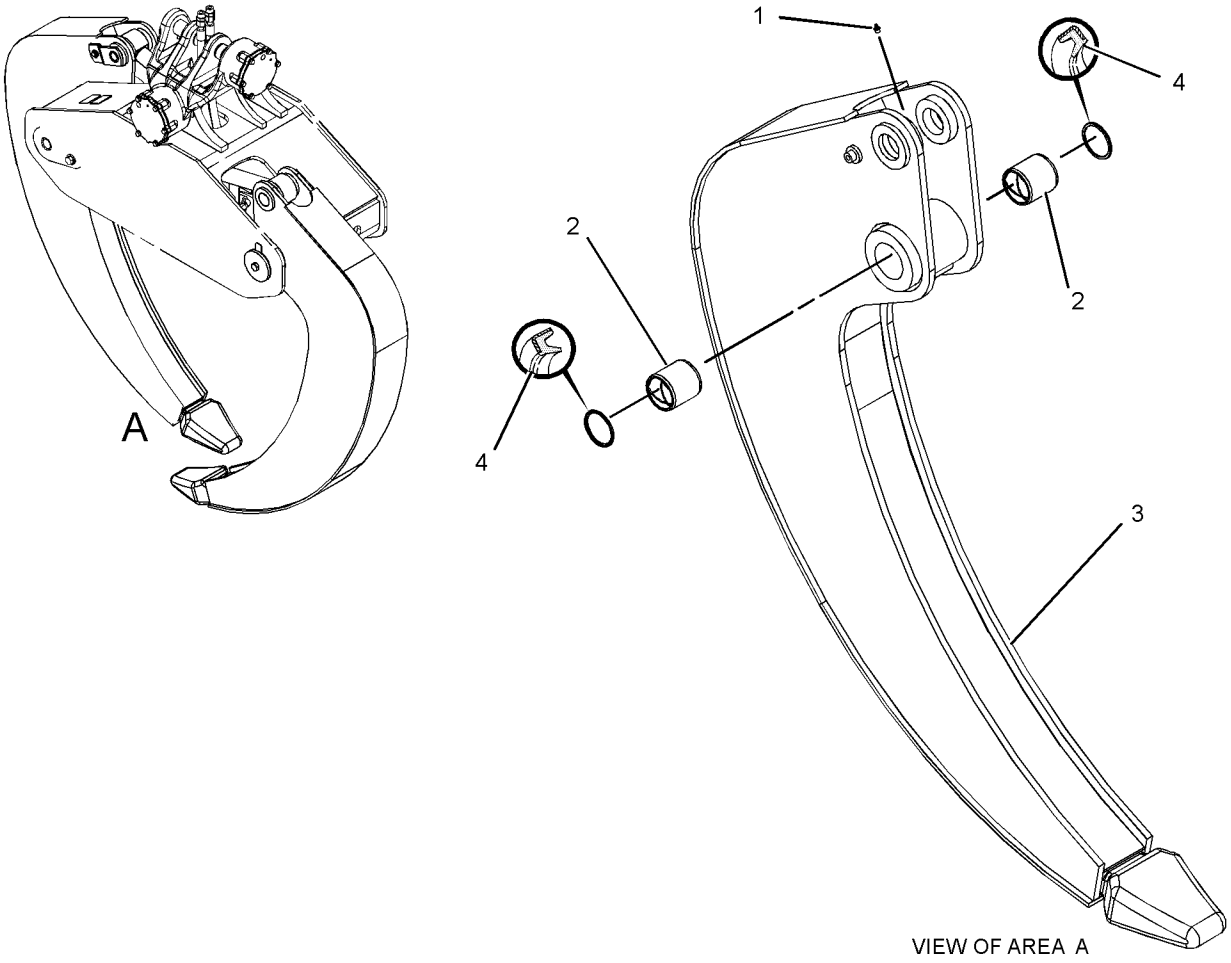


VIEW OF AREA A

GRAPHIC #1 **<END>** g01236337

# *276-1941* TONG GP-GRAPPLE

**S/N: 5451-UP**
**PART OF 276-1935 HEAD AR-GRAPPLE**
**AN ATTACHMENT**

**SMCS-6307, 6322** **i02471198**

| NOTE | REF NO | GRAPHIC REF | PART NUMBER | QTY | PART NAME 1 2 3 4 5 6 (PRODUCT LEVEL) | SEE PAGE |
|---|---|---|---|---|---|---|
| | 1 | 1 | **3B-8489** | 1 | FITTING-GREASE | |
| | 2 | 1 | **236-1879** | 2 | BUSHING | |
| | 3 | 1 | **276-1968** | 1 | ARM AS | |
| | 4 | 1 | **5P-0072** | 2 | SEAL-LIP TYPE | |

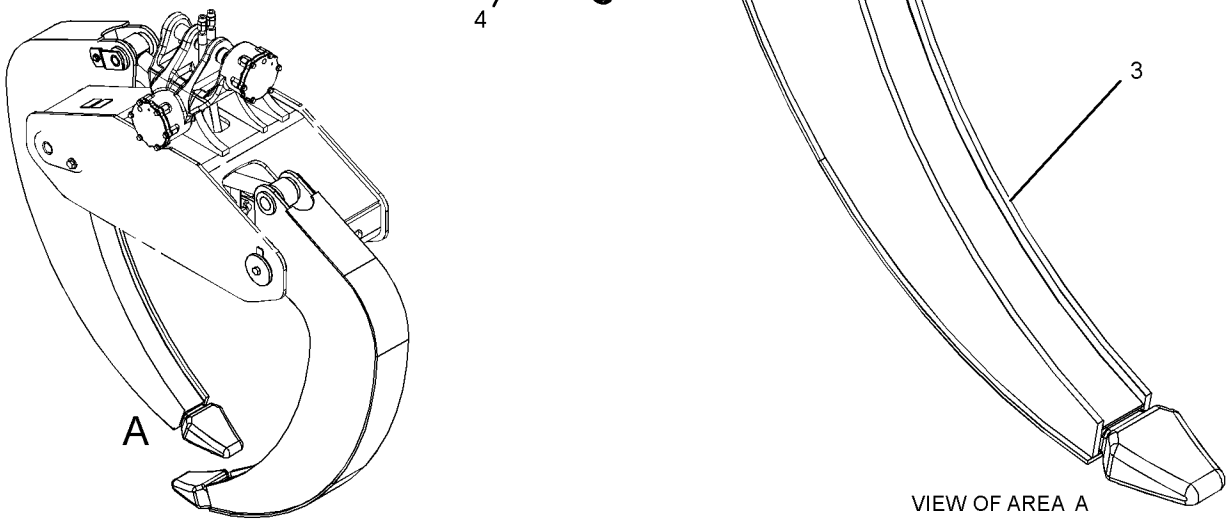


GRAPHIC #1 **<END>** g01236376

# WORK TOOLS

## *270-5267* VALVE GP-DRAIN–WINCH

**S/N: 5451-UP**
**PART OF 252-5206 WINCH GP**
**AN ATTACHMENT**

**SMCS-1372, 5163** **i02594417**

| NOTE | REF NO | GRAPHIC REF | PART NUMBER | QTY | PART NAME 1 2 3 4 5 6 (PRODUCT LEVEL) | SEE PAGE |
|---|---|---|---|---|---|---|
| | 1 | 1 | **7M-8485** | 1 | SEAL-O-RING | |
| | 2 | 1 | **106-8186** | 1 | VALVE AS-DRAIN (ECOLOGY) | |
| | | 1 | **077-3241** | 1 | SEAL-O-RING | |
| | 3 | 1 | **179-9492** | 1 | PLUG (DRAIN) | |
| | 4 | 1 | **270-5268** | 1 | HOUSING (DRAIN) | |
| | 5 | 1 | **270-5269** | 1 | SEAL-O-RING | |

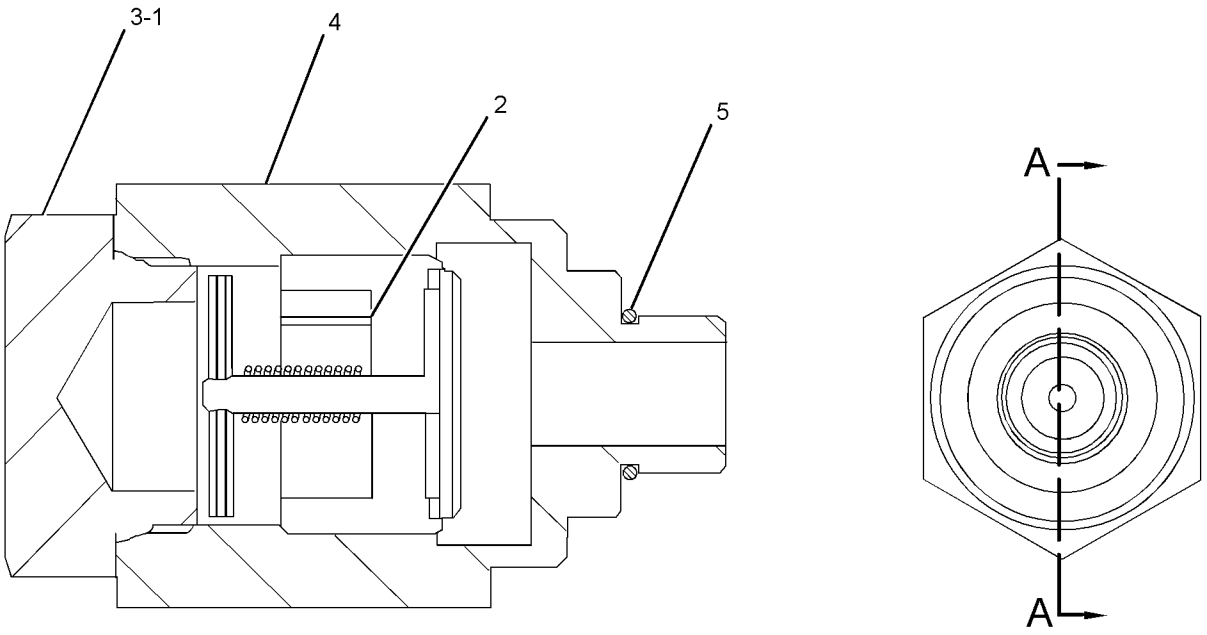


SECTION A-A

GRAPHIC #1 **<END>** g01299020

## *252-5196* WINCH AR—GRAPPLE MACHINE

**S/N: 5451-UP**
**PART OF 253-2518 GRAPPLE AR**
**AN ATTACHMENT**

**SMCS-5163** **i02467647**

| NOTE | PART NUMBER | QTY | PART NAME 1 2 3 4 5 6 (PRODUCT LEVEL) | SEE PAGE |
|---|---|---|---|---|
| Y | *252-5200* | 1 | CONTROL GP-WINCH | 510 |
| Y | *252-5202* | 1 | GUARD GP-WINCH | 536 |
| Y | *278-8842* | 1 | LINES GP-WINCH | 546 |
| Y | *252-5198* | 1 | MOUNTING GP-WINCH | 552 |
| Y | **252-5206** | 1 | WINCH GP (GRAPPLE MACHINE) | 569 |
| | | | | |
| | **257-3166** | 1 | FILM-NOTICE (WINCH FREESPOOL) | |
| | | | (INSIDE CAB, RH SIDE OF MACHINE ON THE HORIZONTAL SURFACE BEHIND THE WINCH CONTROL SWITCHES) | |

Y-SEPARATE ILLUSTRATION

**<END>**

## *252-5197* WINCH AR—GRAPPLE MACHINE

**S/N: 5451-UP**
**PART OF 295-8464 WINCH AR**
**AN ATTACHMENT**

**SMCS-5163** **i02533914**

| NOTE | PART NUMBER | QTY | PART NAME 1 2 3 4 5 6 (PRODUCT LEVEL) | SEE PAGE |
|---|---|---|---|---|
| Y | *252-5201* | 1 | CONTROL GP-WINCH | 511 |
| Y | *252-5203* | 1 | GUARD GP-WINCH | 537 |
| Y | *252-5205* | 1 | LINES GP-WINCH | 541 |
| Y | *252-5199* | 1 | MOUNTING GP-WINCH | 553 |
| Y | *252-5206* | 1 | WINCH GP (GRAPPLE MACHINE) | 569 |
| | | | | |
| | **257-3166** | 1 | FILM-NOTICE (WINCH FREESPOOL) | |

Y-SEPARATE ILLUSTRATION

**<END>**

## *271-9081* WINCH AR—CABLE MACHINE

**S/N: 5451-UP**
**PART OF 272-5920 ARCH AR**
**AN ATTACHMENT**

**SMCS-5163** **i02470038**

| NOTE | PART NUMBER | QTY | PART NAME 1 2 3 4 5 6 (PRODUCT LEVEL) | SEE PAGE |
|---|---|---|---|---|
| Y | *271-9088* | 1 | CONTROL GP-WINCH | 513 |
| Y | *143-2064* | 1 | DRIVE GP-WINCH | 517 |
| Y | *159-2821* | 1 | GUARD GP-WINCH | 535 |
| Y | *271-9086* | 1 | LINES GP-WINCH | 544 |
| Y | *143-2074* | 1 | MOUNTING GP-WINCH | 550 |
| Y | *271-9085* | 1 | WINCH GP (CABLE MACHINE) | 572 |

Y-SEPARATE ILLUSTRATION

**<END>**

# WORK TOOLS

## *295-8464* WINCH AR—WITHOUT GRAPPLE

**S/N: 5451-UP**

**CANNOT BE USED WITH ANY OTHER HEAD OR GRAPPLE ARRANGEMENT**

**AN ATTACHMENT AND FIELD INSTALLATION**

**SMCS-5163** **i02582370**

| NOTE | PART NUMBER | QTY | PART NAME 1 2 3 4 5 6 (PRODUCT LEVEL) | SEE PAGE |
|---|---|---|---|---|
| Y | *278-4732* | 1 | CONTROL GP-PILOT OPERATED HYD (JOYSTICK, DUAL FCTN GRAPPLE) | 597 |
| Y | *253-4116* | 1 | GUARD GP-LINES (REAR FRAME, GRAPPLE) | 339 |
| Y | *280-8999* | 1 | VALVE & LINES GP-GRAPPLE (DUAL FUNCTION) | 461 |
| Y | *252-5197* | 1 | WINCH AR (GRAPPLE MACHINE) | 567 |
| | | | | |
| | *148-8408* | 8 | PLUG AS | |
| | | | (EACH INCLUDES) | |
| | **3D-2824** | 1 | SEAL-O-RING | |
| | **9S-4183** | 1 | PLUG-O-RING | |

Y-SEPARATE ILLUSTRATION

**<END>**

## 252-5206 WINCH GP—GRAPPLE MACHINE

**S/N: 5451-UP**

**PART OF 252-5196, 252-5197 WINCH AR**

**AN ATTACHMENT**

**SMCS-5163** **i02707734**

| NOTE | REF NO | GRAPHIC REF | PART NUMBER | QTY | PART NAME 1 2 3 4 5 6 (PRODUCT LEVEL) | SEE PAGE |
|---|---|---|---|---|---|---|
| | 1 | 1 | **119-1586** | 1 | SEAL | |
| | 2 | 1 | **2K-2939** | 1 | SEAL-O-RING | |
| | 4 | 1 | **136-8037** | 1 | KIT-CLUTCH | |
| | | | | | (INCLUDES RINGS, BEARINGS, CLUTCH & RACES) | |
| | 5 | 1 | **211-8754** | 1 | RING-THRUST | |
| Y | 6 | 1 | *270-5165* | 1 | CYLINDER GP-BRAKE (WINCH) | 516 |
| Y | 7 | 1 | *270-5168* | 1 | CARRIER GP-PLANETARY (WINCH, PRIMARY) | 501 |
| Y | 8 | 1 | *270-5175* | 1 | CARRIER GP-PLANETARY (WINCH OUTPUT) | 502 |
| Y | 9 | 1 | *270-5200* | 1 | PLANETARY GP-WINCH | 557 |
| | 10 | 1 | **270-5212** | 1 | BRACKET | |
| | 11 | 1 | **270-5214** | 1 | BRACKET | |
| | 12 | 1 | **270-5215** | 1 | PLATE | |
| | 13 | 1 | **270-5218** | 1 | BEARING | |
| | 14 | 1 | **270-5219** | 1 | SPACER (2.58X3.33X0.75-MM THK) | |
| | 15 | 1 | **270-5220** | 1 | GEAR-SUN | |
| | 16 | 1 | **270-5221** | 1 | GEAR (18-TEETH) | |
| | 17 | 1 | **270-5225** | 1 | BALL BEARING | |
| | 18 | 1 | **270-5227** | 1 | CYLINDER | |
| | 19 | 1 | **270-5228** | 1 | COVER-SPRING | |
| | 20 | 1 | **270-5229** | 2 | SHIM (2.8-MM THK) | |
| | 21 | 1 | **270-5232** | 6 | SPRING | |
| | 22 | 1 | **270-5233** | 1 | PISTON | |
| | 23 | 1 | **270-5235** | 1 | RING-BACKUP | |
| | 24 | 1 | **270-5236** | 1 | CLUTCH | |
| | 25 | 1 | **270-5237** | 1 | CLUTCH | |
| | 26 | 1 | **270-5238** | 1 | SHAFT-OUTPUT | |
| | 27 | 1 | **270-5240** | 1 | SPACER-THRUST (3.27X4X0.14-MM THK) | |
| | 28 | 1 | **270-5241** | 1 | SPACER-THRUST (3.27X3.77X0.19-MM THK) | |
| | 29 | 1 | **270-5242** | 1 | SLEEVE-SPRING | |
| | 30 | 1 | **270-5244** | 1 | GAUGE-SIGHT (WINCH) | |
| | 31 | 1 | **270-5246** | 2 | PLATE | |
| | 32 | 1 | **5D-5959** | 1 | SEAL-O-RING | |
| | 33 | 1 | **270-5248** | 1 | COVER | |
| | 34 | 1 | **270-5249** | 2 | WASHER-THRUST | |
| | 35 | 1 | **270-5250** | 1 | SPACER (4.93X5.88X0.52-MM THK) | |
| | 36 | 1 | **2K-5967** | 1 | RING-RETAINING | |
| | 37 | 1 | **270-5253** | 1 | RING-SNAP | |
| | 38 | 1 | **270-5256** | 1 | RING-RETAINING | |
| | 39 | 1 | **270-5259** | 1 | BUSHING-THRUST | |
| Y | 40 | 1 | *270-5260* | 1 | MOTOR GP-PISTON (WINCH) | 549 |
| | 41 | 1 | *270-5266* | 1 | BRAKE GP-WINCH | |
| | | 1 | **203-6641** | 1 | SPRING | |
| | | 1 | **2H-3786** | 1 | NUT-JAM (1-14-THD) | |
| | | 1 | **161-6417** | 1 | DISC-BRAKE | |
| | | 1 | **203-6637** | 1 | HOUSING-SPRING | |
| Y | 42 | 1 | *270-5267* | 1 | VALVE GP-DRAIN (WINCH) | 566 |
| | 43 | 1 | **270-5217** | 1 | DRUM | |
| | 44 | 1 | *162-0177* | 1 | PLUG AS | |
| | | 1 | **3J-1907** | 1 | SEAL-O-RING | |
| | | 1 | **9S-8004** | 1 | PLUG-O-RING | |
| | 45 | 1 | **1H-9696** | 1 | SEAL-O-RING | |
| | 46 | 1 | **4B-4158** | 4 | SCREW-DRIVE (3/16X0.25-IN) | |
| M | 47 | 1 | **8T-4136** | 6 | BOLT (M10X1.5X25-MM) | |
| | 48 | 1 | **9S-8005** | 2 | PLUG-O-RING | |
| | 49 | 1 | **219-7935** | 1 | PLATE | |

## 252-5206 WINCH GP *(contd. )* i02707734

| NOTE | REF NO | GRAPHIC REF | PART NUMBER | QTY | PART NAME 1 2 3 4 5 6 (PRODUCT LEVEL) | SEE PAGE |
|---|---|---|---|---|---|---|
| | 50 | 1 | **5M-3062** | 1 | BOLT (3/8-16X0.75-IN) | |
| | 51 | 1 | **8T-4896** | 1 | WASHER-HARD (10.2X18.5X2.5-MM THK) | |
| | 52 | 1 | **270-5234** | 1 | RING-BACKUP | |
| | 53 | 1 | **9X-4620** | 1 | SEAL-LIP TYPE | |

M-METRIC PART
Y-SEPARATE ILLUSTRATION

**252-5206 WINCH GP** *(contd.)* **i02707734**

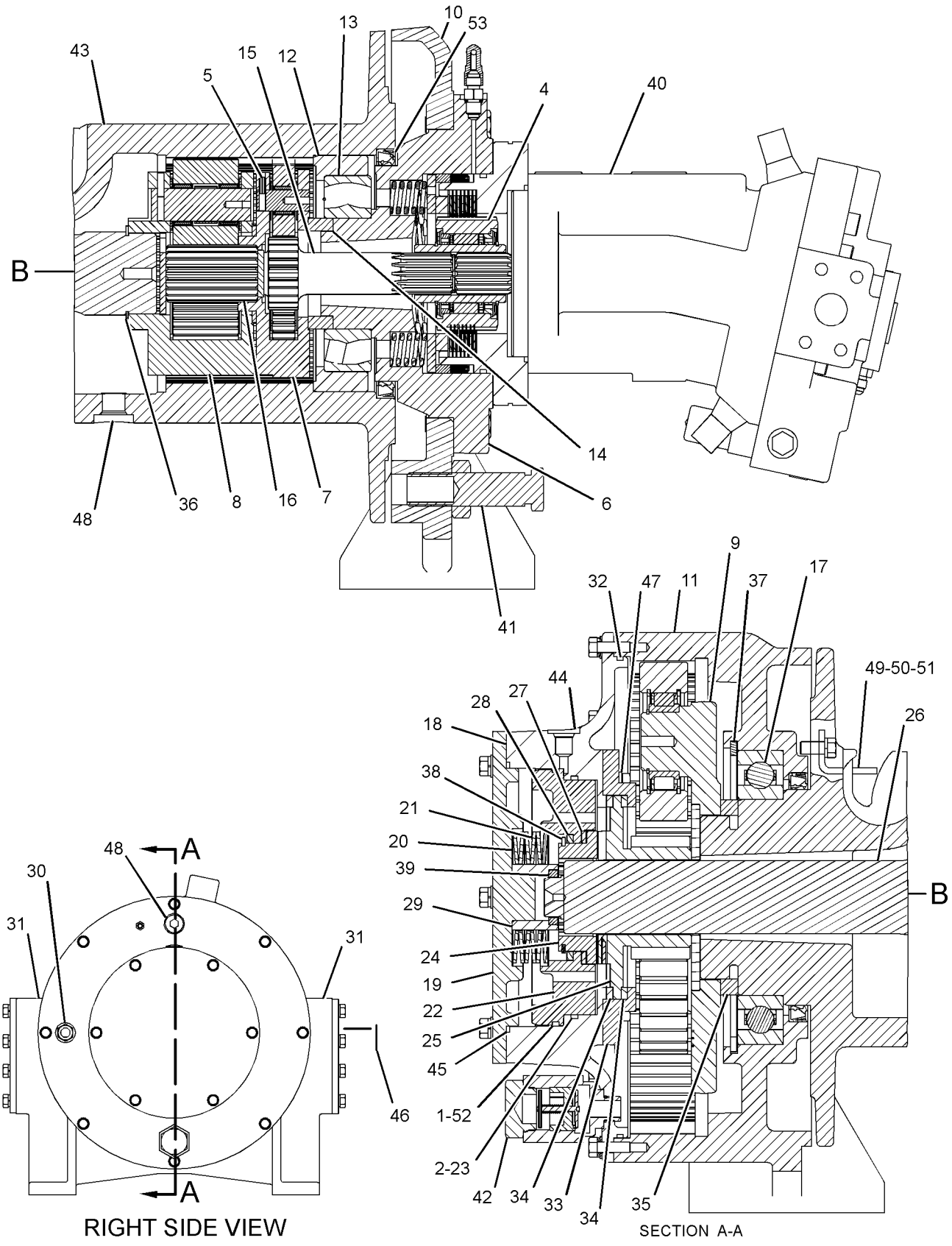


GRAPHIC #1 **<END>** g01359342

# WORK TOOLS

## *271-9085* WINCH GP—CABLE MACHINE

**S/N: 5451-UP**
**PART OF 271-9081 WINCH AR**
**AN ATTACHMENT**

**SMCS-5163** **i02470113**

| NOTE | REF NO | GRAPHIC REF | PART NUMBER | QTY | PART NAME 1 2 3 4 5 6 (PRODUCT LEVEL) | SEE PAGE |
|---|---|---|---|---|---|---|
| | 1 | 1 | **118-6273** | 1 | FERRULE | |
| Y | 2 | 1 | *161-6405* | 1 | CLUTCH & GEAR GP-WINCH | 505 |
| Y | 3 | 1 | *161-6406* | 1 | GEAR GP-WINCH OUTPUT | 532 |
| Y | 4 | 1 | *162-0119* | 1 | GEAR GP-WINCH INPUT | 530 |
| Y | 5 | 1 | *166-2910* | 1 | BRAKE GP-WINCH | 500 |
| Y | 6 | 1 | *166-3545* | 1 | LINES GP-WINCH | 540 |
| Y | 7 | 1 | *173-9881* | 1 | CLUTCH GP-WINCH | 506 |
| Y | 8 | 1 | *179-7064* | 1 | DRUM GP-WINCH | 519 |
| Y | 9 | 1 | *193-7417* | 1 | CASE GP-WINCH | 503 |
| | 10 | 1 | **7J-9108** | 7 | SEAL-O-RING | |

Y-SEPARATE ILLUSTRATION

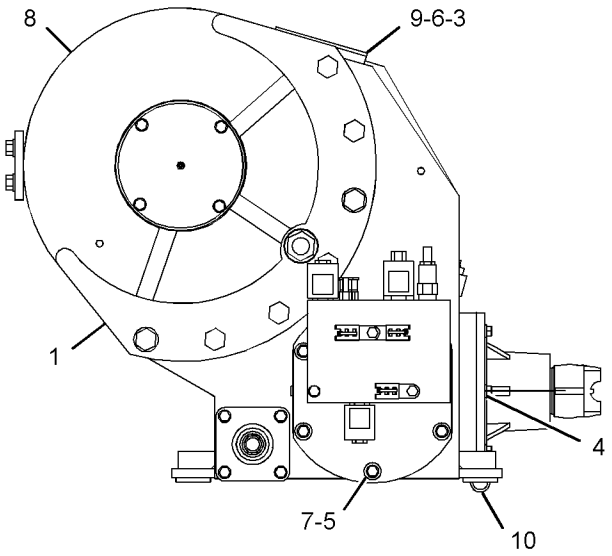


RIGHT SIDE VIEW

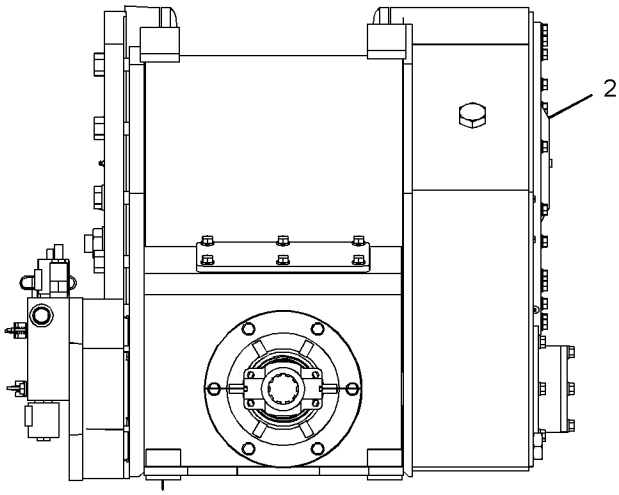


FRONT VIEW

GRAPHIC #1 **<END>** g01238780

# OPERATOR STATION

## *176-3900* ACCUMULATOR GP-REFRIGERANT–WITH DESICCANT

**S/N: 5451-UP**

**FIELD REPLACEMENT FOR 186-6190–PAGE 574**

**SMCS-7320** **i02195254**

| NOTE | REF NO | GRAPHIC REF | PART NUMBER | QTY | PART NAME 1 2 3 4 5 6 (PRODUCT LEVEL) | SEE PAGE |
|---|---|---|---|---|---|---|
| | | | | | (NO SERVICED PARTS) | |

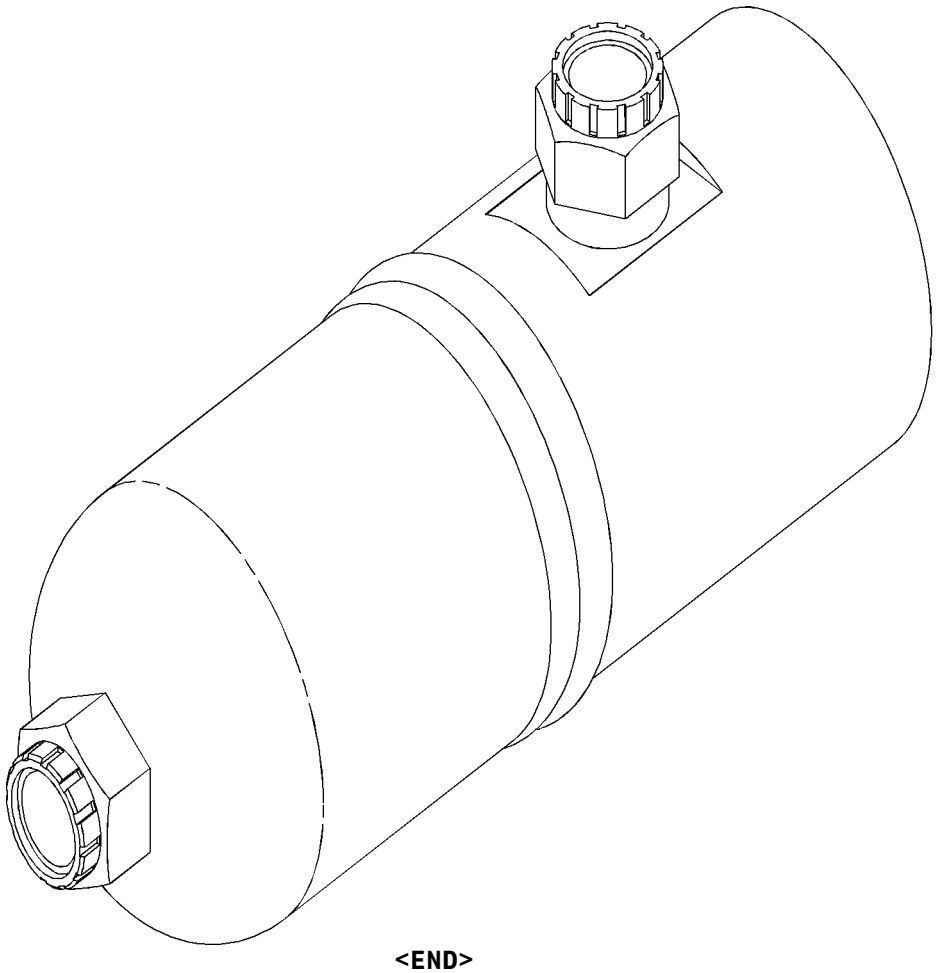

GRAPHIC #1 **<END>** g01035076

# OPERATOR STATION

## *186-6190* ACCUMULATOR GP-REFRIGERANT—WITH DESICCANT

**S/N: 5451-UP**
**PART OF 251-1318 LINES GP-AIR CONDITIONER**
**FIELD REPLACEMENT ORDER 176-3900—PAGE 573**
**AN ATTACHMENT**

**SMCS-7320** **i02306357**

| NOTE | REF NO | GRAPHIC REF | PART NUMBER | QTY | PART NAME 1 2 3 4 5 6 (PRODUCT LEVEL) | SEE PAGE |
|---|---|---|---|---|---|---|
| | | | | | (NO SERVICED PARTS) | |

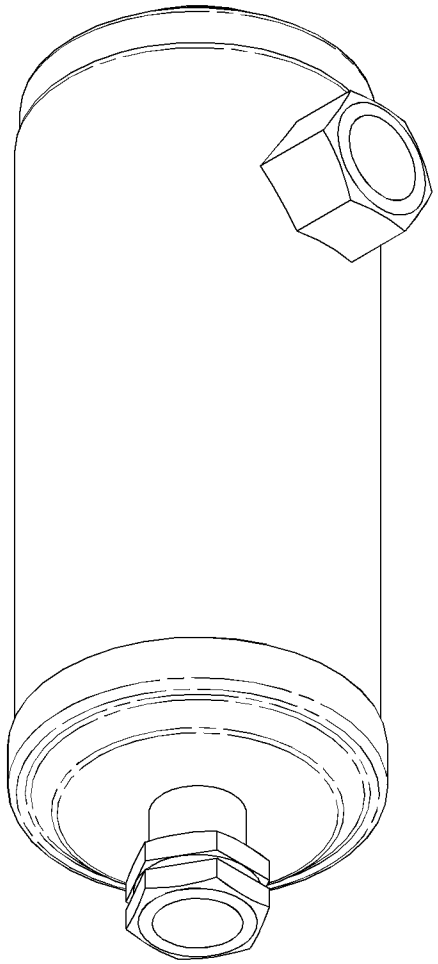

GRAPHIC #1 **<END>** g01155244

# OPERATOR STATION

## *237-3970* AIR COMPRESSOR GP-SEAT

**S/N: 5451-UP**

**FOR OPTIONAL FIELD REPLACEMENT ORDER 214-0783 COMPRESSOR, 211-5358 CONDUIT(100-CM) & 5P-6010 TUBE (1-M), PROVIDES HEAVY DUTY SEAT COMPRESSOR**

**PART OF 191-4508 SUSPENSION GP-SEAT**

**AN ATTACHMENT**

**SMCS-731S, 7324** **i02012095**

| NOTE | REF NO | GRAPHIC REF | PART NUMBER | QTY | PART NAME 1 2 3 4 5 6 (PRODUCT LEVEL) | SEE PAGE |
|---|---|---|---|---|---|---|
| | | | | | (NO SERVICED PARTS) | |

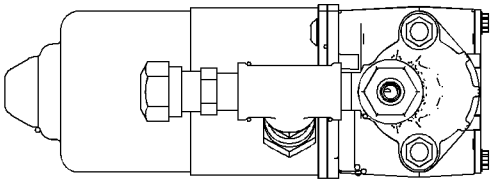

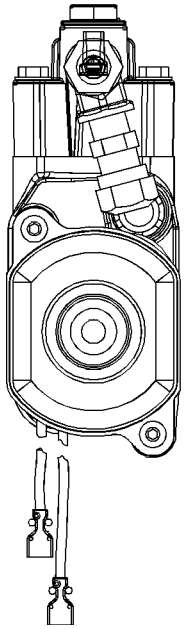

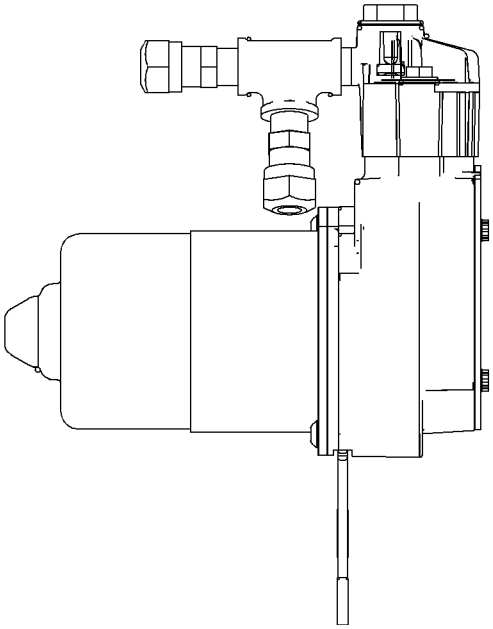

GRAPHIC #1

**<END>**

g01040576

# OPERATOR STATION

## *252-1413* AIR CONDITIONER AR

**S/N: 5451-UP**

**PART OF 252-1410, 252-1718 CAB AR-ENCLOSED ROPS**

**AN ATTACHMENT**

**SMCS-7320** **i02178363**

| NOTE | PART NUMBER | QTY | PART NAME 1 2 3 4 5 6 (PRODUCT LEVEL) | SEE PAGE |
|---|---|---|---|---|
| Y | *252-1414* | 1 | AIR CONDITIONER GP | 577 |
| Y | *251-1549* | 1 | COMPRESSOR & MTG GP-REFRIG | 590 |
| Y | *251-1316* | 1 | CONDENSER & MTG GP-REFRIGERANT | 592 |
| Y | *251-1318* | 1 | LINES GP-AIR CONDITIONER | 614 |

Y-SEPARATE ILLUSTRATION

**<END>**

# OPERATOR STATION

## *252-1414* AIR CONDITIONER GP

**S/N: 5451-335**

**PART OF 252-1413 AIR CONDITIONER AR**

**AN ATTACHMENT**

**SMCS-7320** **i02465952**

| NOTE | REF NO | GRAPHIC REF | PART NUMBER | QTY | PART NAME 1 2 3 4 5 6 (PRODUCT LEVEL) | SEE PAGE |
|---|---|---|---|---|---|---|
| | 1 | 1 | **3E-5464** | 1 | SWITCH AS-TEMPERATURE (AIR CONDITIONER) | |
| | 2 | 1 | **3S-2093** | 8 | STRAP-CABLE | |
| | 3 | 1 | **121-2759** | 1 | PAN | |
| | 4 | 1 | **121-2761** | 1 | FILTER-CAB AIR | |
| | 5 | 1 | **125-1192** | 2 | ANGLE | |
| | 6 | 2 | **130-8237** | 2 | SPACER | |
| | 7 | 1 | **170-2169** | 1 | COIL-EVAPORATOR | |
| | 8 | 1 | **170-2170** | 1 | COIL-HEATER | |
| | 9 | 2 | **208-0305** | 2 | LATCH AS | |
| | 10 | 1 | **217-3405** | 1 | DOOR AS | |
| M | | 1 | **6V-9632** | 4 | NUT-WELD (M6X1-THD) | |
| | 11 | 2 | **217-4145** | 1 | CASE AS | |
| Y | 12 | 1 | *217-8749* | 1 | BLOWER GP-CAB (LH) | 583 |
| Y | 13 | 1 | *217-8750* | 1 | BLOWER GP-CAB (RH) | 584 |
| | 14 | 1 | **218-2328** | 1 | HARNESS AS-HEATER & AIR COND | |
| | | 1 | **102-8802** | 1 | KIT-RECEPTACLE (2-PIN) | |
| | | | | | (INCLUDES RECEPTACLE AS & WEDGE) | |
| | | 1 | **155-2270** | 1 | KIT-CONNECTING PLUG (2-PIN) | |
| | | | | | (INCLUDES PLUG AS, WEDGE & INTERFACE SEAL) | |
| | | 1 | **8C-3654** | 1 | PLUG-CONNECTOR (6-PIN) | |
| E | | 1 | **119-3662** | | TUBE-HEAT SHRINK (10.85-MM DIA) (7-CM) | |
| | 15 | 1 | **223-3694** | 1 | FILTER-FRESH AIR | |
| | 16 | 1 | **267-8557** | 1 | KIT-HOSE | |
| D | | 1 | **5P-6129** | | TUBE (2.6-M) | |
| | | 1 | **7T-9793** | 2 | VALVE (CHECK) | |
| | 17 | 2 | **267-8558** | 1 | DUCT GP-CAB AIR (KIT) | |
| E | | 2 | **3E-6696** | | HOSE (36-CM) | |
| | | 2 | **9M-0164** | 2 | CLAMP-HOSE | |
| | | 2 | **108-0691** | 2 | BOOT | |
| | | 2 | **116-7857** | 1 | ADAPTER | |
| | 18 | 2 | **267-8561** | 1 | RESISTOR GP | |
| | | 2 | **6T-6708** | 2 | WASHER (7X28.6X4.1-MM THK) | |
| | | 2 | **6V-1668** | 2 | WASHER (6.5X29.1X3-MM THK) | |
| | | 2 | **9X-8256** | 2 | WASHER (6.6X12X2-MM THK) | |
| | | 2 | **125-9740** | 1 | RESISTOR | |
| M | | 2 | **129-3178** | 1 | LOCKNUT (M6X1-THD) | |
| M | | 2 | **141-9784** | 1 | BOLT (M6X1X190-MM) | |
| | 19 | 1 | **267-8562** | 1 | VALVE GP-A/C & HEATER CONTROL | |
| | | 1 | **2H-3920** | 1 | LOCKWASHER | |
| | | 1 | **5P-7111** | 4 | SCREW (10-16X3/8-IN) | |
| | | 1 | **8Y-5737** | 1 | CLAMP | |
| | | 1 | **110-6109** | 2 | KNOB-CONTROL (AIR CONDITIONER) | |
| | | 1 | **123-0144** | 1 | BRACKET | |
| | | 1 | **131-2356** | 1 | VALVE AS-WATER (HEATER CONTROL) | |
| | | 1 | **157-1361** | 1 | SWITCH AS-ROTARY (FAN SPEED) | |
| | | 1 | **251-1196** | 1 | SWITCH AS-ROCKER (AIR CONDITIONER ON, OFF) | |
| | | 1 | **256-8940** | 1 | CABLE AS (AIR CONDITIONER, HEATER CONT) | |
| M | 20 | 2 | **166-3777** | 4 | SCREW-BUTTON HEAD (M6X1X28-MM) | |
| | 21 | 1 | **3B-4501** | 2 | LOCKWASHER | |
| M | 22 | 1 | **5C-9553** | 8 | BOLT (M6X1X16-MM) | |
| | 23 | 2 | **5P-8441** | 2 | GROMMET | |
| | 24 | 1 | **8T-4121** | 4 | WASHER-HARD (11X21X2.5-MM THK) | |
| M | 25 | 1 | **8T-4137** | 4 | BOLT (M10X1.5X20-MM) | |
| M | 26 | 2 | **8T-4138** | 4 | BOLT (M6X1X20-MM) | |
| M | 27 | 1 | **8T-4171** | 10 | BOLT (M6X1X12-MM) | |

## *252-1414* **AIR CONDITIONER GP** *(contd.)* **i02465952**

| NOTE | REF NO | GRAPHIC REF | PART NUMBER | QTY | PART NAME 1 2 3 4 5 6 (PRODUCT LEVEL) | SEE PAGE |
|---|---|---|---|---|---|---|
| | 28 | 1 | **8T-4205** | 6 | WASHER-HARD (7.2X14.5X2-MM THK) | |
| | 29 | 1 | **8T-6631** | 2 | SCREW-MACHINE (8-32XO.5-IN) | |
| | 30 | 1,2 | **9X-8256** | 16 | WASHER (6.6X12X2-MM THK) | |
| D | 31 | 1 | **5P-7070** | | INSULATION-STRIP (2.4-M) | |
| BD | 32 | 1 | **6V-2496** | | SEAL | |
| BD | 33 | 2 | **5P-5637** | | SEAL | |
| BE | 34 | 1,2 | **155-7688** | | SEAL | |
| BE | 35 | 1 | **117-4657** | | SEAL | |

B-USE AS REQUIRED
D-ORDER BY THE METER
E-ORDER BY THE CENTIMETER
M-METRIC PART
Y-SEPARATE ILLUSTRATION

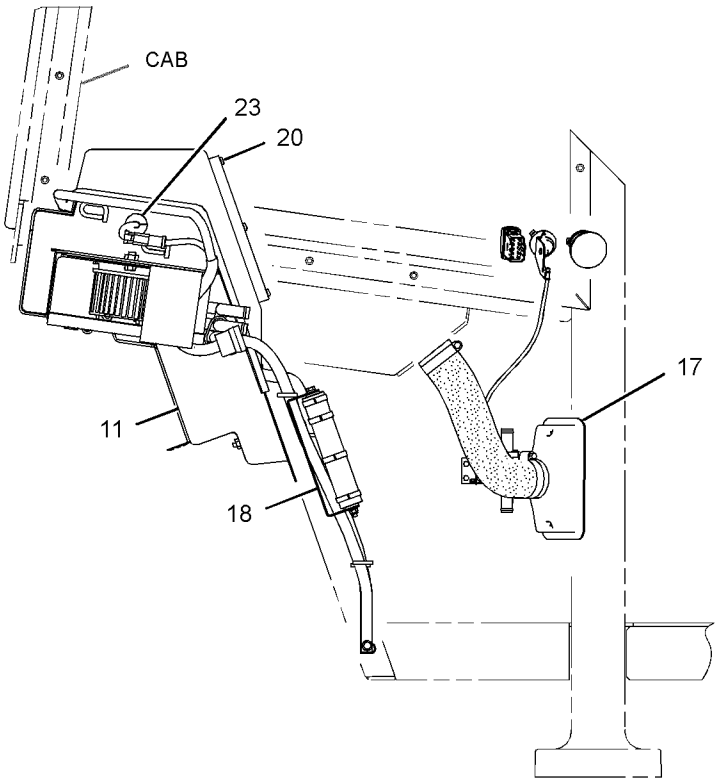


RIGHT SIDE VIEW

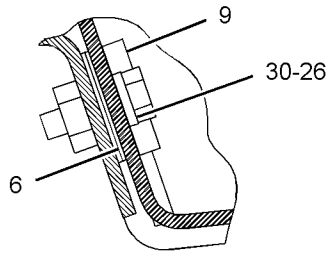


VIEW OF AREA F

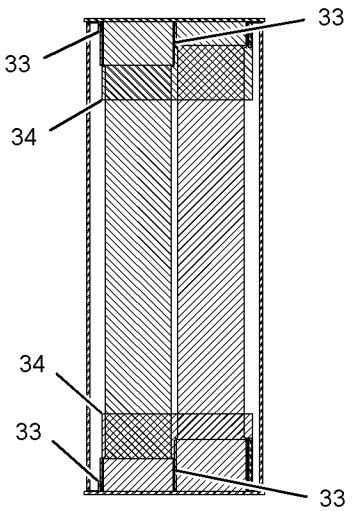


SECTION E-E

GRAPHIC #1

g01239407

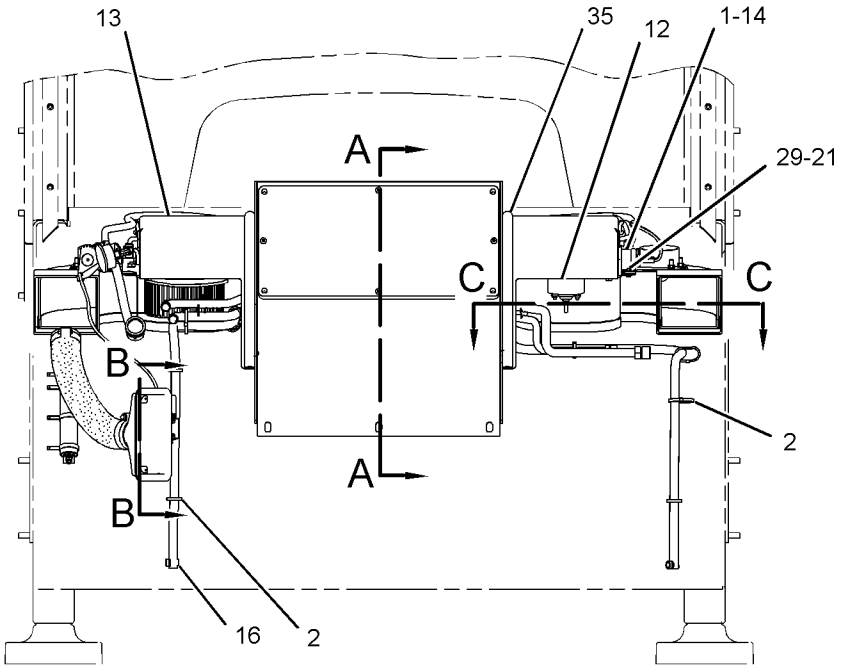


FRONT VIEW

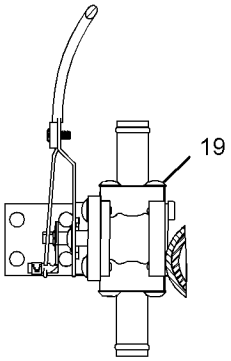


SECTION B-B

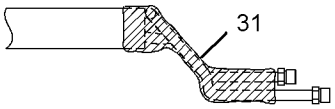


SECTION C-C

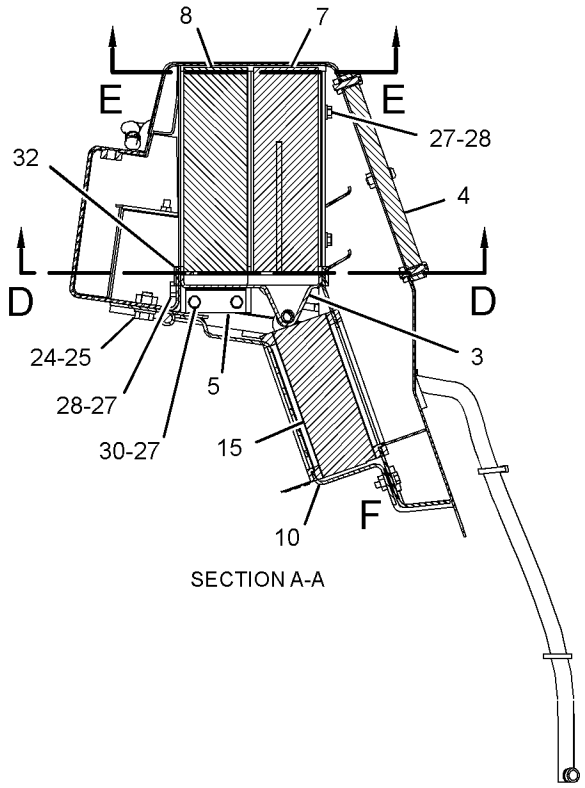


SECTION A-A

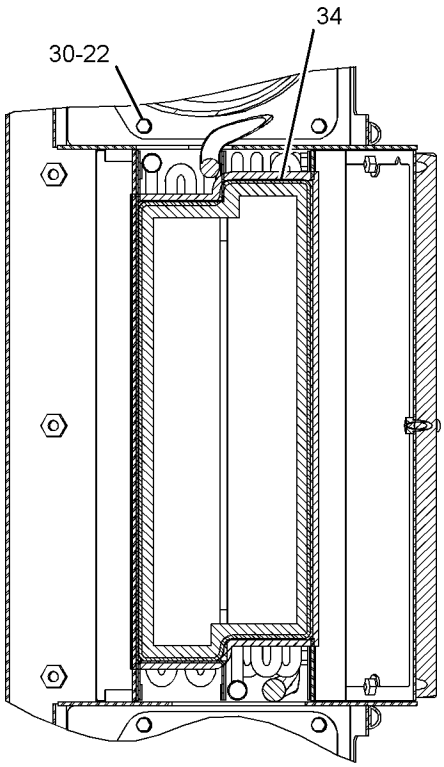


SECTION D-D

REFER TO ALL ILLUSTRATIONS OF
THIS GROUP FOR AUXILIARY VIEWS

GRAPHIC #2 **<END>** g01239404

# OPERATOR STATION

## *252-1414* AIR CONDITIONER GP

**S/N: 5451-UP**
**PART OF 252-1413 AIR CONDITIONER AR**
**AN ATTACHMENT**

**SMCS-7320** **i02686236**

| NOTE | REF NO | GRAPHIC REF | PART NUMBER | QTY | PART NAME 1 2 3 4 5 6 (PRODUCT LEVEL) | SEE PAGE |
|---|---|---|---|---|---|---|
| | 1 | 1 | **3E-5464** | 1 | SWITCH AS-TEMPERATURE (AIR CONDITIONER) | |
| | 2 | 1 | **3S-2093** | 8 | STRAP-CABLE | |
| C | 3 | 1 | **286-5805** | 1 | PAN | |
| | 4 | 1 | **121-2761** | 1 | FILTER-CAB AIR | |
| | 5 | 1 | **125-1192** | 2 | ANGLE | |
| | 6 | 2 | **130-8237** | 2 | SPACER | |
| | 7 | 1 | **170-2169** | 1 | COIL-EVAPORATOR | |
| | 8 | 1 | **170-2170** | 1 | COIL-HEATER | |
| | 9 | 2 | **208-0305** | 2 | LATCH AS | |
| | 10 | 1 | **217-3405** | 1 | DOOR AS | |
| | 11 | 2 | **217-4145** | 1 | CASE AS | |
| CY | 12 | 1 | *288-0672* | 1 | BLOWER GP-CAB (LH) | 585 |
| CY | 13 | 1 | **288-0676** | 1 | BLOWER GP-CAB (RH) | 586 |
| | 14 | 1 | **218-2328** | 1 | HARNESS AS-HEATER & AIR COND | |
| | | 1 | **102-8802** | 1 | KIT-RECEPTACLE (2-PIN) | |
| | | | | | (INCLUDES RECEPTACLE AS & WEDGE) | |
| | | 1 | **155-2270** | 1 | KIT-CONNECTING PLUG (2-PIN) | |
| | | | | | (INCLUDES PLUG AS, WEDGE & INTERFACE SEAL) | |
| | | 1 | **8C-3654** | 1 | PLUG-CONNECTOR (6-PIN) | |
| E | | 1 | **119-3662** | | TUBE-HEAT SHRINK (10.85-MM DIA) (7-CM) | |
| | 15 | 1 | **223-3694** | 1 | FILTER-FRESH AIR | |
| | 16 | 1 | **267-8557** | 1 | KIT-HOSE | |
| | | | | | (INCLUDES TUBE & VALVES) | |
| | 17 | 2 | **267-8558** | 1 | DUCT GP-CAB AIR (KIT) | |
| E | | 2 | **3E-6696** | | HOSE (36-CM) | |
| | | 2 | **9M-0164** | 2 | CLAMP-HOSE | |
| | | 2 | **108-0691** | 2 | BOOT | |
| | | 2 | **116-7857** | 1 | ADAPTER | |
| Y | 18 | 2 | **267-8561** | 1 | RESISTOR GP | 166 |
| Y | 19 | 1 | **267-8562** | 1 | VALVE GP-A/C & HEATER CONTROL | 675 |
| M | 20 | 2 | **166-3777** | 4 | SCREW-BUTTON HEAD (M6X1X28-MM) | |
| | 21 | 1 | **3B-4501** | 2 | LOCKWASHER | |
| M | 22 | 1 | **5C-9553** | 8 | BOLT (M6X1X16-MM) | |
| | 23 | 2 | **5P-8441** | 2 | GROMMET | |
| | 24 | 1 | **8T-4121** | 4 | WASHER-HARD (11X21X2.5-MM THK) | |
| M | 25 | 1 | **8T-4137** | 4 | BOLT (M10X1.5X20-MM) | |
| M | 26 | 2 | **8T-4138** | 4 | BOLT (M6X1X20-MM) | |
| M | 27 | 1 | **8T-4171** | 10 | BOLT (M6X1X12-MM) | |
| | 28 | 1 | **8T-4205** | 6 | WASHER-HARD (7.2X14.5X2-MM THK) | |
| | 29 | 1 | **8T-6631** | 2 | SCREW-MACHINE (8-32X0.5-IN) | |
| | 30 | 2 | **9X-8256** | 16 | WASHER (6.6X12X2-MM THK) | |
| D | 31 | 1 | **5P-4610** | | INSULATION-STRIP (2.4-M) | |
| D | 32 | 2 | **5P-5637** | | SEAL (0.8-M EACH) | |
| D | 33 | 1 | **5P-5672** | | SEAL (0.1-M) | |
| D | 34 | 1 | **6V-2496** | | SEAL (1.2-M) | |
| E | 35 | 2 | **155-7688** | | SEAL (14.5-CM EACH) | |
| E | 36 | 1 | **117-4657** | | SEAL (47.1-CM EACH) | |

C-CHANGE FROM PREVIOUS TYPE
D-ORDER BY THE METER
E-ORDER BY THE CENTIMETER
M-METRIC PART
Y-SEPARATE ILLUSTRATION

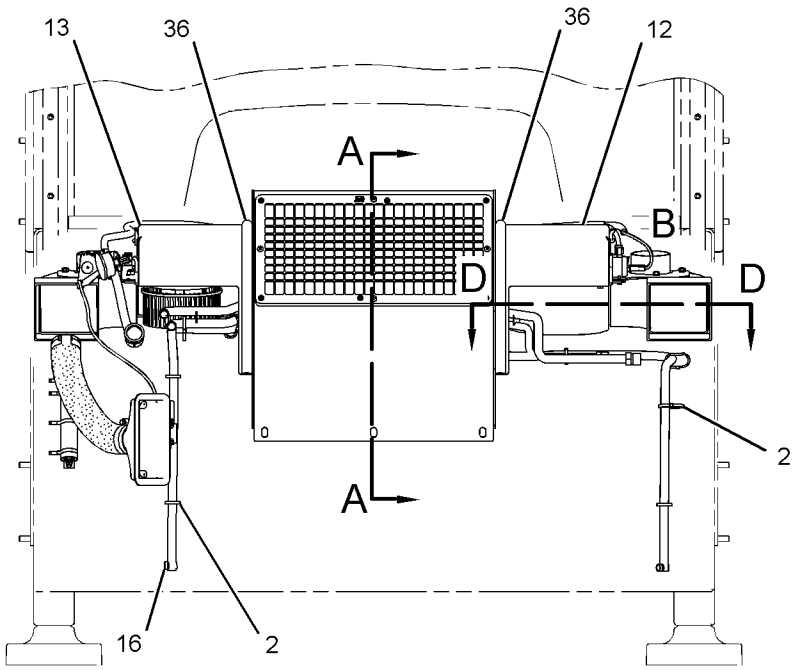


FRONT VIEW

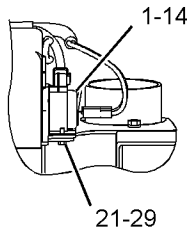


VIEW OF AREA B

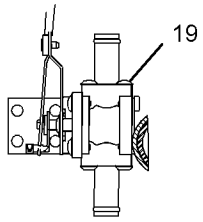


VIEW OF AREA C
(HOSE REMOVED FOR CLARITY)

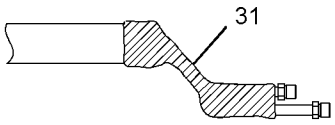


SECTION D-D

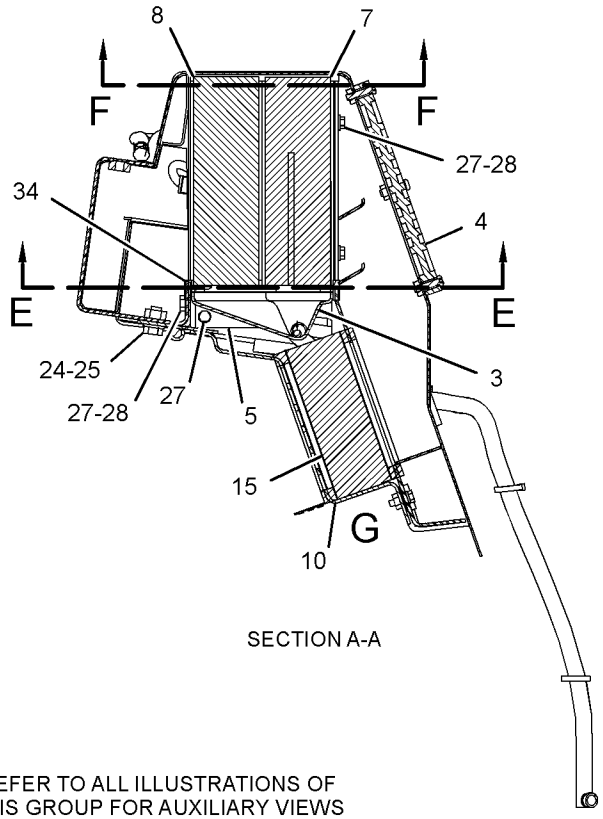


SECTION A-A

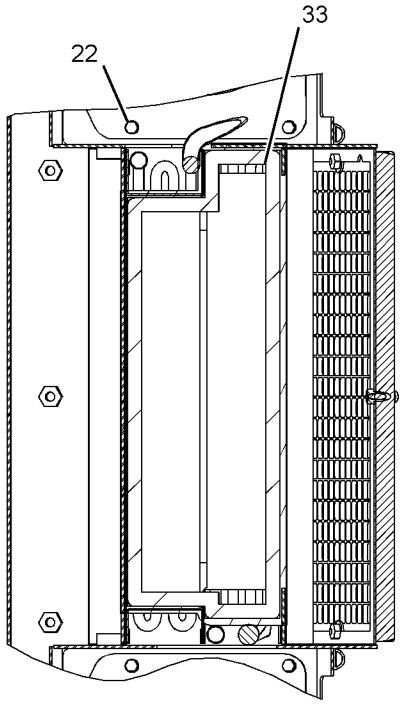


SECTION E-E

REFER TO ALL ILLUSTRATIONS OF
THIS GROUP FOR AUXILIARY VIEWS

GRAPHIC #1

g01356834

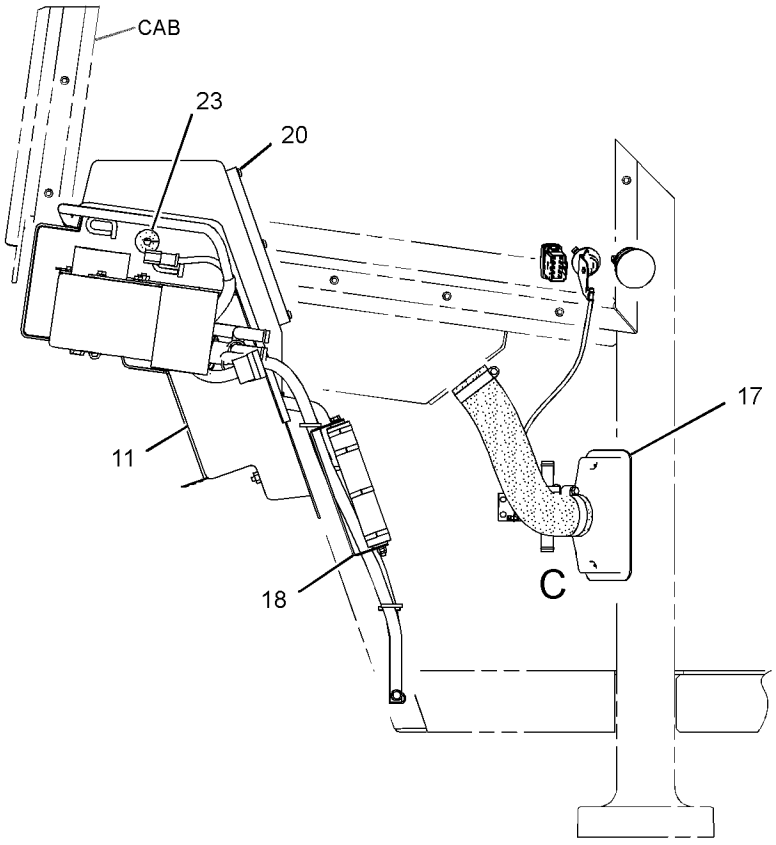


RIGHT SIDE VIEW

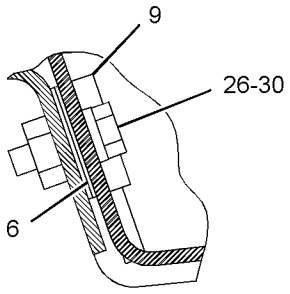


VIEW OF AREA G

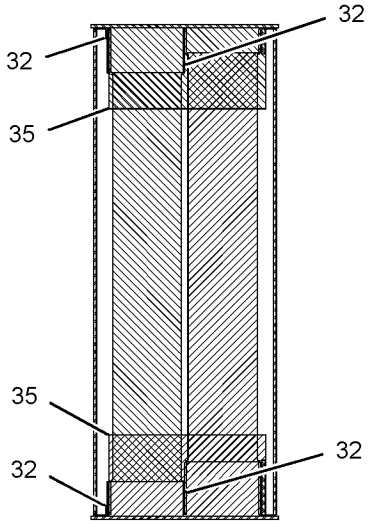


SECTION F-F

GRAPHIC #2 **<END>** g01356835

# OPERATOR STATION

## *217-8749* BLOWER GP-CAB–LH

**S/N: 5451-UP**
**PART OF 252-1414 AIR CONDITIONER GP**
**AN ATTACHMENT**

**SMCS-7316** **i02291601**

| NOTE | REF NO | GRAPHIC REF | PART NUMBER | QTY | PART NAME 1 2 3 4 5 6 (PRODUCT LEVEL) | SEE PAGE |
|---|---|---|---|---|---|---|
| | 2 | 1 | **256-0623** | 1 | WHEEL-BLOWER (CCW) | |
| | 3 | 1 | **125-9081** | 1 | ORIFICE-LH | |
| | 4 | 1 | **174-1504** | 1 | MOTOR AS-BLOWER (27-VOLT, A/C, HEATER, CW) | |
| | | 1 | **9W-0852** | 2 | PIN-CONNECTOR (14-GA) | |
| | | 1 | **102-8802** | 1 | KIT-RECEPTACLE (2-PIN) | |
| | | | | | (INCLUDES RECEPTACLE AS AND WEDGE) | |
| | 5 | 1 | **174-4869** | 1 | PLATE AS (LH) | |
| | 6 | 1 | **175-0070** | 2 | BRACKET | |
| | 7 | 1 | **217-8748** | 1 | HOUSING-FAN | |
| | | 1 | **033-7291** | 4 | RIVET | |
| | 8 | 1 | **4B-2049** | 2 | NUT (10-32-THD) | |
| | 9 | 1 | **4B-4274** | 2 | WASHER (5.5X13X1.2-MM THK) | |
| M | 10 | 1 | **5C-2890** | 7 | NUT (M6X1-THD) | |
| | 11 | 1 | **9X-8256** | 7 | WASHER (6.6X12X2-MM THK) | |

M-METRIC PART

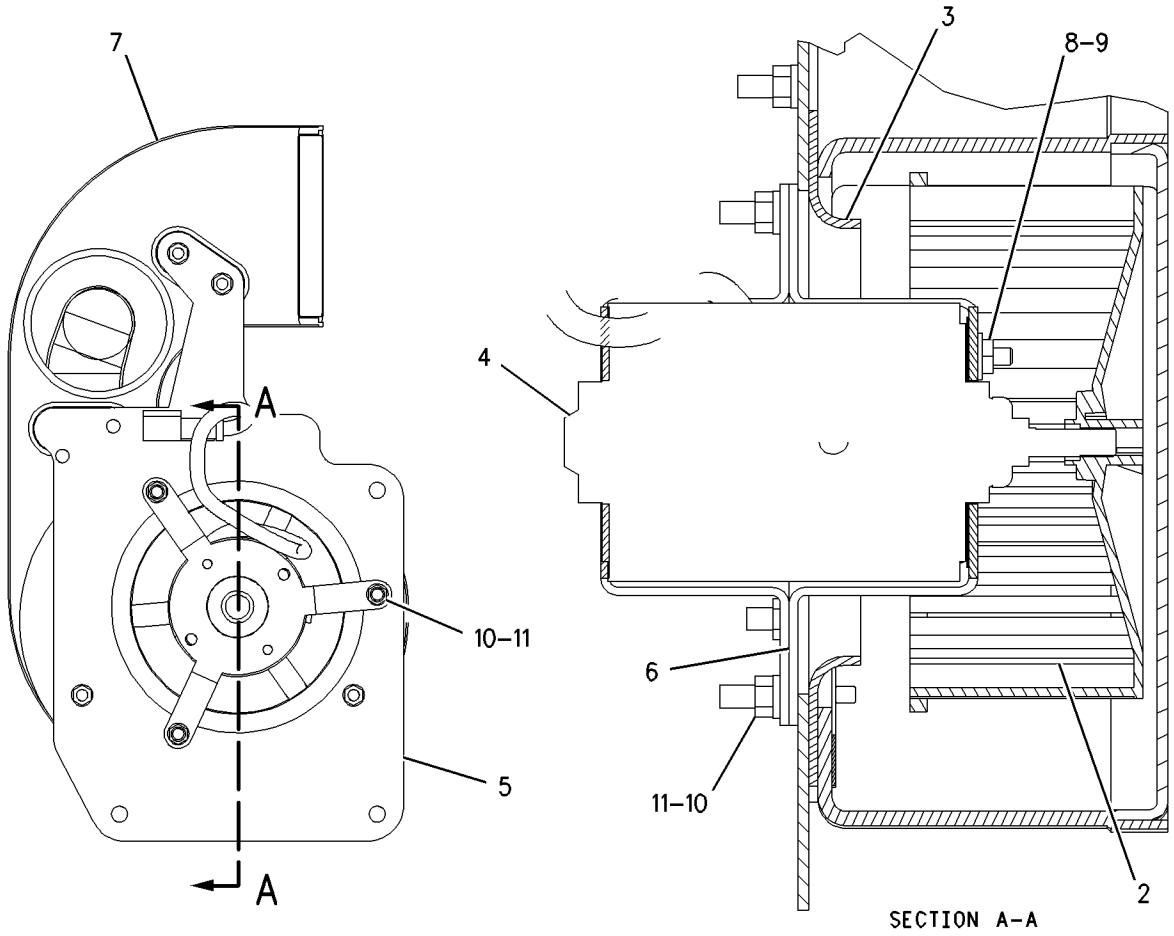


GRAPHIC #1 **<END>** g00919883

# OPERATOR STATION

## *217-8750* BLOWER GP-CAB–RH

**S/N: 5451-UP**
**PART OF 252-1414 AIR CONDITIONER GP**
**AN ATTACHMENT**

**SMCS-7316** **i02291603**

| NOTE | REF NO | GRAPHIC REF | PART NUMBER | QTY | PART NAME 1 2 3 4 5 6 (PRODUCT LEVEL) | SEE PAGE |
|---|---|---|---|---|---|---|
| | 2 | 1 | **256-0622** | 1 | WHEEL-BLOWER (CW) | |
| | 3 | 1 | **125-8688** | 1 | ORIFICE-RH | |
| | 4 | 1 | **174-1505** | 1 | MOTOR AS-BLOWER (27-VOLT, A/C, HEATER, CCW) | |
| | | 1 | **9W-0844** | 2 | SOCKET-CONNECTOR (14-GA) | |
| | | 1 | **155-2261** | 1 | WEDGE-PLUG LOCK (2-PIN) | |
| | | 1 | **155-2270** | 1 | KIT-CONNECTING PLUG (2-PIN) | |
| | | | | | (INCLUDES PLUG AS AND WEDGE) | |
| | 5 | 1 | **174-4870** | 1 | PLATE AS (RH) | |
| | 6 | 1 | **175-0070** | 2 | BRACKET | |
| | 7 | 1 | **217-8751** | 1 | HOUSING-FAN | |
| | | 1 | **033-7291** | 4 | RIVET | |
| | 8 | 1 | **4B-2049** | 2 | NUT (10-32-THD) | |
| | 9 | 1 | **4B-4274** | 2 | WASHER (5.5X13X1.2-MM THK) | |
| M | 10 | 1 | **5C-2890** | 7 | NUT (M6X1-THD) | |
| | 11 | 1 | **9X-8256** | 7 | WASHER (6.6X12X2-MM THK) | |

M-METRIC PART

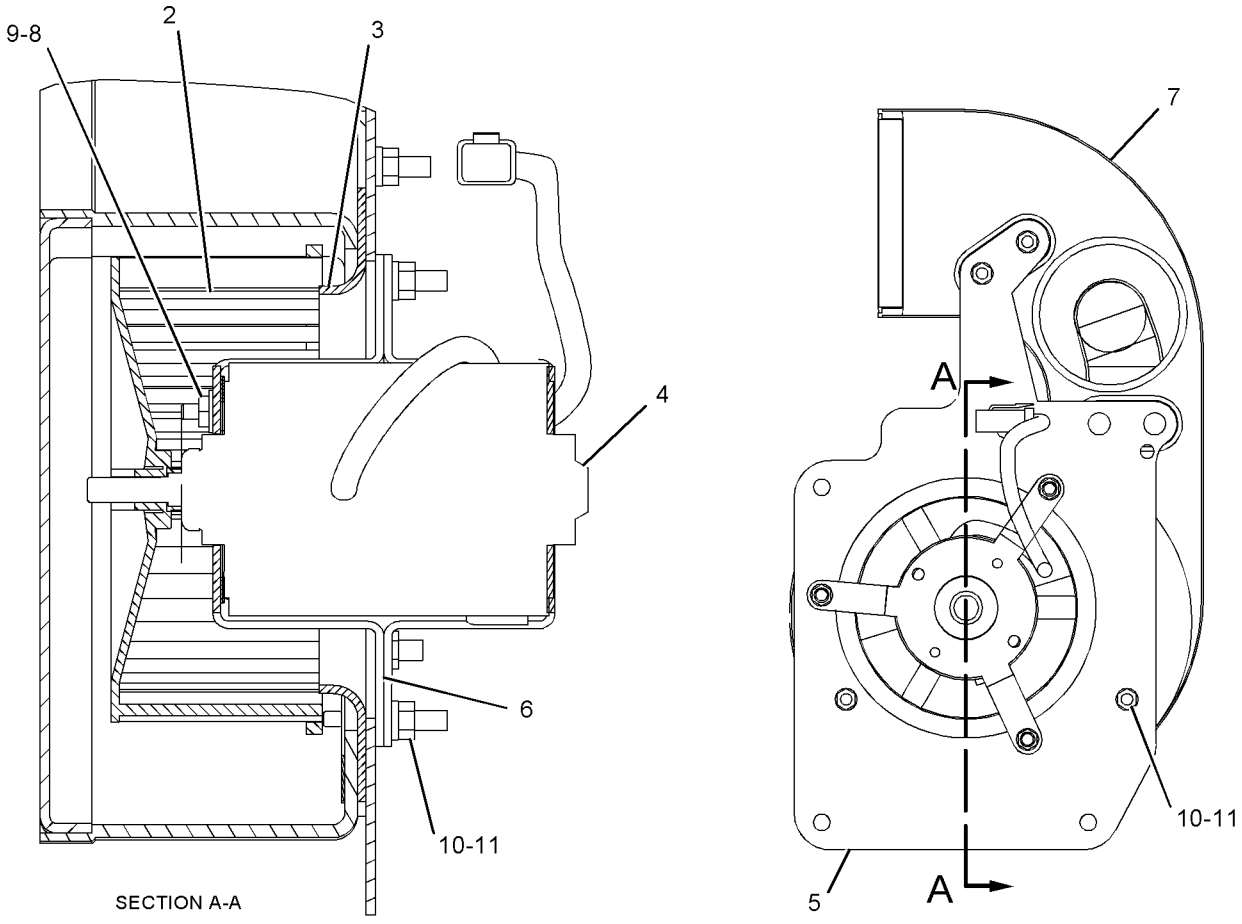


GRAPHIC #1 **<END>** g01148428

# OPERATOR STATION

## *288-0672* BLOWER GP-CAB–LH

**S/N: 5451-UP**
**PART OF 252-1414 AIR CONDITIONER GP**
**AN ATTACHMENT**

**SMCS-7316** **i02676345**

| NOTE | REF NO | GRAPHIC REF | PART NUMBER | QTY | PART NAME 1 2 3 4 5 6 (PRODUCT LEVEL) | SEE PAGE |
|---|---|---|---|---|---|---|
| | 1 | 1 | **132-6534** | 1 | PLATE-ORIFICE | |
| | 2 | 1 | **174-1504** | 1 | MOTOR AS-BLOWER (27-VOLT, A/C, HEATER, CW) | |
| | | 1 | **9W-0852** | 2 | PIN-CONNECTOR (14-GA) | |
| | | 1 | **102-8802** | 1 | KIT-RECEPTACLE (2-PIN) | |
| | | | | | (INCLUDES RECEPTACLE AS & WEDGE) | |
| | 3 | 1 | **175-0070** | 2 | BRACKET | |
| | 4 | 1 | **256-0623** | 1 | WHEEL-BLOWER (CCW) | |
| | 5 | 1 | **286-5808** | 1 | HOUSING AS | |
| | 6 | 1 | **295-4324** | 1 | PLATE | |
| | 7 | 1 | **288-0682** | 1 | DUCT | |
| | 8 | 1 | **4B-2049** | 2 | NUT (10-32-THD) | |
| | 9 | 1 | **4B-4274** | 2 | WASHER (5.5X13X1.2-MM THK) | |
| M | 10 | 1 | **5C-2890** | 3 | NUT (M6X1-THD) | |
| M | 11 | 1 | **8T-4138** | 3 | BOLT (M6X1X20-MM) | |
| | 12 | 1 | **9X-8256** | 6 | WASHER (6.6X12X2-MM THK) | |

M-METRIC PART

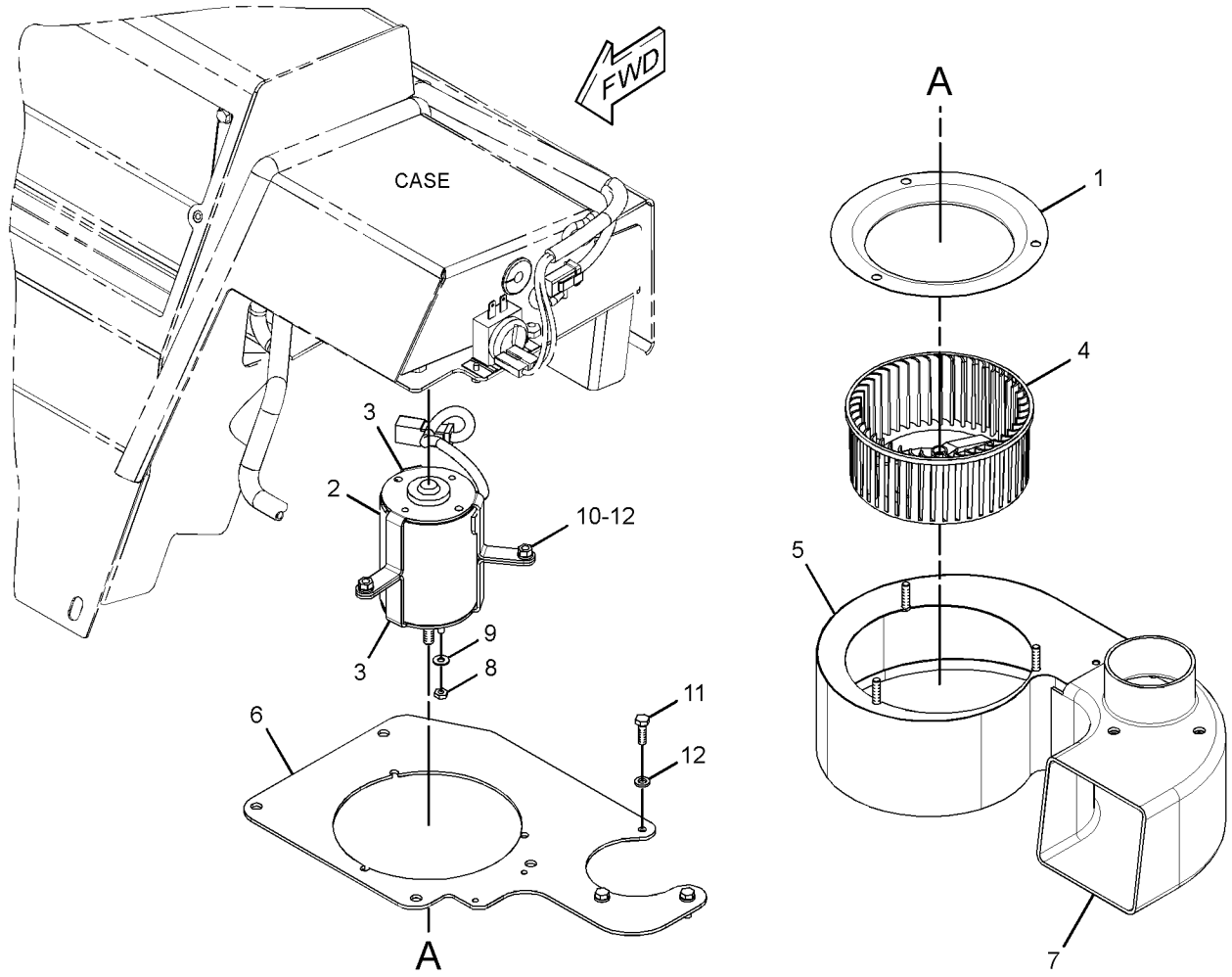


GRAPHIC #1 **<END>** g01347098

# OPERATOR STATION

## 288-0676 BLOWER GP-CAB–RH

**S/N: 5451-UP**
**PART OF 252-1414 AIR CONDITIONER GP**
**AN ATTACHMENT**

**SMCS-7316** **i02676347**

| NOTE | REF NO | GRAPHIC REF | PART NUMBER | QTY | PART NAME 1 2 3 4 5 6 (PRODUCT LEVEL) | SEE PAGE |
|---|---|---|---|---|---|---|
| | 1 | 1 | **132-6534** | 1 | PLATE-ORIFICE | |
| | 2 | 1 | **174-1505** | 1 | MOTOR AS-BLOWER (27-VOLT, A/C, HEATER, CCW) | |
| | | 1 | **9W-0844** | 2 | SOCKET-CONNECTOR (14-GA) | |
| | | 1 | **155-2270** | 1 | KIT-CONNECTING PLUG (2-PIN) | |
| | | | | | (INCLUDES PLUG AS, WEDGE & INTERFACE SEAL) | |
| | 3 | 1 | **175-0070** | 2 | BRACKET | |
| | 4 | 1 | **256-0622** | 1 | WHEEL-BLOWER (CW) | |
| | 5 | 1 | **286-5807** | 1 | HOUSING AS | |
| | 6 | 1 | **295-4324** | 1 | PLATE | |
| | 7 | 1 | **288-0683** | 1 | DUCT | |
| | 8 | 1 | **4B-2049** | 2 | NUT (10-32-THD) | |
| | 9 | 1 | **4B-4274** | 2 | WASHER (5.5X13X1.2-MM THK) | |
| M | 10 | 1 | **5C-2890** | 3 | NUT (M6X1-THD) | |
| M | 11 | 1 | **8T-4138** | 3 | BOLT (M6X1X20-MM) | |
| | 12 | 1 | **9X-8256** | 6 | WASHER (6.6X12X2-MM THK) | |

M-METRIC PART

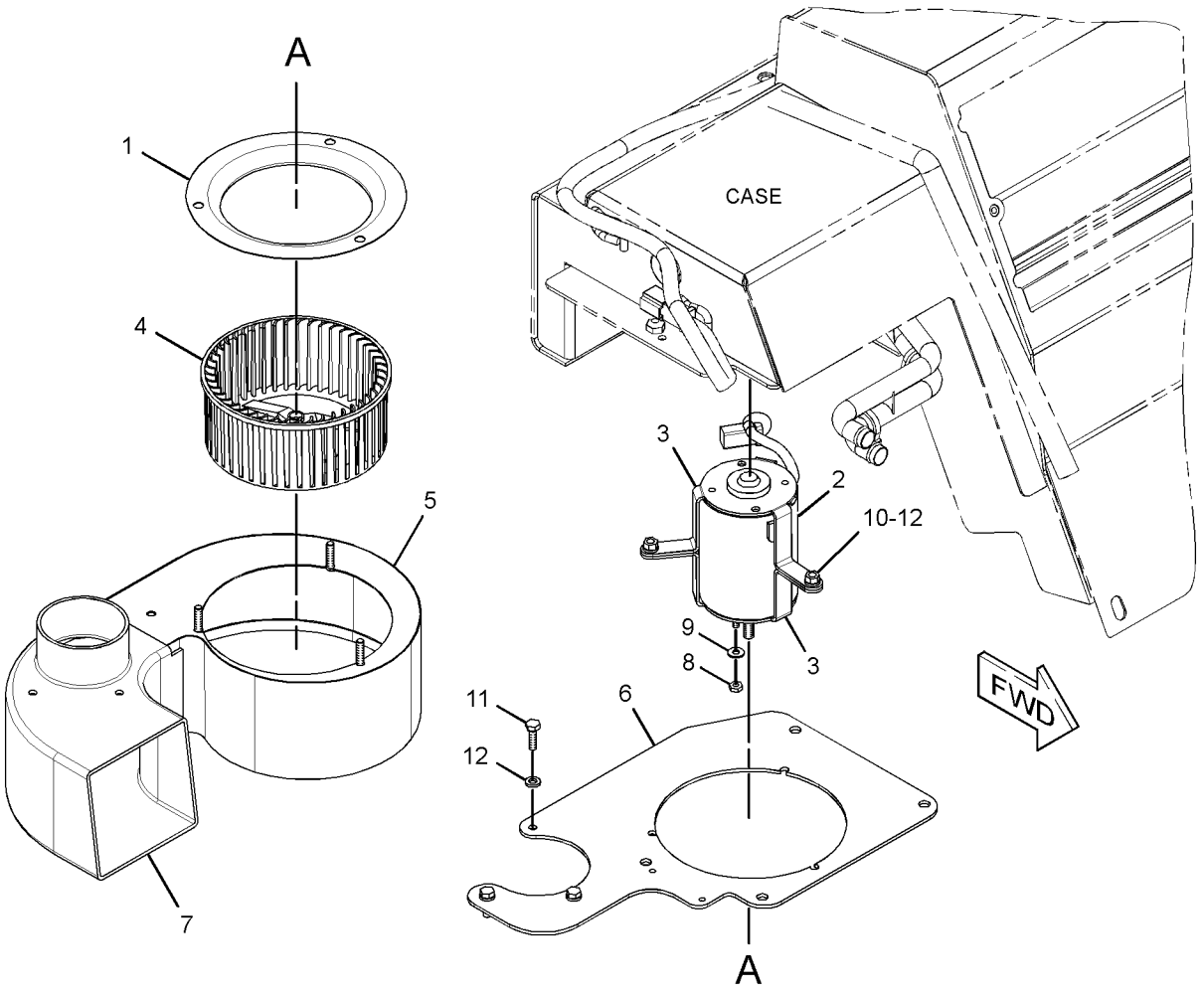


GRAPHIC #1 **<END>** g01347099

# OPERATOR STATION

## *252-1410* CAB AR-ENCLOSED ROPS

**S/N: 5451-UP**

**AN ATTACHMENT**

**SMCS-7301** **i02178362**

| NOTE | PART NUMBER | QTY | PART NAME 1 2 3 4 5 6 (PRODUCT LEVEL) | SEE PAGE |
|---|---|---|---|---|
| Y | *252-1413* | 1 | AIR CONDITIONER AR | 576 |
| Y | *252-1415* | 1 | CAB AR-ENCLOSED ROPS (GRAPPLE MACHINE) | 587 |

Y-SEPARATE ILLUSTRATION

**<END>**

## *252-1415* CAB AR-ENCLOSED ROPS—GRAPPLE MACHINE

**S/N: 5451-UP**

**PART OF 252-1410 CAB AR-ENCLOSED ROPS**

**AN ATTACHMENT**

**SMCS-7301** **i02466029**

| NOTE | PART NUMBER | QTY | PART NAME 1 2 3 4 5 6 (PRODUCT LEVEL) | SEE PAGE |
|---|---|---|---|---|
| Y | *260-1921* | 1 | CONTROL GP-FOOT BRAKE | 372 |
| Y | *264-2256* | 1 | CONTROL GP-STEERING | 601 |
| Y | *269-5816* | 1 | DOOR GP-CAB | 603 |
| Y | *255-9005* | 1 | FAN GP-DEFROSTER | 608 |
| Y | *252-1417* | 1 | FLOORPLATE GP | 319 |
| Y | *270-0612* | 1 | GUARD GP-CAB | 334 |
| Y | *217-7368* | 1 | GUARD GP-ENCLOSED ROPS | 610 |
| Y | *154-6738* | 1 | INSTALLATION GP-RADIO | 612 |
| Y | *215-3128* | 1 | LIGHTING GP-FLOOD (CAB) | 158 |
| Y | *126-3749* | 1 | LITERATURE GP | 690 |
| Y | *159-3979* | 1 | MIRROR GP-REAR VIEW | 617 |
| Y | *143-2056* | 1 | MOUNTING GP-ROPS | 619 |
| Y | *252-1418* | 1 | PLATE & FILM GP | 695 |
| Y | *252-2228* | 1 | ROPS GP | 624 |
| Y | *173-5373* | 1 | SEAT GP-SUSPENSION | 634 |
| Y | *252-1712* | 1 | TRIM GP-CAB (GRAPPLE MACHINE) | 643 |
| Y | *269-5836* | 1 | WINDOW GP | 678 |
| Y | *255-9006* | 1 | WIPER & WASHER GP-WINDOW | 680 |

Y-SEPARATE ILLUSTRATION

**<END>**

## *252-1718* CAB AR-ENCLOSED ROPS

**S/N: 5451-UP**

**AN ATTACHMENT**

**SMCS-7301** **i02178618**

| NOTE | PART NUMBER | QTY | PART NAME 1 2 3 4 5 6 (PRODUCT LEVEL) | SEE PAGE |
|---|---|---|---|---|
| Y | *252-1413* | 1 | AIR CONDITIONER AR | 576 |
| Y | *252-1720* | 1 | CAB AR-ENCLOSED ROPS (CABLE MACHINE) | 588 |

Y-SEPARATE ILLUSTRATION

**<END>**

# OPERATOR STATION

## *252-1720* CAB AR-ENCLOSED ROPS—CABLE MACHINE

**S/N: 5451-UP**

**PART OF 252-1718 CAB AR-ENCLOSED ROPS**

**AN ATTACHMENT**

**SMCS-7301** **i02467488**

| NOTE | PART NUMBER | QTY | PART NAME 1 2 3 4 5 6 (PRODUCT LEVEL) | SEE PAGE |
|---|---|---|---|---|
| Y | *260-1921* | 1 | CONTROL GP-FOOT BRAKE | 372 |
| Y | *264-2256* | 1 | CONTROL GP-STEERING | 601 |
| Y | *269-5816* | 1 | DOOR GP-CAB | 603 |
| Y | *255-9005* | 1 | FAN GP-DEFROSTER | 608 |
| Y | *252-1417* | 1 | FLOORPLATE GP | 319 |
| Y | *180-9186* | 1 | GUARD GP-CAB | 333 |
| Y | *217-7368* | 1 | GUARD GP-ENCLOSED ROPS | 610 |
| Y | *154-6738* | 1 | INSTALLATION GP-RADIO | 612 |
| Y | *215-3128* | 1 | LIGHTING GP-FLOOD (CAB) | 158 |
| Y | *126-3749* | 1 | LITERATURE GP | 690 |
| Y | *159-3979* | 1 | MIRROR GP-REAR VIEW | 617 |
| Y | *143-2056* | 1 | MOUNTING GP-ROPS | 619 |
| Y | *252-1418* | 1 | PLATE & FILM GP | 695 |
| Y | *252-2228* | 1 | ROPS GP | 624 |
| Y | *173-5373* | 1 | SEAT GP-SUSPENSION | 634 |
| Y | *252-1721* | 1 | TRIM GP-CAB (CABLE MACHINE) | 653 |
| Y | *269-5836* | 1 | WINDOW GP | 678 |
| Y | *255-9006* | 1 | WIPER & WASHER GP-WINDOW | 680 |

Y-SEPARATE ILLUSTRATION

**<END>**

## *252-1722* CAB AR-OPEN ROPS—GRAPPLE MACHINE

**S/N: 5451-UP**

**AN ATTACHMENT**

**SMCS-7301** **i02467597**

| NOTE | PART NUMBER | QTY | PART NAME 1 2 3 4 5 6 (PRODUCT LEVEL) | SEE PAGE |
|---|---|---|---|---|
| Y | *260-1921* | 1 | CONTROL GP-FOOT BRAKE | 372 |
| Y | *264-2256* | 1 | CONTROL GP-STEERING | 601 |
| Y | *269-5816* | 1 | DOOR GP-CAB | 603 |
| Y | *252-1417* | 1 | FLOORPLATE GP | 319 |
| Y | *270-0612* | 1 | GUARD GP-CAB | 334 |
| Y | *221-2657* | 1 | GUARD GP-OPEN ROPS | 611 |
| Y | *215-3128* | 1 | LIGHTING GP-FLOOD (CAB) | 158 |
| Y | *126-3749* | 1 | LITERATURE GP | 690 |
| Y | *159-3979* | 1 | MIRROR GP-REAR VIEW | 617 |
| Y | *143-2056* | 1 | MOUNTING GP-ROPS | 619 |
| Y | *252-1418* | 1 | PLATE & FILM GP | 695 |
| Y | *252-2228* | 1 | ROPS GP | 624 |
| Y | *246-1206* | 1 | SCREEN GP-CAB | 629 |
| Y | *173-5372* | 1 | SEAT GP-SUSPENSION | 634 |
| Y | *252-1729* | 1 | TRIM GP-OPEN ROPS (GRAPPLE MACHINE) | 661 |

Y-SEPARATE ILLUSTRATION

**<END>**

# OPERATOR STATION

## *252-1728* CAB AR-OPEN ROPS—CABLE MACHINE

**S/N: 5451-UP**

**AN ATTACHMENT**

**SMCS-7301** **i02467600**

| NOTE | PART NUMBER | QTY | PART NAME 1 2 3 4 5 6 (PRODUCT LEVEL) | SEE PAGE |
|---|---|---|---|---|
| Y | *260-1921* | 1 | CONTROL GP-FOOT BRAKE | 372 |
| Y | *264-2256* | 1 | CONTROL GP-STEERING | 601 |
| Y | *269-5816* | 1 | DOOR GP-CAB | 603 |
| Y | *252-1417* | 1 | FLOORPLATE GP | 319 |
| Y | *180-9186* | 1 | GUARD GP-CAB | 333 |
| Y | *221-2657* | 1 | GUARD GP-OPEN ROPS | 611 |
| Y | *215-3128* | 1 | LIGHTING GP-FLOOD (CAB) | 158 |
| Y | *126-3749* | 1 | LITERATURE GP | 690 |
| Y | *159-3979* | 1 | MIRROR GP-REAR VIEW | 617 |
| Y | *143-2056* | 1 | MOUNTING GP-ROPS | 619 |
| Y | *252-1418* | 1 | PLATE & FILM GP | 695 |
| Y | *252-2228* | 1 | ROPS GP | 624 |
| Y | *246-1206* | 1 | SCREEN GP-CAB | 629 |
| Y | *173-5372* | 1 | SEAT GP-SUSPENSION | 634 |
| Y | *252-1730* | 1 | TRIM GP-OPEN ROPS (CABLE MACHINE) | 667 |

Y-SEPARATE ILLUSTRATION

**<END>**

# OPERATOR STATION

## *251-1549* COMPRESSOR & MTG GP-REFRIG

**S/N: 5451-UP**

**PART OF 252-1413 AIR CONDITIONER AR**

**AN ATTACHMENT**

**SMCS-1802** **i02466028**

| NOTE | REF NO | GRAPHIC REF | PART NUMBER | QTY | PART NAME 1 2 3 4 5 6 (PRODUCT LEVEL) | SEE PAGE |
|---|---|---|---|---|---|---|
| Y | 1 | 1 | **163-0872** | 1 | COMPRESSOR GP-REFRIGERANT | 591 |
| Y | 2 | 1 | **192-1563** | 1 | IDLER GP-BELT (ALTERNATOR, REFRIGERANT COMPR) | 45 |
| | 3 | 1 | **197-9642** | 1 | PULLEY AS-IDLER (8-GROOVE) | |
| | 4 | 1 | **249-8740** | 1 | BELT-SERPENTINE (A/C COMPRESSOR) | |
| M | 5 | 1 | **7X-2538** | 4 | BOLT (M8X1.25X100-MM) | |
| | 6 | 1 | **8T-4224** | 4 | WASHER-HARD (8.8X16X2-MM THK) | |
| | 7 | 1 | **8T-4121** | 7 | WASHER-HARD (11X21X2.5-MM THK) | |
| M | 8 | 1 | **8T-4136** | 7 | BOLT (M10X1.5X25-MM) | |
| | 9 | 1 | **265-0838** | 1 | PLATE | |
| | 10 | 1 | **275-8276** | 1 | PLATE AS | |
| M | | 1 | **8T-3490** | 1 | NUT-WELD (M10X1.5-THD) | |

M-METRIC PART
Y-SEPARATE ILLUSTRATION

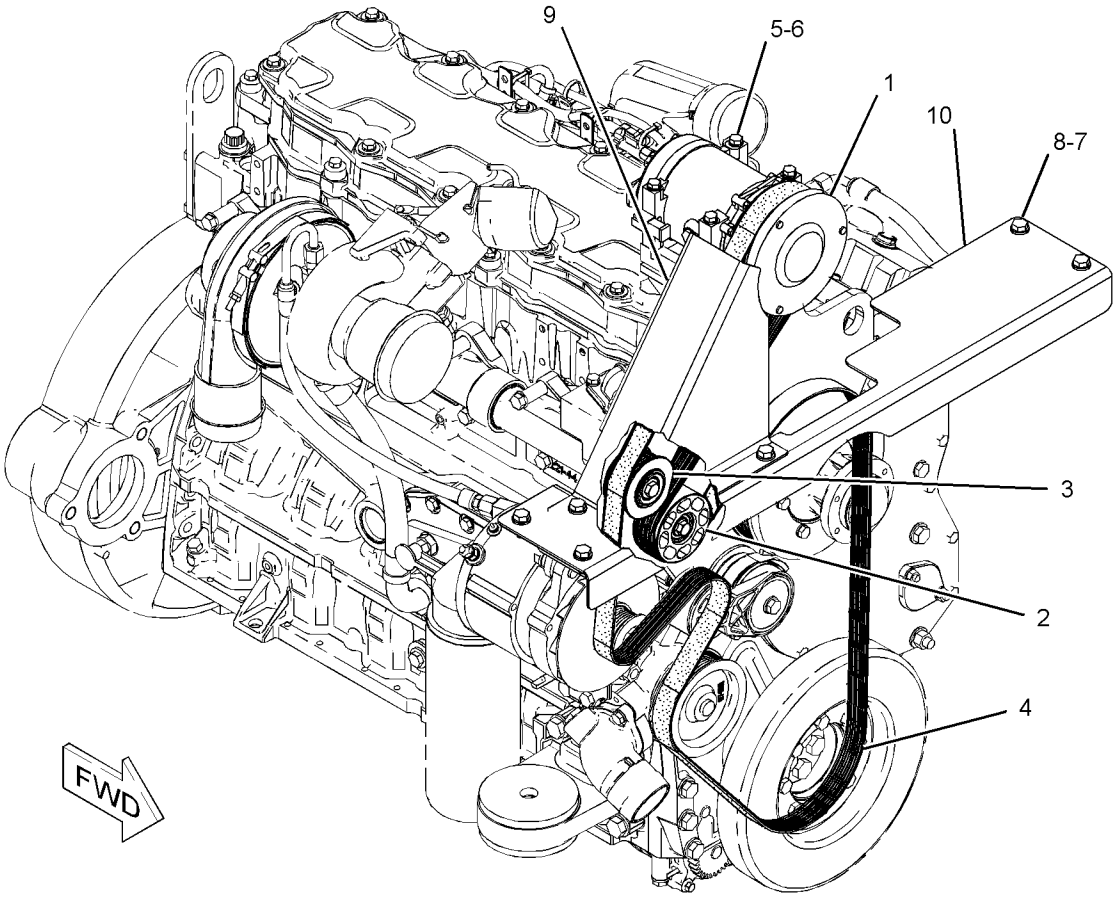


GRAPHIC #1 **<END>** g01236435

# 163-0872 COMPRESSOR GP-REFRIGERANT

**S/N: 5451-UP**

**PART OF 251-1549 COMPRESSOR & MTG GP-REFRIG**

**AN ATTACHMENT**

**SMCS-1802** **i02664566**

| NOTE | REF NO | GRAPHIC REF | PART NUMBER | QTY | PART NAME 1 2 3 4 5 6 (PRODUCT LEVEL) | SEE PAGE |
|---|---|---|---|---|---|---|
| | 1 | 1 | **102-8802** | 1 | KIT-RECEPTACLE (2-PIN) | |
| | | | | | (INCLUDES RECEPTACLE AS & WEDGE) | |
| | 2 | 1 | **114-3469** | 1 | VALVE GP-RELIEF (REFRIGERANT COMPRESSOR) | |
| | | 1 | **9X-7378** | 1 | SEAL-O-RING | |
| | 3 | 1 | **7T-4532** | 1 | PLUG AS | |
| | 4 | 1 | **9X-7385** | 2 | SEAL-O-RING | |
| B | 5 | 1 | **4C-2959** | | OIL-AIR CONDITIONER | |

B-USE AS REQUIRED

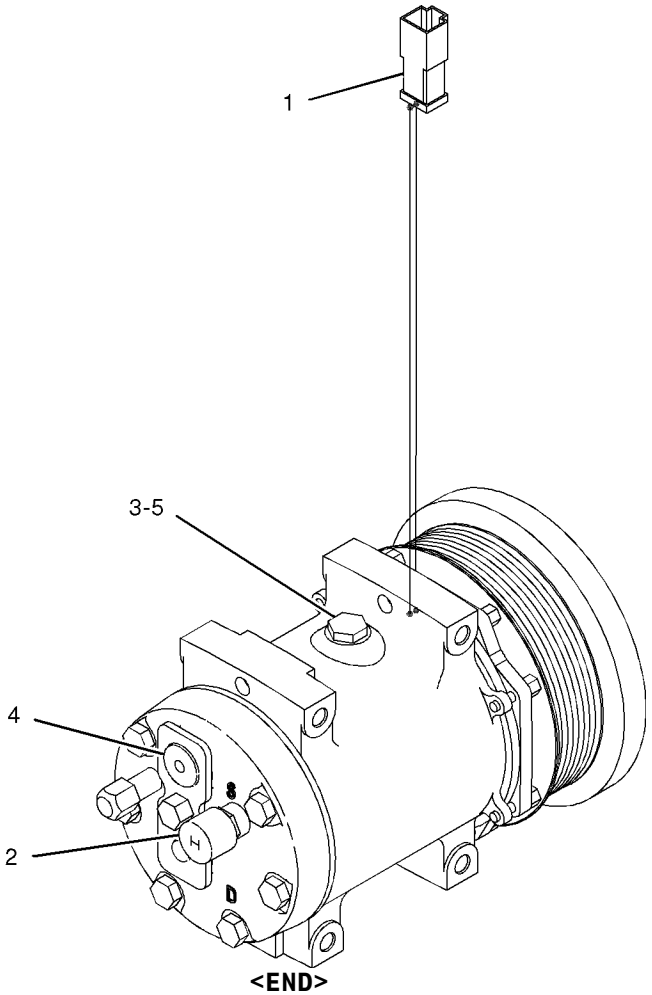


GRAPHIC #1

**<END>**

g01031701

# OPERATOR STATION

## *251-1316* CONDENSER & MTG GP-REFRIGERANT

**S/N: 5451-UP**
**PART OF 252-1413 AIR CONDITIONER AR**
**AN ATTACHMENT**

**SMCS-1805** **i02178499**

| NOTE | REF NO | GRAPHIC REF | PART NUMBER | QTY | PART NAME 1 2 3 4 5 6 (PRODUCT LEVEL) | SEE PAGE |
|---|---|---|---|---|---|---|
| | 1 | 1 | **6N-6984** | 4 | MOUNT-RUBBER | |
| | 2 | 1 | **164-5915** | 1 | CORE AS-CONDENSER | |
| | 3 | 1 | **254-6998** | 2 | PLATE | |
| | 4 | 1 | **8T-4121** | 8 | WASHER-HARD (11X21X2.5-MM THK) | |
| M | 5 | 1 | **8T-4137** | 4 | BOLT (M10X1.5X20-MM) | |
| M | 6 | 1 | **8T-4196** | 4 | BOLT (M10X1.5X35-MM) | |
| | 7 | 1 | **8T-4222** | 4 | WASHER-PLATED (11X32X2.5-MM THK) | |

M-METRIC PART

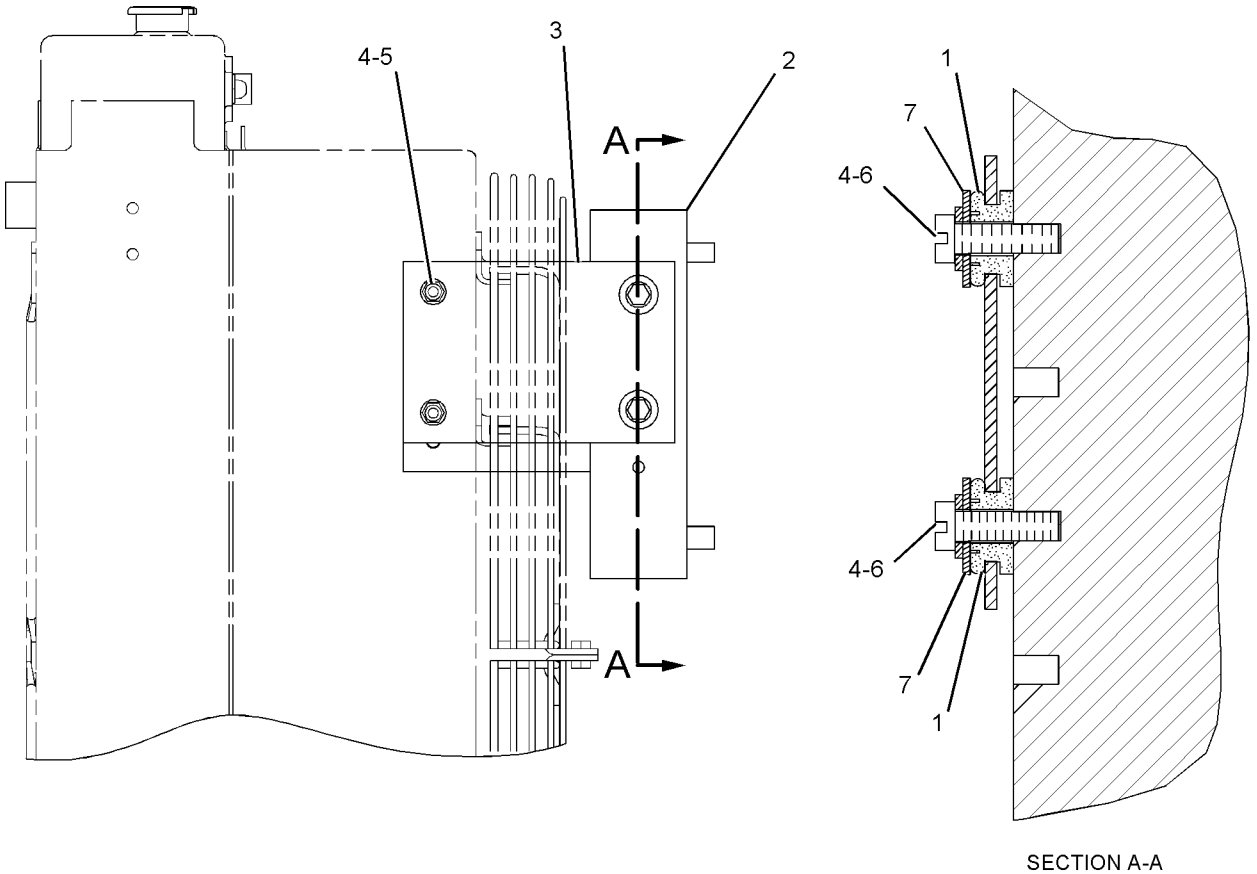


SECTION A-A

GRAPHIC #1 **<END>** g01103969

# 262-2003 CONTROL GP-HANDLE–GRAPPLE CONTROL

**S/N: 5451-UP**
**PART OF 238-9804 CONTROL GP-JOYSTICK**
**AN ATTACHMENT**

**SMCS-5063, 5705** **i02400042**

| NOTE | REF NO | GRAPHIC REF | PART NUMBER | QTY | PART NAME 1 2 3 4 5 6 (PRODUCT LEVEL) | SEE PAGE |
|---|---|---|---|---|---|---|
| M | 1 | 1 | **139-6366** | 1 | NUT (M14X2-THD) | |
| | 2 | 1 | **262-1999** | 1 | RETAINER | |
| | 3 | 1 | **262-2000** | 5 | BUTTON | |
| | 4 | 1 | **262-2001** | 1 | SWITCH (GRAPPLE TONG CLOSE) | |
| | 4A | 1 | **262-2001** | 1 | SWITCH (GRAPPLE TONG OPEN) | |
| | 4B | 1 | **262-2001** | 1 | SWITCH (GRAPPLE AUTO GRAB, TRIGGER) | |
| | 4C | 1 | **262-2001** | 1 | SWITCH (GRAPPLE ROTATION, CCW) | |
| | 4D | 1 | **262-2001** | 1 | SWITCH (GRAPPLE ROTATION, CW) | |
| | 5 | 1 | **262-2002** | 1 | BOOT-DUST | |

M-METRIC PART

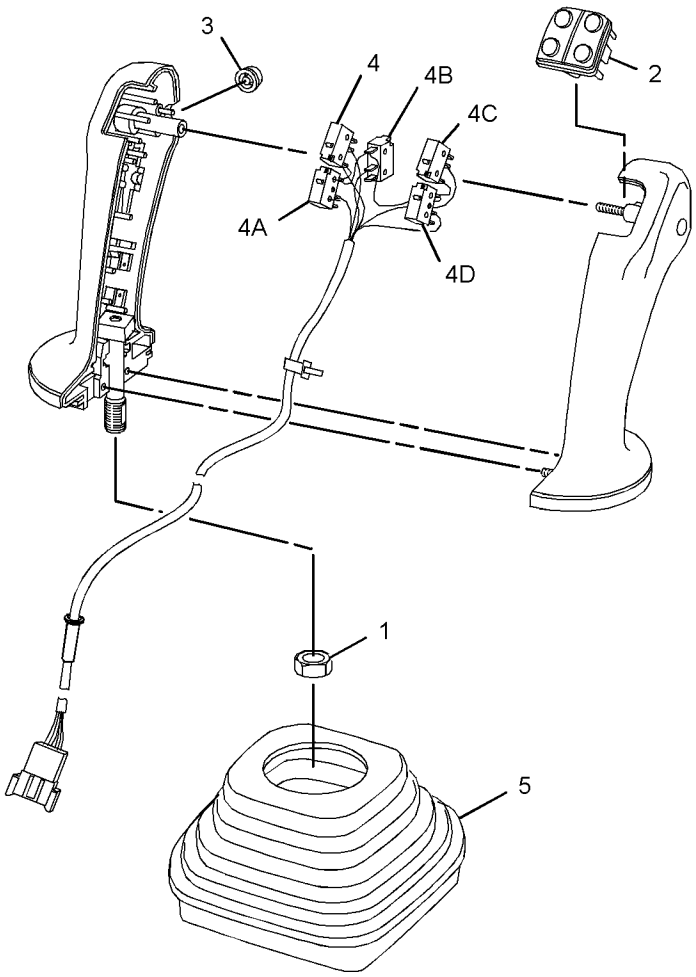


GRAPHIC #1 **<END>** g01181462

## 289-8626 CONTROL GP-HANDLE–GRAPPLE CONTROL

**S/N: 5451-UP**

**PART OF 238-9804 CONTROL GP-JOYSTICK**

**AN ATTACHMENT**

**SMCS-5063, 5705** **i02496709**

| NOTE | REF NO | GRAPHIC REF | PART NUMBER | QTY | PART NAME 1 2 3 4 5 6 (PRODUCT LEVEL) | SEE PAGE |
|---|---|---|---|---|---|---|
| M | 1 | 1 | **139-6366** | 1 | NUT (M14X2-THD) | |
| | 2 | 1 | **262-1999** | 1 | RETAINER | |
| | 3 | 1 | **289-8627** | 5 | BUTTON | |
| | 4 | 1 | **262-2001** | 1 | SWITCH (GRAPPLE TONG CLOSE) | |
| | 4A | 1 | **262-2001** | 1 | SWITCH (GRAPPLE TONG OPEN) | |
| | 4B | 1 | **262-2001** | 1 | SWITCH (GRAPPLE AUTO GRAB TRIGGER) | |
| | 4C | 1 | **262-2001** | 1 | SWITCH (GRAPPLE ROTATION CCW) | |
| | 4D | 1 | **262-2001** | 1 | SWITCH (GRAPPLE ROTATION CW) | |
| | 5 | 1 | **262-2002** | 1 | BOOT-DUST | |

M-METRIC PART

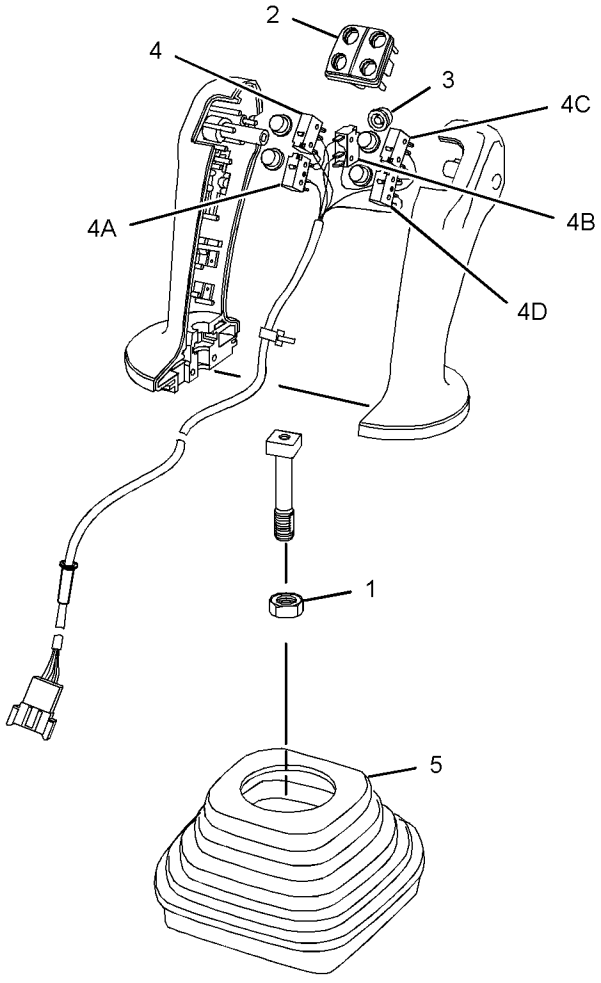


GRAPHIC #1 **<END>** g01249604

# 238-9804 CONTROL GP-JOYSTICK–GRAPPLE CONTROL

**S/N: 5451-UP**
**PART OF 279-0204 CONTROL GP-PILOT OPERATED HYD**
**AN ATTACHMENT**
**TYPE 1**

**SMCS-5063, 5705** **i02299115**

| NOTE | REF NO | GRAPHIC REF | PART NUMBER | QTY | PART NAME 1 2 3 4 5 6 (PRODUCT LEVEL) | SEE PAGE |
|---|---|---|---|---|---|---|
| | 1 | 1 | **9S-8004** | 1 | PLUG-O-RING | |
| | 2 | 1 | **153-4906** | 1 | SEAL-O-RING | |
| | 3 | 1 | **223-4375** | 1 | KIT-SWIVEL | |
| | 4 | 1 | **223-4376** | 4 | KIT-PIN | |
| Y | 5 | 1 | **262-2003** | 1 | CONTROL GP-HANDLE (GRAPPLE CONTROL) | 593 |

Y-SEPARATE ILLUSTRATION

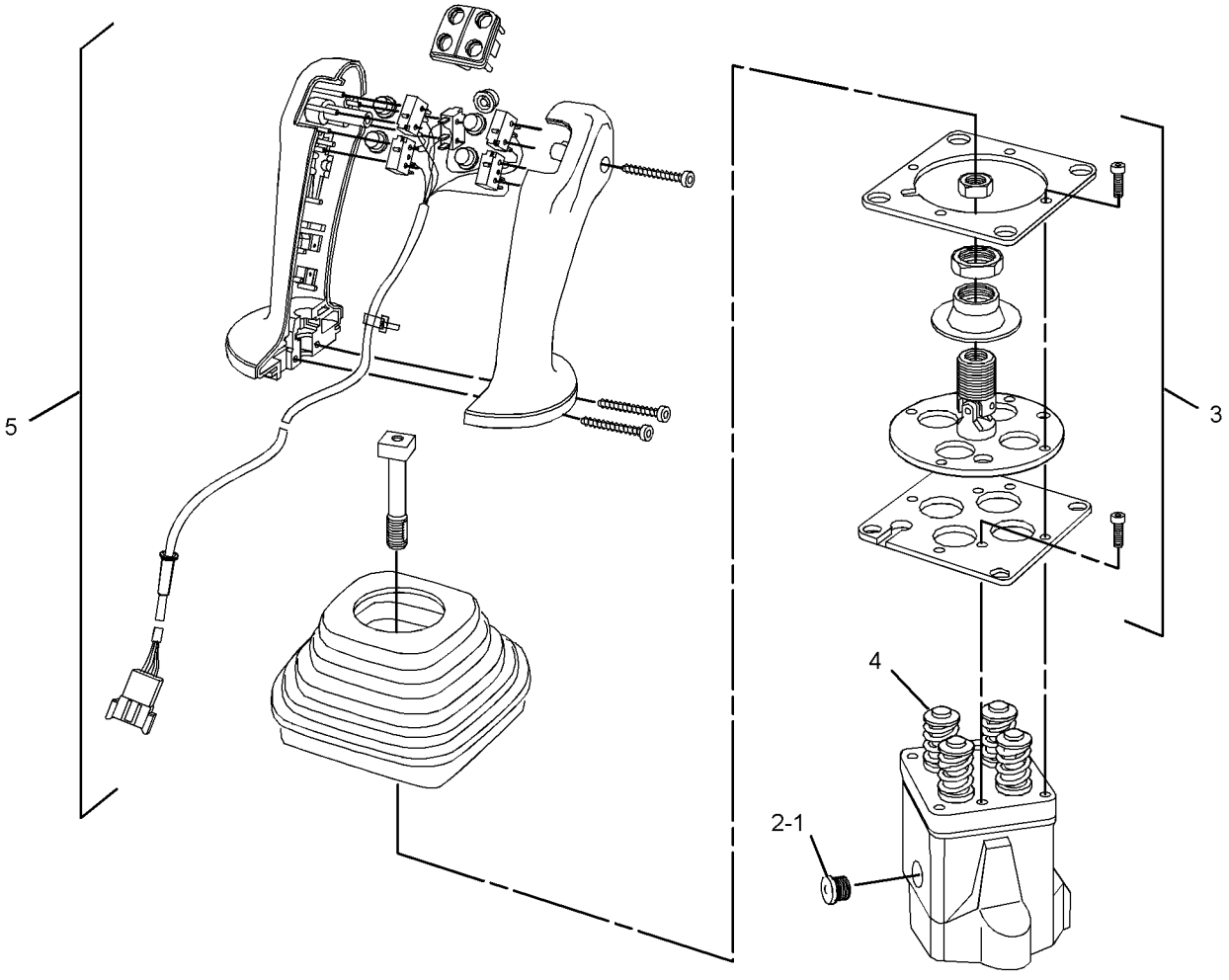


GRAPHIC #1 **<END>** g01166782

## 238-9804 CONTROL GP-JOYSTICK—GRAPPLE CONTROL

**S/N: 5451-UP**

**PART OF 278-4732, 279-0204 CONTROL GP-PILOT OPERATED HYD**

**AN ATTACHMENT**

**TYPE 2**

**SMCS-5063, 5705** **i02507689**

| NOTE | REF NO | GRAPHIC REF | PART NUMBER | QTY | PART NAME 1 2 3 4 5 6 (PRODUCT LEVEL) | SEE PAGE |
|---|---|---|---|---|---|---|
| | 1 | 1 | **9S-8004** | 1 | PLUG-O-RING | |
| | 2 | 1 | **153-4906** | 1 | SEAL-O-RING | |
| | 3 | 1 | **223-4375** | 1 | KIT-SWIVEL | |
| | | | | | (INCLUDES SCREWS, BOLTS, NUT, RETAINER, SWIVEL & PLATES) | |
| | 4 | 1 | **223-4376** | 4 | KIT-PIN | |
| | | | | | (EACH INCLUDES RETAINERS, SPRING, GUIDE-SPRING, SEAL-O-RING, SHIMS, RING-RETAINERS, SEAL & SHAFT) | |
| CY | 5 | 1 | **289-8626** | 1 | CONTROL GP-HANDLE (GRAPPLE CONTROL) | 594 |

C-CHANGE FROM PREVIOUS TYPE
Y-SEPARATE ILLUSTRATION

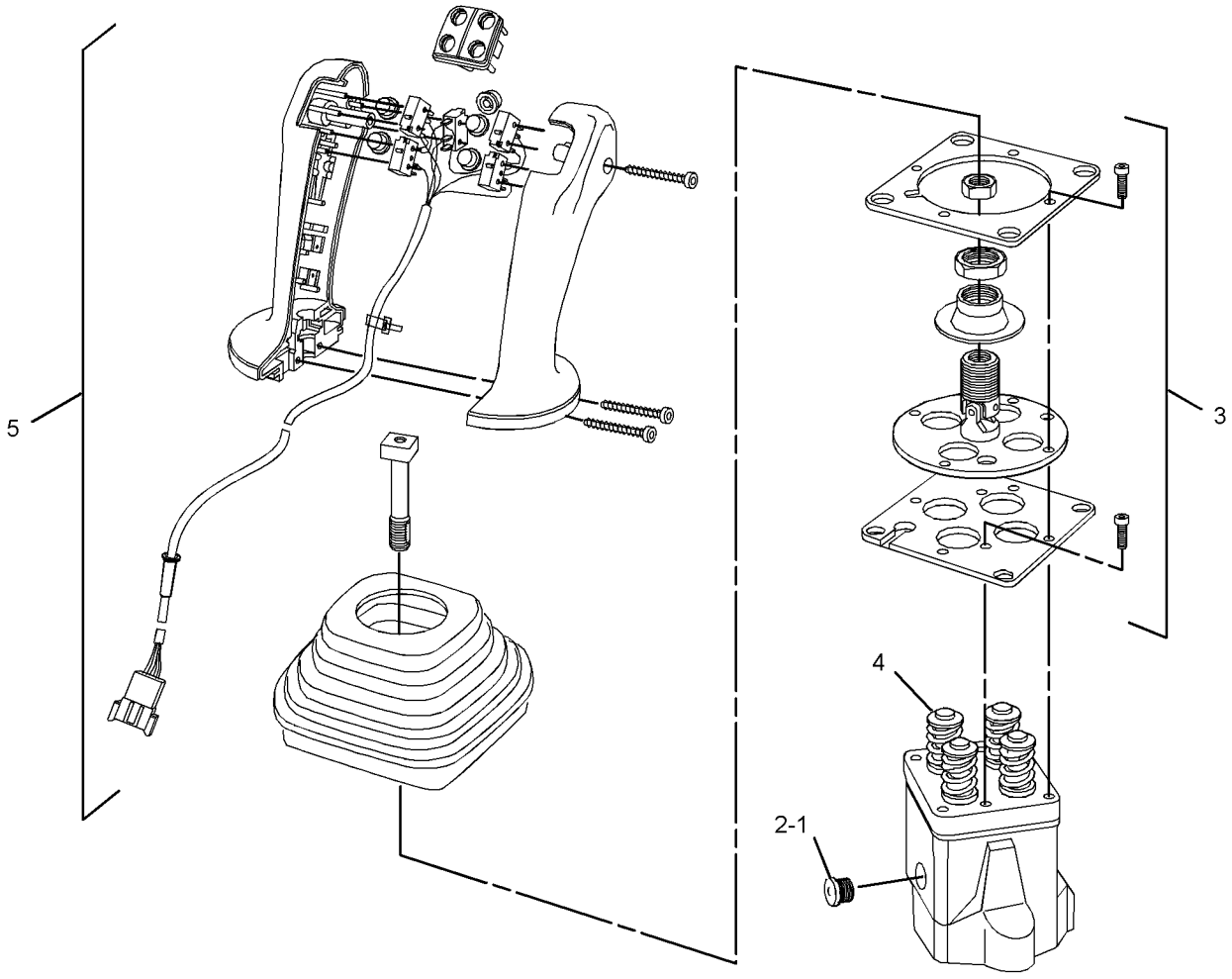


GRAPHIC #1 **<END>** g01166782

# OPERATOR STATION

## *278-4732* CONTROL GP-PILOT OPERATED HYD–
### JOYSTICK, DUAL FUNCTION GRAPPLE
### S/N: 5451-UP
### PART OF 295-8464 WINCH AR
### AN ATTACHMENT

**SMCS-5059, 5063** **i02467925**

| NOTE | REF NO | GRAPHIC REF | PART NUMBER | QTY | PART NAME 1 2 3 4 5 6 (PRODUCT LEVEL) | SEE PAGE |
|---|---|---|---|---|---|---|
| Y | 1 | 1 | **238-9804** | 1 | CONTROL GP-JOYSTICK (GRAPPLE CONTROL) | 595 |
| | 2 | 1 | **252-6570** | 1 | PLATE AS | |
| M | | 1 | **8T-3851** | 1 | BOSS-WELD (M10X1.5X17.5-MM) | |
| M | | 1 | **110-2023** | 1 | STUD-WELD (M10X1.5X25-MM) | |
| | 3 | 1 | **253-3867** | 1 | TUBE AS | |
| | 4 | 1 | **253-3868** | 1 | TUBE AS | |
| | 5 | 1 | **257-6830** | 1 | PLATE AS | |
| | 6 | 1 | **257-8489** | 1 | TUBE AS | |
| | 7 | 1 | **258-8860** | 1 | TUBE AS | |
| | 8 | 1 | **261-5748** | 1 | FILM-CONTROL | |
| | 9 | 1 | **266-8698** | 1 | SEAL | |
| | 10 | 1 | **269-7903** | 1 | TUBE AS | |
| | 11 | 1 | **269-7904** | 1 | TUBE AS | |
| I | 12 | 1 | **276-5664** | 2 | HOSE AS | |
| I | 13 | 1 | **276-5665** | 2 | HOSE AS | |
| | 14 | 1 | *148-8336* | 6 | CONNECTOR AS | |
| | | | | | (EACH INCLUDES) | |
| | | 1 | **3J-1907** | 1 | SEAL-O-RING | |
| | | 1 | **6V-8397** | 1 | SEAL-O-RING | |
| | | 1 | **6V-8636** | 1 | CONNECTOR | |
| | 15 | 1 | *148-8361* | 4 | ELBOW AS | |
| | | | | | (EACH INCLUDES) | |
| | | 1 | **3J-7354** | 1 | SEAL-O-RING | |
| | | 1 | **6V-8397** | 1 | SEAL-O-RING | |
| | | 1 | **6V-9200** | 1 | ELBOW | |
| | 16 | 1 | *148-8366* | 2 | ELBOW AS | |
| | | | | | (EACH INCLUDES) | |
| | | 1 | **6V-8397** | 2 | SEAL-O-RING | |
| | | 1 | **6V-8987** | 1 | ELBOW | |
| | 17 | 1 | *148-8377* | 2 | ELBOW AS | |
| | | | | | (EACH INCLUDES) | |
| | | 1 | **6V-8397** | 2 | SEAL-O-RING | |
| | | 1 | **6V-8980** | 1 | ELBOW | |
| | 18 | 1 | **6V-3265** | 4 | CLIP | |
| M | 19 | 1 | **6V-5683** | 4 | BOLT (M6X1X16-MM) | |
| | 20 | 1 | **6V-9168** | 4 | NUT (11/16-16-THD) | |
| | 21 | 1 | **8T-4121** | 4 | WASHER-HARD (11X21X2.5-MM THK) | |
| M | 22 | 1 | **8T-4136** | 2 | BOLT (M10X1.5X25-MM) | |
| M | 23 | 1 | **8T-4137** | 2 | BOLT (M10X1.5X20-MM) | |
| M | 24 | 1 | **9X-2045** | 4 | SCREW-TRUSS HEAD (M6X1X20-MM) | |
| | 25 | 1 | **9X-8256** | 4 | WASHER (6.6X12X2-MM THK) | |

I-REFER TO HYDRAULIC INFORMATION SYSTEM
M-METRIC PART
Y-SEPARATE ILLUSTRATION

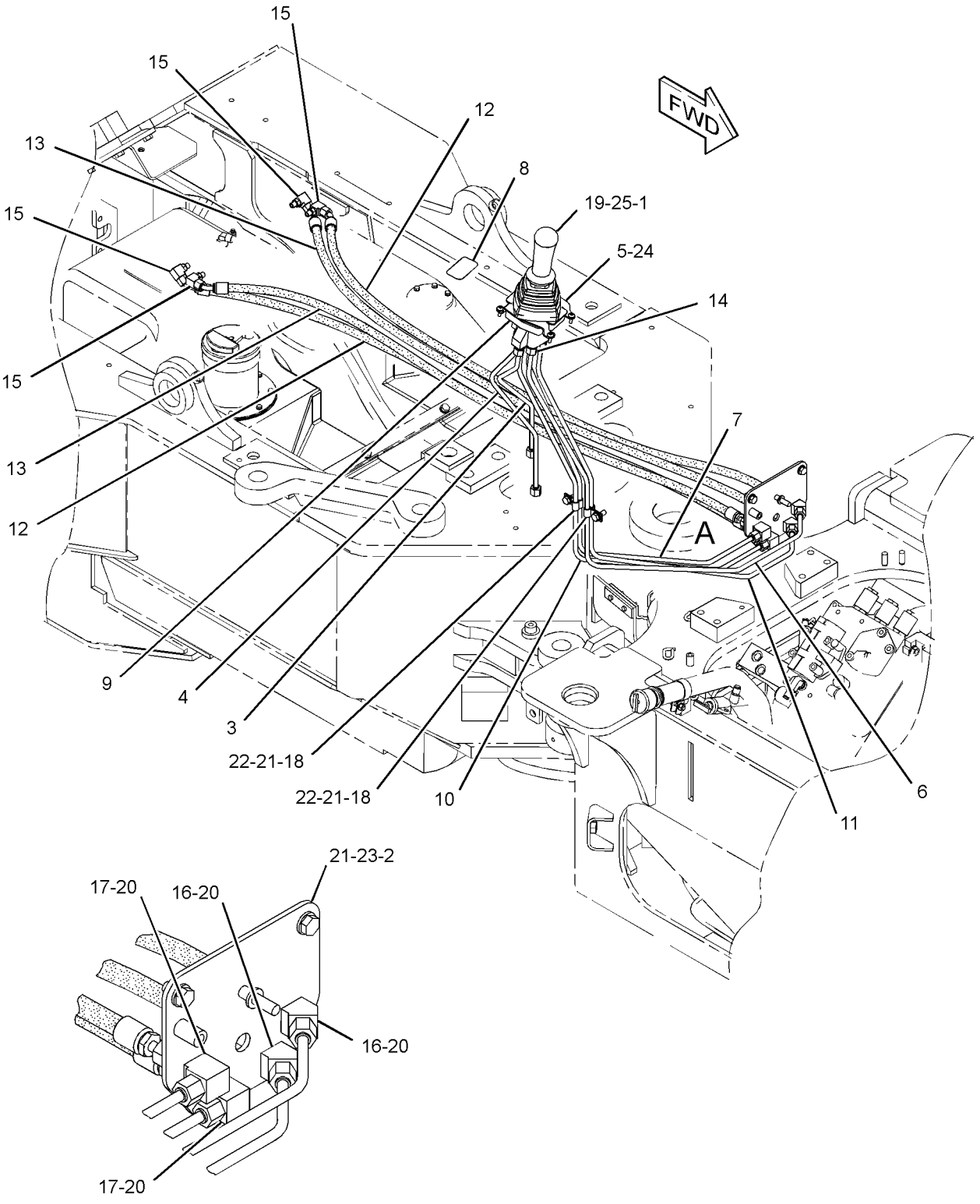


GRAPHIC #1 **<END>** g01237052

# *279-0204* CONTROL GP-PILOT OPERATED HYD–
## JOYSTICK, DUAL FUNCTION GRAPPLE
**S/N: 5451-UP**
**PART OF 253-2515, 253-2518 GRAPPLE AR, 272-6512 INDUSTRIAL AR-HYDRAULIC AN ATTACHMENT**

**SMCS-5059, 5063** **i02468876**

| NOTE | REF NO | GRAPHIC REF | PART NUMBER | QTY | PART NAME 1 2 3 4 5 6 (PRODUCT LEVEL) | SEE PAGE |
|---|---|---|---|---|---|---|
| Y | 1 | 1 | **238-9804** | 1 | CONTROL GP-JOYSTICK (GRAPPLE CONTROL) | 595 |
| | 2 | 1 | **252-6570** | 1 | PLATE AS | |
| M | | 1 | **8T-3851** | 1 | BOSS-WELD (M10X1.5X17.5-MM) | |
| M | | 1 | **110-2023** | 1 | STUD-WELD (M10X1.5X25-MM) | |
| | 3 | 1 | **253-3867** | 1 | TUBE AS | |
| | 4 | 1 | **253-3868** | 1 | TUBE AS | |
| | 5 | 1 | **257-6830** | 1 | PLATE AS | |
| | 6 | 1 | **257-8489** | 1 | TUBE AS | |
| | 7 | 1 | **258-8860** | 1 | TUBE AS | |
| | 8 | 1 | **261-5748** | 1 | FILM-CONTROL | |
| | 9 | 1 | **266-8698** | 1 | SEAL | |
| | 10 | 1 | **269-7903** | 1 | TUBE AS | |
| | 11 | 1 | **269-7904** | 1 | TUBE AS | |
| | 12 | 1 | **279-1202** | 2 | HOSE AS | |
| | 13 | 1 | **279-1203** | 2 | HOSE AS | |
| | 14 | 1 | *148-8336* | 6 | CONNECTOR AS | |
| | | | | | (EACH INCLUDES) | |
| | | 1 | **3J-1907** | 1 | SEAL-O-RING | |
| | | 1 | **6V-8397** | 1 | SEAL-O-RING | |
| | | 1 | **6V-8636** | 1 | CONNECTOR | |
| | 15 | 1 | *148-8361* | 4 | ELBOW AS | |
| | | | | | (EACH INCLUDES) | |
| | | 1 | **3J-7354** | 1 | SEAL-O-RING | |
| | | 1 | **6V-8397** | 1 | SEAL-O-RING | |
| | | 1 | **6V-9200** | 1 | ELBOW | |
| | 16 | 1 | *148-8366* | 2 | ELBOW AS | |
| | | | | | (EACH INCLUDES) | |
| | | 1 | **6V-8397** | 2 | SEAL-O-RING | |
| | | 1 | **6V-8987** | 1 | ELBOW | |
| | 17 | 1 | *148-8377* | 2 | ELBOW AS | |
| | | | | | (EACH INCLUDES) | |
| | | 1 | **6V-8397** | 2 | SEAL-O-RING | |
| | | 1 | **6V-8980** | 1 | ELBOW | |
| | 18 | 1 | **6V-3265** | 4 | CLIP | |
| M | 19 | 1 | **6V-5683** | 4 | BOLT (M6X1X16-MM) | |
| | 20 | 1 | **6V-9168** | 4 | NUT (11/16-16-THD) | |
| | 21 | 1 | **8T-4121** | 4 | WASHER-HARD (11X21X2.5-MM THK) | |
| M | 22 | 1 | **8T-4136** | 2 | BOLT (M10X1.5X25-MM) | |
| M | 23 | 1 | **8T-4137** | 2 | BOLT (M10X1.5X20-MM) | |
| M | 24 | 1 | **9X-2045** | 4 | SCREW-TRUSS HEAD (M6X1X20-MM) | |
| | 25 | 1 | **9X-8256** | 4 | WASHER (6.6X12X2-MM THK) | |

M-METRIC PART
Y-SEPARATE ILLUSTRATION

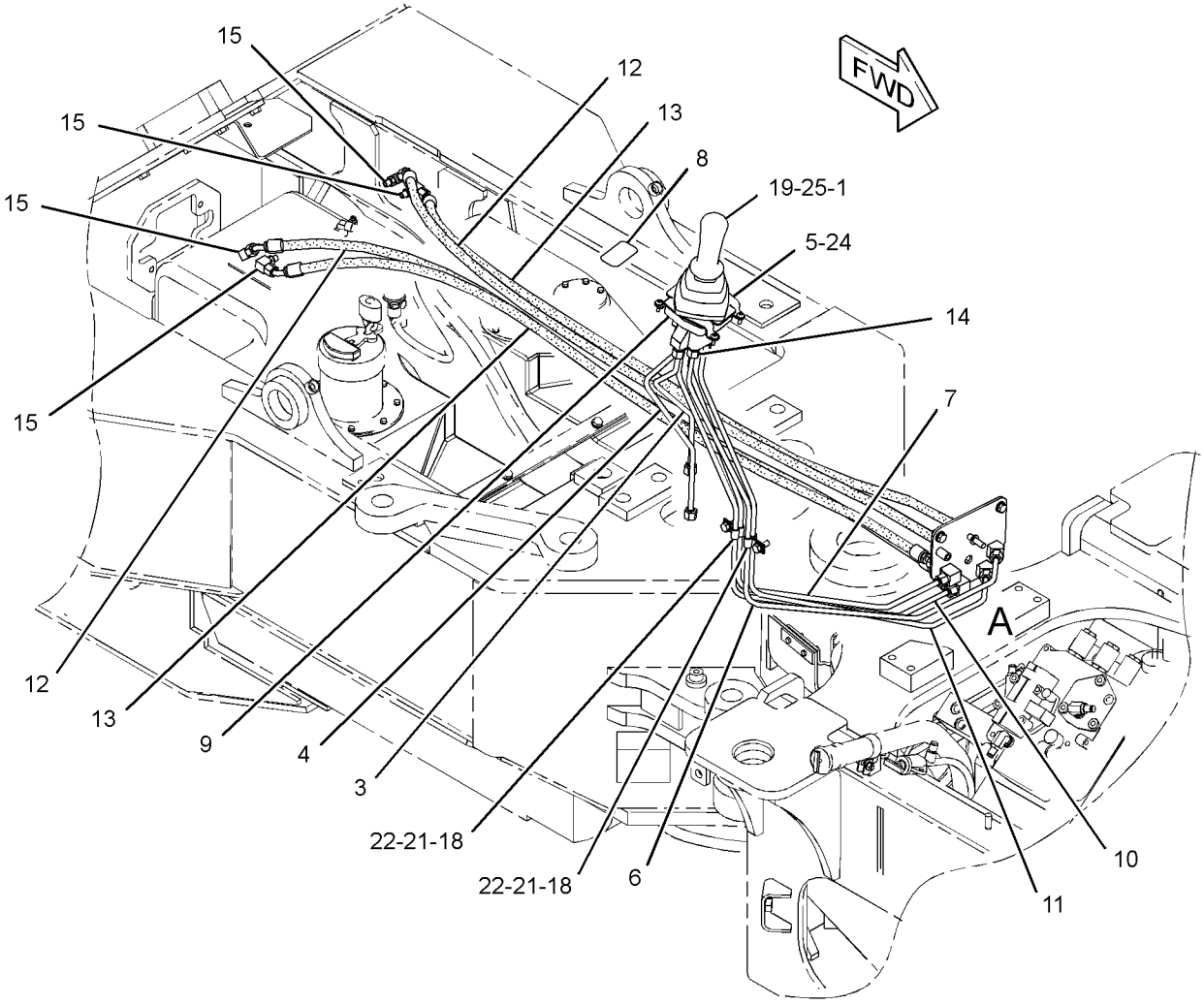


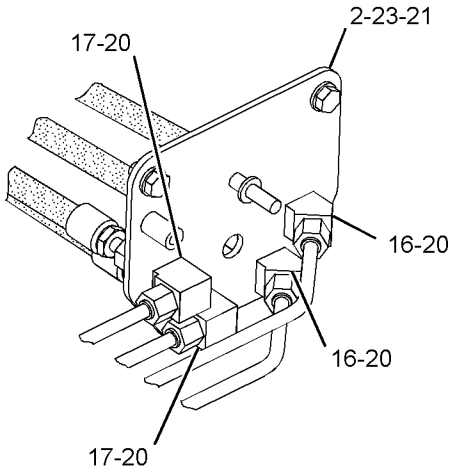


VIEW OF AREA A

GRAPHIC #1 **<END>** g01236998

# OPERATOR STATION

## *264-2256* CONTROL GP-STEERING

**S/N: 5451-UP**

**PART OF 252-1415, 252-1720 CAB AR-ENCLOSED ROPS, 252-1722, 252-1728 CAB AR-OPEN ROPS**

**AN ATTACHMENT**

**SMCS-4309, 4310, 4338** **i02322503**

| NOTE | REF NO | GRAPHIC REF | PART NUMBER | QTY | PART NAME 1 2 3 4 5 6 (PRODUCT LEVEL) | SEE PAGE |
|---|---|---|---|---|---|---|
| | 1 | 1 | **1B-8706** | 2 | KEY-WOODRUFF | |
| | 2 | 1 | **3B-4629** | 1 | PIN-COTTER | |
| | 3 | 1 | **6D-5974** | 2 | BEARING-ROLLER | |
| M | 4 | 1 | **8T-0389** | 4 | LOCKNUT (M10X1.15-THD) | |
| | 5 | 1 | **114-5309** | 1 | COVER AS (RH) | |
| | 6 | 1 | **114-5312** | 1 | COVER AS (LH) | |
| | 7 | 1 | **118-4508** | 1 | COLUMN AS | |
| | | 1 | **145-8867** | 1 | KIT-GAS ASSIST | |
| | | 1 | **146-0248** | 1 | KIT-HOUSING | |
| | | 1 | **146-0249** | 1 | KIT-SHAFT | |
| | | 1 | **149-2906** | 1 | KIT-NUT | |
| | | 1 | **149-2907** | 1 | KIT-TILT LEVER | |
| | | 1 | **254-1519** | 1 | COVER | |
| Y | 8 | 1 | *123-7406* | 1 | STEERING WHEEL GP | 399 |
| | 9 | 1 | **158-3558** | 1 | MOUNT AS | |
| | 10 | 1 | **158-3570** | 1 | LEVER | |
| | 11 | 1 | **158-3574** | 1 | LEVER | |
| | 12 | 1 | **168-5228** | 1 | SHAFT AS | |
| | 13 | 1 | **170-6114** | 1 | LINK AS | |
| | 14 | 1 | **264-2257** | 1 | PLATE AS | |
| | 15 | 1 | **2V-3216** | 2 | CLIP | |
| M | 16 | 1 | **3T-0849** | 2 | BOLT-SOCKET HEAD (M6X1X25-MM) | |
| | 17 | 1 | **5K-2294** | 1 | BEARING-SELF-ALIGNING | |
| | 18 | 1 | **6V-5839** | 4 | WASHER (11X21X2.5-MM THK) | |
| | 19 | 1 | **7X-7729** | 5 | WASHER (11X25X3-MM THK) | |
| M | 20 | 1 | **8T-1159** | 4 | BOLT-SOCKET HEAD (M10X1.5X25-MM) | |
| M | 21 | 1 | **8T-4133** | 7 | NUT (M10X1.5-THD) | |
| M | 22 | 1 | **8T-4171** | 4 | BOLT (M6X1X12-MM) | |
| M | 23 | 1 | **8T-4182** | 2 | BOLT (M10X1.5X45-MM) | |
| M | 24 | 1 | **8T-4195** | 2 | BOLT (M10X1.5X30-MM) | |
| | 25 | 1 | **9F-6655** | 2 | WASHER (0.766X1.5X0.125-IN) | |
| | 26 | 1 | **9X-8256** | 4 | WASHER (6.6X12X2-MM THK) | |

M-METRIC PART
Y-SEPARATE ILLUSTRATION

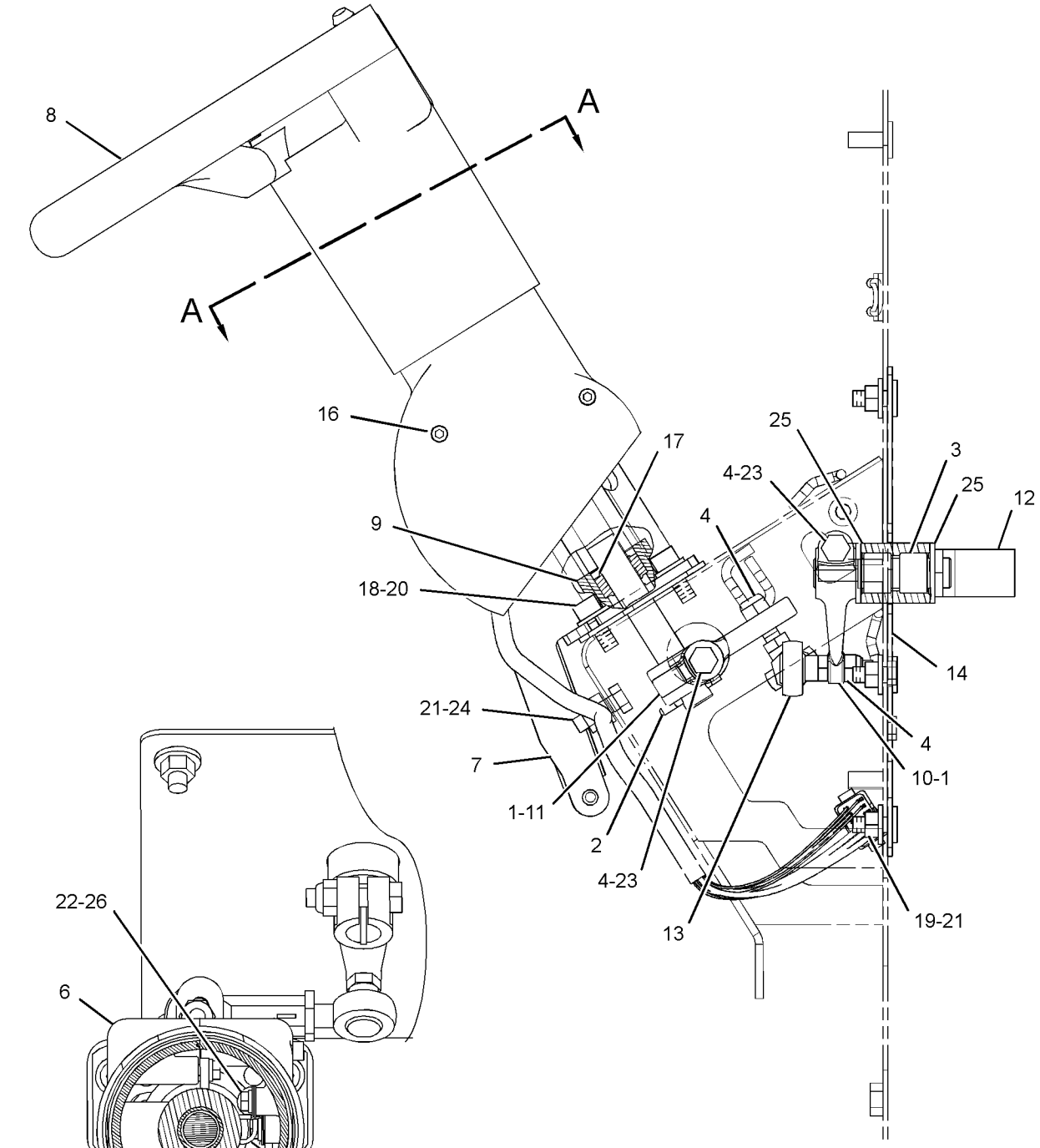


GRAPHIC #1 **<END>** g01188772

# OPERATOR STATION

## *269-5816* DOOR GP-CAB

**S/N: 5451-UP**

**PART OF 252-1415, 252-1720 CAB AR-ENCLOSED ROPS, 252-1722, 252-1728 CAB AR-OPEN ROPS**

**AN ATTACHMENT**

**SMCS-7308** **i02613959**

| NOTE | REF NO | GRAPHIC REF | PART NUMBER | QTY | PART NAME 1 2 3 4 5 6 (PRODUCT LEVEL) | SEE PAGE |
|---|---|---|---|---|---|---|
| | 1 | 1 | **118-3148** | 2 | STRIKER AS-LATCH | |
| | | | | | (EACH INCLUDES) | |
| | | 1 | **8Y-6377** | 2 | STRIKER | |
| | | 1 | **108-4311** | 2 | SCREW-MACHINE (3/8-16X0.75-IN) | |
| | | 1 | **109-0629** | 2 | GUARD-STRIKER | |
| Y | 2 | 1 | *269-5817* | 1 | DOOR GP-CAB (RH) | 604 |
| Y | 3 | 1 | *269-5819* | 1 | DOOR GP-CAB (LH) | 606 |
| | 4 | 1 | **7X-7729** | 20 | WASHER (11X25X3-MM THK) | |
| M | 5 | 1 | **8T-4133** | 16 | NUT (M10X1.5-THD) | |
| M | 6 | 1 | **9X-2040** | 4 | SCREW-TRUSS HEAD (M10X1.5X25-MM) | |

M-METRIC PART
Y-SEPARATE ILLUSTRATION

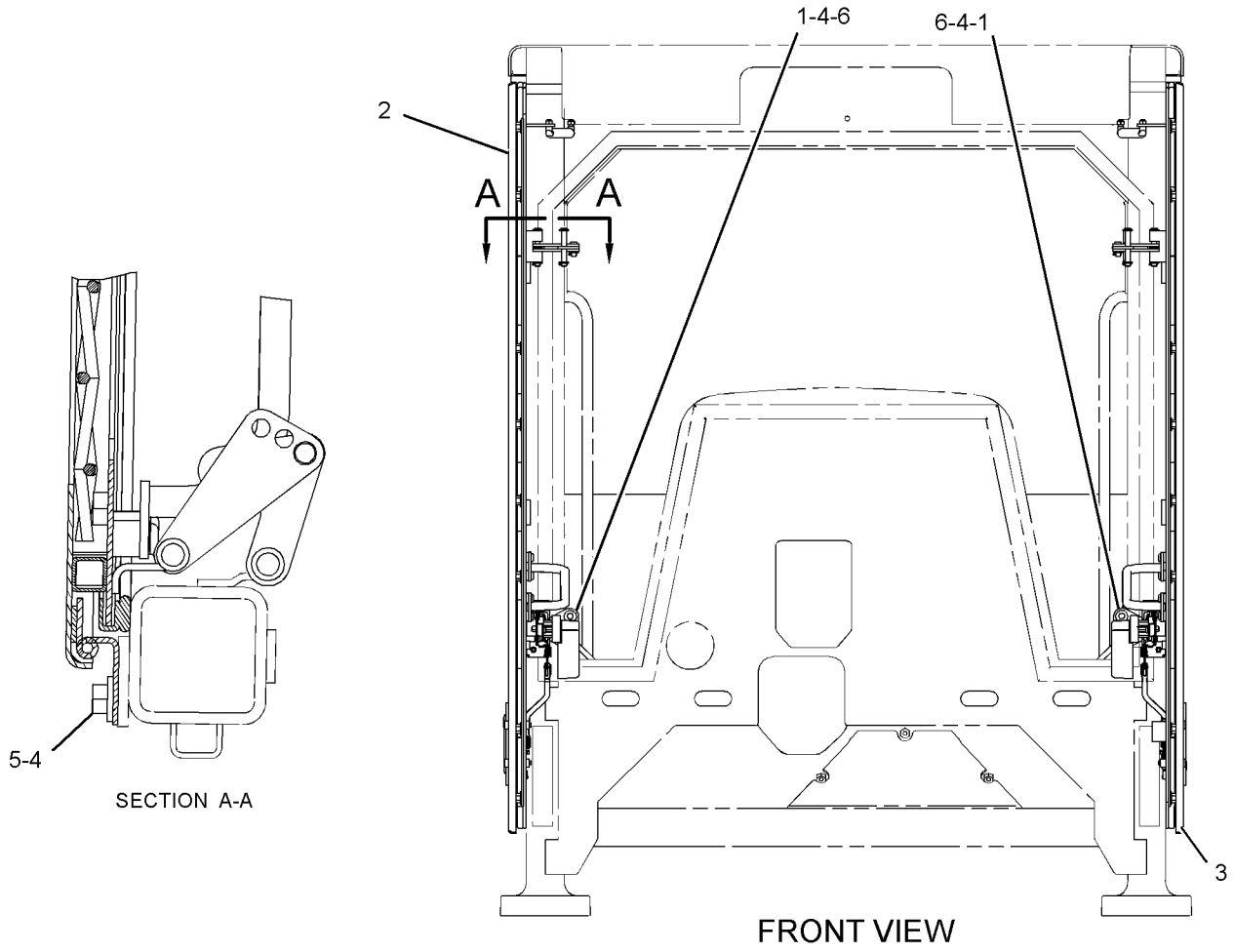


SECTION A-A

FRONT VIEW

GRAPHIC #1 **<END>** g01337490

# OPERATOR STATION

## *269-5817* DOOR GP-CAB—RH

**S/N: 5451-UP**
**PART OF 269-5816 DOOR GP-CAB**
**AN ATTACHMENT**

**SMCS-7308** **i02613961**

| NOTE | REF NO | GRAPHIC REF | PART NUMBER | QTY | PART NAME 1 2 3 4 5 6 (PRODUCT LEVEL) | SEE PAGE |
|---|---|---|---|---|---|---|
| | 1 | 1 | **2D-6006** | 2 | PIN | |
| | 2 | 1 | **3B-4611** | 3 | PIN-COTTER | |
| | 3 | 1 | **8T-3504** | 1 | HANDLE AS-INSIDE | |
| | 4 | 1 | **8T-4747** | 2 | BRACKET | |
| | 5 | 1 | **8T-4896** | 6 | WASHER-HARD (10.2X18.5X2.5-MM THK) | |
| J | 6 | 1 | **8Y-4617** | 1 | HANDLE AS | |
| | | 1 | **8Y-4501** | 1 | SPRING-HANDLE | |
| | 7 | 1 | **8Y-6386** | 1 | SEAL-HANDLE | |
| | 8 | 1 | **9F-0348** | 1 | PIN | |
| | 9 | 1 | **9R-9755** | 1 | STRUT-NONLOCKING | |
| M | 10 | 1 | **9X-2546** | 2 | BOLT (M6X1X20-MM) | |
| | 11 | 1 | **120-0144** | 1 | LINK-CONNECTING | |
| | 12 | 1 | **120-5282** | 1 | LATCH AS | |
| | 13 | 1 | **196-8556** | 2 | PLATE | |
| | 14 | 1 | **199-6162** | 1 | PLATE | |
| | 15 | 1 | **269-5818** | 1 | DOOR AS (RH) | |
| M | | 1 | **6V-9632** | 2 | NUT-WELD (M6X1-THD) | |
| M | | 1 | **8T-3490** | 6 | NUT-WELD (M10X1.5-THD) | |
| | | 1 | **119-0884** | 1 | HINGE AS | |
| | | 1 | **174-9801** | 2 | BOSS | |
| | | 1 | **192-9018** | 1 | HINGE | |
| | 16 | 1 | **269-5831** | 1 | BAR AS | |
| M | 17 | 1 | **5C-7261** | 2 | NUT (M8X1.25-THD) | |
| | 18 | 1 | **6V-7636** | 2 | PIN AS-SPRING | |
| M | 19 | 1 | **9X-2041** | 4 | SCREW-TRUSS HEAD (M10X1.5X20-MM) | |
| M | 20 | 1 | **8T-4181** | 4 | BOLT (M6X1X20-MM) | |
| | 21 | 1 | **9N-3388** | 4 | BOLT (10-24X0.75-IN) | |
| M | 22 | 1 | **9X-2042** | 1 | SCREW-TRUSS HEAD (M6X1X12-MM) | |
| | 23 | 1 | **9X-8256** | 1 | WASHER (6.6X12X2-MM THK) | |
| E | 24 | 1 | **3E-3805** | | SEAL (420-CM) | |

E-ORDER BY THE CENTIMETER
J-REQUIRES 5P8500 KEY
M-METRIC PART

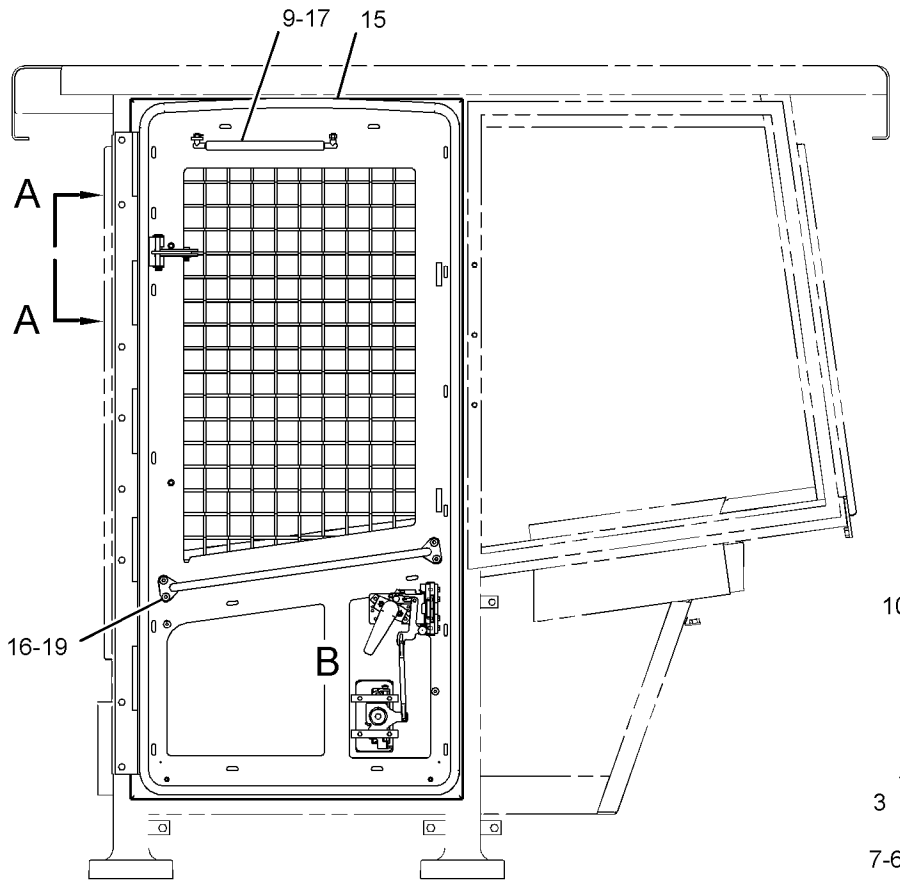


LEFT SIDE VIEW
(INSIDE RIGHT DOOR)

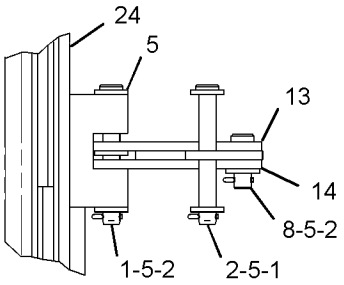


VIEW A-A

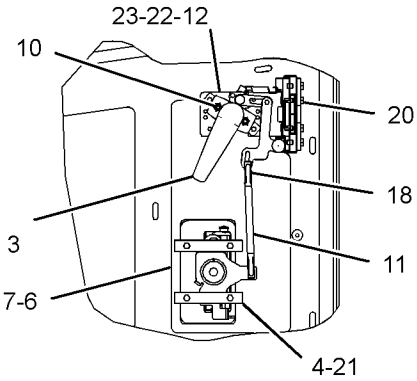


VIEW OF AREA B

GRAPHIC #1 **<END>** g01236444

# OPERATOR STATION

## *269-5819* DOOR GP-CAB—LH

**S/N: 5451-UP**
**PART OF 269-5816 DOOR GP-CAB**
**AN ATTACHMENT**

**SMCS-7308** **i02613962**

| NOTE | REF NO | GRAPHIC REF | PART NUMBER | QTY | PART NAME 1 2 3 4 5 6 (PRODUCT LEVEL) | SEE PAGE |
|---|---|---|---|---|---|---|
| | 1 | 1 | **2D-6006** | 2 | PIN | |
| | 2 | 1 | **3B-4611** | 3 | PIN-COTTER | |
| | 3 | 1 | **8T-3504** | 1 | HANDLE AS-INSIDE | |
| | 4 | 1 | **8T-4747** | 2 | BRACKET | |
| | 5 | 1 | **8T-4896** | 6 | WASHER-HARD (10.2X18.5X2.5-MM THK) | |
| | 6 | 1 | **8Y-6386** | 1 | SEAL-HANDLE (MOUNTING) | |
| | 7 | 1 | **9F-0348** | 1 | PIN | |
| | 8 | 1 | **9R-9755** | 1 | STRUT-NONLOCKING | |
| M | 9 | 1 | **9X-2546** | 2 | BOLT (M6X1X20-MM) | |
| | 10 | 1 | **105-7895** | 1 | HANDLE AS | |
| | | 1 | **8Y-4501** | 1 | SPRING-HANDLE | |
| | 11 | 1 | **120-0144** | 1 | LINK-CONNECTING | |
| | 12 | 1 | **120-5283** | 1 | LATCH AS | |
| | 13 | 1 | **196-8556** | 2 | PLATE | |
| | 14 | 1 | **199-6162** | 1 | PLATE | |
| | 15 | 1 | **269-5820** | 1 | DOOR AS (LH) | |
| M | | 1 | **6V-9632** | 2 | NUT-WELD (M6X1-THD) | |
| M | | 1 | **8T-3490** | 6 | NUT-WELD (M10X1.5-THD) | |
| | | 1 | **119-0884** | 1 | HINGE AS | |
| | | 1 | **174-9801** | 2 | BOSS | |
| | | 1 | **192-9018** | 1 | HINGE | |
| | 16 | 1 | **269-5831** | 1 | BAR AS | |
| M | 17 | 1 | **5C-7261** | 2 | NUT (M8X1.25-THD) | |
| | 18 | 1 | **6V-7636** | 2 | PIN AS-SPRING | |
| M | 19 | 1 | **9X-2041** | 4 | SCREW-TRUSS HEAD (M10X1.5X20-MM) | |
| M | 20 | 1 | **8T-4181** | 4 | BOLT (M6X1X20-MM) | |
| | 21 | 1 | **9N-3388** | 4 | BOLT (10-24X0.75-IN) | |
| M | 22 | 1 | **9X-2042** | 1 | SCREW-TRUSS HEAD (M6X1X12-MM) | |
| | 23 | 1 | **9X-8256** | 1 | WASHER (6.6X12X2-MM THK) | |
| E | 24 | 1 | **3E-3805** | | SEAL (420-CM) | |

E-ORDER BY THE CENTIMETER
M-METRIC PART

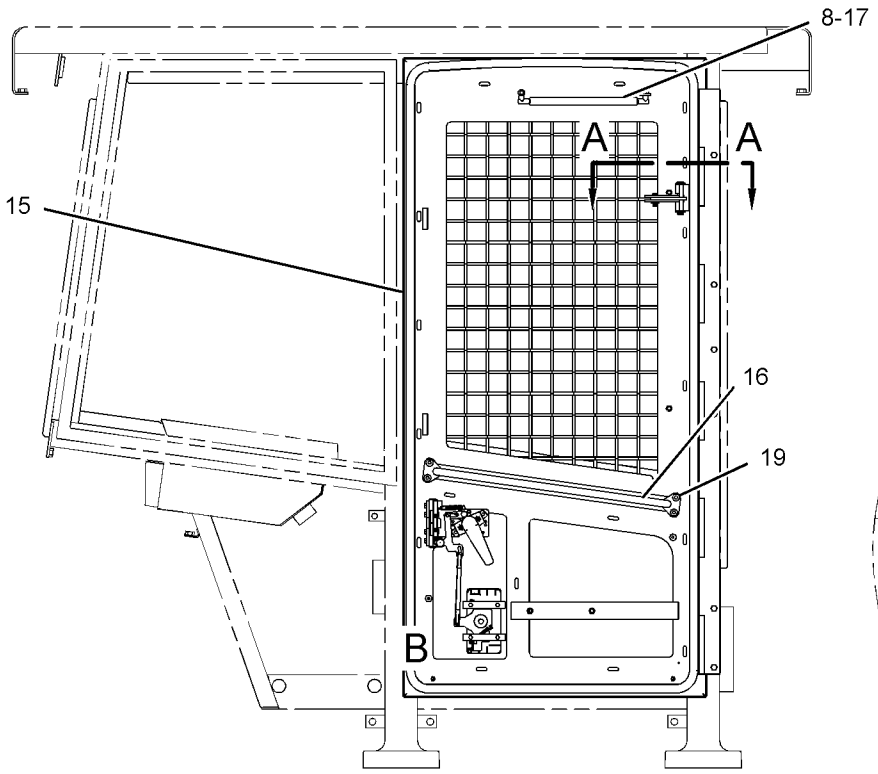


RIGHT SIDE VIEW

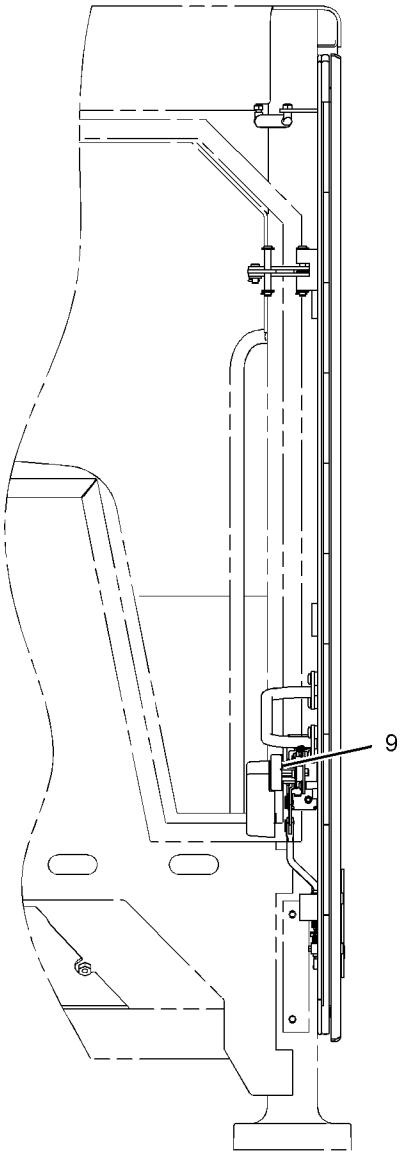


FRONT VIEW
(LEFT SIDE)

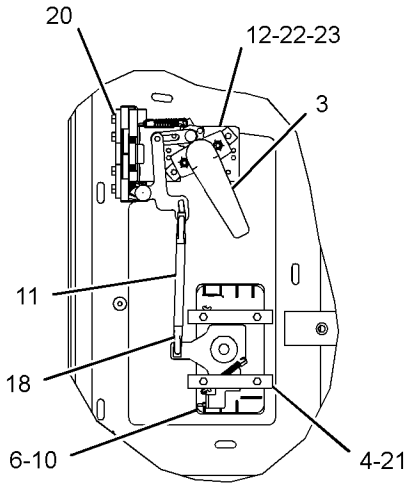


VIEW OF AREA B

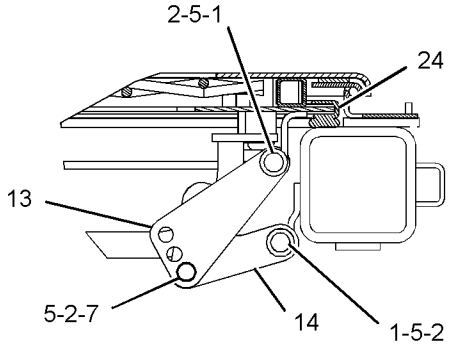


SECTION A-A

GRAPHIC #1 **<END>** g01338250

# OPERATOR STATION

## *255-9005* FAN GP-DEFROSTER

**S/N: 5451-UP**

**PART OF 252-1415, 252-1720 CAB AR-ENCLOSED ROPS**

**AN ATTACHMENT**

**SMCS-7316** **i02178546**

| NOTE | REF NO | GRAPHIC REF | PART NUMBER | QTY | PART NAME 1 2 3 4 5 6 (PRODUCT LEVEL) | SEE PAGE |
|---|---|---|---|---|---|---|
| | 1 | 1 | **122-6709** | 1 | FAN GP-DEFROSTER | |
| | 2 | 1 | **032-0683** | 5 | SCREW-MACHINE | |
| | 3 | 1 | **4B-5324** | 5 | WASHER (3.9X9.6X1.2-MM THK) | |
| | 4 | 1 | **4B-2041** | 5 | NUT (6-32-THD) | |
| | 5 | 1 | **236-4611** | 1 | SWITCH AS-ROCKER (FAN BLOWER SPEED) | |

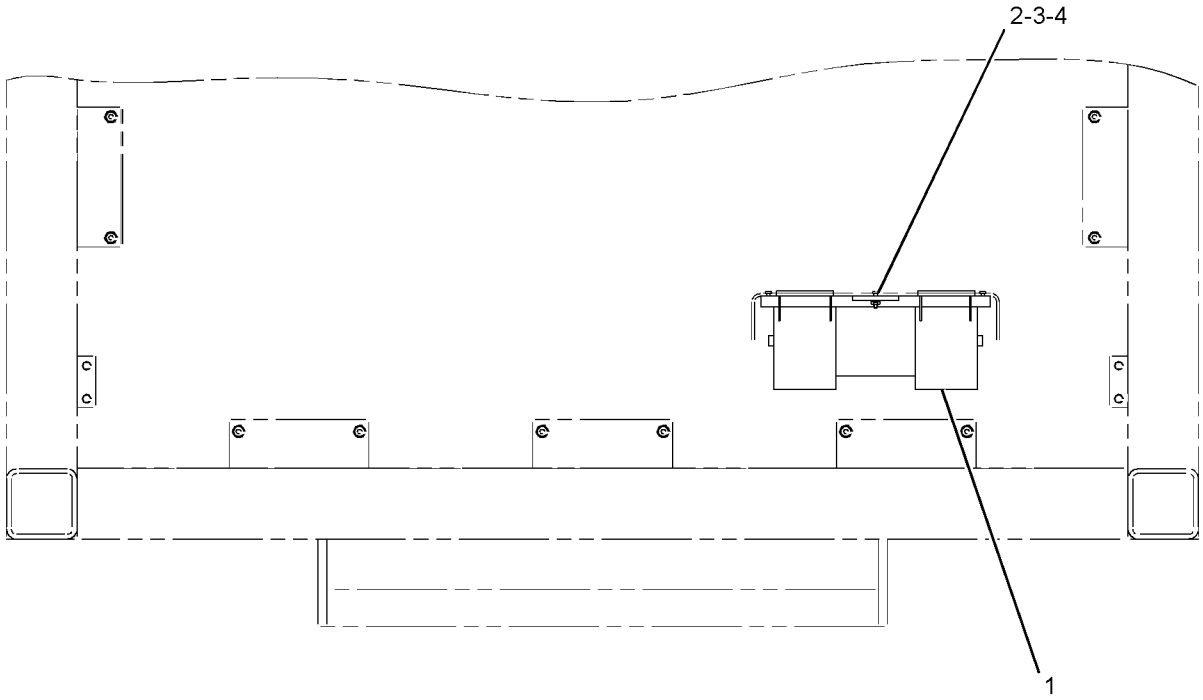


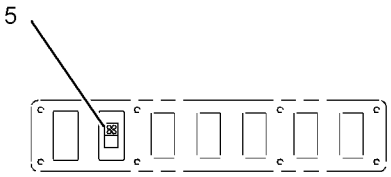


VIEW OF BEZEL
IN CAB

GRAPHIC #1 **<END>** g01104524

# OPERATOR STATION

## *217-7368* GUARD GP-ENCLOSED ROPS

**S/N: 5451-UP**
**PART OF 252-1415, 252-1720 CAB AR-ENCLOSED ROPS**
**AN ATTACHMENT**

**SMCS-7158** **i01761182**

| NOTE | REF NO | GRAPHIC REF | PART NUMBER | QTY | PART NAME 1 2 3 4 5 6 (PRODUCT LEVEL) | SEE PAGE |
|---|---|---|---|---|---|---|
| | 1 | 1 | **217-7371** | 1 | PLATE AS | |
| M | | 1 | **8T-3490** | 4 | NUT-WELD (M10X1.5 THD) | |
| | 2 | 1 | **217-7374** | 1 | PLATE AS | |
| M | | 1 | **8T-3490** | 3 | NUT-WELD (M10X1.5 THD) | |
| | 3 | 1 | **091-0079** | 1 | PLUG | |
| | 4 | 1 | **7X-7729** | 11 | WASHER (11X25X3-MM THK) | |
| M | 5 | 1 | **8T-4136** | 11 | BOLT (M10X1.5X25-MM) | |

M-METRIC PART

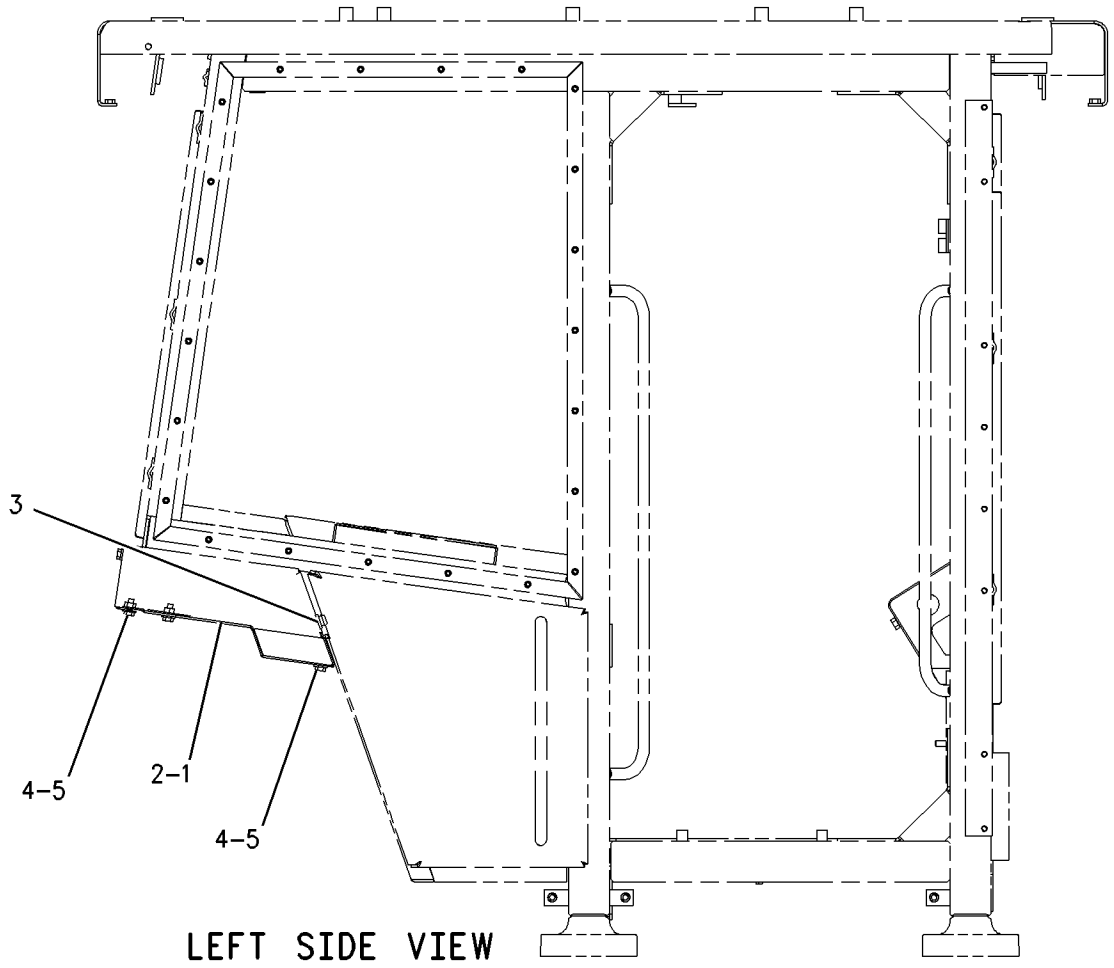


LEFT SIDE VIEW

GRAPHIC #1 **<END>** g00913762

# OPERATOR STATION

## *221-2657* GUARD GP-OPEN ROPS

**S/N: 5451-UP**
**PART OF 252-1722, 252-1728 CAB AR-OPEN ROPS**
**AN ATTACHMENT**

**SMCS-7158** **i02178811**

| NOTE | REF NO | GRAPHIC REF | PART NUMBER | QTY | PART NAME 1 2 3 4 5 6 (PRODUCT LEVEL) | SEE PAGE |
|---|---|---|---|---|---|---|
| | 1 | 1 | **223-9121** | 1 | PLATE AS | |
| M | | 1 | **8T-3490** | 6 | NUT-WELD (M10X1.5 THD) | |
| | 2 | 1 | **7X-7729** | 13 | WASHER (11X25X3-MM THK) | |
| M | 3 | 1 | **8T-4136** | 13 | BOLT (M10X1.5X25-MM) | |

M-METRIC PART

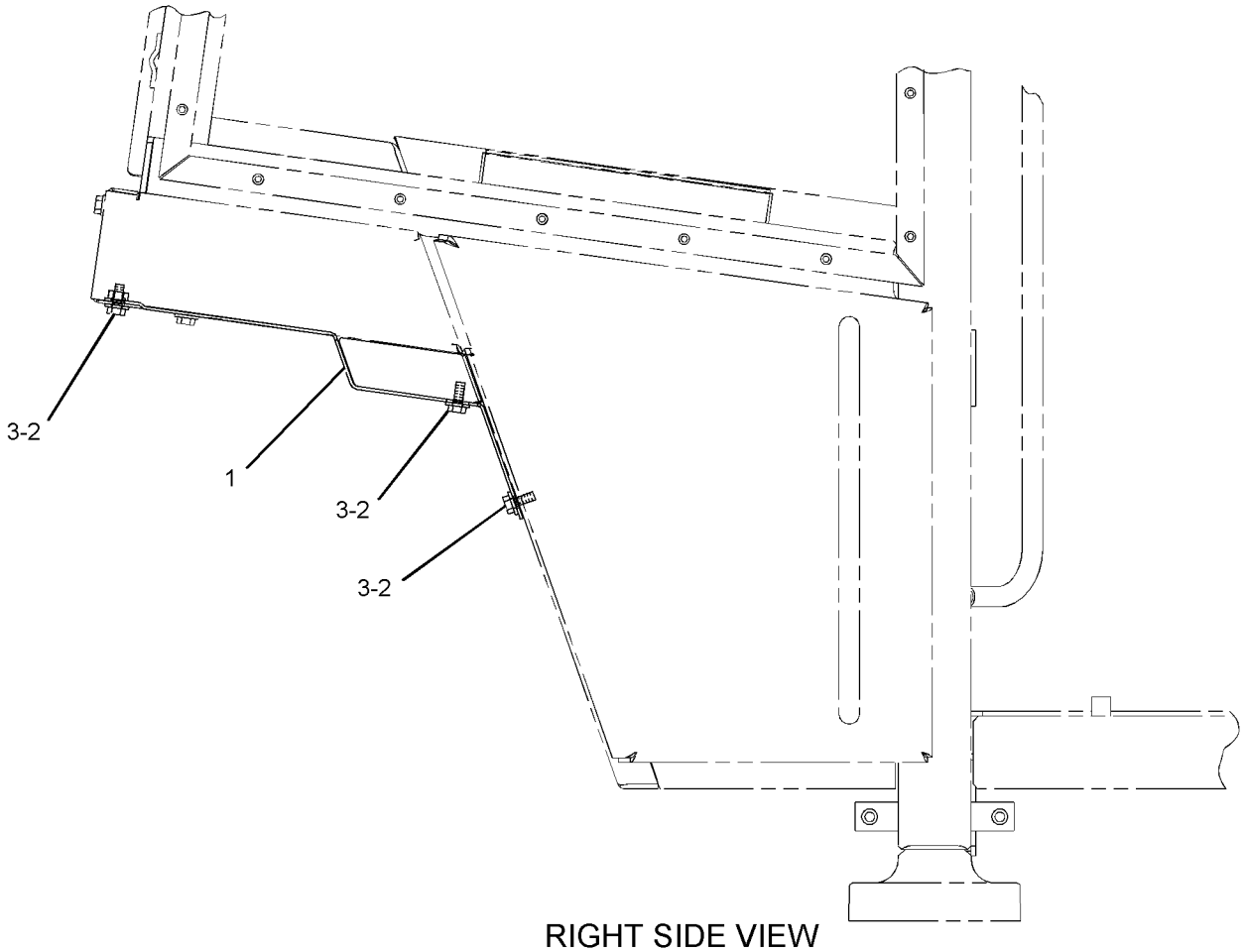


RIGHT SIDE VIEW

GRAPHIC #1

**<END>**

g01103928

# OPERATOR STATION

## *154-6738* INSTALLATION GP-RADIO

**S/N: 5451-UP**

**PART OF 252-1415, 252-1720 CAB AR-ENCLOSED ROPS**

**AN ATTACHMENT**

**SMCS-7338** **i02466034**

| NOTE | REF NO | GRAPHIC REF | PART NUMBER | QTY | PART NAME 1 2 3 4 5 6 (PRODUCT LEVEL) | SEE PAGE |
|---|---|---|---|---|---|---|
| C | 1 | 1 | **3S-2093** | 1 | STRAP-CABLE | |
| | 2 | 1 | **3E-6601** | 1 | FILM-NOTICE (RADIO) | |
| C | 3 | 1 | **117-2311** | 1 | RECEPTACLE AS-POWER (12-VOLT) | |
| | 4 | 1 | **6T-7695** | 2 | SPEAKER AS-RADIO | |
| C | 5 | 1 | **154-6739** | 1 | CABLE AS | |
| | 6 | 1 | **7S-1197** | 8 | SCREW-MACHINE (8-32X0.5-IN) | |
| M | 7 | 1 | **7X-3332** | 2 | SCREW-HEX FLANGE (M4X0.7X8-MM) | |
| | 8 | 1 | **8E-1118** | 1 | ANTENNA AS | |
| | 9 | 1 | **8K-1433** | 1 | GROMMET | |
| | 10 | 1 | **9U-8263** | 1 | COVER | |
| | 11 | 1 | **205-4285** | 1 | CONVERTER GP-ELECTRICAL (24-VOLT TO 12-VOLT) | |

C-CHANGE FROM PREVIOUS TYPE
M-METRIC PART

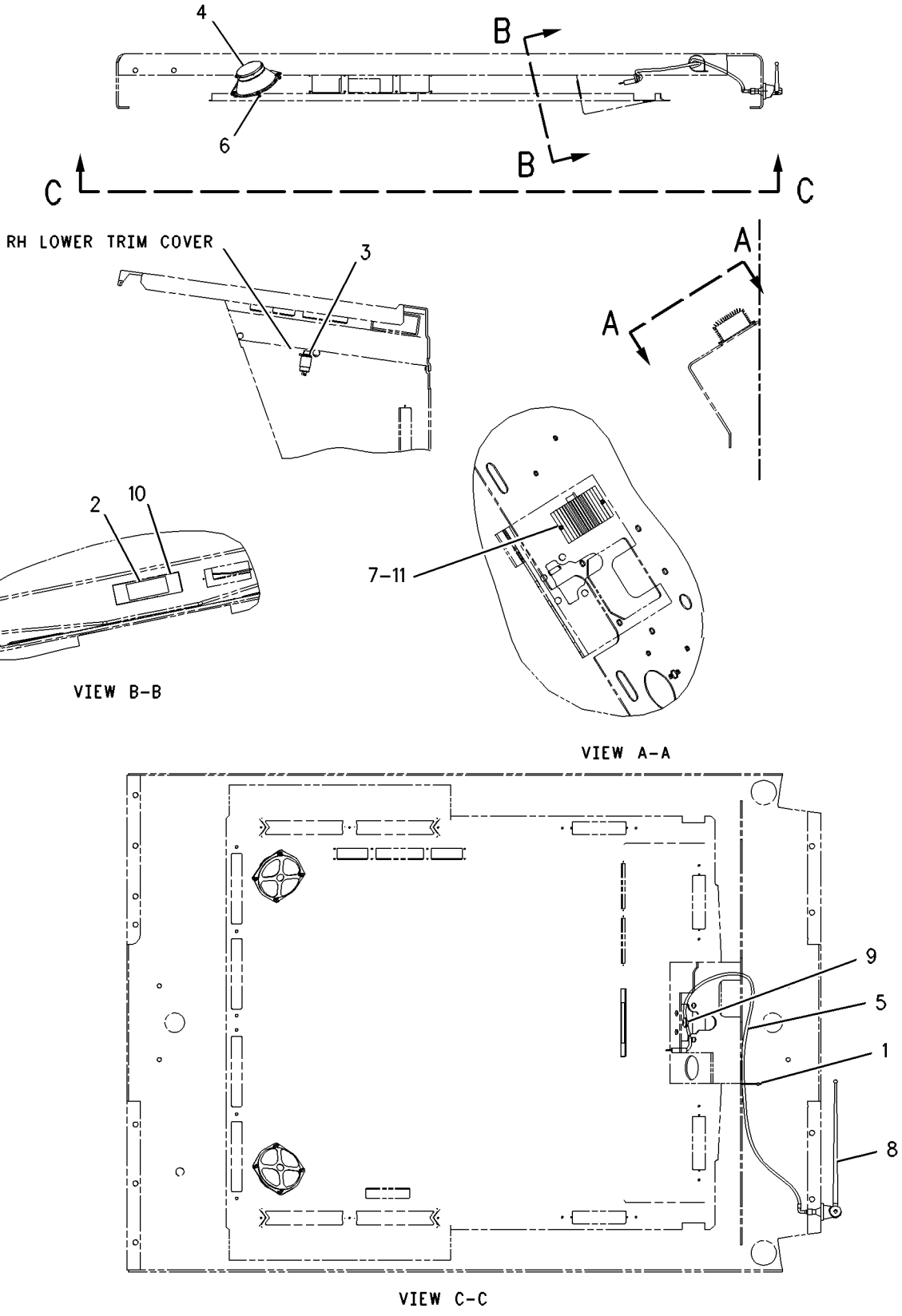


GRAPHIC #1 **<END>** g00921210

# OPERATOR STATION

## *251-1318* LINES GP-AIR CONDITIONER

**S/N: 5451-UP**

**PART OF 252-1413 AIR CONDITIONER AR**

**AN ATTACHMENT**

**SMCS-1808** **i02465957**

| NOTE | REF NO | GRAPHIC REF | PART NUMBER | QTY | PART NAME 1 2 3 4 5 6 (PRODUCT LEVEL) | SEE PAGE |
|---|---|---|---|---|---|---|
| | 1 | 1 | **1P-6356** | 1 | PLATE | |
| | 2 | 1 | **3S-2093** | 3 | STRAP-CABLE | |
| | 3 | 1 | **5D-1026** | 10 | CLAMP-HOSE | |
| | 4 | 1 | **7X-2049** | 1 | TUBE AS-REFRIGERANT ORIFICE | |
| | 5 | 1 | **106-8704** | 1 | SUPPRESSOR AS-ARC | |
| | | 1 | **102-8802** | 1 | KIT-RECEPTACLE (2-PIN) | |
| | | | | | (INCLUDES RECEPTACLE AND WEDGE) | |
| | 6 | 1 | **163-9324** | 1 | PLATE-INSTRUCTION (AIR CONDITIONER) | |
| | 7 | 1 | **114-5333** | 1 | SWITCH AS-PRESSURE (AIR CONDITIONER, HIGH SIDE) | |
| | | 1 | **102-8802** | 1 | KIT-RECEPTACLE (2-PIN) | |
| | | | | | (INCLUDES RECEPTACLE AND WEDGE) | |
| | 8 | 1 | *165-2273* | 2 | VALVE AS-SHUTOFF (ENGINE COOLANT) | |
| | | | | | (EACH INCLUDES) | |
| | | 1 | **3K-0360** | 1 | SEAL-O-RING | |
| | | 1 | **6V-7238** | 1 | VALVE-SHUTOFF | |
| | 9 | 1 | **218-8487** | 1 | TUBE AS | |
| | 10 | 1 | **218-8488** | 1 | TUBE AS | |
| I | 11 | 1 | **251-6167** | 1 | HOSE AS | |
| I | 12 | 1 | **252-9607** | 1 | HOSE AS | |
| I | 13 | 1 | **256-0308** | 1 | HOSE AS | |
| | 14 | 1 | *260-9149* | 1 | ADAPTER AS | |
| | | 1 | **6V-9027** | 1 | SEAL-O-RING | |
| | | 1 | **8C-7325** | 1 | ADAPTER | |
| I | 15 | 1 | **263-2599** | 1 | HOSE AS | |
| | 16 | 1 | **125-2796** | 1 | FITTING AS-AIR CONDITIONER | |
| | | 1 | **3E-4051** | 1 | CAP-SEAL | |
| | | 1 | **3E-4057** | 1 | VALVE AS | |
| N | 17 | 1 | **139-1398** | 1 | CLIP | |
| N | 18 | 1 | **144-3935** | 1 | CLIP | |
| | 19 | 1 | *148-8311* | 2 | ADAPTER AS | |
| | | | | | (EACH INCLUDES) | |
| | | 1 | **3K-0360** | 1 | SEAL-O-RING | |
| | | 1 | **8T-1715** | 1 | ADAPTER (STRAIGHT THREAD O-RING) | |
| Y | 20 | 1 | *186-6190* | 1 | ACCUMULATOR GP-REFRIGERANT (WITH DESICCANT) | 574 |
| | 21 | 1 | **2V-8259** | 1 | GROMMET | |
| | 22 | 1 | **3E-4066** | 1 | FITTING AS-AIR CONDITIONER | |
| | | 1 | **3E-4052** | 1 | CAP-SEAL | |
| | | 1 | **3E-4058** | 1 | VALVE AS | |
| | 23 | 1 | **4S-1962** | 2 | CLIP | |
| M | 24 | 1 | **5C-7261** | 1 | NUT (M8X1.25-THD) | |
| | 25 | 1 | **5P-4116** | 1 | WASHER-HARD (8.8X20.5X2-MM THK) | |
| | 26 | 1 | **6D-1641** | 3 | CLIP | |
| | 27 | 1 | **6V-4356** | 1 | CLIP (SLOT) | |
| | 28 | 1 | **6V-4357** | 1 | CLIP (TAB) | |
| | 29 | 1 | **8M-2770** | 1 | CLIP | |
| J | 30 | 1 | **8M-2773** | 3 | CLIP | |
| | 31 | 1 | **8T-4121** | 8 | WASHER-HARD (11X21X2.5-MM THK) | |
| M | 32 | 1 | **8T-4133** | 1 | NUT (M10X1.5-THD) | |
| M | 33 | 1 | **8T-4137** | 5 | BOLT (M10X1.5X20-MM) | |
| M | 34 | 1 | **8T-4183** | 1 | BOLT (M12X1.75X40-MM) | |
| M | 35 | 1 | **8T-4191** | 1 | BOLT (M10X1.5X16-MM) | |
| | 36 | 1 | **8T-4223** | 1 | WASHER-HARD (13.5X25.5X3-MM THK) | |
| M | 37 | 1 | **8T-6466** | 1 | BOLT (M10X1.5X60-MM) | |
| | 38 | 1 | **9M-8406** | 1 | CLIP | |
| | 39 | 1 | **9X-7378** | 1 | SEAL-O-RING | |

## *251-1318* **LINES GP-AIR CONDITIONER** *(contd.)* **i02465957**

| NOTE | REF NO | GRAPHIC REF | PART NUMBER | QTY | PART NAME 1 2 3 4 5 6 (PRODUCT LEVEL) | SEE PAGE |
|---|---|---|---|---|---|---|
| | 40 | 1 | **9X-7380** | 1 | SEAL-O-RING | |
| | 41 | 1 | **9X-7381** | 4 | SEAL-O-RING | |
| | 42 | 1 | **9X-7382** | 3 | SEAL-O-RING | |
| | 43 | 1 | **9X-7383** | 2 | SEAL-O-RING | |
| | 44 | 1 | **9X-7385** | 2 | SEAL-O-RING | |
| E | 45 | 1 | **5P-0767** | | HOSE (18-CM) | |
| E | 46 | 1 | **5P-0767** | | HOSE (52-CM) | |
| E | 47 | 1 | **5P-0767** | | HOSE (64-CM) | |
| E | 48 | 1 | **5P-0767** | | HOSE (279-CM) | |
| E | 49 | 1 | **5P-0767** | | HOSE (261-CM) | |
| D | 50 | 1 | **5P-5924** | | SEAL (0.3-M) | |

D-ORDER BY THE METER
E-ORDER BY THE CENTIMETER
I-REFER TO HYDRAULIC INFORMATION SYSTEM
J-USE 2 CLIPS ON 535C WHERE SPECIFIED AND USE 3 CLIPS ON 525C WHERE SPECIFIED ON DRAWING
M-METRIC PART
N-WHEN BUILDING 525C DO NOT USE PARTS MARKED N WHERE SPECIFIED ON DRAWING
Y-SEPARATE ILLUSTRATION

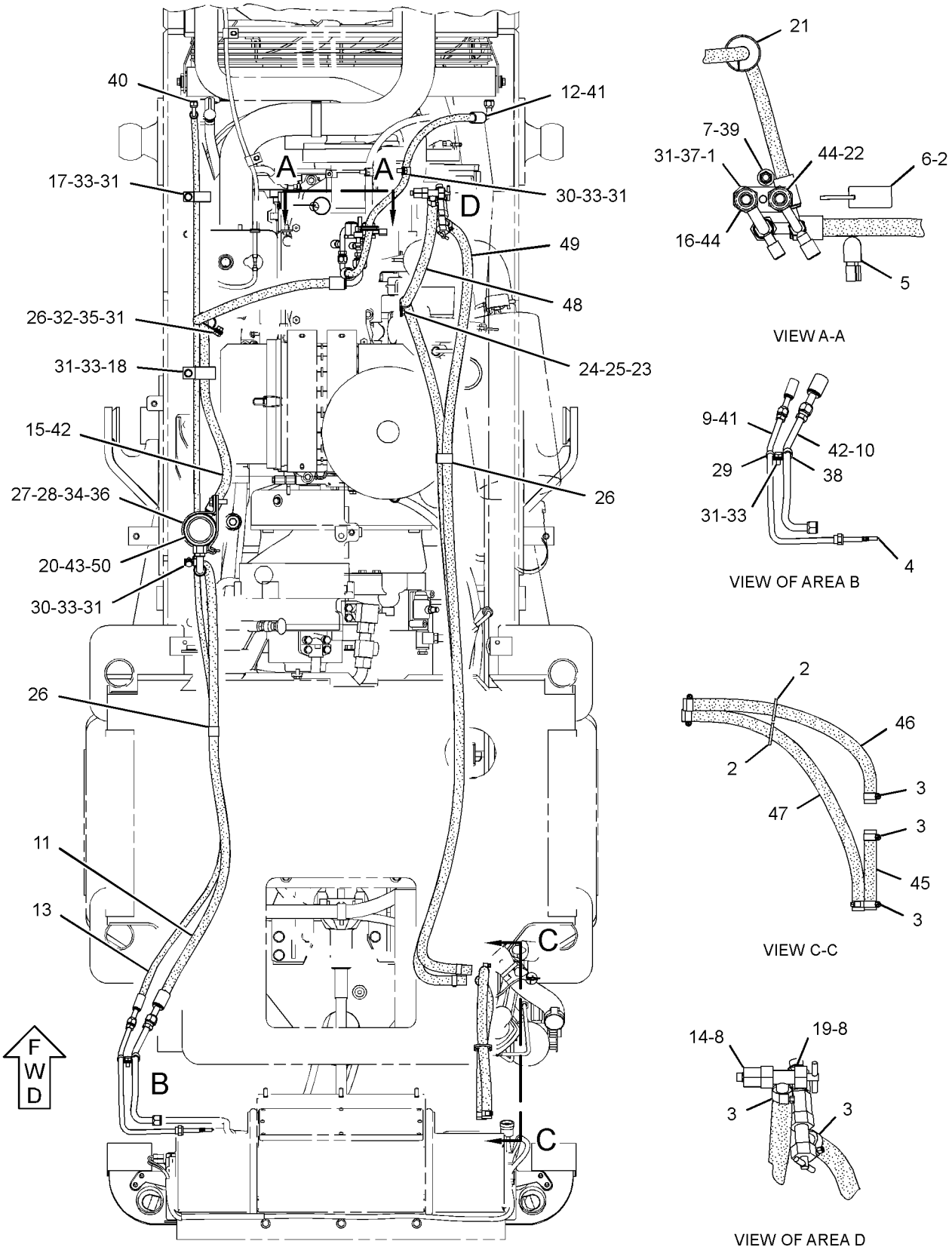


TOP VIEW

GRAPHIC #1 **<END>** g01236430

# *159-3979* MIRROR GP-REAR VIEW

**S/N: 5451-UP**

**PART OF 252-1415, 252-1720 CAB AR-ENCLOSED ROPS, 252-1722, 252-1728 CAB AR-OPEN ROPS**

**AN ATTACHMENT**

**SMCS-7319** **i00934497**

| NOTE | REF NO | GRAPHIC REF | PART NUMBER | QTY | PART NAME 1 2 3 4 5 6 (PRODUCT LEVEL) | SEE PAGE |
|---|---|---|---|---|---|---|
| | 1 | 1 | **122-3808** | 2 | BRACKET AS | |
| | 2 | 1 | **5P-6872** | 2 | MIRROR AS | |
| | | | | | (EACH INCLUDES) | |
| | 2A | 1 | **3K-6060** | 1 | LOCKNUT (3/8-16-THD) | |
| M | 3 | 1 | **8C-8585** | 4 | SCREW-BUTTON HEAD (M10X1.5X20-MM) | |

M-METRIC PART

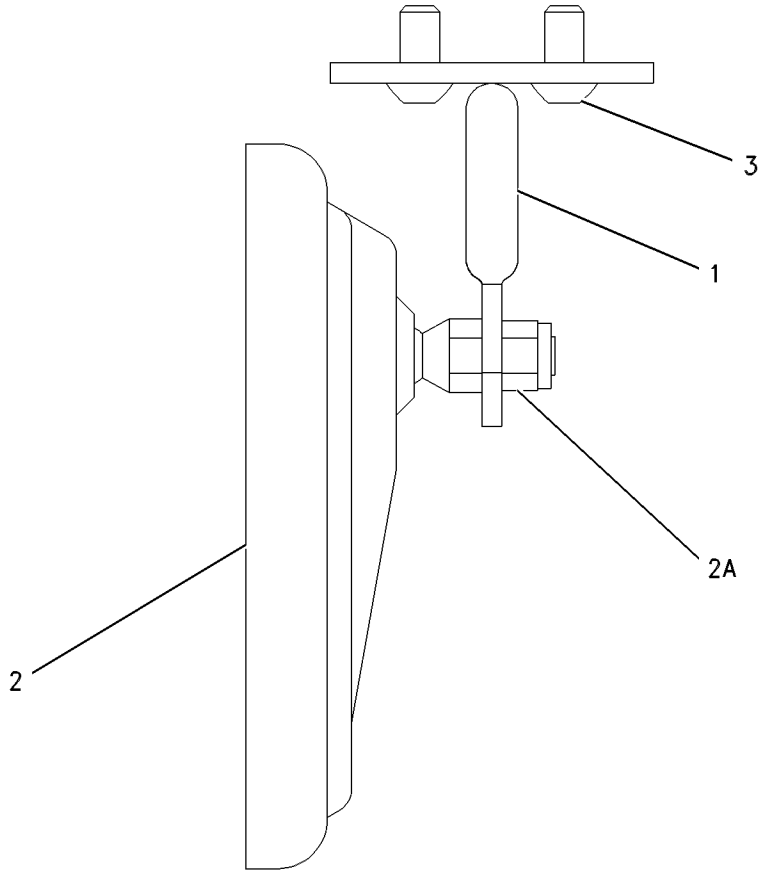


GRAPHIC #1 **<END>** g00480383

# OPERATOR STATION

## *245-1339* MODULE GP-DISPLAY—GAUGE CLUSTER

**S/N: 5451-UP**

**PART OF 255-8102 WIRING GP-CAB**

**SMCS-7450, 7490** **i02182553**

| NOTE | PART NUMBER | QTY | PART NAME 1 2 3 4 5 6 (PRODUCT LEVEL) | SEE PAGE |
|---|---|---|---|---|
| | | | (NO SERVICED PARTS) | |

**<END>**

# *143-2056* MOUNTING GP-ROPS

**S/N: 5451-UP**

**PART OF 252-1415, 252-1720 CAB AR-ENCLOSED ROPS, 252-1722, 252-1728 CAB AR-OPEN ROPS**

**AN ATTACHMENT**

**SMCS-7266** **i02571526**

| NOTE | REF NO | GRAPHIC REF | PART NUMBER | QTY | PART NAME 1 2 3 4 5 6 (PRODUCT LEVEL) | SEE PAGE |
|---|---|---|---|---|---|---|
| | 1 | 1 | **9X-8258** | 4 | WASHER (33X56X6-MM THK) | |
| | 2 | 1 | **163-3128** | 4 | SLEEVE-TAPERED | |
| | 3 | 1 | **9U-0512** | 4 | WASHER (32X144X12-MM THK) | |
| | 4 | 1 | **6Y-9960** | 4 | MOUNT AS | |
| | | 1 | **9W-8095** | 1 | PAD-REBOUND | |
| | 5 | 1 | **288-8888** | 4 | BOLT (M30X3.5X150-MM) | |

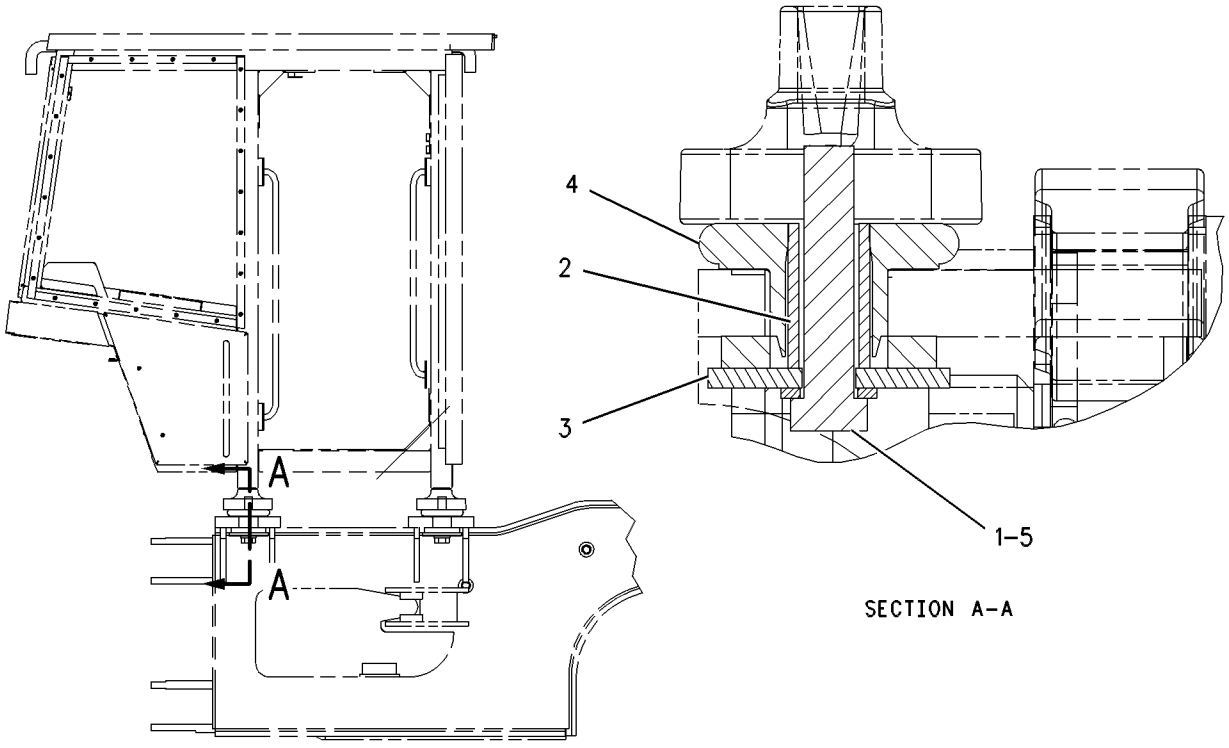


GRAPHIC #1 **<END>** g00486798

# OPERATOR STATION

## *245-7707* PANEL GP-ACCESS–ROPS, RH

**S/N: 5451-UP**
**PART OF 252-2228 ROPS GP**
**AN ATTACHMENT**

**SMCS-726A** **i02157547**

| NOTE | REF NO | GRAPHIC REF | PART NUMBER | QTY | PART NAME 1 2 3 4 5 6 (PRODUCT LEVEL) | SEE PAGE |
|---|---|---|---|---|---|---|
| | 1 | 1 | **1D-4164** | 1 | HANDHOLD | |
| | 2 | 1 | **256-4584** | 1 | PANEL AS (RH) | |
| M | 3 | 1 | **8T-4139** | 2 | BOLT (M12X1.75X30-MM) | |
| | 4 | 1 | **8T-4223** | 2 | WASHER-HARD (13.5X25.5X3-MM THK) | |

M-METRIC PART

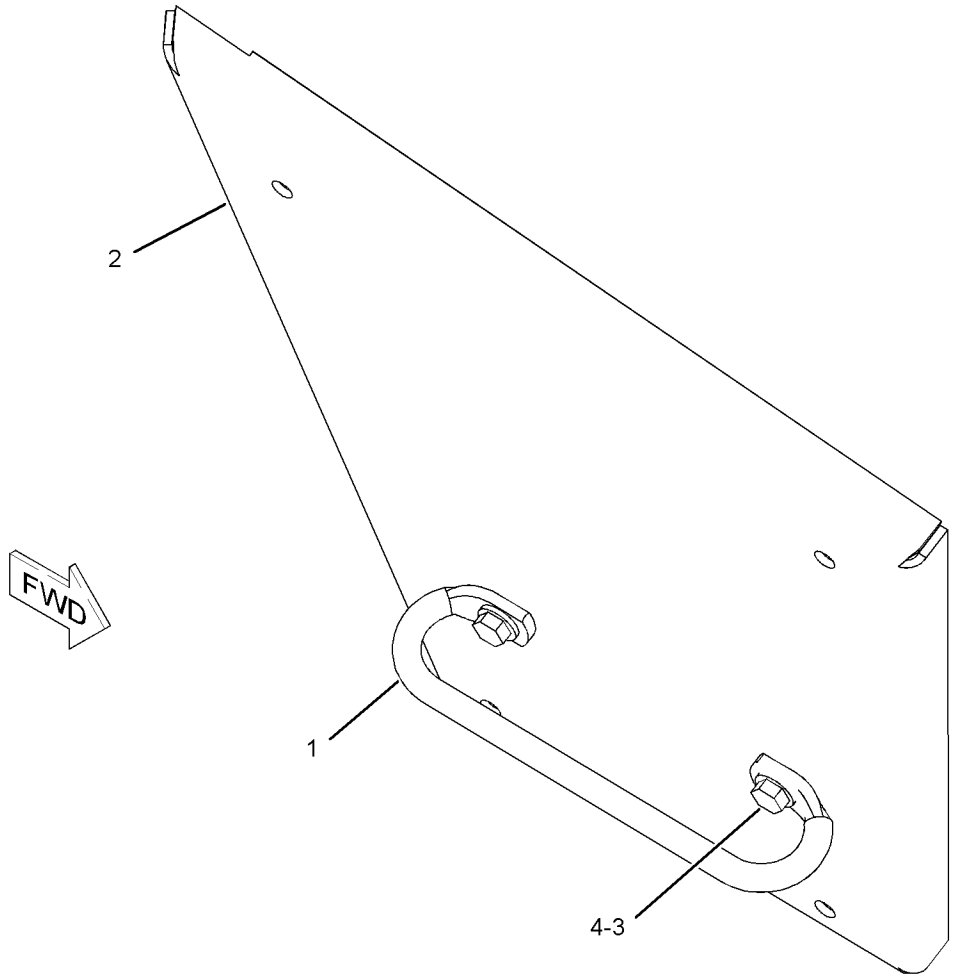


GRAPHIC #1 **<END>** g01098599

# OPERATOR STATION

## *257-4051* PANEL GP-ACCESS—ROPS, LH

**S/N: 5451-UP**
**PART OF 252-2228 ROPS GP**
**AN ATTACHMENT**

**SMCS-726A** **i02178554**

| NOTE | REF NO | GRAPHIC REF | PART NUMBER | QTY | PART NAME 1 2 3 4 5 6 (PRODUCT LEVEL) | SEE PAGE |
|---|---|---|---|---|---|---|
| | 1 | 1 | **1D-4164** | 1 | HANDHOLD | |
| | 2 | 1 | *201-9109* | 1 | DOOR GP-ACCESS (BREAKERS, 24-VOLT OUTLET) | |
| | | 1 | **202-7670** | 1 | LOCK GP-CYLINDER (DOOR ACCESS) | |
| | | 1 | **203-6066** | 1 | LATCH AS | |
| | | 1 | **219-6036** | 1 | DOOR AS | |
| | | 1 | **1V-8284** | 2 | HINGE | |
| | 3 | 1 | **202-4327** | 1 | PULLER-FUSE | |
| | 4 | 1 | **257-4052** | 1 | PANEL AS-ACCESS (LH) | |
| M | | 1 | **8T-3490** | 2 | NUT-WELD (M10X1.5-THD) | |
| M | | 1 | **8T-3597** | 2 | NUT-WELD (M12X1.75-THD) | |
| | | 1 | **257-4053** | 1 | PANEL | |
| | 5 | 1 | **8T-4121** | 2 | WASHER-HARD (11X21X2.5-MM THK) | |
| M | 6 | 1 | **8T-4137** | 2 | BOLT (M10X1.5X20-MM) | |
| M | 7 | 1 | **8T-4139** | 2 | BOLT (M12X1.75X30-MM) | |
| | 8 | 1 | **8T-4223** | 2 | WASHER-HARD (13.5X25.5X3-MM THK) | |
| BE | 9 | 1 | **103-2543** | | SEAL | |

B-USE AS REQUIRED
E-ORDER BY THE CENTIMETER
M-METRIC PART

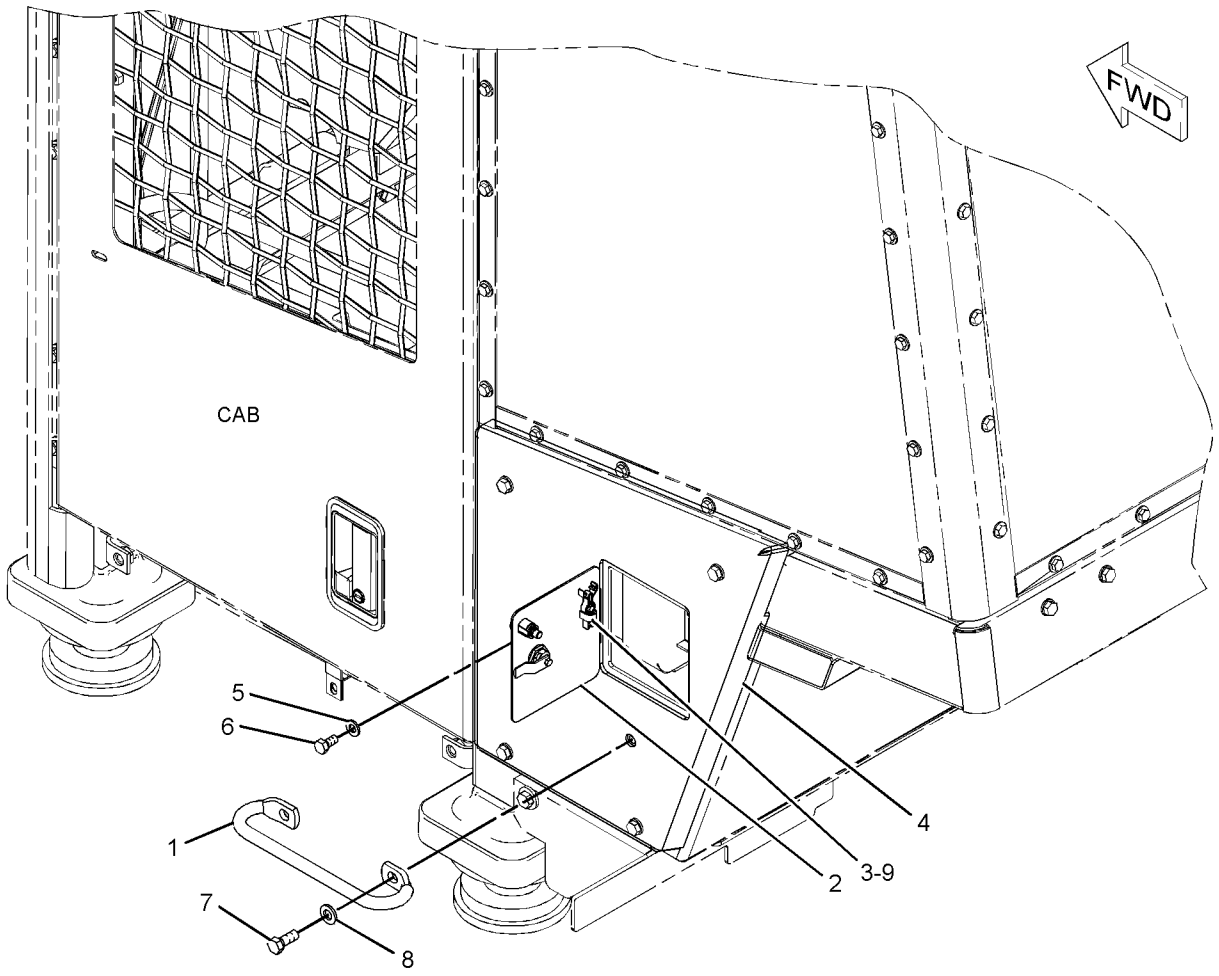


GRAPHIC #1 **<END>** g01104653

# OPERATOR STATION

## 130-8176 PEDAL GP-GOVERNOR

**S/N: 5451-UP**

**PART OF 255-8102 WIRING GP-CAB**

**SMCS-1276** **i02505214**

| NOTE | REF NO | GRAPHIC REF | PART NUMBER | QTY | PART NAME 1 2 3 4 5 6 (PRODUCT LEVEL) | SEE PAGE |
|---|---|---|---|---|---|---|
| | 1 | 1 | **123-9431** | 1 | COVER | |
| | 2 | 1 | **7G-7053** | 1 | GROMMET | |
| | 3 | 1 | **160-6353** | 1 | PLATE AS | |
| Y | 4 | 1 | **204-7949** | 1 | SENSOR GP-POSITION (ROTARY) (THROTTLE) | 169 |
| | 5 | 1 | **160-6365** | 2 | SCREW | |
| | 6 | 1 | **160-6366** | 2 | CLIP | |
| | 7 | 1 | **140-2961** | 1 | KIT-ROLLER | |
| | | | | | (KIT INCLUDES SNAP RING, ROLLER AND ROLLER PIN) | |
| | 8 | 1 | **274-9189** | 1 | KIT-TREADLE PIN | |
| | | | | | (KIT INCLUDES BUSHINGS, PIN, AND PUSH NUT) | |
| | 9 | 1 | **140-2963** | 2 | SCREW | |

Y-SEPARATE ILLUSTRATION

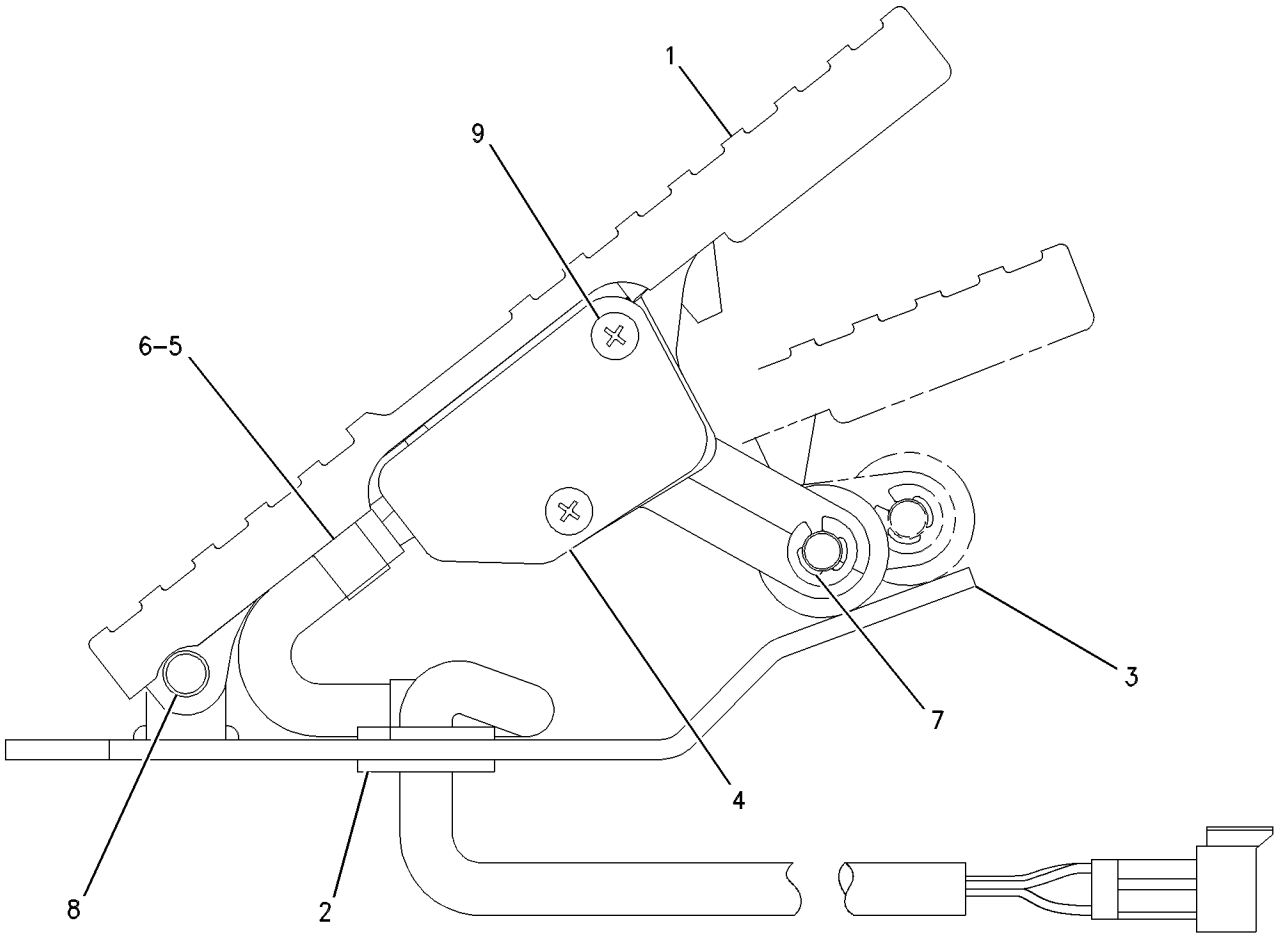


GRAPHIC #1 **<END>** g00495129

# OPERATOR STATION

## *204-0363* RADIO GP–AM/FM/WB CD PLAYER

**S/N: 5451-UP**

**AN ATTACHMENT**

**SMCS-7338** **i02168409**

| NOTE | PART NUMBER | QTY | PART NAME 1 2 3 4 5 6 (PRODUCT LEVEL) | SEE PAGE |
|---|---|---|---|---|
| | *136-5490* | 1 | BUSHING (RADIO MOUNT) | |
| | **204-0354** | 1 | HARNESS AS-RADIO | |
| | **102-8806** | 1 | KIT-RECEPTACLE (8-PIN) | |
| | | | (INCLUDES RECEPTACLE AS & WEDGE) | |
| | **8T-8737** | 1 | PLUG-SEAL | |
| | **169-6326** | 1 | RADIO GP (AM/FM CD PLAYER) | |
| | **102-0382** | 1 | SLEEVE | |
| | **142-9681** | 1 | KNOB-SELECT | |

**<END>**

# OPERATOR STATION

## *252-2228* ROPS GP

**S/N: 5451-UP**

**PART OF 252-1415, 252-1720 CAB AR-ENCLOSED ROPS, 252-1722, 252-1728 CAB AR-OPEN ROPS**

**AN ATTACHMENT**

**SMCS-7323** **i02355146**

| NOTE | REF NO | GRAPHIC REF | PART NUMBER | QTY | PART NAME 1 2 3 4 5 6 (PRODUCT LEVEL) | SEE PAGE |
|---|---|---|---|---|---|---|
| | 1 | 1 | **5G-2934** | 2 | PLUG | |
| | 2 | 1 | **246-1200** | 1 | ROPS AS | |
| Y | 3 | 2 | *257-4051* | 1 | PANEL GP-ACCESS (ROPS, LH) | 621 |
| Y | 4 | 1 | *245-7707* | 1 | PANEL GP-ACCESS (ROPS, RH) | 620 |
| | 5 | 1 | **217-7380** | 1 | GUARD AS | |
| | | 1 | **6A-8024** | 4 | SPACER | |
| | 6 | 1 | **8T-4121** | 16 | WASHER-HARD (11X21X2.5-MM THK) | |
| M | 7 | 1 | **8T-4137** | 4 | BOLT (M10X1.5X20-MM) | |
| M | 8 | 1 | **8T-4195** | 8 | BOLT (M10X1.5X30-MM) | |
| M | 9 | 1 | **085-8091** | 4 | BOLT (M10X1.5X55-MM) | |
| E | 10 | 2 | **122-8339** | | SEAL (51-CM) | |
| | 11 | 2 | **8T-3996** | 19 | NUT (M6X1-THD) | |
| | 12 | 1 | **257-5597** | 4 | INSERT-THREADED | |

E-ORDER BY THE CENTIMETER
M-METRIC PART
Y-SEPARATE ILLUSTRATION

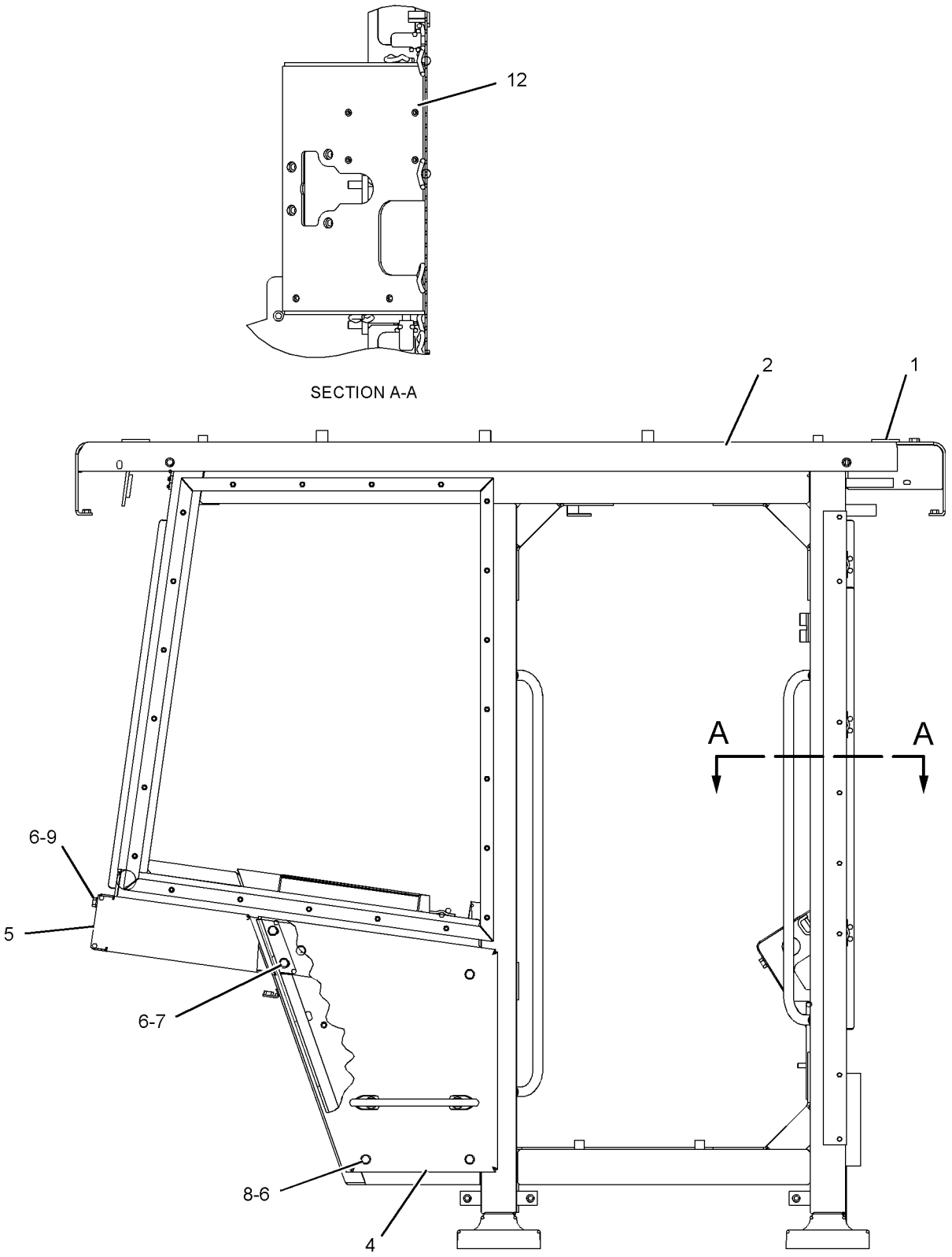


GRAPHIC #1

g01103186

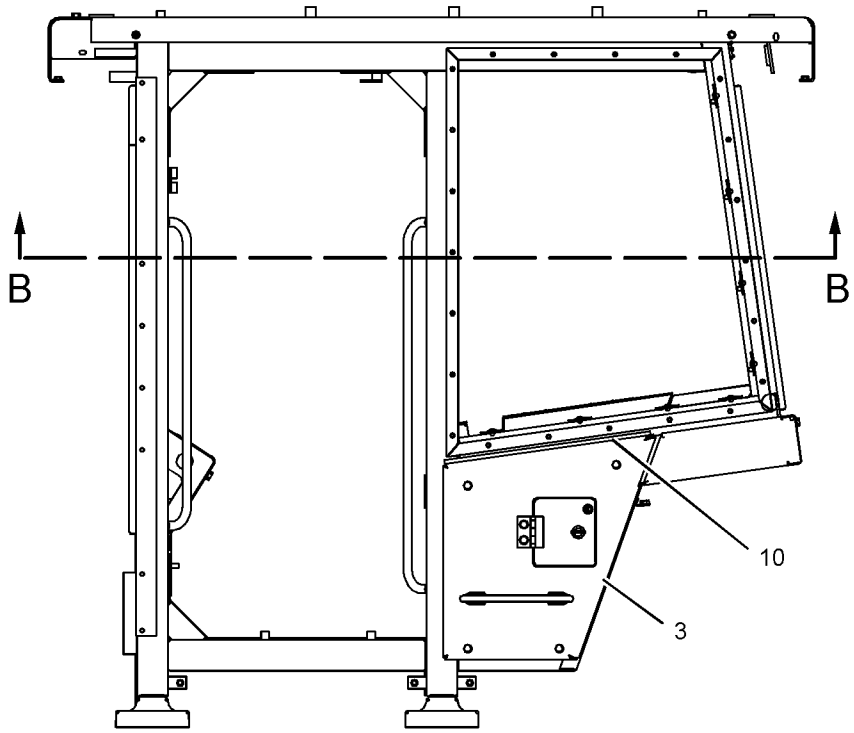


LEFT SIDE VIEW

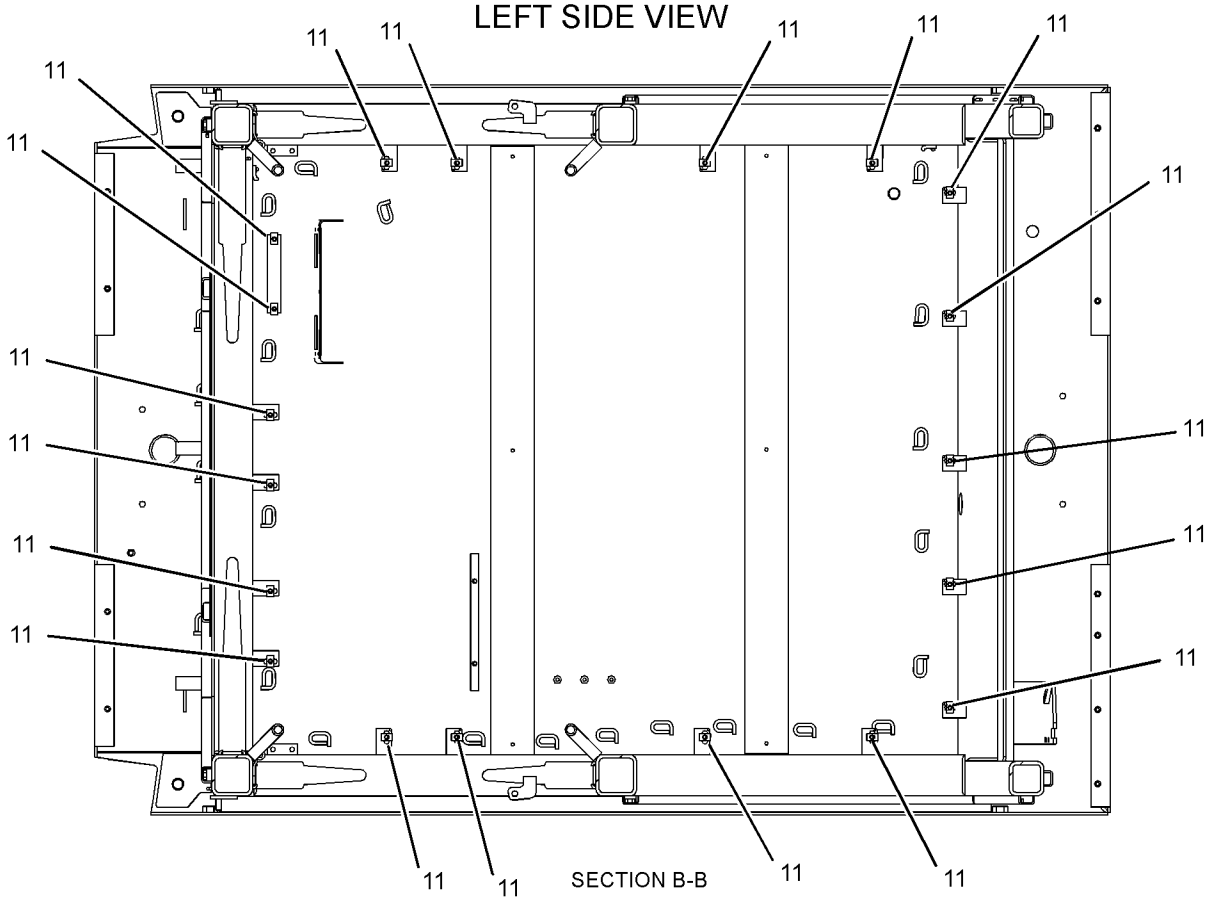
11
11
11

# OPERATOR STATION

## *221-9193* SCREEN GP-CAB

**S/N: 5451-UP**

**AN ATTACHMENT**

**SMCS-7165** **i02400047**

| NOTE | REF NO | GRAPHIC REF | PART NUMBER | QTY | PART NAME 1 2 3 4 5 6 (PRODUCT LEVEL) | SEE PAGE |
|---|---|---|---|---|---|---|
| | 1 | 1 | **221-9348** | 1 | SCREEN AS (RIGHT SIDE) | |
| | 2 | 1 | **221-9349** | 1 | SCREEN AS (LEFT SIDE) | |
| | 3 | 1 | **221-9350** | 1 | SCREEN AS (REAR) | |
| M | | 1 | **8T-3612** | 5 | NUT-WELD (M8X1.25-THD) | |
| | | 1 | **8Y-8495** | 3 | SPACER (16X32X12-MM THK) | |
| | | 1 | **222-3731** | 1 | HINGE | |
| | 4 | 1 | **221-9378** | 1 | SHEET | |
| | 5 | 1 | **221-9379** | 1 | CHANNEL AS | |
| M | | 1 | **8T-3612** | 3 | NUT-WELD (M8X1.25-THD) | |
| | 6 | 1 | **5P-4116** | 24 | WASHER-HARD (8.8X20.5X2-MM THK) | |
| M | 7 | 1 | **7X-2537** | 20 | BOLT (M8X1.25X35-MM) | |
| M | 8 | 1 | **8T-4200** | 5 | BOLT (M8X1.25X16-MM) | |
| | 9 | 1 | **8T-4224** | 14 | WASHER-HARD (8.8X16X2-MM THK) | |
| M | 10 | 1 | **8T-7329** | 10 | BOLT (M8X1.25X55-MM) | |
| M | 11 | 1 | **8T-7547** | 3 | BOLT (M8X1.25X30-MM) | |

M-METRIC PART

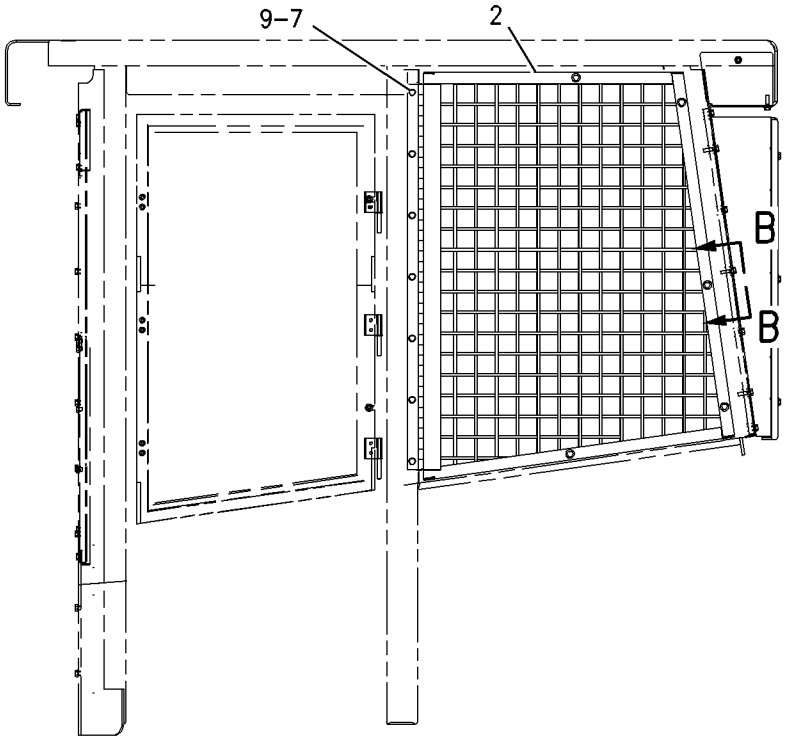


LEFT SIDE VIEW

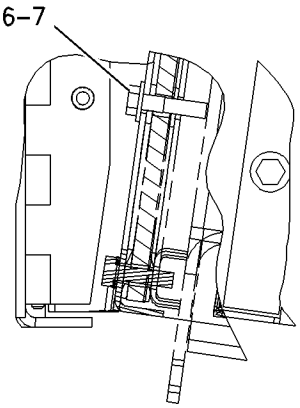


SECTION B–B

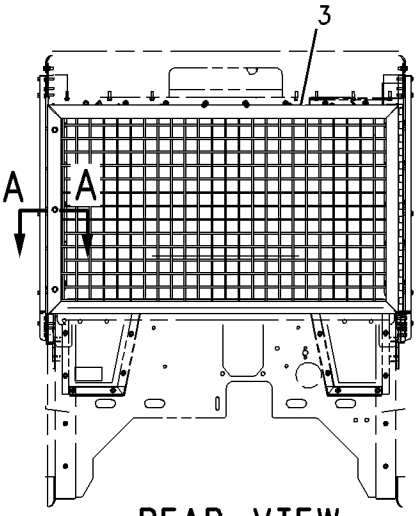


REAR VIEW

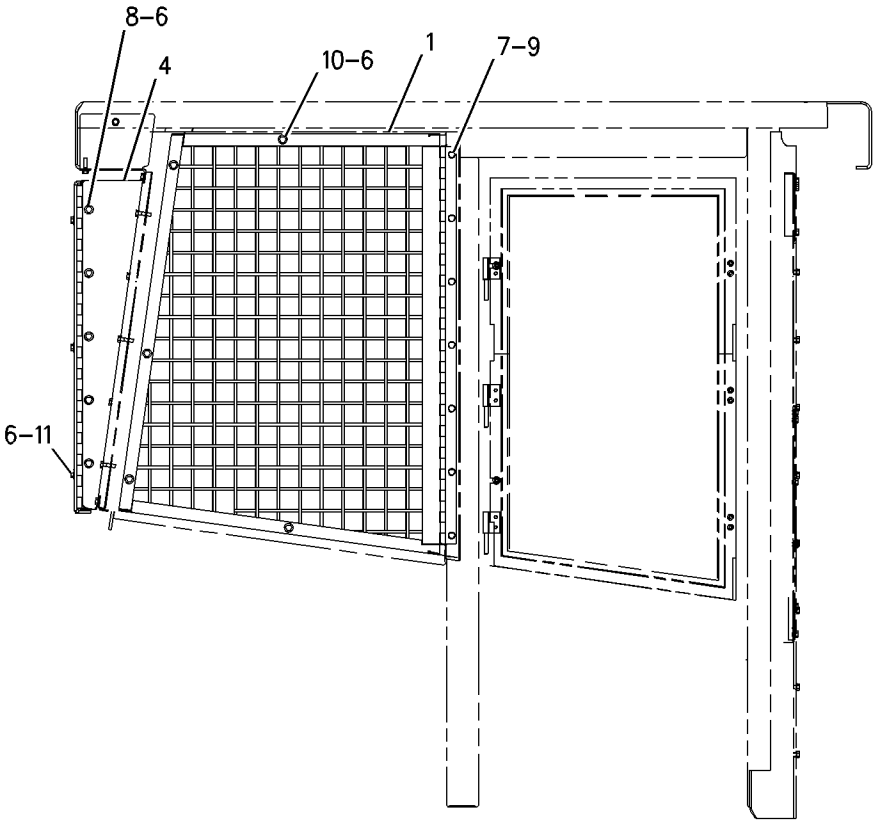


RIGHT SIDE VIEW

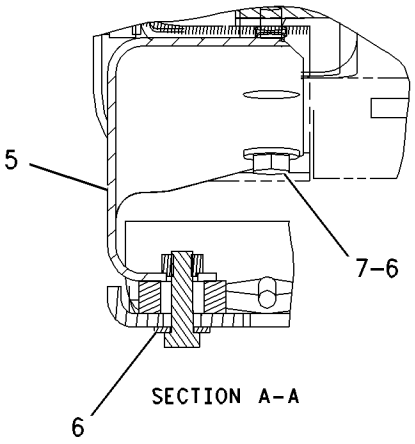


SECTION A–A

GRAPHIC #1 **<END>** g00916023

# OPERATOR STATION

## *246-1206* SCREEN GP-CAB

**S/N: 5451-UP**
**PART OF 252-1722, 252-1728 CAB AR-OPEN ROPS**
**AN ATTACHMENT**

**SMCS-7165** **i02299833**

| NOTE | REF NO | GRAPHIC REF | PART NUMBER | QTY | PART NAME 1 2 3 4 5 6 (PRODUCT LEVEL) | SEE PAGE |
|---|---|---|---|---|---|---|
| | 1 | 1 | **219-9906** | 2 | ANGLE | |
| | 2 | 2 | **224-2777** | 1 | SCREEN AS (REAR) | |
| | | 2 | **8Y-7386** | 26 | SPACER (12.5X17.1X16.5-MM THK) | |
| | 3 | 1 | **224-3469** | 1 | PLATE AS | |
| M | | 1 | **8T-3612** | 2 | NUT-WELD (M8X1.25-THD) | |
| | 4 | 1 | **224-4273** | 1 | SCREEN AS (LEFT SIDE) | |
| | | 1 | **8Y-7386** | 22 | SPACER (12.5X17.1X16.5-MM THK) | |
| | 5 | 2 | **224-4274** | 1 | SCREEN AS (RIGHT SIDE) | |
| | | 2 | **8Y-7386** | 22 | SPACER (12.5X17.1X16.5-MM THK) | |
| | 6 | 1 | **224-7277** | 1 | COVER AS | |
| M | | 1 | **8T-3612** | 2 | NUT-WELD (M8X1.25-THD) | |
| | 7 | 1 | **246-1190** | 1 | RETAINER (LH) | |
| | 8 | 1 | **246-1204** | 1 | RETAINER (RH) | |
| | 9 | 1 | **246-7169** | 1 | SCREEN AS (FRONT) | |
| M | | 1 | **8T-3612** | 4 | NUT-WELD (M8X1.25-THD) | |
| | | 1 | **178-7242** | 22 | SPACER (12.52X17.14X9.5-MM THK) | |
| | 10 | 1 | **246-7170** | 2 | WINDOW | |
| | 11 | 1 | **246-7171** | 2 | PLATE | |
| | 12 | 1 | **257-2061** | 1 | RETAINER | |
| | 13 | 1 | **257-2062** | 1 | RETAINER (LH) | |
| | 14 | 1 | **257-2063** | 1 | RETAINER (RH) | |
| M | 15 | 1,2 | **7X-2537** | 100 | BOLT (M8X1.25X35-MM) | |
| | 16 | 1,2 | **8T-4224** | 114 | WASHER-HARD (8.8X16X2-MM THK) | |
| M | 17 | 1 | **8T-7547** | 14 | BOLT (M8X1.25X30-MM) | |
| E | 18 | 2 | **122-0019** | | SEAL (480-CM) | |
| E | 19 | 1 | **120-7609** | | SEAL (50-CM) | |
| | 20 | 1 | **263-5433** | 1 | PLATE-RETAINER | |

E-ORDER BY THE CENTIMETER
M-METRIC PART

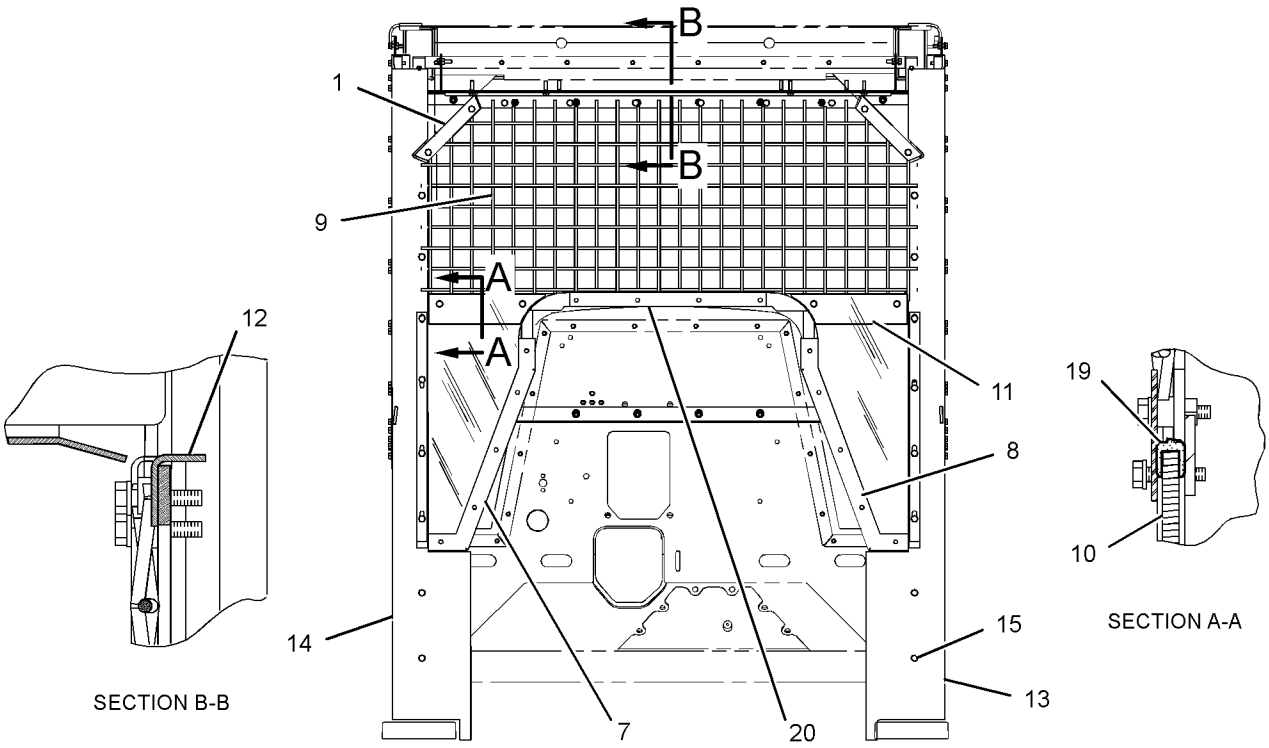


FRONT VIEW

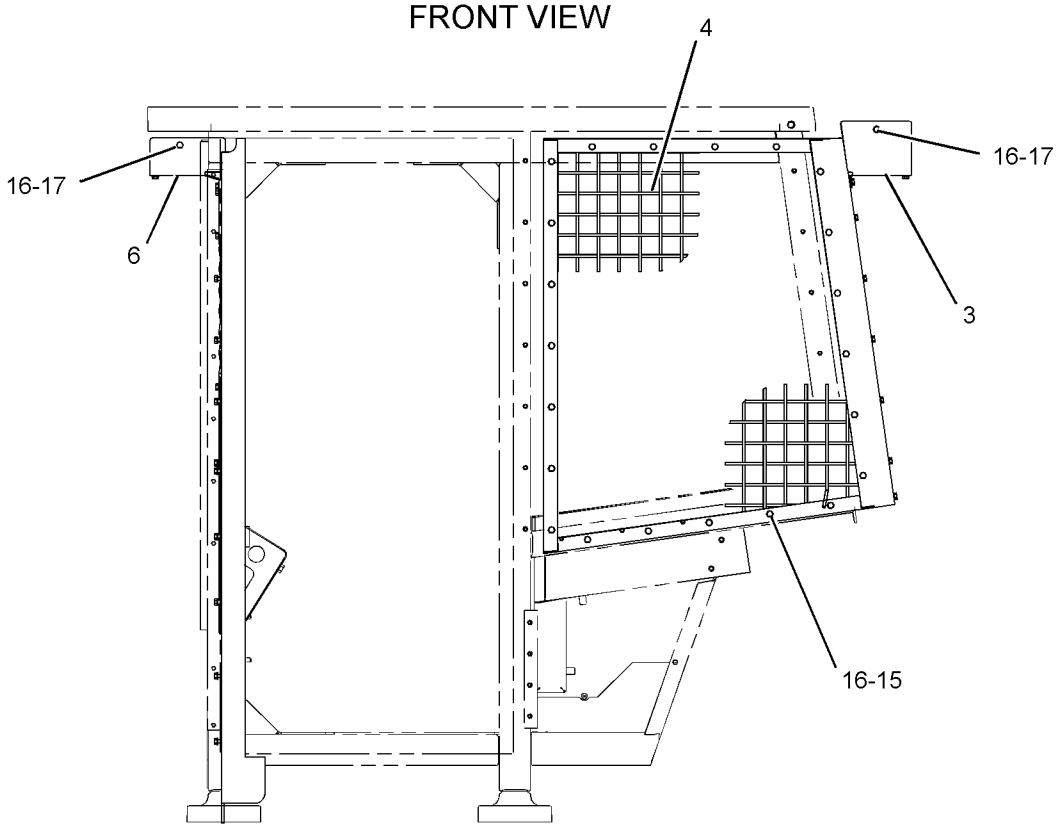


LEFT SIDE VIEW

GRAPHIC #1

g01171946

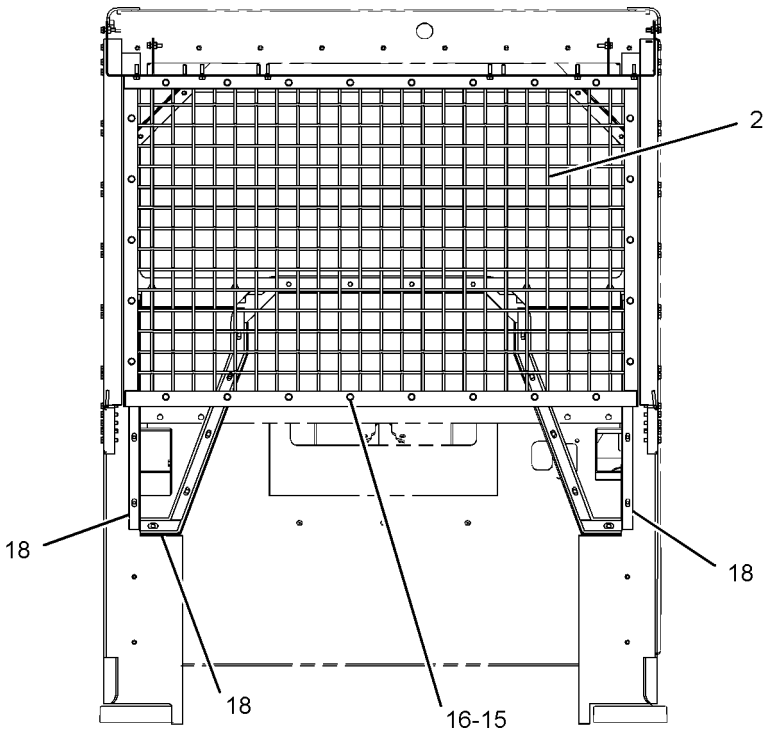


REAR VIEW

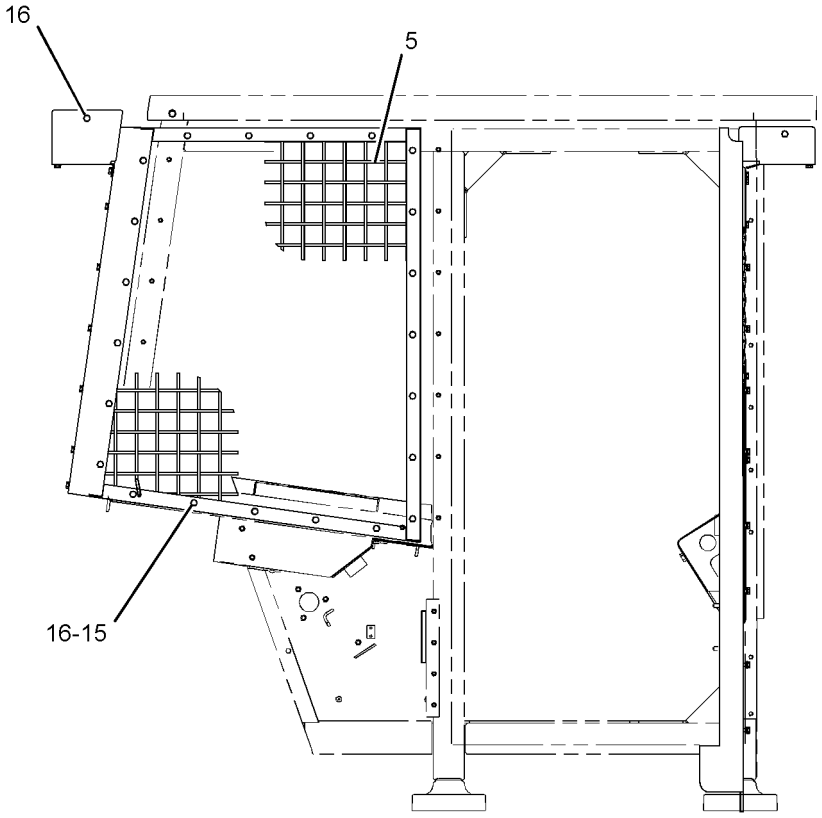


RIGHT SIDE VIEW

GRAPHIC #2

**<END>**

g01103542

# OPERATOR STATION

## 122-4620 SEAT GP–VINYL

**S/N: 5451-UP**
**PART OF 222-1251 SEAT GP-SUSPENSION**
**AN ATTACHMENT**

**SMCS-7312** **i01949140**

| NOTE | REF NO | GRAPHIC REF | PART NUMBER | QTY | PART NAME 1 2 3 4 5 6 (PRODUCT LEVEL) | SEE PAGE |
|---|---|---|---|---|---|---|
| | 1 | 1 | **126-7263** | 1 | SEAT AS | |
| | 2 | 1 | **126-7264** | 1 | CUSHION AS-ARM | |
| | 3 | 1 | **126-7265** | 1 | CUSHION AS-ARM | |
| | 4 | 1 | **126-7267** | 1 | CUSHION AS-BACK | |
| | 5 | 1 | **126-7269** | 1 | CUSHION AS-SEAT | |

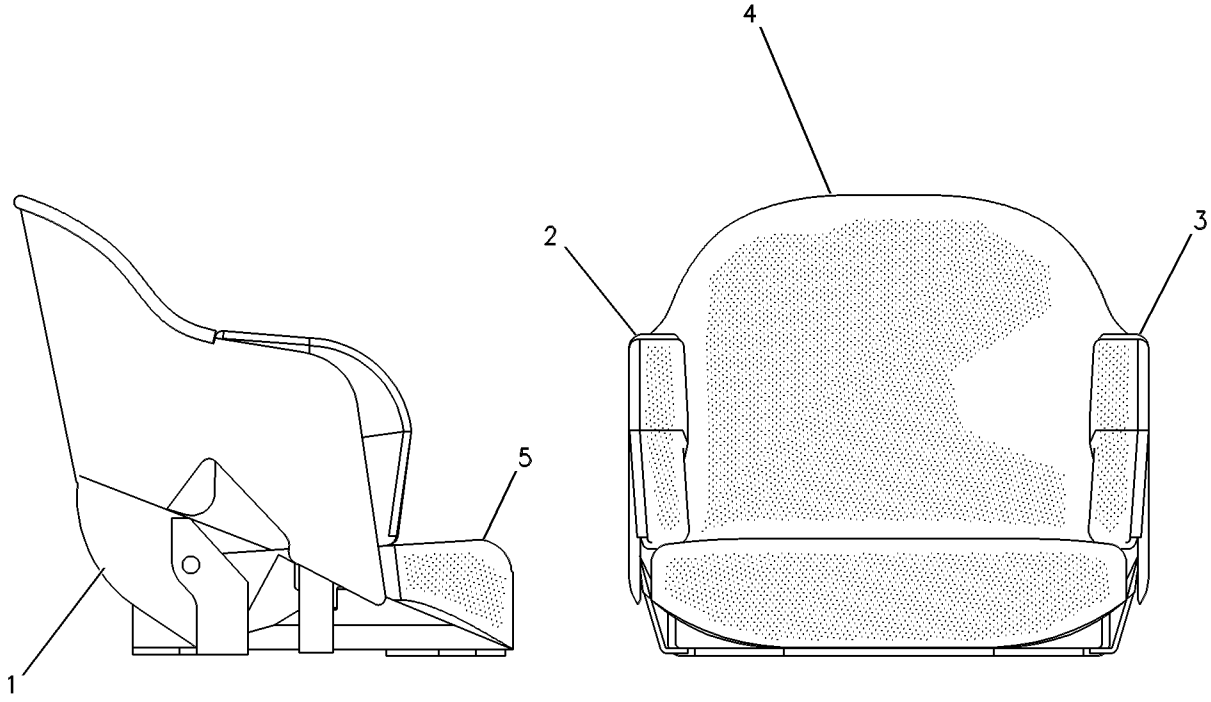


RIGHT SIDE VIEW FRONT VIEW

GRAPHIC #1 **<END>** g00120982

# OPERATOR STATION

## 122-4622 SEAT GP–CLOTH

**S/N: 5451-UP**
**PART OF 222-1250 SEAT GP-SUSPENSION**
**AN ATTACHMENT**

**SMCS-7312** **i01120491**

| NOTE | REF NO | GRAPHIC REF | PART NUMBER | QTY | PART NAME 1 2 3 4 5 6 (PRODUCT LEVEL) | SEE PAGE |
|---|---|---|---|---|---|---|
| | 1 | 1 | **126-7263** | 1 | SEAT AS | |
| | 2 | 1 | **126-7264** | 1 | CUSHION AS-ARM | |
| | 3 | 1 | **126-7265** | 1 | CUSHION AS-ARM | |
| | 4 | 1 | **126-7266** | 1 | CUSHION AS-BACK | |
| | 5 | 1 | **126-7268** | 1 | CUSHION AS-SEAT | |

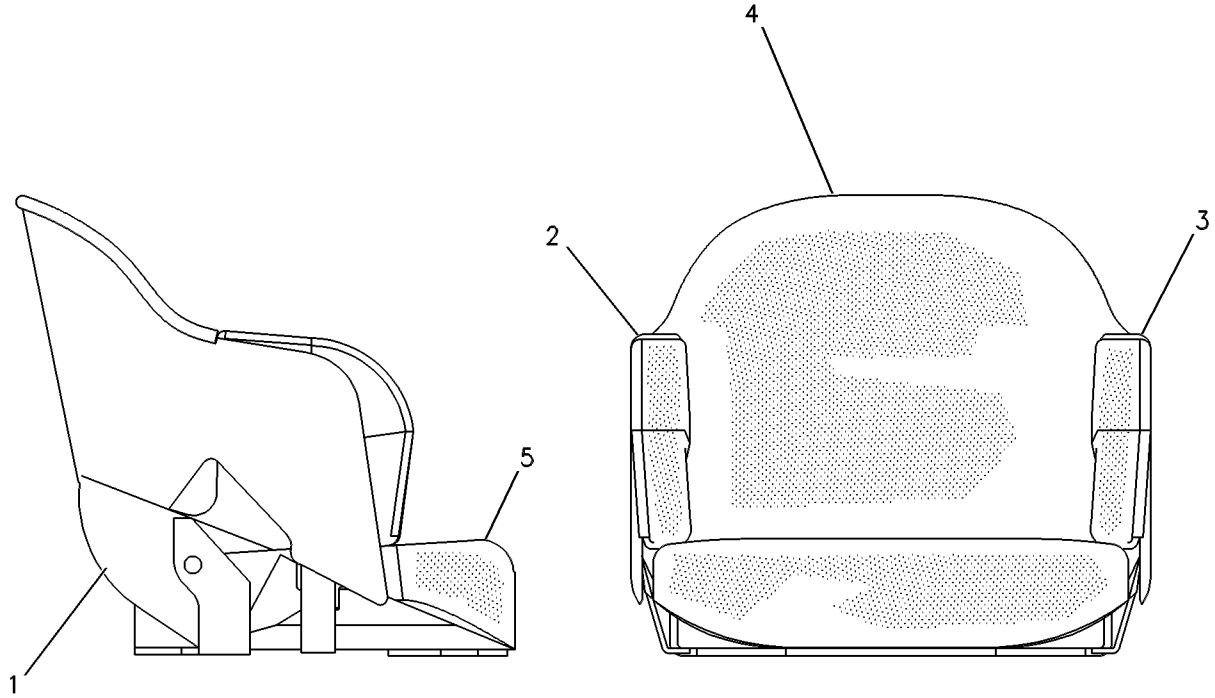


GRAPHIC #1 **<END>** g00120974

# OPERATOR STATION

## *173-5372* SEAT GP-SUSPENSION

**S/N: 5451-UP**

**PART OF 252-1722, 252-1728 CAB AR-OPEN ROPS**

**AN ATTACHMENT**

**SMCS-7324, 7336** **i01816818**

| NOTE | PART NUMBER | QTY | PART NAME 1 2 3 4 5 6 (PRODUCT LEVEL) | SEE PAGE |
|---|---|---|---|---|
| M | **8T-4195** | 4 | BOLT (M10X1.5X30-MM) | |
| Y | **222-1251** | 1 | SEAT GP-SUSPENSION | 636 |
| | **8T-4121** | 4 | WASHER-HARD (11X21X2.5-MM THK) | |

M-METRIC PART
Y-SEPARATE ILLUSTRATION

**<END>**

## *173-5373* SEAT GP-SUSPENSION

**S/N: 5451-UP**

**PART OF 252-1415, 252-1720 CAB AR-ENCLOSED ROPS**

**AN ATTACHMENT**

**SMCS-7324, 7336** **i01818418**

| NOTE | PART NUMBER | QTY | PART NAME 1 2 3 4 5 6 (PRODUCT LEVEL) | SEE PAGE |
|---|---|---|---|---|
| M | **8T-4195** | 4 | BOLT (M10X1.5X30-MM) | |
| Y | *222-1250* | 1 | SEAT GP-SUSPENSION | 635 |
| | **8T-4121** | 4 | WASHER-HARD (11X21X2.5-MM THK) | |

M-METRIC PART
Y-SEPARATE ILLUSTRATION

**<END>**

# OPERATOR STATION

## *222-1250* SEAT GP-SUSPENSION

**S/N: 5451-UP**

**PART OF 173-5373 SEAT GP-SUSPENSION**

**AN ATTACHMENT**

**SMCS-7324, 7336** **i01757898**

| NOTE | REF NO | GRAPHIC REF | PART NUMBER | QTY | PART NAME 1 2 3 4 5 6 (PRODUCT LEVEL) | SEE PAGE |
|---|---|---|---|---|---|---|
| | 1 | 1 | **4D-6432** | 2 | LOCKNUT (7/16-20-THD) | |
| | 2 | 1 | **8Y-4030** | 1 | SEAT BELT GP | |
| Y | 3 | 1 | **122-4622** | 1 | SEAT GP (CLOTH) | 633 |
| | 4 | 1 | **122-7166** | 2 | BRACKET | |
| Y | 5 | 1 | *201-3423* | 1 | SUSPENSION GP-SEAT (SWIVEL, SLIDE) | 639 |
| | 6 | 1 | **7U-4898** | 6 | SCREW (3/8-16X0.75-IN) | |
| | 7 | 1 | **8T-5360** | 6 | WASHER (12X22.5X2.5-MM THK) | |
| | 8 | 1 | **8T-9381** | 4 | BOLT (7/16-20X1-IN) | |
| | | | | | AVAILABLE REPAIR KIT(S): | |
| | | | **173-7035** | | KIT-SLIDER BLOCK (SUSPENSION SEAT) | |
| | | | | | INCLUDES BOLT, BLOCK, SETSCREW, AND WASHER | |

Y-SEPARATE ILLUSTRATION

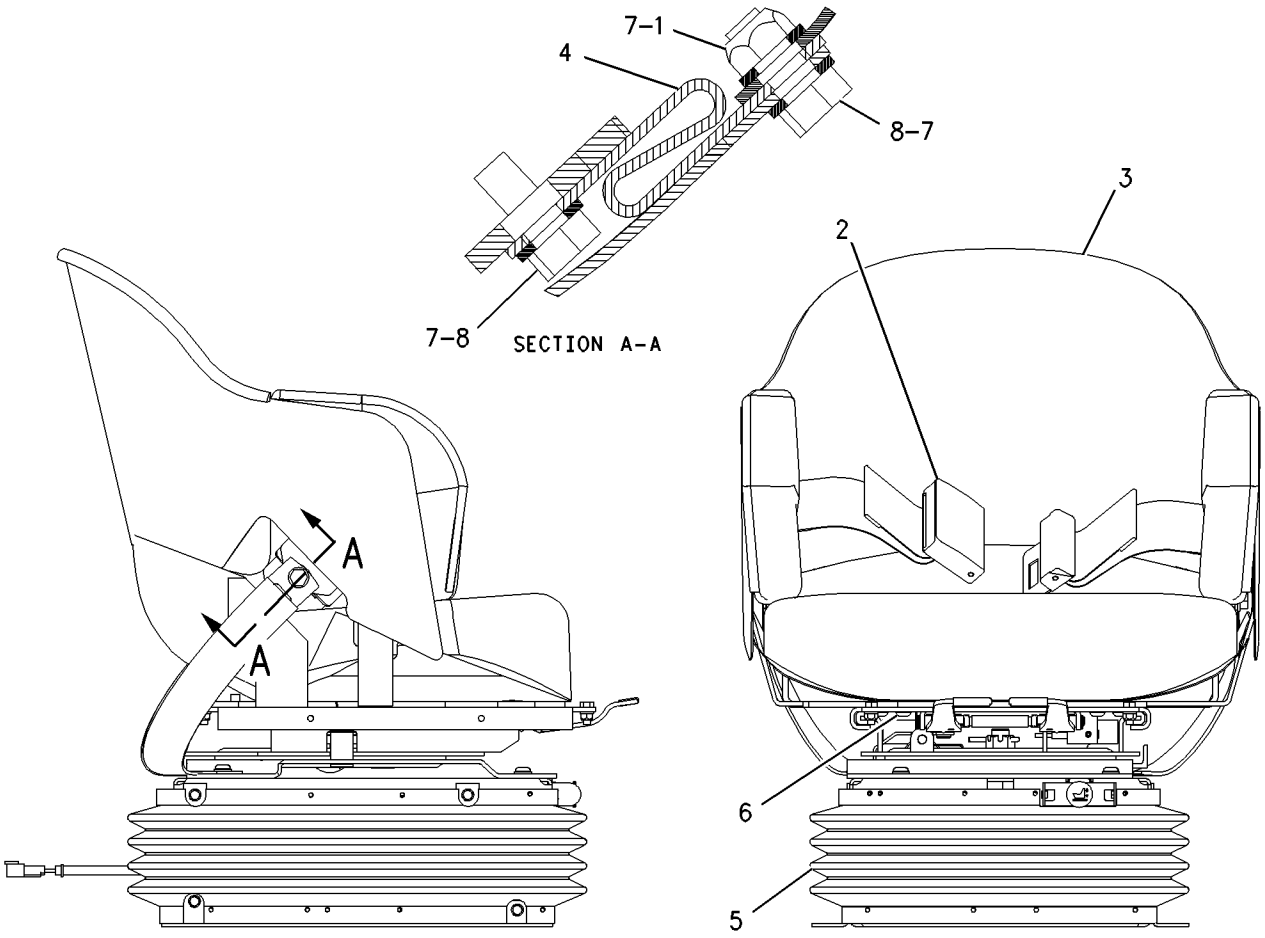


GRAPHIC #1 **<END>** g00901780

# OPERATOR STATION

## *222-1251* SEAT GP-SUSPENSION

**S/N: 5451-UP**
**PART OF 173-5372 SEAT GP-SUSPENSION**
**AN ATTACHMENT**

**SMCS-7324, 7336** **i01949119**

| NOTE | REF NO | GRAPHIC REF | PART NUMBER | QTY | PART NAME 1 2 3 4 5 6 (PRODUCT LEVEL) | SEE PAGE |
|---|---|---|---|---|---|---|
| | 1 | 1 | **4D-6432** | 2 | LOCKNUT (7/16-20-THD) | |
| | 2 | 1 | **8Y-4030** | 1 | SEAT BELT GP | |
| Y | 3 | 1 | **122-4620** | 1 | SEAT GP (VINYL) | 632 |
| | 4 | 1 | **122-7166** | 2 | BRACKET | |
| Y | 5 | 1 | **201-3423** | 1 | SUSPENSION GP-SEAT (SWIVEL, SLIDE) | 639 |
| | 6 | 1 | **7U-4898** | 6 | SCREW (3/8-16X0.75-IN) | |
| | 7 | 1 | **8T-5360** | 6 | WASHER (12X22.5X2.5-MM THK) | |
| | 8 | 1 | **8T-9381** | 4 | BOLT (7/16-20X1-IN) | |

Y-SEPARATE ILLUSTRATION

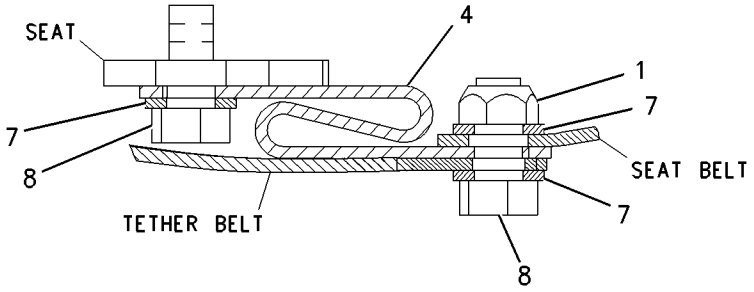


SECTION A-A

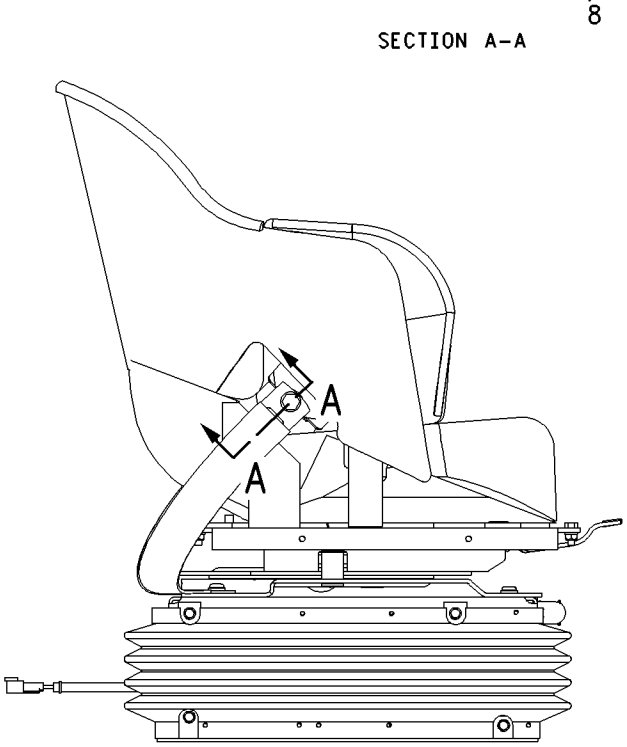


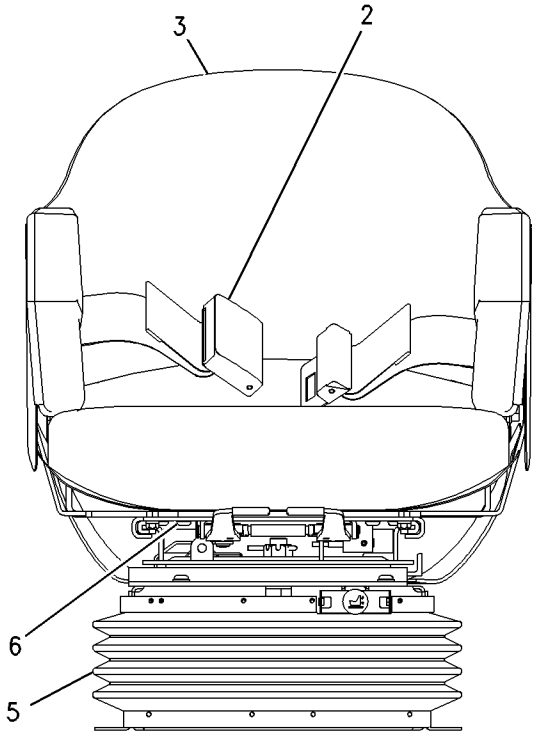


GRAPHIC #1 **<END>** g00926348

# OPERATOR STATION

## 191-4508 SUSPENSION GP-SEAT—AIR

**S/N: 5451-UP**
**PART OF 201-3423 SUSPENSION GP-SEAT**
**AN ATTACHMENT**

**SMCS-7324** **i02129178**

| NOTE | REF NO | GRAPHIC REF | PART NUMBER | QTY | PART NAME 1 2 3 4 5 6 (PRODUCT LEVEL) | SEE PAGE |
|---|---|---|---|---|---|---|
| | 1 | 1 | **3P-9900** | 5 | WASHER (10.5X30X3-MM THK) | |
| | 2 | 1 | **4B-4278** | 2 | WASHER (10.2X20.5X1.6-MM THK) | |
| | 3 | 1 | **4V-8577** | 12 | BEARING | |
| | 4 | 1 | **8L-8413** | 1 | STRAP-CABLE | |
| | 5 | 1 | **145-0326** | 1 | FILM-INSTRUCTION (SEAT ADJUSTMENT) | |
| | 6 | 1 | **237-3943** | 1 | BRACKET | |
| | 7 | 1 | **164-1234** | 1 | PLATE | |
| | 8 | 1 | **101-0003** | 28 | FASTENER | |
| | 9 | 1 | **186-5107** | 2 | SCREW (NO 8X1.25-IN) | |
| | 10 | 1 | **192-7752** | 4 | SHAFT AS | |
| | 11 | 1 | **192-7755** | 1 | HOUSING AS | |
| | 12 | 1 | **192-7760** | 1 | SHAFT | |
| | 13 | 1 | **192-7767** | 1 | SCISSORS AS | |
| | 14 | 1 | **192-7783** | 1 | TOGGLE AS | |
| | 15 | 1 | **192-7787** | 1 | TOGGLE AS | |
| | 16 | 1 | **192-7795** | 1 | BOOT | |
| | 17 | 1 | **192-7805** | 1 | HARNESS AS-VALVE (SEAT AIR COMPRESSOR) | |
| | | 1 | **102-8802** | 1 | KIT-RECEPTACLE (2-PIN) | |
| | | | | | (INCLUDES RECEPTACLE AS & WEDGE) | |
| | 18 | 1 | **192-7810** | 1 | SPRING AS-AIR | |
| | | 1 | **5P-4423** | 1 | ELBOW | |
| | | 1 | **163-1135** | 1 | SPRING | |
| | 19 | 1 | **192-7812** | 1 | BOLT-SHOULDER (3/8-16X2-IN) | |
| | 20 | 1 | **192-7820** | 3 | BUMPER | |
| | 21 | 1 | **192-7822** | 1 | SHAFT | |
| Y | 22 | 1 | **237-3970** | 1 | AIR COMPRESSOR GP-SEAT | 575 |
| | 23 | 1 | **222-1807** | 1 | HOUSING AS | |
| | 24 | 1 | **1H-8296** | 1 | SCREW-MACHINE (3/8-16X0.52-IN) | |
| | 25 | 1 | **2K-4973** | 8 | LOCKNUT (3/8-16-THD) | |
| | 26 | 1 | **3J-4818** | 1 | LOCKWASHER | |
| M | 27 | 1 | **5C-2890** | 3 | NUT (M6X1-THD) | |
| | 28 | 1 | **8T-9371** | 1 | BOLT (3/8-16X0.5-IN) | |
| BE | 29 | 1 | **211-5358** | | CONDUIT-FLEXIBLE | |
| BD | 30 | 1 | **5P-6010** | | TUBE | |
| | | | | | AVAILABLE REPAIR KIT(S): | |
| | | | **192-7799** | 1 | KIT-AIR VALVE | |
| | | | | | INCLUDES KNOB AS. | |
| | | | **192-7848** | 1 | KIT-SHOCK ABSORBER | |
| | | | | | INCLUDES LOCKNUT, LOCKWASHER, SHOCK ABSORBER, BEARING, WASHER, AND BOLTS | |
| | | | **211-9294** | 1 | KIT-TETHER | |

B-USE AS REQUIRED
D-ORDER BY THE METER
E-ORDER BY THE CENTIMETER
M-METRIC PART
Y-SEPARATE ILLUSTRATION

## 191-4508 SUSPENSION GP-SEAT *(contd. )* i02129178

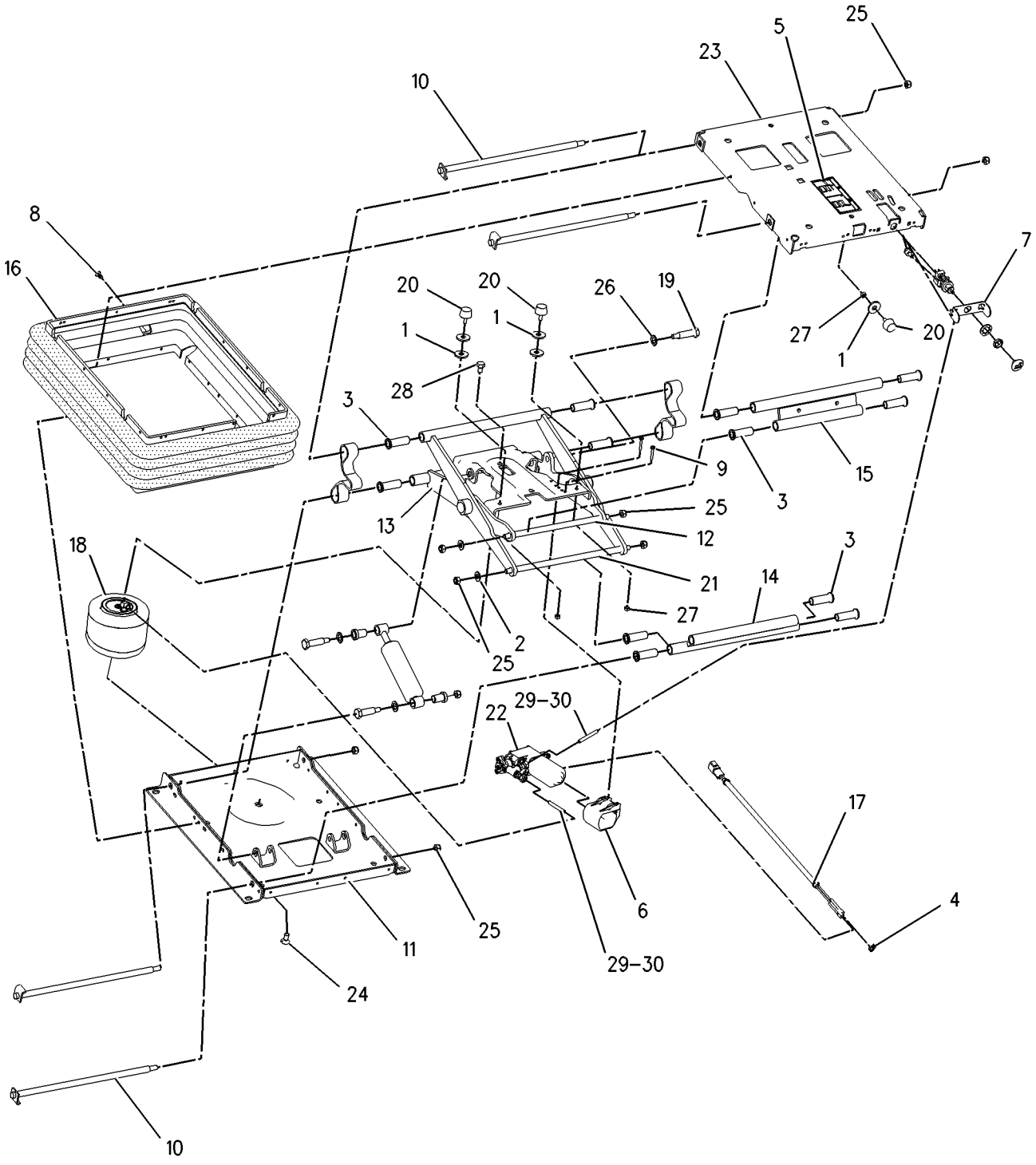


GRAPHIC #1 **<END>** g00902840

# *201-3423* SUSPENSION GP-SEAT—SWIVEL, SLIDE

**S/N: 5451-UP**

**PART OF 222-1250, 222-1251 SEAT GP-SUSPENSION**

**AN ATTACHMENT**

**SMCS-7324** **i01757902**

| NOTE | REF NO | GRAPHIC REF | PART NUMBER | QTY | PART NAME 1 2 3 4 5 6 (PRODUCT LEVEL) | SEE PAGE |
|---|---|---|---|---|---|---|
| | 1 | 1 | **171-1230** | 4 | SCREW-BUTTON HEAD (3/8-16X1-IN) | |
| Y | 2 | 1 | **173-5365** | 1 | SWIVEL GP-SEAT | 640 |
| | 3 | 1 | **173-5367** | 2 | BELT AS | |
| Y | 4 | 1 | **191-4508** | 1 | SUSPENSION GP-SEAT (AIR) | 637 |
| | 5 | 1 | **5M-2894** | 4 | WASHER-HARD (10.2X18.5X2.5-MM THK) | |

Y-SEPARATE ILLUSTRATION

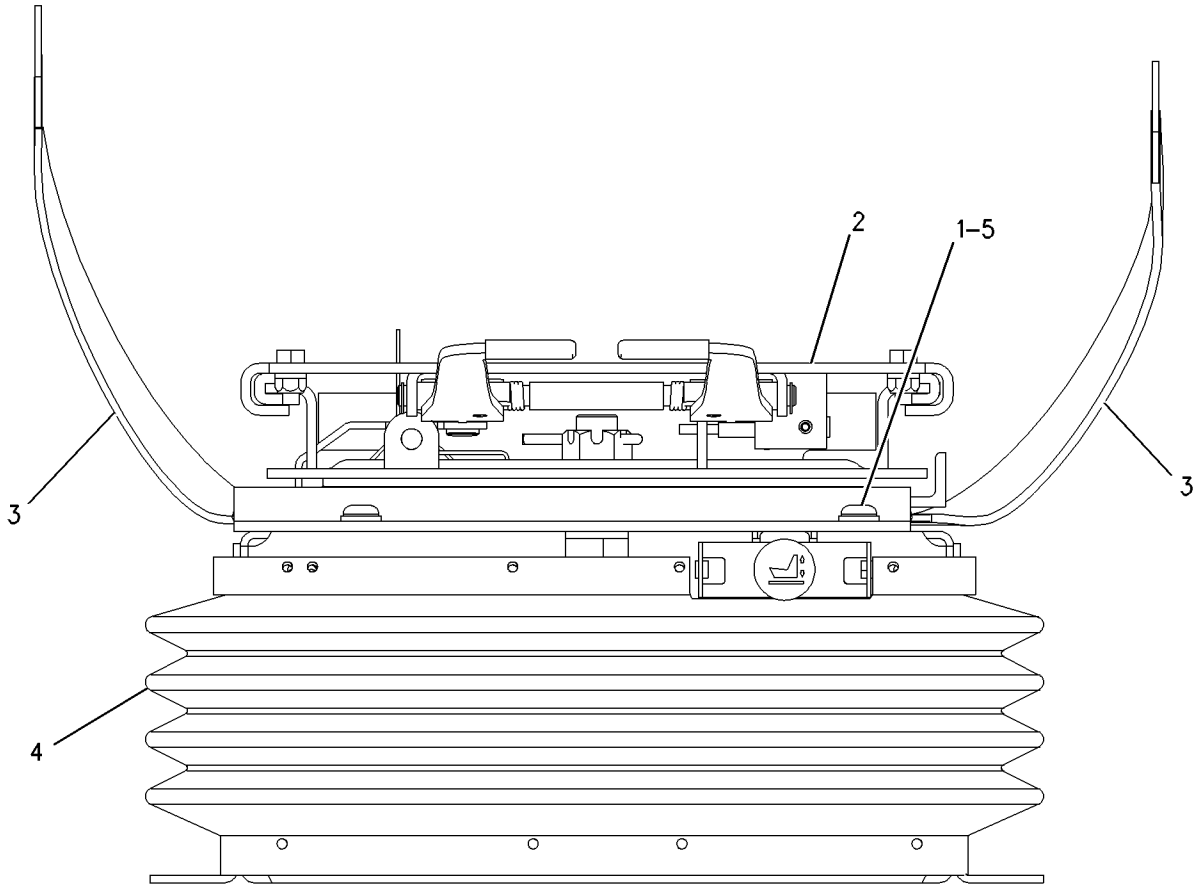


FRONT VIEW

GRAPHIC #1 **<END>** g00901790

# OPERATOR STATION

## *173-5365* SWIVEL GP-SEAT

**S/N: 5451-UP**

**PART OF 201-3423 SUSPENSION GP-SEAT**

**AN ATTACHMENT**

**SMCS-5060, 7312** **i01258522**

| NOTE | REF NO | GRAPHIC REF | PART NUMBER | QTY | PART NAME 1 2 3 4 5 6 (PRODUCT LEVEL) | SEE PAGE |
|---|---|---|---|---|---|---|
| | 1 | 1 | **3B-4505** | 4 | LOCKWASHER | |
| | 2 | 1 | **8S-7803** | 2 | RING-RETAINING | |
| | 3 | 1 | **8Y-6064** | 1 | ROLLER-SLIDER | |
| | 4 | 1 | **009-3681** | 1 | RING-RETAINING | |
| | 5 | 1 | **095-0878** | 1 | PIN-SPRING | |
| | 6 | 1 | **123-6075** | 1 | LATCH AS-SLIDE | |
| | 7 | 1 | **123-6077** | 1 | SHAFT-PIVOT | |
| | 8 | 1 | **134-5484** | 2 | CAP | |
| | 9 | 1 | **144-6699** | 1 | PLATE AS-SLIDE | |
| | 10 | 1 | **4M-0061** | 4 | BOLT (5/16-18X0.75-IN) | |
| | 11 | 1 | **154-8278** | 1 | SPRING-RETURN | |
| | 12 | 1 | **154-8280** | 1 | SPRING-RETURN | |
| | 13 | 1 | **154-8284** | 1 | TUBE | |
| | 14 | 1 | **155-4707** | 1 | LEVER AS (SLIDE) | |
| | 15 | 1 | **155-4753** | 1 | LEVER AS-SWIVEL | |
| | 16 | 1 | **135-1706** | 1 | SPRING | |
| | 17 | 1 | **161-9290** | 1 | WASHER (11.9X20.7X2.3-MM THK) | |
| | 18 | 1 | **172-6986** | 1 | SWIVEL AS-SEAT | |
| | | 1 | **8S-7803** | 1 | RING-RETAINING | |
| | | 1 | **161-9286** | 1 | SPRING-LATCH | |
| | | 1 | **161-9288** | 1 | SHAFT-PIVOT | |
| | | 1 | **172-6987** | 1 | PLATE | |
| | 19 | 1 | **173-5787** | 2 | SETSCREW (1/4-20-THD) | |
| | 20 | 1 | **031-4155** | 4 | LOCKNUT (5/16-18-THD) | |

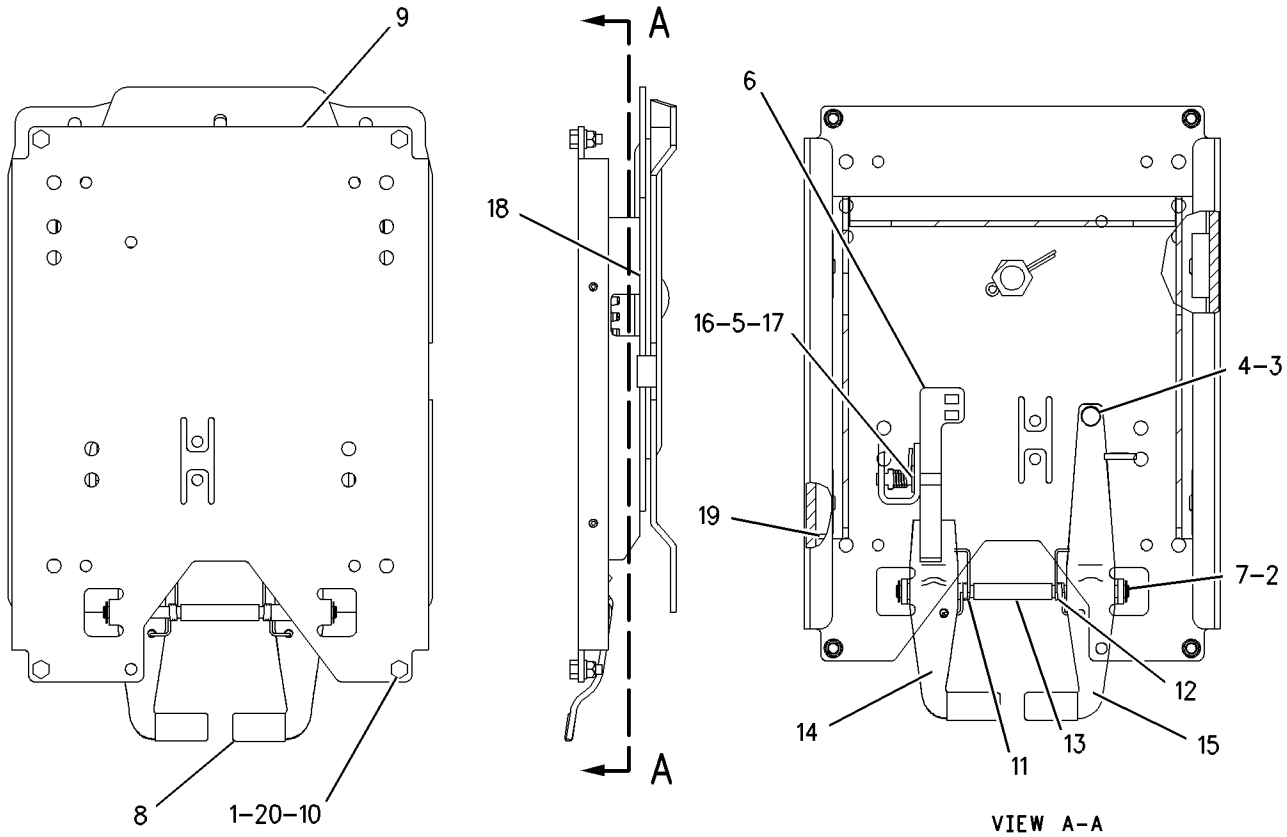


GRAPHIC #1 **<END>** g00669698

# OPERATOR STATION

## *8R-1774* TANK GP-WINDOW WASHER

**S/N: 5451-UP**

**PART OF 255-9006 WIPER & WASHER GP-WINDOW**

**AN ATTACHMENT**

**SMCS-7306** **i01728423**

| NOTE | REF NO | GRAPHIC REF | PART NUMBER | QTY | PART NAME 1 2 3 4 5 6 (PRODUCT LEVEL) | SEE PAGE |
|---|---|---|---|---|---|---|
| | 1 | 1 | **3W-6398** | 1 | CAP (WINDOW WASHER TANK FILL) | |
| | | 1 | **3W-6399** | 1 | PACKING | |
| | 2 | 1 | **8T-5914** | 2 | GROMMET | |
| | 3 | 1 | **8T-5913** | 2 | SCREEN-FILTER (WINDOW WASHER TANK) | |
| | 4 | 1 | **7T-8890** | 2 | PUMP AS-WASHER | |

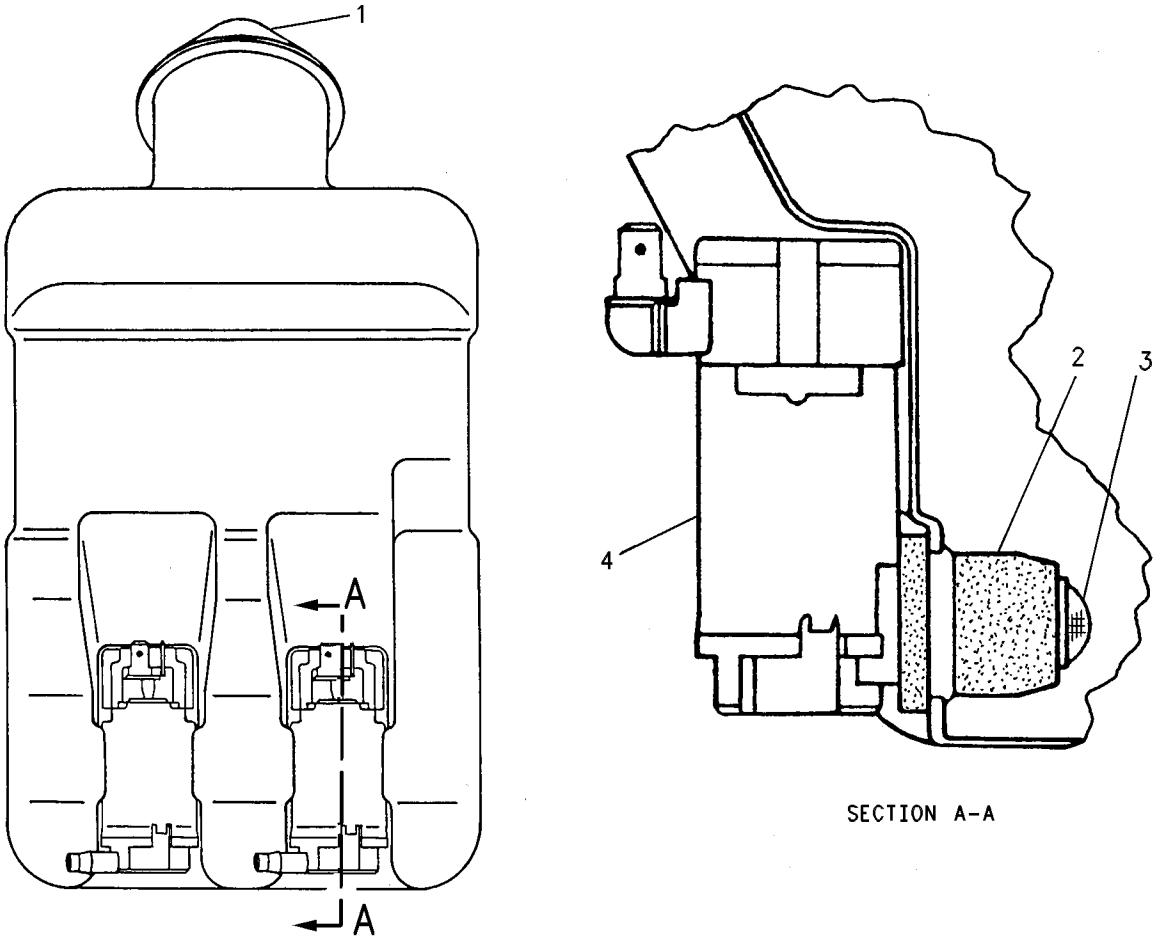


SECTION A-A

GRAPHIC #1 **<END>** g00598876

# OPERATOR STATION

## *252-1712* TRIM GP-CAB—GRAPPLE MACHINE

**S/N: 5451-UP**
**PART OF 252-1415 CAB AR-ENCLOSED ROPS**
**AN ATTACHMENT**
**TYPE 1**

**SMCS-7329** **i02466068**

| NOTE | REF NO | GRAPHIC REF | PART NUMBER | QTY | PART NAME 1 2 3 4 5 6 (PRODUCT LEVEL) | SEE PAGE |
|---|---|---|---|---|---|---|
| | 1 | 4 | **5V-1474** | 8 | SCREW-FORMING (10-16X0.625-IN) | |
| | 2 | 4 | **8T-3996** | 4 | NUT (M6X1-THD) | |
| | 3 | 2,4 | **8Y-6388** | 5 | LOUVER AS | |
| | 4 | 2 | **9K-0974** | 1 | BRACKET | |
| | 5 | 2 | **9M-7959** | 2 | CLAMP-HOSE | |
| | 6 | 1 | **118-5502** | 2 | LOUVER AS | |
| | 7 | 4 | **171-4047** | 4 | LOUVER AS | |
| | 8 | 4 | **128-1040** | 1 | PLUG | |
| | 9 | 2 | **128-4805** | 1 | COVER (RH) | |
| | 10 | 2 | **156-6427** | 1 | COVER-DOOR (LH) | |
| | 11 | 3 | **156-6438** | 1 | COVER-CENTER (LOWER) | |
| | 12 | 3 | **156-6439** | 1 | COVER-CENTER (UPPER) | |
| | 13 | 2 | **156-6449** | 1 | DOOR AS | |
| | | 2 | **3V-7689** | 1 | HANDLE AS | |
| | 14 | 2 | **164-8474** | 2 | LOUVER AS | |
| | 15 | 1 | **166-0354** | 1 | COVER-LOWER | |
| | 16 | 2 | **166-3719** | 2 | BRACKET AS | |
| | | | | | (EACH INCLUDES) | |
| M | | 2 | **6V-9632** | 2 | NUT-WELD (M6X1-THD) | |
| | 17 | 2 | **199-9822** | 2 | SCREW-FLAT HEAD (M6-20X61.39-MM) | |
| | 18 | 4 | **269-5864** | 1 | LINER AS-CAB | |
| | 19 | 4 | **220-3330** | 3 | GRILL | |
| | 20 | 2 | **245-8900** | 1 | COVER-LOWER (RH) | |
| | 21 | 3 | **245-8904** | 1 | COVER-UPPER (LH) | |
| | 22 | 1 | **246-1205** | 1 | COVER-DASH | |
| | 23 | 1 | **251-7691** | 1 | SEAL | |
| | 24 | 1 | **251-7692** | 4 | SEAL | |
| | 25 | 1 | **251-7693** | 1 | COVER-DASH (LOWER) | |
| | 26 | 2 | **251-7694** | 1 | COVER-UPPER (RH) | |
| | 27 | 4 | **252-5116** | 1 | BEZEL | |
| | 28 | 2 | **252-5120** | 1 | COVER-LOWER (LH) | |
| | 29 | 2 | **257-3391** | 1 | FILM-INFORMATION (AIR CONDITIONER, HEATER) | |
| | 30 | 2 | **104-2091** | 14 | SCREW-FLAT HEAD (NO 6X0.5-IN) | |
| | 31 | 1,4 | **118-5619** | 10 | SCREW-FLAT HEAD (NO 6X20X1-IN) | |
| | 32 | 4 | **269-5815** | 4 | PLUG | |
| E | 33 | 2 | **125-3228** | | HOSE (11.7-CM EACH) | |
| | 34 | 1 | **213-7315** | 12 | SCREW-TRUSS HEAD (M4X0.7X25-MM) | |
| M | 35 | 2,3 | **3E-8020** | 4 | SCREW-TRUSS HEAD (M6X1X25-MM) | |
| | 36 | 3,4 | **5P-4115** | 27 | WASHER-HARD (7.2X19X2-MM THK) | |
| M | 37 | 2 | **6V-7744** | 6 | LOCKNUT (M10X1.15-THD) | |
| | 38 | 2 | **7X-7729** | 6 | WASHER (11X25X3-MM THK) | |
| E | 39 | 2 | **122-8339** | | SEAL (8-CM EACH) | |
| M | 40 | 2 | **9X-2041** | 2 | SCREW-TRUSS HEAD (M10X1.5X20-MM) | |
| M | 41 | 1,2,3,4 | **9X-2045** | 63 | SCREW-TRUSS HEAD (M6X1X20-MM) | |

E-ORDER BY THE CENTIMETER
M-METRIC PART

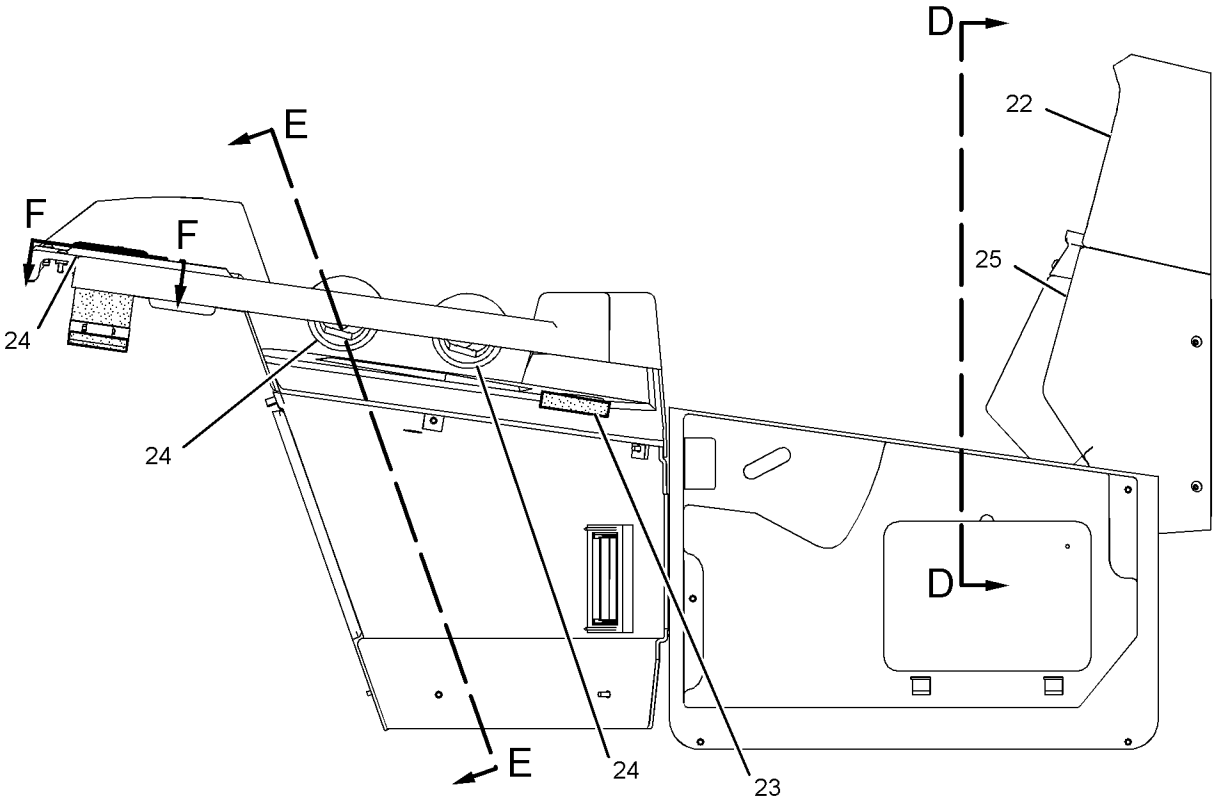


RIGHT SIDE VIEW

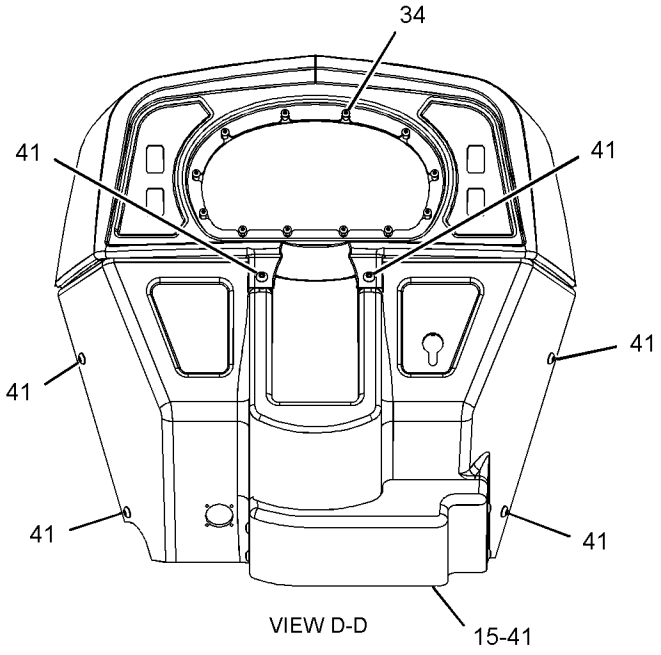


VIEW D-D

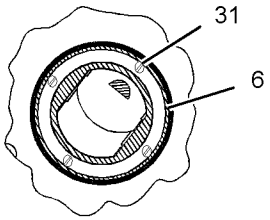


SECTION F-F

REFER TO ALL ILLUSTRATIONS OF THIS GROUP FOR AUXILIARY VIEWS

GRAPHIC #1

g01236437

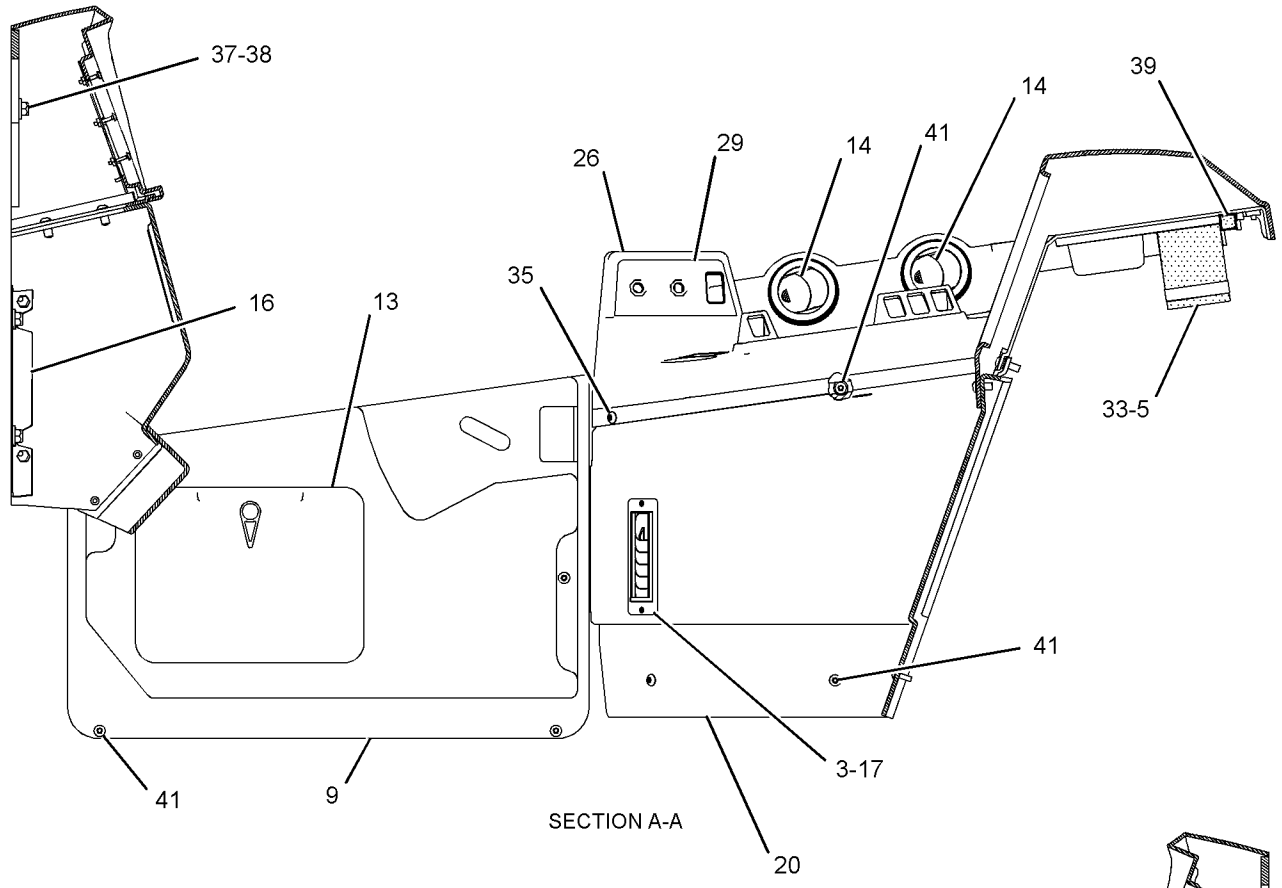


SECTION A-A

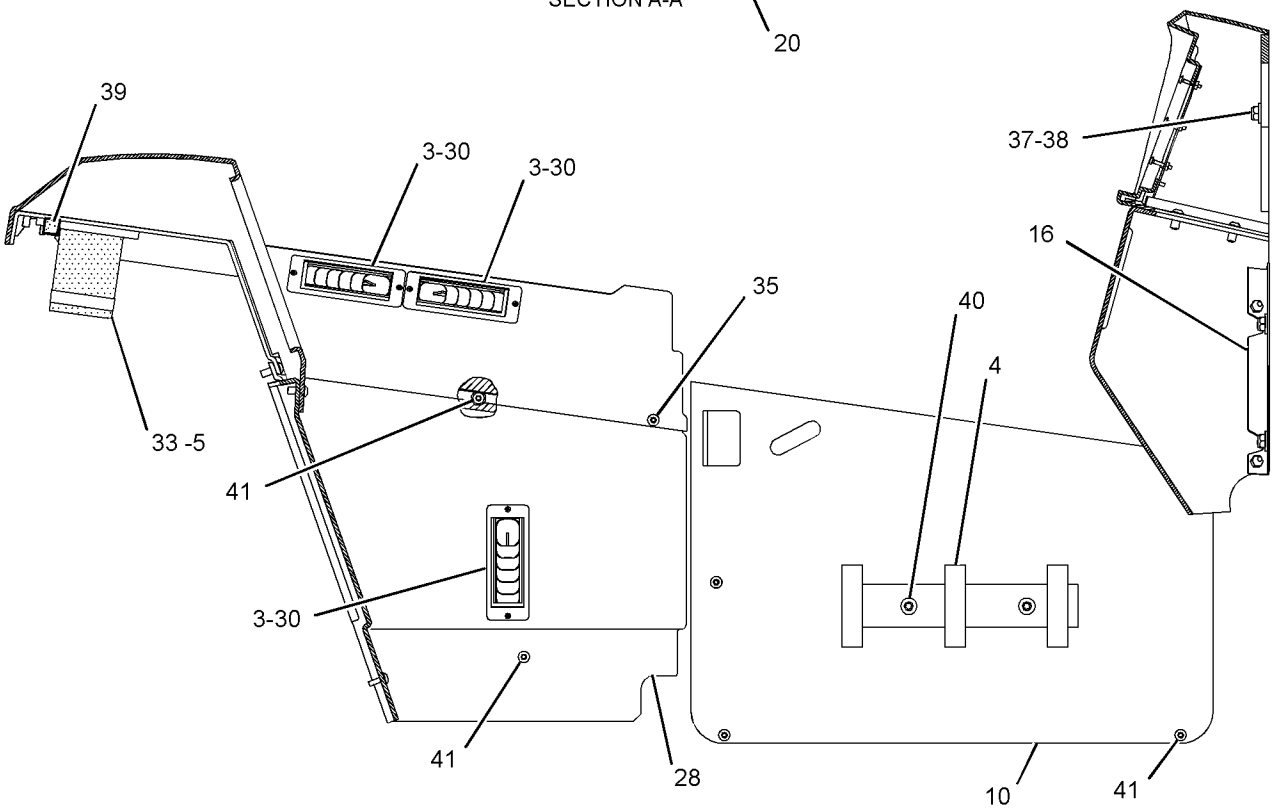


SECTION B-B

GRAPHIC #2 g01236438

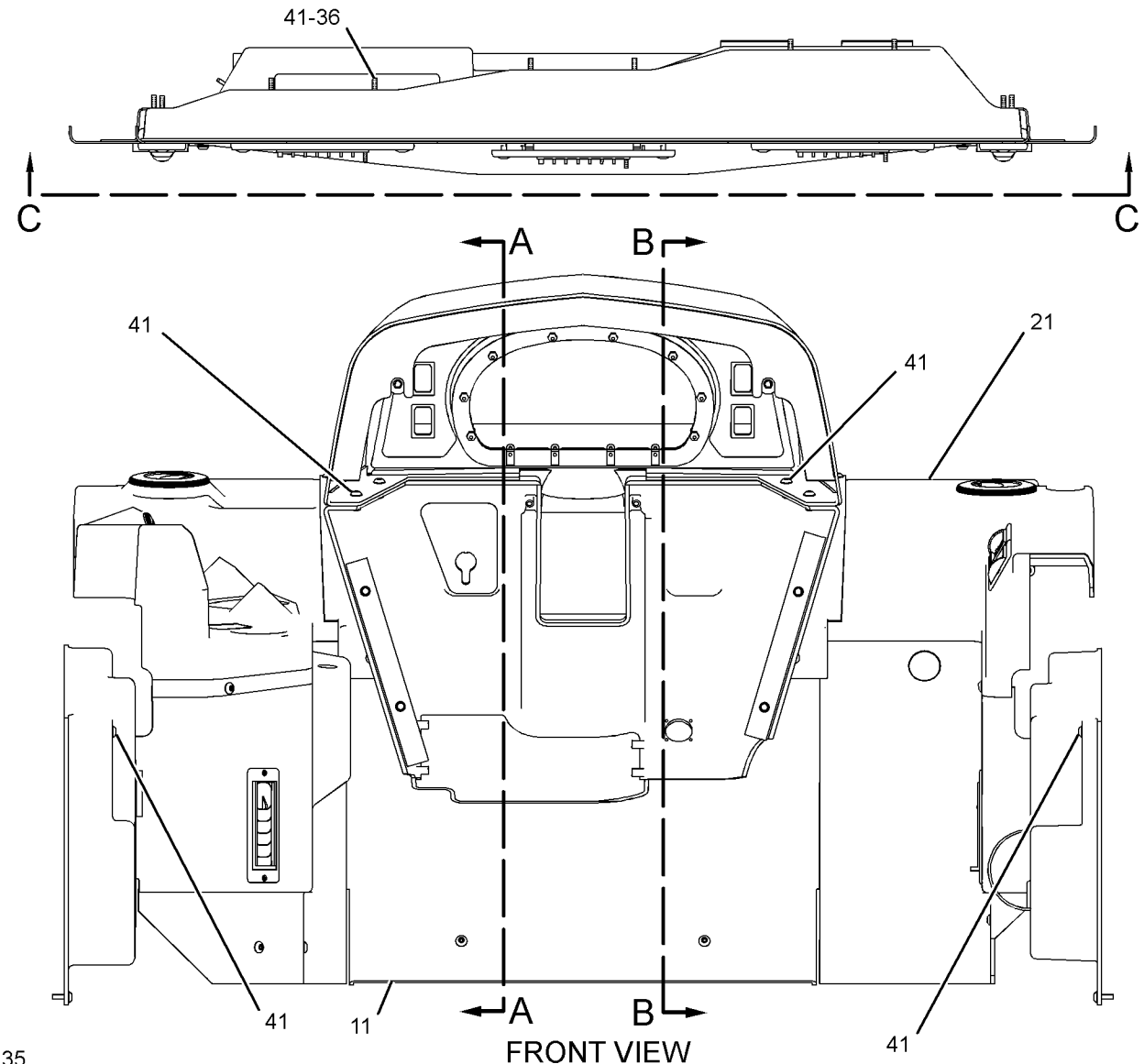


REFER TO ALL ILLUSTRATIONS OF THIS GROUP FOR AUXILIARY VIEWS

GRAPHIC #3

g01236439

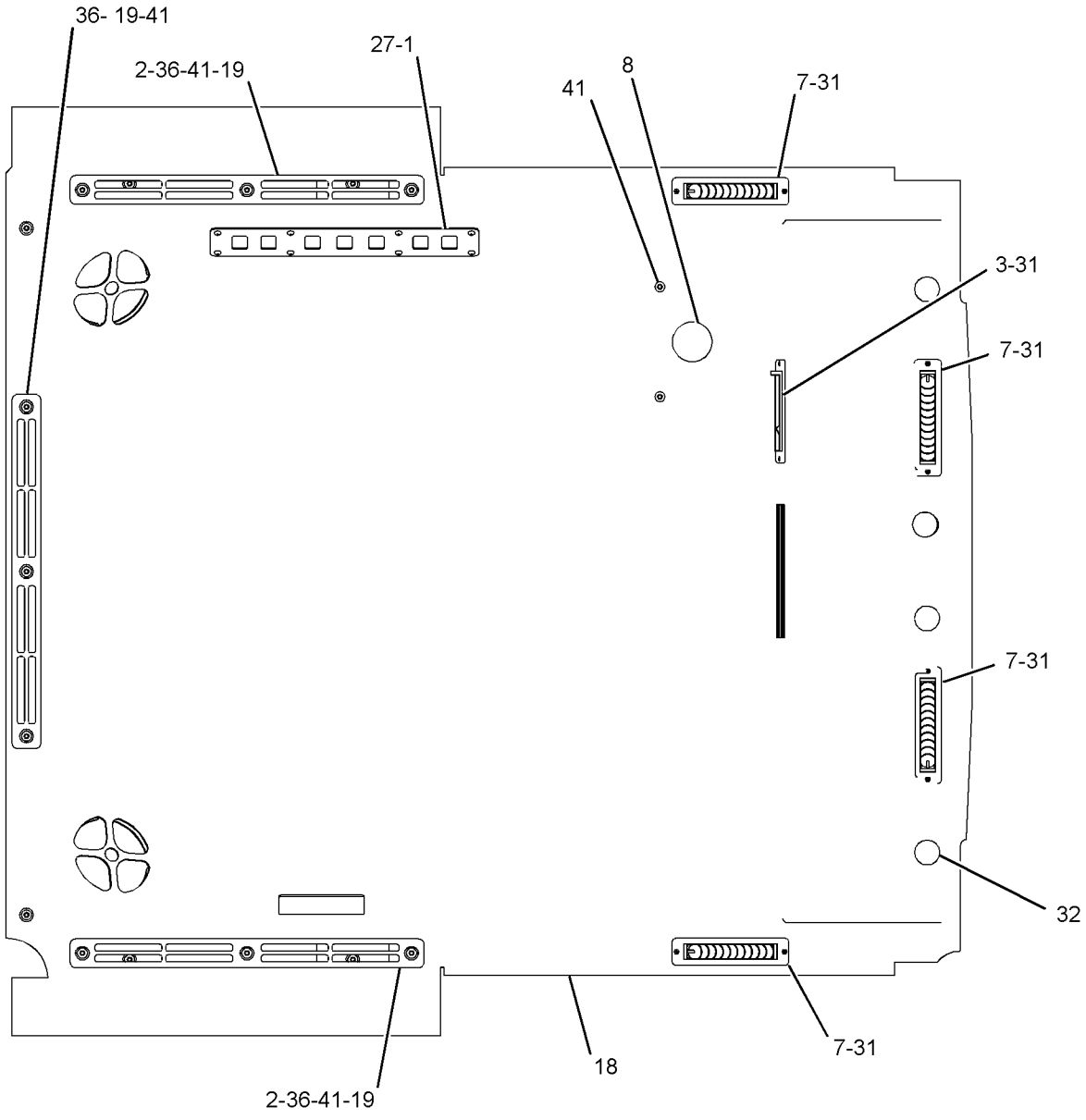


VIEW C-C

GRAPHIC #4 **<END>** g01236440

# OPERATOR STATION

## *252-1712* TRIM GP-CAB—GRAPPLE MACHINE

**S/N: 5451-UP**
**PART OF 252-1415 CAB AR-ENCLOSED ROPS**
**AN ATTACHMENT**
**TYPE 2**

**SMCS-7329** **i02634467**

| NOTE | REF NO | GRAPHIC REF | PART NUMBER | QTY | PART NAME 1 2 3 4 5 6 (PRODUCT LEVEL) | SEE PAGE |
|---|---|---|---|---|---|---|
| | 1 | 4 | **5V-1474** | 8 | SCREW-FORMING (10-16X0.625-IN) | |
| | 2 | 4 | **8T-3996** | 6 | NUT (M6X1-THD) | |
| | 3 | 2,4 | **8Y-6388** | 5 | LOUVER AS | |
| | 4 | 2 | **9K-0974** | 1 | BRACKET | |
| | 5 | 2 | **9M-7959** | 2 | CLAMP-HOSE | |
| | 6 | 1 | **118-5502** | 2 | LOUVER AS | |
| | 7 | 4 | **171-4047** | 4 | LOUVER AS | |
| | 8 | 4 | **128-1040** | 1 | PLUG | |
| | 9 | 2 | **128-4805** | 1 | COVER (RH) | |
| | 10 | 2 | **156-6427** | 1 | COVER-DOOR (LH) | |
| | 11 | 3 | **156-6438** | 1 | COVER-CENTER (LOWER) | |
| | 12 | 3 | **156-6439** | 1 | COVER-CENTER (UPPER) | |
| | 13 | 2 | **156-6449** | 1 | DOOR AS | |
| | | 2 | **3V-7689** | 1 | HANDLE AS | |
| | 14 | 2 | **164-8474** | 2 | LOUVER AS | |
| | 15 | 1 | **166-0354** | 1 | COVER-LOWER | |
| | 16 | 2 | **166-3719** | 2 | BRACKET AS | |
| | | | | | (EACH INCLUDES) | |
| M | | 2 | **6V-9632** | 2 | NUT-WELD (M6X1-THD) | |
| | 17 | 2 | **199-9822** | 2 | SCREW-FLAT HEAD (M6-20X61.39-MM) | |
| | 18 | 4 | **269-5864** | 1 | LINER AS-CAB | |
| | 19 | 4 | **220-3330** | 3 | GRILL | |
| | 20 | 2 | **245-8900** | 1 | COVER-LOWER (RH) | |
| | 21 | 3 | **245-8904** | 1 | COVER-UPPER (LH) | |
| | 22 | 1 | **246-1205** | 1 | COVER-DASH | |
| | 23 | 1 | **251-7691** | 1 | SEAL | |
| | 24 | 1 | **251-7692** | 4 | SEAL | |
| | 25 | 1 | **251-7693** | 1 | COVER-DASH (LOWER) | |
| | 26 | 2 | **251-7694** | 1 | COVER-UPPER (RH) | |
| | 27 | 4 | **252-5116** | 1 | BEZEL | |
| | 28 | 2 | **252-5120** | 1 | COVER-LOWER (LH) | |
| | 29 | 2 | **257-3391** | 1 | FILM-INFORMATION (AIR CONDITIONER, HEATER) | |
| | 30 | 2 | **104-2091** | 14 | SCREW-FLAT HEAD (NO 6X0.5-IN) | |
| | 31 | 1,4 | **118-5619** | 10 | SCREW-FLAT HEAD (NO 6X20X1-IN) | |
| C | 32 | 4 | **6V-0292** | 4 | PLUG | |
| E | 33 | 2 | **125-3228** | | HOSE (11.7-CM EACH) | |
| M | 35 | 2,3 | **3E-8020** | 4 | SCREW-TRUSS HEAD (M6X1X25-MM) | |
| | 36 | 3,4 | **5P-4115** | 27 | WASHER-HARD (7.2X19X2-MM THK) | |
| M | 37 | 2 | **6V-7744** | 6 | LOCKNUT (M10X1.15-THD) | |
| | 38 | 2 | **7X-7729** | 6 | WASHER (11X25X3-MM THK) | |
| E | 39 | 2 | **122-8339** | | SEAL (8-CM EACH) | |
| M | 40 | 2 | **9X-2040** | 2 | SCREW-TRUSS HEAD (M10X1.5X25-MM) | |
| M | 41 | 1,2,3,4 | **9X-2045** | 63 | SCREW-TRUSS HEAD (M6X1X20-MM) | |

C-CHANGE FROM PREVIOUS TYPE
E-ORDER BY THE CENTIMETER
M-METRIC PART

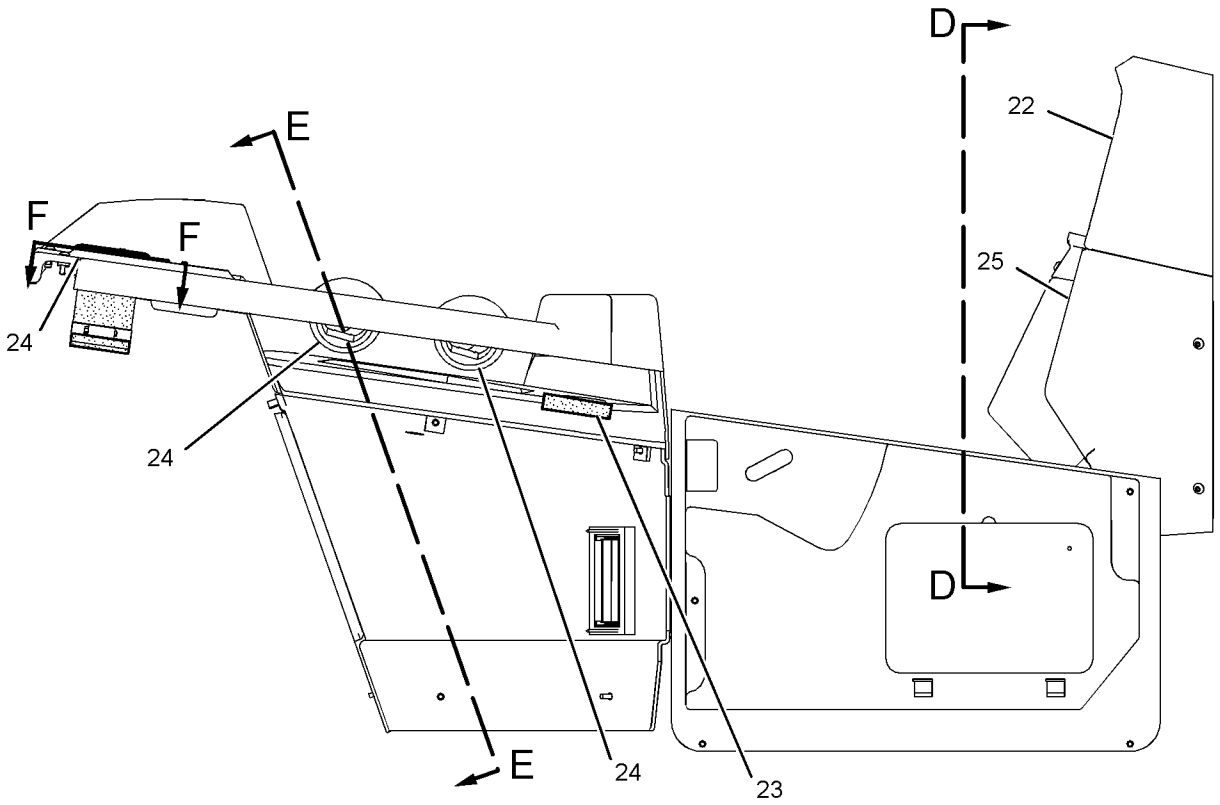


RIGHT SIDE VIEW

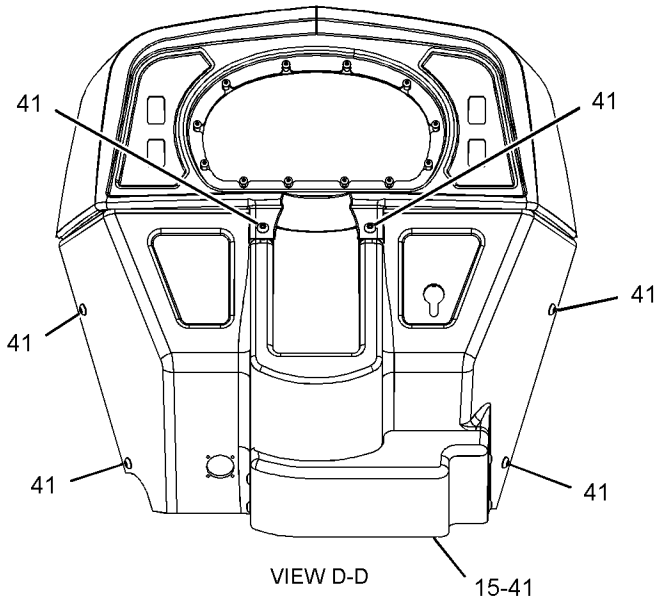


VIEW D-D

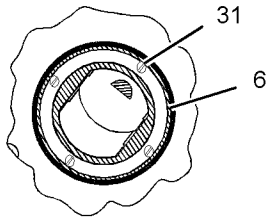


SECTION F-F

REFER TO ALL ILLUSTRATIONS OF THIS GROUP FOR AUXILIARY VIEWS

GRAPHIC #1

g01307071

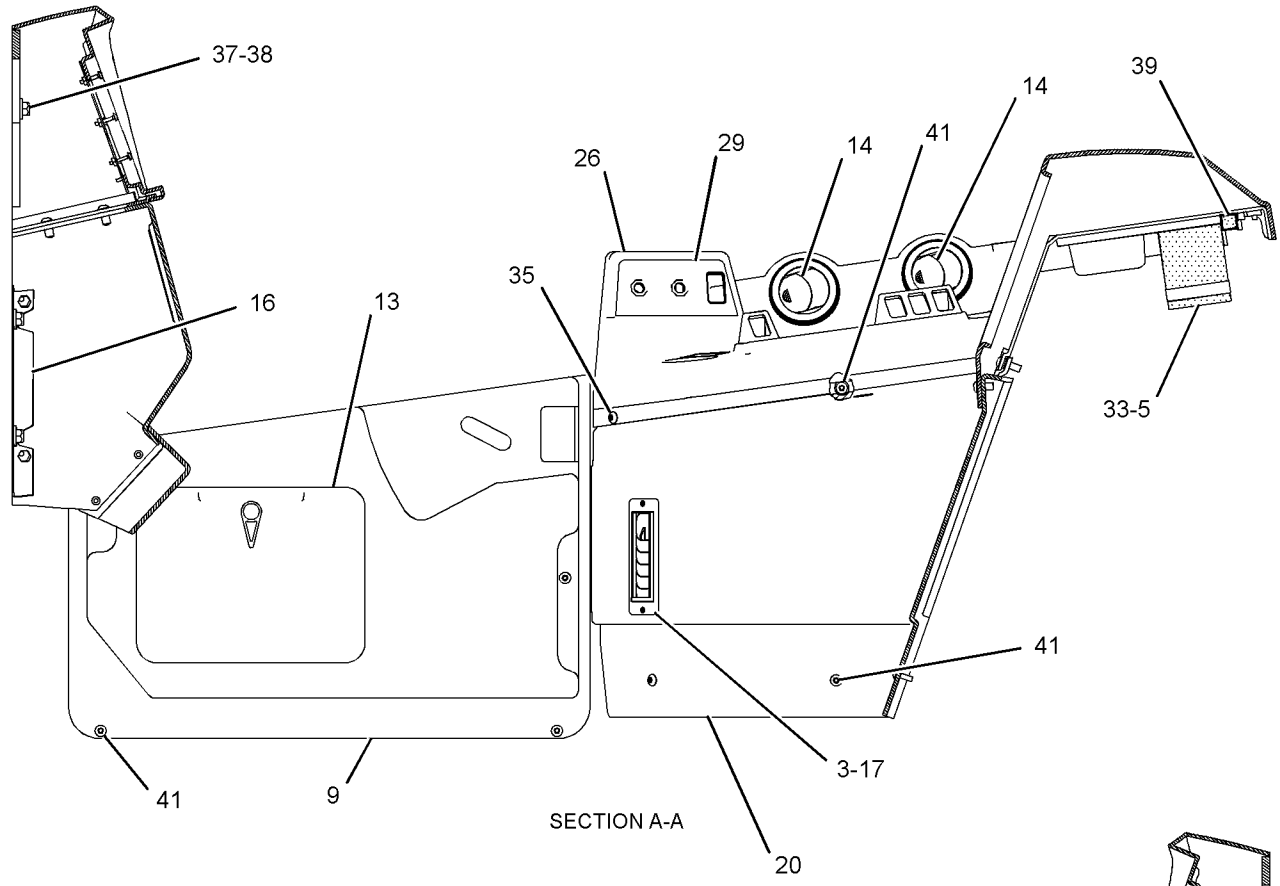


SECTION A-A

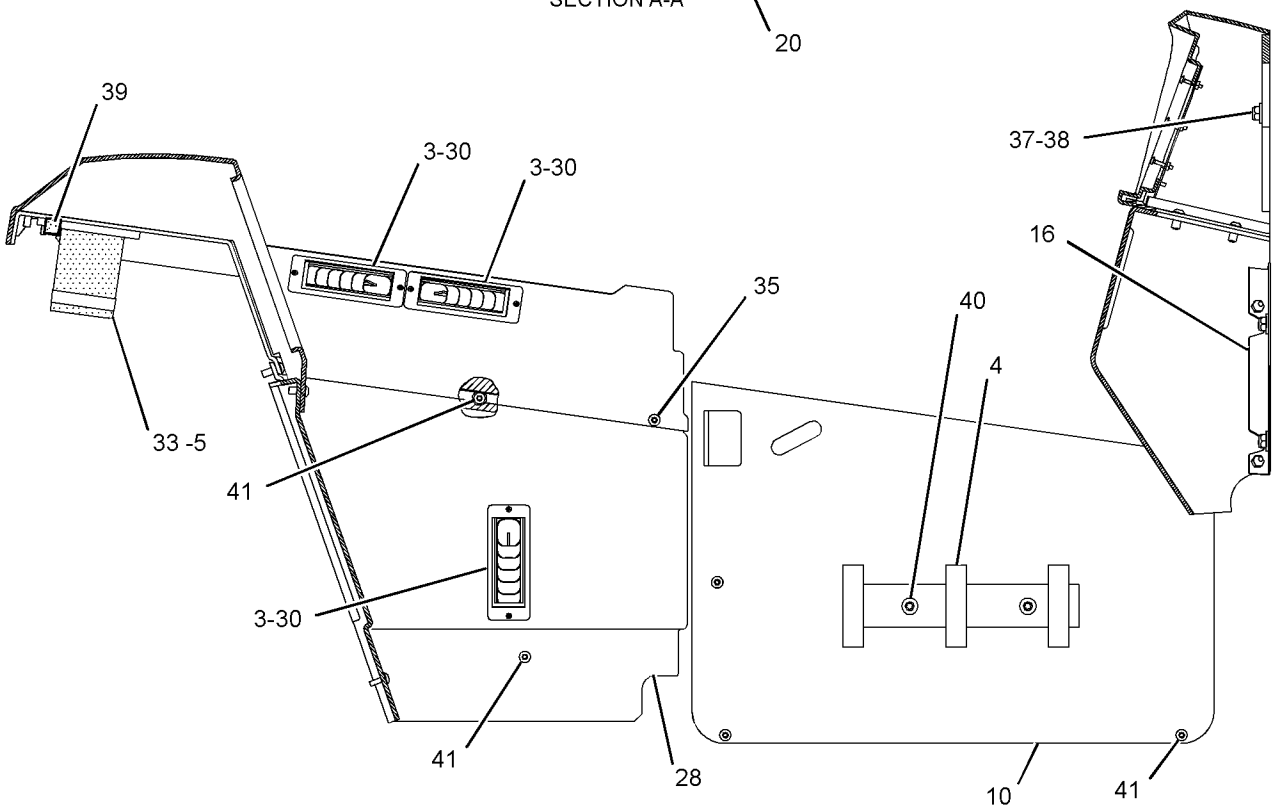


SECTION B-B

GRAPHIC #2

g01236438

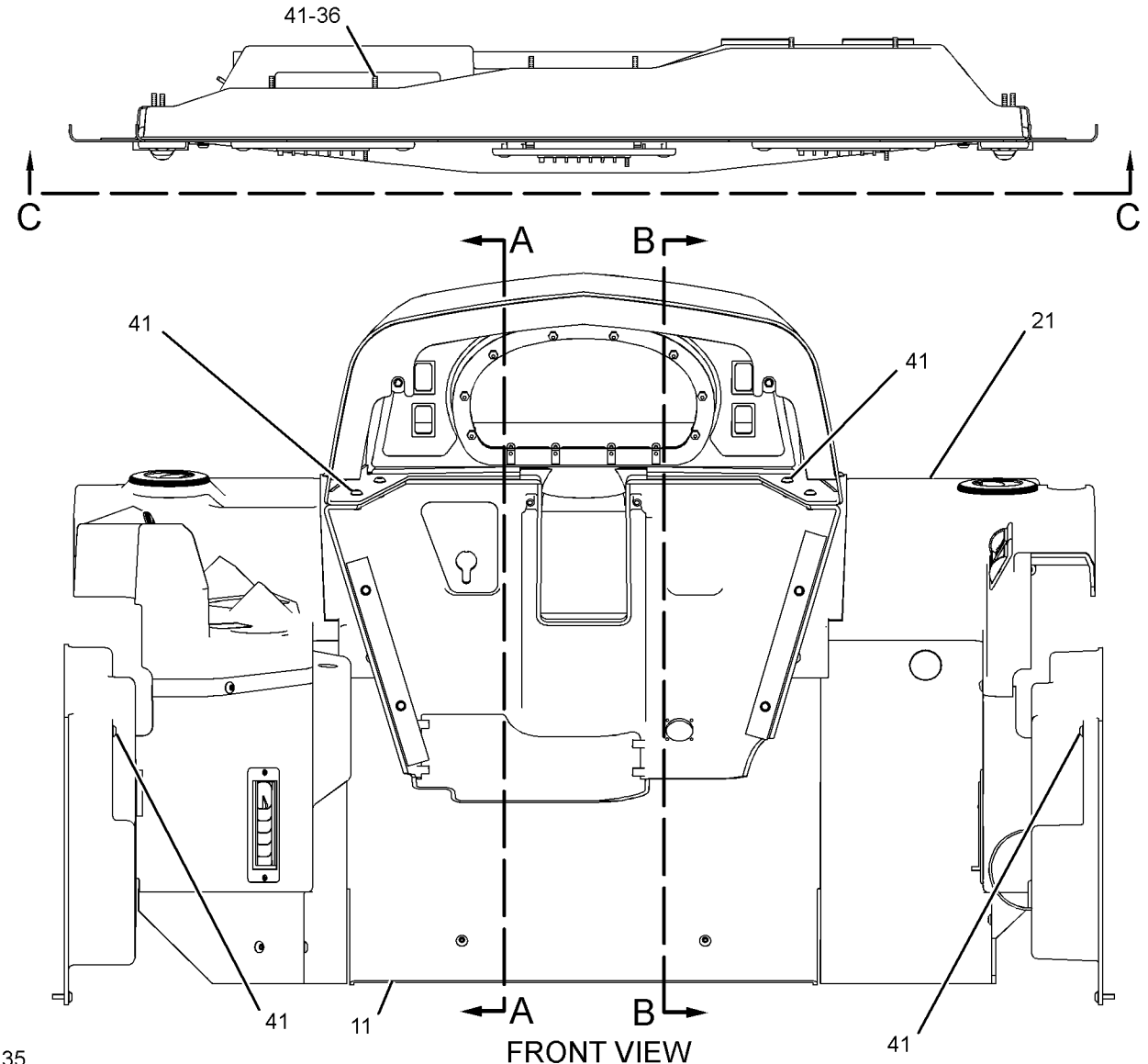


REFER TO ALL ILLUSTRATIONS OF THIS GROUP FOR AUXILIARY VIEWS

GRAPHIC #3

g01236439

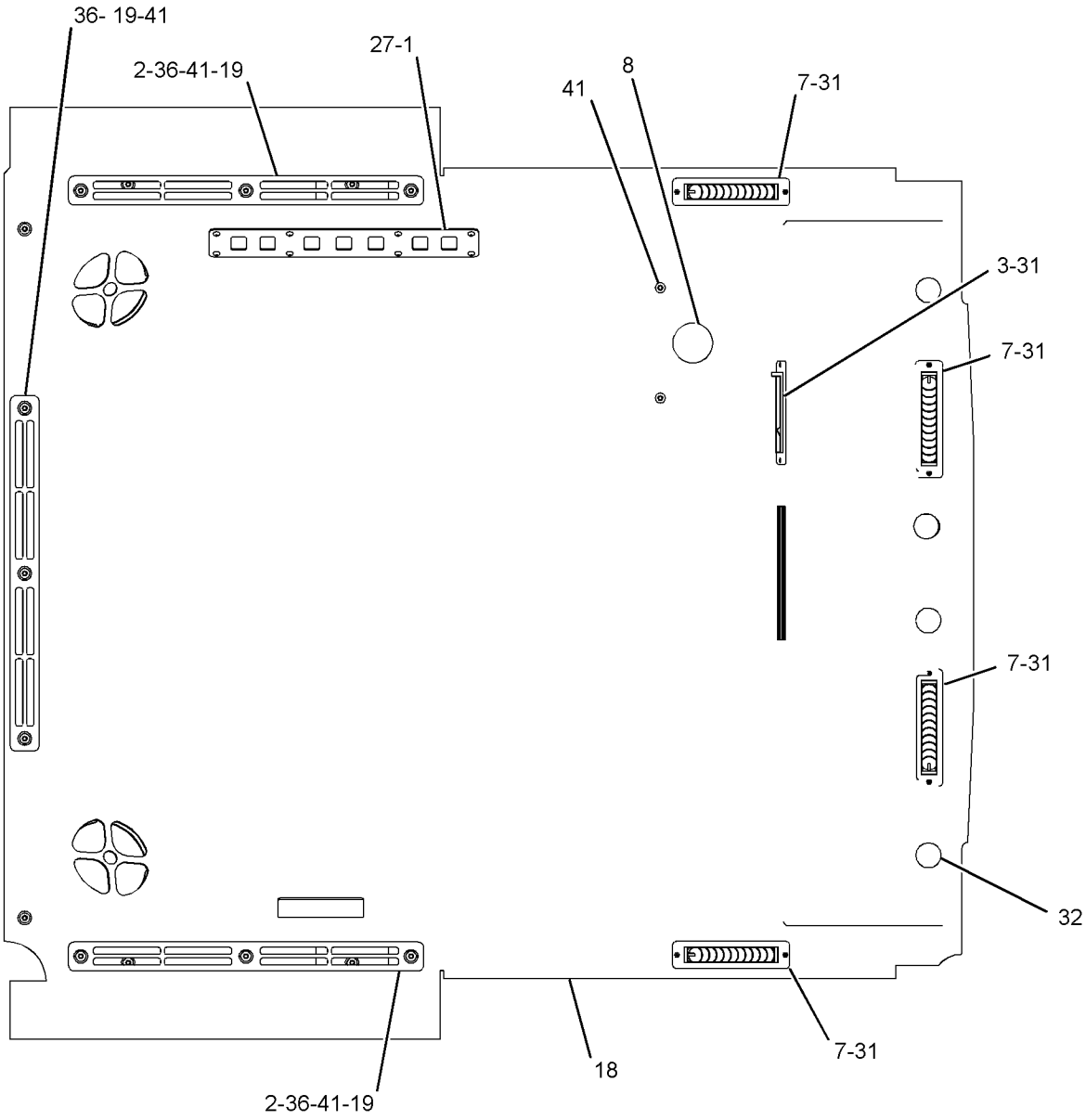


VIEW C-C

GRAPHIC #4 **<END>** g01236440

# OPERATOR STATION

## *252-1721* TRIM GP-CAB–CABLE MACHINE

**S/N: 5451-UP**
**PART OF 252-1720 CAB AR-ENCLOSED ROPS**
**AN ATTACHMENT**
**TYPE 1**

**SMCS-7329** **i02467517**

| NOTE | REF NO | GRAPHIC REF | PART NUMBER | QTY | PART NAME 1 2 3 4 5 6 (PRODUCT LEVEL) | SEE PAGE |
|---|---|---|---|---|---|---|
| | 1 | 3 | **5V-1474** | 8 | SCREW-FORMING (10-16X0.625-IN) | |
| | 2 | 3 | **8T-3996** | 6 | NUT (M6X1-THD) | |
| | 3 | 2,3 | **8Y-6388** | 5 | LOUVER AS | |
| | 4 | 2 | **9K-0974** | 1 | BRACKET | |
| | 5 | 2 | **9M-7959** | 2 | CLAMP-HOSE | |
| | 6 | 2 | **118-5502** | 2 | LOUVER AS | |
| | 7 | 3 | **128-1040** | 1 | PLUG | |
| | 8 | 2 | **128-4805** | 1 | COVER (RH) | |
| | 9 | 2 | **156-6427** | 1 | COVER-DOOR (LH) | |
| | 10 | 1 | **156-6438** | 1 | COVER-CENTER (LOWER) | |
| | 11 | 2 | **156-6439** | 1 | COVER-CENTER (UPPER) | |
| | 12 | 2 | **156-6449** | 1 | DOOR AS | |
| | | 2 | **3V-7689** | 1 | HANDLE AS | |
| | 13 | 2 | **164-8474** | 2 | LOUVER AS | |
| | 14 | 1 | **166-0354** | 1 | COVER-LOWER | |
| | 15 | 2 | **166-3719** | 2 | BRACKET AS | |
| | 16 | 3 | **171-4047** | 4 | LOUVER AS | |
| | 17 | 2 | **199-9822** | 2 | SCREW-FLAT HEAD (M6-20X61.39-MM) | |
| | 18 | 3 | **220-3330** | 3 | GRILL | |
| | 19 | 2 | **245-8900** | 1 | COVER-LOWER (RH) | |
| | 20 | 1 | **245-8904** | 1 | COVER-UPPER (LH) | |
| | 21 | 1 | **246-1205** | 1 | COVER-DASH | |
| | 22 | 1 | **251-7691** | 2 | SEAL | |
| | 23 | 1 | **251-7692** | 4 | SEAL | |
| | 24 | 1 | **251-7693** | 1 | COVER-DASH (LOWER) | |
| | 25 | 3 | **252-5116** | 1 | BEZEL | |
| | 26 | 2 | **252-5119** | 1 | COVER-UPPER (RH) | |
| | 27 | 2 | **252-5120** | 1 | COVER-LOWER (LH) | |
| | 28 | 2 | **257-3391** | 1 | FILM-INFORMATION (AIR CONDITIONER, HEATER) | |
| | 29 | 3 | **269-5815** | 5 | PLUG | |
| | 30 | 3 | **269-5864** | 1 | LINER AS-CAB | |
| | 31 | 2 | **104-2091** | 14 | SCREW-FLAT HEAD (NO 6X0.5-IN) | |
| | 32 | 3 | **118-5619** | 10 | SCREW-FLAT HEAD (NO 6X20X1-IN) | |
| | 33 | 1 | **213-7315** | 12 | SCREW-TRUSS HEAD (M4X0.7X25-MM) | |
| M | 34 | 2 | **3E-8020** | 4 | SCREW-TRUSS HEAD (M6X1X25-MM) | |
| | 35 | 1,3 | **5P-4115** | 27 | WASHER-HARD (7.2X19X2-MM THK) | |
| M | 36 | 2 | **6V-7744** | 6 | LOCKNUT (M10X1.15-THD) | |
| | 37 | 2 | **7X-7729** | 6 | WASHER (11X25X3-MM THK) | |
| | 38 | 3 | **9K-5635** | 6 | SCREW-TAPPING (8-18X1-IN) | |
| M | 39 | 2 | **9X-2041** | 2 | SCREW-TRUSS HEAD (M10X1.5X20-MM) | |
| M | 40 | 1,2,3 | **9X-2045** | 57 | SCREW-TRUSS HEAD (M6X1X20-MM) | |
| E | 41 | 2 | **125-3228** | | HOSE (11.7-CM EACH) | |
| E | 42 | 2 | **122-8339** | | SEAL (8-CM EACH) | |

E-ORDER BY THE CENTIMETER
M-METRIC PART

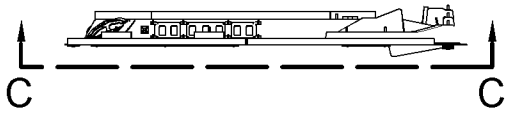


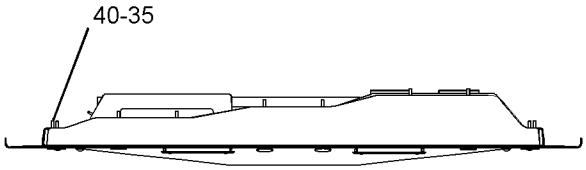


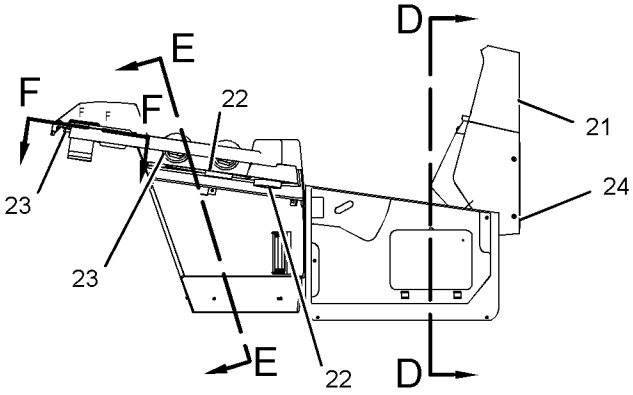


RIGHT SIDE VIEW

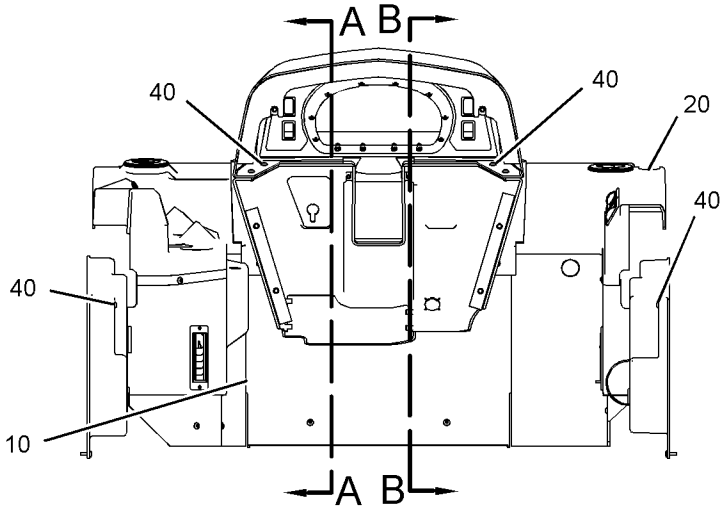


REAR VIEW

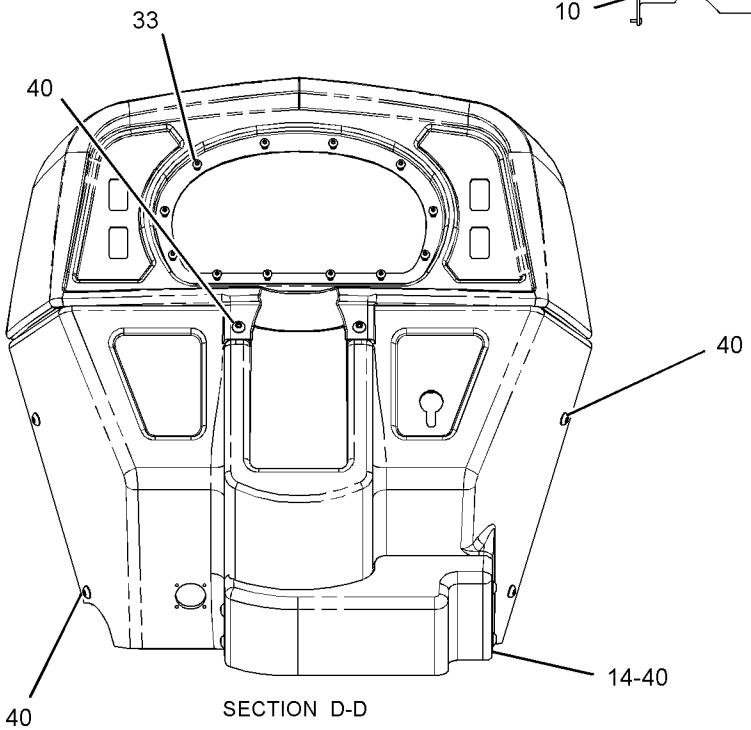


SECTION D-D

REFER TO ALL ILLUSTRATIONS OF THIS GROUP FOR AUXILIARY VIEWS

GRAPHIC #1

g01236249

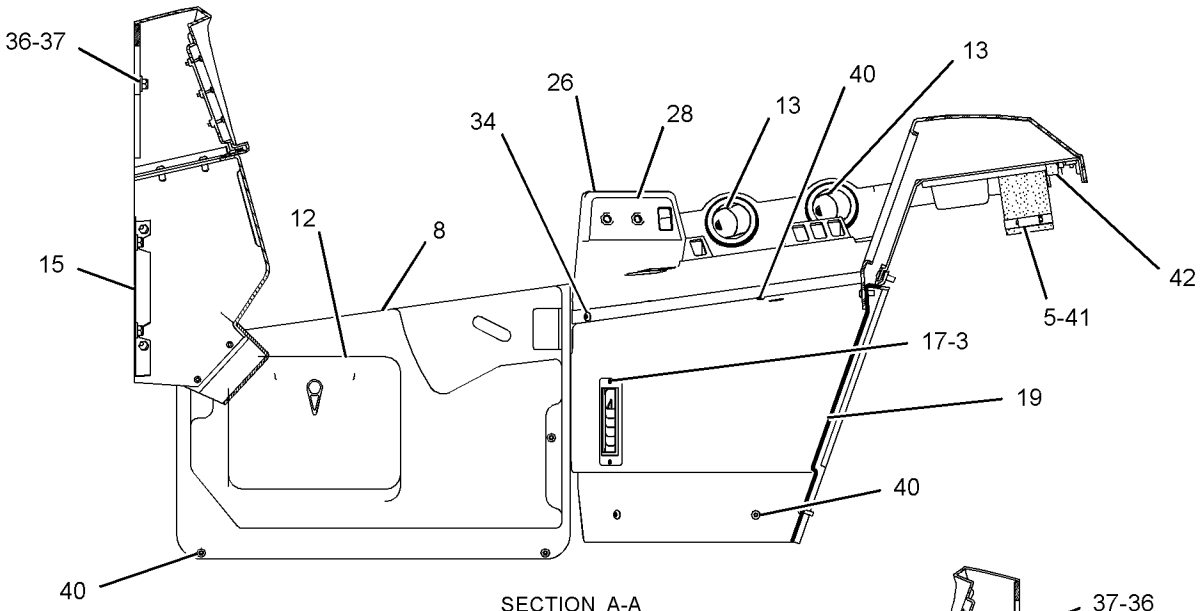


SECTION A-A

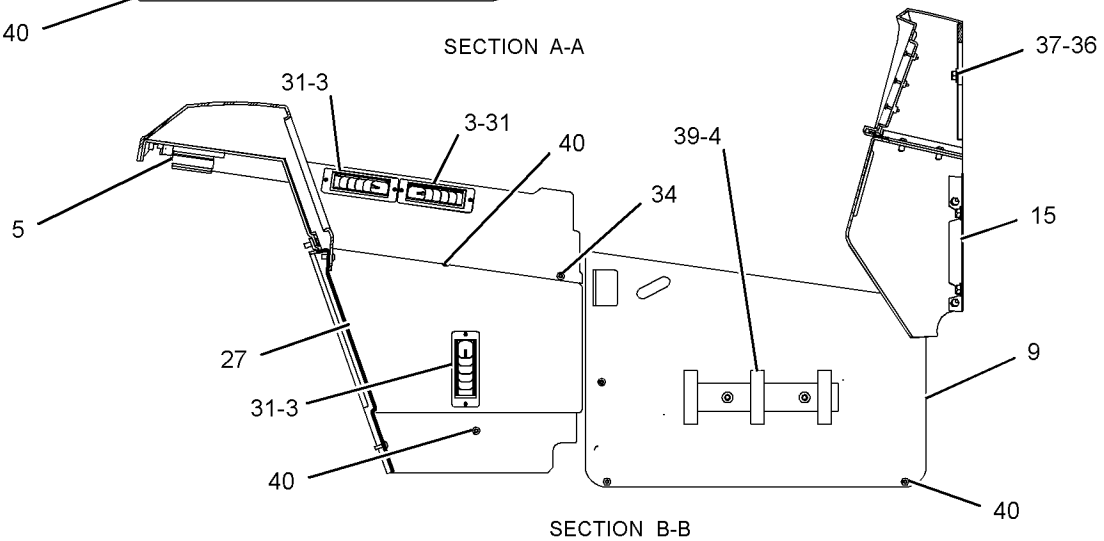


SECTION B-B

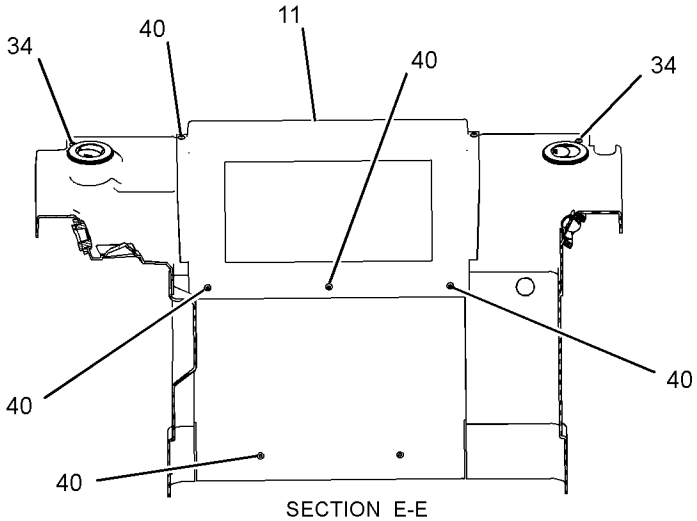


SECTION E-E

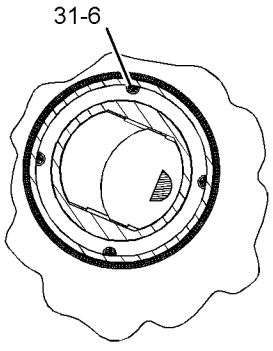


SECTION F-F

GRAPHIC #2

g01236250

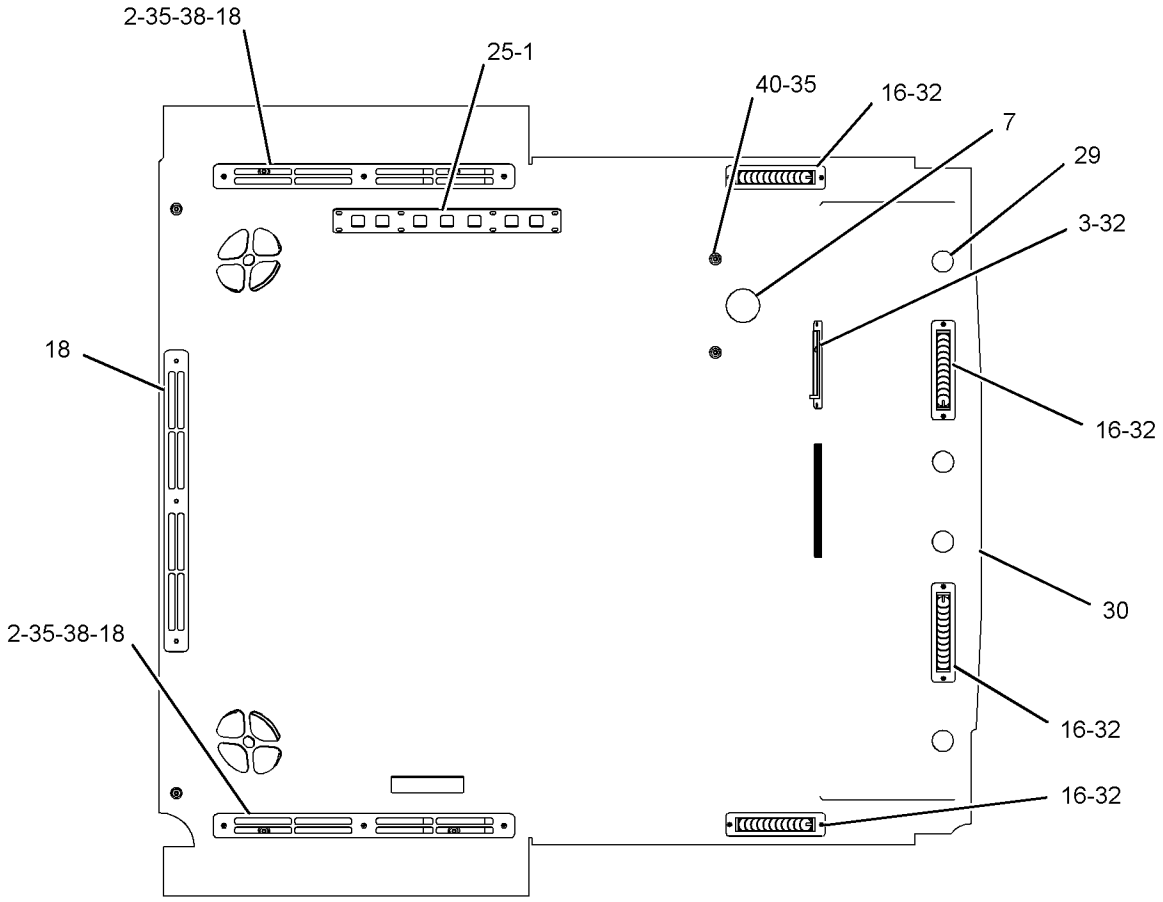


VIEW C-C

GRAPHIC #3 **<END>** g01236251

# OPERATOR STATION

## *252-1721* TRIM GP-CAB–CABLE MACHINE

**S/N: 5451-UP**
**PART OF 252-1720 CAB AR-ENCLOSED ROPS**
**AN ATTACHMENT**
**TYPE 2**

**SMCS-7329** **i02634466**

| NOTE | REF NO | GRAPHIC REF | PART NUMBER | QTY | PART NAME 1 2 3 4 5 6 (PRODUCT LEVEL) | SEE PAGE |
|---|---|---|---|---|---|---|
| | 1 | 3 | **5V-1474** | 8 | SCREW-FORMING (10-16X0.625-IN) | |
| | 2 | 3 | **8T-3996** | 6 | NUT (M6X1-THD) | |
| | 3 | 2,3 | **8Y-6388** | 5 | LOUVER AS | |
| | 4 | 2 | **9K-0974** | 1 | BRACKET | |
| | 5 | 2 | **9M-7959** | 2 | CLAMP-HOSE | |
| | 6 | 2 | **118-5502** | 2 | LOUVER AS | |
| | 7 | 3 | **128-1040** | 1 | PLUG | |
| | 8 | 2 | **128-4805** | 1 | COVER (RH) | |
| | 9 | 2 | **156-6427** | 1 | COVER-DOOR (LH) | |
| | 10 | 1 | **156-6438** | 1 | COVER-CENTER (LOWER) | |
| | 11 | 2 | **156-6439** | 1 | COVER-CENTER (UPPER) | |
| | 12 | 2 | **156-6449** | 1 | DOOR AS | |
| | | 2 | **3V-7689** | 1 | HANDLE AS | |
| | 13 | 2 | **164-8474** | 2 | LOUVER AS | |
| | 14 | 1 | **166-0354** | 1 | COVER-LOWER | |
| | 15 | 2 | **166-3719** | 2 | BRACKET AS | |
| | | | | | (EACH INCLUDES) | |
| M | | 2 | **6V-9632** | 2 | NUT-WELD (M6X1-THD) | |
| | 16 | 3 | **171-4047** | 4 | LOUVER AS | |
| | 17 | 2 | **199-9822** | 2 | SCREW-FLAT HEAD (M6-20X61.39-MM) | |
| | 18 | 3 | **220-3330** | 3 | GRILL | |
| | 19 | 2 | **245-8900** | 1 | COVER-LOWER (RH) | |
| | 20 | 1 | **245-8904** | 1 | COVER-UPPER (LH) | |
| | 21 | 1 | **246-1205** | 1 | COVER-DASH | |
| | 22 | 1 | **251-7691** | 2 | SEAL | |
| | 23 | 1 | **251-7692** | 4 | SEAL | |
| | 24 | 1 | **251-7693** | 1 | COVER-DASH (LOWER) | |
| | 25 | 3 | **252-5116** | 1 | BEZEL | |
| | 26 | 2 | **252-5119** | 1 | COVER-UPPER (RH) | |
| | 27 | 2 | **252-5120** | 1 | COVER-LOWER (LH) | |
| | 28 | 2 | **257-3391** | 1 | FILM-INFORMATION (AIR CONDITIONER, HEATER) | |
| C | 29 | 3 | **6V-0292** | 4 | PLUG | |
| | 30 | 3 | **269-5864** | 1 | LINER AS-CAB | |
| | 31 | 2 | **104-2091** | 14 | SCREW-FLAT HEAD (NO 6X0.5-IN) | |
| | 32 | 3 | **118-5619** | 10 | SCREW-FLAT HEAD (NO 6X20X1-IN) | |
| M | 34 | 2 | **3E-8020** | 4 | SCREW-TRUSS HEAD (M6X1X25-MM) | |
| | 35 | 1,3 | **5P-4115** | 27 | WASHER-HARD (7.2X19X2-MM THK) | |
| M | 36 | 2 | **6V-7744** | 6 | LOCKNUT (M10X1.15-THD) | |
| | 37 | 2 | **7X-7729** | 6 | WASHER (11X25X3-MM THK) | |
| | 38 | 3 | **9K-5635** | 6 | SCREW-TAPPING (8-18X1-IN) | |
| M | 39 | 2 | **9X-2040** | 2 | SCREW-TRUSS HEAD (M10X1.5X25-MM) | |
| M | 40 | 1,2,3 | **9X-2045** | 57 | SCREW-TRUSS HEAD (M6X1X20-MM) | |
| E | 41 | 2 | **125-3228** | | HOSE (11.7-CM EACH) | |
| E | 42 | 2 | **122-8339** | | SEAL (8-CM EACH) | |

C-CHANGE FROM PREVIOUS TYPE
E-ORDER BY THE CENTIMETER
M-METRIC PART

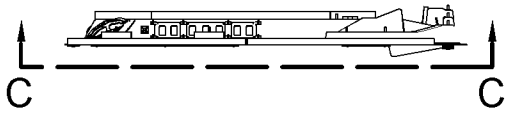


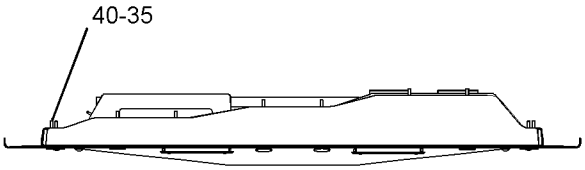


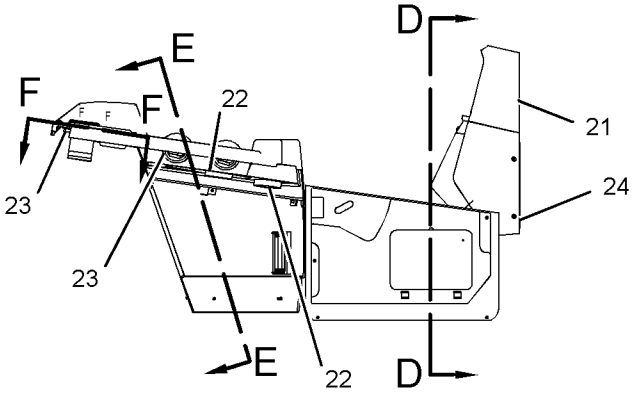


RIGHT SIDE VIEW

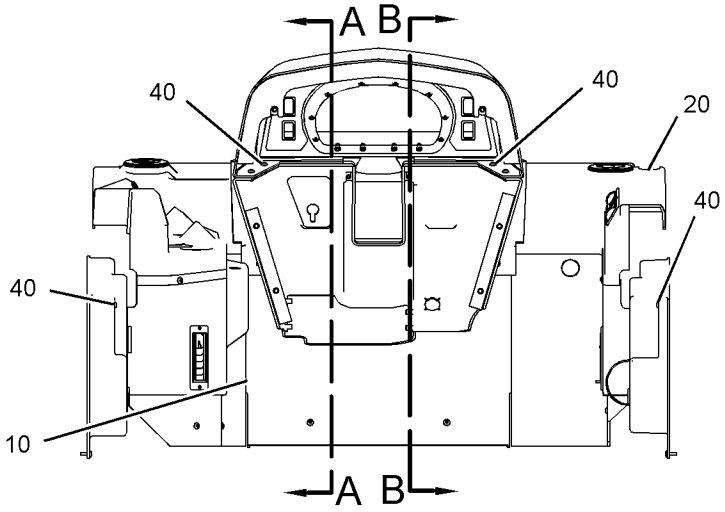


REAR VIEW

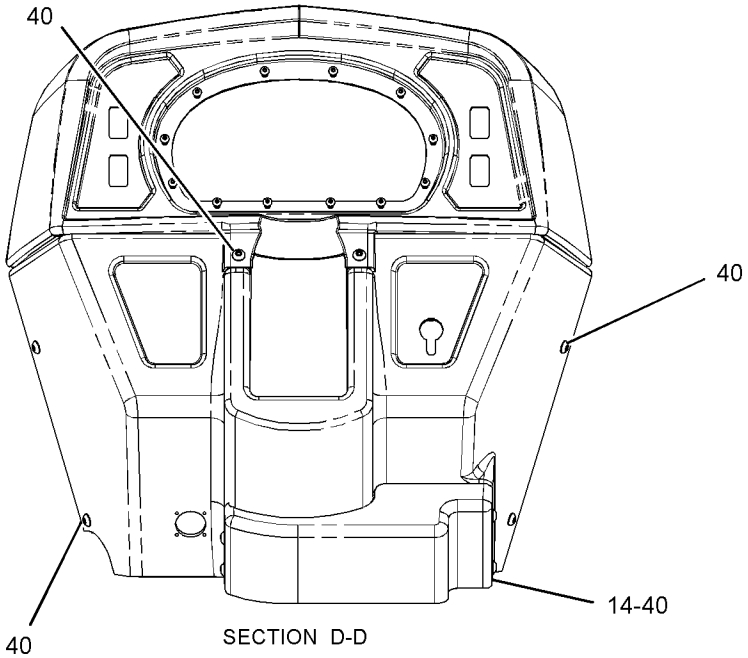


SECTION D-D

REFER TO ALL ILLUSTRATIONS OF
THIS GROUP FOR AUXILIARY VIEWS

GRAPHIC #1

g01307113

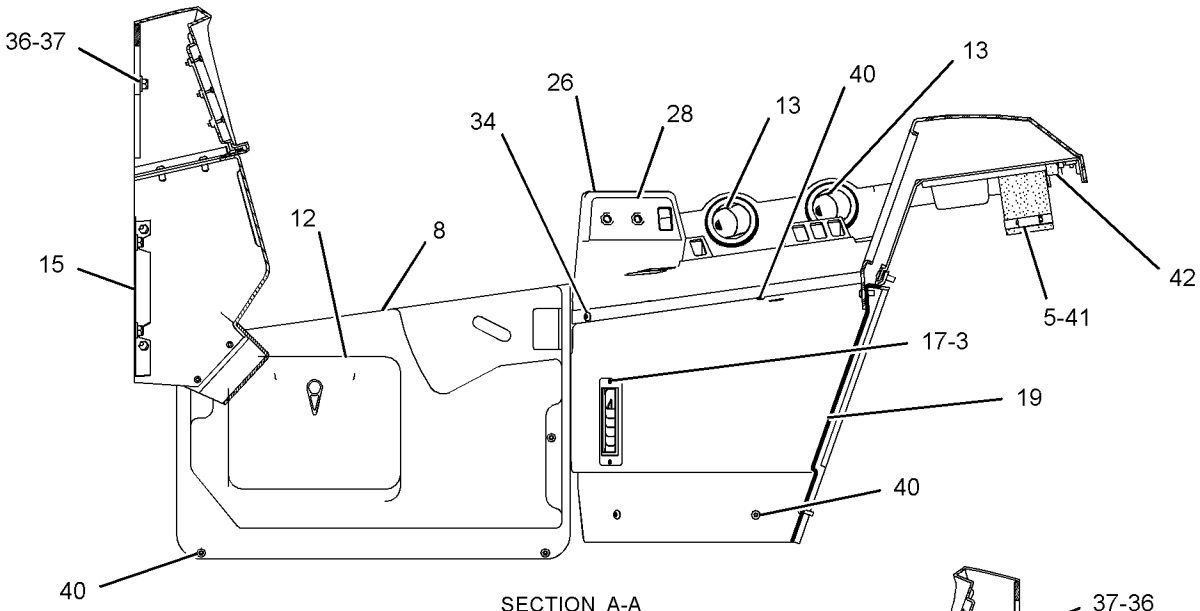


SECTION A-A

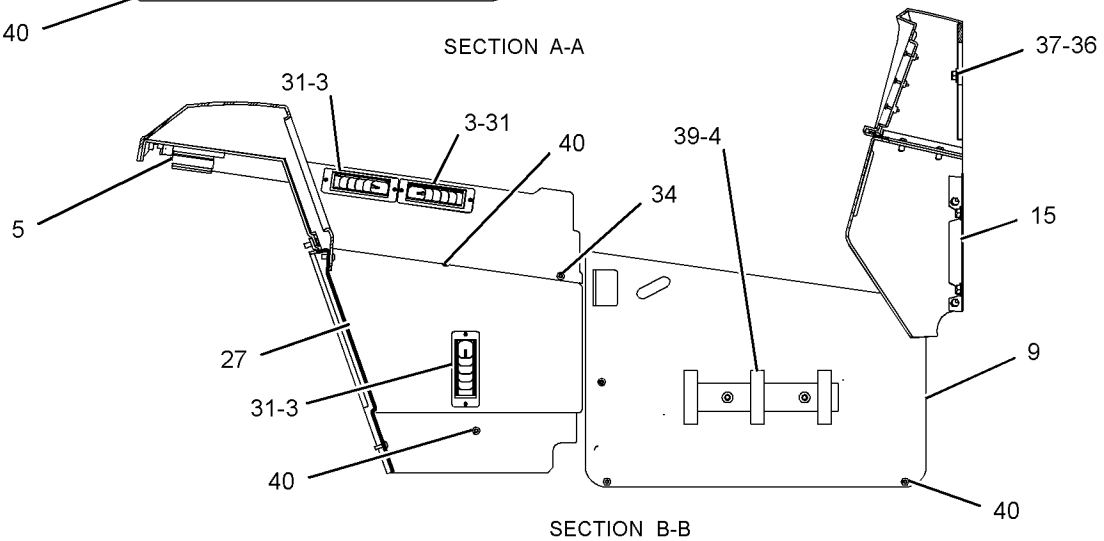


SECTION B-B

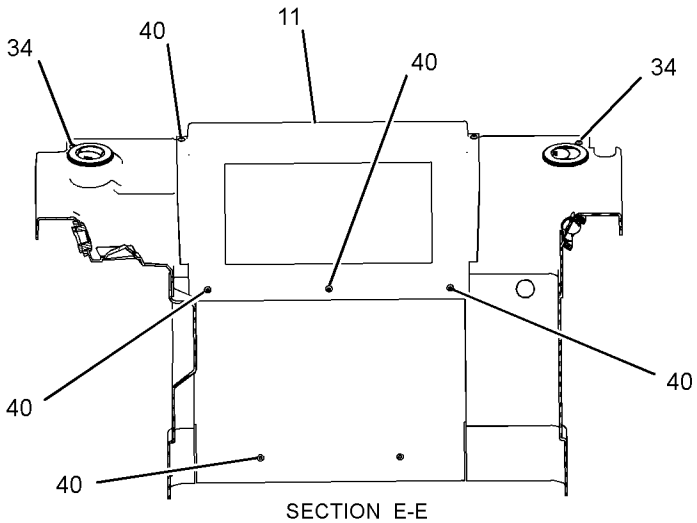


SECTION E-E

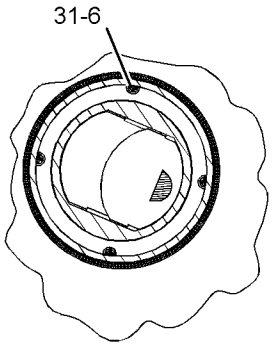


SECTION F-F

GRAPHIC #2

g01236250

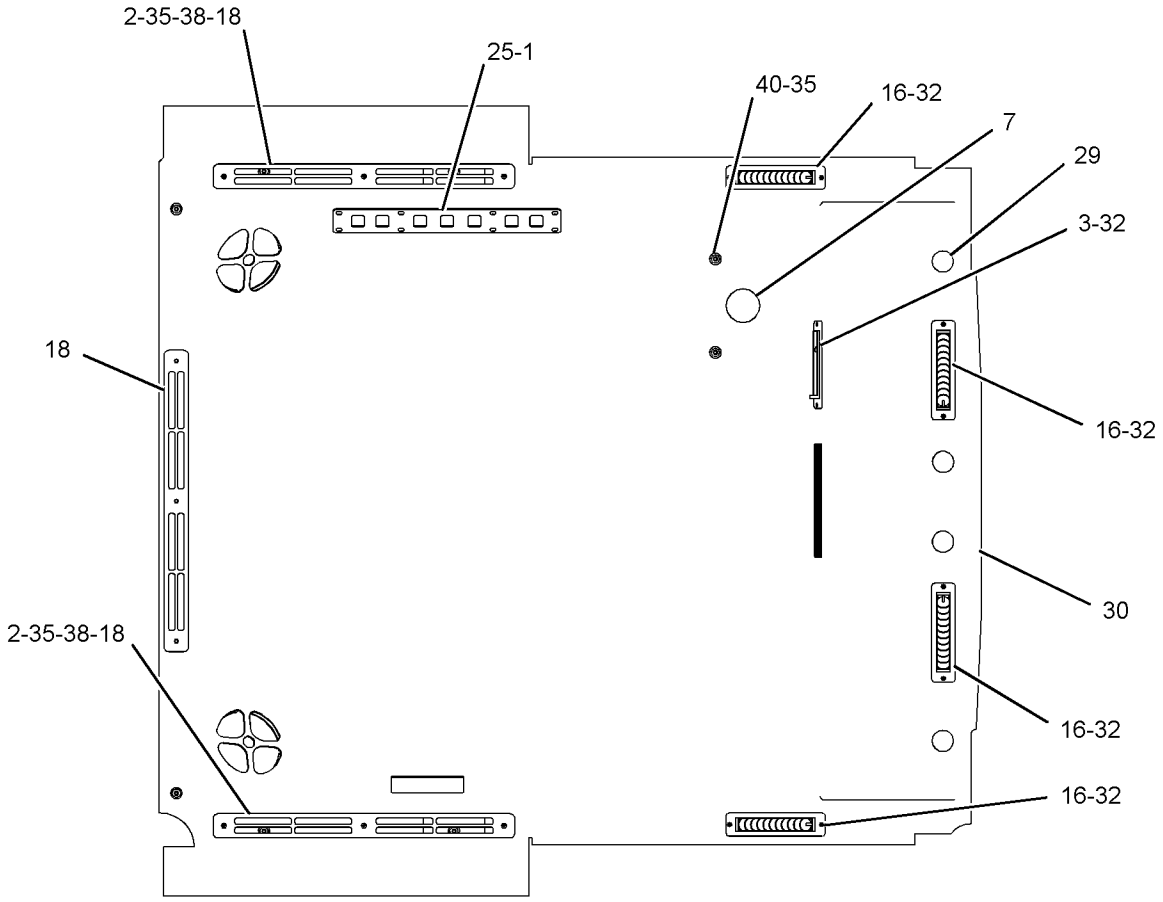


VIEW C-C

GRAPHIC #3 **<END>** g01236251

# OPERATOR STATION

## *252-1729* TRIM GP-OPEN ROPS—GRAPPLE MACHINE

**S/N: 5451-UP**
**PART OF 252-1722 CAB AR-OPEN ROPS**
**AN ATTACHMENT**
**TYPE 1**

**SMCS-7330** **i02467629**

| NOTE | REF NO | GRAPHIC REF | PART NUMBER | QTY | PART NAME 1 2 3 4 5 6 (PRODUCT LEVEL) | SEE PAGE |
|---|---|---|---|---|---|---|
| | 1 | 2 | **5V-1474** | 8 | SCREW-FORMING (10-16X0.625-IN) | |
| | 2 | 1 | **9K-0974** | 1 | BRACKET | |
| | 3 | 2 | **128-1040** | 1 | PLUG | |
| | 4 | 1 | **128-4805** | 1 | COVER (RH) | |
| | 5 | 2 | **156-6427** | 1 | COVER-DOOR (LH) | |
| | 6 | 1 | **156-6438** | 1 | COVER-CENTER (LOWER) | |
| | 7 | 1 | **156-6441** | 1 | COVER-CENTER (UPPER) | |
| | 8 | 2 | **156-6449** | 1 | DOOR AS | |
| | | 2 | **3V-7689** | 1 | HANDLE AS | |
| | 9 | 1 | **166-0354** | 1 | COVER-LOWER | |
| | 10 | 1,2 | **166-3719** | 2 | BRACKET AS | |
| M | | 1,2 | **6V-9632** | 2 | NUT-WELD (M6X1-THD) | |
| | 11 | 2 | **245-8905** | 1 | COVER-LOWER (RH) | |
| | 12 | 1 | **245-8909** | 1 | COVER-UPPER (LH) | |
| | 13 | 1 | **246-1205** | 1 | COVER-DASH | |
| | 14 | 2 | **246-1210** | 1 | COVER-UPPER (RH) | |
| | 15 | 1 | **251-7693** | 1 | COVER-DASH (LOWER) | |
| | 16 | 2 | **252-5116** | 1 | BEZEL | |
| | 17 | 1 | **257-9504** | 1 | COVER-LOWER (LH) | |
| | 18 | 2 | **269-5815** | 14 | PLUG | |
| | 19 | 2 | **269-5865** | 1 | LINER AS-CAB | |
| | 20 | 2 | **272-2954** | 1 | FILM | |
| | 21 | 1 | **213-7315** | 12 | SCREW-TRUSS HEAD (M4X0.7X25-MM) | |
| M | 22 | 1,2 | **3E-8020** | 4 | SCREW-TRUSS HEAD (M6X1X25-MM) | |
| | 23 | 1,2 | **5P-4115** | 21 | WASHER-HARD (7.2X19X2-MM THK) | |
| M | 24 | 1,2 | **6V-7744** | 6 | LOCKNUT (M10X1.15-THD) | |
| | 25 | 1,2 | **7X-7729** | 6 | WASHER (11X25X3-MM THK) | |
| M | 26 | 1 | **9X-2041** | 2 | SCREW-TRUSS HEAD (M10X1.5X20-MM) | |
| M | 27 | 1,2 | **9X-2045** | 57 | SCREW-TRUSS HEAD (M6X1X20-MM) | |

M-METRIC PART

REFER TO ALL ILLUSTRATIONS OF
THIS GROUP FOR AUXILIARY VIEWS

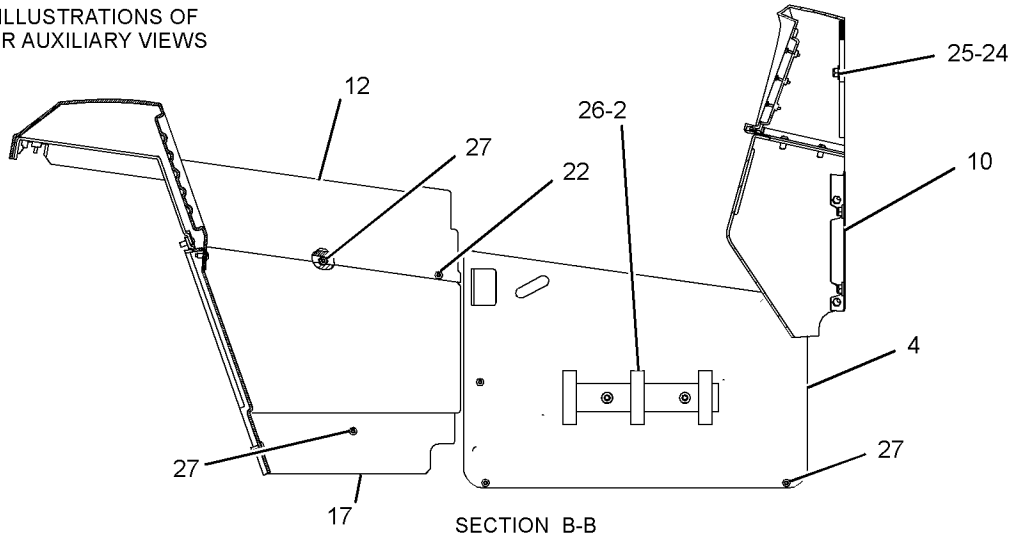


SECTION B-B

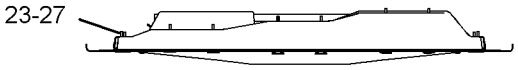


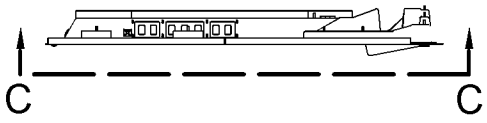


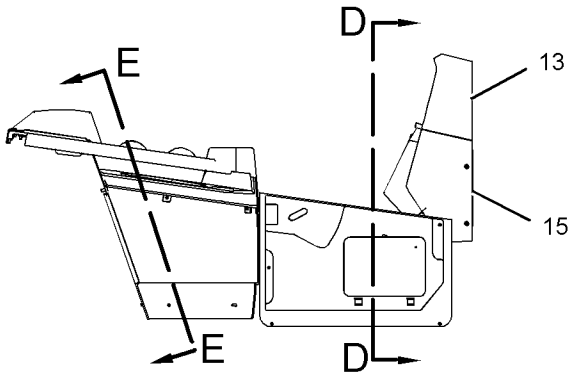


RIGHT SIDE VIEW

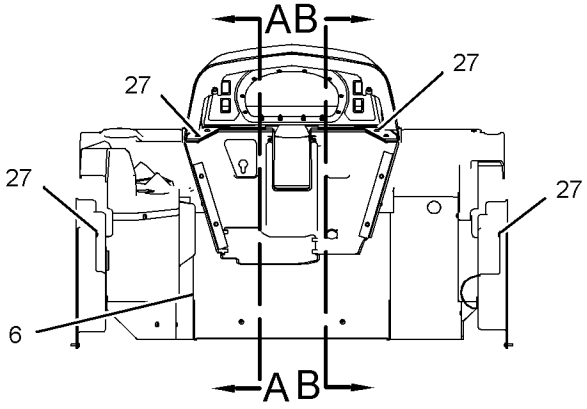


FRONT VIEW

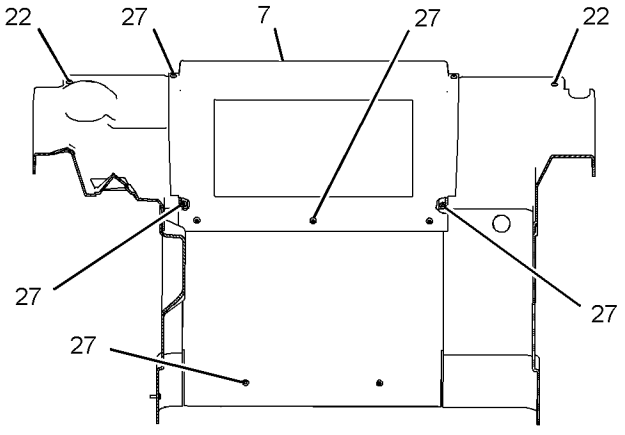


SECTION E-E

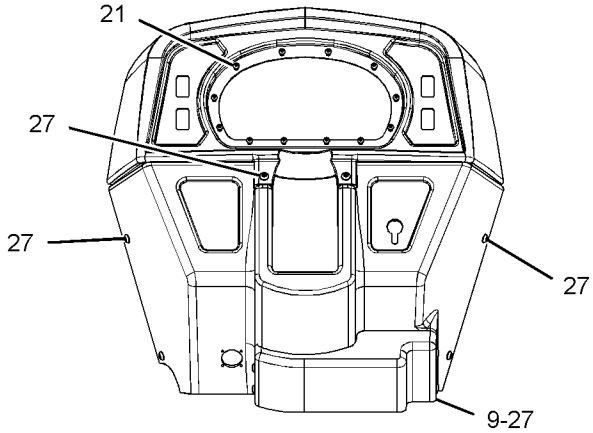


SECTION D-D

GRAPHIC #1

g01236235

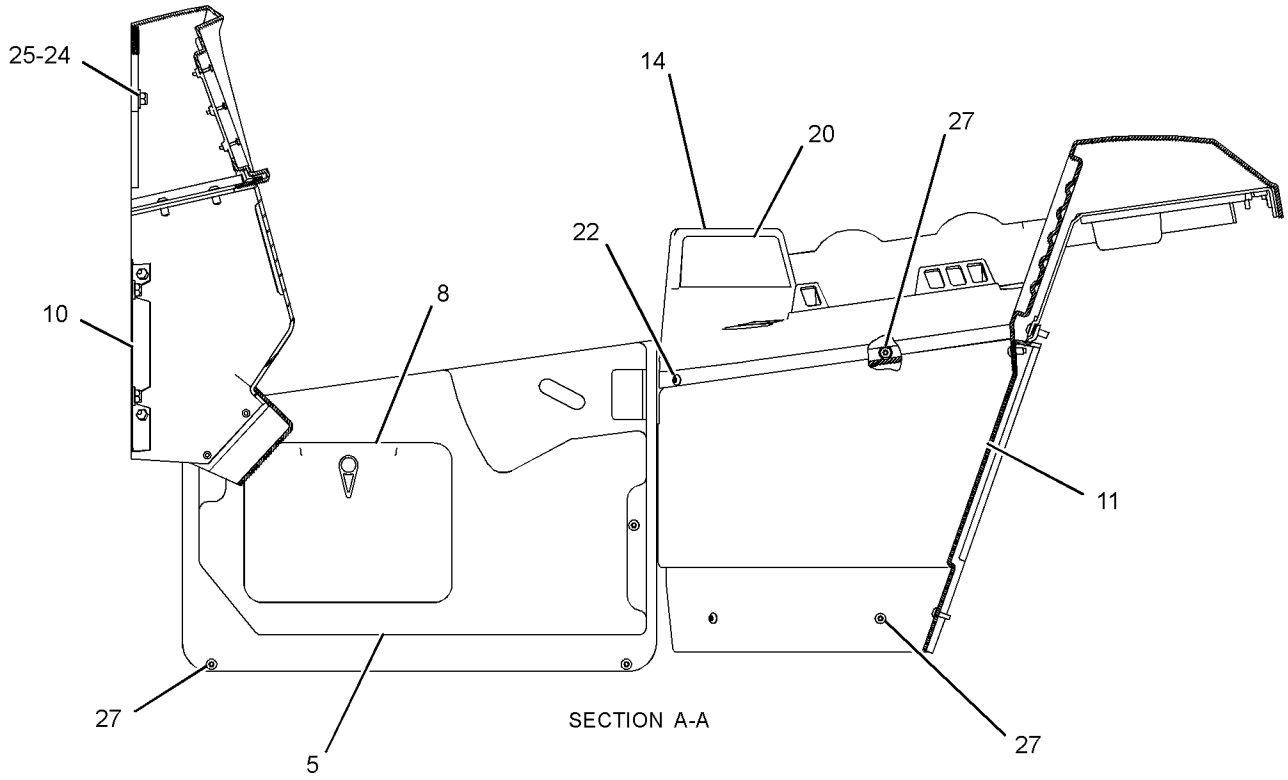


SECTION A-A

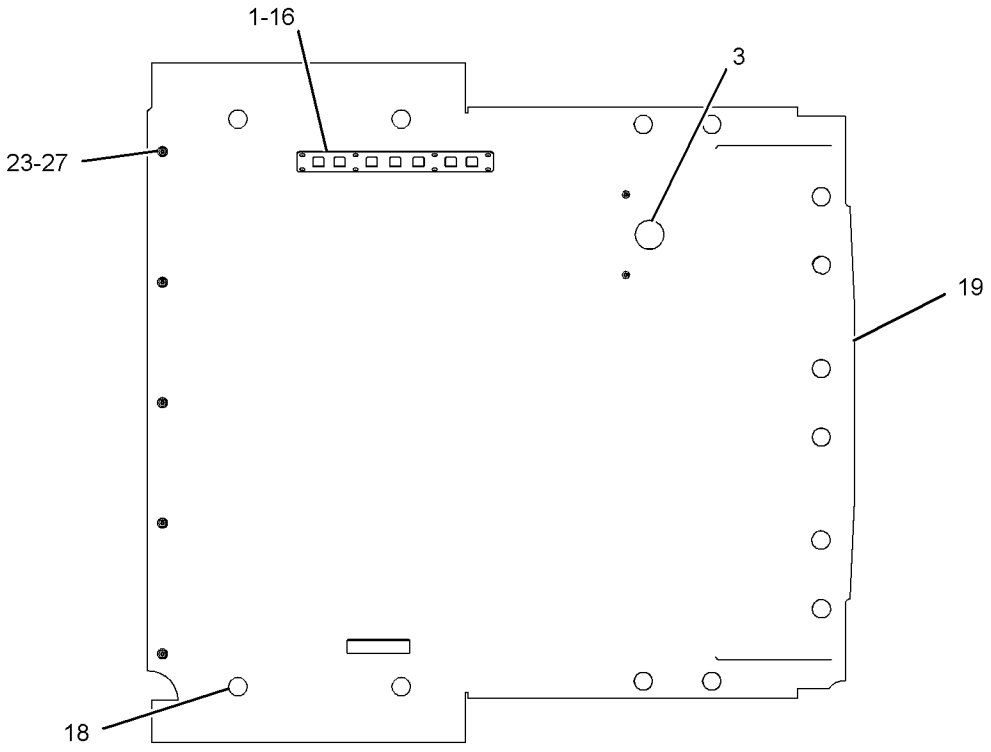


VIEW C-C

GRAPHIC #2 **<END>** g01236236

# OPERATOR STATION

## *252-1729* TRIM GP-OPEN ROPS—GRAPPLE MACHINE

**S/N: 5451-UP**
**PART OF 252-1722 CAB AR-OPEN ROPS**
**AN ATTACHMENT**
**TYPE 2**

**SMCS-7330** **i02634465**

| NOTE | REF NO | GRAPHIC REF | PART NUMBER | QTY | PART NAME 1 2 3 4 5 6 (PRODUCT LEVEL) | SEE PAGE |
|---|---|---|---|---|---|---|
| | 1 | 2 | **5V-1474** | 8 | SCREW-FORMING (10-16X0.625-IN) | |
| | 2 | 1 | **9K-0974** | 1 | BRACKET | |
| | 3 | 2 | **128-1040** | 1 | PLUG | |
| | 4 | 1 | **128-4805** | 1 | COVER (RH) | |
| | 5 | 2 | **156-6427** | 1 | COVER-DOOR (LH) | |
| | 6 | 1 | **156-6438** | 1 | COVER-CENTER (LOWER) | |
| | 7 | 1 | **156-6441** | 1 | COVER-CENTER (UPPER) | |
| | 8 | 2 | **156-6449** | 1 | DOOR AS | |
| | | 2 | **3V-7689** | 1 | HANDLE AS | |
| | 9 | 1 | **166-0354** | 1 | COVER-LOWER | |
| | 10 | 1,2 | **166-3719** | 2 | BRACKET AS | |
| | | | | | (EACH INCLUDES) | |
| M | | 1,2 | **6V-9632** | 2 | NUT-WELD (M6X1-THD) | |
| | 11 | 2 | **245-8905** | 1 | COVER-LOWER (RH) | |
| | 12 | 1 | **245-8909** | 1 | COVER-UPPER (LH) | |
| | 13 | 1 | **246-1205** | 1 | COVER-DASH | |
| | 14 | 2 | **246-1210** | 1 | COVER-UPPER (RH) | |
| | 15 | 1 | **251-7693** | 1 | COVER-DASH (LOWER) | |
| | 16 | 2 | **252-5116** | 1 | BEZEL | |
| | 17 | 1 | **257-9504** | 1 | COVER-LOWER (LH) | |
| C | 18 | 2 | **6V-0292** | 14 | PLUG | |
| | 19 | 2 | **269-5865** | 1 | LINER AS-CAB | |
| | 20 | 2 | **272-2954** | 1 | FILM | |
| M | 22 | 1,2 | **3E-8020** | 4 | SCREW-TRUSS HEAD (M6X1X25-MM) | |
| | 23 | 1,2 | **5P-4115** | 21 | WASHER-HARD (7.2X19X2-MM THK) | |
| M | 24 | 1,2 | **6V-7744** | 6 | LOCKNUT (M10X1.15-THD) | |
| | 25 | 1,2 | **7X-7729** | 6 | WASHER (11X25X3-MM THK) | |
| M | 26 | 1 | **9X-2040** | 2 | SCREW-TRUSS HEAD (M10X1.5X25-MM) | |
| M | 27 | 1,2 | **9X-2045** | 57 | SCREW-TRUSS HEAD (M6X1X20-MM) | |

C-CHANGE FROM PREVIOUS TYPE
M-METRIC PART

REFER TO ALL ILLUSTRATIONS OF
THIS GROUP FOR AUXILIARY VIEWS

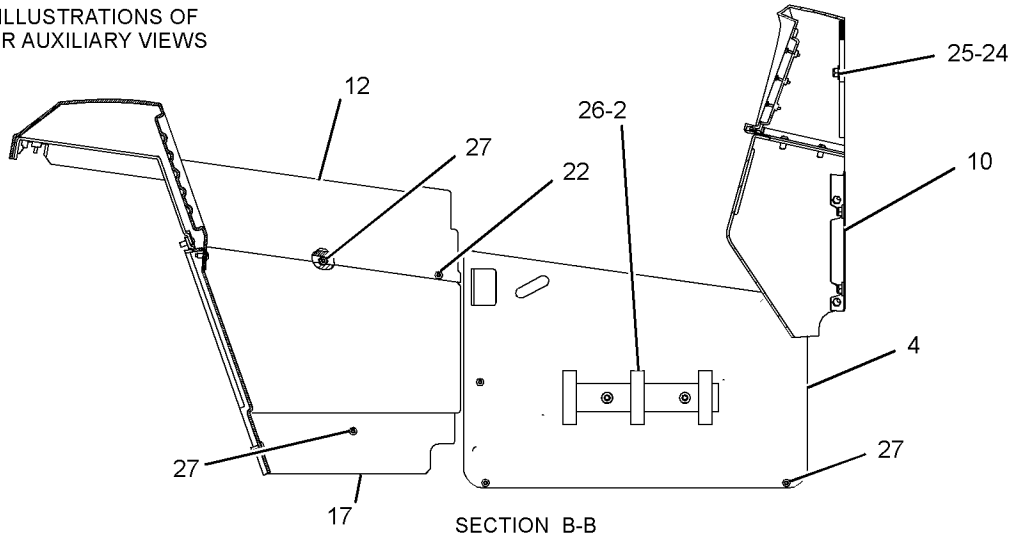


SECTION B-B

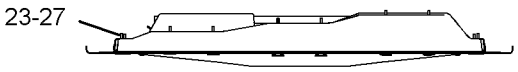


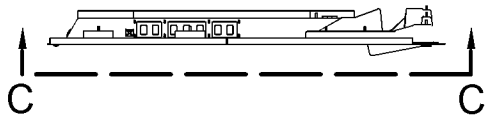


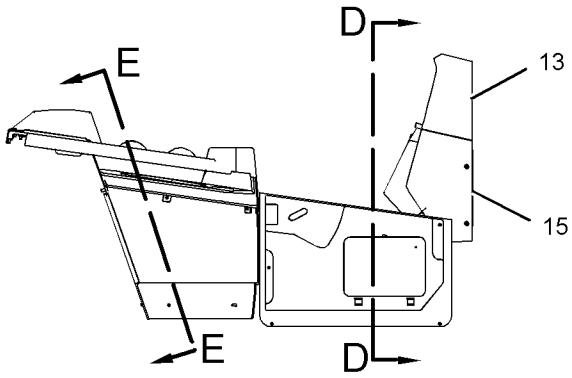


RIGHT SIDE VIEW

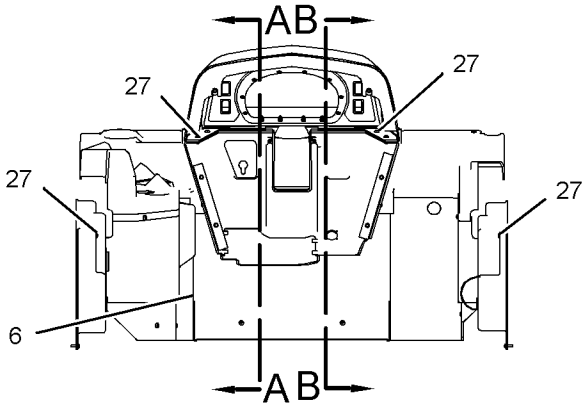


FRONT VIEW

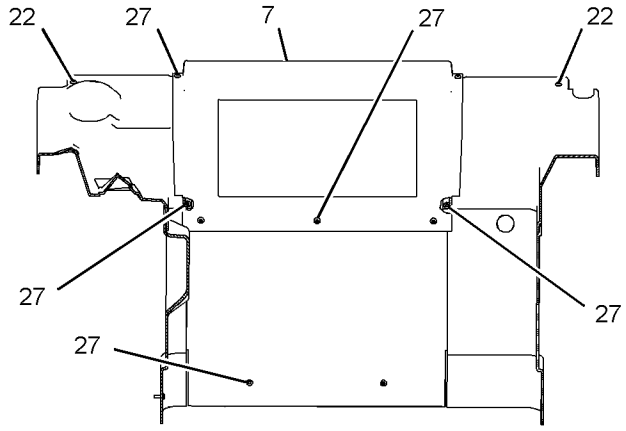


SECTION E-E

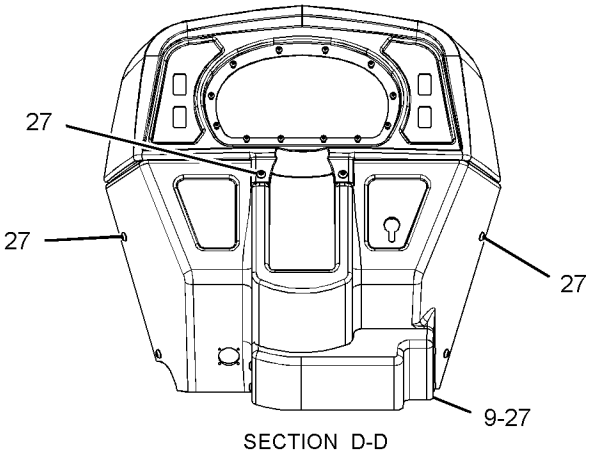


SECTION D-D

GRAPHIC #1

g01307430

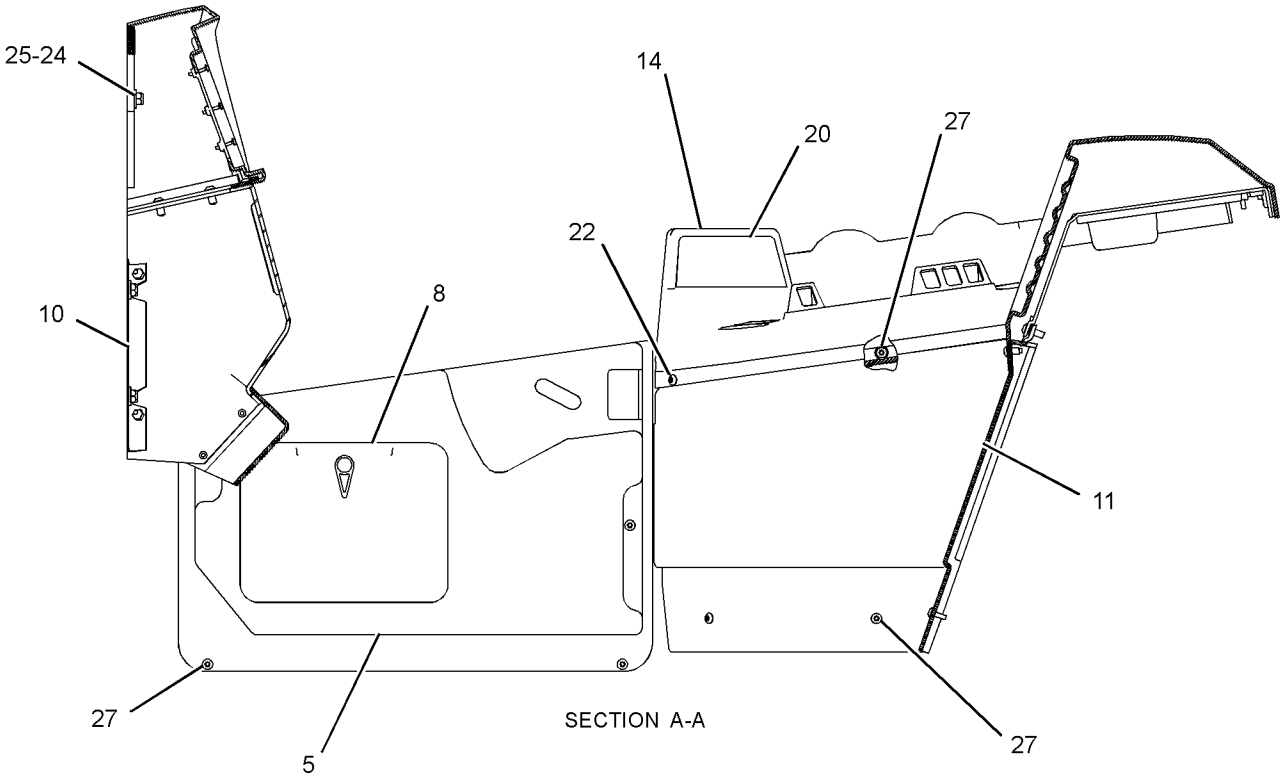


SECTION A-A

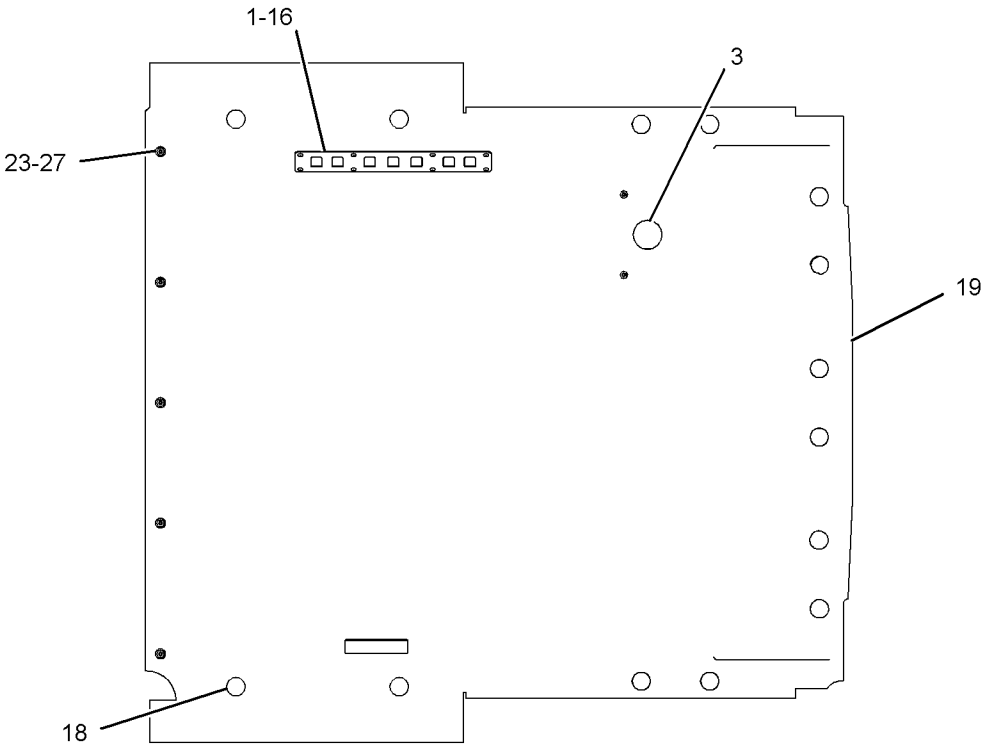


VIEW C-C

GRAPHIC #2 **<END>** g01236236

# OPERATOR STATION

## *252-1730* TRIM GP-OPEN ROPS—CABLE MACHINE

**S/N: 5451-UP**
**PART OF 252-1728 CAB AR-OPEN ROPS**
**AN ATTACHMENT**
**TYPE 1**

**SMCS-7330** **i02467635**

| NOTE | REF NO | GRAPHIC REF | PART NUMBER | QTY | PART NAME 1 2 3 4 5 6 (PRODUCT LEVEL) | SEE PAGE |
|---|---|---|---|---|---|---|
| | 1 | 3 | **5V-1474** | 8 | SCREW-FORMING (10-16X0.625-IN) | |
| | 2 | 2 | **9K-0974** | 1 | BRACKET | |
| | 3 | 3 | **128-1040** | 1 | PLUG | |
| | 4 | 2 | **128-4805** | 1 | COVER (RH) | |
| | 5 | 2 | **156-6427** | 1 | COVER-DOOR (LH) | |
| | 6 | 1 | **156-6438** | 1 | COVER-CENTER (LOWER) | |
| | 7 | 1 | **156-6441** | 1 | COVER-CENTER (UPPER) | |
| | 8 | 2 | **156-6449** | 1 | DOOR AS | |
| | | 2 | **3V-7689** | 1 | HANDLE AS | |
| | 9 | 3 | **166-0354** | 1 | COVER-LOWER | |
| | 10 | 2 | **166-3719** | 2 | BRACKET AS | |
| | 11 | 2 | **245-8905** | 1 | COVER-LOWER (RH) | |
| | 12 | 2 | **245-8909** | 1 | COVER-UPPER (LH) | |
| | 13 | 3 | **246-1205** | 1 | COVER-DASH | |
| | 14 | 3 | **251-7693** | 1 | COVER-DASH (LOWER) | |
| | 15 | 2 | **252-5113** | 1 | COVER-UPPER (RH) | |
| | 16 | 3 | **252-5116** | 1 | BEZEL | |
| | 17 | 2 | **257-9504** | 1 | COVER-LOWER (LH) | |
| | 18 | 3 | **269-5815** | 14 | PLUG | |
| | 19 | 3 | **269-5865** | 1 | LINER AS-CAB | |
| | 20 | 2 | **272-2954** | 1 | FILM | |
| | 21 | 3 | **213-7315** | 12 | SCREW-TRUSS HEAD (M4X0.7X25-MM) | |
| M | 22 | 1,2 | **3E-8020** | 4 | SCREW-TRUSS HEAD (M6X1X25-MM) | |
| | 23 | 1,3 | **5P-4115** | 21 | WASHER-HARD (7.2X19X2-MM THK) | |
| M | 24 | 2 | **6V-7744** | 6 | LOCKNUT (M10X1.15-THD) | |
| | 25 | 2 | **7X-7729** | 6 | WASHER (11X25X3-MM THK) | |
| M | 26 | 2 | **9X-2041** | 2 | SCREW-TRUSS HEAD (M10X1.5X20-MM) | |
| M | 27 | 1,2,3 | **9X-2045** | 57 | SCREW-TRUSS HEAD (M6X1X20-MM) | |

M-METRIC PART

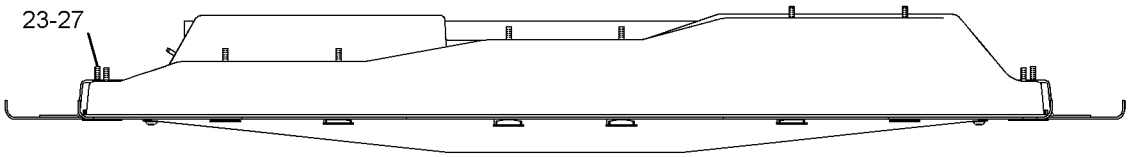


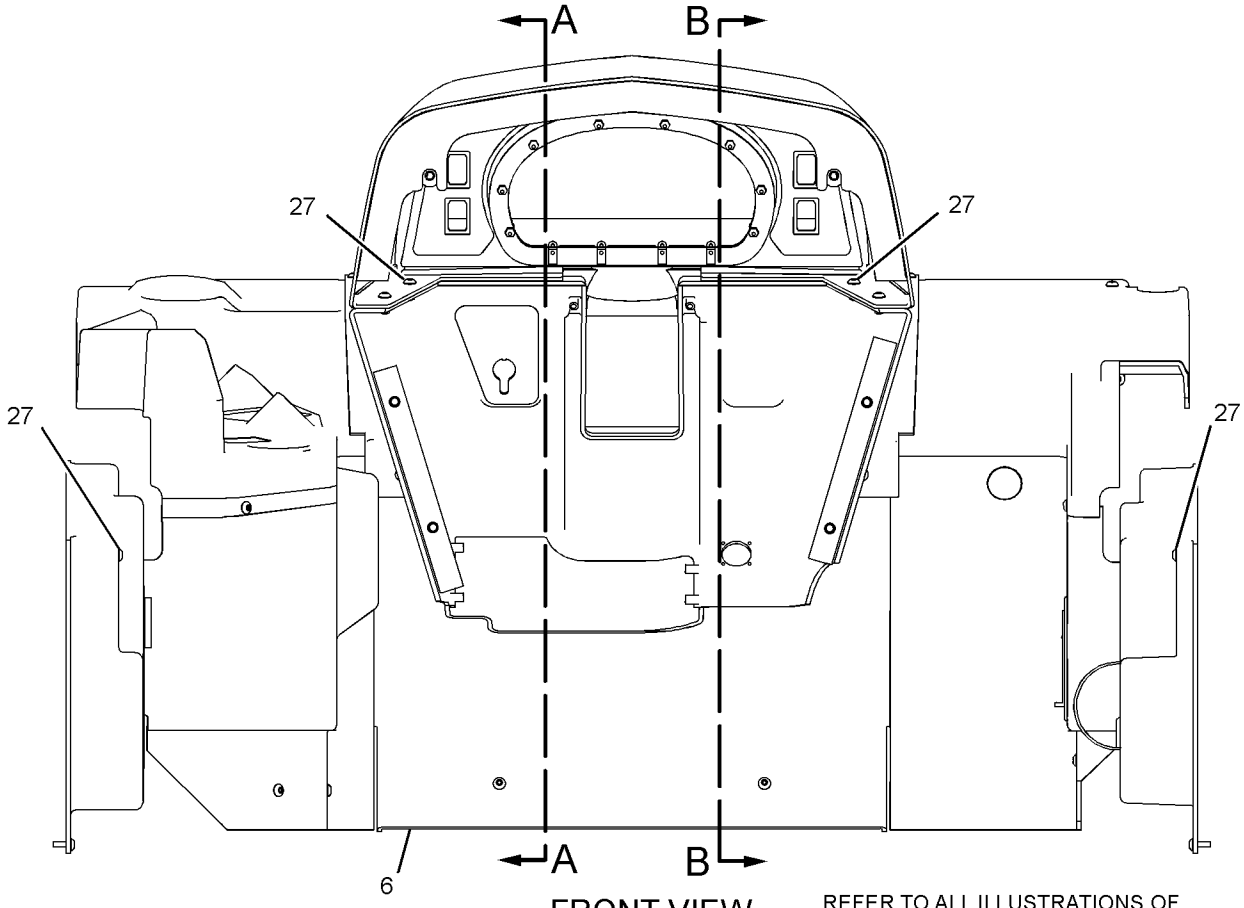


FRONT VIEW

REFER TO ALL ILLUSTRATIONS OF THIS GROUP FOR AUXILIARY VIEWS

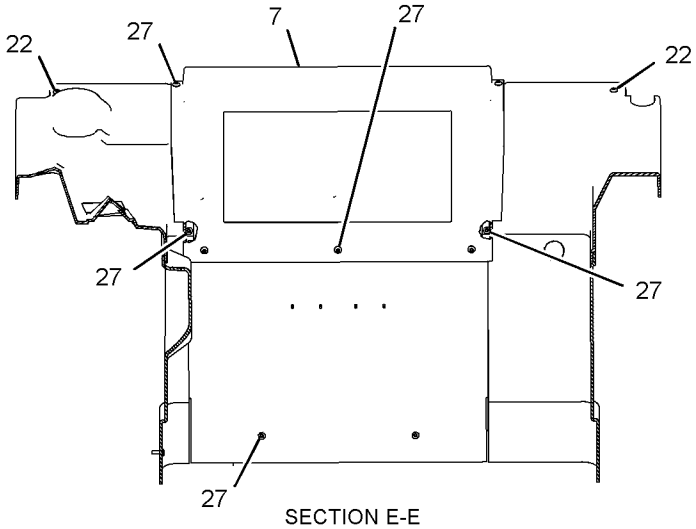


SECTION E-E

GRAPHIC #1

g01236095

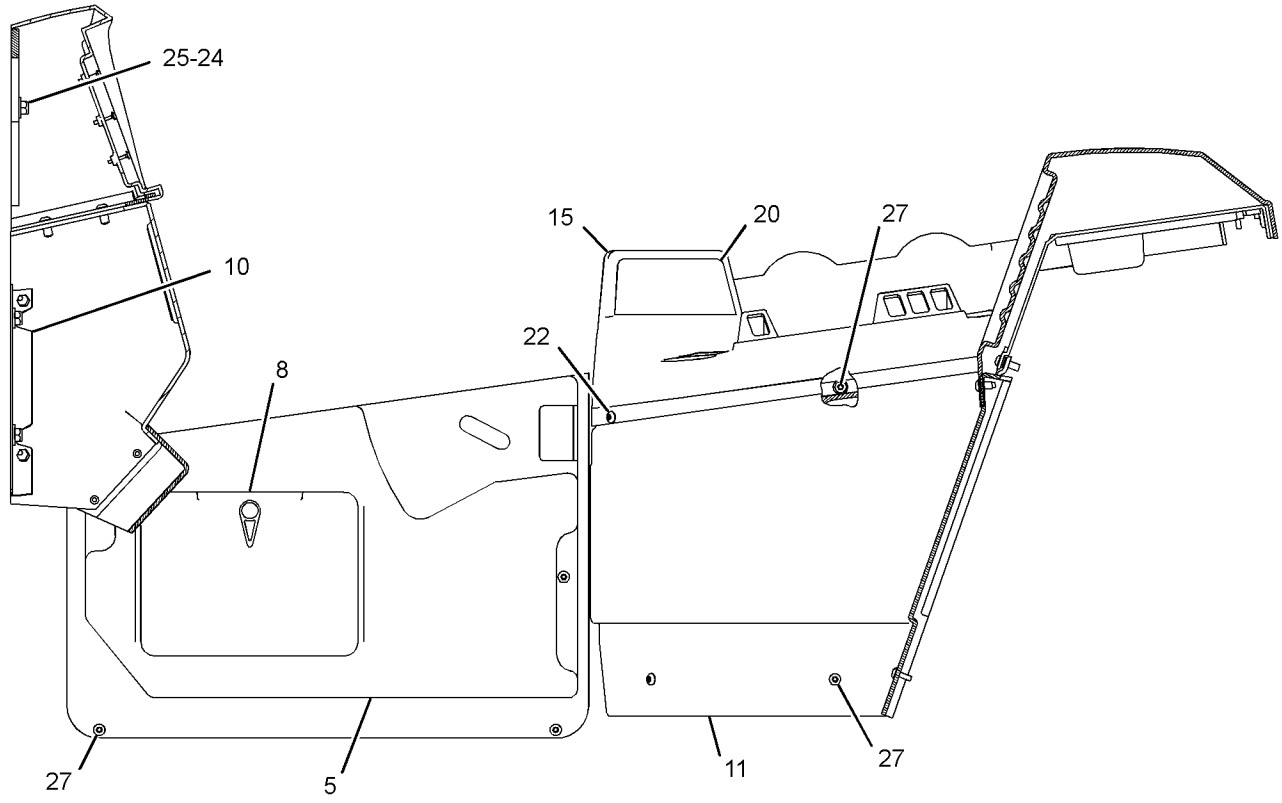


SECTION A-A

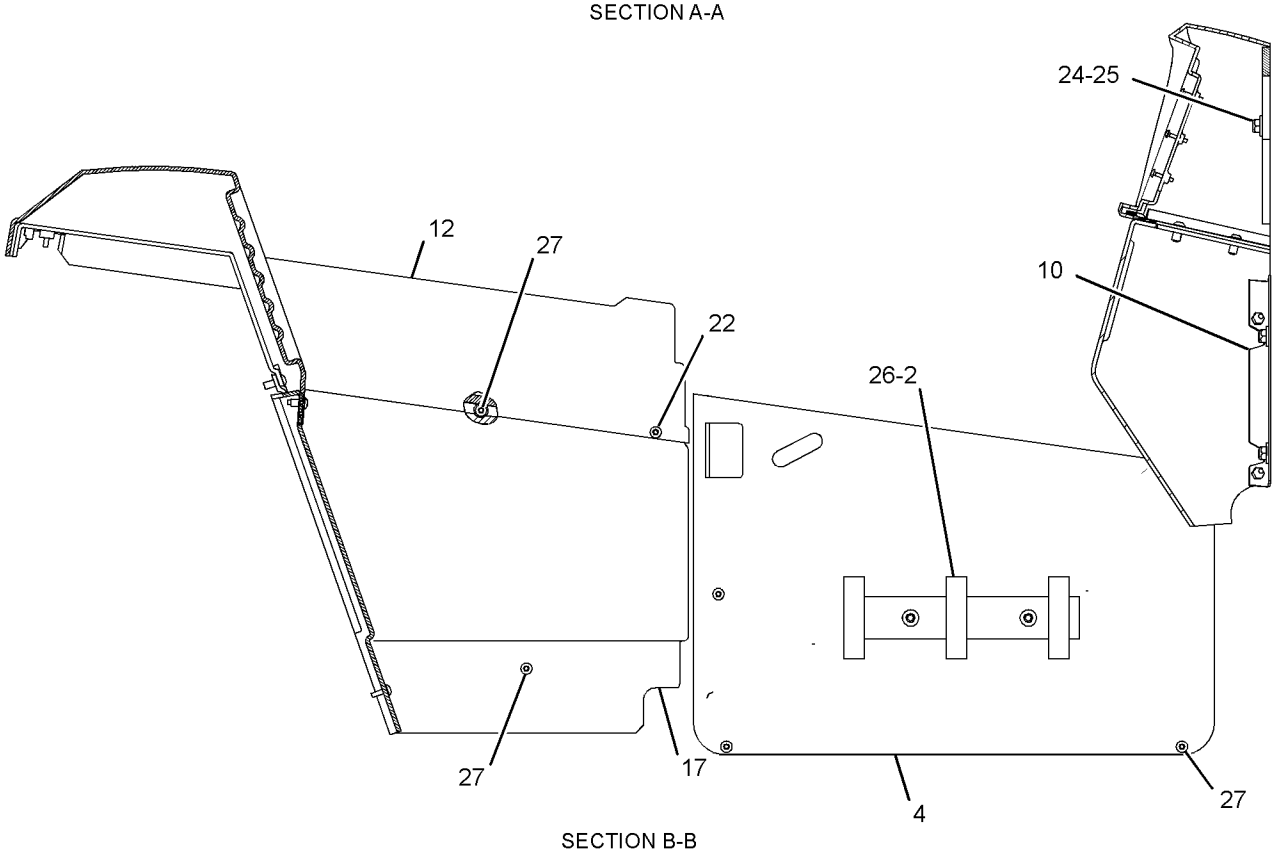


SECTION B-B

GRAPHIC #2

g01236100

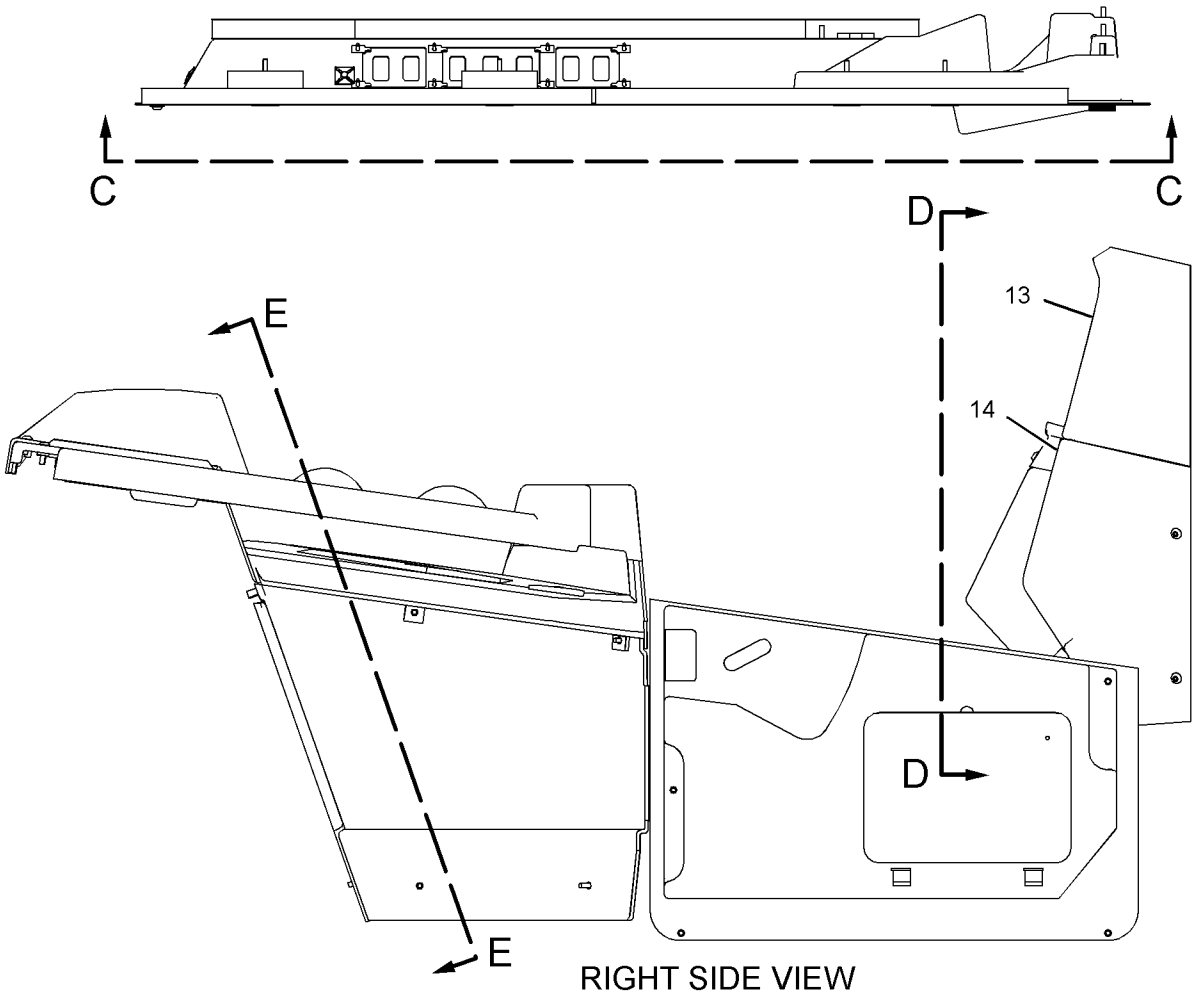


RIGHT SIDE VIEW

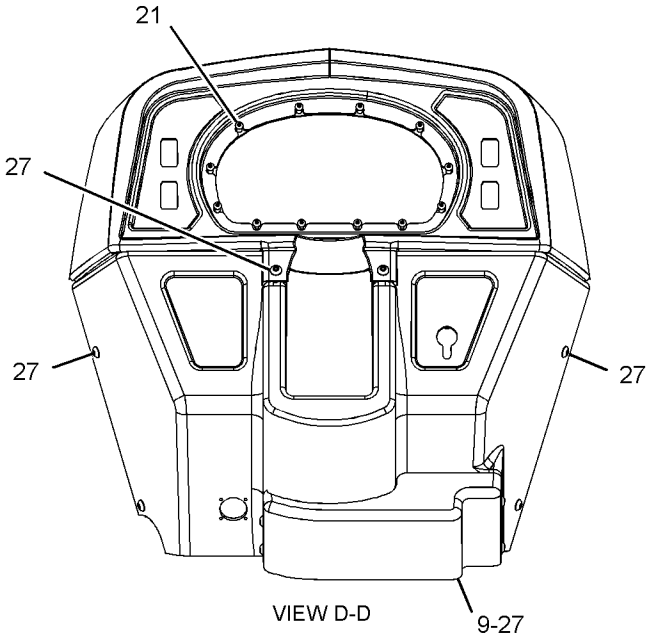


VIEW D-D

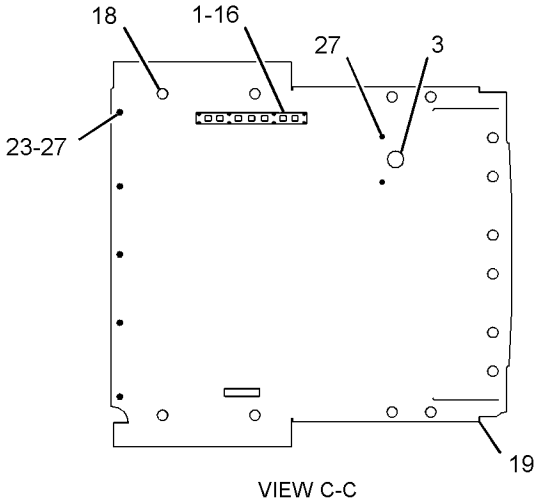


VIEW C-C

REFER TO ALL ILLUSTRATIONS OF THIS GROUP FOR AUXILIARY VIEWS

GRAPHIC #3 **<END>** g01236481

# OPERATOR STATION

## *252-1730* TRIM GP-OPEN ROPS—CABLE MACHINE

**S/N: 5451-UP**
**PART OF 252-1728 CAB AR-OPEN ROPS**
**AN ATTACHMENT**
**TYPE 2**

**SMCS-7330** **i02634464**

| NOTE | REF NO | GRAPHIC REF | PART NUMBER | QTY | PART NAME 1 2 3 4 5 6 (PRODUCT LEVEL) | SEE PAGE |
|---|---|---|---|---|---|---|
| | 1 | 3 | **5V-1474** | 8 | SCREW-FORMING (10-16X0.625-IN) | |
| | 2 | 2 | **9K-0974** | 1 | BRACKET | |
| | 3 | 3 | **128-1040** | 1 | PLUG | |
| | 4 | 2 | **128-4805** | 1 | COVER (RH) | |
| | 5 | 2 | **156-6427** | 1 | COVER-DOOR (LH) | |
| | 6 | 1 | **156-6438** | 1 | COVER-CENTER (LOWER) | |
| | 7 | 1 | **156-6441** | 1 | COVER-CENTER (UPPER) | |
| | 8 | 2 | **156-6449** | 1 | DOOR AS | |
| | | 2 | **3V-7689** | 1 | HANDLE AS | |
| | 9 | 3 | **166-0354** | 1 | COVER-LOWER | |
| | 10 | 2 | **166-3719** | 2 | BRACKET AS | |
| | | | | | (EACH INCLUDES) | |
| M | | 2 | **6V-9632** | 2 | NUT-WELD (M6X1-THD) | |
| | 11 | 2 | **245-8905** | 1 | COVER-LOWER (RH) | |
| | 12 | 2 | **245-8909** | 1 | COVER-UPPER (LH) | |
| | 13 | 3 | **246-1205** | 1 | COVER-DASH | |
| | 14 | 3 | **251-7693** | 1 | COVER-DASH (LOWER) | |
| | 15 | 2 | **252-5113** | 1 | COVER-UPPER (RH) | |
| | 16 | 3 | **252-5116** | 1 | BEZEL | |
| | 17 | 2 | **257-9504** | 1 | COVER-LOWER (LH) | |
| C | 18 | 3 | **6V-0292** | 14 | PLUG | |
| | 19 | 3 | **269-5865** | 1 | LINER AS-CAB | |
| | 20 | 2 | **272-2954** | 1 | FILM | |
| M | 22 | 1,2 | **3E-8020** | 4 | SCREW-TRUSS HEAD (M6X1X25-MM) | |
| | 23 | 1,3 | **5P-4115** | 21 | WASHER-HARD (7.2X19X2-MM THK) | |
| M | 24 | 2 | **6V-7744** | 6 | LOCKNUT (M10X1.15-THD) | |
| | 25 | 2 | **7X-7729** | 6 | WASHER (11X25X3-MM THK) | |
| M | 26 | 2 | **9X-2040** | 2 | SCREW-TRUSS HEAD (M10X1.5X25-MM) | |
| M | 27 | 1,2,3 | **9X-2045** | 57 | SCREW-TRUSS HEAD (M6X1X20-MM) | |

C-CHANGE FROM PREVIOUS TYPE
M-METRIC PART

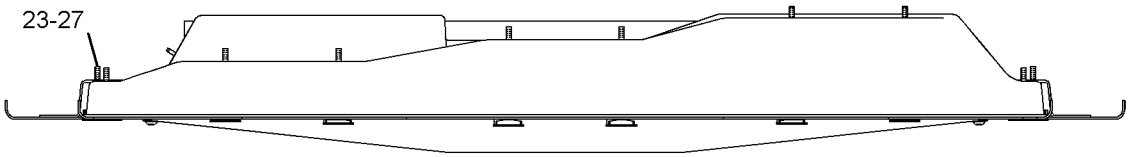


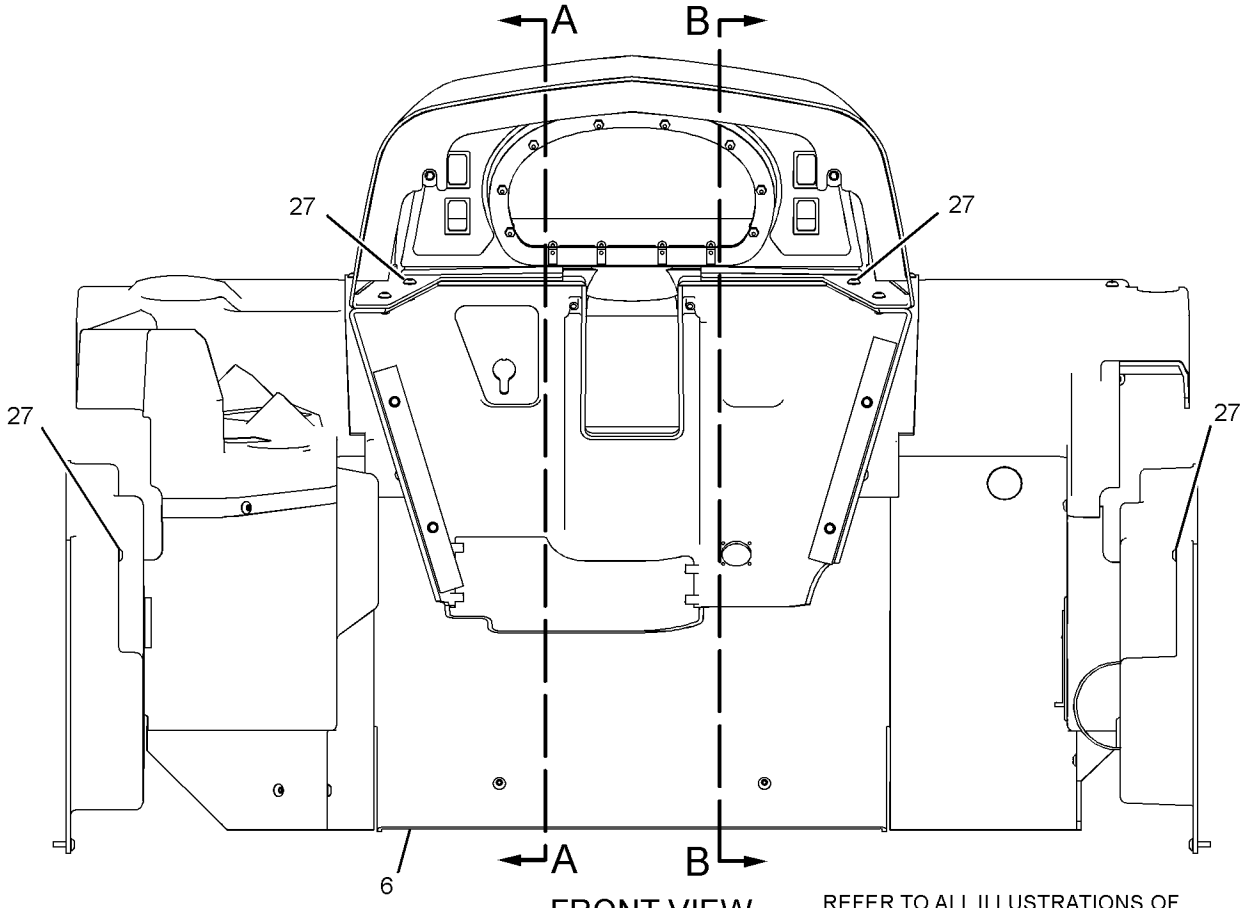


FRONT VIEW

REFER TO ALL ILLUSTRATIONS OF THIS GROUP FOR AUXILIARY VIEWS

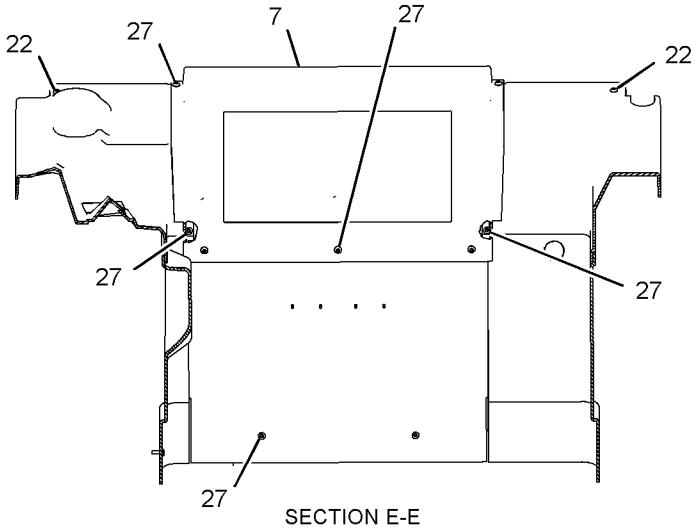


SECTION E-E

GRAPHIC #1

g01236095

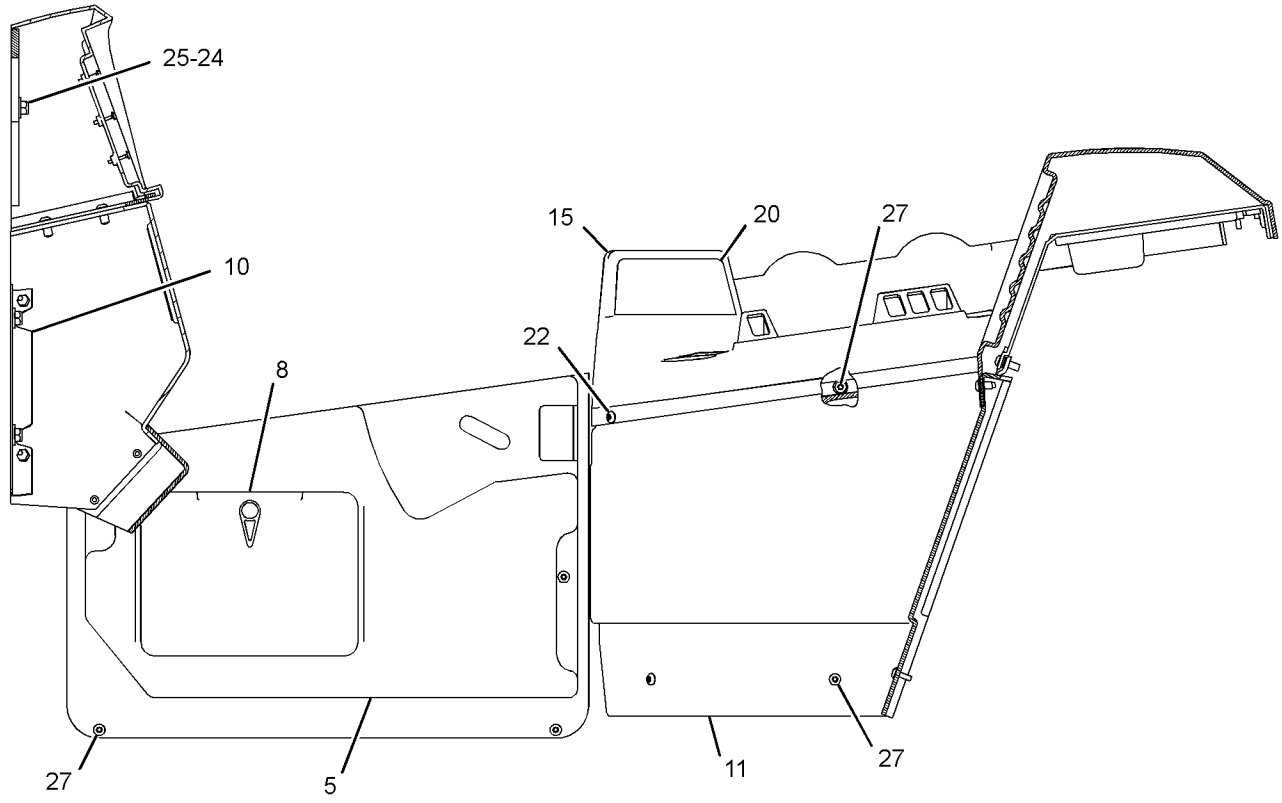


SECTION A-A

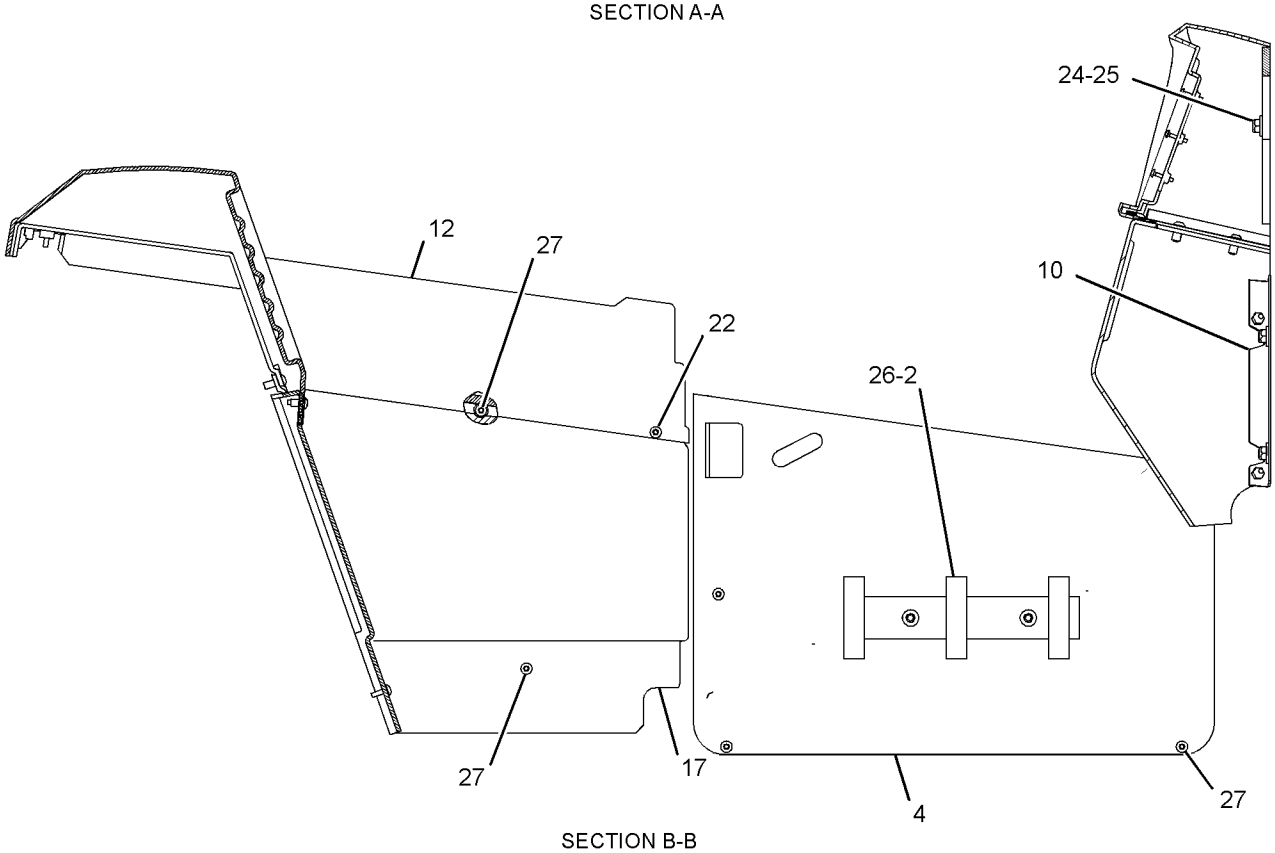


SECTION B-B

GRAPHIC #2 g01236100

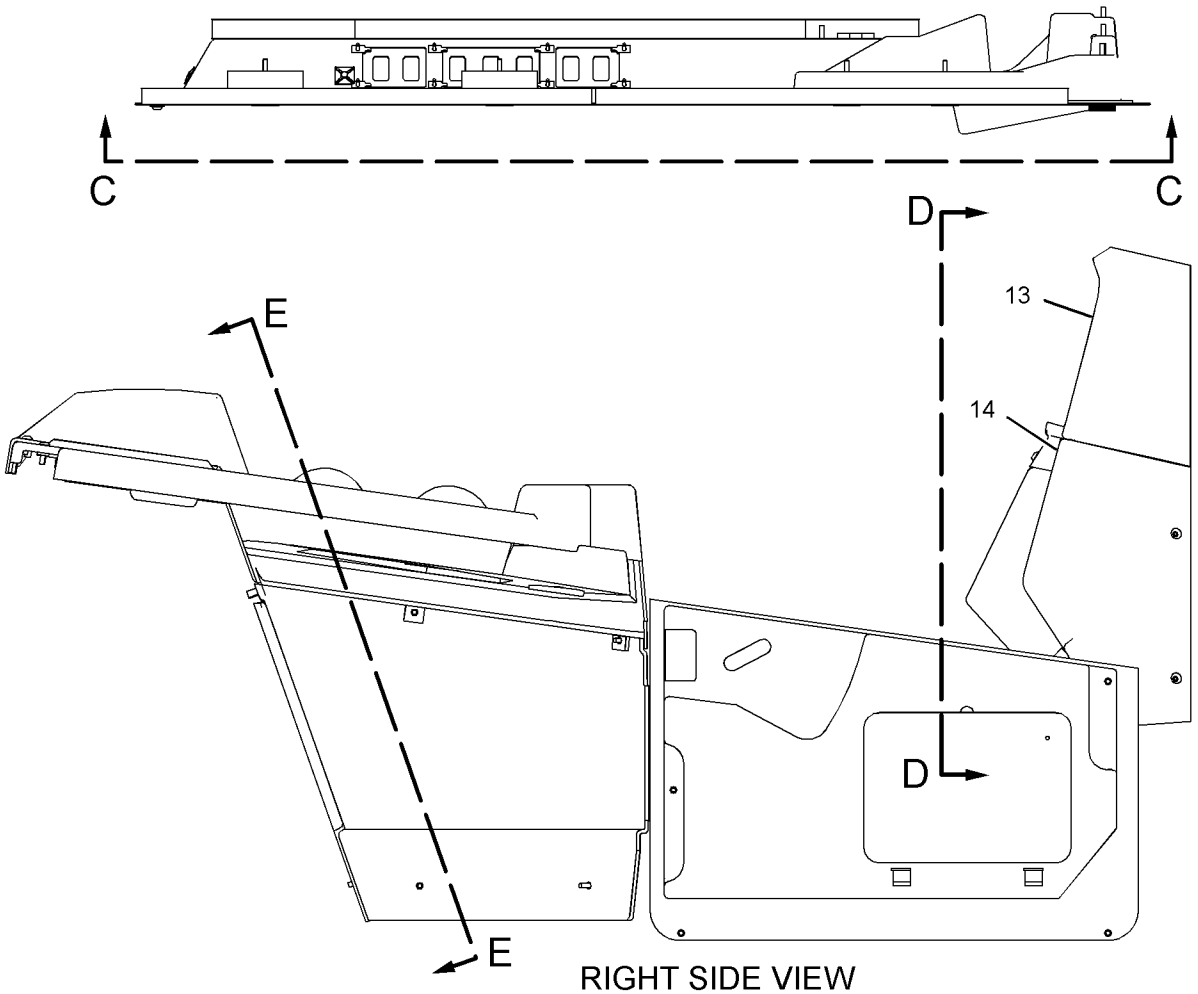


RIGHT SIDE VIEW

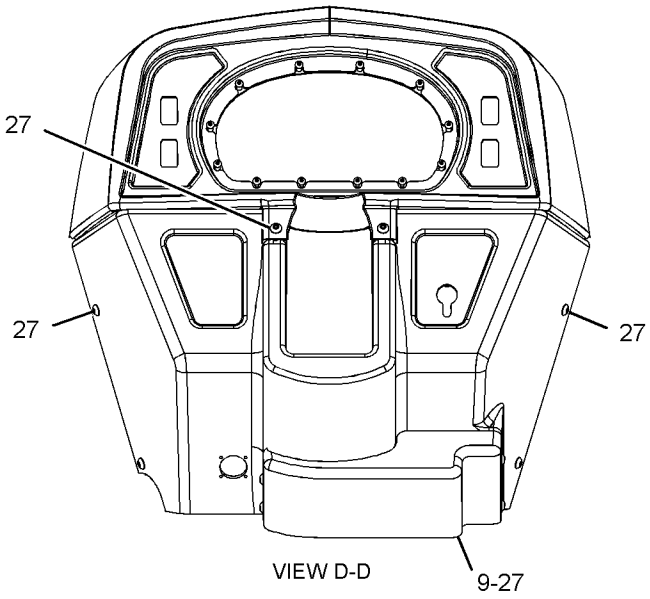


VIEW D-D

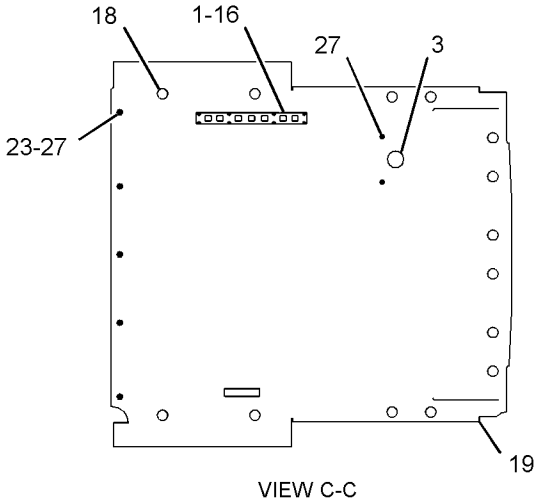


VIEW C-C

REFER TO ALL ILLUSTRATIONS OF THIS GROUP FOR AUXILIARY VIEWS

GRAPHIC #3 **<END>** g01307014

# OPERATOR STATION

## 267-8562 VALVE GP-A/C & HEATER CONTROL

**S/N: 5451-UP**

**PART OF 252-1414 AIR CONDITIONER GP**

**AN ATTACHMENT**

**SMCS-7304, 7320** **i02565370**

| NOTE | REF NO | GRAPHIC REF | PART NUMBER | QTY | PART NAME 1 2 3 4 5 6 (PRODUCT LEVEL) | SEE PAGE |
|---|---|---|---|---|---|---|
| | 1 | 1 | **8Y-5737** | 1 | CLAMP | |
| | 2 | 1 | **110-6109** | 2 | KNOB-CONTROL (AIR CONDITIONER, HEATER CONT) | |
| | 3 | 1 | **123-0144** | 1 | BRACKET | |
| | 4 | 1 | **131-2356** | 1 | VALVE AS-WATER (HEATER CONTROL) | |
| | | 1 | **3E-1841** | 1 | LEVER | |
| | | 1 | **6V-6717** | 1 | SCREW-WASHER HEAD (8-32X9.52-MM) | |
| | | 1 | **8Y-5737** | 1 | CLAMP | |
| | | 1 | **037-4426** | 1 | RETAINER | |
| | | 1 | **102-0341** | 1 | CLIP | |
| | 5 | 1 | **157-1361** | 1 | SWITCH AS-ROTARY (AIR CONDITIONER CONTROL) | |
| | | 1 | **9W-0852** | 6 | PIN-CONNECTOR (14-GA) | |
| | | 1 | **102-8805** | 1 | KIT-RECEPTACLE (6-PIN) | |
| | | | | | (INCLUDES RECEPTACLE AS & WEDGE) | |
| | 6 | 1 | **251-1196** | 1 | SWITCH AS-ROCKER (AIR CONDITIONER ON, OFF) | |
| | 7 | 1 | **256-8940** | 1 | CABLE AS (AIR CONDITIONER, HEATER CONT) | |
| | 8 | 1 | **2H-3920** | 1 | LOCKWASHER | |
| | 9 | 1 | **5P-7111** | 4 | SCREW (10-16X3/8-IN) | |

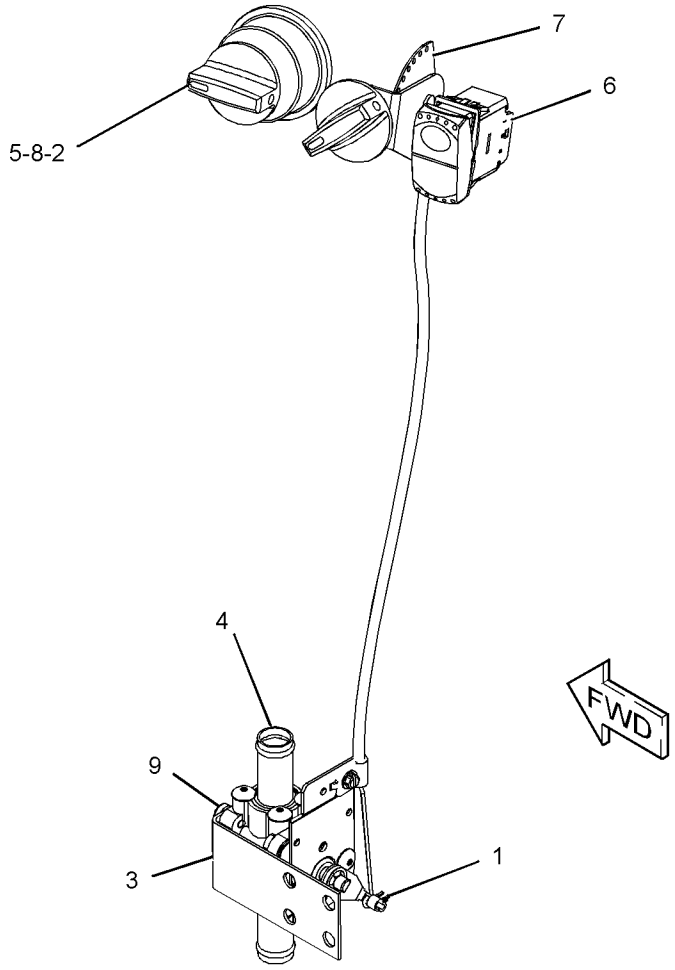


GRAPHIC #1 **<END>** g01304542

# OPERATOR STATION

## 269-5827 WINDOW GP–RH

**S/N: 5451-UP**
**PART OF 269-5836 WINDOW GP**
**AN ATTACHMENT**

**SMCS-7310, 7340** **i02466060**

| NOTE | REF NO | GRAPHIC REF | PART NUMBER | QTY | PART NAME 1 2 3 4 5 6 (PRODUCT LEVEL) | SEE PAGE |
|---|---|---|---|---|---|---|
| | 1 | 1 | **187-5127** | 1 | CATCH AS (LH) | |
| | | 1 | **150-8015** | 1 | GASKET | |
| | 2 | 1 | **187-5128** | 1 | CATCH AS (RH) | |
| | | 1 | **150-8015** | 1 | GASKET | |
| | 3 | 1 | **269-5829** | 1 | GLASS-LOWER | |
| | 4 | 1 | **269-5830** | 1 | GLASS-UPPER | |
| E | 5 | 1 | **9X-2532** | | SEAL (49-CM EACH) | |
| E | 6 | 1 | **191-3040** | | SEAL (5-CM) | |
| E | 7 | 1 | **191-3040** | | SEAL (5-CM) | |
| E | 8 | 1 | **191-3040** | | SEAL (5-CM) | |
| E | 9 | 1 | **137-2170** | | SEAL (39-CM) | |
| E | 10 | 1 | **137-2170** | | SEAL (83-CM) | |
| E | 11 | 1 | **137-2170** | | SEAL (33-CM) | |
| E | 12 | 1 | **137-2170** | | SEAL (46-CM) | |
| E | 13 | 1 | **137-2170** | | SEAL (51-CM) | |
| E | 14 | 1 | **137-2170** | | SEAL (51-CM) | |
| E | 15 | 1 | **137-2170** | | SEAL (30-CM) | |

E-ORDER BY THE CENTIMETER

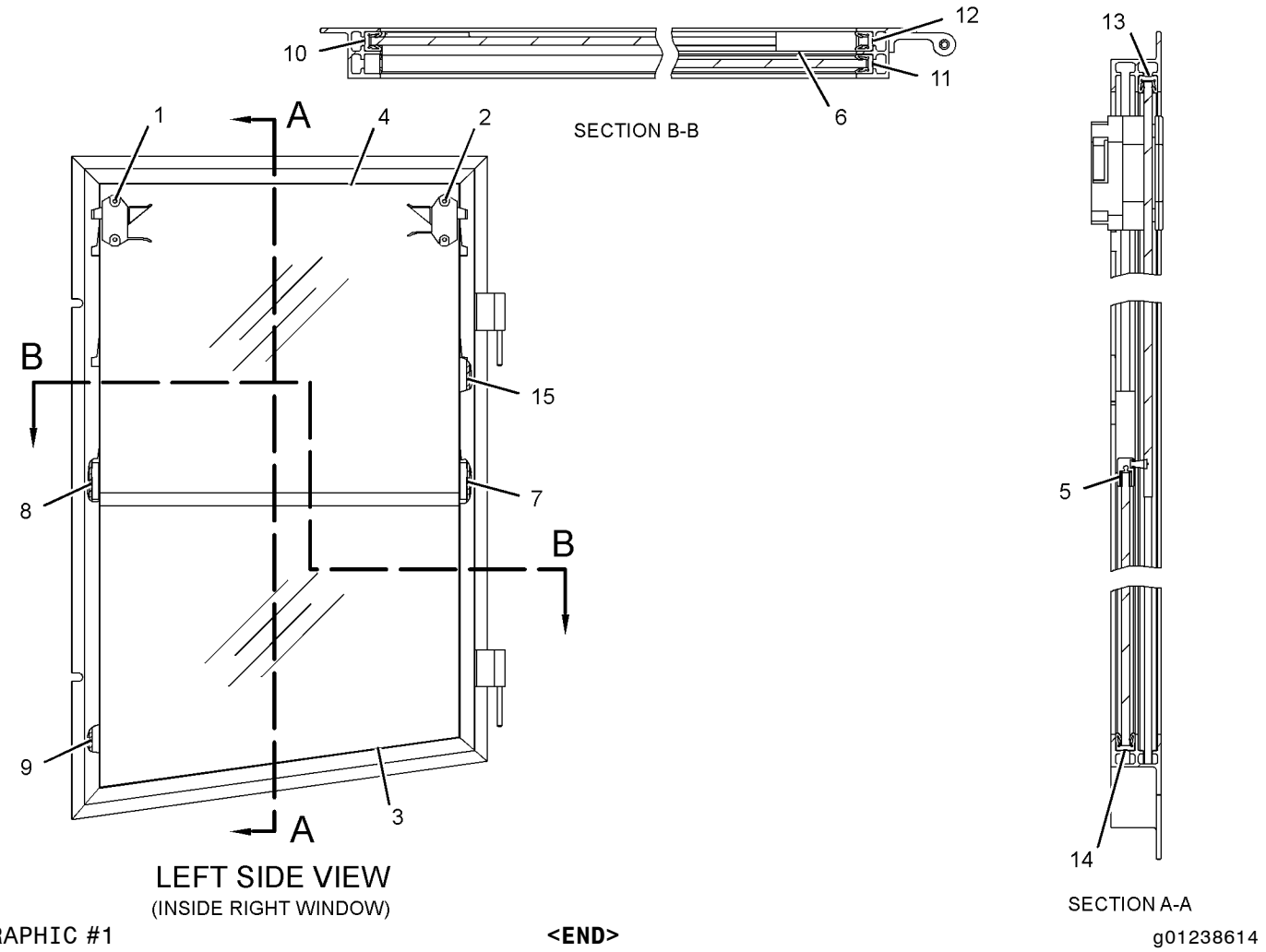


GRAPHIC #1

**<END>**

g01238614

# OPERATOR STATION

## 269-5828 WINDOW GP–LH

**S/N: 5451-UP**
**PART OF 269-5836 WINDOW GP**
**AN ATTACHMENT**

**SMCS-7310, 7340** **i02481730**

| NOTE | REF NO | GRAPHIC REF | PART NUMBER | QTY | PART NAME 1 2 3 4 5 6 (PRODUCT LEVEL) | SEE PAGE |
|---|---|---|---|---|---|---|
| | 1 | 1 | **187-5127** | 1 | CATCH AS (LH) | |
| | | 1 | **150-8015** | 1 | GASKET | |
| | 2 | 1 | **187-5128** | 1 | CATCH AS (RH) | |
| | | 1 | **150-8015** | 1 | GASKET | |
| | 3 | 1 | **269-5829** | 1 | GLASS-LOWER | |
| | 4 | 1 | **269-5830** | 1 | GLASS-UPPER | |
| E | 5 | 1 | **9X-2532** | | SEAL (49-CM EACH) | |
| E | 6 | 1 | **191-3040** | | SEAL (5-CM) | |
| E | 7 | 1 | **191-3040** | | SEAL (5-CM) | |
| E | 8 | 1 | **191-3040** | | SEAL (5-CM) | |
| E | 9 | 1 | **137-2170** | | SEAL (83-CM) | |
| E | 10 | 1 | **137-2170** | | SEAL (46-CM) | |
| E | 11 | 1 | **137-2170** | | SEAL (33-CM) | |
| E | 12 | 1 | **137-2170** | | SEAL (39-CM) | |
| E | 13 | 1 | **137-2170** | | SEAL (51-CM) | |

E-ORDER BY THE CENTIMETER

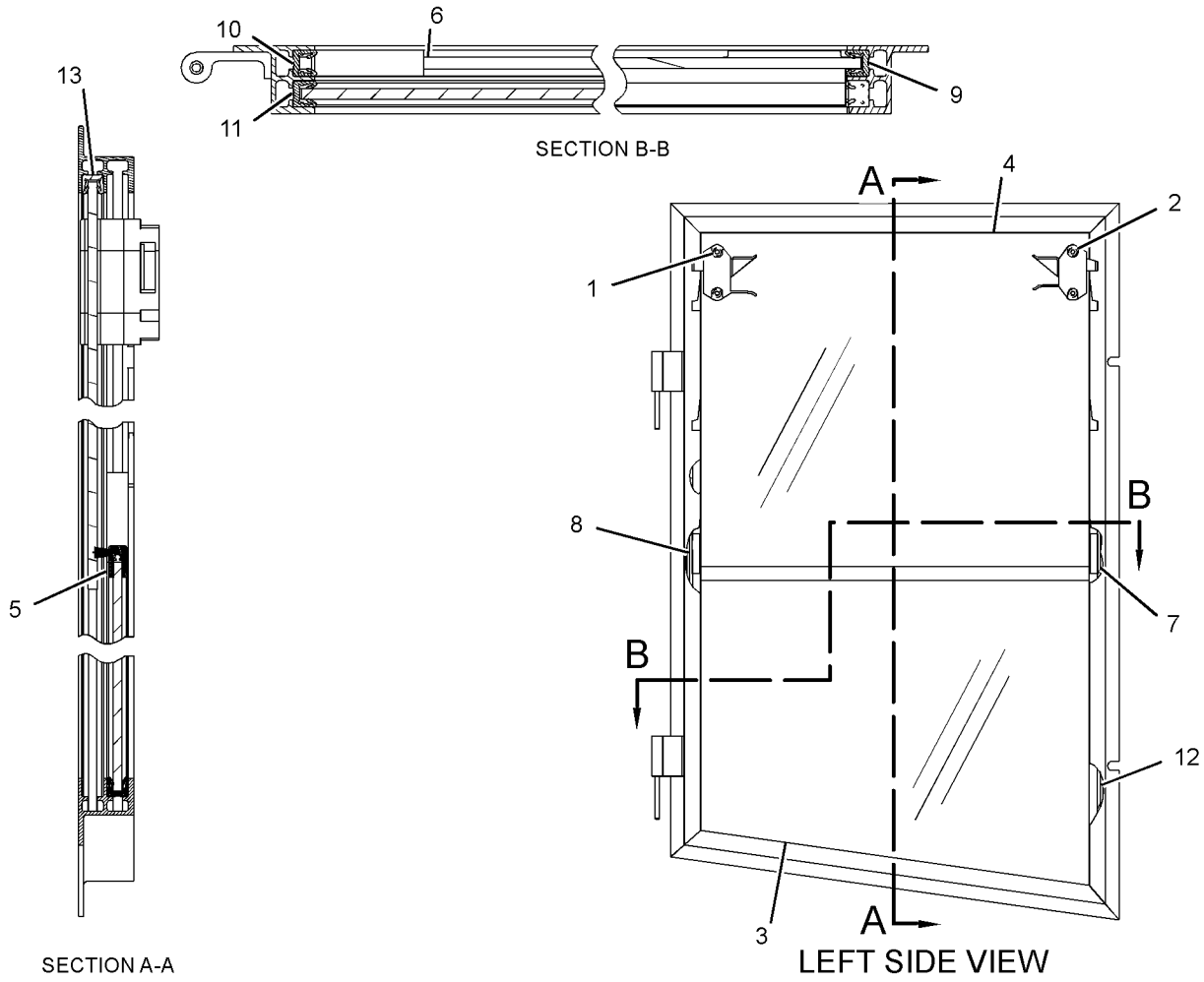


GRAPHIC #1

**<END>**

g01238613

# OPERATOR STATION

## *269-5836* WINDOW GP

**S/N: 5451-UP**
**PART OF 252-1415, 252-1720 CAB AR-ENCLOSED ROPS**
**AN ATTACHMENT**

**SMCS-7310, 7340** **i02738550**

| NOTE | REF NO | GRAPHIC REF | PART NUMBER | QTY | PART NAME 1 2 3 4 5 6 (PRODUCT LEVEL) | SEE PAGE |
|---|---|---|---|---|---|---|
| | 1 | 1 | **121-3945** | 2 | WINDOW (SIDE, REAR, LH, RH) | |
| | 2 | 1 | **219-9905** | 1 | ANGLE | |
| | 3 | 1 | **219-9906** | 2 | ANGLE | |
| | 4 | 1 | **220-0170** | 1 | WINDOW (REAR) | |
| | 5 | 1 | **220-2346** | 1 | ANGLE | |
| | 6 | 1 | **220-2347** | 1 | ANGLE | |
| | 7 | 1 | **220-2348** | 1 | ANGLE | |
| | 8 | 1 | **220-2349** | 1 | ANGLE | |
| | 9 | 1 | **220-2350** | 1 | ANGLE | |
| | 10 | 1 | **220-2351** | 1 | ANGLE | |
| | 11 | 1 | **246-1190** | 1 | RETAINER (LH) | |
| | 12 | 1 | **246-1204** | 1 | RETAINER (RH) | |
| | 13 | 1 | **246-1209** | 1 | WINDOW (FRONT) | |
| | 14 | 1 | **246-7165** | 1 | RETAINER (RH) | |
| | 15 | 1 | **246-7167** | 1 | PLATE AS | |
| | 16 | 1 | **246-7168** | 1 | PLATE AS | |
| | 17 | 1 | **257-2061** | 1 | RETAINER | |
| | 18 | 1 | **257-2062** | 1 | RETAINER (LH) | |
| | 19 | 1 | **257-2063** | 1 | RETAINER (RH) | |
| | 20 | 1 | **263-5433** | 1 | PLATE-RETAINER | |
| Y | 21 | 1 | **269-5827** | 1 | WINDOW GP (RH) | 676 |
| Y | 22 | 1 | **269-5828** | 1 | WINDOW GP (LH) | 677 |
| | 23 | 1 | **277-2364** | 1 | RETAINER AS | |
| | 24 | 1 | **5P-4116** | 119 | WASHER-HARD (8.8X20.5X2-MM THK) | |
| M | 25 | 1 | **8C-8585** | 4 | SCREW-BUTTON HEAD (M10X1.5X20-MM) | |
| M | 26 | 1 | **8T-7547** | 119 | BOLT (M8X1.25X30-MM) | |
| E | 27 | 1 | **122-0019** | | SEAL (508-CM) | |
| E | 27A | 1 | **122-0019** | | SEAL (535-CM) | |
| E | 27B | 1 | **122-0019** | | SEAL (330-CM EACH) | |
| E | 27C | 1 | **122-0019** | | SEAL (400-CM EACH) | |
| E | 28 | 1 | **117-4654** | | SEAL (299-CM EACH) | |
| D | 29 | 1 | **9X-2335** | | FILM (0.16-M EACH) | |

D-ORDER BY THE METER
E-ORDER BY THE CENTIMETER
M-METRIC PART
Y-SEPARATE ILLUSTRATION

*269-5836* **WINDOW GP** ***(contd.)*** **i02738550**

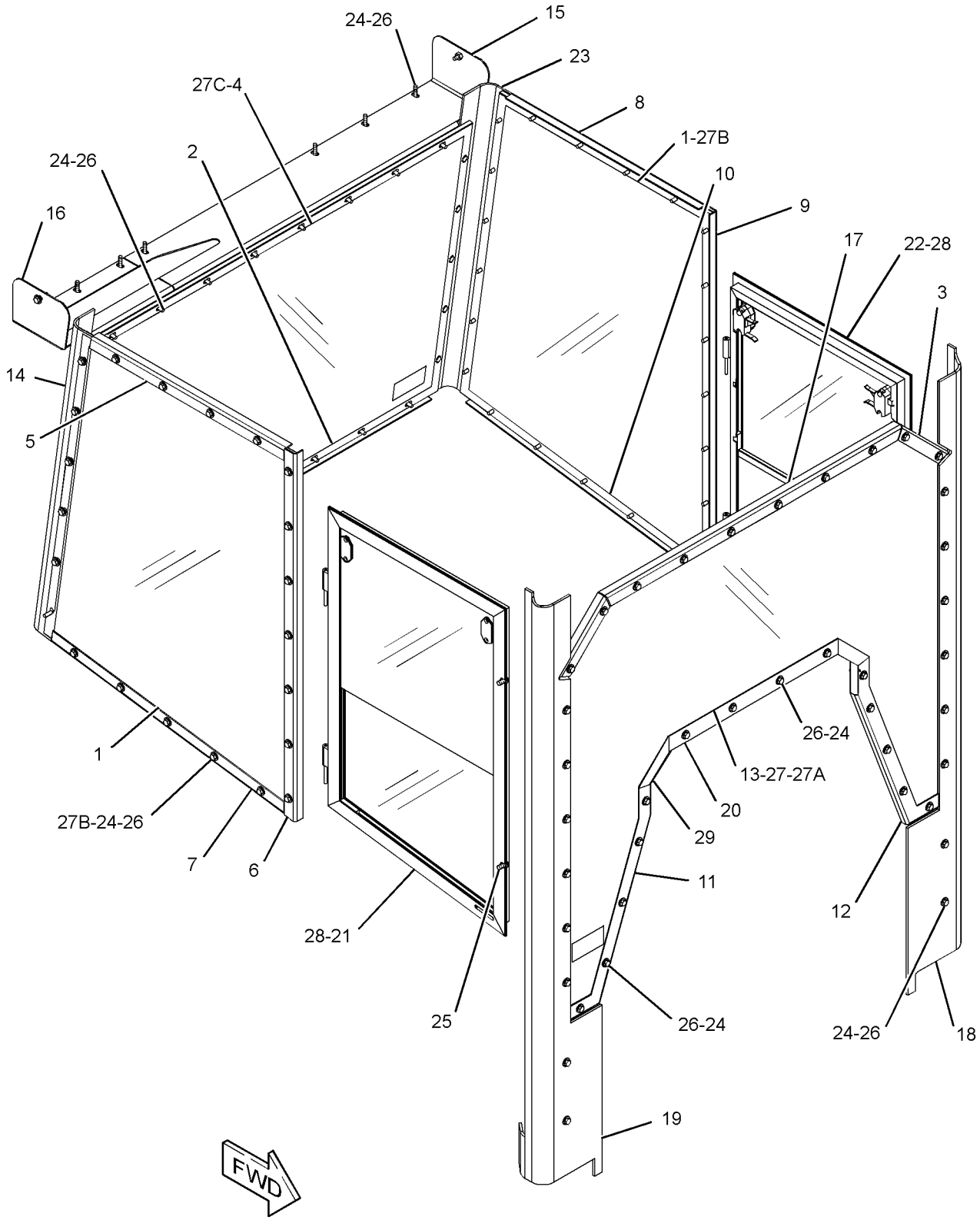


GRAPHIC #1 **<END>** g01340524

# OPERATOR STATION

## *255-9006* WIPER & WASHER GP-WINDOW

**S/N: 5451-UP**
**PART OF 252-1415, 252-1720 CAB AR-ENCLOSED ROPS**
**AN ATTACHMENT**

**SMCS-7305, 7306** **i02601352**

| NOTE | REF NO | GRAPHIC REF | PART NUMBER | QTY | PART NAME 1 2 3 4 5 6 (PRODUCT LEVEL) | SEE PAGE |
|---|---|---|---|---|---|---|
| | 1 | 1 | **3S-2093** | 14 | STRAP-CABLE | |
| | 2 | 1 | **3V-3263** | 5 | CONNECTOR (HOSE) | |
| | 3 | 1 | **5C-8811** | 1 | BLADE AS-WIPER (REAR) | |
| | 4 | 1 | **7Y-7365** | 1 | JOINT (3-WAY) | |
| Y | 5 | 1 | **8R-1774** | 1 | TANK GP-WINDOW WASHER | 642 |
| | 6 | 1 | **191-0446** | 1 | MOTOR AS-WINDOW WIPER (24-VOLT) (REAR) | |
| | | 1 | **8T-8737** | 1 | PLUG-SEAL | |
| | | 1 | **102-8805** | 1 | KIT-RECEPTACLE (6-PIN) | |
| | | | | | (INCLUDES RECEPTACLE AS AND WEDGE) | |
| | | 1 | **186-3735** | 5 | PIN-CONNECTOR (16-GA TO 18-GA) | |
| | 7 | 1 | **191-0447** | 1 | ARM AS-WIPER (REAR) | |
| | 8 | 1 | **221-8546** | 1 | COVER AS | |
| M | | 1 | **8T-3612** | 2 | NUT-WELD (M8X1.25-THD) | |
| | 9 | 1 | **254-2325** | 1 | BRACKET | |
| | 10 | 1 | **256-4965** | 1 | SWITCH AS-ROCKER (FRONT WIPER) | |
| | 11 | 1 | **256-4966** | 1 | SWITCH AS-ROCKER (REAR WIPER) | |
| | 12 | 1 | **256-4967** | 1 | SWITCH AS-ROCKER (FRONT, REAR WASHER) | |
| Y | 13 | 1 | *257-7636* | 1 | WIPER GP-WINDOW (FRONT) | 682 |
| | 14 | 1 | **7Y-3474** | 2 | VALVE AS-CHECK (WINDOW WASHER) | |
| M | 15 | 1 | **6V-7357** | 2 | BOLT (M6X1X25-MM) | |
| | 16 | 1 | **8T-4121** | 6 | WASHER-HARD (11X21X2.5-MM THK) | |
| M | 17 | 1 | **8T-4137** | 3 | BOLT (M10X1.5X20-MM) | |
| M | 18 | 1 | **8T-4201** | 3 | BOLT-LOCKING (M10X1.5X20-MM) | |
| | 19 | 1 | **8T-4224** | 6 | WASHER-HARD (8.8X16X2-MM THK) | |
| M | 20 | 1 | **8T-7547** | 6 | BOLT (M8X1.25X30-MM) | |
| | 21 | 1 | **9X-8256** | 2 | WASHER (6.6X12X2-MM THK) | |
| E | 22 | 1 | **144-0195** | | HOSE (289.7-CM) | |
| E | 22A | 1 | **144-0195** | | HOSE (464.8-CM) | |
| E | 22B | 1 | **144-0195** | | HOSE (30-CM) | |
| E | 22C | 1 | **144-0195** | | HOSE (114-CM) | |
| E | 22D | 1 | **144-0195** | | HOSE (136.5-CM) | |
| E | 22E | 1 | **144-0195** | | HOSE (136-CM) | |

E-ORDER BY THE CENTIMETER
M-METRIC PART
Y-SEPARATE ILLUSTRATION

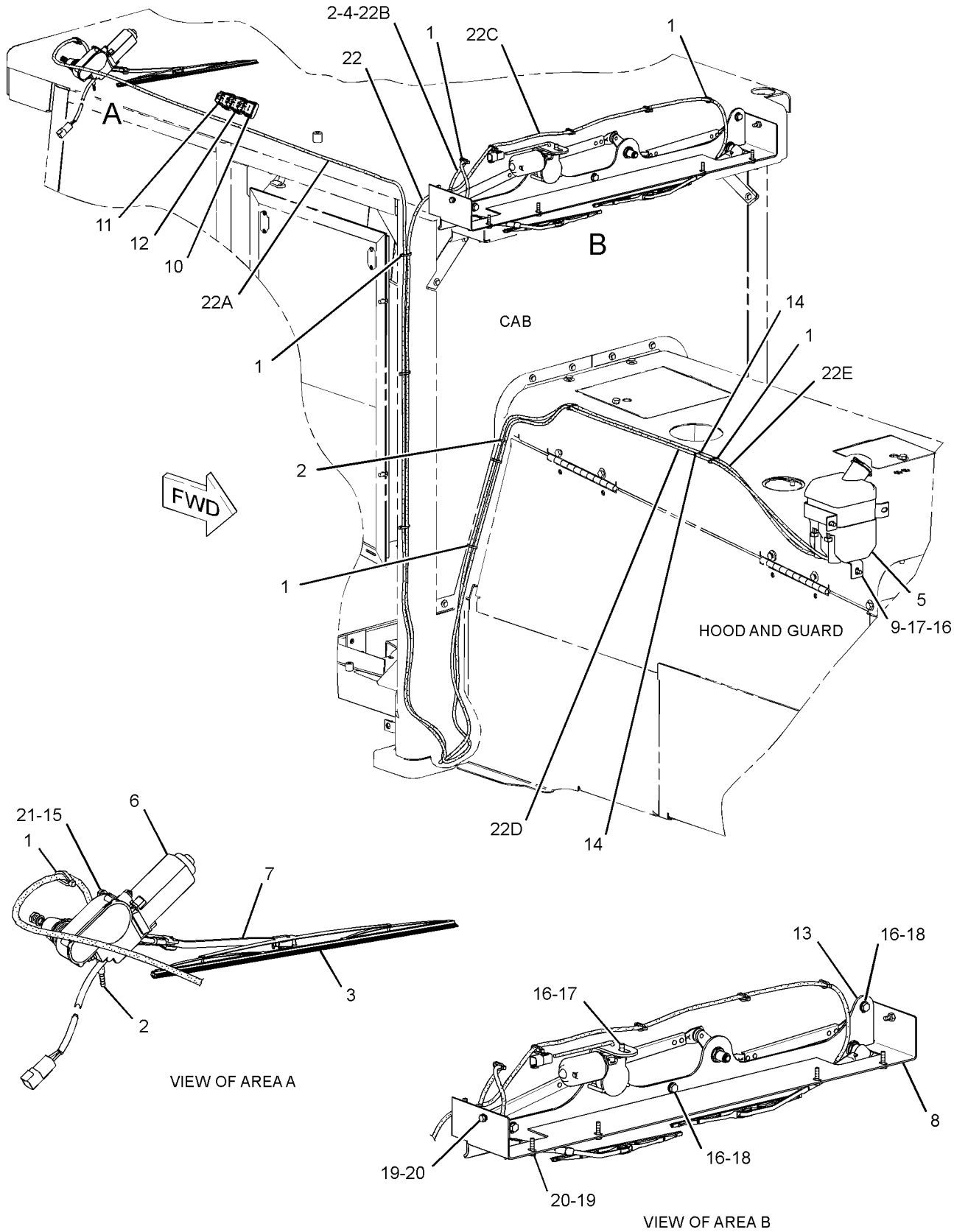


GRAPHIC #1 **<END>** g01348407

# OPERATOR STATION

## *257-7636* WIPER GP-WINDOW—FRONT

**S/N: 5451-UP**

**PART OF 255-9006 WIPER & WASHER GP-WINDOW**

**AN ATTACHMENT**

**SMCS-7305** **i02400050**

| NOTE | REF NO | GRAPHIC REF | PART NUMBER | QTY | PART NAME 1 2 3 4 5 6 (PRODUCT LEVEL) | SEE PAGE |
|---|---|---|---|---|---|---|
| | 1 | 1 | **6V-5849** | 2 | BLADE AS-WIPER | |
| | 2 | 1 | **135-0611** | 1 | MOTOR GP-WINDOW WIPER (24-VOLT, 2-SPEED) (FRONT) | |
| | 3 | 1 | **223-8968** | 1 | PLATE | |
| | 4 | 1 | **226-9219** | 1 | LINKAGE GP-WIPER (RH) | |
| | 5 | 1 | **226-9220** | 1 | LINKAGE GP-WIPER (CENTER) | |
| | 6 | 1 | **226-9221** | 1 | LINKAGE GP-WIPER (LH) | |
| | 7 | 1 | **222-5378** | 1 | ARM GP-WINDOW WIPER | |
| | | 1 | **136-3193** | 1 | NOZZLE AS-WASHER | |
| E | | 1 | **194-5171** | | HOSE (33-CM) | |
| | 8 | 1 | **222-5374** | 1 | ARM GP-WINDOW WIPER | |
| | | 1 | **136-3192** | 1 | NOZZLE AS-WASHER | |
| E | | 1 | **194-5171** | | HOSE (33-CM) | |
| | 9 | 1 | **3F-9556** | 1 | LOCKWASHER | |
| M | 10 | 1 | **5C-7261** | 1 | NUT (M8X1.25-THD) | |
| M | 11 | 1 | **5C-9553** | 3 | BOLT (M6X1X16-MM) | |
| | 12 | 1 | **9X-8256** | 3 | WASHER (6.6X12X2-MM THK) | |

E-ORDER BY THE CENTIMETER
M-METRIC PART

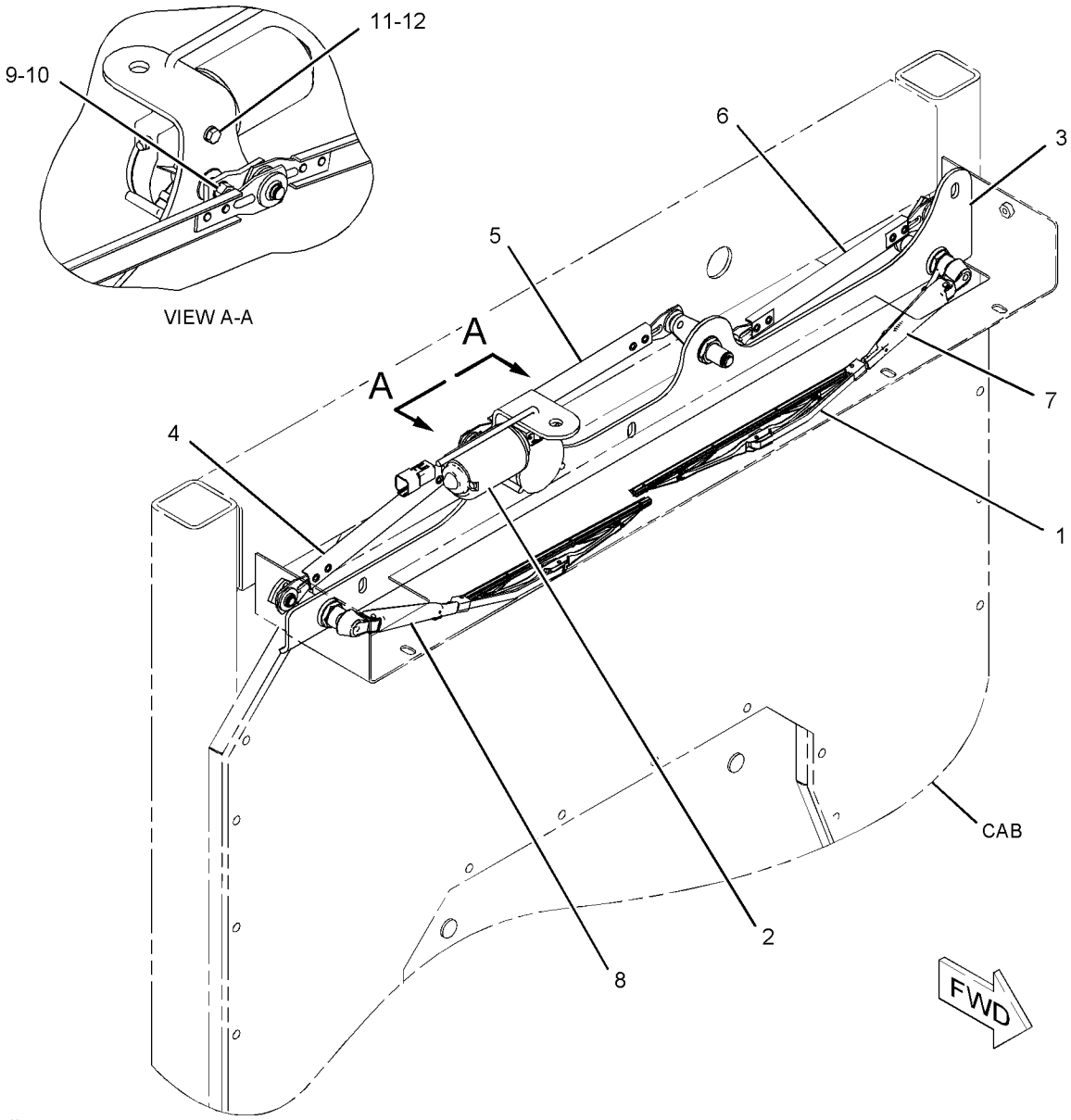


GRAPHIC #1 **<END>** g01104029

# SERVICE EQUIPMENT AND SUPPLIES

## *281-7739* FILM GP

**S/N: 5451-354**

**PART OF 248-0062 PLATE & FILM GP**

**SMCS-7405, 7557** **i02739926**

| NOTE | REF NO | GRAPHIC REF | PART NUMBER | QTY | PART NAME 1 2 3 4 5 6 (PRODUCT LEVEL) | SEE PAGE |
|---|---|---|---|---|---|---|
| | 1 | 1 | **284-2691** | 2 | FILM-STRIPE (545C, HOOD, RH/LH) | |
| | 2 | 1 | **284-2694** | 1 | FILM-STRIPE (CAT, RH) | |
| | 3 | 1 | **3E-6509** | 2 | FILM-IDENTIFICATION (CAT, ARCH, BOOM) | |
| | 4 | 1 | **253-0861** | 2 | FILM-INFORMATION (CAT POWER, ACERT TECHNOLOGY) | |
| | 5 | 1 | **284-2693** | 1 | FILM-STRIPE (CAT, LH) | |
| | 6 | 1 | **9X-2433** | 1 | FILM-IDENTIFICATION (CATERPILLAR, RADIATOR GRILL) | |

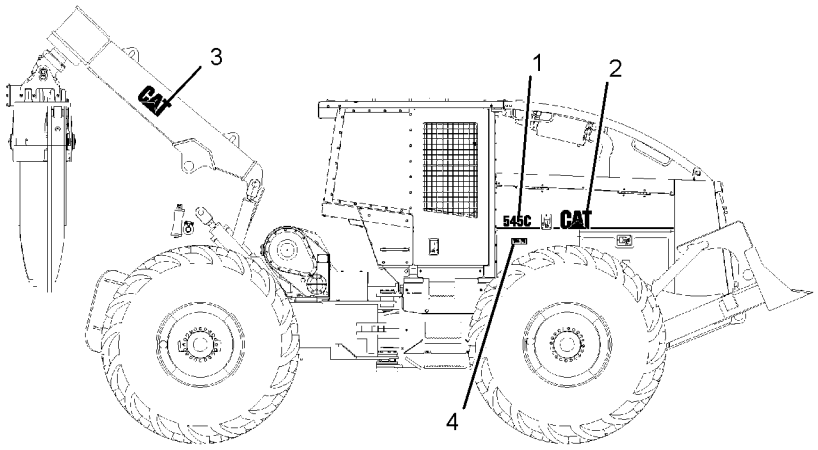


RIGHT SIDE VIEW

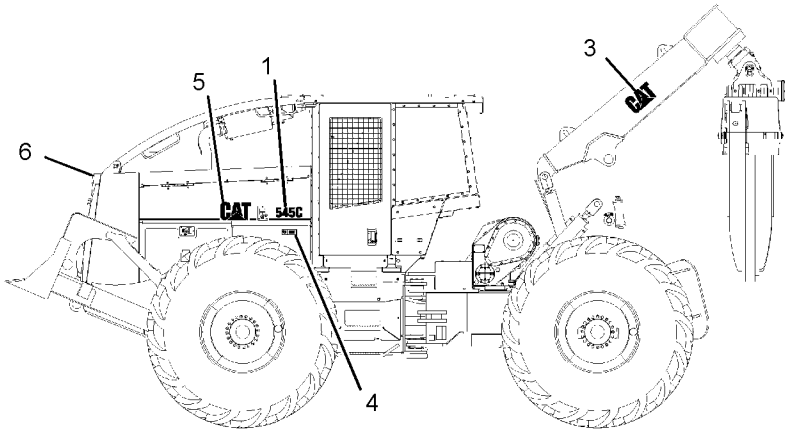


LEFT SIDE VIEW

GRAPHIC #1 **<END>** g01236745

# *293-5937* FILM GP

**S/N: 545355-UP**

**PART OF 248-0062 PLATE & FILM GP**

**SMCS-7405, 7557** **i02686171**

| NOTE | REF NO | GRAPHIC REF | PART NUMBER | QTY | PART NAME 1 2 3 4 5 6 (PRODUCT LEVEL) | SEE PAGE |
|---|---|---|---|---|---|---|
| | 1 | 1 | **3E-6509** | 2 | FILM-IDENTIFICATION (CAT, ARCH, BOOM) | |
| | 2 | 1 | **293-5933** | 1 | FILM-STRIPE (HOOD, RH) | |
| | 3 | 1 | **293-5931** | 2 | FILM-IDENTIFICATION (545C) | |
| | 4 | 1 | **293-5934** | 2 | FILM-IDENTIFICATION (CAT) | |
| | 5 | 1 | **253-0861** | 2 | FILM-INFORMATION (CAT POWER, ACERT TECHNOLOGY) | |
| | 6 | 1 | **9X-2433** | 1 | FILM-IDENTIFICATION (CATERPILLAR, RADIATOR GRILL) | |
| | 7 | 1 | **293-5932** | 1 | FILM-STRIPE (HOOD, LH) | |

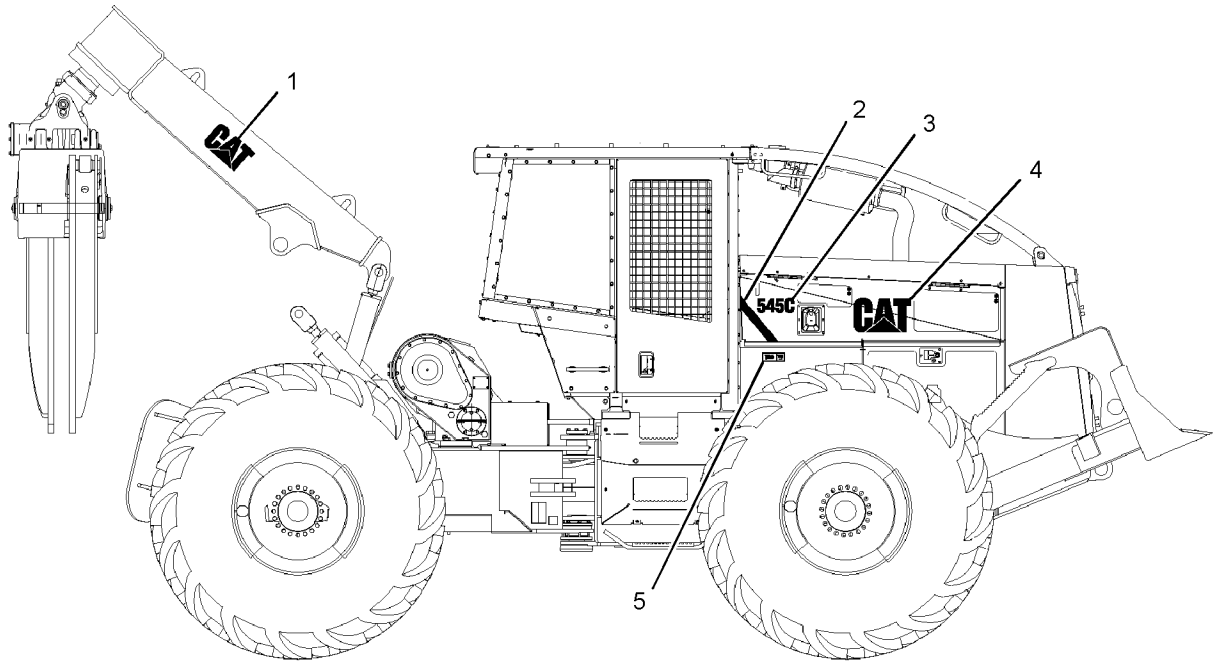


RIGHT SIDE VIEW

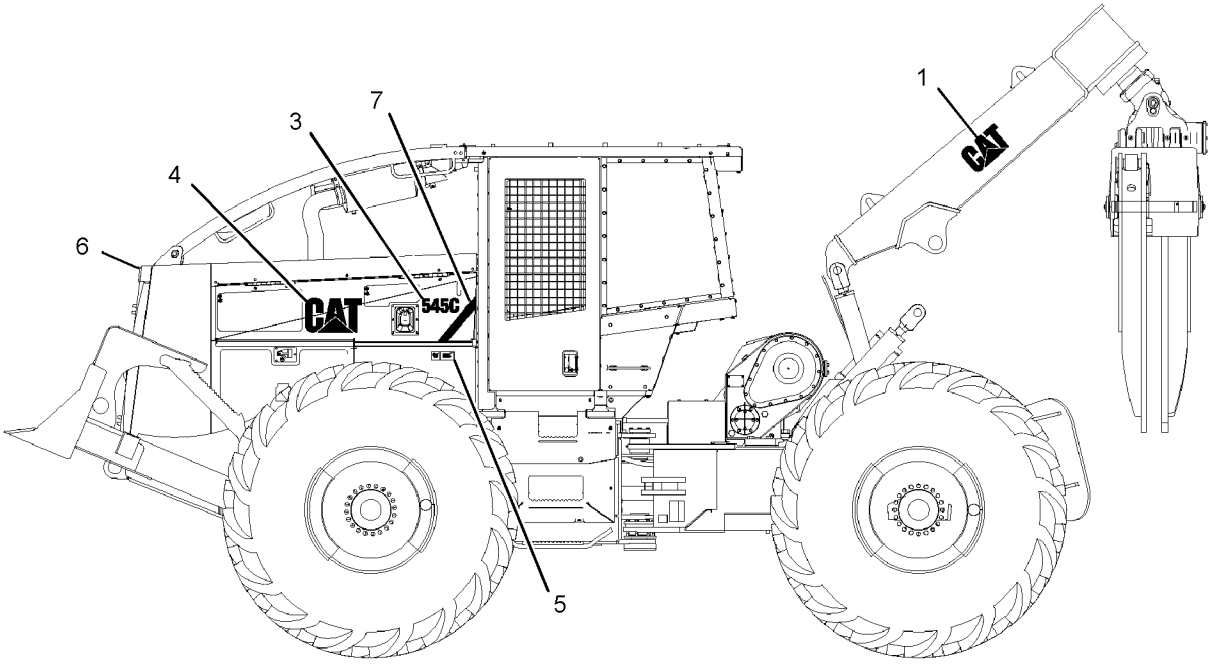


LEFT SIDE VIEW

GRAPHIC #1

**<END>**

g01353366

# *205-8130* GUARD GP-WATER TANK

**S/N: 5451-UP**
**PART OF 204-0364 TANK AR-WATER**
**AN ATTACHMENT**

**SMCS-5613** **i01532740**

| NOTE | REF NO | GRAPHIC REF | PART NUMBER | QTY | PART NAME 1 2 3 4 5 6 (PRODUCT LEVEL) | SEE PAGE |
|---|---|---|---|---|---|---|
| | 1 | 1 | **205-8134** | 1 | PLATE AS | |
| M | | 1 | **8T-3490** | 2 | NUT-WELD (M10X1.5 THD) | |
| | 2 | 1 | **205-8140** | 1 | PLATE AS | |
| | 3 | 1 | **205-8143** | 1 | BRACKET AS | |
| M | | 1 | **8T-3490** | 4 | NUT-WELD (M10X1.5 THD) | |
| | 4 | 1 | **8T-4121** | 16 | WASHER-HARD (11X21X2.5-MM THK) | |
| M | 5 | 1 | **8T-4137** | 16 | BOLT (M10X1.5X20-MM) | |

M-METRIC PART

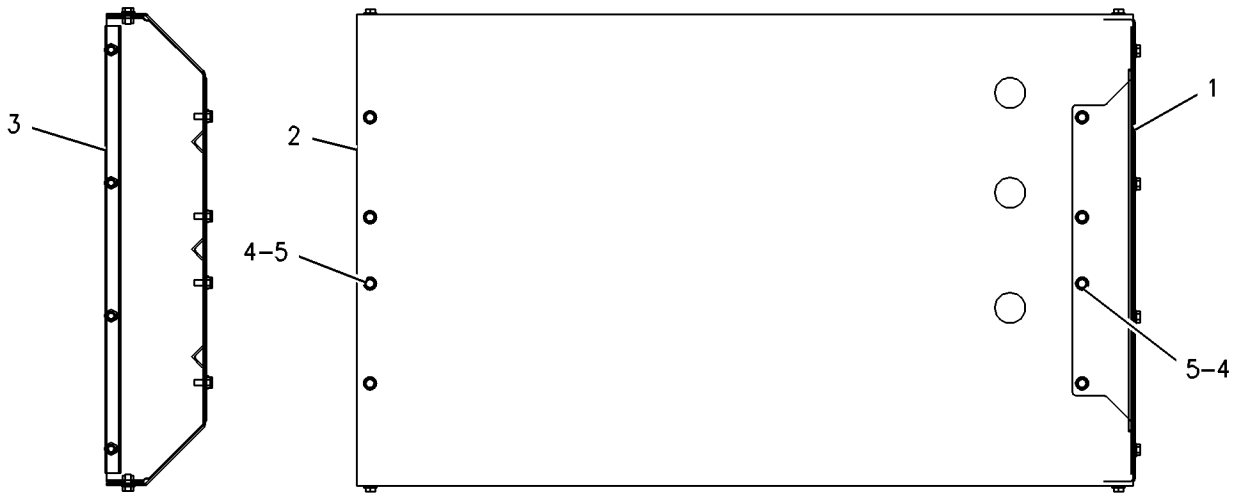


GRAPHIC #1 **<END>** g00797437

# SERVICE EQUIPMENT AND SUPPLIES

## *205-8129* LINES GP-PRESSURIZED WATER

**S/N: 5451-UP**
**WATER CLEANING SYSTEM**
**PART OF 204-0364 TANK AR-WATER**
**AN ATTACHMENT**

**SMCS-5612, 5613** **i02485306**

| NOTE | REF NO | GRAPHIC REF | PART NUMBER | QTY | PART NAME 1 2 3 4 5 6 (PRODUCT LEVEL) | SEE PAGE |
|---|---|---|---|---|---|---|
| | 1 | 1 | **3S-2093** | 4 | STRAP-CABLE | |
| | 2 | 1 | **4C-4509** | 1 | HOSE AS (RECOIL) | |
| | 3 | 1 | **5K-3739** | 1 | VALVE AS-TANK | |
| | | 1 | **2D-2628** | 1 | CORE-VALVE | |
| | | 1 | **2D-2633** | 1 | CAP | |
| | 4 | 1 | **2D-5802** | 1 | VALVE-BALL | |
| | 5 | 1 | *148-8457* | 1 | UNION AS | |
| | | 1 | **6V-8995** | 1 | UNION | |
| | | 1 | **6V-8398** | 2 | SEAL-O-RING | |
| | 6 | 1 | **8T-0853** | 1 | GAUGE GP-PRESSURE (WATER) | |
| | 7 | 1 | **207-8637** | 1 | CROSS-PIPE | |
| | 8 | 1 | **106-2105** | 1 | ELBOW | |
| | 10 | 1 | **203-3938** | 1 | VALVE-RELIEF | |
| | 11 | 1 | **203-7715** | 3 | PLUG AS | |
| | | | | | (EACH INCLUDES) | |
| | | 1 | **7M-8485** | 1 | SEAL-O-RING | |
| | 12 | 1 | **205-8135** | 1 | NOZZLE-WATER | |
| I | 13 | 1 | **118-1031** | 1 | HOSE AS | |
| | 14 | 1 | **205-8137** | 1 | TUBE AS | |
| | 15 | 1 | **205-8138** | 1 | TUBE AS | |
| | 16 | 1 | **205-8139** | 2 | TUBE AS | |
| | 17 | 1 | *148-8370* | 1 | ELBOW AS | |
| | | 1 | **6V-9851** | 1 | ELBOW | |
| | | 1 | **6V-8398** | 1 | SEAL-O-RING | |
| | 18 | 1 | **205-9501** | 1 | ADAPTER | |
| | 19 | 1 | *148-8365* | 1 | ELBOW AS | |
| | | 1 | **8T-6876** | 1 | ELBOW | |
| | | 1 | **3J-1907** | 1 | SEAL-O-RING | |
| | | 1 | **6V-8398** | 1 | SEAL-O-RING | |
| | 20 | 1 | *148-8375* | 1 | ELBOW AS | |
| | | 1 | **6V-8981** | 1 | ELBOW | |
| | | 1 | **6V-8398** | 2 | SEAL-O-RING | |
| | 21 | 1 | *148-8378* | 6 | ELBOW AS | |
| | | | | | (EACH INCLUDES) | |
| | | 1 | **6V-8724** | 1 | ELBOW | |
| | | 1 | **3J-1907** | 1 | SEAL-O-RING | |
| | | 1 | **6V-8397** | 1 | SEAL-O-RING | |
| | 22 | 1 | **3J-1907** | 1 | SEAL-O-RING | |
| | 23 | 1 | **000-7244** | 1 | ELBOW | |
| | 25 | 1 | **6V-9169** | 2 | NUT-BULKHEAD (13/16-16-THD) | |

I-REFER TO HYDRAULIC INFORMATION SYSTEM

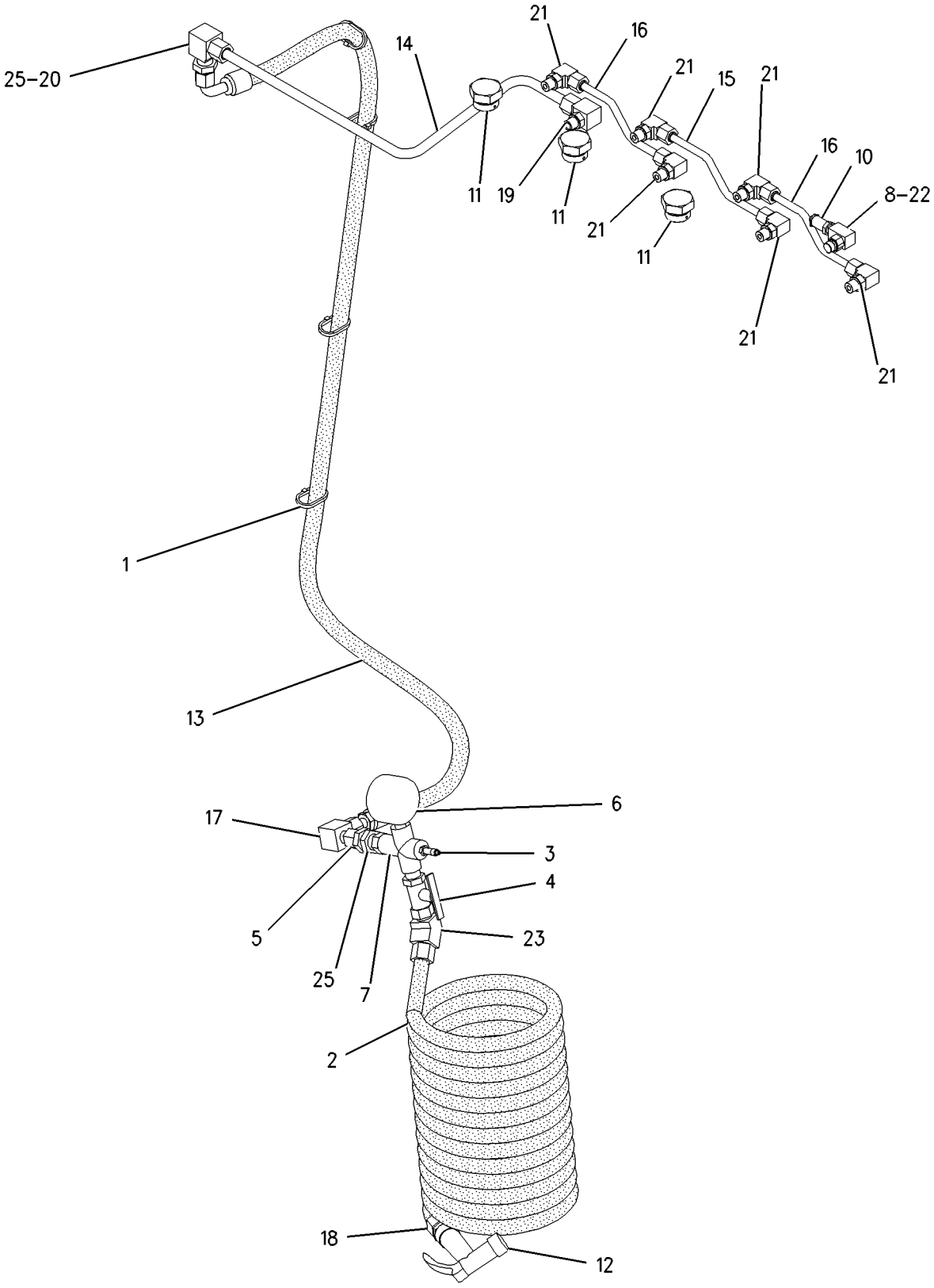


GRAPHIC #1 **<END>** g00931593

## *6V-1971* LITERATURE GP

**S/N: 5451-UP**

**PART OF 245-9460 CHASSIS AR**

**SMCS-0374** **i02485092**

| NOTE | PART NUMBER | QTY | PART NAME 1 2 3 4 5 6 (PRODUCT LEVEL) | SEE PAGE |
|---|---|---|---|---|
| | **246-2641** | 1 | PADLOCK GP (LITERATURE COMPARTMENT) | |
| | **5P-8500** | 2 | KEY | |

**<END>**

## *126-3749* LITERATURE GP

**S/N: 5451-UP**

**PART OF 252-1415, 252-1720 CAB AR-ENCLOSED ROPS, 252-1722, 252-1728 CAB AR-OPEN ROPS**

**AN ATTACHMENT**

**SMCS-0374** **i01794323**

| NOTE | PART NUMBER | QTY | PART NAME 1 2 3 4 5 6 (PRODUCT LEVEL) | SEE PAGE |
|---|---|---|---|---|
| | **186-3148** | 1 | KEY | |
| | **5P-7957** | 1 | LANYARD | |
| | **9M-5732** | 1 | RIVET-POP | |
| | **5P-7958** | 1 | SLEEVE-CABLE SPLICE | |
| | **1F-1603** | 2 | WASHER | |

**<END>**

# SERVICE EQUIPMENT AND SUPPLIES

## *248-0062* PLATE & FILM GP

**S/N: 5451-354**

**PART OF 245-9460 CHASSIS AR**

**SMCS-7405, 7557** **i02485186**

| NOTE | REF NO | GRAPHIC REF | PART NUMBER | QTY | PART NAME 1 2 3 4 5 6 (PRODUCT LEVEL) | SEE PAGE |
|---|---|---|---|---|---|---|
| | 1 | 1 | **1P-2807** | 4 | FILM-INFORMATION (LIFT EYE LOCATION) | |
| | 2 | 1 | **5P-1175** | 1 | FILM-IDENTIFICATION (ENGINE OIL FILL) | |
| | 3 | 1 | **7X-7644** | 4 | FILM-INFORMATION (TIE-DOWN) | |
| | 4 | 1 | **226-1242** | 2 | FILM-WARNING (CRUSH HAZARD, STAY BACK) | |
| | 5 | 1 | **226-1275** | 1 | FILM-WARNING (CRUSH HAZARD, READ MANUAL) | |
| | 6 | 1 | **225-0313** | 1 | FILM-WARNING (JUMP START, READ OMM, U.S.) | |
| | 7 | 1 | **146-6747** | 1 | FILM-INFORMATION (24-VOLT) | |
| | 8 | 1 | **8C-5898** | 1 | FILM-IDENTIFICATION (FUEL DRAIN) | |
| | 9 | 1 | **241-3722** | 1 | FILM-WARNING (RECOIL SPRING) | |
| | 10 | 1 | **223-9818** | 4 | FILM-INSTRUCTION (WINDOW CLEANING, READ OMM) | |
| | 11 | 1 | **224-7830** | 2 | FILM-WARNING (HIGH PRESSURE, READ OMM, U.S.) | |
| | 12 | 1 | **118-1225** | 1 | FILM-IDENTIFICATION (TRANSMISSION TANK FILL CAP) | |
| | 13 | 1 | **225-4256** | 2 | FILM-WARNING (HOT FLUID UNDER PRESSURE, U.S.) | |
| | 14 | 1 | **158-7864** | 1 | FILM-INSTRUCTION (HYDRAULIC OIL) | |
| | 15 | 1 | **239-6986** | 1 | PLATE-IDENTIFICATION (MACHINE) | |
| | 16 | 1 | **228-2615** | 1 | FILM-WARNING (UNIVERSAL) | |
| | 17 | 1 | **224-8945** | 2 | FILM-WARNING (DO NOT USE ETHER) | |
| | 18 | 1 | **9X-6562** | 8 | TACK-FASTENER | |
| | 19 | 1 | **257-8504** | 1 | FILM-INFORMATION (ROPS, FOPS, OPS, READ OMM) | |
| | 20 | 1 | **219-0305** | 1 | FILM-WARNING (NO WELD, NO DRILL, READ OMM) | |
| | | | | | | |
| FY | | | *281-7739* | 1 | FILM GP | 684 |
| AF | | | **4W-1413** | 1 | PLATE-SERIAL NUMBER (ENGINE) | |

A-NOT PART OF THIS GROUP
F-NOT SHOWN
Y-SEPARATE ILLUSTRATION

*248-0062* **PLATE & FILM GP** *(contd.)* **i02485186**

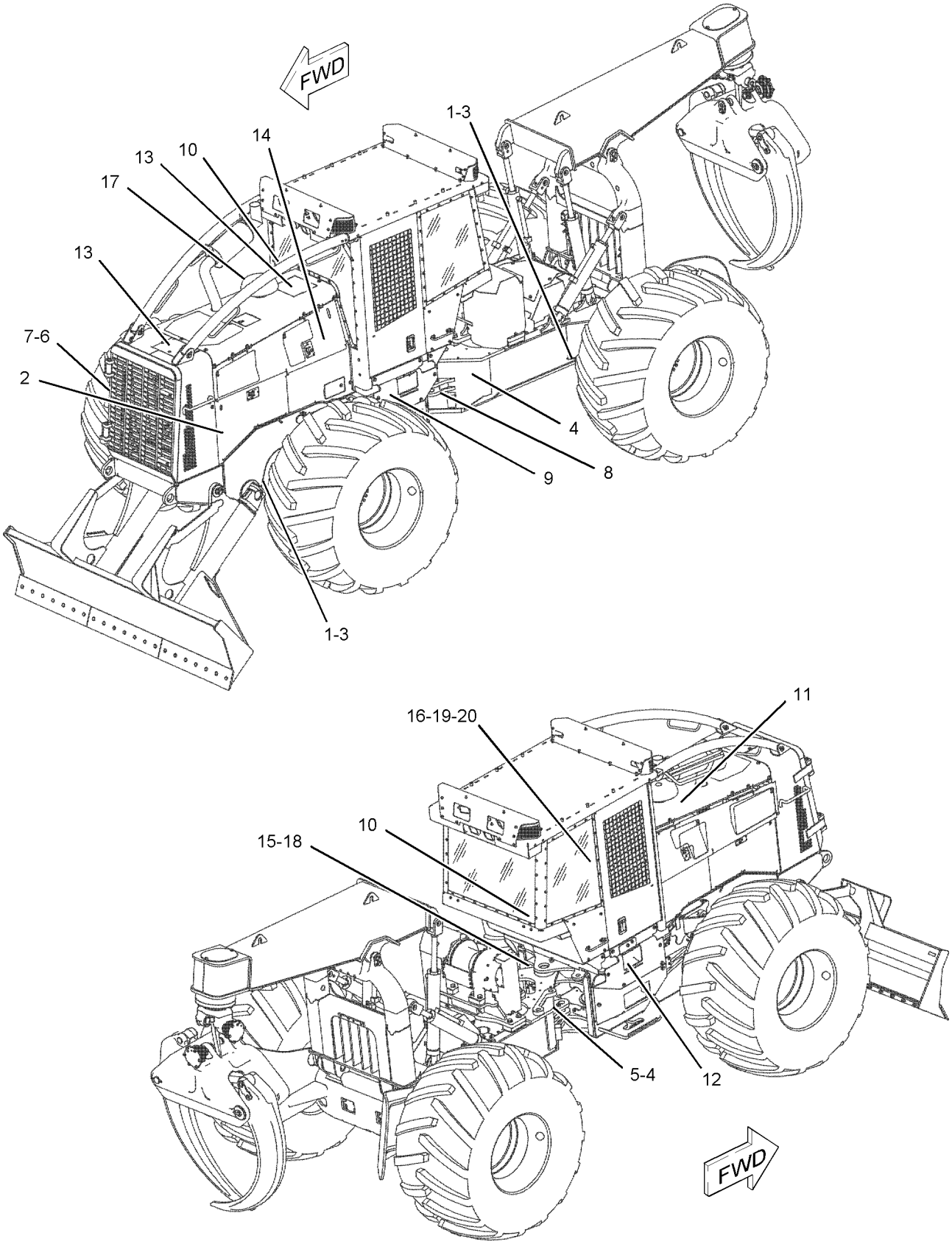


GRAPHIC #1 **<END>** g01104015

# SERVICE EQUIPMENT AND SUPPLIES

## *248-0062* PLATE & FILM GP

**S/N: 545355-UP**

**PART OF 245-9460 CHASSIS AR**

**SMCS-7405, 7557** **i02739928**

| NOTE | REF NO | GRAPHIC REF | PART NUMBER | QTY | PART NAME 1 2 3 4 5 6 (PRODUCT LEVEL) | SEE PAGE |
|---|---|---|---|---|---|---|
| | 1 | 1 | **1P-2807** | 4 | FILM-INFORMATION (LIFT EYE LOCATION) | |
| | 2 | 1 | **5P-1175** | 1 | FILM-IDENTIFICATION (ENGINE OIL FILL) | |
| | 3 | 1 | **7X-7644** | 4 | FILM-INFORMATION (TIE-DOWN) | |
| | 4 | 1 | **226-1242** | 2 | FILM-WARNING (CRUSH HAZARD, STAY BACK) | |
| | 5 | 1 | **226-1275** | 1 | FILM-WARNING (CRUSH HAZARD, READ MANUAL) | |
| | 6 | 1 | **225-0313** | 1 | FILM-WARNING (JUMP START, READ OMM, U.S.) | |
| | 7 | 1 | **146-6747** | 1 | FILM-INFORMATION (24-VOLT) | |
| | 8 | 1 | **8C-5898** | 1 | FILM-IDENTIFICATION (FUEL DRAIN) | |
| | 9 | 1 | **241-3722** | 1 | FILM-WARNING (RECOIL SPRING) | |
| | 10 | 1 | **223-9818** | 4 | FILM-INSTRUCTION (WINDOW CLEANING, READ OMM) | |
| | 11 | 1 | **224-7830** | 2 | FILM-WARNING (HIGH PRESSURE, READ OMM, U.S.) | |
| | 12 | 1 | **118-1225** | 1 | FILM-IDENTIFICATION (TRANSMISSION TANK FILL CAP) | |
| | 13 | 1 | **225-4256** | 2 | FILM-WARNING (HOT FLUID UNDER PRESSURE, U.S.) | |
| | 14 | 1 | **158-7864** | 1 | FILM-INSTRUCTION (HYDRAULIC OIL) | |
| | 15 | 1 | **239-6986** | 1 | PLATE-IDENTIFICATION (MACHINE) | |
| | 16 | 1 | **228-2615** | 1 | FILM-WARNING (UNIVERSAL) | |
| | 17 | 1 | **224-8945** | 2 | FILM-WARNING (DO NOT USE ETHER) | |
| | 18 | 1 | **9X-6562** | 8 | TACK-FASTENER | |
| | 19 | 1 | **257-8504** | 1 | FILM-INFORMATION (ROPS, FOPS, OPS, READ OMM) | |
| | 20 | 1 | **219-0305** | 1 | FILM-WARNING (NO WELD, NO DRILL, READ OMM) | |
| | | | | | | |
| CFY | | | *293-5937* | 1 | FILM GP | 685 |
| AF | | | **4W-1413** | 1 | PLATE-SERIAL NUMBER (ENGINE) | |

A-NOT PART OF THIS GROUP
C-CHANGE FROM PREVIOUS TYPE
F-NOT SHOWN
Y-SEPARATE ILLUSTRATION

*248-0062* **PLATE & FILM GP** *(contd.)* **i02739928**

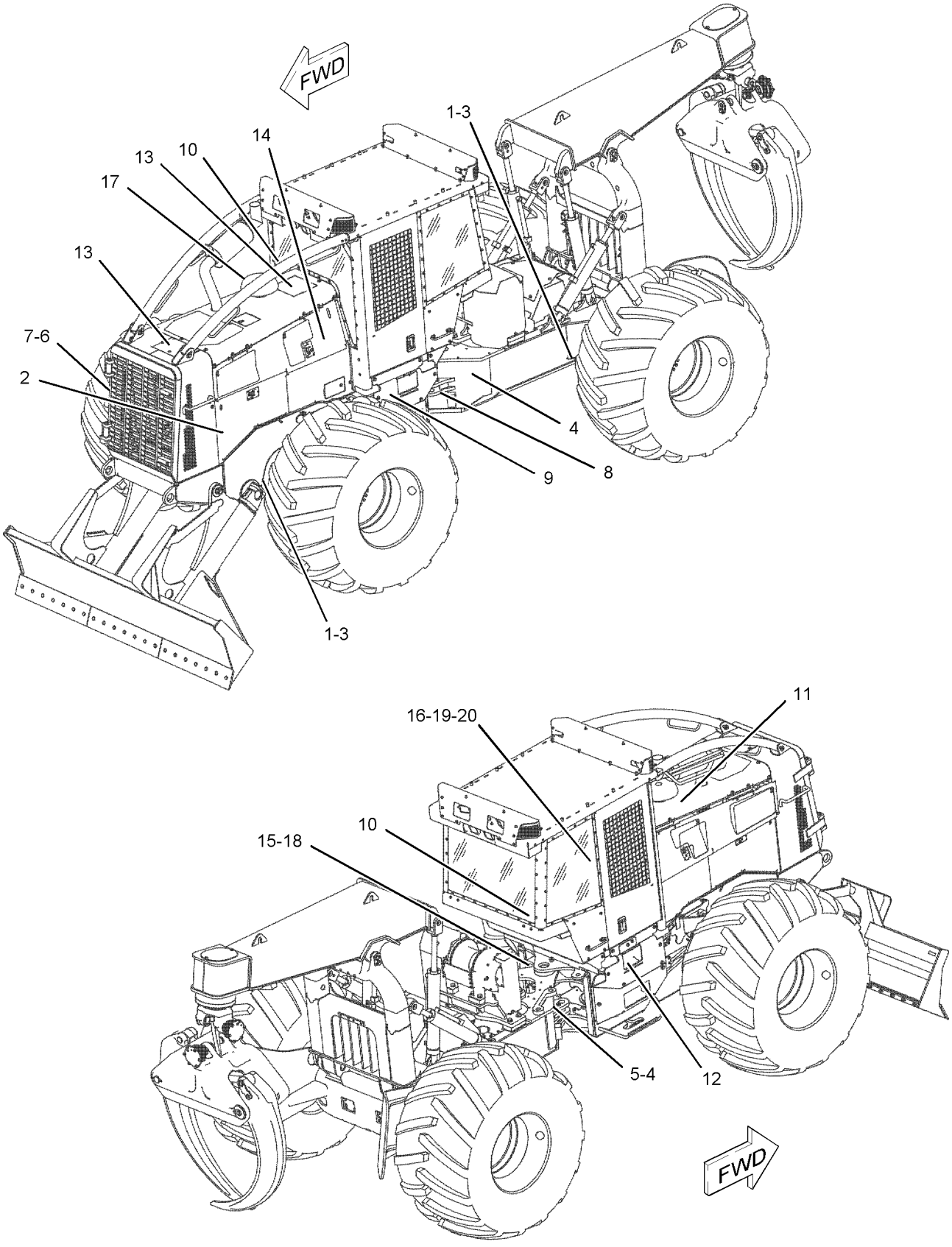


GRAPHIC #1 **<END>** g01104015

## *252-1418* PLATE & FILM GP

**S/N: 5451-UP**

**PART OF 252-1415, 252-1720 CAB AR-ENCLOSED ROPS, 252-1722, 252-1728 CAB AR-OPEN ROPS**

**AN ATTACHMENT**

**SMCS-7405, 7557** **i02547523**

| NOTE | PART NUMBER | QTY | PART NAME 1 2 3 4 5 6 (PRODUCT LEVEL) | SEE PAGE |
|---|---|---|---|---|
| | **262-6882** | 1 | FILM-CONSOLE (BLACK, LH) | |
| | | | (ON LH SIDE OF FRONT DASH CONSOLE) | |
| | **262-6881** | 1 | FILM-CONSOLE (BLACK, RH) | |
| | | | (ON RH SIDE OF FRONT DASH CONSOLE) | |
| | **257-7996** | 1 | FILM-IDENTIFICATION (FUSE PANEL) | |
| | | | (ON INSIDE OF FUSE PANEL ACCESS COVER WHICH IS LOCATED ON THE LH EXTERIOR ACCESS PANEL) | |
| | **257-2161** | 1 | FILM-INSTRUCTION (DECKING BLADE CONTROL) | |
| | | | (ON RH PLASTIC CONSOLE NEXT TO DECKING BLADE CONTROL) | |
| | **257-3161** | 1 | FILM-INSTRUCTION (ENGINE START SWITCH) | |
| | | | (ON FRONT LOWER DASH PLASTIC AROUND KEY SWITCH) | |
| | **227-7390** | 1 | FILM-WARNING (SEAT BELT) | |
| | | | (ON INSIDE SURFACE OF LH B-POST JUST ABOVE LH CONSOLE) | |

**<END>**

## *278-9712* PLATE & FILM GP

**S/N: 5451-UP**

**AN ATTACHMENT**

**SMCS-7405, 7557** **i02471234**

| NOTE | PART NUMBER | QTY | PART NAME 1 2 3 4 5 6 (PRODUCT LEVEL) | SEE PAGE |
|---|---|---|---|---|
| | **224-0672** | 2 | FILM-WARNING (HIGH PRESSURE, READ OMM, INTL) | |
| | | | (2 ON ACCUMULATOR BRACKET) | |
| | **224-8946** | 2 | FILM-WARNING (DO NOT USE ETHER) | |
| | | | (ON EACH SIDE OF AIRCLEANER INTAKE RAINCAP) | |
| | **225-0312** | 1 | FILM-WARNING (JUMP START, READ OMM, INTL) | |
| | | | (ON INSIDE FRONT RH RADIATOR GUARD) | |
| | **225-4257** | 2 | FILM-WARNING (HOT FLUID UNDER PRESS, INTL) | |
| | | | (PLACE ON TOP SURFACE OF HYDRAULIC TANK NEAR CAP & ON BOTTOM SURFACE OF RADIATOR CAP DOOR) | |
| | **226-1240** | 2 | FILM-WARNING (CRUSH HAZARD, STAY BACK) | |
| | | | (ON RH & LH BACK FRAME - (50-MM) FROM TOP, (25-MM) BEHIND FRONT FACE) | |
| | **226-1274** | 1 | FILM-WARNING (CRUSH HAZARD, READ OMM) | |
| | | | (ON RH & BACK FRAME - (150-MM) FROM TOP, (25-MM) BEHIND FRONT FACE) | |
| | **227-7391** | 1 | FILM-WARNING (SEAT BELT) | |
| | | | (ON INSIDE SURFACE OF LH B-POST JUST ABOVE LH CONSOLE) | |
| | **228-2616** | 1 | FILM-WARNING (UNIVERSAL, READ OMM) | |
| | | | (ON FIREWALL 100-MM ABOVE ROPS/FOPS PLATE) | |
| | **241-3720** | 1 | FILM-WARNING (RECOIL SPRING) | |
| | | | (ON PARKING BRAKE SPRING CANISTER) | |
| | **283-0142** | 1 | FILM-WARNING (PRESSURE, READ OMM) | |
| | | | (TOP OF WATER TANK GUARD ON RIGHT SIDE OF MACHINE) | |

**<END>**

# SERVICE EQUIPMENT AND SUPPLIES

## *204-0364* TANK AR-WATER

**S/N: 5451-UP**
**WATER CLEANING SYSTEM**
**AN ATTACHMENT**

**SMCS-5612, 5613** **i01561348**

| NOTE | REF NO | GRAPHIC REF | PART NUMBER | QTY | PART NAME 1 2 3 4 5 6 (PRODUCT LEVEL) | SEE PAGE |
|---|---|---|---|---|---|---|
| | 1 | 1 | **202-8709** | | FILM-WARNING (TANK PRESSURE) | |
| Y | 2 | 1 | *205-8129* | 1 | LINES GP-PRESSURIZED WATER | 688 |
| Y | 3 | 1 | *205-8130* | 1 | GUARD GP-WATER TANK | 687 |
| Y | 4 | 1 | *205-8131* | 1 | TANK GP-WATER | 697 |

Y-SEPARATE ILLUSTRATION

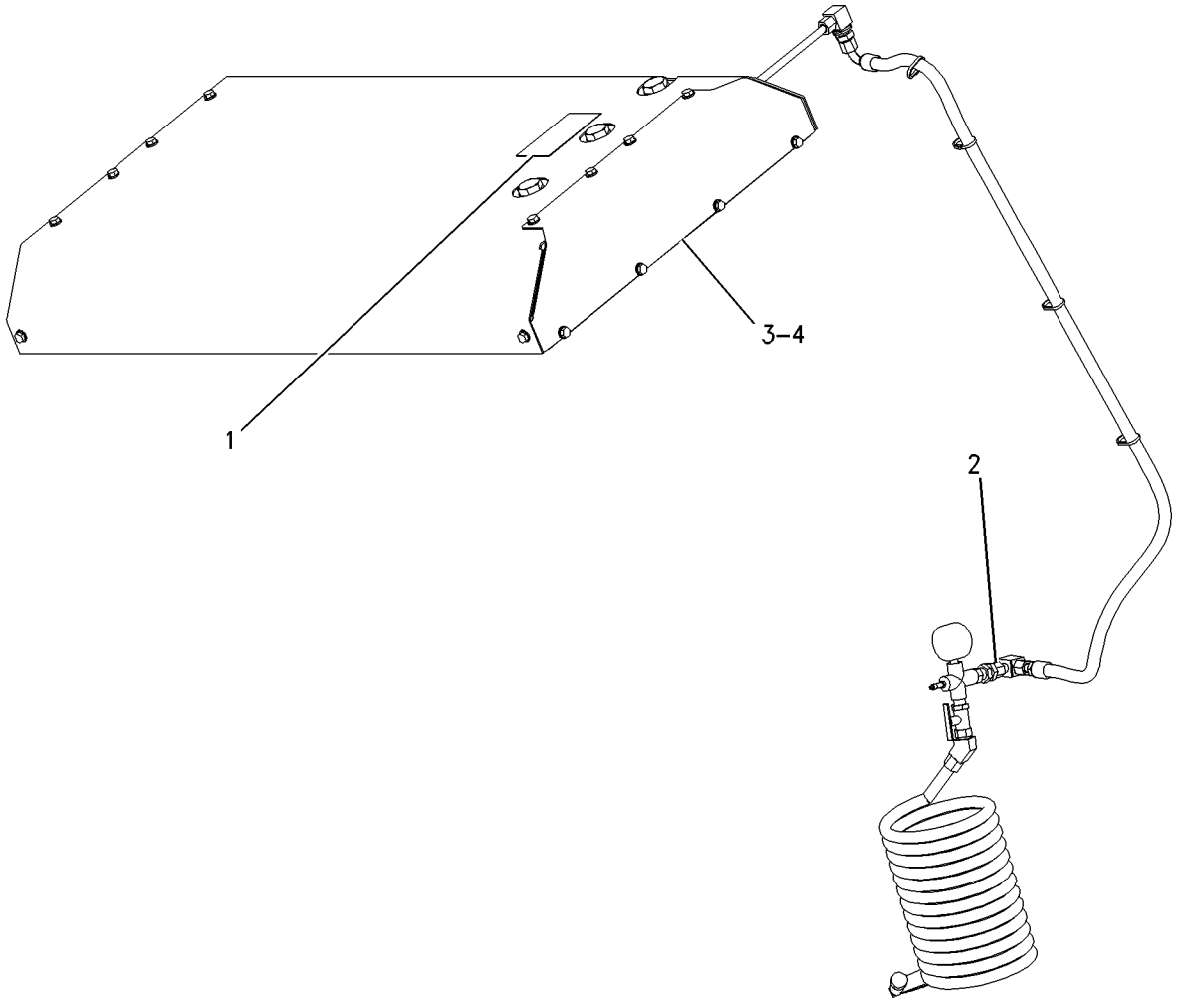


GRAPHIC #1 **<END>** g00811251

# SERVICE EQUIPMENT AND SUPPLIES

## *205-8131* TANK GP-WATER

**S/N: 5451-UP**
**PART OF 204-0364 TANK AR-WATER**
**AN ATTACHMENT**

**SMCS-5612, 5613** **i02010667**

| NOTE | REF NO | GRAPHIC REF | PART NUMBER | QTY | PART NAME 1 2 3 4 5 6 (PRODUCT LEVEL) | SEE PAGE |
|---|---|---|---|---|---|---|
| | 1 | 1 | **205-8132** | 1 | TANK AS | |
| | 1A | 1 | **8R-5011** | 3 | BOSS | |
| | 1B | 1 | *205-8154* | 1 | PLATE AS | |
| M | | 1 | **8T-3490** | 4 | NUT-WELD (M10X1.5 THD) | |
| | 1C | 1 | *205-8395* | 1 | PLATE AS | |
| M | | 1 | **8T-3490** | 6 | NUT-WELD (M10X1.5 THD) | |
| | 2 | 1 | **5P-1076** | 6 | WASHER-HARD (13.5X30X4-MM THK) | |
| M | 3 | 1 | **8T-4139** | 3 | BOLT (M12X1.75X30-MM) | |
| M | 4 | 1 | **8T-4192** | 3 | BOLT (M12X1.75X25-MM) | |

M-METRIC PART

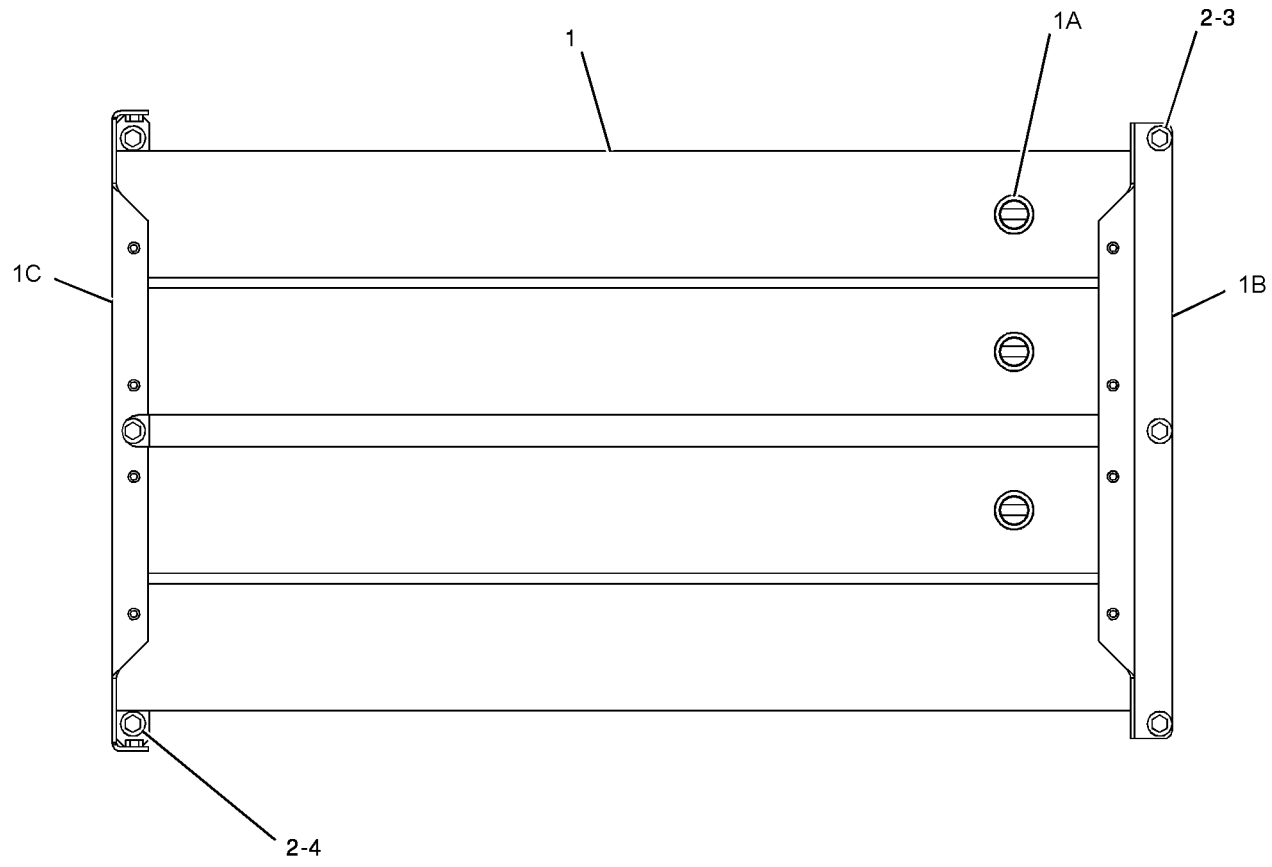


GRAPHIC #1 **<END>** g01039845

# MEMORANDA

# PART NUMBER INDEX


| Part | Page |
|---|---|
| **0** | |
| 0S-0175 | 367 |
| 0S-1585 | 519 |
| 0S-1587 | 517 |
| | 530 |
| 0S-1588 | 498 |
| | 503 |
| | 506 |
| | 530 |
| 0S-1594 | 503 |
| | 519 |
| 0S-1619 | 506 |
| **1** | |
| 1A-2209 | 396 |
| 1B-2578 | 196 |
| 1B-5964 | 220 |
| | 263 |
| 1B-8705 | 5 |
| | 16 |
| | 18 |
| | 20 |
| 1B-8706 | 601 |
| 1D-4164 | 620 |
| | 621 |
| 1F-1603 | 690 |
| 1G-8878 | 269 |
| | 414 |
| 1H-3244 | 142 |
| 1H-3338 | 195 |
| 1H-6227 | 508 |
| 1H-8296 | 637 |
| 1H-9696 | 569 |
| 1J-2860 | 270 |
| | 272 |
| 1J-2921 | 412 |
| 1J-4034 | 519 |
| 1J-4757 | 270 |
| 1J-6472 | 493 |
| | 495 |
| 1J-9671 | 236 |
| | 242 |
| | 362 |
| | 363 |
| | 364 |
| | 365 |
| | 366 |
| 1K-6985 | 385 |
| | 387 |
| | 528 |
| 1K-8850 | 336 |
| | 343 |
| | 345 |
| 1L-7518 | 272 |
| 1M-6119 | 146 |
| | 149 |
| 1M-6120 | 146 |
| | 149 |
| 1M-7914 | 532 |
| 1N-5999 | 28 |
| 1P-2807 | 691 |
| | 693 |
| 1P-3703 | 287 |
| | 289 |
| 1P-3707 | 236 |
| | 242 |
| 1P-3934 | 519 |
| 1P-3935 | 519 |
| 1P-4278 | 118 |
| | 120 |
| 1P-4577 | 287 |
| | 289 |
| | 426 |
| 1P-4695 | 559 |
| 1P-4696 | 559 |
| 1P-6356 | 614 |
| 1P-6872 | 442 |
| 1P-7363 | 470 |
| | 474 |
| | 476 |
| | 478 |
| | 480 |
| | 482 |
| | 484 |
| 1P-8521 | 107 |
| 1P-9252 | 284 |
| 1R-0762 | 122 |
| | 124 |
| 1R-0770 | 114 |
| 1R-1807 | 69 |
| 1S-0994 | 118 |
| | 120 |
| | 136 |
| | 379 |
| | 389 |
| | 392 |
| | 405 |
| | 420 |
| | 430 |
| | 433 |
| | 544 |
| 1S-2563 | 71 |
| 1S-4974 | 530 |
| 1S-6595 | 256 |
| 1S-7251 | 146 |
| | 149 |
| | 165 |
| | 190 |
| 1S-7252 | 146 |
| | 149 |
| 1S-8947 | 487 |
| 1S-9593 | 314 |
| 1S-9989 | 234 |
| 1T-0738 | 236 |
| | 315 |
| 1T-0936 | 486 |
| 1T-1621 | 303 |
| 1T-1639 | 237 |
| | 243 |
| 1U-2744 | 478 |
| 1U-8846 | 7 |
| | 9 |
| | 44 |
| | 59 |
| | 96 |
| | 97 |
| | 100 |
| | 236 |
| | 242 |
| | 280 |
| | 282 |
| 1V-3283 | 522 |
| | 558 |
| 1V-3287 | 522 |
| | 558 |
| 1V-3289 | 522 |
| | 558 |
| 1V-6341 | 237 |
| 1V-6755 | 535 |
| 1V-8284 | 621 |
| 1W-2431 | 105 |
| 1W-2715 | 27 |
| 1W-8407 | 22 |
| **2** | |
| 2A-4429 | 27 |
| 2B-0858 | 282 |
| 2B-7557 | 522 |
| 2B-9373 | 293 |
| 2D-0094 | 256 |
| 2D-1683 | 297 |
| | 358 |
| 2D-2628 | 688 |
| 2D-2633 | 688 |
| 2D-4202 | 447 |
| 2D-5802 | 688 |
| 2D-6006 | 604 |
| | 606 |
| 2D-6642 | 46 |
| 2D-8926 | 265 |
| | 267 |
| 2D-9453 | 280 |
| 2D-9454 | 270 |
| 2D-9455 | 270 |
| 2G-8767 | 335 |
| 2G-8793 | 493 |
| | 494 |
| | 495 |
| 2G-8898 | 263 |
| 2H-3088 | 274 |
| | 276 |
| | 278 |
| | 280 |
| | 282 |
| 2H-3764 | 478 |
| | 484 |
| 2H-3775 | 492 |
| | 524 |
| | 525 |
| 2H-3786 | 519 |
| | 569 |
| 2H-3920 | 577 |
| | 675 |
| 2H-3922 | 194 |
| 2H-6184 | 236 |
| | 242 |
| 2H-9247 | 506 |
| 2J-3505 | 291 |
| 2J-3506 | 521 |
| 2J-6356 | 383 |
| 2J-7550 | 236 |
| | 242 |
| 2K-0703 | 326 |
| 2K-2939 | 561 |
| | 569 |
| 2K-4821 | 142 |
| 2K-4973 | 637 |
| 2K-5103 | 272 |
| 2K-5967 | 569 |
| 2K-6830 | 406 |
| | 408 |
| | 410 |
| | 411 |
| | 412 |
| 2K-8199 | 242 |
| | 262 |
| 2L-6055 | 301 |
| | 302 |
| 2L-6726 | 308 |
| 2L-8050 | 162 |
| 2L-8065 | 162 |
| 2L-8069 | 203 |
| 2L-8071 | 203 |
| 2L-8079 | 203 |
| 2L-8081 | 162 |
| | 203 |
| 2M-4453 | 86 |
| 2M-6471 | 24 |
| 2M-9780 | 24 |
| | 28 |
| | 51 |
| | 69 |
| | 118 |
| | 120 |
| | 307 |
| | 312 |
| | 388 |
| | 391 |
| | 417 |
| | 422 |
| | 429 |
| | 432 |
| | 470 |
| | 472 |
| | 474 |
| | 476 |
| | 480 |
| | 482 |
| | 484 |
| | 487 |
| | 489 |
| | 544 |
| 2N-7006 | 236 |
| | 242 |
| 2N-7007 | 236 |
| | 242 |
| 2N-8142 | 549 |
| 2P-1278 | 540 |
| 2P-1293 | 420 |
| | 422 |
| | 547 |
| 2P-1294 | 43 |
| 2P-1373 | 282 |
| 2P-2537 | 69 |
| 2P-2975 | 165 |


► **PRIMARY REFERENCE**

# PART NUMBER INDEX


| Part | Page | Part | Page | Part | Page | Part | Page |
|---|---|---|---|---|---|---|---|
| 2P-7846 | 88 | 3B-4505 | 640 | 3E-0136 | 188 | 3E-8320 | 146 |
| 2P-8986 | 236 | 3B-4512 | 368 | 3E-0137 | 188 | | 149 |
| | 242 | | 369 | 3E-0138 | 188 | 3E-9411 | 297 |
| | 274 | | 370 | 3E-0139 | 188 | 3E-9412 | 61 |
| | 276 | 3B-4611 | 604 | 3E-0140 | 188 | | 62 |
| | 278 | | 606 | 3E-0141 | 188 | | 127 |
| 2P-8987 | 274 | 3B-4617 | 367 | 3E-0142 | 188 | 3F-0379 | 192 |
| | 276 | 3B-4621 | 372 | 3E-0143 | 188 | 3F-5792 | 256 |
| | 278 | 3B-4628 | 347 | 3E-0144 | 188 | 3F-9556 | 142 |
| 2R-1236 | 506 | 3B-4629 | 601 | 3E-0145 | 188 | | 212 |
| 2S-1654 | 517 | 3B-6552 | 358 | 3E-1841 | 675 | | 682 |
| 2S-2053 | 70 | 3B-6767 | 136 | 3E-2333 | 459 | 3G-5980 | 447 |
| | 71 | 3B-6775 | 265 | 3E-3365 | 141 | 3H-0442 | 472 |
| 2S-4078 | 236 | | 267 | | 178 | | 476 |
| | 242 | 3B-8485 | 350 | | 181 | | 478 |
| | 425 | 3B-8488 | 494 | | 198 | | 482 |
| | 426 | | 495 | | 201 | | 484 |
| | 450 | | 517 | | 314 | 3H-5552 | 24 |
| | 453 | 3B-8489 | 413 | | 490 | 3H-7654 | 61 |
| | 455 | | 422 | 3E-3368 | 170 | | 62 |
| | 458 | | 494 | 3E-3371 | 169 | 3H-8430 | 413 |
| | 462 | | 495 | 3E-3805 | 604 | 3J-1907 | 28 |
| | 544 | | 519 | | 606 | | 73 |
| 2S-4663 | 310 | | 528 | 3E-4051 | 614 | | 74 |
| 2S-5835 | 310 | | 561 | 3E-4052 | 614 | | 76 |
| 2T-1922 | 139 | | 564 | 3E-4057 | 614 | | 84 |
| 2T-2991 | 422 | | 565 | 3E-4058 | 614 | | 86 |
| 2T-3013 | 294 | 3B-8822 | 505 | 3E-4066 | 614 | | 98 |
| | 295 | 3D-2824 | 32 | 3E-4075 | 32 | | 99 |
| | 296 | | 53 | 3E-4210 | 516 | | 118 |
| 2T-3360 | 399 | | 59 | 3E-4302 | 442 | | 120 |
| | 401 | | 86 | 3E-4352 | 70 | | 122 |
| 2V-3216 | 399 | | 93 | | 100 | | 124 |
| | 401 | | 388 | | 167 | | 136 |
| | 601 | | 391 | 3E-5169 | 213 | | 236 |
| 2V-8259 | 614 | | 394 | | 219 | | 242 |
| 2V-8314 | 522 | | 416 | | 226 | | 265 |
| 2V-8369 | 522 | | 417 | 3E-5239 | 202 | | 267 |
| | 558 | | 419 | 3E-5464 | 577 | | 269 |
| 2W-0027 | 52 | | 420 | | 580 | | 285 |
| 2W-4332 | 540 | | 422 | 3E-6328 | ▶141 | | 287 |
| 2W-6544 | 7 | | 426 | | 202 | | 289 |
| | 9 | | 429 | 3E-6509 | 684 | | 307 |
| 2W-6546 | 6 | | 430 | | 685 | | 309 |
| 2W-7213 | 24 | | 432 | 3E-6601 | 612 | | 310 |
| 2W-7381 | 30 | | 433 | 3E-6696 | 577 | | 315 |
| 2W-8147 | 16 | | 435 | | 580 | | 317 |
| | 18 | | 447 | 3E-6749 | 490 | | 374 |
| | 20 | | 478 | 3E-6787 | 243 | | 376 |
| 2Y-4785 | 549 | | 487 | 3E-7417 | 442 | | 377 |
| 2Y-5829 | 56 | | 541 | 3E-7423 | 388 | | 379 |
| | 57 | | 544 | | 391 | | 383 |
| | 63 | | 546 | 3E-7775 | 192 | | 388 |
| | 74 | | 568 | 3E-7806 | 376 | | 389 |
| | 274 | 3D-8317 | 310 | 3E-7808 | 230 | | 391 |
| | 276 | 3E-0125 | 188 | 3E-8017 | 110 | | 392 |
| | 278 | 3E-0127 | 188 | | 113 | | 419 |
| | | 3E-0128 | 188 | 3E-8020 | 643 | | 425 |
| | | 3E-0129 | 188 | | 648 | | 429 |
| | | 3E-0130 | 188 | | 653 | | 430 |
| | | 3E-0131 | 188 | | 657 | | 432 |
| 3B-0551 | 280 | 3E-0132 | 188 | | 661 | | 435 |
| | 282 | 3E-0133 | 188 | | 664 | | 449 |
| 3B-4501 | 577 | 3E-0134 | 188 | | 667 | | 452 |
| | 580 | 3E-0135 | 188 | | 671 | | 455 |


3

▶ PRIMARY REFERENCE

# PART NUMBER INDEX


| Part | Page | Part | Page | Part | Page | Part | Page |
|---|---|---|---|---|---|---|---|
| | 458 | | 237 | 3S-2713 . . . . . | 383 | | 287 |
| | 461 | | 242 | 3S-6162 . . . . . | 412 | | 289 |
| | 487 | | 243 | 3S-9233 . . . . . | 280 | 4D-7794 . . . . . | 374 |
| | 488 | | 254 | | 282 | 4D-9517 . . . . . | 263 |
| | 541 | | 285 | 3S-9557 . . . . . | 203 | 4D-9986 . . . . . | 236 |
| | 544 | | 307 | 3T-0849 . . . . . | 444 | | 242 |
| | 546 | | 310 | | 601 | | 464 |
| | 547 | | 315 | 3T-2094 . . . . . | 293 | | 465 |
| | 569 | | 374 | 3T-3422 . . . . . | 192 | | 467 |
| | 597 | | 376 | 3T-3434 . . . . . | 192 | | 468 |
| | 599 | | 377 | 3T-4688 . . . . . | 214 | 4E-2240 . . . . . | 280 |
| | 688 | | 379 | | 220 | 4E-3645 . . . . . | 270 |
| 3J-4818 . . . . . | 637 | | 388 | 3T-4965 . . . . . | 419 | 4E-3896 . . . . . | 270 |
| 3J-5190 . . . . . | 497 | | 391 | 3T-6541 . . . . . | 282 | | 272 |
| 3J-6956 . . . . . | 315 | | 405 | 3T-6572 . . . . . | 252 | 4E-3897 . . . . . | 270 |
| 3J-7352 . . . . . | 549 | | 419 | 3T-6573 . . . . . | 274 | | 272 |
| 3J-7354 . . . . . | 59 | | 420 | | 276 | 4E-4030 . . . . . | 270 |
| | 69 | | 425 | | 278 | | 272 |
| | 82 | | 426 | 3V-2431 . . . . . | 126 | 4E-4031 . . . . . | 270 |
| | 84 | | 429 | 3V-3263 . . . . . | 680 | | 272 |
| | 93 | | 432 | 3V-7089 . . . . . | 535 | 4E-6986 . . . . . | 280 |
| | 167 | | 442 | 3V-7689 . . . . . | 643 | | 282 |
| | 265 | | 445 | | 648 | | 296 |
| | 267 | | 449 | | 653 | 4E-8535 . . . . . | 280 |
| | 362 | | 452 | | 657 | 4E-9413 . . . . . | 280 |
| | 363 | | 455 | | 661 | | 282 |
| | 364 | | 458 | | 664 | 4F-2294 . . . . . | 197 |
| | 365 | | 461 | | 667 | 4F-4097 . . . . . | 315 |
| | 366 | | 469 | | 671 | 4F-5695 . . . . . | 26 |
| | 425 | | 478 | 3W-6398 . . . . . | 642 | 4F-7391 . . . . . | 549 |
| | 429 | | 544 | 3W-6399 . . . . . | 642 | 4F-9029 . . . . . | 76 |
| | 432 | | 614 | 3W-9117 . . . . . | 321 | 4F-9653 . . . . . | 126 |
| | 449 | 3K-2366 . . . . . | 383 | | 323 | 4H-1225 . . . . . | 213 |
| | 452 | 3K-6060 . . . . . | 383 | 3Y-9267 . . . . . | 508 | | 219 |
| | 455 | | 617 | | | | 226 |
| | 458 | 3K-6905 . . . . . | 263 | | | 4H-2558 . . . . . | 203 |
| | 461 | 3K-8460 . . . . . | 167 | **4** | | 4H-6520 . . . . . | 282 |
| | 470 | | 236 | | | 4H-7869 . . . . . | 190 |
| | 472 | | 242 | 4B-2041 . . . . . | 608 | 4H-8380 . . . . . | 502 |
| | 474 | 3L-6513 . . . . . | 162 | 4B-2049 . . . . . | 188 | 4I-3953 . . . . . | 352 |
| | 476 | | 230 | | 583 | | 355 |
| | 478 | 3N-6408 . . . . . | 530 | | 584 | 4I-6141 . . . . . | 389 |
| | 480 | 3P-1156 . . . . . | 72 | | 585 | | 392 |
| | 482 | | 73 | | 586 | 4J-0520 . . . . . | 265 |
| | 484 | | 79 | 4B-3665 . . . . . | 236 | | 267 |
| | 486 | 3P-1932 . . . . . | 69 | | 242 | | 287 |
| | 498 | 3P-7832 . . . . . | 233 | 4B-4158 . . . . . | 569 | | 289 |
| | 549 | | 234 | 4B-4274 . . . . . | 583 | | 426 |
| | 597 | 3P-9847 . . . . . | 90 | | 584 | 4J-0525 . . . . . | 86 |
| | 599 | 3P-9900 . . . . . | 637 | | 585 | 4J-0527 . . . . . | 426 |
| 3K-0360 . . . . . | 31 | 3S-0004 . . . . . | 293 | | 586 | 4J-2506 . . . . . | 315 |
| | 54 | 3S-2093 . . . . . | 122 | 4B-4278 . . . . . | 637 | 4J-5140 . . . . . | 464 |
| | 80 | | 124 | 4B-4863 . . . . . | 162 | | 465 |
| | 82 | | 159 | 4B-5324 . . . . . | 608 | | 467 |
| | 84 | | 210 | 4B-9880 . . . . . | 310 | | 468 |
| | 86 | | 227 | 4C-2959 . . . . . | 591 | 4J-5267 . . . . . | 464 |
| | 100 | | 254 | 4C-4509 . . . . . | 688 | | 465 |
| | 118 | | 358 | 4C-9612 . . . . . | 6 | | 467 |
| | 120 | | 577 | | 13 | | 468 |
| | 122 | | 580 | 4D-1322 . . . . . | 315 | 4J-7533 . . . . . | 307 |
| | 124 | | 612 | 4D-1326 . . . . . | 196 | | 312 |
| | 136 | | 614 | 4D-6432 . . . . . | 635 | | 437 |
| | 214 | | 680 | | 636 | 4J-8251 . . . . . | 447 |
| | 220 | | 688 | 4D-7388 . . . . . | 265 | 4J-8252 . . . . . | 447 |
| | 227 | 3S-2708 . . . . . | 236 | | 267 | 4J-9118 . . . . . | 497 |


► **PRIMARY REFERENCE**

# PART NUMBER INDEX


| Part | Page |
|---|---|
| 4J-9224 | 385 |
| | 387 |
| 4K-1388 | 422 |
| | 470 |
| | 472 |
| | 474 |
| | 476 |
| | 478 |
| | 480 |
| | 482 |
| 4K-2039 | 500 |
| | 505 |
| | 506 |
| 4K-4986 | 472 |
| | 474 |
| | 476 |
| | 478 |
| | 480 |
| | 482 |
| | 484 |
| 4K-5537 | 263 |
| 4K-6804 | 280 |
| 4K-7463 | 350 |
| 4K-8302 | 230 |
| | 417 |
| 4K-8501 | 336 |
| | 343 |
| | 345 |
| 4K-8864 | 214 |
| | 220 |
| | 227 |
| | 230 |
| 4K-9821 | 103 |
| 4K-9822 | 103 |
| 4L-6499 | 196 |
| 4L-9337 | 383 |
| 4M-0061 | 640 |
| 4M-1831 | 192 |
| 4M-2381 | 310 |
| 4M-5905 | 310 |
| 4M-5912 | 385 |
| | 387 |
| 4M-7945 | 308 |
| 4M-8973 | 103 |
| 4N-7521 | 188 |
| 4P-4369 | 70 |
| 4P-5918 | 7 |
| | 9 |
| | 210 |
| 4P-7428 | 214 |
| | 220 |
| | 227 |
| | 510 |
| 4P-7581 | 186 |
| | 214 |
| | 220 |
| | 227 |
| | 230 |
| | 237 |
| | 254 |
| | 510 |
| 4P-7751 | 213 |
| | 219 |
| | 226 |
| 4P-8134 | 210 |
| | 214 |
| | 220 |
| | 462 |
| 4R-9999 | 58 |
| 4S-1936 | 214 |
| | 227 |
| 4S-1962 | 214 |
| | 220 |
| | 227 |
| | 614 |
| 4S-5816 | 303 |
| 4S-5824 | 274 |
| | 276 |
| | 278 |
| 4S-5898 | 549 |
| 4S-5971 | 256 |
| 4S-8541 | 303 |
| 4S-8598 | 237 |
| | 243 |
| 4S-8603 | 237 |
| | 243 |
| 4T-2723 | 464 |
| | 465 |
| | 467 |
| | 468 |
| 4T-4145 | 447 |
| 4T-4218 | 465 |
| | 467 |
| 4T-4516 | 470 |
| 4T-4520 | 470 |
| 4T-4521 | 470 |
| 4T-4524 | 470 |
| 4T-4528 | 470 |
| 4T-4531 | 472 |
| | 478 |
| | 482 |
| 4T-4533 | 470 |
| 4T-4538 | 464 |
| 4T-5613 | 385 |
| | 387 |
| | 406 |
| | 408 |
| | 410 |
| | 411 |
| 4T-7807 | 470 |
| | 472 |
| | 474 |
| | 476 |
| | 478 |
| | 480 |
| | 482 |
| | 484 |
| | 487 |
| 4T-8054 | 385 |
| | 387 |
| 4V-3962 | 503 |
| | 506 |
| 4V-5392 | 258 |
| 4V-8577 | 637 |
| 4V-9490 | 522 |
| 4V-9497 | 522 |
| 4W-1203 | 34 |
| 4W-1204 | 34 |
| 4W-1413 | 691 |
| | 693 |
| 4W-2042 | 34 |
| 4W-2232 | 72 |
| 4W-2914 | 2 |
| | ▶72 |
| 4W-3462 | 2 |
| | ▶6 |
| 4Y-9652 | 7 |
| | 9 |

## 5

| Part | Page |
|---|---|
| 5B-0935 | 358 |
| 5B-1866 | 63 |
| | 65 |
| 5B-2301 | 263 |
| 5B-9318 | 470 |
| | 472 |
| | 474 |
| | 476 |
| | 478 |
| | 480 |
| | 482 |
| | 484 |
| | 487 |
| 5C-2890 | 195 |
| | 203 |
| | 583 |
| | 584 |
| | 585 |
| | 586 |
| | 637 |
| 5C-7261 | 7 |
| | 9 |
| | 11 |
| | 107 |
| | 214 |
| | 220 |
| | 227 |
| | 263 |
| | 352 |
| | 355 |
| | 604 |
| | 606 |
| | 614 |
| | 682 |
| 5C-8811 | 680 |
| 5C-9553 | 139 |
| | 162 |
| | 203 |
| | 577 |
| | 580 |
| | 682 |
| 5D-1026 | 90 |
| | 614 |
| 5D-1241 | 368 |
| 5D-1242 | 368 |
| | 369 |
| | 370 |
| 5D-5959 | 569 |
| 5D-7449 | 559 |
| 5D-7453 | 559 |
| 5D-7927 | 447 |
| 5D-8269 | 517 |
| 5F-3106 | 438 |
| 5F-3488 | 447 |
| 5F-9144 | 269 |
| 5G-2934 | 624 |
| 5H-2730 | 263 |
| 5H-3252 | 293 |
| 5H-3701 | 280 |
| | 282 |
| 5H-5012 | 280 |
| 5H-6005 | 447 |
| | 472 |
| | 482 |
| 5H-8985 | 501 |
| 5I-8544 | 546 |
| 5J-3886 | 317 |
| 5J-4773 | 521 |
| 5J-6444 | 498 |
| 5J-8775 | 297 |
| 5K-0983 | 350 |
| 5K-0984 | 350 |
| 5K-2294 | 601 |
| 5K-3739 | 688 |
| 5K-5068 | 103 |
| 5K-5338 | 118 |
| | 379 |
| 5K-5959 | 508 |
| 5K-9090 | 265 |
| | 267 |
| | 287 |
| | 289 |
| | 388 |
| | 389 |
| | 391 |
| | 392 |
| | 419 |
| | 420 |
| | 425 |
| | 426 |
| | 429 |
| | 432 |
| | 449 |
| | 450 |
| | 452 |
| | 453 |
| | 455 |
| | 456 |
| | 458 |
| | 459 |
| | 461 |
| | 462 |
| | 470 |
| | 472 |
| | 474 |
| | 476 |
| | 478 |
| | 480 |
| | 482 |
| | 484 |
| 5L-2952 | 68 |
| 5L-3233 | 103 |
| 5L-4751 | 297 |
| 5L-4759 | 242 |
| | 280 |
| | 282 |
| 5L-9018 | 472 |
| | 476 |


▶ PRIMARY REFERENCE

# PART NUMBER INDEX


| Part | Page | Part | Page | Part | Page | Part | Page |
|---|---|---|---|---|---|---|---|
| | 482 | 5P-3119 | 282 | 5P-7469 | 287 | 5P-9436 | 503 |
| 5M-2894 | 465 | 5P-3454 | 203 | | 289 | 5P-9617 | 82 |
| | 467 | 5P-3779 | 365 | | 450 | | 265 |
| | 468 | 5P-4115 | 643 | | 453 | | 267 |
| | 498 | | 648 | | 456 | | 425 |
| | 500 | | 653 | | 459 | 5P-9684 | 472 |
| | 503 | | 657 | | 462 | | 482 |
| | 506 | | 661 | 5P-7701 | 287 | 5P-9806 | 237 |
| | 519 | | 664 | | 289 | | 243 |
| | 530 | | 667 | | 450 | 5P-9909 | 90 |
| | 639 | | 671 | | 453 | 5S-0003 | 472 |
| 5M-3062 | 377 | 5P-4116 | 31 | | 456 | | 474 |
| | 519 | | 263 | | 459 | | 476 |
| | 570 | | 352 | | 462 | | 478 |
| 5M-3154 | 256 | | 355 | 5P-7814 | 167 | | 480 |
| 5M-4987 | 293 | | 614 | 5P-7957 | 690 | | 482 |
| 5M-6214 | 493 | | 627 | 5P-7958 | 202 | | 484 |
| 5P-0072 | 561 | | 678 | | 690 | 5S-0581 | 377 |
| | 564 | 5P-4423 | 637 | 5P-8066 | 73 | 5S-4245 | 203 |
| | 565 | 5P-4536 | 111 | 5P-8196 | 69 | 5S-4246 | 199 |
| 5P-0093 | 493 | | 112 | 5P-8245 | 38 | 5S-4408 | 517 |
| | 494 | 5P-4571 | 202 | | 40 | 5S-6174 | 532 |
| | 495 | | 203 | | 68 | 5S-7349 | 142 |
| 5P-0537 | 237 | 5P-4610 | 580 | | 236 | | 192 |
| | 470 | 5P-5293 | 522 | | 242 | 5S-7382 | 426 |
| | 474 | 5P-5461 | 358 | | 258 | 5S-9062 | 34 |
| | 480 | 5P-5463 | 358 | | 260 | 5V-1474 | 643 |
| 5P-0747 | 146 | 5P-5623 | 213 | | 274 | | 648 |
| | 149 | | 219 | | 276 | | 653 |
| | 190 | | 226 | | 278 | | 657 |
| 5P-0760 | 230 | 5P-5630 | 103 | 5P-8247 | 23 | | 661 |
| 5P-0761 | 146 | | 186 | | 142 | | 664 |
| | 149 | 5P-5637 | 578 | | 237 | | 667 |
| 5P-0765 | 213 | | 580 | | 258 | | 671 |
| | 219 | 5P-5672 | 580 | | 260 | 5V-2545 | 517 |
| 5P-0767 | 90 | 5P-5924 | 615 | | 270 | 5V-3854 | 336 |
| | 615 | 5P-6010 | 637 | | 272 | | 343 |
| 5P-1076 | 265 | 5P-6129 | 577 | | 280 | | 345 |
| | 267 | 5P-6300 | 530 | | 282 | 5V-6380 | 359 |
| | 332 | 5P-6414 | 303 | 5P-8248 | 521 | 5W-2817 | 559 |
| | 333 | 5P-6872 | 617 | 5P-8249 | 291 | 5Y-0254 | 396 |
| | 334 | 5P-6944 | 374 | 5P-8250 | 519 | | |
| | 336 | | 376 | 5P-8347 | 82 | | |
| | 339 | | 388 | | 84 | | |
| | 341 | | 391 | | 237 | | |
| | 347 | 5P-7070 | 578 | | 243 | 6A-5591 | 236 |
| | 352 | 5P-7111 | 577 | | 317 | | 242 |
| | 355 | | 675 | 5P-8394 | 162 | 6A-8024 | 624 |
| | 360 | 5P-7464 | 450 | 5P-8428 | 258 | 6B-4370 | 272 |
| | 438 | | 453 | | 260 | | 280 |
| | 522 | | 456 | 5P-8441 | 577 | 6B-4540 | 203 |
| | 528 | | 459 | | 580 | 6B-6682 | 370 |
| | 535 | | 462 | 5P-8444 | 289 | 6C-3060 | 139 |
| | 544 | 5P-7465 | 450 | 5P-8500 | 690 | 6D-1641 | 614 |
| | 556 | | 453 | 5P-9297 | 450 | 6D-4244 | 214 |
| | 558 | | 456 | | 453 | | 220 |
| | 697 | | 459 | | 456 | | 227 |
| 5P-1175 | 691 | | 462 | | 459 | 6D-4246 | 542 |
| | 693 | 5P-7468 | 287 | | 462 | 6D-4247 | 120 |
| 5P-1256 | 263 | | 289 | 5P-9299 | 90 | | 405 |
| 5P-1606 | 280 | | 450 | | 450 | 6D-5364 | 136 |
| 5P-1610 | 522 | | 453 | | 453 | 6D-5974 | 383 |
| | 558 | | 456 | | 456 | | 601 |
| 5P-2948 | 103 | | 459 | | 459 | 6D-8305 | 377 |
| 5P-2949 | 103 | | 462 | | 462 | 6E-0358 | 470 |


6

► **PRIMARY REFERENCE**

# PART NUMBER INDEX


| Part | Page |
|---|---|
| | 474 |
| | 476 |
| | 480 |
| 6E-0381 | 469 |
| 6E-1497 | 385 |
| | 387 |
| 6E-3772 | 385 |
| | 387 |
| 6E-4224 | 442 |
| 6E-4228 | 488 |
| 6E-4230 | 488 |
| 6E-4239 | 488 |
| 6E-4241 | 488 |
| 6E-4242 | 488 |
| 6E-4246 | 488 |
| 6E-4317 | 470 |
| | 472 |
| | 474 |
| | 476 |
| | 478 |
| | 480 |
| | 482 |
| | 484 |
| 6E-4318 | 488 |
| 6E-4974 | 385 |
| | 387 |
| 6E-4977 | 412 |
| 6E-5066 | 437 |
| 6E-6140 | 488 |
| 6E-6141 | 488 |
| 6E-6142 | 488 |
| 6E-6419 | 488 |
| 6E-6420 | 488 |
| 6E-6594 | 442 |
| 6E-6596 | 442 |
| 6E-6597 | 442 |
| 6E-6598 | 442 |
| 6E-6599 | 442 |
| 6E-6600 | 442 |
| 6E-6601 | 442 |
| 6E-6602 | 442 |
| 6E-6603 | 442 |
| 6E-6604 | 444 |
| 6E-6605 | 444 |
| 6F-6405 | 335 |
| 6F-7045 | 194 |
| 6F-7062 | 53 |
| | 93 |
| 6H-9361 | 447 |
| 6I-1418 | 202 |
| 6I-8030 | 234 |
| 6I-8723 | ▶312 |
| | 315 |
| 6I-9269 | 293 |
| 6I-9395 | 308 |
| 6J-2797 | 406 |
| | 408 |
| | 410 |
| | 411 |
| | 412 |
| 6J-3473 | 508 |
| 6J-5541 | 516 |
| 6K-2430 | 297 |
| 6K-9194 | 540 |
| 6L-2609 | 68 |
| 6M-5062 | 420 |
| 6N-3827 | 192 |
| 6N-6984 | 336 |
| | 592 |
| 6N-7523 | 210 |
| 6P-4975 | 93 |
| 6T-1847 | 146 |
| | 149 |
| 6T-2815 | 280 |
| 6T-3631 | 213 |
| | 219 |
| | 226 |
| 6T-3632 | 213 |
| | 219 |
| | 226 |
| 6T-3633 | 213 |
| | 219 |
| | 226 |
| 6T-3644 | 162 |
| 6T-6708 | 166 |
| | 577 |
| 6T-7695 | 612 |
| 6U-1989 | 505 |
| 6V-0292 | 648 |
| | 657 |
| | 664 |
| | 671 |
| 6V-0484 | 315 |
| 6V-0545 | 450 |
| | 453 |
| | 456 |
| | 459 |
| | 462 |
| 6V-0852 | 237 |
| | 254 |
| | 285 |
| | 287 |
| | 289 |
| | 310 |
| | 315 |
| | 317 |
| | 376 |
| | 379 |
| | 388 |
| | 391 |
| | 425 |
| | 429 |
| | 432 |
| | 435 |
| | 541 |
| | 546 |
| 6V-1625 | 388 |
| | 391 |
| 6V-1668 | 166 |
| | 577 |
| 6V-1720 | 236 |
| | 242 |
| 6V-1722 | 420 |
| | 426 |
| 6V-1820 | 236 |
| | 242 |
| | 303 |
| 6V-1867 | 430 |
| | 433 |
| 6V-1868 | 430 |
| | 433 |
| 6V-1869 | 430 |
| | 433 |
| 6V-1874 | 450 |
| | 453 |
| | 456 |
| | 459 |
| | 462 |
| 6V-1889 | 389 |
| | 392 |
| | 544 |
| 6V-1971 | 1 |
| | ▶690 |
| 6V-2200 | 506 |
| 6V-2317 | 7 |
| | 9 |
| | 11 |
| | 37 |
| | 69 |
| | 210 |
| | 254 |
| 6V-2394 | 248 |
| | 250 |
| | 252 |
| 6V-2496 | 578 |
| | 580 |
| 6V-2722 | 152 |
| 6V-3250 | 82 |
| 6V-3265 | 542 |
| | 597 |
| | 599 |
| 6V-3538 | 6 |
| | 22 |
| 6V-3545 | 372 |
| 6V-3668 | 236 |
| | 242 |
| | 256 |
| | 258 |
| | 260 |
| | 274 |
| | 276 |
| | 278 |
| | 338 |
| 6V-3821 | 237 |
| | 254 |
| 6V-3822 | 72 |
| | 122 |
| | 124 |
| | 303 |
| 6V-3823 | 296 |
| 6V-3834 | 442 |
| 6V-3918 | 44 |
| | 51 |
| | 87 |
| | 237 |
| 6V-3940 | 5 |
| | 6 |
| | 52 |
| | 72 |
| | 80 |
| | 82 |
| | 84 |
| | 167 |
| | 310 |
| | 517 |
| 6V-3965 | 285 |
| | 287 |
| | 289 |
| | 309 |
| | 310 |
| | 315 |
| | 376 |
| | 389 |
| | 392 |
| | 425 |
| | 429 |
| | 432 |
| | 435 |
| | 542 |
| | 547 |
| 6V-4248 | 72 |
| | 74 |
| | 236 |
| | 242 |
| | 303 |
| 6V-4249 | 36 |
| | 274 |
| 6V-4356 | 614 |
| 6V-4357 | 614 |
| 6V-4589 | 198 |
| 6V-5002 | 528 |
| 6V-5003 | 528 |
| 6V-5048 | 28 |
| | 122 |
| | 124 |
| | 167 |
| | 172 |
| | 173 |
| 6V-5049 | 122 |
| | 124 |
| | 135 |
| | 167 |
| | 171 |
| | 265 |
| | 267 |
| | 287 |
| | 289 |
| | 420 |
| 6V-5063 | 93 |
| 6V-5195 | 315 |
| 6V-5215 | 254 |
| 6V-5217 | 44 |
| | 236 |
| | 242 |
| 6V-5218 | 236 |
| | 242 |
| | 310 |
| 6V-5219 | 76 |
| 6V-5221 | 100 |
| | 317 |
| 6V-5223 | 82 |
| | 84 |
| | 237 |
| | 254 |
| 6V-5386 | 90 |
| 6V-5538 | ▶188 |
| | 191 |
| 6V-5683 | 399 |
| | 401 |
| | 597 |


▶ PRIMARY REFERENCE

# PART NUMBER INDEX


| Part | Page | Part | Page | Part | Page | Part | Page |
|---|---|---|---|---|---|---|---|
| | 599 | | 282 | | 452 | 6V-8624 . . . . . | 544 |
| 6V-5686 . . . . . | 280 | 6V-7744 . . . . . | 447 | | 453 | 6V-8625 . . . . . | 237 |
| | 282 | | 643 | | 455 | | 243 |
| 6V-5696 . . . . . | 61 | | 648 | | 456 | | 419 |
| | 62 | | 653 | | 458 | | 426 |
| | 274 | | 657 | | 459 | | 449 |
| | 276 | | 661 | | 461 | | 452 |
| | 278 | | 664 | | 462 | | 455 |
| 6V-5698 . . . . . | 7 | | 667 | | 541 | | 458 |
| | 9 | | 671 | | 544 | | 461 |
| 6V-5722 . . . . . | 465 | 6V-7981 . . . . . | 127 | | 546 | 6V-8626 . . . . . | 422 |
| | 467 | 6V-7991 . . . . . | 274 | | 597 | 6V-8633 . . . . . | 394 |
| | 472 | | 276 | | 599 | | 419 |
| | 476 | | 278 | | 688 | 6V-8634 . . . . . | 374 |
| | 478 | 6V-8004 . . . . . | 34 | 6V-8398 . . . . . | 118 | | 376 |
| | 482 | | 442 | | 120 | 6V-8635 . . . . . | 265 |
| | 484 | 6V-8076 . . . . . | 425 | | 136 | | 267 |
| 6V-5758 . . . . . | 420 | 6V-8128 . . . . . | 303 | | 237 | | 287 |
| 6V-5815 . . . . . | 77 | 6V-8149 . . . . . | 68 | | 243 | | 289 |
| 6V-5839 . . . . . | 29 | 6V-8154 . . . . . | 280 | | 376 | | 388 |
| | 72 | 6V-8182 . . . . . | 368 | | 377 | | 391 |
| | 74 | | 369 | | 379 | | 429 |
| | 77 | 6V-8187 . . . . . | 162 | | 388 | | 432 |
| | 122 | 6V-8188 . . . . . | 188 | | 389 | 6V-8636 . . . . . | 74 |
| | 124 | | 192 | | 391 | | 122 |
| | 127 | 6V-8189 . . . . . | 142 | | 392 | | 124 |
| | 274 | | 149 | | 394 | | 126 |
| | 276 | 6V-8200 . . . . . | 516 | | 405 | | 285 |
| | 278 | 6V-8201 . . . . . | 274 | | 417 | | 376 |
| | 303 | | 276 | | 419 | | 419 |
| | 426 | | 278 | | 420 | | 429 |
| | 447 | 6V-8212 . . . . . | 236 | | 425 | | 432 |
| | 601 | | 256 | | 426 | | 449 |
| 6V-5842 . . . . . | 43 | | 315 | | 429 | | 452 |
| | 236 | 6V-8214 . . . . . | 442 | | 430 | | 455 |
| | 242 | 6V-8336 . . . . . | 38 | | 432 | | 458 |
| | 293 | | 68 | | 433 | | 461 |
| 6V-5843 . . . . . | 41 | 6V-8337 . . . . . | 442 | | 449 | | 544 |
| | 276 | 6V-8376 . . . . . | 162 | | 450 | | 546 |
| | 278 | 6V-8378 . . . . . | 192 | | 452 | | 597 |
| 6V-5849 . . . . . | 682 | | 196 | | 453 | | 599 |
| 6V-6228 . . . . . | 236 | | 212 | | 455 | 6V-8637 . . . . . | 388 |
| 6V-6317 . . . . . | 236 | 6V-8397 . . . . . | 73 | | 456 | | 391 |
| | 242 | | 74 | | 458 | | 435 |
| | 256 | | 118 | | 459 | | 541 |
| 6V-6563 . . . . . | 349 | | 120 | | 461 | | 546 |
| 6V-6609 . . . . . | 82 | | 122 | | 462 | 6V-8638 . . . . . | 118 |
| | 184 | | 124 | | 541 | | 120 |
| | 185 | | 285 | | 544 | | 544 |
| 6V-6717 . . . . . | 675 | | 367 | | 546 | 6V-8639 . . . . . | 118 |
| 6V-7238 . . . . . | 445 | | 374 | | 547 | | 120 |
| | 614 | | 376 | | 688 | | 136 |
| 6V-7357 . . . . . | 680 | | 377 | 6V-8400 . . . . . | 425 | | 237 |
| 6V-7359 . . . . . | 450 | | 379 | | 426 | | 243 |
| | 453 | | 419 | | 450 | | 376 |
| | 456 | | 420 | | 453 | | 419 |
| | 459 | | 425 | | 455 | 6V-8640 . . . . . | 417 |
| | 462 | | 426 | | 456 | 6V-8713 . . . . . | 394 |
| 6V-7420 . . . . . | 388 | | 429 | | 458 | | 417 |
| | 391 | | 430 | | 459 | | 422 |
| 6V-7636 . . . . . | 604 | | 432 | | 461 | 6V-8714 . . . . . | 419 |
| | 606 | | 433 | | 462 | 6V-8721 . . . . . | 118 |
| 6V-7673 . . . . . | 303 | | 435 | 6V-8554 . . . . . | 379 | | 120 |
| 6V-7700 . . . . . | 557 | | 449 | | 389 | | 388 |
| 6V-7732 . . . . . | 280 | | 450 | | 392 | | 391 |


► **PRIMARY REFERENCE**

# PART NUMBER INDEX


| Part | Page | Part | Page | Part | Page | Part | Page |
|---|---|---|---|---|---|---|---|
| | 417 | 6V-9006 . . . . . | 450 | | 338 | 6V-9853 . . . . . | 422 |
| | 429 | | 453 | | 372 | 6V-9854 . . . . . | 265 |
| | 432 | | 456 | | 541 | | 267 |
| 6V-8723 . . . . . | 124 | | 459 | | 577 | | 388 |
| | 377 | | 462 | | 604 | | 391 |
| | 420 | 6V-9007 . . . . . | 388 | | 606 | | 419 |
| | 429 | | 391 | | 643 | | 426 |
| | 432 | | 541 | | 648 | 6V-9872 . . . . . | 429 |
| | 544 | | 544 | | 657 | | 432 |
| 6V-8724 . . . . . | 73 | | 546 | | 661 | | 449 |
| | 74 | 6V-9008 . . . . . | 265 | | 664 | | 452 |
| | 118 | | 287 | | 671 | | 455 |
| | 120 | | 289 | 6V-9746 . . . . . | 388 | | 458 |
| | 285 | | 450 | | 391 | | 461 |
| | 374 | | 453 | | 417 | 6V-9873 . . . . . | 377 |
| | 379 | | 456 | | 420 | | 430 |
| | 541 | | 459 | | 422 | | 433 |
| | 546 | | 462 | | 435 | | 541 |
| | 688 | 6V-9009 . . . . . | 426 | | 541 | 6V-9876 . . . . . | 285 |
| 6V-8774 . . . . . | 379 | 6V-9023 . . . . . | 162 | | 544 | | 376 |
| 6V-8781 . . . . . | 379 | | 212 | | 546 | | 379 |
| | 541 | 6V-9027 . . . . . | 45 | | 547 | 6W-1638 . . . . . | 270 |
| 6V-8782 . . . . . | 405 | | 82 | 6V-9748 . . . . . | 34 | 6Y-0373 . . . . . | 252 |
| 6V-8801 . . . . . | 161 | | 614 | 6V-9804 . . . . . | 31 | 6Y-0809 . . . . . | 237 |
| | 464 | 6V-9160 . . . . . | 422 | 6V-9829 . . . . . | 416 | | 243 |
| 6V-8837 . . . . . | 237 | 6V-9168 . . . . . | 285 | | 544 | 6Y-0869 . . . . . | 236 |
| 6V-8926 . . . . . | 388 | | 420 | 6V-9830 . . . . . | 416 | | 242 |
| | 391 | | 430 | 6V-9836 . . . . . | 377 | 6Y-0871 . . . . . | 312 |
| | 425 | | 433 | | 449 | 6Y-1089 . . . . . | 303 |
| 6V-8943 . . . . . | 422 | | 450 | | 452 | 6Y-1090 . . . . . | 303 |
| 6V-8980 . . . . . | 597 | | 453 | 6V-9837 . . . . . | 136 | 6Y-1758 . . . . . | 252 |
| | 599 | | 456 | | 389 | 6Y-1763 . . . . . | 312 |
| 6V-8981 . . . . . | 688 | | 459 | | 392 | 6Y-2522 . . . . . | 315 |
| 6V-8984 . . . . . | 389 | | 462 | | 541 | 6Y-2538 . . . . . | 282 |
| | 392 | | 597 | | 546 | 6Y-2546 . . . . . | 280 |
| 6V-8987 . . . . . | 419 | | 599 | 6V-9843 . . . . . | 285 | 6Y-2547 . . . . . | 280 |
| | 449 | 6V-9169 . . . . . | 379 | | 377 | 6Y-2584 . . . . . | 315 |
| | 452 | | 394 | | 379 | 6Y-2982 . . . . . | 303 |
| | 455 | | 417 | | 430 | 6Y-4620 . . . . . | 293 |
| | 458 | | 450 | | 432 | 6Y-4638 . . . . . | 312 |
| | 461 | | 453 | 6V-9844 . . . . . | 389 | 6Y-4873 . . . . . | 274 |
| | 597 | | 456 | | 392 | | 276 |
| | 599 | | 459 | | 420 | | 278 |
| 6V-8994 . . . . . | 450 | | 462 | 6V-9850 . . . . . | 285 | 6Y-5632 . . . . . | 252 |
| | 453 | | 688 | | 377 | 6Y-6584 . . . . . | 202 |
| | 455 | 6V-9170 . . . . . | 417 | | 379 | | 230 |
| | 458 | 6V-9172 . . . . . | 389 | | 429 | 6Y-7582 . . . . . | 307 |
| | 462 | | 392 | | 432 | 6Y-7621 . . . . . | 307 |
| 6V-8995 . . . . . | 449 | | 450 | | 449 | 6Y-7623 . . . . . | 315 |
| | 452 | | 453 | | 452 | 6Y-7951 . . . . . | 303 |
| | 455 | | 456 | | 455 | 6Y-7954 . . . . . | 258 |
| | 458 | | 459 | | 458 | | 260 |
| | 462 | | 462 | | 461 | 6Y-8265 . . . . . | 248 |
| | 688 | 6V-9182 . . . . . | 422 | | 544 | | 250 |
| 6V-8996 . . . . . | 417 | | 541 | 6V-9851 . . . . . | 118 | | 252 |
| 6V-8997 . . . . . | 503 | | 546 | | 120 | 6Y-8278 . . . . . | 250 |
| | 547 | 6V-9186 . . . . . | 212 | | 377 | 6Y-8285 . . . . . | 248 |
| 6V-8998 . . . . . | 450 | 6V-9200 . . . . . | 597 | | 392 | | 250 |
| | 453 | | 599 | | 420 | | 252 |
| | 456 | 6V-9350 . . . . . | 417 | | 426 | 6Y-8286 . . . . . | 252 |
| | 459 | 6V-9352 . . . . . | 394 | | 449 | 6Y-8288 . . . . . | 252 |
| | 462 | 6V-9353 . . . . . | 394 | | 452 | 6Y-8289 . . . . . | 252 |
| 6V-9001 . . . . . | 426 | 6V-9509 . . . . . | 136 | | 688 | 6Y-8293 . . . . . | 274 |
| 6V-9002 . . . . . | 426 | 6V-9510 . . . . . | 445 | 6V-9852 . . . . . | 417 | | 276 |
| 6V-9005 . . . . . | 455 | 6V-9632 . . . . . | 202 | | 422 | | 278 |

# PART NUMBER INDEX


| Part | Page |
|---|---|
| 6Y-8512 | 248 |
| | 250 |
| | 252 |
| 6Y-8514 | 248 |
| | 250 |
| | 252 |
| 6Y-9692 | 315 |
| 6Y-9960 | 619 |
| **7** | |
| 7B-3028 | 310 |
| 7B-7525 | 549 |
| 7C-0714 | 68 |
| 7C-1113 | 256 |
| 7C-1445 | 11 |
| 7C-1493 | 69 |
| 7C-1675 | 60 |
| 7C-1770 | 2 |
| | ▶59 |
| 7C-4354 | 74 |
| | 265 |
| | 267 |
| | 450 |
| | 453 |
| | 456 |
| | 459 |
| | 462 |
| 7C-6670 | 111 |
| 7C-6672 | 111 |
| 7C-6921 | 265 |
| | 267 |
| 7C-6976 | 52 |
| 7C-6977 | 52 |
| 7C-7431 | 110 |
| | 113 |
| 7C-7980 | 16 |
| | 18 |
| | 20 |
| 7C-8369 | 34 |
| 7C-8370 | 34 |
| 7C-8634 | 34 |
| 7D-1728 | 103 |
| 7D-8185 | 258 |
| | 260 |
| 7E-0711 | 40 |
| 7E-0712 | 2 |
| | ▶40 |
| 7E-0759 | 82 |
| | 84 |
| 7E-2968 | 23 |
| 7E-6794 | 46 |
| 7E-7779 | 27 |
| 7E-8630 | 105 |
| 7F-0560 | 146 |
| | 152 |
| 7F-8268 | 256 |
| 7F-8607 | 470 |
| 7F-9571 | 368 |
| | 369 |
| | 370 |
| 7F-9572 | 368 |
| | 369 |
| | 370 |
| 7F-9578 | 368 |
| | 369 |
| | 370 |
| 7F-9579 | 368 |
| | 369 |
| | 370 |
| 7G-1831 | 535 |
| 7G-2132 | 256 |
| 7G-5984 | 287 |
| | 289 |
| 7G-5985 | 287 |
| | 289 |
| 7G-7053 | 622 |
| 7G-8430 | 303 |
| 7G-8839 | 326 |
| | 350 |
| 7H-1447 | 447 |
| 7H-4543 | 503 |
| 7H-7107 | 236 |
| | 242 |
| 7I-2272 | 230 |
| 7I-3759 | 367 |
| 7I-8479 | 383 |
| 7J-0204 | 28 |
| | 214 |
| | 220 |
| | 227 |
| | 280 |
| | 282 |
| | 317 |
| | 470 |
| | 472 |
| | 474 |
| | 476 |
| | 478 |
| | 480 |
| | 482 |
| | 484 |
| | 487 |
| 7J-3554 | 256 |
| 7J-8209 | 236 |
| | 242 |
| 7J-8210 | 284 |
| 7J-9108 | 394 |
| | 417 |
| | 422 |
| | 445 |
| | 500 |
| | 572 |
| 7J-9884 | 524 |
| | 525 |
| 7J-9885 | 385 |
| | 387 |
| 7K-1181 | 162 |
| | 186 |
| | 203 |
| | 214 |
| | 220 |
| | 227 |
| | 230 |
| | 510 |
| 7K-4129 | 540 |
| 7K-5448 | 506 |
| | 517 |
| | 530 |
| 7K-5449 | 506 |
| | 517 |
| | 530 |
| 7L-2894 | 192 |
| 7L-9061 | 198 |
| | 442 |
| 7M-3361 | 203 |
| 7M-6492 | 360 |
| 7M-8485 | 242 |
| | 256 |
| | 262 |
| | 265 |
| | 267 |
| | 280 |
| | 282 |
| | 287 |
| | 289 |
| | 312 |
| | 388 |
| | 389 |
| | 391 |
| | 392 |
| | 422 |
| | 425 |
| | 426 |
| | 429 |
| | 432 |
| | 449 |
| | 450 |
| | 452 |
| | 453 |
| | 455 |
| | 456 |
| | 458 |
| | 459 |
| | 461 |
| | 503 |
| | 541 |
| | 546 |
| | 566 |
| | 688 |
| 7M-9918 | 111 |
| | 112 |
| 7N-0718 | 146 |
| | 149 |
| | ▶194 |
| 7N-2059 | 186 |
| 7N-5683 | 22 |
| 7N-9801 | 201 |
| 7P-2288 | 350 |
| 7S-1197 | 612 |
| 7T-1099 | 159 |
| | 321 |
| | 323 |
| | 461 |
| 7T-3267 | 192 |
| 7T-3268 | 192 |
| 7T-3271 | 192 |
| 7T-3276 | 192 |
| 7T-3277 | 192 |
| 7T-3278 | 192 |
| 7T-3279 | 192 |
| 7T-3451 | 192 |
| 7T-3454 | 192 |
| 7T-3974 | 192 |
| 7T-4515 | 314 |
| 7T-4532 | 591 |
| 7T-4567 | 166 |
| 7T-6653 | 530 |
| 7T-6799 | 202 |
| 7T-7388 | 203 |
| 7T-7679 | 312 |
| 7T-8272 | 442 |
| 7T-8273 | 442 |
| 7T-8682 | 250 |
| 7T-8797 | 312 |
| 7T-8803 | 312 |
| 7T-8810 | 315 |
| 7T-8836 | 284 |
| 7T-8890 | 642 |
| 7T-9793 | 577 |
| 7U-4898 | 635 |
| | 636 |
| 7V-8632 | 350 |
| 7V-8633 | 350 |
| 7W-3871 | 7 |
| 7W-3872 | 7 |
| | 9 |
| 7W-5095 | 40 |
| 7W-5340 | 72 |
| 7W-5341 | 72 |
| 7W-8327 | 361 |
| 7W-8798 | 2 |
| | ▶68 |
| 7W-9737 | 78 |
| 7W-9738 | 78 |
| 7W-9740 | 78 |
| 7W-9930 | 78 |
| 7X-0290 | 500 |
| 7X-0325 | 426 |
| 7X-0338 | 144 |
| 7X-0510 | 60 |
| 7X-0515 | 331 |
| | 335 |
| | 341 |
| | 360 |
| 7X-0555 | 361 |
| 7X-0562 | 188 |
| | 192 |
| 7X-0579 | 95 |
| 7X-0583 | 331 |
| 7X-0590 | 338 |
| 7X-0608 | 161 |
| 7X-0613 | 203 |
| 7X-0620 | 196 |
| 7X-0818 | 81 |
| | 203 |
| 7X-0820 | 285 |
| | 430 |
| | 433 |
| 7X-0870 | 237 |
| 7X-0873 | 435 |
| 7X-2049 | 614 |
| 7X-2454 | 550 |
| 7X-2459 | 376 |
| | 425 |
| 7X-2465 | 297 |
| 7X-2489 | 553 |
| 7X-2532 | 49 |
| 7X-2537 | 74 |


▶ **PRIMARY REFERENCE**

# PART NUMBER INDEX


| Part | Page |
|---|---|
| | 95 |
| | 220 |
| | 627 |
| | 629 |
| 7X-2538 | 590 |
| 7X-2539 | 133 |
| 7X-2550 | 350 |
| 7X-2552 | 450 |
| | 453 |
| | 456 |
| | 459 |
| | 462 |
| | 497 |
| | 526 |
| 7X-2553 | 331 |
| | 335 |
| | 360 |
| | 361 |
| | 517 |
| 7X-2557 | 361 |
| 7X-2562 | 297 |
| | 332 |
| | 556 |
| 7X-2563 | 331 |
| 7X-2564 | 361 |
| 7X-2567 | 552 |
| 7X-2575 | 552 |
| | 553 |
| 7X-2577 | 526 |
| 7X-2581 | 550 |
| 7X-2583 | 552 |
| 7X-3332 | 154 |
| | 612 |
| 7X-3343 | 294 |
| 7X-3350 | 40 |
| 7X-3373 | 192 |
| 7X-6222 | 203 |
| 7X-7644 | 691 |
| | 693 |
| 7X-7700 | 139 |
| 7X-7729 | 95 |
| | 103 |
| | 136 |
| | 336 |
| | 339 |
| | 343 |
| | 345 |
| | 352 |
| | 355 |
| | 394 |
| | 397 |
| | 417 |
| | 535 |
| | 536 |
| | 601 |
| | 603 |
| | 610 |
| | 611 |
| | 643 |
| | 648 |
| | 653 |
| | 657 |
| | 661 |
| | 664 |
| | 667 |
| | 671 |
| 7X-7740 | 524 |
| | 525 |
| 7Y-3474 | 680 |
| 7Y-3731 | 287 |
| | 289 |
| 7Y-5231 | 349 |
| 7Y-7365 | 680 |
| 7Y-8169 | 203 |

## 8

| Part | Page |
|---|---|
| 8B-2377 | 470 |
| 8B-4884 | 358 |
| 8B-6342 | 282 |
| 8B-6343 | 282 |
| 8C-0563 | 26 |
| 8C-3056 | 162 |
| 8C-3086 | 498 |
| 8C-3089 | 430 |
| | 433 |
| 8C-3093 | 287 |
| | 289 |
| | 450 |
| | 453 |
| | 456 |
| | 459 |
| | 462 |
| 8C-3290 | 49 |
| 8C-3334 | 237 |
| 8C-3445 | 69 |
| 8C-3446 | 69 |
| | 265 |
| | 267 |
| | 425 |
| 8C-3447 | 265 |
| | 267 |
| 8C-3451 | 426 |
| 8C-3654 | 577 |
| | 580 |
| 8C-3655 | 192 |
| 8C-3681 | 90 |
| 8C-3979 | 252 |
| 8C-4436 | 426 |
| 8C-5176 | 236 |
| | 315 |
| 8C-5723 | 426 |
| | 449 |
| | 452 |
| | 458 |
| 8C-5898 | 691 |
| | 693 |
| 8C-6354 | 202 |
| 8C-6358 | 146 |
| | 152 |
| 8C-6416 | 379 |
| | 388 |
| | 391 |
| 8C-6855 | 60 |
| 8C-6959 | 118 |
| | 120 |
| 8C-7325 | 614 |
| 8C-7562 | 258 |
| | 260 |
| 8C-8451 | 547 |
| 8C-8550 | 252 |
| 8C-8585 | 617 |
| | 678 |
| 8C-8988 | 374 |
| | 379 |
| | 429 |
| | 455 |
| | 458 |
| | 462 |
| | 541 |
| | 546 |
| 8C-8989 | 389 |
| | 392 |
| | 420 |
| | 430 |
| | 433 |
| | 462 |
| | 547 |
| 8C-9160 | 406 |
| | 408 |
| | 410 |
| | 411 |
| | 412 |
| 8C-9660 | 203 |
| 8D-1470 | 203 |
| 8E-1118 | 612 |
| 8E-1139 | 312 |
| 8E-1142 | 312 |
| 8E-1143 | 310 |
| | 312 |
| 8E-1279 | 252 |
| 8E-3416 | 248 |
| | 250 |
| | 252 |
| 8E-3433 | 252 |
| 8E-3435 | 248 |
| 8E-3674 | 312 |
| 8E-3675 | 312 |
| 8E-4884 | 307 |
| 8E-4958 | 307 |
| 8E-4959 | 307 |
| 8E-5247 | 303 |
| 8E-5261 | 236 |
| | 242 |
| 8E-5380 | 236 |
| | 242 |
| 8E-5523 | ▶307 |
| | 315 |
| 8E-5735 | 252 |
| 8E-5737 | 252 |
| 8E-5742 | 252 |
| 8E-5818 | 497 |
| 8E-6051 | 307 |
| 8E-6648 | 303 |
| 8E-8317 | 248 |
| | 250 |
| | 252 |
| 8E-8321 | 252 |
| 8E-8652 | 252 |
| 8E-8653 | 250 |
| 8E-8654 | 248 |
| | 250 |
| | 252 |
| 8E-9254 | 236 |
| | 242 |
| 8E-9377 | 521 |
| 8E-9550 | 274 |
| | 276 |
| | 278 |
| 8E-9972 | 303 |
| 8F-1434 | 188 |
| | 192 |
| | 196 |
| | 212 |
| 8F-4452 | 272 |
| 8F-7219 | 442 |
| 8F-8151 | 90 |
| 8F-9516 | 498 |
| 8G-4513 | 297 |
| 8H-0707 | 474 |
| | 480 |
| 8H-1141 | 192 |
| 8H-2046 | 67 |
| 8H-5244 | 63 |
| | 65 |
| 8H-5303 | 194 |
| 8H-5306 | 194 |
| 8H-7521 | 237 |
| | 243 |
| | 406 |
| | 408 |
| | 410 |
| | 411 |
| 8J-0278 | 412 |
| | 497 |
| 8J-1665 | 447 |
| 8J-2283 | 312 |
| 8J-7424 | 297 |
| 8J-9823 | 528 |
| 8K-1207 | 258 |
| | 260 |
| 8K-1433 | 612 |
| 8K-8518 | 517 |
| 8K-9176 | 417 |
| 8L-2786 | 69 |
| | 122 |
| | 124 |
| | 182 |
| | 183 |
| | 186 |
| 8L-5008 | 358 |
| 8L-8413 | 637 |
| 8M-2769 | 214 |
| | 220 |
| | 227 |
| 8M-2770 | 614 |
| 8M-2773 | 118 |
| | 120 |
| | 122 |
| | 124 |
| | 214 |
| | 227 |
| | 285 |
| | 433 |
| | 614 |
| 8M-4791 | 530 |
| 8M-4986 | 505 |
| 8M-5251 | 254 |
| 8M-5253 | 310 |


▶ PRIMARY REFERENCE

# PART NUMBER INDEX


| Part | Page | Part | Page | Part | Page | Part | Page |
|---|---|---|---|---|---|---|---|
| 8M-5860 | 26 | | 282 | | 323 | | 120 |
| 8N-0869 | 146 | 8T-0341 | 237 | | 331 | | 122 |
| | 149 | | 243 | | 333 | | 124 |
| | 163 | 8T-0372 | 274 | | 336 | | 136 |
| | 165 | | 276 | | 339 | | 139 |
| | 230 | | 278 | | 343 | | 144 |
| 8N-1517 | 163 | | 280 | | 345 | | 146 |
| 8N-1518 | 214 | | 282 | | 372 | | 149 |
| | 220 | | 296 | | 374 | | 156 |
| | 226 | | 442 | | 397 | | 158 |
| 8N-1521 | 163 | 8T-0375 | 270 | | 461 | | 159 |
| | 214 | | 272 | | 535 | | 165 |
| | 220 | 8T-0389 | 88 | | 541 | | 188 |
| | 226 | | 136 | | 552 | | 190 |
| 8N-1523 | 163 | | 156 | | 590 | | 203 |
| 8N-2694 | 103 | | 601 | | 604 | | 214 |
| 8N-6854 | 31 | 8T-0404 | 422 | | 606 | | 220 |
| 8P-0346 | 307 | 8T-0643 | 237 | | 610 | | 227 |
| 8P-7857 | 303 | | 242 | | 611 | | 230 |
| 8P-7858 | 303 | 8T-0644 | 86 | | 621 | | 237 |
| 8P-9770 | 497 | 8T-0650 | 258 | | 687 | | 256 |
| 8R-0931 | 280 | | 260 | | 697 | | 263 |
| 8R-0932 | 280 | 8T-0853 | 688 | 8T-3504 | 604 | | 265 |
| 8R-0934 | 272 | 8T-1159 | 126 | | 606 | | 267 |
| 8R-0935 | 272 | | 601 | 8T-3518 | 146 | | 285 |
| 8R-1774 | ▶642 | 8T-1715 | 614 | | 152 | | 287 |
| | 680 | 8T-1779 | 435 | 8T-3519 | 152 | | 289 |
| 8R-2991 | 417 | 8T-1810 | 417 | 8T-3597 | 321 | | 319 |
| 8R-5011 | 697 | 8T-1885 | 389 | | 323 | | 333 |
| 8R-5846 | 190 | | 392 | | 336 | | 334 |
| 8R-7752 | 517 | 8T-1886 | 389 | | 352 | | 336 |
| 8R-7756 | 517 | | 392 | | 355 | | 343 |
| 8R-7783 | 321 | 8T-1899 | 136 | | 621 | | 345 |
| | 323 | 8T-1900 | 136 | 8T-3612 | 627 | | 352 |
| 8S-0768 | 237 | 8T-2275 | 447 | | 629 | | 355 |
| | 254 | 8T-2353 | 167 | | 680 | | 358 |
| | 317 | 8T-2360 | 470 | 8T-3635 | 321 | | 367 |
| 8S-2332 | 190 | | 472 | | 323 | | 372 |
| 8S-2634 | 165 | | 474 | 8T-3666 | 30 | | 374 |
| 8S-7803 | 640 | | 476 | 8T-3851 | 321 | | 377 |
| 8T-0100 | 11 | | 478 | | 323 | | 379 |
| | 35 | | 480 | | 329 | | 383 |
| | 37 | | 482 | | 330 | | 389 |
| | 61 | | 484 | | 552 | | 392 |
| | 62 | | 487 | | 597 | | 394 |
| | 237 | 8T-2361 | 470 | | 599 | | 397 |
| | 254 | | 474 | 8T-3996 | 624 | | 405 |
| 8T-0119 | 388 | | 476 | | 643 | | 420 |
| | 391 | | 478 | | 648 | | 422 |
| 8T-0129 | 379 | | 480 | | 653 | | 430 |
| 8T-0198 | 461 | | 482 | | 657 | | 433 |
| 8T-0226 | 43 | | 484 | 8T-4001 | 526 | | 445 |
| 8T-0251 | 248 | 8T-2363 | 426 | 8T-4121 | 33 | | 447 |
| | 250 | 8T-2925 | 233 | | 39 | | 450 |
| | 252 | | 234 | | 47 | | 453 |
| 8T-0276 | 69 | 8T-3282 | 29 | | 49 | | 456 |
| | 254 | 8T-3490 | 81 | | 55 | | 459 |
| 8T-0282 | 282 | | 120 | | 71 | | 462 |
| 8T-0293 | 53 | | 159 | | 81 | | 510 |
| | 93 | | 212 | | 88 | | 522 |
| 8T-0328 | 162 | | 213 | | 90 | | 537 |
| | 188 | | 219 | | 102 | | 542 |
| | 192 | | 226 | | 104 | | 544 |
| | 230 | | 263 | | 107 | | 547 |
| 8T-0336 | 280 | | 321 | | 118 | | 577 |


▶ **PRIMARY REFERENCE**

# PART NUMBER INDEX


| Part | Page |
|---|---|
| | 580 |
| | 590 |
| | 592 |
| | 597 |
| | 599 |
| | 614 |
| | 621 |
| | 624 |
| | 634 |
| | 680 |
| | 687 |
| 8T-4123 . . . . . | 49 |
| | 294 |
| | 295 |
| | 297 |
| | 350 |
| 8T-4133 . . . . . | 71 |
| | 90 |
| | 103 |
| | 188 |
| | 203 |
| | 214 |
| | 220 |
| | 227 |
| | 230 |
| | 256 |
| | 352 |
| | 355 |
| | 358 |
| | 359 |
| | 372 |
| | 377 |
| | 383 |
| | 397 |
| | 417 |
| | 420 |
| | 450 |
| | 453 |
| | 456 |
| | 459 |
| | 462 |
| | 544 |
| | 601 |
| | 603 |
| | 614 |
| 8T-4136 . . . . . | 39 |
| | 47 |
| | 71 |
| | 81 |
| | 88 |
| | 102 |
| | 107 |
| | 120 |
| | 265 |
| | 267 |
| | 333 |
| | 334 |
| | 339 |
| | 343 |
| | 345 |
| | 374 |
| | 379 |
| | 394 |
| | 417 |
| | 420 |
| | 422 |
| | 450 |
| | 453 |
| | 456 |
| | 459 |
| | 462 |
| | 544 |
| | 569 |
| | 590 |
| | 597 |
| | 599 |
| | 610 |
| | 611 |
| 8T-4137 . . . . . | 48 |
| | 81 |
| | 90 |
| | 95 |
| | 118 |
| | 120 |
| | 122 |
| | 124 |
| | 136 |
| | 146 |
| | 149 |
| | 159 |
| | 165 |
| | 190 |
| | 203 |
| | 214 |
| | 220 |
| | 227 |
| | 230 |
| | 237 |
| | 263 |
| | 265 |
| | 267 |
| | 285 |
| | 289 |
| | 319 |
| | 336 |
| | 352 |
| | 355 |
| | 379 |
| | 405 |
| | 426 |
| | 433 |
| | 445 |
| | 447 |
| | 450 |
| | 453 |
| | 456 |
| | 459 |
| | 462 |
| | 510 |
| | 535 |
| | 536 |
| | 537 |
| | 542 |
| | 544 |
| | 547 |
| | 577 |
| | 580 |
| | 592 |
| | 597 |
| | 599 |
| | 614 |
| | 621 |
| | 624 |
| | 680 |
| | 687 |
| 8T-4138 . . . . . | 203 |
| | 372 |
| | 577 |
| | 580 |
| | 585 |
| | 586 |
| 8T-4139 . . . . . | 90 |
| | 287 |
| | 289 |
| | 326 |
| | 336 |
| | 341 |
| | 343 |
| | 345 |
| | 347 |
| | 350 |
| | 352 |
| | 355 |
| | 360 |
| | 430 |
| | 433 |
| | 445 |
| | 450 |
| | 453 |
| | 456 |
| | 459 |
| | 462 |
| | 492 |
| | 524 |
| | 525 |
| | 620 |
| | 621 |
| | 697 |
| 8T-4141 . . . . . | 294 |
| | 295 |
| | 492 |
| | 528 |
| 8T-4167 . . . . . | 49 |
| | 297 |
| | 526 |
| | 550 |
| | 552 |
| | 553 |
| 8T-4171 . . . . . | 204 |
| | 577 |
| | 580 |
| | 601 |
| 8T-4172 . . . . . | 55 |
| | 430 |
| | 433 |
| 8T-4175 . . . . . | 297 |
| | 497 |
| 8T-4176 . . . . . | 347 |
| 8T-4178 . . . . . | 263 |
| 8T-4179 . . . . . | 146 |
| | 339 |
| | 341 |
| | 352 |
| | 355 |
| | 535 |
| | 544 |
| | 554 |
| | 556 |
| 8T-4181 . . . . . | 604 |
| | 606 |
| 8T-4182 . . . . . | 335 |
| | 450 |
| | 453 |
| | 456 |
| | 459 |
| | 462 |
| | 601 |
| 8T-4183 . . . . . | 338 |
| | 350 |
| | 438 |
| | 522 |
| | 561 |
| | 614 |
| 8T-4184 . . . . . | 528 |
| 8T-4185 . . . . . | 103 |
| | 265 |
| | 267 |
| | 462 |
| 8T-4186 . . . . . | 33 |
| | 136 |
| | 263 |
| | 287 |
| | 289 |
| | 372 |
| | 377 |
| 8T-4187 . . . . . | 526 |
| 8T-4189 . . . . . | 88 |
| | 214 |
| | 220 |
| | 227 |
| 8T-4191 . . . . . | 136 |
| | 139 |
| | 204 |
| | 374 |
| | 405 |
| | 614 |
| 8T-4192 . . . . . | 90 |
| | 146 |
| | 326 |
| | 332 |
| | 333 |
| | 334 |
| | 349 |
| | 377 |
| | 383 |
| | 536 |
| | 697 |
| 8T-4193 . . . . . | 49 |
| | 297 |
| 8T-4195 . . . . . | 48 |
| | 49 |
| | 88 |
| | 104 |
| | 149 |
| | 214 |
| | 220 |
| | 227 |
| | 287 |
| | 289 |
| | 339 |


► PRIMARY REFERENCE

# PART NUMBER INDEX


| Part | Page | Part | Page | Part | Page | Part | Page |
|---|---|---|---|---|---|---|---|
| | 389 | | 462 | | 383 | 8T-6631 . . . . . | 578 |
| | 392 | | 492 | | 426 | | 580 |
| | 397 | | 519 | | 430 | 8T-6663 . . . . . | 419 |
| | 418 | | 522 | | 433 | 8T-6684 . . . . . | 429 |
| | 450 | | 524 | | 464 | | 432 |
| | 453 | | 525 | | 505 | 8T-6869 . . . . . | 107 |
| | 456 | | 536 | | 532 | | 133 |
| | 459 | | 544 | | 570 | 8T-6870 . . . . . | 422 |
| | 462 | | 554 | | 604 | 8T-6876 . . . . . | 118 |
| | 522 | | 561 | | 606 | | 120 |
| | 542 | | 614 | 8T-4908 . . . . . | 55 | | 376 |
| | 601 | | 620 | | 107 | | 429 |
| | 624 | | 621 | | 165 | | 432 |
| | 634 | 8T-4224 . . . . . | 7 | | 204 | | 546 |
| 8T-4196 . . . . . | 144 | | 9 | | 214 | | 688 |
| | 335 | | 11 | | 220 | 8T-7013 . . . . . | 282 |
| | 367 | | 13 | | 227 | 8T-7044 . . . . . | 106 |
| | 418 | | 14 | 8T-4910 . . . . . | 377 | 8T-7087 . . . . . | 287 |
| | 592 | | 55 | 8T-4935 . . . . . | 321 | 8T-7088 . . . . . | 287 |
| 8T-4200 . . . . . | 162 | | 73 | | 323 | | 289 |
| | 186 | | 74 | 8T-4956 . . . . . | 367 | 8T-7329 . . . . . | 627 |
| | 627 | | 81 | | 522 | 8T-7547 . . . . . | 73 |
| 8T-4201 . . . . . | 680 | | 88 | | 558 | | 263 |
| 8T-4205 . . . . . | 142 | | 107 | 8T-4958 . . . . . | 412 | | 627 |
| | 162 | | 142 | 8T-4967 . . . . . | 321 | | 629 |
| | 192 | | 146 | | 323 | | 678 |
| | 399 | | 149 | 8T-4971 . . . . . | 338 | | 680 |
| | 401 | | 162 | 8T-4984 . . . . . | 425 | 8T-7876 . . . . . | 388 |
| | 578 | | 165 | 8T-4994 . . . . . | 519 | | 391 |
| | 580 | | 186 | 8T-5005 . . . . . | 374 | | 425 |
| 8T-4222 . . . . . | 592 | | 204 | | 377 | | 442 |
| 8T-4223 . . . . . | 90 | | 214 | 8T-5039 . . . . . | 442 | 8T-7927 . . . . . | 456 |
| | 120 | | 220 | 8T-5050 . . . . . | 389 | | 461 |
| | 144 | | 227 | | 392 | 8T-7950 . . . . . | 29 |
| | 146 | | 422 | 8T-5353 . . . . . | 236 | 8T-7968 . . . . . | 419 |
| | 149 | | 590 | | 242 | 8T-8442 . . . . . | 61 |
| | 165 | | 627 | 8T-5360 . . . . . | 635 | | 62 |
| | 204 | | 629 | | 636 | 8T-8549 . . . . . | 352 |
| | 214 | | 680 | 8T-5429 . . . . . | 426 | | 355 |
| | 220 | 8T-4244 . . . . . | 146 | | 541 | 8T-8566 . . . . . | 192 |
| | 227 | | 149 | | 544 | 8T-8569 . . . . . | 192 |
| | 230 | | 165 | | 546 | 8T-8729 . . . . . | 181 |
| | 287 | | 204 | 8T-5439 . . . . . | 331 | | 199 |
| | 289 | | 214 | | 332 | 8T-8737 . . . . . | 210 |
| | 326 | | 220 | | 361 | | 256 |
| | 341 | | 227 | | 492 | | 623 |
| | 343 | | 230 | | 526 | | 680 |
| | 345 | | 265 | | 528 | 8T-8902 . . . . . | 285 |
| | 350 | | 267 | | 554 | | 435 |
| | 352 | | 352 | | 556 | | 541 |
| | 355 | | 355 | | 561 | | 546 |
| | 367 | | 367 | 8T-5460 . . . . . | 528 | 8T-8919 . . . . . | 144 |
| | 377 | | 389 | | 554 | 8T-9371 . . . . . | 637 |
| | 383 | | 392 | | 561 | 8T-9381 . . . . . | 635 |
| | 389 | | 445 | 8T-5464 . . . . . | 136 | | 636 |
| | 392 | | 544 | 8T-5913 . . . . . | 642 | 8T-9399 . . . . . | 519 |
| | 417 | 8T-4747 . . . . . | 604 | 8T-5914 . . . . . | 642 | 8T-9515 . . . . . | 237 |
| | 426 | | 606 | 8T-6380 . . . . . | 553 | | 243 |
| | 429 | 8T-4750 . . . . . | 442 | 8T-6393 . . . . . | 383 | 8T-9535 . . . . . | 315 |
| | 432 | 8T-4779 . . . . . | 331 | 8T-6430 . . . . . | 332 | 8T-9655 . . . . . | 133 |
| | 445 | | 341 | 8T-6462 . . . . . | 321 | | 153 |
| | 450 | | 347 | | 323 | | 202 |
| | 453 | | 360 | 8T-6466 . . . . . | 256 | 8T-9884 . . . . . | 192 |
| | 456 | | 422 | | 359 | 8W-8673 . . . . . | 368 |
| | 459 | 8T-4896 . . . . . | 377 | | 614 | | 369 |


► **PRIMARY REFERENCE**

# PART NUMBER INDEX


| Part | Page |
|---|---|
| 8W-8674 | 368 |
| | 369 |
| 8X-4718 | 321 |
| | 323 |
| 8X-4903 | 325 |
| | 329 |
| | 330 |
| 8Y-4030 | 635 |
| | 636 |
| 8Y-4501 | 604 |
| | 606 |
| 8Y-4617 | 604 |
| 8Y-4804 | 360 |
| 8Y-5737 | 577 |
| | 675 |
| 8Y-6064 | 640 |
| 8Y-6377 | 603 |
| 8Y-6386 | 604 |
| | 606 |
| 8Y-6388 | 643 |
| | 648 |
| | 653 |
| | 657 |
| 8Y-7386 | 629 |
| 8Y-8495 | 627 |
| **9** | |
| 9B-7233 | 162 |
| 9B-7237 | 429 |
| | 432 |
| | 505 |
| | 532 |
| 9C-4935 | 321 |
| | 323 |
| 9C-6016 | 258 |
| 9C-6023 | 260 |
| 9C-6041 | 280 |
| | 282 |
| 9C-6327 | 280 |
| | 282 |
| 9C-6809 | 321 |
| | 323 |
| 9C-8287 | 270 |
| 9C-8419 | 282 |
| 9C-9194 | 282 |
| 9C-9844 | 233 |
| 9D-3768 | 90 |
| 9D-5296 | 540 |
| 9F-0348 | 604 |
| | 606 |
| 9F-1399 | 508 |
| 9F-5644 | 194 |
| 9F-6655 | 383 |
| | 601 |
| 9G-0002 | 146 |
| | 149 |
| 9G-0003 | 146 |
| | 149 |
| 9G-0004 | 146 |
| | 149 |
| 9G-0005 | 146 |
| | 149 |
| 9G-3695 | 213 |
| | 219 |
| | 226 |
| 9G-4343 | 162 |
| | 203 |
| 9G-5127 | 265 |
| | 267 |
| 9G-8909 | 146 |
| | 149 |
| | 165 |
| 9H-6454 | 447 |
| 9K-0974 | 643 |
| | 648 |
| | 653 |
| | 657 |
| | 661 |
| | 664 |
| | 667 |
| | 671 |
| 9K-5635 | 653 |
| | 657 |
| 9L-0749 | 95 |
| 9L-6770 | 142 |
| 9L-9068 | 254 |
| | 315 |
| | 317 |
| 9L-9188 | 307 |
| 9M-0164 | 263 |
| | 577 |
| | 580 |
| 9M-1328 | 385 |
| | 387 |
| 9M-1974 | 6 |
| | 7 |
| | 9 |
| | 44 |
| | 51 |
| | 61 |
| | 62 |
| | 69 |
| | 72 |
| | 80 |
| | 82 |
| | 84 |
| | 87 |
| | 100 |
| | 153 |
| | 210 |
| | 212 |
| | 237 |
| | 243 |
| | 254 |
| | 310 |
| | 315 |
| | 317 |
| 9M-2008 | 284 |
| 9M-2110 | 310 |
| 9M-2904 | 70 |
| 9M-4136 | 72 |
| 9M-5137 | 368 |
| | 369 |
| | 370 |
| 9M-5138 | 368 |
| | 369 |
| | 370 |
| 9M-5139 | 368 |
| | 369 |
| | 370 |
| 9M-5140 | 368 |
| | 369 |
| | 370 |
| 9M-5732 | 690 |
| 9M-7958 | 139 |
| 9M-7959 | 643 |
| | 648 |
| | 653 |
| | 657 |
| 9M-8406 | 146 |
| | 149 |
| | 165 |
| | 614 |
| 9N-0869 | 35 |
| | 67 |
| | 133 |
| | 153 |
| 9N-3388 | 604 |
| | 606 |
| 9P-0356 | 294 |
| | 295 |
| 9P-7121 | 136 |
| 9P-9150 | 236 |
| | 315 |
| 9P-9185 | 372 |
| 9R-2613 | 553 |
| 9R-2630 | 447 |
| 9R-2640 | 321 |
| | 323 |
| 9R-2821 | 535 |
| 9R-2994 | 517 |
| 9R-9755 | 604 |
| | 606 |
| 9S-1240 | 144 |
| 9S-1350 | 71 |
| 9S-1812 | 358 |
| 9S-2396 | 144 |
| 9S-3581 | 506 |
| 9S-4167 | 122 |
| | 124 |
| 9S-4181 | 256 |
| | 280 |
| | 282 |
| 9S-4182 | 43 |
| | 82 |
| | 84 |
| | 482 |
| 9S-4183 | 43 |
| | 416 |
| | 447 |
| | 568 |
| 9S-4185 | 80 |
| | 82 |
| | 84 |
| | 86 |
| | 122 |
| | 124 |
| | 442 |
| 9S-4191 | 76 |
| | 86 |
| | 98 |
| | 99 |
| | 122 |
| | 124 |
| | 167 |
| | 236 |
| | 242 |
| | 265 |
| | 267 |
| | 287 |
| | 289 |
| | 383 |
| | 420 |
| | 488 |
| 9S-6130 | 544 |
| 9S-8002 | 28 |
| | 167 |
| | 472 |
| | 498 |
| | 505 |
| | 508 |
| | 549 |
| 9S-8003 | 486 |
| 9S-8004 | 28 |
| | 84 |
| | 127 |
| | 307 |
| | 437 |
| | 487 |
| | 569 |
| | 595 |
| | 596 |
| 9S-8005 | 54 |
| | 82 |
| | 84 |
| | 100 |
| | 242 |
| | 243 |
| | 307 |
| | 315 |
| | 569 |
| 9S-8006 | 24 |
| | 28 |
| | 51 |
| | 307 |
| | 470 |
| | 472 |
| | 474 |
| | 476 |
| | 478 |
| | 480 |
| | 482 |
| | 484 |
| | 487 |
| 9S-8007 | 280 |
| | 282 |
| 9S-8008 | 53 |
| | 86 |
| | 93 |
| 9S-8010 | 237 |
| | 243 |
| 9S-8068 | 107 |
| 9S-8071 | 107 |
| 9S-8752 | 465 |
| | 467 |
| | 468 |
| 9S-9334 | 26 |
| | 28 |


► **PRIMARY REFERENCE**

# PART NUMBER INDEX


| Part | Page | Part | Page | Part | Page | Part | Page |
|---|---|---|---|---|---|---|---|
| | 426 | 9W-2033 | 203 | | 661 | | 162 |
| 9T-0655 | 487 | 9W-6096 | 312 | | 664 | | 166 |
| 9T-0656 | 487 | 9W-6097 | 312 | | 667 | | 204 |
| 9T-0704 | 470 | 9W-6582 | 49 | | 671 | | 372 |
| | 474 | 9W-6584 | 49 | 9X-2085 | 377 | | 542 |
| | 476 | 9W-7226 | 236 | 9X-2098 | 69 | | 547 |
| | 480 | | 242 | 9X-2099 | 7 | | 577 |
| | 484 | 9W-7385 | 49 | | 9 | | 578 |
| 9T-1013 | 388 | 9W-7388 | 49 | | 73 | | 580 |
| | 391 | 9W-8095 | 619 | | 74 | | 583 |
| 9T-1636 | 442 | 9W-8279 | 312 | 9X-2125 | 447 | | 584 |
| 9T-1652 | 442 | 9W-9271 | 250 | 9X-2158 | 559 | | 585 |
| 9T-1699 | 442 | 9W-9272 | 252 | 9X-2205 | 139 | | 586 |
| 9T-1710 | 442 | 9W-9278 | 248 | 9X-2206 | 139 | | 597 |
| 9T-2186 | 488 | | 250 | 9X-2305 | 78 | | 599 |
| 9T-2197 | 442 | | 252 | 9X-2335 | 678 | | 601 |
| 9T-4518 | 472 | 9W-9399 | 248 | 9X-2433 | 684 | | 604 |
| | 478 | | 250 | | 685 | | 606 |
| | 482 | | 252 | 9X-2480 | 542 | | 680 |
| 9T-6635 | 186 | 9W-9436 | 248 | 9X-2488 | 445 | | 682 |
| 9T-7754 | 444 | | 250 | 9X-2492 | 388 | 9X-8257 | 49 |
| 9T-7755 | 444 | | 252 | | 391 | | 297 |
| 9T-7756 | 444 | 9W-9920 | 49 | 9X-2532 | 676 | | 347 |
| 9U-0512 | 619 | 9X-0195 | 230 | | 677 | | 422 |
| 9U-1913 | 270 | 9X-0196 | 203 | 9X-2546 | 604 | | 450 |
| | 272 | | 214 | | 606 | | 453 |
| 9U-2886 | 376 | | 220 | 9X-3463 | 156 | | 456 |
| 9U-4098 | 425 | 9X-0262 | 167 | 9X-4244 | 156 | | 459 |
| 9U-4623 | 383 | 9X-1046 | 204 | 9X-4609 | 237 | | 462 |
| 9U-4894 | 517 | 9X-1056 | 203 | | 243 | | 497 |
| 9U-8023 | 236 | 9X-1386 | 178 | 9X-4611 | 406 | | 517 |
| | 242 | 9X-1481 | 372 | | 408 | | 526 |
| 9U-8025 | 236 | 9X-1813 | 170 | | 410 | 9X-8258 | 297 |
| | 242 | | 175 | | 411 | | 349 |
| 9U-8027 | 236 | | 177 | 9X-4620 | 570 | | 550 |
| | 242 | | 195 | 9X-4814 | 203 | | 552 |
| 9U-8028 | 236 | | 198 | 9X-4824 | 192 | | 619 |
| | 242 | | 213 | 9X-6269 | 321 | 9X-8268 | 274 |
| 9U-8029 | 236 | | 219 | | 323 | | 276 |
| | 242 | | 226 | | 360 | | 278 |
| 9U-8263 | 612 | | 254 | 9X-6562 | 691 | 9X-8399 | 385 |
| 9U-8669 | 310 | 9X-2027 | 280 | | 693 | | 387 |
| 9U-9322 | 252 | | 282 | 9X-6772 | 162 | | 406 |
| 9U-9328 | 312 | 9X-2040 | 603 | | 203 | | 408 |
| 9U-9576 | 236 | | 648 | | 214 | | 410 |
| | 242 | | 657 | | 220 | | 411 |
| 9V-3659 | 336 | | 664 | | 226 | 9X-8403 | 167 |
| | 343 | | 671 | 9X-7345 | 204 | 9X-8600 | 139 |
| | 345 | 9X-2041 | 319 | 9X-7378 | 591 | 9X-8906 | 297 |
| 9V-7251 | 522 | | 604 | | 614 | 9X-8916 | 23 |
| 9W-0719 | 236 | | 606 | 9X-7380 | 615 | 9X-8917 | 199 |
| | 242 | | 643 | 9X-7381 | 615 | 9X-9120 | 230 |
| | 248 | | 653 | 9X-7382 | 615 | 9Y-9236 | 503 |
| | 250 | | 661 | 9X-7383 | 615 | | |
| | 252 | | 667 | 9X-7385 | 591 | | |
| 9W-0742 | 149 | 9X-2042 | 604 | | 615 | **0** | |
| | ►152 | | 606 | 9X-7680 | 488 | | |
| 9W-0844 | 584 | 9X-2045 | 204 | 9X-7712 | 26 | 000-7244 | 688 |
| | 586 | | 513 | | 28 | 003-7501 | 506 |
| 9W-0852 | 583 | | 597 | 9X-7713 | 519 | 004-9040 | 442 |
| | 585 | | 599 | 9X-7743 | 274 | 006-2884 | 202 |
| | 675 | | 643 | 9X-8250 | 394 | 006-8663 | 442 |
| 9W-0884 | 308 | | 648 | | 420 | 009-2069 | 444 |
| 9W-1951 | 203 | | 653 | | 445 | 009-3681 | 640 |
| 9W-2032 | 203 | | 657 | 9X-8256 | 139 | 010-2571 | 413 |


► **PRIMARY REFERENCE**

# PART NUMBER INDEX


| Part | Page |
|---|---|
| 012-0380 | 195 |
| 030-0060 | 270 |
| | 272 |
| 030-0061 | 270 |
| | 272 |
| 030-1193 | 162 |
| 030-1707 | 230 |
| 030-1712 | 163 |
| | 212 |
| 030-7962 | 540 |
| 030-8194 | 134 |
| 030-8370 | 265 |
| | 267 |
| 031-0214 | 470 |
| 031-4155 | 146 |
| | 640 |
| 031-5085 | 470 |
| 032-0683 | 608 |
| 032-3506 | 265 |
| | 267 |
| 032-9882 | 530 |
| 033-5879 | 490 |
| 033-6027 | 66 |
| | 488 |
| 033-6036 | 442 |
| | 488 |
| 033-7291 | 583 |
| | 584 |
| 033-8248 | 74 |
| | 220 |
| 036-9823 | 192 |
| 037-4426 | 675 |
| 061-7706 | 519 |
| 061-9455 | 11 |
| 064-3843 | 303 |
| 068-9526 | 69 |
| 077-3241 | 262 |
| | 566 |
| 085-8091 | 624 |
| 091-0079 | 610 |
| 095-0878 | 640 |
| 095-0888 | 442 |
| 095-0930 | 561 |
| 095-9804 | 280 |
| | 282 |
| 096-5962 | 199 |
| 096-6166 | 203 |
| 099-3095 | 439 |
| | 441 |
| 099-3649 | 13 |
| | 14 |

## 1

| Part | Page |
|---|---|
| 100-3320 | 210 |
| 100-5041 | 203 |
| 100-5147 | 442 |
| 100-5151 | 429 |
| | 432 |
| 100-5154 | 442 |
| 100-6741 | 442 |
| | ▶488 |
| 100-8123 | 438 |
| 101-0003 | 637 |
| 101-0052 | 449 |
| | 452 |
| 101-3128 | 153 |
| 101-8375 | 88 |
| 102-0341 | 675 |
| 102-0382 | 623 |
| 102-8801 | 202 |
| | 210 |
| | 213 |
| | 219 |
| | 226 |
| | 254 |
| | 399 |
| | 401 |
| 102-8802 | 141 |
| | 178 |
| | 181 |
| | 195 |
| | 198 |
| | 201 |
| | 203 |
| | 210 |
| | 212 |
| | 213 |
| | 219 |
| | 220 |
| | 226 |
| | 254 |
| | 269 |
| | 314 |
| | 490 |
| | 510 |
| | 513 |
| | 577 |
| | 580 |
| | 583 |
| | 585 |
| | 591 |
| | 614 |
| | 637 |
| 102-8803 | 122 |
| | 124 |
| | 159 |
| | 169 |
| | 203 |
| | 210 |
| | 213 |
| | 219 |
| | 226 |
| | 230 |
| | 374 |
| | 376 |
| 102-8804 | 202 |
| | 203 |
| | 213 |
| | 214 |
| | 219 |
| | 226 |
| 102-8805 | 202 |
| | 203 |
| | 213 |
| | 219 |
| | 226 |
| | 510 |
| | 511 |
| | 513 |
| | 675 |
| | 680 |
| 102-8806 | 122 |
| | 124 |
| | 162 |
| | 203 |
| | 213 |
| | 219 |
| | 226 |
| | 230 |
| | 623 |
| 103-2543 | 621 |
| 103-4754 | 487 |
| 104-2050 | 338 |
| 104-2091 | 643 |
| | 648 |
| | 653 |
| | 657 |
| 104-3123 | 444 |
| 104-3947 | 314 |
| 104-5381 | 338 |
| 104-7336 | 252 |
| 104-8598 | 544 |
| 105-1797 | 210 |
| 105-2154 | 442 |
| | ▶444 |
| 105-7895 | 606 |
| 105-8029 | 199 |
| 106-2105 | 136 |
| | 688 |
| 106-8186 | 503 |
| | 566 |
| 106-8704 | 510 |
| | 511 |
| | 513 |
| | 614 |
| 107-3786 | 399 |
| | 401 |
| 107-3953 | 550 |
| 107-6032 | 202 |
| 107-7694 | 5 |
| 107-7708 | 16 |
| | 18 |
| | 20 |
| 107-8117 | 468 |
| 108-0691 | 577 |
| | 580 |
| 108-4311 | 603 |
| 108-4814 | 488 |
| 109-0629 | 603 |
| 109-3207 | 115 |
| | 116 |
| | 117 |
| | 130 |
| 109-5383 | 465 |
| | 467 |
| | 468 |
| 109-5388 | 464 |
| | ▶470 |
| 109-5836 | 417 |
| 109-9436 | 90 |
| 110-2023 | 321 |
| | 323 |
| | 597 |
| | 599 |
| 110-6109 | 577 |
| | 675 |
| 110-6845 | 162 |
| 110-7595 | 372 |
| 110-7618 | 7 |
| | 9 |
| 110-7887 | 202 |
| 110-8769 | 214 |
| | 220 |
| 111-2416 | 210 |
| 111-9758 | 330 |
| | 539 |
| 112-3587 | 227 |
| 112-9073 | 321 |
| | 323 |
| 112-9488 | 546 |
| 112-9705 | 399 |
| | 401 |
| 112-9707 | 399 |
| | 401 |
| 112-9714 | 399 |
| | 401 |
| 112-9715 | 399 |
| | 401 |
| 113-0580 | 203 |
| 113-5335 | 31 |
| 113-6069 | 41 |
| 113-6170 | 2 |
| | ▶39 |
| 113-6377 | 546 |
| 114-1071 | 248 |
| | 250 |
| | 252 |
| 114-1972 | 472 |
| | 474 |
| | 476 |
| | 478 |
| | 480 |
| | 482 |
| | 484 |
| 114-1973 | 472 |
| | 474 |
| | 476 |
| | 478 |
| | 480 |
| | 482 |
| | 484 |
| 114-3469 | 591 |
| 114-3906 | 472 |
| | 474 |
| | 476 |
| | 478 |
| | 480 |
| | 482 |
| | 484 |
| 114-4232 | 474 |
| | 478 |
| | 480 |
| 114-5309 | 601 |
| 114-5312 | 601 |
| 114-5333 | 614 |
| 114-8843 | 162 |
| | 226 |
| | 254 |


▶ PRIMARY REFERENCE

# PART NUMBER INDEX


| Part | Page |
|---|---|
| 114-8845 | 162 |
| | 214 |
| | 220 |
| | 227 |
| 115-2422 | 146 |
| | 149 |
| 115-3201 | 517 |
| 115-4072 | 41 |
| 115-4210 | 2 |
| | ▶58 |
| 115-4219 | 41 |
| 115-4223 | 82 |
| 115-4550 | 310 |
| 115-5411 | 122 |
| 116-2659 | 109 |
| 116-4556 | 2 |
| | ▶38 |
| 116-5298 | 444 |
| 116-5305 | 444 |
| 116-7857 | 577 |
| | 580 |
| 117-2311 | 612 |
| 117-3643 | 3 |
| | ▶79 |
| 117-3915 | ▶161 |
| | 396 |
| 117-4654 | 678 |
| 117-4657 | 578 |
| | 580 |
| 117-7798 | 382 |
| 117-7799 | 382 |
| 118-1031 | 388 |
| | 391 |
| | 688 |
| 118-1225 | 691 |
| | 693 |
| 118-2291 | 274 |
| | ▶368 |
| 118-2943 | 399 |
| 118-3148 | 603 |
| 118-3619 | 31 |
| 118-4508 | 601 |
| 118-4639 | 388 |
| | 391 |
| 118-4702 | 103 |
| 118-5502 | 643 |
| | 648 |
| | 653 |
| | 657 |
| 118-5619 | 643 |
| | 648 |
| | 653 |
| | 657 |
| 118-5849 | 508 |
| 118-6273 | 572 |
| 118-8271 | 350 |
| 118-8272 | 350 |
| 118-8273 | 350 |
| 118-8275 | 350 |
| 118-8276 | 350 |
| 119-0884 | 604 |
| | 606 |
| 119-1084 | 270 |
| 119-1534 | 498 |
| | 508 |
| 119-1586 | 569 |
| 119-1590 | 500 |
| 119-1616 | 532 |
| 119-2164 | 503 |
| 119-2167 | 498 |
| 119-2195 | 508 |
| | 519 |
| 119-3075 | 84 |
| 119-3388 | 270 |
| 119-3662 | 162 |
| | 203 |
| | 214 |
| | 220 |
| | 227 |
| | 577 |
| | 580 |
| 119-5727 | 303 |
| 120-0144 | 604 |
| | 606 |
| 120-5282 | 604 |
| 120-5283 | 606 |
| 120-5867 | 104 |
| 120-7609 | 629 |
| 121-1340 | 120 |
| 121-2759 | 577 |
| 121-2761 | 577 |
| | 580 |
| 121-3945 | 678 |
| 121-7848 | 165 |
| 122-0019 | 629 |
| | 678 |
| 122-2222 | 419 |
| 122-2228 | 405 |
| 122-3151 | 212 |
| 122-3808 | 617 |
| 122-4620 | ▶632 |
| | 636 |
| 122-4622 | ▶633 |
| | 635 |
| 122-6709 | 608 |
| 122-6909 | 426 |
| 122-7166 | 635 |
| | 636 |
| 122-8339 | 624 |
| | 643 |
| | 648 |
| | 653 |
| | 657 |
| 123-0144 | 577 |
| | 675 |
| 123-1373 | 146 |
| | 149 |
| 123-2341 | 490 |
| 123-3726 | 202 |
| 123-4003 | 280 |
| | 282 |
| 123-4410 | 532 |
| 123-4626 | 319 |
| 123-6075 | 640 |
| 123-6077 | 640 |
| 123-7032 | 319 |
| 123-7406 | ▶399 |
| | ▶401 |
| | 601 |
| 123-9431 | 622 |
| 124-0195 | 419 |
| 124-0378 | 146 |
| | 149 |
| 124-3019 | 213 |
| | 219 |
| | 226 |
| 124-7436 | 361 |
| 124-8333 | 425 |
| 124-9401 | 237 |
| 124-9402 | 237 |
| 125-1192 | 577 |
| | 580 |
| 125-1302 | 162 |
| | ▶195 |
| 125-2796 | 614 |
| 125-3228 | 643 |
| | 648 |
| | 653 |
| | 657 |
| 125-7325 | 419 |
| 125-7874 | 162 |
| | 203 |
| | 213 |
| | 214 |
| | 219 |
| | 220 |
| | 227 |
| | 254 |
| | 513 |
| 125-7875 | 162 |
| | 203 |
| | 213 |
| | 219 |
| | 226 |
| | 254 |
| | 513 |
| 125-8688 | 584 |
| 125-9081 | 583 |
| 125-9740 | 166 |
| | 577 |
| 125-9794 | 303 |
| 126-1499 | 280 |
| 126-1757 | 10 |
| 126-1774 | 203 |
| | 214 |
| | 220 |
| | 227 |
| 126-3749 | 587 |
| | 588 |
| | 589 |
| | ▶690 |
| 126-4003 | 498 |
| 126-5011 | 210 |
| 126-5466 | 82 |
| | 84 |
| 126-5476 | 470 |
| | 472 |
| | 474 |
| | 476 |
| | 478 |
| | 480 |
| | 482 |
| | 484 |
| 126-5796 | 470 |
| | 476 |
| 126-5984 | 470 |
| | 474 |
| | 476 |
| | 478 |
| | 480 |
| | 482 |
| | 484 |
| 126-5985 | 470 |
| | 474 |
| | 476 |
| | 478 |
| | 480 |
| | 482 |
| | 484 |
| 126-7263 | 632 |
| | 633 |
| 126-7264 | 632 |
| | 633 |
| 126-7265 | 632 |
| | 633 |
| 126-7266 | 633 |
| 126-7267 | 632 |
| 126-7268 | 633 |
| 126-7269 | 632 |
| 126-7575 | 465 |
| | 467 |
| | 468 |
| 126-7968 | 472 |
| | 476 |
| | 482 |
| | 484 |
| 126-7971 | 472 |
| | 476 |
| | 482 |
| | 484 |
| | ▶490 |
| 126-8306 | 425 |
| 126-8503 | 81 |
| 127-1960 | 258 |
| | 260 |
| 127-2228 | 405 |
| 127-2849 | 526 |
| 127-2851 | 526 |
| 127-5483 | 162 |
| 127-5484 | 203 |
| 127-9323 | 213 |
| | 219 |
| | 226 |
| | 461 |
| 128-1040 | 643 |
| | 648 |
| | 653 |
| | 657 |
| | 661 |
| | 664 |
| | 667 |
| | 671 |
| 128-1693 | 265 |
| | 267 |
| 128-4805 | 643 |
| | 648 |
| | 653 |
| | 657 |


▶ **PRIMARY REFERENCE**

# PART NUMBER INDEX


| Part | Page | Part | Page | Part | Page | Part | Page |
|---|---|---|---|---|---|---|---|
| | 661 | 133-3605 | 272 | 139-4128 | 258 | 143-7157 | 233 |
| | 664 | 133-4952 | 233 | 139-4130 | 233 | 143-7345 | 233 |
| | 667 | 133-4995 | 29 | 139-4131 | 233 | 143-7352 | 233 |
| | 671 | 133-5545 | 489 | 139-4183 | 232 | 143-7354 | 234 |
| 128-6157 | 202 | 133-6379 | 61 | | ▶270 | 143-7355 | 234 |
| 129-2339 | 260 | 133-8780 | 406 | 139-6366 | 593 | 143-7356 | 350 |
| 129-2341 | 260 | | 408 | | 594 | 143-7357 | 234 |
| 129-2342 | 258 | | 410 | 139-9476 | 46 | 143-7358 | 234 |
| | 260 | | 411 | 140-0860 | 219 | 143-7360 | 234 |
| 129-3178 | 166 | 134-2540 | 203 | 140-2961 | 622 | 143-7415 | 233 |
| | 577 | | 227 | 140-2963 | 622 | 143-7508 | 233 |
| 129-5096 | 144 | 134-3079 | 350 | 140-6188 | 27 | 143-7509 | 233 |
| 129-5127 | 136 | 134-4483 | 27 | 140-9670 | 27 | 143-7510 | 233 |
| 129-7286 | 502 | 134-5484 | 640 | 141-0052 | 88 | 143-9392 | 153 |
| 129-7292 | 516 | 135-0611 | 682 | 141-0752 | 303 | 143-9956 | 236 |
| 129-7293 | 516 | 135-1706 | 640 | 141-1236 | 303 | | 242 |
| 129-7294 | 516 | 135-2543 | 212 | 141-1289 | 287 | 144-0195 | 680 |
| 129-7301 | 532 | | 214 | | 289 | 144-0329 | 282 |
| 129-7307 | 502 | | 220 | 141-6763 | 280 | 144-0496 | 258 |
| 129-7319 | 516 | | 227 | 141-6765 | 232 | | 260 |
| 129-7320 | 516 | 135-5975 | 210 | | ▶272 | 144-0780 | 303 |
| 129-7321 | 516 | 135-6259 | 105 | 141-6766 | 260 | 144-0781 | 303 |
| 129-7632 | 488 | 135-9819 | 68 | 141-6773 | 232 | 144-0812 | 303 |
| 130-3280 | 109 | 136-0822 | 10 | | ▶234 | 144-2252 | 303 |
| 130-5300 | 214 | 136-1122 | 338 | 141-6777 | 234 | 144-2253 | 303 |
| | 220 | 136-3192 | 682 | 141-6778 | 234 | 144-3935 | 614 |
| | 227 | 136-3193 | 682 | 141-6779 | 234 | 144-4534 | 303 |
| | 254 | 136-4183 | 41 | 141-6780 | 234 | 144-5611 | 45 |
| 130-8176 | 202 | 136-5490 | 623 | 141-6781 | 234 | 144-6699 | 640 |
| | ▶622 | 136-7227 | 134 | 141-6782 | 234 | 144-7175 | 236 |
| 130-8237 | 577 | 136-8037 | 569 | 141-6783 | 234 | | 242 |
| | 580 | 137-1602 | 112 | 141-9784 | 166 | 144-7176 | 236 |
| 130-9473 | 429 | 137-2170 | 676 | | 577 | | 242 |
| | 432 | | 677 | 142-0245 | 361 | 144-7656 | 303 |
| 130-9811 | ▶180 | 137-6645 | 183 | 142-1767 | 315 | 144-7659 | ▶303 |
| | 182 | | 185 | 142-4247 | 274 | | 305 |
| | 184 | 137-6715 | 27 | | 276 | | 306 |
| | 219 | 137-6717 | 63 | | 278 | 144-8440 | 332 |
| 131-0359 | 213 | | 65 | 142-4431 | 237 | 144-8442 | 332 |
| | 219 | 137-6718 | 27 | | 243 | 145-0152 | 367 |
| | 226 | 138-0444 | 139 | 142-8929 | 447 | 145-0162 | 16 |
| 131-1488 | 203 | 138-1645 | 233 | 142-9654 | 272 | | 18 |
| 131-1489 | 203 | | 234 | 142-9655 | 272 | | 20 |
| 131-1490 | 203 | 138-2456 | 503 | 142-9681 | 623 | 145-0164 | 16 |
| 131-1768 | 493 | 138-3252 | 29 | 143-1386 | 1 | | 18 |
| | 494 | 138-7198 | 63 | | ▶338 | | 20 |
| | 495 | | 65 | 143-1413 | 292 | 145-0168 | 16 |
| 131-1769 | 493 | 138-8402 | 63 | | ▶367 | | 18 |
| | 494 | | 65 | 143-1430 | 496 | | 20 |
| | 495 | 138-8403 | 63 | | ▶497 | 145-0170 | 16 |
| 131-2356 | 577 | | 65 | 143-1450 | 416 | | 18 |
| | 675 | 138-9868 | 63 | | ▶438 | | 20 |
| 131-9180 | 301 | | 65 | 143-2056 | 587 | 145-0326 | 637 |
| | 302 | 139-0532 | 442 | | 588 | 145-2901 | 45 |
| 132-1204 | 425 | 139-1398 | 614 | | 589 | 145-3252 | 234 |
| 132-5789 | 203 | 139-3231 | 236 | | ▶619 | 145-6899 | 439 |
| | 214 | | 242 | 143-2064 | ▶517 | | 441 |
| | 220 | 139-4081 | ▶46 | | 567 | 145-7028 | ▶181 |
| | 227 | | 61 | 143-2074 | ▶550 | | 213 |
| | 237 | | 62 | | 567 | | 219 |
| | 254 | 139-4084 | 46 | 143-4654 | 67 | | 226 |
| 132-6534 | 585 | 139-4117 | 270 | 143-5472 | 497 | | 317 |
| | 586 | 139-4118 | 270 | 143-7154 | 233 | 145-7229 | 274 |
| 132-6596 | 270 | 139-4126 | 232 | 143-7155 | 233 | | 276 |
| 132-6598 | 272 | | ▶233 | 143-7156 | 233 | | 278 |

# PART NUMBER INDEX


| Part | Page |
|---|---|
| 145-7266 | ▶293 |
| | 305 |
| | 306 |
| 145-7268 | 293 |
| 145-7376 | 63 |
| 145-7385 | 63 |
| 145-7390 | 27 |
| 145-8396 | 284 |
| 145-8397 | 248 |
| | 250 |
| 145-8867 | 601 |
| 145-9269 | 291 |
| 146-0209 | 200 |
| 146-0248 | 601 |
| 146-0249 | 601 |
| 146-3801 | 237 |
| | 243 |
| 146-6747 | 165 |
| | 691 |
| | 693 |
| 147-0178 | ▶414 |
| | 544 |
| 147-1445 | 203 |
| 147-1446 | 203 |
| 147-1689 | 284 |
| 147-1690 | 284 |
| 147-4511 | 293 |
| 147-4512 | 293 |
| 147-5088 | 87 |
| 147-5607 | 394 |
| 147-5653 | 292 |
| | ▶305 |
| 147-5654 | ▶284 |
| | 305 |
| | 306 |
| 147-5655 | ▶248 |
| | 305 |
| | 306 |
| 147-5656 | ▶250 |
| | 305 |
| | 306 |
| 147-5657 | ▶252 |
| | 305 |
| | 306 |
| 147-5658 | ▶274 |
| | ▶276 |
| | ▶278 |
| | 305 |
| | 306 |
| 147-5659 | 236 |
| 147-8211 | 27 |
| 147-8214 | 27 |
| 147-8218 | 26 |
| 147-8220 | 27 |
| 148-0775 | 372 |
| 148-0776 | 372 |
| 148-1928 | 237 |
| | 243 |
| 148-2336 | 136 |
| 148-2591 | 385 |
| | 387 |
| 148-2903 | 115 |
| | 116 |
| | 117 |
| | 130 |
| 148-4472 | 442 |
| 148-6550 | 248 |
| 148-8305 | 265 |
| | 267 |
| 148-8311 | 614 |
| 148-8312 | 419 |
| 148-8313 | 374 |
| | 376 |
| | 388 |
| | 391 |
| 148-8317 | 419 |
| 148-8318 | 374 |
| | 376 |
| 148-8322 | 417 |
| 148-8326 | 429 |
| | 432 |
| | 449 |
| | 452 |
| | 455 |
| | 458 |
| | 461 |
| 148-8327 | 388 |
| | 391 |
| | 435 |
| | 541 |
| | 546 |
| 148-8328 | 394 |
| | 419 |
| 148-8330 | 461 |
| 148-8333 | 461 |
| 148-8335 | 265 |
| | 267 |
| | 287 |
| | 289 |
| | 388 |
| | 391 |
| | 429 |
| | 432 |
| 148-8336 | 122 |
| | 124 |
| | 285 |
| | 376 |
| | 419 |
| | 429 |
| | 432 |
| | 449 |
| | 452 |
| | 455 |
| | 458 |
| | 461 |
| | 544 |
| 148-8340 | 118 |
| | 120 |
| | 136 |
| | 376 |
| | 419 |
| 148-8341 | 394 |
| | 417 |
| | 422 |
| 148-8345 | 118 |
| | 120 |
| | 544 |
| 148-8347 | 388 |
| | 391 |
| | 541 |
| | 544 |
| | 546 |
| 148-8352 | 265 |
| | 267 |
| | 388 |
| | 391 |
| | 419 |
| | 426 |
| 148-8353 | 425 |
| 148-8354 | 426 |
| 148-8355 | 455 |
| 148-8356 | 426 |
| 148-8357 | 265 |
| 148-8358 | 544 |
| 148-8360 | 422 |
| | 541 |
| | 546 |
| 148-8361 | 597 |
| | 599 |
| 148-8362 | 429 |
| | 432 |
| 148-8363 | 285 |
| | 376 |
| | 379 |
| 148-8364 | 237 |
| | 243 |
| | 419 |
| | 426 |
| | 449 |
| | 452 |
| | 455 |
| | 458 |
| | 461 |
| 148-8365 | 118 |
| | 120 |
| | 376 |
| | 429 |
| | 432 |
| | 546 |
| | 688 |
| 148-8366 | 419 |
| | 429 |
| | 432 |
| | 449 |
| | 452 |
| | 455 |
| | 458 |
| | 461 |
| | 597 |
| | 599 |
| 148-8367 | 285 |
| | 377 |
| | 379 |
| | 429 |
| | 432 |
| | 449 |
| | 452 |
| | 455 |
| | 458 |
| | 461 |
| | 544 |
| 148-8370 | 118 |
| | 120 |
| | 376 |
| | 392 |
| | 419 |
| | 426 |
| | 449 |
| | 452 |
| | 688 |
| 148-8371 | 374 |
| | 379 |
| | 429 |
| | 455 |
| | 458 |
| | 461 |
| | 541 |
| | 546 |
| 148-8372 | 118 |
| | 120 |
| | 388 |
| | 391 |
| | 417 |
| | 429 |
| | 432 |
| 148-8374 | 377 |
| | 420 |
| | 429 |
| | 432 |
| | 544 |
| 148-8375 | 688 |
| 148-8377 | 597 |
| | 599 |
| 148-8378 | 74 |
| | 118 |
| | 120 |
| | 285 |
| | 374 |
| | 379 |
| | 541 |
| | 546 |
| | 688 |
| 148-8381 | 426 |
| | 541 |
| | 544 |
| | 546 |
| 148-8382 | 422 |
| 148-8390 | 422 |
| 148-8392 | 422 |
| 148-8393 | 417 |
| | 422 |
| 148-8395 | 84 |
| 148-8406 | 426 |
| 148-8407 | 86 |
| | 383 |
| 148-8408 | 416 |
| | 447 |
| | 568 |
| 148-8409 | 86 |
| | 93 |
| 148-8411 | 80 |
| | 84 |
| | 122 |
| | 124 |
| 148-8414 | 422 |
| 148-8424 | 285 |
| | 435 |
| | 541 |


▶ **PRIMARY REFERENCE**

# PART NUMBER INDEX


| Part | Page | Part | Page | Part | Page | Part | Page |
|---|---|---|---|---|---|---|---|
| | 546 | | 276 | 153-8003 . . . . . | 399 | | 256 |
| 148-8428 . . . . . | 405 | | 278 | | 401 | | 510 |
| 148-8430 . . . . . | 435 | 150-4037 . . . . . | 389 | 153-8004 . . . . . | 399 | | 511 |
| 148-8433 . . . . . | 377 | | 392 | | 401 | | 513 |
| | 449 | | 420 | 153-8467 . . . . . | 63 | | 577 |
| | 452 | 150-4043 . . . . . | 377 | 153-8470 . . . . . | 63 | | 580 |
| 148-8434 . . . . . | 285 | | 430 | 153-9301 . . . . . | 399 | | 584 |
| | 377 | | 432 | | 401 | | 586 |
| | 379 | | 541 | 154-0273 . . . . . | 544 | 155-2271 . . . . . | 162 |
| | 429 | 150-4044 . . . . . | 435 | 154-0896 . . . . . | 47 | 155-2274 . . . . . | 213 |
| | 432 | 150-4381 . . . . . | 367 | 154-3028 . . . . . | 441 | | 219 |
| 148-8435 . . . . . | 379 | 150-4538 . . . . . | 559 | 154-3029 . . . . . | 441 | | 226 |
| | 541 | 150-4557 . . . . . | 559 | 154-3031 . . . . . | 441 | 155-2276 . . . . . | 174 |
| 148-8439 . . . . . | 379 | 150-4559 . . . . . | 559 | 154-3159 . . . . . | 237 | | 175 |
| 148-8443 . . . . . | 376 | 150-4561 . . . . . | 559 | 154-3951 . . . . . | ▶256 | 155-2815 . . . . . | 526 |
| | 425 | 150-4562 . . . . . | 559 | | 305 | 155-2817 . . . . . | 526 |
| 148-8444 . . . . . | 136 | 150-4563 . . . . . | 559 | 154-6738 . . . . . | 587 | 155-3624 . . . . . | 84 |
| | 388 | 150-8015 . . . . . | 676 | | 588 | 155-4707 . . . . . | 640 |
| | 391 | | 677 | | ▶612 | 155-4753 . . . . . | 640 |
| | 541 | 151-0837 . . . . . | 332 | 154-6739 . . . . . | 612 | 155-5916 . . . . . | 297 |
| | 546 | 151-1402 . . . . . | 325 | 154-8278 . . . . . | 640 | 155-6611 . . . . . | 297 |
| 148-8452 . . . . . | 426 | | 329 | 154-8280 . . . . . | 640 | 155-7321 . . . . . | 420 |
| 148-8455 . . . . . | 547 | | 330 | 154-8284 . . . . . | 640 | | 426 |
| 148-8457 . . . . . | 449 | 151-2898 . . . . . | 45 | 154-9023 . . . . . | 82 | 155-7328 . . . . . | 287 |
| | 452 | 151-2900 . . . . . | 45 | | 93 | | 289 |
| | 455 | 151-3832 . . . . . | 379 | 155-0551 . . . . . | 526 | | 450 |
| | 458 | 151-4464 . . . . . | 260 | 155-1497 . . . . . | 526 | | 453 |
| | 462 | 151-4590 . . . . . | 379 | 155-2026 . . . . . | 450 | | 456 |
| | 688 | 151-4809 . . . . . | 258 | | 453 | | 459 |
| 148-8562 . . . . . | 331 | 151-5163 . . . . . | 417 | | 456 | | 462 |
| 149-0021 . . . . . | 383 | 151-5337 . . . . . | 417 | | 459 | 155-7688 . . . . . | 578 |
| 149-2719 . . . . . | 107 | 151-9274 . . . . . | 202 | | 462 | | 580 |
| 149-2906 . . . . . | 601 | | 513 | 155-2255 . . . . . | 162 | 155-9412 . . . . . | 49 |
| 149-2907 . . . . . | 601 | 152-0648 . . . . . | 136 | | 203 | 155-9836 . . . . . | 472 |
| 149-3471 . . . . . | 412 | 152-6902 . . . . . | 415 | | 210 | | 474 |
| 149-3472 . . . . . | 412 | 152-9074 . . . . . | 544 | | 254 | | 478 |
| 149-5240 . . . . . | 115 | 153-1036 . . . . . | 30 | 155-2260 . . . . . | 170 | | 480 |
| | 116 | 153-4173 . . . . . | 202 | | 174 | | 482 |
| | 117 | 153-4906 . . . . . | 595 | | 175 | | 484 |
| | 130 | | 596 | | 177 | 156-1267 . . . . . | 478 |
| 149-5452 . . . . . | 449 | 153-5043 . . . . . | 181 | | 210 | 156-1592 . . . . . | 476 |
| | 452 | 153-5417 . . . . . | 2 | | 213 | | 478 |
| | 455 | | ▶47 | | 214 | 156-1596 . . . . . | 476 |
| | 458 | 153-6238 . . . . . | 450 | | 219 | | 478 |
| | 462 | | 453 | | 220 | | 484 |
| 149-7136 . . . . . | 425 | | 455 | | 226 | 156-4321 . . . . . | 476 |
| 149-7155 . . . . . | 376 | | 458 | | 227 | | 478 |
| 149-7647 . . . . . | 517 | | 462 | | 230 | | 484 |
| 149-8125 . . . . . | 258 | 153-6241 . . . . . | 389 | 155-2261 . . . . . | 584 | 156-5198 . . . . . | 258 |
| 149-8128 . . . . . | 260 | | 392 | 155-2265 . . . . . | 162 | | 260 |
| 149-8346 . . . . . | 301 | | 420 | | 210 | 156-5970 . . . . . | 381 |
| 149-8347 . . . . . | 301 | | 430 | | 401 | 156-6427 . . . . . | 643 |
| 149-8362 . . . . . | 301 | | 433 | 155-2270 . . . . . | 122 | | 648 |
| | 302 | | 462 | | 124 | | 653 |
| 149-8363 . . . . . | 300 | | 547 | | 159 | | 657 |
| | ▶301 | 153-6246 . . . . . | 285 | | 162 | | 661 |
| 149-8364 . . . . . | 300 | | 430 | | 197 | | 664 |
| | ▶301 | | 433 | | 210 | | 667 |
| 149-8372 . . . . . | ▶300 | 153-6248 . . . . . | 419 | | 213 | | 671 |
| 149-8373 . . . . . | ▶300 | 153-6258 . . . . . | 389 | | 214 | 156-6438 . . . . . | 643 |
| 150-1147 . . . . . | 372 | | 392 | | 219 | | 648 |
| 150-1148 . . . . . | 372 | 153-8001 . . . . . | 399 | | 220 | | 653 |
| 150-2995 . . . . . | 139 | | 401 | | 226 | | 657 |
| 150-3072 . . . . . | 136 | 153-8002 . . . . . | 399 | | 227 | | 661 |
| 150-3087 . . . . . | 274 | | 401 | | 254 | | 664 |


▶ PRIMARY REFERENCE

# PART NUMBER INDEX


| Part | Page | Part | Page | Part | Page | Part | Page |
|---|---|---|---|---|---|---|---|
| | 667 | | 220 | | 459 | | 317 |
| | 671 | | 227 | 161-8041 . . . . . | 532 | 164-3961 . . . . . | 498 |
| 156-6439 . . . . . | 643 | 160-8492 . . . . . | 439 | 161-8290 . . . . . | 265 | 164-5544 . . . . . | 459 |
| | 648 | 160-9354 . . . . . | 338 | | 267 | 164-5548 . . . . . | 389 |
| | 653 | 161-1512 . . . . . | ▶494 | 161-9286 . . . . . | 640 | | 392 |
| | 657 | | 534 | 161-9288 . . . . . | 640 | 164-5567 . . . . . | 285 |
| 156-6441 . . . . . | 661 | 161-1703 . . . . . | 171 | 161-9290 . . . . . | 640 | | 287 |
| | 664 | 161-1704 . . . . . | 173 | 161-9916 . . . . . | 388 | | 289 |
| | 667 | 161-1705 . . . . . | 172 | | 391 | | 376 |
| | 671 | 161-4121 . . . . . | 522 | 162-0119 . . . . . | ▶530 | | 389 |
| 156-6449 . . . . . | 643 | 161-5715 . . . . . | 438 | | 572 | | 392 |
| | 648 | | ▶442 | 162-0122 . . . . . | 506 | | 425 |
| | 653 | 161-5797 . . . . . | 497 | 162-0123 . . . . . | 263 | | 429 |
| | 657 | 161-6149 . . . . . | 489 | 162-0174 . . . . . | 519 | | 432 |
| | 661 | 161-6154 . . . . . | 469 | 162-0175 . . . . . | 505 | | 435 |
| | 664 | 161-6161 . . . . . | 489 | 162-0177 . . . . . | 84 | | 541 |
| | 667 | 161-6405 . . . . . | ▶505 | | 569 | | 547 |
| | 671 | | 572 | 162-0178 . . . . . | 508 | 164-5576 . . . . . | 388 |
| 157-0670 . . . . . | 82 | 161-6406 . . . . . | ▶532 | | 532 | | 391 |
| | 93 | | 572 | 162-0179 . . . . . | 532 | | 425 |
| 157-1361 . . . . . | 577 | 161-6407 . . . . . | ▶498 | 162-0180 . . . . . | 532 | 164-5577 . . . . . | 389 |
| | 675 | | 500 | 162-0182 . . . . . | 506 | | 392 |
| 157-4317 . . . . . | 303 | 161-6416 . . . . . | 519 | 162-0183 . . . . . | 506 | 164-5590 . . . . . | 265 |
| 157-8371 . . . . . | 51 | 161-6417 . . . . . | 519 | 162-0184 . . . . . | 506 | | 267 |
| 158-3558 . . . . . | 601 | | 569 | 162-0185 . . . . . | 530 | | 425 |
| 158-3570 . . . . . | 601 | 161-6419 . . . . . | 505 | 162-2446 . . . . . | 535 | 164-5594 . . . . . | 426 |
| 158-3574 . . . . . | 601 | 161-6420 . . . . . | 505 | 162-2447 . . . . . | 535 | | 449 |
| 158-6072 . . . . . | 111 | 161-6422 . . . . . | 505 | 162-2448 . . . . . | 535 | | 452 |
| | 112 | 161-6424 . . . . . | 532 | 162-2449 . . . . . | 535 | | 458 |
| 158-6634 . . . . . | 213 | 161-6425 . . . . . | 532 | 162-2450 . . . . . | 550 | 164-5616 . . . . . | 544 |
| | 219 | 161-6426 . . . . . | 532 | 162-2753 . . . . . | 508 | 164-5624 . . . . . | 377 |
| | 226 | 161-6427 . . . . . | 532 | 162-2754 . . . . . | 508 | 164-5753 . . . . . | 285 |
| 158-7864 . . . . . | 691 | 161-6430 . . . . . | 498 | 162-2760 . . . . . | 530 | 164-5915 . . . . . | 592 |
| | 693 | 161-6432 . . . . . | 500 | 162-2762 . . . . . | 519 | 164-6859 . . . . . | 394 |
| 158-9956 . . . . . | 437 | 161-6433 . . . . . | 498 | 162-2766 . . . . . | 505 | 164-6860 . . . . . | 417 |
| | ▶469 | 161-6434 . . . . . | 498 | 162-2772 . . . . . | 532 | 164-6862 . . . . . | 422 |
| 159-0303 . . . . . | 2 | | 508 | 162-2775 . . . . . | 500 | 164-6864 . . . . . | 417 |
| | ▶53 | 161-6435 . . . . . | 498 | 162-3148 . . . . . | 70 | 164-6871 . . . . . | 419 |
| 159-2821 . . . . . | ▶535 | | 508 | 162-8068 . . . . . | 2 | 164-7005 . . . . . | 425 |
| | 567 | 161-6436 . . . . . | 498 | | ▶54 | 164-7556 . . . . . | 156 |
| 159-2905 . . . . . | 297 | | 508 | 162-8797 . . . . . | 336 | 164-8474 . . . . . | 643 |
| 159-3979 . . . . . | 587 | 161-6439 . . . . . | 508 | 162-9997 . . . . . | 498 | | 648 |
| | 588 | 161-6445 . . . . . | 506 | 163-0342 . . . . . | 248 | | 653 |
| | 589 | 161-6446 . . . . . | 506 | | 250 | | 657 |
| | ▶617 | 161-6448 . . . . . | 506 | | 252 | 165-1518 . . . . . | 139 |
| 159-5901 . . . . . | 461 | 161-6449 . . . . . | 506 | 163-0343 . . . . . | 252 | 165-2273 . . . . . | 445 |
| 159-8049 . . . . . | 165 | 161-6450 . . . . . | 506 | 163-0397 . . . . . | 237 | | 614 |
| 159-8050 . . . . . | 165 | 161-6451 . . . . . | 506 | | 243 | 165-4446 . . . . . | 3 |
| 159-9322 . . . . . | 214 | 161-6453 . . . . . | 530 | | ▶262 | | ▶44 |
| | 220 | 161-6454 . . . . . | 530 | 163-0872 . . . . . | 590 | 165-4557 . . . . . | 2 |
| | 227 | 161-6455 . . . . . | 530 | | ▶591 | | ▶30 |
| 160-0492 . . . . . | ▶412 | 161-6456 . . . . . | 530 | 163-1135 . . . . . | 637 | 165-4927 . . . . . | 422 |
| | 496 | 161-6466 . . . . . | 503 | 163-1201 . . . . . | 213 | 165-4935 . . . . . | 445 |
| 160-1577 . . . . . | 497 | 161-6467 . . . . . | 503 | | 219 | 165-5942 . . . . . | 305 |
| | ▶521 | 161-6468 . . . . . | 503 | | 226 | | ▶315 |
| 160-1762 . . . . . | 333 | 161-6641 . . . . . | 491 | 163-2478 . . . . . | 27 | 166-0354 . . . . . | 643 |
| 160-3448 . . . . . | 447 | | ▶558 | 163-3128 . . . . . | 619 | | 648 |
| 160-5131 . . . . . | 82 | 161-6642 . . . . . | 491 | 163-9324 . . . . . | 614 | | 653 |
| | 84 | | ▶522 | 164-0210 . . . . . | 67 | | 657 |
| 160-5773 . . . . . | 136 | 161-6861 . . . . . | 376 | 164-1234 . . . . . | 637 | | 661 |
| 160-6353 . . . . . | 622 | 161-6963 . . . . . | 90 | 164-2108 . . . . . | 309 | | 664 |
| 160-6365 . . . . . | 622 | | 111 | | 478 | | 667 |
| 160-6366 . . . . . | 622 | | 112 | 164-2748 . . . . . | 263 | | 671 |
| 160-7100 . . . . . | 139 | 161-8021 . . . . . | 450 | 164-3651 . . . . . | 287 | 166-0534 . . . . . | 2 |
| 160-7689 . . . . . | 214 | | 453 | | 289 | | ▶31 |


▶ **PRIMARY REFERENCE**

# PART NUMBER INDEX


| Part | Page |
|---|---|
| 166-1238 | 4 |
| | ▶190 |
| 166-1776 | 10 |
| 166-1781 | 10 |
| 166-2905 | 51 |
| 166-2910 | ▶500 |
| | 572 |
| 166-2914 | 506 |
| 166-2915 | 506 |
| 166-3541 | 530 |
| 166-3542 | 530 |
| 166-3543 | 530 |
| 166-3545 | ▶540 |
| | 572 |
| 166-3719 | 643 |
| | 648 |
| | 653 |
| | 657 |
| | 661 |
| | 664 |
| | 667 |
| | 671 |
| 166-3777 | 577 |
| | 580 |
| 166-7389 | 399 |
| | 401 |
| 167-2195 | 385 |
| | 387 |
| | 406 |
| | 408 |
| | 410 |
| | 411 |
| 167-2200 | 412 |
| 167-2304 | 385 |
| | 387 |
| | 406 |
| | 408 |
| | 410 |
| | 411 |
| 167-2307 | 412 |
| 167-6768 | 470 |
| 167-8121 | 30 |
| 167-9524 | 309 |
| 168-4527 | 282 |
| 168-5228 | 601 |
| 169-2894 | 535 |
| 169-3104 | 115 |
| | 130 |
| 169-5861 | 167 |
| 169-6326 | 623 |
| 169-6538 | 274 |
| | 276 |
| | 278 |
| 169-7391 | 394 |
| 169-7393 | 549 |
| 169-7409 | 417 |
| 169-8586 | 115 |
| | 130 |
| 169-8598 | 115 |
| | 130 |
| 170-1259 | 331 |
| 170-1807 | 236 |
| | 242 |
| 170-1840 | 250 |
| 170-1841 | 252 |
| 170-1877 | 360 |
| 170-1880 | 360 |
| 170-2169 | 577 |
| | 580 |
| 170-2170 | 577 |
| | 580 |
| 170-3503 | 331 |
| 170-6114 | 601 |
| 170-8531 | ▶403 |
| | 429 |
| | 432 |
| 171-1230 | 639 |
| 171-2014 | 374 |
| 171-2170 | 321 |
| | 323 |
| 171-2210 | 162 |
| 171-2212 | 162 |
| 171-3370 | 90 |
| 171-4047 | 643 |
| | 648 |
| | 653 |
| | 657 |
| 171-5349 | 178 |
| | 254 |
| 172-0307 | 505 |
| 172-0309 | 506 |
| 172-0311 | 506 |
| 172-0312 | 506 |
| 172-0313 | 530 |
| 172-0320 | 503 |
| 172-2437 | 532 |
| 172-3548 | 508 |
| 172-5761 | 425 |
| 172-6298 | 106 |
| 172-6986 | 640 |
| 172-6987 | 640 |
| 172-7966 | 310 |
| 172-7968 | 310 |
| 172-9906 | 559 |
| 173-0566 | 242 |
| | 262 |
| 173-4532 | 498 |
| 173-4533 | 498 |
| 173-5365 | 639 |
| | ▶640 |
| 173-5367 | 639 |
| 173-5372 | 588 |
| | 589 |
| | ▶634 |
| 173-5373 | 587 |
| | 588 |
| | ▶634 |
| 173-5549 | 63 |
| 173-5787 | 640 |
| 173-7035 | 635 |
| 173-7430 | 248 |
| | 250 |
| 173-7431 | 250 |
| | 252 |
| 173-7437 | 248 |
| 173-7438 | 250 |
| 173-7439 | 252 |
| 173-7469 | 341 |
| 173-7502 | 272 |
| 173-8458 | 146 |
| | 149 |
| 173-9683 | 297 |
| | 406 |
| | 408 |
| | 410 |
| | 411 |
| 173-9877 | 498 |
| 173-9881 | ▶506 |
| | 572 |
| 173-9882 | 506 |
| | ▶508 |
| 173-9883 | 508 |
| 174-1504 | 583 |
| | 585 |
| 174-1505 | 584 |
| | 586 |
| 174-4312 | 374 |
| 174-4797 | 412 |
| 174-4869 | 583 |
| 174-4870 | 584 |
| 174-5415 | 109 |
| 174-6133 | 296 |
| 174-7449 | 310 |
| 174-9570 | ▶114 |
| | 128 |
| 174-9801 | 604 |
| | 606 |
| 175-0070 | 583 |
| | 584 |
| | 585 |
| | 586 |
| 175-1367 | 7 |
| 175-1375 | 417 |
| 175-1444 | 519 |
| 175-1445 | 519 |
| 175-3726 | 297 |
| 175-4966 | 242 |
| | 262 |
| 175-7898 | 385 |
| | 387 |
| 175-7900 | 412 |
| 176-0029 | 519 |
| 176-0629 | 236 |
| | ▶308 |
| 176-3900 | ▶573 |
| 176-5311 | 361 |
| 176-7075 | 144 |
| 176-7091 | 519 |
| 176-9394 | 71 |
| 177-1052 | 87 |
| 177-1058 | 87 |
| 177-2373 | ▶199 |
| | 200 |
| 177-4255 | 439 |
| | 441 |
| 177-9742 | ▶396 |
| | 397 |
| 177-9743 | 396 |
| 177-9953 | ▶142 |
| | 144 |
| 178-5210 | 263 |
| 178-7242 | 629 |
| 178-9029 | 285 |
| 179-0006 | ▶196 |
| | 230 |
| 179-0091 | 111 |
| 179-1967 | 274 |
| | 276 |
| 179-1971 | 274 |
| | 276 |
| | 278 |
| 179-4324 | 385 |
| | 387 |
| 179-6023 | 2 |
| | ▶60 |
| 179-6377 | 315 |
| 179-7064 | ▶519 |
| | 572 |
| 179-7304 | 530 |
| 179-9387 | ▶404 |
| 179-9392 | 202 |
| 179-9492 | 503 |
| | 566 |
| 180-9186 | ▶333 |
| | 588 |
| | 589 |
| 180-9900 | 202 |
| 183-1410 | 464 |
| | ▶487 |
| 183-2931 | 87 |
| 183-3399 | 73 |
| | 74 |
| 183-3406 | 122 |
| | 124 |
| | 167 |
| | 265 |
| | 267 |
| | 287 |
| | 289 |
| | 420 |
| 183-3873 | 136 |
| 183-4183 | 372 |
| 183-4184 | 372 |
| 183-4216 | 372 |
| 183-4365 | 63 |
| 183-6845 | 2 |
| | ▶106 |
| 183-6854 | 106 |
| 183-6856 | 106 |
| 183-7263 | 167 |
| | 549 |
| 183-7512 | 388 |
| | 391 |
| 183-8562 | 376 |
| 183-9322 | 388 |
| | 391 |
| 184-1155 | 491 |
| | ▶526 |
| 184-1156 | 526 |
| 184-3582 | 258 |
| | 260 |
| 184-3586 | 258 |
| | 260 |
| 184-3587 | 232 |
| | ▶258 |
| 184-3588 | 232 |
| | ▶260 |
| 184-8067 | 519 |
| 184-8068 | 519 |
| 185-1145 | 3 |


▶ PRIMARY REFERENCE

# PART NUMBER INDEX


| Part | Page |
|---|---|
| | ▶110 |
| 185-2638 | 142 |
| 185-2639 | 142 |
| 185-2643 | 142 |
| 185-2644 | 142 |
| 185-2645 | 142 |
| 185-2647 | 142 |
| 185-2648 | 142 |
| 185-2650 | 142 |
| 185-2651 | 142 |
| 185-2653 | 142 |
| 185-2654 | 142 |
| 185-2655 | 142 |
| 185-2658 | 142 |
| 185-3365 | 379 |
| 185-6619 | 258 |
| | 260 |
| 185-7650 | 336 |
| 185-7659 | 336 |
| 185-8016 | 110 |
| | ▶111 |
| 185-8779 | 258 |
| | 260 |
| 186-1526 | 312 |
| | ▶314 |
| 186-2562 | 360 |
| 186-3148 | 690 |
| 186-3735 | 141 |
| | 169 |
| | 178 |
| | 195 |
| | 198 |
| | 201 |
| | 202 |
| | 212 |
| | 213 |
| | 219 |
| | 226 |
| | 230 |
| | 254 |
| | 314 |
| | 513 |
| | 680 |
| 186-3736 | 197 |
| 186-5107 | 637 |
| 186-6190 | ▶574 |
| | 614 |
| 187-5127 | 676 |
| | 677 |
| 187-5128 | 676 |
| | 677 |
| 187-6279 | 2 |
| | ▶73 |
| | ▶74 |
| 187-6294 | 73 |
| | 74 |
| 189-5433 | 2 |
| | ▶69 |
| 189-7726 | 405 |
| 189-8369 | 388 |
| | 391 |
| 189-8772 | 106 |
| 189-8777 | 78 |
| 189-8780 | 2 |
| | ▶96 |
| 189-8898 | 478 |
| 190-1094 | 338 |
| 190-1105 | 118 |
| | 120 |
| | ▶133 |
| 190-4372 | 429 |
| | 432 |
| 191-0446 | 680 |
| 191-0447 | 680 |
| 191-0461 | 3 |
| | ▶126 |
| 191-0522 | 66 |
| 191-0523 | ▶66 |
| | 126 |
| 191-0920 | 130 |
| 191-1782 | 133 |
| 191-1783 | 133 |
| 191-3040 | 676 |
| | 677 |
| 191-4508 | ▶637 |
| | 639 |
| 191-4904 | 425 |
| 191-8720 | 303 |
| 192-1563 | ▶45 |
| | 590 |
| 192-2684 | 425 |
| 192-2981 | 3 |
| | ▶77 |
| 192-4594 | 100 |
| 192-6406 | 385 |
| | 387 |
| 192-7752 | 637 |
| 192-7755 | 637 |
| 192-7760 | 637 |
| 192-7767 | 637 |
| 192-7783 | 637 |
| 192-7787 | 637 |
| 192-7795 | 637 |
| 192-7799 | 637 |
| 192-7805 | 637 |
| 192-7810 | 637 |
| 192-7812 | 637 |
| 192-7820 | 637 |
| 192-7822 | 637 |
| 192-7848 | 637 |
| 192-9018 | 604 |
| | 606 |
| 193-0421 | ▶178 |
| | 237 |
| 193-2200 | 236 |
| | 242 |
| | 276 |
| | 278 |
| 193-3067 | 258 |
| 193-3068 | 258 |
| 193-4623 | 203 |
| 193-7417 | ▶503 |
| | 572 |
| 193-7418 | 503 |
| 193-8570 | 192 |
| 194-2903 | 388 |
| | 391 |
| 194-4411 | 303 |
| 194-5171 | 682 |
| 194-5226 | 170 |
| | 174 |
| | 175 |
| 194-5227 | 175 |
| 194-5444 | 379 |
| 194-6725 | 122 |
| | 124 |
| | ▶170 |
| 195-0321 | 52 |
| 195-0821 | 455 |
| | ▶465 |
| 195-5033 | 465 |
| | ▶472 |
| 195-7386 | 80 |
| 196-0077 | 2 |
| | ▶51 |
| 196-0268 | 111 |
| 196-0351 | 111 |
| 196-1185 | 254 |
| 196-2036 | 388 |
| | 391 |
| 196-3836 | 472 |
| | 482 |
| 196-3837 | 472 |
| | 482 |
| 196-8556 | 604 |
| | 606 |
| 196-9519 | 16 |
| | 18 |
| | 20 |
| 197-3578 | 474 |
| | 480 |
| 197-8391 | 167 |
| | ▶182 |
| | ▶183 |
| 197-8392 | 167 |
| | ▶184 |
| | ▶185 |
| 197-8393 | 167 |
| | ▶171 |
| 197-8394 | 167 |
| | ▶172 |
| 197-8419 | 74 |
| 197-9353 | 52 |
| 197-9371 | 52 |
| 197-9372 | 52 |
| 197-9386 | 52 |
| 197-9580 | 87 |
| 197-9581 | 87 |
| 197-9642 | 590 |
| 198-2713 | 210 |
| 198-2714 | 2 |
| | ▶210 |
| 198-7667 | 136 |
| 199-4322 | 439 |
| | 441 |
| 199-6162 | 604 |
| | 606 |
| 199-7891 | 142 |
| 199-8436 | 142 |
| 199-9822 | 643 |
| | 648 |
| | 653 |
| | 657 |

## 2

| Part | Page |
|---|---|
| 200-1315 | 276 |
| | ▶369 |
| 200-1316 | 369 |
| | 370 |
| 200-2050 | 317 |
| 200-2258 | 80 |
| 200-3195 | ▶410 |
| | 534 |
| 200-3202 | ▶406 |
| | 534 |
| 200-3204 | ▶408 |
| | 534 |
| 200-4495 | 41 |
| 200-4497 | 77 |
| | ▶78 |
| 200-6345 | 388 |
| | 391 |
| 200-7138 | 109 |
| 200-7871 | 339 |
| 200-7872 | 339 |
| 200-8457 | 339 |
| 200-8458 | 339 |
| 201-0875 | 425 |
| 201-1566 | 410 |
| 201-3321 | 254 |
| 201-3423 | 635 |
| | 636 |
| | ▶639 |
| 201-4826 | 406 |
| | 408 |
| | 410 |
| | 411 |
| 201-9109 | 621 |
| 201-9774 | 69 |
| 202-4327 | 621 |
| 202-6614 | 156 |
| 202-7670 | 621 |
| 202-7935 | 104 |
| 202-8709 | 696 |
| 203-2744 | 410 |
| 203-3338 | 559 |
| 203-3768 | 106 |
| 203-3938 | 688 |
| 203-3940 | 179 |
| 203-3953 | 561 |
| 203-6066 | 621 |
| 203-6093 | 87 |
| 203-6127 | 493 |
| | 494 |
| | 495 |
| 203-6128 | 297 |
| 203-6623 | 516 |
| 203-6637 | 569 |
| 203-6641 | 569 |
| 203-7632 | 530 |
| 203-7715 | 688 |
| 204-0347 | 559 |
| 204-0354 | 623 |
| 204-0363 | ▶623 |
| 204-0364 | ▶696 |
| 204-0920 | 90 |
| 204-2281 | 388 |
| | 391 |


▶ **PRIMARY REFERENCE**

# PART NUMBER INDEX


| Part | Page | Part | Page | Part | Page | Part | Page |
|---|---|---|---|---|---|---|---|
| 204-4476 | 556 | 208-9282 | 212 | 214-7567 | 176 | 219-5847 | ▶28 |
| 204-5308 | 300 | 208-9284 | 212 | 214-7568 | 73 | | 29 |
| | ▶301 | 209-0381 | 154 | | 74 | 219-5849 | 3 |
| 204-5309 | ▶300 | 209-4573 | 90 | | 126 | | ▶29 |
| 204-7057 | 318 | 209-4578 | 104 | | 127 | 219-6036 | 621 |
| | 329 | 209-4580 | 104 | 215-3128 | 157 | 219-7935 | 519 |
| 204-7949 | ▶169 | 209-4600 | 2 | | ▶158 | | 569 |
| | 622 | | ▶86 | | 587 | 219-8899 | 441 |
| 204-8758 | 403 | 209-5582 | 212 | | 588 | 219-9905 | 678 |
| | 404 | 209-5786 | 343 | | 589 | 219-9906 | 629 |
| 205-1280 | 126 | | 345 | 215-3685 | 376 | | 678 |
| 205-1320 | 41 | 209-5787 | 343 | | ▶382 | 220-0170 | 678 |
| 205-1321 | 3 | | 345 | 215-6981 | 48 | 220-1194 | 2 |
| | ▶41 | 209-7194 | 554 | 215-6982 | 2 | | ▶70 |
| 205-2357 | 419 | 209-9234 | 134 | | ▶48 | 220-1864 | 157 |
| 205-3079 | 420 | 210-1747 | 167 | 216-4983 | 88 | | ▶159 |
| 205-4285 | 612 | | ▶173 | 216-5586 | 24 | 220-2346 | 678 |
| 205-6406 | 302 | 210-3321 | 7 | 216-7325 | 107 | 220-2347 | 678 |
| 205-6407 | 302 | | 9 | 217-3252 | 258 | 220-2348 | 678 |
| 205-7341 | 300 | 210-5590 | 3 | | 260 | 220-2349 | 678 |
| | ▶302 | | ▶16 | 217-3405 | 577 | 220-2350 | 678 |
| 205-7342 | ▶300 | | ▶18 | | 580 | 220-2351 | 678 |
| 205-7343 | 301 | | ▶20 | 217-3681 | 258 | 220-3330 | 643 |
| | ▶302 | 210-7722 | 106 | 217-3682 | 260 | | 648 |
| 205-7345 | ▶301 | 210-9246 | 74 | 217-4145 | 577 | | 653 |
| 205-8129 | ▶688 | 211-0394 | 519 | | 580 | | 657 |
| | 696 | 211-1640 | 508 | 217-5213 | 26 | 220-3450 | 361 |
| 205-8130 | ▶687 | 211-2101 | 48 | 217-5293 | 388 | 220-3458 | 361 |
| | 696 | 211-5358 | 637 | | 391 | 220-8427 | 159 |
| 205-8131 | 696 | 211-7730 | 134 | 217-5701 | 12 | 220-8436 | 159 |
| | ▶697 | 211-8754 | 569 | 217-6885 | 90 | 220-8437 | 159 |
| 205-8132 | 697 | 211-9023 | 502 | 217-7368 | 587 | 220-8678 | 114 |
| 205-8134 | 687 | 211-9024 | 502 | | 588 | 221-2657 | 588 |
| 205-8135 | 688 | 211-9120 | 3 | | ▶610 | | 589 |
| 205-8137 | 688 | | ▶10 | 217-7371 | 610 | | ▶611 |
| 205-8138 | 688 | 211-9294 | 637 | 217-7374 | 610 | 221-3417 | ▶174 |
| 205-8139 | 688 | 212-3652 | 3 | 217-7380 | 624 | | 388 |
| 205-8140 | 687 | | ▶52 | 217-8748 | 583 | | 391 |
| 205-8143 | 687 | 212-3706 | 126 | 217-8749 | 577 | 221-3494 | 73 |
| 205-8154 | 697 | 212-4288 | 5 | | ▶583 | | 74 |
| 205-8395 | 697 | 212-4289 | 3 | 217-8750 | 577 | | 126 |
| 205-9501 | 688 | | ▶5 | | ▶584 | 221-4035 | ▶157 |
| 206-1345 | 122 | 212-4893 | 16 | 217-8751 | 584 | 221-4037 | ▶157 |
| | 124 | | 18 | 217-9060 | 82 | 221-4482 | 3 |
| | 210 | | 20 | | 93 | | ▶22 |
| 206-4228 | 2 | 212-7426 | 333 | 218-0859 | 2 | 221-5341 | 159 |
| | ▶82 | 212-7427 | 333 | | ▶36 | 221-5342 | 159 |
| 206-5157 | 406 | 213-1578 | 100 | 218-2328 | 577 | 221-8546 | 680 |
| 206-5158 | 406 | 213-3193 | 52 | | 580 | 221-9193 | ▶627 |
| | 408 | 213-6311 | ▶291 | 218-2373 | 478 | 221-9348 | 627 |
| | 411 | | 292 | 218-8487 | 614 | 221-9349 | 627 |
| 206-6465 | 111 | 213-7315 | 643 | 218-8488 | 614 | 221-9350 | 627 |
| 206-6998 | 408 | | 653 | 219-0305 | 691 | 221-9378 | 627 |
| 207-1560 | 190 | | 661 | | 693 | 221-9379 | 627 |
| | ▶191 | | 667 | 219-0314 | 95 | 222-1185 | 63 |
| 207-1561 | 191 | 213-9100 | 213 | | 105 | 222-1186 | 63 |
| | ▶192 | | 219 | 219-0643 | 561 | 222-1250 | 634 |
| 207-6069 | 461 | | 226 | 219-1956 | ▶154 | | ▶635 |
| 207-8637 | 688 | 214-0736 | 429 | 219-3309 | 61 | 222-1251 | 634 |
| 208-0305 | 577 | | 432 | | 62 | | ▶636 |
| | 580 | 214-3221 | 413 | 219-3560 | 559 | 222-1807 | 637 |
| 208-7047 | 265 | 214-3222 | 413 | 219-5844 | ▶26 | 222-2880 | 55 |
| | 267 | 214-3225 | 413 | | 27 | 222-3731 | 627 |
| 208-7448 | 105 | 214-6589 | ▶415 | 219-5846 | ▶27 | 222-3910 | 58 |
| 208-9277 | 212 | | 425 | | 28 | 222-5374 | 682 |


▶ PRIMARY REFERENCE

# PART NUMBER INDEX


| Part | Page |
|---|---|
| 222-5378 | 682 |
| 222-5806 | 265 |
| | 267 |
| | ▶269 |
| 222-5893 | 7 |
| | 9 |
| 222-5915 | 82 |
| | 84 |
| 222-5917 | 210 |
| 222-5946 | 2 |
| | ▶67 |
| 222-5947 | 2 |
| | ▶7 |
| | ▶9 |
| 222-5958 | 3 |
| | ▶129 |
| | ▶130 |
| 222-5962 | 130 |
| 222-7890 | 202 |
| 222-8632 | 331 |
| 222-8635 | 331 |
| 222-8636 | 331 |
| 223-3645 | 331 |
| 223-3694 | 577 |
| | 580 |
| 223-3917 | ▶362 |
| 223-4375 | 595 |
| | 596 |
| 223-4376 | 595 |
| | 596 |
| 223-8968 | 682 |
| 223-9121 | 611 |
| 223-9818 | 691 |
| | 693 |
| 224-0672 | 695 |
| 224-2777 | 629 |
| 224-3247 | 5 |
| 224-3362 | 554 |
| 224-3364 | 554 |
| 224-3386 | 554 |
| 224-3388 | 554 |
| 224-3418 | 519 |
| 224-3419 | 519 |
| 224-3469 | 629 |
| 224-4111 | 528 |
| 224-4273 | 629 |
| 224-4274 | 629 |
| 224-4536 | ▶175 |
| | 176 |
| 224-4977 | 528 |
| | 561 |
| 224-4978 | 561 |
| 224-5132 | 362 |
| | 363 |
| | 364 |
| | 365 |
| | 366 |
| 224-5152 | 362 |
| | 363 |
| | 364 |
| | 365 |
| | 366 |
| 224-6638 | 52 |
| 224-7277 | 629 |
| 224-7830 | 691 |
| | 693 |
| 224-8945 | 691 |
| | 693 |
| 224-8946 | 695 |
| 225-0287 | 528 |
| | 554 |
| | 561 |
| 225-0312 | 695 |
| 225-0313 | 165 |
| | 691 |
| | 693 |
| 225-4256 | 691 |
| | 693 |
| 225-4257 | 695 |
| 225-6557 | 559 |
| 225-8031 | 534 |
| | ▶554 |
| 225-9457 | 528 |
| | ▶559 |
| 226-1240 | 695 |
| 226-1242 | 691 |
| | 693 |
| 226-1274 | 695 |
| 226-1275 | 691 |
| | 693 |
| 226-2684 | 282 |
| 226-6039 | 87 |
| 226-6051 | 87 |
| 226-7927 | 49 |
| 226-8696 | 76 |
| 226-9219 | 682 |
| 226-9220 | 682 |
| 226-9221 | 682 |
| 226-9622 | 309 |
| | 478 |
| 227-1200 | 26 |
| 227-2004 | 379 |
| 227-4002 | 210 |
| 227-4299 | 86 |
| | ▶87 |
| 227-4301 | 87 |
| 227-5480 | 18 |
| 227-5904 | 127 |
| 227-5942 | 82 |
| | 84 |
| 227-6744 | 269 |
| 227-7390 | 695 |
| 227-7391 | 695 |
| 228-0830 | 413 |
| 228-2615 | 691 |
| | 693 |
| 228-2616 | 695 |
| 228-3621 | 36 |
| 228-3714 | 559 |
| 228-3715 | 559 |
| 228-3716 | 559 |
| 228-3717 | 559 |
| 228-3718 | 559 |
| 228-3720 | 559 |
| 228-3722 | 559 |
| 228-3725 | 559 |
| 228-3726 | 559 |
| 228-3737 | 559 |
| 228-4709 | 73 |
| 228-6089 | 203 |
| | 515 |
| 228-8510 | 70 |
| 228-9898 | ▶397 |
| | 398 |
| 228-9922 | 1 |
| | ▶360 |
| 229-0080 | 397 |
| 229-0105 | 544 |
| 229-0666 | 297 |
| 229-3604 | 394 |
| 229-3614 | 394 |
| 229-3623 | 394 |
| 229-5153 | 16 |
| | 18 |
| | 20 |
| 229-5154 | 16 |
| | 18 |
| | 20 |
| 229-5155 | 16 |
| | 18 |
| | 20 |
| 229-5156 | 16 |
| | 18 |
| | 20 |
| 229-5424 | 331 |
| 229-6701 | 417 |
| 229-7253 | 297 |
| 229-7290 | 297 |
| 229-7292 | 297 |
| 229-8343 | 394 |
| 229-8344 | 394 |
| 229-8844 | 35 |
| 229-8851 | 212 |
| 229-9382 | 385 |
| | 387 |
| | 406 |
| | 408 |
| | 410 |
| | 411 |
| 230-3246 | 321 |
| | 323 |
| 230-3250 | 321 |
| | 323 |
| 230-6262 | 51 |
| 230-8871 | 544 |
| 231-1977 | 2 |
| | ▶167 |
| 231-3538 | 412 |
| 231-5899 | 546 |
| 231-6361 | 2 |
| | ▶80 |
| 232-0343 | 122 |
| | 124 |
| | ▶135 |
| 232-1754 | 61 |
| | 62 |
| 232-3717 | 3 |
| | ▶61 |
| | ▶62 |
| 233-0891 | 153 |
| 233-4862 | 297 |
| 233-6660 | 297 |
| 233-7486 | 517 |
| 233-7654 | 69 |
| 233-7655 | 79 |
| 234-4325 | ▶156 |
| | 158 |
| | 159 |
| 234-4380 | 280 |
| 234-6666 | 314 |
| 234-7730 | 156 |
| 234-7731 | 156 |
| 235-1496 | 2 |
| | ▶3 |
| 235-1497 | 1 |
| | ▶2 |
| 235-3595 | 122 |
| | 124 |
| 235-3596 | 122 |
| | 124 |
| 235-5527 | 63 |
| | 65 |
| 235-5528 | 61 |
| | ▶63 |
| 235-8724 | 128 |
| 235-8725 | ▶128 |
| | 134 |
| 235-9651 | 129 |
| | 131 |
| | 132 |
| 236-1879 | 564 |
| | 565 |
| 236-2541 | 248 |
| | 250 |
| | 252 |
| 236-4608 | 202 |
| 236-4611 | 608 |
| 236-4615 | 230 |
| 236-6220 | 167 |
| | ▶176 |
| 236-6221 | 167 |
| | ▶179 |
| 237-0957 | ▶177 |
| | 419 |
| 237-3943 | 637 |
| 237-3970 | ▶575 |
| | 637 |
| 237-4147 | 379 |
| 237-5176 | 82 |
| | 84 |
| 237-8063 | 2 |
| | ▶76 |
| 237-9308 | 122 |
| | 124 |
| 238-1074 | 144 |
| 238-2706 | 52 |
| 238-2720 | 52 |
| 238-4802 | 2 |
| | ▶84 |
| 238-8178 | 2 |
| | ▶71 |
| 238-8181 | 71 |
| 238-8185 | 2 |
| | ▶122 |
| | ▶124 |
| 238-8232 | ▶363 |
| | 376 |
| 238-9804 | ▶595 |
| | ▶596 |
| | 597 |


▶ **PRIMARY REFERENCE**

# PART NUMBER INDEX


| Part | Page | Part | Page | Part | Page | Part | Page |
|---|---|---|---|---|---|---|---|
| | 599 | | 657 | 246-9345 . . . . . | 2 | 250-3522 . . . . . | 350 |
| 239-0583 . . . . . | 6 | 245-8905 . . . . . | 661 | | ▶153 | 250-3554 . . . . . | 352 |
| 239-1134 . . . . . | 186 | | 664 | 247-1876 . . . . . | 6 | | 355 |
| | ▶201 | | 667 | 247-5010 . . . . . | 107 | 250-6148 . . . . . | 437 |
| 239-3639 . . . . . | 301 | | 671 | 247-5011 . . . . . | 107 | | 541 |
| 239-6986 . . . . . | 691 | 245-8909 . . . . . | 661 | 247-5716 . . . . . | 2 | | 546 |
| | 693 | | 664 | | ▶11 | 250-6158 . . . . . | 4 |
| 239-9941 . . . . . | ▶364 | | 667 | 248-0055 . . . . . | 4 | | ▶144 |
| | 376 | | 671 | | ▶104 | 250-6161 . . . . . | 4 |
| 240-3454 . . . . . | 425 | 245-9457 . . . . . | ▶1 | 248-0059 . . . . . | 1 | | ▶95 |
| 240-5972 . . . . . | ▶365 | 245-9460 . . . . . | ▶1 | | ▶361 | 250-6162 . . . . . | 4 |
| 240-6822 . . . . . | 314 | 245-9463 . . . . . | 1 | 248-0062 . . . . . | 1 | | ▶107 |
| 241-0037 . . . . . | 362 | | ▶292 | | ▶691 | 250-6743 . . . . . | 447 |
| 241-3720 . . . . . | 695 | 245-9466 . . . . . | 1 | | ▶693 | 250-7563 . . . . . | 4 |
| 241-3722 . . . . . | 691 | | ▶416 | 248-0066 . . . . . | 104 | | ▶81 |
| | 693 | 245-9469 . . . . . | 1 | 248-0833 . . . . . | 280 | 250-7564 . . . . . | 4 |
| 241-4194 . . . . . | 186 | | ▶155 | | 282 | | ▶55 |
| 241-5895 . . . . . | 437 | 245-9848 . . . . . | 486 | 248-4224 . . . . . | 1 | 251-0029 . . . . . | 347 |
| | 541 | 245-9865 . . . . . | 486 | | ▶4 | 251-1195 . . . . . | 202 |
| | 546 | 246-1190 . . . . . | 629 | 248-4874 . . . . . | 492 | 251-1196 . . . . . | 577 |
| 241-6205 . . . . . | 310 | | 678 | | 524 | | 675 |
| 241-6215 . . . . . | 425 | 246-1200 . . . . . | 624 | | 525 | 251-1316 . . . . . | 576 |
| 241-8368 . . . . . | ▶197 | 246-1204 . . . . . | 629 | 248-4876 . . . . . | 524 | | ▶592 |
| | 202 | | 678 | | 525 | 251-1318 . . . . . | 576 |
| 242-2411 . . . . . | ▶12 | 246-1205 . . . . . | 643 | 249-3441 . . . . . | 445 | | ▶614 |
| | 13 | | 648 | | ▶447 | 251-1323 . . . . . | 1 |
| 242-3360 . . . . . | 112 | | 653 | 249-3442 . . . . . | 447 | | ▶118 |
| 242-3864 . . . . . | 69 | | 657 | 249-3824 . . . . . | 416 | | ▶120 |
| 243-0767 . . . . . | 416 | | 661 | | ▶445 | 251-1325 . . . . . | 1 |
| | 510 | | 664 | 249-6698 . . . . . | 347 | | ▶90 |
| | 511 | | 667 | 249-6699 . . . . . | 1 | 251-1549 . . . . . | 576 |
| 243-2757 . . . . . | 360 | | 671 | | ▶347 | | ▶590 |
| 243-2758 . . . . . | 360 | 246-1206 . . . . . | 588 | 249-6708 . . . . . | 347 | 251-2029 . . . . . | 202 |
| 243-2759 . . . . . | 360 | | 589 | 249-6716 . . . . . | 347 | 251-3573 . . . . . | 3 |
| 243-2760 . . . . . | 360 | | ▶629 | 249-8137 . . . . . | 1 | 251-4315 . . . . . | 429 |
| 244-0357 . . . . . | ▶94 | 246-1209 . . . . . | 678 | | ▶352 | | 432 |
| | 95 | 246-1210 . . . . . | 661 | | ▶355 | | ▶439 |
| 244-3114 . . . . . | 237 | | 664 | 249-8139 . . . . . | 352 | 251-4320 . . . . . | 325 |
| | 254 | 246-2641 . . . . . | 136 | | 355 | 251-4339 . . . . . | 202 |
| | ▶309 | | 690 | 249-8720 . . . . . | 352 | 251-5887 . . . . . | 352 |
| | 317 | 246-4612 . . . . . | 94 | | 355 | | 355 |
| 244-3168 . . . . . | 153 | 246-4614 . . . . . | 94 | 249-8740 . . . . . | 590 | 251-6167 . . . . . | 614 |
| 244-4486 . . . . . | 13 | 246-4615 . . . . . | 94 | 249-9113 . . . . . | 352 | 251-7691 . . . . . | 643 |
| | 14 | 246-5083 . . . . . | 13 | | 355 | | 648 |
| 244-4500 . . . . . | 35 | 246-5996 . . . . . | 1 | 249-9180 . . . . . | 352 | | 653 |
| 245-1339 . . . . . | 202 | | ▶326 | | 355 | | 657 |
| | ▶618 | 246-5998 . . . . . | 1 | 249-9215 . . . . . | 352 | 251-7692 . . . . . | 643 |
| 245-3259 . . . . . | 44 | | ▶331 | | 355 | | 648 |
| 245-4628 . . . . . | 55 | 246-6003 . . . . . | ▶325 | 249-9245 . . . . . | 352 | | 653 |
| 245-4630 . . . . . | 179 | | 328 | | 355 | | 657 |
| 245-6375 . . . . . | 94 | 246-6004 . . . . . | 329 | 249-9283 . . . . . | 352 | 251-7693 . . . . . | 643 |
| 245-6376 . . . . . | 94 | 246-6005 . . . . . | 330 | | 355 | | 648 |
| 245-6795 . . . . . | 98 | 246-6006 . . . . . | 1 | 249-9421 . . . . . | 352 | | 653 |
| | 99 | | ▶349 | | 355 | | 657 |
| 245-6796 . . . . . | 14 | 246-6007 . . . . . | 1 | 250-0187 . . . . . | 352 | | 661 |
| 245-7339 . . . . . | 58 | | ▶332 | | 355 | | 664 |
| 245-7707 . . . . . | ▶620 | 246-6008 . . . . . | 1 | 250-0216 . . . . . | 352 | | 667 |
| | 624 | | ▶350 | | 355 | | 671 |
| 245-8900 . . . . . | 643 | 246-6036 . . . . . | 74 | 250-0220 . . . . . | 352 | 251-7694 . . . . . | 643 |
| | 648 | 246-7165 . . . . . | 678 | | 355 | | 648 |
| | 653 | 246-7167 . . . . . | 678 | 250-0841 . . . . . | ▶112 | 251-7800 . . . . . | 325 |
| | 657 | 246-7168 . . . . . | 678 | | 113 | | 329 |
| 245-8904 . . . . . | 643 | 246-7169 . . . . . | 629 | 250-1799 . . . . . | 282 | | 330 |
| | 648 | 246-7170 . . . . . | 629 | 250-1899 . . . . . | 352 | 251-9335 . . . . . | 248 |
| | 653 | 246-7171 . . . . . | 629 | | 355 | | 250 |


▶ PRIMARY REFERENCE

# PART NUMBER INDEX


| Part | Page |
|---|---|
| | 252 |
| 251-9350 | ▶200 |
| | 399 |
| | 401 |
| 251-9553 | 200 |
| 251-9554 | 200 |
| 251-9627 | 55 |
| 251-9707 | 1 |
| | ▶297 |
| 251-9734 | ▶321 |
| | ▶323 |
| | 326 |
| 251-9735 | 331 |
| 252-0741 | 381 |
| 252-0742 | 374 |
| | ▶381 |
| 252-0745 | 381 |
| 252-0796 | ▶441 |
| | 544 |
| 252-1410 | ▶587 |
| 252-1413 | ▶576 |
| | 587 |
| 252-1414 | 576 |
| | ▶577 |
| | ▶580 |
| 252-1415 | ▶587 |
| 252-1417 | ▶319 |
| | 587 |
| | 588 |
| | 589 |
| 252-1418 | 587 |
| | 588 |
| | 589 |
| | ▶695 |
| 252-1712 | 587 |
| | ▶643 |
| | ▶648 |
| 252-1718 | ▶587 |
| 252-1720 | 587 |
| | ▶588 |
| 252-1721 | 588 |
| | ▶653 |
| | ▶657 |
| 252-1722 | ▶588 |
| 252-1728 | ▶589 |
| 252-1729 | 588 |
| | ▶661 |
| | ▶664 |
| 252-1730 | 589 |
| | ▶667 |
| | ▶671 |
| 252-2228 | 587 |
| | 588 |
| | 589 |
| | ▶624 |
| 252-4558 | 513 |
| 252-4559 | 202 |
| 252-5113 | 667 |
| | 671 |
| 252-5116 | 643 |
| | 648 |
| | 653 |
| | 657 |
| | 661 |
| | 664 |
| | 667 |
| | 671 |
| 252-5119 | 653 |
| | 657 |
| 252-5120 | 643 |
| | 648 |
| | 653 |
| | 657 |
| 252-5196 | 534 |
| | ▶567 |
| 252-5197 | ▶567 |
| | 568 |
| 252-5198 | ▶552 |
| | 567 |
| 252-5199 | ▶553 |
| | 567 |
| 252-5200 | ▶510 |
| | 567 |
| 252-5201 | ▶511 |
| | 567 |
| 252-5202 | ▶536 |
| | 567 |
| 252-5203 | ▶537 |
| | 567 |
| 252-5205 | ▶541 |
| | 567 |
| 252-5206 | 567 |
| | ▶569 |
| 252-5864 | 385 |
| | 387 |
| 252-5867 | 385 |
| 252-5868 | 387 |
| 252-5870 | 385 |
| | 387 |
| 252-5871 | ▶385 |
| | 416 |
| 252-5872 | ▶387 |
| | 416 |
| 252-6534 | 416 |
| | ▶425 |
| 252-6536 | ▶376 |
| | 416 |
| 252-6537 | 416 |
| | ▶429 |
| 252-6538 | ▶374 |
| | 416 |
| 252-6539 | ▶394 |
| | 416 |
| 252-6540 | ▶287 |
| | ▶289 |
| | 292 |
| 252-6543 | ▶265 |
| | ▶267 |
| | 292 |
| 252-6545 | ▶285 |
| | 292 |
| 252-6548 | 292 |
| | ▶379 |
| 252-6551 | 1 |
| | ▶136 |
| 252-6553 | 1 |
| | ▶358 |
| 252-6555 | ▶383 |
| | 416 |
| 252-6556 | ▶263 |
| | 292 |
| 252-6567 | ▶405 |
| | 416 |
| 252-6570 | 597 |
| | 599 |
| 252-6574 | 285 |
| 252-6575 | 425 |
| 252-6576 | 425 |
| 252-6577 | 425 |
| 252-6578 | 425 |
| 252-6579 | 425 |
| 252-6580 | 425 |
| 252-7096 | 376 |
| 252-7097 | 376 |
| 252-7098 | 376 |
| 252-7099 | 376 |
| 252-7100 | 376 |
| 252-7101 | 376 |
| 252-7102 | 376 |
| 252-7103 | 376 |
| 252-7104 | 376 |
| 252-7105 | 374 |
| 252-7106 | 374 |
| 252-7107 | 374 |
| 252-7109 | 429 |
| | 432 |
| 252-7110 | 429 |
| | 432 |
| 252-7123 | 383 |
| 252-7125 | 425 |
| 252-8757 | 326 |
| | 349 |
| 252-9530 | 361 |
| 252-9607 | 614 |
| 253-0556 | 1 |
| | ▶103 |
| 253-0861 | 684 |
| | 685 |
| 253-0931 | 385 |
| | 387 |
| 253-1764 | 464 |
| 253-2111 | 162 |
| 253-2142 | ▶398 |
| 253-2515 | ▶534 |
| 253-2518 | ▶534 |
| 253-2682 | 212 |
| 253-3368 | 332 |
| 253-3867 | 597 |
| | 599 |
| 253-3868 | 597 |
| | 599 |
| 253-3876 | 139 |
| 253-3881 | ▶496 |
| 253-3885 | ▶328 |
| 253-3886 | ▶329 |
| 253-3887 | ▶330 |
| 253-3888 | 358 |
| 253-3889 | 358 |
| 253-3890 | 358 |
| 253-3891 | 358 |
| 253-3894 | 139 |
| 253-3895 | 136 |
| 253-3898 | 139 |
| 253-3899 | 139 |
| 253-3900 | 263 |
| 253-4034 | 552 |
| 253-4116 | ▶339 |
| | 568 |
| 253-4603 | 429 |
| | 432 |
| | ▶437 |
| 253-5269 | 292 |
| | ▶294 |
| | ▶295 |
| 253-6139 | 202 |
| 253-6140 | 416 |
| | 510 |
| | 511 |
| 253-6141 | 416 |
| | 510 |
| | 511 |
| 253-6259 | 1 |
| | ▶359 |
| 253-7537 | 425 |
| 253-8307 | 122 |
| | 124 |
| 253-9886 | 2 |
| | ▶212 |
| 253-9892 | 2 |
| | ▶33 |
| 253-9893 | 33 |
| | ▶34 |
| 253-9947 | 34 |
| 254-0095 | 3 |
| | ▶127 |
| 254-1519 | 601 |
| 254-2308 | 81 |
| 254-2325 | 680 |
| 254-4516 | 4 |
| | ▶105 |
| 254-5027 | 107 |
| 254-6033 | 104 |
| 254-6034 | 104 |
| 254-6043 | 90 |
| 254-6044 | 90 |
| 254-6827 | 331 |
| 254-6998 | 592 |
| 254-7001 | 105 |
| 254-7025 | 352 |
| | 355 |
| 254-7027 | ▶88 |
| | 90 |
| 255-0732 | 297 |
| 255-0872 | 90 |
| 255-0879 | 352 |
| | 355 |
| 255-0927 | 352 |
| | 355 |
| 255-1582 | 394 |
| 255-1583 | 394 |
| 255-4510 | 139 |
| 255-4514 | 136 |
| | ▶139 |
| 255-4515 | ▶388 |
| | ▶391 |
| | 398 |
| 255-5284 | 153 |
| 255-5440 | ▶186 |
| 255-6279 | 536 |


▶ **PRIMARY REFERENCE**

# PART NUMBER INDEX


| Part | Page | Part | Page | Part | Page | Part | Page |
|---|---|---|---|---|---|---|---|
| 255-6282 | 536 | 256-0622 | 584 | 257-8483 | 417 | 260-9190 | 425 |
| 255-6477 | 388 | | 586 | 257-8489 | 597 | 260-9232 | 93 |
| | 391 | 256-0623 | 583 | | 599 | 260-9622 | 511 |
| 255-6478 | 388 | | 585 | 257-8495 | 491 | 260-9661 | ▶318 |
| | 391 | 256-0733 | 155 | | ▶515 | 261-1872 | 335 |
| 255-6480 | 388 | 256-3830 | 62 | | 534 | 261-1874 | 335 |
| | 391 | | ▶65 | 257-8504 | 691 | 261-1876 | 335 |
| 255-6481 | 417 | 256-3831 | ▶56 | | 693 | 261-1877 | 335 |
| 255-6482 | 417 | | 65 | 257-8529 | 350 | 261-3721 | 2 |
| 255-6483 | 417 | 256-3832 | 56 | 257-9472 | 202 | | ▶13 |
| 255-6484 | 417 | 256-3834 | ▶57 | 257-9504 | 661 | | ▶14 |
| 255-6485 | 417 | | 65 | | 664 | 261-5748 | 597 |
| 255-6486 | 417 | 256-3835 | 57 | | 667 | | 599 |
| 255-6487 | 417 | 256-3893 | 352 | | 671 | 261-9287 | 112 |
| 255-6488 | 394 | | 355 | 258-0883 | 122 | 262-0494 | 32 |
| 255-6490 | ▶417 | 256-4584 | 620 | | 124 | 262-1408 | 202 |
| | 496 | 256-4965 | 680 | | ▶198 | 262-1999 | 593 |
| 255-6497 | 374 | 256-4966 | 680 | 258-2403 | 3 | | 594 |
| 255-8030 | 497 | 256-4967 | 680 | | ▶113 | 262-2000 | 593 |
| 255-8090 | 146 | 256-5702 | 155 | 258-5664 | 441 | 262-2001 | 593 |
| | 149 | 256-5703 | 155 | 258-7492 | 186 | | 594 |
| 255-8091 | 146 | 256-6007 | 213 | 258-7540 | 202 | 262-2002 | 593 |
| | 149 | | 219 | 258-7613 | 230 | | 594 |
| 255-8092 | 146 | | 226 | 258-8723 | 2 | 262-2003 | ▶593 |
| | 149 | 256-6151 | 439 | | ▶35 | | 595 |
| 255-8094 | ▶146 | 256-6453 | 213 | 258-8753 | 339 | 262-6881 | 695 |
| | ▶149 | | 226 | 258-8754 | 339 | 262-6882 | 695 |
| | 155 | 256-6915 | 133 | 258-8755 | 339 | 262-8088 | 32 |
| 255-8096 | 155 | | ▶134 | 258-8860 | 597 | 263-1154 | 445 |
| | ▶213 | 256-8940 | 577 | | 599 | 263-1772 | 497 |
| | ▶219 | | 675 | 258-8861 | 461 | 263-2543 | 265 |
| 255-8098 | 162 | 257-2061 | 629 | 258-8870 | 461 | | 267 |
| 255-8099 | 213 | | 678 | 258-8979 | 541 | | 287 |
| | 219 | 257-2062 | 629 | 258-8980 | 541 | | 289 |
| 255-8100 | 146 | | 678 | 258-8981 | 541 | | 419 |
| | 149 | 257-2063 | 629 | 258-8982 | 541 | 263-2545 | 287 |
| 255-8102 | 155 | | 678 | 258-8984 | 541 | | 289 |
| | ▶202 | 257-2161 | 695 | 259-0617 | ▶366 | 263-2596 | 118 |
| 255-8106 | ▶230 | 257-3161 | 695 | 259-0933 | 537 | | 120 |
| | 398 | 257-3166 | 567 | 259-0934 | 537 | 263-2597 | 118 |
| 255-8107 | 230 | 257-3391 | 643 | 259-0935 | 537 | | 120 |
| 255-8108 | 230 | | 648 | 259-4795 | 405 | 263-2599 | 614 |
| 255-8109 | 230 | | 653 | 259-7138 | 280 | 263-3477 | 379 |
| 255-8110 | 213 | | 657 | | 282 | 263-3774 | ▶23 |
| | 219 | 257-3447 | 441 | 260-1921 | ▶372 | | 24 |
| | 226 | 257-4051 | ▶621 | | 587 | 263-5433 | 629 |
| 255-8111 | 510 | | 624 | | 588 | | 678 |
| 255-8833 | ▶341 | 257-4052 | 621 | | 589 | 263-6401 | 88 |
| | 496 | 257-4053 | 621 | 260-1923 | 372 | 263-6402 | 88 |
| 255-8894 | 341 | 257-4949 | 553 | 260-3059 | 2 | 263-6403 | 88 |
| 255-8895 | 341 | 257-5124 | 162 | | ▶100 | 263-6404 | 88 |
| 255-8899 | 1 | 257-5157 | 319 | 260-3217 | 2 | 263-6405 | 88 |
| | ▶49 | 257-5158 | 319 | | ▶37 | 263-6406 | 88 |
| 255-9005 | 587 | 257-5159 | 319 | 260-3963 | 282 | 263-6407 | 88 |
| | 588 | 257-5160 | 319 | 260-3964 | 280 | 263-6408 | 88 |
| | ▶608 | 257-5597 | 624 | 260-3965 | 280 | 263-6409 | 88 |
| 255-9006 | 587 | 257-6364 | 541 | 260-4861 | 122 | 263-6963 | 265 |
| | 588 | | 546 | | 124 | | 267 |
| | ▶680 | 257-6830 | 597 | 260-7524 | 56 | 263-7783 | 445 |
| 255-9263 | 43 | | 599 | | 57 | 263-8596 | 536 |
| 255-9264 | 2 | 257-7147 | 162 | 260-7601 | 405 | 264-2256 | 587 |
| | ▶43 | 257-7636 | 680 | 260-8630 | 74 | | 588 |
| 255-9324 | 359 | | ▶682 | 260-8631 | 74 | | 589 |
| 256-0129 | 482 | 257-7889 | 513 | 260-9149 | 614 | | ▶601 |
| 256-0308 | 614 | 257-7996 | 695 | 260-9189 | 425 | 264-2257 | 601 |


▶ PRIMARY REFERENCE

# PART NUMBER INDEX


| Part | Page |
|---|---|
| 264-4297 | 183 |
| | 185 |
| 264-5194 | 528 |
| 264-5222 | 538 |
| | ▶561 |
| 264-5246 | 556 |
| 264-5247 | 528 |
| 264-5249 | 561 |
| 264-5251 | 561 |
| 264-5253 | 556 |
| 264-5254 | 528 |
| 264-5276 | 561 |
| 264-5279 | 561 |
| 264-5281 | 561 |
| 264-5283 | 561 |
| 264-5284 | 561 |
| 264-5285 | 528 |
| 264-5287 | 561 |
| 264-6156 | 62 |
| 264-7723 | 494 |
| 264-7800 | 349 |
| 265-0838 | 590 |
| 265-7025 | 202 |
| 265-9110 | 465 |
| | ▶474 |
| 266-8698 | 597 |
| | 599 |
| 266-8954 | 425 |
| 266-9932 | 294 |
| | 295 |
| | ▶296 |
| 266-9934 | 294 |
| | 295 |
| 267-2741 | 2 |
| | ▶93 |
| 267-4743 | 79 |
| 267-6614 | 296 |
| 267-6615 | 296 |
| 267-8557 | 577 |
| | 580 |
| 267-8558 | 577 |
| | 580 |
| 267-8561 | ▶166 |
| | 577 |
| | 580 |
| 267-8562 | 577 |
| | 580 |
| | ▶675 |
| 268-1835 | ▶115 |
| | 131 |
| 268-1839 | 3 |
| | ▶131 |
| | ▶132 |
| 268-2970 | 102 |
| 268-3287 | ▶102 |
| | 157 |
| 268-3289 | 202 |
| 268-6622 | ▶157 |
| 269-1892 | 461 |
| 269-3130 | 202 |
| 269-3407 | 105 |
| 269-5815 | 643 |
| | 653 |
| | 661 |
| | 667 |
| 269-5816 | 587 |
| | 588 |
| | 589 |
| | ▶603 |
| 269-5817 | 603 |
| | ▶604 |
| 269-5818 | 604 |
| 269-5819 | 603 |
| | ▶606 |
| 269-5820 | 606 |
| 269-5827 | ▶676 |
| | 678 |
| 269-5828 | ▶677 |
| | 678 |
| 269-5829 | 676 |
| | 677 |
| 269-5830 | 676 |
| | 677 |
| 269-5831 | 604 |
| | 606 |
| 269-5836 | 587 |
| | 588 |
| | ▶678 |
| 269-5864 | 643 |
| | 648 |
| | 653 |
| | 657 |
| 269-5865 | 661 |
| | 664 |
| | 667 |
| | 671 |
| 269-7903 | 597 |
| | 599 |
| 269-7904 | 597 |
| | 599 |
| 269-8788 | 74 |
| 270-0612 | ▶334 |
| | 587 |
| | 588 |
| 270-0613 | 334 |
| 270-0614 | 334 |
| 270-1744 | 81 |
| 270-2433 | 1 |
| | ▶335 |
| 270-2434 | 335 |
| 270-4315 | 537 |
| 270-4428 | 146 |
| | 149 |
| 270-5165 | ▶516 |
| | 569 |
| 270-5166 | 516 |
| 270-5167 | 516 |
| 270-5168 | ▶501 |
| | 569 |
| 270-5169 | 501 |
| 270-5170 | 501 |
| 270-5171 | 501 |
| 270-5172 | 501 |
| 270-5173 | 501 |
| 270-5174 | 501 |
| 270-5175 | ▶502 |
| | 569 |
| 270-5176 | 502 |
| 270-5177 | 502 |
| 270-5178 | 502 |
| 270-5200 | ▶557 |
| | 569 |
| 270-5201 | 557 |
| 270-5202 | 557 |
| 270-5203 | 557 |
| 270-5204 | 557 |
| 270-5205 | 557 |
| 270-5207 | 557 |
| 270-5212 | 569 |
| 270-5214 | 569 |
| 270-5215 | 569 |
| 270-5217 | 569 |
| 270-5218 | 569 |
| 270-5219 | 569 |
| 270-5220 | 569 |
| 270-5221 | 569 |
| 270-5225 | 569 |
| 270-5227 | 569 |
| 270-5228 | 569 |
| 270-5229 | 569 |
| 270-5232 | 569 |
| 270-5233 | 569 |
| 270-5234 | 570 |
| 270-5235 | 569 |
| 270-5236 | 569 |
| 270-5237 | 569 |
| 270-5238 | 569 |
| 270-5240 | 569 |
| 270-5241 | 569 |
| 270-5242 | 569 |
| 270-5244 | 569 |
| 270-5246 | 569 |
| 270-5248 | 569 |
| 270-5249 | 569 |
| 270-5250 | 569 |
| 270-5253 | 569 |
| 270-5256 | 569 |
| 270-5259 | 569 |
| 270-5260 | ▶549 |
| | 569 |
| 270-5261 | 549 |
| 270-5262 | 549 |
| 270-5263 | 549 |
| 270-5264 | 549 |
| 270-5266 | 569 |
| 270-5267 | ▶566 |
| | 569 |
| 270-5268 | 566 |
| 270-5269 | 566 |
| 270-5320 | 114 |
| 270-6951 | 549 |
| 271-2417 | 13 |
| | 14 |
| 271-5658 | 16 |
| | 20 |
| 271-9081 | 491 |
| | ▶567 |
| 271-9085 | 567 |
| | ▶572 |
| 271-9086 | ▶544 |
| | 567 |
| 271-9088 | ▶513 |
| | 567 |
| 271-9089 | 544 |
| 271-9090 | 544 |
| 272-0388 | 14 |
| 272-1880 | 465 |
| | 467 |
| | 468 |
| | ▶476 |
| 272-1890 | 539 |
| 272-1956 | 106 |
| 272-2954 | 661 |
| | 664 |
| | 667 |
| | 671 |
| 272-5920 | ▶491 |
| 272-6512 | ▶416 |
| 273-0104 | 232 |
| | ▶280 |
| 273-0105 | ▶232 |
| | 292 |
| 273-0125 | 232 |
| | ▶282 |
| 273-0128 | ▶232 |
| | 292 |
| 273-0145 | 513 |
| 273-1741 | 162 |
| 273-1743 | 162 |
| 273-1750 | 162 |
| 273-2838 | 14 |
| 273-5789 | 213 |
| | 219 |
| | 226 |
| 274-8380 | 146 |
| | 149 |
| 274-9189 | 622 |
| 275-3590 | 379 |
| 275-3591 | 285 |
| 275-3600 | 31 |
| 275-5149 | 321 |
| | 323 |
| 275-8276 | 590 |
| 276-0738 | 280 |
| 276-0739 | 282 |
| 276-1932 | 538 |
| | ▶556 |
| 276-1934 | ▶538 |
| 276-1935 | ▶538 |
| 276-1937 | ▶422 |
| | 538 |
| 276-1940 | 538 |
| | ▶564 |
| 276-1941 | 538 |
| | ▶565 |
| 276-1947 | ▶413 |
| | 538 |
| 276-1953 | 538 |
| | ▶539 |
| 276-1960 | 422 |
| 276-1961 | 422 |
| 276-1965 | 422 |
| 276-1967 | 564 |
| 276-1968 | 565 |
| 276-1997 | 539 |
| 276-2031 | 422 |
| 276-2038 | 556 |
| 276-2042 | ▶528 |
| | 534 |
| 276-2045 | ▶435 |


▶ **PRIMARY REFERENCE**

# PART NUMBER INDEX


| Part | Page |
|---|---|
| | 528 |
| 276-2048 | 435 |
| 276-2049 | 435 |
| 276-5034 | 422 |
| | ▶486 |
| 276-5657 | 449 |
| | 452 |
| | 455 |
| | 458 |
| | 461 |
| 276-5658 | 449 |
| | 455 |
| | 461 |
| 276-5659 | 449 |
| | 452 |
| | 455 |
| | 458 |
| | 461 |
| 276-5660 | 449 |
| | 455 |
| | 461 |
| 276-5661 | 449 |
| | 452 |
| | 455 |
| | 458 |
| | 461 |
| 276-5662 | 449 |
| | 455 |
| | 461 |
| 276-5663 | 449 |
| | 452 |
| | 455 |
| | 458 |
| | 461 |
| 276-5664 | 597 |
| 276-5665 | 597 |
| 276-5666 | 461 |
| 276-5667 | 461 |
| 276-5668 | 461 |
| 276-5669 | 461 |
| 276-5670 | 449 |
| | 452 |
| | 455 |
| | 458 |
| | 461 |
| 276-5673 | 449 |
| | 452 |
| | 455 |
| | 458 |
| | 461 |
| 276-5675 | 449 |
| | 452 |
| | 455 |
| | 458 |
| | 461 |
| 276-7036 | 237 |
| 276-9535 | 162 |
| 277-0701 | 437 |
| | ▶489 |
| 277-2364 | 678 |
| 277-4421 | 9 |
| 277-5765 | 556 |
| 277-8039 | ▶492 |
| | 528 |
| 277-8040 | 492 |
| 277-8045 | 492 |
| 277-8579 | ▶236 |
| | 305 |
| 277-9999 | ▶343 |
| | 534 |
| 278-0000 | ▶345 |
| | 416 |
| | 534 |
| 278-0403 | 561 |
| 278-4732 | 568 |
| | ▶597 |
| 278-6144 | 343 |
| | 345 |
| 278-6149 | 345 |
| 278-6150 | 343 |
| | 345 |
| 278-6151 | 343 |
| 278-6155 | 343 |
| | 345 |
| 278-6160 | 345 |
| 278-8369 | 546 |
| 278-8370 | 546 |
| 278-8371 | 546 |
| 278-8372 | 546 |
| 278-8763 | 546 |
| 278-8842 | ▶546 |
| | 567 |
| 278-8965 | 202 |
| | 513 |
| 278-8967 | 202 |
| | 513 |
| 278-8970 | 202 |
| | 513 |
| 278-8974 | 202 |
| | 513 |
| 278-9712 | ▶695 |
| 278-9752 | 419 |
| 278-9753 | 419 |
| 278-9754 | 419 |
| 278-9755 | 419 |
| 278-9798 | 236 |
| 278-9823 | ▶419 |
| | 534 |
| 278-9895 | 413 |
| 279-0200 | 419 |
| 279-0203 | 419 |
| 279-0204 | 416 |
| | 534 |
| | ▶599 |
| 279-1202 | 599 |
| 279-1203 | 599 |
| 279-4144 | 449 |
| | 452 |
| 279-4145 | 449 |
| | 452 |
| 279-4146 | 449 |
| | 452 |
| | 455 |
| | 458 |
| 279-4147 | 449 |
| | 452 |
| | 455 |
| | 458 |
| 279-4148 | 449 |
| | 452 |
| | 455 |
| | 458 |
| 279-4149 | 449 |
| | 452 |
| | 455 |
| | 458 |
| | 461 |
| 279-4150 | 449 |
| | 452 |
| | 455 |
| | 458 |
| 279-4337 | 416 |
| | ▶449 |
| | ▶452 |
| | 534 |
| 279-7321 | ▶455 |
| | ▶458 |
| | 534 |
| 279-7353 | 455 |
| | 458 |
| 279-7354 | 455 |
| | 458 |
| 279-8927 | ▶109 |
| 280-2748 | 52 |
| 280-8999 | ▶461 |
| | 568 |
| 280-9661 | 265 |
| | 267 |
| | 405 |
| 281-1704 | ▶524 |
| | 534 |
| 281-1705 | ▶525 |
| | 534 |
| 281-2502 | 405 |
| 281-4197 | 336 |
| 281-4198 | 336 |
| 281-4199 | 336 |
| 281-4200 | ▶336 |
| | 491 |
| 281-4201 | 336 |
| 281-4315 | 336 |
| 281-4316 | 336 |
| 281-7739 | ▶684 |
| | 691 |
| 281-7744 | 352 |
| | 355 |
| 281-7745 | 352 |
| | 355 |
| 282-0583 | 352 |
| | 355 |
| 282-2969 | 292 |
| | ▶306 |
| 282-2970 | ▶242 |
| | 306 |
| 282-2971 | 243 |
| 282-2972 | 243 |
| 282-2973 | 236 |
| 282-2974 | ▶254 |
| | 306 |
| 282-3835 | ▶165 |
| 282-3836 | 165 |
| 282-3837 | 165 |
| 282-4220 | ▶162 |
| | 214 |
| | 220 |
| 282-5089 | 155 |
| | ▶226 |
| 282-5090 | 254 |
| 282-5415 | 95 |
| 283-0142 | 695 |
| 283-1224 | 212 |
| 283-3367 | 401 |
| 283-9977 | 278 |
| | ▶370 |
| 283-9978 | 370 |
| 283-9979 | 370 |
| 284-1429 | 31 |
| 284-2691 | 684 |
| 284-2693 | 684 |
| 284-2694 | 684 |
| 284-3711 | 1 |
| | ▶32 |
| 284-7040 | 1 |
| | ▶292 |
| 284-9505 | 326 |
| 285-2269 | 155 |
| 285-2280 | 1 |
| | ▶155 |
| 285-5784 | 242 |
| 286-5805 | 580 |
| 286-5807 | 586 |
| 286-5808 | 585 |
| 286-9127 | 242 |
| 287-2125 | ▶310 |
| | 317 |
| 287-2126 | 254 |
| | ▶317 |
| 287-5787 | 422 |
| 288-0672 | 580 |
| | ▶585 |
| 288-0676 | 580 |
| | ▶586 |
| 288-0682 | 585 |
| 288-0683 | 586 |
| 288-0973 | 96 |
| | ▶98 |
| 288-4795 | 422 |
| 288-4796 | 422 |
| 288-4797 | 422 |
| 288-6755 | 413 |
| 288-6758 | 413 |
| 288-6761 | 413 |
| 288-8091 | 549 |
| 288-8636 | 492 |
| 288-8888 | 619 |
| 288-9175 | 14 |
| 289-2473 | 118 |
| | 120 |
| 289-8626 | ▶594 |
| | 596 |
| 289-8627 | 594 |
| 290-2949 | 105 |
| 290-7514 | 294 |
| | 295 |
| 292-5937 | ▶495 |
| | 534 |
| 292-5939 | 491 |
| | ▶493 |
| 292-8687 | 513 |


▶ PRIMARY REFERENCE

# PART NUMBER INDEX


| Part | Page |
|---|---|
| 293-0730 | 116 |
| | 117 |
| 293-5931 | 685 |
| 293-5932 | 685 |
| 293-5933 | 685 |
| 293-5934 | 685 |
| 293-5937 | ▶685 |
| | 693 |
| 294-0007 | 513 |
| 294-7675 | 97 |
| | ▶99 |
| 294-8620 | 135 |
| 294-8634 | 294 |
| | 295 |
| 295-1410 | ▶116 |
| | 129 |
| 295-1411 | ▶117 |
| | 132 |
| 295-1797 | 508 |
| 295-1906 | 452 |
| | 458 |
| 295-4324 | 585 |
| | 586 |
| 295-8464 | ▶568 |
| 296-7517 | 452 |
| | 458 |
| 296-7518 | 452 |
| | 458 |
| 297-9657 | 416 |
| 298-2525 | ▶411 |
| 298-2526 | 411 |
| 299-9530 | 458 |
| | ▶467 |
| 299-9531 | 449 |
| | 452 |
| | 461 |
| | ▶468 |
| 299-9532 | 383 |
| | ▶464 |


## 3


| | |
|---|---|
| 300-0135 | 464 |
| | ▶478 |
| 300-0136 | 467 |
| | 468 |
| | ▶480 |
| 300-0137 | 467 |
| | 468 |
| | ▶482 |
| 300-0138 | 468 |
| | ▶484 |
| 302-6453 | 528 |
| 304-0607 | 127 |
| 305-7989 | 355 |
| 305-8141 | 22 |
| | ▶24 |
| 306-2669 | 559 |

# MEMORANDA



© 2007 Caterpillar
All Rights Reserved

Printed in U.S.A.