MICHIGAN

RUTHZIL TRATOR COMERCIAL DE PEÇAS LTDA 11 97083-6812 ROLANDO CITRANGULO

PARTS MANUAL

No. 1657

Series I

MODELS 55A and 55B TRACTOR SHOVEL

Information contained herein pertains to machine serial numbers listed below:

55A — 3726 thru 3855, 1BCO134 thru 1BCO282, 2BCO1 thru 2BCO999

55B — 50BCO1 thru 50BCO999

Record Your Machine Serial Number Here

_____

CLARK EQUIPMENT

CLARK EQUIPMENT COMPANY
Construction Machinery Division
BENTON HARBOR, MICHIGAN, U.S.A.
In Canada: Canadian Clark, Ltd., St. Thomas, Ontario

MICHIGAN

2M625B1214

Printed in U.S.A.

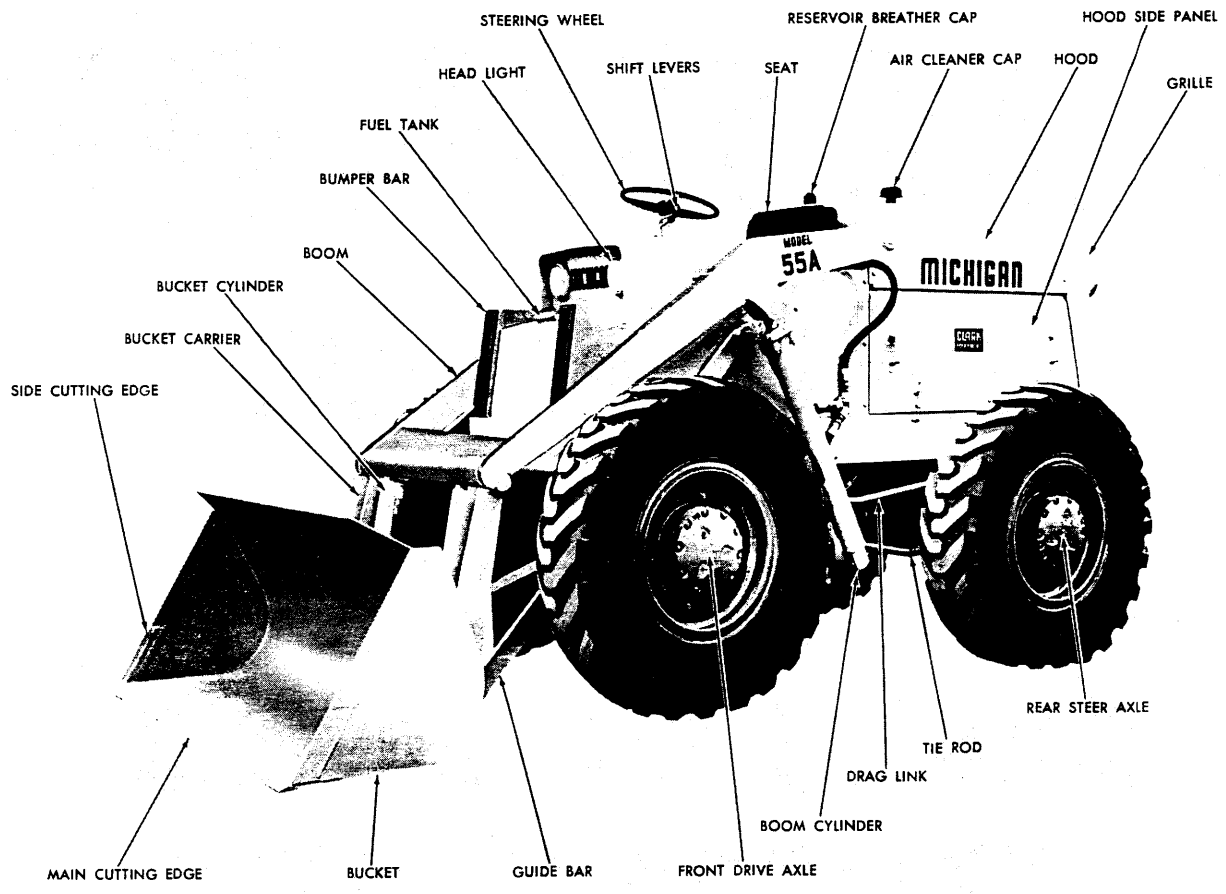

Model 55A Series I

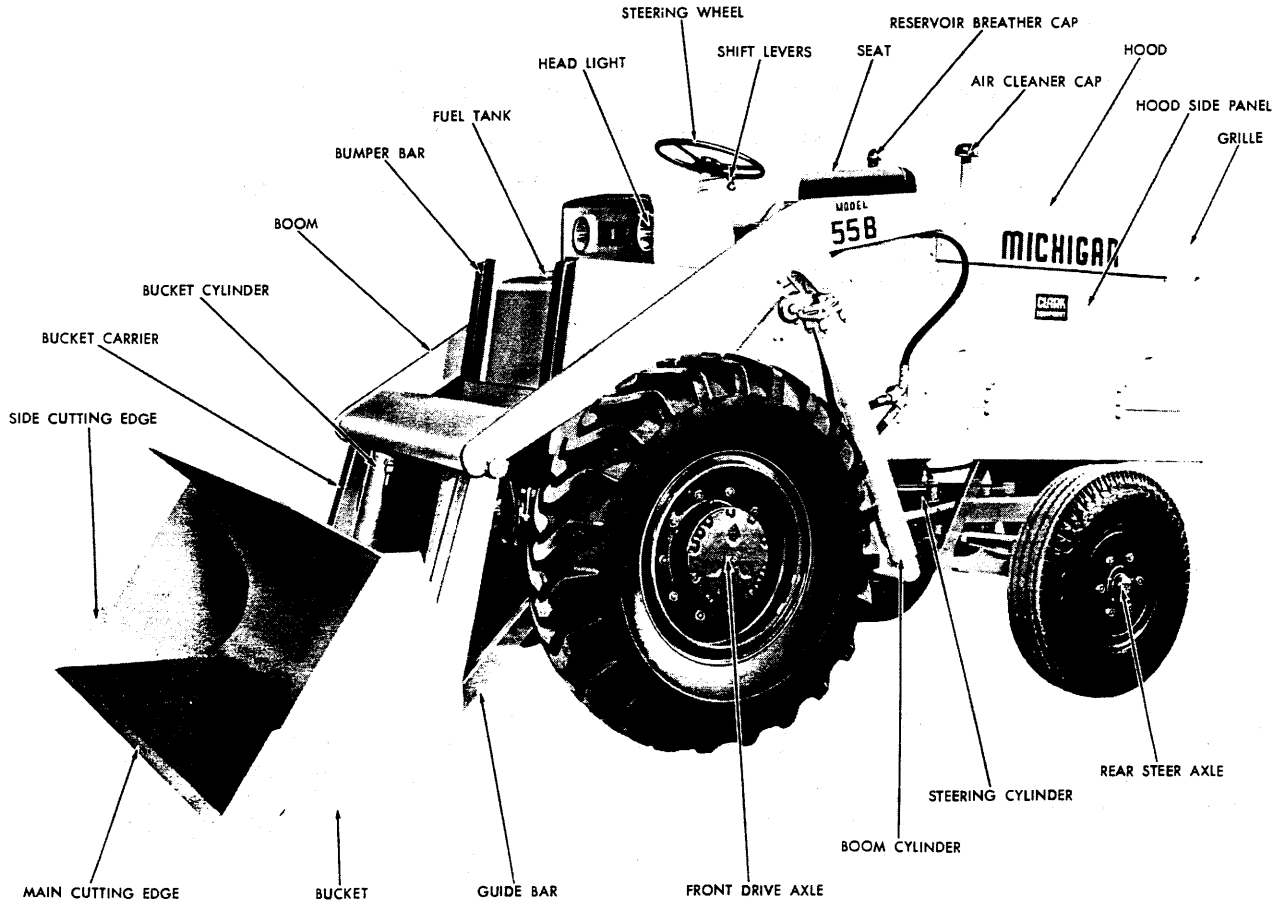

Model 55B Series I

INDEX—MODEL 55A—55B

A

Accelerator Pedal & Linkage 14
Accessories, Engine ..... See Engine
Air Cleaner & Muffler 13.2
Axle Group
- Front Axle Assy 47.3
- Front Axle Differential & Carrier Assy 48
- Front Axle Differential & Carrier Assy 49.2
- Rear Axle Assy — 55A 57.2
- Rear Axle Assy — 55B 60.2
- Rear Axle Differential & Carrier Assy 63.2
- Tie Rod Assy 61.2

B

Battery & Battery Box ..... See Wiring
Body Panels ..... See Grille
Boom & Guide Bar 9
Brake Group
- Brake Assy, Front 51.2
- Brake Assy, Rear 64.3
- Brake Controls & Floorboards 65.1
- Brake Lines, Four Wheel 55.1
- Brake Lines, Two Wheel 54.1
- Parking Brake Assy 52.2
- Parking Brake Controls 53

Bucket & Carrier Assy 7
Bucket Indicator 8

C

Cab Assy 100.1
Converter Group
- Converter Assy (C-302-6) 29.4
- Converter Assy (C-272-2) 33.5
- Converter Charging Pump ..... See Pump Group
- Converter Pressure Regulating Valve 34.1

Cylinder Group
- Boom Cylinder Assy 88.5
- Boom Cylinder Step 83
- Bucket Cylinder Assy 89.5
- Steering Cylinder Assy — 55A 78.4
- Steering Cylinder Assy — 55B 79.4

D

Decals & Tools ..... See Tools
Drag Link, Steering ..... See Steering Group

E

Engine & Accessories 1.3, 2.4
Engine By-Pass Filter & Connections 3
Engine Generator & Mtg. Parts — Dust-Proof 1A.1

F

Filter, Engine By-Pass ..... See Engine
Filter, Steering ..... See Hydraulic Systems
Filter, Trans & Converter ..... See Hydraulic System
Floorboards ..... See Brake Group
Frame & Cradle Assy — 55A 5.1
Frame & Cradle Assy — 55B 6.1
Fuel Lines 15
Fuel Tank 16, 17

G

Gauges ..... See Instrument Panel
Gear Shift Levers & Linkage ..... See Transmission
Grille, Counterweight & Body Panels 11.1
Guide Bar ..... See Boom

H

Hood ..... See Grille
Hydraulic Group
- Bucket & Boom Hyd. System 87.2
- Hydraulic Oil Reservoir 77
- Steering Hydraulic System — 55A 70
- Steering Hydraulic System — 55B 72
- Trans. & Converter Hyd. System 41

I

Instrument Panel Assy 94.4

L

Lights ..... See Tools

M

Muffler ..... See Air Cleaner

P

Parking Brake ..... See Brake Group
Propeller Shafts 66.4
Pump Group
- Bucket & Boom Pump 84.3
- Converter Charging Pump 36.2
- Steering Pump 80.2

R

Radiator & Connections 12.1
Reservoir, Hyd. Oil ..... See Hydraulic Group

S

Seat & Support 93
Steering Group
- Steering Cylinder ..... See Cylinder Group
- Steering Drag Link 74
- Steering Gear Assy 69.3
- Steering Hyd. System ..... See Hydraulic Group
- Steering Pump ..... See Pump Group
- Steering Relief Valve ..... See Valve Group

T

Tools, Lights & Decals 97.2
Transmission Group
- Gear Shift Levers & Linkage 18.1
- Trans. Assembly 21.1
- Trans. Control Cover Assy 25.2
- Trans. Controls 26
- Trans. & Converter Oil Filter ..... See Hydraulic Group

V

Valve Assembly Group
- Bucket & Boom Control Valve 91.1
- Steering Pressure Relief Valve 75.1
- Valve Control Levers & Linkage 92

W

Wheel & Tire Data 98
Wiring Group
- Battery & Battery Box 95.1
- Horn & Mtg. Parts 96.2
- Wiring & Battery Cables 96.2
- Wiring Diagram, Dust-Proof Generator 1B.1

ENGINE AND ACCESSORIES — CONTINENTAL POWERED

All orders for engine assembly or components thereof should be placed with the nearest Continental Motors Corporation Distributor. Always give model, specifications and serial number of your engine. This data will be found on nameplate attached to side of the engine.

Item No.	Part No.	Description	No. Req'd.
		ENGINE SUPPORT PARTS	
1	524699	STUD, Front Engine Mounting	1
2	524703	MOUNTING, Upper Rubber	1
3	524702	CUP, Retainer Upper	1
4	710066	MOUNTING, Lower Rubber	1
5	524704	WASHER, Front Lower Mounting	2
6	524705	WASHER, Front Upper Mounting	2
7	4D-10	NUT, Front Mounting Stud	1
8	1F-424	COTTER, Front Mounting Stud	1
		ENGINE ACCESSORIES	
9	551323	SENDER UNIT, Engine Temperature	1
10	550832	**SENDER UNIT, Oil Pressure	1
11	636260	SWITCH, Hourmeter Pressure	1
		GENERATOR AND MOUNTING PARTS	
12	940133	GENERATOR (D.R.#1102009)	1
		For Serial: 55A — 3726 thru 3855, 1BCO134 thru 1BCO282, 2MCO1 thru 2BCO999.	
		55B — 50BCO1 thru 50BCO32.	
		NOTE: For 55B Serial 50BCO33 and thereafter see page 1A.	
13	940135	ARMATURE, Generator (D.R.#1927182)	1
14	1801015	BRUSH, Generator	2
15	619052	FAN, Generator	1
16	630506	BAFFLE, Generator	1
17	529688	PULLEY, Generator	1
18	2C-518	BOLT, Generator to Bracket	2
19	2D-05	NUT, Generator to Bracket	2
20	8D-05	NUT, Generator to Bracket	2
21	878125	CLIP, Generator Adjusting Strap	1
22	1C-516	BOLT, Adjusting Strap to Generator	1
23	4E-05	LKWSHR, Adjusting Strap to Generator	1
		STARTER AND MOUNTING PARTS	
24	520901	*STARTER (12V) (D.R.#1107842)	1
24A	585314	STARTER (12V) (D.R.#1107851)	1
25	850813	ARMATURE, Starter (For D.R.#1107842)	1
25A	871513	ARMATURE, Starter (For D.R.#1107851)	1
26	940139	BRUSH, Starter (For D.R.#1107842)	1
26A	871518	BRUSH, Starter (For D.R.#1107851)	4
27	852135	DRIVE ASSY, Starter	1
28	943413	HOUSING, Starter Drive (For D.R.#1107842)	1
28A	945383	HOUSING, Starter Drive (For D.R.#1107851)	1
29	1D-06	NUT, Starter to Flywheel Housing	3
30	4E-06	LKWSHR, Starter to Flywheel Housing	3
		SOLENOID SWITCH AND MOUNTING PARTS	
31	551530	SWITCH, Solenoid	1
32	2C-412	BOLT, Solenoid to Bracket	2
33	2D-04	NUT, Solenoid to Bracket	2
34	4E-04	LKWSHR, Solenoid to Bracket	2
		VOLTAGE REGULATOR AND MOUNTING PARTS	
35	940105	REGULATOR, Voltage	1
36	2C-412	BOLT, Regulator to Bracket	3
37	2D-04	NUT, Regulator to Bracket	3
38	4E-04	LKWSHR, Regulator to Bracket	3
39	550862	BRACKET, Voltage Regulator Mtg.	1
40	2C-620	BOLT, Bracket to Frame	2
41	2D-06	NUT, Bracket to Frame	2
42	4E-06	LKWSHR, Bracket to Frame	2

*NOTE: For complete replacement of 520901 Starter, use 585314 Starter. **NOTE: For replacement refer to Service Gram S.G.-326B.

ENGINE AND ACCESSORIES — CONTINENTAL POWERED (Continued)

Item No.	Part No.	Description	No. Req'd.
		CARBURETOR AND MOUNTING PARTS	
43	990820	CARBURETOR	1
44	531279	STUD, Carburetor to Manifold	2
45	529686	VALVE BOX, Throttle	1
46	648872	GASKET, Carburetor to Valve Box & Manifold	2
47	1D-06	NUT, Carb. to Manifold Stud	4
48	4E-06	LKWSHR, Carb. to Manifold Stud	4
49	944412	REPAIR KIT, Carburetor	—
50	957740	GASKET KIT, Carburetor	—
51	944413	JET, Adjustable Main	1
52	361938	BALL JOINT, Gov. Rod to Carb.	1
53	2D-04	NUT, Ball Joint	1
54	873791	SCREW, Gov. to Carb. Rod (Yoke End)	1
55	529690	ROD, Governor to Carburetor — See Note "A"	1
		FAN BLADE AND MOUNTING PARTS	
56	527723	BLADE, Fan	1
57	1C-512	BOLT, Fan Blade to Hub	4
58	4E-05	LKWSHR, Fan Blade to Hub	4
59	631550	BELT, (Matched Set of Two(2))	1
		IGNITION COIL AND CABLES	
60	722593 ***	COIL, Ignition	1
61	2C-512	BOLT, Coil to Bracket	2
62	25E-15	WASHER, Coil to Bracket	2
63	4E-05	LKWSHR, Coil to Bracket	2
64	2D-05	NUT, Coil to Bracket	2
65	527824	CABLE KIT, Ignition (Inc. 66 thru 70)	1
66	717995	CABLE (Distributor to #3, 4, 5, 6 Cyl.)	4
67	730401	CABLE (Distributor to #2 Cyl.)	1
68	742234	CABLE (Distributor to #1 Cyl.)	1
69	742235	CABLE (Distributor to Coil) Hi-Tens.	1
70	653973	CABLE (Distributor to Coil) Low-Tens.	1
		DISTRIBUTOR AND MOUNTING PARTS	
71	527725	DISTRIBUTOR	1
72	639496	CLAMP, Distributor Hold Down	2
73	1C-616	BOLT, Distributor Mounting	2
74	4E-06	LKWSHR, Distributor Mounting	2
75	857852	CAP, Distributor	1
76	853628	POINT SET, Distributor	1
77	850091	ROTOR, Distributor	1
78	850085	CONDENSER, Distributor	1
		FUEL PUMP AND MOUNTING PARTS	
79	877647	PUMP, Fuel (Inc. 80)	1
80	899584	GASKET, Fuel Pump Mounting	1
81	952779	WASHER, Fuel Pump Mounting	2
82	1D-05	NUT, Fuel Pump Mounting	2
83	42F-3	ELBOW, Fuel Pump Outlet	1
84	527833	HOSE, Fuel Pump to Carburetor	1
85	877646	REPAIR KIT, Fuel Pump	—

***NOTE: For replacement use 2503976 Coil plus 1—897894 Bracket.
NOTE "A": For replacement use 1—1308261 Rod plus 1—961895 Yoke.

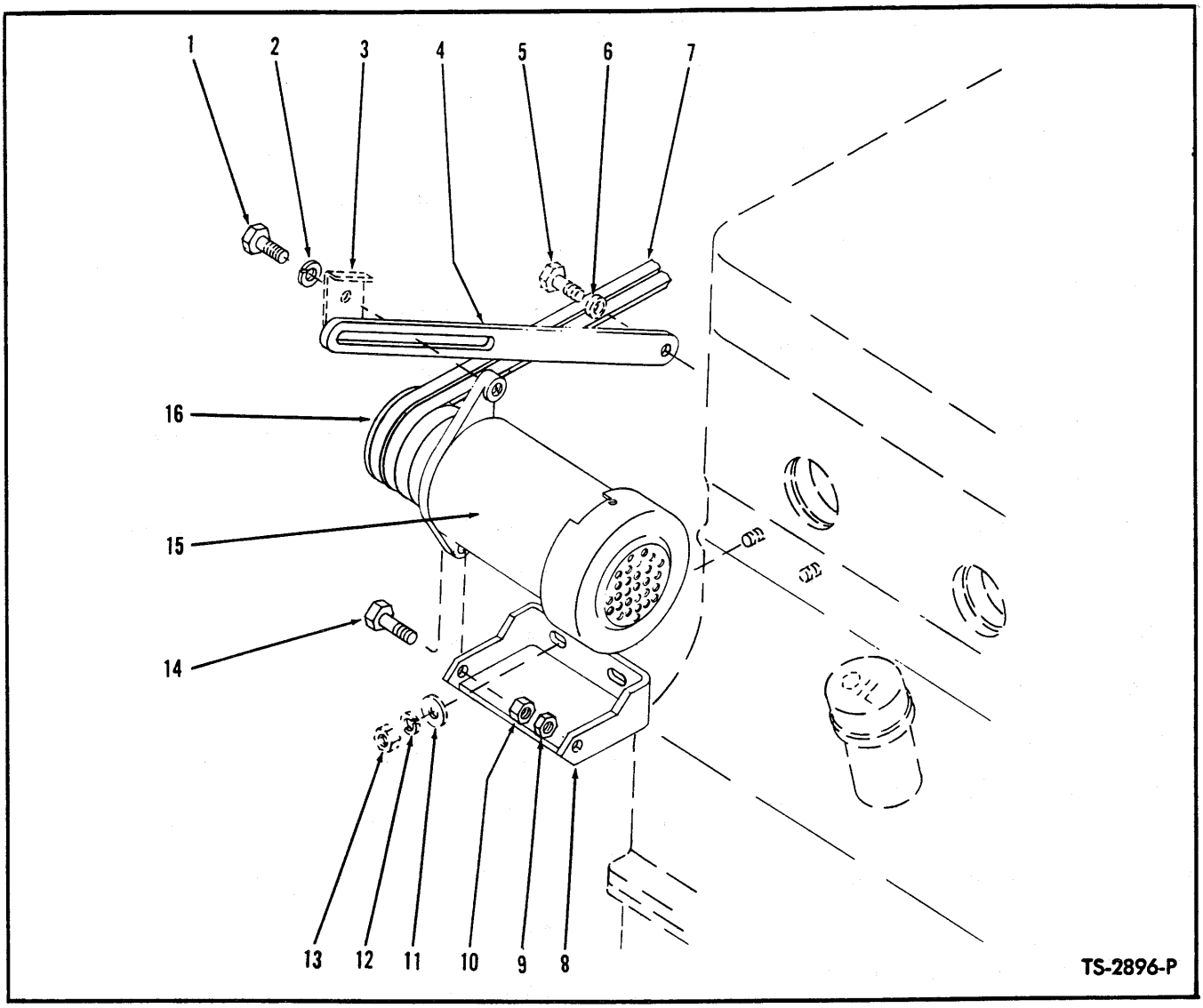

GENERATOR AND MOUNTING PARTS — DUST PROOF

For Serial: 55B — 50BCO33 and thereafter

Item No.	Part No.	Description	No. Req'd.
1	1C-616	BOLT, Adjusting Strap to Generator	1
2	4E-06	LKWSHR, Adjusting Strap to Generator	1
3	———	*CLIP, Adjusting Strap	1
4	944762	STRAP, Generator Adjusting	1
5	———	*BOLT, Adjusting Strap to Engine	1
6	———	*LKWSHR, Adjusting Strap to Engine	1
7	538305	BELT SET, Generator [Matched Set of two (2)]	1
8	944761	BRACKET, Generator Mounting	1
9	8D-08	NUT, Generator to Bracket Jam	2
10	2D-08	NUT, Generator to Bracket	2
11	———	*WASHER, Bracket to Engine	2
12	———	*LKWSHR, Bracket to Engine	2
13	———	*NUT, Bracket to Engine	2
14	2C-828	BOLT, Generator to Bracket	2
15	538245	**GENERATOR ASSY (Inc. 15A, 15B, 15C)	1
15A	944764	†ARMATURE, Generator	1
15B	858028	†BRUSH, Generator	2
15C	944765	†FAN & BAFFLE, Generator	1
16	538304	PULLEY, Generator	1
17	538246	†VOLTAGE REGULATOR	1

*NOTE: These parts are furnished with engine.

**NOTE: This Dust Proof Generator Installation may be installed on Serial Numbers as listed below:
For 55A — 3726 thru 3855, 1BCO134 thru 1BCO282, 2BCO1 thru 2BCO999.
For 55B — 50BCO1 thru 50BCO32.
See Wiring Diagram on page 1B for Dust Proof Generator Installation.

†Not Illustrated

WHEN ORDERING PARTS, ALWAYS STATE MODEL AND SERIAL NO. OF MACHINE

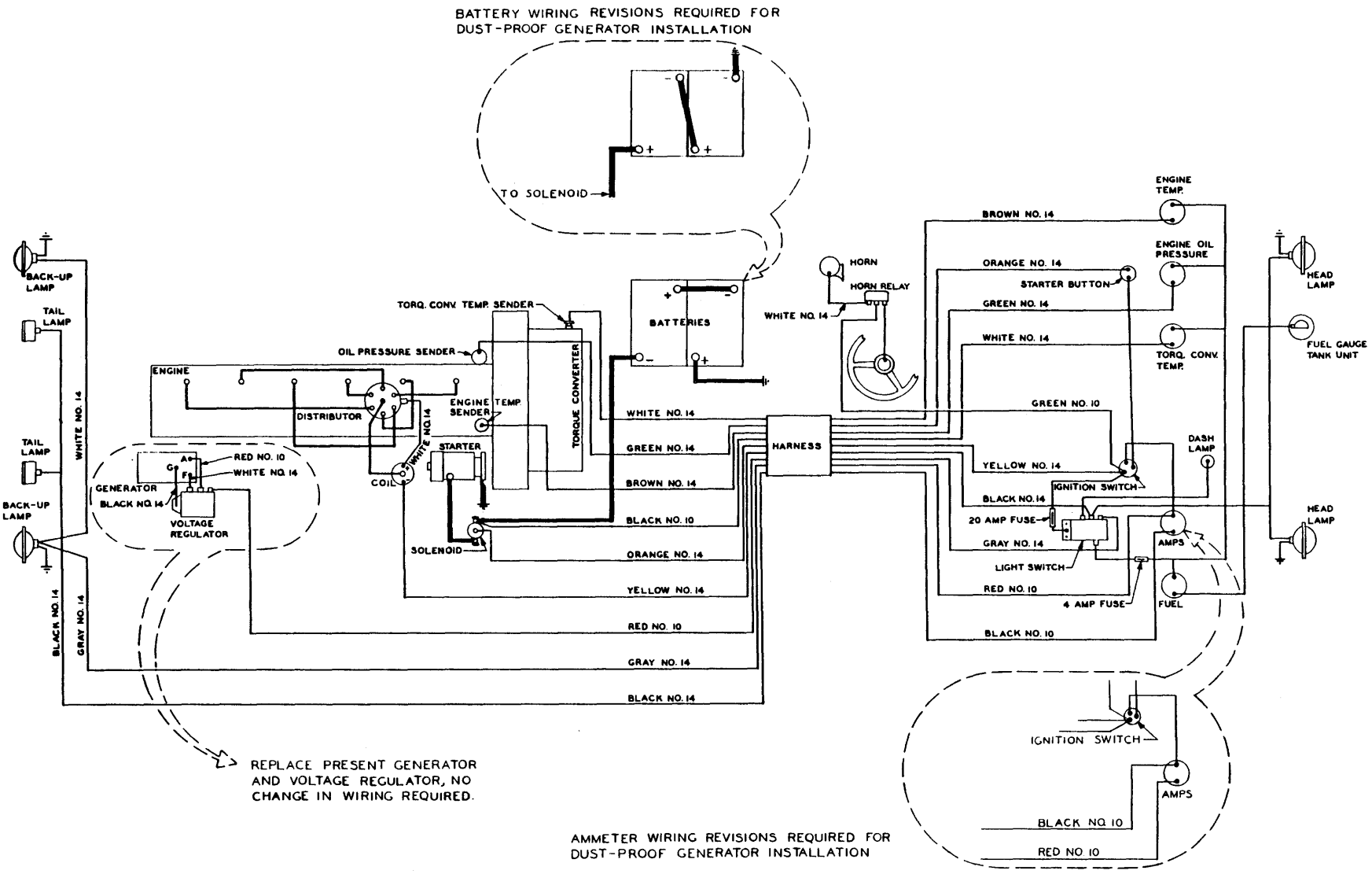

WIRING DIAGRAM — DUST PROOF GENERATOR

TS-2897

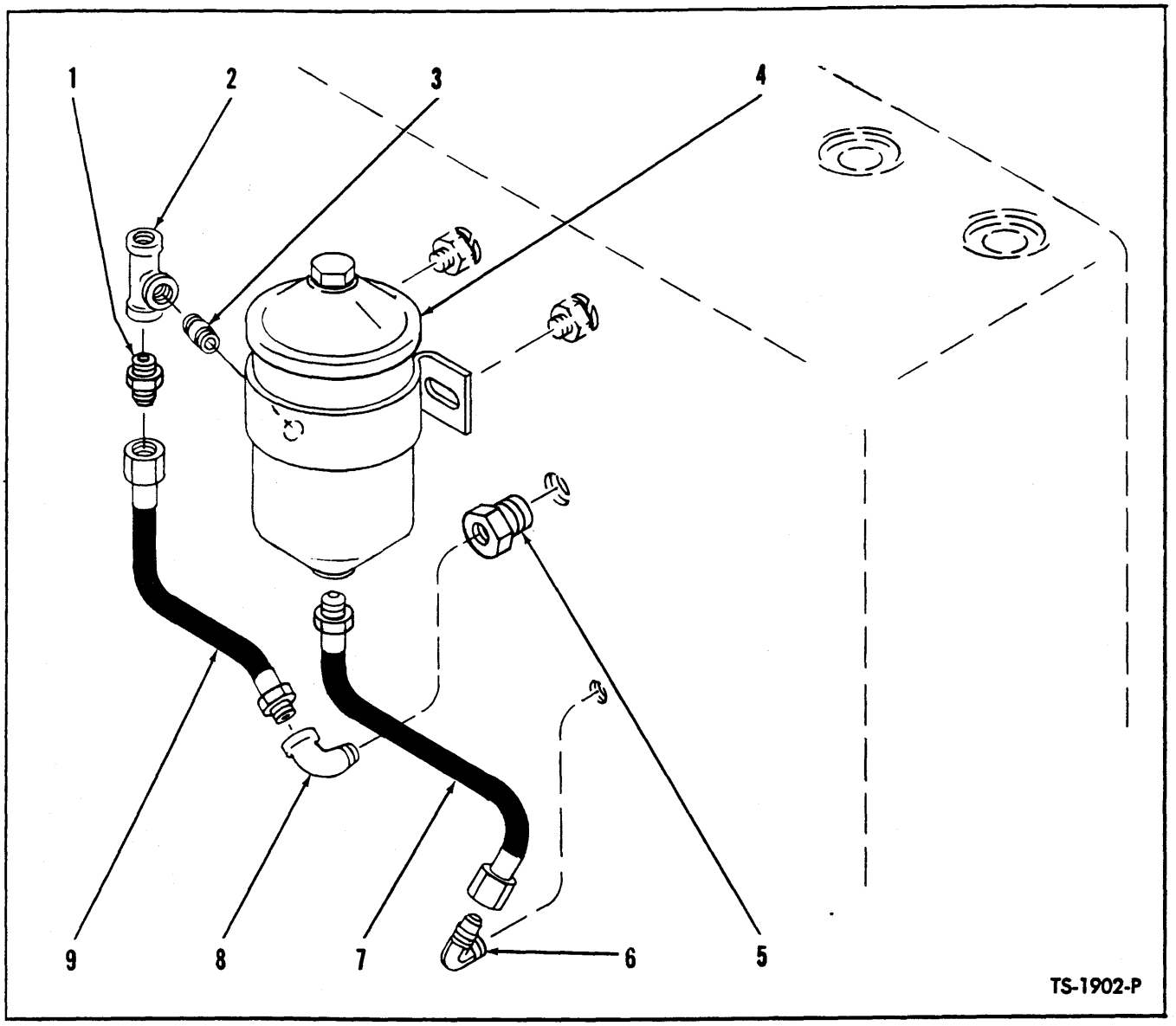

ENGINE BY-PASS OIL FILTER AND CONNECTIONS

Item No.	Part No.	Description	No. Req'd.
1	38F-3	CONNECTOR, Hose to Tee	1
2	18F-1	TEE, Filter to Hose	1
3	5K-108	NIPPLE, Filter to Tee	1
4	529687	FILTER ASSY, By-Pass Oil (Inc. 4A)	1
4A	944426	CARTRIDGE KIT, Oil Filter	1
5	356611	BUSHING, Reducing—Cylinder Block to Elbow	1
6	42F-3	ELBOW, Cylinder Block to Hose	1
7	529691	HOSE, Cylinder Block to Filter	1
8	26F-1	ELBOW, Hose to Reducing Bushing	1
9	529692	HOSE, Cylinder Block to Tee	1

WHEN ORDERING PARTS, ALWAYS STATE MODEL AND SERIAL NO. OF MACHINE

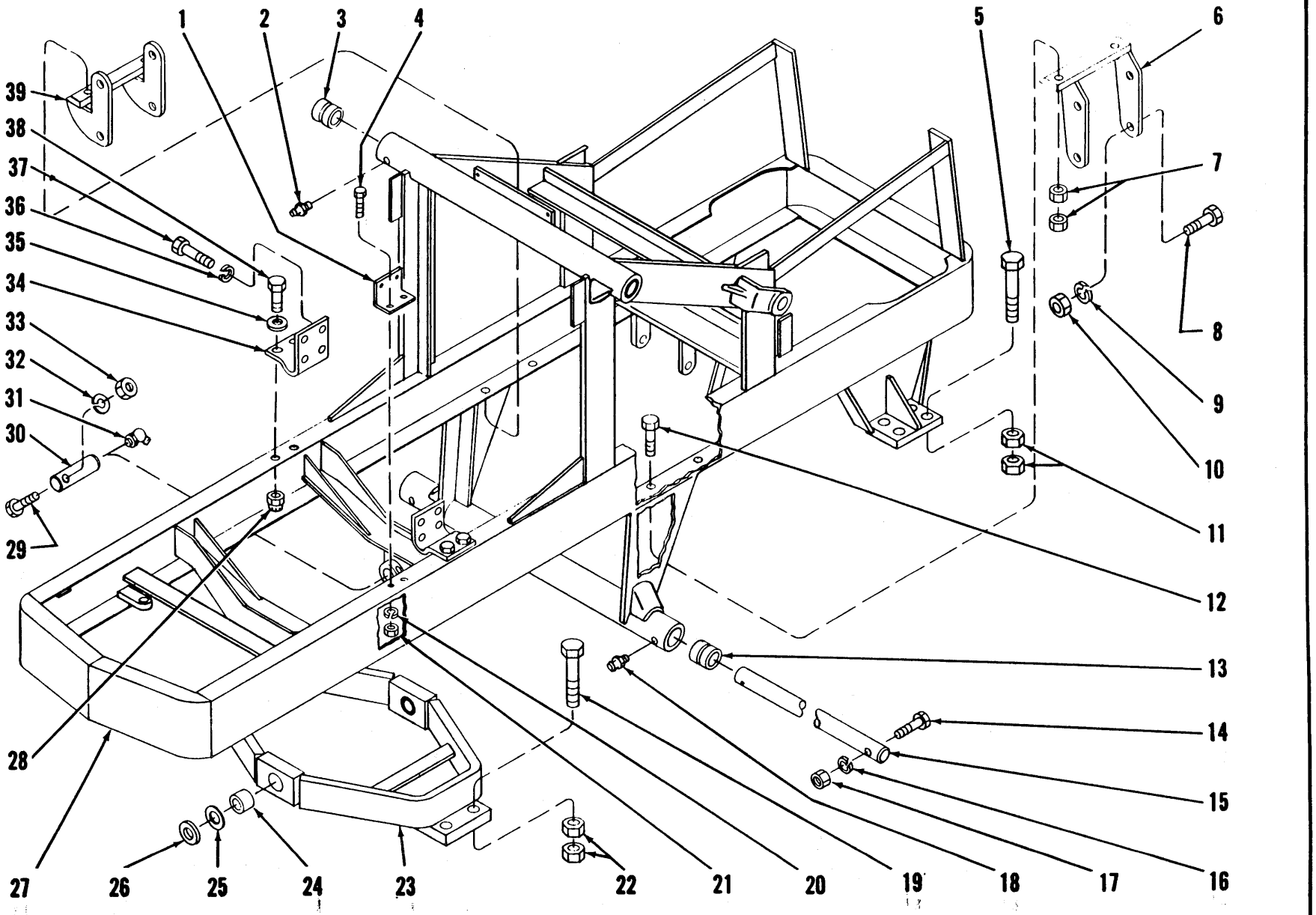

FRAME AND CRADLE ASSEMBLY

TS-1530-P

FRAME AND CRADLE ASSEMBLY

Model 55A

Item No.	Part No.	Description	No. Req'd.
1	528304	*BRACKET, Solenoid Mounting	1
2	10H-25	FITTING, Upper Tube Grease	2
3	523044	BUSHING, Upper Pivot Tube	2
4	2C-616	BOLT, Bracket to Frame	2
5	24C-12112	BOLT, Front Axle to Frame	8
6	523591	BRACKET, Trans. Mounting—R.H.	1
7	68D-08	NUT, Bracket to Frame	4
8	2C-1044	BOLT, Bracket to Transmission	8
9	OMIT	LKWSHR, Bracket to Trans. Bolt	—
10	18D-10	NUT, Bracket to Trans. Bolt	8
11	68D-12	NUT, Front Axle to Frame	8
12	18C-836	BOLT, Bracket to Frame	4
13	523044	BUSHING, Lower Pivot Tube	2
14	2C-656	BOLT, Shaft Retaining	2
15	523081	SHAFT, Boom Cylinder to Frame	1
16	4E-06	LKWSHR, Shaft Retaining Bolt	2
17	2D-06	NUT, Shaft Retaining Bolt	2
18	10H-25	FITTING, Lower Tube Grease	2
19	24C-12120	BOLT, Rear Axle to Frame	8
20	4E-06	LKWSHR, Bracket to Frame	2
21	2D-06	NUT, Bracket to Frame	2
22	68D-12	NUT, Rear Axle to Frame	8
23	533025	CRADLE ASSY, Rear Axle (Inc. 24)	1
24	550066	BUSHING, Cradle	2
25	551348	‡WASHER, Cradle to Frame—1/16"	—
26	551347	‡WASHER, Cradle to Frame—1/8"	—
27		*FRAME ASSY (Inc. 3, 13)*	
27A	523036	For Serial 3726 thru 3785	1
27B	533651	For Serial 3786 thru 3855, IBCO 134 & thereafter	1
28	21D-08	NUT, Support to Frame	4
29	2C-856	BOLT, Pin Retaining	2
30	523080	PIN, Cradle Pivot	2
31	15H-15	FITTING, Pivot Pin Grease	2
32	4E-08	LKWSHR, Pin Retaining Bolt	2
33	2D-08	NUT, Pin Retaining Bolt	2
34		*SUPPORT, Engine*	
34A	524535	L.H., For Serial 3726 thru 3855, IBCO 134 thru IBCO 186	1
34B	526680	R.H., For Serial 3726 thru 3855, IBCO 134 thru IBCO 186	1
34C	528302	For Serial IBCO 187 & thereafter	2
35	25E-21	WASHER, Support to Frame	4
36	4E-08	LKWSHR, Support to Flywheel Hsg.	8
37	1C-824	BOLT, Support to Flywheel Housing	8
38	2C-832	BOLT, Support to Frame	4
39	523593	BRACKET, Trans. Mounting—L.H.	1

*NOTE: First Used on Machine Serial IBCO 187 and thereafter.
‡As Required

WHEN ORDERING PARTS, ALWAYS STATE MODEL AND SERIAL NO. OF MACHINE

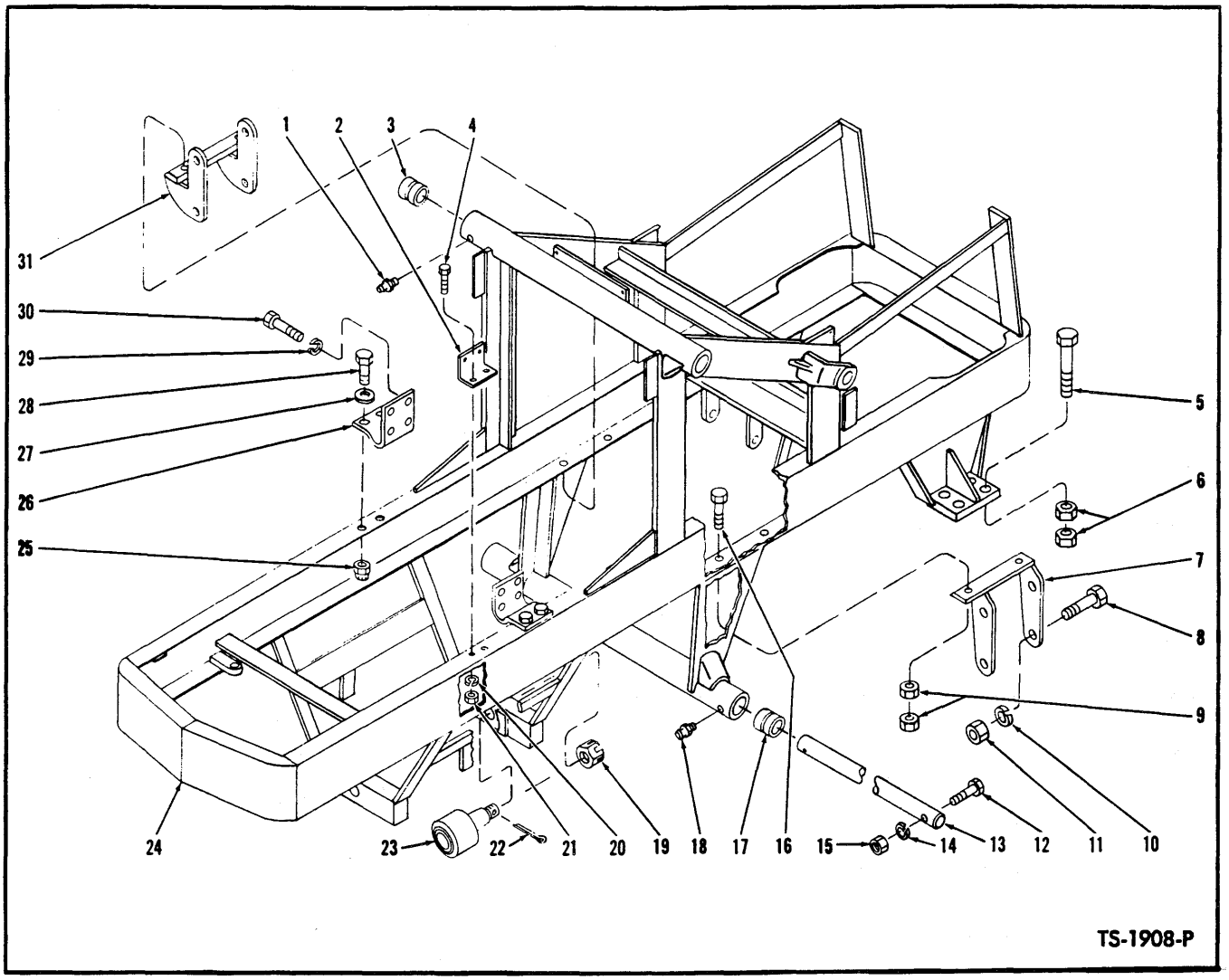

FRAME ASSEMBLY

MODEL 55B

Item No.	Part No.	Description	No. Req'd.
1	10H-25	FITTING, Upper Tube Grease	2
2	508304	BRACKET, Solenoid Mounting	1
3	523044	BUSHING, Upper Pivot Tube	2
4	2C-616	BOLT, Bracket to Frame	2
5	24C-12112	BOLT, Front Axle to Frame	8
6	68D-12	NUT, Front Axle to Frame	8
7	523591	BRACKET, Transmission Mounting — R.H.	1
8	2C-1044	BOLT, Bracket to Transmission	8
9	68D-08	NUT, Bracket to Frame	4
10	OMIT	LKWSHR, Bracket to Transmission Bolt	—
11	18D-10	NUT, Bracket to Transmission Bolt	8
12	2C-656	BOLT, Shaft Retaining	2
13	523081	SHAFT, Boom Cylinder to Frame	1
14	4E-06	LKWSHR, Shaft Retaining Bolt	2
15	2D-06	NUT, Shaft Retaining Bolt	2
16	18C-836	BOLT, Bracket to Frame	4
17	523044	BUSHING, Lower Pivot Tube	2
18	10H-25	FITTING, Lower Tube Grease	2
19	4D-24	NUT, Pivot Pin	2
20	4E-06	LKWSHR, Bracket to Frame	2
21	2D-06	NUT, Bracket to Frame	2
22	1F-848	COTTER, Pivot Pin	2
23	626561	PIN ASSY, Pivot & Bushing (Inc. 23A, 23B)	2
23A	626515	PIN, Pivot	2
23B	626516	BUSHING, Silent Block	2
24	509576	FRAME ASSY (Inc. 3, 17)	1
25	21D-08	NUT, Support to Frame	4
26	528302	SUPPORT, Engine	2
27	25E-21	WASHER, Support to Frame	4
28	2C-832	BOLT, Support to Frame	4
29	4E-08	LKWSHR, Support to Flywheel Housing	8
30	1C-824	BOLT, Support to Flywheel Housing	8
31	523593	BRACKET, Transmission Mounting—L.H.	1

WHEN ORDERING PARTS, ALWAYS STATE MODEL AND SERIAL NO. OF MACHINE

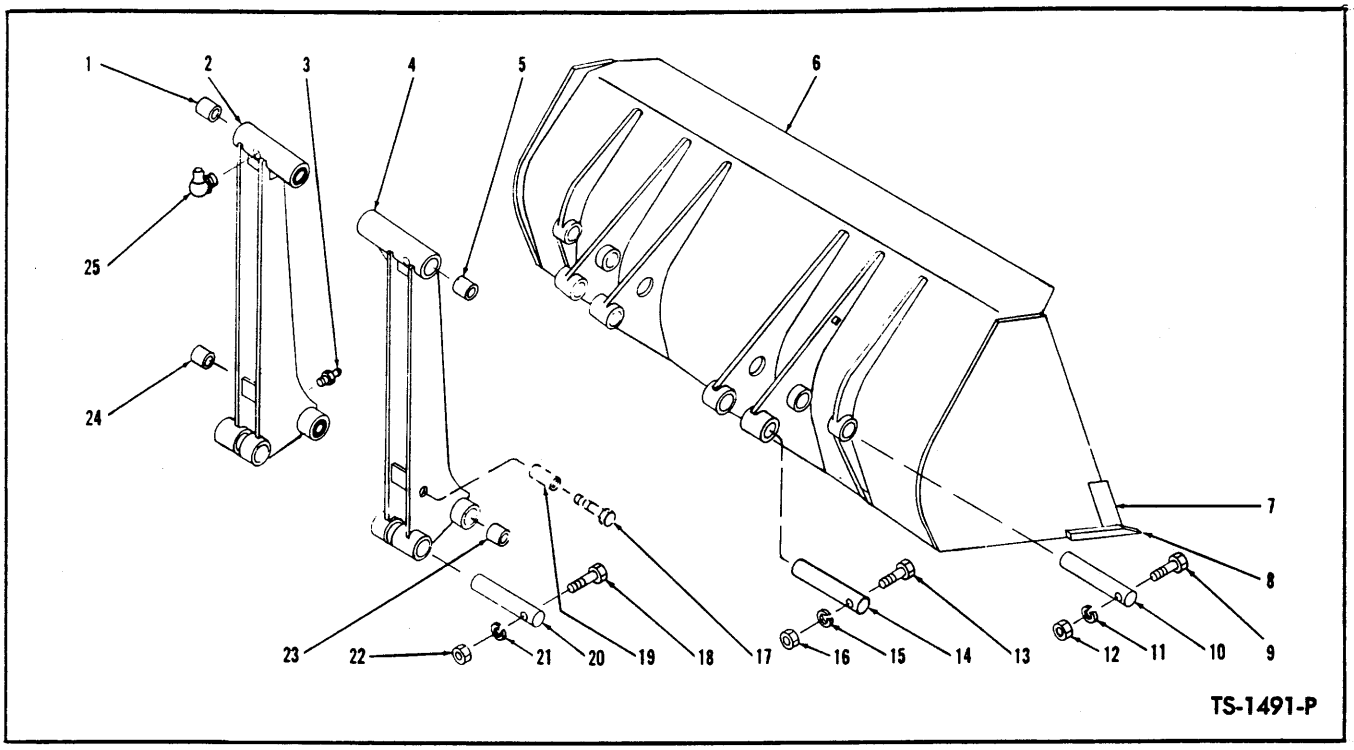

BUCKET AND CARRIER ASSEMBLY

Item No.	Part No.	Description	No. Req'd.
1	550066	BUSHING, Bucket Carrier	2
2	522800	CARRIER ASSY—L.H. (Inc. 1, 24)	1
3	10H-25	FITTING, Carrier Grease	2
4	522799	CARRIER ASSY—R.H. (Inc. 5, 23)	1
5	550066	BUSHING, Bucket Carrier	2
6	———	BUCKET—See Chart Below	—
7	———	SIDE CUTTING EDGE—See Chart Below	—
8	———	MAIN CUTTING EDGE—See Chart Below	—
9	2C-648	BOLT, Carrier to Bucket Pin Retaining	2
10	522809	PIN, Carrier to Bucket	2
11	4E-06	LKWSHR, Pin Retaining	2
12	2D-06	NUT, Pin Retaining	2
13	2C-644	BOLT, Cylinder Pin Retaining	2
14	523116	PIN, Cylinder to Bucket	2
15	4E-06	LKWSHR, Cylinder Pin Retaining	2
16	2D-06	NUT, Cylinder Pin Retaining	2
17	———	BOLT—See Bucket Indicator, Index	—
18	2C-644	BOLT, Guide Bar Pin Retaining	2
19	———	TUBE, See Bucket Indicator, Index	—
20	522810	PIN, Guide Bar to Carrier	2
21	4E-06	LKWSHR, Guide Bar Pin Retaining	2
22	2D-06	NUT, Guide Bar Pin Retaining	2
23	550066	BUSHING, Bucket Carrier	2
24	550066	BUSHING, Bucket Carrier	2
25	12H-25	FITTING, Carrier Grease	2

BUCKET ASSEMBLY DATA

WIDTH		BUCKET ASSEMBLY	MAIN CUTTING EDGE	SIDE CUTTING EDGE REPLACEMENT
61"	18 cu. ft. Struck	531818	553798	940173 R.H. 940172 L.H.
79"	Standard	523143	523146	940173 R.H. 940172 L.H.
85"	1 cu. yard Struck	531849	529115	940173 R.H. 940172 L.H.
85"	Light Material	529112	529115	940173 R.H. 940172 L.H.
85"	Extra Light Material	509694	529115	940173 R.H. 940172 L.H.

WHEN ORDERING PARTS, ALWAYS STATE MODEL AND SERIAL NO. OF MACHINE

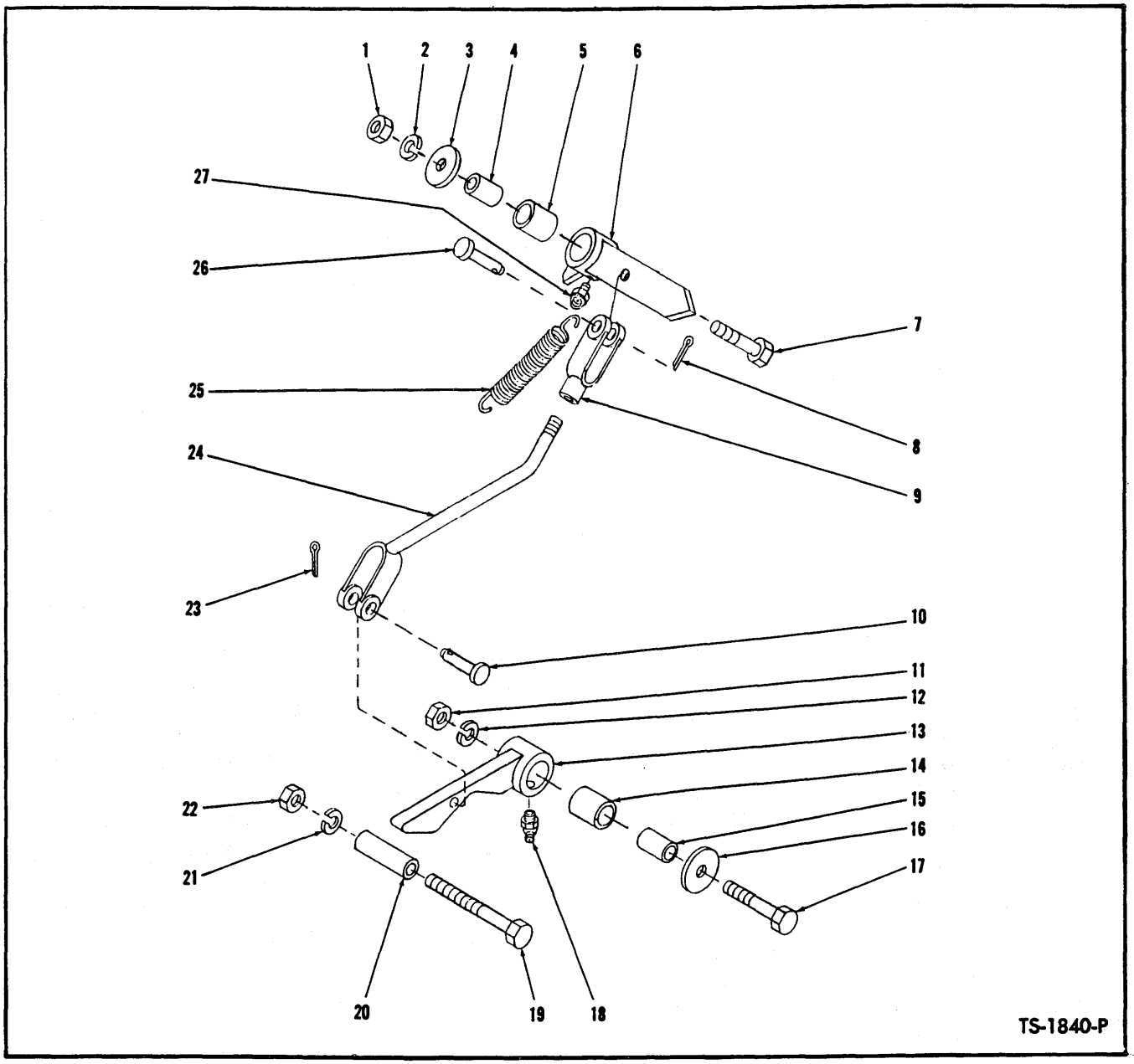

BUCKET INDICATOR

Item No.	Part No.	Description	No. Req'd.
1	2D-08	NUT, Pointer to Bucket	1
2	4E-08	LKWSHR, Pointer to Bucket	1
3	616796	WASHER, Pointer to Bucket	1
4	550646	SLEEVE, Pointer to Bucket	1
5	526767	BUSHING, Pointer	1
6	551521	POINTER	1
7	2C-840	BOLT, Pointer to Bucket	1
8	1F-414	COTTER, Clevis Pin	1
9	2J-8300	CLEVIS, Rod to Pointer	1
10	4F-08127	PIN, Rod to Cam	1
11	2D-08	NUT, Cam to Bucket	1
12	4E-08	LKWSHR, Cam to Bucket	1
13	551517	CAM	1
14	526767	BUSHING, Cam	1
15	550646	SLEEVE, Cam to Bucket	1
16	616796	WASHER, Cam to Bucket	1
17	2C-840	BOLT, Cam to Bucket	1
18	12H-15	FITTING, Cam Grease	1
19	2C-1072	BOLT, Tube to Carrier	1
20	551523	TUBE, Bucket Indicator	1
21	4E-10	LKWSHR, Tube to Carrier	1
22	2D-10	NUT, Tube to Carrier	1
23	1F-414	COTTER, Clevis Pin	1
24	528982	ROD, Pointer Indicator	1
25	551644	SPRING, Pointer Return	1
26	4F-08127	PIN, Clevis to Pointer	1
27	12H-15	FITTING, Pointer Grease	1

WHEN ORDERING PARTS, ALWAYS STATE MODEL AND SERIAL NO. OF MACHINE

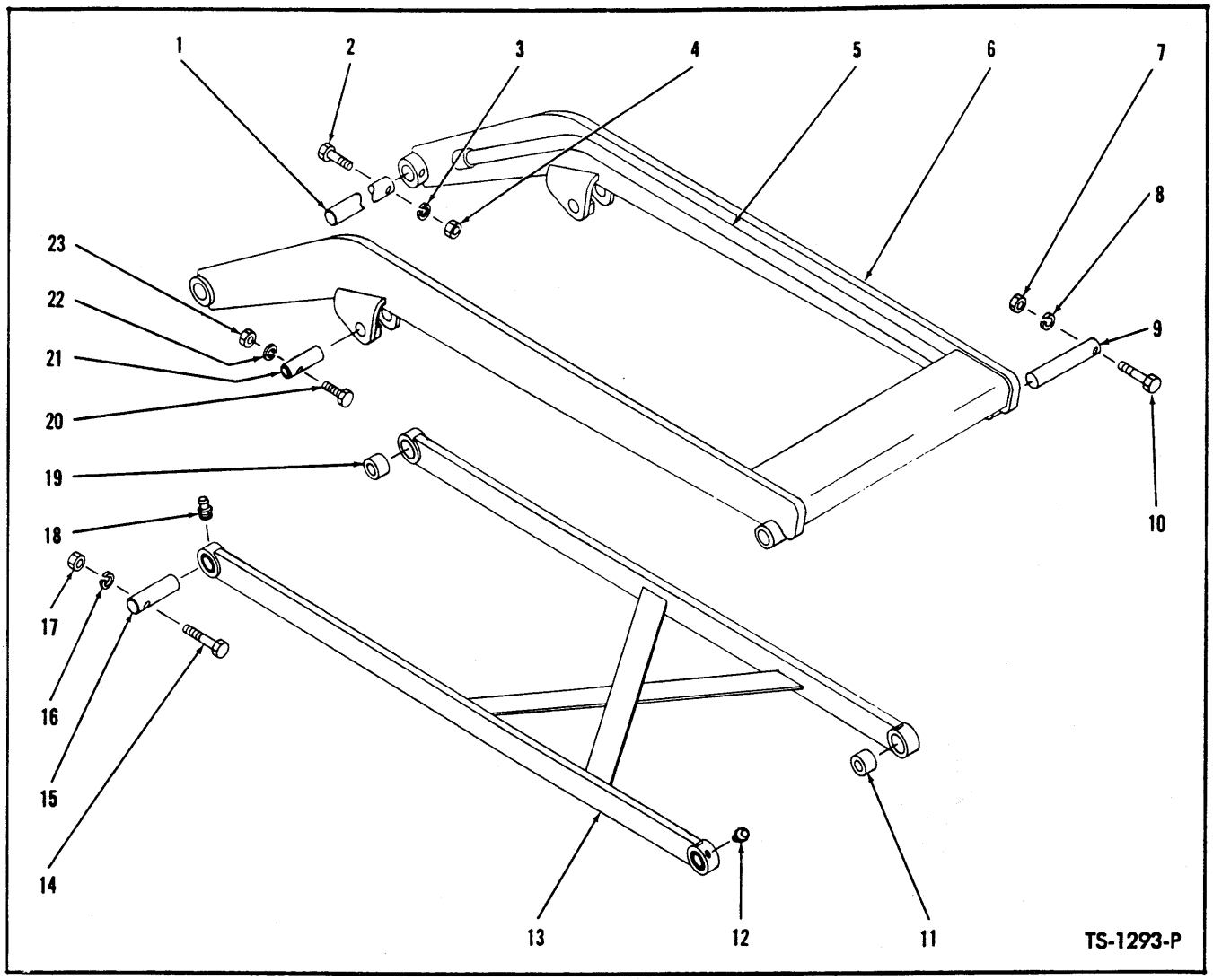

BOOM AND GUIDE BAR

Item No.	Part No.	Description	No. Req'd.
1	523103	SHAFT, Boom Pivot	1
2	2C-868	BOLT, Shaft Retaining	2
3	4E-08	LKWSHR, Shaft Retaining	2
4	2D-08	NUT, Shaft Retaining	2
5	527601	PIPE, Boom—R.H.	1
5A	527603	PIPE, Boom—L.H.	1
6	527600	BOOM ASSY (Inc. 5, 5A)	1
7	2D-06	NUT, Boom to Carrier & Cylinder	2
8	4E-06	LKWSHR, Boom to Carrier Pin Ret.	2
9	522808	PIN, Boom to Carrier & Cylinder	2
10	2C-648	BOLT, Boom to Carrier Pin Ret.	2
11	553082	BUSHING, Guide Bar	2
12	10H-25	FITTING, Guide Bar Grease	2
13	522864	GUIDE BAR ASSY (Inc. 11, 19)	1
14	2C-660	BOLT, Guide Bar Pin Retaining	2
15	522870	PIN, Guide Bar to Frame	2
16	4E-06	LKWSHR, Guide Bar Pin Retaining	2
17	2D-06	NUT, Guide Bar Pin Retaining	2
18	10H-35	FITTING, Guide Bar Grease	2
19	522868	BUSHING, Guide Bar	2
20	2C-644	BOLT, Cylinder Pin Retaining	2
21	523104	PIN, Cylinder to Boom	2
22	4E-06	LKWSHR, Cylinder Pin Retaining	2
23	2D-06	NUT, Cylinder Pin Retaining	2

WHEN ORDERING PARTS, ALWAYS STATE MODEL AND SERIAL NO. OF MACHINE

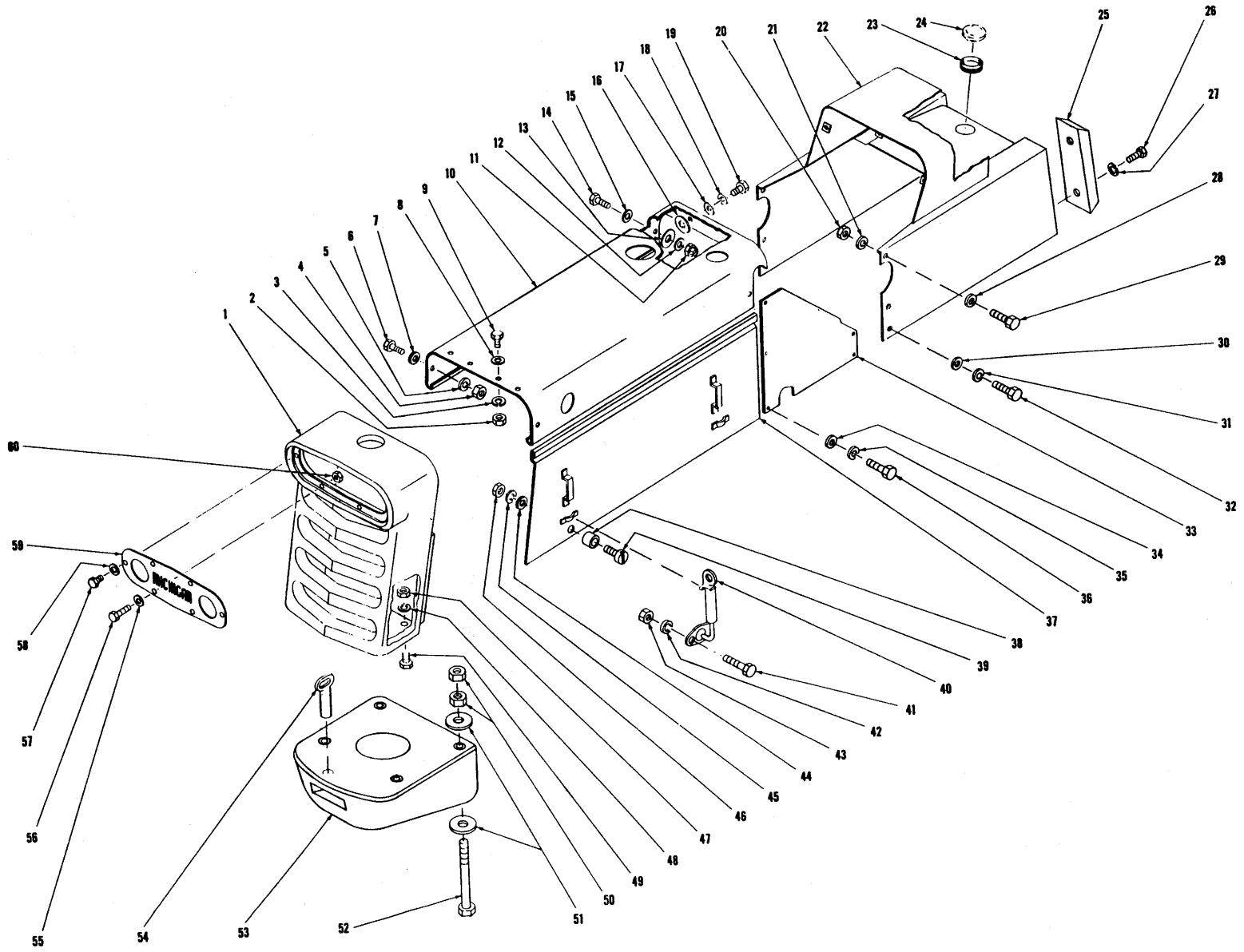

GRILLE, COUNTERWEIGHT AND BODY PANEL ASSEMBLY

TS-1531-P

GRILLE, COUNTERWEIGHT AND BODY PANEL ASSEMBLY

Item No.	Part No.	Description	No. Req'd.
1	550252	GRILLE	1
2	2D-06	NUT, Hood to Grille	4
3	4E-06	LKWSHR, Hood to Grille	4
4	2D-06	NUT, Hood to Grille	2
5	4E-06	LKWSHR, Hood to Grille	2
6	2C-620	BOLT, Hood to Grille	2
7	551835	WASHER, Hood to Grille	2
8	551835	WASHER, Hood to Grille	4
9	2C-616	BOLT, Hood to Grille	4
10	523922	HOOD	1
11	103376	NUT, Hood to Clip Lock	2
12	25E-18	WASHER, Hood to Clip	2
13	518233	PAD, Hood to Clip	2
14	2C-622	BOLT, Hood to Clip	2
15	551835	WASHER, Hood to Clip	2
16	518233	PAD, Hood to Frame	2
17	616791	WASHER, Hood to Frame	2
18	4E-08	LKWSHR, Hood to Frame	2
19	2C-824	BOLT, Hood to Frame	2
20	2D-06	NUT, Shroud to Frame	2
21	4E-06	LKWSHR, Shroud to Frame	2
22	526548	SHROUD, Front	1
23	553849	GROMMET, Front Shroud	1
24	———	CAP, Fuel Tank (See Index)	—
25	551539	BAR, Bumper	2
26	2C-836	BOLT, Bumper Bar	4
27	4E-08	LKWSHR, Bumper Bar	4
28	103293	WASHER, Shroud to Frame	2
29	2C-610	BOLT, Shroud to Frame	2
30	103293	WASHER, Shroud to Frame	4
31	4E-06	LKWSHR, Shroud to Frame	4
32	2C-610	BOLT, Shroud to Frame	4
33	523923	PANEL, Side	2
34	103293	WASHER, Side Panel	12
35	4E-06	LKWSHR, Side Panel	12
36	2C-610	BOLT, Side Panel	12
37	523924	PANEL, Hood Side — R.H.	1
37A	523925	†PANEL, Hood Side — L.H.	1
38	551434	BUMPER, Hood Side Panel	4
39	2G-1014	SCREW, Bumper	4
40	552336	CATCH, Hood Side Panel	4
41	2G-1014	SCREW, Hood Catch	8
42	12E-10	LKWSHR, Hood Catch	8
43	14D-10	NUT, Hood Catch	8
44	616775	WASHER, Bumper	4
45	13E-10	LKWSHR, Bumper	4
46	14D-10	NUT, Bumper	4
47	2D-10	NUT, Grille	2
48	4E-10	LKWSHR, Grille	2
49	2C-1052	BOLT, Grille	2
50	68D-12	NUT, Counterweight	4
51	25E-27	WASHER, Counterweight	4
52		*BOLT, Counterweight to Frame*	
52A	16C-12180	For Model 55A	4
52B	24C-12224	For Model 55B	4
53		*COUNTERWEIGHT*	
53A	522978	For Model 55A	1
53B	530961	For Model 55B	1
54		*PIN, Drawbar*	
54A	550586	For Model 55A	1
54B	531766	For Model 55B	1
55	4E-05	LKWSHR, Mounting Plate to Grille	2
56	1C-520	BOLT, Mounting Plate to Grille	2
57	1C-510	BOLT, Mounting Plate to Grille	4
58	4E-05	LKWSHR, Mounting Plate to Grille	4
59	550880	PLATE, Light Mounting	1
60	1D-05	NUT, Mounting Plate to Grille	2

†Not Illustrated

WHEN ORDERING PARTS, ALWAYS STATE MODEL AND SERIAL NO. OF MACHINE

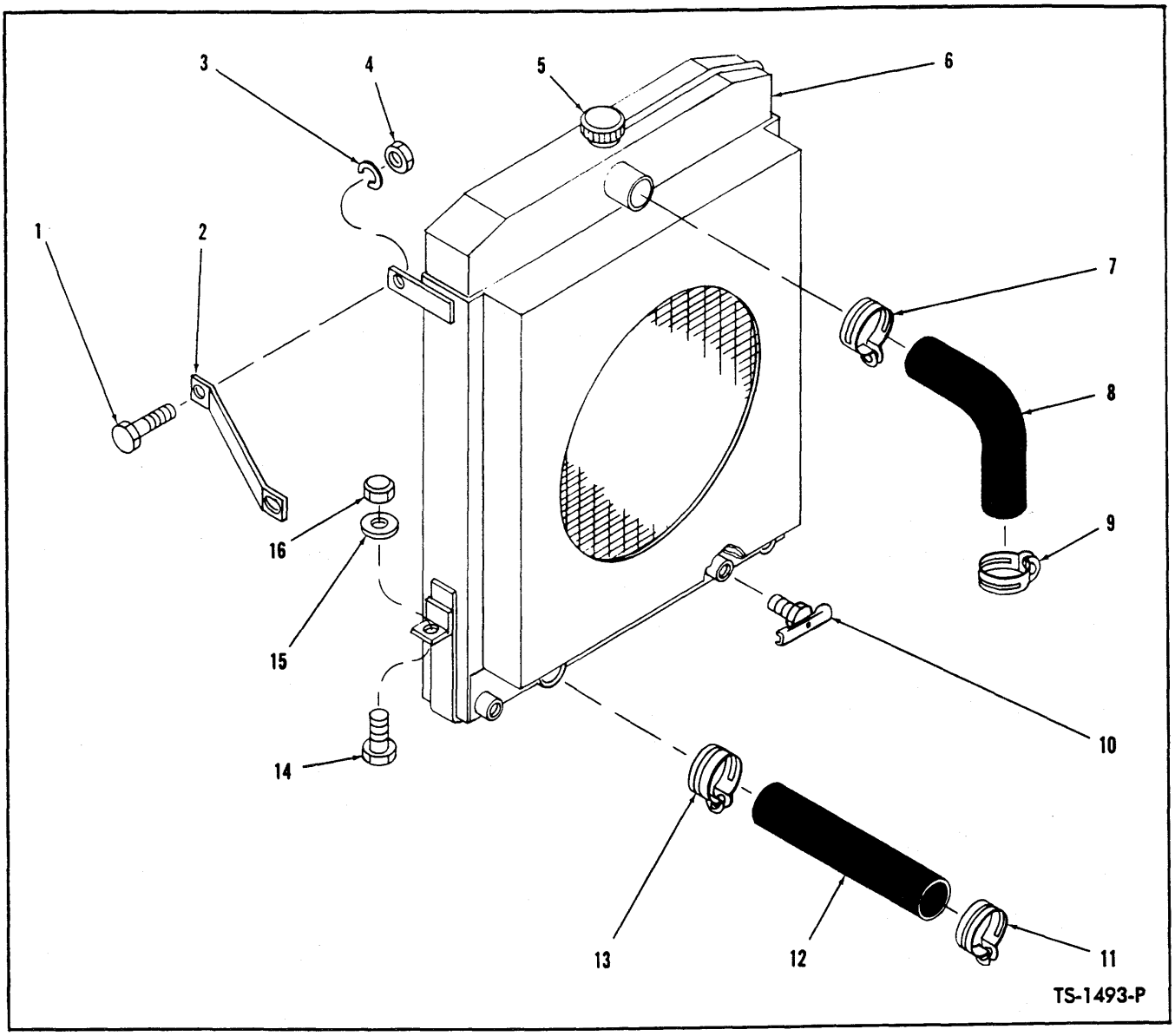

RADIATOR AND CONNECTIONS

Item No.	Part No.	Description	No. Req'd.
1	2C-620	BOLT, Clip to Radiator	2
2	514658	CLIP, Radiator to Grille	2
3	4E-06	LKWSHR, Clip to Radiator	2
4	2D-06	NUT, Clip to Radiator	2
5	351495	CAP, Radiator	1
6	1518428	RADIATOR	1
7	784663	CLAMP, Upper Radiator Hose	1
8	523699	HOSE, Upper Radiator	1
9	784663	CLAMP, Upper Radiator Hose	1
10	73F-2	DRAIN COCK, Radiator	1
11	784663	CLAMP, Lower Radiator Hose	1
12	523698	HOSE, Lower Radiator	1
13	784663	CLAMP, Lower Radiator Hose	1
14	2C-828	BOLT, Radiator to Frame	2
15	518233	PAD, Radiator to Frame	2
16	21D-08	NUT, Radiator to Frame	2

WHEN ORDERING PARTS, ALWAYS STATE MODEL AND SERIAL NO. OF MACHINE

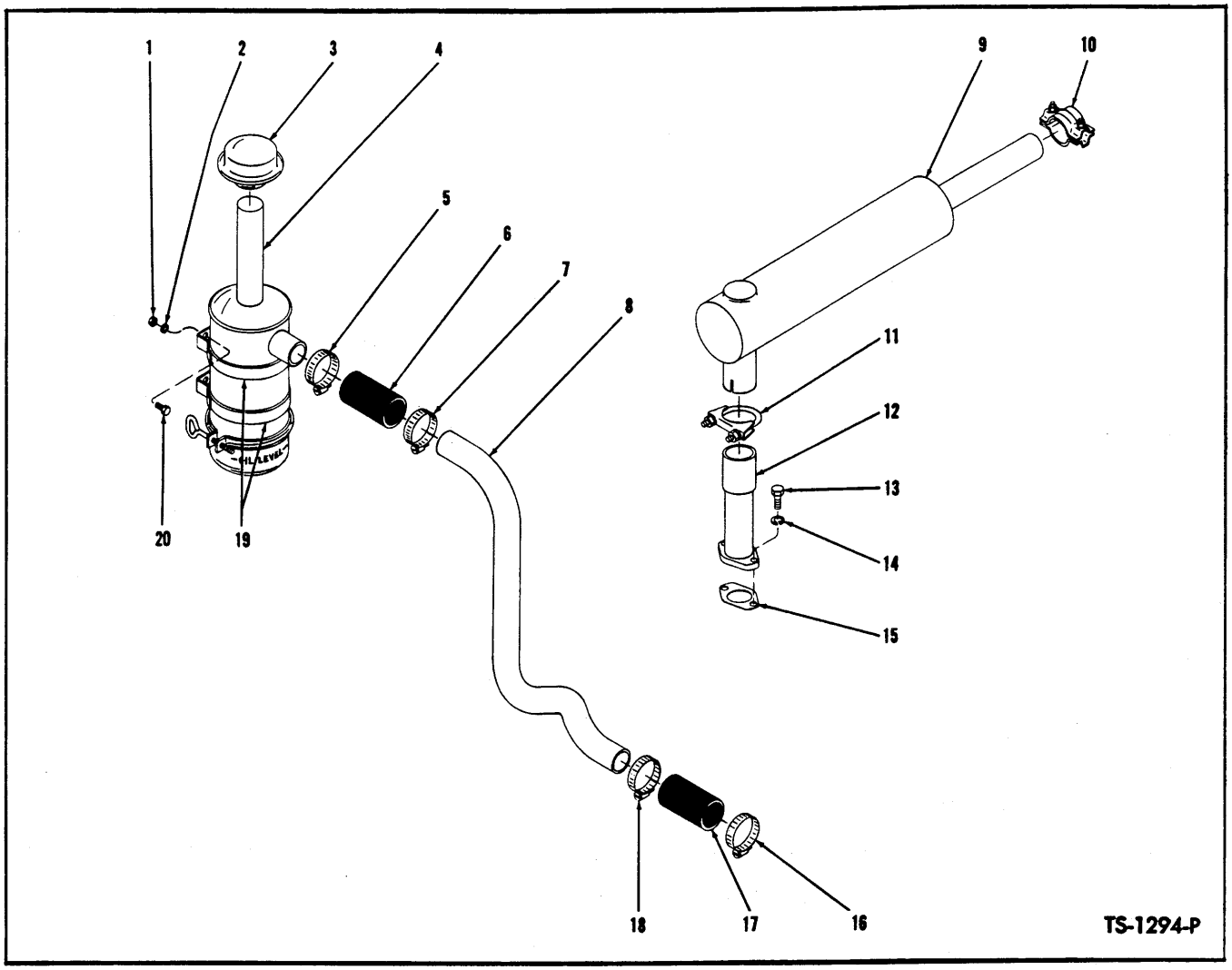

AIR CLEANER AND MUFFLER *

Item No.	Part No.	Description	No. Req'd.
1	2D-04	NUT, Air Cleaner to Reservoir	4
2	4E-04	LKWSHR, Air Cleaner to Reservoir	4
3	663879	CAP, Air Cleaner	1
4	524186	AIR CLEANER	1
5	875248	CLAMP, Hose	1
6	1M-16030	HOSE, Air Cleaner	1
7	875248	CLAMP, Hose	1
8	524190	TUBE, Air Cleaner	1
9	550650	MUFFLER	1
10	551528	CLAMP, Tail Pipe to Hood	1
11	550652	CLAMP, Muffler	1
12	524192	ADAPTER, Manifold to Muffler	1
13	1C-620	BOLT, Adapter to Manifold	2
14	4E-06	LKWSHR, Adapter to Manifold	2
15	524221	GASKET, Adapter to Manifold	1
16	875248	CLAMP, Hose	1
17	1M-16030	HOSE, Tube to Carburetor	1
18	875248	CLAMP, Hose	1
19	524188	STRAP, Air Cleaner Mounting	2
20	2C-410	BOLT, Air Cleaner to Reservoir	4

*Ref. SG-711

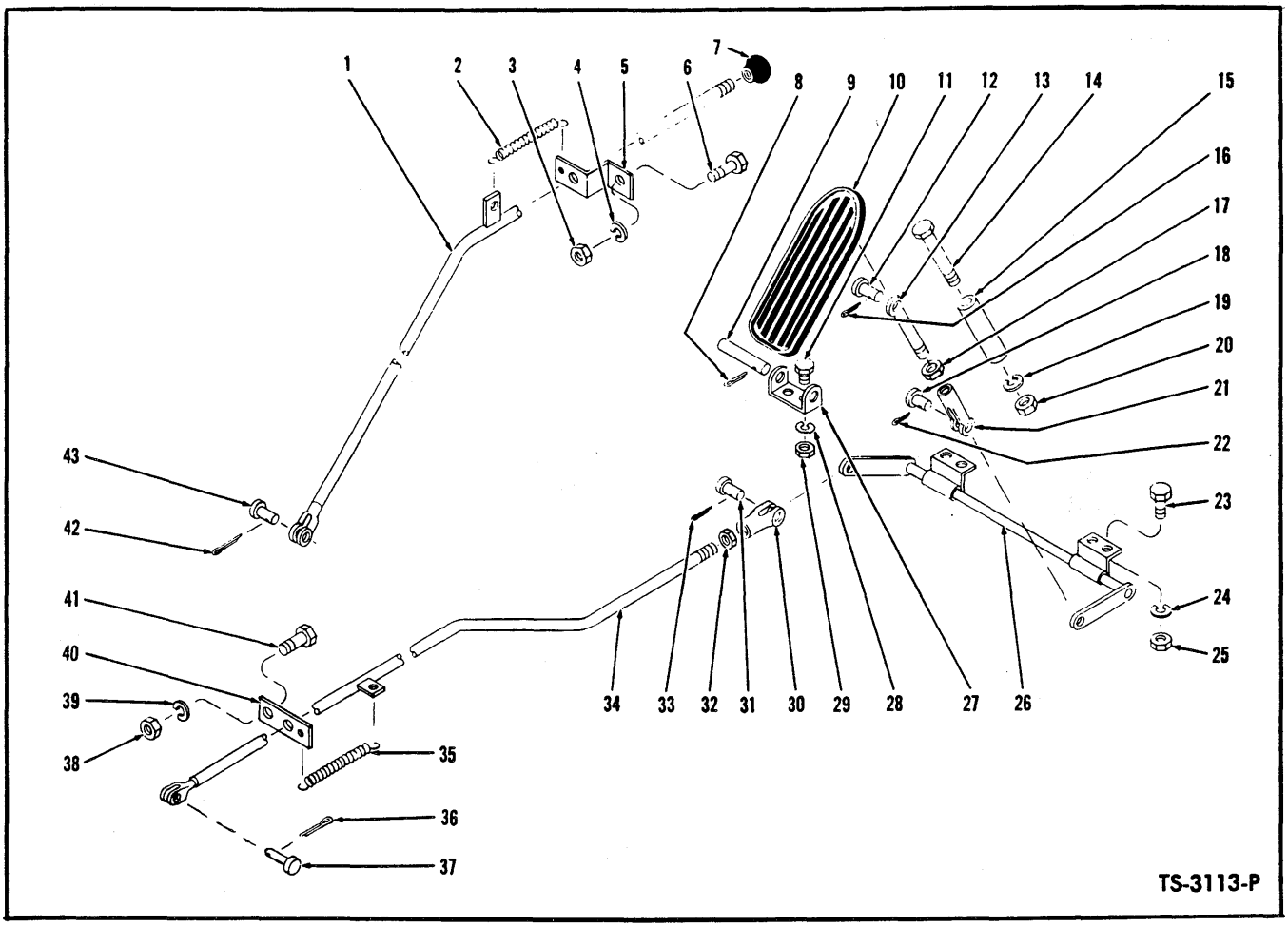

ACCELERATOR PEDAL AND LINKAGE

Item No	Part No.	Description	No. Req'd.
1		*CHOKE ROD*	
1A	525662	For 55A Serial 3726 thru 3825	1
1B	528283	For Serial: 55A — 3826 thru 3855, 1BCO134 thru 1BCO282, 2BCO1 thru 2BCO999	
		55B — 50BCO1 thru 50BCO999	1
2	551090	SPRING, Return	1
3	2D-06	NUT, Spring Return Support	1
4	4E-07	LKWSHR, Spring Return Support	1
5	526604	SUPPORT, Spring Return	1
6	2C-616	BOLT, Spring Return Support	1
7	551178	KNOB, Choke Rod	1
8	1F-316	COTTER, Pedal to Bracket Pin	1
9	623762	PIN, Pedal to Bracket	1
10	623829	PEDAL, Accelerator	1
11	2C-410	BOLT, Bracket to Floorboard	1
12	4F-04051	PIN, Pedal Rod to Pedal	1
13	550619	ROD, Pedal	1
14	2C-444	BOLT, Pedal Stop	1
15	551016	STOP, Pedal	1
16	1F-207	COTTER, Pedal Rod to Pedal Pin	1
17	8D-04	NUT, Pedal Rod Jam	1
18	4F-04051	PIN, Pedal Rod Yoke	1
19	4E-04	LKWSHR, Pedal Stop	1
20	2D-04	NUT, Pedal Stop	1
21	2J-4200	YOKE, Pedal Rod	1
22	1F-207	COTTER, Pedal Rod Yoke Pin	1
23	2C-410	BOLT, Bell Crank Mounting	4
24	4E-04	LKWSHR, Bell Crank Mounting	4
25	2D-04	NUT, Bell Crank Mounting	4
26	525522	BELL CRANK	1
27	551015	BRACKET, Pedal Pivot	1
28	4E-04	LKWSHR, Bracket to Floorboard	2
29	2D-04	NUT, Bracket to Floorboard	2
30	2J-4200	YOKE, Accelerator Rod	1
31	4F-04051	PIN, Rod to Bell Crank	1
32	8D-04	NUT, Yoke Jam	1
33	1F-207	COTTER, Yoke Pin	1
34	525528	ROD, Accelerator	1
35	551090	SFRING, Accelerator Rod Return	1
36	1F-207	COTTER, Rod to Carburetor	1
37	4F-04051	PIN, Rod to Carburetor	1
38	2D-06	NUT, Accelerator Rod Guide	1
39	4E-06	LKWSHR, Accelerator Rod Guide	1
40	526639	GUIDE, Accelerator Rod	1
41	2C-616	BOLT, Accelerator Rod Guide	1
42	1F-208	COTTER, Clevis Pin	1
43	4F-03038	PIN, Clevis	1

WHEN ORDERING PARTS, ALWAYS STATE MODEL AND SERIAL NO. OF MACHINE

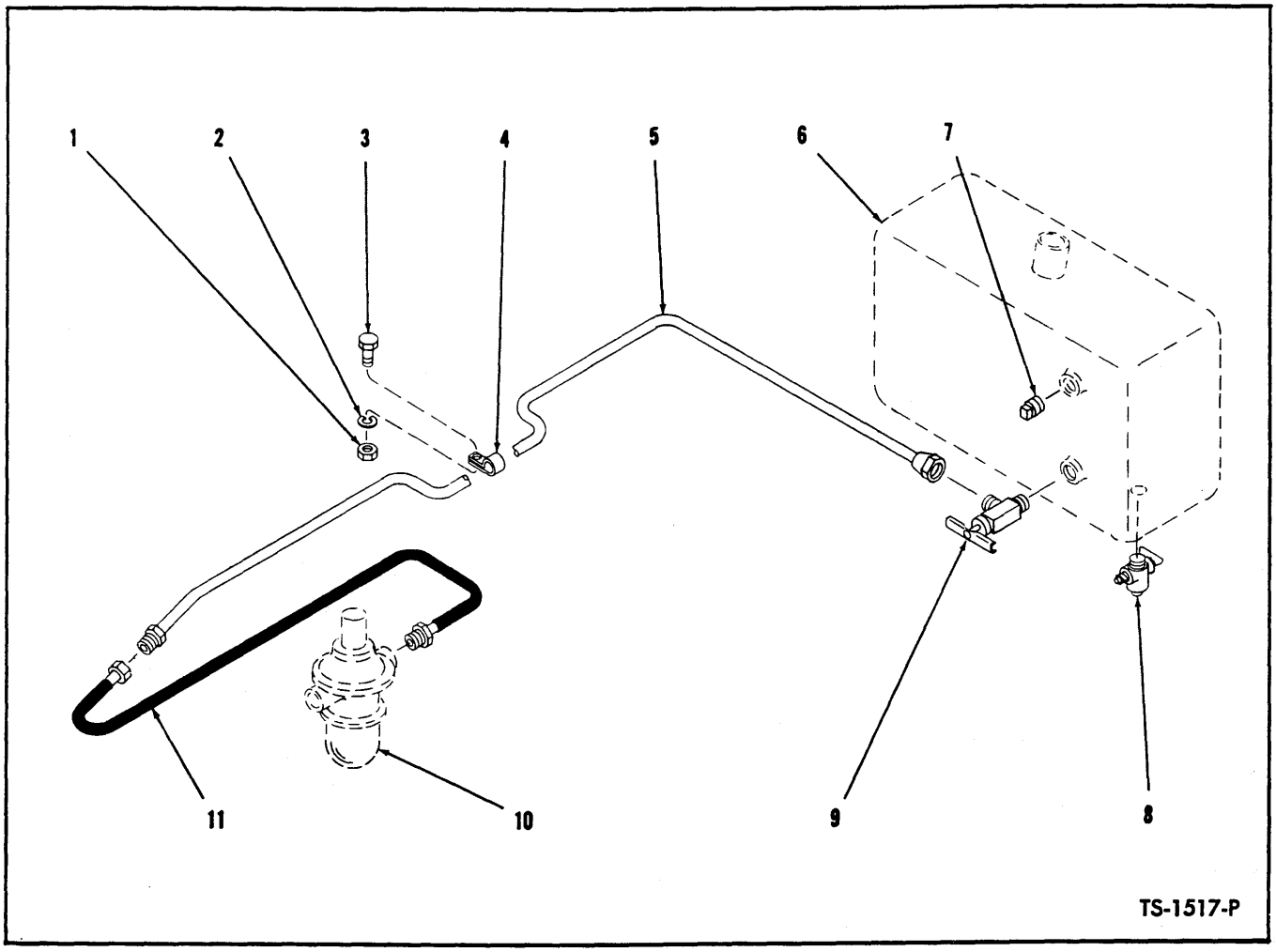

FUEL LINES

Item No.	Part No.	Description	No. Req'd.
1	2D-06	NUT, Fuel Line Clip	3
2	4E-06	LKWSHR, Fuel Line Clip	3
3	2C-624	BOLT, Fuel Line Clip	3
4	6H-9	CLIP, Fuel Line	3
5	526607	LINE, Fuel	1
6	———	FUEL TANK (See Index)	—
7	13F-04	PLUG, Pipe	1
8	71F-2	DRAINCOCK, Fuel Tank	1
9	69F-4	VALVE, Fuel Shut-Off	1
10	———	FUEL PUMP (See Index)	—
11	550984	HOSE, Fuel Line to Fuel Pump	1

WHEN ORDERING PARTS, ALWAYS STATE MODEL AND SERIAL NO. OF MACHINE

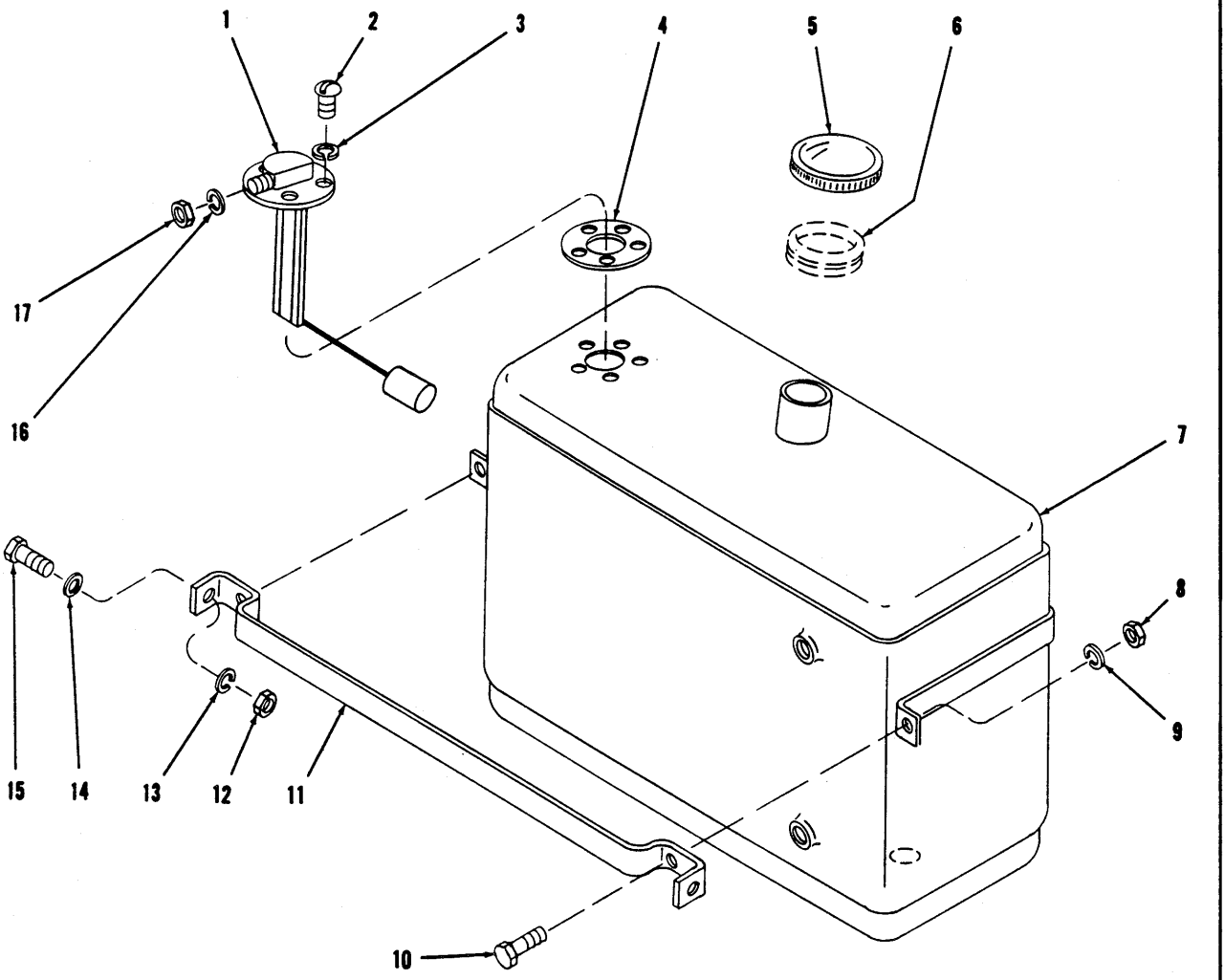

FUEL TANK — MODEL 55A

For Serial 3726 thru 3785

Item No.	Part No.	Description	No. Req'd.
1	528100	GAUGE, Fuel Tank	1
2	3G-1008	SCREW, Fuel Gauge to Tank	5
3	12E-10	LKWSHR, Fuel Gauge to Tank	5
4	627982	GASKET, Fuel Gauge to Tank	1
5	539837	CAP, Fuel Tank	1
6	———	GROMMET (See Shroud, Index)	—
7	526510	TANK, Fuel	1
8	2D-04	NUT, Brace to Strap	2
9	4E-04	LKWSHR, Brace to Strap	2
10	2C-424	BOLT, Brace to Strap	2
11	526514	BRACE, Fuel Tank	1
12	2D-06	NUT, Brace to Shroud	2
13	4E-06	LKWSHR, Brace to Shroud	2
14	103293	WASHER, Brace to Shroud	2
15	2C-614	BOLT, Brace to Shroud	2
16	12E-10	LKWSHR, Fuel Gauge Terminal	1
17	14D-10	NUT, Fuel Gauge Terminal	1

WHEN ORDERING PARTS, ALWAYS STATE MODEL AND SERIAL NO. OF MACHINE

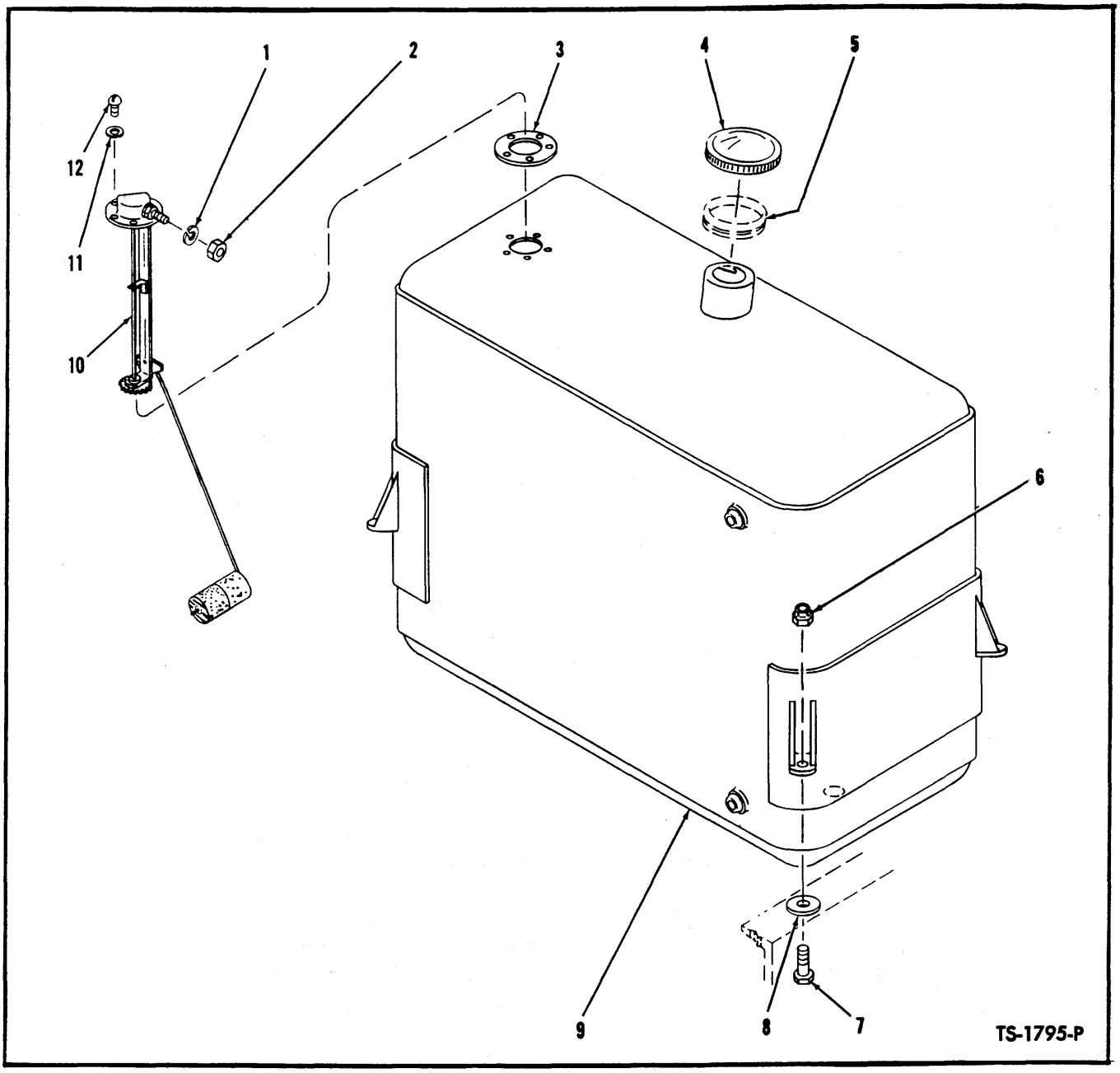

FUEL TANK

For Serial: 55A — 3786 thru 3855, 1BCO134 thru 1BCO282, 2BCO1 thru 2BCO999
55B — 50BCO1 thru 50BCO999

Item No.	Part No.	Description	No. Req'd.
1	12E-10	LKWSHR, Fuel Gauge Terminal	1
2	14D-10	NUT, Fuel Gauge Terminal	1
3	627982	GASKET, Fuel Gauge to Tank	1
4	539837	CAP, Fuel Tank	1
5	———	GROMMET (See Shroud, Index)	—
6	21D-08	NUT, Fuel Tank Mounting	4
7	2C-828	BOLT, Fuel Tank Mounting	4
8	518233	PAD, Fuel Tank to Frame	4
9	527324	TANK, Fuel	1
10	528100	GAUGE, Fuel Tank	1
11	12E-10	LKWSHR, Fuel Gauge to Tank	5
12	3G-1008	SCREW, Fuel Gauge to Tank	5

WHEN ORDERING PARTS, ALWAYS STATE MODEL AND SERIAL NO. OF MACHINE

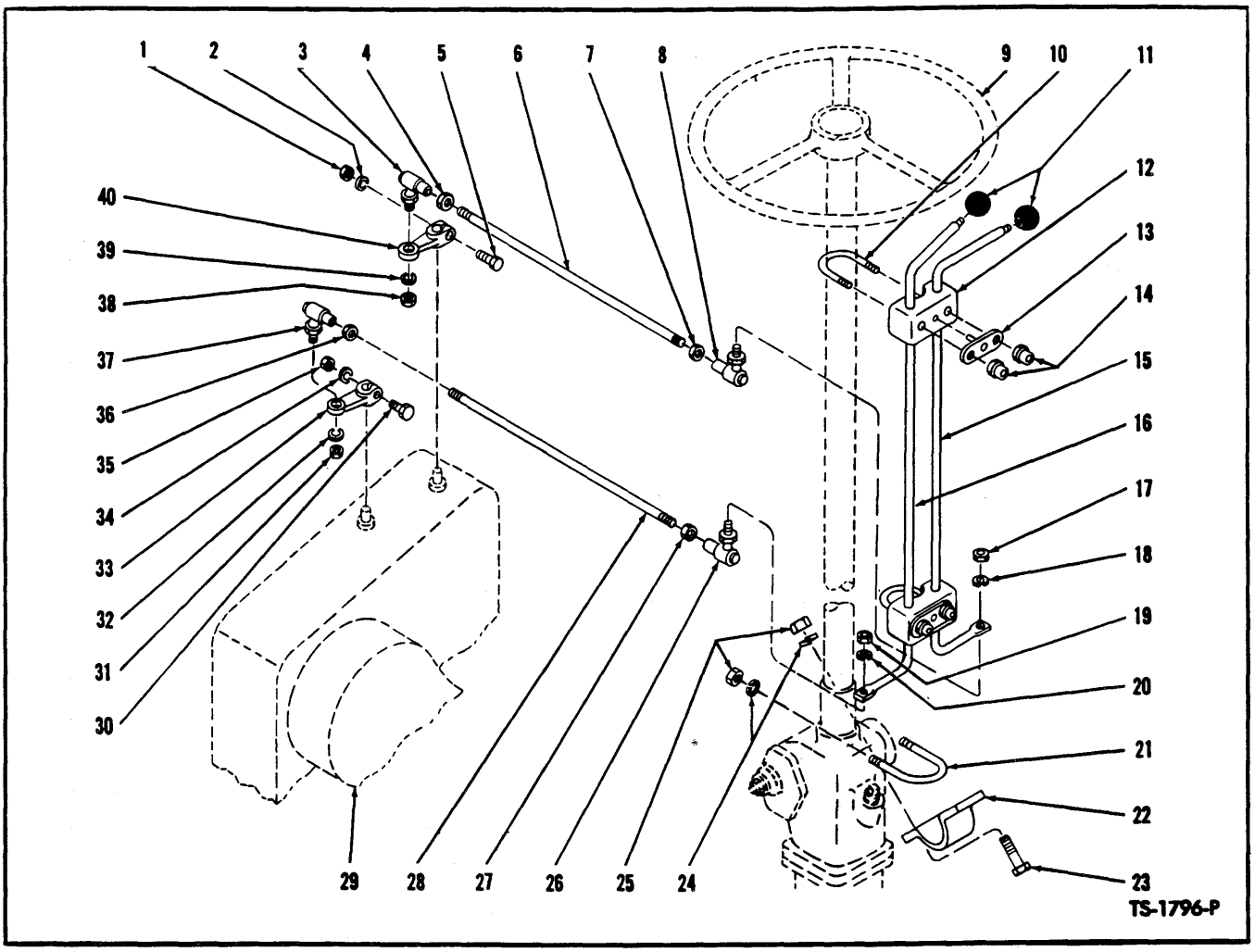

GEAR SHIFT LEVERS AND LINKAGE

Item No.	Part No.	Description	No. Req'd.
1	2D-04	NUT, Transmission Valve Lever	1
2	4E-04	LKWSHR, Transmission Valve Lever	1
3	2520677	BALL SOCKET, Rod to Trans. Lever	1
4	8D-06	NUT, Ball Socket Jam	1
5	2C-424	BOLT, Transmission Valve Lever	1
6	550674	ROD, Shift	1
7	8D-06	NUT, Ball Socket Jam	1
8	2520677	BALL SOCKET, Rod to Shift Lever	1
9	———	STEERING WHEEL (See Index)	—
10	550672	U-BOLT, Support to Steering Column	2
11	509772	KNOB, Shift Lever	2
12		*SUPPORT, Shift Levers	
12A	581978	Male Half	2
12B	581979	Female Half	2
13	550669	PLATE, Shift Lever Support	2
14	18D-05	NUT, U-Bolt	4
15	526562	LEVER, High & Low Shift	1
16	526560	LEVER, Forward & Reverse Shift	1
17	8D-06	NUT, Ball Socket to Lever	1
18	4E-06	LKWSHR, Ball Socket to Lever	1
19	8D-06	NUT, Ball Socket to Lever	1
20	4E-06	LKWSHR, Ball Socket to Lever	1
21	523783	U-BOLT, Steering Gear to Frame	1
22	550044	CLAMP, Steering Gear to Frame	1
23	2C-832	BOLT, Clamp to Frame	2
24	4E-08	LKWSHR, Clamp & U-Bolt to Frame	4
25	2D-08	NUT, Clamp & U-Bolt to Frame	4
26	2520677	BALL SOCKET, Rod to Shift Lever	1
27	8D-06	NUT, Ball Socket Jam	1
28	550674	ROD, Shift	1
29	———	TRANSMISSION (See Index)	—
30	2C-424	BOLT, Lever to Transmission	1
31	8D-06	NUT, Ball Socket to Trans. Lever	1
32	4E-06	LKWSHR, Ball Socket to Trans. Lever	1
33	550803	LEVER, Rod to Transmission	1
34	4E-04	LKWSHR, Lever to Transmission	1
35	2D-04	NUT, Lever to Transmission	1
36	8D-06	NUT, Ball Socket Jam	1
37	2520677	BALL SOCKET, Rod to Trans. Lever	1
38	8D-06	NUT, Ball Socket to Trans. Lever	1
39	4E-06	LKWSHR, Ball Socket to Trans. Lever	1
40	550803	LEVER, Rod to Transmission	1

NOTE: When 581978 and 581979 Nylon Supports are installed in place of (one piece) rubber support, 550669 Plate Item 13 is not required.

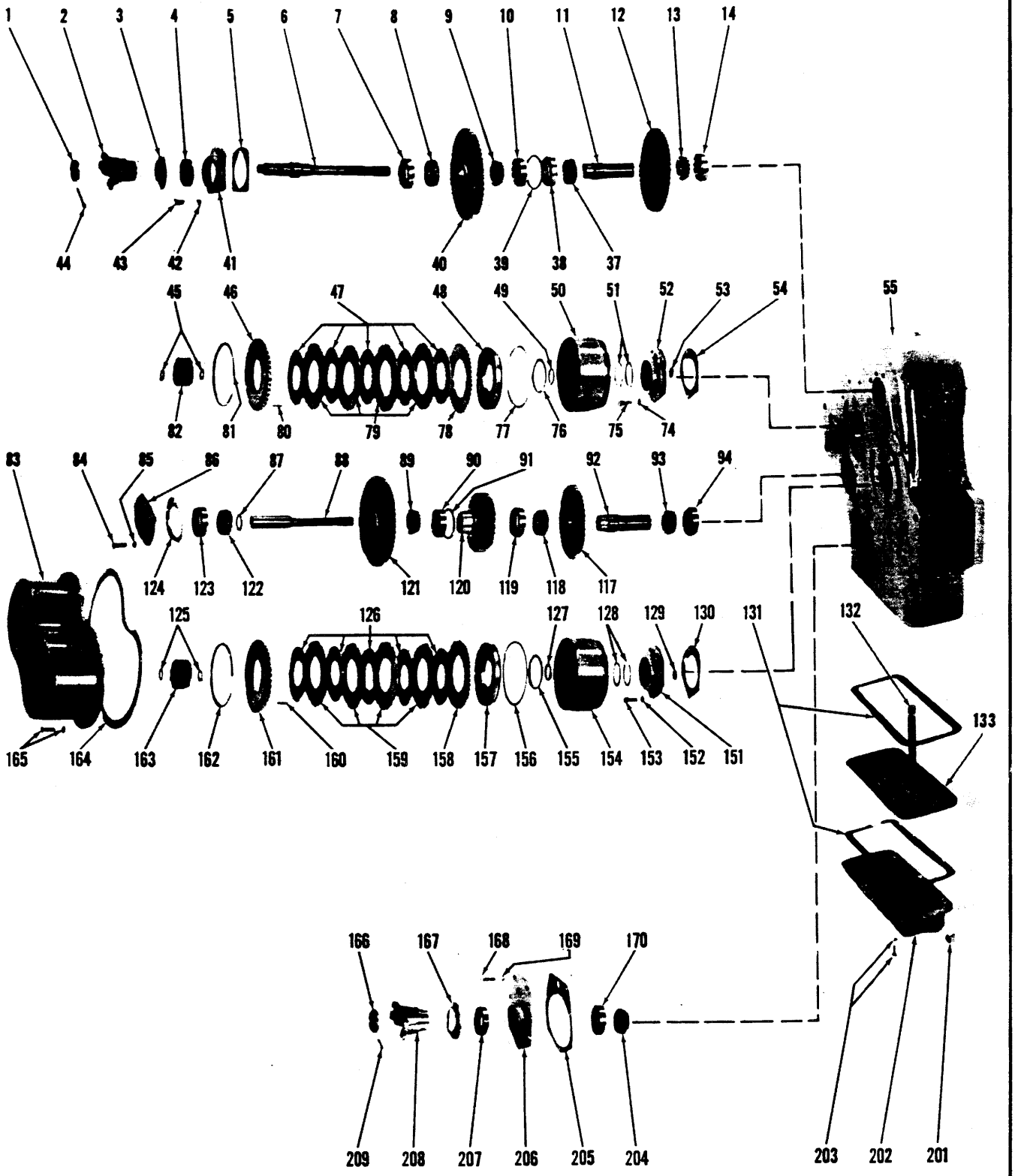

TRANSMISSION ASSY

TRANSMISSION ASSEMBLY (Continued)

Item No.	Part No.	Description	No. Req'd.
71	4E-07	LKWSHR, Bearing Cap	4
72	209365	‡SHIM, Bearing Cap —.004	—
72A	209366	‡SHIM, Bearing Cap —.007	—
72B	209367	‡SHIM, Bearing Cap —.010	—
73	209375	GEAR, 1st & 3rd Drop (44T)	1
74	4E-07	LKWSHR, Bearing Cap	4
75	1C-718	BOLT, Bearing Cap	4
76	234038	RING, Clutch Piston Inner Sealing	1
77	208776	SEAL, Clutch Piston Outer	1
78	221998	DISC, Clutch Outer	1
79	208773	DISC, Clutch Outer	4
80	216697	SPRING, Clutch Disc Release	10
81	223942	RING, End Plate Retaining	1
82	216673	HUB, Clutch Disc	1
83	209357	COVER, Clutch	1
84	1C-718	BOLT, Bearing Cap	4
85	4E-07	LKWSHR, Bearing Cap	4
86	209416	CAP, 2nd & 4th Bearing	1
87	224031	RING, 2nd & 4th High Gear Locating	1
88	216672	SHAFT, 2nd & 4th Drive	1
89	675546	CONE, 2nd & 4th Shaft Bearing	1
90	675542	CUP, 2nd & 4th Shaft Bearing	1
91	223951	RING, 2nd & 4th Shaft Brng. Locating	1
92	209368	SHAFT, 2nd & 4th Quill	1
93	675548	CONE, 2nd & 4th Shaft Bearing	1
94	675544	CUP, 2nd & 4th Shaft Bearing	1
95	221401	GASKET, Clutch Cover	1
96	209392	‡SHIM, Clutch Bearing Cap —.004	—
96A	209393	‡SHIM, Clutch Bearing Cap —.007	—
96B	209394	‡SHIM, Clutch Bearing Cap —.010	—
96C	221208	‡SHIM, Clutch Bearing Cap —.020	—
97	25K-30016	"O" RING, Bearing Cap	1
98	209387	RING, Hub Oil Seal	2
99	222410	DRUM ASSY (Inc. 99A, 99B)	1
99A	222407	†HOUSING, Bleed Valve	1
99B	10J-06	†BALL, Bleed Valve	1
100	234038	RING, Clutch Piston Inner Sealing	1
101	208776	SEAL, Clutch Piston Outer	1
102	221996	PISTON, Clutch	1
103	216677	DISC, Clutch Inner	5
104	224068	RING, Clutch Disc Hub Retaining	2
105	209358	COVER, Clutch	1
106	5C-614	BOLT & LKWSHR, Clutch Cover	10
107	216673	HUB, Clutch Disc	1
108	223942	RING, End Plate Retaining	1
109	208760	PLATE, Clutch Disc End	1
110	216697	SPRING, Clutch Disc Release	10
111	208773	DISC, Clutch Outer	4
112	221998	DISC, Clutch Outer	1
113	224097	RING, Clutch Drum Hub Retaining	1
114	1C-718	BOLT, Bearing Cap	4
115	4E-07	LKWSHR, Bearing Cap	4
116	209391	CAP, Clutch Bearing	1
117	209369	GEAR, 2nd & 4th Drive (43T)	1
118	675548	CONE, 2nd & 4th Shaft Bearing	1
119	675544	CUP, 2nd & 4th Shaft Bearing	1
120	220395	GEAR, 2nd & 4th Low Drive (32T)	1
121	209421	GEAR, 2nd & 4th Drive Shaft Hi (57T)	1
122	675545	CONE, 2nd & 4th Shaft Bearing	1
123	675542	CUP, 2nd & 4th Shaft Bearing	1
124	209417	‡SHIM, 2nd & 4th Bearing Cap —.004	—
124A	209418	‡SHIM, 2nd & 4th Bearing Cap —.007	—
124B	209419	‡SHIM, 2nd & 4th Bearing Cap —.010	—
125	224068	RING, Clutch Disc Hub Retaining	2
126	216677	DISC, Clutch Inner	5
127	224097	RING, Clutch Drum Hub Retaining	1
128	209387	RING, Hub Oil Seal	2
129	25K-30016	"O" RING, Bearing Cap	1
130	209392	‡SHIM, Clutch Bearing Cap —.004	—
130A	209393	‡SHIM, Clutch Bearing Cap —.007	—
130B	209394	‡SHIM, Clutch Bearing Cap —.010	—
130C	221208	‡SHIM, Clutch Bearing Cap —.020	—
131	209353	GASKET, Oil Pan	2
132	220673	PIPE, Oil Suction	1
133	220669	SCREEN, Sump	1
134	223881	RING, Reverse Shaft Bearing Locating	2
135	675544	CUP, Reverse Shaft Bearing	1
136	675547	CONE, Reverse Shaft Bearing	1
137	675547	CONE, Reverse Shaft Bearing	1
138	675544	CUP, Reverse Shaft Bearing	1
139	4E-07	LKWSHR, Reverse Bearing Cap	4
140	1C-718	BOLT, Reverse Bearing Cap	4
141	209364	CAP, Reverse Bearing	1
142	209365	‡SHIM, Reverse Bearing Cap —.004	—

‡As Required
†Not Illustrated

WHEN ORDERING PARTS, ALWAYS STATE MODEL AND SERIAL NO. OF MACHINE

TRANSMISSION ASSEMBLY (Continued)

Item No.	Part No.	Description	No. Req'd.
142A	209366	‡SHIM, Reverse Bearing Cap —.007	—
142B	209367	‡SHIM, Reverse Bearing Cap —.010	—
143	209372	GEAR, Reverse Idler (52-T)	1
144	216671	SHAFT, Reverse	1
145	675544	CUP, Reverse Shaft Bearing	1
146	675548	CONE, Reverse Shaft Bearing	1
147	209371	GEAR, Reverse Shaft Drive (54-T)	1
148	209368	SHAFT, Reverse Quill	1
149	675548	CONE, Reverse Shaft Bearing	1
150	675544	CUP, Reverse Shaft Bearing	1
151	209391	CAP, Clutch Bearing	1
152	4E-07	LKWSHR, Bearing Cap	4
153	1C-718	BOLT, Bearing Cap	4
154	222410	DRUM ASSY, Clutch (Inc. 154A, 154B)	1
154A	222407	†HOUSING, Bleed Valve	1
154B	10J-06	†BALL, Bleed Valve	1
155	234038	RING, Clutch Piston Inner Sealing	1
156	208776	SEAL, Clutch Piston Outer	1
157	221996	PISTON, Clutch	1
158	221998	DISC, Clutch Outer	1
159	208773	DISC, Clutch Outer	4
160	216697	SPRING, Clutch Disc Release	10
161	208760	PLATE, Clutch Disc End	1
162	223942	RING, End Plate Retaining	1
163	216673	HUB, Clutch Disc	1
164	209370	GASKET, Cover	1
165	5C-614	BOLT & LKWSHR, Cover	16
166	205928	NUT, Output Shaft Flange	1
167	100949	DEFLECTOR, Flange	1
168	1C-720	BOLT, Rear Output Shaft Brng. Ret.	7
169	4E-07	LKWSHR, Rear Output Shaft Bearing Retainer	7
170	675544	CUP, Output Shaft Rear Bearing	1
171	209407	WASHER, Output Shaft Gear Thrust	1
172	209409	HUB, Output Shaft Hi & Low Shift	1
173	209408	SHAFT, Output	1
174	209673	RING, Low Gear Oil	1
175	675548	CONE, Output Shaft Front Bearing	1
176	675544	CUP, Output Shaft Front Bearing	1
177	209692	CAP, Output Shaft Bearing	1
178	206864	SEAL, Output Shaft Front Oil	1
179	100949	DEFLECTOR, Flange	1
180	209403	FORK, High & Low Shift	1
181	209406	GASKET, Shift Shaft Support	1
182	209405	SUPPORT, Shift Shaft	1
183	5C-616	BOLT & LKWSHR, Shift Shaft Support	4
184	209404	SHAFT, High & Low Shift	1
185	208871	SEAL, Shift Shaft Support Oil	1
186	10J-12	BALL, Mesh Lock (Support)	1
187	40K-04	PLUG, Mesh Lock (Support)	1
188	201844	SPRING, Mesh Lock (Support)	1
189	201566	SCREW, Fork Lock	1
189A	28H-18	†LOCKWIRE, Fork Lock Screw	1
190	205928	NUT, Output Shaft Flange	1
191	1F-432	COTTER, Flange Nut	1
192	224465	FLANGE ASSY, Output (Inc. 181)	1
193	1C-718	BOLT, Bearing Cap	4
194	4E-07	LKWSHR, Bearing Cap	4
195	209701	‡SHIM, Bearing Cap —.004	—
195A	209702	‡SHIM, Bearing Cap —.007	—
195B	209703	‡SHIM, Bearing Cap —.010	—
196	209407	WASHER, Output Shaft Gear Thrust	1
197	800656	GEAR & BUSHING ASSY, Low (55-T) (Inc. 174, 197A)	1
197A	209402	†BUSHING, Low Gear	1
198	209396	GEAR & BUSHING ASSY, High (29-T) (Inc. 198A)	1
198A	209398	†BUSHING, High Gear	1
199	525293	MAGNET, Sump Screen	1
200	223780	SPRING, Magnet Retaining	1
201	201120	PLUG, Drain — Magnetic	1
202	215644	COVER, Oil	1
203	5C-616	BOLT & LKWSHR, Oil Pan	14
204	675548	CONE, Output Shaft Rear Bearing	1
205	209411	SHIM, Output Shaft Rear Brng. Ret.	1
206	209410	RETAINER, Output Shaft Rear Bearing	1
207	206864	SEAL, Output Shaft Rear Oil	1
208	224465	FLANGE ASSY, Output (Inc. 208)	1
209	1F-432	COTTER, Flange Nut	1
210	19F-8	†BUSHING, Reducing ⅜ x ¾	1
211	356626	†BUSHING, Reducing 1 x 1¼	1
212	13F-12	†PLUG, Oil Level ¾"	1
213	13F-06	†PLUG, Breather Hole	1

†Not Illustrated
‡As Required

WHEN ORDERING PARTS, ALWAYS STATE MODEL AND SERIAL NO. OF MACHINE

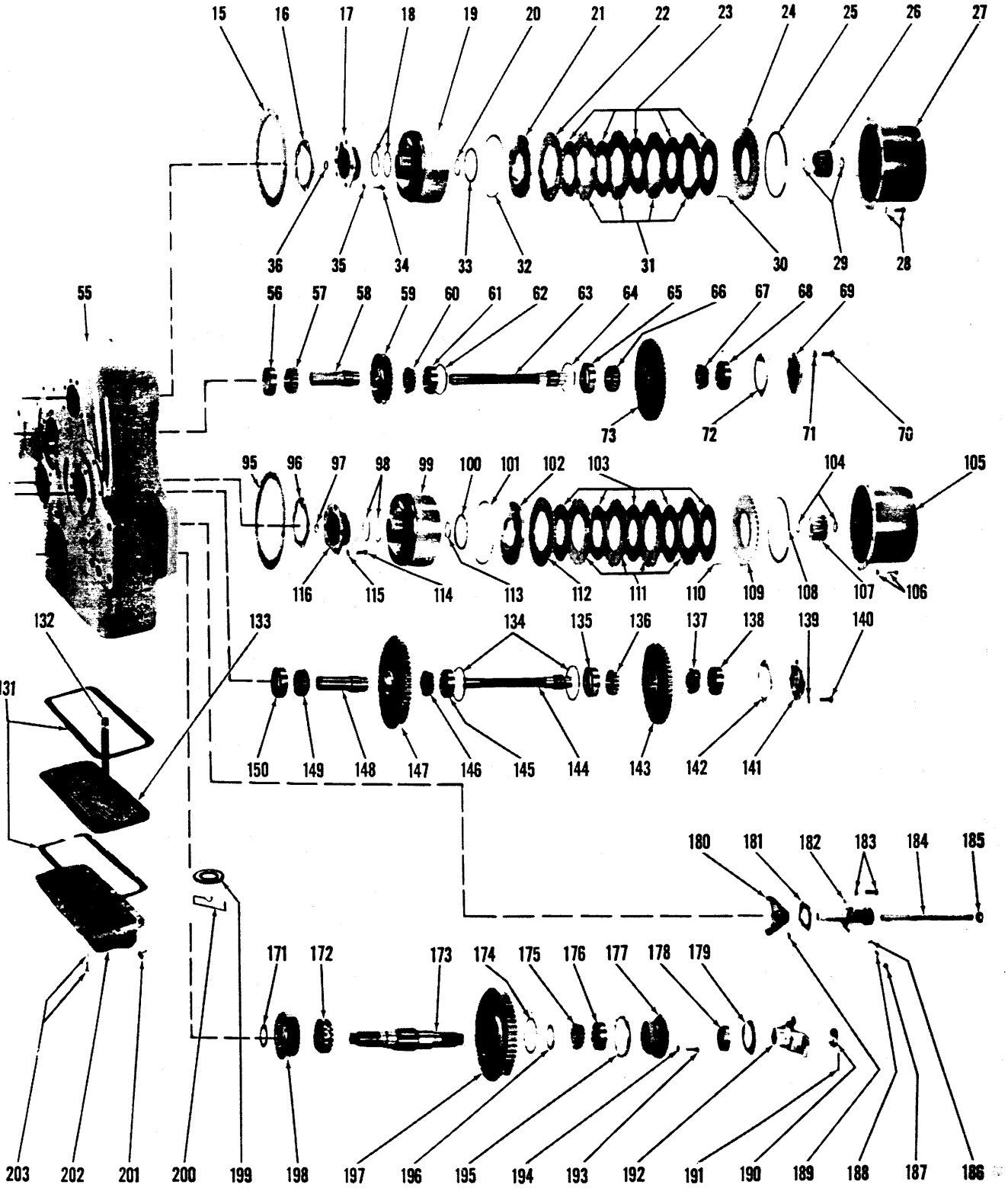

TRANSMISSION ASSEMBLY

TS-1889-P

TRANSMISSION ASSEMBLY

Item No.	Part No.	Description	No. Req'd.
A	281041	*TRANSMISSION ASSY (Inc. 1 thru 213) — T75A-6	1
1	201951	NUT, Input Flange	1
2	209343	FLANGE ASSY, Input (Inc. 3)	1
3	100949	DEFLECTOR, Input Flange	1
4	206864	SEAL, Input Shaft Oil	1
5	209340	‡SHIM, Bearing Cap —.004	—
5A	209341	‡SHIM, Bearing Cap —.007	—
5B	209342	‡SHIM, Bearing Cap —.010	—
6	216674	SHAFT, Input	1
7	675544	CUP, Input Shaft Bearing	1
8	675547	CONE, Input Shaft Bearing	1
9	675547	CONE, Input Shaft Bearing	1
10	675544	CUP, Input Shaft Bearing	1
11	209368	SHAFT, Forward Gear Quill	1
12	209369	GEAR, Input Shaft Forward (54T)	1
13	675548	CONE, Input Shaft Bearing	1
14	675544	CUP, Input Shaft Bearing	1
15	221401	GASKET, Clutch Cover	1
16	209392	‡SHIM, Clutch Bearing Cap —.004	—
16A	209393	‡SHIM, Clutch Bearing Cap —.007	—
16B	209394	‡SHIM, Clutch Bearing Cap —.010	—
16C	221208	‡SHIM, Clutch Bearing Cap —.020	—
17	209391	CAP, Clutch Bearing	1
18	209387	RING, Hub Oil Seal	2
19	222410	DRUM ASSY, Clutch (Inc. 19A, 19B)	1
19A	222407	†HOUSING, Bleed Valve	1
19B	10J-06	†BALL, Bleed Valve	1
20	224097	RING, Clutch Drum Hub Retaining	1
21	221996	PISTON, Clutch	1
22	221998	DISC, Clutch Outer	1
23	216677	DISC, Clutch Inner	5
24	208760	PLATE, Clutch Disc End	1
25	223942	RING, End Plate Retaining	1
26	216673	HUB, Clutch Disc	1
27	209358	COVER, Clutch	1
28	5C-614	BOLT & LKWSHR, Clutch Cover	10
29	224068	RING, Clutch Disc Hub Retaining	2
30	216697	SPRING, Clutch Disc Release	10
31	208773	DISC, Clutch Outer	4
32	208776	SEAL, Clutch Piston Outer	1
33	234038	RING, Clutch Piston Inner Sealing	1
34	1C-718	BOLT, Bearing Cap	4
35	4E-07	LKWSHR, Bearing Cap	4
36	25K-30016	"O" RING, Bearing Cap	1
37	675548	CONE, Input Shaft Bearing	1
38	675544	CUP, Input Shaft Bearing	1
39	223881	RING, Input Shaft Bearing Locating	2
40	209377	GEAR, Input Shaft Reverse (45T)	1
41	209339	CAP, Input Shaft Bearing	1
42	4E-07	LKWSHR, Bearing Cap	4
43	1C-718	BOLT, Bearing Cap	4
44	1F-424	COTTER, Input Flange Nut	1
45	224068	RING, Clutch Disc Hub Retaining	2
46	208760	PLATE, Clutch Disc End	1
47	216677	DISC, Clutch Inner	5
48	221996	PISTON, Clutch	1
49	224097	RING, Clutch Drum Hub Retaining	1
50	222410	DRUM ASSY, Clutch (Inc. 50A, 50B)	1
50A	222407	†HOUSING, Bleed Valve	1
50B	10J-06	†BALL, Bleed Valve	1
51	209387	RING, Hub Oil Seal	2
52	209391	CAP, Clutch Bearing	1
53	25K-30016	"O" RING, Bearing Cap	1
54	209392	‡SHIM, Clutch Bearing Cap —.004	—
54A	209393	‡SHIM, Clutch Bearing Cap —.007	—
54B	209394	‡SHIM, Clutch Bearing Cap —.010	—
54C	221208	‡SHIM, Clutch Bearing Cap —.020	—
55	220672	CASE, Transmission	1
56	675544	CUP, 1st & 3rd Shaft Bearing	1
57	675548	CONE, 1st & 3rd Shaft Bearing	1
58	209368	SHAFT, 1st & 3rd Quill	1
59	209374	GEAR, 1st & 3rd Drive (29T)	1
60	675548	CONE, 1st & 3rd Shaft Bearing	1
61	675544	CUP, 1st & 3rd Shaft Bearing	1
62	223881	RING, 1st & 3rd Shaft Brng. Locating	1
63	216671	SHAFT, 1st & 3rd Drive	1
64	223881	RING, 1st & 3rd Shaft Brng. Locating	1
65	675544	CUP, 1st & 3rd Shaft Bearing	1
66	675547	CONE, 1st & 3rd Shaft Bearing	1
67	675547	CONE, 1st & 3rd Shaft Bearing	1
68	675544	CUP, 1st & 3rd Shaft Bearing	1
69	209364	CAP, 1st & 3rd Shaft Bearing	1
70	1C-718	BOLT, Bearing Cap	4

‡As Required
†Not Illustrated
*NOTE: For complete replacement use 282983 Transmission Assy. plus 1—356621 Reducing Bushing.

WHEN ORDERING PARTS, ALWAYS STATE MODEL AND SERIAL NO. OF MACHINE

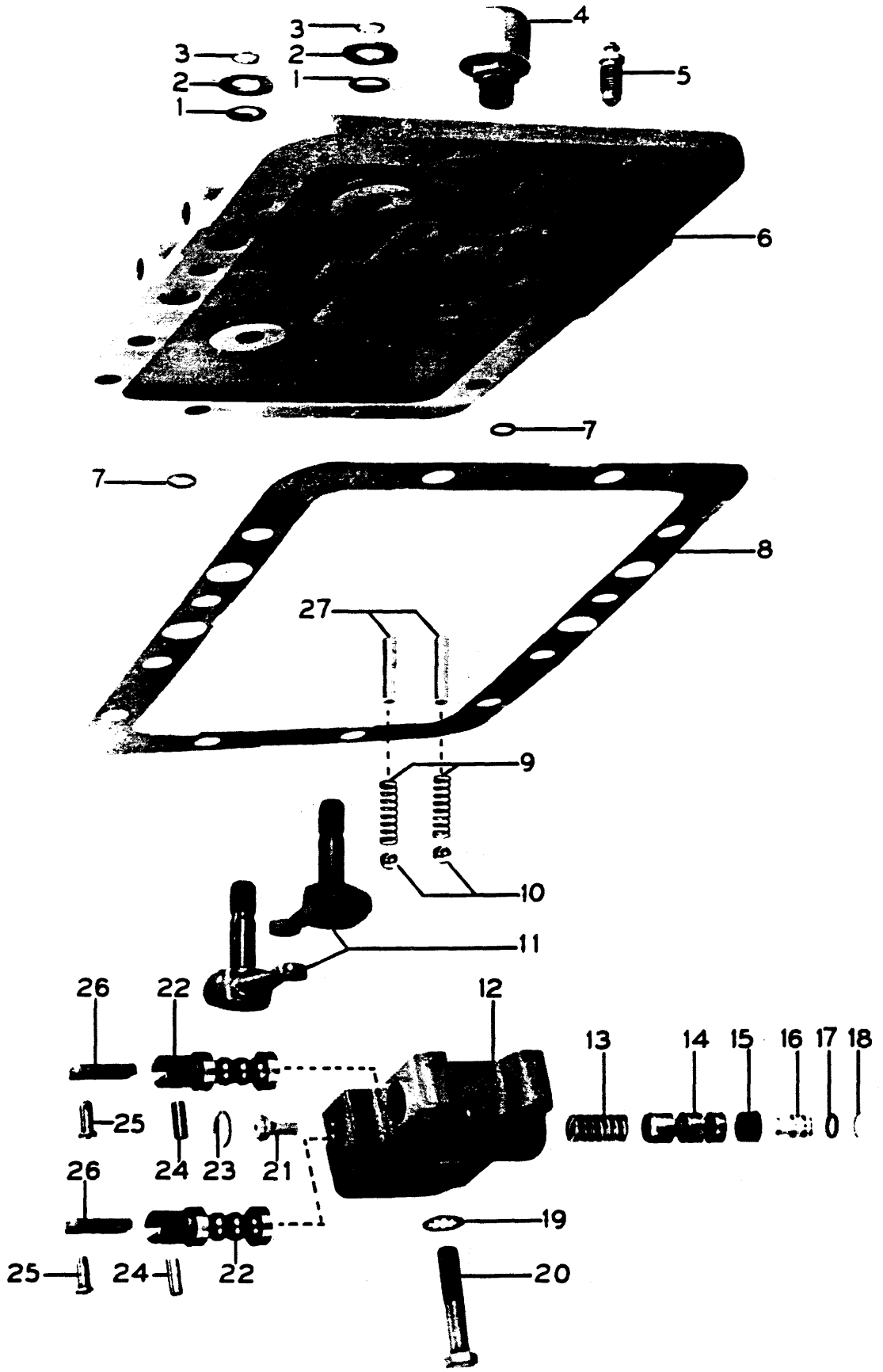

TRANSMISSION CONTROL COVER ASSEMBLY 3816-P-48-55G

TRANSMISSION CONTROL COVER ASSEMBLY

Item No.	Part No.	Description	No. Req'd.
A	800657	CONTROL COVER & VALVE ASSY (Inc. 1 thru 29)	1
1	208812	SEAL, Selector Arm Shaft Oil	2
2	25E-21	WASHER, Selector Arm Shaft	2
3	224095	RING, Selector Arm Shaft Washer Retaining	2
4	104942	BREATHER ASSEMBLY	1
5	208805	VALVE, Bleeder	1
6	209378	COVER, Control	1
7	25K-30016	"O" RING	5
8	209379	GASKET, Control Cover	1
9	203647	SPRING, Selector Valve Detent	2
10	10J-12	BALL, Selector Valve Detent Spring	2
11	209690	SELECTOR ARM & SHAFT ASSY	2
12	209380	HOUSING, Selector Valve	1
13	220363	SPRING, Shutoff Valve	1
14	208815	VALVE, Shutoff	1
15	227874	CUP, Shutoff Valve Sealing	1
16	209878	STOP, Shutoff Valve	1
17	25K-30014	SEAL, Shutoff Valve Stop	1
18	223944	RING, Shutoff Valve Stop Retaining	1
19	6E-06	LKWSHR, Control Valve Bolt	4
20	1C-628	BOLT, Control Valve	4
21	227873	GUIDE, Valve Spring	1
22	————	§SELECTOR VALVE (See 29)	2
23	223944	RING, Shutoff Valve Spring Retaining	1
24	208809	PIN, Selector Valve Link	2
25	208810	PIN, Selector Valve Link Clevis	2
26	209382	LINK, Selector Valve	2
27	209874	BALL STOP, Selector Valve Detent	2
28	1F-208	†COTTER, Valve Link Clevis	2
29	227968	†SELECTOR VALVE ASSY (Inc. 22, 24 & 26)	2
30	13F-02	†PLUG, Control Cover Oil Passage	5
31	1C-718	†BOLT, Control Cover to Case	9
32	4E-07	†LKWSHR, Control Cover to Case	9
33	227968	†SELECTOR CONTROL VALVE ASSY (Inc. 12 thru 18, 21 thru 24 & 26)	1

†Not Illustrated
§Not Sold Separately

WHEN ORDERING PARTS ALWAYS STATE MODEL AND SERIAL NO. OF MACHINE

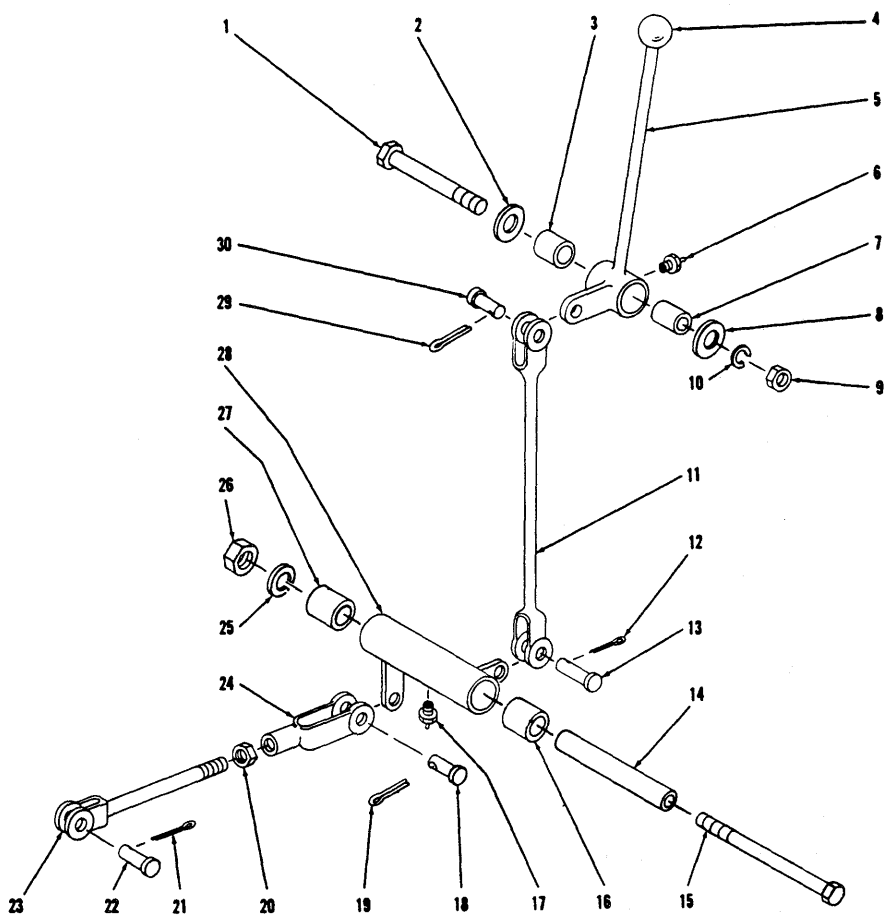

TS-1521-P

TRANSMISSION CONTROLS

Item No.	Part No.	Description	No. Req'd.
1	2C-844	BOLT, Lever Mounting	1
2	616796	WASHER, Lever Mounting	1
3	526767	BUSHING, Range Lever	1
4	509772	KNOB, Range Lever	1
5	550677	LEVER ASSY, Range (Inc. 3)	1
6	12H-25	FITTING, Range Lever Grease	1
7	550646	SLEEVE, Lever Mounting	1
8	616796	WASHER, Lever Mounting	1
9	2D-08	NUT, Lever Mounting	1
10	4E-08	LKWSHR, Lever Mounting	1
11	509733	ROD, Range Shift—Upper	1
12	1F-414	COTTER, Clevis Pin	1
13	4F-08127	PIN, Clevis	1
14	551496	SLEEVE, Bell Crank Mounting	1
15	14C-10144	BOLT, Bell Crank Mounting	1
16	526767	BUSHING, Bell Crank	1
17	12H-25	FITTING, Bell Crank Grease	1
18	4F-08127	PIN, Clevis	1
19	1F-414	COTTER, Clevis Pin	1
20	8D-08	NUT, Clevis Jam	1
21	1F-310	COTTER, Clevis Pin	1
22	4F-06106	PIN, Clevis	1
23	550683	ROD, Range Shift—Lower	1
24	2J-8300	CLEVIS, Rod to Bell Crank	1
25	4E-10	LKWSHR, Bell Crank Mounting	1
26	2D-10	NUT, Bell Crank Mounting	1
27	526767	BUSHING, Bell Crank	1
28	551494	BELL CRANK ASSY (Inc. 16 & 27)	1
29	1F-414	COTTER, Clevis Pin	1
30	4F-08127	PIN, Clevis	1

WHEN ORDERING PARTS, ALWAYS STATE MODEL AND SERIAL NO. OF MACHINE

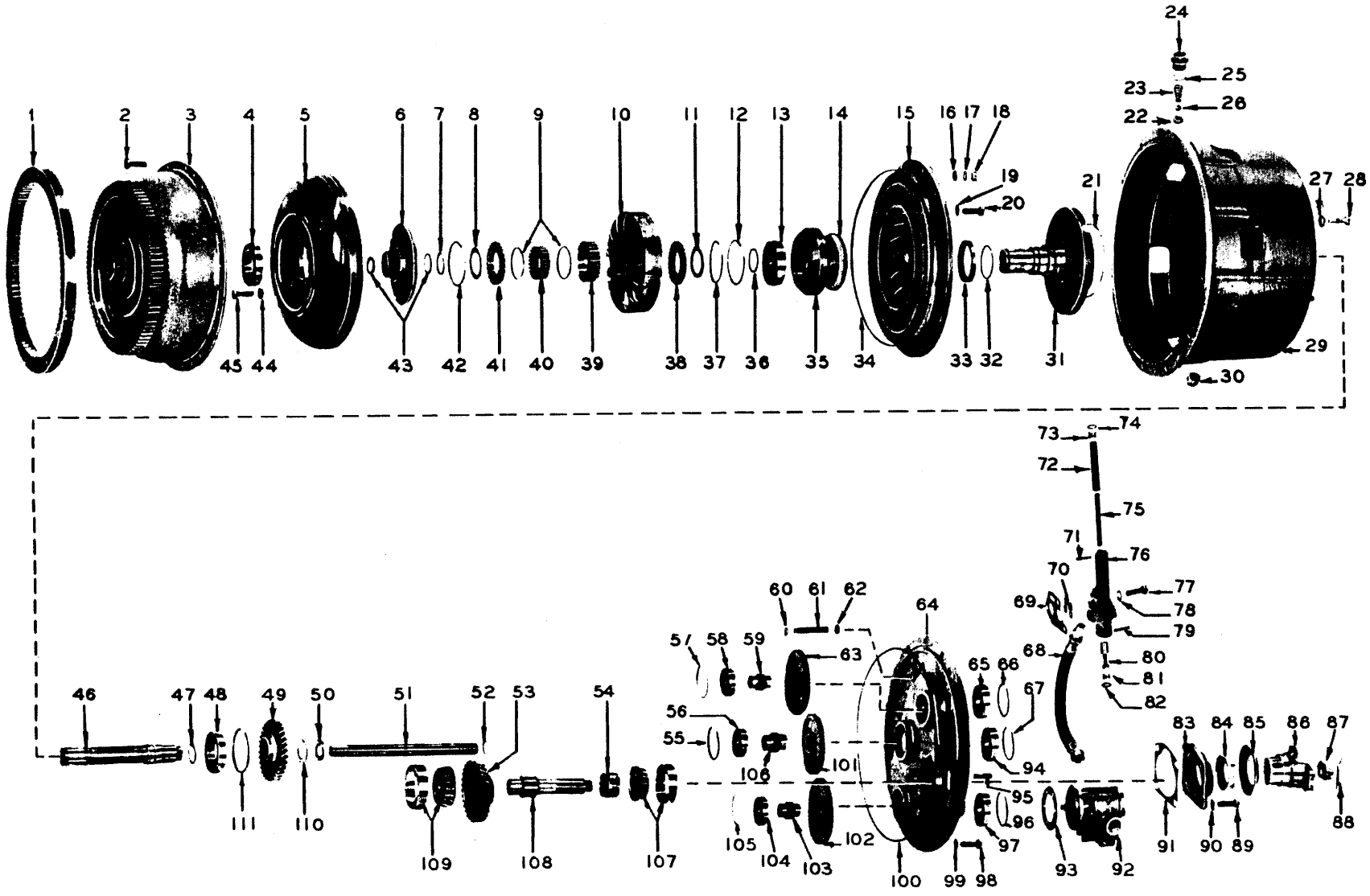

TORQUE CONVERTER ASSEMBLY

3609-P-87-56

TORQUE CONVERTER ASSEMBLY — MODEL 55A

For Serial 3726 thru 3785

Item No.	Part No.	Description	No. Req'd.
A	281037	TORQUE CONVERTER ASSY (C-302-6) (Inc. 1 thru 122)	1
1	233089	GEAR, Converter Drive (See 120)	1
2	2C-618	BOLT, Impeller to Drive Disc	30
3	220483	DISC ASSY (See 120)	1
4	223358	BEARING, Disc Hub	1
5	220129	TURBINE, Converter	1
6	209333	HUB, Turbine	1
7	224028	RING, Front Thrust Washer Retaining	1
8	209319	WASHER, Front Thrust	1
9	209948	SPRING, Sprag	2
10	———	REACTION MEMBER, Converter (See 121)	1
11	209320	WASHER, Rear Thrust	1
12	223859	RING, Impeller Hub Bearing Retainer	1
13	223358	BEARING, Impeller Hub	1
14	25K-40520	"O" RING, Impeller to Hub	1
15	220123	IMPELLER, Converter	1
16	619023	WASHER, Impeller to Drive Disc	30
17	6E-06	LKWSHR, Impeller to Drive Disc	30
18	2D-06	NUT, Impeller to Drive Disc	30
19	619023	WASHER, Impeller to Hub	6
20	209313	BOLT, Impeller to Hub	6
21	25K-40600	"O" RING, Converter Support	1
22	208788	SEAT, By-Pass Ball	1
23	222312	SPRING, By-Pass	1
24	220847	FITTING, By-Pass Plug	1
25	221023	SEAL, By-Pass Plug	1
26	222318	PLUNGER, By-Pass	1
27	6E-08	LKWSHR, Converter Support to Housing	6
28	2C-820	BOLT, Converter Support to Housing	6
29	222344	HOUSING, Converter (Inc. 22)	1
29A	13F-12	PLUG, Housing Filler	1
30	201120	PLUG, Magnetic Drain	1
31	220706	SUPPORT	1
32	209307	RING, Converter Support Oil	1
33	228385	SEAL, Converter Support Oil	1
34	60K41200	"O" RING, Impeller to Drive Disc	1
35	222610	HUB, Converter Impeller	1
36	224075	RING, Impeller Hub Bearing Locating	1
37	223967	RING, End Plate Retainer	1
38	220480	END PLATE	1
39	220479	RACE, Reaction Member (See 121)	1
40	221947	CLUTCH ASSY, Over-Running (Inc. Item 9)	1
41	220480	END PLATE	1
42	223967	RING, End Plate Retainer	1

TORQUE CONVERTER ASSEMBLY (Continued)

Item No.	Part No.	Description	No. Req'd.
43	224033	RING, Turbine Hub Retainer	2
44	619023	WASHER, Turbine to Hub	6
45	209313	BOLT, Turbine to Hub	6
46	221073	SHAFT, Main Drive Gear	1
47	209304	RING, Main Drive Shaft Oil	1
48	658016	BEARING, Main Drive Gear Retainer	1
49	220492	GEAR, Main Drive (33T)	1
50	221074	NUT, Main Drive Gear Retainer	1
51	209779	SHAFT, Oil Pump	1
52	209781	RING, Oil Pump Shaft Piston	1
53	209336	GEAR, Output Shaft (32T)	1
54	209337	SPACER, Output Gear	1
55	223863	RING, Oil Pump Drive Gear Hub Retainer	1
56	743458	BEARING, Oil Pump Drive Gear Hub	1
57	223981	RING, Oil Pump Driven Gear Hub Bearing Retainer	1
58	860668	BEARING, Oil Pump Driven Gear Hub	1
59	220987	HUB, Oil Pump Driven Gear	1
60	25K-30018	"O" RING, Oil Cross-Over Tube	1
61	209869	TUBE, Oil Cross-Over	1
62	25K-30018	"O" RING, Oil Cross-Over Tube	1
63	221082	GEAR, Oil Pump Driven (43T)	1
64	221072	COVER, Converter Housing	1
65	860668	BEARING, Oil Pump Driven Gear Hub	1
66	223981	RING, Oil Pump Driven Gear Hub Bearing Retainer	1
67	223863	RING, Oil Pump Drive Gear Hub Bearing Retainer	1
68	221084	HOSE, Valve Body to Converter Pump	1
69	220978	GASKET, Valve Body	1
70	58K-210	"O" RING, Valve Body to Converter Housing	2
71	660178	PIN, Regulating Valve Body Roll	1
72	220981	SPRING, Regulating Valve, Outer	1
73	220983	STOP, Regulating Valve Piston	1
74	25K-30018	"O" RING, Regulating Valve Stop	1
75	220982	SPRING, Regulating Valve, Inner	1
76	———	§BODY, Regulating Valve (See 122)	—
77	1C-820	BOLT, Regulating Valve Body	2
77A	1C-840	BOLT, Regulating Valve Body	1
78	4E-08	LKWSHR, Regulating Valve Body	3
79	660178	PIN, Regulating Valve Body Roll	1
80	———	§PISTON, Regulating Valve Body (See 122)	—
81	220983	STOP, Regulating Valve Body	1
82	25K-30018	"O" RING, Regulating Valve Stop	1
83	221076	CAP, Output Shaft	1
84	206864	SEAL, Output Shaft Oil	1
85	100949	DEFLECTOR, Output Shaft	1

§Not Sold Separately

WHEN ORDERING PARTS, ALWAYS STATE MODEL AND SERIAL NO. OF MACHINE

TORQUE CONVERTER ASSEMBLY (Continued)

Item No.	Part No.	Description	No. Req'd.
86	209343	FLANGE & DEFLECTOR ASSY (Inc. Item 85)	1
87	201951	NUT, Output Shaft Flange	1
88	1F-432	COTTER, Flange Nut	1
89	1C-720	BOLT, Output Shaft Bearing Cap	4
90	4E-07	LKWSHR, Bearing Cap	4
91	221077	‡SHIM, Output Bearing Cap (.004)	—
91A	221078	‡SHIM, Output Bearing Cap (.007)	—
91B	221079	‡SHIM, Output Bearing Cap (.010)	—
92	———	PUMP, Converter Charging (See Index)	—
93	235961	GASKET, Oil Pump	1
94	743458	BEARING, Oil Pump Drive Gear Hub	1
95	207647	STUD, Oil Pump Mounting	3
96	223981	RING, Oil Pump Driven Gear Hub Retainer	1
97	860668	BEARING, Oil Pump Driven Gear Hub	1
98	1C-720	BOLT, Cover to Housing	12
99	4E-07	LKWSHR, Cover to Housing	12
100	209294	"O" RING, Housing to Cover Sealing	1
101	221080	GEAR, Oil Pump Drive (46T)	1
102	221082	GEAR, Oil Pump Driven (43T)	1
103	220987	HUB, Oil Pump Driven Gear	1
104	860668	BEARING, Oil Pump Driven Gear Hub	1
105	223981	RING, Oil Pump Driven Gear Hub Bearing Retainer	1
106	221081	HUB, Oil Pump Drive Gear	1
107	223271	BEARING, Output Shaft	1
108	209334	SHAFT, Output	1
109	223271	BEARING, Output Shaft	1
110	221075	WASHER, Main Drive Gear Nut Retainer	1
111	223947	‡RING, Main Drive Gear Bearing (.088-.090)	—
111A	223948	‡RING, Main Drive Gear Bearing (.091-.093)	—
111B	223949	‡RING, Main Drive Gear Bearing (.094-.096)	—
111C	223950	‡RING, Main Drive Gear Bearing (.097-.099)	—
112	224043	†RING, Main Drive Gear Bearing Retainer	1
113	220979	†DOWEL, Housing to Cover	1
114	207647	†STUD, Vehicle Pump Mounting	9
115	659041	†RING, Oil Pump Shaft Retainer	1
116	89F-8	†CONNECTOR, Hydraulic Tube	1
117	8D-06	†NUT, Converter Oil Pump	3
118	4E-06	†LKWSHR, Converter Oil Pump	3
119	221083	†SPACER, Oil Pump Drive Gear	1
120	800840	GEAR SET, Converter Drive & Driven (Inc. 1, 3 & 34)	1
121	801062	REACTION MEMBER & RACE ASSY (Inc. Items 10, 37, 38, 39)	1
122	———	PRESSURE REGULATOR VALVE ASSY (Inc. Items 69 thru 76 & 79 thru 82) (See Index)	—
		TORQUE CONVERTER MOUNTING PARTS	
123	233092	†BOLT, Torque Converter to Flywheel	8
124	215909	†WASHER, Torque Converter to Flywheel	8
125	763428	†LKWSHR, Torque Converter to Flywheel	8
126	550099	†LOCKWIRE, Torque Converter to Flywheel	4
127	1C-620	†BOLT, Torque Converter to Flywheel Housing	12
128	4E-06	†LKWSHR, Torque Converter to Flywheel Housing	12

‡As Required
†Not Illustrated

WHEN ORDERING PARTS, ALWAYS STATE MODEL AND SERIAL NO. OF MACHINE

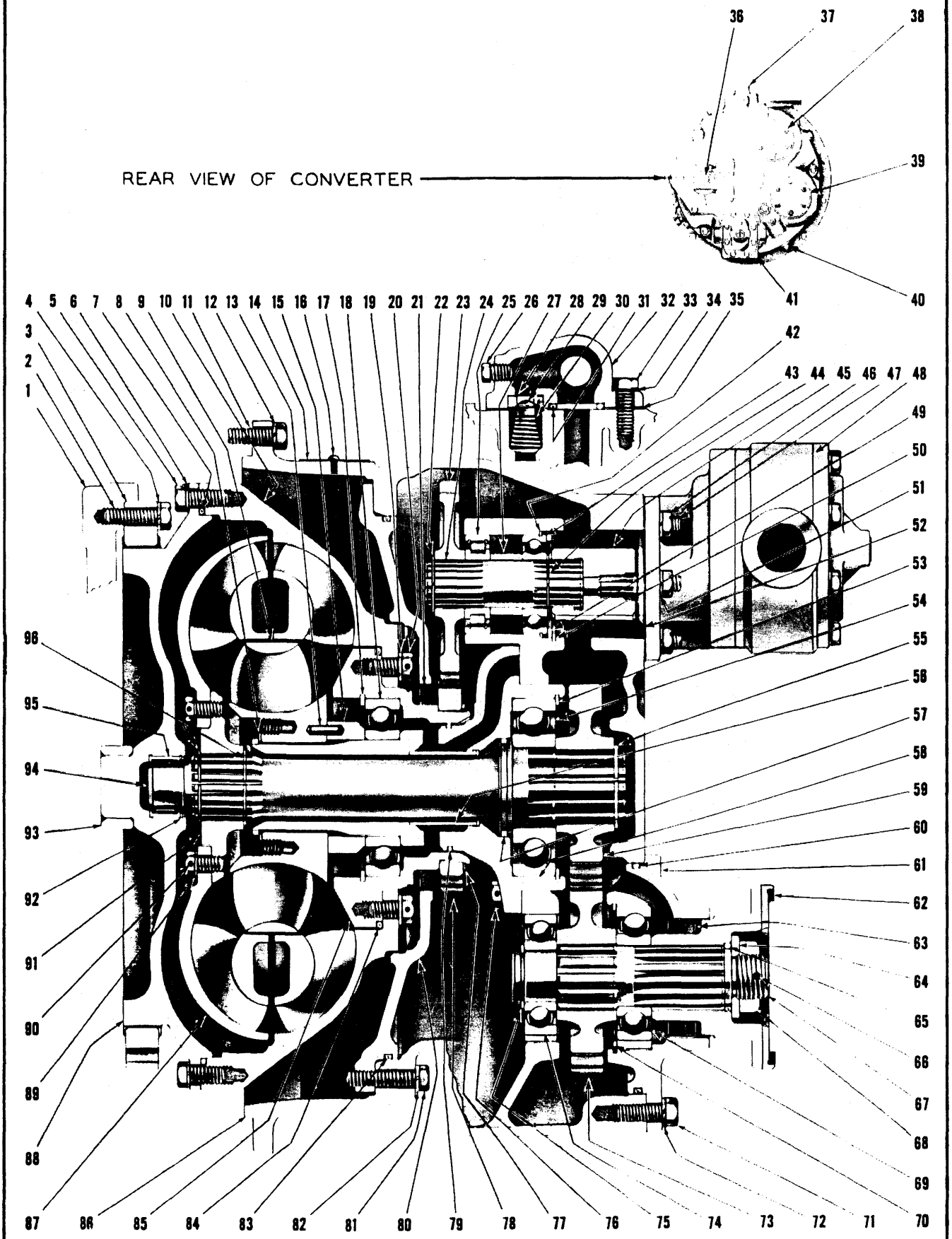

TORQUE CONVERTER ASSEMBLY

TS-1566-P

TORQUE CONVERTER ASSEMBLY

For Serial: 55A — 3786 thru 3855, 1BCO134 thru 1BCO282, 2BCO1 thru 2BCO999
55B — 50BCO1 thru 50BCO999

Item No.	Part No.	Description	No. Req'd.
A	281022	CONVERTER ASSY (C-272-2) (Inc. 3, 5 thru 96)	1
1	———	FLYWHEEL, Engine	—
2	233092	BOLT, Ring Gear to Flywheel	8
3	233089	GEAR, Ring	1
4	215909	WASHER, Ring Gear to Flywheel	8
5	1C-616	BOLT, Impeller to Cover	24
6	4E-06	LKWSHR, Impeller to Cover	24
7	60K41200	"O" RING, Impeller to Cover	1
8	743035	RING, Reaction Member Retaining	1
9	214921	*MEMBER, Reaction	1
10	214920	IMPELLER	1
11	1C-620	BOLT, Converter to Engine	12
12	4E-06	LKWSHR, Converter to Engine	12
13	658244	PIN, Spacer to Reaction Member Lock	1
14	220725	PLATE, Name	1
15	214934	SPACER, Reaction Member	1
16	207873	SCREW, Name Plate Drive	2
17	214953	RING, Impeller Hub Bearing Retainer	1
18	214596	BEARING, Impeller Hub	1
19	25E-19	WASHER, Hub to Impeller Bolt	8
20	4C-714	BOLT, Hub to Impeller Bolt	8
21	214941	SEAL, Oil Baffle	1
22	711298	RING, Gear Retainer	3
23	214931	GEAR, Pump Drive (39T)	3
24	237548	SHAFT, Pump Drive	3
25	214936	BEARING, Pump Drive Shaft	3
26	40K-02	PLUG, Valve Housing Pipe	2
27	214930	SPACER, Pump Shaft	3
28	214946	SEAT, Safety Valve	1
29	222318	PLUNGER, Safety Valve	1
30	222312	SPRING, Safety Valve	1
31	25K-40104	"O" RING, Valve to Converter	1
32	———	REGULATOR VALVE ASSY (Same as Item 37)	—
33	1C-616	BOLT, Valve Body	4
34	4E-06	LKWSHR, Valve Body	4
35	214949	GASKET, Valve to Converter	1
36	———	SHAFT, Output (See Item 67)	—
37	———	VALVE ASSY, Pressure Regulator (See Index)	—
38	———	PAD, Pump Mounting	—
39	———	PAD, Pump Mounting	—
40	13F-16	PLUG, Pipe	4
41	———	PUMP, Conv. Charging (See Index)	—
42	214954	RING, Bearing Snap	3
43	214956	BEARING, Shaft	3
44	224039	RING, Bearing Retainer	3
45	214961	SLEEVE, Pump Drive Adapter	1
46	8D-06	NUT, Pump Stud	6
47	207647	STUD, Pump	6
48	———	PUMP, Conv. Steering (See Index)	—
49	214929	WASHER, Pump Shaft	3
50	713186	RING, Washer Retaining	3
51	4E-06	LKWSHR, Pump Stud	6
52	235961	GASKET, Pump Mounting	1
53	214953	RING, Bearing Retainer	1
54	231554	BEARING, Turbine Shaft	1
55	22416	RING, Gear Snap	1
56	———	§SLEEVE, Stator Support (Included in 58)	—
57	222079	RING, Turbine Shaft Sealing	1
58	214932	STATOR SUPPORT ASSY (Inc. 56)	1
59	214935	GEAR, Turbine Shaft	1
60	25K-40512	"O" RING, Bearing Retainer	1
61	214945	RETAINER, Bearing	1
62	214940	FLANGE, Companion	1
63	206864	SEAL, Oil	1
64	102745	WASHER, Output Shaft	1
65	25K-40112	"O" RING, Companion Flange	1
66	1F-424	PIN, Cotter	1
67	214937	SHAFT, Output	1
68	201951	NUT, Output Shaft	1
69	743439	BEARING, Output Shaft Rear	1
70	223901	RING, Bearing Snap	1
71	1C-720	BOLT, Bearing Retainer	3
71A	214730	STUD, Bearing Retainer	2
71B	8D-07	NUT, Bearing Retainer	2
72	4E-07	LKWSHR, Bearing Retainer	5
73	214938	GEAR, Output Shaft	1
74	235057	BEARING, Output Shaft Front	1
75	214955	RING, Bearing Snap	1
76	1C-820	BOLT, Stator Support	6
76A	7E-08	LKWSHR, Stator Support Bolt	6
77	224009	RING, Gear Retaining	1
78	214951	GEAR, Impeller Hub (41-T)	1
79	221653	RING, Sealing	1
80	214925	BAFFLE, Oil	1
81	1C-628	BOLT, Oil Baffle	3
82	4E-06	LKWSHR, Oil Baffle	3
83	60K41200	"O" RING, Oil Bafffle	1
84	25K-40616	"O" RING, Impeller Hub	1
85	214923	HUB, Impeller	1
86	214950	HOUSING, Converter	1
86A	14F-08	PLUG, Pipe	1
86B	40K-02	PLUG, Pipe	1
86C	13F-20	PLUG, Pipe	1
87	222684	TURBINE	1
88	214922	**COVER, Impeller	1
89	619023	WASHER, Turbine Hub Bolt	8
90	209313	BOLT, Turbine to Hub	8
91	214924	HUB, Turbine	1
92	666542	RING, Bearing Retainer	1
93	222006	SLEEVE	1
94	214933	SHAFT, Turbine	1
95	214988	BEARING, Impeller Cover	1
96	659065	RING, Turbine Hub Snap	2

§Not Sold Separately

*NOTE: For replacement use 801607 Kit, which consists of 1—229565 Reaction Member plus 1—229566 Reaction Member Spacer.

**NOTE: For replacement use 801524 Kit, which consists of 1—234503 Impeller Cover plus 1—222006 Impeller Cover Sleeve.

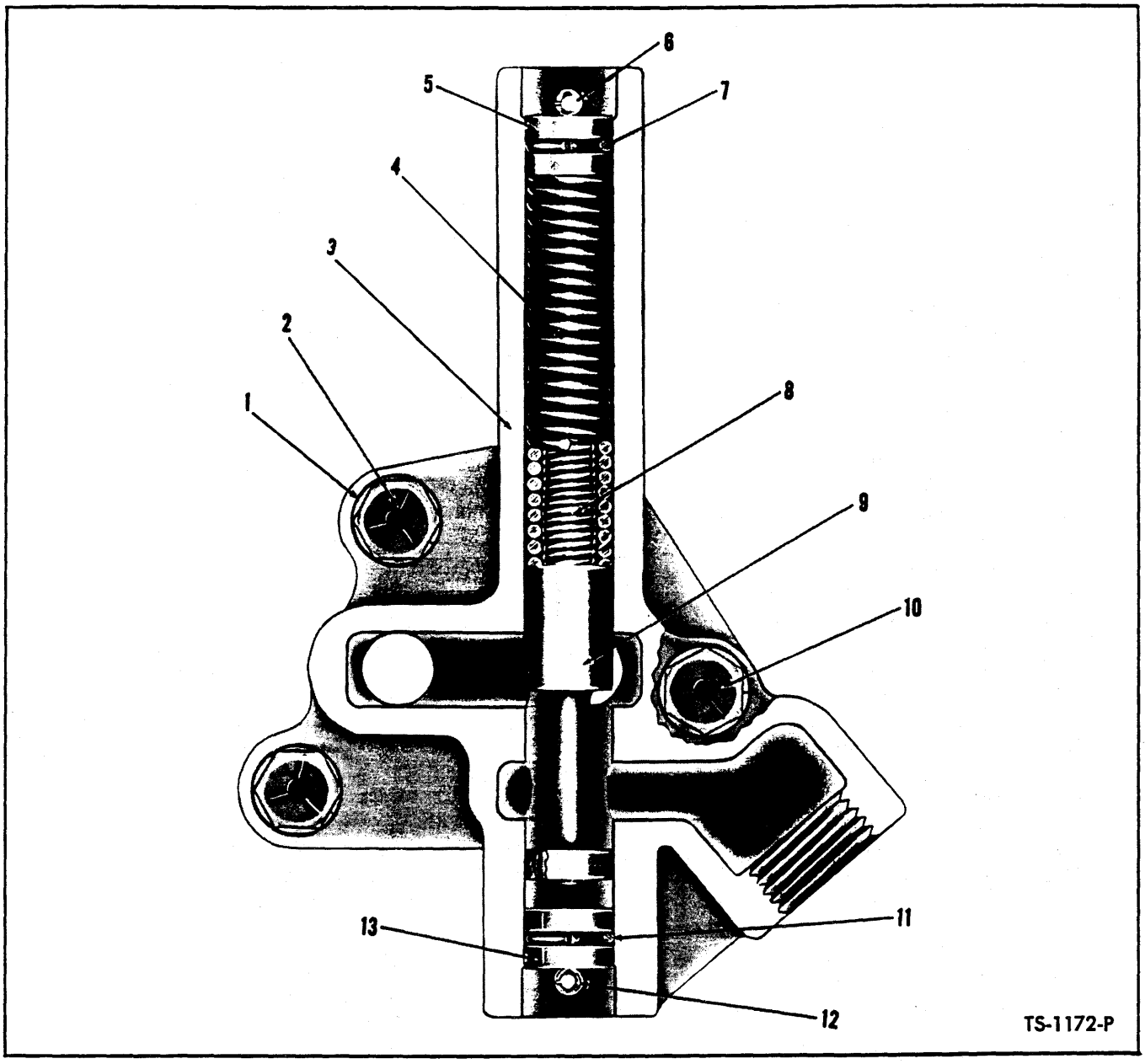

PRESSURE REGULATOR VALVE ASSEMBLY — MODEL 55A

For Serial 3726 thru 3785

Item No.	Part No.	Description	No. Req'd.
A	801067	VALVE ASSY, Pressure Regulator (Inc. 3 thru 9, 11 thru 15)	1
1	4E-08	LKWSHR, Valve to Converter	3
2	1C-820	BOLT, Valve to Converter—Short	2
3	———	§BODY, Valve (See A)	1
4	220981	SPRING, Valve—Outer	1
5	220983	STOP, Piston	1
6	660178	PIN	1
7	25K-30018	"O" RING, Piston Stop	1
8	220982	SPRING, Valve—Inner	1
9	———	§PISTON, Valve (See A)	1
10	1C-840	BOLT, Valve to Converter	1
11	25K-30018	"O" RING, Piston Stop	1
12	660178	PIN	1
13	220983	STOP, Piston	1
14	220978	†GASKET, Valve to Converter	1
15	58K-210	†"O" RING, Valve to Converter	1

†Not Illustrated
§Not Sold Separately

WHEN ORDERING PARTS, ALWAYS STATE MODEL AND SERIAL NO. OF MACHINE

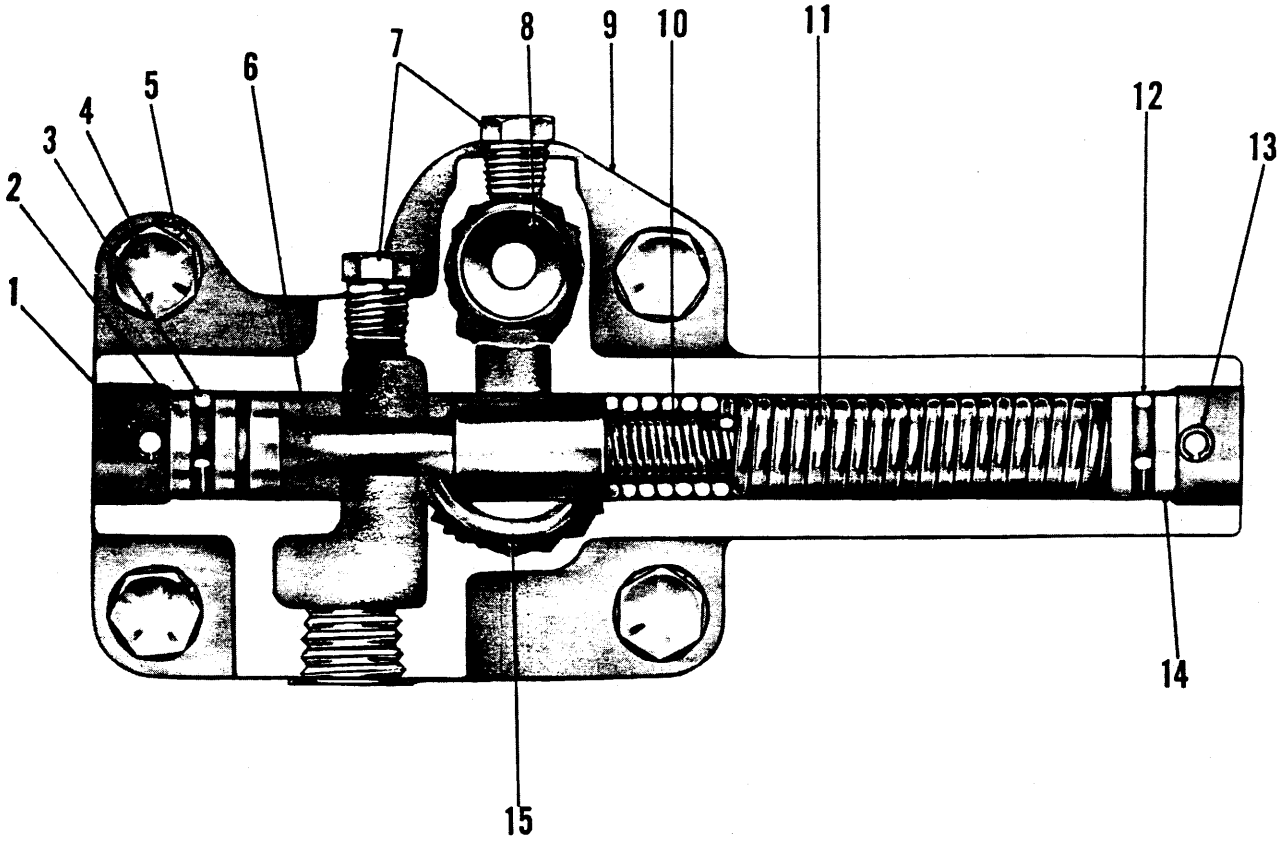

PRESSURE REGULATOR VALVE ASSEMBLY

For Serial: 55A — 3786 thru 3855, 1BCO134 thru 1BCO282, 2BCO1 thru 2BCO999
55B — 50BCO1 thru 50BCO999

Item No.	Part No.	Description	No. Req'd.
A	214969	VALVE ASSY, Pressure Regulator (Inc. 1 thru 3, 6, 8 thru 16)	1
1	660178	PIN, Piston Stop	1
2	220983	STOP, Piston	1
3	25K-30018	"O" RING, Piston Stop	1
4	1C-616	BOLT, Valve to Converter	4
5	4E-06	LKWSHR, Valve to Converter	4
6	———	§PISTON, Valve (See Item 16)	—
7	40K-02	PLUG, Valve Housing Pipe	2
8	214946	SEAT, Safety Valve	1
9	———	§BODY, Valve (See Item 16)	—
10	220981	SPRING, Valve—Inner	1
11	220982	SPRING, Valve—Outer	1
12	25K-30018	"O" RING, Piston Stop	1
13	660178	PIN, Piston Stop	1
14	220983	STOP, Piston	1
15	25K-40104	"O" RING, Valve to Converter	1
16	214969	†HOUSING & PISTON ASSY (Inc. 6 & 9)	1
17	214949	†GASKET, Valve to Housing	1

†Not Illustrated
§Not Sold Separately

WHEN ORDERING PARTS, ALWAYS STATE MODEL AND SERIAL NO. OF MACHINE

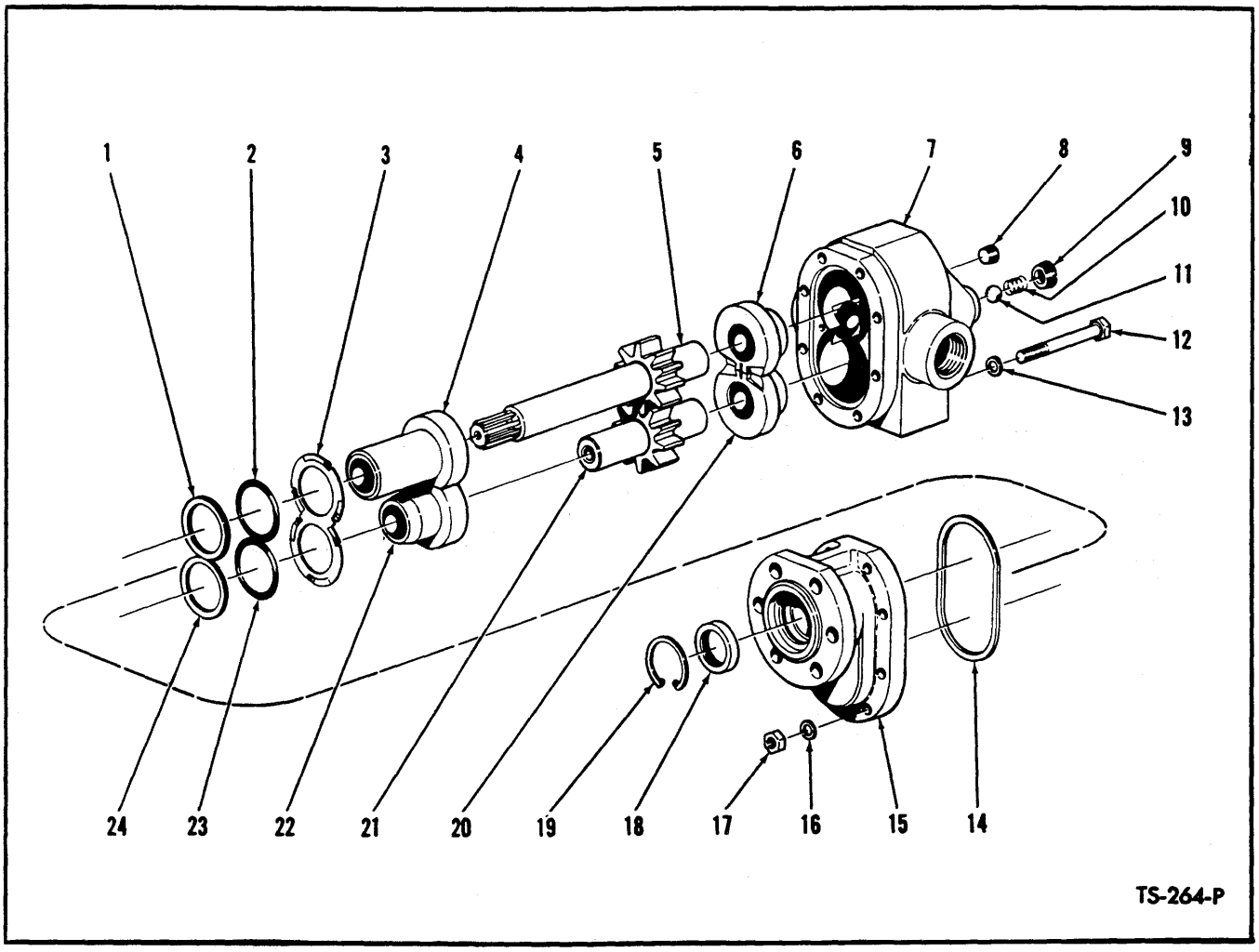

HYDRAULIC PUMP — CONVERTER CHARGING

For Serial: 55A — 3726 thru 3855, 1BCO134 thru 1BCO183
55B — 50BCO1 ONLY

Item No.	Part No.	Description	No. Req'd.
A	221450	*PUMP ASSY (Inc. 1 thru 24)	1
B	942404	REPAIR KIT, Major (Inc. 1 thru 4, 6, 10 thru 14, 16 thru 20, 22, 23, 24)	1
C	942403	REPAIR KIT, Minor (Inc. 1, 2, 14, 18, 19, 23, 24)	1
1	———	§WASHER, Back-Up	1
2	———	§"O" RING	1
3	———	§SPRING, Bearing	1
4	———	§BEARING, Cover — Drive	1
5	———	§GEAR, Drive	1
6	———	§BEARING, Body — Drive	1
7	———	§BODY	1
8	16F-02	PLUG, Seal Chamber	1
9	———	§PLUG, Seal Relief	1
10	———	**§SPRING, Seal Relief	1
11	———	**§BALL, Seal Relief	1
12	———	§BOLT, Cover to Body	8
13	———	§WASHER, Cover to Body	8
14	———	§GASKET, Cover	1
15	———	§COVER	1
16	———	§WASHER, Cover to Body	8
17	———	§NUT, Cover to Body	8
18	———	§SEAL, Shaft Oil	1
19	———	§RING, Seal Retaining	1
20	———	§BEARING, Body — Driven	1
21	———	§GEAR, Driven	1
22	———	§BEARING, Cover — Driven	1
23	———	§"O" RING	1
24	———	§WASHER, Back-Up	1
26	8D-06	†NUT, Pump to Converter	6
27	4E-06	†LKWSHR, Pump to Converter	6

§Not Sold Separately
†Not Illustrated
*NOTE: When complete Pump Assembly is replaced use 450229 Pump Assembly.
**NOTE: Spring and Ball to be removed when rebuilding pump.

WHEN ORDERING PARTS, ALWAYS STATE MODEL AND SERIAL NO. OF MACHINE

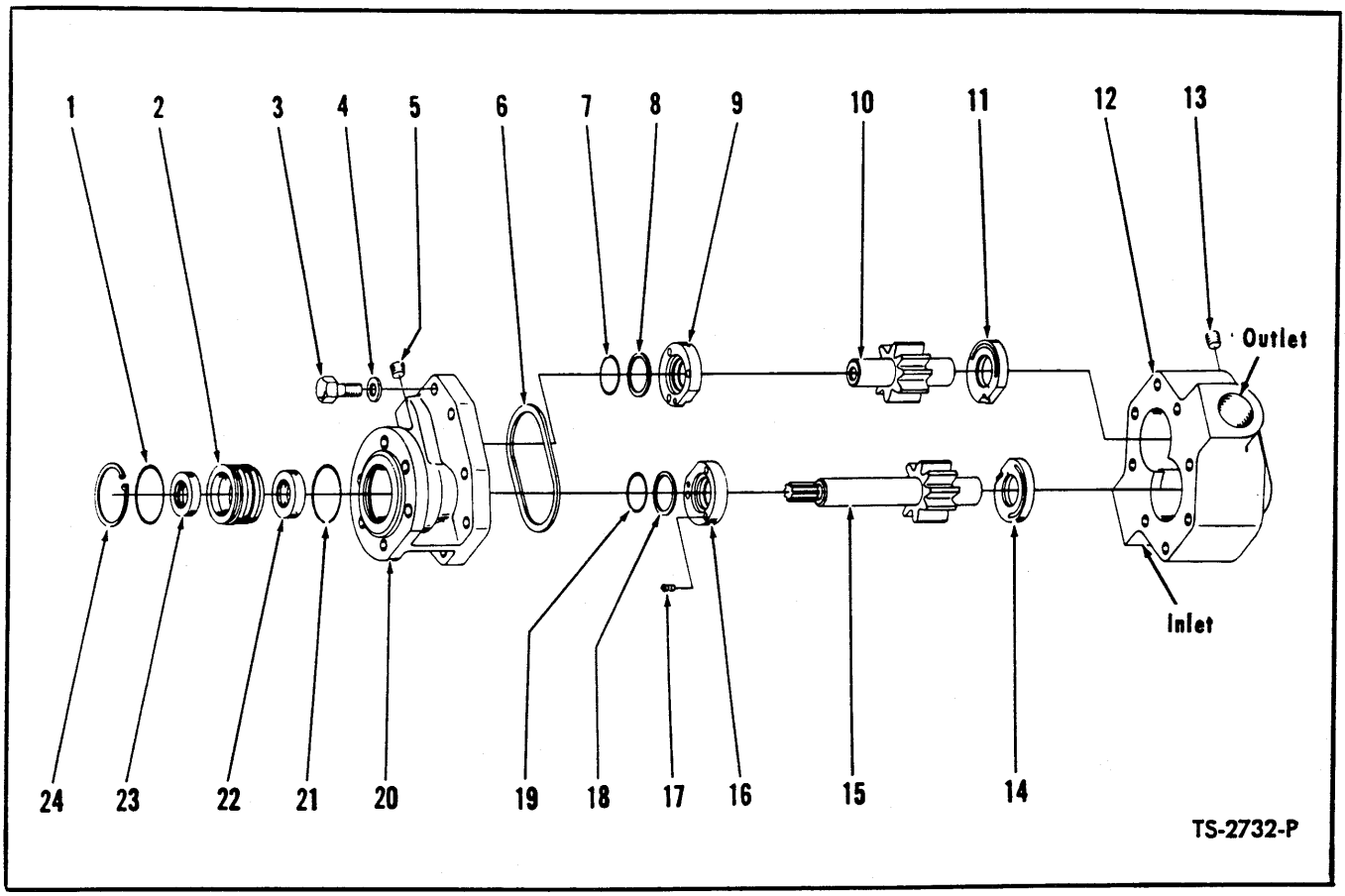

HYDRAULIC PUMP — CONVERTER CHARGING

For Serial: 55A — 1BCO184 thru 1BCO268
55B — 50BCO2 thru 50BCO7

Item No.	Part No.	Description	No. Req'd.
A	450012	*PUMP ASSY (Inc. 1 thru 24)	1
B	498152	REPAIR KIT, Major (Inc. 9, 11, 14, 16)	1
C	498151	**REPAIR KIT, Minor (Inc. 1, 3, 4, 6, 7, 8, 17, 18, 19, 21)	1
D	498024	GEAR SET, Drive & Driven (Inc. 10, 15)	1
E	498113	REPAIR KIT, Shaft Seal (Inc. 1, 2, 21 thru 24)	1
1	———	§"O" RING, Retainer	1
2	———	§RETAINER, Shaft Seal	1
3	———	§BOLT, Cover to Body	8
4	———	§WASHER, Cover to Body	8
5	———	§PLUG, Cover	1
6	———	§GASKET, Cover	1
7	———	§"O" RING, Cover Thrust Plate	1
8	———	§WASHER, Back-Up	1
9	———	§THRUST PLATE, Cover	1
10	———	§GEAR, Driven	1
11	———	§THRUST PLATE, Body	1
12	———	§BODY (Inc. Bushings) (See Note "A")	1
13	———	§PLUG, Body	1
14	———	§THRUST PLATE, Body	1
15	———	§GEAR, Drive	1
16	———	§THRUST PLATE, Cover	1
17	———	§SPRING, Cover Thrust Plate	6
18	———	§WASHER, "O" Ring Back-Up	1
19	———	§"O" RING, Cover Thrust Plate	1
20	———	§COVER (Inc. Bushings) (See Note "A")	1
21	———	§"O" RING, Retainer	1
22	———	§SEAL, Inner Oil	1
23	———	§SEAL, Outer Oil	1
24	———	§RING, Seal Retainer	1
25	235961	†GASKET, Pump to Converter	1
26	8D-06	†NUT, Pump to Converter	6
27	4E-06	†LKWSHR, Pump to Converter	6

*NOTE: When complete pump assy is replaced use 450229 Pump.

**NOTE: *Minor Repair Kit* consists of "O" Rings, Back-up Washers, Gaskets and approximately 20% of the hardware items such as bolts, nuts, springs and washers. The latter for the purpose of replacing any of these items lost or damaged in repair operation.

NOTE "A": Pump Bodies, Covers and Bearings will not be made available for field use since when these items are worn beyond limits permitting re-use, the cost of rebuilding the pump exceeds practical limits. In such cases a new pump assembly should be utilized.

†Not Illustrated

§Not Sold Separately

WHEN ORDERING PARTS, ALWAYS STATE MODEL AND SERIAL NO. OF MACHINE

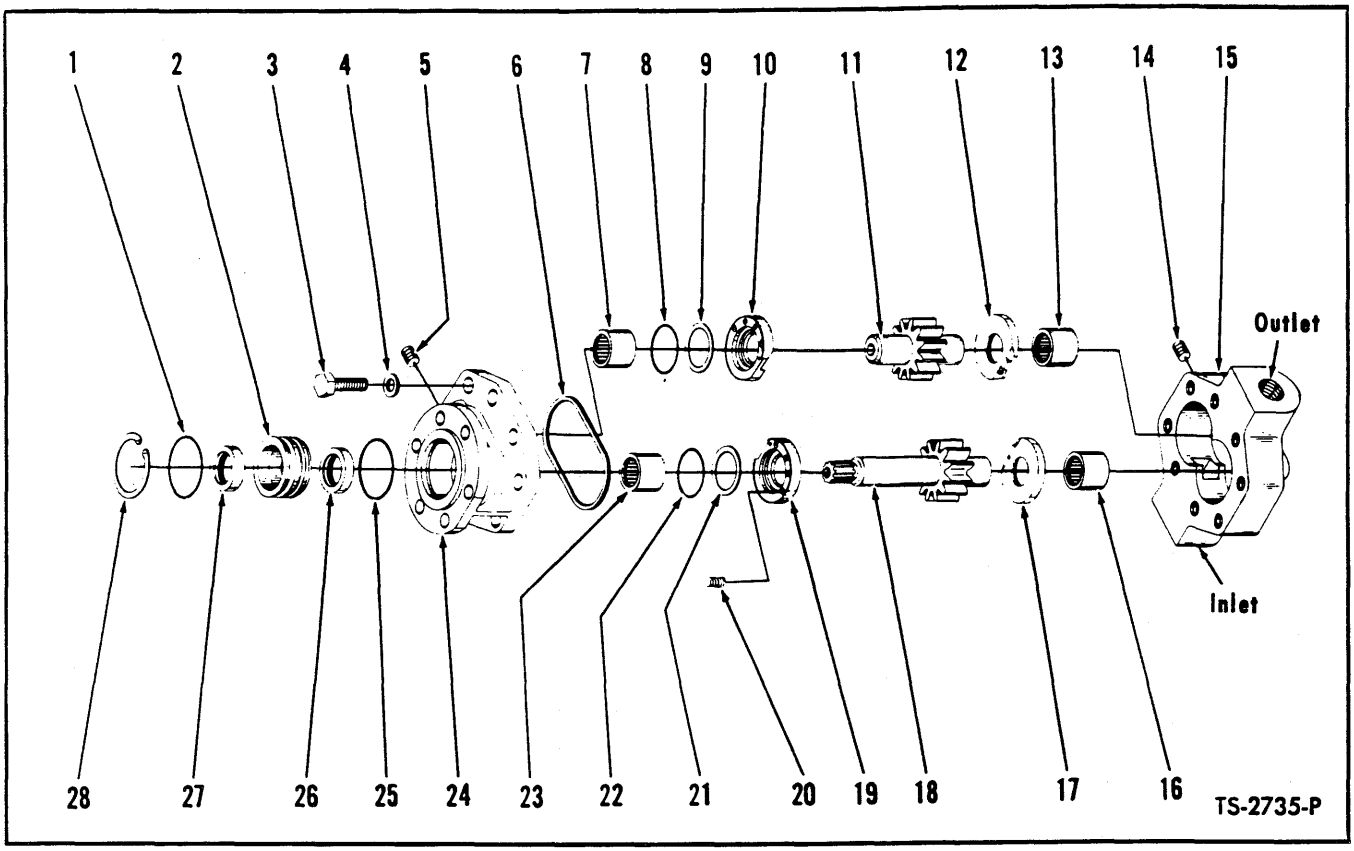

HYDRAULIC PUMP — CONVERTER CHARGING

For Serial: 55A — 1BCO269 thru 1BCO282, 2BCO1 thru 2BCO999
55B — 50BCO8 thru 50BCO999

Item No.	Part No.	Description	No. Req'd.
A	450072	***PUMP ASSY (Inc. 1 thru 28)	1
B	498128	REPAIR Kit, Major (Inc. 10, 12, 17, 19)	1
C	498127	*REPAIR KIT, Minor (Inc. 1, 3, 4, 6, 8, 9, 20, 21, 22, 25)	1
D	498024	GEAR SET, Drive & Driven (Inc. 11, 18)	1
E	498113	REPAIR KIT, Shaft Seal (Inc. 1, 2, 25 thru 28)	1
1	———	§"O" RING, Retainer	1
2	———	§RETAINER, Shaft Seal	1
3	———	§BOLT, Cover to Body	8
4	———	§WASHER, Cover to Body	8
5	———	§PLUG, Cover	1
6	———	§GASKET, Cover	1
7	———	**§BEARING, Cover — Driven	1
8	———	§"O" RING, Cover Thrust Plate	1
9	———	§WASHER, "O" Ring Back-Up	1
10	———	§THRUST PLATE, Cover	1
11	———	§GEAR, Driven	1
12	———	§THRUST PLATE, Body	1
13	———	**§BEARING, Body	1
14	———	§PLUG, Body	1
15	———	**§BODY	1
16	———	**§BEARING, Body	1
17	———	§THRUST PLATE, Body	1
18	———	§GEAR, Drive	1
19	———	§THRUST PLATE, Cover	1
20	———	§SPRING, Cover Thrust Plate	6
21	———	§WASHER, "O" Ring Back-Up	1
22	———	§"O" RING, Cover Thrust Plate	1
23	———	**§BEARING, Cover	1
24	———	**§COVER	1
25	———	§"O" RING, Retainer	1
26	———	§SEAL, Inner Oil	1
27	———	§SEAL, Outer Oil	1
28	———	§RING, Seal Retaining	1
29	214961	†SLEEVE, Pump Drive	1
30	235961	†GASKET, Pump to Converter	1
31	8D-06	†NUT, Pump to Converter	6
32	4E-06	†LKWSHR, Pump to Converter	6

*NOTE: *Minor Repair Kit* consists of "O" Rings, Back-up Washers, Gaskets and approximately 20% of the hardware items such as bolts, nuts, springs and washers. The latter for the purpose of replacing any of these items lost or damaged in repair operation.

**NOTE: Pump Bodies, Covers and Bearings will not be made available for field use since when these items are worn beyond limits permitting re-use, the cost of rebuilding the pump exceeds practical limits. In such cases a new pump assembly should be utilized.

†Not Illustrated §Not Sold Separately

***NOTE: For complete replacement use 450229 Pump Assy.

WHEN ORDERING PARTS ALWAYS STATE MODEL AND SERIAL NO. OF MACHINE

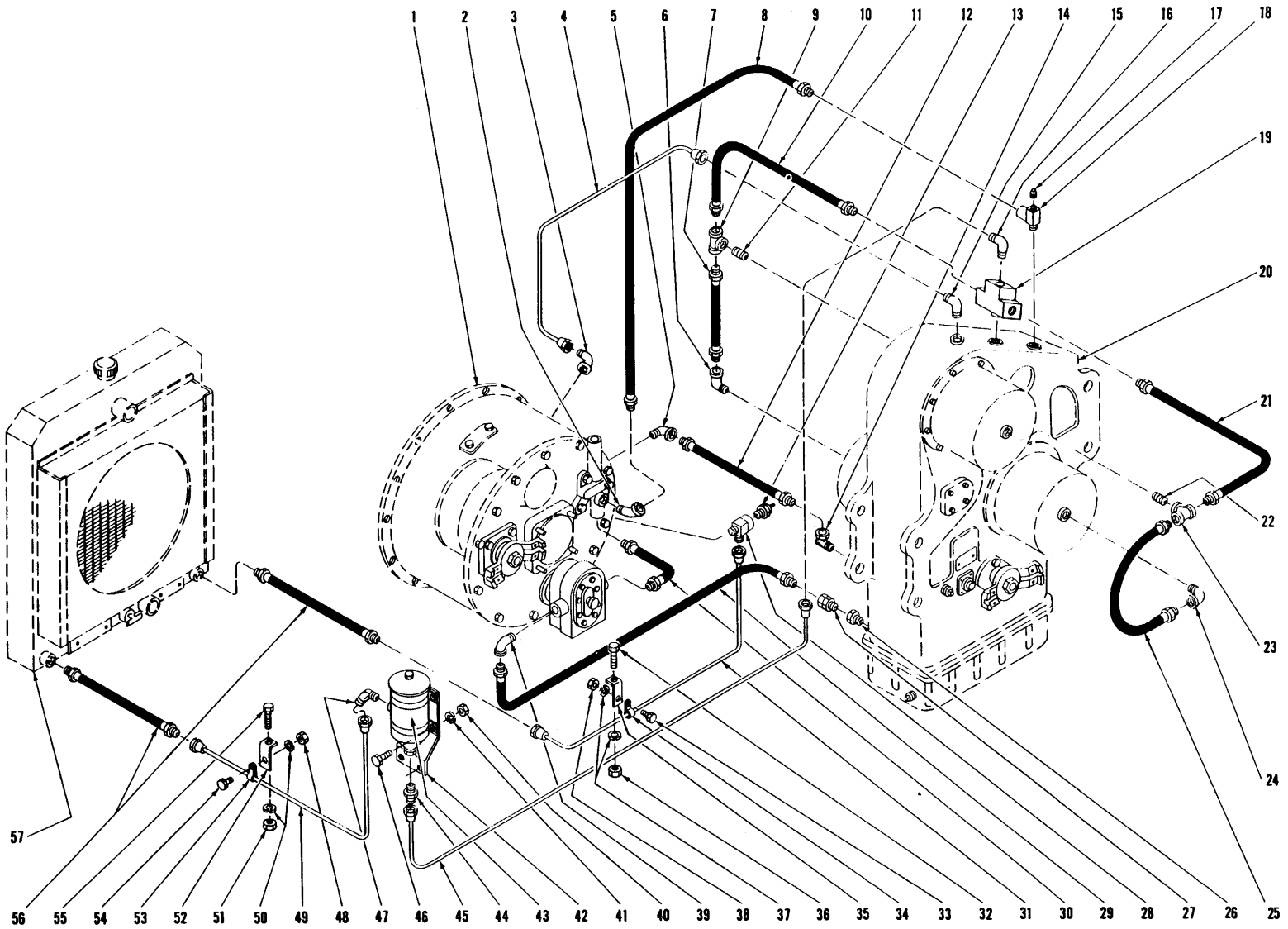

HYDRAULIC SYSTEM — TRANSMISSION AND TORQUE CONVERTER

TS-1791-P

HYDRAULIC SYSTEM — TRANSMISSION AND TORQUE CONVERTER — MODEL 55A

For Serial 3726 thru 3785

Item No.	Part No.	Description	No. Req'd.
1	———	CONVERTER (See Index)	—
2	25F-3	ELBOW, Hose to Regulator Valve	1
3	85F-8	ELBOW, Overflow Line to Converter	1
4	514613	LINE, Trans. to Converter Overflow	1
5	26F-5	ELBOW, Hose to Converter	1
6	26F-2	ELBOW, Hose to Clutch Cover	1
7	550874	HOSE, 1st & 3rd to Reverse Clutch	1
8	519738	HOSE, Regulator Valve to Trans.	1
9	18F-2	TEE, Hose to 1st & 3rd Clutches	1
10	550875	HOSE, Tee to Cross	1
11	5K-207	NIPPLE, Tee to Clutch Cover	1
12	550724	HOSE, Transmission to Converter	1
13	551323	SENDER UNIT, Conv. Temperature	1
14	31F-5	ADAPTER UNION, Hose to Trans.	1
15	83F-8	ELBOW, Overflow Line to Trans.	1
16	83F-7	ELBOW, Cooler Line to Trans.	1
17	13F-04	PLUG, Tee	1
18	30F-1	TEE, Hose to Transmission	1
19	550866	CROSS, Special—Transmission	1
20	———	TRANSMISSION (See Index)	—
21	550758	HOSE, Cross to Forward Clutch Tee	1
22	5K-207	NIPPLE, Tee to Clutch Cover	1
23	18F-2	TEE, Forward Clutch	1
24	26F-2	ELBOW, Hose to Clutch Cover	1
25	550758	HOSE, Forward to 2nd & 4th Clutches	1
26	356626	BUSHING, Transmission Reducing	1
27	36F-6	ADAPTER UNION, Hose to Trans.	1
28	551896	TEE, Cooler Line to Converter	1
29	552156	HOSE, Trans. to Pump—Suction	1
30	221084	HOSE, Pump to Regulator Valve	1
31	525521	LINE, Converter to Radiator Cooler	1
32	2C-620	BOLT, Bracket to Frame	1
33	2C-612	BOLT, Clip to Bracket	1
34	6H-16	CLIP, Cooler Line	1
35	551996	BRACKET, Cooler Line	1
36	2D-06	NUT, Bracket to Frame	1
37	4E-06	LKWSHR, Bracket to Frame & Clip	2
38	2D-06	NUT, Clip to Bracket	1
39	26F-6	ELBOW, Pump to Transmission Hose	1
40	2D-05	NUT, Filter to Bracket	4
41	4E-05	LKWSHR, Filter to Bracket	4
42	525676	BRACKET, Filter Mounting	1
43	552470	FILTER, Trans. & Converter Oil	1
43A	957577	CARTRIDGE KIT, Filter	1
44	89F-7	CONNECTOR, Return Line to Filter	1
45	514614	LINE, Filter to Trans. Return	1
46	2C-514	BOLT, Filter to Bracket	4
47	84F-7	ELBOW, Return Line to Filter	1
48	2D-06	NUT, Clip to Bracket	1
49	525520	LINE, Radiator to Filter Return	1
50	4E-06	LKWSHR, Bracket to Frame & Clip	2
51	2D-06	NUT, Bracket to Frame	1
52	551996	BRACKET, Cooler Line	1
53	6H-16	CLIP, Cooler Line	1
54	2C-612	BOLT, Clip to Bracket	1
55	2C-620	BOLT, Bracket to Frame	1
56	552296	HOSE, Cooler Line to Radiator	2
57	———	RADIATOR (See Index)	—

WHEN ORDERING PARTS, ALWAYS STATE MODEL AND SERIAL NO. OF MACHINE

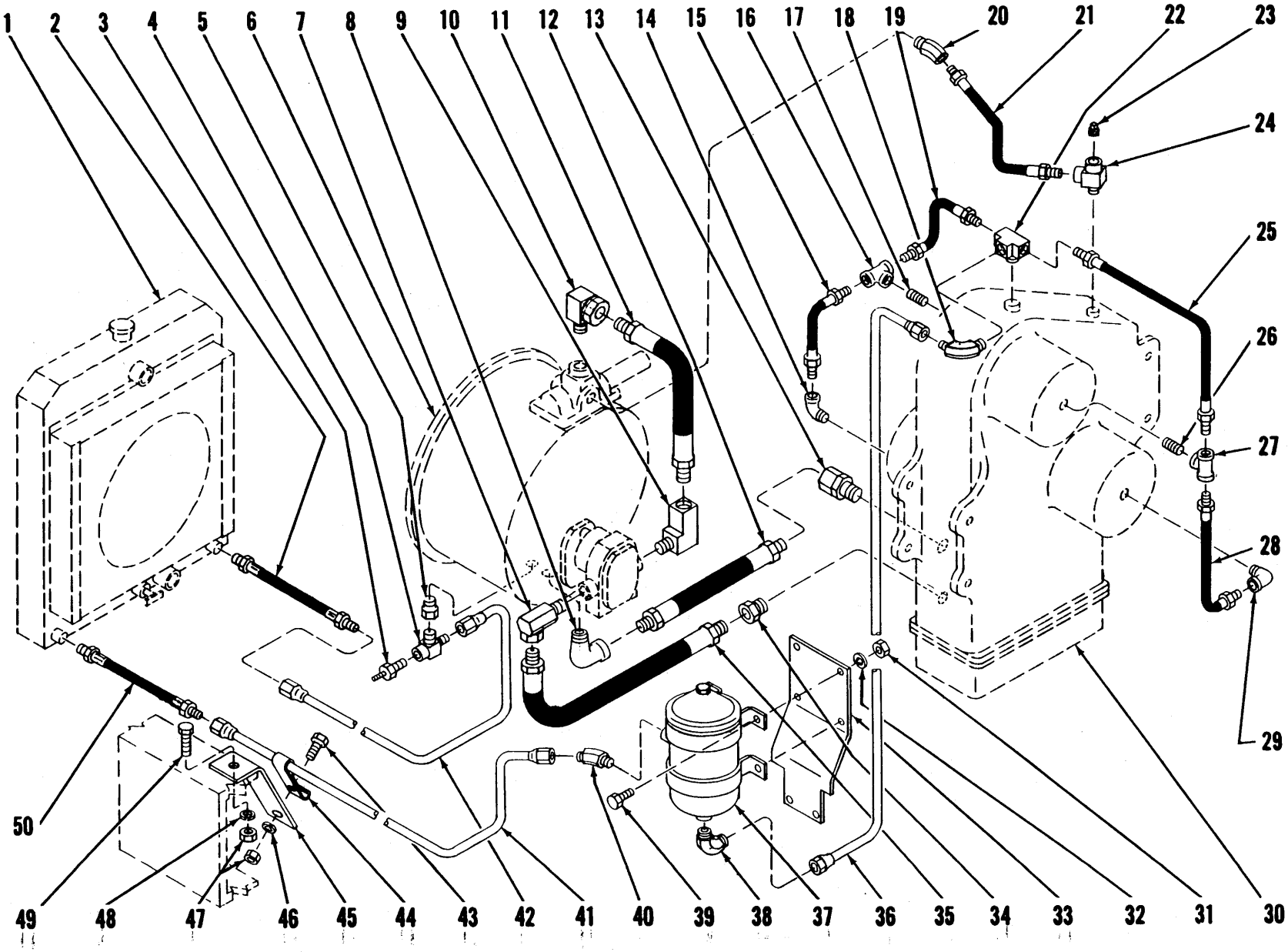

HYDRAULIC SYSTEM — TRANSMISSION AND TORQUE CONVERTER

TS-1812-P

HYDRAULIC SYSTEM — TRANSMISSION AND TORQUE CONVERTER

For Serial: 55A — 3786 thru 3855, 1BCO134 thru 1BCO282
55B — 50BCO1 thru 50BCO12

Item No.	Part No.	Description	No. Req'd.
1	———	RADIATOR (See Index)	—
2	552296	HOSE, Cooler Line to Radiator	1
3	551323	SENDER UNIT, Conv. Temperature	1
4	551896	TEE, Converter	1
5	356617	REDUCER, Converter	1
6	———	TORQUE CONVERTER (See Index)	—
7	31F-6	ELBOW, Hose to Pump	1
8	26F-5	ELBOW, Hose to Converter	1
9	29F-4	ELBOW, Pump to Hose	1
10	31F-5	ADAPTER UNION, Hose to Reg. Valve	1
11	616533	HOSE, Converter Pump to Reg. Valve	1
12	616533	HOSE, Converter to Transmission	1
13	36F-5	ADAPTER UNION, Hose to Trans.	1
14	31F-2	ELBOW, Hose to Clutch Cover	1
15	550874	HOSE, 1st & 3rd to Reverse Clutch	1
16	18F-2	TEE, 1st & 3rd Clutch	1
17	5K-207	NIPPLE, Tee to Clutch Cover	1
18	83F-7	ELBOW, Filter Line to Transmission	1
19		*HOSE, Tee to Special Cross*	
19A	550875	For Serial 3786 thru 3825	1
19B	551301	For Serial 55A — 3826 thru 3855, 1BCO134 thru 1BCO282, 55B — 50BCO1 thru 50BCO12	1
20		*ELBOW, Reg. Valve to Trans. Hose*	
20A	33F-3	For Serial 3786 thru 3825	1
20B	81F-2	For Serial 55A — 3826 thru 3855, 1BCO134 thru 1BCO282, 55B — 50BCO1 thru 50BCO12	1
21	527550	HOSE, Converter to Transmission	1
22	550866	CROSS, Transmission	1
23	13F-04	PLUG, Tee	1
24	30F-1	TEE, Hose to Transmission	1
25	550758	HOSE, Cross to Forward Clutch	1
26	5K-207	NIPPLE, Tee to Clutch Cover	1
27	18F-2	TEE, Clutch Cover	1
28	550758	HOSE, Forward to 2nd & 4th Clutch	1
29	26F-2	ELBOW, Hose to Clutch Cover	1
30	———	TRANSMISSION (See Index)	—
31	2D-05	NUT, Filter to Bracket	4
32	4E-05	LKWSHR, Filter to Bracket	4
33	525676	BRACKET, Oil Filter to Frame	1
34	356626	BUSHING, Transmission Reducing	1
35	520708	HOSE, Trans. to Pump—Suction	1
36		*LINE, Cooler Return — Filter to Trans.*	
36A	514614	For Serial 3786 thru 3825	1
36B	528266	For Serial 55A — 3826 thru 3855, 1BCO134 thru 1BCO282, 55B — 50BCO1 thru 50BCO12	1
37	552470	FILTER, Trans. & Conv. Oil (Inc. 37A)	1
37A	957577	†CARTRIDGE KIT, Oil Filter	1
38		*CONNECTOR & ELBOW, Filter to Cooler Return Line*	
38A	89F-7	CONNECTOR, For Serial 3786 thru 3825	1
38B	83F-7	ELBOW, For Serial 55A — 3826 thru 3855, 1BCO134 thru 1BCO282, 55B — 50BCO1 thru 50BCO12	1
39	2C-514	BOLT, Filter to Bracket	4
40	84F-7	ELBOW, Filter to Radiator Return Line	1
41	525520	LINE, Cooler Return—Radiator to Filter	1
42	527546	LINE, Converter to Radiator Cooler	1
43	2C-612	BOLT, Clip to Bracket	2
44	6H-16	CLIP, Cooler Line	2
45	551996	BRACKET, Cooler Line Clip	2
46	4E-06	LKWSHR, Clip to Bracket	2
47	2D-06	NUT, Clip to Bracket & Frame	4
48	4E-06	LKWSHR, Bracket to Frame	2
49	2C-624	BOLT, Bracket to Frame	2
50	552296	HOSE, Cooler Line to Radiator	1

†Not Illustrated

WHEN ORDERING PARTS, ALWAYS STATE MODEL AND SERIAL NO. OF MACHINE

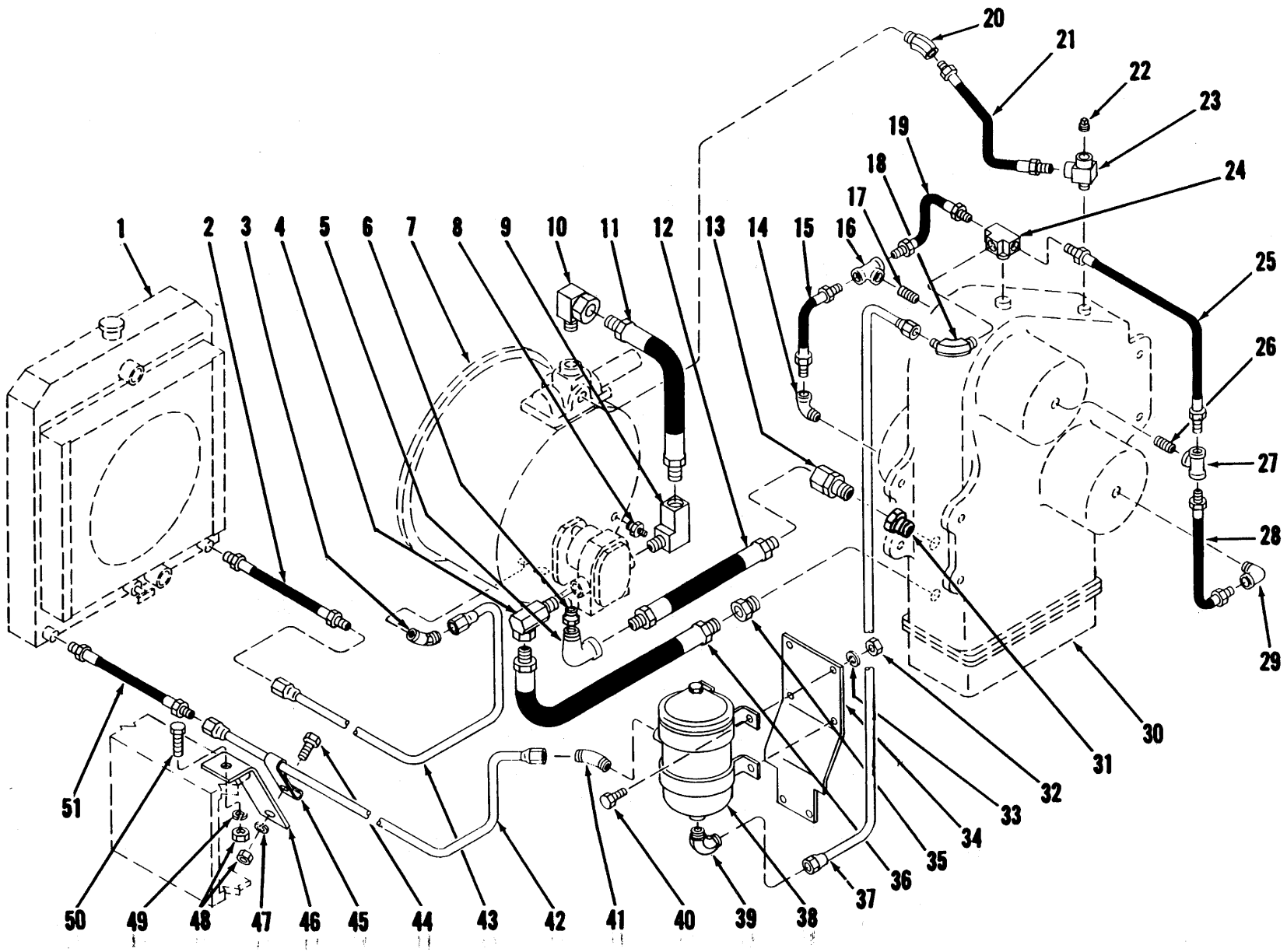

HYDRAULIC SYSTEM — TRANSMISSION AND TORQUE CONVERTER

TS-2042-P

HYDRAULIC SYSTEM — TRANSMISSION AND TORQUE CONVERTER

For Serial: 55A — 2BCO1 thru 2BCO999
55B — 50BCO13 thru 50BCO999

Item No.	Part No.	Description	No. Req'd.
1	———	RADIATOR (See Index)	—
2	531523	HOSE, Cooler Line to Radiator	1
3	84F-8	ELBOW, Converter to Cooler Line	1
4	31F-6	ELBOW, Hose to Pump	1
5	26F-5	ELBOW, Hose to Converter	1
6	356621	REDUCER, Converter	1
7	———	TORQUE CONVERTER (See Index)	—
8	551323	SENDER UNIT, Conv. Temperature	1
9	29F-4	ELBOW, Pump to Hose	1
10	31F-5	ADAPTER UNION, Hose to Reg. Valve	1
11	616533	HOSE, Connector Pump to Reg. Valve	1
12	616533	HOSE, Converter to Transmission	1
13	36F-5	ADAPTER UNION, Hose to Transmission	1
14	26F-2	ELBOW, Hose to Clutch Cover	1
15	550874	HOSE, 1st & 3rd to Reverse Clutch	1
16	18F-2	TEE, 1st & 3rd Clutch	1
17	5K-207	NIPPLE, Tee to Clutch Cover	1
18	83F-7	ELBOW, Filter Line to Transmission	1
19	551301	HOSE, Tee to Special Cross	1
20	81F-2	ELBOW, Reg. Valve to Transmission Hose	1
21	527550	HOSE, Converter to Transmission	1
22	13F-04	PLUG, Tee	1
23	30F-1	TEE, Hose to Transmission	1
24	550866	CROSS, Transmission	1
25	550758	HOSE, Cross to Forward Clutch	1
26	5K-207	NIPPLE, Tee to Clutch Cover	1
27	18F-2	TEE, Clutch Cover	1
28	550758	HOSE, Forward to 2nd & 4th Clutch	1
29	26F-2	ELBOW, Hose to Clutch Cover	1
30	———	TRANSMISSION (See Index)	—
31	356621	REDUCER, Transmission to Adapter Union	1
32	2D-05	NUT, Filter to Bracket	4
33	4E-05	LKWSHR, Filter to Bracket	4
34	525676	BRACKET, Oil Filter to Frame	1
35	356626	BUSHING, Transmission Reducing	1
36	520708	HOSE, Trans. to Pump—Suction	1
37	528266	LINE, Cooler Return—Filter to Trans.	1
38	552470	FILTER, Trans. & Conv. Oil (Inc. 38A)	1
38A	957577	†CARTRIDGE KIT, Oil Filter	1
39	83F-7	ELBOW, Filter to Cooler Return Line	1
40	2C-514	BOLT, Filter to Bracket	4
41	531400	ELBOW, Filter to Radiator Return Line	1
42	531525	LINE, Cooler Return—Radiator to Filter	1
43	531524	LINE, Converter to Radiator Cooler	1
44	2C-612	BOLT, Clip to Bracket	2
45	6H-18	CLIP, Cooler Line	2
46	551996	BRACKET, Cooler Line Clip	2
47	4E-06	LKWSHR, Clip to Bracket	2
48	2D-06	NUT, Clip to Bracket & Frame	4
49	4E-06	LKWSHR, Bracket to Frame	2
50	2C-620	BOLT, Bracket to Frame	2
51	531523	HOSE, Cooler Line to Radiator	1

†Not Illustrated

WHEN ORDERING PARTS, ALWAYS STATE MODEL AND SERIAL NO. OF MACHINE

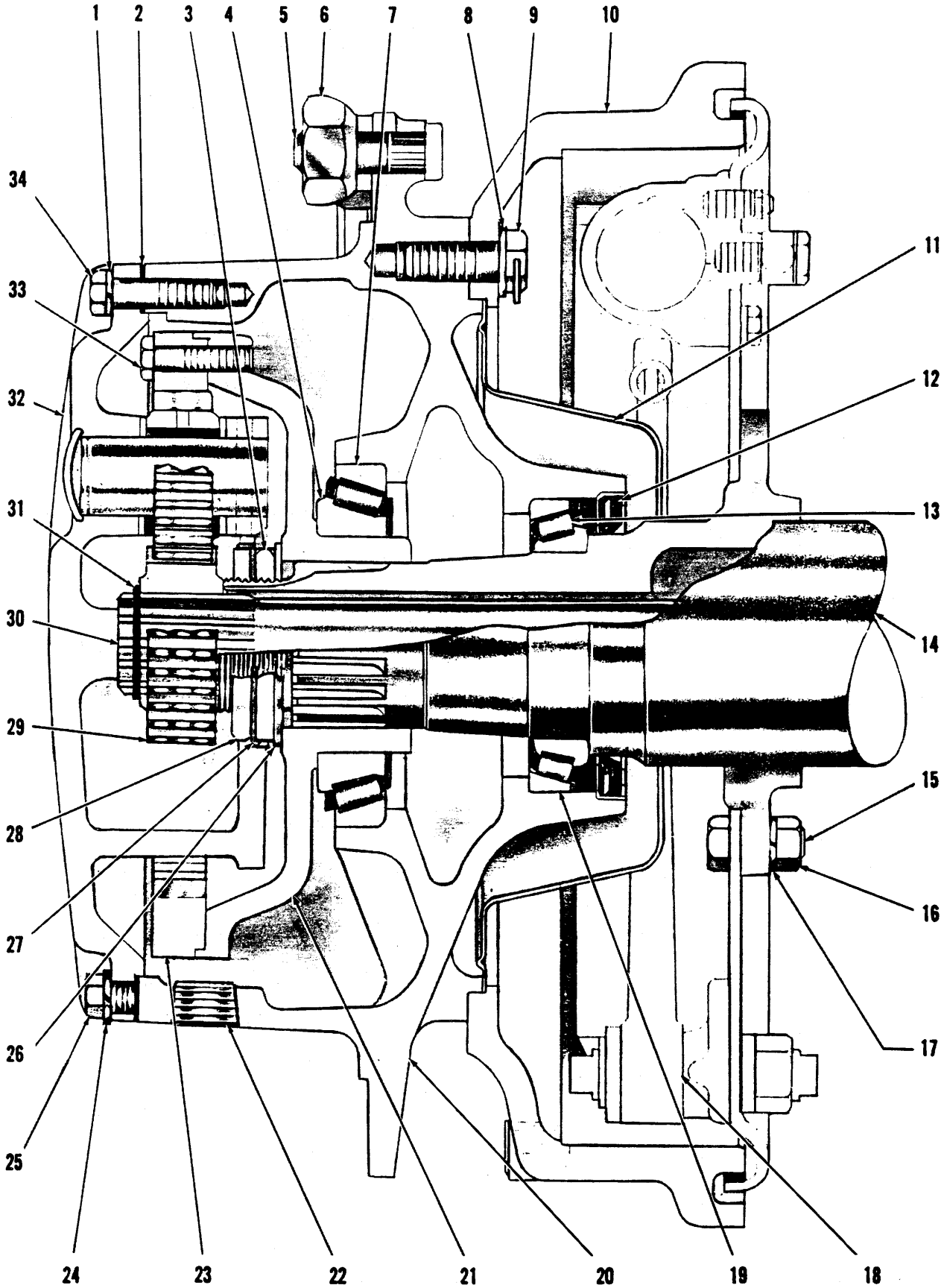

FRONT DRIVE AXLE ASSEMBLY

TS-1501-P

AXLE ASSEMBLY — FRONT DRIVE

Item No.	Part No.	Description	No. Req'd.
A	130973	AXLE ASSY (Inc. B, 1 thru 37)	1
B	———	†DIFFERENTIAL & CARRIER ASSY (See Index)	—
1	112278	LKWSHR, Planet Spider	20
2	———	Use PERMATEX #2	—
3	102313	NUT, Housing Tube	2
4	658974	CONE, Hub Bearing, Outer	2
5	109640	STUD, Wheel	20
6	109641	NUT, Wheel	20
7	658990	CUP, Hub Bearing Outer	2
8	104412	WASHER, Brake Drum	12
9	17C1024	BOLT, Brake Drum	12
10	106254	DRUM, Brake	2
11	109055	OIL SLINGER	2
12	111726	SEAL, Inner Hub Oil	2
13	742257	CONE, Hub Bearing Inner	2
14	105449	HOUSING, Axle	1
15	101092	BOLT, Brake Mounting	16
16	2D-08	NUT, Brake Mounting	16
17	4E-08	LKWSHR, Brake Mounting	16
18	———	BRAKE ASSY (See Index)	—
19	742258	CUP, Hub Bearing Inner	2
20	109639	HUB ASSY (Inc. 5, 7, 19)	2
21	———	§HUB, Internal Gear — See 37	2
22	11F-12	PLUG, Filler & Drain	4
23	———	§GEAR, Internal — See 37	2
24	4E-07	LKWSHR, Planet Puller Hole	4
25	1C-707	BOLT, Planet Puller Hole	4
26	106572	WASHER, Housing Tube Thrust	2
27	102314	LOCK, Housing Tube Nut	2
28	102313	NUT, Housing Tube	2
29	107390	GEAR, Sun	2
30	109642	SHAFT, Axle	2
31	224031	RING, Sun Gear Snap	2
32	———	PLANET SPIDER ASSY (See Index)	—
33	111842	BOLT, Internal Gear	20
34	100638	BOLT, Planet Spider	20
35	107608	†CLIP, Brake Inspection	2
36	106656	†BREATHER, Axle Housing	1
37	114591	†INTERNAL GEAR & HUB ASSY (One Piece)	2

†Not Illustrated
§Not Sold Separately

WHEN ORDERING PARTS, ALWAYS STATE MODEL AND SERIAL NO. OF MACHINE

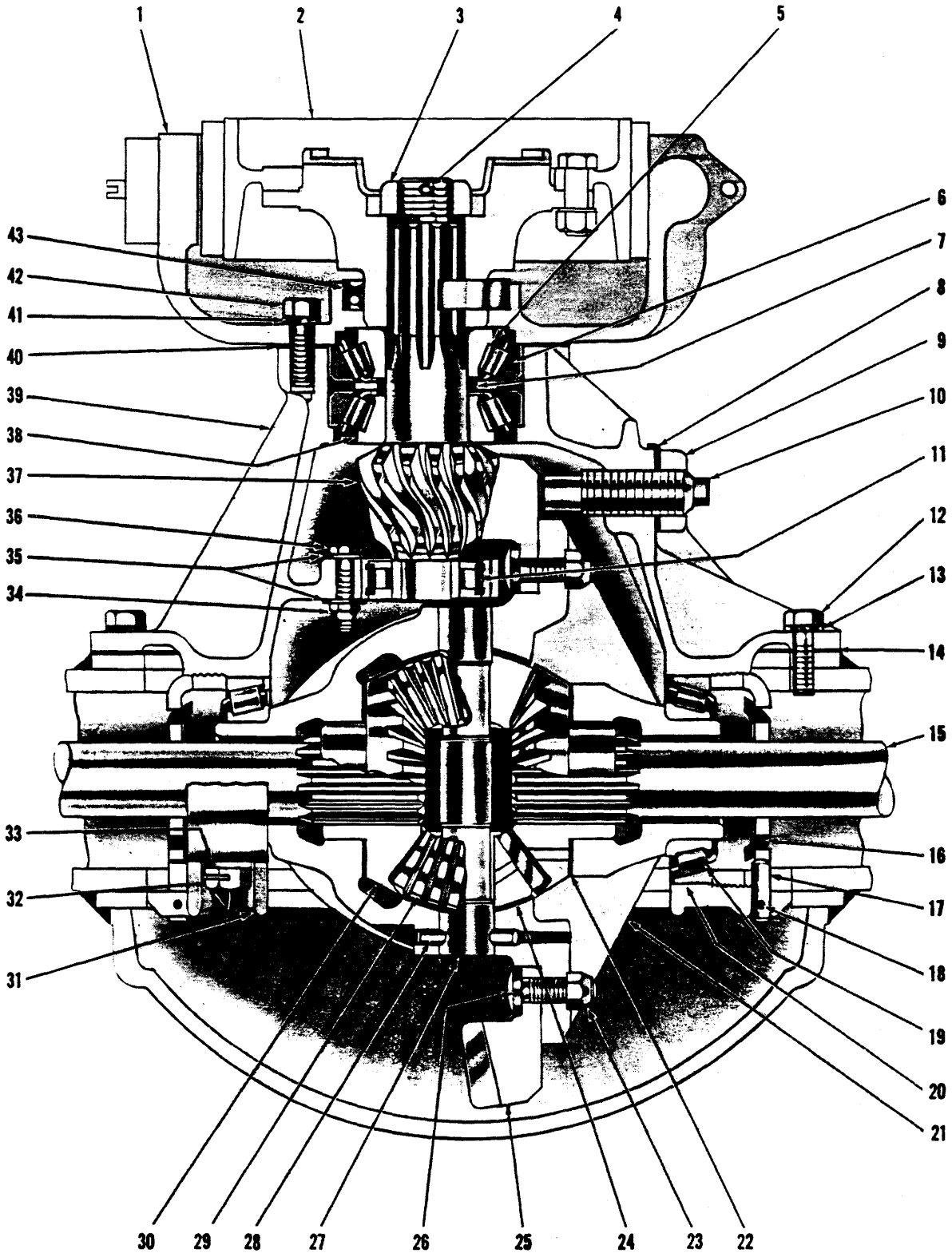

DIFFERENTIAL AND CARRIER ASSEMBLY — FRONT DRIVE TS-1841-P

DIFFERENTIAL AND CARRIER ASSEMBLY — FRONT DRIVE

Item No.	Part No.	Description	No. Req'd.
A	815548	DIFF. & CARRIER ASSY (Inc. 1, 3 thru 14, 16 thru 43)	1
1	102609	BRACKET, Bearing Retainer	1
2	———	PARKING BRAKE (See Index)	—
3	100675	NUT, Pinion Shaft	1
4	1F-424	COTTER, Pinion Shaft	1
5	———	§CONE, Pinion Bearing (See 47)	1
6	———	§CUP, Pinion Bearing (See 47)	1
7	815082	SPACER & SHIM KIT, Pinion Bearing	1
8	100954	LOCK, Thrust Screw	1
9	8D-14	NUT, Thrust Screw	1
10	123800	SCREW, Thrust	1
11	111437	*BEARING, Pinion Inner	1
12	1C-720	BOLT, Carrier to Axle Housing — 1¼"	10
12A	1C-724	†BOLT, Carrier to Axle Housing—1½"	2
13	4E-07	LKWSHR, Carrier to Axle Housing	12
14	———	Use PERMATEX #2	—
15	———	AXLE SHAFT (See Front Axle Assy, Index)	—
16	123746	NUT, Differential Adjusting	2
17	101411	PIN, Differential Adjusting Nut Lock	2
18	1F-428	COTTER, Lock Pin	2
19	648334	CONE, Differential Bearing	2
20	667279	CUP, Differential Bearing	2
21	101396	CASE, Differential	1
22	101400	WASHER, Side Gear Thrust	2
23	109389	NUT, Ring Gear Bolt	12
24	101399	WASHER, Pinion Thrust	12
25	———	*§RING GEAR (See 46)	—
26	101424	BOLT, Ring Gear	12
27	101401	PIN, Side Pinion	1
28	666364	PIN, Side Pinion Lock	1
29	101397	PINION, Differential Side	2
30	101398	GEAR, Differential Side	2
31	———	§CAP, Differential Carrier (See 39)	—
32	3C-1040	BOLT, Differential Carrier Cap	4
33	104549	WASHER, Differential Carrier Cap	4
34	45D-05	*NUT, Bearing Retainer	1
35	102350	*WASHER, Bearing Retainer	2
36	2C-522	*BOLT, Bearing Retainer	1
37	———	*§PINION (See 46)	—
38	———	§CONE, Pinion Bearing (See 47)	1
39	815563	CARRIER & CAP ASSY, Differential (Inc. 31, 32, 33)	1
40	127684	GASKET, Pinion Bearing Retainer	1
41	3E-07	LKWSHR, Pinion Bearing Retainer	6
42	104289	Bolt, Pinion Bearing Retainer	6
43	111646	SEAL, Pinion Oil	1
44	102567	†DIFFERENTIAL ASSY (Inc. 21 thru 30, 37)	1
45	101395	†DIFF. BODY SUB ASSY (Inc. 21, 22, 24, 27 thru 30)	1
46	111651	*†GEAR & PINION SET (Inc. 25, 37)	1
47	111735	†BRG. ASSY, Pinion (Inc. 5, 6, 38)	1

*NOTE: When installing 111651 Gear and Pinion Set on machine serial numbers listed below, one (1) 111437 Inner Pinion Bearing must also be used. When new 111437 Bearing is installed, items 34, 35 and 36 are no longer required.

55A — 3726 thru 3855, 1BCO134 thru 1BCO282, 2BCO1 thru 2BCO140

55B — 50BCO1 thru 50BCO34

†Not Illustrated

§Not Sold Separately

WHEN ORDERING PARTS, ALWAYS STATE MODEL AND SERIAL NO. OF MACHINE

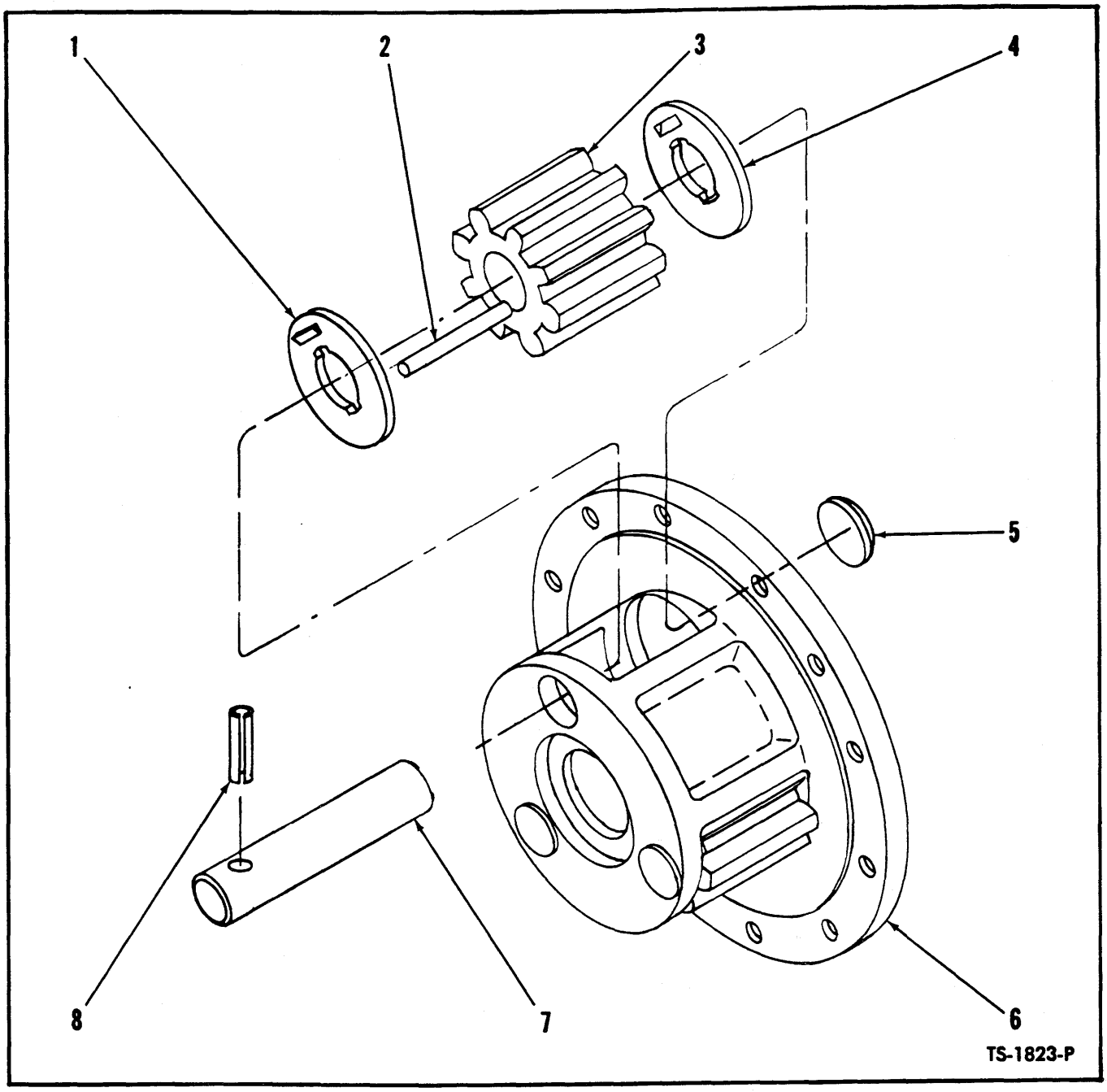

PLANET SPIDER ASSEMBLY

4 Planet Spiders Used on Machine — Quantity Indicated is for 1 Plant Spider

Item No.	Part No.	Description	No. Req'd.
A	944280	PLANET SPIDER ASSY (Inc. 1 thru 8)	1
1	106569	WASHER, Pinion Thrust	3
2	106570	ROLLER, Pinion Needle	102
3	120192	PINION, Planet	3
4	106569	WASHER, Pinion Thrust	3
5	12F-108	PLUG, Planet Expansion	3
6	944279	SPIDER, Planet (Inc. 6A)	1
6A	111805	†VALVE, Relief	1
7	106917	SHAFT, Pinion	3
8	104994	PIN, Pinion Shaft Lock	3

†Not Illustrated

WHEN ORDERING PARTS, ALWAYS STATE MODEL AND SERIAL NO. OF MACHINE

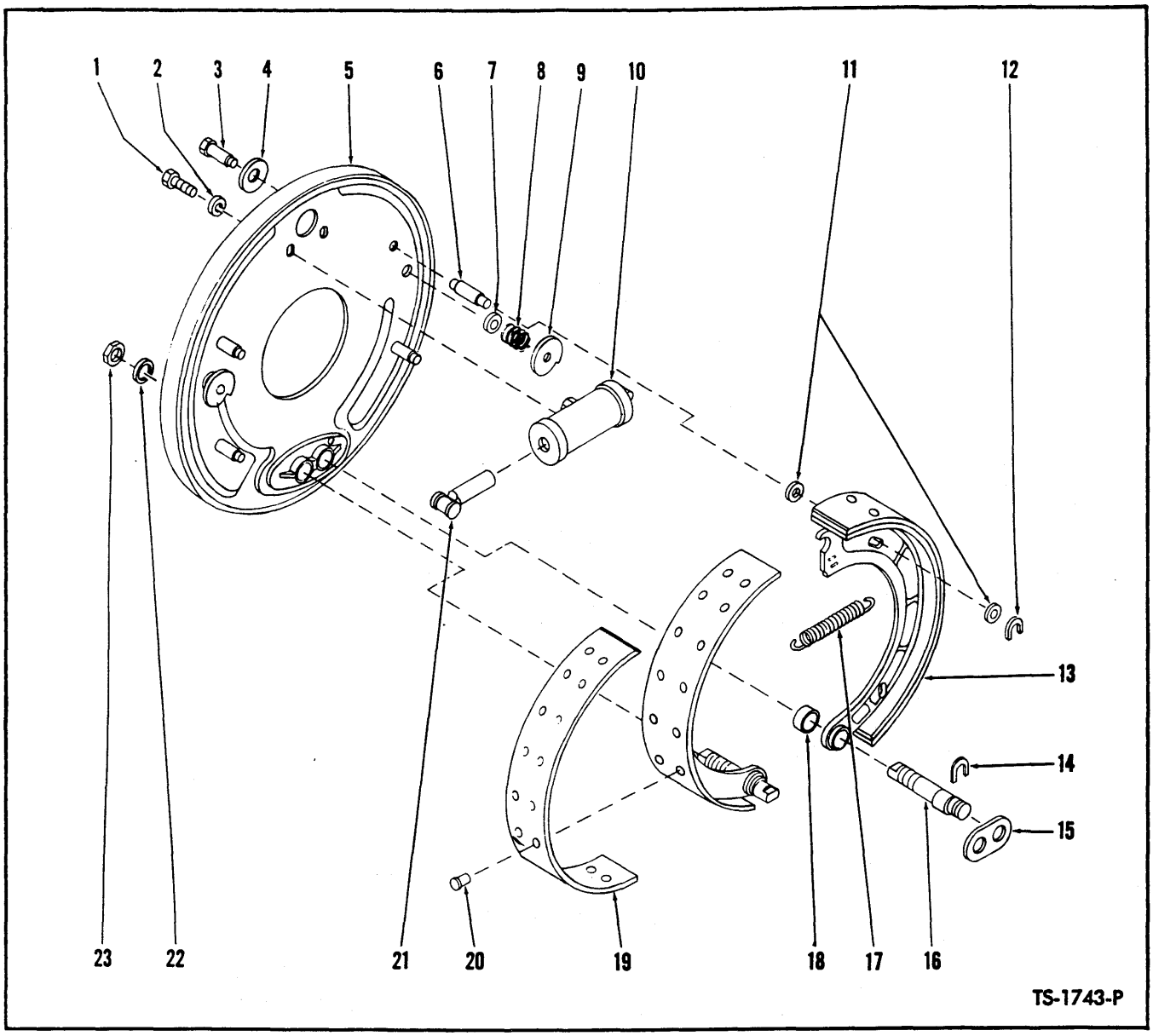

BRAKE ASSEMBLY — FRONT *

2 Brakes Used on Axle — Quantity Indicated is for 1 Brake

Item No.	Part No.	Description	No. Req'd.
A	110932	BRAKE ASSY (Inc. 1 thru 23)	1
1	1C-610	BOLT, Cylinder to Brake Disc	2
2	4E-06	LKWSHR, Cylinder to Brake Disc	2
3	114169	PIN, Cam (Inc. 4)	2
4	100867	WASHER, Cam Pin	2
5	106586	DISC ASSY, Brake (Inc. 3, 4, 6 thru 9)	1
6	106373	PIN, Guide	4
7	851771	WASHER, Cam Spring	2
8	943859	KIT, Cam Spring (Inc. 7)	2
9	100864	CAM, Brake Shoe Adjusting	2
10	107014	CYLINDER, Wheel (Inc. 21)	1
10A	940130	REPAIR KIT, Wheel Cylinder	1
11	102322	WASHER, Guide Pin	8
12	100878	"C" WASHER, Guide Pin	4
13	118254	SHOE ASSY, Brake (Inc. 18, 19, 20)	2
14	101332	"C" WASHER, Anchor Pin	2
15	106970	STRUT, Anchor Pin	1
16	106969	PIN, Anchor	2
17	106216	SPRING, Brake Shoe Return	1
18	201966	BUSHING, Brake Shoe	2
19	944217	LINING KIT, Brake Shoe (Inc. 20)	2
20	3H-1216	RIVET, Lining to Shoe (See Note "A")	36
20A	106184	RIVET, Lining to Shoe (See Note "B")	36
21	958553	LINK, Wheel Cylinder Connector	2
22	4E-12	LKWSHR, Anchor Pin	2
23	2D-12	NUT, Anchor Pin	2

*Ref. SG-681

NOTE "A" — For use with 944217 kit and shoes with 13/64" holes.

NOTE "B" — For use with 108147 linings and shoes with 5/32" holes.

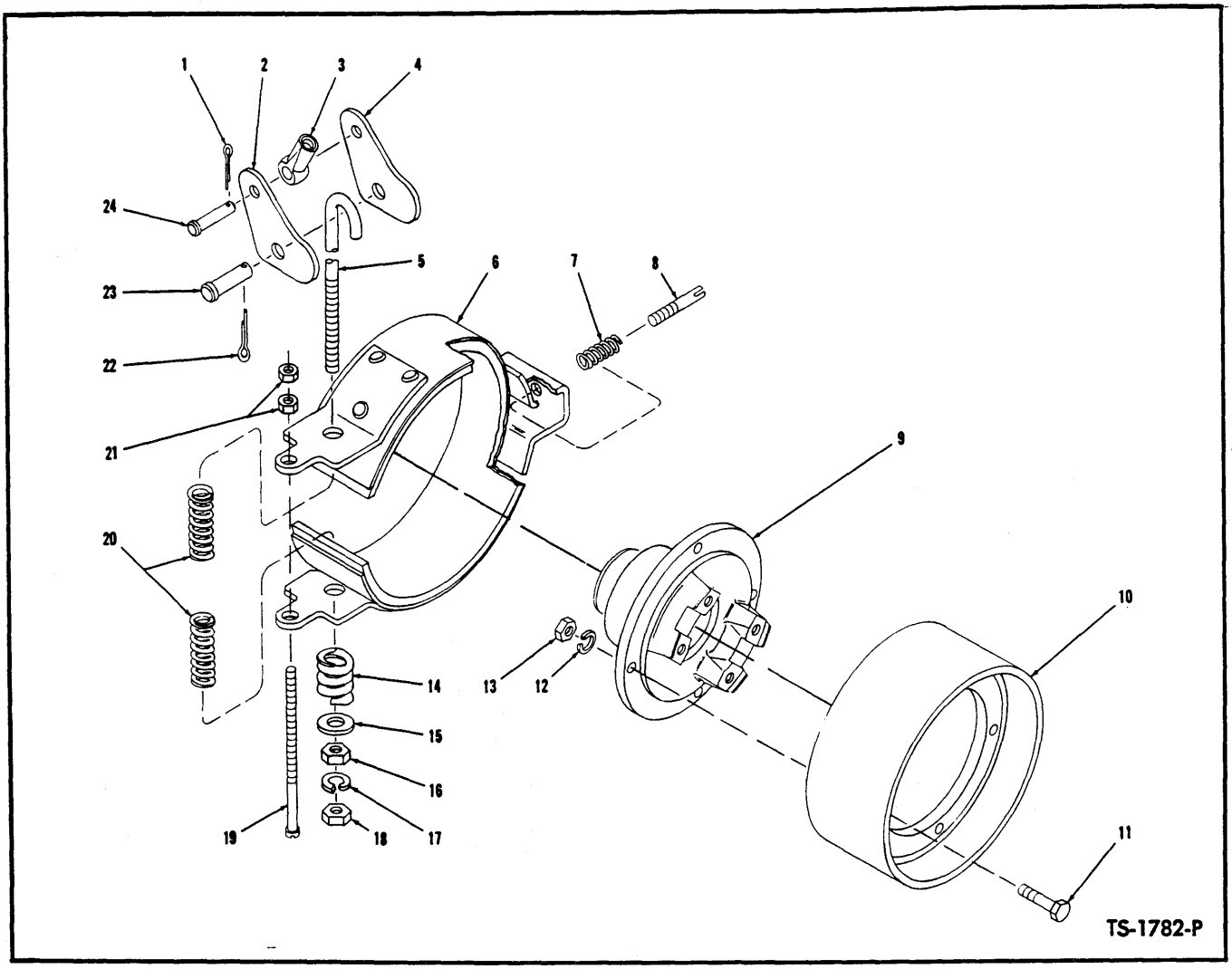

PARKING BRAKE ASSEMBLY *

Item No.	Part No.	Description	No. Req'd.
1	1F-312	COTTER, Draw Rod Clevis Pin	1
2	202834	LEVER, Brake Cam	1
3	201583	END, Adjusting Bolt	1
4	202834	LEVER, Brake Cam	1
5	202739	BOLT, Brake Adjusting	1
6	200756	BRAKE BAND & LINING ASSY (Inc. 6A)	1
6A	943868	LINING & RIVET KIT (Inc. 6B)	1
6B	3H-909	RIVET, Brake Band Lining	18
7	201537	SPRING, Brake Anchor Clip	1
8	201582	SCREW, Brake Anchor Clip Adjusting	1
9	122983	FLANGE, Companion	1
10	109637	DRUM, Brake	1
11	1C-720	BOLT, Drum to Flange	4
12	4E-07	LKWSHR, Drum to Flange	4
13	1D-07	NUT, Drum to Flange	4
14	202673	SPRING, Compression	1
15	25E-21	WASHER, Compression Spring	1
16	7D-07	NUT, Adjusting Bolt	1
17	4E-07	LKWSHR, Adjusting Bolt	1
18	7D-07	NUT, Adjusting Bolt	1
19	202349	SCREW, Locating	1
20	201124	SPRING, Brake Release	2
21	1D-04	NUT, Locating Screw	2
22	1F-416	COTTER, Cam Lever Clevis Pin	1
23	202129	PIN, Cam Lever Clevis	1
24	2F-06106	PIN, Draw Rod Clevis	1

*Ref. SG-681

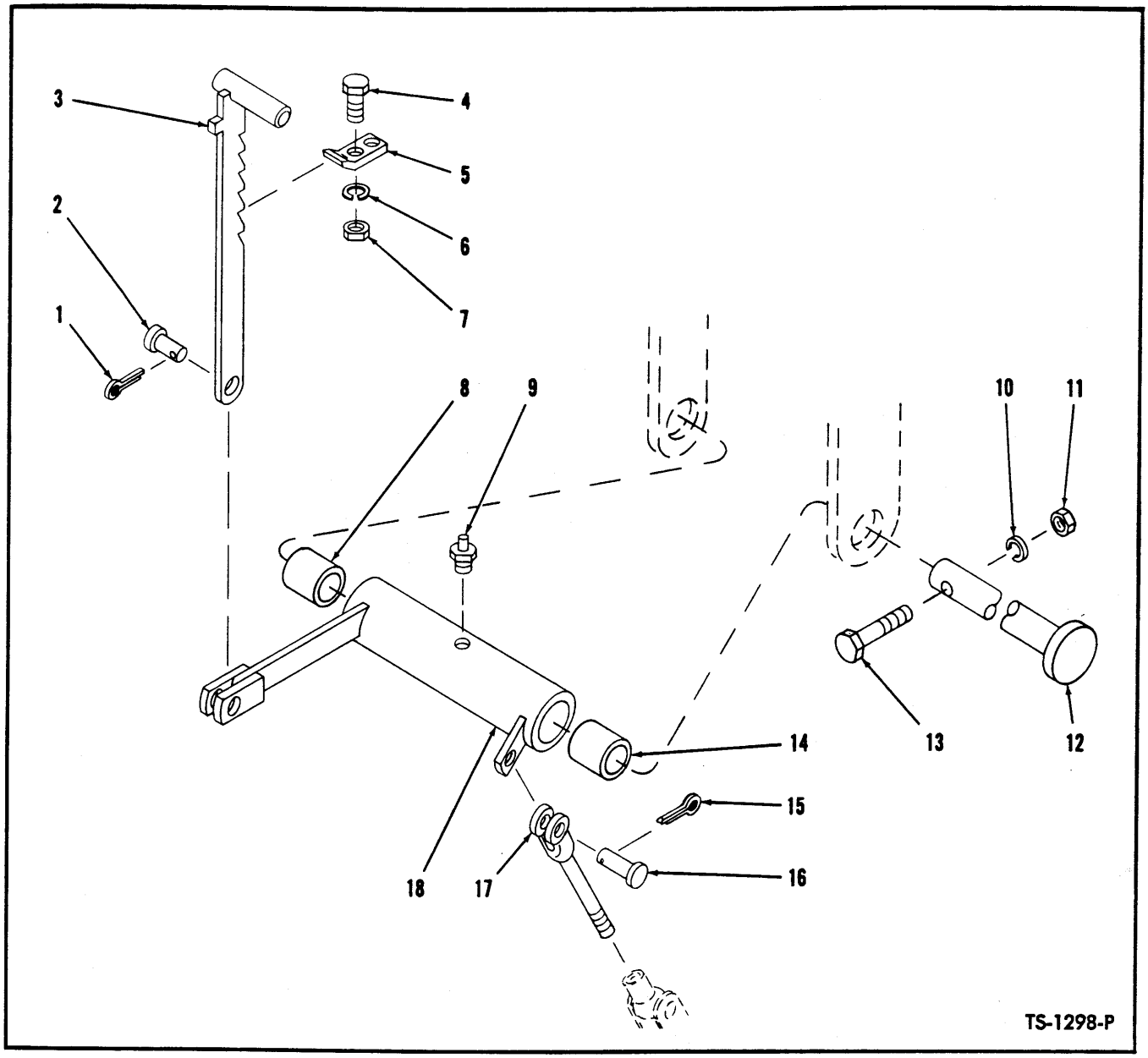

PARKING BRAKE CONTROLS

Item No.	Part No.	Description	No. Req'd.
1	1F-312	COTTER, Clevis Pin	1
2	4F-06106	PIN, Clevis	1
3	526169	HANDLE, Parking Brake	1
4	2C-616	BOLT, Catch to Floorboard	2
5	512709	CATCH, Parking Brake Handle	1
6	4E-06	LKWSHR, Catch to Floorboard	2
7	2D-06	NUT, Catch to Floorboard	2
8	526767	BUSHING, Bell Crank	1
9	10H-25	FITTING, Bell Crank	1

No. Item	No. Part	Description	Req'd. No.
10	4E-06	LKWSHR, Bell Crank Mtg. Pin Bolt	1
11	2D-06	NUT, Bell Crank Mounting Pin Bolt	1
12	526176	PIN, Bell Crank Mounting	1
13	2C-640	BOLT, Bell Crank Mounting Pin	1
14	526767	BUSHING, Bell Crank	1
15	1F-312	COTTER, Clevis Pin	1
16	4F-06106	PIN, Clevis	1
17	526177	ROD, Brake	1
18	526172	BELL CRANK	1

WHEN ORDERING PARTS, ALWAYS STATE MODEL AND SERIAL NO. OF MACHINE

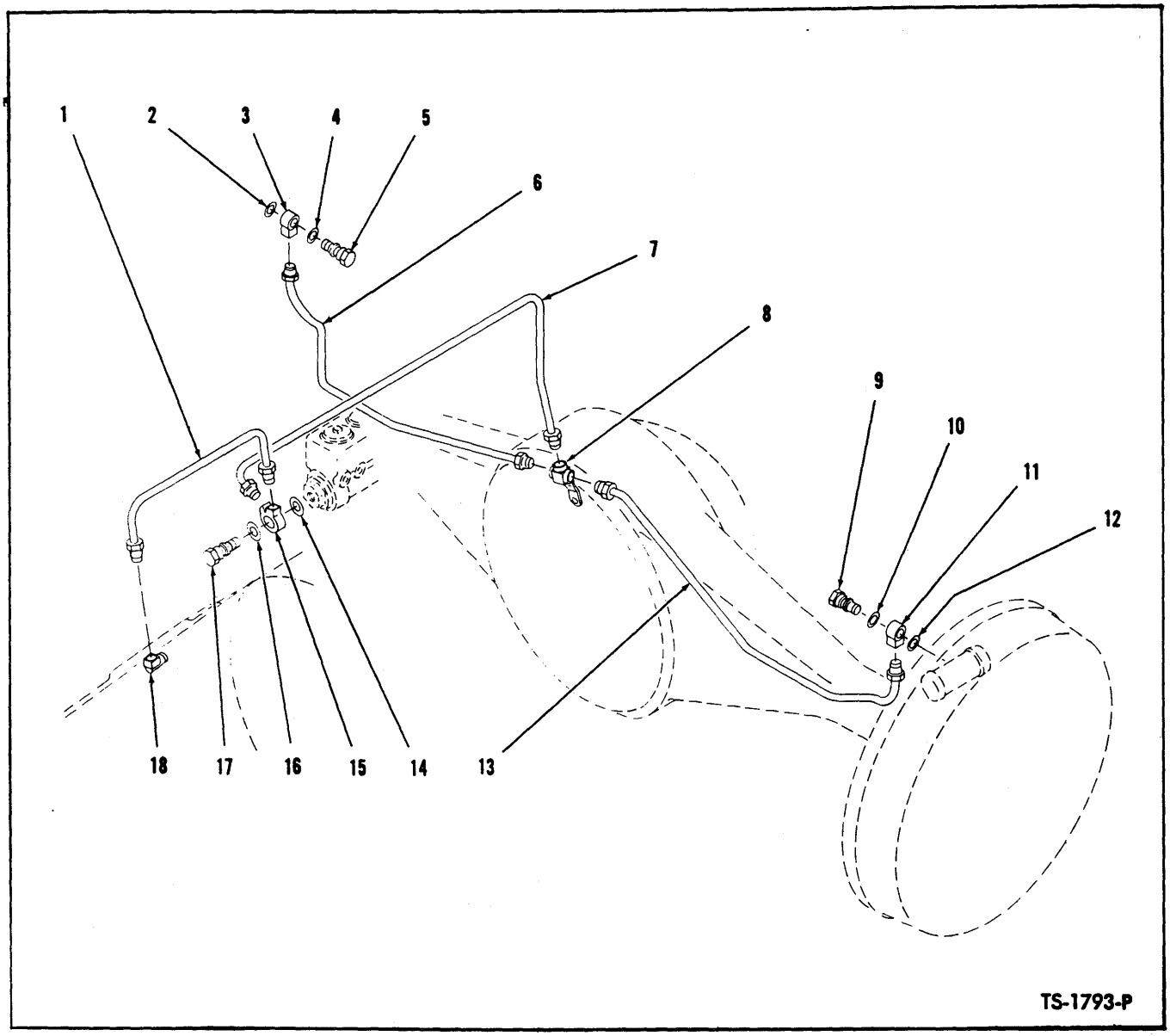

BRAKE LINES — 2 WHEEL BRAKES *

For Serial: 55A — 3723 thru 3855, 1BCO134 thru 1BCO282
55B — 50BCO1 thru 50BCO999

Item No.	Part No.	Description	No. Req'd.
1	552382	LINE, Brake — Master Cyl. to Trans.	1
2	613750	GASKET, Copper — Inner Wheel Cyl.	1
3	620235	FITTING, Wheel Cylinder	1
4	620238	GASKET, Copper — Outer Wheel Cyl.	1
5	692722	BOLT, Wheel Cylinder Fitting	1
6	525743	LINE, Axle Tee to Left Wheel Brake	1
7	552383	LINE, Brake—Master Cyl. to Axle Tee	1
8	100582	TEE, Axle Brake Line	1
9	692722	BOLT, Wheel Cylinder Fitting	1
10	620238	GASKET, Copper — Outer Wheel Cyl.	1
11	620235	FITTING, Wheel Cylinder	1
12	613750	GASKET, Copper — Inner Wheel Cyl.	1
13	525742	LINE, Axle Tee to Right Wheel Brake	1
14	613750	GASKET, Copper — Inner Master Cyl.	1
15	633242	FITTING, Master Cylinder Outlet	1
16	620238	GASKET, Copper—Outer Master Cyl.	1
17	692722	BOLT, Master Cylinder Fitting	1
18	62F-3	ELBOW, Trans. to Master Cyl. Line	1

*Ref. SG-681

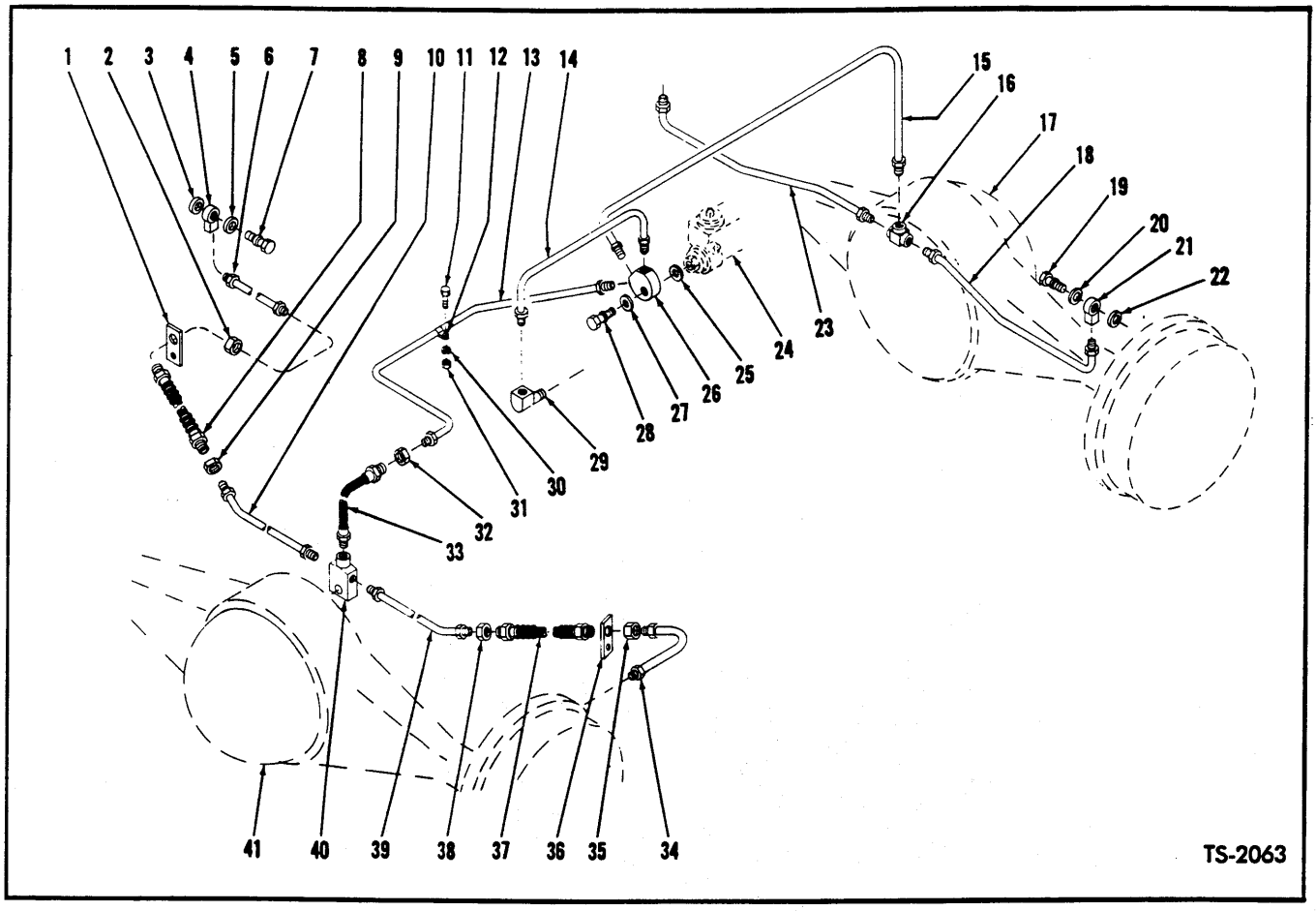

BRAKE LINES — FOUR WHEEL BRAKES — MODEL 55A*

For Serial 2BCO1 thru 2BCO99

Item No.	Part No.	Description	No. Req'd.
1	550325	CLIP, Brake Hose to Cradle	1
2	8D-10	NUT, Clip to Hose	1
3	613750	GASKET, Wheel Cylinder Fitting	2
4	620235	FITTING, Wheel Cylinder	2
5	620238	GASKET, Wheel Cylinder Fitting	2
6	536017	LINE, Brake Hose to Fitting	1
7	692722	BOLT, Wheel Cylinder Fitting	2
8	552374	HOSE, Brake	1
9	8D-10	NUT, Brake Hose	1
10	528504	LINE, Hose to Axle Tee	1
11	2C-616	BOLT, Line Clip Attaching	1
12	6H-4	CLIP, Line Support	1
13	528503	LINE, Hose to Fitting	1
14	552382	LINE, Elbow to Fitting	1
15	552383	LINE, Fitting to Axle Tee	1
16	100582	TEE, Front Axle Brake Line	1
17	———	FRONT AXLE — See Index	—
18	525742	LINE, Tee to Wheel Cylinder Fitting	1
19	692722	BOLT, Wheel Cylinder Fitting	2
20	620238	GASKET, Wheel Cylinder Fitting	2
21	620235	FITTING, Wheel Cylinder	2
22	613750	GASKET, Wheel Cylinder Fitting	2
23	525743	LINE, Tee to Wheel Cylinder Fitting	1
24	———	BRAKE MASTER CYL.—See Index	—
25	613750	GASKET, Master Cylinder Fitting	1
26	552264	FITTING, Master Cylinder	1
27	620238	GASKET, Master Cylinder Fitting	1
28	692722	BOLT, Fitting to Master Cylinder	1
29	62F-3	ELBOW, Trans. to Fitting Line	1
30	4E-06	LKWSHR, Line Clip Attaching	1
31	2D-06	NUT, Line Clip Attaching	1
32	8D-10	NUT, Brake Hose	1
33	550324	HOSE, Tee to Line	1
34	536017	LINE, Hose to Wheel Cylinder Fitting	1
35	8D-10	NUT, Clip to Hose	1
36	550325	CLIP, Brake Hose to Cradle	1
37	552374	HOSE, Brake	1
38	8D-10	NUT, Brake Hose	1
39	528505	LINE, Hose to Axle Tee	1
40	550320	TEE, Rear Axle Brake Line	1
41	———	REAR DRIVE STEER AXLE — See Index	—

*Ref. SG-681

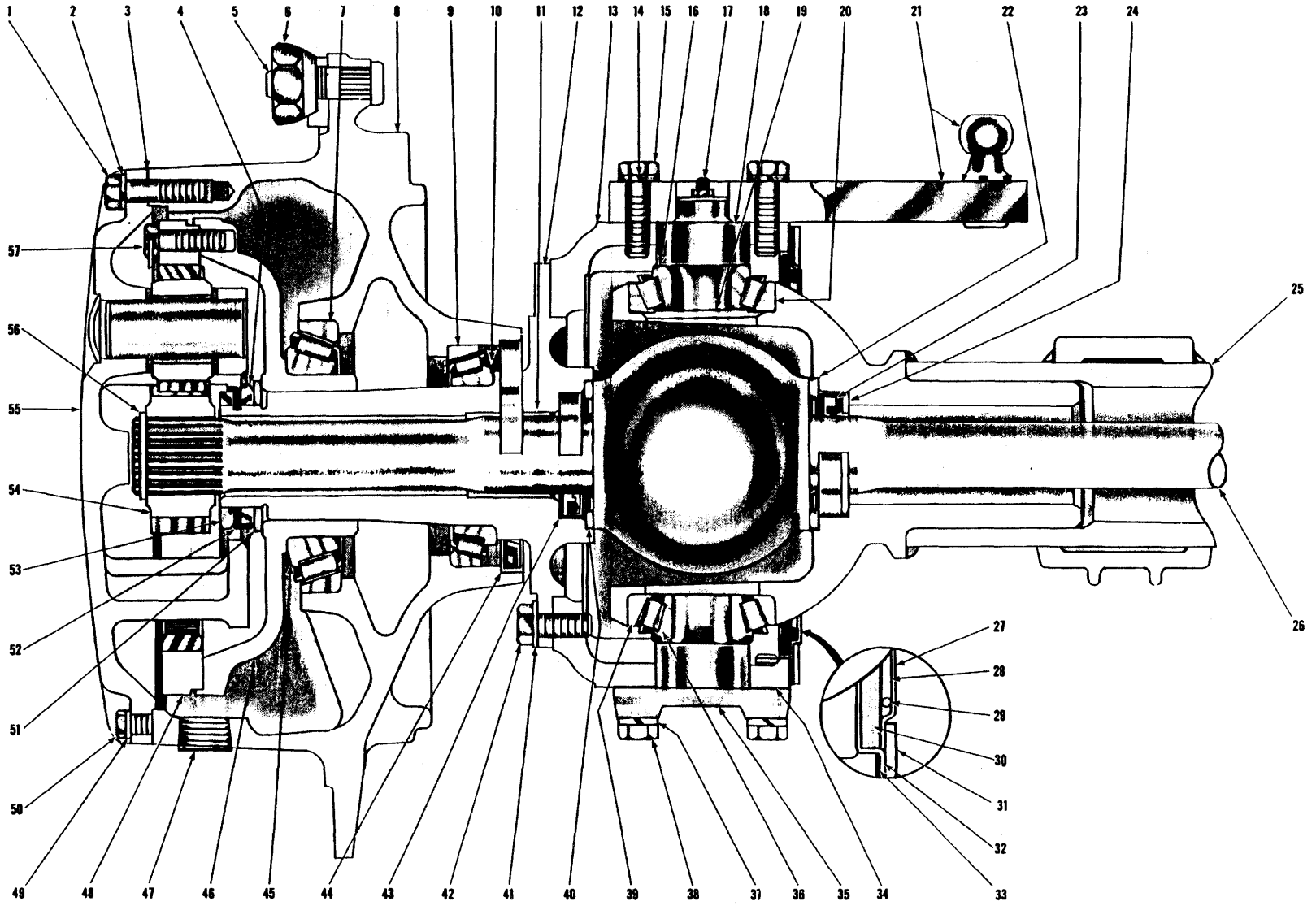

REAR DRIVE STEER AXLE ASSEMBLY

TS-1499-P

REAR DRIVE STEER AXLE ASSEMBLY — MODEL 55A

For Serial 3723 thru 3855, 1BCO134 thru 1BCO282

Item No.	Part No.	Description	No. Req'd.
A	130519	AXLE ASSY (Inc. B, C, 1 thru 57)	1
B	———	†DIFF. & CARRIER ASSY (See Index)	—
C	———	†TIE ROD ASSY (See Index)	—
1	100638	BOLT, Planet Spider to Hub	20
2	112278	LKWSHR, Planet Spider to Hub	20
3	———	Use PERMATEX #2	—
4	102313	NUT, Spindle—Inner	2
5	109640	STUD, Wheel	20
6	109641	NUT, Wheel	20
7	658990	CUP, Outer Hub Bearing	2
8	109645	HUB ASSY (Inc. 7, 9)	2
9	742258	CUP, Inner Hub Bearing	2
10	742257	CONE, Inner Hub Bearing	2
11	109652	BUSHING, Spindle	2
12	110242	*SPINDLE ASSY (Inc. 11)	2
13	114792	SUPPORT, Spindle—R.H.	1
13A	114793	†SUPPORT, Spindle—L.H.	1
13B	11F-12	†PLUG, Spindle Support Filler	2
14	4E-08	LKWSHR, Steering Arm	4
15	17C-828	BOLT, Steering Arm	4
16	713659	CONE, Trunnion Bearing	2
17	10H-25	FITTING, Trunnion Grease	2
18	109668	TRUNNION, Steering—Flange—Upper	1
18A	109669	†TRUNNION, Steering	1
19	109670	RETAINER, Trunnion Oil	2
20	713660	CUP, Trunnion Bearing	2
21	109656	ARM, Steering	1
22	106129	WASHER, Universal Joint Thrust	2
23	109659	SEAL, Universal Joint Oil	2
24	109658	WASHER, Oil Seal	2
25	109653	**HOUSING, Axle	1
25A	11F-12	†PLUG, Housing Filler & Drain	2
25B	106656	†BREATHER, Axle Housing	1
25C	1C-712	†BOLT, Axle Housing Stop Boss	2
25D	4E-07	†LKWSHR, Axle Housing Stop Boss	2
26	109649	SHAFT, Axle	2
26A	774728	†PIN, Spiral (1¼" long)	2
26B	944160	†PIN, Center Ball (2 1/16")	2
27	109665	RETAINER, Outer End Dust Seal	2
28	109663	SEAL, Outer End Dust	2
29	109664	SPRING, Outer End Dust Seal	2
30	109662	SEAL, Outer End Oil	2
31	109666	RING, Outer End Seal Retaining	4
32	109660	RETAINER, Outer End Oil Seal	2
32A	1C-612	†BOLT, Oil Seal Retainer	24
32B	4E-06	†LKWSHR, Oil Seal Retainer	24
33	109661	GASKET, Oil Seal Retainer	2
34	109771	‡SHIM, Trunnion—Thin	—
34A	109772	‡SHIM, Trunnion—Medium	—
34B	109773	‡SHIM, Trunnion—Thick	—
35	109667	TRUNNION, Steering—Flange—Lower	2
36	713659	CONE, Trunnion Bearing	2
37	4E-08	LKWSHR, Trunnion Bolt	12
38	17C-824	BOLT, Trunnion	12
39	713660	CUP, Trunnion Bearing	2
40	106129	WASHER, Universal Joint Thrust	2
41	106762	WASHER, Spindle Bolt	20
42	106539	BOLT, Spindle Attaching	20
43	109659	SEAL, Universal Joint Oil	2
44	111726	SEAL, Hub Oil	2
45	658974	CONE, Outer Hub Bearing	2
46	———	§HUB, Internal Gear (See 58)	2
47	11F-12	PLUG, Hub Filler	2
48	———	§GEAR, Internal (See 58)	2
49	4E-07	LKWSHR, Planet Puller Hole	4
50	1C-707	BOLT, Planet Puller Hole	4
51	106572	WASHER, Spindle Thrust	2
52	102314	LOCK, Spindle Nut	2
53	102313	NUT, Spindle Outer	2
54	107390	GEAR, Sun	2
55	———	PLANET SPIDER ASSY (See Index)	—
56	224104	RING, Sun Gear Snap	2
57	111842	BOLT, Internal Gear to Hub	20
58	114591	†INTERNAL GEAR & HUB ASSY (Inc. 46, 48)	2

*NOTE: When installing 110242 Spindle on above serial numbers 20 — 106762 Washers and 10 — 106539 Bolts must be used. Two (2) washers to be used under the head of each bolt.

†Not Illustrated
‡As Required
§Not Sold Separately

**NOTE: For replacement use 815899 Kit, which consists of 1—121982 Housing Assy., 2—112638 Plate, plus 4—1C-616C Screw.

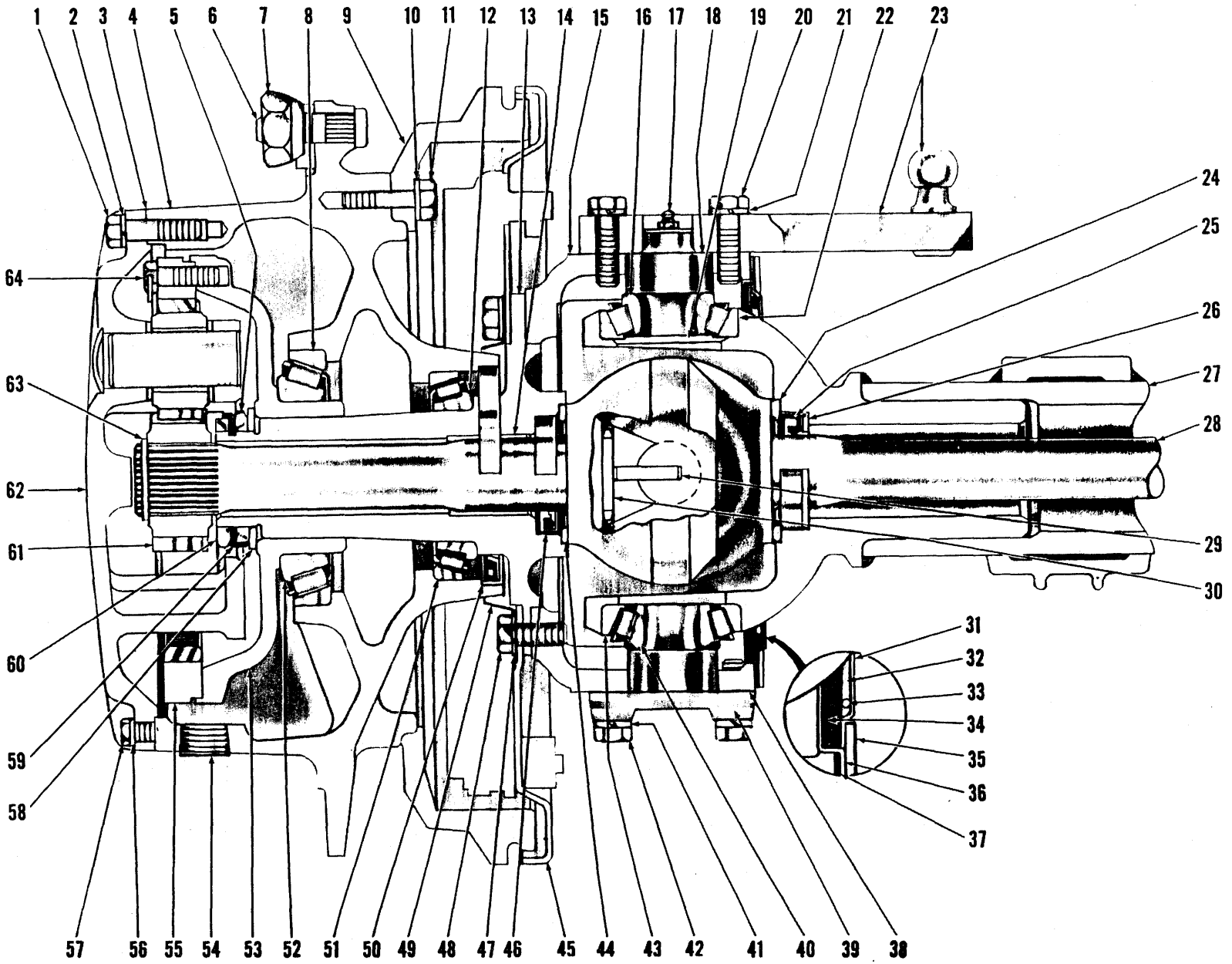

REAR DRIVE STEER AXLE ASSEMBLY

TS-2032

REAR DRIVE STEER AXLE ASSEMBLY — MODEL 55A

For Serial 2BCO1 thru 2BCO999

Item No.	Part No.	Description	No. Req'd.
A	130979	AXLE ASSY (Inc. B, C, 1 thru 64)	1
B	———	†DIFF. & CARRIER ASSY (See Index)	—
C	———	†TIE ROD ASSY (See Index)	—
1	100638	BOLT, Planet Spider to Hub	20
2	112278	WASHER, Planet Spider to Hub	20
3	———	Use PERMATEX #2	—
4	110240	HUB ASSY (Inc. 8, 51)	2
5	102313	NUT, Spindle — Inner	2
6	109640	STUD, Wheel	20
7	109641	NUT, Wheel	20
8	658990	CUP, Outer Hub Bearing	2
9	106815	DRUM, Brake	2
9A	100320	†CLIP, Inspection Hole	2
10	104412	WASHER, Brake Drum	12
11	17C1024	BOLT, Brake Drum	12
12	742257	CONE, Inner Hub Bearing	2
13	110242	SPINDLE ASSY (Inc. 14)	2
14	109652	BUSHING, Spindle	2
15	114792	SUPPORT, Spindle — R.H.	1
15A	114793	†SUPPORT, Spindle — L.H.	1
15B	11F-12	†PLUG, Spindle Support Filler	2
16	713659	CONE, Trunnion Bearing	2
17	10H-25	FITTING, Trunnion Grease	2
18	109668	TRUNNION, Steering—Flange—Upper	1
18A	109669	†TRUNNION, Steering	1
19	109670	RETAINER, Trunnion Oil	2
20	17C-828	BOLT, Steering Arm	4
21	4E-08	LKWSHR, Steering Arm	4
22	713660	CUP, Trunnion Bearing	2
23	109656	ARM, Steering	1
24	106129	WASHER, Universal Joint Thrust	2
25	109659	SEAL, Universal Joint Oil	2
26	109658	WASHER, Oil Seal	2
27	109653	*HOUSING, Axle	1
27A	11F-12	†PLUG, Housing Filler & Drain	2
27B	106656	†BREATHER, Axle Housing	1
27C	1C-712	†BOLT, Axle Housing Stop Boss	2
27D	4E-07	†LKWSHR, Axle Housing Stop Boss	2
28	109649	SHAFT, Axle	2
29	944160	PIN, Center Ball (2 1/16" long)	2
30	774728	PIN, Spiral (1 1/4" long)	2
31	109665	RETAINER, Outer End Dust Seal	2
32	109663	SEAL, Outer End Dust	2
33	109664	SPRING, Outer End Dust Seal	2
34	109662	SEAL, Outer End Oil	2
35	109666	RING, Outer End Seal Retaining	4
36	109660	RETAINER, Outer End Oil Seal	2
36A	1C-612	†BOLT, Oil Seal Retainer	24
36B	4E-06	†LKWSHR, Oil Seal Retainer	24
37	109661	GASKET, Oil Seal Retainer	2
38	109771	‡SHIM, Trunnion — Thin	—
38A	109772	‡SHIM, Trunnion — Medium	—
38B	109773	‡SHIM, Trunnion — Thick	—
39	109667	TRUNNION, Steering—Flange—Lower	2
40	713659	CONE, Trunion Bearing	2
41	4E-08	LKWSHR, Trunnion Bolt	12
42	17C-824	BOLT, Trunnion	12
43	713660	CUP, Trunnion Bearing	2
44	106129	WASHER, Universal Joint Thrust	2
45	———	BRAKE ASSY (See Index)	—
46	109659	SEAL, Universal Joint Oil	2
47	106762	WASHER, Spindle Bolt	20
48	106539	BOLT, Spindle Attaching	20
49	106820	OIL CATCHER	2
50	111726	SEAL, Hub Oil	2
51	742258	CUP, Inner Hub Bearing	2
52	658974	CONE, Outer Hub Bearing	2
53	106920	HUB, Internal Gear	2
54	11F-12	PLUG, Hub Filler	2
55	106921	GEAR, Internal	2
56	4E-07	LKWSHR, Planet Puller Hole	4
57	1C-707	BOLT, Planet Puller Hole	4
58	106572	WASHER, Spindle Thrust	2
59	102314	LOCK, Spindle Nut	2
60	102313	NUT, Spindle — Outer	2
61	107390	GEAR, Sun	2
62	———	PLANET SPIDER ASSY (See Index)	—
63	224104	RING, Sun Gear Snap	2
64	111842	BOLT, Internal Gear to Hub	20

†Not Illustrated
‡As Required
**NOTE: For replacement use 815899 Kit, which consists of 1—121982 Housing Assy., 2—112638 Plate, plus 4—1C-616C Screw.

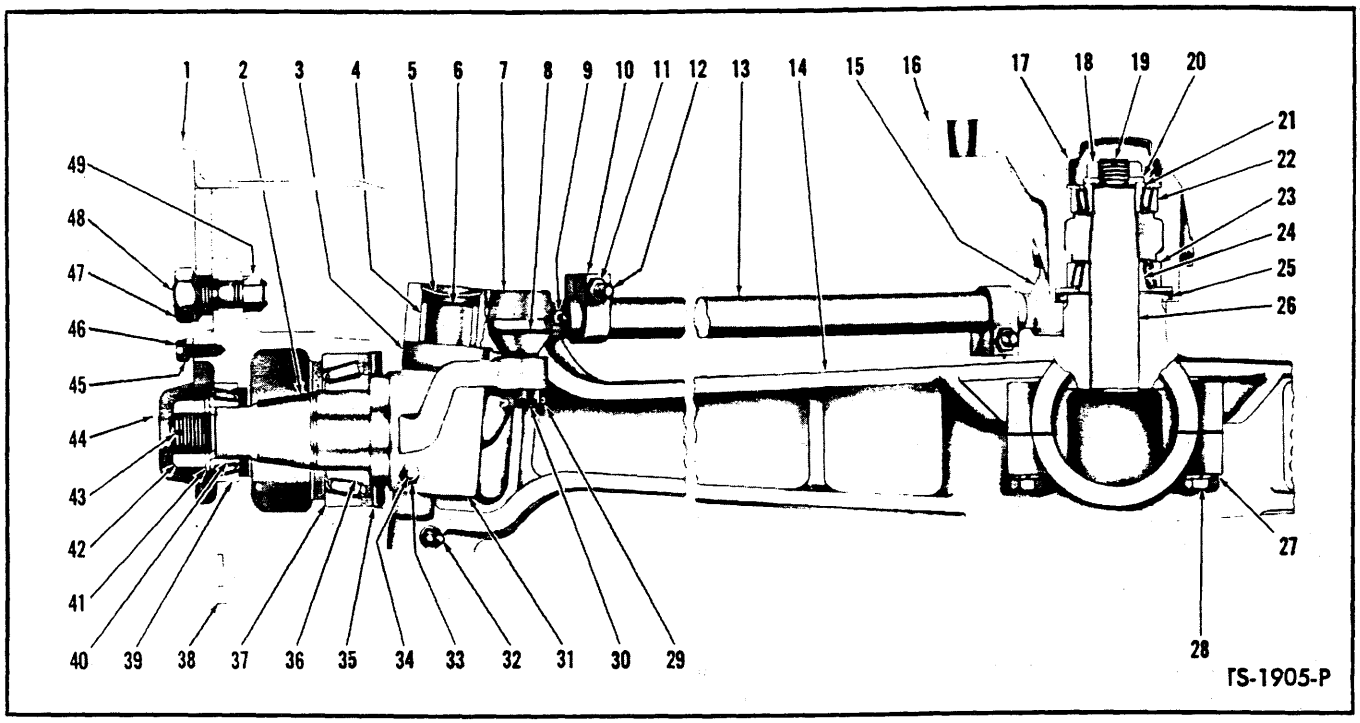

AXLE ASSEMBLY — REAR STEERING — MODEL 55B

Item No.	Part No.	Description	No. Req'd.
A	130151	REAR STEERING AXLE ASSY (Inc. 2 thru 49)	1
1	———	WHEEL ASSY — (See Index)	—
2	103928	KNUCKLE — L.H. Steering	1
2A	103927	KNUCKLE — R.H. Steering	1
2B	13G-820	†SCREW, Knuckle Stop	2
2C	7D-08	†NUT, Knuckle Stop Screw	2
3	666553	BEARING, Knuckle Thrust	2
4	711120	BEARING, Knuckle Pin	4
5	12F-200	PLUG, Axle Center Expansion	4
6	103929	PIN, Knuckle	2
7	103227	END ASSY, Tie Rod — L.H. (Inc. 8, 30)	2
8	103166	COVER, Tie Rod End Ball	4
9	15H-1	FITTING, Tie Rod End Grease	4
10	103165	CLAMP, Tie Rod	4
11	2D-08	NUT, Tie Rod Clamp Bolt	4
12	2C-836	BOLT, Tie Rod Clamp	4
12A	4E-08	LKWSHR, Tie Rod Clamp Bolt	4
13	106165	TIE ROD ASSY (Inc. 7, 8, 10 thru 12A, 13A, 15, 30)	2
13A	106166	TIE ROD	2
14	107447	AXLE CENTER ASSY (Inc. 4, 26, 27, 28)	1
15	103228	END ASSY, Tie Rod — R.H. (Inc. 8, 30)	2
16	107450	SPIDER & CUP ASSY, Steering (Inc. 22, 23)	1
17	100323	CAP, Spider Hub Grease	1
18	100575	NUT, Spider	1
19	1F-428	COTTER, Spider Nut	1
20	100588	WASHER, Spider	1
21	675246	CONE, Spider Bearing — Upper	1
22	672070	CUP, Spider Bearing — Upper	1
23	654167	CUP, Spider Bearing — Lower	1
24	654139	CONE, Spider Bearing — Lower	1
25	107461	SEAL, Spider	1
26	107449	PIN, Steering Arm	1
27	4E-10	LKWSHR, Axle Center Brg. Mtg. Cap	8
28	1C-1048	BOLT, Axle Center Brg. Mtg. Cap	8
29	1F-416	COTTER, Tie Rod End	4
30	4D-10	NUT, Tie Rod End	4
31	103942	‡SHIM, Knuckle	—
32	11H-1	FITTING, Knuckle Pin Grease	4
33	2D-06	NUT, Knuckle Pin Draw Key	4
33A	4E-06	LKWSHR, Knuckle Pin Draw Key	4
34	102594	KEY, Knuckle Pin Draw	4
35	103935	SEAL, Inner Hub Oil	2
36	654042	CONE, Inner Hub Bearing	2
37	710037	CUP, Inner Hub Bearing	2
38	106160	HUB ASSY (Inc. 37, 39, 44 thru 49)	2
39	654167	CUP, Outer Hub Bearing	2
40	654139	CONE, Outer Hub Bearing	2
41	102251	WASHER, Knuckle	2
42	4D-20	NUT, Knuckle	2
43	1F-632	COTTER, Knuckle	2
44	103188	CAP, Hub Grease	2
45	6E-06	LKWSHR, Hub Grease Cap	10
46	1C-614	BOLT, Hub Grease Cap	10
47	103522	NUT, Wheel	12
48	103445	STUD, Wheel Mount	12
49	121062	NUT, Wheel Stud	12

†Not Illustrated
‡As Required

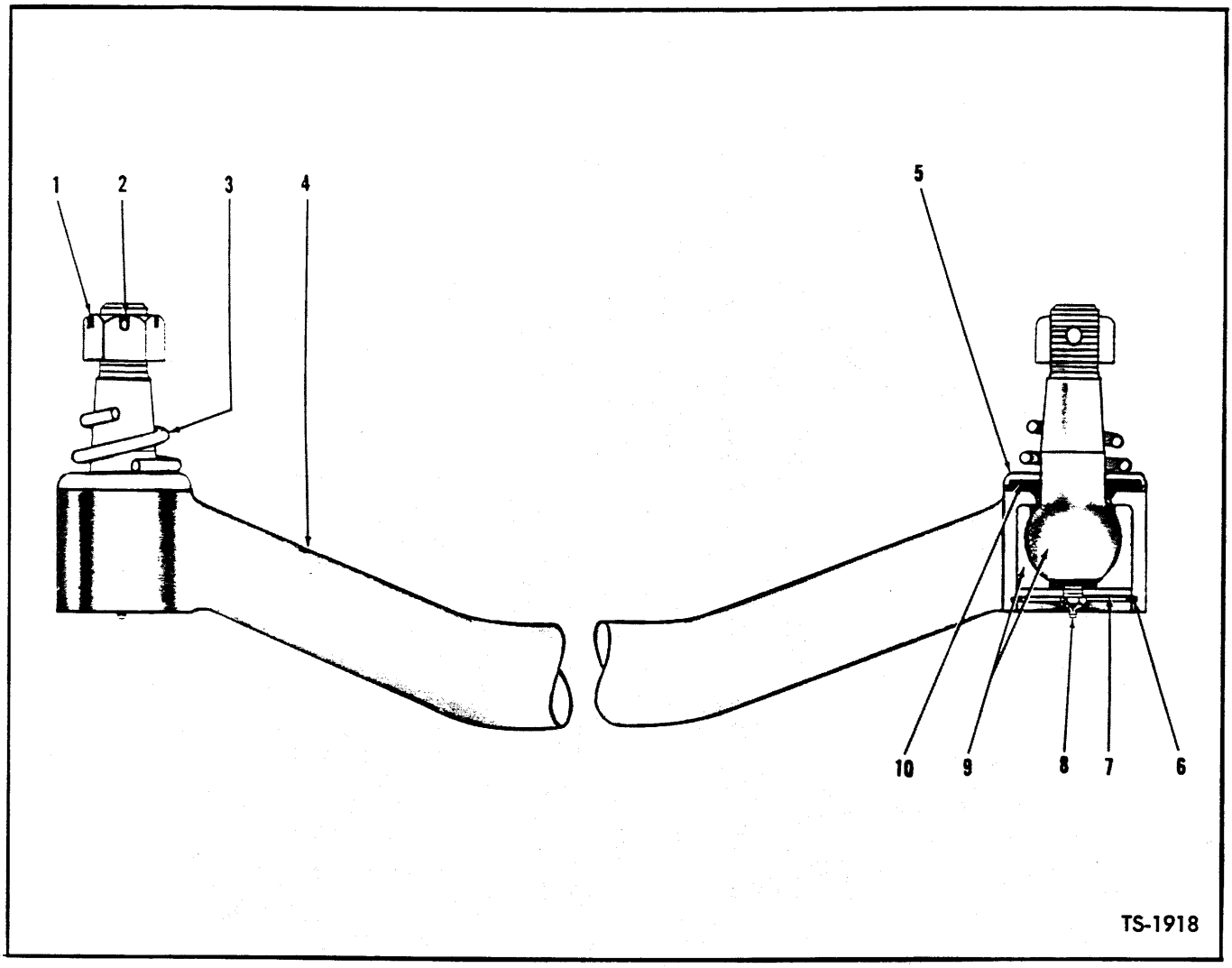

TIE ROD ASSEMBLY – MODEL 55A

Item No.	Part No.	Description	No. Req'd.
1	112174	NUT, Ball Stud	2
2	1F-428	COTTER, Ball Stud Nut	2
3	106268	SPRING	2
4	532447	TIE ROD ASSY (Inc. 6 thru 9)	1
5	106138	RETAINER, Felt Washer	2
6	507695	RING, Ball Stud Retaining	2
7	541879	*PLATE, Ball Stud Retaining	2
8	OMIT	FITTING, Ball Stud Grease	–
9	117228	BALL STUD	2
10	106137	WASHER, Felt	2

*NOTE: For replacement use 815841 Retainer Plate Assy., which consists of 1–524066 Retainer Plate plus 1–10H-25 Grease Fitting.

WHEN ORDERING PARTS, ALWAYS STATE MODEL AND SERIAL NO. OF MACHINE

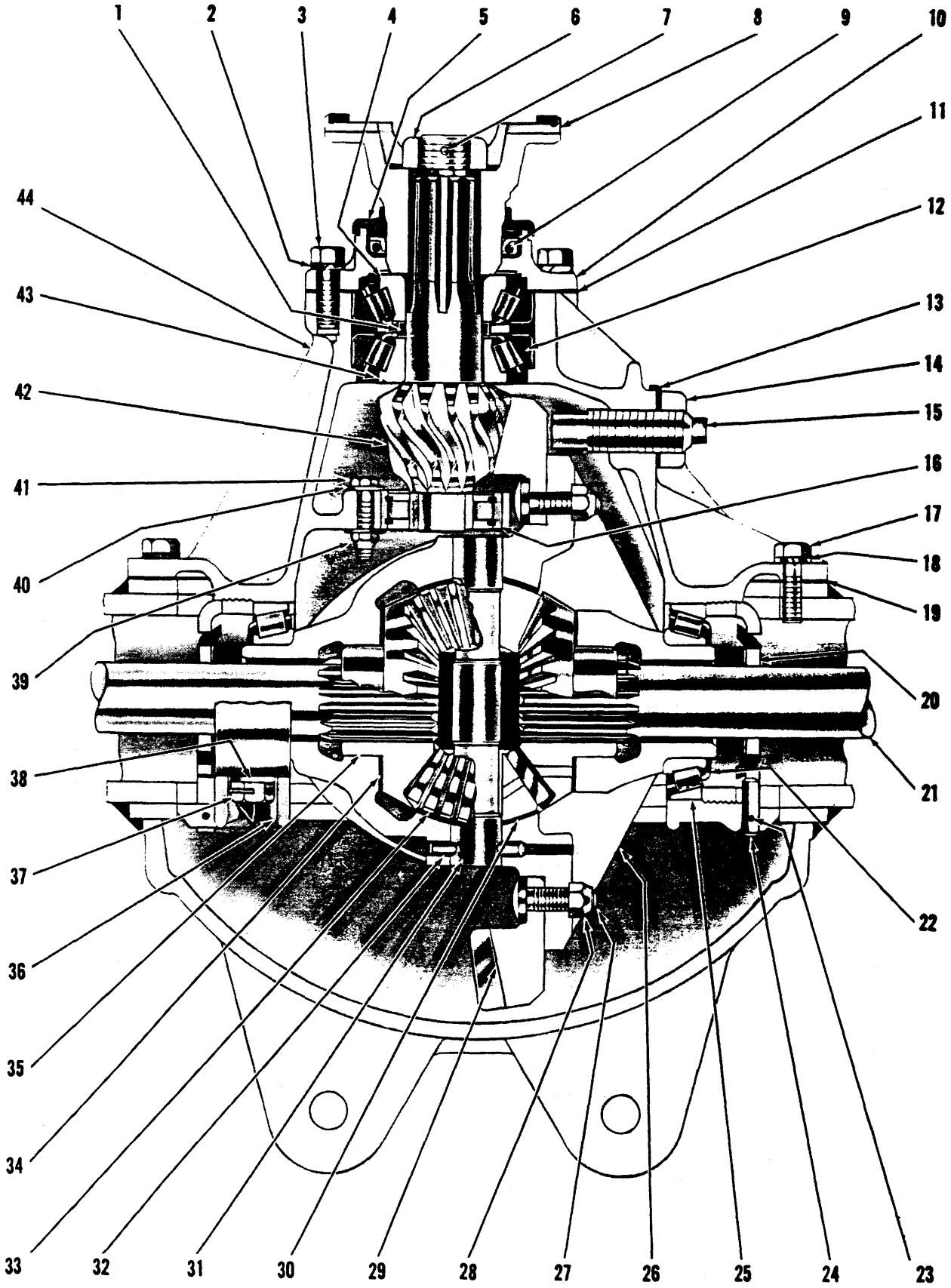

DIFFERENTIAL AND CARRIER ASSEMBLY — REAR DRIVE STEER TS-1502-P

DIFFERENTIAL AND CARRIER ASSEMBLY — REAR DRIVE STEER — MODEL 55A

Item No.	Part No.	Description	No. Req'd.
A	815553	DIFF. & CARRIER ASSY (Inc. 1 thru 20, 22 thru 44)	1
1	815082	SPACER & SHIM KIT, Pinion Bearing	1
2	3E-07	LKWSHR, Pinion Bearing Retainer	6
3	1C-720	BOLT, Pinion Bearing Retainer	6
4	———	§CONE, Pinion Bearing (See 48)	1
5	100674	SHIELD, Pinion Dust	1
6	100675	NUT, Pinion Shaft	1
7	1F-424	COTTER, Pinion Shaft	1
8	109644	FLANGE, Companion	1
9	111646	SEAL, Pinion Oil	1
10	101406	RETAINER, Pinion Bearing	1
11	127684	GASKET, Pinion Bearing Retainer	1
12	———	§CUP, Pinion Bearing (See 48)	1
13	100954	LOCK, Thrust Screw	1
14	8D-14	NUT, Thrust Screw	1
15	123800	SCREW, Thrust	1
16	111437	*BEARING, Pinion Inner	1
17	1C-720	BOLT, Carrier to Axle Housing—1¼"	10
17A	1C-724	†BOLT, Carrier to Axle Housing—1½"	2
18	4E-07	LKWSHR, Carrier to Housing Bolt	12
19	———	Use PERMATEX #2	—
20	123746	NUT, Differential Adjusting	2
21	———	SHAFT, Axle (See Rear Drive Steer Axle—Index)	—
22	648334	CONE, Differential Bearing	2
23	1F-428	COTTER, Diff. Adj. Nut Lock Pin	2
24	101411	PIN, Differential Adjusting Nut Lock	2
25	667279	CUP, Differential Bearing	2
26	101396	CASE, Differential	1
27	101424	BOLT, Ring Gear	12
28	109389	NUT, Ring Gear Bolt	12
29	———	*§RING GEAR (See 47)	—
30	101399	WASHER, Differential Pinion Thrust	2
31	101401	PIN, Side Pinion	1
32	666364	PIN, Side Pinion Lock	1
33	101397	PINION, Differential Side	2
34	101400	WASHER, Diff. Side Gear Thrust	2
35	101398	GEAR, Differential Side	2
36	———	§CAP, Differential Carrier (See 44)	—
37	3C-1040	BOLT, Differential Carrier Cap	4
38	104549	WASHER, Differential Carrier Cap	4
39	45D-05	*NUT, Bearing Retainer	1
40	102350	*WASHER, Bearing Retainer	2
41	2C-522	*BOLT, Bearing Retainer	1
42	———	*§PINION (See 47)	—
43	———	§CONE, Pinion Bearing (See 48)	1
44	815563	CARRIER & CAP ASSY, Differential (Inc. 36, 37, 38)	1
45	111559	†DIFFERENTIAL ASSY (Inc. 26 thru 35, 42)	1
46	101395	†DIFFERENTIAL BODY SUB ASSY (Inc. 26, 30 thru 35)	1
47	815417	*†GEAR & PINION SET (Inc. 29, 42)	1
48	111735	†BRG. ASSY, Pinion (Inc. 4, 12, 43)	1

*NOTE: When installing 815417 Gear and Pinion Set on machine serial numbers listed below, one (1) 111437 Inner Pinion Bearing must also be used. When new 111437 Bearing is installed, items 39, 40 and 41 are no longer required.

55A — 3726 thru 3855, 1BCO134 thru 1BCO282, 2BCO1 thru 2BCO140

55B — 50BCO1 thru 50BCO34

†Not Illustrated

§Not Sold Separately

WHEN ORDERING PARTS, ALWAYS STATE MODEL AND SERIAL NO. OF MACHINE

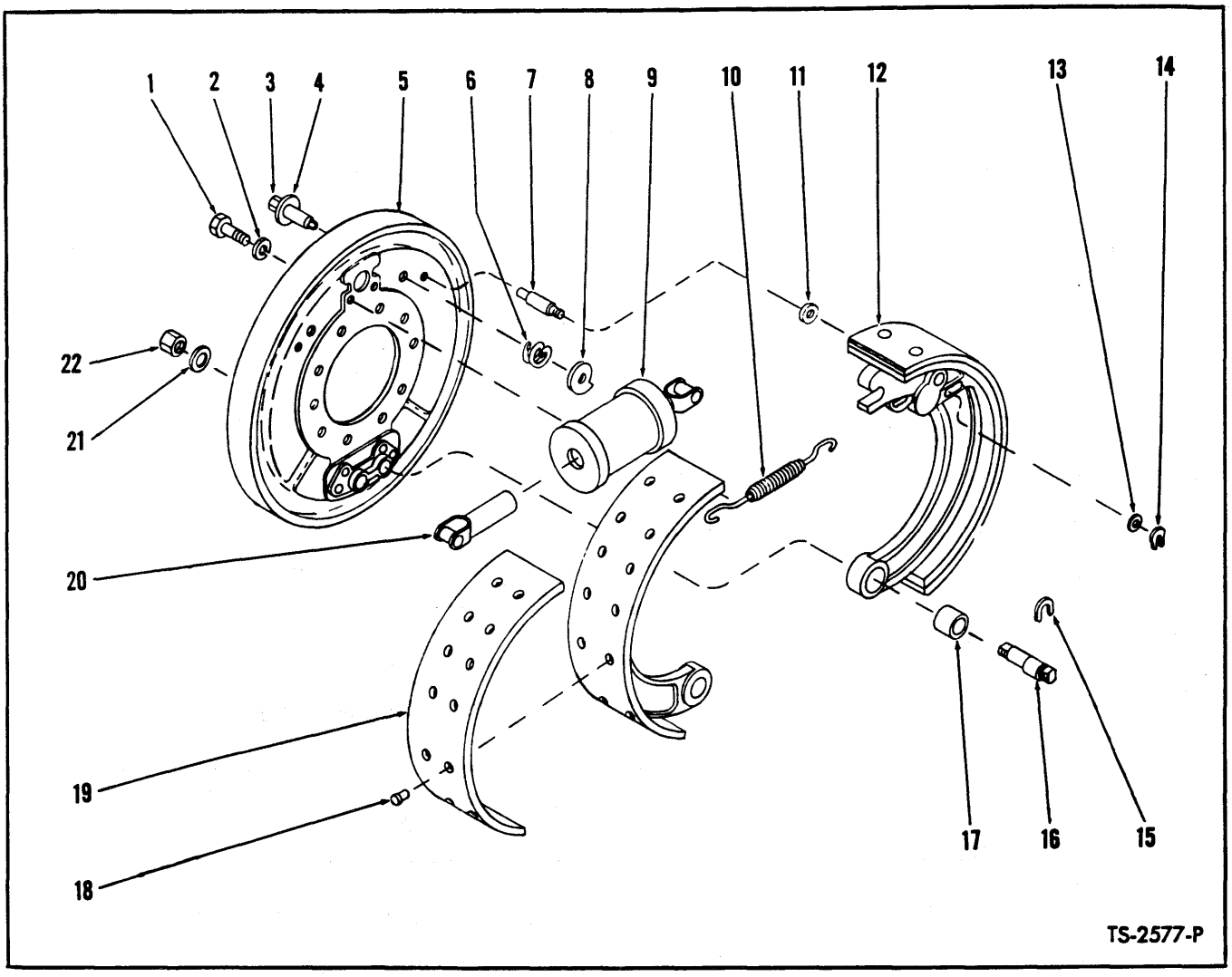

BRAKE ASSEMBLY — REAR *

Item No.	Part No.	Description	No. Req'd.
A	110917	[2]BRAKE ASSY (Inc. 1 thru 22)	2
NOTE: 2 brake assemblies used on axle — Quantities listed below are for 1 brake assembly.			
1	1C-510	BOLT, Cylinder to Brake Disc	2
2	4E-05	LKWSHR, Cylinder to Brake Disc	2
3	114170	PIN ASSY, Cam (Inc. 4)	2
4	100867	WASHER, Cam Pin	2
5	106817	DISC ASSY, Brake (Inc. 3, 4, 6, 7, 8)	1
6	943859	SPRING, Cam (Inc. 6A)	2
6A	851771	†WASHER, Cam Spring	4
7	100877	PIN, Guide	2
8	100864	CAM, Brake Shoe Adjusting	2
9	102488	CYLINDER ASSY, Wheel (Inc. 21)	1
9A	853405	†REPAIR KIT, Wheel Cylinder	1
10	100879	SPRING, Brake Shoe Return	1
11	102322	WASHER, Guide Pin	2
12	111440	SHOE ASSY, Brake (Inc. 17, 19)	2
13	102322	WASHER, Guide Pin	2
14	100878	"C" WASHER, Guide Pin	2
15	100613	"C" WASHER, Anchor Pin	2
16	102498	PIN, Anchor	2
17	102497	BUSHING, Brake Shoe	2
18		*RIVET, Lining to Shoe*	
18A	106184	7/64" — For Shoes with 9/32" rivet holes	24
18B	3H-1214	3/16" — For Shoes with 13/64" rivet holes	24
19	944216	LINING KIT, Brake Shoe (Inc. 18B)	2
20	853402	LINK, Wheel Cylinder Connector	2
21	6E-12	LKWSHR, Anchor Pin	2
22	2D-12	NUT, Anchor Pin	2

†Not Illustrated
*Ref. S.G.-681
[2]For complete replacement use 120505 Brake Assembly.

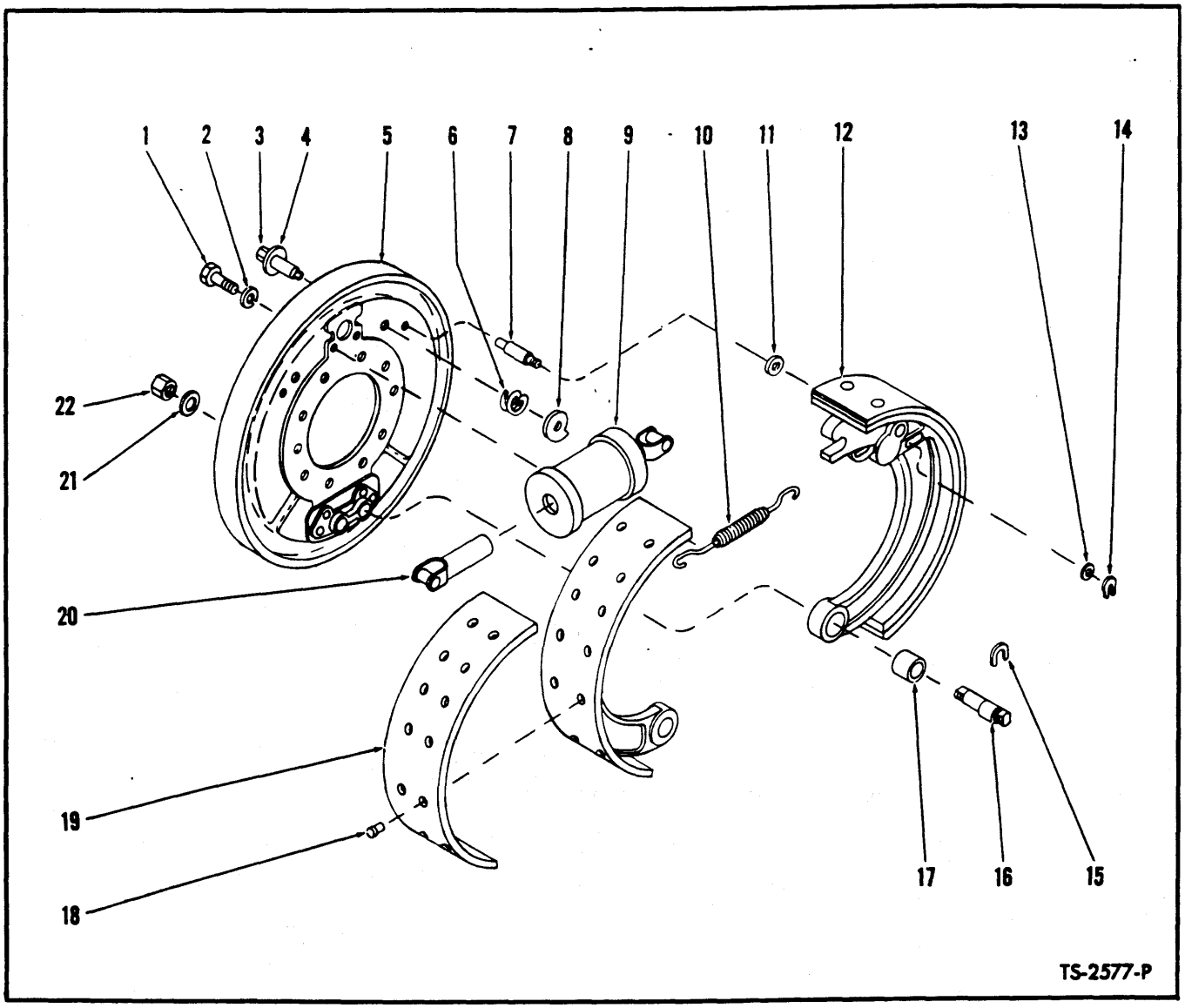

BRAKE ASSEMBLY — REAR*

Item No.	Part No.	Description	No. Req'd.
A	120505	BRAKE ASSY (Inc. 1 thru 22)	2
		NOTE: 2 Brake Assemblies used per axle — Quantities listed below are for 1 Brake Assembly.	
1	1C-510	BOLT, Cylinder to Brake Disc	2
2	4E-05	LKWSHR, Cylinder to Brake Disc	2
3	114170	PIN ASSY, Cam (Inc. 4)	2
4	100867	WASHER, Cam Pin	2
5	106817	DISC ASSY, Brake (Inc. 3, 4, 6, 7, 8)	1
6	100865	SPRING, Cam	2
7	100877	PIN, Guide	2
8	100864	CAM, Brake Shoe Adjusting	2
9	———	CYLINDER ASSY, Wheel — See Index	1
10	100879	SPRING, Brake Shoe Return	1
11	102322	WASHER, Guide Pin	2
12	120507	SHOE ASSY, Brake (Inc. 17, 18, 19)	2
13	102322	WASHER, Guide Pin	2
14	100878	"C" WASHER, Guide Pin	2
15	100613	"C" WASHER, Anchor Pin	2
16	102498	PIN, Anchor	2
17	102497	BUSHING, Brake Shoe	2
18	23H-706	RIVET, Lining to Shoe	24
19	944216	LINING KIT, Brake Shoe (Inc. 18)	2
19A	840040	†LINING KIT, Brake Shoe — 1/16" O.S. (Inc. 18)	2
20	853402	LINK, Wheel Cylinder Connector	2
21	6E-12	LKWSHR, Anchor Pin	2
22	62D-12	NUT, Anchor Pin	2

†Not Illustrated
*Ref. S.G.-681

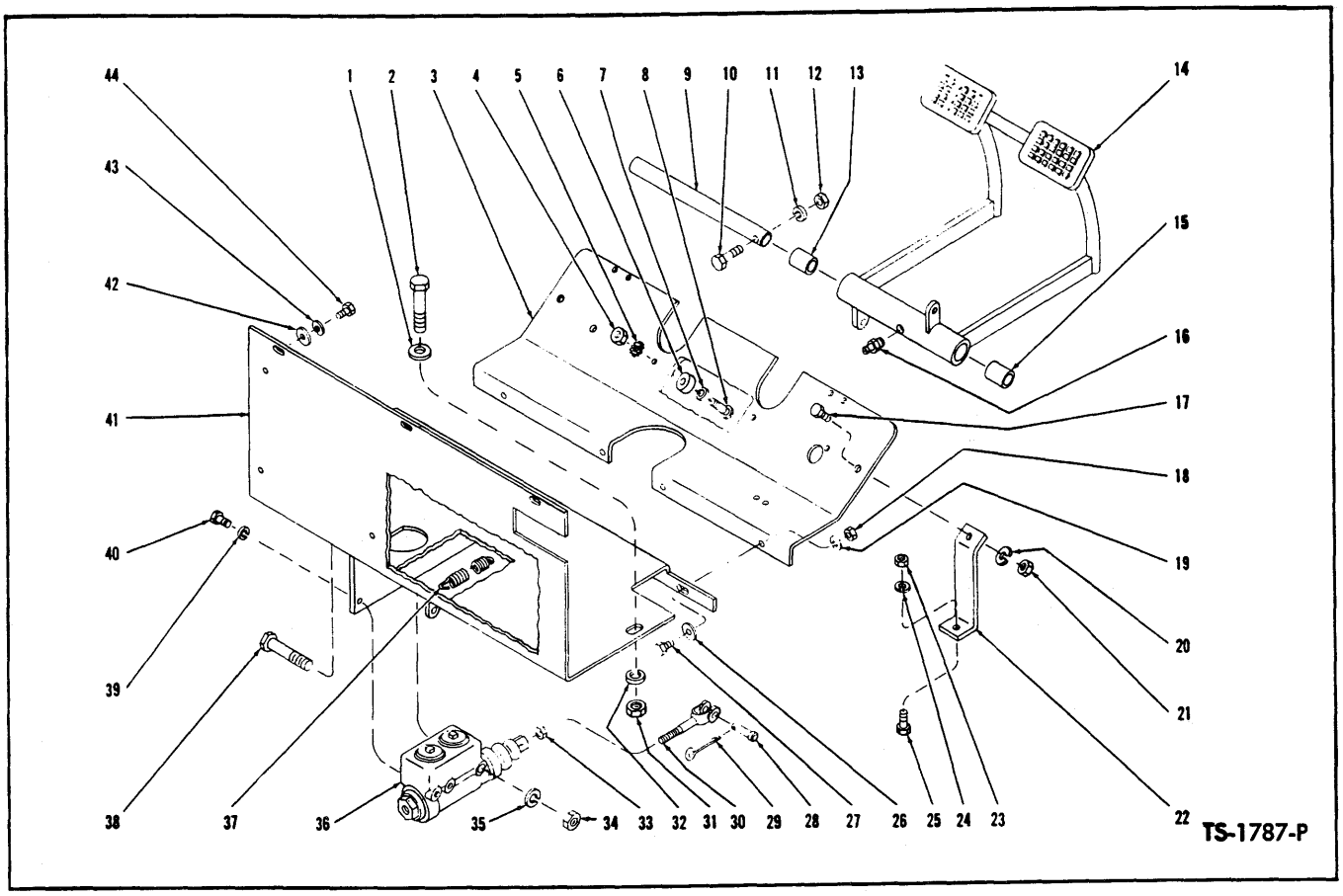

BRAKE CONTROLS AND FLOORBOARDS

Item No.	Part No.	Description	No. Req'd.
1	25E-18	WASHER, Floorboard to Frame	2
2	2C-616	BOLT, Floorboard to Frame	2
3	525519	FLOORBOARD, Front	1
4	14D-10	NUT, Bumper to Floorboard	2
5	13E-10	LKWSHR, Bumper to Floorboard	2
6	302568	BUMPER, Brake Pedal	2
7	616775	WASHER, Bumper to Floorboard	2
8	2G-1010	SCREW, Bumper to Floorboard	2
9	550299	SHAFT, Brake Pedal	1
10	2C-640	BOLT, Shaft Retaining	1
11	4E-06	LKWSHR, Shaft Retaining	1
12	2D-06	NUT, Shaft Retaining	1
13	526767	BUSHING, Brake Pedal	1
14	550292	PEDAL ASSY, Brake (Inc. 13, 15)	1
15	526767	BUSHING, Brake Pedal	1
16	11H-15	FITTING, Brake Pedal Grease	1
17	2C-616	BOLT, Floorboard to Bracket	2
18	2D-06	NUT, Floorboard to Floorboard	4
19	4E-06	LKWSHR, Floorboard to Floorboard	4
20	4E-06	LKWSHR, Bracket to Floorboard	2
21	2D-06	NUT, Bracket to Floorboard	2
22	550632	BRACKET, Floorboard Support	2
23	2D-06	NUT, Bracket to Frame	2
24	4E-06	LKWSHR, Bracket to Frame	2
25	2C-624	BOLT, Bracket to Frame	2
26	25E-18	WASHER, Floorboard to Floorboard	4
27	2C-616	BOLT, Floorboard to Floorboard	4
28	4F-08127	PIN, Clevis to Pedal	1
29	1F-412	COTTER, Clevis Pin	1
30	552377	CLEVIS, Master Cylinder	1
31	2D-06	NUT, Floorboard to Frame	2
32	4E-06	LKWSHR, Floorboard to Frame	2
33	8D-07	NUT, Clevis Jam	1
34	2D-07	NUT, Cylinder to Floorboard	1
35	4E-07	LKWSHR, Cylinder to Floorboard	1
36	552373	CYLINDER, Brake Master	1
36A	869449	†REPAIR KIT, Master Cylinder	1
37	550301	SPRING, Pedal Return	1
38	2C-760	BOLT, Cylinder to Floorboard	1
39	4E-06	LKWSHR, Cylinder to Floorboard	1
40	1C-614	BOLT, Cylinder to Floorboard	1
41	525517	FLOORBOARD, Rear	1
42	25E-18	WASHER, Rear Floorboard to Frame	3
43	4E-06	LKWSHR, Rear Floorboard to Frame	3
44	1C-612	BOLT, Rear Floorboard to Frame	3

†Not Illustrated

WHEN ORDERING PARTS, ALWAYS STATE MODEL AND SERIAL NO. OF MACHINE

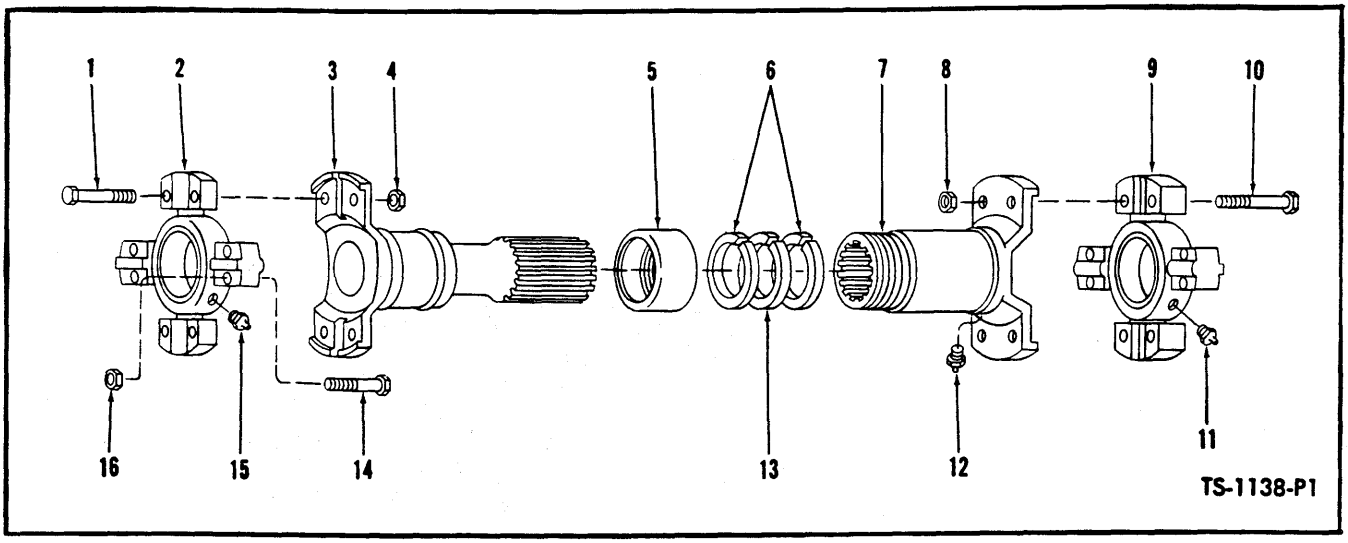

PROPELLER SHAFTS

Column 1 — Converter to Transmission
Column 2 — Transmission to Front Axle
Column 3 — Transmission to Rear Axle — Model 55A ONLY

Item No.	Description	No. Req'd.	1	2	3
A	PROP SHAFT ASSY (Inc. 1 thru 16)	1	514268	523361	523360
1	BOLT, Spider & Bearing to Tube	4	695811	18C632	18C632
2	SPIDER & BEARING	1	946067	945208	945208
3	TUBE	1	942659	944025	944024
4	NUT, Spider & Bearing to Tube	4	8D-06	8D-08	8D-08
5	RETAINER, Felt	1	940654	942744	942744
6	WASHER, Felt Retainer	2	940653	942750	942750
7	SLIP YOKE (Inc. 12)	1	944868	949457	949457
8	NUT, Spider & Bearing to Slip Yoke	4	8D-06	8D-08	8D-08
9	SPIDER & BEARING	1	946067	945208	945208
10	BOLT, Spider & Bearing to Slip Yoke	4	695811	18C632	18C632
11	FITTING, Spider Grease	1	10H-25	944688	944688
12	FITTING, Slip Yoke Grease	1	10H-25	10H-25	10H-25
13	WASHER, Felt	1	940081	942751	942751
14	BOLT, Spider & Bearing Attaching	8	695811	18C632	18C632
15	FITTING, Spider Grease	1	10H-25	944688	944688
16	NUT, Spider & Bearing Attaching	8	8D-06	8D-08	8D-08

†Not Illustrated

WHEN ORDERING PARTS, ALWAYS STATE MODEL AND SERIAL NO. OF MACHINE

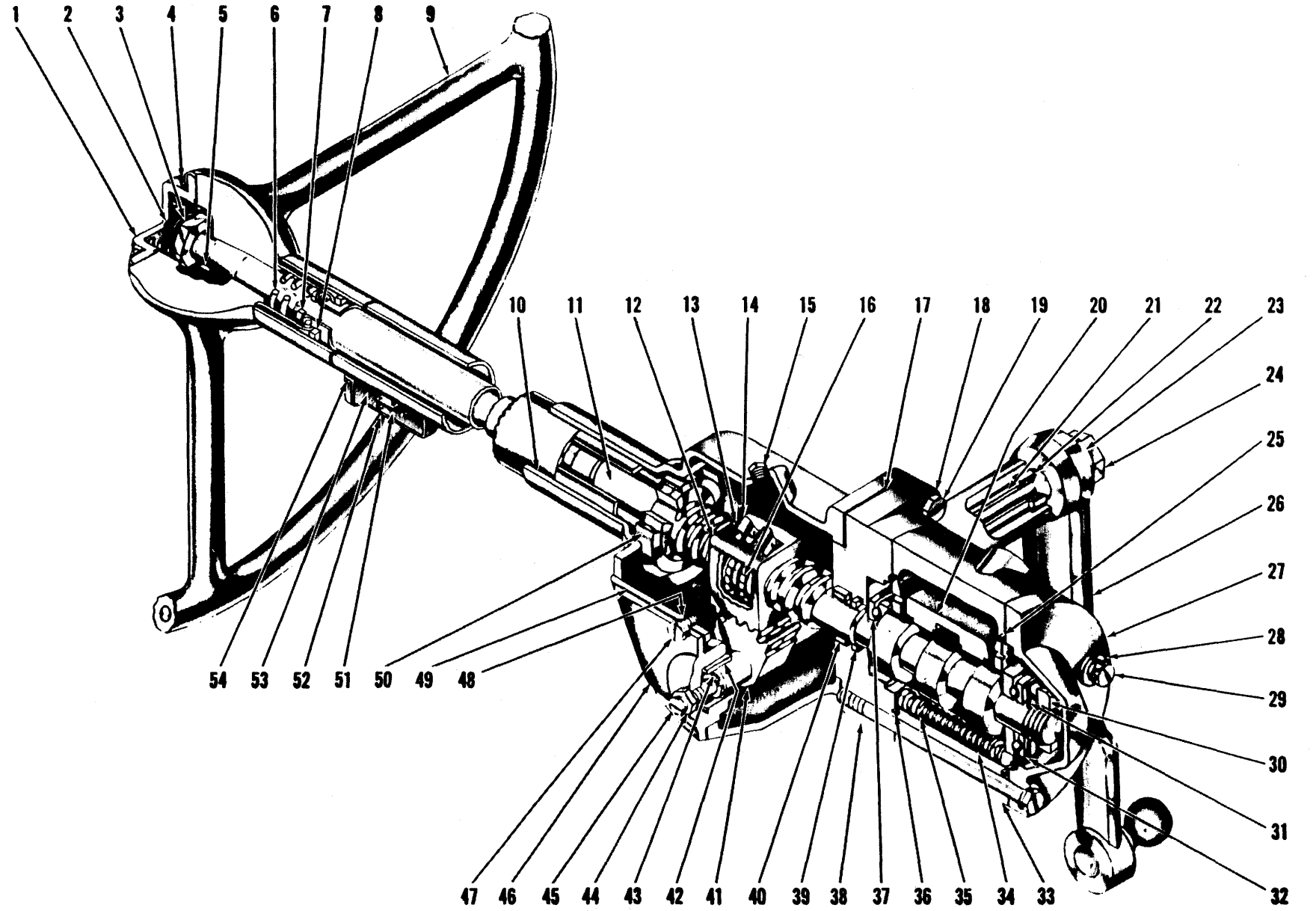

STEERING GEAR ASSEMBLY

TS-1912-P

STEERING GEAR ASSEMBLY

Item No.	Part No.	Description	No. Req'd.
A	523817	STEERING GEAR ASSY (Inc. 2, 5 thru 8, 10 thru 25, 27 thru 50, 53)	1
1	639796	HORN BUTTON ASSY	1
2	853368	TERMINAL ASSY, Horn	1
3	648304	NUT, Steering Wheel	1
4	695930	SCREW, Horn Button	4
5	853384	KEY, Steering Wheel	1
6	853395	SPRING, Steering Shaft Upper	1
7	861768	WASHER, Steering Shaft Upper	1
8	857729	BEARING ASSY, Upper	1
9	1508704	[2]WHEEL, Steering	1
10	944010	HOUSING ASSY (Inc. 21, 50)	1
11	944011	SHAFT ASSY (Inc. 2, 12, 13, 14, 16, 16A, 53)	1
12	853408	NUT, Ball	1
13	851762	BOLT & WASHER, Clamp	3
14	853464	CLAMP, Ball Return Guide	1
15	13F-08	PLUG, Filler	1
16	10J-09	BALL	106
16A	853412	†GUIDE, Ball Return	4
17	853380	GASKET, Adapter	1
18	3E-07	LKWSHR, Adapter	4
19	1C-720	BOLT, Adapter	4
20	———	§VALVE SPOOL (See Item 33)	—
21	853357	BUSHING, Pitman Shaft	2
22	853391	SEAL, Pitman Shaft Grease	1
23	3E-18	LKWSHR, Pitman Arm	1
24	850756	NUT, Pitman Arm	1
25	58K-232	"O" RING, Valve	1
26		*ARM, Pitman*	
26A	944009	For Model 55A	1
26B	940125	For Model 55B	1
27	943667	COVER, Valve End	1
28	2E-06	LKWSHR, End Cover	3
29	1C-656	BOLT, End Cover	3
30	873250	NUT, Worm Bearing	1
31	943429	SPRING, Worm Bearing	1
32	860997	BEARING, Worm Thrust	1
33	943800	VALVE ASSY, Hyd. (Inc. 20, 34, 35)	1
34	944014	SPRING, Valve Centering	5
35	944013	PLUNGER, Valve Centering	10
36	58K-232	"O" RING, Valve	1
37	860997	BEARING, Worm Thrust	1
38	861738	ADAPTER ASSY, Valve (Inc. 39, 40)	1
39	25K-40108	"O" RING, Adapter	1
40	861741	BEARING, Adapter	1
41	940111	GEAR, Pitman Shaft	1
42	———	§BUSHING, Housing Side Cover (See Item 46)	1
43	853187	SHIM KIT, Lash Adjuster	1
44	8D-07	NUT, Lash Adjuster	1
45	851770	ADJUSTER, Lash	1
46	853182	COVER ASSY, Housing Side (Inc. 42)	1
47	1C-612	BOLT, Side Cover	3
48	2E-06	LKWSHR, Side Cover	3
49	851756	GASKET, Side Cover	1
50	730143	BEARING, Housing	1
51	622026	CONNECTOR ASSY, Horn Cable	1
51A	622027	§SCREW, Connector	2
51B	518346	†GASKET, Horn Connector Assy	1
52	622028	COVER, Horn Cable Connector	1
53	944012	CONTACT ASSY, Horn Cable	1
54	3G-1003	SCREW, Connector Cover	2
54A	17E-10	LKWSHR, Connector Cover	2

†Not Illustrated
§Not Sold Separately
[2]For replacement use 2506951 Wheel plus 1—2504408 Plate.

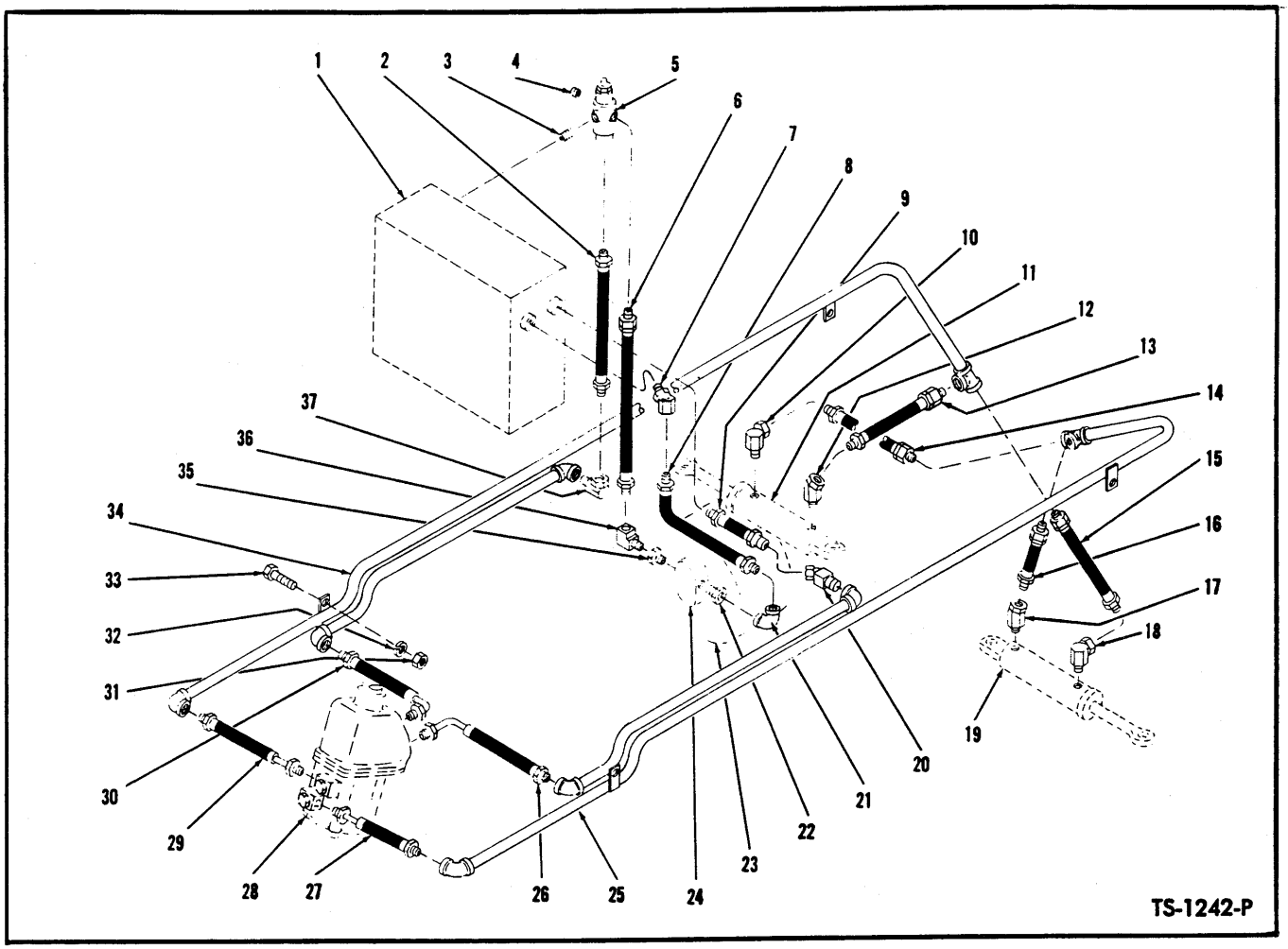

HYDRAULIC SYSTEM — STEERING — MODEL 55A

For Serial 3726 thru 3855, 1BCO134 thru 1BCO232

Item No.	Part No.	Description	No. Req'd.
1	———	HYDRAULIC OIL RESERVOIR (See Index)	—
2	712766	HOSE, Relief Valve to Elbow	1
3	5K-611	NIPPLE, Relief Valve to Reservoir	1
4	16F-08	PLUG, Relief Valve	1
5	———	PRESSURE RELIEF VALVE (See Index)	—
6	550804	HOSE, Relief Valve to Pump	1
7	33F-5	ADAPTER UNION, Reservoir to Hose	1
8	712647	HOSE, Reservoir to Pump	1
9	672806	HOSE, Reservoir to Pipe	1
10	662026	ELBOW, Hose to Cylinder	1
11	———	STEERING CYLINDER (See Index)	—
12	33F-4	ADAPTER UNION, Hose to Cylinder	1
13	550808	HOSE, Pipe to Cylinder	1
14	550873	HOSE, Pipe to Cylinder	1
15	550873	HOSE, Pipe to Cylinder	1
16	550808	HOSE, Pipe to Cylinder	1
17	33F-4	ADAPTER UNION, Hose to Cylinder	1
18	662026	ELBOW, Hose to Cylinder	1
19	———	STEERING CYLINDER (See Index)	—
20	33F-4	ADAPTER UNION, Pipe to Hose	1
21	26F-5	ELBOW, Hose to Pump	1
22	356621	REDUCER, Elbow to Pump	1
23	———	TORQUE CONVERTER (See Index)	—
24	———	CONVERTER PUMP (See Index)	—
25	525327	PIPE, Steering—L.H.	1
26	525333	HOSE, Pipe to Steering Gear	1
27	525332	HOSE, Pipe to Steering Gear	1
28	———	STEERING GEAR (See Index)	—
29	524863	HOSE, Pipe to Steering Gear	1
30	524864	HOSE, Pipe to Steering Gear	1
31	2D-06	NUT, Pipe Attaching	4
32	4E-06	LKWSHR, Pipe Attaching	4
33	2C-618	BOLT, Pipe Attaching	4
34	525320	PIPE, Steering—R.H.	1
35	356617	REDUCER, Pump to Elbow	1
36	29F-3	ELBOW, Reducer to Hose	1
37	31F-4	ADAPTER UNION, Pipe to Hose	1

WHEN ORDERING PARTS, ALWAYS STATE MODEL AND SERIAL NO. OF MACHINE

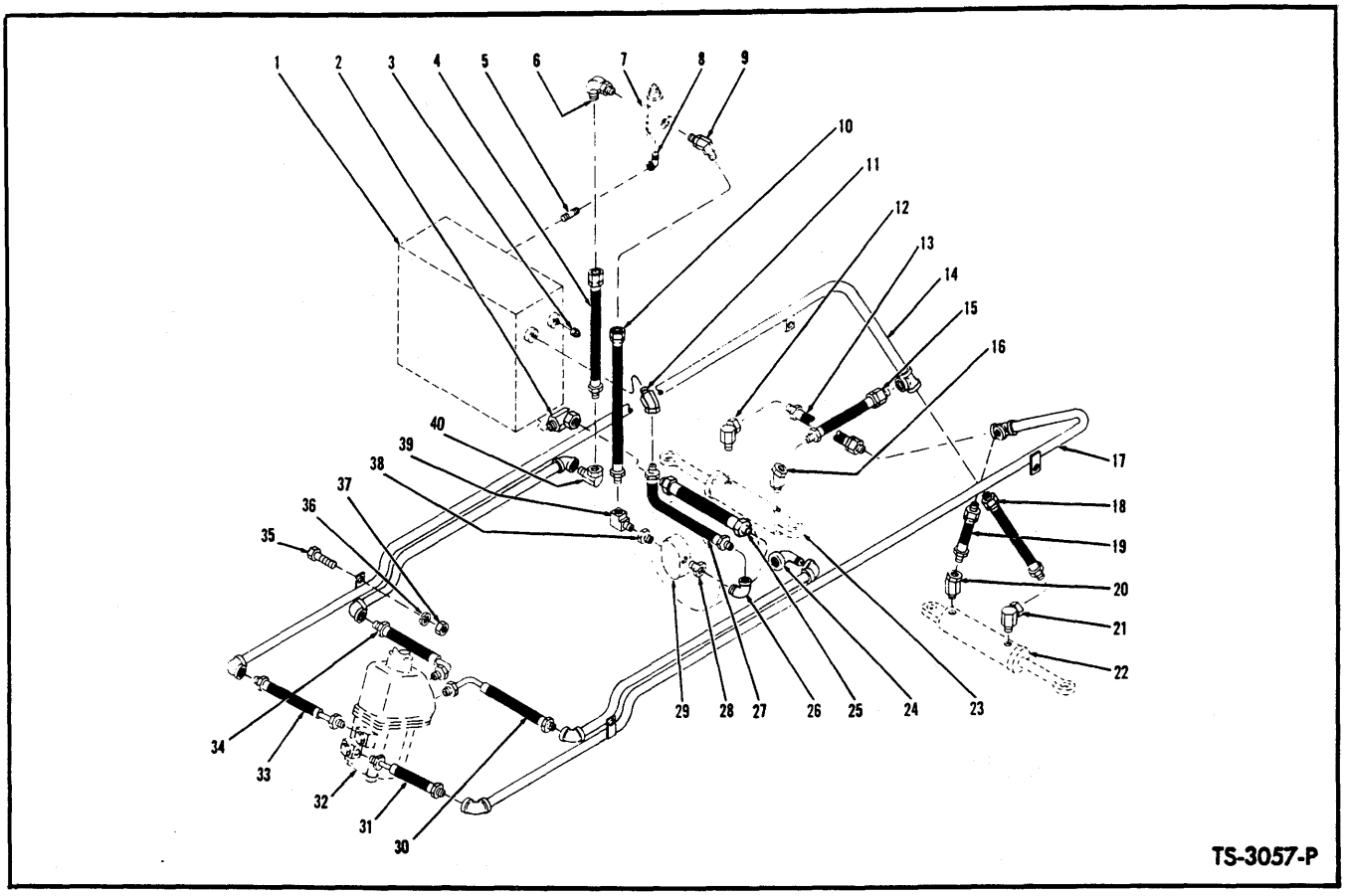

HYDRAULIC SYSTEM — STEERING — MODEL 55A

For Serial 1BCO233 thru 1BCO282, 2BCO1 thru 2BCO999

Item No.	Part No.	Description	No. Req'd.
1	———	HYDRAULIC OIL RESERVOIR (See Index)	—
2	711053	ADAPTER	1
3	13F-08	PLUG, Reservoir	1
4	675015	HOSE, Relief Valve to Pipe	1
5	5K-616	NIPPLE, Relief Valve to Reservoir	1
6	17K-7	ELBOW, Hose to Relief Valve	1
7	———	PRESSURE RELIEF VALVE (See Index)	—
8	26F-5	ELBOW, Relief Valve to Nipple	1
9	18K-7	ELBOW, Hose to Relief Valve	1
10	675016	HOSE, Pump to Relief Valve	1
11	33F-5	ADAPTER	1
12	662026	ADAPTER	1
13	550873	HOSE, Pipe to Cylinder	1
14	525320	PIPE, Steering — R.H.	1
15	550808	HOSE, Pipe to Cylinder	1
16	33F-4	ADAPTER	1
17	525327	PIPE, Steering — L.H.	1
18	550873	HOSE, Pipe to Cylinder	1
19	550808	HOSE, Pipe to Cylinder	1
20	33F-4	ADAPTER	1
21	662026	ADAPTER	1
22	———	STEERING CYLINDER (See Index)	—
23	———	STEERING CYLINDER (See Index)	—
24	26F-4	ELBOW, Hose to Pipe	1
25	672806	HOSE, Control Valve to Pipe	1
26	26F-5	ELBOW, Hose to Pump	1
27	712647	HOSE, Reservoir to Pump	1
28	356621	BUSHING, Elbow to Pump	1
29	———	STEERING PUMP (See Index)	—
30	525333	HOSE, Pipe to Steering Gear	1
31	525332	HOSE, Pipe to Steering Gear	1
32	———	STEERING GEAR (See Index)	—
33	524863	HOSE, Pipe to Steering Gear	1
34	524864	HOSE, Pipe to Steering Gear	1
35	2C-618	BOLT, Pipe Attaching	4
36	4E-06	LKWSHR, Pipe Attaching	4
37	2D-06	NUT, Pipe Attaching	4
38	356617	BUSHING, Adapter to Pump	1
39	29F-3	ADAPTER	1
40	31F-4	ADAPTER, Control Valve to Hose	1

WHEN ORDERING PARTS, ALWAYS STATE MODEL AND SERIAL NO. OF MACHINE

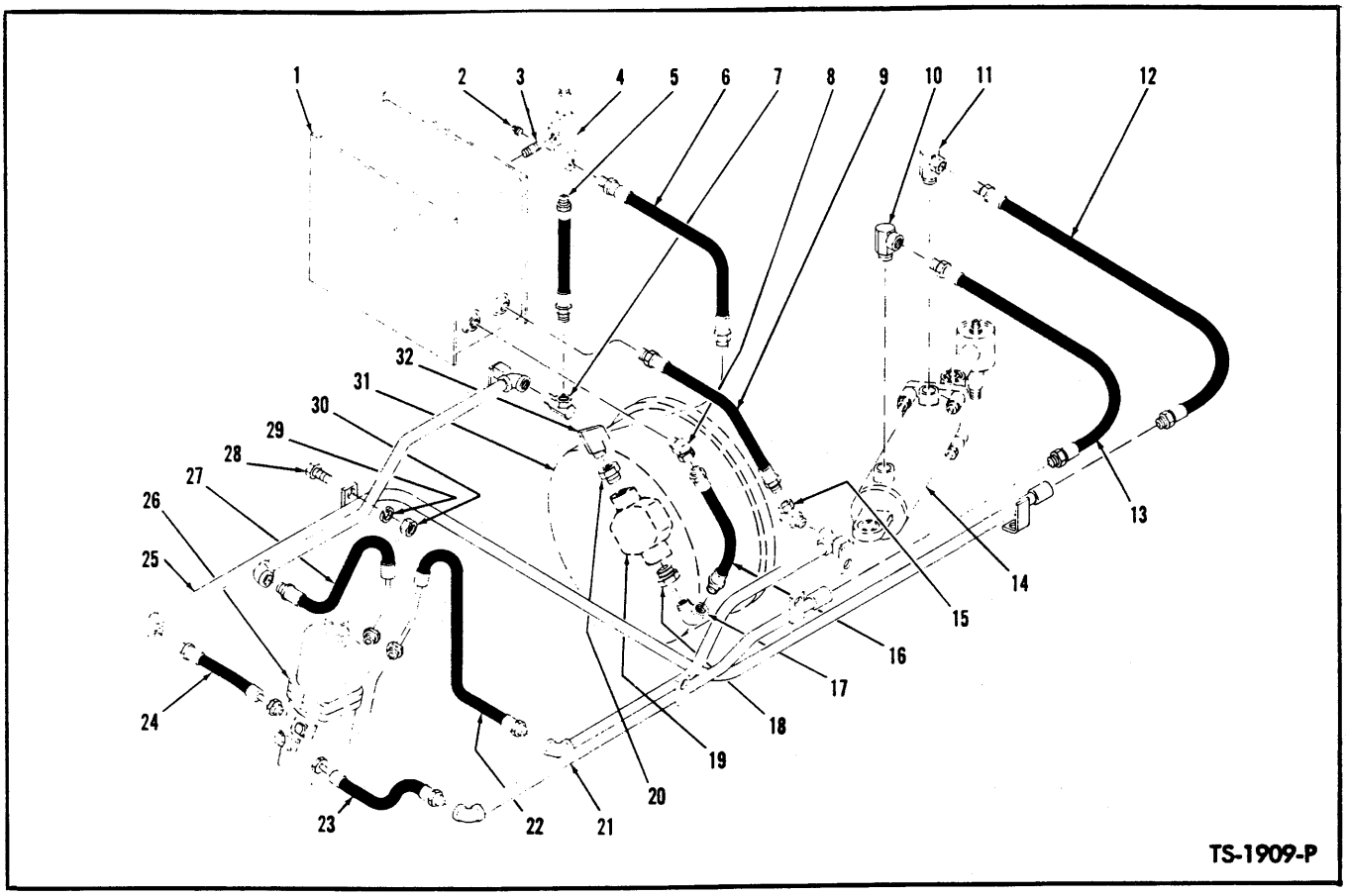

HYDRAULIC SYSTEM — STEERING — MODEL 55B

For Serial 50BC01 thru 50BC07

Item No.	Part No.	Description	No. Req'd.
1	———	HYDRAULIC OIL RESERVOIR (See Index)	—
2	16F-08	PLUG, Relief Valve	1
3	5K-611	NIPPLE, Relief Valve to Reservoir	1
4	———	PRESSURE RELIEF VALVE (See Index)	—
5	712766	HOSE, Relief Valve to Pipe	1
6	550804	HOSE, Relief Valve to Pump	1
7	31F-4	ADAPTER UNION, Pipe to Hose	1
8	33F-5	ADAPTER UNION, Reservoir to Hose	1
9	672806	HOSE, Reservoir to Pipe	1
10	31F-4	ADAPTER UNION, Hose to Cylinder	1
11	31F-4	ADAPTER UNION, Hose to Cylinder	1
12	550808	HOSE, Pipe to Cylinder	1
13	550808	HOSE, Pipe to Cylinder	1
14	———	STEERING CYLINDER (See Index)	—
15	33F-4	ADAPTER UNION, Pipe to Hose	1
16	712647	HOSE, Reservoir to Pump Suction	1
17	26F-5	ELBOW, Hose to Pump	1
18	356621	REDUCER, Elbow to Pump	1
19	———	STEERING PUMP, Hydraulic (See Index)	—
20	356617	REDUCER, Pump to Elbow	1
21	509729	PIPE, Steering—L.H.	1
22	525333	HOSE, Pipe to Steering Gear—L.H.	1
23	525332	HOSE, Pipe to Steering Gear—L.H.	1
24	524863	HOSE, Pipe to Steering Gear—R.H.	1
25	509725	PIPE, Steering—R.H.	1
26	———	STEERING GEAR ASSY (See Index)	—
27	524864	HOSE, Pipe to Steering Gear—R.H.	1
28	2C-618	BOLT, Pipe Attaching	6
29	4E-06	LKWSHR, Pipe Attaching	6
30	2D-06	NUT, Pipe Attaching	6
31	———	TORQUE CONVERTER (See Index)	—
32	29F-3	ELBOW, Reducer to Hose	1

WHEN ORDERING PARTS, ALWAYS STATE MODEL AND SERIAL NO. OF MACHINE

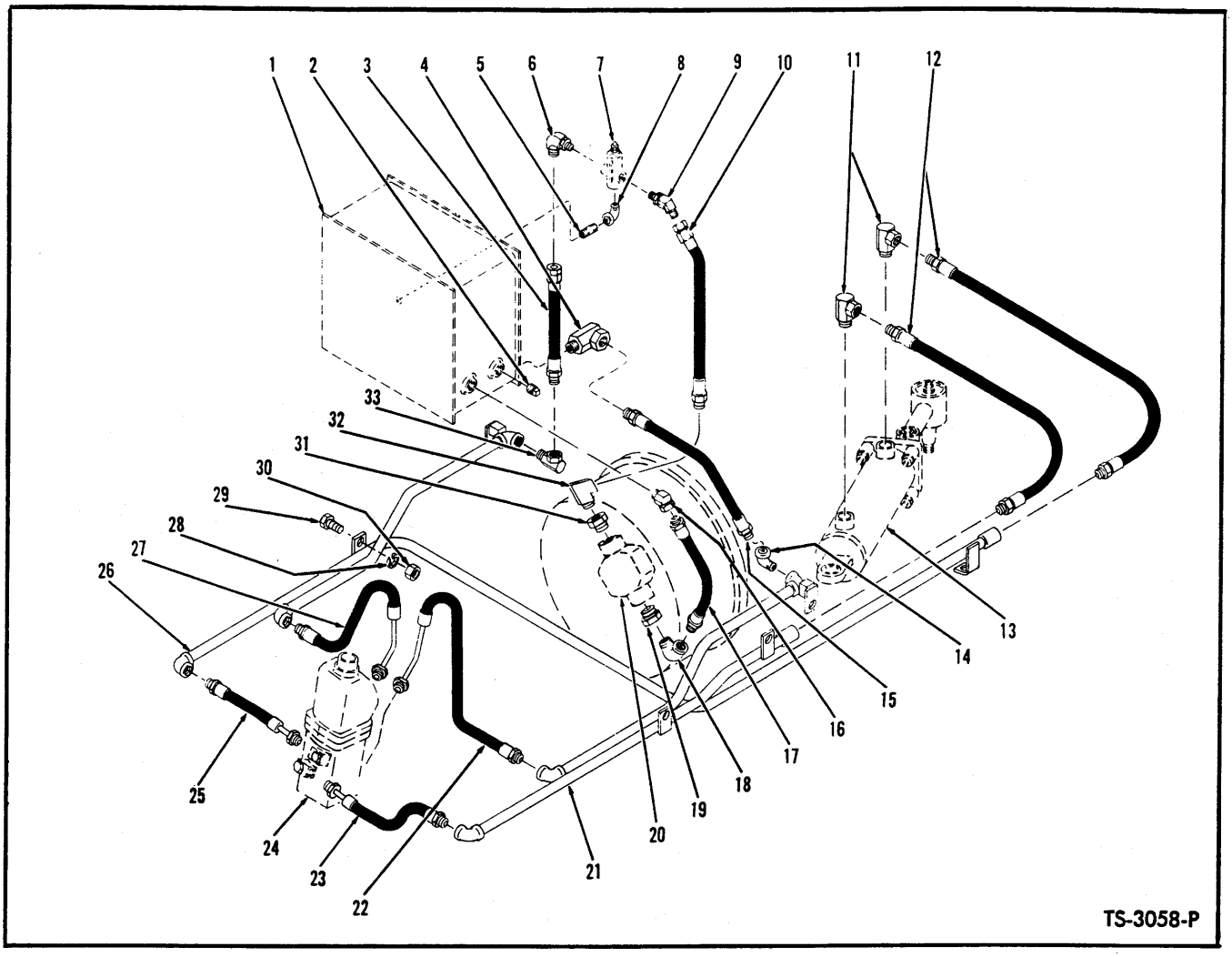

HYDRAULIC SYSTEM — STEERING — MODEL 55B

For Serial 50BCO8 thru 50BCO999

Item No.	Part No.	Description	No. Req'd.
1	———	HYDRAULIC OIL RESERVOIR (See Index)	—
2	13F-08	PLUG, Reservoir	1
3	675015	HOSE, Relief Valve to Pipe	1
4	711053	ADAPTER	1
5	5K-616	NIPPLE, Relief Valve to Reservoir	1
6	17K-7	ELBOW, Hose to Relief Valve	1
7	———	PRESSURE RELIEF VALVE (See Index)	—
8	26F-5	ELBOW, Relief Valve to Nipple	1
9	18K-7	ELBOW, Hose to Relief Valve	1
10	675016	HOSE, Relief Valve to Pump	1
11	31F-4	ADAPTER	2
12	550808	HOSE, Pipe to Cylinder	2
13	———	STEERING CYLINDER (See Index)	—
14	26F-4	ELBOW, Hose to Pipe	1
15	672806	HOSE, Control Valve to Pipe	1
16	33F-5	ADAPTER	1
17	712647	HOSE, Reservoir to Pump — Suction	1
18	26F-5	ELBOW, Hose to Pump	1
19	356621	BUSHING, Elbow to Pump	1
20	———	STEERING PUMP (See Index)	—
21	509729	PIPE, Steering — L.H.	1
22	525333	HOSE, Pipe to Steering Gear	1
23	525332	HOSE, Pipe to Steering Gear	1
24	———	STEERING GEAR (See Index)	—
25	524863	HOSE, Pipe to Steering Gear	1
26	509725	PIPE, Steering — R.H.	1
27	524864	HOSE, Pipe to Steering Gear	1
28	4E-06	LKWSHR, Pipe Attaching	6
29	2C-618	BOLT, Pipe Attaching	6
30	2D-06	NUT, Pipe Attaching	6
31	356617	BUSHING, Elbow to Pump	1
32	29F-3	ELBOW, Hose to Pump	1
33	31F-4	ADAPTER	1

WHEN ORDERING PARTS, ALWAYS STATE MODEL AND SERIAL NO. OF MACHINE

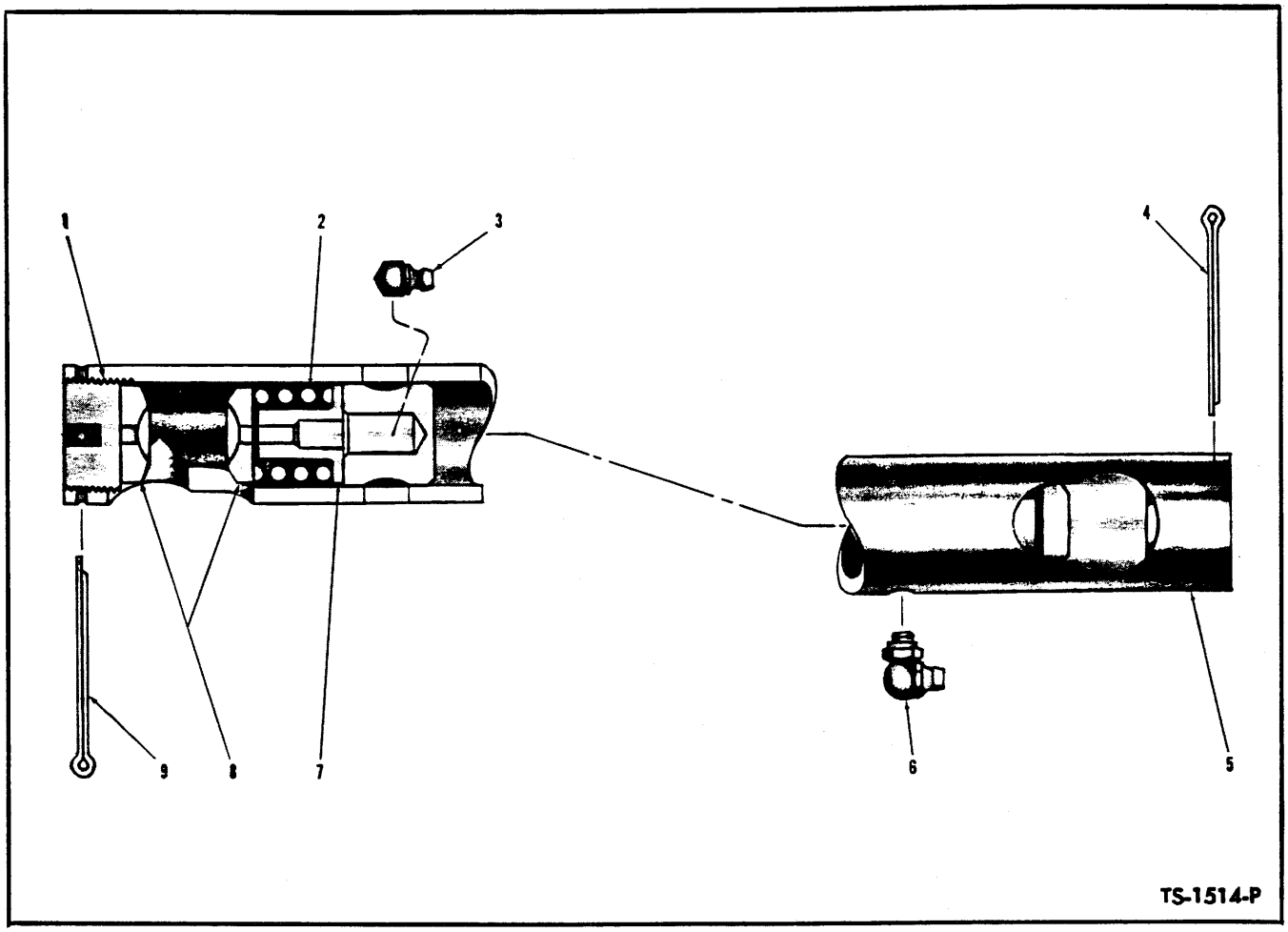

DRAG LINK ASSEMBLY

Item No.	Part No.	Description	No. Req'd.
1	940604	PLUG, Adjusting	2
2	940605	SPRING	2
3	12H-15	FITTING, Grease	1
4	1F-432	COTTER	1
5		*DRAG LINK ASSY* (Inc. 1, 2, 7, 8)	
5A	528373	For Model 55A	1
5B	509560	For Model 55B	1
6	12H-15	FITTING, Grease	1
7	940606	PLUG, Spring	2
8	940015	SEAT, Ball Stud	4
9	1F-432	COTTER	1

WHEN ORDERING PARTS, ALWAYS STATE MODEL AND SERIAL NO. OF MACHINE

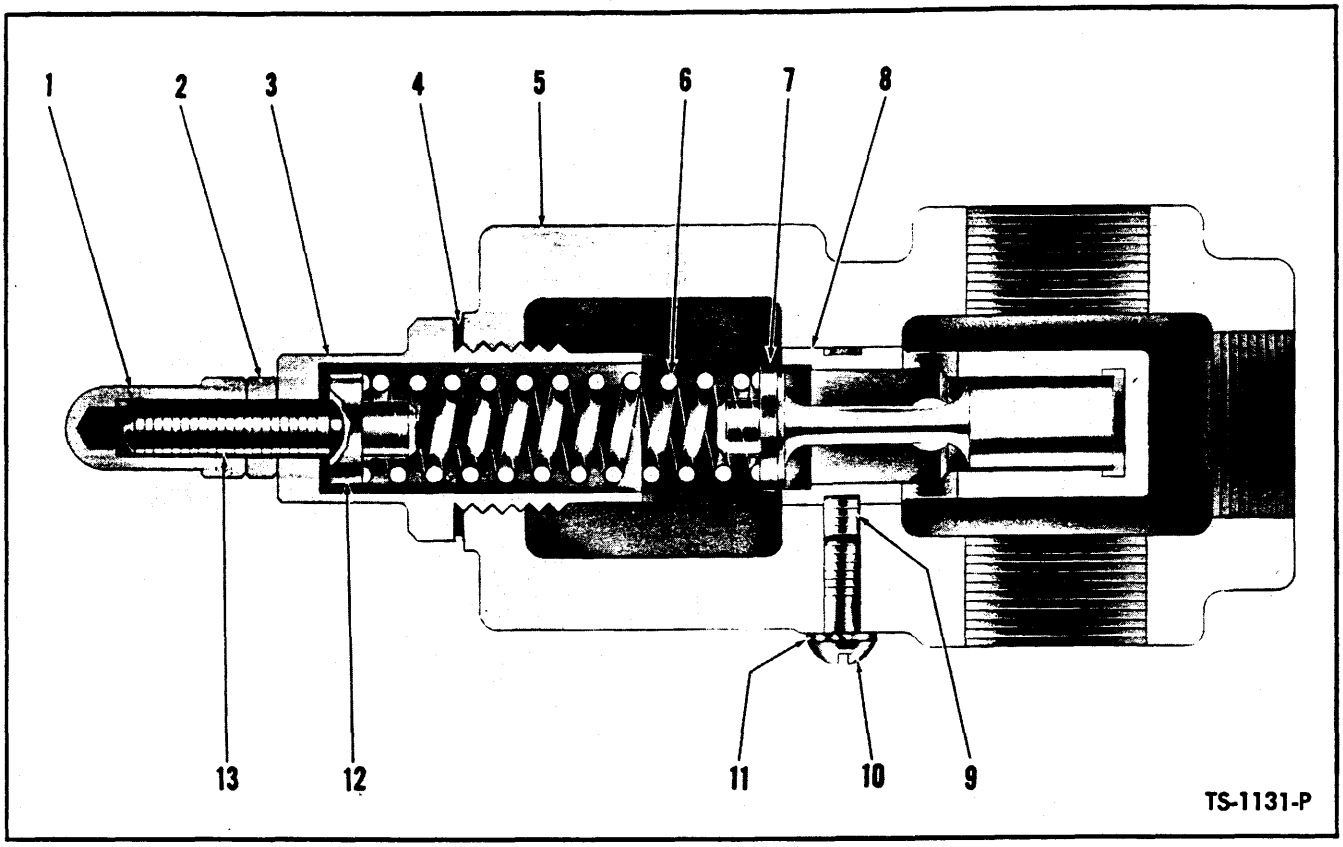

PRESSURE RELIEF VALVE — STEERING SYSTEM

For Serial: 55A — 3726 thru 3855, 1BCO134 thru 1BCO232
55B — 50BCO1 thru 50BCO7

Item No.	Part No.	Description	No. Req'd.
A	356022	*VALVE ASSY (Inc. 1 thru 13)	1
1	863045	NUT, Acorn	1
2	8D-06	NUT, Jam	1
3	958206	CAP, Valve	1
4	25K-40028	"O" RING, Cap	1
5	944005	HOUSING	1
6	944008	SPRING	1
7	940612	PLUNGER	1
8	940611	SEAT, Valve	1
9	15G-505	SET SCREW, Relief Valve Seat	1
10	863052	SCREW, Relief Valve Seat	1
11	863053	GASKET, Screw	1
12	958204	GUIDE, Spring	1
13	863046	SCREW, Adjusting	1

*NOTE: For complete replacement 1—2305159 Valve, plus 2—19F-9 Bushing will also be needed.

WHEN ORDERING PARTS, ALWAYS STATE MODEL AND SERIAL NO. OF MACHINE

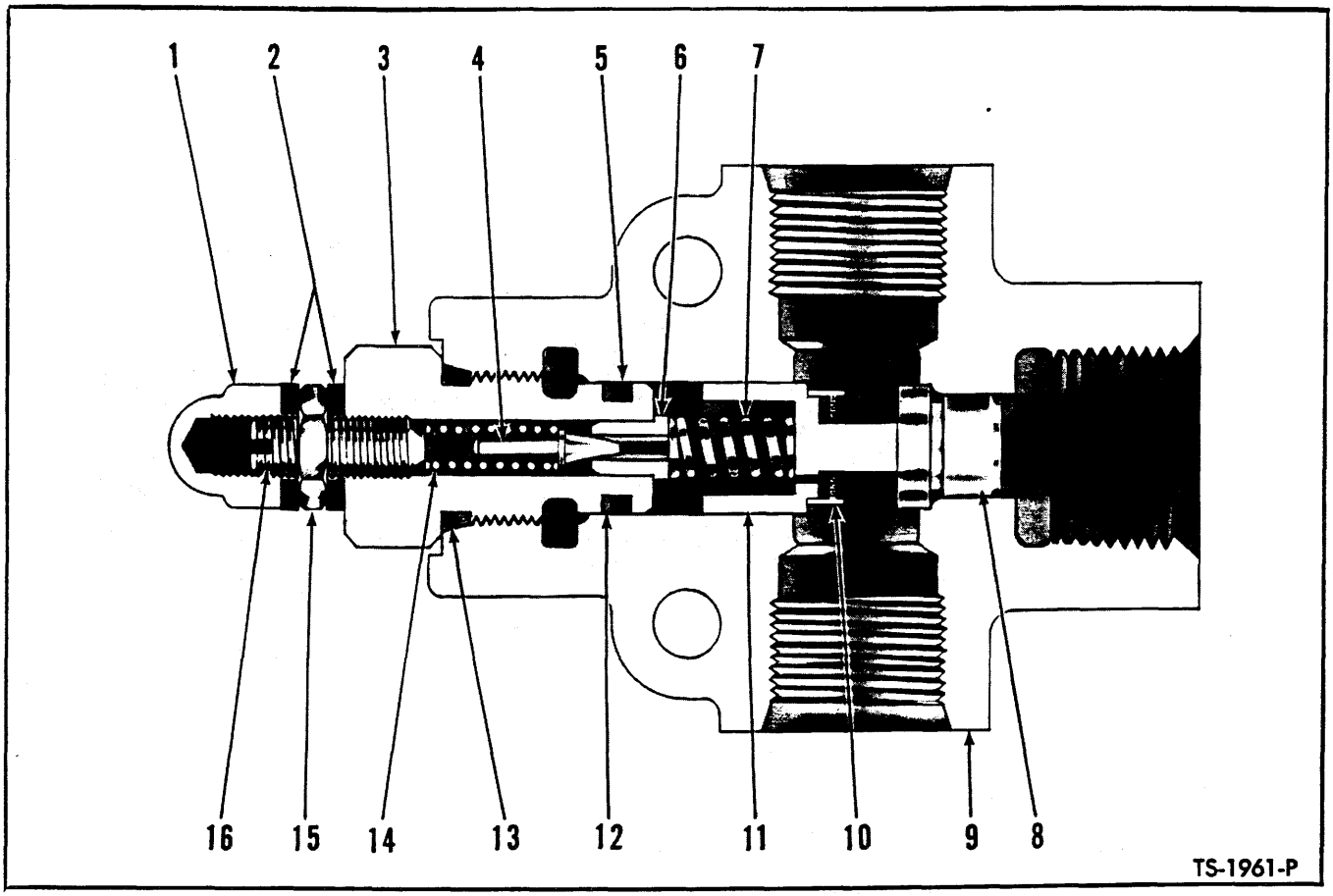

PRESSURE RELIEF VALVE — STEERING SYSTEM

For Serial: 55A — 1BCO233 thru 1BCO282, 2BCO1 thru 2BCO999
55B — 50BCO8 thru 50BCO999

Item No.	Part No.	Description	No. Req'd.
A		*VALVE ASSY*	
B	531080	*Parker No. VPR3-P-2F (Inc. 1 thru 16)	1
C	536539	Parker No. VPR3-P-4F (Inc. 1 thru 17)	1
1	47D-05	NUT, Acorn	1
2	663792	WASHER, Stat-O-Seal	2
3	944467	CAP, Valve	1
4	883734	PLUNGER, Pilot	1
5	899039	"O" RING	1
6	944469	SEAT, Pilot	1
7		*SPRING, Relief*	
7A	944466	For 531080 (Parker No. VPR3-P-2F) Valve	1
7B	944646	For 536539 (Parker No. VPR3-P-4F) Valve	1
8		*SEAT, Poppet*	
8A	944462	For 531080 (Parker No. VPR3-P-2F) Valve	1
8B	944645	For 536539 (Parker No. VPR3-P-4F) Valve	1
9	———	§BODY, Valve — See "C"	1
10		*SCREEN, Poppet*	
10A	———	§ For 531080 (Parker No. VPR3-P-2F) Valve — See 11	1
10B	———	§ For 536539 (Parker No. VPR3-P-4F) Valve — See 11	1
11		*POPPET ASSY (Inc. 10)*	
11A	945375	For 531080 (Parker No. VPR3-P-2F) Valve	1
11B	944643	For 536539 (Parker No. VPR3-P-4F) Valve	1
12	899038	RING, Back-Up	1
13	91F-6	"O" RING	1
14	944471	SPRING, Pilot	1
15	8D-05	NUT, Jam	1
16	33G-514	SCREW, Adjusting	1
17	40K-02	†PLUG	2

*NOTE: For complete replacement of 531080 use 536539.
§Not Sold Separately
†Not Illustrated.

WHEN ORDERING PARTS, ALWAYS STATE MODEL AND SERIAL NO. OF MACHINE

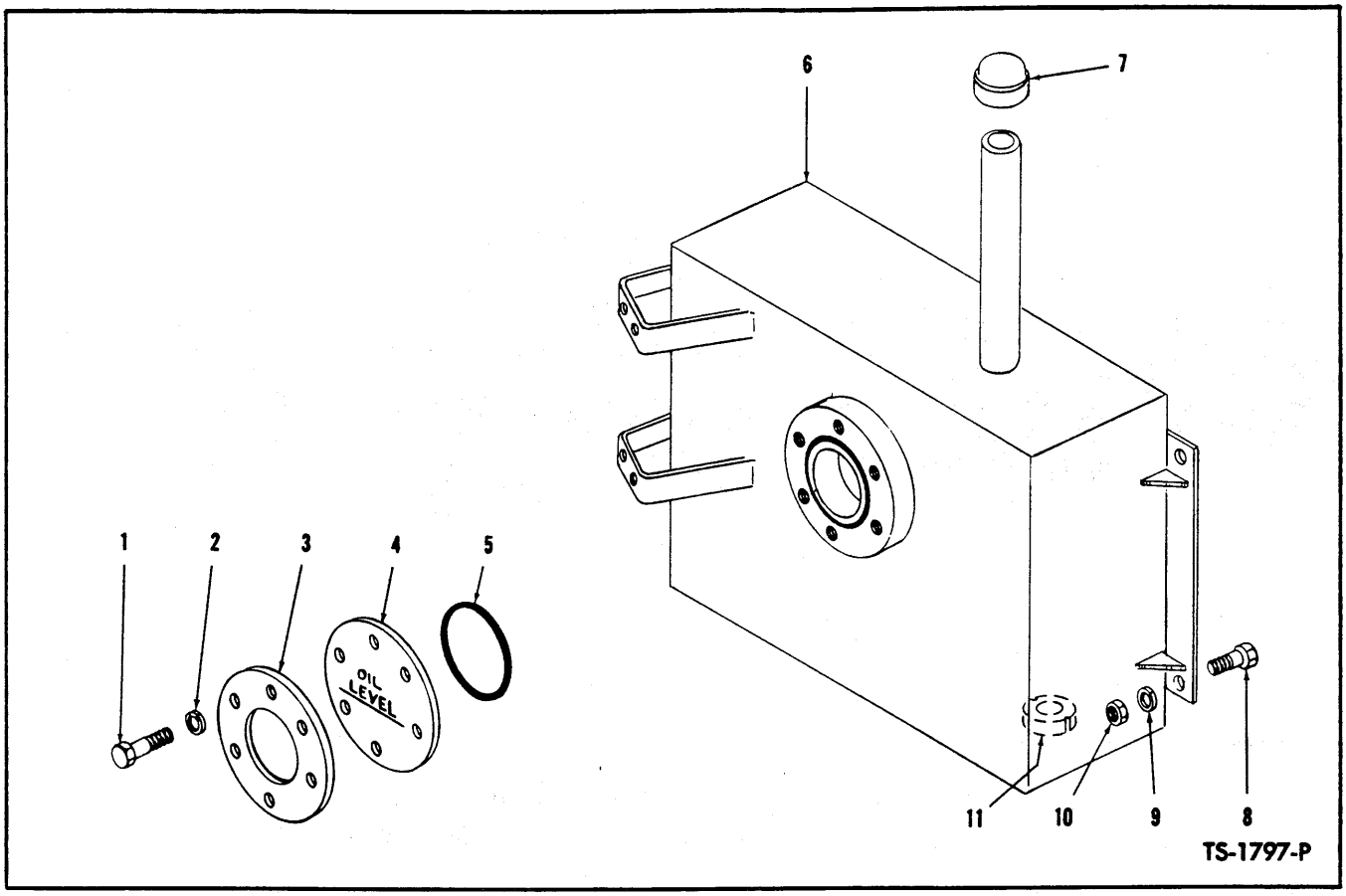

HYDRAULIC OIL RESERVOIR

Item No.	Part No.	Description	No. Req'd.
1	2C-616	BOLT, Inspection Cover	6
2	4E-06	LKWSHR, Inspection Cover	6
3	550398	RING, Inspection Cover Clamp	1
4	550389	COVER, Reservoir Inspection	1
5	25K-40428	"O" RING, Inspection Cover	1
6		*RESERVOIR, Hydraulic Oil (Inc. 1, 2, 3, 4, 5)*	
6A	526600	For Serial 3726 thru 3785	1
6B	527504	For Serial: 55A — 3786 thru 3855, 1BCO134 thru 1BCO282, 2BCO1 thru 2BCO999	1
		55B — 50BCO1 thru 50BCO999	1
7	604639	CAP, Reservoir Breather	1
8	2C-820	BOLT, Reservoir to Frame	3
9	4E-08	LKWSHR, Reservoir to Frame	3
10	2D-08	NUT, Reservoir to Frame	3
11	525293	MAGNET	1

WHEN ORDERING PARTS, ALWAYS STATE MODEL AND SERIAL NO. OF MACHINE

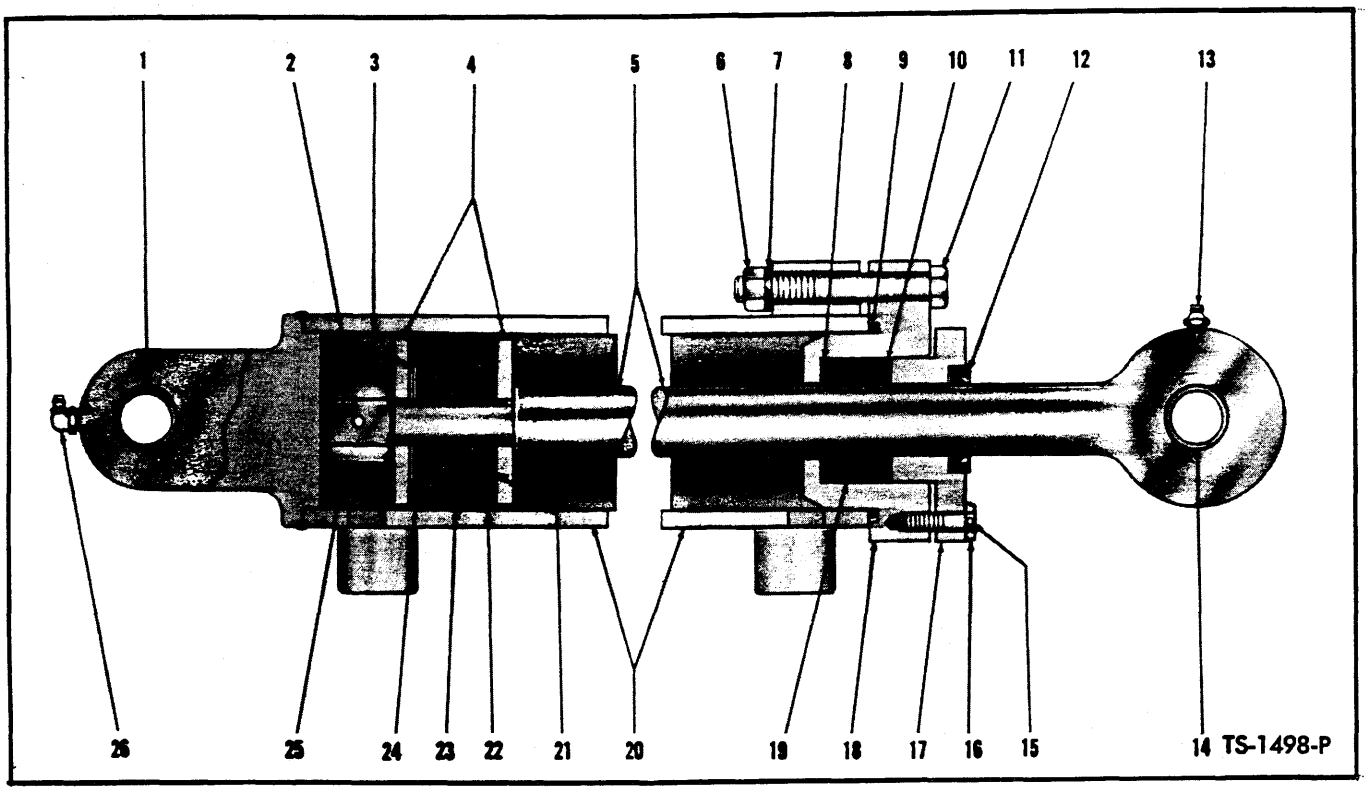

STEERING CYLINDER ASSEMBLY — MODEL 55A

2 Cylinders Used on Machine — Quantity Indicated is for 1 Cylinder

Item No.	Part No.	Description	No. Req'd.
A	526406	*CYLINDER ASSY (Inc. 1 thru 26)	1
B	2523424	KIT (Inc. 2, 3, 8 thru 10, 19, 22 thru 24) - See Note "B"	1
1	763451	BUSHING, Cylinder	1
2	1F-424	COTTER, Piston Rod Nut	1
3	———	§‡SHIM, Chevron Backing Plate — See B	—
4	526423	PLATE, Chevron Backing	2
5	545155	ROD, Piston	1
6	68D-06	NUT, Cylinder Cap	4
7	4E-06	LKWSHR, Cylinder Cap	4
8	———	§ADAPTER, Male — See 19	2
9	———	§"O" RING, Cylinder Cap — See B	1
10	———	§ADAPTER, Female — See 19	2
11	18C-652	BOLT, Cylinder Cap	4
12	526415	SEAL, Piston Rod Oil	1
13	10H-25	FITTING, Piston Rod Grease	1
14	763451	BUSHING, Piston Rod	1
15	———	LOCKWIRE, Packing Gland Bolt (16 ga x 13" lg)	2
16	4C-414	BOLT, Packing Gland	4
17	526414	GLAND, Packing	1
18	526413	**CAP, Cylinder	1
19	2501105	PACKING SET, (Inc. 8, 9)	1
20	526407	CYLINDER — See Note "A"	1
21	526422	SLEEVE, Piston	1
22	———	§ADAPTER, Female Chevron Packing See 23	1
23	———	§PACKING SET, Piston (Inc. 22, 24) See B	1
24	———	§ADAPTER, Male Chevron Packing See 23	1
25	523325	NUT, Piston Rod	1
26	12H-25	FITTING, Cylinder Grease	1
27	18C-1244	†BOLT, Cylinder Pivot	2
28	86D12	†NUT, Cylinder Pivot Lock	2

‡As Required
§Not Sold Separately
†Not Illustrated
*NOTE: For complete replacement of 526406 Cylinder Assy use 532943 Cylinder Assy.
**NOTE: For replacement of 526413 Cap use 945118 Cap Assy. 945118 Cap Assy includes 1-58K-228 O-Ring and 1-532948 Back-Up Ring.
NOTE A: For replacement of 526407 Cylinder use 532944 plus 1—945118 Cap Assy, 4—18C-652 & 4—68D-06 Nuts.
NOTE B: For reference see Service Gram S.G.-597.

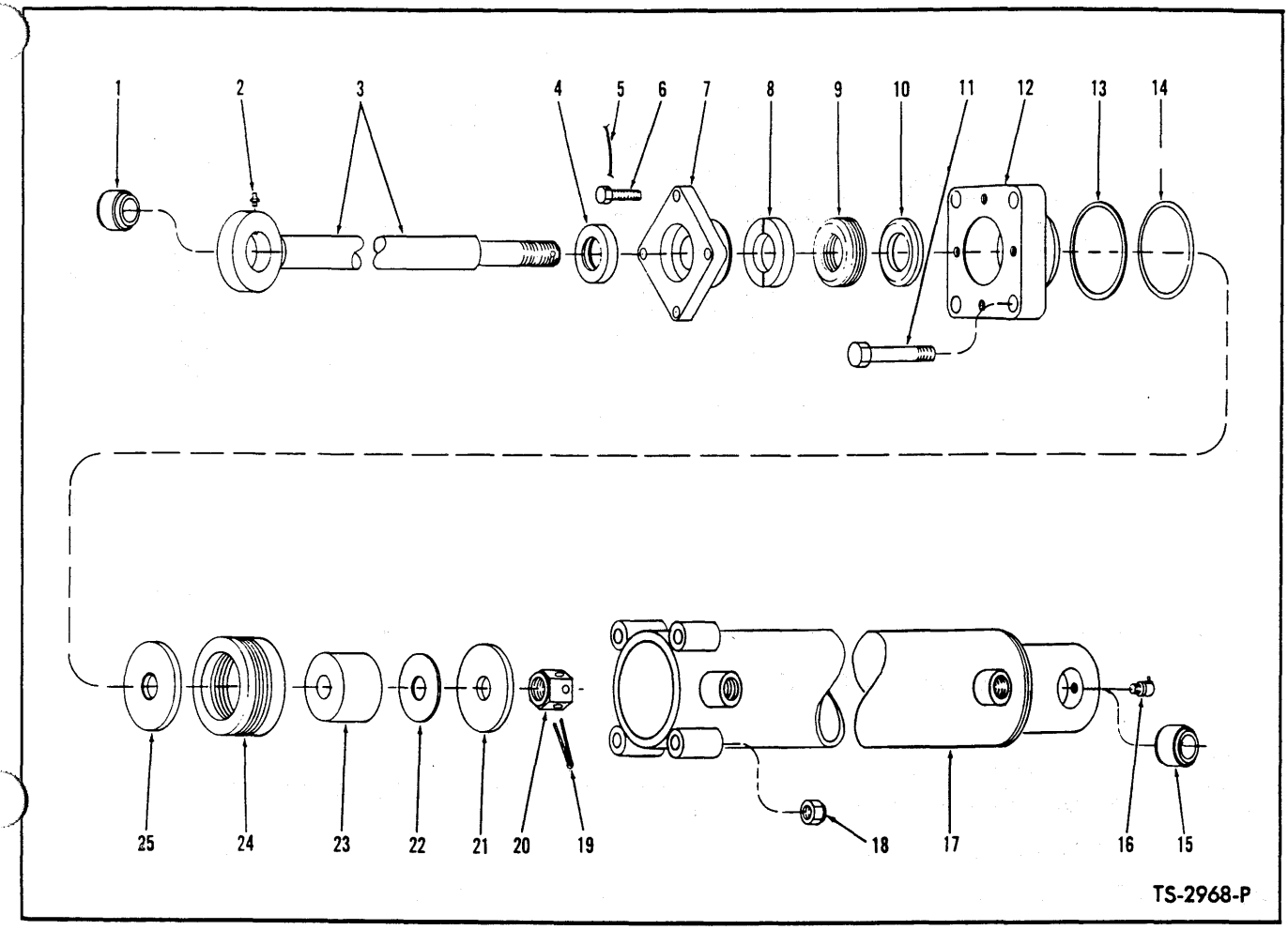

STEERING CYLINDER ASSEMBLY

2 Cylinders used on machine — Quantities listed below are for 1 Cylinder

Item No.	Part No.	Description	No. Req'd.
A	532943	CYLINDER ASSY (Inc. 1 thru 25)	1
B	2523424	*KIT (Inc. 8 thru 10, 13, 14, 19, 22, 24)	1
1	763451	BUSHING, Piston Rod	1
2	10H-35	FITTING, Piston Rod Grease	1
3	545155	ROD, Piston	1
4	526415	SEAL, Piston Rod	1
5	———	LOCKWIRE (16 ga-13" lg)	2
6	4C-414	BOLT, Gland to Cap	4
7	516414	GLAND, Packing	1
8	———	§ADAPTER, Female — See 9	2
9	2501105	PACKING SET (Inc. 8, 10)	1
10	———	§ADAPTER, Male — See 9	2
11	18C-652	BOLT, Cap to Cylinder	4
12	945118	CAP, Cylinder (Inc. 13, 14)	1
13	———	§RING, "O" Ring Backup — See B	1
14	———	§"O" RING, Cylinder Cap — See B	1
15	763451	BUSHING, Cylinder	1
16	12H-25	FITTING, Cylinder Grease	1
17	532944	CYLINDER	1
18	68D-06	NUT, Cap to Cylinder	4
19	1F-424	COTTER, Piston Rod Nut	1
20	523325	NUT, Piston Rod	1
21	526423	PLATE, Backing	1
22	———	§‡SHIM — See B	—
23	526422	SLEEVE	1
24	———	§PACKING SET, Piston — See B	1
25	526423	PLATE, Backing	1
26	18C-1244	†BOLT, Cylinder Pivot	2
27	86D12	†NUT, Cylinder Pivot Lock	2

‡As Required
†Not Illustrated
*NOTE: For reference see Service Gram S.G.-597

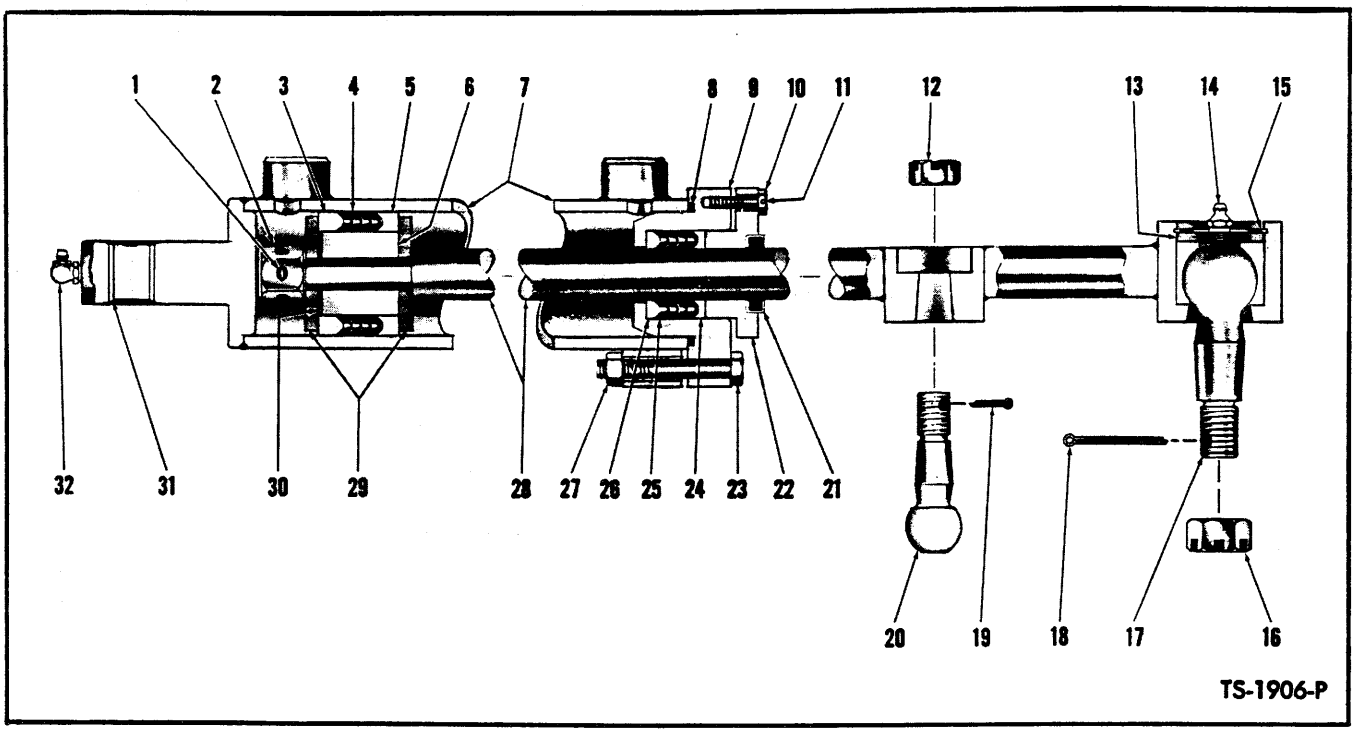

STEERING CYLINDER ASSEMBLY — MODEL 55B

NOTE: Only One Cylinder Used on Machine

Item No.	Part No.	Description	No. Req'd.
A	509569	CYLINDER ASSY (Inc. 1 thru 11, 13, 14, 15, 17, 21 thru 32)	1
B	2523424	[2]KIT (Inc. 1, 3 thru 5, 8, 24 thru 26, 30)	1
1	1F-424	COTTER, Piston Rod Nut	1
2	523325	NUT, Piston Rod	1
3	-----	§ADAPTER, Male — See 4	1
4	-----	§PACKING SET (Inc. 3, 5) — See B	1
5	-----	§ADAPTER, Female — See 4	1
6	526422	SLEEVE, Piston	1
7	509570	CYLINDER	1
8	-----	§"O" RING, Cylinder Cap — See B	1
9	526413	*CAP, Cylinder	1
10	4C-414	BOLT, Packing Gland	4
11	28H-16100	LOCKWIRE, Packing Gland Bolt	2
12	4D-10	NUT, Ball Stud to Drag Link	1
13	541879	**PLATE, Ball Stud Retaining	1
14	OMIT	FITTING, Ball Stud Grease	—
15	507695	RING, Ball Stud Retaining Snap	1
16	4D-12	NUT, Ball Stud	1
17	117228	BALL STUD	1
18	1F-428	COTTER, Ball Stud	1
19	1F-332	COTTER, Ball Stud	1
20	513122	BALL STUD, Steering Cylinder to Drag Link	1
21	526415	SEAL, Piston Rod Oil	1
22	526414	GLAND, Packing	1
23	18C-652	BOLT, Cylinder Cap	4
24	-----	§ADAPTER, Female — See 25	1
25	2501105	PACKING SET (Inc. 24, 26)	1
26	-----	§ADAPTER, Male — See 25	1
27	68D-06	NUT, Cylinder Cap	4
28	509573	ROD, Piston	1
29	526423	PLATE, Chevron Backing	2
30	-----	§‡SHIM, Chevron Backing Plate — See B	—
31	763451	BUSHING, Cylinder	1
32	10H-25	FITTING, Cylinder Grease	1

§Not Sold Separately ‡As Required

*NOTE: For replacement of 526413 Cap use 945118 Cap Assy. 945118 Cap Assy includes 1—58K-228 O-Ring and 1—532948 Back-Up Ring.

**NOTE: For replacement use 815841 Retainer Plate Assy., which consists of 1—524066 Retainer Plate plus 1—10H-25 Grease Fitting.

[2]For reference see Service Gram S.G.-597.

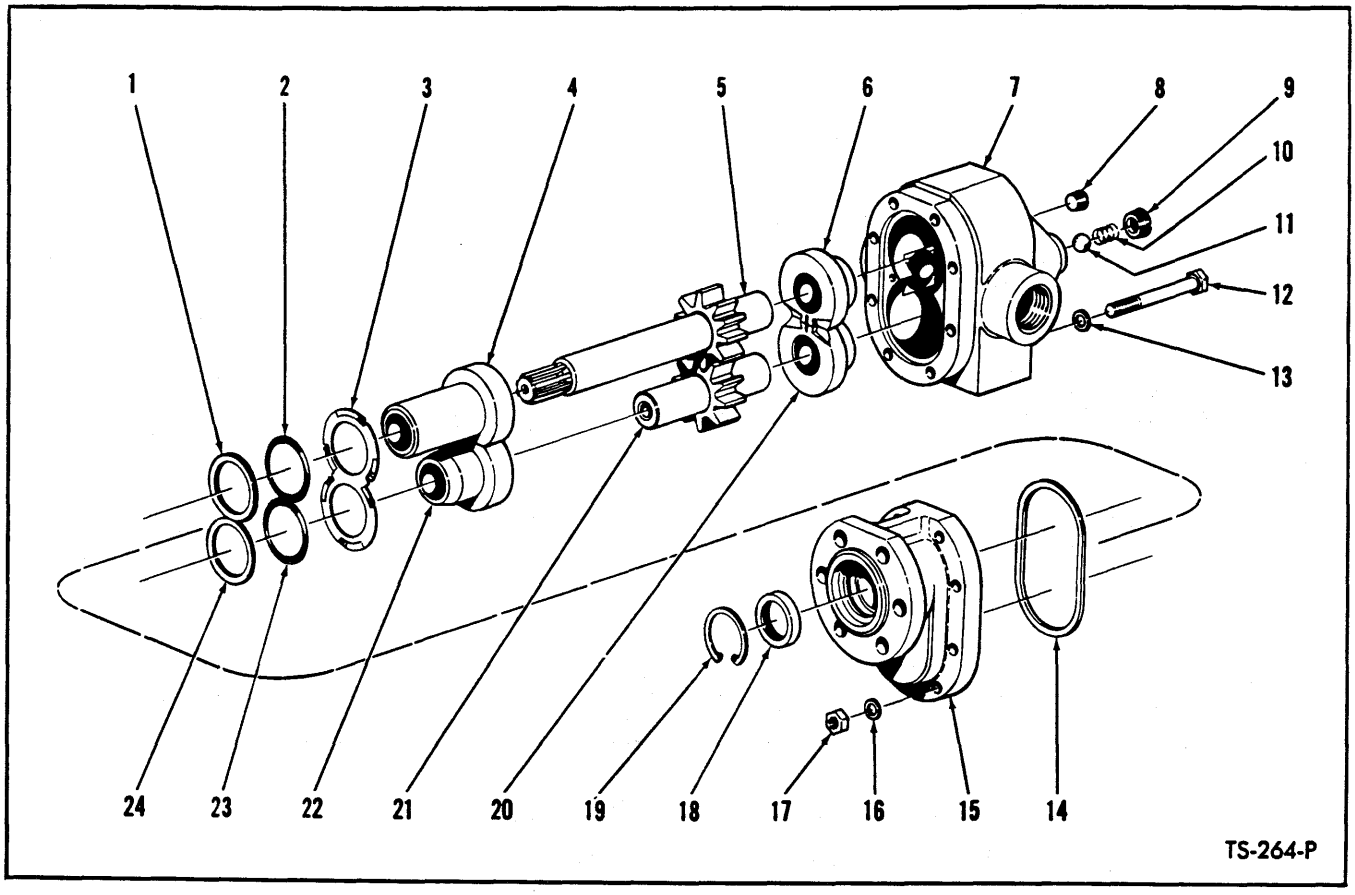

HYDRAULIC PUMP — STEERING

For Serial: 55A — 3726 thru 3855
55B — 50BCO1 ONLY

Item No.	Part No.	Description	No. Req'd.
A	221450	*PUMP ASSY (Inc. 1 thru 24)	1
B	942404	REPAIR KIT, Major (Inc. 1 thru 4, 6, 10 thru 14, 16 thru 20, 22, 23, 24)	1
C	942403	REPAIR KIT, Minor (Inc. 1, 2, 14, 18, 19, 23, 24)	1
1	———	§WASHER, Back-Up	1
2	———	§"O" RING	1
3	———	§SPRING, Bearing	1
4	———	§BEARING, Cover — Drive	1
5	———	§GEAR, Drive	1
6	———	§BEARING, Body — Drive	1
7	———	§BODY	1
8	16F-02	PLUG, Seal Chamber	1
9	———	§PLUG, Seal Relief	1
10	———	§SPRING, Seal Relief	1
11	———	§BALL, Seal Relief	1
12	———	§BOLT, Cover to Body	8
13	———	§WASHER, Cover to Body	8
14	———	§GASKET, Cover	1
15	———	§COVER	1
16	———	§WASHER, Cover to Body	8
17	———	§NUT, Cover to Body	8
18	———	§SEAL, Shaft Oil	1
19	———	§RING, Seal Retaining	1
20	———	§BEARING, Body — Driven	1
21	———	§GEAR, Driven	1
22	———	§BEARING, Cover — Driven	1
23	———	§"O" RING	1
24	———	§WASHER, Back-Up	1
25	235961	†GASKET, Pump to Converter	1
26	8D-06	†NUT, Pump to Converter	6
27	4E-06	†LKWSHR, Pump to Converter	6

†Not Illustrated §Not Sold Separately

*NOTE: When complete pump assy is replaced use 1521257 plus 1—235961 Gasket, 3—9E6 Lockwasher, 3—8D6 Nut, 3—103293 Washer, 1—1520566 Adapter Union, 1—91F10 "O"-Ring, 1—1522464 Adapter Union & 1—91F8 "O"-Ring.

WHEN ORDERING PARTS, ALWAYS STATE MODEL AND SERIAL NO. OF MACHINE

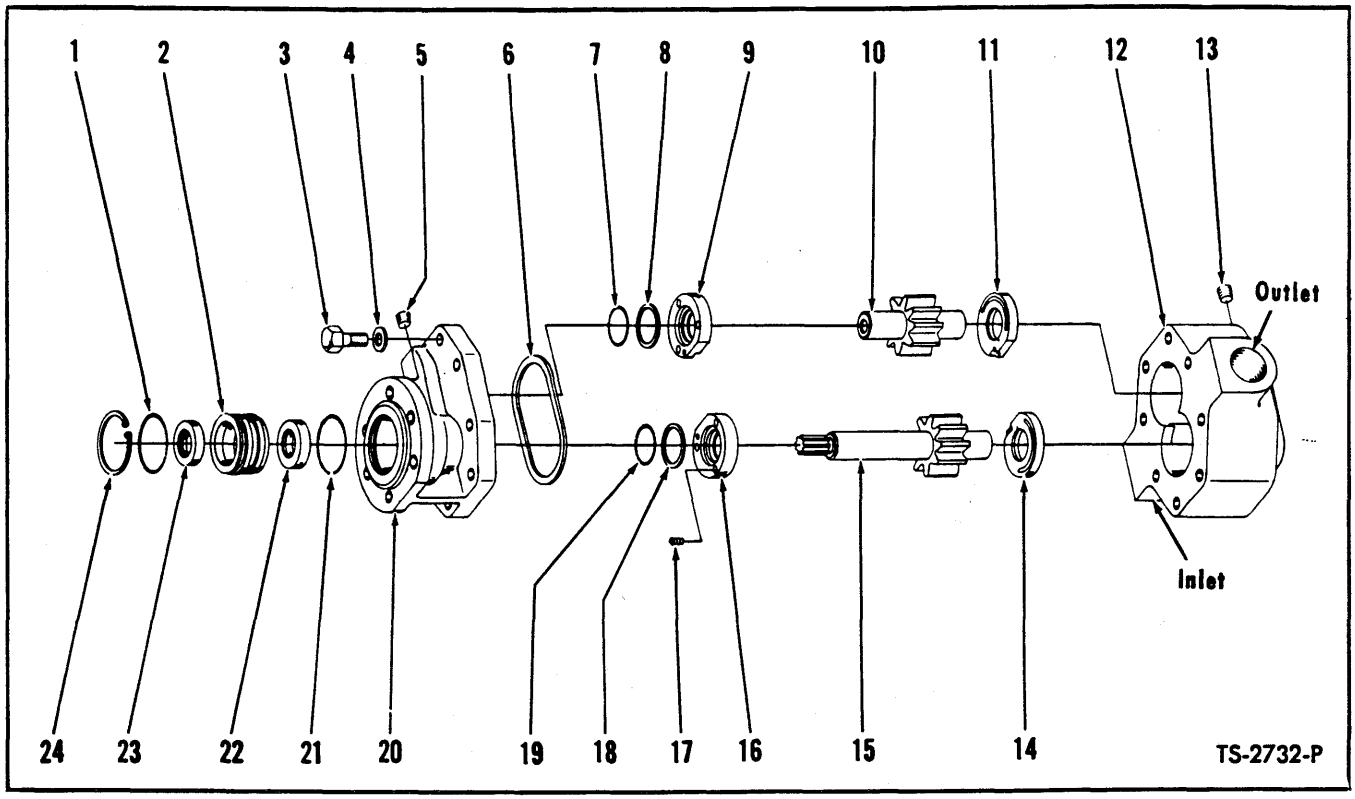

HYDRAULIC PUMP — STEERING

For Serial: 55A — 1BCO134 thru 1BCO207

55B — 50BCO2 thru 50BCO7

Item No.	Part No.	Description	No. Req'd.
A	450012	*PUMP ASSY (Inc. 1 thru 24)	1
B	498152	REPAIR KIT, Major (Inc. 9, 11, 14, 16)	1
C	498151	**REPAIR KIT, Minor (Inc. 1, 3, 4, 6, 7, 8, 17, 18, 19, 21)	1
D	498024	GEAR SET, Drive & Driven (Inc. 10, 15)	1
E	498113	REPAIR KIT, Shaft Seal (Inc. 1, 2, 21 thru 24)	1
1	———	§"O" RING, Retainer	1
2	———	§RETAINER, Shaft Seal	1
3	———	§BOLT, Cover to Body	8
4	———	§WASHER, Cover to Body	8
5	———	§PLUG, Cover	1
6	———	§GASKET, Cover	1
7	———	§"O" RING, Cover Thrust Plate	1
8	———	§WASHER, Back-Up	1
9	———	§THRUST PLATE, Cover	1
10	———	§GEAR, Driven	1
11	———	§THRUST PLATE, Body	1
12	———	§BODY (Inc. Bushings) (See Note "A")	1
13	———	§PLUG, Body	1
14	———	§THRUST PLATE, Body	1
15	———	§GEAR, Drive	1
16	———	§THRUST PLATE, Cover	1
17	———	§SPRING, Cover Thrust Plate	6
18	———	§WASHER, "O" Ring Back-Up	1
19	———	§"O" RING, Cover Thrust Plate	1
20	———	§COVER (Inc. Bushings) (See Note "A")	1
21	———	§"O" RING, Retainer	1
22	———	§SEAL, Inner Oil	1
23	———	§SEAL, Outer Oil	1
24	———	§RING, Seal Retainer	1
25	235961	†GASKET, Pump to Converter	1
26	8D-06	†NUT, Pump to Converter	6
27	4E-06	†LKWSHR, Pump to Converter	6

†Not Illustrated §Not Sold Separately

*NOTE: When complete pump assy is replaced use 1521257 pump plus 1—235961 Gasket, 3—8D6 Nut, 1—1520566 Adapter Union, 3—9E6 Lockwasher, 3—103293 Washer, 1—91F10 O-Ring, 1—91F8 O-Ring.

**NOTE: *Minor Repair Kit* consists of "O" Rings, Back-up Washers, Gaskets and approximately 20% of the hardware items such as bolts, nuts, springs, and washers. The latter for the purpose of replacing any of these items lost or damaged in repair operation.

NOTE "A": Pump Bodies, Covers and Bearings will not be made available for field use since when these items are worn beyond limits permitting re-use, the cost of rebuilding the pump exceeds practical limits. In such cases a new pump assembly should be utilized.

WHEN ORDERING PARTS, ALWAYS STATE MODEL AND SERIAL NO. OF MACHINE

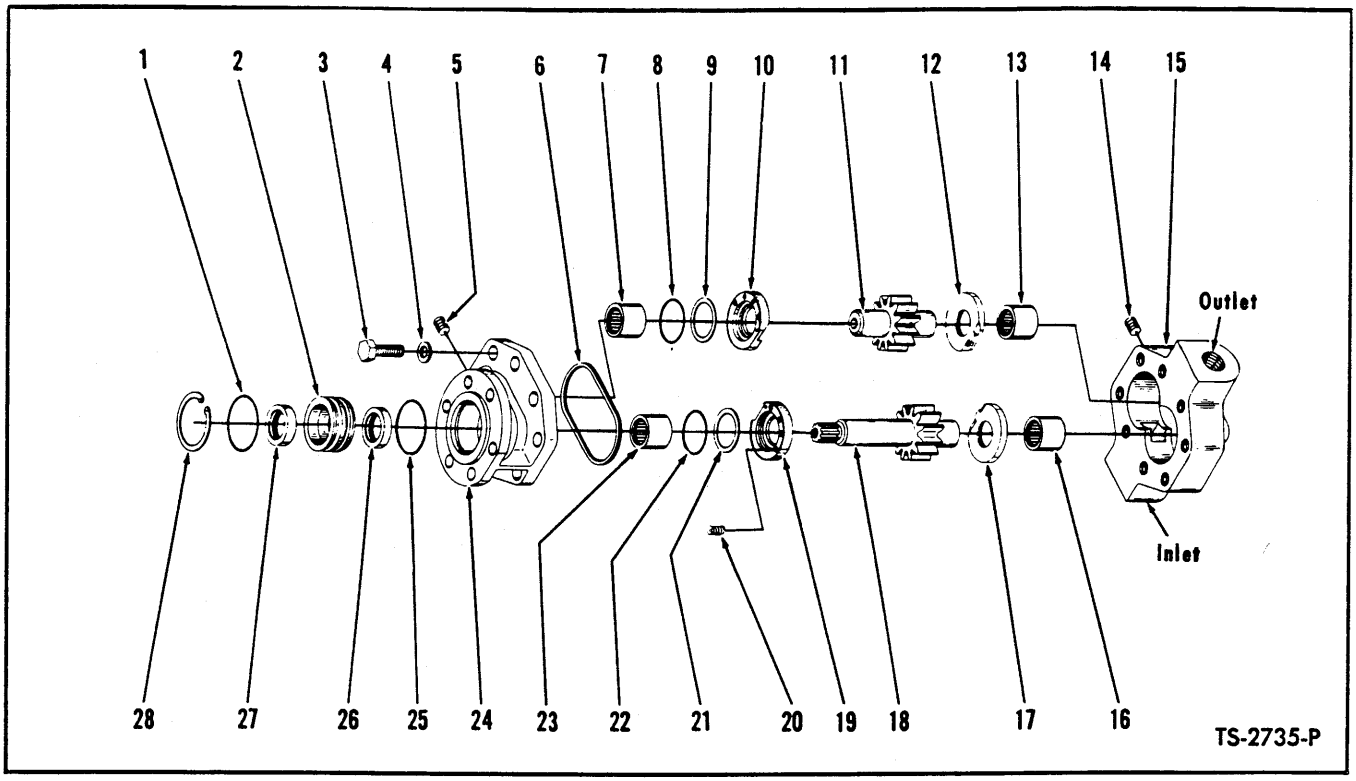

HYDRAULIC PUMP — STEERING

For Serial: 55A — 1BCO208 thru 1BCO282, 2BCO1 thru 2BCO999
55B — 50BCO8 thru 50BCO999

Item No.	Part No.	Description	No. Req'd.
A	450072	***PUMP ASSY (Inc. 1 thru 28)	1
B	498128	REPAIR KIT, Major (Inc. 10, 12, 17, 19)	1
C	498127	*REPAIR KIT, Minor (Inc. 1, 3, 4, 6, 8, 9, 20, 21, 22, 25)	1
D	498024	GEAR SET, Drive & Driven (Inc. 11, 18)	1
E	498113	REPAIR KIT, Shaft Seal (Inc. 1, 2, 25 thru 28)	1
1	———	§"O" RING, Retainer	1
2	———	§RETAINER, Shaft Seal	1
3	———	§BOLT, Cover to Body	8
4	———	§WASHER, Cover to Body	8
5	———	§PLUG, Cover	1
6	———	§GASKET, Cover	1
7	———	**§3EARING, Cover — Driven	1
8	———	§"O" RING, Cover Thrust Plate	1
9	———	§WASHER, "O" Ring Back-Up	1
10	———	§THRUST PLATE, Cover	1
11	———	§GEAR, Driven	1
12	———	§THRUST PLATE, Body	1
13	———	**§BEARING, Body	1
14	———	§PLUG, Body	1
15	———	**§BODY	1
16	———	**§BEARING, Body	1
17	———	§THRUST PLATE, Body	1
18	———	§GEAR, Drive	1
19	———	§THRUST PLATE, Cover	1
20	———	§SPRING, Cover Thrust Plate	6
21	———	§WASHER, "O" Ring Back-Up	1
22	———	§"O" RING, Cover Thrust Plate	1
23	———	**§BEARING, Cover	1
24	———	**§COVER	1
25	———	§"O" RING, Retainer	1
26	———	§SEAL, Inner Oil	1
27	———	§SEAL, Outer Oil	1
28	———	§RING, Seal Retaining	1
29	214961	†SLEEVE, Pump Drive	1
30	235961	†GASKET, Pump to Converter	1
31	8D-06	†NUT, Pump to Converter	6
32	4E-06	†LKWSHR, Pump to Converter	6

†Not Illustrated
§Not Sold Separately

*NOTE: *Minor Repair Kit* consists of "O" Rings, Back-up Washers, Gaskets and approximately 20% of the hardware items such as bolts, nuts, springs and washers. The latter for the purpose of replacing any of these items lost or damaged in repair operation.

**NOTE: Pump Bodies, Covers and Bearings will not be made available for field use since when these items are worn beyond limits permitting re-use, the cost of rebuilding the pump exceeds practical limits. In such cases a new pump assembly should be utilized.

***NOTE: For complete replacement use 1521257 Pump plus 1—235961 Gasket, 3—8D6 Nut, 1—1520566 Adapter Union, 1—1522464 Adapter Union, 3—9E6 Lockwasher, 3—103293 Washer, 1—91F10 O-Ring, & 1—91F8 O-Ring.

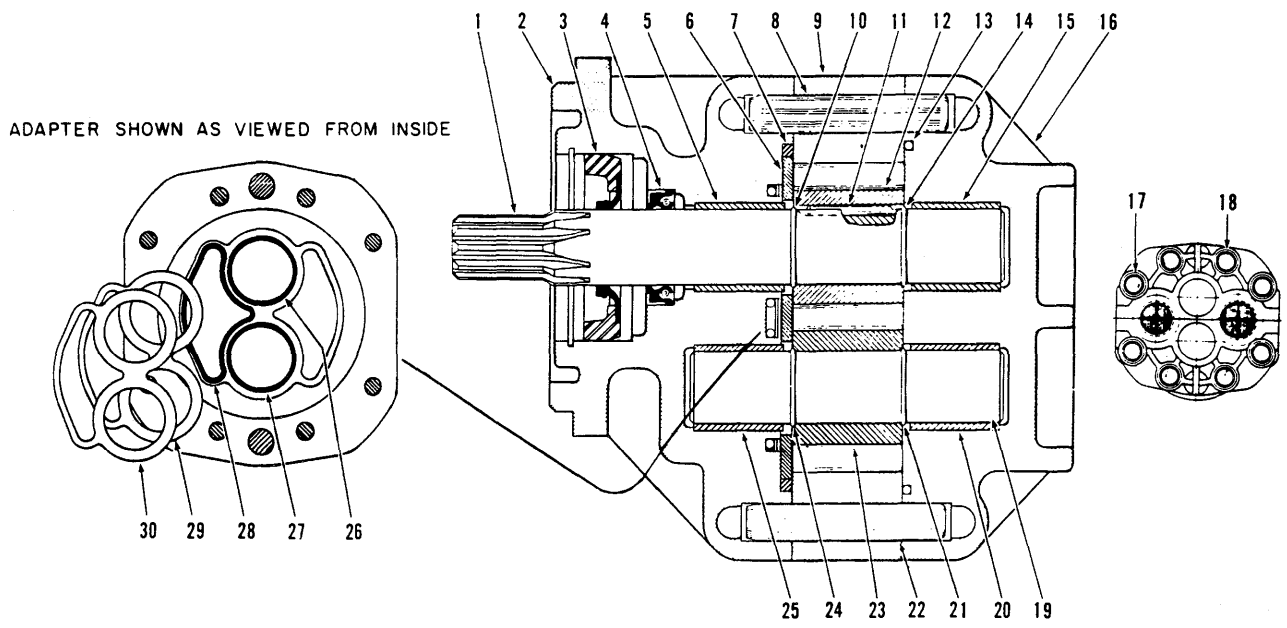

TS-7060-P

HYDRAULIC PUMP – STEERING

Item No.	Part No.	Description	No. Req'd.
A	1521257	*PUMP ASSY (Inc. 1 thru 30)	1
B	946483	SEAL KIT (Inc. 3, 4, 7, 13, 26 thru 30)	1
1	———	§SHAFT, Drive	1
2	———	§ADAPTER, Pump	1
3	———	§SEAL, Shaft	1
4	———	§SEAL, Shaft	1
5	———	§BUSHING, Shaft	1
6	———	§WEAR PLATE	1
7	———	§"O" RING	1
8	———	§DOWEL PIN	1
9	———	§HOUSING, Center Section	1
10	———	§RING, Retaining	1
11	———	§DOWEL PIN	1
12	———	§GEAR, Drive	1
13	———	§"O" RING	1
14	———	§RING, Retaining	1
15	———	§BUSHING, Shaft	1
16	———	§COVER, Pump	1
17	———	§BOLT, Cover to Housing	4
17A	———	§LKWSHR, Cover to Housing	4
17B	———	§WASHER, Cover to Housing	4
18	———	§BOLT, Cover to Housing	4
18A	———	§LKWSHR, Cover to Housing	4
18B	———	§WASHER, Cover to Housing	4
19	———	§SHAFT, Drive	1
20	———	§BUSHING, Shaft	1
21	———	§RING, Retaining	1
22	———	§DOWEL PIN	1
23	———	§GEAR, Driven	1
24	———	§RING, Retaining	1
25	———	§BUSHING	1
26	———	§"O" RING	1
27	———	§"O" RING	1
28	———	§"O" RING	1
29	———	§RING, Back-up	1
30	———	§RING, Back-up	1

§Not Sold Separately

*NOTE: The above listed pump, with the exception of the Seal Kit listed, is not considered rebuildable in the field. Due to extremely close tolerances involved and extensive break-in test required, the cost of equipment needed and parts plus labor would exceed cost of replacement pump. Order replacement Pump by part number listed.

WHEN ORDERING REPLACEMENT PUMP, ALWAYS REFER TO PUMP REPLACEMENT CHART

P.M. 1657
Printed in U.S.A.

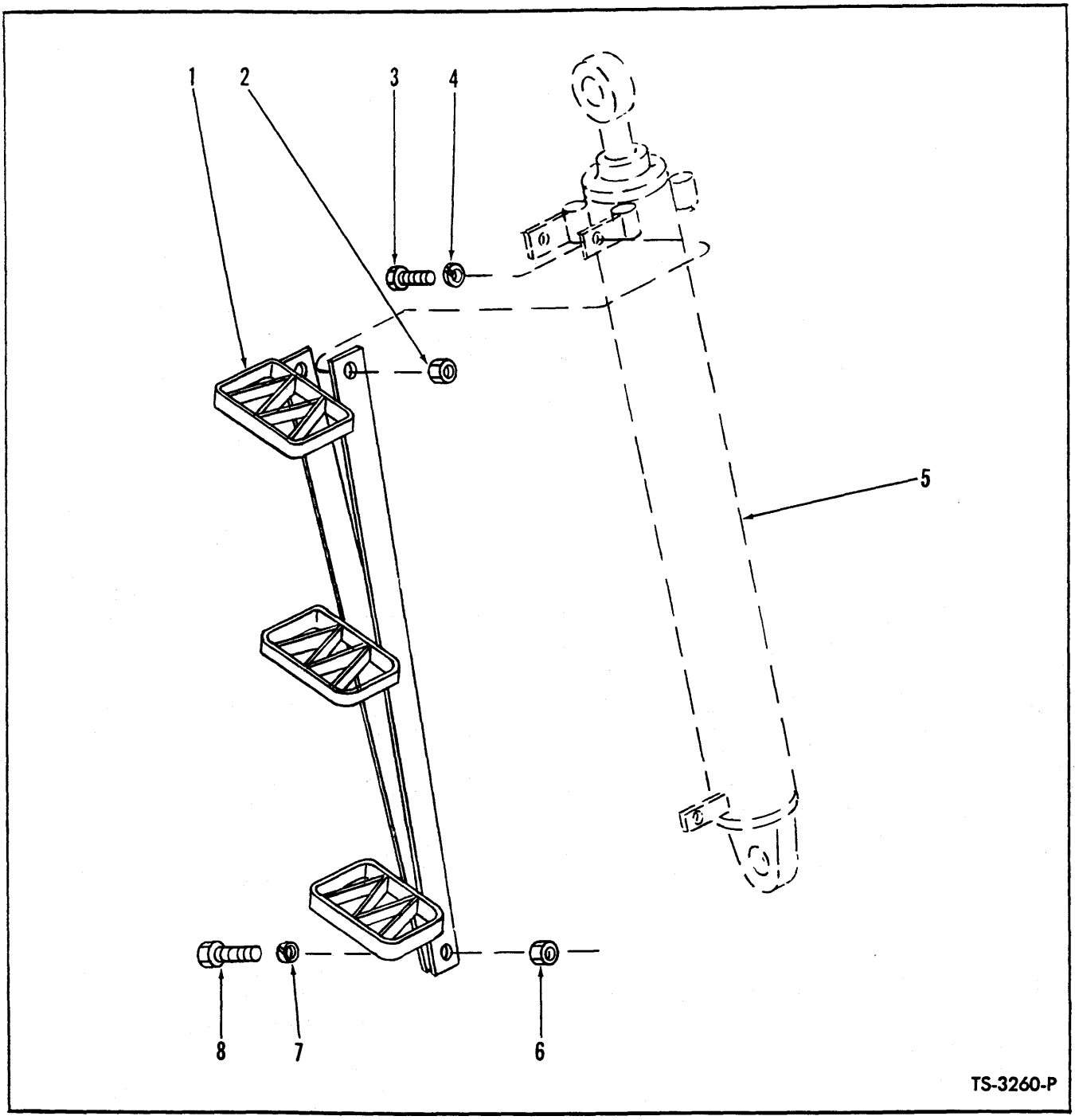

CYLINDER STEP ASSEMBLY

Item No.	Part No.	Description	No. Req'd.
1	533667	STEP ASSY, Boom Cylinder	1
2	2D-08	NUT, Step to Cylinder Mounting	2
3	2C-820	BOLT, Step to Cylinder Mounting	2
4	4E-08	LKWSHR, Step to Cylinder Mounting	2
5	———	BOOM CYLINDER — (See Index)	—
6	2D-08	NUT, Step to Cylinder Mounting	1
7	4E-08	LKWSHR, Step to Cylinder Mounting	1
8	2C-824	BOLT, Step to Cylinder Mounting	1

WHEN ORDERING PARTS, ALWAYS STATE MODEL AND SERIAL NO. OF MACHINE

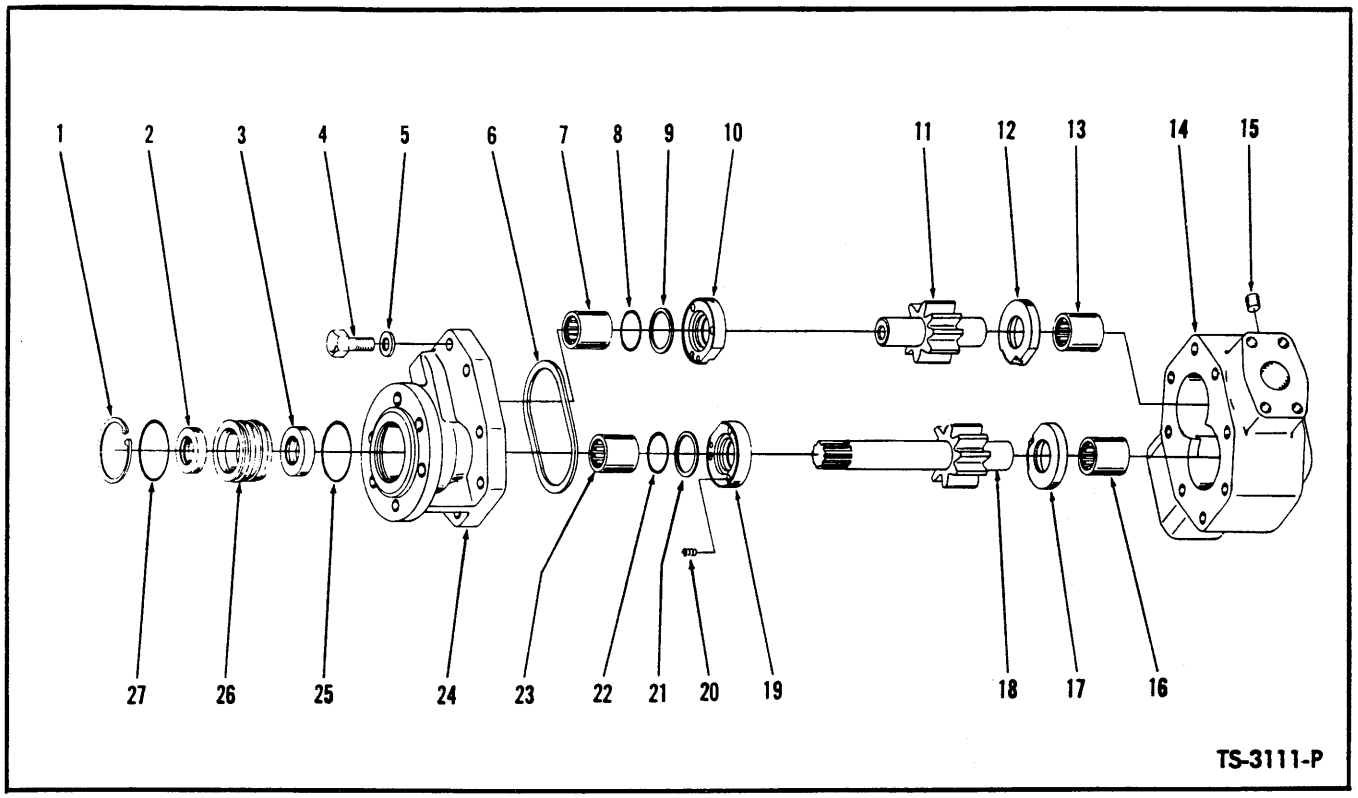

HYDRAULIC PUMP — BUCKET AND BOOM

Item No.	Part No.	Description	No. Req'd.
A		*PUMP ASSY (Inc. 1 thru 27)*	
B	450004	*For 55A — Serial 3726 thru 3785	1
C	450003	*For Serial: 55A — 3786 thru 3855, 1BCO134 thru 1BCO282, 2BCO1 thru 2BCO999, 55B — 50BCO1 thru 50BCO999	1
D	498130	REPAIR KIT, Major (Inc. 10, 12, 17, 19)	1
E	498129	**REPAIR KIT, Minor (Inc. 1, 4, 5, 6, 8, 9, 20, 21, 22, 25, 27)	1
F	498019	GEAR SET, Drive & Driven (Inc. 11, 18)	1
G	498113	REPAIR KIT, Shaft Seal (Inc. 1, 2, 3, 25, 26, 27)	1
1	———	§RING, Seal Retainer Retaining	1
2	———	§SEAL, Outer Shaft Oil	1
3	———	§SEAL, Inner Shaft Oil	1
4	———	§BOLT, Cover to Body	8
5	———	§WASHER, Cover to Body	8
6	———	§GASKET, Cover to Body	1
7	———	§BEARING, Cover — Driven (See Note "A")	1
8	———	§"O" RING, Cover Thrust Plate	1
9	———	§RING, "O" Ring Back-Up	1
10	———	§THRUST PLATE, Cover	1
11	———	§GEAR, Driven	1
12	———	§THRUST PLATE, Body	1
13	———	§BEARING, Body — Driven (See Note "A")	1
14	———	§BODY (See Note "A")	1
15	———	§PLUG, Body	1
16	———	§BEARING, Body — Drive (See Note "A")	1
17	———	§THRUST PLATE, Body	1
18	———	§GEAR, Drive	1
19	———	§THRUST PLATE, Cover	1
20	———	§SPRING, Cover Thrust Plate	1
21	———	§WASHER, "O" Ring Back-Up	1
22	———	§"O" RING, Cover Thrust Plate	1
23	———	§BEARING, Cover — Drive (See Note "A")	1
24	———	§COVER (See Note "A")	1
25	———	§"O" RING, Retainer	1
26	———	§RETAINER, Shaft Seal	1
27	———	§"O" RING, Retainer	1
28	235961	†GASKET, Pump to Converter	1
29	8D-06	†NUT, Pump to Converter	1
30	4E-06	†LKWSHR, Pump to Converter	1

*NOTE: For complete replacement use 2522671 Pump.

**NOTE: *Minor Repair Kit* consists of "O" Rings, Back-up Washers, Gaskets and approximately 20% of the hardware items such as bolts, nuts, springs and washers. The latter for the purpose of replacing any of these items lost or damaged in repair operation.

NOTE "A": Pump Bodies, Covers and Bearings will not be made available for field use since when these items are worn beyond limits permitting re-use, the cost of rebuilding the pump exceeds practical limits. In such cases a new pump assembly should be utilized.

§Not Sold Separately

†Not Illustrated

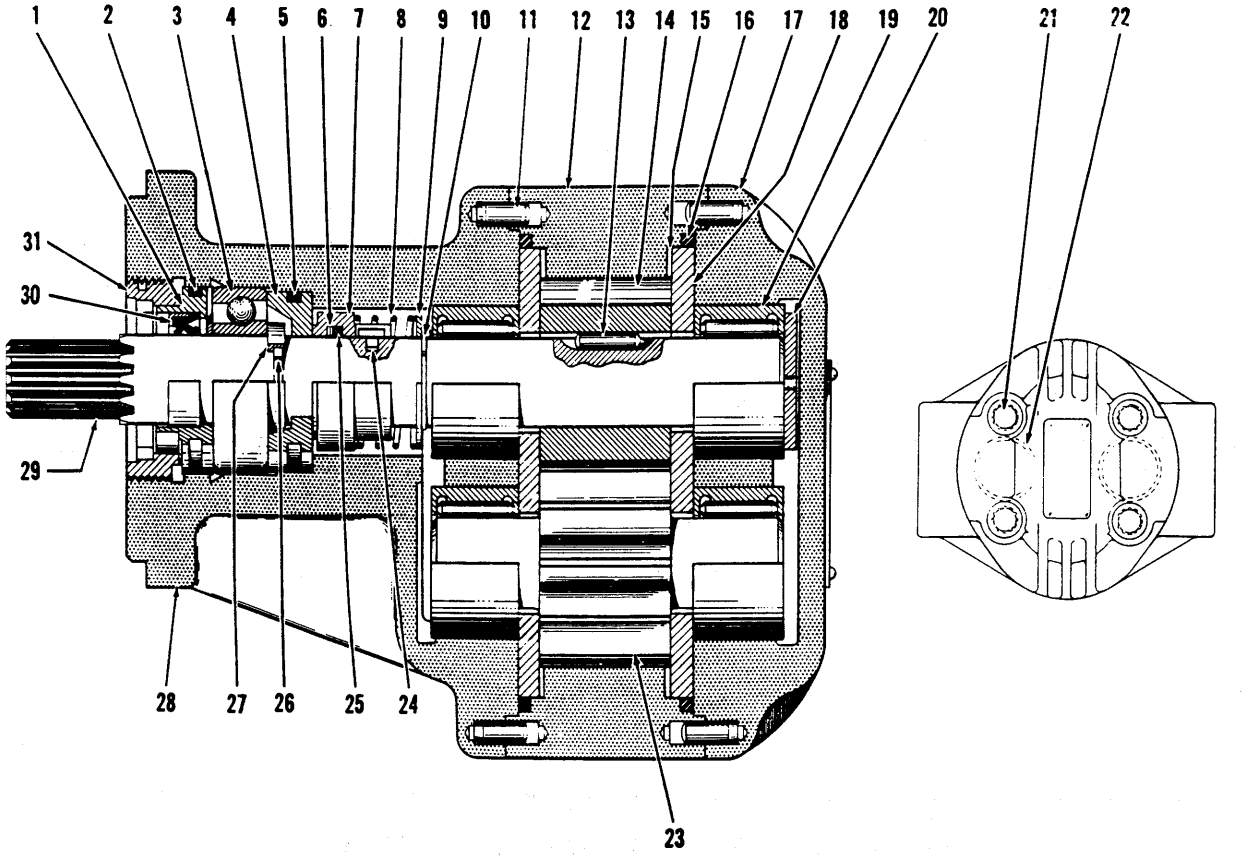

HYDRAULIC PUMP — BUCKET AND BOOM

Item No.	Part No.	Description	No. Req'd.
A	538319	PUMP ASSY (Inc. 1 thru 31)	1
B	944814	REPAIR KIT, Minor (Inc. 2, 4, 5, 7, 10, 15, 16, 22, 24, 25, 30)	1
C	944787	WEAR PLATE KIT (Inc. 15, 18)	1
D	944777	BEARING KIT (Inc. 3, 19)	1
E	944820	GEAR & SHAFT KIT (Inc. 13, 14, 23, 29)	1
F	944794	SHAFT SEAL KIT (Inc. 2, 30)	1
1	884604	RETAINER, Shaft Inner Seal	1
2	———	§"O" RING, Retainer — See B & F	1
3	884605	BEARING, Shaft — See D	1
4	———	§SEAT ASSY, Seal (Inc. 5) — See B	1
5	———	§"O" RING, Seal Seat — See B	1
6	———	§WASHER, "O" Ring Back-Up—See B	1
7	———	§SEAL ASSY, High Pressure (Inc. 6, 8, 9, 26, 27) — See B	1
8	———	§SPRING, High Pressure Seal — See B	1
9	———	§WASHER, High Pressure Seal — See B	1
10	———	§RING, Seal Retaining — See B	1
11	867753	PIN, Housing to Adapter & Cover Dowel	4
12	944975	HOUSING, Pump Center Section	1
13	———	§PIN, Shaft to Gear Dowel — See E	1
14	———	§GEAR, Drive — See E	1
15	———	§SHIM, Wear Plate — See B & C	3
16	———	§"O" RING, Housing — See B	2
17	———	§COVER, Pump — See A	1
18	———	§PLATE, Wear — See C	1
19	———	§BEARING, Roller — See D	4
20	884614	WASHER, Drive Shaft Thrust	1
21	12G-1052	BOLT, Cover & Housing to Adapter	4
22	———	§"O" RING — See B	4
23	———	§GEAR, Driven — See E	1
24	———	§KEY, Drive — See B	1
25	———	§"O" RING, High Pressure Seal—See B	1
26	———	§RING, Drive Shaft Snap — See B	1
27	———	§RETAINER, Shaft Snap Ring—See B	1
28	———	§ADAPTER, Pump — See A	1
29	———	§SHAFT, Drive — See E	1
30	———	§SEAL, Shaft — See B & F	1
31	884602	RETAINER, Shaft Seal	1

§Not Sold Separately

WHEN ORDERING PARTS, ALWAYS STATE MODEL AND SERIAL NO. OF MACHINE

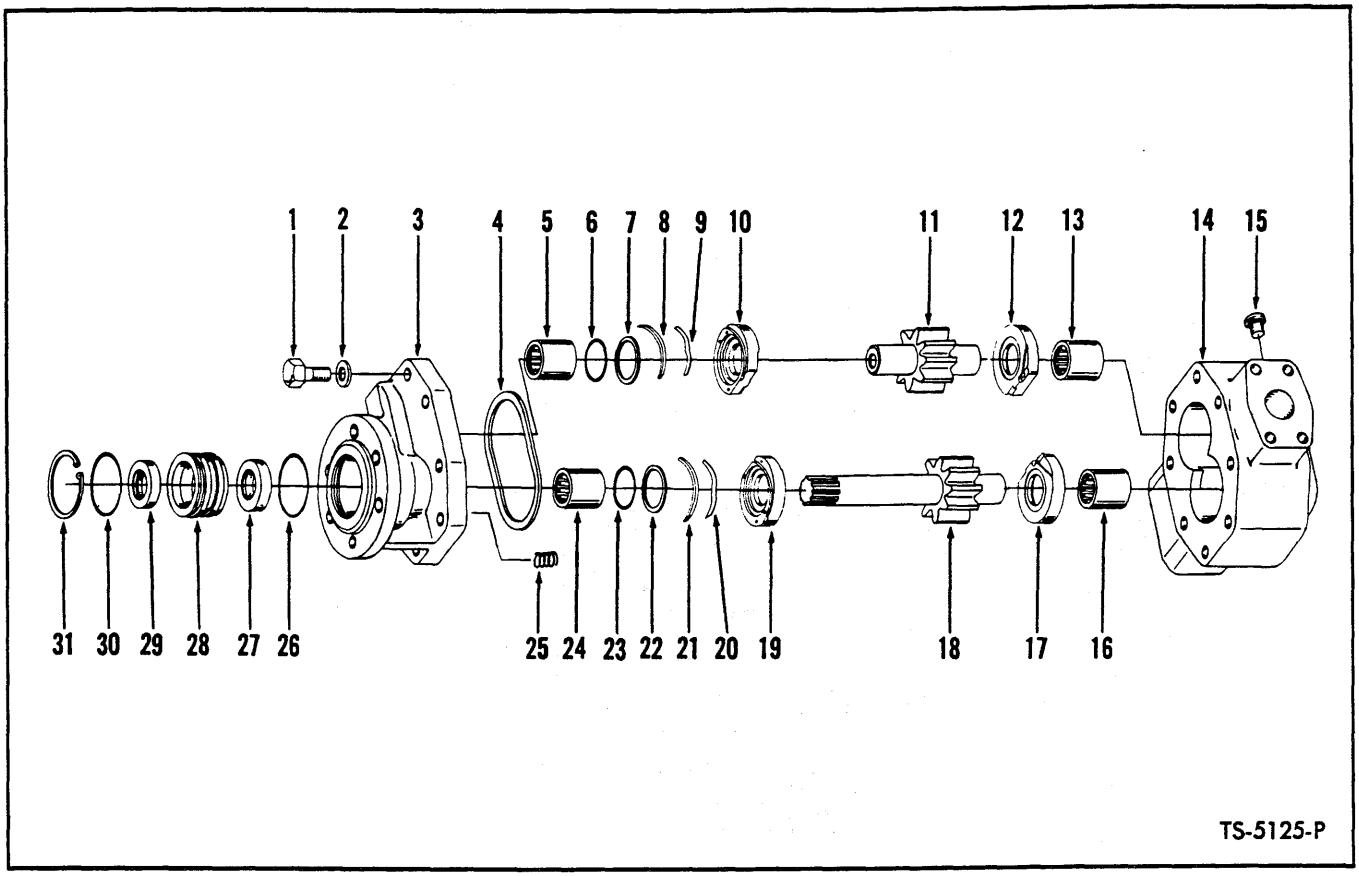

HYDRAULIC PUMP — BUCKET AND BOOM

Item No.	Part No.	Description	No. Req'd.
A	450237	[2]PUMP ASSY (Inc. 1 thru 31)	1
B	498159	REPAIR KIT, Minor (Inc. 1, 2, 4, 6, 7, 22, 23, 25, 26, 30)	1
C	498160	REPAIR KIT, Thrust Plate (Inc. 8, 9, 10, 12, 17, 19, 20, 21)	1
D	498113	REPAIR KIT, Shaft Seal (Inc. 26 thru 31)	1
E	498221	REPAIR KIT, Bearing (Inc. 5, 13, 16, 24)	1
F	498019	GEAR KIT (Inc. 11, 18)	1
1	———	§BOLT, Cover to Body	8
2	———	§WASHER, Cover to Body	8
3	———	§COVER, Pump — See Item "A"	1
4	———	§GASKET, Cover	1
5	———	§BEARING, Cover	1
6	———	§"O" RING, Cover Thrust Plate	1
7	———	§RING, "O" Ring Back-Up	1
8	———	§RING, Mask-Off	1
9	———	§SPRING, Wave	1
10	———	§THRUST PLATE, Cover	1
11	———	§GEAR, Driven	1
12	———	§THRUST PLATE, Body	1
13	———	§BEARING, Body	1
14	———	§BODY, Pump — See Item "A"	1
15	16F-02	PLUG, Body	1
16	———	§BEARING, Body	1
17	———	§THRUST PLATE, Body	1
18	———	§GEAR, Drive	1
19	———	§THRUST PLATE, Cover	1
20	———	§SPRING, Wave	1
21	———	§RING, Mask-Off	1
22	———	§RING, "O" Ring Back-Up	1
23	———	§"O" RING, Cover Thrust Plate	1
24	———	§BEARING, Cover	1
25	———	§SPRING, Cover Thrust Plate	3
26	———	§"O" RING, Oil Seal Retainer	1
27	———	§SEAL, Inner Shaft Oil	1
28	———	§RETAINER, Shaft Seal	1
29	———	§SEAL, Outer Shaft Oil	1
30	———	§"O" RING, Oil Seal Retainer	1
31	———	§RING, Seal Retainer Retaining	1
32	235961	†GASKET, Pump to Converter	1
33	8D-06	†NUT, Pump to Converter	3
34	4E-06	†LKWSHR, Pump to Converter	3

[2]For complete replacement use 2522671 Pump.

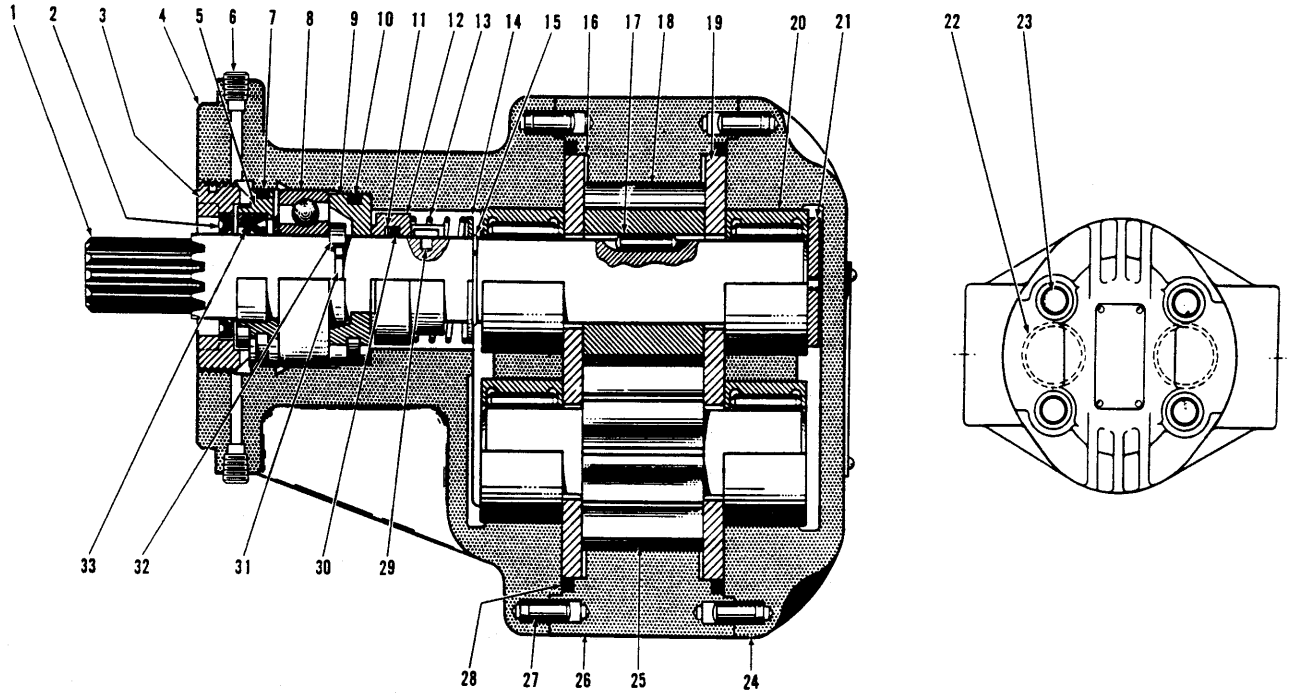

TS-3030

HYDRAULIC PUMP — BUCKET AND BOOM

Item No.	Part No.	Description	No. Req'd.
A	1525904	PUMP ASSY (Inc. 1 thru 33)	1
B	944710	REPAIR KIT, Minor (Inc. 2, 7, 9, 10, 12, 15, 16, 22, 28, 32, 33)	1
C	944820	GEAR & SHAFT SET (Inc. 1, 17, 18, 25)	1
D	944776	SEAL KIT, Shaft (Inc. 2, 7, 33)	1
E	944777	BEARING KIT (Inc. 8, 20, 21)	1
F	944787	WEAR PLATE SET (Inc. 16, 19)	1
1	———	§SHAFT, Drive — See "C"	1
2	———	§SEAL, Shaft Outer — See "B" & "D"	1
3	944782	RETAINER, Shaft Outer Seal	1
4	———	§ADAPTER, Pump — See "A"	1
5	884604	RETAINER, Shaft Inner Seal	1
6	16F-01	PLUG, Adapter Port	3
7	———	§"O" RING, Retainer — See "B" & "D"	1
8	884605	BEARING, Shaft — See "E"	1
9	———	§SEAT ASS, Seal (Inc. 10) — See "B"	1
10	———	§"O" RING, Seal Seat — See "B"	1
11	———	§WASHER, "O" Ring Back-Up — See "B"	1
12	———	§SEAL ASSY, High Pressure (Inc. 11, 13, 14, 29, 30) — See "B"	1
13	———	§SPRING, High Pressure Seal — See "B"	1
14	———	§WASHER, High Pressure Seal — See "B"	1
15	———	§RING, Seal Retaining — See "B"	1
16	———	§SHIM, Wear Plate — See "B" & "F"	4
17	———	§PIN, Gear to Shaft Dowel — See "C"	1
18	———	§GEAR, Drive — See "C"	1
19	———	§PLATE, Wear — See "F"	2
20	———	§BEARING, Drive & Driven Shaft — See "E"	4
21	884614	PLATE, Drive Shaft Thrust	1
22	———	§"O" RING — See "B"	4
23	12G-1052	BOLT, Cover & Housing to Adapter	4
24	———	§COVER, Pump — See "A"	1
25	———	§GEAR, Driven — See "C"	1
26	944975	HOUSING, Pump Center Section	1
27	867753	PIN, Housing to Adapter & Cover	4
28	———	§"O" RING, Housing — See "B"	2
29	———	§KEY, Drive — See "B"	1
30	———	§"O" RING, High Pressure Seal — See "B"	1
31	———	§RING, Retaining — See "B"	1
32	———	§RETAINER, Retaining Ring — See "B"	1
33	———	§SEAL, Shaft Inner — See "B" & "D"	1

§Not Sold Separately
[2]For complete replacement use 2522671 Pump.

TS-1245-P

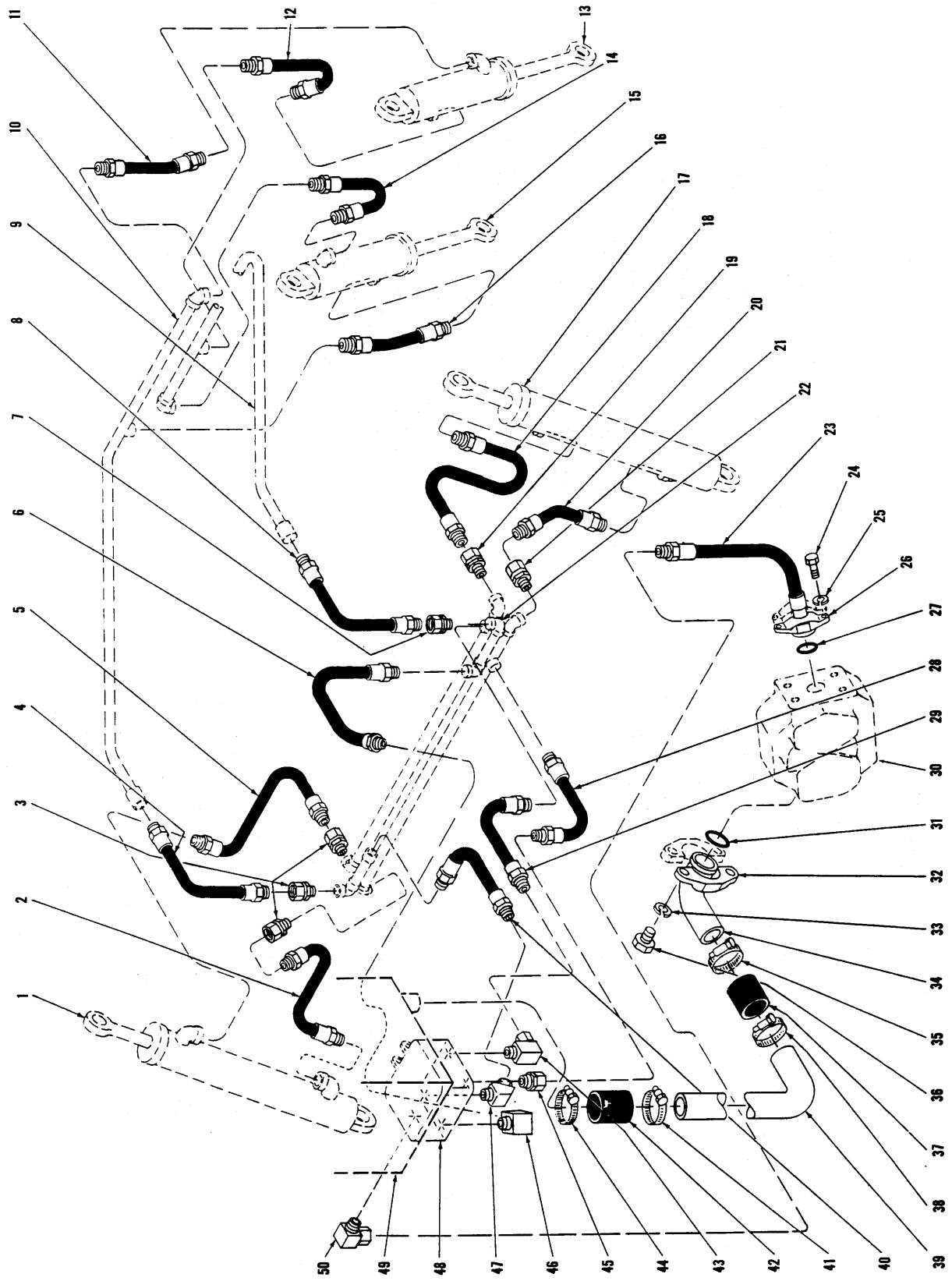

HYDRAULIC SYSTEM — BUCKET AND BOOM

HYDRAULIC SYSTEM — BUCKET AND BOOM

Item No.	Part No.	Description	No. Req'd.
1	———	BOOM CYLINDER — See Index	—
2	645432	HOSE, Crosspipe to Boom Cyl. (See Note "A")	1
3	36F-5	ADAPTER UNION	3
4	658914	HOSE, Crosspipe to Boom Pipe (See Note "A")	1
5	691800	HOSE, Crosspipe to Boom Cyl. (See Note "A")	1
6	712647	HOSE, Valve to Crosspipe (See Note "B")	1
7	36F-5	ADAPTER UNION	1
8	658914	HOSE, Crosspipe to Boom Pipe (See Note "A")	1
9	———	BOOM PIPE — R.H. — See Index	1
10	———	BOOM PIPE — L.H. — See Index	1
11	522736	HOSE, Boom Pipe to Bucket Cyl.	1
12	550807	HOSE, Boom Pipe to Bucket Cyl.	1
13	———	BUCKET CYLINDER — See Index	1
14	550807	HOSE, Boom Pipe to Bucket Cyl.	1
15	———	BUCKET CYLINDER — See Index	—
16	522736	HOSE, Boom Pipe to Bucket Cyl.	1
17	———	BOOM CYLINDER — See Index	—
18	691800	HOSE, Crosspipe to Boom Cyl. (See Note "A")	1
19	36F-5	ADAPTER UNION	1
20	645432	HOSE, Crosspipe to Boom Cyl. (See Note "A")	1
21	36F-5	ADAPTER UNION	1
22	528343	*CROSSPIPE*	1
22A	2C-628	†BOLT, Crosspipe to Frame	2
22B	2D-06	†NUT, Crosspipe to Frame	2
22C	4E-06	†LKWSHR, Crosspipe to Frame	2
23		*HOSE, Pump to Valve-Pressure*	
23A	553419	For 55A — Serial 3726 thru 3785	1
23B	527549	For Serial: 55A — 3786 thru 3855, 1BCO134 thru 1BCO282, 2BCO1 thru 2BCO999 55B — 50BCO1 thru 50BCO999	1
24	1C-620	BOLT, Flange to Pump	4
25	4E-06	LKWSHR, Flange to Pump	4
26	19J16	FLANGE HALF, Hose to Pump	2
27	58K-219	"O" RING, Hose to Pump	1
28	657184	HOSE, Valve to Crosspipe (See Note "A")	1
29	712647	HOSE, Valve to Crosspipe (See Note "B")	1
30	———	PUMP, Bucket & Boom — See Index	—
31	58K-222	"O" RING, Stem to Pump	1
32	19J20	FLANGE HALF, Stem to Pump	2
33	4E-07	LKWSHR, Flange to Pump	4
34		*STEM, Hose to Pump — Suction*	
34A	526382	For 55A — Serial 3726 thru 3785	1
34B	593505	For Serial: 55A — 3786 thru 3855, 1BCO134 thru 1BCO282, 2BCO1 thru 2BCO999 55B — 50BCO1 thru 50BCO999	1
35	784663	CLAMP, Hose	1
36	1C-724	BOLT, Flange to Pump	4
37	536710	*HOSE, Tube to Stem	1
38	784663	*CLAMP, Hose	1
39		*TUBE, Reservoir to Pump — Suction*	
39A	553340	HOSE, For 55A — Serial 3726 thru 3785	1
39B	529518	TUBE, For Serial: 55A — 3786 thru 3855, 1BCO134 thru 1BCO282, 2BCO1 thru 2BCO999 55B — 50BCO1 thru 50BCO999	1
40	669952	HOSE, Valve to Crosspipe (See Note "C")	1
41	784663	*CLAMP, Hose	1
42	536710	*HOSE, Tube to Reservoir	1
43	31F-5	ADAPTER UNION	1
44	784663	CLAMP, Hose	1
45	36F-5	ADAPTER UNION	1
46	31F-5	ADAPTER UNION	1
47	33F-5	ADAPTER UNION	1
48	———	CONTROL VALVE — See Index	1
49	———	RESERVOIR, Hydraulic Oil—See Index	1
50	31F-5	ADAPTER UNION	1

†Not Illustrated

*NOTE: Items designated by an asterisk are not applicable to machine serial numbers 3726 thru 3785.

NOTE "A": When installing Hose Items 2, 4, 5, 8, 18, 20 and 28 in place of swivel end hoses use one 36F-5 Adapter Union.

NOTE "B": When installing Hose Items 6 and 29 in place of swivel end hoses use one 31F-5 Adapter Union.

NOTE "C": When installing Hose Item 40, in place of swivel end hose use one 33F-5 Adapter Union.

WHEN ORDERING PARTS, ALWAYS STATE MODEL AND SERIAL NO. OF MACHINE

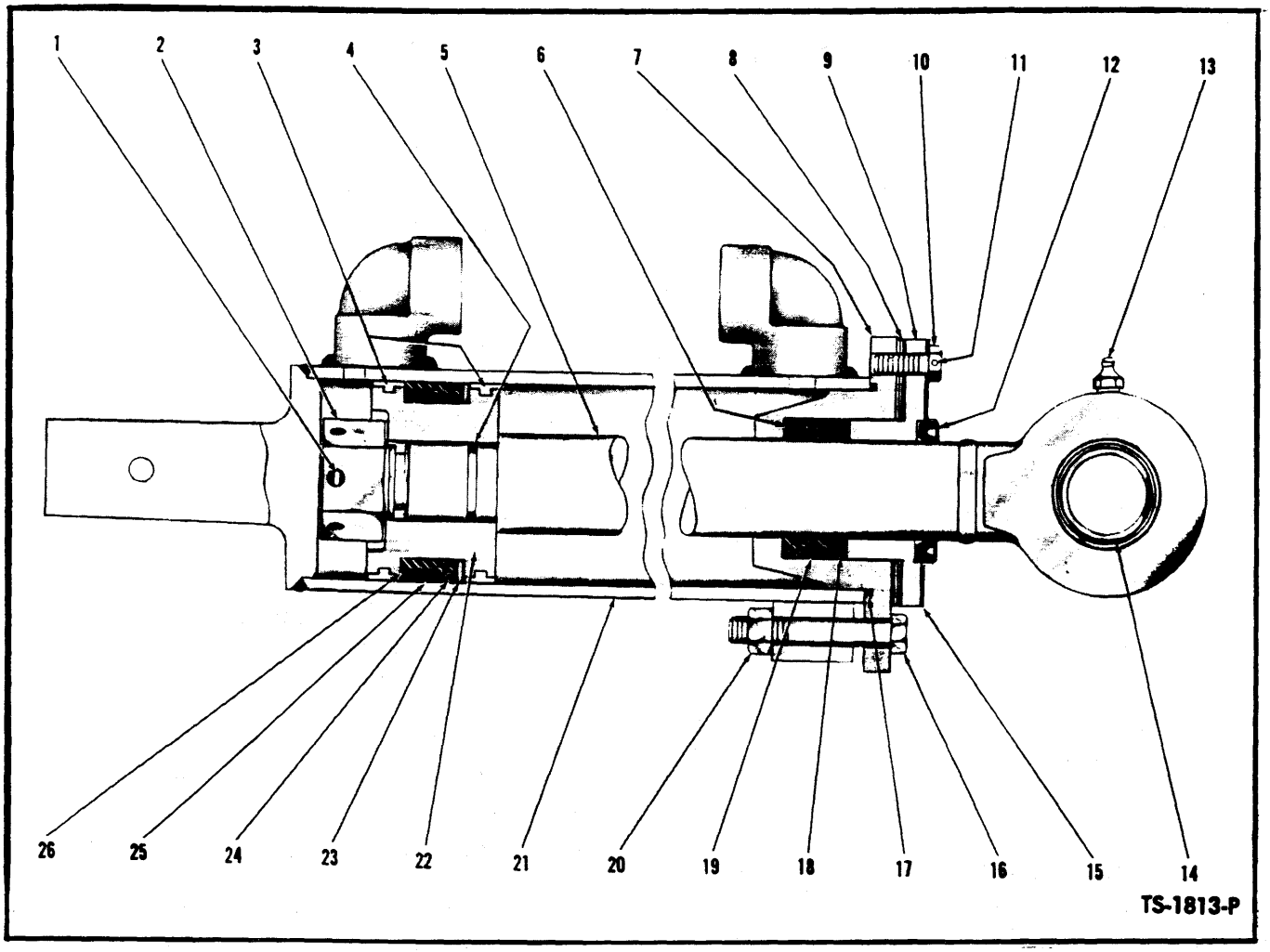

BOOM CYLINDER ASSEMBLY

2 Cylinders Used on Machine — Quantity Indicated is for 1 Cylinder

Item No.	Part No.	Description	No. Req'd.
A	523118	CYLINDER ASSY (Inc. 1 thru 26) R.H.	1
B	533654	†CYLINDER ASSY (Inc. 1 thru 26) L.H.	1
C	2523424	KIT (Inc. 1, 3, 4, 6, 8, 17 thru 19, 23 thru 26) - See Note "A"	1
1	1F-540	COTTER, Piston Rod Nut	1
2	517298	NUT, Piston Rod	1
3	———	§RING, Piston Wear — See C	2
4	———	§"O" RING, Piston Rod — See C	1
5	523123	ROD ASSY (Inc. 13, 14)	1
6	———	§ADAPTER, Male — See 19	2
7	526450	*CAP, Cylinder	1
8	517581	‡SHIM, Packing Gland	—
9	526451	GLAND, Packing	1
10	4C-620	BOLT, Packing Gland	4
11	28H-16130	LOCKWIRE, Packing Gland Bolt	2
12	941568	WIPER, Piston Rod	1
13	10H-25	FITTING, Piston Rod Grease	1
14	552766	BUSHING, Piston Rod	1
15	512797	RETAINER, Piston Rod Wiper	1
16	18C-748	BOLT, Cylinder Cap	4
17	———	§"O" RING, Cylinder Cap — See C	1
18	———	§ADAPTER, Female — See 19	2
19	2501106	PACKING SET, (Inc. 6, 18)	1
20	64D-07	NUT, Cylinder Cap	4
21	533655	CYLINDER	1
22	512789	**PISTON	1
23	———	§‡SHIM, Piston Packing — See C	—
24	———	§ADAPTER, Female — See C	2
25	———	§PACKING SET, Piston — See C	1
26	———	§ADAPTER, Male — See C	2

†Not Illustrated ‡As Required §Not Sold Separately

*NOTE: For replacement of 526450 Cap use 945112 Cap Assy. 945112 Cap Assy includes 1—25K-40308 O-Ring and 1—532917 Back-Up Ring.

**NOTE: For replacement use 1503639 Piston plus 1—2516071 Kit.

NOTE "A": For reference see Service Gram S.G.-597

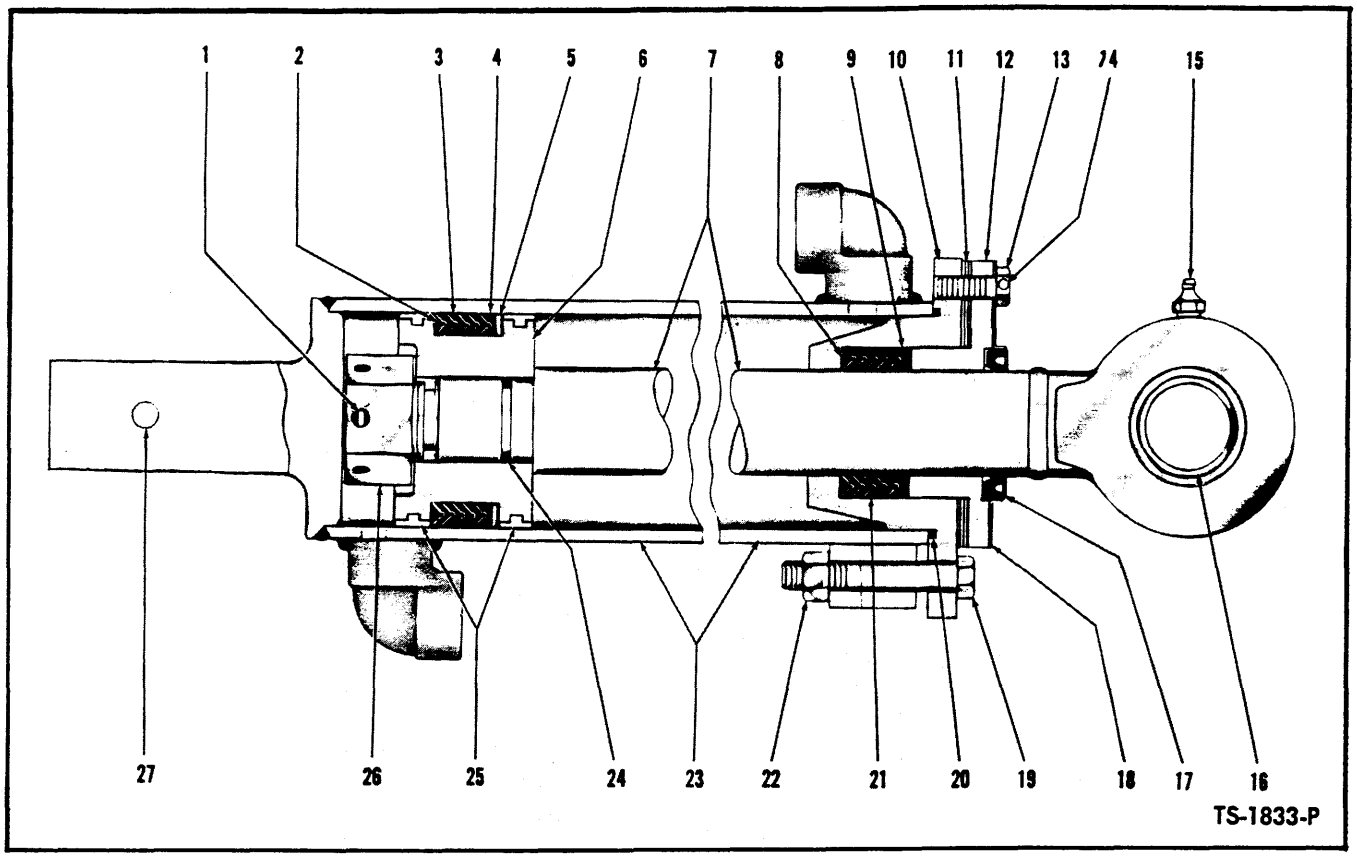

BUCKET CYLINDER ASSEMBLY

2 Cylinders Used on Machine — Quantity Indicated is for 1 Cylinder

Item No.	Part No.	Description	No. Req'd.
A	523110	CYLINDER ASSY (Inc. 1 thru 27)	1
B	2523425	KIT (Inc. 1 thru 5, 8, 9, 11, 20, 21, 24, 25) See Note "A"	1
1	1F-540	COTTER, Piston Rod Nut	1
2	———	§ADAPTER, Male — See B	2
3	———	§PACKING SET, Piston — See B	1
4	———	§ADAPTER, Female — See B	2
5	———	§‡SHIM, Piston Packing — See B	—
6	512789	**PISTON	1
7	523114	ROD ASSY, Piston (Inc. 15, 16)	1
8	———	§ADAPTER, Male — See 21	2
9	———	§ADAPTER, Female — See 21	2
10	526450	*CAP, Cylinder	1
11	517581	‡SHIM, Packing Gland	—
12	526451	GLAND, Packing	1
13	4C-620	BOLT, Packing Gland	4
14	28H-16130	LOCKWIRE	2
15	12H-15	FITTING, Piston Rod Grease	1
16	552766	BUSHING, Piston Rod	1
17	941568	WIPER, Piston Rod	1
18	512797	RETAINER, Piston Rod Wiper	1
19	18C-748	BOLT, Cylinder Cap	4
20	———	§"O" RING, Cylinder Cap — See B	1
21	2501106	PACKING SET, (Inc. 8, 9)	1
22	64D-07	NUT, Cylinder Cap	4
23	523111	CYLINDER	1
24	———	§"O" RING, Piston Rod — See B	1
25	———	§RING, Piston Wear — See B	2
26	517298	NUT, Piston Rod	1
27	12H-25	FITTING, Cylinder Grease	1

‡As Required
*NOTE: For replacement of 526450 Cap use 945112 Cap Assy. 945112 Cap Assy includes 1-25K-40308 O-Ring and 1-532917 Back-Up Ring.
**NOTE: For replacement use 1503639 Piston plus 1—2516071 Kit. NOTE "A": For reference see Service Gram S.G.-597

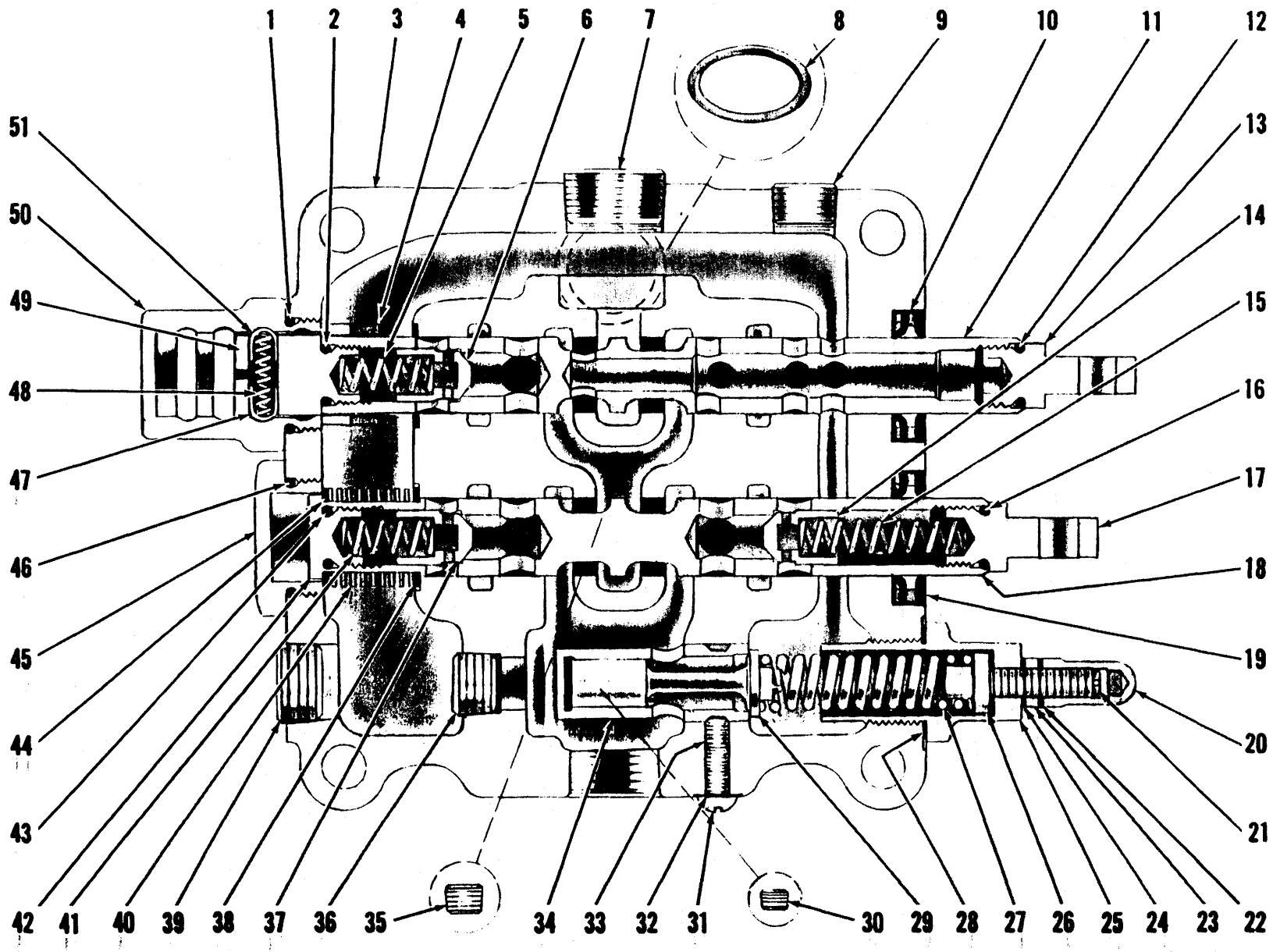

CONTROL VALVE ASSEMBLY

TS-1799-P

CONTROL VALVE ASSEMBLY

Item No.	Part No.	Description	No. Req'd.
A	526664	*VALVE ASSY, Control (Inc. 1 thru 51)	1
1	25K-30112	"O" RING, Detent Cap	1
2	940061	RING, Boom Plunger Seal	1
3	———	§HOUSING, Valve (See A)	—
4	940062	SPACER, Boom Plunger	1
5	940063	SPRING, Boom Plunger Check Valve	1
6	940064	PLUNGER, Boom Check Valve	1
7	16F-16	PLUG, Housing Discharge, Pipe—1"	1
8	58K-222	"O" RING, Valve to Reservoir	1
9	16F-08	PLUG, Housing Cleanout, Pipe—½"	1
10	944022	SEAL, Plunger	1
11	———	§PLUNGER, Boom Operating (See A)	—
12	940061	RING, Boom Plunger Seal	1
13	940068	EYE, Plunger End	1
14	940064	PLUNGER, Bucket Check Valve	1
15	940070	SPRING, Check Valve Plunger	1
16	940061	RING, Bucket Plunger Seal	1
17	940068	EYE, Plunger End	1
18	———	§PLUNGER, Bucket Operating (See A)	—
19	944022	SEAL, Plunger	1
20	863045	NUT, Relief Valve Acorn	1
21	519782	SCREW, Relief Valve Adjusting	1
22	958210	WASHER, Relief Valve (Gasket)	1
23	8D-06	NUT, Relief Valve Jam	1
24	958210	WASHER, Relief Valve (Gasket)	1
25	940025	CAP, Relief Valve Adjusting	1
26	940029	GUIDE, Relief Spring	1
27	519783	SPRING, Relief Valve	1
28	940031	GASKET, Relief Valve Adjusting Cap	1
29	940032	PLUNGER, Relief Valve	1
30	16F-04	PLUG, Housing Pipe—¼"	1
31	863052	SCREW, Relief Seat Lock	1
32	863053	GASKET	1
33	15G-506	SCREW, Relief Seat Set	1
34	940033	SEAT, Relief Valve Plunger	1
35	16F-06	PLUG, Housing Pipe—⅜"	1
36	16F-08	PLUG, Housing Relief Pipe—½"	1
37	940064	PLUNGER, Bucket Check Valve	1
38	940074	WASHER, Plunger Spring	1
39	16F-12	PLUG, Housing Pipe—¾"	1
40	940072	SPRING, Plunger Return	1
41	940063	SPRING, Bucket Plunger Check Valve	1
42	940073	CAP, Plunger End	1
43	940061	RING, Plunger Cap Seal	1
44	940074	WASHER, Plunger Spring	1
45	940039	CAP, Bucket Plunger Housing	1
46	25K-30112	"O" RING, Housing Cap	1
47	940075	POPPET, Detent	1
48	940024	SPRING, Detent Poppet	1
49	940023	CAP, Detent Poppet	1
50	940040	CAP, Housing Detent	1
51	940075	POPPET, Detent	1
52	2C-856	†BOLT, Valve to Reservoir	3
53	4E-08	†LKWSHR, Valve to Reservoir	3

§Not Sold Separately
†Not Illustrated

*NOTE: For complete replacement use 2511040 Control Valve plus 1—960604 Service Kit.

WHEN ORDERING PARTS ALWAYS STATE MODEL AND SERIAL NO. OF MACHINE

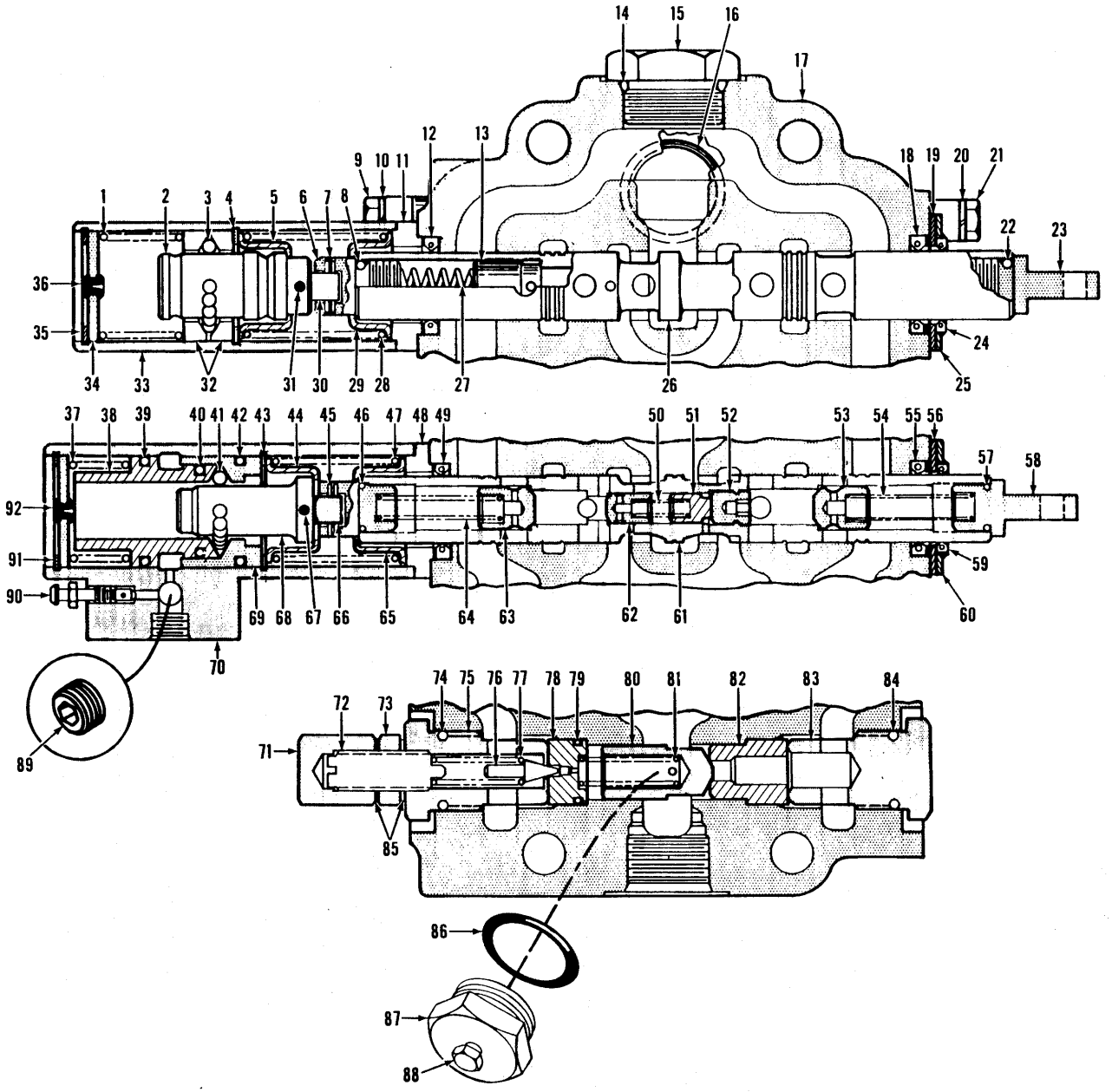
1 2 3 4 5 6 7 8 9 10 11 12 13 14 15 16 17 18 19 20 21 22 23 24 25 26 27 28 29 30 31 32 33 34 35 36
37 38 39 40 41 42 43 44 45 46 47 48 49 50 51 52 53 54 55 56 57 58 59 60 61 62 63 64 65 66 67 68 69 70 89 90 91 92
71 72 73 74 75 76 77 78 79 80 81 82 83 84 85 86 87 88

TS-14064

Valve Assembly, Main (2 Spool)

MICHIGAN

No.	Part No.	Qty.	Description
A	[2]2511040	1	Valve assy
1	945853	1	Spring
2	945848	1	Cap
3	10J-06	15	Ball
4	1300582	1	Ring
5	888451	1	Retainer
6	961005	1	Cap
7	300232	1	Pin
8	25K-30014	1	O-ring
9	11G-520	2	Bolt
10	4E-05	2	Lockwasher
11	960971	1	Plate
12	961004	1	Seal
13	945590	1	Check
14	91F-10	2	O-ring
15	24K-10	2	Cap
16	25K-40106	1	O-ring
17	§[3]———	—	Housing
18	961004	1	Seal
19	960966	1	Plate
20	4E-05	4	Lockwasher
21	1C-512	4	Bolt
22	25K-30014	1	O-ring
23	945226	1	Plunger eye
24	960968	1	Wiper
25	960967	1	Plate
26	§[3]———	—	Plunger
27	871388	1	Spring
28	888452	1	Spring
29	888451	1	Retainer
30	888449	1	Pin
31	300232	1	Pin
32	886758	2	Retainer
33	886761	1	Cover
34	886762	1	Plug
35	755855	1	Retainer
36	886763	1	Plug
37	945233	1	Spring
38	945231	1	Retainer
39	58K-124	1	O-ring
40	58K-121	1	O-ring
41	10J-06	12	Ball
42	58K-124	1	O-ring
43	1300582	1	Ring
44	888451	1	Retainer
45	300232	1	Pin
46	25K-30014	1	O-ring

[1]See Index
[2]Inc. 1→92
[3]See "A"

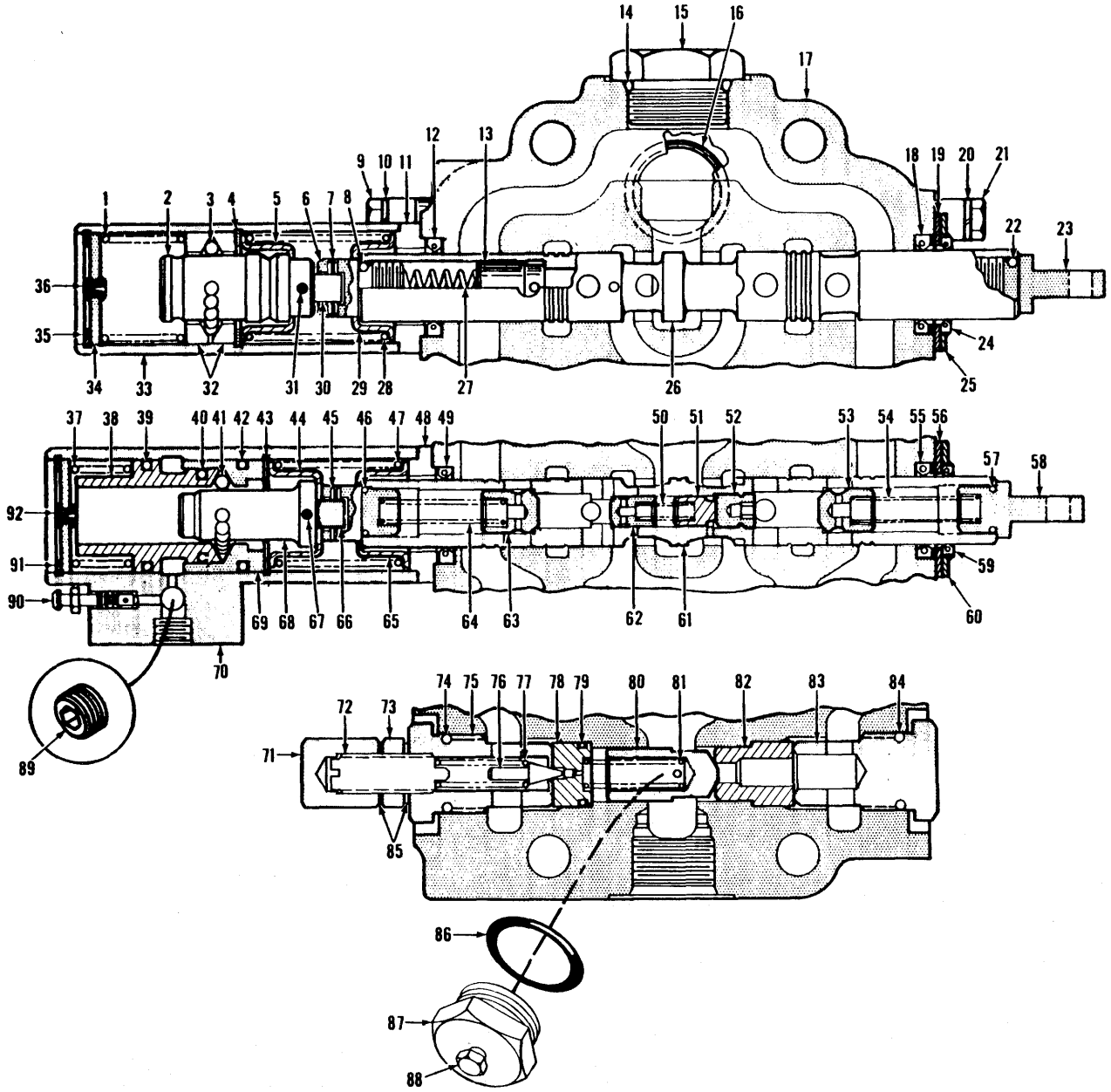

TS-14064

PMS 1657
Printed in U.S.A.

Valve Assembly, Main (2 Spool)

MICHIGAN

No.	Part No.	Qty.	Description
47	888455	1	Spring
48	960971	1	Plate
49	961004	1	Seal
50	§[3]———	—	Spring
51	§[3]———	—	Piston
52	§[3]———	—	Cap
53	945590	1	Check
54	871388	1	Spring
55	961004	1	Seal
56	960966	1	Plate
57	25K-30014	1	O-ring
58	945226	1	Plunger eye
59	960968	1	Wiper
60	960967	1	Plate
61	§[3]———	—	Plunger
62	§[3]———	—	Check
63	945590	1	Check
64	946540	1	Spring
65	888451	1	Retainer
66	888449	1	Pin
67	730432	1	Pin
68	945232	1	Cap
69	945217	1	Retainer
70	945234	1	Housing
70A	†11G-520	2	Bolt
70B	†4E-05	2	Lockwasher
71	49D-08	1	Nut
72	980834	1	Screw
73	8D-08	1	Nut
74	58K-210	1	O-ring
75	980835	1	Cap
76	886739	1	Poppet
77	886753	1	Spring
78	960964	1	Seat
79	25K-30020	1	O-ring
80	960965	1	Check
81	947791	1	Spring
82	960963	1	Seat
83	980838	1	Cap
84	58K-210	1	O-ring
85	613750	2	Washer
86	91F-8	1	O-ring
87	945430	1	Cap
88	40K-04	1	Plug
89	16F-02	1	Plug
90	641297	1	Screw
91	755855	1	Retainer
92	886763	1	Plug

[1]See Index
[2]Inc. 1→92
[3]See "A"

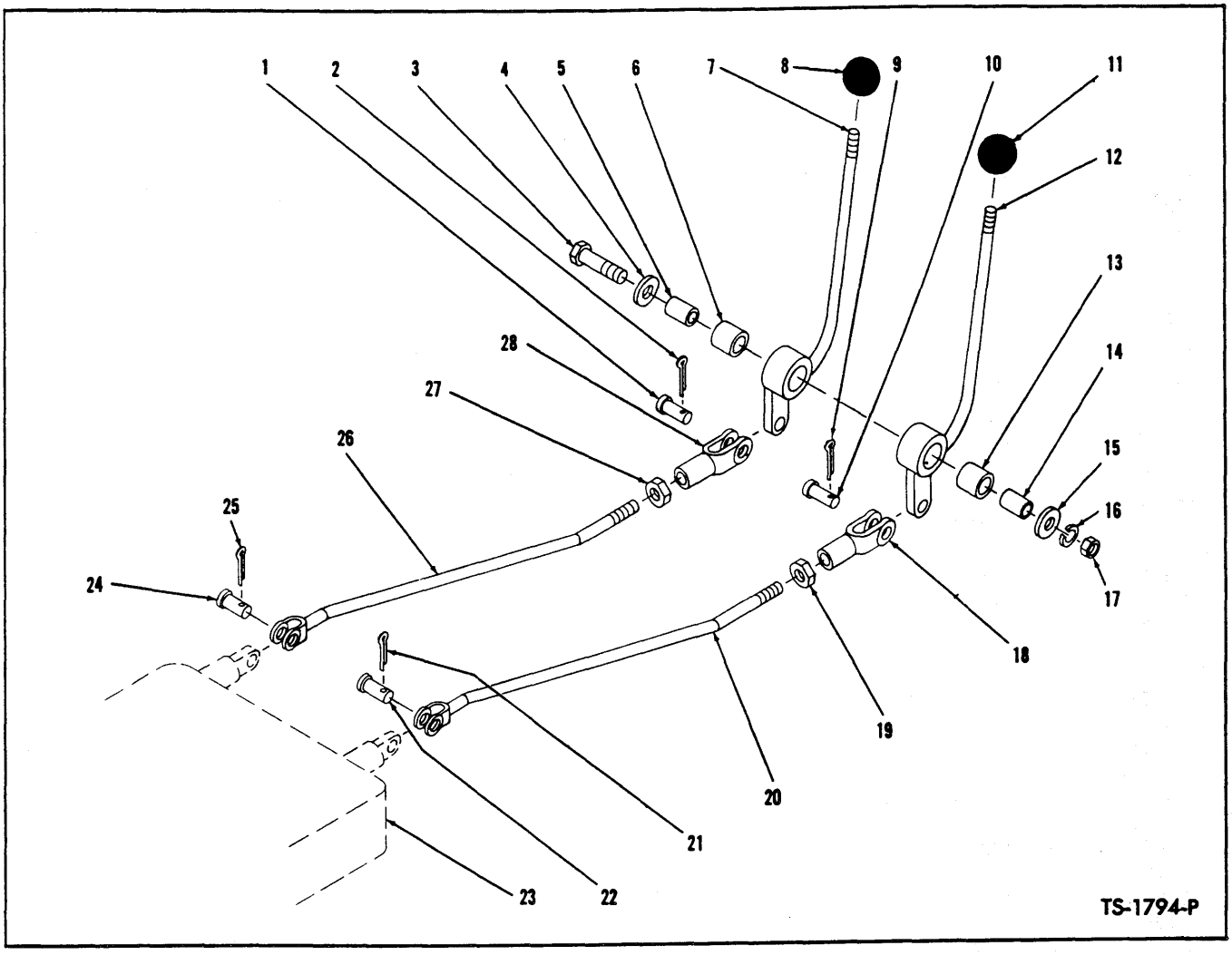

VALVE CONTROL LEVERS AND LINKAGE

Item No.	Part No.	Description	No. Req'd.
1	4F-08127	PIN, Clevis to Lever	1
2	1F-414	COTTER, Clevis Pin	1
3	2C-868	BOLT, Lever to Frame	1
4	616795	WASHER, Lever to Frame	1
5	550646	SLEEVE, Lever to Frame	1
6	526767	BUSHING, Bucket Valve Lever	1
7	550644	LEVER, Bucket Valve	1
8	509772	KNOB, Bucket Lever	1
9	1F-414	COTTER, Clevis Pin	1
10	4F-08127	PIN, Clevis to Lever	1
11	509772	KNOB, Boom Lever	1
12	550640	LEVER, Boom Valve	1
13	526767	BUSHING, Boom Valve Lever	1
14	550646	SLEEVE, Lever to Frame	1
15	616795	WASHER, Lever to Frame	1
16	4E-08	LKWSHR, Lever to Frame	1
17	2D-08	NUT, Lever to Frame	1
18	2J-8300	CLEVIS, Rod to Lever	1
19	8D-08	NUT, Clevis Jam	1
20	550647	ROD, Boom Valve	1
21	1F-414	COTTER, Clevis Pin	1
22	4F-08127	PIN, Rod to Valve	1
23	———	CONTROL VALVE (See Index)	—
24	4F-08127	PIN, Rod to Valve	1
25	1F-414	COTTER, Clevis Pin	1
26	550647	ROD, Bucket Valve	1
27	8D-08	NUT, Clevis Jam	1
28	2J-8300	CLEVIS, Rod to Lever	1

WHEN ORDERING PARTS, ALWAYS STATE MODEL AND SERIAL NO. OF MACHINE

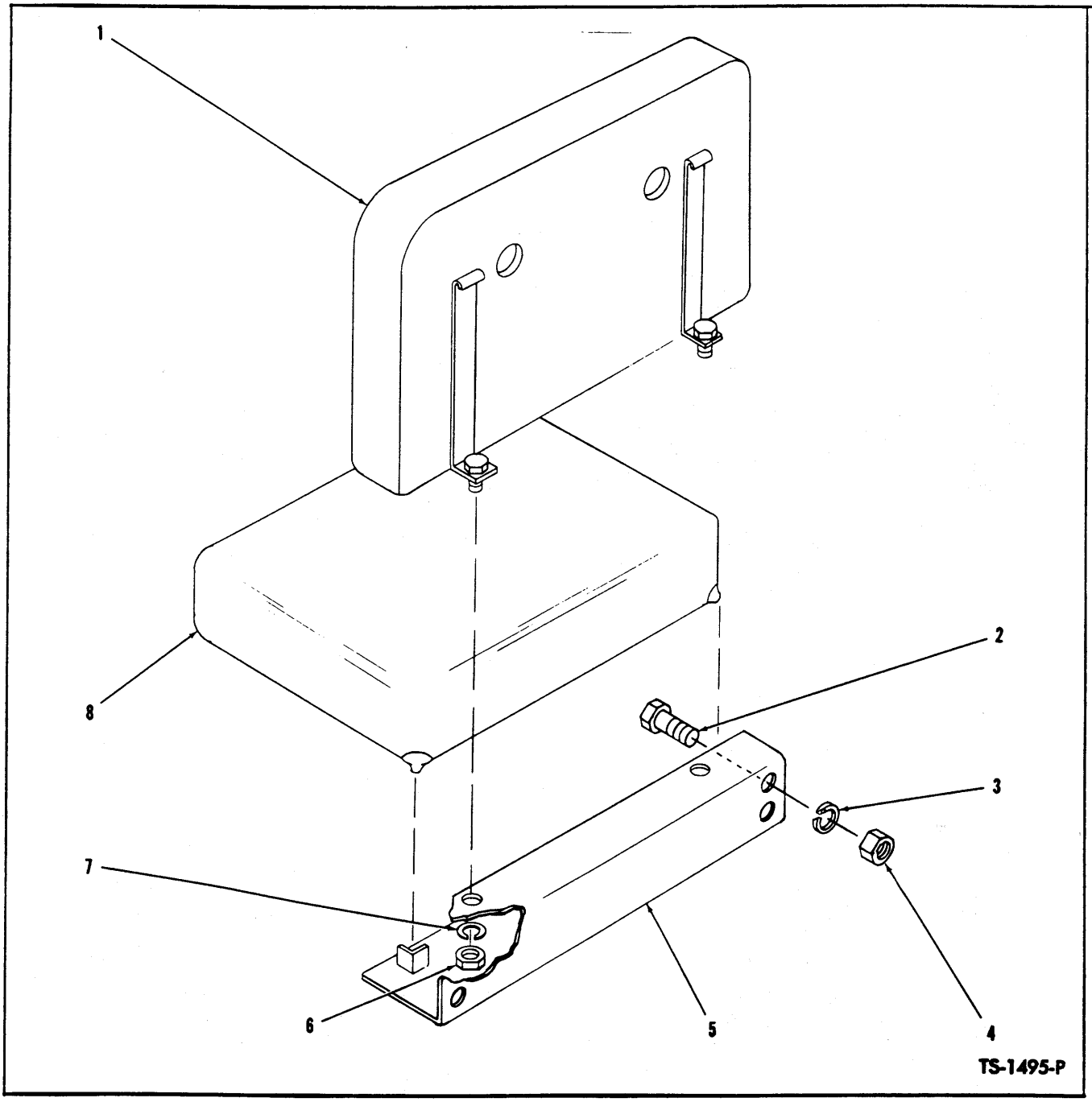

SEAT AND SUPPORT

Item No.	Part No.	Description	No. Req'd.
1	550635	CUSHION, Backrest	1
2	2C-616	BOLT, Seat Support to Frame	4
3	4E-06	LKWSHR, Seat Support to Frame	4
4	2D-06	NUT, Seat Support to Frame	4
5	524776	SUPPORT, Seat	1
6	2D-06	NUT, Cushion Backrest to Support	2
7	4E-06	LKWSHR, Cushion Backrest to Support	2
8	550634	CUSHION, Seat	1

WHEN ORDERING PARTS, ALWAYS STATE MODEL AND SERIAL NO. OF MACHINE

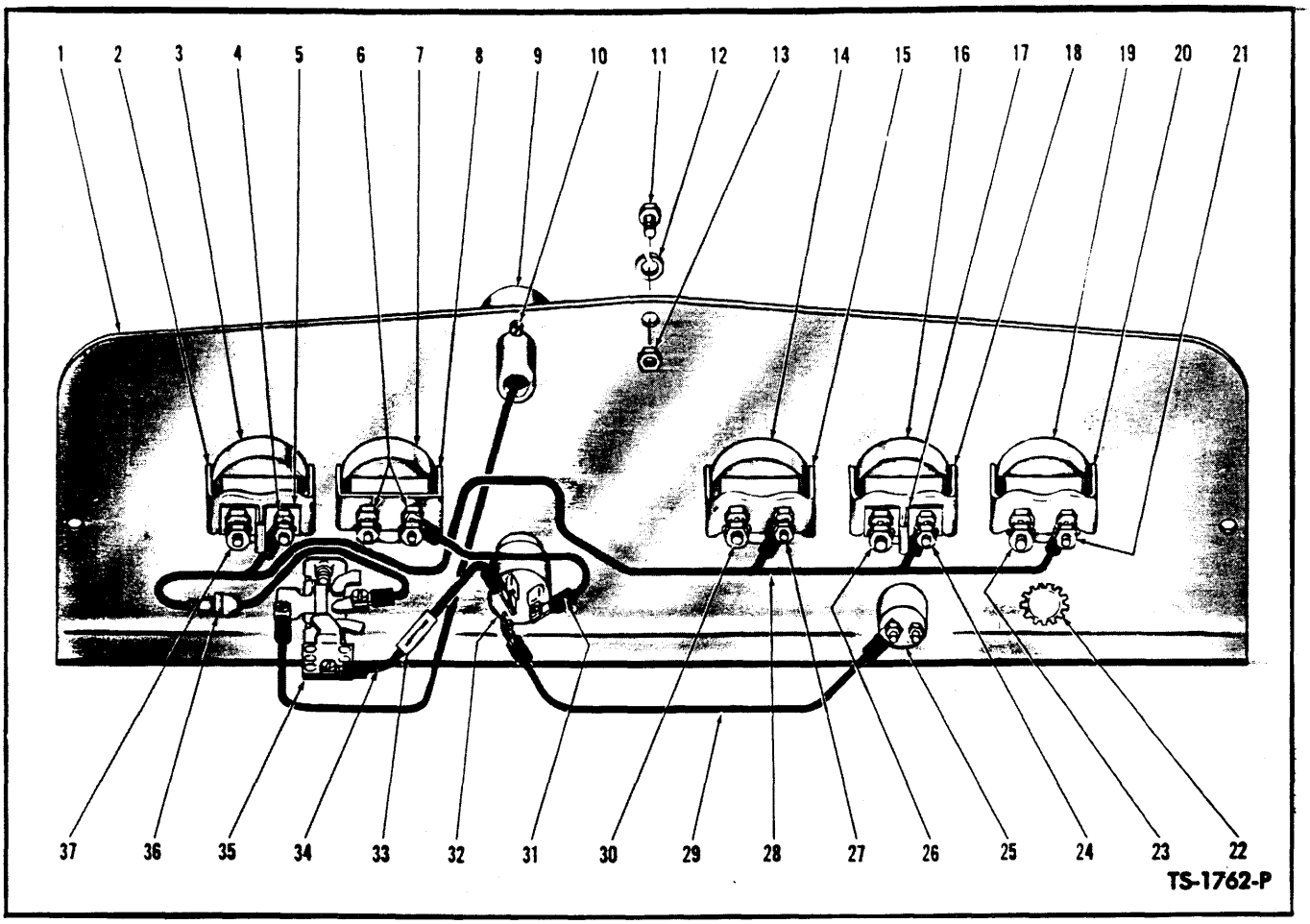

INSTRUMENT PANEL ASSEMBLY

Item No.	Part No.	Description	No. Req'd.
1	528287	PANEL, Instrument	1
2	626530	CLAMP, Instrument	1
3	551320	GAUGE, Fuel	1
4	12D-8	NUT, Fuel Gauge Terminal	2
4A	12E-8	†LKWSHR, Fuel Gauge Terminal	1
5	602350	SEPARATOR, Terminal	1
6	14D-10	NUT, Ammeter Terminal	4
6A	12E-10	†LKWSHR, Ammeter Terminal	2
7	550735	AMMETER	1
8	601212	CLAMP, Ammeter	1
9	551503	*LAMP, Dash	1
10	18G-606	SCREW, Dash Lamp	2
10A	12E-6	†LKWSHR, Dash Lamp	2
11	2C-614	BOLT, Panel to Shroud	3
12	4E-06	LKWSHR, Panel to Shroud	3
13	2D-06	NUT, Panel to Shroud	3
14	551321	GAUGE, Torque Conv. Temperature	1
15	626530	CLAMP, Instrument	1
16	551319	GAUGE, Engine Oil Pressure	1
17	602350	SEPARATOR, Terminal	1
18	626530	CLAMP, Instrument	1
19	551322	**GAUGE, Engine Temperature	1
20	626530	CLAMP, Instrument	1
21	12D-8	NUT, Engine Temperature Gauge	2
21A	12E-8	†LKWSHR, Engine Temperature Gauge	1
22	696073	BUTTON, Plug	1
23	14D-10	NUT, Engine Temperature Gauge	2
23A	12E-10	†LKWSHR, Engine Temperature Gauge	1
24	12D-8	NUT, Oil Pressure Gauge	2
24A	12E-8	†LKWSHR, Oil Pressure Gauge	1
25	600259	BUTTON, Starter Push	1
25A	857420	†BOOT, Push Button — Rubber	1
26	14D-10	NUT, Oil Pressure Gauge	2
26A	12E-10	†LKWSHR, Oil Pressure Gauge	1
27	12D-8	NUT, Torque Converter Temp. Gauge	2
27A	12E-8	†LKWSHR, Torque Conv. Temp. Gauge	1
28	528288	WIRE, Light Switch to Gauges	1
29	550746	WIRE, Ignition Switch to Starter Button	1
30	14D-10	NUT, Torque Conv. Temp. Gauge	2
30A	12E-10	†LKWSHR, Torque Conv. Temp. Gauge	1
31	639543	WIRE, Ammeter to Ignition Switch	1
32	573548	SWITCH, Ignition	1
33	611074	FUSE—20 Amp.	1
34	552946	WIRE, Ignition Switch to Light Switch	1
35	2514253	SWITCH, Light - See Note "A"	1
35A	550742	†ROD, Light Switch	1
35B	550743	†BUSHING, Light Switch	1
36	661555	FUSE—4 Amp.	1
37	14D-10	NUT, Fuel Gauge Terminal	2
37A	12E-10	†LKWSHR, Fuel Gauge Terminal	1

*NOTE: For replacement use 574276 Lamp plus 1—1940316 Bulb & 1—574275 Tab.
**NOTE: For replacement refer to Service Gram S.G.-326B.
†Not Illustrated
NOTE "A": For replacement the mounting hole must be enlarged to .4688.

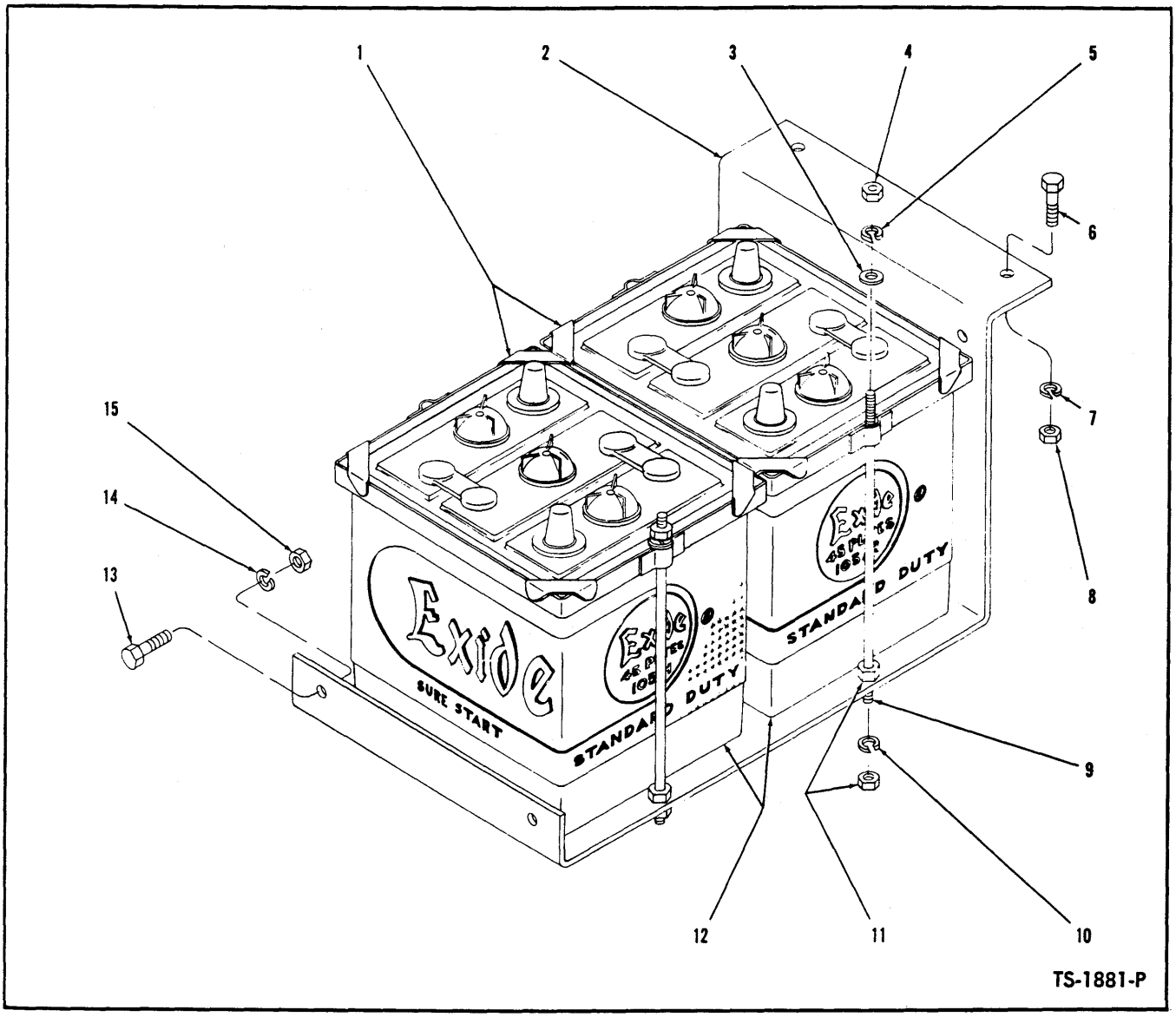

BATTERY AND BATTERY BOX

Item No.	Part No.	Description	No. Req'd.
1		*COVER, Battery Hold Down*	
1A	550844	For Machines with Exide #SS-1 Battery	2
1B	536488	For Machines with Exide #CX-1-105 Battery	2
2	550843	BOX, Battery	1
3	25E-15	WASHER, Hold Down Cover Stud	4
4	1D-05	NUT, Hold Down Cover Stud	4
5	4E-05	LKWSHR, Hold Down Cover Stud	4
6	2C-612	BOLT, Battery Box Attaching	2
7	4E-06	LKWSHR, Battery Box Attaching	2
8	2D-06	NUT, Battery Box Attaching	2
9	600183	STUD, Hold Down Cover	4
10	4E-05	LKWSHR, Hold Down Cover	4
11	1D-05	NUT, Hold Down Cover	4
12	———	BATTERY, EXIDE #CX-1-105	2
13	2C-612	BOLT, Battery Box Attaching	2
14	4E-06	LKWSHR, Battery Box Attaching	2
15	2D-06	NUT, Battery Box Attaching	2

WHEN ORDERING PARTS, ALWAYS STATE MODEL AND SERIAL NO. OF MACHINE

WIRING AND BATTERY CABLES

Item No.	Part No.	Description	No. Req'd.
1	550845	CABLE, Battery to Ground	1
2	550846	CABLE, Battery to Battery	1
3	554016	CABLE, Battery to Solenoid Switch	1
4	675611	CABLE, Solenoid Switch to Starter	1
5	550848	CABLE, Starter to Ground	1
6	2C-616	BOLT, Engine Ground Cable	1
7	2D-06	NUT, Engine Ground Cable	1
8	4E-06	LKWSHR, Engine Ground Cable	1
9	526589	HARNESS, Wiring	1
10	550850	HARNESS, Generator to Voltage Reg.	1
11	550851	WIRE, Light Switch to Head Lamp	1
12	535369	WIRE, Fuel Gauge to Tank Unit	1
13	695120	WIRE, Steering Column to Horn Relay	1
14	550855	*WIRE, Horn Relay to Horn	1
14A	557438	*WIRE, Horn Relay to Horn	1
15	29H-12	CLIP, Wiring Harness	1
16	30H-23	CLIP, Wiring Harness	1
17	30H-38	CLIP, Wiring Harness	4
18	2C-652	BOLT, Clip to Valve	1
19	2D-06	NUT, Clip to Valve	1
20	4E-06	LKWSHR, Clip to Valve	1

*NOTE: 550855 is used with 647300 Horn and 557438 is used with 733624 Horn. 733624 Horn has a permanent mounting bracket for identification purposes.

HORN AND MOUNTING PARTS

Item No.	Part No.	Description	No. Req'd.
1	647300	**HORN	1
1A	733624	HORN	1
2	621279	BRACKET, Horn Attaching	1
3	2D-04	NUT, Horn to Bracket	2
4	4E-04	LKWSHR, Horn to Bracket	2
5	2C-612	BOLT, Horn to Floorboard	1
6	2D-06	NUT, Horn to Floorboard	1
7	4E-06	LKWSHR, Horn to Floorboard	1
8	647310	RELAY, Horn	1

**NOTE: For replacement of 647300 Horn use 733624 Horn plus 1 – 557438 Horn Relay to Horn Wire.

NOTES

WHEN ORDERING PARTS, ALWAYS STATE MODEL AND SERIAL NO. OF MACHINE

LIGHTS AND MOUNTING PARTS

Item No.	Part No.	Description	No. Req'd.
1	945958	LAMP ASSY, Back-up (Inc. 1A, 2)	2
1A	944976	RETAINER & FRAME ASSY	2
2	877752	SEALED BEAM UNIT, Back-up Lamp	2
3	550745	WIRE, Back-up Lamp Ground	2
4	550853	WIRE, Back-up Lamp Jumper	1
5	12D-8	NUT, Lamp to Plate	6
6	12E-8	LKWSHR, Lamp to Plate	6
7	30H-11	CLIP, Wiring Harness	2
8	30H-12	CLIP, Wiring Harness	3
9	547006	LAMP ASSY, Head (Inc. 9A, 10)	2
9A	551293	CLIP, Sealed Beam Unit	4
10	551242	SEALED BEAM UNIT, Head Lamp	2
11	3G-808	SCREW, Ground Wire	2
12	13E-8	LKWSHR, Ground Wire	2
13	12D-8	NUT, Ground Wire	2
14	5203855	LAMP, Tail	2
15	551314	BRACKET, Tail Lamp	2
16	1C-610	BOLT, Bracket to Grille	4
17	4E-06	LKWSHR, Bracket to Grille	4
18	1D-04	NUT, Lamp to Bracket	4
19	4E-04	LKWSHR, Lamp to Bracket	4

TOOLS

Item No.	Part No.	Description	No. Req'd.
1	711264	WRENCH, Wheel	1
2	552164	HANDLE	1
3	526629	WRENCH, Hub Bearing	1
4		*RING, Packing Compressor*	
4A	519324	For Boom & Bucket Cylinder	1
4B	526643	For Steering Cylinder	1
5		*SLEEVE, Piston Rod Wiper Taper*	
5A	523257	For Boom & Bucket Cylinder	1
5B	530822	For Steering Cylinder	1

DECALS

Item No.	Part No.	Description	No. Req'd.
1	551740	DECAL, Michigan	2
2		OMIT	—
3		*DECAL, Model*	
3A	2513634	*Model 55A	2
3B	509558	Model 55B	2
4	551808	DECAL, Gear Shift	1
5	548472	DECAL, Oil Level	2
6	538256	DECAL, Drain	3
7	552196	DECAL, Fill	1
8	548520	DECAL, Torque Converter	1
9	542074	PLATE, Patent	1
10	6C-605	SCREW, Patent Plate	4

*NOTE: Remove letter "B".

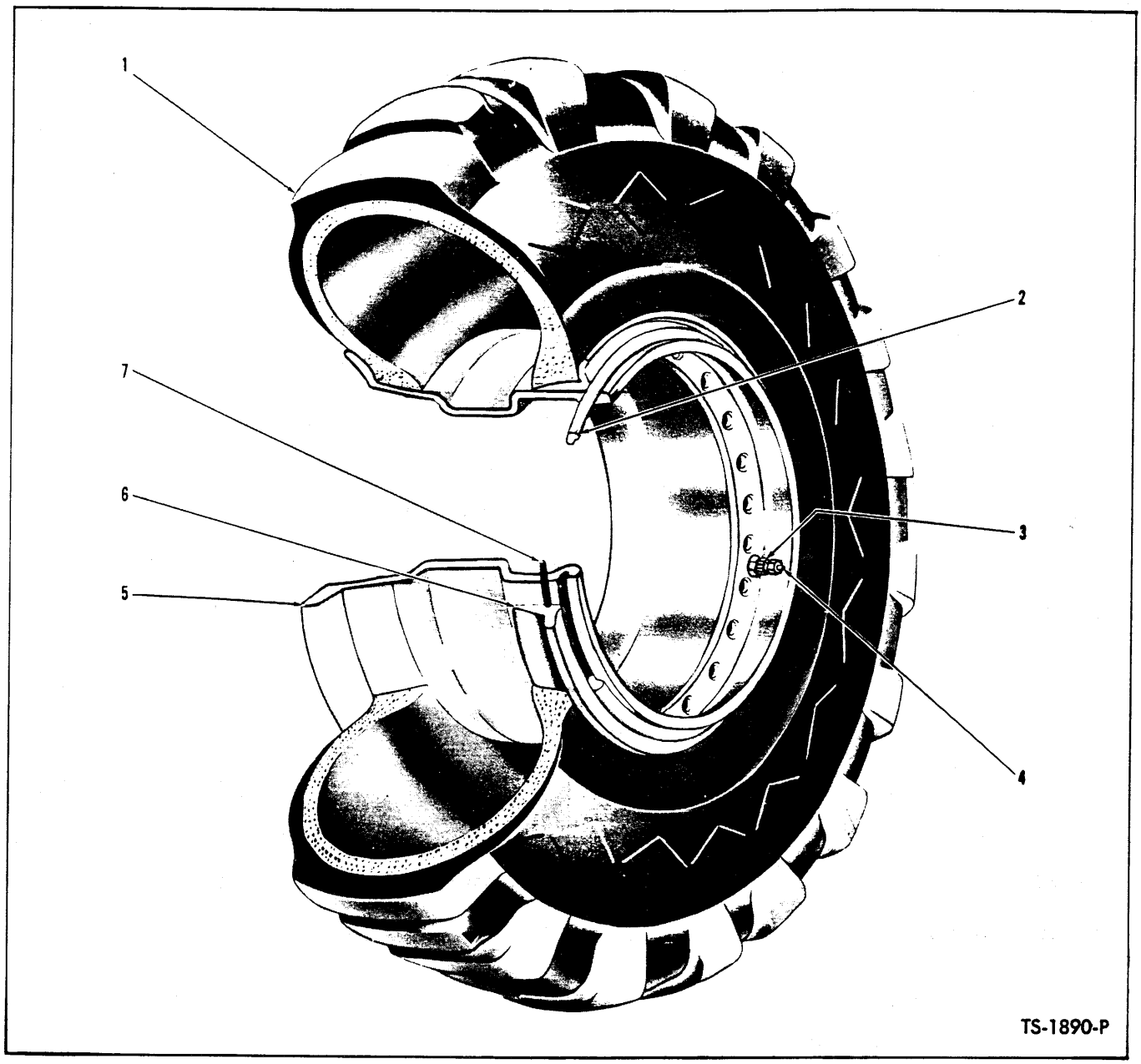

WHEEL AND TIRE DATA

(13:00 x 24 — 8 PR. Tubeless)
Models 55A and 55B

Item No.	Part No.	Description	No. Req'd.
1	———	TIRE	4
2	524009	RING, Lock	4
3	941422	STEM, Valve (Inc. 3A)	4
3A	943658	†ADAPTER, Valve Stem	4
4	109247	CAP, Valve	4
5	524006	WHEEL	4
6	524010	FLANGE	4
7	941329	"O" RING	4

†Not Illustrated

WHEN ORDERING PARTS, ALWAYS STATE MODEL AND SERIAL NO. OF MACHINE

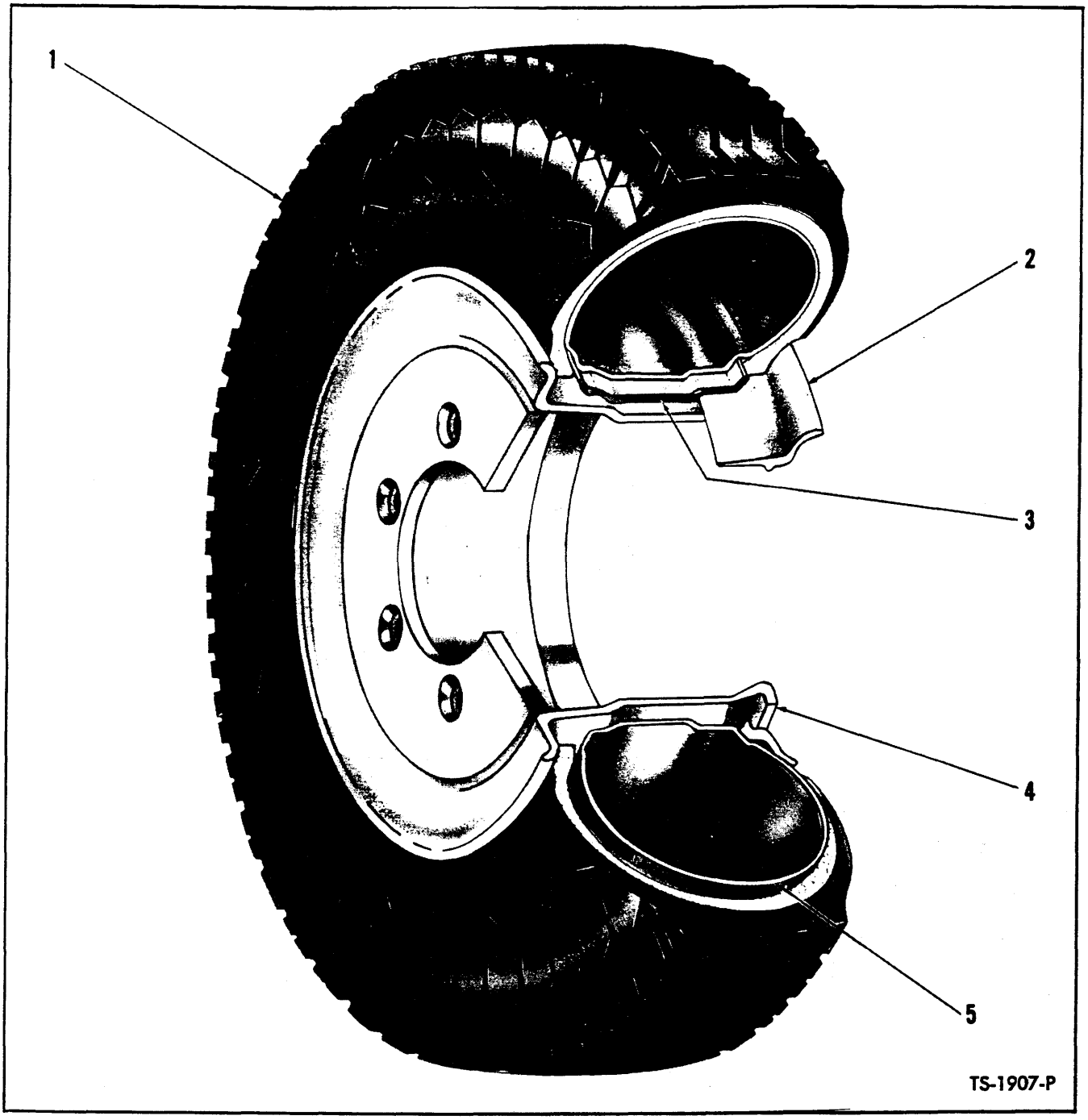

WHEEL AND TIRE DATA — WITH TUBE — MODEL 55B

(9:00 x 16 — 8 Pr. Truck Type)

Item No.	Part No.	Description	No. Req'd.
1	———	TIRE	—
2	552650	RING, Lock	2
3	———	FLAP	—
4	551111	WHEEL	2
5	———	TUBE	—

WHEN ORDERING PARTS ALWAYS STATE MODEL AND SERIAL NO. OF MACHINE

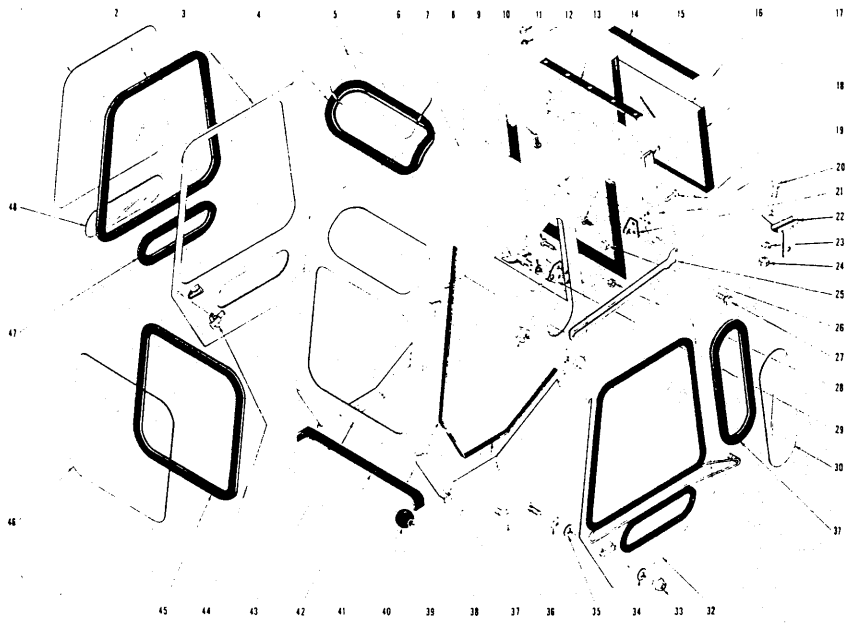

TS-1942-P

CAB ASSEMBLY

Models 55A and 55B

Item No.	Part No.	Description	No. Req'd.
A	528726	CAB ASSY (Inc. 1 thru 48)	1
1	———	GLASS PATTERN, Upper Door (See 49)	2
2	944448	MOULDING, Upper Door Glass	2
3	944436	DOOR, R.H. Panel (Inc. 44)	1
4	940477	MOULDING, Curved Roof Glass	1
5	940350	GLASS, Curved Roof	1
6	940438	WING BOLT, Throwout Arm	2
7	25E-12	WASHER, Throwout Arm Spacer	2
8	3G-1010	SCREW, Throwout Arm Bracket	4
8A	12E-10	†LKWSHR, Bracket Screw	4
9	944443	MOULDING, Rear Window Sides & Bottom	1
10	3G-1010	SCREW, Rear Window Hinge	5
11	12D-10	NUT, Hinge Screw	5
12	4E-04	LKWSHR, Hinge Screw	5
13	943607	EVERSEAL, Upper Rear Window Frame	1
14	944449	EVERSEAL, Upper Rear Window Glass	1
15	4G-408	SCREW, Throwout Arm to Bracket	2
15A	25E-12	†WASHER, Arm to Bracket Screw	2
16	———	GLASS PATTERN, Rear Window (See 49)	1
17	944442	EVERSEAL, Rear Window Sides & Bottom	1
18	3G-1016	SCREW, Throwout Arm Bracket	4
18A	12E-10	†LKWSHR, Bracket Screw	4
19	944444	FRAME, Rear Window	1
20	2C-620	BOLT, Door Stop Bracket	2
21	940434	BRACKET, Rear Window Throwout Arm	2
22	944434	BRACKET, Door Stop	1
23	4E-06	LKWSHR, Bracket Bolt	2
24	2D-06	NUT, Bracket Bolt	2
25	940436	ARM, Rear Window Throwout	2
26	12D-10	NUT, Throwout Arm Bracket	4
27	1C-510	BOLT, Hinge Bracket to Cab	3
27A	25E-12	†WASHER, Hinge Bracket Bolt	3
28	12D-10	NUT, Throwout Arm Bracket	4
29	940437	BRACKET, Throwout Arm	2
30	———	GLASS PATTERN, Quarter Panel (See 49)	2
31	944447	MOULDING, Quarter Panel Glass	2
32	944435	DOOR & HINGE ARM ASSY, L.H. Panel	1
33	17D-3	NUT, Door Check Lock	1
34	25E-18	WASHER, Door Check	1
35	25E-18	WASHER, Door Check	1
36	656427	SPACER, Door Check	1
37	944437	DOOR CHECK ASSY (Inc. 33 thru 37)	1
38	944438	SPONGE, Lower Door Opening	2
39	17D-10	NUT, Door Hinge Lock	1
40	509772	KNOB, Door Check	1
41	943972	SPONGE, Upper Door Opening	1
42	943974	WEATHERSTRIP, Shroud to Cab	1
43	———	CAB (See A)	—
44	356657	LATCH, R.H. Door Panel	1
45	940409	MOULDING, Windshield Glass	1
46	———	GLASS PATTERN, Windshield (See 49)	1
47	944446	MOULDING, Lower Door Glass	2
48	———	GLASS PATTERN, Lower Door (See 49)	2
49	944231	†GLASS PATTERN KIT (Inc. 1, 16, 30, 46, 48)	1
50	2C-616	†BOLT, Cab to Frame Attaching	2
51	2C-612	†BOLT, Cab to Frame Attaching	5
52	2D-06	†NUT, Cab to Frame Attaching	7
53	4E-06	†LKWSHR, Cab to Frame Attaching	7

†Not Illustrated

WHEN ORDERING PARTS, ALWAYS STATE MODEL AND SERIAL NO. OF MACHINE