RUTHZIL TRATOR COMERCIAL DE PEÇAS LTDA 11 97083-6812 ROLANDO CITRANGULO

REVISION RECORD LOG

REVISION NO.	DATE INSERTED
1	
2	
3	
4	
5	

580 SUPER E CONSTRUCTION KING LOADER BACKHOE

Parts Catalog 8-1833

NOTE: Discard Parts Catalog 8-1832.

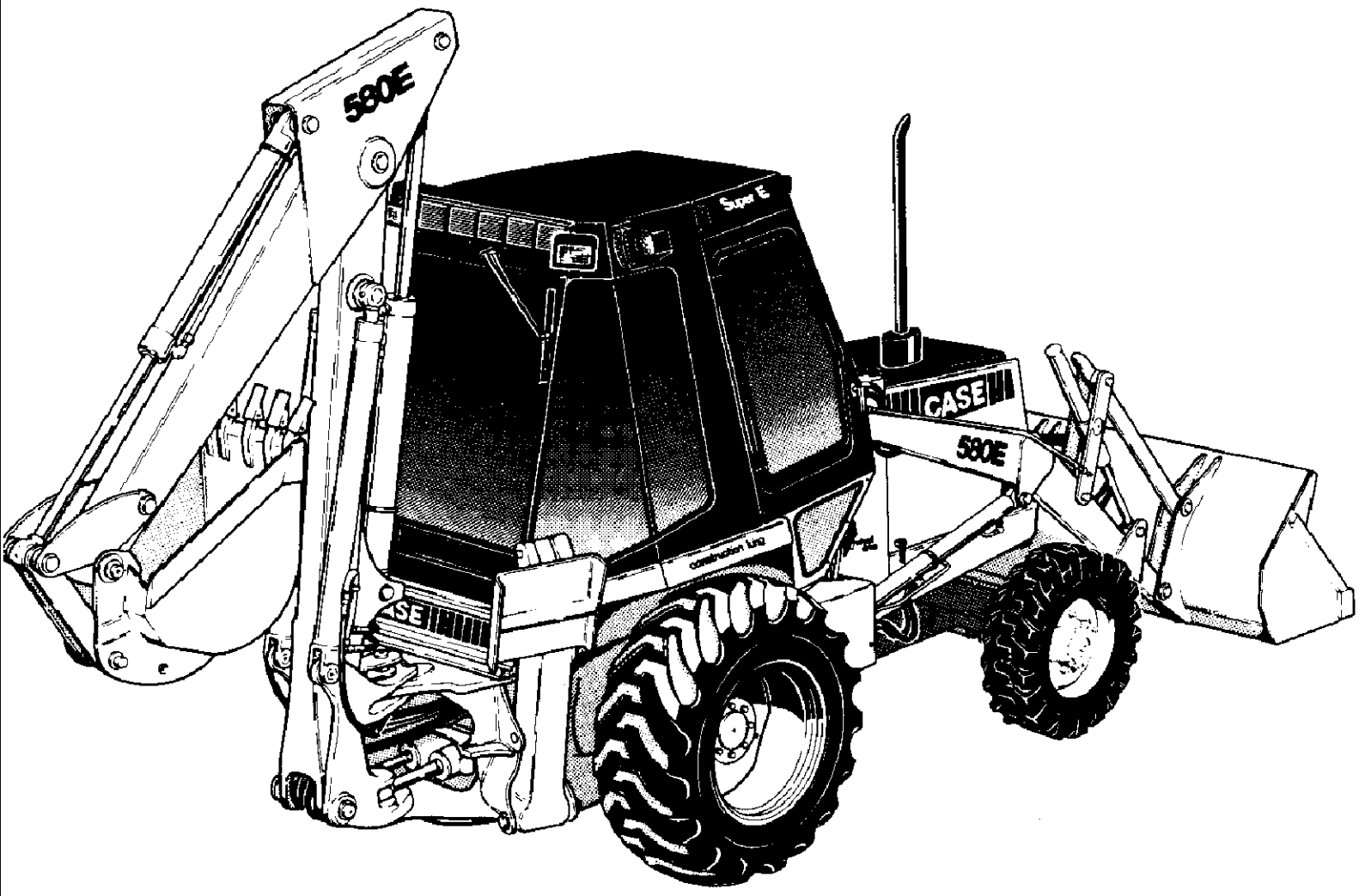

J I Case
A Tenneco Company
TENNECO
Issued December, 1986
Printed in U.S.A.
830548A

001 REVISION RECORD LOG

Ref	Part Number	Qty	Description

2

GENERAL INFORMATION

Indexes

This parts catalog is arranged for easy identification on parts. The Alphabetical Index at the front of the catalog gives location of major groups and assemblies. The Numerical Index at the rear of the catalog gives part numbers and the page on which they are listed.

Abbreviations and Terms

PIN - Product Identification Number.
SN - Serial Number.
NSS - Not sold separately.
REF - Reference. Used to clarify drawing.
RESERVED - No item listed.
UAR - Use as required.

Changes

When changes are made to the machine, revised pages for this catalog will be issued. These pages must be inserted into your catalog as soon as they are received. Failure to keep your catalog up to date will result in confusion and may cause you to order wrong parts.

Orders

Orders should specify correct part number, full description, quantity required, machine and engine model, machine and engine serial numbers, method of shipment and shipping address.

Right-Hand and Left-Hand Sides

The terms right-hand and left-hand (abbreviated to RH and LH) as used in this catalog indicate the right and left sides of the machine as viewed by the operator in the normal operating position for proper operation of the machine or attachment.

U.S. and Metric Units

Sizes, lengths, and dimensions are given in U.S. units followed by its equivalent in metric units. See item 8 below. Sizes of hardware (bolts, nuts, etc.) are given according to hardware type --- in inches for U.S. hardware; in millimeter for metric hardware. See items 9 and 10.

Description, Quantity and Machinery Items

All parts are briefly described under DESCRIPTION. The quanitity used is listed under REQ'D. Notice in the example below that the description of some items is moved in (indented) from the left-hand margin. An indented item is part of the item under which it is indented. The example shows that one hydraulic oil filter is used on the machine. Each filter contains one head assembly, one element kit, and one housing (indented items with no reference numbers and item 6). The head assembly and kit are further divided to show individual part (items 2, 3, 4 & 5).

Machinery items must be ordered from the Machinery Price List. See item 7 in the example.

REF.	PART NO.	DESCRIPTION	REQ'D
1	D 43567	FILTER ASSEMBLY - hydraulic oil	1
	D 61903	HEAD ASSEMBLY - filter	1
2	NSS	HEAD - filter	1
3	D 58199	VALVE - bypass	1
	D 43800	KIT - filter element	1
4	NSS	ELEMENT - filter	1
5	A 27994	O-RING - filter	1
6	D 42439	HOUSING - filter	1
7	REF	CANOPY - ROPS, machinery item, see page 2 for ordering	2
8	R 42849	HOSE - from upper valve port, 38" (965 mm) long	1
9	13- 728	BOLT - hex head, 7/16" - 14 NC x 1-3/4"	2
10	814- 8030	BOLT - hex head, 8 mm - 1.25 x 30 mm (8.8)	2

002 GENERAL INFORMATION

Ref	Part Number	Qty	Description

PARTS ORDERING INFORMATION FOR FRENCH, GERMAN, ITALIAN AND SWEDISH SPEAKING COUNTRIES

COMMANDE DE PIÈCES DE RECHANGE

Ce catalogue Pièces Rechange est conçu pour une identification facile de toutes les pièces CASE d'origine. Situe au début du catalogue, un répertoire permet de localiser rapidement les principaux groupes ou montages. A la fin du catalogue, un index numérique de pièces de rechange précise la page sur laquelle chacune des pièces est décrite.
Les pièces sont mentionnées par ordre du numéro de référence suivies du numéro de la pièce, de la description et de la quantité nécessaire. Les quantités mentionnées sous la rubrique « Quantité » correspondent à la quantité nécessaire pour former des assemblages ou des sous-ensembles.
Toutes les pièces sont illustrées sur des dessins éclatés montrant les pièces individuellement les unes par rapport aux autres. Les numéros de référence correspondent aux numéros des pièces sur les vues eclatées. Ces chiffres se rapportent à ceux de la rubrique « Chiffre de référence » qui sont suivis par le numéro de la pièce et sa description.
Toutes les commandes doivent spécifier exactement le numéro correct de la pièce, sa description, la quantité nécessaire, le type et le NUMERO DU MATERIEL, le mode d'expédition et l'adresse du destinataire.
Pour être sûr que votre commande de pièces correspond à vos besoins, vérifier l'illustration et la description dans le catalogue avec la pièce à commander.

BESTELLUNG VON ERSATZTEILEN

Diese Ersatzteilliste ist so zusammengestellt, dass alle Original—CASE—Ersatzteile leicht identifiziert werden koennen. Vorn ist ein Inhaltsverzeichnis nach Baugruppen und Bauteilen angeordnet, welches das Auffinden der Teile erleichtert. Hinten am Schluss der Liste befindet sich ein fortlaufendes Verzeichnis der Ersatzteilnummern, in dem der betreffenden Ersatzteilnummer jeweils die Seitennummer gegenuebersteht, auf der das Teil verzeichnet ist
Im Ersatzteilverzeichnis befindet sich vor der Ersatzteilnummer eine laufende Nummer, die auch auf der Abbildung wiederholt wird, daneben die Ersatzteilnummer, die Bezeichnung des Teils und die davon benoetigte Stueckzahl fur die betreffende Baugruppe.
Alle Teile sind in Zerlegt-Darstellung so abgebildet, dass sie in ihrem natuerlichen Zusammenhang mit den anderen Teilen erkennbar sind, und werden mit der « laufenden Nummer » des Ersatzteilverzeichnisses bezeichnet, um ihre Auffindung zu erleichtern.
Alle Ersatzteil-Auftraege muessen deutlich die richtige Ersatzteilnummer, die genaue Beschreibung, die benoetigte Anzahl von Teilen, Modell und NUMMER des traktors, die gewuenschte Versandart und die Versandadresse enthalten.
Das benoetigte Teil muss sorgfaeltig mit der Abbildung und der Beschreibung verglichen werden, damit die in Auftrag gegebenen Teile auch richtig bestellt sind.

ORDINI DI PEZZI

Questo libro di pezzi è disposto in modo da permettere facilmente una identificazione di tutti gli Autentici Pezzi CASE Impiegati. Un indice è fornito sulla facciata del catalogo dei pezzi per individuare i principali gruppi o montaggi. Un indice numerico alla fine del catalogo dei pezzi indica la pagina in cui ciascun pezzo numerato è descritto.
I pezzi sono elencati in ordine di numero di riferimento seguito dalnumero del pozzo, descrizione, e quantitativo richiesto. I quantitativi indicati nella colonna « Quantitativo richiesto » rappresentano il numero di pezzi richiesto per comporre uno dei precedenti Montaggi o Sotto- Montaggi.
Tutti i pezzi sono illustrati in « Prospetti Sviluppati » che mostrano i singoli pezzi e la loro relazione normale tra di loro. I numeri di riferimento sono indicati nella illustrazione. Questi numeri corrispondono a quelli nella colonna « Numero di Riferimento » e sono seguiti dal numero del pezzo e la descrizione.
Tutti gli ordini devono specificare chiaramente il preciso numero del pezzo, completa descrizione, quantitativo richiesto, modello e NUMERO DELLA SERIE della trattrice, metodo di spedizione e indirizzo della spedizione.
Controllate l'illustrazione e la descrizione con il pezzo richiesto, per assicurarvi che i pezzi ordinati sono giusti.

BESTÄLLNING AV RESERVDELAR

Denna reservdelkatalog har getts en speciell uppställningsform for att forenkla identifieringen av alla äkta CASE reservdelar. Ett register finns i borjan av katalogen upptagande de olika storre grupperna och enheterna. En reservdelsnummerförteckning i slutet av katalogen anger vilken sida de olika detaljerna förekomma på
De olika reservdelarna anges i referensnummerordning atföljda av serservdelsnumret, beskrivning och antal. Antalet, som anges i kolumnen « Quantity Required », ar det antal som ingär i enheten i fräga.
Alla reservdelaravbildas i sprangbilder i sina inbördes lagen. Referensnumren anges pa sprangbilderna. De framga också av kolumnen « Reference Number » dar de atföljas av beskrivning och reservdelsnummer.
Reservdelbeställningar skall upptaga korrekt reservdelsnummer, beskrivning, bestallt antal, modell och serienummer pa maskinen, transportsätt och mottagarens adress.
Kontrollera noga att bild och beskrivning motsvara den önskade detaljen sa att misstag undvikas

Printed in U.S.A. Issued December, 1986 801048

003 PARTS ORDERING INFORMATION FOR FRENCH, GERMAN, ITALIAN AND SWEDISH SPEAKING COUNTRIES

Ref	Part Number	Qty	Description

4

580 SUPER E CONSTRUCTION KING LOADER BACKHOE
LOCATION OF SERIAL NUMBERS
AND
PRODUCT IDENTIFICATION NUMBER

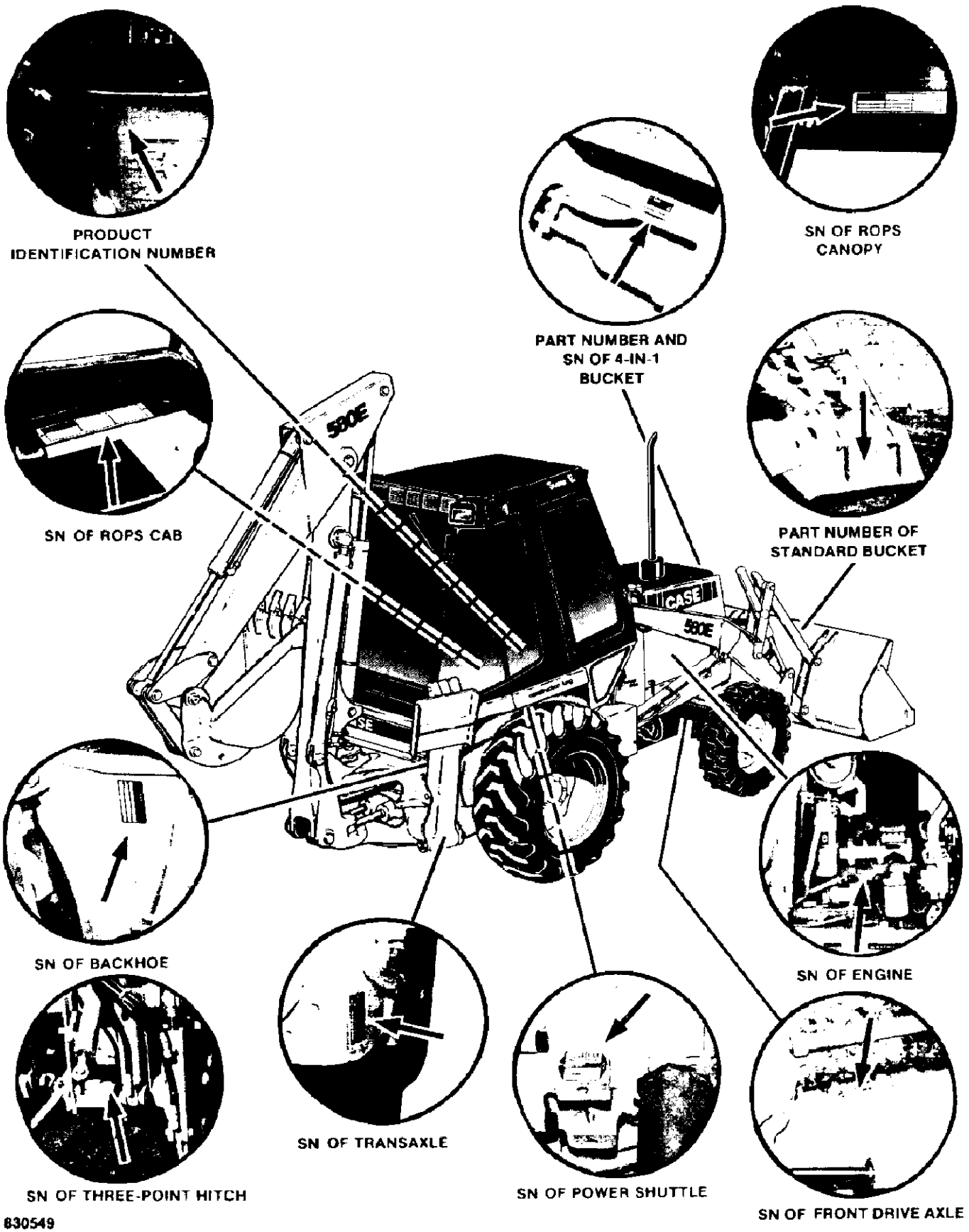

830549

580SE CASE SUPER-E CONSTRUCTION KING LOADER BACKHOE - Pictorial Index

004 LOCATION OF SERIAL NUMBERS AND PRODUCT IDENTIFICATION NUMBER

Ref	Part Number	Qty	Description

12

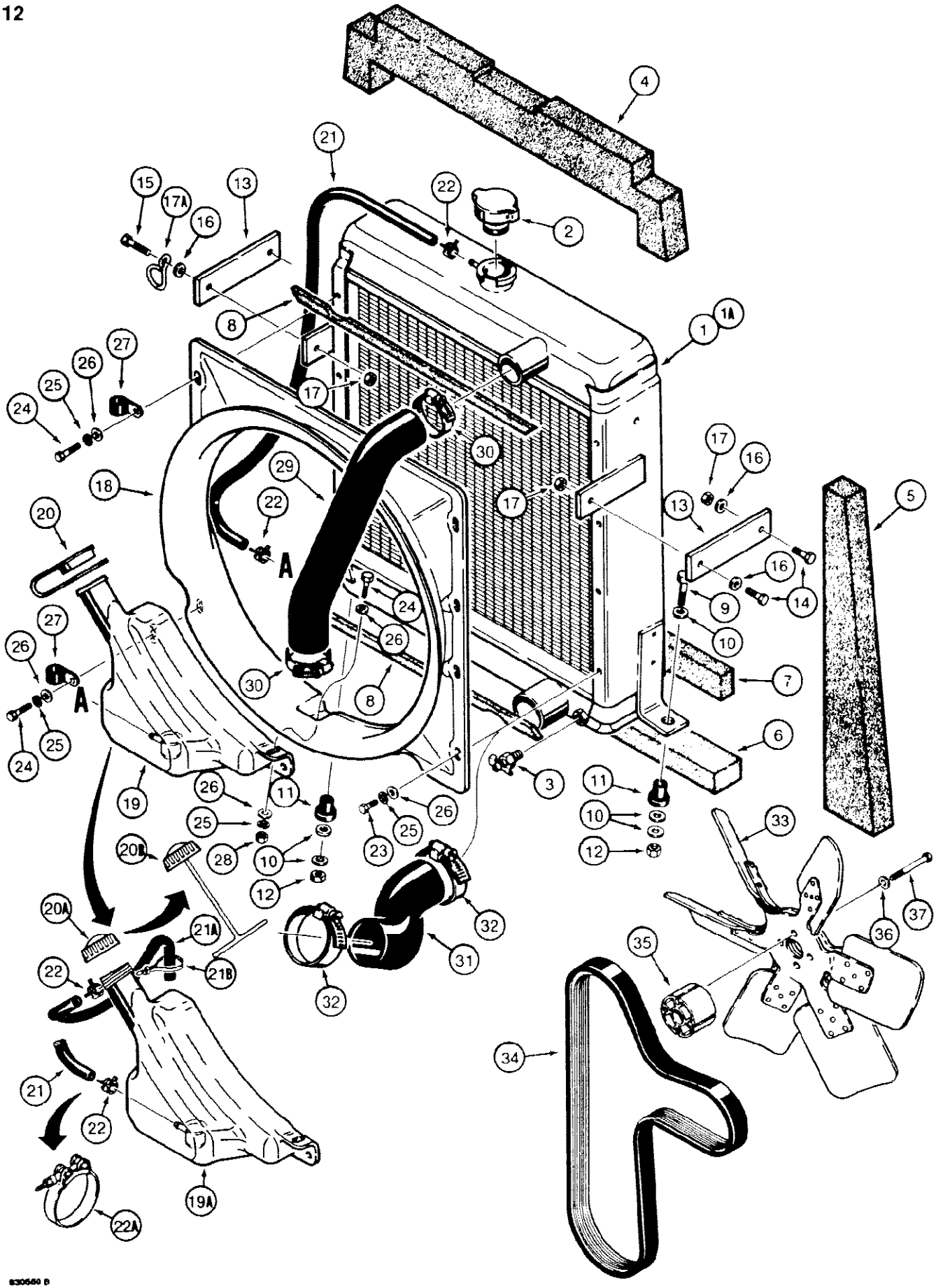
4
21
15
17A
16
13
22
2
8
1
1A
27
26
25
24
17
30
29
18
22
A
20
17
16
13
5
16
14
9
10
24
26
27
26
A
30
8
7
24
25
6
3
19
26
11
11
10
12
26
25
23
25
33
20B
28
10
12
32
37
20A
21A
21B
31
36
35
22
32
34
21
22
19A
22A

012 RADIATOR, FAN, AND MOUNTING PARTS

Ref	Part Number	Qty	Description
1	A171080	1	RADIATOR engine cooling, models with air conditioning
1A	A171356	1	RADIATOR engine cooling, models without air conditioning
2	A170241	1	CAP filler, radiator, 15 psi
3	217-92	1	VALVE drain
4	REF	1	BAFFLE radiator, top, cut from D92228, see below, base size is 5-5/16" (135 mm) x 24-5/8" (625 mm)
5	REF	2	BAFFLE radiator, sides, cut from D92228, see below, base size is 3-3/4" (95 mm) x 22-1/4" (565 mm)
7	REF	1	BAFFLE radiator, lower front, cut from D92228, see below, base size is 1" (25 mm) x 25-3/16" (640 mm)
8	A173165	2	SEAL radiator, upper and lower
9	113-233	2	BOLT, Hex, 3/8"-16 x 1 3/4", G5
10	D52275	6	WASHER flat, special
11	D52276	2	INSULATOR vibration, rubber
12	131-52	2	NUT hex, self locking, plated, 3/8" - 16 NC
13	A170665	2	STRAP radiator, mounting, side
14	113-208	3	BOLT, Hex, 3/8"-16 x 1 1/4", G5, Full Thd
15	113-209	1	BOLT, Hex, 3/8"-16 x 1 1/2", G5
16	195-104	4	WASHER flat, plated, 3/8"
17	131-52	4	NUT hex, self locking, plated, 3/8" - 16 NC
17A	D125868	1	SUPPORT mechanical tachometer drive cable to radiator, if used
18	A171002	1	SHROUD radiator
19	A171518	1	RESERVOIR coolant recovery bottle, used with A171177 cap, item 20, if used
19A	A171805	1	RESERVOIR coolant recovery bottle, used with A171775 cap, item 20A, or A184079 tethered cap, item 20B, if used
20	A171177	1	CAP snap on, reservoir, used with A171518 reservoir, item 19, if used
20A	A171775	1	CAP screw on, reservoir, used with A171805 reservoir, item 19A, no longer used, order A184079 tethered cap
20B	A184079	1	CAP tethered, screw on, reservoir, used with A171805 reservoir, if used
21	A171019	1	HOSE radiator to reservoir
21A	D128547	1	HOSE coolant overflow, used with A171805 reservoir, if used
21B	L18337	1	STRAP tie, nylon, 15 inch
22	A171099	2-3	CLAMP hose
22A	214-335	1	CLAMP narrow worm drive, hose
	D92228	1	BAFFLE bulk pad, 35-1/2" (900 mm) x 55-1/8" (1400 mm) x 1-1/2" (38 mm) use to cut items 4 - 7, not shown
	345-44	1	ADHESIVE spray can, for attaching foam pads to metal surface, not shown
23	814-8016	6	BOLT hex head, plated, 8 mm - 1.25 x 16 mm (8.8)
24	814-8030	3	BOLT - hex head, plated, 8 mm - 1.25 x 30 mm (8.8)
25	192-20	9	WASHER, LOCK, 5/16"
26	195-103	10	WASHER flat, plated, 5/16"
27	49768	2	CLAMP p type
28	825-1108	1	NUT hex, plated, 8 mm - 1.25

580SE CASE SUPER-E CONSTRUCTION KING LOADER BACKHOE - Engine

012 RADIATOR, FAN, AND MOUNTING PARTS

Ref	Part Number	Qty	Description
29	A170431	1	HOSE radiator, upper
30	214-259	2	CLAMP upper hose
31	A170632	1	HOSE radiator, lower
32	214-261	2	CLAMP lower hose
33	A171552	1	FAN suction, six blade, double spider
34	J903099	1	BELT fan, v ribbed
	D101856	1	KIT, spacer, fan, Includes: Ref. 35 - 37
35	A172589	1	SPACER fan
36	H426775	4	WASHER flat, hardened, plated
37	827-8080	4	BOLT, hex 8 - 1.25 x 80 mm, class 10.9

16

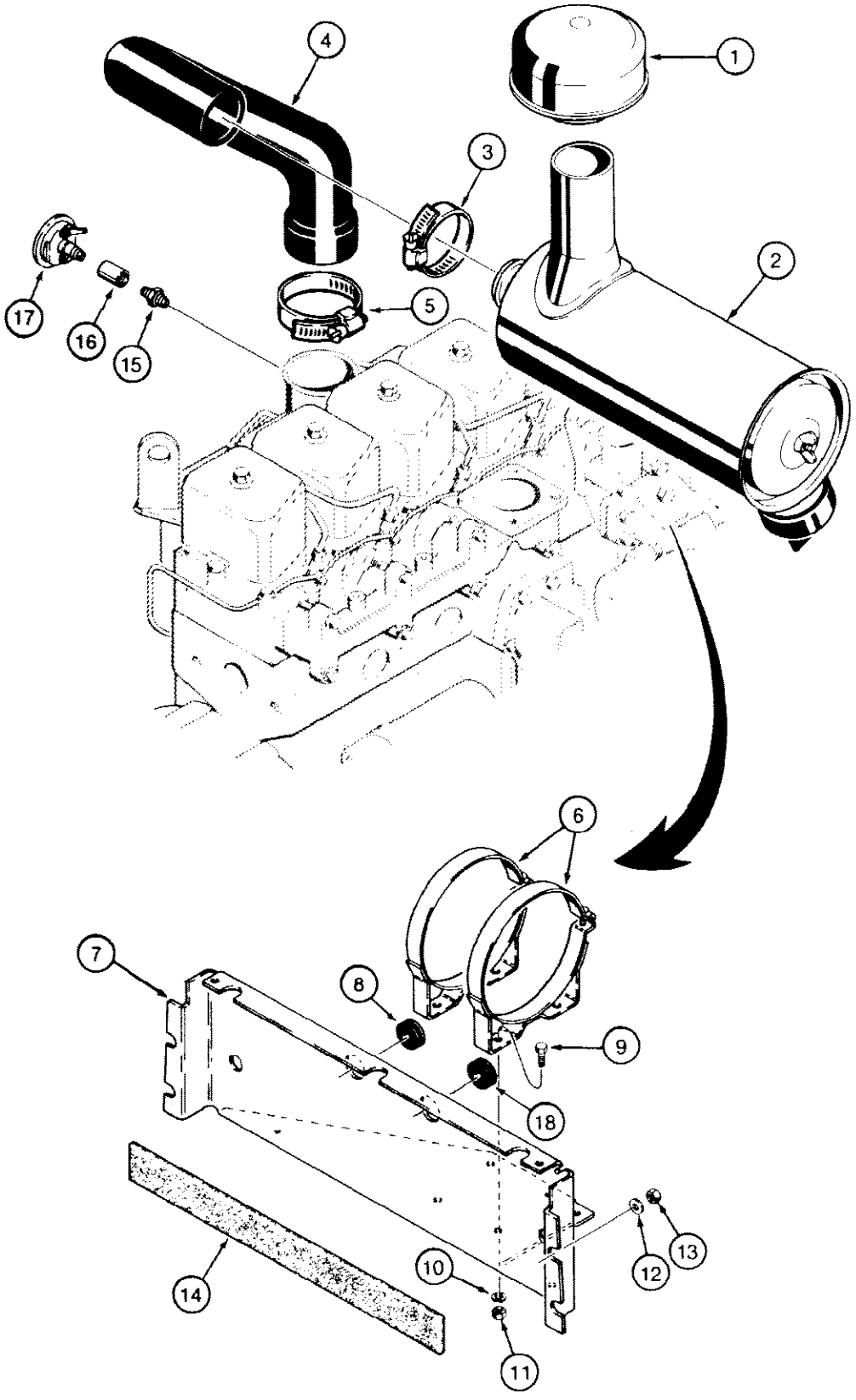

330870C

580SE CASE SUPER-E CONSTRUCTION KING LOADER BACKHOE - Engine

016 AIR CLEANER AND AIR INTAKE PARTS, MODELS WITHOUT TURBOCHAGED ENGINE

Ref	Part Number	Qty	Description
1	A61277	1	CAP air cleaner
2	A170974	1	AIR CLEANER engine, parts list Figure 20
3	214-262	1	CLAMP hose to air cleaner
4	D126494	1	HOSE air cleaner
5	214-265	1	CLAMP hose to engine
6	L113910	2	BAND air cleaner mounting
7	D127281	1	BRACKET air cleaner mounting
8	F37765	1	GROMMET mechanical tachometer drive cable to air cleaner bracket, if used
9	113-206	4	BOLT, Hex, 3/8"-16 x 3/4", G5, Full Thd
10	192-21	4	WASHER, LOCK, 3/8"
11	129-103	4	NUT, 3/8"-16, G5
12	195-524	4	WASHER flat, plated, 3/8" ID x 1-1/8" OD
13	131-4	4	NUT hex, self locking, 5/16" - 18 NC
14	D83436	1	STRIP sponge rubber
15	D36264	1	FITTING AND FILTER ASSEMBLY, air restriction indicator
16	221-1335	1	COUPLING, 1/8" NPT
17	L103131	1	SENDER air filter restriction indicator
18	F37765	1	GROMMET harness wire to hydraulic oil filter

18

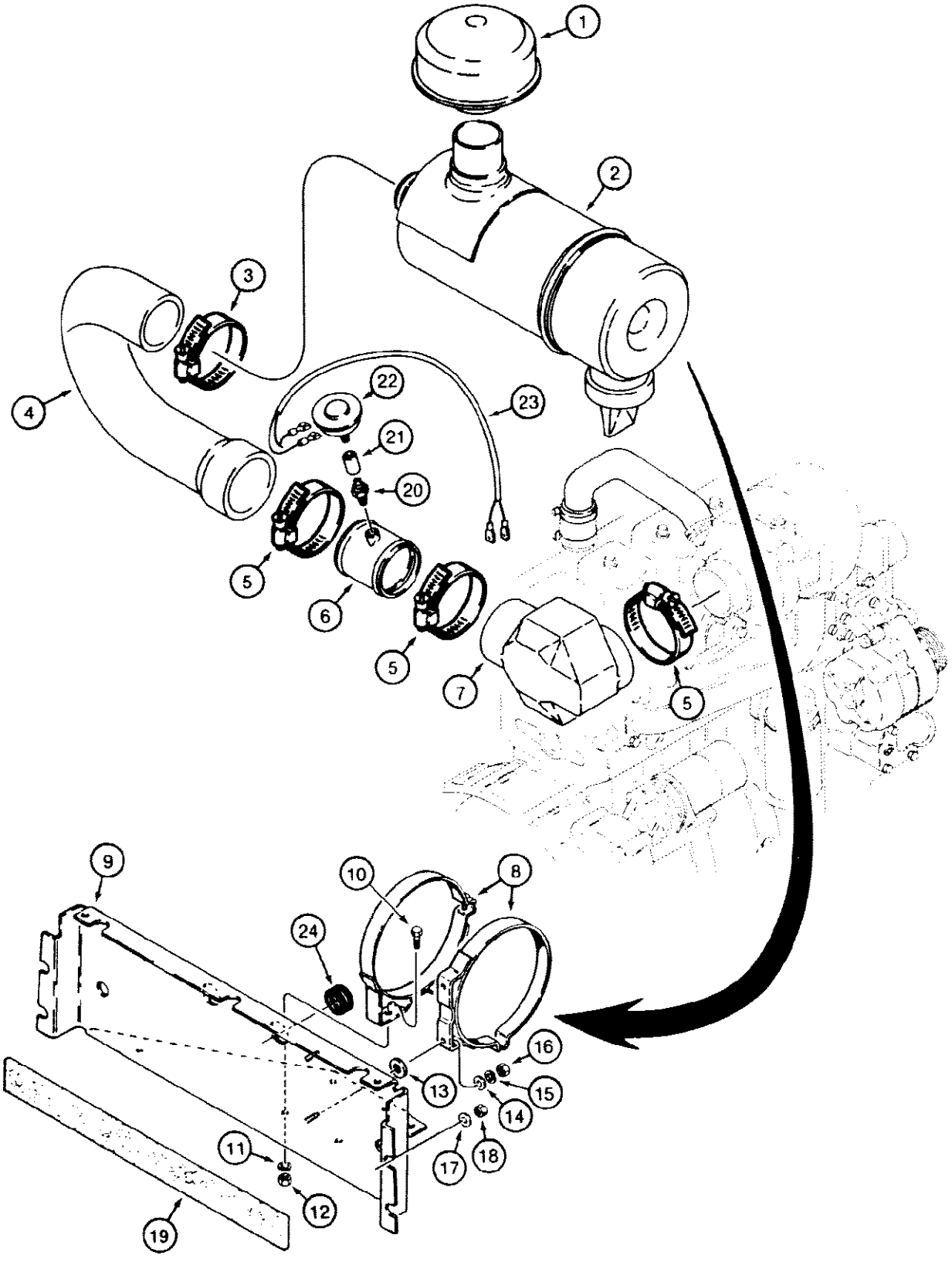

851308A

580SE CASE SUPER-E CONSTRUCTION KING LOADER BACKHOE - Engine

018 AIR CLEANER AND AIR INTAKE PARTS, MODELS WITH TURBOCHARGED ENGINE

Ref	Part Number	Qty	Description
1	A61277	1	CAP air cleaner
2	A172256	1	AIR CLEANER engine, parts list Figure 22
3	214-264	1	CLAMP hose to air cleaner
4	D133679	1	HOSE air cleaner
5	214-265	3	CLAMP hose
6	D132805	1	ADAPTER coupling, air restriction
7	A172545	1	HOSE elbow
8	L11247	2	BAND air cleaner mounting
9	D133220	1	BRACKET air cleaner mounting
10	113-206	2	BOLT, Hex, 3/8"-16 x 3/4", G5, Full Thd
11	192-21	2	WASHER, LOCK, 3/8"
12	129-103	2	NUT, 3/8"-16, G5
13	195-533	2	WASHER flat, plated, 1/2"
14	195-521	2	WASHER flat, plated, 5/16"
15	192-20	2	WASHER, LOCK, 5/16"
16	9635082	2	NUT, 5/16"-18, G5
17	195-524	4	WASHER flat, plated, 3/8" ID x 1-1/8" OD
18	131-4	4	NUT hex, self locking, 5/16" - 18 NC
19	D83436	1	STRIP sponge rubber
20	D36264	1	FITTING AND FILTER ASSEMBLY, air restriction indicator
21	221-1335	1	COUPLING 1/8" NPT
22	L103131	1	SENDER air filter restriction indicator
23	D133266	1	WIRE jumper, to engine harness
24	F37765	1	GROMMET harness wire to hydraulic oil filter

020 A170974 AIR CLEANER, MODELS WITHOUT TURBOCHARGED ENGINE

20

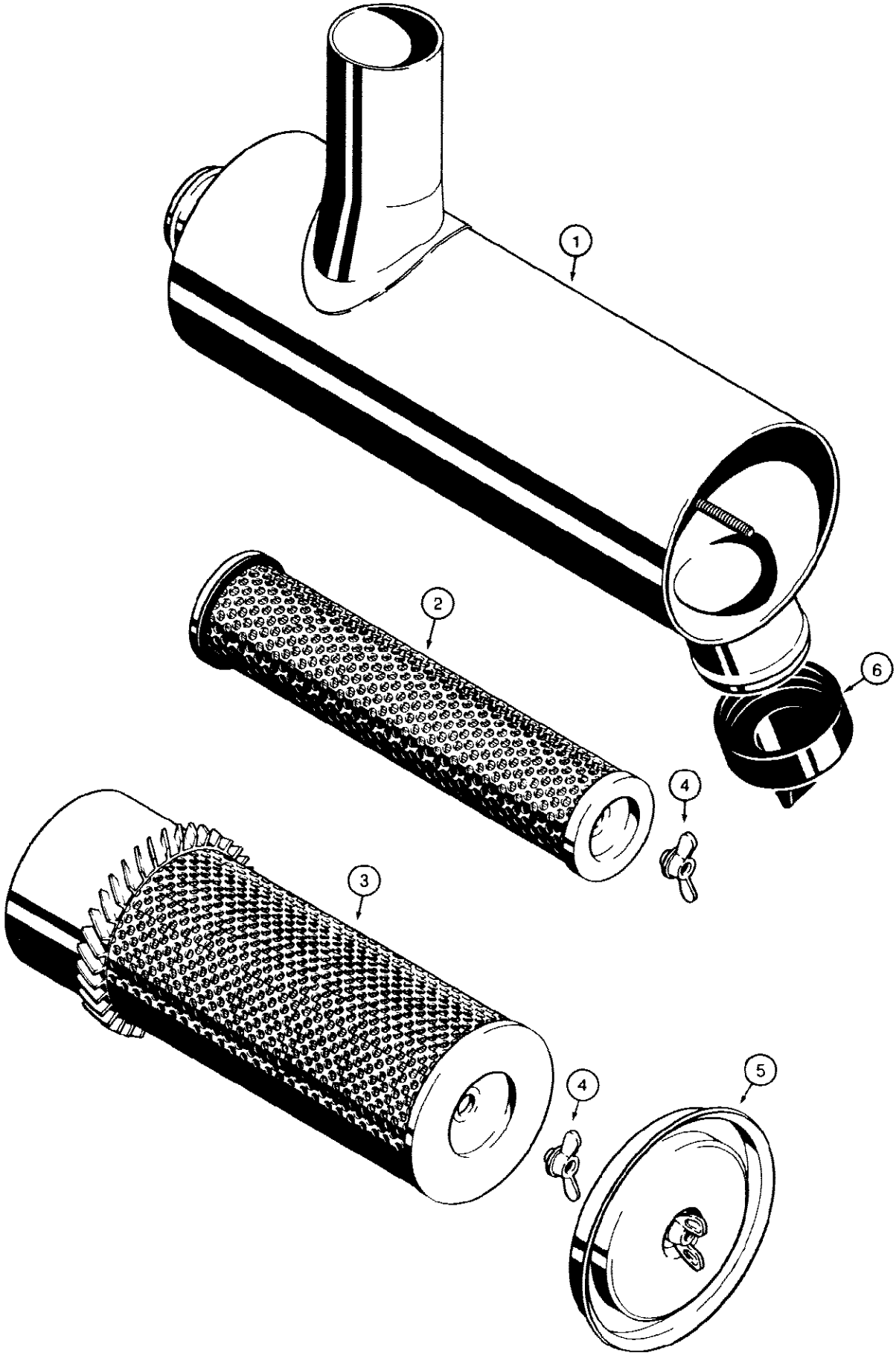

800775

580SE CASE SUPER-E CONSTRUCTION KING LOADER BACKHOE - Engine

020 A170974 AIR CLEANER, MODELS WITHOUT TURBOCHARGED ENGINE

Ref	Part Number	Qty	Description
	A170974	1	AIR CLEANER ASSEMBLY, engine, Includes: Ref. 1 - 6
1	NSS	1	HOUSING air cleaner
2	N6777	1	ELEMENT secondary
3	N6778	1	ELEMENT primary
4	D78354	2	NUT wing, element and cover
5	N6779	1	COVER end
6	S113982	1	VALVE dust, rubber

022 A172256 AIR CLEANER, MODELS WITH TURBOCHARGED ENGINE

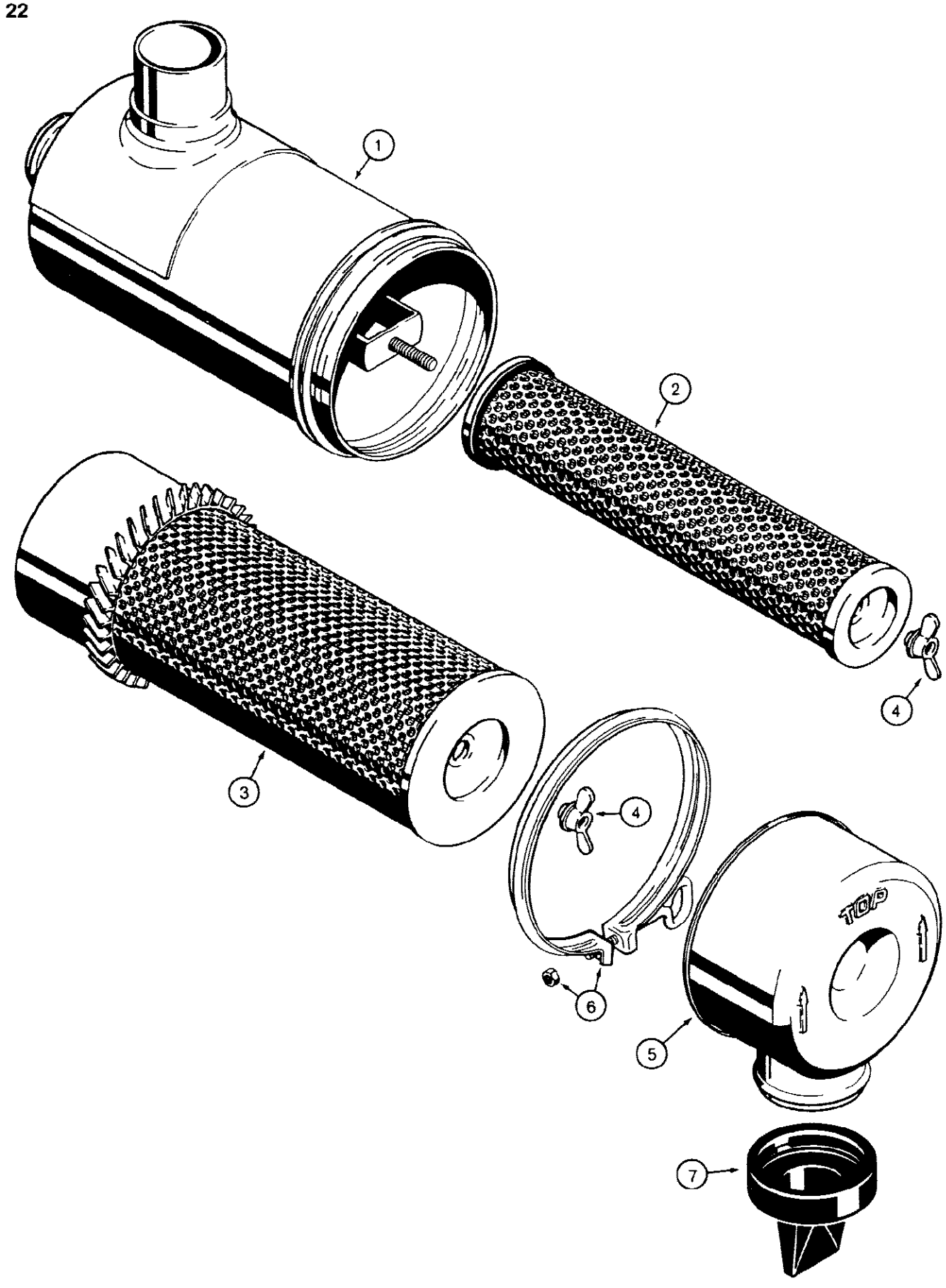

022 A172256 AIR CLEANER, MODELS WITH TURBOCHARGED ENGINE

Ref	Part Number	Qty	Description
	A172256	1	AIR CLEANER ASSEMBLY, engine, Includes: Ref. 1 - 7
1	NSS	1	HOUSING air cleaner
2	A173291	1	ELEMENT secondary
3	A173290	1	ELEMENT primary
4	D78354	2	NUT wing, element
5	NSS	1	COVER end
6	F84999	1	CLAMP housing to cover
7	S113982	1	VALVE dust, rubber

24

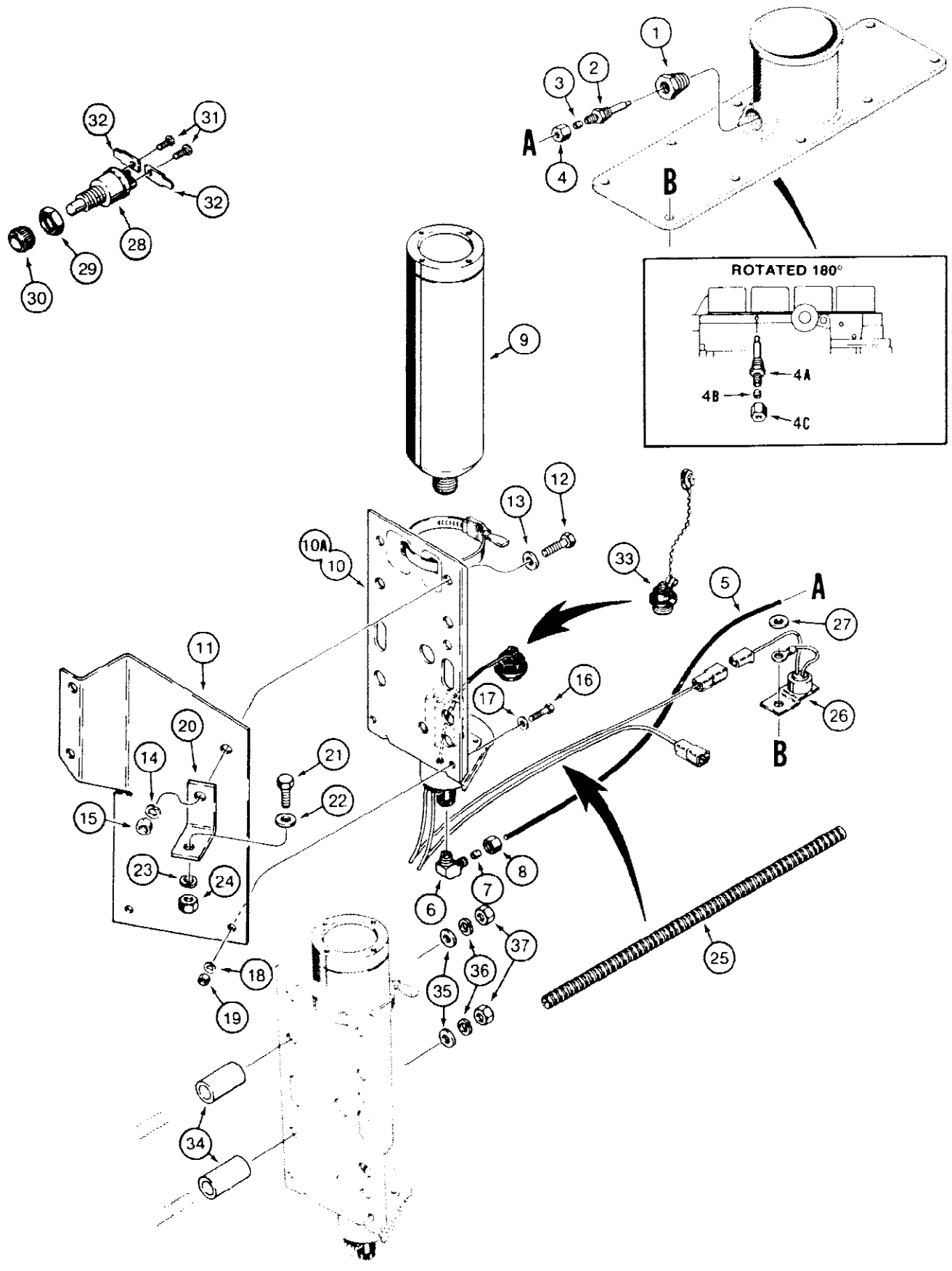

024 COLD START SYSTEM

Ref	Part Number	Qty	Description
1	J904346	1	PLUG manifold, Replaces existing manifold plug without a tapped hole for injector nozzle, used with A171946 nozzle and A171938 valve
	A171946	1	NOZZLE ASSEMBLY, cold start injector, single orifice nozzle, mounts in top of manifold with item 1 plug, Includes: Ref. 2 - 4
2	NSS	1	BODY nozzle
3	222-650	1	SLEEVE, 1/8" Tube, Comp, Brass
4	222-660	1	NUT compression, fitting, brass, 1/8"
	A172352	1	NOZZLE ASSEMBLY, cold start injector, .008 dual orifice nozzle, mounts to side of manifold, used with A172116 valve, no longer available, order A172900 nozzle, Includes: Ref. 4A - 4C
4A	NSS	1	BODY nozzle
4B	222-650	1	SLEEVE, 1/8" Tube, Comp, Brass
4C	222-660	1	NUT compression, fitting, brass, 1/8"
	A172900	1	NOZZLE ASSEMBLY, cold start injector, .011 dual orifice nozzle, component parts not serviced separately, mounts to side of manifold, used with A172116 valve
5	D41013	1	TUBE valve to injector nozzle, 18" (457 mm) long, Replaces 12" (305 mm) long tube used on some models, see Parts Substitution List for bulk hose options
	222-615	1	ELBOW, 90є, 5/16"-24 x 1/8" NPT, Comp, Assy, Incl. Ref 6 - 8
6	NSS	1	BODY elbow
7	222-650	1	SLEEVE, 1/8" Tube, Comp, Brass
8	222-660	1	NUT compression, fitting, brass, 1/8"
9	A171940	1	STARTING FLUID cylinder
10	A171938	1	VALVE ASSEMBLY, 1.5 cc starting fluid injection, valve hex port for cylinder mounting is silver colored, with bracket, component parts not serviced separately, used with A171946 nozzle and J904346 plug
10A	A172116	1	VALVE ASSEMBLY, 3 cc starting fluid injection, valve hex port for cylinder mounting is gold colored, with bracket, component parts not serviced separately, used with A172352 or A172900 nozzle
11	D128096	1	BRACKET valve mounting, attaches to air cleaner mounting bracket, used on models without turbocharged engine
12	113-207	1	BOLT, Hex, 3/8"-16 x 1", G5, Full Thd, If used
13	195-525	1	WASHER flat, plated, if used, 3/8"
14	192-21	1	WASHER, LOCK, 3/8", If used
15	129-103	1	NUT, 3/8"-16, G5, If used
16	113-3	2	BOLT, Hex, 1/4"-20 x 3/4", G5, Full Thd, If used
17	195-518	2	WASHER flat, plated, if used, 1/4"
18	192-19	2	WASHER, LOCK, 1/4", If used
19	7770	2	NUT, 1/4"-20, G5, If used
20	D128097	1	SUPPORT valve mounting bracket to air cleaner mounting bracket, used on models without turbocharged engine
21	113-206	1	BOLT, Hex, 3/8"-16 x 3/4", G5, Full Thd, If used
22	195-525	1	WASHER flat, plated, if used, 3/8"
23	192-21	1	WASHER, LOCK, 3/8", If used
24	129-103	1	NUT, 3/8"-16, G5, If used

024 COLD START SYSTEM

Ref	Part Number	Qty	Description
25	D128402	1	SLEEVE wire guard, 15" (380 mm) long
26	A171943	1	SWITCH temperature, circuit breaking, uses existing intake manifold mounting hardware
27	195-521	1	WASHER flat, plated, 5/16"
	L72776	1	SWITCH ASSEMBLY, cold start, includes screws, must also order, 2, L59682 blade terminals, item 32, Includes: Ref. 28 - 31
28	NSS	1	SWITCH cold start
29	H275784	1	NUT jam, special
30	D73741	1	NUT special
31	174-93	2	SCREW machine, round head slotted, No. 10 - 32 NF x 1/4"
32	L59682	2	TERMINAL blade, used with L72776 switch
33	N8826	1	PLUG with chain, place in starting fluid valve when starting fluid cylinder is not in place, item 9, if used
34	D95022	2	SPACER valve mounting, used on models with turbocharged engine
35	195-525	2	WASHER flat, plated, if used, 3/8"
36	192-21	2	WASHER, LOCK, 3/8", If used
37	129-103	2	NUT, 3/8"-16, G5, If used

28

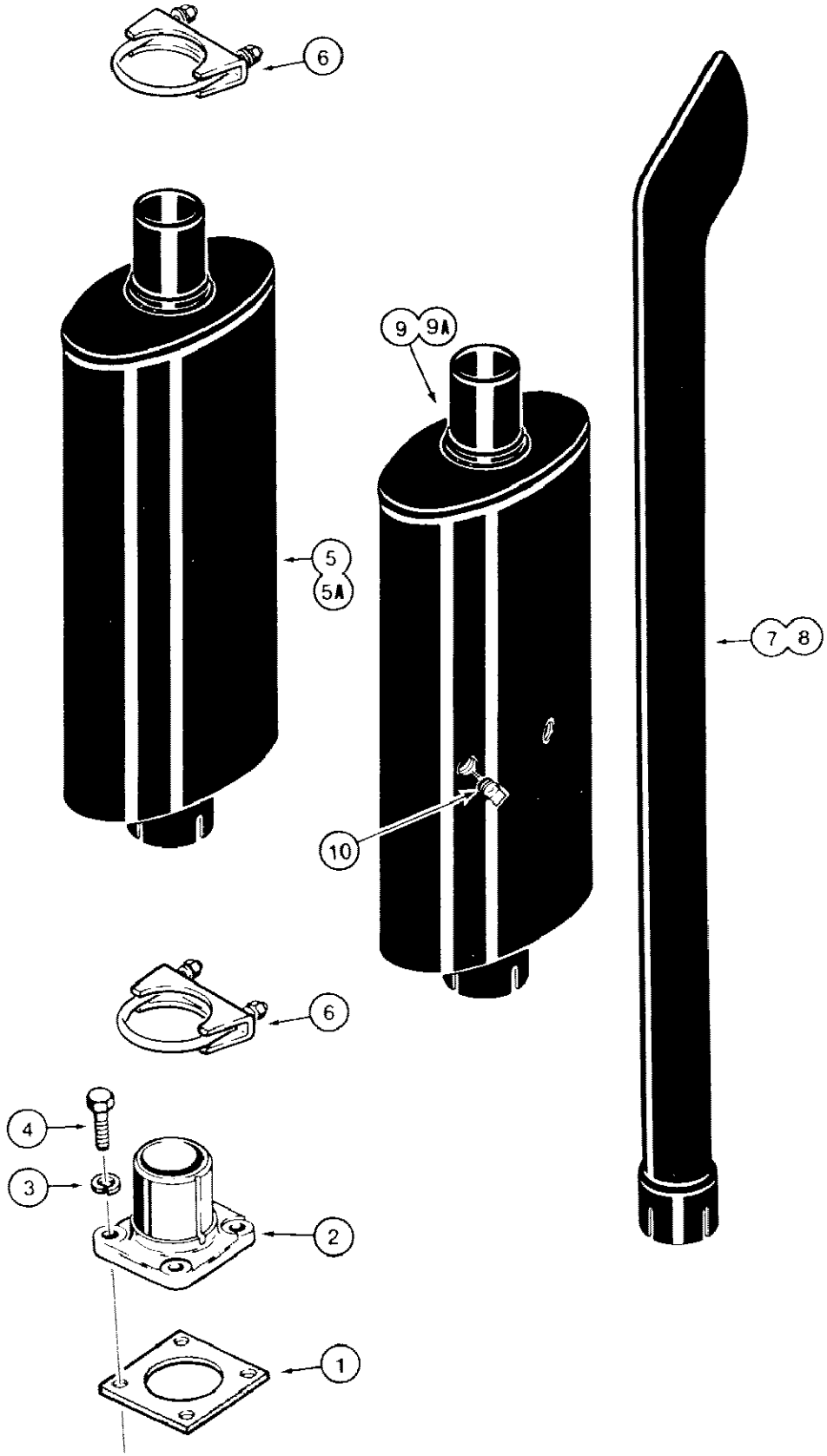

580SE CASE SUPER-E CONSTRUCTION KING LOADER BACKHOE - Engine

028 MUFFLER AND EXHAUST SYSTEM, MODELS WITHOUT TURBOCHARGED ENGINE

Ref	Part Number	Qty	Description
1	A170151	1	GASKET exhaust pipe
2	A170611	1	ADAPTER muffler
3	892-1110	4	WASHER lock, plated, 10 mm
4	813-10025	4	BOLT hex head, 10 mm - 1.5 x 25 mm (8.8)
5	A170064	1	MUFFLER engine exhaust, 4 slots, no longer available, order A173180 muffler
5A	A173180	1	MUFFLER engine exhaust, 2 slots, not shown
6	A13240	2	CLAMP muffler, includes hardware
7	L104036	1	PIPE exhaust, muffler extension, 39-7/8" long, if used
8	A172152	1	PIPE exhaust, muffler extension, 31-5/8" long, if used
9	A171108	1	MUFFLER spark arrester, inlet diameter 2-1/2" (64 mm) 4 slots, no longer available, order A173648 muffler
9A	A173648	1	MUFFLER spark arrester, inlet diameter 2-1/2" (64 mm) 2 slots, not shown, Includes: Ref. 10
10	217-77	2	PLUG square head, brass, 3/8" NPT, A171108 or A173648 muffler

30

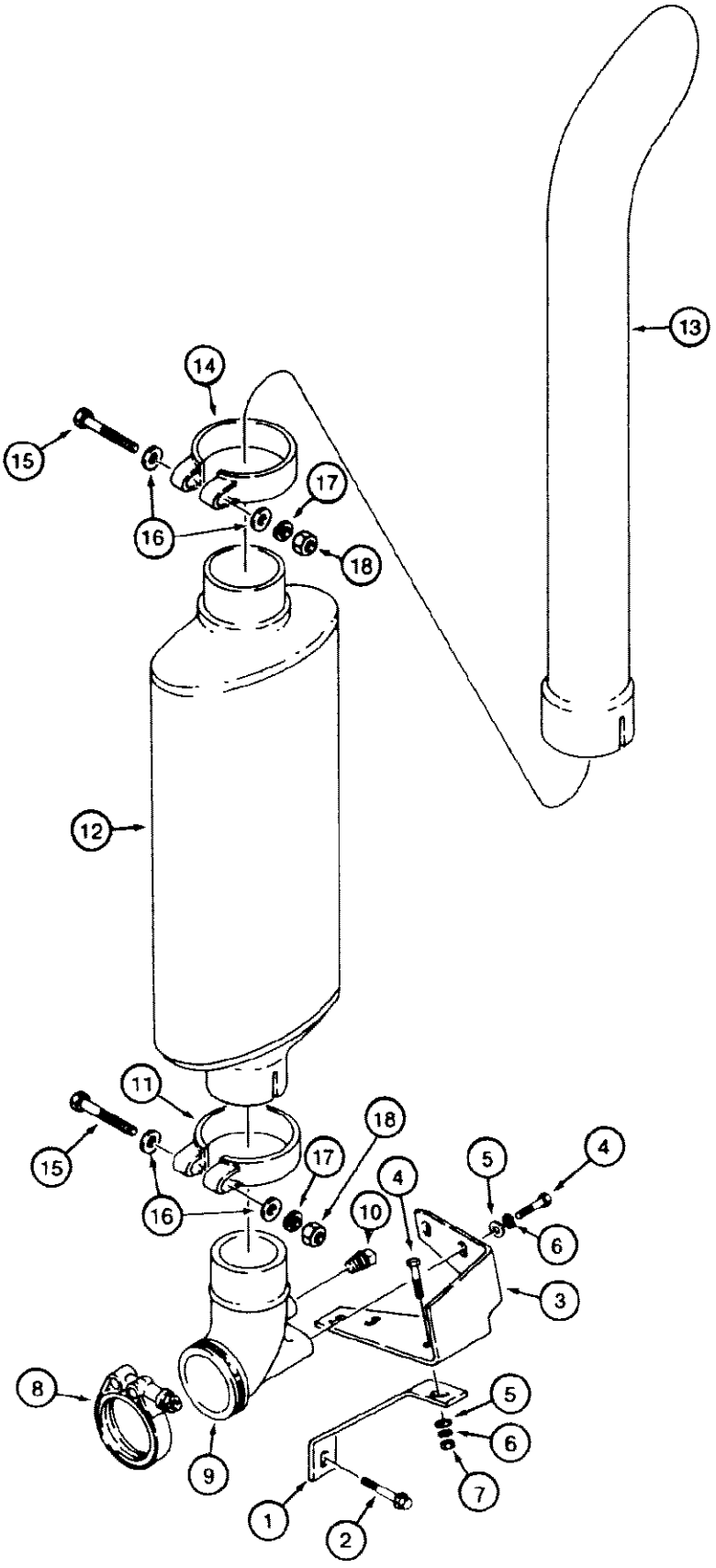

851310

580SE CASE SUPER-E CONSTRUCTION KING LOADER BACKHOE - Engine

030 MUFFLER AND EXHAUST SYSTEM, MODELS WITH TURBOCHARGED ENGINE

Ref	Part Number	Qty	Description
1	L115129	1	SUPPORT bracket
2	844-10080	1	BOLT hex flange head, plated, 10 mm - 1.5 x 80 mm (8.8)
3	L114429	1	BRACKET muffler mounting
4	814-10030	5	BOLT, Hex, M10 x 30, 8.8
5	895-11010	5	WASHER, M10 x 20 x 2
6	892-1110	5	WASHER lock, plated, 10 mm
7	825-1110	1	NUT hex, plated, 10 mm 1.5
8	A170467	1	CLAMP t bolt type, adapter to turbine
9	A173795	1	ADAPTER exhaust, 93 degree
10	221-12	1	PLUG square head, 1/4" NPT, adapter
11	R27691	1	CLAMP muffler, lower
12	A170065	1	MUFFLER engine exhaust, 2 slots
13	A172158	1	PIPE exhaust, muffler extension, 28-1/4" long
14	D136017	1	CLAMP muffler, upper
15	113-2281	2	BOLT hex head, special locking, black Teflon, 3/8" - 16 NC x 2-3/4"
16	195-129	4	WASHER flat, plated, 3/8"
17	192-46	2	WASHER, LOCK, 3/8"
18	129-770	2	NUT hex, black plated, 3/8" - 16 NC

32

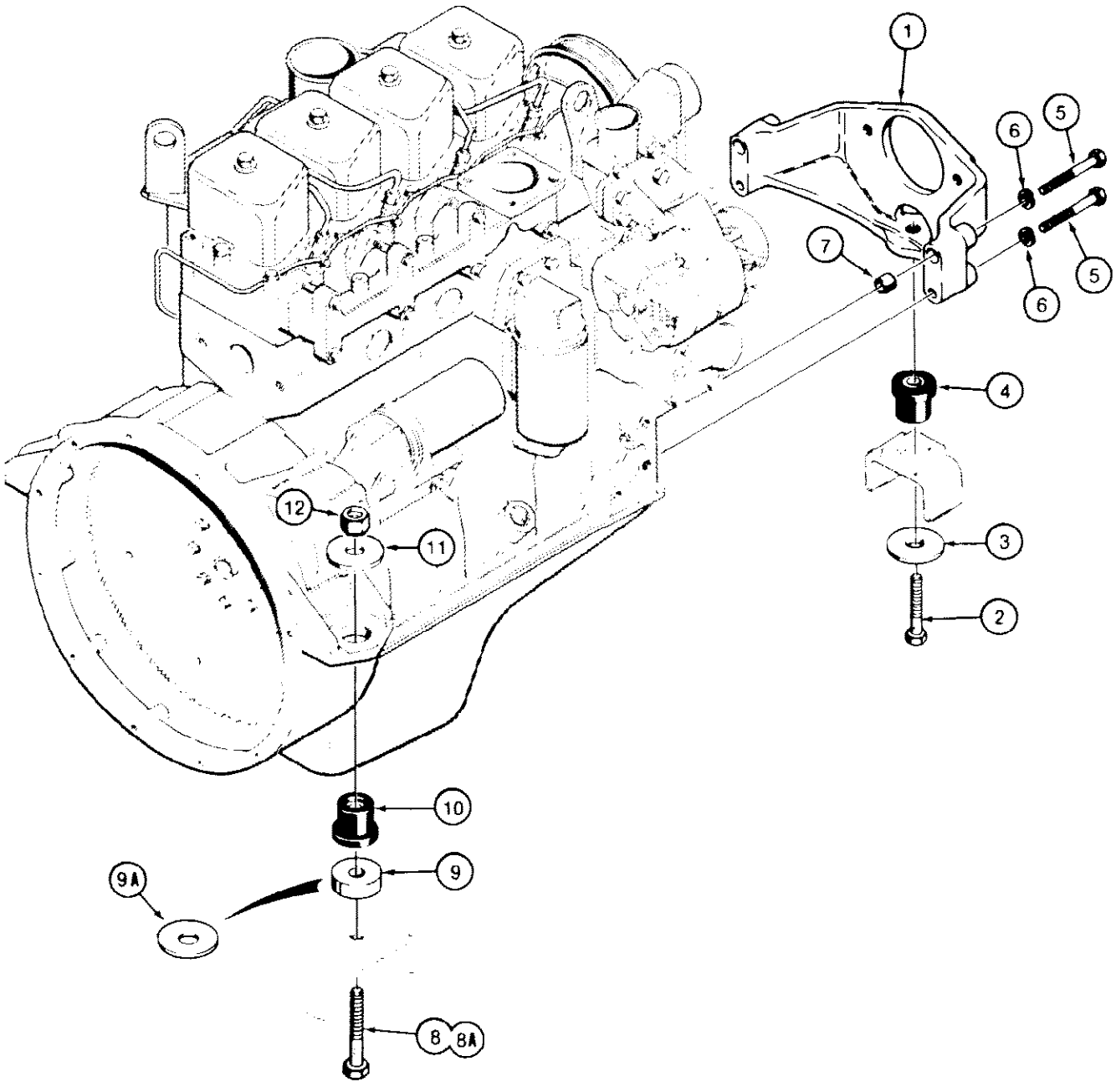

580SE CASE SUPER-E CONSTRUCTION KING LOADER BACKHOE - Engine

032 ENGINE MOUNTING

Ref	Part Number	Qty	Description
1	A170580	1	SUPPORT engine front
2	113-621	1	BOLT, Hex, 5/8"-11 x 2 3/4", G5
3	D35009	1	WASHER flat, special, hardened
4	D122727	1	INSULATOR engine mount, rubber
5	814-12085	4	BOLT hex head, plated, 12 mm - 1.75 x 85 mm (8.8)
6	192-23	4	WASHER, LOCK, 1/2"
7	A170309	2	SLEEVE dowel ring
8	113-618		BOLT hex head, plated, used with D121888 spacer, 5/8" - 11 NC x 4"
		2	item 9, if used
8A	113-628		BOLT, Hex, 5/8"-11 x 3 1/2", G5, Used with D35009 washer
		2	item 9A, if used
9	D121888	2	SPACER engine mount, used with 113-618 bolt, item 8, if used
9A	D35009	2	WASHER flat, special, hardened, used with 113-628 bolt, item 8A, if used
10	D122727	2	INSULATOR engine mount, rubber
11	D35009	2	WASHER flat, special, hardened
12	129-107	2	NUT, 5/8"-11, G5

34

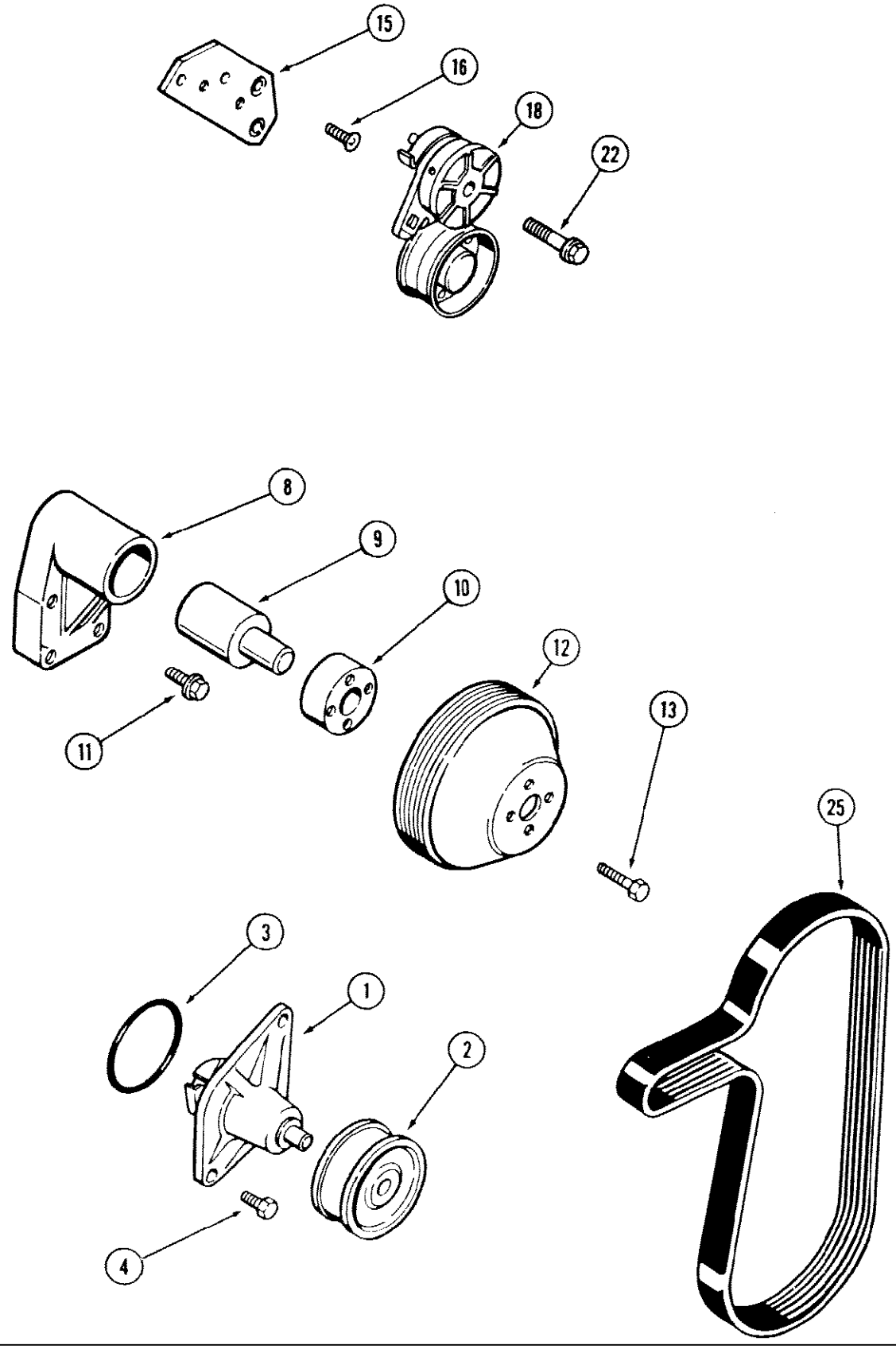

580SE CASE SUPER-E CONSTRUCTION KING LOADER BACKHOE - Engine

034 WATER PUMP AND PULLEYS, 4T-390 AND 4-390 DIESEL ENGINE

Ref	Part Number	Qty	Description
	AR77471	1	PUMP water, remanufactured, North America only
	AC77471	1	RETURN NUMBER use this part no. to return pump core for credit
	A77471	1	KIT, pump, water, new, Includes: Ref. 1 - 3
1	NSS	1	PUMP ASSEMBLY, water, Reference No. J903749
2	NSS	1	PULLEY water pump, Order A77471 Reference No. J903657
3	A30395	1	O RING sealing
4	J900227	2	BOLT, Hex, M8 x 1.25 x 22
8	J908270	1	BRACKET ASSEMBLY, fan, Replaces J907070, Includes: Ref. 9 - 10
9	NSS	1	SHAFT bearing, fan, Reference No. J908164
10	NSS	1	HUB fan mounting, Reference No. J901364
11	J900678	4	BOLT hex flange, M8 x 40 mm
12	J902710	1	PULLEY fan
13	813-8020	2	BOLT hex, M8 x 20 mm, For shipping only
15	J904548	1	BRACKET belt tension
16	J925186	2	SCREW, flat head cap, M8 x 25
18	J908163	1	TENSIONER ASSEMBLY, belt, Use P/N J912246. Subs to J918944 tensioner and 854 10070 bolt.
22	J905426	1	BOLT belt tensioner retaining
25	J903099	1	BELT fan and water pump pulley

36

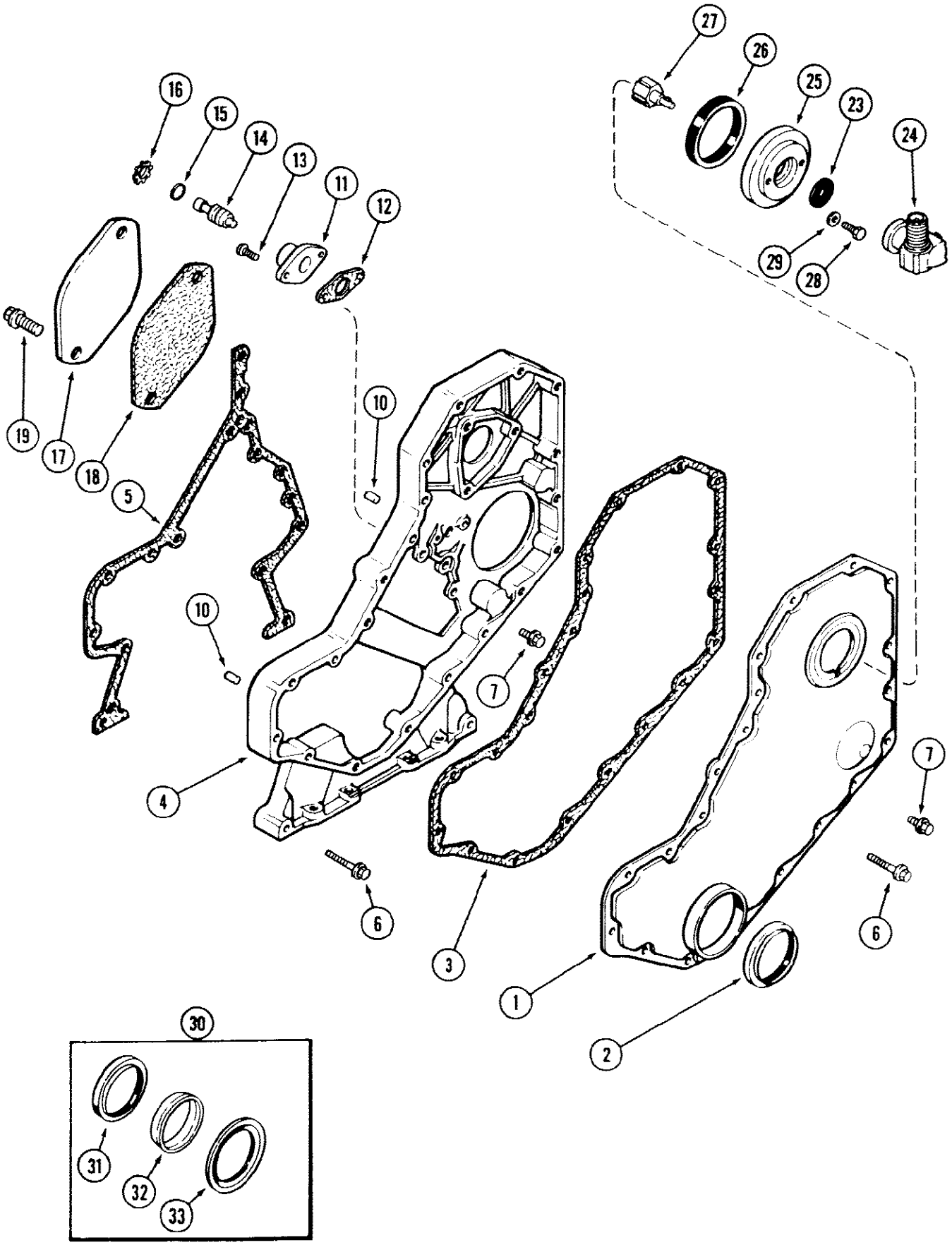
27
26
25
23
24
16
15
14
13
11
12
29
28
19
17
18
10
5
10
7
4
7
6
3
6
1
2
30
31
32
33

580SE CASE SUPER-E CONSTRUCTION KING LOADER BACKHOE - Engine

036 FRONT GEAR COVER, 4T-390 AND 4-390 DIESEL ENGINE

Ref	Part Number	Qty	Description
1	J903794	1	COVER gear, front
2	NSS	1	SEAL oil, crankshaft front, Order Ref. 30
3	J910500	1	GASKET cover to housing, Replaces J904492
4	J905731	1	HOUSING timing gear, Replaces J903276
5	J907836	1	GASKET housing to block
6	J900633	11	BOLT hex, M8 x 50 mm
7	J900629	16	BOLT hex, M8 x 16 mm
10	J900257	2	PIN dowel, locating, 16 mm
11	J905933	1	HOUSING timing pin, Replaces J904960, Ref #11 J905933 housing Housing shown in, drawing is old part nbr J904960, which did not have groove for O ring.
12	J905595	1	GASKET pin housing, Replaces J903926
13	J902630	2	SCREW round head, M5 x 17 mm
14	J903924	1	PIN timing
15	J903927	1	O RING sealing
16	J904849	1	Ring, Snap, 0.875", Int, #87, timing pin
17	A77440	1	PLATE cover, access
18	A77441	1	GASKET cover plate
19	J901249	2	BOLT hex flange, M12 x 25 mm
	NSS	1	DRIVE ASSEMBLY, tachometer, Reference No. J905309, Includes: Ref. 23 - 33
23	J905218	1	GASKET tachometer drive, Replaces J903793
24	J905217	1	ADAPTER tachometer
25	J903476	1	COVER tachometer drive, Ref #25 J903476 cover This is a bolt on cover, for cable drive tach. Screw on cover for electric drive tach. is J903463, no holes as are shown in illustration
26	J903475	1	SEAL cover
27	J905306	1	HUB tachometer drive coupling, Replaces J903637
28	A77442	2	SCREW tachometer drive
29	J903644	2	WASHER retaining
30	J904353	1	KIT, seal, oil, crankshaft front
31	NSS	1	SEAL oil, crankshaft front, Reference No. J900709
32	NSS	1	TOOL seal installation
33	NSS	1	TOOL seal installation

38

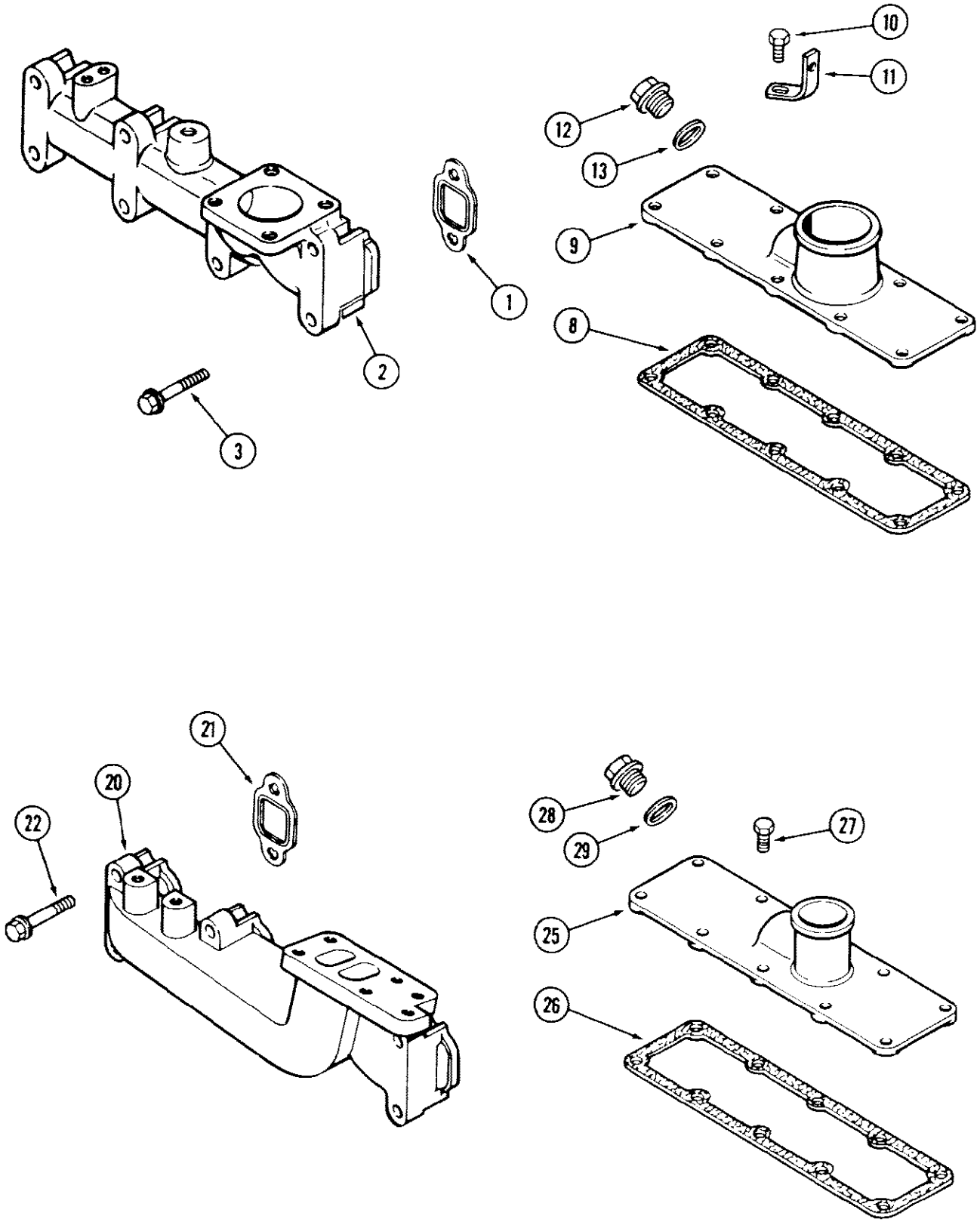

580SE CASE SUPER-E CONSTRUCTION KING LOADER BACKHOE - Engine

038 MANIFOLDS, 4-390 DIESEL ENGINE, EXHAUST, INTAKE, 4T-390

Ref	Part Number	Qty	Description
1	J905443	4	GASKET exhaust manifold, Replaces J901456
2	J901223	1	MANIFOLD exhaust
3	J901448	8	BOLT exhaust, hex flange, M10 x 65
8	J901999	1	GASKET intake manifold
9	J904340	1	MANIFOLD intake
10	J904341	8	BOLT intake, retaining
11	NSS	1	BRACE intake, fuel tube, See Figure 78
12	J907185	1	PLUG intake, hex flanged, manifold
13	J906773	1	WASHER intake, plug sealing
20	J901919	1	MANIFOLD exhaust
21	J905443	4	GASKET exhaust, manifold
22	J901448	8	BOLT exhaust, hex flange, M10 x 65
25	J904339	1	MANIFOLD intake
26	J901999	1	GASKET intake, manifold
27	J904341	8	BOLT intake, hex langed, M8 x 26 mm
28	J907185	1	PLUG intake, hex flanged, manifold
29	J906773	1	WASHER intake, plug

40

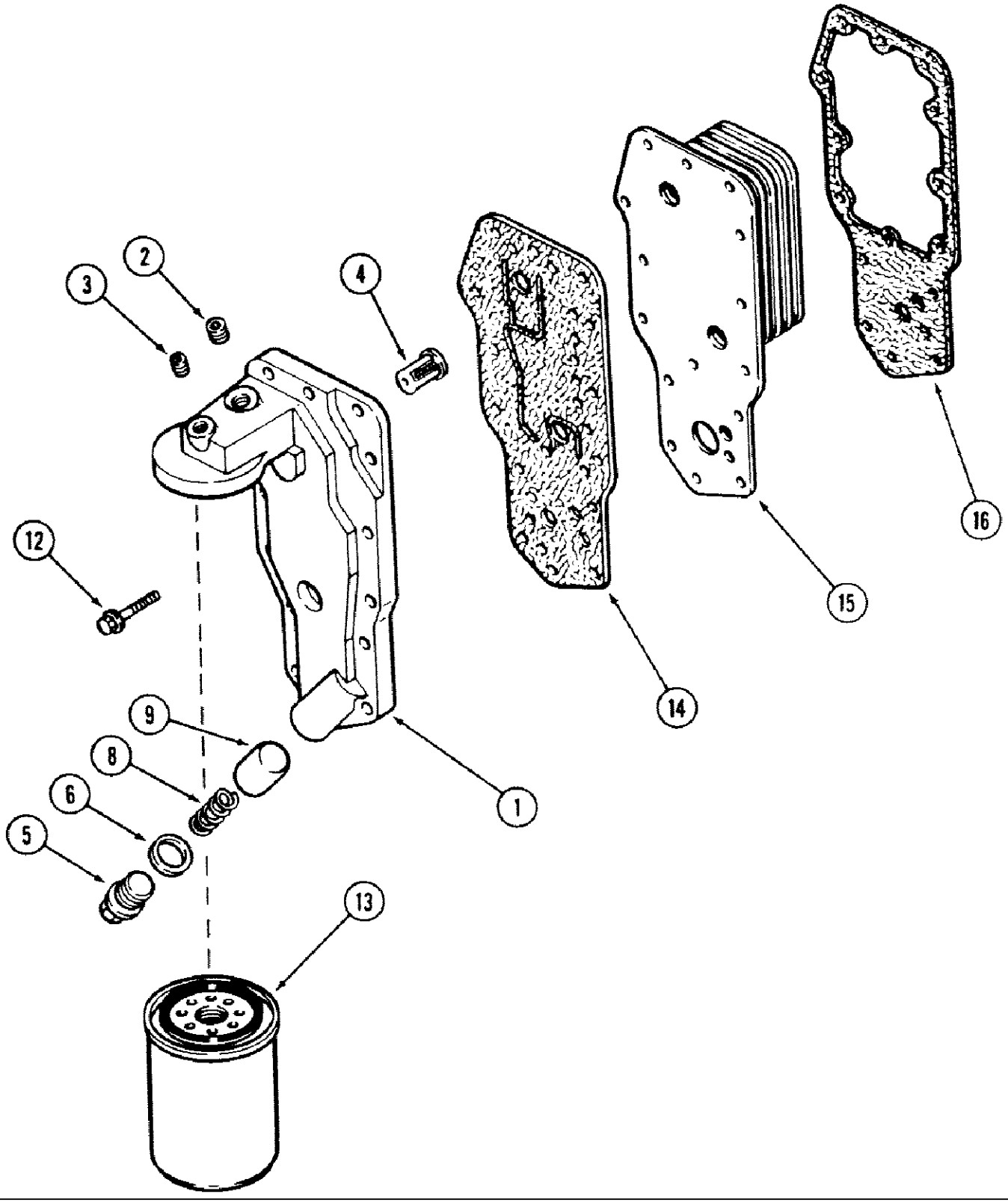

580SE CASE SUPER-E CONSTRUCTION KING LOADER BACKHOE - Engine

040 OIL FILTER AND COOLER, 4T-390 AND 4-390 DIESEL ENGINE

Ref	Part Number	Qty	Description
1	J902295	1	HEAD filter, lube oil
2	A77428	1	PLUG hex socket pipe, 1/4 18 inch PT, Used without turbo
3	J906619	1	PLUG hex socket pipe, 1/8 27 inch PT
4	J902338	1	VALVE relief, pressure
5	J904386	1	PLUG regulator valve
6	J902425	1	WASHER seal, plug
8	J903261	1	SPRING compression
9	J906456	1	PLUNGER regulator, pressure, Replaces J904385
12	J900632	14	BOLT hex flange head, M8 x 35 mm
13	J908616	1	FILTER lube oil, cartridge
14	J905589	1	GASKET filter head, Replaces J904426
15	JR904320	1	COOLER oil, remanufactured, North America only
15	JC904320	1	NUMBER use this part no. to return cooler core for credit
15	J904320	1	COOLER oil, new
16	J904427	1	GASKET cooler core

42

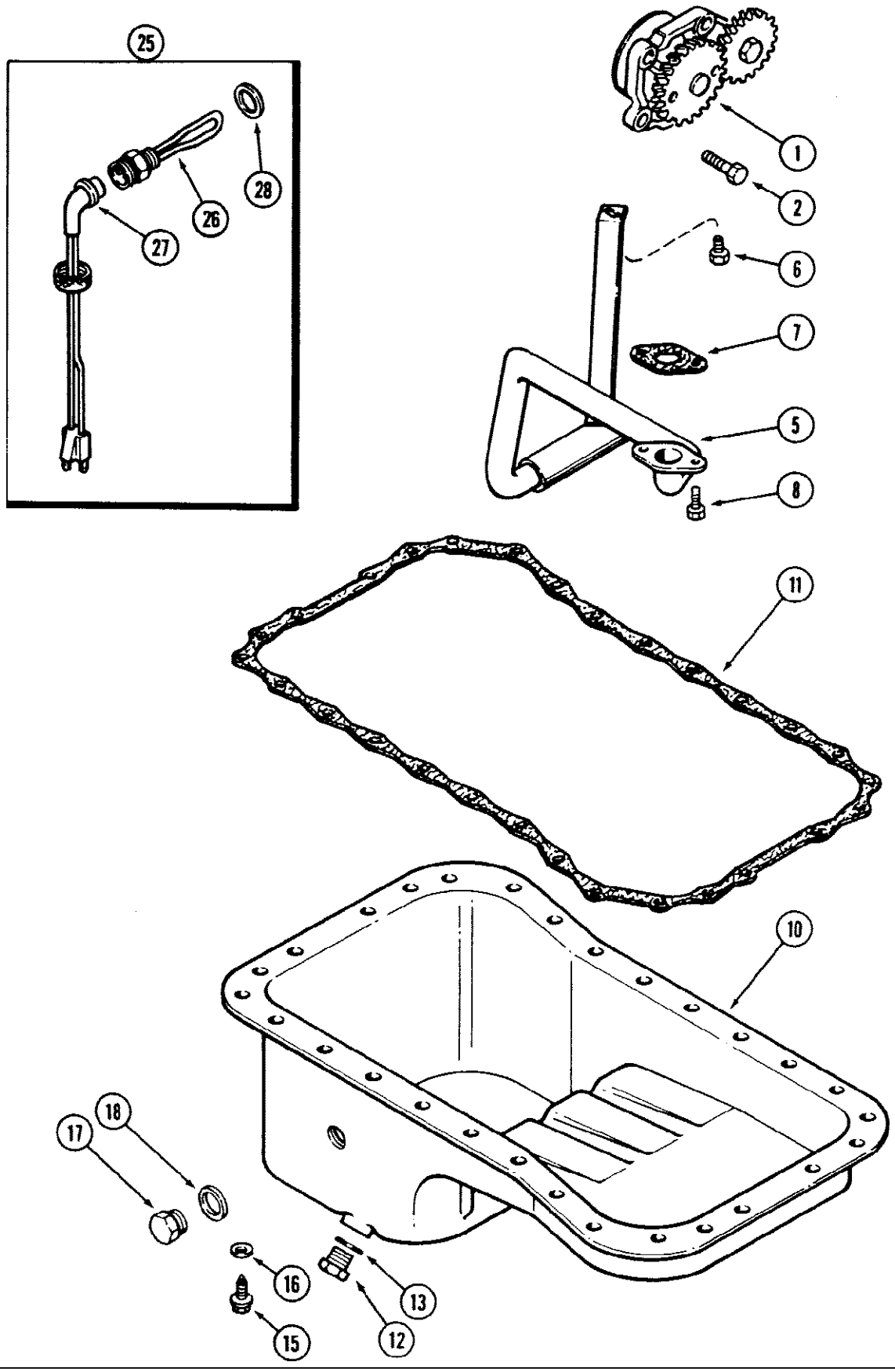

580SE CASE SUPER-E CONSTRUCTION KING LOADER BACKHOE - Engine

042 OIL PUMP AND OIL PAN, 4T-390 AND 4-390 DIESEL ENGINE

Ref	Part Number	Qty	Description
1	JR906413	1	PUMP oil, remanufactured, North America only
1	JC906413	1	RETURN NUMBER use this part no. to return pump core for credit
1	J906413	1	PUMP ASSEMBLY, oil, engine, new
2	813-8030	4	BOLT hex, M8 x 30 mm
5	J905206	1	TUBE suction, oil
6	J901235	1	BOLT hex flange head, M8 x 12 mm
7	J905468	1	GASKET suction tube Replaces J900454, Part of Gasket Kit, P/N A77482
8	J900629	2	BOLT mounting, tube
10	J901049	1	PAN oil, engine
11	J906027	1	GASKET oil pan, Part of Gasket Kit, P/N A77482
12	J900215	1	PLUG drain, oil
13	J900216	1	WASHER seal, drain plug, Part of Gasket Kit, P/N A77482
15	J907860	28	SCREW, Hex, Flg Hd, M8 x 25, Spcl, Oil pan
16	J907537	28	WASHER spring
17	J904386	1	PLUG heater hole, M18
18	J902425	1	WASHER seal, heater plug
	A77482	1	KIT, gasket, oil pan, Includes: Ref. 7, 11, 13
25	A77490	1	KIT, heater, engine oil, Includes: Ref. 26 - 27
26	NSS	1	ELEMENT heater Order A77490, Reference No. J904380
27	J905113	1	CABLE heater electric
28	J902425	1	WASHER heater sealing

44

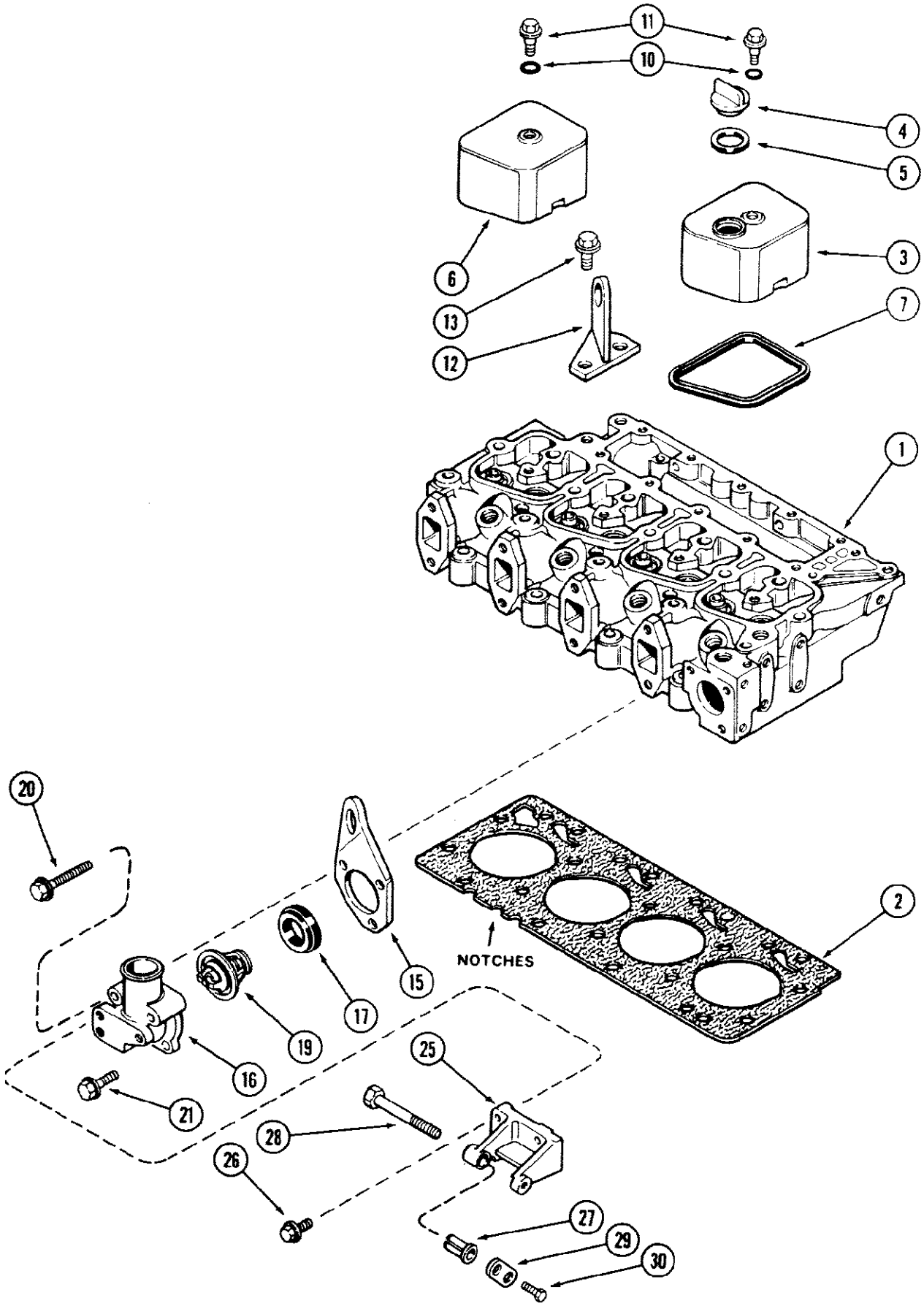

044 CYLINDER HEAD COVERS, 4T-390 AND 4-390 DIESEL ENGINE

Ref	Part Number	Qty	Description
1	REF	1	HEAD cylinder, engine, See Figure 46
2	J907054	1	GASKET cylinder head, 0.040 inch (1 mm) over bore, standard thickness, no marking = J907054 gasket
2	J907055	1	GASKET cylinder head, 0.040 inch (1 mm) over bore, 0.010 (0.25 mm) thickness, 2 Notches, X = J907055 gasket
2	J907056	1	GASKET cylinder head, 0.040 inch (1 mm) over bore, 0.020 (0.50 mm) thickness, 3 Notches, XX = J907056 gasket
3	NSS	1	COVER rocker and oil fill, front, Order J902604, Reference No. J902605
4	J901895	1	CAP oil filler, If equipped
5	J902363	1	RING sealing, If equipped
6	J902604	4	COVER rocker
7	J902666	4	SEAL rocker cover
10	J901837	4	O RING cover bolt
11	J907049	4	BOLT hex flange head, M8 x 21.25 mm, Prior to SN 44173451 used bolt J902375, SN, covers with the raised boss, ser nbr, REF. 11 ON SOME VERY EARLY UNITS, THE BOLT WAS J902375, M8X1.25X13mm LONG THD. IF UNIT HAS THESE BOLTS, THE SUPPORTS REF. 22 FIGURE 46 #J907048 SHOULD BE CHANGED TO ACCOMODATE THE NEW BOLTS., 44173452 and later. To SN 44180997 they also used a J900269 washer under the capscrew, Ref #11 J907049 bolt Used on the valve
12	J903170	1	BRACKET lifting, rear
13	814-12025	2	BOLT hex flange head, M12 x 25 mm
15	J903757	1	BRACKET lifting, front
16	J903756	1	HOUSING thermostat
17	J903301	1	GASKET housing
19	J906700	1	THERMOSTAT water, 95 degree C, 203 degree F
20	J903096	2	BOLT hex flange head, M8 x 70 mm
21	J900632	1	BOLT hex flange head, M8 x 35 mm
25	J908774	1	SUPPORT alternator mounting, Replaces J903086
26	814-8025	3	BOLT hex flange head, M8 x 25 mm
27	J902469	1	SPACER alternator mounting, If equipped
28	813-10100	1	BOLT hex, M10 x 100 mm
29	J903089	1	BRACE alternator mounting
30	814-8020	1	BOLT hex, M8 x 25 mm

46

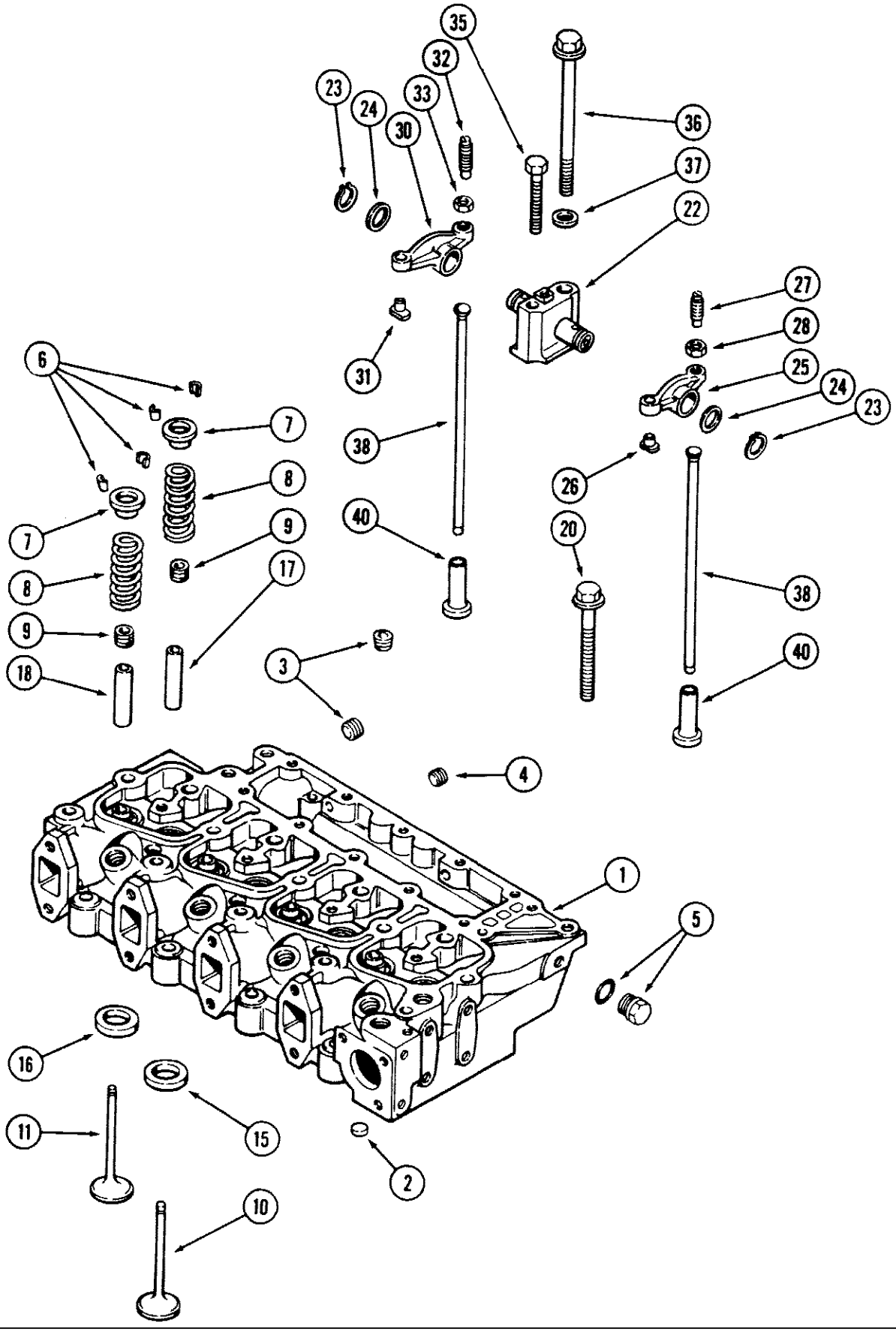
35
32
33
30
23
24
36
37
22
27
28
25
24
23
31
38
40
6
7
8
9
17
18
3
26
20
38
40
4
1
5
16
11
15
2
10

580SE CASE SUPER-E CONSTRUCTION KING LOADER BACKHOE - Engine

046 CYLINDER HEAD AND VALVE MECHANISM, 4T-390 AND 4-390 DIESEL ENGINE

Ref	Part Number	Qty	Description
1	JR905864	1	HEAD cylinder, remanufactured, North America only
1	JC905864	1	RETURN NUMBER use this part no. to return head core for credit
1	J905864	1	HEAD ASSEMBLY, cylinder, new, with valves, Replaces J903919, Includes: Ref. 1 - 11
1	J904572	1	HEAD ASSEMBLY, cylinder, without valves, Replaces J902614
2	J902606	3	PLUG expansion, 21 mm, OD
3	A77429	5	PLUG hex socket pipe, 1/4 8 PT
4	J906619	2	PLUG hex socket pipe, 1/8 27 PT
5	J904386	1	PLUG pipe, If equipped
6	J900250	16	KEEPER valve
7	J900299	8	RETAINER valve spring
8	J900276	8	SPRING valve
9	J901097	8	SEAL valve
10	J901117	4	VALVE intake
11	J901607	4	VALVE exhaust
15	J906854	4	SEAT insert, intake valve, Service repair only
16	J904105	4	SEAT insert, exhaust valve, Service repair only
17	J904408	4	GUIDE valve, intake,Service repair only
18	J904409	4	GUIDE valve, exhaust, Service repair only
20	J903938	4	BOLT hex flange head, M12 x 70 mm
20	J903939	10	BOLT hex flange head, M12 x 120 mm
22	J910814	4	SUPPORT AND SHAFT ASSEMBLY, rocker arm, Replaced J907048
23	J900242	8	RING retaining, rocker arm
24	J900245	8	WASHER thrust, rocker arm
25	J900540	4	ARM ASSEMBLY, rocker, intake, Includes: Ref. 26 - 28
26	NSS	1	INSERT rocker arm, Reference No. J900705
27	J937438	1	SCREW slotted set, 3/8 inch NF x 40 mm
28	A77434	1	NUT hex jam, 3/8 inch NF
30	J900539	4	ARM ASSEMBLY, rocker, exhaust, Includes: Ref. 31 - 33
31	NSS	1	INSERT rocker arm, Reference No. J900705
32	J937438	1	SCREW slotted set, 3/8 inch - NF x 40 mm
33	A77434	1	NUT hex jam, 3/8 inch NF
35	813-8075	4	BOLT hex, M8 x 75 mm
36	J903940	4	BOLT hex flange head, M12 x 180 mm
38	J904679	8	ROD push, rocker arm
40	J907240	8	TAPPET valve, push rod, Replaces J901787

48

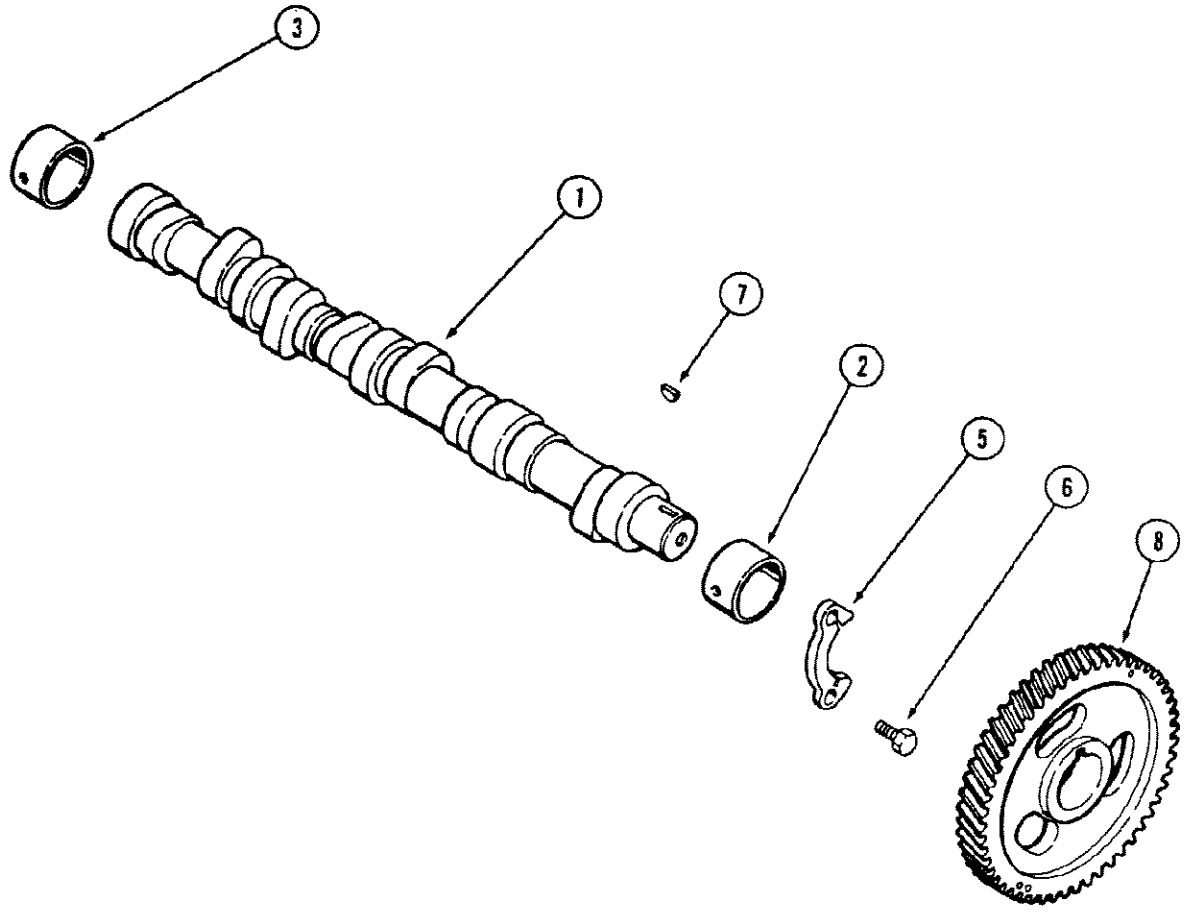

048 CAMSHAFT, 4T-390 AND 4-390 DIESEL ENGINE

Ref	Part Number	Qty	Description
1	J907446	1	CAMSHAFT engine, Replaces J904220
2	J901306	1	BUSHING camshaft front, standard
2	J904369	1	BUSHING camshaft front, oversize
3	J903242	4	BUSHING camshaft, See Note, When the intermediate and rear cylinder block camshaft bores are reamed in engine repair use J903242 bushings.
5	J901761	1	SUPPORT thrust, camshaft
6	813-8020	2	BOLT hex, M8 x 20 mm
7	J902332	1	KEY camshaft gear
8	J907431	1	GEAR camshaft, Replaces J902235

50

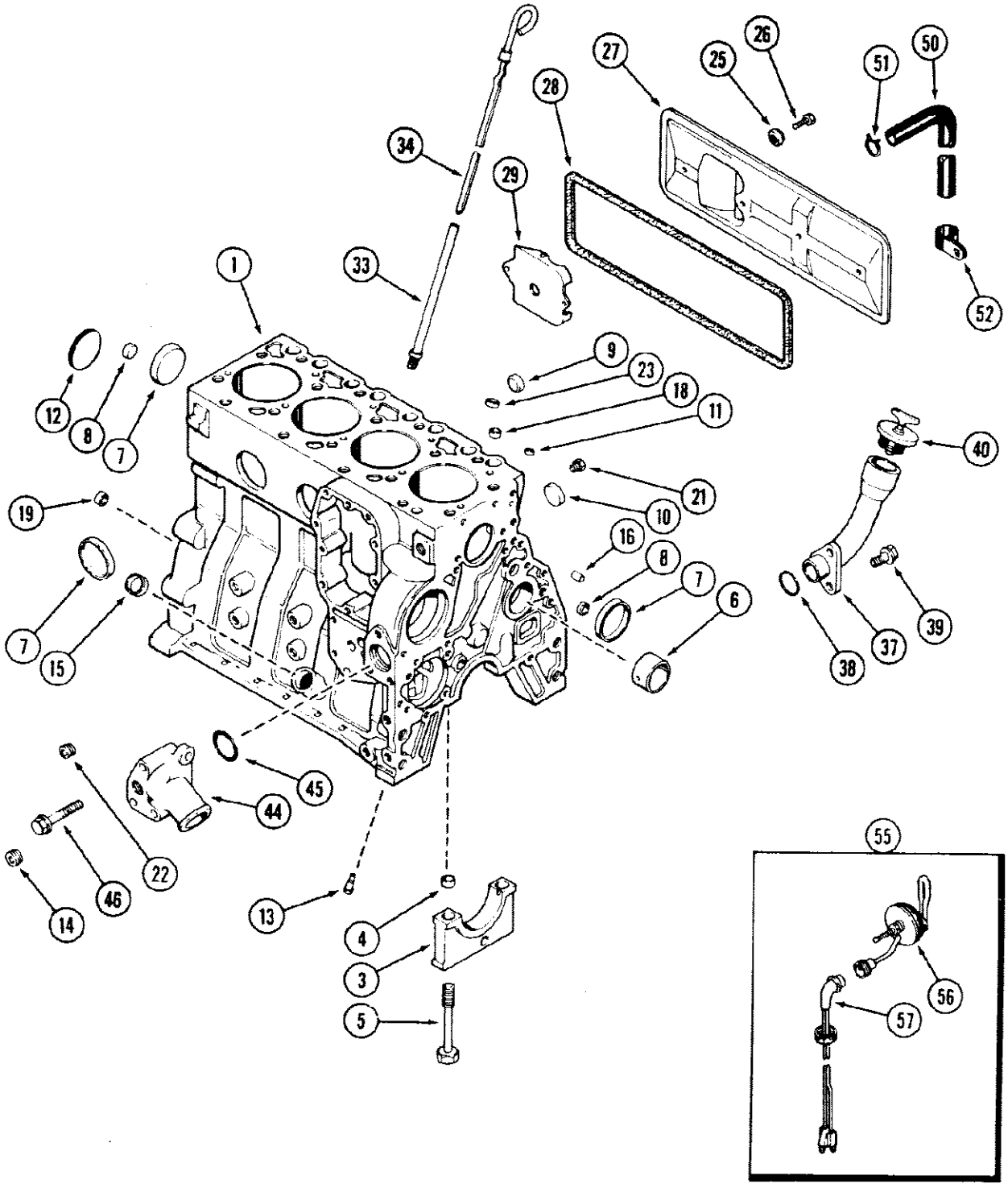
1
2
3
4
5
6
7
8
9
10
11
12
13
14
15
16
18
19
21
22
23
25
26
27
28
29
33
34
37
38
39
40
44
45
46
50
51
52
55
56
57

050 CYLINDER BLOCK, 4-390 DIESEL ENGINE, BLOCK HEATER

Ref	Part Number	Qty	Description
	JR905377		BLOCK ASSEMBLY, short, remanufactured, Order J905813 hardware kit
		1	North America kit only
	JC905377	1	RETURN NUMBER use this part no. to return block core for credit
1	J905377		BLOCK ASSEMBLY, short, engine, new, Includes stripped block, pistons, connecting rods and bearings, crankshaft and bearings, Includes: Ref. 1 - 22
		1	Also Order J905813 kit
1	J905376		BLOCK ASSEMBLY, stripped, engine, Replaces J904990
		1	Order J905813 hardware kit, North America only
3	J900967	5	CAP main bearing
4	J900068	10	DOWEL ring, bearing cap
5	J904217	10	BOLT bearing cap
6	REF	1	BUSHING camshaft front, See Figure 48
7	J900965	4	PLUG expansion, 58.1 mm OD
8	J900956	3	PLUG expansion, 17.7 mm OD
9	J900957	2	PLUG expansion, 25.7 mm OD
	J905813	1	KIT, hardware, block, engine
10	J900958	2	PLUG expansion, 32 mm OD
11	J900955	1	PLUG expansion, 9.8 mm OD
12	J900687	1	PLUG expansion, Welch, 60.3 mm OD
13	J901020	4	NOZZLE piston cooling
14	A77429	2	PLUG hex socket head pipe, 1/2 inch PT
15	A77439	1	PLUG expansion, 0.886 mm OD
16	J900257	2	PIN dowel, 16 mm long
18	J902343	2	DOWEL ring, 16 mm OD
19	J900068	2	RING dowel, 18 mm OD
21	J906619	2	PLUG hex socket head pipe, 1/8 inch PT
22	A77429	1	PLUG hex socket head pipe, 1/2 inch PT
25	J900267	2	SEAL ASSEMBLY, cover bolt
26	813-8020	2	BOLT hex, M8 x 20 mm
26	J900629	2	BOLT cover retaining, 16 mm long
27	J905023	1	COVER tappet, Replaces J903936, This does not include the baffle, Ref. 29.
28	J904056	1	GASKET tappet cover
29	NSS	1	BAFFLE tappet cover, Reference No. J907586, This is P/N J907586.
33	J905779	1	TUBE dipstick, Replaces J900438
34	J905781	1	DIPSTICK oil level gauge, Replaces J902647
37	J905440	1	TUBE oil fill, Replaces J903248
38	J906704	1	O RING sealing, 38 mm ID
39	J901249	2	BOLT hex flange head, M12 x 25 mm
40	A77424	1	CAP oil fill tube, Replaces J903265
44	J903102	1	CONNECTION water inlet
45	J901467	1	O RING sealing, 50 mm ID

050 CYLINDER BLOCK, 4-390 DIESEL ENGINE, BLOCK HEATER

Ref	Part Number	Qty	Description
46	J901757	3	BOLT hex flange head, M10 x 75 mm
50	J906593	1	HOSE breather
51	J904230	1	CLAMP spring, hose
52	A77531	1	CLIP hose
55	A77489	1	KIT heater, engine coolant, Includes: Ref. 56 - 57, The O ring seal for this is P/N J910517.
56	NSS	1	ELEMENT heater Order A77489, Reference No. J903645
57	J905113	1	CABLE heater electric

52

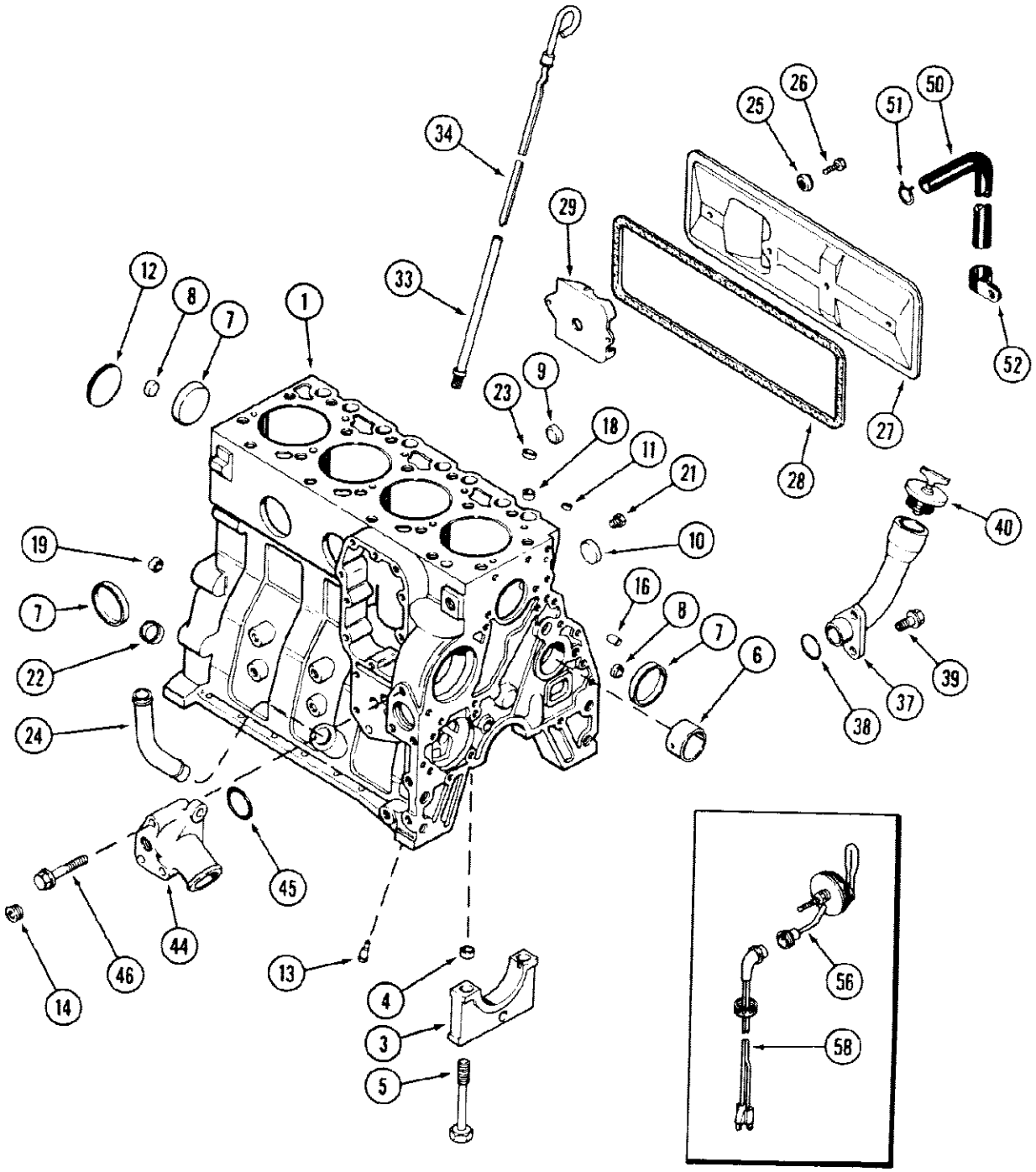
1
2
3
4
5
6
7
8
9
10
11
12
13
14
16
18
19
21
22
23
24
25
26
27
28
29
33
34
37
38
39
40
44
45
46
50
51
52
56
58

052 CYLINDER BLOCK, 4T-390 DIESEL ENGINE, BLOCK HEATER

Ref	Part Number	Qty	Description
1	JR905378	1	BLOCK ASSEMBLY, short, engine remanufactured, North America only, Service only
1	JC905378		RETURN NUMBER use this number when returning short block assembly
		1	for credit, includes J905813 hardware kit
1	J905378		BLOCK ASSEMBLY, short, engine, Includes stripped block, pistons, connecting rods and bearings, crankshaft and bearings, includes
		1	J905813 kit, Includes: Ref. 1 - 21
1	J905376	1	BLOCK ASSEMBLY, stripped, engine, Order J905813 hardware kit
3	J900967	5	CAP main bearing
4	J900068	10	DOWEL ring, bearing cap
5	J904217	10	BOLT bearing cap
6	REF	1	BUSHING camshaft front, See Figure 48
7	J900965	4	PLUG expansion, 58.1 mm OD
8	J900956	3	PLUG expansion, 17.9 mm OD
9	J900957	2	PLUG expansion, 25.7 mm OD
	J905813	1	KIT hardware, block, engine
10	J900958	2	PLUG expansion, 32 mm OD
11	J900955	1	PLUG expansion, 9.8 mm OD
12	J900687	1	PLUG expansion, Welch, 60.3 mm OD
13	J901020	4	NOZZLE piston cooling
14	A77429	2	PLUG hex socket head pipe, 1/2 inch PT
16	J900257	2	PIN dowel, 16 mm long
18	J902343	2	DOWEL ring, 16 mm OD
19	J900068	2	RING dowel, 18 mm OD
21	J906619	2	PLUG hex head, 1/8 inch PT
22	A77439	1	PLUG expansion, 0.886 mm OD
24	J903744	1	TUBE turbocharger oil drain
25	J900267	2	SEAL ASSEMBLY, cover bolt
26	813-8020	2	BOLT hex, M8 x 20 mm
26	J900629	2	BOLT hex flange, cover
27	J905023	1	COVER tappet, This does not include the baffle, Ref. 29.
28	J904056	1	GASKET tappet cover
29	NSS	1	BAFFLE tappet cover, Order Cover J905023
			Reference No. J907586, This is P/N J907586.
33	J905779	1	TUBE dipstick
34	J905781	1	DIPSTICK oil level gauge
37	J905440	1	TUBE oil fill
38	J906704	1	O RING sealing
39	J901249	2	BOLT hex flange head, M12 x 25 mm
40	A77424	1	CAP oil fill tube
44	J903102	1	CONNECTION water inlet
45	J901467	1	O RING sealing, 50 mm ID

580SE CASE SUPER-E CONSTRUCTION KING LOADER BACKHOE - Engine

052 CYLINDER BLOCK, 4T-390 DIESEL ENGINE, BLOCK HEATER

Ref	Part Number	Qty	Description
46	J901757	3	BOLT hex flange head, M10 x 75 mm
50	J906593	1	HOSE breather
51	J904230	1	CLAMP spring, hose
52	A77531	1	CLIP hose
55	A77489	1	KIT, heater, engine coolant, Includes: Ref. 56 - 58, The O ring seal for this is P/N J910517.
56	NSS	1	ELEMENT engine heater, Reference No. J903645
58	J905113	1	CABLE engine block heater

54

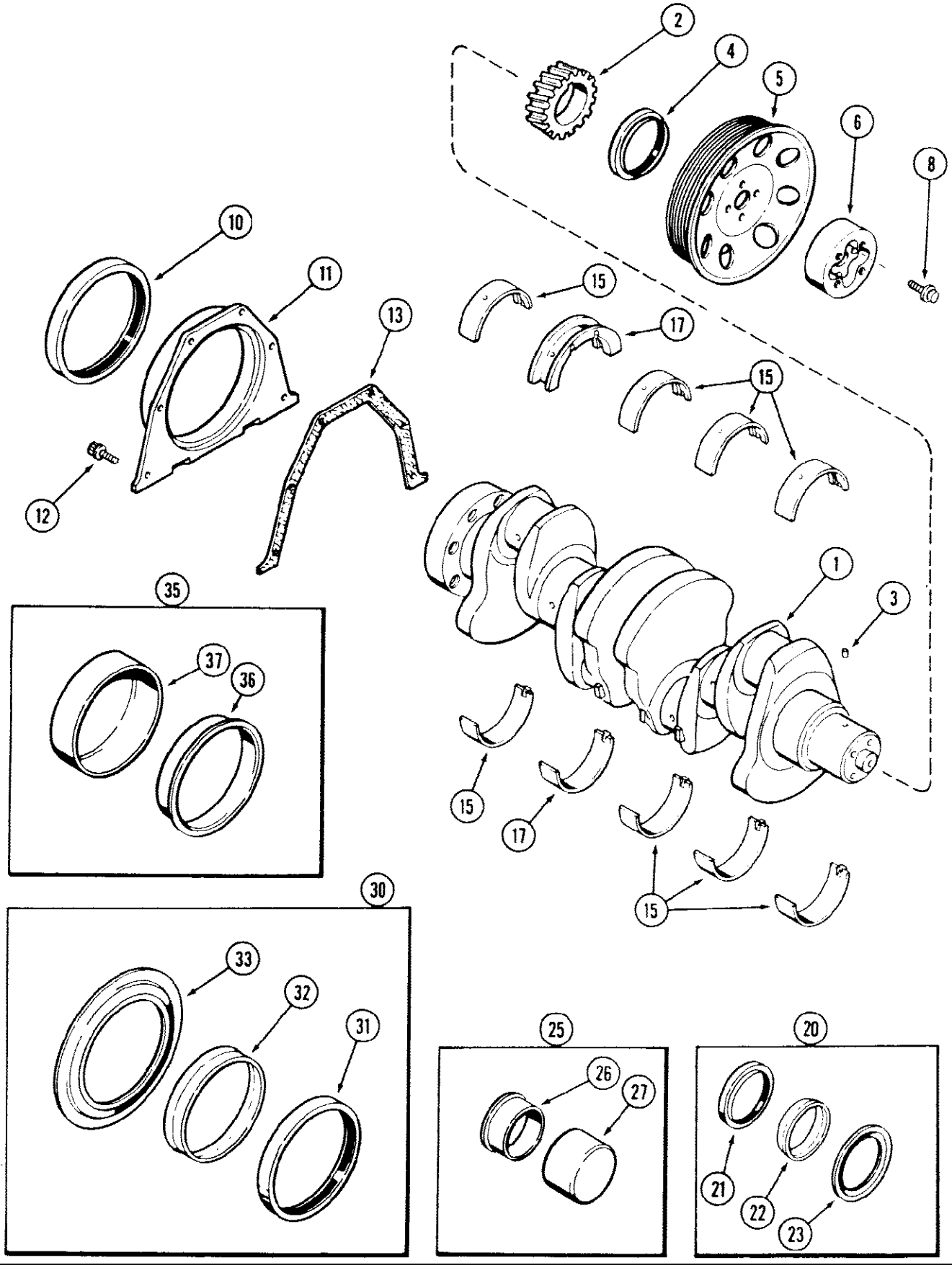
2
4
5
6
8
10
11
13
15
17
15
12
1
3
35
37
36
15
17
15
30
33
32
31
25
26
27
20
21
22
23

580SE CASE SUPER-E CONSTRUCTION KING LOADER BACKHOE - Engine

054 CRANKSHAFT, 4T-390 AND 4-390 DIESEL ENGINE

Ref	Part Number	Qty	Description
1	JR908031	1	CRANKSHAFT remanufactured, North America only
1	JC908031	1	RETURN NUMBER use this part no. to return crankshaft for credit
1	J908031	1	CRANKSHAFT ASSEMBLY, engine, new, Includes: Ref. 2 - 3
2	J901258	1	GEAR crankshaft
3	J904483	1	PIN dowel
4	NSS	1	SEAL oil, crankshaft front, Order Ref 20, Reference No. J900709
5	J903858	1	PULLEY crankshaft
6	J905820	1	ADAPTER flange, crankshaft, Replaces J903829
8	J903857	4	BOLT hex flange head, M12 x 36 mm
10	NSS	1	SEAL oil, crankshaft rear, Order Ref 30, Reference No. J904089
11	J906526	1	RETAINER rear seal, Replaces J902674
12	J900627	6	BOLT hex flange head, M6 x 14 mm
13	J901019	1	GASKET seal retainer
15	A77405	4	KIT, bearing, main, set, upper and lower, standard
15	A77472	4	KIT, bearing, main, set, upper and lower, 0.25 mm oversize
15	A77474	4	KIT, bearing, main, set, upper and lower, 0.5 mm oversize
15	A77476	4	KIT, bearing, main, set, upper and lower, 0.75 mm oversize
15	A77478	4	KIT, bearing, main, set, upper and lower, 1.0 mm oversize
17	A77406	1	KIT, bearing, thrust, main, set, upper and lower, standard
17	A77473	1	KIT, bearing, thrust, main, set, upper and lower, 0.25 mm oversize
17	A77475	1	KIT, bearing, thrust, main, set, upper and lower, 0.5 mm oversize
17	A77477	1	KIT, bearing, thrust, main, set, upper and lower, 0.75 mm oversize
17	A77479	1	KIT, bearing, thrust, main, set, upper and lower, 1.0 mm oversize
20	J904353	1	KIT, seal, oil, crankshaft front, Includes: Ref. 21 - 23
21	NSS	1	SEAL oil, front, Reference No. J900709
22	NSS	1	TOOL installation
23	NSS	1	TOOL installation
25	J904355	1	KIT, wear sleeve, crankshaft front, Includes: Ref. 26 - 27
26	NSS	1	SLEEVE wear, Reference No. J904355
27	NSS	1	TOOL installation
30	J904323	1	KIT, seal, oil, crankshaft rear, Includes: Ref. 31 - 33
31	NSS	1	SEAL oil, rear, Reference No. J904089
32	NSS	1	TOOL installation
33	NSS	1	TOOL installation
35	J904356	1	KIT, wear sleeve, crankshaft rear, Includes: Ref. 36 - 37
36	NSS	1	SLEEVE wear Reference No. J904356
37	NSS	1	TOOL installation

56

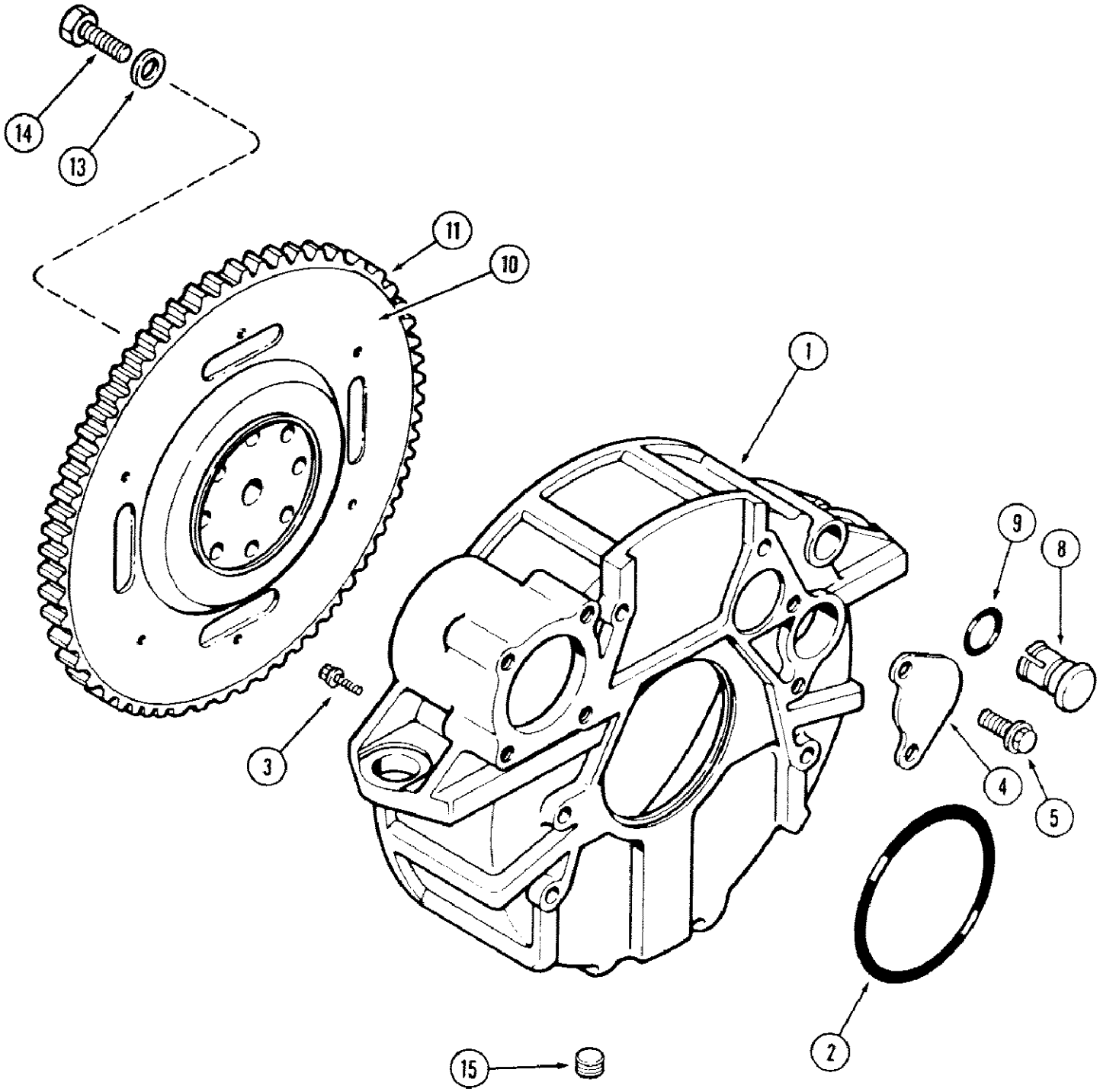

580SE CASE SUPER-E CONSTRUCTION KING LOADER BACKHOE - Engine

056 FLYWHEEL AND HOUSING, 4T-390 AND 4-390 DIESEL ENGINE

Ref	Part Number	Qty	Description
1	J903287	1	HOUSING flywheel
2	A157927	1	O RING sealing
3	J901408	8	BOLT hex flange head, M12 x 40 mm
4	J901399	1	PLATE cover, housing, Replaces J901399
5	J902735	2	BOLT hex flange head, self tapping, M8 x 21 mm
8	J904470	1	PLUG housing
9	J904469	1	O RING plug, 25 mm ID
10	J902217	1	FLYWHEEL ASSEMBLY, crankshaft, Includes: Ref. 11
11	J901774	1	GEAR flywheel
13	J900269	8	WASHER flat, flywheel bolt
14	J901395	8	BOLT hex head, M12 x 30 mm
15	221-1845	1	PLUG square socket head pipe, 3/4 inch PT

58

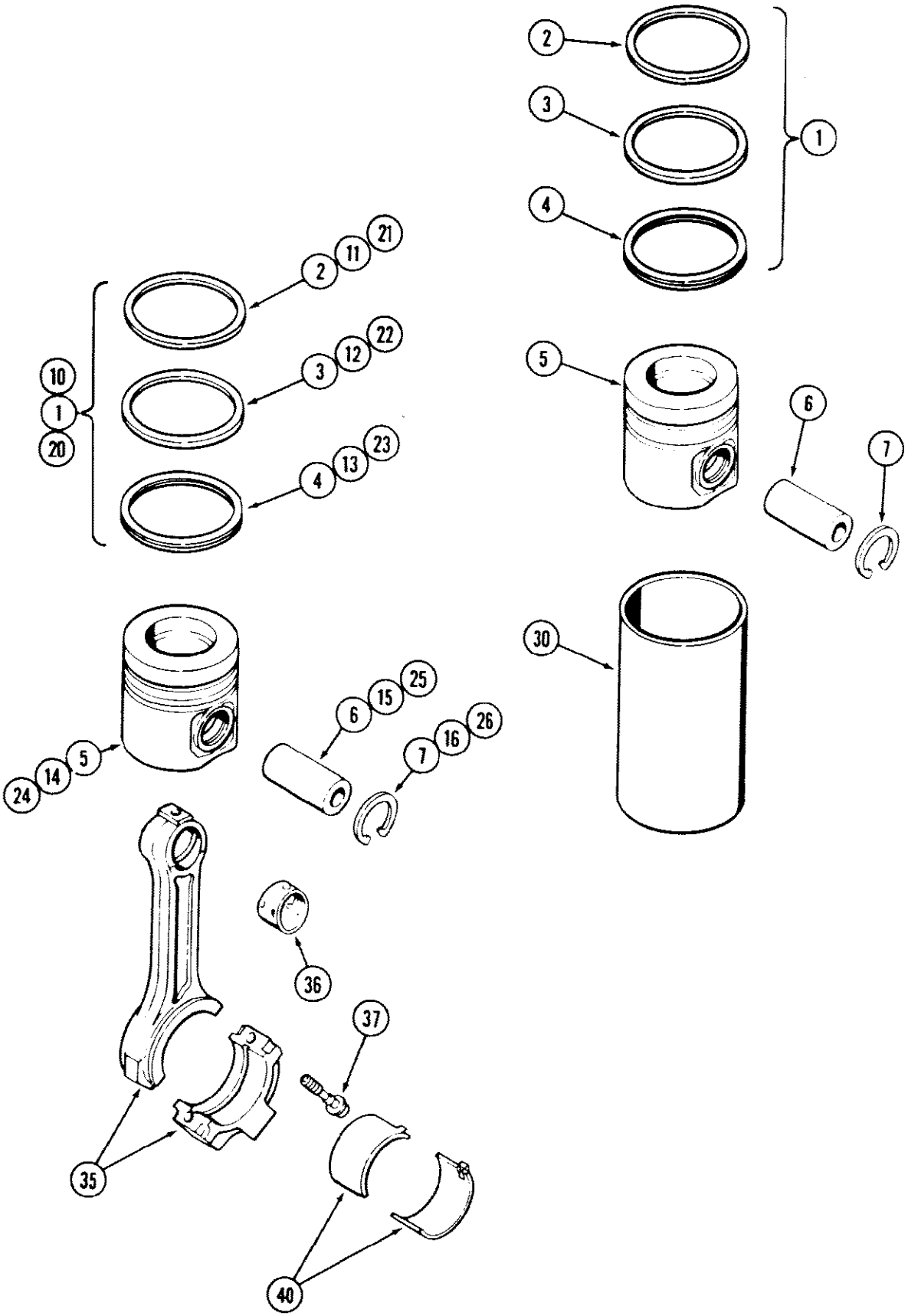
2
3
4
1
2
11
21
10
1
20
3
12
22
4
13
23
5
6
7
30
5
14
24
6
15
25
7
16
26
36
37
35
40

580SE CASE SUPER-E CONSTRUCTION KING LOADER BACKHOE - Engine

058 PISTONS, 4-390 DIESEL ENGINE, CONNECTING RODS

Ref	Part Number	Qty	Description
	A77460	4	KIT, piston, engine, standard, Prior to Engine Serial No. 44117591
	A77410	4	KIT, piston, engine, Standard, Engine Serial No. 44117591 and after, Includes: Ref. 1 - 7, A77410/411/412 are short pin piston kits, stamped 6223,6209, and 6208 on piston A77818/819/820 are long pin piston kits, stamped 1880, 1882, 1881 on piston
1	A77401	1	KIT, ring, piston, standard, Includes: Ref. 2 - 4
2	NSS	1	RING compression, top, Reference No. J902400
3	NSS	1	RING compression, middle, Reference No. J902286
4	NSS	1	RING oil, bottom, Reference No. J903384
5	NSS	1	PISTON engine, standard, Reference No. J903803, Used in A77460 kit
5	NSS	1	PISTON engine standard, Reference No. J906222, Used in A77410 kit
6	J901793	1	PIN piston
7	J901706	2	RING retainer, pin
	A77461		KIT, piston, engine, 0.5 mm oversize, Prior to
		4	Engine Serial No. 44117591
	A77411		KIT, piston, engine, 0.5 mm oversize, Includes: Ref. 10 - 16
		4	Engine Serial No. 44117591 and after
10	A77463	1	KIT, ring, engine, 0.5 mm oversize, Includes: Ref. 11 - 13
11	NSS	1	RING compression, top, Reference No. J902393
12	NSS	1	RING compression, middle, Reference No. J904317
13	NSS	1	RING oil, bottom, Reference No. J904349
14	NSS		PISTON engine, 0.5 mm oversize, Reference No. J903811
		1	Used in A77461 kit
14	NSS		PISTON engine, 0.5 mm oversize, Reference No. J906209
		1	Used in A77411 kit
15	J901793	1	PIN piston
16	J901706	2	RING retainer, pin
	A77462		KIT, piston, engine, 1.0 mm oversize, Includes: Ref. 20 - 26
		4	Prior to Engine Serial No. 44117591
	A77412		KIT, piston, engine, 1.0 mm oversize
		4	Engine Serial No. 44117591 and after
20	A77464	1	KIT, ring, engine 1.0 mm oversize, Includes: Ref. 21 - 23
21	NSS	1	RING compression top, Reference No. J902442
22	NSS	1	RING compression, middle, Reference No. J901348
23	NSS	1	RING oil, bottom, Reference No. J904350
24	NSS		PISTON engine 1.0 mm oversize, Reference No. J903814
		1	Used in A77462 kit
24	NSS		PISTON engine, 1.0 mm oversize, Reference No. J906208
		1	Used in A77412 kit
25	J901793	1	PIN piston
26	J901706	2	RING retainer, pin
30	J904166		LINER piston, Used only in engine block repair

058 PISTONS, 4-390 DIESEL ENGINE, CONNECTING RODS

Ref	Part Number	Qty	Description
		UAR	When liner is installed, use only A77460 or A77410 Piston Kit
35	JR901569	4	ROD connecting, remanufactured, North America only
35	JC901569	1	RETURN NUMBER use this part no. to return connecting rod for credit
35	J901569	4	ROD ASSEMBLY, connecting, new, Includes: Ref. 36 - 37
36	NSS	1	BUSHING connecting rod to piston pin, Order J901569, Reference No. J901085
37	J900919	2	BOLT hex special, connecting rod, MJ11 x 26 mm
40	A77465	4	KIT, bearing, connecting rod, set, upper and lower, standard
40	A77466	4	KIT, bearing, connecting rod, set, upper and lower, 0.25 mm oversize
40	A77467	4	KIT, bearing, connecting rod, set, upper and lower, 0.5 mm oversize
40	A77468	4	KIT, bearing, connecting rod, set, upper and lower, 0.76 mm oversize
40	A77469	4	KIT, bearing, connecting rod, set, upper and lower, 1.0 mm oversize

60

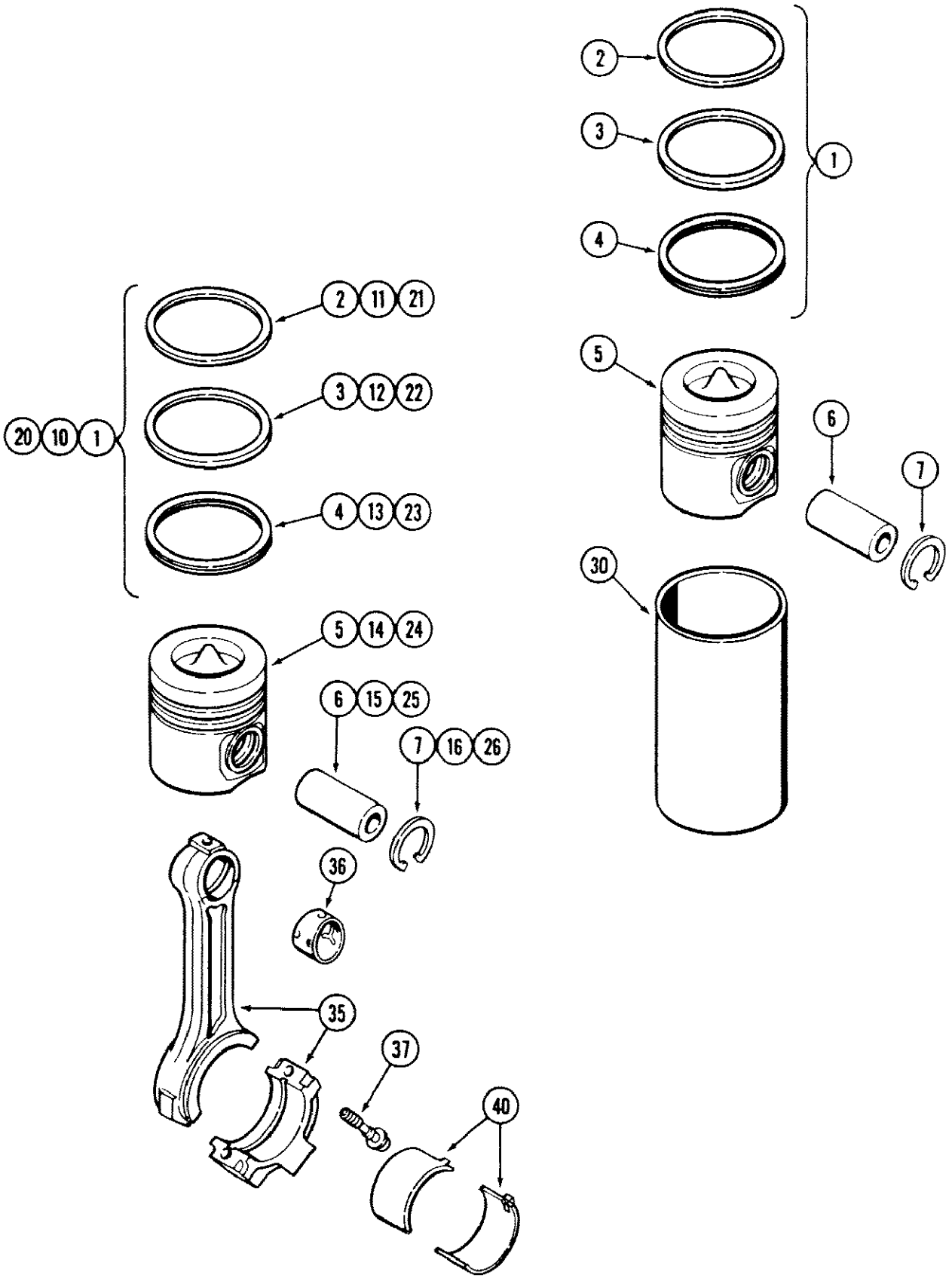
2
3
4
1
5
6
7
30
2 11 21
3 12 22
4 13 23
20 10 1
5 14 24
6 15 25
7 16 26
36
35
37
40

060 PISTONS, 4T-390 DIESEL ENGINE, CONNECTING RODS

Ref	Part Number	Qty	Description
	A77419	4	KIT, piston, engine, standard, Includes: Ref. 1 - 7
1	A77500	1	KIT, ring, piston, standard, Includes: Ref. 2 - 4
2	NSS	1	RING compression, top, Reference No. J904529
3	NSS	1	RING compression, middle, Reference No. J904531
4	NSS	1	RING oil, bottom, Reference No. J903384
5	NSS	1	PISTON engine, standard, Reference No. J907163
6	J901793	1	PIN piston
7	J901706	2	RING retainer, pin
	A77420	4	KIT, piston, engine, 0.5 mm oversize, Includes: Ref. 10 - 16, Ref A77420 piston kit Order part nbr A77731, which replaced A77637
10	A77501	1	KIT, ring, engine, 0.5 mm oversize, Includes: Ref. 11 - 13
11	NSS	1	RING compression, top, Reference No. J902392
12	NSS	1	RING compression, middle, Reference No. J904347
13	NSS	1	RING oil, bottom, Reference No. J904349
14	NSS	1	PISTON engine, 0.5 mm oversize, Reference No. J908815
15	J901793	1	PIN piston
16	J901706	2	RING retainer, pin
	A77421	4	KIT, piston, engine, 1.0 mm oversize, Includes: Ref. 20 - 26, Ref A77421 piston kit Order part nbr A77732
21	NSS	1	RING compression, top, Reference No. J902441
22	NSS	1	RING compression, middle, Reference No. J904348
23	NSS	1	RING oil, bottom, Reference No. J904350
24	NSS	1	PISTON engine, 1.0 mm oversize, Reference No. J908816
25	J901793	1	PIN piston
26	J901706	2	RING retainer, pin
30	J904166		LINER piston, Used only in engine block repair
		UAR	When liner is installed, use only A77419 Piston Kit
35	JR901569		ROD ASSEMBLY, connecting, remanufactured, North America only
		4	Service only
35	JC901569		RETURN NUMBER use this number when returning connecting rods
		UAR	for credit
35	J901569	4	ROD ASSEMBLY, connecting, new, Reference No. J901085, Includes: Ref. 36 - 37
36	NSS	1	BUSHING connecting rod to piston pin, Order J901569, Reference No. J901085
37	J900919	2	BOLT connecting rod, hex special, MJ11 x 26 mm
40	A77465	4	KIT, bearing, connecting rod, set, upper and lower, standard
40	A77466	4	KIT, bearing, connecting rod, set, upper and lower, 0.25 mm oversize
40	A77467	4	KIT, bearing, connecting rod, set, upper and lower, 0.5 mm oversize
40	A77468	4	KIT, bearing, connecting rod, set, upper and lower, 0.76 mm oversize
40	A77469	4	KIT, bearing, connecting rod, set, upper and lower, 1.0 mm oversize

62

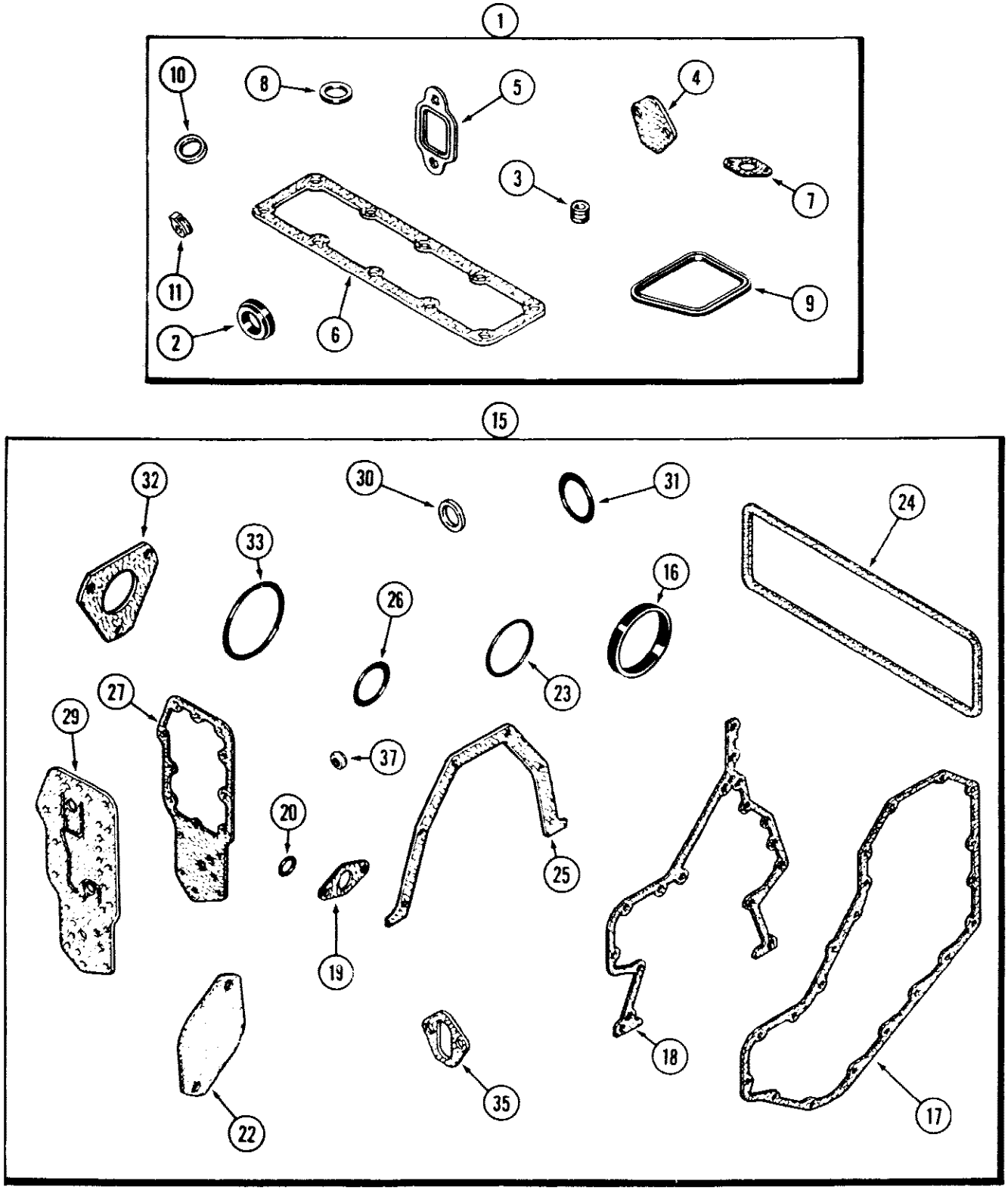
1
10
8
5
4
3
7
11
6
9
2
15
32
30
31
24
33
16
26
23
27
29
37
20
25
19
18
22
35
17

580SE CASE SUPER-E CONSTRUCTION KING LOADER BACKHOE - Engine

062 ENGINE GASKET KITS, 4T-390 AND 4-390 DIESEL ENGINE, VALVE GRIND

Ref	Part Number	Qty	Description
1	A77481	1	KIT, gasket, valve grind, engine, see note, Includes: Ref. 2 - 11, When just the valve grind gasket kit is used, also order the required cylinder head gasket on Figure 44.
2	J903301	1	GASKET thermostat, valve grind
3	J901097	8	SEAL valve, valve grind
4	J901356	1	GASKET turbocharger, valve grind, Not used this application
5	J905443	4	GASKET exhaust manifold, valve grind, Replaces J901456
6	J901999	1	GASKET intake manifold, valve grind
7	J901805	1	GASKET turbocharger oil drain tube, valve grind, Not used this application
8	J902363	1	SEAL oil fill cap, valve grind
9	J902666	4	GASKET valve cover, valve grind
10	J900808	4	SEAL injector, valve grind
11	J903380	4	SEAL connector, banjo, valve grind
15	A77480	1	KIT, gasket, engine block, cylinder block, see note, Includes: Ref. 15 - 37, For complete engine overhaul, order 1 valve grind kit, 1 cylinder block kit, 1 oil pan kit, Figure 44, front or rear crankshaft seal kit, Figure 56, and required cylinder head gasket, Figure 46.
16	J903475	1	SEAL tachometer cover, cylinder block
17	J905143	1	GASKET timing gear cover, cylinder block, Replaces J904492
18	J907836	1	GASKET timing gear housing, cylinder block
19	J905595	1	GASKET timing pin housing, cylinder block, Replaces J903926
20	A30395	1	O RING timing pin, cylinder block
22	A77441	1	GASKET tachometer drive, cylinder block
23	J903297	1	O RING water pump, cylinder block
24	J903837	1	GASKET tappet cover, cylinder block
25	J901019	1	GASKET rear crankshaft seal retainer, cylinder block
26	J901467	1	O RING water inlet, cylinder block
27	J904427	1	GASKET oil cooler, cylinder block
29	J905589	1	GASKET filter head, cylinder block, Replaces J904426
30	J902425	1	WASHER sealing, oil pan heater plug, cylinder block
31	J906704	1	O RING engine oil filler, cylinder block
32	J905685	1	GASKET fuel pump, cylinder block, Replaces J900379
33	A157927	1	O RING flywheel housing, cylinder block
35	J904044	1	GASKET fuel lift pump, cylinder block
37	J900267	4	SEAL tappet cover bolt, cylinder block

64

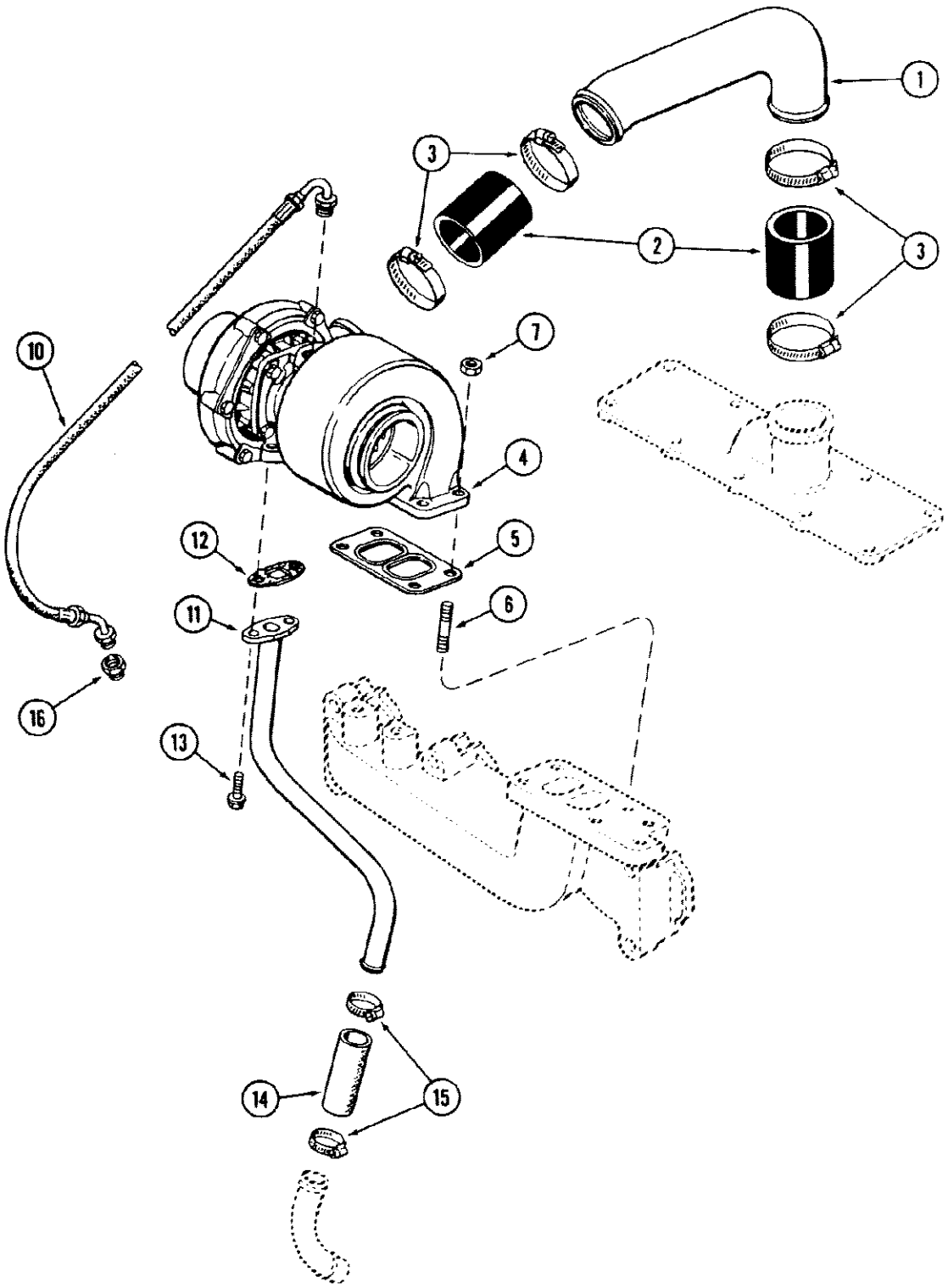

064 TURBOCHARGER SYSTEM, 4T-390 DIESEL ENGINE

Ref	Part Number	Qty	Description
1	J906623	1	ELBOW air intake
2	J901804	2	HOSE air intake
3	214-258	4	CLAMP hose, 1-5/16 to 2-1/4 inch (33 to 57 mm)
4	REF	1	TURBOCHARGER ASSEMBLY, See Figure 66
5	J901356	1	GASKET turbocharger to manifold
6	J905417	1	STUD turbocharger mounting
7	J901961	4	NUT hex, turbocharger mounting
10	J903658	1	HOSE ASSEMBLY, turbocharger oil supply
11	J903740	1	TUBE turbocharger oil drain
12	J901805	1	GASKET oil drain tube
13	J900630	2	BOLT hex, M8 x 1.6 mm
14	J903745	1	HOSE turbocharger oil drain
15	214-256	2	CLAMP hose, 1-3/16 to 1-3/4 inch (30 to 44 mm)
16	A77457	1	CONNECTOR female hex, drain tube to filter hose

66

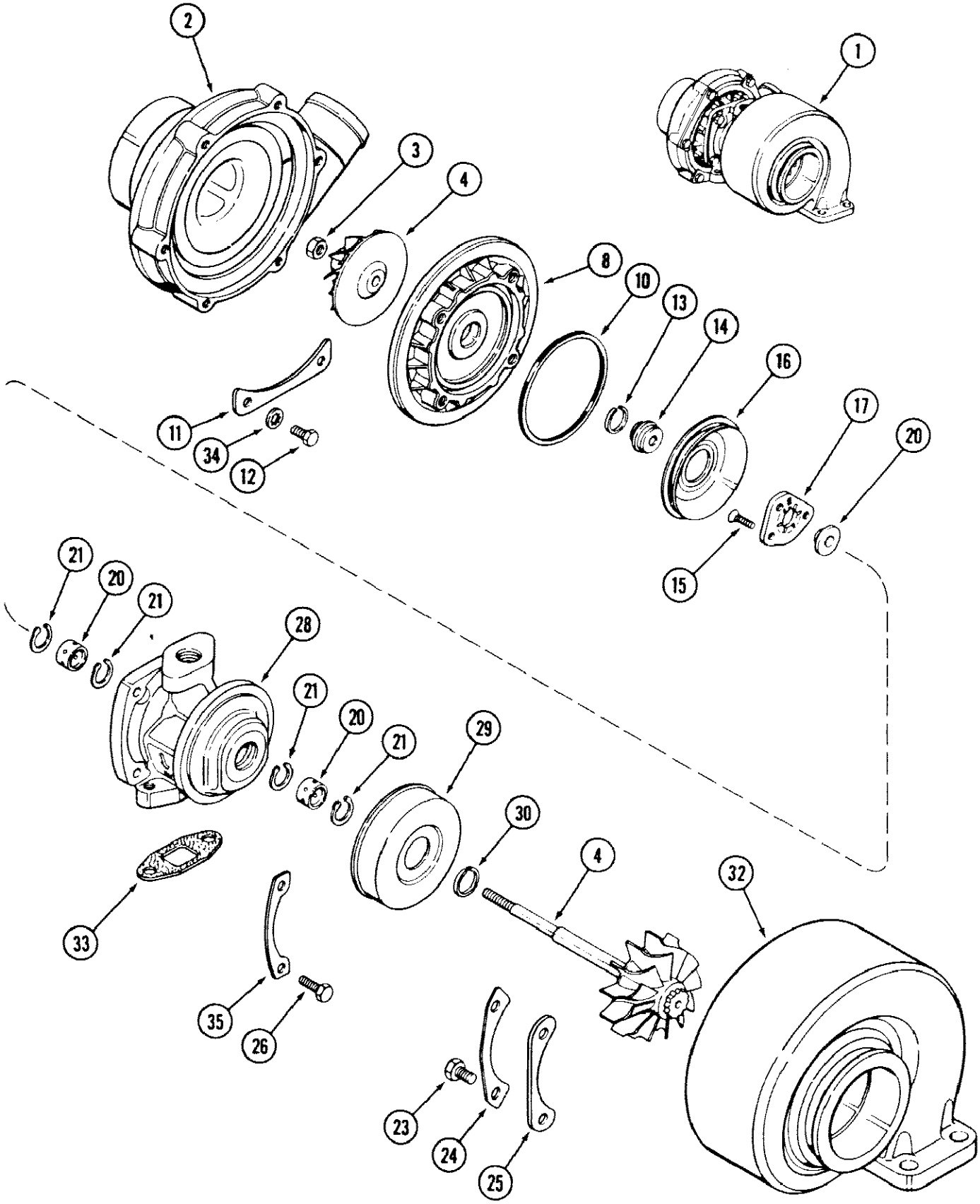
2
1
3
4
8
10
13
14
16
17
20
11
34
12
15
21
20
21
28
21
20
21
29
30
4
32
33
35
26
23
24
25

580SE CASE SUPER-E CONSTRUCTION KING LOADER BACKHOE - Engine

066 TURBOCHARGER ASSEMBLY, 4T-390 DIESEL ENGINE

Ref	Part Number	Qty	Description
1	JR908293	1	TURBOCHARGER ASSEMBLY, remanufactured, North America only
1	JC908293	1	RETURN NUMBER use this number when returning turbocharger for credit
1	J908293	1	TURBOCHARGER ASSEMBLY, new, Includes: Ref. 2 - 35
2	NSS	1	HOUSING compressor
3	NSS	1	NUT hex lock, Reference No. J904749, Part of Overhaul Kit, P/N J904772
4	NSS	1	ROTOR ASSEMBLY, turbocharger
8	NSS	1	DIFFUSER compressor
10	NSS	1	SEAL diffuser, Reference No. J904751, Part of Overhaul Kit, P/N J904772
11	NSS	3	PLATE diffuser clamping
12	NSS	6	BOLT AND WASHER ASSEMBLY, hex lock, Reference No. J90453, Part of Overhaul Kit, P/N J904772
13	NSS	1	SEAL split ring, compressor, Reference No. J904754, Part of Overhaul Kit, P/N J904772
14	NSS	1	SLINGER oil
15	NSS	3	SCREW flat head Torx, Reference No. J904757, Part of Overhaul Kit, P/N J904772
16	NSS	1	BAFFLE oil
17	NSS	1	BEARING thrust, Reference No. J904758, Part of Overhaul Kit, P/N J904772
20	NSS	1	COLLAR thrust
21	NSS	4	RING snap, Reference No. J904760, Part of Overhaul Kit, P/N J904772
22	NSS	2	BEARING impeller shaft, Reference No. J904761, Part of Overhaul Kit, P/N J904772
23	NSS	4	BOLT cap, Reference No. J904762, Part of Overhaul Kit, P/N J904772
24	NSS	2	PLATE lock, turbine housing, Reference No. J904763, Part of Overhaul Kit, P/N J904772
25	NSS	2	PLATE clamping, turbine housing
26	NSS	4	BOLT AND WASHER ASSEMBLY, hex lock, Reference No. J904765, Part of Overhaul Kit, P/N J904772
28	NSS	1	HOUSING turbine bearing
29	NSS	1	SHIELD heat, turbine
30	NSS	1	SEAL piston ring, turbine, Reference No. J904768, Part of Overhaul Kit, P/N J904772
32	NSS	1	HOUSING turbine
33	NSS	1	GASKET oil drain, Reference No. J904770, Part of Overhaul Kit, P/N J904772
34	NSS	6	WASHER lock, Reference No. J904774, Part of Overhaul Kit, P/N J904772
35	NSS	2	PLATE lock, turbine, Reference No. J904775, Part of Overhaul Kit, P/N J904772
	J904772	1	KIT, overhaul, turbocharger, Includes: Ref. 3, 10, 12, 13, 15, 17, 21, 22, 23, 24, 26, 30, 33, 34, 35

068 FUEL TANK AND FUEL LINES

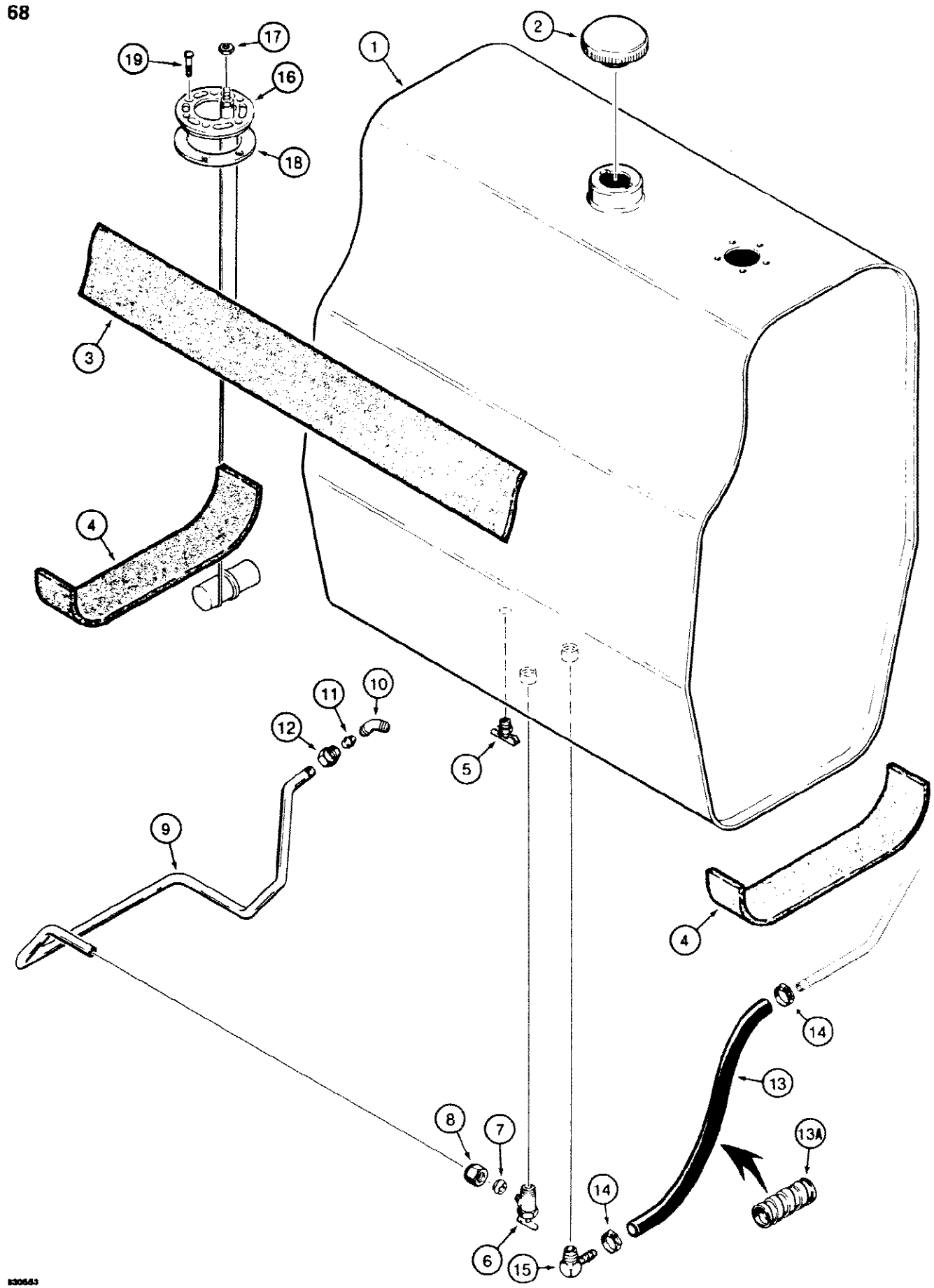

580SE CASE SUPER-E CONSTRUCTION KING LOADER BACKHOE - Fuel System

068 FUEL TANK AND FUEL LINES

Ref	Part Number	Qty	Description
1	D124538	1	FUEL TANK diesel fuel
2	A51390	1	CAP fuel tank, Ref #3, spongy, rubber strip, is not listed in the text, however is shown in the picture. The part number is D86157. This is per a 480E which uses the same fuel tank.
4	D93351	2	STRIP sponge rubber, bottom
5	217-81	1	VALVE fuel tank drain
	D74027	1	SHUTOFF VALVE ASSEMBLY, fuel tank outlet, Includes: Ref. 6 - 8
6	NSS	1	BODY shutoff valve
7	222-654	1	SLEEVE fitting
8	222-664	1	NUT compression, fitting
9	D126696	1	TUBE engine supply
	222-95	1	ELBOW ASSEMBLY, tube, 45 degree, Includes: Ref. 10 - 12
10	NSS	1	BODY elbow
11	222-104	1	SLEEVE fitting, for 3/8" (9.53 mm) tube
12	222-114	1	NUT compression, fitting, for 3/8" (9.53 mm) tube
13	D72098	1	HOSE engine return
13A	D126828	1	GUARD tube, return
14	214-274	2	CLAMP tube
15	217-294	1	FITTING barb, 90 degree
16	D83480	1	SENDER fuel level gauge
17	193-1000	1	NUT AND LOCK WASHER plated, No.10 - 32 NF
18	A11822	1	GASKET fuel sender
19	D75465	5	SCREW special sealing

070 THROTTLE CONTROL LINKAGE

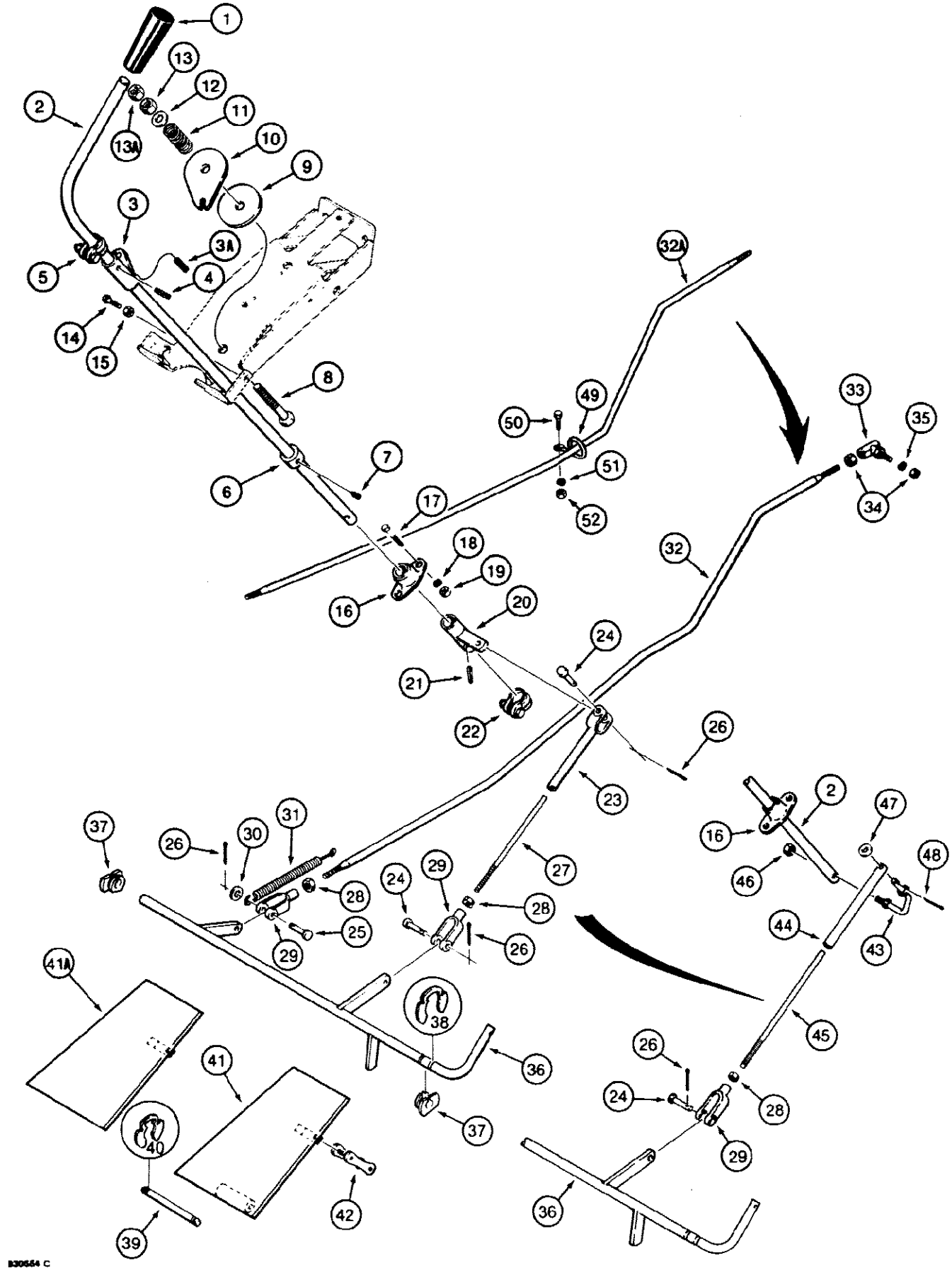

580SE CASE SUPER-E CONSTRUCTION KING LOADER BACKHOE - Fuel System

070 THROTTLE CONTROL LINKAGE

Ref	Part Number	Qty	Description
1	D86694	1	KNOB hand throttle
2	D83336	1	LEVER control, hand throttle
3	D83332	1	SLEEVE throttle control lever, upper, Includes: Ref.3A
3A	138-128	1	PIN, 1/4" x 5/8", Slotted
4	138-150	1	PIN, 5/16" x 13/16", Slotted
5	D71880	1	CLAMP throttle control lever, upper, includes hardware
6	D81756	1	COLLAR throttle control lever. Includes: Ref. 7
7	178-888	1	SCREW set, hex headless, cup point, plated, 1/4" - 20 NC x 1/4"
8	80087972	1	BOLT hex head, plated, 1/2" - 13 NC x 2 1/2"
9	R15071	1	DISC friction
10	D66096	1	PLATE throttle linkage
11	A34113	1	SPRING detent
12	195-533	1	WASHER flat, plated, 1/2"
13	129-105	1	NUT, 1/2"-13, G5
13A	131-70	1	NUT hex, self locking, plated, 1/2" - 13 NC, Replaces a hex nut on some models
14	113-4	1	BOLT, Hex, 1/4"-20 x 1", G5, Throttle stop
15	7770	1	NUT, 1/4"-20, G5
16	L15401	1	BEARING floor plate
17	113-103	2	BOLT, Hex, 5/16"-18 x 1", G5, Full Thd
18	192-20	2	WASHER, LOCK, 5/16"
19	9635082	2	NUT, 5/16"-18, G5
20	D83335	1	SLEEVE throttle control lever, lower, no longer available, for service order D101883 kit, items 43-48
21	138-150	1	PIN, 5/16" x 13/16", Slotted, If used
22	D71880	1	CLAMP throttle control lever, lower, includes hardware, if used
23	D66655	1	SLEEVE rod, if used
24	141-53	1-2	PIN clevis, rod ends
25	141-65	1	PIN clevis, throttle rod and spring
26	132-320	3	PIN, SPLIT (COTTER), 3/32" x 3/4"
27	D83345	1	ROD control lever to shaft, if used
28	129-122	2	NUT, 5/16"-24, G5
29	H44198	2	CLEVIS rod end, plated
30	195-521	1	WASHER flat, plated, 5/16"
31	D93823	1	SPRING throttle return
32	D121537	1	ROD throttle, to injection pump, no longer used, order D133833 rod, item 32A, and D125868 support and mounting hardware, items 49 - 52
32A	D133833	1	ROD throttle, to injection pump, used with items 49 - 52
33	A10329	1	BALL JOINT at injection pump
34	129-121	2	NUT, 1/4"-28, G5
35	192-19	1	WASHER, LOCK, 1/4"
36	D135768	1	SHAFT cross, throttle
37	D83337	2	BEARING throttle rod

070 THROTTLE CONTROL LINKAGE

Ref	Part Number	Qty	Description
38	D95095	2	RING retaining
39	D83344	1	PIN pedal base
40	D95093	2	RING retaining
41	D120403	1	PEDAL accelerator, used with item 42 link, no longer available, order D132921 pedal
41A	D132921	1	PEDAL accelerator, used with item 42 link
42	B12528	1	LINK ASSEMBLY, C2060 roller chain, includes two cotter pins
	D101883	1	KIT, throttle linkage, Includes: Ref. 43 - 48
43	D129024	1	LINK control, sleeve to control lever
44	D129025	1	SLEEVE rod
45	D129026	1	ROD control lever to shaft
46	131-4	1	NUT lock, 5/16"
47	195-521	1	WASHER flat, plated, 5/16"
48	132-320	1	PIN, SPLIT (COTTER), 3/32" x 3/4"
49	D125868	1	SUPPORT throttle rod
50	113-209	1	BOLT, Hex, 3/8"-16 x 1 1/2", G5
51	192-21	1	WASHER, LOCK, 3/8"
52	129-103	1	NUT, 3/8"-16, G5

74

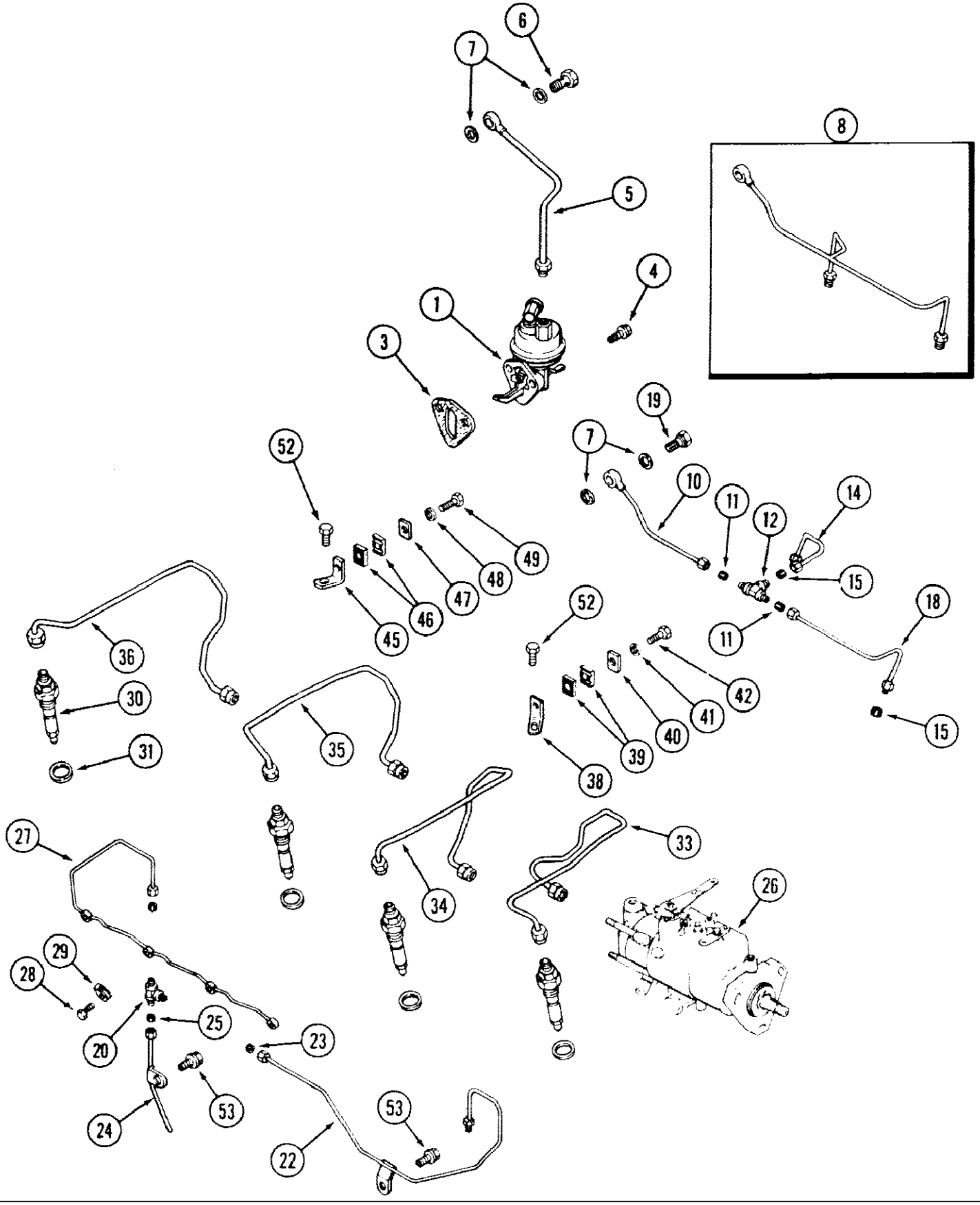
6
7
8
5
4
1
3
19
7
52
10
11
14
12
49
48
47
46
45
15
52
18
36
11
42
41
40
39
38
30
35
15
31
27
33
34
26
29
28
25
20
23
24
53
53
22

074 FUEL INJECTION SYSTEM, 4T-390 AND 4-390 DIESEL ENGINE

Ref	Part Number	Qty	Description
1	J904374	1	PUMP ASSEMBLY, lift, fuel
3	J904044	1	GASKET mounting, lift pump
4	J900631	2	BOLT hex flange head, M8 x 25 mm
5	J905649	1	TUBE ASSEMBLY, supply, fuel, Replaces J904377
6	J903035	1	BOLT banjo hex, M12 x 2 mm
7	J903037	4	WASHER sealing, Replaces A77445
8	J903310	1	TUBE ASSEMBLY, fuel supply, Order J905363, J905364, J905375 and 222-123
10	J905364	1	TUBE ASSEMBLY, fuel supply, filter to tee, Includes: Ref. 11
11	222-103	1	SEAL tube
12	222-123	1	TEE union, 5/16 inch tube, Includes: Ref. 222-663
	222-663	3	NUT hex, 1/2 - 24 inch thread, Discard before assembly
14	J905375	1	TUBE ASSEMBLY, fuel supply, tee to rear of injection pump, Includes: Ref. 15
15	222-103	1	SEAL tube
18	J905363	1	TUBE ASSEMBLY, fuel supply, tee to front of injection pump
19	J905860	1	BOLT banjo hex, special
20	222-121	1	TEE union, 3/16 inch tube, Includes: Ref. 222-661
	222-661	3	NUT hex, 3/8 - 24 inch thread, Discard before assembly
22	J905703	1	TUBE ASSEMBLY, fuel return, tee to pump, Includes: Ref. 23
23	222-103	1	SEAL tube
24	J905692	1	TUBE ASSEMBLY, fuel return, tee to fuel tank, Includes: Ref. 25
25	222-103	1	SEAL tube
26	REF	1	PUMP ASSEMBLY, fuel injection, See Figure 78
27	J905690	1	MANIFOLD ASSEMBLY, fuel return, Replaces J903601
28	J905307	4	BOLT banjo drain, Replaces J902173
29	J903380	4	WASHER sealing, banjo bolt
30	REF	4	INJECTOR ASSEMBLY, fuel, See Figure 80
31	J900808	4	GASKET injector
33	J903522	1	TUBE ASSEMBLY, fuel injector, No. 1 cylinder
34	J903523	1	TUBE ASSEMBLY, fuel injector, No. 2 cylinder
35	J903524	1	TUBE ASSEMBLY, fuel injector, No. 3 cylinder
36	J903525	1	TUBE ASSEMBLY, fuel injector, No. 4 cylinder
	A77484	1	BRACKET ASSEMBLY, injection supply tube No. 1 and 2, Includes: Ref. 38 - 42
38	NSS	1	BRACKET fuel tube, Reference No. J903606
39	NSS	2	ISOLATOR fuel tube, Reference No. J903608
40	NSS	1	PLATE clamp, fuel tube, Reference No. J903607
41	NSS	1	WASHER lock, M5, Reference No. J903610
42	NSS	1	BOLT hex head, Reference No. J903609
	A77485	1	BRACKET ASSEMBLY, injection supply No. 3 and 4 tubes, Includes: Ref. 45 - 49
45	NSS	1	BRACKET fuel tube, Reference No. J903612
46	NSS	2	ISOLATOR fuel tube, Reference No. J903608
47	NSS	1	PLATE clamp, fuel tube, Reference No. J903607

074 FUEL INJECTION SYSTEM, 4T-390 AND 4-390 DIESEL ENGINE

Ref	Part Number	Qty	Description
48	NSS	1	WASHER lock, M5, Reference No. J903610
49	NSS	1	BOLT hex head, Reference No. J903609
52	J904341	2	BOLT hex
53	J900629	1	BOLT hex, M8 x 16 mm

76

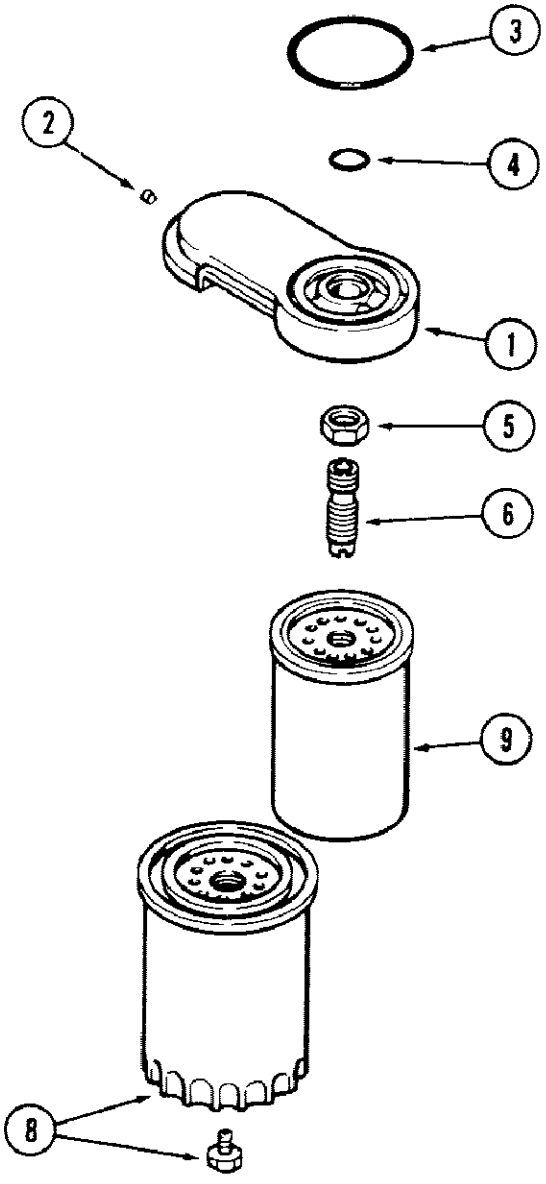

580SE CASE SUPER-E CONSTRUCTION KING LOADER BACKHOE - Fuel System

076 FUEL FILTER, 4T-390 AND 4-390 DIESEL ENGINE

Ref	Part Number	Qty	Description
1	J904362	1	HEAD ASSEMBLY, fuel filter, Includes: Ref. 2
2	A77432	1	PLUG expansion, 0.26 mm OD
3	J903546	1	O RING sealing, 17.2 mm ID
4	J903846	1	O RING sealing, 14 mm ID
5	J903293	1	NUT hex, M16 x 2 mm
6	J903845	1	ADAPTER fuel
	A77470	1	KIT, filter, fuel, Includes: Ref. 8 - 9
8	J930942	1	FILTER, fuel, Primary
9	J903640	1	FILTER fuel, secondary

78

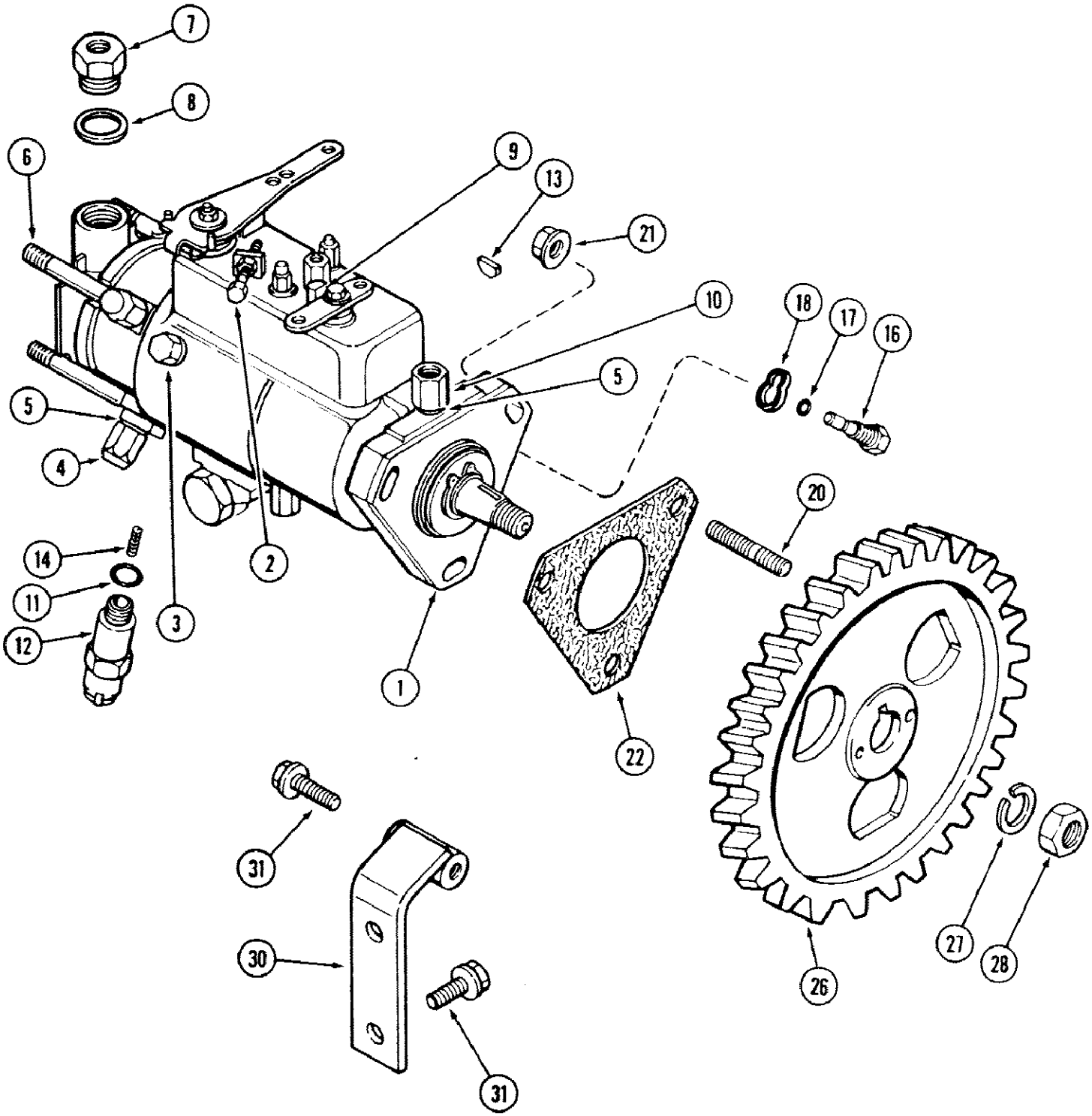

580SE CASE SUPER-E CONSTRUCTION KING LOADER BACKHOE - Fuel System

078 FUEL INJECTION PUMP AND DRIVE, 4T-390 AND 4-390 DIESEL ENGINE

Ref	Part Number	Qty	Description
1	JR908645	1	PUMP fuel injection, remanufactured, North America only
1	JC908645	1	RETURN NUMBER use this part no. to return pump core for credit
1	J908645	1	PUMP ASSEMBLY, fuel injection, new, Lucas DPA3042/00996, Includes: Ref. 2 - 18, Reman. injection pump for North America., Ref #1 J908645 fuel injection pump Use
2	J904637	1	SCREW adjusting, low idle
3	K963867	1	SCREW ASSEMBLY, bleed, pump head
4	J904646	4	BOLT banjo
5	J904644	1	WASHER sealing, package of 10
6	K962755	4	FITTING banjo
7	J904641	1	FITTING inlet
8	K962748	1	WASHER inlet fitting, copper
9	J904640	1	ORIFICE bleed
10	J904643	1	FITTING return
11	J904635	1	O RING solenoid
12	J904630	1	SOLENOID ASSEMBLY, 12 volt
13	J902332	1	KEY retainer, pump gear
14	J904777	1	SPRING plunger
16	J904778	1	BOLT hex, locking device
17	J904780	1	SEAL locking bolt
18	J904779	1	WASHER locking
20	J902501	3	STUD mounting, M8 x 48 mm
21	J900589	3	NUT hex flange, M8 x 1 mm
22	J905685	1	GASKET pump mounting, Replaces J900379
26	J902236	1	GEAR drive, pump
27	92-9	1	9/16"
28	J903738	1	NUT hex jam, M14
30	J905387	1	BRACE fuel pump, Replaces J902704
31	J900630	3	BOLT hex flange head, M8 x 20 mm

80

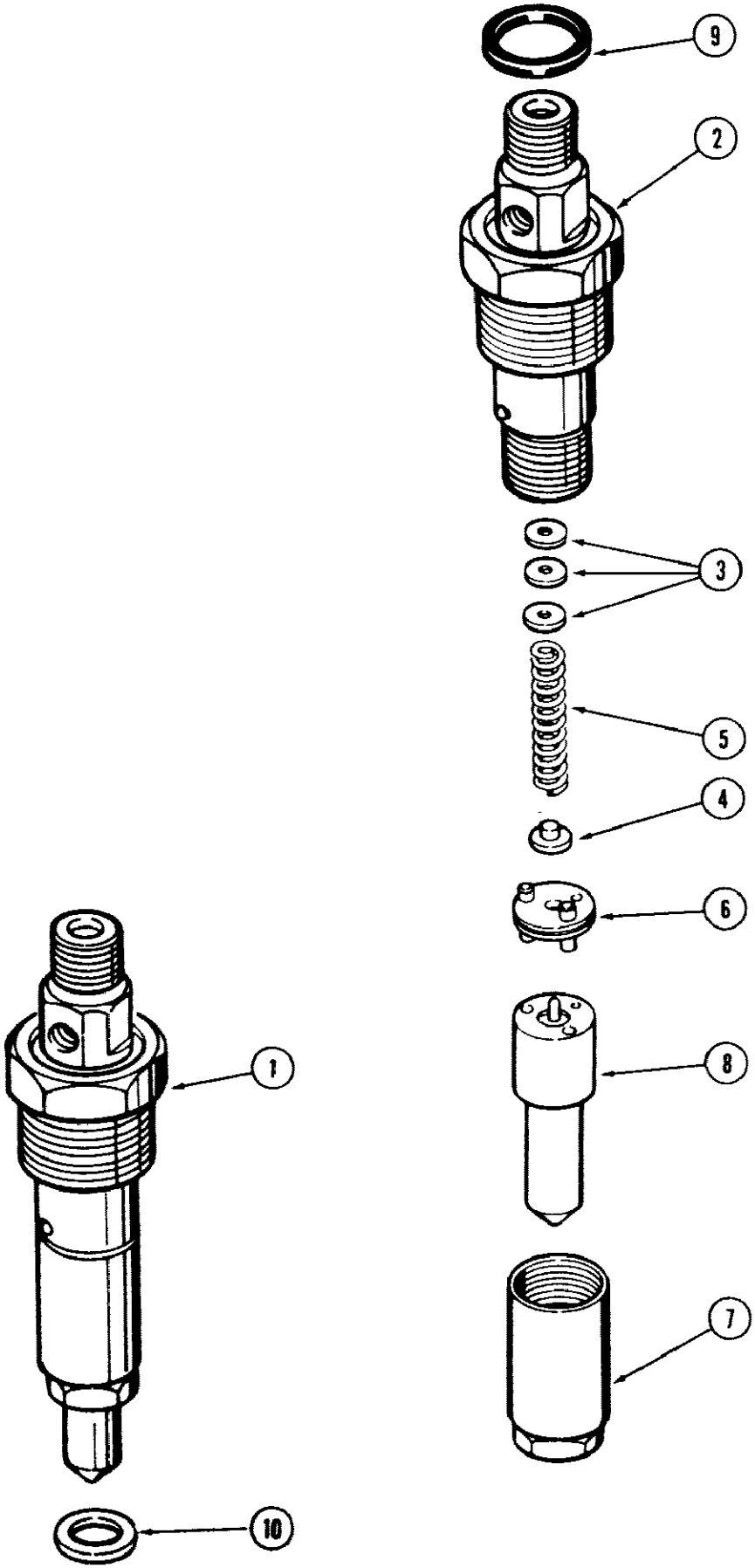

NOTE: Whenever a nozzle is removed from the cylinder head, J900808 gasket must be replaced before nozzle is installed in cylinder head. NOTE: Reference numbers in description are for Cares use only and cannot be ordered separately.

080 FUEL INJECTION NOZZLE, 4T-390 AND 4-390 DIESEL ENGINE

Ref	Part Number	Qty	Description
1	JR909475	4	NOZZLE ASSEMBLY, fuel injection, Remanufactured, North America only, repairs use A77553 kit, A77553 kit contains a 9mm injector. If a 7mm or pencil injector is req'd, use part nbr J919331., Ref #1 J909475 fuel injection nozzle assy For
1	JC909475	4	RETURN NUMBER use this number when returning injector for credit
1	J909475	4	NOZZLE ASSEMBLY, fuel injection, Bosch 0 432 131 881, Includes: Ref. 3
2	NSS	1	BODY ASSEMBLY, injector, Reference No. J905146, Includes: Ref. 3
	A48186	1	KIT, shim, nozzle opening pressure, one kit will repair four nozzles, Includes: Ref. 3, Ref #3 A48186 shim kit Order following primes as needed : J903380 banjo seal, J909886 injector sleeve and following shims as req'd :
3	1806233C1		UAR SHIM, 1.00mm Thk, Nozzle (5 in kit)
3	1806234C1		UAR SHIM, 1.04mm Thk, Nozzle (5 in kit)
3	1806235C1		UAR SHIM, 1.08mm Thk, Nozzle (5 in kit)
3	1806236C1		UAR SHIM, 1.10mm Thk, Nozzle (5 in kit)
3	1806237C1		UAR SHIM, 1.14mm Thk, Nozzle (5 in kit)
3	1806238C1		UAR SHIM, 1.18mm Thk, Nozzle (5 in kit)
3	1806239C1		UAR SHIM, 1.20mm Thk, Nozzle (5 in kit)
3	1806240C1		UAR SHIM, 1.24mm Thk, Nozzle (5 in kit)
3	1806241C1		UAR SHIM, 1.28mm Thk, Nozzle (5 in kit)
3	1806242C1		UAR SHIM, 1.30mm Thk, Nozzle (5 in kit)
3	1806243C1		UAR SHIM, 1.34mm Thk, Nozzle (5 in kit)
3	1806244C1		UAR SHIM, 1.38mm Thk, Nozzle (5 in kit)
3	1806245C1		UAR SHIM, 1.40mm Thk, Nozzle (5 in kit)
3	1806246C1		UAR SHIM, 1.44mm Thk, Nozzle (5 in kit)
3	1806247C1		UAR SHIM, 1.48mm Thk, Nozzle (5 in kit)
3	1806248C1		UAR SHIM, 1.50mm Thk, Nozzle (5 in kit)
3	1806249C1		UAR SHIM, 1.54mm Thk, Nozzle (5 in kit)
3	1806250C1		UAR SHIM, 1.58mm Thk, Nozzle (5 in kit)
3	1806251C1		UAR SHIM, 1.60mm Thk, Nozzle (5 in kit)
3	1806252C1		UAR SHIM, 1.64mm Thk, Nozzle (5 in kit)
3	1806253C1		UAR SHIM, 1.68mm Thk, Nozzle (5 in kit)
3	1806254C1		UAR SHIM, 1.70mm Thk, Nozzle (5 in kit)
3	1806255C1		UAR SHIM, 1.74mm Thk, Nozzle (5 in kit)
3	1806256C1		UAR SHIM, 1.78mm Thk, Nozzle (5 in kit)
3	1806257C1		UAR SHIM, 1.80mm Thk, Nozzle (5 in kit)
3	1806258C1		UAR SHIM, 1.84mm Thk, Nozzle (5 in kit)
3	1806259C1		UAR SHIM, 1.88mm Thk, Nozzle (5 in kit)
3	1806260C1		UAR SHIM, 1.90mm Thk, Nozzle (5 in kit)
3	1806261C1		UAR SHIM, 1.94mm Thk, Nozzle (5 in kit)
3	1806262C1		UAR SHIM, 1.98mm Thk, Nozzle (5 in kit)
4	J905153	1	SEAT nozzle pressure spring
5	J905152	1	SPRING nozzle pressure, Includes: Ref. 6 - 7

NOTE: Whenever a nozzle is removed from the cylinder head, J900808 gasket must be replaced before nozzle is installed in cylinder head. NOTE: Reference numbers in description are for Cares use only and cannot be ordered separately.

080 FUEL INJECTION NOZZLE, 4T-390 AND 4-390 DIESEL ENGINE

Ref	Part Number	Qty	Description
6	J905154	1	VALVE STOP ASSEMBLY, nozzle
7	A48201	1	NUT cap, nozzle end
8	J903313	1	TIP ASSEMBLY, nozzle injector, Order complete injector., Ref #8 J903313 tip assy This is an NSS item.
9	J909356	4	SEAL nozzle
10	J900808	4	GASKET nozzle, see note, Whenever a nozzle is removed from the cylinder head, J900808 gasket must be replaced before nozzle is installed in cylinder head.

NOTE: Whenever a nozzle is removed from the cylinder head, J900808 gasket must be replaced before nozzle is installed in cylinder head. NOTE: Reference numbers in description are for Cares use only and cannot be ordered separately.

82

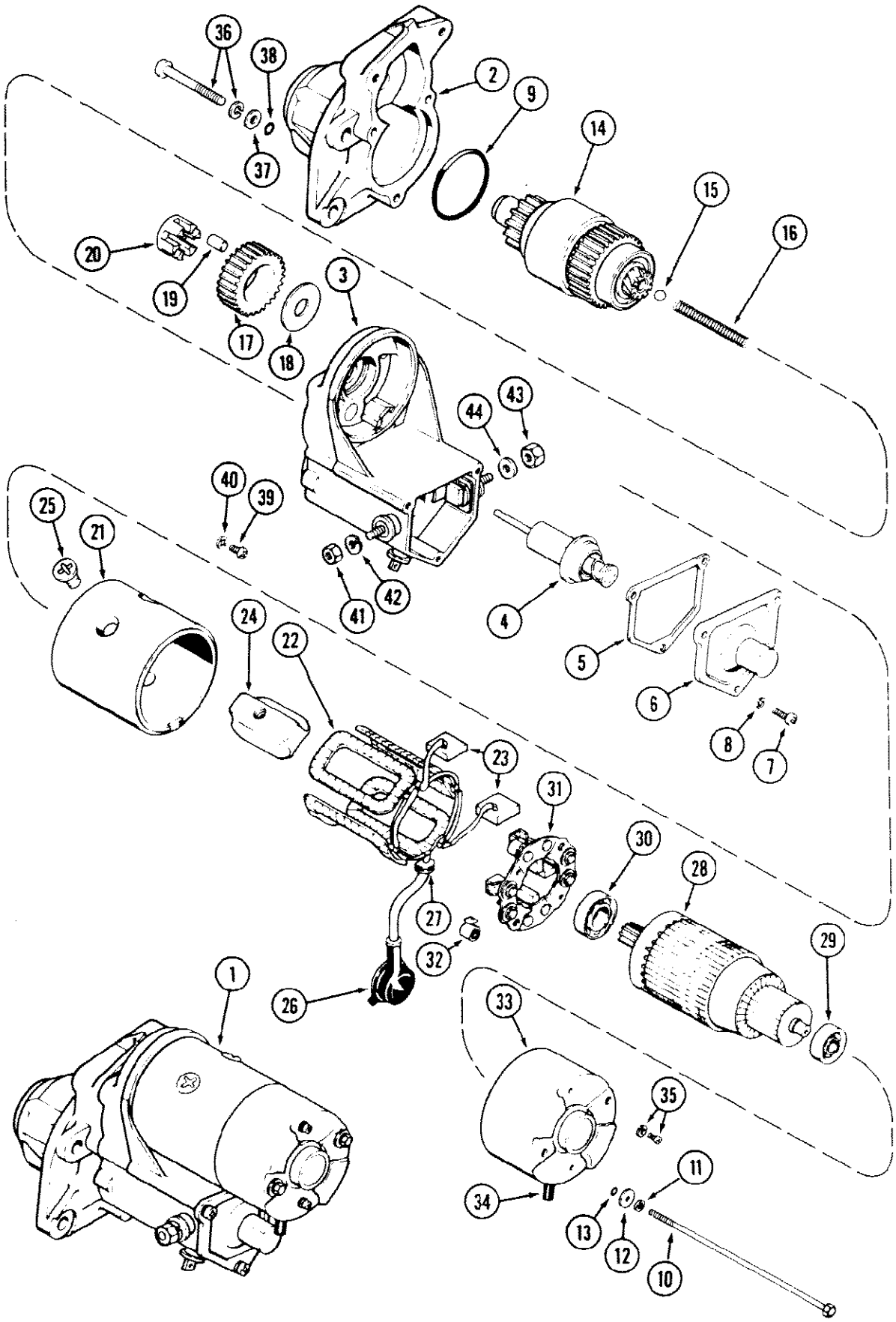
36
38
2
9
14
15
16
37
20
19
3
17
18
44
43
40
39
25
21
41
42
4
5
6
8
7
24
22
23
31
30
28
29
27
32
26
1
33
35
34
11
13
12
10

082 A170746 STARTER

Ref	Part Number	Qty	Description
1	AR170746	1	STARTER ASSEMBLY, engine, Remanufactured, North America only
1	AC170746	1	RETURN NUMBER use this number when returning starter for credit
1	A170746	1	STARTER ASSEMBLY, new, Nippondenso No. 5-128000-395, Includes: Ref. 2 - 8
2	A46948	1	HOUSING drive end
3	A46949	1	SWITCH ASSEMBLY, magnetic
4	NSS	1	SOLENOID
5	NSS	1	GASKET solenoid cover
6	NSS	1	COVER solenoid
7	NSS	3	SCREW cover to switch
8	NSS	3	WASHER cover screw
9	A47229	1	O RING switch to housing
	A47230	2	BOLT ASSEMBLY, through, Includes: Ref. 10 - 13
10	NSS	1	BOLT through
11	892-1106	1	WASHER lock, 1/4 inch
12	195-516	1	WASHER flat, 1/4 x 9/16 x 1/16 inch (6 x 14 x 2 mm)
13	A47127	1	O RING bolt seal
14	A47231	1	CLUTCH ASSEMBLY, drive
15	211-10	1	BALL thrust, 3/8 inch diameter, steel (10 mm)
16	A47232	1	SPRING clutch drive, 2-13/16 inch free length (71 mm)
17	A47233	1	PINION idler
18	A47234	1	WASHER thrust, idler pinion
19	A47235	6	ROLLER idler pinion bearing
20	A47236	1	RETAINER roller bearings
	A47240	1	HOUSING ASSEMBLY, with coil and brushes, Includes: Ref. 21 - 26
21	NSS	1	HOUSING starter
22	NSS	1	COIL field
23	NSS	2	BRUSHES starter
24	NSS	4	SHOE pole
25	NSS	4	SCREW pole shoes
26	NSS	1	BOOT magnetic switch terminal
27	A47241	1	PLATE lock
	A170746	1	STARTER ASSEMBLY, engine, Includes: Ref. 28 - 44
28	A47242	1	ARMATURE ASSEMBLY, Includes: Ref. 29 - 30
29	A47248	1	BEARING commutator end
30	A47247	1	BEARING drive end
31	A47239	1	HOLDER ASSEMBLY, brush, Includes 2 brushes, Includes: Ref. 32
32	A47249	4	SPRING brush tension
33	A47237	1	FRAME commutator end
34	A47238	1	COVER end frame
35	A47244	2	SCREW ASSEMBLY, brush holder to cover
	A47243	3	BOLT ASSEMBLY, commutator end cover to drive end housing, Includes: Ref. 36 - 38

082 A170746 STARTER

Ref	Part Number	Qty	Description
36	NSS	1	BOLT with lockwasher
37	195-516	1	WASHER flat, 1/4 x 9/16 x 1/16 inch (6 x 14 x 2 mm)
38	A47130	1	O RING bolt seal
39	182-508	1	SCREW No. 8 - 32 x 3/8 inch, pan head
40	193-91	1	WASHER, LOCK, Int Tooth, #8
41	87016560	1	NUT, Jam, 3/8"-16, G5, Battery terminal
42	192-21	1	WASHER, LOCK, 3/8"
43	825-1110	1	NUT field coil terminal
44	A10454	1	WASHER field coil terminal
	73-48	1	SCREW flat head slotted, 1/4 - NC x 1/2 inch

86

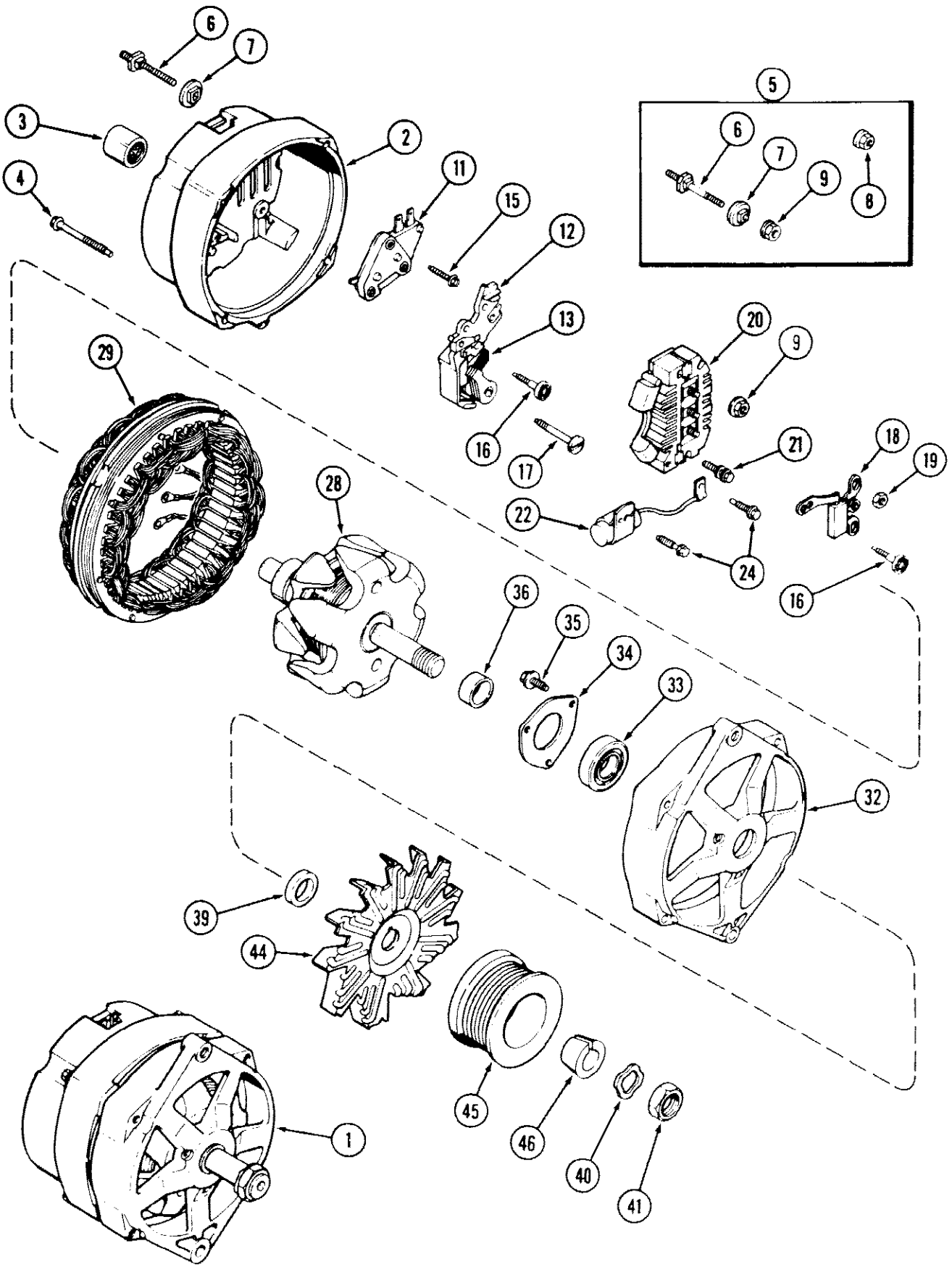
6
7
3
2
4
11
15
12
5
6
7
9
8
13
20
9
29
16
17
21
18
19
28
22
24
16
36
35
34
33
32
39
44
45
46
40
41
1

086 D121831 ALTERNATOR

Ref	Part Number	Qty	Description
	D121831		ALTERNATOR ASSEMBLY, 42 ampere, Delco Remy, J I Case Installed
		1	Order A46932, A43384, J903586 and J903333
1	A46932	1	ALTERNATOR ASSEMBLY, engine, 63 ampere alternator, Includes: Ref. 2 - 41
2	A47595	1	FRAME ASSEMBLY, slip ring end
3	A47578	1	BEARING roller
4	163-6	4	BOLT hex, No. 10 - 24 x 1-3/4 inch
5	A47597	1	KIT, terminal, battery, Includes: Ref. 6 - 9
6	NSS	1	STUD terminal
7	NSS	1	INSULATOR terminal
8	NSS	1	NUT ASSEMBLY, terminal
9	NSS	1	NUT ASSEMBLY, terminal
11	A45213	1	REGULATOR voltage
12	A47042	1	HOLDER ASSEMBLY, brush, Includes: Ref. 13
13	A47987	2	BRUSH alternator
15	A47043	1	SCREW brush holder, grounded
16	A45223	1	SCREW brush holder, insulated
17	A47581	1	SCREW brush holder, retaining
18	A48339	1	DIODE trio
19	129-16	3	NUT, #8-32
20	A46942	1	RECTIFIER BRIDGE alternator
21	A45221	1	SCREW rectifier bridge attaching
22	A47734	1	CAPACITOR alternator
24	A45228	2	SCREW capacitor bracket
28	A49495	1	ROTOR ASSEMBLY, alternator
29	A49388	1	STATOR ASSEMBLY, alternator
32	A49174	1	FRAME drive end
33	A49389	1	BEARING ball, drive end
34	R15101	1	PLATE bearing retainer
35	A46941	3	SCREW bearing plate retaining
36	A48261	1	COLLAR rotor shaft, inner
39	A45613	1	COLLAR rotor shaft, outer
40	R16171	1	WASHER lock, pulley nut
41	A25546	1	NUT pulley and fan retaining
44	A43384	1	FAN alternator ventilating
45	J903586	1	PULLEY drive
46	J903333	1	RETAINER pulley

088 A167897 ALTERNATOR

88

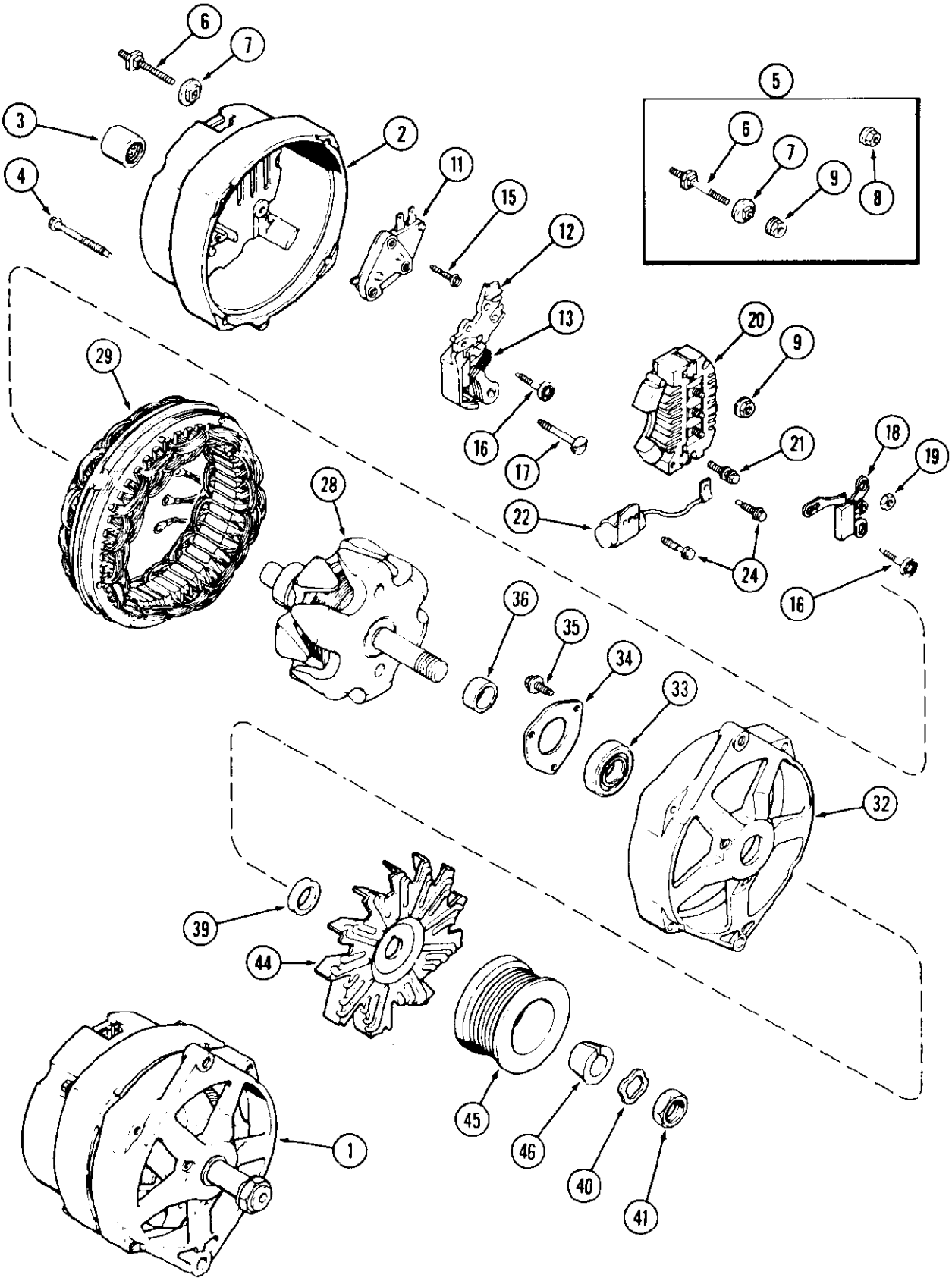

088 A167897 ALTERNATOR

Ref	Part Number	Qty	Description
	A167897		ALTERNATOR ASSEMBLY, 63 ampere, Delco Remy, J I Case Installed
		1	Order A46932, A43384, J903586 and J903333
1	A46932	1	ALTERNATOR ASSEMBLY, engine, Service only, Includes: Ref. 2 - 41
2	A47595	1	FRAME ASSEMBLY, slip ring end
3	A47578	1	BEARING roller
4	163-6	4	BOLT through hex, No. 10 - 24 x 1-3/4 inch
5	A47597	1	KIT, terminal, battery, Includes: Ref. 6 - 9
6	NSS	1	STUD terminal
7	NSS	1	INSULATOR terminal
8	NSS	1	NUT ASSEMBLY, terminal
9	NSS	1	NUT ASSEMBLY, terminal
11	A45213	1	REGULATOR voltage
12	A47042	1	HOLDER ASSEMBLY, brush, Includes: Ref. 13
13	A47987	2	BRUSH alternator
15	A47043	1	SCREW brush holder, grounded
16	A45223	1	SCREW brush holder, insulated
17	A47581	1	SCREW brush holder, retaining
18	A48339	1	DIODE trio
19	129-16	3	NUT, #8-32
20	A46942	1	RECTIFIER BRIDGE alternator
21	A45221	1	SCREW rectifier bridge attaching
22	A47734	1	CAPACITOR alternator
24	A45228	2	SCREW capacitor bracket
28	A46935	1	ROTOR ASSEMBLY, alternator
29	A46936	1	STATOR ASSEMBLY, alternator
32	A46933	1	FRAME drive end
33	A49389	1	BEARING ball, drive end, Replaces A47579
34	R15101	1	PLATE bearing retainer
35	A46941	3	SCREW bearing plate retaining
36	A48261	1	COLLAR rotor shaft, inner
39	A49733	1	COLLAR rotor shaft, outer
40	R16171	1	WASHER lock, pulley nut
41	A25546	1	NUT pulley and fan retaining
44	A43384	1	FAN alternator ventilating
45	J903586	1	PULLEY drive
46	J903333	1	RETAINER pulley

90

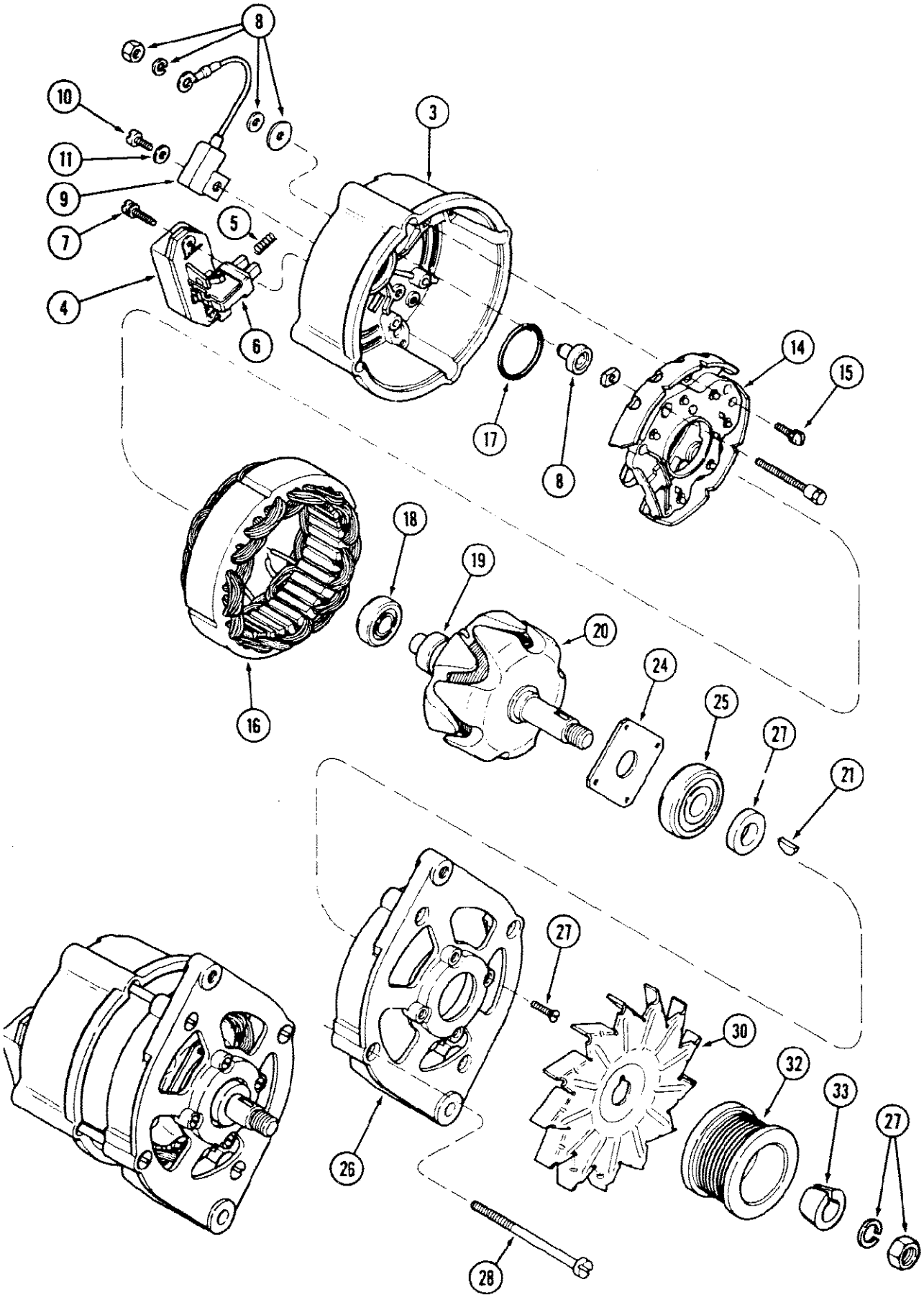

090 BOSCH ALTERNATOR

Ref	Part Number	Qty	Description
	A186132	1	ALTERNATOR ASSEMBLY, engine, 65 ampere, JI Case Installed, Order A186125, 221425RI and A77414
	A186125	1	ALTERNATOR ASSEMBLY, engine, service, 12 volt, Includes: Ref. 3 - 28
3	A186187	1	HOUSING collector ring end
4	A186189	1	REGULATOR voltage, Includes: Ref. 5 - 6
5	NSS	2	SPRING compression
6	NSS	1	BRUSH ASSEMBLY, alternator
7	A186194	2	SCREW, regulator retaining, with washer
8	NSS	1	KIT, terminal, Order 3079135R1
9	A186195	1	CAPACITOR alternator
10	625589C1	1	BOLT capacitor retaining
11	A186196	1	WASHER retaining bolt
14	A186197	1	RECTIFIER BRIDGE alternator
15	A186188	3	BOLT ASSEMBLY, rectifier bridge retaining, with washer
16	A186192	1	STATOR ASSEMBLY, alternator
17	NSS	1	O RING bearing, Order 3079386R1
18	A186186	1	BEARING ball
19	A186185	1	RING collector
20	A186184	1	ROTOR ASSEMBLY, alternator
21	NSS	1	KEY rotor, Order 3078897R1 kit
24	NSS	1	PLATE bearing retaining, Order 3078379R1
25	A186183	1	BEARING ball, drive end
26	A186182	1	HOUSING drive end
27	NSS	1	KIT, rotor retaining, Order 3078897R1
28	A186193	4	BOLT alternator retaining
30	221425R1	1	FAN alternator
	A77414	1	KIT, alternator pulley, Includes: Ref. 32 - 33
32	NSS	1	PULLEY drive, Order A77414, Reference No. J903586
33	NSS	1	RETAINER pulley, Order A77414, Reference No. J903333

92

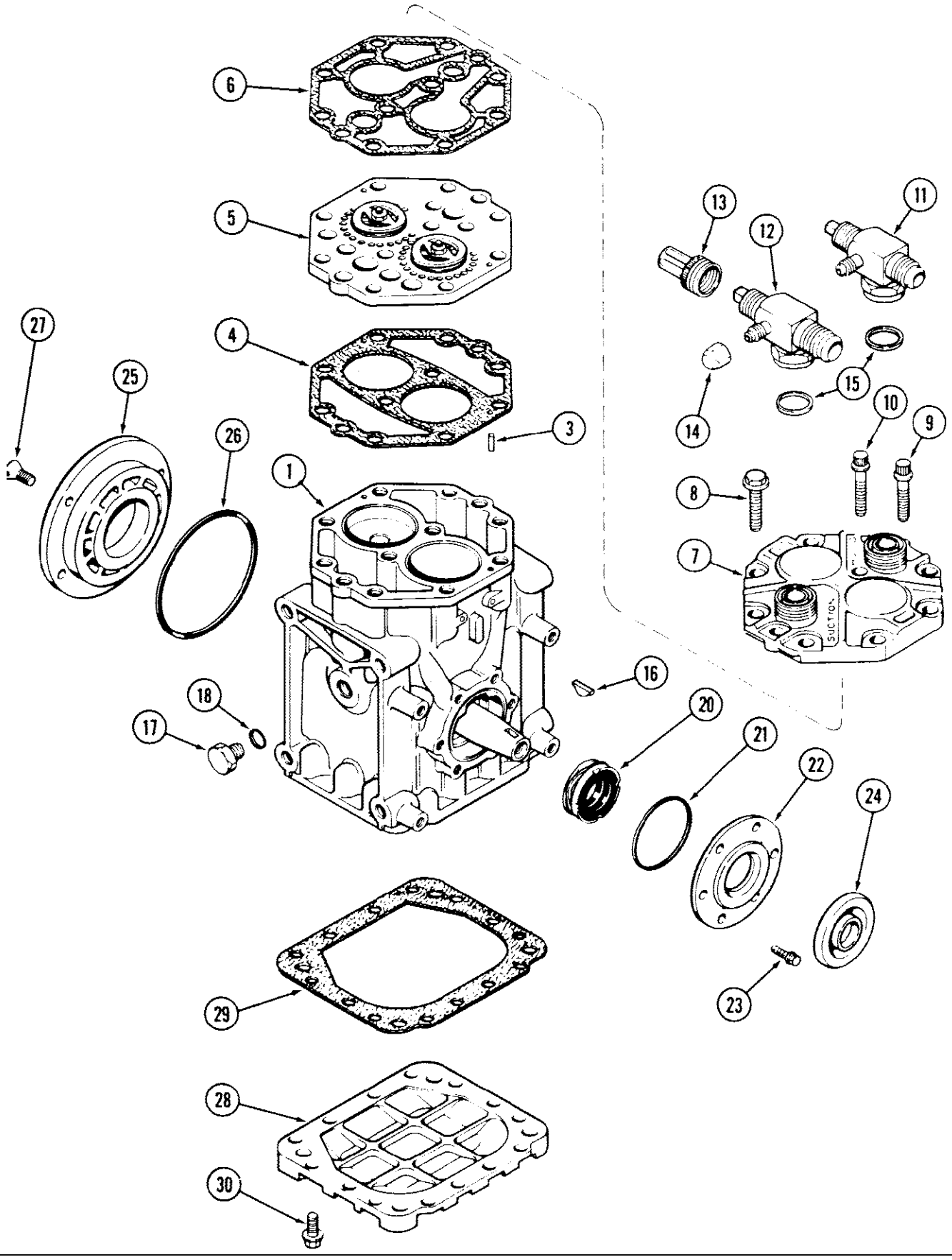
6
5
4
3
27
25
26
1
13
12
11
15
14
10
9
8
7
SUCTION
16
18
17
20
21
22
24
23
29
28
30

092 COMPRESSOR

Ref	Part Number	Qty	Description
	A141060	1	COMPRESSOR ASSEMBLY, air, York No. ER210L 20126T, Includes: Ref. 1 - 30
1	NSS	1	CRANKCASE ASSEMBLY, compressor
3	138-56	1	PIN, 1/8" x 11/16", Slotted
	A45420	1	KIT, valve plate, Includes: Ref. 4 - 6
4	NSS	1	GASKET valve plate to crankcase, Part of Gasket Kit, P/N A42964
5	NSS	1	PLATE valve, Order A45420
6	NSS	1	GASKET cylinder head to valve plate, Part of Gasket Kit, P/N A42964
7	NSS	1	HEAD cylinder, compressor
8	A42949	8	BOLT hex washer head, 1-3/8 inch
9	A42947	2	BOLT 12 point head, 1-3/8 inch
10	A42948	2	BOLT 12 point head, 1-17/32 inch
11	A42936	1	VALVE ASSEMBLY, roto lock, discharge 1/2 inch port
12	A42937	1	VALVE ASSEMBLY, roto lock, suction, 5/8 inch port, Includes: Ref. 13 - 14
13	A42944	2	CAP sleeve, valve stem
14	222-981	2	CAP valve stem
15	A42938	2	GASKET roto lock to cylinder head
16	A42939	1	KEY crankshaft, No.6 non rok
17	114-210	2	BOLT hex, 3/8 NF x 1/2 inch
18	NSS	2	O RING filter and level plug, Part of Gasket Kit, P/N A42964
	A48248	1	KIT, seal, front crankcase, Includes: Ref. 20 - 22
20	NSS	1	SEAL crankcase
21	NSS	1	O RING plate, Part of Gasket Kit, P/N A42964
22	NSS	1	PLATE seal retaining
23	A42961	6	BOLT hex washer head
24	A42965	1	CAP dust, crankcase oil seal
25	NSS	1	HOUSING crankcase, rear
26	NSS	1	GASKET rear housing, Part of Gasket Kit, P/N A42964
27	NSS	4	SCREW rear housing to crankcase
28	NSS	1	PLATE crankcase base
29	NSS	1	GASKET base plate, Part of Gasket Kit, P/N A42964
30	NSS	12	BOLT base plate to crankcase
	A42964	1	KIT, gasket, complete overhaul, Includes: Ref. 4, 6, 18, 21, 26, 29

94

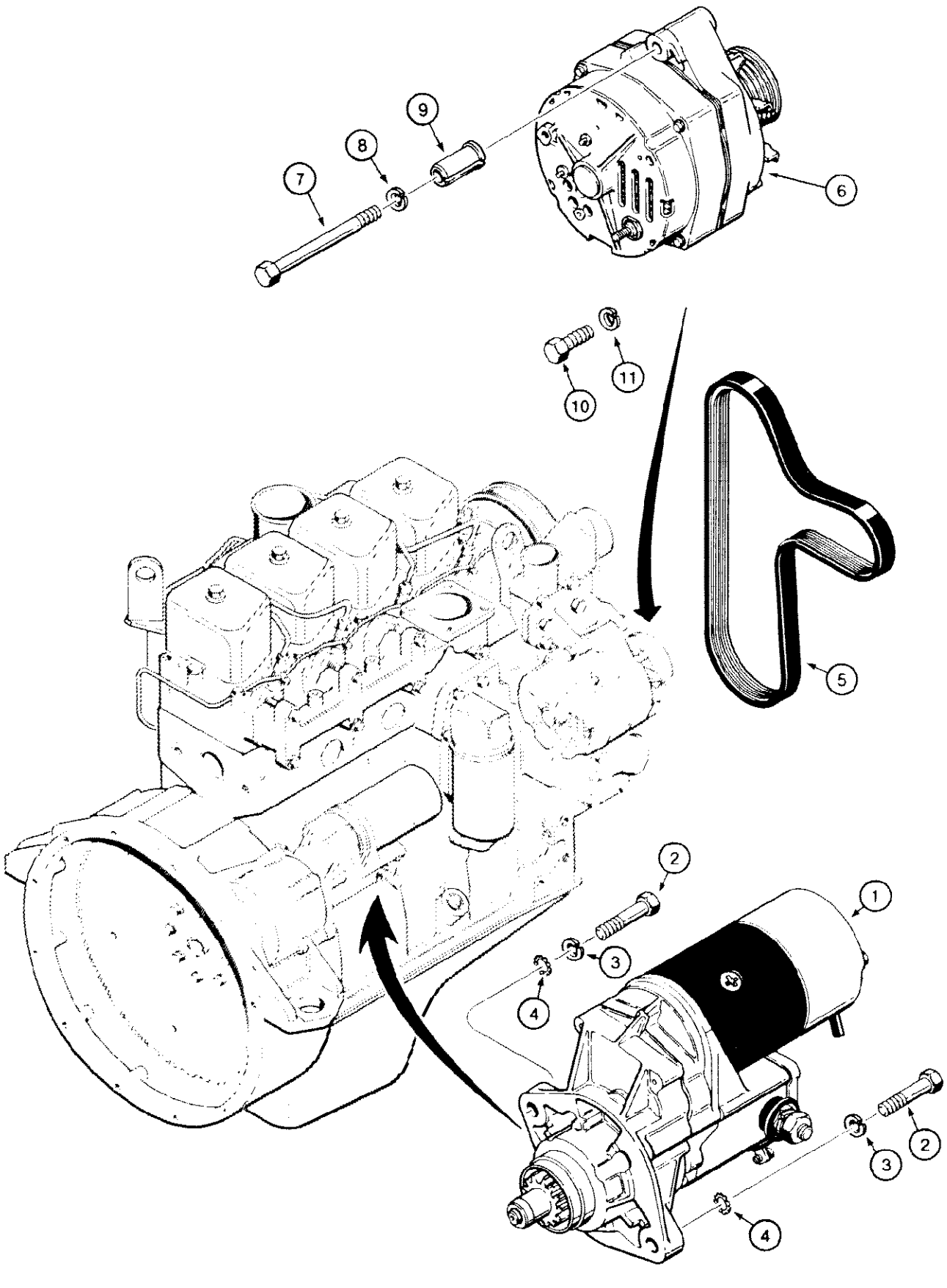

930585

094 STARTER AND ALTERNATOR MOUNTING

Ref	Part Number	Qty	Description
1	REF	1	STARTER engine, See Figures 82
2	814-10040	2	Bolt, Hex, M10 x 40, 8.8, Full Thd
3	892-1110	2	WASHER lock, plated, 10 mm
4	193-97	2	WASHER, LOCK, Ext Tooth, 7/16", No longer required
5	J903099	1	DRIVE BELT alternator and fan
6	REF	1	ALTERNATOR electrical, for correct assembly and components, See Figures 86-90
7	813-10100	1	BOLT hex head, 10 mm - 1.5 x 100 mm (8.8)
8	892-1110	1	WASHER lock, plated, 10 mm
9	J902469	1	SPACER alternator
10	814-8025	1	BOLT hex head, 8 mm - 1.25 x 25 mm (8.8)
11	192-20	1	WASHER, LOCK, 5/16"

096 AIR CONDITIONING COMPRESSOR MOUNTING, BOLT-ON HINGE BRACKET,

96

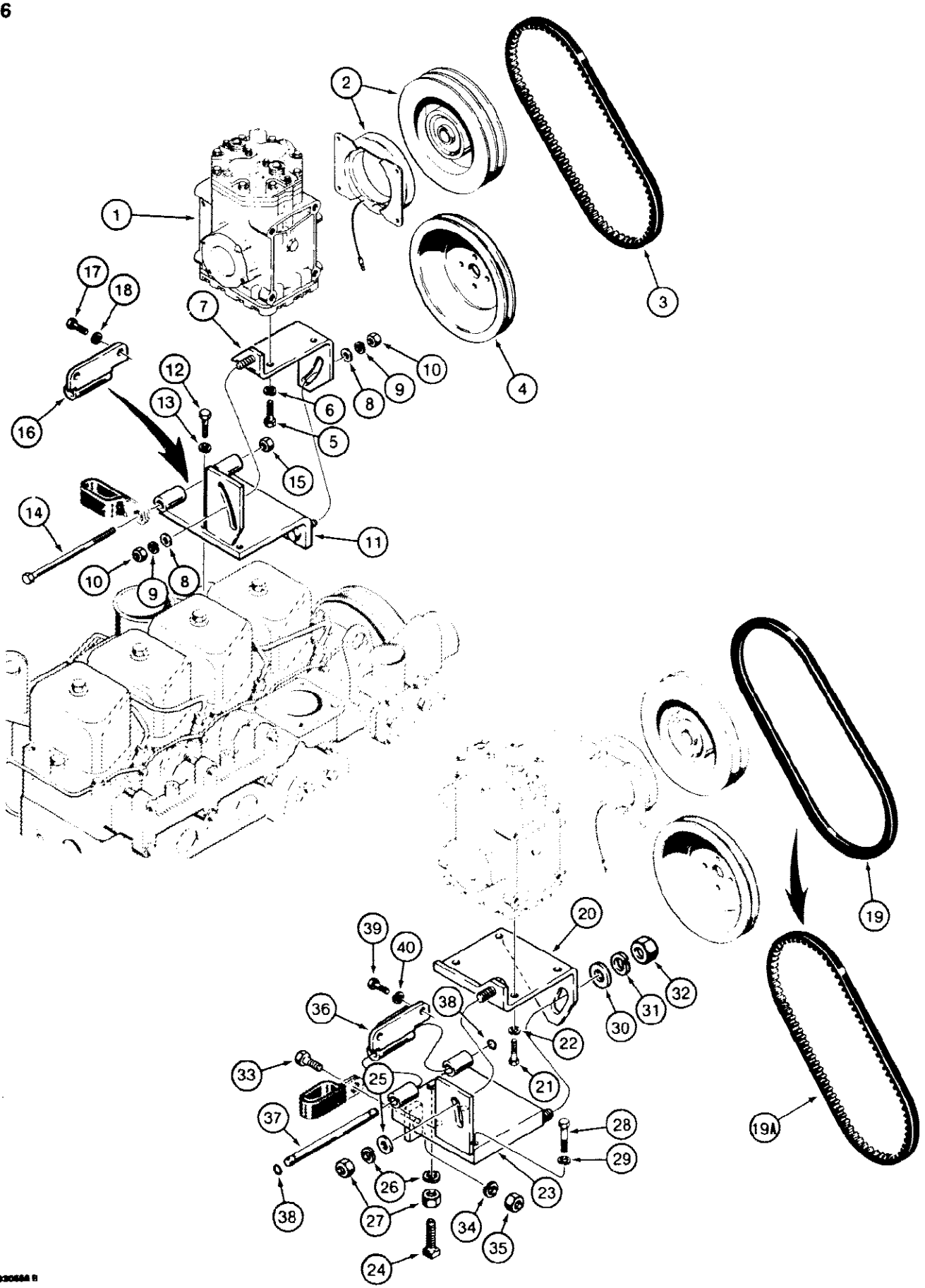

096 AIR CONDITIONING COMPRESSOR MOUNTING, BOLT-ON HINGE BRACKET,

Ref	Part Number	Qty	Description
1	A141060	1	COMPRESSOR ASSEMBLY, air conditioning, See Figure 92
2	A162008	1	CLUTCH ASSEMBLY, complete, with mounting bolts
3	D84316	1	DRIVE BELT compressor
4	J903221	1	PULLEY compressor drive
5	113-208	2	BOLT, Hex, 3/8"-16 x 1 1/4", G5, Full Thd
6	192-21	2	WASHER, LOCK, 3/8"
7	D121749	1	BRACKET compressor base, no longer used, for service order items 20, 23, and 24 below, and items, 3 - 28, 30, 31, 32, 35, 37, and, 2 - 38
8	195-533	2	WASHER flat, plated, 1/2"
9	192-23	2	WASHER, LOCK, 1/2"
10	129-105	2	NUT, 1/2"-13, G5
11	D121742	1	PLATE compressor mounting, no longer used, for service order items 20, 23, and 24 below, and items, 3 - 28, 30, 31, 32, 35, 37, and, 2 - 38
12	814-10030	3	BOLT, Hex, M10 x 30, 8.8
13	892-1110	3	WASHER lock, plated, 10 mm
14	113-2419	1	BOLT hex head, plated, 1/2" - 13 NC x 6-1/2"
15	131-70	1	NUT hex, self locking, plated, 1/2" - 13 NC
16	D121743	1	BRACKET hinge, compressor side, no longer used, for service order D127528 bracket, item 36
17	113-207	2	BOLT, Hex, 3/8"-16 x 1", G5, Full Thd
18	192-21	2	WASHER, LOCK, 3/8"
19	D128065	1	DRIVE BELT compressor, no longer used, for service order D84316 drive belt
19A	D84316	1	DRIVE BELT compressor
20	D128415	1	BRACKET compressor base
21	113-208	4	BOLT, Hex, 3/8"-16 x 1 1/4", G5, Full Thd
22	192-21	4	WASHER, LOCK, 3/8"
23	D128414	1	PLATE compressor mounting, includes item 32 nut
24	85-828	1	SET SCREW square head, cup point, 1/2" - 13 NC x 1-3/4"
25	195-533	1	WASHER flat, plated, 1/2"
26	192-23	2	WASHER, LOCK, 1/2"
27	129-105	2	NUT, 1/2"-13, G5
28	814-10045	3	BOLT - hex head, plated, 10 mm - 1.5 x 45 mm (8.8)
29	892-1110	3	WASHER lock, plated (10 mm)
30	195-541	1	WASHER flat, plated, 5/8"
31	192-25	1	WASHER, LOCK, 5/8"
32	129-107	1	NUT, 5/8"-11, G5
33	113-417	1	BOLT, Hex, 1/2"-13 x 1 1/4", G5, Full Thd
34	192-23	1	WASHER, LOCK, 1/2"
35	129-105	1	NUT, 1/2"-13, G5
36	D127528	1	BRACKET hinge, compressor side
37	D127320	1	PIN shaft, mounting plate to hinge bracket
38	A11538	2	Ring, Snap, #50, Ext, pin

096 AIR CONDITIONING COMPRESSOR MOUNTING, BOLT-ON HINGE BRACKET,

Ref	Part Number	Qty	Description
39	113-207	2	BOLT, Hex, 3/8"-16 x 1", G5, Full Thd
40	192-21	2	WASHER, LOCK, 3/8"

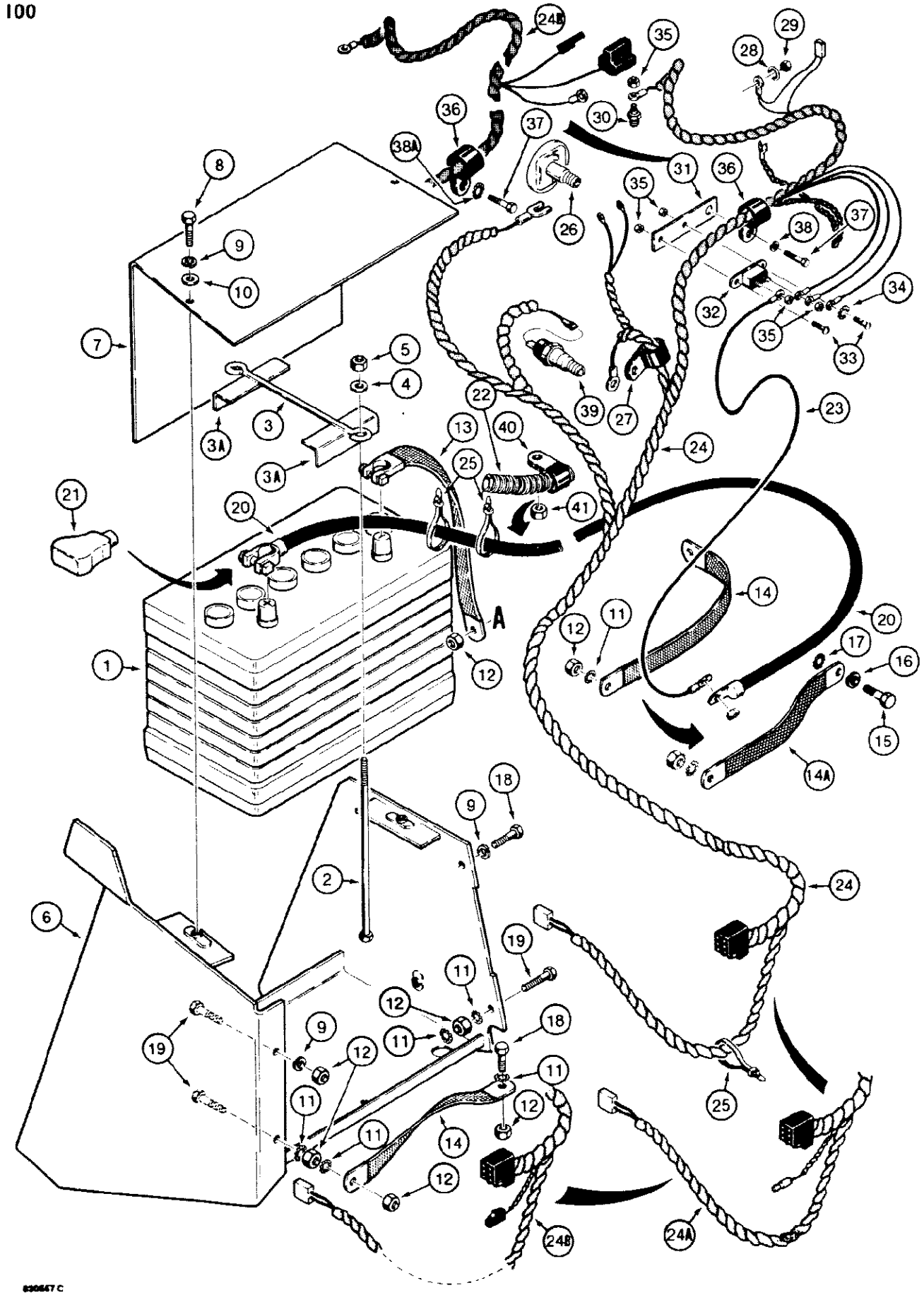
100
A
630647 C

100 BATTERY AND ENGINE ELECTRICAL CIRCUIT

Ref	Part Number	Qty	Description
1	A145205	1	BATTERY 12 volt, order BMF31E battery, see note, For use on models without a cold start system. For models with a cold start system, See Figure 104.
2	115-218	2	BOLT, Hex, 3/8"-16 x 10", G2
3	D55561	1	RETAINER battery hold down, see note, For use on models without a cold start system. For models with a cold start system, See Figure 104.
3A	D125079	2	BRACKET battery hold down, see note, For use on models without a cold start system. For models with a cold start system, See Figure 104.
4	195-525	2	WASHER flat, plated, 3/8"
5	131-52	2	NUT hex, self locking, plated, 3/8" - 16 NC
6	D93030	1	BOX battery, see note, For use on models without a cold start system. For models with a cold start system, See Figure 104.
7	D86490	1	COVER battery box, For use on models without a cold start system. For models with a cold start system, See Figure 104.
8	113-208	2	BOLT, Hex, 3/8"-16 x 1 1/4", G5, Full Thd
9	192-21	4	WASHER, LOCK, 3/8"
10	195-525	2	WASHER flat, plated, 3/8"
11	193-72	6	WASHER internal external tooth lock, plated, 3/8"
12	129-103	7	NUT, 3/8"-16, G5
13	D83485	1	STRAP negative, at battery, see note, For use on models without a cold start system. For models with a cold start system, See Figure 104.
14	D73383		STRAP negative, frame and chassis to starter, 13", 330 mm, long, uses strap at starter with 10 mm mounting hardware
14A	D127018		STRAP negative, mounts from chassis to cylinder block, 13", 330 mm, long, uses 12 mm mounting bolt, item 15, if used
15	814-12025	1	BOLT hex head, plated, 12 mm - 1.75 x 25 mm (8.8) if used
16	192-23	1	WASHER, LOCK, 1/2", If used
17	193-87	1	WASHER, LOCK, Ext-Int Tooth, 1/2", If used
18	113-207	2	BOLT, Hex, 3/8"-16 x 1", G5, Full Thd
19	113-209	3	BOLT, Hex, 3/8"-16 x 1 1/2", G5, See note, For use on models without a cold start system. For models with a cold start system, See Figure 104.
20	D86724	1	CABLE positive, see note, Includes: Ref. 21, For use on models without a cold start system. For models with a cold start system, See Figure 104.
21	383619R1	1	COVER positive cable terminal
22	D88060	1	SLEEVE positive cable, 56", 1422 mm, long, cut to required length from D99461, see below
23	D67876	1	WIRE solenoid to circuit breaker, used on models with Delco Remy alternator
24	D127283	1	HARNESS front, used on models with Delco Remy alternator, with test switch and solenoid, See Figure 106
24A	D127911	1	HARNESS front, used on models with Delco Remy alternator, without test switch and solenoid, See Figure 108
24B	D133352	1	HARNESS front, used on models with Bosch alternator, with electric tachometer
25	L18337	UAR	STRAP tie, nylon, 15 inch

100 BATTERY AND ENGINE ELECTRICAL CIRCUIT

Ref	Part Number	Qty	Description
26	REF	1	SENDER air cleaner restriction indicator, See Figures 16 and 18 for air cleaner and connecting parts
27	49768	1	CLAMP p type, harness to filter
28	193-60	1	WASHER, LOCK, Int Tooth, 1/4"
29	825-1106	1	NUT hex, plated, 6 mm - 1
30	D65446	1	SENDER engine water temperature
	D99461	1	SLEEVE bulk, 80" (2032 mm) long
31	D123602	1	PLATE circuit breaker mounting, if used
32	A22877	1	CIRCUIT BREAKER 40 amperes, used on models with Delco Remy alternator
33	182-145	2	MACHINE SCREW pan head slotted, No. 10 - 32 NF x 1/2", if used
34	193-70	1	WASHER, LOCK, Ext-Int Tooth, #10, If used
35	193-1000	1-5	NUT AND LOCK WASHER plated, No. 10 - 32 NF
36	T42284	1	CLAMP harness mounting
37	814-12025	1	BOLT hex head, plated, 12 mm - 1.75 x 25 mm (8.8)
38	192-23	1	WASHER, LOCK, 1/2", If used
38A	193-87	1	WASHER, LOCK, Ext-Int Tooth, 1/2", If used
39	A162297	1	SENDER oil pressure gauge
40	D94397	1	CLAMP cable to frame bolt
41	129-183	1	NUT, 5/8"-11, G8, See Figure 584, Ref. 2 for frame mounting bolt

104

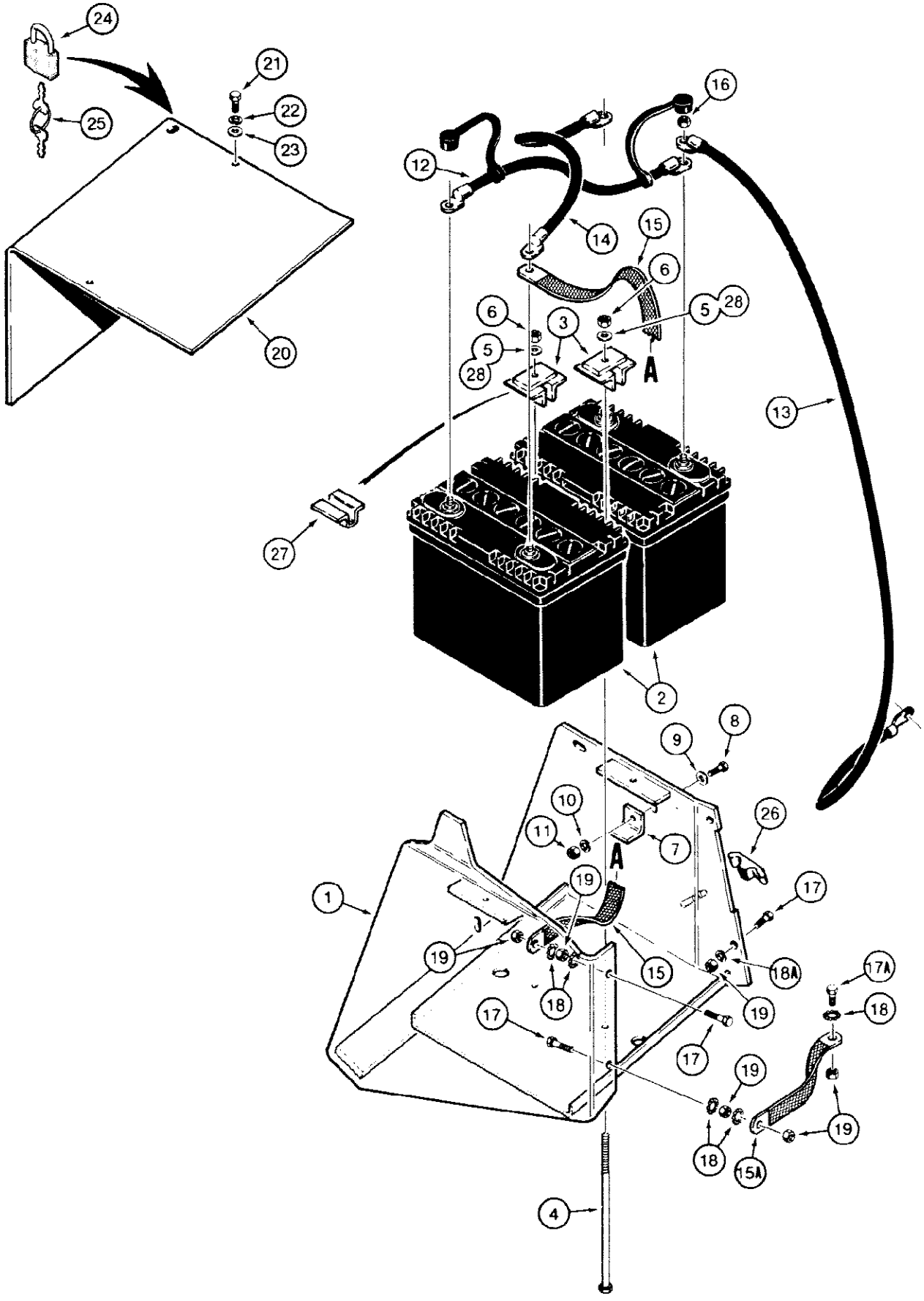
24
21
22
23
25
20
16
12
14
15
6
5
28
3
A
13
27
2
8
9
10
11
7
26
1
19
17
18A
17A
18
15
15A
4

580SE CASE SUPER-E CONSTRUCTION KING LOADER BACKHOE - Electrical System

104 BATTERIES AND CABLES, COLD START SYSTEM

Ref	Part Number	Qty	Description
1	D120634	1	BOX battery
2	D127414	2	BATTERY 12 volt, order BMF28S
3	D124322		BRACKET battery hold down, no longer available, for service order
		2	2, D135006 bracket and, 2, 195-2174 washer, see items 27 and 28
4	115-218	2	BOLT, Hex, 3/8"-16 x 10", G2
5	195-525		WASHER flat, plated, 3/8" bolt size, 13/32" ID x 13/16" OD x 1/16" thick
		2	used with D124322 bracket
6	131-52	2	NUT hex, self locking, plated, 3/8" - 16 NC
7	D42582	2	SUPPORT battery
8	113-208	2	BOLT, Hex, 3/8"-16 x 1 1/4", G5, Full Thd
9	195-525	2	WASHER flat, plated, 3/8"
10	192-21	2	WASHER, LOCK, 3/8"
11	129-103	2	NUT, 3/8"-16, G5
12	D126410	1	CABLE positive jumper
13	D126411	1	CABLE positive
14	D126412	1	CABLE negative jumper
15	D120366	1	STRAP negative ground
15A	D73383	1	STRAP ground
16	D126409	4	NUT hex, battery terminal, 3/8" - 16 NC
17	113-209	3	BOLT, Hex, 3/8"-16 x 1 1/2", G5
17A	113-207	1	BOLT, Hex, 3/8"-16 x 1", G5, Full Thd
18	193-72	5	WASHER internal external tooth lock, plated, 3/8"
18A	192-21	1	WASHER, LOCK, 3/8"
19	129-103	6	NUT, 3/8"-16, G5
20	D120633	1	COVER battery box
21	113-208	2	BOLT, Hex, 3/8"-16 x 1 1/4", G5, Full Thd
22	192-21	2	WASHER, LOCK, 3/8"
23	195-525	2	WASHER flat, plated, 3/8"
24	D93753	1	PADLOCK includes keys, Includes: Ref. 25 - 26
25	R29555	2	KEY for Master padlock only
25	D93751	2	KEY for Yale padlock only
26	D128965		CLAMP replaces existing loader lift tube clamp on models with dual battery cold start system, uses existing lift tube clamp
		1	mounting hardware
27	D135006	2	BRACKET battery hold down
28	195-2174		WASHER flat, plated, 3/8" bolt size, 13/32" ID x 2" OD x 1/8" thick, used
		2	with D135006 bracket

106

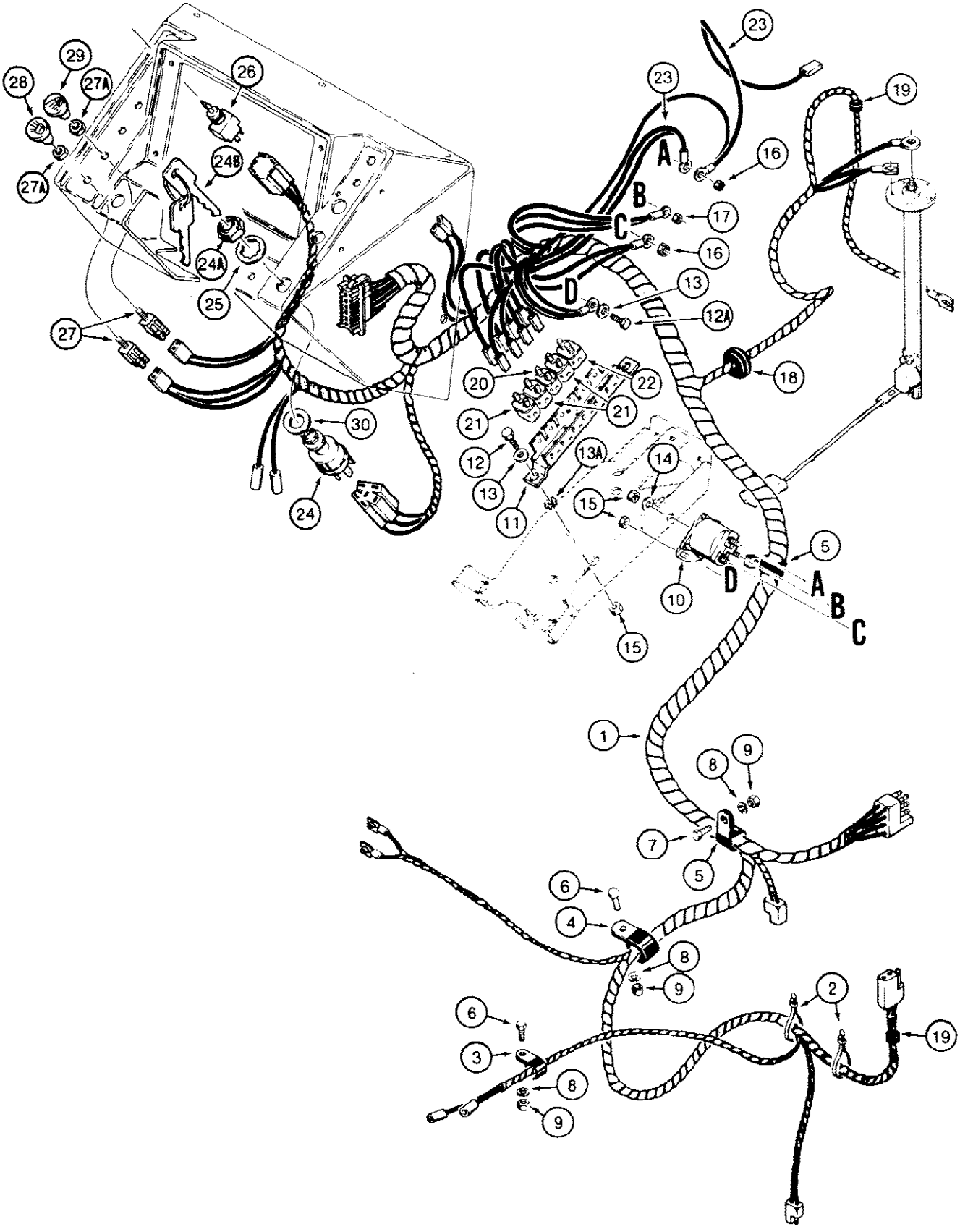
29
28
27A
26
24B
24A
25
27
30
24
23
A
B
C
D
16
17
16
13
12A
20
22
21
21
12
13
13A
14
15
11
15
10
5
D
A
B
C
18
19
1
8
9
7
5
6
4
8
9
6
3
8
9
2
19

106 MAIN WIRING HARNESS AND CONNECTIONS, MODELS WITH TEST SWITCH AND SOLENOID

Ref	Part Number	Qty	Description
1	D88038	1	HARNESS main
2	L18337	UAR	STRAP tie, nylon, 15 inch
3	49851	1	CLAMP harness, lower
4	49838	1	CLAMP harness, center, models without cab or flasher lamps
4	49858	1	CLAMP harness, center, models without cab, but with flasher lamps
4	D47782	1	CLAMP harness, center, models with cab
5	D88051	2	CLAMP harness, upper, models without cab or flasher lamps
5	D88052	2	CLAMP harness, upper, models with cab or flasher lamps
6	113-206	2	BOLT, Hex, 3/8"-16 x 3/4", G5, Full Thd
7	113-207	1	BOLT, Hex, 3/8"-16 x 1", G5, Full Thd
8	92-6	3	3/8"
9	129-103	3	NUT, 3/8"-16, G5
10	A77311	1	SOLENOID electrical
11	D75355	1	BRACKET circuit breaker
12	113-3	2	BOLT, Hex, 1/4"-20 x 3/4", G5, Full Thd
12A	113-4	2	BOLT, Hex, 1/4"-20 x 1", G5
13	195-102	4	WASHER flat, plated, 1/4"
13A	193-73	2	WASHER internal external tooth lock, plated, 1/4"
14	195-2011	1	WASHER flat, 1/4", special
15	193-1006	3	NUT AND LOCK WASHER plated, 1/4" - 20 NC
16	193-1009	2	NUT AND LOCK WASHER plated, 5/16" - 18 NC
17	193-1000	1	NUT AND LOCK WASHER plated, No. 10 - 32 NF
18	A145925	1	GROMMET harness, fuel gauge sender wire, at firewall
19	H114272	2	GROMMET harness, at floorplate
20	D78001	1	CIRCUIT BREAKER 10 amperes
21	D78002	3	CIRCUIT BREAKER 15 amperes
22	D84689	1	CIRCUIT BREAKER 25 amperes, cab circuit only, if used
23	D88040	2	WIRE solenoid to circuit breaker
	D134737	1	KEY SWITCH ASSEMBLY, includes keys, Includes: Ref. 24 - 24B
24	NSS	1	KEY SWITCH without keys
24A	A77314	1	NUT key switch mounting
24B	A77313	1	Metal Without Padding
25	193-108	1	WASHER internal tooth lock, 1"
26	D75360	1	SWITCH test, warning lamp
27	D74330	2	SWITCH lamp, Includes: Ref. 27A
27A	N7557	1	NUT special, switch retaining, 3/8" - 24 NF
28	D70446	1	KNOB lamp switch, lower
29	D70448	1	KNOB lamp switch, flood, upper
30	195-2105	1	WASHER flat, special, 1"

108 MAIN WIRING HARNESS AND CONNECTIONS, MODELS WITHOUT TEST SWITCH AND SOLENOID

108

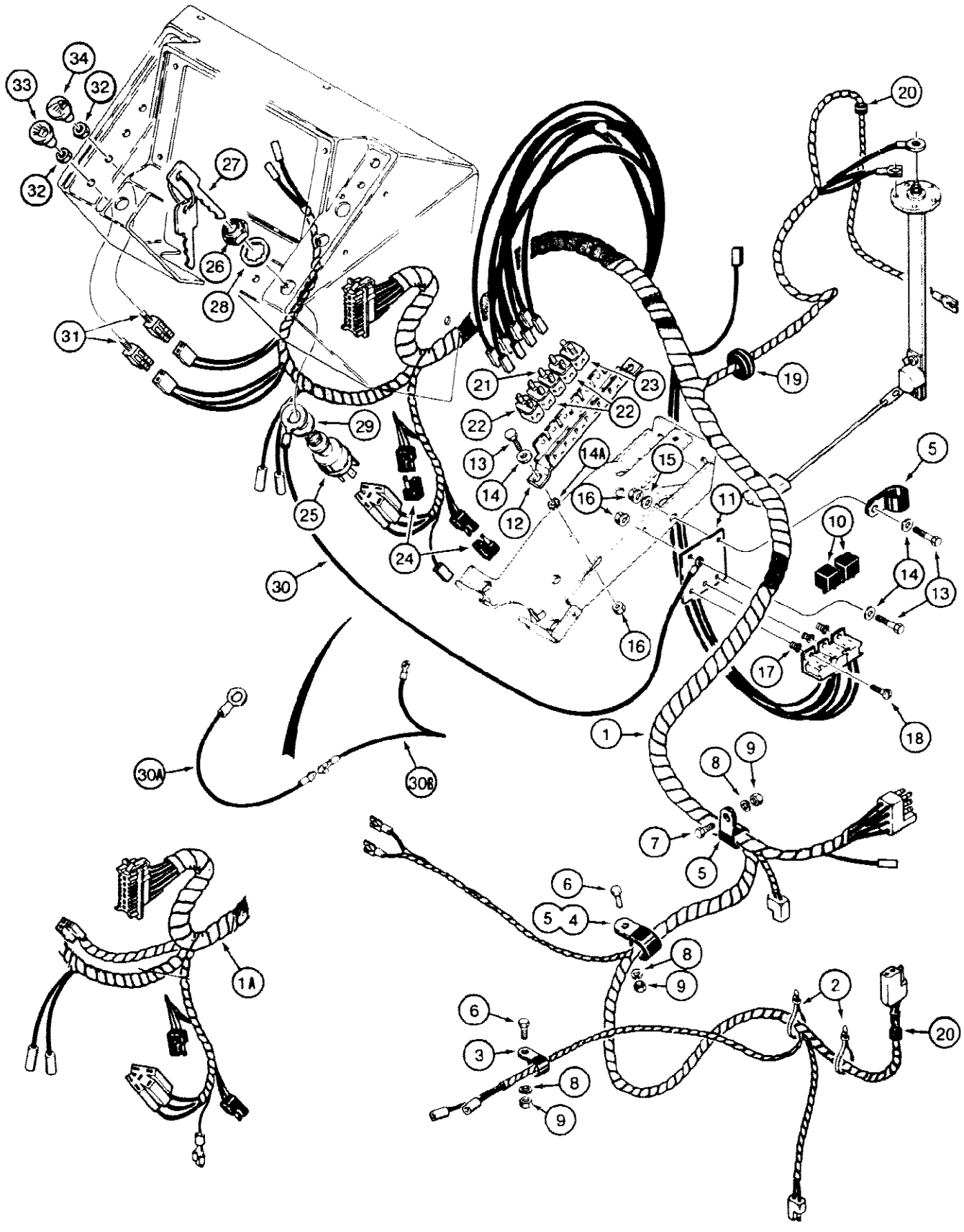

850606 A

108 MAIN WIRING HARNESS AND CONNECTIONS, MODELS WITHOUT TEST SWITCH AND SOLENOID

Ref	Part Number	Qty	Description
1A	D137337	1	HARNESS main, used on models with Bosch alternator with electric tachometer
2	L18337	UAR	STRAP tie, nylon, 15 inch
3	49845	1	CLAMP harness, lower
4	49858	1	CLAMP harness, center, models without cab, but with flasher lamps
4	R21385	1	CLAMP harness, center, models with cab
5	D88052	3	CLAMP harness
6	113-206	2	BOLT, Hex, 3/8"-16 x 3/4", G5, Full Thd
7	113-207	1	BOLT, Hex, 3/8"-16 x 1", G5, Full Thd
8	192-21	3	WASHER, LOCK, 3/8"
9	129-103	3	NUT, 3/8"-16, G5
10	D128310	2	RELAY 30 amperes, Ref. 10 D128310 relay is marked 40 amp on the relay this is the RESISTANCE rating. The INDUCTIVE rating is 30 amps. We use this inductive rating in our literature.
11	D127957	1	BRACKET mounting, harness to steering column support bracket, illustration which screws to Ref #11 bracket is part nbr S237214., Ref #11, #17, #18 Socket showing in
12	D75355	1	BRACKET circuit breaker
13	113-3	4	BOLT, Hex, 1/4"-20 x 3/4", G5, Full Thd
14	195-102	4	WASHER flat, plated, 1/4"
14A	193-73	2	WASHER internal external tooth lock, plated, 1/4"
15	195-2011	1	WASHER flat, special, 1/4"
16	193-1006	3	NUT AND LOCK WASHER plated, 1/4" - 20 NC
17	D123827	3	RETAINER threaded insert
18	182-145	3	SCREW machine, pan head slotted, No. 10 - 32 NF x 1/2"
19	A145925	1	GROMMET harness, fuel gauge sender wire, at firewall
20	H114272	2	GROMMET harness, at floorplate
21	D78001	1	CIRCUIT BREAKER 10 amperes
22	D78002	3	CIRCUIT BREAKER 15 amperes
23	D84689	1	CIRCUIT BREAKER 25 amperes, cab circuit only, if used
24	L71879	2	DIODE isolation
	D134737	1	KEY SWITCH ASSEMBLY, includes keys, Includes: Ref. 25 - 27
25	NSS	1	KEY SWITCH without keys
26	A77314	1	NUT key switch mounting
27	A77313	1	Metal Without Padding
28	193-108	1	WASHER internal tooth lock, 1"
29	195-2105	1	WASHER flat, special, 1"
30	D127037	1	WIRE ground, ignition switch, no longer available, order D133074 and D133075 ground wires, items 30A and 30B
30A	D133074	1	WIRE ground, ignition switch, used with item 30B wire
30B	D133075	1	WIRE ground, used with item 30A wire
31	D74330	2	SWITCH lamp, Includes: Ref. 32
32	N7557	1	NUT special, switch retaining, 3/8" - 24 NF
33	D70446	1	KNOB lamp switch, lower

108 MAIN WIRING HARNESS AND CONNECTIONS, MODELS WITHOUT TEST SWITCH AND SOLENOID

Ref	Part Number	Qty	Description
34	D70448	1	KNOB lamp switch, flood, upper

I10

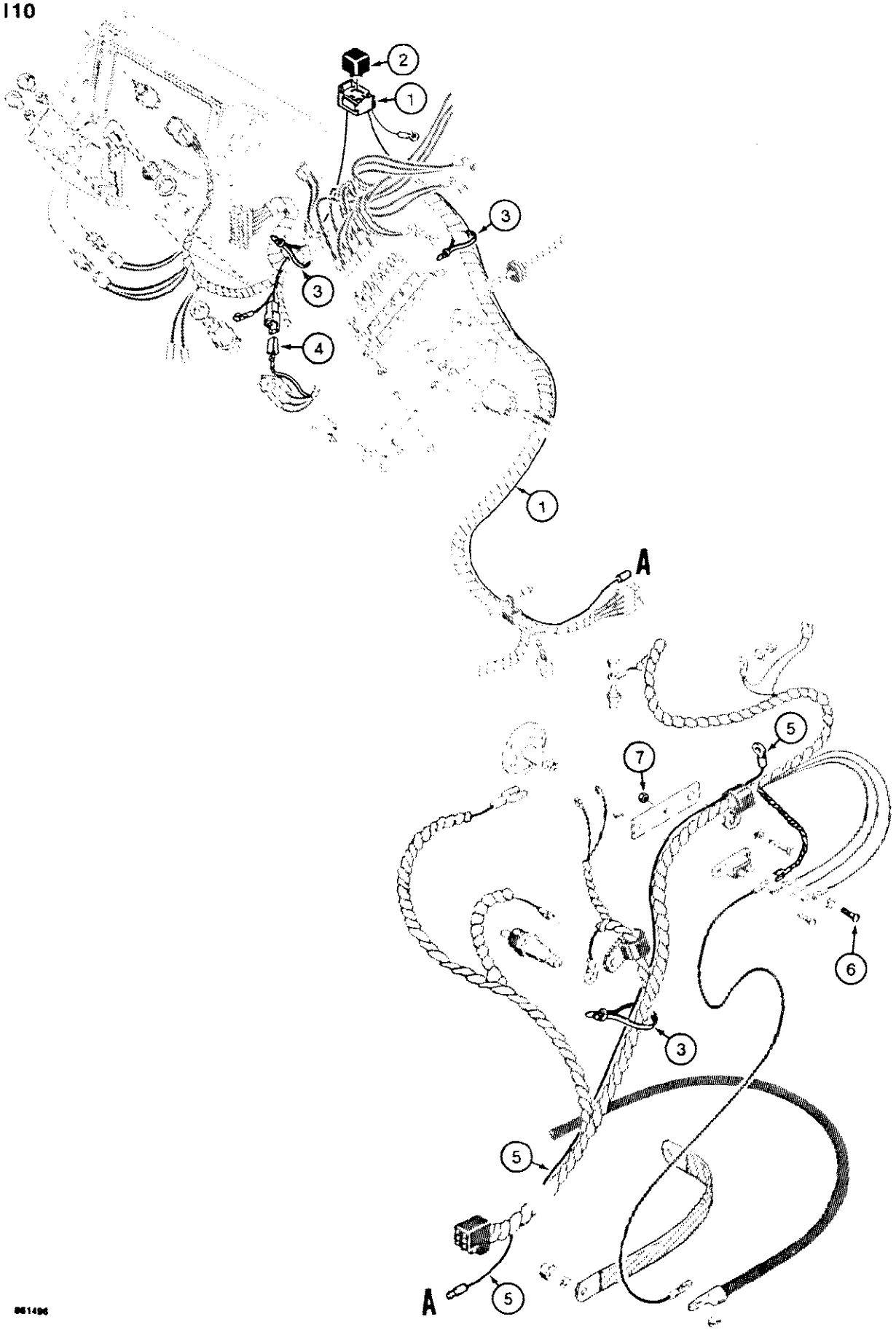

861496

110 NEUTRAL START CONVERSION KIT

Ref	Part Number	Qty	Description
	D101559	1	KIT, neutral start conversion, includes instruction sheet, Includes: Ref. 1 - 7
1	D127340	1	HARNESS relay, attaches to D127339 wire
2	D128310	1	RELAY neutral start, Ref. 2 D128310 relay is marked 40 amp on the relay this is the RESISTANCE rating. The INDUCTIVE rating is 30 amps. We use this inductive rating in our literature.
3	L18337	6	STRAP tie, nylon, 15 inch
4	223-155	1	CONNECTOR male
5	D127339	1	WIRE starter to relay harness
6	182-86	1	SCREW machine, pan head slotted, No. 8 - 32 NC x 1/2", Replaces existing right hand circuit breaker mounting hardware
7	193-1002	1	NUT AND LOCK WASHER plated, No. 8 - 32 NC, Replaces existing right hand circuit breaker mounting hardware

112

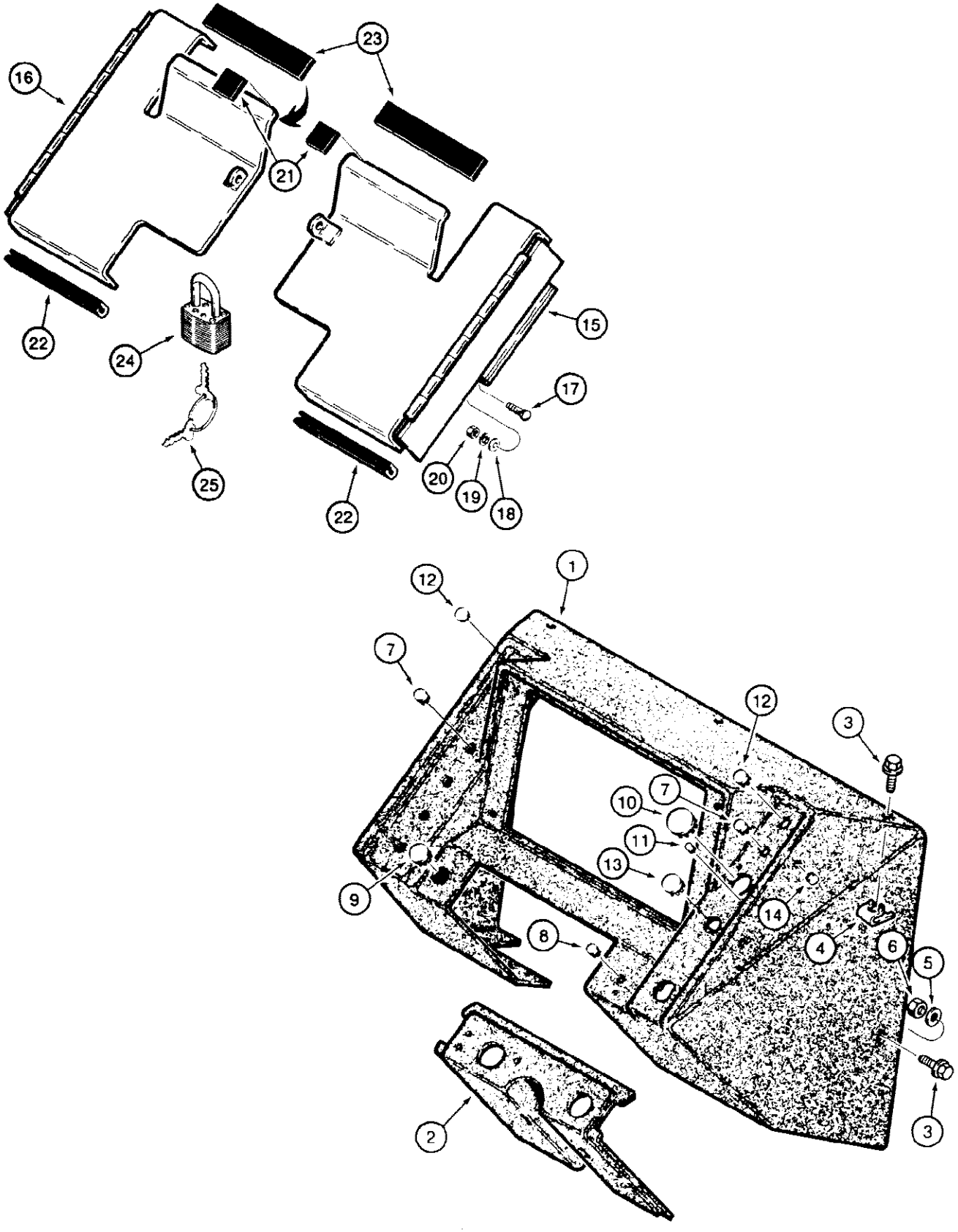

580SE CASE SUPER-E CONSTRUCTION KING LOADER BACKHOE - Electrical System

112 INSTRUMENT PANEL AND COVERS

Ref	Part Number	Qty	Description
1	D123199	1	INSTRUMENT PANEL tractor, four #10 24 nuts molded into panel, used to accept screws which mount instrument cluster D91122., Ref #1 D123199 instrument panel Panel has
2	D123198	1	BRACKET steering column and controls
3	121-123	5	BOLT, Hex Flg, 5/16"-18 x 3/4", Serr
4	131-641	3	NUT u type, 5/16" - 18 NC
5	195-521	2	WASHER flat, plated, 5/16"
6	9635082	2	NUT, 5/16"-18, G5
7	353-402	4	PLUG, Dome, .375" hole, Nylon, If used
8	353-403	2	PLUG, Dome, .437" hole, Nylon, If used
9	353-407	1	PLUG nylon, 11/16", if used
10	353-411	1	PLUG, Dome, 1.000" hole, Nylon, If used
11	353-400	2	PLUG, Dome, .250" hole, Nylon, If used
12	353-404	1-2	PLUG, Dome, .500" hole, Nylon, If used
13	353-408	1	PLUG nylon, 3/4", if used
14	353-401	4	PLUG nylon, 5/16", if used
15	D90320	1	COVER anti vandalism, right hand, if used
16	D90321	1	COVER anti vandalism, left hand, if used
17	111-108	4	CARRIAGE BOLT plated, 1/4" - 20 NC x 3/4"
18	195-102	4	WASHER flat, plated, 1/4"
19	192-19	4	WASHER, LOCK, 1/4"
20	7770	4	NUT, 1/4"-20, G5
21	D83236	2	PAD cushion
22	D95462	1	TRIM edge, 9" (229 mm) cut to fit two places
23	D66072	2	STRIP cushion
24	D93753	1	PADLOCK includes keys, Includes: Ref. 25
25	R29555	2	KEY for Master padlock only
25	D93751	2	KEY for Yale padlock only

114 INSTRUMENT CLUSTER, USED WITH DELCO REMY ALTERNATOR, WITH MECHANICAL TACHOMETER

114

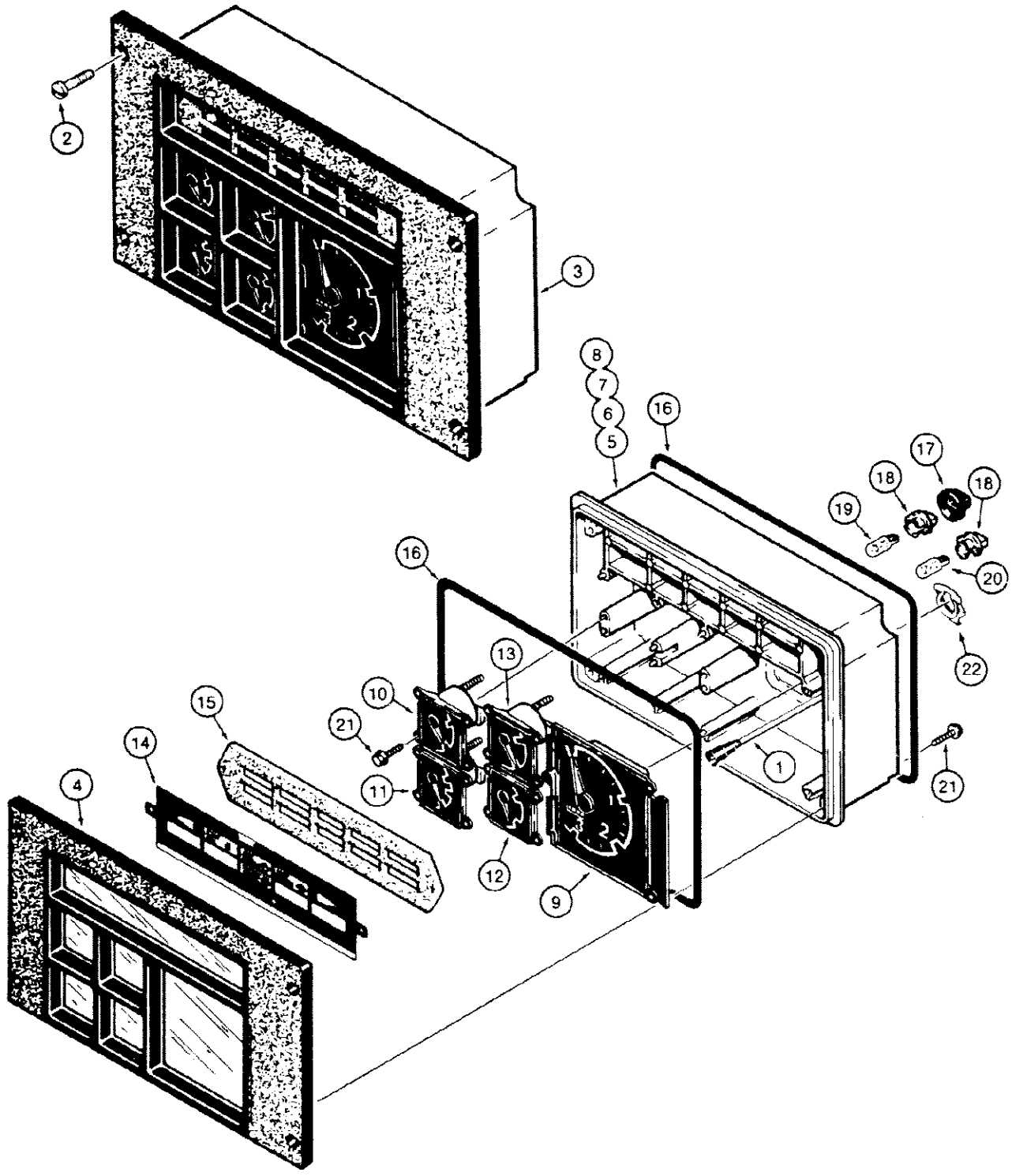

800786

114 INSTRUMENT CLUSTER, USED WITH DELCO REMY ALTERNATOR, WITH MECHANICAL TACHOMETER

Ref	Part Number	Qty	Description
1	D122931	1	CABLE mechanical tachometer drive
2	182-516	4	SCREW machine, pan head slotted, plated, No. 10 - 24 NC x 1/2"
3	D91122	1	INSTRUMENT CLUSTER ASSEMBLY, mechanical tachometer drive, Includes: Ref. 4 - 22
4	D71334	1	COVER instrument
	D71335	1	CASE ASSEMBLY, instrument cluster, Includes: Ref. 5 - 8
5	NSS	1	CASE instrument cluster
6	H422774	1	CIRCUIT BOARD printed
7	NSS	12	CLIP gauges
8	NSS	1	GASKET case
9	N6805	1	GAUGE tachometer, includes hourmeter
10	N6806	1	GAUGE water temperature
11	A47688	1	GAUGE fuel level
12	N6807	1	GAUGE voltmeter
13	N6808	1	GAUGE transmission oil temperature
14	N6809	1	LENS identification, warning lamps
15	D71342	1	GASKET lens
16	D71343	2	GASKET cluster
17	D71344	3	BOOT rubber
18	A47125	9	SOCKET lamp, green
19	W10478	3	BULB illumination, No. 194
20	D71346	6	BULB warning, No. 168
21	A45093	12	SCREW special
22	A47704	1	SPRING locking

116 INSTRUMENT CLUSTER, USED WITH BOSCH ALTERNATOR, WITH ELECTRIC TACHOMETER

116

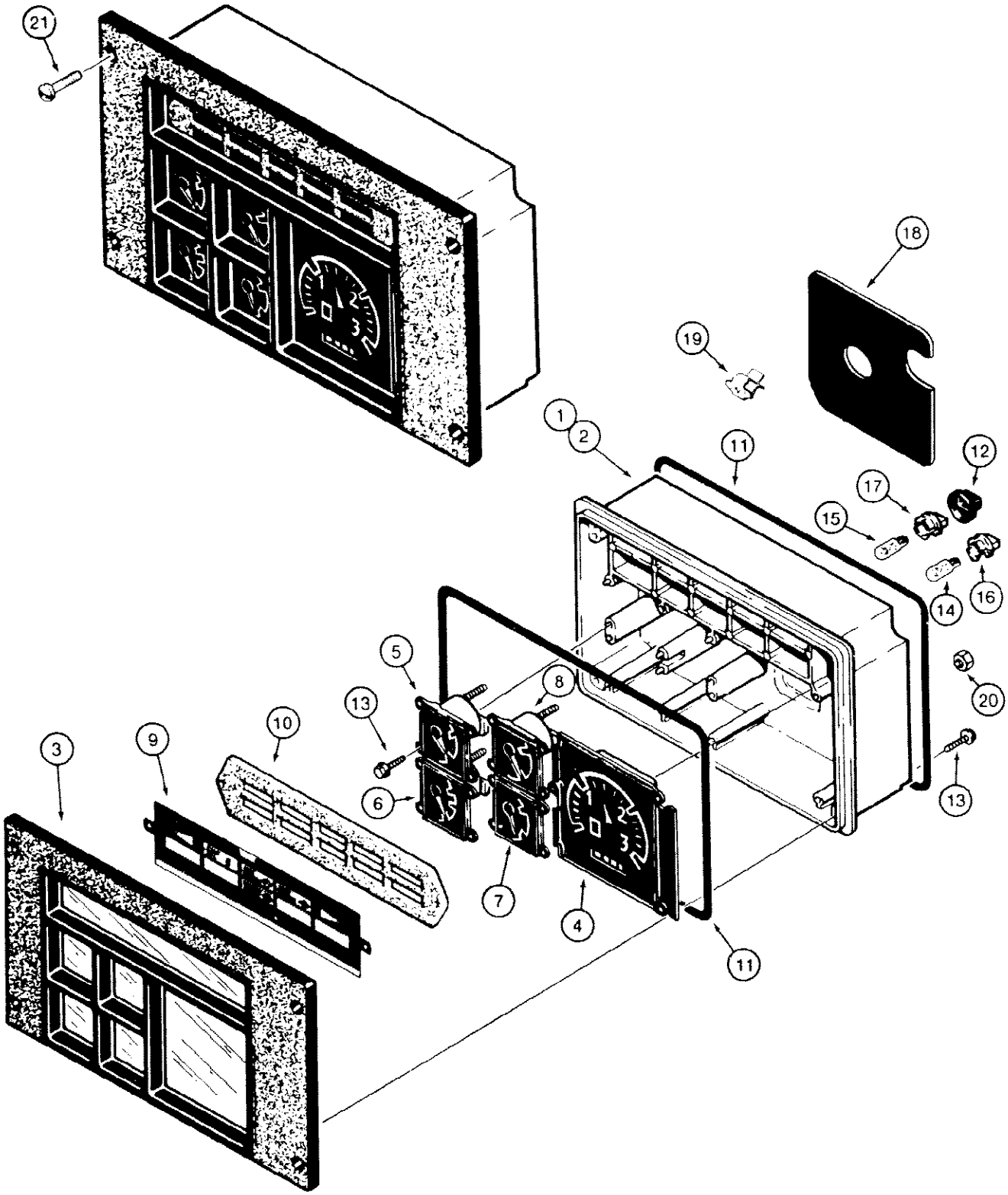

860021

116 INSTRUMENT CLUSTER, USED WITH BOSCH ALTERNATOR, WITH ELECTRIC TACHOMETER

Ref	Part Number	Qty	Description
	D132690	1	INSTRUMENT CLUSTER ASSEMBLY, electric, Includes: Ref. 1 - 20
1	N13545	1	HOUSING instrument cluster
2	H422774	1	CIRCUIT printed, instrument cluster, not shown
3	D71334	1	COVER instrument cluster
4	N13543	1	GAUGE tachometer, includes hourmeter
5	N13542	1	GAUGE water temperature
6	A47688	1	GAUGE fuel level
7	N6807	1	GAUGE voltmeter
8	N13546	1	GAUGE oil temperature
9	N13538	1	LENS identification, warning lamps
10	D71342	1	GASKET lens
11	D71343	2	GASKET instrument cluster
12	D71344	3	BOOT rubber
13	A45093	12	SCREW special
14	D71346	9	BULB warning, No. 168
15	W10478	3	BULB illumination, No. 194
16	A47123	9	SOCKET lamp
17	A47125	3	SOCKET lamp, green
18	H422758	1	GASKET housing
19	H422766	12	CLIP gauges
20	129-15	3	NUT, #6-32
21	182-516	4	SCREW machine, pan head slotted, plated, No. 10 - 24 NC x 1/2", HEX NUT USED WITH 182 516 #21 IS 129 17

118 HOURMETER ELECTRICAL CIRCUIT

118

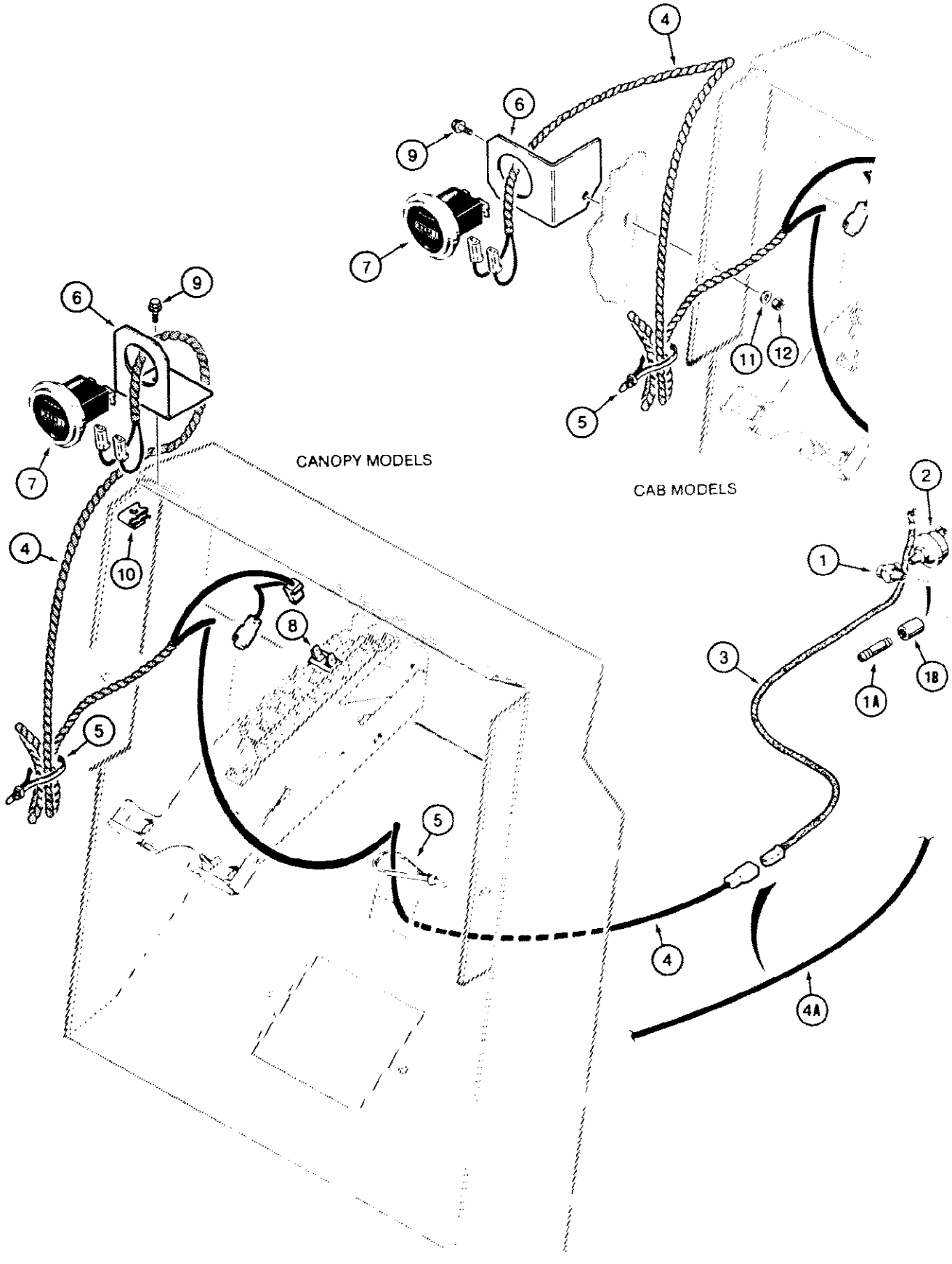

580SE CASE SUPER-E CONSTRUCTION KING LOADER BACKHOE - Electrical System

118 HOURMETER ELECTRICAL CIRCUIT

Ref	Part Number	Qty	Description
1	217-1061	1	TEE 1/8" NPT, at engine, if used
1A	221-106	1	NIPPLE 1/8" NPT x 1-1/2"
1B	221-1335	1	COUPLING 1/8" NPT
2	H342774	1	SENDER hourmeter, at engine
3	D92170	1	WIRE from sender, used with D76118 harness only
4	D76118	1	HARNESS hourmeter, if used
4A	D126556	1	HARNESS hourmeter, if used
5	L18337	UAR	STRAP tie, nylon, 15 inch
6	D75592	1	BRACKET hourmeter
7	D53047	1	HOURMETER ASSEMBLY, complete
8	D78002	1	CIRCUIT BREAKER 15 amperes
9	121-123	1	BOLT, Hex Flg, 5/16"-18 x 3/4", Serr
10	131-641	1	NUT u type, 5/16" - 18 NC
11	195-521	1	WASHER flat, plated, 5/16"
12	9635082	1	NUT, 5/16"-18, G5

120

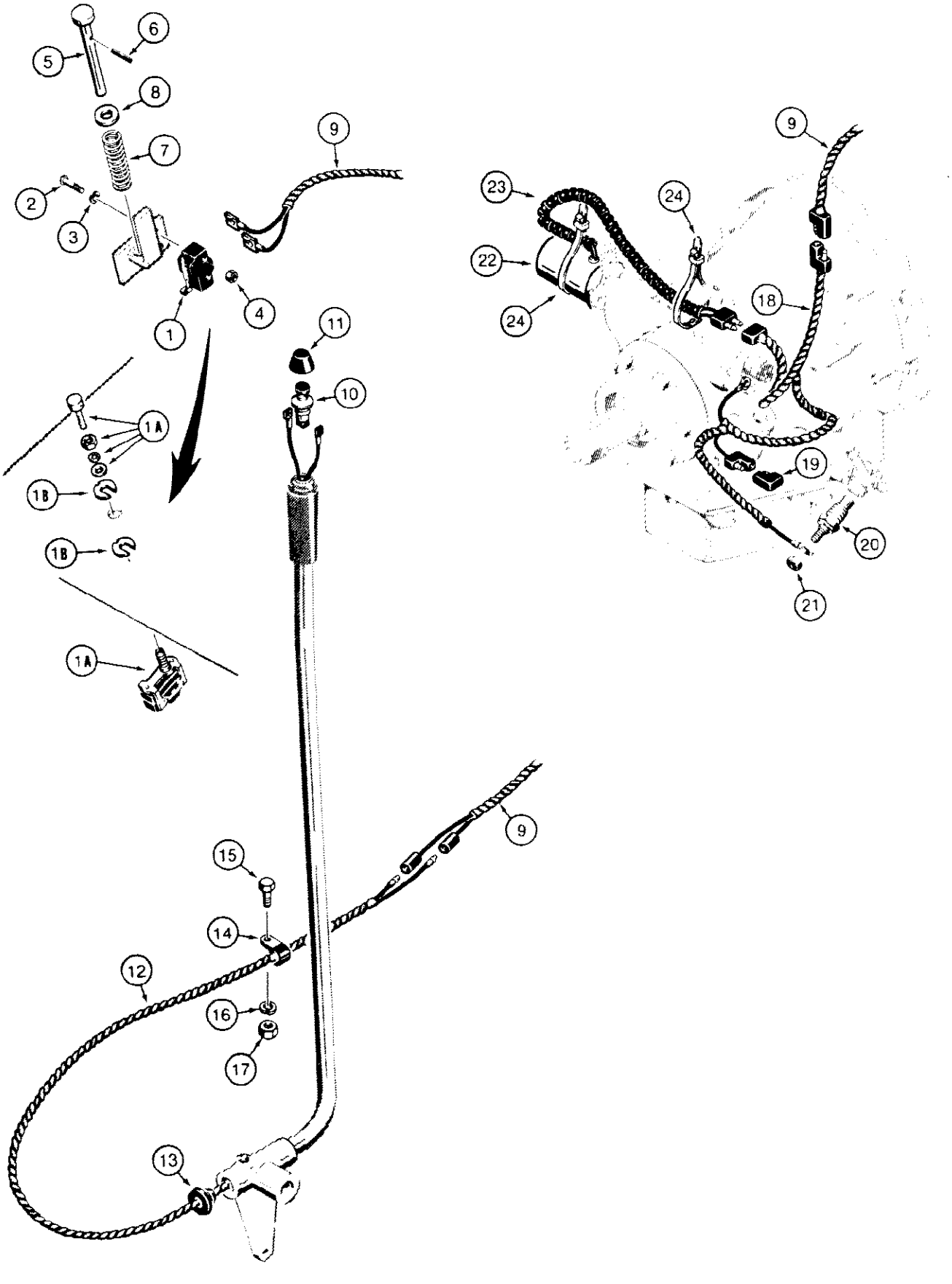

840740 B

120 POWER SHUTTLE ELECTRICAL CIRCUIT

Ref	Part Number	Qty	Description
1	D134622		SWITCH clutch cutout, floor, used with D87604 floor plate with switch, The switch mounting bracket shown in phantom at Ref. 1 is NSS weldment D90544.
		1	mounting bracket, if used, See Figure 586 for floor plate
1A	D135612		SWITCH clutch cutout, floor, used with D126612 floor plate without switch
		1	mounting bracket, if used, See Figure 586 for floor plate
1B	D126116	2	WASHER special, used with D135612 clutch cutout switch only
2	182-530	2	SCREW machine, pan head slotted, plated, No. 6 - 32 NC x 1-1/4", if used
3	195-507	2	WASHER flat, No. 6, plated, if used
4	193-1003	2	NUT AND LOCK WASHER plated, No. 6 - 32 NC, if used
5	D84327	1	ROD switch actuating, if used
6	138-61	1	PIN, 1/8" x 1", Slotted, If used
7	T34088	1	SPRING rod return, if used
8	195-525	1	WASHER flat, plated, 3/8", if used
9	REF	1	HARNESS main, See Figure 106 or 108
10	D91440	1	SWITCH clutch cutout, lever handle
11	D138252	1	BOOT switch cover
12	D88009	1	HARNESS control lever switch
13	D83832	1	GROMMET lever
14	49845	1	CLAMP harness
15	113-206	1	BOLT, Hex, 3/8"-16 x 3/4", G5, Full Thd
16	192-21	1	WASHER, LOCK, 3/8"
17	129-103	1	NUT, 3/8"-16, G5
18	D87972	1	HARNESS shuttle
19	L71879	1	DIODE switch protecting
20	D65446	1	SENDER shuttle oil temperature
21	193-1000	1	NUT AND LOCK WASHER plated, No. 10 - 32 NF
22	D134742	1	SOLENOID clutch cutout, at power shuttle
23	D88053	1	SLEEVE solenoid wires
24	L18337	2	STRAP tie, nylon, 15 inch

122 TRACTOR LAMP ELECTRICAL CIRCUIT, WITHOUT CANOPY OR CAB

122

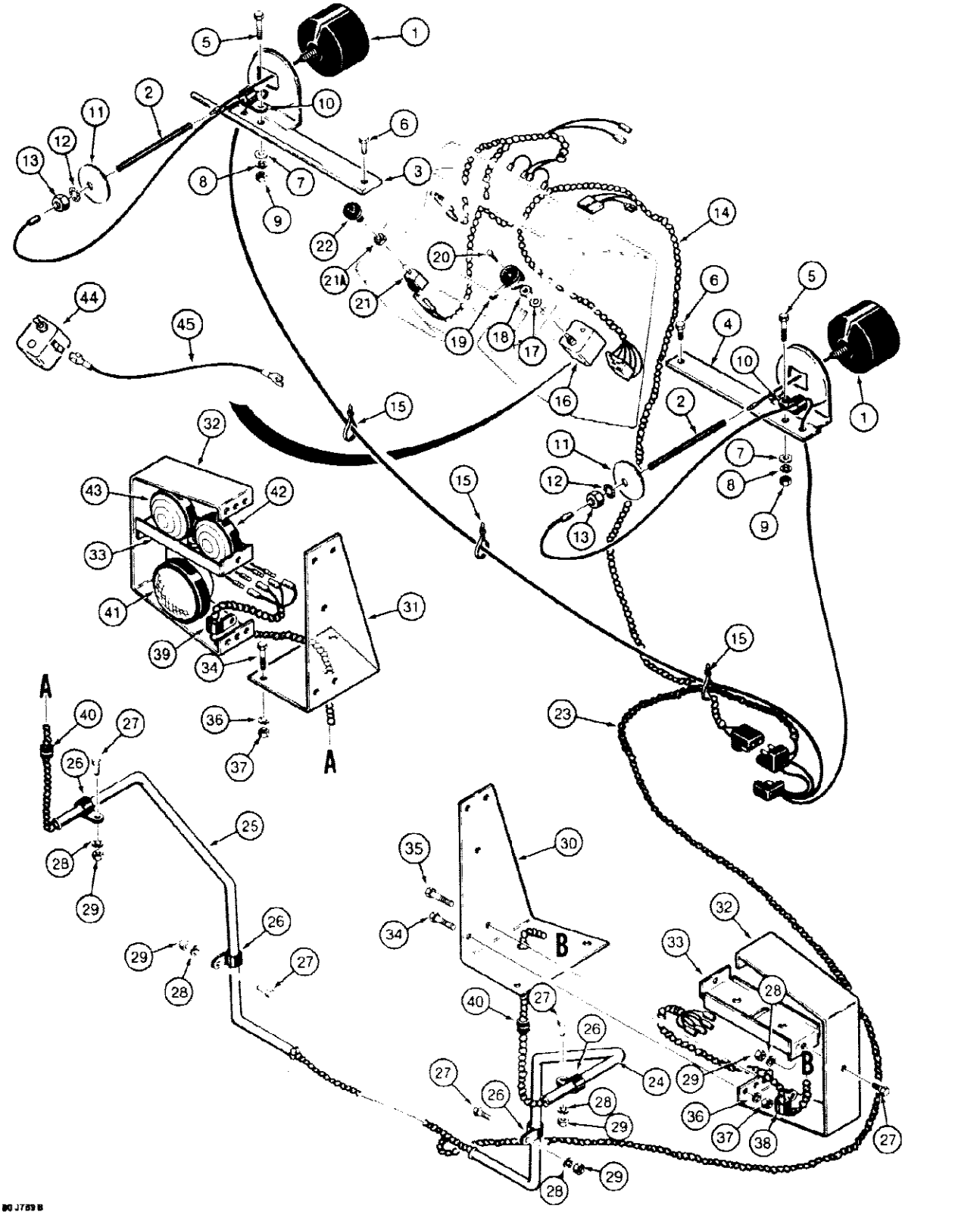

122 TRACTOR LAMP ELECTRICAL CIRCUIT, WITHOUT CANOPY OR CAB

Ref	Part Number	Qty	Description
1	F96725	2	LAMP ASSEMBLY, front driving, incandescent, See Figure 130
2	NSS	2	SLEEVE lamp wire
3	D89547	1	BRACKET AND HANDLE left hand lamp
4	D89548	1	BRACKET right hand lamp
5	113-209	2	BOLT, Hex, 3/8"-16 x 1 1/2", G5, Outside
6	113-208	2	BOLT, Hex, 3/8"-16 x 1 1/4", G5, Full Thd, Inside
7	195-525	4	WASHER flat, plated, 3/8"
8	192-21	4	WASHER, LOCK, 3/8"
9	129-103	4	NUT, 3/8"-16, G5
10	49851	2	CLAMP lamp wires
11	A59702	2	WASHER retainer
12	193-87	2	WASHER, LOCK, Ext-Int Tooth, 1/2"
13	129-105	2	NUT, 1/2"-13, G5
14	D88132	1	HARNESS front driving lamps and flasher, for clamps See Figure 106 or 108
15	L18337	UAR	STRAP tie, nylon, 15 inch
16	A77184	1	SWITCH turn signal, no longer used, order D135847 kit, see below
17	193-98	1	WASHER, LOCK, Ext Tooth, 3/4"
18	D91352	1	NUT special, 3/4" - 20 National Extra Fine
19	A141736	1	KNOB turn signal switch
20	193-556	1	SCREW AND LOCK WASHER black, No. 5 - 40 NC x 1/2"
21	D74330	1	SWITCH flasher, See Figure 106 or 108 for front and rear lamp switches, Includes: Ref. 21A
21A	N7557	1	NUT special, switch retaining, 3/8" - 24 NF
22	D88134	1	KNOB flasher switch
23	D89576	1	HARNESS rear lamps and flasher
24	D89560	1	CONDUIT right hand fender
25	D89561	1	CONDUIT left hand fender
26	R14668	4	CLAMP conduit
27	113-206	6	BOLT, Hex, 3/8"-16 x 3/4", G5, Full Thd
28	192-21	6	WASHER, LOCK, 3/8"
29	129-103	6	NUT, 3/8"-16, G5
30	D89565	1	BRACKET upright, right hand
31	D89566	1	BRACKET upright, left hand
32	D58721	2	BRACKET rear lamp, outer
33	D58713	2	BRACKET rear lamp, center
34	113-207	10	BOLT, Hex, 3/8"-16 x 1", G5, Full Thd
35	113-208	2	BOLT, Hex, 3/8"-16 x 1 1/4", G5, Full Thd
36	192-21	12	WASHER, LOCK, 3/8"
37	129-103	12	NUT, 3/8"-16, G5
38	49885	1	CLAMP wire, right hand side
39	49838	1	CLAMP wire, left hand side
40	D37936	2	GROMMET rubber

122 TRACTOR LAMP ELECTRICAL CIRCUIT, WITHOUT CANOPY OR CAB

Ref	Part Number	Qty	Description
41	D88684	2	LAMP ASSEMBLY, rear flood, incandescent, See Figure 130
42	D49733	2	LAMP ASSEMBLY, stop and tail, See Figure 136
43	D49734	2	LAMP ASSEMBLY, signal and flasher, See Figure 136
	D135847	1	KIT, turn signal, includes instruction sheet, Includes: Ref. 44 - 45
44	D134896	1	SWITCH turn signal and flasher, used with item 45 ground wire, Replaces switch without ground wire on some models
45	D135829	1	WIRE ground, used with item 44 switch, wire grounds to harness bracket, item 11 on Figure 108

126 TRACTOR LAMP ELECTRICAL CIRCUIT, WITH CANOPY

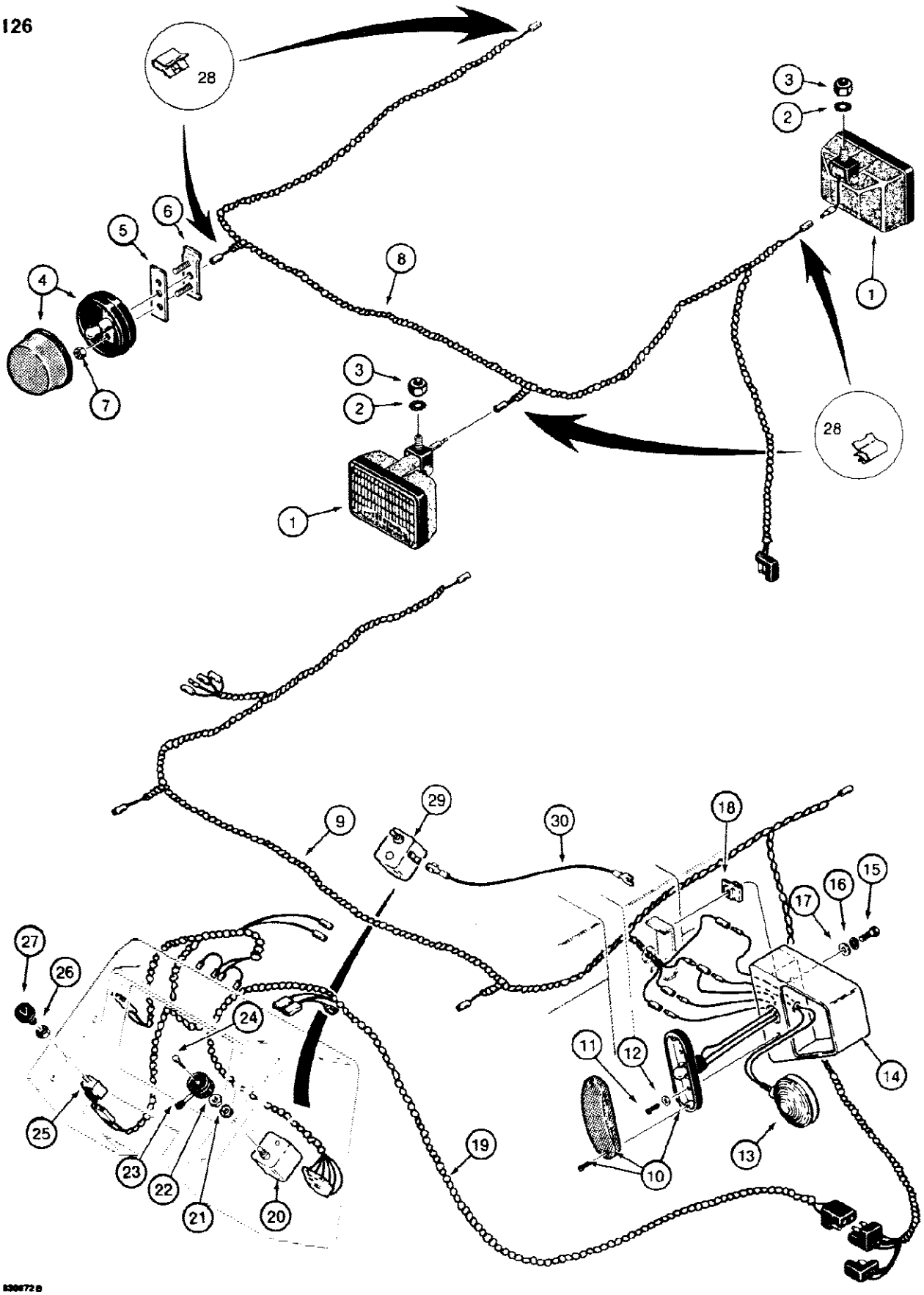

126 TRACTOR LAMP ELECTRICAL CIRCUIT, WITH CANOPY

Ref	Part Number	Qty	Description
1	F96838	3-4	LAMP ASSEMBLY, flood, halogen, See Figure 132
2	193-87	3-4	WASHER, LOCK, Ext-Int Tooth, 1/2"
3	129-145	3-4	NUT, Jam, 1/2"-13, G5
4	D91096	1	TAIL LAMP ASSEMBLY, used on models without flasher lamps only, see items 1 and 10, See Figure 134
5	D91089	1	PLATE retainer, tail lamp, if used
6	D91091	1	BRACKET tail lamp, if used
7	193-1006	2	NUT AND LOCK WASHER plated, 1/4" - 20 NC
8	D88042	1	HARNESS canopy, used without flasher lamps
9	D89974	1	HARNESS canopy, used with flasher lamps
10	D121152	2	LAMP ASSEMBLY, stop and tail, if used, see item 4 above, See Figure 134
11	187-1917	4	SCREW pan head, self tapping, plated, No. 8 x 5/8"
12	195-510	4	WASHER flat, plated, No. 8
13	D122121	2	LAMP ASSEMBLY, flasher, See Figure 136
14	D120124	2	BRACKET side lamps, if used
15	113-103	4	BOLT, Hex, 5/16"-18 x 1", G5, Full Thd, If used
16	192-20	4	WASHER, LOCK, 5/16", If used
17	195-103	4	WASHER flat, plated, 5/16", if used
18	131-636	4	NUT j type, 5/16" - 18 NC, if used
19	D88132	1	HARNESS flasher switches, if used, See Figure 106 or 108 for clamps
20	A77184	1	SWITCH turn signal, no longer used, order D135847 kit, see below
21	193-98	1	WASHER, LOCK, Ext Tooth, 3/4"
22	D91352	1	NUT special, 3/4" - 20 National Extra Fine
23	A141736	1	KNOB turn signal switch
24	193-556	1	SCREW AND LOCK WASHER plated, No. 5 - 40 NC x 1/2"
25	D74330	1	SWITCH flasher, See Figure 106 or 108 for front and rear lamp switches, Includes: Ref. 26
26	N7557	1	NUT special, switch retaining, 3/8" - 24 NF
27	D88134	1	KNOB flasher switch
28	214-1102	3-4	CLIP wire, if used
	D135847	1	KIT turn signal, includes instruction sheet, Includes: Ref. 29 - 30
29	D134896	1	SWITCH turn signal and flasher, used with item 30 ground wire, replaces switch without ground wire on some models
30	D135829	1	WIRE ground, used with item 29 switch, wire grounds to harness bracket, item 11 on Figure 108

128 TRACTOR LAMP ELECTRICAL CIRCUIT, WITH CAB

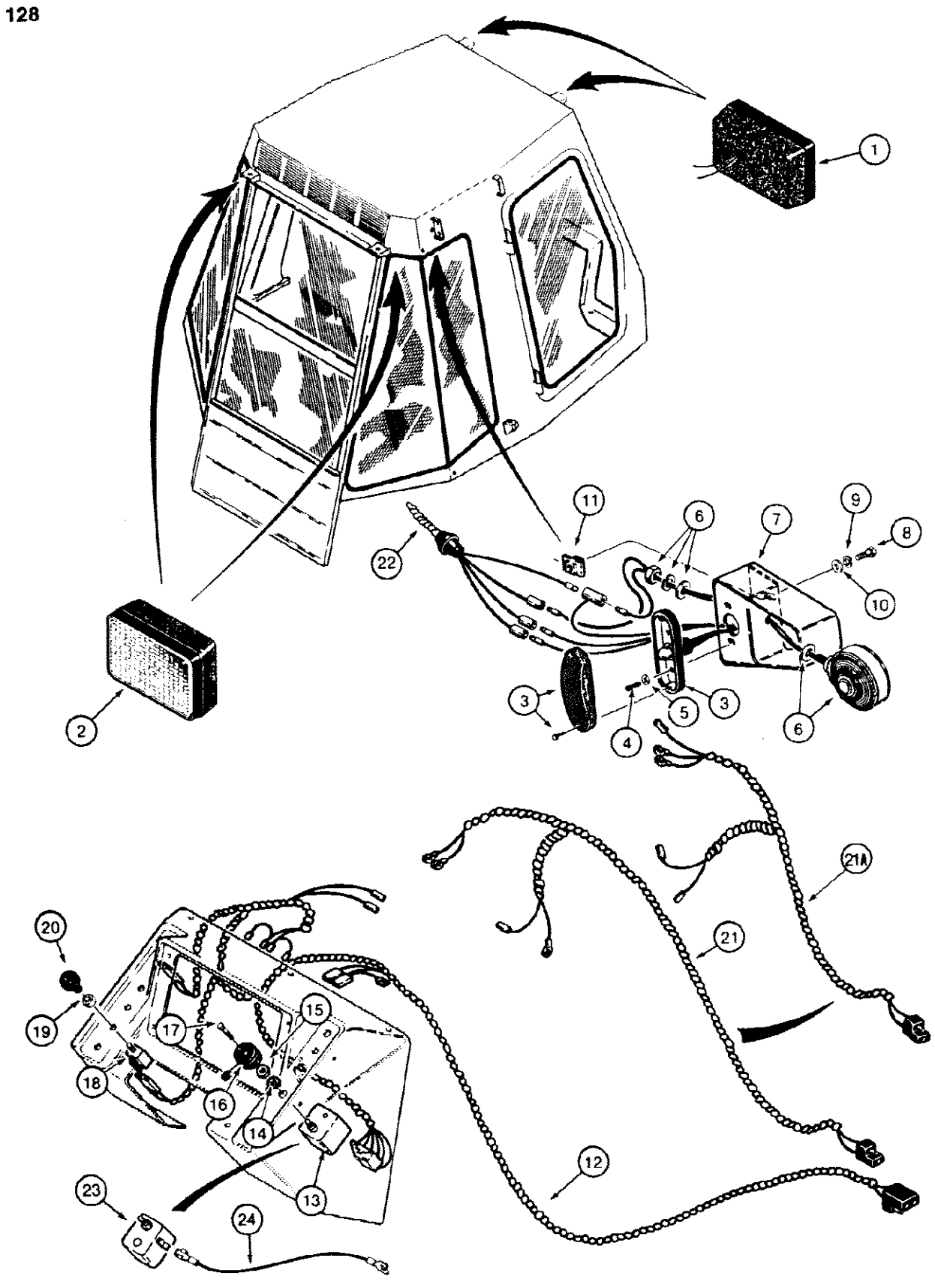

128 TRACTOR LAMP ELECTRICAL CIRCUIT, WITH CAB

Ref	Part Number	Qty	Description
1	F96838	2	LAMP ASSEMBLY, front driving, halogen, used without hinge bracket, See Figure 132, for lamp mounting and cab harness See Figures 616 and 632
2	F96838	2	LAMP ASSEMBLY, rear flood, halogen, used with hinge bracket, See Figure 132, for lamp mounting and cab harness See Figures 616 and 632
3	D121152	2	LAMP ASSEMBLY, stop and tail, See Figure 134
4	187-1917	4	SCREW pan head, self tapping, plated, No. 8 x 5/8"
5	195-510	4	WASHER flat, plated, No. 8
6	D122121	2	LAMP ASSEMBLY, flasher, See Figure 136
7	D120124	2	BRACKET side lamp
8	113-103	4	BOLT, Hex, 5/16"-18 x 1", G5, Full Thd
9	192-20	4	WASHER, LOCK, 5/16"
10	195-103	4	WASHER flat, plated, 5/16"
11	131-636	4	NUT j type, 5/16" - 18 NC
12	D88132	1	HARNESS flasher switches, See Figure 106 or 108 for clamps
13	A77184	1	SWITCH turn signal, no longer used, order D135847 kit, see below
14	193-98	1	WASHER, LOCK, Ext Tooth, 3/4"
15	D91352	1	NUT special, 3/4" - 20 National Extra Fine
16	A141736	1	KNOB turn signal switch
17	193-556	1	SCREW AND LOCK WASHER plated, No. 5 - 40 NC x 1/2"
18	D74330	1	SWITCH flasher, See Figure 106 or 108 for front and rear lamp switches, Includes: Ref. 19
19	N7557	1	NUT special, 3/8" - 24 NF, switch retaining
20	D88134	1	KNOB flasher switch
21	D88133	1	HARNESS cab power, used on models with test switch and solenoid, See Figure 106, See Figure 632 for cab harness
21A	D129823	1	HARNESS cab power, used on models without test switch and solenoid, See Figure 108, See Figure 632 for cab harness
22	F45224	1	HARNESS cab
	D135847	1	KIT, turn signal and flasher, includes instruction sheet, Includes: Ref. 23 - 24
23	D134896	1	SWITCH turn signal, used with item 24 ground wire, Replaces switch without ground wire on some models
24	D135829	1	WIRE ground, used with item 23 switch, wire grounds to harness bracket, item 11 on Figure 108

130 INCANDESCENT TRACTOR LAMPS, FRONT DRIVING AND REAR FLOOD LAMPS,USED ON MODELS W/O CAB OR CANOPY

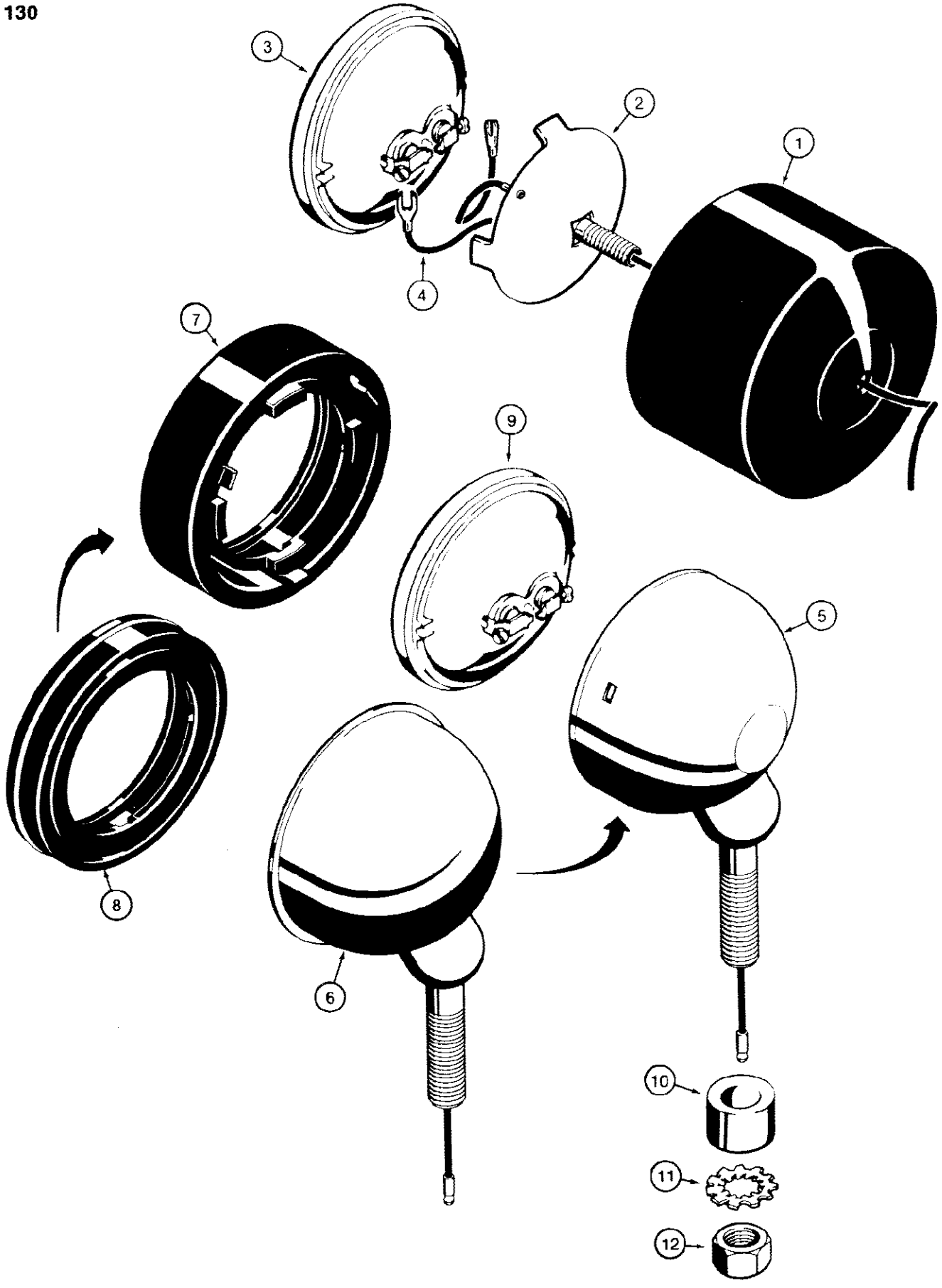

130 INCANDESCENT TRACTOR LAMPS, FRONT DRIVING AND REAR FLOOD LAMPS,USED ON MODELS W/O CAB OR CANOPY

Ref	Part Number	Qty	Description
	F96725	2	LAMP ASSEMBLY, front driving, incandescent, used on models without cab or canopy, Includes: Ref. 1 - 3
1	F44804	1	SHELL lamp
2	F44805	1	WASHER support
3	A11280	1	BULB sealed beam, No. 4411
4	NSS	1	WIRE lamp, make locally
	D88684		LAMP ASSEMBLY, rear, incandescent, interchangeable with D49976,
		2	used on models without canopy or cab, Includes: Ref. 5 - 12
5	NSS	1	SHELL lamp, uses item 7 only
6	NSS	1	SHELL lamp, uses item 8 only
7	A25213	1	RETAINER lamp, rubber, locks to shell with 3 rubber tabs, if used
8	N6160	1	RETAINER lamp, rubber, locks over shell flange, if used
9	A11280	1	BULB sealed beam, No. 4411
10	D37048	1	BUSHING pivot
11	193-87	1	WASHER, LOCK, Ext-Int Tooth, 1/2"
12	129-165	1	NUT, Jam, 1/2"-20, G5

132 HALOGEN TRACTOR LAMPS, FRONT DRIVING AND REAR FLOOD LAMPS,USED ON MODELS W/CAB OR CANOPY

132

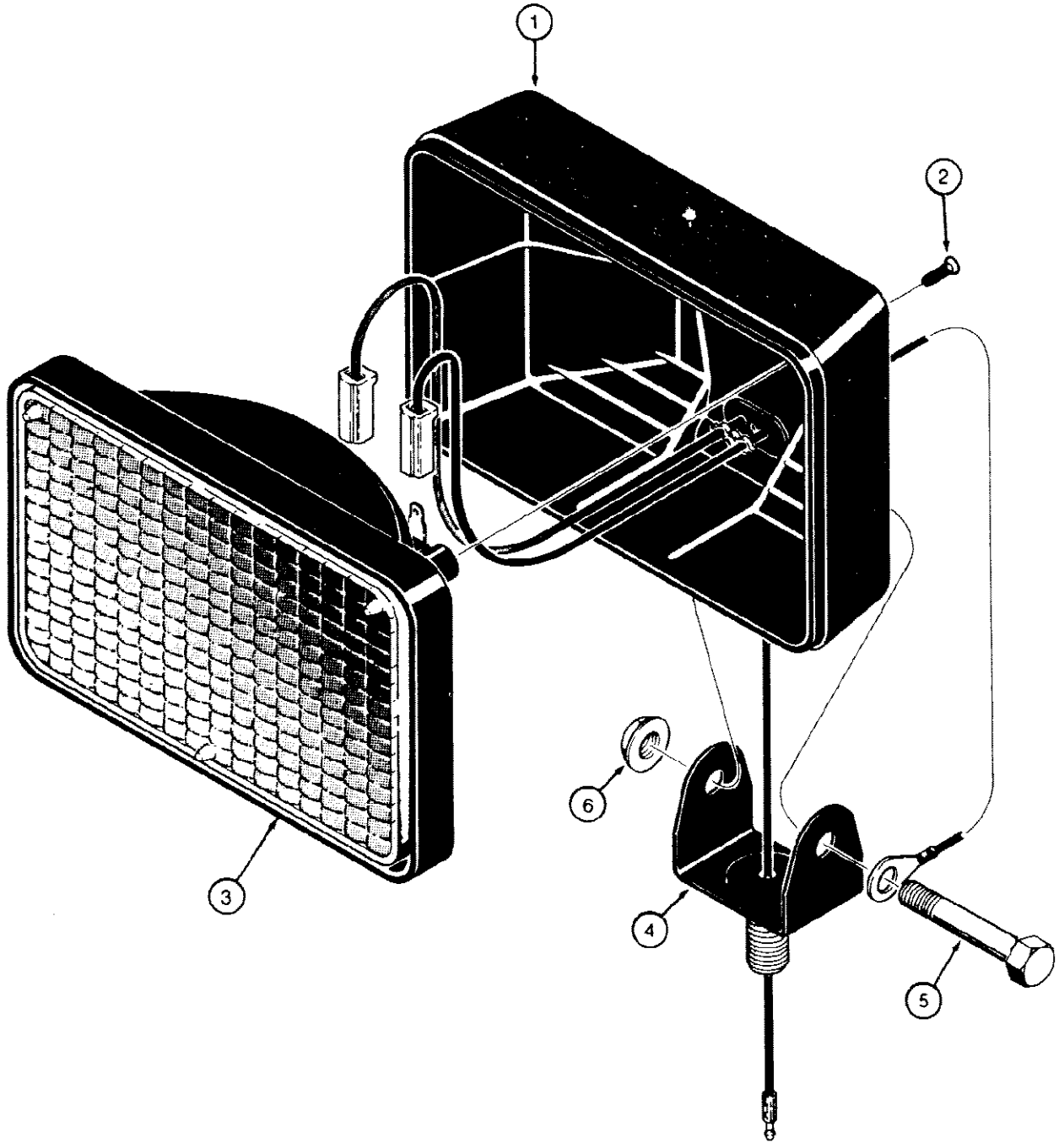

830674 A

580SE CASE SUPER-E CONSTRUCTION KING LOADER BACKHOE - Electrical System

132 HALOGEN TRACTOR LAMPS, FRONT DRIVING AND REAR FLOOD LAMPS,USED ON MODELS W/CAB OR CANOPY

Ref	Part Number	Qty	Description
	REF	2	LAMP ASSEMBLY, front driving, without bracket, item 4, order F96838 lamp assembly
	F96838	1-2	LAMP ASSEMBLY, rear flood, halogen, with bracket, item 4, Includes: Ref. 1 - 6
1	NSS	1	HOUSING lamp
2	187-625	2	SCREW flat head, self tapping, No. 8 x 1/2"
3	F45230	1	BULB sealed beam
4	N8347	1	BRACKET lamp, used with rear flood lamp only
5	113-121	1	BOLT, Hex, 5/16"-18 x 2", G5
6	131-937	1	NUT hex, flange type, plated, special locking, 5/16" - 18 NC

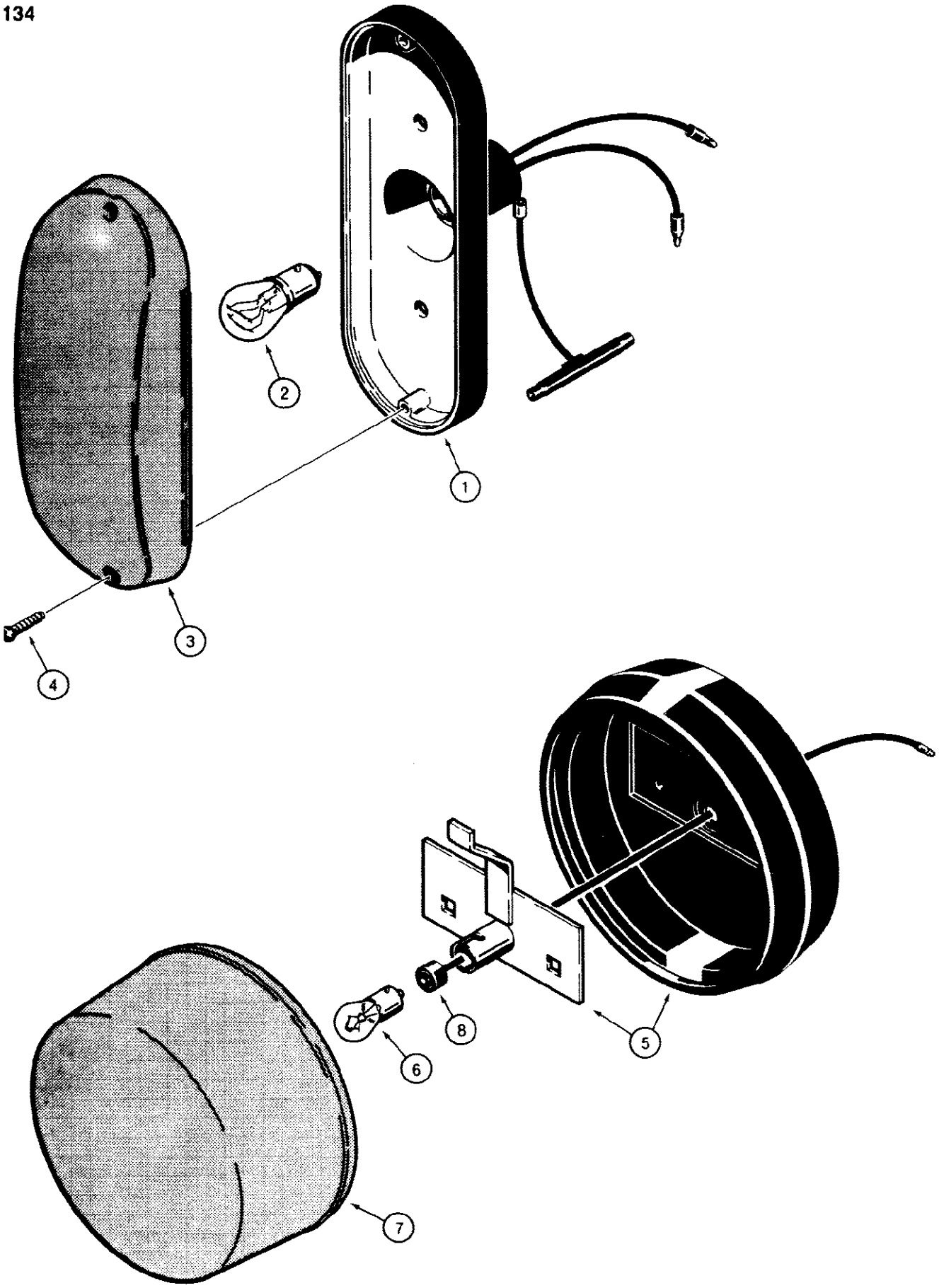
134
1
2
3
4
5
6
7
8
30675

134 TRACTOR LAMPS, STOP AND TAIL LAMPS, D121152 STOP AND TAIL

Ref	Part Number	Qty	Description
	D121152	2	LAMP ASSEMBLY, stop and tail, used on models with cab or canopy with flasher lamps, Includes: Ref. 1 - 4, For stop and tail lamp on models without cab or canopy, See Figure 136.
1	NSS	1	BODY lamp, complete
2	T34857	1	BULB stop and tail, No. 1157
3	N6836	1	LENS red
4	187-1005	2	SCREW round head, self tapping, plated, No. 6 - 32 NC x 5/8"
	D91096	1	TAIL LAMP ASSEMBLY, used on models with canopy without side mounted flasher lamps
5	NSS	1	BODY AND SOCKET lamp
6	N6835	1	BULB tail lamp, No. 97
7	L31185	1	LENS red
8	L31186	1	WIRE lamp

136

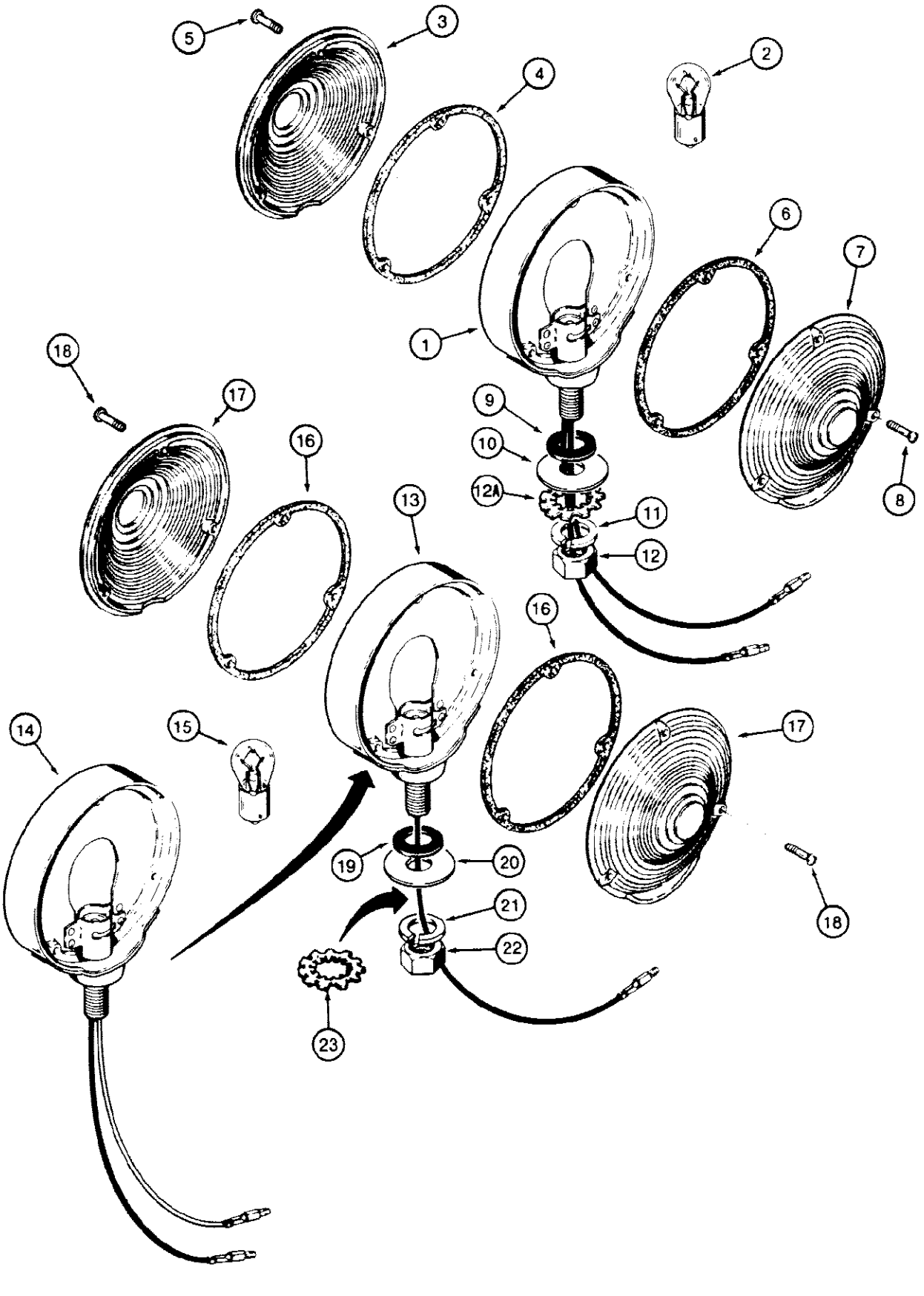

630678

136 TRACTOR LAMPS, STOP AND TAIL AND FLASHER LAMPS, D49733 STOP

Ref	Part Number	Qty	Description
	D49733	2	LAMP ASSEMBLY, stop and tail, used on models without cab or canopy, Includes: Ref. 1 - 12, For stop and tail lamp on models with cab or canopy, See Figure 134.
1	NSS	1	BODY lamp, complete
2	T34857	1	BULB stop and tail, No. 1157
	L32213	1	KIT, lens replacement, red, Includes: Ref. 3 - 5
3	NSS	1	LENS red
4	NSS	1	GASKET lens
5	182-565	3	SCREW machine, pan head slotted, self locking, plated, No. 6 - 32 NC x 5/8"
	L32214	1	KIT, lens replacement, amber, Includes: Ref. 6 - 8
6	NSS	1	GASKET lens
7	NSS	1	LENS amber
8	182-565	3	SCREW machine, pan head slotted, self locking, plated, No. 6 - 32 NC x 5/8"
9	L32256	1	BUSHING rubber
10	195-105	1	WASHER flat, plated, 1/2"
11	192-23	1	WASHER, LOCK, 1/2"
12	129-125	1	NUT, 1/2"-20, G5
12A	193-87	2	WASHER, LOCK, Ext-Int Tooth, 1/2"
	D49734	2	LAMP ASSEMBLY, flasher, used on models without cab or canopy
	D122121	2	LAMP ASSEMBLY, flasher, used on models with cab or canopy, Includes: Ref. 13 - 22
13	NSS	1	BODY D49734 lamp assembly, without ground wire
14	NSS	1	BODY D122121 lamp assembly, with additional ground wire
15	A41264	1	BULB, #1156, 12V, Flasher
	L32214	2	KIT, lens replacement, Includes: Ref. 16 - 18
16	NSS	1	GASKET lens
17	NSS	1	LENS amber
18	182-565	3	SCREW machine, pan head slotted, self locking, plated, No. 6 - 32 NC x 5/8"
19	L32256	1	BUSHING rubber
20	195-105	1	WASHER flat, plated, 1/2"
21	192-23	1	WASHER, LOCK, 1/2"
22	129-125	1	NUT, 1/2"-20, G5
23	193-87	2	WASHER, LOCK, Ext-Int Tooth, 1/2", Used on models without cap or canopy

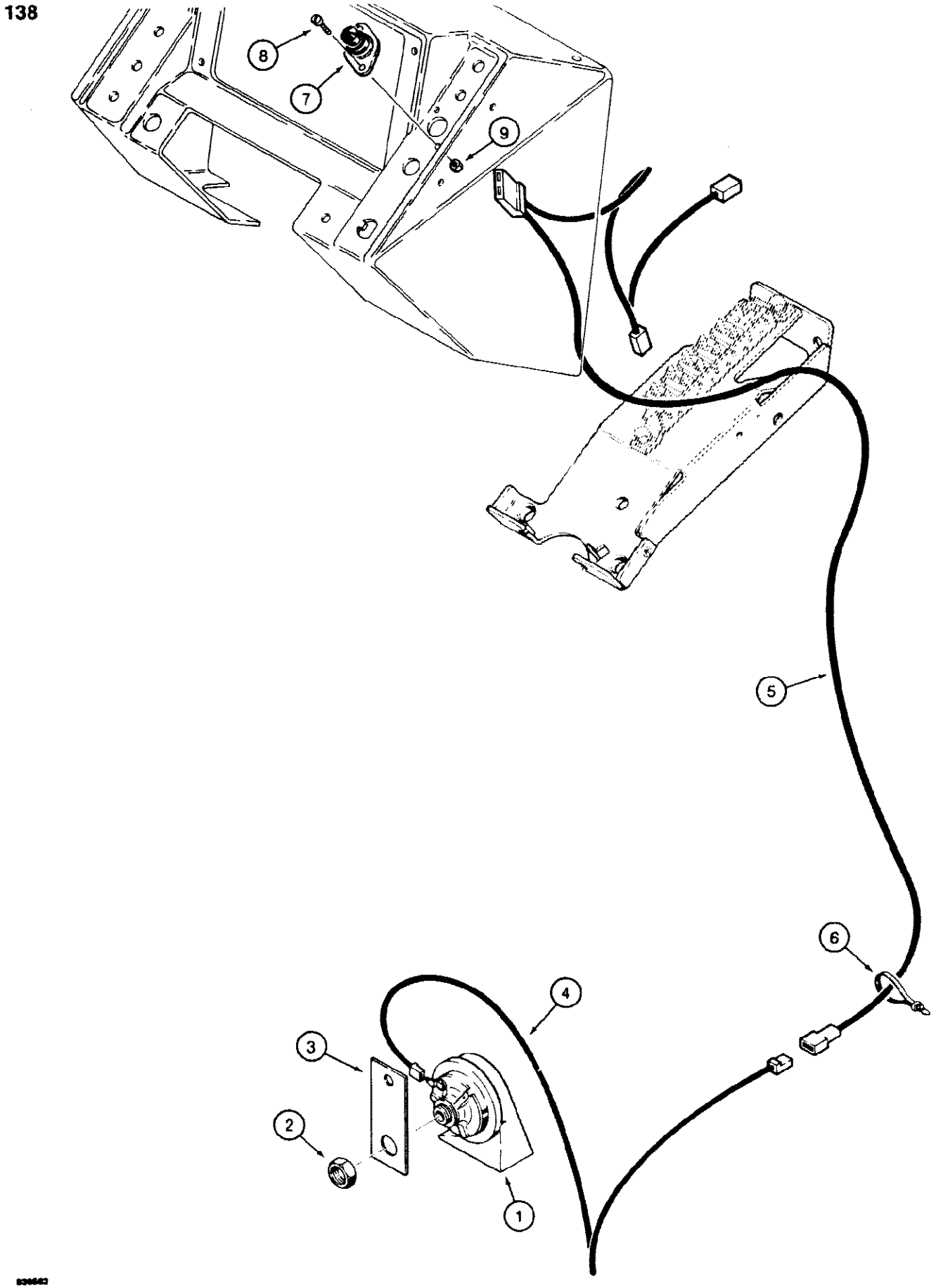
138
8
7
9
5
6
4
3
2
1

138 HORN

Ref	Part Number	Qty	Description
1	D123205	1	HORN 12 volt
2	L30866	1	NUT horn mounting, 7/8" - 20
3	D122734		BRACKET horn mounting, fastens to transmission support strap, for attaching hardware See Figure 198, items 4, 5, and 6 or See Figure 202,
		1	items 3, 4, and 5
4	D91176	1	WIRE horn to switch wire
5	D75818	1	WIRE from switch and circuit breaker
6	L18337	1	STRAP tie, nylon, 15 inch
7	D67872	1	SWITCH push button, horn
8	163-15	2	SCREW machine, hex head, plated, No. 10 - 24 NC x 5/8"
9	193-1004	2	NUT AND LOCK WASHER plated, No. 10 - 24 NC

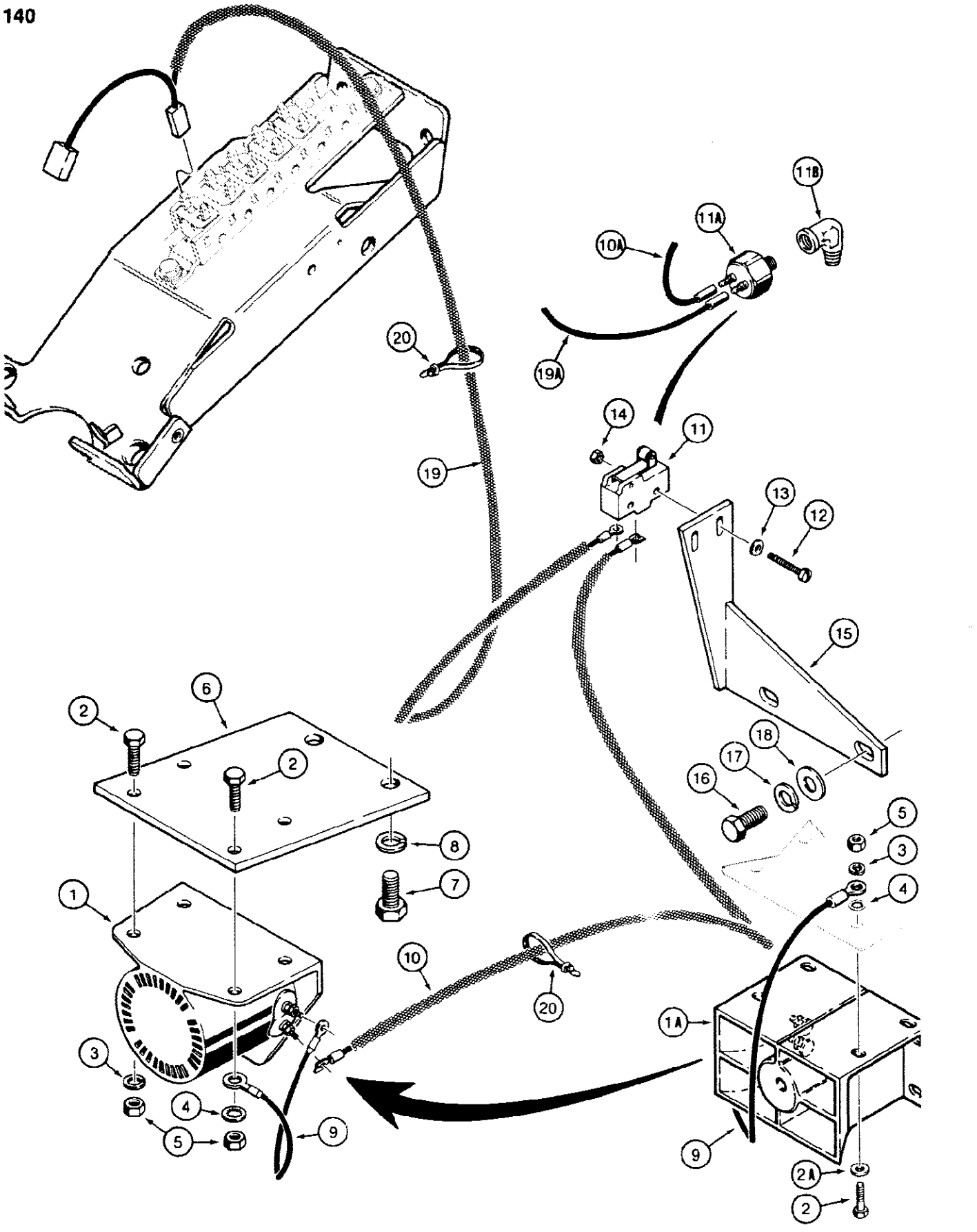
140
11B
11A
10A
19A
20
14
11
19
13
12
15
6
2
2
18
17
16
5
3
4
8
7
1
10
20
1A
3
4
5
9
9
2A
2
330643 C

580SE CASE SUPER-E CONSTRUCTION KING LOADER BACKHOE - Electrical System

140 BACKUP ALARM

Ref	Part Number	Qty	Description
1	D75814	1	ALARM backup, electric, round type, if used
1A	D121972	1	ALARM backup, electric, rectangular type, if used
2	113-103	4	BOLT, Hex, 5/16"-18 x 1", G5, Full Thd
2A	195-521	4	WASHER flat, 5/16", plated, used with rectangular type alarm only
3	192-20	3-4	WASHER, LOCK, 5/16"
4	193-82	1	WASHER, LOCK, Int Tooth, 5/16"
5	9635082	4	NUT, 5/16"-18, G5
6	D91219	1	PLATE backup alarm mounting
7	113-433	2	BOLT, Hex, 1/2"-13 x 3/4", G5, Full Thd
8	192-23	2	WASHER, LOCK, 1/2"
9	D70125	1	WIRE ground
10	D89613	1	WIRE micro switch to alarm, if used
10A	D131326	1	WIRE pressure switch to alarm, if used
11	D134622	1	SWITCH micro, backup alarm, if used
11A	D127319	1	SWITCH pressure, backup alarm, if used
11B	217-1014	1	ELBOW, 90є, 1/8"-27 Female x 1/8"-27 Male, Street, Shuttle port, if used
12	182-530	2	SCREW machine, pan head slotted, plated, No. 6 - 32 NC x 1-1/4"
13	195-507	2	WASHER flat, plated, No. 6
14	193-1003	2	NUT AND LOCK WASHER plated, No. 6 - 32 NC
15	D89607	1	BRACKET switch
16	113-310	2	BOLT, Hex, 7/16"-14 x 1", G5, Full Thd
17	192-22	2	WASHER, LOCK, 7/16"
18	195-105	2	WASHER flat, plated, 7/16"
19	D76756	1	WIRE micro switch to circuit breaker, if used
19A	D131327	1	WIRE pressure switch to circuit breaker, if used
20	L18337	UAR	STRAP tie, nylon, 15 inch

142

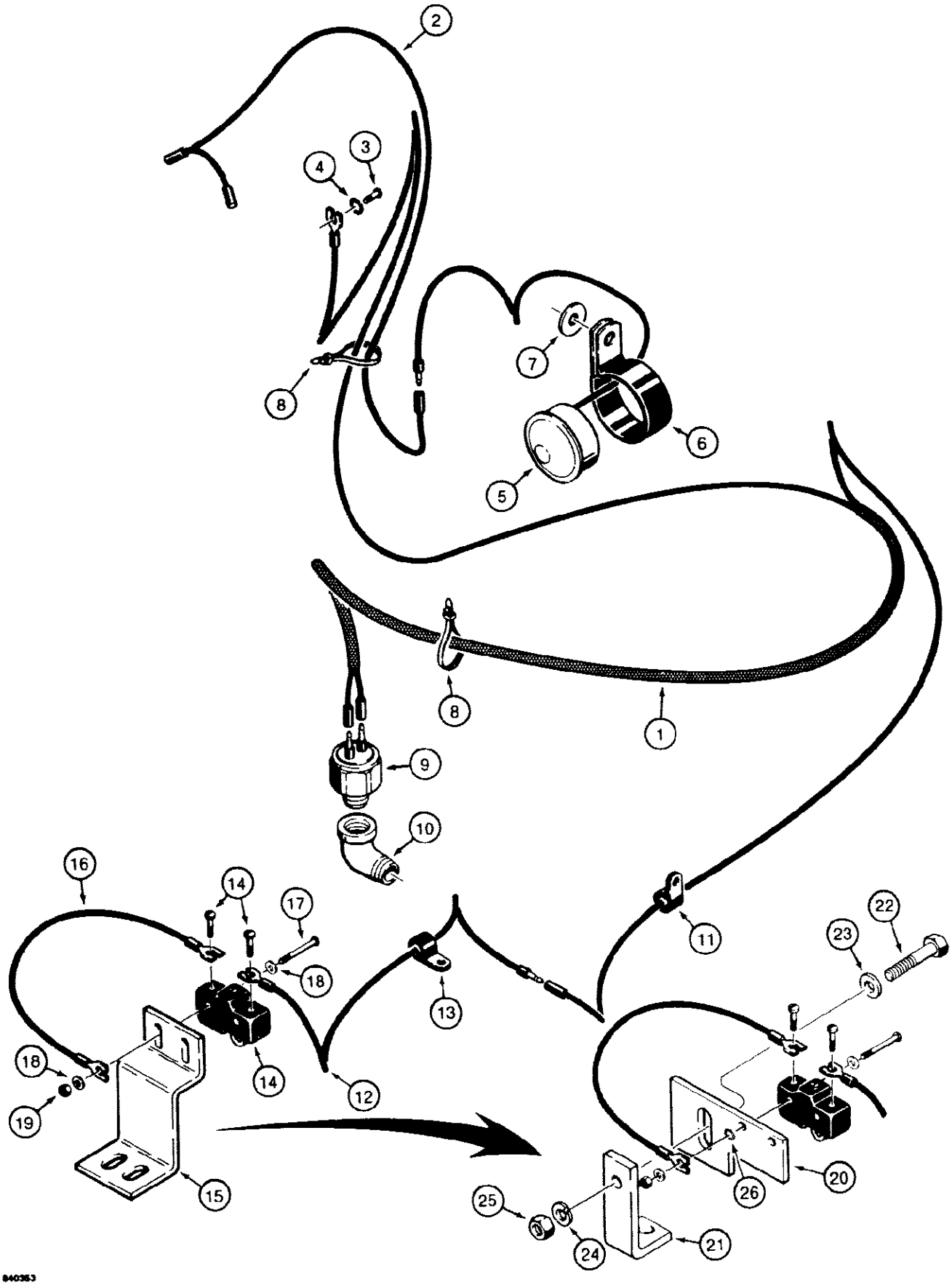
2
3
4
8
7
6
5
8
1
9
10
16
14
17
18
11
22
23
13
18
14
12
19
15
26
20
25
24
21
840353

142 PARKING BRAKE ALARM

Ref	Part Number	Qty	Description
1	D126934	1	HARNESS parking brake alarm
2	D75454	1	WIRE circuit breaker to alarm
3	182-81	1	SCREW machine, pan head slotted, No. 8 -32 NC x 3/16"
4	193-90	1	WASHER, LOCK, Ext, #8
5	D126995	1	ALARM parking brake
6	D120561	1	CLAMP alarm mounting, uses existing solenoid mounting hardware plus item 7 spacer
7	195-2011	1	WASHER flat, 1/4" bolt size, 5/16" ID x 1" OD x 3/32" thick, used as a spacer
8	L18337	2	STRAP tie, nylon, 15 inch
9	D127319	1	SWITCH pressure
10	221-411		ELBOW street, 90 degree, 1/8" NPT, replaces existing 1/8" plug located on the left hand side of the power shuttle behind
		1	the shift lever
11	49851		CLAMP harness, uses existing hydraulic brake tube mounting hardware
		1	on right hand side of frame channel
12	D126933	1	WIRE micro switch to parking brake alarm
13	49851	1	CLAMP wire, uses existing transaxle shift control cover mounting hardware
14	D134622	1	SWITCH micro
15	D126919		BRACKET micro switch mounting, uses existing parking brake cable mounting bracket hardware, no longer available, order D101656
		1	kit and, 1, 193 4 washer
16	D126935	1	WIRE ground, micro switch
17	182-530	2	SCREW machine, pan head slotted, plated, No. 6 - 32 NC x 1-1/4"
18	195-507	4	WASHER flat, plated, No. 6
19	193-1003	2	NUT AND LOCK WASHER plated, No. 6 - 32 NC
	D101656		KIT, service, parking brake alarm micro switch mounting, includes
		1	installation instruction, Includes: Ref. 20 - 25
20	D128291	1	PLATE micro switch mounting
21	D65647		BRACKET plate, support, uses existing parking brake cable mounting
		1	bracket hardware
22	113-233	1	BOLT, Hex, 3/8"-16 x 1 3/4", G5
23	95-6	1	WASHER flat, 3/8"
24	192-21	1	WASHER, LOCK, 3/8"
25	129-103	1	NUT, 3/8"-16, G5
26	193-4	1	WASHER, LOCK, Ext Tooth, #6

144

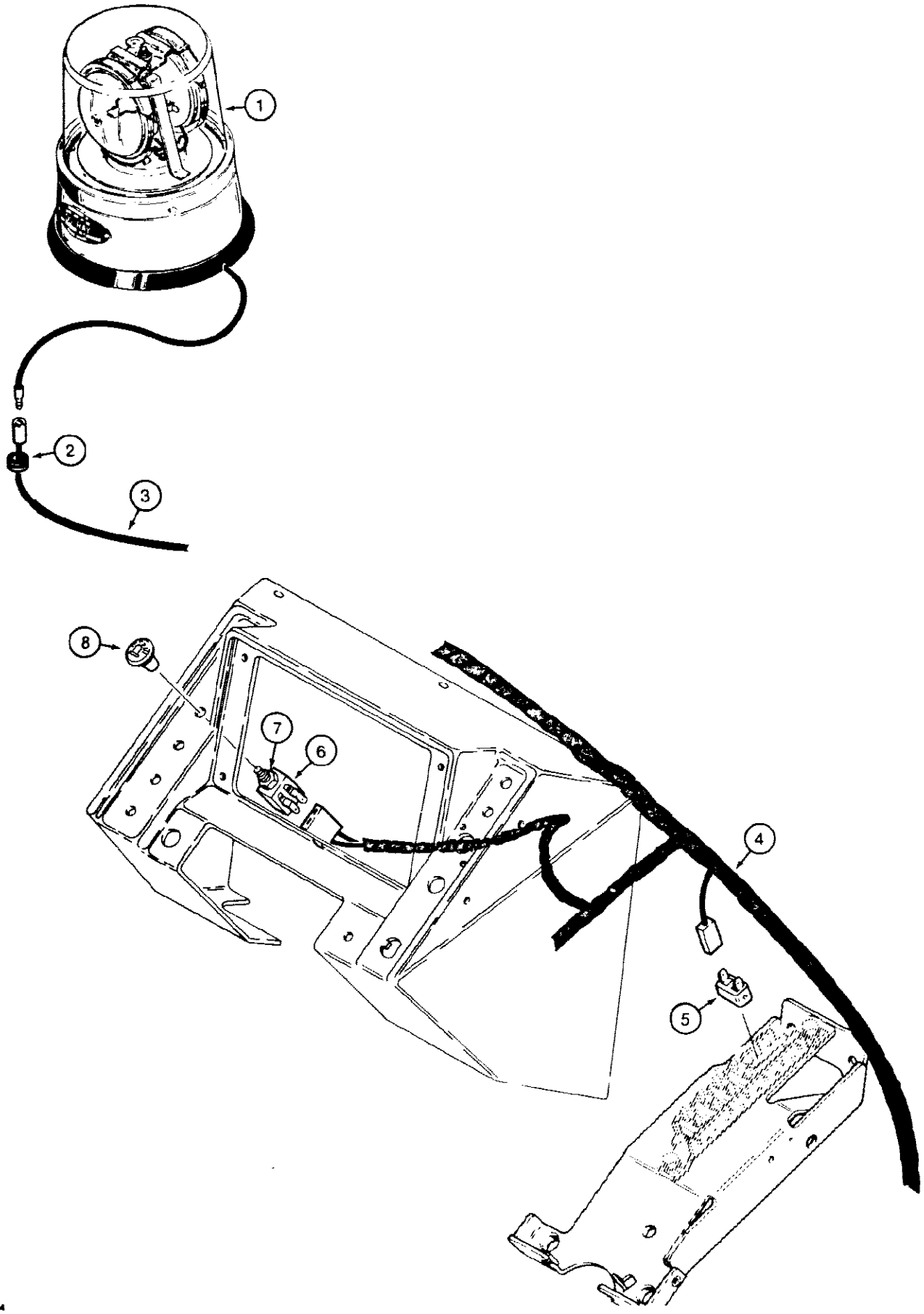

144 ROTATING BEACON AND CIRCUIT

Ref	Part Number	Qty	Description
1	F93158	1	BEACON rotating, See Figure 146
2	A23870	1	GROMMET wire, canopy only, use in place of item 7 on Figure 146
3	REF	1	HARNESS cab or canopy, See Figure 126 for canopy and Figure 128 for cab
4	REF	1	HARNESS flasher and rotating beacon switches, See Figure 126 for canopy and Figure 128 for cab
5	D78002	1	CIRCUIT BREAKER 15 amperes
6	D74330	1	SWITCH rotating beacon, Includes: Ref. 7
7	N7557	1	NUT special, 3/8" - 24 NF, switch retaining
8	D92573	1	KNOB rotating beacon switch

146

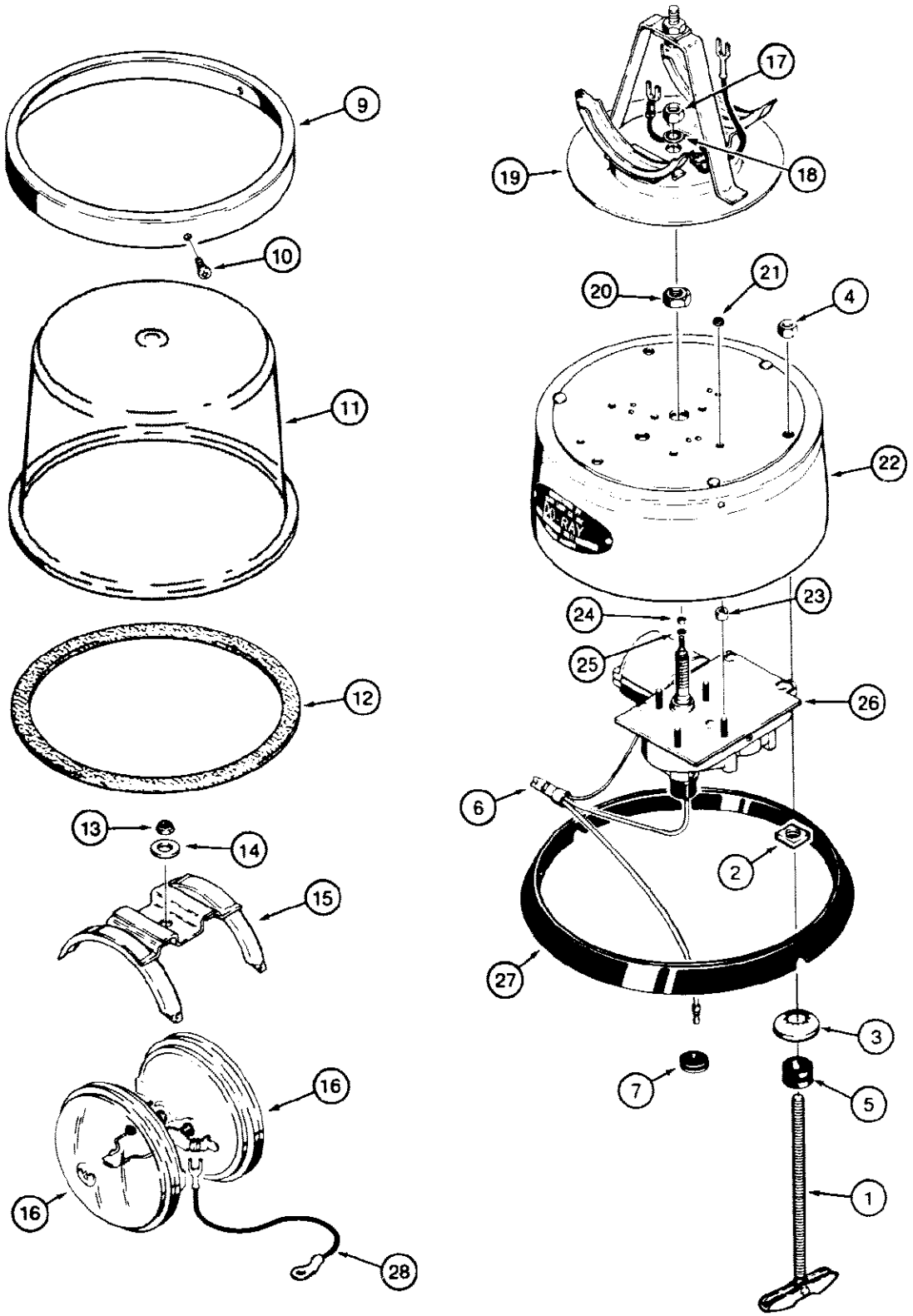

630686

146 ROTATING BEACON

Ref	Part Number	Qty	Description
	F93158		ROTATING BEACON ASSEMBLY, 360 degree, amber, includes a switch
		1	and wire not used on 580 Super E, Includes: Ref. 1 - 28
	L35092	1	KIT, mounting, includes an instruction sheet, Includes: Ref. 1 - 8
1	L35148	3	BOLT toggle, No. 10 - 24 NC
2	129-47	3	NUT square, No. 10 - 24 NC
3	L35146	3	WASHER lock, No. 10
4	86625057	3	NUT, LOCK, #10-24, GB
5	F13115	3	GROMMET rubber, mounting
6	T29401	1	NUT twist on, wire
7	A43211	1	GROMMET rubber, wire
8	L35145	1	WIRE, 8 foot block, not shown
9	L32219	1	RING clamp, lens
10	168-70	3	SCREW drive, plated, No. 8 x 3/8"
11	L32221	1	LENS amber
12	L32220	1	GASKET lens
13	131-204	1	NUT hex, self locking, plated, 1/4" - 20 NC
14	195-102	1	WASHER flat, plated, 1/4"
15	L32222	1	BRACKET retainer, sealed beam lamp
16	D66204	2	LAMP sealed beam, No. 4416
17	129-175	1	NUT hex, plated, left hand thread, 3/8" - 16 NC
18	193-94	1	WASHER internal tooth lock, left hand twist, 3/8"
19	L32224	1	PLATE mounting, lamp
20	L32225	1	NUT special brass
21	131-29	4	NUT hex, self locking, plated, No. 8 - 32 NC
22	L32226	1	BASE motor and lens
23	L32228	4	SPACER motor to base
24	129-13	2	NUT, #4-40
25	192-13	1	Washer, Lock, #4
26	D65187	1	MOTOR electric, 12 volt
27	L32227	1	GASKET base
28	L35144	1	WIRE ground

148 DIPPER LAMP, USED WITH NON-EXTENDABLE DIPPER

148

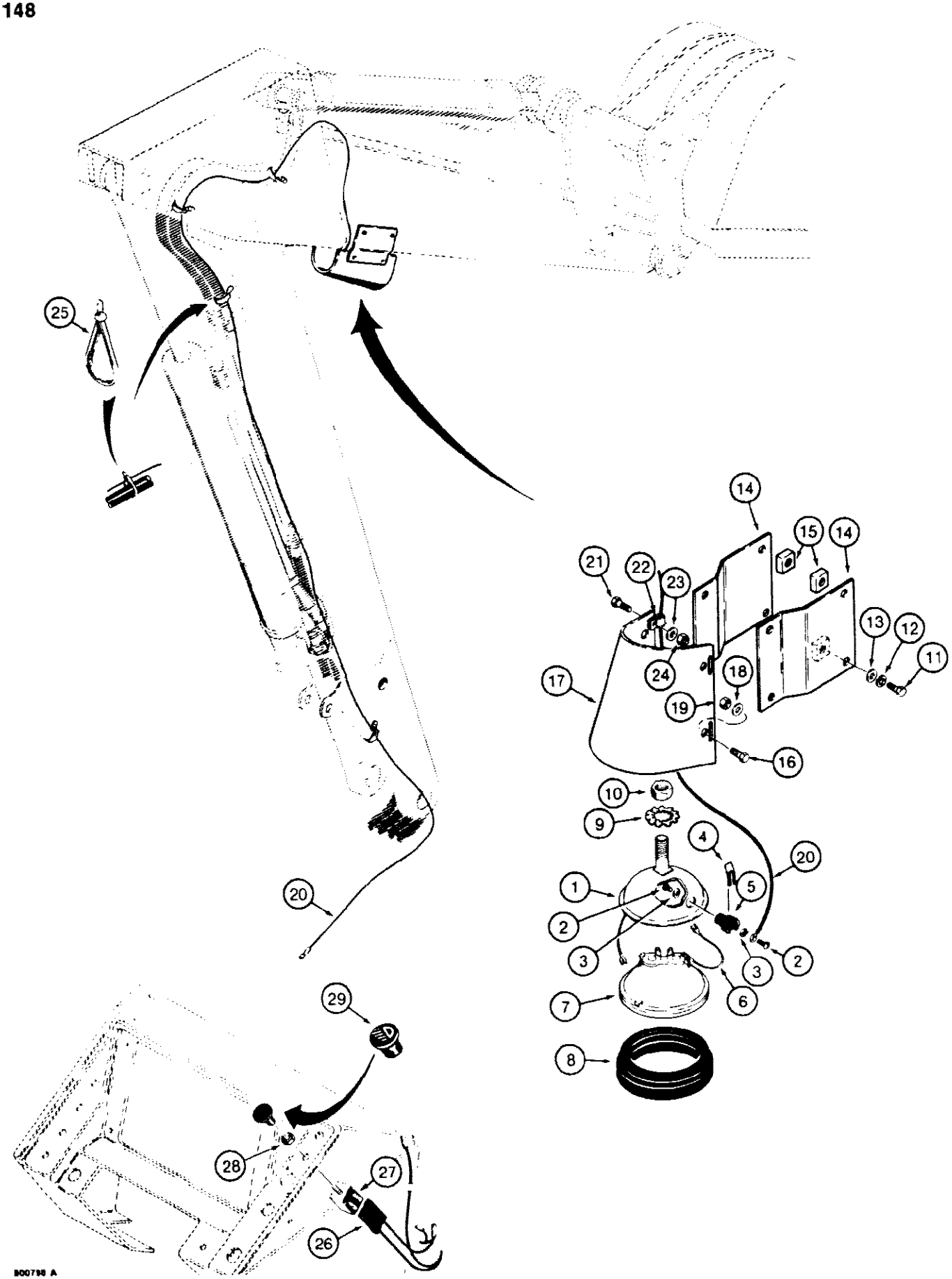

580SE CASE SUPER-E CONSTRUCTION KING LOADER BACKHOE - Electrical System

148 DIPPER LAMP, USED WITH NON-EXTENDABLE DIPPER

Ref	Part Number	Qty	Description
	D37811	1	LAMP ASSEMBLY, dipper arm, Includes: Ref. 1 - 8
1	NSS	1	BODY lamp
2	182-82	2	SCREW machine, pan head slotted, No. 8 - 32 NC x 1/4"
3	193-91	2	WASHER, LOCK, Int Tooth, #8
4	10927	1	SPRING lamp
5	B50293	1	INSULATOR lamp
6	A25262	1	WIRE lamp
7	A42294	1	BULB sealed beam, No. 4406
8	D31441	1	RETAINER lamp
9	193-87	1	WASHER, LOCK, Ext-Int Tooth, 1/2"
10	131-1116	1	NUT, LOCK, 1/2"-13, GB
11	113-206	4	BOLT, Hex, 3/8"-16 x 3/4", G5, Full Thd
12	192-21	4	WASHER, LOCK, 3/8"
13	195-525	4	WASHER flat, plated, 3/8"
14	D56849	2	BRACKET support, shield
15	D30458	4	BLOCK tapped, welded to dipper
16	113-207	4	BOLT, Hex, 3/8"-16 x 1", G5, Full Thd
17	D41427	1	SHIELD dipper lamp
18	195-525	4	WASHER flat, plated, 3/8"
19	131-666	4	NUT hex, self locking, plated, 3/8" - 16 NC
20	D50717	1	WIRE to dipper lamp
21	113-206	1	BOLT, Hex, 3/8"-16 x 3/4", G5, Full Thd
22	49853	1	CLAMP wire, at dipper
23	195-525	1	WASHER flat, plated, 3/8"
24	131-666	1	NUT hex, self locking, plated, 3/8" - 16 NC
25	L18337	UAR	STRAP tie, nylon, 15 inch
26	D75761	1	WIRE from dipper lamp switch
27	D74330	1	SWITCH dipper lamp, Includes: Ref. 28
28	N7557	1	NUT special, 3/8" - 24 NF, switch retaining
29	D70448	1	KNOB dipper lamp switch

150 DIPPER LAMP, USED WITH EXTENDABLE DIPPER

150

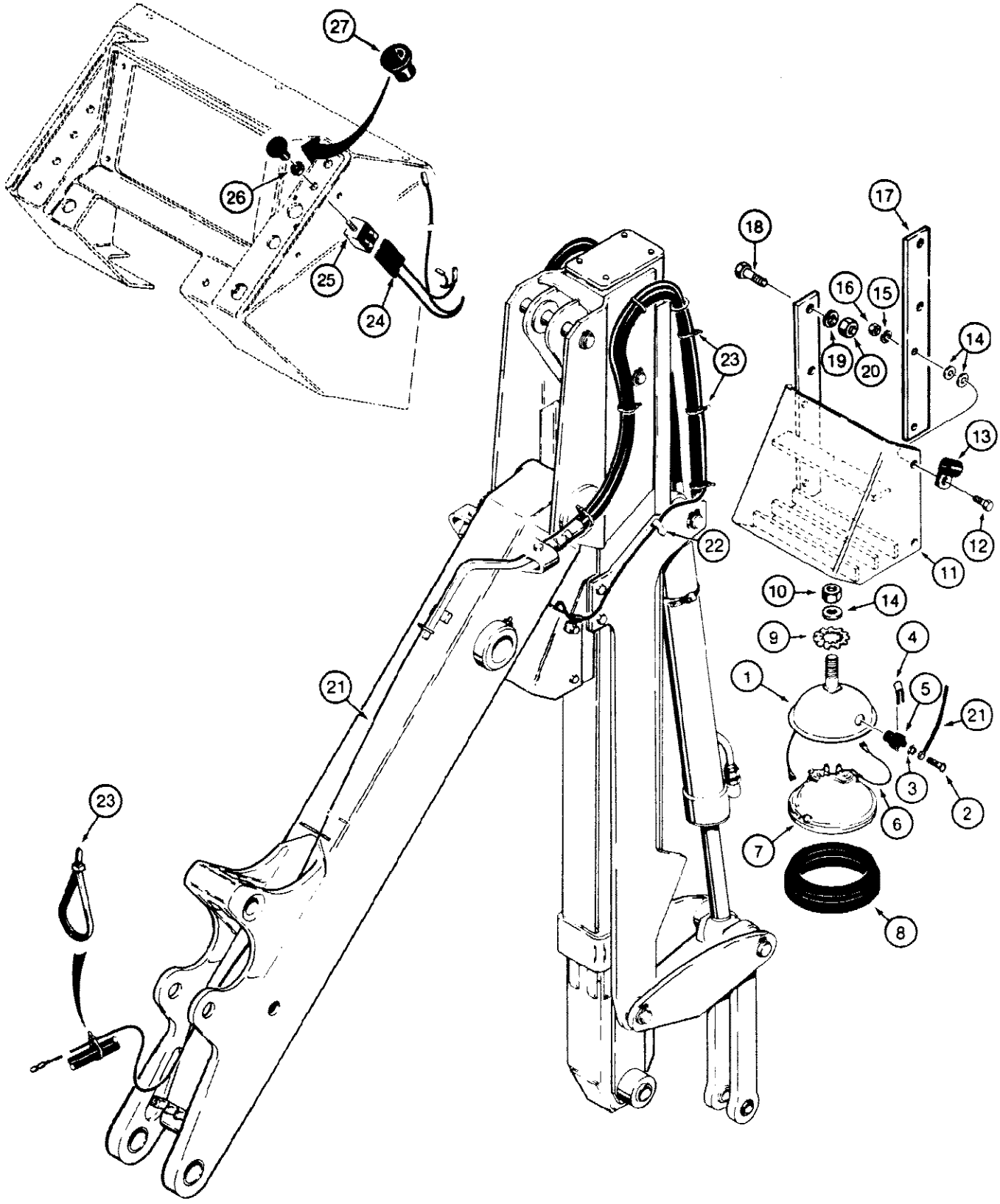

580SE CASE SUPER-E CONSTRUCTION KING LOADER BACKHOE - Electrical System

150 DIPPER LAMP, USED WITH EXTENDABLE DIPPER

Ref	Part Number	Qty	Description
	D37811	1	LAMP ASSEMBLY, dipper arm, Includes: Ref. 1 - 8
1	NSS	1	BODY lamp
2	182-82	2	SCREW machine, pan head slotted, No. 8 - 32 NC x 1/4"
3	193-91	2	WASHER, LOCK, Int Tooth, #8
4	10927	1	SPRING lamp
5	B50293	1	INSULATOR lamp
6	A25262	1	WIRE lamp
7	A42294	1	BULB sealed beam, No. 4406
8	D31441	1	RETAINER lamp
9	193-87	1	WASHER, LOCK, Ext-Int Tooth, 1/2"
10	131-1116	1	NUT, LOCK, 1/2"-13, GB
11	D52591	1	HOUSING dipper lamp
12	113-208	4	BOLT, Hex, 3/8"-16 x 1 1/4", G5, Full Thd
13	49859	1	CLAMP wire to housing
14	195-533	9	WASHER flat, plated, 3/8"
15	192-21	4	WASHER, LOCK, 3/8"
16	129-103	4	NUT, 3/8"-16, G5
17	D75730	2	PLATE housing to dipper
18	113-421	4	BOLT, Hex, 1/2"-13 x 2", G5
19	192-23	4	WASHER, LOCK, 1/2"
20	129-105	4	NUT, 1/2"-13, G5
21	D53268	1	WIRE to dipper lamp
22	D48071	1	CLAMP wire to dipper
23	L18337	UAR	STRAP tie, nylon, 15 inch
24	D75761	1	WIRE from dipper lamp switch
25	D74330	1	SWITCH dipper lamp, Includes: Ref. 26
26	N7557	1	NUT special, switch retaining, 3/8" - 24 NF
27	D70448	1	KNOB dipper lamp switch

152

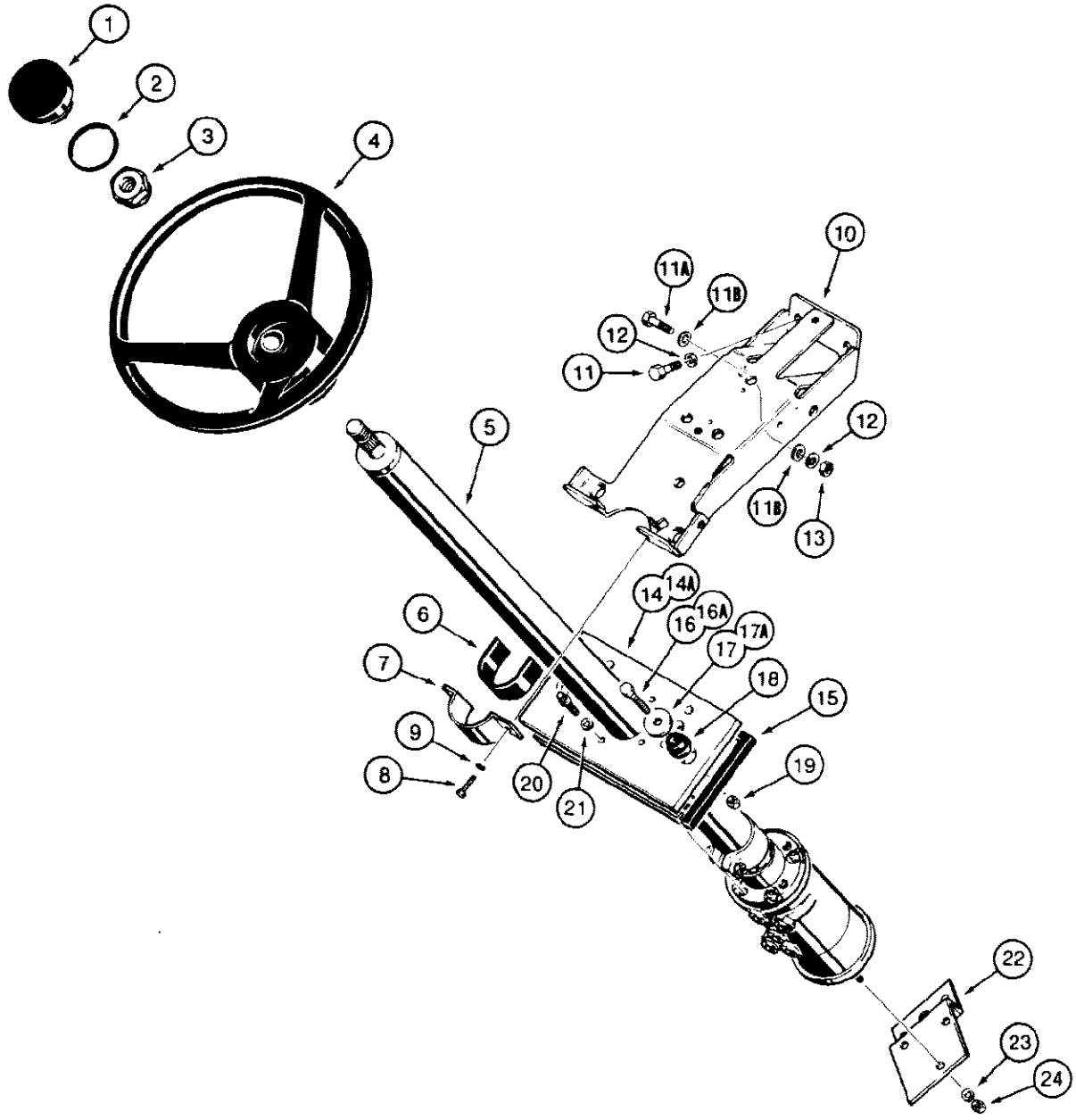
1
2
3
4
5
6
7
8
9
10
11A
11B
12
11
12
11B
13
14
14A
16
16A
17
17A
18
15
19
20
21
22
23
24

830587 A

152 STEERING WHEEL AND COLUMN

Ref	Part Number	Qty	Description
1	A62210	1	CAP steering wheel
2	D26115	1	O RING cap
3	F19646	1	NUT steering wheel retaining
4	A65544	1	STEERING WHEEL tractor
5	D91505	1	VALVE control, steering, includes steering column, See Figure 160
6	D66844	1	COLLAR steering column
7	D66049	1	CLAMP steering column
8	113-103	2	BOLT, Hex, 5/16"-18 x 1", G5, Full Thd
9	192-20	2	WASHER, LOCK, 5/16"
10	D94995	1	BRACKET steering column support
11	113-207	2	BOLT, Hex, 3/8"-16 x 1", G5, Full Thd
11A	113-208	1	BOLT, Hex, 3/8"-16 x 1 1/4", G5, Full Thd
11B	195-525	2	WASHER flat, plated, 3/8"
12	192-21	3	WASHER, LOCK, 3/8"
13	129-103	1	NUT, 3/8"-16, G5
14	D83767	1	PLATE control valve, top, 5/16" (8 mm) thick, no longer used, order D132593 plate, item 14A
14A	D132593	1	PLATE control valve, top, 1/8" (3 mm) thick, Replaces items 14 and 15 on some models, see item 15A
15	D83770	1	SEAL control valve plate, used with D83767 plate, item 14, only
15A	REF	UAR	SEALANT .3 oz (9 ml) required with item 14A plate on cab models only, not shown
16	113-209	2	BOLT, Hex, 3/8"-16 x 1 1/2", G5, Used with items 14 and 15
16A	113-206	2	BOLT, Hex, 3/8"-16 x 3/4", G5, Full Thd, Used with item 14A plate
17	D52275	2	WASHER special, hardened, used with items 14 and 15
17A	195-525	2	WASHER flat, plated, 3/8", used with item 14A plate
18	D52276	2	INSULATOR control valve plate, used with items 14 and 15
19	131-52	2	NUT hex, self locking, plated, 3/8" - 16 NC
20	166-23	4	BOLT Ferry head, grade 8, control valve mounting, 5/16" - 18 NC x 5/8"
21	192-20	4	WASHER, LOCK, 5/16"
22	D86426	1	PLATE control valve, bottom
23	192-20	3	WASHER, LOCK, 5/16"
24	9635082	3	NUT, 5/16"-18, G5
	345-108	UAR	SEALANT Weatherband, gray, 3M No. 404, 16 oz (473 ml)

154 STEERING HYDRAULIC CIRCUIT, HYDRAULIC PUMP TO STEERING CONTROL VALVE AND RELIEF VALVE

154

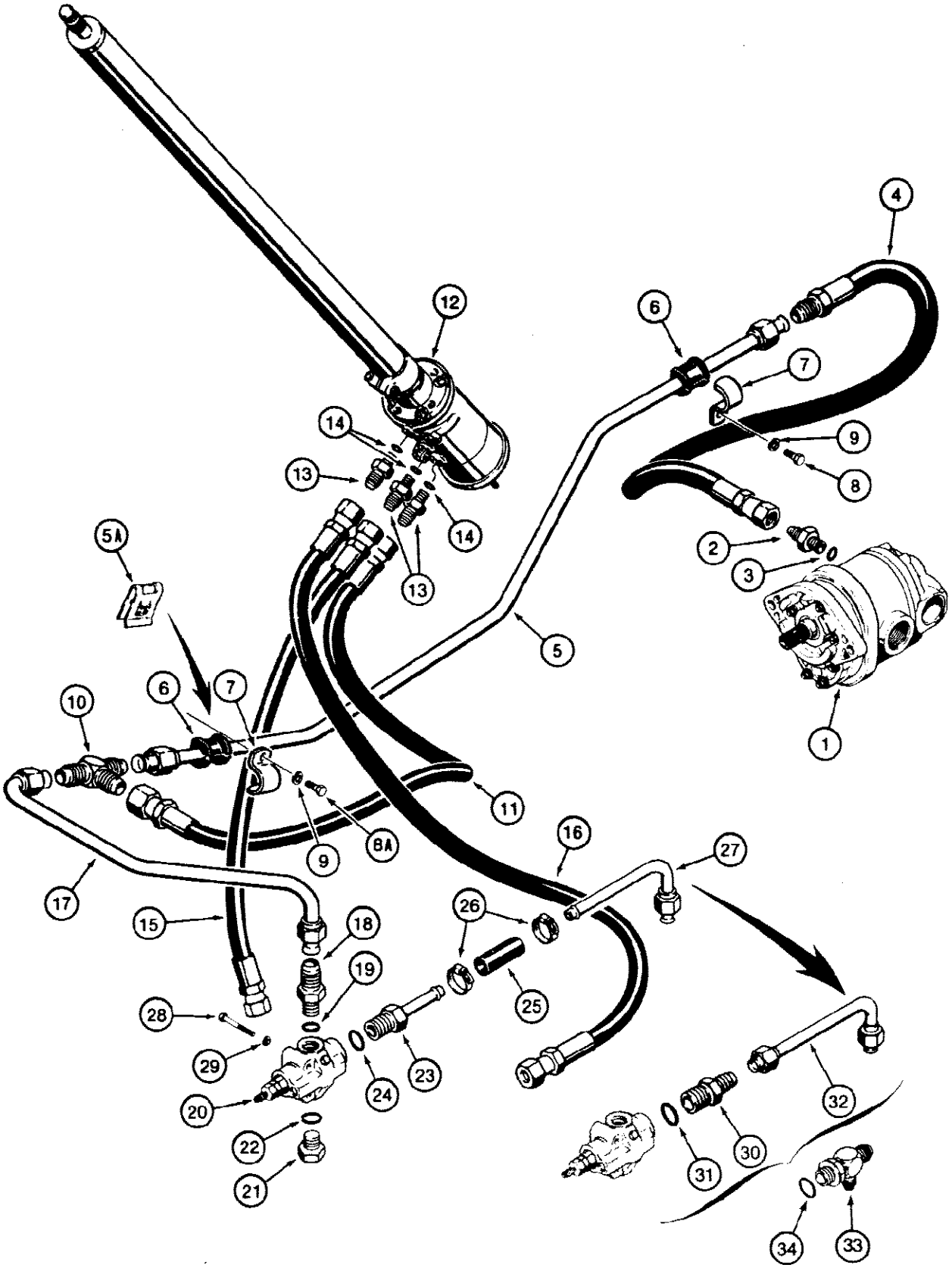

630686 C

154 STEERING HYDRAULIC CIRCUIT, HYDRAULIC PUMP TO STEERING CONTROL VALVE AND RELIEF VALVE

Ref	Part Number	Qty	Description
1	REF	1	PUMP hydraulic, power steering and equipment, See Figure 388, Ref #1 hydraulic pump For fittings and hoses, from pump to loader control valve, See Figure 310.
2	218-5062	1	CONNECTOR straight, hydraulic pump to hose, Includes: Ref. 3
3	237-6010	1	O RING connector
4	D89554	1	HOSE, 19-7/8" (500 mm) long, from hydraulic pump
5	D94525	1	TUBE from hydraulic pump
5A	131-856	1	NUT, Ret, J, 3/8"-16
6	D74182	2	INSULATOR tube
7	D74192	2	CLAMP tube
8	113-205	1	BOLT, Hex, 3/8"-16 x 5/8", G5, Full Thd
8A	113-206	1	BOLT, Hex, 3/8"-16 x 3/4", G5, Full Thd
9	192-21	2	WASHER, LOCK, 3/8"
10	218-596	1	TEE male
11	L51379	1	HOSE, 16-1/2" (419 mm) long, to control valve
12	D91505	1	VALVE control, steering, includes steering column, parts list Figure 160
13	218-5351	3	ADAPTER straight, control valve, Includes: Ref. 14
14	218-5005	1	O-Ring, 6-1, 90 Duro, .468" ID x .078" Thk, adapter
15	R33545	1	HOSE, 21" (533 mm) long, return, from control valve
16	D89556	1	HOSE, 29-1/2" (750 mm) long, to rear line, See Figures 314 item 9 and 318 item 6 for clamp
17	D94527	1	TUBE to relief valve
18	218-5065	1	ADAPTER straight, tube to relief valve, Includes: Ref. 19
19	167269	1	O RING adapter, Replaced 218 5007
20	D142330	1	VALVE relief, steering, parts list Figure 444, Replaced REF
21	86512512	1	PLUG, Hex Hd, 7/8"-14 ORB, Relief valve, Incl. Ref. 22
22	237-6010	1	O RING plug
23	217-394	1	FITTING stem, straight, relief valve outlet, used with D90623 tube, if used, Includes: Ref. 24
24	218-5008	1	O RING stem fitting
25	D121521	1	HOSE, 5/8" (16 mm) ID x 3" (76 mm) long, special, relief valve outlet, used with D90623 tube, if used
26	214-254	2	CLAMP hose, if used
27	D90623	1	TUBE relief valve return, no longer used, for service order D128307 tube and 218-5063 adapter
28	113-121	2	BOLT, Hex, 5/16"-18 x 2", G5
29	192-20	2	WASHER, LOCK, 5/16"
30	218-5063	1	ADAPTER straight, male, relief valve outlet, if used, Includes: Ref. 31
31	218-5008	1	O RING adapter
32	D128307	1	TUBE relief valve return, if used
33	218-5294	1	TEE male, adjustable, if used, Includes: Ref. 34
34	218-5008	1	O RING tee, if used

156 STEERING HYDRAULIC CIRCUIT, STEERING CONTROL VALVE TO CYLINDERS

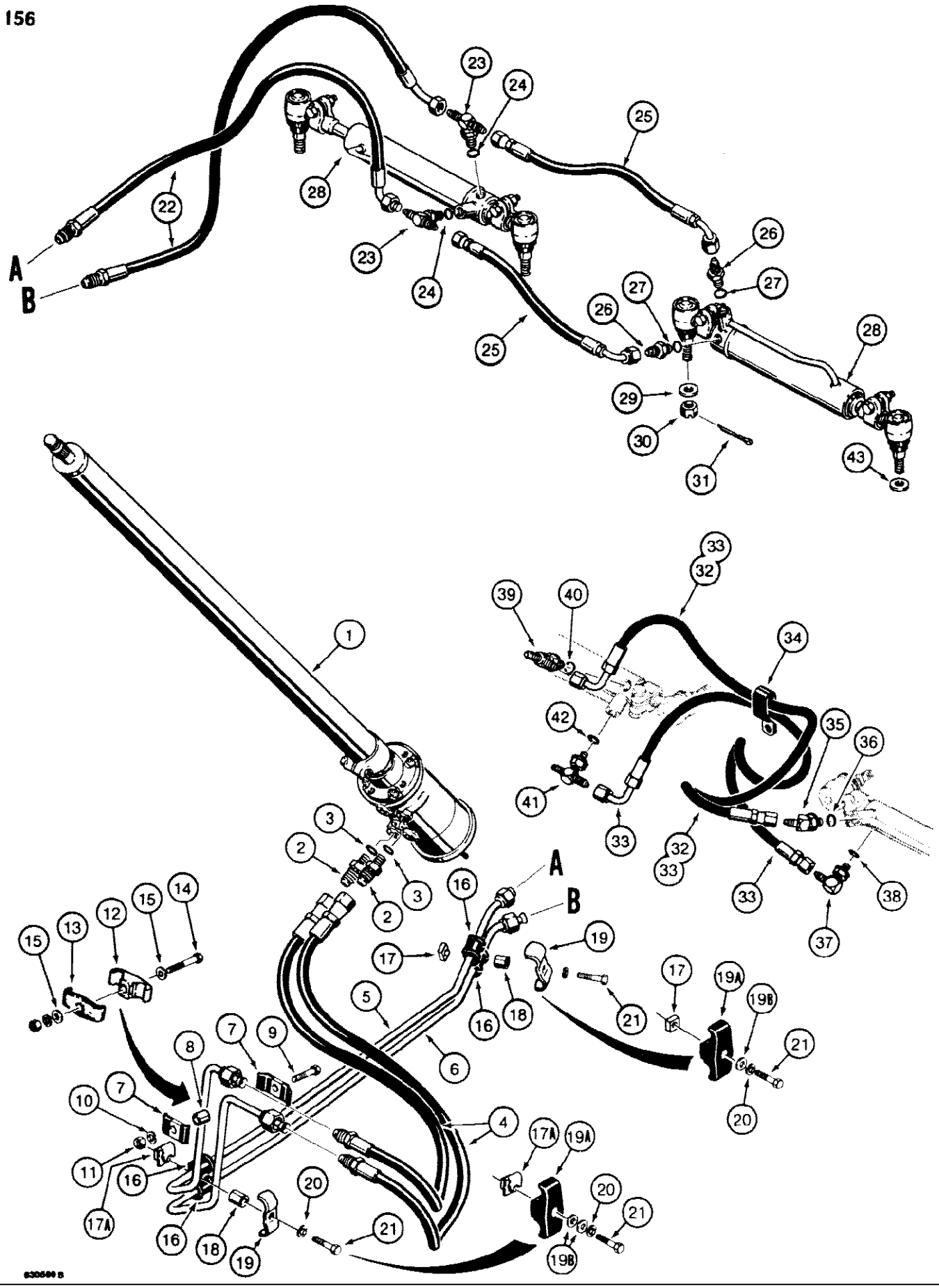

580SE CASE SUPER-E CONSTRUCTION KING LOADER BACKHOE - Steering

156 STEERING HYDRAULIC CIRCUIT, STEERING CONTROL VALVE TO CYLINDERS

Ref	Part Number	Qty	Description
1	D91505	1	VALVE control, steering, includes steering column, See Figure 160
2	D93918	2	CONNECTOR straight, male, control valve to hose, restrictor, Includes: Ref. 3
3	218-5005	1	O-Ring, 6-1, 90 Duro, .468" ID x .078" Thk, connector
4	D63184	2	HOSE, 12" (305 mm) long, from control valve
5	D94531	1	TUBE upper
6	D94533	1	TUBE lower
7	R17319	2	CLAMP tube, metal, if used
8	D76208	1	SPACER tube clamp, used with item 7, if used
9	113-104	1	BOLT, Hex, 5/16"-18 x 1 1/4", G5, Used with item 7, if used
10	192-20	1	WASHER, LOCK, 5/16"
11	9635082	1	NUT, 5/16"-18, G5
12	D120679	1	CLAMP spacer, tube, plastic, if used
13	D120614	1	CLAMP tube, plastic, used with item 12, if used
14	113-120	1	BOLT, Hex, 5/16"-18 x 1 3/4", G5, Used with item 12, if used
15	195-103	2	WASHER flat, plated, 5/16", if used
16	D67296	4	INSULATOR tube, if used
17	25-226	1	NUT square, 3/8" - 16 NC
17A	131-856	1	NUT, Ret, J, 3/8"-16
18	D76195	2	SPACER tube, if used
19	D68646	2	CLAMP tube, if used
19A	D120679	2	CLAMP spacer, tube, plastic, if used
19B	195-525	3	WASHER flat, plated, 3/8", if used
20	192-21	2	WASHER, LOCK, 3/8"
21	113-209	2	BOLT, Hex, 3/8"-16 x 1 1/2", G5
22	D62390	2	HOSE, 20" (508 mm) long, to left hand steering cylinder
23	218-5182	2	TEE adjustable, left hand cylinder, Includes: Ref. 24
24	218-5005	1	O-Ring, 6-1, 90 Duro, .468" ID x .078" Thk, tee
25	D126884	2	HOSE, 15" (382 mm) long, to right hand steering cylinder
26	218-5057	2	CONNECTOR straight, right hand cylinder, Incl. Ref. 27
27	218-5005	1	O-Ring, 6-1, 90 Duro, .468" ID x .078" Thk, connector
28	D128454	2	CYLINDER steering, parts list Figure 164, nbr D147753, not a sub. Refer to Service Bulletin NLB SB 002 91., Ref #28 D128454 cylinder Replaced by part
29	95-10	UAR	WASHER flat, 5/8", two wheel drive models
30	129-610	4	SLOTTED NUT, 5/8"-18, G5
31	132-335	4	1/8" x 1-1/4"
32	D120745	1	HOSE, 21-1/2" (550 mm) long, closed end of left hand cylinder to rod end of right hand cylinder, no longer used, order D123917 hose
33	D123917	1-2	HOSE, 25-1/2" (650 mm) long, cylinders
34	L17508	1	CLAMP items 32 and 33 only, fastens to front axle
35	218-5135	1	ELBOW, 45 degree, adjustable, right hand cylinder, used with item 32, Includes: Ref. 36
36	218-5005	1	O-Ring, 6-1, 90 Duro, .468" ID x .078" Thk, elbow

156 STEERING HYDRAULIC CIRCUIT, STEERING CONTROL VALVE TO CYLINDERS

Ref	Part Number	Qty	Description
37	218-5105	1	ELBOW, 90 degree, adjustable, right hand cylinder, used with item 33, Includes: Ref. 38
38	218-5005	1	O-Ring, 6-1, 90 Duro, .468" ID x .078" Thk, elbow
39	218-5243	1	TEE adjustable, left hand cylinder, used with item 32, Includes: Ref. 40
40	218-5005	1	O-Ring, 6-1, 90 Duro, .468" ID x .078" Thk, tee
41	218-5182	1	TEE adjustable, left hand cylinder, used with item 33, Includes: Ref. 42
42	218-5005	1	O-Ring, 6-1, 90 Duro, .468" ID x .078" Thk, tee
43	D34666	2	WASHER flat, 3/4", hardened, rod end of steering cylinders on models with D127440 Carraro 710 transaxle

160

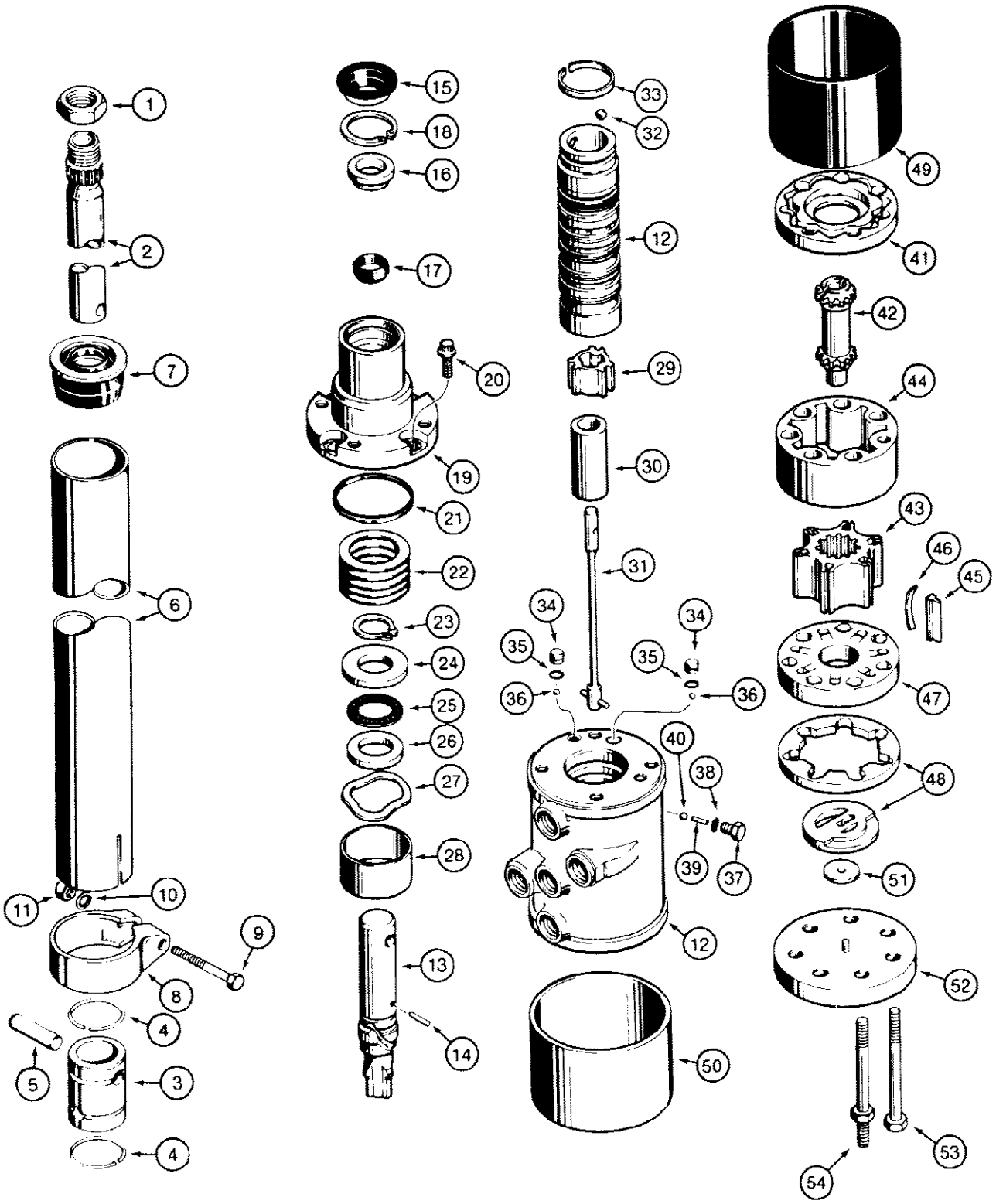
1
2
7
6
11
10
9
8
4
5
3
4
15
18
16
17
20
19
21
22
23
24
25
26
27
28
13
14
33
32
12
29
30
31
34
35
36
34
35
36
40
38
39
37
12
50
49
41
42
44
43
46
45
47
48
51
52
53
54

160 STEERING COLUMN AND CONTROL VALVE

Ref	Part Number	Qty	Description
	D91505	1	STEERING COLUMN AND CONTROL VALVE complete, Includes: Ref. 1 - 54
1	F19646	1	NUT steering wheel retaining
2	N6797	1	SHAFT steering column
	D72851	1	KIT, coupling, Includes: Ref. 3 - 4
3	NSS	1	COUPLING steering column to control valve
4	79012C1	2	RING pin retaining
5	L35654	2	PIN coupling
	N6798	1	JACKET ASSEMBLY, steering column, Includes: Ref. 6 - 7
6	NSS	1	JACKET steering column
7	L35675	1	SEAL steering column
	L35657	1	CLAMP ASSEMBLY, tube, Includes: Ref. 8 - 11
8	NSS	1	CLAMP tube
9	114-122	1	BOLT, Hex, 5/16"-24 x 2", G5
10	193-29	1	WASHER, LOCK, Int Tooth, 5/16"
11	129-122	1	NUT, 5/16"-24, G5
12	NSS	1	BODY AND SPOOL ASSEMBLY, steering control valve
13	A43551	1	SHAFT input, steering control valve
14	D53297	1	PIN torsion bar retaining
	A47038	1	KIT, seal, shaft, Includes: Ref. 15 - 17
15	D70586	1	SEAL dirt
16	NSS	1	SPACER seal kit
17	NSS	1	SEAL dust
18	A21145	1	Ring, Snap, 1.25", Int, #125, brg
19	D65139	1	COVER upper
20	166-24	4	BOLT Ferry head, grade 8, 5/16" - 18 NC x 3/4"
21	A43566	1	SEAL cover
22	A44435	1	SHIM KIT cover
23	A43720	1	SNAP RING retaining, shaft
24	A43558	1	WASHER thrust, control valve
25	F19633	1	BEARING thrust, control valve
26	F19634	1	WASHER thrust, control valve
27	A43721	1	WASHER wave
28	N6514	1	SPACER bearing
29	A43554	1	RING drive
30	L36011	1	SPACER drive link
31	N6799	1	TORSION BAR control valve
32	211-9	1	BALL grade 200, chrome alloy steel, 5/16"
33	79012C1	1	SPRING preload
	REF	1	STEERING COLUMN AND CONTROL VALVE continued
	L36015	2	PLUG ASSEMBLY, steering control valve, Includes: Ref. 34 - 35
34	NSS	1	PLUG control valve

160 STEERING COLUMN AND CONTROL VALVE

Ref	Part Number	Qty	Description
35	A43729	1	O RING plug
36	211-7	2	BALL, 1/4", grade 200, chrome alloy steel, check
	F82943	1	PIN AND PLUG ASSEMBLY, steering control valve, Includes: Ref. 37 - 40
37	NSS	1	PLUG check assembly
38	218-5002	1	O-Ring, 3-1, .301" ID x .064" Thk, plug
39	138-60	1	PIN, 1/8" x 15/16", Slotted, Check
40	211-7	1	BALL grade 200, chrome alloy steel, check, 1/4"
41	A43569	1	SPACER link
42	A43568	1	LINK drive
	D78406	1	GEROTOR SET steering control valve, Includes: Ref. 43 - 46
43	NSS	1	ROTOR steering control valve
44	NSS	1	STATOR steering control valve
45	A42778	6	VANE rotor
46	A42219	6	SPRING rotor
47	A43573	1	MANIFOLD steering control valve
48	A43574	1	COMMUTATOR steering control valve
49	D74440	1	SEAL rotor
50	D71315	1	RETAINER seal
51	A43579	1	WASHER wear, rotor
52	A45182	1	COVER end
53	D71316	4	BOLT hex head, special, 5/16" - 18 NC x 2-11/16"
54	N6800	3	BOLT hex head, special, 5/16" - 18 NC

164

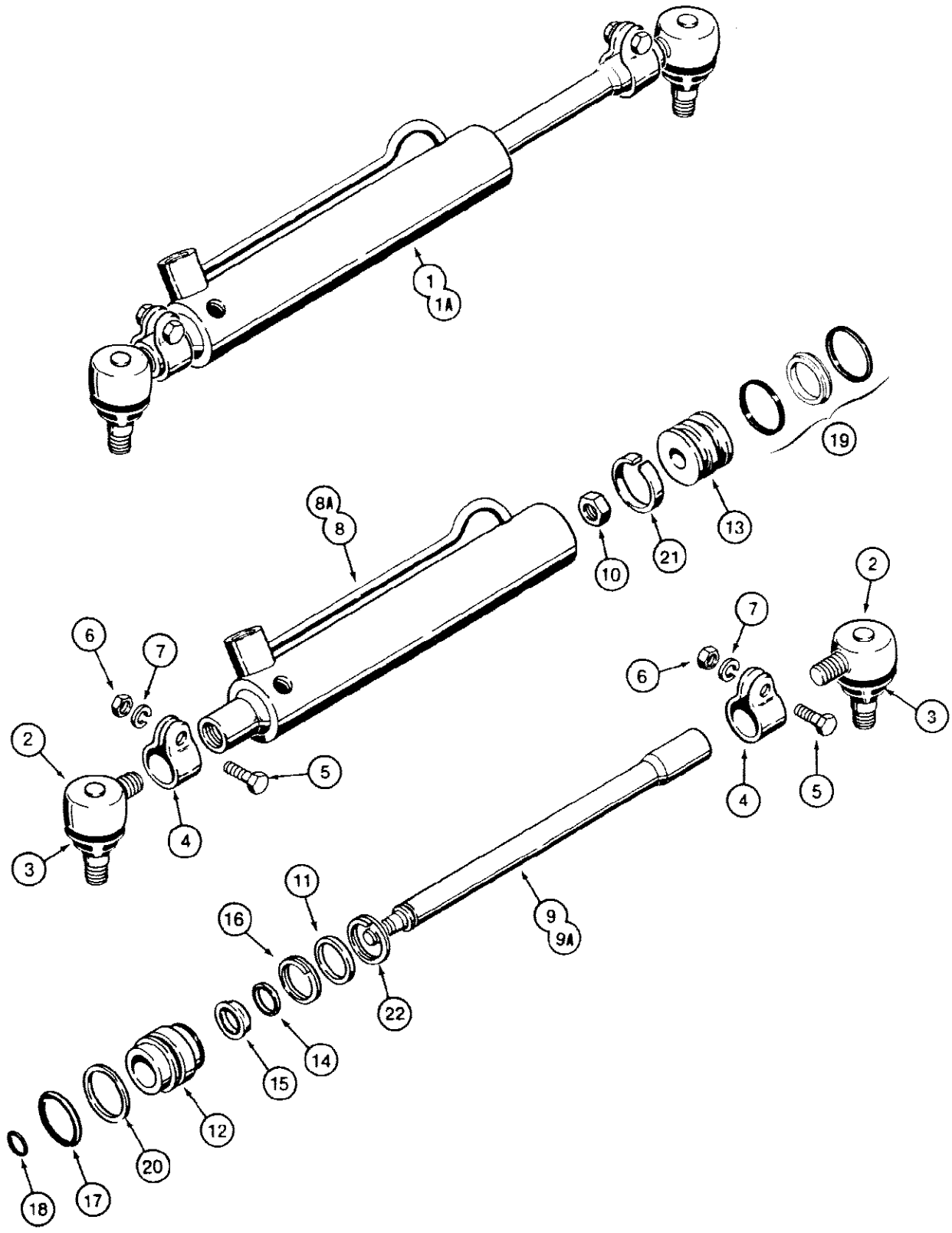

861502

580SE CASE SUPER-E CONSTRUCTION KING LOADER BACKHOE - Steering

164 STEERING CYLINDERS

Ref	Part Number	Qty	Description
1	D128454		CYLINDER ASSEMBLY, steering, interchangeable with D84800 steering, part nbr D147753, not a sub. Refer to Service Bulletin NLB SB 002 91., Ref #1 D128454 cylinder assy Replaced by
		2	cylinder, used with D120346 or D127422 axle
1A	D92099	2	CYLINDER ASSEMBLY, steering, used with D127440 Carraro 710 front axle, Includes: Ref. 2 - 22
2	A40962	2	BALL JOINT male thread, Includes: Ref. 3
3	A41424	1	BOOT dust cover
	A27080	2	CLAMP ASSEMBLY, end, Includes: Ref. 4 - 7
4	NSS	1	CLAMP end
5	113-209	1	BOLT, Hex, 3/8"-16 x 1 1/2", G5
6	129-103	1	NUT, 3/8"-16, G5
7	192-21	1	WASHER, LOCK, 3/8"
8	D83188	1	TUBE cylinder, used with item 1 cylinder
8A	N7467	1	TUBE cylinder, used with item 1A cylinder
9	N8890	1	ROD cylinder, hardened, used with item 1 cylinder
9A	N7466	1	ROD cylinder, hardened, used with item 1A cylinder
10	131-1145	1	NUT hex, jam, self locking, 9/16" - 18 NF
11	A44641	1	SPACER head
12	D83189	1	GLAND ASSEMBLY, cylinder, includes bushing
13	D83190	1	PISTON cylinder
	D148100	1	KIT, cylinder repair, Replaced D83184, Includes: Ref. 14 - 21
14	A44651	1	WIPER rod
15	NSS	1	SEAL rod
16	A44652	1	RING lock, gland
17	S6582	1	O RING outer gland
18	A64436	1	O RING rod to piston
19	NSS	1	SEAL piston
20	A45035	1	RING backup, O ring
21	NSS	1	RING wear, piston
22	A44654	1	RING lock, outer

166

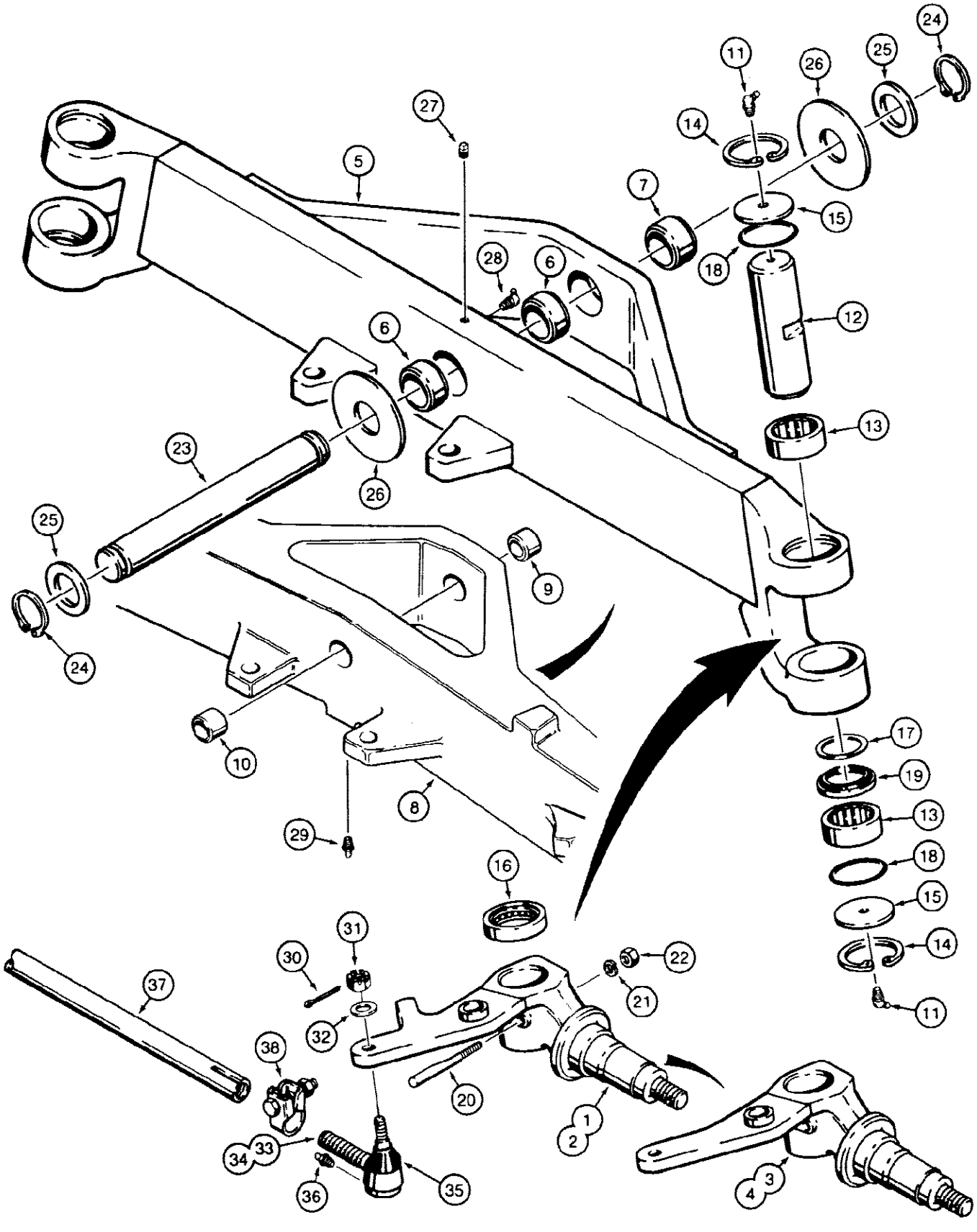
1
2
3
4
5
6
7
8
9
10
11
12
13
14
15
16
17
18
19
20
21
22
23
24
25
26
27
28
29
30
31
32
33
34
35
36
37
38
840364

580SE CASE SUPER-E CONSTRUCTION KING LOADER BACKHOE - Steering

166 FRONT AXLE AND SPINDLES

Ref	Part Number	Qty	Description
1	D86343	1	SPINDLE right hand, used with item 5 only
2	D86344	1	SPINDLE left hand, used with item 5 only
3	D125862	1	SPINDLE right hand, used with item 8 only, Part of Axle Kit, P/N D101471
4	D125863	1	SPINDLE left hand, used with item 8 only, Part of Axle Kit, P/N D101471
5	D67317	1	AXLE ASSEMBLY, front, welded, no longer used, order D101471 axle kit, see below, Includes: Ref. 6 - 7, ends of this axle are D69359, RH, and D69360, LH., Ref #5 D67317 axle assy Welded yokes at
6	D61241	2	BUSHING axle
7	D43940	1	BUSHING axle
8	D125824	1	AXLE ASSEMBLY, front, cast, Includes: Ref. 9 - 10, Part of Axle Kit, P/N D101471
9	D50146	1	BUSHING axle
10	D126498	1	BUSHING axle
11	219-89	4	FITTING grease, self tapping, 45 degree, 1/8" pipe
12	D72337	2	KINGPIN front axle, Ref #12 D72337 kingpin Kingpin kit includes, Ref. 11 thru 20 qty's for one side only, available as part nbr D103156.
13	A28230	4	BEARING needle, kingpin
14	A27463	4	Ring, Snap, 2.375", Int, #237, brg
15	D72371	4	SPACER kingpin
16	A27602	2	BEARING roller, spindle
17	D72372	2	WASHER thrust, bearing
18	A23904	4	O RING kingpin seal
19	D61297	2	SEAL oil
20	D57486	2	PIN kingpin lock
21	192-23	2	WASHER, LOCK, 1/2"
22	129-125	2	NUT, 1/2"-20, G5
23	D64171	1	PIN axle pivot
24	D25280	2	Ring, Snap, #175, Ext, axle pivot pin
25	195-2152	2	WASHER flat, 1-3/4" bolt size, 1-13/16" ID x 2-1/2" OD x 1/8" thick, used as a spacer
26	D61076	UAR	WASHER spacer
27	221-849	1	PLUG hex socket head, 1/8" NPT, Replaces square head plug on some models, used with item 5 only
28	219-89	1	FITTING grease, self tapping, 45 degree, 1/8" pipe, used with item 5 only
29	219-1	1	FITTING grease, straight, 1/8" NPT, used with item 8 only, Part of Axle Kit, P/N D101471
30	132-335	2	1/8" x 1-1/4"
31	129-610	2	SLOTTED NUT, 5/8"-18, G5
32	195-2084	UAR	WASHER flat, 3/4" bolt size, 13/16" ID x 1-1/4" OD x 1/16" thick
	D73398	1	TIE ROD ASSEMBLY, tractor
33	D88491	1	BALL JOINT tie rod, right hand
34	D88492	1	BALL JOINT tie rod, left hand, Includes: Ref. 35 - 36
35	N7681	1	BOOT dust cover, ball joint
36	219-1	1	FITTING grease, straight, 1/8" NPT

580SE CASE SUPER-E CONSTRUCTION KING LOADER BACKHOE - Steering

166 FRONT AXLE AND SPINDLES

Ref	Part Number	Qty	Description
37	D73397	1	TIE ROD tractor
38	D73799	2	CLAMP tie rod, includes hardware
	D101471		KIT, axle, includes: Ref. 3, 4, 8, 29. This kit also includes two stop blocks with installation instruction not for use on the
		1	580 Super E

168

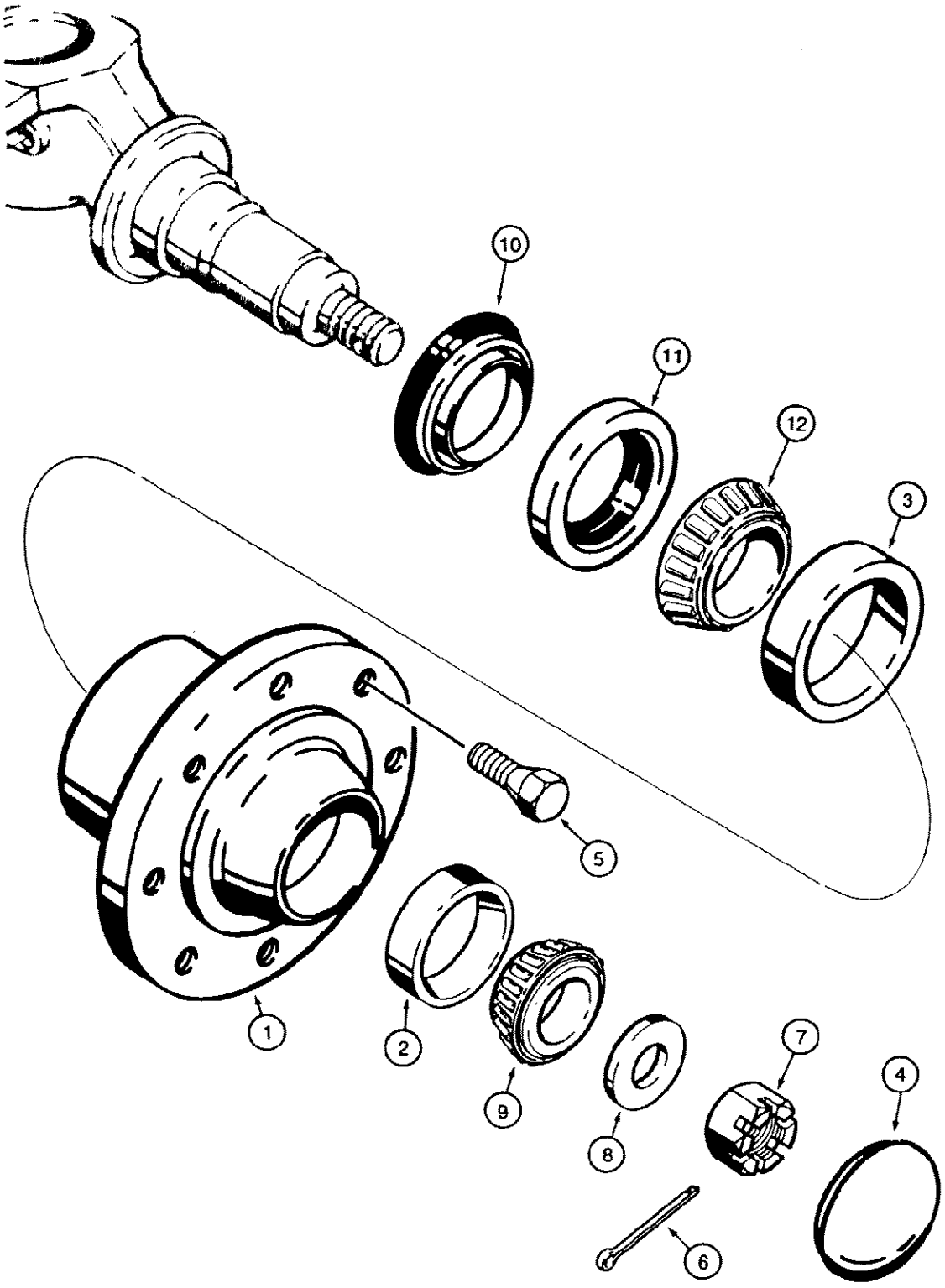

50380

580SE CASE SUPER-E CONSTRUCTION KING LOADER BACKHOE - Steering

168 FRONT WHEEL HUB AND BEARINGS

Ref	Part Number	Qty	Description
	A66759	2	HUB ASSEMBLY, front wheel, Includes: Ref. 1 - 3
1	NSS	1	HUB front wheel
2	G15214	1	CUP outer, tapered roller bearing
3	A61446	1	CUP inner, tapered roller bearing
4	A61450	2	CAP hub
5	A38208	16	BOLT wheel retaining
6	132-317	2	PIN, SPLIT (COTTER), 3/16" x 2"
7	25-1918	2	NUT hex, slotted, thick, 1-1/8" - 12 NF
8	D74949	2	WASHER flat, 1-1/8"
9	G15215	2	BEARING tapered, roller, outer
10	A61449	2	SEAL spindle
11	A61448	2	SEAL hub
12	A61447	2	BEARING tapered, roller, inner

170 FRONT WHEELS AND TIRES, FOR 7.50 X 16 AND 8.00 X 16 TIRES

170



861501

580SE CASE SUPER-E CONSTRUCTION KING LOADER BACKHOE - Steering

170 FRONT WHEELS AND TIRES, FOR 7.50 X 16 AND 8.00 X 16 TIRES

Ref	Part Number	Qty	Description
1	A139081	2	WHEEL rim, for 7.50 x 16 and 8.00 x 16 tires, two wheel drive models
2	REF	2	TIRE front, for 7.50 x 16 and 8.00 x 16 tires, two wheel drive models
3	A38261	2	VALVE STEM wheel, for 7.50 x 16 and 8.00 x 16 tires, two wheel drive models
1	A139082	2	WHEEL rim, for 11L x 16 tires, two wheel drive models
2	REF	2	TIRE front, for 11L x 16 tires, two wheel drive models
3	A38261	2	VALVE STEM wheel, for 11L x 16 tires, two wheel drive models
4	D120271	2	WHEEL rim, for 12 x 16.5 tires, four wheel drive models, use with D120346 or D127422 front drive axle
5	REF	2	TIRE front, for 12 x 16.5 tires, four wheel drive models, use with D120346 or D127422 front drive axle
6	A38261	2	VALVE STEM wheel, for 12 x 16.5 tires, four wheel drive models, use with D120346 or D127422 front drive axle
4	D126930	2	WHEEL rim, 8 hole pattern, not shown, for 12 x 16.5 tires, four wheel drive models, used with D127440 Carraro 710 front drive axle
5	REF	2	TIRE front, for 12 x 16.5 tires, four wheel drive models, used with D127440 Carraro 710 front drive axle
6	A38261	2	VALVE STEM wheel, for 12 x 16.5 tires, four wheel drive models, used with D127440 Carraro 710 front drive axle
7	A38208	16	BOLT wheel retaining, two wheel drive models
8	K965326	12	NUT wheel retaining, four wheel drive models, used with D127440 Carraro 710 front drive axle
8A	D136813		NUT wheel retaining, flanged, with swivel washer attached, no longer, used, order item 8B nut and item 9 washer,
		16	four wheel drive models, used with D127440 Carraro 710 front drive axle
8B	K395089	16	NUT wheel retaining, replaces flanged nut on some models, four wheel drive models, used with D127440 Carraro 710 front drive axle
9	D34666	16	WASHER flat, hardened, used with K395089 nut, four wheel drive models, used with D127440 Carraro 710 front drive axle

172

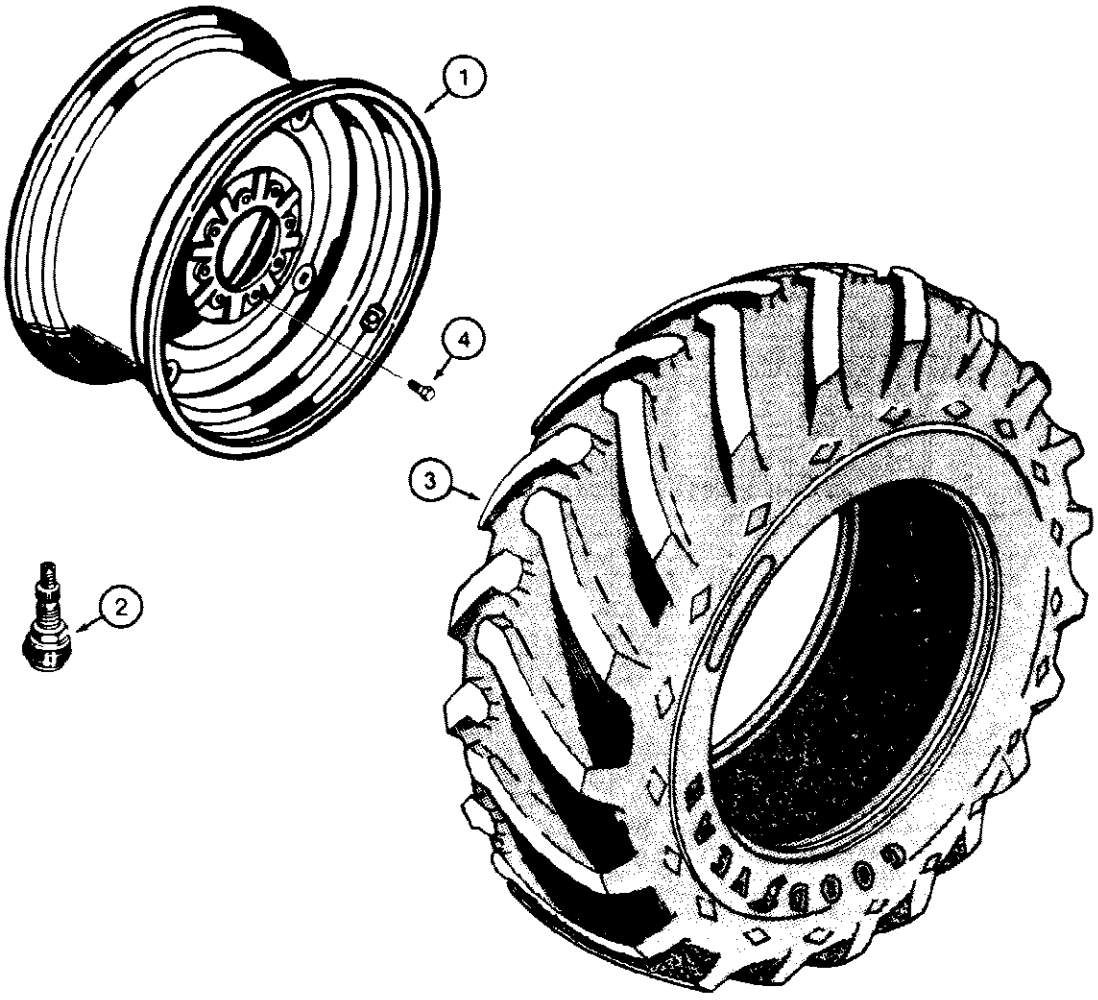

808806

172 REAR WHEELS AND TIRES, 14.9 X 24 - FIXED DISC WHEEL, 16.9 X

Ref	Part Number	Qty	Description
1	A139083	2	WHEEL rim, 14.9 x 24 fixed disc wheel
2	A20058	2	VALVE STEM wheel, 14.9 x 24 fixed disc wheel
3	REF	2	TIRE rear, 14.9 x 24 fixed disc wheel
1	A139085	2	WHEEL rim, 16.9 x 24 and 17.5L x 24 fixed disc wheel
2	A20058	2	VALVE STEM wheel, 16.9 x 24 and 17.5L x 24 fixed disc wheel
3	REF	2	TIRE rear, 16.9 x 24 and 17.5L x 24 fixed disc wheel
4	A38208	16	BOLT wheel retaining

174

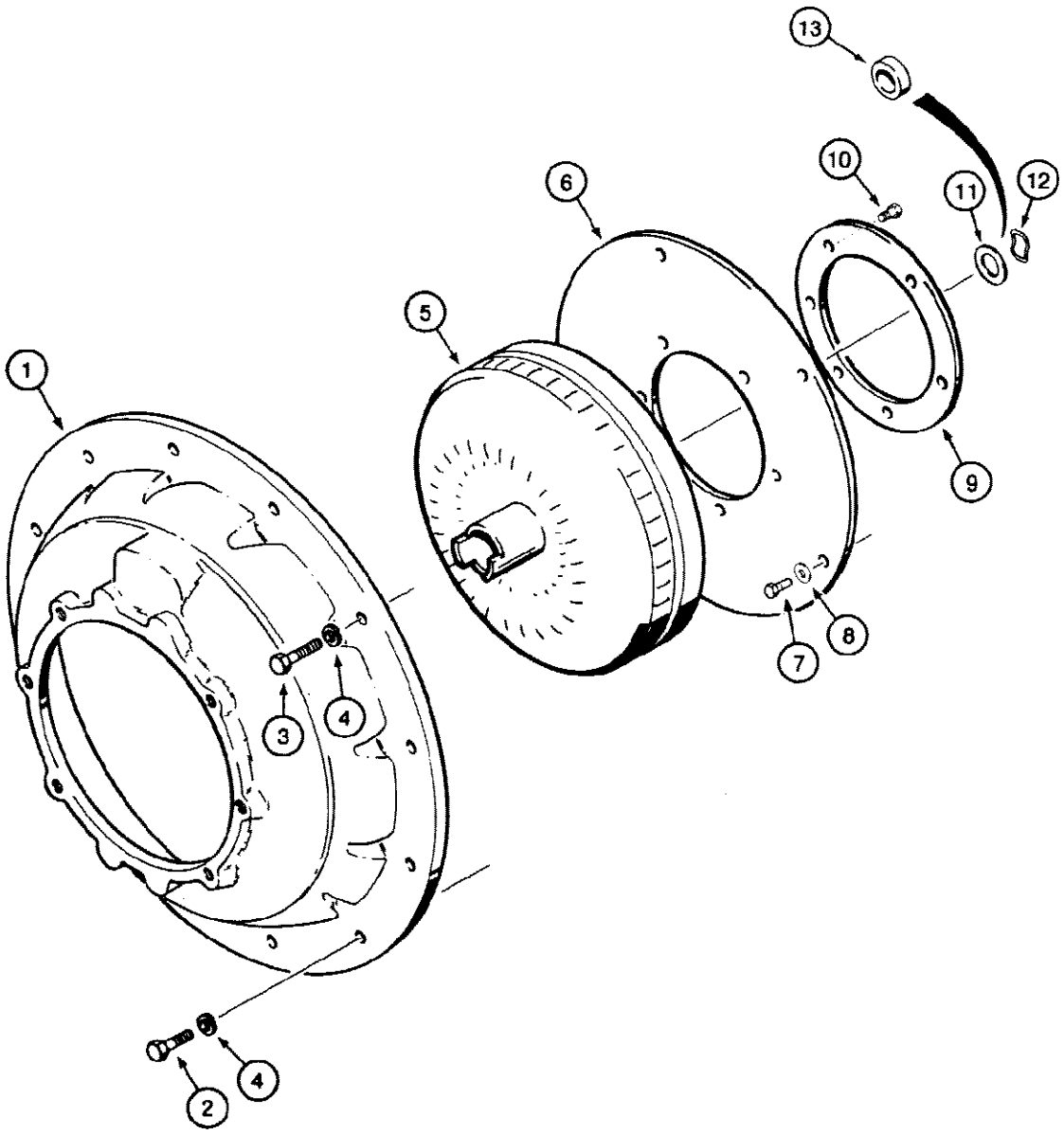

580SE CASE SUPER-E CONSTRUCTION KING LOADER BACKHOE - Power Train

174 TORQUE CONVERTER AND HOUSING

Ref	Part Number	Qty	Description
1	D48445	1	HOUSING torque converter
2	814-10030	11	BOLT, Hex, M10 x 30, 8.8
3	814-10035	1	BOLT hex head, plated, 10 mm - 1.5 x 35 mm (8.8)
4	892-1110	12	WASHER lock, plated, 10 mm
5	D81693	1	CONVERTER torque, transmission
6	D131147	1	PLATE torque converter, hardened
7	121-103	6	BOLT special, grade 8, torque converter mounting, 5/16" - 18 NC x 5/8"
8	A15672	6	WASHER flat, special
9	D81592	1	PLATE torque converter drive
10	121-203	6	BOLT special, grade 8, drive plate mounting, 3/8" - 24 NF x 1/2"
11	D128411	1	SPACER, 3/32" torque converter, thick, used with item 12 wave washer, no longer used, order D135817 spacer and 8-61300 instruction sheet
12	G49413	1	WASHER wave, used with item 11 spacer only
13	D135817	1	SPACER, 9/16" thick, torque converter, if used

176

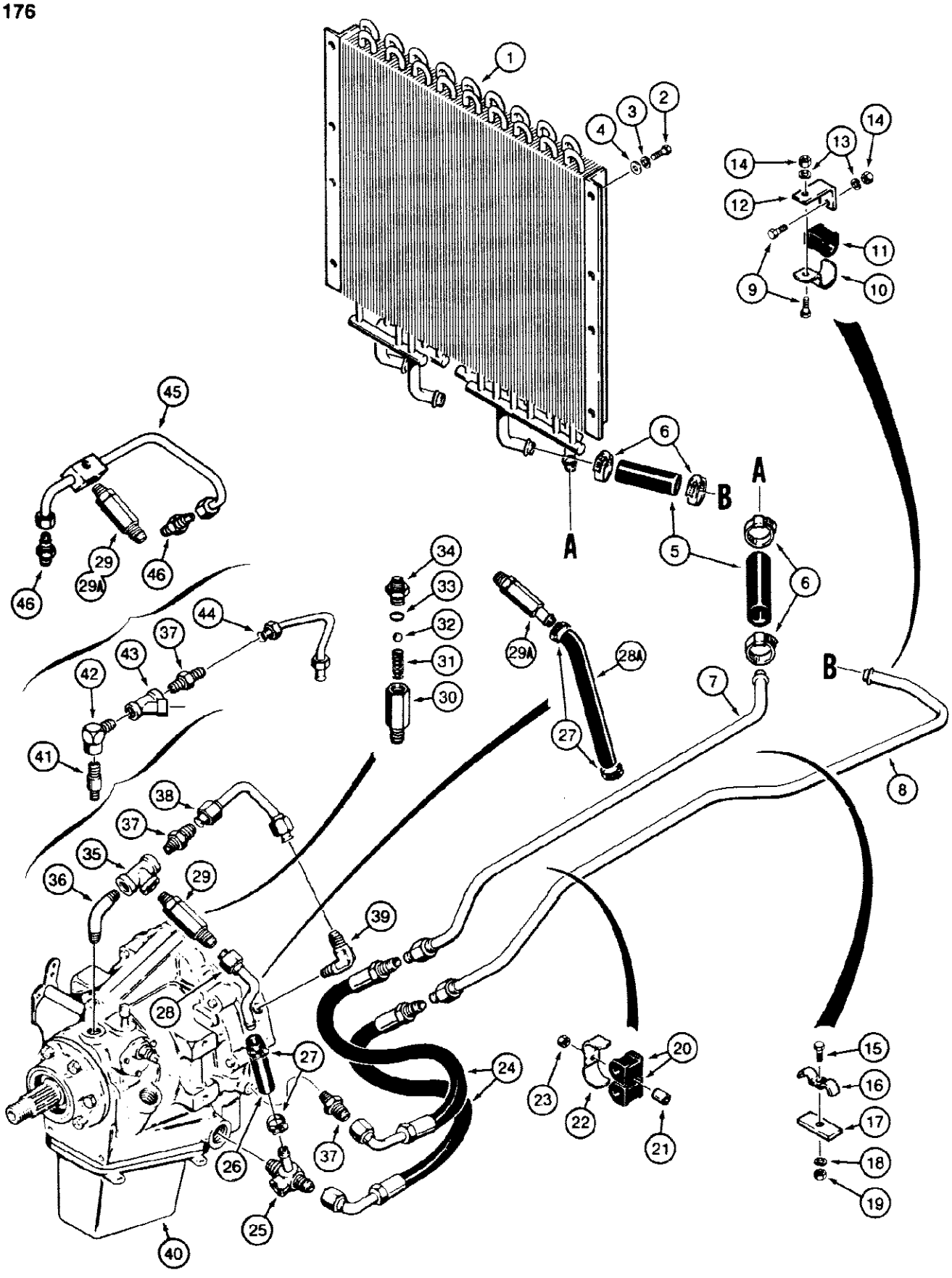
1
2
3
4
5
6
A
B
7
8
9
10
11
12
13
14
15
16
17
18
19
20
21
22
23
24
25
26
27
28
29
29A
30
31
32
33
34
35
36
37
38
39
40
41
42
43
44
45
46
28A
530677 B

580SE CASE SUPER-E CONSTRUCTION KING LOADER BACKHOE - Power Train

176 POWER SHUTTLE COOLING SYSTEM, OIL COOLER WITH ANGLED CONNECTIONS

Ref	Part Number	Qty	Description
1	A171130	1	COOLER oil, power shuttle and equipment hydraulic oil, for equipment hydraulic oil cooler lines, See Figure 324
2	814-8016	8	BOLT hex head, plated, 8 mm - 1.25 x 16 mm (8.8)
3	192-20	8	WASHER, LOCK, 5/16"
4	195-521	8	WASHER flat, plated, 5/16"
5	REF	2	HOSE, 1/2" (13 mm) ID x 4" (102 mm) long, cut from S118388 bulk, see below, oil cooler to tubes
6	214-253	4	CLAMP hose, adjustable
7	D123432	1	TUBE power shuttle to oil cooler
8	D123434	1	TUBE oil cooler to power shuttle
9	113-207	1-2	BOLT, Hex, 3/8"-16 x 1", G5, Full Thd
10	D68638	1	CLAMP D123434, item 8, tube
11	D67296	1	INSULATOR tube mounting
12	D124732	1	BRACKET tube mounting, at radiator, if used
13	192-21	1-2	WASHER, LOCK, 3/8"
14	129-103	1-2	NUT, 3/8"-16, G5
15	113-103	1	BOLT, Hex, 5/16"-18 x 1", G5, Full Thd
16	D90270	1	CLAMP double, tubes
17	D70281	1	PLATE clamp mounting
18	192-20	1	WASHER, LOCK, 5/16"
19	9635082	1	NUT, 5/16"-18, G5
20	D67296	2	INSULATOR tube mounting
21	D76195	1	SPACER tube mounting
22	D68646	1	CLAMP double, tube
23	129-103	1	NUT, 3/8"-16, G5
24	D69051	2	HOSE, 18" (457 mm) long, power shuttle to tubes
25	D68972	1	TEE special
26	REF	1	HOSE, 1/2" (13 mm) ID x 4" (102 mm) long, cut from S118388 bulk, see below, power shuttle, if used
27	214-253	2	CLAMP hose
	S118388	UAR	HOSE bulk, 1/2" (13 mm) ID x 168" (4267 mm) long
28A	D136710	1	HOSE, 9-7/8" (250 mm) long, used with D133321 relief valve, may Replace items 26 and 28 on some models
29	D48540	1	RELIEF VALVE ASSEMBLY, threaded both ends, power shuttle, includes items 30 - 34, if used
29A	D133321	1	RELIEF VALVE ASSEMBLY, with stem fitting at one end, power shuttle, includes items 30 - 34, if used
30	NSS	1	BODY relief valve
31	S73472	1	SPRING relief valve
32	211-212	1	BALL grade 25, chrome alloy steel, 7/16"
33	D26265	1	O RING seat
34	S73469	1	SEAT spring
35	221-423	1	TEE 3/8" NPT, if used
36	D48539	1	ELBOW, 75 degree, special, if used
37	218-444	1-2	ADAPTER straight, male

176 POWER SHUTTLE COOLING SYSTEM, OIL COOLER WITH ANGLED CONNECTIONS

Ref	Part Number	Qty	Description
38	D48523	1	TUBE power shuttle inlet, if used
39	218-484	1	ELBOW, 90 degree, male, if used
40	REF	1	SHUTTLE power, parts list Figures 184-192
41	221-164	1	NIPPLE male, 3/8" NPT x 2", if used
42	217-1016	1	ELBOW street, 90 degree, 3/8" NPT, if used
43	221-823	1	FITTING y type, 3/8" NPT, if used
44	D125845	1	TUBE power shuttle inlet, if used
	D135703	1	TUBE power shuttle, items 29A - 34, 45 and 46 are included in D135731 power shuttle assembly and may Replace items 35 - 39 and 41 - 44
45	D135703	1	TUBE power shuttle, Replaced NSS, Does not have check valve P/N D133321. Small test port plug is 218 5152. Has both adapters on it.
46	NSS	2	CONNECTOR with sleeve and nut

180

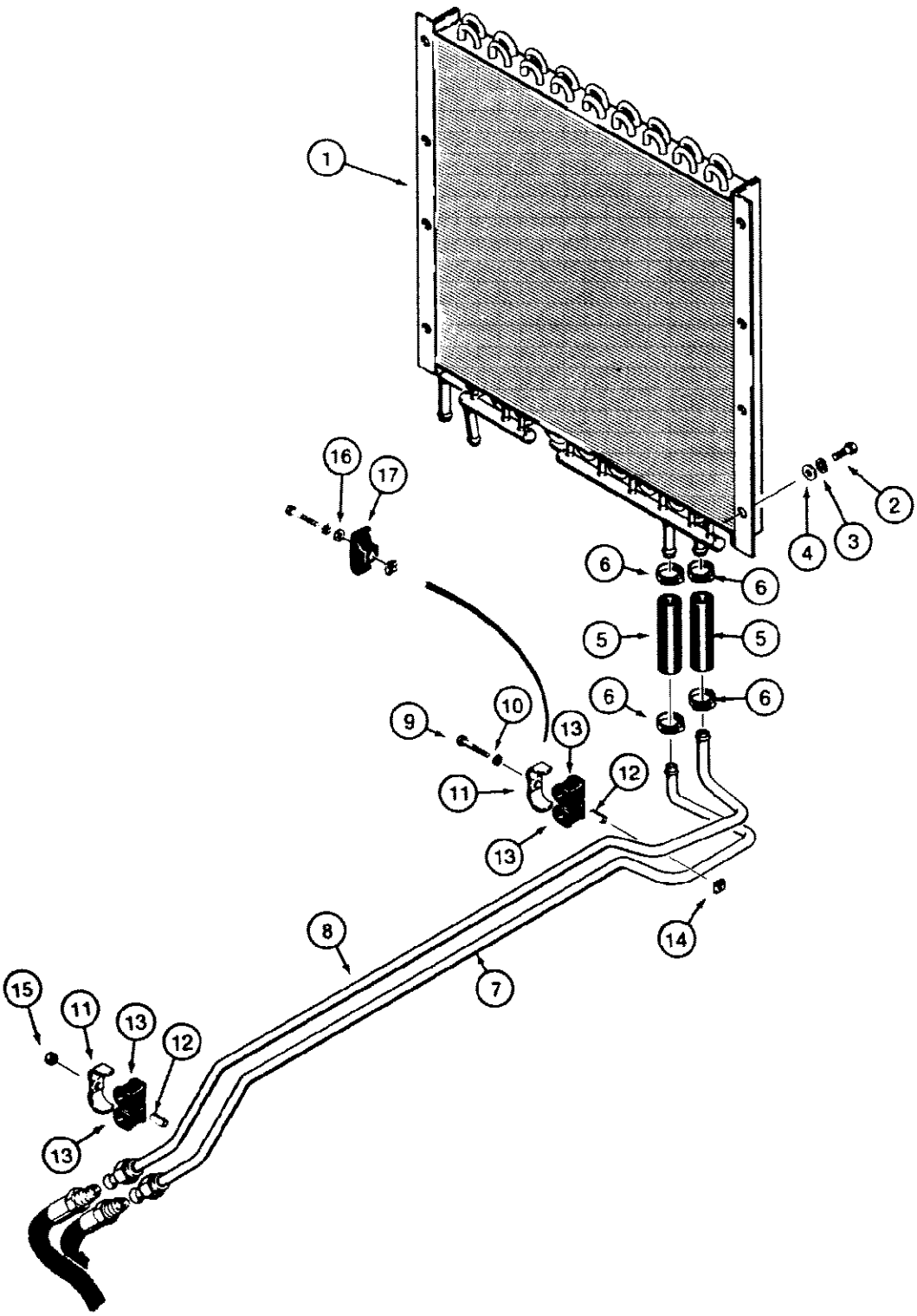

84B355 A

180 POWER SHUTTLE COOLING SYSTEM, OIL COOLER WITH STRAIGHT CONNECTIONS

Ref	Part Number	Qty	Description
1	A171876	1	COOLER oil, power shuttle and equipment hydraulic oil, for equipment hydraulic oil cooler lines, See Figures 326 - 330
2	814-8016	8	BOLT hex head, plated, 8 mm - 1.25 x 16 mm (8.8)
3	192-20	8	WASHER, LOCK, 5/16"
4	195-521	8	WASHER flat, plated, 5/16"
5	REF	2	HOSE, 1/2" (13 mm) ID x 4" (102 mm) long, cut from S118388 bulk, see below, oil cooler to tubes
6	214-253	4	CLAMP hose, adjustable
7	D127116	1	TUBE power shuttle to oil cooler
8	D127118	1	TUBE oil cooler to power shuttle
9	113-208	1	BOLT, Hex, 3/8"-16 x 1 1/4", G5, Full Thd
10	192-21	1	WASHER, LOCK, 3/8"
11	D68646	1-2	CLAMP double, tube
12	D76195	1-2	SPACER tube mounting
13	D67296	2-4	INSULATOR tube mounting
14	25-226	1	NUT square, 3/8" - 16 NC
15	129-103	1	NUT, 3/8"-16, G5
16	195-525	1	WASHER flat, plated, 3/8", used with D120679 plastic tube clamp
17	D120679	1	CLAMP plastic, tube, Replaces items 11 - 13 clamp arrangement on some models
	S118388	UAR	HOSE bulk, 1/2" (13 mm) ID x 168" (4267 mm) long

182

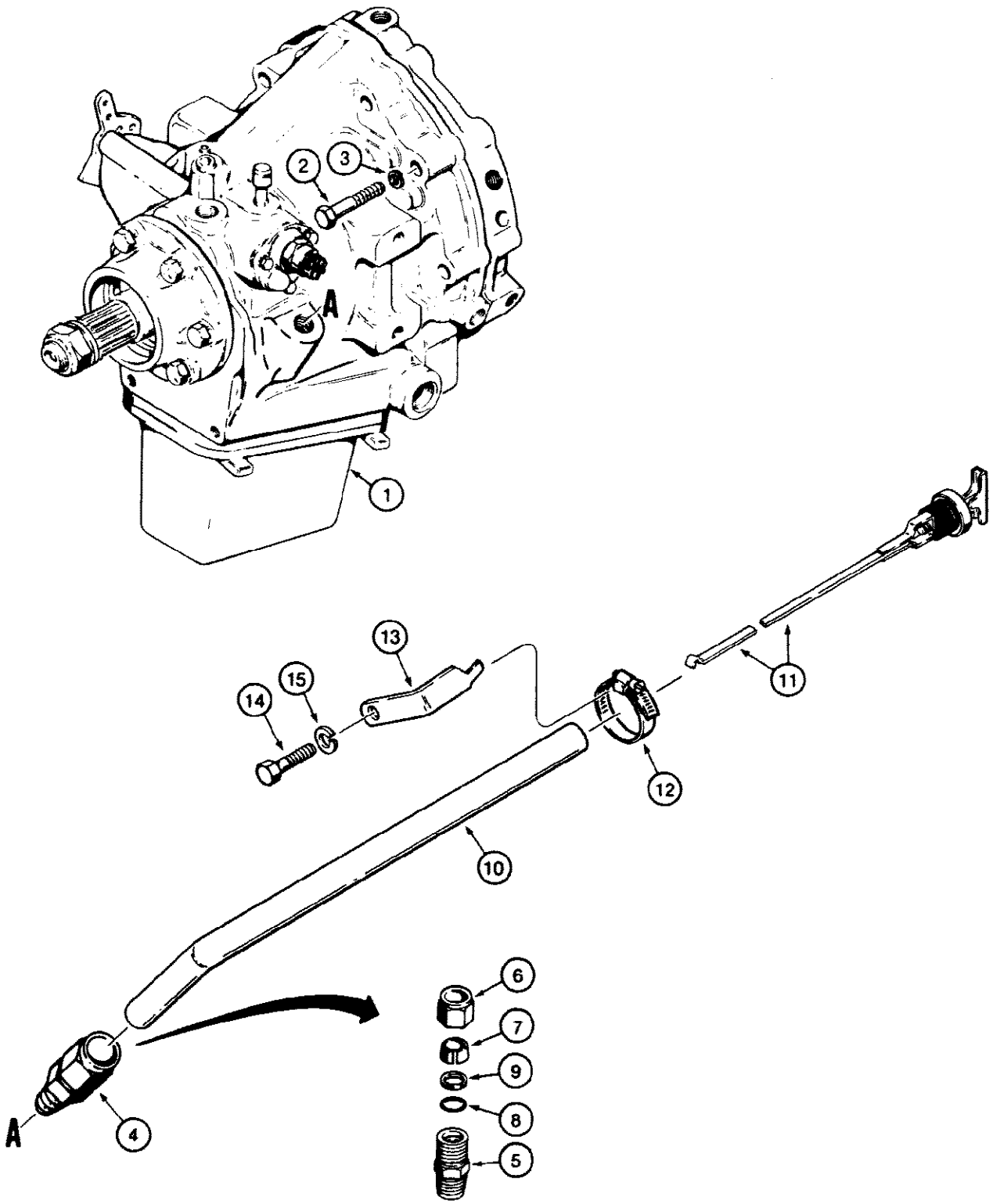

580SE CASE SUPER-E CONSTRUCTION KING LOADER BACKHOE - Power Train

182 POWER SHUTTLE MOUNTING AND DIPSTICK

Ref	Part Number	Qty	Description
1	REF	1	SHUTTLE power, for correct assembly and components See Figures 184 - 192
2	113-329	6	BOLT hex head, plated, 7/16" - 14 NC x 3-1/4"
3	192-22	6	WASHER, LOCK, 7/16"
4	222-3006	1	CONNECTOR ASSEMBLY, straight, power shuttle to dipstick tube, Includes: Ref. 5 - 9
5	NSS	1	BODY connector
6	222-3111	1	NUT connector
7	222-3105	1	SLEEVE connector
8	A7623	1	O RING connector
9	D54295	1	RING backup, connector O ring
10	D125818	1	TUBE filler, power shuttle
11	D125819	1	DIPSTICK power shuttle
12	214-254	1	CLAMP tube
13	D121358	1	SUPPORT filler tube
14	814-10035	1	BOLT hex head, plated, 10 mm - 1.5 x 35 mm (8.8)
15	892-1110	1	WASHER lock, plated, 10 mm

184

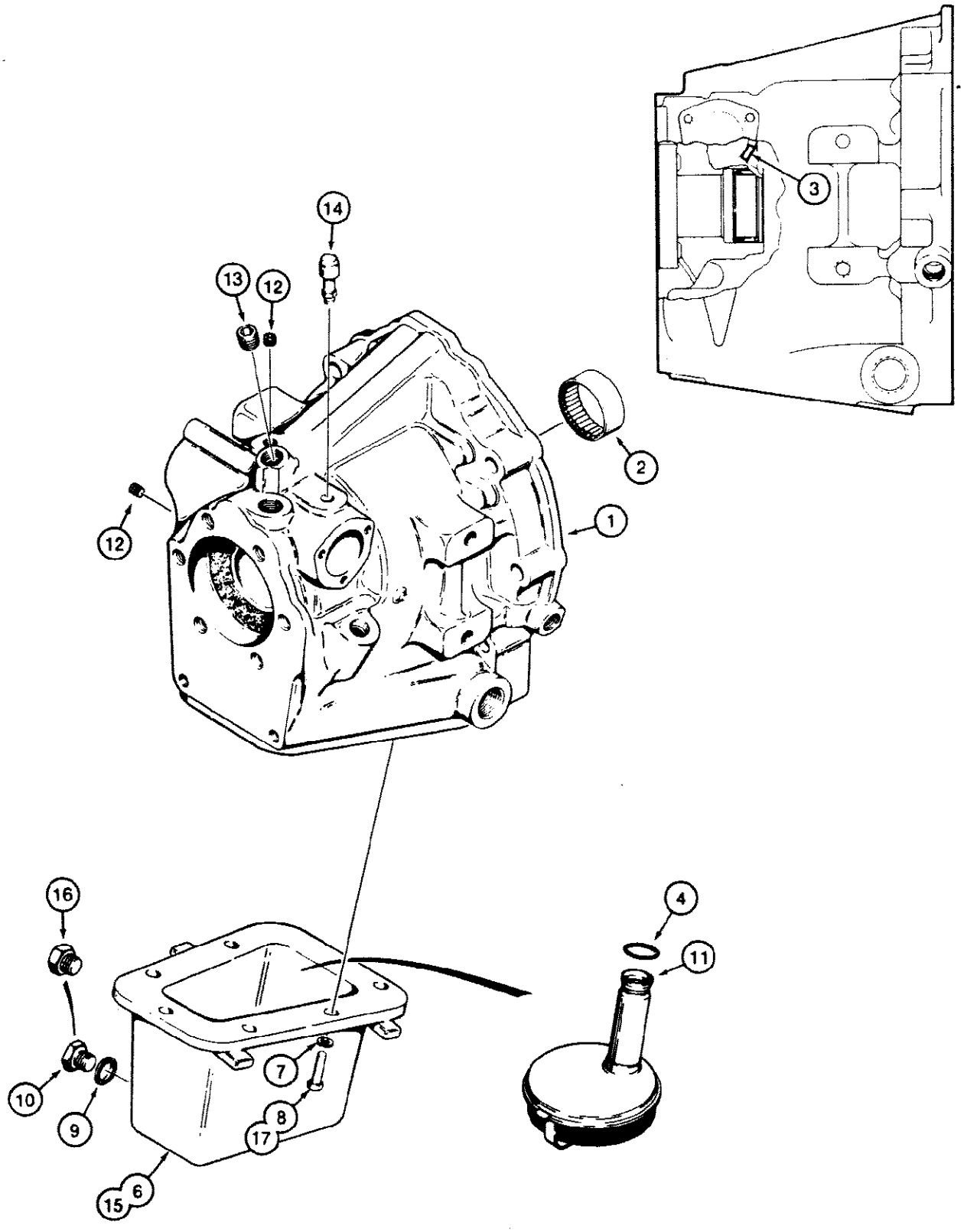

184 POWER SHUTTLE, HOUSING AND OIL PAN

Ref	Part Number	Qty	Description
	D88050	1	POWER SHUTTLE ASSEMBLY, Warner Gear No. 10 16 000 022, for service order D101784 kit below and D73776 yoke on Figure 186, See Figures 186 - 192, Check the part number on the power shuttle serial number plate before ordering.
	329669A1	AR	POWER SHUTTLE - 329669A1 includes a reman power shuttle (DR140175) with a reman converter (103293A1R)
	329669A1C	AR	POWER SHUTTLE - 329669A1 includes a reman power shuttle (DR140175) with a reman converter (103293A1R)
	D136020	1	POWER SHUTTLE ASSEMBLY, service replacement for D125633, Warner Gear No.10 16 000 026, and D135731, Warner Gear No.10 16 000 033, power shuttles used in production on some models, includes instruction sheet, See Figures 186-192, D135731 power shut Includes: Ref. D70650, 1 - 17, Check the part number on the power shuttle serial number plate before ordering.
	329669A1	AR	POWER SHUTTLE - 329669A1 includes a reman power shuttle (DR140175) with a reman converter (103293A1R)
	329669A1C	AR	POWER SHUTTLE - 329669A1 includes a reman power shuttle (DR140175) with a reman converter (103293A1R)
	D70650	1	HOUSING ASSEMBLY, power shuttle, Includes: Ref. 1 - 3
1	NSS	1	HOUSING power shuttle
2	R21491	1	BEARING needle, housing, 1-3/4 in ID
3	41-1007	1	PLUG cup, 7/16"
4	R29797	1	O RING screen tube
5	345-84	1	SEALANT 3 oz (89 ml) of sealant in a tube, oil pan to housing, not shown
6	R29902	1	PAN oil, power shuttle, no longer available, for service order N13577 oil pan, 221 841 drain plug, and, 7, 113 221 bolts, see items 15 - 17
7	92-6	7	3/8"
8	113-207	7	BOLT, Hex, 3/8"-16 x 1", G5, Full Thd
	D73701	1	PLUG ASSEMBLY, drain, used with R29902 oil pan, Includes: Ref, 9 - 10
9	D73701	1	GASKET drain plug, Replaced NSS
10	NSS	1	PLUG drain
11	D66455	1	SCREEN sump, power shuttle
12	221-849	2	PLUG hex socket head, 1/8" NPT
13	221-843	1	PLUG hex socket head, 3/8" NPT
14	D50062	1	BREATHER power shuttle
15	N13577	1	PAN oil, power shuttle
16	221-841	1	PLUG hex socket head, 1/4" NPT
17	113-221	7	BOLT, Hex, 3/8"-16 x 7/8", G5, Full Thd
	D101784	1	KIT, power shuttle, includes D125633 power shuttle assembly and installation instruction
	329669A1	AR	POWER SHUTTLE - 329669A1 includes a reman power shuttle (DR140175) with a reman converter (103293A1R)
	329669A1C	AR	POWER SHUTTLE - 329669A1 includes a reman power shuttle (DR140175) with a reman converter (103293A1R)

186

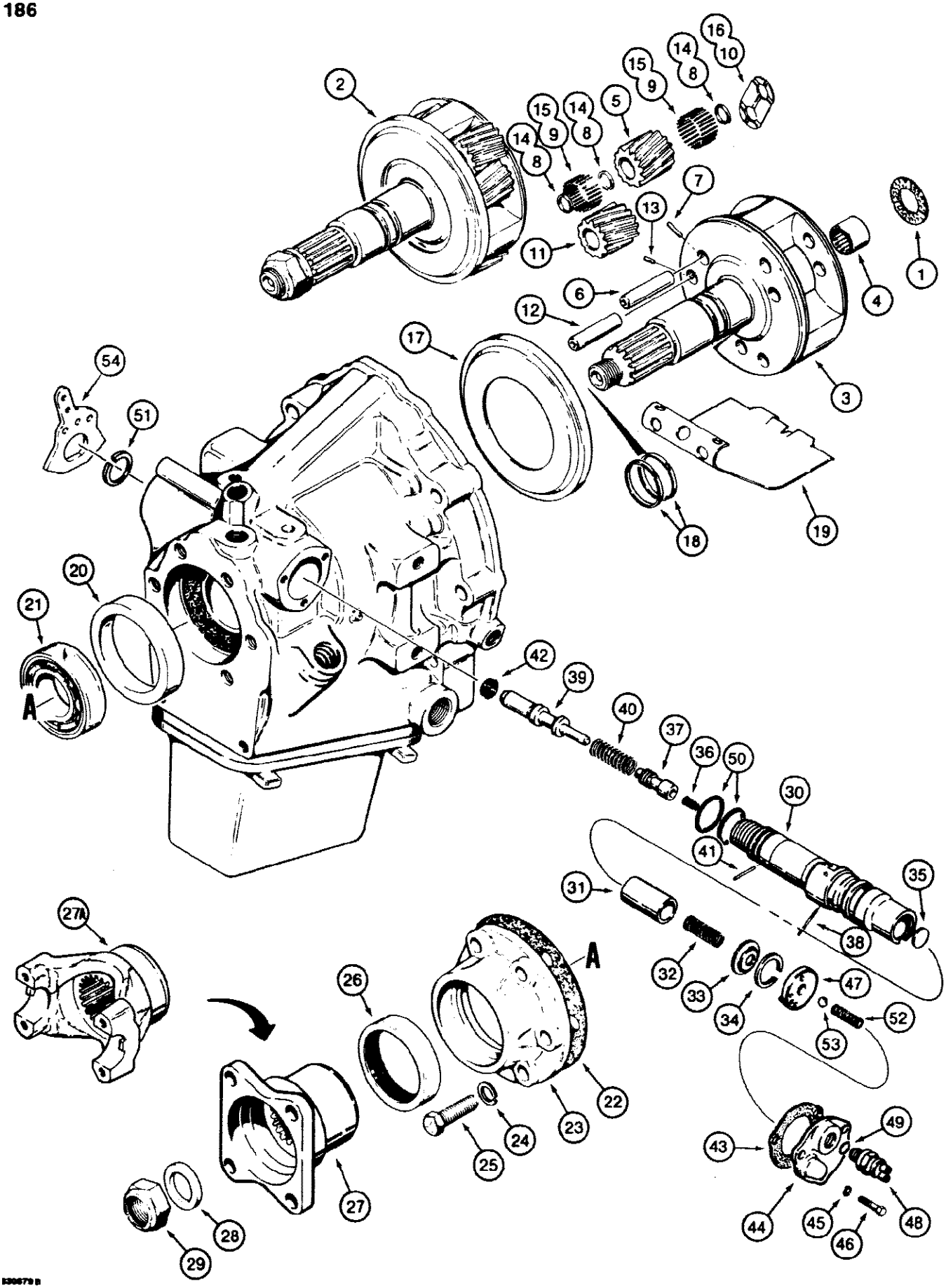
1
2
3
4
5
6
7
8
9
10
11
12
13
14
15
16
17
18
19
20
21
22
23
24
25
26
27
27A
28
29
30
31
32
33
34
35
36
37
38
39
40
41
42
43
44
45
46
47
48
49
50
51
52
53
54
A
A

186 POWER SHUTTLE, PINION CAGE, OUTPUT SHAFT AND CONTROL VALVE

Ref	Part Number	Qty	Description
	REF	1	POWER SHUTTLE ASSEMBLY, See Figure 184 for service information, See Figures 184-192, Includes: Ref. 1 - 54, Check the part number on the power shuttle serial number plate before ordering.
1	D50055	1	WASHER thrust, clutch hub
2	D70665	1	PINION CAGE AND OUTPUT SHAFT power shuttle, Includes: Ref. 3 - 17
3	NSS	1	CAGE AND SHAFT basic
4	H747964	1	BEARING needle, output shaft
	D50030	3	KIT, inner pinion gear and shaft, Includes: Ref. 5 - 10
5	NSS	1	GEAR pinion, inner
6	NSS	1	SHAFT pinion, inner
7	NSS	1	PIN retaining
8	NSS	3	SPACER pinion bearing
9	NSS	48	ROLLER pinion bearing
10	NSS	2	PLATE thrust
	D50031	3	KIT, outer pinion gear and shaft, Includes: Ref. 11 - 16
11	NSS	1	GEAR pinion, outer
12	NSS	1	SHAFT pinion, outer
13	NSS	1	PIN retaining
14	NSS	3	SPACER pinion bearing
15	NSS	48	ROLLER pinion bearing
16	NSS	2	PLATE thrust
17	D50087	1	RING collector
18	D50080	2	RING sealing
19	D50056	1	BAFFLE plate
20	D50057	1	SPACER ball bearing
21	40011	1	BEARING ball, output shaft
22	D50058	1	GASKET ball bearing retainer
23	D50059	1	RETAINER rear ball bearing
24	92-7	6	7/16"
25	13-718	6	BOLT, Hex, 7/16"-14 x 1 1/8", G5, Full Thd
26	D50060	1	SEAL oil, rear
27	D73776	1	YOKE output shaft mounting, used with D86246 drive shaft, See Figure 196
27A	D124144	1	YOKE output shaft mounting, used with D124145 or D128558 drive shaft, See Figure 196
28	D65247	1	WASHER output shaft
	345-84	1	SEALANT, 3 oz., 89 ml, of sealer in a tube, not shown, can be used between D65247 washer and end of shaft
29	131-91	1	NUT hex, self locking, special, 3/4" - 16 NF
	D77473	1	VALVE ASSEMBLY, power shuttle, single groove for one D37156 O ring, item 50, no longer available, for service order N13639 valve and 2, D37156 O rings, item 50
	N13639	1	VALVE ASSEMBLY, power shuttle, double groove for two D37156 O rings, item 50, Includes: Ref. 30 - 42A

186 POWER SHUTTLE, PINION CAGE, OUTPUT SHAFT AND CONTROL VALVE

Ref	Part Number	Qty	Description
30	NSS	1	BODY valve
31	D50089	1	VALVE pressure regulator
32	D50090	1	SPRING valve
33	D50091	1	RETAINER spring
34	D50092	1	RING spring retaining
35	41-12	1	PLUG expansion, 3/4"
36	D77476	1	SPRING clutch cutout
37	D77474	1	SPOOL valve
38	135-198	1	PIN, GROOVED, 5/64" x 1", Type B, Half length taper
39	D75488	1	PLUNGER valve
40	D77475	1	SPRING plunger
41	138-59	1	PIN, 1/8" x 7/8", Slotted
42	D75489	1	SEAL oil, see item 42A
42A	D75492	1	TOOL installation, used to install D75489 seal, item 42, not shown
43	D50066	1	GASKET valve cover
44	D86488	1	COVER valve
45	192-19	3	WASHER, LOCK, 1/4"
46	113-9	3	BOLT hex head, 1/4" - 20 NC x 7/8"
47	D86489	1	CAM neutral start switch
48	S113435	1	SWITCH neutral start, Includes: Ref. 49, This plugs into engine harness. Connector on harness is 899166R1.
49	218-5005	1	O-Ring, 6-1, 90 Duro, .468" ID x .078" Thk, switch
50	D37156	1-2	O RING valve
51	A75171	1	RING retaining
52	S47892	2	SPRING poppet
53	211-9	2	BALL grade 200, chrome alloy steel, 5/16"
54	D77621	1	LEVER shift, Spring and ball also appear between Ref. 54 shift lever and power shuttle housing.

190

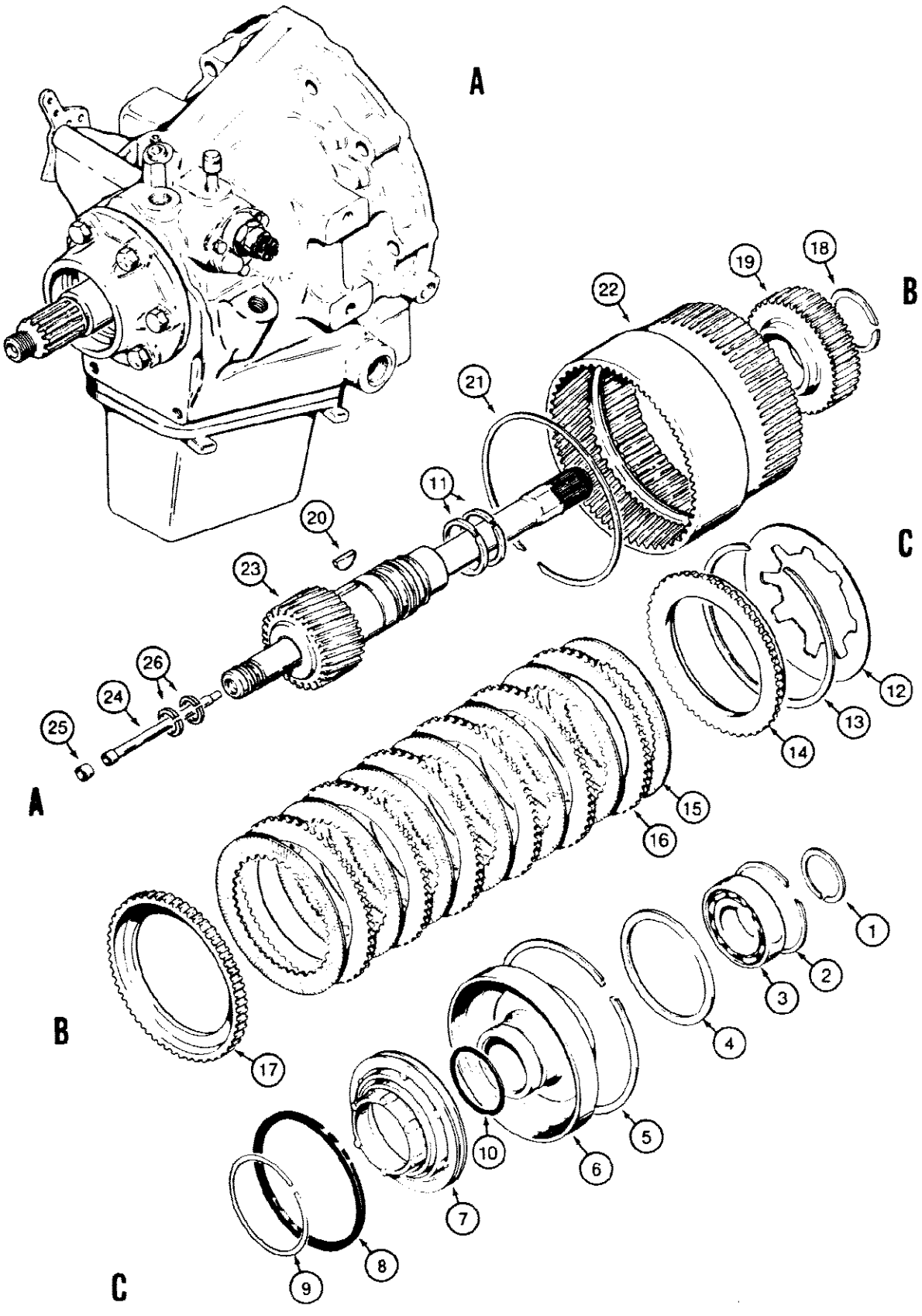

190 POWER SHUTTLE, INPUT SHAFT AND FORWARD CLUTCH

Ref	Part Number	Qty	Description
	REF	1	POWER SHUTTLE ASSEMBLY, See Figure 184 for service information, See Figures 184 - 192, Includes: Ref. 1 - 26, Check the part number on the power shuttle serial number plate before ordering.
1	D50042	1	RING snap, bearing retaining, small
2	D50043	1	RING snap, bearing retaining, large
3	D50044	1	BEARING ball, clutch cylinder
4	D50045	1	WASHER thrust, forward clutch
5	D50046	1	RING ring gear retaining
6	D50075	1	CYLINDER forward clutch
7	D70670	1	PISTON forward clutch
8	D50077	1	RING piston
9	D50078	1	RING piston
10	D50079	1	O RING cylinder
11	D50080	2	RING sealing
12	D50047	1	SPRING Belleville
13	D50048	1	RING retaining, pressure plate
14	D50081	1	PLATE pressure, front
15	D70672	7	DISC friction, internal tooth
16	D50083	6	DISC friction, external tooth
17	D50084	1	PLATE pressure, rear
18	D50049	1	RING clutch hub retaining
19	D75853	1	HUB clutch
20	126-124	1	Woodruff Key, #15, 1/4" x 1", HT, Input shaft
21	D50051	UAR	RING, .050" (1.270 mm) to .054" (1.372 mm) thick
21	D78397	UAR	RING, .062" (1.575 mm) to .066" (1.676 mm) thick
21	D50052	UAR	RING, .074" (1.880 mm) to .078" (1.981 mm) thick
21	D78398	UAR	RING, .084" (2.134 mm) to .088" (2.235 mm) thick
21	D50053	UAR	RING, .096" (2.438 mm) to .100" (2.540 mm) thick
22	D50054	1	GEAR ring, power shuttle
	D70666	1	INPUT SHAFT ASSEMBLY, power shuttle, Includes: Ref. 23 - 25
23	NSS	1	SHAFT input, drive
24	N7043	1	TUBE forward clutch supply
25	D50086	1	PLUG shaft end
26	D70668	2	RING sealing

192

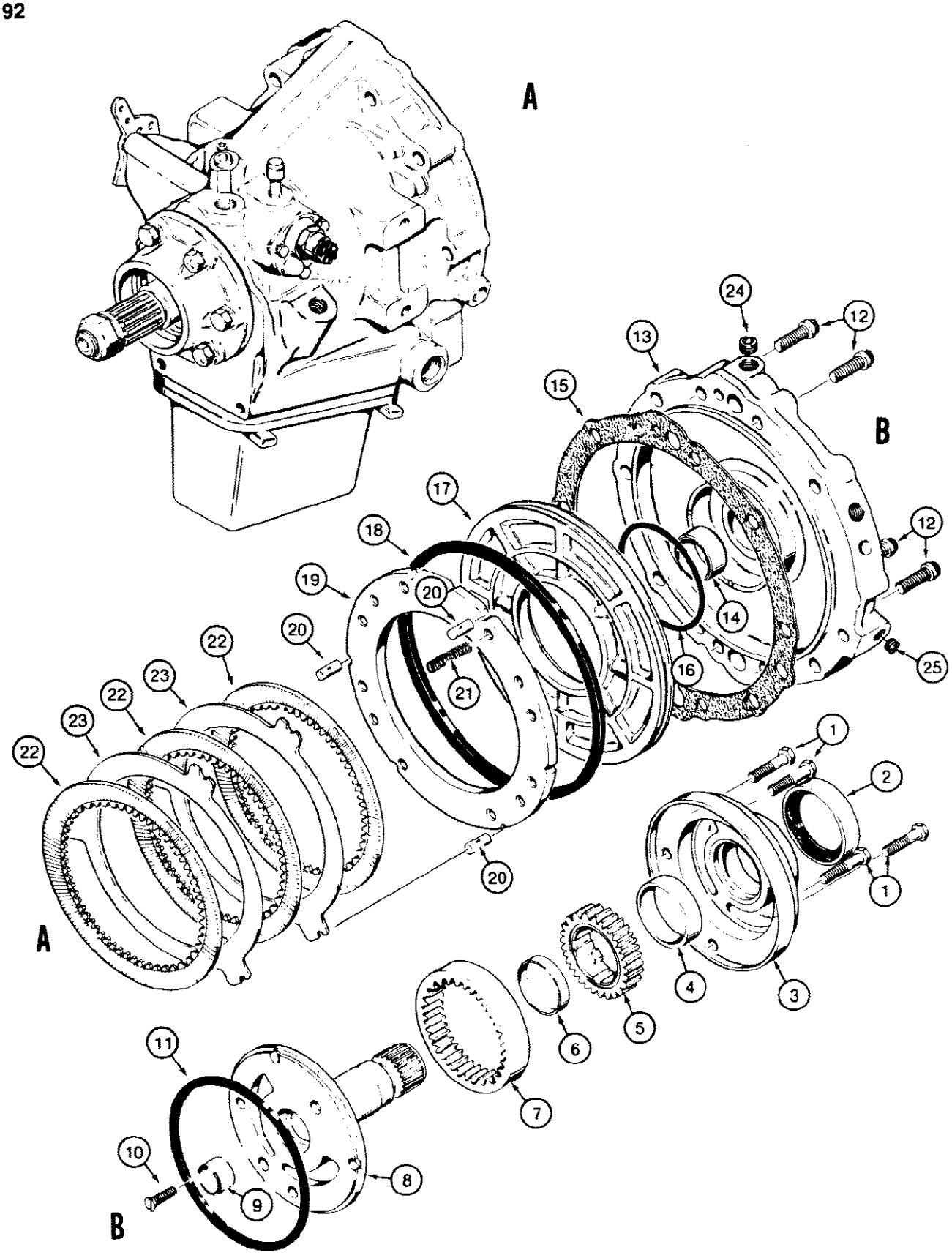

830681

192 POWER SHUTTLE, CHARGING PUMP AND REVERSE CLUTCH

Ref	Part Number	Qty	Description
	REF	1	POWER SHUTTLE ASSEMBLY, See Figure 184 for service information, See Figures 184 - 192, Includes: Ref. 1 - 25, Check the part number on the power shuttle serial number plate before ordering.
1	113-120	4	BOLT, Hex, 5/16"-18 x 1 3/4", G5
	R29995	1	CHARGING PUMP ASSEMBLY, power shuttle, Includes: Ref. 2 - 10
2	N8071	1	SEAL oil
3	NSS	1	BODY charging pump, Includes: Ref. 4
4	NSS	1	BUSHING charging pump
5	NSS	1	GEAR drive, charging pump, Includes: Ref. 6
6	NSS	1	BUSHING charging pump gear drive
7	NSS	1	GEAR driven, charging pump
8	NSS	1	SUPPORT torque converter, Includes: Ref. 9
9	NSS	1	BUSHING torque converter support
10	171-100	1	SCREW machine, flat head slotted, special, No. 10 - 24 NC x 3/4"
11	L30487	1	GASKET charging pump
12	166-46	4	BOLT Ferry head, grade 8, 3/8" - 16 NC x 1-1/4"
	D50022	1	COVER ASSEMBLY, power shuttle, Includes: Ref. 13 - 14
13	NSS	1	COVER power shuttle
14	D50074	1	BUSHING cover
15	D50033	1	GASKET cover to housing
16	D50034	1	O RING small
17	D50035	1	PISTON reverse clutch
18	D50036	1	RING piston seal, square section
19	D50037	1	PLATE pressure, reverse clutch
20	D50038	3	PIN dowel, pressure plate
21	D50039	11	SPRING pressure plate
22	D50040	3	DISC friction, internal tooth
23	D50041	2	DISC metal, external flange
24	221-841	1	PLUG hex socket head, 1/4" NPT
25	221-849	2	PLUG hex socket head, 1/8" NPT

194

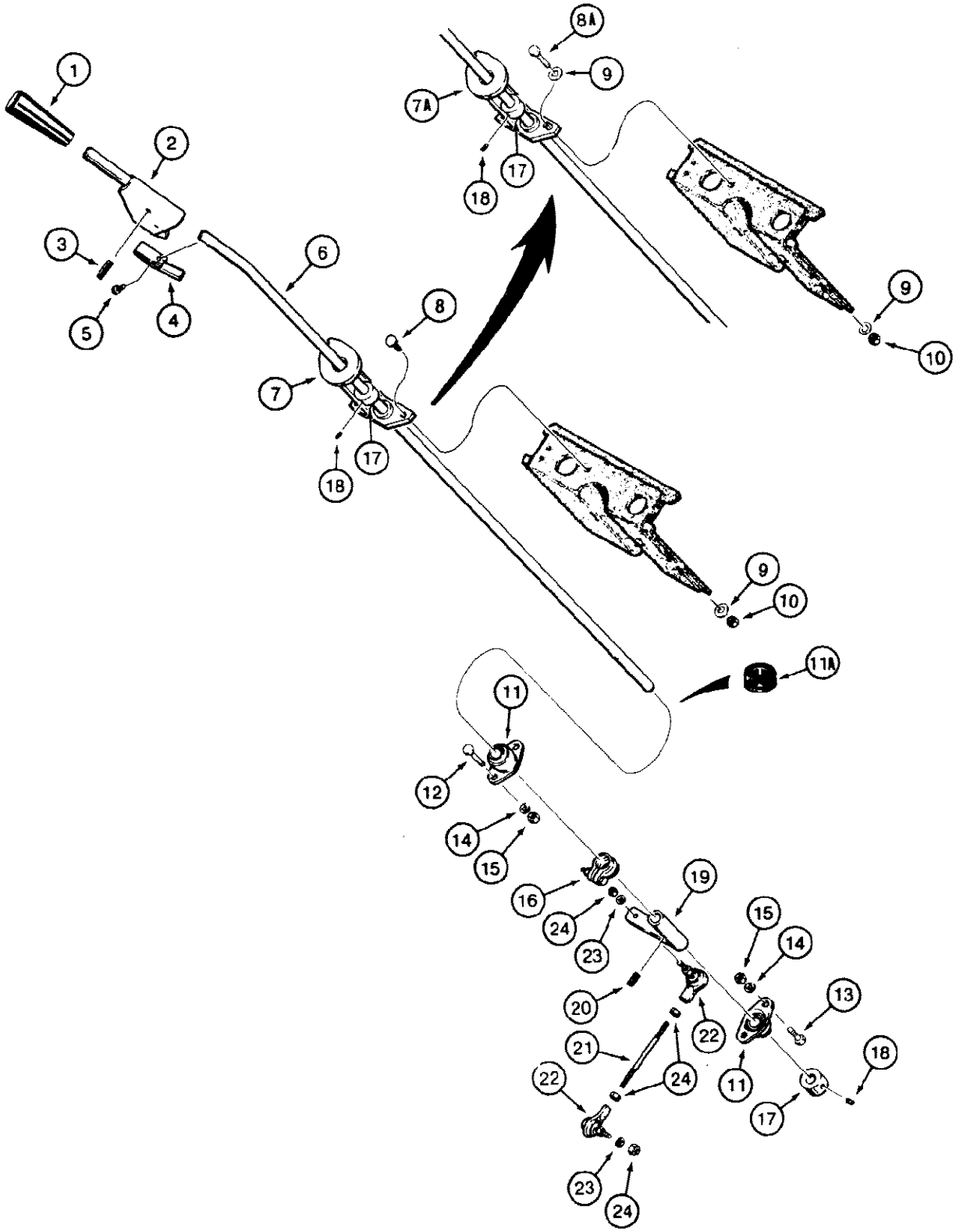

580SE CASE SUPER-E CONSTRUCTION KING LOADER BACKHOE - Power Train

194 SHUTTLE CONTROL AND LINKAGE

Ref	Part Number	Qty	Description
1	D86694	1	KNOB shuttle control lever
2	D86946	1	LEVER control, shuttle, upper
3	138-2053	1	PIN, 1/4" x 1 1/4", Coiled
4	D125772	1	SPRING detent
5	163-28	1	SCREW machine, hex washer head, No. 8 - 32 NC x 1/4"
6	D83269	1	ROD lever
7	D122306	1	BRACKET detent, shuttle lever, with square mounting holes, no longer used, order D126713 bracket and, 3, 113 103 bolts
7A	D126713	1	BRACKET detent, shuttle lever, with slotted mounting holes
8	111-203	3	BOLT, CARRIAGE, Short NK, 5/16"-18 x 1", G2, Used with D122306 bracket, if used
8A	113-103	3	BOLT, Hex, 5/16"-18 x 1", G5, Full Thd, Used with D126713 bracket
9	195-521	3-6	WASHER flat, plated, 5/16"
10	131-4	3	NUT hex, self locking, 5/16" - 18 NC
11	L15401	1-2	BEARING lower steering valve bracket, bearing at floor plate no longer used, not required
11A	D51643	1	GROMMET replaces L15401 bearing, item 11, on some models, used as a seal on cab units only
12	113-103	2	BOLT, Hex, 5/16"-18 x 1", G5, Full Thd, Upper bearing, if used
13	113-102	2	BOLT, Hex, 5/16"-18 x 3/4", G5, Full Thd, Lower bearing
14	192-20	2-4	WASHER, LOCK, 5/16"
15	9635082	2-4	NUT, 5/16"-18, G5
16	D71880	1	CLAMP shuttle control lever, includes hardware
	D81756	2	COLLAR ASSEMBLY, bearing, shuttle rod, Includes: Ref. 17 - 18
17	NSS	1	COLLAR bearing
18	178-888	1	SCREW set, hex socket headless, cup point, plated, 1/4" - 20 NC x 1/4"
19	D83274	1	LEVER shuttle, lower
20	138-150	1	PIN, 5/16" x 13/16", Slotted
21	D84515	1	ROD lever to power shuttle
22	D63154	2	JOINT ball, 1/4"
23	192-19	2	WASHER, LOCK, 1/4"
24	129-121	4	NUT, 1/4"-28, G5

196

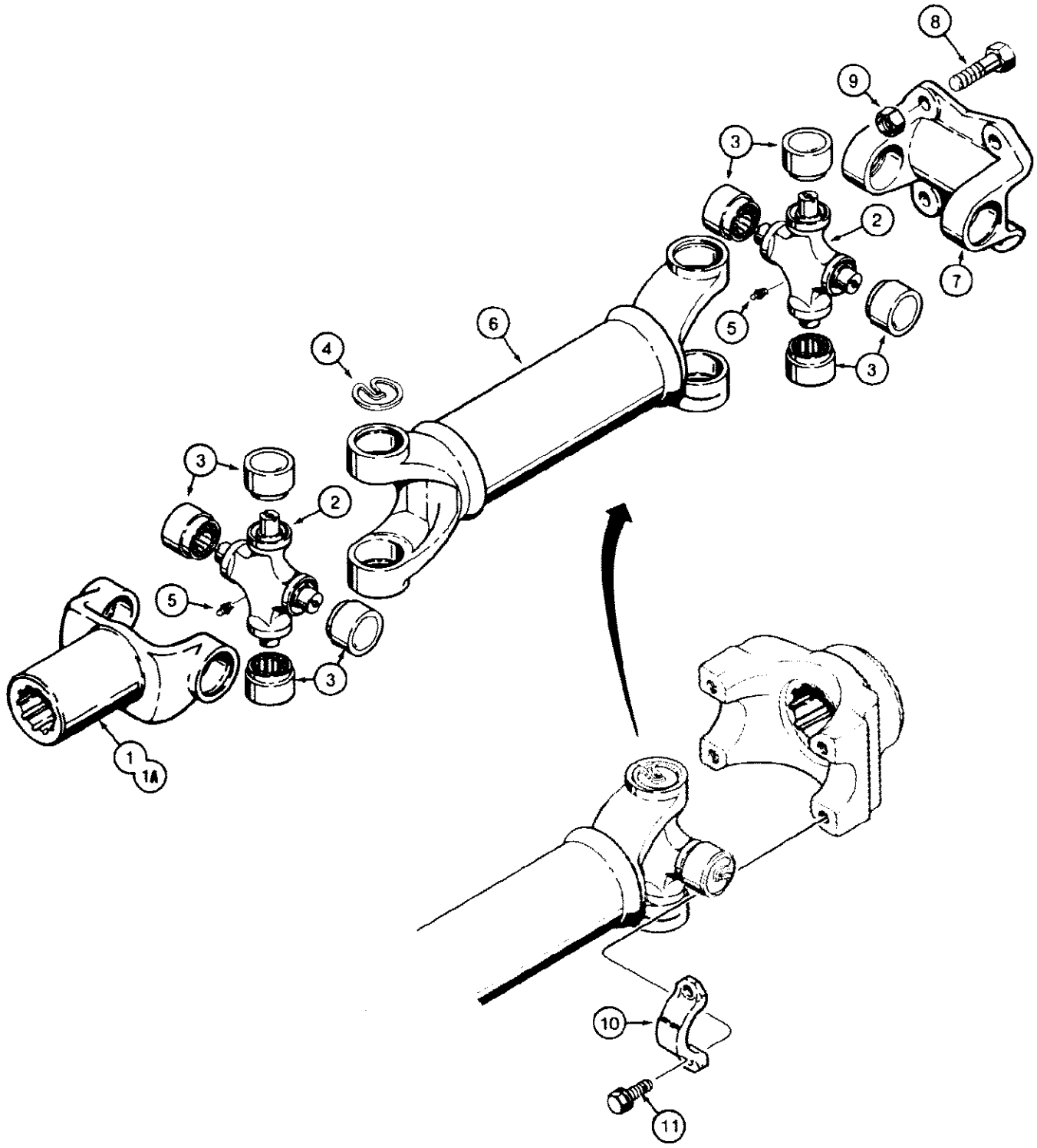

830682 A

196 DRIVE SHAFT, POWER SHUTTLE TO TRANSAXLE

Ref	Part Number	Qty	Description
	D86246	1	DRIVE SHAFT ASSEMBLY, to transaxle, mounts to power shuttle with W13668 bracket, item 7
	D124145	1	DRIVE SHAFT ASSEMBLY, to transaxle, mounts to power shuttle with D124146 strap, item 10, used on models with four wheel drive
	D128558	1	DRIVE SHAFT ASSEMBLY, to transaxle, mounts to power shuttle with D124146 strap, used on models with two wheel drive, Includes: Ref. 1 - 7
1	N6834	1	YOKE end, to transaxle, D86246 or D124145 drive shaft
1A	N9815	1	YOKE end, to transaxle, D128558 drive shaft, Includes: Ref. 1B
1B	N13653	1	PLUG grease, N6834 or N9815 yoke, not shown
	D70629	2	KIT, universal joint, Includes: Ref. 2 - 5
2	NSS	1	JOINT universal, drive shaft
3	NSS	4	BEARING universal joint
4	11256	4	RING retaining
5	219-10	1	FITTING grease, straight, 1/4" - 28 NF taper
6	NSS	1	DRIVE SHAFT power shuttle
7	W13668	1	BRACKET to power shuttle, used with D86246 drive shaft only
8	114-266	4	BOLT, Hex, 3/8"-24 x 1", G8, Full Thd, Special thread length, used with W13668 bracket, item 7
9	131-1133	4	NUT hex, self locking, plated, 3/8" - 24 NF, used with W13688 bracket, item 7
10	D124146	2	STRAP bearing, used with D124145 or D128558 drive shaft only
11	D124151	4	BOLT special, used with D124146 strap, item 10

198

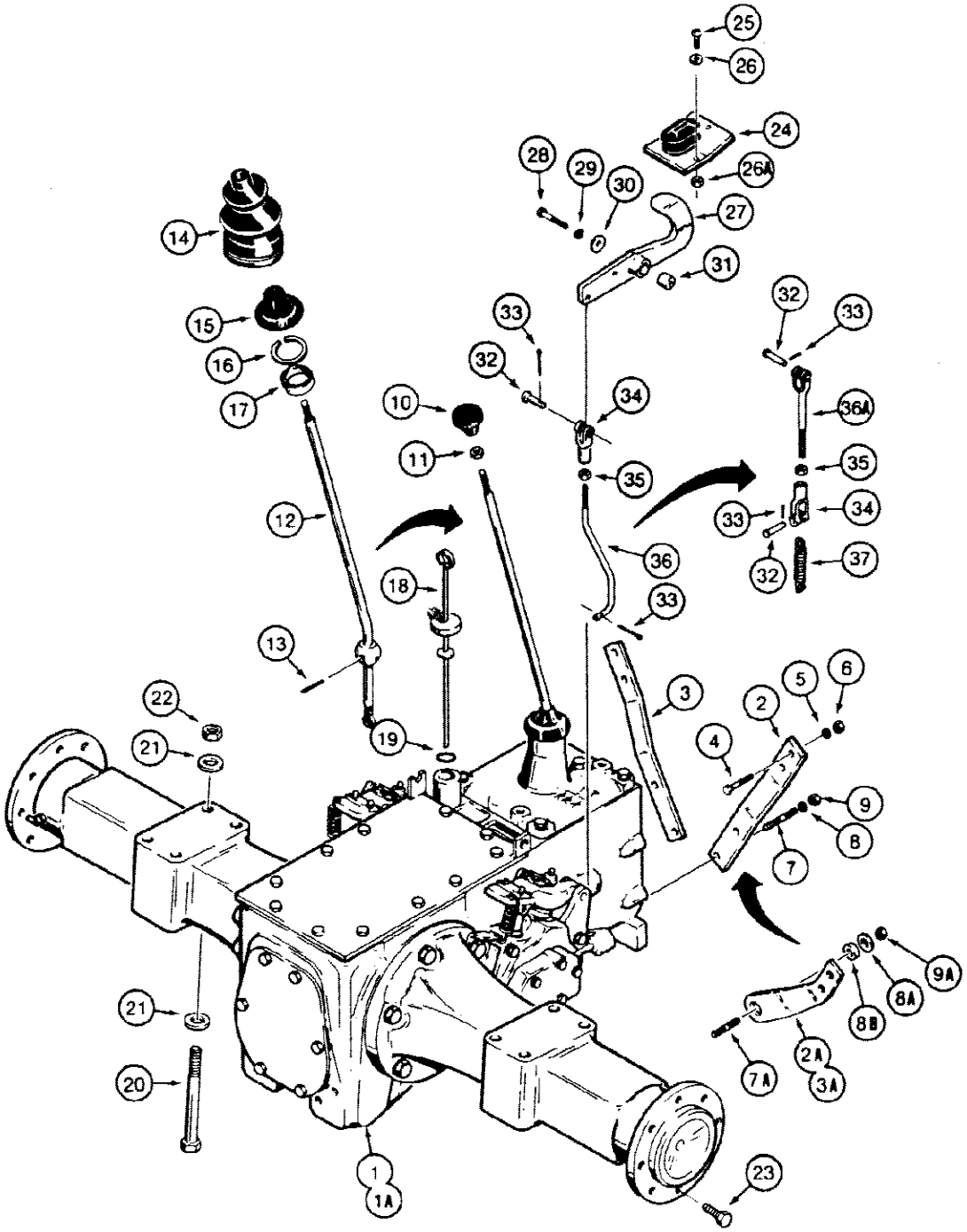
25
26
24
26A
28
29
30
27
31
14
15
16
17
10
11
12
18
13
19
22
21
21
20
1
1A
23
32
33
32
33
34
34
36A
35
35
33
34
32
37
36
33
3
2
5
6
4
9
8
7
9A
8A
8B
7A
2A
3A

830883 A

580SE CASE SUPER-E CONSTRUCTION KING LOADER BACKHOE - Power Train

198 TRANSAXLE AND DIFFERENTIAL LOCK, USED BEFORE TRANSAXLE SN 16270319

Ref	Part Number	Qty	Description
1	A157660	1	TRANSAXLE two wheel drive, before transaxle SN 16251570, no longer used, for service order A179165 transaxle, 141 54 clevis pin, item 32, D68302 rod, item 36A, and A59470 spring, item 37, See Figures 238 - 286, For transaxle SN 16270319 and after, See Figures 202 and 204.
1	A158685	1	TRANSAXLE four wheel drive, before transaxle SN 16251570, no longer used, for service order A179166 transaxle, 141 54 clevis pin, item 32, D68302 rod, item 36A, and A59470 spring, item 37, See Figures 238 - 286, For transaxle SN 16270319 and after, See Figures 202 and 204.
1A	A179165	1	TRANSAXLE two wheel drive transaxle SN 16251570 thru 16270318, not shown, See Figures 238 - 286, For transaxle SN 16270319 and after, See Figures 202 and 204.
1A	A179166	1	TRANSAXLE four wheel drive transaxle SN 16251570 thru 16270318, not shown, See Figures 238 - 286, For transaxle SN 16270319 and after, See Figures 202 and 204.
2	D90452	1	SUPPORT right hand, two wheel drive models
2A	D122704	1	SUPPORT right hand, four wheel drive models, when installing on models without item 8B, also order and Replace items 8A and 8B
3	D90453	1	SUPPORT left hand, two wheel drive models
3A	D122705	1	SUPPORT left hand, four wheel drive models
4	113-410	4	BOLT, Hex, 1/2"-13 x 1 1/2", G5, Full Thd
5	192-23	4	WASHER, LOCK, 1/2"
6	129-105	4	NUT, 1/2"-13, G5
7	D69763	4	STUD two wheel drive models, 1/2" - 20 NF
7A	A50237	2	STUD four wheel drive models, 5/8" - 11 NC x 2-1/2"
8	192-23	4	WASHER, LOCK, 1/2", 2WD models
8A	T53567	2	WASHER flat, hardened, four wheel drive models, 5/8"
8B	D122706	2	BUSHING four wheel drive models
9	129-125	4	NUT, 1/2"-20, G5, 2WD models
9A	129-183	2	NUT, 5/8"-11, G8, 4WD models
10	D69105	1	KNOB shift lever
11	129-145	1	NUT, Jam, 1/2"-13, G5
12	A154286	1	LEVER shift, transaxle, Includes: Ref. 13
13	A156515	1	PIN groove, 1/8" x 1-1/4"
14	D86664	1	BOOT shift lever at floor plate
15	A26956	1	COVER rubber, shift lever
16	A26836	1	RING retaining, seat
17	A7923	1	SEAT shift lever
18	A154968	1	DIPSTICK transaxle, Includes: Ref. 19
19	A42597	1	O RING dipstick
20	113-732	8	BOLT hex head, plated, 3/4" - 10 NC x 8"
21	D34666	16	WASHER flat, hardened
22	129-108	8	NUT, 3/4"-10, G5
23	A38208	16	BOLT lug, rear
24	D89325	1	BOOT differential lock lever, if used
25	182-553	3	SCREW machine, pan Phillips head, plated, No. 10 - 32 NF x 5/8"

198 TRANSAXLE AND DIFFERENTIAL LOCK, USED BEFORE TRANSAXLE SN 16270319

Ref	Part Number	Qty	Description
26	195-513	3	WASHER flat, plated, No. 10
26A	D123827	3	NUT special
27	D124890	1	PEDAL differential lock
28	113-441	1	BOLT, Hex, 1/2"-13 x 2 1/4", G5
29	192-23	1	WASHER, LOCK, 1/2"
30	D64050	1	WASHER flat, special, 1/2"
31	D122241	1	SPACER pedal
32	141-54	1-2	PIN clevis, plated, special length, differential lock rod, 3/8"
33	132-320	2	PIN, SPLIT (COTTER), 3/32" x 3/4"
34	213-41	1	CLEVIS plated, differential lock rod, metal, 3/8", Replaces fiberglass clevis on some models
35	129-123	1	NUT, 3/8"-24, G5
36	D93488	1	ROD differential lock, bent, used with A157660 and A158685 transaxles
37	A59470	1	SPRING used with D68302 rod on A179165 and A179166 transaxles

202

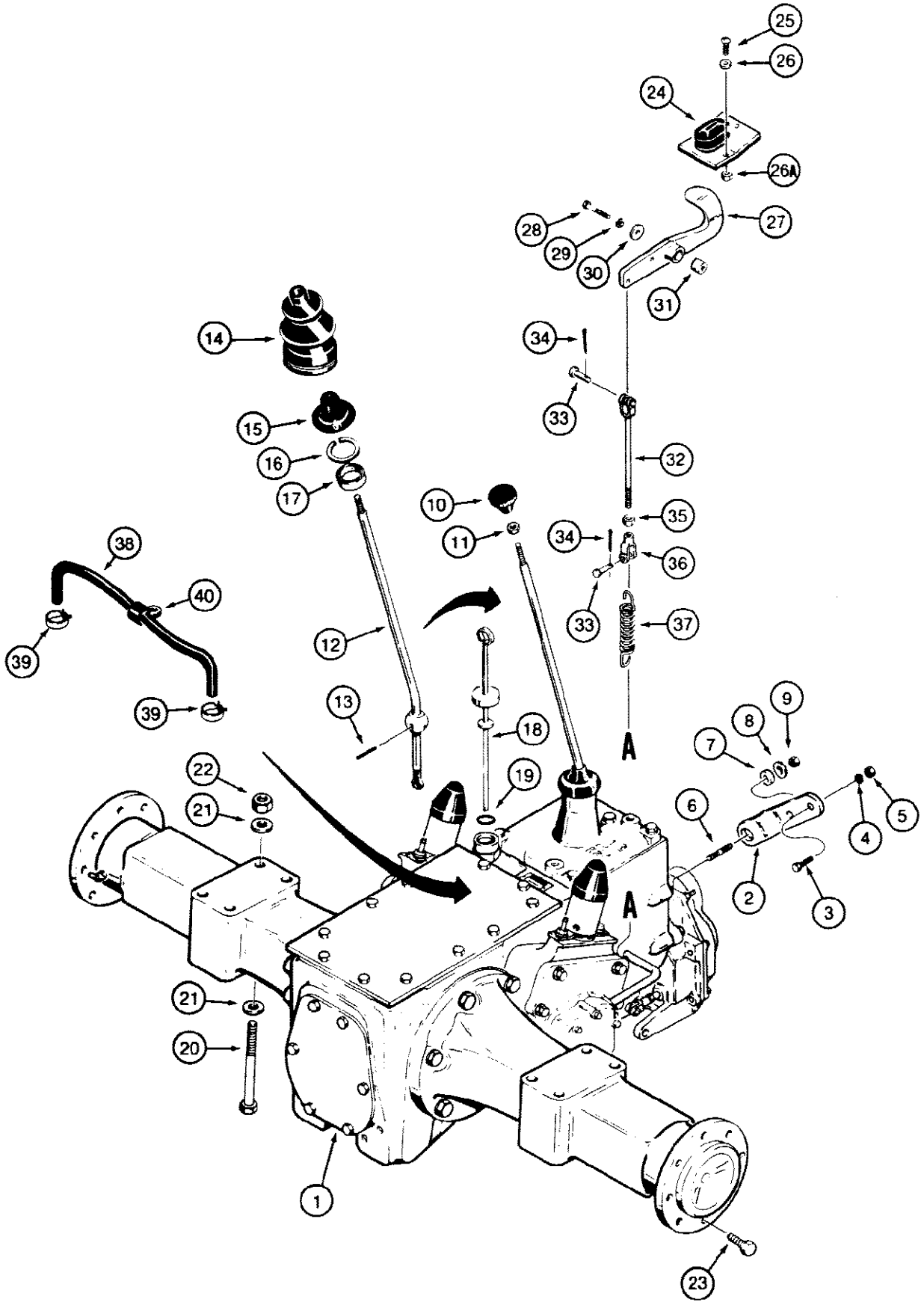
25
26
24
26A
28
29
30
27
31
14
34
33
15
16
17
32
10
11
35
34
36
38
40
33
37
39
12
39
13
18
A
9
8
7
22
19
6
21
5
4
2
3
A
21
20
1
23

850605 A

580SE CASE SUPER-E CONSTRUCTION KING LOADER BACKHOE - Power Train

202 TRANSAXLE & DIFFERENTIAL LOCK, USED ON TRANSAXLE SN 16270319-16276841 & TRANSAXLE SN 1626842 & AFTER

Ref	Part Number	Qty	Description
1	A179041	1	TRANSAXLE two wheel drive, dry brake transaxle SN 16270319 thru 16276841, See Figures 238 - 286, if used, See Figure 198 for transaxle and differential lock used before transaxle SN 16270319.
1	A179909	1	TRANSAXLE four wheel drive, dry brake transaxle SN 16270319 thru 16276841, no longer available, for service order A179022 transaxle, See Figures 238 - 286, See Figure 198 for transaxle and differential lock used before transaxle SN 16270319.
1A	A179021	1	TRANSAXLE two wheel drive, wet brake transaxle SN 16276842 and after, not shown, See Figures 238 - 286, See Figure 198 for transaxle and differential lock used before transaxle SN 16270319.
1A	A179022	1	TRANSAXLE four wheel drive, wet brake transaxle SN 16276842 and after, not shown, See Figures 238 - 286
	345-39	UAR	wet brake, See Figure 198 for transaxle and differential lock used before transaxle SN 16270319.
2	D129915	2	SUPPORT transaxle
3	113-410	4	BOLT, Hex, 1/2"-13 x 1 1/2", G5, Full Thd
4	192-23	4	WASHER, LOCK, 1/2"
5	129-105	4	NUT, 1/2"-13, G5
6	A50237	2	STUD hardened, 5/8" - 11 NC x 2-1/2", used with Ref. 1
7	D122706	2	BUSHING support
8	T53567	2	WASHER flat, hardened, 5/8"
9	129-183	2	NUT, 5/8"-11, G8
10	D69105	1	KNOB shift lever
11	129-145	1	NUT, Jam, 1/2"-13, G5
12	A154286	1	LEVER shift, transaxle, Includes: Ref. 13
13	A156515	1	PIN groove, 1/8" x 1-1/4"
14	D86664	1	BOOT shift lever at floor plate
15	A26956	1	COVER rubber, shift lever
16	A26836	1	RING retaining, seat
17	A7923	1	SEAT shift lever
18	A154968	1	DIPSTICK transaxle, used with item 1 dry brake transaxle
18A	D138048	1	DIPSTICK transaxle, used with item 1A wet brake transaxle, not shown, Includes: Ref. 19, Part number is new per NLB MP 003 87 service bulletin to get about 1 more gallon of oil in the transaxle to improve the bearing life in the 4 spee unit.
19	F62075	1	O RING A154968 or D131658 dipstick
20	113-732	8	BOLT hex head, plated, 3/4" - 10 NC x 8"
21	D34666	16	WASHER flat, hardened
22	129-108	8	NUT, 3/4"-10, G5
23	A38208	16	BOLT lug, rear
24	D89325	1	BOOT differential lock lever, if used
25	182-553	3	SCREW machine, pan Phillips head, plated, No. 10 - 32 NF x 5/8"
26	195-513	3	WASHER flat, plated, No. 10
26A	D123827	3	NUT special
27	D124890	1	PEDAL differential lock
28	113-441	1	BOLT, Hex, 1/2"-13 x 2 1/4", G5

202 TRANSAXLE & DIFFERENTIAL LOCK, USED ON TRANSAXLE SN 16270319-16276841 & TRANSAXLE SN 1626842 & AFTER

Ref	Part Number	Qty	Description
29	192-23	1	WASHER, LOCK, 1/2"
30	D64050	1	WASHER flat, special, 1/2"
31	D122241	1	SPACER pedal
32	D68302	1	ROD differential lock, straight
33	141-54	2	PIN clevis, plated, special length, differential lock rod, 3/8"
34	132-320	2	PIN, SPLIT (COTTER), 3/32" x 3/4"
35	129-123	1	NUT, 3/8"-24, G5
36	213-41	1	CLEVIS plated, differential lock rod, Replaces fiberglass clevis on some models, 3/8"
37	A59470	1	SPRING differential lock
38	REF	1	HOSE, 1/4" (6 mm) ID x 21-5/8" (550 mm) long, cut to required length from D134170 bulk hose, see below, vent, brake actuator, used with item 1 dry brake transaxle
39	F64936	2	CLAMP vent hose, if used
40	49838	1	CLAMP p type, uses existing transaxle cover plate mounting hardware, if used
	D134170	1	HOSE bulk, 1/4" (6 mm) ID x 62-3/16" (1580 mm) long

206 FRONT DRIVE AXLE CONTROL, USED BEFORE TRANSAXLE SN 16270319

206

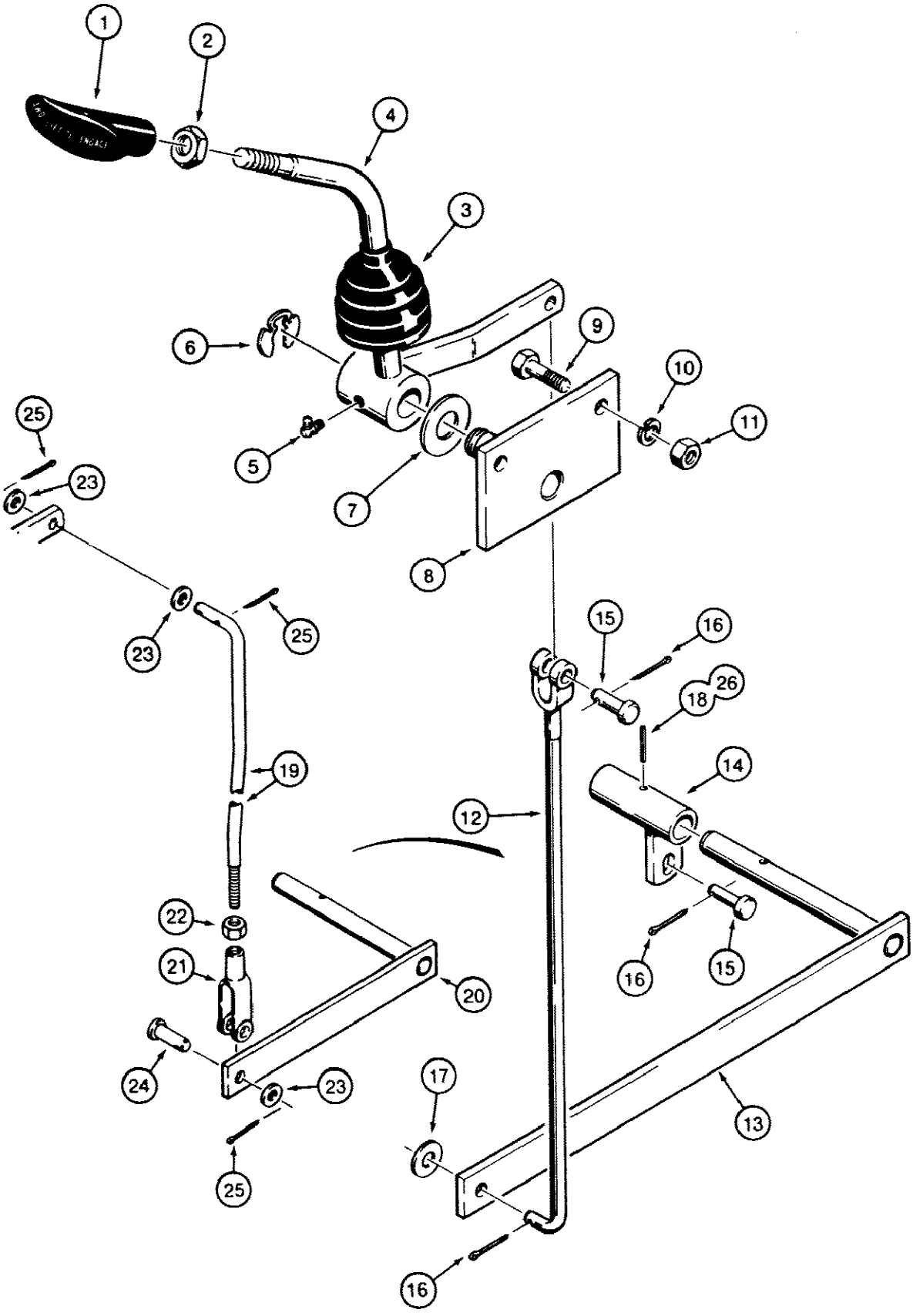

880336

580SE CASE SUPER-E CONSTRUCTION KING LOADER BACKHOE - Power Train

206 FRONT DRIVE AXLE CONTROL, USED BEFORE TRANSAXLE SN 16270319

Ref	Part Number	Qty	Description
1	D120758	1	HANDLE t grip
2	129-145	1	NUT, Jam, 1/2"-13, G5
3	D86664	1	BOOT lever
4	D121850	1	LEVER shift
5	219-57	1	FITTING grease, 90 degree, 1/4" - 28 NF taper
6	D95097	1	RING retaining
7	195-545	1	WASHER flat, plated, 3/4"
8	D121853	1	BRACKET lever
9	113-208	2	BOLT, Hex, 3/8"-16 x 1 1/4", G5, Full Thd
10	192-21	2	WASHER, LOCK, 3/8"
11	129-103	2	NUT, 3/8"-16, G5
12	D94053	1	ROD shift, no longer used, for service order D135001 kit, see below
13	D94058	1	LEVER shift, 15-5/16" (390 mm) long, no longer used, for service order D135001 kit, see below
14	D94059	1	LEVER pivot
15	141-54	2	PIN clevis, plated, special length, 3/8"
16	132-320	3	PIN, SPLIT (COTTER), 3/32" x 3/4"
17	195-525	1	WASHER flat, plated, 3/8"
18	135-146	1	Grooved pin, 3/16" x 1 1/4", Type A, Hardened, full taper
	D135001	1	KIT, service, shift rod and shift lever, includes instruction sheet, Includes: Ref.19 - 26
19	D134615	1	ROD shift
20	D136233	1	LEVER shift, 7-1/16" (180 mm) long
21	213-41	1	CLEVIS plated, 3/8"
22	129-123	1	NUT, 3/8"-24, G5
23	195-525	3	WASHER flat, plated, 3/8"
24	141-54	1	PIN clevis, plated, special length, 3/8"
25	132-320	3	PIN, SPLIT (COTTER), 3/32" x 3/4"
26	135-146	1	Grooved pin, 3/16" x 1 1/4", Type A, Hardened, full taper

208

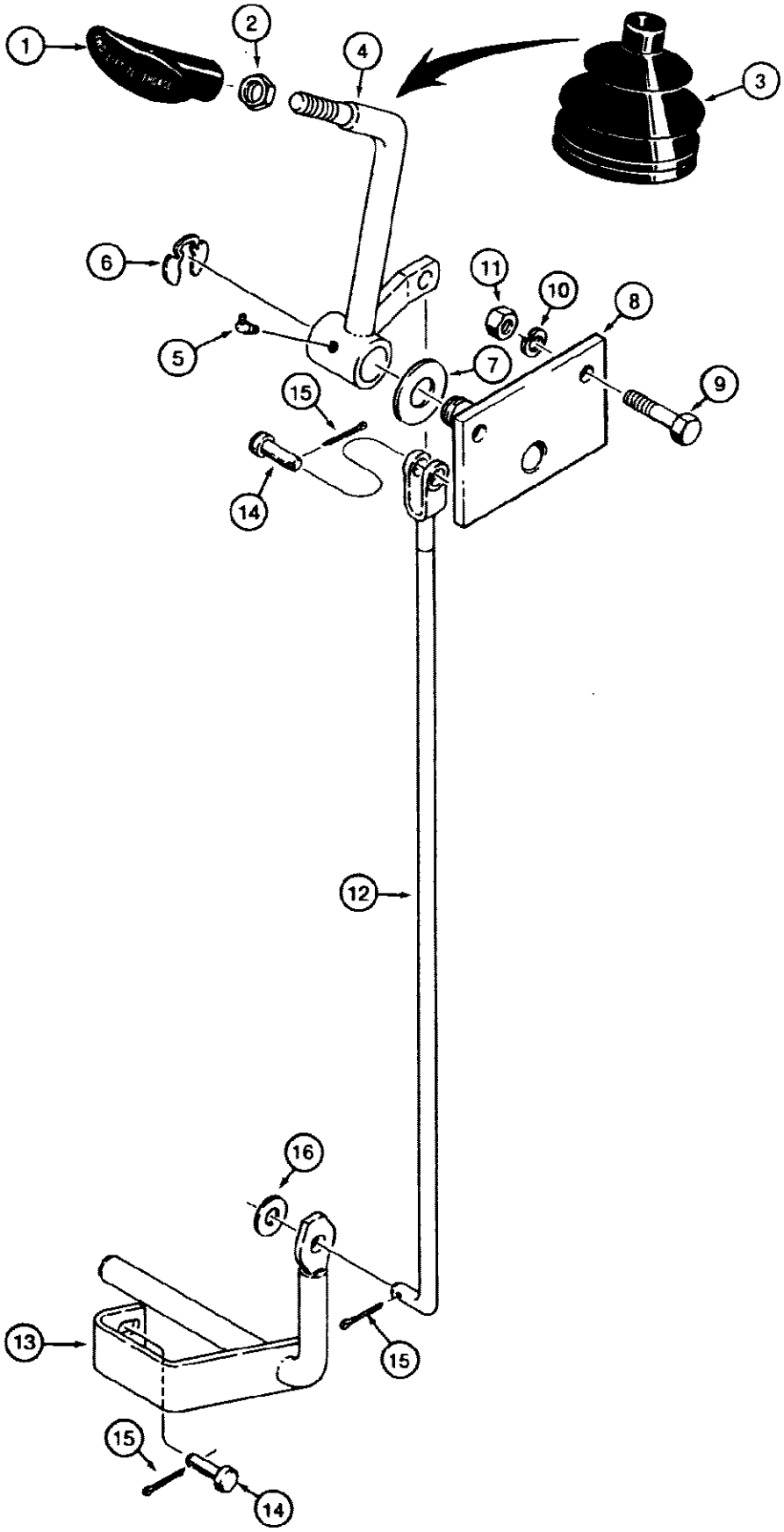

580SE CASE SUPER-E CONSTRUCTION KING LOADER BACKHOE - Power Train

208 FRONT DRIVE AXLE CONTROL, USED WITH TRANSAXLE SN 16270319 AND AFTER

Ref	Part Number	Qty	Description
1	D120758	1	HANDLE t grip
2	129-145	1	NUT, Jam, 1/2"-13, G5
3	D86664	1	BOOT lever
4	D133525	1	LEVER shift
5	219-57	1	FITTING grease, 90 degree, 1/4" - 28 NF taper
6	D95097	1	RING retaining
7	195-545	1	WASHER flat, plated, 3/4"
8	D121853	1	BRACKET lever
9	113-208	2	BOLT, Hex, 3/8"-16 x 1 1/4", G5, Full Thd
10	192-21	2	WASHER, LOCK, 3/8"
11	129-103	2	NUT, 3/8"-16, G5
12	D133526	1	ROD shift
13	D133527	1	LEVER pivot shift
14	141-54	2	PIN clevis, plated, special length, 3/8"
15	132-320	3	PIN, SPLIT (COTTER), 3/32" x 3/4"
16	195-525	1	WASHER flat, plated, 3/8"

210

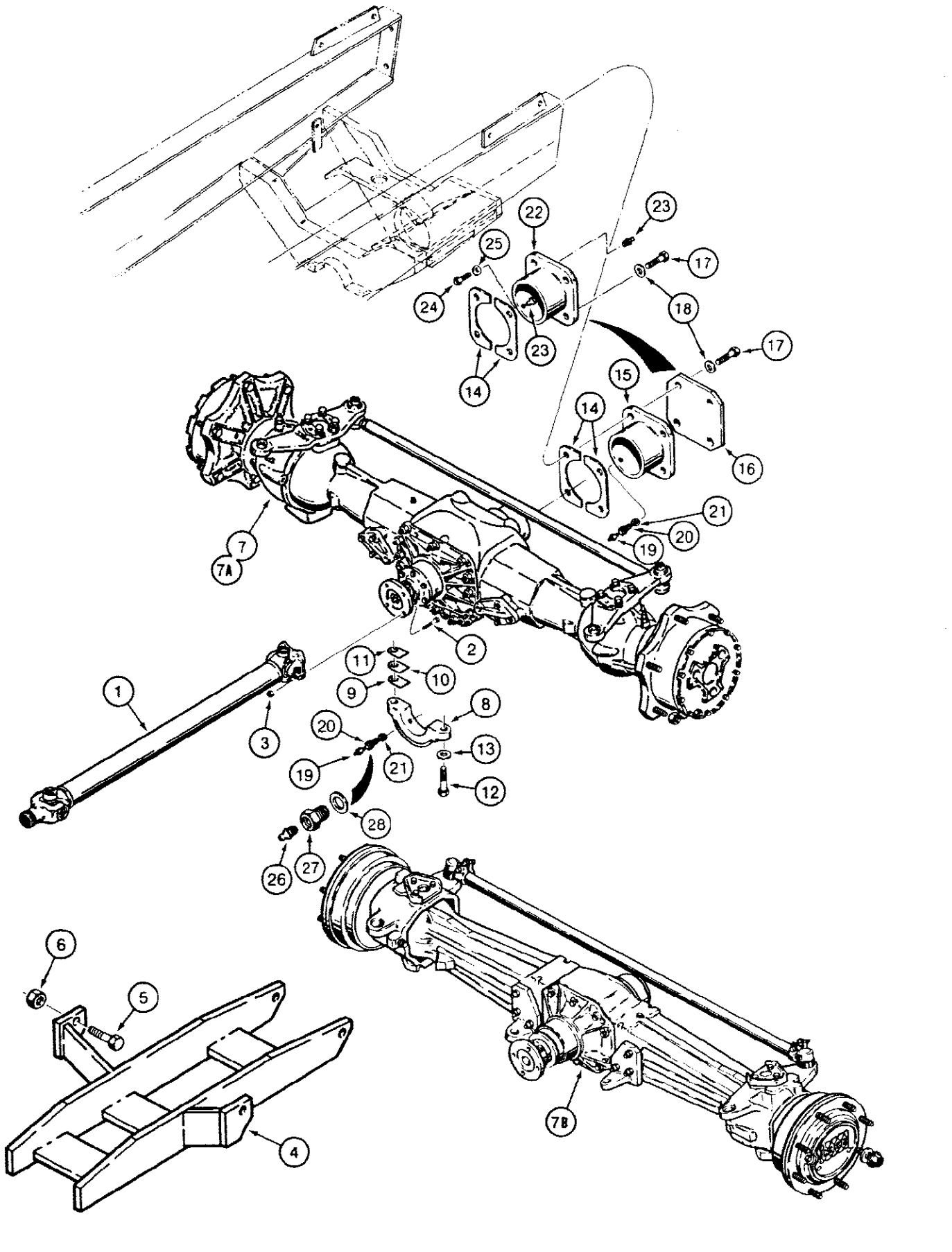
22
23
25
17
24
18
23
17
14
15
14
16
21
7
20
7A
19
2
11
1
10
9
8
20
13
3
19
21
12
28
26
27
6
5
4
7B

8305748

210 FRONT DRIVE AXLE MOUNTING AND DRIVE SHAFT

Ref	Part Number	Qty	Description
1	REF	1	SHAFT drive, front wheel drive, See Figure 212
2	28-724	4	BOLT hex head, grade 8, 7/16" - 20 NF x 1-1/2"
3	131-1247	4	NUT hex, self locking, plated, 7/16" - 20 NF
4	D125602	1	GUARD drive shaft
5	113-924	4	BOLT, Hex, 1"-8 x 2 1/2", G5, Full Thd
6	131-20	4	NUT hex, self locking, 1" - 8 NC
7	D120346	1	AXLE ASSEMBLY, front drive, no longer available, for service order D127422 front drive axle, See Figures 214 - 222
7A	D127422	1	AXLE ASSEMBLY, front drive, if used, See Figures 214 - 222
7B	D127440	1	AXLE ASSEMBLY, Carraro 710 front drive, if used, See Figures 226 - 236
	D126549	1	KIT, bearing cap, Replaces production axle caps, Includes: Ref. 8 - 11
8	NSS	1	CAP axle mounting, rear
9	D126551	UAR	SHIM, 0.3mm Thk, Cap
10	D126552	UAR	SHIM, 0.4mm Thk, Cap
11	D126553	UAR	SHIM, 0.5mm Thk, Cap
12	26-1256	2	BOLT hex head, grade 8, 3/4" - 10 NC x 3-1/2"
13	D34666	2	WASHER hardened, 3/4"
14	D122148	2	SHIM, 0.5mm Thk, Front
15	D120801	1	CAP front, no longer available, for service order D101820 kit, see below
16	D120332	1	PLATE cover, front, if used
17	26-1232	4	BOLT hex head, grade 8, 3/4" - 10 NC x 2"
18	D34666	4	WASHER hardened, 3/4"
19	219-1	1-2	FITTING grease, straight, 1/8" NPT, used with D93588 adapter
20	D93588	1-2	ADAPTER locating, grease fitting, 1-7/8" long, 1/2" socket head depth, no longer available, for service order D102386 kit, see below
21	192-23	1-2	WASHER, LOCK, 1/2", Used with D93588 adapter
	D101820	1	KIT, four wheel drive flange, Includes: Ref. 22 - 25
22	D126791	1	CAP front, includes cover plate and instructions
23	219-1	2	FITTING grease, straight, 1/8" NPT
24	13-812	1	BOLT hex head, 1/2" - 13 NC x 3/4"
25	196-16	1	WASHER flat, plated, hardened, 1/2"
	D102386	1	KIT, four wheel drive locating adapter, rear axle mounting cap, includes instruction sheet, Includes: Ref. 26 - 28
26	219-17	1	FITTING, grease, straight, 3/16"drive
27	D136218	1	ADAPTER locating, grease fitting, 3/16" socket head depth
28	196-16	1	Flat, 1/2, Hardened

212

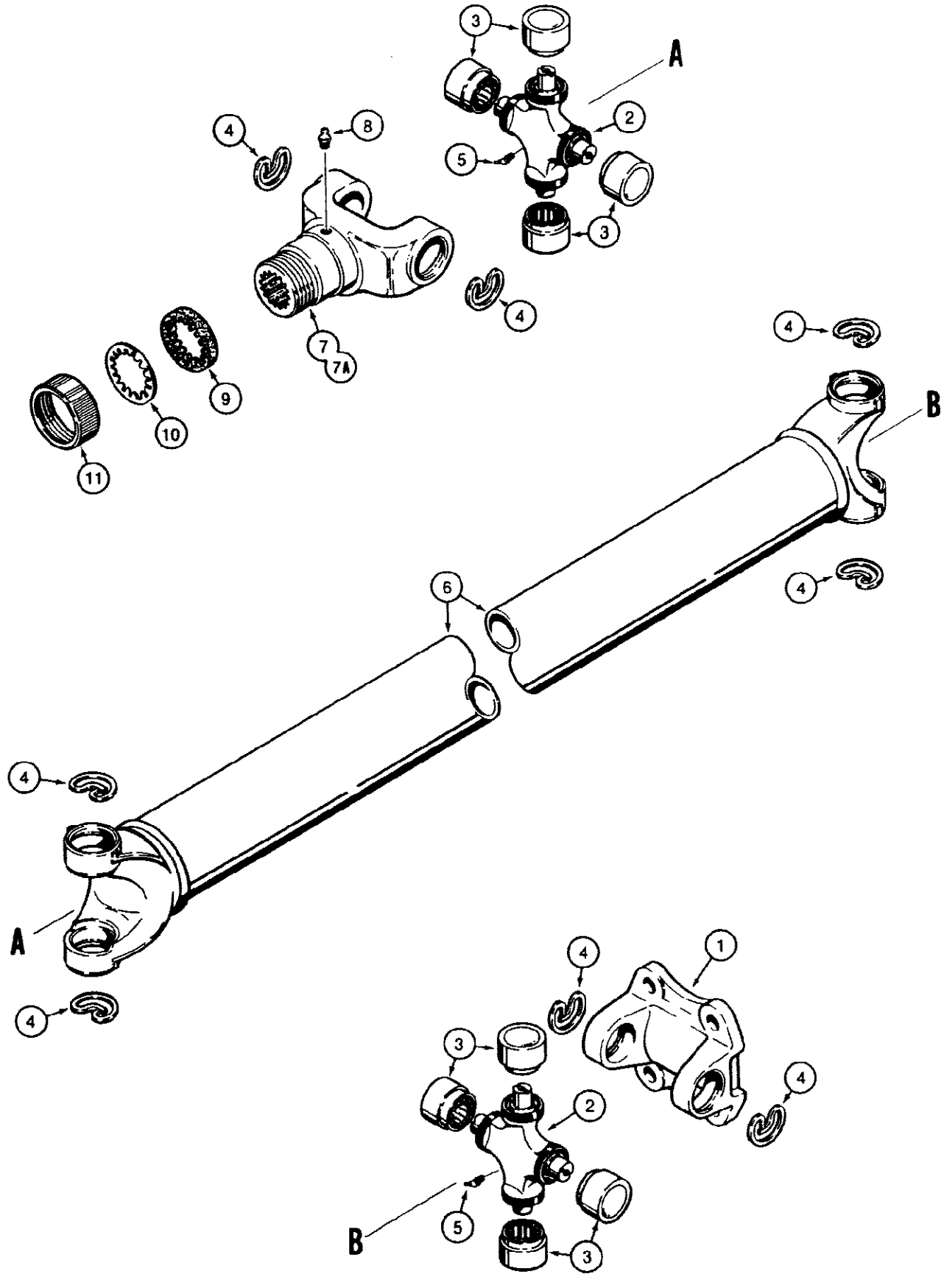

830675 A

580SE CASE SUPER-E CONSTRUCTION KING LOADER BACKHOE - Power Train

212 DRIVE SHAFT FOR FRONT DRIVE AXLE

Ref	Part Number	Qty	Description
	D94017	1	SHAFT drive, front drive axle, no longer available, order D128561 drive shaft
	D128561	1	SHAFT drive, front drive axle, Includes: Ref. 1 - 11
1	S80726	1	BRACKET flange
	R2713	2	KIT, universal joint, Includes: Ref. 2 - 5
2	NSS	1	JOINT universal, drive shaft
3	NSS	4	BEARING universal joint
4	NSS	4	RING retaining
5	219-37	1	FITTING - grease, 45 degree, 1/4" - 28 NF taper
6	NSS	1	SHAFT drive, front drive axle
7	N7512	1	YOKE splined, D94017 drive shaft only
7A	N9926	1	YOKE D128561 drive shaft only, Dimension from center of eye to end of yoke is: N7512 100mm, Ref #7 and #7A N7512 yoke and N9926 yoke, N9926 25mm
8	219-10	1	FITTING grease, straight, 1/4" - 28 NF taper
	N7513	1	KIT, dust seal and cap, Includes: Ref. 9 - 11
9	NSS	1	WASHER cork
10	NSS	1	WASHER seal, steel
11	NSS	1	CAP dust seal retaining

214

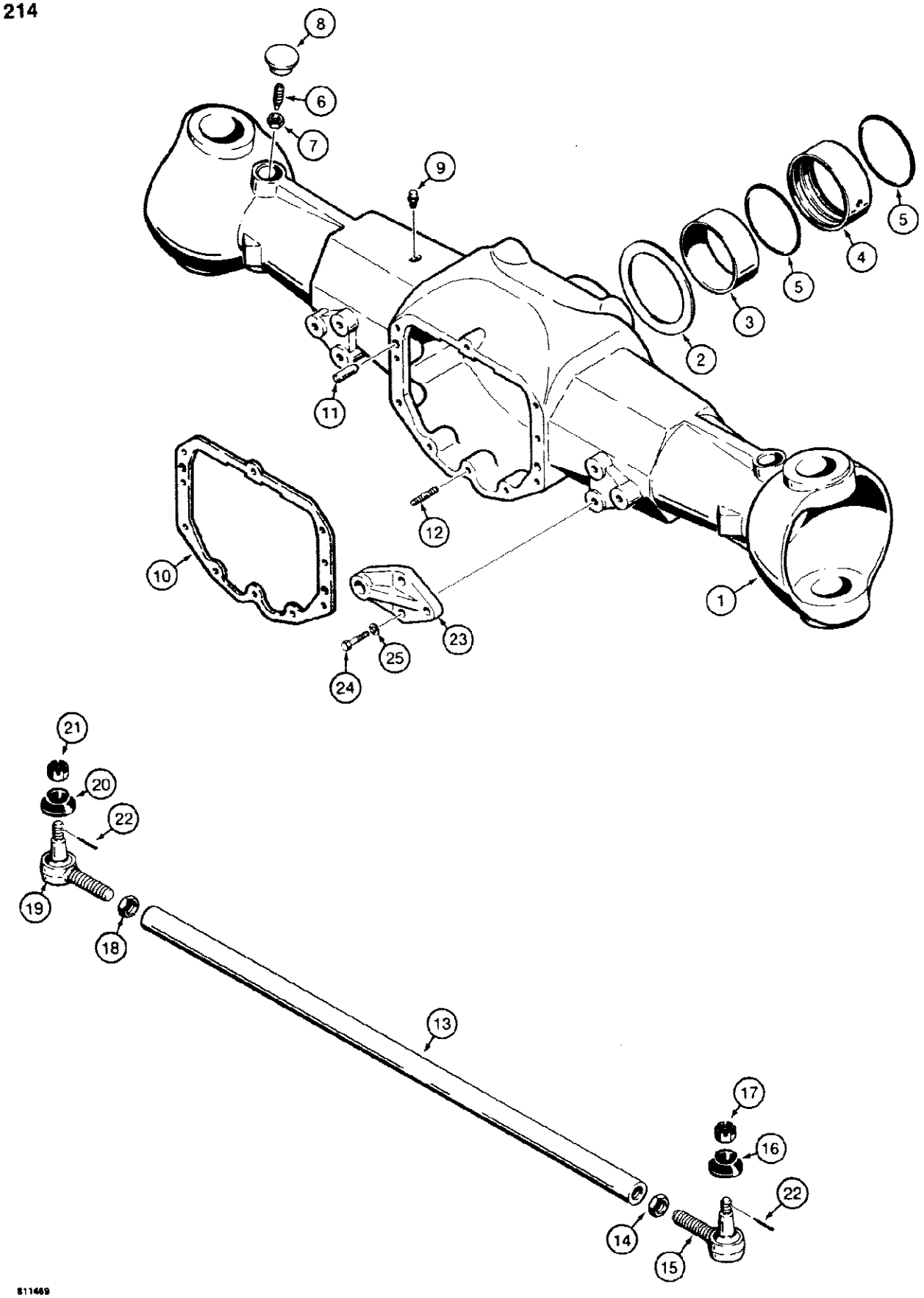
8
6
7
9
5
4
5
3
2
11
12
10
1
23
25
24
21
20
22
19
18
13
17
16
22
14
15
811469

214 FRONT DRIVE AXLE, HOUSING AND TIE ROD

Ref	Part Number	Qty	Description
	D120346	1	AXLE ASSEMBLY, Carraro No. 112632, front drive, no longer available, for service order D127422 front drive axle, Axle assembly includes parts on Figures 214 222. For axle mounting, See Figure 210.
	D127422	1	AXLE ASSEMBLY, Carraro No. 118159, front drive, if used, also see D127440 Carraro 710 axle on Figures 226 - 236, Includes: Ref. 1 - 25, Axle assembly includes parts on Figures 214 222. For axle mounting, See Figure 210.
1	N7627	1	HOUSING axle
2	K965264	1	SPACER front pivot
3	K965266	1	SLEEVE front pivot
4	K965265	1	COLLAR front pivot
5	K965267	2	O RING front pivot
6	K965232	4	SCREW lock, bearing retaining
7	825-1014	4	NUT hex, 14 mm - 2
8	K260135	4	COVER dust
9	K965231	1	BREATHER axle housing
10	N7524	1	GASKET differential carrier
11	K965252	2	PIN dowel, housing to carrier
12	K965254	10	STUD housing to carrier
13	N7548	1	TIE ROD steering
14	N7547	1	NUT hex, right hand
	K260254	1	BALL JOINT ASSEMBLY, right hand, Includes: Ref. 15 - 17, Carraro has made a change on this ball joint. In parts books and print, this shows a hole where a cotter pin goes through to hole on a nut. This hole has been removed and no longer requires the pin. The ball joint received without a hole requires a new locking nut P/N 102894A1.
15	NSS	1	JOINT ball, right hand
16	K956939	1	BOOT ball joint
17	K956938	1	NUT hex, slotted, ball joint
18	N7549	1	NUT hex, left hand
	K260250	1	BALL JOINT ASSEMBLY, left hand, Includes: Ref. 19 - 21, Carraro has made a change on this ball joint. In parts books and print, this shows a hole where a cotter pin goes through to hole on a nut. This hole has been removed and no longer requires the pin. The ball joint received without a hole requires a new locking nut P/N 102894A1.
19	NSS	1	JOINT ball, left hand
20	K956939	1	BOOT ball joint
21	K260251	1	NUT hex, slotted, ball joint
22	K260255	2	PIN cotter, ball joint
23	N7525	2	SUPPORT steering cylinder
24	N7526	6	BOLT hex head, 14 mm
25	K965248	6	WASHER lock, 14 mm

216

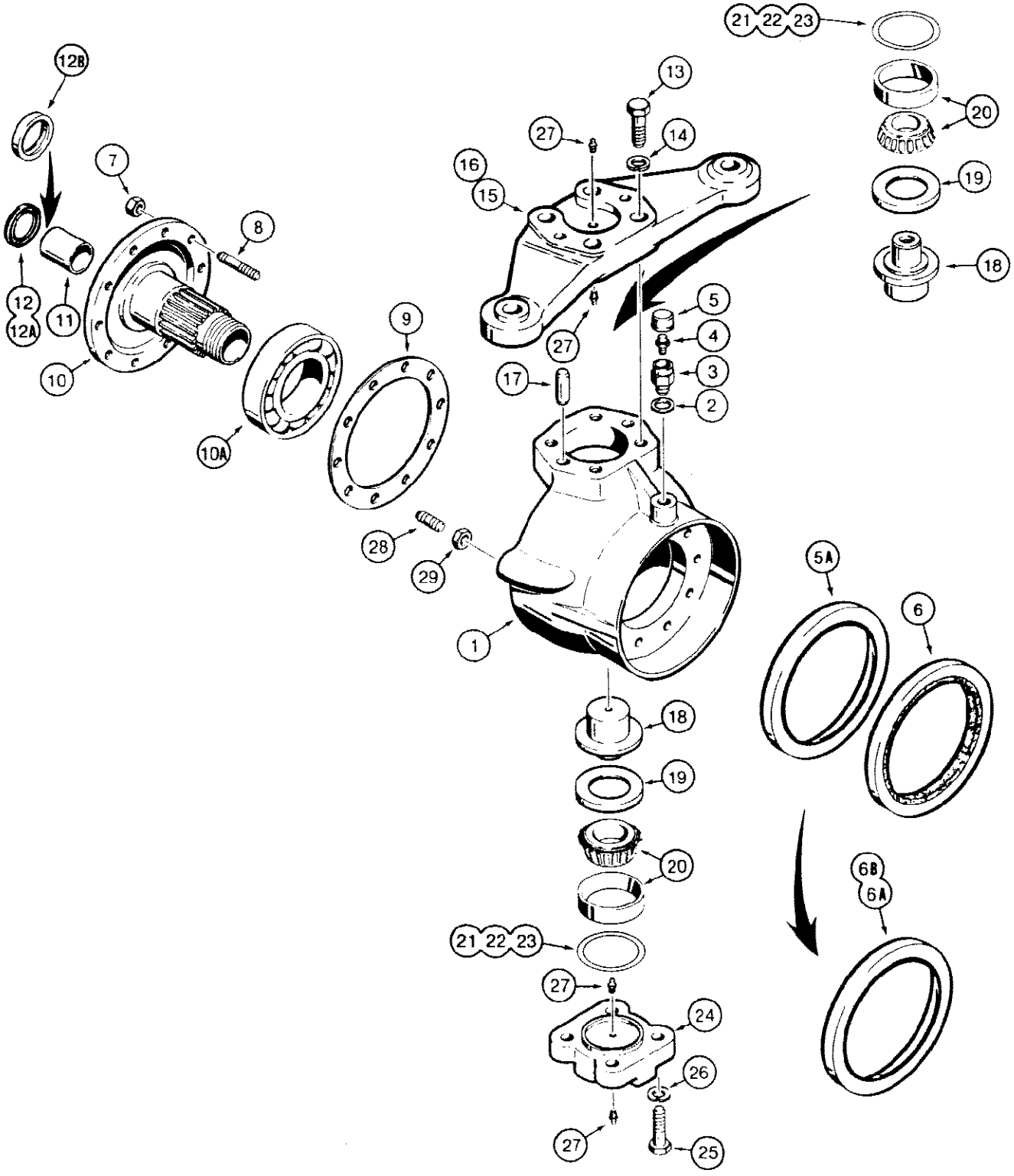
12B
12
12A
11
7
8
10
10A
9
28
29
1
13
27
14
16
15
27
17
5
4
3
2
21 22 23
20
19
18
5A
6
6B
6A
18
19
20
21 22 23
27
24
26
27
25

216 FRONT DRIVE AXLE, SWIVEL HOUSINGS

Ref	Part Number	Qty	Description
	REF	1	AXLE ASSEMBLY, front drive, includes Figures 214 - 222, Includes: Ref. 1 - 27
1	N7523	2	HOUSING swivel, axle ends
2	K957001	2	SEAL breather protector
3	K957000	2	PROTECTOR breather
4	K965231	2	BREATHER swivel housing
5	K260136	2	CAP breather cover
5A	NSS		SEAL oil, inner, 170 mm OD x 140 mm ID x 15 mm wide, used with item, When replacing Ref. 5A lip seal, must also replace Ref. 6 felt seal with Ref. 6A oil seal above and Ref. 10 wear ring on Figure 220. Ref. 5A and 6 seals are installed one behind the other. Ref. 6A and 10 on Figure 220 are installed one inside the other.
		2	6 felt seal on D120346 axle, no longer available, see service note below
6	NSS	2	SEAL felt, outer, 170 mm OD x 149 mm ID x 10 mm wide, used with item 5A on D120346 axle, no longer available, see service note below, When replacing Ref. 5A lip seal, must also replace Ref. 6 felt seal with Ref. 6A oil seal above and Ref. 10 wear ring on Figure 220. Ref. 5A and 6 seals are installed one behind the other. Ref. 6A and 10 on Figure 220 are installed one inside the other., If looking for a seal with an all felt interior, use P/N K965323. Carraro P/N is 102148. Measures 6.7" OD and 5.75" ID.
6A	N8898	2	SEAL oil, housing, 170 mm OD x 145 mm ID x 16 mm wide, D127422 axle, fits outside of item 10 wear ring on Figure 220, used on 140 mm, OD hub, item 11 on Figure 220, If looking for a seal with an all felt interior, use P/N K965323. Carraro P/N is 102148. Measures 6.7" OD and 5.75" ID.
6B	N9859	2	SEAL oil, housing, 170 mm OD x 150 mm ID, fits outside of item 10A wear ring on Figure 220, used on 145 mm OD hub, item 11A on Figure 220, If looking for a seal with an all felt interior, use P/N K965323. Carraro P/N is 102148. Measures 6.7" OD and 5.75" ID.
7	K965250	20	NUT hub stud
8	K965249	20	STUD hub to swivel housing
9	K965237	2	GASKET hub to swivel housing
10	K965236	2	SPINDLE planetary
10A	K965321	2	BEARING ball, small
11	K965322	2	BUSHING spindle
12	NSS	2	SEAL spindle, 62 mm OD x 40 mm ID x 10 mm wide, without sleeve, D120346 axle, no longer available, see service note below, When replacing Ref.12 seal, must order both Ref. 12A seal and 12B sleeve.
12A	N8897	2	SEAL spindle, 55 mm OD x 40 mm ID x 10 mm wide, used with item 12B
12B	N8892	2	SLEEVE seal, 62 mm OD x 55 mm ID x 11 mm wide, used with item 12A
13	N7552	8	BOLT steering lever
14	K965248	8	WASHER lock, 14 mm
15	N7550	1	LEVER steering, right hand
16	N7551	1	LEVER steering, left hand
17	K965275	4	PIN dowel, steering lever
18	N7532	4	PIN swivel
19	N7533	4	SEAL pin

216 FRONT DRIVE AXLE, SWIVEL HOUSINGS

Ref	Part Number	Qty	Description
20	N7534	4	BEARING tapered, roller, swivel pin
21	K965243	UAR	SHIM, 0.1mm Thk
22	K965244	UAR	SHIM, 0.3mm Thk
23	K965245	UAR	SHIM, 0.5mm Thk
24	K965242	2	CAP lower swivel pin
25	K965247	8	BOLT hex head, 14 mm, cover
26	K965248	8	WASHER lock, 14 mm
27	5194260	8	FITTING grease, steering levers and covers
28	N7527	2	STUD steering stop
29	K965369	2	NUT hex, 12 mm

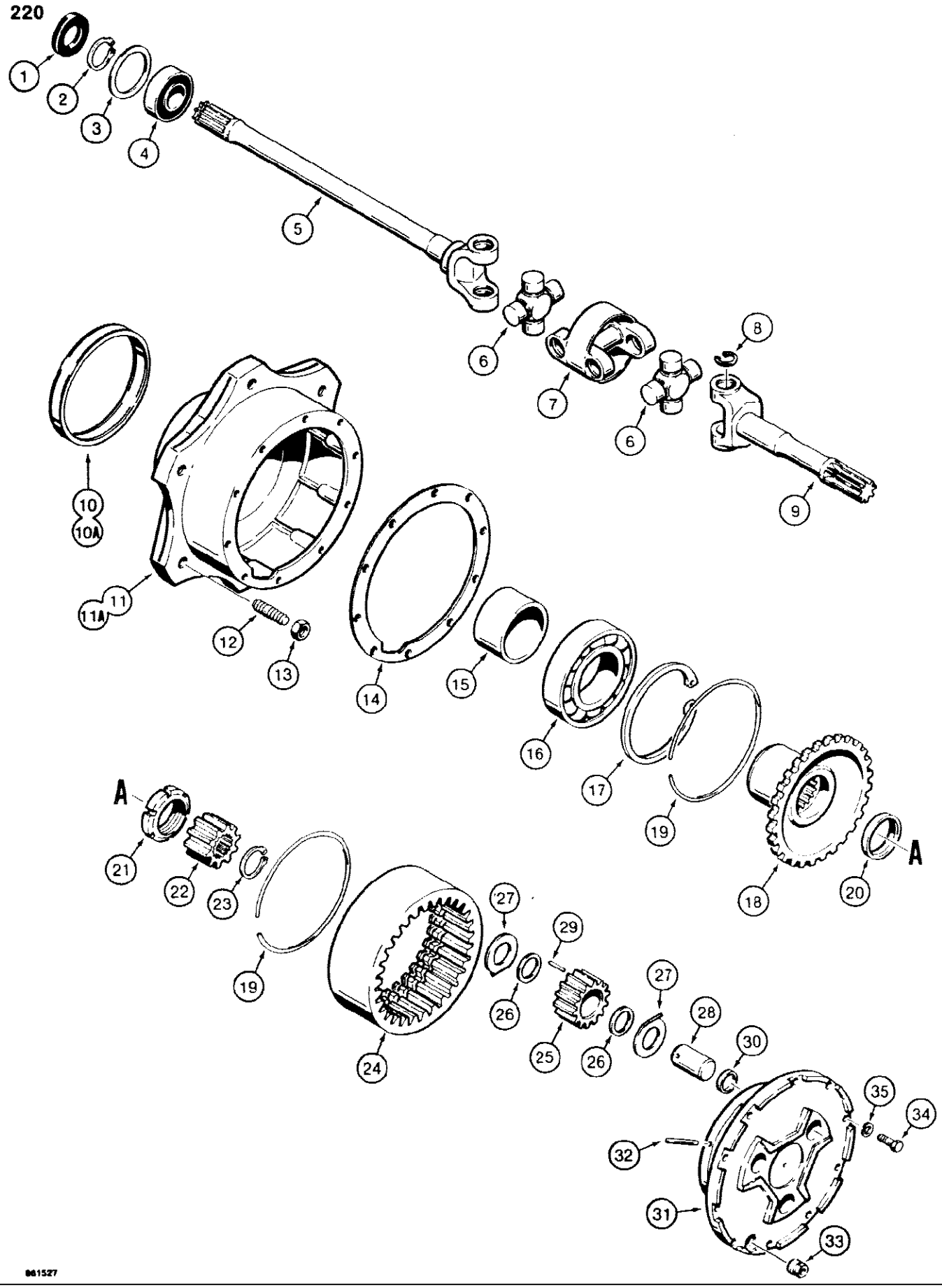
220
1
2
3
4
5
6
7
8
9
10
10A
11
11A
12
13
14
15
16
17
18
19
20
A
21
22
23
24
25
26
27
28
29
30
31
32
33
34
35
861527

220 FRONT DRIVE AXLE, AXLE SHAFT AND PLANETARY

Ref	Part Number	Qty	Description
	REF	1	AXLE ASSEMBLY, front drive, includes Figures 214 - 222 , Includes: Ref. 1 - 35
1	K965335	2	SEAL axle shaft
2	K965334	2	SNAP RING, M40, Ext, Axle shaft
3	K965337	2	RING seal, bearing
4	K965333	2	BEARING ball, axle shaft
5	N7543	2	SHAFT long
6	K260189	4	JOINT universal, axle shaft, There are several different possibilities on U joints that may not show in the parts books, so go by dimensions if you have to. K262161, across cap 27.02 mm, from cap to cap 74.58 mm. N14411, across cap 27.02 mm, from cap to cap 73.51 mm. K260189, across cap 30.18 mm, from cap to cap 92.22 mm. 100546A1, across cap 23.84 mm, from cap to cap 65.42 mm. K262161 is identified with BTB210, N14411 is BTB310, K260189 is BTB220 and 100546A1 is BTB300.
7	K260190	2	FLANGE connecting
8	K260188	16	SNAP RING universal joint
9	N7542	2	SHAFT short
10	K261816	2	RING wear, hub, 140 mm ID x 145 mm OD, D127422 axle, fits inside of item 6A seal on Figure 216, used on 140 mm OD hub, item 11
10A	N9858	2	RING wear, hub, 145 mm ID x 150 mm OD, fits inside of item 6B seal on Figure 216, used on 145 mm OD hub, item 11A, Refer to Figure 216 regarding the seal/wear ring.
11	K965278	2	HUB wheel attaching, 140 mm OD at wear ring
11A	NSS	2	HUB wheel attachcing, 145 mm OD at wear ring, see service note below, When replacing this 145 mm OD hub, you must order 140 mm OD hub K965278, Ref. 11, plus N8898 oil seal, Ref. 6A, on Figure 216, and K261816 wear ring, Ref. 10, above.
12	K205125	12	STUD wheel attaching
13	K965326	12	NUT wheel
13A	K260765		used with K965326, not shown
14	K965304	2	GASKET hub to cover
15	K965320	2	SPACER bearing
16	K965319	2	BEARING ball, large
17	K965318	2	SNAP RING bearing retaining
18	K965317	2	HUB ring gear
19	K965306	4	RING lock
20	K965316	2	BUSHING centering
21	K965315	2	NUT spindle
22	K965312	2	GEAR sun, planetary
23	K965313	2	SNAP RING axle shaft
24	K965314	2	GEAR ring, planetary
25	K965308	6	GEAR pinion, planetary
26	K965311	12	SPACER pinion gear
27	K965310	12	WASHER tab, pinion gear
28	K965307	6	PIN pinion gear
29	K965309	138	NEEDLE pinion gear

220 FRONT DRIVE AXLE, AXLE SHAFT AND PLANETARY

Ref	Part Number	Qty	Description
30	K965301	6	PLUG pinion gear
31	N7546	2	HOUSING planetary
32	K965305	6	PIN pinion gear pin
33	K965263	2	PLUG expansion
34	K965302	20	BOLT hex head, 10 mm, housing
35	K965303	20	WASHER lock, 10 mm

222

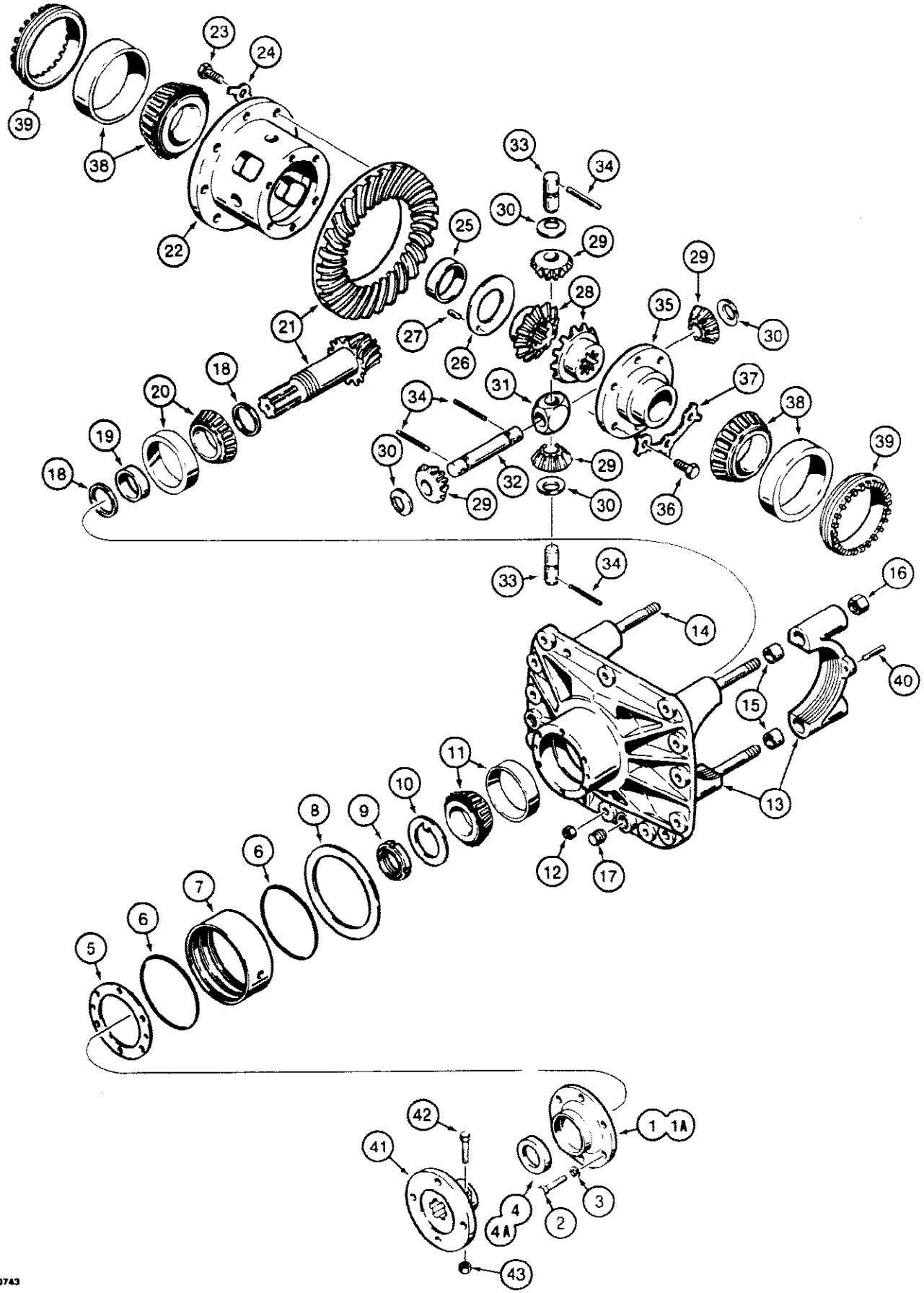
1
1A
2
3
4
4A
5
6
7
8
9
10
11
12
13
14
15
16
17
18
19
20
21
22
23
24
25
26
27
28
29
30
31
32
33
34
35
36
37
38
39
40
41
42
43
M40743

222 FRONT DRIVE AXLE, DIFFERENTIAL

Ref	Part Number	Qty	Description
	REF	1	AXLE ASSEMBLY, front drive, includes Figures 214 - 220, Includes: Ref. 1 - 43
1	NSS	1	COVER rear, 55 mm lip ID, D120346 axle, no longer available, see service note below, When replacing Ref. 1 cover, must also replace Ref. 4 seal with Ref. 1A cover and Ref. 4A seal.
1A	N8894	1	COVER rear, 50 mm lip ID, D127422 axle
2	814-8020	6	BOLT, Hex, M8 x 20, 8.8
3	892-1108	6	WASHER lock, 8 mm
4	NSS		SEAL pinion shaft, 55 mm O.D. x 35 mm ID x 10 mm wide, D120346 axle, no longer available, see service note below, When replacing Ref. 1 cover, must also replace Ref. 4 seal with Ref. 1A cover and Ref. 4A seal.
4A	N8895	1	SEAL pinion shaft, 50 mm O.D. x 35 mm ID x 10 mm wide, D127422 axle
5	K965364	1	GASKET cover
6	K965267	2	O RING rear pivot
7	K965265	1	BUSHING rear pivot
8	K965264	1	WASHER rear pivot
9	N7537	1	NUT pinion shaft
10	K261065	1	WASHER special
11	K965358	1	BEARING tapered, roller, outer
12	K965256	10	NUT hex, 12 mm
	N7528	1	CARRIER ASSEMBLY, differential, Includes: Ref. 13 - 16
13	NSS	1	CARRIER differential
14	K965257	4	STUD differential carrier
15	K965259	4	SLEEVE differential carrier
16	K965250	4	NUT differential carrier
17	K965263	2	PLUG differential carrier
18	K965280		UAR SHIM, 2.50mm Thk
18	K965281		UAR SHIM, 2.55mm Thk
18	K965282		UAR SHIM, 2.60mm Thk
18	K965283		UAR SHIM, 2.65mm Thk
18	K965284		UAR SHIM, 2.70mm Thk
18	K965285		UAR SHIM, 2.75mm Thk
18	K965286		UAR SHIM, 2.80mm Thk
18	K965287		UAR SHIM, 2.85mm Thk
18	K965288		UAR SHIM, 2.90mm Thk
18	K965289		UAR SHIM, 2.95mm Thk
18	K965290		UAR SHIM, 3.00 mm
18	K965291		UAR SHIM, 3.05mm Thk
18	K965292		UAR SHIM, 3.10mm Thk
18	K965293		UAR SHIM, 3.15mm Thk
18	K965294		UAR SHIM, 3.20mm Thk
18	K965295		UAR SHIM, 3.25mm Thk
18	K965296		UAR SHIM, 3.30mm Thk

222 FRONT DRIVE AXLE, DIFFERENTIAL

Ref	Part Number	Qty	Description
18	K965297		UAR SHIM, 3.35mm Thk
18	K965298		UAR SHIM, 3.40mm Thk
19	895-11008	1	SPACER bearing, Order for model 580E is K965412, which subs to 1 of 1349058C1 spacer and 2 of 1349049C1 washer.
	REF	1	AXLE ASSEMBLY, front drive, includes Figures 214-220
20	K965357	1	BEARING tapered, roller, inner
21	N7535	1	GEAR set, ring and pinion
22	K965351	1	CAGE differential
23	K965356	8	BOLT hex head, 12 mm, cage to ring gear
24	K965355	4	PLATE lock, cage bolts
25	K965347	1	BUSHING cage to side gear
26	K965346	1	WASHER cage, inner
27	K965348	1	PIN dowel, washer to cage
28	E43051	2	GEAR side, differential
29	E43052	4	GEAR pinion, differential
30	K965350	4	WASHER pinion gear
31	K965353	1	BLOCK support
32	K965352	1	SHAFT long
33	K965354	2	SHAFT short
34	K965349	4	PIN dowel, differential shafts
35	K965343	1	COVER differential
36	K965341	6	BOLT hex head, 10 mm, cover
37	K965342	2	PLATE lock, cover bolts
38	K965339	2	BEARING tapered roller, side gears
39	K965338	2	RING bearing adjustment
40	K965340	2	PIN adjustment ring lock
41	K956954	1	FLANGE drive shaft
42	K965415	2	BOLT hex head, 10 mm - 1.25 x 60 mm
43	K965414	2	NUT hex, 10 mm - 1.25

226

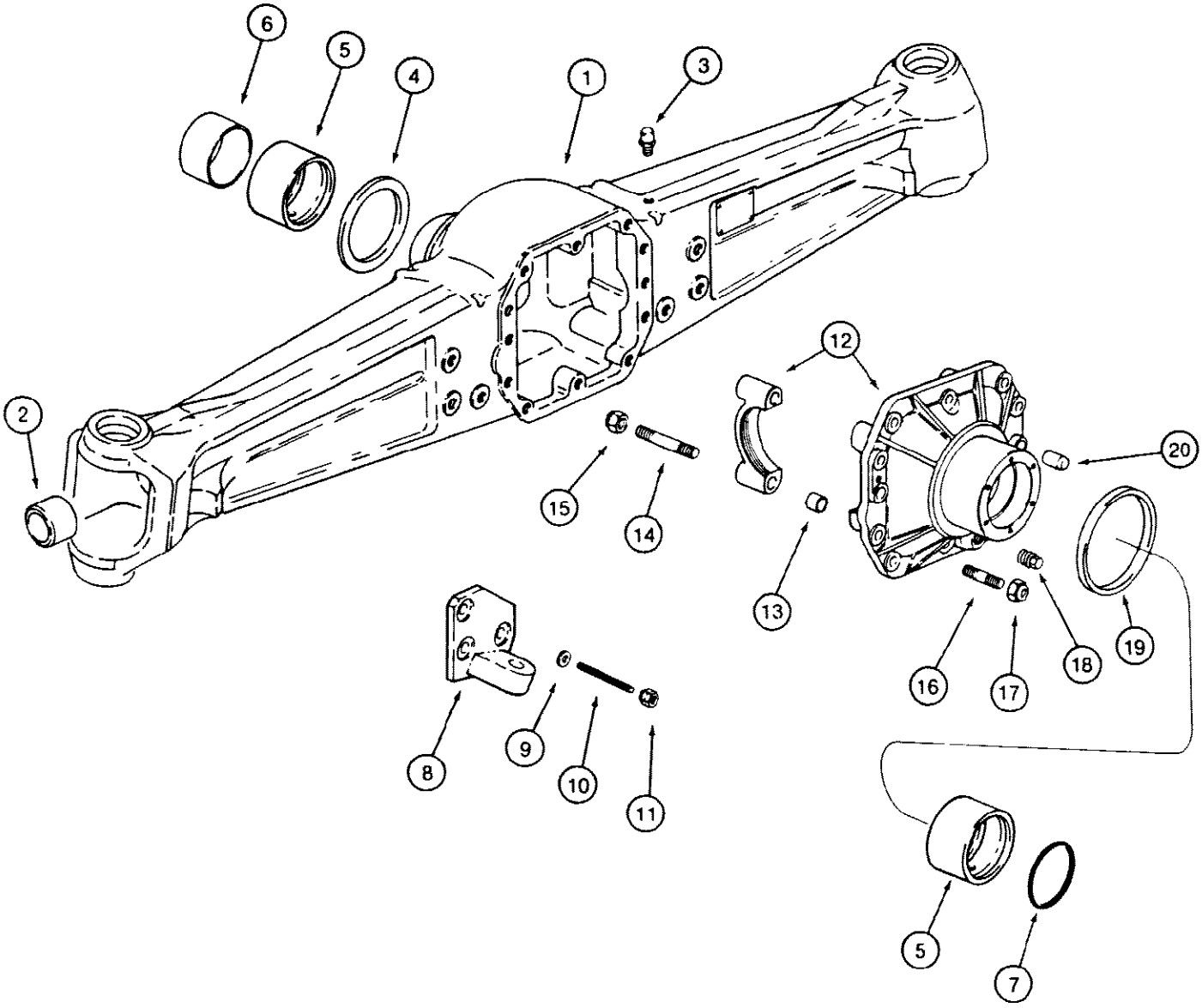

861525

226 FRONT DRIVE AXLE, AXLE HOUSING

Ref	Part Number	Qty	Description
	D127440	1	AXLE ASSEMBLY, Carraro 710 front drive, Carraro No. 118562, Includes: Ref. 1 - 20, D127440 axle assembly includes parts on Figures 226 236. For axle mounting, See Figure 210.
1	N13610	1	HOUSING front axle
2	K395019	2	BUSHING housing
3	K965231	1	BREATHER axle housing
4	K395022	1	SPACER front pivot
5	K965265	2	COLLAR front pivot
6	K965266	1	SLEEVE front pivot
7	K965267	1	O RING housing, fits in outer groove of K965265 front pivot collar, Ref. 5
8	N13611	1	SUPPORT steering cylinder, left hand
8	N13612	1	SUPPORT steering cylinder, right hand
9	K395052	6	WASHER lock, special, 14 mm
10	N13503	6	STUD bracket
11	K965250	6	NUT hex, self locking, special, 14 mm - 1.5
	K395118	1	CARRIER ASSEMBLY, differential, Includes: Ref. 12 - 15
12	NSS	1	CARRIER differential
13	K965259	4	BUSHING centering, carrier
14	K261836	4	STUD carrier
15	K965250	4	NUT hex, self locking, special, 14 mm - 1.5
16	K261839	10	STUD carrier to housing
17	905834R1	10	NUT hex, self locking, special, 12 mm - 1.25
18	A156873	2	PLUG drain
19	K395023	1	WASHER rear pivot
20	K965252	2	PIN dowel, housing to carrier
	M20704		SEALANT, 3 oz (89 ml) of sealant in a tube, differential carrier to axle
		UAR	housing, not shown

228

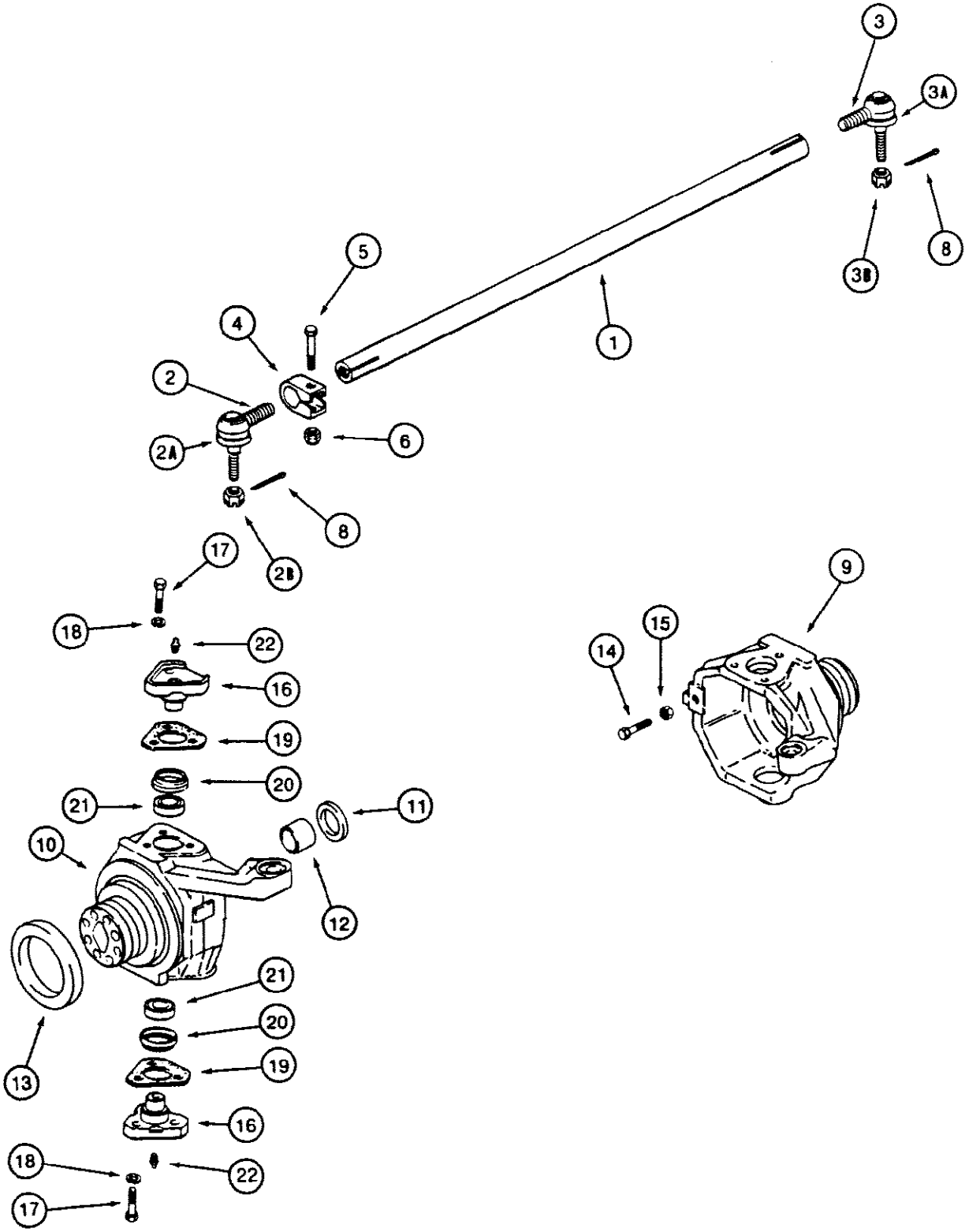
3
3A
3B
8
1
5
4
2
2A
6
8
2B
17
18
22
16
19
20
21
11
10
12
21
20
19
16
18
22
17
13
9
15
14

228 FRONT DRIVE AXLE, TIE ROD AND SWIVEL HOUSING

Ref	Part Number	Qty	Description
1	N13615	1	ROD tie, steering
	K260254	1	JOINT ball, left hand, Includes: Ref. 2 - 2B, Carraro has made a change on this ball joint. In parts books and print, this shows a hole where a cotter pin goes through to hole on a nut. This hole has been removed and no longer requires the pin. The ball joint received without a hole requires a new locking nut P/N 102894A1.
2	NSS	1	JOINT ball, left hand
2A	K956939	1	BOOT ball joint
2B	K956938	1	NUT hex, slotted, ball joint
	K260250	1	JOINT ball, right hand, Includes: Ref.3 - 3B, Carraro has made a change on this ball joint. In parts books and print, this shows a hole where a cotter pin goes through to hole on a nut. This hole has been removed and no longer requires the pin. The ball joint received without a hole requires a new locking nut P/N 102894A1.
3	NSS	1	JOINT ball, right hand
3A	K956939	1	BOOT ball joint
3B	K260251	1	NUT hex, slotted, ball joint
4	N8904	2	CLAMP tie rod
5	N8905	2	BOLT hex head, special
6	K260157	2	NUT hex, self locking, special
7			RESERVED
8	K260255	2	PIN cotter, special
9	N13614	1	HOUSING swivel, right hand
10	N13613	1	HOUSING swivel, left hand
11	K262143	2	SEAL oil, swivel housing
12	K395033	2	BUSHING swivel housing
13	K395138	2	RING sealing, swivel housing
14	K395032	4	BOLT steering stop, special, This is a 12 mm bolt and nut. If swivel housing requires a 14 mm bolt and nut, order D142907 bolt and D142908 nut.
15	K965369	4	NUT hex, 12 mm, special, This is a 12 mm bolt and nut. If swivel housing requires a 14 mm bolt and nut, order D142907 bolt and D142908 nut.
16	N13504	4	CAP swivel housing
17	K965247	12	BOLT hex head, special, 14 mm - 2 x 35 mm
18	K965248	12	WASHER lock, special, 14 mm
19	K395036	UAR	SHIM, 0.10mm Thk, Swivel cap
19	K395037	UAR	SHIM, 0.19mm Thk, Swivel cap
19	K395038	UAR	SHIM, 0.35mm Thk, Swivel cap
20	K395039	4	SEAL bearing
21	K395040	4	BEARING roller, swivel cap
22	5194260	4	FITTING grease, straight, swivel cap, upper

230

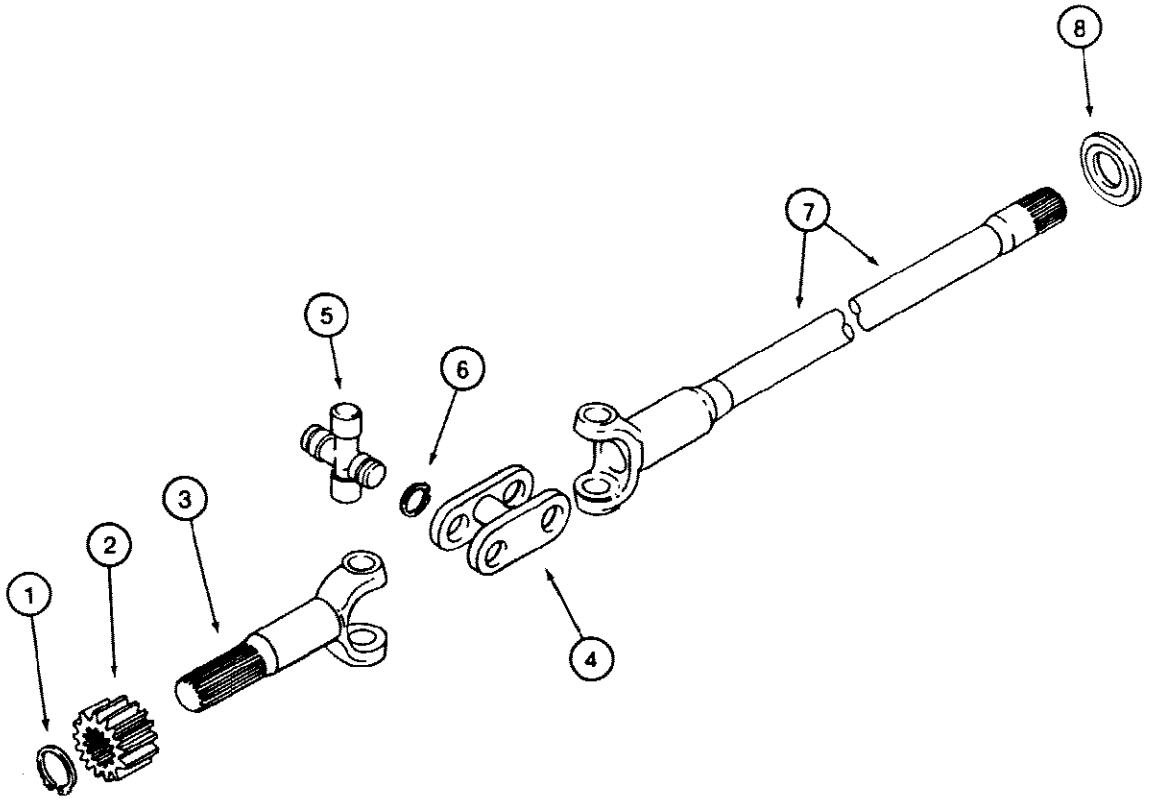

852058

230 FRONT DRIVE AXLE, AXLE SHAFTS

Ref	Part Number	Qty	Description
1	K261897	2	SNAP RING axle shaft
2	K395114	2	GEAR pinion, axle shaft
3	N13510	2	SHAFT axle, wheel side, short
4	K262199	2	FLANGE connecting
5	K262161	4	JOINT universal, axle shaft, There are several different possibilities on U joints that may not show in the parts books, so go by dimensions if you have to. K262161, across cap 27.02 mm, from cap to cap 74.58 mm. N14411, across cap 27.02 mm, from cap to cap 73.51 mm. K260189, across cap 30.18 mm, from cap to cap 92.22 mm. 100546A1, across cap 23.84 mm, from cap to cap 65.42 mm. K262161 is identified with BTB210, N14411 is BTB310, K260189 is BTB220 and 100546A1 is BTB300.
6	K965336	16	SNAP RING universal joint
7	N13509	2	SHAFT axle, differential side, long
8	K395103	2	SEAL oil, axle shaft

232

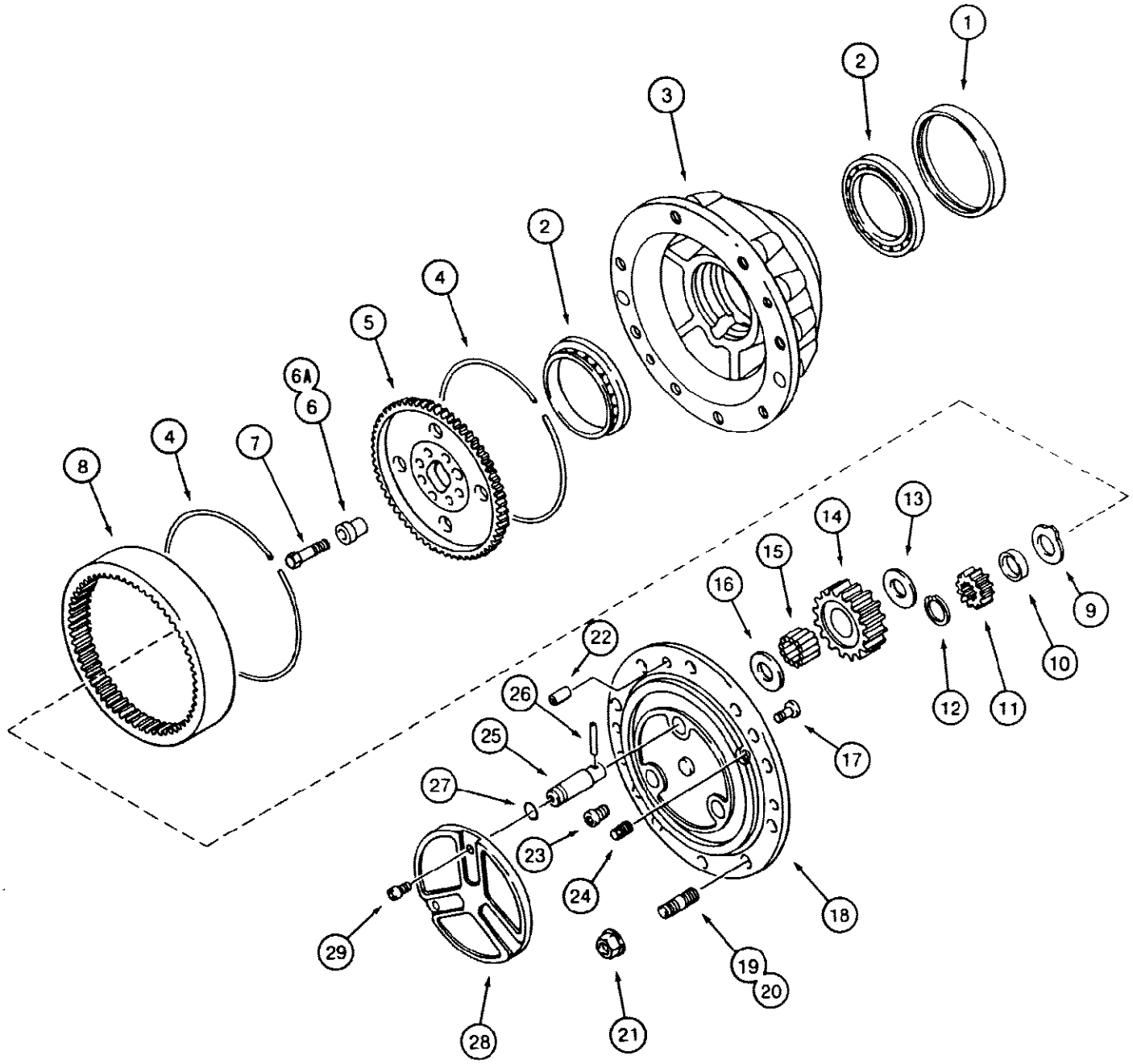
1
2
3
2
4
5
6A
6
4
7
8
9
10
11
12
13
14
15
16
17
18
19
20
21
22
23
24
25
26
27
28
29

861529

232 FRONT DRIVE AXLE, PLANETARY

Ref	Part Number	Qty	Description
1	K395102	2	SEAL oil, hub, Ref #1 K395102 seal Refer to notes on Fig. 216 for notes on dimensions and substitution.
2	K395101	4	BALL BEARING hub, Ref #2 K395101 ball bearing This is a cup and cone, tapered, bearing, not a ball bearing as indicated in catalog.
3	K395123	2	HUB wheel attaching
4	K395095	4	RING lock
5	K395126	2	HUB ring gear
6	K395105	14	BUSHING centering, 20 mm OD
6A	K395104	2	BUSHING centering, 24 mm OD
7	K395131	16	BOLT hex head, special
8	K395113	2	GEAR ring, planetary
9	K395115	2	WASHER tab lock, special
10	K395121	2	SPACER pinion gear
11	K395114	2	GEAR pinion, axle shaft
12	K261897	2	SNAP RING pinion gear retaining
13	N13512	6	WASHER thrust, pinion gear, inner
14	N13513	6	GEAR pinion, planetary
15	N13514	180	BEARING needle, planetary gear
16	K395091	6	WASHER thrust, pinion gear, outer
17	K395093	2	PIN lock, planetary cover
18	309421A1	2	COVER planetary, Replaced N13516, REF #18 IF NEED WITH OUT PLATE #28 TRY 230510A1
19	K260218	12	STUD special, without collar, not shown
20	N13515	4	STUD special, with collar, for recessed bolt holes
21	K395089	16	NUT hex, special
22	K395094	4	PIN dowel, planetary cover
23	K395029	4	SCREW special, planetary cover
24	A156873	2	PLUG drain
25	N13517	6	SHAFT pinion gear
26	K965305	6	PIN pinion gear shaft
27	A27342	6	O RING planetary gear shaft
28	K395135	2	PLATE planetary cover
29	K395082	6	SCREW special, planetary cover plate
	M20704	UAR	SEALANT, 3 oz (89 ml) of sealant in a tube, planetary cover to hub, not shown, REF #28 AND #29. SEE ECN H93SR54. EFFECTIVE WITH AXLE SERIAL NUMBERS WA1368 AND WP1368, CARRARO REMOVED COVER AND SCREWS FROM PLANETARY'S AND REPLACED THE SCREWS WITH PLUGS. THE NEW PLUGS CAN BE USED PRIOR TO THESE AXLE S/N BREAKS. PLUG IS 138866A1, 6 PER. ALSO EFF. WITH AXLE S/N WA1219 AND WP1218, THE COMBINATION OF 2 892 11006 6 mm LOCKWASHERS AND 2 614 6012 BOLTS, NOT SHOWN, WERE REPLACED BY 2 PCS OF 112486A1 SELF LOCKING BOLT. ALL OLD PARTS ARE RETAINED FOR SERVICE FOR MACHINES WITH AXLES BUILT PRIOR TO THE ABOVE S/N BREAKS.

234

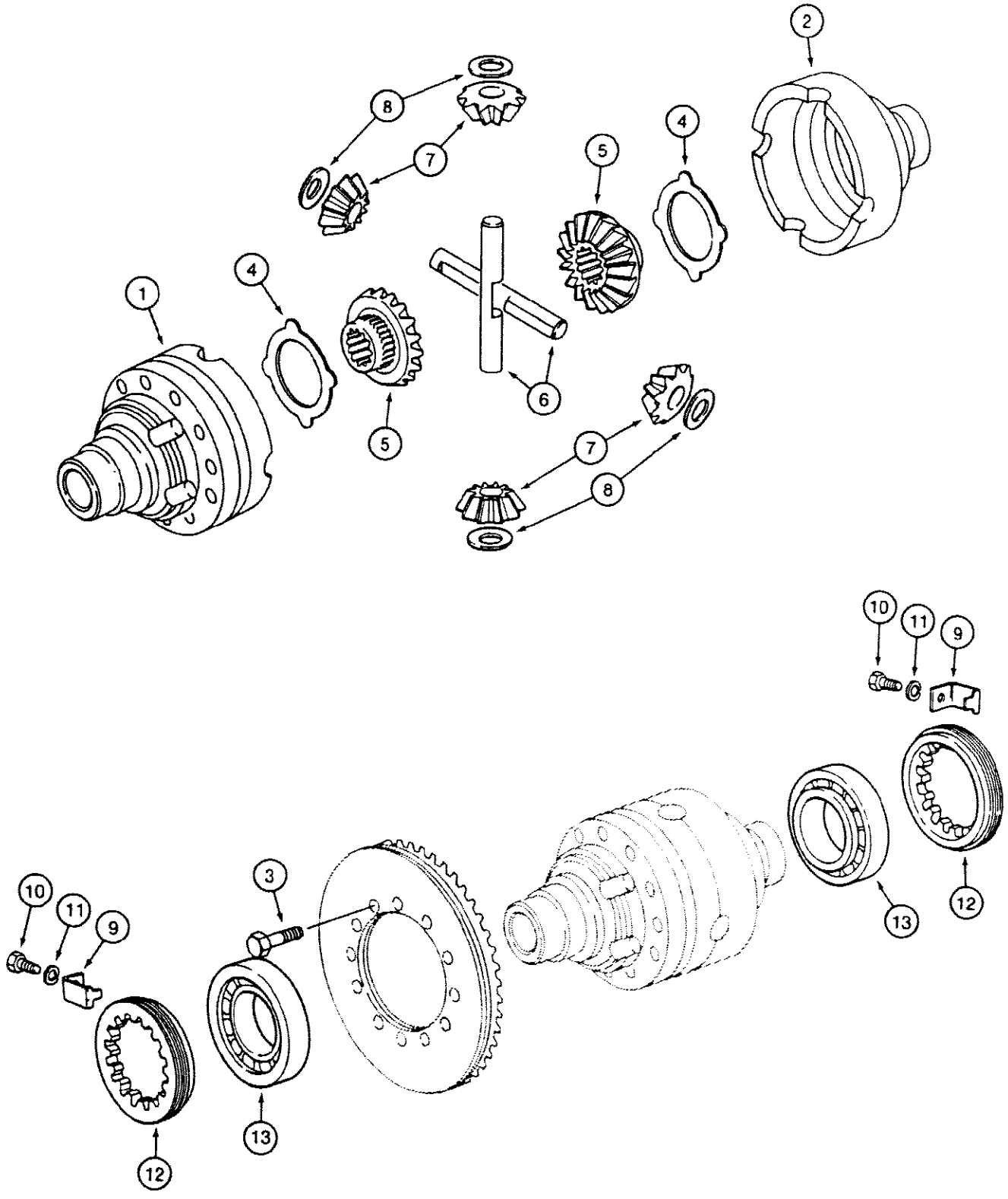

861530

234 FRONT DRIVE AXLE, DIFFERENTIAL

Ref	Part Number	Qty	Description
	N13508	1	CASE ASSEMBLY, self locking differential, Includes: Ref 1 - 3
1	NSS	1	CASE differential, flange half
2	NSS	1	CASE differential, plain half
3	827-10080	12	BOLT - hex, 10 - 1.5 x 80 mm, class 10.9, plated
4	N13618	2	SEAL differential case
5	N13617	2	GEAR side, differential
6	N13507	2	SHAFT pinion gear
7	K395076	4	GEAR pinion, differential
8	K395075	4	WASHER thrust, pinion gear
9	K261869	2	BRACKET lock
10	K261871	2	BOLT hex head, special, 6 mm - 1 x 12 mm
11	K261870	2	WASHER lock, special, 6 mm
12	K261868	2	RING lock, threaded
13	K395027	2	BEARING roller, differential

236

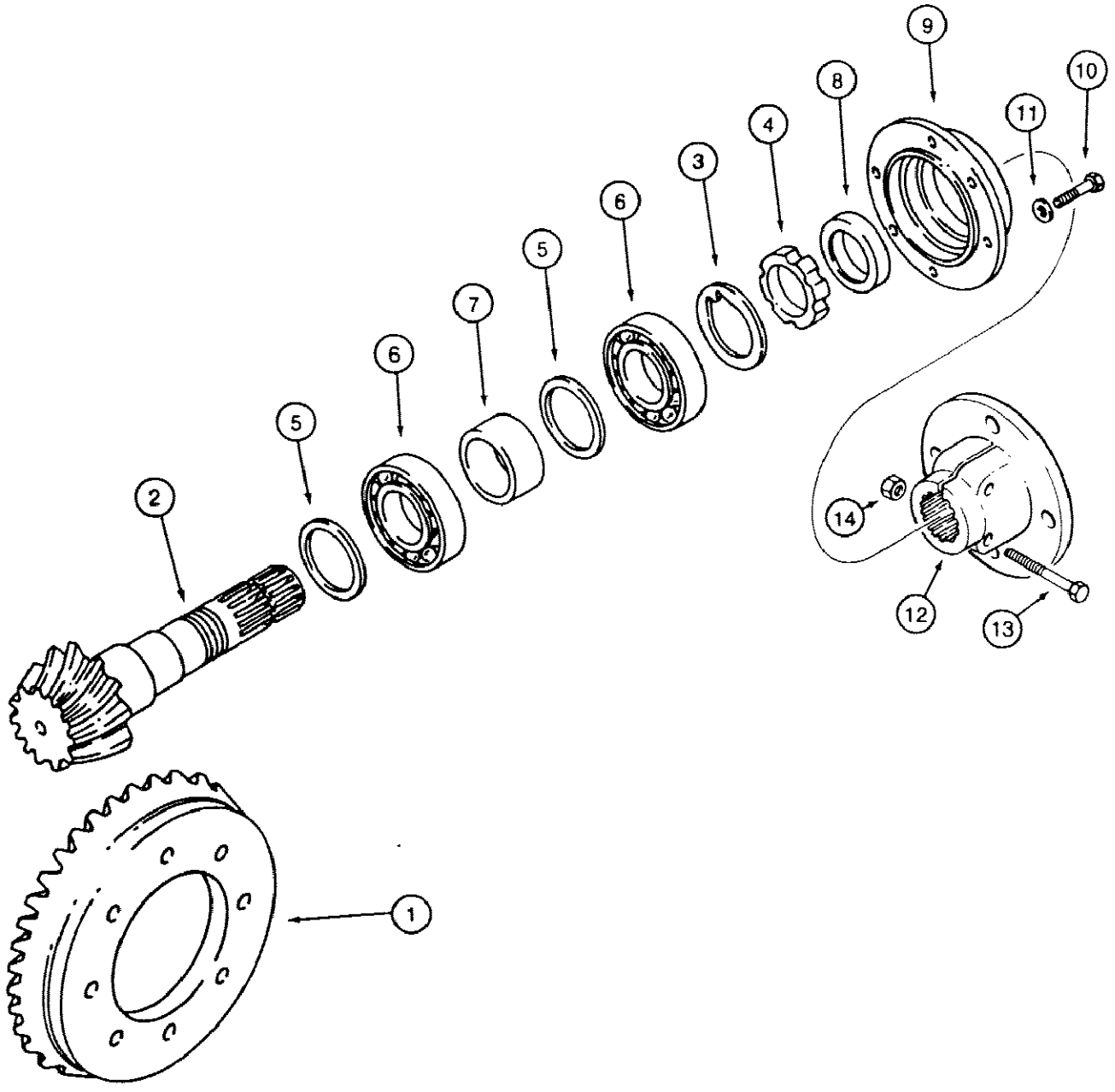

861531

580SE CASE SUPER-E CONSTRUCTION KING LOADER BACKHOE - Power Train

236 FRONT DRIVE AXLE, RING AND PINION GEAR SET

Ref	Part Number	Qty	Description
	N13506	1	GEAR SET ring and pinion, Includes: Ref.1 - 4
1	NSS	1	GEAR ring, differential
2	NSS	1	GEAR pinion, differential
3	K261065	1	WASHER special
4	K261852	1	RING nut, pinion gear
5	K965280		UAR SHIM, 2.50mm Thk
5	K965281		UAR SHIM, 2.55mm Thk
5	K965282		UAR SHIM, 2.60mm Thk
5	K965283		UAR SHIM, 2.65mm Thk
5	K965284		UAR SHIM, 2.70mm Thk
5	K965285		UAR SHIM, 2.75mm Thk
5	K965286		UAR SHIM, 2.80mm Thk
5	K965287		UAR SHIM, 2.85mm Thk
5	K965288		UAR SHIM, 2.90mm Thk
5	K965289		UAR SHIM, 2.95mm Thk
5	K965290		UAR SHIM, 3.00 mm thick
5	K965291		UAR SHIM, 3.05mm Thk
5	K965292		UAR SHIM, 3.10mm Thk
5	K965293		UAR SHIM, 3.15mm Thk
5	K965294		UAR SHIM, 3.20mm Thk
5	K965295		UAR SHIM, 3.25mm Thk
5	K965296		UAR SHIM, 3.30mm Thk
5	K965297		UAR SHIM, 3.35mm Thk
5	K965298		UAR SHIM, 3.40mm Thk
6	K395090	2	BEARING roller, pinion gear, and cone, tapered, roller bearing., Ref #6 K395090 roller bearing This is a cup
7	K965412	1	SPACER bearing
8	K262143	1	SEAL oil
9	K395055	1	COVER differential
10	K395026	6	BOLT special, cover mounting
11	K261870	6	WASHER special
12	N13619	1	COVER flange, drive shaft end, and I.D. of 1.25"., Ref #12 N13619 cover This has 21 splines
13	K965415	2	BOLT hex head, special, 10 mm - 1.25 x 60 mm
14	K965414	2	NUT hex, self locking, special, 10 mm 1.25
	M20704		SEALANT, 3 oz (89 ml) of sealant in a tube, differential cover to differential
			UAR carrier, not shown

238 TRANSAXLE TRANSMISSION HOUSING, PRIOR TO TRANSMISSION SERIAL 16270319

238

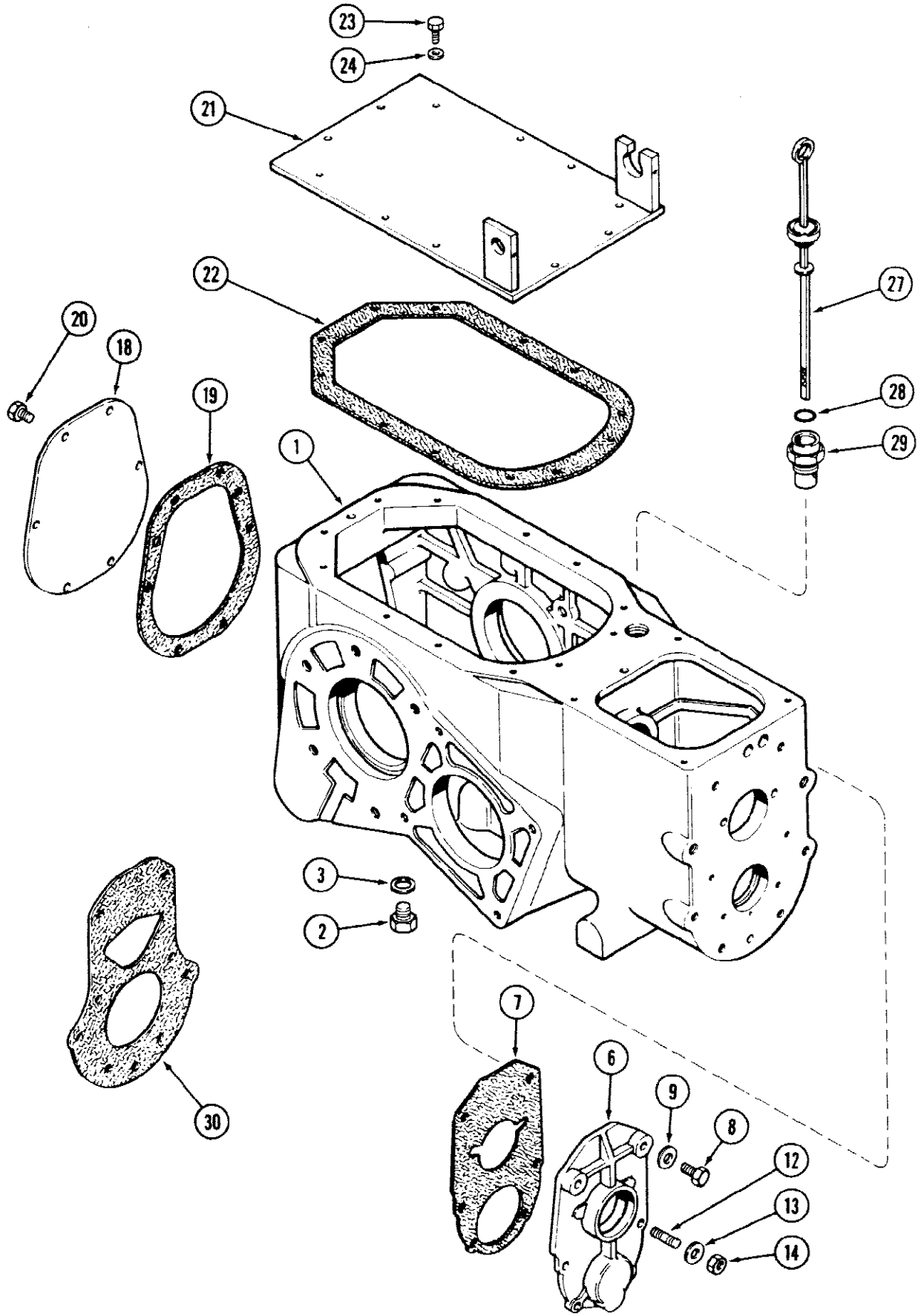

580SE CASE SUPER-E CONSTRUCTION KING LOADER BACKHOE - Power Train

238 TRANSAXLE TRANSMISSION HOUSING, PRIOR TO TRANSMISSION SERIAL 16270319

Ref	Part Number	Qty	Description
1	A157659	1	HOUSING transmission
2	A140222	1	PLUG drain, transmission housing
3	A58608	1	GASKET drain plug
6	A154308	1	COVER transmission housing, front, 2 wheel drive
7	G46849	1	GASKET front cover to transmission housing, 2 wheel drive
8	13-830	2	BOLT hex, 1/2 NC x 1 inch
9	195-533	2	WASHER flat, 17/32 x 1-1/16 x 7/64 inch (14 x 27 x 3 mm)
12	A29717	2	STUD cover, center, 1-1/2 inch
12	G10710	2	STUD cover, bottom, 1-3/4 inch
13	195-525	4	WASHER flat, 13/32 x 13/16 x 1/16 inch (10 x 21 x 2 mm)
14	129-123	4	NUT, 3/8"-24, G5
18	A39105	1	COVER transmission housing, rear
19	G10447	1	GASKET rear cover to transmission housing, see note, JI Case installed housing may not have a cover gasket. If rear housing cover is removed, install a gasket prior to reassembly.
20	13-612	6	BOLT, Hex, 3/8"-16 x 3/4", G5, Full Thd
21	A154625	1	COVER transmission housing, top, rear
22	A153777	1	GASKET top cover to transmission housing
23	26-616	10	BOLT hex, Grade 8, 3/8 NC x 1 inch
24	A140282	10	WASHER cover bolt, hardened
27	A154968	1	DIPSTICK oil gauge, Includes: Ref. 28
28	A42597	1	O RING dipstick
29	A154850	1	TUBE dipstick and oil filler
30	A156248	1	GASKET housing to gear box, 4 wheel drive, See Figure 264

240

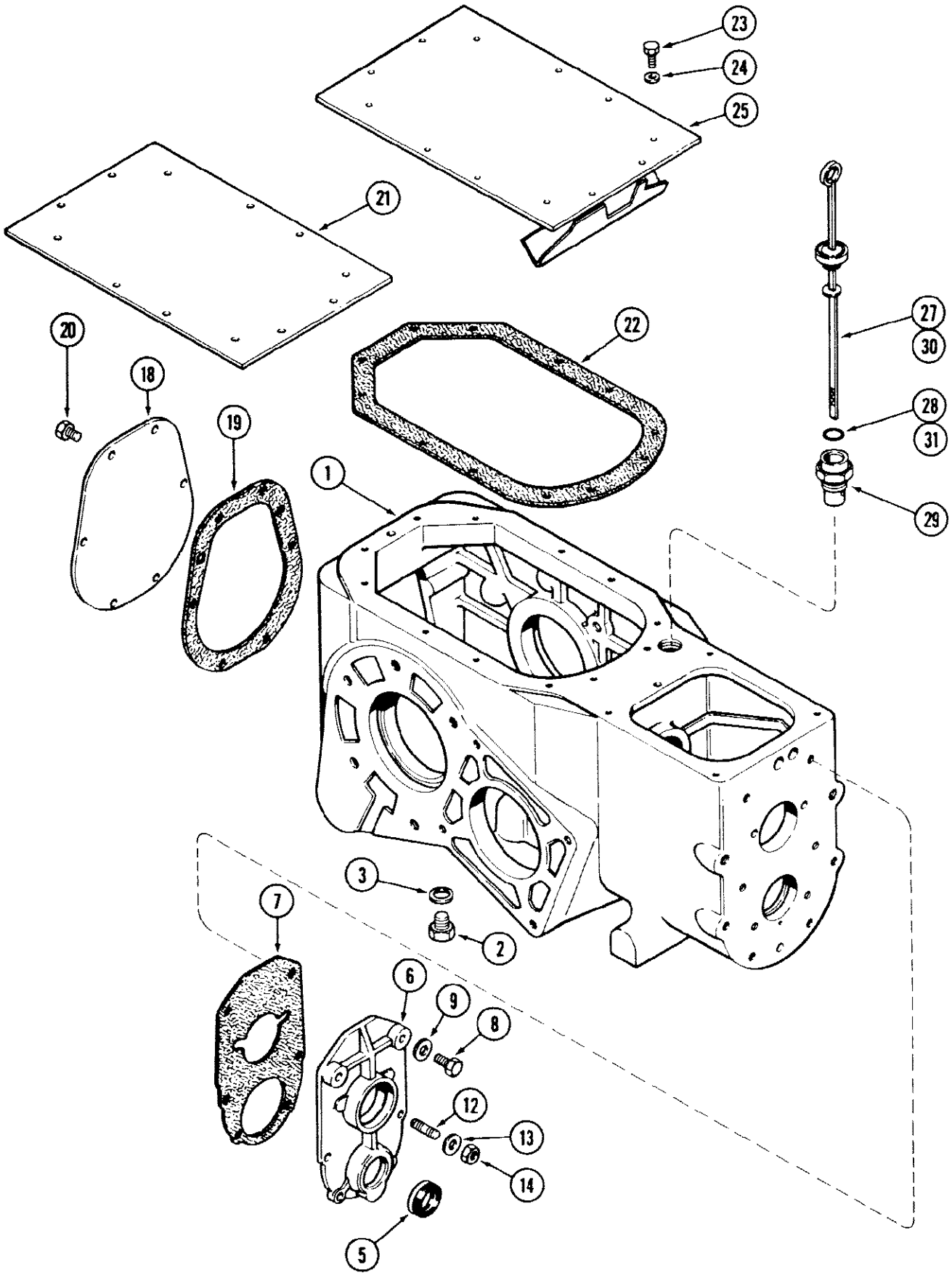

580SE CASE SUPER-E CONSTRUCTION KING LOADER BACKHOE - Power Train

240 TRANSAXLE TRANSMISSION HOUSING, 2 WHEEL DRIVE, TRANSMISSION SN 16270319 & AFTER

Ref	Part Number	Qty	Description
1	A157659	1	HOUSING transmission, Transmission Serial No. 16270319 to 16276842
1	A179055	1	HOUSING transmission, Transmission Serial No. 16276842 and after
2	A140222	1	PLUG drain, transmission housing
3	A58608	1	GASKET drain plug
5	A179056	1	SEAL oil
6	A168851	1	COVER transmission housing, front
7	G46849	1	GASKET front cover to transmission housing
8	13-830	2	BOLT hex, 1/2 NC x 1 inch
9	195-533	2	WASHER flat, 17/32 x 1-1/16 x 7/64 inch (14 x 27 x 3 mm)
12	A29717	2	STUD cover, center, 1-1/2 inch
12	G10710	2	STUD cover, bottom, 1-3/4 inch
13	195-525	4	WASHER flat, 13/32 x 13/16 x 1/16 inch (10 x 21 x 2 mm)
14	129-123	4	NUT, 3/8"-24, G5
18	A39105	1	COVER transmission housing, rear
19	G10447	1	GASKET rear cover to transmission housing, see note, JI Case installed housing may not have a cover gasket. If rear housing cover is removed, install a gasket prior to reassembly.
20	13-612	6	BOLT, Hex, 3/8"-16 x 3/4", G5, Full Thd
21	A153744	1	COVER housing, top, rear, Transmission Serial No. 16270319 to 16276842
22	A153777	1	GASKET top cover to transmission housing
23	26-616	11	BOLT hex, Grade 8, 3/8 NC x 1 inch
24	A140282	11	WASHER cover bolt, hardened
25	A179385	1	COVER housing, top rear, Transmission Serial No. 16276842 and after
27	A154968	1	DIPSTICK oil gauge, Transmission Serial No. 16270319 to 16276842, Includes: Ref. 28
28	A42597	1	O RING dipstick
29	A154850	1	TUBE dipstick and oil filler
30	D138048	1	DIPSTICK ASSEMBLY, oil gauge, Transmission Serial No. 16276842 and after, Includes: Ref. 31
31	F62075	1	O RING dipstick

242

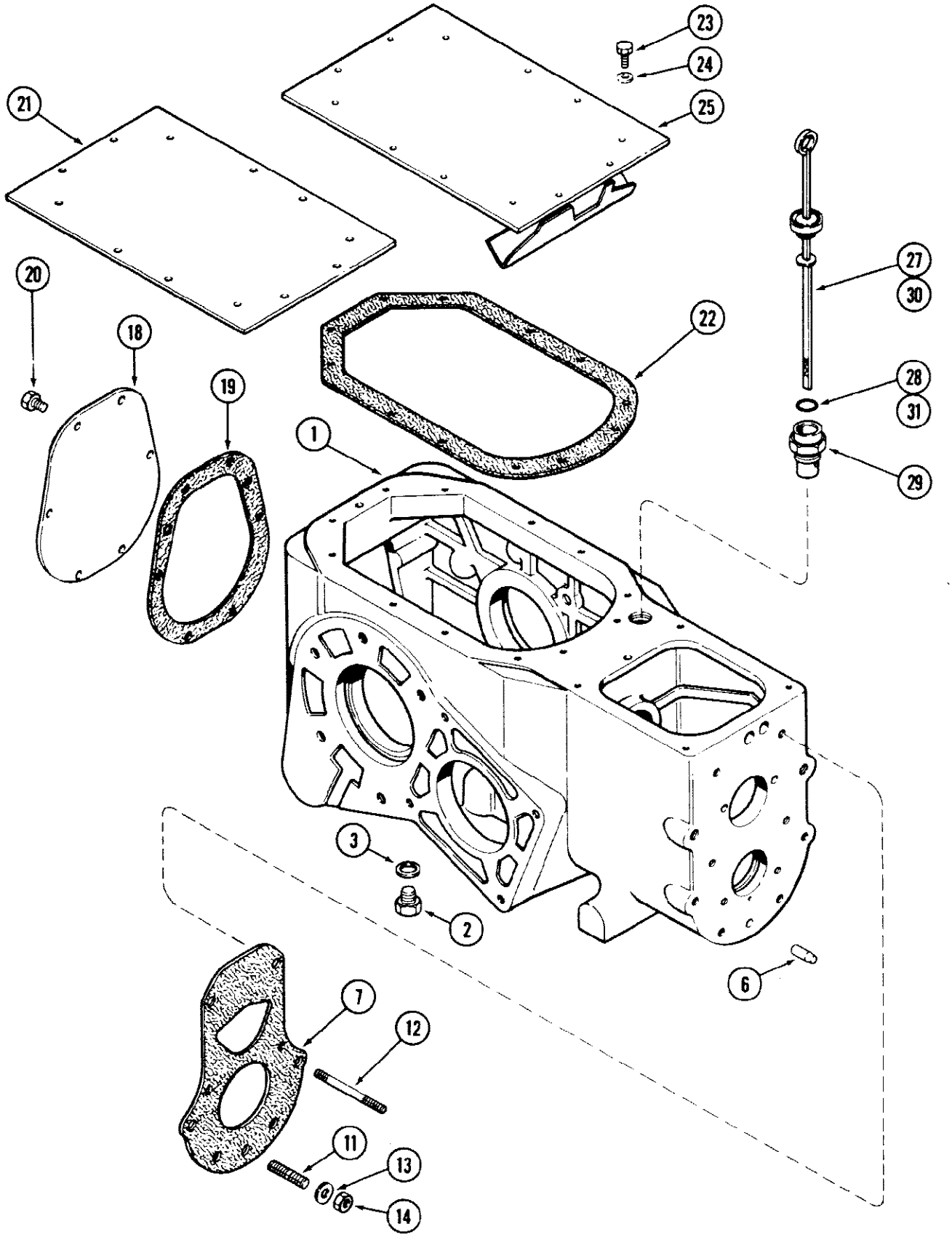

580SE CASE SUPER-E CONSTRUCTION KING LOADER BACKHOE - Power Train

242 TRANSAXLE TRANSMISSION HOUSING, 4 WHEEL DRIVE, TRANSMISSION SN 16270319 & AFTER

Ref	Part Number	Qty	Description
1	A157659	1	HOUSING transmission, Transmission Serial No. 16270319 to 16276842
1	A179055	1	HOUSING transmission, Transmission Serial No. 16276842 and after
2	A140222	1	PLUG drain, transmission housing
3	A58608	1	GASKET drain plug
6	A29540	1	PIN dowel, locating
7	A156248	1	GASKET front cover to transmission housing
11	A157625	2	STUD front mount, 2-1/2 inch
12	A153248	2	STUD cover, center, 4-13/16 inch
13	92-6	2	3/8"
14	25-106	2	NUT hex, 3/8 inch NC
18	A39105	1	COVER transmission housing, rear
19	G10447	1	GASKET rear cover to transmission housing, See Note, JI Case installed housing may not have a cover gasket. If rear housing cover is removed, install a gasket prior to reassembly.
20	13-612	6	BOLT, Hex, 3/8"-16 x 3/4", G5, Full Thd
21	A153744	1	COVER housing, top rear, Transmission Serial No. 16270319 to 16276842
22	A153777	1	GASKET top cover to transmission housing
23	26-616	11	BOLT hex, Grade 8, 3/8 NC x 1 inch
24	A140282	11	WASHER cover bolt, hardened
25	A179385	1	COVER housing, top rear, Transmission Serial No. 16276842 and after
27	A154968	1	DIPSTICK ASSEMBLY, oil gauge, Transmission Serial No. 16276842 and after, Includes: Ref. 28, Ref #27 A154968 dipstick assy This should, read "for transmission SN prior to 16276842
28	A42597	1	O RING dipstick
29	A154850	1	TUBE dipstick and oil filler
30	D138048	1	DIPSTICK ASSEMBLY, oil gauge, Transmission Serial No. 16276842 and after, Includes: Ref. 31
31	F62075	1	O RING dipstick

244

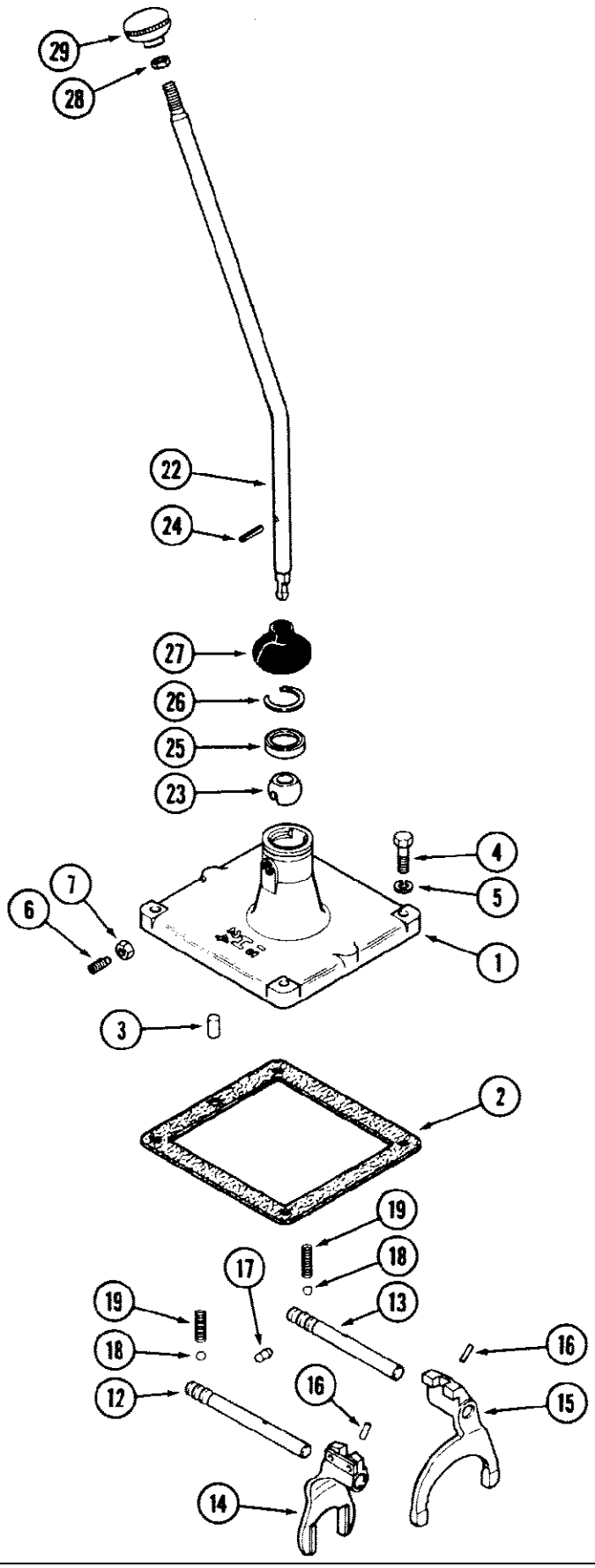

580SE CASE SUPER-E CONSTRUCTION KING LOADER BACKHOE - Power Train

244 TRANSAXLE SHIFTER MECHANISM

Ref	Part Number	Qty	Description
1	A138312	1	COVER shift control
2	G10342	1	GASKET cover to transmission housing
3	138-245	1	Pin, 1/2" x 7/8", Slotted
4	13-624	4	BOLT hex, 3/8 NC x 1-1/2 inch
5	92-6	4	3/8"
6	G15468	1	SCREW set, shift lever retaining, 5/16 inch NC
7	25-145	1	NUT hex jam lock, 5/16 inch NC
12	A138313	1	RAIL shifter, first and second gear, Shift rails originally had three grooves around the rail circumference. Service bulletin NLB SB 006 90 explains that the only groove that now runs the circumference is the neutral groove. The two in gear positions have flats for the detents. This improves the shift action.
13	A140578	1	RAIL shifter, third and fourth gear, Shift rails originally had three grooves around the rail circumference. Service bulletin NLB SB 006 90 explains that the only groove that now runs the circumference is the neutral groove. The two in gear positions have flats for the detents. This improves the shift action.
14	A51964	1	FORK ASSEMBLY, shift, first and second gear
15	A150726	1	FORK shifter, third and fourth gear
16	138-2009	2	PIN, 3/16" x 1", Coiled
17	A29060	1	PLUG interlock, shifter rails
18	211-211	2	BALL detent, 13/32 inch diameter (10 mm)
19	G47039	2	SPRING tension, detent ball
22	A154286	1	LEVER ASSEMBLY, shift, transmission, Includes: Ref. 23 - 24
23	NSS	1	BALL lever
24	A156515	1	PIN groove, lever ball
25	A7923	1	SEAT lever, shift
26	A26836	1	RING snap
27	A26956	1	COVER dust, Replaced A29956
28	129-145	1	NUT, Jam, 1/2"-13, G5
29	D69105	1	KNOB lever, shift

246

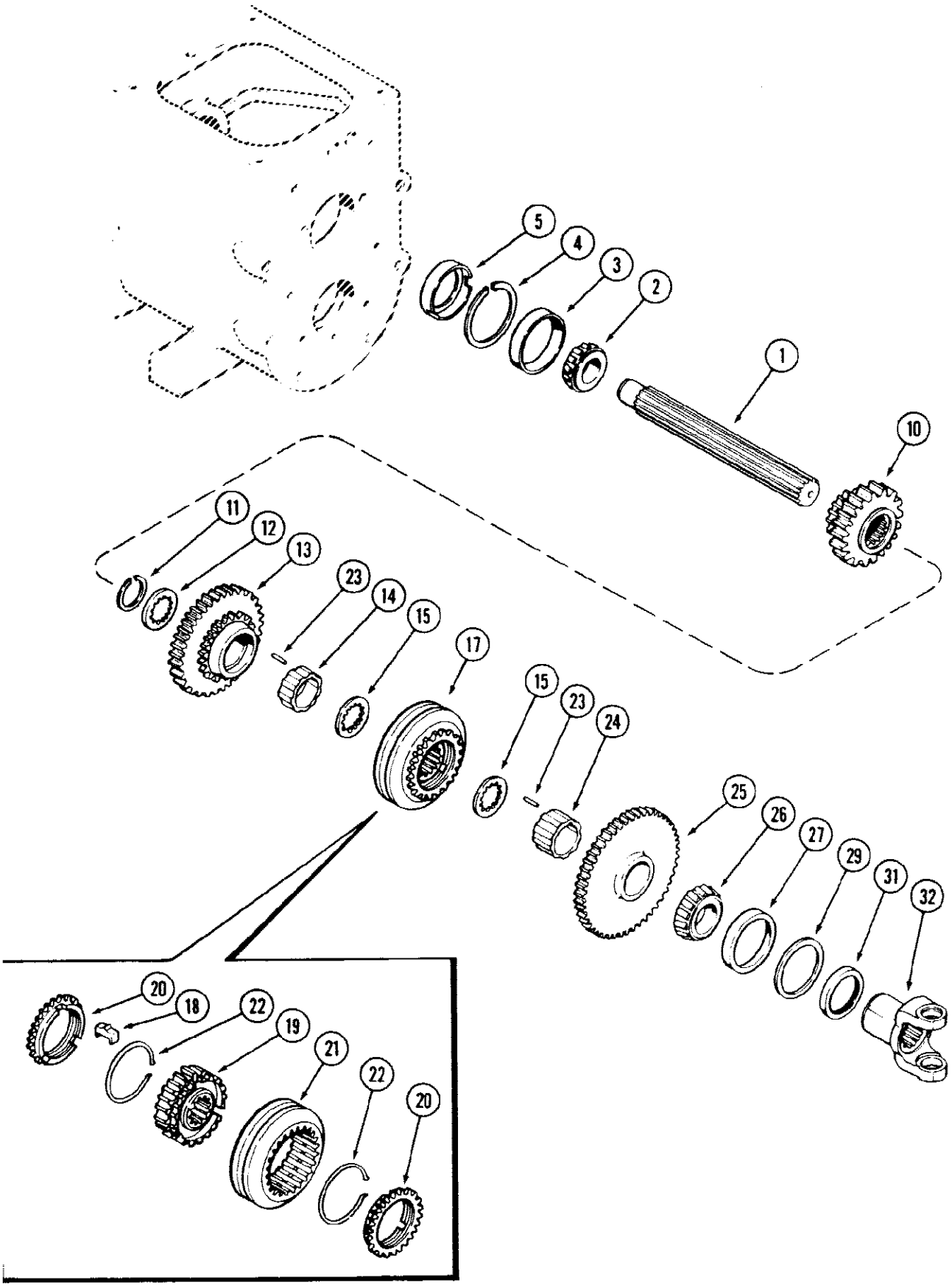
5
4
3
2
1
10
11
12
13
23
14
15
17
15
23
24
25
26
27
29
31
32
20
18
22
19
21
22
20

246 TRANSAXLE MAINSHAFT

Ref	Part Number	Qty	Description
1	A168330	1	MAINSHAFT transaxle
2	T20939	1	CONE bearing, rear, 1-1/4 inch ID (32 mm)
3	A29977	1	CUP bearing, rear, 2-3/4 inch OD (70 mm)
4	A29971	1	RING snap, rear bearing retaining
5	G10616	1	CUP oiling, mainshaft, rear
10	A168172	1	GEAR sliding, first and second, 16 and 25 external and 24 internal teeth
11	A26946	1	RING snap, gear retaining
12	A140239	1	COLLAR thrust, third and fourth gears, 24 internal teeth
13	A179853	1	GEAR sliding, third, 27 and 35 external teeth, teeth have back taper., Ref #13 and #25 third and fourth gears Clutch
14	A150317	1	BUSHING third gear
15	A157470	2	WASHER thrust, third and fourth gears, 1/8 inch (3 mm) thick with 24 internal teeth
17	A182240	1	SYNCHRONIZER ASSEMBLY, mainshaft, Includes: Ref. 18 - 22
18	G46078	3	SPRING synchronizer
19	NSS	1	HUB synchronizer, Reference No. G46076
20	A45568	2	RING blocking
21	NSS	1	COLLAR synchronizer, Reference No. A52383
22	L33396	2	SPRING lock ring, Replaces A40766
23	A168375	2	PIN bushing
24	A150318	1	BUSHING fourth gear
25	A179854	1	GEAR sliding, fourth
26	H753566	1	CONE bearing, front, 1-9/16 inch ID (40 mm)
27	H753574	1	CUP bearing, front, 2-7/8 inch OD (73 mm)
29	A51527	UAR	SHIM, .035" Thk, Front bearing (0.89 mm)
29	G10341	UAR	SHIM, .005" Thk, Front bearing (0.13 mm)
29	G10340	UAR	SHIM, .007" Thk (0.18 mm), Front bearing
31	A154253	1	SEAL oil, front, 2WD Only
32	N6834	1	YOKE power input

248 TRANSAXLE COUNTERSHAFT, 2 WHEEL DRIVE, PRIOR TO TRANSMISSION SN 16270319

248

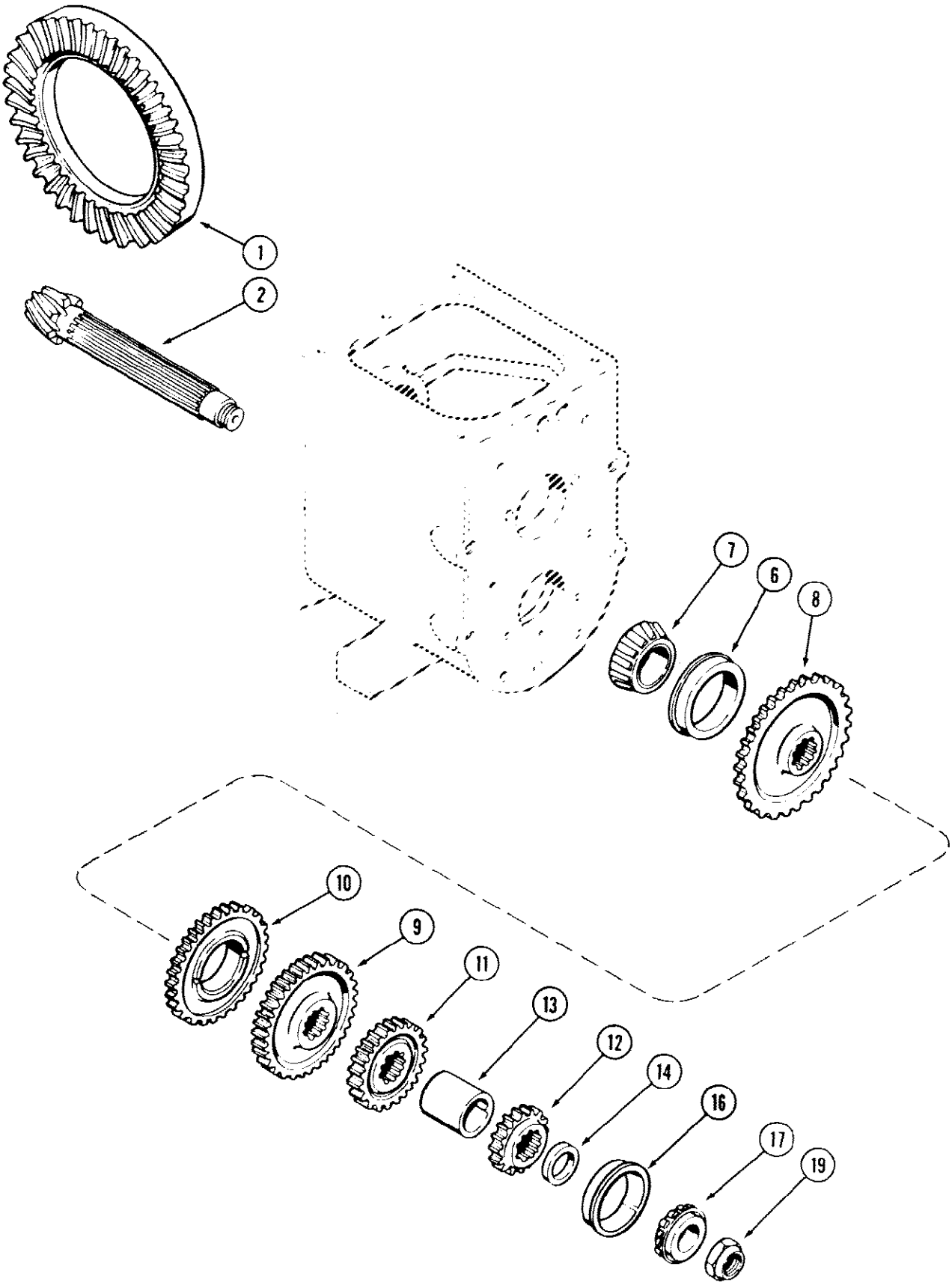

580SE CASE SUPER-E CONSTRUCTION KING LOADER BACKHOE - Power Train

248 TRANSAXLE COUNTERSHAFT, 2 WHEEL DRIVE, PRIOR TO TRANSMISSION SN 16270319

Ref	Part Number	Qty	Description
	A168102	1	GEAR pinion and ring, 2 wheel drive, Matched set, Includes: Ref. 1 - 2
1	NSS	1	GEAR ring, Reference No. A168100
2	NSS	1	PINION bevel, Reference No. A168101
6	A153753	1	CUP bearing, rear, with snap ring, 3-1/2 inch OD (89 mm)
7	R10276	1	CONE bearing, rear, 1-5/8 inch ID (41 mm)
8	A153751	1	GEAR first, 47 external and 10 internal teeth
9	A51961	1	GEAR second, 38 external and 10 internal teeth
10	A157304	1	GEAR oil slinger, 38 external teeth, Replaces A51962
11	A51960	1	GEAR third, 28 external and 10 internal teeth
12	A154649	1	GEAR fourth, 29 external and 10 internal teeth
13	A51959	1	SPACER third and fourth gears, 1-5/8 x 2-5/16 x 2-3/16 inch (41 x 59 x 56 mm)
14	A153776	UAR	SPACER thrust, 0.250 0.258 inch (6.35 - 6.55 mm)
14	A153775	UAR	SPACER thrust, 0.244 inch (6.20 mm)
14	A153774	UAR	SPACER thrust, 0.239 inch (6.08 mm)
14	A153773	UAR	SPACER thrust, 0.234 inch (5.95 mm)
14	A153772	UAR	SPACER thrust, 0.229 inch (5.81 mm)
14	A153771	UAR	SPACER thrust, 0.224 inch (5.71 mm)
14	A153770	UAR	SPACER thrust, 0.219 inch (5.59 mm)
14	A153754	UAR	SPACER thrust, 0.210 0.218 inch (5.34 - 5.56 mm)
14	A153769	UAR	SPACER thrust, 0.214 inch (5.41 mm)
14	A153755	UAR	SPACER thrust, 0.209 inch (5.31 mm)
14	A153756	UAR	SPACER thrust, 0.204 inch (5.18 mm)
14	A153757	UAR	SPACER thrust, 0.199 inch (5.08 mm)
14	A153758	UAR	SPACER thrust, 0.194 inch (4.94 mm)
14	A153759	UAR	SPACER thrust, 0.189 inch (4.81 mm)
14	A153760	UAR	SPACER thrust, 0.184 inch (4.68 mm)
14	A153761	UAR	SPACER thrust, 0.179 inch (4.57 mm)
14	A153762	UAR	SPACER thrust, 0.174 inch (4.45 mm)
14	A153763	UAR	SPACER thrust, 0.169 inch (4.30 mm)
14	A153764	UAR	SPACER thrust, 0.164 inch (4.18 mm)
16	A179719	1	CUP flanged bearing, 2-11/16 inch OD (68 mm) Replaces A153748 and A153750
17	A153749	1	CONE bearing, rear, 1-5/16 inch ID (33 mm)
19	G49010	1	NUT adjusting, countershaft, 2 wheel drive

250 TRANSAXLE COUNTERSHAFT, 4 WHEEL DRIVE, PRIOR TO TRANSMISSION SN 16270319

250

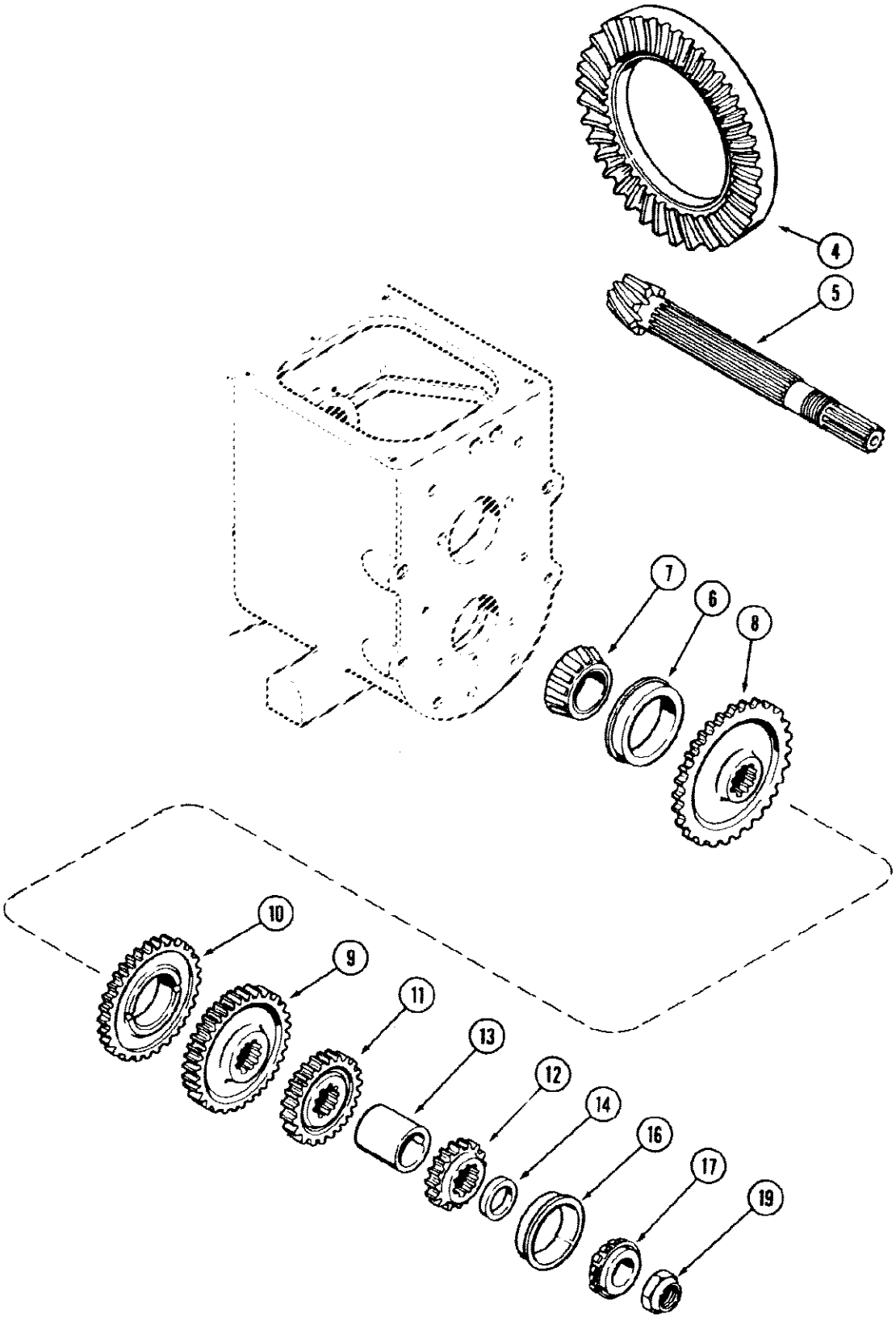

580SE CASE SUPER-E CONSTRUCTION KING LOADER BACKHOE - Power Train

250 TRANSAXLE COUNTERSHAFT, 4 WHEEL DRIVE, PRIOR TO TRANSMISSION SN 16270319

Ref	Part Number	Qty	Description
	A168108	1	GEAR pinion and ring, 4 wheel drive, Matched set, Includes: Ref. 4 - 5
4	NSS	1	GEAR ring, Reference No. A168100
5	NSS	1	PINION bevel, Reference No. A168107
6	A153753	1	CUP bearing, rear, with snap ring, 3-1/2 inch OD (89 mm)
7	R10276	1	CONE bearing, rear, 1-5/8 inch ID (41 mm)
8	A153751	1	GEAR first, 47 external and 10 internal teeth
9	A51961	1	GEAR second, 38 external and 10 internal teeth
10	A157304	1	GEAR oil slinger, 38 external teeth, Replaces A51962
11	A51960	1	GEAR third, 28 external and 10 internal teeth
12	A154649	1	GEAR fourth, 29 external and 10 internal teeth
13	A51959	1	SPACER third and fourth gears, 1-5/8 x 2-5/16 x 2-3/16 inch (41 x 59 x 56 mm)
14	A153776	UAR	SPACER thrust, 0.250 0.258 inch (6.35 - 6.55 mm)
14	A153775	UAR	SPACER thrust, 0.244 inch (6.20 mm)
14	A153774	UAR	SPACER thrust, 0.239 inch (6.08 mm)
14	A153773	UAR	SPACER thrust, 0.234 inch (5.95 mm)
14	A153772	UAR	SPACER thrust, 0.229 inch (5.81 mm)
14	A153771	UAR	SPACER thrust, 0.224 inch (5.71 mm)
14	A153770	UAR	SPACER thrust, 0.219 inch (5.59 mm)
14	A153754	UAR	SPACER thrust, 0.210 0.218 inch (5.34 - 5.56 mm)
14	A153769	UAR	SPACER thrust, 0.214 inch (5.41 mm)
14	A153755	UAR	SPACER thrust, 0.209 inch (5.31 mm)
14	A153756	UAR	SPACER thrust, 0.204 inch (5.18 mm)
14	A153757	UAR	SPACER thrust, 0.199 inch (5.08 mm)
14	A153758	UAR	SPACER thrust, 0.194 inch (4.94 mm)
14	A153759	UAR	SPACER thrust, 0.189 inch (4.81 mm)
14	A153760	UAR	SPACER thrust, 0.184 inch (4.68 mm)
14	A153761	UAR	SPACER thrust, 0.179 inch (4.57 mm)
14	A153762	UAR	SPACER thrust, 0.174 inch (4.45 mm)
14	A153763	UAR	SPACER thrust, 0.169 inch (4.30 mm)
14	A153764	UAR	SPACER thrust, 0.164 inch (4.18 mm)
16	A179719	1	CUP flanged bearing, 2-11/16 inch OD (68 mm) Replaces A153748 and A153750
17	A153749	1	CONE bearing, rear, 1-5/16 inch ID (33 mm)
19	A156260	1	NUT adjusting, countershaft

252 TRANSAXLE COUNTERSHAFT, 2 AND 4 WHEEL DRIVE, TRANSMISSION SN 16270319 & AFTER

252

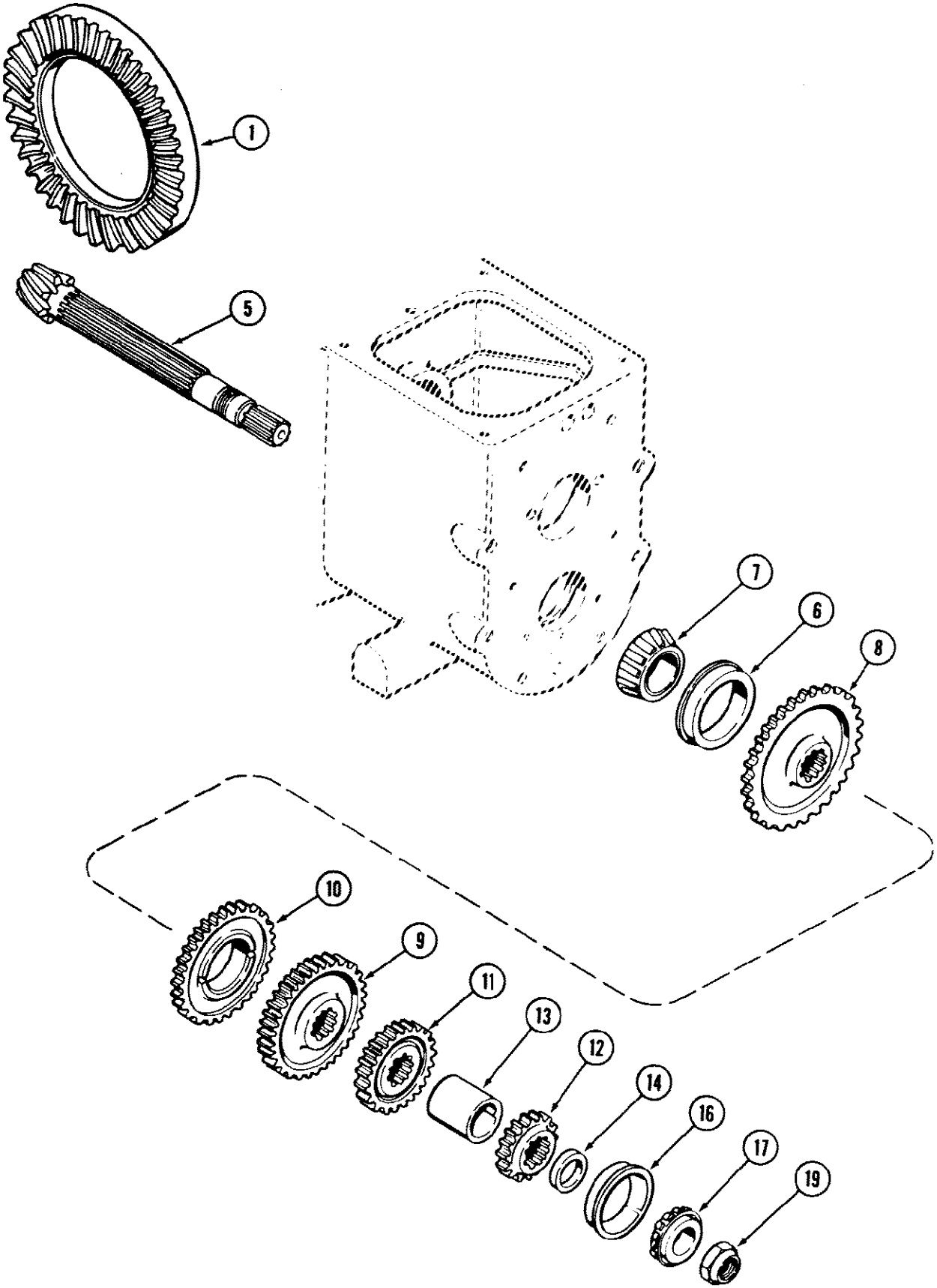

580SE CASE SUPER-E CONSTRUCTION KING LOADER BACKHOE - Power Train

252 TRANSAXLE COUNTERSHAFT, 2 AND 4 WHEEL DRIVE, TRANSMISSION SN 16270319 & AFTER

Ref	Part Number	Qty	Description
	A168883	1	GEAR pinion and ring, transaxle, Matched set, Includes: Ref. 1 - 5
1	NSS	1	GEAR ring, Reference No. A168100
5	NSS	1	PINION bevel, Reference No. A168824
6	A153753	1	CUP bearing, rear, with snap ring, 3-1/2 inch OD (89 mm)
7	R10276	1	CONE bearing, rear, 1-5/8 inch ID (41 mm)
8	A153751	1	GEAR first, 47 external and 10 internal teeth
9	A51961	1	GEAR second, 38 external and 10 internal teeth
10	A157304	1	GEAR oil slinger, 38 external teeth, Replaces A51962
11	A51960	1	GEAR third, 28 external and 10 internal teeth
12	A154649	1	GEAR fourth, 29 external and 10 internal teeth
13	A51959	1	SPACER third and fourth gears, 1-5/8 x 2-5/16 x 2-3/16 inch (41 x 59 x 56 mm)
14	A179800	UAR	SPACER thrust, 0.248 0.25 inch (6.30 - 6.35 mm)
14	A179799	UAR	SPACER thrust, 0.245 0.243 inch (6.22 - 6.17 mm)
14	A179798	UAR	SPACER thrust, 0.240 0.238 inch (6.10 - 6.05 mm)
14	A179797	UAR	SPACER thrust, 0.235 0.233 inch (5.97 - 5.92 mm)
14	A179796	UAR	SPACER thrust, 0.230 0.228 inch (5.84 - 5.79 mm)
14	A179795	UAR	SPACER thrust, 0.225 0.223 inch (5.72 - 5.66 mm)
14	A179794	UAR	SPACER thrust, 0.220 0.218 inch (5.59 - 5.54 mm)
14	A179793	UAR	SPACER thrust, 0.215 0.213 inch (5.46 - 5.41 mm)
14	A179792	UAR	SPACER thrust, 0.210 0.208 inch (5.33 - 5.28 mm)
14	A179791	UAR	SPACER thrust, 0.205 0.203 inch (5.21 - 5.16 mm)
14	A179790	UAR	SPACER thrust, 0.200 0.198 inch (5.08 - 5.03 mm)
14	A179789	UAR	SPACER thrust, 0.195 0.193 inch (4.95 - 4.90 mm)
14	A179788	UAR	SPACER thrust, 0.190 0.188 inch (4.83 - 4.78 mm)
14	A179787	UAR	SPACER thrust, 0.185 0.183 inch (4.70 - 4.65 mm)
14	A179786	UAR	SPACER thrust, 0.180 0.178 inch (4.57 - 4.52 mm)
14	A179785	UAR	SPACER thrust, 0.175 0.173 inch (4.45 - 4.39 mm)
14	A179784	UAR	SPACER thrust, 0.170 0.168 inch (4.32 - 4.27 mm)
14	A179783	UAR	SPACER thrust, 0.165 0.163 inch (4.19 - 4.14 mm)
16	A179719	1	CUP bearing
17	A153749	1	CONE bearing, rear, 1-5/16 inch ID (33 mm)
19	A156260	1	NUT adjusting, countershaft

254

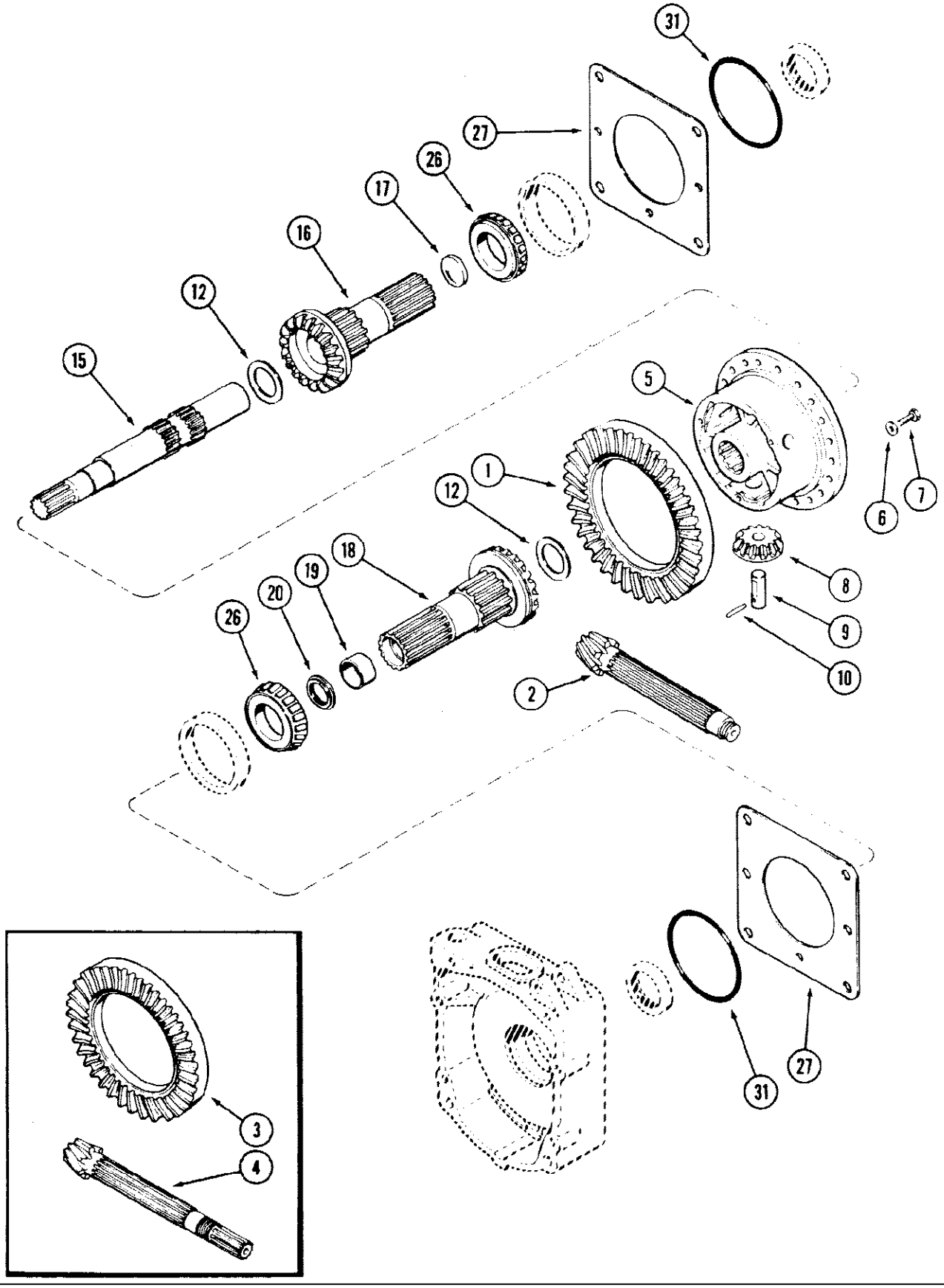

580SE CASE SUPER-E CONSTRUCTION KING LOADER BACKHOE - Power Train

254 TRANSAXLE DIFFERENTIAL, PRIOR TO TRANSMISSION SERIAL NO.16270319

Ref	Part Number	Qty	Description
	A168102	1	GEAR pinion and ring, 2 wheel drive, Matched Set, Includes: Ref. 1 - 2
1	NSS	1	GEAR ring, Reference No. A168100
2	NSS	1	PINION bevel, Reference No. A168101
	A168108	1	GEAR pinion and ring, 4 wheel drive, Matched Set, Includes: Ref. 3 - 4
3	NSS	1	GEAR ring, Reference No. A168100
4	NSS	1	PINION bevel, Reference No. A168107
5	A159506	1	WHEEL center, Replaces A155737
6	A155847	20	WASHER wheel bolt
7	28-614	20	BOLT hex, 3/8 NF x 7/8 inch
8	A157462	3	GEAR pinion
9	A153711	3	PIN pinion gear
10	A140705	3	PIN groove, 3/16 x 2 inch
12	A154141	UAR	WASHER thrust, center wheel, 0.079 inch (2.01 mm)
12	A153717	UAR	WASHER thrust, center wheel, 0.084 inch (2.13 mm)
12	A153712	UAR	WASHER thrust, center wheel, 0.089 inch (2.26 mm)
12	A153713	UAR	WASHER thrust, center wheel, 0.094 inch (2.40 mm)
12	A153714	UAR	WASHER thrust, center wheel, 0.099 inch (2.52 mm)
12	A153715	UAR	WASHER thrust, center wheel, 0.104 inch (2.66 mm)
12	A153716	UAR	WASHER thrust, center wheel, 0.109 inch (2.78 mm)
15	A156376	1	SHAFT cross, Replaces A153706
16	A158745	1	GEAR ASSEMBLY side, left hand, Transmission Serial No. 16270319 to 16276842, Includes: Ref. 17, Ref #16 A158745 gear assy Should read for, transmission Ser nbr prior to 16276842.
17	41-1028	1	PLUG expansion, 1-3/4 inch (44 mm)
18	A179107	1	GEAR ASSEMBLY, side, right hand, Transmission Serial No. 16270319 to 16276842, Includes: Ref. 19, transmission Ser nbr prior to 16276842., Ref #18 A179107 gear assy Should read for
19	A153719	1	BUSHING gear
20	A179053	2	SEAL oil, right hand side gear Replaced A153709
26	A7891	2	CONE bearing, 2-1/2 inch ID (64 mm)
27	A39289	UAR	SHIM, .007" Thk, Bearing carrier (0.20 mm)
27	G10719	UAR	SHIM, .005" Thk, Bearing carrier (0.14 mm)
27	G10720	UAR	SHIM, .010" Thk, Bearing carrier (0.26 mm)
31	G10347	2	O RING, 5 x 5-1/4 x 1/8 inch, 127 x 133 x 3 mm
33	1342927C1		GEAR ASSEMBLY, side, RH, Includes Ref 19, Transmission Serial No. 16276842 & After, Replaced A182283
34	1342925C1		GEAR ASSEMBLY, side, LH, Transmission Serial No. 16276842 & After, Replaced A182286

256

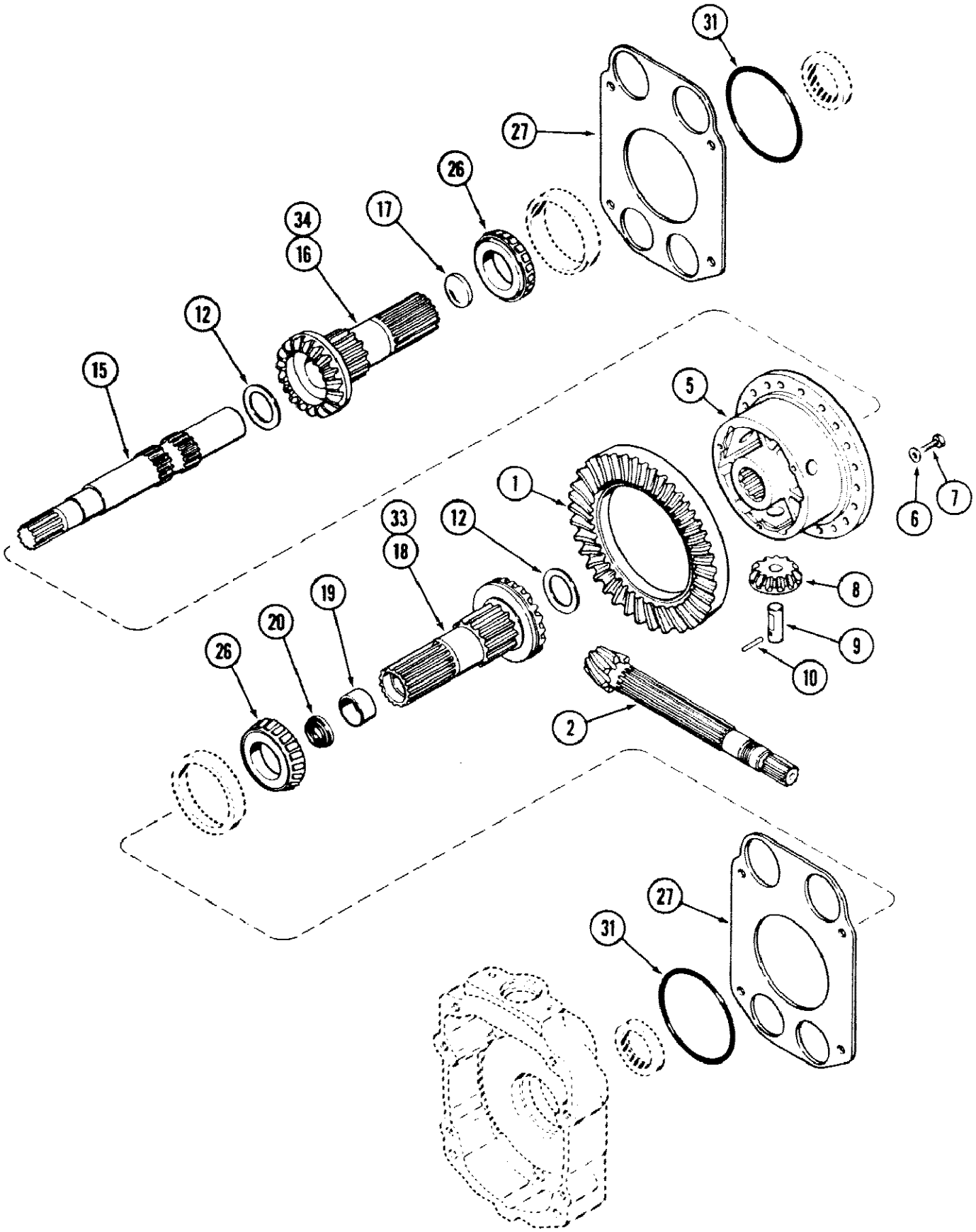

580SE CASE SUPER-E CONSTRUCTION KING LOADER BACKHOE - Power Train

256 TRANSAXLE DIFFERENTIAL, TRANSMISSION SERIAL NO. 16270319 AND AFTER

Ref	Part Number	Qty	Description
	A168883	1	GEAR pinion and ring, differential, Matched Set, Includes: Ref. 1 - 2
1	NSS	1	GEAR ring, Reference No. A168100
2	NSS	1	PINION bevel, Reference No. A168824
5	A179986	1	WHEEL center
6	A155847	20	WASHER wheel bolt
7	28-614	20	BOLT hex, 3/8 NF x 7/8 inch
8	A179762	3	GEAR pinion
9	A153711	3	PIN pinion gear
10	A140705	3	PIN groove, 3/16 x 2 inch
12	A154141	UAR	WASHER thrust, center wheel, 0.079 inch (2.01 mm)
12	A153717	UAR	WASHER thrust, center wheel, 0.084 inch (2.13 mm)
12	A153712	UAR	WASHER thrust, center wheel, 0.089 inch (2.26 mm)
12	A153713	UAR	WASHER thrust, center wheel, 0.094 inch (2.40 mm)
12	A153714	UAR	WASHER thrust, center wheel, 0.099 inch (2.52 mm)
12	A153715	UAR	WASHER thrust, center wheel, 0.104 inch (2.66 mm)
12	A153716	UAR	WASHER thrust, center wheel, 0.109 inch (2.78 mm)
15	A156376	1	SHAFT cross, Replaces A153706
16	A158745	1	GEAR ASSEMBLY, side, left hand, Transmission Serial No. 16270319 to 16276842, Includes: Ref. 17
17	41-1028	1	PLUG expansion, 1 3/4 inch, 44 mm
18	A179107	1	GEAR ASSEMBLY, side, right hand, Transmission Serial No. 16270319 to 16276842, Includes: Ref. 19
19	A153719	1	BUSHING gear
20	A179053	2	SEAL oil, right hand side gear
26	A7891	2	CONE bearing, 2-1/2 inch ID (64 mm)
27	A179076	UAR	SHIM, .007" Thk, Bearing carrier (0.20 mm)
27	A179075	UAR	SHIM, .005" Thk, Bearing carrier (0.14 mm)
27	A179077	UAR	SHIM bearing carrier, 0.010 inch (0.26 mm)
31	G10347	2	O RING housing
33	1342927C1	1	GEAR ASSEMBLY, side, right hand , Includes Ref 19, Transmission Serial No. 16276842 and after, Replaced A182283
34	1342925C1	1	GEAR side, left hand, Transmission Serial No. 16276842 and after, Replaced A182286

258 TRANSAXLE DIFFERENTIAL LOCK, PRIOR TO TRANSMISSION SERIAL NO16270319

258

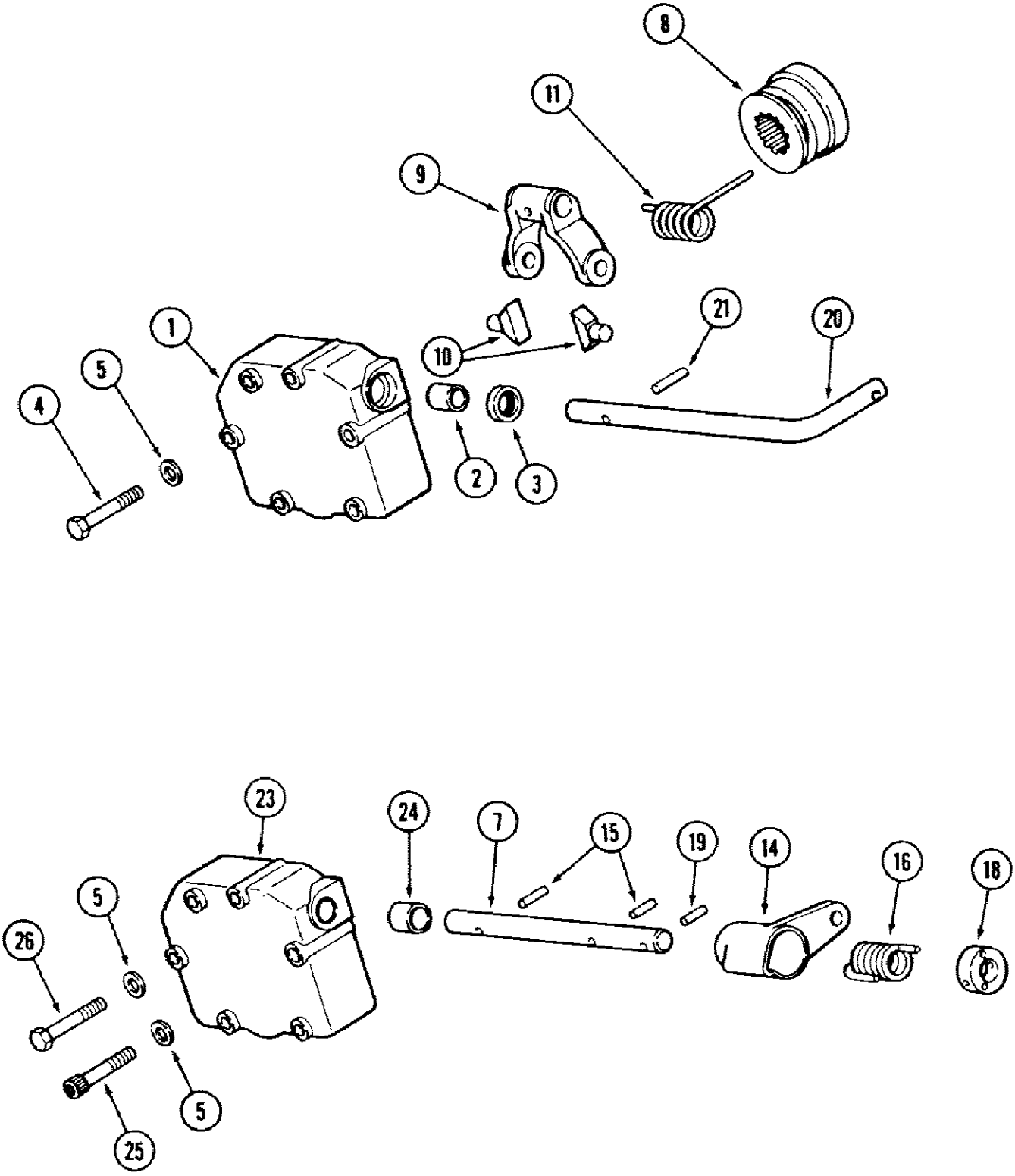

580SE CASE SUPER-E CONSTRUCTION KING LOADER BACKHOE - Power Train

258 TRANSAXLE DIFFERENTIAL LOCK, PRIOR TO TRANSMISSION SERIAL NO16270319

Ref	Part Number	Qty	Description
1	A168525	1	COVER ASSEMBLY, lock, on right brake housing, Replaces A154718, Includes: Ref. 2 - 3
2	B15768	1	BUSHING cover, Replaces A35925
3	G105700	1	SEAL oil
4	113-111	6	BOLT, Hex, 5/16"-18 x 2 1/2", G5
5	195-103	6	WASHER flat, 3/8 x 7/8 x 5/64 inch (10 x 22 x 2 mm)
7	A158385	1	SHAFT actuating, Prior to Transmission Serial No. 16251570
8	A156373	1	COLLAR differential lock
9	A168524	1	LEVER collar throw out, Replaces A38749
10	A65101	2	FINGERS lever to collar
11	A156559	1	SPRING throw out lever
14	A148426	1	LEVER actuating, Prior to Transmission Serial No. 16251570
15	138-96	2	PIN, 3/16" x 1", Slotted, Prior to Transmission S/N 16251570
16	A36446	1	SPRING actuating lever, Prior to Transmission Serial No. 16251570
18	A154215	1	RETAINER actuating lever spring, Prior to Transmission Serial No. 16251570
19	138-319	1	PIN, 3/16" x 1 1/4", Slotted, Prior to Transmission S/N 16251570
20	A157734	1	SHAFT actuating, Transmission Serial No. 16251570 to Serial No. 16270319
21	138-319	1	PIN, 3/16" x 1 1/4", Slotted, Transmission S/N 16251570 to S/N 16270319
23	NSS	1	COVER ASSEMBLY, lock, brake, Order A168525, Includes: Ref. 24
24	L14229	1	BUSHING cover, Replaces A35925
25	61-536	1	BOLT hex socket head, 5/16 NC x 2-1/4 inch
26	113-111	5	BOLT, Hex, 5/16"-18 x 2 1/2", G5

260 TRANSAXLE DIFFERENTIAL LOCK, TRANSMISSION SERIAL NO.16270319 AND AFTER

260

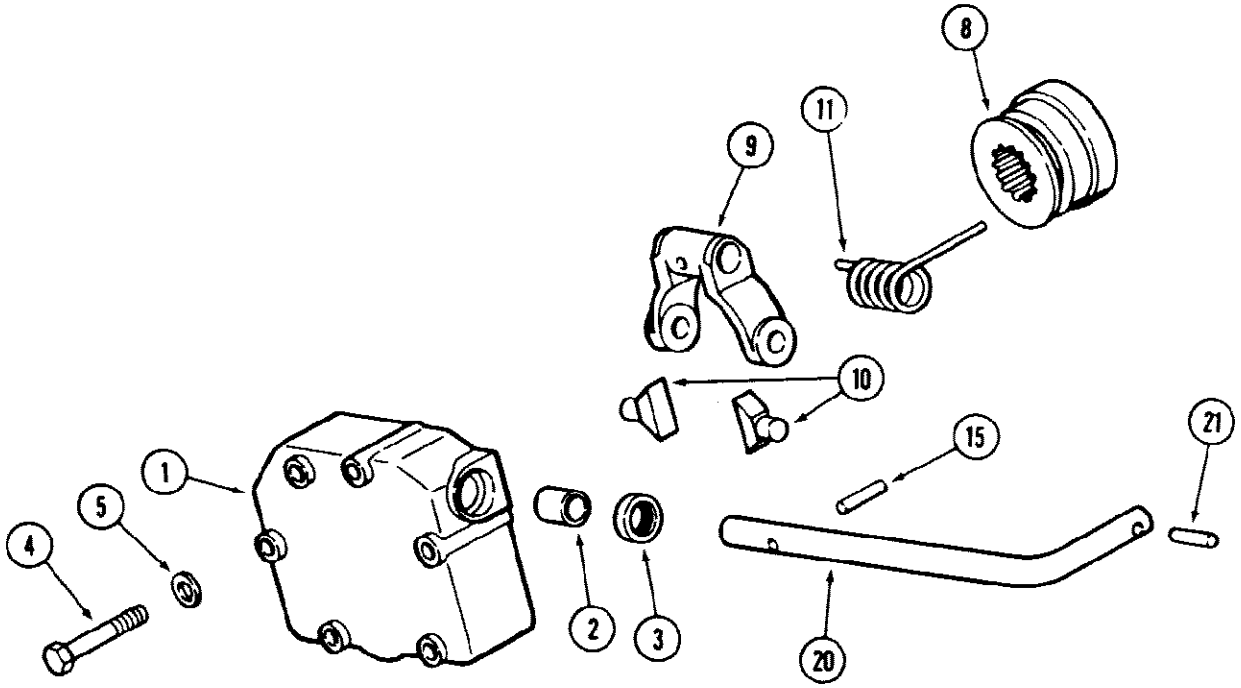

580SE CASE SUPER-E CONSTRUCTION KING LOADER BACKHOE - Power Train

260 TRANSAXLE DIFFERENTIAL LOCK, TRANSMISSION SERIAL NO.16270319 AND AFTER

Ref	Part Number	Qty	Description
1	A168525	1	COVER ASSEMBLY, lock, on right brake housing, Includes: Ref. 2 - 3
2	B15768	1	BUSHING cover
3	A63399	1	SEAL oil
4	113-111	6	BOLT, Hex, 5/16"-18 x 2 1/2", G5
5	195-103	6	WASHER flat, 3/8 x 7/8 x 5/64 inch (10 x 22 x 2 mm)
8	A156373	1	COLLAR differential lock
9	A168524	1	LEVER collar throw out
10	A38750	2	FINGERS lever to collar
11	A156559	1	SPRING throw out lever
15	138-96	2	PIN, 3/16" x 1", Slotted
20	A157734	1	SHAFT actuating
21	138-319	1	PIN, 3/16" x 1 1/4", Slotted

262

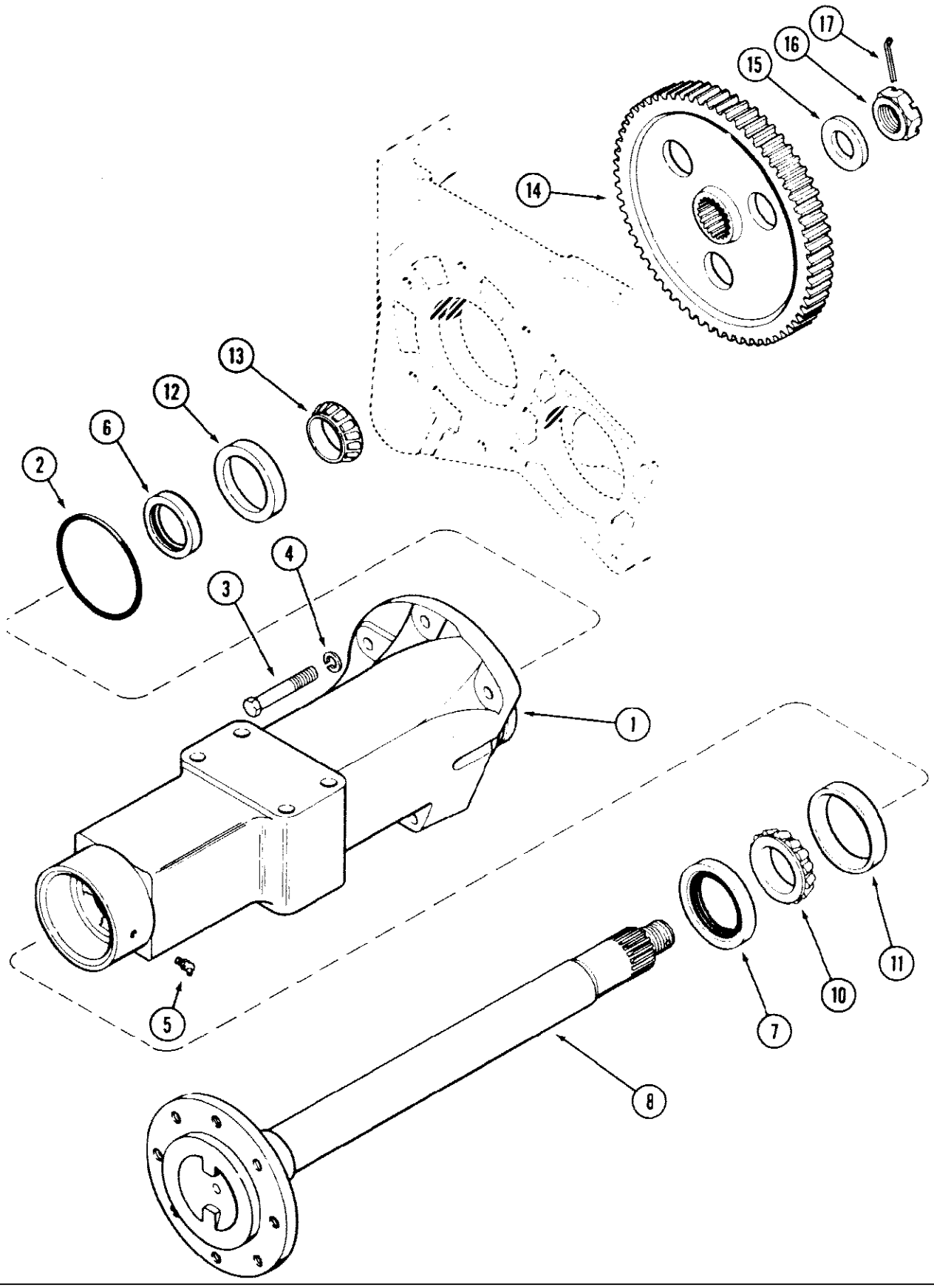

580SE CASE SUPER-E CONSTRUCTION KING LOADER BACKHOE - Power Train

262 TRANSAXLE REAR AXLE

Ref	Part Number	Qty	Description
1	A153737	1	HOUSING axle, right hand
1	A153738	1	HOUSING axle, left hand, right hand shown
2	G10347	2	O RING axle housing to transmission case
3	26-1032	2	BOLT hex, Grade 8, 5/8 NC x 2 inch
3	26-1036	6	BOLT hex, Grade 8, 5/8 NC x 2-1/4 inch
3	26-1064	2	BOLT hex, Grade 8, 5/8 NC x 4 inch
4	192-25	10	WASHER, LOCK, 5/8"
5	219-36	2	FITTING grease, 45 degrees, 1/8 inch PT
6	G13801	2	SEAL oil, inner, 2-1/4 inch (57 mm) ID
7	G13822	2	SEAL oil, outer, 3 inch (76 mm) ID
8	A154936	2	SHAFT rear axle
10	G15207	2	CONE bearing, outer, 2-5/8 inch ID (67 mm)
11	G15208	2	CUP bearing, outer, 4-11/32 inch OD (110 mm)
12	G10415	2	CUP bearing, inner, 3-15/16 inch OD (101 mm)
13	L33289	2	CONE bearing, inner, 2-1/4 inch ID (57 mm)
14	A154940	2	GEAR final drive, bull gear, 64 external and 35 internal teeth
15	F62105	2	WASHER take up
16	A30075	1	NUT hex slotted, 1/2 inch NF
17	132-352	2	Pin, Split (Cotter), 1/4" x 2 1/2"

264 TRANSAXLE TRANSFER GEAR BOX, 4 WHEEL DRIVE, PRIOR TO TRANSMISSION SN 16270319

264

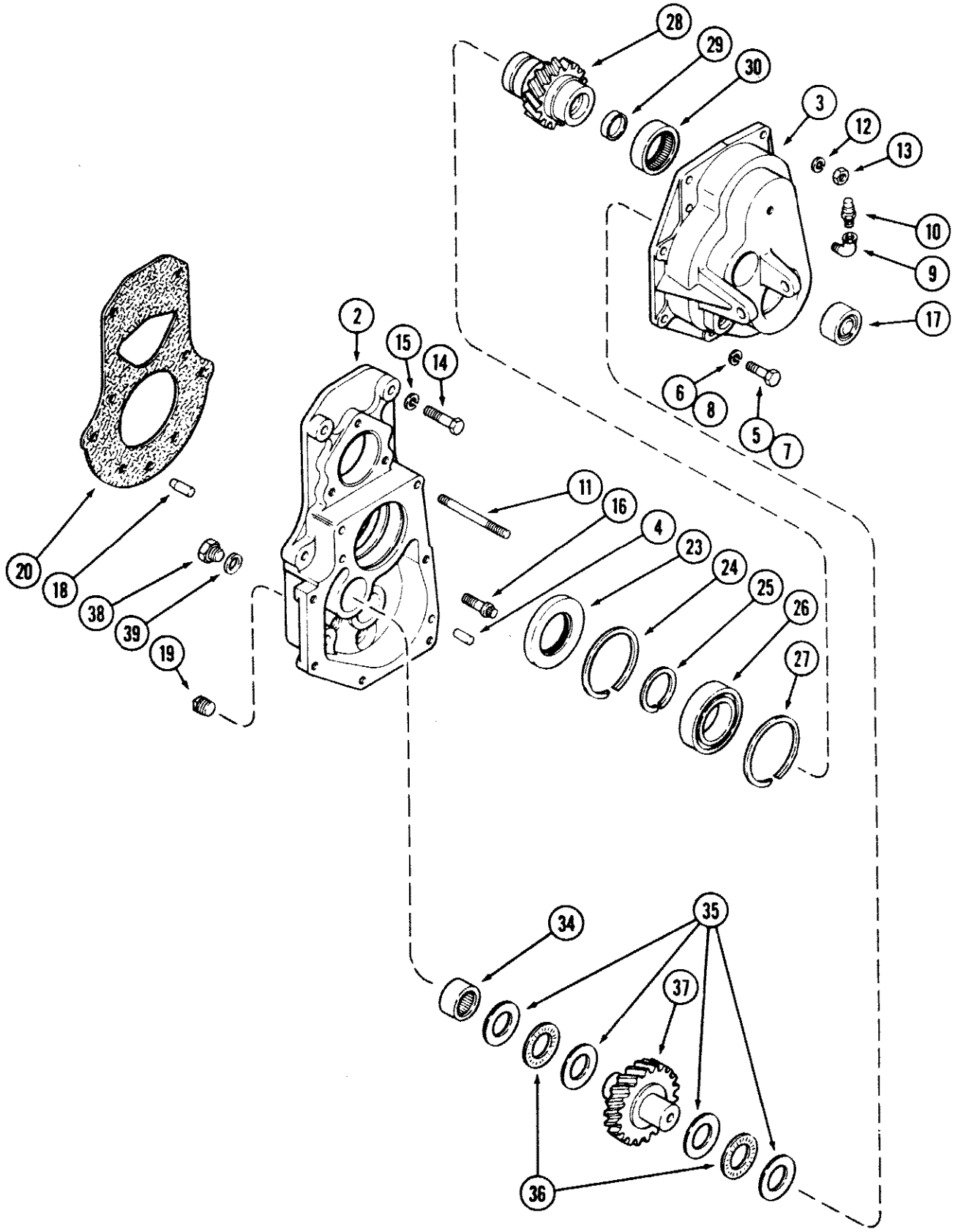

580SE CASE SUPER-E CONSTRUCTION KING LOADER BACKHOE - Power Train

264 TRANSAXLE TRANSFER GEAR BOX, 4 WHEEL DRIVE, PRIOR TO TRANSMISSION SN 16270319

Ref	Part Number	Qty	Description
	A156239	1	HOUSING ASSEMBLY, transfer gearbox, matched set, Includes: Ref. 2 - 6
2	NSS	1	HOUSING transfer gearbox, order A156239, Reference No. A156238
3	NSS	1	COVER transfer gearbox, order A156239, Reference No. A156237
4	A55459	2	PIN dowel, cover to housing
5	26-624	3	BOLT hex, Grade 8, 3/8 x 1-1/2 inch
6	92-6	3	3/8"
7	26-624	2	BOLT hex, Grade 8, 3/8 NC x 1-1/2 inch
8	92-6	2	3/8"
9	221-411	1	ELBOW gearbox cover, 90 degree
10	A12928	1	BREATHER transfer gearbox
11	A153248	2	STUD transfer gearbox mounting, 4-13/16 inch
12	92-6	2	3/8"
13	129-103	2	NUT, 3/8"-16, G5
14	13-830	4	BOLT, Hex, 1/2"-13 x 1 7/8", G5
15	92-8	4	1/2"
16	166-87	2	BOLT, 12 point head, 1/2 NC x 1-1/2 inch
17	A156286	1	BEARING idler gear, front
18	A29540	1	PIN dowel, transmission housing
19	221-844	1	PLUG square head, 1/4 inch PT
20	A156248	1	GASKET transmission housing to transfer gearbox
23	A157228	1	SEAL input gear oil
24	A31234	1	RING bearing to gearbox retaining
25	A27117	UAR	RING retaining, 0.096 inch (2.44 mm)
25	A27118	UAR	RING retaining, 0.0975 inch (2,47 mm)
25	A27119	UAR	RING retaining, 0.099 inch (2.52 mm)
25	A27116	UAR	RING retaining, 0.109 inch (2.78 mm)
26	A21266	1	BEARING input gear, rear
27	A31234	1	RING bearing to gearbox retaining
28	A157190	1	GEAR input, 14 teeth
29	41-1024	1	PLUG cup type, 1-1/2 inch (38 mm)
30	A28161	1	BEARING input gear, front
34	F7356	1	BEARING idler gear, rear
35	A54031	4	WASHER idler gear thrust
36	T41022	2	BEARING idler gear thrust
37	A156256	1	GEAR idler, 17 teeth
38	A140222	1	PLUG transfer gearbox drain
39	A58608	1	GASKET drain plug
	A157625	2	STUD transaxle front mount, 5/8 NC x 63.5 mm, Not Shown

266 TRANSAXLE TRANSFER GEAR BOX, 4 WHEEL DRIVE, TRANSMISSION SN16270319 AND AFTER

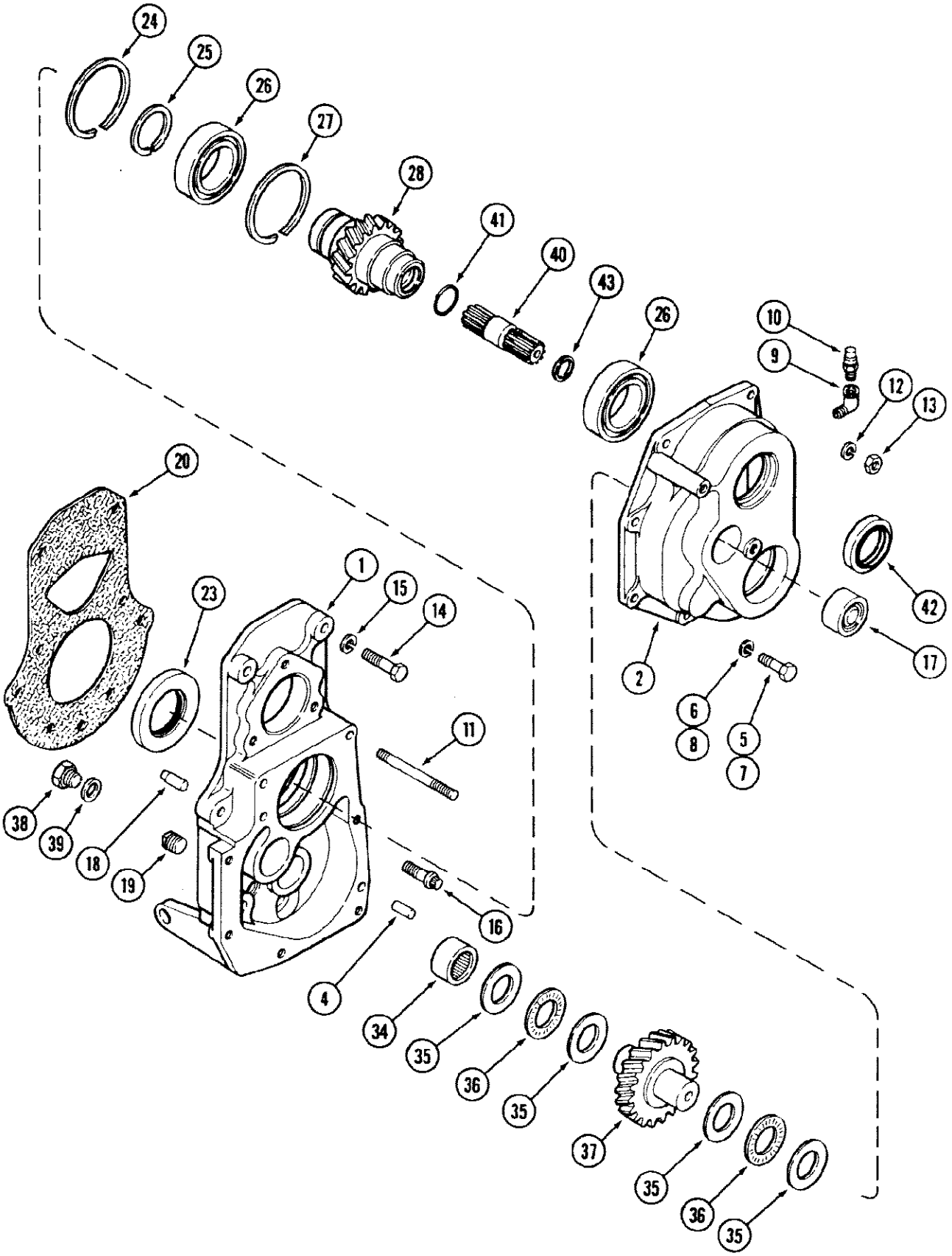

580SE CASE SUPER-E CONSTRUCTION KING LOADER BACKHOE - Power Train

266 TRANSAXLE TRANSFER GEAR BOX, 4 WHEEL DRIVE, TRANSMISSION SN16270319 AND AFTER

Ref	Part Number	Qty	Description
	A168942	1	HOUSING ASSEMBLY, transfer gearbox, matched set, Includes: Ref. 1 - 6
1	NSS	1	HOUSING transfer gearbox, order A168942, Reference No. A168934
2	NSS	1	COVER transfer gearbox, order A168942, Reference No. A168922
4	A55459	2	PIN dowel, cover to housing
5	26-624	3	BOLT hex, Grade 8, 3/8 NC x 1-1/2 inch
6	92-6	3	3/8"
7	26-624	2	BOLT hex, Grade 8, 3/8 NC x 1-1/2 inch
8	92-6	2	3/8"
9	221-411	1	ELBOW gearbox cover, 90 degree
10	A12928	1	BREATHER transfer gearbox
11	A153248	2	STUD transfer gearbox mounting, 4-13/16 inch
12	92-6	2	3/8"
13	129-103	2	NUT, 3/8"-16, G5
14	13-830	4	BOLT, Hex, 1/2"-13 x 1 7/8", G5
15	92-8	4	1/2"
16	166-87	2	BOLT, 12 point head, 1/2 NC x 1-1/2 inch
17	A156286	1	BEARING idler gear, front
18	A29540	1	PIN dowel, transmission housing
19	221-4	1	PLUG square head, 1/2 inch PT
20	A156248	1	GASKET transmission housing to transfer gearbox
23	A157228	1	SEAL input gear oil
24	A31234	1	RING bearing to gearbox retaining
25	A27117	UAR	RING retaining, 0.096 inch (2.44 mm)
25	A27118	UAR	RING retaining, 0.0975 inch (2,47 mm)
25	A27119	UAR	RING retaining, 0.099 inch (2.52 mm)
25	A27116	UAR	RING retaining, 0.109 inch (2.78 mm)
26	A21266	2	BEARING input gear
27	A31234	1	RING bearing to gearbox retaining
28	A179007	1	GEAR input, 14 teeth
34	F7356	1	BEARING idler gear, rear
35	A54031	4	WASHER idler gear thrust
36	T41022	2	BEARING idler gear thrust
37	A156256	1	GEAR idler, 17 teeth
38	A140222	1	PLUG transfer gearbox drain
39	A58608	1	GASKET drain plug
40	A179006	1	SPLINE stub
41	A179155	1	O RING sealing
42	A179071	1	SEAL oil
43	A140169	1	RING snap

268

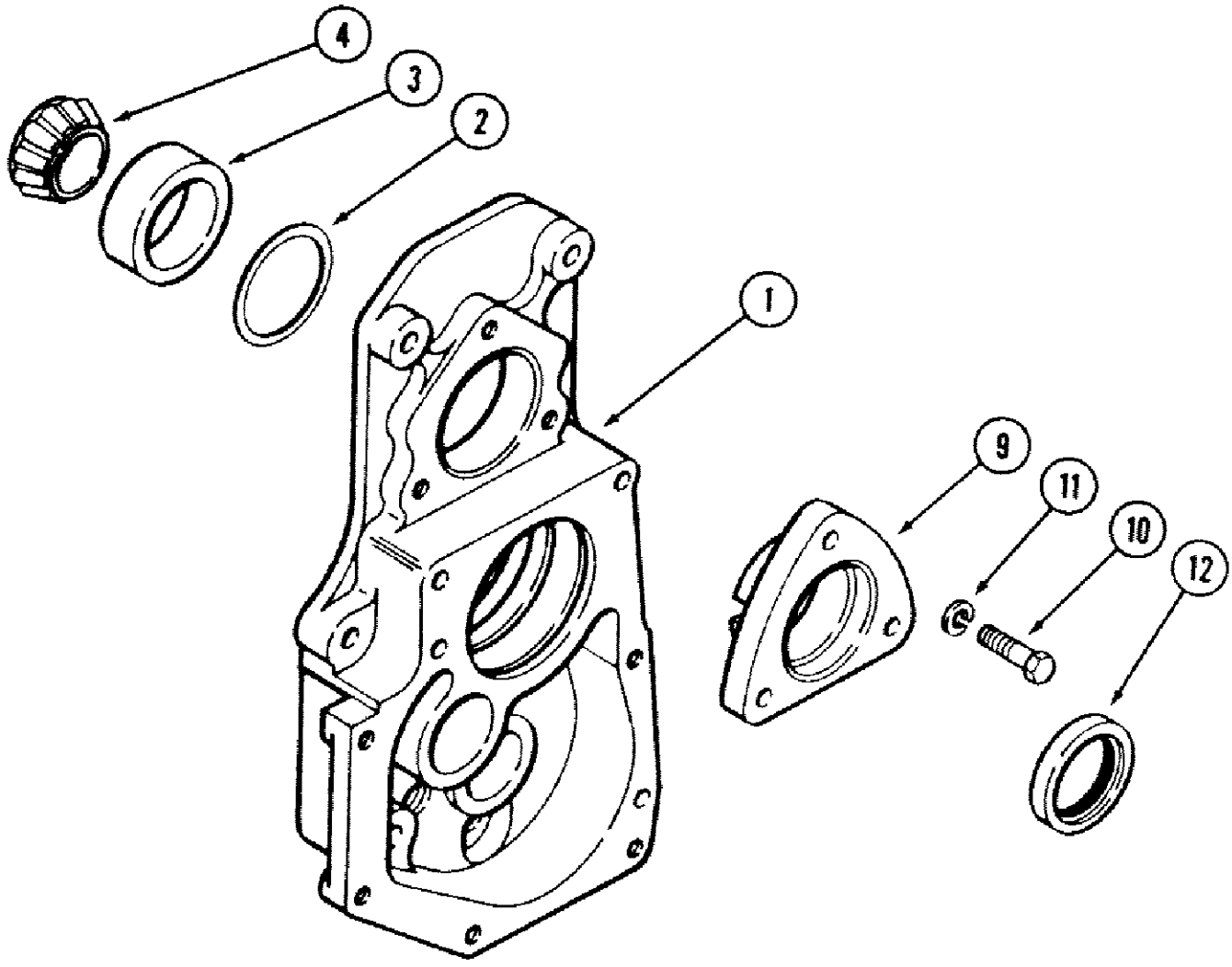

268 TRANSAXLE MAINSHAFT ADJUSTING COVER, 4 WHEEL DRIVE

Ref	Part Number	Qty	Description
1	REF	1	HOUSING transfer gearbox, See Figure 264 and 266
2	G10341	UAR	SHIM, .005" Thk, Mainshaft front bearing (0.13 mm)
2	G10340	UAR	SHIM, .007" Thk (0.18 mm), Mainshaft front bearing
2	A51527	UAR	SHIM, .035" Thk, Mainshaft front bearing (0.89 mm)
3	H753574	1	CUP mainshaft bearing, front
4	H753566	1	CONE mainshaft bearing, front
9	A156606	1	COVER mainshaft bearing adjusting
10	113-209	3	BOLT, Hex, 3/8"-16 x 1 1/2", G5
11	92-6	3	3/8"
12	A154253	1	SEAL mainshaft

270 TRANSAXLE SHIFT MECHANISM & OUTPUT SHAFT, 4 WHEEL DRIVE, PRIOR TO TRANSMISSION SN 16270319

270

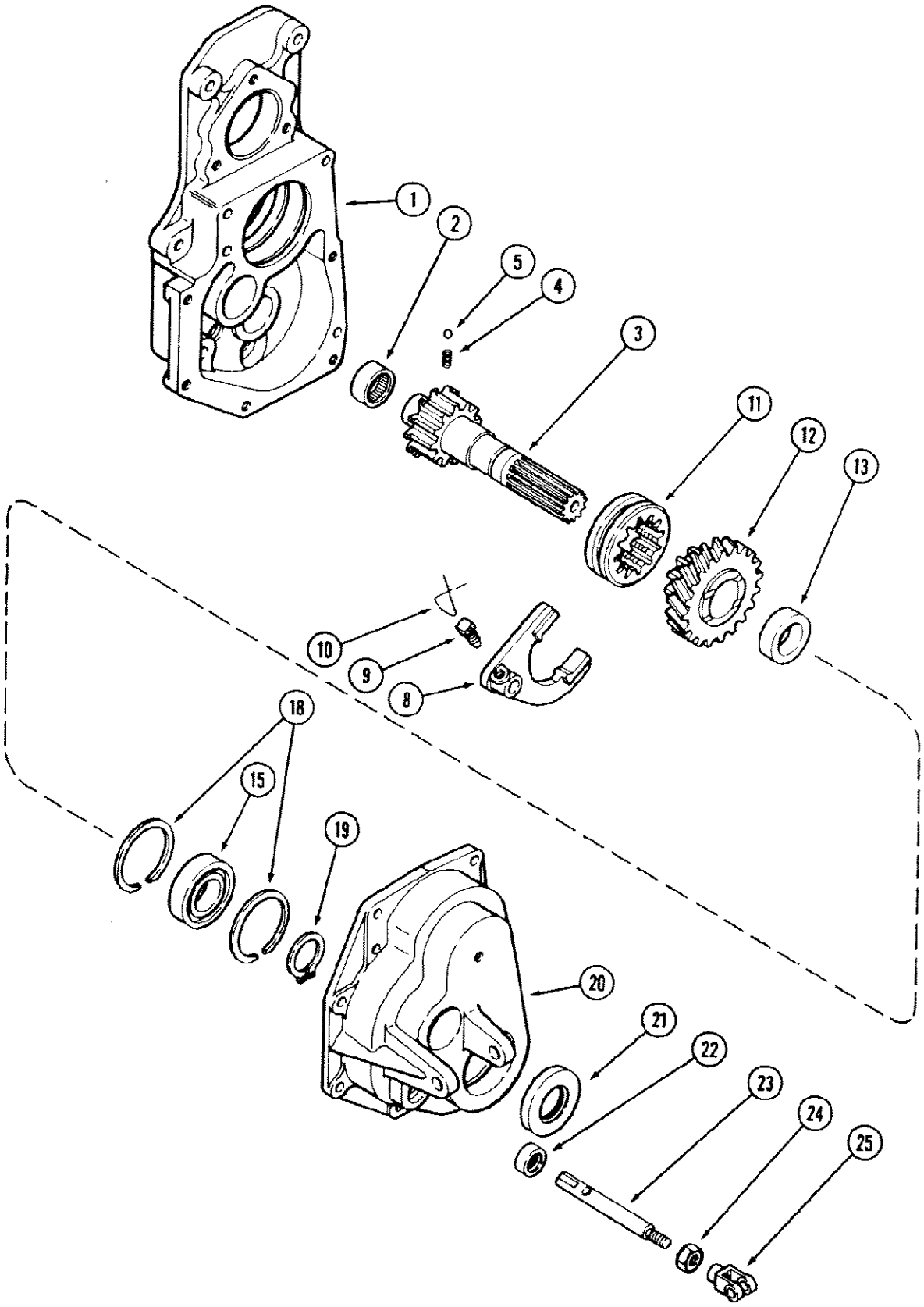

580SE CASE SUPER-E CONSTRUCTION KING LOADER BACKHOE - Power Train

270 TRANSAXLE SHIFT MECHANISM & OUTPUT SHAFT, 4 WHEEL DRIVE, PRIOR TO TRANSMISSION SN 16270319

Ref	Part Number	Qty	Description
1	REF	1	HOUSING transfer gearbox, See Figure 264
2	A35767	1	BEARING output shaft, rear
3	A156220	1	SHAFT output
4	A156269	3	SPRING detent
5	211-7	3	BALL detent, 1/4 inch diameter (6 mm)
8	A51951	1	FORK shifter
9	A29964	1	SCREW shifter fork locking
10	A29966	1	WIRE screw to shift fork, locking
11	A156258	1	COLLAR output shaft
12	A156253	1	GEAR output, 19 teeth
13	A156278	UAR	SPACER gear, 0.611 inch (15.52 mm)
13	A156277	UAR	SPACER gear, 0.616 inch (15.64 mm)
13	A156276	UAR	SPACER gear, 0.621 inch (15.78 mm)
13	A156250	UAR	SPACER gear, 0.626 inch (15.90 mm)
15	B18215	1	BEARING output shaft, front
18	A27579	2	RING bearing to cover retaining
19	A144595	1	Ring, Snap, #156, Ext, output shaft
20	REF	1	COVER transfer gearbox, See Figure 264
21	A51948	1	SEAL output shaft
22	A63399	1	SEAL shift fork oil
23	A156259	1	RAIL shift fork
24	129-123	1	NUT, 3/8"-24, G5
25	T40057	1	YOKE shifter rail

272 TRANSAXLE SHIFT MECHANISM & OUTPUT SHAFT, 4 WHEEL DRIVE, TRANSMISSION SN 16270319 AND AFTER

272

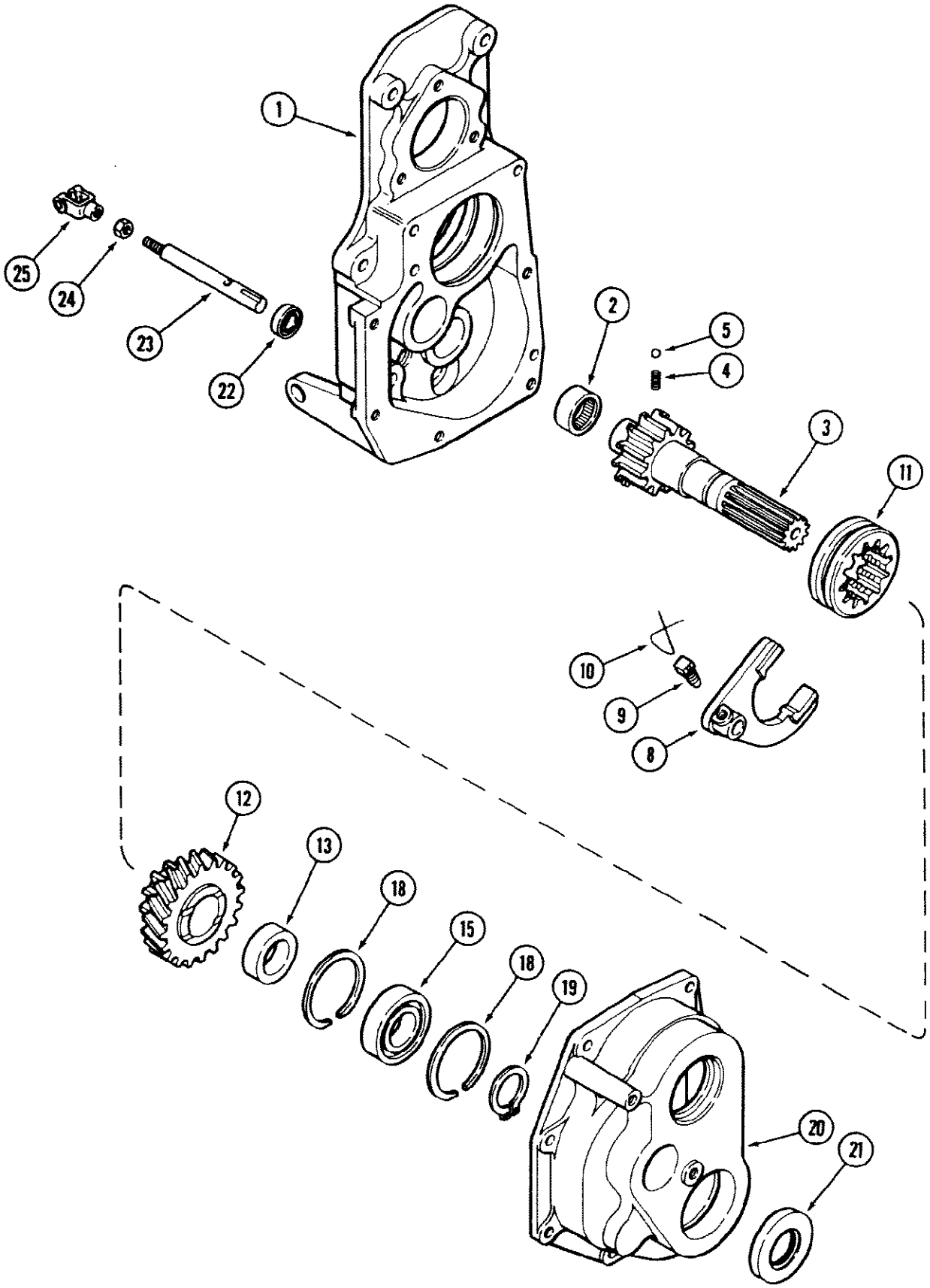

580SE CASE SUPER-E CONSTRUCTION KING LOADER BACKHOE - Power Train

272 TRANSAXLE SHIFT MECHANISM & OUTPUT SHAFT, 4 WHEEL DRIVE, TRANSMISSION SN 16270319 AND AFTER

Ref	Part Number	Qty	Description
1	REF	1	HOUSING transfer gearbox, See Figure 266
2	A35767	1	BEARING output shaft, rear
3	A156220	1	SHAFT output
4	A156269	3	SPRING detent
5	211-7	3	BALL detent, 1/4 inch diameter (6 mm)
8	A51951	1	FORK shifter
9	A29964	1	SCREW shifter fork locking
10	A29966	1	WIRE screw to shift fork, locking
11	A156258	1	COLLAR output shaft
12	A156253	1	GEAR output, 19 teeth
13	A156278	UAR	SPACER gear, 0.611 inch (15.52 mm)
13	A156277	UAR	SPACER gear, 0.616 inch (15.64 mm)
13	A156276	UAR	SPACER gear, 0.621 inch (15.78 mm)
13	A156250	UAR	SPACER gear, 0.626 inch (15.90 mm)
15	B18215	1	BEARING output shaft, front
18	A27579	2	RING bearing to cover retaining
19	A144595	1	Ring, Snap, #156, Ext, output shaft
20	REF	1	COVER transfer gearbox, See Figure 266
21	A51948	1	SEAL output shaft
22	A63399	1	SEAL shift fork oil
23	A156259	1	RAIL shift fork
24	129-123	1	NUT, 3/8"-24, G5
25	T40057	1	YOKE shifter rail

274 TRANSAXLE DIFFERENTIAL BRAKE HOUSING AND BRAKE, PRIOR TO TRANSMISSION SN 16270319

274

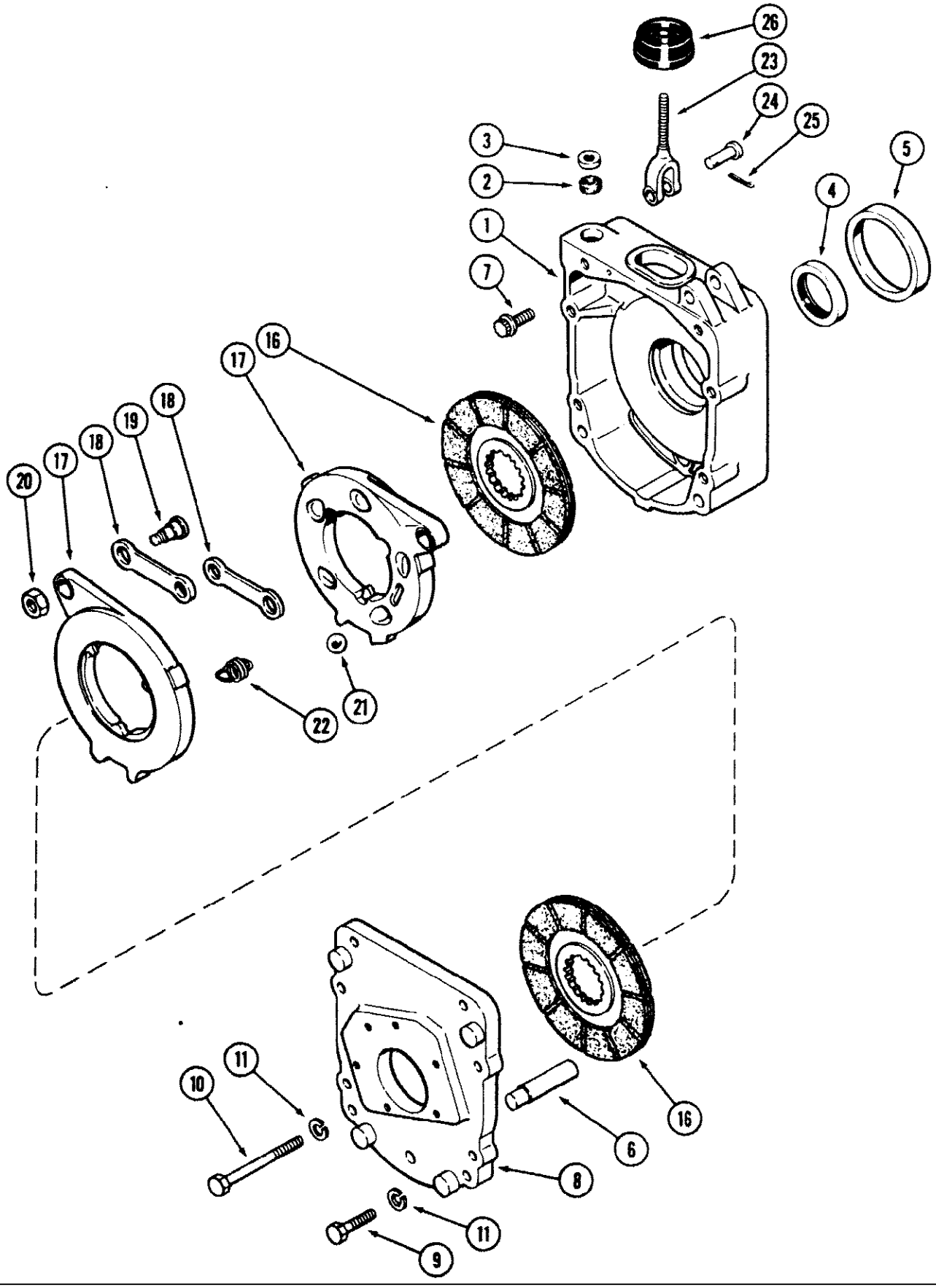

580SE CASE SUPER-E CONSTRUCTION KING LOADER BACKHOE - Power Train

274 TRANSAXLE DIFFERENTIAL BRAKE HOUSING AND BRAKE, PRIOR TO TRANSMISSION SN 16270319

Ref	Part Number	Qty	Description
1	A168292	1	HOUSING ASSEMBLY, brake, right hand, Includes: Ref. 2 - 5
1	A168294	1	HOUSING ASSEMBLY, brake, left hand, Right hand shown, Includes: Ref. 2 - 5
2	A30011	1	SEAL lube felt, 13/16 inch (21 mm) OD
3	A155602	1	SEAL dirt, 27/32 inch (21 mm) OD
4	A179054	1	SEAL oil, 3-1/2 inch (89 mm) OD
5	A7890	1	CUP bearing, 4-7/16 inch OD (113 mm)
6	A153728	2	PIN spring anchor, 3-13/16 inch long (97 mm)
7	A156878	4	BOLT, 12 point, 1/2 NC x 1-1/4 inch
8	A168296	1	COVER brake housing, right hand, Replaces A153731
8	A168297	1	COVER brake housing, left hand, right hand shown, Replaces A153732
9	113-421	12	BOLT, Hex, 1/2"-13 x 2", G5
10	113-429	4	BOLT, Hex, 1/2"-13 x 5", G5
11	92-8	16	1/2"
	A168628	2	BRAKE ASSEMBLY, differential, Replaces A155872, Includes: Ref. 16 - 22
16	A153982	2	DISC ASSEMBLY, brake
17	A41860	2	DISC brake actuating
18	A41861	2	LINK actuating disc
19	A41865	2	BOLT actuating disc
20	A42801	2	NUT hex jam, 1/2 inch NF
21	211-223	5	BALL actuating, 1 inch diameter (25 mm)
22	A47719	3	SPRING disc tension
23	A168382	2	ROD brake actuating
24	L13129	2	PIN clevis rod to brake links
25	132-310	2	PIN, SPLIT (COTTER), 1/8" x 1"
26	A146418	2	SEAL dust, brake housing

276 TRANSAXLE DIFFERENTIAL BRAKE HOUSING AND BRAKE, TRANSMISSION SN16270319 -16276842

276

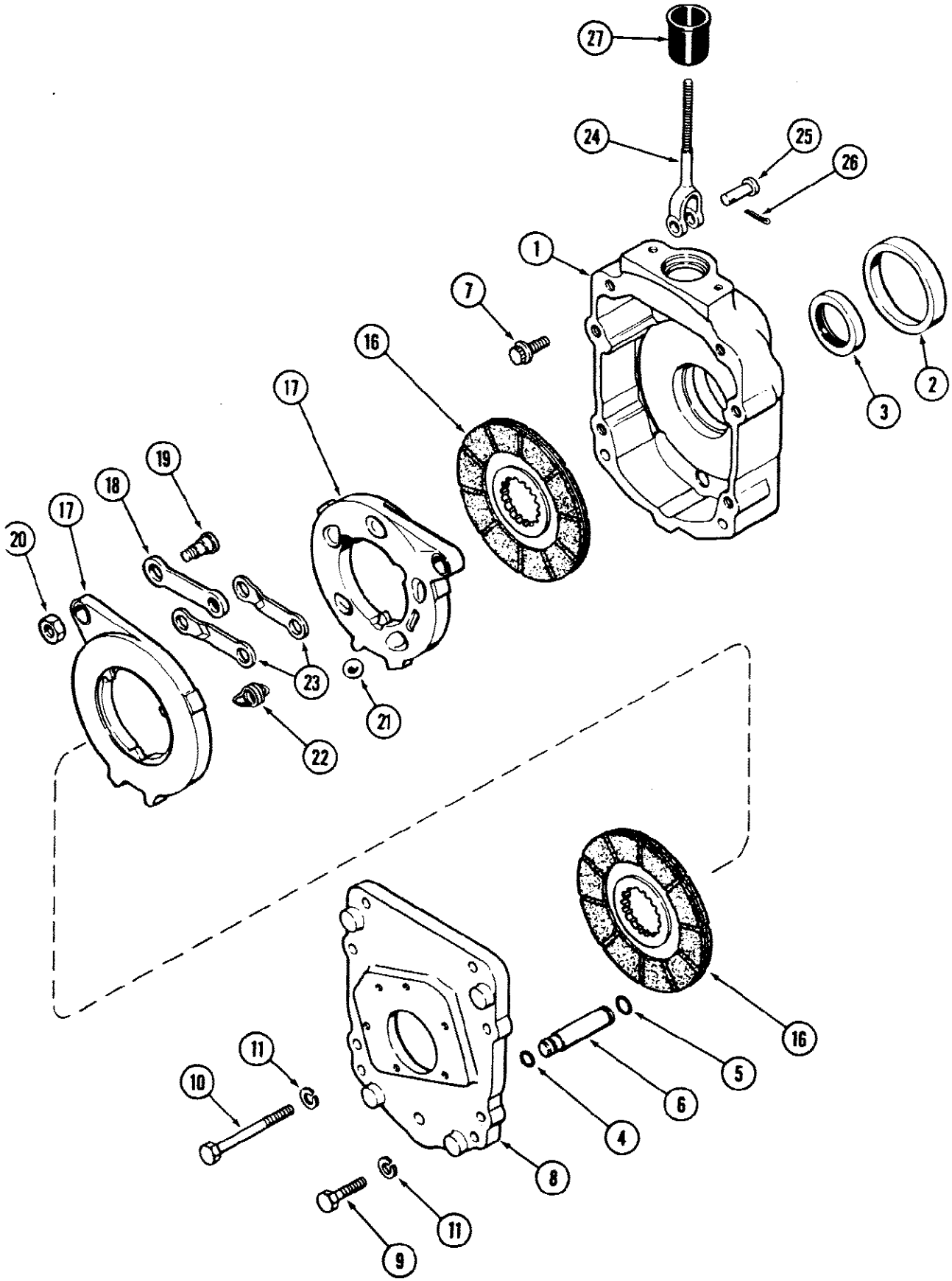

580SE CASE SUPER-E CONSTRUCTION KING LOADER BACKHOE - Power Train

276 TRANSAXLE DIFFERENTIAL BRAKE HOUSING AND BRAKE, TRANSMISSION SN16270319 -16276842

Ref	Part Number	Qty	Description
1	A179102	2	HOUSING ASSEMBLY, brake, Includes: Ref. 2
2	A7890	1	CUP bearing, 4-7/16 inch OD (113 mm)
3	A179054	1	SEAL oil
4	A182413	2	O RING anchor pin, 5/8 inch (16 mm) ID
5	A64436	2	O RING anchor pin, 3/4 inch (19 mm) ID
6	A182439	2	PIN spring anchor
7	A156878	4	BOLT 12 point head, housing
8	A168821	1	COVER brake housing, right hand
8	A168822	1	COVER brake housing, left hand, right hand shown
9	113-421	12	BOLT, Hex, 1/2"-13 x 2", G5
10	113-429	4	BOLT, Hex, 1/2"-13 x 5", G5
11	92-8	16	1/2"
	A168628	2	BRAKE ASSEMBLY, disc, Includes: Ref. 16 - 23
16	A153982	2	DISC ASSEMBLY, brake
17	A41860	2	DISC brake, actuating
18	A41861	2	LINK actuating, disc
19	A41865	2	BOLT actuating, disc
20	A42801	2	NUT hex jam, 1/2 inch NF
21	211-223	5	BALL actuating, 1 inch diameter (25 mm)
22	A47719	3	SPRING disc tension
23	A48952	2	LINK actuating, disc
24	A168817	2	ROD pull, brake actuating
25	L13129	2	PIN clevis rod to brake links
26	132-310	2	PIN, SPLIT (COTTER), 1/8" x 1"
27	A179595	2	SEAL dust, brake housing

278 TRANSAXLE DIFFERENTIAL BRAKE HOUSING AND BRAKE, TRANSMISSION SN 16276842 AND AFTER

278

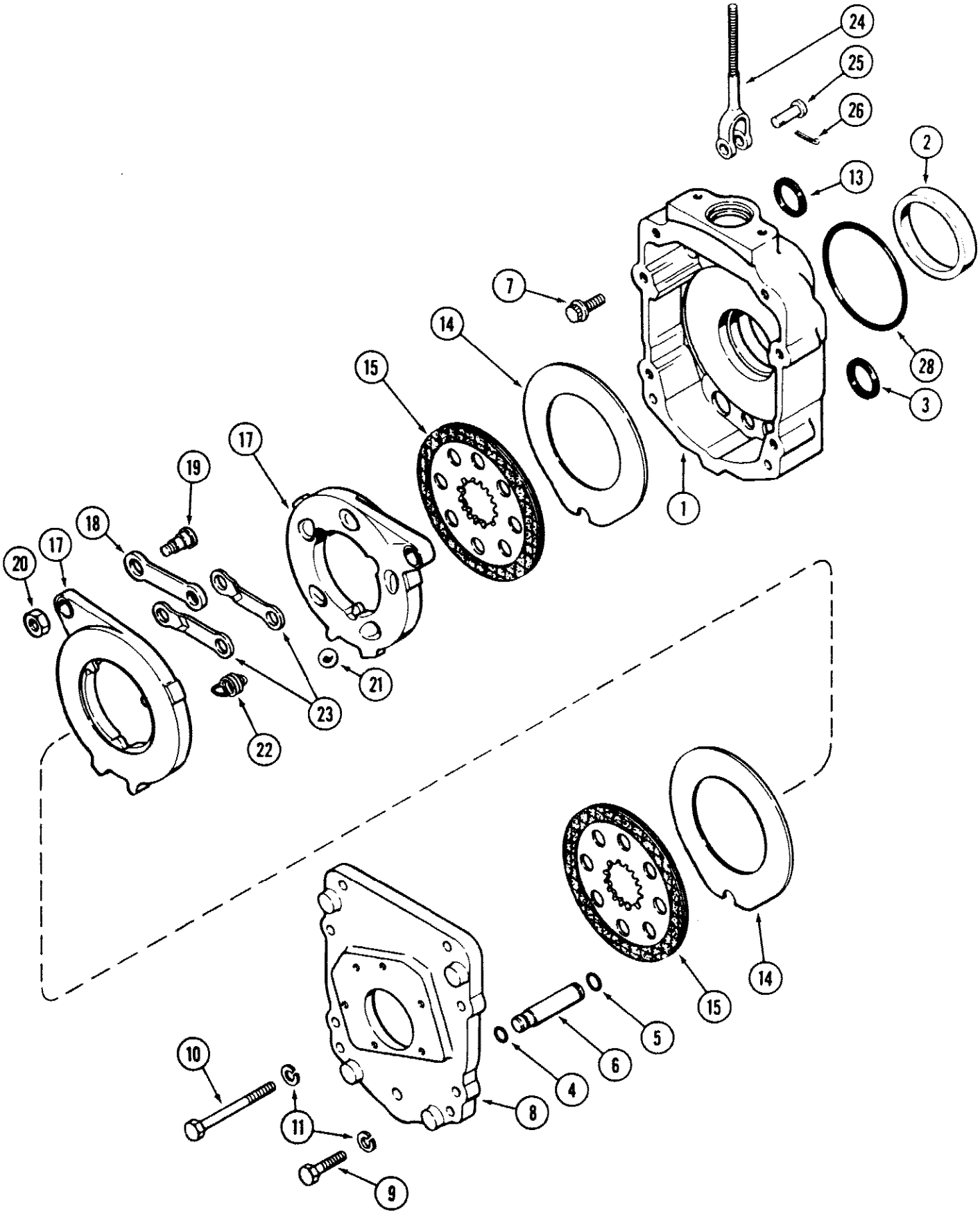

580SE CASE SUPER-E CONSTRUCTION KING LOADER BACKHOE - Power Train

278 TRANSAXLE DIFFERENTIAL BRAKE HOUSING AND BRAKE, TRANSMISSION SN 16276842 AND AFTER

Ref	Part Number	Qty	Description
1	A179911	2	HOUSING brake, Includes: Ref. 2, Use RTV 106 sealant, P/N 345 39, between brake housing and brake housing cover.
2	A7890	1	CUP bearing, 4-7/16 inch OD (113 mm)
3	A179567	4	SEAL oil, lower
4	238-7115	2	O-RING, -115, CI 7, .674" ID x .103" Thk, Anchor pin, 5/8 inch (16 mm) ID (Replaced A182413)
5	238-7113	2	O-RING, -113, CI 7, .549" ID x .103" Thk, Anchor pin (Replaced A64436)
6	A182414	2	PIN spring anchor
7	A156878	4	BOLT 12 point head, housing
8	A179912	1	COVER brake housing, right hand
8	A179944	1	COVER brake housing, left hand, right hand shown
9	113-421	12	BOLT, Hex, 1/2"-13 x 2", G5
10	113-429	4	BOLT, Hex, 1/2"-13 x 5", G5
11	92-8	16	1/2"
13	A179568	4	SEAL oil, upper
	1342286C1	2	BRAKE ASSEMBLY, disc, Replaced A179938, Includes: Ref. 14 - 23
14	A52252	4	DISC brake, stationary
15	1342285C1	5	DISC ASSEMBLY, brake, rotating, Replaced A52253
	A52251	2	DISC ASSEMBLY, brake, actuating, Includes: Ref. 17 - 23
17	A52278	2	DISC brake, actuating
18	A41861	2	LINK actuating, plain
19	A52254	2	BOLT actuating, disc
20	129-165	2	NUT, Jam, 1/2"-20, G5
21	211-19	6	BALL actuating, 7/8 inch diameter (22 mm)
22	A30897	3	SPRING disc tension
23	A48952	2	LINK actuating, offset
24	A168817	2	ROD pull, brake actuating
25	L13129	2	PIN clevis rod to brake links
26	132-310	2	PIN, SPLIT (COTTER), 1/8" x 1"
28	G10347	2	O RING housing

280

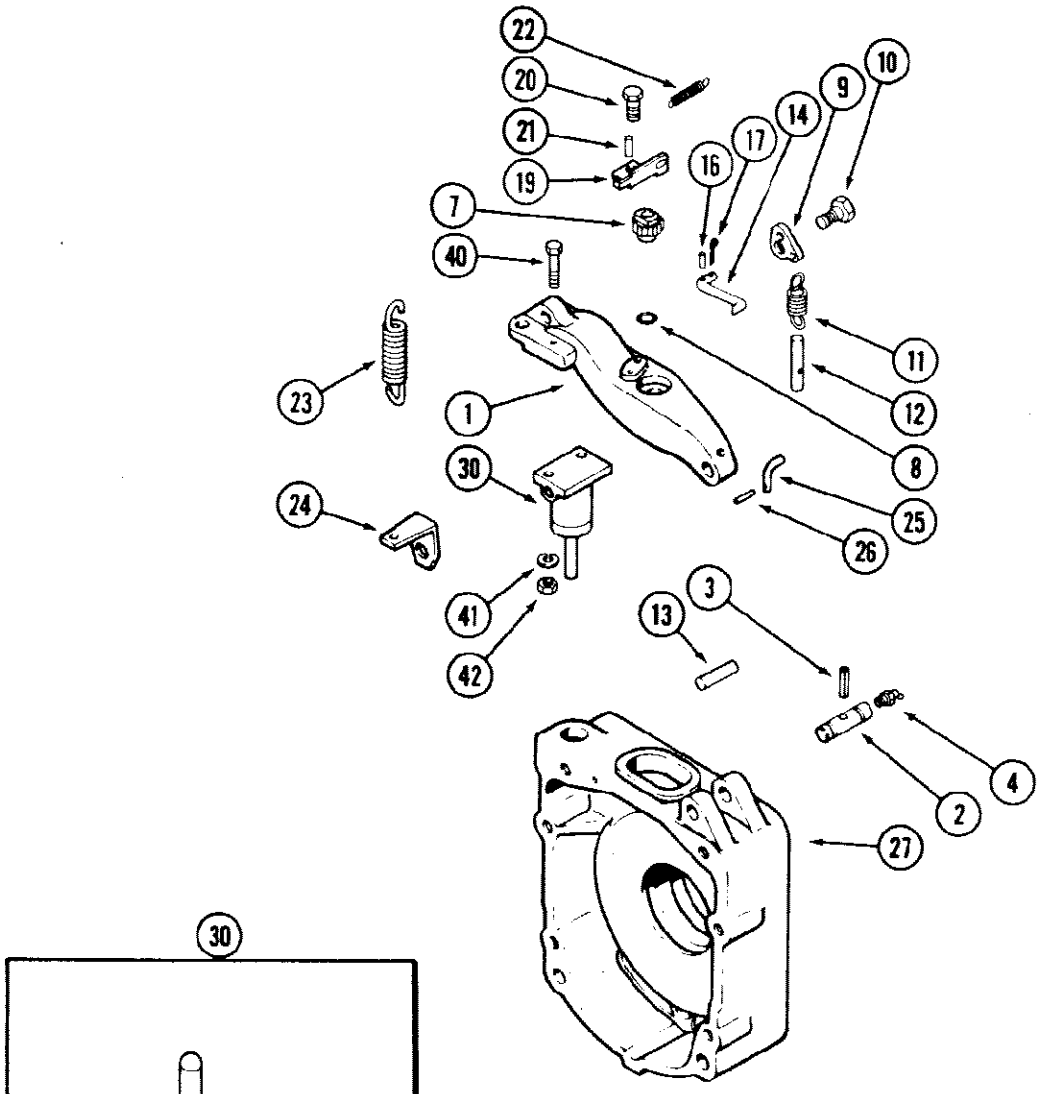
22
20
21
19
7
40
16
17
14
9
10
11
12
8
23
1
30
24
25
26
41
42
13
3
4
2
27

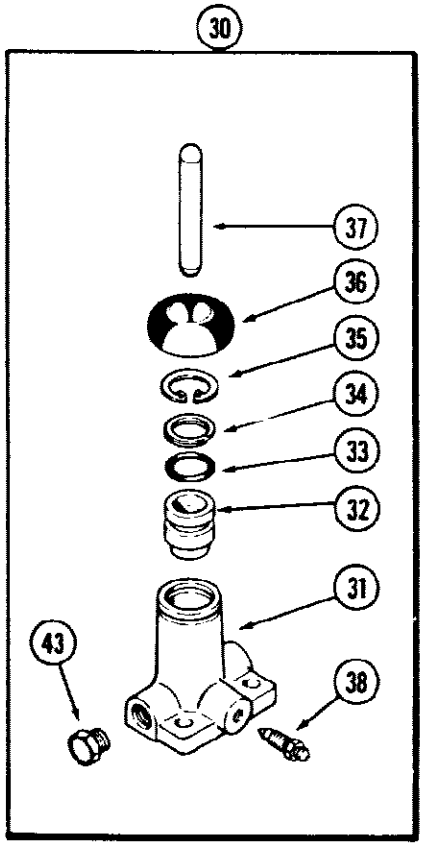
30
37
36
35
34
33
32
31
43
38

580SE CASE SUPER-E CONSTRUCTION KING LOADER BACKHOE - Power Train

280 TRANSAXLE DIFFERENTIAL BRAKE LEVER, PRIOR TO TRANSMISSION SN 16270319

Ref	Part Number	Qty	Description
1	A154640	2	LEVER brake
2	A154569	2	PIN pivot
3	138-2028	2	PIN, 3/16" x 1 1/4", Coiled
4	219-55	2	NIPPLE, LUBE, 90є, 1/8" NPT x .84" lg
7	A62230	2	NUT ratchet, brake adjusting
8	A27891	2	O RING fitting
9	A64490	2	CAM self adjusting, brake
10	A58471	2	BOLT cam pivot
11	A60489	2	SPRING adjusting cam
12	A61216	2	ROD cam stop
13	A153728	2	PIN spring anchor, 3-13/16 inch long (97 mm)
14	A59607	2	ROD lock ratchet
16	138-20	2	PIN roll, 1/16 x 1/2 inch
17	132-5	2	Pin, Split (Cotter), 1/16" x 1/2"
19	A59609	2	BRACKET self adjusting brake
20	113-205	2	BOLT, Hex, 3/8"-16 x 5/8", G5, Full Thd
21	138-92	2	PIN, 3/16" x 3/4", Slotted
22	A60555	2	SPRING return, ratchet rod
23	A35789	2	SPRING brake return
24	A155840	2	BRACKET anchor, return spring
25	A59319	2	STUD spring retaining
26	138-71	2	PIN, 5/32" x 5/8", Slotted
27	REF	2	HOUSING brake, See Figure 274
30	A168473	2	CYLINDER ASSEMBLY, brake, with green boot, differential brake cylinder
30	A62483	2	CYLINDER ASSEMBLY, brake, with white boot mark, 168473, differential brake cylinder, Includes: Ref. 31 - 38
31	NSS	1	BODY cylinder, differential brake cylinder
32	A45383	1	PISTON ASSEMBLY, cylinder, differential brake cylinder
33	F62114	1	O RING piston, differential brake cylinder, Part of Wheel Cylinder Repair Kit, P/N A42258, Part of Wheel Cylinder Repair Kit, P/N A48971
34	A42252	1	RING o ring backup, differential brake cylinder, Part of Wheel Cylinder Repair Kit, P/N A42258, Part of Wheel Cylinder Repair Kit, P/N A48971
35	A42256	1	Ring, Snap, 0.901", Int, #90, piston, differential brake cylinder, Part of Wheel Cylinder Repair Kit, P/N A42258, Part of Wheel Cylinder Repair Kit, P/N A48971
36	A48972	1	BOOT cylinder weatherseal, green, differential brake cylinder, Replaces A42255, Part of Wheel Cylinder Repair Kit, P/N A42258, Part of Wheel Cylinder Repair Kit, P/N A48971
37	A42254	1	ROD push, differential brake cylinder
38	A41491	1	SCREW cylinder bleeder, differential brake cylinder
	A48971	2	KIT, repair, wheel cylinder, with green boot, differential brake cylinder, Includes: Ref. 33 - 36
	A42258	2	KIT, repair, wheel cylinder, with white boot mark, differential brake cylinder, Includes: Ref. 33 - 36
40	113-17	4	BOLT, Hex, 1/4"-20 x 1 1/4", G5, Differential brake cylinder

280 TRANSAXLE DIFFERENTIAL BRAKE LEVER, PRIOR TO TRANSMISSION SN 16270319

Ref	Part Number	Qty	Description
41	192-19	4	WASHER, LOCK, 1/4", Differential brake cylinder
42	7770	4	NUT, 1/4"-20, G5, Differential brake cylinder
43	222-1062	2	PLUG cylinder, 7/16 inch PT, differential brake cylinder

282

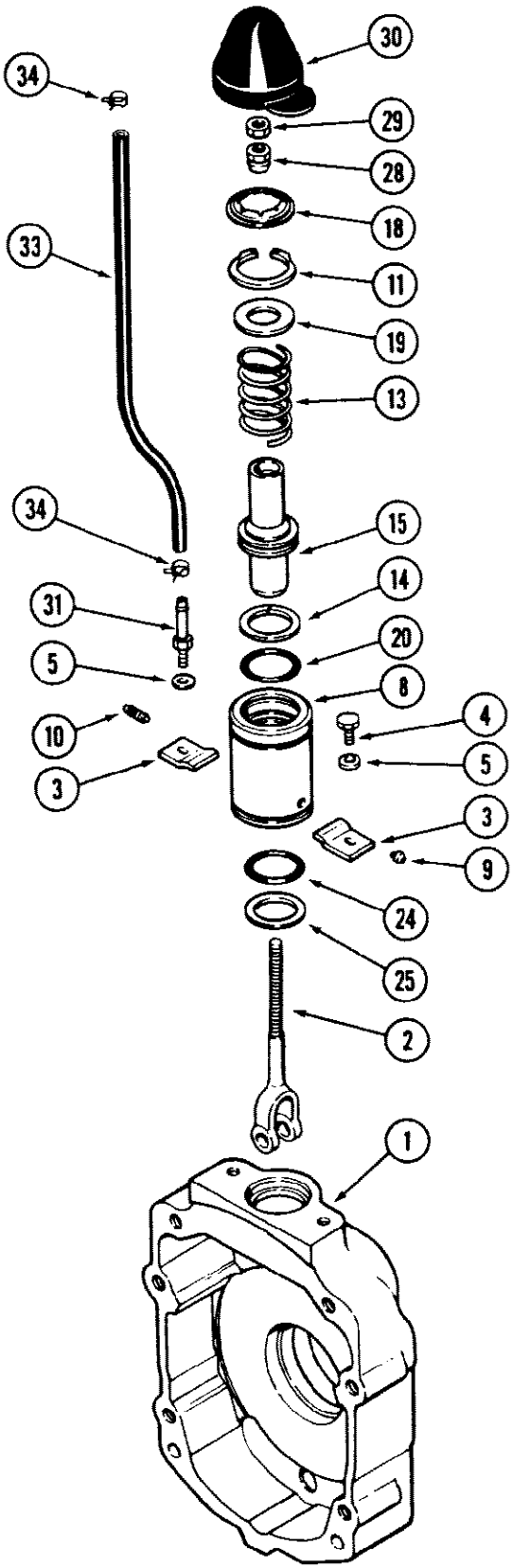

580SE CASE SUPER-E CONSTRUCTION KING LOADER BACKHOE - Power Train

282 TRANSAXLE DIFFERENTIAL BRAKE ACTUATOR, TRANSMISSION SERIAL NO 16270319 AND AFTER

Ref	Part Number	Qty	Description
1	REF	2	HOUSING brake, See Figures 276 and 278
2	A168817	2	ROD pull, brake actuating
3	A168909	4	PLATE clamp, actuator
4	13-612	4	BOLT, Hex, 3/8"-16 x 3/4", G5, Full Thd, See note, Right hand side has one breather bolt and one hex bolt. Left hand side has two breather bolts.
5	195-25	4	WASHER flat, 13/32 x 13/16 x 1/16 inch (10 x 21 x 2 mm)
	A168974	2	ACTUATOR ASSEMBLY, brake, Includes: Ref. 8 - 25
8	A52266	1	HOUSING piston
9	S114301	1	INSERT seat
10	S114300	1	SCREW bleed
11	A52276	1	RING retainer
13	A52272	1	SPRING piston
14	A52271	1	RING backup, piston
15	A52267	1	PISTON actuator
	A52277	1	KIT, repair, piston, Includes: Ref. 18 - 25
18	NSS	1	WASHER spring, Reference No. A52275
19	NSS	1	WASHER flat, 2 inch (51 mm) OD, Reference No. A52273
20	NSS	1	O RING piston, 1-1/2 inch (38 mm) ID, Reference No. A52270
24	NSS	1	O RING housing, 1-5/8 inch (41 mm) OD, Reference No. A52269
25	NSS	1	RING back up, Reference No. A52268
28	A157951	2	NUT hex, pull rod
29	25-157	2	NUT hex jam, 7/16 inch NF
30	A179594	2	SEAL dust
31	A182270	3	FITTING bolt, breather, Transmission Serial No. 16270319 to 16276842, See Note, Right hand side has one breather bolt and one hex bolt. Left hand side has two breather bolts.
33	D134065		HOSE breather, 1/4", 6 mm, ID x 21-5/8" (550 mm) long, Used with Ref 31
		1	Order D134170 and cut to length
34	F64936	2	CLAMP hose
	D134170	1	HOSE bulk, 1/4" (6 mm) ID x 62-3/16" (1580 mm) long

284

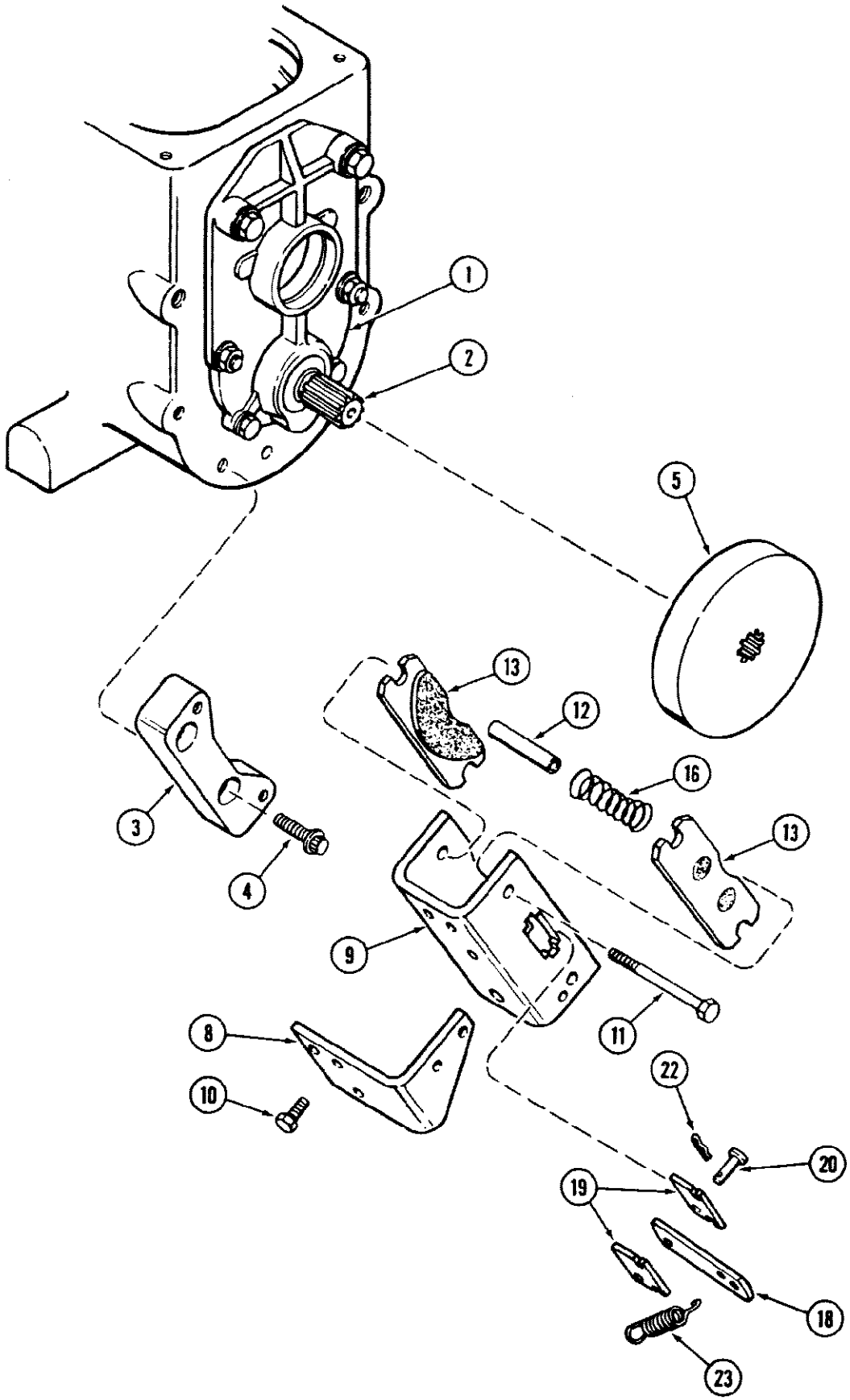

284 TRANSAXLE PARK BRAKE, TWO WHEEL DRIVE, TRANSMISSION SERIAL NO 16270319 AND AFTER

Ref	Part Number	Qty	Description
1	REF	1	COVER front, transmission, See Figure 240
2	REF	1	SHAFT counter, See Figure 254
3	A179065	1	PLATE mounting, brake
4	166-87	2	BOLT, 12 point flanged head, 1/2 NC x 1-1/2 inch
5	A168790	1	DISC brake, caliper
	A182271	1	BRAKE ASSEMBLY, park, Includes: Ref, 8 - 23
8	A52380	1	BRACKET mounting, cable
9	A52256	1	HOUSING brake
10	113-335	3	BOLT, Hex, 7/16"-14 x 3/4", G5, Full Thd
11	A52263	2	BOLT retaining, brake
12	A52261	2	SPACER stator
13	A52255	2	PAD brake
16	A52262	2	SPRING compression
18	A52379	1	LEVER actuating
19	A52257	2	PLATE pivot
20	A52259	1	PIN clevis, pivot
22	A52260	1	PIN retainer, pivot pin
23	A52264	1	SPRING extension

286

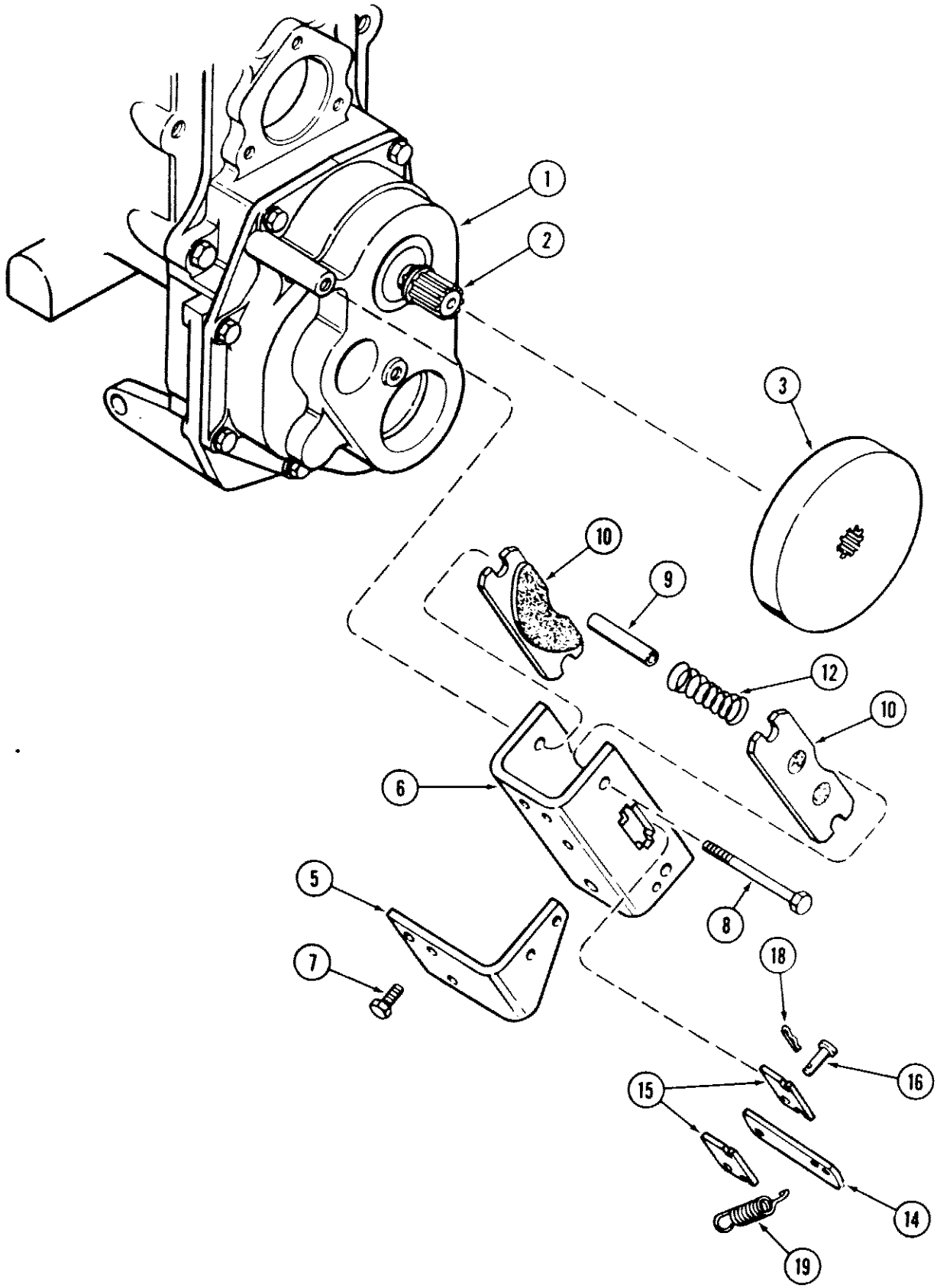

580SE CASE SUPER-E CONSTRUCTION KING LOADER BACKHOE - Power Train

286 TRANSAXLE PARK BRAKE, FOUR WHEEL DRIVE, TRANSMISSION SERIAL NO 16270319 AND AFTER

Ref	Part Number	Qty	Description
1	REF	1	COVER transfer gear box, See Figure 266
2	REF	1	SPLINE stub, See Figure 266
3	A168790	1	DISK brake, caliper
	A182271	1	BRAKE ASSEMBLY, park, Includes: Ref. 5 - 19
5	A52380	1	BRACKET mounting, cable
6	A52256	1	HOUSING brake
7	113-335	3	BOLT, Hex, 7/16"-14 x 3/4", G5, Full Thd
8	A52263	2	BOLT retaining, brake
9	A52261	2	SPACER stator
10	A52255	2	PAD brake
12	A52262	2	SPRING compression
14	A52379	1	LEVER actuating
15	A52257	2	PLATE pivot
16	A52259	1	PIN clevis, pivot
18	A52260	1	PIN retainer, pivot pin
19	A52264	1	SPRING extension

288

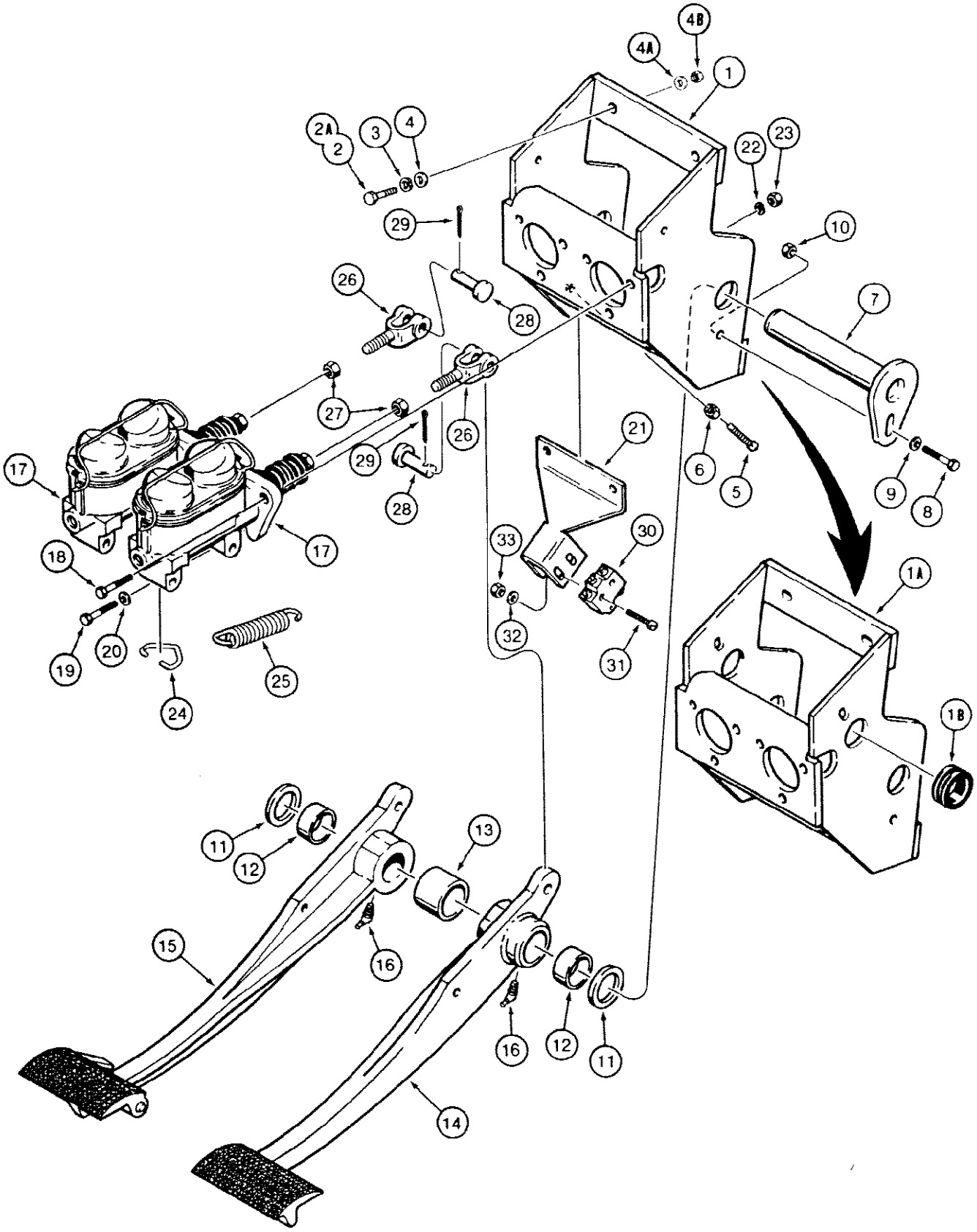
4B
4A
1
2A
2
3
4
22
23
29
10
26
28
7
27
26
21
6
5
9
8
17
29
28
33
30
18
17
1A
19
20
24
25
32
31
1B
11
12
13
15
16
16
12
11
14

040366 B

288 BRAKE PEDALS AND MOUNTING

Ref	Part Number	Qty	Description
1	D89795	1	BRACKET brake pedal and master cylinder mounting before tractor PIN 9869266
1A	D127611		BRACKET brake pedal and master cylinder mounting on tractor 9869266 and after.
1B	D67915	1	GROMMET rubber, used with item 1A only
2	113-207	2-4	BOLT, Hex, 3/8"-16 x 1", G5, Full Thd
2A	113-2225	2	BOLT, Hex, 3/8"-16 x 1 3/8", G5, Upper mounting holes only on models with transaxle vent hose system, See Figure 294
3	192-21	4	WASHER, LOCK, 3/8"
4	195-525	4	WASHER flat, plated, 3/8"
4A	195-525	1	WASHER flat, plated, 3/8", upper left hand mounting hole only on models with transaxle vent hose system, See Figure 294
4B	129-103	1	NUT, 3/8"-16, G5, Upper LH mounting hole only on models with transaxle vent hose system, See Figure 294
5	85-628	1	SCREW set, square head, 3/8" - 16 NC x 1-3/4", cup point
6	129-103	1	NUT, 3/8"-16, G5
7	D84355	1	SHAFT pedal
8	113-208	1	BOLT, Hex, 3/8"-16 x 1 1/4", G5, Full Thd
9	195-525	1	WASHER flat, plated, 3/8"
10	131-52	1	NUT hex, self locking, plated, 3/8" - 16 NC
11	195-2125	UAR	WASHER flat, pedal shaft, 1-1/4" bolt size, 1-5/16" ID x 2" OD x 1/8" thick
12	D89845	2	SPACER pedal, outer
13	D94176	1	SPACER pedal, center
14	D90654	1	PEDAL brake, right hand
15	D90751	1	PEDAL brake, left hand, includes pedal lock
16	219-31	2	FITTING grease, 30 degree, 1/8" NPT, special short
17	REF	2	CYLINDER master, brake, for correct assembly and components, See Figures 296 and 298
18	113-208	4	BOLT, Hex, 3/8"-16 x 1 1/4", G5, Full Thd
19	113-209	2	BOLT, Hex, 3/8"-16 x 1 1/2", G5, Lower
20	195-525	2	WASHER flat, plated, 3/8"
21	D84475	1	BRACKET brake lamp switches, if used
22	192-21	6	WASHER, LOCK, 3/8"
23	129-103	6	NUT, 3/8"-16, G5
24	D120218	2	CLIP spring to master cylinder, if used
25	D120911	2	SPRING pedal return
26	D94105	2	CLEVIS master cylinder
27	129-164	2	NUT, Jam, 7/16"- 20, G5
28	141-64	2	PIN clevis, plated, special length, 7/16
29	132-320	2	PIN, SPLIT (COTTER), 3/32" x 3/4"
30	D134622	2	SWITCH brake lamp, if used
31	182-530	4	SCREW machine, pan head slotted, plated, No. 6 - 32 NC x 1-1/4"
32	195-507	4	WASHER flat, plated, No. 6
33	193-1003	4	NUT AND LOCK WASHER plated, No. 6 - 32 NC

290 BRAKE MASTER CYLINDER HYDRAULIC CIRCUIT, BEFORE TRACTOR PIN 9869266

290

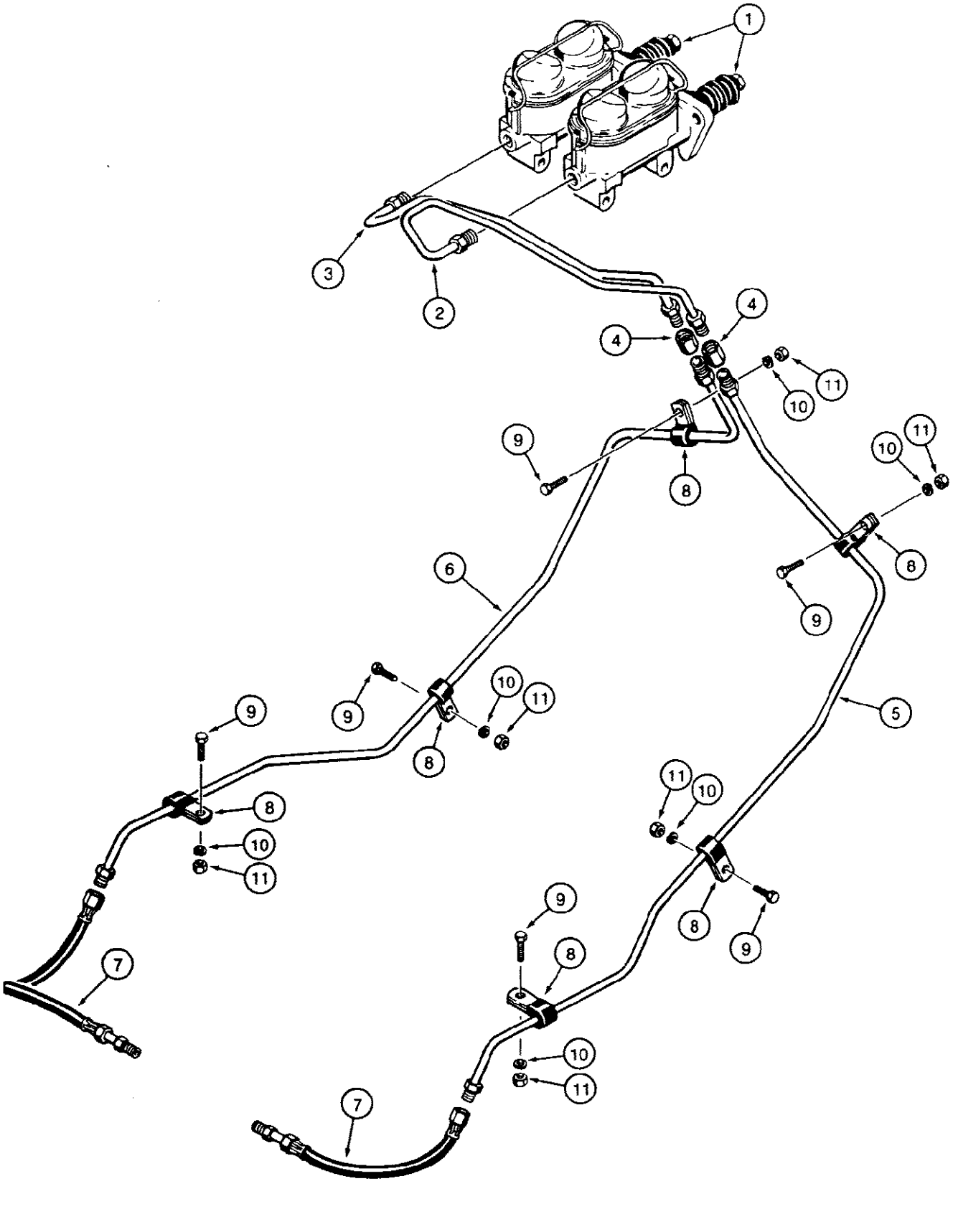

840357

290 BRAKE MASTER CYLINDER HYDRAULIC CIRCUIT, BEFORE TRACTOR PIN 9869266

Ref	Part Number	Qty	Description
1	REF	2	CYLINDER master, brake, See Figure 296
2	D91667	1	TUBE from right hand master cylinder
3	D91669	1	TUBE from left hand master cylinder
4	222-1053	2	CONNECTOR straight, female, brake tubes
5	D83965	1	TUBE to right hand brake
6	D83967	1	TUBE to left hand brake
7	D66741	2	HOSE brake
8	49851	6	CLAMP brake tubes
9	113-207	6	BOLT, Hex, 3/8"-16 x 1", G5, Full Thd
10	192-21	6	WASHER, LOCK, 3/8"
11	129-103	6	NUT, 3/8"-16, G5

292 BRAKE MASTER CYLINDER HYDRAULIC CIRCUIT, TRACTOR PIN 9869266 AND AFTER

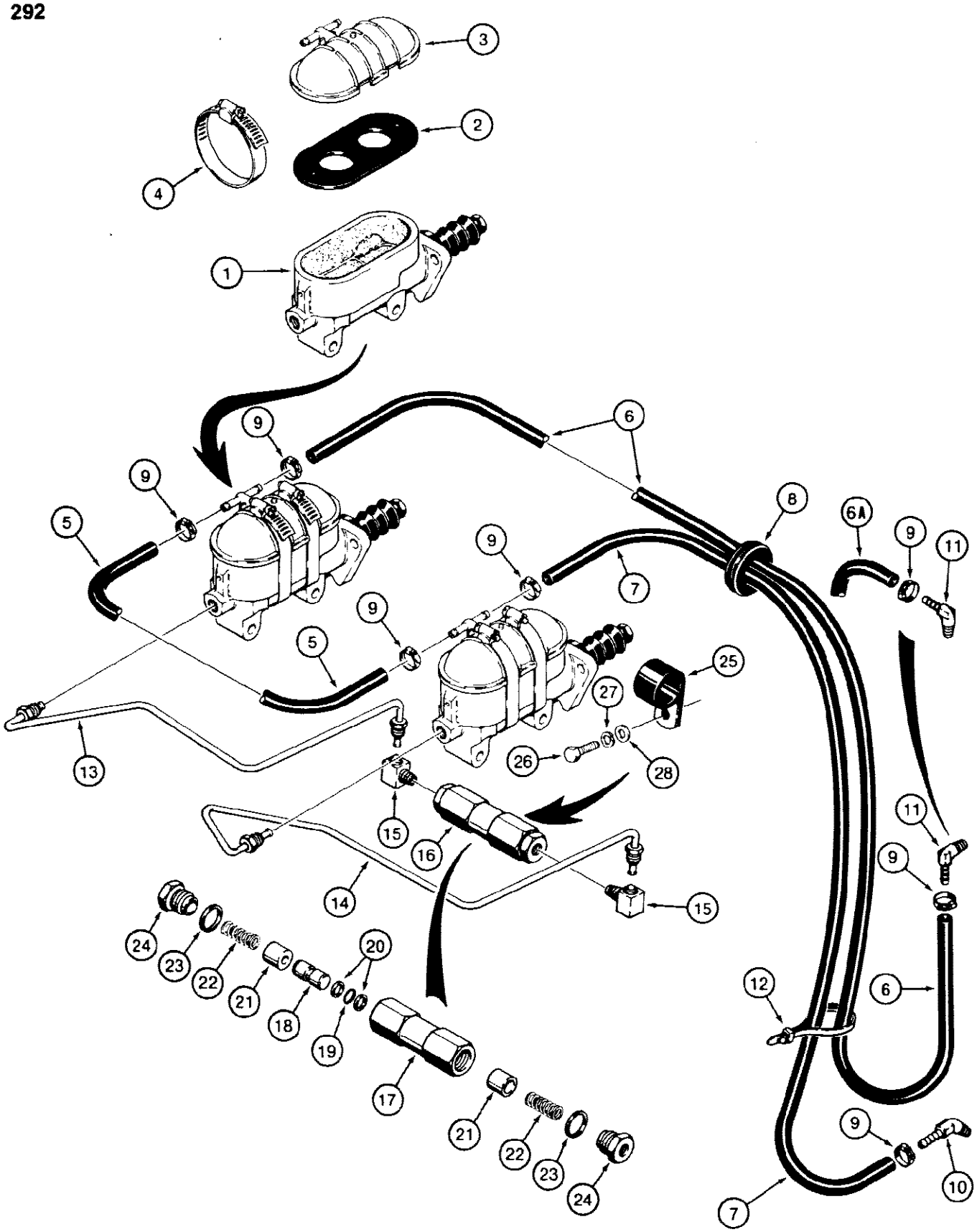

580SE CASE SUPER-E CONSTRUCTION KING LOADER BACKHOE - Brakes

292 BRAKE MASTER CYLINDER HYDRAULIC CIRCUIT, TRACTOR PIN 9869266 AND AFTER

Ref	Part Number	Qty	Description
1	D127519	2	CYLINDER master, brake, See Figure 298
2	D128313	2	GASKET master cylinder
3	D127405	2	COVER master cylinder
4	214-264	4	CLAMP cover to master cylinder, includes screw
5	D59944	1	HOSE cylinder connecting, 7-3/16" (183 mm) long
6	D128689	1	HOSE, 60" (1524 mm) long, cylinder to hydraulic oil filter return tube, attaches in side port of elbow at hydraulic oil filter, See Figure 330
6A	D134170	1	HOSE, 62-3/16" (1580 m) long, cylinder to hydraulic oil filter return tube, attaches in top port of elbow at hydraulic oil filter, See Figure 330
7	D71599	1	HOSE, 40" (1016 mm) long, cylinder to hydraulic oil filter
8	D67915	1	GROMMET rubber
9	214-274	6	CLAMP hose
10	217-281	1	FITTING barb, brass, 45 degree, For further hydraulic related parts, see equipment hydraulic system return lines on Figures 324 330.
11	217-292	1	FITTING barb, brass, 90 degree, For further hydraulic related parts, see equipment hydraulic system return lines on Figures 324 330.
12	L18337	1	STRAP tie, nylon, 15 inch
13	D127478	1	TUBE vertical, to left hand master cylinder
14	D127474	1	TUBE vertical, to right hand master cylinder
15	222-1071	2	TEE tubes to equalizer valve
16	D126650	1	VALVE equalizer, Includes: Ref. 17 - 24
17	NSS	1	BODY equalizer valve
18	NSS	1	PISTON equalizer valve
19	A29197	1	O RING piston
20	N9058	2	RING backup, piston O ring
21	NSS	2	RETAINER spring
22	NSS	2	SPRING piston
23	A16673	2	GASKET plug, copper
24	NSS	2	PLUG equalizer valve end
25	A141013	1	CLAMP p type, equalizer valve, mounts to firewall
26	113-207	1	BOLT, Hex, 3/8"-16 x 1", G5, Full Thd
27	192-21	1	WASHER, LOCK, 3/8"
28	195-525	1	WASHER flat, plated, 3/8"

294 BRAKE MASTER CYLINDER HYDRAULIC CIRCUIT, EQUALIZER VALVE TO BRAKE CYL. TRACTOR PIN 9869266 & AFTER

294

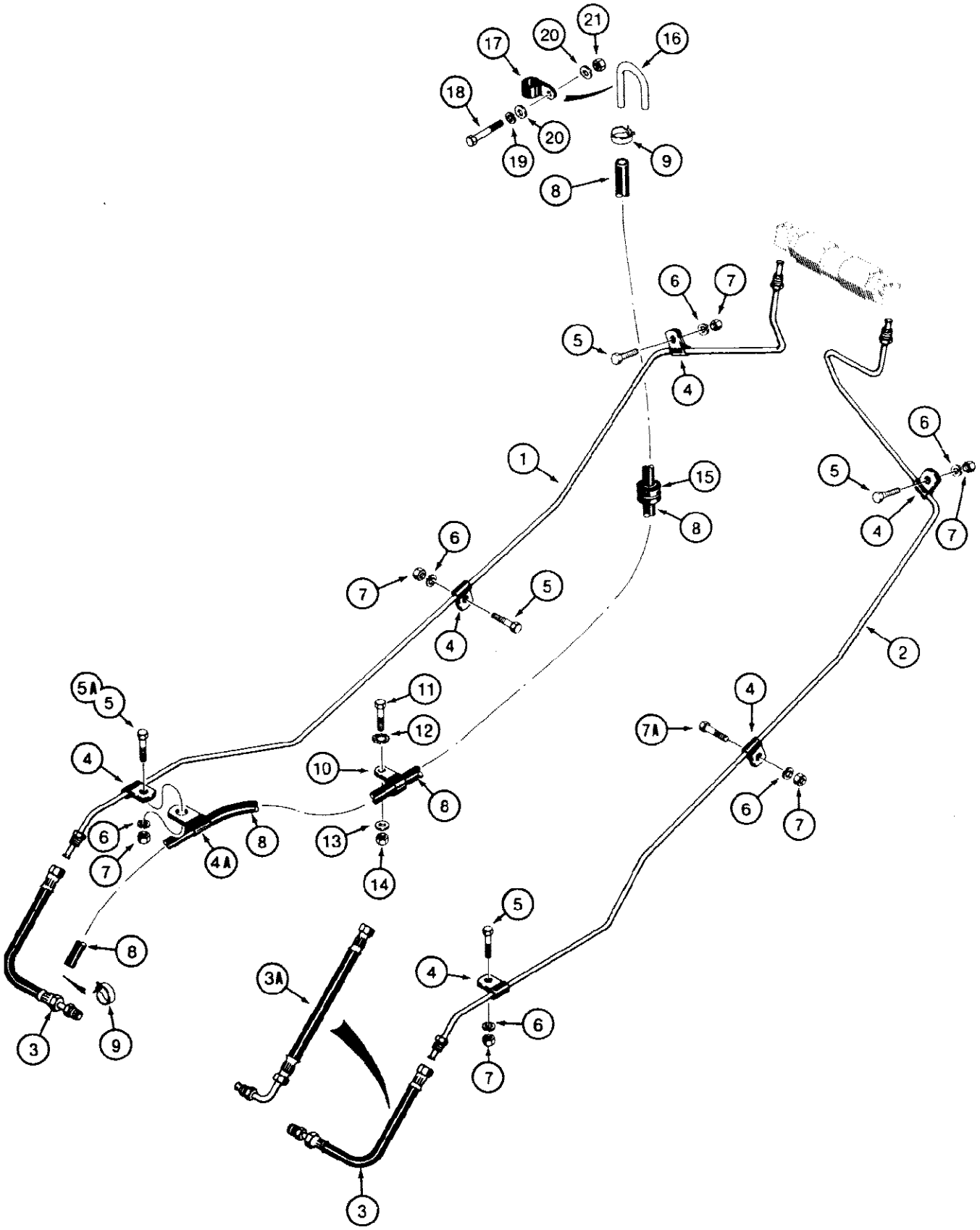

580SE CASE SUPER-E CONSTRUCTION KING LOADER BACKHOE - Brakes

294 BRAKE MASTER CYLINDER HYDRAULIC CIRCUIT, EQUALIZER VALVE TO BRAKE CYL. TRACTOR PIN 9869266 & AFTER

Ref	Part Number	Qty	Description
1	D127480	1	TUBE horizontal, left hand master cylinder to brake cylinder hose
2	D127523	1	TUBE horizontal, right hand master cylinder to brake cylinder hose
3	D66741	2	HOSE, 10" (254 mm) long, tube to brake cylinder, used on models with transaxle SN 16270319 and after, transaxle with unit actuator brake, See Figure 202 for transaxle
3A	D126980	2	HOSE, 8-11/16" (221 mm) long, tube to brake cylinder, used on models with transaxle SN 16251570 thru 16270318, transaxle without unit actuator brake, See Figure 198 for transaxle, Replaced hose with straight ends on some models
4	49851	6	CLAMP p type, tube
4A	49838	1	CLAMP p type, used on models with item 8 vent hose, no longer used, not required
5	113-207	4-5	BOLT, Hex, 3/8"-16 x 1", G5, Full Thd
5A	113-208		BOLT, Hex, 3/8"-16 x 1 1/4", G5, Full Thd, Used on models with item 8 vent hose
6	192-21	6	WASHER, LOCK, 3/8"
7	129-103	6	NUT, 3/8"-16, G5
7A	113-208	1	BOLT, Hex, 3/8"-16 x 1 1/4", G5, Full Thd
8	REF		HOSE, 1/4" (6 mm) ID x 55-1/8" (1400 mm) long, cut to required length from D134170 bulk hose, see below, vent, used on models with dry brake transaxle SN 16270319 thru 16276841, For brake actuator vent hose, see transaxle and differential lock on Figure 202.
9	F64936	2	CLAMP vent hose, if used
10	49838	1	CLAMP p type, used on models with item 8 vent hose, if used
11	113-207	1	BOLT, Hex, 3/8"-16 x 1", G5, Full Thd
12	193-72	1	WASHER internal external tooth lock, plated, 3/8"
13	195-525	1	WASHER flat, plated, 3/8", if used
14	129-103	1	NUT, 3/8"-16, G5
15	D67915	1	GROMMET rubber, vent hose, if used
16	D133917	1	TUBE vent, used on models with dry brake transaxle SN 16270319 thru 16276841
17	49851	1	CLAMP p type, vent tube, at brake pedal mounting bracket, if used
18	113-2225	1	BOLT, Hex, 3/8"-16 x 1 3/8", G5, If used
19	192-21	1	WASHER, LOCK, 3/8", If used
20	195-525	2	WASHER flat, plated, 3/8", if used
21	129-103	1	NUT, 3/8"-16, G5, If used
	D134170	UAR	HOSE bulk, 1/4" (6 mm) ID x 62-3/16" (1580 mm) long

296 D120090 AND D126695 BRAKE MASTER CYLINDERS

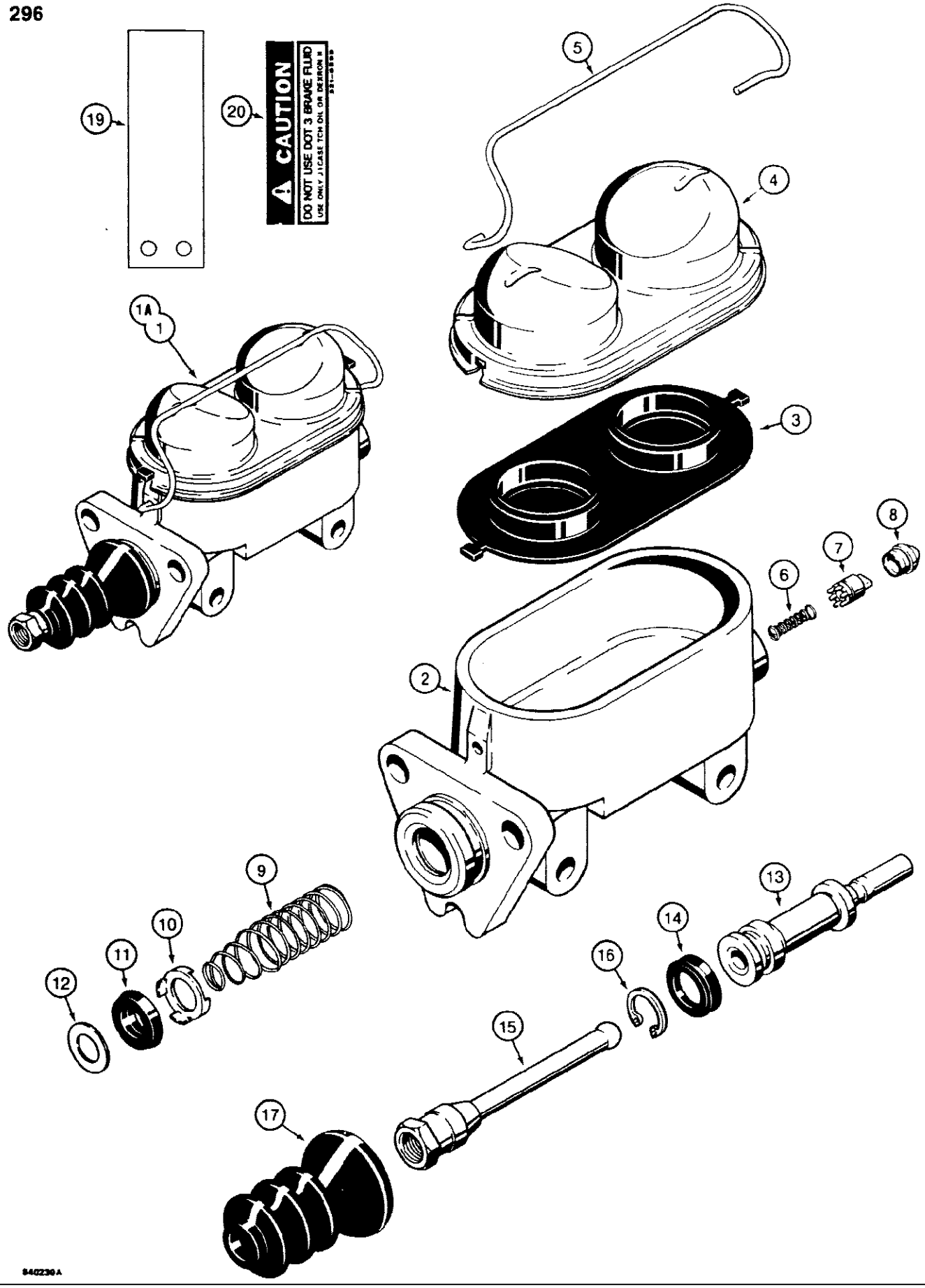

296 D120090 AND D126695 BRAKE MASTER CYLINDERS

Ref	Part Number	Qty	Description
1	D120090		CYLINDER master, brake, no longer available, order D126695
		2	master cylinder
1A	D126695	2	CYLINDER master, brake, Includes: Ref. 2 - 20
2	NSS	1	BODY master cylinder
3	N6832	1	GASKET diaphragm, filler cap
4	N6833	1	COVER filler cap, Replaced NSS
5	N6831	1	BAIL filler cap
6	N6824	1	SPRING valve
7	N6827	1	VALVE residual
8	N6825	1	SEAT tube
	N6823	1	PISTON ASSEMBLY, brake master cylinder, Includes: Ref. 9 - 14
9	NSS	1	SPRING return
10	NSS	1	RETAINER cup
11	N6830	1	CUP pump
12	N6828	1	PROTECTOR cup
13	NSS	1	PISTON master cylinder
14	N6829	1	SEAL double lip
15	L32137	1	ROD push
16	A42256	1	Ring, Snap, 0.901", Int, #90, master cylinder
17	N8819	1	BOOT push rod
18	321-6398	1	DECAL caution, brake fluid, D120090 cylinder, not shown, See Figure 670, item 31
	D127086	1	DECAL ASSEMBLY, brake fluid, D126695 cylinder, Includes: Ref. 19 - 20
19	NSS	1	PLATE decal, right hand cylinder
20	321-6398	1	DECAL caution, brake fluid

298 D127519 BRAKE MASTER CYLINDER

298

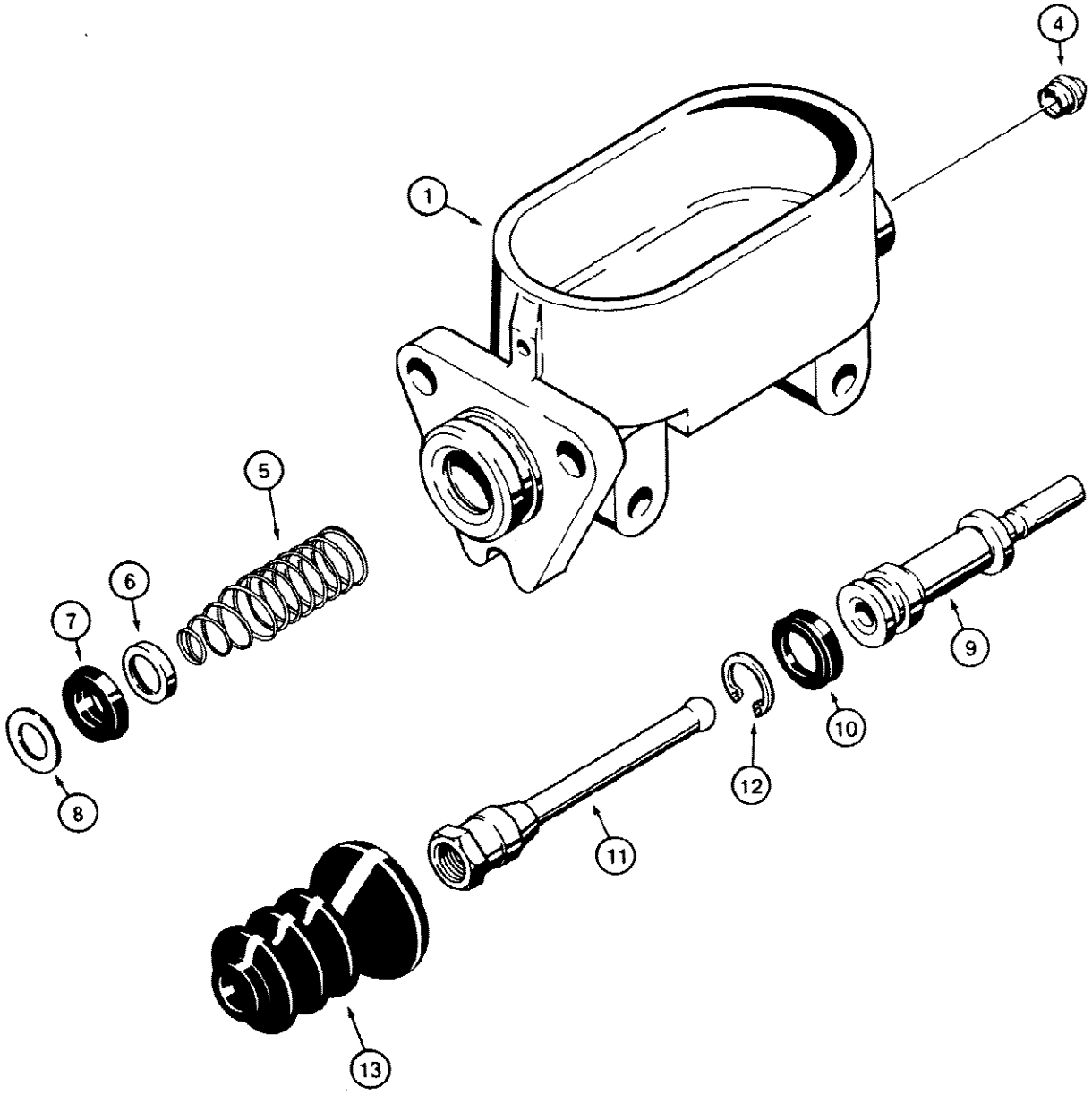

831670 A

298 D127519 BRAKE MASTER CYLINDER

Ref	Part Number	Qty	Description
	D127519	2	CYLINDER master, brake, Includes: Ref. 1 - 13
1	NSS	1	BODY master cylinder
2			RESERVED
3			RESERVED
4	N6825	1	SEAT tube
	N6823	1	PISTON ASSEMBLY, master cylinder, Includes: Ref. 5 - 10
5	NSS	1	SPRING return
6	NSS	1	RETAINER cup
7	N6830	1	CUP pump
8	N6828	1	PROTECTOR cup
9	NSS	1	PISTON master cylinder
10	N6829	1	SEAL double lip
11	L32137	1	ROD push
12	A42256	1	Ring, Snap, 0.901", Int, #90, master cylinder
13	N8819	1	BOOT push rod

300 PARKING BRAKE LEVER AND LINKAGE, USED BEFORE TRANSAXLE SN 16270319

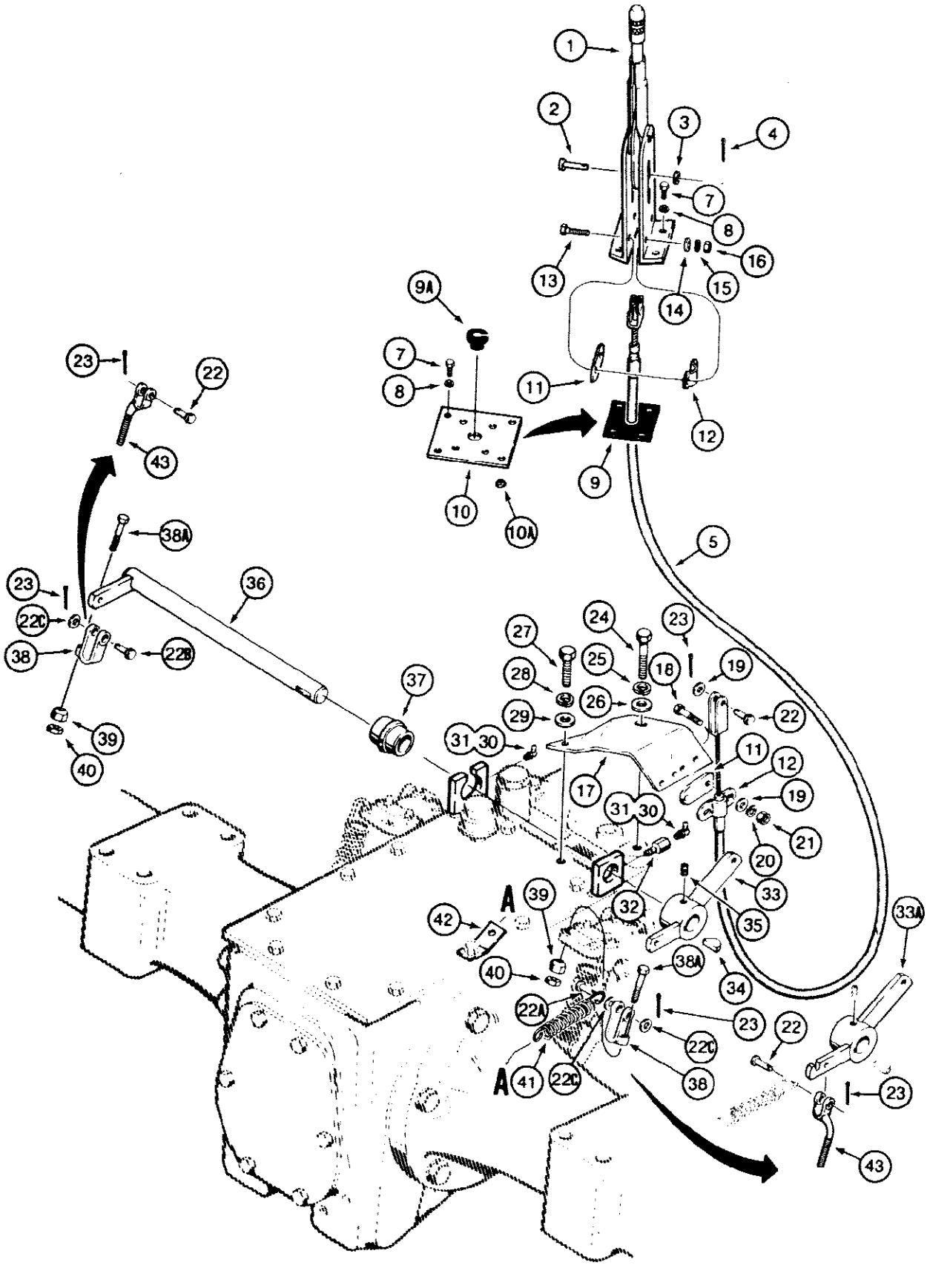

580SE CASE SUPER-E CONSTRUCTION KING LOADER BACKHOE - Brakes

300 PARKING BRAKE LEVER AND LINKAGE, USED BEFORE TRANSAXLE SN 16270319

Ref	Part Number	Qty	Description
	D86814	1	LEVER ASSEMBLY, parking brake, Includes: Ref. 1 - 4
1	NSS	1	LEVER ASSEMBLY, riveted
2	L30975	1	PIN lever to brake cable
3	195-103	1	WASHER flat, plated, 5/16"
4	132-320	1	PIN, SPLIT (COTTER), 3/32" x 3/4"
5	D126606	1	CABLE parking brake
6			RESERVED
7	113-118	8	BOLT, Hex, 5/16"-18 x 5/8", G5, Full Thd
8	192-20	8	WASHER, LOCK, 5/16"
9	D84561	1	BOOT parking brake cable, no longer used, order D120154 grommet
9A	D120154	1	GROMMET brake cable, used in place of item 9 boot on some models
10	D126625	1	PLATE lever mounting, Includes: Ref. 10A
10A	D126570	8	NUT self piercing, 5/16" - 18 NC
11	D129747	2	PLATE cable clamp, oval, Replaces rectangular plate on some models
12	D121608	2	CLAMP parking brake cable
13	113-103	2	BOLT, Hex, 5/16"-18 x 1", G5, Full Thd
14	195-521	2	WASHER flat, plated, 5/16"
15	192-20	2	WASHER, LOCK, 5/16"
16	9635082	2	NUT, 5/16"-18, G5
17	D83993	1	BRACKET cable mounting
18	113-122	2	BOLT, Hex, 5/16"-18 x 1 1/2", G5
19	195-521	3	WASHER flat, plated, 5/16"
20	192-20	2	WASHER, LOCK, 5/16"
21	9635082	2	NUT, 5/16"-18, G5
22	141-53	1-3	PIN clevis, plated, special length, cable and shaft ends, 5/16"
22A	141-66	1	PIN clevis, plated, special length, bellcrank, 5/16", if used
22B	141-60	1	PIN clevis, special length, shaft, 5/16", if used
22C	195-102	3	WASHER flat, plated, 5/16", if used
23	132-330	3	PIN, SPLIT (COTTER), 3/32" x 1/2"
24	113-219	1	BOLT, Hex, 3/8"-16 x 2", G5
25	192-21	1	WASHER, LOCK, 3/8"
26	195-525	1	WASHER flat, plated, 3/8"
27	26-624	1	BOLT hex head, grade 8, 3/8" - 16 NC x 1-1/2"
28	192-21	1	WASHER, LOCK, 3/8"
29	A140282	1	WASHER flat, hardened, 3/8"
30	219-57	1-2	FITTING grease, 90 degree, 1/4" - 28 NF taper
31	219-55	1	NIPPLE, LUBE, 90ε, 1/8" NPT x .84" lg, Special short, 4 wheel drive models only
32	219-418	1	ADAPTER grease fitting, 1/8" NPT x 1/4" - 28 taper, four wheel drive models only
33	D69995	1	BELLCRANK right hand brake, no longer used, for service order D126957 bellcrank
33A	D126957	1	BELLCRANK right hand brake
34	126-24	1	WOODRUFF KEY, #15, 1/4" X 1", Shaft

580SE CASE SUPER-E CONSTRUCTION KING LOADER BACKHOE - Brakes

300 PARKING BRAKE LEVER AND LINKAGE, USED BEFORE TRANSAXLE SN 16270319

Ref	Part Number	Qty	Description
35	85-610	1	SCREW set, square head, cup point, 3/8" - 16 NC x 5/8"
36	D69400	1	SHAFT parking brake
37	D74218	1	BUSHING spacer
38	D127499	2	CLEVIS parking brake, no longer used, order D127530 clevis rod
38A	61-548	2	BOLT hex socket head, 5/16" - 18 NC x 3", if used
39	D69410	2	NUT parking brake, special, 5/16" - 18 NC
40	9635082	2	NUT, 5/16"-18, G5
41	A35789	1	SPRING bellcrank return
42	D127508	1	BRACKET return spring
43	D127530	2	ROD offset clevis, parking brake

304 PARKING BRAKE, USED WITH TRANSAXLE SN 16270319 AND AFTER

304

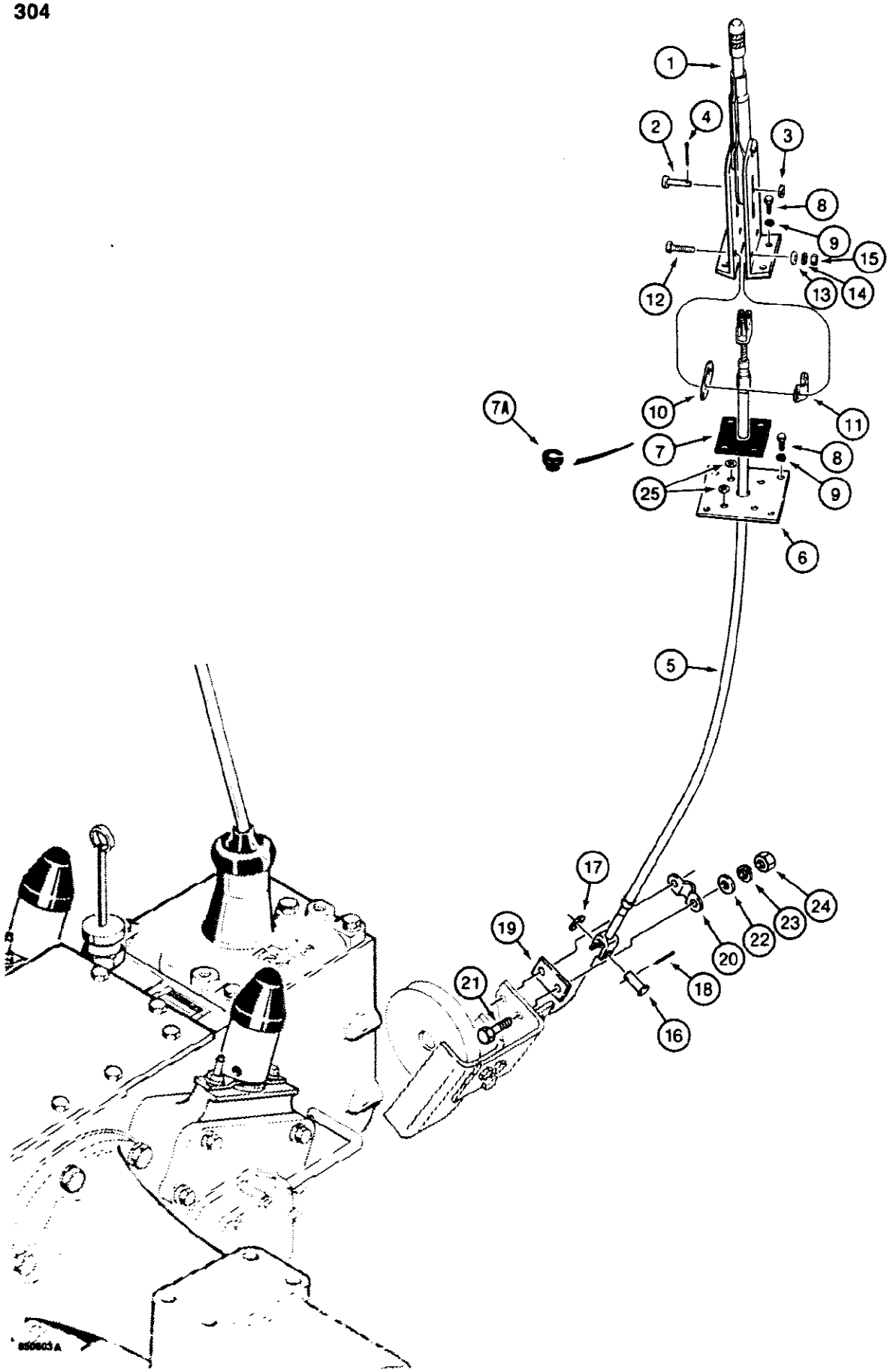

580SE CASE SUPER-E CONSTRUCTION KING LOADER BACKHOE - Brakes

304 PARKING BRAKE, USED WITH TRANSAXLE SN 16270319 AND AFTER

Ref	Part Number	Qty	Description
	D86814	1	LEVER ASSEMBLY, parking brake, Includes: Ref. 1 - 4
1	NSS	1	LEVER ASSEMBLY, riveted
2	L30975	1	PIN lever to brake cable
3	195-103	1	WASHER flat, plated, 5/16"
4	132-320	1	PIN, SPLIT (COTTER), 3/32" x 3/4"
5	D126606	1	CABLE parking brake
6	D126625	1	PLATE lever mounting
7	D84561	1	BOOT parking brake cable, no longer available, order D120154 grommet
7A	D120154	1	GROMMET parking brake cable, Replaces item 7 boot on some models
8	113-118	8	BOLT, Hex, 5/16"-18 x 5/8", G5, Full Thd
9	192-20	8	WASHER, LOCK, 5/16"
10	D129747	1	PLATE oval spacer
11	D121608	1	CLAMP parking brake cable
12	113-103	2	BOLT, Hex, 5/16"-18 x 1", G5, Full Thd
13	195-521	2	WASHER flat, plated, 5/16"
14	192-20	2	WASHER, LOCK, 5/16"
15	9635082	2	NUT, 5/16"-18, G5
16	141-53	1	PIN clevis, plated, special length, 5/16"
17	195-521	1	WASHER flat, plated, 5/16"
18	132-330	1	PIN, SPLIT (COTTER), 3/32" x 1/2"
19	D129747	1	PLATE oval spacer
20	D121608	1	CLAMP parking brake cable
21	113-122	2	BOLT, Hex, 5/16"-18 x 1 1/2", G5
22	195-521	2	WASHER flat, plated, 5/16"
23	192-20	2	WASHER, LOCK, 5/16"
24	9635082	2	NUT, 5/16"-18, G5
25	195-521	2	WASHER flat, plated, lever positioning, 5/16"

306

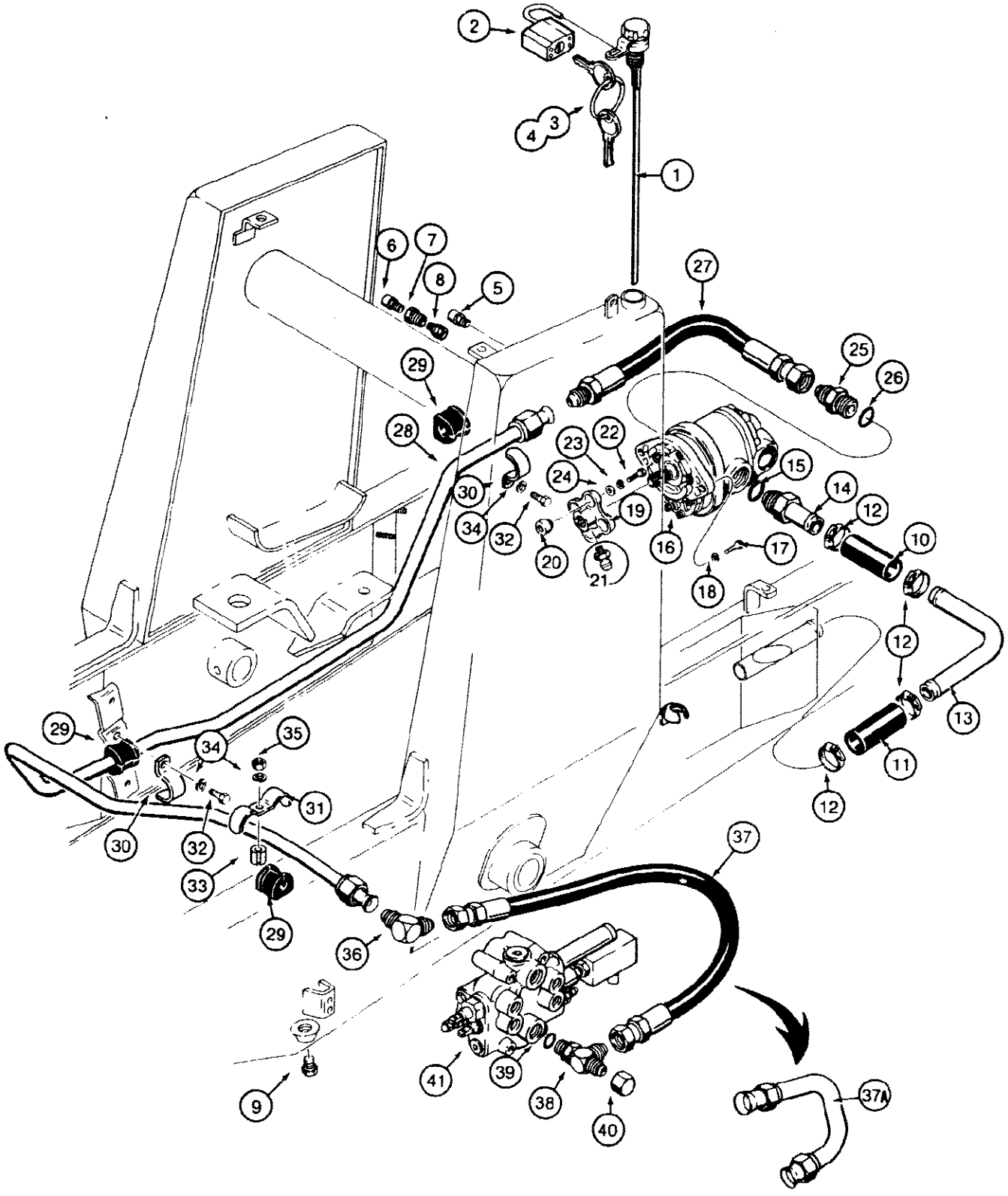
2
4
3
1
6
7
8
5
27
25
26
29
28
23
22
24
15
14
12
10
30
34
32
20
21
19
16
17
18
12
13
29
35
34
31
30
32
33
29
36
37
11
12
9
41
39
38
40
37A

840350

306 EQUIPMENT HYDRAULIC SYSTEM, RESERVOIR TO PARKER LOADER CONTROL VALVE

Ref	Part Number	Qty	Description
1	D94386	1	DIPSTICK reservoir
2	D93753	1	PADLOCK includes keys, if used, Includes: Ref. 3 - 4
3	R29555	2	KEY for Master padlock only
4	D93751	2	KEY for Yale padlock only
5	D94060	1	VALVE relief, air outlet
6	R15538	1	BREATHER air inlet
7	D63506	1	ADAPTER relief valve
8	D63543	1	FILTER relief valve
9	D123893	1	PLUG drain, reservoir, hex head, 3/4" NPT
10	REF	1	HOSE suction, 1-1/4" (32 mm) ID x 4" (102 mm) long, cut to required length from D33365, see below
11	REF	1	HOSE suction, 1-1/4" (32 mm) ID x 5" (127 mm) long, cut to required length from D33365, see below
12	214-257	4	CLAMP hose
13	D89585	1	TUBE suction
14	217-178	1	FITTING stem, straight, at pump, Includes: Ref. 15
15	218-5011	1	O RING stem fitting
16	REF	1	PUMP hydraulic, See Figure 388
17	113-410	2	BOLT, Hex, 1/2"-13 x 1 1/2", G5, Full Thd
18	192-23	2	WASHER, LOCK, 1/2"
19	D90883	1	COUPLING hydraulic pump, Includes: Ref. 20 - 21
20	A45216	4	BUSHING coupling
21	86636814	1	FITTING - grease, straight, 1/4"-28 NF
22	113-311	4	BOLT, Hex, 7/16"-14 x 1 1/2", G5
23	192-22	4	WASHER, LOCK, 7/16"
24	A30013	4	WASHER flat, special
25	218-5069	1	ADAPTER straight, male, Includes: Ref. 26
26	218-5010	1	O RING adapter
27	D68547	1	HOSE pump pressure, 20" (508 mm) long
28	D123555	1	TUBE pressure
29	D67297	4	INSULATOR tube to clamp
30	D68846	2	CLAMP tube, single
31	D83594	1	CLAMP tube, double
32	113-205	2	BOLT, Hex, 3/8"-16 x 5/8", G5, Full Thd
33	R46493	1	SPACER double clamp
34	192-21	3	WASHER, LOCK, 3/8"
35	129-103	1	NUT, 3/8"-16, G5
	D33365	1	HOSE 1-1/4" (32 mm) ID x 18-1/2" (470 mm) long
36	218-478	1	ELBOW, 90 degree
37	D86791	1	HOSE, 23-5/8" (600 mm) long, to loader control valve, if used
37A	D121553	1	TUBE used with two or three spool control valve, if used

306 EQUIPMENT HYDRAULIC SYSTEM, RESERVOIR TO PARKER LOADER CONTROL VALVE

Ref	Part Number	Qty	Description
38	218-5298	1	TEE adjustable, valve inlet, Includes: Ref. 39
39	218-5008	1	O RING tee
40	218-335	1	CAP hex, tee, 3/4" tube OD x 1-1/16" - 12 NF thread
41	REF	1	VALVE control, loader, Parker, for correct assembly and components, See Figures 390 and 392

310

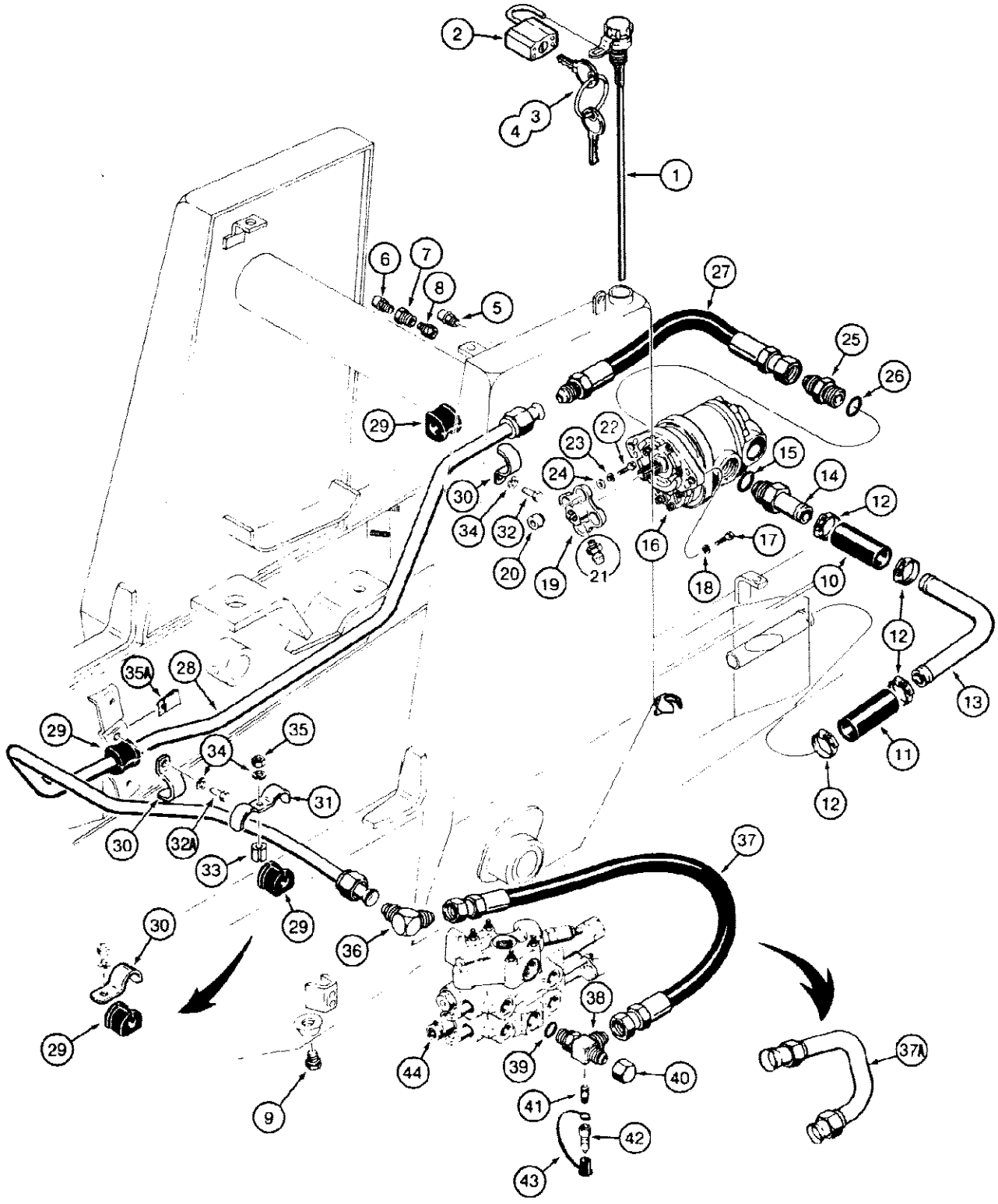
2
3
4
1
6
7
8
5
27
25
26
29
22
23
24
15
14
12
30
34
32
20
19
21
16
17
18
10
12
13
11
12
35A
28
29
34
35
31
30
32A
33
29
37
30
29
36
38
44
39
40
41
42
43
37A
9

840360 A

310 EQUIPMENT HYDRAULIC SYSTEM, RESERVOIR TO CASE LOADER CONTROL VALVE

Ref	Part Number	Qty	Description
1	D94386	1	DIPSTICK reservoir
2	D93753	1	PADLOCK includes keys, if used, Includes: Ref. 3 - 4
3	R29555	2	KEY for Master padlock only
4	D93751	2	KEY for Yale padlock only
5	D94060	1	VALVE relief, air outlet
6	R15538	1	BREATHER air inlet
7	D63506	1	ADAPTER relief valve
8	D63543	1	FILTER relief valve
9	D123893	1	PLUG drain, reservoir, hex head, 3/4" NPT
10	REF	1	HOSE suction, 1-1/4" (32 mm) ID x 4" (102 mm) long, cut to required length from D33365, see below
11	REF	1	HOSE suction, 1-1/4" (32 mm) ID x 5" (127 mm) long, cut to required length from D33365, see below
12	214-257	4	CLAMP hose
13	D89585	1	TUBE suction
14	217-178	1	FITTING stem, straight, at pump, Includes: Ref. 15
15	218-5011	1	O RING stem fitting
16	REF	1	PUMP hydraulic, See Figure 388, Ref #16 hydraulic pump For fittings and hoses, to steering control valve and relief valve, See Figure 154.
17	113-410	2	BOLT, Hex, 1/2"-13 x 1 1/2", G5, Full Thd
18	192-23	2	WASHER, LOCK, 1/2"
19	D90883	1	COUPLING hydraulic pump, Includes: Ref. 20 - 21
20	A45216	4	BUSHING coupling
21	86636814	1	FITTING - grease, straight, 1/4"-28 NF
22	113-311	4	BOLT, Hex, 7/16"-14 x 1 1/2", G5
23	192-22	4	WASHER, LOCK, 7/16"
24	A30013	4	WASHER flat, special
25	218-5069	1	ADAPTER straight, male, Includes: Ref. 26
26	218-5010	1	O RING adapter
27	D68547	1	HOSE pump pressure, 20" (508 mm) long
28	D123555	1	TUBE pressure
29	D67297	3-4	INSULATOR tube to clamp
30	D68846	2-3	CLAMP tube, single
31	D83594	1	CLAMP tube, double, if used
32	113-205	1	BOLT, Hex, 3/8"-16 x 5/8", G5, Full Thd
32A	113-206	1	BOLT, Hex, 3/8"-16 x 3/4", G5, Full Thd
33	R46493	1	SPACER double clamp, if used
34	192-21	3	WASHER, LOCK, 3/8"
35	129-103	1	NUT, 3/8"-16, G5
35A	131-856	1	NUT, Ret, J, 3/8"-16
	D33365	1	HOSE, 1-1/4" (32 mm) ID x 18-1/2" (470 mm) long

310 EQUIPMENT HYDRAULIC SYSTEM, RESERVOIR TO CASE LOADER CONTROL VALVE

Ref	Part Number	Qty	Description
36	218-478	1	ELBOW, 90 degree
37	D86791	1	HOSE, 23-5/8" (600 mm) long, to loader control valve, if used
37A	D123572	1	TUBE pressure loop, if used
38	D124435	1	TEE valve inlet, special, Includes: Ref. 39
39	218-5008	1	O RING tee
40	218-335	1	CAP hex, tee, 3/4" tube OD x 1-1/16" - 12 NF thread
41	221-130	1	NIPPLE 1/4" NPT x 7/8"
42	S206607	1	COUPLING male, Ref #42 S206607 male coupling Female, coupling is part nbr S206610 and dust plug for female coupling is part nbr S206609.
43	D123387	1	COVER dust
44	REF	1	VALVE control, loader, Case, See Figure 406

314 EQUIPMENT HYDRAULIC SYSTEM, REAR EQUIPMENT LINES, USED WITH PARKER LOADER CONTROL VALVE

314

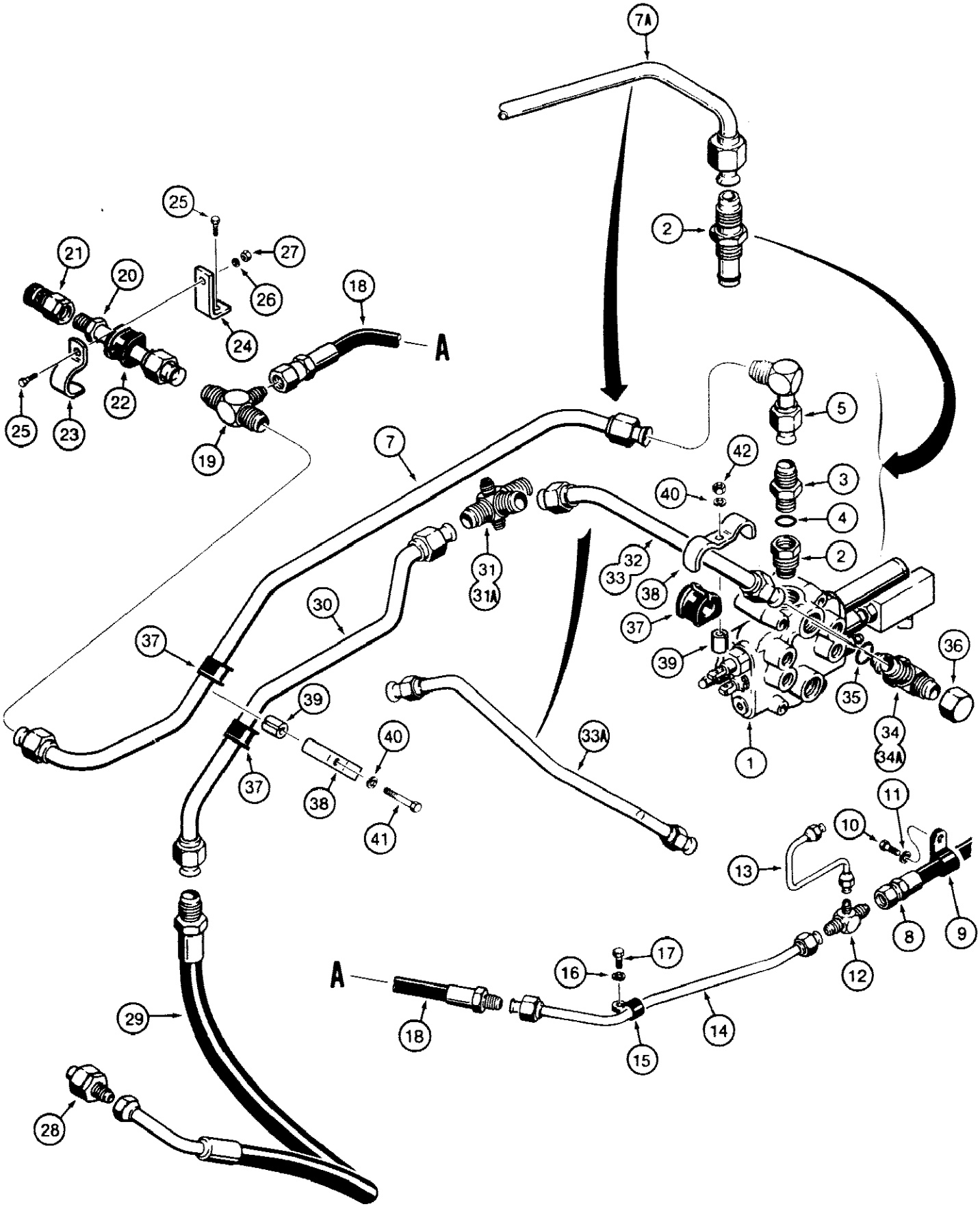

840361A

314 EQUIPMENT HYDRAULIC SYSTEM, REAR EQUIPMENT LINES, USED WITH PARKER LOADER CONTROL VALVE

Ref	Part Number	Qty	Description
1	REF	1	VALVE control, loader, Parker, for correct assembly and components, See Figures 390 and 392
2	REF	1	SLEEVE power beyond, for correct assembly and components, See Figures 390 and 392
3	218-5050	1	ADAPTER straight, male, used with three spool control valve only, Includes: Ref. 4
4	218-5008	1	O RING adapter
5	D93831	1	ELBOW, 90 degree, used with three spool control valve
6			RESERVED
7	D120003	1	TUBE to backhoe, used with three spool control valve
7A	D92651	1	TUBE to backhoe, used with two spool control valve
8	D89556	1	HOSE, 29-1/2" (750 mm) long, from steering control valve, See Figure 154, item 16
9	R14668	1	CLAMP steering control valve hose to frame
10	113-118	1	BOLT, Hex, 5/16"-18 x 5/8", G5, Full Thd
11	192-20	1	WASHER, LOCK, 5/16"
12	218-1581	1	TEE male, steering hose to backhoe
13	D122814	1	TUBE tee to relief valve
14	D120001	1	TUBE hose to tee
15	49771	1	CLAMP p type
16	192-21	1	WASHER, LOCK, 3/8"
17	113-205	1	BOLT, Hex, 3/8"-16 x 5/8", G5, Full Thd
18	37318	1	HOSE, 1/2" (13 mm) ID x 16-1/2" (419 mm) long, to backhoe
19	218-588	1	TEE male, backhoe pressure line, for three point hitch connecting parts, See Figure 322
20	D90402	1	TUBE to hydraulic coupling
21	D52800	1	QUICK DISCONNECT coupling, hydraulic, female, See Figure 458
22	D67297	1	INSULATOR tube clamp
23	D68846	1	CLAMP tube
24	D65647	1	BRACKET used with D68846 clamp
25	26-616	2	BOLT hex head, grade 8, 3/8" - 16 NC x 1"
26	192-21	1	WASHER, LOCK, 3/8"
27	129-103	1	NUT, 3/8"-16, G5
28	D90260	1	QUICK DISCONNECT coupling, hydraulic, male, See Figure 458
29	D89646	1	HOSE special, from coupling
30	D120005	1	TUBE backhoe return
31	D124952	1	MANIFOLD male fitting, used with D86783 tube or D90103 tube, items 32 or 33
31A	D126802	1	MANIFOLD male fitting, used with D126801 tube, item 33A
32	D86783	1	TUBE to two spool control valve
33	D90103	1	TUBE to three spool control valve, 1" tube OD, if used
33A	D126801	1	TUBE to three spool control valve, 3/4" tube OD, if used
34	218-5298	1	TEE adjustable, control valves, used with D86783 or D90103 tube, items 32 or 33
34A	218-5239	1	TEE adjustable, control valve, used with D126801 tube, item 33A, Includes: Ref. 35
35	218-5008	1	O RING 218-5298 or 218-5239 tee
36	218-335	1	CAP hex, tee, 3/4" tube OD x 1-1/16" - 12 NF thread
37	D67297	4	INSULATOR tube clamps

314 EQUIPMENT HYDRAULIC SYSTEM, REAR EQUIPMENT LINES, USED WITH PARKER LOADER CONTROL VALVE

Ref	Part Number	Qty	Description
38	D83594	2	CLAMP double tube
39	R46493	2	SPACER double tube clamps
40	192-21	2	WASHER, LOCK, 3/8"
41	113-209	1	BOLT, Hex, 3/8"-16 x 1 1/2", G5
42	129-103	1	NUT, 3/8"-16, G5

318 EQUIPMENT HYDRAULIC SYSTEM, REAR EQUIPMENT LINES, USED WITH CASE LOADER CONTROL VALVE

318

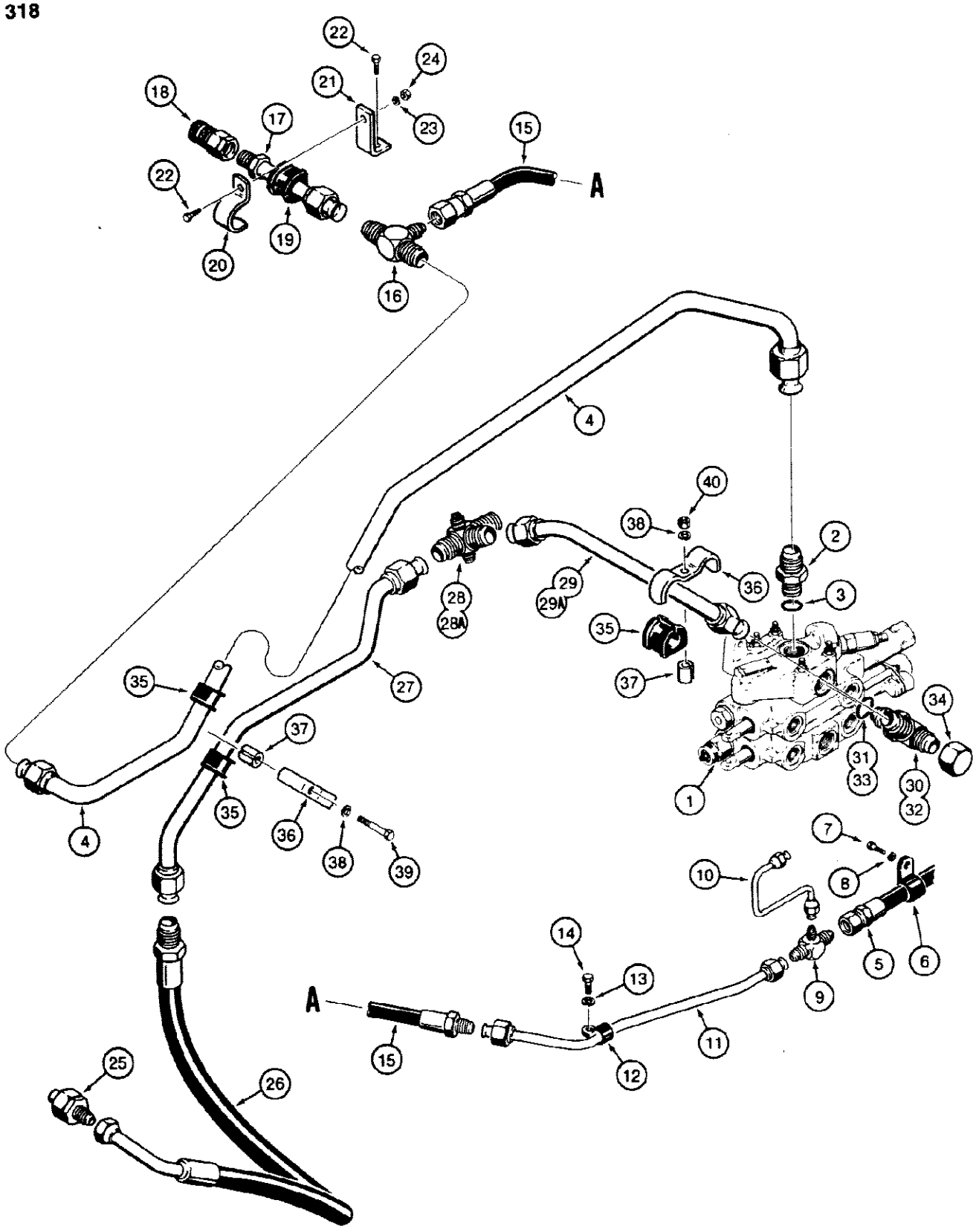

318 EQUIPMENT HYDRAULIC SYSTEM, REAR EQUIPMENT LINES, USED WITH CASE LOADER CONTROL VALVE

Ref	Part Number	Qty	Description
1	REF	1	VALVE control, loader, Case, See Figure 406
2	218-5050	1	ADAPTER straight, male, power beyond, Includes: Ref. 3
3	218-5008	1	O RING adapter
4	D123553	1	TUBE to backhoe
5	D89556	1	HOSE, 29-1/2" (750 mm) long, from steering control valve, See Figure 154 item 16
6	R14668	1	CLAMP steering control valve hose to frame
7	113-118	1	BOLT, Hex, 5/16"-18 x 5/8", G5, Full Thd
8	192-20	1	WASHER, LOCK, 5/16"
9	218-1581	1	TEE male, steering hose to backhoe
10	D122814	1	TUBEtee to relief valve
11	D120001	1	TUBE hose to tee
12	49771	1	CLAMP p type
13	192-21	1	WASHER, LOCK, 3/8"
14	113-205	1	BOLT, Hex, 3/8"-16 x 5/8", G5, Full Thd
15	37318	1	HOSE, 1/2" (13 mm) ID x 16-1/2" (419 mm) long, to backhoe
16	218-588	1	TEE male, backhoe pressure line, for three point hitch connecting parts, See Figure 322
17	D90402	1	TUBE to hydraulic coupling
18	D52800	1	QUICK DISCONNECT coupling, hydraulic, female, See Figure 458
19	D67297	1	INSULATOR tube clamp
20	D68846	1	CLAMP tube
21	D65647	1	BRACKET used with D68846 clamp
22	26-616	2	BOLT hex head, grade 8, 3/8" - 16 NC x 1"
23	192-21	1	WASHER, LOCK, 3/8"
24	129-103	1	NUT, 3/8"-16, G5
25	D90260	1	QUICK DISCONNECT coupling, hydraulic, male, See Figure 458
26	D89646	1	HOSE special, from coupling
27	D120005	1	TUBE backhoe return
28	D124952	1	MANIFOLD male fitting, special, if used
28A	D126802	1	MANIFOLD male fitting, special, used with D126801 tube, if used
29	D123557	1	TUBE to control valve, no longer used, for service order D126801 tube, D126802 tee, and 218-5239 tee
29A	D126801	1	TUBE to control valve, clamping hardware not used with this tube
30	218-5298	1	TEE adjustable, control valve, if used, Includes: Ref. 31
31	218-5008	1	O RING tee
32	218-5239	1	TEE adjustable, used with D126801 tube, if used, Includes: Ref. 33
33	218-5008	1	O RING tee
34	218-335	1	CAP hex, 3/4" tube OD x 1-1/16" - 12 NF thread, 218-5298 or 218-5239 tee
35	D67297	2-4	INSULATOR tube clamps
36	D83594	1-2	CLAMP double tube
37	R46493	1-2	SPACER double tube clamps
38	192-21	1-2	WASHER, LOCK, 3/8"
39	113-209	1	BOLT, Hex, 3/8"-16 x 1 1/2", G5

318 EQUIPMENT HYDRAULIC SYSTEM, REAR EQUIPMENT LINES, USED WITH CASE LOADER CONTROL VALVE

Ref	Part Number	Qty	Description
40	129-103	1	NUT, 3/8"-16, G5, If used

322

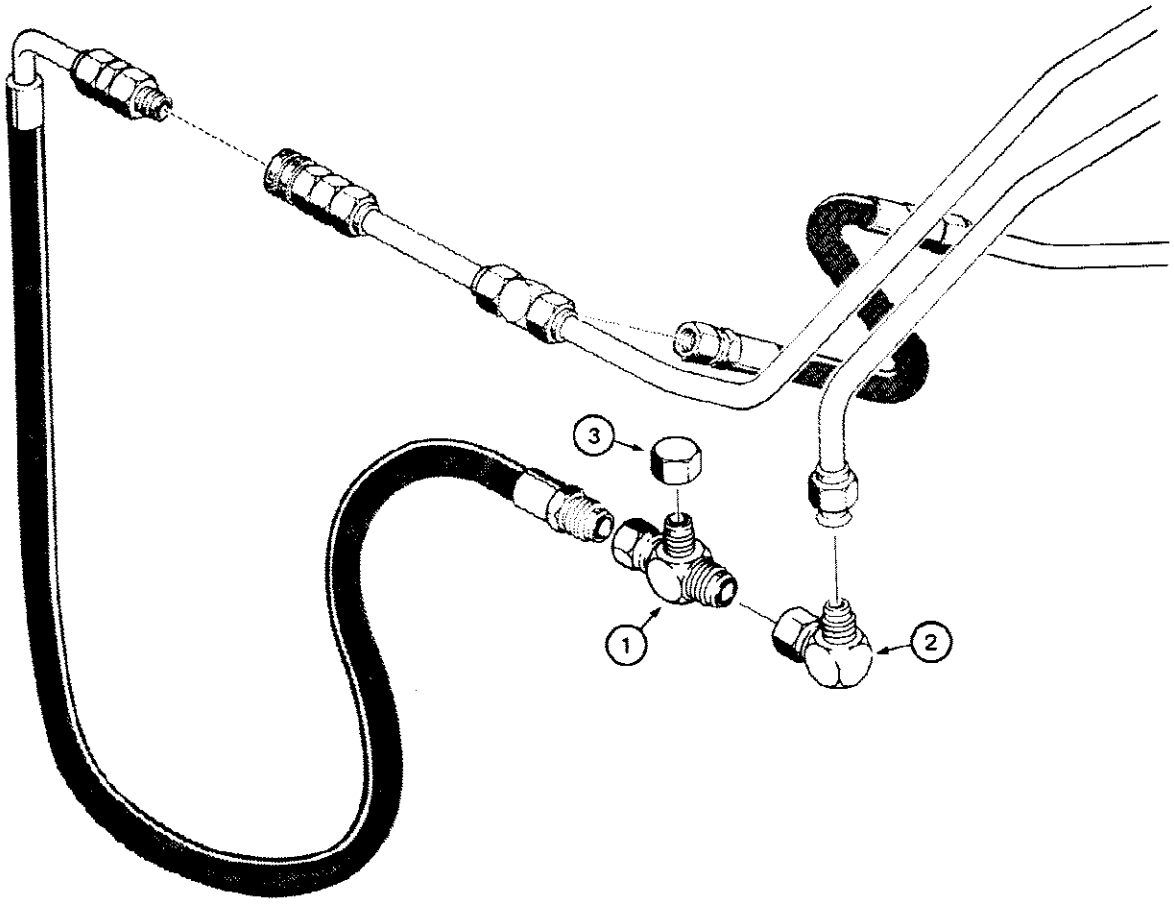

580SE CASE SUPER-E CONSTRUCTION KING LOADER BACKHOE - Hydraulics

322 EQUIPMENT HYDRAULIC SYSTEM, SPECIAL PARTS TO ADAPT3-PT. HITCH

Ref	Part Number	Qty	Description
1	218-5490	1	TEE swivel, return
2	218-5234	1	ELBOW street, 90 degree, swivel
3	218-756	1	CAP, 37є, 7/8"-14, Tee

324 EQUIPMENT HYDRAULIC SYSTEM, OIL COOLER LINES W/ANGLED CONNECTIONS, RETURN LINES & FILTER

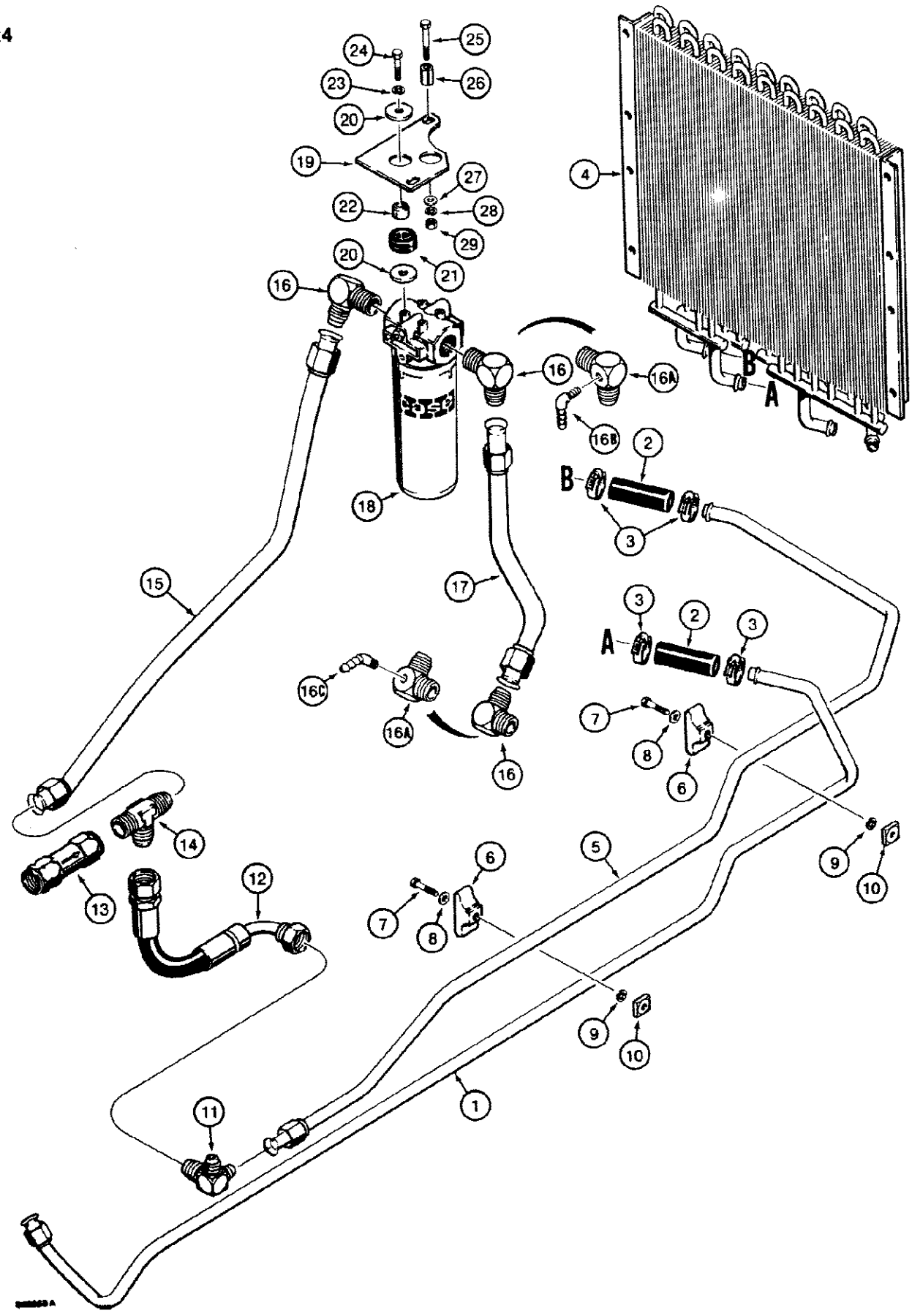

324 EQUIPMENT HYDRAULIC SYSTEM, OIL COOLER LINES W/ANGLED CONNECTIONS, RETURN LINES & FILTER

Ref	Part Number	Qty	Description
1	D124379	1	TUBE lower, to cooler
2	D125080	2	HOSE, 5/8" (16 mm) ID x 3 15/16" (100 mm) long, oil cooler to tubes
3	214-253	4	CLAMP hose
4	A171130	1	COOLER oil, for oil cooler mounting and power shuttle cooling lines, See Figures 176 and 178
5	D124381	1	TUBE upper, from cooler
6	D120613	2	CLAMP plastic, oil cooler tubes
7	113-209	2	BOLT, Hex, 3/8"-16 x 1 1/2", G5
8	195-525	2	WASHER flat, plated, 3/8"
9	192-21	2	WASHER, LOCK, 3/8"
10	25-226	2	NUT square, 3/8" - 16 NC
11	D125458	1	TEE special
12	D90273	1	HOSE special, to main return tube
13	D89332	1	VALVE check, return line
14	218-618	1	TEE male, return line
15	D125130	1	TUBE return, to filter
16	218-488	1-3	ELBOW, 90 degree, at filter and reservoir, if used
16A	D71940	2	ELBOW, 90 degree, at filter and reservoir, if used
16B	217-292	1	FITTING barb, brass, 90 degree, if used, For further hydraulic related parts, see brake master cylinder hydraulic circuit on Figure 292.
16C	217-281	1	FITTING barb, brass, 45 degree, if used, For further hydraulic related parts, see brake master cylinder hydraulic circuit on Figure 292.
17	D125132	1	TUBE filter to reservoir
18	D122362	1	FILTER hydraulic oil, See Figure 456
19	D125598	1	BRACKET filter mounting
20	195-2042	4	WASHER flat, special, 7/16"
21	D67915	2	GROMMET filter mounting bracket
22	D89934	2	SPACER filter mounting
23	192-21	2	WASHER, LOCK, 3/8"
24	113-209	2	BOLT, Hex, 3/8"-16 x 1 1/2", G5
25	113-219	2	BOLT, Hex, 3/8"-16 x 2", G5
26	D76210	2	SPACER filter bracket
27	195-525	2	WASHER flat, plated, 3/8"
28	192-21	2	WASHER, LOCK, 3/8"
29	129-103	2	NUT, 3/8"-16, G5

326 EQUIP HYD SYSTEM, OIL COOLER LINES W/STRAIGHT CONN., RETURN LINES & FILTER, W/O TURBOCHARGED ENGINE

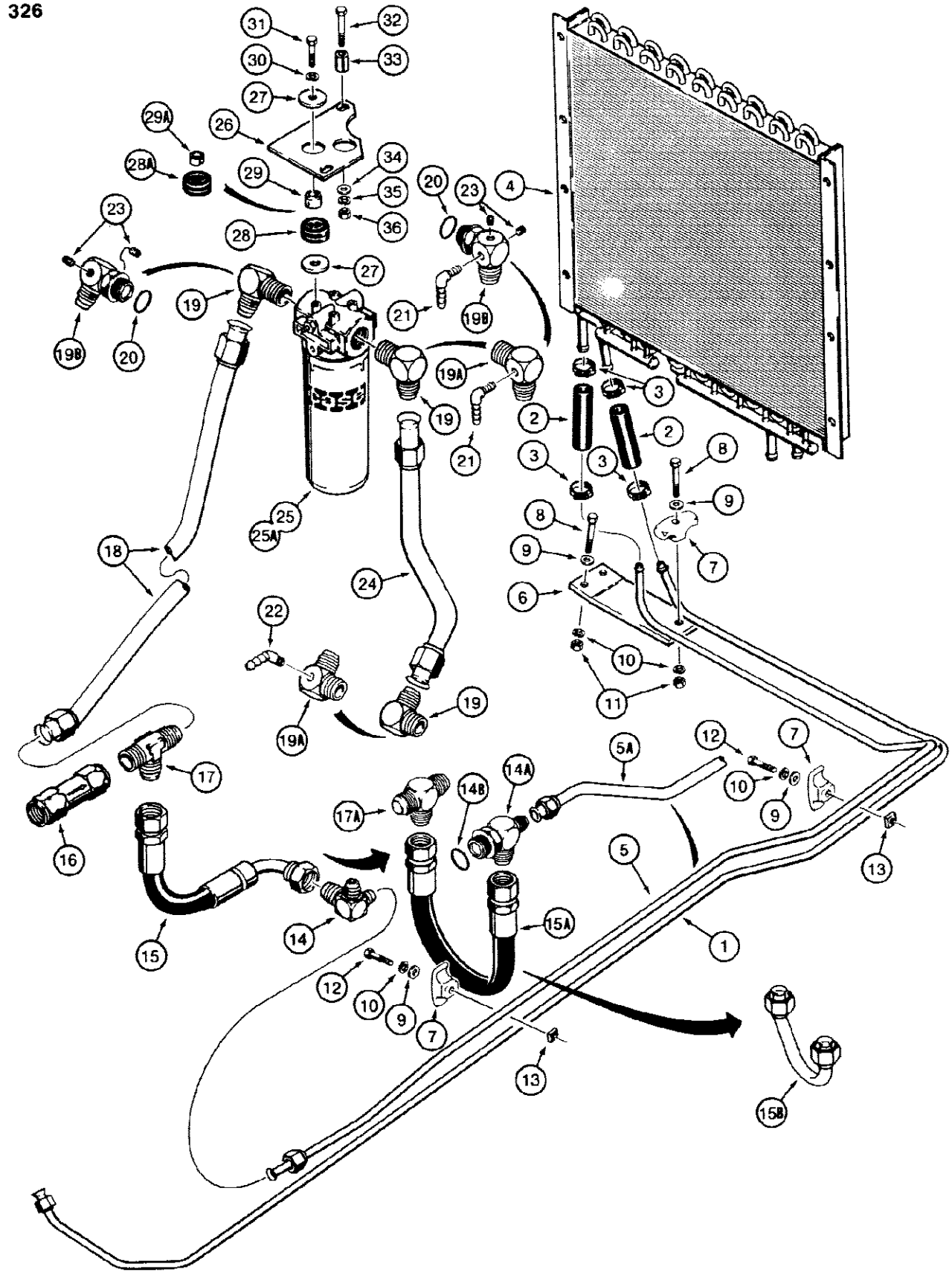

326 EQUIP HYD SYSTEM, OIL COOLER LINES W/STRAIGHT CONN., RETURN LINES & FILTER, W/O TURBOCHARGED ENGINE

Ref	Part Number	Qty	Description
1	D128156	1	TUBE lower, to cooler
2	REF	2	HOSE, 1/2" (13 mm) ID x 4" (102 mm) long, oil cooler to tubes, cut from S118388 bulk, see below
3	214-253	4	CLAMP hose
4	A171876	1	COOLER oil, for oil cooler mounting and power shuttle cooling lines, See Figure 180
5	D128157	1	TUBE upper, from cooler, used with items 14, 15, and 17, if used
5A	D128693	1	TUBE upper, from cooler, used with items 14A, 15A, and 17A, if used
6	D127123	1	BRACKET tube mounting
7	D120613	3	CLAMP plastic, oil cooler tubes
8	113-219	3	BOLT, Hex, 3/8"-16 x 2", G5
9	195-525	5	WASHER flat, plated, 3/8"
10	192-21	5	WASHER, LOCK, 3/8"
11	129-103	3	NUT, 3/8"-16, G5
12	113-209	2	BOLT, Hex, 3/8"-16 x 1 1/2", G5
13	25-226	2	NUT square, 3/8" - 16 NC
14	D125458	1	TEE special, used with items 5 and 15, if used
14A	218-5294	1	TEE male, adjustable, connects to steering relief valve return port, See Figure 154, used with items 5A and 15A, if used, Includes: Ref. 14B
14B	218-5008	1	O RING tee
15	D90273	1	HOSE special, to main return tube, used with items 5, 14, 15, and 17, if used
15A	D129650	1	HOSE, 17-11/16" (450 mm) long, used with items 5A, 14A, and 17A, no longer used, order D134104 tube
15B	D134104	1	TUBE return, used with items 5A, 14A, and 17A
16	D89332	1	VALVE check, return line
17	218-618	1	TEE male, return line, used with item 15 hose, if used
17A	218-1123	1	TEE male, used with item 15A hose, if used
18	D125130	1	TUBE return, to filter
19	218-488	1-3	ELBOW, 90 degree, at filter and reservoir, if used
19A	D71940	1-2	ELBOW, 90 degree, at filter and reservoir, if used
19B	D132008	2	ELBOW, 90 degree, adjustable, used with D131293 oil filter with O ring ports, See Figure 456 for filter
20	218-5010	1	O RING D132008 elbow
	S118388	UAR	HOSE bulk, 1/2" (13 mm) ID x 168" (4267 mm) long
21	217-292	1-2	FITTING barb, brass, 90 degree, used with D71940 elbow at filter, if used, For further hydraulic related parts, see brake master cylinder hydraulic circuit on Figure 292.
22	217-281	1	FITTING barb, brass, 45 degree, used with D71940 elbow at reservoir, if used, For further hydraulic related parts, see brake master cylinder hydraulic circuit on Figure 292.
23	221-849	3	PLUG hex socket head, 1/8" NPT, used with D132008 elbow
24	D125132	1	TUBE filter to reservoir
25	D122362	1	FILTER hydraulic oil, without O ring ports, See Figure 456
25A	D131293	1	FILTER hydraulic oil, with O ring ports, See Figure 456
26	D125598	1	BRACKET filter mounting
27	195-2042	4	WASHER flat, special, 7/16"

326 EQUIP HYD SYSTEM, OIL COOLER LINES W/STRAIGHT CONN., RETURN LINES & FILTER, W/O TURBOCHARGED ENGINE

Ref	Part Number	Qty	Description
28	D67915	2	GROMMET filter mounting bracket, 7/8" ID, used with item 29 spacer, if used
28A	D132895	2	GROMMET filter mounting bracket, 5/8" ID, used with item 29A spacer, if used
29	D89934	2	SPACER filter mounting, 7/8" OD x 7/32" thick, used with item 28 grommet, if used
29A	D76209	2	SPACER split, filter mounting, 5/8" OD x 1/8" thick, used with item 28A grommet, if used
30	192-21	2	WASHER, LOCK, 3/8"
31	113-209	2	BOLT, Hex, 3/8"-16 x 1 1/2", G5
32	113-219	2	BOLT, Hex, 3/8"-16 x 2", G5
33	D76210	2	SPACER filter bracket
34	195-525	2	WASHER flat, plated, 3/8"
35	192-21	2	WASHER, LOCK, 3/8"
36	129-103	2	NUT, 3/8"-16, G5

330 EQUIP HYD SYSTEM, OIL COOLER LINES W/STRAIGHT CONN., RETURN LINES & FILTER, W/TURBOCHARGED ENGINE

330

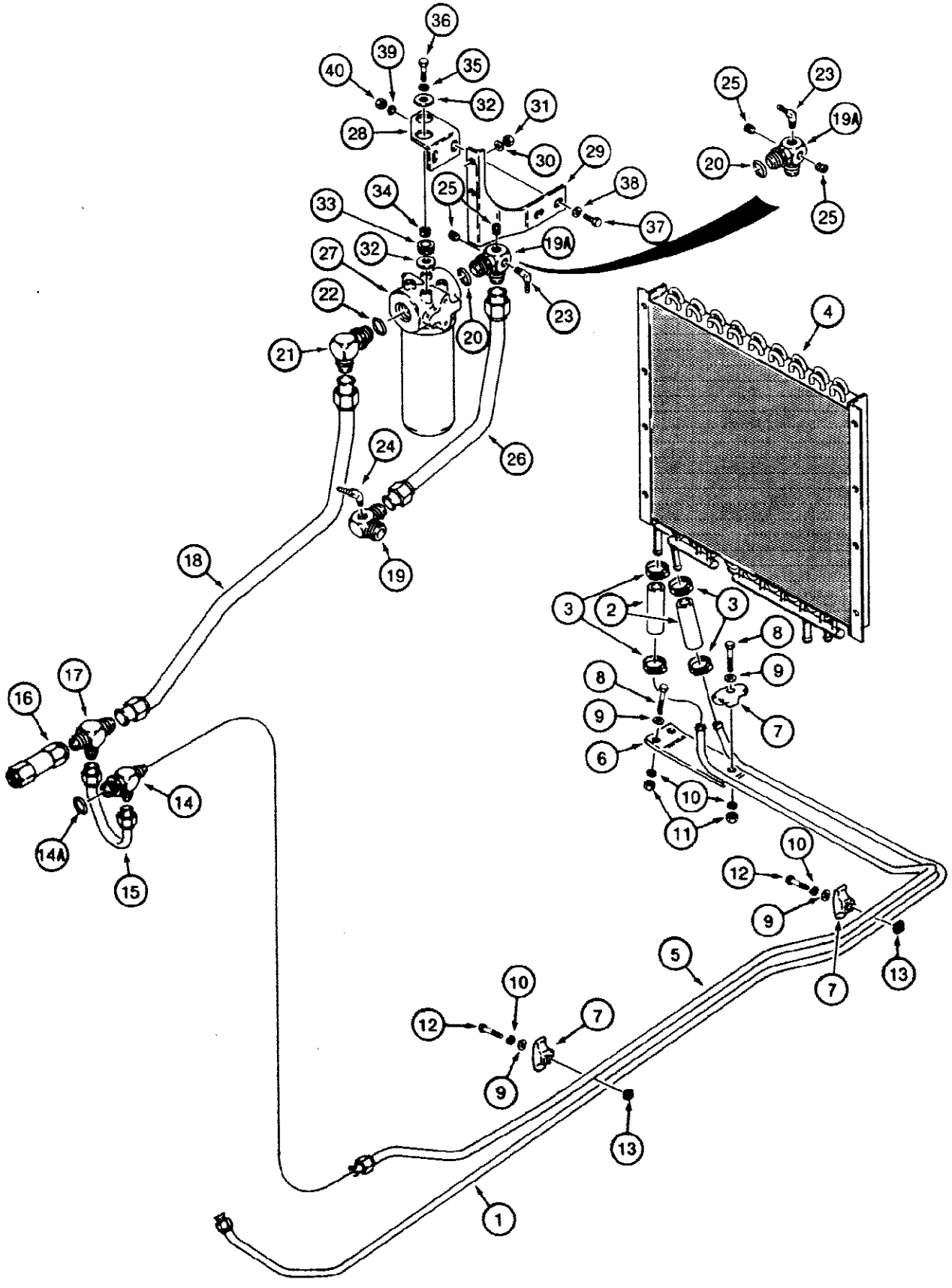

651311 A

580SE CASE SUPER-E CONSTRUCTION KING LOADER BACKHOE - Hydraulics

330 EQUIP HYD SYSTEM, OIL COOLER LINES W/STRAIGHT CONN., RETURN LINES & FILTER, W/TURBOCHARGED ENGINE

Ref	Part Number	Qty	Description
1	D128156	1	TUBE lower, to cooler
2	REF	2	HOSE, 1/2" (13 mm) ID x 4" (102 mm) long, oil cooler to tubes, cut from S118388 bulk, see below
3	214-253	4	CLAMP hose
4	A171876	1	COOLER oil, for oil cooler mounting and power shuttle cooling lines, See Figure 180
5	D128693	1	TUBE upper, from cooler
6	D127123	1	BRACKET tube mounting
7	D120613	3	CLAMP plastic, oil cooler tubes
8	113-219	3	BOLT, Hex, 3/8"-16 x 2", G5
9	195-525	5	WASHER flat, plated, 3/8"
10	192-21	5	WASHER, LOCK, 3/8"
11	129-103	3	NUT, 3/8"-16, G5
12	113-209	2	BOLT, Hex, 3/8"-16 x 1 1/2", G5
13	25-226	2	NUT square, 3/8" - 16 NC
14	218-5294	1	TEE male, adjustable, connects to steering relief valve return port, See Figure 154, Includes: Ref. 14A
14A	218-5008	1	O RING tee
15	D134104	1	TUBE return
16	D89332	1	VALVE check, return line
17	218-1123	1	TEE male
18	D132761	1	TUBE return, to filter
19	D71940	1	ELBOW, 90 degree, at filter and reservoir
19A	D132008	1	ELBOW adjustable, 90 degree, Includes: Ref. 20
20	218-5010	1	O RING D132008 elbow
21	218-5110	1	ELBOW adjustable, 90 degree, Includes: Ref. 22
22	218-5010	1	O RING elbow
	S118388	UAR	HOSE bulk, 1/2" (13 mm) ID x 168" (4267 mm) long
23	217-292	1	FITTING barb, brass, 90 degree, For further hydraulic related parts, see brake master cylinder hydraulic circuit on Figure 292.
24	217-281	1	FITTING barb, brass, 45 degree, For further hydraulic related parts, see brake master cylinder hydraulic circuit on Figure 292.
25	221-849	1-2	PLUG hex socket head, 1/8" NPT
26	D132759	1	TUBE filter to reservoir
27	D131293	1	FILTER hydraulic oil, with O ring ports, See Figure 456
28	D132765	1	BRACKET filter mounting
29	D132764	1	SUPPORT filter mounting, uses air cleaner mounting bracket hardware, Refs. 30 and 31
30	195-524	2	WASHER flat, plated, 3/8" ID x 1-1/8" O.D.
31	131-4	2	NUT hex, self locking, 5/16" - 18 NC
32	195-2042	4	WASHER flat, special, 7/16"
33	D132895	2	GROMMET filter mounting bracket, 5/8" ID
34	D76209	2	SPACER split, filter mounting, 5/8" O.D. x 1/8" thick
35	192-21	4	WASHER, LOCK, 3/8"
36	113-209	2	BOLT, Hex, 3/8"-16 x 1 1/2", G5

330 EQUIP HYD SYSTEM, OIL COOLER LINES W/STRAIGHT CONN., RETURN LINES & FILTER, W/TURBOCHARGED ENGINE

Ref	Part Number	Qty	Description
37	113-206	2	BOLT, Hex, 3/8"-16 x 3/4", G5, Full Thd
38	195-525	2	WASHER flat, plated, 3/8"
39	192-21	2	WASHER, LOCK, 3/8"
40	129-103	2	NUT, 3/8"-16, G5

334 LOADER LIFT CYLINDER HYDRAULIC CIRCUIT

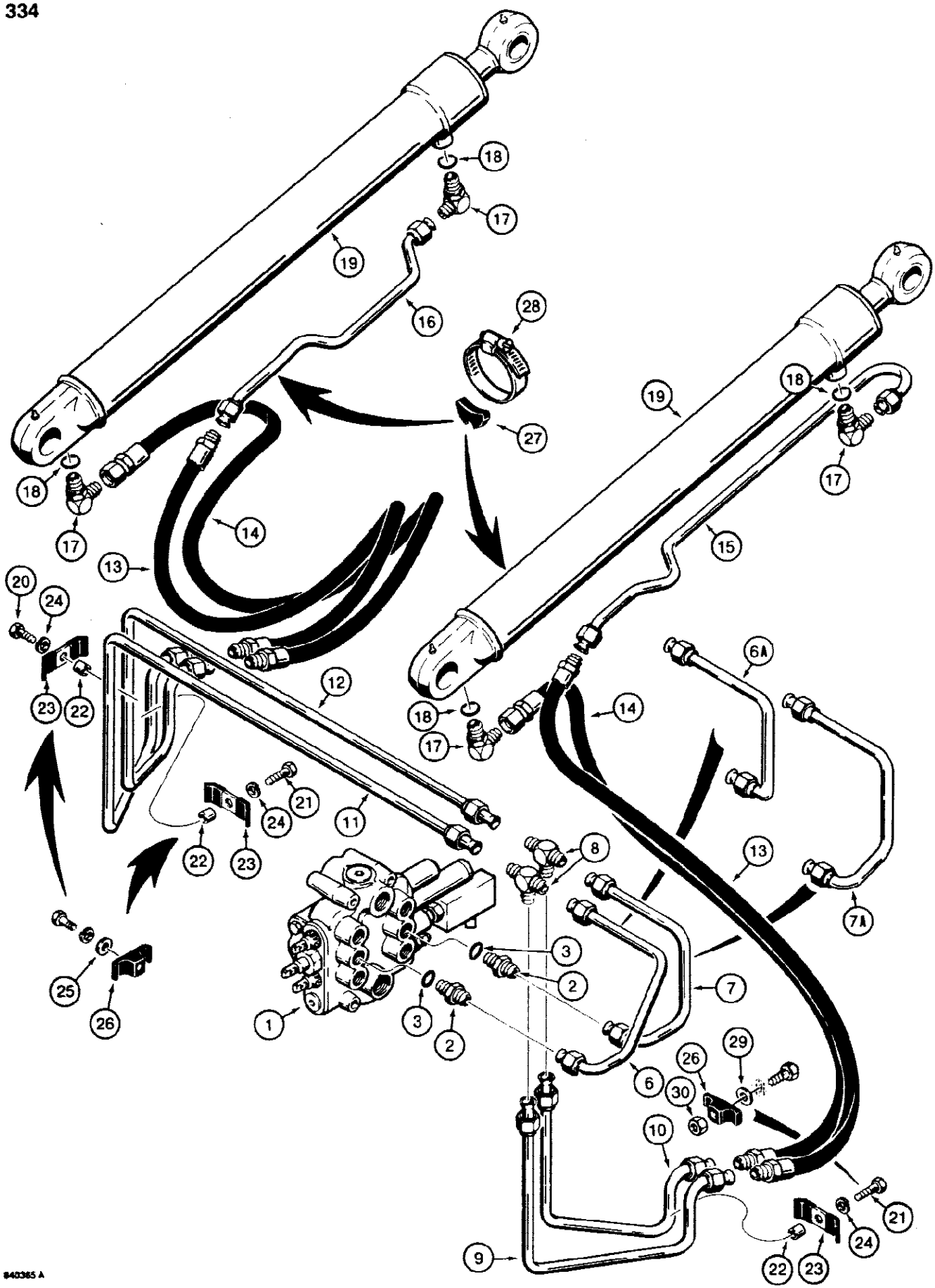

334 LOADER LIFT CYLINDER HYDRAULIC CIRCUIT

Ref	Part Number	Qty	Description
1	REF		VALVE control, loader, for correct assembly and components,
		1	See Figures 390, 392 or 406
2	218-5062	2	CONNECTOR straight, male, used with Parker control valve only, Includes: Ref. 3
3	237-6010	1	O RING connector
4			RESERVED
5			RESERVED
6	D87769	1	TUBE to rod end of lift cylinders, used with Parker control valve only, if used
6A	D123547	1	TUBE to rod end of lift cylinders, used with Case or Parker control valve, Replaced D123545
7	D87771	1	TUBE to closed end of lift cylinders, used with Parker control valve only
7A	D123545	1	TUBE to closed end of lift cylinders, used with Case control valve only, Replaced D123547
8	218-595	2	TEE male, right hand to left hand cylinders
9	D92937	1	TUBE to rod end of right hand lift cylinder
10	D92935	1	TUBE to closed end of right hand lift cylinder
11	D92933	1	TUBE to rod end of left hand lift cylinder
12	D92931	1	TUBE to closed end of left hand lift cylinder
13	D38485	2	HOSE, 22-3/4" (572 mm) long, to rod end of lift cylinders
14	D27984	2	HOSE, 26" (660 mm) long, to closed end of lift cylinders
15	D93902	1	TUBE to rod end of right hand lift cylinder
16	D93906	1	TUBE to rod end of left hand lift cylinder
17	218-5107	4	ELBOW adjustable, male, 90 degree, Includes: Ref. 18
18	237-6010	1	O RING elbow
19	REF	2	CYLINDER lift, See Figure 462
20	113-209	1	BOLT, Hex, 3/8"-16 x 1 1/2", G5
21	113-233	2	BOLT, Hex, 3/8"-16 x 1 3/4", G5
22	D76209	2-3	SPACER used with metal tube clamp, if used
23	D40236	2-3	CLAMP metal, tube, if used
24	192-21	3	WASHER, LOCK, 3/8"
25	95-6	2	WASHER flat, 3/8", used with plastic tube clamp, if used
26	D120613	3	CLAMP plastic, tube, if used
27	D38648	2	SPACER rubber, single tube
28	214-267	2	CLAMP tube
29	195-525	1	WASHER flat, plated, 3/8"
30	129-103	1	NUT, 3/8"-16, G5, If used

336 LOADER BUCKET CYLINDER HYDRAULIC CIRCUIT

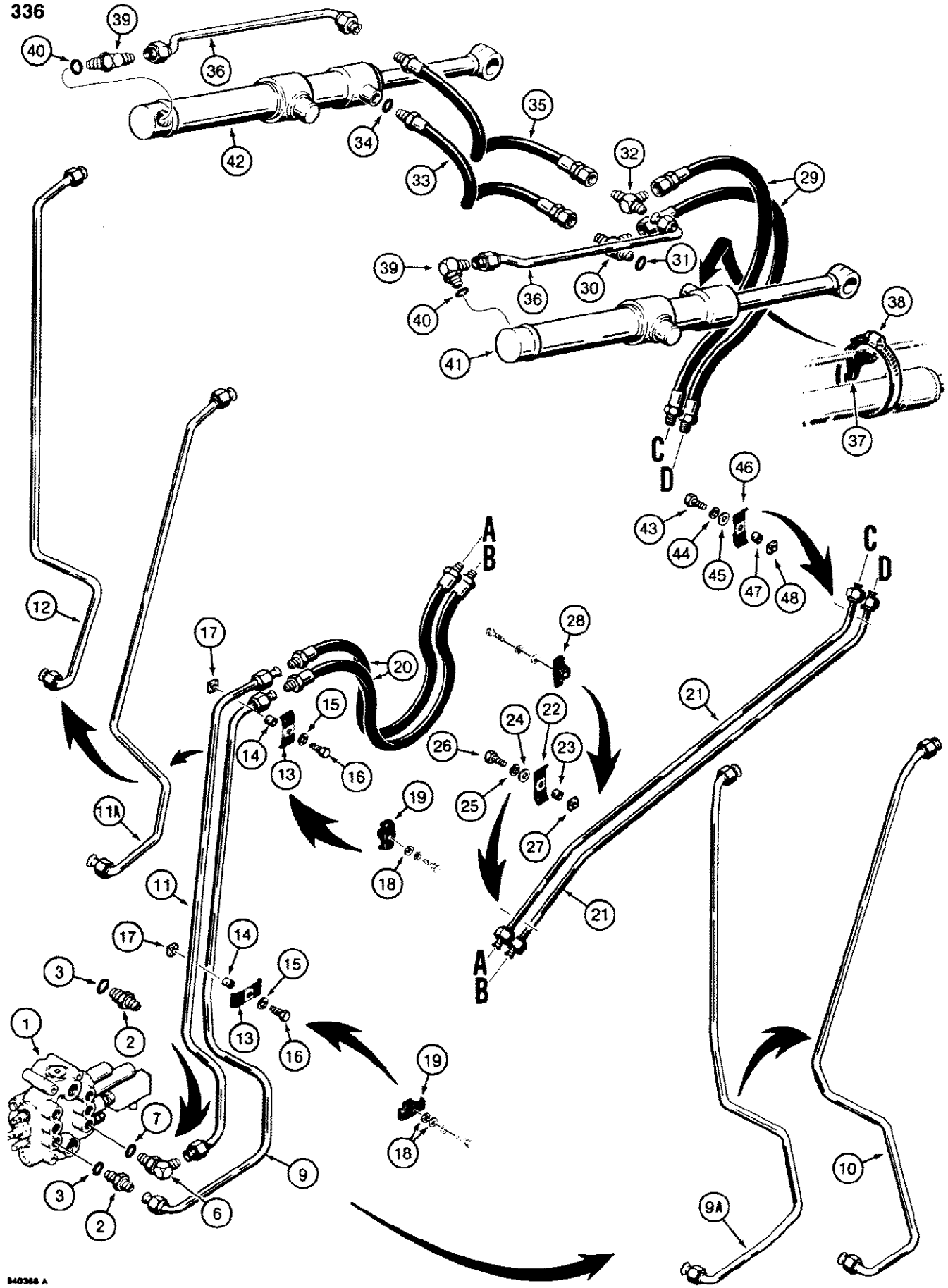

580SE CASE SUPER-E CONSTRUCTION KING LOADER BACKHOE - Hydraulics

336 LOADER BUCKET CYLINDER HYDRAULIC CIRCUIT

Ref	Part Number	Qty	Description
1	REF	1	VALVE control, loader, for correct assembly and components, See Figures 390, 392 or 406
2	218-5062	1-2	CONNECTOR straight, male, Includes: Ref. 3
3	237-6010	1	O RING connector
4			RESERVED
5			RESERVED
6	218-5107	1	ELBOW adjustable, 90 degree, used with D86880 tube only, if used, Includes: Ref. 7
7	237-6010	1	O RING elbow
8			RESERVED
9	D86878	1	TUBE to rod end of bucket cylinders, used with Parker two or three spool control valve only, if used
9A	D120814	1	TUBE to rod end of bucket cylinders, used with Parker three spool control valve only, if used
10	D123549	1	TUBE to rod end of bucket cylinders, used with Case control valve only
11	D86880	1	TUBE to closed end of bucket cylinders, used with Parker two or three spool control valve only, if used
11A	D120812	1	TUBE to closed end of bucket cylinders, used with Parker three spool control valve only, if used
12	D123551	1	TUBE to closed end of bucket cylinders, used with Case control valve only
13	D40236	1-2	CLAMP metal, tube
14	D76209	1-2	SPACER used with metal tube clamp
15	192-21	2	WASHER, LOCK, 3/8"
16	113-233	2	BOLT, Hex, 3/8"-16 x 1 3/4", G5
17	25-226	2	NUT square, 3/8" - 16 NC, if used
18	95-6	3	WASHER flat, 3/8", used with plastic tube clamp, if used
19	D120613	2	CLAMP plastic, tube, if used
20	D86852	2	HOSE, 29-1/2" (750 mm) long, chassis to loader lift frame
21	D86856	2	TUBE to bucket cylinders
22	R17319	1	CLAMP metal, tube, if used
23	D76208	1	SPACER used with metal tube clamp, if used
24	95-6	1	WASHER flat, 3/8"
25	192-21	1	WASHER, LOCK, 3/8"
26	113-209	1	BOLT, Hex, 3/8"-16 x 1 1/2", G5
27	25-226	1	NUT square, 3/8" - 16 NC, if used
28	D120679	1	CLAMP plastic, tube, if used
29	D73244	2	HOSE, 30-7/16" (773 mm) long, to bucket cylinders
30	218-5241	1	TEE adjustable, male, hoses to rod end of cylinders, Includes: Ref. 31
31	237-6010	1	O RING, 218-5241 tee
32	218-586	1	TEE male
33	D67731	1	HOSE, 32" (813 mm) long, to rod end of left hand bucket cylinder, Includes: Ref. 34
34	237-6010	1	O RING D67731 hose
35	D30543	1	HOSE, 29" (737 mm) long, to closed end of left hand bucket cylinder
36	D73800	2	TUBE to closed end of bucket cylinders
37	D38648	2	SPACER rubber
38	214-265	2	CLAMP tube
39	218-5121	2	ELBOW adjustable, male, 90 degree, Includes: Ref. 40

336 LOADER BUCKET CYLINDER HYDRAULIC CIRCUIT

Ref	Part Number	Qty	Description
40	237-6010	1	O RING elbow
41	G101186	1	CYLINDER bucket, right hand, See Figure 462
42	G101187	1	CYLINDER bucket, left hand, See Figure 462
43	113-104	1	BOLT, Hex, 5/16"-18 x 1 1/4", G5, Replaces 3/8" hardware used on some models
44	192-20	1	WASHER, LOCK, 5/16"
45	195-103	1	WASHER flat, plated, 5/16"
46	R17319	1	CLAMP metal, tube, Replaces plastic clamp used in this location on some models
47	D76208	1	SPACER clamp
48	25-225	1	NUT square, 5/16" - 18 NC

340

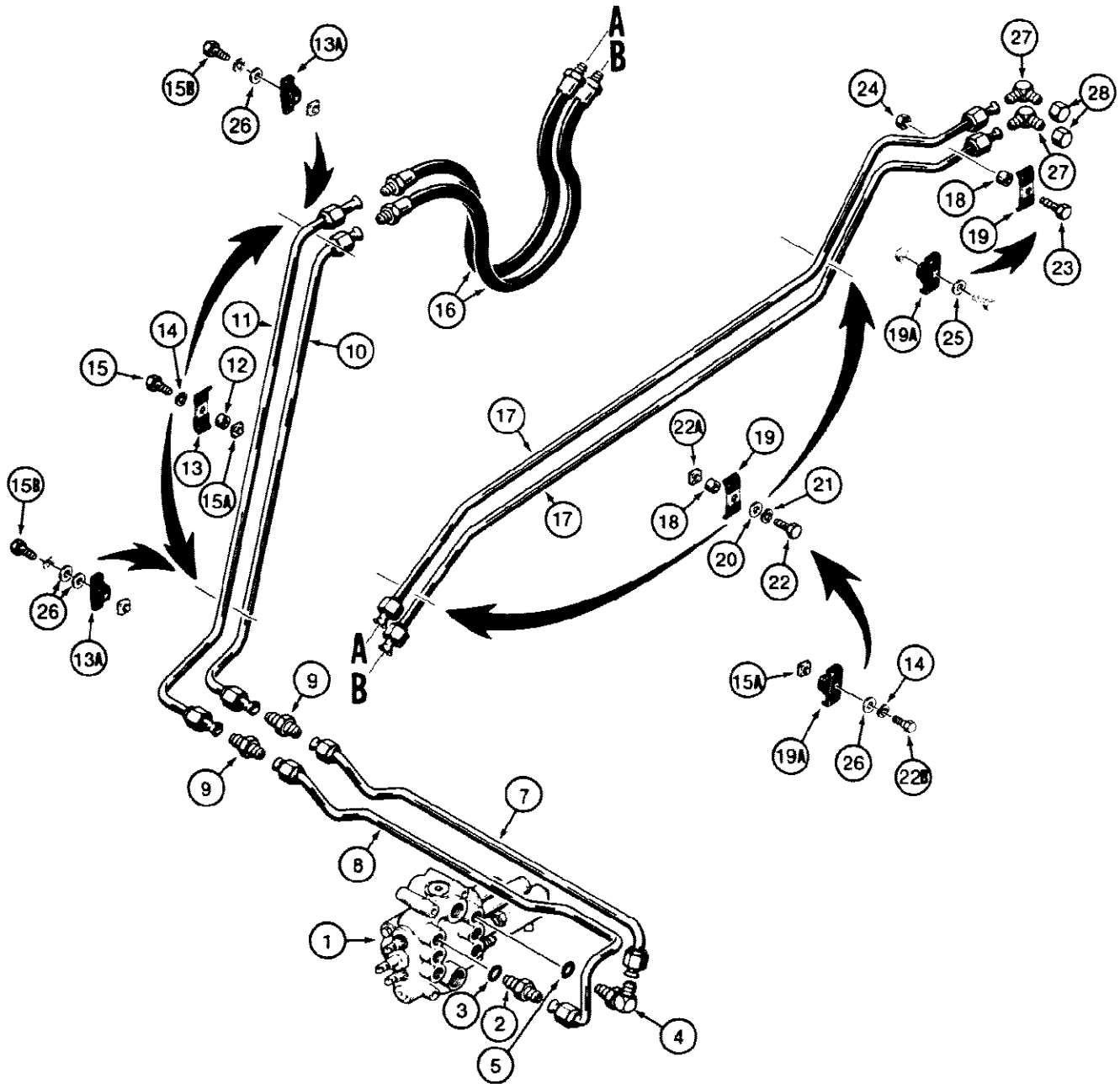
A
B
13A
15B
26
16
27
24
28
18
19
23
19A
25
14
11
10
15
12
13
15A
17
22A
21
20
22
9
7
8
1
3
2
5
4
14
26
22B

580SE CASE SUPER-E CONSTRUCTION KING LOADER BACKHOE - Hydraulics

340 LOADER CLAM CYLINDER HYDRAULIC CIRCUIT

Ref	Part Number	Qty	Description
1	D123470	1	VALVE control, loader, See Figure 392
2	218-5062	1	CONNECTOR straight, male, Includes: Ref. 3
3	237-6010	1	O RING connector
4	218-5107	1	ELBOW, 90 degree, adjustable, Includes: Ref. 5
5	237-6010	1	O RING elbow
6			RESERVED
7	D90107	1	TUBE to rod end of clam cylinder
8	D90105	1	TUBE to closed end of clam cylinder
9	218-736	2	CONNECTOR straight, tubes
10	D90111	1	TUBE to rod end of clam cylinder
11	D90109	1	TUBE to closed end of clam cylinder
12	D76209	1-2	SPACER used with metal tube clamp
13	D40236	1-2	CLAMP metal, tube, if used
13A	D120613	1-2	CLAMP plastic, chassis tubes, if used
14	192-21	2-4	WASHER, LOCK, 3/8"
15	113-208	2	BOLT, Hex, 3/8"-16 x 1 1/4", G5, Full Thd, If used
15A	25-226		NUT square, 3/8" - 16 NC, mounts in welded cage D88417 on left hand
		2-4	reservoir and left hand lift frame
15B	113-233	2	BOLT, Hex, 3/8"-16 x 1 3/4", G5, If used
15C	D88417		CAGE nut, welded to left hand lift frame and left hand reservoir, used with
		4	25-226 square nut, not shown
16	D86852	2	HOSE, 29-1/2" (750 mm) long, chassis to loader lift frame
17	D90113	2	TUBE on loader lift frame
18	D76208	3	SPACER used with metal tube clamp, if used
19	R17319	3	CLAMP metal, tube, if used
19A	D120679	3	CLAMP plastic, loader lift frame tubes, if used
20	195-103	2	WASHER flat, plated, 5/16", if used
21	192-20	2	WASHER, LOCK, 5/16", If used
22	113-104	2	BOLT, Hex, 5/16"-18 x 1 1/4", G5, If used
22A	25-225	2	NUT square, 5/16" - 18 NC, if used
22B	113-209	2	BOLT, Hex, 3/8"-16 x 1 1/2", G5, If used
23	113-122	1	BOLT, Hex, 5/16"-18 x 1 1/2", G5
24	131-4	1	NUT hex, self locking, 5/16" - 18 NC
25	195-103	1	WASHER flat, plated, 5/16", used with plastic tube clamp, if used
26	95-6	2-5	WASHER flat, 3/8", used with plastic tube clamp, if used
27	218-474	2	ELBOW, 90 degree
28	218-755	2	CAP, 37ɛ, 3/4"-16, Elbow, Used when attachments are removed

342 LOADER CLAM CYLINDER HYDRAULIC CIRCUIT

342

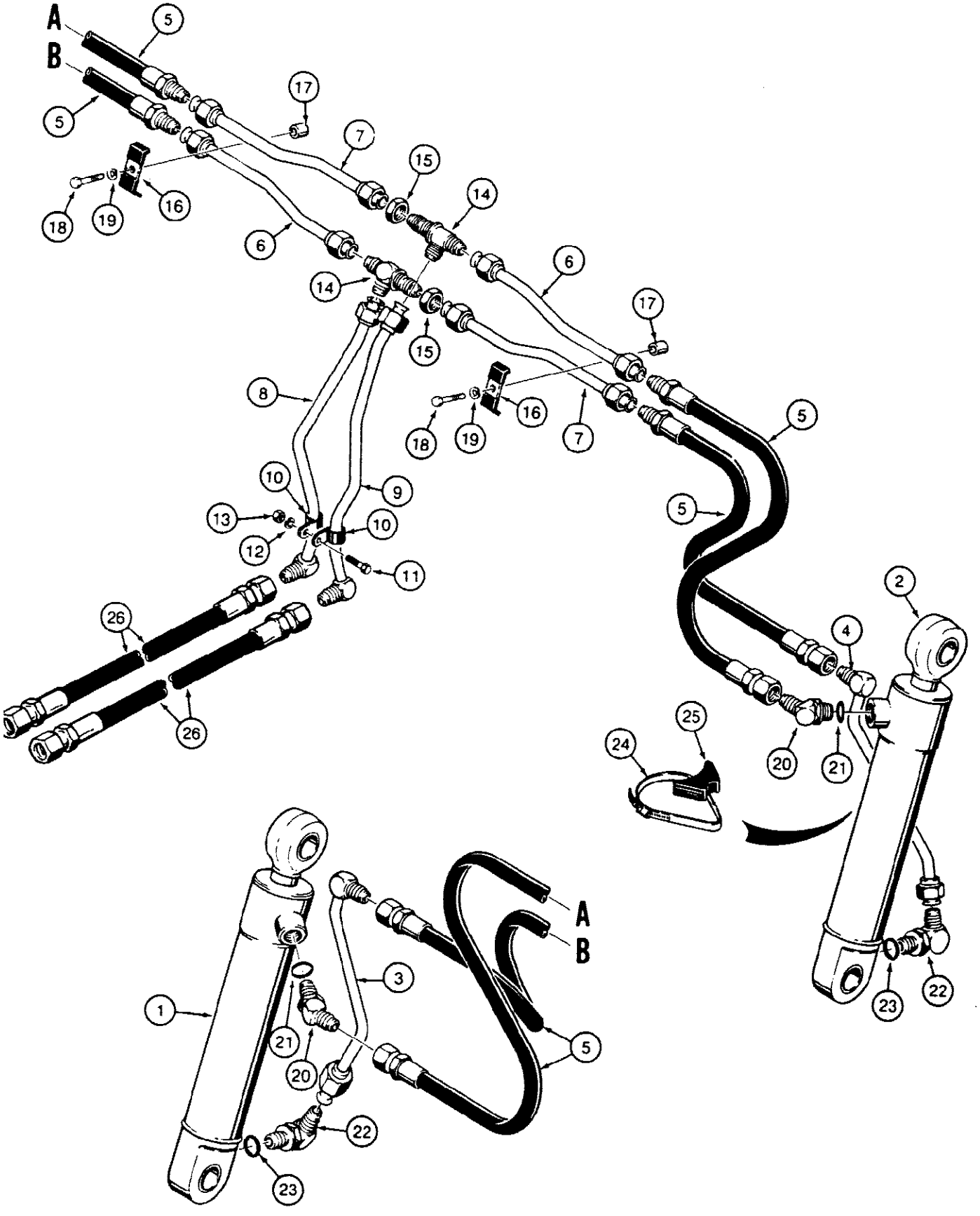

800828

580SE CASE SUPER-E CONSTRUCTION KING LOADER BACKHOE - Hydraulics

342 LOADER CLAM CYLINDER HYDRAULIC CIRCUIT

Ref	Part Number	Qty	Description
1	G101191	1	CYLINDER clam, left hand, See Figure 464
2	G101190	1	CYLINDER clam, right hand, See Figure 464
3	D51619	1	TUBE left hand cylinder
4	D51621	1	TUBE right hand cylinder
5	D27984	4	HOSE, 26" (660 mm) long, right hand and left hand cylinders
6	D67081	2	TUBE horizontal, right hand upper and left hand lower, short
7	D67083	2	TUBE horizontal, right hand lower and left hand upper, long
8	D51615	1	TUBE vertical, left hand
9	D51617	1	TUBE vertical, right hand
10	38188	2	CLAMP vertical tubes
11	113-103	1	BOLT, Hex, 5/16"-18 x 1", G5, Full Thd
12	192-20	1	WASHER, LOCK, 5/16"
13	9635082	1	NUT, 5/16"-18, G5
14	218-1237	2	TEE bulkhead, connecting horizontal and vertical tubing
15	218-1251	2	NUT, LOCK, Blkhd, 7/8"-14
16	D40236	2	CLAMP horizontal tubing
17	D33552	2	SPACER tube clamps
18	113-209	2	BOLT, Hex, 3/8"-16 x 1 1/2", G5
19	192-21	2	WASHER, LOCK, 3/8"
20	218-5137	2	ELBOW adjustable, clam cylinders, rod end, 45 degree, Incl. Ref 21
21	237-6010	1	O RING elbow
22	218-5107	2	ELBOW adjustable, clam cylinders, closed end, 90 degree, Includes: Ref. 23
23	237-6010	1	O RING elbow
24	214-267	2	CLAMP clam cylinder tubing, adjustable
25	D38648	2	INSULATOR rubber, clamp
26	D51691	2	HOSE, 40" (1016 mm) long, from loader lift frame

344 BACKHOE STABILIZER CYLINDER HYDRAULIC CIRCUIT

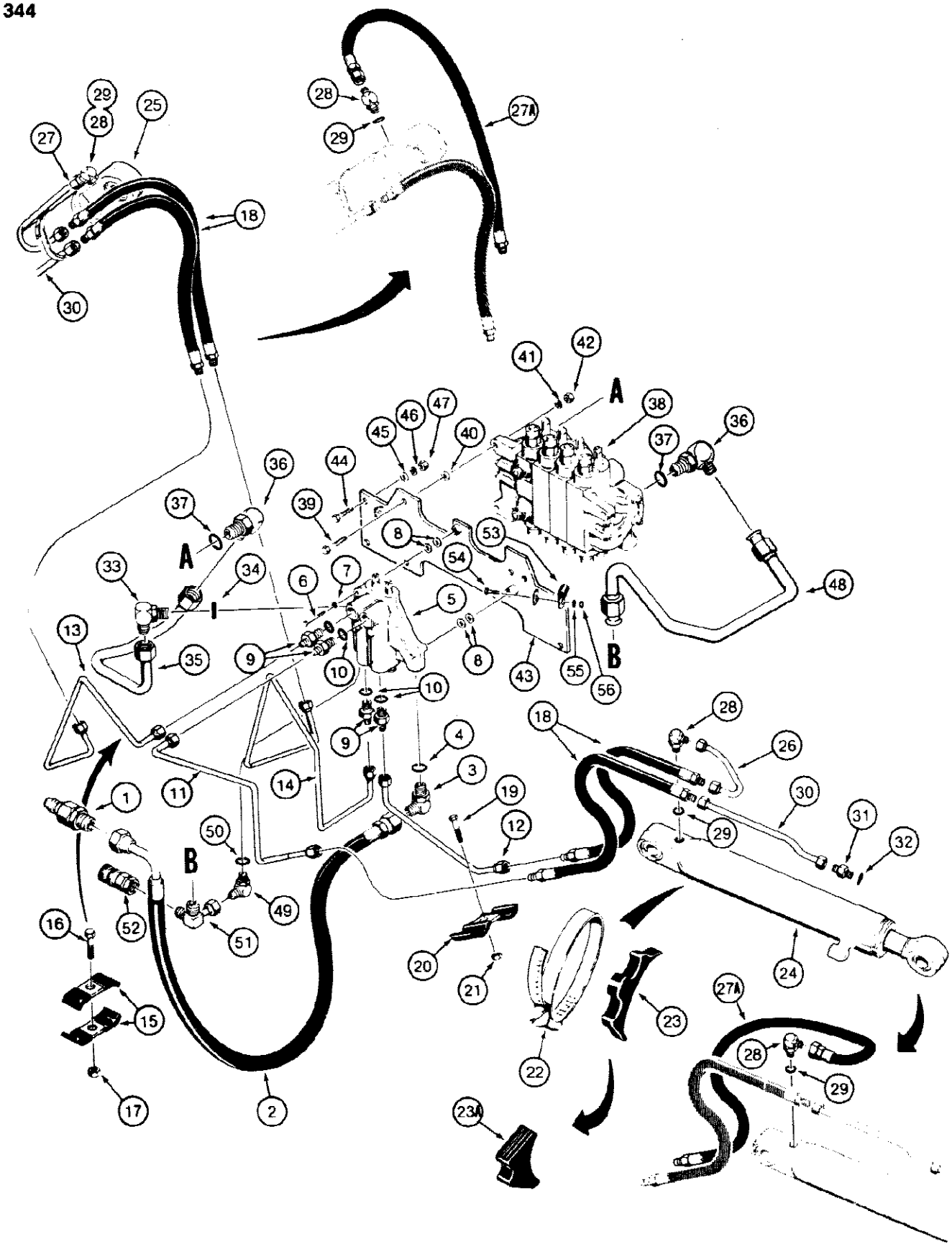

344 BACKHOE STABILIZER CYLINDER HYDRAULIC CIRCUIT

Ref	Part Number	Qty	Description
1	D90260	1	DISCONNECT quick, coupling, hydraulic, male, See Figure 458
2	D89645	1	HOSE, 39-3/8" (1000 mm) long, to stabilizer valve
3	218-5108	1	ELBOW adjustable, male, 90 degree, Includes: Ref. 4
4	218-5008	1	O RING elbow
5	REF	1	VALVE control, stabilizer, for correct assembly and components See Figure 414
6	113-110	2	BOLT, Hex, 5/16"-18 x 2 1/4", G5
7	192-20	2	WASHER, LOCK, 5/16"
8	195-521	4	WASHER flat, plated, 5/16"
9	218-5060	4	ADAPTER straight, male, Includes: Ref. 10
10	237-6010	1	O RING adapter
11	D121656	1	TUBE right hand, top port of control valve
12	D124889	1	TUBE right hand, bottom port of control valve
13	D121652	1	TUBE left hand, top port of control valve
14	D121654	1	TUBE left hand, bottom port of control valve
15	A12032	2	CLAMP left hand tubes
16	113-103	1	BOLT, Hex, 5/16"-18 x 1", G5, Full Thd
17	131-665	1	NUT hex, self locking, plated, 5/16" - 18 NC
18	D121658	2-4	HOSE, 17-3/4" (450 mm) long, to cylinders
19	113-219	2	BOLT, Hex, 3/8"-16 x 2", G5
20	D40236	2	CLAMP hose
21	131-666	2	NUT hex, self locking, plated, 3/8" - 16 NC
22	214-272	2	CLAMP size No. 84, tube, used with G103252 and G103253 stabilizer cylinders
22	214-270	2	CLAMP size No. 76, tube, used with G109139 and G109140 stabilizer cylinders
23	R24703	2	SPACER tube, rubber, used with items 18, 26, and 27, if used
23A	D38648	2	SPACER hose, if used
24	REF	1	CYLINDER stabilizer, right hand, See Figure 466
25	REF	1	CYLINDER stabilizer, left hand, See Figure 466
26	D94488	1	TUBE to closed end of right hand stabilizer cylinder, if used
27	D94490	1	TUBE to closed end of left hand stabilizer cylinder, if used
27A	R34485	2	HOSE, 23" (584 mm) long, cylinder closed end ports, if used
28	218-5121	2	ELBOW adjustable, male, 90 degree, Includes: Ref. 29
29	237-6010	1	O RING elbow
30	D94486	2	TUBE to rod end of stabilizer cylinders, may Replace straight tube used on some models
31	218-5060	2	ADAPTER straight, male, Includes: Ref. 32
32	237-6010	1	O RING adapter
33	218-5124	1	ELBOW adjustable, male, 90 degree, Includes: Ref. 34
34	218-5008	1	O RING elbow
35	D93279	1	TUBE power beyond port of stabilizer control valve to backhoe control valve
36	218-5110	2	ELBOW adjustable, male, 90 degree, Includes: Ref. 37
37	218-5010	1	O RING elbow
38	REF	1	VALVE control, backhoe, See Figure 416 or 418

344 BACKHOE STABILIZER CYLINDER HYDRAULIC CIRCUIT

Ref	Part Number	Qty	Description
39	113-421	3	BOLT, Hex, 1/2"-13 x 2", G5
40	95-8	3	WASHER flat, 1/2"
41	192-23	3	WASHER, LOCK, 1/2"
42	129-105	3	NUT, 1/2"-13, G5
43	D94282	1	PLATE control valve mounting
44	113-410	4	BOLT, Hex, 1/2"-13 x 1 1/2", G5, Full Thd
45	95-8	4	WASHER flat, 1/2"
46	192-23	4	WASHER, LOCK, 1/2"
47	129-105	4	NUT, 1/2"-13, G5
48	D93281	1	TUBE backhoe control valve return, models without extendable dipper
48	D93283	1	TUBE backhoe control valve return, models with extendable dipper
49	218-5123	1	ELBOW adjustable, male, 90 degree, Includes: Ref. 50
50	237-6010	1	O RING elbow
51	D88966	1	TUBE three way, Ref #51 and #52 3 way tube and quick disconnect See page 381 Ref #24 for boom lock tee.
52	D52800	1	DISCONNECT quick, coupling, hydraulic, female, See Figure 458
53	T50103	2	CLAMP p type, tube, mounting plate to swing tubes
54	113-424	2	BOLT, Hex, 1/2"-13 x 1", G5, Full Thd
55	192-23	2	WASHER, LOCK, 1/2"
56	129-105	2	NUT, 1/2"-13, G5

348 BACKHOE SWING CYLINDER HYDRAULIC CIRCUIT

348

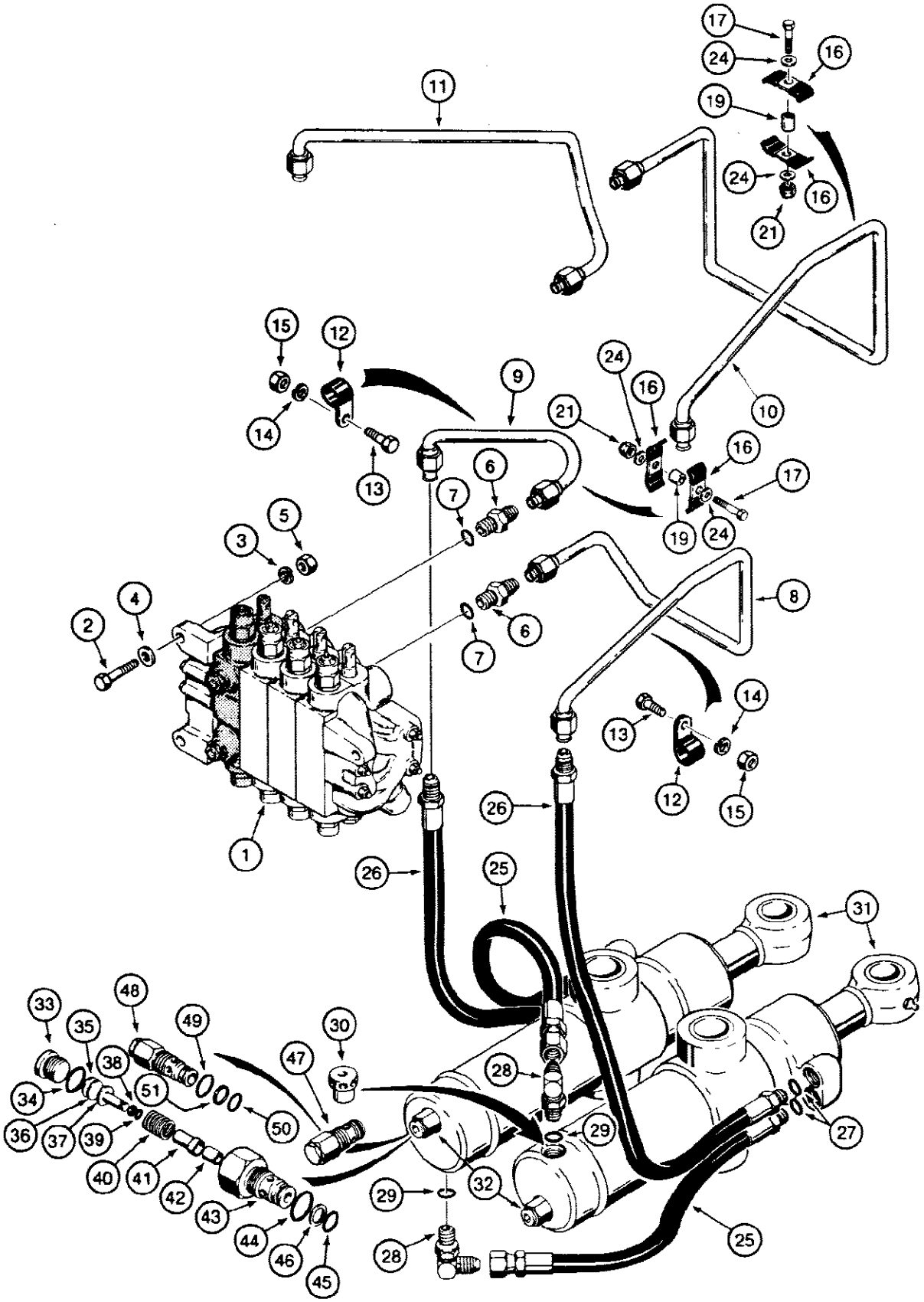

348 BACKHOE SWING CYLINDER HYDRAULIC CIRCUIT

Ref	Part Number	Qty	Description
1	REF	1	VALVE control, backhoe, See Figure 416 or 418, for mounting plate See Figure 346, valve shown is for foot swing models without extendable dipper, for correct valve section location in other valves See Figure 416 or 418
2	113-421	3	BOLT, Hex, 1/2"-13 x 2", G5
3	192-23	3	WASHER, LOCK, 1/2"
4	95-8	3	WASHER flat, 1/2"
5	129-105	3	NUT, 1/2"-13, G5
6	218-5063	2	ADAPTER straight, male, Includes: Ref. 7
7	218-5008	1	O RING adapter
8	D94546	1	TUBE bottom port to right hand swing cylinder, models with foot swing, if used
9	D94544	1	TUBE top port to left hand swing cylinder, models with foot swing, if used
10	D121681	1	TUBE top port to right hand swing cylinder, models with hand swing, if used
11	D121679	1	TUBE bottom port to left hand swing cylinder, models with hand swing, if used
12	T50103	2	CLAMP p type, tube
13	113-424	2	BOLT, Hex, 1/2"-13 x 1", G5, Full Thd
14	192-23	2	WASHER, LOCK, 1/2"
15	129-105	2	NUT, 1/2"-13, G5
16	D40236	2	CLAMP metal, swing tube to boom tube, Replaces plastic tube clamps on some models
17	113-219	1	BOLT, Hex, 3/8"-16 x 2", G5
18			RESERVED
19	D76195	1	SPACER used with metal tube clamp
20			RESERVED
21	131-666	1	NUT hex, self locking, plated, 3/8" - 16 NC
22			RESERVED
23			RESERVED
24	95-6	2	WASHER flat, 3/8"
25	D39140	2	HOSE, 24" (610 mm) long, swing cylinders
26	D94547	2	HOSE, 22-3/4" (577 mm) long, tubes to swing cylinders, Includes: Ref. 27
28	218-5121	2	ELBOW, 90 degree, adjustable, Includes: Ref. 29
29	237-6010	1	O RING elbow
30	D121828	2	RESTRICTOR flow control, with or without extendable dipper
31	REF	2	CYLINDER swing, See Figure 468
32	D47557	2	VALVE relief, Allen head, if used, Includes: Ref. 33 - 46
33	D40354	1	PLUG relief valve, Includes: Ref. 34
35	D40355	UAR	SHIM, .005" Thk, Spring guide (0.127 mm)
36	16917	UAR	SHIM spring guide, .0105" (0.267 mm) thick
37	N7985	1	GUIDE spring
38	D37147	1	RING backup, spring guide
39	A51274	1	O RING spring guide
40	D37148	1	SPRING plunger
41	D37151	1	PLUNGER relief valve

348 BACKHOE SWING CYLINDER HYDRAULIC CIRCUIT

Ref	Part Number	Qty	Description
42	D37075	1	SEAT plunger
43	D47667	1	BODY relief valve
44	237-6010	1	O RING valve body to cylinder
45	D26265	1	O RING valve body
46	D37071	1	RING backup, valve body seal
47	D55017	2	VALVE relief, hex head, if used, for service order item 32 above, Includes: Ref. 48 - 51
48	NSS	1	BODY ASSEMBLY, relief valve
49	237-6010	1	O RING outer
50	D26265	1	O RING inner
51	D37071	1	RING backup, inner O ring
27	218-5006	1	O-Ring, 8-1, 90 Duro, .644" ID x .087" Thk, D39140 or D94547 hose
34	218-5006	1	O-Ring, 8-1, 90 Duro, .644" ID x .087" Thk, plug

352 BACKHOE BOOM CYLINDER HYDRAULIC CIRCUIT, MODELS WITH ONE BOOM MOUNTING PIN AT SWING TOWER

352

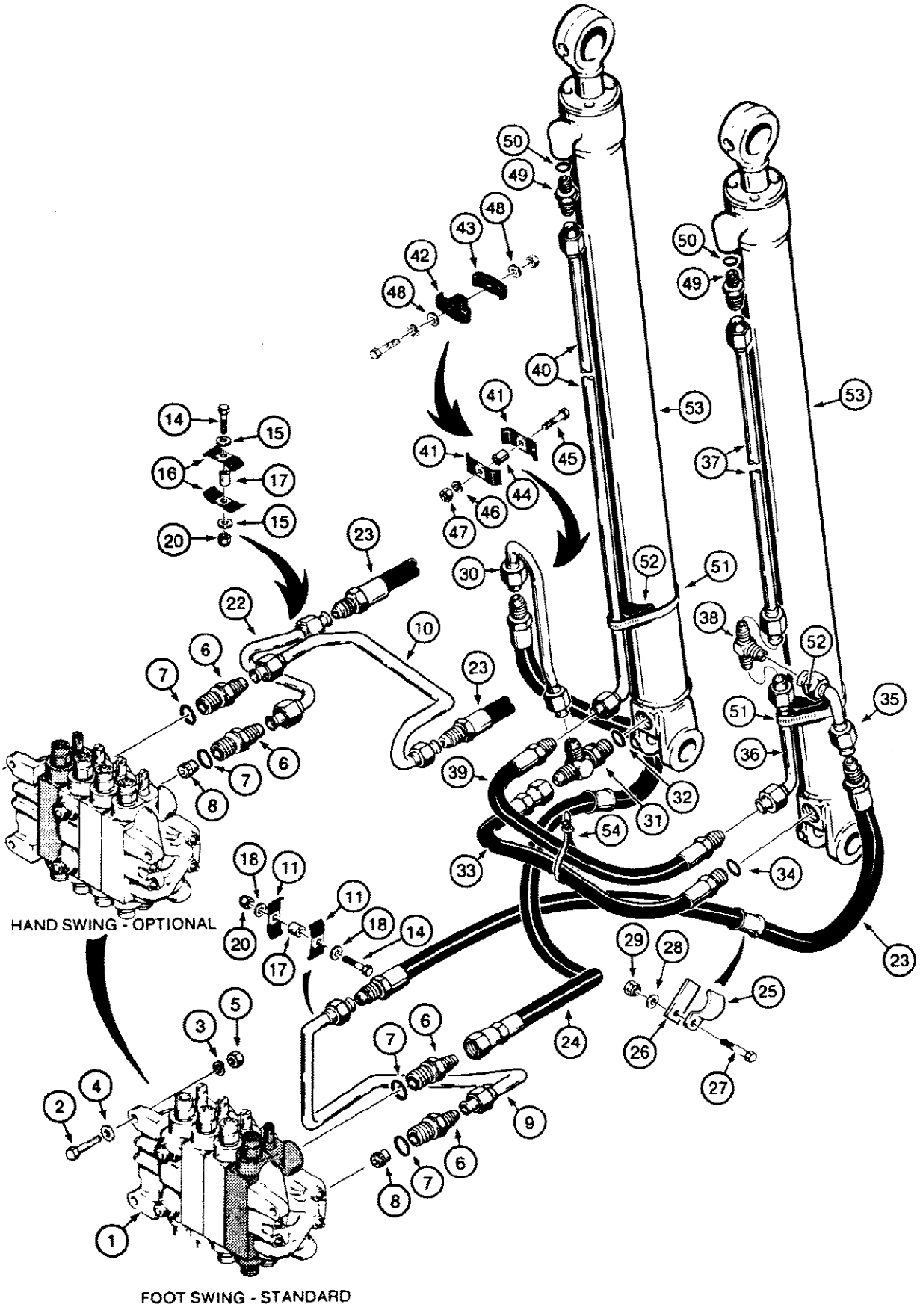

352 BACKHOE BOOM CYLINDER HYDRAULIC CIRCUIT, MODELS WITH ONE BOOM MOUNTING PIN AT SWING TOWER

Ref	Part Number	Qty	Description
1	REF	1	VALVE control, backhoe, See Figure 416 or 418, for mounting plate See Figure 346, valves shown are for models without extendable dipper, for correct valve section location in other valves, See Figure 416 or 418
2	113-421	3	BOLT, Hex, 1/2"-13 x 2", G5
3	192-23	3	WASHER, LOCK, 1/2"
4	95-8	3	WASHER flat, 1/2"
5	129-105	3	NUT, 1/2"-13, G5
6	218-5064	2	CONNECTOR straight, male, Includes: Ref. 7
7	218-5008	1	O RING connector
8	D93207	1	RESTRICTOR check, lower port
9	D88964	1	TUBE bottom port, models with foot swing, For special parts used with hydraulic boom lock, See Figure 380.
10	D91817	1	TUBE top port, models with hand swing, For special parts used with hydraulic boom lock, See Figure 380.
11	D40236	2	CLAMP metal, boom tube to swing tube, models with foot swing, Replaces plastic tube clamps on some models
12			RESERVED
13			RESERVED
14	113-219	1	BOLT, Hex, 3/8"-16 x 2", G5
15	95-6	2	WASHER flat, 3/8", models with hand swing
16	D40236	2	CLAMP metal, models with hand swing, Replaces plastic tube clamps on some models
17	D76195	1	SPACER used with metal tube clamps, if used
18	95-6	2	WASHER flat, 3/8"
19			RESERVED
20	131-666	1	NUT hex, self locking, plated, 3/8" - 16 NC
21		1	RESERVED
22	D120444	1	TUBE bottom port, models with hand swing
23	D88977	1-2	HOSE, 51-1/8" (1300 mm) long, to right hand cylinder on models with foot swing or both cylinders on models with hand swing
24	D88978	1	HOSE, 53-5/32" (1350 mm) long, to left hand cylinder on models with foot swing
25	D93472	2	CLAMP hose, at swing tower
26	D93471	2	PLATE clamp
27	113-213	2	BOLT, Hex, 3/8"-16 x 2 1/4", G5
28	D41740	2	WASHER flat, special, 3/8"
29	131-52	2	NUT hex, self locking, plated, 3/8" - 16 NC
30	D69421	1	TUBE closed end of left hand cylinder
31	218-5239	1	TEE adjustable, male, Includes: Ref. 32
32	218-5008	1	O RING tee
33	D50732	1	HOSE, 25-11/16" (653 mm) long, crossover, closed end circuit, Includes: Ref. 34
34	218-5008	1	O RING hose end
35	D121777	1	TUBE hose to right hand cylinder tee

352 BACKHOE BOOM CYLINDER HYDRAULIC CIRCUIT, MODELS WITH ONE BOOM MOUNTING PIN AT SWING TOWER

Ref	Part Number	Qty	Description
36	D121779	1	TUBE tee at right hand cylinder to crossover hose
37	S207953	1	TUBE to rod end of right hand cylinder
38	218-596	1	TEE male, right hand cylinder tubes
39	D65886	1	HOSE, 18" (457 mm) long, crossover, rod end circuit
40	D69234	1	TUBE to rod end of left hand cylinder
41	D40236	2	CLAMP metal, tube, if used
42	D124301	1	CLAMP plastic, tube, used with item 43, if used
43	D120614	1	CLAMP plastic, tube, if used
44	D76195	1	SPACER used with metal tube clamp, if used
45	113-213	1	BOLT, Hex, 3/8"-16 x 2 1/4", G5
46	192-21	1	WASHER, LOCK, 3/8"
47	129-103	1	NUT, 3/8"-16, G5
48	95-6	2	WASHER flat, 3/8", used with plastic tube clamp, if used
49	218-5065	2	ADAPTER straight, male, Includes: Ref. 50
50	237-6010	1	O RING adapter
51	214-267	2	CLAMP cylinder tube
52	D38648	2	SPACER clamp
53	REF	2	CYLINDER boom, See Figure 470
54	L18337	1	STRAP tie, nylon, 15 inch

356 BACKHOE BOOM CYLINDER HYDRAULIC CIRCUIT, MODELS WITH TWO BOOM MOUNTING PIN AT SWING TOWER

356

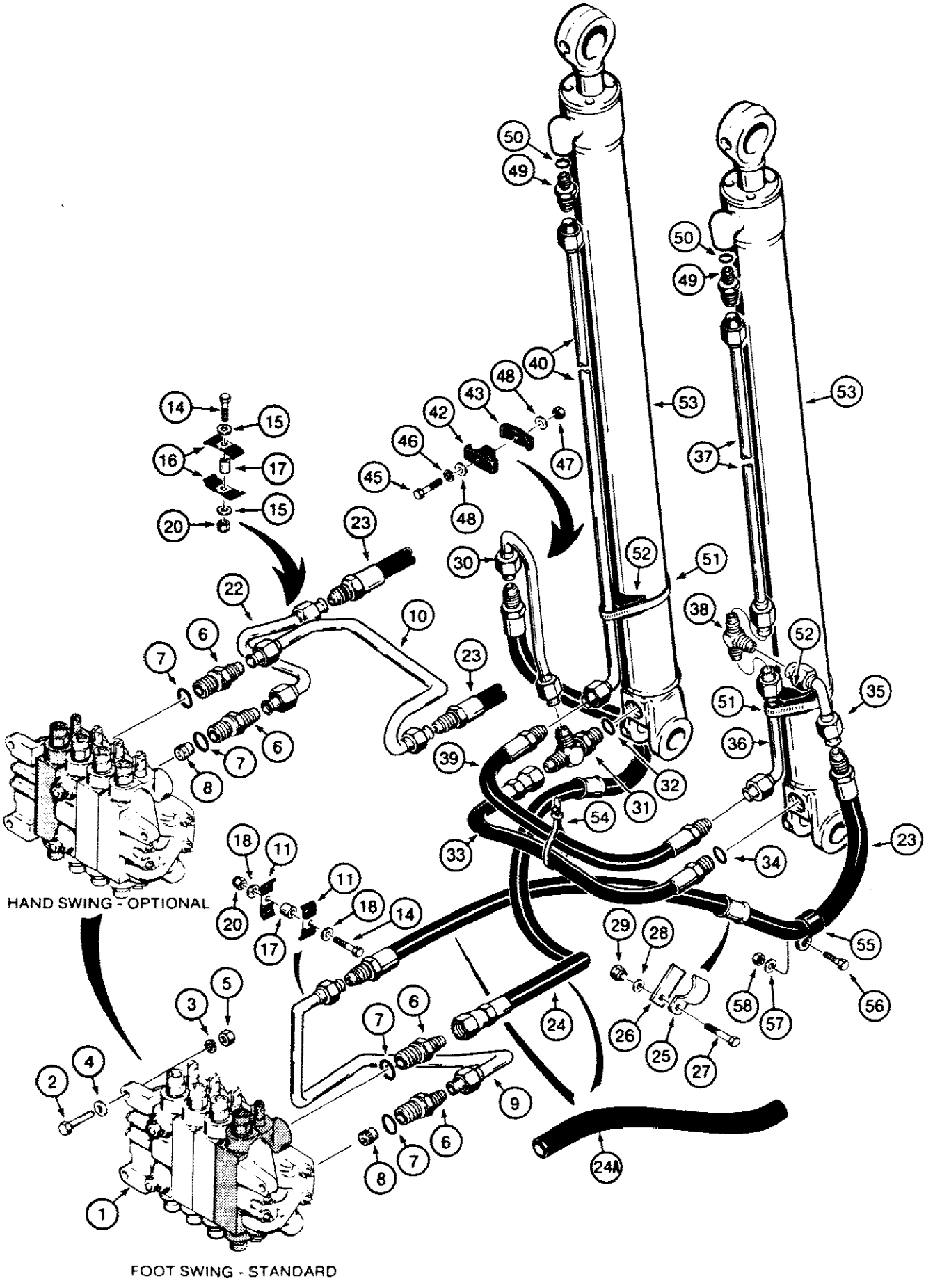

B50602 A

356 BACKHOE BOOM CYLINDER HYDRAULIC CIRCUIT, MODELS WITH TWO BOOM MOUNTING PIN AT SWING TOWER

Ref	Part Number	Qty	Description
1	REF	1	VALVE control, backhoe, See Figure 416 or 418, for mounting plate See Figure 346, valves shown are for models without extendable dipper, for correct valve section location in other valves, See Figure 416 or 418
2	113-421	3	BOLT, Hex, 1/2"-13 x 2", G5
3	192-23	3	WASHER, LOCK, 1/2"
4	95-8	3	WASHER flat, 1/2"
5	129-105	3	NUT, 1/2"-13, G5
6	218-5064	2	CONNECTOR straight, male, Includes: Ref. 7
7	218-5008	1	O RING connector
8	D93207	1	RESTRICTOR check, lower port
9	D88964	1	TUBE bottom port, models with foot swing, For special parts used with hydraulic boom lock, See Figure 380.
10	D91817	1	TUBE top port, models with hand swing, For special parts used with hydraulic boom lock, See Figure 380.
11	D40236	2	CLAMP metal, boom tube to swing tube, models with foot swing
12			RESERVED
13			RESERVED
14	113-219	1	BOLT, Hex, 3/8"-16 x 2", G5
15	95-6	2	WASHER flat, 3/8", models with hand swing
16	D40236	2	CLAMP metal, models with hand swing
17	D76195	1	SPACER used with metal tube clamps
18	95-6	2	WASHER flat, 3/8"
19			RESERVED
20	131-666	1	NUT hex, self locking, plated, 3/8" - 16 NC
21			RESERVED
22	D120444	1	TUBE bottom port, models with hand swing
23	D129635	1-2	HOSE, 52-1/8" (1325 mm) long, to right hand cylinder on models with foot swing or both cylinders on models with hand swing
24	D129634	1	HOSE, 52-5/8" (1336 mm) long, to left hand cylinder on models with foot swing
24A	D131789	2	SLEEVE, D129634 and D129635 hoses
25	D93472	2	CLAMP hose, at swing tower
26	D93471	2	PLATE clamp
27	113-213	2	BOLT, Hex, 3/8"-16 x 2 1/4", G5
28	D41740	2	WASHER flat, hardened, 3/8"
29	131-52	2	NUT hex, self locking, plated, 3/8" - 16 NC
30	D69421	1	TUBE closed end of left hand cylinder
31	218-5239	1	TEE adjustable, male, Includes: Ref. 32
32	218-5008	1	O RING tee
33	D50732	1	HOSE crossover, closed end circuit, 25-11/16" (653 mm) long, Includes: Ref. 34
34	218-5008	1	O RING hose end
35	D121777	1	TUBE hose to right hand cylinder tee

356 BACKHOE BOOM CYLINDER HYDRAULIC CIRCUIT, MODELS WITH TWO BOOM MOUNTING PIN AT SWING TOWER

Ref	Part Number	Qty	Description
36	D121779	1	TUBE tee at right hand cylinder to crossover hose
37	S207953	1	TUBE to rod end of right hand cylinder
38	218-596	1	TEE male, right hand cylinder tubes
39	D65886	1	HOSE, 18" (457 mm) long, crossover, rod end circuit
40	D69234	1	TUBE to rod end of left hand cylinder
41			RESERVED
42	D124301	1	CLAMP plastic, tube, used with item 43
43	D120614	1	CLAMP plastic, tube
44			RESERVED
45	113-213	1	BOLT, Hex, 3/8"-16 x 2 1/4", G5
46	192-21	1	WASHER, LOCK, 3/8"
47	129-103	1	NUT, 3/8"-16, G5
48	95-6	2	WASHER flat, 3/8"
49	218-5065	2	ADAPTER straight, male, Includes: Ref. 50
50	237-6010	1	O RING adapter
51	214-267	2	CLAMP cylinder tube
52	D38648	2	SPACER clamp
53	REF	2	CYLINDER boom, See Figure 470
54	L18337	1	STRAP tie, nylon, 15 inch
55	S88820	2	CLAMP hose, at swing tower
56	113-208	2	BOLT, Hex, 3/8"-16 x 1 1/4", G5, Full Thd
57	95-6	2	WASHER flat, 3/8"
58	131-52	2	NUT hex, self locking, plated, 3/8" - 16 NC

360 BACKHOE DIPPER CYLINDER HYDRAULIC CIRCUIT, MODELS WITH ONE BOOM MOUNTING PIN AT SWNG TOWER

360

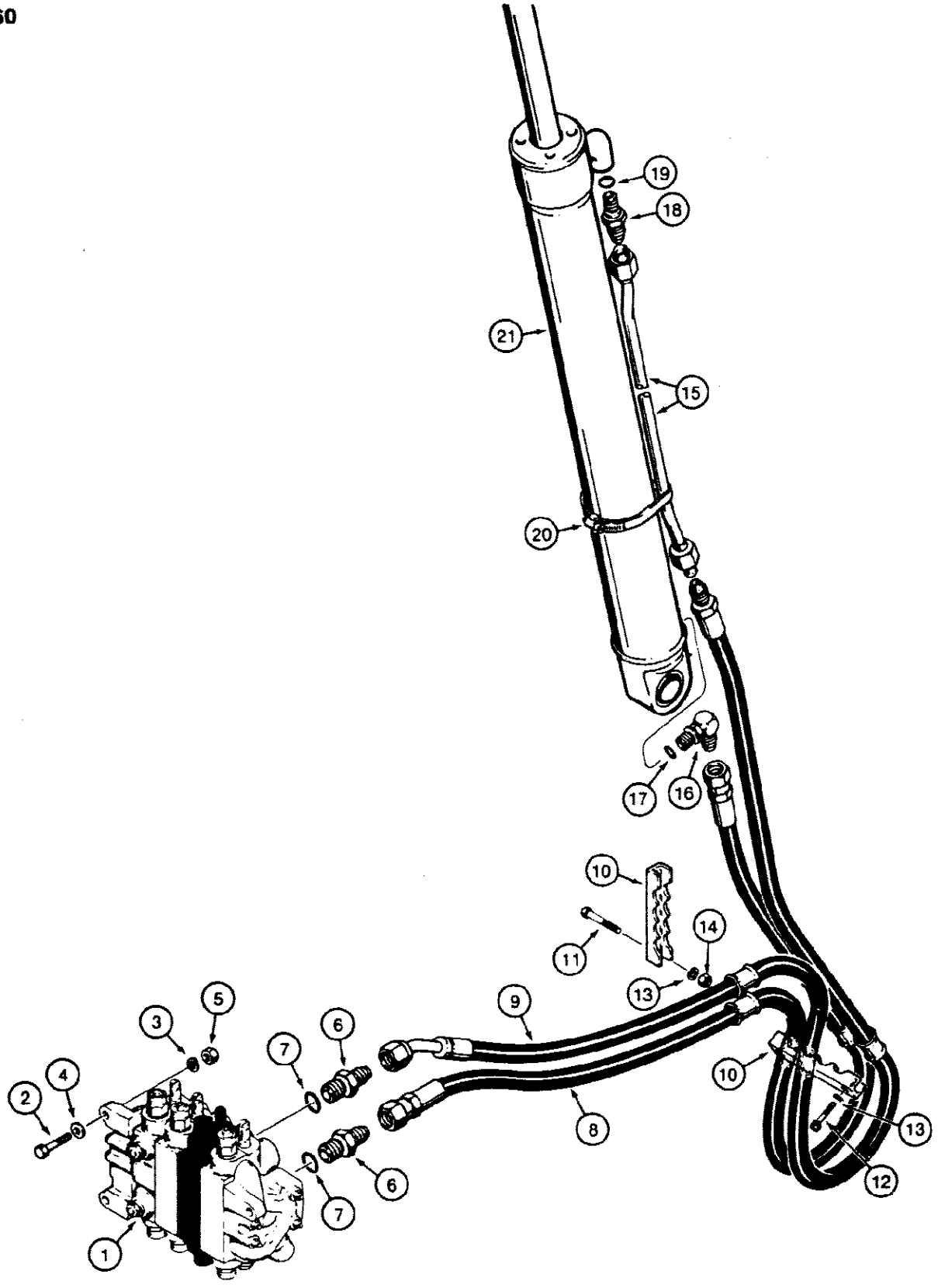

808832

360 BACKHOE DIPPER CYLINDER HYDRAULIC CIRCUIT, MODELS WITH ONE BOOM MOUNTING PIN AT SWNG TOWER

Ref	Part Number	Qty	Description
1	REF	1	VALVE control, backhoe, See Figure 416 or 418, for valve mounting plate See Figure 344, valve shown is for foot swing models without extendable dipper, for correct valve section location in other valves See Figure 416 or 418
2	113-421	3	BOLT, Hex, 1/2"-13 x 2", G5
3	192-23	3	WASHER, LOCK, 1/2"
4	95-8	3	WASHER flat, 1/2"
5	129-105	3	NUT, 1/2"-13, G5
6	218-5064	2	CONNECTOR straight, male, Includes: Ref. 7
7	218-5008	1	O RING connector
8	D88976	1	HOSE, 71-5/8" (1820 mm) long, to closed end of dipper cylinder
9	D88975	1	HOSE, 78-3/4" (2000 mm) long, to rod end of dipper cylinder
10	D92721	2	CLAMP hoses
11	113-447	2	BOLT, Hex, 1/2"-13 x 3 1/2", G5
12	61-828	2	BOLT hex socket head, 1/2" - 13 NC x 1-3/4"
13	192-23	4	WASHER, LOCK, 1/2"
14	129-105	2	NUT, 1/2"-13, G5
15	D50379	1	TUBE to rod end of cylinder
16	218-5123	1	ELBOW adjustable, male, 90 degee, Includes: Ref. 17
17	237-6010	1	O RING elbow
18	218-5065	1	ADAPTER straight, male, Includes: Ref. 19
19	237-6010	1	O RING adapter
20	214-269	1	CLAMP cylinder tube
21	REF	1	CYLINDER dipper, See Figure 472

362 BACKHOE DIPPER CYLINDER HYDRAULIC CIRCUIT, MODELS WITH TWO BOOM MOUNTING PINS AT SWING TOWER

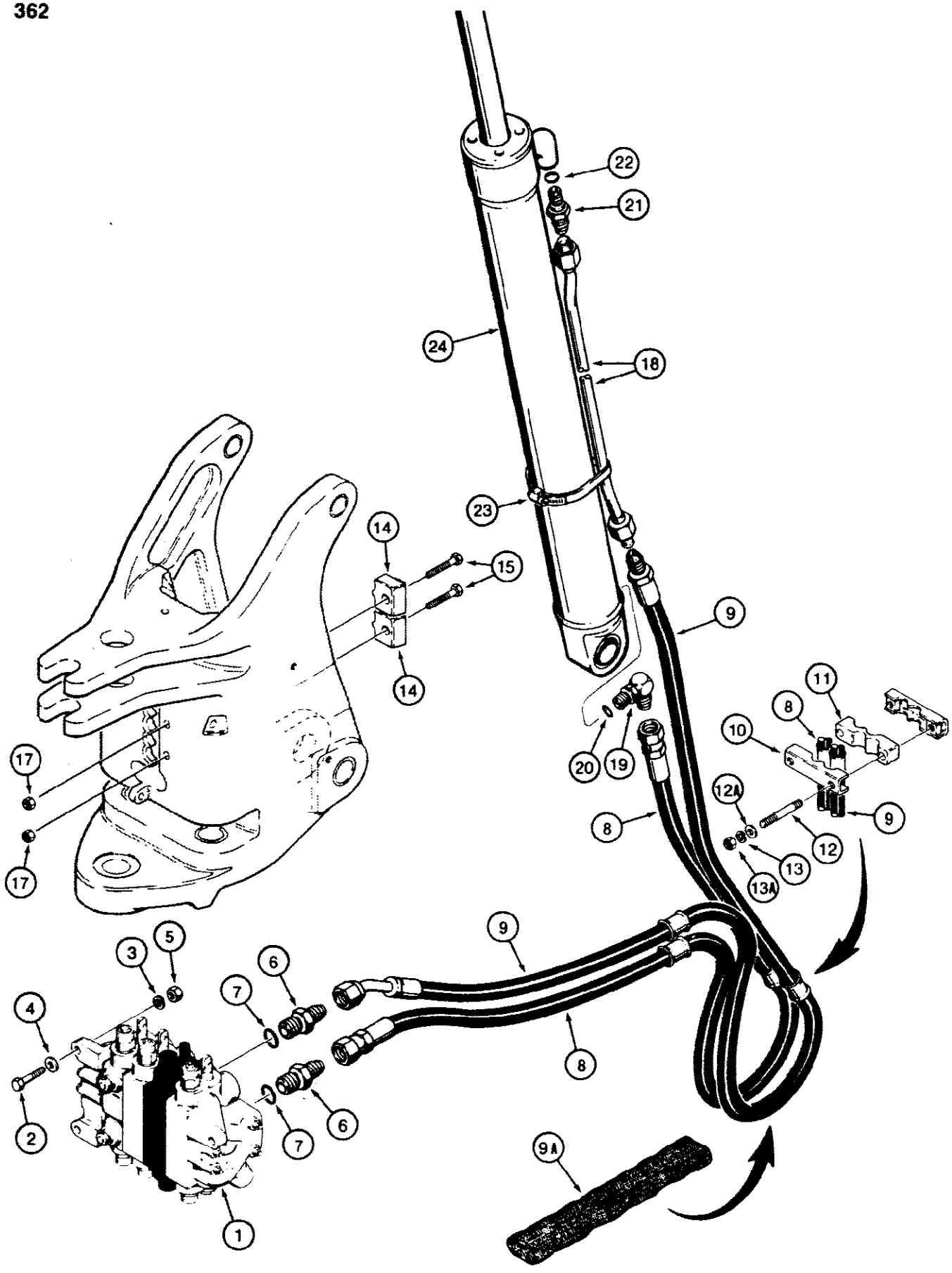

580SE CASE SUPER-E CONSTRUCTION KING LOADER BACKHOE - Hydraulics

362 BACKHOE DIPPER CYLINDER HYDRAULIC CIRCUIT, MODELS WITH TWO BOOM MOUNTING PINS AT SWING TOWER

Ref	Part Number	Qty	Description
1	REF	1	VALVE control, backhoe, See Figure 416 or 418, for valve mounting plate See Figure 344, valve shown is for foot swing models without extendable dipper, for correct valve section location in other valves See Figure 416 or 418
2	113-421	3	BOLT, Hex, 1/2"-13 x 2", G5
3	192-23	3	WASHER, LOCK, 1/2"
4	95-8	3	WASHER flat, 1/2"
5	129-105	3	NUT, 1/2"-13, G5
6	218-5064	2	CONNECTOR straight, male, Includes: Ref. 7
7	218-5008	1	O RING connector
8	D133952	1	HOSE, 66-5/8" (1693 mm) long, to closed end of dipper cylinder, third position from top in item 14 swing tower clamp
9	D133950	1	HOSE, 72-7/8" (1851 mm) long, to rod end of dipper cylinder, top position in item 14 swing tower clamp
9A	D133294	1	SLEEVE hose
10	D124502	1	CLAMP hoses, attaches to clamp welded in boom
11	D127521	1	SPACER hose clamp
12	D134182	2	STUD, 1/2" - 13 NC x 3 1/2"
12A	195-533	2	WASHER flat, plated, 1/2"
13	192-23	4	WASHER, LOCK, 1/2"
13A	129-105	2	NUT, 1/2"-13, G5
14	D127510	2	CLAMP hose, in swing tower
15	113-319	2	BOLT, Hex, 7/16"-14 x 2 1/2", G5
16			RESERVED
17	131-667	2	NUT hex, self locking, plated, 7/16" - 14 NC, Replaces lock washer and hex nut on some models
18	D50379	1	TUBE to rod end of cylinder
19	218-5123	1	ELBOW adjustable, male, 90 degee, Includes: Ref. 20
20	237-6010	1	O RING elbow
21	218-5065	1	ADAPTER straight, male, Includes: Ref. 22
22	237-6010	1	O RING adapter
23	214-269	1	CLAMP cylinder tube
24	REF	1	CYLINDER dipper, See Figure 472

364

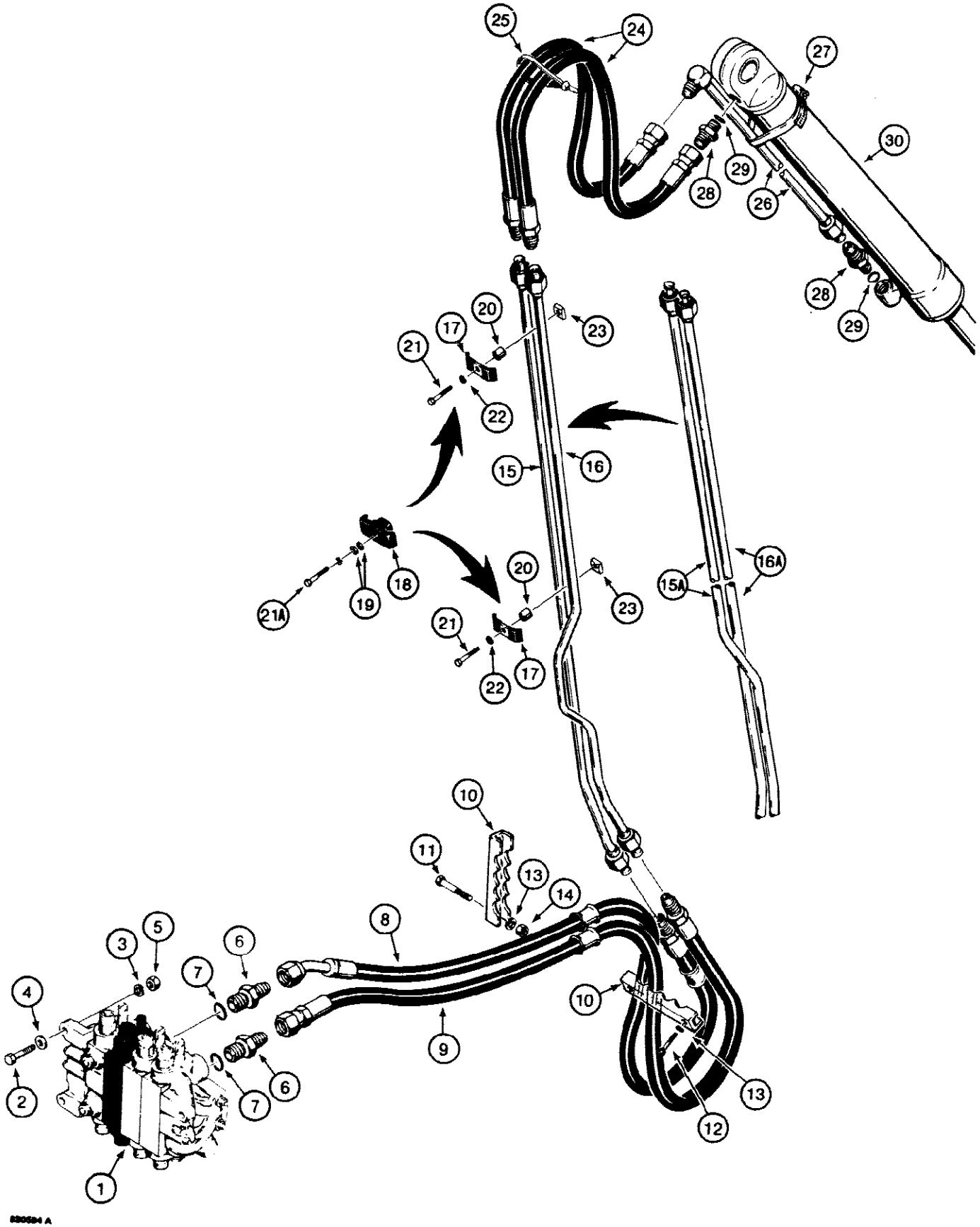
25
24
27
30
29
28
26
28
29
20
17
23
21
22
15
16
18
19
21A
20
23
15A
16A
21
22
17
10
11
13
14
8
3
5
6
7
4
10
9
2
7
6
13
12
1

364 BACKHOE BUCKET CYL HYD CIRCUIT,MODEL W/O EXTENDABLE DIPPER MODEL W/1BOOM MOUNTING PIN AT SWING T

Ref	Part Number	Qty	Description
1	REF	1	VALVE control, backhoe, See Figure 416 or 418, for mounting plate See Figure 344, valve shown is for foot swing models without extendable dipper, for correct valve section location in optional valves See Figure 416 or 418
2	113-421	3	BOLT, Hex, 1/2"-13 x 2", G5
3	192-23	3	WASHER, LOCK, 1/2"
4	95-8	3	WASHER flat, 1/2"
5	129-105	3	NUT, 1/2"-13, G5
6	218-5064	2	CONNECTOR straight, male, Includes: Ref. 7
7	218-5008	1	O RING connector
8	D88973	1	HOSE, 50" (1270 mm) long, top port
9	D88974	1	HOSE, 46-7/8" (1190 mm) long, bottom port
10	D92721	2	CLAMP hose
11	113-447	2	BOLT, Hex, 1/2"-13 x 3 1/2", G5
12	61-828	2	BOLT hex socket head, 1/2" - 13 NC x 1-3/4"
13	192-23	4	WASHER, LOCK, 1/2"
14	129-105	2	NUT, 1/2"-13, G5
15	D91204	1	TUBE top port to rod end of bucket cylinder, used on backhoes with foot swing
15A	D94423	1	TUBE bottom port to rod end of bucket cylinder, used on backhoes with hand swing
16	D91206	1	TUBE bottom port to closed end of bucket cylinder, used on backhoes with foot swing
16A	D94421	1	TUBE top port to closed end of bucket cylinder, used on backhoes with hand swing
17	D40236	2	CLAMP metal, tubes to boom, if used
18	D124301	2	CLAMP plastic, tubes to boom, if used
19	95-6	4	WASHER flat, 3/8", used with plastic tube clamps, if used
20	D76195	2	SPACER used with metal tube clamp, if used
21	113-209	2	BOLT, Hex, 3/8"-16 x 1 1/2", G5, If used
21A	113-233	2	BOLT, Hex, 3/8"-16 x 1 3/4", G5, If used
22	192-21	2	WASHER, LOCK, 3/8"
23	25-226	2	NUT square, 3/8" - 16 NC
24	D50372	2	HOSE, 34" (864 mm) long, to bucket cylinder
25	L18337	1	STRAP tie, nylon, 15 inch
26	D58609	1	TUBE to rod end of bucket cylinder
27	214-267	1	CLAMP tube
28	218-5065	2	ADAPTER straight, male, Includes: Ref. 29
29	237-6010	1	O RING adapter
30	REF	1	CYLINDER bucket, See Figure 474

366 BACKHOE BUCKET CYL HYD CIRCUIT,MODEL W/O EXTENDABLE DIPPER MODEL W/2BOOM MOUNTING PIN AT SWING T

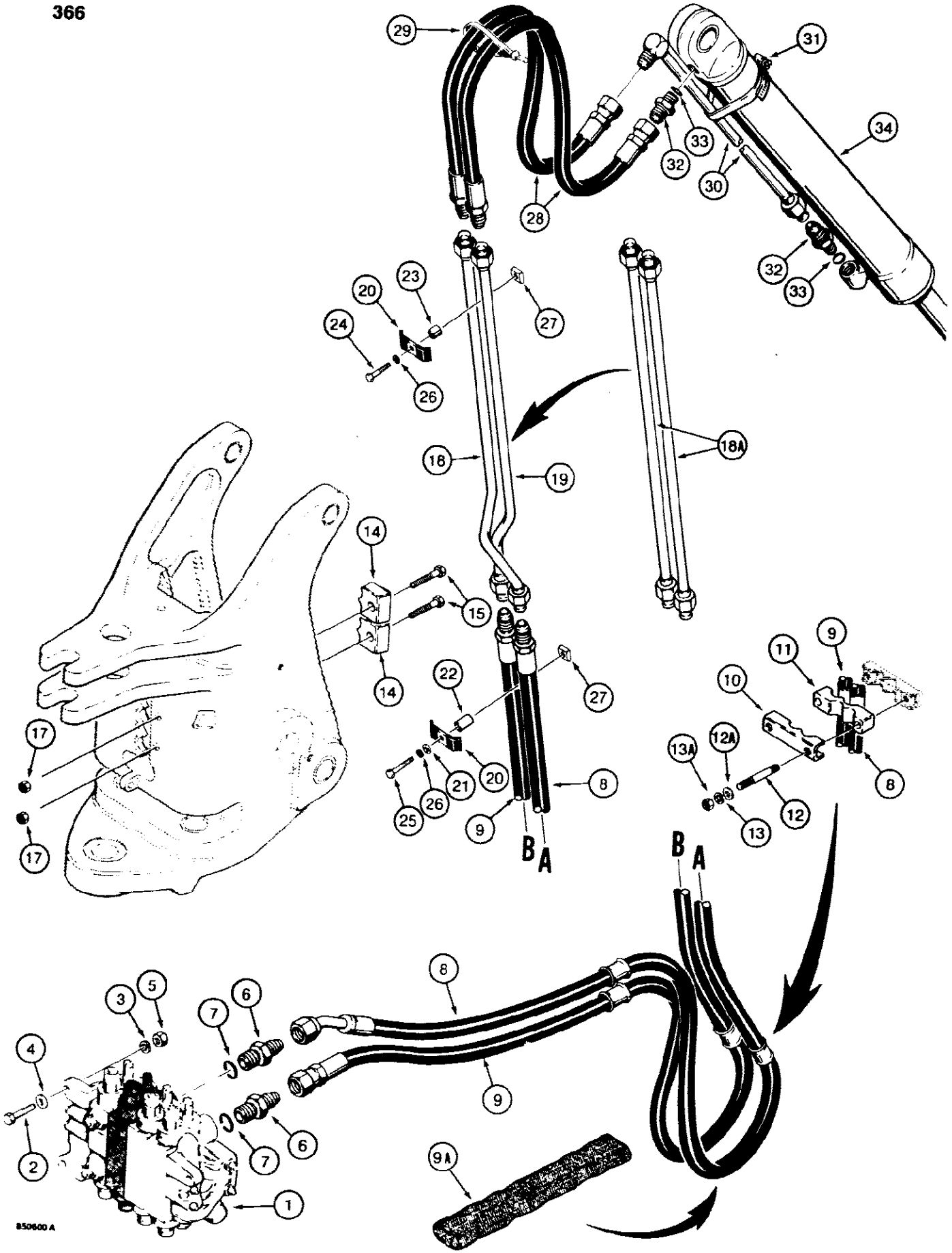

366 BACKHOE BUCKET CYL HYD CIRCUIT,MODEL W/O EXTENDABLE DIPPER MODEL W/2BOOM MOUNTING PIN AT SWING T

Ref	Part Number	Qty	Description
1	REF	1	VALVE control, backhoe, See Figure 416 or 418, for mounting plate See Figure 344, valve shown is for foot swing models without extendable dipper, for correct valve section location in optional valves See Figure 416 or 418
2	113-421	3	BOLT, Hex, 1/2"-13 x 2", G5
3	192-23	3	WASHER, LOCK, 1/2"
4	95-8	3	WASHER flat, 1/2"
5	129-105	3	NUT, 1/2"-13, G5
6	218-5064	2	CONNECTOR straight, male, Includes: Ref. 7
7	218-5008	1	O RING connector
8	D133951	1	HOSE, 81-7/8" (2079 mm) long, top port, second position from top in item 14 swing tower clamp
9	D133953	1	HOSE, 80-7/16" (2043 mm) long, bottom port, bottom position in item 14 swing tower clamp
9A	D133294	1	SLEEVE hose
10	D124502	1	CLAMP hose, attaches to clamp welded in boom
11	D127521	1	SPACER hose clamp
12	D134182	2	STUD, 1/2" - 13 NC x 3-1/2"
12A	195-533	2	WASHER flat, plated, 1/2"
13	192-23	2	WASHER, LOCK, 1/2"
13A	129-105	2	NUT, 1/2"-13, G5
14	D127510	2	CLAMP hose, in swing tower
15	113-319	2	BOLT, Hex, 7/16"-14 x 2 1/2", G5
16			RESERVED
17	131-667	2	NUT hex, self locking, plated, 7/16" - 14 NC, Replaces lock washer and hex nut on some models
18	D133212	1	TUBE top port to rod end of bucket cylinder, used on backhoes with foot swing
18A	D131142	2	TUBE to both ends of bucket cylinder, used on backhoes with hand swing
19	D133214	1	TUBE bottom port to closed end of bucket cylinder, used on backhoes with foot swing
20	D40236	2	CLAMP metal
21	95-6	1	WASHER flat, 3/8"
22	D34089	1	SPACER hose clamp
23	D76195	1	SPACER tube clamp
24	113-209	1	BOLT, Hex, 3/8"-16 x 1 1/2", G5
25	113-219	1	BOLT, Hex, 3/8"-16 x 2", G5
26	192-21	2	WASHER, LOCK, 3/8"
27	25-226	2	NUT square, 3/8" - 16 NC
28	D50372	2	HOSE, 34" (864 mm) long, to bucket cylinder
29	L18337	1	STRAP tie, nylon, 15 inch
30	D58609	1	TUBE to rod end of bucket cylinder
31	214-267	1	CLAMP tube

366 BACKHOE BUCKET CYL HYD CIRCUIT,MODEL W/O EXTENDABLE DIPPER MODEL W/2BOOM MOUNTING PIN AT SWING T

Ref	Part Number	Qty	Description
32	218-5065	2	ADAPTER straight, male, Includes: Ref. 33
33	237-6010	1	O RING adapter
34	REF	1	CYLINDER bucket, See Figure 474

368

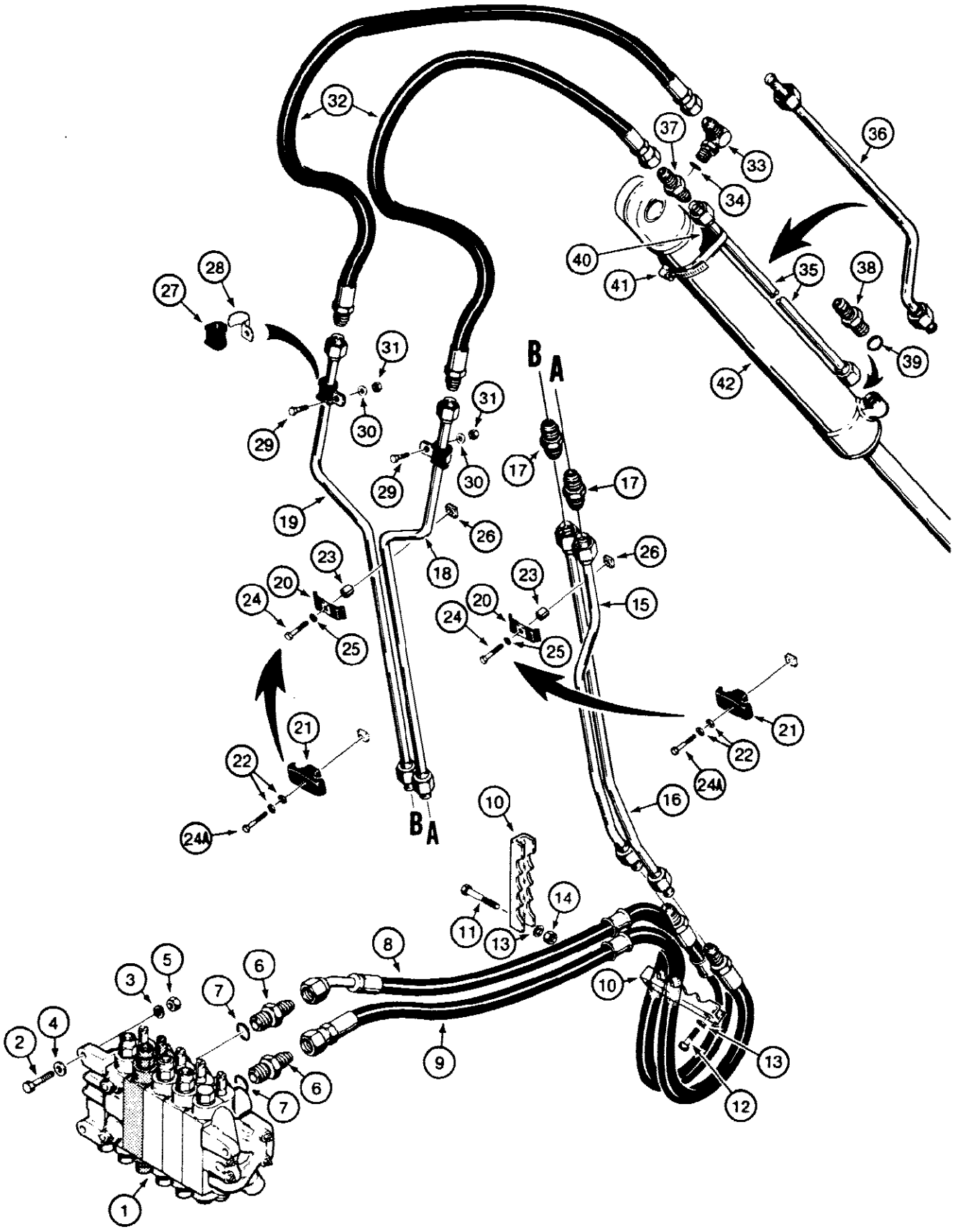
32
37
33
36
34
40
41
35
38
28
27
39
42
31
B
A
29
30
17
19
26
18
23
20
24
25
21
22
24A
16
10
11
13
14
8
3
5
6
7
2
4
9
12
1

830686 A

368 BACKHOE BUCKET CYL HYD CIRCUIT,MODEL W/EXTENDABLE DIPPER MODELS W/1BOOM MOUNTING PIN AT SWING TO

Ref	Part Number	Qty	Description
1	REF	1	VALVE control, backhoe, See Figure 416 or 418, for valve mounting plate See Figure 344, valve shown is for foot swing models, for correct valve section location with hand swing See Figure 416 or 418
2	113-421	3	BOLT, Hex, 1/2"-13 x 2", G5
3	192-23	3	WASHER, LOCK, 1/2"
4	95-8	3	WASHER flat, 1/2"
5	129-105	3	NUT, 1/2"-13, G5
6	218-5064	2	CONNECTOR straight, male, Includes: Ref. 7
7	218-5008	1	O RING connector
8	D88973	1	HOSE top port, 50" (1270 mm) long
9	D88974	1	HOSE, 46-7/8" (1190 mm) long, bottom port
10	D92721	2	CLAMP hoses
11	113-447	2	BOLT, Hex, 1/2"-13 x 3 1/2", G5
12	61-828	2	BOLT hex socket head, 1/2" - 13 NC x 1-3/4"
13	192-23	4	WASHER, LOCK, 1/2"
14	129-105	2	NUT, 1/2"-13, G5
15	D123141	1	TUBE from upper port
16	D123143	1	TUBE from lower port
17	218-737	2	CONNECTOR straight, tube to tube
18	D123139	1	TUBE right hand, upper
19	D123145	1	TUBE left hand, upper
20	D40236	2	CLAMP metal, tubes to boom, if used
21	D124301	2	CLAMP plastic, tubes to boom, if used
22	95-6	4	WASHER flat, 3/8", used with plastic tube clamp, if used
23	D76195	2	SPACER used with metal tube clamp, if used
24	113-209	2	BOLT, Hex, 3/8"-16 x 1 1/2", G5, If used
24A	113-233	2	BOLT, Hex, 3/8"-16 x 1 3/4", G5, If used
25	192-21	2	WASHER, LOCK, 3/8"
26	25-226	2	NUT square, 3/8" - 16 NC, welded to boom
27	D74182	2	INSULATOR tube clamp
28	D74192	2	CLAMP tube
29	113-207	2	BOLT, Hex, 3/8"-16 x 1", G5, Full Thd
30	195-525	2	WASHER flat, plated, 3/8"
31	131-52	2	NUT hex, self locking, plated, 3/8" - 16 NC
32	D52566	2	HOSE, 70" (1778 mm) long, to bucket cylinder
33	218-5123	1	ELBOW adjustable, 90 degree, at closed end port, Includes: Ref. 34, 218 5123 elbow, Ref. 33, and 218 737 connector, Ref. 37, are reversed on models with hand swing
34	237-6010	1	O RING elbow
35	D123159	1	TUBE to rod end port, models with foot swing, see Ref. 36
36	D92158	1	TUBE to rod end port, models with hand swing, see Ref. 35, 218 5123 elbow, Ref. 33, and 218 737 connector, Ref. 37, are reversed on models with hand swing

368 BACKHOE BUCKET CYL HYD CIRCUIT,MODEL W/EXTENDABLE DIPPER MODELS W/1BOOM MOUNTING PIN AT SWING TO

Ref	Part Number	Qty	Description
37	218-737	1	CONNECTOR straight, hose to tube, 218 5123 elbow, Ref. 33, and 218 737 connector, Ref. 37, are reversed on models with hand swing
38	218-5065	1	ADAPTER straight, male, Includes: Ref. 39
39	237-6010	1	O RING adapter
40	D38648	1	SPACER tube, rubber
41	214-269	1	CLAMP tube
42	REF	1	CYLINDER bucket, See Figure 474

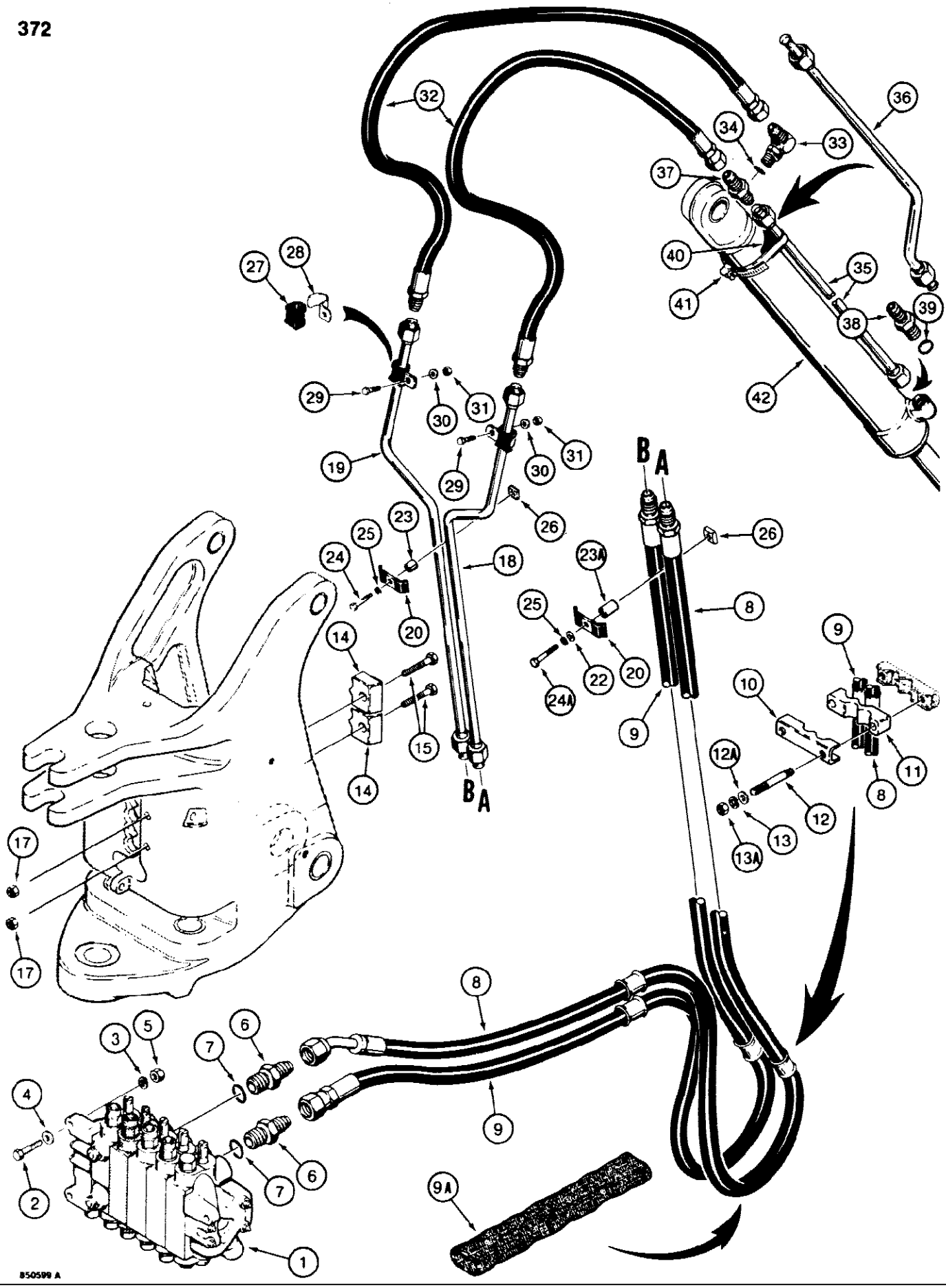
372
B A
B A
B50599 A

372 BACKHOE BUCKET CYL HYD CIRCUIT,MODEL W/EXTENDABLE DIPPER MODELS W/2BOOM MOUNTING PIN AT SWING TO

Ref	Part Number	Qty	Description
1	REF	1	VALVE control, backhoe, See Figure 416 or 418, for valve mounting plate See Figure 344, valve shown is for foot swing models, for correct valve section location with hand swing See Figure 416 or 418
2	113-421	3	BOLT, Hex, 1/2"-13 x 2", G5
3	192-23	3	WASHER, LOCK, 1/2"
4	95-8	3	WASHER flat, 1/2"
5	129-105	3	NUT, 1/2"-13, G5
6	218-5064	2	CONNECTOR straight, male, Includes: Ref. 7
7	218-5008	1	O RING connector
8	D133951	1	HOSE, 81-7/8" (2079 mm) long, top port, second position from top in item 14 swing tower clamp
9	D133953	1	HOSE, 80-7/16" (2043 mm) long, bottom port, bottom position in item 14 swing tower clamp
9A	D133294	1	SLEEVE hose
10	D124502	1	CLAMP hose, attaches to clamp welded in boom
11	D127521	1	SPACER hose clamp
12	D134182	2	STUD, 1/2" - 13 NC x 3-1/2"
12A	195-533	2	WASHER flat, plated, 1/2"
13	192-23	2	WASHER, LOCK, 1/2"
13A	129-105	2	NUT, 1/2"-13, G5
14	D127510	2	CLAMP hose, in swing tower
15	113-319	2	BOLT, Hex, 7/16"-14 x 2 1/2", G5
16			RESERVED
17	131-667	2	NUT hex, self locking, plated, 7/16" - 14 NC, Replaces lock washer and hex nut on some models
18	D77848	1	TUBE right hand, upper
19	D77846	1	TUBE left hand, upper
20	D40236	2	CLAMP metal, tubes to boom
21			RESERVED
22	95-6	1	WASHER flat, 3/8"
23	D76195	1	SPACER tube clamp
23A	D34089	1	SPACER clamp
24	113-209	1	BOLT, Hex, 3/8"-16 x 1 1/2", G5
24A	113-219	1	BOLT, Hex, 3/8"-16 x 2", G5
25	192-21	2	WASHER, LOCK, 3/8"
26	25-226	2	NUT square, 3/8" - 16 NC, welded to boom
27	D74182	2	INSULATOR tube clamp
28	D74192	2	CLAMP tube
29	113-207	2	BOLT, Hex, 3/8"-16 x 1", G5, Full Thd
30	195-525	2	WASHER flat, plated, 3/8"
31	131-52	2	NUT hex, self locking, plated, 3/8" - 16 NC
32	D52566	2	HOSE, 70" (1778 mm) long, to bucket cylinder
33	218-5123	1	ELBOW adjustable, 90 degree, at closed end port, Includes: Ref. 34
34	237-6010	1	O RING elbow

372 BACKHOE BUCKET CYL HYD CIRCUIT,MODEL W/EXTENDABLE DIPPER MODELS W/2BOOM MOUNTING PIN AT SWING TO

Ref	Part Number	Qty	Description
35	D123159	1	TUBE to rod end port, models with foot swing, see item 36
36	D92158	1	TUBE to rod end port, models with hand swing, see item 35
37	218-737	1	CONNECTOR straight, hose to tube
38	218-5065	1	ADAPTER straight, male, Includes: Ref. 39
39	237-6010	1	O RING adapter
40	D38648	1	SPACER tube, rubber
41	214-269	1	CLAMP tube
42	REF	1	CYLINDER bucket, See Figure 474

376 BACKHOE EXTENDABLE DIPPER HYDRAULIC CIRCUIT, MODELS WITH ONE BOOM MOUNTING PIN AT SWING TOWER

376

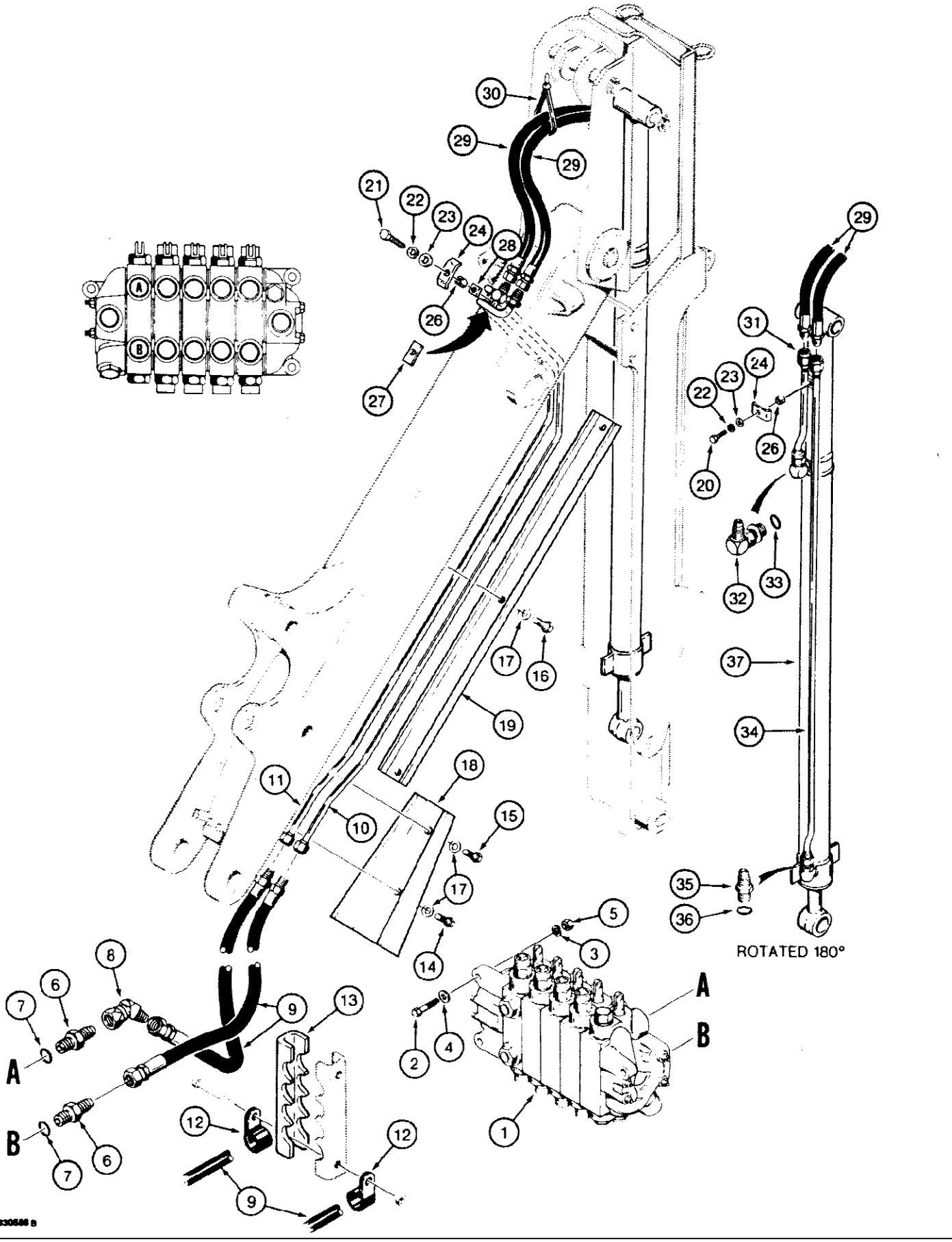

580SE CASE SUPER-E CONSTRUCTION KING LOADER BACKHOE - Hydraulics

376 BACKHOE EXTENDABLE DIPPER HYDRAULIC CIRCUIT, MODELS WITH ONE BOOM MOUNTING PIN AT SWING TOWER

Ref	Part Number	Qty	Description
1	REF	1	VALVE control, backhoe, See Figure 416 or 418, for mounting plate, See Figure 344
2	113-421	3	BOLT, Hex, 1/2"-13 x 2", G5
3	192-23	3	WASHER, LOCK, 1/2"
4	95-8	3	WASHER flat, 1/2"
5	129-105	3	NUT, 1/2"-13, G5
6	218-5064	2	CONNECTOR straight, male, Includes: Ref. 7
7	218-5008	1	O RING connector
8	218-5175	1	ELBOW swivel, upper port, 45 degree
9	D93649	2	HOSE, 47 1/4" (1200 mm) long, from control valve
10	D93646	1	TUBE right hand
11	D93648	1	TUBE left hand
12	S88820	2	CLAMP p type, hose
13	REF	1	CLAMP hoses, see items 10 - 14 on Figure 368
14	113-412	1	BOLT, Hex, 1/2"-13 x 1 3/4", G5
15	113-417	1	BOLT, Hex, 1/2"-13 x 1 1/4", G5, Full Thd
16	113-433	3	BOLT, Hex, 1/2"-13 x 3/4", G5, Full Thd
17	95-8	5	WASHER flat, 1/2"
18	D93678	1	GUARD tube, lower
19	D54137	1	GUARD tube, upper
20	113-209	1	BOLT, Hex, 3/8"-16 x 1 1/2", G5
21	113-233	1	BOLT, Hex, 3/8"-16 x 1 3/4", G5
22	192-21	2	WASHER, LOCK, 3/8"
23	195-525	1-2	WASHER flat, plated, 3/8"
24	D42504	2	CLAMP metal, tube, Replaces plastic clamp on some models
25			RESERVED
26	D76209	2	SPACER used with metal tube clamp
27	D76302	1	SPACER flat
28	25-226	1	NUT square, 3/8" - 16 NC
29	D32284	2	HOSE, 40" (1016 mm) long, to cylinder
30	L18337	1	STRAP tie, nylon, 15 inch
31	D52572	1	TUBE to cylinder, closed end
32	218-5107	1	ELBOW adjustable, male, 90 degree, Includes: Ref. 33
33	237-6010	1	O RING elbow
34	D52574	1	TUBE to cylinder, rod end
35	218-5062	1	CONNECTOR straight, male, Includes: Ref. 36
36	237-6010	1	O RING connector
37	G101183	1	CYLINDER dipper extension, See Figure 480

378 BACKHOE EXTENDABLE DIPPER HYDRAULIC CIRCUIT, MODELS WITH TWO BOOM MOUNTING PIN AT SWING TOWER

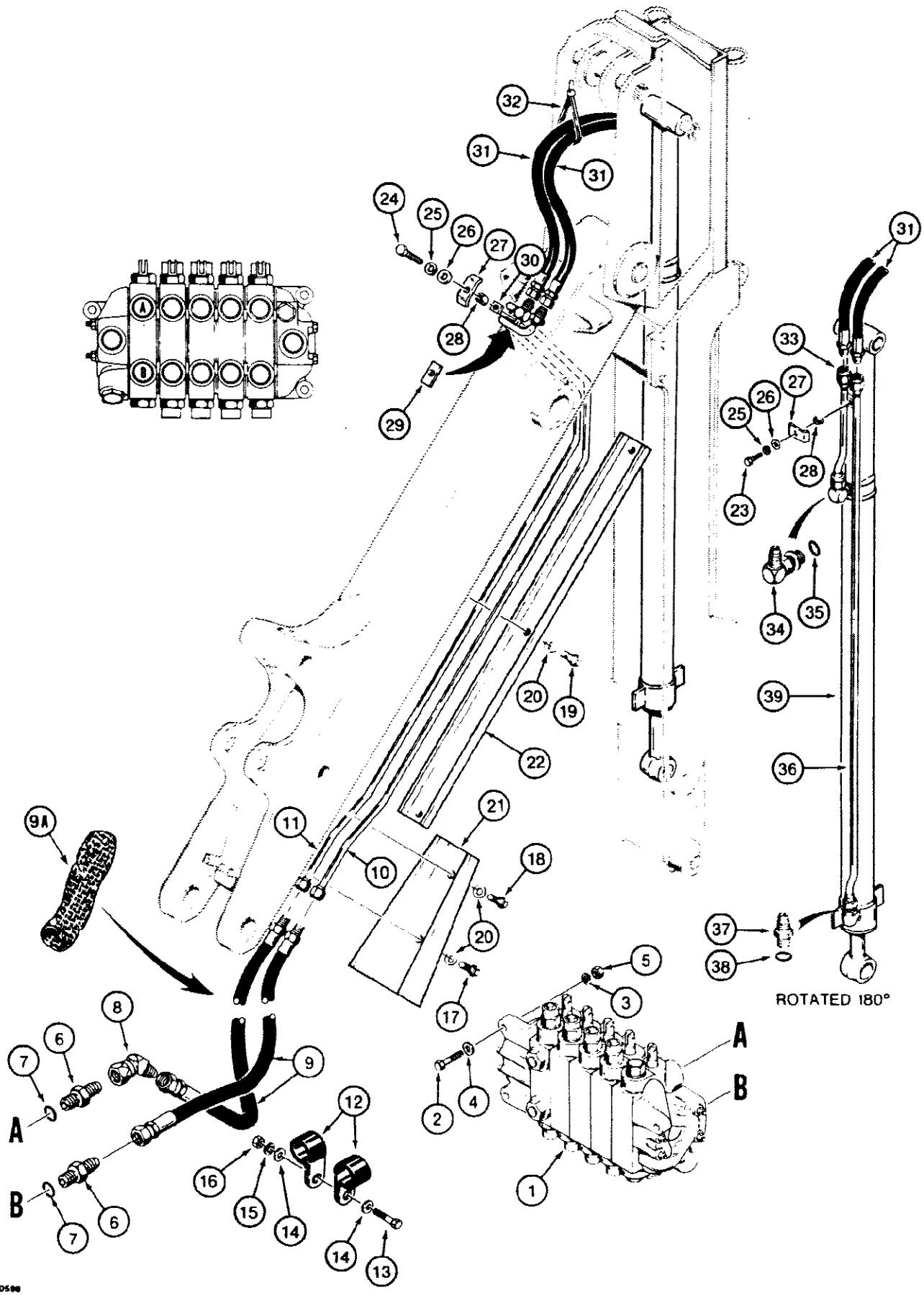

378 BACKHOE EXTENDABLE DIPPER HYDRAULIC CIRCUIT, MODELS WITH TWO BOOM MOUNTING PIN AT SWING TOWER

Ref	Part Number	Qty	Description
1	REF	1	VALVE control, backhoe, See Figure 416 or 418, for mounting plate, See Figure 344
2	113-421	3	BOLT, Hex, 1/2"-13 x 2", G5
3	192-23	3	WASHER, LOCK, 1/2"
4	95-8	3	WASHER flat, 1/2"
5	129-105	3	NUT, 1/2"-13, G5
6	218-5064	2	CONNECTOR straight, male, Includes: Ref. 7
7	218-5008	1	O RING connector
8	218-5175	1	ELBOW swivel, upper port, 45 degree
9	D93649	2	HOSE, 47 1/4" (1200 mm) long, from control valve
9A	D131814	1	SLEEVE hose
10	D93646	1	TUBE right hand
11	D93648	1	TUBE left hand
12	T50103	2	CLAMP p type, hose
13	113-219	1	BOLT, Hex, 3/8"-16 x 2", G5
14	95-6	2	WASHER flat, 3/8"
15	192-21	1	WASHER, LOCK, 3/8"
16	129-103	1	NUT, 3/8"-16, G5
17	113-412	1	BOLT, Hex, 1/2"-13 x 1 3/4", G5
18	113-417	1	BOLT, Hex, 1/2"-13 x 1 1/4", G5, Full Thd
19	113-433	3	BOLT, Hex, 1/2"-13 x 3/4", G5, Full Thd
20	95-8	5	WASHER flat, 1/2"
21	D93678	1	GUARD tube, lower
22	D54137	1	GUARD tube, upper
23	113-209	1	BOLT, Hex, 3/8"-16 x 1 1/2", G5
24	113-233	1	BOLT, Hex, 3/8"-16 x 1 3/4", G5
25	192-21	2	WASHER, LOCK, 3/8"
26	195-525	1-2	WASHER flat, plated, 3/8"
27	D42504	2	CLAMP metal, tube
28	D76209	2	SPACER tube clamp
29	D76302	1	SPACER flat
30	25-226	1	NUT square, 3/8" - 16 NC
31	D32284	2	HOSE, 40" (1016 mm) long, to cylinder
32	L18337	1	STRAP tie, nylon, 15 inch
33	D52572	1	TUBE to cylinder, closed end
34	218-5107	1	ELBOW adjustable, male, 90 degree, Includes: Ref. 35
35	237-6010	1	O RING elbow
36	D52574	1	TUBE to cylinder, rod end, Includes: Ref. 37
37	218-5062	1	CONNECTOR straight, male
38	237-6010	1	O RING connector
39	G101183	1	CYLINDER dipper extension, See Figure 480

380 BACKHOE BOOM LOCK HYDRAULIC CIRCUIT

380

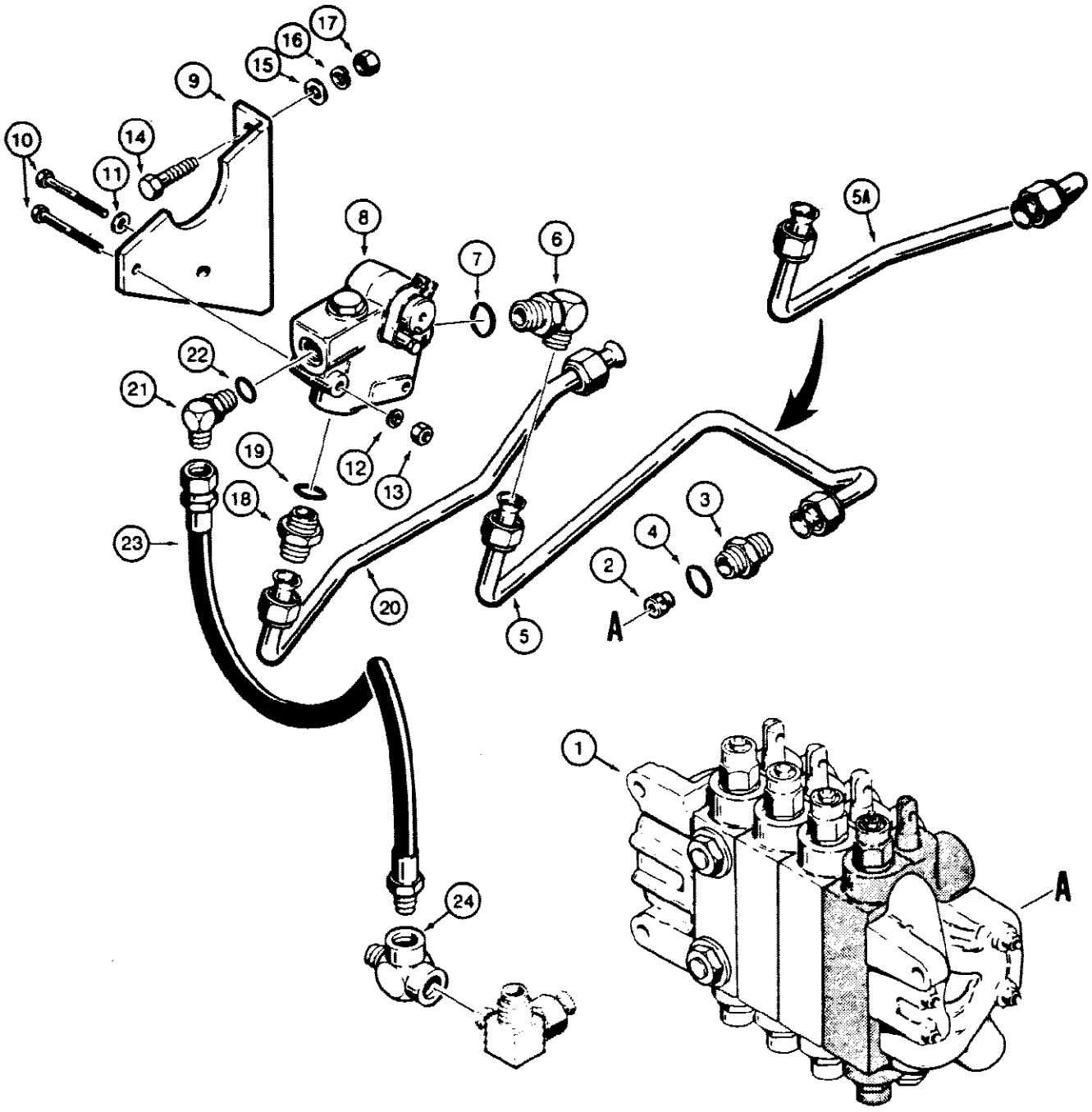

580SE CASE SUPER-E CONSTRUCTION KING LOADER BACKHOE - Hydraulics

380 BACKHOE BOOM LOCK HYDRAULIC CIRCUIT

Ref	Part Number	Qty	Description
1	REF	1	VALVE control, backhoe, See Figure 416 or 418, for mounting plate, See Figure 344, valve shown is for foot swing models without extendable dipper, for correct valve section location in other valves See Figure 416 or 418
2	D93207	1	RESTRICTOR check, lower valve port
3	218-5064	1	CONNECTOR straight, male, Includes: Ref. 4
4	218-5008	1	O RING connector
5	D88619	1	TUBE from backhoe control valve to boom lock valve, models with foot swing
5A	D91878	1	TUBE from backhoe control valve to boom lock valve, models with hand swing
6	218-5108	1	ELBOW adjustable, male, 90 degree, Includes: Ref. 7
7	218-5008	1	O RING elbow
8	D88644	1	VALVE boom lock, See Figure 442
9	D89347	1	BRACKET boom lock valve
10	113-241	2	BOLT, Hex, 3/8"-16 x 3", G5
11	195-525	1	WASHER flat, plated, 3/8"
12	192-21	2	WASHER, LOCK, 3/8"
13	129-103	2	NUT, 3/8"-16, G5
14	113-421	2	BOLT, Hex, 1/2"-13 x 2", G5
15	95-8	2	WASHER flat, 1/2"
16	192-23	2	WASHER, LOCK, 1/2"
17	129-105	2	NUT, 1/2"-13, G5
18	218-5064	1	CONNECTOR straight, male, Includes: Ref. 19
19	218-5008	1	O RING connector
20	D88621	1	TUBE boom lock valve to boom cylinder
21	218-5106	1	ELBOW adjustable, male, 90 degree, Includes: Ref. 22
23	D89350	1	HOSE, 21-5/8" (550 mm) long, boom lock valve return
24	217-1065	1	TEE, 3/4" NPT, backhoe return lines, for related parts see Ref. 51 and 52 on Figure 344
22	218-5006	1	O-Ring, 8-1, 90 Duro, .644" ID x .087" Thk, elbow

382 THREE-POINT HITCH VALVE HYDRAULIC CIRCUIT

382

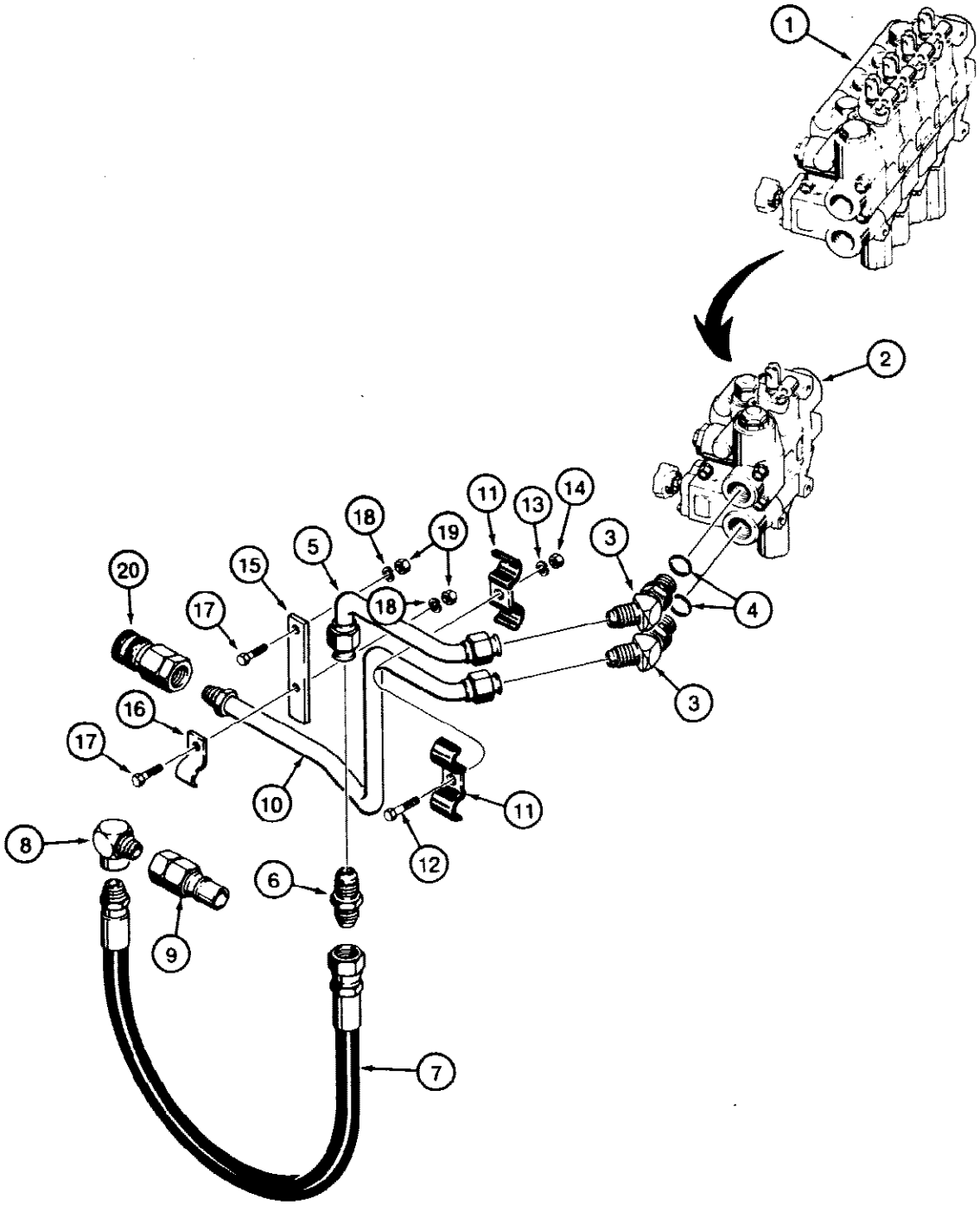

830647

382 THREE-POINT HITCH VALVE HYDRAULIC CIRCUIT

Ref	Part Number	Qty	Description
1	REF	1	VALVE control, hitch, four spool, for hydraulic hitch only, See Figure 446
2	REF	1	VALVE control, hitch, one spool, for mechanical hitch only, See Figure 446
3	218-5138	2	ELBOW adjustable, 45 degree, Includes: Ref. 4
4	218-5008	1	O RING elbow
5	D124893	1	TUBE upper valve port
6	218-737	1	CONNECTOR straight, upper tube to hose
7	36232	1	HOSE, 32" (813 mm) long, from upper tube
8	217-1020	1	ELBOW street, 90 degree, 3/4" NPT
9	D52694	1	DISCONNECT quick, coupling, male, See Figure 458
10	D124895	1	TUBE lower valve port
11	D42833	2	CLAMP tube
12	113-208	1	BOLT, Hex, 3/8"-16 x 1 1/4", G5, Full Thd
13	192-21	1	WASHER, LOCK, 3/8"
14	129-103	1	NUT, 3/8"-16, G5
15	D124920	1	PLATE tube support
16	D41165	1	CLAMP tube
17	113-207	2	BOLT, Hex, 3/8"-16 x 1", G5, Full Thd
18	192-21	2	WASHER, LOCK, 3/8"
19	129-103	2	NUT, 3/8"-16, G5
20	D52800	1	DISCONNECTquick, coupling, female, See Figure 458

384 THREE-POINT HITCH CYLINDER HYDRAULIC CIRCUIT, USED WITH MECHANICAL HITCH

384

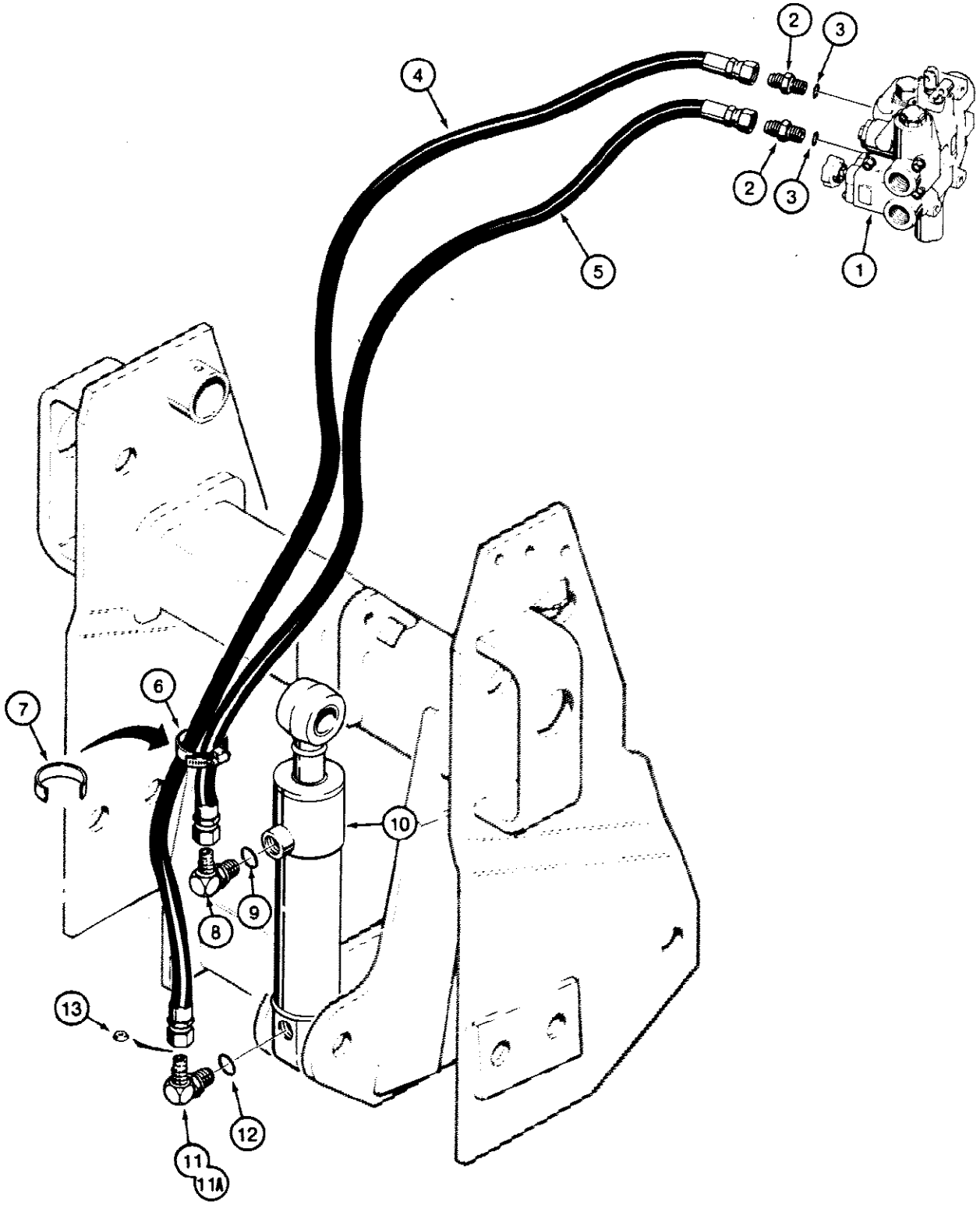

580SE CASE SUPER-E CONSTRUCTION KING LOADER BACKHOE - Hydraulics

384 THREE-POINT HITCH CYLINDER HYDRAULIC CIRCUIT, USED WITH MECHANICAL HITCH

Ref	Part Number	Qty	Description
1	REF	1	VALVE control, hitch, one spool, See Figure 446
2	218-5059	2	CONNECTOR straight, male, Includes: Ref. 3
4	D36129	1	HOSE, 57" (1448 mm) long, to closed end of lift cylinder
5	D51688	1	HOSE, 42" (1068 mm) long, to rod end of lift cylinder
6	214-256	1	CLAMP hose
7	D95251	1	GUARD hose protector
8	218-5121	1	ELBOW adjustable, male, 90 degree, Includes: Ref. 9
9	237-6010	1	O RING elbow
10	G101189	1	CYLINDER lift, See Figure 482
11	218-5121	1	ELBOW adjustable, male, 90 degree, used with D71629 restrictor, no longer used at closed end port, order D135096 restriction elbow
11A	D135096	1	ELBOW restriction, 90 degree, Replaces elbow and restrictor on some models, Includes: Ref. 12
12	237-6010	1	O RING 218 5121 or D135096 elbow
13	D71629	1	RESTRICTOR flow control, used with 218-5121 elbow Ref.11 only
3	218-5006	1	O-Ring, 8-1, 90 Duro, .644" ID x .087" Thk, connector

386 THREE-POINT HITCH CYLINDER HYDRAULIC CIRCUIT, USED WITH HYDRAULIC HITCH

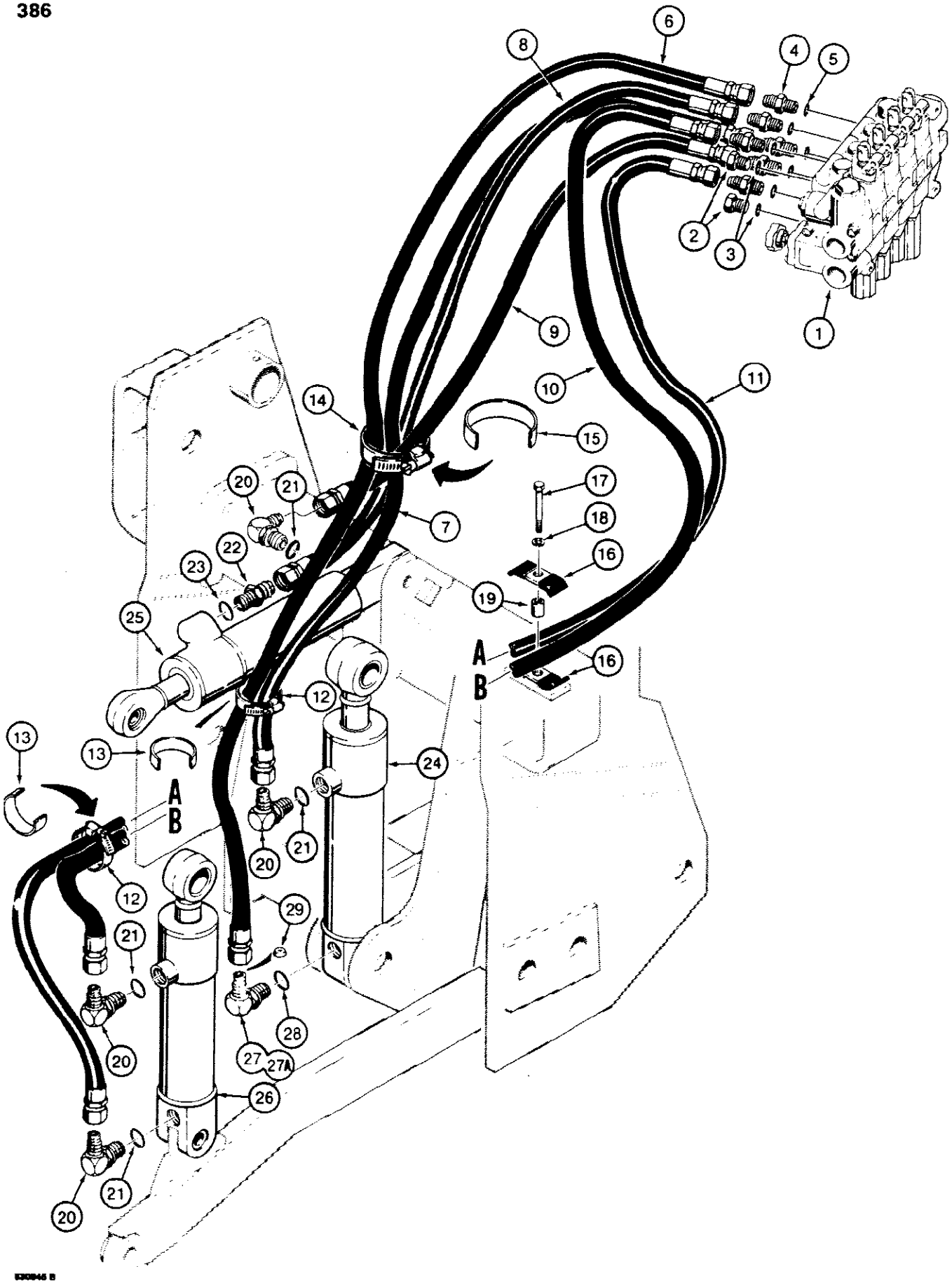

580SE CASE SUPER-E CONSTRUCTION KING LOADER BACKHOE - Hydraulics

386 THREE-POINT HITCH CYLINDER HYDRAULIC CIRCUIT, USED WITH HYDRAULIC HITCH

Ref	Part Number	Qty	Description
1	D124205	1	VALVE control, hitch, four spool, See Figure 446
2	214389	2	PLUG, Hex Hd, 3/4"-16 ORB, Control valve ports, if used, Includes Ref. 3
4	218-5059	6	CONNECTOR straight, male, control valve ports, Includes: Ref. 5
6	D36129	1	HOSE, 57" (1448 mm) long, to closed end of lift cylinder
7	D51688	1	HOSE, 42" (1068 mm) long, to rod end of lift cylinder
8	R32709	1	HOSE, 40" (1016 mm) long, to rod end of pitch cylinder
9	R30836	1	HOSE, 28" (711 mm) long, to closed end of pitch cylinder
10	D51686	1	HOSE, 54" (1372 mm) long, to rod end of tilt cylinder
11	D51685	1	HOSE, 66" (1676 mm) long, to closed end of tilt cylinder
12	214-256	2	CLAMP hose, small
13	D95251	2	GUARD hose protector
14	214-261	1	CLAMP hose, large
15	D95252	1	GUARD hose protector
16	D33316	2	CLAMP hose
17	113-120	1	BOLT, Hex, 5/16"-18 x 1 3/4", G5
18	192-20	1	WASHER, LOCK, 5/16"
19	D34244	1	SPACER hose clamp
20	218-5121	4	ELBOW adjustable, 90 degree, Includes: Ref. 21
21	237-6010	1	O RING elbow
22	218-5060	1	ADAPTER straight, male, Includes: Ref. 23
23	237-6010	1	O RING adapter
24	G101189	1	CYLINDER lift, See Figure 482
25	G33128	1	CYLINDER pitch, See Figure 486
26	G101188	1	CYLINDER tilt, See Figure 484
27	218-5121	1	ELBOW adjustable, male, 90 degree, used with D71629 restrictor, no longer used at closed end port of lift cylinder, order D135096 restriction elbow
27A	D135096	1	ELBOW restriction, 90 degree, Replaces elbow and restrictor on some models, Includes: Ref. 28
28	237-6010	1	O RING, 218-5121 or D135096 elbow
29	D71629	1	RESTRICTOR flow control, used with 218 5121 Ref. 27 elbow only
3	218-5006	1	O-Ring, 8-1, 90 Duro, .644" ID x .087" Thk, plug
5	218-5006	1	O-Ring, 8-1, 90 Duro, .644" ID x .087" Thk, connector

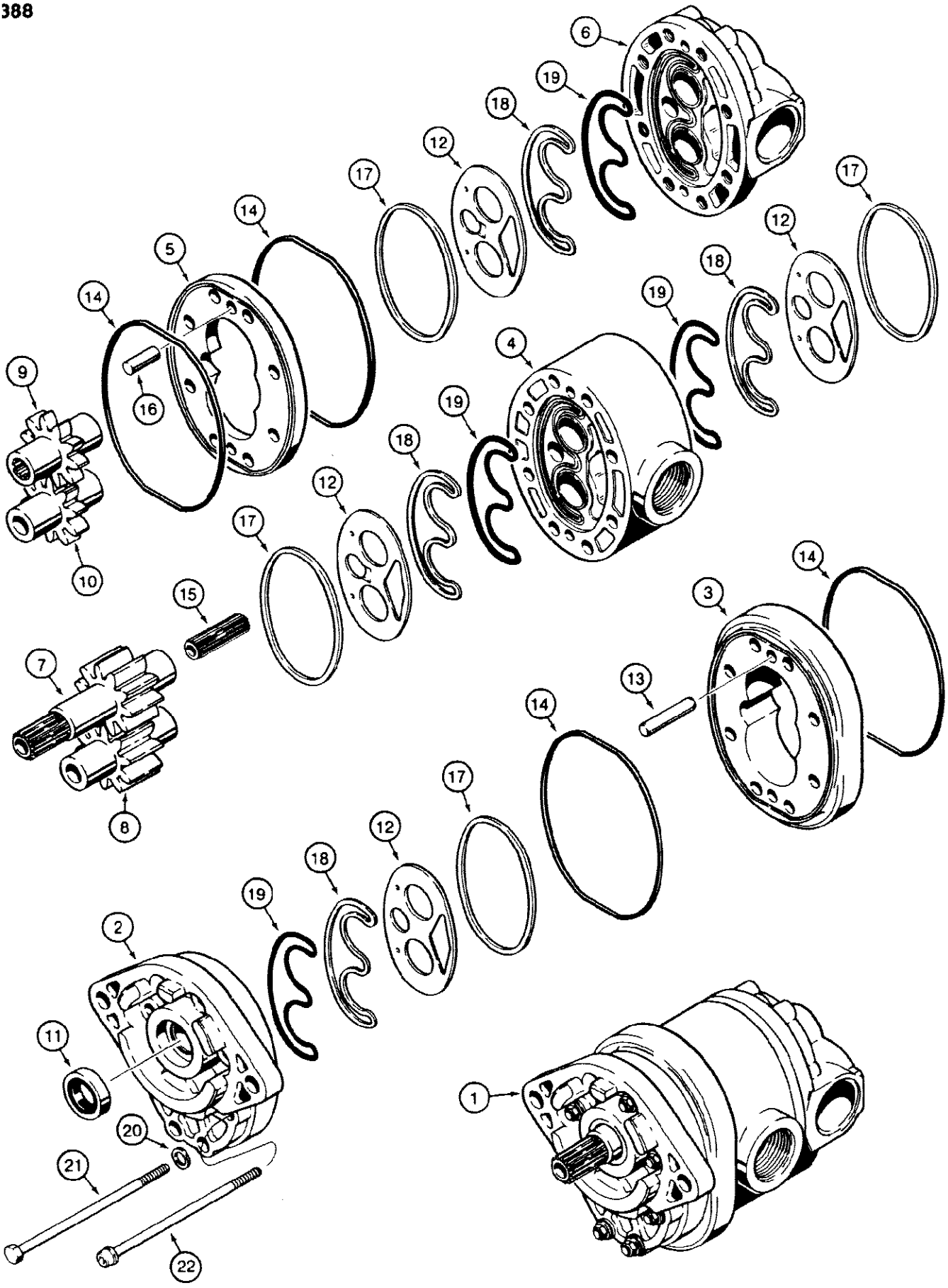
388
6
19
18
12
17
14
5
14
16
9
10
15
7
8
4
19
18
12
17
14
3
13
14
17
12
18
19
2
11
20
21
22
1
830687

580SE CASE SUPER-E CONSTRUCTION KING LOADER BACKHOE - Hydraulics

388 WEBSTER HYDRAULIC PUMP

Ref	Part Number	Qty	Description
1	D126580	1	PUMP hydraulic, equipment and steering, Webster No. 152-45207-115, Includes: Ref. 2 - 22
2	N6885	1	COVER mounting, drive shaft end
3	N6892	1	HOUSING gear, drive shaft end
4	N6887	1	CARRIER bushing
5	N6895	1	HOUSING gear, port end
6	N6886	1	COVER port end
7	N6888	1	DRIVE GEAR drive, equipment hydraulic circuit
8	N6890	1	GEAR driven, equipment hydraulic circuit
9	N6889	1	GEAR drive, steering circuit
10	N6891	1	GEAR driven, steering circuit
11	A23903	1	SEAL drive shaft
12	A45046	4	PLATE wear
13	N6893	2	PIN dowel, drive shaft end plate
14	N6896	4	SEAL ring
15	N6899	1	COUPLING drive and driven gear
16	N6894	2	PIN dowel, bearing plate to cover
17	D54169	4	SEAL ring
18	D54168	4	SEAL backup
19	D54167	4	SEAL pre load
20	A45050	8	WASHER special
21	26-692	6	BOLT hex head, grade 8, 3/8" - 16 NC x 5-3/4"
22	61-692	2	BOLT hex socket head, 3/8" - 16 NC x 5-3/4"

390

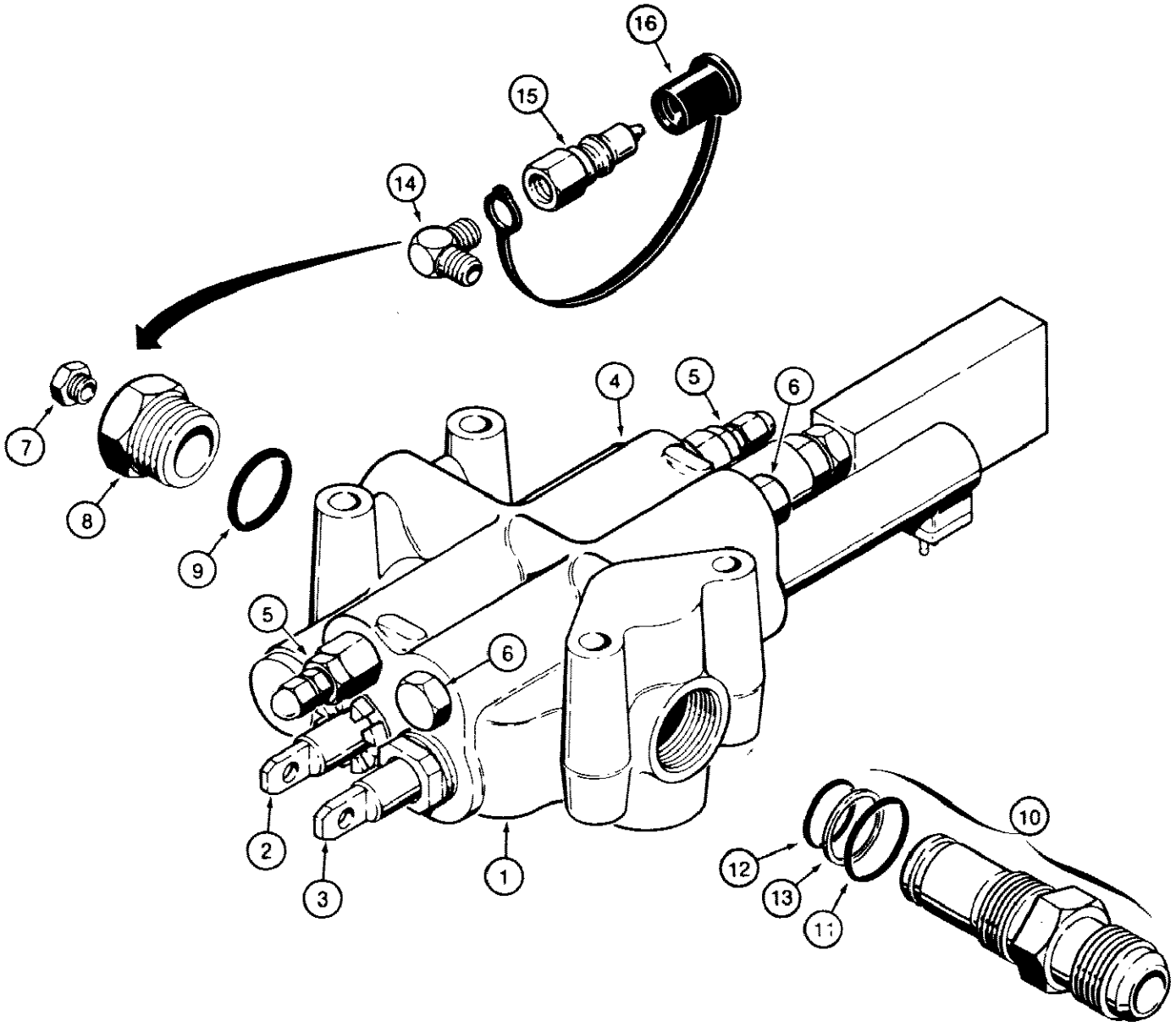

580SE CASE SUPER-E CONSTRUCTION KING LOADER BACKHOE - Hydraulics

390 PARKER LOADER CONTROL VALVE - TWO SPOOL

Ref	Part Number	Qty	Description
1	D146465	1	VALVE control, loader, two spool, Parker No. VDSP22DF75 Replaced: D122746, Includes: Ref. 2 - 9
2	N8524	1	SPOOL loader bucket, See Figure 396
3	N6592	1	SPOOL loader lift, See Figure 394
4	NSS	1	VALVE main relief, See Figure 400
5	NSS	2	VALVE circuit relief and load check, See Figure 402
6	NSS	2	VALVE load check, See Figure 404
7	221-662	1	PLUG pipe, hex head, 1/4" NPT, do not use plated plug at this location
8	D38825	1	PLUG control valve port, Includes: Ref. 9
9	218-5008	1	O RING plug
10	D92756	1	SLEEVE power beyond, Includes: Ref. 11-13
11	218-5010	1	O RING large
12	A58602	1	O RING small
13	L31332	1	RING backup, small O ring
14	217-1225	1	ELBOW, 90 degree
15	S206607	1	COUPLING male
16	D123387	1	COVER dust

392

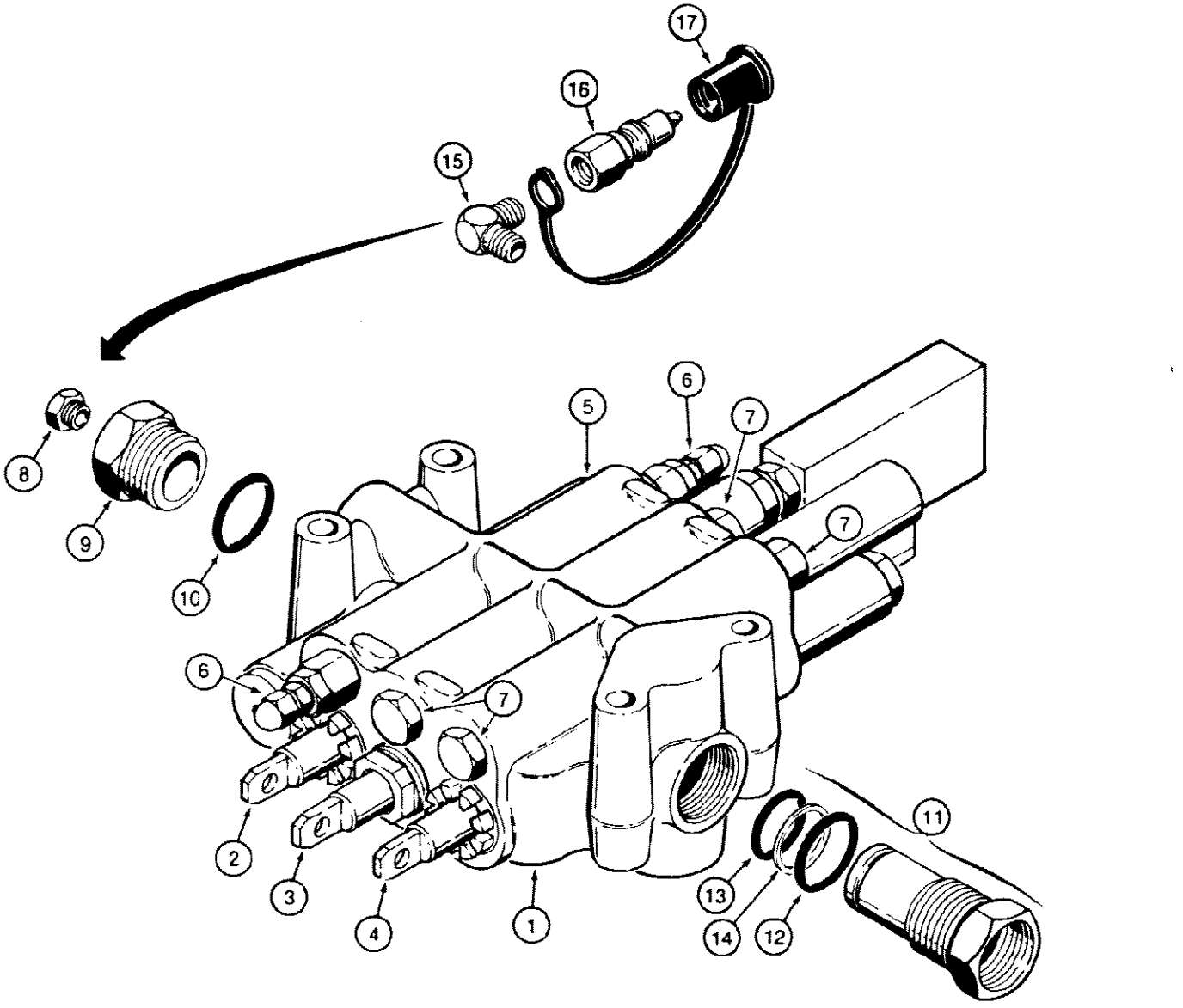

580SE CASE SUPER-E CONSTRUCTION KING LOADER BACKHOE - Hydraulics

392 PARKER LOADER CONTROL VALVE - THREE SPOOL

Ref	Part Number	Qty	Description
1	D146466	1	VALVE control, loader, three spool, Parker No. VDSP22DFD46 Replaced: D123470, Includes: Ref. 2 - 10
2	N8524	1	SPOOL loader bucket, See Figure 396
3	N6592	1	SPOOL loader lift, See Figure 394
4	D37050	1	SPOOL loader clam, See Figure 398
5	NSS	1	VALVE main relief, See Figure 400
6	NSS	2	VALVE check relief and load check, See Figure 402
7	NSS	4	VALVE load check, See Figure 404
8	221-662	1	PLUG pipe, hex head, 1/4" NPT, do not use plated plug at this location
9	D38825	1	PLUG control valve port, Includes: Ref. 10
10	218-5008	1	O RING plug
11	D89496	1	SLEEVE power beyond, Includes: Ref. 12 - 14
12	218-5010	1	O RING large
13	A58602	1	O RING small
14	L31332	1	RING backup, small O ring
15	217-1225	1	ELBOW, 90 degree
16	S206607	1	COUPLING male
17	D123387	1	COVER dust

394 PARKER LOADER CONTROL VALVE, LOADER LIFT SPOOL

394

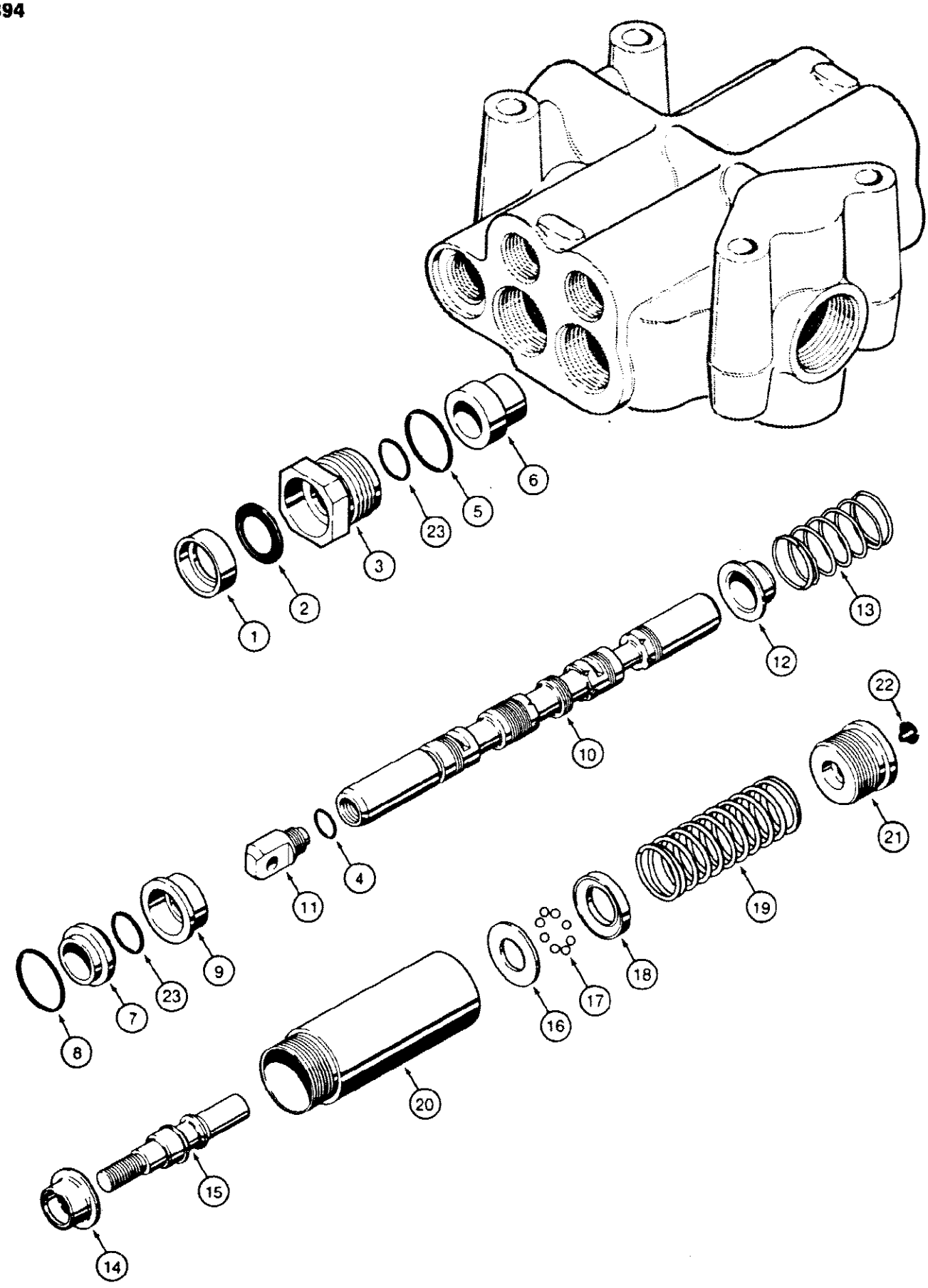

I00843

580SE CASE SUPER-E CONSTRUCTION KING LOADER BACKHOE - Hydraulics

394 PARKER LOADER CONTROL VALVE, LOADER LIFT SPOOL

Ref	Part Number	Qty	Description
	N6592	1	SPOOL ASSEMBLY, loader lift, Includes: Ref. 1 - 23
1	D37153	1	RETAINER wiper ring
2	A14527	1	WIPER spool
3	D37152	1	GLAND spool
5	D37156	1	O RING large, gland
6	D37076	1	SLEEVE spool, eye end
7	D33857	1	RETAINER O ring, inner
8	A7623	1	O RING spool
9	D33856	1	RETAINER O ring, outer
10	NSS	1	SPOOL four position
11	NSS	1	EYE spool
12	A14533	1	SEAT spring, upper
13	N6013	1	SPRING centering, spool
14	A16881	1	SEAT spring, lower
15	N6014	1	STUD detent
16	L30455	1	WASHER detent
17	211-207	8	BALL 9/32", grade 25, chrome alloy steel, detent
18	N6015	1	CAM detent
19	L30626	1	SPRING detent
20	L30454	1	HOUSING valve, detent
21	N6643	1	PLUG detent adjustment
22	N6644	1	PLUG check
23	A27365	2	O RING spool seal, control valve body
4	237-6006	1	O-Ring, 6-1, 90 Duro, .468" ID x .078" Thk, Spool eye, replaced: NSS

396 PARKER LOADER CONTROL VALVE, LOADER BUCKET SPOOL

396

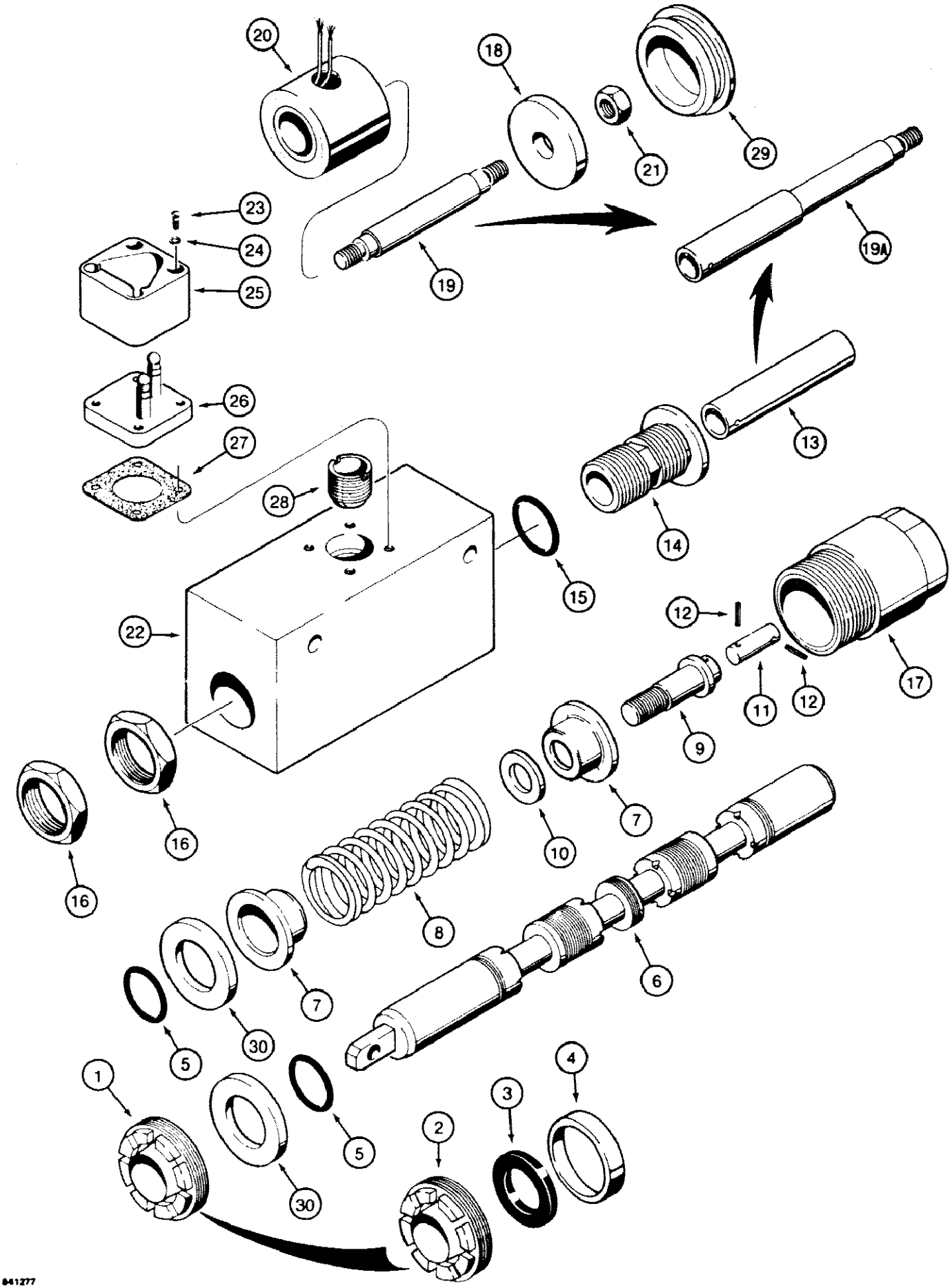

841277

580SE CASE SUPER-E CONSTRUCTION KING LOADER BACKHOE - Hydraulics

396 PARKER LOADER CONTROL VALVE, LOADER BUCKET SPOOL

Ref	Part Number	Qty	Description
	N8524	1	SPOOL ASSEMBLY, loader bucket, Includes: Ref. 1 through 30
1	D80412	1	GLAND AND WIPER ASSEMBLY, spool, Includes: Ref. 2 - 4
2	NSS	1	GLAND spool
3	A14527	1	WIPER spool
4	NSS	1	SLEEVE gland
5	A27365	2	O RING spool seal, control valve body
6	N8525	1	SPOOL bucket control
7	A14533	2	SEAT spring
8	A25285	1	SPRING centering, spool
9	L36048	1	SCREW spool end
10	A25286	1	WASHER spacer
11	D33858	1	LINK spool detent
12	138-2012	2	PIN, 1/8" x 1/2", Coiled
13	L36049	1	SPACER detent link, used with Ref. 19, no longer available, replace this spacer and Ref. 19 with N9078 spacer, Ref. 19A
14	L36046	1	CONNECTOR spool end and detent
15	F62114	1	O RING connector
16	L36045	2	NUT lock, 7/8" - 14 NF
17	L36047	1	HOUSING spring
18	N6008	1	WASHER magnetic detent
19	L36050	1	SPACER coil, rod, used with Ref. 13, no longer available, replace this spacer and Ref. 13 with N9078 spacer, Ref. 19A
19A	N9078	1	SPACER coil, rod, one piece, replaces two piece spacer, Ref. 13 and 19, on some models
20	D78419	1	COIL AND SLEEVE one piece design
21	25-114	1	NUT hex, 1/4" - 28 NF
22	L36040	1	HOUSING magnetic detent
23	187-1351	4	SCREW pan Phillips head, self tapping, plated, No. 4 40 NC x 1"
24	192-53	4	WASHER, LOCK, #4
25	N6046	1	COVER connector
26	N6642	1	CONNECTOR two male bullets
27	D80410	1	GASKET connector
28	L36042	1	SCREW lock, hollow
29	L36039	1	CAP magnetic detent spool
30	A14535	2	RETAINER spool seal

398 PARKER LOADER CONTROL VALVE, LOADER CLAM SPOOL

398

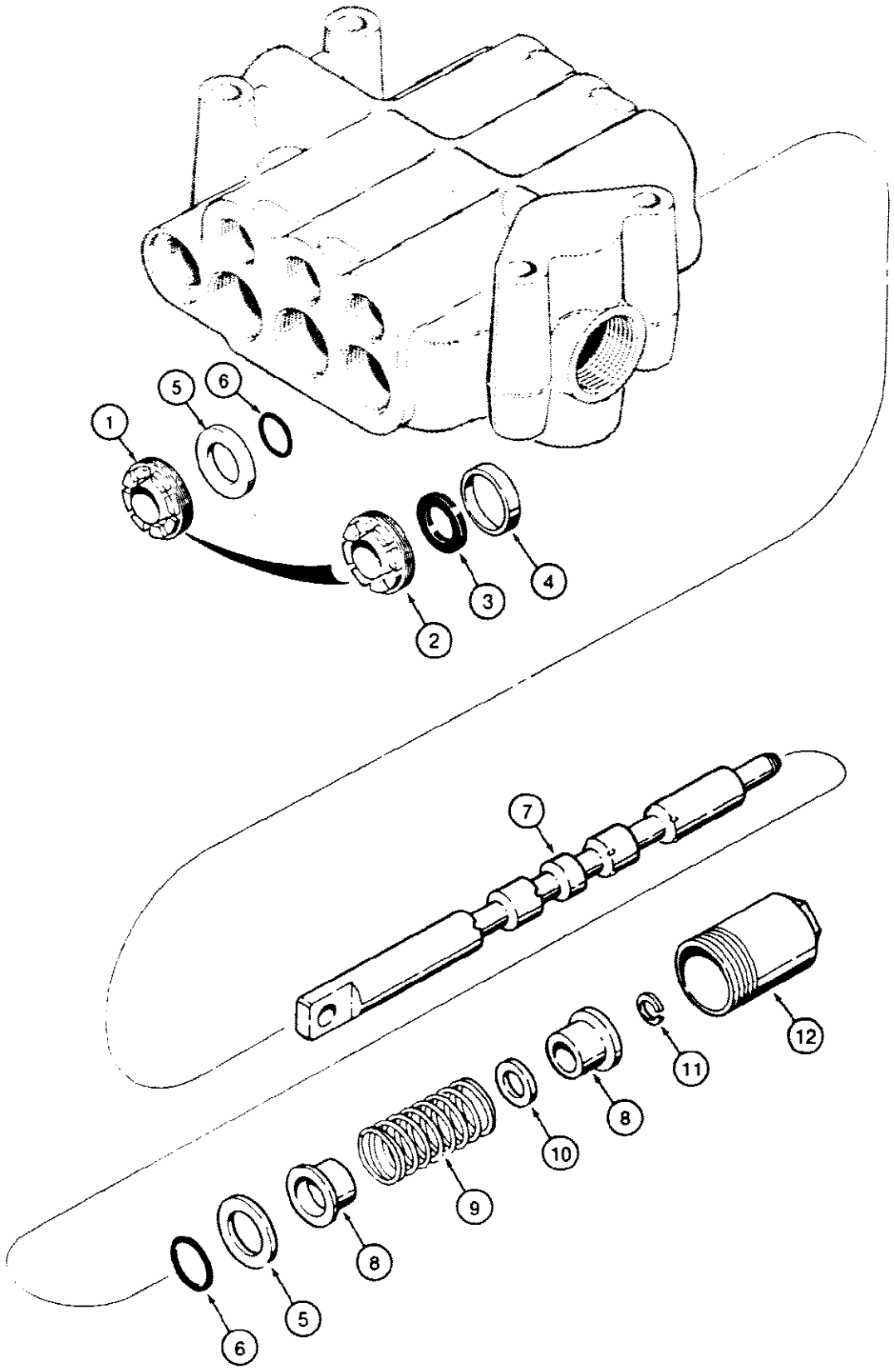

580SE CASE SUPER-E CONSTRUCTION KING LOADER BACKHOE - Hydraulics

398 PARKER LOADER CONTROL VALVE, LOADER CLAM SPOOL

Ref	Part Number	Qty	Description
	D37050	1	SPOOL ASSEMBLY, loader clam, Includes: Ref. 1 through 12
1	D80412	1	GLAND AND WIPER ASSEMBLY, spool, Includes: Ref. 2 - 4
2	NSS	1	GLAND spool
3	A14527	1	WIPER spool
4	NSS	1	SLEEVE gland
5	A14535	2	RETAINER seal
6	A27365	2	O RING spool seal, control valve body
7	NSS	1	SPOOL clam control
8	A14533	2	SEAT spring
9	A14534	1	SPRING centering, spool
10	A25286	1	WASHER special
11	A27020	1	RING snap, spring seat
12	A14529	1	HOUSING spring

400

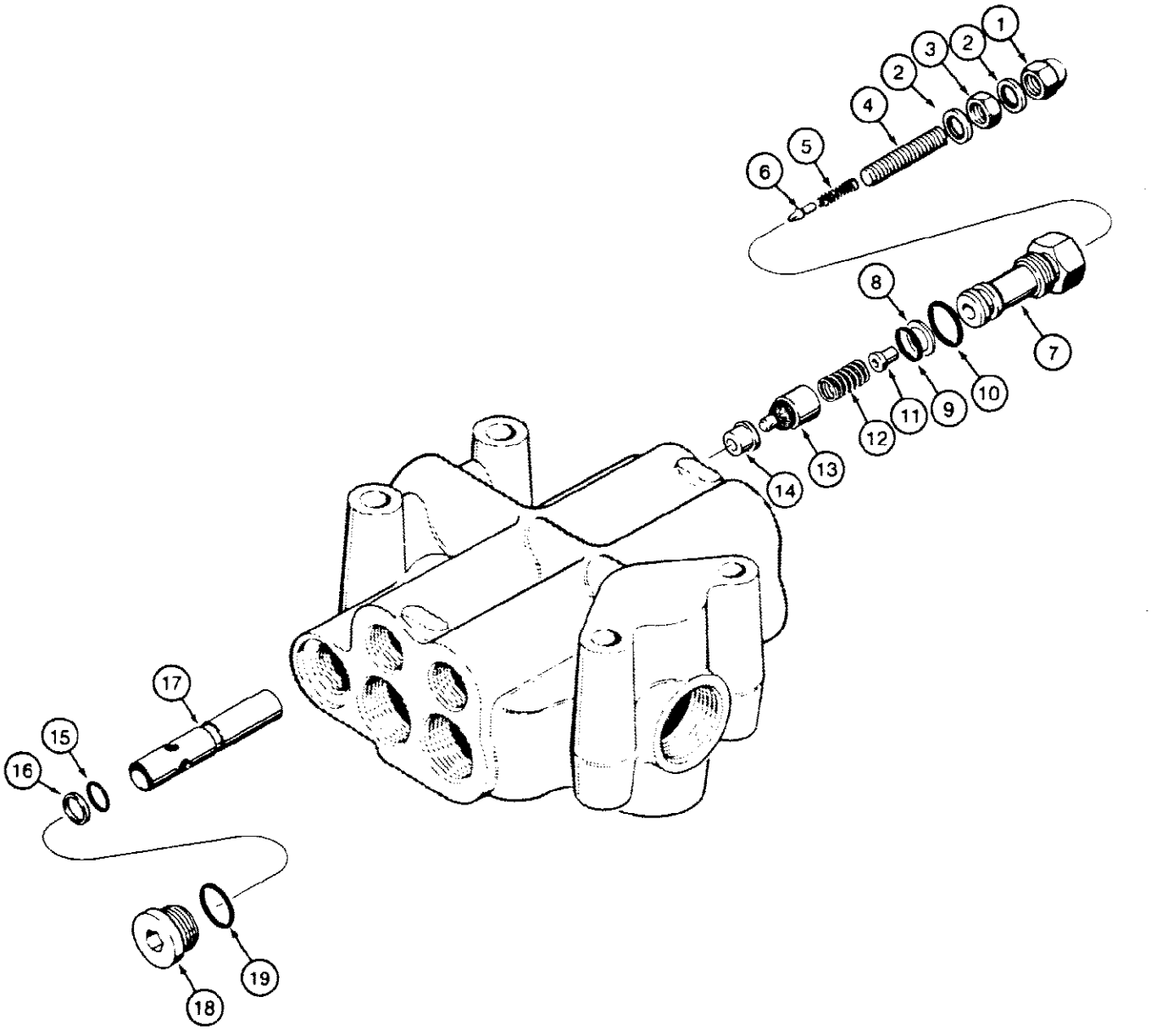

580SE CASE SUPER-E CONSTRUCTION KING LOADER BACKHOE - Hydraulics

400 PARKER LOADER CONTROL VALVE, MAIN RELIEF VALVE

Ref	Part Number	Qty	Description
1	129-514	1	NUT dome, 5/16" - 24 NF
2	D26270	2	SEAL special, may be one or two piece part
3	25-155	1	NUT hex, jam, 5/16" - 24 NF
4	176-296	1	SCREW adjusting, main relief valve, 5/16" - 24 NF x 1-3/4"
5	D26268	1	SPRING plunger
6	D26267	1	PLUNGER main relief valve
7	A25291	1	BODY main relief valve
8	L30443	1	RING backup, L30444 O ring
9	L30444	1	O RING small
11	D26266	1	SEAT plunger
12	D52319	1	SPRING poppet
13	D37062	1	POPPET ASSEMBLY, main relief valve
14	D37063	1	SEAT poppet
15	L30444	1	O RING sleeve seat
16	L30443	1	RING backup, L30444 O ring
17	D83201	1	SLEEVE seat
18	71100209	1	PLUG, Hex Soc, 3/4"-16 ORB, Main relief valve, Includes Ref. 19
10	218-5006	1	O-Ring, 8-1, 90 Duro, .644" ID x .087" Thk
19	218-5006	1	O-Ring, 8-1, 90 Duro, .644" ID x .087" Thk, plug

402

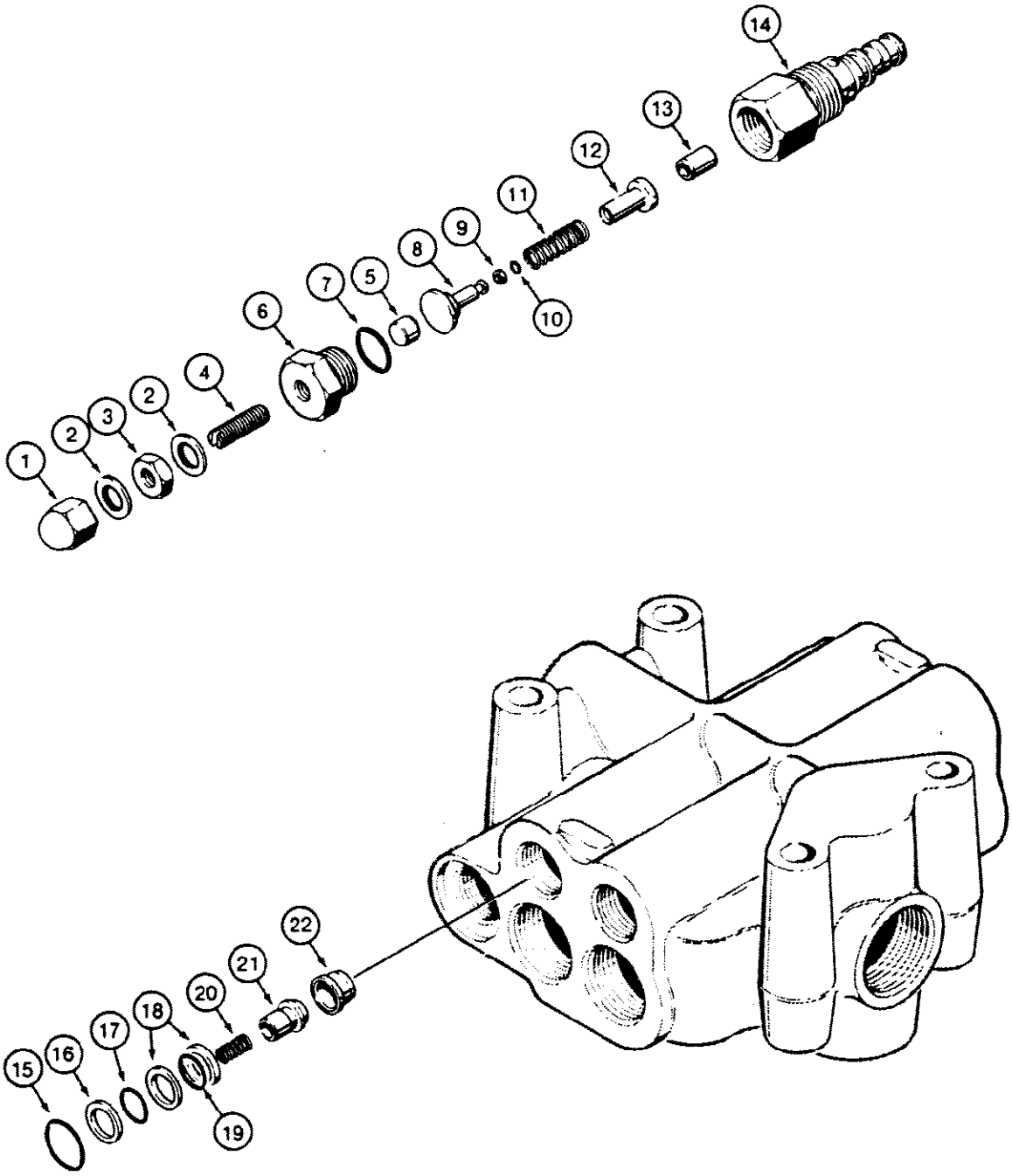

800847A

402 PARKER LOADER CONTROL VALVE, CIRCUIT RELIEF VALVE AND LOAD CHECK VALVE

Ref	Part Number	Qty	Description
1	129-514	1	NUT dome, 5/16" - 24 NF
2	D26270	2	SEAL special, may be one or two piece part
3	25-155	1	NUT hex, jam, 5/16" - 24 NF
4	176-297	1	SCREW adjusting, circuit relief valve, 5/16" - 24 NF x 1"
5	N6042	1	PLUG stop
6	D66437	1	CAP circuit relief valve, Includes: Ref. 7
8	N7764	1	GUIDE spring
9	D40357	1	RING backup, guide O ring
10	D40356	1	O RING spring guide
11	D37148	1	SPRING poppet
12	N7765	1	POPPET circuit relief valve
13	D37075	1	SEAT poppet
14	D37072	1	BODY circuit relief valve
15	237-6010	1	O RING body
16	D37071	1	RING backup, center O ring
17	D26265	1	O RING center
18	D37070	2	RING backup, small O ring
19	A18414	1	O RING small
20	D37067	1	SPRING poppet
21	D37068	1	POPPET load check valve
22	D40358	1	SEAT poppet
7	218-5006	1	O-Ring, 8-1, 90 Duro, .644" ID x .087" Thk, cap

404

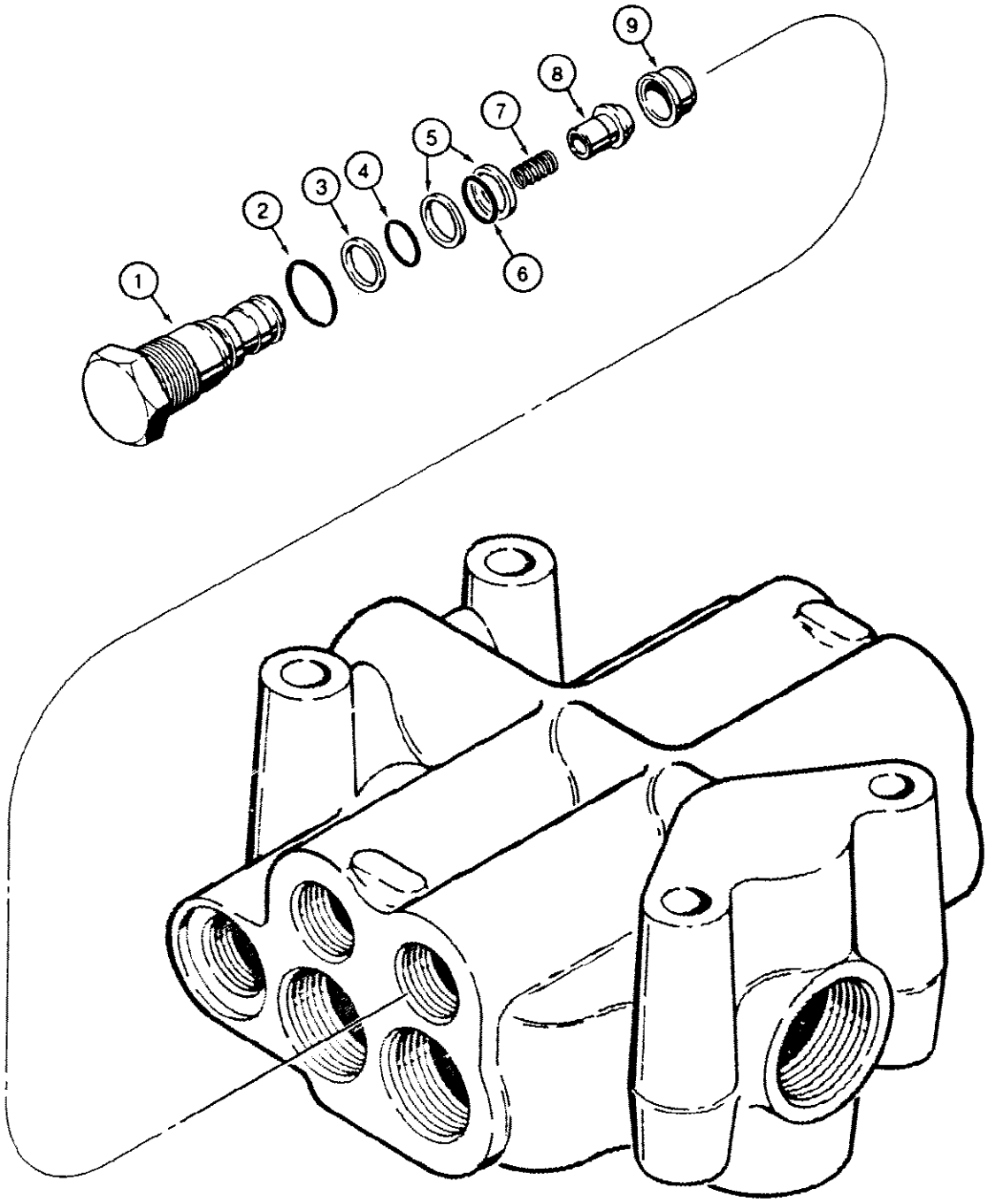

800644

404 PARKER LOADER CONTROL VALVE, LOAD CHECK VALVE

Ref	Part Number	Qty	Description
1	D37066	1	PLUG load check valve
2	237-6010	1	O RING large
3	D37071	1	RING backup, center O ring
4	D26265	1	O RING center
5	D37070	2	RING backup, small
6	A18414	1	O RING small
7	D37067	1	SPRING poppet
8	D37068	1	POPPET load check valve
9	D40358	1	SEAT poppet

406

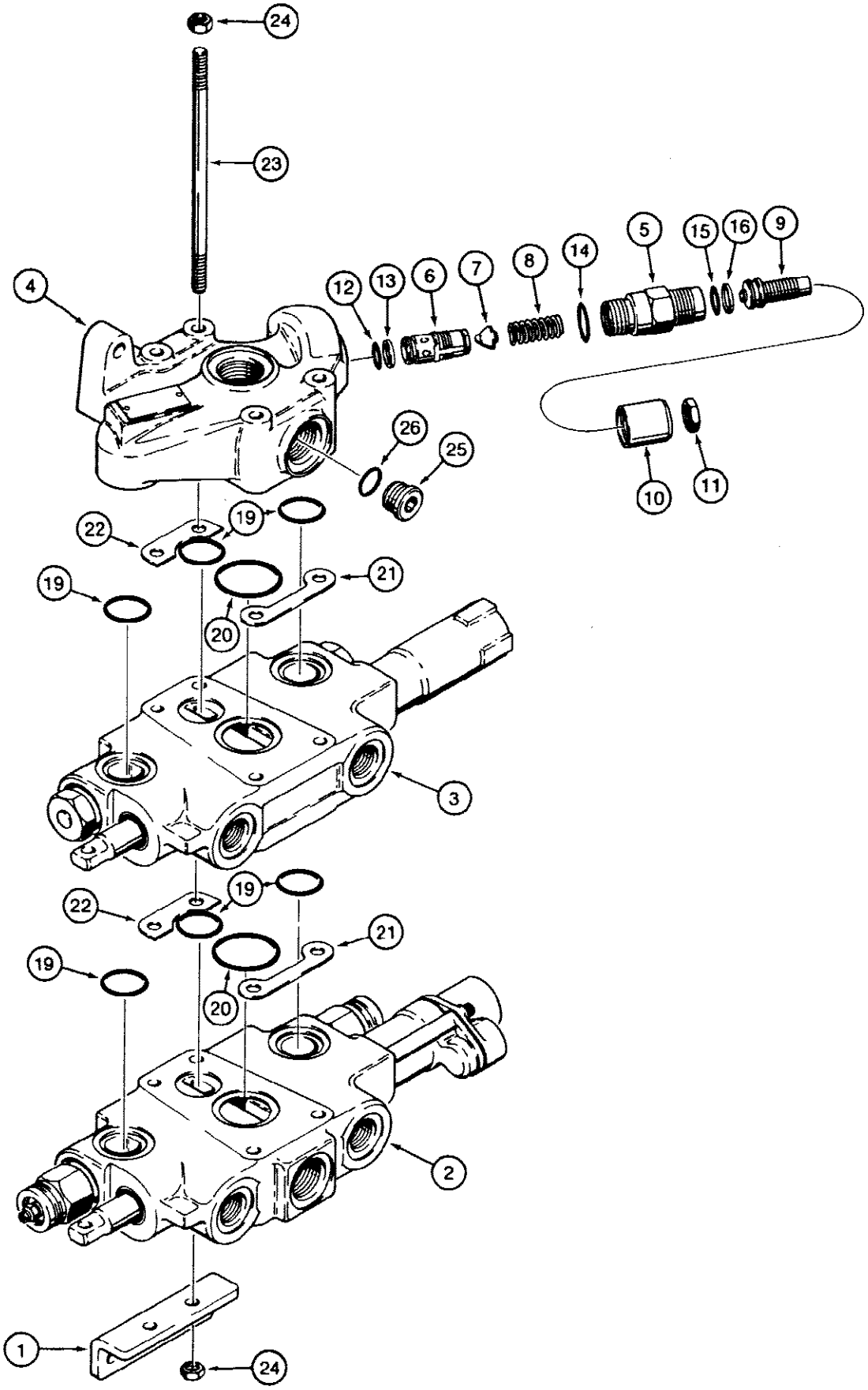

B40370 A

580SE CASE SUPER-E CONSTRUCTION KING LOADER BACKHOE - Hydraulics

406 CASE LOADER CONTROL VALVE - TWO SPOOL

Ref	Part Number	Qty	Description
	G106334		CONTROL VALVE ASSEMBLY, loader, two spool, no longer available, order G110082 loader control valve
	G109580		CONTROL VALVE ASSEMBLY, loader, two spool, replaces G106334 control valve, no longer available, order G110082 control valve
	G110082	1	CONTROL VALVE ASSEMBLY, loader, two spool, Includes: Ref. 1 - 26
1	G106405	1	BRACKET mounting
2	G106335	1	BUCKET SECTION See Figure 408, no longer available, order G109586 section
2	G109586	1	BUCKET SECTION See Figure 408, Replaces G106335 bucket section
3	G106336	1	LIFT SECTION See Figure 410
4	G106340	1	SECTION outlet with main relief valve
	G106406	1	MAIN RELIEF VALVE ASSEMBLY, loader control valve, no longer available, order G110083 main relief valve, see below, Includes: Ref. 5 - 26
5	NSS	1	HOUSING relief valve cartridge
6	NSS	1	CARTRIDGE ASSEMBLY, relief valve, component parts not serviced separately
7	NSS	1	POPPET relief valve cartridge
8	NSS	1	SPRING relief valve
9	NSS	1	SCREW adjusting, relief valve
10	NSS	1	CAP relief valve
11	NSS	1	NUT cap retaining
	G109402	1	KIT, seal, relief valve assembly, no longer available, for service order G110098 seal kit and G110099 screen filter kit, see below, Includes: Ref. 12 - 26
12	NSS	1	O RING cartridge, outer
13	NSS	1	RING backup, cartridge, outer O ring
14	NSS	1	O RING housing, large, outer
15	NSS	1	O RING adjusting screw, inner
16	NSS	1	RING backup, adjusting screw O ring
17	NSS	1	FILTER inner end of cartridge, not shown, The filter and snap ring included in this kit may be replaced without disassembling the cartridge.They do not have to be replaced unless system contamination is high.
18	NSS	1	RING snap, filter retaining, not shown, The filter and snap ring included in this kit may be replaced without disassembling the cartridge.They do not have to be replaced unless system contamination is high.
18A	G110083	1	MAIN RELIEF VALVE ASSEMBLY, component parts not serviced separately, for service order G110098 seal kit and G110099 screen filler kit, not shown
19	G34000	6	O RING section ports, small
20	G34001	2	O RING section ports, large
21	G107251	2	SHIM, 0.051mm Thk, Section, Port side of control valve
22	G33965	2	SHIM, 0.051mm Thk, Section, Non-port side of control valve
23	G106302	4	STUD tie, 3/8" - 16 NC x 7"
24	129-103	8	NUT, 3/8"-16, G5
25	71100209	1	PLUG, Hex Soc, 3/4"-16 ORB, Used with power beyond only, Includes Ref. 26

580SE CASE SUPER-E CONSTRUCTION KING LOADER BACKHOE - Hydraulics

406 CASE LOADER CONTROL VALVE - TWO SPOOL

Ref	Part Number	Qty	Description
	G110098		KIT, seal, services loader control valve end of relief valve, includes, 2, O rings and, 1, backup ring whiich are not serviced separately
	G110099		KIT, filter screen, relief valve, includes filter screen, snap ring, and screen retainer which are not serviced separately
26	218-5006	1	O-Ring, 8-1, 90 Duro, .644" ID x .087" Thk, plug

408

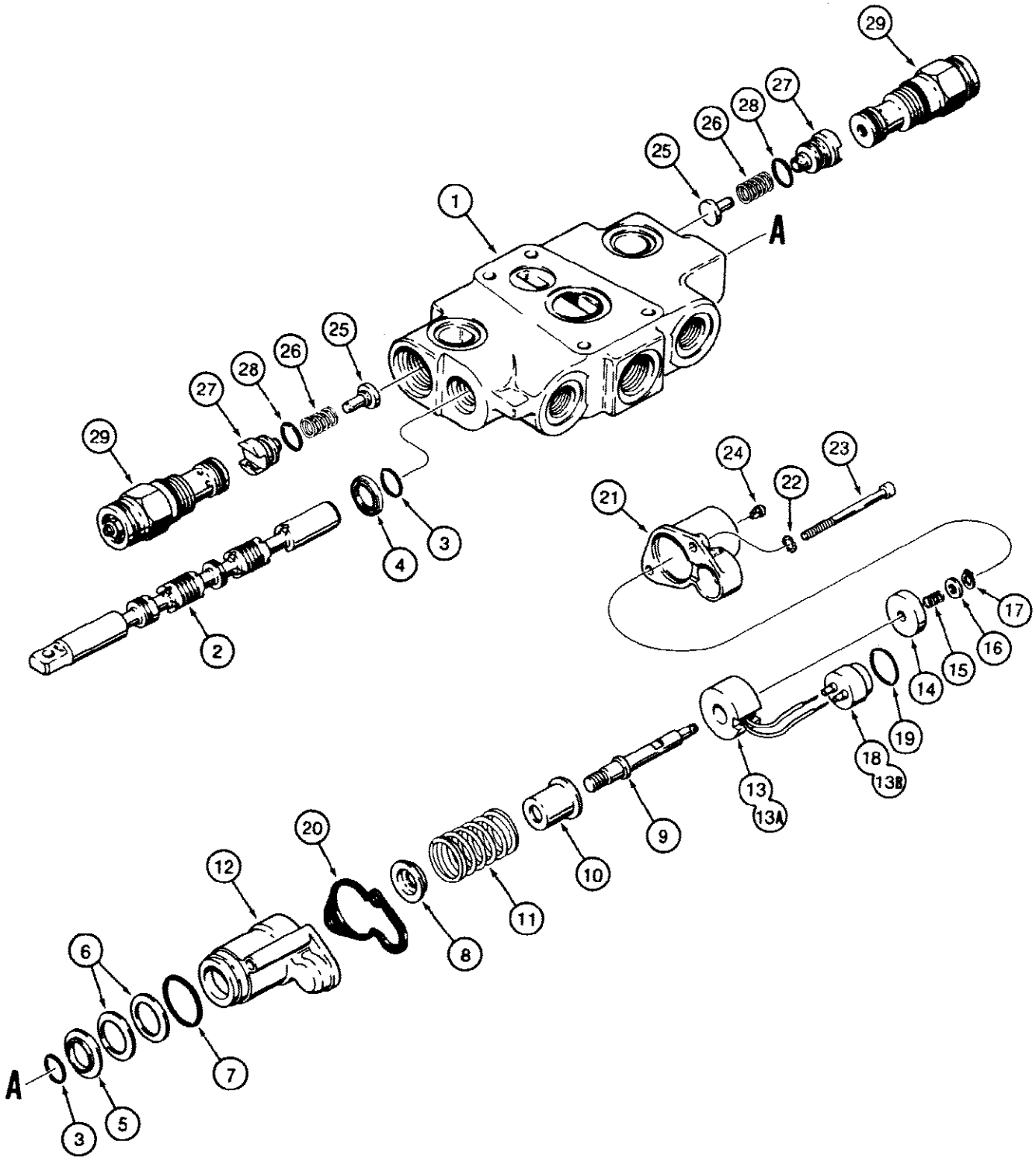
29
27
28
26
25
1
A
25
26
28
27
29
24
23
22
21
17
16
15
14
19
18
13B
13
13A
9
10
11
8
20
12
6
7
5
3
A
3
4
2

40371A

408 CASE LOADER CONTROL VALVE - TWO SPOOL, BUCKET SECTION WITH MAGNETIC DETENT

Ref	Part Number	Qty	Description
	G106335	1	SECTION ASSEMBLY, bucket, no longer available, order G109586 bucket section
	G109586	1	SECTION ASSEMBLY, bucket, Replaces G106335 bucket section, Includes: Ref. 1 - 29
1	NSS	1	HOUSING section
2	NSS	1	SPOOL section
3	G108461	2	O RING spool and housing
4	A32309	1	SEAL spool
5	G102711	1	RETAINER O ring
6	G106452	2	SPRING belleville, washer
7	A59066	1	O RING retainer
8	G106442	1	RETAINER centering spring
9	G107445	1	SHAFT magnetic detent
10	G106441	1	SEAT centering spring
11	G109302	1	SPRING centering, spool
12	G106423	1	HOUSING magnetic detent
13	G106447	1	COIL magnetic detent, no longer available, order G110079 magnetic detent coil assembly
	G110079	1	COIL ASSEMBLY, magnetic detent, Includes: Ref. 13A and 13B
13A	NSS	1	COIL magnetic detent
13B	G106450	1	CONNECTOR coil
14	G109295	1	WASHER detent
15	G107447	1	SPRING detent washer
16	A50778	1	WASHER shaft
17	A7111	1	Ring, Snap, #25, Ext, washer retaining
18	G106450	1	CONNECTOR coil, used with G106447 magnetic detent coil, Ref. 13
19	G106453	1	O RING connector
20	G106443	1	GASKET connector
21	G106424	1	CAP magnetic detent
22	193-6	2	WASHER, LOCK, Ext Tooth, #10
23	165-46	2	BOLT hex socket head, No. 10 - 24 NC x 2-3/4"
24	G107780	1	VALVE check, magnetic detent
25	G33081	2	POPPET load check
26	G33573	2	SPRING load check
27	G33084	2	PLUG load check
28	G33686	2	O RING plug
29	G106354	2	CIRCUIT RELIEF VALVE ASSEMBLY, See Figure 412, used in production, no longer available, Replaced by G107786 valve in production, order G109449 circuit relief valve kit for service, See Figure 412 for kit
29	G107786	2	CIRCUIT RELIEF VALVE ASSEMBLY, See Figure 412, Replaces G106354 circuit relief valve in production, order G109449 kit for service, See Figure 412 for kit

410

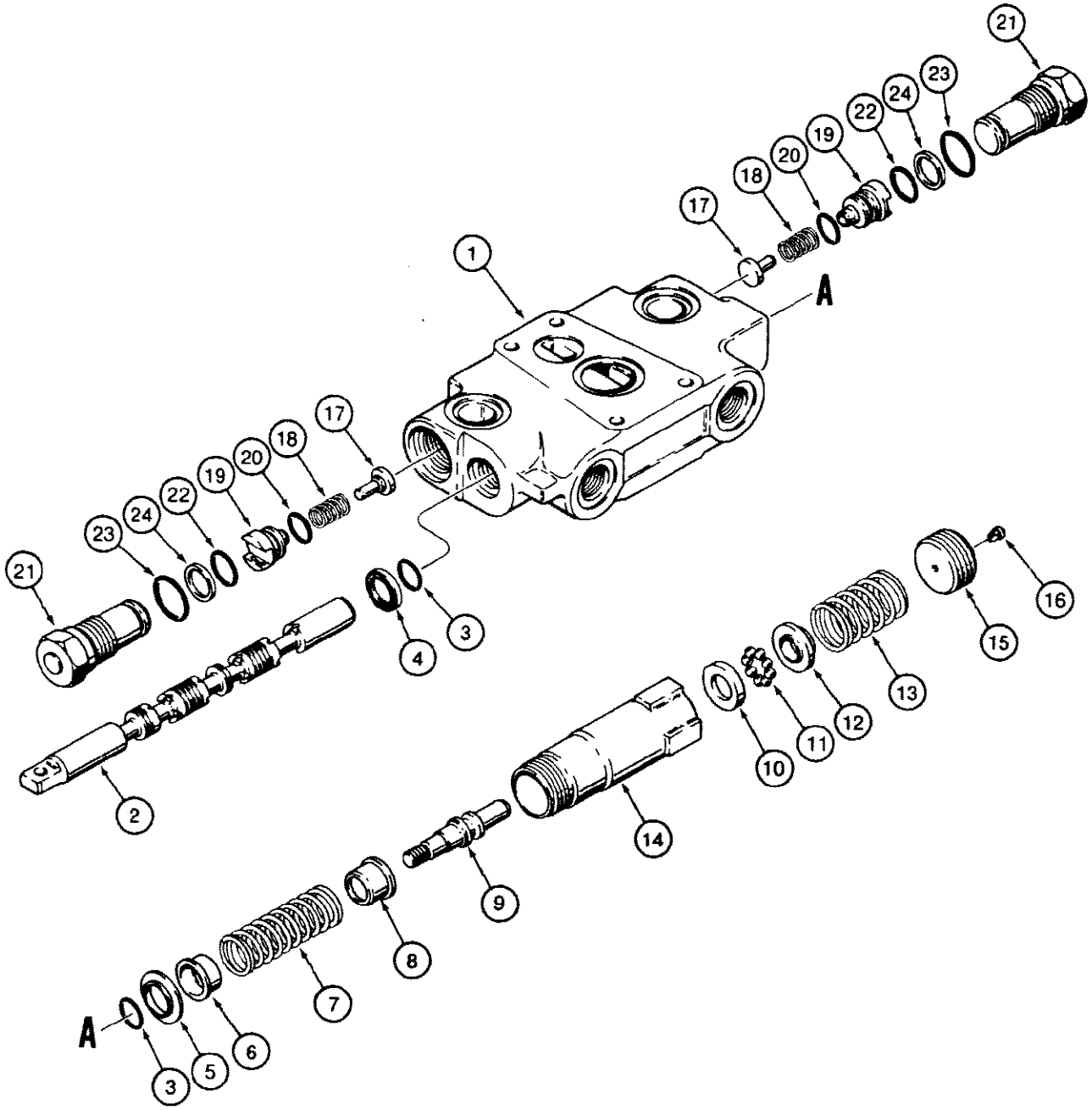

580SE CASE SUPER-E CONSTRUCTION KING LOADER BACKHOE - Hydraulics

410 CASE LOADER CONTROL VALVE - TWO SPOOL, LIFT SECTION

Ref	Part Number	Qty	Description
	G106336	1	SECTION ASSEMBLY, lift, Includes: Ref. 1 - 24
1	NSS	1	HOUSING section
2	NSS	1	SPOOL section
3	G108461	2	O RING spool and housing
4	A32309	1	SEAL spool
5	G102711	1	RETAINER O ring
6	G33075	1	SEAT centering spring, upper, small
7	G106455	1	SPRING centering, spool
8	G106395	1	SEAT centering spring, lower, large
9	G106396	1	SHAFT detent
10	G109127	1	WASHER detent, ball retainer
11	211-258	8	BALL grade 50, chrome alloy steel, 9/32"
12	G106398	1	RETAINER ball stop
13	G109081	1	SPRING detent
14	G106425	1	HOUSING detent
15	G106454	1	PLUG detent housing
16	G107780	1	VALVE check, detent plug
17	G33081	2	POPPET load check
18	G33573	2	SPRING load check
19	G33084	2	PLUG load check
20	G33686	2	O RING plug
	G33122	2	PLUG ASSEMBLY, load check valve port, Includes: Ref. 21 - 24
21	NSS	1	PLUG load check valve port
22	G107675	1	O RING small
23	218-5008	1	O RING large
24	G35540	1	RING backup, small O ring

412

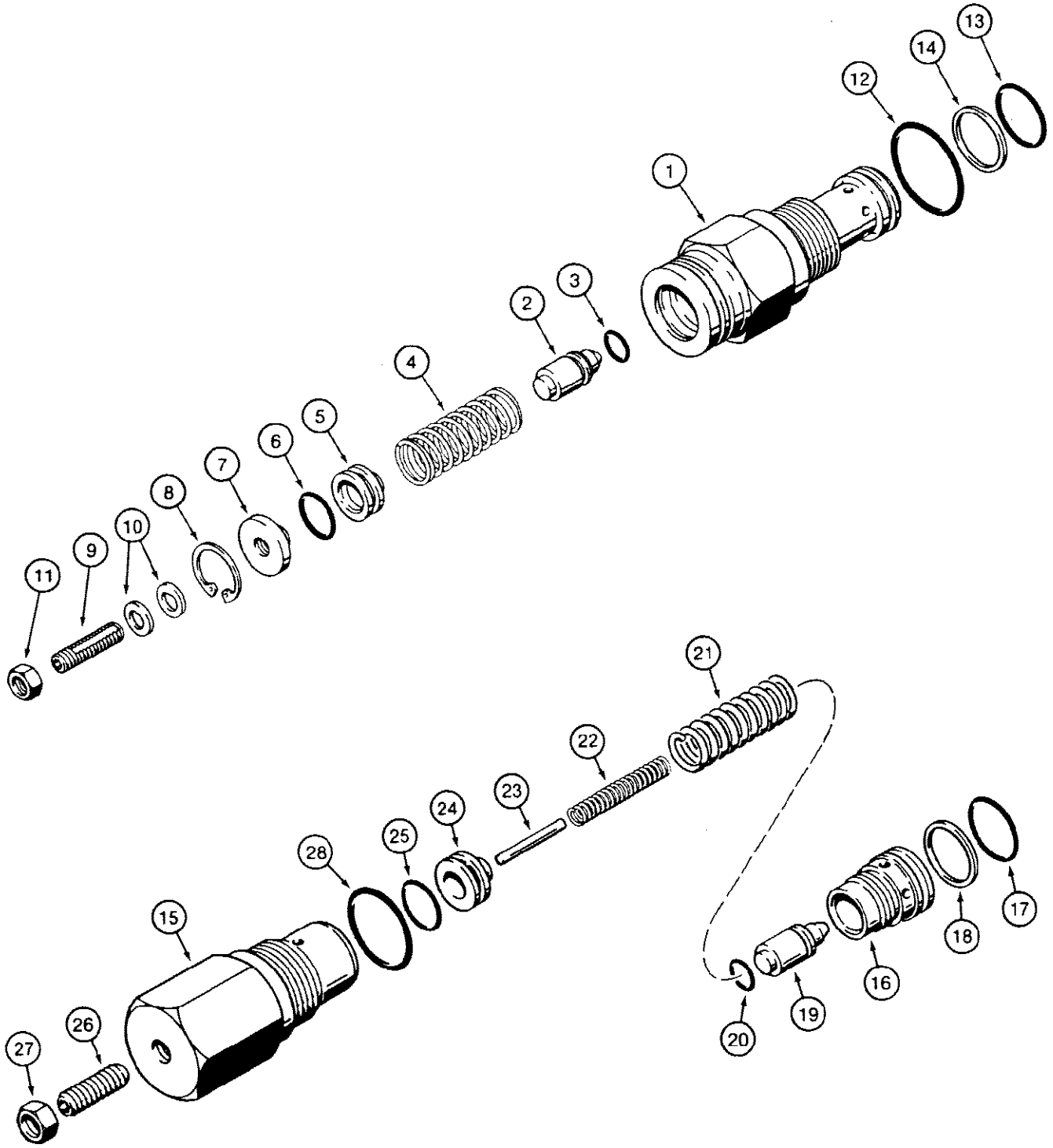

861550

580SE CASE SUPER-E CONSTRUCTION KING LOADER BACKHOE - Hydraulics

412 CASE LOADER CONTROL VALVE - TWO SPOOL, CIRCUIT RELIEF VALVE

Ref	Part Number	Qty	Description
	G106354	2	CIRCUIT RELIEF VALVE ASSEMBLY, bucket section, used in production, no longer available, Replaced by G107786 valve in production, order G109449 circuit relief valve kit for service, see below, Includes: Ref. 1 - 14
1	NSS	1	HOUSING circuit relief valve
2	NSS	1	POPPET circuit relief valve
3	A28090	1	O-Ring -011, 70 Duro, .031" ID x .070" Thk poppet
4	G105693	1	SPRING circuit relief valve
5	G33091	1	PISTON circuit relief valve
6	G102845	1	O RING piston
7	G33092	1	RETAINER relief adjusting
8	G46150	1	Ring, Snap, 0.75", Int, #75, circuit relief valve
9	G102782	1	SCREW set, hex socket, 1/4" - 20 NC x 1"
10	G102781	2	WASHER special
11	129-141	1	NUT, Jam, 1/4"-20, G5
12	218-5008	1	O RING large
13	G107675	1	O RING small
14	G35540	1	RING backup, small O ring
	G107786	2	CIRCUIT RELIEF VALVE ASSEMBLY, bucket section, high pressure, Replaces G106354 valve in production, order G109449 kit for service, Includes: Ref. 15 - 28, The pressure setting of the repair circuit relief valve is not preset for this application. Adjust the setting according to the instrucitons sent with the repair valve.
15	NSS	1	HOUSING circuit relief valve
16	NSS	1	SEAT circuit relief valve
17	G107675	1	O RING circuit relief valve seat
18	G35540	1	RING backup, seat O ring
19	NSS	1	POPPET circuit relief valve
20	NSS	1	O RING poppet
21	NSS	1	SPRING relief, outer
22	NSS	1	SPRING relief, inner
23	NSS	1	PIN relief stop, no longer used, not required
24	NSS	1	PISTON circuit relief valve
25	NSS	1	O RING piston
26	178-890	1	SCREW set, hex socket headless, oval point, plated, 5/16" - 24 NF x 1"
27	86637933	1	NUT, Jam, 5/16"-24, G5
28	218-5008	1	O RING large, housing
	G109449	1	KIT, service for G107786, includes G109447 circuit relief valve, Refs. 15-28, and an instruction sheet, The pressure setting of the repair circuit relief valve is not preset for this application. Adjust the setting according to the instrucitons sent with the repair valve.

414

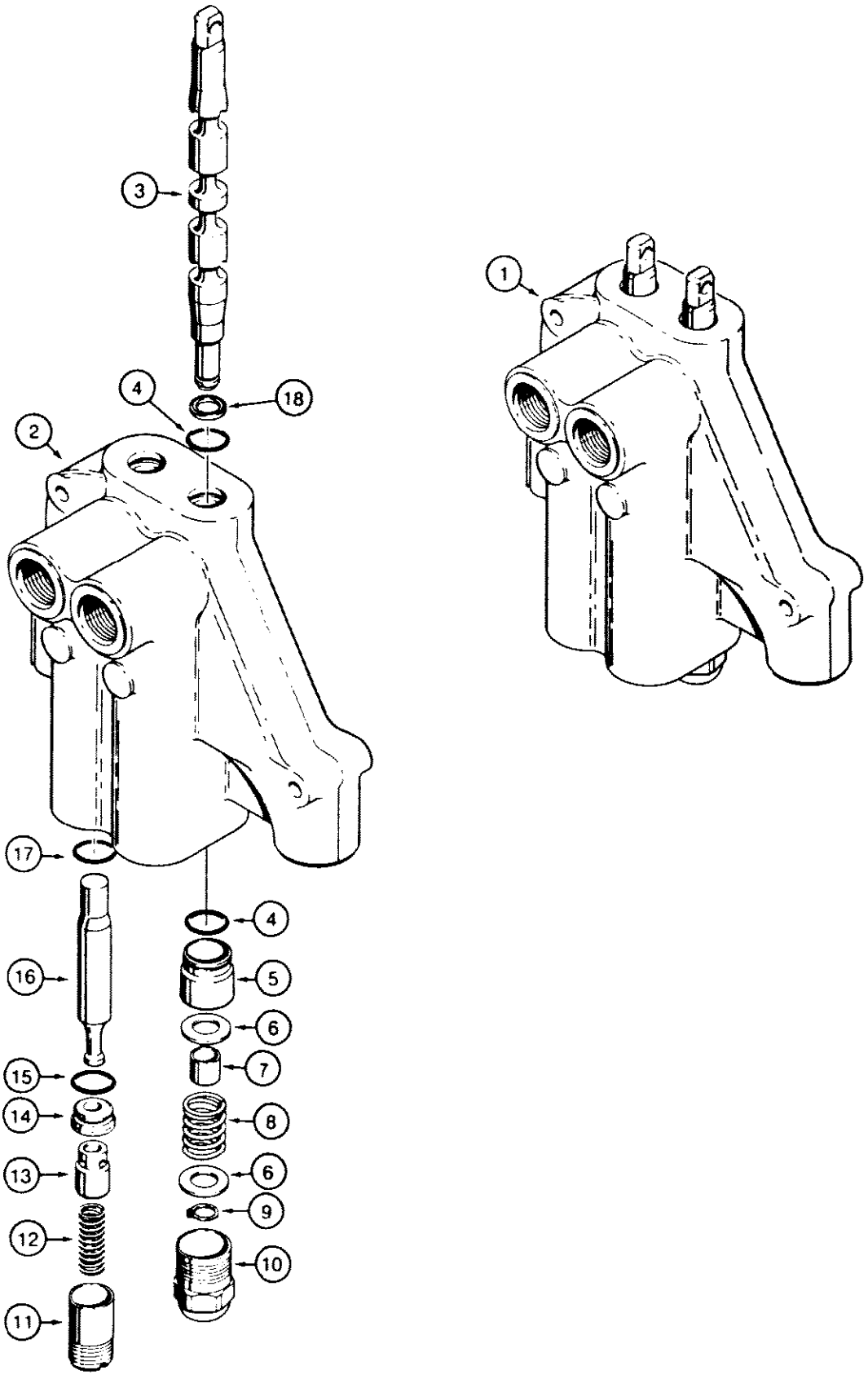

800929 B

414 STABILIZER CONTROL VALVE

Ref	Part Number	Qty	Description
1	DR124856	1	CONTROL VALVE ASSEMBLY, stabilizer, remanufactured, component parts shown on this figure do not apply to the remanufactured assembly
1	DC124856	1	NUMBER return, use this part number to return valve core for credit when using a remanufactured assembly
1	NSS	1	CONTROL VALVE ASSEMBLY, stabilizer, new, Cessna No. 39042 AAL, for service order D124856 valve, In valves identified as Cessna No. 39042 AAL, the N8451 seat and N8452 plunger must be replaced at the same time.
1	D124856	1	CONTROL VALVE ASSEMBLY, stabilizer, new, Cessna No. 39042-AAQ, Includes: Ref. 2 - 18
2	NSS	1	BODY control valve
3	NSS	2	SPOOL control valve
4	N8453	4	O RING spool
5	N8450	2	BUSHING spool
6	N6470	4	WASHER spring retainer
7	N8436	2	SPACER split, spring
8	D56445	2	SPRING spool return
9	A27020	2	RING snap, washer
10	F35196	2	CAP spool end
11	D59653	2	PLUG spring retainer
12	D56444	2	SPRING poppet
13	D59654	2	POPPET control valve
	N8451	2	SEAT ASSEMBLY, plunger, Includes: Ref. 14 and 15, In valves identified as Cessna No. 39042 AAL, the N8451 seat and N8452 plunger must be replaced at the same time.
14	NSS	1	SEAT plunger
15	D48359	1	O RING seat
16	N8452	2	PLUNGER control valve, In valves identified as Cessna No. 39042 AAL, the N8451 seat and N8452 plunger must be replaced at the same time.
17	D31410	2	O RING plunger
18	N8005	2	WIPER spool, outer

416

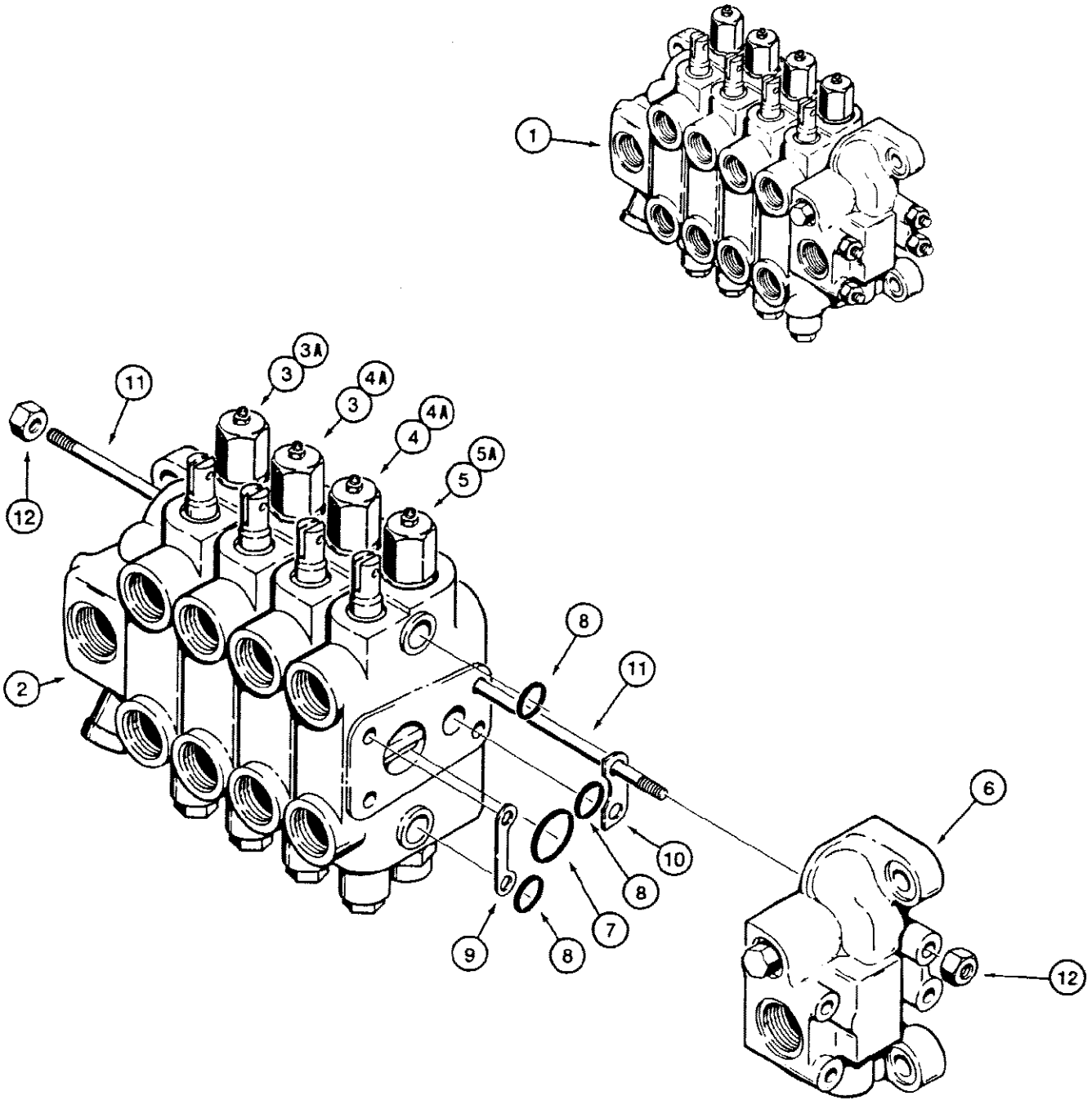

B61551

416 BACKHOE CONTROL VALVES, USED ON MODELS WITHOUT EXTENDABLE DIPPER

Ref	Part Number	Qty	Description
1	G109536	1	CONTROL VALVE ASSEMBLY, foot swing models, Replaces G104993 control valve
1	G109541	1	CONTROL VALVE ASSEMBLY, hand swing models, Replaces G104995 control valve, Includes: Ref. 2 - 12
2	G33108	1	OUTLET SECTION See Figure 420
3	REF	2	DIPPER AND BUCKET SECTION See Figures 422 and 424, used with G109541 control valve assembly
3A	REF	1	BOOM SECTION See Figures 432-438, used with G109536 control valve assembly
4A	REF	2	DIPPER AND BUCKET SECTION See Figures 422 and 424, used with G109536 control valve assembly
5	REF	1	BOOM SECTION See Figures 432 - 438, used with G109541 control valve assembly
5A	REF	1	SWING SECTION See Figures 428 and 430, used with G109536 control valve assembly
6	G33102	1	INLET SECTION See Figure 420
7	G34001	5	O RING section ports, large
8	G34000	15	O RING section ports, small
9	G107251	5	SHIM, 0.051mm Thk, Section, Port side of control valve
10	G33965	5	SHIM, 0.051mm Thk, Section, Non-port side of control valve
11	G34942	4	STUD tie, 3/8" - 16 NC x 13-3/4"
12	129-103	8	NUT, 3/8"-16, G5

418

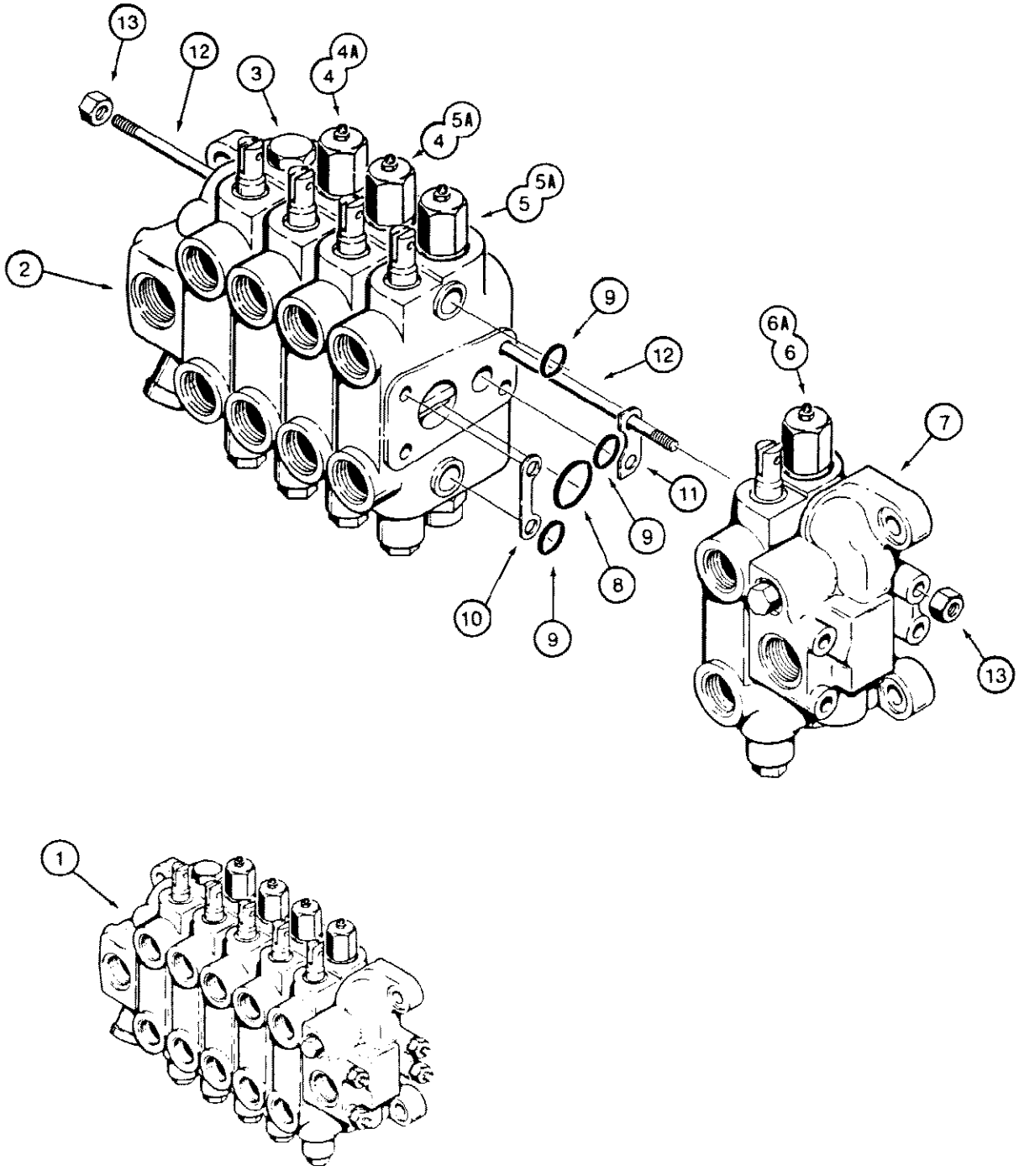

M61552

418 BACKHOE CONTROL VALVES, USED ON MODELS WITH EXTENDABLE DIPPER

Ref	Part Number	Qty	Description
1	G109537	1	CONTROL VALVE ASSEMBLY, foot swing models, Replaces G104994 control valve
1	G109540	1	CONTROL VALVE ASSEMBLY, hand swing models, Replaces G104996 control valve, Includes: Ref. 2 - 13
2	G33108	1	OUTLET SECTION See Figure 420
3	G103404	1	EXTENDABLE DIPPER SECTION See Figure 426
4	REF	2	DIPPER AND BUCKET SECTION See Figures 422 and 424, used with G109540 control valve assembly
4A	REF	1	BOOM SECTION See Figures 432-438, used with G109537 control valve assembly 5REFSWING SECTION See Figures 428 and 430, used with G109540 control valve assembly
5A	REF	2	DIPPER AND BUCKET SECTION See Figures 422 and 424, used with G109537 control valve assembly
6	REF	1	BOOM SECTION See Figures 432 - 438, used with G109540 control valve assembly
6A	REF	1	SWING SECTION See Figures 428 and 430, used with G109537 control valve assembly
7	G33102	1	INLET SECTION See Figure 420
8	G34001	6	O RING section ports, large
9	G34000	18	O RING section ports, small
10	G107251	6	SHIM, 0.051mm Thk, Section, Port side of control valve
11	G33965	6	SHIM, 0.051mm Thk, Section, Non-port side of control valve
12	G34675	4	STUD tie, 3/8" - 16 NC x 15-3/4"
13	129-103	8	NUT, 3/8"-16, G5

420 BACKHOE CONTROL VALVE, OUTLET SECTION, INLET SECTION

420

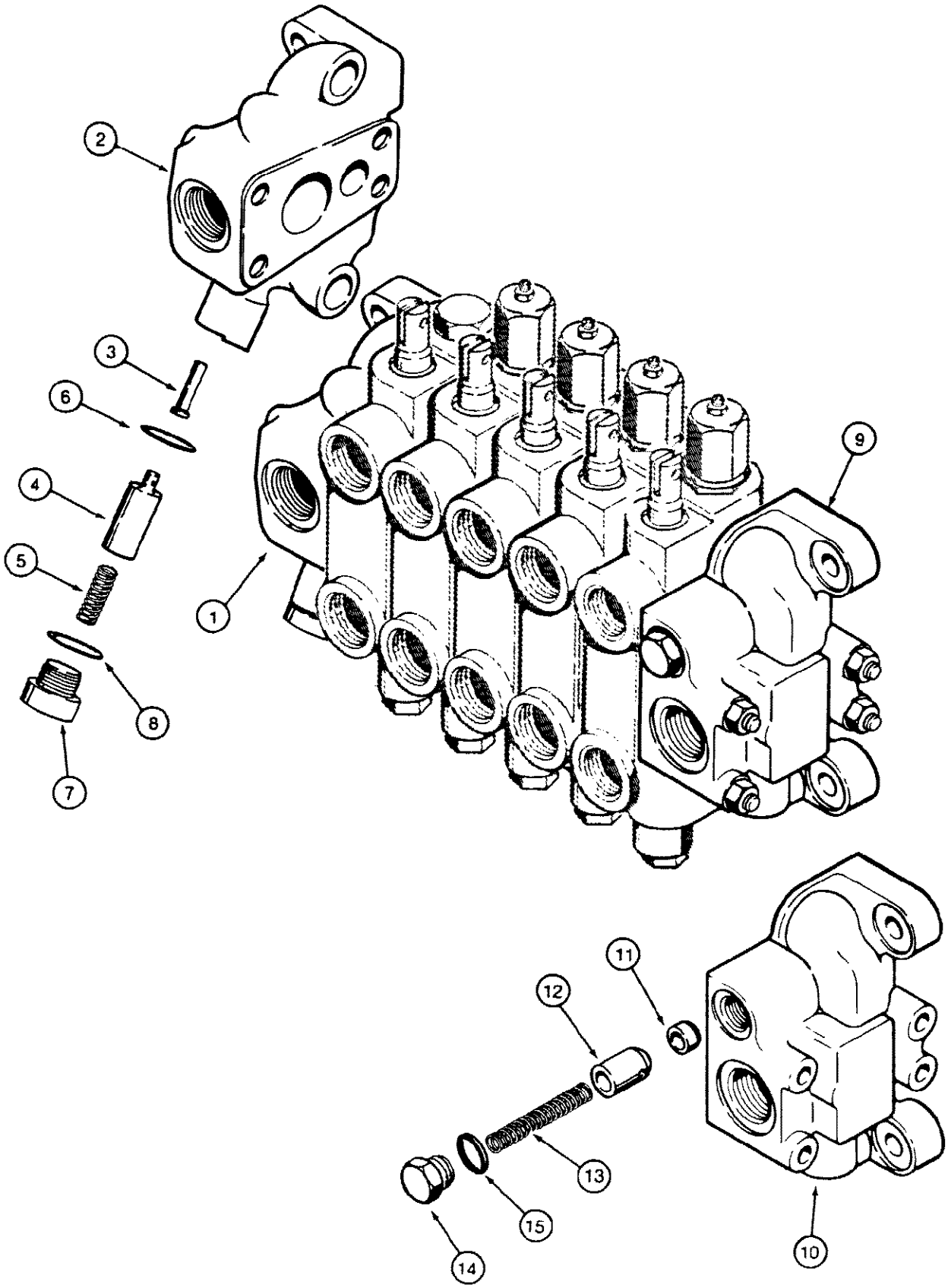

961553

580SE CASE SUPER-E CONSTRUCTION KING LOADER BACKHOE - Hydraulics

420 BACKHOE CONTROL VALVE, OUTLET SECTION, INLET SECTION

Ref	Part Number	Qty	Description
1	G33108	1	SECTION outlet, outlet section, Includes: Ref. 2 - 8
2	NSS	1	MANIFOLD section body, outlet section
3	G33110	1	PISTON regeneration sensing, outlet section
4	G34586	1	SPOOL regeneration, outlet section
5	G33112	1	SPRING regeneration spool, outlet section
6	A35104	1	O RING internal, outlet section
7	218-5213	1	PLUG hex socket head, 1-3/16" - 12 NF, regeneration spool, outlet section, Includes: Ref. 8
8	218-5009	1	O RING plug, outlet section
9	G33102	1	SECTION inlet, inlet section, Includes: Ref. 10 - 15
10	NSS	1	MANIFOLD section body, inlet section
11	G33104	1	SEAT check valve poppet, inlet section
12	G33105	1	POPPET check valve, inlet section
13	G33106	1	SPRING check valve, inlet section
14	A39586	1	PLUG check valve, inlet section
15	237-6010	1	O RING plug, inlet section

422 BACKHOE CONTROL VALVE, DIPPER AND BUCKET SECTION

422

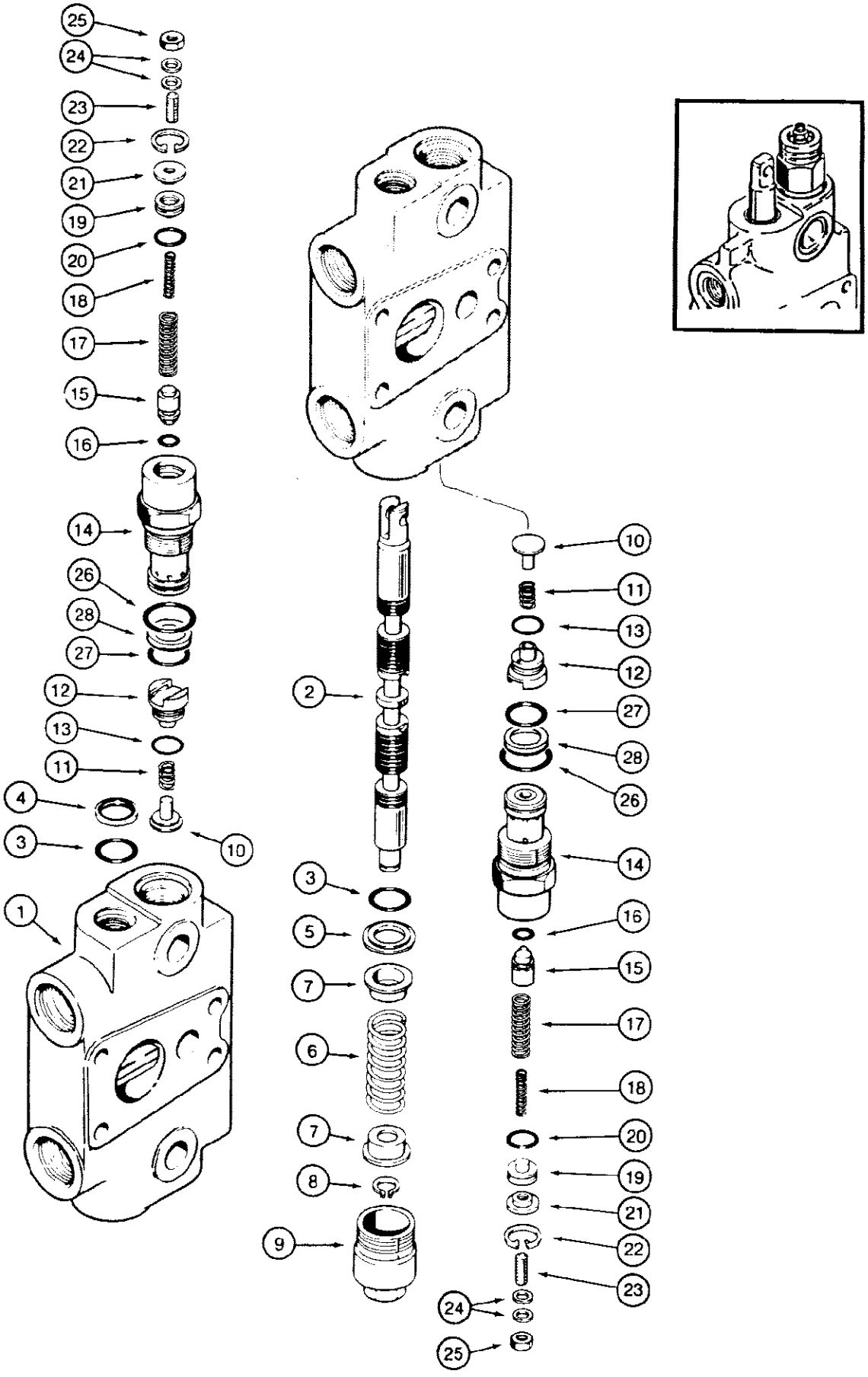

860338

580SE CASE SUPER-E CONSTRUCTION KING LOADER BACKHOE - Hydraulics

422 BACKHOE CONTROL VALVE, DIPPER AND BUCKET SECTION

Ref	Part Number	Qty	Description
	G103400	1	SECTION ASSEMBLY, dipper and bucket, no longer available, order G109512 section on Figure 424, Includes: Ref. 1 - 28
1	NSS	1	BODY section
2	NSS	1	SPOOL section
3	G108461	2	O RING body
4	A32309	1	SEAL spool
5	G102711	1	RETAINER O ring
6	G34463	1	SPRING centering, spool
7	G33075	2	SEAT centering spring
8	G33077	1	Ring, Snap, #47, Ext, spool end
9	G33080	1	CAP centering spring
10	G33081	2	POPPET load check valve
11	G33573	2	SPRING load check valve
12	G33084	2	PLUG load check valve
13	G33686	2	O RING plug
	G34672	2	CIRCUIT RELIEF VALVE ASSEMBLY, with round retainer and snap ring at outer end of circuit relief cap, used in production, no longer available, Replaced by G109445 valve in production, See Figure 424, order G109449 kit for service, Includes: Ref. 14 - 28, The pressure setting of the repair circuit relief valve is not preset for this application. Adjust the setting according to the instrucitons sent with the repair valve.
14	NSS	1	BODY circuit relief valve
15	NSS	1	POPPET circuit relief valve
16	A28090	1	O-Ring -011, 70 Duro, .031" ID x .070" Thk poppet
17	G105693	1	SPRING circuit relief valve, outer
18	G34659	1	SPRING circuit relief valve, inner
19	G33091	1	PISTON circuit relief valve
20	G102845	1	O RING piston
21	G33092	1	RETAINER circiut relief valve
22	G46150	1	Ring, Snap, 0.75", Int, #75, circuit relief valve
23	G102782	1	SCREW set, hex socket, 1/4" - 20 NC x 1"
24	G102781	2	WASHER special, if used
25	129-141	1	NUT, Jam, 1/4"-20, G5
26	218-5008	1	O RING large
27	G107675	1	O RING small
28	G35540	1	RING backup, O ring, if used
	G109449	1	KIT, service for G34672, includes G109445 relief valve assembly, Ref. 14 - 28, and an instruction sheet, The pressure setting of the repair circuit relief valve is not preset for this application. Adjust the setting according to the instrucitons sent with the repair valve.

424 BACKHOE CONTROL VALVE, DIPPER AND BUCKET SECTION

424

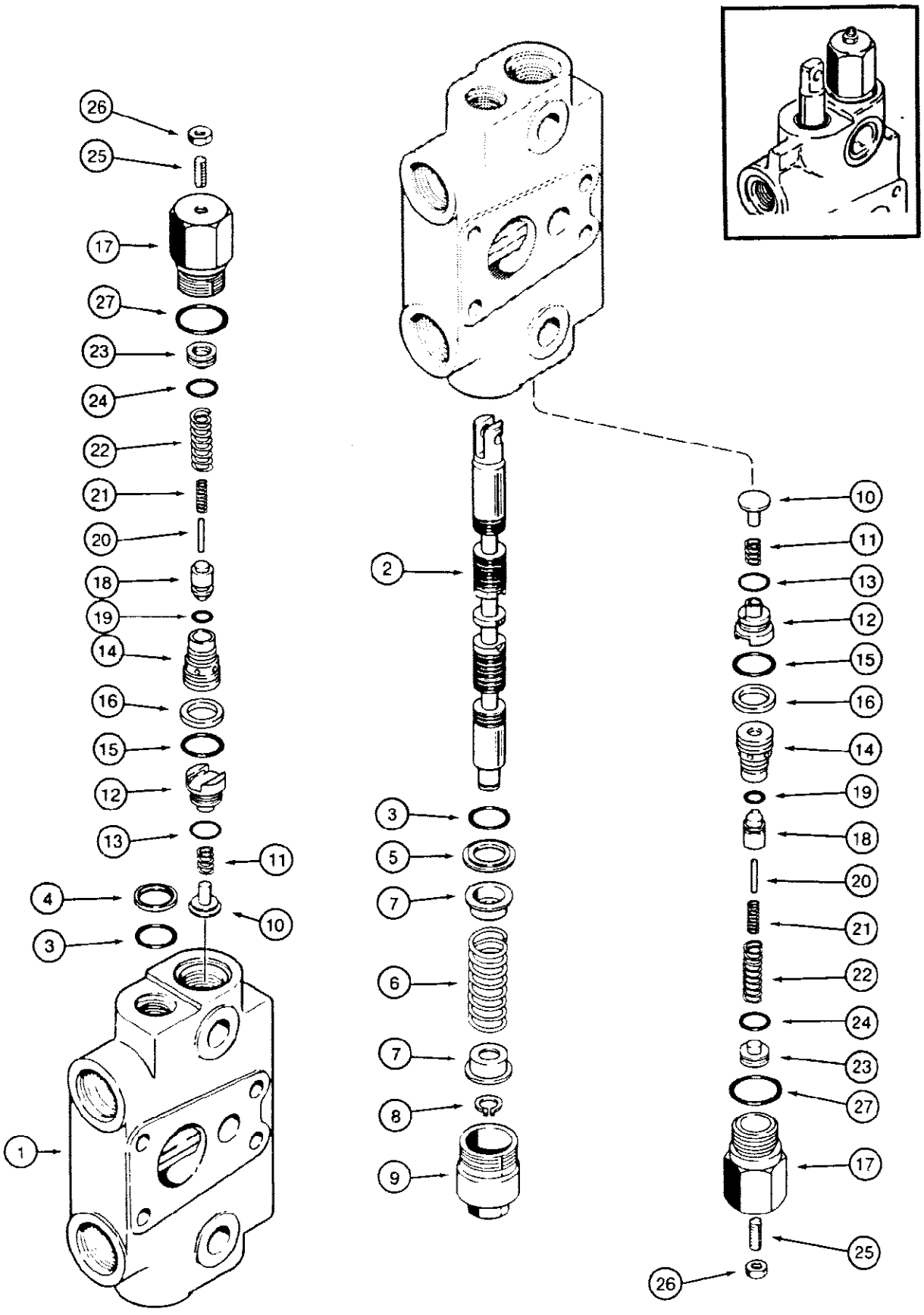

860339 A

580SE CASE SUPER-E CONSTRUCTION KING LOADER BACKHOE - Hydraulics

424 BACKHOE CONTROL VALVE, DIPPER AND BUCKET SECTION

Ref	Part Number	Qty	Description
	G109512	1	SECTION ASSEMBLY, dipper and bucket, circuit relief valve with one piece cap, Replaces G103400 section assembly on Figure 422, Includes: Ref. 1 - 27
1	NSS	1	BODY section
2	NSS	1	SPOOL section
3	G108461	2	O RING body
4	A32309	1	SEAL spool
5	G102711	1	RETAINER O ring
6	G34463	1	SPRING centering, spool
7	G33075	2	SEAT centering spring
8	G33077	1	Ring, Snap, #47, Ext, spool end
9	G33080	1	CAP centering spring
10	G33081	2	POPPET load check valve
11	G33573	2	SPRING load check valve
12	G33084	2	PLUG load check valve
13	G33686	2	O RING plug
	G109445	2	CIRCUIT RELIEF VALVE ASSEMBLY, one piece cap, Replaces G34672 valve in production, See Figure 422, order G109449 kit for service, Includes: Ref. 14 - 27, The pressure setting of the repair circuit relief valve is not preset for this application. Adjust the setting according to the instrucitons sent with the repair valve.
14	NSS	1	SEAT circuit relief valve
15	G107675	1	O RING small, seat
16	G35540	1	RING backup, small O ring, seat
17	NSS	1	BODY circuit relief valve
18	NSS	1	POPPET circuit relief valve
19	NSS	1	O RING poppet
20	NSS	1	PIN relief stop
21	NSS	1	SPRING circuit relief valve, inner
22	NSS	1	SPRING circuit relief valve, outer
23	NSS	1	PISTON circuit relief valve
24	NSS	1	O RING piston
25	178-890	1	SCREW set, hex socket headless, oval point, plated, 5/16" - 24 NF x 1"
26	86637933	1	NUT, Jam, 5/16"-24, G5
27	218-5008	1	O RING large, body
	G109449	1	KIT, service for G109445, includes G109447 relief valve assembly, Refs. 14 - 27, and an instruction sheet, The pressure setting of the repair circuit relief valve is not preset for this application. Adjust the setting according to the instrucitons sent with the repair valve.

426 BACKHOE CONTROL VALVE, DIPPER EXTENSION SECTION

426

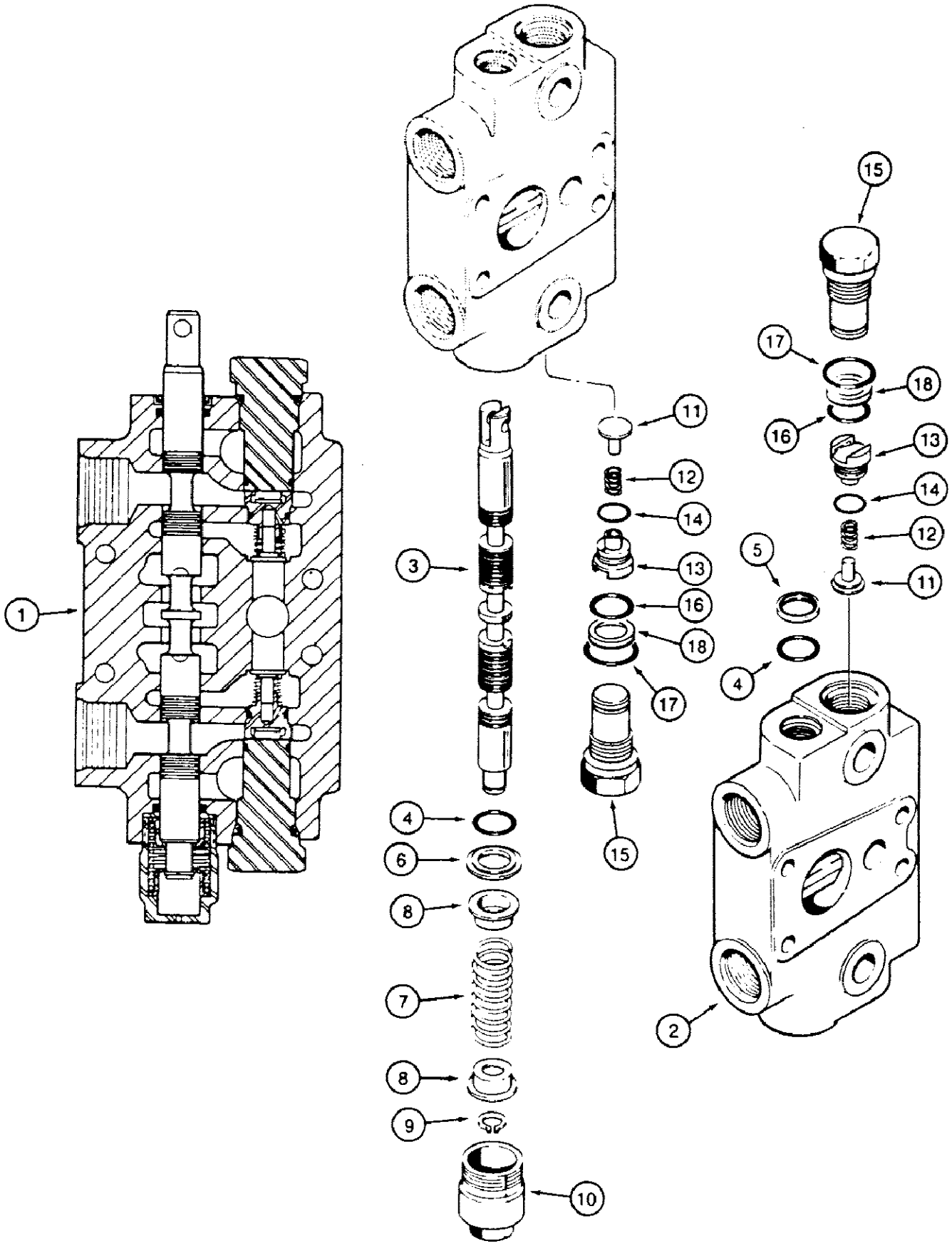

426 BACKHOE CONTROL VALVE, DIPPER EXTENSION SECTION

Ref	Part Number	Qty	Description
1	G103404	1	SECTION ASSEMBLY, dipper extension, Includes: Ref. 2 - 18
2	NSS	1	BODY section
3	NSS	1	SPOOL section
4	G108461	2	O RING body
5	A32309	1	SEAL spool
6	G102711	1	RETAINER O ring
7	G34463	1	SPRING centering, spool
8	G33075	2	SEAT centering spring
9	G33077	1	Ring, Snap, #47, Ext, spool end
10	G33080	1	CAP centering spring
11	G33081	2	POPPET load check valve
12	G33573	2	SPRING load check valve
13	G33084	2	PLUG load check valve
14	G33686	2	O RING plug
	G33122	2	PLUG ASSEMBLY, circuit relief valve port, Includes: Ref. 15 - 18
15	NSS	1	PLUG circuit relief valve port
16	G107675	1	O RING plug, small
17	218-5008	1	O RING plug, large
18	G35540	1	RING backup, O ring

428

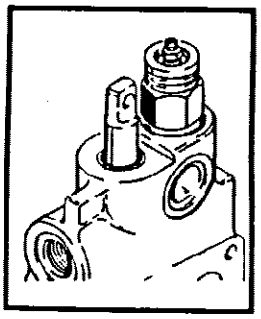

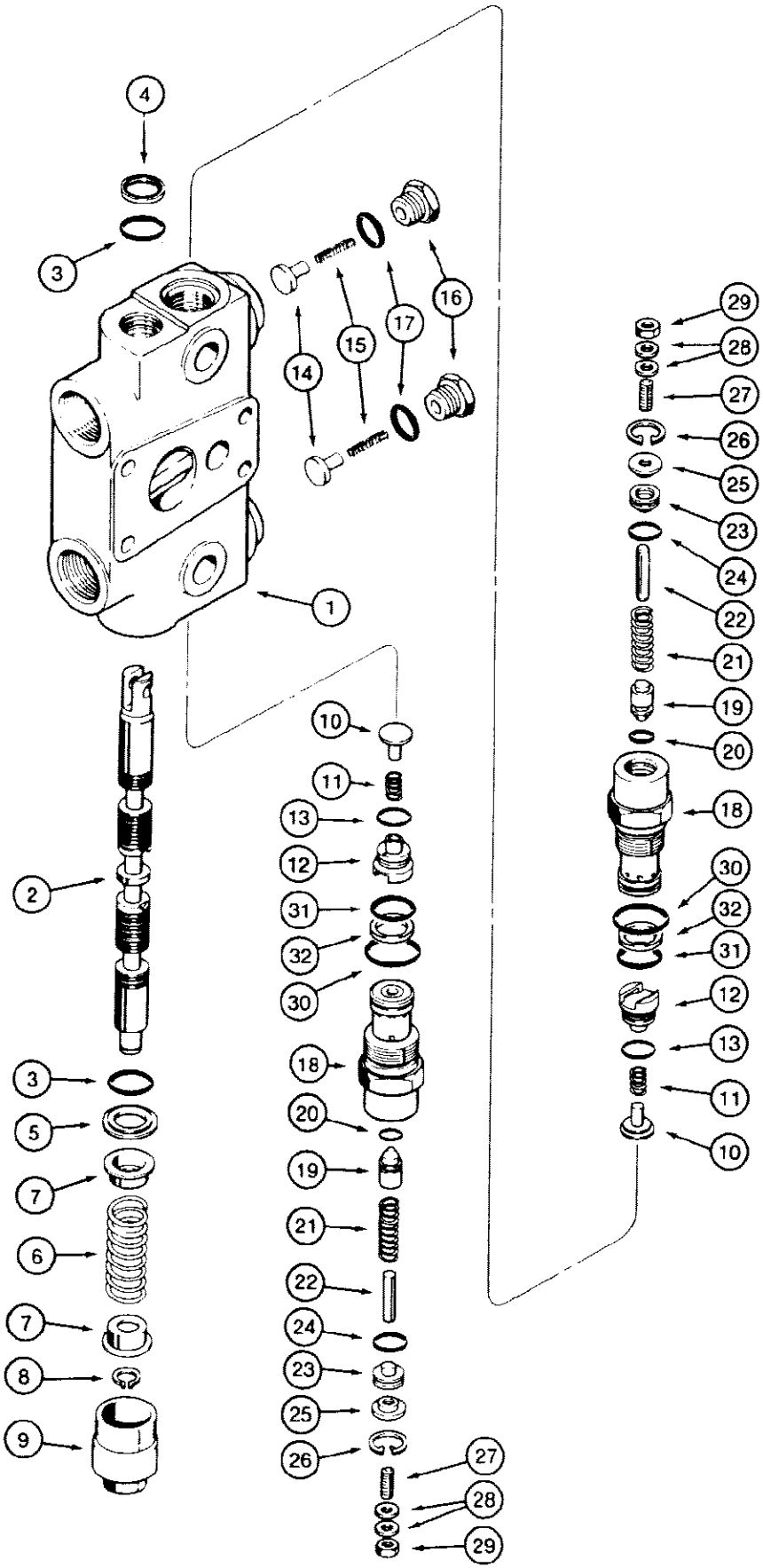
4
3
16
15
17
14
1
29
28
27
26
25
23
24
22
21
19
20
18
30
32
31
12
13
11
10
2
3
5
7
6
7
8
9
10
11
13
12
31
32
30
18
20
19
21
22
24
23
25
26
27
28
29

M40342

428 BACKHOE CONTROL VALVE, SWING SECTION

Ref	Part Number	Qty	Description
	G103402	1	SECTION ASSEMBLY, swing, no longer available, order G109521 section on Figure 430, Includes: Ref. 1 - 32
1	NSS	1	BODY swing valve
2	NSS	1	SPOOL swing valve
3	G108461	2	O RING body
4	A32309	1	SEAL spool
5	G102711	1	RETAINER O ring
6	G34463	1	SPRING centering, spool
7	G33075	2	SEAT centering spring
8	G33077	1	Ring, Snap, #47, Ext
9	G33080	1	CAP centering spring
10	G33081	2	POPPET load check valve
11	G33573	2	SPRING load check valve
12	G33084	2	PLUG load check valve
13	G33686	2	O RING plug
14	G34938	2	POPPET anticavitation valve
15	G34458	2	SPRING anticavitation valve
16	G34937	2	PLUG anticavitation valve
17	237-6010	2	O RING plug
	G34657	2	CIRCUIT RELIEF VALVE ASSEMBLY, with round retainer and snap ring at outer end of circuit relief cap, used in production, no longer available, Replaced by G109444 valve in production, See Figure 430, order G109448 kit for service, Includes: Ref. 18 - 32, The pressure setting of the repair circuit relief valve is not preset for this application. Adjust the setting according to the instructions sent with the repair valve., G34657 subs to G34862 CONTINUE TO USE THIS LOW PRESSURE VALVE UNTIL DEPLETED, THEN USE G109448 VALVE FOR PRESSURES BELOW
18	NSS	1	BODY circuit relief valve
19	NSS	1	POPPET circuit relief valve
20	A28090	1	O-Ring -011, 70 Duro, .031" ID x .070" Thk poppet
21	G105693	1	SPRING circuit relief valve
22	G34455	1	PIN stop, circuit relief valve spring
23	G33091	1	PISTON circuit relief valve
24	G102845	1	O RING piston
25	G33092	1	RETAINER circuit relief valve
26	G46150	1	Ring, Snap, 0.75", Int, #75, circuit relief valve
27	G102782	1	SCREW set, piston adjusting, 1/4" - 20 NC x 1"
28	G102781	2	WASHER special, if used
29	129-141	1	NUT, Jam, 1/4"-20, G5
30	218-5008	1	O RING large
31	G107675	1	O RING small
32	G35540	1	RING backup, O ring, if used

428 BACKHOE CONTROL VALVE, SWING SECTION

Ref	Part Number	Qty	Description
	G109448	1	KIT, service for G34657, includes G109446 relief valve assembly, Ref. 18 - 32, and an instruction sheet, The pressure setting of the repair circuit relief valve is not preset for this application. Adjust the setting according to the instructions sent with the repair valve.

430

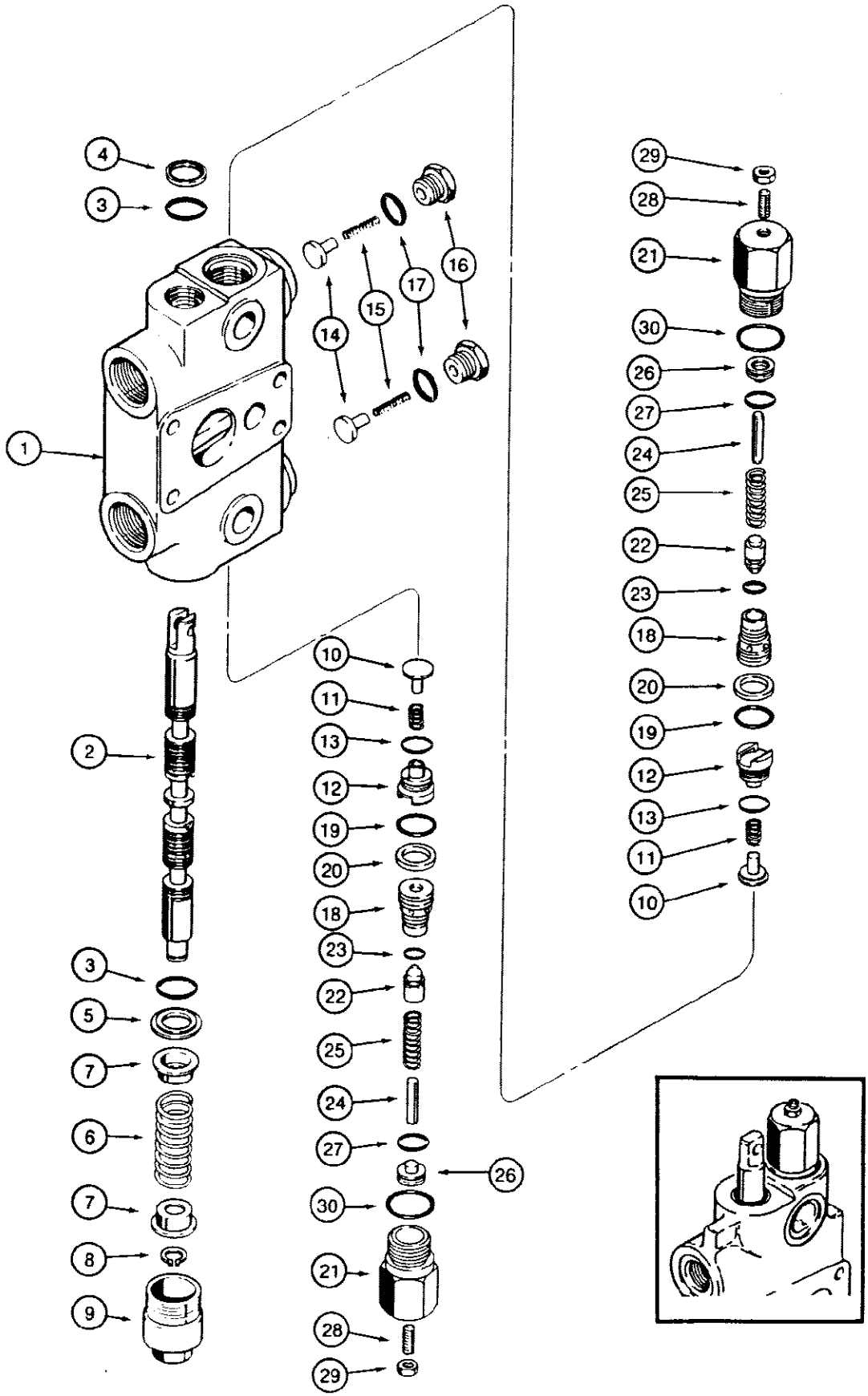
4
3
1
16
17
15
14
2
3
5
7
6
7
8
9
10
11
13
12
19
20
18
23
22
25
24
27
26
30
21
28
29
29
28
21
30
26
27
24
25
22
23
18
20
19
12
13
11
10
960340 A

580SE CASE SUPER-E CONSTRUCTION KING LOADER BACKHOE - Hydraulics

430 BACKHOE CONTROL VALVE, SWING SECTION

Ref	Part Number	Qty	Description
	G109521	1	SECTION ASSEMBLY, swing, circuit relief valve with one piece cap, Replaces G103402 section assembly on Figure 428, Includes: Ref. 1 - 30
1	NSS	1	BODY swing section
2	NSS	1	SPOOL swing section
3	G108461	2	O RING body
4	A32309	1	SEAL spool
5	G102711	1	RETAINER O ring
6	G34463	1	SPRING centering, spool
7	G33075	2	SEAT centering spring
8	G33077	1	Ring, Snap, #47, Ext, retainer
9	G33080	1	CAP centering spring
10	G33081	2	POPPET load check valve
11	G33573	2	SPRING load check valve
12	G33084	2	PLUG load check valve
13	G33686	2	O RING plug
14	G34938	2	POPPET anticavitation valve
15	G34458	2	SPRING anticavitation valve
16	G34937	2	PLUG anticavitation valve
17	237-6010	2	O RING plug
	G109444	2	CIRCUIT RELIEF VALVE ASSEMBLY, one piece cap, Replaces G34657 valve in production, See Figure 428, order G109448 kit for service, Includes: Ref. 18 - 30, The pressure setting of the repair circuit relief valve is not preset for this application. Adjust the setting according to the instrucitons sent with the repair valve.
18	NSS	1	SEAT circuit relief valve
19	G107675	1	O RING small, seat
20	G35540	1	RING backup, small O ring, seat
21	NSS	1	BODY circuit relief valve
22	NSS	1	POPPET circuit relief valve
23	NSS	1	O RING poppet
24	NSS	1	PIN stop, circuit relief valve spring
25	NSS	1	SPRING circuit relief valve
26	NSS	1	PISTON circuit relief valve
27	NSS	1	O RING piston
28	178-890	1	SCREW set, hex socket headless, oval point, plated, 5/16" - 24 NF x 1"
29	86637933	1	NUT, Jam, 5/16"-24, G5
30	218-5008	1	O RING large, body
	G109448	1	KIT, service for G109444, includes G109446 relief valve assembly, Refs. 18 - 30, and an instruction sheet, The pressure setting of the repair circuit relief valve is not preset for this application. Adjust the setting according to the instrucitons sent with the repair valve.

432 BACKHOE CONTROL VALVE, BOOM SECTION

432

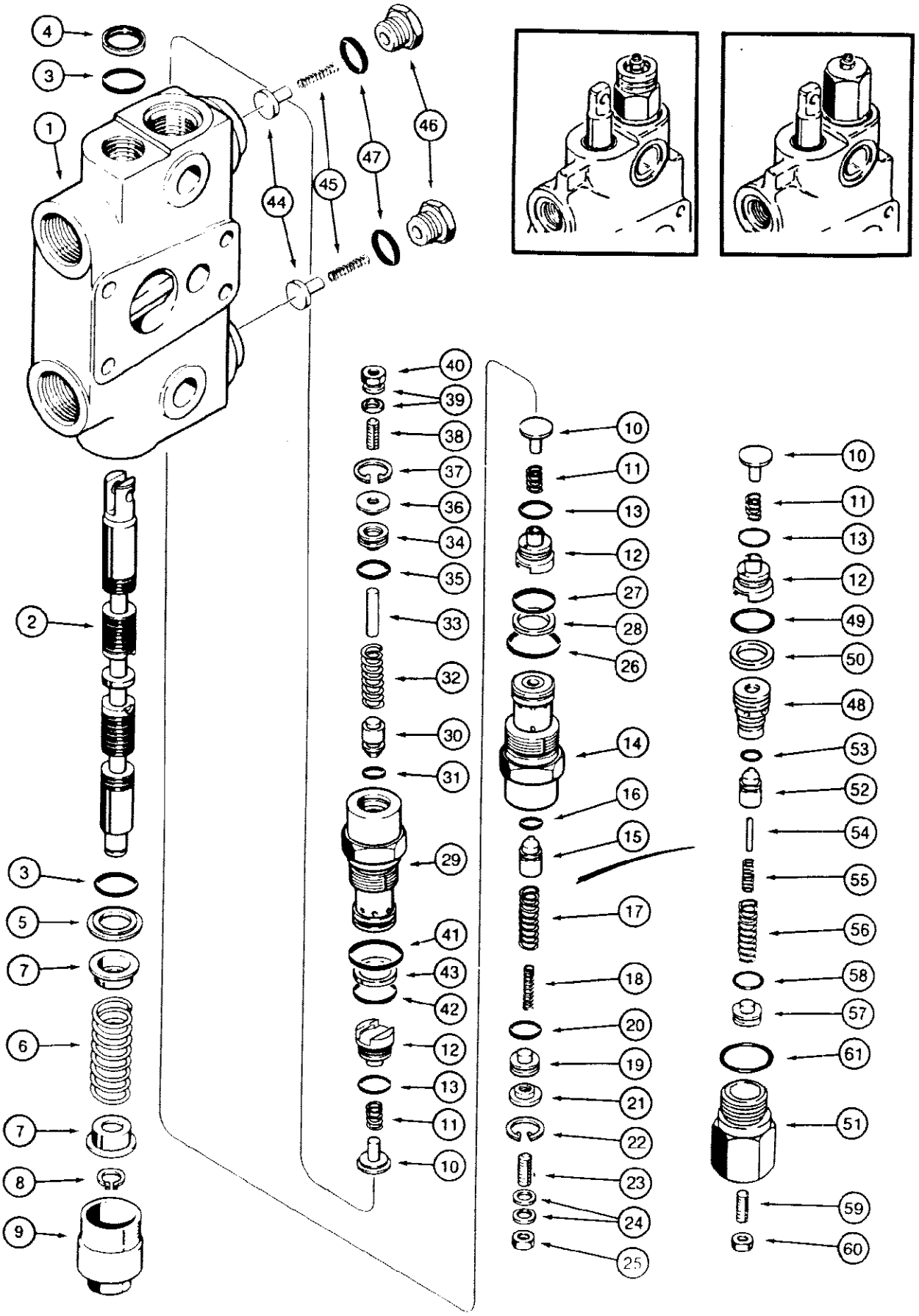

432 BACKHOE CONTROL VALVE, BOOM SECTION

Ref	Part Number	Qty	Description
	G104997	1	SECTION ASSEMBLY, boom, with round retainer and snap ring at outer end of circuit relief cap, no longer available, order G109517 section on Figure 438, Includes: Ref. 1 - 61
1	NSS	1	BODY section
2	NSS	1	SPOOL boom section
3	G108461	2	O RING body
4	A32309	1	SEAL spool
5	G102711	1	RETAINER O ring
6	G34463	1	SPRING centering, spool
7	G33075	2	SEAT centering spring
8	G33077	1	Ring, Snap, #47, Ext
9	G33080	1	CAP centering spring
10	G33081	2	POPPET load check valve
11	G33573	2	SPRING load check valve
12	G33084	2	PLUG load check valve
13	G33686	2	O RING plug
	G34672	1	CIRCUIT RELIEF VALVE ASSEMBLY, lower, with round retainer and snap ring at outer of circuit relief cap, used in production, no longer available, replaced by G109445 valve in production, order G109449 kit for service, Includes: Ref. 14 - 28, The pressure setting of the repair circuit relief valve is not preset for this application. Adjust the setting according to the instructions sent with the repair valve.
14	NSS	1	BODY circuit relief valve
15	NSS	1	POPPET circuit relief valve
16	A28090	1	O-Ring -011, 70 Duro, .031" ID x .070" Thk poppet
17	G105693	1	SPRING circuit relief valve, outer
18	G34659	1	SPRING circuit relief valve, inner
19	G33091	1	PISTON circuit relief valve
20	G102845	1	O RING piston
21	G33092	1	RETAINER circuit relief valve
22	G46150	1	Ring, Snap, 0.75", Int, #75, circuit relief valve
23	G102782	1	SCREW set, piston, 1/4" - 20 NC x 1"
24	G102781	2	WASHER special, if used
25	129-141	1	NUT, Jam, 1/4"-20, G5
26	218-5008	1	O RING large
27	G107675	1	O RING small
28	G35540	1	RING backup, O ring, if used
	G109449	1	KIT, service for G34672, includes G109447 relief valve assembly, Ref. 14 - 28, and an instruction sheet, The pressure setting of the repair circuit relief valve is not preset for this application. Adjust the setting according to the instructions sent with the repair valve.
	G104997	1	SECTION ASSEMBLY, boom
	G103396	1	CIRCUIT RELIEF VALVE ASSEMBLY, upper, with round retainer and snap ring at outer end of circuit relief cap, used in production, no longer available, Replaced by G109441 valve in production, See Figure 438, order G109448 kit for service,

432 BACKHOE CONTROL VALVE, BOOM SECTION

Ref	Part Number	Qty	Description
			Includes: Ref. 29 - 43, The pressure setting of the repair circuit relief valve is not preset for this application. Adjust the setting according to the instructions sent with the repair valve.
29	NSS	1	BODY circuit relief valve
30	NSS	1	POPPET circuit relief valve
31	A28090	1	O-Ring -011, 70 Duro, .031" ID x .070" Thk poppet
32	G105693	1	SPRING circuit relief valve
33	G33241	1	PIN circuit relief valve
34	G33091	1	PISTON circuit relief valve
35	G102845	1	O RING piston
36	G33092	1	RETAINER circuit relief valve
37	G46150	1	Ring, Snap, 0.75", Int, #75, circuit relief valve
38	G102782	1	SCREW set, piston, 1/4" - 20 NC x 1"
39	G102781	2	WASHER special, if used
40	129-141	1	NUT, Jam, 1/4"-20, G5
41	218-5008	1	O RING large
42	G107675	1	O RING small
43	G35540	1	RING backup, O ring, if used
44	G34938	2	POPPET anticavitation valve
45	G34458	2	SPRING anticavitation valve
46	G34937	2	PLUG anticavitation valve
47	237-6010	2	O RING plug
	G109448	1	KIT, service for G103396, includes G109446 relief valve assembly, Ref, 29 - 47, and an instruction sheet
	G104997	1	SECTION ASSEMBLY boom
	G109445	1	CIRCUIT RELIEF VALVE ASSEMBLY, lower, one piece cap, Replaces G34672 valve in production, order G109449 kit for service, Includes: Ref. 48 - 61, The pressure setting of the repair circuit relief valve is not preset for this application. Adjust the setting according to the instructions sent with the repair valve.
48	NSS	1	SEAT circuit relief valve
49	G107675	1	O RING small, seat
50	G35540	1	RING backup, small O ring, seat
51	NSS	1	BODY circuit relief valve
52	NSS	1	POPPET circuit relief valve
53	NSS	1	O RING poppet
54	NSS	1	PIN relief stop
55	NSS	1	SPRING circuit relief valve, inner
56	NSS	1	SPRING circuit relief valve, outer
57	NSS	1	PISTON circuit relief valve
58	NSS	1	O RING piston
59	178-890	1	SCREW set, hex socket headless, oval point, plated, 5/16" - 24 NF x 1"
60	86637933	1	NUT, Jam, 5/16"-24, G5

432 BACKHOE CONTROL VALVE, BOOM SECTION

Ref	Part Number	Qty	Description
61	218-5008	1	O RING large, body
	G109449	1	KIT, service for G109445, includes G109447 relief valve assembly, Ref. 48 - 61, and an instruction sheet, The pressure setting of the repair circuit relief valve is not preset for this application. Adjust the setting according to the instructions sent with the repair valve.

438

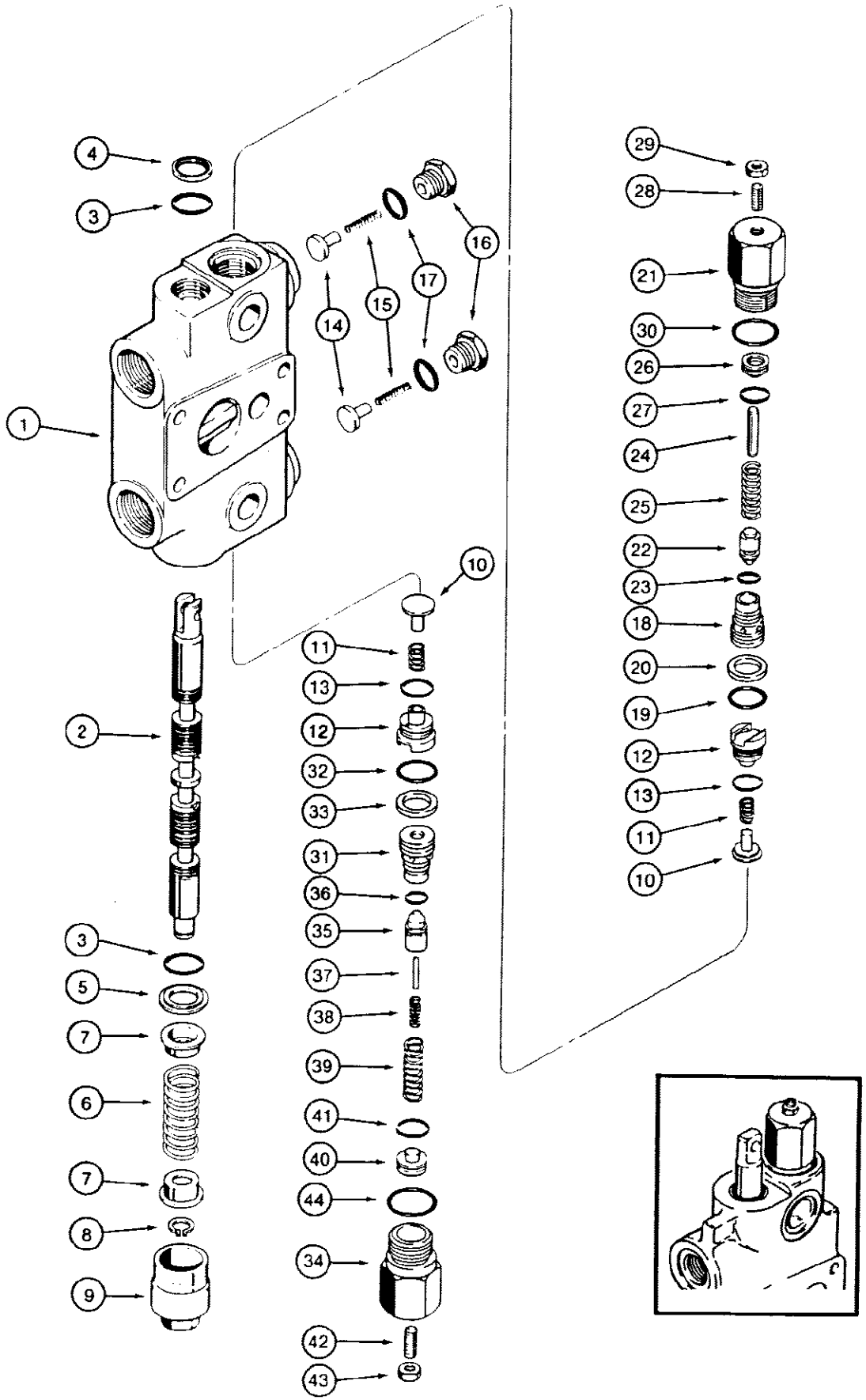
4
3
16
17
15
14
1
10
11
13
12
32
33
31
36
35
37
38
39
41
40
44
34
42
43
2
3
5
7
6
7
8
9
29
28
21
30
26
27
24
25
22
23
18
20
19
12
13
11
10

3341A

438 BACKHOE CONTROL VALVE, BOOM SECTION

Ref	Part Number	Qty	Description
	G109517	1	SECTION ASSEMBLY, boom, circuit relief valve with one piece cap, Replaces G104997 section assembly on Figure 432, Includes: Ref. 1 - 44
1	NSS	1	BODY boom section
2	NSS	1	SPOOL boom section
3	G108461	2	O RING body
4	A32309	1	SEAL spool
5	G102711	1	RETAINER O ring
6	G34463	1	SPRING centering, spool
7	G33075	2	SEAT centering spring
8	G33077	1	Ring, Snap, #47, Ext, retainer
9	G33080	1	CAP centering spring
10	G33081	2	POPPET load check valve
11	G33573	2	SPRING load check valve
12	G33084	2	PLUG load check valve
13	G33686	2	O RING plug
14	G34938	2	POPPET anticavitation valve
15	G34458	2	SPRING anticavitation valve
16	G34937	2	PLUG anticavitation valve
17	237-6010	2	O RING plug
	G109441	1	CIRCUIT RELIEF VALVE ASSEMBLY, upper, one piece cap, Replaces G103396 valve in production, See Figure 434, order G109448 kit for service, Includes: Ref. 18 - 30, The pressure setting of the repair circuit relief valve is not preset for this application. Adjust the setting according to the instrucitons sent with the repair valve.
18	NSS	1	SEAT circuit relief valve
19	G107675	1	O RING small, seat
20	G35540	1	RING backup, small O ring, seat
21	NSS	1	BODY circuit relief valve
22	NSS	1	POPPET circuit relief valve
23	NSS	1	O RING poppet
24	NSS	1	PIN stop, circuit relief valve spring
25	NSS	1	SPRING circuit relief valve
26	NSS	1	PISTON circuit relief valve
27	NSS	1	O RING piston
28	178-890	1	SCREW set, hex socket headless, oval point, plated, 5/16" - 24 NF x 1"
29	86637933	1	NUT, Jam, 5/16"-24, G5
30	218-5008	1	O RING large, body
	G109448	1	KIT, service for G109441, includes G109446 relief valve assembly, Refs. 18 - 30, and an instruction sheet, The pressure setting of the repair circuit relief valve is not preset for this application. Adjust the setting according to the instrucitons sent with the repair valve.
	G109517	1	SECTION ASSEMBLY, boom

580SE CASE SUPER-E CONSTRUCTION KING LOADER BACKHOE - Hydraulics

438 BACKHOE CONTROL VALVE, BOOM SECTION

Ref	Part Number	Qty	Description
	G109391	1	CIRCUIT RELIEF VALVE ASSEMBLY, lower, one piece cap, used in production, order G109449 kit for service, Includes: Ref. 31 - 44, The pressure setting of the repair circuit relief valve is not preset for this application. Adjust the setting according to the instrucitons sent with the repair valve.
31	NSS	1	SEAT circuit relief valve
32	G107675	1	O RING small, seat
33	G35540	1	RING backup, small O ring, seat
34	NSS	1	BODY circuit relief valve
35	NSS	1	POPPET circuit relief valve
36	NSS	1	O RING poppet
37	NSS	1	PIN relief stop
38	NSS	1	SPRING circuit relief valve, inner
39	NSS	1	SPRING circuit relief valve, outer
40	NSS	1	PISTON circuit relief valve
41	NSS	1	O RING piston
42	178-890	1	SCREW set, hex socket headless, oval point, plated, 5/16" - 24 NF x 1"
43	86637933	1	NUT, Jam, 5/16"-24, G5
44	218-5008	1	O RING large, body
	G109449	1	KIT, service for G109391, includes G109447 relief valve assembly, Refs. 31 - 44, and an instruction sheet, The pressure setting of the repair circuit relief valve is not preset for this application. Adjust the setting according to the instrucitons sent with the repair valve.

442 BOOM LOCK VALVE

442

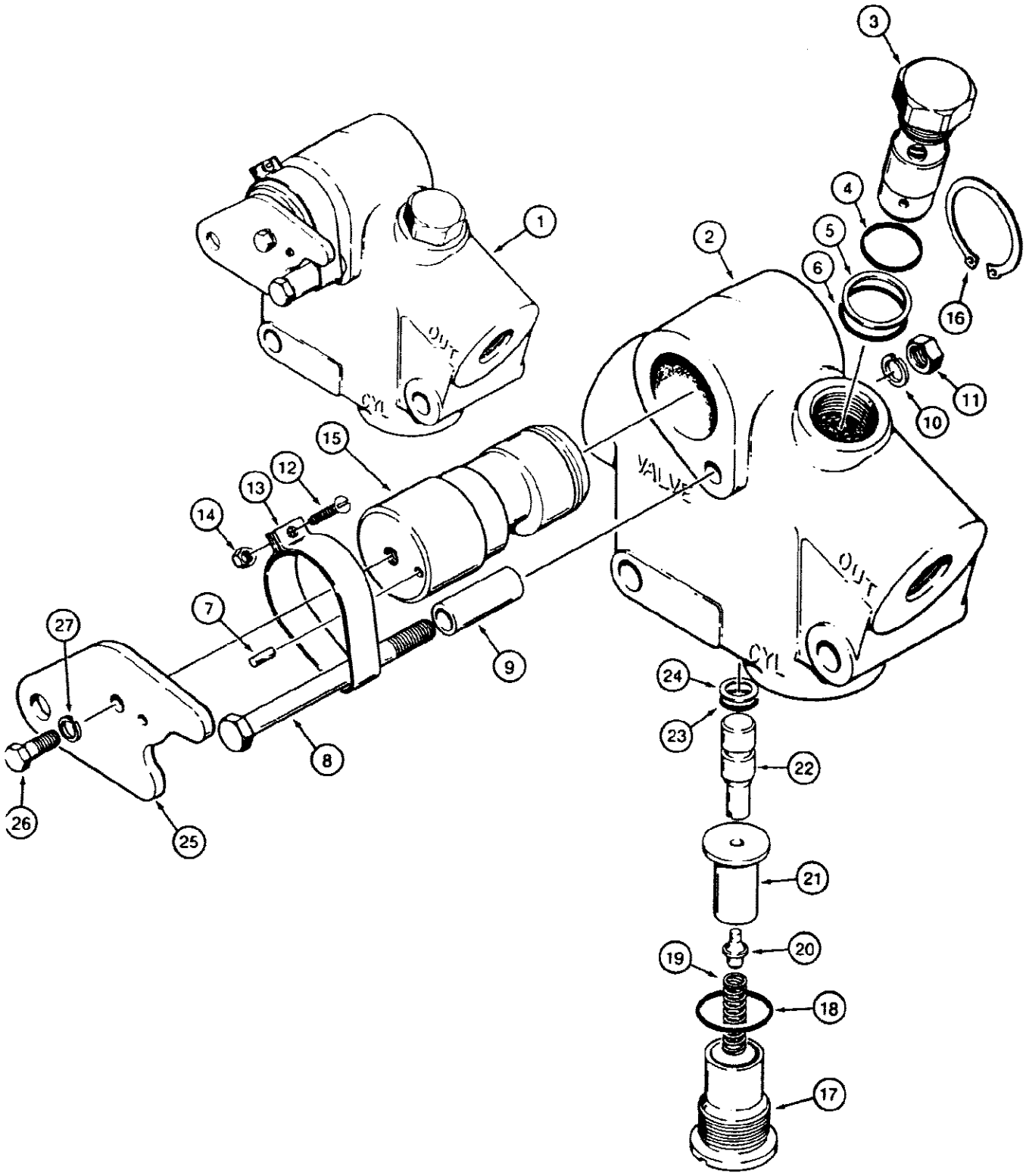

580SE CASE SUPER-E CONSTRUCTION KING LOADER BACKHOE - Hydraulics

442 BOOM LOCK VALVE

Ref	Part Number	Qty	Description
1	D88644	1	VALVE boom lock, Cessna No. 39013 CAG, Includes: Ref. 2 - 24
2	NSS	1	BODY valve
3	D56470	1	RELIEF VALVE ASSEMBLY, boom lock valve, Includes: Ref. 4
4	F9857	1	O RING relief valve
5	D56469	1	RING backup, inner O ring
6	A7464	1	O RING inner
7	D56881	1	PIN dowel, handle
8	13-558	1	BOLT hex head, 5/16" - 18 NC x 3-5/8"
9	D56460	1	BUSHING spacer
10	192-20	1	WASHER, LOCK, 5/16"
11	25-145	1	NUT hex, jam, 5/16" - 18 NC
12	182-48	1	SCREW machine, pan head, slotted, No. 6 - 32 NC x 3/4"
13	D56467	1	CLAMP shaft retaining
14	131-150	1	NUT, LOCK, #6-32, GA
15	NSS	1	SHAFT lock control
16	F62020	1	Ring, Snap, #125, Ext, shaft
17	D56461	1	PLUG plunger retainer
18	A35104	1	O RING plug
19	D56462	1	SPRING poppet
20	D56464	1	POPPET valve
21	D56463	1	SEAT poppet
22	D56466	1	PLUNGER valve
23	N8539	1	O RING plunger
24	L31330	1	RING backup, seal
25	D89888	1	LEVER boom lock valve
26	113-118	1	BOLT, Hex, 5/16"-18 x 5/8", G5, Full Thd
27	192-20	1	WASHER, LOCK, 5/16"

444 D89498 AND D128430 STEERING RELIEF VALVES

444

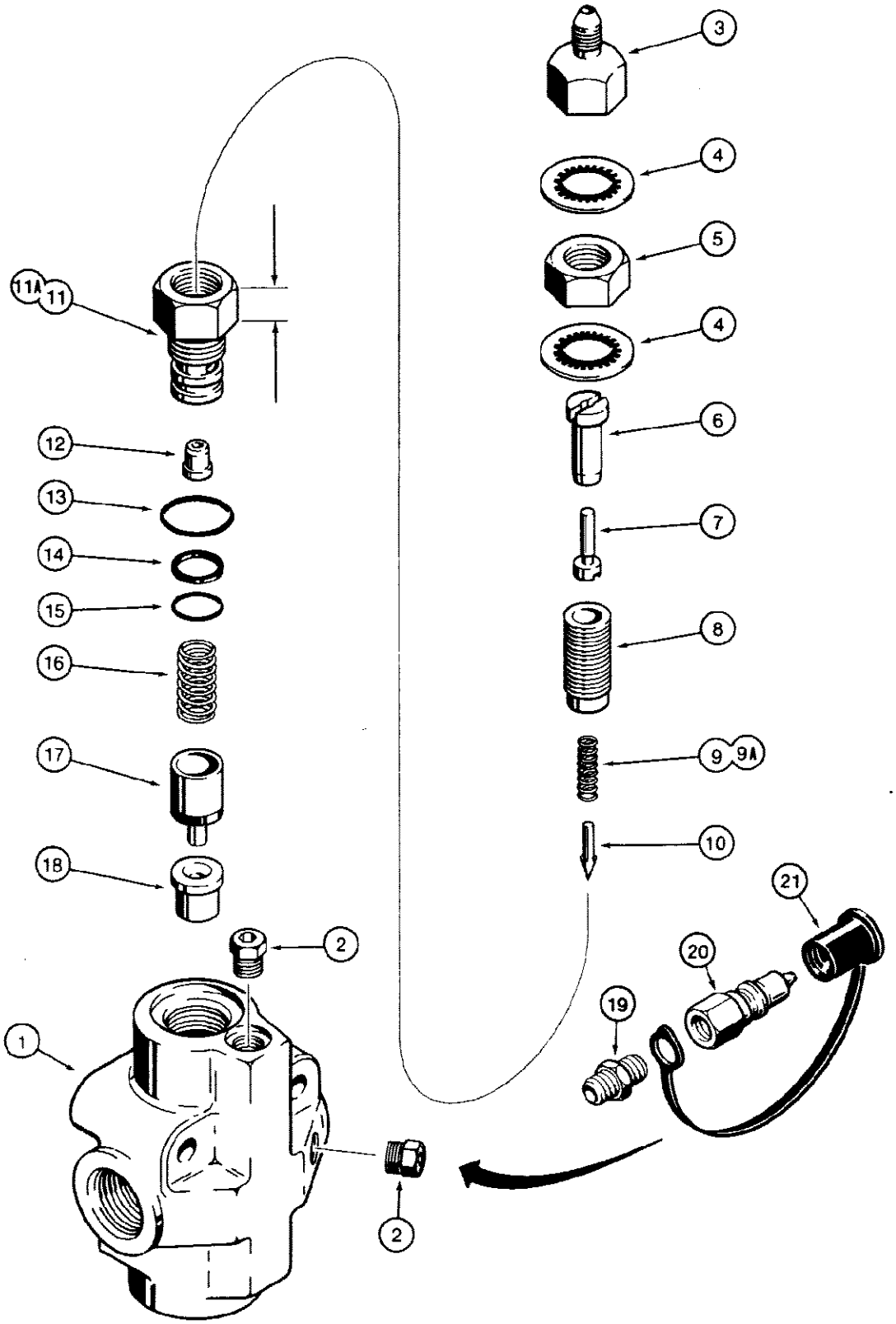

580SE CASE SUPER-E CONSTRUCTION KING LOADER BACKHOE - Hydraulics

444 D89498 AND D128430 STEERING RELIEF VALVES

Ref	Part Number	Qty	Description
	D89498	1	RELIEF VALVE ASSEMBLY, steering, Parker No. VPRP5X 017, no longer used, order D128430 valve
	D128430	1	RELIEF VALVE ASSEMBLY, steering, Parker No. VPRP5X 024, Includes: Ref. 1 through 18
1	NSS	1	HOUSING relief valve
2	221-1849	2	PLUG hex socket head, 1/8" NPT
	N9524	1	RELIEF VALVE ASSEMBLY, steering, Includes: Ref. 3 - 18
3	N6841	1	FITTING pilot relief
4	D27259	2	SEAL special
5	86637932	1	NUT hex, jam, 5/8" - 18 NF
6	N6803	1	RETAINER piston
7	N6802	1	PISTON two stage
8	N6840	1	SCREW adjusting
9	D26268	1	SPRING pilot, N6839 body
9A	N9526	1	SPRING pilot, N9009 body
10	D26267	1	PLUNGER pilot
11	N6839	1	BODY relief, hex head height is 1/2", no longer used, when replacing this body, must order both N9526 spring and N9009 body
11A	N9009	1	BODY relief, hex head height is 5/8"
12	N6804	1	SEAT pilot plunger
14	L30443	1	RING backup, small O ring
15	L30444	1	O RING small
16	D26261	1	SPRING relief valve
17	L30687	1	POPPET relief valve
18	D26259	1	SEAT poppet
19	217-1071	1	NIPPLE hex, 1/4" NPT x 1/8" NPT, if used
20	S206607	1	COUPLING male, if used, Ref: 20 S206607 Male coupling Female coupling is part nbr. S206610, and dust plug for female coupling is part nbr. S206609.
21	D123387	1	COVER dust, if used
13	218-5006	1	O-Ring, 8-1, 90 Duro, .644" ID x .087" Thk, cap

446

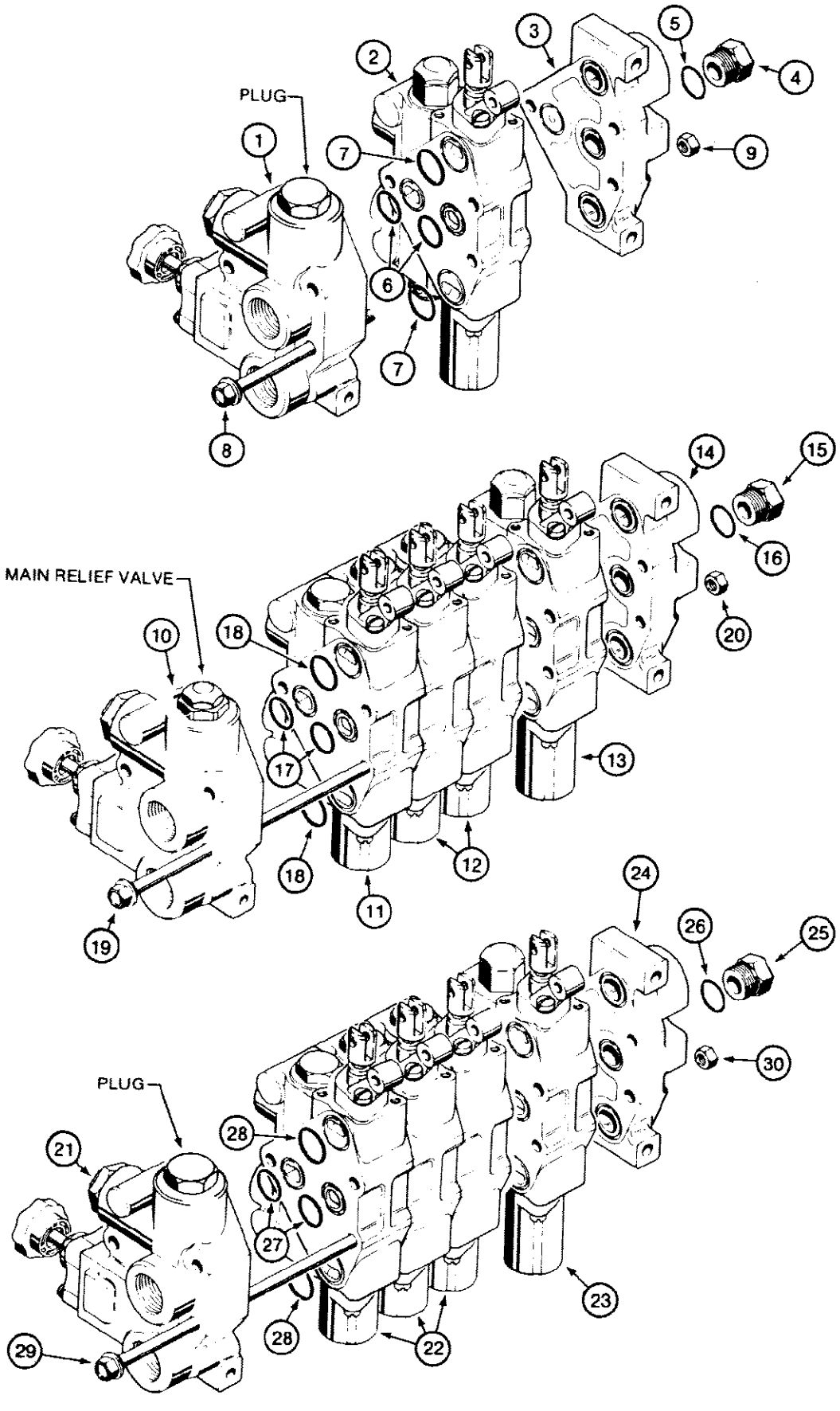
PLUG
1
2
3
4
5
6
7
8
9
MAIN RELIEF VALVE
10
11
12
13
14
15
16
17
18
19
20
PLUG
21
22
23
24
25
26
27
28
29
30

830842

580SE CASE SUPER-E CONSTRUCTION KING LOADER BACKHOE - Hydraulics

446 THREE-POINT HITCH CONTROL VALVES, ONE-SPOOL VALVE ASSEMBLY

Ref	Part Number	Qty	Description
	D124204	1	VALVE control, hitch, one spool, Ref. 1 has a plugged main relief port, one spool valve assembly, Includes: Ref. 1 - 9
1	D122551	1	END SECTION inlet outlet, See Figure 448, one spool valve assembly
2	N8692	1	SECTION lift, See Figure 450, one spool valve assembly
	D122553	1	END SECTION cover plate, one spool valve assembly, Includes: Ref. 3 - 5
3	NSS	1	PLATE cover, one spool valve assembly
4	218-5158	1	PLUG hex head, 1-1/16" - 12 NC, cover plate, one spool valve assembly, Includes: Ref. 5
5	218-5008	1	O RING plug, one spool valve assembly
6	A15888	4	O RING between sections, 13/16" (21 mm) ID, one spool valve assembly
7	A62239	4	O RING between sections, 15/16" (24 mm) ID, one spool valve assembly
8	413-668	3	BOLT tie, 3/8" - 24 NF x 4-1/4", one spool valve assembly, Ref. 8, N7039, 3/8" 24 tie bolt, Using part nbr
9	425-116	3	NUT, 3/8"-24, G5, Hex, Replaced 129-123, 1 spool valve assembly
	D99475	1	VALVE control, hitch, fourspool, Ref. 10 has a main relief valve, no longer used, for service order D124205, four spool valve assembly, Includes: Ref. 10 - 20
10	N7108	1	END SECTION inlet outlet, See Figure 448, four spool valve assembly
11	N7115	1	SECTION auxiliary, See Figure 452, four spool valve assembly, Auxiliary section has a flow restriction seal, see parts list Figure 452, and is always located next to the inlet-outlet section. Also includes a lever, link assembly, and pins not required for use on the 580 Super E.
12	N8691	2	SECTION pitch, tilt, implement, See Figure 452, four spool valve assembly
13	N8692	1	SECTION lift, See Figure 450, four spool valve assembly
	D122553	1	END SECTION cover plate, four spool valve assembly, Includes: Ref. 14 - 16
14	NSS	1	PLATE cover, four spool valve assembly
15	218-5158	1	PLUG hex head, 1-1/16" - 12 NC, cover plate, four spool valve assembly, Includes: Ref. 16
16	218-5008	1	O RING plug, four spool valve assembly
17	A15888	10	O RING between sections, 13/16" (21 mm) ID, four spool valve assembly
18	A62239	10	O RING between sections, 15/16" (24 mm) ID, four spool valve assembly
19	D86578	3	BOLT tie, 3/8" - 24 NF x 9-1/2", four spool valve assembly
20	129-123	3	NUT, 3/8"-24, G5, Four spool valve assembly
	D124205	1	VALVE control, hitch, four spool, Ref. 21 has a plugged main relief port, four spool valve assembly, Includes: Ref. 21 - 30
21	D122551	1	END SECTION inlet outlet, See Figure 448, four spool valve assembly
22	N8691	3	SECTION implement, pitch and tilt, See Figure 452, four spool valve assembly
23	N8692	1	SECTION lift, See Figure 450, four spool valve assembly, Includes: Ref. 24 - 26
	D122553	1	END SECTION cover plate, four spool valve assembly
24	NSS	1	PLATE cover, four spool valve assembly
25	218-5158	1	PLUG hex head, 1-1/16" - 12 NC, cover plate, four spool valve assembly, Includes: Ref. 26
26	218-5008	1	O RING plug, four spool valve assembly
27	A15888	10	O RING between sections, 13/16" (21 mm) ID, four spool valve assembly
28	A62239	10	O RING between sections, 15/16" (24 mm) ID, four spool valve assembly
29	D86578	3	BOLT tie, 3/8" - 24 NF x 9-1/2", four spool valve assembly

446 THREE-POINT HITCH CONTROL VALVES, ONE-SPOOL VALVE ASSEMBLY

Ref	Part Number	Qty	Description
30	129-123	3	NUT, 3/8"-24, G5, Four spool valve assembly

448 THREE-POINT HITCH CONTROL VALVE, INLET-OUTLET SECTION

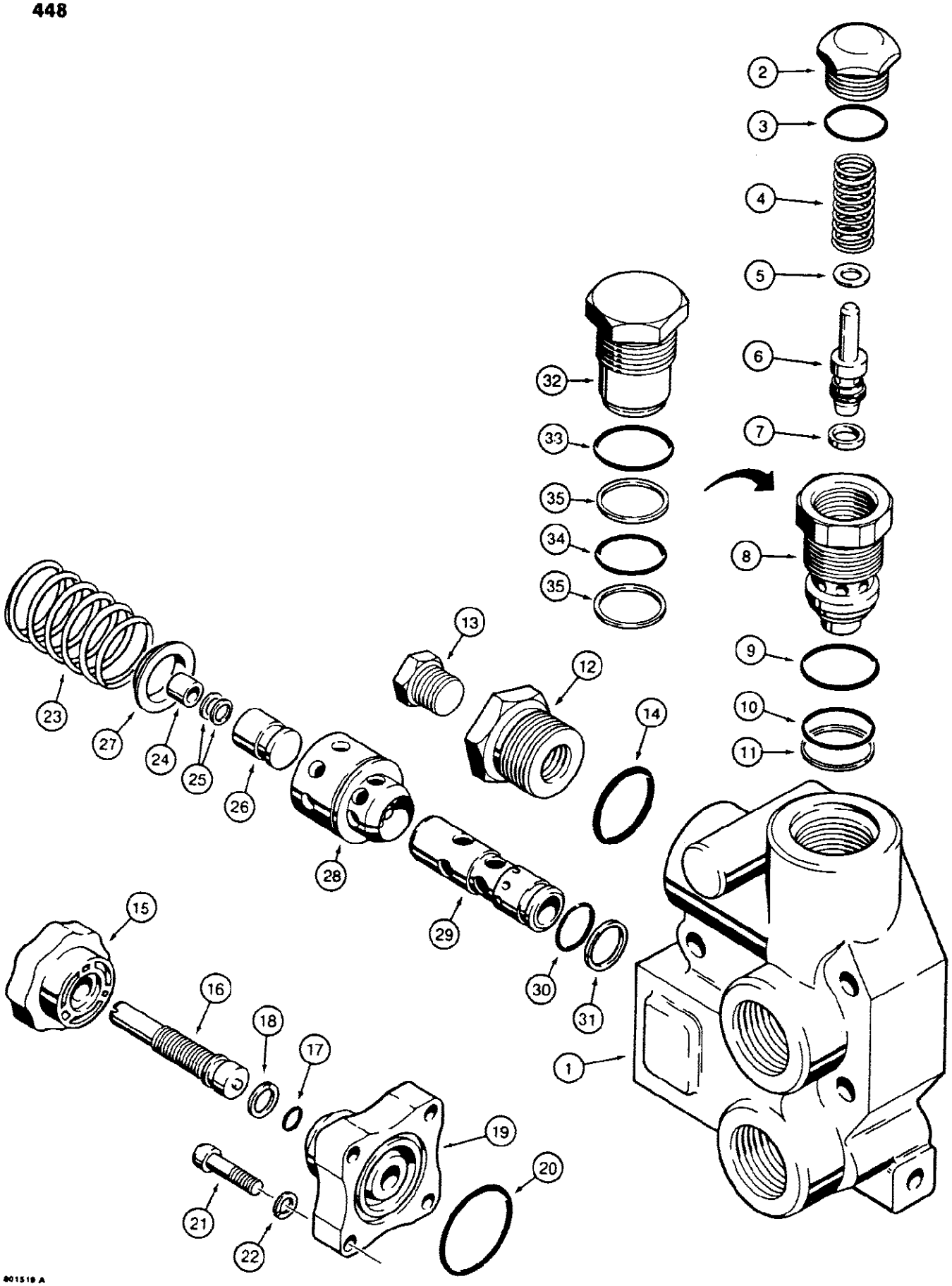

448 THREE-POINT HITCH CONTROL VALVE, INLET-OUTLET SECTION

Ref	Part Number	Qty	Description
	N7108	1	SECTION inlet outlet, uses N7040 main relief valve
	D122551	1	SECTION inlet outlet, uses D87301 plug in place of main relief valve, Includes: Ref. 1 - 35
1	NSS	1	HOUSING inlet outlet section
	N7040	1	VALVE main relief, hitch valve, used in N7108 section only, Includes: Ref. 2 - 11
2	NSS	1	CAP main relief valve
3	237-6010	1	O RING cap
4	D51540	1	SPRING main relief valve
5	A55893	UAR	SHIM, .0418" Thk (1.016 mm)
5	A55894	UAR	SHIM, .0209" Thk (0.508 mm)
5	D39712	UAR	SHIM, .010" (0.254 mm) thick
	D66490	1	PLUNGER ASSEMBLY, main relief, Includes: Ref. 6 and 7
6	NSS	1	PLUNGER main relief valve
7	D39714	1	SEAL plunger
8	NSS	1	BODY relief valve
9	343900R1	1	O RING large
10	D39718	1	O RING small
11	D87303	1	RING backup, small O ring
	N7109	1	PLUG ASSEMBLY, section port, Includes: Ref. 12 - 14
12	NSS	1	PLUG section port
13	221-841	1	PLUG hex socket head, 1/4" NPT
14	218-5008	1	O RING plug
	N7111	1	REGULATOR ASSEMBLY, flow control, Includes: Ref. 15 - 22
15	D54188	1	KNOB regulator assembly
16	NSS	1	SCREW adjusting
17	D54290	1	O RING adjusting
18	C11865	1	RING backup, O ring
19	NSS	1	COVER regulator
20	A16755	1	O RING cover
21	61-414	4	BOLT hex socket head, 1/4" - 20 NC x 7/8"
22	192-19	4	WASHER, LOCK, 1/4"
	N7110	1	CONTROL ASSEMBLY, flow, Includes: Ref. 23 - 31
23	L35302	1	SPRING flow control
24	NSS	1	SLEEVE piston
25	NSS	UAR	SHIM sleeve
26	NSS	1	PISTON flow control
27	L35301	1	COLLAR metering sleeve
28	NSS	1	SLEEVE metering
29	NSS	1	GUIDE sleeve, flow control
30	D26265	1	O RING guide
31	L35297	1	RING backup, O ring
	D87301	1	PLUG ASSEMBLY, main relief port, used in D122551 section only, Includes: Ref. 32 - 35

448 THREE-POINT HITCH CONTROL VALVE, INLET-OUTLET SECTION

Ref	Part Number	Qty	Description
32	NSS	1	PLUG main relief port
33	343900R1	1	O RING plug, large
34	D39718	1	O RING plug, small
35	D87303	2	RING backup, small O ring

450 THREE-POINT HITCH CONTROL VALVES, LIFT SECTION WITH TWO CIRCUIT RELIEF VALVES

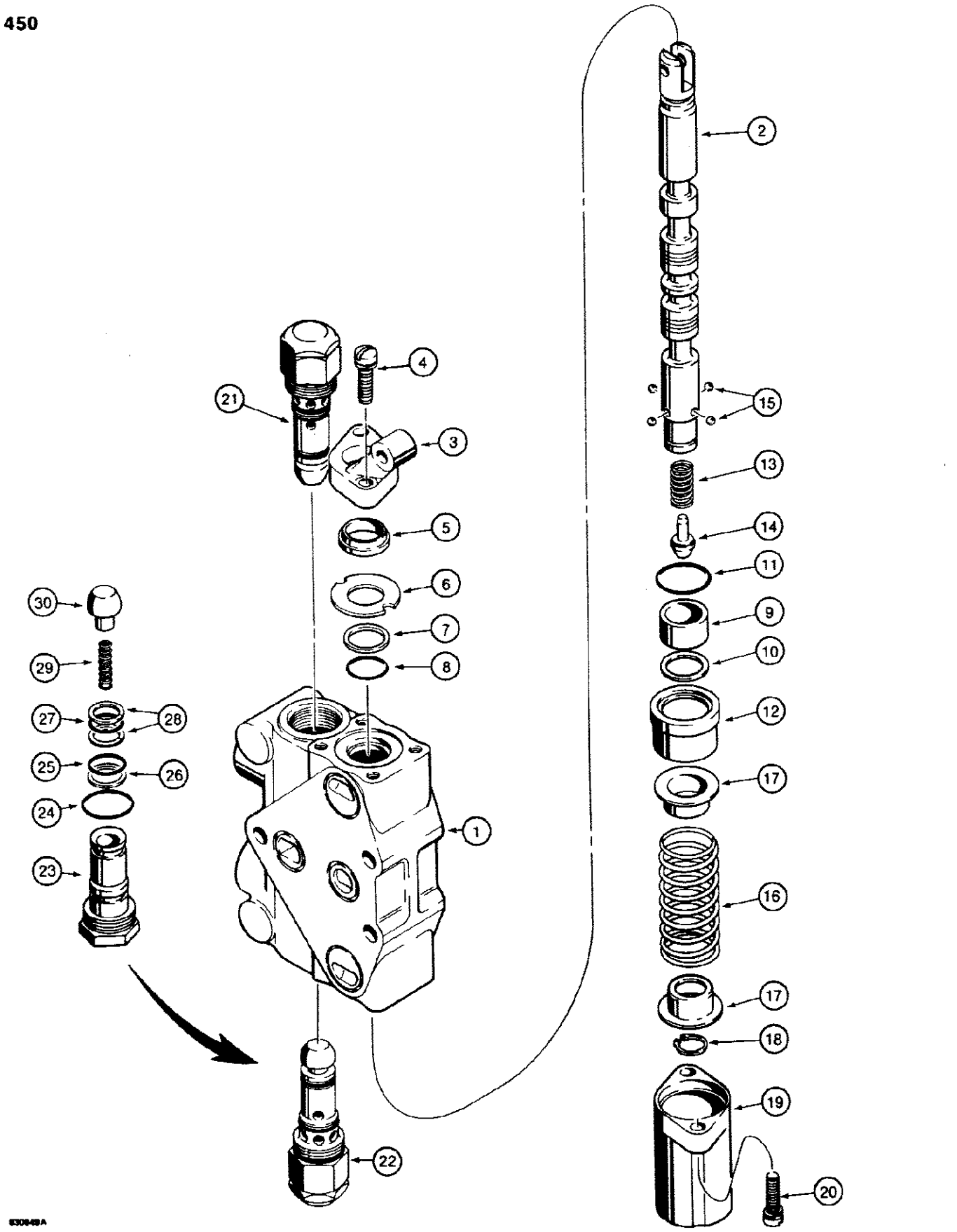

450 THREE-POINT HITCH CONTROL VALVES, LIFT SECTION WITH TWO CIRCUIT RELIEF VALVES

Ref	Part Number	Qty	Description
	N8692	1	SECTION hitch lift, contains two circuit relief valves, Includes: Ref. 1 - 22
1	NSS	1	HOUSING valve section
2	NSS	1	SPOOL valve section
3	N7114	1	RETAINER AND BRACKET section
4	193-558	2	SCREW AND LOCK WASHER plated, 1/4" - 20 NC x 7/8"
5	N7029	1	WIPER spool
6	D88730	1	RETAINER seal
7	D88729	1	RING backup, spool seal O ring
8	N13962	1	O RING spool seal
9	N7038	1	SLEEVE spool
10	N7036	1	RING quad, spool seal
11	343900R1	1	O RING detent sleeve to section housing
12	N7034	1	SLEEVE detent
13	N7037	1	SPRING detent
14	N7035	1	PLUNGER ball retaining
15	211-256	4	BALL grade 50, chrome alloy steel, 7/32",
16	N7032	1	SPRING centering, spool
17	N7033	2	SEAT centering spring
18	49476	1	Ring, Snap, #62, Ext, seat
19	N7031	1	CAP valve spool
20	193-558	2	SCREW AND LOCK WASHER plated, 1/4" - 20 NC x 7/8"
21	H593228	1	VALVE circuit relief, upper port, See Figure 454
22	D122552	1	VALVE circuit relief, lower port, See Figure 454
	D87307	1	VALVE load check, valve section, if used
23	NSS	1	PLUG load check valve, Includes: Ref. 23 - 30
24	237-6010	1	O RING outer
25	D26265	1	O RING center
26	L35297	1	RING backup, center O ring
27	16905	1	O RING inner
28	D88725	2	RING backup, inner O ring
29	H268730	1	SPRING poppet
30	D28576	1	POPPET load check valve

452 THREE-POINT HITCH CONTROL VALVE, PITCH, TILT, AND IMPLEMENT SECTIONS

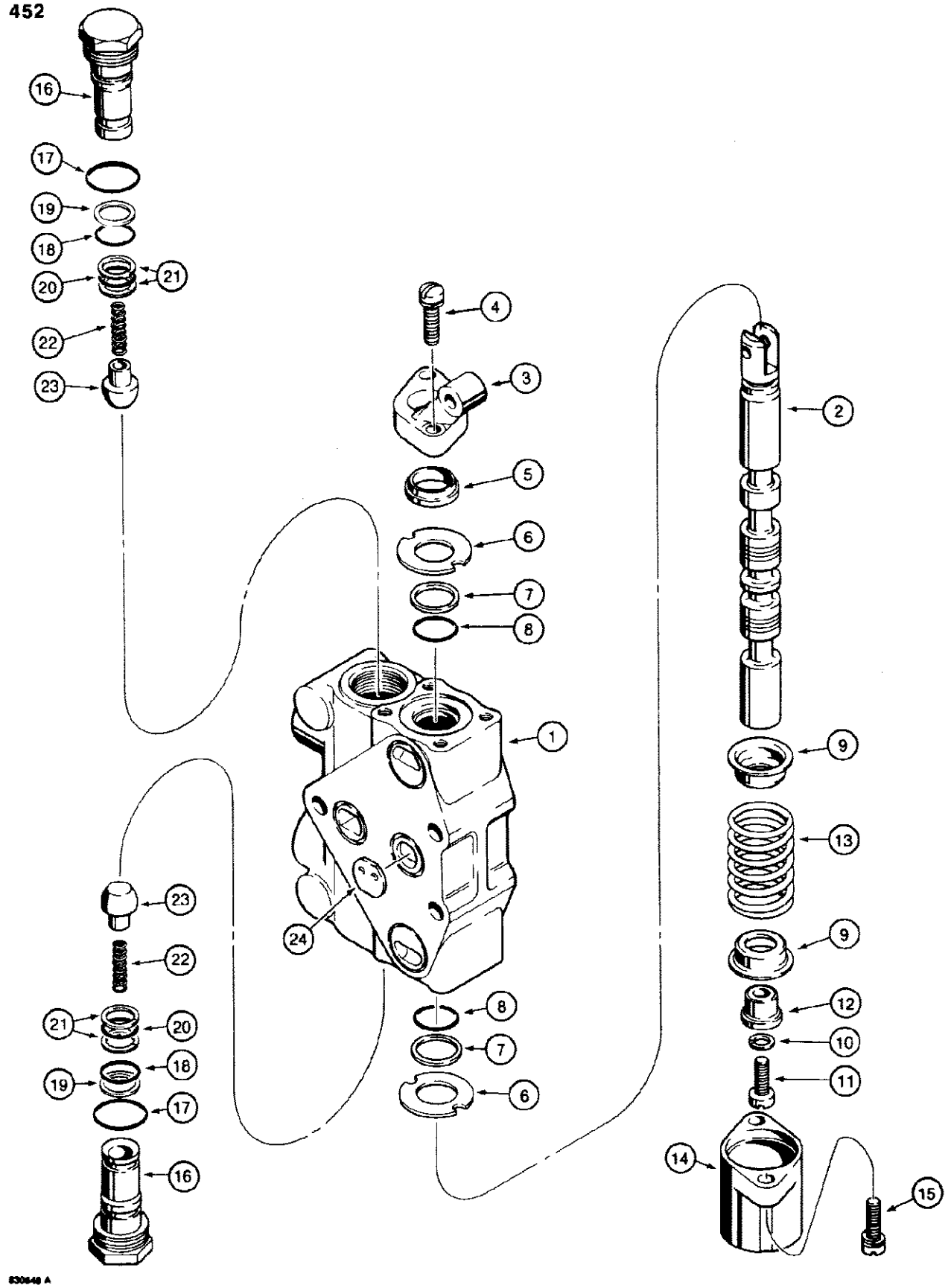

452 THREE-POINT HITCH CONTROL VALVE, PITCH, TILT, AND IMPLEMENT SECTIONS

Ref	Part Number	Qty	Description
	N8691	2-4	SECTION hitch pitch, tilt, and implement, used in four-spool control valves
	N7115	1	SECTION hitch auxiliary, used in four-spool control valve, D99475 only, Includes: Ref. 1 through 23 and P/N D87307, Auxiliary section includes a lever, link assembly, and pins not required for use the 580 Super E.
1	NSS	1	HOUSING valve section, not the same between N8691 and N7115
2	NSS	1	SPOOL valve section
3	N7114	1	RETAINER AND BRACKET section
4	193-558	2	SCREW AND LOCK WASHER plated, 1/4" - 20 NC x 7/8"
5	N7029	1	WIPER spool
6	D88730	2	RETAINER seal
7	D88729	2	RING backup, O-ring
8	N13962	2	O-RING spool seal
9	H267591	2	SEAT centering spring
10	192-404	1	WASHER, LOCK, 5/16"
11	169-160	1	SCREW machine, Fillister head, plated, 5/16" - 18 NC x 3/4"
12	H267609	1	COLLAR spool
13	D87306	1	SPRING centering, spool
14	H267583	1	CAP valve spool
15	193-558	2	SCREW AND LOCK WASHER plated, 1/4" - 20 NC x 7/8"
	D87307	2	VALVE load check, valve section, Includes: Ref. 16 - 23
16	NSS	1	PLUG load check valve
17	237-6010	1	O-RING outer
18	D26265	1	O-RING center
19	L35297	1	RING backup, center O-ring
20	16905	1	O-RING inner
21	D88725	2	RING backup, inner O-ring
22	H268730	1	SPRING poppet
23	D28576	1	POPPET load check valve
24	N7116	1	PLATE flow restriction, used with N7115 section only, if used

454

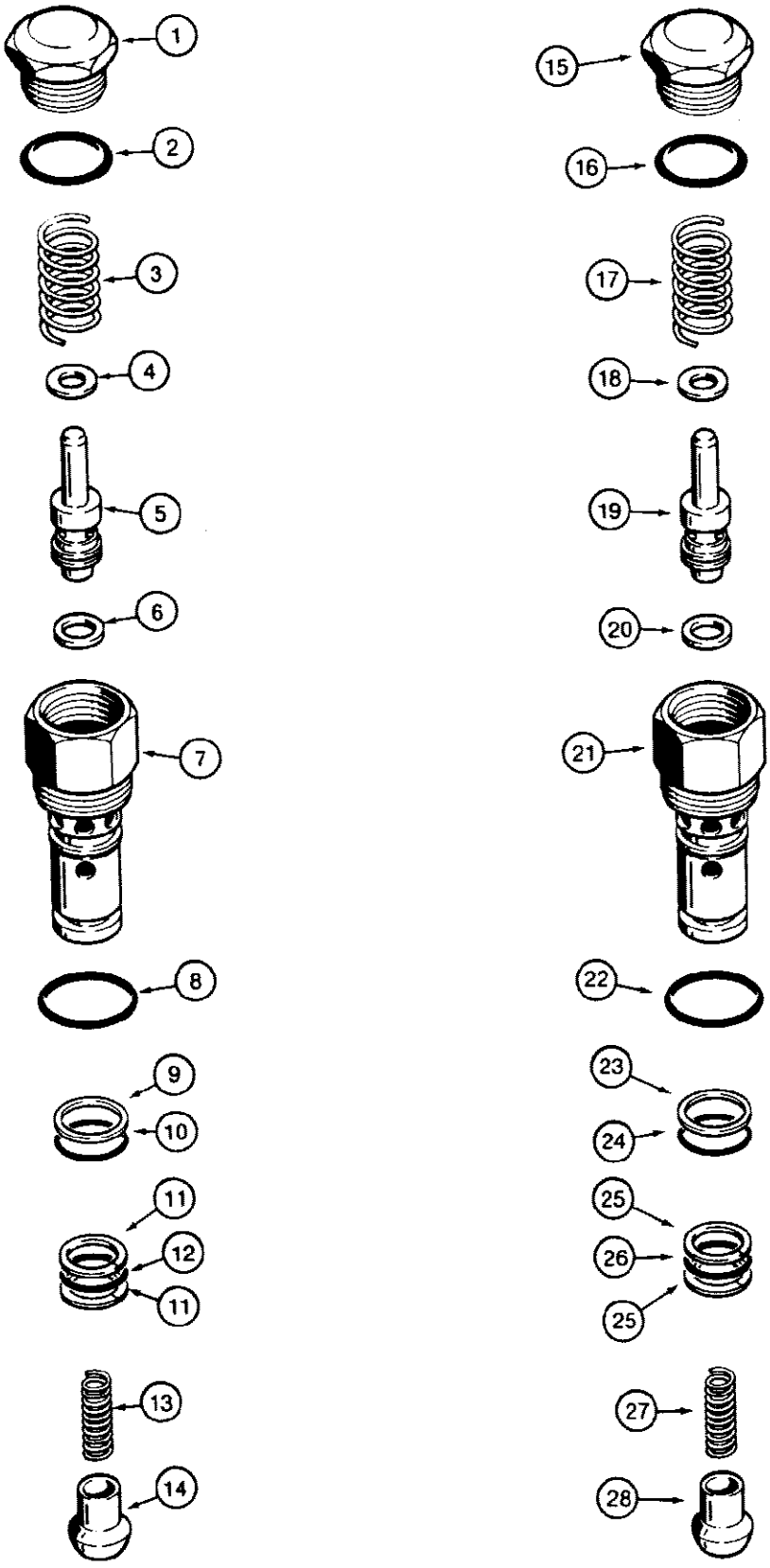
1
2
3
4
5
6
7
8
9
10
11
12
11
13
14
15
16
17
18
19
20
21
22
23
24
25
26
25
27
28

454 THREE-POINT HITCH RELIEF VALVE ASSEMBLIES, LIFT SECTIONS

Ref	Part Number	Qty	Description
	H593228	1	VALVE circuit relief, lift circuit, upper port, H593228 circuit relief valve, Includes: Ref. 1 - 14, The pressure setting of the repair valve is not preset for this application. Adjust the setting according to the instructions sent with the repair valve or according to the service manual.
1	D39716	1	CAP circuit relief valve, H593228 circuit relief valve
2	237-6010	1	O RING cap, H593228 circuit relief valve
3	D51540	1	SPRING outer, H593228 circuit relief valve
4	A55893	UAR	SHIM, .0418" Thk (1.016 mm), H593228 circuit relief valve
4	A55894	UAR	SHIM, .0209" Thk (0.508 mm), H593228 circuit relief valve
4	D39712	UAR	SHIM, .010" (0.254 mm) thick, H593228 circuit relief valve
	D66490	1	PLUNGER ASSEMBLY, circuit relief valve, H593228 circuit relief valve, Includes: Ref. 5 and 6
5	NSS	1	PLUNGER body, H593228 circuit relief valve
6	D39714	1	SEAL plunger, H593228 circuit relief valve
7	NSS	1	BODY circuit relief valve, H593228 circuit relief valve
8	237-6010	1	O RING outer, H593228 circuit relief valve
9	L35297	1	RING backup, center O ring, H593228 circuit relief valve
10	D26265	1	O RING center, H593228 circuit relief valve
11	H411371	2	RING backup, inner O ring, H593228 circuit relief valve
12	16905	1	O RING inner, H593228 circuit relief valve
13	H268730	1	SPRING load check valve poppet, H593228 circuit relief valve
14	D28576	1	POPPET load check valve, H593228 circuit relief valve
	D122552	1	VALVE circuit relief, lift circuit, lower port, D122552 circuit relief valve, Includes: Ref. 15 - 28, The pressure setting of the repair valve is not preset for this application. Adjust the setting according to the instructions sent with the repair valve or according to the service manual.
15	D39716	1	CAP circuit relief valve, D122552 circuit relief valve
16	237-6010	1	O RING cap, D122552 circuit relief valve
17	D39709	1	SPRING outer, D122552 circuit relief valve
18	A55893	UAR	SHIM, .0418" Thk (1.016 mm), D122552 circuit relief valve
18	A55894	UAR	SHIM, .0209" Thk (0.508 mm), D122552 circuit relief valve
18	D39712	UAR	SHIM, .010" (0.254 mm) thick, D122552 circuit relief valve
	D66490	1	PLUNGER ASSEMBLY, circuit relief valve, D122552 circuit relief valve, Includes: Ref. 19 and 20
19	NSS	1	PLUNGER circuit relief valve, D122552 circuit relief valve
20	D39714	1	SEAL plunger, D122552 circuit relief valve
21	NSS	1	BODY circuit relief valve, D122552 circuit relief valve
22	237-6010	1	O RING outer, D122552 circuit relief valve
23	L35297	1	RING backup, center O ring, D122552 circuit relief valve
24	D26265	1	O RING center, D122552 circuit relief valve
25	H411371	2	RING backup, inner O ring, D122552 circuit relief valve
26	16905	1	O RING inner, D122552 circuit relief valve
27	H268730	1	SPRING load check valve poppet, D122552 circuit relief valve
28	D28576	1	POPPET load check valve, D122552 circuit relief valve

456

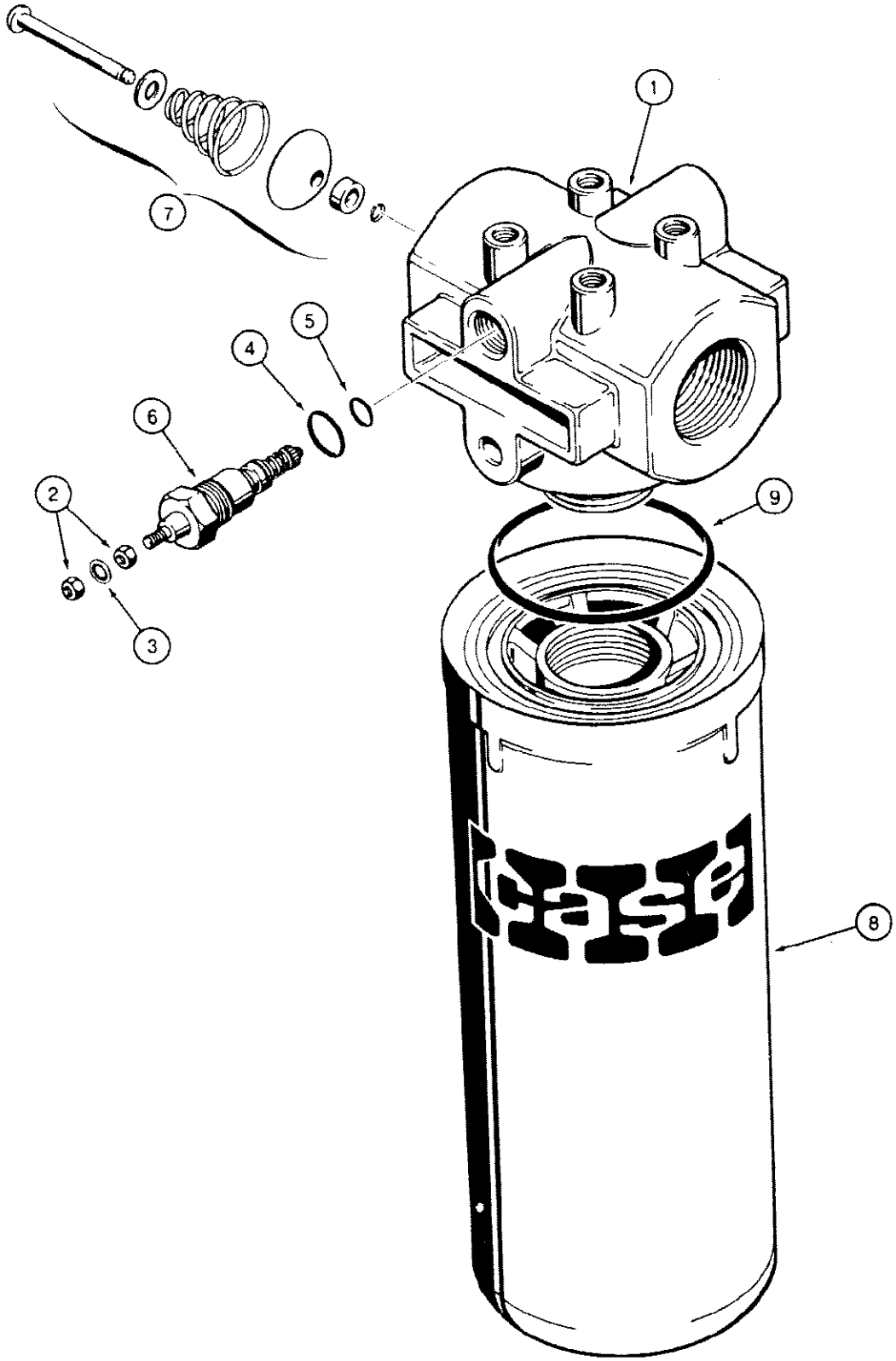

800662

580SE CASE SUPER-E CONSTRUCTION KING LOADER BACKHOE - Hydraulics

456 HYDRAULIC OIL FILTER

Ref	Part Number	Qty	Description
	D122362	1	FILTER ASSEMBLY, hydraulic oil, without O ring ports, if used, Includes: Ref. 1 - 9
	D131293	1	FILTER ASSEMBLY, hydraulic oil, with O ring ports, if used, Includes: Ref. 1 - 9
1	NSS	1	HEAD filter
	N6755	1	RESTRICTION INDICATOR ASSEMBLY, electric
	N6941	1	KIT, restriction indicator repair, Includes: P/N N6941 and Ref. 2 - 5
2	129-667	2	NUT, #10-32, LH
3	193-99	1	WASHER, LOCK, Int Tooth, #10
4	218-5005	1	O-Ring, 6-1, 90 Duro, .468" ID x .078" Thk
5	A28090	1	O-Ring -011, 70 Duro, .031" ID x .070" Thk inner
6	NSS	1	INDICATOR restriction, electric
7	NSS	1	VALVE bypass
	N9025	1	ELEMENT ASSEMBLY, filter, interchangeable with P/N D94236 element, Includes: Ref. 8 and 9
8	NSS	1	ELEMENT filter
9	N9026	1	O RING, filter to head

458 HYDRAULIC QUICK DISCONNECT COUPLINGS, D52800 FEMALE COUPLING

458

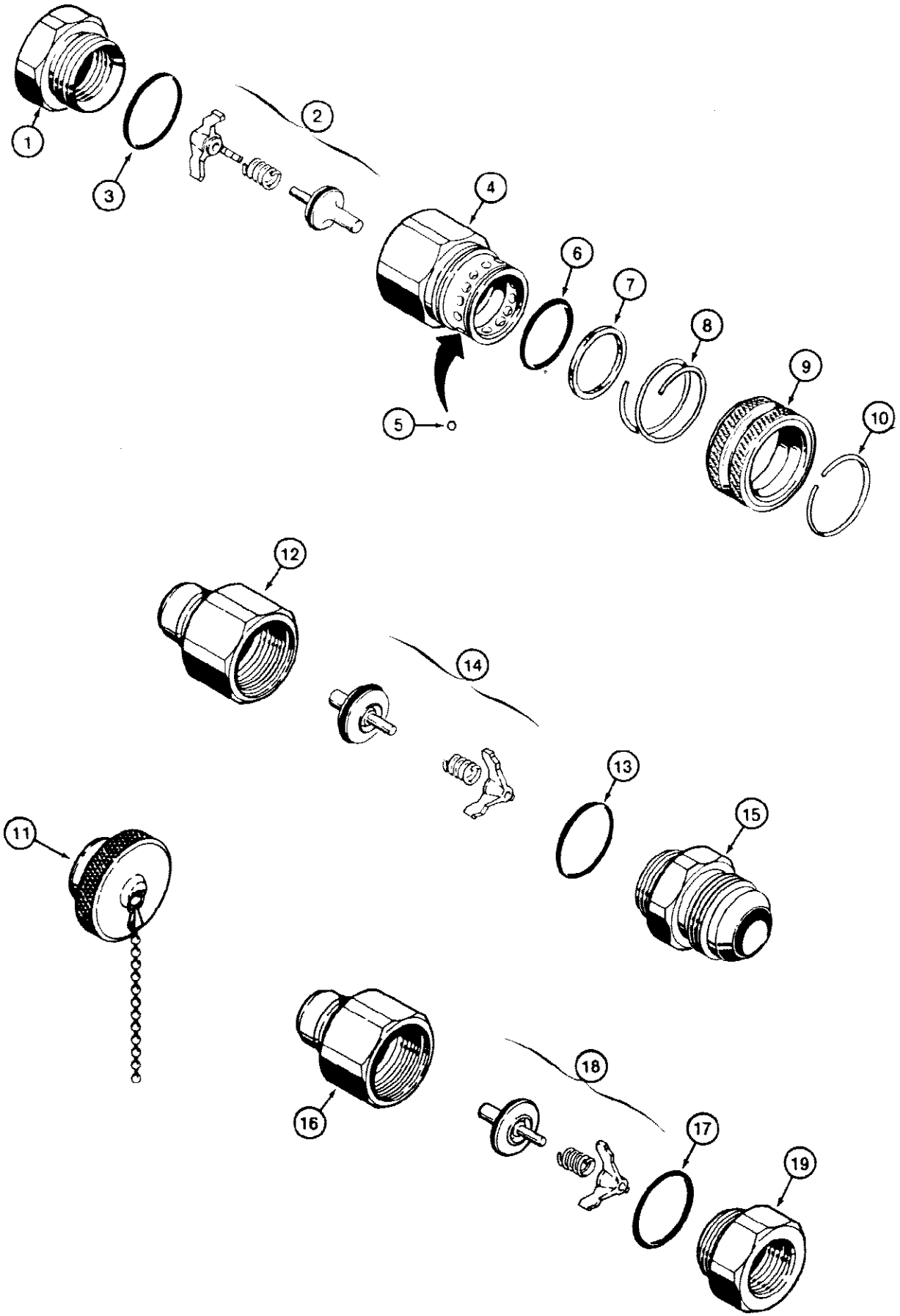

B30643

458 HYDRAULIC QUICK DISCONNECT COUPLINGS, D52800 FEMALE COUPLING

Ref	Part Number	Qty	Description
	D52800	1	DISCONNECTquick, coupling, female, used with backhoe and three point hitch, pipe thread, Includes: Ref. 1-10
1	D31975	1	ADAPTER end, coupling
2	D53915	1	VALVE ASSEMBLY, coupling
3	A13184	1	O RING coupling
4	D53916	1	BODY coupling
5	211-256	10	BALL, alloy steel, chrome, grade 50, 7/32"
6	D53895	1	O RING body, coupling
7	D54276	1	RING backup, O ring
8	D31979	1	SPRING sleeve
9	D31980	1	SLEEVE ball retaining
10	D31981	1	RING retaining
11	D39924	1	PLUG dust, for female coupling, D52800, pipe thread
	D90260	1	DISCONNECT quick, coupling, male, used with backhoe, Includes: Ref. 12-15
12	NSS	1	BODY coupling, male
	N6906	1	KIT valve and seal, coupling, Includes: Ref. 13 and 14
13	A13184	1	O RING coupling
14	NSS	1	VALVE ASSEMBLY, coupling
15	NSS	1	ADAPTER end, coupling, D90260 Male, pipe thread
	D52694	1	DISCONNECTquick, coupling, male, used with three point hitch, Includes: Ref. 16-19
16	D31971	1	BODY coupling
17	A13184	1	O RING body,coupling
18	D53915	1	VALVE ASSEMBLY, coupling
19	D31975	1	ADAPTER hydraulic coupling

460

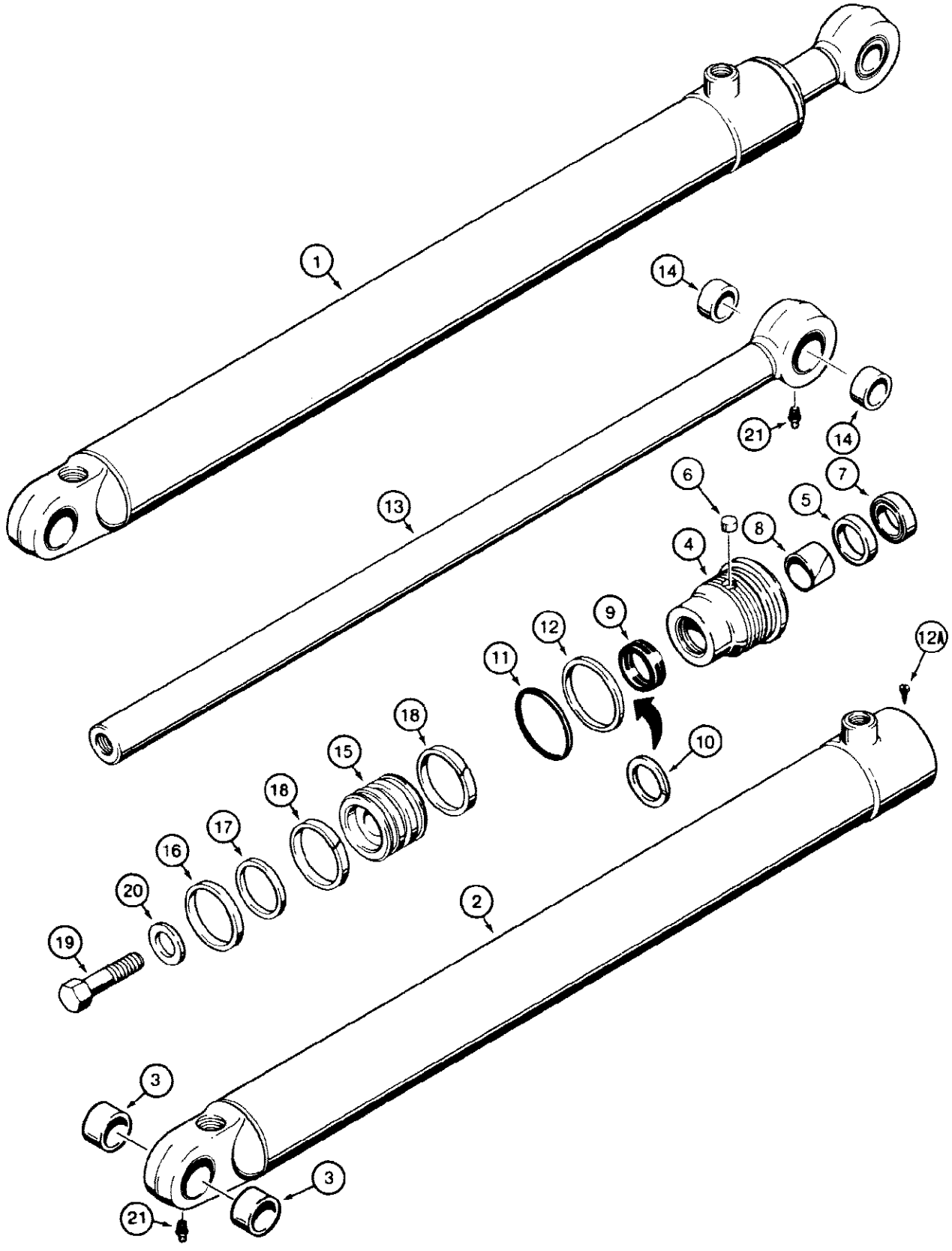

830693 B

The cylinder assembly part number is stamped on some cylinder glands or tubes.

580SE CASE SUPER-E CONSTRUCTION KING LOADER BACKHOE - Hydraulics

460 G105756 LOADER LIFT CYLINDER

Ref	Part Number	Qty	Description
1	G105756		CYLINDER ASSEMBLY, lift, right hand and left hand, 3" (76 mm) Includes: Ref. 2 - 21
		2	ID x 31-1/2" (800 mm) stroke, includes bushings in cylinder tube
2	G105757	1	TUBE ASSEMBLY, cylinder, Includes: Ref. 3
3	G33858	2	BUSHING tube
	G104240	1	GLAND ASSEMBLY, cylinder, Includes: Ref. 4 - 12
4	NSS	1	GLAND cylinder
5	G34600	1	RING retaining, bushing
6	G102569	1	PLUG nylon, thread locking, gland, if used
7	D95143	1	WIPER piston rod, outer, Part of Seal Kit, P/N G109460
8	G102425	1	BUSHING center, Part of Seal Kit, P/N G109460
9	G107922	1	SEAL u cup, with O ring, piston rod, wide
9	G100777	1	SEAL u cup, piston rod, service option for severe heat or cold
10	G109094	1	SEAL buffer, grooved, piston rod, narrow, Part of Seal Kit, P/N G109460
11	A30095	1	O RING gland, Part of Seal Kit, P/N G109460
12	G32122	1	RING backup, O ring gland, Part of Seal Kit, P/N G109460
12A	187-1524	1	SCREW hex head, slotted, self tapping, plated, No. 8 - 32 NC x 3/8", if used
13	G35332	1	ROD ASSEMBLY, piston, 1-3/4" (44 mm) diameter, Includes: Ref. 14
14	D30930	2	BUSHING piston rod
15	G100704	1	PISTON cylinder
16	G102288	1	SEAL piston, Part of Seal Kit, P/N G109460
17	G100444	1	RING backup, piston seal, Part of Seal Kit, P/N G109460
18	G100449	2	RING wear, piston, Part of Seal Kit, P/N G109460
19	28-1640	1	BOLT hex head, grade 8, 1" - 14 NS x 2-1/2"
20	G32303	1	WASHER hardened
21	219-1	2	FITTING grease, straight, 1/8" NPT
	G109460	1	KIT, seal, Includes: Ref. 7 - 12, 16, 17 and 18

The cylinder assembly part number is stamped on some cylinder glands or tubes.

462 G101186 AND G101187 LOADER BUCKET CYLINDERS

462

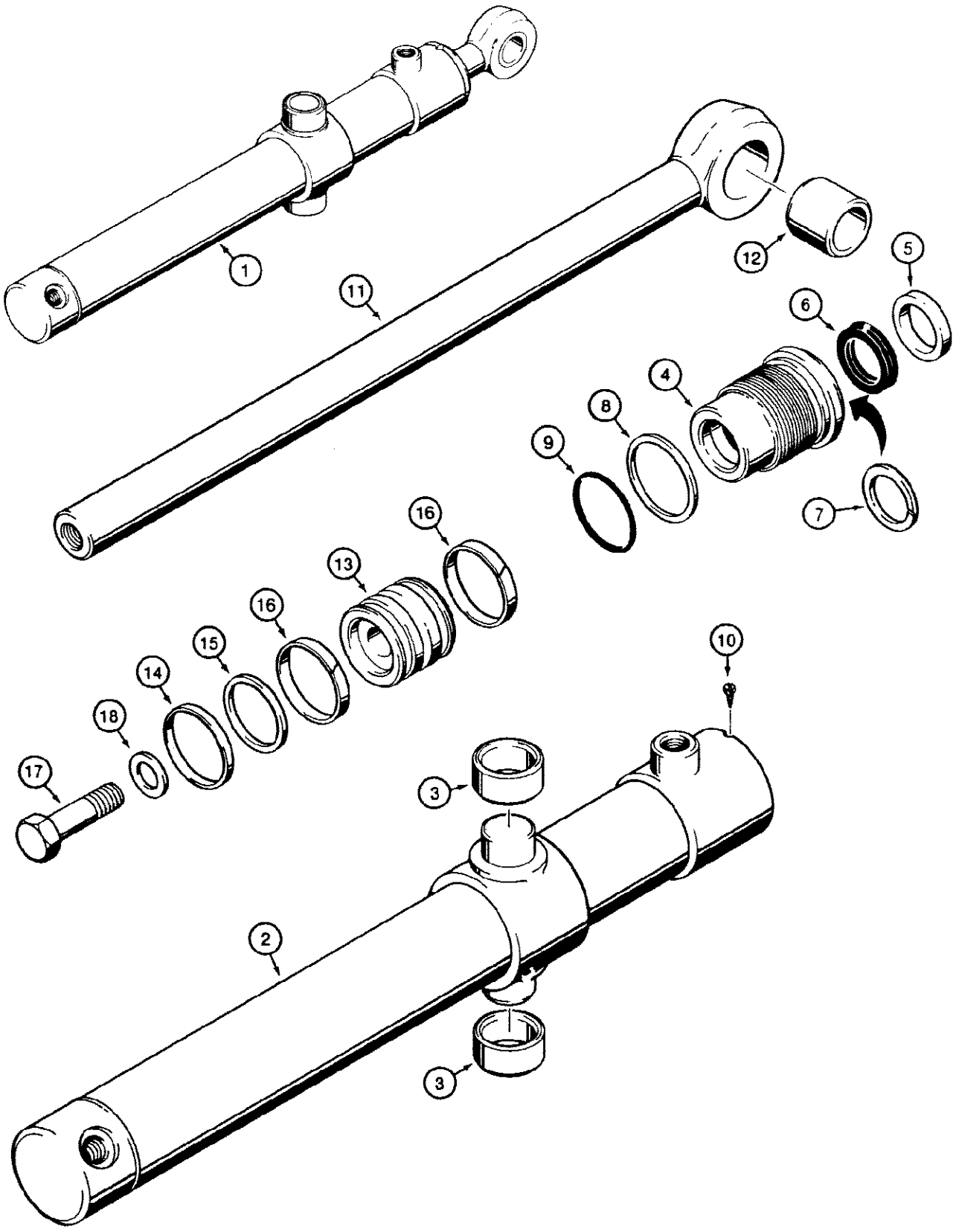

830884 B

580SE CASE SUPER-E CONSTRUCTION KING LOADER BACKHOE - Hydraulics

462 G101186 AND G101187 LOADER BUCKET CYLINDERS

Ref	Part Number	Qty	Description
1	G101186	1	CYLINDER ASSEMBLY, bucket, right hand, 2-1/2" (64 mm) ID x 20" (508 mm) stroke, Includes: Ref. 2 - 18
1	G101187	1	CYLINDER ASSEMBLY, bucket, left hand, 2-1/2" (64 mm) ID x 20" (508 mm) stroke, Includes: Ref. 2 - 18
2	D31098	1	TUBE ASSEMBLY, right hand cylinder, Includes: Ref. 3
2	D31099	1	TUBE ASSEMBLY, left hand cylinder, Includes: Ref. 3
3	G103411	2	BUSHING tube trunnion
	G104008	1	GLAND ASSEMBLY, cylinder, Includes: Ref. 4 - 9
4	NSS	1	GLAND cylinder
5	D95142	1	WIPER piston rod, outer, Part of Seal Kit, P/N G109456
6	G107921	1	SEAL u cup, with O ring, piston rod, wide, Part of Seal Kit, P/N G109456
6	G100776	1	SEAL u cup, piston rod, service option for severe heat or cold
7	G109093	1	SEAL buffer, grooved, piston rod, narrow, Part of Seal Kit, P/N G109456
8	G32129	1	RING backup, gland O ring, Part of Seal Kit, P/N G109456
9	A28318	1	O RING gland, Part of Seal Kit, P/N G109456
10	187-1524	1	SCREW hex head, slotted, self tapping, plated, No. 8 - 32 NC x 3/8"
11	G33422	1	ROD ASSEMBLY, piston, 1-1/2" (38 mm) diameter, Includes: Ref. 12
12	D30929	1	BUSHING rod
13	G100706	1	PISTON cylinder
14	G102289	1	SEAL piston, Part of Seal Kit, P/N G109456
15	G100713	1	RING backup, piston seal, Part of Seal Kit, P/N G109456
16	G100714	2	RING wear, piston, Part of Seal Kit, P/N G109456
17	28-1240	1	BOLT hex head, grade 8, 3/4" - 16 NF x 2-1/2"
18	G32317	1	WASHER hardened
	G109456	1	KIT, seal, Includes: Ref. 5, 6, 7, 9 and 14 - 16

464 G101190 AND G101191 LOADER CLAM CYLINDERS

464

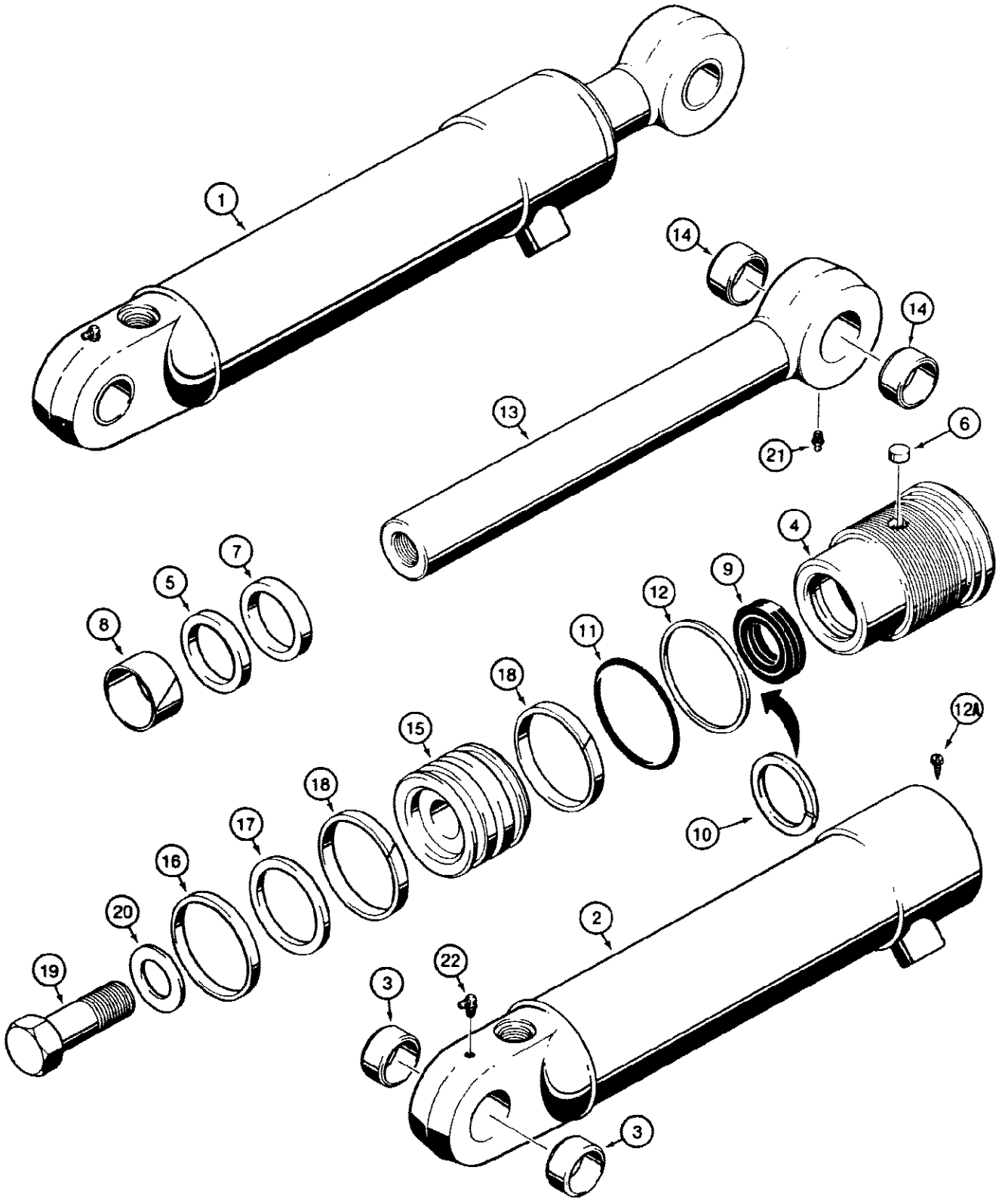

580SE CASE SUPER-E CONSTRUCTION KING LOADER BACKHOE - Hydraulics

464 G101190 AND G101191 LOADER CLAM CYLINDERS

Ref	Part Number	Qty	Description
1	G101190	1	CYLINDER ASSEMBLY, clam, right hand, 3" (76 mm) ID x 9" (229 mm) stroke, Includes: Ref. 2 - 22
1	G101191		CYLINDER ASSEMBLY, clam, left hand, 3" (76 mm) ID x 9" (229 mm) stroke, Includes: Ref. 2 - 22
2	G32305	1	TUBE ASSEMBLY, cylinder, right hand, Includes: Ref. 3 - 12
2	G32305	1	TUBE ASSEMBLY, cylinder, right hand, Includes: Ref. 3 - 12
2	G32304	1	TUBE ASSEMBLY, cylinder, left hand
3	30634	2	BUSHING tube
	G104240	1	GLAND ASSEMBLY, cylinder
4	NSS	1	GLAND cylinder
5	G34600	1	RING retaining, bushing
6	G102569	1	PLUG nylon, thread locking, gland, if used
7	D95143	1	WIPER piston rod, outer, Part of Seal Kit, P/N G109460
8	G102425	1	BUSHING center, Part of Seal Kit, P/N G109460
9	G107922	1	SEAL u cup, piston rod, wide, with O ring, Part of Seal Kit, P/N G109460
9	G100777	1	SEAL u cup, piston rod, service option for severe heat or cold
10	G109094	1	SEAL buffer, grooved, piston rod, narrow, Part of Seal Kit, P/N G109460
11	A30095	1	O RING gland, Part of Seal Kit, P/N G109460
12	G32122	1	RING backup, gland O ring, Part of Seal Kit, P/N G109460
12A	187-1524	1	SCREW hex head, slotted, self tapping, plated, No. 8 - 32 NC x 3/8", if used
13	G33800	1	ROD ASSEMBLY, piston, 1-3/4" (44 mm) diameter
14	30634	2	BUSHING piston rod
15	G100704	1	PISTON cylinder
16	G102288	1	SEAL piston, Part of Seal Kit, P/N G109460
17	G100444	1	RING piston seal, Part of Seal Kit, P/N G109460
18	G100449	2	RING wear, piston, Part of Seal Kit, P/N G109460
19	28-1640	1	BOLT hex head, grade 8, 1" - 14 NS x 2-1/2"
20	G32303	1	WASHER hardened
21	219-1	1	FITTING grease, straight, 1/8" NPT
22	219-55	1	NIPPLE, LUBE, 90e, 1/8" NPT x .84" lg, Special short
	G109460	1	KIT, seal, Includes Ref. 7-12, 16, 17 and 18

466 G109139 AND G109140 BACKHOE STABILIZER CYLINDERS

466

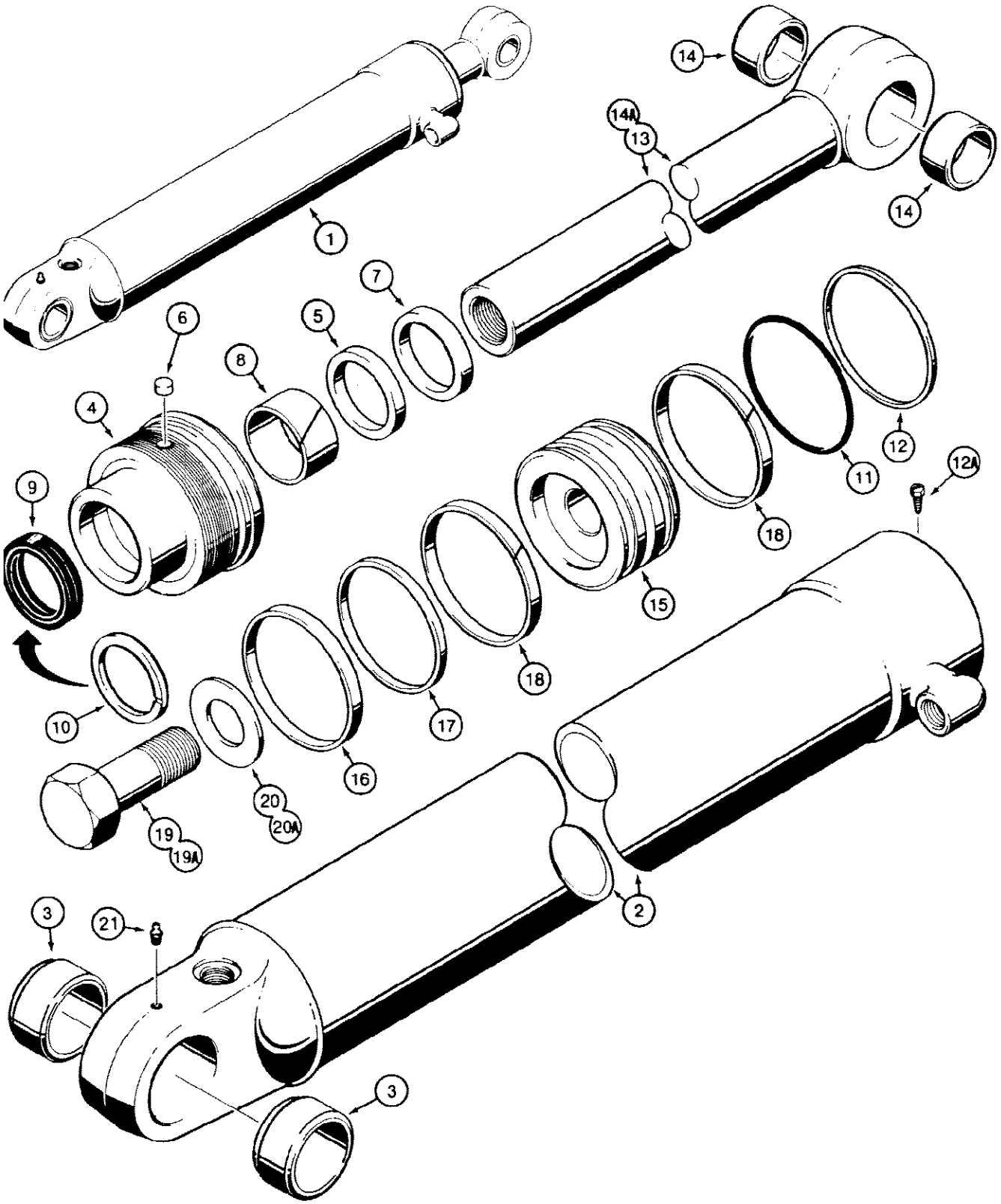

580SE CASE SUPER-E CONSTRUCTION KING LOADER BACKHOE - Hydraulics

466 G109139 AND G109140 BACKHOE STABILIZER CYLINDERS

Ref	Part Number	Qty	Description
1	G109140	1	CYLINDER ASSEMBLY, stabilizer, right hand, 4"/102 mm ID x 21 3/4"/553 mm stroke, interchangeable with P/N G103252 cylinder, Includes: Ref. 2-21
1	G109139	1	CYLINDER ASSEMBLY, stabilizer, left hand, 4"/102 mm ID x 21 3/4"/553 mm stroke, interchangeable with P/N G103253 cylinder, Includes: Ref. 2-21
2	G109142	1	TUBE ASSEMBLY, cylinder, right hand, Includes: Ref. 3-12
2	G109141	1	TUBE ASSEMBLY, cylinder, left hand, Includes: Ref. 3-12
3	D32865	2	BUSHING, P/N G109141 or G109142 tube
	G107524	1	GLAND ASSEMBLY, cylinder
4	NSS	1	GLAND cylinder
5	G34321	1	RING retaining, bushing
6	G102569	1	PLUG nylon, thread locking, gland, if used
7	D95144	1	WIPER piston rod, outer, Part of Seal Kit, P/N G109423
8	G101533	1	BUSHING center, Part of Seal Kit, P/N G109423
9	G107923	1	SEAL u cup, piston rod, wide, with O ring, Part of Seal Kit, P/N G109423
9	G100778	1	SEAL piston rod, service option for severe heat or cold
10	G107997	1	SEAL buffer, grooved, piston rod, narrow, Part of Seal Kit, P/N G109423
11	A27507	1	O RING gland, Part of Seal Kit, P/N G109423
12	G32176	1	RING backup, gland O ring, Part of Seal Kit, P/N G109423
12A	187-1524	1	SCREW hex head, slotted, self tapping, plated, No. 8 32 NC x 3/8", if used
13	G103264	1	ROD ASSEMBLY, piston, 2"/51 mm diameter, with bushing, no longer used, order P/N G107916 rod, Includes: Ref. 14
14	D32865	2	BUSHING piston rod eye
14A	G107916	1	ROD ASSEMBLY, piston, 2"/51 mm diameter, without bushings
15	G100438	1	PISTON cylinder
16	G102285	1	SEAL piston, Part of Seal Kit, P/N G109423
17	G100440	1	RING backup, piston seal, Part of Seal Kit, P/N G109423
18	G100448	2	RING wear, piston, Part of Seal Kit, P/N G109423
19	28-2040	1	BOLT hex head, grade 8, 1 1/4" 12 NF x 2 1/2", used with P/N G103264 rod, no longer used, order P/N 28 2044 bolt and G105980 washer
19A	28-2044	1	BOLT hex head, grade 8, 1 1/4" 12 NF x 2 3/4", used with P/N G107916 rod
20	G32351	1	WASHER, 1 11/32" ID x 1/8" thick, hardened, used with P/N G103264 rod, no longer used, order P/N G105980 washer and 28 2044 bolt
20A	G105980	1	WASHER hardened, 1 7/16" ID x 3/16" thick, used with P/N G107916 rod
21	219-1	1	FITTING grease, straight, 1/8" NPT
	G109423	1	KIT seal, Includes: Ref. 7-12, 16, 17 and 18

468 G104917 AND G110165 BACKHOE SWING CYLINDERS

468

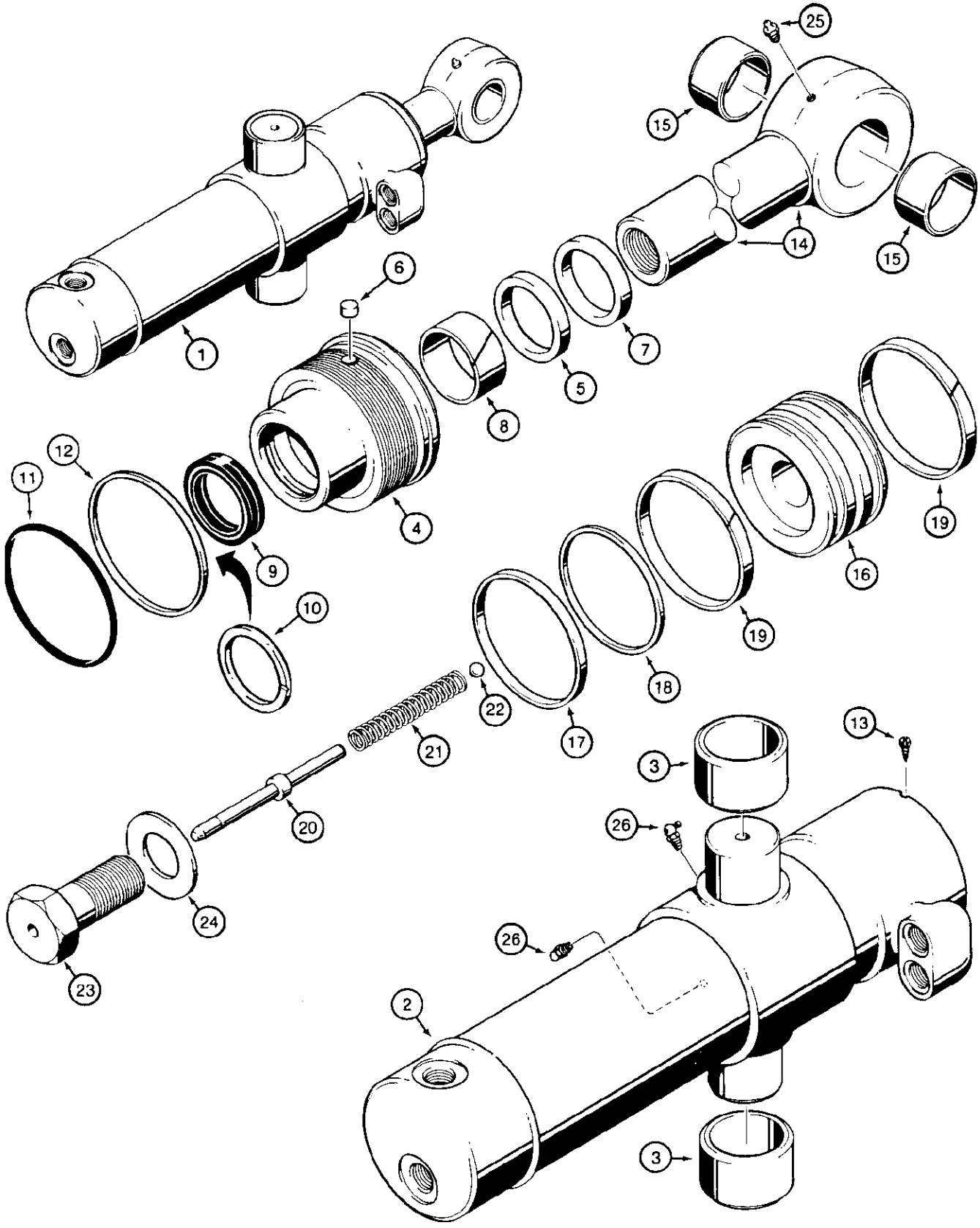

831163A

580SE CASE SUPER-E CONSTRUCTION KING LOADER BACKHOE - Hydraulics

468 G104917 AND G110165 BACKHOE SWING CYLINDERS

Ref	Part Number	Qty	Description
1	G104917		CYLINDER ASSEMBLY, swing, 4" (102 mm) ID x 11-7/32" (285 mm) stroke,no longer available, order P/N G110165 cylinder, Includes: Ref. 2 - 26, A thicker walled cylinder is available, P/N 1346045C1, use with Seal Kit P/N G110054/1543269C1
1	G110165	2	CYLINDER ASSEMBLY, swing, 4" (102 mm) ID x 11-7/32" (285 mm) stroke, Includes: Ref. 2 - 26
2	G103774	1	TUBE ASSEMBLY, cylinder, Includes: Ref. 3
3	G34875	2	BUSHING tube trunnion
	G107524	1	GLAND ASSEMBLY, cylinder, Includes: Ref. 4 - 12
4	NSS	1	GLAND cylinder
5	NSS	1	RING retaining, bushing
6	G102569	1	PLUG nylon, thread locking, gland, if used
7	D95144	1	WIPER piston rod, outer, Part of Seal Kit, P/N G109423
8	G101533	1	BUSHING center, Part of Seal Kit, P/N G109423
9	G107923	1	SEAL u cup, piston rod, wide, with O ring, Part of Seal Kit, P/N G109423
9	G100778	1	SEAL u cup, piston rod, service option for severe heat or cold
10	G107997	1	SEAL buffer, grooved, piston rod, narrow, Part of Seal Kit, P/N G109423
11	A27507	1	O RING gland, Part of Seal Kit, P/N G109423
12	G32176	1	RING backup, gland O ring, Part of Seal Kit, P/N G109423
13	187-1524	1	SCREW hex head, slotted, self tapping, plated, No. 8 - 32 NC x 3/8", if used
14	G110166	1	ROD ASSEMBLY, piston, 2" (51 mm) diameter, Includes: Ref. 15
15	G34854	2	BUSHING piston rod
16	G101309	1	PISTON cylinder
17	G102285	1	SEAL piston, Part of Seal Kit, P/N G109423
18	G100440	1	RING backup, piston seal, Part of Seal Kit, P/N G109423
19	G100448	2	RING wear, piston, Part of Seal Kit, P/N G109423
20	G104378	1	PIN cushion relief
21	D38683	1	SPRING cushion relief
22	211-17	1	BALL, chrome alloy steel, grade 200, cushion relief spring, 3/4"
23	D41359	1	BOLT piston and cushion relief
24	G32351	1	WASHER hardened
25	219-1	1	FITTING grease, straight, 1/8" NPT
26	219-55	2	NIPPLE, LUBE, 90ɛ, 1/8" NPT x .84" lg, Special short
	G109423	1	KIT, seal, Includes: Ref. 7 - 12, 17, 18 and 19

470 G106168 BACKHOE BOOM CYLINDER

470

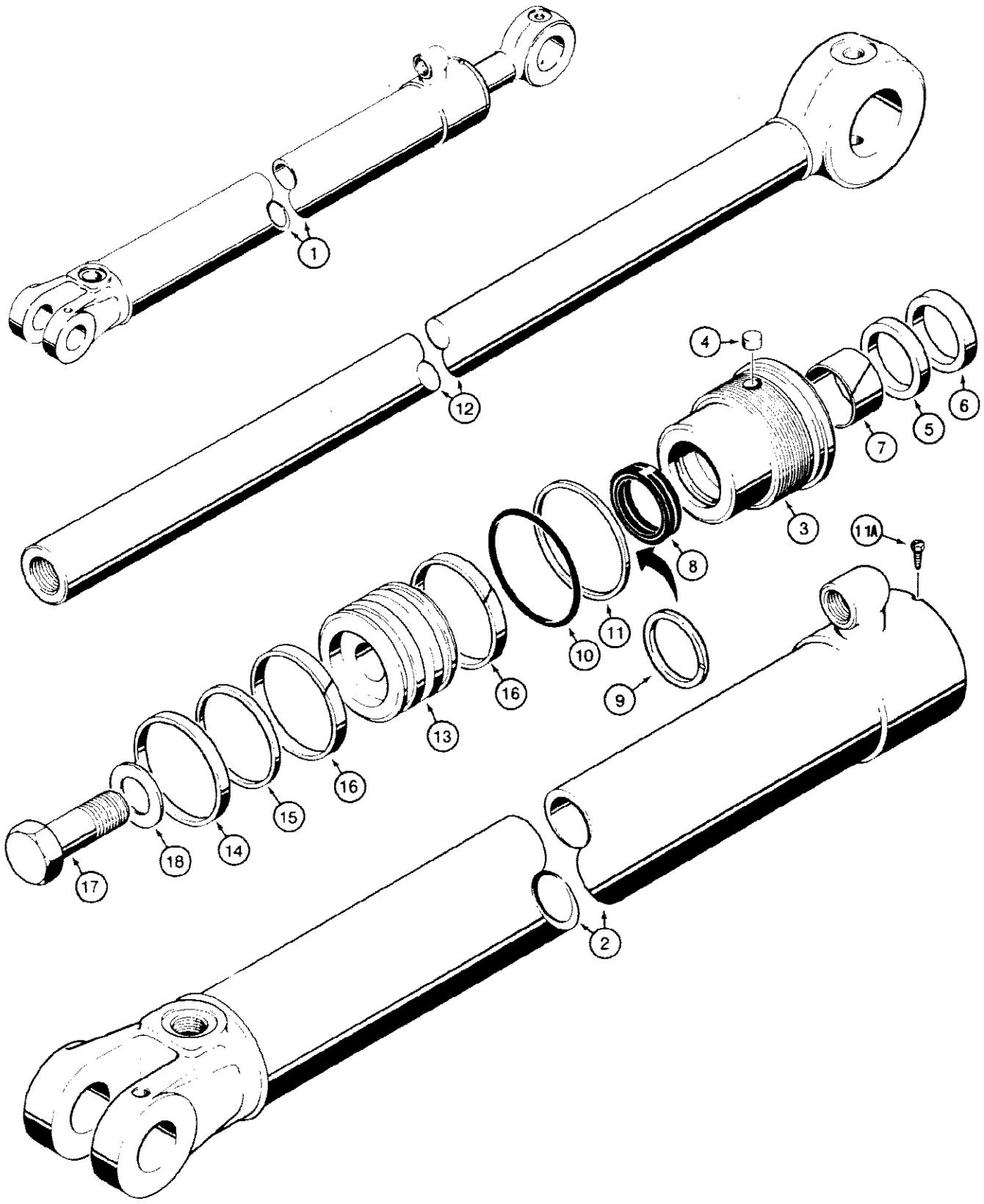

811048 B

580SE CASE SUPER-E CONSTRUCTION KING LOADER BACKHOE - Hydraulics

470 G106168 BACKHOE BOOM CYLINDER

Ref	Part Number	Qty	Description
1	G106168	2	CYLINDER ASSEMBLY, boom, 3-1/4" (83 mm) ID x 42-27/32" (1063 mm) stroke, Replaces: P/N G109339 cylinder used in production on some models, Includes: Ref. 2 - 18
2	G106169	1	TUBE cylinder
	G107671	1	GLAND ASSEMBLY, cylinder, Includes: Ref. 4 - 11
3	NSS	1	GLAND cylinder
4	G102569	1	PLUG nylon, thread locking, gland, if used
5	NSS	1	RING retaining, bushing
6	D95143	1	WIPER piston rod, outer
7	G102425	1	BUSHING center
8	G107922	1	SEAL u cup, piston rod, wide, with O ring
8	G100777	1	SEAL u cup, piston rod, service option for severe heat or cold
9	G109094	1	SEAL buffer, grooved, piston rod, narrow
10	A27994	1	O RING gland
11	D38858	1	RING backup, gland O ring
11A	187-1524	1	SCREW hex head, slotted, self tapping, plated, No. 8 - 32 NC x 3/8", if used
12	G33885		ROD piston, 1-3/4" (44 mm) from end of rod to center of eye, 1.75" diameter, 2.00" ID
13	G100642	1	PISTON cylinder
14	G102287	1	SEAL piston
15	S109444	1	RING backup, piston seal
16	S109445	2	RING wear, piston
17	28-1640	1	BOLT hex head, grade 8, 1" - 14 NC x 2-1/2"
18	G32303	1	WASHER hardened
	G109417	1	KIT, seal, Includes: Ref. 6, 7, 8, P/N G107922, 9, 10, 11 and 14 - 16

472 G106682 BACKHOE DIPPER CYLINDER

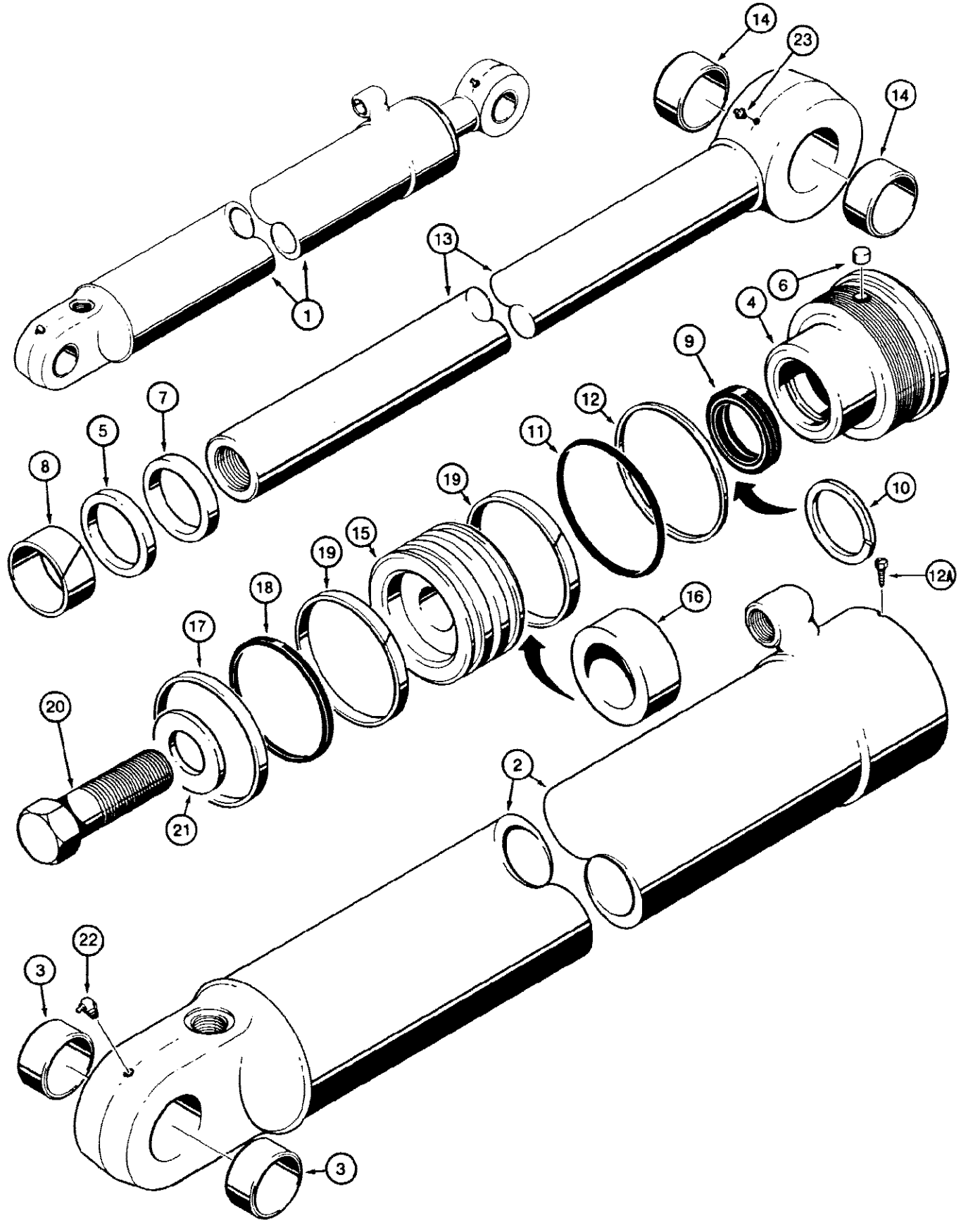

580SE CASE SUPER-E CONSTRUCTION KING LOADER BACKHOE - Hydraulics

472 G106682 BACKHOE DIPPER CYLINDER

Ref	Part Number	Qty	Description
1	G106682	1	CYLINDER ASSEMBLY, dipper, 4" (102 mm) ID x 33-7/8" (860 mm) stroke, Includes: Ref. 2 - 23
2	G107986	1	TUBE ASSEMBLY, cylinder, Includes: Ref. 3
3	D33047	2	BUSHING tube
	G107524	1	GLAND ASSEMBLY, cylinder, Includes: Ref. 4 - 12
4	NSS	1	GLAND cylinder
5	NSS	1	RING retaining, bushing
6	G102569	1	PLUG nylon, thread locking, gland, if used
7	D95144	1	WIPER piston rod, Part of Seal Kit, P/N G109423
8	G101533	1	BUSHING center, Part of Seal Kit, P/N G109423
9	G107923	1	SEAL u cup, piston rod, wide, with O ring, Part of Seal Kit, P/N G109423
9	G100778	1	SEAL piston rod, service option for severe heat or cold
10	G107997	1	SEAL buffer, grooved, piston rod, narrow, Part of Seal Kit, P/N G109423
11	A27507	1	O RING gland, Part of Seal Kit, P/N G109423
12	G32176	1	RING backup, gland O ring, Part of Seal Kit, P/N G109423
12A	187-1524	1	SCREW hex head, slotted, self tapping, plated, No. 8 - 32 NC x 3/8" if used
13	G105087	1	ROD ASSEMBLY, piston, 2" (51 mm) diameter, Includes: Ref. 14
14	D33047	2	BUSHING piston rod
15	G105090	1	PISTON cylinder
16	G106684	1	SPACER rod
17	G102285	1	SEAL piston, Part of Seal Kit, P/N G109423
18	G100440	1	RING backup, piston seal, Part of Seal Kit, P/N G109423
19	G100448	2	RING wear, piston, Part of Seal Kit, P/N G109423
20	G105958	1	BOLT special
			WASHER hardened
22	219-55	1	NIPPLE, LUBE, 90e, 1/8" NPT x .84" lg, Special short
23	219-1	1	FITTING grease, straight, 1/8" NPT
	G109423	1	KIT, seal, Includes: Ref. 7 - 12, 17, 18 and 19

474 G103350 AND G109434 BACKHOE BUCKET CYLINDERS

474

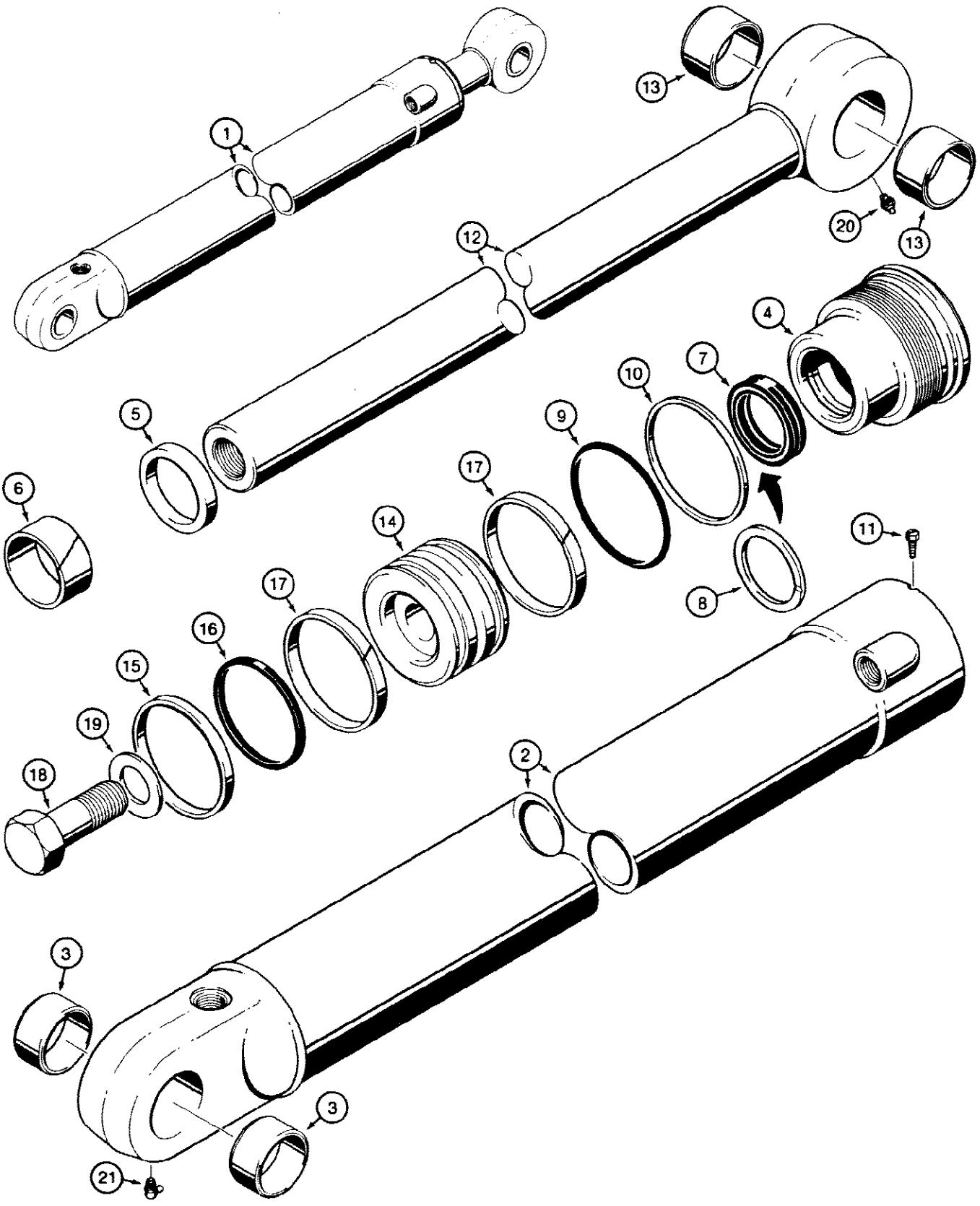

830686 B

580SE CASE SUPER-E CONSTRUCTION KING LOADER BACKHOE - Hydraulics

474 G103350 AND G109434 BACKHOE BUCKET CYLINDERS

Ref	Part Number	Qty	Description
1	G103350	1	CYLINDER ASSEMBLY, bucket, 3-1/2" (89 mm) ID x 30-9/16" (776 mm) stroke, with bushings in cylinder tube eye, no longer available, order P/N G109434 cylinder, Includes: Ref. 2 - 21
1	G109434	1	CYLINDER ASSEMBLY, bucket, 3-1/2" (89 mm) ID x 30-9/16" (776 mm) stroke, without bushings in cylinder tube eye, Includes: Ref. 2 - 21
2	G109097	1	TUBE ASSEMBLY, P/N G103350 cylinder, with bushings, no longer available, order P/N G109435 tube
2	G109435	1	TUBE, P/N G109434 cylinder, without bushings, Includes: Ref. 3
3	D33047	2	BUSHING, P/N G109097 tube only
	G104268	1	GLAND ASSEMBLY, cylinder, Includes: Ref. 5 - 10
4	NSS	1	GLAND cylinder
5	D95146	1	WIPER piston rod, Part of Seal Kit, P/N G109504
6	G102427	1	BUSHING center, Part of Seal Kit, P/N G109504
7	G109228	1	SEAL u cup, with O ring, piston rod, wide, Part of Seal Kit, P/N G109504
7	G100780	1	SEAL u cup, piston rod, service option for severe heat or cold
8	G107998	1	SEAL buffer, grooved, piston rod, narrow, Part of Seal Kit, P/N G109504
9	G15457	1	O RING gland, Part of Seal Kit, P/N G109504
10	G32126	1	RING backup, gland O ring, Part of Seal Kit, P/N G109504
11	187-1524	1	SCREW hex head, slotted, self tapping, plated, No. 8 - 32 NC x 3/8"
12	G103351	1	ROD ASSEMBLY, piston, 2-1/2" (64 mm) diameter
13	D34340	2	BUSHING piston rod
14	G103357	1	PISTON cylinder
15	G102286	1	SEAL piston, Part of Seal Kit, P/N G109504
16	G100710	1	RING backup, piston seal, Part of Seal Kit, P/N G109504
17	G100711	2	RING wear, piston, Part of Seal Kit, P/N G109504
18	28-2048	1	BOLT hex head, grade 8, 1-1/4" - 12 NF x 3"
19	G105980	1	WASHER hardened
20	219-1	1	FITTING greased, straight, 1/8" NPT
21	219-55	1	NIPPLE, LUBE, 90e, 1/8" NPT x .84" lg, Special short
	G109504	1	KIT, seal, Includes: Ref. 5 - 10, 15, 16 and 17

476 G109166 BACKHOE BUCKET CYLINDER, SPECIAL FEATURE

476

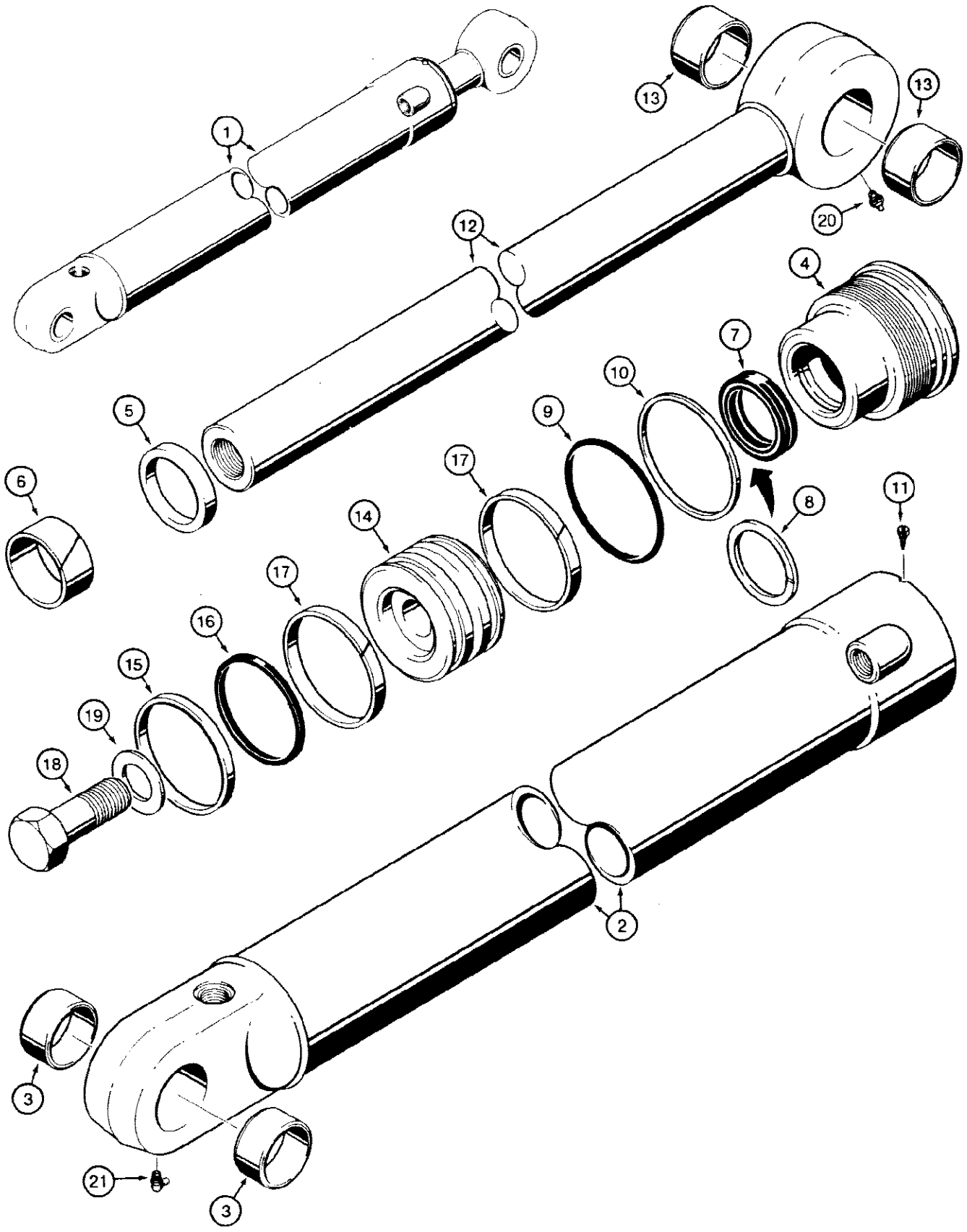

476 G109166 BACKHOE BUCKET CYLINDER, SPECIAL FEATURE

Ref	Part Number	Qty	Description
1	G109166	1	CYLINDER ASSEMBLY, bucket, 4" (102 mm) ID x 30-9/16" (776 mm) stroke, special feature cylinder, no longer used, order P/N G109713 cylinder on Figure 478, Includes: Ref. 2 - 21
2	G109167	1	TUBE ASSEMBLY, used with P/N G109166 cylinder, no longer used, order P/N G109714 tube on Figure 478, Includes: Ref. 3
3	D33047	2	BUSHING tube
	G104292	1	GLAND ASSEMBLY, cylinder, Includes: Ref. 4 - 10
4	NSS	1	GLAND cylinder
5	D95146	1	WIPER piston rod, Part of Seal Kit, P/N G109424
6	G102427	1	BUSHING center, Part of Seal Kit, P/N G109424
7	G109228	1	SEAL u cup, with O ring, piston rod, wide, Part of Seal Kit, P/N G109424
7	G100780	1	SEAL u cup, piston rod, service option for severe heat or cold
8	G107998	1	SEAL buffer, grooved, piston rod, narrow, Part of Seal Kit, P/N G109424
9	A27507	1	O RING gland, Part of Seal Kit, P/N G109424
10	G32176	1	RING backup, gland O ring, Part of Seal Kit, P/N G109424
11	187-1524	1	SCREW hex head, slotted, self tapping, plated, No. 8 - 32 NC x 3/8"
12	G103351	1	ROD ASSEMBLY, piston, 2-1/2" (64 mm) diameter, Includes: Ref. 13
13	D34340	2	BUSHING piston rod
14	G109171	1	PISTON cylinder
15	G102285	1	SEAL piston, Part of Seal Kit, P/N G109424
16	G100440	1	RING backup, piston seal, Part of Seal Kit, P/N G109424
17	G100448	2	RING wear, piston, Part of Seal Kit, P/N G109424
18	28-2044	1	BOLT hex head, grade 8, 1-1/4" - 12 NF x 2-3/4"
19	G105980	1	WASHER hardened
20	219-1	1	FITTING grease, straight, 1/8" NPT
21	219-55	1	NIPPLE, LUBE, 90e, 1/8" NPT x .84" lg, Special short
	G109424	1	KIT, seal, Includes: Ref. 5 - 10, 15, 16 and 17

478 G109713 BACKHOE BUCKET CYLINDER, SPECIAL FEATURE

478

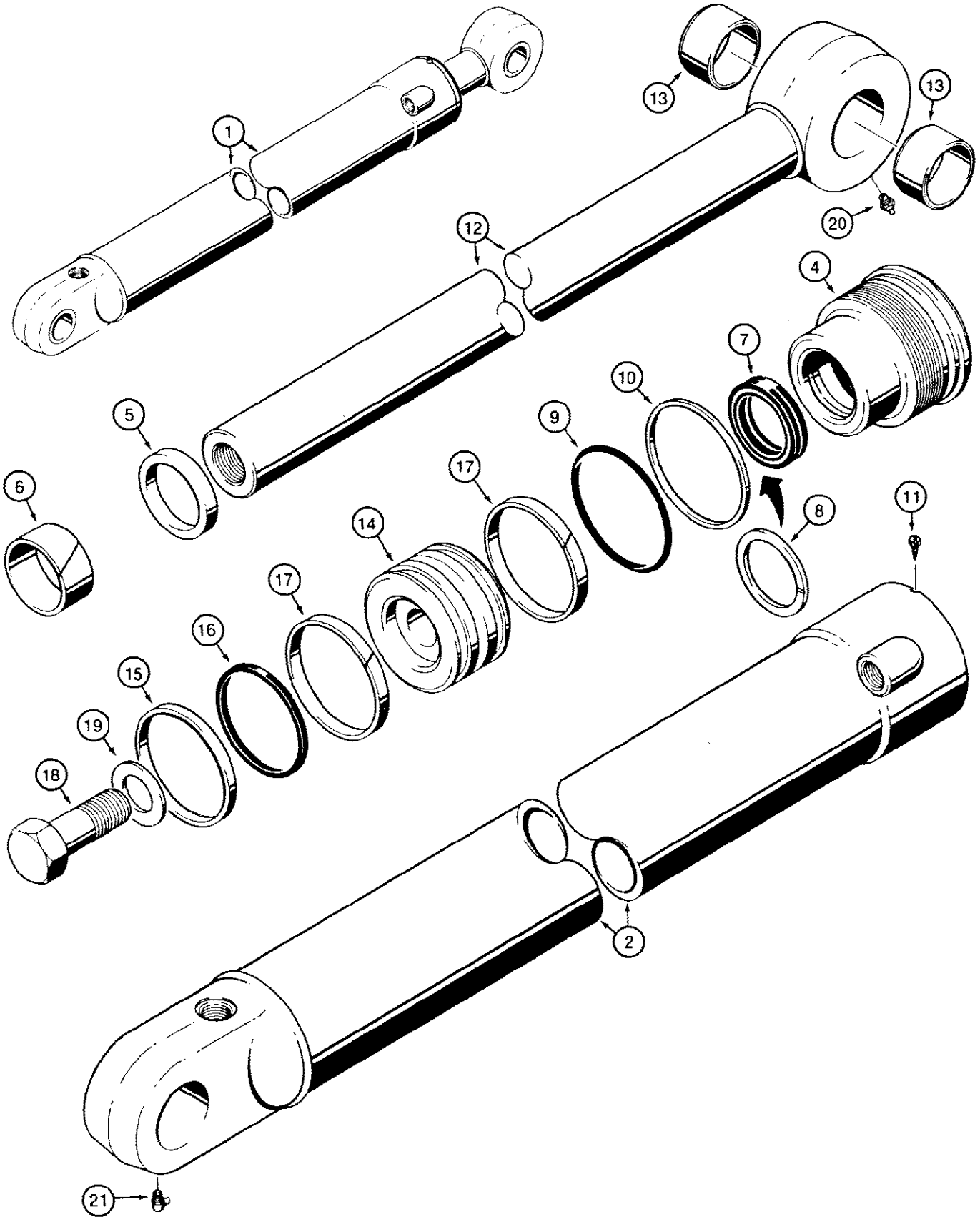

B61556

580SE CASE SUPER-E CONSTRUCTION KING LOADER BACKHOE - Hydraulics

478 G109713 BACKHOE BUCKET CYLINDER, SPECIAL FEATURE

Ref	Part Number	Qty	Description
1	G109713	1	CYLINDER ASSEMBLY, bucket, 4" (102 mm) ID x 30-9/16" (776 mm) stroke, special feature cylinder, Includes: Ref. 2-21
2	G109714	1	TUBE ASSEMBLY, cylinder
3			RESERVED
	G109720	1	GLAND ASSEMBLY, cylinder
4	NSS	1	GLAND cylinder
5	D95148	1	WIPER piston rod, Part of Seal Kit, P/N G109781
6	G102429	1	BUSHING center, Part of Seal Kit, P/N G109781
7	G109054	1	SEAL u cup, with O ring, piston rod, wide, Part of Seal Kit, P/N G109781
7	G100782	1	SEAL u cup, piston rod, service option for severe heat or cold
8	G109015	1	SEAL buffer, grooved, piston rod, narrow, Part of Seal Kit, P/N G109781
9	A27507	1	O RING gland, Part of Seal Kit, P/N G109781
10	G32176	1	RING backup, gland O ring, Part of Seal Kit, P/N G109781
11	187-1524	1	SCREW hex head, slotted, self tapping, plated, No. 8 - 32 NC x 3/8"
12	G109677	1	ROD ASSEMBLY, piston, 3" (76 mm) diameter
13	D34340	2	BUSHING piston rod
14	G100684	1	PISTON cylinder
15	G102285	1	SEAL piston, Part of Seal Kit, P/N G109781
16	G100440	1	RING backup, piston seal, Part of Seal Kit, P/N G109781
17	G100448	2	RING wear, piston, Part of Seal Kit, P/N G109781
18	28-2048	1	BOLT hex head, grade 8, 1-1/4" - 12 NF x 3"
19	G105980	1	WASHER hardened
20	219-1	1	FITTING grease, straight, 1/8" NPT
21	219-55	1	NIPPLE, LUBE, 90ɛ, 1/8" NPT x .84" lg, Special short
	G109781	1	KIT, seal, Includes: Ref. 5 - 10, 15, 16 and 17

480

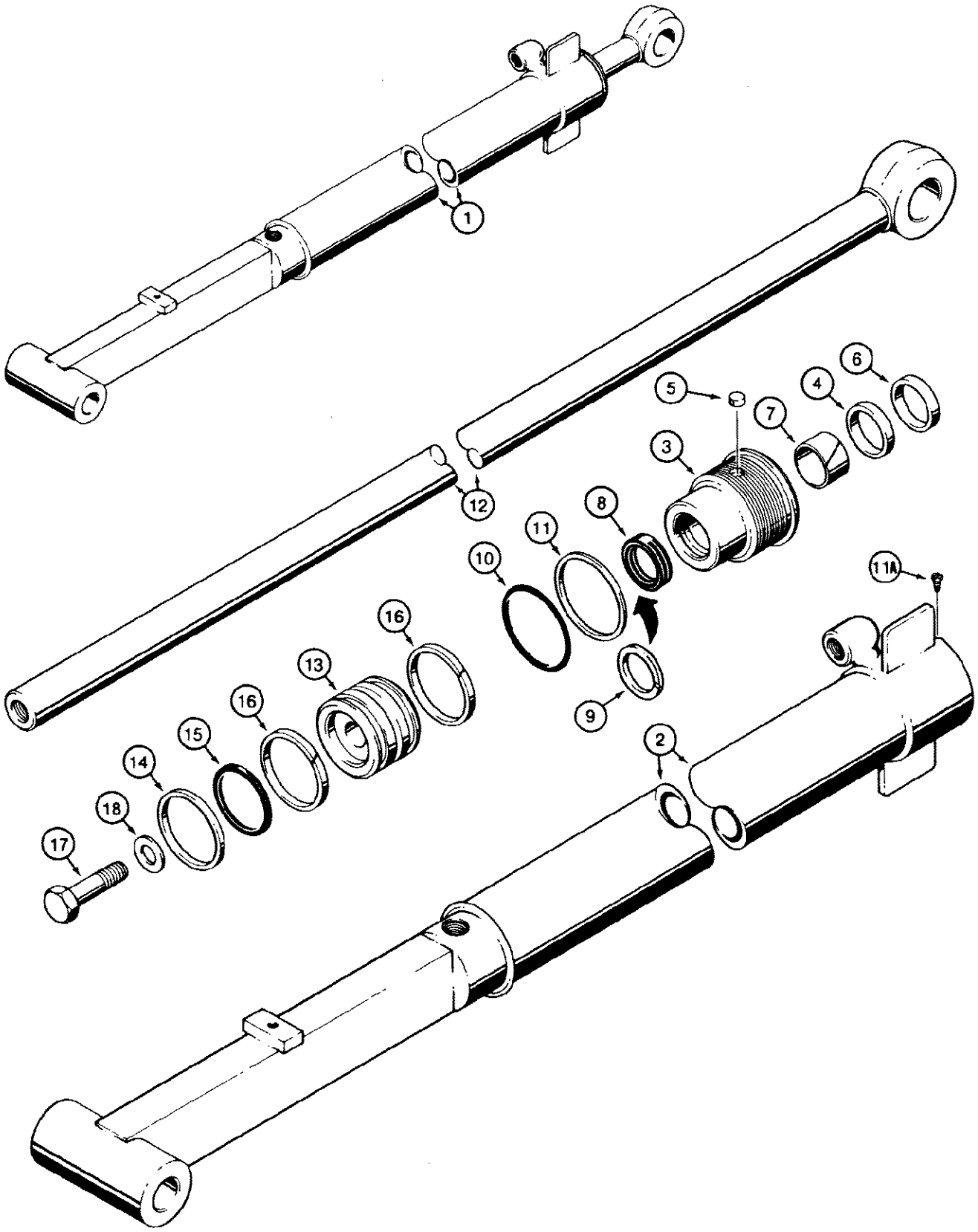

830687 B

580SE CASE SUPER-E CONSTRUCTION KING LOADER BACKHOE

480 G101183 BACKHOE DIPPER EXTENSION CYLINDER

Ref	Part Number	Qty	Description
1	G101183	1	CYLINDER ASSEMBLY, dipper extension, 3" (76 mm) ID x 48" (219 mm) stroke, Includes: Ref. 2 - 18
2	G32699	1	TUBE cylinder
	G104222	1	GLAND ASSEMBLY, cylinder, Includes: Ref. 3 - 11
3	NSS	1	GLAND cylinder
4	NSS	1	RING retaining, bushing
5	G102569	1	PLUG nylon, thread locking, gland, if used
6	D95142	1	WIPER piston rod, Part of Seal Kit, P/N G109452
7	G102424	1	BUSHING center, Part of Seal Kit, P/N G109452
8	G107921	1	SEAL u cup, with O ring, piston rod, wide, Part of Seal Kit, P/N G109452
8	G100776	1	SEAL u cup, piston rod, service option for severe heat or cold
9	G109093	1	SEAL buffer, grooved, piston rod, narrow, Part of Seal Kit, P/N G109452
10	A30095	1	O RING gland, Part of Seal Kit, P/N G109452
11	G32122	1	RING backup, gland O ring, Part of Seal Kit, P/N G109452
11A	187-1524	1	SCREW hex head, slotted, self tapping, plated, No. 8 - 32 NC x 3/8", if used
12	G33143	1	ROD ASSEMBLY, piston, 1-1/2" (38 mm) diameter
13	G100442	1	PISTON cylinder
14	G102288	1	SEAL piston, Part of Seal Kit, P/N G109452
15	G100444	1	RING backup, piston seal, Part of Seal Kit, P/N G109452
16	G100449	2	RING wear, piston, Part of Seal Kit, P/N G109452
17	28-1240	1	BOLT hex head, grade 8, 3/4" - 16 NF x 2-1/2"
18	G32317	1	WASHER hardened
	G109452	1	KIT, seal, Includes: Ref. 6 - 11, 14, 15 and 16

482 G101189 THREE-POINT HITCH LIFT CYLINDER

482

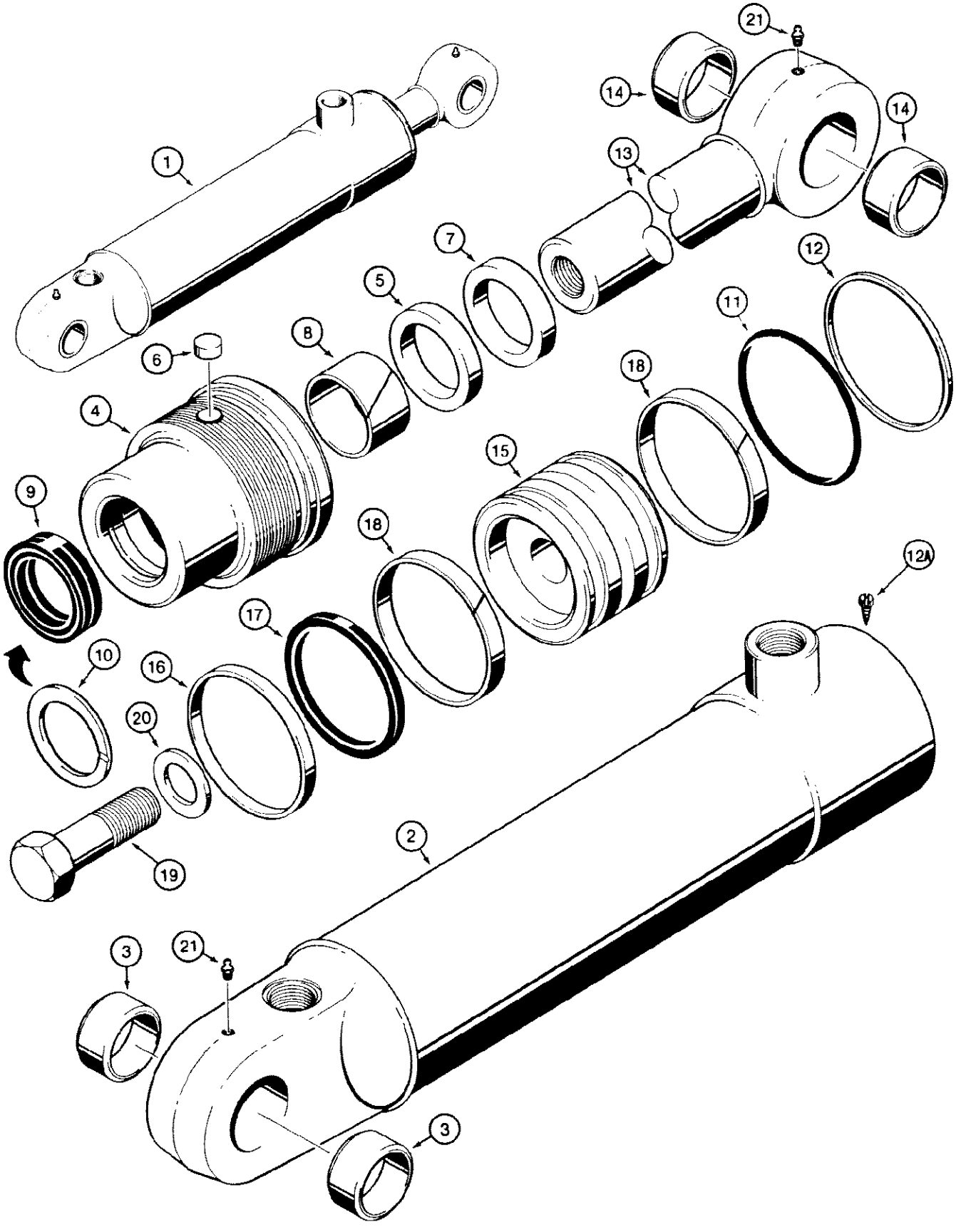

630688 B

580SE CASE SUPER-E CONSTRUCTION KING LOADER BACKHOE

482 G101189 THREE-POINT HITCH LIFT CYLINDER

Ref	Part Number	Qty	Description
1	G101189	1	CYLINDER ASSEMBLY, lift, 3" (76 mm) ID x 8-3/8" (213 mm) stroke, Includes: Ref. 2 - 21
2	G32330	1	TUBE ASSEMBLY, cylinder, Includes: Ref. 3
3	30634	2	BUSHING tube, Includes: Ref. 4 - 12
	G104222	1	GLAND ASSEMBLY, cylinder
4	NSS	1	GLAND cylinder
5	NSS	1	RING retaining, bushing
6	G102569	1	PLUG nylon, thread locking, gland, if used
7	D95142	1	WIPER piston rod, Part of Seal Kit, P/N G109452
8	G102424	1	BUSHING center, Part of Seal Kit, P/N G109452
9	G107921	1	SEAL u cup, with O ring, piston rod, wide, Part of Seal Kit, P/N G109452
9	G100776	1	SEAL u cup, piston rod, service option for severe heat or cold
10	G109093	1	SEAL buffer, grooved, piston rod, narrow, Part of Seal Kit, P/N G109452
11	A30095	1	O RING gland, Part of Seal Kit, P/N G109452
12	G32122	1	RING backup, gland O ring, Part of Seal Kit, P/N G109452
12A	187-1524	1	SCREW hex head, slotted, self tapping, plated, No. 8 - 32 NC x 3/8", if used
13	G33457	1	ROD ASSEMBLY, piston, 1-1/2" (38 mm) diameter, Includes: Ref. 14
14	30634	2	BUSHING piston rod
15	G100442	1	PISTON cylinder
16	G102288	1	SEAL piston, Part of Seal Kit, P/N G109452
17	G100444	1	RING backup, piston seal, Part of Seal Kit, P/N G109452
18	G100449	2	RING wear, piston, Part of Seal Kit, P/N G109452
19	28-1240	1	BOLT hex head, grade 8, 3/4" - 16 NF x 2-1/2"
20	G32317	1	WASHER hardened
21	219-1	2	FITTING grease. straight, 1/8" NPT
	G109452	1	KIT, seal, Includes: Ref. 7 - 12, 16, 17 and 18

484

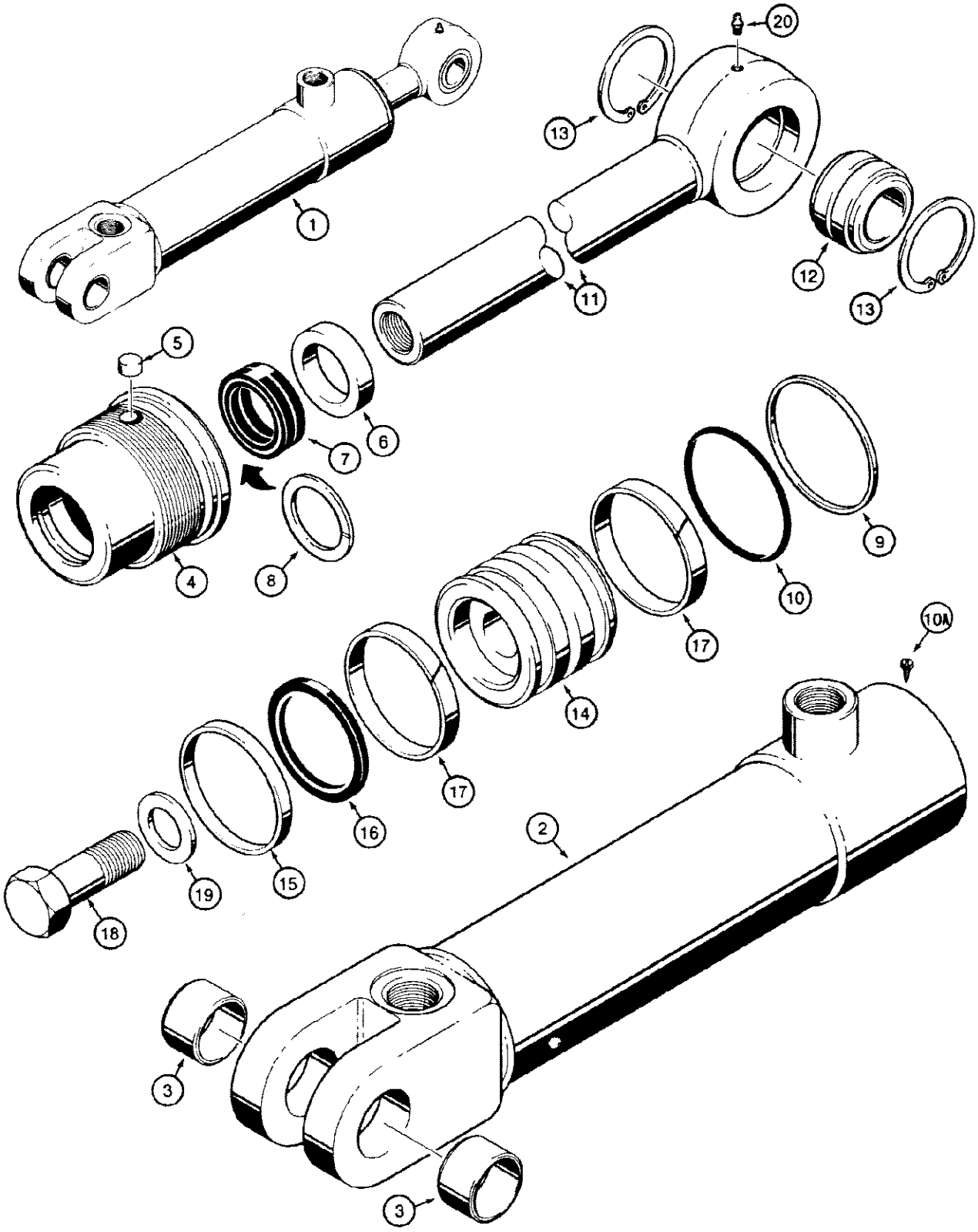

830699 B

580SE CASE SUPER-E CONSTRUCTION KING LOADER BACKHOE

484 G101188 THREE-POINT HITCH TILT CYLINDER

Ref	Part Number	Qty	Description
1	G101188	1	CYLINDER ASSEMBLY, tilt, 2-1/2" (64 mm) ID x 6-5/16" (160 mm) stroke, Includes: Ref. 2 - 20
2	G32313	1	TUBE ASSEMBLY, cylinder, Includes: Ref. 3
3	D34359	2	BUSHING tube
	G104915	1	GLAND ASSEMBLY, cylinder, Includes: Ref. 5 - 10
4	NSS	1	GLAND cylinder
5	G102569	1	PLUG nylon, thread locking, gland, if used
6	D95141	1	WIPER piston rod, Part of Seal Kit, P/N G109475
7	D36968	1	SEAL u cup, piston rod, wide, Part of Seal Kit, P/N G109475
7	G100775	1	SEAL u cup, piston rod, service option for severe heat or cold
8	G109092	1	SEAL buffer, grooved, piston rod, narrow, Part of Seal Kit, P/N G109475
9	G32129	1	RING backup, gland O ring, Part of Seal Kit, P/N G109475
10	A28318	1	O RING gland, Part of Seal Kit, P/N G109475
10A	187-1524	1	SCREW hex head, slotted, self tapping, plated, No. 8 - 32 NC x 3/8", if used
11	G33352	1	ROD ASSEMBLY, piston, 1-1/4" (32 mm) diameter, Includes: Ref. 12 and 13
12	D22200	1	BUSHING piston rod, self aligning
13	D27833	2	Ring, Snap, 1.625", Int, #162
14	G100708	1	PISTON cylinder
15	G102289	1	SEAL piston, Part of Seal Kit, P/N G109475
16	G100713	1	RING backup, piston seal, Part of Seal Kit, P/N G109475
17	G100714	2	RING wear, piston, Part of Seal Kit, P/N G109475
18	28-1240	1	BOLT hex head, grade 8, 3/4" - 16 NF x 2-1/2"
19	G32317	1	WASHER hardened
20	219-1	1	FITTING grease, straight, 1/8" NPT
	G109475	1	KIT, seal, Includes: Ref. 6 - 10, 15, 16 and 17

486

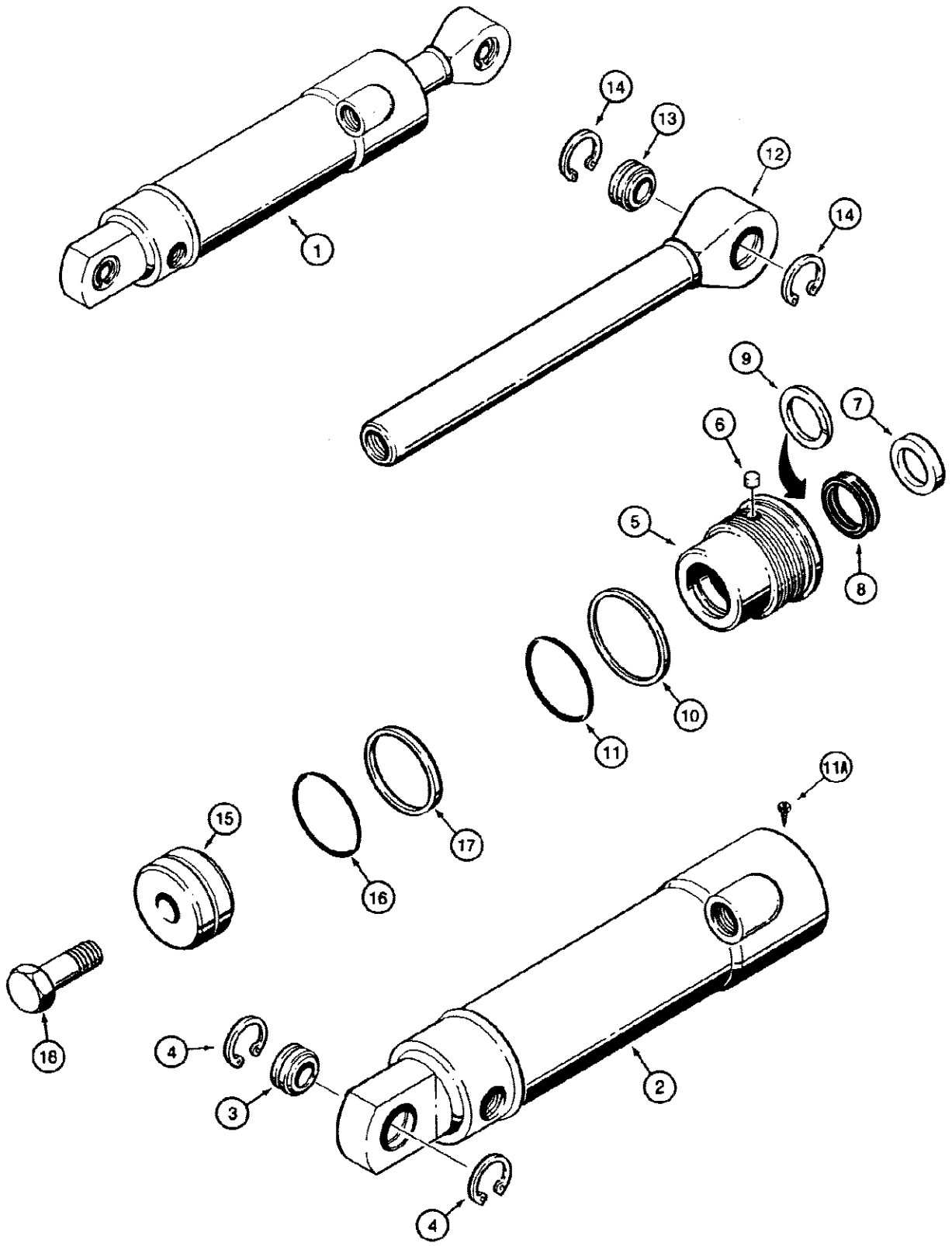

630900 B

580SE CASE SUPER-E CONSTRUCTION KING LOADER BACKHOE

486 G33128 THREE-POINT HITCH PITCH CYLINDER

Ref	Part Number	Qty	Description
1	G33128	1	CYLINDER ASSEMBLY, pitch, 2-1/2" (64 mm) ID x 7" (178 mm) stroke, Includes: Ref. 2 - 18
2	G33129	1	TUBE ASSEMBLY, cylinder, Includes: Ref. 3 and 4
3	G32321	1	BUSHING tube, self aligning, Includes: Ref. 6 - 11
4	A21145	2	Ring, Snap, 1.25", Int, #125
	G104915	1	GLAND ASSEMBLY, cylinder
5	NSS	1	GLAND cylinder
6	G102569	1	PLUG nylon, thread locking, gland, if used
7	D95141	1	WIPER piston rod, outer, Part of Seal Kit, P/N G109476
8	D36968	1	SEAL u cup, piston rod, wide, Part of Seal Kit, P/N G109476
8	G100775	1	SEAL u cup, piston rod, service option for severe heat or cold
10	G32129	1	RING backup, gland O ring, Part of Seal Kit, P/N G109476
11	A28318	1	O RING gland, Part of Seal Kit, P/N G109476
11A	187-1524	1	SCREW hex head, slotted, self tapping, plated, No. 8 - 32 NC x 3/8", if used
12	G33134	1	ROD ASSEMBLY, piston, 1-1/4" (32 mm) diameter
13	G32321	1	BUSHING piston rod, self aligning
14	A21145	2	Ring, Snap, 1.25", Int, #125, bushing
15	G104098	1	PISTON cylinder, single groove, Replaces: P/N G33138 piston, if used
16	F62076	1	O RING piston, Part of Seal Kit, P/N G109476
17	G33140	1	SEAL piston, Part of Seal Kit, P/N G109476
18	28-1232	1	BOLT, Hex, 3/4-16 x 2", G8, Full Thd
	G109476	1	KIT, seal, Includes: Ref. 7 - 11, 16, 17, plus a wear ring not used in this cylinder

488

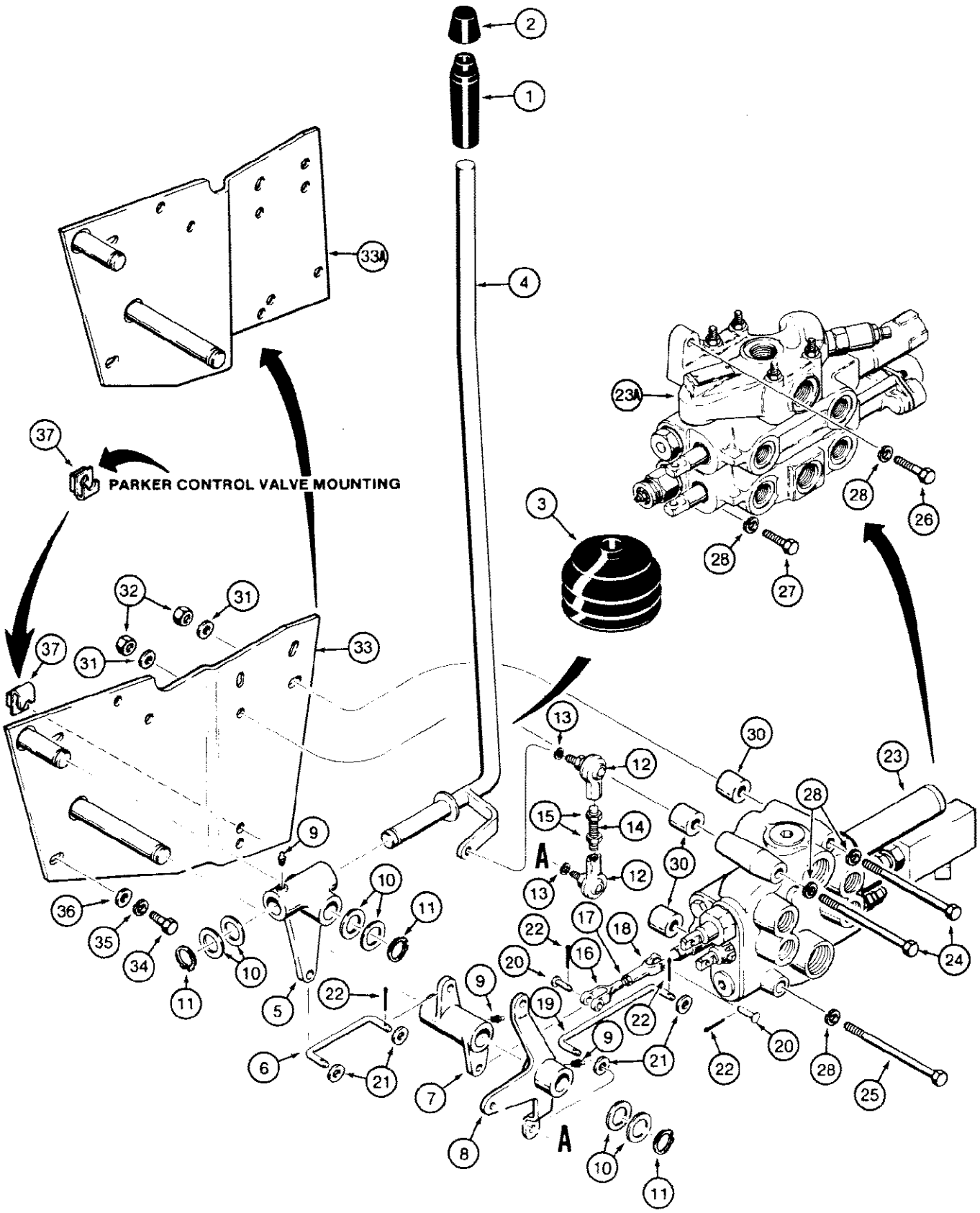

840374

488 LOADER CONTROLS - LIFT AND BUCKET SPOOLS

Ref	Part Number	Qty	Description
1	D91439	1	KNOB control lever, See Figure 120 for clutch cutout switch and wire
2	REF	1	COVER switch, See Figure 120 or switch and cover
3	D86664	1	BOOT control lever
4	D86502	1	LEVER control, loader lift and bucket
5	D86520	1	LEVER pivot, loader lift
6	D121193	1	LINK lever to bellcrank, rod like
7	D86484	1	BELLCRANK loader lift
8	D86491	1	BELLCRANK loader bucket
9	219-1	3	FITTING grease, straight, 1/8" NPT
10	A30881	UAR	WASHER flat, spacer
11	D95097	3	RING snap, retaining
12	D64925	2	JOINTball, bucket control
13	192-21	2	WASHER, LOCK, 3/8"
14	D86680	1	ROD threaded
15	129-123	2	NUT, 3/8"-24, G5
16	D93270	1	CLEVIS male, loader lift
17	129-122	1	NUT, 5/16"-24, G5
18	H44198	1	CLEVIS female, metal, plated, Replaces fiberglass clevis on some models
19	D121838	1	LINK bucket spool, rod type
20	D88430	2	PIN clevis, lift and bucket control
21	195-102	4	WASHER flat, plated, 1/4"
22	132-320	6	PIN, SPLIT (COTTER), 3/32" x 3/4"
23	REF	1	VALVE control, loader, Parker, for correct assembly and components, See Figure 390 and 392
23A	REF	1	VALVE control, loader, Case, See Figure 406
24	113-253	2	BOLT, Hex, 3/8"-16 x 5", G5, Upper mounting holes, used with Parker two or three spool control valve
25	113-2238	1	BOLT, Hex, 3/8"-16 x 5 1/4", G5, Lower mounting hole, used with Parker two or three spool control valve
26	113-209	1	BOLT, Hex, 3/8"-16 x 1 1/2", G5, Upper mounting hole, used with Case control valve
27	113-208	2	BOLT, Hex, 3/8"-16 x 1 1/4", G5, Full Thd, Lower mounting holes, used with Case control valve
28	192-21	3	WASHER, LOCK, 3/8"
29			RESERVED
30	D123696	3	SPACER Parker, two or three spool control valve mounting only
31	95-6	2	WASHER flat, 3/8"
32	129-103	2	NUT, 3/8"-16, G5
33	D92132	1	PLATE valve mounting, used with Parker control valves
33A	D123559	1	PLATE valve mounting, used with Case control valve
34	113-206	2	BOLT, Hex, 3/8"-16 x 3/4", G5, Full Thd
35	192-21	2	WASHER, LOCK, 3/8"
36	95-6	2	WASHER flat, 3/8"
37	131-856	1	NUT, Ret, J, 3/8"-16

490

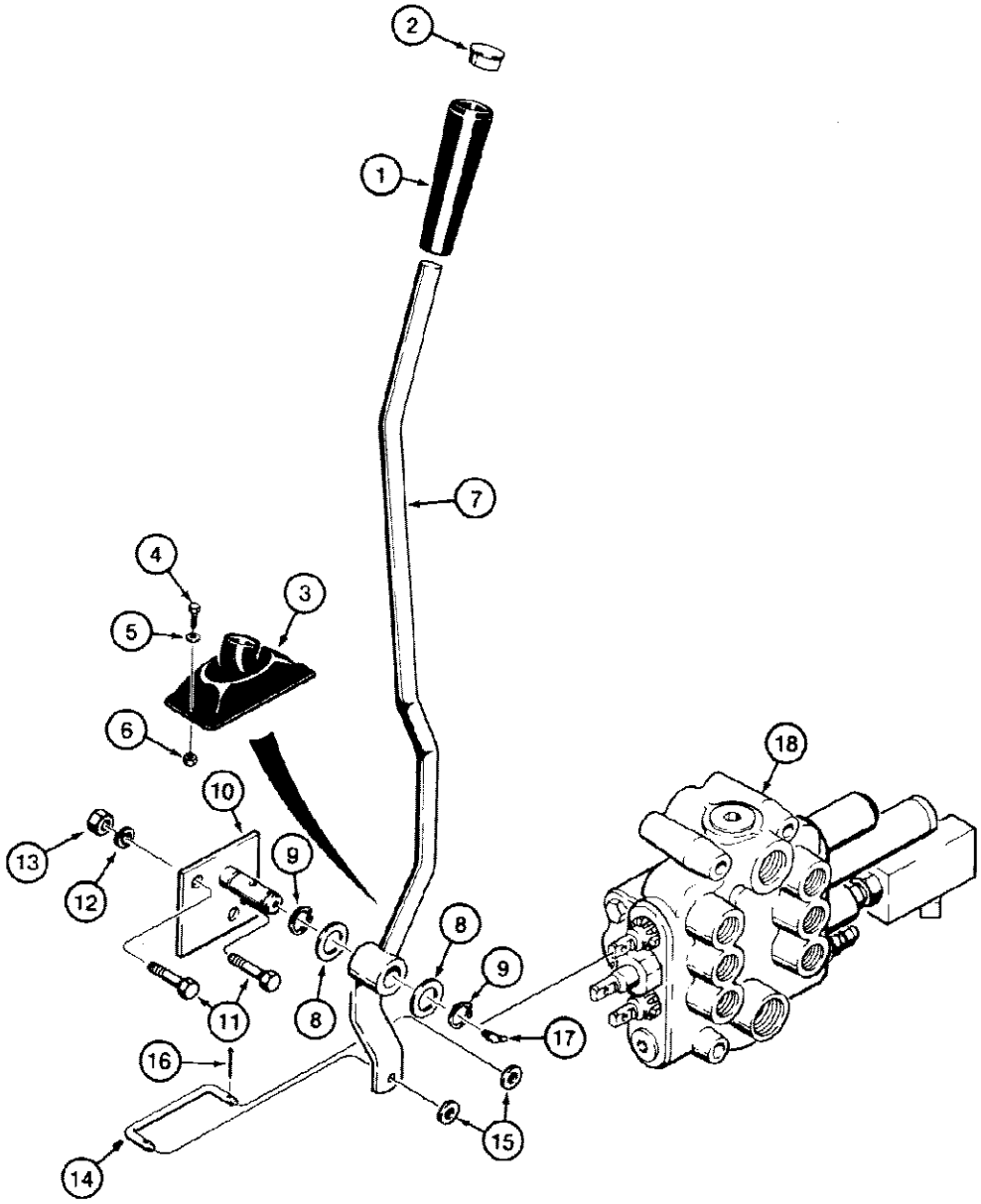

830696 A

490 LOADER CONTROLS - CLAM SPOOL

Ref	Part Number	Qty	Description
1	D91439	1	KNOB control lever
2	353-406	1	PLUG nylon, 5/8", control lever
3	D72302	1	BOOT control lever
4	163-15	2	SCREW hex head, machine, plated, No. 10 - 24 NC x 5/8"
5	195-513	2	WASHER flat, plated, No. 10
6	193-1004	2	NUT lock washer, plated, No. 10 - 4 NC
7	D89889	1	LEVER control, loader clam
8	A30881	2	WASHER spacer
9	D95097	2	RING snap, control lever retaining
10	D92134	1	BRACKET See Figure 488 for control valve mounting plate and related parts
11	113-207	2	BOLT hex head, plated, 3/8" - 16 NC x 3/4"
12	192-21	2	WASHER, LOCK, 3/8"
13	129-103	2	NUT, 3/8"-16, G5
14	D122541	1	LINK control lever to spool, rod type
15	195-102	2	WASHER flat, plated, 1/4"
16	132-320	2	PIN, SPLIT (COTTER), 3/32" x 3/4"
17	219-38	1	FITTING grease, 1/4" - 28 NF taper, 45°
18	REF	1	VALVE control, loader, Figure 392, for mounting See Figure 488

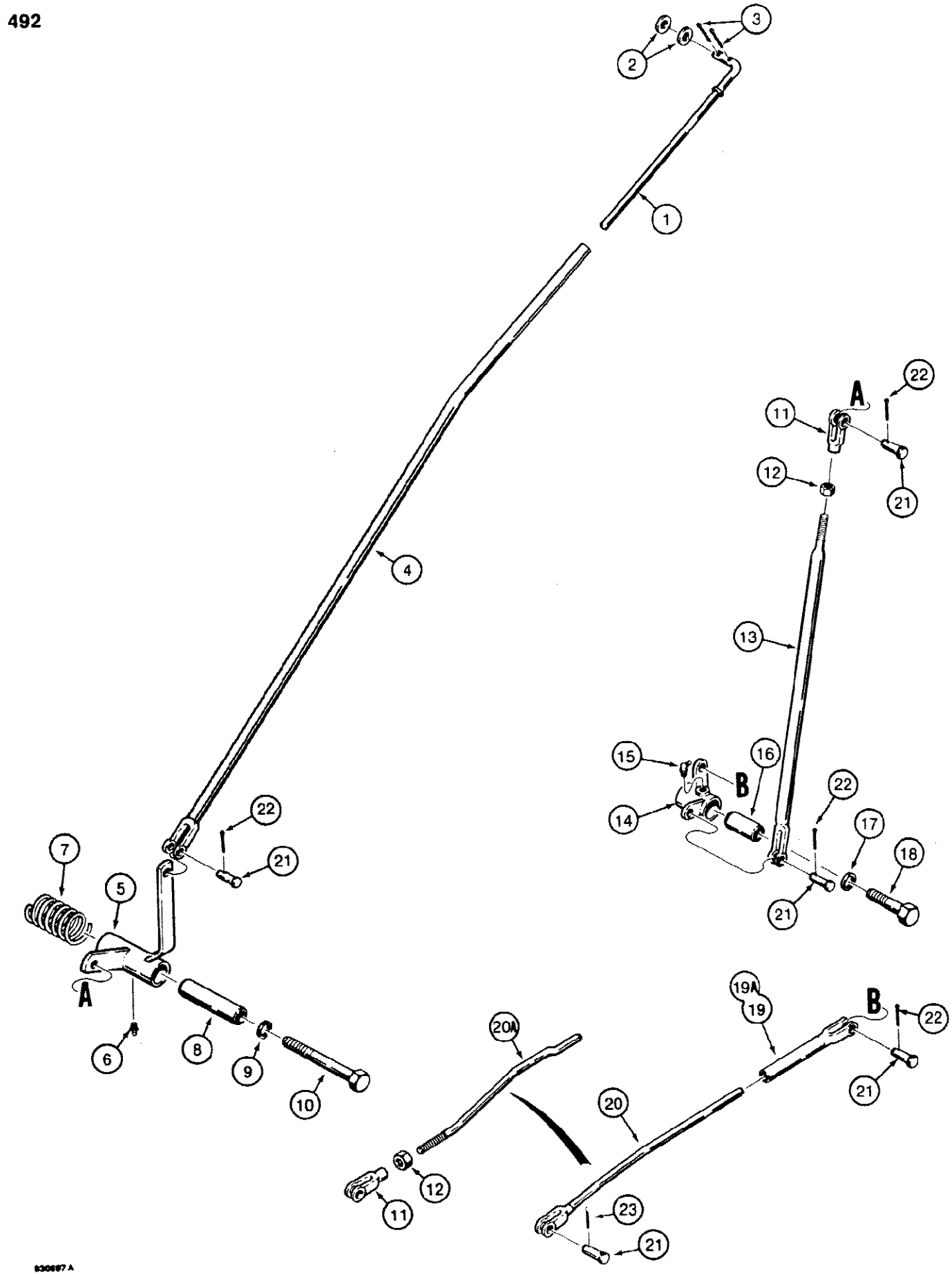
492
1
2
3
4
5
6
7
8
9
10
11
12
13
14
15
16
17
18
19
19A
20
20A
21
22
23
A
B
830697 A

580SE CASE SUPER-E CONSTRUCTION KING LOADER BACKHOE - Chassis/Attachments

492 LOADER ANTIROLLBACK CONTROL

Ref	Part Number	Qty	Description
1	D128748	1	ROD, at bucket cylinder link
2	195-533	2	WASHER flat, plated, 1/2"
3	132-310	2	PIN, SPLIT (COTTER), 1/8" x 1"
4	D89316	1	GUIDE upper rod
5	D86677	1	BELLCRANK bucket
6	86636814	1	FITTING - grease, straight, 1/4"-28 NF
7	D72099	1	SPRING return
8	D86652	1	SLEEVE lever
9	T53567	1	WASHER special, hardened
10	113-643	1	BOLT, Hex, 5/8"-11 x 5 1/2", G5
11	213-41	1-2	CLEVIS plated, metal, vertical rod, 3/8", Replaces fiberglass clevis on some models
12	129-123	1-2	NUT, 3/8"-24, G5
13	D88907	1	ROD vertical, lever to bellcrank
14	D86624	1	BELLCRANK lower
15	219-55	1	NIPPLE, LUBE, 90є, 1/8" NPT x .84" lg, Special short
16	D86653	1	SLEEVE bellcrank
17	T53567	1	WASHER special
18	113-621	1	BOLT, Hex, 5/8"-11 x 2 3/4", G5
19	D86667	1	GUIDE lower rod, used on models with Parker control valves
19A	D125137	1	GUIDE lower rod, used on models with Case control valve
20	D88905	1	ROD antirollback, lower, used on models with Parker control valves
20A	D125138	1	ROD antirollback, lower, used on models with Case control valve
21	141-54	5	PIN clevis, plated, 3/8", special length
22	132-320	4	PIN, SPLIT (COTTER), 3/32" x 3/4"
23	132-331	1	PIN, SPLIT (COTTER), 3/32" x 5/8"

494 LOADER RETURN-TO-DIG CONTROL

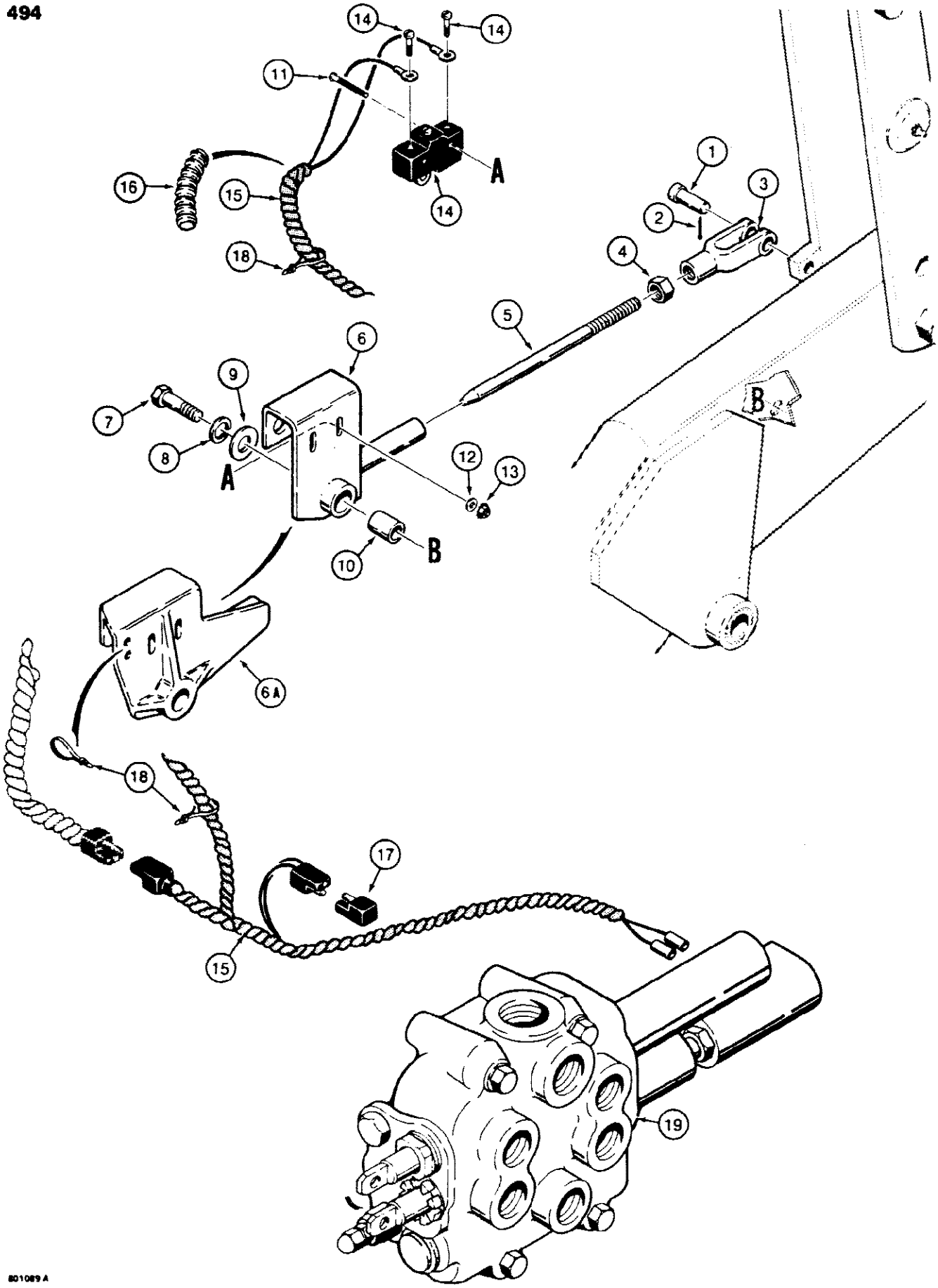

494 LOADER RETURN-TO-DIG CONTROL

Ref	Part Number	Qty	Description
1	141-54	1	PIN clevis, plated, 3/8", special length
2	132-331	1	PIN, SPLIT (COTTER), 3/32" x 5/8"
3	213-41	1	CLEVIS plated, metal, return to dig rod, 3/8", Replaces fiberglass clevis on some models
4	86585245	1	NUT hex, jam, plated, 3/8" - 24 NF
5	D75722	1	ROD return to dig
6	D75724	1	BRACKET return to dig switch mounting, no longer used, order D94534 bracket and, 1, L18337 tie strap
7	113-208	1	BOLT, Hex, 3/8"-16 x 1 1/4", G5, Full Thd
8	192-21	1	WASHER, LOCK, 3/8"
9	195-525	1	WASHER flat, plated, 3/8"
10	D76175	1	SPACER guide
11	182-530	2	SCREW machine, pan head slotted, plated, No. 6 - 32 NC x 1-1/4"
12	195-507	2	WASHER flat, plated, No. 6,
13	193-1003	2	NUT AND LOCK WASHER plated, No. 6 - 32 NC
14	D134622	1	SWITCH return to dig, includes terminal screws
15	D87986	1	HARNESS return to dig
16	D88053	1	GUARD wire, no longer used, not required
17	L71879	1	DIODE valve protecting
18	L18337	UAR	STRAP tie, nylon, 15 inch
19	REF	1	VALVE control, loader, See Figures 390, 392, or 406

496 LOADER FRAME AND MOUNTING PARTS

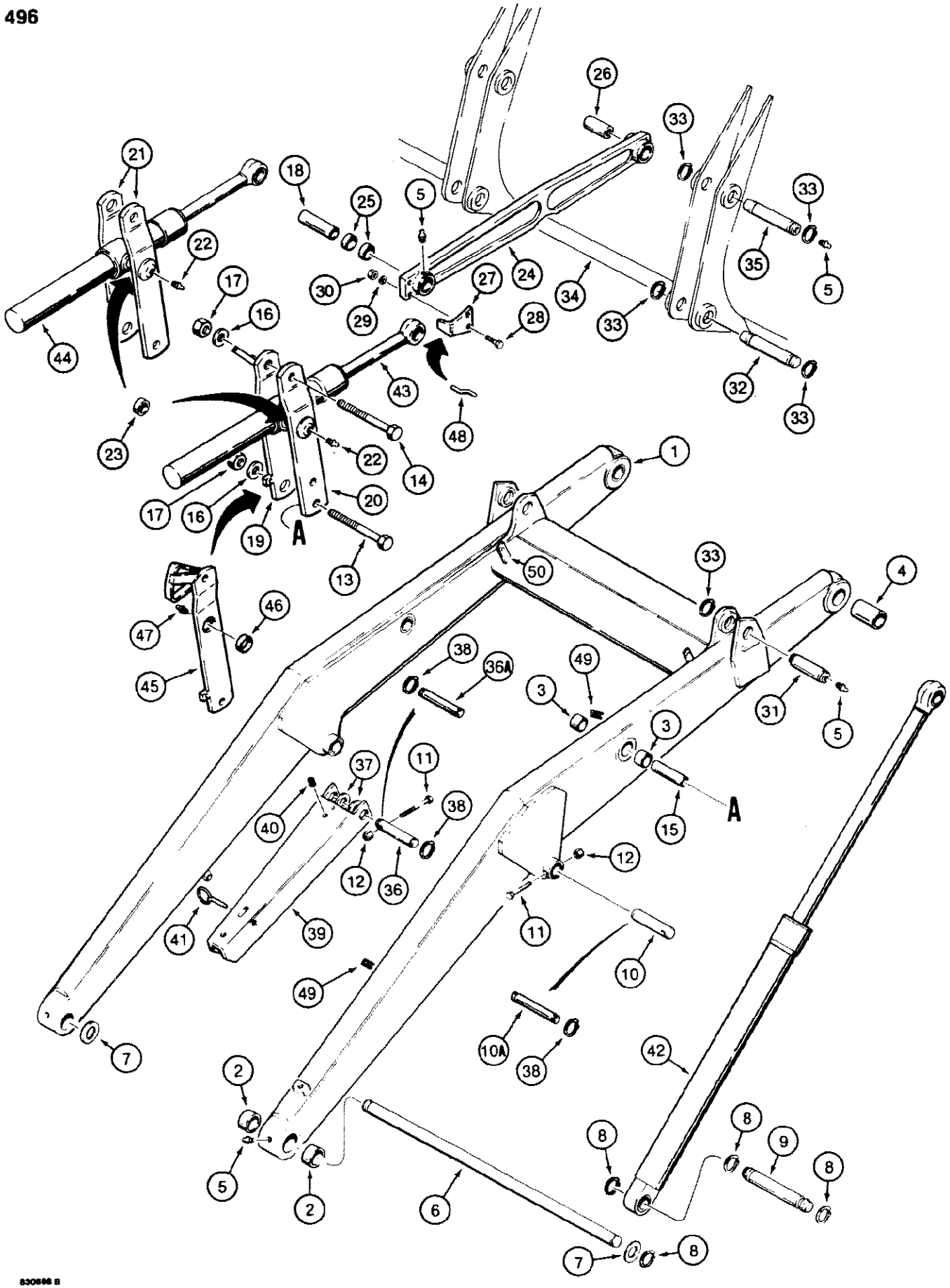

496 LOADER FRAME AND MOUNTING PARTS

Ref	Part Number	Qty	Description
1	D90960	1	FRAME loader, lift, Includes: Ref. 2 - 4
2	D37392	4	BUSHING loader frame pivot
3	D37763	4	BUSHING bucket cylinder link pivot
4	D30931	2	BUSHING bucket mounting, orifice which this bushing fits into is P/N D5538, pivot tube
5	219-1	8	FITTING grease, straight, 1/8" NPT
6	D129819	1	SHAFT pivot
7	D62194	UAR	WASHER flat
8	D25280	8	Ring, Snap, #175, Ext
9	D37611	2	PIN lift, cylinder pivot
10	D67357	1	PIN lift, cylinder to frame, right hand, if used
10A	D44881	1	PIN lift, cylinder to frame, right hand, if used
11	113-248	2	BOLT, Hex, 3/8"-16 x 2 3/4", G5, If used
12	131-52	2	NUT hex, self locking, plated, 3/8" - 16 NC, if used
13	113-929	2	BOLT hex head, plated, 1" - 8 NC x 6-1/2"
14	113-927	2	BOLT hex head, plated, 1" - 8 NC x 5-1/2"
15	D31219	2	SPACER bushing
16	195-553	4	WASHER flat, plated, 1"
17	129-110	4	NUT, 1"-8, G5
18	D90422	2	SPACER bushing
19	D124047	1	LINK bucket cylinder, right hand, inner, models without clam bucket, See Ref. 45, Includes: Ref. 22 - 26
20	D124045	1	LINK bucket cylinder, right hand, outer, with extra hole for antirollback rod, Includes: Ref. 22 - 26
21	D124045	2	LINK bucket cylinder, left hand, inner and outer, extra hole not used in left hand position, Includes: Ref. 22 - 26
22	219-86	1	FITTING grease, straight, self tapping, 1/8" pipe, one per each link
23	D31512	1	BUSHING, one per each link
24	D120494	2	LINK bucket, may Replace links without bushings on some models
25	D30933	2	BUSHING, at bucket cylinder link
26	D30931	1	BUSHING, at bucket
27	D121194	1	POINTER right hand inner link, models without clam bucket, See Ref. 48
28	113-104	2	BOLT, Hex, 5/16"-18 x 1 1/4", G5
29	192-20	2	WASHER, LOCK, 5/16"
30	9635082	2	NUT, 5/16"-18, G5
31	D89321	2	PIN bucket cylinder mounting
32	D126717	2	PIN bucket mounting, lower
33	D25279	12	RING snap, retaining
34	REF	1	BUCKET loader, See Figure 500 for buckets
35	D126718	2	PIN bucket mounting, upper
36	D80739	1	PIN lift cylinder to frame, left hand, if used
36A	D28649	1	PIN lift cylinder to frame, left hand, if used
37	D28610	UAR	WASHER spacer
38	D25279	2-4	RING snap, retaining

496 LOADER FRAME AND MOUNTING PARTS

Ref	Part Number	Qty	Description
39	D121846	1	STRUT support, loader frame
40	D121047	2	GROMMET support strut
41	L78801	1	PIN lock, 1/2" (13 mm) diameter
42	G105756	2	CYLINDER loader lift, See Figure 460
43	G101186	1	CYLINDER loader bucket, right hand, See Figure 462
44	G101187	1	CYLINDER loader bucket, left hand, See Figure 462
45	D124046	1	LINK bucket cylinder, right hand, inner, models with clam bucket, Includes: Ref. 46 and 47
46	D31512	1	BUSHING link
47	219-86	1	FITTING grease, straight, 1/8" pipe, self tapping
48	REF	1	POINTER right hand, inner link, models with clam bucket, See Figure 502
49	D88417	2	CAGE nut, welded to right hand lift arm
50	D78059	2	BRACKET tube mounting, welded to lift arm

500

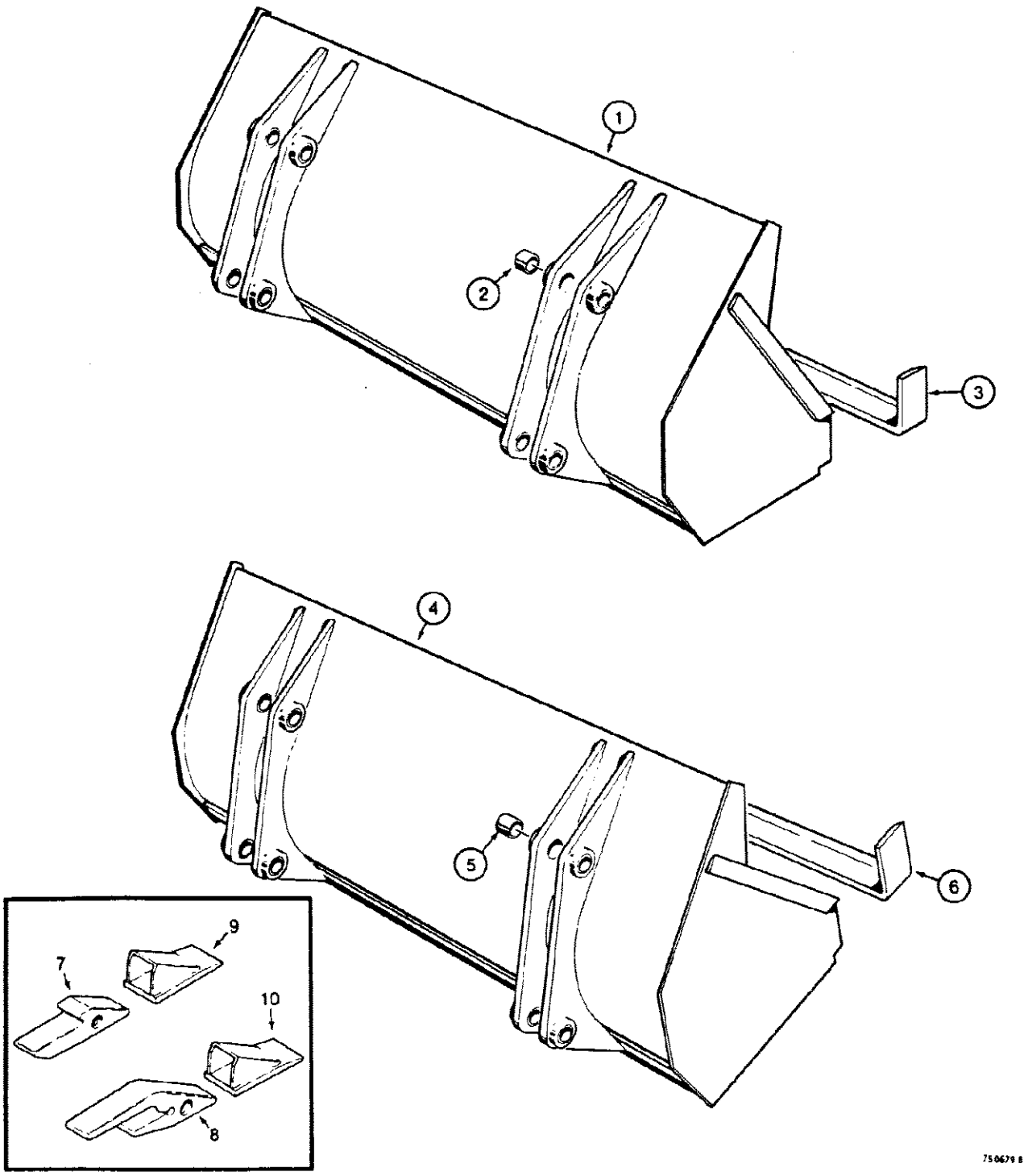

500 LOADER BUCKETS, SHORT LIP BUCKETS, LONG LIP BUCKETS, BUCKET TEETH

Ref	Part Number	Qty	Description
	D64731	1	BUCKET ASSEMBLY, loader, 74" (1880 mm) wide, two wheel drive, machinery item, See Figure 002 for ordering, Includes: Ref. 1 - 3, Short lip buckets
1	NSS	1	BUCKET loader, Short lip buckets
2	D30932	8	BUSHING bucket ear, Short lip buckets
3	D95072	1	EDGE cutting, front, Short lip buckets
	D122572	1	BUCKET ASSEMBLY, loader, 82" (2083 mm) wide, two wheel drive models only, machinery item, See Figure 2 for ordering, Includes: Ref. 4 - 6, Long lip buckets
	D122630	1	BUCKET ASSEMBLY, loader, 82" (2083 mm) wide, four wheel drive models only, machinery item, See Figure 2 for ordering, Includes: Ref. 4 - 6, Long lip buckets
4	NSS	1	BUCKET loader, Long lip buckets
5	D30932	8	BUSHING bucket ear, P/N D122572 or D122630 bucket, Long lip buckets
6	D122568	1	EDGE cutting, front, P/N D122572 or D122630 bucket, Long lip buckets
7	D26368		UAR SHANK tooth, original equipment, Bucket teeth
8	D58499		UAR SHANK tooth, service option, Bucket teeth
9	D27748		UAR POINT tooth, Bucket teeth
10	D36720		UAR POINT tooth, heavy duty service option, Bucket teeth

502

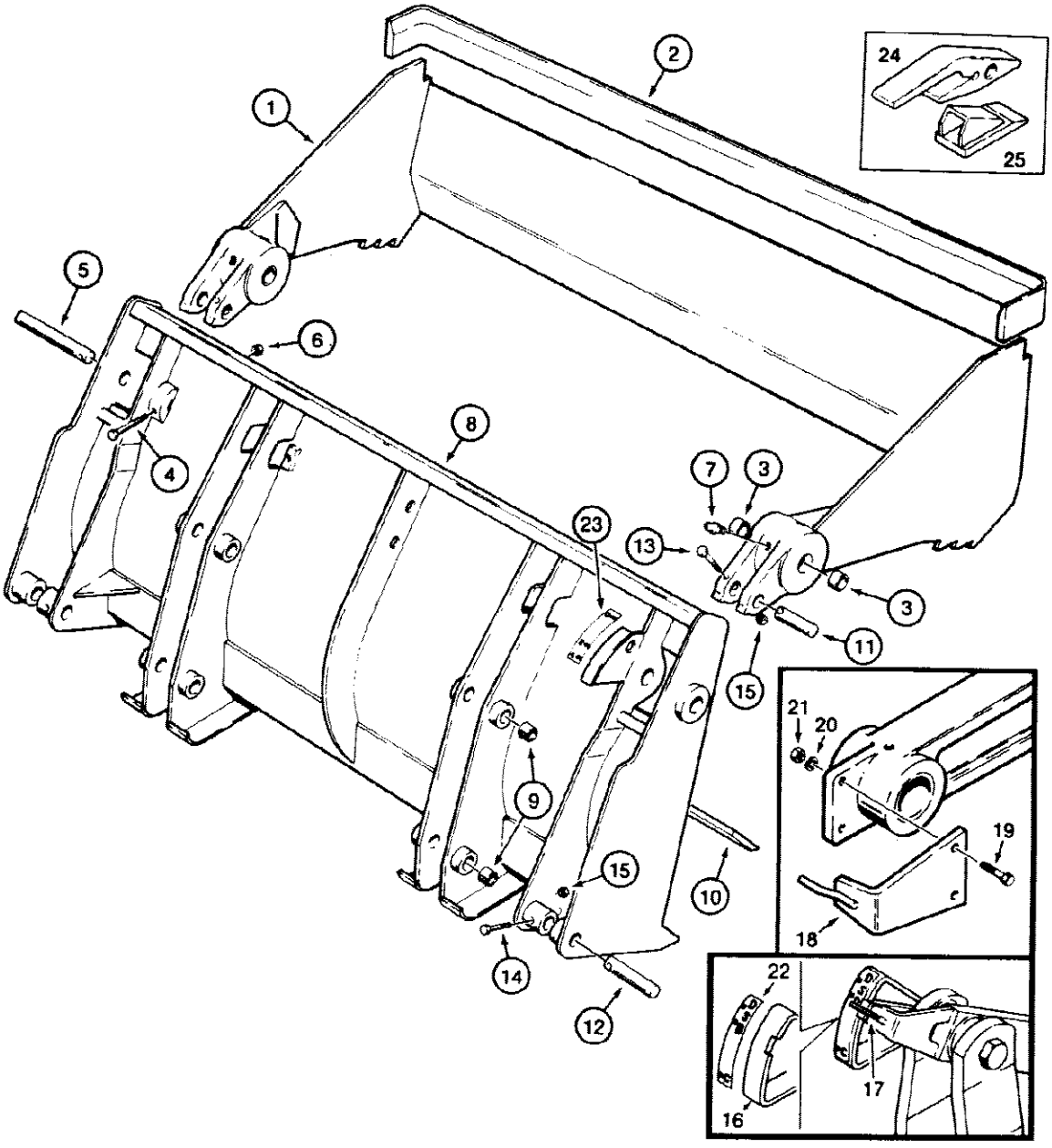

830680 A

502 CLAM BUCKET

Ref	Part Number	Qty	Description
	D75644	1	BUCKET ASSEMBLY, clam, 82"/2083 mm wide, machinery item, see Figure 2 for ordering, Includes: Ref. P/N D75633 and Ref. 1-15
	D75633	1	CLAM ASSEMBLY, bucket, order compaction kit, P/N D75630, 79 1/2" long and 3/8" thick, Includes: Ref. 1-8
1	NSS	1	CLAM bucket
2	D76258	1	EDGE cutting, clam
3	D31140	4	BUSHING clam pivot
4	113-267	2	BOLT, Hex, 3/8"-16 x 4", G5
5	D51391	2	PIN pivot, clam to blade
6	131-666	2	NUT hex, self locking, plated, 3/8" 16 NC
7	219-1	2	FITTING grease, straight, 1/8" NPT
	D79843	1	BLADE ASSEMBLY, clam bucket, Includes: Ref. 9-11
8	NSS	1	BLADE bucket
9	D30932	8	BUSHING bucket ear
10	D75636	1	EDGE cutting, blade
11	D51392	2	PIN cylinder mounting, upper
12	D51393	2	PIN cylinder mounting, lower
13	113-203	2	BOLT, Hex, 3/8"-16 x 3 1/2", G5, Upper mounting pin
14	113-248	2	BOLT, Hex, 3/8"-16 x 2 3/4", G5, Lower mounting pin
15	131-666	4	NUT hex, self locking, plated, 3/8" 16 NC
16	D120544	1	GAUGE bucket position
17	D120546	1	POINTER bucket position, if used
18	D123157	1	POINTER bucket position, if used
19	113-104	2	BOLT, Hex, 5/16"-18 x 1 1/4", G5
20	192-20	2	WASHER, LOCK, 5/16"
21	9635082	2	NUT, 5/16"-18, G5
22	REF	1	DECAL bucket position, see Figure 672 for decal number
23	REF	1	DECAL clam position, see Figure 672 for decal number
24	D58499	10	SHANK bucket tooth, if used
25	D27748	10	POINT tooth, if used

504

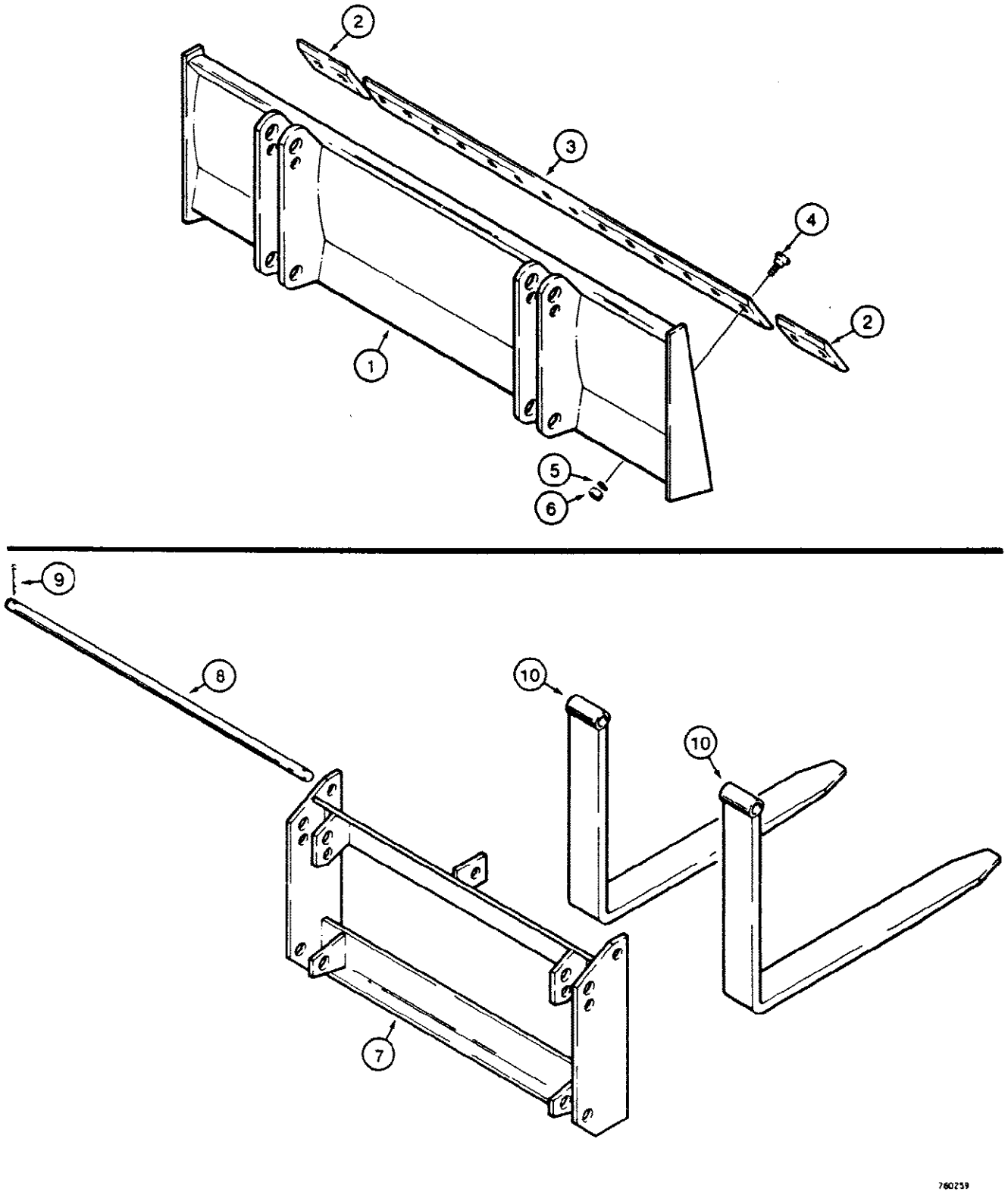

504 LOADER BLADE, PALLET FORKS

Ref	Part Number	Qty	Description
	REF	1	BLADE ASSEMBLY, loader, machinery item, see Figure 2 for ordering, Includes: Ref. 1-6
1	NSS	1	BLADE loader
2	38150	2	EDGE cutiing, blade, end, Loader
3	16040	1	EDGE cutting, blade, center, Loader
4	118-331	18	BOLT plow, plated, Loader blade, 1/2" 13 NC x 1 3/4"
5	192-23	18	WASHER, LOCK, 1/2", Loader blade
6	129-105	18	NUT, 1/2"-13, G5
7	D69200	1	FRAME pallet fork
8	D69201	1	SHAFT fork mounting, Pallet forks
9	132-307	2	PIN, Split (Cotter), 1/4" x 1 3/4", Pallet forks
10	D47999	2	FORK pallet

506 BACKHOE CONTROL TOWER

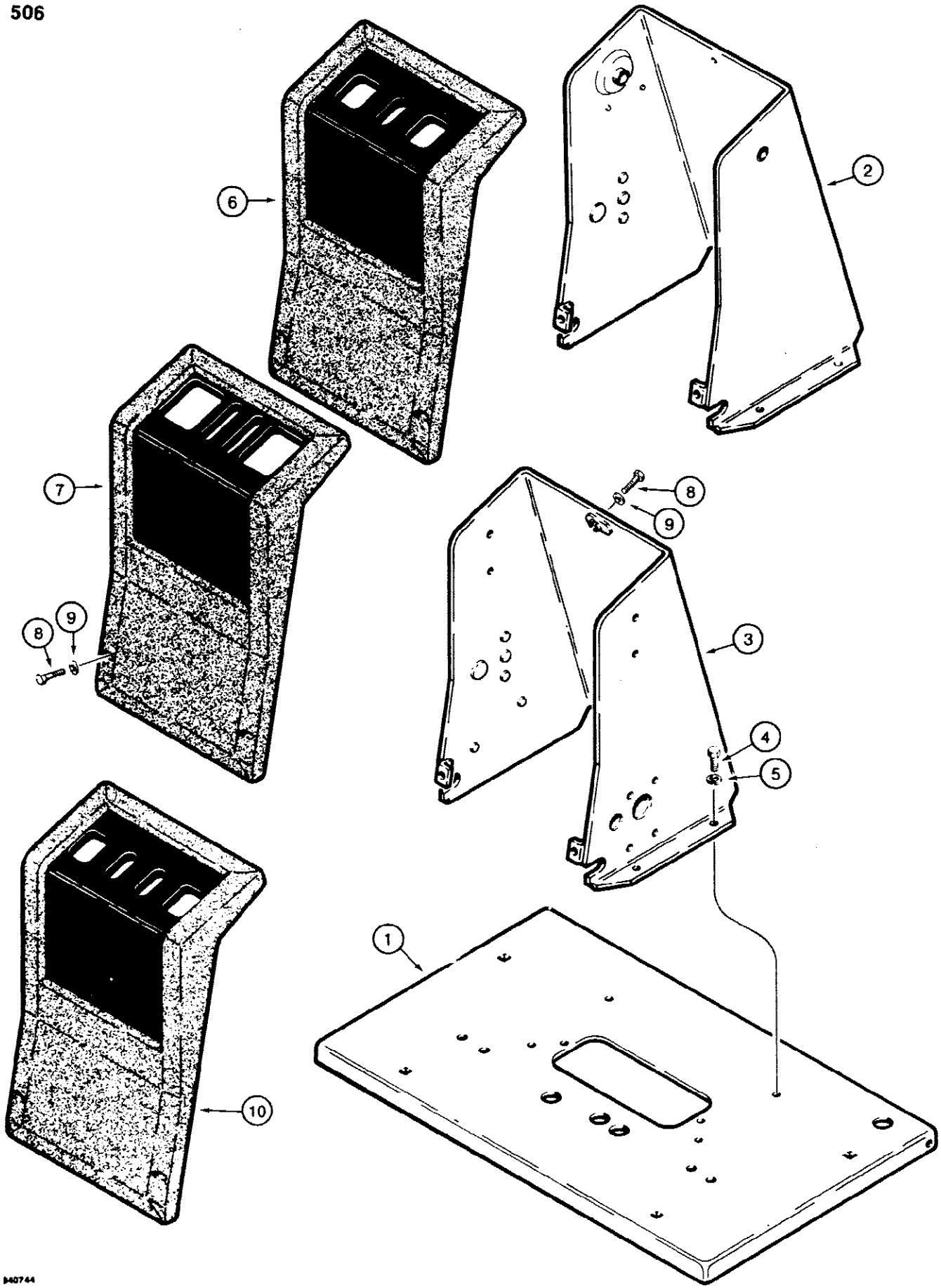

580SE CASE SUPER-E CONSTRUCTION KING LOADER BACKHOE - Chassis/Attachments

506 BACKHOE CONTROL TOWER

Ref	Part Number	Qty	Description
1	REF	1	PLATE floor, backhoe, See Figure 586 for floor plates and related parts
2	D123189	1	TOWER control, backhoe, used with foot swing
3	D123963	1	TOWER control, backhoe, used with hand swing
4	113-102	4	BOLT, Hex, 5/16"-18 x 3/4", G5, Full Thd
5	192-20	4	WASHER, LOCK, 5/16"
6	D124081	1	COVER console, used with foot swing without extendable dipper, includes decals, See Figure 672
7	D124080	1	COVER console, used with hand swing, includes decals, See Figure 672
8	187-575	3	SCREW hex washer head, self tapping, black, 1/4" - 20 NC x 3/4"
9	195-133	3	WASHER flat, black Teflon, 1/4"
10	D124082	1	COVER console, used with foot swing with extendable dipper, includes decals, see Figure 672

508 BACKHOE CONTROLS WITH FOOT SWING, STABILIZER CONTROL LEVERS AND LINKAGE

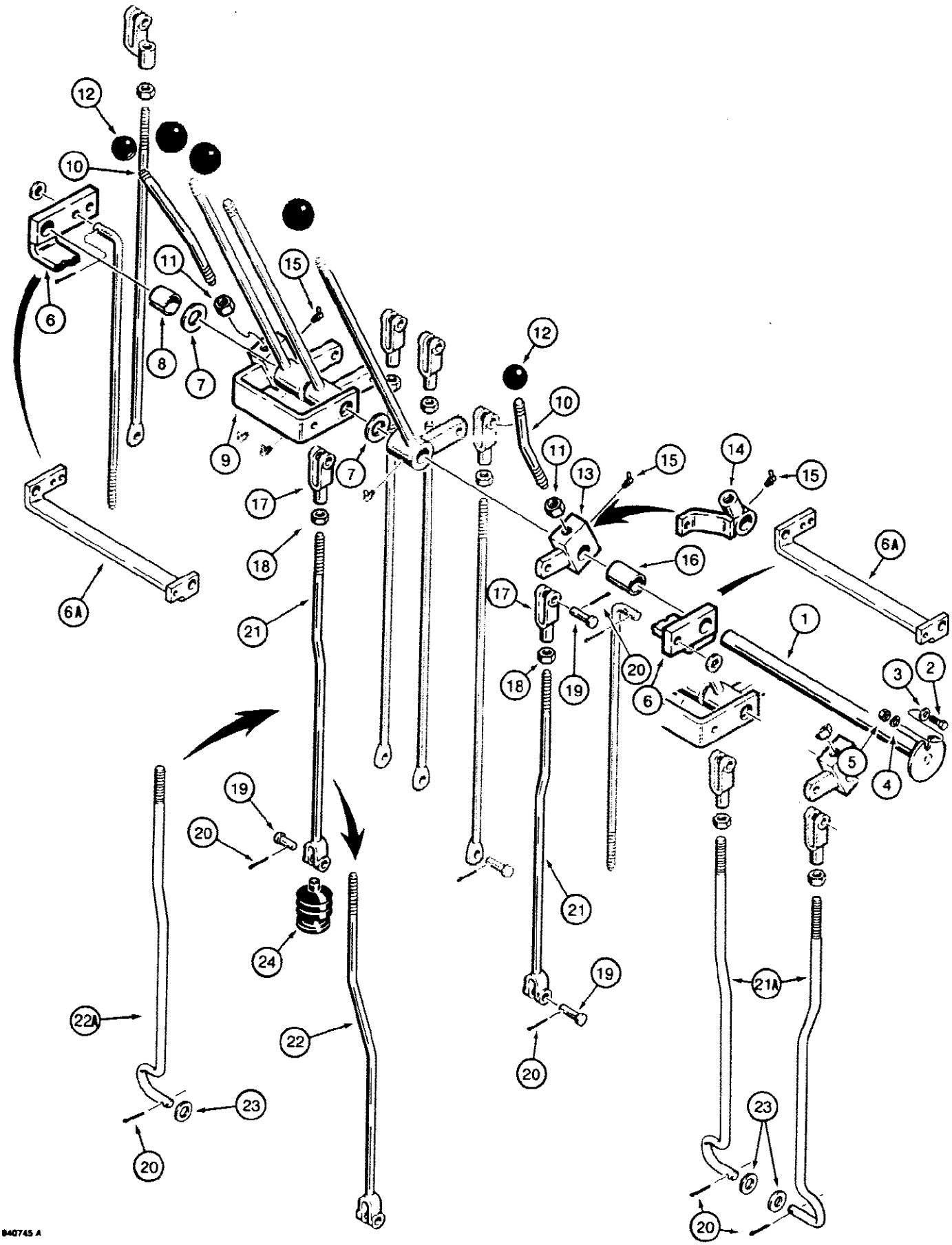

580SE CASE SUPER-E CONSTRUCTION KING LOADER BACKHOE - Chassis/Attachments

508 BACKHOE CONTROLS WITH FOOT SWING, STABILIZER CONTROL LEVERS AND LINKAGE

Ref	Part Number	Qty	Description
1	D123224	1	SHAFT control levers
2	113-66	1	BOLT, Hex, 1/4"-20 x 3/4", G5, Full Thd, Teflon coated
3	195-133	1	WASHER flat, black Teflon, 1/4"
4	192-19	1	WASHER, LOCK, 1/4"
5	7770	1	NUT, 1/4"-20, G5
6	D86082	1	BRACKET swing pivot, no longer used, order P/N D129392 bracket
6A	D129392	1	BRACKET swing pivot
7	195-545	UAR	WASHER flat, plated, 3/4", used as a shim
8	D88212	1	SPACER left hand, not used with extendable dipper
9	D92993	1	BRACKET left hand stabilizer pivot
10	L108004	2	LEVER control, stabilizer
11	129-125	2	NUT, 1/2"-20, G5
12	D59912	2	KNOB stabilizer control levers
13	D92995	1	LEVER pivot, right hand stabilizer on models without extendable dipper
14	D87834	1	LEVER pivot, right hand stabilizer on models with extendable dipper
15	219-57	2	FITTING grease, 1/4" - 28 NF taper, 90°
16	D88213	1	SPACER right hand, not used with extendable dipper
17	H44198	2	CLEVIS metal, plated, 5/16", Replaces fiberglass clevis on some models
18	129-122	2	NUT, 5/16"-24, G5
19	141-53	2-4	PIN clevis, plated, special length, 5/16" x 15/16" long
20	132-320	4	PIN, SPLIT (COTTER), 3/32" x 3/4"
21	D85934	1-2	ROD stabilizer control, two used on models without extendable dipper, no longer used, order P/N D126331 rod
21A	D126331	1-2	ROD stabilizer control, two used on models without extendable dipper
22	D87482	1	ROD left hand stabilizer control on models with extendable dipper, if used
22A	D126334	1	ROD left hand stabilizer control on models with extendable dipper, if used
23	195-102	2	WASHER flat, plated, 1/4", if used
24	D85869	2	BOOT rods, if used

510 BACKHOE CONTROLS WITH FOOT SWING, BOOM, DIPPER, AND BUCKET CONTROL LEVERS AND LINKAGE

510

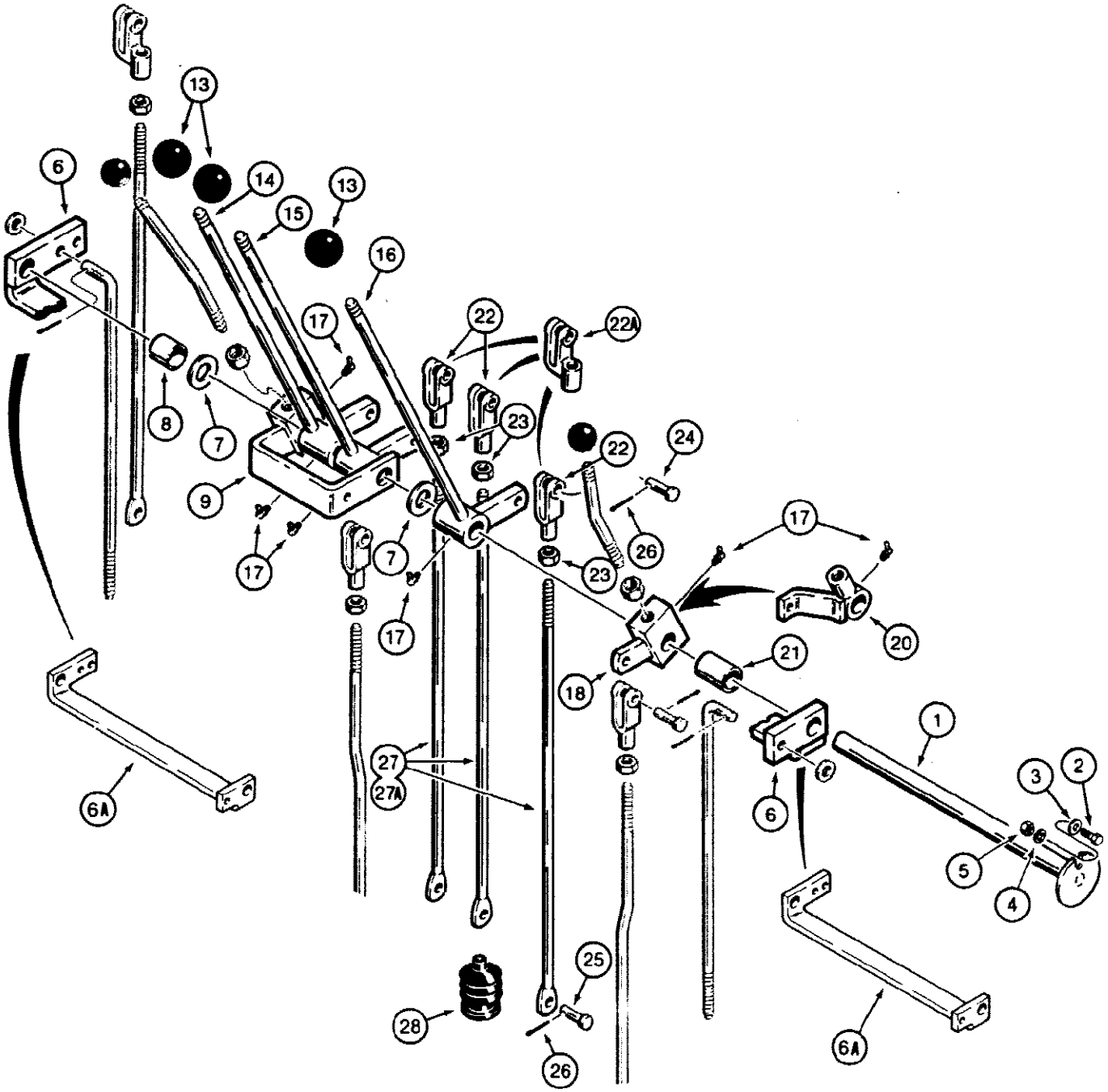

580SE CASE SUPER-E CONSTRUCTION KING LOADER BACKHOE - Chassis/Attachments

510 BACKHOE CONTROLS WITH FOOT SWING, BOOM, DIPPER, AND BUCKET CONTROL LEVERS AND LINKAGE

Ref	Part Number	Qty	Description
1	D123224	1	SHAFT control levers
2	113-66	1	BOLT, Hex, 1/4"-20 x 3/4", G5, Full Thd, Teflon coated
3	195-133	1	WASHER flat, black Teflon, 1/4"
4	192-19	1	WASHER, LOCK, 1/4"
5	7770	1	NUT, 1/4"-20, G5
6	D86082	1	BRACKET swing pivot, no longer used, order P/N D129392 bracket
6A	D129392	1	BRACKET swing pivot
7	195-545	UAR	WASHER flat, plated, 3/4", used as a shim
8	D88212	1	SPACER left hand, not used with extendable dipper
9	D92993	1	BRACKET left hand stabilizer pivot
10			RESERVED
11			RESERVED
12			RESERVED
13	L54563	3	KNOB boom, dipper, and bucket control levers
14	D79531	1	LEVER control, bucket
15	D79530	1	LEVER control, dipper
16	D79529	1	LEVER control, boom
17	219-57	5	FITTING grease, 1/4" - 28 NF taper, 90°
18	D92995	1	LEVER pivot, right hand stabilizer on models without extendable dipper
19			RESERVED
20	D87834	1	LEVER pivot, right hand stabilizer on models with extendable dipper
21	D88213	1	SPACER right hand, not used with extendable dipper
22	213-41	3	CLEVIS metal, plated, straight, 3/8", Replaces fiberglass clevis on some models, used on models without extendable dipper
22A	L11182	3	CLEVIS offset, 3/8", offset, used on models with extendable dipper
23	129-123	3	NUT, 3/8"-24, G5
24	141-54	3	PIN clevis, plated, special length, 3/8"
25	141-53	3	PIN clevis, plated, special length, 5/16" x 15/16" long
26	132-320	6	PIN, SPLIT (COTTER), 3/32" x 3/4"
27	D81902	3	ROD boom, dipper, and bucket control, straight, models without extendable dipper
27A	D30821	3	ROD boom, dipper, and bucket control, straight, models with extendable dipper, uses offset clevis
28	D85869	3	BOOT rods, if used

512

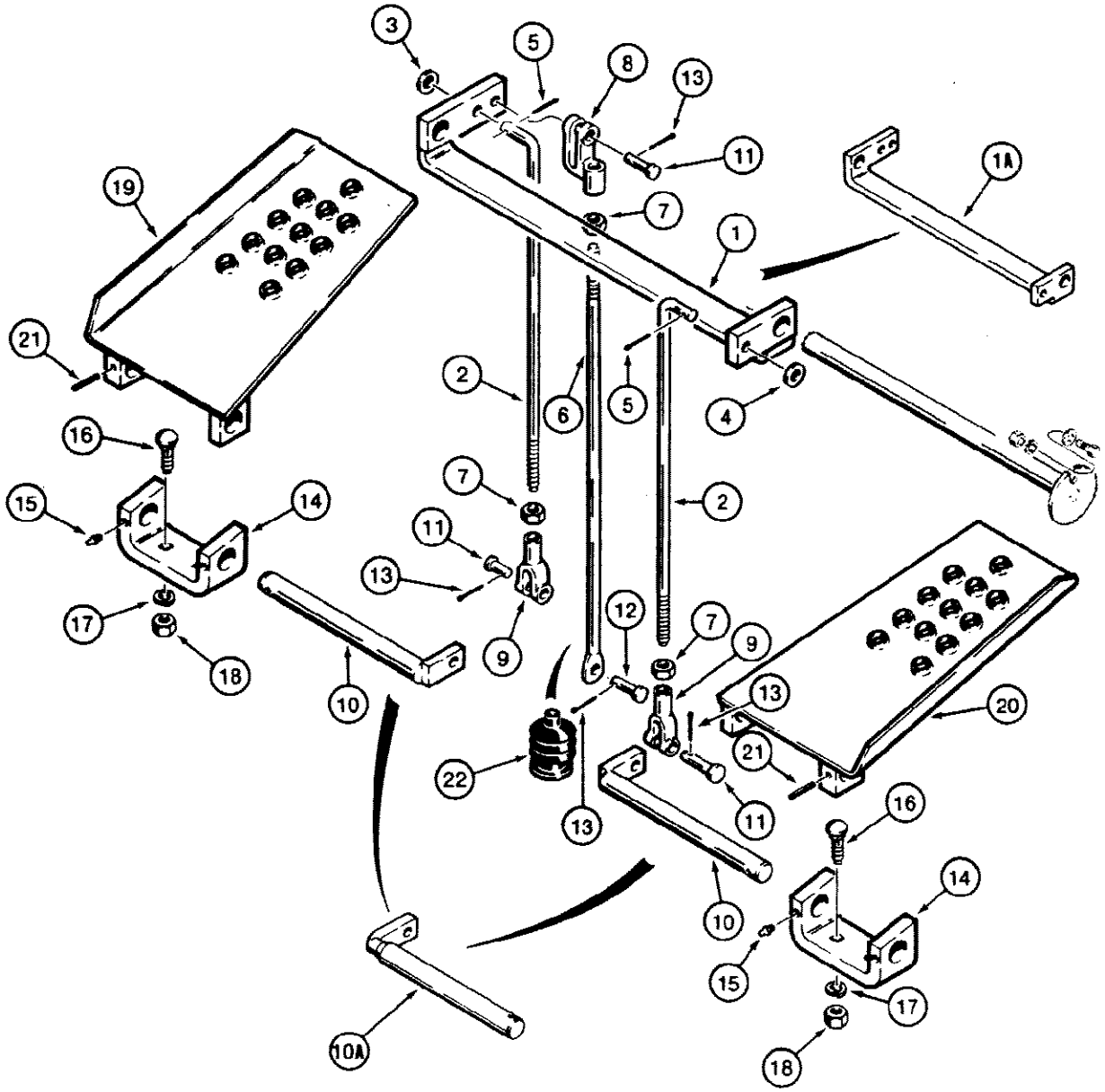
3
5
8
13
11
1A
19
7
1
21
2
6
5
4
16
7
2
15
14
11
13
17
12
7
9
18
9
10
13
20
22
21
13
11
16
14
10
15
17
18
10A

840747

580SE CASE SUPER-E CONSTRUCTION KING LOADER BACKHOE - Chassis/Attachments

512 BACKHOE CONTROLS WITH FOOT SWING, SWING PEDALS AND MOUNTING

Ref	Part Number	Qty	Description
1	D86082	1	BRACKET swing pivot, no longer used, order P/N D129392 bracket
1A	D129392	1	BRACKET swing pivot
2	D81905	2	ROD swing peda, shafts to bracket
3	T40163	1	WASHER flat, left hand rod
4	195-525	1	WASHER flat, plated, right hand rod, 3/4"
5	132-320	2	PIN, SPLIT (COTTER), 3/32" x 3/4"
6	D30821	1	ROD swing bracket to valve, straight, uses offset clevis
7	129-123	3	NUT, 3/8"-24, G5
8	L11182	1	CLEVIS, 3/8" offset, used on models with or without extendable dipper
9	213-41	2	CLEVIS, plated, metal, straight, 3/8", Replaces fiberglass clevis on some models
10	D89317	2	SHAFT swing pedal, no longer available, order P/N D135328 shaft
10A	D135328	2	SHAFT swing pedal
11	141-54	3	PIN clevis, plated, special length, 3/8"
12	141-53	1	PIN clevis, plated, special length, 5/16"
13	132-320	4	PIN, SPLIT (COTTER), 3/32" x 3/4"
14	D92817	2	BRACKET swing pedal shaft
15	219-17	4	FITTING, grease, straight, 3/16" drive
16	111-319	4	BOLT, CARRIAGE, Short NK, 3/8"-16 x 1 1/4", G2
17	192-21	4	WASHER, LOCK, 3/8"
18	129-103	4	NUT, 3/8"-16, G5
19	D87888	1	PEDAL swing, left hand
20	D87886	1	PEDAL swing, right hand
21	138-304	2	PIN, 1/4" x 1 1/4", Slotted
22	D85869	1	BOOT rod, if used

514

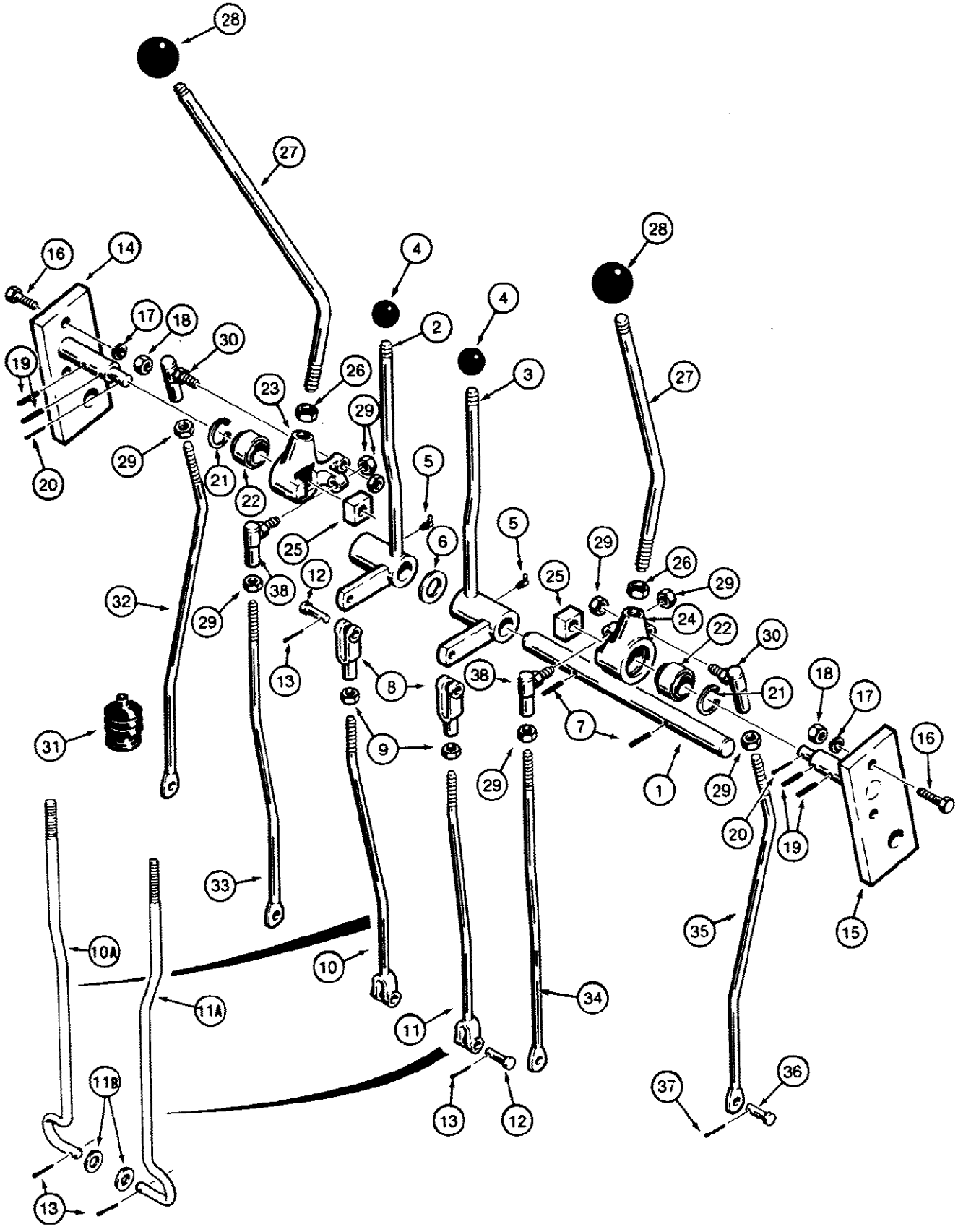
28
27
16
14
4
28
4
17
18
30
2
19
3
27
26
23
29
29
5
20
21
22
25
6
5
29
26
12
38
25
29
32
29
24
22
30
13
8
38
18
17
21
31
9
7
16
29
1
29
20
19
33
35
15
10A
10
34
11A
11
36
11B
37
13
12
13

580SE CASE SUPER-E CONSTRUCTION KING LOADER BACKHOE - Chassis/Attachments

514 BACKHOE CONTROLS WITH HAND SWING

Ref	Part Number	Qty	Description
1	D91195	1	SHAFT stabilizer control levers
2	D91169	1	LEVER control, stabilizer, left hand
3	D91170	1	LEVER control, stabilizer, right hand
4	D59912	2	KNOB stabilizer control lever
5	219-55	2	NIPPLE, LUBE, 90є, 1/8" NPT x .84" lg, Special short
6	195-2097	UAR	WASHER flat, 7/8" bolt size, 15/16" ID x 1-3/4" OD x 3/32" thick, used as a shim
7	138-98	2	PIN, 3/16" x 1 1/4", Slotted
8	H44198	2	CLEVIS plated, 5/16"
9	129-122	2	NUT, 5/16"-24, G5
10	D91182	1	ROD left hand stabilizer, no longer used, order P/N D126335 rod
10A	D126335	1	ROD left hand stabilizer
11	D91181	1	ROD right hand stabilizer, no longer used, order P/N D126336 rod
11A	D126336	1	ROD right hand stabilizer
11B	195-102	2	WASHER flat, plated, 1/4"
12	141-53	2-4	PIN clevis, plated, special length, 5/16"
13	132-320	4	PIN, SPLIT (COTTER), 3/32" x 3/4"
14	D91534	1	SUPPORT backhoe controls, left hand
15	D91185	1	SUPPORT backhoe controls, right hand
16	113-208	4	BOLT, Hex, 3/8"-16 x 1 1/4", G5, Full Thd
17	192-21	4	WASHER, LOCK, 3/8"
18	129-103	4	NUT, 3/8"-16, G5
19	138-96	4	PIN, 3/16" x 1", Slotted
20	132-25	2	Pin, Split (Cotter), 3/32" x 5/8"
21	D38298	2	Ring, Snap, 1.438", Int, #143, brg
22	D38297	2	BEARING self aligning
23	D38302	1	LEVER pivot, left hand
24	D38303	1	LEVER pivot, right hand
25	D38305	2	BLOCK wear
26	129-127	2	NUT, 5/8"-18, G5
27	D94184	2	LEVER control, boom and swing, dipper and bucket
28	D39118	2	KNOB control levers
29	129-123	8	NUT, 3/8"-24, G5
30	D121417	2	JOINT ball, special, 3/8"
31	D85869	6	BOOT rods, if used
32	D91177	1	ROD boom control
33	D91178	1	ROD swing control
34	D91179	1	ROD bucket control
35	D91180	1	ROD dipper control
36	141-53	4	PIN clevis, plated, special length, 5/16"
37	132-320	4	PIN, SPLIT (COTTER), 3/32" x 3/4"
38	D121417	2	JOINT ball, special, 3/8"

516

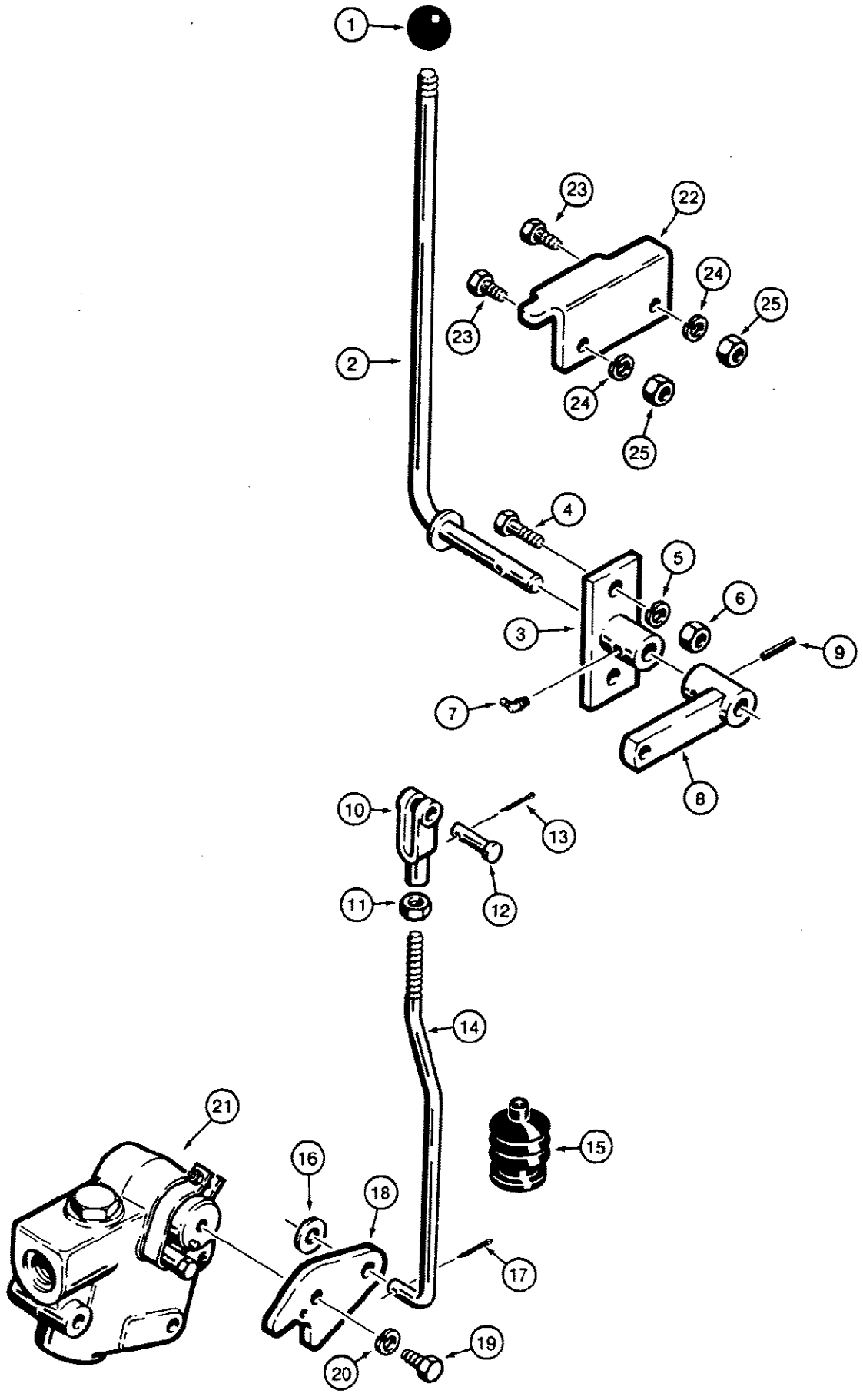

580SE CASE SUPER-E CONSTRUCTION KING LOADER BACKHOE - Chassis/Attachments

516 BACKHOE BOOM LOCK CONTROL

Ref	Part Number	Qty	Description
1	D59912	1	KNOB control lever
2	D89994	1	LEVER control, boom lock
3	D89341	1	SUPPORT boom lock control
4	113-207	2	BOLT, Hex, 3/8"-16 x 1", G5, Full Thd
5	192-21	2	WASHER, LOCK, 3/8"
6	129-103	2	NUT, 3/8"-16, G5
7	219-56	1	FITTING grease, 1/8" NPT, 90°
8	D89344	1	LEVER pivot
9	138-96	1	PIN, 3/16" x 1", Slotted
10	213-41	1	CLEVIS metal, plated, 3/8", Replaces fiberglass clevis on some models
11	129-123	1	NUT, 3/8"-24, G5
12	141-54	1	PIN clevis, plated, 3/8", special length
13	132-320	1	PIN, SPLIT (COTTER), 3/32" x 3/4"
14	D89346	1	ROD boom lock control
15	D85869	1	BOOT rod
16	195-525	1	WASHER flat, plated, 3/8"
17	132-320	1	PIN, SPLIT (COTTER), 3/32" x 3/4"
18	D89888	1	LEVER valve
19	113-118	1	BOLT, Hex, 5/16"-18 x 5/8", G5, Full Thd
20	192-20	1	WASHER, LOCK, 5/16"
22	D93422	1	BRACKET lever latch
23	113-118	2	BOLT, Hex, 5/16"-18 x 5/8", G5, Full Thd
24	192-20	2	WASHER, LOCK, 5/16"
25	9635082	2	NUT, 5/16"-18, G5

518

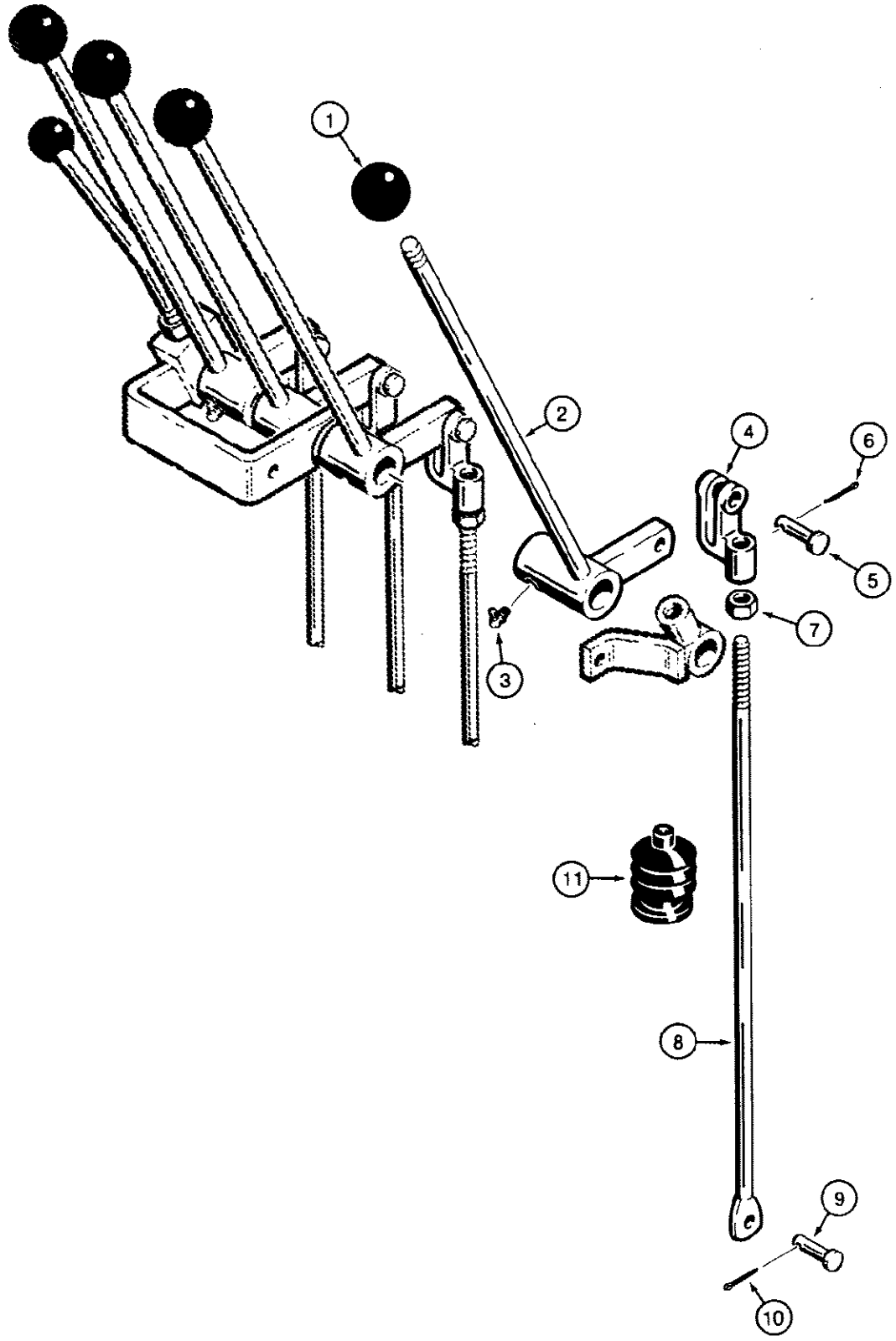

830603

580SE CASE SUPER-E CONSTRUCTION KING LOADER BACKHOE - Chassis/Attachments

518 BACKHOE EXTENDABLE DIPPER CONTROL, FOOT SWING MODELS

Ref	Part Number	Qty	Description
1	L54563	1	KNOB control lever
2	D87528	1	LEVER control, extendable dipper
3	219-57	1	FITTING grease, 1/4" - 28 NF taper, 90°
4	L11182	1	CLEVIS, 3/8", offset
5	141-54	1	PIN clevis, plated, special length, 3/8"
6	132-320	1	PIN, SPLIT (COTTER), 3/32" x 3/4"
7	129-123	1	NUT, 3/8"-24, G5
8	D30821	1	ROD extendable dipper control, straight, uses offset clevis
9	141-53	1	PIN clevis, plated, special length, 5/16"
10	132-320	1	PIN, SPLIT (COTTER), 3/32" x 3/4"
11	D85869	1	BOOT rod, if used

520

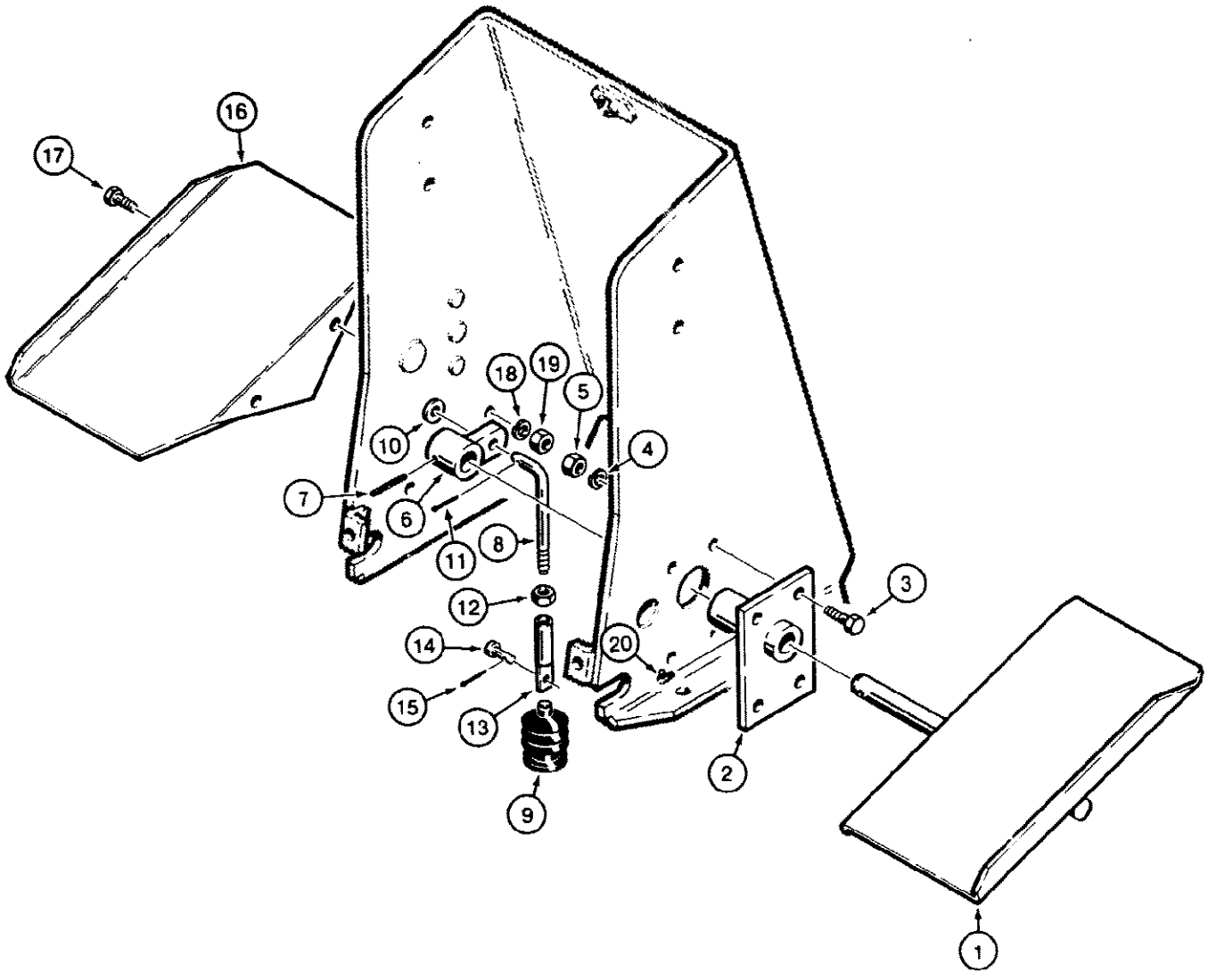

580SE CASE SUPER-E CONSTRUCTION KING LOADER BACKHOE - Chassis/Attachments

520 BACKHOE EXTENDABLE DIPPER CONTROL, HAND SWING MODELS

Ref	Part Number	Qty	Description
1	D87866	1	PEDAL extendable dipper control
2	D87854	1	SUPPORT pedal
3	113-207	4	BOLT, Hex, 3/8"-16 x 1", G5, Full Thd
4	192-21	4	WASHER, LOCK, 3/8"
5	129-103	4	NUT, 3/8"-16, G5
6	D87860	1	LEVER pivot
7	138-136	1	PIN, 1/4" x 1 1/4", Slotted
8	D87867	1	ROD control
9	D85869	1	BOOT control rod
10	195-525	1	WASHER flat, plated, 3/8"
11	132-320	1	PIN, SPLIT (COTTER), 3/32" x 3/4"
12	129-123	1	NUT, 3/8"-24, G5
13	D87857	1	LINK, rod to valve
14	141-53	1	PIN clevis, plated, special length, 5/16"
15	132-320	1	PIN, SPLIT (COTTER), 3/32" x 3/4"
16	D87863	1	PLATFORM left hand foot
17	113-206	2	BOLT, Hex, 3/8"-16 x 3/4", G5, Full Thd
18	192-21	2	WASHER, LOCK, 3/8"
19	129-103	2	NUT, 3/8"-16, G5
20	219-56	1	FITTING grease, 1/8" NPT, 90°

522 BACKHOE MOUNTING FRAME AND STABILIZERS

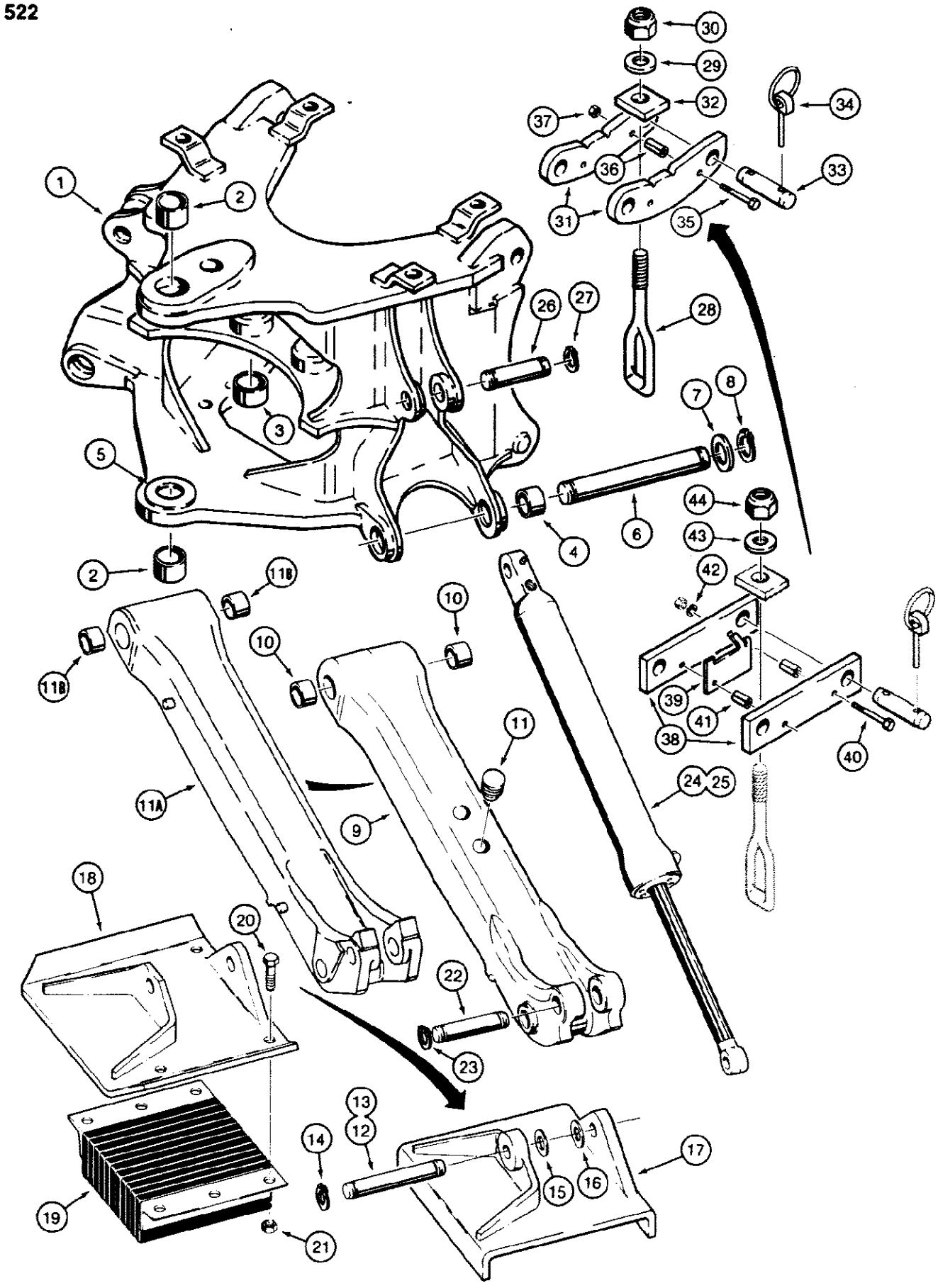

522 BACKHOE MOUNTING FRAME AND STABILIZERS

Ref	Part Number	Qty	Description
1	D93335	1	FRAME backhoe mounting
2	D90722	2	BUSHING swing tower mounting, upper and lower
3	D60159	2	BUSHING swing cylinder plate
4	D37495	4	BUSHING stabilizers
5	D73848	1	WASHER bearing, welds to frame
6	D89838	2	PIN, stabilizer leg to mounting frame
7	195-2152	4	WASHER flat, 1-3/4" bolt size, 1-13/16" ID x 2-1/2" OD x 1/8" thick, used as a spacer
8	D25280	4	Ring, Snap, #175, Ext, P/N D89838 pin
9	D94215	2	LEG stabilizer, no longer used, order P/N D133428 stabilizer leg
10	D50146	2	BUSHING, leg to frame
11	D120450	4	PLUG leg
11A	D133428	2	LEG stabilizer, without plugs
11B	D50146	2	BUSHING, leg to frame
12	D28648	2	PIN, P/N D88427 stabilizer, plate to leg
13	D50696	2	PIN, P/N D61376 stabilizer, plate to leg
14	D25279	4	RING snap, pin retaining
15	D28610	UAR	WASHER shim, 2-1/2" (63.5 mm) OD x 7/64" (3 mm) thick
16	D31312	UAR	WASHER shim, 2-3/4" (70 mm) OD x 1/16" (1.6 mm) thick
17	D88427	2	PLATE stabilizer, cleated, if used
18	D61376	2	PLATE stabilizer, street or cemetery pad, if used, uses P/N D61368 pad
19	D61368	2	PAD rubber, P/N D61376 stabilizer plate, if used, also, P/N D142314 may be used, 4-1/2" x 12" flip pad, used with P/N D143474 plate
20	113-713	8	BOLT, Hex, 3/4"-10 x 1 3/4", G5
21	129-108	8	NUT, 3/4"-10, G5
22	D26002	2	PIN stabilizer, cylinder to leg
23	D25279	4	RING snap, pin retaining
24	REF	1	CYLINDER stabilizer, right hand, See Figure 466
25	REF	1	CYLINDER stabilizer, left hand, See Figure 466, not shown
26	D32930	2	PIN stabilizer, cylinder to frame
27	D25279	4	RING snap, pin retaining
28	D123960	2	ROD tension
29	D64968	2	WASHER hardened, 1-1/4", used with Ref. 31, if used
30	131-454	2	NUT hex, self locking, 1-1/4" - 7 NC, 1.6" long, used with Ref. 31, if used
31	D120162	4	LINK curved, frame to chassis, no longer available, order P/N D101397 Kit
32	D120163	2	PLATE link
33	D49812	4	PIN link
34	D33805	8	PIN self locking
35	113-203	2	BOLT, Hex, 3/8"-16 x 3 1/2", G5, Used with Ref. 31, if used
	D101397	1	KIT, backhoe mounting link, must order two kits when servicing both sides of backhoe frame
36	D94121	1	SPACER link
37	129-103	2	NUT, 3/8"-16, G5

522 BACKHOE MOUNTING FRAME AND STABILIZERS

Ref	Part Number	Qty	Description
38	D123569	2	LINK flat bar type, frame to chassis
39	D124421	1	RETAINER links, used with Ref. 38
40	113-267	2	BOLT, Hex, 3/8"-16 x 4", G5
41	D64745	1	SPACER link, used with Ref. 38
42	192-21	2	WASHER, LOCK, 3/8"
44	131-479	1	NUT hex, self locking, 1-1/4" - 7 NC, used with Ref. 38

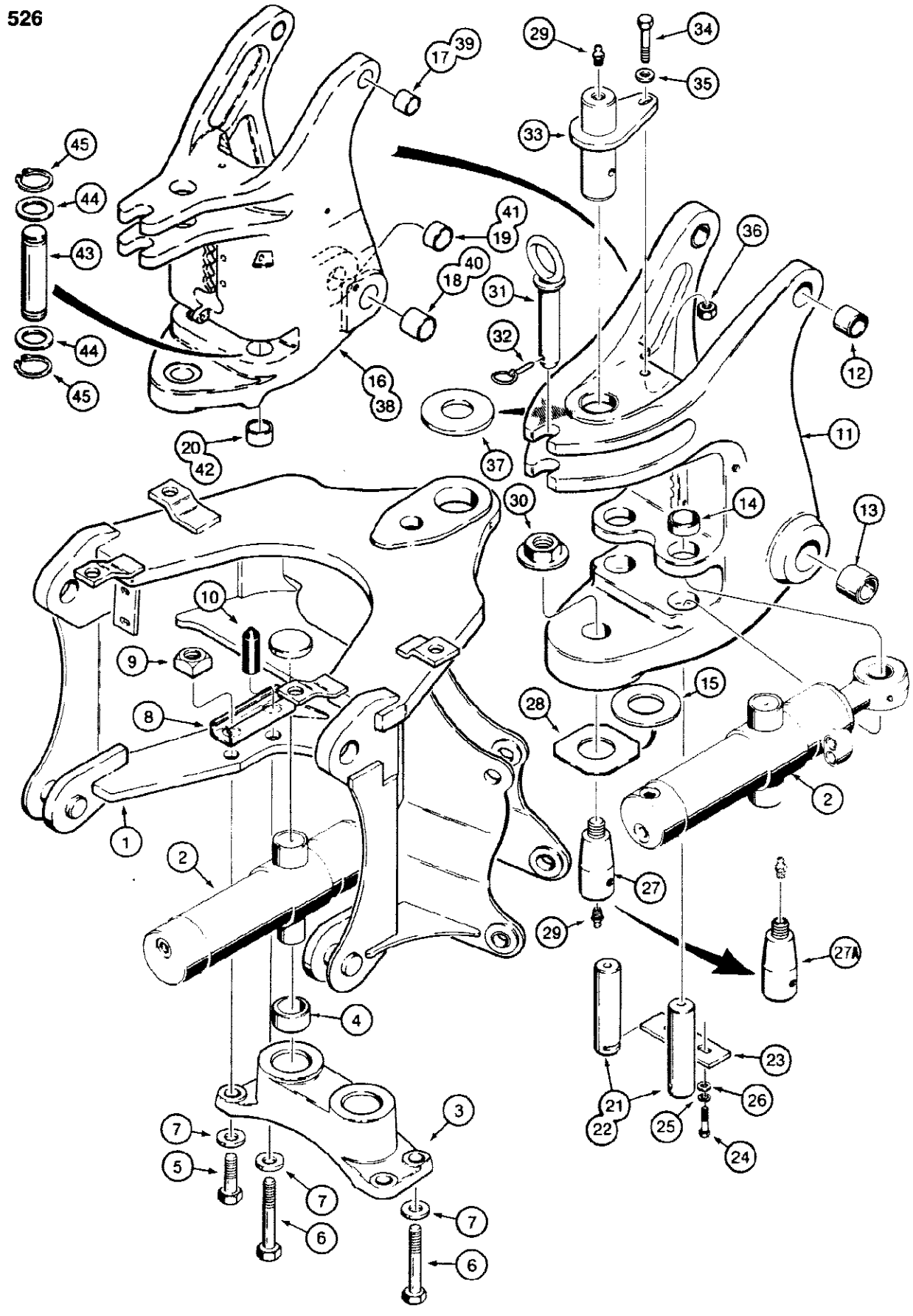
526
1
2
2
3
4
5
6
6
7
7
7
8
9
10
11
12
13
14
15
16
17
18
19
20
21
22
23
24
25
26
27
27A
28
29
29
30
31
32
33
34
35
36
37
38
39
40
41
42
43
44
44
45
45

526 BACKHOE SWING CYLINDERS AND SWING TOWER

Ref	Part Number	Qty	Description
1	REF	1	FRAME backhoe mounting, See Figure 522 for bushings
2	REF	2	CYLINDER backhoe swing, See Figure 468
3	D94401	1	SUPPORT swing cylinders, Includes: Ref. 4
4	D60159	2	BUSHING plate
5	113-925	2	BOLT hex head, plated, 1" - 8 NC x 3"
6	113-945	2	BOLT hex head, special thread length, 1" - 8 NC x 5-1/2"
7	D36505	4	WASHER hardened, 1"
8	D94229	2	RETAINER nut
9	129-568	4	NUT square, 1" - 8 NC
10	D90057	2	COVER vinyl, bolt
11	D90868	1	TOWER swing, without inner ears, uses one boom mounting pin and Ref. 21 - 26 for mounting swing cylinder, see Ref. 16, See Figure 530 for boom attaching parts, Includes: Ref. 12 - 15, Hole through which swing tower pin, Ref. 33, inserts has no bushing., When ordering a new swing tower, two D88985 pins, Ref. 21, and one D94031 plate, Ref. 23, must also be ordered, unless these items are already installed.
12	D49429	2	BUSHING, at boom cylinder
13	D91241	2	BUSHING boom mounting, (51.10 - 51.02 mm) 2.009 - 2.012" ID, (69.88 - 69.85 mm) 2.751 - 2.750" OD, (60.0 mm) 2.362" long, if 2.01" ID x 2.5" OD x 2" long is needed for swing tower with inner ears order P/N D33023
14	D94018	4	BUSHING swing cylinder mounting, if used
15	D90863	1	SHIM, 6mm Thk, Washer - Bearing, welded to bottom of some swing towers, not used when Ref. 28 is used
16	D127544	1	TOWER swing, 2-1/8" OD bushings at swing cylinder mounting holes, with inner ears, uses two boom mounting pins and Ref. 21 - 26 for mounting swing cylinder, see item 11, See Figure 530 for boom attaching parts, no longer available, Includes: Ref. 17 - 20, For service order D136868 swing tower, 2 R30449 pins, 4 D25280 snap rings and 4 195 2152 washers on Figure 528, This was first used on backhoe S/N 5486800, vehicle S/N 17027323, in June of 1985., This subs to new tower, D136868, with new pins, 2 of R57306, new retaining rings, 4 of 103 16175, and new washers, 4 of 495 81226.
17	D49429	2	BUSHING, at boom cylinder
18	D33023	2	BUSHING outer ears, boom mouting
19	D38943	2	BUSHING inner ears, boom mounting
20	D94018	4	BUSHING cylinder mounting swing, 2-1/8" OD
21	D88985	2	PIN swing cylinder to swing tower, 7-1/8" (181 mm) long, used with Ref. 11 or 16 swing tower, if used, When ordering a new swing tower, two D88985 pins, Ref. 21, and one D94031 plate, Ref. 23, must also be ordered, unless these items are already installed.
22	D94019	2	PIN swing cylinder to swing tower, 7-3/4" (197 mm) long, used with Ref. 11 or 16 swing tower, if used, When ordering a new swing tower, two D88985 pins, Ref. 21, and one D94031 plate, Ref. 23, must also be ordered, unless these items are already installed.
23	D94031	1	PLATE pin retaining, 6-3/8" (162 mm) long, mounts between pins, used with Ref. 11 or 16 swing tower, When ordering a new swing tower, two D88985 pins, Ref. 21, and one D94031 plate, Ref. 23, must also be ordered, unless these items are already installed.

526 BACKHOE SWING CYLINDERS AND SWING TOWER

Ref	Part Number	Qty	Description
24	113-424	2	BOLT, Hex, 1/2"-13 x 1", G5, Full Thd, Used with Ref. 11 or 16 swing tower
25	192-23	2	WASHER, LOCK, 1/2", Used with Ref. 11 or 16 swing tower
26	D64050	2	WASHER flat, 1/2", used with Ref. 11 or 16 swing tower
27	D120495	1	PIN tapered, swing tower to backhoe frame, lower, Ref. 24 grease fitting mounts in bottom of pin, no longer used, order P/N D123653 pin
27A	D123653	1	PIN tapered, swing tower to backhoe frame, lower, Ref. 24 grease fitting mounts in top of pin
28	D89338	1	SPACER bearing, if used, not used when Ref. 15, is used
29	219-1	2	FITTING grease, straight, 1/8" NPT
30	D120610	1	NUT hex, 1-3/4" - 12 NF
31	D90576	1	PIN lock, backhoe swing
32	D33805	1	PIN self locking
33	D90727	1	PIN swing tower to backhoe frame, upper
34	80087972	1	BOLT hex head, plated, 1/2" - 13 NC x 2-1/2"
35	195-533	1	WASHER flat, plated, 1/2"
36	131-70	1	NUT hex, self locking, plated, 1/2" - 13 NC
37	D74249	UAR	SPACER bearing, 5/64" (2 mm) thick
38	D136868	1	TOWER swing, 2-1/4" OD bushings at swing cylinder mounting holes, with inner ears, uses two boom mounting pins and items 43 - 45 for mounting swing cylinder, See Figure 530 for boom attaching parts, Includes: Ref. 39 - 42
39	D49429	2	BUSHING, at boom cylinder
40	D33023	2	BUSHING outer ears, boom mounting
41	D38943	2	BUSHING inner ears, boom mounting
42	D37495	4	BUSHING swing cylinder mounting, 2-1/4" OD
43	R30449	2	PIN, swing cylinder to swing tower, used with Ref. 38 swing tower
44	195-2152	4	WASHER flat, 1-3/4" bolt size, 1-13/16" ID x 2-1/2" OD x 1/8" thick, used with Ref. 38 swing tower
45	D25280	4	Ring, Snap, #175, Ext, P/N R30449 pin, used with ref. 38 swing tower

530 BACKHOE SWING TOWER AND BOOM

530

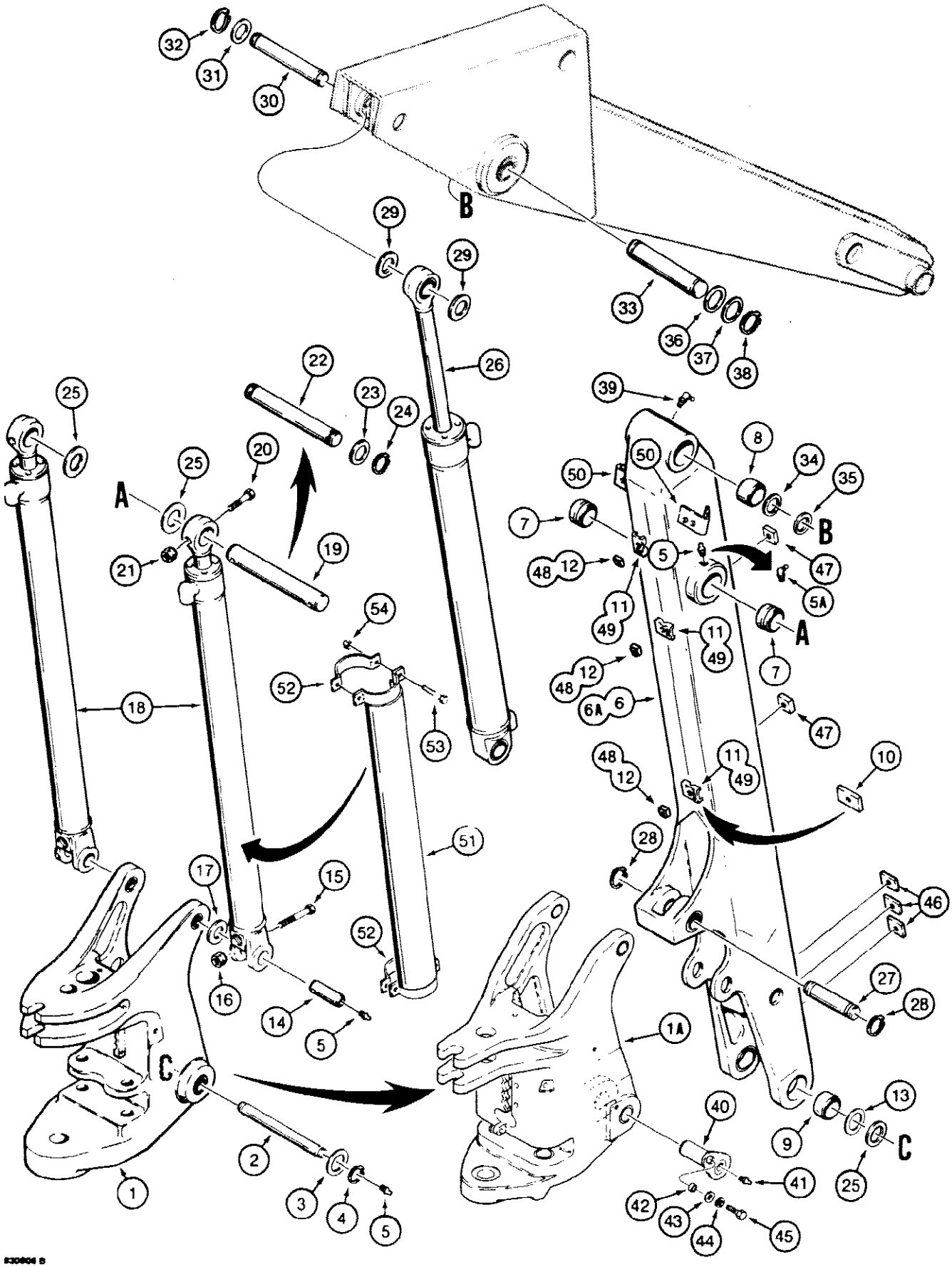

530404 B

530 BACKHOE SWING TOWER AND BOOM

Ref	Part Number	Qty	Description
1	D90868	1	TOWER swing, uses one boom mounting pin, See Figure 526 for swing tower and bushings, if used
1A	REF	1	TOWER swing, uses two boom mounting pins, See Figure 526 for swing tower and bushing identification
2	D91240	1	PIN boom to swing tower, used with Ref. 1
3	195-2155	2	WASHER flat, 2" bolt size, 2-1/16" ID x 3" OD x 1/8" thick, used with Ref. 1
4	D26919	2	Ring, Snap, #200, Ext, pin, used with ref. 1
5	219-1	4-6	FITTING grease, straight, 1/8" NPT
5A	219-89	2	FITTING grease, 1/8" pipe, self tapping, 45°, used on models with extendable dipper, if used
6	D121393	1	BOOM backhoe, mounts to swing tower with 1, Ref. 2 pin, used with P/N D90869 swing tower
6A	D131153	1	BOOM backhoe, mounts to swing tower with 2, Ref. 40 pins, used with P/N D127544 swing tower
7	D95362	2	BUSHING boom cylinder mounting, top
8	D31142	2	BUSHING dipper pivot, Ref #8 fits inside of spacer d37416 that fits inside end of boom.
9	D50698	2	BUSHING boom pivot
10	D50004	2	BLOCK tapped, welded to boom, if used
11	D88417	UAR	CAGE weld to boom for retaining Ref. 12, if used
12	25-226	UAR	NUT square, 3/8" - 16 NC, if used
13	D44813	UAR	SHIM, .035" Thk, Spacer, between swing tower and boom
14	D49866	2	PIN boom cylinder to swing tower
15	113-252	2	BOLT, Hex, 3/8"-16 x 3 3/4", G5
16	131-52	2	NUT hex, self locking, plated, 3/8" - 16 NC
17	D28610	UAR	WASHER spacer, flat, 1-1/2" (38 mm) ID
18	REF	2	CYLINDER boom, See Figure 470
19	D49865	1	PIN boom cylinder to boom, if used
20	113-411	2	BOLT, Hex, 1/2"-13 x 4 1/2", G5, If used
21	131-70	2	NUT hex, self locking, plated, 1/2" - 13 NC, if used
22	L103135	1	PIN boom cylinder to boom, if used
23	72990	2	WASHER flat, 2" (51 mm) ID x 1/16" (.06 mm) thick, if used
24	D26919	2	Ring, Snap, #200, Ext, pin, if used
25	195-2155	UAR	WASHER flat, 2" bolt size, 2-1/16" ID x 3" OD x 1/8" thick, used as a spacer
26	REF	1	CYLINDER dipper, See Figure 472
27	D72359	1	PIN dipper cylinder to boom
28	D25280	2	Ring, Snap, #175, Ext, pin
29	195-2152	2	WASHER flat, 1-3/4" bolt size, 1-13/16" ID x 2-1/2" OD x 1/8" thick
30	D52522	1	PIN dipper cylinder to dipper
31	30575	UAR	WASHER spacer, 1-3/4" (44 mm) ID
32	D25280	2	Ring, Snap, #175, Ext, pin
33	D45523	1	PIN boom to dipper
34	D44813	UAR	SHIM, .035" Thk, Spacer, 2" (51 mm) ID
35	195-2155	UAR	WASHER flat, 2" bolt size, 2-1/16" ID x 3" OD x 1/8" thick
36	72990	2	WASHER flat, 2" ID x 1/16" thick
37	195-2155	2	WASHER flat, 2" bolt size, 2-1/16" ID x 3" OD x 1/8" thick

530 BACKHOE SWING TOWER AND BOOM

Ref	Part Number	Qty	Description
38	D26919	2	Ring, Snap, #200, Ext, pin
39	219-55	1	NIPPLE, LUBE, 90ɛ, 1/8" NPT x .84" lg, Special short
40	D125594	2	PIN boom to swing cylinders, used with Ref. 1A
41	219-1	2	FITTING grease, straight, 1/8" NPT, used with Ref.1A
42	D125595	2	SPACER pin, used with Ref. 1A
43	195-41	2	WASHER, 5/8", Used with Ref. 1A
44	192-25	2	WASHER, LOCK, 5/8", Used with Ref. 1A
45	113-607	2	BOLT, Hex, 5/8"-11 x 1 1/2", G5, Full Thd, Used with Ref. 1A
46	D83825	3	BLOCK tapped, welded to boom
47	25-288	2	NUT square, heavy, 1/2" - 13 NC, welded to boom
48	25-226	2-3	NUT square, 3/8" 16 NC
49	D88417	2-3	CAGE, welded to boom
50	D45559	2	BRACKET tube clamp, welded to boom
51	D62468	2	GUARD boom cylinder, if used
52	D62467	4	BRACKET guard mounting, if used
53	113-177	8	BOLT, Hex, 5/16"-18 x 3", G5
54	131-176	8	NUT hex, self locking, plated, 5/16" - 18 NC

534 BOOM LATCH

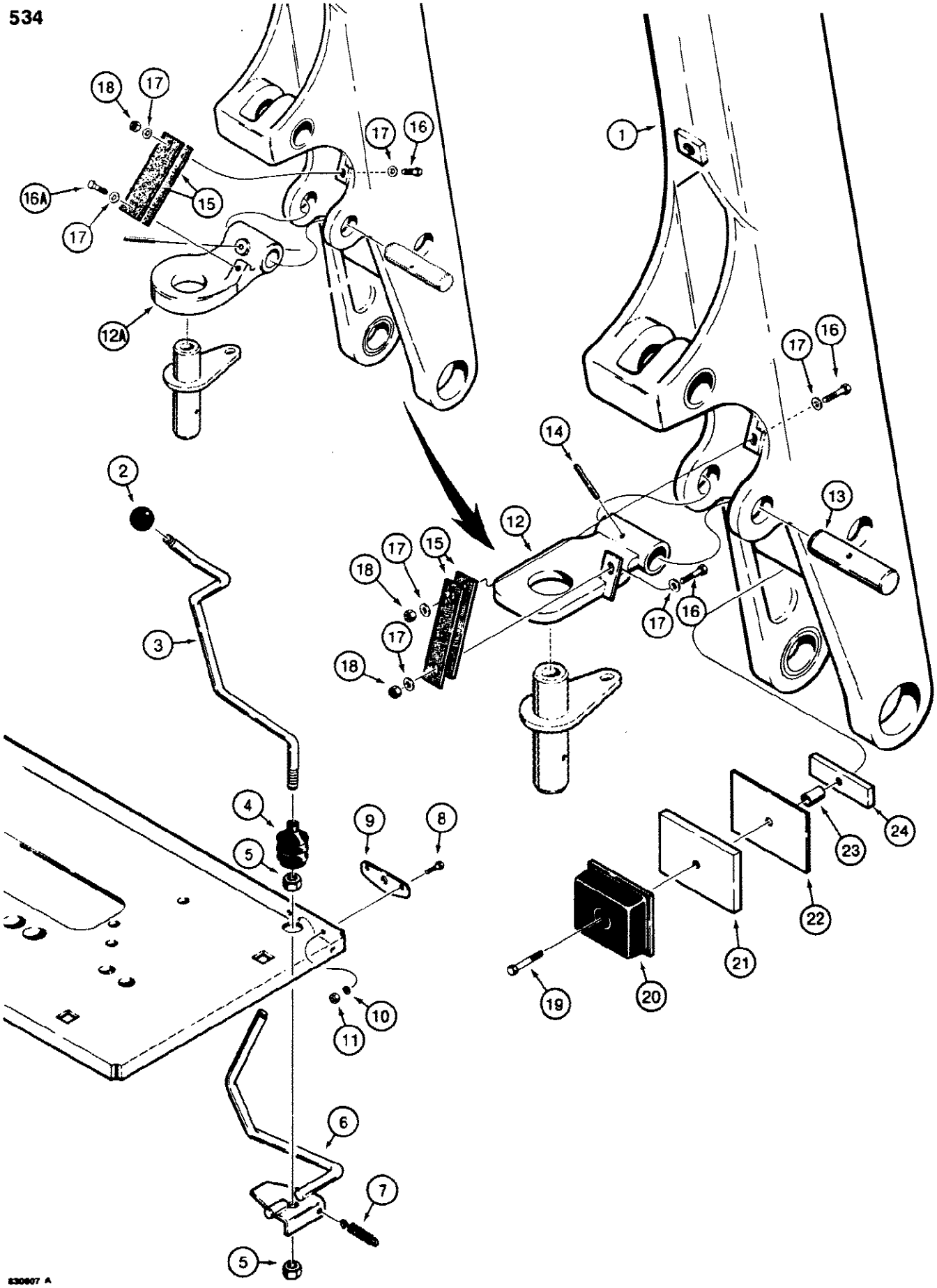

534 BOOM LATCH

Ref	Part Number	Qty	Description
1	REF	1	BOOM backhoe, See Figure 530
2	D59912	1	KNOB lever, latch release
3	D91102	1	LEVER boom latch release
4	D85869	1	BOOT rubber, lever
5	129-125	2	NUT, 1/2"-20, G5
6	D91098	1	ROD latch release
7	D91097	1	SPRING rod
8	113-102	2	BOLT, Hex, 5/16"-18 x 3/4", G5, Full Thd
9	D90398	1	PLATE rod support
10	192-20	2	WASHER, LOCK, 5/16"
11	9635082	2	NUT, 5/16"-18, G5
12	D90687	1	LATCH backhoe boom, no longer used, for service order P/N D125775 latch and 113-217 bolt
12A	D125775	1	LATCH backhoe boom
13	D89366	1	PIN boom latch
14	138-144	1	PIN, 1/4" x 2 1/2", Slotted
15	L73300	2	STRAP boom latch
16	113-208	1-2	BOLT, Hex, 3/8"-16 x 1 1/4", G5, Full Thd
16A	113-217	1	BOLT, Locking, 3/8"-16 x 1", G5, Full Thd
17	95-6	3-4	WASHER flat, 3/8"
18	131-52	1-2	NUT hex, self locking, plated, 3/8" - 16 NC
19	113-219	1	BOLT, Hex, 3/8"-16 x 2", G5
20	D90990	1	BUMPER rubber, boom
21	D90970	1	PLATE boom stop, support
22	D92254	UAR	SHIM plate, boom stop
23	R46103	1	SPACER plate
24	D90971	1	PLATE support

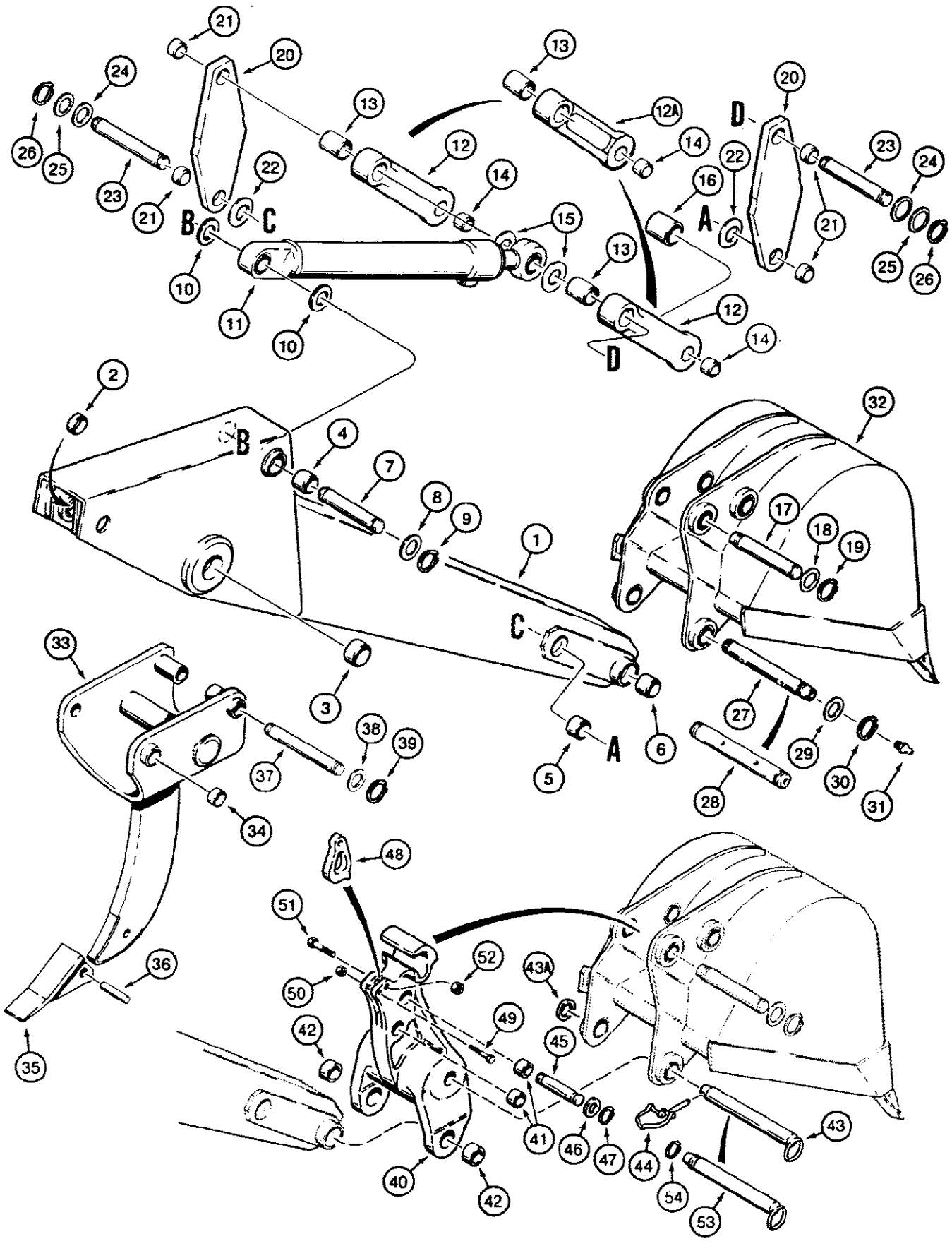
536
A
B
C
D

536 BACKHOE DIPPER AND BUCKET

Ref	Part Number	Qty	Description
	D77895	1	DIPPER ASSEMBLY, backhoe, uses P/N D34340 bushing, Ref. 4 at bucket cylinder mounting, no longer used, order P/N D128946 dipper, Includes: Ref. 1-6
	D128946	1	DIPPER ASSEMBLY, backhoe, Includes: Ref. 1 - 6
1	NSS	1	DIPPER backhoe
2	D43940	2	BUSHING dipper, at dipper cylinder
3	D31142	2	BUSHING dipper, at boom
4	D34340	2	BUSHING dipper, at bucket cylinder, P/N D77895 dipper only
5	D50146	2	BUSHING dipper, at bucket links
6	D55626	2	BUSHING dipper, at bucket
7	D52522	1	PIN bucket cylinder to dipper
8	30575	UAR	WASHER flat, 1/16" (1.6 mm) thick
9	D25280	2	Ring, Snap, #175, Ext, pin
10	195-2152	2	WASHER flat, 1-3/4" bolt size, 1-13/16" ID x 2-1/2" OD x 1/8" thick
11	REF	1	CYLINDER backhoe bucket, See Figure 474
12	D120755	2	LINK bucket cylinder to bucket, no longer used, order P/N D126492 link
12A	D126492	2	LINK bucket cylinder to bucket, Includes: Ref. 13 - 14
13	D121845	1	BUSHING at cylinder, P/N D120755 or D126492 link
14	D30933	1	BUSHING at bucket, P/N D120755 or D126492 link
15	195-2152	2	WASHER flat, 1-3/4" bolt size, 1-13/16" ID x 2-1/2" OD x 1/8" thick
16	D93227	1	SPACER bucket links to bucket
17	D37614	1	PIN bucket links to bucket
18	D28610	2	WASHER special
19	D25279	2	RING snap, pin retaining
20	D89620	2	LINK bucket cylinder to dipper, Includes: Ref. 21
21	D46405	2	BUSHING link
22	D77725	2	WASHER special, 3/8" (9.5 mm) thick
23	D53818	2	PIN bucket linkage to dipper
24	195-2152	UAR	WASHER flat, 1-3/4" bolt size, 1-13/16" ID x 2-1/2" OD x 1/8" thick
25	30575	UAR	WASHER flat, 1/16" (1.6 mm) thick
26	D25280	4	Ring, Snap, #175, Ext, pin
27	D64799	1	PIN dipper to bucket, all buckets except 12" (305 mm) buckets, used on models with or without bucket coupler assembly, see Ref. 43 and 44
28	D55584	1	PIN dipper to bucket, 12" (305 mm) buckets only, used on models with or without bucket coupler assembly, see Ref. 53 and 54
29	195-2152	UAR	WASHER flat, 1-3/4" bolt size, 1-13/16" ID x 2-1/2" OD x 1/8" thick
30	D25280	2	Ring, Snap, #175, Ext, pin
31	219-1	2	FITTING grease, straight, 1/8" NPT
32	REF	1	BUCKET backhoe, See Figure 544 - 554 for bucket options
	D54136	1	POINT ASSSEMBLY, frost, backhoe, Includes: Ref. 33 - 36
33	NSS	1	BODY frost point
34	D37495	2	BUSHING frost point pivot

536 BACKHOE DIPPER AND BUCKET

Ref	Part Number	Qty	Description
35	D83306	1	POINT tooth
36	D43417	1	PIN tooth point
37	D54218	1	PIN link to frost point
38	195-63	2	WASHER flat, 1-9/16" ID x 3-1/4" OD x 3/16" thick
39	D25279	2	RING snap, pin retaining
	D129757	1	COUPLER ASSEMBLY, bucket, machinery item, See Figure 002 for ordering, special parts used with backhoe bucket coupler assembly are Ref. 40 - 54, Includes: Ref. 40 - 42
40	D129757	1	COUPLER bucket, buckets with coupler assembly
41	D31140	4	BUSHING link pivot, 1-1/2" ID x 3/16" thick x 1" long, buckets with coupler assembly
42	D37495	2	BUSHING bucket pivot, 1-3/4" ID x 1/4" thick x 1-1/4" long, buckets with coupler assembly
43	D135671	1	PIN bucket to coupler, all buckets except 12" (305 mm) buckets with coupler assembly
43A	195-2152	1	WASHER flat, 1-3/4" bolt size, 1-13/16" ID x 2-1/2" OD x 1/8" thick, buckets with coupler assembly
44	D130037	1	PIN self ocking, used with P/N D135671 pin only, buckets with coupler assembly
45	D32931	1	PIN link to coupler, buckets with coupler assembly
46	D28610	2	WASHER flat, buckets with coupler assembly
47	D25279	2	RING snap, pin retaining, buckets with coupler assembly
48	D132705	1	LINK coupler, buckets with coupler assembly
49	113-425	1	BOLT, Hex, 1/2"-13 x 3", G5, Buckets with coupler assembly
50	131-70	1	NUT hex, self locking, plated, 1/2" - 13 NC, buckets with coupler assembly
51	113-757	1	BOLT, Hex, 3/4"-10 x 3 1/4", G8, Buckets with coupler assembly
52	131-16	1	LOCKNUT, 3/4"-10, GB, Buckets with coupler assembly
53	D135690	1	PIN bucket to coupler, 12" (305 mm) buckets only, models with bucket coupler assembly
54	D25280	1	Ring, Snap, #175, Ext, used with P/N D135690 pin only, buckets with coupler assembly

540 EXTENDABLE DIPPER

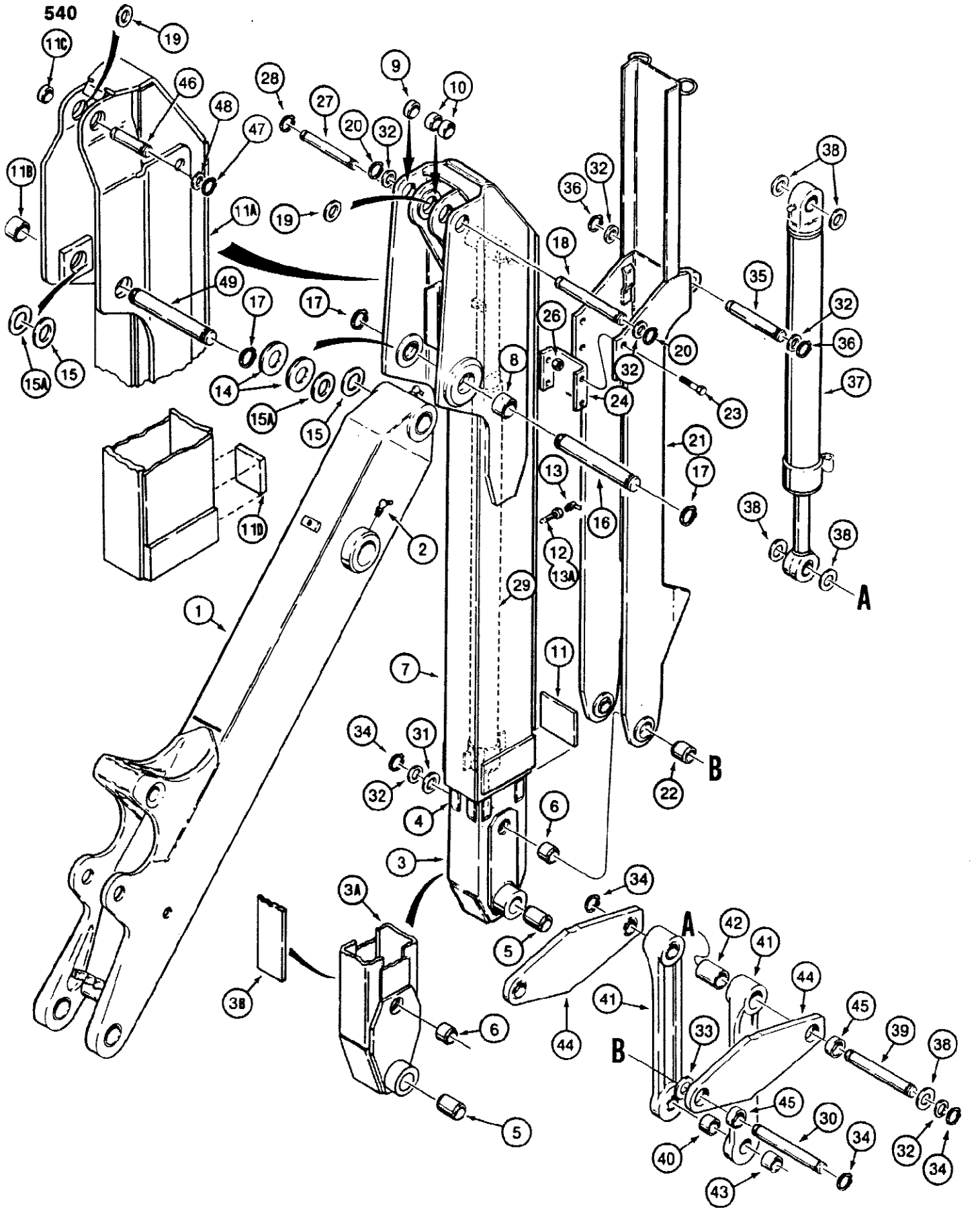

580SE CASE SUPER-E CONSTRUCTION KING LOADER BACKHOE - Chassis/Attachments

540 EXTENDABLE DIPPER

Ref	Part Number	Qty	Description
1	REF	1	BOOM backhoe, See Figure 530
2	219-89	2	FITTING grease, self tapping, 1/8" pipe, 45°
3	D55727	1	DIPPER ASSEMBLY, extension, inner, used with P/N D73826 dipper housing, Ref. 7 - 11, if used, Includes: Ref. 3B - 6, Inner dipper extension assemblies are not interchangeable. D55727, Ref. 3, inner dipper extension assembly must be used with D73826, Ref. 7, outer dipper housing assembly. Either D55727, Ref. 3, or D133021, Ref. 3A, inner dipper extension assembly can be used with D133096 or D133421, Ref. 7 or 11A, outer dipper housing assembly. D73826 dipper housing has weld flash on center at bottom inside of housing., Includes: Ref. 3B-6
3A	D133021	1	DIPPER ASSEMBLY, extension, inner, used with P/N D133096 or D133421 dipper housing Ref. 7 - 11 or 11A - 11D, if used, Inner dipper extension assemblies are not interchangeable. D55727, Ref. 3, inner dipper extension assembly must be used with D73826, Ref. 7, outer dipper housing assembly. Either D55727, Ref. 3, or D133021, Ref. 3A, inner dipper extension assembly can be used with D133096 or D133421, Ref. 7 or 11A, outer dipper housing assembly. D73826 dipper housing has weld flash on center at bottom inside of housing., Includes: Ref. 3B-6
3B	D133010	1	PLATE wear, 6' (1830 mm) long, P/N D133021 dipper only
4	D55688	8	STRIP wear, dipper slide, steel, P/N D55727 dipper only
5	D50146	2	BUSHING at bucket, P/N D55727 or D133021 dipper, Bottom of the extendable dipper, The Weldment boss that that fits into is D133012. The plate is part no. D133014 and the smaller upper boss is part no. D133013.
6	D37443	2	BUSHING at bucket link, P/N D55727 or D133021 dipper
	D73826	1	HOUSING ASSEMBLY, dipper, backhoe, no longer used, order P/N D133096 dipper housing, P/N D37611 pin, P/N D45034 pin, and, 4, P/N D127471 spacers, Includes: Ref. 7 - 11
	D133096	1	HOUSING ASSEMBLY, dipper, backhoe, service replacement, Includes: Ref. 7 - 11, Inner dipper extension assemblies are not interchangeable. D55727, Ref. 3, inner dipper extension assembly must be used with D73826, Ref. 7, outer dipper housing assembly. Either D55727, Ref. 3, or D133021, Ref. 3A, inner dipper extension assembly can be used with D133096 or D133421, Ref. 7 or 11A, outer dipper housing assembly. D73826 dipper housing has weld flash on center at bottom inside of housing., Includes: Ref. 3B-6
7	NSS	1	HOUSING dipper
8	D30756	2	BUSHING at boom
9	D34340	1	BUSHING at dipper cylinder, left hand side plate, if used
10	D46405	2	BUSHING dipper cylinder, inner plate
11	D61708	1	BLOCK stop
	D133421	1	HOUSING ASSEMBLY, dipper, backhoe, Includes: Ref. 11A - 11D, Inner dipper extension assemblies are not interchangeable. D55727, Ref. 3, inner dipper extension assembly must be used with D73826, Ref. 7, outer dipper housing assembly. Either D55727, Ref. 3, or D133021, Ref. 3A, inner dipper extension assembly can be used with D133096 or D133421, Ref. 7 or 11A, outer dipper housing assembly. D73826 dipper housing has weld flash on center at bottom inside of housing., Includes: Ref. 3B-6, Does not require P/N D127471 spacers at dipper housing to boom mounting hole location, used in prodution on some models, not available, for service order P/N D133096 dipper housing, P/N D37611 pin, P/N D45034 pin, 4, P/N D127471 spacers, and P/N D55727 inner dipper

580SE CASE SUPER-E CONSTRUCTION KING LOADER BACKHOE - Chassis/Attachments

540 EXTENDABLE DIPPER

Ref	Part Number	Qty	Description
11A	NSS	1	HOUSING dipper
11B	D30756	2	BUSHING at boom
11C	D46405	2	BUSHING at dipper cylinder
11D	D61708	1	BLOCK stop
12	D134699	1	NOZZLE extension, grease fitting, for 1/4" diameter hole, used with Ref. 13 to lubricate dipper slide, P/N D133421 or D133096 dipper housing, also order P/N 9-72236 instruction sheet
13	219-89	1	FITTING grease, 1/8" pipe, self tapping, 45°, used with Ref. 12 or 13A to lubricate dipper slide
13A	219-107	1	NOZZLE extension, grease fitting, for 1/2" diameter hole, used with Ref. 13 to lubricate dipper slide, P/N D73826 dipper housing
14	D127471	4	SPACER dipper housing to boom, 5/16" (8 mm) thick
15	D44813	UAR	SHIM, .035" Thk, Spacer (.78 mm)
15A	195-2155	UAR	WASHER flat, 2" bolt size, 2-1/16" ID x 3" O.D. x 1/8" thick, between boom and dipper
16	D45034	1	PIN 2" O.D. x 11-3/4" long, dipper housing to boom
17	D26919	2	Ring, Snap, #200, Ext, pin
18	D37611	1	PIN, 1-3/4" O.D. x 10-1/16" long, dipper cylinder to dipper housing
19	195-2152	2	WASHER flat, 1-3/4" bolt size, 1-13/16" ID x 2-1/2" O.D. x 1/8" thick, side of cylinder eye
20	D25280	2	Ring, Snap, #175, Ext, pin
21	D124163	1	EXTENSION ASSEMBLY, dipper, Includes: Ref. 23
22	D43940	2	BUSHING bucket link pin
23	26-832	4	BOLT hex head, 1/2" - 13 NC x 2", grade 8, Replaces bolt with lock washer and hex nut used on some models
24	D61701	1	PLATE guide
25			RESERVED
26	131-72	4	NUT hex, self locking, 1/2" - 13 NC, plated, Replaces lock washer and hex nut used on some models
27	D44882	1	PIN extension cylinder to housing
28	D25279	2	RING ring, pin retaining
29	G101183	1	CYLINDER dipper extension, See Figure 480
30	D53818	1	PIN dipper, and dipper extension to bucket links
31	195-2152	UAR	WASHER flat, 1-3/4" bolt size, 1-13/16" ID x 2-1/2" O.D. x 1/8" thick, bucket link to extension
32	30575	UAR	WASHER spacer, 1/16" (1.6 mm) thick
33	D77725	2	WASHER spacer, 5/16" (7.9 mm) thick
34	D25280	4	Ring, Snap, #175, Ext, pin
35	D38907	1	PIN bucket cylinder to dipper extension
36	D25280	2	Ring, Snap, #175, Ext, pin
37	REF	1	CYLINDER bucket, See Figure 474
38	195-2152	UAR	WASHER flat, 1-3/4" bolt size, 1-13/16" ID x 2-1/2" O.D. x 1/8" thick, bucket cylinder to links
39	D53818	1	PIN bucket cylinder
40	D93227	1	SPACER bucket link
41	D126492	2	LINK bucket cylinder to bucket, Includes: Ref. 42 - 43
42	D121845	1	BUSHING at cylinder
43	D30933	1	BUSHING at bucket

540 EXTENDABLE DIPPER

Ref	Part Number	Qty	Description
44	D89620	2	LINK bucket cylinder to dipper, Includes: Ref. 45
45	D46405	2	BUSHING link
46	D121564	1	PIN, 1-3/4" OD x 4-7/8" long, dipper cylinder to dipper housing, used with P/N D133421 housing only
47	195-2152	2	WASHER flat, 1-3/4" bolt size, 1-13/16" ID x 2-1/2" O.D. x 1/8" thick
48	D25280	2	Ring, Snap, #175, Ext, pin
49	D42911	1	PIN, 2" O.D. x 10-1/2" long, dipper housing to boom, used with P/N D133421 housing only

544

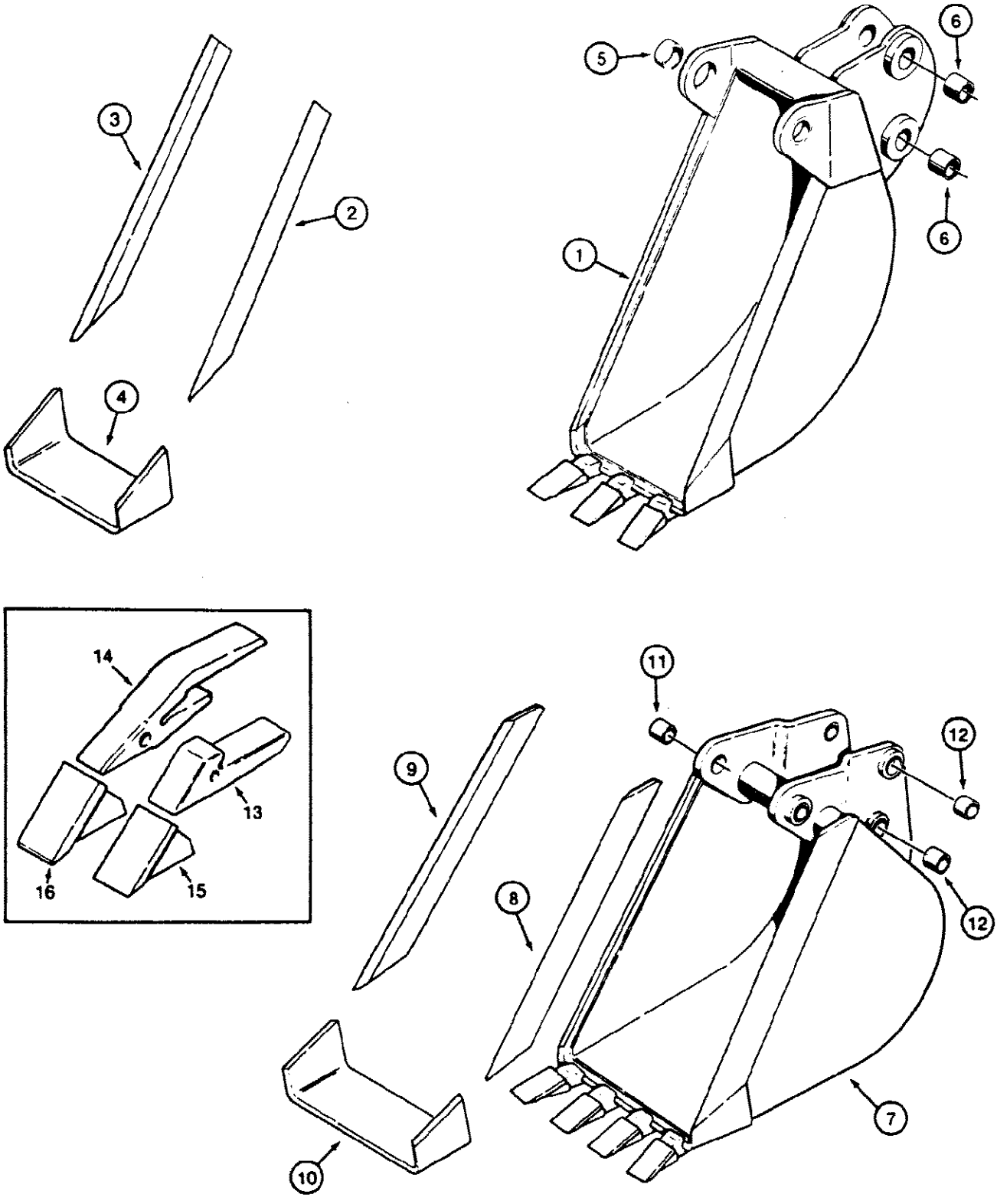

580SE CASE SUPER-E CONSTRUCTION KING LOADER BACKHOE - Chassis/Attachments

544 BACKHOE BUCKETS, TRENCHING BUCKETS, BUCKET TEETH

Ref	Part Number	Qty	Description
1	D52642	1	BUCKET ASSEMBLY, 12"/305 mm, machinery item, see Figure 002 for ordering, Includes: Ref. 2-6, containing holes for Ref #6 bushings are part nbrs D52636, RH, and D52637, LH, Ref #1 D52642 12" bucket Welded lugs
2	D29424	1	EDGE cutting, bucket, right hand side
3	D29423	1	EDGE cutting, bucket, left hand side
4	D37464	1	EDGE cutting, bucket, center
5	D40243	2	BUSHING bucket, at dipper
6	D30933	4	BUSHING bucket, link pin hole
7	D37473	1	BUCKET ASSEMBLY, 18" (457 mm), machinery item, See Figure 002 for ordering, Includes: Ref. 8 - 12
8	D21606	1	EDGE cutting, bucket, right hand side
9	D21605	1	EDGE cutting, bucket, left hand side
10	D37642	1	EDGE cutting, bucket, center
11	D37495	2	BUSHING bucket, at dipper
12	D30933	4	BUSHING bucket, upper and lower bucket link pin hole
7	D37474	1	BUCKET ASSEMBLY, 24" (610 mm), machinery item, See Figure 003 for ordering, Includes: Ref. 8 - 12
8	D21606	1	EDGE cutting, bucket, right hand side
9	D21605	1	EDGE cutting, bucket, left hand side
10	D37507	1	EDGE cutting, bucket, center
11	D37495	2	BUSHING bucket at dipper
12	D30933	4	BUSHING bucket, upper and lower bucket link pin hole
7	D37475	1	BUCKET ASSEMBLY, 30" (762 mm), machinery item, See Figure 002 for ordering, Includes: Ref. 8 - 12
8	D21606	1	EDGE cutting, bucket, right hand side
9	D21605	1	EDGE cutting, bucket, left hand side
10	D37505	1	EDGE cutting, bucket, center
11	D37495	2	BUSHING bucket, at dipper
12	D30933	4	BUSHING bucket, upper and lower bucket link pin hole
7	D37476	1	BUCKET ASSEMBLY, 36" (914 mm), machinery item, See Figure 002 for ordering, Includes: Ref. 8 - 12
8	D21606	1	EDGE cutting, bucket, right hand side
9	D21605	1	EDGE cutting, bucket, left hand side
10	D37471	1	EDGE cutting, bucket, center
11	D37495	2	BUSHING bucket, at dipper
12	D30933	4	BUSHING bucket, upper and lower bucket link pin hole
13	D26368		UAR SHANK tooth, original equipment, Bucket teeth
14	D58499		UAR SHANK tooth, service option, Bucket teeth
15	D27748		UAR POINT tooth, Bucket teeth
16	D36720		UAR POINT tooth, heavy duty service option, Bucket teeth

546

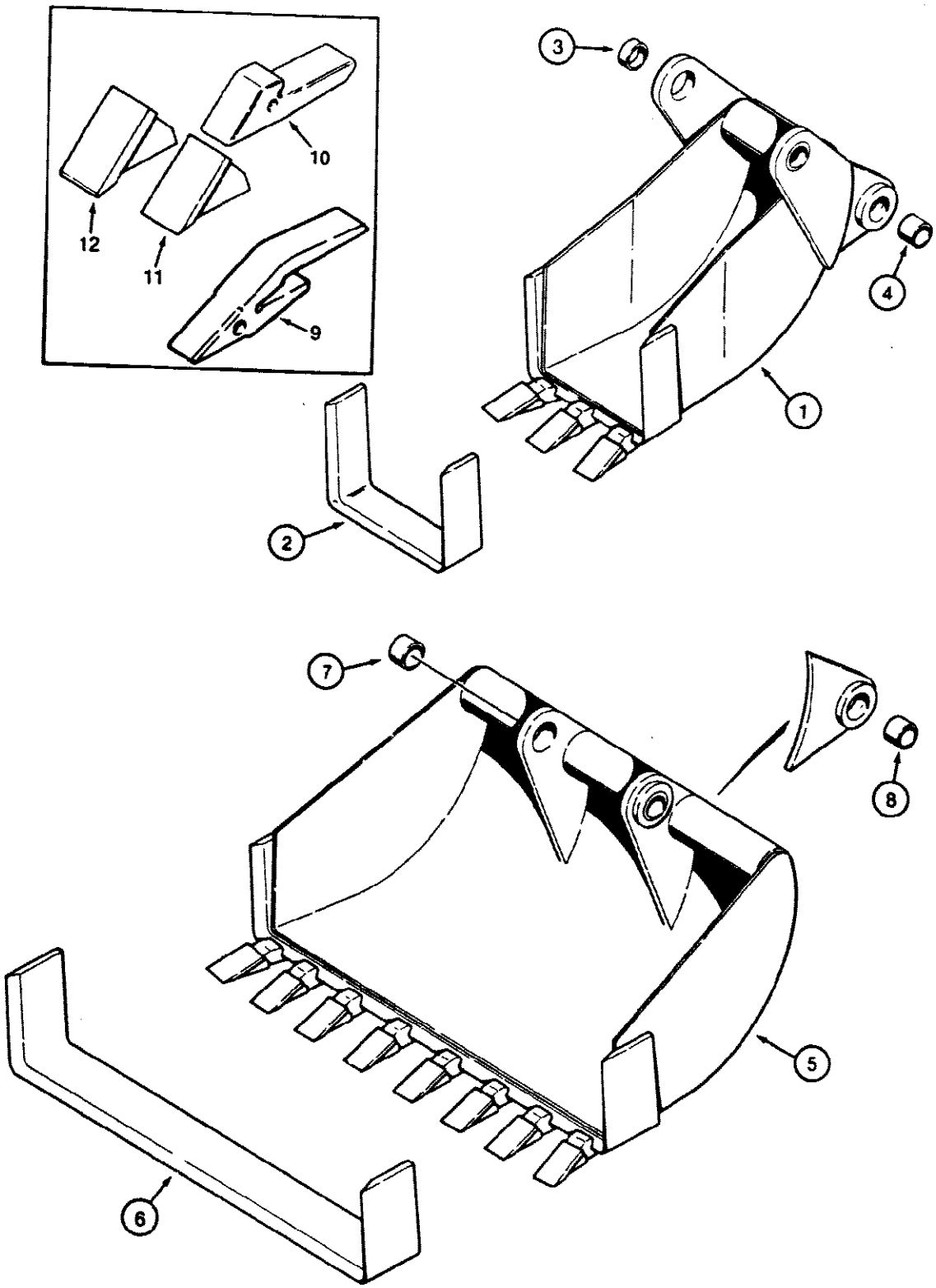

546 BACKHOE BUCKETS, BELLHOLE BUCKETS, COMBINATION BELLHOLE AND

Ref	Part Number	Qty	Description
1	D41547	1	BUCKET ASSEMBLY, 12" (305 mm), machinery item, See Figure 002 for ordering, Includes: Ref. 2 - 4, Bellhoe buckets
2	D37490	1	EDGE cutting, bucket, Bellhoe buckets
3	D40243	2	BUSHING bucket, at dipper, Bellhoe buckets
4	D30933	2	BUSHING bucket, bucket link pin hole, Bellhoe buckets
1	D41548	1	BUCKET ASSEMBLY, 16" (406 mm), machinery item, See Figure 002 for ordering, Includes: Ref. 2 - 4, Bellhoe buckets
2	D37518	1	EDGE cutting, bucket, Bellhoe buckets
3	D37495	2	BUSHING bucket, at dipper, Bellhoe buckets
4	D30933	2	BUSHING bucket, bucket link pin hole, Bellhoe buckets
1	D41549	1	BUCKET ASSEMBLY, 30" (762 mm), machinery item, See Figure 002 for ordering, Includes: Ref. 2 - 4, Bellhoe buckets
2	D37515	1	EDGE cutting, bucket, Bellhoe buckets
3	D37495	2	BUSHING bucket at dipper, Bellhoe buckets
4	D30933	2	BUSHING bucket, bucket link pin hole, Bellhoe buckets
5	D41550	1	BUCKET ASSEMBLY, 36" (914 mm), machinery item, See Figure 002 for ordering, Includes: Ref. 6 - 8, Combination bellhoe and graveyard bucket
6	D37516	1	EDGE cutting, bucket, Combination bellhoe and graveyard bucket
7	D37495	2	BUSHING bucket, at dipper, Combination bellhoe and graveyard bucket
8	D30933	2	BUSHING bucket, bucket link pin hole, Combination bellhoe and graveyard bucket
9	D58499		UAR SHANK tooth, service option, Bucket teeth
10	D26368		UAR SHANK tooth, original equipment, Bucket teeth
11	D27748		UAR POINT tooth, Bucket teeth
12	D36720		UAR POINT tooth, heavy duty service option, Bucket teeth

548

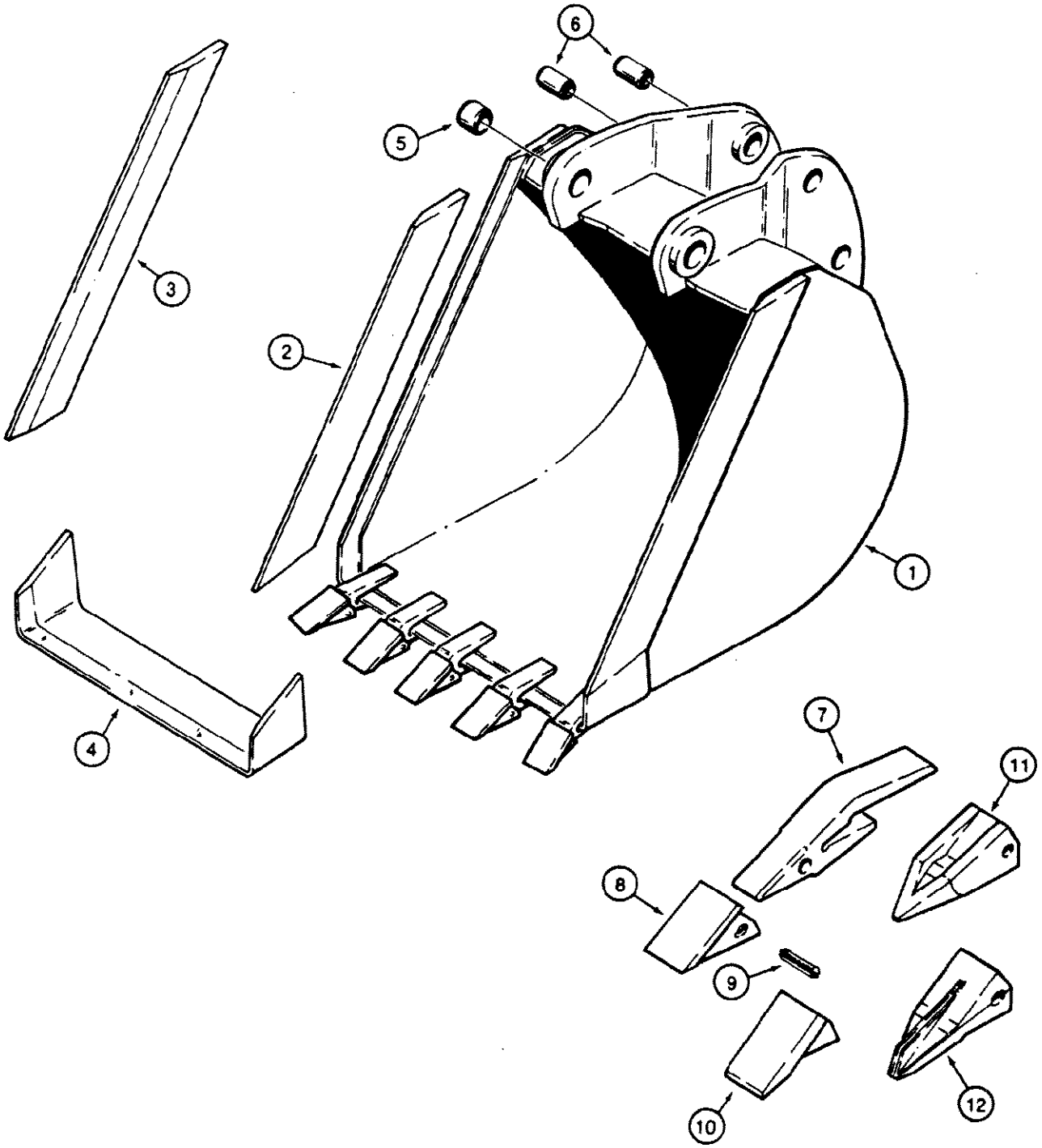

548 BACKHOE BUCKETS, TRENCHING BUCKETS - HEAVY DUTY BUCKET

Ref	Part Number	Qty	Description
1	D57546	1	BUCKET ASSEMBLY, 18" (457 mm), machinery item, See Figure 002 for ordering, if used, also See Figures 550 and 552, Includes: Ref. 2 - 6
2	D57550	1	EDGE cutting, bucket, right hand side
3	D57551	1	EDGE cutting, bucket, left hand side
4	D57594	1	EDGE cutting, bucket, center
5	D37495	2	BUSHING bucket, at dipper
6	D30933	4	BUSHING bucket, at bucket link
1	D57544	1	BUCKET ASSEMBLY, 24" (610 mm), machinery item, See Figure 002 for ordering if, used, also See Figures 550 and 552, Includes: Ref. 2 - 6
2	D57550	1	EDGE cutting, bucket, right hand side
3	D57551	1	EDGE cutting, bucket, left hand side
4	D57591	1	EDGE cutting, bucket, center
5	D37495	2	BUSHING bucket, at dipper
6	D30933	4	BUSHING bucket, at bucket link
1	D57543	1	BUCKET ASSEMBLY, 30" (762 mm), machinery item, See Figure 002 for ordering, if used, also See Figures 550 and 552, Includes: Ref. 2 - 6
2	D57550	1	EDGE cutting, bucket, right hand side
3	D57551	1	EDGE cutting, bucket, left hand side
4	D57559	1	EDGE cutting, bucket, center
5	D37495	2	BUSHING bucket, at dipper
6	D30933	4	BUSHING bucket, at bucket link
1	D57545	1	BUCKET ASSEMBLY, 36" (914 mm), machinery item, See Figure 002 for ordering, if used, also See Figures 550 and 552, Includes: Ref. 2 - 6
2	D57550	1	EDGE cutting, bucket, right hand side
3	D57551	1	EDGE cutting, bucket, left hand side
4	D57595	1	EDGE cutting, bucket, center
5	D37495	2	BUSHING bucket, at dipper
6	D30933	4	BUSHING bucket, at link
7	D48212		UAR SHANK tooth, original equipment, Bucket teeth
8	D39093		UAR POINT tooth, original equipment, Bucket teeth
9	D39094		UAR PIN flex, point, original equipment, Bucket teeth
10	D44193		UAR POINT tooth, heavy duty, flat end, service option, Bucket teeth
11	D80119		UAR POINT tooth, heavy duty, pointed end, service option, Bucket teeth
12	D79100		UAR POINT tooth, heavy duty, star point, service option, Bucket teeth

550

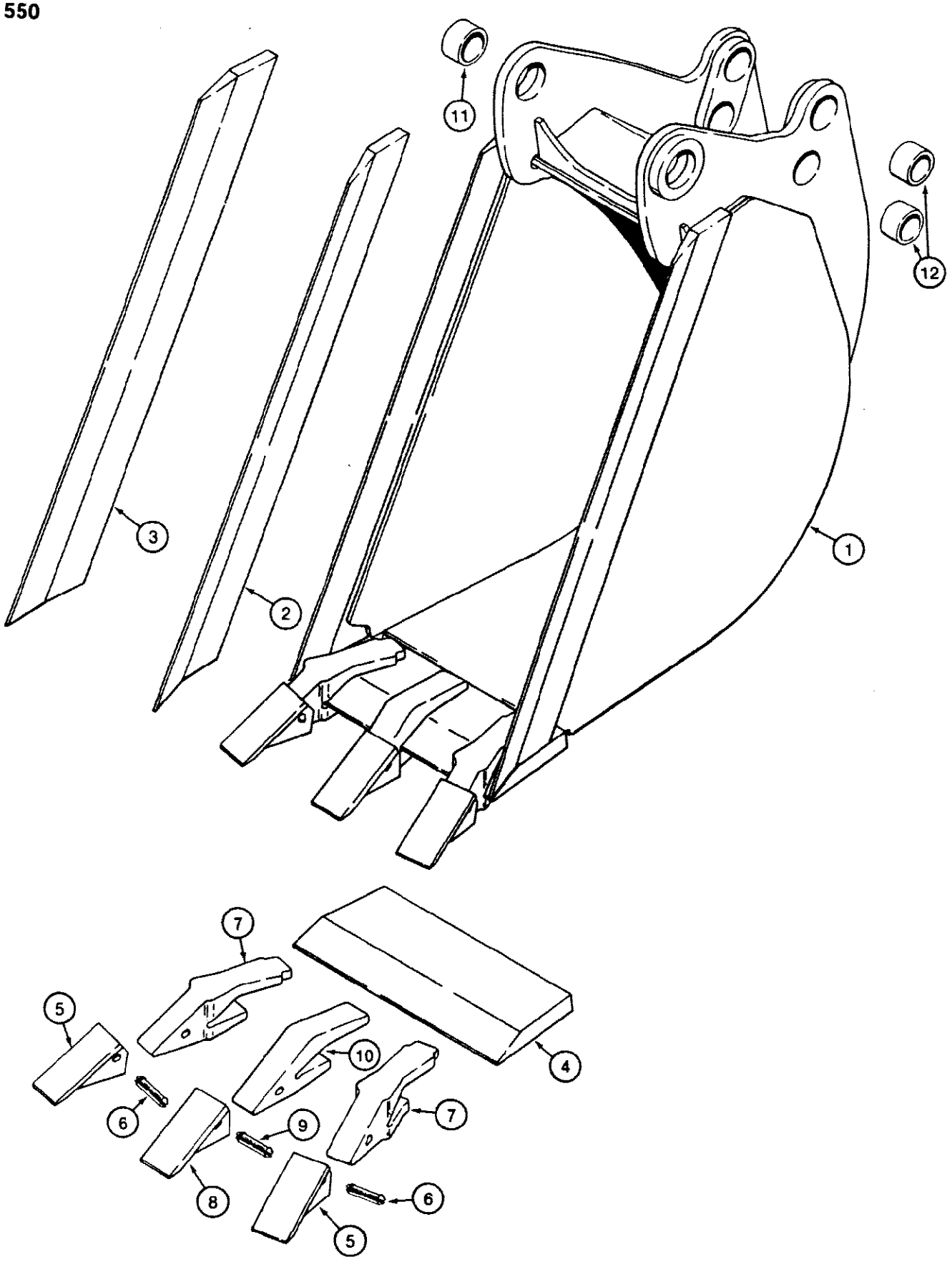

861557

550 BACKHOE BUCKETS, INCLUDES BUCKET TEETH, TRENCHING BUCKETS, HEAVY DUTY

Ref	Part Number	Qty	Description
1	D137891	1	BUCKET ASSEMBLY, 16" (406 mm), with 3 teeth, machinery item, See Figure 002 for ordering, Includes: Ref. 2 - 12
2	D134982	1	EDGE cutting, bucket, right hand side
3	D134983	1	EDGE cutting, bucket, left hand side
4	D135512	1	EDGE cutting, center, 16" (406 mm) bucket
	D136861	2	TOOTH ASSEMBLY, outer corners, Includes: Ref. 5 - 7
5	D39093	1	POINT tooth, outer corners
6	D134686	1	PIN flex, outer point and shank
7	D138157	1	SHANK tooth, outer corners
8	D39093	1	POINT tooth, center
9	D39094	1	PIN flex, center point and shank
10	D48212	1	SHANK tooth, center
11	D37495	2	BUSHING, 1-3/4" ID x 2-1/2" OD x 1-1/4" long
12	D30933	4	BUSHING, 1-1/2" ID x 1-7/8" OD x 1-1/4" long
1	D137750	1	BUCKET ASSEMBLY, 24" (610 mm), with 4 teeth, machinery item, See Figure 002 for ordering, not shown, Includes: Ref. 2 - 12
2	D134982	1	EDGE cutting, bucket, right hand side
3	D134983	1	EDGE cutting, bucket, left hand side
4	D135514	1	EDGE cutting, center, 24" (610 mm) bucket
	D136861	2	TOOTH ASSEMBLY, outer corners, Includes: Ref. 5 - 7
5	D39093	1	POINT tooth, outer corners
6	D134686	1	PIN flex, outer point and shank
7	D138157	1	SHANK tooth, outer corners
8	D39093	2	POINT tooth, center
9	D39094	2	PIN flex, center point and shank
10	D48212	2	SHANK tooth, center
11	D37495	2	BUSHING, 1-3/4" ID x 2-1/2" OD x 1-1/4" long
12	D30933	4	BUSHING, 1-1/2" ID x 1-7/8" OD x 1-1/4" long
1	D137892	1	BUCKET ASSEMBLY, 30" (762 mm), with 5 teeth, machinery item, See Figure 002 for ordering, not shown, Includes: Ref. 2 - 12
2	D134982	1	EDGE cutting, bucket, right hand side
3	D134983	1	EDGE cutting, bucket, left hand side
4	D135515	1	EDGE cutting, center, 30" (762 mm) bucket
	D136861	2	TOOTH ASSEMBLY, outer corners, Includes: Ref. 5 - 7
5	D39093	1	POINT tooth, outer corners
6	D134686	1	PIN flex, outer point and shank
7	D138157	1	SHANK tooth, outer corners
8	D39093	3	POINT tooth, center
9	D39094	3	PIN flex, center point and shank
10	D48212	3	SHANK tooth, center
11	D37495	2	BUSHING, 1-3/4" ID x 2-1/2" OD x 1-1/4" long

580SE CASE SUPER-E CONSTRUCTION KING LOADER BACKHOE - Chassis/Attachments

550 BACKHOE BUCKETS, INCLUDES BUCKET TEETH, TRENCHING BUCKETS, HEAVY DUTY

Ref	Part Number	Qty	Description
12	D30933	4	BUSHING, 1-1/2" ID x 1-7/8" OD x 1-1/4" long
1	D137893	1	BUCKET ASSEMBLY, 36" (914 mm), with 6 teeth, machinery item, See Figure 002 for ordering, not shown, Includes: Ref. 2 - 12
2	D134982	1	EDGE cutting, bucket, right hand side
3	D134983	1	EDGE cutting, bucket, left hand side
4	D135516	1	EDGE cutting, center, 36" (914 mm) bucket
	D136861	2	TOOTH ASSEMBLY, outer corners, Includes: Ref. 5 - 7
5	D39093	1	POINT tooth, outer corners
6	D134686	1	PIN flex, outer point and shank
7	D138157	1	SHANK tooth, outer corners
8	D39093	4	POINT tooth, center
9	D39094	4	PIN flex, center point and shank
10	D48212	4	SHANK tooth, center
11	D37495	2	BUSHING, 1-3/4" ID x 2-1/2" OD x 1-1/4" long
12	D30933	4	BUSHING, 1-1/2" ID x 1-7/8" OD x 1-1/4" long

554

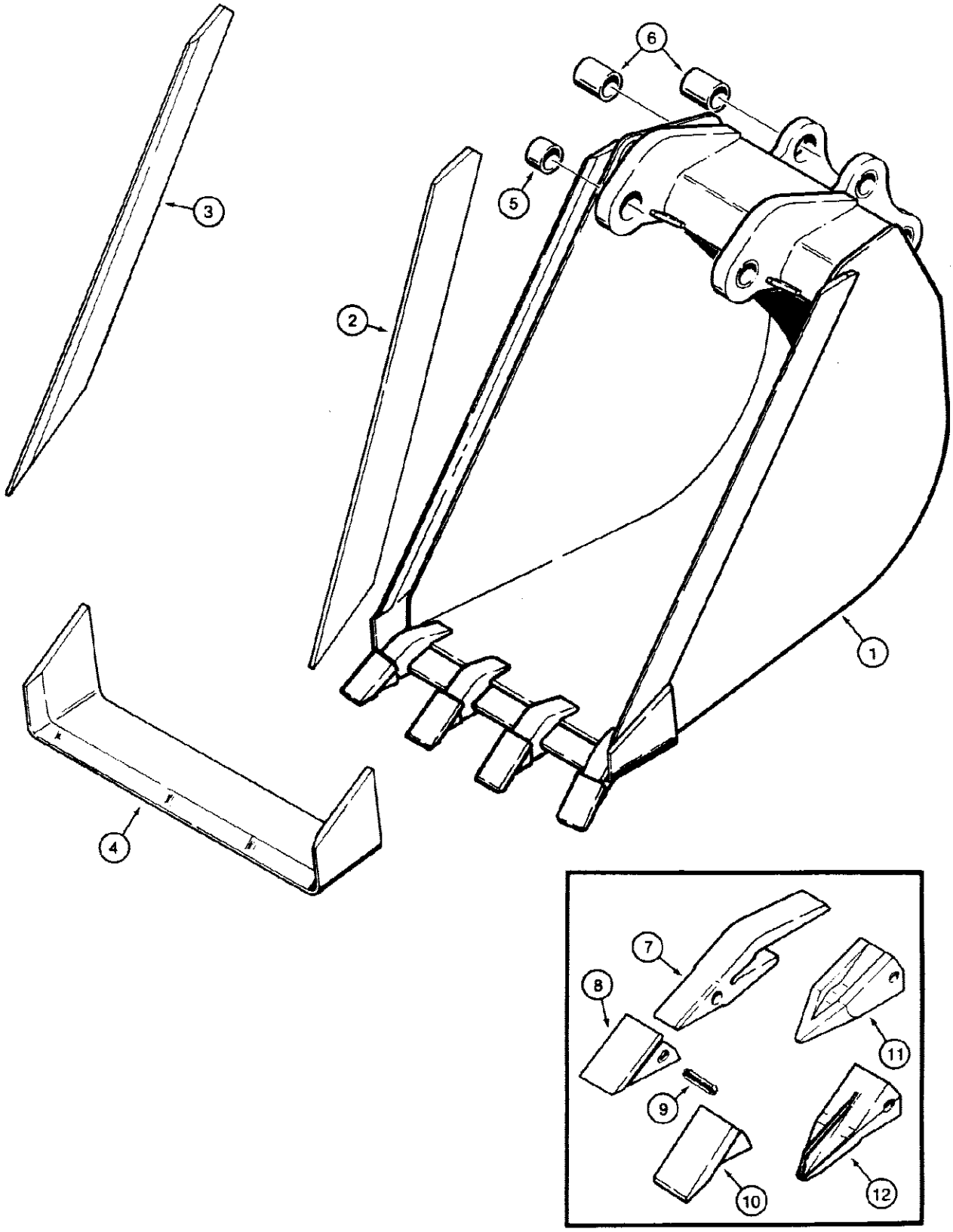

830810

554 BACKHOE BUCKETS, 24 INCH (610 MM) HIGH CAPACITY TRENCHING

Ref	Part Number	Qty	Description
1	L107618	1	BUCKET ASSEMBLY, 24" (610 mm), machinery item, See Figure 002 for ordering, 24" (610 mm) High capacity trenching buckets, Includes: Ref. 2 - 6
2	L70084	1	EDGE cutting, bucket, right hand side, 24" (610 mm) High capacity trenching buckets
3	L70083	1	EDGE cutting, bucket, left hand side, 24" (610 mm) High capacity trenching buckets
4	D41673	1	EDGE cutting, bucket, center, 24" (610 mm) High capacity trenching buckets
5	D37495	2	BUSHING bucket, at dipper, 24" (610 mm) High capacity trenching buckets
6	D30933	4	BUSHING bucket, at link, 24" (610 mm) High capacity trenching buckets
	L43266	UAR	TOOTH ASSEMBLY, high capacity bucket, Bucket teeth included with bucket, Includes: Ref. 7 - 10
7	NSS	1	SHANK tooth, Bucket teeth included with bucket
8	D39093	1	POINT tooth, Bucket teeth included with bucket
9	D39094	1	PIN flex, point, Bucket teeth included with bucket
10	D44193	UAR	POINT tooth, heavy duty, flat end, service option, Bucket teeth included with bucket
11	D80119	UAR	POINT tooth, heavy duty, pointed end, service option, Bucket teeth included with bucket
12	D79100	UAR	POINT tooth, heavy duty, star point, service option, Bucket teeth included with bucket

556

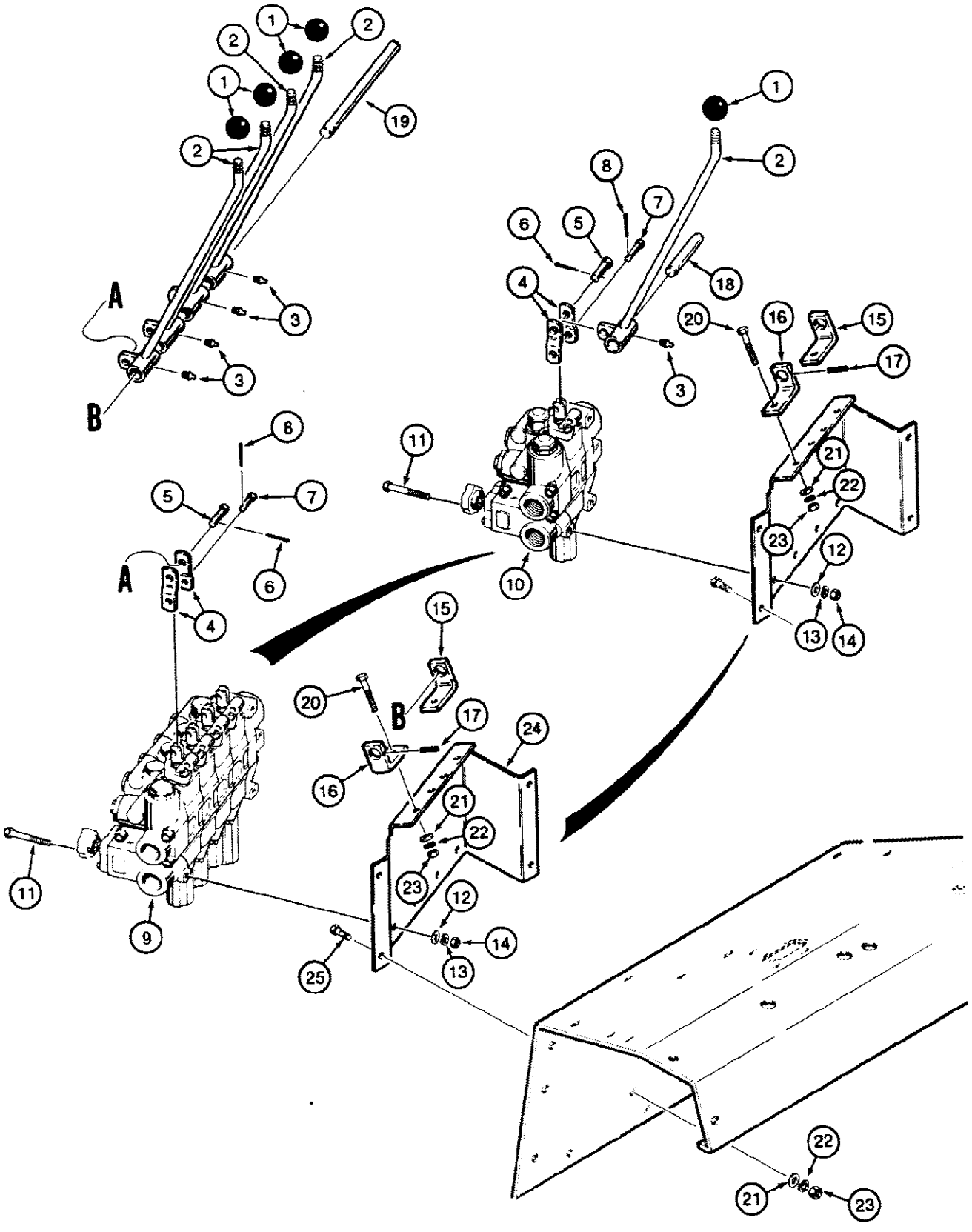

556 THREE-POINT HITCH CONTROLS

Ref	Part Number	Qty	Description
1	D59912	1-4	KNOB control lever
2	D93792	1-4	LEVER control, three point hitch
3	86636814	1-4	FITTING - grease, straight, 1/4"-28 NF
4	D91135	2-8	LINK control lever to spool
5	141-53	1-4	PIN clevis, plated, special length, 5/16", link to control lever
6	132-25	1-4	Pin, Split (Cotter), 3/32" x 5/8"
7	141-52	1-4	PIN clevis, 1/4", plated, special length, link to control valve
8	132-5	1-4	Pin, Split (Cotter), 1/16" x 1/2"
9	REF	1	VALVE control, three point hitch, four spool, See Figure 446
10	REF	1	VALVE control, three point hitch, one spool, See Figure 446
11	113-119	3	BOLT, Hex, 5/16"-18 x 2 3/4", G5
12	195-521	3	WASHER flat, plated, 5/16"
13	192-20	3	WASHER, LOCK, 5/16"
14	9635082	3	NUT, 5/16"-18, G5
15	D93789	1	BRACKET control valve mounting, without hole for roll pin
16	D93788	1	BRACKET control valve mounting, with hole for roll pin
17	138-98	1	PIN, 3/16" x 1 1/4", Slotted
18	D94179	1	SHAFT control lever, used with one spool control valve
19	D52945	1	SHAFT control lever, used with four spool control valve
20	113-104	2	BOLT, Hex, 5/16"-18 x 1 1/4", G5
21	195-521	6	WASHER flat, plated, 5/16"
22	192-20	6	WASHER, LOCK, 5/16"
23	9635082	6	NUT, 5/16"-18, G5
24	D124405	1	PLATE control valve mounting
25	113-103	4	BOLT, Hex, 5/16"-18 x 1", G5, Full Thd

558 THREE-POINT HITCH FRAME AND MOUNTING PARTS

558

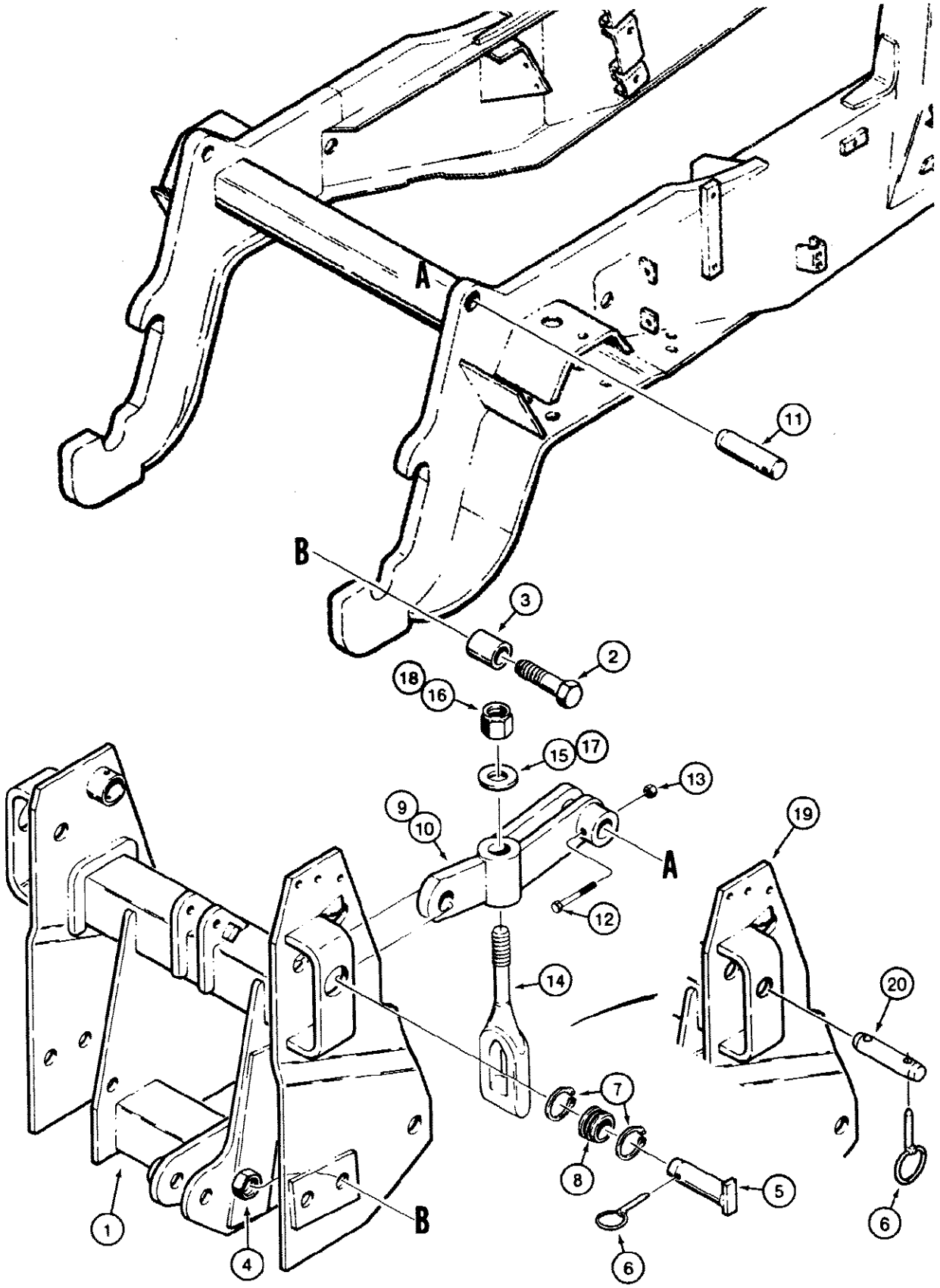

530612A

558 THREE-POINT HITCH FRAME AND MOUNTING PARTS

Ref	Part Number	Qty	Description
1	D90985	1	FRAME mounting, outer mounting bracket hole at frame to link is 2-1/4" diameter, no longer used, order P/N D133255 mounting frame
2	13-2072	2	BOLT hex head, 1-1/4" - 7 NC x 4-1/2"
3	D90983	2	SPACER mounting
4	25-1020	2	NUT, 1 1/4"-7, G5
5	D54957	2	PIN frame to link, used with P/N D90985 frame
6	D33805	2-4	PIN self locking
7	F40807	4	Ring, Snap, #225, Ext, spacer, if used
8	D51895	2	SPACER link, if used
9	D90984	1	LINK three point hitch frame to chassis, left hand, not shown
10	D91107	1	LINK three point hitch frame to chassis, right hand
11	D90825	2	PIN link to chassis
12	113-447	2	BOLT, Hex, 1/2"-13 x 3 1/2", G5
13	131-1116	2	NUT, LOCK, 1/2"-13, GB
14	D123960	2	ROD tension
15	D64968	2	WASHER hardened, 1-1/4", used with Ref. 16, if used
16	131-454	2	NUT hex, self locking, 1-1/4" - 7 NC, 1-11/16" thick, if used
17	D36434	2	WASHER hardened, 1-1/4", used with Ref. 18, if used
18	131-479	2	NUT hex, self locking, plated, 1-1/4" - 7 NC, 1-1/8" thick, if used, Replaces: P/N 131 - 438
19	D133255	1	FRAME mounting, outer mounting bracket hole at frame to link is 1-1/2" diameter
20	D133267	2	PIN hitch mounting, frame to link, used with P/N D133255 frame

560 THREE-POINT HITCH DRAFT ARMS, LINKAGE, AND CYLINDER, USED WITH MECHANICAL HITCH

560

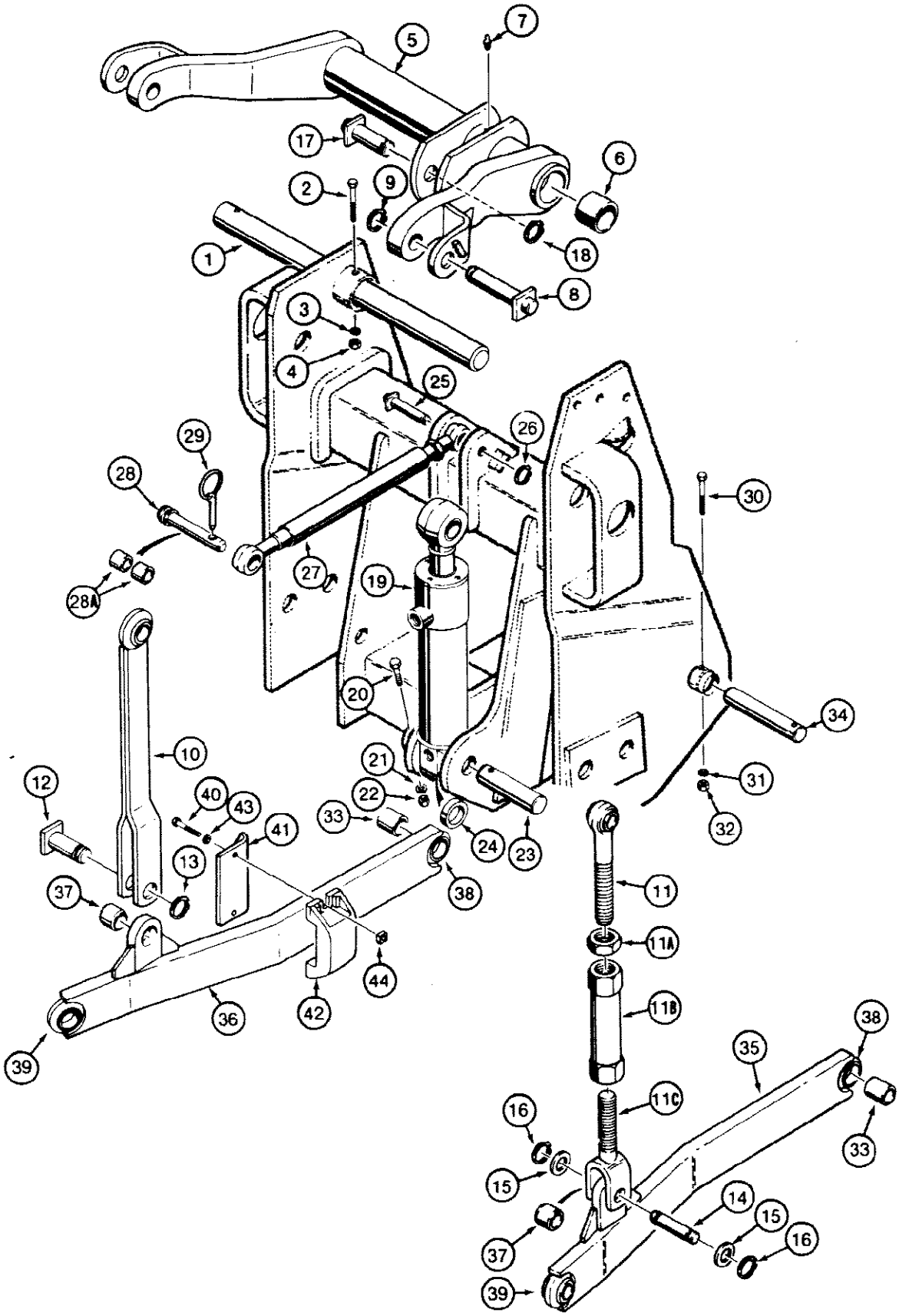

860346

580SE CASE SUPER-E CONSTRUCTION KING LOADER BACKHOE - Chassis/Attachments

560 THREE-POINT HITCH DRAFT ARMS, LINKAGE, AND CYLINDER, USED WITH MECHANICAL HITCH

Ref	Part Number	Qty	Description
1	D51569	1	ROCKSHAFT three point hitch
2	113-241	1	BOLT, Hex, 3/8"-16 x 3", G5
3	192-21	1	WASHER, LOCK, 3/8"
4	129-103	1	NUT, 3/8"-16, G5
5	D72875	1	TUBE rockshaft, Includes: Ref. 7
6	D50146	2	BUSHING tube
7	219-1	1	FITTING grease, straight, 1/8" NPT
8	D51299	2	PIN mounting, strut and leveling link, upper
9	D25277	2	RING snap, pin retaining
10	D51276	1	STRUT stationary
11	D91488	1	EYE leveling link
11A	129-152	1	NUT hex, jam, plated, 1-1/4" - 7 NC
11B	D91489	1	TURNBUCKLE leveling link
11C	D91491	1	CLEVIS leveling link
12	D51297	1	PIN mounting, strut, lower
13	D25277	1	RING snap, retaining, lower strut mounting pin
14	D95481	1	PIN leveling link, lower
15	195-553	2	WASHER flat, plated, 1", leveling link alignment
16	D25277	2	RING snap, retaining, lower pin, leveling link
17	D51302	1	PIN lift cylinder mounting, upper
18	D26918	1	Ring, Snap, #125, Ext, upper lift cylinder mounting pin
19	G101189	1	CYLINDER lift, See Figure 482
20	113-257	1	BOLT, Hex, 3/8"-16 x 2 1/2", G5
21	192-21	1	WASHER, LOCK, 3/8"
22	129-103	1	NUT, 3/8"-16, G5
23	D51695	1	PIN mounting, lift cylinder, lower
24	D51692	1	SPACER lift cylinder mounting pin, lower
25	D51294	1	PIN mounting, upper link at mounting frame
26	T25683	1	Ring, Snap, #75, Ext, upper link mounting pin
27	A36228	1	LINK upper
28	G16735	1	PIN mounting, upper link to equipment
28A	T39236	2	SPACER to adapt P/N G16735 pin for use with category II hitch, if used
29	A30338	1	PIN self locking
30	113-257	2	BOLT, Hex, 3/8"-16 x 2 1/2", G5
31	192-21	2	WASHER, LOCK, 3/8"
32	129-103	2	NUT, 3/8"-16, G5
33	D51588	2	BUSHING pivot, draft arm mounting pin
34	D50724	2	PIN mounting, draft arm to mounting frame
35	D51339	1	ARM draft, right hand, 7/8" (22 mm) pin hole, Includes: Ref. 37 - 39
36	D51340	1	ARM draft, left hand, 7/8" (22 mm) pin hole, Includes: Ref. 37 - 39
37	D51608	1	BUSHING arm, 1" (25 mm) ID

560 THREE-POINT HITCH DRAFT ARMS, LINKAGE, AND CYLINDER, USED WITH MECHANICAL HITCH

Ref	Part Number	Qty	Description
38	D51336	1	BUSHING self aligning, 1" (25 mm) ID
39	D51557	1	BUSHING self aligning, 7/8" (22 mm) ID
40	113-219	4	BOLT, Hex, 3/8"-16 x 2", G5
41	D91303	2	PLATE retainer, draft arm
42	D51722	2	RETAINER draft arm
43	192-21	4	WASHER, LOCK, 3/8"
44	25-226	4	NUT square, 3/8" - 16 NC

564

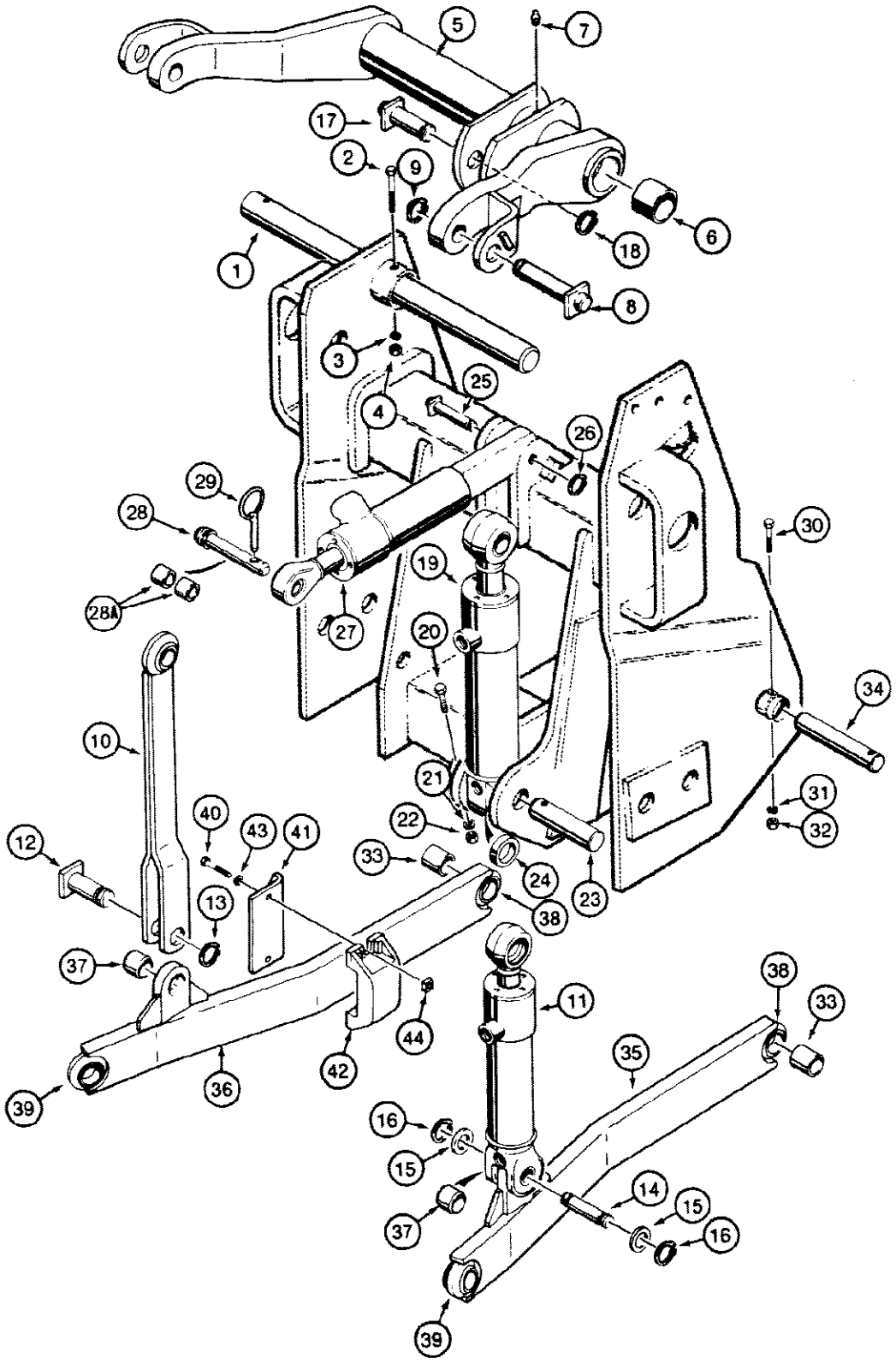
5
7
17
2
9
18
6
1
8
3
25
4
26
29
28
30
19
28A
27
20
34
10
21
31
40
43
41
22
32
12
33
24
13
38
23
37
38
11
33
44
42
35
36
39
16
15
14
15
37
16
39

880347

564 THREE-POINT HITCH DRAFT ARMS, LINKAGE, AND CYLINDERS, USED HYDRAULIC HITCH

Ref	Part Number	Qty	Description
1	D51569	1	ROCKSHAFT three point hitch
2	113-241	1	BOLT, Hex, 3/8"-16 x 3", G5
3	192-21	1	WASHER, LOCK, 3/8"
4	129-103	1	NUT, 3/8"-16, G5
5	D72875	1	TUBE rockshaft, Includes: Ref. 6
6	D50146	2	BUSHING tube
7	219-1	1	FITTING grease, straight, 1/8" NPT
8	D51299	2	PIN mounting, tilt cylinder and strut, upper
9	D25277	2	RING snap, retaining
10	D51276	1	STRUT stationary
11	G101188	1	CYLINDER tilt, See Figure 484
12	D51297	1	PIN mounting, strut, lower
13	D25277	1	RING snap, retaining, lower strut mounting pin
14	D30609	1	PIN mounting, tilt cylinder, lower
15	195-553	UAR	WASHER flat, plated, 1", cylinder alignment
16	D25277	2	RING snap, retaining, lower tilt cylinder mounting pin
17	D51302	1	PIN mounting, lift cylinder, upper
18	D26918	1	Ring, Snap, #125, Ext, upper lift cylinder mounting pin
19	G101189	1	CYLINDER lift, See Figure 482
20	113-257	1	BOLT, Hex, 3/8"-16 x 2 1/2", G5
21	192-21	1	WASHER, LOCK, 3/8"
22	129-103	1	NUT, 3/8"-16, G5
23	D51695	1	PIN mounting, lift cylinder, lower
24	D51692	1	SPACER lift cylinder mounting pin, lower
25	D51294	1	PIN mounting, pitch cylinder at mounting frame
26	T25683	1	Ring, Snap, #75, Ext, pitch cylinder mounting pin
27	G33128	1	CYLINDER pitch, See Figure 486
28	G16735	1	PIN mounting, pitch cylinder to equipment
28A	T39236	2	SPACER to adapt P/N G16735 pin for use with category II hitch, if used
29	A30338	1	PIN retaining, self locking
30	113-257	2	BOLT, Hex, 3/8"-16 x 2 1/2", G5
31	192-21	2	WASHER, LOCK, 3/8"
32	129-103	2	NUT, 3/8"-16, G5
33	D51588	2	BUSHING pivot, draft arm mounting pin
34	D50724	2	PIN mounting, draft arm to mounting frame
35	D51339	1	ARM draft, right hand, 7/8" (22 mm) pin hole, Includes: Ref. 37 - 39
36	D51340	1	ARM draft, left hand, 7/8" (22 mm) pin hole, Includes: Ref. 37 - 39
37	D51608	1	BUSHING arm, 1" (25 mm) ID
38	D51336	1	BUSHING self aligning, 1" (25 mm) ID
39	D51557	1	BUSHING self aligning, 7/8" (22 mm) ID
40	113-219	4	BOLT, Hex, 3/8"-16 x 2", G5

564 THREE-POINT HITCH DRAFT ARMS, LINKAGE, AND CYLINDERS, USED HYDRAULIC HITCH

Ref	Part Number	Qty	Description
41	D91303	2	PLATE retainer, draft arm
42	D51722	2	RETAINER draft arm
43	192-21	4	WASHER, LOCK, 3/8"
44	25-226	4	NUT square, 3/8" - 16 NC

568 RIGID DRAWBAR, USED WITH THREE-POINT HITCH

568

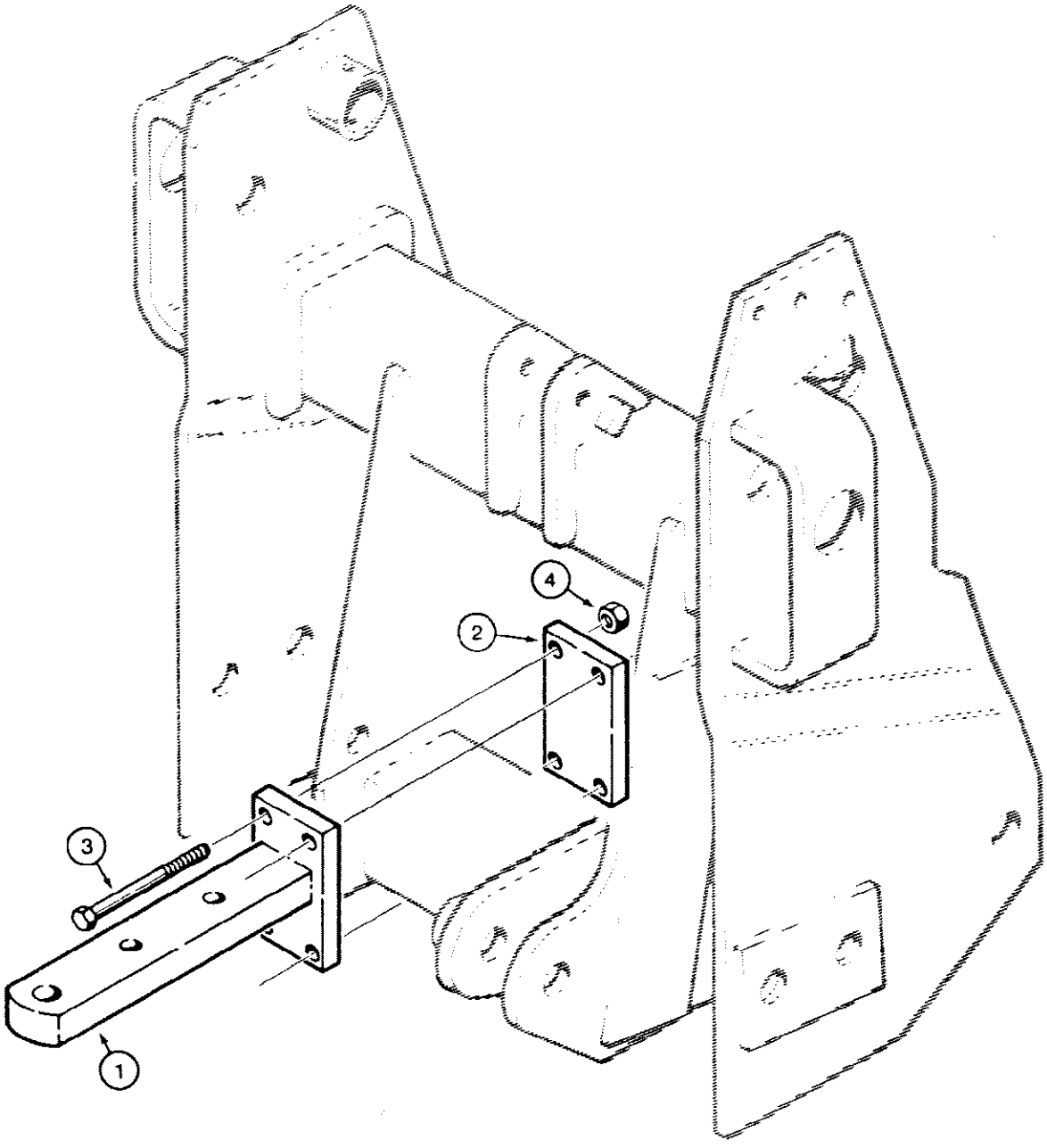

861560

580SE CASE SUPER-E CONSTRUCTION KING LOADER BACKHOE - Chassis/Attachments

568 RIGID DRAWBAR, USED WITH THREE-POINT HITCH

Ref	Part Number	Qty	Description
1	D73232	1	DRAWBAR rigid, tractor
2	D73231	1	PLATE mounting
3	113-650	4	BOLT, Hex, 5/8"-11 x 6 1/2", G5
4	129-107	4	NUT, 5/8"-11, G5

570 FRONT COUNTERWEIGHT

570

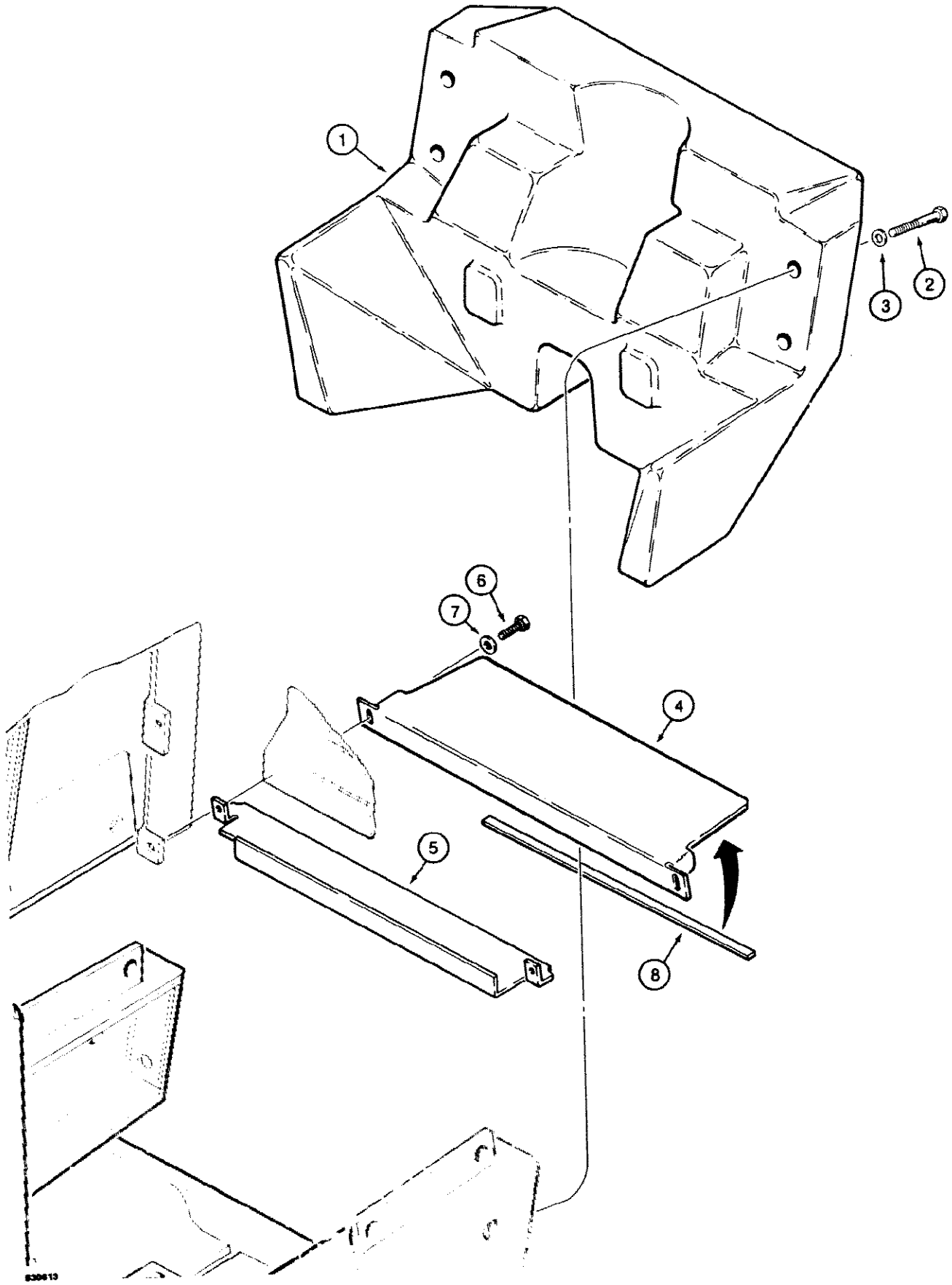

570 FRONT COUNTERWEIGHT

Ref	Part Number	Qty	Description
1	D93145	1	COUNTERWEIGHT front, 800 lbs (362.4 kg), two wheel drive models
1	D120757	1	COUNTERWEIGHT front, 700 lbs (317.5 kg), four wheel drive models
2	113-718	4	BOLT, Hex, 3/4"-10 x 4 1/2", G5
3	D34666	4	WASHER hardened
4	D93492	1	COVER counterweight, in front of grille
5	D125460	1	COVER counterweight, behind grille
6	113-208	2	BOLT, Hex, 3/8"-16 x 1 1/4", G5, Full Thd
7	195-525	2	WASHER flat, plated, 3/8"
8	D91137	1	STRIP vibration cushion, 500 mm long

572

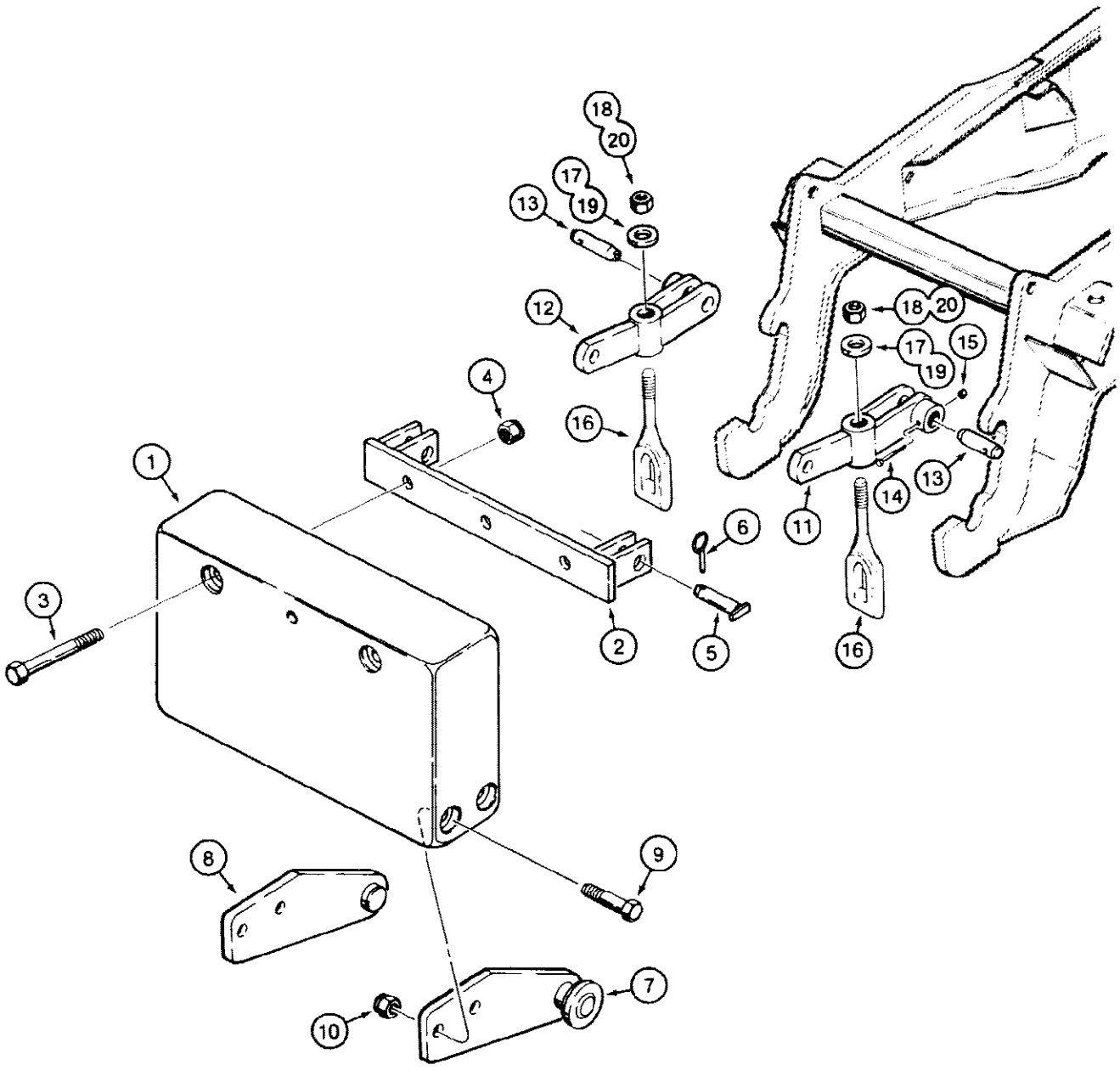

572 REAR COUNTERWEIGHT

Ref	Part Number	Qty	Description
1	D31204	1	COUNTERWEIGHT rear, 1425 lbs (646 kg)
2	D50818	1	BRACKET counterweight mounting
3	15-16168	2	BOLT hex head, 1" - 8 NC x 10-1/2"
4	131-698	2	NUT hex, self locking, plated, 1" - 8 NC
5	D54957	2	PIN bracket mounting
6	D33805	2	PIN retaining, self locking
7	D91161	1	SUPPORT lower, right hand
8	D91162	1	SUPPORT lower, left hand
9	113-929	4	BOLT hex head, plated, 1" - 8 NC x 6-1/2"
10	131-698	4	NUT hex, self locking, plated, 1" - 8 NC
11	D91107	1	LINK upper, right hand
12	D90984	1	LINK upper, left hand
13	D90825	2	PIN link to chassis
14	113-447	2	BOLT, Hex, 1/2"-13 x 3 1/2", G5
15	131-1116	2	NUT, LOCK, 1/2"-13, GB
16	D123960	2	ROD tension
17	D64968	2	WASHER hardened, 1-1/4", used with Ref. 18, if used
18	131-454	2	NUT hex, self locking, 1-1/4" - 7 NC, 1-11/16" thick, 1.1" long, if used
19	D36434	2	WASHER hardened, 1-1/4", used with Ref. 20, if used
20	131-479	2	NUT hex, self locking, plated, 1-1/4" - 7 NC, 1-1/8" thick, Replaces: P/N 131-438

574 CHASSIS AND LOADER CONTROL VALVE COVER

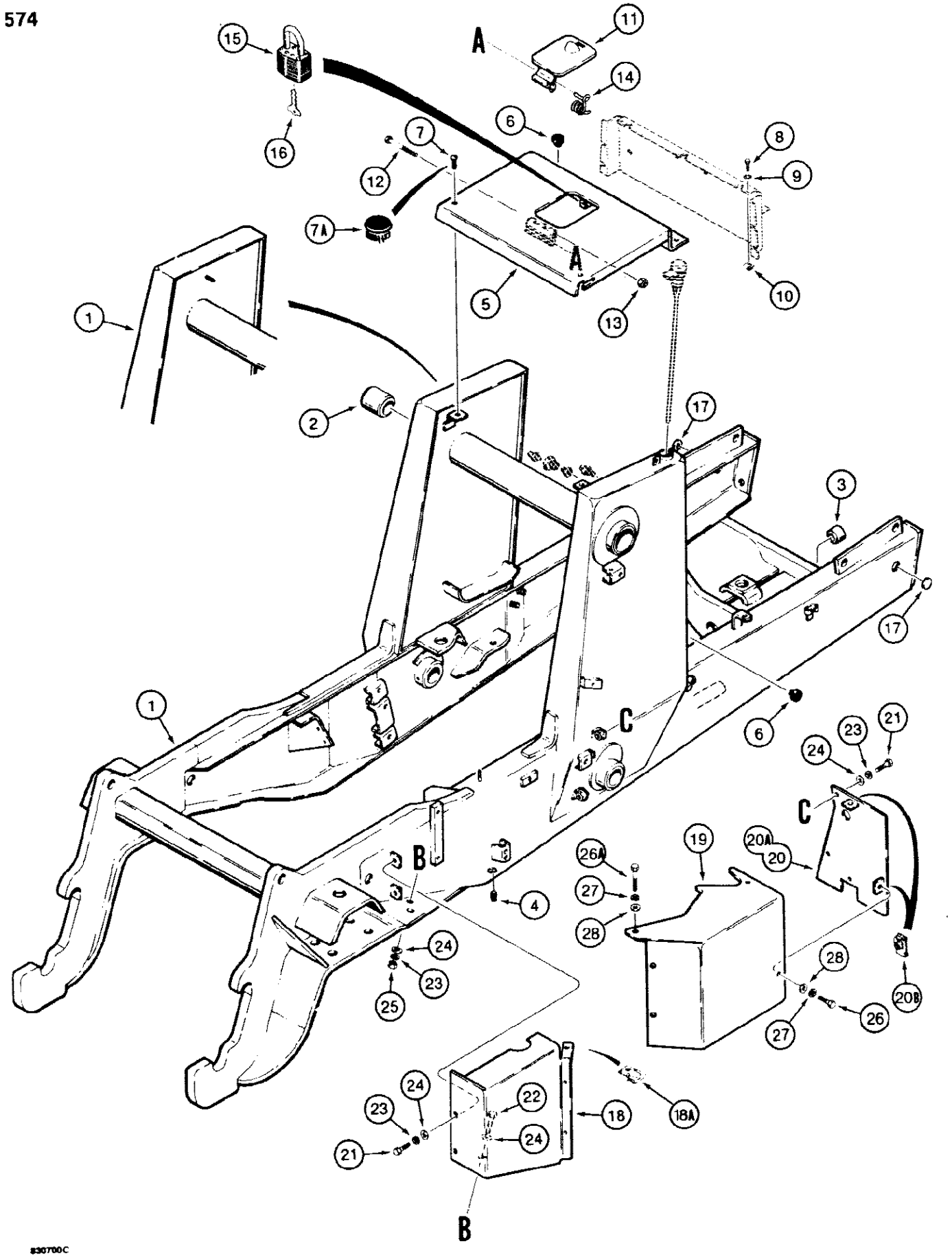

Welded on receiver pictured on frame between #3 and #16 is P/N D123073- Bolted on style is P/N L47158.

580SE CASE SUPER-E CONSTRUCTION KING LOADER BACKHOE - Chassis/Attachments

574 CHASSIS AND LOADER CONTROL VALVE COVER

Ref	Part Number	Qty	Description
1	D120738	1	CHASSIS tractor, with decals, two wheel drive models, Parker loader control valve is used with this chassis, Includes: Ref. 2 - 4
1	D126815	1	CHASSIS tractor, with decals, may have bracket or stud for mounting chassis cover, Ref. 5 to upright, two wheel drive models, not shown, Case loader control valve is used with this chassis, Includes: Ref. 2 - 4, If a Parker loader control valve is used with D126815 or D126816 chassis, you must also use, 3 D123696 spacer and D123559 plate for valve mounting, see Figure 488, Ref. 30 and 33A for spacer and plate.
1	D123781	1	CHASSIS tractor, with decals, four wheel drive models, also includes Ref. 8, 12, and 13, See Figure 210, not shown, Parker loader control valve is used with this chassis, Includes: Ref. 2 - 4
1	D126816	1	CHASSIS tractor, with decals, may have bracket or stud for mounting chassis cover, Ref. 5 to upright, four wheel drive models, also includes Ref. 8, 12, and 13, See Figure 210, not shown, Case loader control valve is used with this chassis, Includes:, If a Parker loader control valve is used with D126815 or D126816 chassis, you must also use, 3 D123696 spacer and D123559 plate for valve mounting, see Figure 488, Ref. 30 and 33A for spacer and plate.
2	D37443	2	BUSHING loader frame pivot, two or four wheel drive models
3	D43940	2	BUSHING front axle mounting, two wheel drive models only
4	D123893	1	PLUG drain, hydraulic reservoir, hex head, 3/4" NPT
5	D125196	1	COVER chassis, may have bolt holes only, side slots only, or bolt holes and side slots for mounting to chassis upright, if cover has slots and holes also order, 2, P/N 353-406 plugs, Ref. 7A
6	L60224	5	INSULATOR rubber, cover, Bracket showing in illustration on right front side rail, above Ref #6, is hood panel hook bracket L47158.
7	D122618	2	BOLT hex socket head, 1/2"-13 NC x 1", special, chassis cover, two wheel drive models , BSN 17028366
	D122618	2	BOLT hex socket head, 1/2"-13 NC x 1", special, chassis cover, four wheel drive models , BSN 17028049
7A	353-406	2	PLUG nylon, 5/8", used with P/N D125196 chassis cover, Ref. 5 in place of Ref. 7 bolt on two wheel drive models, ASN 17028366
7A	353-406	2	PLUG nylon, 5/8", used with P/N D125196 chassis cover, Ref. 5 in place of Ref. 7 bolt on four wheel drive models, ASN 17028049
8	113-102	2	BOLT, Hex, 5/16"-18 x 3/4", G5, Full Thd
9	193-71	2	WASHER, LOCK, Ext-Int Tooth, 5/16"
10	131-641	2	NUT u type, 5/16"-18 NC, Replaces j type nut on some models
11	D92446	1	DOOR access, fuel tank, remove decal that applies to radiator access only
12	113-53	1	BOLT, Hex, 1/4"-20 x 3 1/4", G5
13	131-2	1	NUT hex, self locking, 1/4"-20 NC
14	D121677	1	SPRING fuel access door
15	D93753	1	PADLOCK fuel access door, if used, Includes: Ref. 16's
16	R29555	2	KEY for Master padlock only
16	D93751	2	KEY for Yale padlock only
17	41-1020	2	PLUG cup, 1-1/4", expansion

Welded on receiver pictured on frame between #3 and #16 is P/N D123073- Bolted on style is P/N L47158.

574 CHASSIS AND LOADER CONTROL VALVE COVER

Ref	Part Number	Qty	Description
18	D131688	1	COVER rear, loader control valve, used with 3, P/N 131-856 nuts, Ref. 18A, Replaces cover with weld nuts used in production on some models
18A	131-856	3	NUT, Ret, J, 3/8"-16
19	D126433	1	COVER center, loader control valve
20	D93032	1	COVER front, loader control valve, with welded tabs and weld nuts, no longer available, for service order P/N D133197 cover, 2, P/N D122908 j type nuts, 1, P/N 195-525 flat washer, and 1, P/N 129-103 hex nut, See Figure 334 for washer and hex nut
20A	D133197	1	COVER front, loader control valve, formed tabs, used with P/N D122908 j type nuts, Replaces P/N D93032 cover with welded tabs and weld nuts used in production on some models
20B	D122908	2	NUT j type, 3/8", service with P/N 131-856 j type
21	113-207	4	BOLT, Hex, 3/8"-16 x 1", G5, Full Thd
22	113-208	1	BOLT, Hex, 3/8"-16 x 1 1/4", G5, Full Thd
23	192-21	5	WASHER, LOCK, 3/8"
24	195-525	6	WASHER flat, plated, 3/8"
25	129-103	1	NUT, 3/8"-16, G5
26	113-207	2	BOLT, Hex, 3/8"-16 x 1", G5, Full Thd
27	192-21	5	WASHER, LOCK, 3/8"
28	195-525	5	WASHER flat, plated, 3/8"

Welded on receiver pictured on frame between #3 and #16 is P/N D123073- Bolted on style is P/N L47158.

578 HOOD AND RADIATOR SHROUD

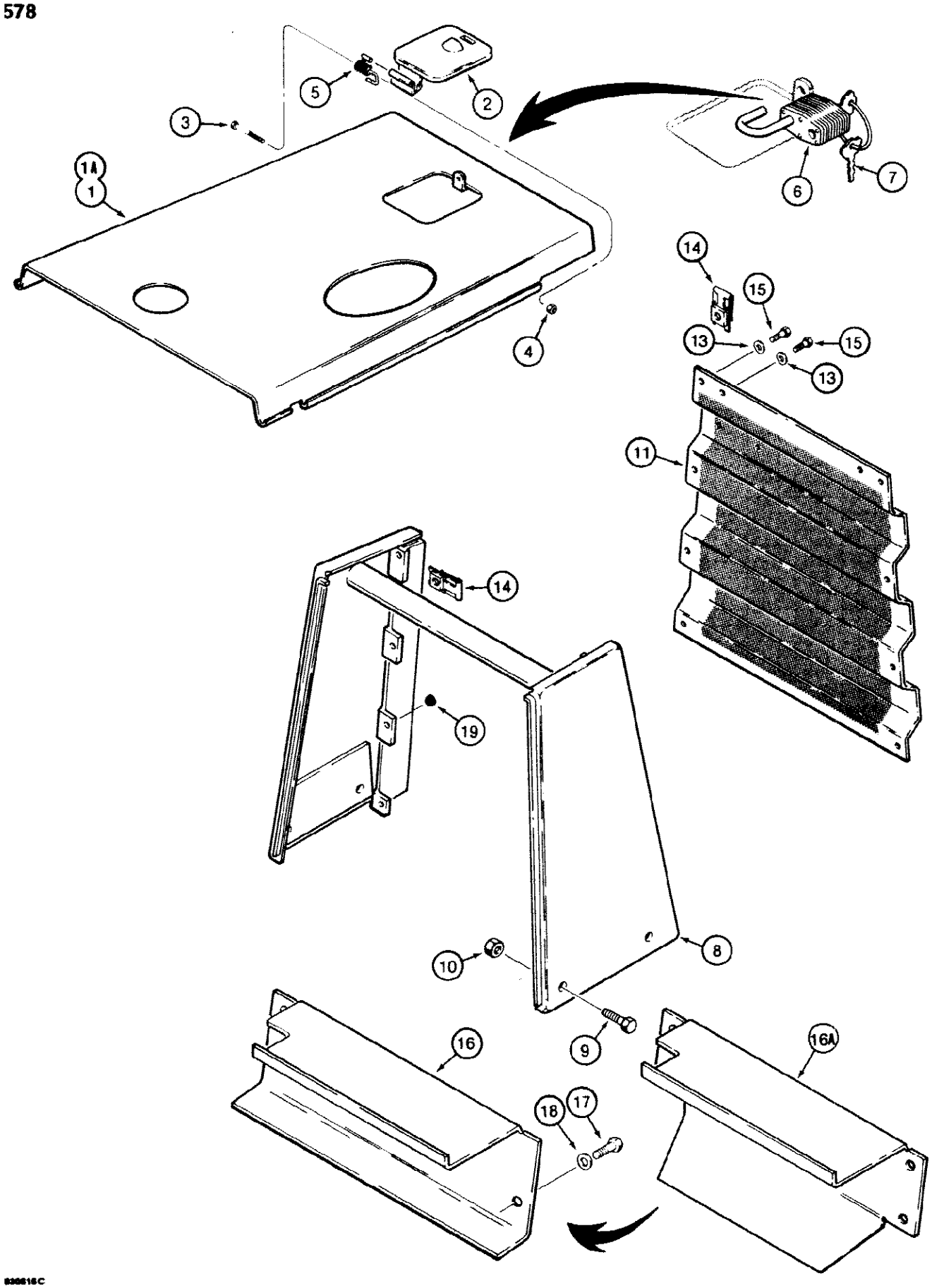

578 HOOD AND RADIATOR SHROUD

Ref	Part Number	Qty	Description
1	D127150	1	HOOD engine, used on models without turbocharged engine
1A	D132925	1	HOOD engine, used on models with turbocharged engine
2	D92446	1	DOOR access, radiator cap, includes decal, See Figure 670
3	113-53	1	BOLT, Hex, 1/4"-20 x 3 1/4", G5
4	131-2	1	NUT hex, self locking, 1/4" - 20 NC
5	D121677	1	SPRING radiator access door
6	D93753	1	PADLOCK radiator access door, if used, Includes: Ref. 7's
7	R29555	2	KEY for Master padlock only
7	D93751	2	KEY for Yale padlock only
8	D129372	1	SHROUD radiator
9	113-708	4	BOLT, Hex, 3/4"-10 x 2", G5
10	129-108	4	NUT, 3/4"-10, G5
11	D91062	1	GRILLE radiator
12			RESERVED
13	195-525	6-10	WASHER flat, plated, 3/8"
14	131-856	6-10	NUT, Ret, J, 3/8"-16
15	113-207	6-10	BOLT, Hex, 3/8"-16 x 1", G5, Full Thd
16	D123839	1	GUARD pump, models with two wheel drive
16A	D123840	1	GUARD pump, models with four wheel drive
17	113-704	2-4	BOLT, Hex, 3/4"-10 x 1 1/4", G5
18	195-545	2-4	WASHER flat, plated, 3/4"
19	L60224	4	BUMPER rubber, Replaces four bolts and attaching hardware on some models

580 ENGINE SIDE PANELS

580

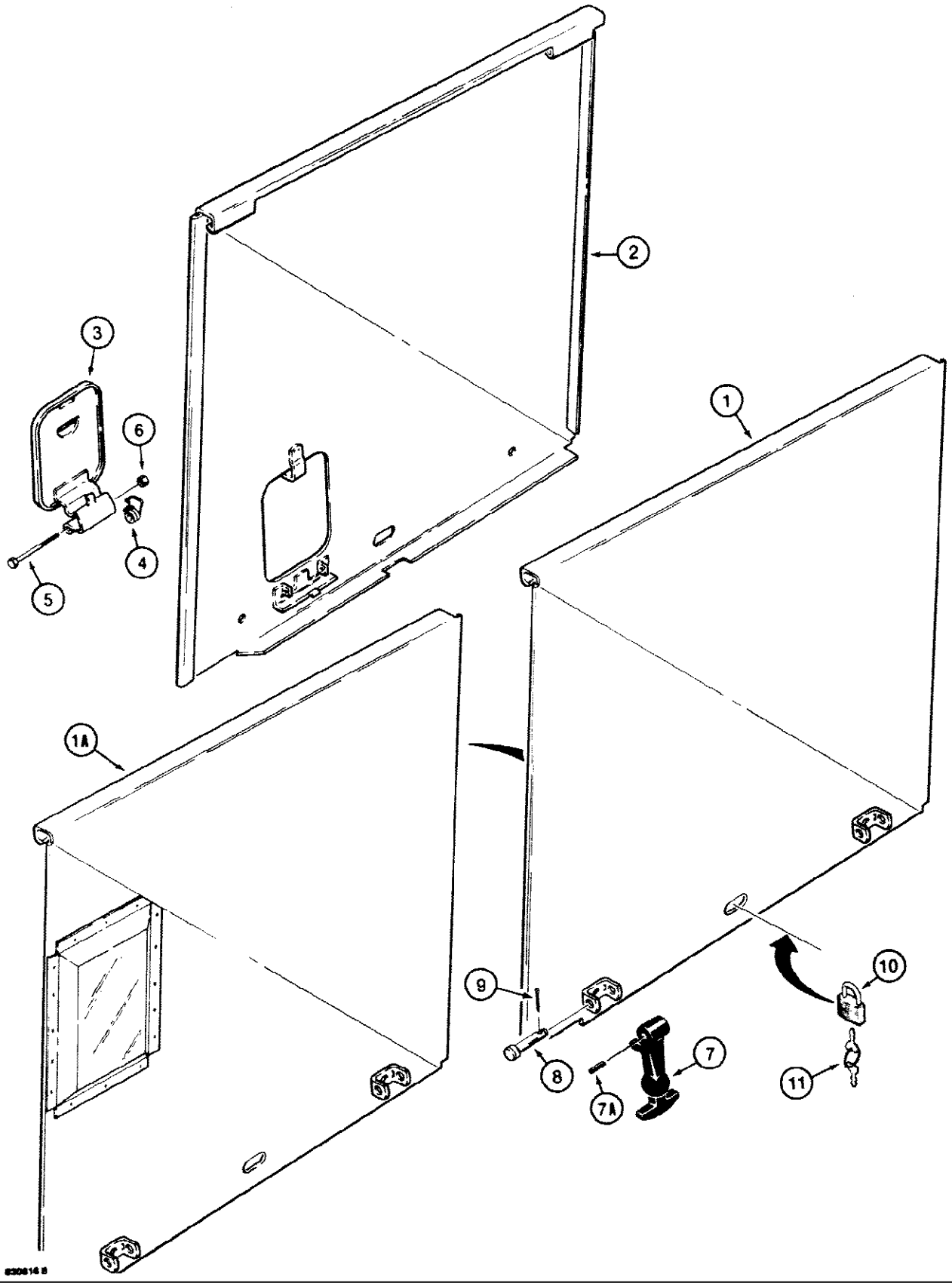

580 ENGINE SIDE PANELS

Ref	Part Number	Qty	Description
1	D122138	1	PANEL side, engine, right hand, used on models without turbocharged engine
1A	D133264	1	PANEL side, engine, right hand, used on models with turbocharged engine
2	D125779	1	PANEL side, engine, left hand
3	D92446	1	DOOR access, engine oil level, remove decal that applies to radiator access only
4	D121677	1	SPRING oil level access door
5	113-53	1	BOLT, Hex, 1/4"-20 x 3 1/4", G5
6	131-2	1	NUT hex, self locking, 1/4" - 20 NC
7	D121323	4	HOOK side panel, THE SMALL PC WELDED TO THE CHASSIS THAT THE D121323 HOOK ATTACHES TO IS D123073.
7A	138-55	4	PIN, 1/8" x 5/8", Slotted, Hook bushing
8	H54890	4	PIN hook mounting
9	132-3	4	Pin, Split (Cotter), 1/16" x 3/8"
10	D93753	2	PADLOCK engine side panels, if used, Includes: Ref. 11's
11	R29555	2	KEY for Master padlock only
11	D93751	2	KEY for Yale padlock only

582

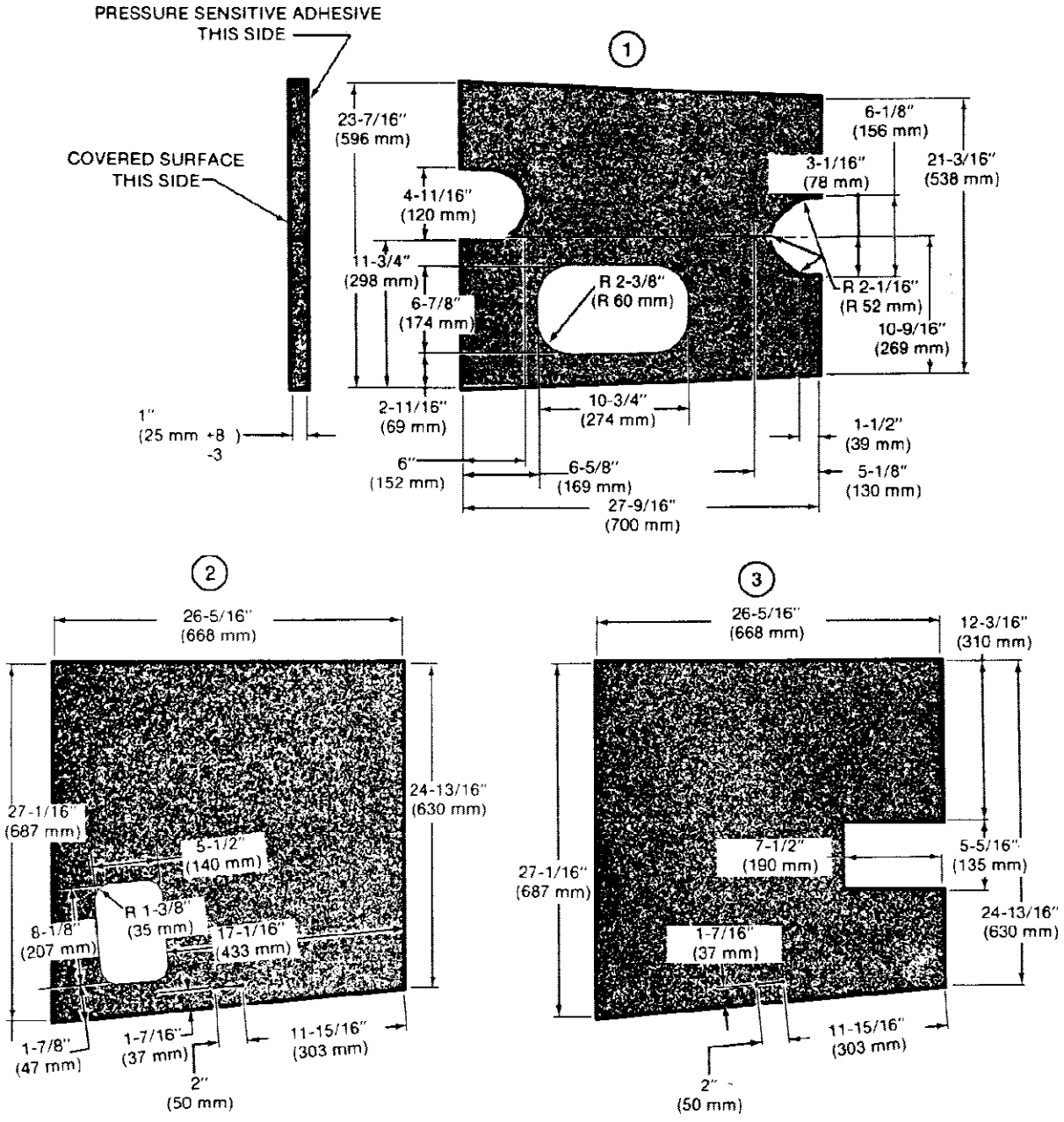
PRESSURE SENSITIVE ADHESIVE THIS SIDE
COVERED SURFACE THIS SIDE
1
23-7/16" (596 mm)
4-11/16" (120 mm)
11-3/4" (298 mm)
6-7/8" (174 mm)
2-11/16" (69 mm)
1" (25 mm +8 -3)
6" (152 mm)
6-5/8" (169 mm)
27-9/16" (700 mm)
10-3/4" (274 mm)
R 2-3/8" (R 60 mm)
6-1/8" (156 mm)
3-1/16" (78 mm)
21-3/16" (538 mm)
R 2-1/16" (R 52 mm)
10-9/16" (269 mm)
1-1/2" (39 mm)
5-1/8" (130 mm)
2
26-5/16" (668 mm)
27-1/16" (687 mm)
24-13/16" (630 mm)
5-1/2" (140 mm)
R 1-3/8" (35 mm)
8-1/8" (207 mm)
17-1/16" (433 mm)
1-7/8" (47 mm)
1-7/16" (37 mm)
2" (50 mm)
11-15/16" (303 mm)
3
26-5/16" (668 mm)
12-3/16" (310 mm)
27-1/16" (687 mm)
7-1/2" (190 mm)
5-5/16" (135 mm)
24-13/16" (630 mm)
1-7/16" (37 mm)
11-15/16" (303 mm)
2" (50 mm)

830617

582 HOOD AND SIDE PANEL NOISE REDUCTION PADS, MODELS WITHOUT TURBOCHARGED ENG

Ref	Part Number	Qty	Description
1	REF	1	PAD hood, cut from P/N D89609
2	REF	1	PAD engine side panel, left hand, cut from P/N D89609
3	REF	1	PAD engine side panel, right hand, cut from P/N D89609
	D89609	UAR	PAD bulk, adhesive, 54" (1372 mm) x 36" (914 mm) x 1" (25 mm), not shown

584 OPERATORS COMPARTMENT FRAME AND MOUNTING

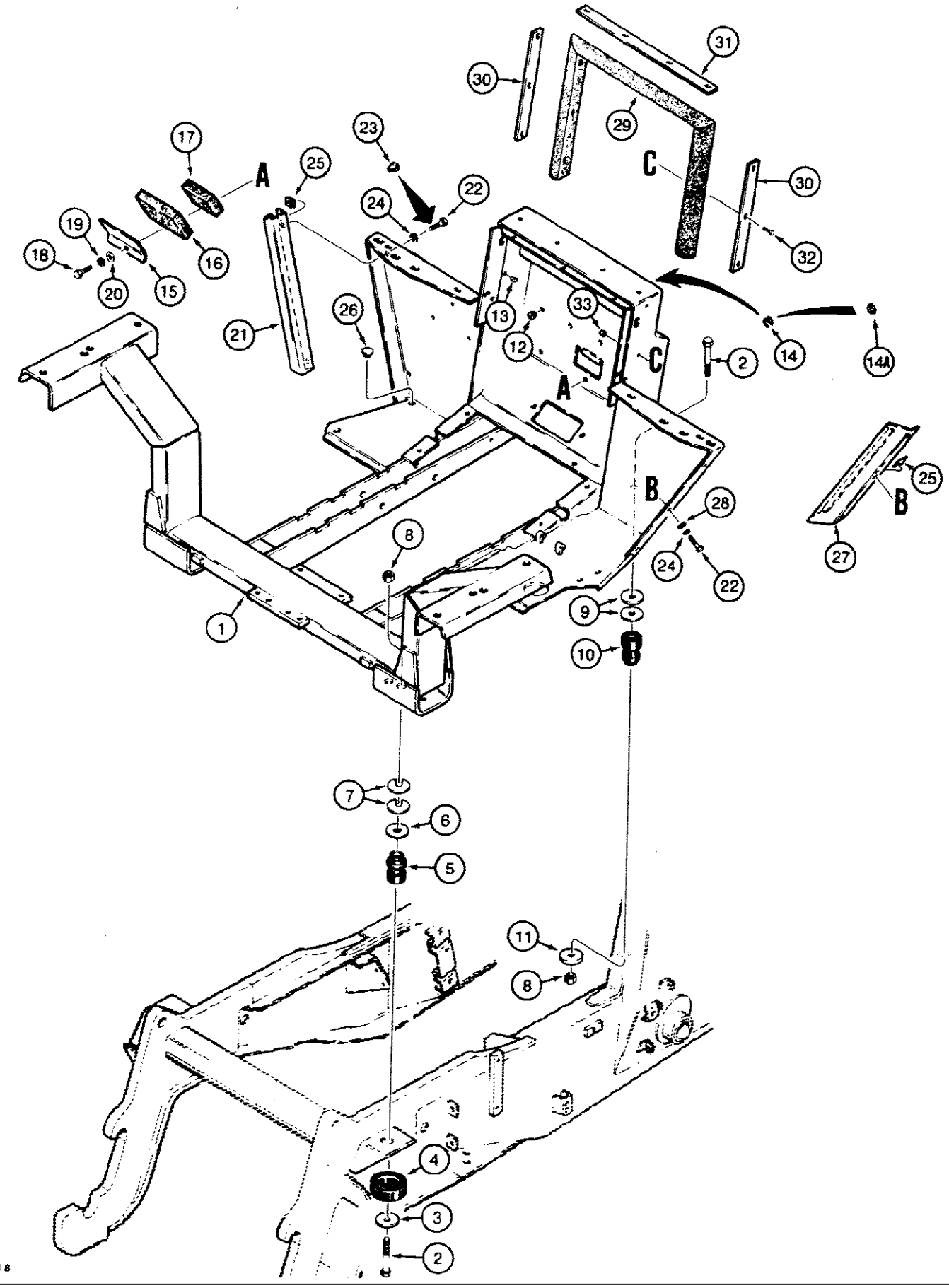

580SE CASE SUPER-E CONSTRUCTION KING LOADER BACKHOE - Chassis/Attachments

584 OPERATORS COMPARTMENT FRAME AND MOUNTING

Ref	Part Number	Qty	Description
1	D127612	1	FRAME operators compartment
2	113-2642	4	BOLT, Hex, 5/8"-11 x 4 1/2", G8
3	D134263	2	WASHER hardened, 3-15/16" (100 mm) OD, Replaces 2-3/4" (70 mm) OD washer on some models
4	D120267	2	SHOCK ABSORBER pod limiter
5	D89717	2	INSULATOR frame mounting, rubber, rear
6	D134265	2	WASHER hardened, 2-3/4" (70 mm) OD
7	D91658	UAR	WASHER shim, 1/16" (2 mm) thick
8	129-563	4	NUT hex, grade 8, 5/8" - 11 NC
9	D134265	UAR	WASHER hardened, 2-3/4" (70 mm) OD
10	D89717	2	INSULATOR frame mounting, rubber, front
11	D83682	2	WASHER, 2-3/4" (70 mm) OD x 1/4" (6 mm) thick
12	353-403	1	PLUG, Dome, .437" hole, Nylon, Used in firewall
13	353-400	10	PLUG, Dome, .250" hole, Nylon, Used on cab models
14	353-475	1	GROMMET snap, plastic, split, mechanical tachometer drive cable to firewall, Replaces rubber grommet on some models, if used
14A	353-410	1	PLUG - nylon, 7/8", Used in place of split snap grommet on some models
15	D83656	1	COVER harness and cables from instrument cluster
16	D83655	1	PAD foam, self adhesive, 6-11/16" (170 mm) x 3-1/8" (80 mm)
17	D83654	1	PAD foam, self adhesive, 4" (100 mm) x 2-3/8" (60 mm)
18	113-207	1	BOLT, Hex, 3/8"-16 x 1", G5, Full Thd
19	192-21	1	WASHER, LOCK, 3/8"
20	195-525	1	WASHER flat, plated, 3/8"
21	D87343	1	COVER wiring and drain tube, left hand side, if used
22	113-102	3-5	BOLT, Hex, 5/16"-18 x 3/4", G5, Full Thd
23	205-75	10	PLUG button, steel, 13/32", used in place of Ref. 22 when Ref. 21 is not used
24	192-20	3-5	WASHER, LOCK, 5/16"
25	131-636	3-5	NUT j type, 5/16" - 18 NC
26	353-408	1	PLUG nylon, 3/4", used on models without air conditioned cab
27	D87342	1	COVER wiring harness, right hand side
28	195-521	3	WASHER flat, plated, 5/16"
29	D91309	1	SEAL firewall, used on models without cab
30	D91132	2	PLATE seal retaining, sides of firewall
31	D91131	1	PLATE seal retaining, top of firewall
32	163-15	10	SCREW machine, hex head, plated, No. 10 - 24 NC x 5/8"
33	86625057	10	NUT, LOCK, #10-24, GB

586 FLOOR PLATES AND MATS

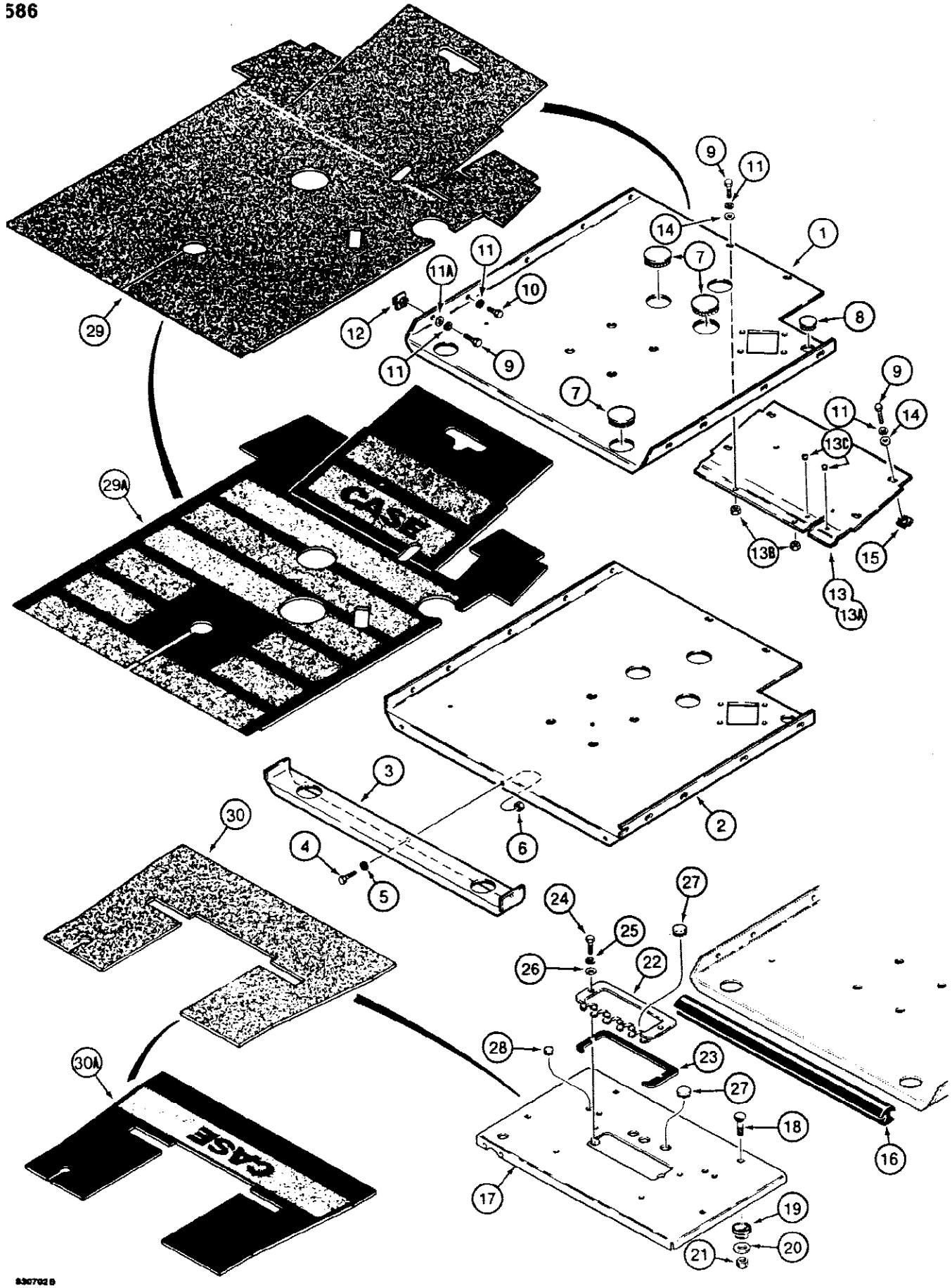

586 FLOOR PLATES AND MATS

Ref	Part Number	Qty	Description
1	D120235	1	PLATE floor, main, models without three point hitch
2	D120264	1	PLATE floor, main, models with three point hitch
3	D91379	1	PLATE floor, extension, models with three point hitch
4	113-102	3	BOLT, Hex, 5/16"-18 x 3/4", G5, Full Thd
5	192-20	3	WASHER, LOCK, 5/16"
6	9635082	3	NUT, 5/16"-18, G5
7	205-72	3	PLUG button, 3", steel
8	205-61	1	PLUG button, 1-1/2"
9	113-102	14	BOLT, Hex, 5/16"-18 x 3/4", G5, Full Thd
10	113-101	1	BOLT, Hex, 5/16"-18 x 1/2", G5, Full Thd
11	192-20	15	WASHER, LOCK, 5/16"
11A	195-521	9	WASHER flat, plated, 5/16"
12	131-636	9	NUT j type, 5/16" - 18 NC
13	D87604	1	PLATE floor, front, with clutch cutout switch mounting bracket, no longer used, for service order D126612 floor plate, D124618 switch and D126116 washer, See Fig. 120 for switch and washer
13A	D126612	1	PLATE floor, front, without clutch cutout switch mounting bracket, Includes: Ref. 13B and 13C
13B	D126570	2	NUT special, D126612 floor plate
13C	D123827	3	NUT special, D126612 floor plate
14	195-521	6	WASHER flat, plated, 5/16"
15	131-641	4	NUT u type, 5/16" - 18 NC, Replaces j type nut on some models
16	D90980	1	SEAL main and backhoe floor plates
17	D124433	1	PLATE floor, backhoe
18	12-832	4	BOLT, 1/2" - 13 NC x 2"
19	R29799	4	INSULATOR rubber, floor plate mounting
20	B15606	4	WASHER flat, retaining, 1/2"
21	131-70	4	NUT hex, plated, 1/2" - 13 NC
	D121493	1	PLATE AND GASKET backhoe control tower, plastic, if used, Includes: Ref. 22 and 23
22	NSS	1	PLATE backhoe control tower, plastic
23	D121492	1	GASKET sealing
24	113-102	2	BOLT, Hex, 5/16"-18 x 3/4", G5, Full Thd
25	192-20	2	WASHER, LOCK, 5/16"
26	195-521	2	WASHER flat, plated, 5/16"
27	205-54	2	PLUG button, 1-3/16", if used
28	353-403	4	PLUG, Dome, .437" hole, Nylon, If used
29	D123202	1	MAT main floor plate, if used, no longer available, order D125825 mat
29A	D125825	1	MAT main floor plate, Case embossed, if used
30	D123207	1	MAT backhoe floor plate, if used, no longer available, order D125826 mat
30A	D125826	1	MAT backhoe floor plate, Case embossed, if used

588 REAR FENDERS, CAB MODELS ONLY, MODELS WITHOUT CAB OR CANOPY

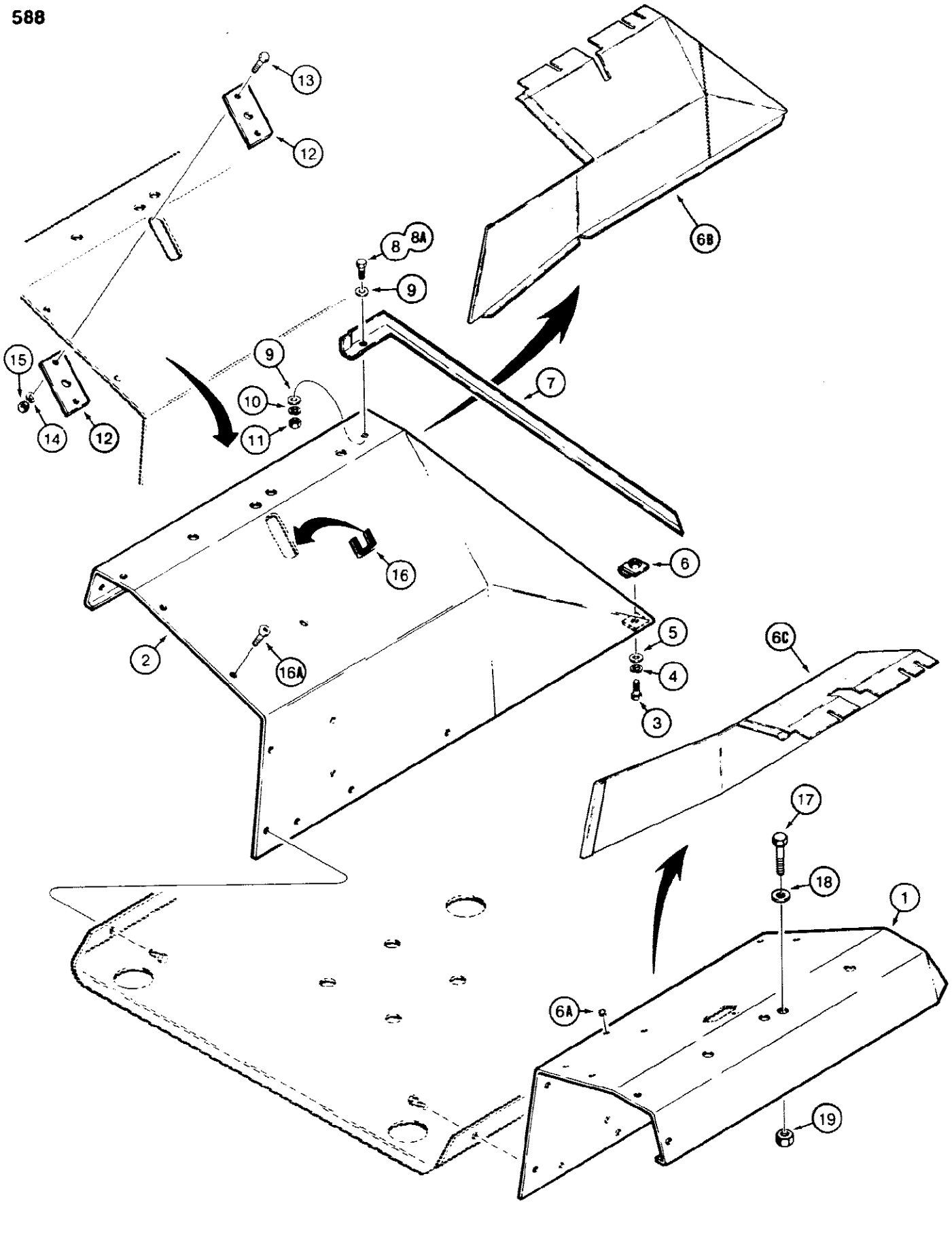

588 REAR FENDERS, CAB MODELS ONLY, MODELS WITHOUT CAB OR CANOPY

Ref	Part Number	Qty	Description
1	D88844	1	FENDER right hand, rear fenders
2	D92322	1	FENDER left hand, includes decals, See Figures 670 and 672, rear fenders
3	113-103	2	BOLT, Hex, 5/16"-18 x 1", G5, Full Thd, Rear fenders
4	192-20	2	WASHER, LOCK, 5/16", Rear fenders
5	195-521	2	WASHER flat, plated, 5/16", rear fenders
6	131-636	2	NUT j type, 5/16" - 18 NC, rear fenders
6A	353-401	4	PLUG nylon, 5/16", if used, rear fenders
6B	D126943	1	COVER padded, left hand fender, optional deluxe interior, cab models only
6C	D126942	1	COVER padded, right hand fender, optional deluxe interior, cab models only
7	F96723	1	SEAL metal, door frame, cab models only
8	113-3	3	BOLT, Hex, 1/4"-20 x 3/4", G5, Full Thd, Used on models without padded fender covers, cab models only
8A	113-4	3	BOLT, Hex, 1/4"-20 x 1", G5, Used on models with padded fender covers, cab models only
9	195-518	6	WASHER flat, plated, 1/4", cab models only
10	192-19	3	WASHER, LOCK, 1/4", Cab models only
11	7770	3	NUT, 1/4"-20, G5, Cab models only
12	D93336	2	PLATE cover, air conditioner drain tube, models without heater, cab models only
13	113-102	2	BOLT, Hex, 5/16"-18 x 3/4", G5, Full Thd, Cab models only
14	192-20	2	WASHER, LOCK, 5/16", Cab models only
15	9635082	2	NUT, 5/16"-18, G5, Cab models only
16	REF	1	TRIM edge, for heater hoses, left hand side, 7" (179 mm) long, Replaces 3" (76 mm) long trim used on some models, cut from F42827, see below, cab models only
16A	182-501	4	SCREW machine, pan Phillips head, plated, 5/16" - 18 NC x 3/4", used on models with padded fender covers, cab models only
17	113-708	4	BOLT, Hex, 3/4"-10 x 2", G5, Models without cab or canopy
18	195-545	4	WASHER flat, plated, 3/4", models without cab or canopy
19	129-108	4	NUT, 3/4"-10, G5, Models without cab or canopy
	F42827	UAR	TRIM edge, 116" (2946 mm) long, models without cab or canopy

590

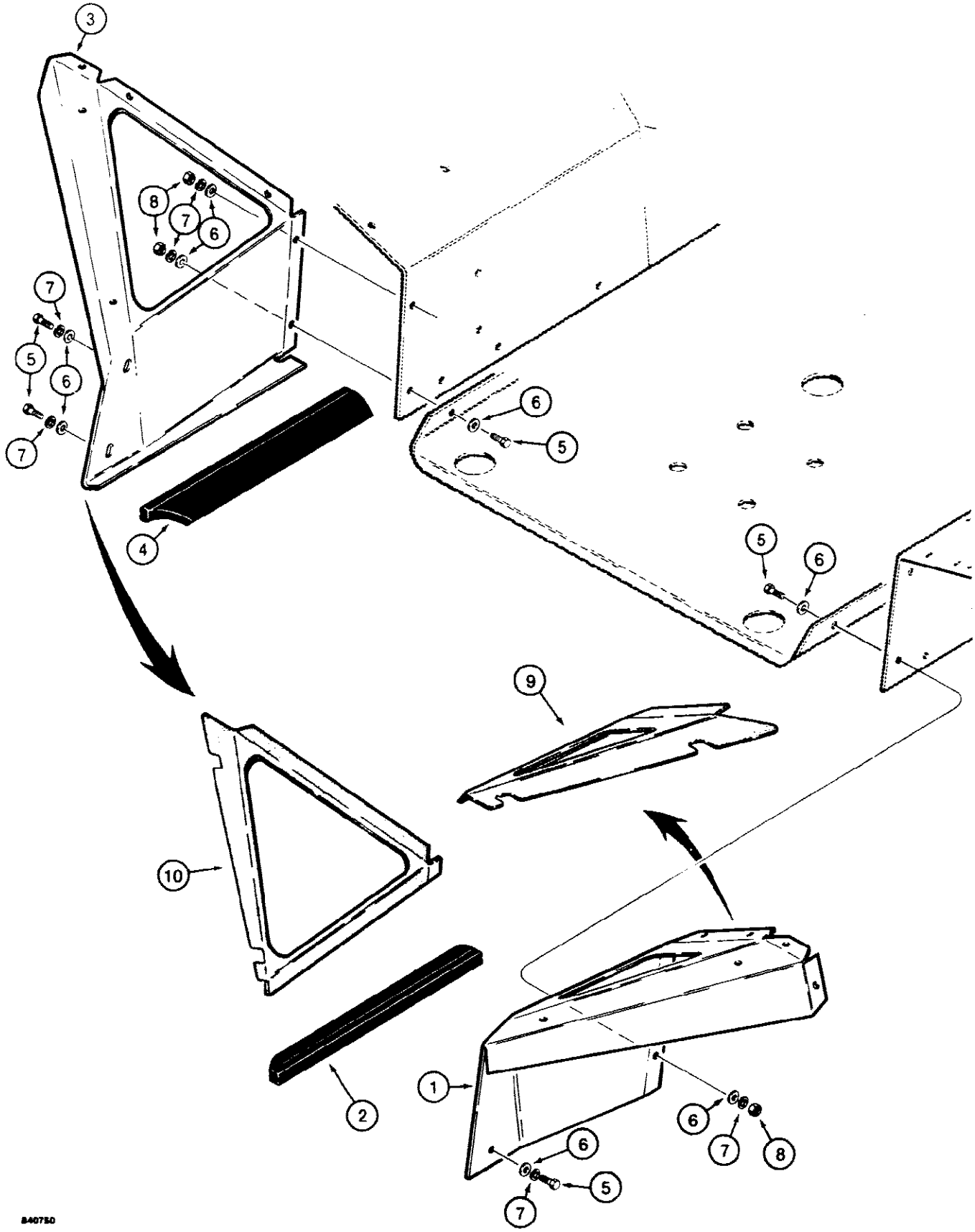

590 REAR CLOSURE PANELS, CAB MODELS WITH BACKHOE

Ref	Part Number	Qty	Description
1	D88681	1	PANEL side closure, right hand
2	REF	1	SEAL right hand panel, cut from D90976, see below
3	D88827	1	PANEL side closure, left hand
4	REF	1	SEAL left hand panel, cut from D90976, see below
5	113-102	14	BOLT, Hex, 5/16"-18 x 3/4", G5, Full Thd
6	195-521	24	WASHER flat, plated, 5/16"
7	192-20	14	WASHER, LOCK, 5/16"
8	9635082	10	NUT, 5/16"-18, G5
9	D126944	1	COVER right hand panel, optional deluxe interior
10	D126945	1	COVER left hand panel, optional deluxe interior
	D90976	UAR	SEAL bulk, 295" (7500 mm) long

592

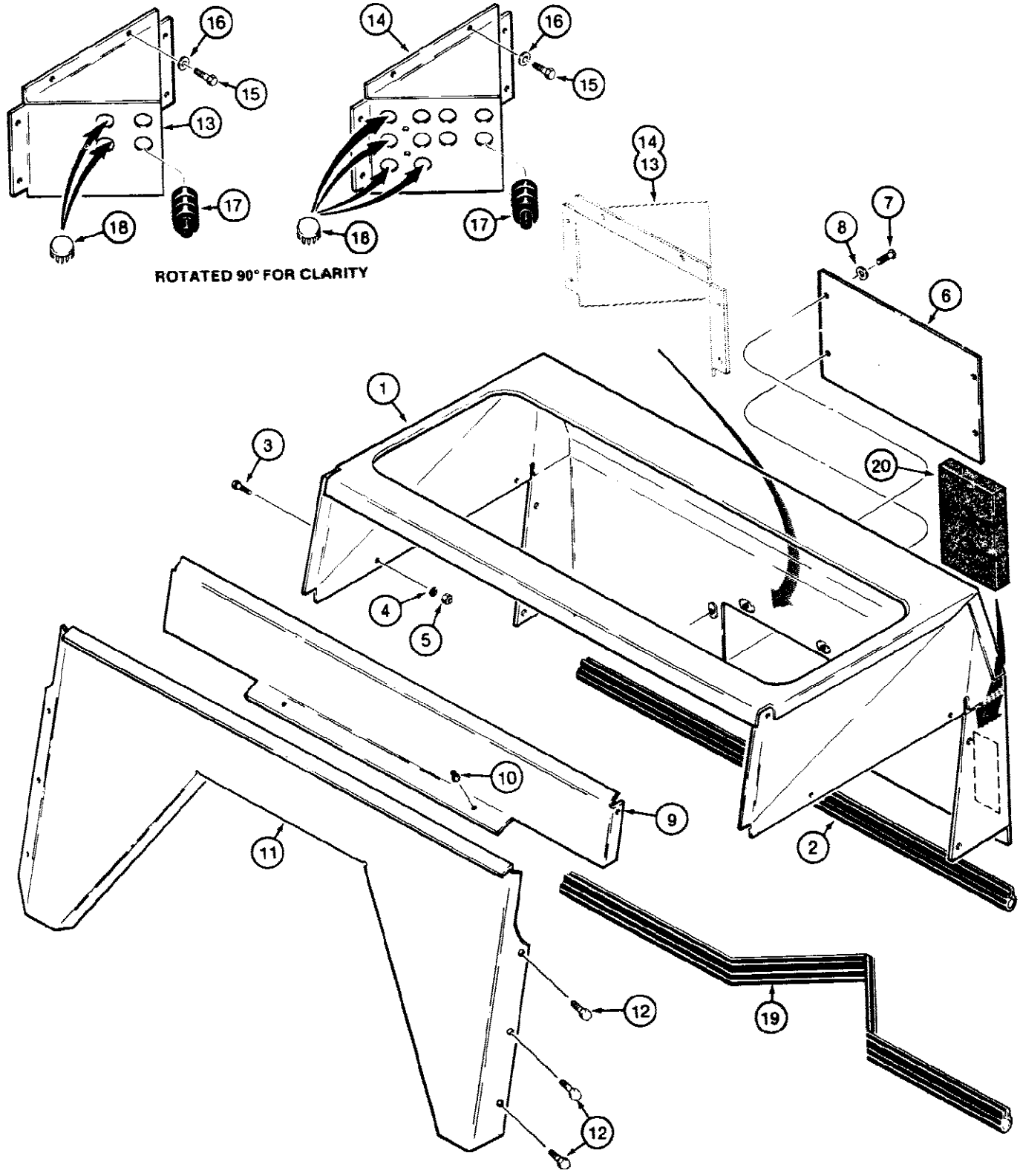

580SE CASE SUPER-E CONSTRUCTION KING LOADER BACKHOE - Chassis/Attachments

592 REAR CLOSURE PANELS, CAB MODELS WITHOUT BACKHOE, SPECIAL

Ref	Part Number	Qty	Description
1	D125552	1	PANEL rear closure, rear closure panels cab models without backhoe
2	REF	1	SEAL rear closure panel, 36-7/8" (936 mm) long, cut from F43117 bulk, see below, rear closure panels cab models without backhoe, Part of bulk Seal P/N F43117
3	113-102	4	BOLT, Hex, 5/16"-18 x 3/4", G5, Full Thd, Rear closure panels cab models without backhoe
4	192-20	4	WASHER, LOCK, 5/16", Rear closure panels cab models without backhoe
5	9635082	4	NUT, 5/16"-18, G5, Rear closure panels cab models without backhoe
6	D120292	1	PLATE rear closure panel, models without backhoe or three point hitch, rear closure panels cab models without backhoe
7	113-1	4	BOLT, Hex, 1/4"-20 x 1/2", G5, Full Thd, Rear closure panels cab models without backhoe
8	195-102	4	WASHER flat, plated, 1/4", rear closure panels cab models without backhoe
9	D90553	1	COVER inner, rear closure panel, special parts used with three point hitch
10	L60224	2	BUMPER window, special parts used with three point hitch
11	D90547	1	COVER outer, rear closure panel, special parts used with three point hitch
12	121-135	6	BOLT, Hex Flg, 5/16"-18 x 3/4", G5, Full Thd, Special parts used with three point hitch
13	D120199	1	COVER hoses, used on three point hitch models with single spool valve, special parts used with three point hitch
14	D94046	1	COVER hoses, used on three point hitch models with four spool valve, special parts used with three point hitch
15	113-1	6	BOLT, Hex, 1/4"-20 x 1/2", G5, Full Thd, Special parts used with three point hitch
16	195-102	6	WASHER flat, plated, 1/4", special parts used with three point hitch
17	D124404	2-6	BOOT cover, 2 used on single spool valve, 6 used on four spool valve, special parts used with three point hitch
18	205-52	2-4	PLUG button, 1-1/8", steel, 2 used on single spool spool valve, 4 used on four spool valve, special parts used with three point hitch
19	REF	1	SEAL rear closure panel, 41" (1040 mm) long, cut from D80646 bulk, see below, used on three point hitch models only, special parts used with three point hitch, Part of bulk Seal P/N D80646
20	D74213	1	SEAL foam, pressure sensitive adhesive one side, special parts used with three point hitch
	F43117	UAR	SEAL bulk, 100 ft. (3048 cm) long, special parts used with three point hitch
	D80646	UAR	SEAL bulk, 50 ft. (1524 cm) long, special parts used with three point hitch

594 REAR CLOSURE PANELS, MODELS WITH CANOPY, USED ON MODELS WITH BACKHOE

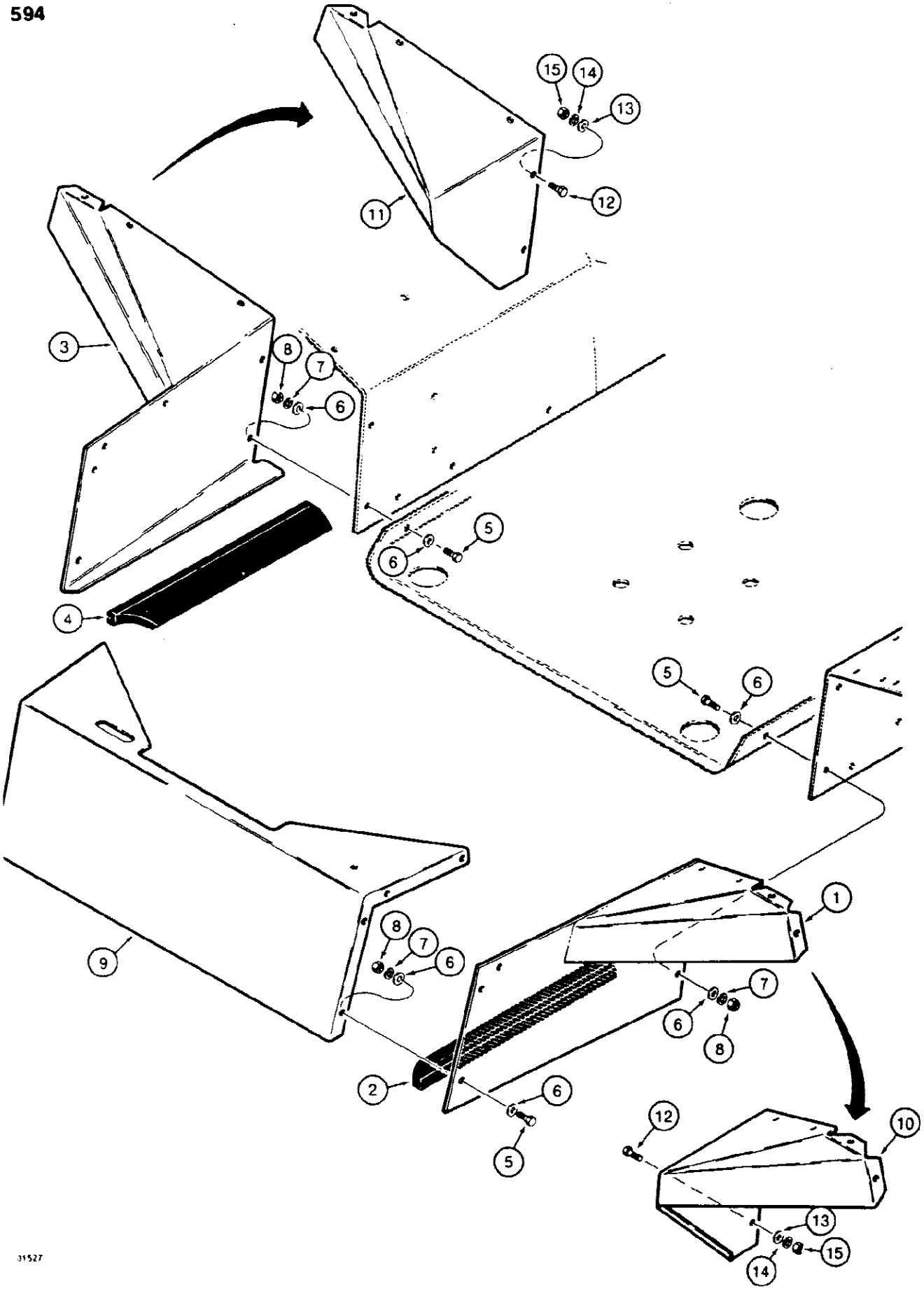

594 REAR CLOSURE PANELS, MODELS WITH CANOPY, USED ON MODELS WITH BACKHOE

Ref	Part Number	Qty	Description
1	D90560	1	PANEL side closure, right hand, used on models with backhoe
2	REF	1	SEAL right hand panel, 19-11/16" (500 mm) long, cut from D90976, used on models with backhoe
3	D90561	1	PANEL side closure, left hand, used on models with backhoe
4	REF	1	SEAL left hand panel, 19-11/16" (500 mm) long, cut from D90976, used on models with backhoe
5	113-102	20	BOLT, Hex, 5/16"-18 x 3/4", G5, Full Thd, Used on models with backhoe
6	195-521	40	WASHER flat, plated, 5/16", used on models with backhoe
7	192-20	20	WASHER, LOCK, 5/16", Used on models with backhoe
8	9635082	20	NUT, 5/16"-18, G5, Used on models with backhoe
9	D92241	1	PANEL rear closure, includes decals, See Figures 670 and 672, used on models with backhoe
10	D91154	1	PANEL side closure, right hand, used on models without backhoe
11	D91155	1	PANEL side closure, left hand, used on models without backhoe
12	113-102	12	BOLT, Hex, 5/16"-18 x 3/4", G5, Full Thd, Used on models without backhoe
13	195-521	12	WASHER flat, plated, 5/16", used on models without backhoe
14	192-20	12	WASHER, LOCK, 5/16", Used on models without backhoe
15	9635082	12	NUT, 5/16"-18, G5, Used on models without backhoe
	D90976	UAR	SEAL bulk, 295-1/4" (7500 mm), long, used on models without backhoe

596 STANDARD SEAT AND MOUNTING PARTS, CAB OR ROPS CANOPY MODELS

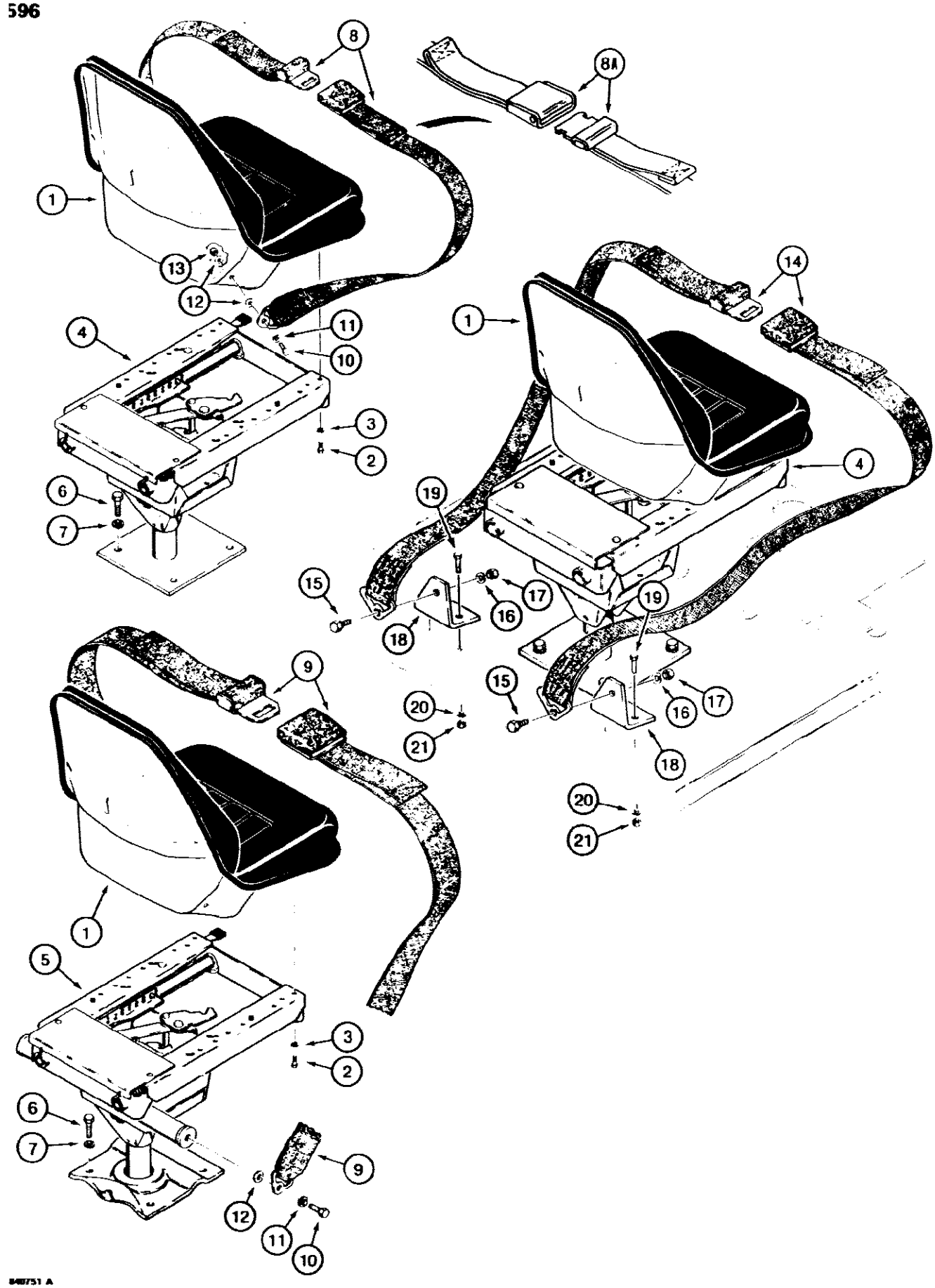

596 STANDARD SEAT AND MOUNTING PARTS, CAB OR ROPS CANOPY MODELS

Ref	Part Number	Qty	Description
1	D123196	1	SEAT ASSEMBLY, standard, See Figure 600, standard seat and mounting parts
2	113-102	4	BOLT, Hex, 5/16"-18 x 3/4", G5, Full Thd, Standard seat and mounting parts
3	192-20	4	WASHER, LOCK, 5/16", Standard seat and mounting parts
4	D124103	1	SUPPORT ASSEMBLY, standard seat, without tube for seat belt mounting, See Figure 604, if used, standard seat and mounting parts
5	D124104	1	SUPPORT ASSEMBLY, standard seat, with tube for seat belt mounting, See Figure 604, if used, standard seat and mounting parts
6	113-410	4	BOLT, Hex, 1/2"-13 x 1 1/2", G5, Full Thd, Standard seat and mounting parts
7	192-23	4	WASHER, LOCK, 1/2", Standard seat and mounting parts
8	D87964	1	SEAT BELT, 2" (51 mm) wide, use with Ref. 4 seat support only, no longer used, order D133870 seat belt, standard seat and mounting parts
8A	D133870	1	SEAT BELT, 2" (51 mm) wide, with anti creep slides, use with Ref. 4 seat support only, if used, standard seat and mounting parts
9	D85816	1	SEAT BELT, 3" (76 mm) wide, use with Ref. 5 seat support only, if used, standard seat and mounting parts
10	114-301	2	BOLT, Hex, 7/16"-20 x 1", G5, Full Thd, Standard seat and mounting parts
11	192-22	2	WASHER, LOCK, 7/16", Standard seat and mounting parts
12	195-529	2-4	WASHER flat, 7/16", two used with Ref. 5 seat support, four used with Ref. 4 seat support, standard seat and mounting parts
13	425-117	2	NUT hex, 7/16" - 20 NF, plated, used with Ref. 4 seat support only, standard seat and mounting parts
14	D83760	1	SEAT BELT, 3" (76 mm) wide, cab or rops canopy models only, floor mounted seat belt option used with D123196 seat and D124103 seat support
15	F42236	2	BOLT shoulder, 7/16" - 20 NF x 1-1/4", cab or rops canopy models only, floor mounted seat belt option used with D123196 seat and D124103 seat support
16	192-22	2	WASHER, LOCK, 7/16", Cab or ROPS canopy models only, floor mounted seat belt option used with D123196 seat and D124103 seat support
17	425-117	2	NUT hex, plated, 7/16" - 20 NF, cab or rops canopy models only, floor mounted seat belt option used with D123196 seat and D124103 seat support
18	D75008	2	BRACKET mounting, seat belt, cab or rops canopy models only, floor mounted seat belt option used with D123196 seat and D124103 seat support
19	113-207	4	BOLT, Hex, 3/8"-16 x 1", G5, Full Thd, Cab or ROPS canopy models only, floor mounted seat belt option used with D123196 seat and D124103 seat support
20	192-21	4	WASHER, LOCK, 3/8", Cab or ROPS canopy models only, floor mounted seat belt option used with D123196 seat and D124103 seat support
21	129-103	4	NUT, 3/8"-16, G5, Cab or ROPS canopy models only, floor mounted seat belt option used with D123196 seat and D124103 seat support

598 SUSPENSION SEAT AND MOUNTING PARTS

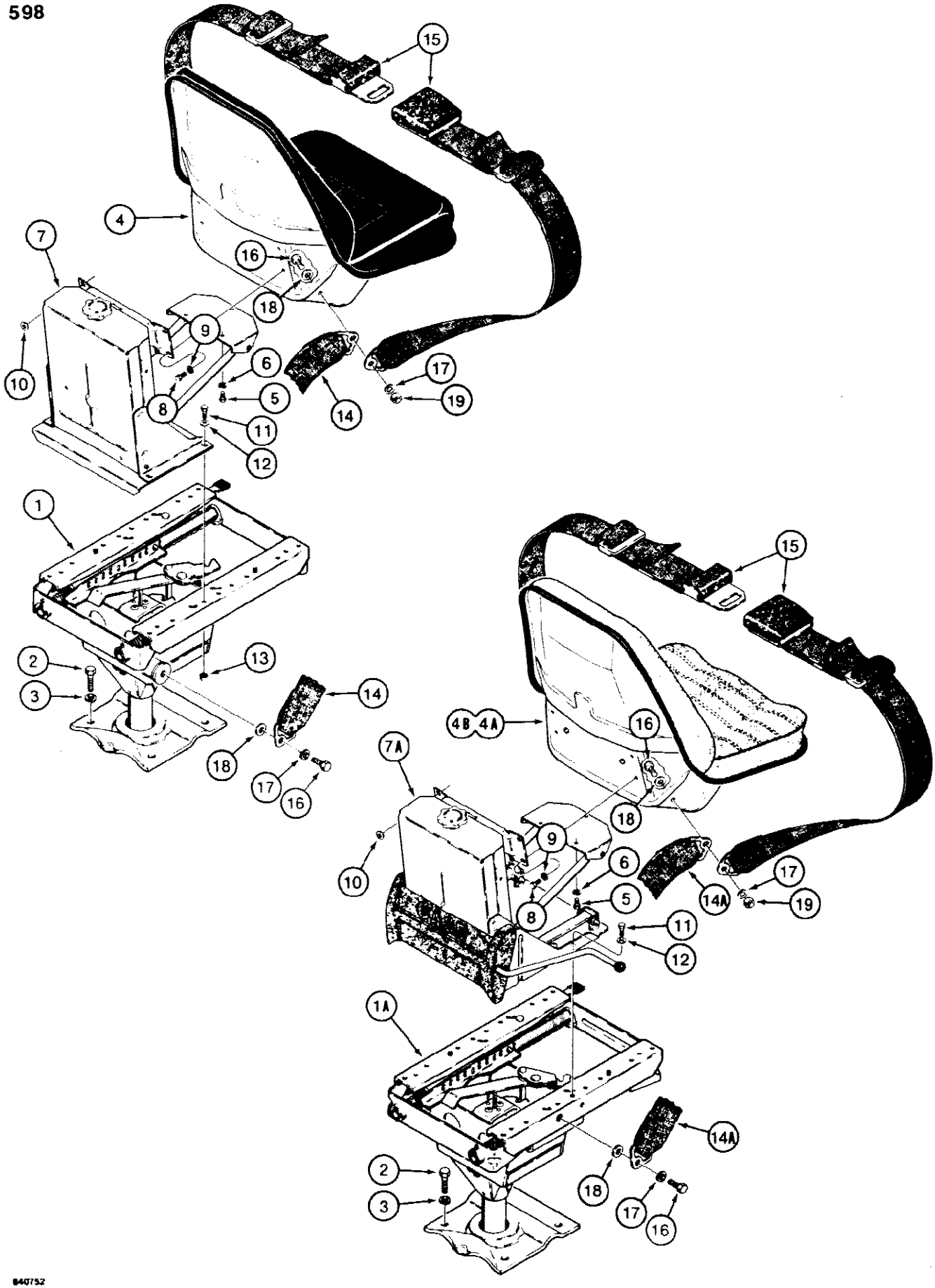

598 SUSPENSION SEAT AND MOUNTING PARTS

Ref	Part Number	Qty	Description
1	D123289	1	SUPPORT ASSEMBLY, suspension seat, See Figure 606, used with D123290 adjuster only
1A	D127369	1	SUPPORT ASSEMBLY, suspension seat, See Figure 608, used with D127368 adjuster only
2	113-410	4	BOLT, Hex, 1/2"-13 x 1 1/2", G5, Full Thd
3	192-23	4	WASHER, LOCK, 1/2"
4	D125246	1	SEAT ASSEMBLY, suspension, vinyl, See Figure 600 for identification
4A	D127367	1	SEAT ASSEMBLY, suspension, vinyl, See Figure 602 for identification
5	113-101	3	BOLT, Hex, 5/16"-18 x 1/2", G5, Full Thd
6	192-20	3	WASHER, LOCK, 5/16"
7	D123290	1	ADJUSTER ASSEMBLY, suspension seat, See Figure 610, used with D123289 seat support only
7A	D127368	1	ADJUSTER ASSEMBLY, suspension seat, See Figure 612, used with D127369 seat support only
8	113-101	4	BOLT, Hex, 5/16"-18 x 1/2", G5, Full Thd
9	192-20	4	WASHER, LOCK, 5/16"
10	195-521	2	WASHER flat, plated, 5/16", left hand side only
11	113-113	4	BOLT, Hex, 5/16"-18 x 7/8", G5, Full Thd
12	195-521	4	WASHER flat, plated, 5/16"
13	193-1009	4	NUT AND LOCK WASHER plated, 5/16" - 18 NC
14	D123292	2	BELT support to seat, 13" (330 mm) long, used with D123289 seat support only
14A	D127382	1	BELT support to seat, 9-3/8" (238 mm) long, used with D127369 seat support only
15	D85816	1	SEAT BELT, 3" (76 mm) wide
16	114-301	4	BOLT, Hex, 7/16"-20 x 1", G5, Full Thd
17	192-22	4	WASHER, LOCK, 7/16"
18	195-529	4	WASHER flat, plated, 7/16"
19	425-117	2	NUT hex, plated, 7/16" - 20 NF

600

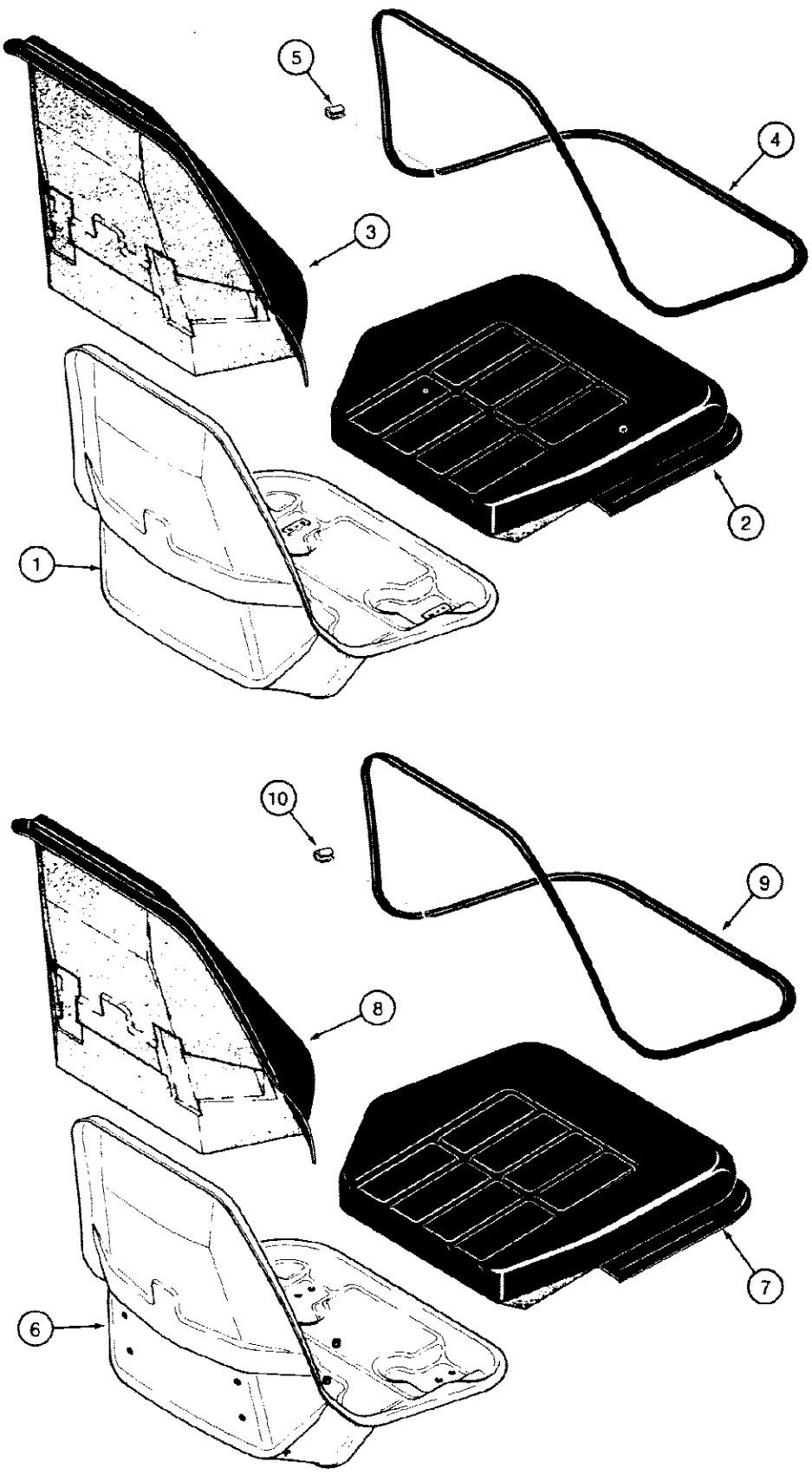

600 SEAT ASSEMBLIES, D123196 STANDARD SEAT ASSEMBLY / D125246 SUSPENSION SEAT ASSEMBLY

Ref	Part Number	Qty	Description
	D123196	1	SEAT ASSEMBLY, standard, for seat support See Figure 604, D123196 standard seat assembly, Includes: Ref. 1 - 5
1	NSS	1	SHELL seat, D123196 standard seat assembly
2	N8462	1	CUSHION seat, Includes N7802 clip kit, see below, D123196 standard seat assembly
3	N8461	1	CUSHION backrest, Includes N7802 clip kit, see below, D123196 standard seat assembly
4	N14614	1	RETAINER strip, cushion to shell, D123196 standard seat assembly, Ref. 4 and 9 NSS retainer This is part nbr N14614 edge trim.
5	NSS	1	CLIP retainer, order N7802 clip kit, see below, D123196 standard seat assembly
	D125246	1	SEAT ASSEMBLY, suspension, vinyl, without three position adjustable seat cushion, for seat support See Figure 606, for seat adjuster assembly, See Figure 610, D125246 suspension seat assembly, Includes: Ref. 6 - 10, See Figure 602 for optional deluxe interior suspension seat assemblies.
6	NSS	1	SHELL suspension seat, D125246 suspension seat assembly
7	N8462	1	CUSHION seat, Includes N7802 clip kit, see below, D125246 suspension seat assembly
8	N8461	1	CUSHION backrest, Includes N7802 clip kit, see below, D125246 suspension seat assembly
9	N14614	1	RETAINER strip, cushion to shell, D125246 suspension seat assembly, Ref. 4 and 9 NSS retainer This is part nbr N14614 edge trim.
10	NSS	1	CLIP retainer, order N7802 clip kit, see below, D125246 suspension seat assembly
	345-44	AR	ADHESIVE pad retaining, in a can, 23 fl. ounces (680 ml) not shown, D125246 suspension seat assembly
	N7802	1	KIT, clip, D125246 suspension seat assembly, Includes: Ref. 5 clip or item 10 clip above plus 6 additional narrow clips

602 SEAT ASSEMBLIES, OPTIONAL DELUXE INTERIOR, D127366 SUSPENSION SEAT ASSEMBLY, CAB MODELS ONLY

602

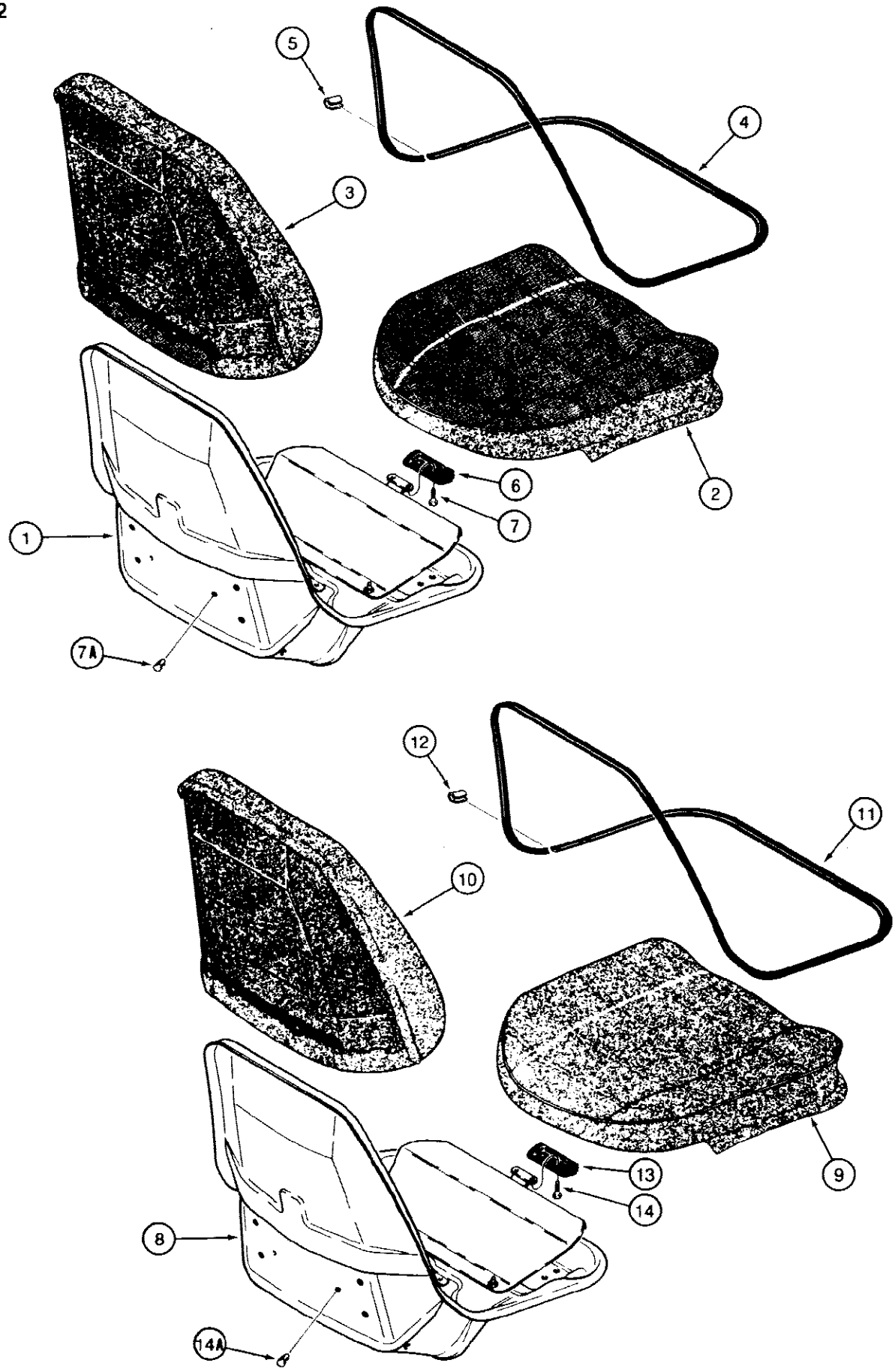

602 SEAT ASSEMBLIES, OPTIONAL DELUXE INTERIOR, D127366 SUSPENSION SEAT ASSEMBLY, CAB MODELS ONLY

Ref	Part Number	Qty	Description
	D127366	1	SEAT ASSEMBLY, suspension, nylon weave, three position adjustable seat cushion, for seat support See Figure 608, for seat adjuster assembly, D127366 suspension seat assembly cab models only, See Figure 612, Includes: Ref. 1 - 7A
1	NSS	1	SHELL seat, D127366 suspension seat assembly cab models only
2	N9237	1	CUSHION seat, Includes N7802 clip kit, see below, D127366 suspension seat assembly cab models only
3	N9238	1	BACKREST seat, Includes N7802 clip kit, see below, D127366 suspension seat assembly cab models only
4	NSS	1	RETAINER strip, brown, cushion to shell, D127366 suspension seat assembly cab models only
5	NSS	1	CLIP retainer, order N7802 clip kit, see below, D127366 suspension seat assembly cab models only
6	N9239	1	HANDLE cushion adjustment, D127366 suspension seat assembly cab models only
7	182-579	2	SCREW machine, pan head slotted, plated, 1/4" - 20 NC x 7/8", D127366 suspension seat assembly cab models only
7A	NSS	2	RIVET plastic, D127366 suspension seat assembly cab models only
	D127367	1	SEAT ASSEMBLY, suspension, vinyl, three position adjustable seat cushion, for seat support See Figure 608, for seat adjuster assembly, See Figure 612, D127367 suspension seat assembly, Includes: Ref. 8 - 14A
8	NSS	1	SHELL seat, D127367 suspension seat assembly
9	N9258	1	CUSHION seat, Includes N7802 clip kit, see below, D127367 suspension seat assembly
10	N9259	1	BACKREST seat, Includes N7802 clip kit, see below, D127367 suspension seat assembly
11	NSS	1	RETAINER strip, brown, cushion to shell, D127367 suspension seat assembly
12	NSS	1	CLIP retainer, order N7802 clip kit, see below, D127367 suspension seat assembly
13	N9239	1	HANDLE cushion adjustment, D127367 suspension seat assembly
14	182-579	2	SCREW machine, pan head slotted, plated, 1/4" - 20 NC x 7/8", D127367 suspension seat assembly
14A	NSS	2	RIVET plastic, D127367 suspension seat assembly
	345-44	AR	ADHESIVE pad retaining, in a can, 23 fl. ounces, (680 ml) not shown, D127367 suspension seat assembly
	N7802	1	KIT, clip, D127367 suspension seat assembly, Includes: Ref. 5 clip or Ref. 12 clip above plus 6 additional narrow clips

604 D124103 AND D124104 STANDARD SEAT SUPPORTS

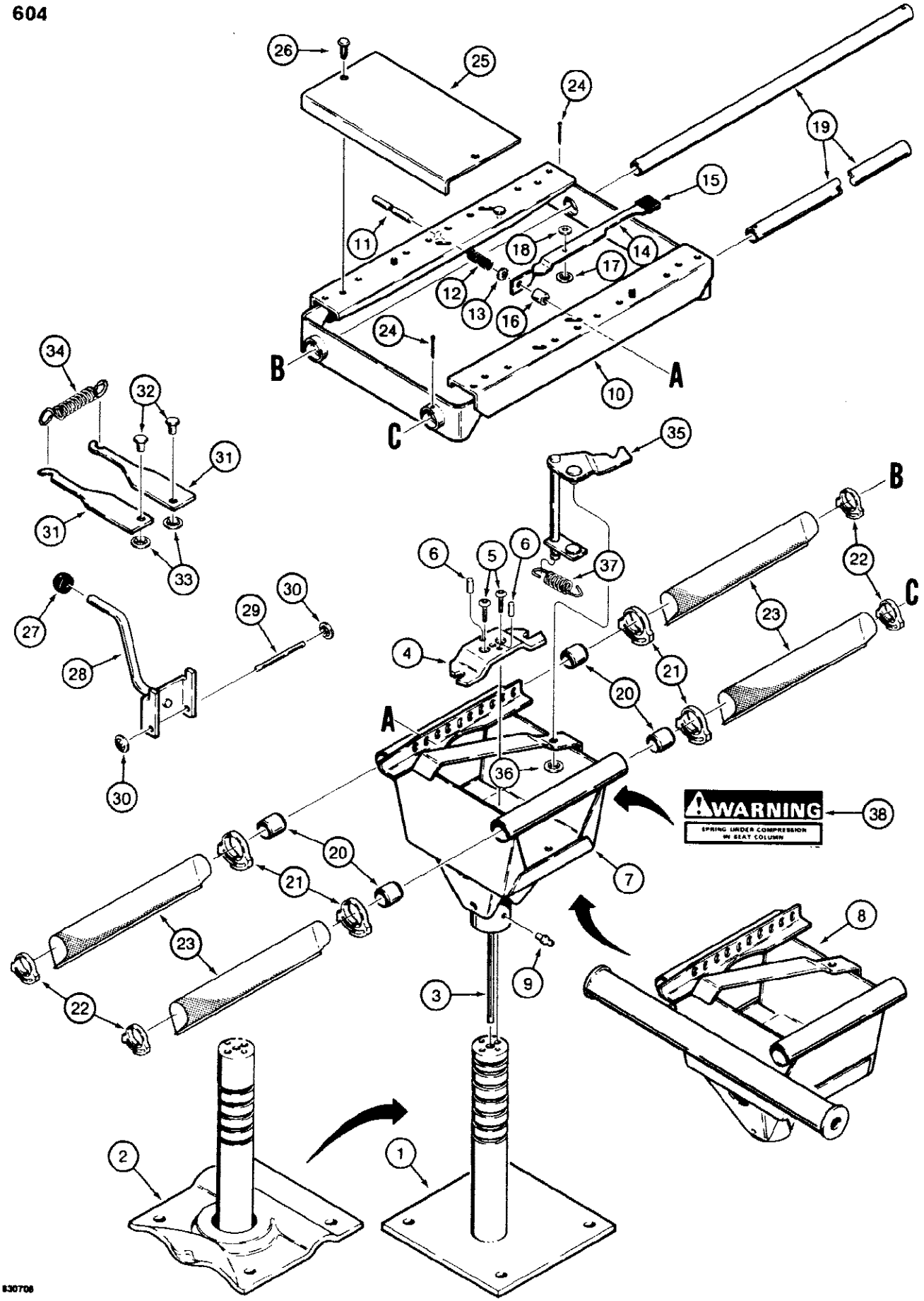

604 D124103 AND D124104 STANDARD SEAT SUPPORTS

Ref	Part Number	Qty	Description
	D124103	1	SUPPORT ASSEMBLY, seat, without tube for seat belt mounting
	D124104	1	SUPPORT ASSEMBLY, seat, with tube for seat belt mounting, Includes: Ref. 1 - 38 and P/N N6934
1	NSS	1	BASE, D124103 seat support assembly, order Ref. 2
2	N8385	1	BASE, D124104 seat support assembly
3	N8340	1	SHAFT seat support
4	N8339	1	LATCH seat swivel
5	164-407	2	BOLT hex socket button head, plated, grade 8, 5/16" - 18 NC x 1/2"
6	135-84	2	PIN, GROOVED, 5/16" x 3/4", Type A
7	N6968	1	RISER, D124103 seat support, without tube
8	N6947	1	RISER, D124104 seat support, with tube
9	219-16	1	FITTING grease, straight, 5/16" drive
10	N6959	1	SLIDE seat
11	N6958	1	PIN slide release
12	N8342	1	SPRING slide release
13	A27795	1	RING spring retaining
14	N6956	1	HANDLE slide release, Includes: Ref. 15
15	N13687	1	GRIP vinyl
16	N6957	1	SPACER handle
17	131-433	1	NUT push on type, 1/4"
18	195-102	1	WASHER flat, plated, 1/4"
19	N6943	2	TUBE slide
20	N6950	4	BEARING slide tube
21	N6966	4	CLAMP plastic, 1-1/2" (38 mm) diameter
22	N6965	4	CLAMP plastic, 1" (25 mm) diameter
23	N6967	4	BELLOWS slide tube
24	132-52	2	Pin, Split (Cotter), 1/8" x 1 1/2"
25	N6969	1	BRACKET seat
26	N6944	2	CLIP bracket, nylon
	N6934	1	KIT, handle, seat height adjustment, Includes: Ref. 27 - 30
27	NSS	1	KNOB handle
28	NSS	1	HANDLE seat height adjustment
29	NSS	1	SHAFT handle
30	131-434	2	NUT push on type, 5/16"
31	N6963	2	LATCH seat height adjustment
32	N6964	2	PIN latch
33	131-435	2	NUT push on type, 3/8"
34	N6970	1	SPRING latch, seat height adjustment
35	D147776	1	LEVER control, seat swivel, Replaced N6951
36	131-435	1	NUT push on type, 3/8"
37	D145790	1	SPRING seat swivel, 2-3/8" (60 mm) long, Replaced N8341
38	REF	1	DECAL warning, seat spring compression, See Figure 670, Ref. 21

606 D123289 SUSPENSION SEAT SUPPORT

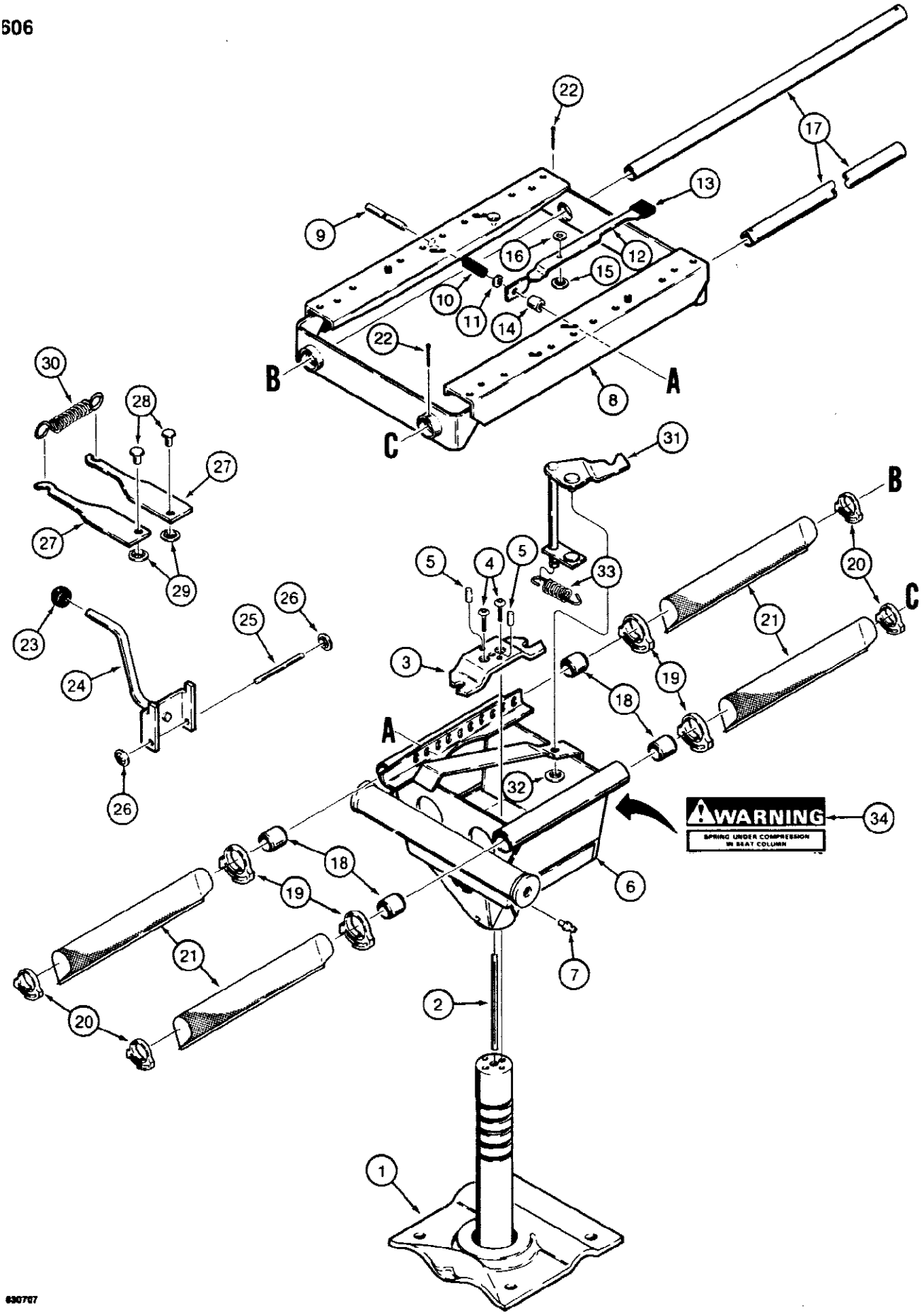

606 D123289 SUSPENSION SEAT SUPPORT

Ref	Part Number	Qty	Description
	D123289	1	SUPPORT ASSEMBLY, suspension seat, used with D123290 adjuster on Figure 610 and D125246 seat on Figure 600, Includes: Ref. 1 - 34 and P/N N6934
1	N8455	1	BASE seat support assembly
2	N8454	1	SHAFT seat support
3	N8339	1	LATCH seat swivel
4	164-407	2	BOLT hex socket button head, plated, grade 8, 5/16" - 18 NC x 1/2"
5	135-84	2	PIN, GROOVED, 5/16" x 3/4", Type A
6	N8456	1	RISER seat support
7	219-16	1	FITTING grease, straight, 5/16" drive
8	N6959	1	SLIDE seat
9	N6958	1	PIN slide release
10	N8342	1	SPRING slide release
11	A27795	1	RING spring retaining
12	N6956	1	HANDLE slide release, Includes: Ref. 13
13	N13687	1	GRIP vinyl
14	N6957	1	SPACER handle
15	131-433	1	NUT push on type, 1/4"
16	195-102	1	WASHER flat, plated, 1/4"
17	N6943	2	TUBE slide
18	N6950	4	BEARING slide tube
19	N6966	4	CLAMP plastic, 1-1/2" (38 mm) diameter
20	N6965	4	CLAMP plastic, 1" (25 mm) diameter
21	N6967	4	BELLOWS slide tube
22	132-52	2	Pin, Split (Cotter), 1/8" x 1 1/2"
	N6934	1	KIT, handle, seat height adjustment, Includes: Ref. 23 - 26
23	NSS	1	KNOB handle
24	NSS	1	HANDLE seat height adjustment
25	NSS	1	SHAFT handle
26	131-434	2	NUT push on type, 5/16"
27	N6963	2	LATCH seat height adjustment
28	N6964	2	PIN latch
29	131-435	2	NUT push on type, 3/8"
30	N6970	1	SPRING latch, seat height adjustment
31	D147776	1	LEVER control, seat swivel, Replaced N6951
32	131-435	1	NUT push on type, 3/8"
33	D145790	1	SPRING seat swivel, 2-3/8" (60 mm) long, if used, Replaced N8341
34	REF	1	DECAL warning, seat spring compression, See Figure 670, Ref. 21

608 D127369 SUSPENSION SEAT SUPPORT, USED WITH OPTIONAL DELUXE INTERIOR SEATS

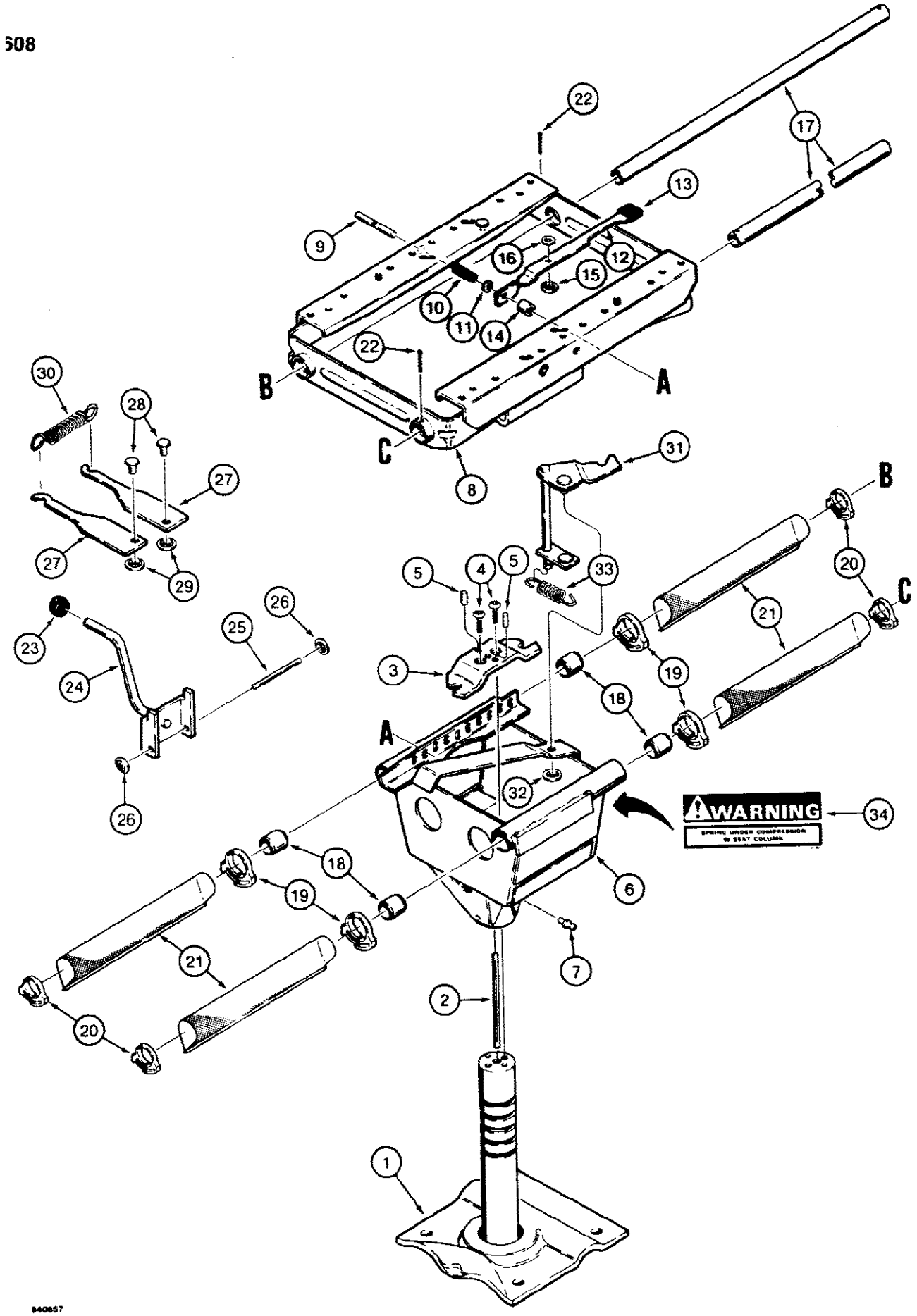

608 D127369 SUSPENSION SEAT SUPPORT, USED WITH OPTIONAL DELUXE INTERIOR SEATS

Ref	Part Number	Qty	Description
	D127369	1	SUPPORT ASSEMBLY, suspension seat, used with D127368 adjuster on Figure 612 and D127366 or D127367 seat on Figure 602, Includes: Ref. 1 - 34 and P/N N6934
1	N8455	1	BASE seat support assembly
2	N8454	1	SHAFT seat support
3	N8339	1	LATCH seat swivel
4	164-407	2	BOLT hex socket button head, plated, grade 8, 5/16" - 18 NC x 1/2"
5	135-84	2	PIN, GROOVED, 5/16" x 3/4", Type A
6	N9245	1	RISER seat support
7	219-16	1	FITTING grease, straight, 5/16" drive
8	N9246	1	SLIDE seat
9	N6958	1	PIN slide release
10	N8342	1	SPRING slide release
11	A27795	1	RING spring retaining
12	N6956	1	HANDLE slide release, Includes: Ref. 13
13	N13687	1	GRIP vinyl
14	N6957	1	SPACER handle
15	131-433	1	NUT push on type, 1/4"
16	195-102	1	WASHER flat, plated, 1/4"
17	N6943	2	TUBE slide
18	N6950	4	BEARING slide tube
19	N6966	4	CLAMP plastic, 1-1/2" (38 mm) diameter
20	N6965	4	CLAMP plastic, 1" (25 mm) diameter
21	N6967	4	BELLOWS slide tube
22	132-52	2	Pin, Split (Cotter), 1/8" x 1 1/2"
	N6934	1	KIT, handle, seat height adjustment, Includes: Ref. 23 - 26
23	NSS	1	KNOB handle
24	NSS	1	HANDLE seat height adjustment
25	NSS	1	SHAFT handle
26	131-434	2	NUT push on type, 5/16"
27	N6963	2	LATCH seat height adjustment
28	N6964	2	PIN latch
29	131-435	2	NUT push on type, 3/8"
30	N6970	1	SPRING latch, seat height adjustment
31	D147776	1	LEVER control, seat swivel, Replaced N6951
32	131-435	1	NUT push on type, 3/8"
33	D145790	1	SPRING seat swivel, 2-3/8" (60 mm) long, if used, Replaced N8341
34	REF	1	DECAL warning, seat spring compression, See Figure 670, Ref. 21

610 D123290 SUSPENSION SEAT ADJUSTER ASSEMBLY

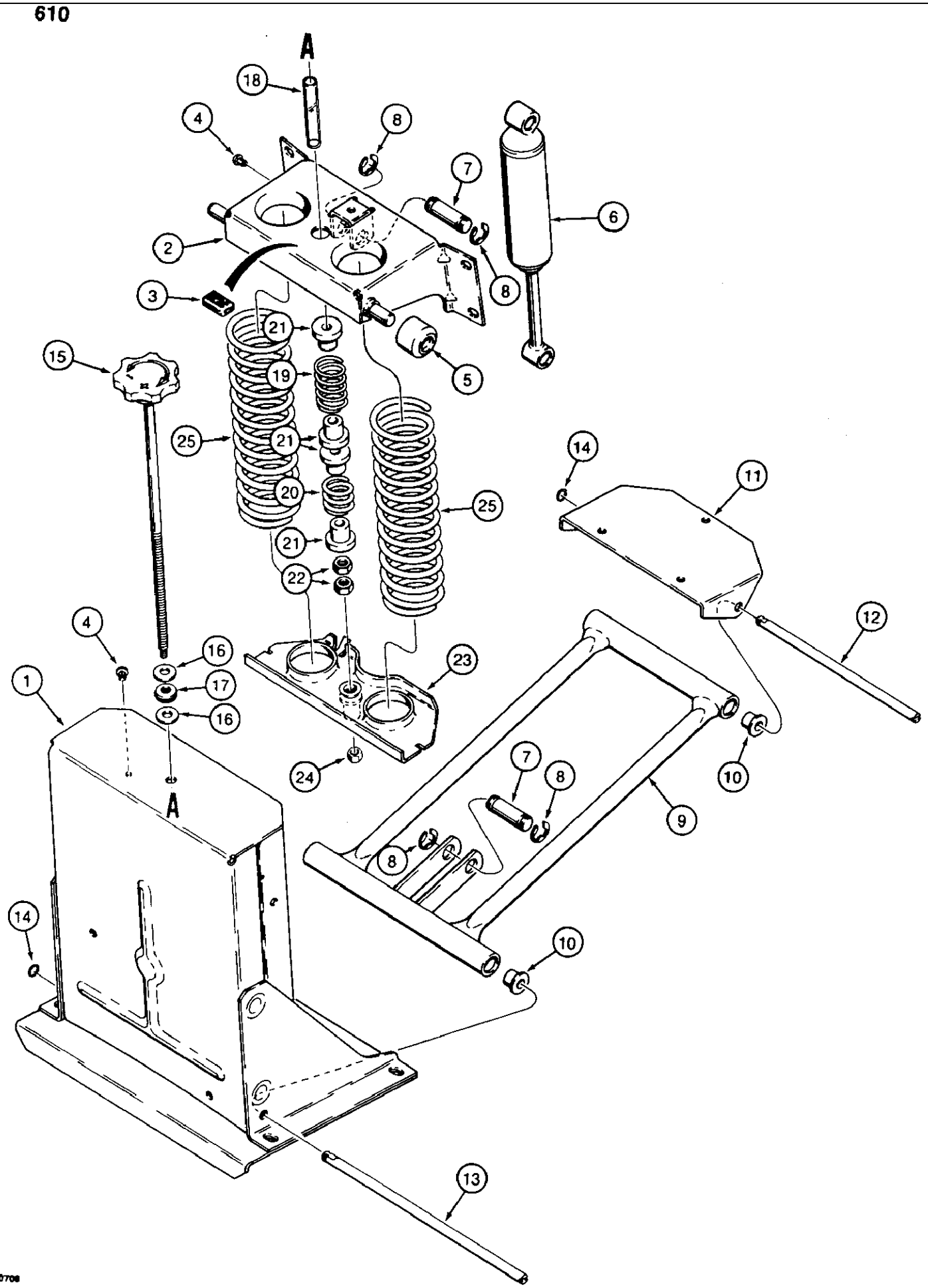

610 D123290 SUSPENSION SEAT ADJUSTER ASSEMBLY

Ref	Part Number	Qty	Description
	D123290	1	ADJUSTER ASSEMBLY, suspension seat, used with D123289 seat support on Figure 606 and D125246 seat on Figure 600, Includes: Ref. 1 - 25
1	NSS	1	HOUSING adjuster assembly
2	NSS	1	BRACKET springs, upper
3	N8484	1	BUMPER rubber
4	N8487	2	RIVET plastic, yellow, weight indicator
5	N8500	2	ROLLER upper bracket, seat adjustment
6	N8488	1	SHOCK ABSORBER adjuster assembly
7	N8485	2	PIN shock absorber mounting
8	A27785	4	Ring, Retaining, #62, .480" Dia, E-Type, pin
9	NSS	1	ARM seat adjuster, Includes: Ref. 10
10	N8527	4	BUSHING arm pivot
11	N8489	1	BRACKET seat pivot, front
12	N8490	1	SHAFT seat adjuster arm, front
13	N8492	1	SHAFT seat adjuster arm, rear
14	G46146	2	Ring, Snap, #37, Ext, shaft, seat adjuster arm
15	N8503	1	ADJUSTER seat, screw with knob
16	N8502	2	WASHER thrust, adjuster knob
17	F13537	1	BEARING thrust, adjuster knob
18	N8501	1	SPACER vinyl, seat adjuster
19	N8496	1	SPRING seat adjuster, upper
20	N8494	1	SPRING seat adjuster, lower
21	N8495	4	RETAINER springs, seat adjuster
22	N8497	2	NUT special, seat adjuster, upper
23	NSS	1	BRACKET springs, lower
24	131-1280	1	NUT hex, jam, self locking, plated, 1/4" - 20 NC
25	N8498	2	SPRING large, adjuster assembly

612 D127368 SUSPENSION SEAT ADJUSTER ASSEMBLY, USED WITH OPTIONAL DELUXE INTERIOR SEATS

612

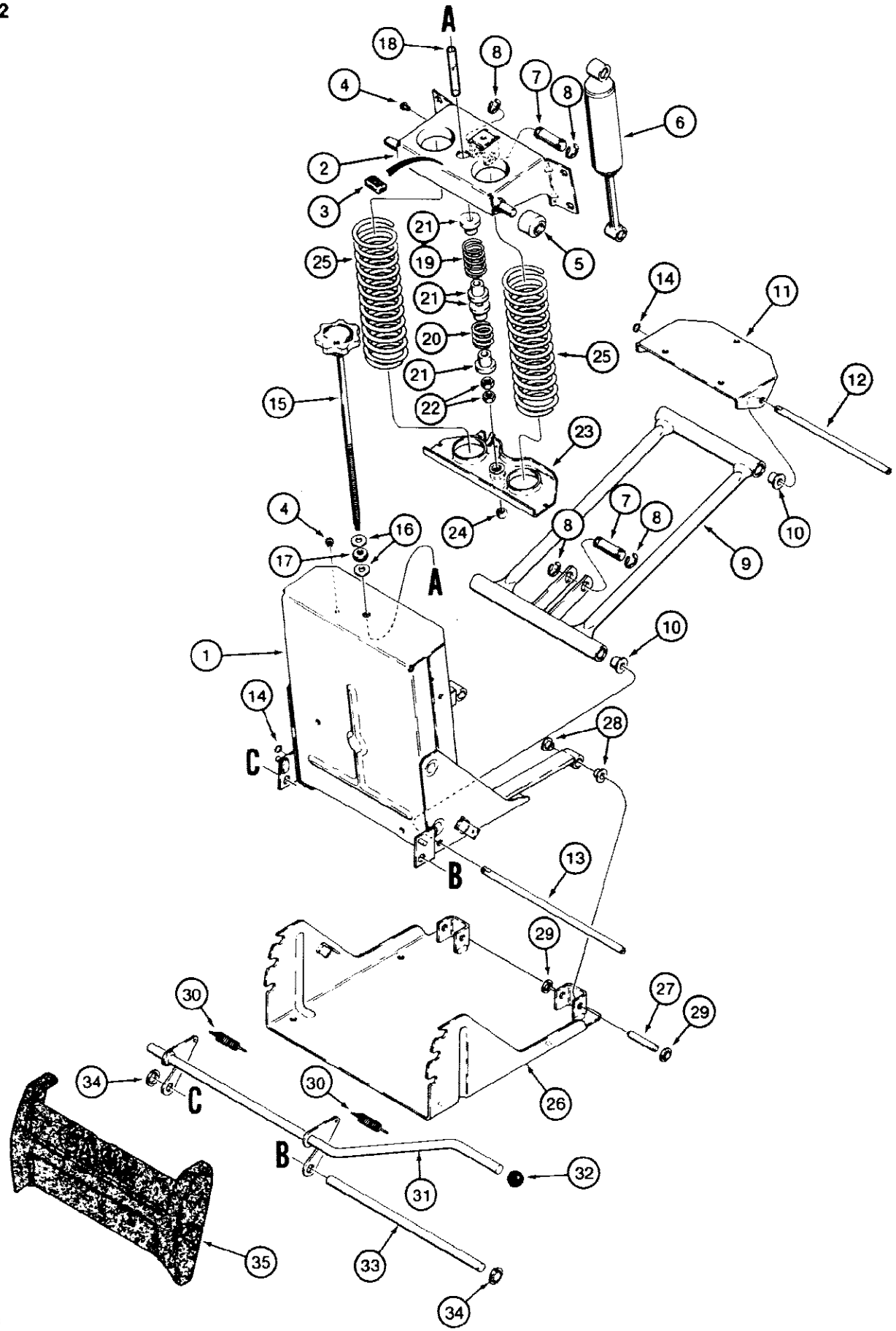

612 D127368 SUSPENSION SEAT ADJUSTER ASSEMBLY, USED WITH OPTIONAL DELUXE INTERIOR SEATS

Ref	Part Number	Qty	Description
	D127368	1	ADJUSTER ASSEMBLY suspension seat, used with D127369 seat support on Figure 608 and D127366 or D127367 seat on Figure 602, Includes: Ref. 1 through 35
1	NSS	1	HOUSING adjuster assembly
2	NSS	1	BRACKET springs, upper
3	N8484	1	BUMPER rubber
4	N8487	2	RIVET plastic, yellow, weight indicator
5	N8500	2	ROLLER upper bracket, seat adjustment
6	N8488	1	SHOCK ABSORBER adjuster assembly
7	N8485	2	PIN shock absorber mounting
8	A27785	4	Ring, Retaining, #62, .480" Dia, E-Type, pin
9	NSS	1	ARM seat adjuster, Includes: Ref. 10
10	N8527	4	BUSHING arm pivot
11	N8489	1	BRACKET seat pivot, front
12	N8490	1	SHAFT seat adjuster arm, front
13	N8492	1	SHAFT seat adjuster arm, rear
14	G46146	2	Ring, Snap, #37, Ext, shaft, seat adjuster arm
15	N8503	1	ADJUSTER seat, screw with knob
16	N8502	2	THRUST WASHER adjuster knob
17	F13537	1	THRUST BEARING adjuster knob
18	N8501	1	SPACER vinyl, seat adjuster
19	N8496	1	SPRING seat adjuster, upper
20	N8494	1	SPRING seat adjuster, lower
21	N8495	4	RETAINER springs, seat adjuster
22	N8497	2	NUT special, seat adjuster, upper
23	NSS	1	BRACKET springs, lower
24	131-1280	1	NUT hex, jam, self locking, plated, 1/4" 20 NC
25	N8498	2	SPRING large, adjuster assembly
26	NSS	1	BASE support
27	N9243	2	PIN housing to base
28	N9241	4	BUSHING base
29	131-435	4	NUT push on type, 3/8"
30	N9240	2	SPRING extension
31	N9244	1	HANDLE seat tilt
32	NSS	1	KNOB handle
33	N9242	1	SHAFT handle to housing
34	131-425	2	NUT push on type, 1/2"
35	NSS	1	EMBLEM Case

614 ROPS CAB AND MOUNTING PARTS

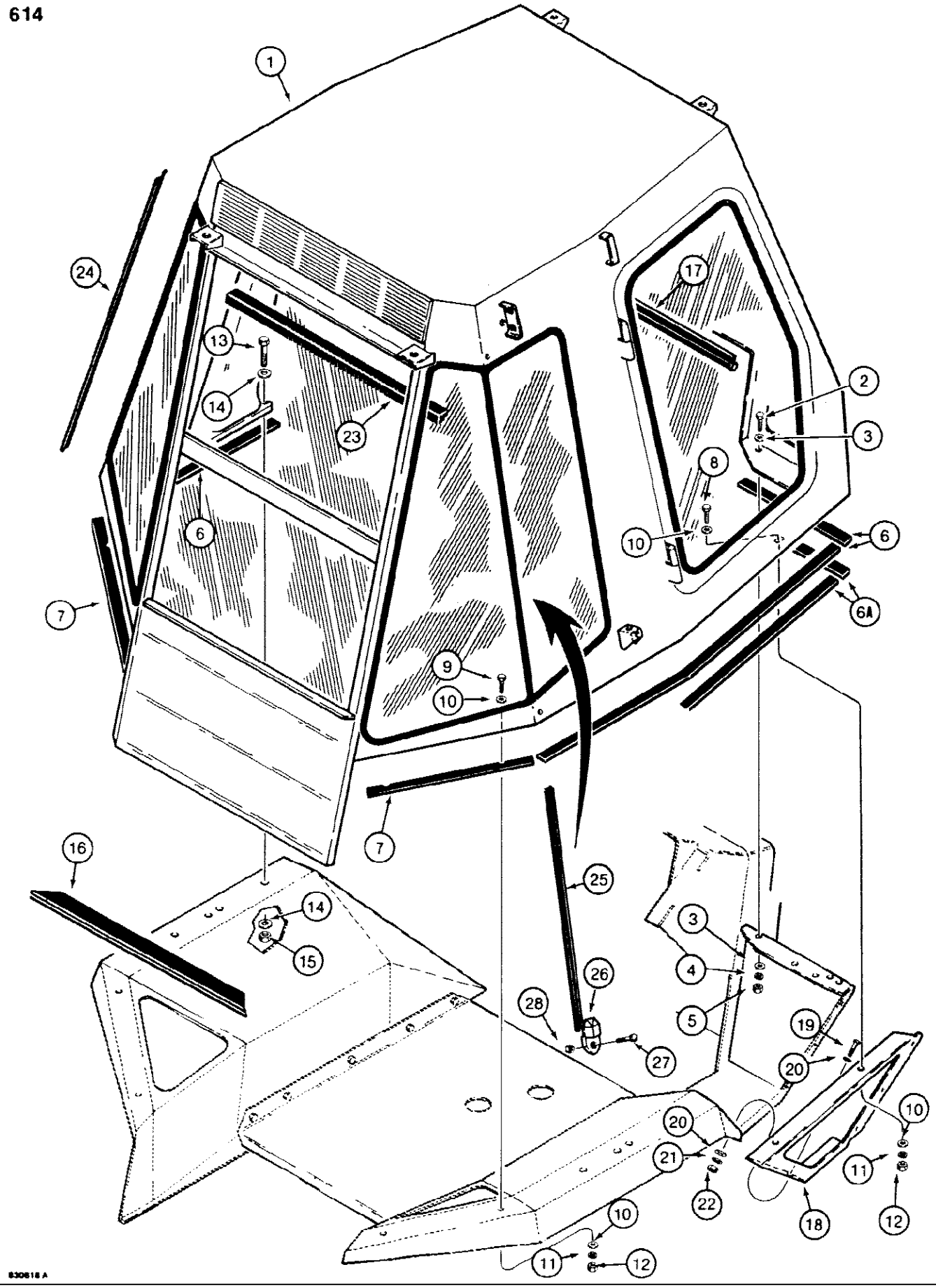

614 ROPS CAB AND MOUNTING PARTS

Ref	Part Number	Qty	Description
1	REF	1	ROPS CAB operators, machinery item, See Fig. 616-660, See Figure 2 for ordering, Part showing in illustration is F97329 frame weldment.
2	113-208	4	BOLT, Hex, 3/8"-16 x 1 1/4", G5, Full Thd
3	195-525	8	WASHER flat, plated, 3/8"
4	192-21	4	WASHER, LOCK, 3/8"
5	129-103	4	NUT, 3/8"-16, G5
6	D90936	1	SEAL, 9 ft (2.85 m) long, rear fenders and front, used on models without optional deluxe interior padded covers
6A	D133071	1	SEAL, 5 ft (1.5 m) long, front, used on models with optional deluxe interior padded covers, this seal is not required along the rear fenders
7	D90935	2	SEAL rear corners
8	113-102	2	BOLT, Hex, 5/16"-18 x 3/4", G5, Full Thd
9	113-104	6	BOLT, Hex, 5/16"-18 x 1 1/4", G5
10	195-521	16	WASHER flat, plated, 5/16"
11	192-20	8	WASHER, LOCK, 5/16"
12	9635082	8	NUT, 5/16"-18, G5
13	113-774	4	BOLT hex head, plated, grade 8, 3/4" - 10 NC x 2-1/2"
14	D34666	8	WASHER hardened, 3/4"
15	129-138	4	NUT, 3/4"-10, G8
16	REF	AR	SEAL rear window panel, 33-1/2" (850 mm) long, cut from D90976, see below
17	REF	1	SEAL cowl, 43-5/16" (1100 mm) long, cut from F43086, see below
18	D86437	1	PANEL closure, right hand, lower
19	113-102	7	BOLT, Hex, 5/16"-18 x 3/4", G5, Full Thd
20	195-521	11	WASHER flat, plated, 5/16"
21	192-20	7	WASHER, LOCK, 5/16"
22	9635082	4	NUT, 5/16"-18, G5
23	F44812	1	SEAL rear, window frame, upper
24	F44667	1	SUPPORT glass, rear, left hand
25	F44668	1	SUPPORT glass, rear, right hand
26	F45183	4	RETAINER glass support
27	111-2	4	BOLT, CARRIAGE, Short NK, 3/16"-24 x 3/4", G2
28	86625057	4	NUT, LOCK, #10-24, GB
	D90976	AR	SEAL bulk, 24-1/2 ft (7.5 m) long
	F43086	AR	SEAL bulk, 100 ft (30.48 m) long

616 CAB FRAME AND LAMPS

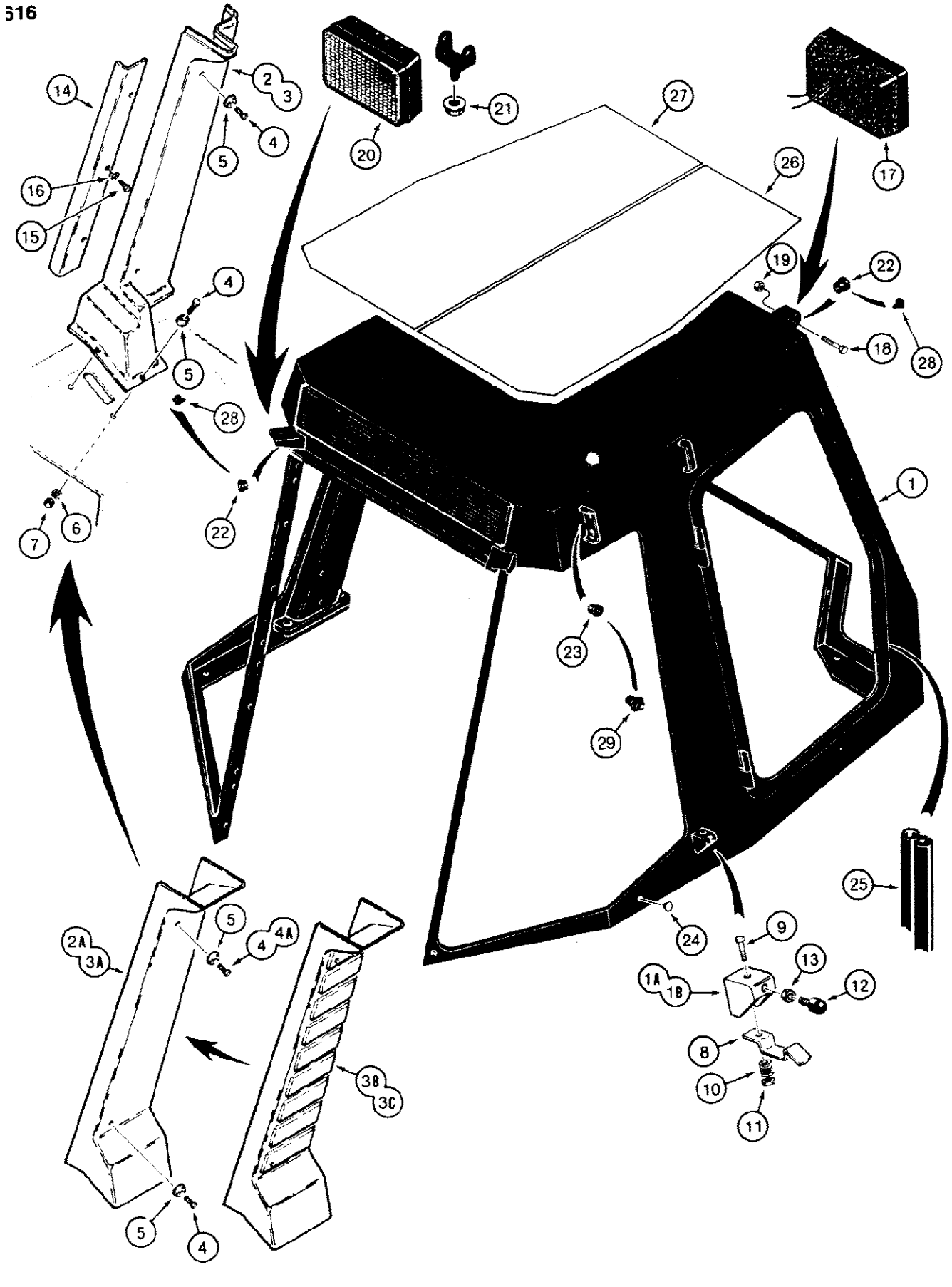

580SE CASE SUPER-E CONSTRUCTION KING LOADER BACKHOE - Chassis/Attachments

616 CAB FRAME AND LAMPS

Ref	Part Number	Qty	Description
1	NSS	1	FRAME cab, Includes: Ref. 1A and 1B, The Part Number for the Frame Weldment is F97329.
1A	F97010	1	BRACKET window latch, right hand
1B	F97011	1	BRACKET window latch, left hand
2	D123200	1	COVER plastic, right hand, no longer used, order D126948 cover
2A	D126948	1	COVER plastic, right hand
3	D123201	1	COVER plastic, left hand, no longer used, order D126949 cover
3A	D126949	1	COVER plastic, left hand
3B	D126946	1	COVER padded, right hand, optional deluxe interior
3C	D126947	1	COVER padded, left hand, optional deluxe interior
4	179-160	4-8	SCREW machine, oval Phillips head, slotted, black, 1/4" - 20 NC x 3/4", used without padded covers
4A	179-168	4	SCREW machine, oval Phillips head, slotted, black, 1/4" - 20 NC x 1", used with padded covers
5	D91156	4-8	WASHER special, plated
6	192-19	4	WASHER, LOCK, 1/4", If used
7	7770	4	NUT, 1/4"-20, G5, If used
8	F42772	2	BRACKET window latch
9	113-17	2	BOLT, Hex, 1/4"-20 x 1 1/4", G5
10	D36669	2	SPRING bracket
11	131-1180	2	NUT, LOCK, 1/4"-20, GA
12	F44935	2	BUMPER window
13	425-145	2	NUT, Jam, 5/16"-18, G5
14	F44766	2	COVER metal, heater and air conditioner lines
15	113-3	2	BOLT, Hex, 1/4"-20 x 3/4", G5, Full Thd, Center hole only
16	195-518	2	WASHER flat, plated, 1/4", center hole only
17	F96838	2	LAMP ASSEMBLY, front driving, used without hinge bracket, See Figure 132
18	113-165	2	BOLT, SPREADER, Hex, 5/16"-18 x 2 1/4", G2, Replaces 2" long hex flange head bolt used on some models
19	131-205	2	NUT hex, self locking, plated, 5/16" - 18 NC, Replaces flange type nut used on some models
20	F96838	2	LAMP ASSEMBLY, rear flood, used with hinge bracket, See Figure 132
21	131-930	2	NUT hex flange type, special locking, plated, 1/2" - 13 NC
22	353-700	4	GROMMET, 3/8" (9.5 mm) hole size, front and rear lamps, may be Replaced with molded grommet, Ref. 28
23	353-704	2-4	GROMMET, 3/4" (19 mm) hole size, side lamp wires, if used
23	353-486	2	GROMMET, 1-1/2" (38 mm) hole size, side lamp wires, if used
24	353-402	2	PLUG, Dome, .375" hole, Nylon, Frame
25	REF	1	SEAL right hand window, cut from F43086
26	F44914	1	SEAL white vinyl, top of roof, heat deflection, used on models with air conditioning, right hand
27	F44915	1	SEAL white vinyl, top of roof, heat deflection, used on models with air conditioning, left hand
28	R52617	4	GROMMET molded, 3/8" (9.5 mm) hole size, on lamp harness at cab frame, front and rear lamps, if used
29	F45451	2	GROMMET molded, 3/4" (19 mm) hole size, on lamp harness at outer cab frame, stop and tail and flasher lamps, if used

616 CAB FRAME AND LAMPS

Ref	Part Number	Qty	Description
	F43086	AR	SEAL bulk, 100 ft (3048 cm long

620

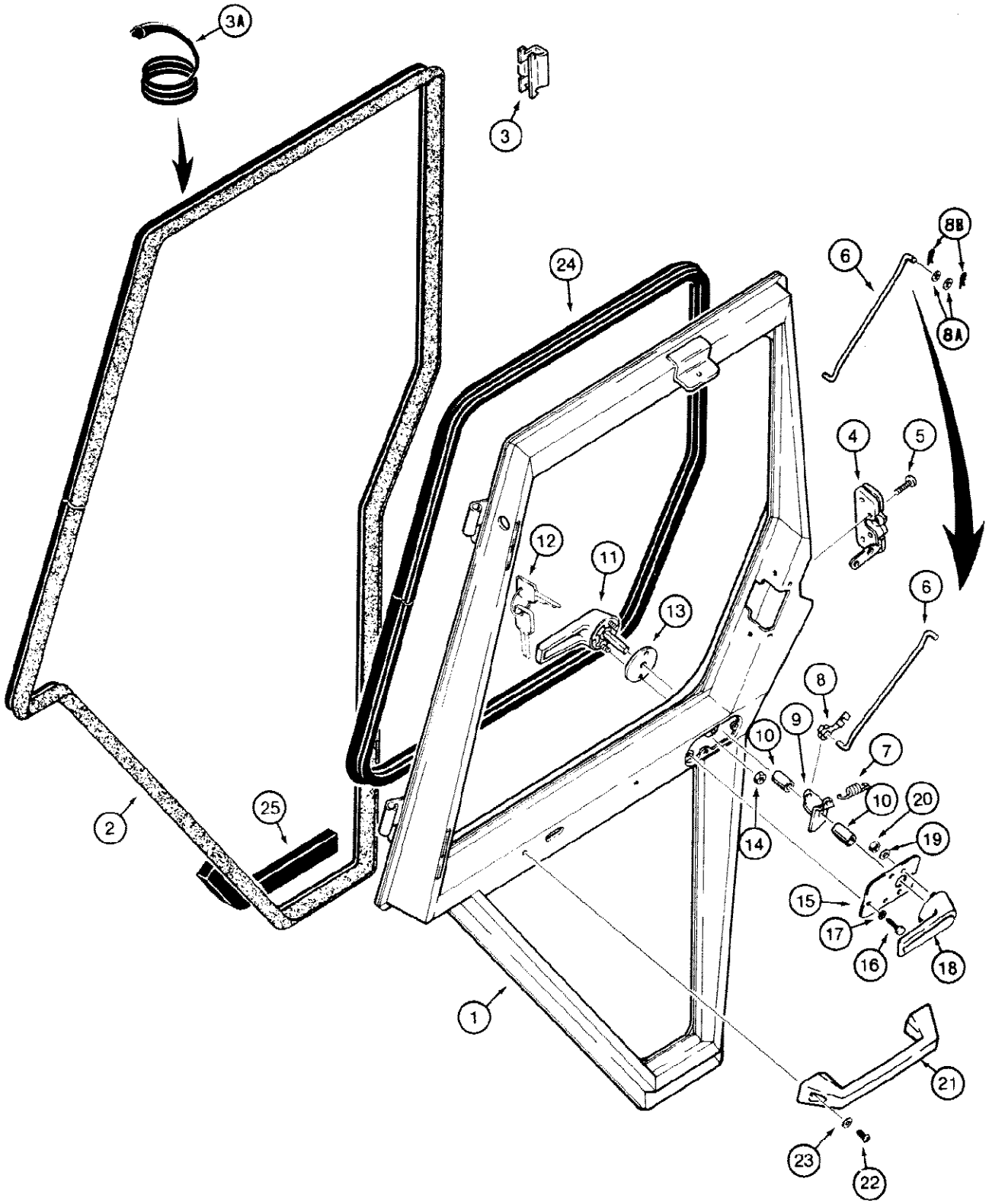
3A
3
24
8B
6
8A
4
5
12
11
13
6
8
9
10
7
10
20
19
14
15
17
16
18
2
25
1
21
23
22

6306209

580SE CASE SUPER-E CONSTRUCTION KING LOADER BACKHOE - Chassis/Attachments

620 CAB DOOR

Ref	Part Number	Qty	Description
1	F96828	1	FRAME door
2	F45169	1	SEAL door frame, with sponge lip, used with Ref. 3 clip, no longer used, Replace with Ref. 3A seal
3	F45176	AR	CLIP door seal retaining, used with Ref. 2 seal only, if used
3A	REF	1	SEAL, 176" (4470 mm) long, cut from R53249 bulk, see below, door frame, rubber bulb type, uses no clip retainers
4	F44925	1	LATCH door striker
5	F45337	4	SCREW special, Phillips head, plated, 1/4" - 20 NC x 1"
6	F44746	1	ROD door latch release
7	F45162	1	SPRING door latch
8	F43350	2	CLIP retainer, door latch release rod, if used
8A	F64384	4	WASHER door latch release rod, if used
8B	136-155	4	PIN hair, internal type, plated, 7/64" x 3/4" long, door latch release rod, if used
9	F93688	1	ARM linkage, door latch release
10	F44749	2	SPACER door handles
11	F66157	1	HANDLE door, outer, service replacement
12	A77313	1	KEY set of two, same as ignition key
13	F64342	1	GASKET outer door handle
14	86625057	2	NUT, LOCK, #10-24, GB
15	F96718	1	PLATE mounting, inner door handle, with handle stop bracket, Replaces plate without stop bracket used in production on some models
16	F45307	3	SCREW special, smooth head, self tapping, requires special tools for installation
17	192-18	3	WASHER, LOCK, #10
18	F45258	1	HANDLE door, inner, This handle has a .82" usable square hole to accept connector from outside handle. F45081 door handle has a .49" usable square hole to accept connector from outside handle.
19	195-513	2	WASHER flat, plated, No. 10
20	86625057	2	NUT, LOCK, #10-24, GB
21	F64547	1	BRACKET door pull, inner
22	182-560	2	SCREW machine, pan Phillips head, plated, 1/4" - 20 NC x 3/4"
23	195-518	2	WASHER flat, plated, 1/4"
24	REF	1	SEAL left hand window, cut to length from F43086 bulk, see below, New moulding is P/N 1999965C1, 92.5". Order and cut from 198131C2, 50' bulk roll sold by the foot.
25	D127423	1	SEAL adhesive back, bottom of door, inside, 7-1/4" (184 mm) long, cut from L35756, see below, used with Ref. 2 seal only, if used
	R53249	AR	SEAL molded rubber, 34-1/2 yd (31.5 m) long
	F43086	AR	SEAL bulk roll, 100 ft. (3048 cm) long

622 CAB DOOR MOUNTING

622

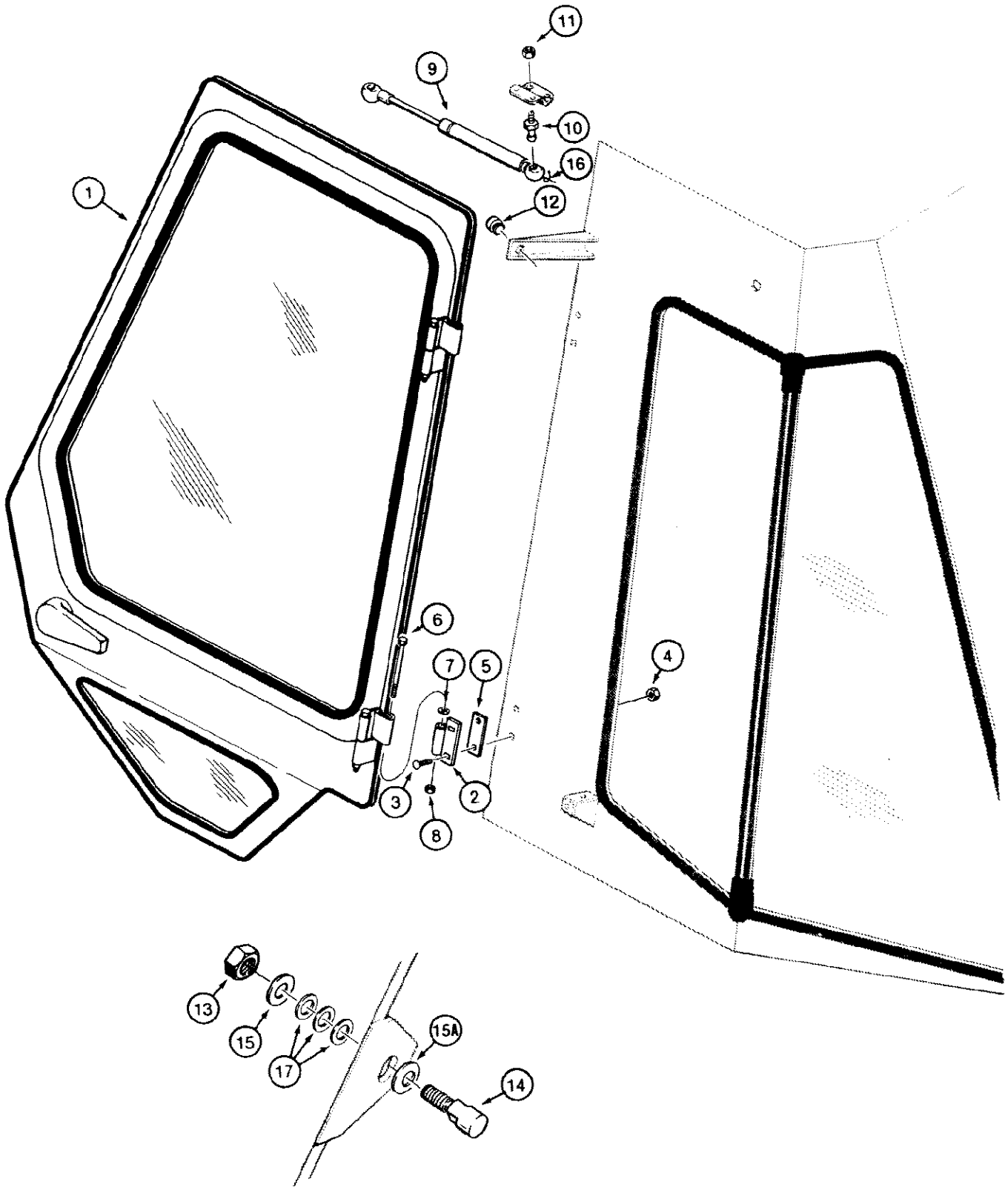

830621 B

622 CAB DOOR MOUNTING

Ref	Part Number	Qty	Description
1	REF	1	DOOR cab, See Figure 620
2	F44868	2	HINGE door
3	111-255	4	BOLT, CARRIAGE, Short NK, 5/16"-18 x 3/4", G5
4	131-176	4	NUT hex, self locking, plated, 5/16" - 18 NC
5	F43257	2	SPACER door hinge
6	113-259	2	BOLT, Hex, 3/8"-16 x 4 1/2", G5
7	F64046	2	WASHER thrust, hinge
8	131-203	2	NUT hex, self locking, plated, 3/8" - 16 NC
9	F44881	1	CYLINDER door, with steel ball socket ends, Replaces cylinders with plastic ends used in production on some models
10	F44882	2	STUD ball, cylinder
11	131-176	2	NUT hex, self locking, plated, 5/16" - 18 NC
12	L60224	1	BUMPER rubber, door stop
13	131-1129	1	NUT hex, self locking, plated, 7/16" - 14 NC
14	F45073	1	STRIKER door latch
15	195-2029	1	WASHER flat, plated, 3/8" bolt size, 7/16" ID x 1-1/4" O.D. x 1/8" thick
15A	F44748		BELLEVILLE SPRING next to door striker, Replaces flat washer used in production on some models
16	F44883	2	CLIP lock, ball stud, used on door cylinders with steel ball socket ends, if used
17	195-2207	3	WASHER flat, plated, 3/8" bolt size, 7/16" ID x 1-1/4" O.D. x 1/16" thick

624 CAB REAR WINDOW

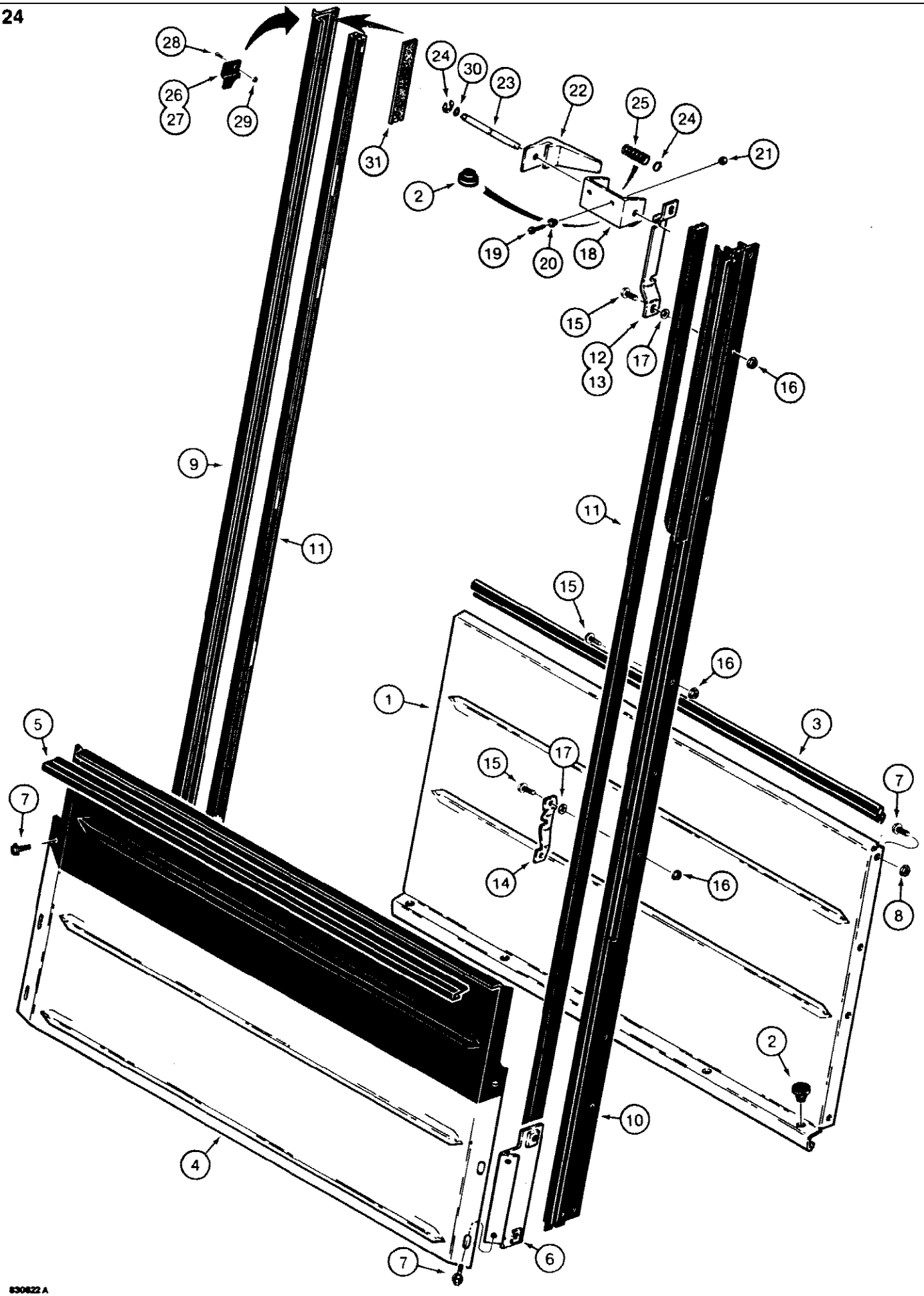

580SE CASE SUPER-E CONSTRUCTION KING LOADER BACKHOE - Chassis/Attachments

624 CAB REAR WINDOW

Ref	Part Number	Qty	Description
1	F42920	1	PANEL rear window, inner
2	L60224	7	BUMPER rubber, rear window
4	F96709	1	PANEL rear window, outer, includes decals, DECALS ON REF. 4 ARE 321 5506 "CASE" AND 313238A1 WARNING DECAL
5	F44711	1	SEAL outer panel, rear window
6	F96836	2	BRACKET support, outer panel
7	121-135	14	BOLT, Hex Flg, 5/16"-18 x 3/4", G5, Full Thd
8	131-937	4	NUT hex, flange type, special locking, plated, 5/16" - 18 NC
9	F96749	1	BRACKET mounting, left hand
10	F96748	1	BRACKET mounting, right hand
11	F44692	2	CHANNEL rear windows
12	F44830	1	BRACKET window retaining, top, right hand
13	F44831	1	BRACKET window retaining, top, left hand
14	F44702	2	BRACKET window retaining, lower
15	121-134	14	BOLT, Hex Flg, 1/4"-20 x 3/4", G5, Full Thd
16	131-1351	14	NUT, LOCK, Flg, 1/4"-20
17	195-518	AR	WASHER flat, plated, 1/4", used as a shim, if used
18	F45111	4	BRACKET lift, window
19	179-155	8	SCREW machine, oval Phillips head, plated, No. 10 - 24 NC x 3/4"
20	F64198	8	SPACER lift bracket mounting
21	131-1142	8	NUT, LOCK, #10-24, GA
22	F45110	4	LEVER window lift
23	F44699	4	PIN window latch
24	F45340	8	Ring, Retaining, #31, Ext, E-Type
25	F62245	4	SPRING window release
26	F45084	1	RETAINER window, up position, left hand
27	F45083	1	RETAINER window, up position, right hand
28	121-134	2	BOLT, Hex Flg, 1/4"-20 x 3/4", G5, Full Thd
29	131-1351	2	NUT, LOCK, Flg, 1/4"-20
30	218-5005	4	O-Ring, 6-1, 90 Duro, .468" ID x .078" Thk, window latch pin, if used
31	REF	2	STRIP foam, behind window channel, adheres to window channel, window retaining, 24" (600 mm) long, cut from F63332 strip, see below
	F43086	AR	SEAL bulk roll, 100 ft. (3048 cm)
	F63332	AR	STRIP foam, 38-5/16" (973 mm) long

626 CAB SIDE WINDOWS

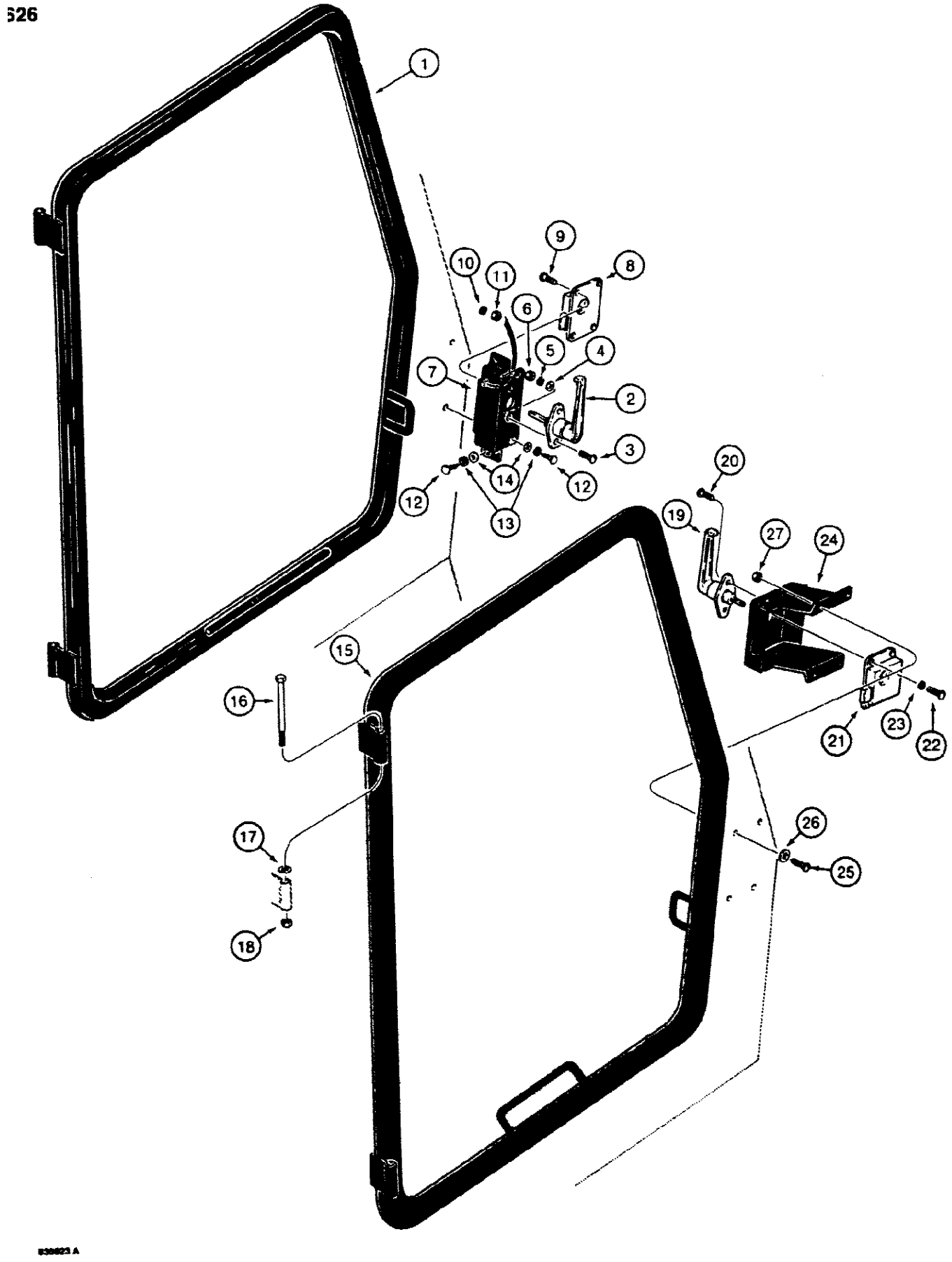

580SE CASE SUPER-E CONSTRUCTION KING LOADER BACKHOE - Chassis/Attachments

626 CAB SIDE WINDOWS

Ref	Part Number	Qty	Description
1	F96713	1	FRAME window, left hand
2	F45168	1	HANDLE window, left hand
3	179-154	2	SCREW machine, oval Phillips head, plated, No. 10 - 24 NC x 5/8"
4	195-513	2	WASHER flat, plated, No. 10
5	192-18	2	WASHER, LOCK, #10
6	129-17	2	NUT hex, plated, No. 10 - 24 NC
7	F44829	1	SUPPORT window latch, left hand
8	F45167	1	LATCH window, left hand
9	113-1	4	BOLT, Hex, 1/4"-20 x 1/2", G5, Full Thd
10	192-19	4	WASHER, LOCK, 1/4"
11	7770	4	NUT, 1/4"-20, G5
12	F45307	4	SCREW special, smooth head, self tapping, requires special tools for installation, Replaces slotted head screw used in production on some models
13	192-18	4	WASHER, LOCK, #10
14	195-513	4	WASHER flat, plated, No. 10
15	F96712	1	FRAME window, right hand
16	113-259	4	BOLT, Hex, 3/8"-16 x 4 1/2", G5
17	F64046	4	WASHER thrust, window frame
18	131-203	4	NUT hex, self locking, plated, 3/8" - 16 NC
19	F45168	1	HANDLE window, right hand
20	179-153	2	SCREW machine, oval Phillips head, plated, No. 10 - 24 NC x 1/2"
21	F45164	1	LATCH window, right hand
22	187-1088	4	SCREW hex washer head, slotted, self tapping, plated, No. 10 - 16 x 1/2"
23	192-18	4	WASHER, LOCK, #10
24	F96825	1	HOUSING latch, right hand
25	182-550	4	SCREW machine, pan Phillips head, plated, No. 10 - 24 NC x 1/2"
26	195-513	4	WASHER flat, plated, No. 10
27	86625057	4	NUT, LOCK, #10-24, GB

628

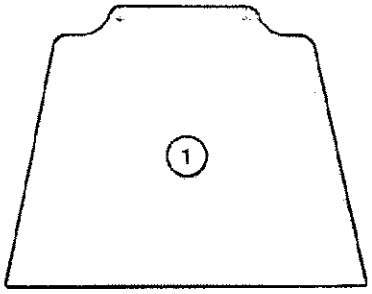
1

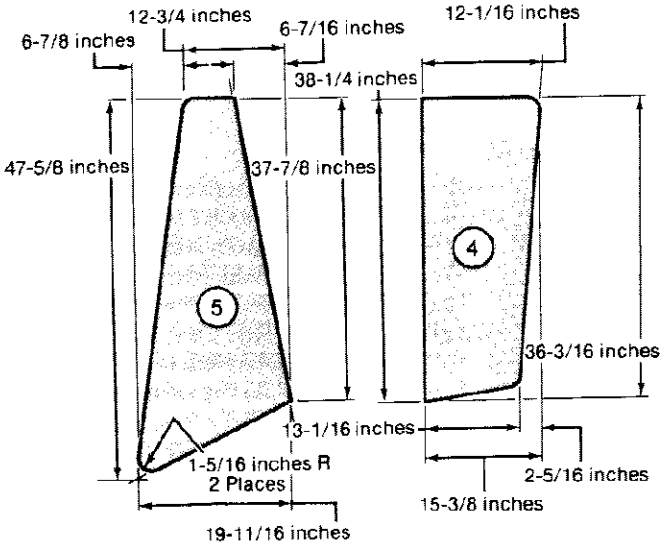
12-3/4 inches
6-7/8 inches
6-7/16 inches
12-1/16 inches
38-1/4 inches
47-5/8 inches
37-7/8 inches
4
5
36-3/16 inches
13-1/16 inches
1-5/16 inches R
2 Places
2-5/16 inches
15-3/8 inches
19-11/16 inches


H
2

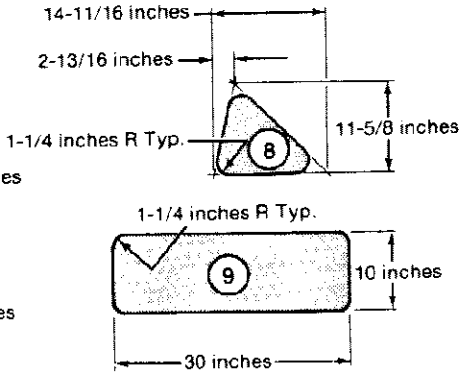
14-11/16 inches
2-13/16 inches
1-1/4 inches R Typ.
8
11-5/8 inches
1-1/4 inches R Typ.
9
10 inches
30 inches

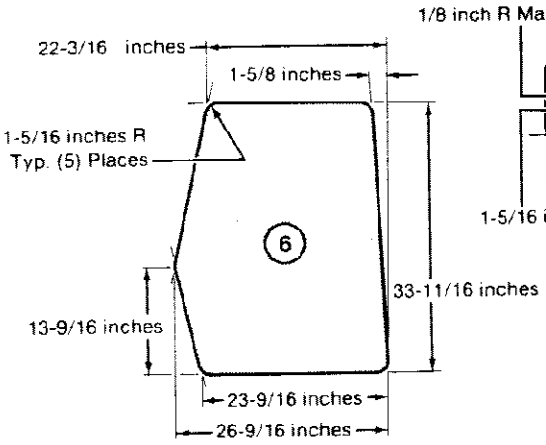
22-3/16 inches
1-5/8 inches
1-5/16 inches R
Typ. (5) Places
6
33-11/16 inches
13-9/16 inches
23-9/16 inches
26-9/16 inches

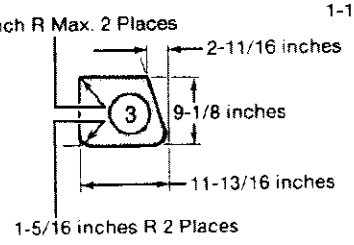
1/8 inch R Max. 2 Places
2-11/16 inches
3
9-1/8 inches
11-13/16 inches
1-5/16 inches R 2 Places

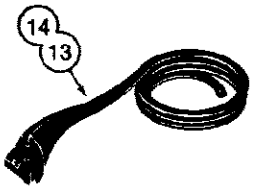
14
13

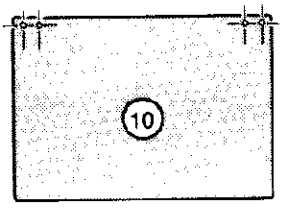
10

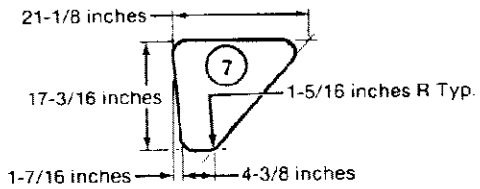
21-1/8 inches
7
17-3/16 inches
1-5/16 inches R Typ.
1-7/16 inches
4-3/8 inches

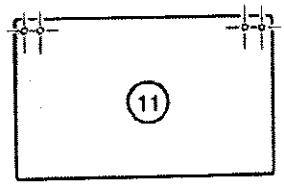
11


12
U

580SE CASE SUPER-E CONSTRUCTION KING LOADER BACKHOE - Chassis/Attachments

628 CAB GLASS - U.S. DIMENSIONS

Ref	Part Number	Qty	Description
1	F44623	1	GLASS windshield, upper, use Ref. 13 seal
2	F44621	1	SUPPORT windshield, bottom of upper windshield
3	REF	2	GLASS windshield, lower, use Ref. 13 seal
4	REF	2	GLASS side, rear, use Ref. 14 seal, REF. 4 THE GLASS SHAPE IS NOT AS SHOWN, THE LEFT SIDE TAPERS TOWARD THE TOP, 12.06 IS CORRECT BUT MEASURED FROM THE UPPER RIGHT CORNER, THE CORNER RADII IS 1.30 TWO PLACES THE OTHER TWO CORNERS ARE A MINIMUM RADIUS.
5	REF	2	GLASS panel, next to rear window, use Ref. 14 seal
6	REF	2	GLASS side windows, use Ref. 13 seal
7	REF	2	GLASS side, front and lower, use Ref. 13 seal
8	REF	2	GLASS rear fenders, use Ref. 13 seal
9	REF	1	GLASS rear closure panel, models without backhoe only, use Ref. 13 seal
10	F44629	1	GLASS rear window, upper
11	F44630	1	GLASS rear window, lower
12	F44710	1	SUPPORT seal, lower rear window, attaches to top of glass
13	A42677	AR	SEAL used around all glass except rear window glass and Ref. 4 and 5, bulk roll, 100 ft long
14	F43628	AR	SEAL used around rear side glass, Ref. 4 and 5, bulk roll, 100 ft long

630

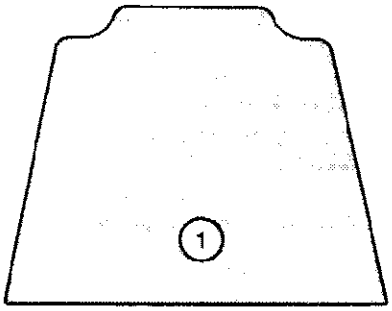
1

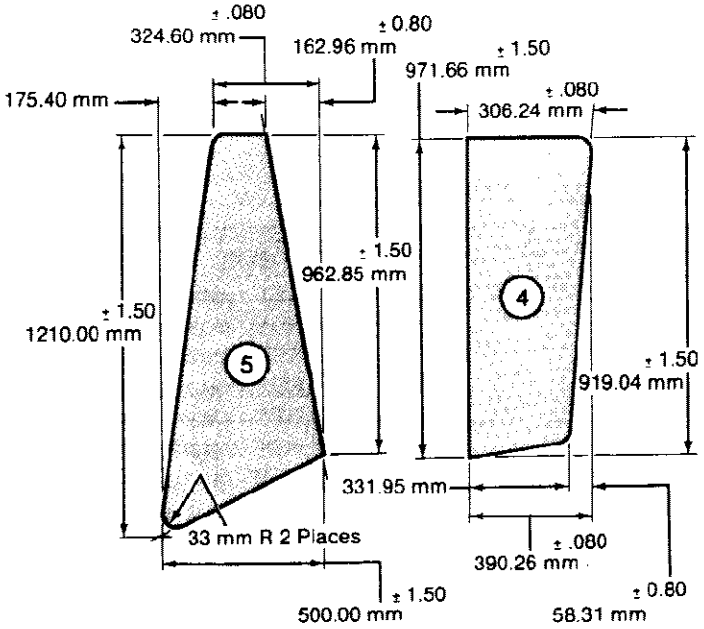
± .080
324.60 mm
± 0.80
162.96 mm
± 1.50
971.66 mm
± .080
306.24 mm
175.40 mm
± 1.50
962.85 mm
± 1.50
1210.00 mm
4
5
± 1.50
919.04 mm
331.95 mm
33 mm R 2 Places
± .080
390.26 mm
± 1.50
500.00 mm
± 0.80
58.31 mm


H
2

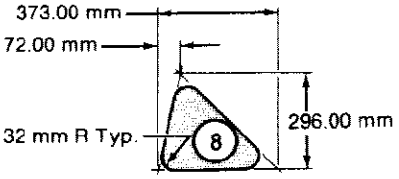
373.00 mm
72.00 mm
32 mm R Typ.
8
296.00 mm

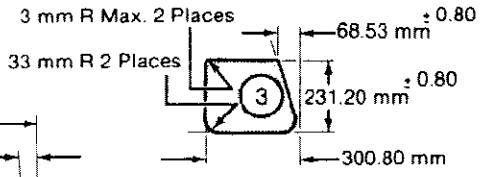
3 mm R Max. 2 Places
68.53 mm
± 0.80
33 mm R 2 Places
3
231.20 mm
± 0.80
300.80 mm

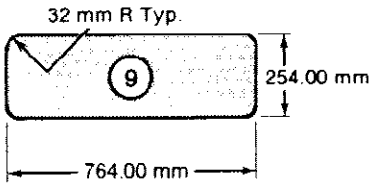
32 mm R Typ.
9
254.00 mm
764.00 mm

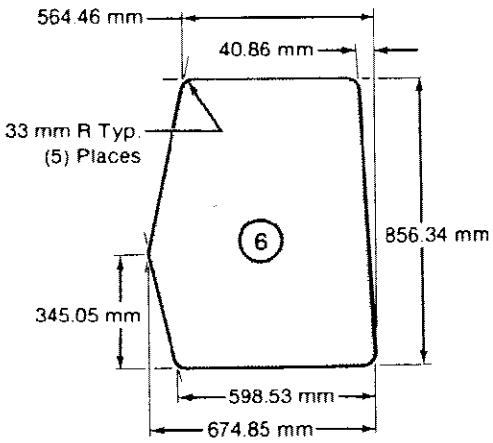
564.46 mm
40.86 mm
33 mm R Typ.
(5) Places
6
856.34 mm
345.05 mm
598.53 mm
674.85 mm

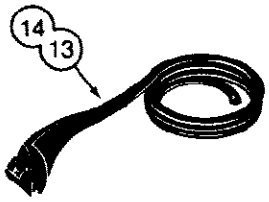
14
13

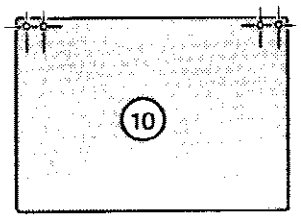
10

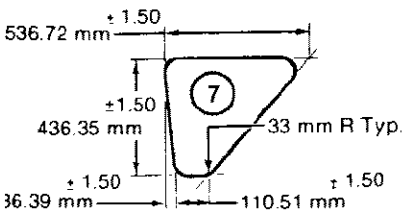
± 1.50
536.72 mm
7
±1.50
436.35 mm
33 mm R Typ.
± 1.50
± 1.50
110.51 mm

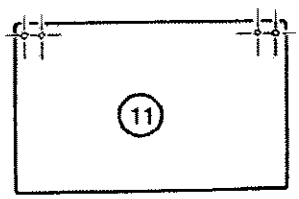
11


12
U

630825 A

630 CAB GLASS - METRIC DIMENSIONS

Ref	Part Number	Qty	Description
1	F44623	1	GLASS windshield, upper, use Ref. 13 seal
2	F44621	1	SUPPORT windshield, bottom of upper windshield
3	REF	2	GLASS windshield, lower, use Ref. 13 seal
4	REF	2	GLASS side, rear, use Ref. 14 seal, REF 4 THE GLASS SHAPE IS NOT AS SHOWN, THE LEFT SIDE TAPERS TOWARD THE TOP, 306.24mm IS CORRECT BUT MEASURED FROM THE UPPER RIGHT CORNER, THE CORNER RADII IS 33mm TWO PLACES THE OTHER TWO CORNERS ARE A MINIMUM RADIUS.
5	REF	2	GLASS panel, next to rear window, use Ref. 14 seal
6	REF	2	GLASS side windows, use Ref. 13 seal
7	REF	2	GLASS side, front, lower, use Ref. 13 seal
8	REF	2	GLASS rear fenders, use Ref. 13 seal
9	REF	1	GLASS rear closure panel, models without backhoe only, use Ref. 13 seal
10	F44629	1	GLASS rear window, upper
11	F44630	1	GLASS rear window, lower
12	F44710	1	SUPPORT seal, lower rear window, attaches to top of glass
13	A42677	AR	SEAL used around all glass except rear window glass and Ref. 4 and 5, bulk roll, 3048 cm long
14	F43628	AR	SEAL used around rear side glass, Ref. 4 and 5, bulk roll, 3048 cm long

532

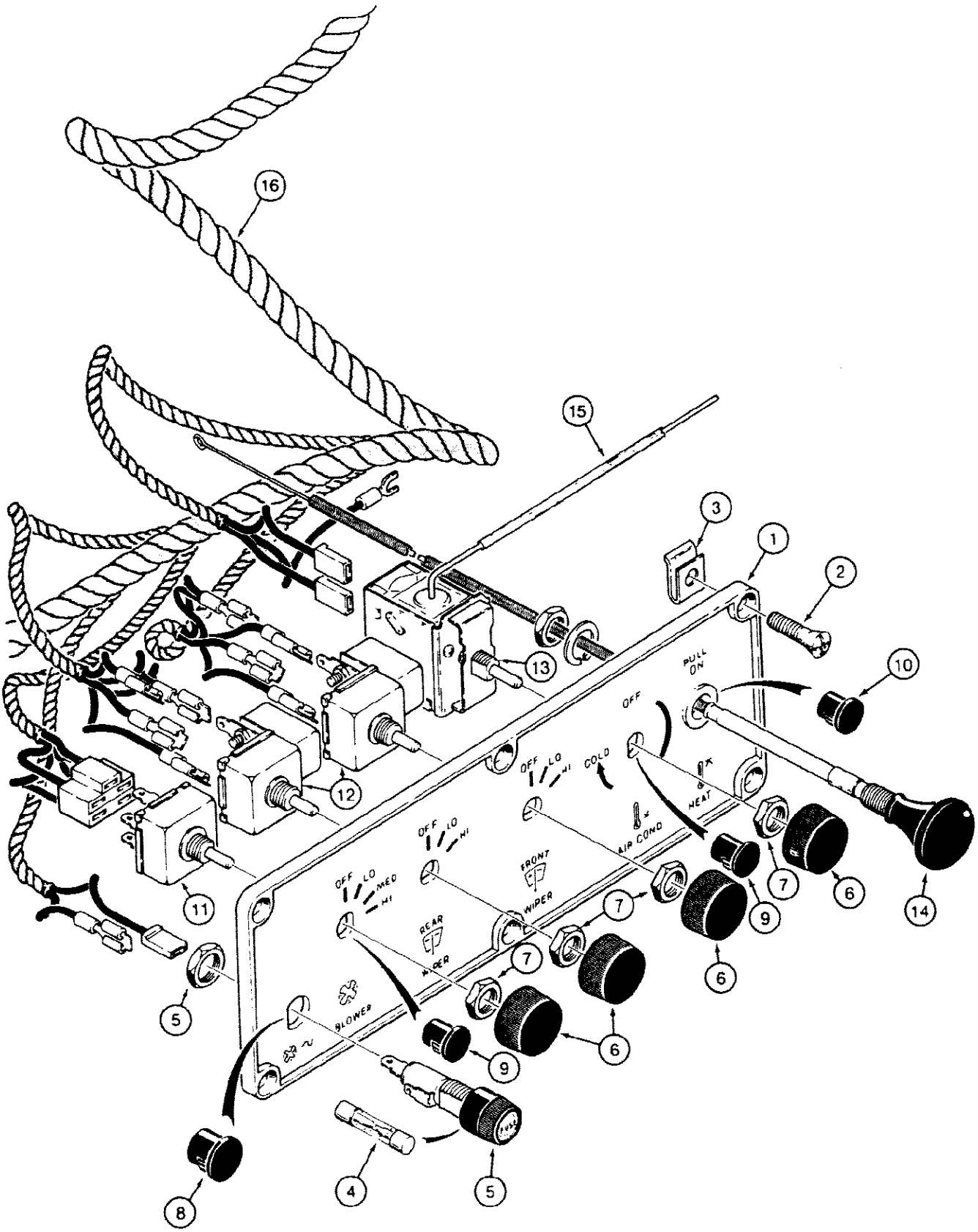
16
15
3
1
2
10
13
12
11
5
9
6
7
14
4
8
PULL ON
OFF
COLD
HEAT
AIR COND
OFF LO HI
OFF LO MED HI
FRONT WIPER
REAR WIPER
BLOWER

800909 A

632 CAB CONTROL PANEL AND WIRING

Ref	Part Number	Qty	Description
1	F44727	1	PANEL control
2	187-1084	6	SCREW oval Phillips head, self tapping, plated, No. 10 - 16 x 3/4"
3	131-861	6	NUT u type, No. 10 - 24 NC
4	223-27	1	FUSE, 20 amp, 3AG20
5	A22874	1	HOLDER fuse
6	A42578	2-4	KNOB switch, use as required, Ref #6 A42578 knob Order part nbr 111282C1 knob
7	A42561	2-4	NUT retaining, switch, use as required
8	353-404	1	PLUG, Dome, .500" hole, Nylon, If used
9	353-403	1-3	PLUG, Dome, .437" hole, Nylon, If used
10	353-402	1	PLUG, Dome, .375" hole, Nylon, If used
11	A42622	1	SWITCH blower
12	A42660	2	SWITCH front and rear windshield wipers
13	L73646	1	SWITCH air conditioner
14	F44755	1	CABLE heat control
15	F44879	1	TUBE from air conditioner switch
16	F45224	1	HARNESS cab, See Figure 128, Ref. 21 for tractor connecting harness

634

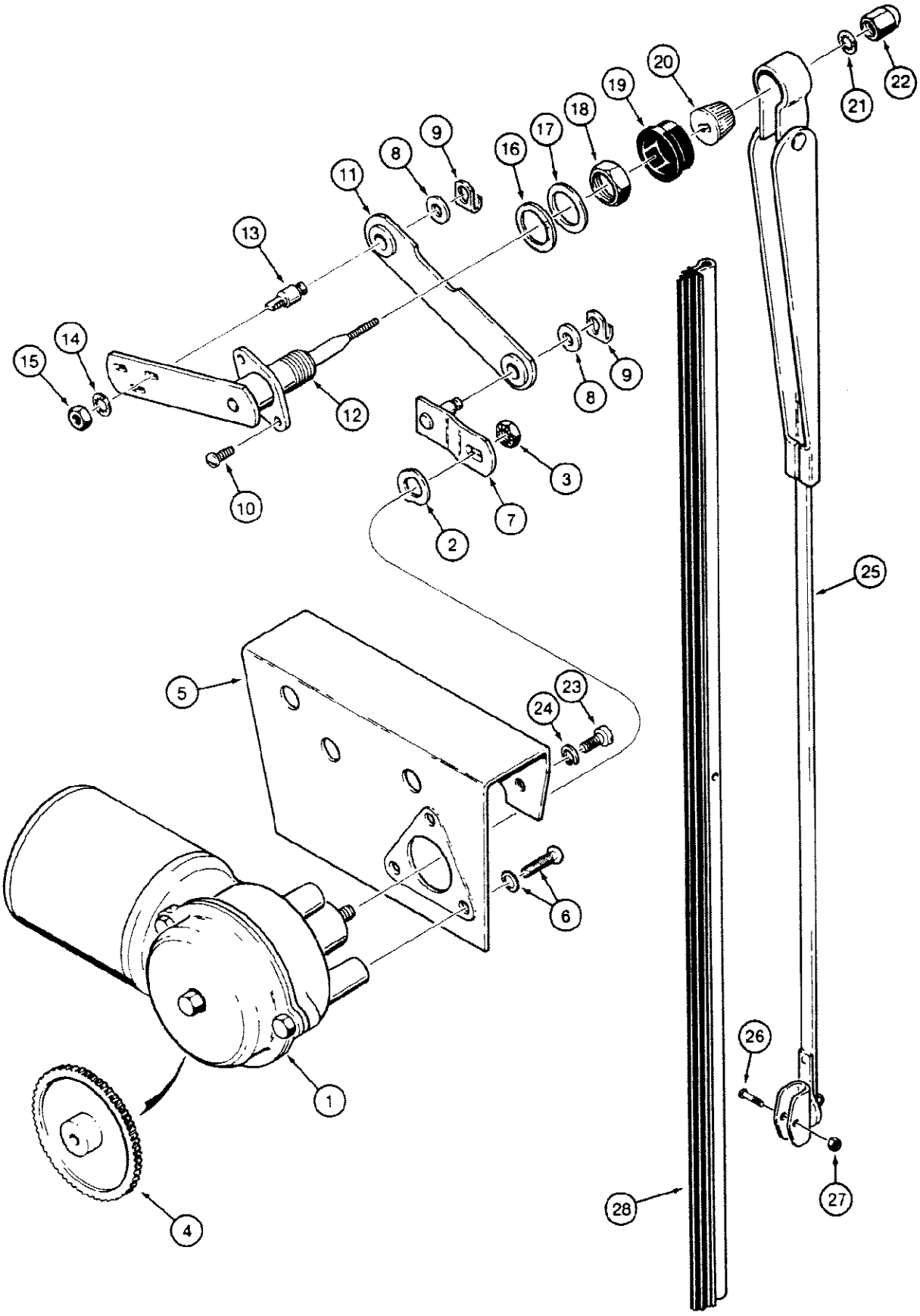

634 CAB FRONT WINDSHIELD WIPER, AMERICAN BOSCH PARTS

Ref	Part Number	Qty	Description
	F96898	1	MOTOR AND BRACKET ASSEMBLY, complete, front windshield wiper, 12 volt, you willl receive American Bosch assembly, see below, or Robert Bosch assembly, See Figure 636, Includes: Ref. 1 - 22 and P/N F96765 and P/N N6714
	F96765	1	MOTOR ASSEMBLY, windshield wiper, American Bosch, front or rear, Includes: Ref. 1 - 4
1	NSS	1	MOTOR windshield wiper
2	D71411	1	WASHER wave
3	F44452	1	NUT hex, lock, plated, 1/4" - 28 NF
4	N6029	1	GEAR plastic drive
5	D72850	1	BRACKET mounting, motor
6	D72849	3	SCREW AND WASHER bracket to motor
7	A36091	1	ARM drive
8	A22431	2	WASHER spacer
9	D71414	2	CLIP spring
10	F44456	2	SCREW pivot shaft to bracket
11	D71427	1	LINK drive arm to pivot shaft
	N6714	1	SHAFT ASSEMBLY, pivot, Includes: Ref. 12 - 22
12	NSS	1	SHAFT pivot
13	D73642	1	BOLT special
14	193-60	1	WASHER, LOCK, Int Tooth, 1/4"
15	425-154	1	NUT, Jam, 1/4"-28, G5
16	N6749	1	WASHER fiber
17	N6750	1	WASHER steel
18	N6751	1	NUT shaft
19	N6752	1	CAP shaft, rubber
20	N6753	1	DRIVER knurled
21	193-68	1	WASHER, LOCK, Int Tooth, 3/8"
22	N6754	1	NUT cap
23	182-548	2	SCREW machine, pan head slotted, plated, 1/4" - 28 NF x 3/8"
24	192-19	2	WASHER, LOCK, 1/4"
25	F44928	1	ARM windshield wiper, 22" (559 mm) long, Includes: Ref. 26 and 27
26	182-567	1	SCREW machine, pan head slotted, plated, No. 5 - 40 NC x 1/2"
27	129-14	1	NUT, #5-40
28	F43938	1	BLADE windshield wiper, 22" (559 mm) long

636

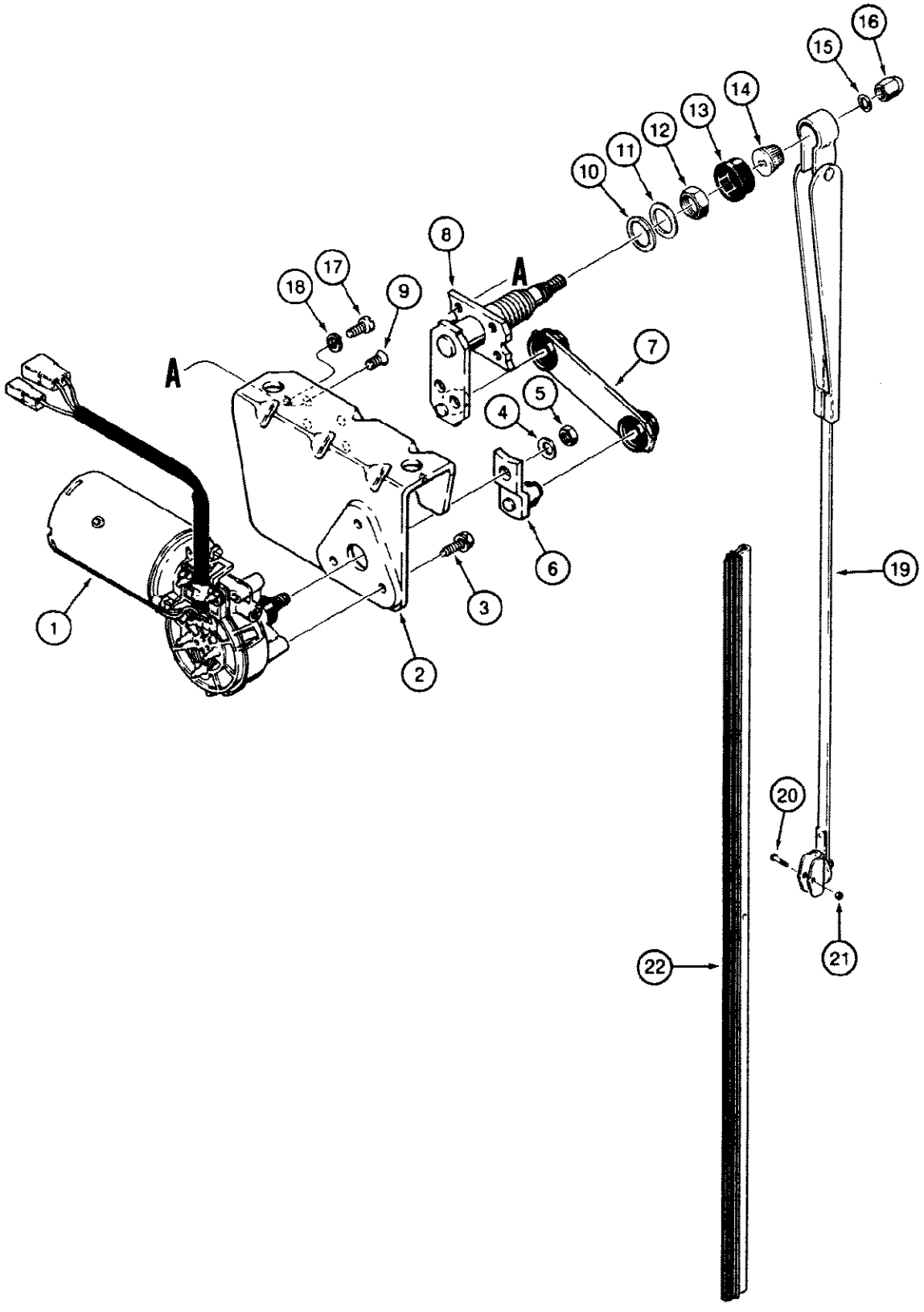

840586

636 CAB FRONT WINDSHIELD WIPER, ROBERT BOSCH PARTS

Ref	Part Number	Qty	Description
	REF	1	MOTOR AND BRACKET ASSEMBLY, complete, front windshield wiper, 12 volt, Robert Bosch, for ordering information See Figure 634, Includes: Ref. 1 - 16
1	F96890	1	MOTOR windshield wiper, 12 volt, Robert Bosch
2	N8359	1	BRACKET windshield wiper assembly
3	N8362	3	SCREW AND WASHER special, motor to bracket
4	N8361	1	WASHER bent, special
5	L112090	1	NUT hex, special, 8 mm
6	N8360	1	ARM drive
7	N9089	1	LINK wiper
8	N9090	1	SHAFT pivot
9	N8356	4	SCREW special, pivot shaft to bracket
10	N6749	1	WASHER fiber
11	N6750	1	WASHER steel
12	N6751	1	NUT shaft
13	N6752	1	CAP shaft, rubber
14	N6753	1	DRIVER knurled
15	193-68	1	WASHER, LOCK, Int Tooth, 3/8"
16	N6754	1	DOME NUT special
17	182-548	2	SCREW machine, pan head slotted, plated, 1/4" - 28 NF x 3/8"
18	192-19	2	WASHER, LOCK, 1/4"
19	F44928	1	ARM windshield wiper, 22" (559 mm) long, Includes: Ref. 20 and 21
20	182-567	1	SCREW machine, pan head slotted, plated, No. 5 - 40 NC x 1/2"
21	129-14	1	NUT, #5-40
22	F43938	1	BLADE windshield wiper, 22" (559 mm) long

638 CAB REAR WINDSHIELD WIPER, MODELS W/SHORT WIPER POSITIONING LEVER (ITEM 42), IF USED

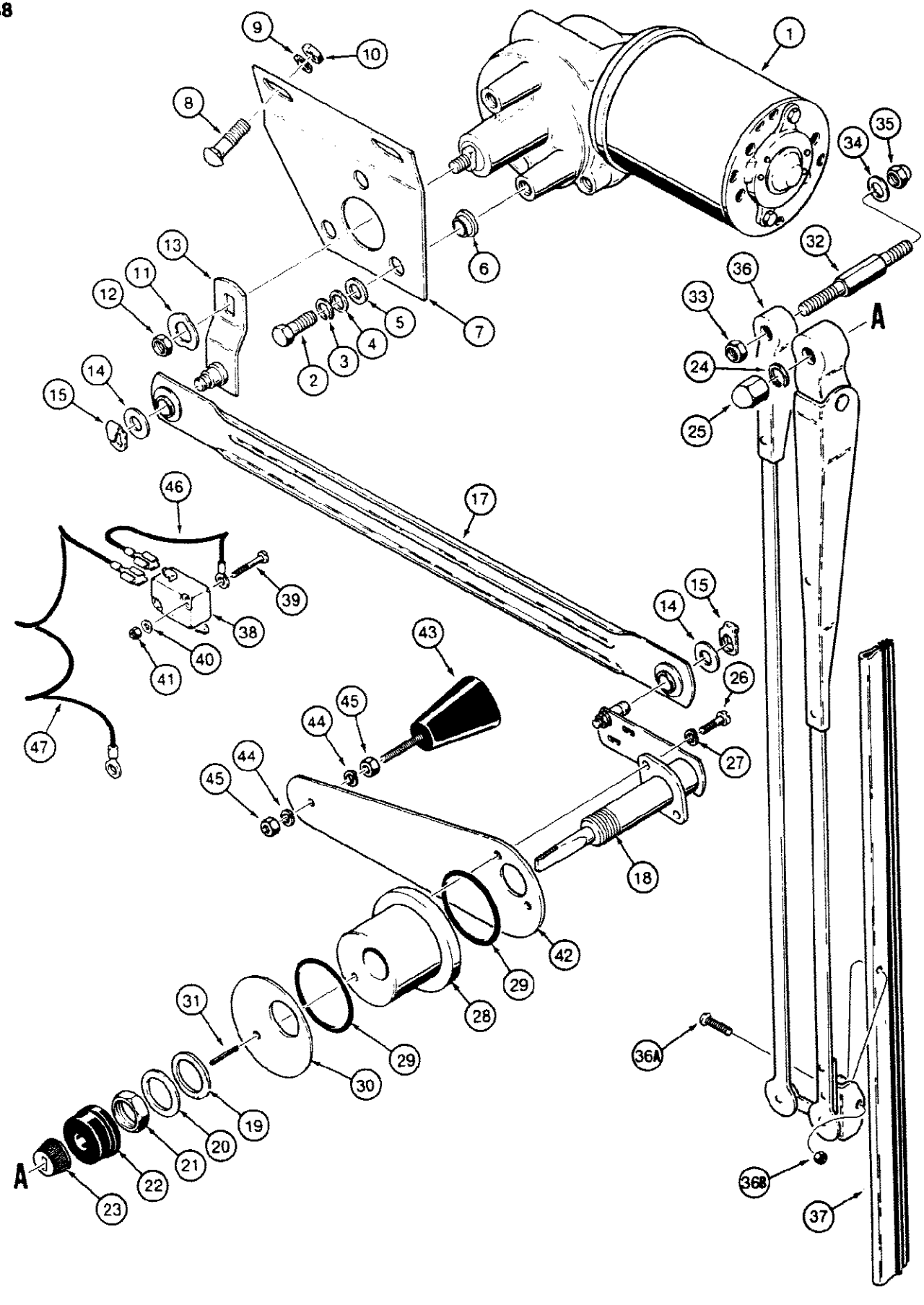

638 CAB REAR WINDSHIELD WIPER, MODELS W/SHORT WIPER POSITIONING LEVER (ITEM 42), IF USED

Ref	Part Number	Qty	Description
1	F96765	1	MOTOR ASSEMBLY, rear windshield wiper, See Figure 634
2	114-7	3	BOLT, Hex, 1/4"-28 x 7/8", G5, Full Thd, Motor to bracket
3	192-19	3	WASHER, LOCK, 1/4"
4	195-521	3	WASHER flat, plated, 5/16"
5	F64384	3	WASHER nylon, insulator
6	F44834	3	BUSHING nylon, motor mounting
7	F44686	1	BRACKET mounting, windshield wiper motor
8	111-203	2	BOLT, CARRIAGE, Short NK, 5/16"-18 x 1", G2, Bracket mounting
9	192-20	2	WASHER, LOCK, 5/16"
10	9635082	2	NUT, 5/16"-18, G5
11	D71411	1	WASHER wave, Included with F96765 motor assembly
12	F44452	1	NUT hex, lock, plated, 1/4" - 28 NF, Included with F96765 motor assembly
13	F64210	1	ARM drive
14	A22431	2	WASHER spacer, drive arm mounting
15	D71414	2	CLIP spring
16			RESERVED
17	F44754	1	LINK drive arm to pivot shaft
	F96719	1	SHAFT ASSEMBLY, pivot, Includes: Ref. 18 - 25
18	NSS	1	SHAFT pivot
19	D71417	1	WASHER fiber
20	D71418	1	WASHER steel
21	D71419	1	NUT shaft
22	D71420	1	CAP shaft
23	D71421	1	DRIVER knurled
24	193-9	1	WASHER, LOCK, Ext Tooth, 5/16"
25	D71422	1	NUT cap
26	182-528	2	SCREW machine, pan head slotted, plated, No. 10 - 32 NF x 1/2"
27	192-18	2	WASHER, LOCK, #10
28	F44821	1	HOUSING pivot shaft
29	D26819	2	O RING housing
30	F44822	1	WASHER pivot shaft
31	138-52	1	PIN, 1/8" x 7/16", Slotted
32	F43960	1	STUD arm mounting
33	425-154	1	NUT, Jam, 1/4"-28, G5
34	195-513	1	WASHER flat, plated, No. 10
35	129-642	1	NUT dome, hex, plated, No. 10 - 24 NC
36	F44823	1	ARM windshield wiper, 17" (432 mm) long, Includes: Ref. 36A and 36B
36A	182-567	1	SCREW machine, pan head slotted, plated, No. 5 - 40 NC x 1/2", blade attaching
36B	129-14	1	NUT, #5-40, Blade attaching
37	F43574	1	BLADE windshield wiper, 14" (356 mm) long
38	F43348	1	SWITCH windshield wiper arm return

638 CAB REAR WINDSHIELD WIPER, MODELS W/SHORT WIPER POSITIONING LEVER (ITEM 42), IF USED

Ref	Part Number	Qty	Description
39	182-575	2	SCREW machine, pan Phillips head, plated, No. 4 - 40 NC x 3/4"
40	195-505	2	WASHER, #4
41	131-1409	2	NUT, LOCK, #4-40, GB
42	F44813	1	LEVER windshield wiper position control
43	F44877	1	KNOB position control lever, windshield wiper
44	192-18	2	WASHER, LOCK, #10
45	129-37	2	NUT, #10-32
46	F43620	1	WIRE ground
47	F43621	1	WIRE motor to switch
48	321-5801	1	DECAL Caution, manually position wiper blade in stowed position before lowering window, not shown, See Figure 670

642 CAB REAR WINDSHIELD WIPER, MODELS W/LONG WIPER POSITIONING LEVER, REF. 29, IF USED

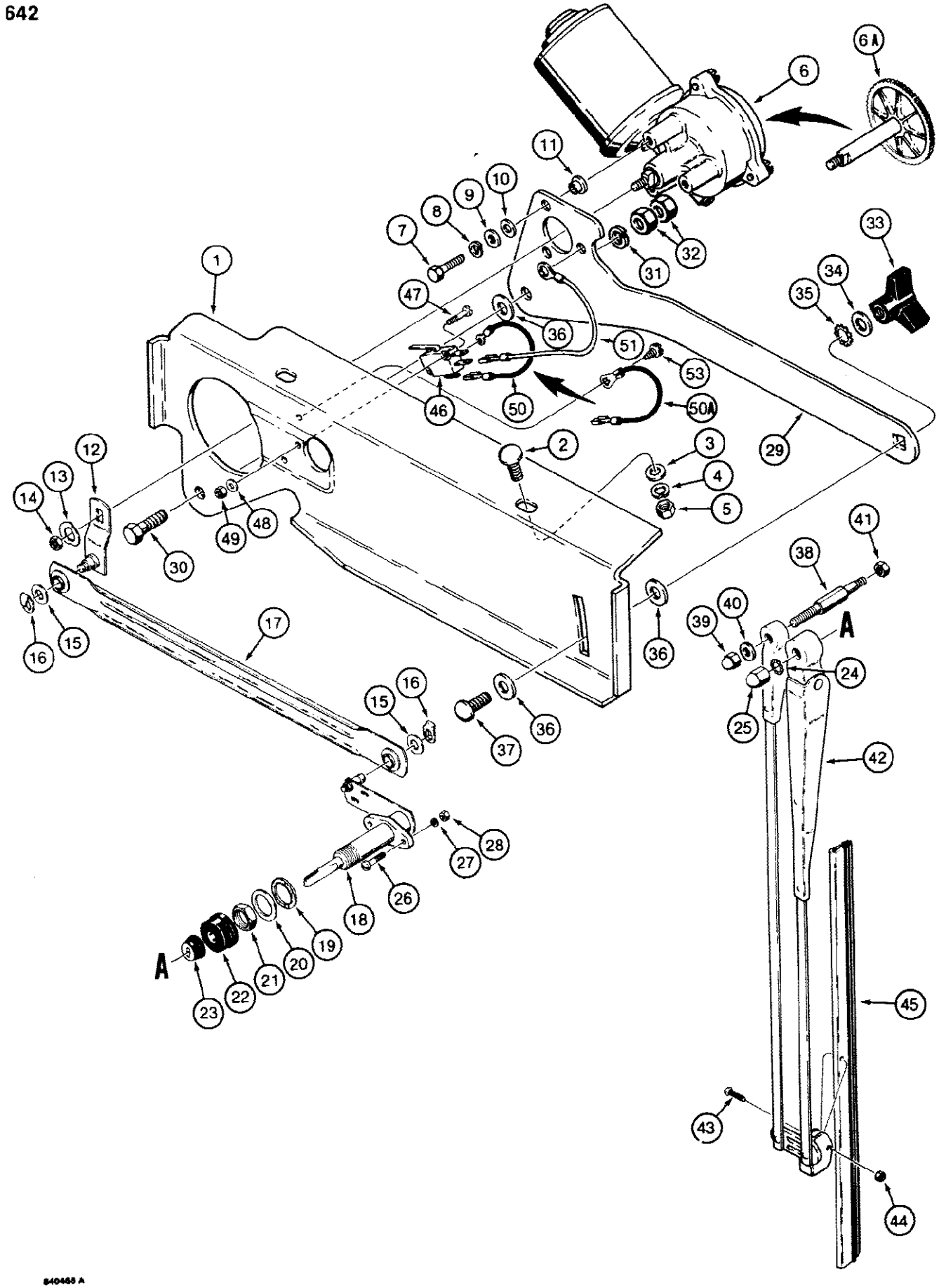

580SE CASE SUPER-E CONSTRUCTION KING LOADER BACKHOE - Chassis/Attachments

642 CAB REAR WINDSHIELD WIPER, MODELS W/LONG WIPER POSITIONING LEVER, REF. 29, IF USED

Ref	Part Number	Qty	Description
1	F45269	1	BRACKET wiper assembly mounting
2	111-255	2	BOLT, CARRIAGE, Short NK, 5/16"-18 x 3/4", G5
3	195-521	2	WASHER flat, plated, 5/16"
4	192-20	2	WASHER, LOCK, 5/16"
5	9635082	2	NUT, 5/16"-18, G5
6	F96765	1	MOTOR ASSEMBLY, rear windshield wiper, 12 volt, American Bosch, See Figure 634, if used
6	F96911	1	MOTOR ASSEMBLY, rear windshield wiper, 12 volt, United Technologies No. 48456-24, Includes Ref. 6A, 13, and 14, if used, Includes: Ref. 6A
6A	N13124	1	SHAFT ASSEMBLY, with gear
7	114-7	3	BOLT, Hex, 1/4"-28 x 7/8", G5, Full Thd
8	192-19	3	WASHER, LOCK, 1/4"
9	195-518	3	WASHER flat, plated, 1/4"
10	F64384	3	WASHER nylon
11	F44834	3	BUSHING nylon
12	F64210	1	ARM drive
13	D71411	1	WASHER wave
14	F44452	1	NUT special, self locking
15	A22431	2	WASHER drive links
16	D71414	2	CLIP spring, drive link
17	F44754	1	LINK drive arm to pivot shaft
	D71415	1	SHAFT ASSEMBLY, pivot, Includes: Ref. 18 - 25
18	NSS	1	SHAFT pivot
19	D71417	1	WASHER fiber
20	195-2069	1	WASHER flat, 5/8" ID x 15/16" OD, Replaces washer with larger OD supplied with D71415 pivot shaft assembly
21	D71419	1	NUT shaft
22	D71420	1	CAP shaft
23	D71421	1	DRIVER knurled
24	193-9	1	WASHER, LOCK, Ext Tooth, 5/16"
25	D71422	1	NUT dome, shaft
26	169-168	2	SCREW machine, Fillister head slotted, plated, No. 10 - 24 NC x 5/8", REF. 26, No longer offered. Suggested replacement is part # 440 11010
27	192-18	2	WASHER, LOCK, #10
28	129-17	2	NUT hex, plated, No. 10 - 24 NC
29	F45268	1	LEVER wiper positioning
30	113-103	1	BOLT, Hex, 5/16"-18 x 1", G5, Full Thd
31	192-20	1	WASHER, LOCK, 5/16"
32	131-176	2	NUT hex, self locking, plated, 5/16" - 18 NC
33	F63415	1	KNOB wiper position lever
34	195-521	1	WASHER flat, plated, 5/16"
35	193-9	1	WASHER, LOCK, Ext Tooth, 5/16"

642 CAB REAR WINDSHIELD WIPER, MODELS W/LONG WIPER POSITIONING LEVER, REF. 29, IF USED

Ref	Part Number	Qty	Description
36	F64046	3	WASHER plastic
37	111-255	1	BOLT, CARRIAGE, Short NK, 5/16"-18 x 3/4", G5
38	F43960	1	STUD wiper arm mounting
39	129-642	1	NUT hex, plated, No. 10 - 24 NC
40	195-513	1	WASHER flat, plated, No. 10
41	425-154	1	NUT, Jam, 1/4"-28, G5
42	F45284	1	ARM windshield wiper, 17" (432 mm) long, Includes: Ref. 43 and 44
43	182-567	1	SCREW machine, pan head slotted, plated, No. 5 - 40 NC x 1/2", blade attaching
44	129-14	1	NUT, #5-40, Blade attaching
45	F43574	1	BLADE windshield wiper, 14" (356 mm) long
46	F43348	1	SWITCH windshield wiper arm return
47	182-575	2	SCREW machine, pan Phillips head, plated, No. 4 - 40 NC, 3/4"
48	195-505	2	WASHER, #4
49	131-1409	2	NUT, LOCK, #4-40, GB
50	F43620	1	WIRE with No. 4 size eyelet, grounds to switch, Ref. 46, using switch mounting hardware, if used
50A	F45354	1	WIRE with No. 10 size eyelet, grounds to wiper mounting bracket using Ref. 53 screw, if used
51	F45272	1	WIRE switch to windshield wiper motor
52	F45339	1	DECAL Important, park wiper before lowering window, not shown, See Figure 670
53	187-1088	1	SCREW hex washer head, slotted, self tapping, plated, No. 10 - 16 x 1/2", grounds item 50A wire to bracket, Ref. 1, if used

646

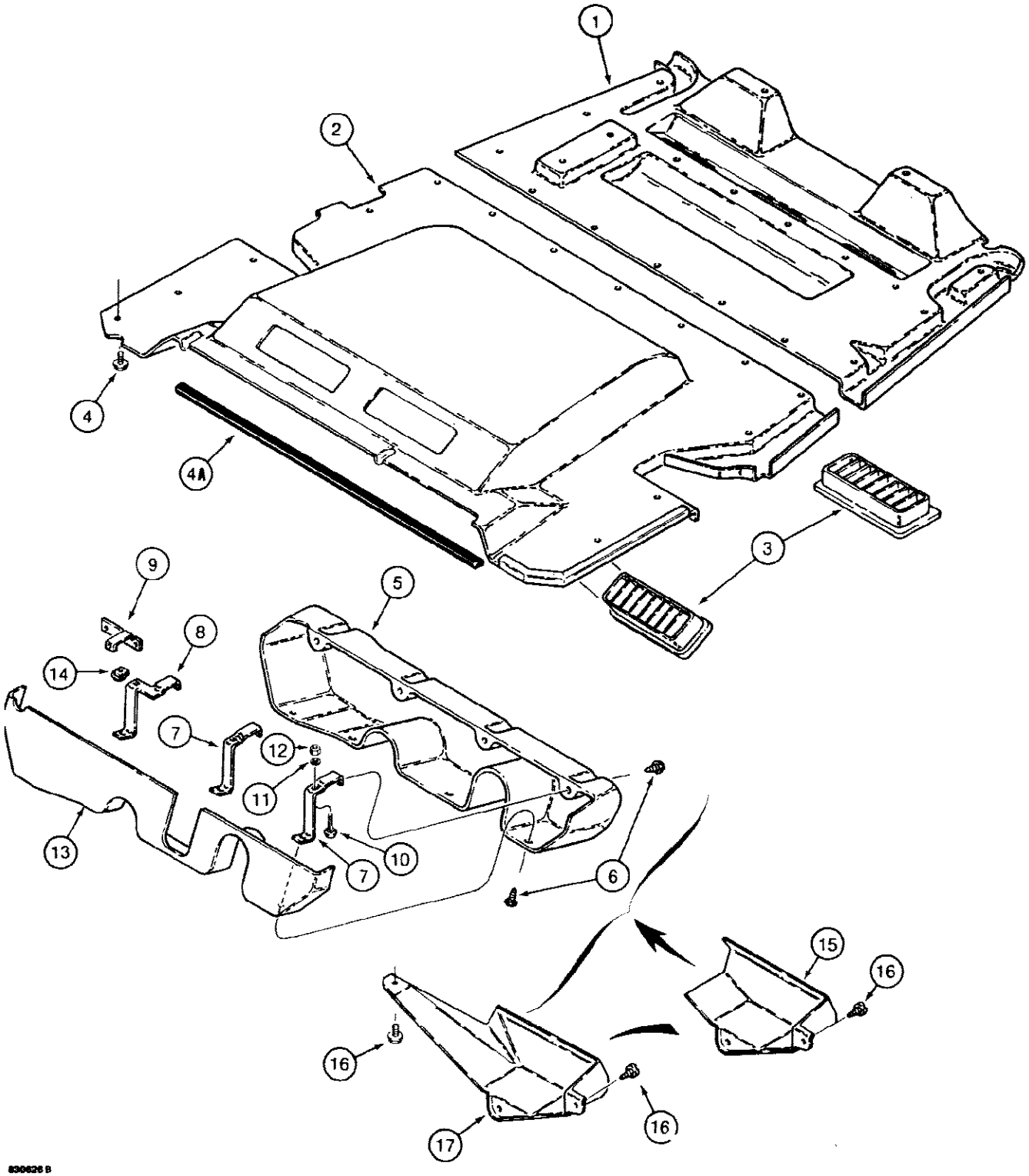

580SE CASE SUPER-E CONSTRUCTION KING LOADER BACKHOE - Chassis/Attachments

646 CAB HEADLINER AND WINDSHIELD WIPER COVERS, REAR WINDSHIELD WIPER MOTOR COVER

Ref	Part Number	Qty	Description
1	F45342	1	HEADLINER front, cab headliner and windshield wiper covers
2	F45343	1	HEADLINER rear, cab headliner and windshield wiper covers
3	L109555	5	LOUVER headliner, cab headliner and windshield wiper covers
4	F64519	34	SCREW special, cab headliner and windshield wiper covers
4A	REF	1	SEAL foam, rear headliner, 23-5/8" (600 mm) long, cut from A42905, see below, cab headliner and windshield wiper covers
5	F45222	1	COVER rear windshield wiper, front, used with Ref. 13, if used, two piece rear windshield wiper covers, if used
6	F64519	8	SCREW special, two piece rear windshield wiper covers, if used
7	F42837	2	BRACKET cover mounting, straight, two piece rear windshield wiper covers, if used
8	F41977	1	BRACKET cover mounting, bent, two piece rear windshield wiper covers, if used
9	F42836	1	BRACKET wiper cover support, two piece rear windshield wiper covers, if used
10	111-102	3	BOLT plated, 1/4" - 20 NC x 5/8", two piece rear windshield wiper covers, if used
11	192-19	3	WASHER, LOCK, 1/4", 2 piece rear windshield wiper covers, if used
12	7770	3	NUT, 1/4"-20, G5, Two piece rear windshield wiper covers, if used
13	F45221	1	COVER rear windshield wiper, used with Ref. 5, if used, two piece rear windshield wiper covers, if used
14	131-861	1	NUT u type, No. 10 - 24 NC, two piece rear windshield wiper covers, if used
15	F45306	1	COVER rear windshield wiper motor, no longer used, Replace with Ref. 17, one piece rear windshield wiper covers, if used
16	F64519	1-2	SCREW special, one used with Ref. 15 cover, two used with Ref. 17 cover, one piece rear windshield wiper covers, if used
17	F45386	1	COVER rear windshield wiper motor, long, Replaces Ref. 15 cover used in production on some models, one piece rear windshield wiper covers, if used
	A42905	UAR	SEAL foam, bulk roll, adhesive backed, 1/2" (13 mm) wide x 1/8" (3 mm) thick x 50 ft (15.2 m) long, one piece rear windshield wiper covers, if used

648 CAB AIR FILTER AND ROOF INSULATION

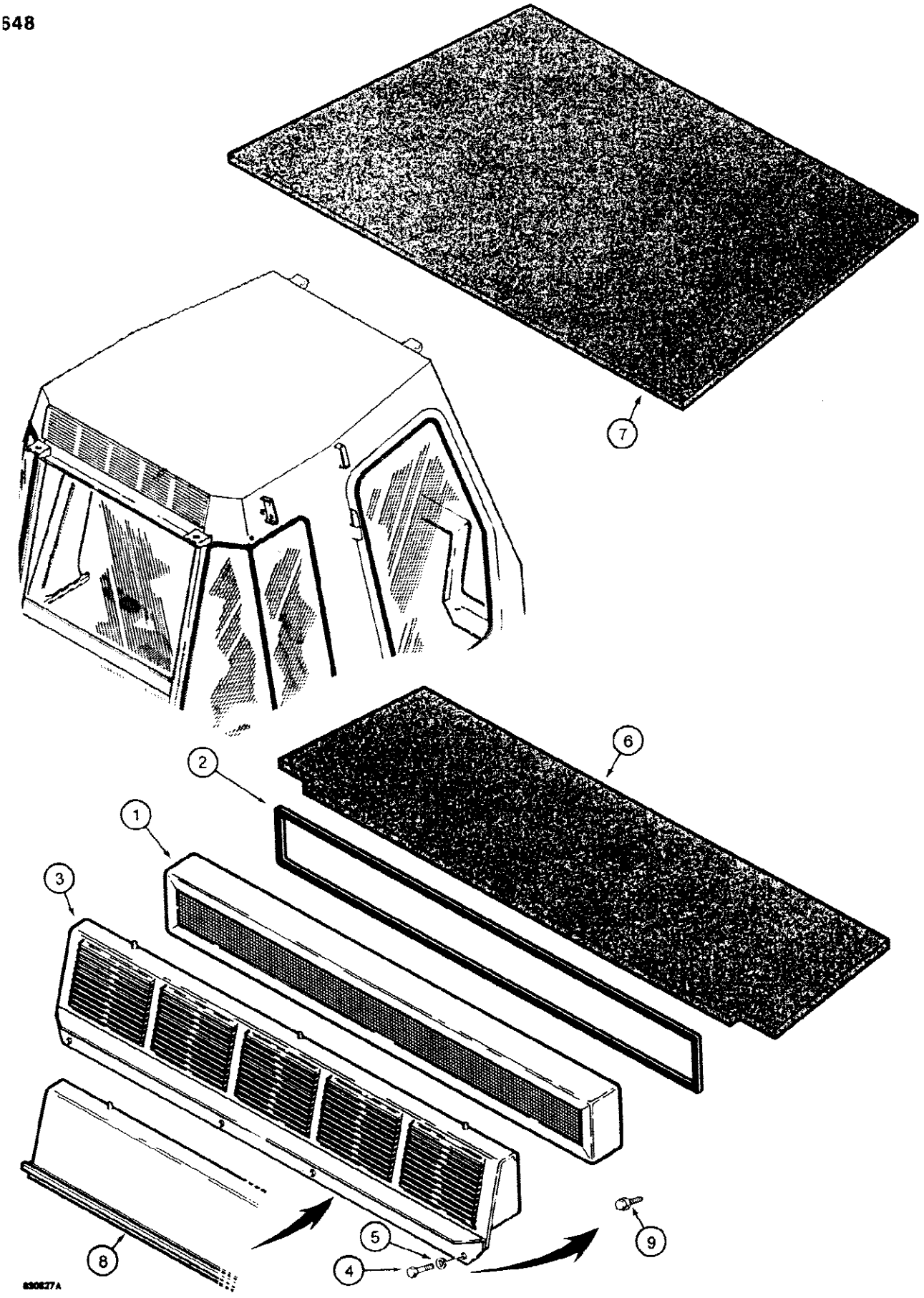

648 CAB AIR FILTER AND ROOF INSULATION

Ref	Part Number	Qty	Description
1	F44714	1	FILTER air
2	F44774	1	SEAL filter
3	F96711	1	COVER filter, with louvers, if used
4	113-102	4	BOLT, Hex, 5/16"-18 x 3/4", G5, Full Thd, If used, may be replaced with Ref. 9 bolt
5	192-20	4	WASHER, LOCK, 5/16", Used with Ref. 4 bolt only, if used
6	F44800	1	LINING roof, rear
7	F44799	1	LINING roof, front
8	F96714	1	COVER filter, without louvers, if used
9	256873	4	BOLT, Hex Flg, 5/16"-18 x 1/2", Serr, If used

650

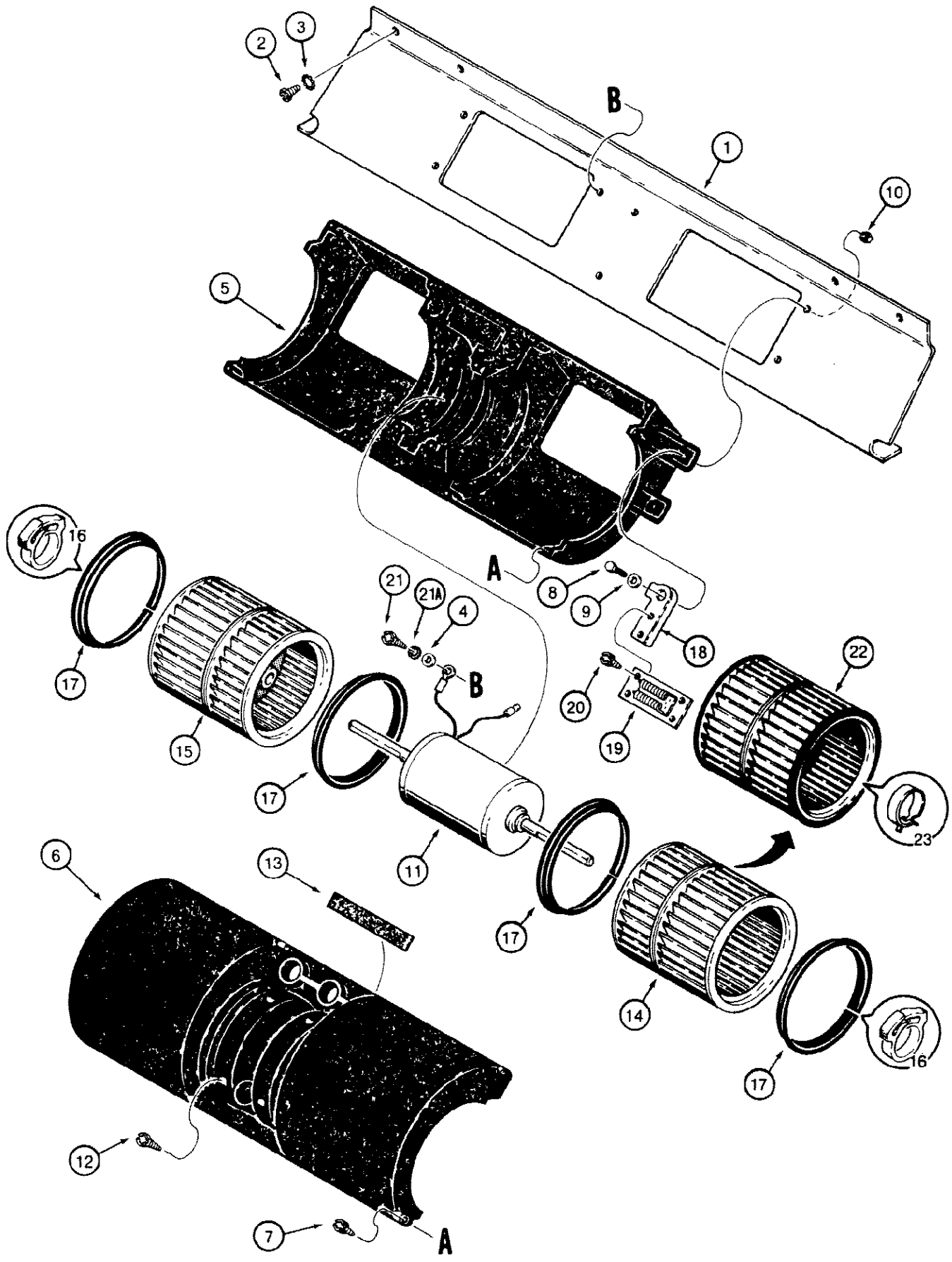

B30628 A

580SE CASE SUPER-E CONSTRUCTION KING LOADER BACKHOE - Chassis/Attachments

650 CAB BLOWER

Ref	Part Number	Qty	Description
1	F45208	1	BRACKET blower mounting
2	187-1903	4	SCREW hex head, self tapping, plated, No. 12 - 24 NC x 1/2", Replaces No. 10 screw used on some models
3	193-7	4	WASHER, LOCK, Ext Tooth, #12, Replaces No. 10 washer used on some models
4	195-513	3	WASHER flat, plated, No. 10
5	F64740	1	HOUSING fans, lower
6	F64741	1	HOUSING fans, upper
7	187-1916	8	SCREW pan head, self tapping, plated, No. 8 - 16 x 3/4"
8	163-13	4	SCREW machine, hex head, plated, No. 10 - 24 NC x 3/4"
9	195-513	4	WASHER flat, plated, No. 10
10	131-1142	4	NUT, LOCK, #10-24, GA
11	F96901	1	MOTOR blower, 12 volt, Ref #11 F96901 blower motor Some units may have A176906 blower motor, # on motor is 7231FB12V8434 overall length 13 15/16", O.D. motor 3.560"
12	187-1920	4	SCREW pan head, self tapping, plated, No. 8 - 16 x 1"
13	REF	1	SEAL foam, upper fan housing, 4" (102 mm) long, cut from F64119 bulk, see below
14	F45020	1	FAN blower, right hand, with offset hub, uses plastic clamp, Ref. 16, if used
15	F45021	1	FAN blower, left hand, with offset hub, uses plastic clamp, if used
16	F64815	2	CLAMP plastic, fan retaining, if used
17	F64739	4	RING plastic, fan retaining
18	F66204	1	BRACKET resistor mounting
19	F44900	1	RESISTOR blower
20	187-1916	2	SCREW pan head, self tapping, plated, No. 8 - 16 x 3/4"
21	187-1088	3	SCREW hex washer head, slotted, self tapping, plated, No. 10 - 16
21A	193-6	3	WASHER, LOCK, Ext Tooth, #10
22	F64935	2	FAN blower, with centered hub, uses Ref. 22 steel clamp, if used
23	F64936	2	CLAMP steel spring, if used
	F64119	AR	SEAL foam, bulk roll, 100 ft. (3048 cm) long

652 CAB HEATER, HOSES ROUTED ON THE LEFT-HAND SIDE OF THE CHASSIS

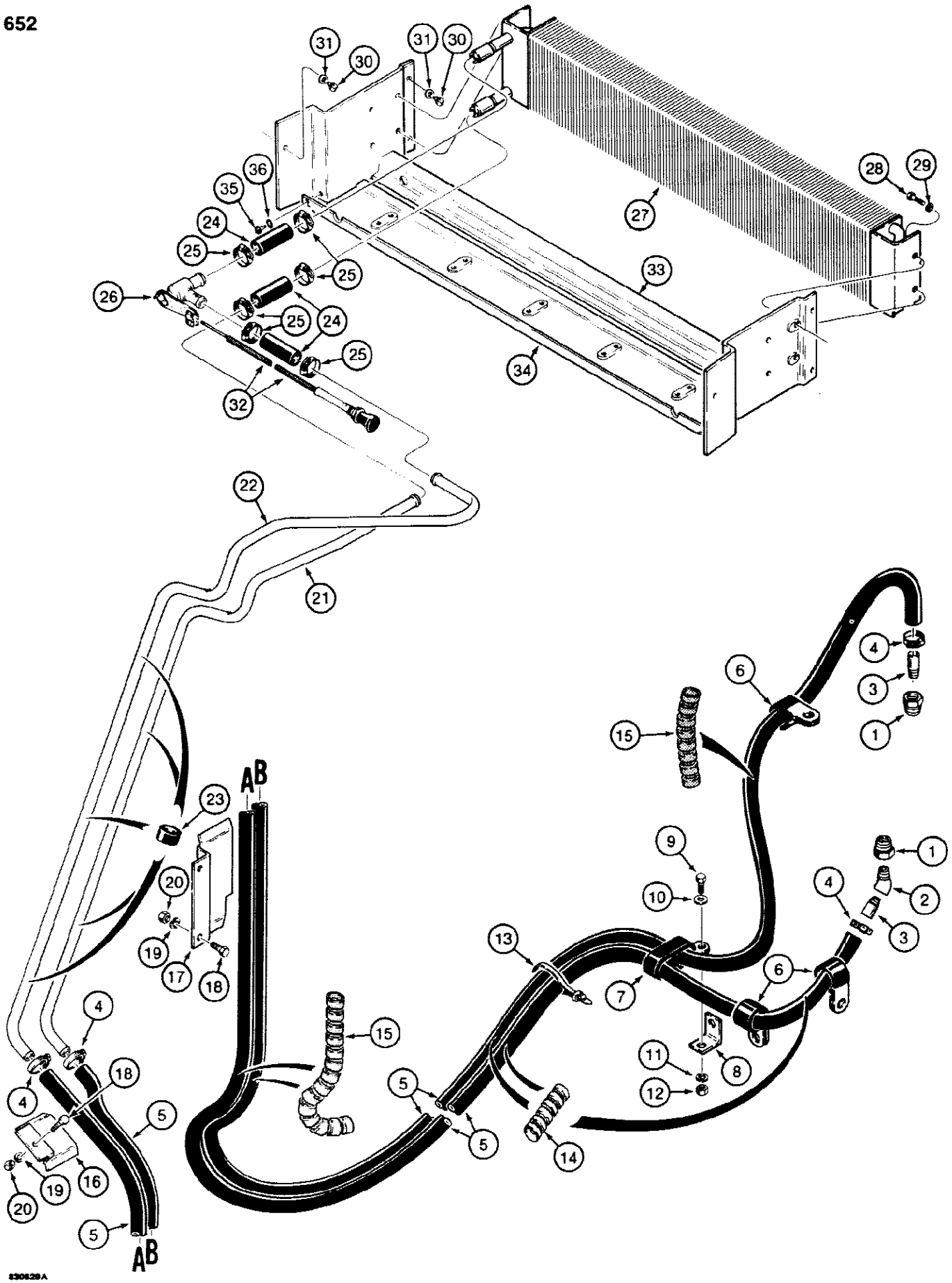

580SE CASE SUPER-E CONSTRUCTION KING LOADER BACKHOE - Chassis/Attachments

652 CAB HEATER, HOSES ROUTED ON THE LEFT-HAND SIDE OF THE CHASSIS

Ref	Part Number	Qty	Description
1	221-89	2	REDUCER, 1/2" x 3/8" NPT
2	D73369	1	ELBOW street, 45 degree, 3/8" NPT
3	L17985	2	NIPPLE, 3/8" NPT
4	214-253	4	CLAMP hose, adjustable
5	D88902	2	HOSE heater, 137-3/4" (3500 mm) long, cut from A42610 bulk hose, see below
6	R14668	3	CLAMP p style
7	D39696	1	CLAMP double p style
8	D126742	1	BRACKET hose
9	113-206	1	BOLT, Hex, 3/8"-16 x 3/4", G5, Full Thd
10	195-525	1	WASHER flat, plated, 3/8"
11	192-21	1	WASHER, LOCK, 3/8"
12	129-103	1	NUT, 3/8"-16, G5
13	L18337	1	STRAP tie, nylon, 15 inch
14	D94364	3	GUARD heater hoses, 9-7/8" (250 mm) long
15	D120221	3	GUARD heater hoses, 27-1/2" (700 mm) long
16	D87758	1	BRACKET hose, left hand fender, small, upper
17	D87759	1	BRACKET hose, left hand fender, large, lower
18	113-206	3	BOLT, Hex, 3/8"-16 x 3/4", G5, Full Thd
19	192-21	3	WASHER, LOCK, 3/8"
20	129-103	3	NUT, 3/8"-16, G5
21	F44938	1	TUBE heater inlet
22	F44939	1	TUBE heater outlet
23	F64347	5	GUARD heater tubes
24	REF	3	HOSE, 2" (51 mm) long, cut from A42610 bulk hose, see below, heater tubes to valve 3 and core
25	214-253	6	CLAMP hose, worm screw type
26	F63865	1	VALVE flow control, heater
27	F45204	1	CORE heater
28	113-6	4	BOLT, Hex, 1/4"-20 x 3/8", G5, Full Thd
29	192-19	4	WASHER, LOCK, 1/4"
30	187-1903	6	SCREW hex head, self tapping, plated, No. 12 - 24 NC x 1/2"
31	193-7	6	WASHER, LOCK, Ext Tooth, #12
32	REF	1	CABLE heater control, See Figure 632
33	F96821	1	BRACKET heater core
34	F96820	1	PANEL heater core
35	187-460	2	SCREW hex head, indented hex washer head, slotted, black, No. 10 - 16 NC x 1/2"
36	193-6	2	WASHER, LOCK, Ext Tooth, #10
	A42610	AR	HOSE bulk, 5/8" (16 mm) ID x 1" (25 mm) OD x 50 ft (1524 cm) long

654 CAB HEATER, HOSES ROUTED ON THE RIGHT-HAND SIDE OF THE CHASSIS

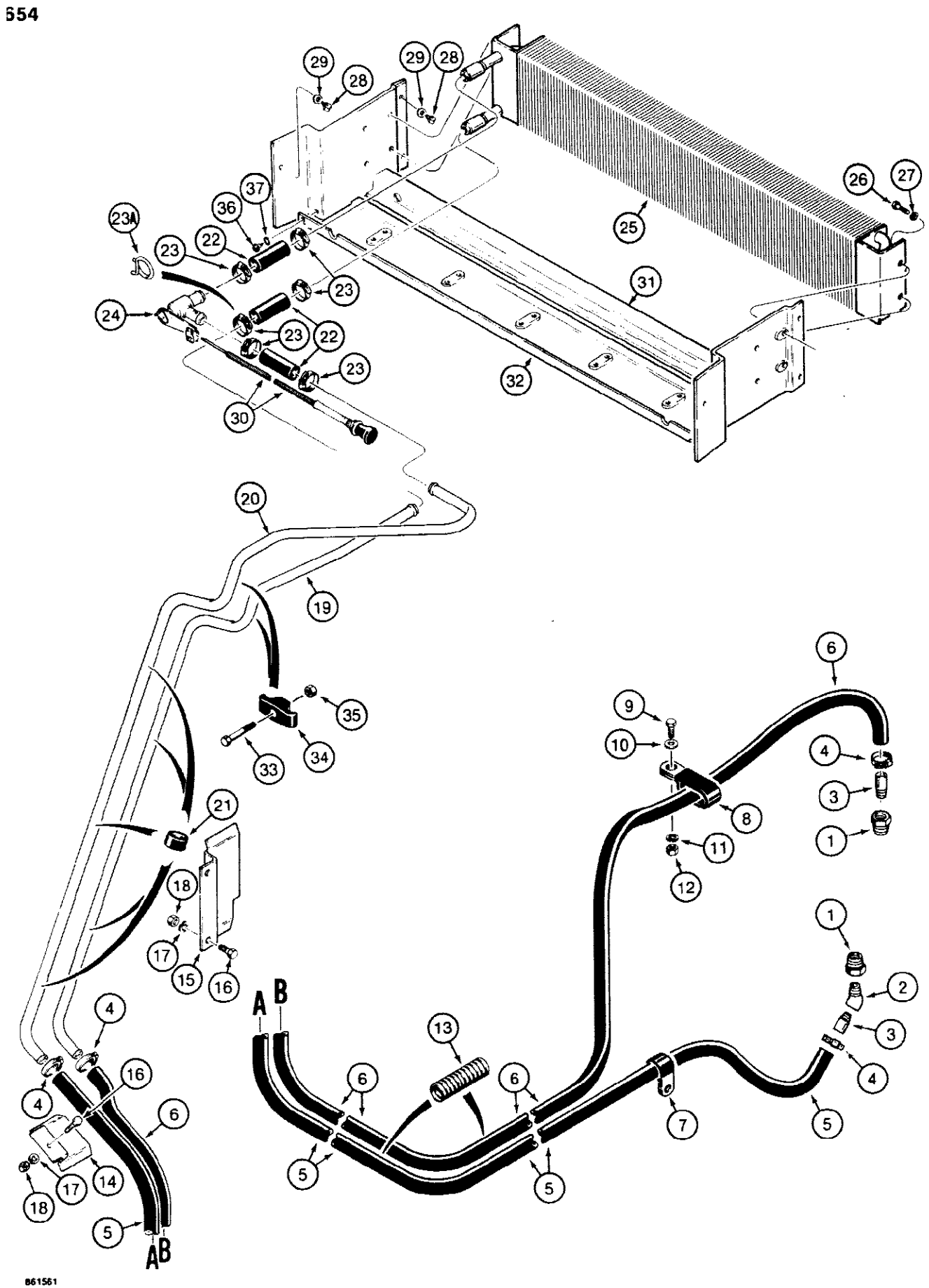

580SE CASE SUPER-E CONSTRUCTION KING LOADER BACKHOE - Chassis/Attachments

654 CAB HEATER, HOSES ROUTED ON THE RIGHT-HAND SIDE OF THE CHASSIS

Ref	Part Number	Qty	Description
1	221-89	2	REDUCER, 1/2" x 3/8" NPT
2	D73369	1	ELBOW street, 45 degree, 3/8" NPT
3	L17985	2	NIPPLE, 3/8" NPT
4	214-253	4	CLAMP hose, adjustable
5	D135462	1	HOSE heater outlet, 5/8" (16 mm) ID x 143-23/32" (3650 mm) long, cut from A42610 bulk hose, see below
6	D134397	1	HOSE heater inlet, 5/8" (16 mm) ID x 161-7/16" (4100 mm) long, cut from A42610 bulk hose, see below
7	D41564	1	CLAMP p style
8	D39696	1	CLAMP double p style, mounts to air cleaner bracket
9	113-206	1	BOLT, Hex, 3/8"-16 x 3/4", G5, Full Thd
10	195-525	1	WASHER flat, plated, 3/8"
11	192-21	1	WASHER, LOCK, 3/8"
12	129-103	1	NUT, 3/8"-16, G5
13	D134399	2	GUARD heater hoses, 1-3/32" (28 mm) ID x 120-7/8" (3070 mm) long
14	D87758	1	BRACKET hose, left hand fender, small, upper
15	D87759	1	BRACKET hose, left hand fender, large, lower
16	113-206	3	BOLT, Hex, 3/8"-16 x 3/4", G5, Full Thd
17	192-21	3	WASHER, LOCK, 3/8"
18	129-103	3	NUT, 3/8"-16, G5
19	F44938	1	TUBE heater inlet
20	F44939	1	TUBE heater outlet
21	F64347	5	GUARD heater tubes
22	REF	3	HOSE, 2" (51 mm) long, cut from A42610 bulk hose, see below, heater tubes to valve and core
23	214-253	6	CLAMP hose, worm screw type, if used
23A	214-109	6	CLAMP hose, single wire spring type, if used
24	F63865	1	VALVE flow control, heater
25	F45204	1	CORE heater
26	113-6	4	BOLT, Hex, 1/4"-20 x 3/8", G5, Full Thd
27	192-19	4	WASHER, LOCK, 1/4"
28	187-1903	6	SCREW hex head, self tapping, plated, No. 12 - 24 NC x 1/2"
29	193-7	6	WASHER, LOCK, Ext Tooth, #12
30	REF	1	CABLE heater control, See Figure 632
31	F96821	1	BRACKET heater core
32	F96820	1	PANEL heater core
33	113-219	1	BOLT, Hex, 3/8"-16 x 2", G5
34	D120613	1	CLAMP heater tubes, if used
35	131-666	1	NUT hex, self locking, plated, 3/8" - 16 NC
36	187-460	2	SCREW hex head, indented hex washer head, slotted, black, No. 10 - 16 NC x 1/2"
37	193-6	2	WASHER, LOCK, Ext Tooth, #10
	A42610		UAR HOSE bulk, 5/8" (16 mm) ID x 1" (25 mm) O.D. x 50 ft (1524 cm) long

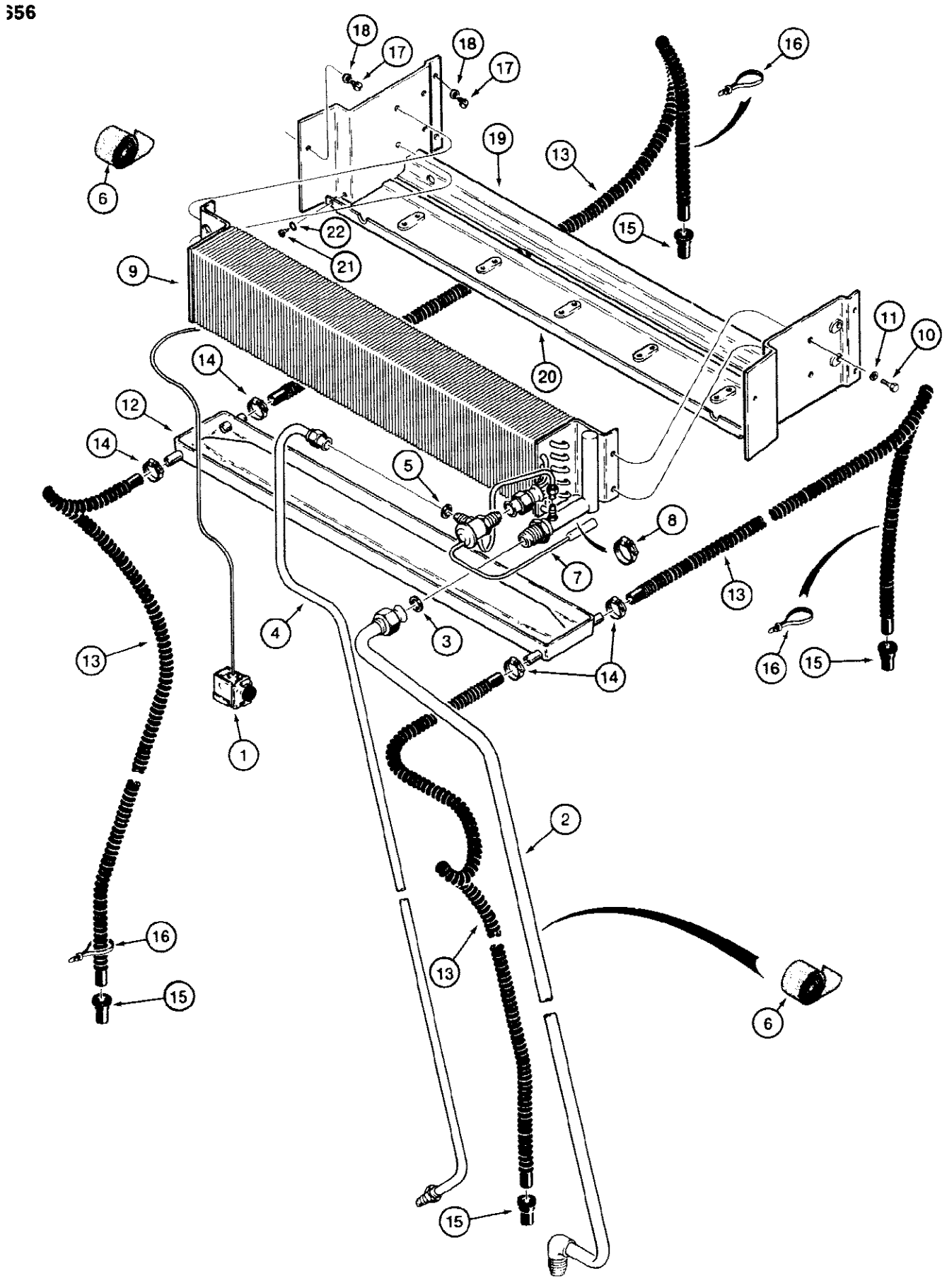
656
18
17
18
17
16
19
13
6
22
15
21
9
11
10
20
14
12
14
5
8
7
13
4
3
13
16
15
14
1
2
16
15
13
6
15
830630 A

656 CAB AIR CONDITIONER

Ref	Part Number	Qty	Description
1	REF	1	SWITCH air conditioner control, See Figure 632
2	F44732	1	TUBE suction
3	222-996	1	GASKET copper, 3/4" (19 mm) tube OD, suction tube
4	F45180	1	TUBE pressure
5	222-993	1	GASKET, 3/8 Tube, FI, Copper (9 mm), Pressure tube
6	A42902	UAR	TAPE cork, insulating, bulk roll, 30 ft (914 cm) long
7	F64389	1	VALVE expansion
8	98156C1	1	CLAMP valve sensor
9	F44712	1	CORE evaporator
10	113-1	4	BOLT, Hex, 1/4"-20 x 1/2", G5, Full Thd
11	192-19	4	WASHER, LOCK, 1/4"
12	F44731	1	PAN condensation
13	REF	4	HOSE, 100" (2540 mm) long, cut from F64508 bulk hose, see below, drain, from condensation pan
14	214-300	4	CLAMP hose
15	F44790	4	END drain hose, rubber
16	L18337	UAR	STRAP tie, nylon, 15 inch
17	187-1903	6	SCREW hex head, self tapping, plated, No. 12 - 24 NC x 1/2"
18	193-7	6	WASHER, LOCK, Ext Tooth, #12
19	F96821	1	BRACKET air conditioner core
20	F96820	1	PANEL air conditioner core
21	187-460	2	SCREW indented hex washer head, slotted, self tapping, black, No. 10 - 16 NC x 1/2"
22	193-6	2	WASHER, LOCK, Ext Tooth, #10
	F64508	UAR	HOSE drain, bulk, 100 ft (3048 cm) long

658 CONDENSER, RECEIVER-DRIER AND AIR CONDITIONER LINES

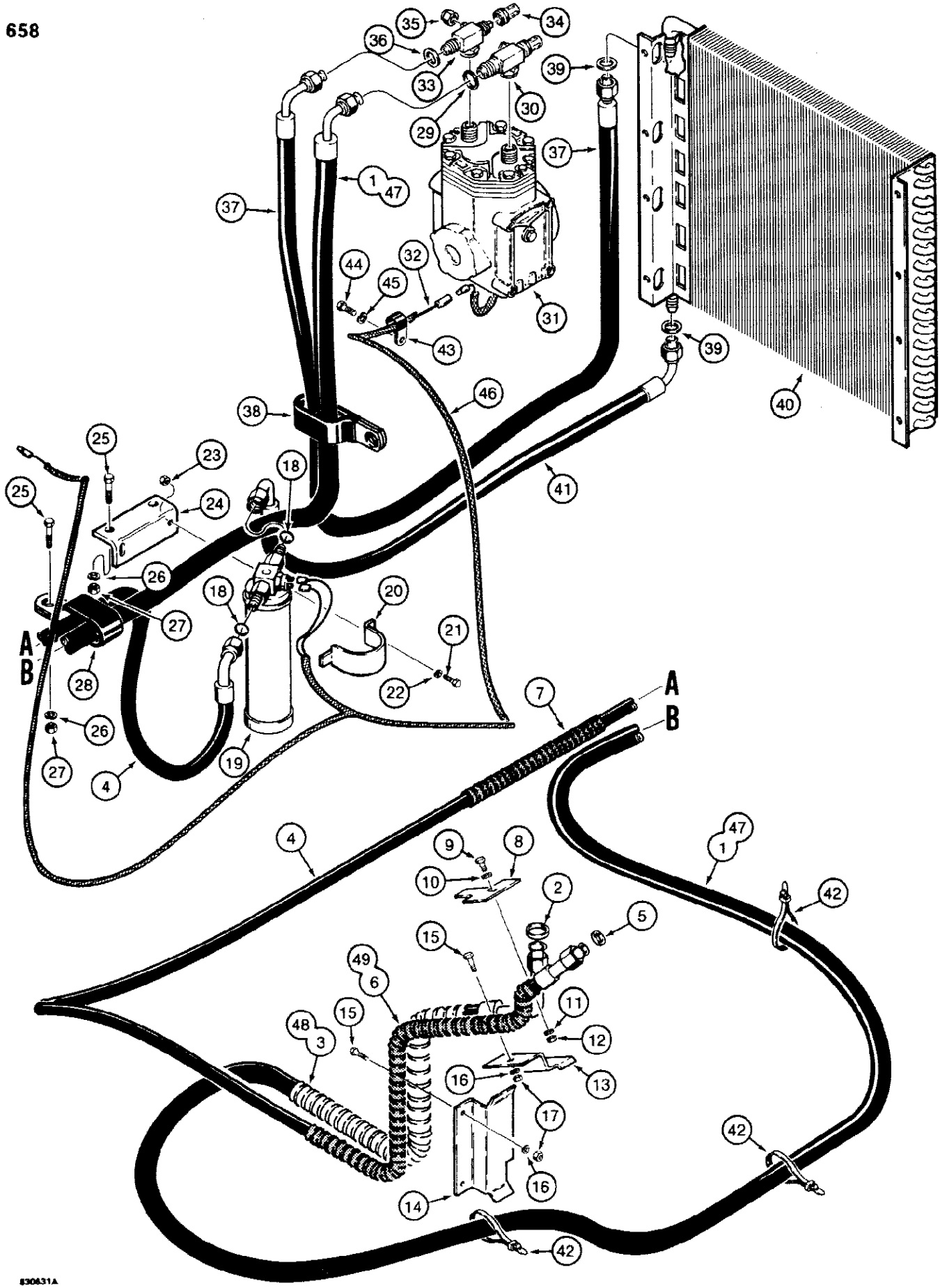

658 CONDENSER, RECEIVER-DRIER AND AIR CONDITIONER LINES

Ref	Part Number	Qty	Description
1	D125619	1	HOSE, 162-13/32" (4125 mm) long, from cab to compressor, condenser, receiver driver and air conditioner lines, See Figure 660 for models with air conditioning lines routed along the left hand side of the chassis.
2	222-996	1	GASKET copper, 3/4" (19 mm) tube O.D., condenser, receiver driver and air conditioner lines
3	D121040	1	GUARD, 1-3/8" (28.90 mm) ID x 31-1/2" (800 mm) long, hose, condenser, receiver driver and air conditioner lines, See Figure 660 for models with air conditioning lines routed along the left hand side of the chassis.
4	D124110	1	HOSE receiver drier to cab, condenser, receiver driver and air conditioner lines
5	222-993	1	GASKET, 3/8 Tube, FI, Copper (9 mm), Condenser, Receiver Driver and Air Conditioner Lines
6	D121039	1	SLEEVE, 3/4" (19.05 mm) ID x 31-1/2" (800 mm) long, hose, rear, condenser, receiver driver and air conditioner lines, See Figure 660 for models with air conditioning lines routed along the left hand side of the chassis.
7	D94363	1	SLEEVE, 3/4" (19.05 mm) ID x 9-27/32" (250 mm) long, hose, front, not used on models with air conditioning hoses routed along the left hand side of the chassis, condenser, receiver driver and air conditioner lines, See Figure 660 for models with air conditioning lines routed along the left hand side of the chassis.
8	D92587	1	PLATE cover, right hand fender, condenser, receiver driver and air conditioner lines
9	113-102	1	BOLT, Hex, 5/16"-18 x 3/4", G5, Full Thd, Condenser, receiver driver and air conditioner lines
10	195-521	1	WASHER flat, plated, 5/16", condenser, receiver driver and air conditioner lines
11	192-20	1	WASHER, LOCK, 5/16", Condenser, receiver driver and air conditioner lines
12	9635082	1	NUT, 5/16"-18, G5, Condenser, receiver driver and air conditioner lines
13	D120968	1	BRACKET hose retaining, upper, condenser, receiver driver and air conditioner lines
14	D120967	1	BRACKET hose retaining, lower, condenser, receiver driver and air conditioner lines
15	113-206	3	BOLT, Hex, 3/8"-16 x 3/4", G5, Full Thd, Condenser, receiver driver and air conditioner lines
16	192-21	3	WASHER, LOCK, 3/8", Condenser, receiver driver and air conditioner lines
17	129-103	3	NUT, 3/8"-16, G5, Condenser, Receiver driver and air conditioner lines
18	A61198	2	O RING hose, condenser, receiver driver and air conditioner lines
19	A76312	1	DRIER receiver, air conditioner, condenser, receiver driver and air conditioner lines, Switch showing in illustration at top of this part is A47717
20	A61193	1	CLAMP receiver drier mounting, condenser, receiver driver and air conditioner lines
21	113-103	1	BOLT, Hex, 5/16"-18 x 1", G5, Full Thd, Condenser, Receiver Driver and Air Conditioner lines
22	192-20	1	WASHER, LOCK, 5/16", Condenser, receiver driver and air conditioner lines
23	9635082	1	NUT, 5/16"-18, G5, Condenser, receiver driver and air conditioner lines
24	D124119	1	BRACKET receiver drier mounting, condenser, receiver driver and air conditioner lines
25	113-208	3	BOLT, Hex, 3/8"-16 x 1 1/4", G5, Full Thd, Condenser, receiver driver and air conditioner lines
26	192-21	3	WASHER, LOCK, 3/8", Condenser, receiver driver and air conditioner lines
27	129-103	3	NUT, 3/8"-16, G5, Condenser, Receiver driver and air conditioner lines
28	D39696	1	CLAMP double p style, condenser, receiver driver and air conditioner lines
29	222-995	1	GASKET copper, 5/8" (16 mm) tube O.D., condenser, receiver driver and air conditioner lines
30	A42937	1	VALVE compressor inlet, 5/8" port, condenser, receiver driver and air conditioner lines

658 CONDENSER, RECEIVER-DRIER AND AIR CONDITIONER LINES

Ref	Part Number	Qty	Description
31	REF	1	COMPRESSOR air conditioner, See Figure 92, mounting parts Figures 96, condenser, receiver driver and air conditioner lines
32	D122139	1	HARNESS air conditioner, condenser, receiver driver and air conditioner lines
33	A145699	1	VALVE compressor, outlet, 1/2" port, condenser, receiver driver and air conditioner lines, Includes: Ref. 34 and 35
34	A42944	1	CAP sleeve valve stem, condenser, receiver driver and air conditioner lines
35	222-981	1	CAP hex, seal, valve stem, condenser, receiver driver and air conditioner lines
36	222-994	1	GASKET copper, 1/2" (13mm) tube O.D., condenser, receiver driver and air conditioner lines
37	D90310	1	HOSE compressor to condenser, condenser, receiver driver and air conditioner lines
38	D39696	1	CLAMP hoses, uses existing compressor mounting plate hardware, See Figure 96, condenser, receiver driver and air conditioner lines
39	222-993	2	GASKET, 3/8 Tube, FI, Copper (9 mm), Condenser, Receiver Driver and Air Conditioner Lines
40	A171233	1	CONDENSER coil, refrigerant cooler, uses oil cooler mounting hardware, condenser, receiver driver and air conditioner lines
41	D124112	1	HOSE condenser to receiver drier, condenser, receiver driver and air conditioner lines
42	L18337	AR	STRAP tie, 15 inch, nylon, condenser, receiver driver and air conditioner lines
43	49851	1	CLAMP p type, condenser, receiver driver and air conditioner lines
44	113-207	1	BOLT, Hex, 3/8"-16 x 1", G5, Full Thd, Condenser, receiver driver and air conditioner lines
45	192-21	1	WASHER, LOCK, 3/8", Condenser, receiver driver and air conditioner lines
46	D126832	1	SLEEVE harness cover, condenser, receive driver and air conditioner lines
47	D134427	1	HOSE, 165-3/8" (4200 mm) long, from cab to compressor, special parts used on models with air conditioner hoses routed on left hand side of chassis
48	D134398	1	GUARD, 1-5/16" (33.10 mm) ID x 118-1/8" (3000 mm) long, hose, special parts used on models with air conditioner hoses routed on left hand side of chassis
49	D134396	1	SLEEVE, 3/4" (19.05 mm) ID x 118-1/8" (3000 mm) long, hose, rear, special parts used on models with air conditioner hoses routed on left hand side of chassis

562

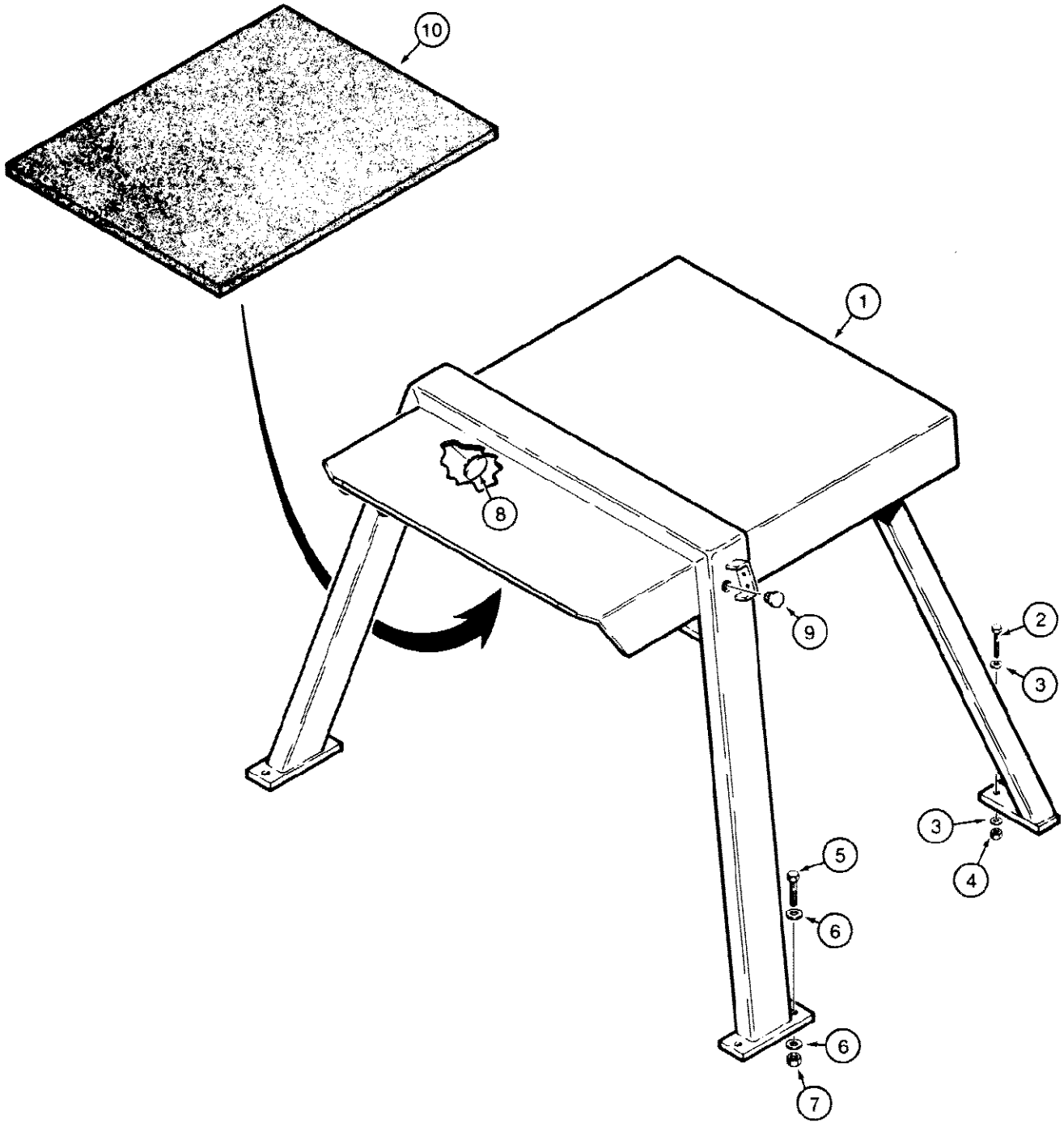

830632

580SE CASE SUPER-E CONSTRUCTION KING LOADER BACKHOE - Chassis/Attachments

662 ROPS CANOPY

Ref	Part Number	Qty	Description
1	REF	1	ROPS CANOPY machinery item, See Figure 2 for ordering, Ref #1 ROPS canopy, Original wholegoods nbr D100223, Available thru parts as kit nbr D101451, now subs to primes. ROPS weldment is part nbr D125597, part of above kit.
2	113-2441	4	BOLT, Hex, 1/2"-13 x 2", G8
3	196-16	8	WASHER flat, hardened, plated, 1/2"
4	129-184	4	NUT hex, plated, grade 8, 1/2" - 13 NC
5	113-739	4	BOLT hex head, plated, grade 8, 3/4" - 10 NC x 2-1/4"
6	196-31	8	WASHER flat, hardened, plated, 3/4"
7	129-138	4	NUT, 3/4"-10, G8
8	205-72	2	PLUG button, 3", steel, if used
9	353-413	2	PLUG nylon, 1-3/16", if used
10	D124147	1	PAD noise reduction, canopy roof
	345-44	UAR	ADHESIVE for attaching pads to metal surfaces, spray can, 23 fl. ounces (680 mm) not shown, ADHESIVE TO ATTACH WIRE HARNESS TO ROPS POST IS SUPERBONDER 409 CASE# 345 00133

664 REAR VIEW MIRROR

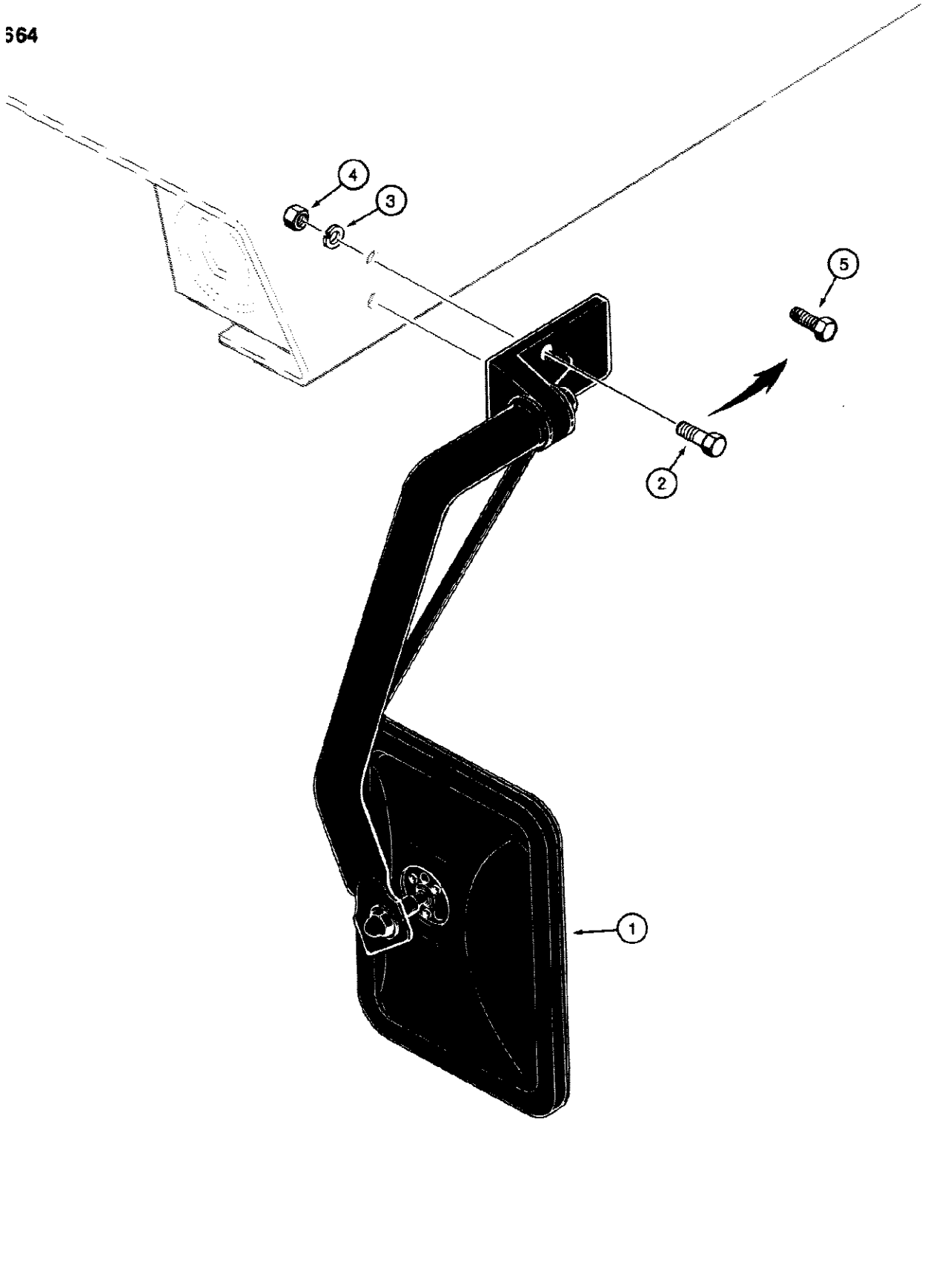

580SE CASE SUPER-E CONSTRUCTION KING LOADER BACKHOE - Chassis/Attachments

664 REAR VIEW MIRROR

Ref	Part Number	Qty	Description
	D100187	1	KIT; Includes D91400 Mirror/A and (2) 187-1069 5/16 x 3/4 Self-Tapping Screw for Mounting Mirror to Frame; No Longer Available, Order Components
1	D91400	1	Includes One Each 9803951 Mirror, 88904 1/2 x 1-1/2 Bolt, 492-21050 1/2 Lock Washer, 495-81271 13.5 x 24 x 2.5 mm Washer, 87398978 Mounting Bracket, 87515108 Mirror Arm; No Longer Available, Order Components
	9803951	1	
	88904	1	BOLT, Hex, 1/2"-13 x 1 1/2", G8, Full Thd
	492-21050	1	WASHER, LOCK, 1/2"
	495-81271	1	Flat Washer, 13.5 x 24 x 2.5 mm
	87398978	1	Mounting Bracket
	87515108	1	Mirror Arm
2	113-104	2	BOLT, Hex, 5/16"-18 x 1 1/4", G5, If used
3	192-20	2	WASHER, LOCK, 5/16", Not required if self tapping screw is used
4	9635082	2	NUT, 5/16"-18, G5, Not required if self tapping screw is used
5	187-1069	2	SCREW hex head, self tapping, plated, 5/16" - 18 NC x 3/4"; If Used

666 OPERATORS TOOL BOX

666

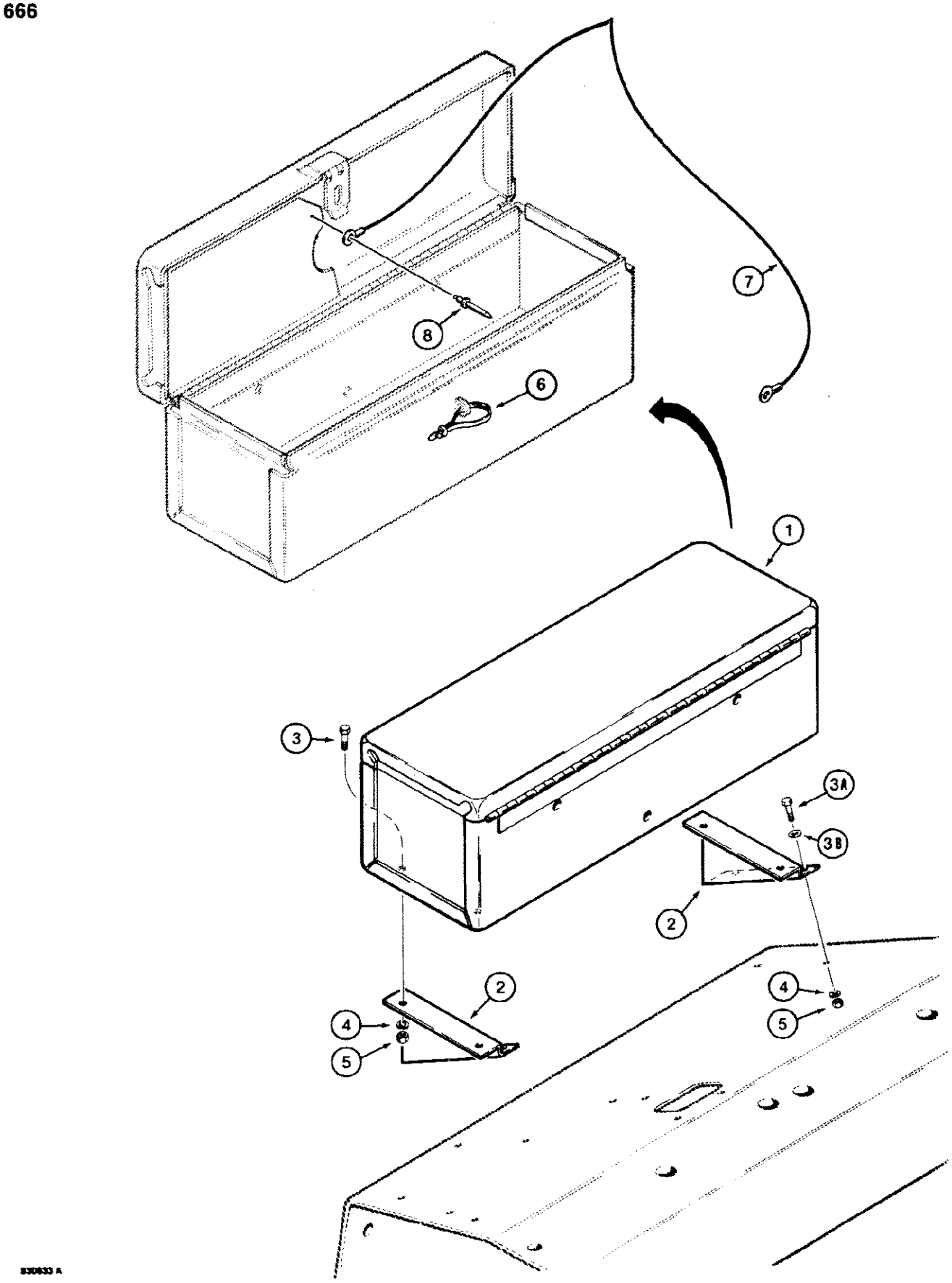

666 OPERATORS TOOL BOX

Ref	Part Number	Qty	Description
1	D124090	1	TOOL BOX tractor, has internal clip for operators manual
2	D84021	2	BRACKET mounting, tool box
3	113-1	4	BOLT, Hex, 1/4"-20 x 1/2", G5, Full Thd
3A	113-2	4	BOLT, Hex, 1/4"-20 x 5/8", G5, Full Thd
3B	195-518	4	WASHER flat, plated, 1/4"
4	192-19	8	WASHER, LOCK, 1/4"
5	7770	8	NUT, 1/4"-20, G5
6	L18337	1	STRAP tie, nylon, 15 inch
7	R46465	1	CORD manual retaining
8	151-522	1	POP RIVET, 3/16"

668 SLOW MOVING VEHICLE EMBLEM, USED ON MODELS WITH BACKHOE

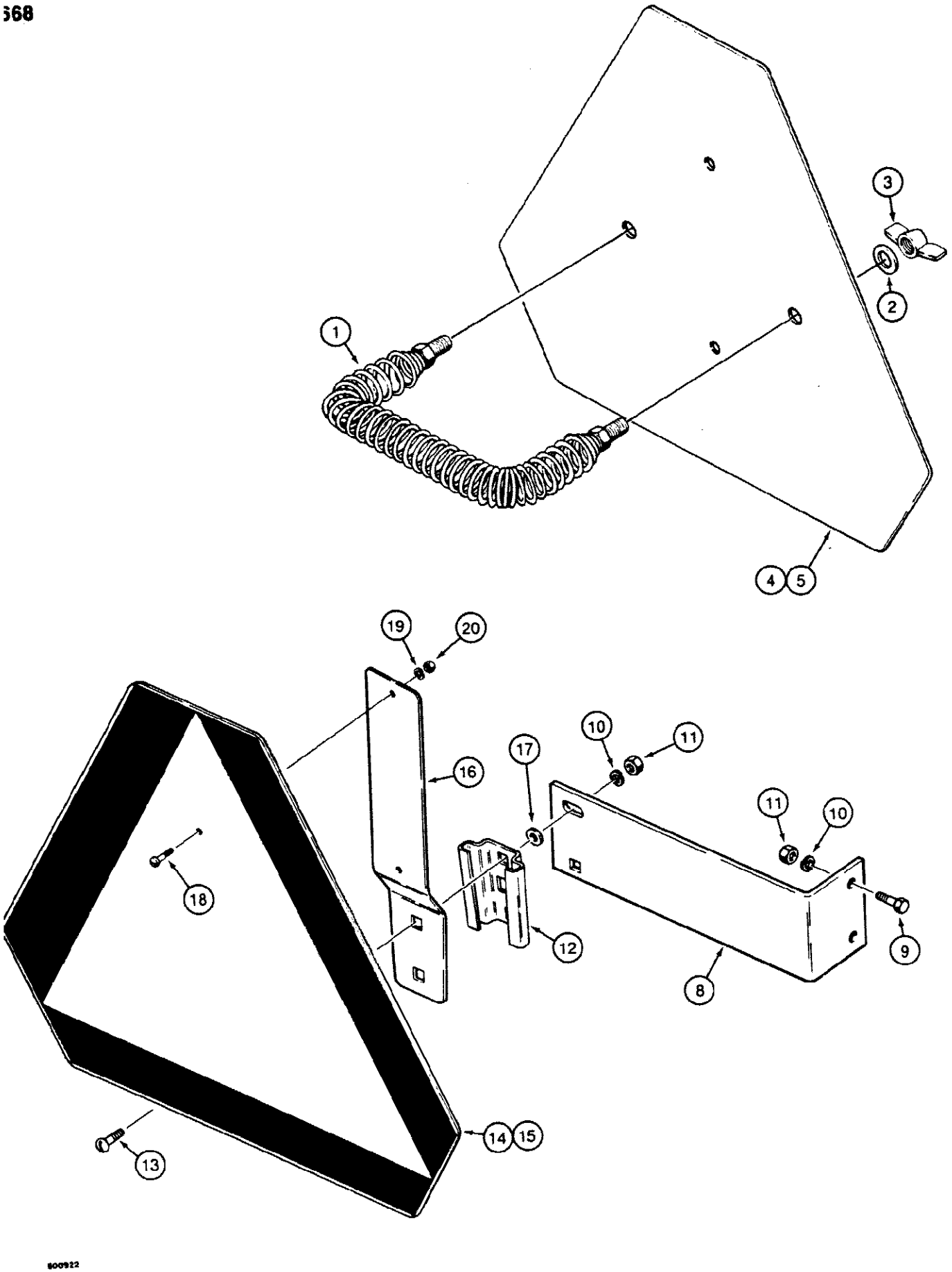

580SE CASE SUPER-E CONSTRUCTION KING LOADER BACKHOE - Chassis/Attachments

668 SLOW MOVING VEHICLE EMBLEM, USED ON MODELS WITH BACKHOE

Ref	Part Number	Qty	Description
1	D52564	1	SPRING emblem retaining, used on models with backhoe
2	195-518	2	WASHER flat, plated, 1/4", used on models with backhoe
3	129-409	2	NUT, WING, 1/4"-20, Used on models with backhoe
4	D123347	1	EMBLEM plate and decal, used on models with backhoe, Includes: Ref. 5
5	321-4311	1	DECAL slow moving vehicle emblem, used on models with backhoe
7	7770	2	NUT, 1/4"-20, G5, Used when storing emblem only, not shown, used on models with backhoe
8	D91465	1	BRACKET SMV emblem mounting, horizontal, used on models without backhoe
9	113-102	2	BOLT, Hex, 5/16"-18 x 3/4", G5, Full Thd, Used on models without backhoe
10	192-20	4	WASHER, LOCK, 5/16", Used on models without backhoe
11	9635082	4	NUT, 5/16"-18, G5, Used on models without backhoe
12	A59457	1	BRACKET emblem mounting, short, used on models without backhoe
13	111-215	2	BOLT short neck, plated, 5/16" - 18 NC x 3/4", used on models without backhoe
	A59450	1	EMBLEM ASSEMBLY, SMV, riveted construction, Replaces bolted construction, used on models without backhoe, Includes: Ref. 14 - 16
14	NSS	1	PLATE SMV emblem, used on models without backhoe
15	321-4311	1	DECAL slow moving vehicle emblem, used on models without backhoe
16	NSS	1	BRACKET emblem mounting, vertical, long, used on models without backhoe
17	195-521	1	WASHER flat, plated, 5/16", used on models without backhoe
18	182-516	2	SCREW machine, pan head slotted, plated, No. 10 - 24 NC x 1/2", if used, used on models without backhoe
19	192-18	2	WASHER, LOCK, #10, If used, used on models without backhoe
20	129-17	2	NUT hex, plated, No. 10 - 24 NC, if used, used on models without backhoe

670

1 580E

2 Super E

3 CASE

4 CASE

5 construction king

6 DIESEL FUEL

7 WARNING

8 HYDRAULIC FLUID

9 WARNING

IF YOU CONNECT JUMPER CABLES WRONG TO THE STARTER MOTOR SOLENOID THE ENGINE CAN BE STARTED WITH THE TRANSMISSION IN GEAR TO PREVENT PERSONAL INJURY OR DAMAGE TO THE MACHINE, USE THE FOLLOWING PROCEDURE

1. TWO PERSONS ARE REQUIRED FOR JUMP STARTING
2. CONNECT THE POSITIVE JUMPER CABLE TO THE BATTERY TERMINAL OF THE STARTER MOTOR SOLENOID
3. CONNECT THE NEGATIVE JUMPER CABLE TO A GOOD FRAME GROUND. SEE THE OPERATOR'S MANUAL FOR THIS MACHINE. SIT IN THE OPERATOR'S SEAT AND THEN START THE ENGINE
4. HAVE THE OTHER PERSON DISCONNECT THE JUMPER CABLES

IF YOU DO NOT USE THE ABOVE PROCEDURE THE MACHINE CAN MOVE OUT OF CONTROL AND YOU OR OTHER PERSONS CAN BE SERIOUSLY INJURED

9A WARNING

WRONG JUMPER CABLE CONNECTIONS TO BATTERY TERMINALS OR SHORTING ACROSS THE STARTER TERMINALS CAN CAUSE THE MACHINE TO MOVE SUDDENLY OUT OF CONTROL YOU CAN BE INJURED OR KILLED.

USE THE CORRECT METHOD SHOWN IN THE OPERATOR'S MANUAL TO CONNECT JUMPER CABLES TO START THE ENGINE

10 WARNING

DO NOT REMOVE ENGINE SIDE PANELS EXCEPT FOR SERVICING

11 IMPORTANT

POWER SHUTTLE MUST BE AT CORRECT OIL LEVEL
DO NOT OVERFILL
TO PROPERLY CHECK OIL LEVEL THE OIL MUST BE AT OPERATING TEMPERATURE WHICH IS FROM 1/2 TO 1/2 INTO THE GREEN ON TEMPERATURE GAUGE SEE OPERATORS MANUAL FOR COMPLETE PROCEDURE

12 ACC START OFF ON

13 DO NOT ATTEMPT TO POLARIZE ALTERNATOR
DO NOT GROUND FIELD OR OUTPUT TERMINALS

14 WARNING

IF YOU SERVICE THE MACHINE WITH THE LOADER LIFT ARMS RAISED, ALWAYS USE THE SUPPORT STRUT. FAILURE TO FOLLOW THIS PROCEDURE CAN CAUSE SERIOUS INJURY OR DEATH IF THE LOADER LIFT ARMS ARE LOWERED BY ACCIDENT

15 IMPORTANT

MAKE SURE THE BACKHOE TENSION ROD NUTS ARE TIGHT AT ALL TIMES WHEN THE BACKHOE IS INSTALLED

MAKE SURE THE BACKHOE LOWER PIVOT PIN NUT IS TIGHT AT ALL TIMES

SEE YOUR OPERATORS MANUAL FOR THE CORRECT PROCEDURE TO TIGHTEN THE TENSION ROD NUTS AND THE PIVOT PIN NUT

16 WARNING

BATTERIES CONTAIN ACID AND EXPLOSIVE GAS. EXPLOSION CAN RESULT FROM SPARKS, FLAMES, OR WRONG CABLE CONNECTIONS. TO CONNECT JUMPER CABLES OR CHARGER, SEE MANUAL(S) FOR THE CORRECT PROCEDURE. FAILURE TO FOLLOW THESE INSTRUCTIONS CAN CAUSE SERIOUS PERSONAL INJURY OR DEATH

17 WARNING

BEFORE STARTING ENGINE
STUDY OPERATOR'S MANUAL SAFETY MESSAGES
READ ALL SAFETY SIGNS ON MACHINE
CLEAR THE AREA OF OTHER PERSONS
LEARN & PRACTICE SAFE USE OF CONTROLS BEFORE OPERATING

18 CAUTION

STOP ENGINE BEFORE DISMOUNTING
OPERATE TRACTOR AND EQUIPMENT CONTROLS FROM SEAT POSITION ONLY
LOWER OR BLOCK ELEVATED COMPONENTS AND ENGAGE PARK BRAKE BEFORE LEAVING MACHINE
LOCK BRAKE PEDALS TOGETHER FOR ROAD TRAVEL
CHECK LOCAL LAW BEFORE OPERATING ON HIGHWAYS
DO NOT PERMIT RIDERS ON MACHINE
WARN ALL PERSONNEL WHO MAY BE WORKING IN OR IN PATH OF MACHINE BEFORE STARTING
DO NOT USE DOT 3 BRAKE FLUID IN BRAKE SYSTEM. USE ONLY CASE TCH OR DEXRON II
FAILURE TO OBSERVE THESE PRECAUTIONS COULD RESULT IN INJURY OR DEATH

19 ATTENTION

SEAT TURNAROUND INSTRUCTIONS

1. RELEASE FORE AND AFT SLIDE DETENT AND SLIDE SEAT FULLY REARWARD TO UNLATCH ROTATIONAL LOCK
2. ROTATE SEAT TOWARD ENTRY SIDE OF TRACTOR
3. ADJUST SEAT TO WORKING POSITION

20 WARNING

FASTEN SEAT BELT

21 WARNING

SPRING UNDER COMPRESSION IN SEAT COLUMN

22 4 wheel drive

23 DIFFERENTIAL LOCK

24

25 CLUTCH DISCONNECT

DRIVE

NEUTRAL

26 WARNING

BRAKE FAILURE CAN RESULT IF YOU ADD DOT 3 (SAE J1703) BRAKE FLUID TO THE BRAKE MASTER CYLINDERS. USE ONLY CASE POWERGARD™ TCH FLUID OR DEXRON II FLUID IN THE BRAKE SYSTEM

USE ONLY HYDRAULIC FLUID IN BRAKE CYLINDERS

27 LAMP TEST

28 CAUTION

MANUALLY POSITION WIPER BLADE IN STOWED POSITION AS SHOWN BEFORE LOWERING WINDOW.

STOWED POSITION

28A IMPORTANT

PARK WIPER BEFORE LOWERING WINDOW

PARK

WIPER

RUN

29 HORN

30 LOCK

31 CAUTION

DO NOT USE DOT 3 BRAKE FLUID

CAUTION

DO NOT USE DOT 3 BRAKE FLUID

32 OPERATORS MANUAL IN TOOL BOX
DO NOT REMOVE FROM MACHINE
REPLACE IF DAMAGED OR ILLEGIBLE

830709C

580SE CASE SUPER-E CONSTRUCTION KING LOADER BACKHOE - Chassis/Attachments

670 DECALS

Ref	Part Number	Qty	Description
	N8348	1	KIT, decal, 580 Super E, Includes: Ref. 1 - 32
1	D124339	4	DECAL, 580E
2	D128395	2	DECAL Super E
3	D123954	1	DECAL Case, with treads, right hand side of machine
4	D123952	1	DECAL Case, with treads, left hand side of machine
5	D123950	2	DECAL construction king
6	321-2601	1	DECAL Diesel Fuel
7	321-6672	1	DECAL Warning, check and service cooling system
8	321-229	1	DECAL Hydraulic Fluid
9	321-5974	1	DECAL Warning, if you connect jumper cables wrong to the starter motor solenoide, no longer used, order 321-6718 decal
9A	321-6718	1	DECAL Warning, wrong jumper cable connections to starterf terminals
10	321-5701	2	DECAL Warning, do not remove engine side panels except for servicing, rotating parts
11	321-3882	1	DECAL Important, power shuttle oil level
12	D123946	1	DECAL ignition switch pattern
13	321-1061	1	DECAL Do not attempt to polarize alternator
14	321-6671	1	DECAL Warning, right hand, loader lift arm support strut usage
15	D120497	1	DECAL Important, backhoe tension rod nuts
16	321-6714	1	DECAL Warning, batteries contain acid and explosive gas
17	321-3705	1	DECAL Warning, before starting engine study operator's manual safety messages
18	321-6262	1	DECAL Caution, stop engine before dismounting, safety warnings
19	321-6215	1	DECAL Attention, seat turnaround instructions
20	321-3060	1	DECAL Warning, fasten seat belt
21	321-3055	1	DECAL Warning, spring under compression in seat column
22	D123949	2	DECAL, 4 wheel drive, if used
23	321-5598	1	DECAL Differential Lock, control pattern
24	321-5797	1	DECAL Clutch Disconnect, control pattern, lever
25	321-5441	1	DECAL Clutch Disconnect, control pattern, floor
26	321-6708	1	DECAL Warning, use only hydraulic fluid in brake cylinders, replaces Caution, do not use DOT 3 brake fluid decal on some models, if used
27	D123942	1	DECAL Lamp Test
28	321-5801	1	DECAL Caution, manually position wiper blade in stowed position before lowering window, used on models with short wiper positioning lever
28A	F45339	1	DECAL Important, park wiper before lowering window, used on models with long wiper positioing lever
29	D123943	1	DECAL Horn
30	321-5922	1	DECAL Lock, boom
31	321-6398	1	DECAL Caution, do not use DOT 3 brake fluid
32	321-6452	1	DECAL operators manual location, tool box

672

(33)
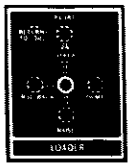

(34)
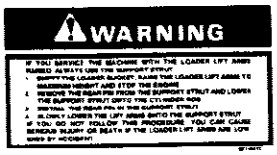

(35)


(36)


(37)


(38)


(39)
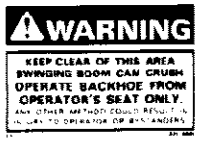

(40)
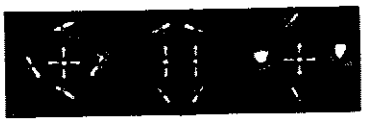

(41)


(42)


(43)


(44)


(45)


(46)


(47)


(48)
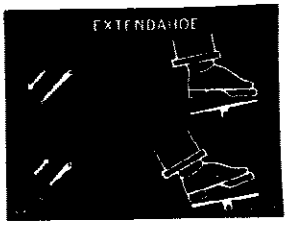

(49)


(50)


(51)


(52)


(53)


(54)
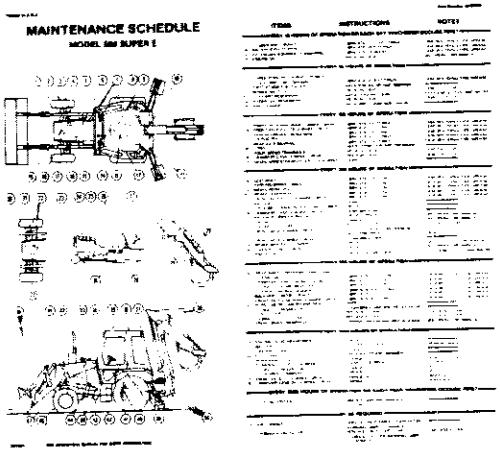

(55)
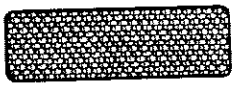

(56)


(57)


(58)


(59)


(60)
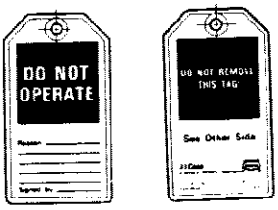

830710C

580SE CASE SUPER-E CONSTRUCTION KING LOADER BACKHOE - Chassis/Attachments

672 DECALS

Ref	Part Number	Qty	Description
	N8348	1	KIT, decal, continued, Includes: Ref. 33 - 57
33	321-3718	1	DECAL loader control pattern
34	321-6413	1	DECAL Warning, left hand, loader lift arm support strut usage
35	321-3581	1	DECAL auxiliary hydraulics, control pattern
36	321-1708	1	DECAL clam bucket opening
37	321-1707	1	DECAL clam bucket position
38	D123959	1	DECAL Case, with right treads, tan, cab models
38	D123951	1	DECAL Case, with right treads, brown, ROPS fender
39	321-4481	2	DECAL Warning, keep clear of this area swinging boom can crush
40	D123978	1	DECAL backhoe control pattern, two lever
41	D123977	1	DECAL standard backhoe control pattern, upper
42	D123976	1	DECAL standard backhoe control pattern, lower
43	321-3056	1	DECAL Caution, operate backhoe from seat position only
44	321-3058	1	DECAL Important, due to possible interference, swinging boom
45	D123941	1	DECAL extendahoe control pattern, upper
46	D123940	1	DECAL extendahoe control pattern, lower
47	D123945	2	DECAL extendahoe
48	D123948	1	DECAL Extendahoe, pedal control pattern
49	321-6046	1	DECAL Warning, backhoe lifting load
50	D124115	2	DECAL Case, three point hitch frame
51	321-6058	1	DECAL three point hitch control pattern, single spool valve models
52	321-6059	1	DECAL three point hitch control pattern, four spool valve models
53	321-3775	1	DECAL Caution, pallet fork, self leveling
54	D128927	1	DECAL Maintenance Schedule, two wheel or four wheel drive, with dry brake transaxles
54A	D137462	1	DECAL Maintenance Schedule, two wheel or four wheel drive, with wet brake transaxles, not shown
55	D87870	2	DECAL reflector, red, rear
56	D55216	3	STRIP anti skid, steps
57	D80270	1	STRIP anti skid, operators compartment
58	321-4739	1	EMBLEM Case, on grille
59	131-431	2	NUT push, attaches emblem to grille
60	321-4614	1	TAG Do Not Operate