http://www.minnparbackhoeparts.com/

MARÇO 1991

RUTHZIL TRATOR COMERCIAL DE PEÇAS LTDA 11 97083-6812 ROLANDO

CASE 580 SUPER K

Construction King Loader Backhoe

Parts Catalog

Bur 8-6952

J I Case
A Tenneco Company

http://www.minnparbackhoeparts.com/

REVISION RECORD LOG

REVISION NO.	DATE INSERTED
1	
2	
3	
4	
5	

580 Super K Construction King Loader Backhoe Parts Catalog

Bur 8-6952

NOTE: This catalog replaces Bur 8-6951



B4083890R

This machine first became available March, 1991.

Copyright © 1994 Case Corporation
Bur 8-6952
Issued May, 1994
Printed in U.S.A.

http://www.minnparbackhoeparts.com/

LOCATION OF SERIAL AND PRODUCT IDENTIFICATION NUMBERS

Please use the horizontal lines provided to record these important serial numbers, product identification number, and part numbers.

PRODUCT IDENTIFICATION NUMBER
(Below left-hand door on chassis)

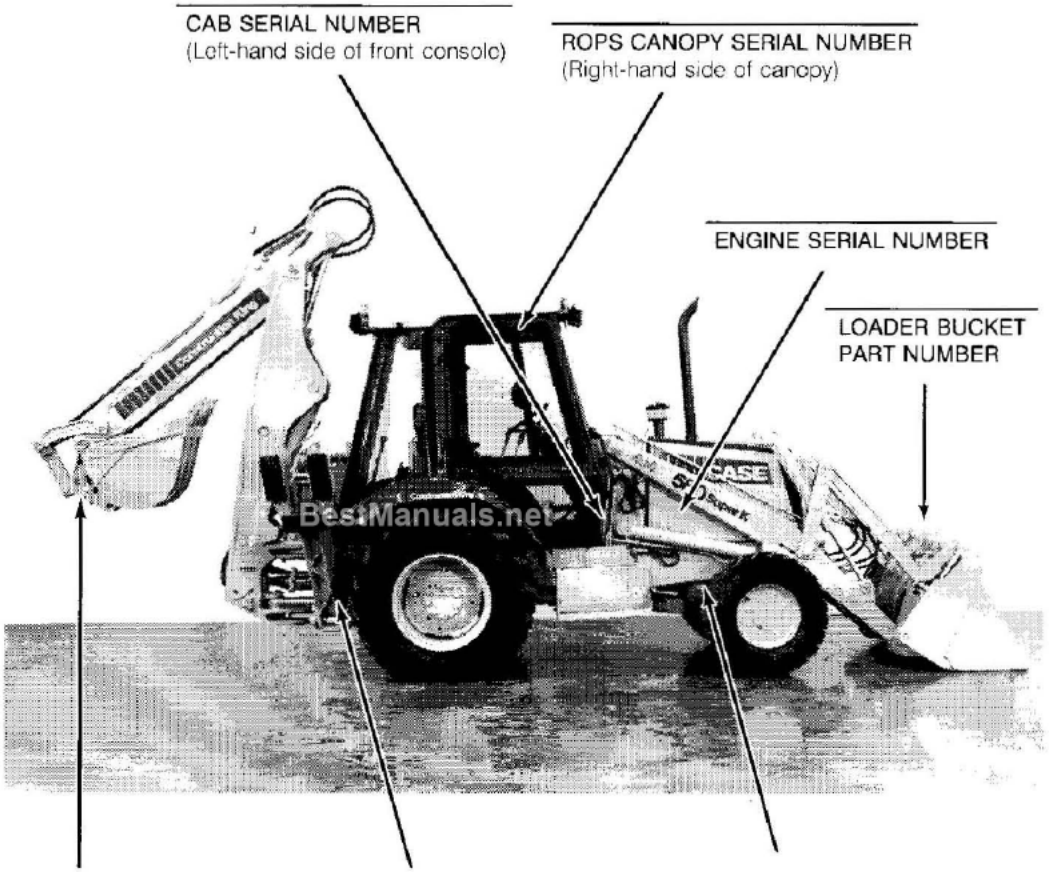

http://www.minnparbackhoeparts.com/

SECTION INDEX



GENERAL

ENGINE



FUEL



ELECTRICAL



STEERING/
TRACK



POWER TRAIN



BRAKES



CHASSIS/
MOUNTED
EQUIPMENT

http://www.minnparbackhoeparts.com/

GENERAL INFORMATION

Indexes

Section 1 of this catalog contains a SN and P.I.N. location guide, alphabetical index, pictorial index of the sections included, and pictorial index(es) for quick location of hoses and tubes (and other system components in some catalogs). An alphabetical index also appears at the beginning of each section. Section 10 is the Numerical Index which lists all part numbers in alpha/numeric order with their page location and reference number.

Illustration and Text

The arrangement of this parts catalog is for easy identification of parts. All parts are illustrated in "exploded views" in proper relation to each other. Reference numbers used in the illustrations refer to those on the text pages. The text pages list reference number, part number, part description and the quantity required.

Abbreviations

P.I.N. "Product Identification Number"
SN "Serial Number"
NSS "Not Serviced Separately" in the part number column indicates this part is not available for service.
REF "Reference" in the part number column indicates this part has special service information. The page where this information can be found is given in the part description column.
UAR "Use As Required" in the quantity required column indicates the number of parts used is determined by service needs.

Right-Hand and Left-Hand Identification

The reference to right-hand and left-hand in this catalog is identified by the operator standing at the rear of the basic unit (without rear attachment), looking toward the front of the machine (in normal forward travel). For pages covering any machine attachments, right-hand and left-hand are defined by the operator sitting in the position for proper operation of the attachment.

Catalog Revisions and Supplements

Changes to the product may make it necessary to revise or add pages to this catalog. A cover sheet will list all pages released in a revision or supplement. Each new or revised page will have a new issue date. All revised and new pages must be put into the parts catalog as soon as they are received.

Parts Orders

Orders must specify product model, all necessary serial numbers, correct part number, complete description, quantity required, method of shipment, and shipping address.

Text Format Explanation

An assembly may contain many service items. The component parts of an assembly or subassembly are indented. The quantity required column lists the number of assemblies required for a complete machine, and the number of components required in a complete assembly or subassembly.

The example below illustrates the use of indents and other text page elements explained on this page.

REF.	PART NO.	DESCRIPTION	REQ'D.
1	D43567	FILTER ASSEMBLY - hydraulic oil, P.I.N. 7534840 and after	1
	D61903	HEAD ASSEMBLY - filter	1
2	NSS	HEAD - filter, order D61903 head assembly	1
3	D58199	VALVE - bypass	1
	D43800	KIT - filter element, replaces D35700 kit	1
4	NSS	ELEMENT - filter, order D43800 element kit	1
5	A27994	O-RING - filter	1
6	D61948	HOUSING - filter	1
7	REF	CANOPY - ROPS, machinery item, order from Machinery Price List	1
8	843065C1	HOSE - 132 inch long, reservoir to pump	1
9	113-323	BOLT - hex, 7/16 NC x 1-3/4 inch	2
10	814-8030	BOLT - hex, 8 - 1.25 x 30 mm	4

http://www.minnparbackhoeparts.com/

DEALERS OWNERS RECORD

OWNERS NAME	SERIAL NUMBER	YEAR	ATTACHMENTS

http://www.minnparbackhoeparts.com/

(580SK) - CASE SUPER-K CONSTRUCTION KING LOADER BACKHOE > (1-06) - PICTORIAL INDEX EQUIPMENT HYDRAULICS HYDRAULIC PUMP TO OIL FILTER AND CONTROL VALVES W/BACKHOE

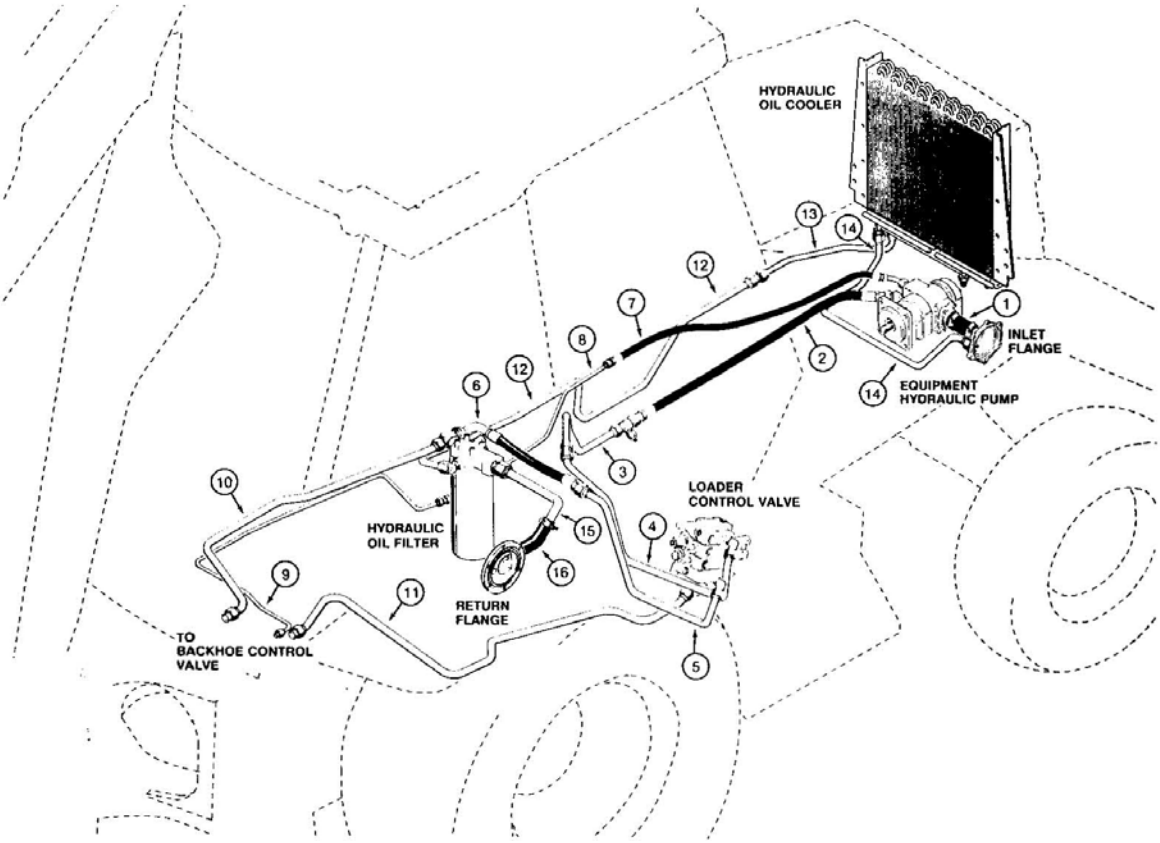

http://www.minnparbackhoeparts.com/

(580SK) - CASE SUPER-K CONSTRUCTION KING LOADER BACKHOE > (1-06) - PICTORIAL INDEX EQUIPMENT HYDRAULICS HYDRAULIC PUMP TO OIL FILTER AND CONTROL VALVES W/BACKHOE

Diag #	Part #	Name	Description	Qty
1		Hose at equipment hydraulic pump inlet adapter flange on chassis, Figure 8-002	Hose at equipment hydraulic pump inlet adapter flange on chassis, Figure 8-002	1
2		Hose at equipment hydraulic pump large section outlet, Figure 8-002	Hose at equipment hydraulic pump large section outlet, Figure 8-002	1
3		Tube from pump outlet hose to loader valve, Figure 8-004	Tube from pump outlet hose to loader valve, Figure 8-004	1
4		Tube from pump outlet at loader valve inlet, Figure 8-004	Tube from pump outlet at loader valve inlet, Figure 8-004	1
5		Return tube to filter from loader valve outlet, Figure 8-004	Return tube to filter from loader valve outlet, Figure 8-004	1
6		Hose from loader valve return to filter, Figure 8-004	Hose from loader valve return to filter, Figure 8-004	1
7		Hose at equipment hydraulic pump small section outlet, Figure 8-006	Hose at equipment hydraulic pump small section outlet, Figure 8-006	1
8		Tube at small pump section hose to backhoe control valve swing section, Figure 8-006	Tube at small pump section hose to backhoe control valve swing section, Figure 8-006	1
9		Tube to backhoe control valve swing section inlet, Figure 8-006	Tube to backhoe control valve swing section inlet, Figure 8-006	1
10		Backhoe return tube to filter, Figure 8-006	Backhoe return tube to filter, Figure 8-006	1
11		Tube at backhoe valve inlet section from loader valve power beyond tube, Figure 8-006	Tube at backhoe valve inlet section from loader valve power beyond tube, Figure 8-006	1
12		Oil filter tube to cooler inlet tube, Figure 8-012	Oil filter tube to cooler inlet tube, Figure 8-012	1
13		Oil cooler inlet tube, Figure 8-012	Oil cooler inlet tube, Figure 8-012	1
14		Oil cooler return to resevoir tube, Figure 8-012	Oil cooler return to resevoir tube, Figure 8-012	1
15		Return to tank tube at hydraulic oil filter, Figure 8-012	Return to tank tube at hydraulic oil filter, Figure 8-012	1
16		Return to tank hose at return flange on chassis, Figure 8-012	Return to tank hose at return flange on chassis, Figure 8-012	1

http://www.minnparbackhoeparts.com/

(580SK) - CASE SUPER-K CONSTRUCTION KING LOADER BACKHOE > (1-08) - PICTORIAL INDEX LOADER HYDRAULICS LIFT AND BUCKET CYLINDERS

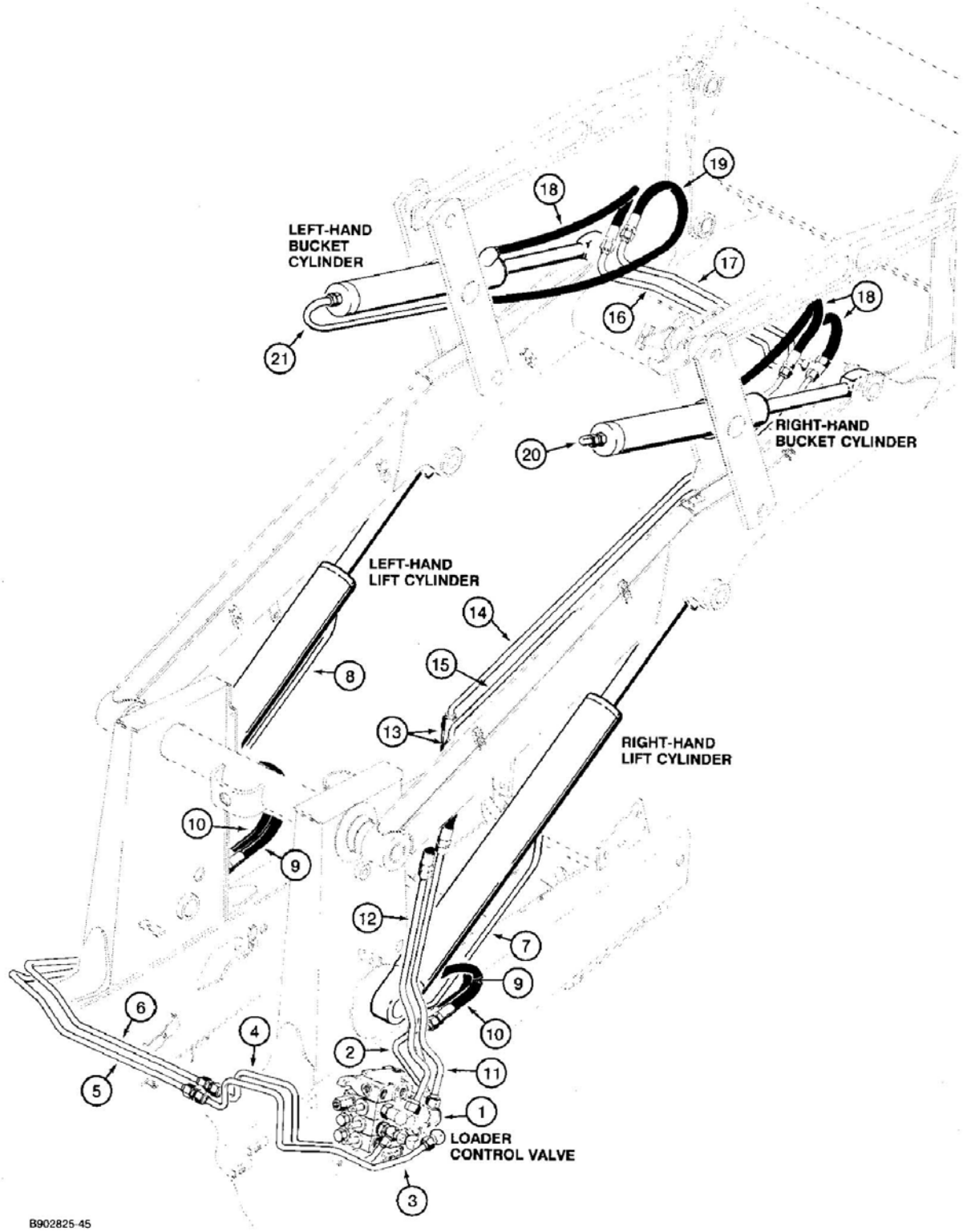

http://www.minnparbackhoeparts.com/

(580SK) - CASE SUPER-K CONSTRUCTION KING LOADER BACKHOE > (1-08) - PICTORIAL INDEX LOADER HYDRAULICS LIFT AND BUCKET CYLINDERS

Diag #	Part #	Name	Description	Qty
1		Tube from lower lift port tee of loader control valve to closed end of right-hand lift cylinder, Figures 8-016, 8-017A	Tube from lower lift port tee of loader control valve to closed end of right-hand lift cylinder, Figures 8-016, 8-017A	1
2		Tube from upper lift port tee of loader control valve to rod end of right-hand lift cylinder, Figures 8-016, 8-017A	Tube from upper lift port tee of loader control valve to rod end of right-hand lift cylinder, Figures 8-016, 8-017A	1
3		Tube from lower lift port tee of loader control valve to closed end of left-hand lift cylinder, Figures 8-016, 8-017A	Tube from lower lift port tee of loader control valve to closed end of left-hand lift cylinder, Figures 8-016, 8-017A	1
4		Tube from upper lift port tee of loader control valve to rod end of left-hand lift cylinder, Figures 8-016, 8-017A	Tube from upper lift port tee of loader control valve to rod end of left-hand lift cylinder, Figures 8-016, 8-017A	1
5		Corssover tube to closed end left-hand lift cylinder, Figures 8-016, 8-017A	Corssover tube to closed end left-hand lift cylinder, Figures 8-016, 8-017A	1
6		Crossover tube to rod end of left-hand lift cylinder, Figures 8-016, 8-017A	Crossover tube to rod end of left-hand lift cylinder, Figures 8-016, 8-017A	1
7		Tube at rod end of rihgt-hand lift cylinder, Figures 8-016, 8-017A	Tube at rod end of rihgt-hand lift cylinder, Figures 8-016, 8-017A	1
8		Tube at rod end of left-hand lift cylinder, Figures 8-016, 8-017A	Tube at rod end of left-hand lift cylinder, Figures 8-016, 8-017A	1
9		Hose at rod end of lift cylinders, Figures 8-016, 8-017A	Hose at rod end of lift cylinders, Figures 8-016, 8-017A	1
10		Hose at closed end of lift cylinders, Figures 8-016, 8-017A	Hose at closed end of lift cylinders, Figures 8-016, 8-017A	1
11		Tube at lower bucket port of loader control valve to closed end of bucket cylinders, Figure 8-018A	Tube at lower bucket port of loader control valve to closed end of bucket cylinders, Figure 8-018A	1
12		Tube at upper bucket port of loader control valve to rod end of bucket cylinders, Figure 8-018A	Tube at upper bucket port of loader control valve to rod end of bucket cylinders, Figure 8-018A	1

Diag #	Part #	Name	Description	Qty
13		Hose at loader lift frame pivot, Figure 8-018A	Hose at loader lift frame pivot, Figure 8-018A	1
14		Upper tube on right-hand lift arm, Figure 8-018A	Upper tube on right-hand lift arm, Figure 8-018A	1
15		Lower tube on right-hand lift arm, Figure 8-018A	Lower tube on right-hand lift arm, Figure 8-018A	1
16		Lower corssover tube to rod end of bucket cylinders, Figure 8-018A	Lower corssover tube to rod end of bucket cylinders, Figure 8-018A	1
17		Upper corssover tube to closed end of bucket cylinders, Figure 8-018A	Upper corssover tube to closed end of bucket cylinders, Figure 8-018A	1
18		Hose to rod end of left-hand and right-hand bucket cylinders and at closed end of right-hand bucket cylinder, Figure 8-018A	Hose to rod end of left-hand and right-hand bucket cylinders and at closed end of right-hand bucket cylinder, Figure 8-018A	1
19		Hose to closed end of left-hand bucket cylinder, Figure 8-018A	Hose to closed end of left-hand bucket cylinder, Figure 8-018A	1
20		Tube at closed end of right-hand bucket cylinder, Figure 8-018A	Tube at closed end of right-hand bucket cylinder, Figure 8-018A	1
21		Tube at closed end of left-hand bucket cylinder, Figure 8-018A	Tube at closed end of left-hand bucket cylinder, Figure 8-018A	1

http://www.minnparbackhoeparts.com/

(580SK) - CASE SUPER-K CONSTRUCTION KING LOADER BACKHOE > (1-10) - PICTORIAL INDEX LOADER HYDRAULICS CLAM CYLINDER

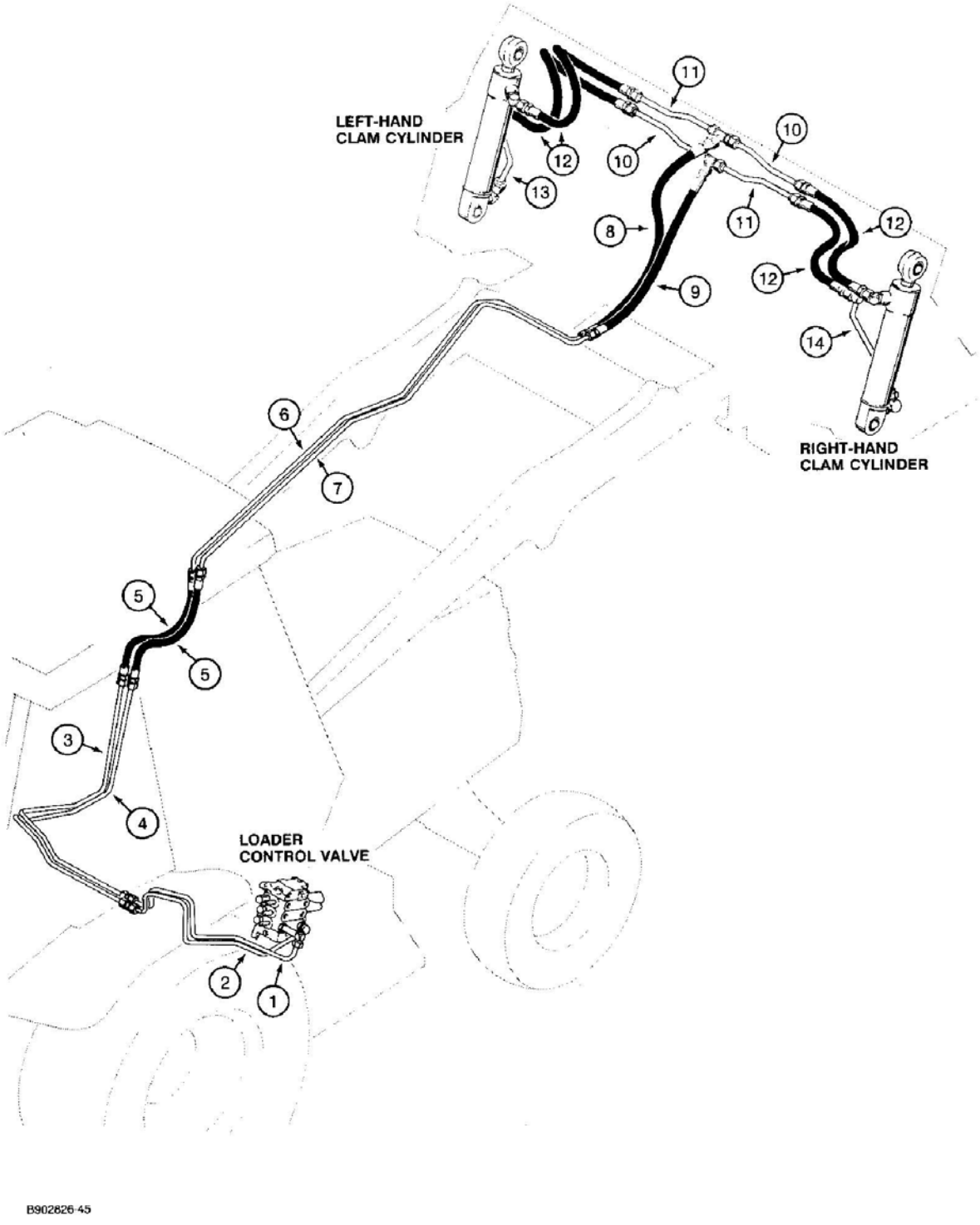

http://www.minnparbackhoeparts.com/

(580SK) - CASE SUPER-K CONSTRUCTION KING LOADER BACKHOE > (1-10) - PICTORIAL INDEX LOADER HYDRAULICS CLAM CYLINDER

Diag #	Part #	Name	Description	Qty
1		Tube at upper auxiliary section of loader control valve, Figure 8-020	Tube at upper auxiliary section of loader control valve, Figure 8-020	1
2		Tube at lower port auxiliary section of loader control valve, Figure 8-020	Tube at lower port auxiliary section of loader control valve, Figure 8-020	1
3		Crossover tube from loader valve upper port tube to hose on lift arm, Figure 8-020	Crossover tube from loader valve upper port tube to hose on lift arm, Figure 8-020	1
4		Crossover tube from loader valve lower port tube to hose on lift arm, Figure 8-020	Crossover tube from loader valve lower port tube to hose on lift arm, Figure 8-020	1
5		Hoses at loader arm pivot, Figure 8-020	Hoses at loader arm pivot, Figure 8-020	1
6		Upper tube on loader lift arm, Figure 8-020	Upper tube on loader lift arm, Figure 8-020	1
7		Lower tube on loader lift arm, Figure 8-020	Lower tube on loader lift arm, Figure 8-020	1
8		Hose to rod end of clam cylinders, Figure 8-022	Hose to rod end of clam cylinders, Figure 8-022	1
9		Hose to closed end of clam cylinders, Figure 8-022	Hose to closed end of clam cylinders, Figure 8-022	1
10		Horizontal tube, right-hand upper and left-hand lower, Figure 8-022	Horizontal tube, right-hand upper and left-hand lower, Figure 8-022	1
11		Horizontal tube, right-hand and left-hand upper, Figure 8-022	Horizontal tube, right-hand and left-hand upper, Figure 8-022	1
12		Hoses at right-hand and left-hand clam cylinders, Figure 8-022	Hoses at right-hand and left-hand clam cylinders, Figure 8-022	1
13		Tube at closed end of left-hand clam cylinder, Figure 8-022	Tube at closed end of left-hand clam cylinder, Figure 8-022	1
14		Tube at closed end of right-hand clam cylinder, Figure 8-022	Tube at closed end of right-hand clam cylinder, Figure 8-022	1

http://www.minnparbackhoeparts.com/

(580SK) - CASE SUPER-K CONSTRUCTION KING LOADER BACKHOE > (1-12) - PICTORIAL INDEX BACKHOE HYDRAULICS STABILIZER CYLINDER SWING CYLINDER

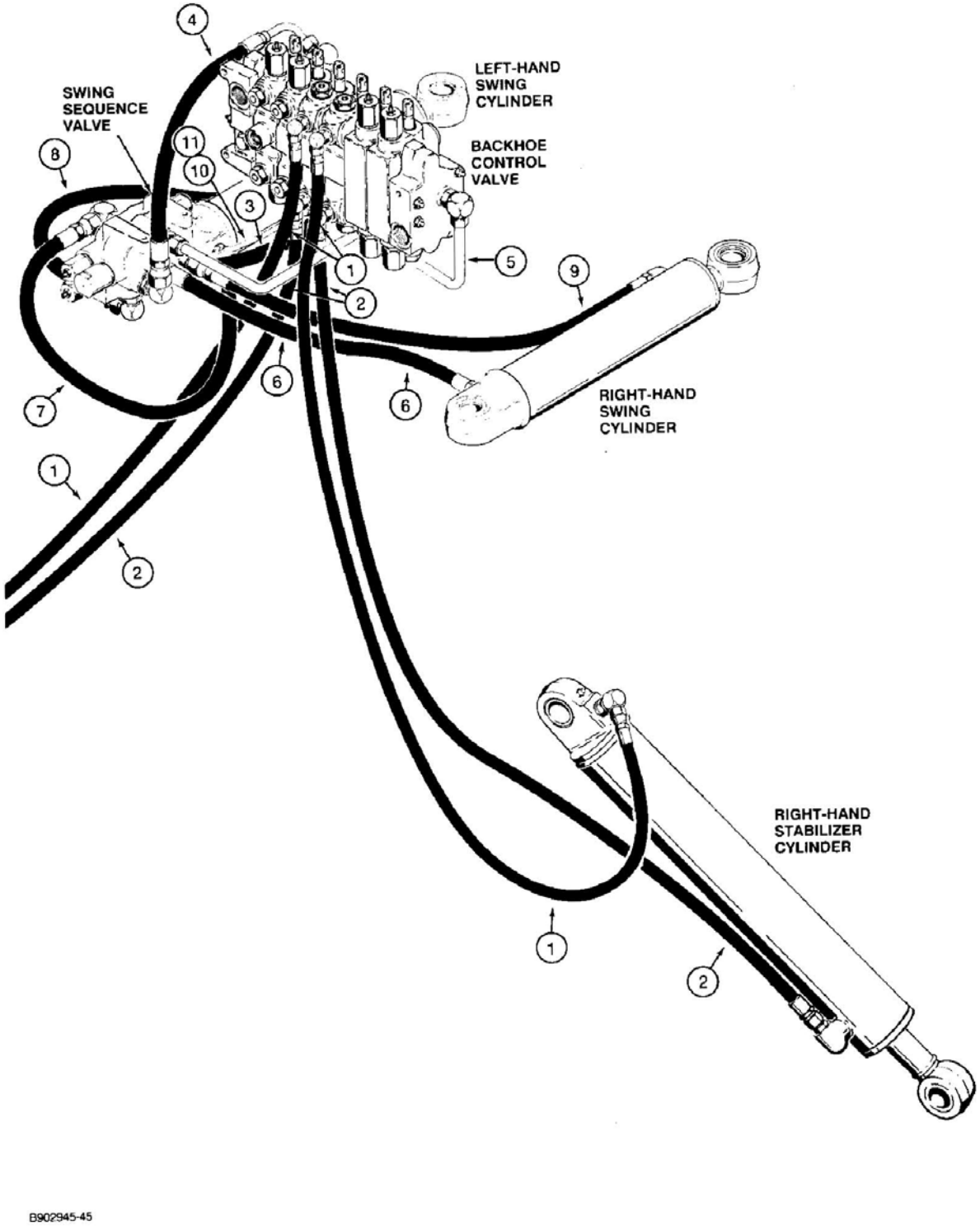

http://www.minnparbackhoeparts.com/

(580SK) - CASE SUPER-K CONSTRUCTION KING LOADER BACKHOE > (1-12) - PICTORIAL INDEX BACKHOE HYDRAULICS STABILIZER CYLINDER SWING CYLINDER

Diag #	Part #	Name	Description	Qty
1		Hose at upper port of backhoe control valve to stabilizer cylinder, closed end, Figure 8-024	Hose at upper port of backhoe control valve to stabilizer cylinder, closed end, Figure 8-024	1
2		Hose at lower port of backhoe control valve to stabilizer cylinder, rod end, Figure 8-024	Hose at lower port of backhoe control valve to stabilizer cylinder, rod end, Figure 8-024	1
3		Hose at swing section lower port of swing sequence valve lower port, Figure 8-028	Hose at swing section lower port of swing sequence valve lower port, Figure 8-028	1
4		Hose at swing section upper to port to swing sequence valve, Figure 8-026	Hose at swing section upper to port to swing sequence valve, Figure 8-026	1
5		Swing sequence valve drain tube, Figure 8-026	Swing sequence valve drain tube, Figure 8-026	1
6		Hose at swing sequence valve to right-hand swing cylinder closed end, Figure 8-028	Hose at swing sequence valve to right-hand swing cylinder closed end, Figure 8-028	1
7		Hose at swing sequence valve to left-hand swing cylinder closed end, Figure 8-026	Hose at swing sequence valve to left-hand swing cylinder closed end, Figure 8-026	1
8		Hose at swing sequence valve to left-hand swing cylinder rod end, Figure 8-028	Hose at swing sequence valve to left-hand swing cylinder rod end, Figure 8-028	1
9		Hose at swing sequence valve to right-hand swing cylinder rod end, Figure 8-026	Hose at swing sequence valve to right-hand swing cylinder rod end, Figure 8-026	1
10		Grease tube for right-hand swing cylinder, Figure 8-028	Grease tube for right-hand swing cylinder, Figure 8-028	1
11		Grease tube for left-hand swing cylinder, Figure 8-028	Grease tube for left-hand swing cylinder, Figure 8-028	1

http://www.minnparbackhoeparts.com/

(580SK) - CASE SUPER-K CONSTRUCTION KING LOADER BACKHOE > (1-14) - PICTORIAL INDEX BACKHOE HYDRAULICS BOOM, DIPPER AND BUCKET

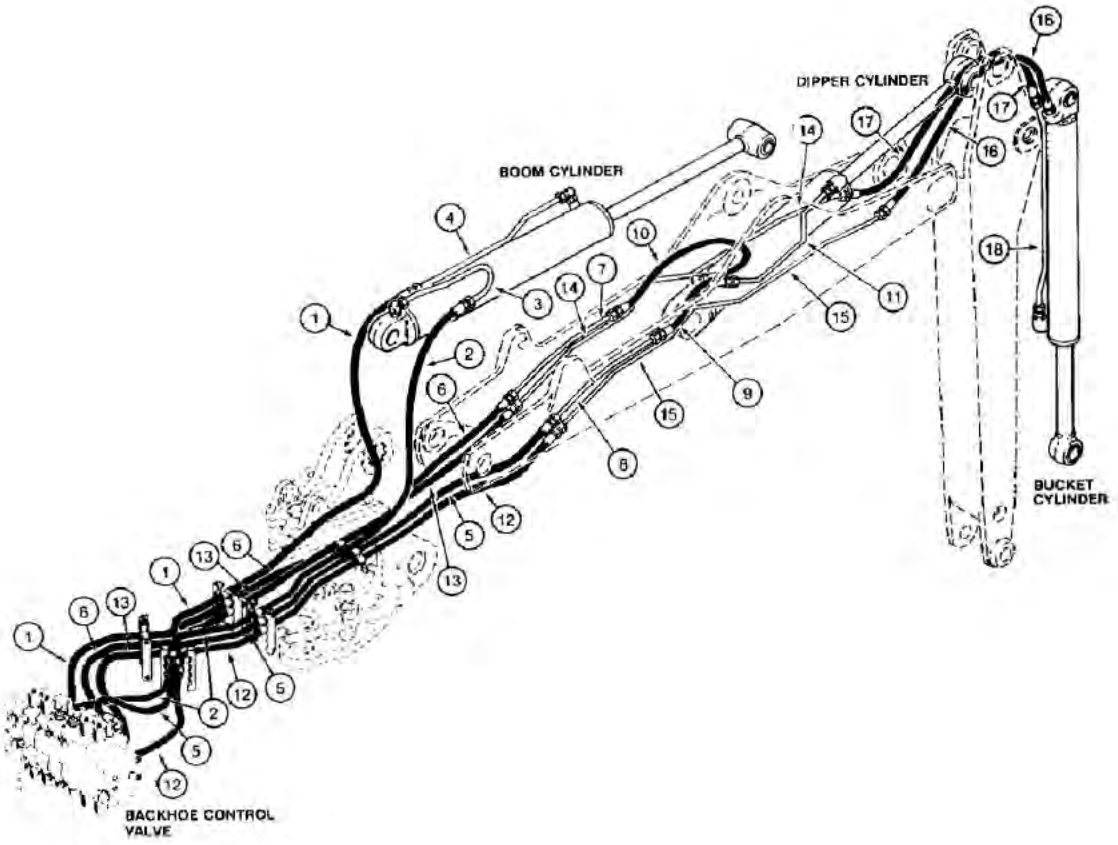

http://www.minnparbackhoeparts.com/

(580SK) - CASE SUPER-K CONSTRUCTION KING LOADER BACKHOE > (1-14) - PICTORIAL INDEX BACKHOE HYDRAULICS BOOM, DIPPER AND BUCKET

Diag #	Part #	Name	Description	Qty
1		Hose at lower port of backhoe control valve boom section to boom cylinder rod end, Figure 8-030	Hose at lower port of backhoe control valve boom section to boom cylinder rod end, Figure 8-030	1
2		Hose at upper port of backhoe control valve boom section to boom cylinder closed end, Figure 8-030	Hose at upper port of backhoe control valve boom section to boom cylinder closed end, Figure 8-030	1
3		Tube at boom cylinder closed end, Figure 8-030	Tube at boom cylinder closed end, Figure 8-030	1
4		Tube at boom cylinder rod end, Figure 8-030	Tube at boom cylinder rod end, Figure 8-030	1
5		Hose at upper port of backhoe control valve dipper section, Figure 8-034	Hose at upper port of backhoe control valve dipper section, Figure 8-034	1
6		Hose at lower port of backhoe control valve dipper section, Figure 8-034	Hose at lower port of backhoe control valve dipper section, Figure 8-034	1
7		Tube at left-hand side of boom, from dipper section lower port hose, Figure 8-034	Tube at left-hand side of boom, from dipper section lower port hose, Figure 8-034	1
8		Tube at right-hand side of boom, from dipper section upper port hose, Figure 8-034	Tube at right-hand side of boom, from dipper section upper port hose, Figure 8-034	1
9		Hose at dipper cylinder rod end tube, Figure 8-036	Hose at dipper cylinder rod end tube, Figure 8-036	1
10		Hose at dipper cylinder closed end, Figure 8-036	Hose at dipper cylinder closed end, Figure 8-036	1
11		Tube at dipper cylinder rod end, Figure 8-036	Tube at dipper cylinder rod end, Figure 8-036	1
12		Hose at lower port of backhoe control valve bucket section, Figure 8-038	Hose at lower port of backhoe control valve bucket section, Figure 8-038	1
13		Hose at upper port of backhoe control valve bucket section, Figure 8-038	Hose at upper port of backhoe control valve bucket section, Figure 8-038	1
14		Tube on left-hand side of boom, to bucket cylinder rod end hose, Figure 8-038	Tube on left-hand side of boom, to bucket cylinder rod end hose, Figure 8-038	1
15		Tube on right-hand side of boom, to bucket cylinder closed end hose, Figure 8-038	Tube on right-hand side of boom, to bucket cylinder closed end hose, Figure 8-038	1

http://www.minnparbackhoeparts.com/

Diag #	Part #	Name	Description	Qty
16		Hose at closed end of bucket cylinder, Figure 8-040	Hose at closed end of bucket cylinder, Figure 8-040	1
17		Hose at bucket cylinder rod end tube, Figure 8-040	Hose at bucket cylinder rod end tube, Figure 8-040	1
18		Tube at rod end of bucket cylinder, Figure 8-040	Tube at rod end of bucket cylinder, Figure 8-040	1

http://www.minnparbackhoeparts.com/

(580SK) - CASE SUPER-K CONSTRUCTION KING LOADER BACKHOE > (1-16) - PICTORIAL INDEX BACKHOE HYDRAULICS EXTENDABLE DIPPER

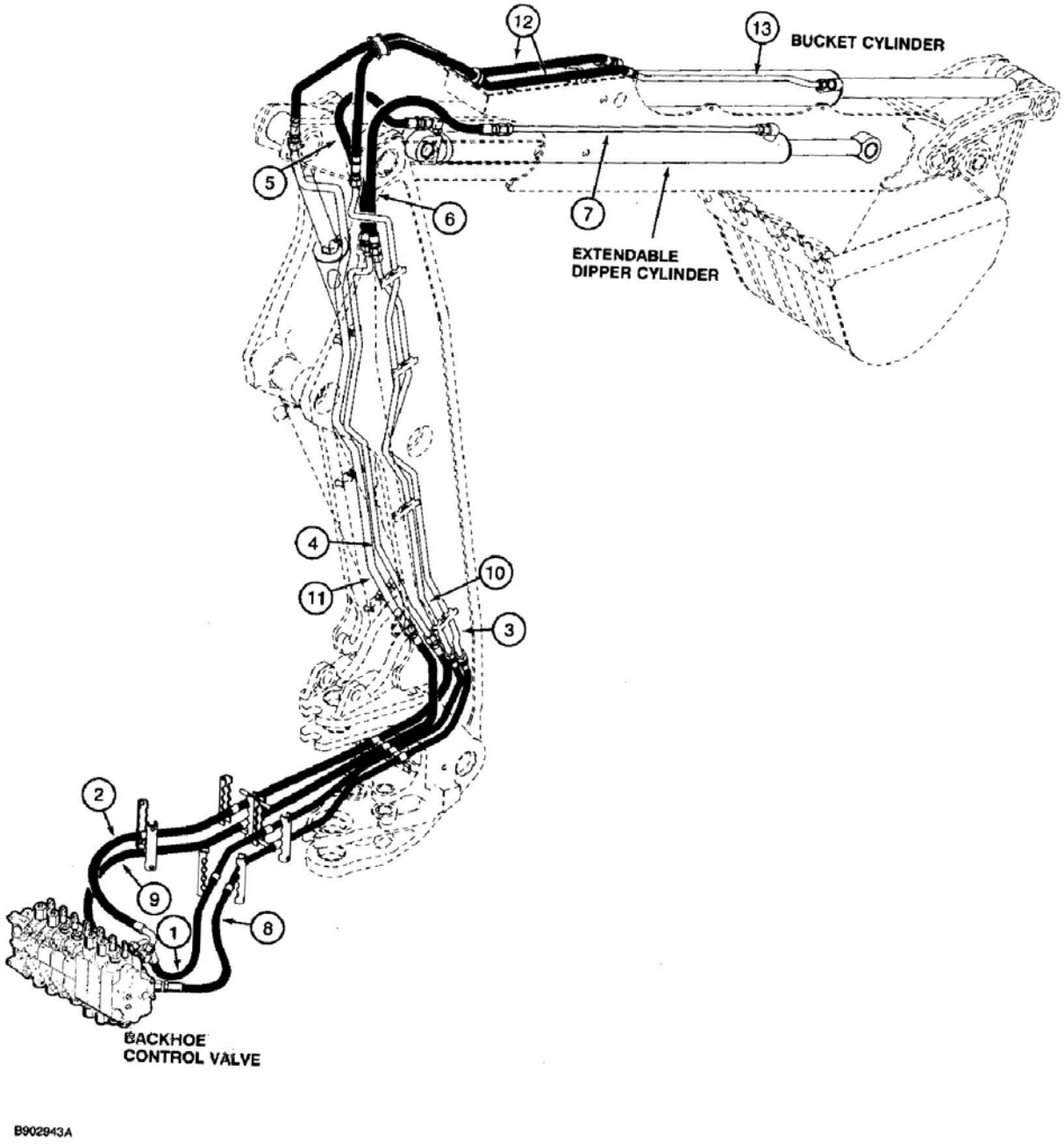

http://www.minnparbackhoeparts.com/

(580SK) - CASE SUPER-K CONSTRUCTION KING LOADER BACKHOE > (1-16) - PICTORIAL INDEX BACKHOE HYDRAULICS EXTENDABLE DIPPER

Diag #	Part #	Name	Description	Qty
1		Hose at extendable section lower port to boom extendable dipper right-hand tube, Figure 8-046	Hose at extendable section lower port to boom extendable dipper right-hand tube, Figure 8-046	1
2		Hose at extendable section upper port to boom extendable dipper left-hand tube, Figure 8-046	Hose at extendable section upper port to boom extendable dipper left-hand tube, Figure 8-046	1
3		Tube at right-hand side of boom, to extendable dipper cylinder rod end hose, Figure 8-046	Tube at right-hand side of boom, to extendable dipper cylinder rod end hose, Figure 8-046	1
4		Tube at left-hand side of boom, to extendable dipper cylinder closed end hose, Figure 8-046	Tube at left-hand side of boom, to extendable dipper cylinder closed end hose, Figure 8-046	1
5		Hose at extendable dipper cylinder closed end, Figure 8-046	Hose at extendable dipper cylinder closed end, Figure 8-046	1
6		Hose at extendable dipper cylinder rod end, Figure 8-046	Hose at extendable dipper cylinder rod end, Figure 8-046	1
7		Tube at extendable dipper cylinder rod end, Figure 8-046	Tube at extendable dipper cylinder rod end, Figure 8-046	1
8		Hose at upper port of backhoe control valve bucket section, Figure 8-042	Hose at upper port of backhoe control valve bucket section, Figure 8-042	1
9		Hose at lower port of backhoe control valve bucket section, Figure 8-042	Hose at lower port of backhoe control valve bucket section, Figure 8-042	1
10		Tube at right-hand side of boom, to bucket cylinder rod end hose, Figure 8-042	Tube at right-hand side of boom, to bucket cylinder rod end hose, Figure 8-042	1
11		Tube at left-hand side of boom, to bucket cylinder closed end hose, Figure 8-042	Tube at left-hand side of boom, to bucket cylinder closed end hose, Figure 8-042	1
12		Hose to bucket cylinder tubes, Figure 8-044	Hose to bucket cylinder tubes, Figure 8-044	1
13		Tube at hose to bucket cylinder, rod end, Figure 8-044	Tube at hose to bucket cylinder, rod end, Figure 8-044	1

http://www.minnparbackhoeparts.com/



ENGINE

http://www.minnparbackhoeparts.com/

(580SK) - CASE SUPER-K CONSTRUCTION KING LOADER BACKHOE > (2-02) - RADIATOR,FAN MODEL W/TURBOCHARGED ENG TRAC PIN JJG0173468

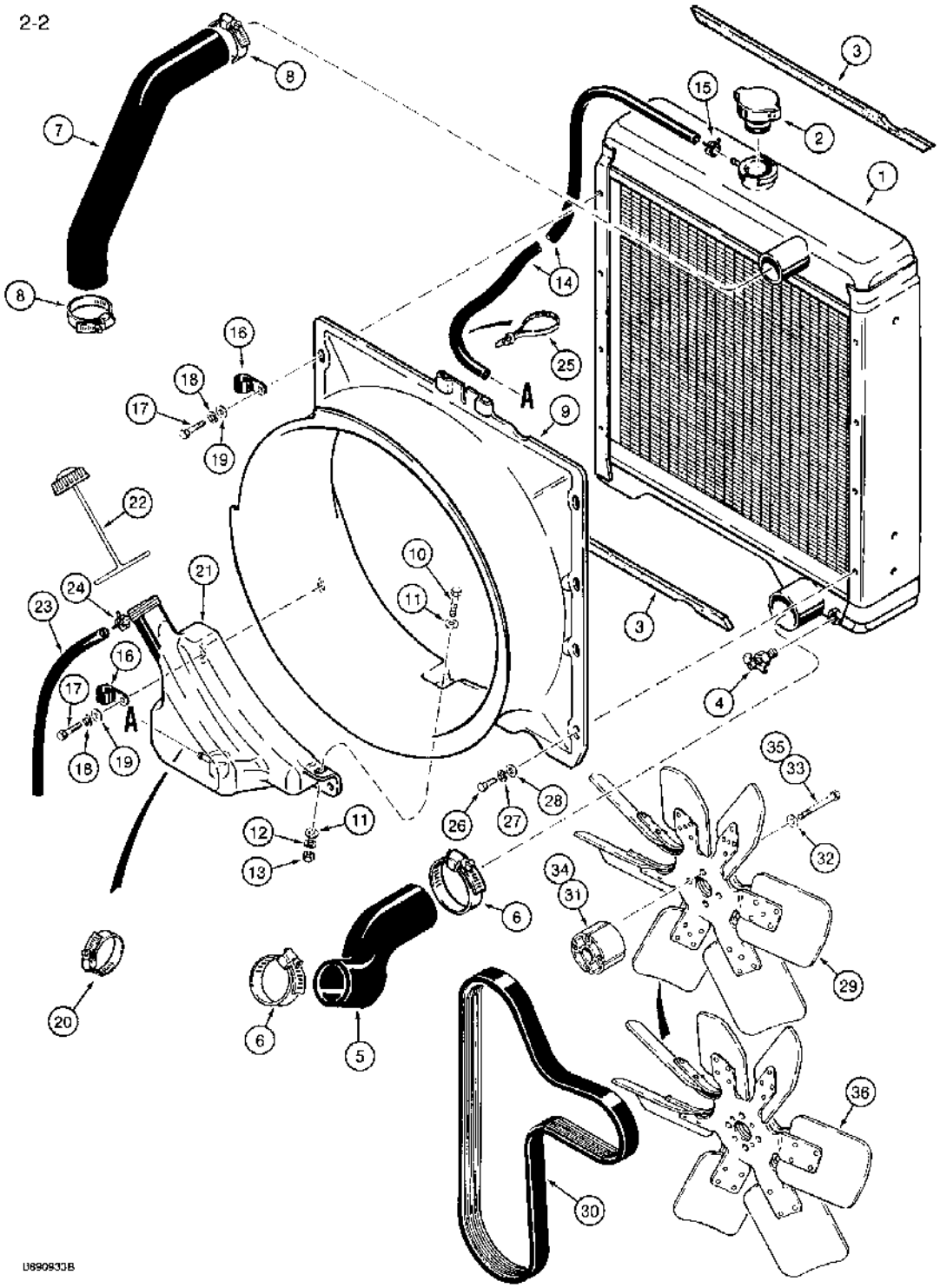

(580SK) - CASE SUPER-K CONSTRUCTION KING LOADER BACKHOE > (2-02) - RADIATOR,FAN MODEL W/TURBOCHARGED ENG TRAC PIN JJG0173468

Diag #	Part #	Name	Description	Qty
1	A172038	RADIATOR	engine coolant	1
2	A170241	RADIATOR CAP	CAP, RADIATOR, Filler, 15 psi	1
3	A173165	SEAL	fan shroud, upper and lower	2
4	217-92	COCK	VALVE, 1/4" PT, drain	1
5	D127775	RADIATOR HOSE,58.00 mm ID x 225.00 mm, SAE 20R4 Class C	58.00 mm ID x 225.00 mm, SAE 20R4 - Class C, Lower	1
6	214-1440	HOSE CLAMP,#40, 2.06/3.00 Type F Worm	CLAMP adj., 2-1/16" - 3" dia., lower radiator hose	2
7	D127774	RADIATOR HOSE,45.00 mm ID x 265.00 mm, SAE 20R4 Class C	- Upper 45.00 mm ID x 265.00 mm, SAE 20R4 Class C	1
8	214-1432	HOSE CLAMP,#32, 1.56/2.50 Type F Worm	CLAMP, HOSE, , Adjustable, Upper radiator hose #32, 1.56/2.50 Type F Worm	2
9	A173459	SHROUD	fan	1
10	614-8030	BOLT,Hex, M8 x 1.25 x 30mm, Cl 8.8, Full Thd	HH, CL 8.8, M8 x 1.25 x 30	1
11	495-21038	WASHER,5/16"	(flat, 3/8 x 7/8 x 5/64") 5/16"	2
12	492-11031	LOCK WASHER,5/16"	WASHER, LOCK, 5/16"	1
13	825-1408	NUT,M8, Cl 8	NUT,M8, Cl 8	1
14	A171019	HOSE,7.50 mm ID, 8.30 mm ID x 900.00 mm, SAE J30	- Radiator to reservoir, Cut to required length from L126767 bulk hose 7.50 mm ID, 8.30 mm ID x 900.00 mm, SAE J30	1
15	A171099	HOSE CLAMP	CLAMP hose, retaining	1
16	515-23143	CLAMP,9/16", Insul, 3/8" Bolt	hose, attaches to radiator fan shroud, oil cooler tubes	2
17	614-8030	BOLT,Hex, M8 x 1.25 x 30mm, Cl 8.8, Full Thd	HH, CL 8.8, M8 x 1.25 x 30	2
18	492-11031	LOCK WASHER,5/16"	WASHER, LOCK, 5/16"	2
19	495-21038	WASHER,5/16"	(flat, 3/8 x 7/8 x 5/64") 5/16"	2
20	214-1704	HOSE CLAMP,#4, 0.25/0.62 Type M Worm	CLAMP, HOSE, , Adjustable, At radiator, lower #4, 0.25/0.62 Type M Worm	1
21	A184370	RESERVOIR	coolant recovery bottle, Replaces A171805 reservoir	1
22	1547924C1	CAP	screw-on, tethered, coolant recovery bottle, Replaces A184079	1
23	A172262	HOSE,7.50 mm ID, 8.30 mm ID x 310.00 mm, SAE 30R6 per J30	- Coolant overflow 7.50 mm ID, 8.30 mm ID x 310.00 mm, SAE 30R6 per J30	1
22	1547924C1	CAP	screw-on, tethered, coolant recovery bottle, Replaces A184079	1

Diag #	Part #	Name	Description	Qty
24	A171099	HOSE CLAMP	CLAMP hose, retaining, at reservoir	1
25	L18337	CABLE TIE,9.95"-12.1" lg	STRAP tie, 15", nylon	1
26	614-8016	BOLT,Hex, M8 x 1.25 x 16mm, Cl 8.8, Full Thd	hex, 8 - 1.25 x 16 mm	6
27	492-11031	LOCK WASHER,5/16"	WASHER, LOCK, 5/16"	6
28	495-21038	WASHER,5/16"	(flat, 3/8 x 7/8 x 5/64") 5/16"	6
29	A184467	FAN	suction, seven blade, models with or without air conditioning	1
		Check part number stamped on fan blade before ordering parts.	Check part number stamped on fan blade before ordering parts.	1
30	J911559	V-BELT,3.56 mm W x 1574.80 mm L, 8 Ribs	Fan 3.56 mm W x 1574.80 mm L, 8 Ribs	1
31	A184545	SPACER	fan, 49.5 mm long, use with Ref. 33 bolt on models with air conditioning	1
32	496-21041	WASHER,13/32" x 13/16" x .089", HDN	- flat, 13/32 x 13/16 x 3/32", hardened	4
33	814-10070	BOLT,Hex, M10 x 1.5 x 70mm, Cl 8.8	- hex, 10 - 1.5 x 70 mm, use with Ref. 31 spacer	4
34	A190656	SPACER	fan, 26 mm long, use with Ref. 35 bolt on models without air conditioning	1
35	814-10045	BOLT,Hex, M10 x 1.5 x 45mm, Cl 8.8	- hex, 10 - 1.5 x 45 mm, Use with Ref. 34 spacer	4
36	1998741C2	FAN	suction	1
		Check part number stamped on fan blade before ordering parts.	Check part number stamped on fan blade before ordering parts.	1
		Models without air conditioning, used with A184545 spacer, 496-21041 washer, and 814-10070 bolt Ref. 31-33, no longer used, when replacing 1998741C2 fan on models without air conditioning order A184467 fan, A190656 spacer, and 814-10045 bolt, Ref. 29, 34 and 35.	Models without air conditioning, used with A184545 spacer, 496-21041 washer, and 814-10070 bolt Ref. 31-33, no longer used, when replacing 1998741C2 fan on models without air conditioning order A184467 fan, A190656 spacer, and 814-10045 bolt, Ref. 29, 34 and 35.	1
	L126767	HOSE,7.9 mm ID x 2336.00 mm, SAE 30R6 or SAE 20R4 Class D1	HOSE,7.9 mm ID x 2336.00 mm, SAE 30R6 or SAE 20R4 Class D1	1

http://www.minnparbackhoeparts.com/

(580SK) - CASE SUPER-K CONSTRUCTION KING LOADER BACKHOE > (2-03A) - RADIATOR, FAN AND MOUNTING PARTS
MODELS WITH TURBOCHARGED ENG TRAC PIN JJG0173468 AND AFTER

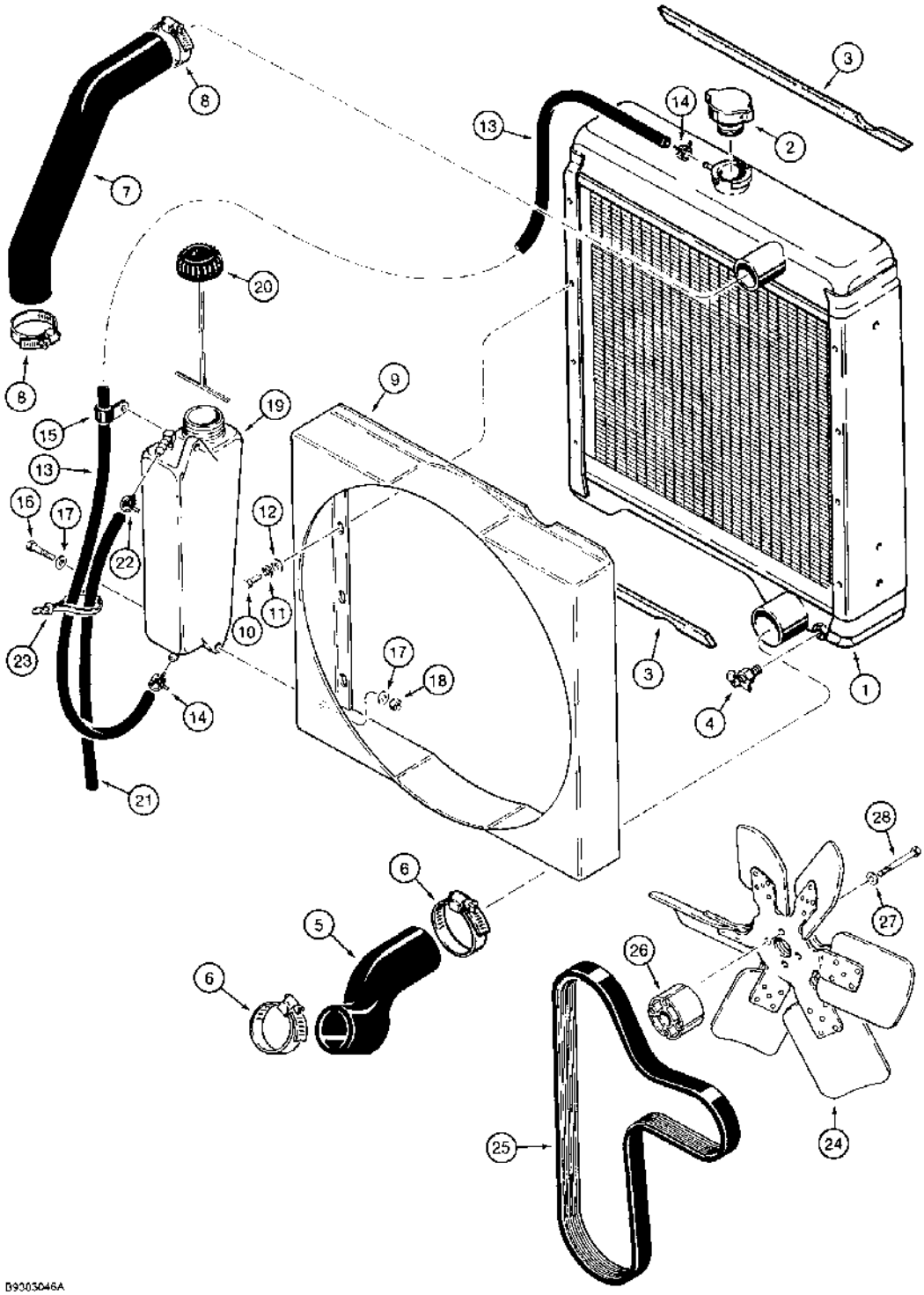

(580SK) - CASE SUPER-K CONSTRUCTION KING LOADER BACKHOE > (2-03A) - RADIATOR, FAN AND MOUNTING PARTS
MODELS WITH TURBOCHARGED ENG TRAC PIN JJG0173468 AND AFTER

Diag #	Part #	Name	Description	Qty
1	A172038	RADIATOR	engine cooling	1
2	A170241	RADIATOR CAP	CAP, RADIATOR, 15 psi	1
3	A173165	SEAL	radiator, upper and lower	2
4	217-92	COCK	VALVE, 1/4 inch PT, drain	1
5	D127775	RADIATOR HOSE,58.00 mm ID x 225.00 mm, SAE 20R4 Class C	58.00 mm ID x 225.00 mm, SAE 20R4 - Class C, Lower	1
6	214-1444	HOSE CLAMP,#44, 2.31/3.25 Type F Worm	CLAMP, HOSE, , Adj., Lower radiator hose #44, 2.31/3.25 Type F Worm	2
7	D127774	RADIATOR HOSE,45.00 mm ID x 265.00 mm, SAE 20R4 Class C	- Upper 45.00 mm ID x 265.00 mm, SAE 20R4 Class C	1
8	214-1432	HOSE CLAMP,#32, 1.56/2.50 Type F Worm	CLAMP, HOSE, , Adjustable #32, 1.56/2.50 Type F Worm	2
9	D147078	SHROUD	fan	1
10	614-8016	BOLT,Hex, M8 x 1.25 x 16mm, Cl 8.8, Full Thd	hex, 8 - 1.25 x 16 mm	8
11	492-11031	LOCK WASHER,5/16"	WASHER, LOCK, 5/16"	8
12	495-21038	WASHER,5/16"	(flat, 3/8 x 7/8 x 5/64") 5/16"	8
13	A171019	HOSE,7.50 mm ID, 8.30 mm ID x 900.00 mm, SAE J30	- Radiator to reservoir, Cut to required length from L126767 bulk hose, See below 7.50 mm ID, 8.30 mm ID x 900.00 mm, SAE J30	1
14	A171099	HOSE CLAMP	CLAMP hose, at radiator and reservoir	2
15	515-23143	CLAMP,9/16", Insul, 3/8" Bolt	P-type, attaches to coolant recovery reservoir, bucket tube upper	1
16	413-520	BOLT,Hex, 5/16" - 18 x 1 1/4", Gr 5	hex, 5/16 NC x 1-1/4 inch	2
17	495-21038	WASHER,5/16"	(flat, 3/8 x 7/8 x 5/64") 5/16"	4
18	231-1445	NUT,5/16"-18, GB	NUT light hex, self-locking, 5/16 inch NC	2
19	D148344	RESERVOIR	coolant recovery bottle	1
20	1547924C1	CAP	screw-on, tethered, coolant recovery bottle replaces A184079	1
21	D148394	HOSE	8 mm x 500 mm, coolant overflow, cut to required length from L126767 bulk hose, see below	1
22	A171099	HOSE CLAMP	CLAMP coolant overflow hose at reservoir	1
23	L18337	CABLE TIE,9.95"-12.1" lg	STRAP tie, hose retaining	1
24	A189138	FAN	six blade, engine	1
25	J911559	V-BELT,3.56 mm W x 1574.80 mm L, 8 Ribs	Fan 3.56 mm W x 1574.80 mm L, 8 Ribs	1

Diag #	Part #	Name	Description	Qty
26	D142327		fan, 54 mm long	1
27	496-21041	WASHER,13/32" x 13/16" x .089", HDN	- flat, 13/32 x 13/16 x 3/32", hardened	4
28	814-10085	BOLT,Hex, M10 x 1.5 x 85mm, Cl 8.8	BOLT,Hex, M10 x 1.5 x 85mm, Cl 8.8	4
	L126767	HOSE,7.9 mm ID x 2336.00 mm, SAE 30R6 or SAE 20R4 Class D1	HOSE,7.9 mm ID x 2336.00 mm, SAE 30R6 or SAE 20R4 Class D1	1

http://www.minnparbackhoeparts.com/

(580SK) - CASE SUPER-K CONSTRUCTION KING LOADER BACKHOE > (2-04) - AIR CLEANER AND AIR INTAKE PARTS
MODELS WITHOUT TURBOCHARGED ENGINE

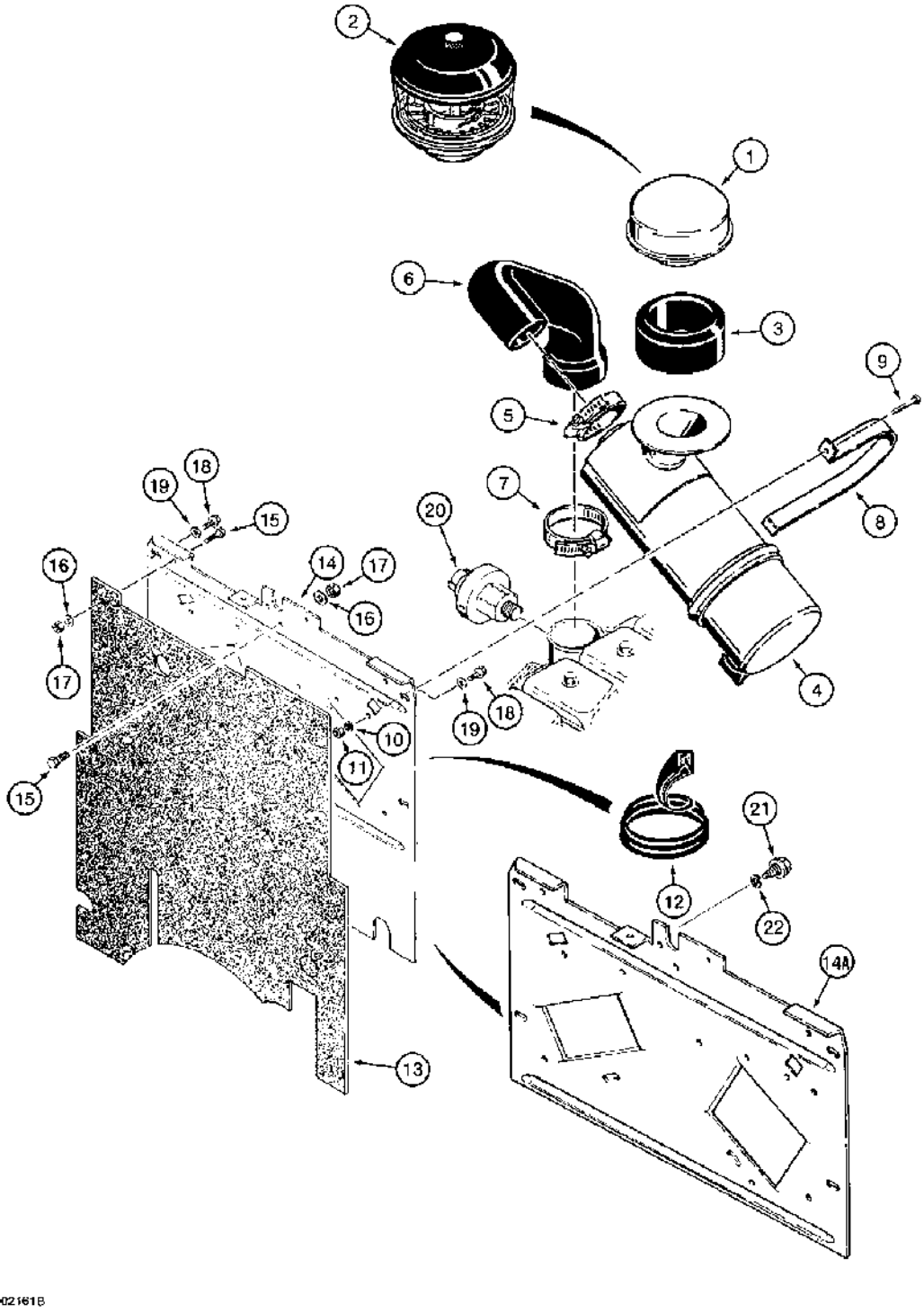

http://www.minnparbackhoeparts.com/

(580SK) - CASE SUPER-K CONSTRUCTION KING LOADER BACKHOE > (2-04) - AIR CLEANER AND AIR INTAKE PARTS MODELS WITHOUT TURBOCHARGED ENGINE

Diag #	Part #	Name	Description	Qty
1	A61277	CAP	air cleaner, standard, if used	1
2	A24391	AIR CLEANER	PRECLEANER ASSEMBLY air, if used, parts list Figure 2-10	1
3	D143756	SEAL	air cleaner	1
4	D143874	AIR CLEANER	CLEANER ASSEMBLY air, engine, parts list Figure 2-08	1
5	214-1444	HOSE CLAMP,#44, 2.31/3.25 Type F Worm	CLAMP, HOSE, , Adj., Hose to air cleaner #44, 2.31/3.25 Type F Worm	1
6	D135793	INTAKE AIR HOSE,63.50 mm ID, 76.2 mm ID, SAE J200	Air Cleaner 63.50 mm ID, 76.2 mm ID, SAE J200	1
7	214-1452	HOSE CLAMP,#52, 2.81/3.75 Type F Worm	CLAMP adj, 2-13/16 - 3-3/4 inch dia, hose to engine	1
8	D129158	STRAP	air cleaner	1
9	413-624	BOLT,Hex, 3/8" - 16 x 1 1/2", Gr 5	hex, 3/8 NC x 1-1/2 inch	1
10	492-11038	LOCK WASHER,3/8"	LOCK WASHER,3/8"	1
11	231-1446	NUT,3/8"-16, GB	NUT hex, self-locking, 3/8 inch NC, grade 8	1
12	D43403	LINING	SEAL, 5 inch, 127 mm, long, cut from bulk seal, see Parts Substitution List for bulk seal options	2
13	D150514	CURTAIN	PAD heat and noise protection	1
14	D145021	BRACKET	air cleaner mounting, no longer available, order D150862 bracket	1
14A	D150862	BRACKET	air cleaner mounting, attaches to chassis upright	1
15	413-512	BOLT,Hex, 5/16" - 18 x 3/4", Gr 5	hex, 5/16 NC x 3/4 inch	3
16	495-11034	WASHER,5/16", SAE	5/16" SAE (flat, 11/32 x 11/16 x 1/16")	3
17	231-1445	NUT,5/16"-18, GB	NUT light hex, self-locking, 5/16 inch NC	3
18	281-44912	SELF-TAP SCREW,Hex Wash Hd, 3/8" x 3/4"	SCREW self-tapping, hex washer, 3/8 NC x 3/4 inch, if used	4
18A	276-24916	SELF-TAP SCREW,Hex Hd, 3/8" x 1"	SCREW self-tapping, hex, 3/8 NC x 1 inch, if used, not shown	4
19	495-11041	WASHER,3/8", SAE	flat, (13/32 x 13/16 x 1/16")	4
20	1983233C1	RESTRICTION SWITCH	SWITCH restriction, air cleaner	1
21	112865A1	SCREW	special, 5/16 x 13/16 inch	1
22	492-11031	LOCK WASHER,5/16"	WASHER, LOCK, 5/16"	1

http://www.minnparbackhoeparts.com/

(580SK) - CASE SUPER-K CONSTRUCTION KING LOADER BACKHOE > (2-06) - AIR CLEANER AND AIR INTAKE PARTS
MODELS WITH TURBOCHARGED ENGINE

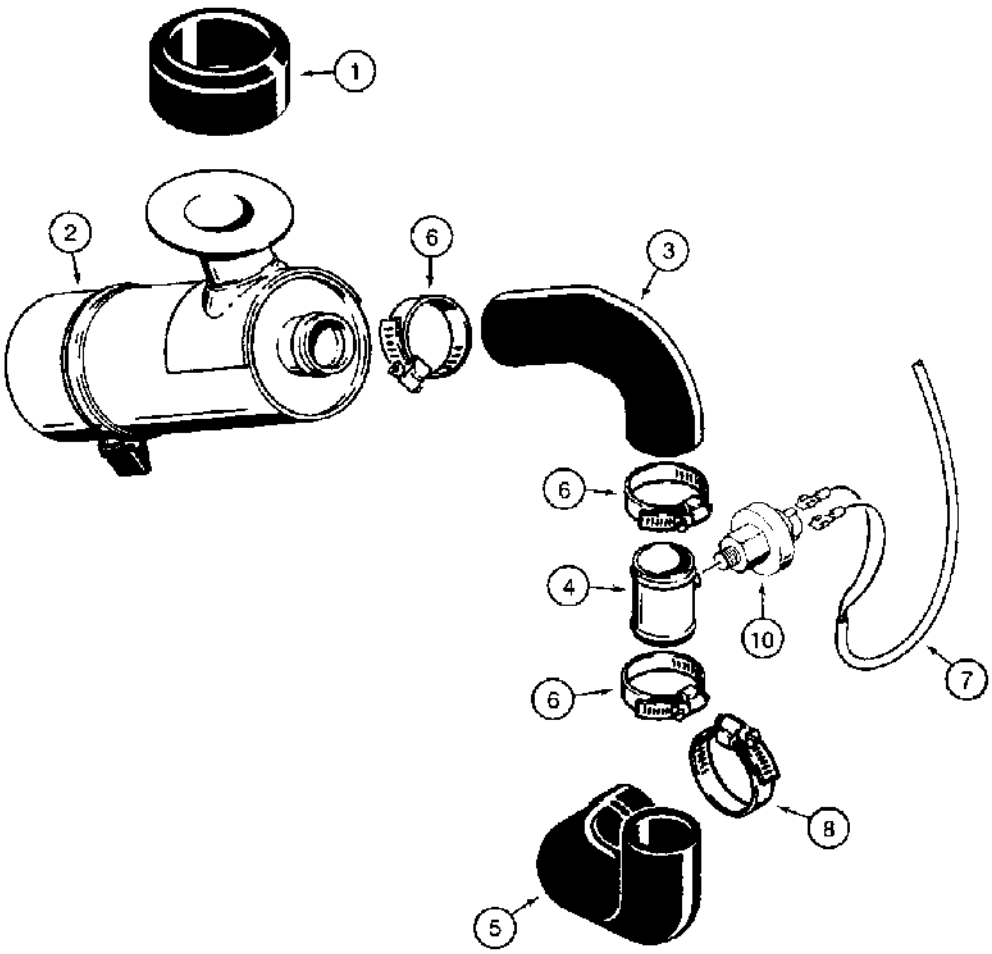

B902160-45

http://www.minnparbackhoeparts.com/

(580SK) - CASE SUPER-K CONSTRUCTION KING LOADER BACKHOE > (2-06) - AIR CLEANER AND AIR INTAKE PARTS MODELS WITH TURBOCHARGED ENGINE

Diag #	Part #	Name	Description	Qty
1	D143756	SEAL	air cleaner	1
2	D143874	AIR CLEANER	CLEANER ASSEMBLY air, engine, parts list Figure 2-08	1
3	D139340	INTAKE AIR HOSE,63.50 mm ID, SAE J200	Air Cleaner, Upper 63.50 mm ID, SAE J200	1
4	D139343	ADAPTER	coupling, air restriction	1
5	D139342	INTAKE AIR HOSE,63.50 mm ID, 76.2 mm ID, SAE J200	Air Cleaner, Lower, At Engine, For service order D139394 hose, See item 9 63.50 mm ID, 76.2 mm ID, SAE J200	1
6	214-1444	HOSE CLAMP,#44, 2.31/3.25 Type F Worm	CLAMP, HOSE, , Adj. #44, 2.31/3.25 Type F Worm	3
7	D140449	HARNESS	WIRE jumper, restriction indicator, attaches to front console wiring harness	1
8	214-1452	HOSE CLAMP,#52, 2.81/3.75 Type F Worm	CLAMP adj, 2-13/16 - 3-3/4 inch dia	1
9	D139394	LARGE HOSE	HOSE air cleaner, lower, at engine, not shown	1
10	1983233C1	RESTRICTION SWITCH	SWITCH restriction, air cleaner	1
	REF	INSTRUCTION	See Figure 2-04 For Common Air Cleaner Attaching Parts	1

http://www.minnparbackhoeparts.com/

(580SK) - CASE SUPER-K CONSTRUCTION KING LOADER BACKHOE > (2-08) - AIR CLEANER

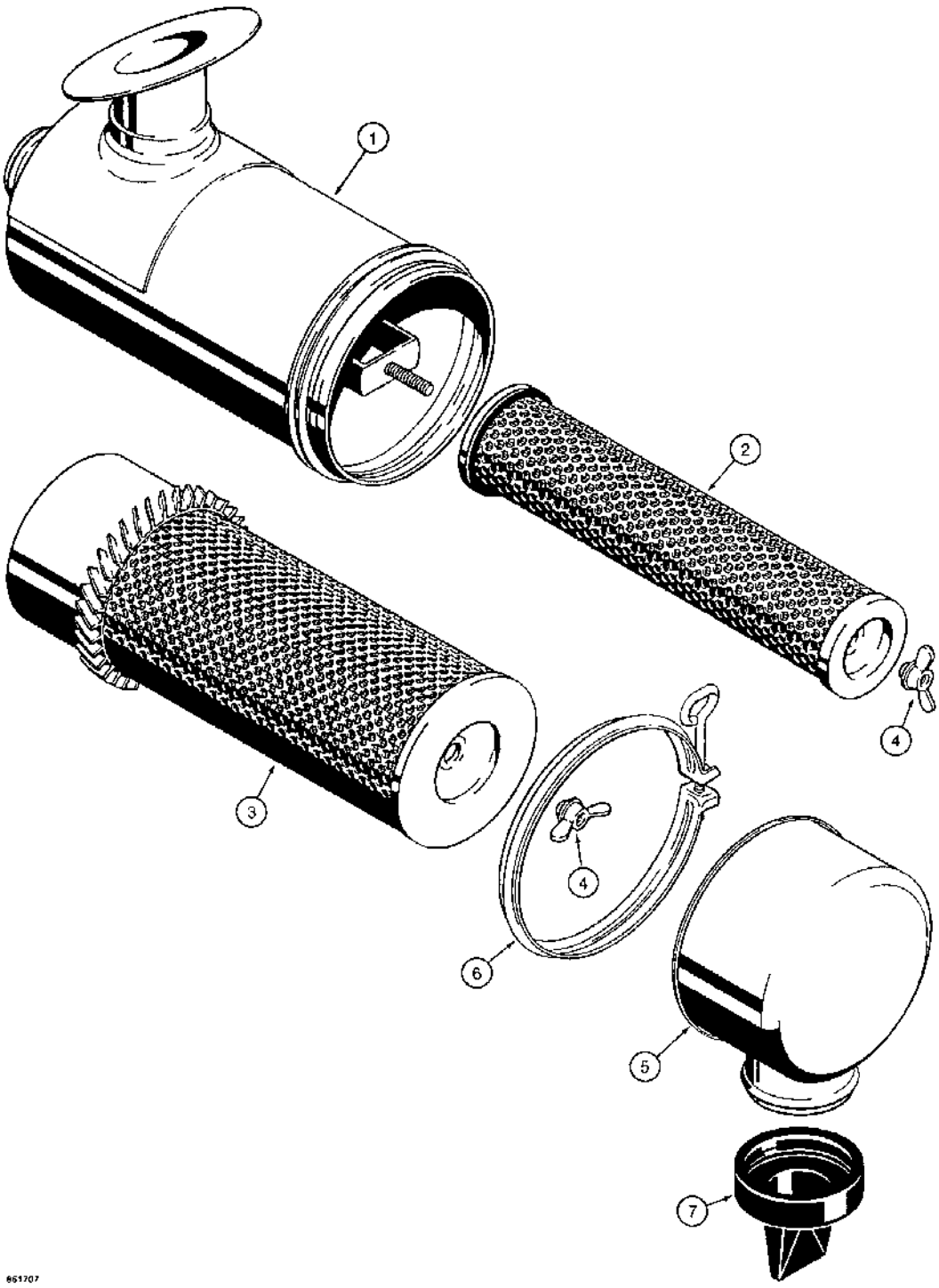

(580SK) - CASE SUPER-K CONSTRUCTION KING LOADER BACKHOE > (2-08) - AIR CLEANER

Diag #	Part #	Name	Description	Qty
	D143874	AIR CLEANER	CLEANER ASSEMBLY air, engine, Includes: Ref. 1 through 7	1
1	NSS	NOT SERVICED SEPARATELY	HOUSING air cleaner	1
2	A173291	AIR FILTER	ELEMENT secondary	1
3	A173290	AIR FILTER	ELEMENT primary	1
4	D78354	WING NUT	NUT wing, element retaining	2
5	A184598	COVER	end	1
6	F84999	CLAMP	air cleaner, housing to end cover	1
7	A184597	VALVE POPPET	VALVE dust, rubber	1

http://www.minnparbackhoeparts.com/

(580SK) - CASE SUPER-K CONSTRUCTION KING LOADER BACKHOE > (2-10) - PRECLEANER

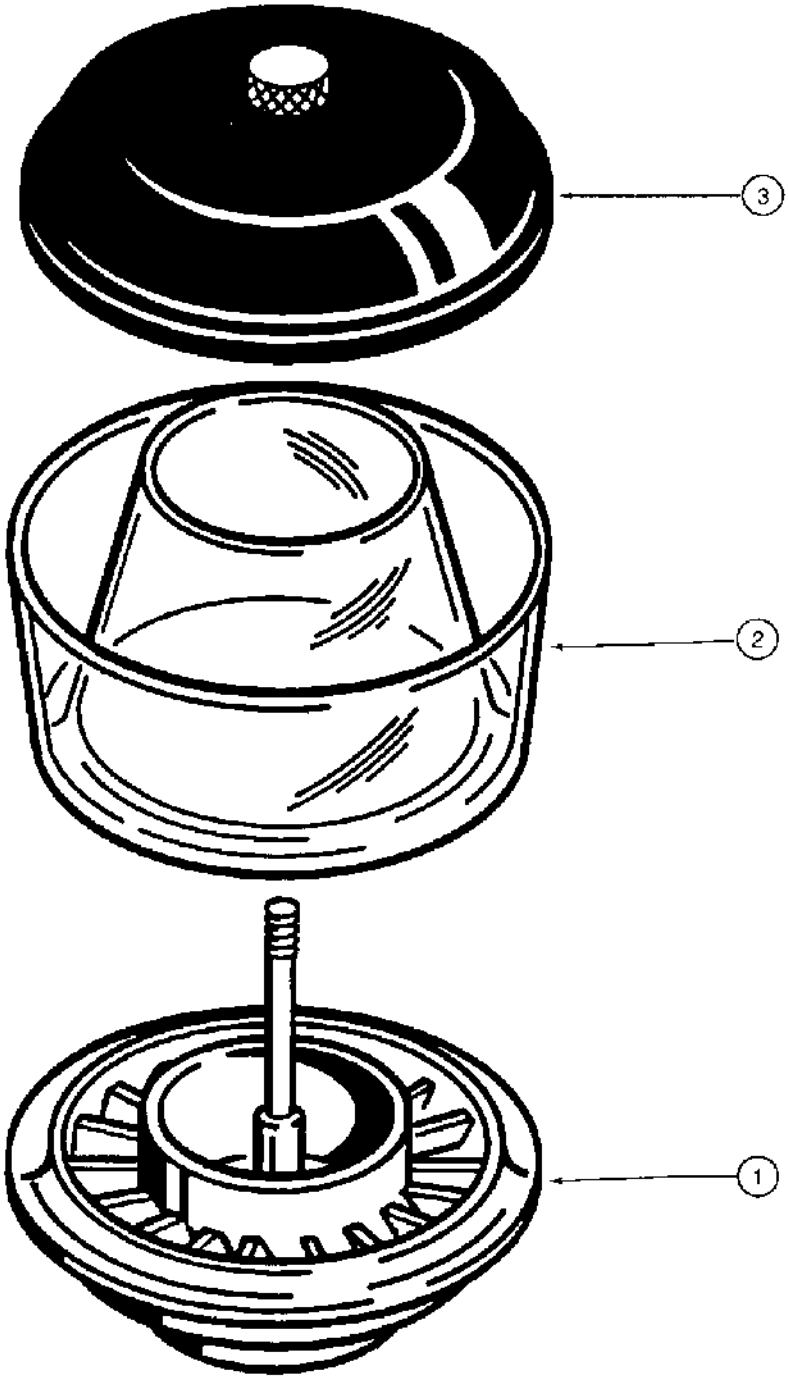

881709

(580SK) - CASE SUPER-K CONSTRUCTION KING LOADER BACKHOE > (2-10) - PRECLEANER

Diag #	Part #	Name	Description	Qty
	A24391	AIR CLEANER	PRECLEANER ASSEMBLY air, if used, Includes: Ref. 1, 2 and 3.	1
1	NSS	NOT SERVICED SEPARATELY	BODY precleaner	1
2	365413R1	BOWL	precleaner, replaces 73186	1
3	365412R91	COVER	precleaner, replaces 73187	1

http://www.minnparbackhoeparts.com/

(580SK) - CASE SUPER-K CONSTRUCTION KING LOADER BACKHOE > (2-12) - COLD START SYSTEM

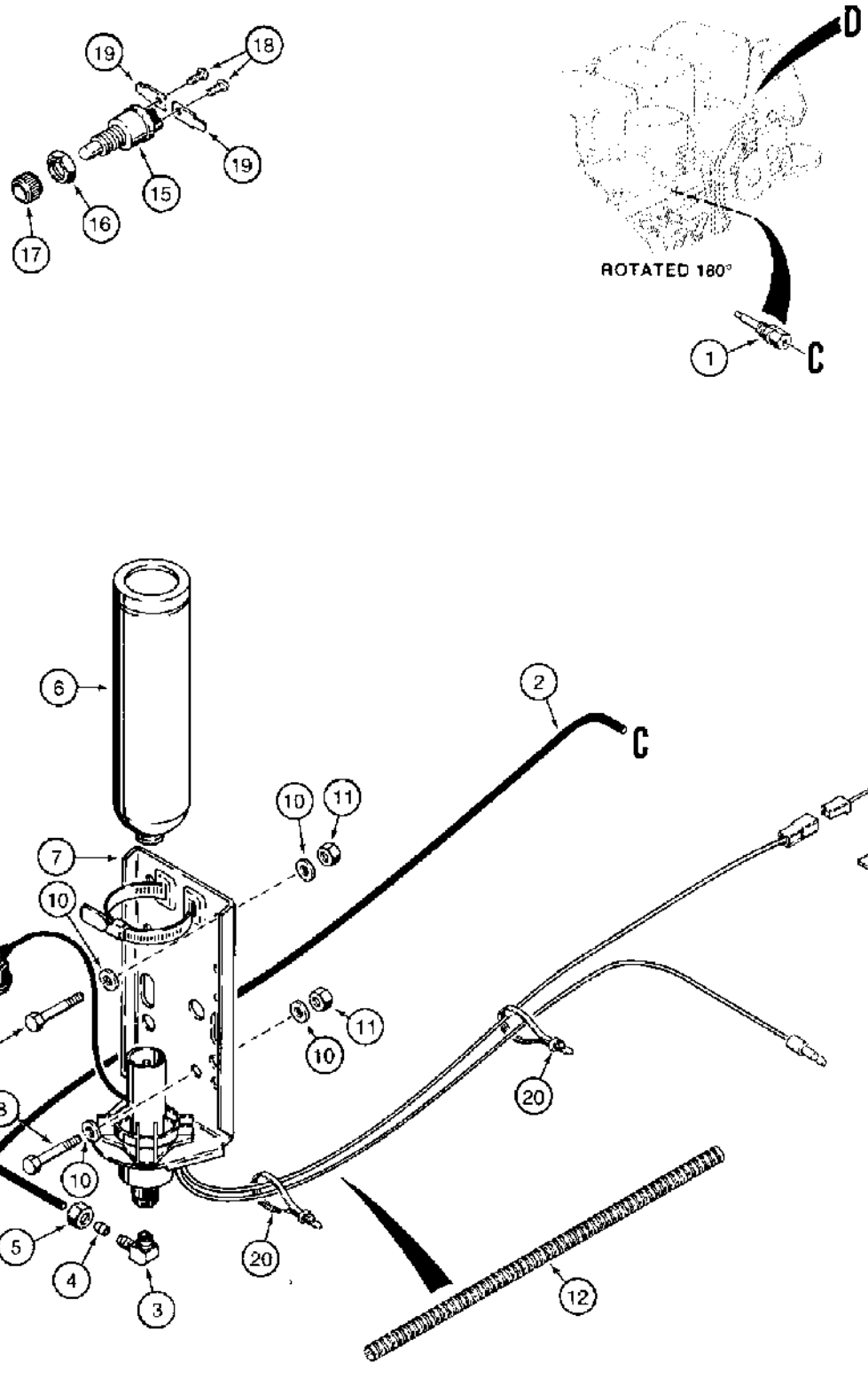

(580SK) - CASE SUPER-K CONSTRUCTION KING LOADER BACKHOE > (2-12) - COLD START SYSTEM

Diag #	Part #	Name	Description	Qty
1	A189154	JET	NOZZLE ASSEMBLY cold start injector, .008 dual orifice nozzle, component parts not serviced seperately	1
2	D145367	TUBE	30 inch, 762 mm, long, valve to injector nozzle, cut to required length from L60539 bulk tube, see below	1
	222-615	ELBOW,90º, 5/16"-24 x 1/8" NPT, Comp	1/8 tube, Incl. Ref 3, 4	1
3	NSS	NOT SERVICED SEPARATELY	BODY elbow	1
4	222-650	SLEEVE,1/8" Tube, Comp	Tapered 1/8" Tube, Comp	1
5	222-660	BEARING LOCK NUT,5/16"-24, 45º Fl, Comp	1/8" tube OD 5/16"-24, 45º Fl, Comp	1
6	A171940	CYLINDER	CONTAINER ether	1
7	A172116	VALVE	ASSEMBLY, 3 cc starting fluid injection, component parts not serviced separately	1
8	413-516	BOLT,Hex, 5/16" - 18 x 1", Gr 5	hex, 5/16 NC x 1 inch	2
10	495-11034	WASHER,5/16", SAE	5/16" SAE (flat, 11/32 x 11/16 x 1/16")	4
11	231-1445	NUT,5/16"-18, GB	NUT hex, 5/16 inch NC	2
12	D128402	PLASTIC-RUBBER TUBE	SLEEVE wire guard, 380 mm long	1
13	A187923	SWITCH	- temperature, circuit breaking, includes lead wires, uses existing intake manifold mounting hardware	1
14	495-11034	WASHER,5/16", SAE	5/16" SAE (flat, 11/32 x 11/16 x 1/16")	1
	L72776	SWITCH	ASSEMBLY push button, cold start, must also order two L59682 blade terminals item 19, Includes: Ref. 15 through 18.	1
15	NSS	NOT SERVICED SEPARATELY	SWITCH cold start	1
16	H275784	JAM NUT	hex, jam, special	1
17	D73741	NUT	hex, special	1
18	174-93	SCREW,Sltd Rd Hd, #10-32 x 1/4"	machine, round head slotted, No. 10 NF x 1/4 inch	2
19	L59682	TERMINAL CONNECTOR	TERMINAL blade, use with L72776 switch	2
20	L18337	CABLE TIE,9.95"-12.1" lg	STRAP tie, nylon	1
	L60539	TUBE,0.125" OD x 168" L	14 foot, bulk roll	1

http://www.minnparbackhoeparts.com/

(580SK) - CASE SUPER-K CONSTRUCTION KING LOADER BACKHOE > (2-14) - MUFFLER AND EXHAUST SYSTEM MODELS WITHOUT TURBOCHARGED ENGINE

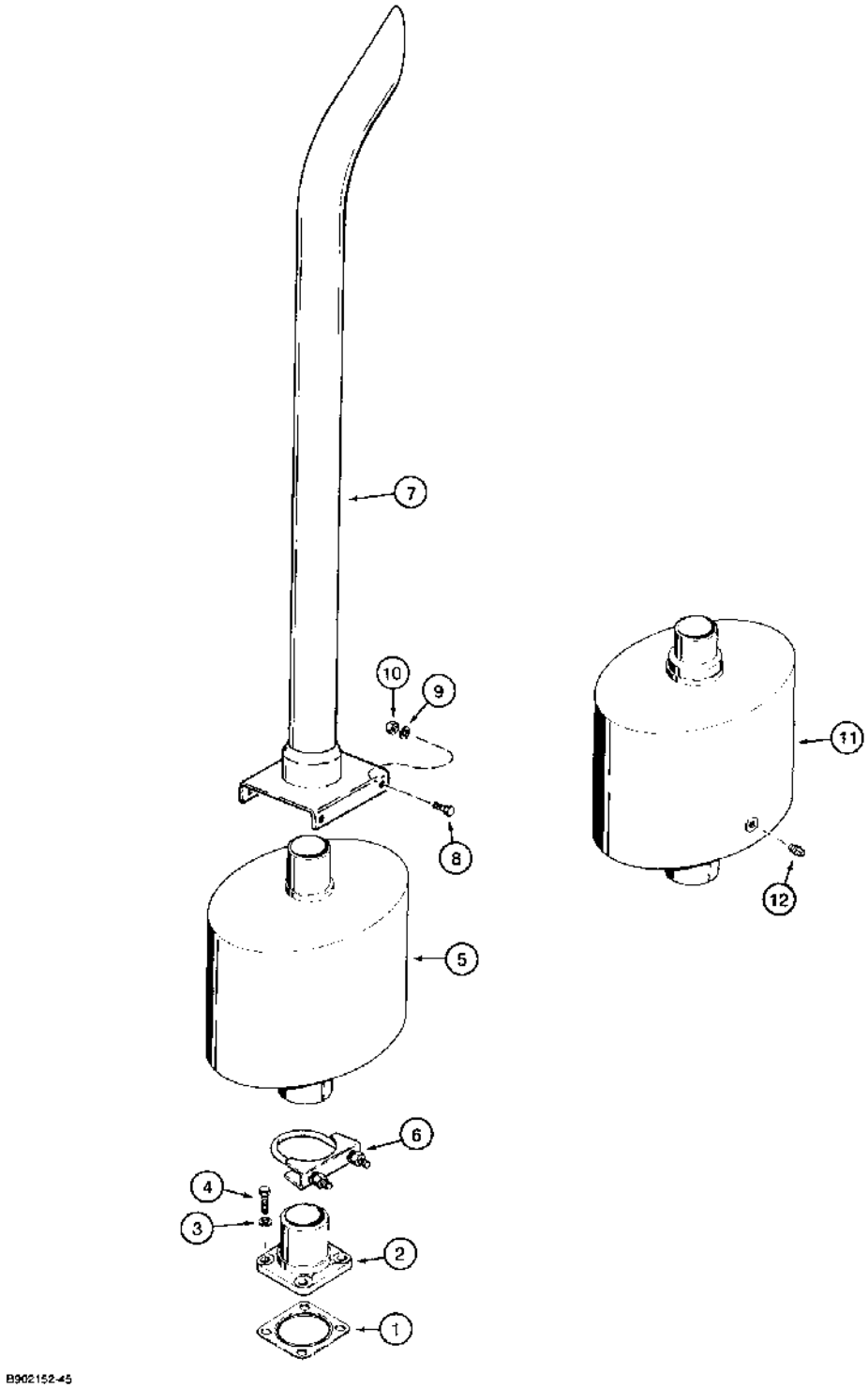

(580SK) - CASE SUPER-K CONSTRUCTION KING LOADER BACKHOE > (2-14) - MUFFLER AND EXHAUST SYSTEM MODELS WITHOUT TURBOCHARGED ENGINE

Diag #	Part #	Name	Description	Qty
1	J912220	GASKET	steel, muffler adapter, muffler and exhaust system models without turbocharged engine	1
2	A170611	ADAPTER	muffler, muffler and exhaust system models without turbocharged engine	1
3	892-11010	LOCK WASHER,M10	Muffler and exhaust system models without turbocharged engine M10	4
4	614-10025	BOLT,Hex, M10 x 1.5 x 25mm, Cl 8.8, Full Thd	Muffler and Exhaust System Models without Turbocharged Engine Hex, M10 x 25, 8.8, Full Thd	4
5	A184237	MUFFLER	engine exhaust, under hood, standard, if used, muffler and exhaust system models without turbocharged engine	1
6	A13240	CLAMP	muffler, includes hardware, replaces A62874 clamp, muffler and exhaust system models without turbocharged engine	1
7	D151014	PIPE	exhaust, muffler extension, attaches to hood, replaces D136087 pipe, muffler and exhaust system models without turbocharged engine	1
8	413-512	BOLT,Hex, 5/16" - 18 x 3/4", Gr 5	hex, 5/16 NC x 3/4 inch, muffler and exhaust system models without turbocharged engine	4
9	492-11031	LOCK WASHER,5/16"	WASHER, LOCK, , muffler and exhaust system models without turbocharged engine 5/16"	4
10	425-105	NUT,5/16"-18, G5	- hex, 5/16 inch NC, Muffler and exhaust system models without turbocharged engine	4
11	A189315	MUFFLER	spark arrester, under hood, if used, spark arrester muffler, Includes: Ref. 12.	1
12	217-77	PLUG	square, 3/8 inch PT, spark arrester muffler	1

http://www.minnparbackhoeparts.com/

(580SK) - CASE SUPER-K CONSTRUCTION KING LOADER BACKHOE > (2-16) - MUFFLER AND EXHAUST SYSTEM MODELS WITH TURBOCHARGED ENGINE

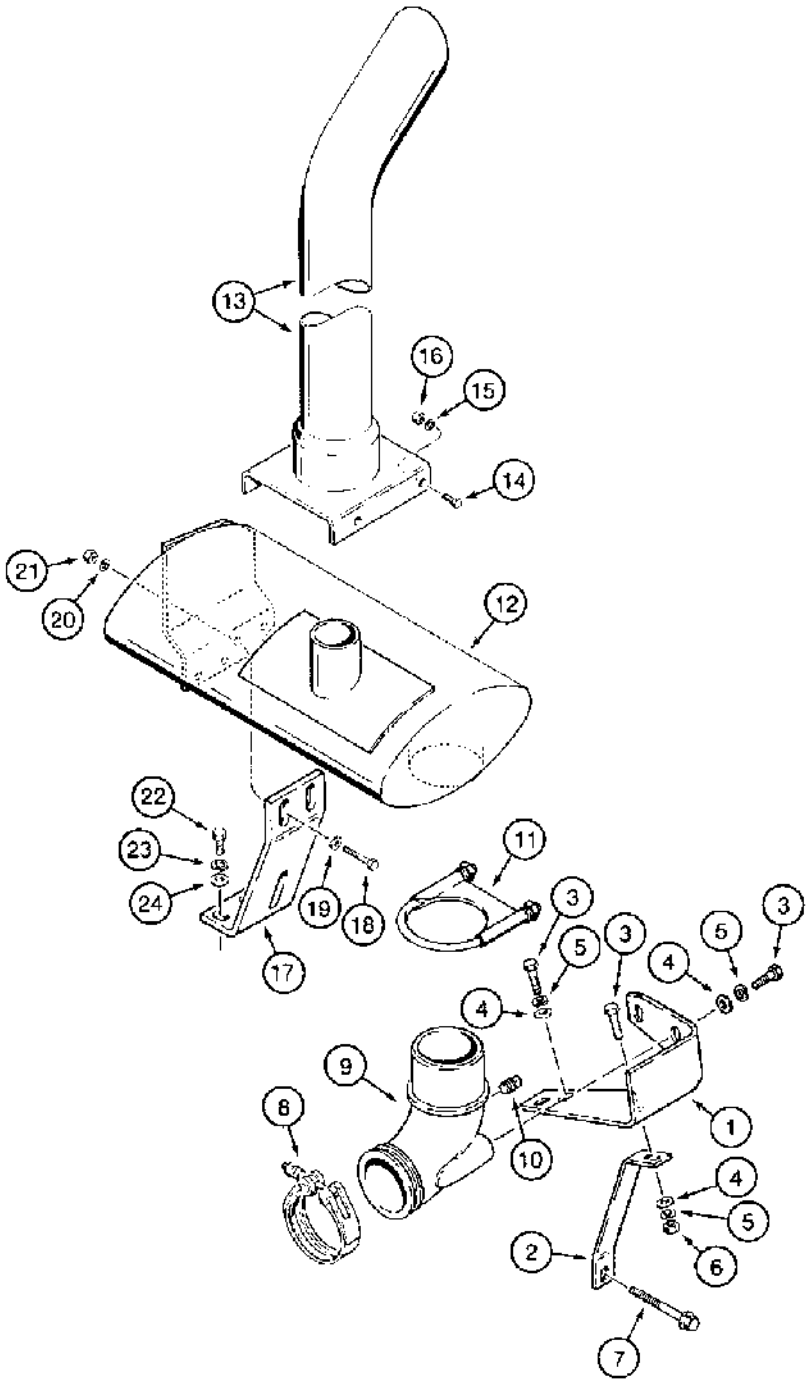

BB90938-45

http://www.minnparbackhoeparts.com/

(580SK) - CASE SUPER-K CONSTRUCTION KING LOADER BACKHOE > (2-16) - MUFFLER AND EXHAUST SYSTEM MODELS WITH TURBOCHARGED ENGINE

Diag #	Part #	Name	Description	Qty
1	L126939	SUPPORT	BRACKET exhaust elbow, replaces L114429	1
2	L115129	SUPPORT	BRACE exhaust bracket	1
3	614-10030	BOLT,Hex, M10 x 1.5 x 30mm, Cl 8.8, Full Thd	BOLT,Hex, M10 x 1.5 x 30mm, Cl 8.8, Full Thd	5
4	895-11010	WASHER,M10 x 20 x 2	flat, 11 x 21 x 2 mm	5
5	892-11010	LOCK WASHER,M10	LOCK WASHER,M10	5
6	825-1410	NUT,M10, Cl 8	NUT,M10, Cl 8	1
7	844-10080	BOLT,Hvy Hex, M10 x 80mm, Cl 8.8	hex flange, 10 mm - 1.5 x 80 mm, replaces existing manifold bolt	1
8	A170467	CLAMP	adapter retaining, includes hardware, at engine	1
9	A173795	ELBOW	ADAPTER, 93 degree, exhaust	1
10	221-841	PLUG	hex socket, 1/4 inch PT	1
11	L14222	CLAMP	at muffler, includes hardware, replaces L73711	1
12	A184890	MUFFLER	engine exhaust	1
13	D151014	PIPE	exhaust, muffler extension, replaces D136087 pipe	1
14	413-512	BOLT,Hex, 5/16" - 18 x 3/4", Gr 5	hex, 5/16 NC x 3/4 inch	4
15	492-11031	LOCK WASHER,5/16"	WASHER, LOCK, 5/16"	4
16	425-105	NUT,5/16"-18, G5	- hex, 5/16 inch NC	4
17	A189275	SUPPORT	BRACKET muffler support	1
18	413-616	BOLT,Hex, 3/8" - 16 x 1", Gr 5	hex, 3/8 NC x 1 inch	2
19	495-11041	WASHER,3/8", SAE	flat, (13/32 x 13/16 x 1/16")	2
20	492-11038	LOCK WASHER,3/8"	LOCK WASHER,3/8"	2
21	425-106	NUT,3/8"-16, G5	NUT,3/8"-16, G5	2
22	614-10025	BOLT,Hex, M10 x 1.5 x 25mm, Cl 8.8, Full Thd	BOLT,Hex, M10 x 1.5 x 25mm, Cl 8.8, Full Thd	2
		See Figure 4-14 for hardware used on models with air conditioning.	See Figure 4-14 for hardware used on models with air conditioning.	1
23	892-11010	LOCK WASHER,M10	LOCK WASHER,M10	2
		See Figure 4-14 for hardware used on models with air conditioning.	See Figure 4-14 for hardware used on models with air conditioning.	1
24	895-11010	WASHER,M10 x 20 x 2	flat, 11 x 21 x 2 mm	2

http://www.minnparbackhoeparts.com/

Diag #	Part #	Name	Description	Qty
		See Figure 4-14 for hardware used on models with air conditioning.	See Figure 4-14 for hardware used on models with air conditioning.	1

http://www.minnparbackhoeparts.com/

(580SK) - CASE SUPER-K CONSTRUCTION KING LOADER BACKHOE > (2-18) - ENGINE MOUNTING

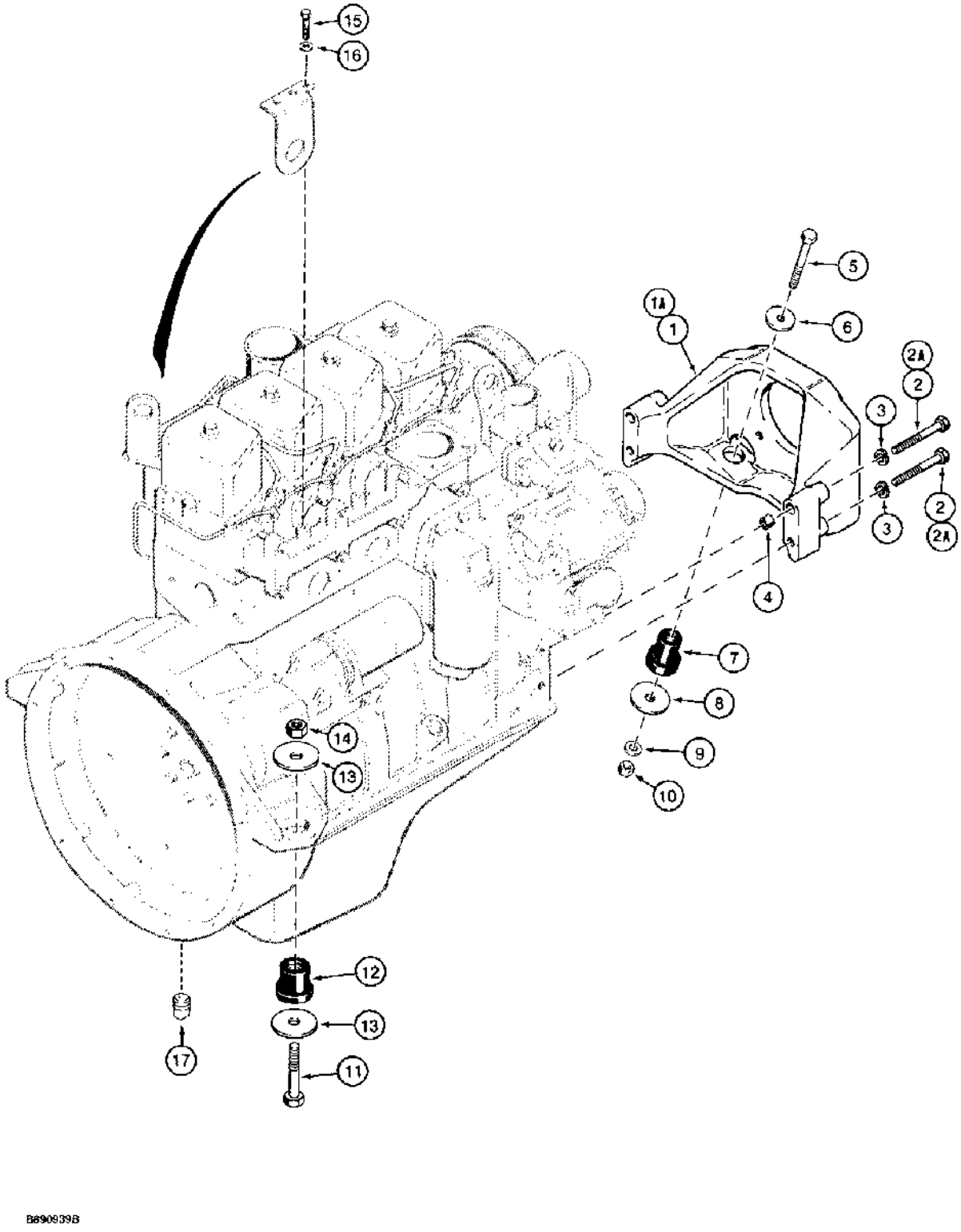

(580SK) - CASE SUPER-K CONSTRUCTION KING LOADER BACKHOE > (2-18) - ENGINE MOUNTING

Diag #	Part #	Name	Description	Qty
1	D123725	SUPPORT	60 mm long mounting bolt flange, engine front, no longer available, order D150604 support, item 1A	1
1A	D150604	SUPPORT	72 mm long mounting bolt flange, engine front	1
2	814-12090	BOLT,Hex, M12 x 1.75 x 90mm, Cl 8.8	- hex, 12 - 1.75 x 90 mm, D123725 support, if used	4
2A	814-12100	BOLT,Hex, M12 x 1.75 x 100mm, Cl 8.8	D150604 support, if used Hex, M12 x 100, 8.8	4
3	892-11012	LOCK WASHER,M12	WASHER, LOCK, M12	4
4	A170309	RING	BUSHING engine support, upper bolt holes	2
5	413-844	BOLT,Hex, 1/2" - 13 x 2 3/4", Gr 5	hex, 1/2 NC x 2-3/4 inch	2
6	D126338	WASHER	flat, 13 x 45 x 5 mm, special	2
7	D60627	SHOCK ABSORBER	INSULATOR engine mount, rubber, front	2
8	495-81270	WASHER,17/32" x 2 1/4" x .134"	flat	2
9	495-11053	WASHER,1/2", SAE	(17/32" x 1-1/16" x 5/64") 1/2", SAE	2
10	231-1448	NUT,1/2"-13, GB	light hex, self-locking, 1/2 inch NC	2
11	413-1056	BOLT,Hex, 5/8" - 11 x 3 1/2", Gr 5	BOLT,Hex, 5/8" - 11 x 3 1/2", Gr 5	2
12	D133316	SHOCK ABSORBER	INSULATOR engine mount, rubber, rear	2
13	D35009		flat, special, hardened	4
14	425-1010	NUT,5/8"-11, G5	NUT,5/8"-11, G5	2
15	814-10020	BOLT,Hex, M10 x 1.5 x 20mm, Cl 8.8, Full Thd	Use to Attach Lift Bracket to Exhaust Manifold Hex, M10 x 20, 8.8, Full Thd	1
16	895-11010	WASHER,M10 x 20 x 2	flat, 11 x 21 x 2 mm	1
17	221-845	PLUG,Hex Soc, 3/4"-14	square socket, 3/4 inch PT, use on models with PTO	1

http://www.minnparbackhoeparts.com/

(580SK) - CASE SUPER-K CONSTRUCTION KING LOADER BACKHOE > (2-20) - WATER PUMP SYSTEM, 4-390 ENGINE, 4T-390 ENGINE

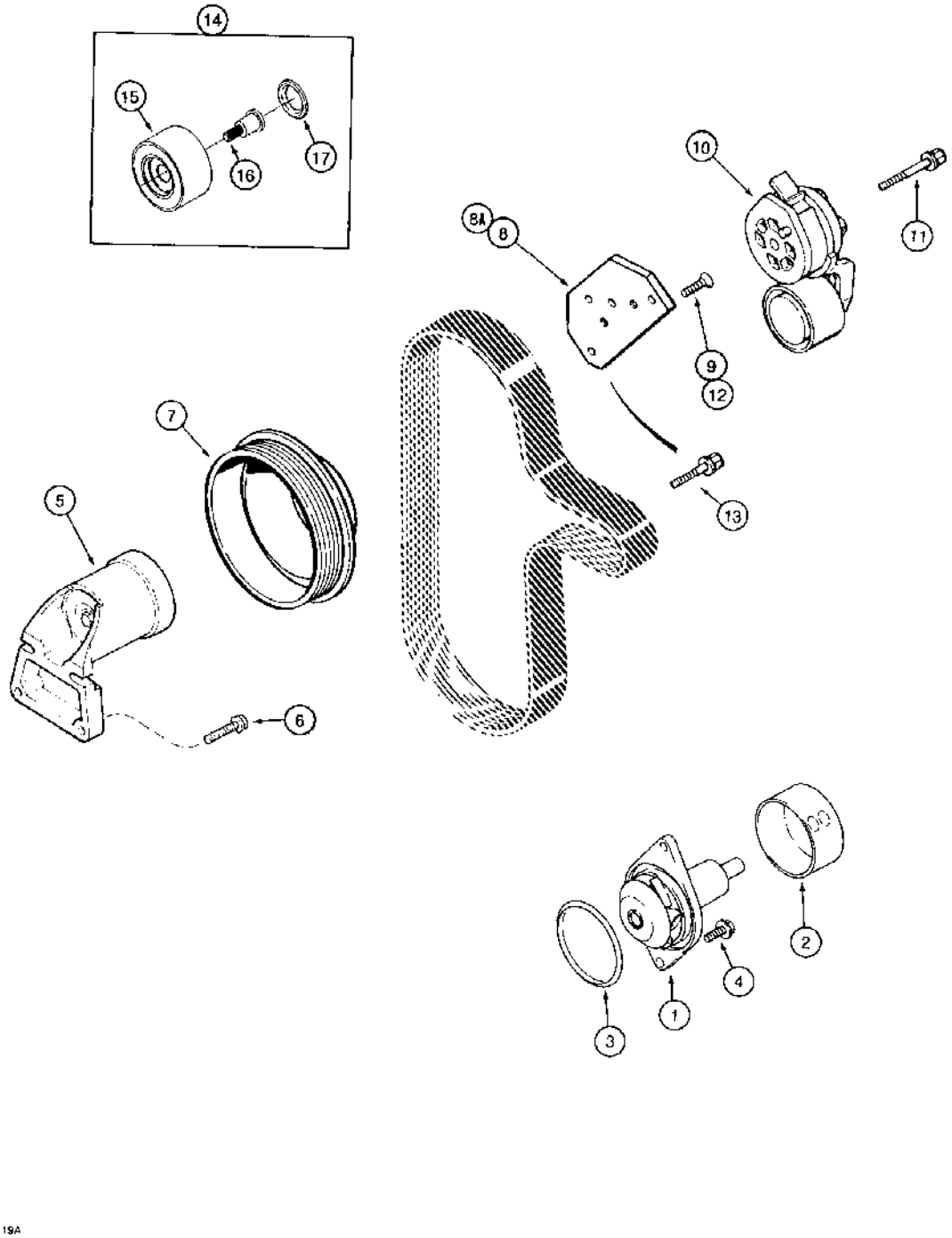

B9401119A

(580SK) - CASE SUPER-K CONSTRUCTION KING LOADER BACKHOE > (2-20) - WATER PUMP SYSTEM, 4-390 ENGINE, 4T-390 ENGINE

Diag #	Part #	Name	Description	Qty
	A77703	PUMP, WATER	KIT water pump, Includes: Ref. 1, 2 and 3.	1
	J286278R	REMAN-WATER PUMP	580SK	1
	J286278C	CORE-WATER PUMP	Return Number	1
1	NSS	NOT SERVICED SEPARATELY	PUMP water	1
2	NSS	NOT SERVICED SEPARATELY	PULLEY water pump	1
3	238-5341	O-RING,-341, 70 Duro, 3.475" ID x .210" Thk	O-RING,-341, 70 Duro, 3.475" ID x .210" Thk	1
4	J900227	SCREW,Hex, M8 x 1.25 x 22mm, Cl 10.9	SCREW,Hex, M8 x 1.25 x 22mm, Cl 10.9	2
5	J911922	SUPPORT ASSY.	BRACKET fan pulley	1
6	845-8040	BOLT,Hvy Hex, M8 x 40mm, Cl 8.8	- heavy hex flange, 8 mm - 1.25 x 40 mm, 8.8	4
7	J914462	PULLEY	fan, 1.1 to 1 ratio	1
8	J919985	SUPPORT	BRACKET belt tensioner, replaces J904548 bracket, no longer used, for service order item 8A, J925207 bracket	1
8A	J925207	SUPPORT	BRACKET belt tensioner	1
9	J925186	SCREW,Torx Soc, M8 x 1.25 x 25	Flat head slotted, Special, Used with item 8, J919985 bracket only Torx Soc, M8 x 1.25 x 25	2
10	J918944	BELT TENSIONER	TENSIONER belt, replaces J914086 tensioner, includes items 15-17	1
11	854-10070	BOLT,Hvy Hex, M10 x 70mm, Cl 10.9	- heavy hex flange, 10 - 1.5 x 70 mm, class 10.9	1
12	J925186	SCREW,Torx Soc, M8 x 1.25 x 25	Flat head, Special, Used with item 8A, J925207 bracket only Torx Soc, M8 x 1.25 x 25	3
13	845-8025	BOLT,Hex Flg, M8 x 25mm, Cl 8.8	- heavy hex flange, 8 - 1.25 x 25 mm, Used with item 8A, J925207 bracket only	1
14	A77817	PACKAGE, REPAIR	KIT pulley assembly, belt tensioner, used to replace pulley of J918944 belt tensioner, Ref. 10, Includes: Ref. 15, 16 and 17.	1
15	NSS	NOT SERVICED SEPARATELY	PULLEY belt tensioner	1
16	NSS	NOT SERVICED SEPARATELY	BOLT pulley	1
17	NSS	NOT SERVICED SEPARATELY	SEAL dust	1

http://www.minnparbackhoeparts.com/

(580SK) - CASE SUPER-K CONSTRUCTION KING LOADER BACKHOE > (2-22) - FRONT GEAR COVER, 4-390 ENGINE, 4T-390 ENGINE

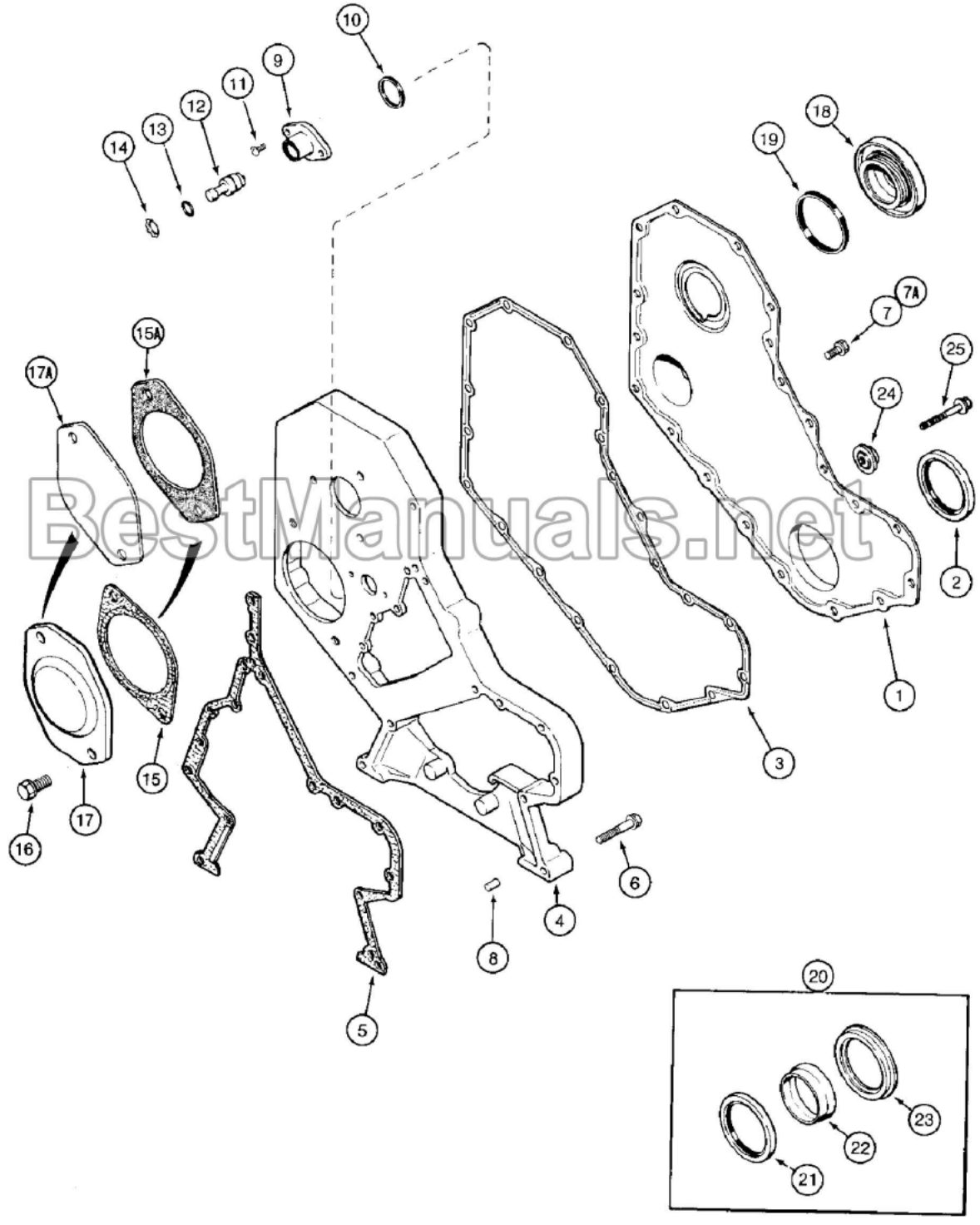

BestManuals.net

http://www.minnparbackhoeparts.com/

(580SK) - CASE SUPER-K CONSTRUCTION KING LOADER BACKHOE > (2-22) - FRONT GEAR COVER, 4-390 ENGINE, 4T-390 ENGINE

Diag #	Part #	Name	Description	Qty
1	J903794	COVER	gear, front	1
2	NSS	NOT SERVICED SEPARATELY	SEAL oil, crankshaft front, order item 20, J904353 seal kit below	1
3	J914385	GASKET	front cover	1
4	J920758	HOUSING	timing gear, replaces J917759 and J920518 housing	1
5	J916131	GASKET	gear housing	1
6	845-8050	BOLT,Hvy Hex, M8 x 50mm, Cl 8.8	- heavy hex flange, 8 - 1.25 x 50 mm	10
7	845-8016	BOLT,Hvy Hex, M8 x 16mm, Cl 8.8	- heavy hex flange, 8 - 1.25 x 16 mm, External, Retains Ref. 1 to Ref. 4	11
		Ref. Item #7 845-8016- the proper bolt to use is J924962 or J900629 bolt with Loctite	Ref. Item #7 845-8016- the proper bolt to use is J924962 or J900629 bolt with Loctite	1
7A	J900629	FLANGE BOLT,Hex Flg, M8 x 16, 8.8, Full Thd	BOLT, , internal, retains item 4 to block Hex Flg, M8 x 16, 8.8, Full Thd	5
8	J900257	PIN	dowel, locating	2
9	J919683	HOUSING	timing pin, replaces J905933 housing	1
10	J915772	SEAL	SEALRING - timing pin housing	1
11	J907998	SCREW,Spc Rd Torx Hd, M5 x 17	LOCK, Spc Rd Torx Hd, M5 x 17	2
12	J903924	PIN	timing	1
13	J913994	O-RING	sealing, timing pin	1
14	J904849	SNAP RING,0.875", Int, #87	RING, SNAP, , timing pin 0.875", Int, #87	1
15	J913192	GASKET	cover plate, no longer available, for service order J919601 gasket, Ref. 15A	1
15A	J919601	GASKET	cover plate	1
16	854-12025	BOLT,Hvy Hex, M12 x 25mm, Cl 10.9	heavy hex flange, 12 - 1.75 x 25 mm, class 10.9	2
17	J909918	PLATE	accessory drive cover, no longer available, for service order J914868 plate, Ref. 17A	1
17A	J914868	COVER	PLATE accessory drive cover	1
18	J903463	COVER	front access	1
19	J903475	SEALING RING	cover	1
20	J904353	GASKET KIT	KIT seal, oil, crankshaft front, Includes: Ref. 21, 22 and 23.	1
21	NSS	NOT SERVICED SEPARATELY	SEAL oil, crankshaft front	1
22	NSS	NOT SERVICED SEPARATELY	TOOL seal installation	1

Diag #	Part #	Name	Description	Qty
23	NSS	NOT SERVICED SEPARATELY	TOOL seal installation	1
24	J912772	RETAINER	belt	1
25	845-8060	BOLT,Hvy Hex, M8 x 60mm, Cl 8.8	- heavy hex flange, 8 - 1.25 x 60 mm	1

http://www.minnparbackhoeparts.com/

(580SK) - CASE SUPER-K CONSTRUCTION KING LOADER BACKHOE > (2-24) - MANIFOLDS - EXHAUST AND INTAKE, EXHAUST - 4-390 ENGINE

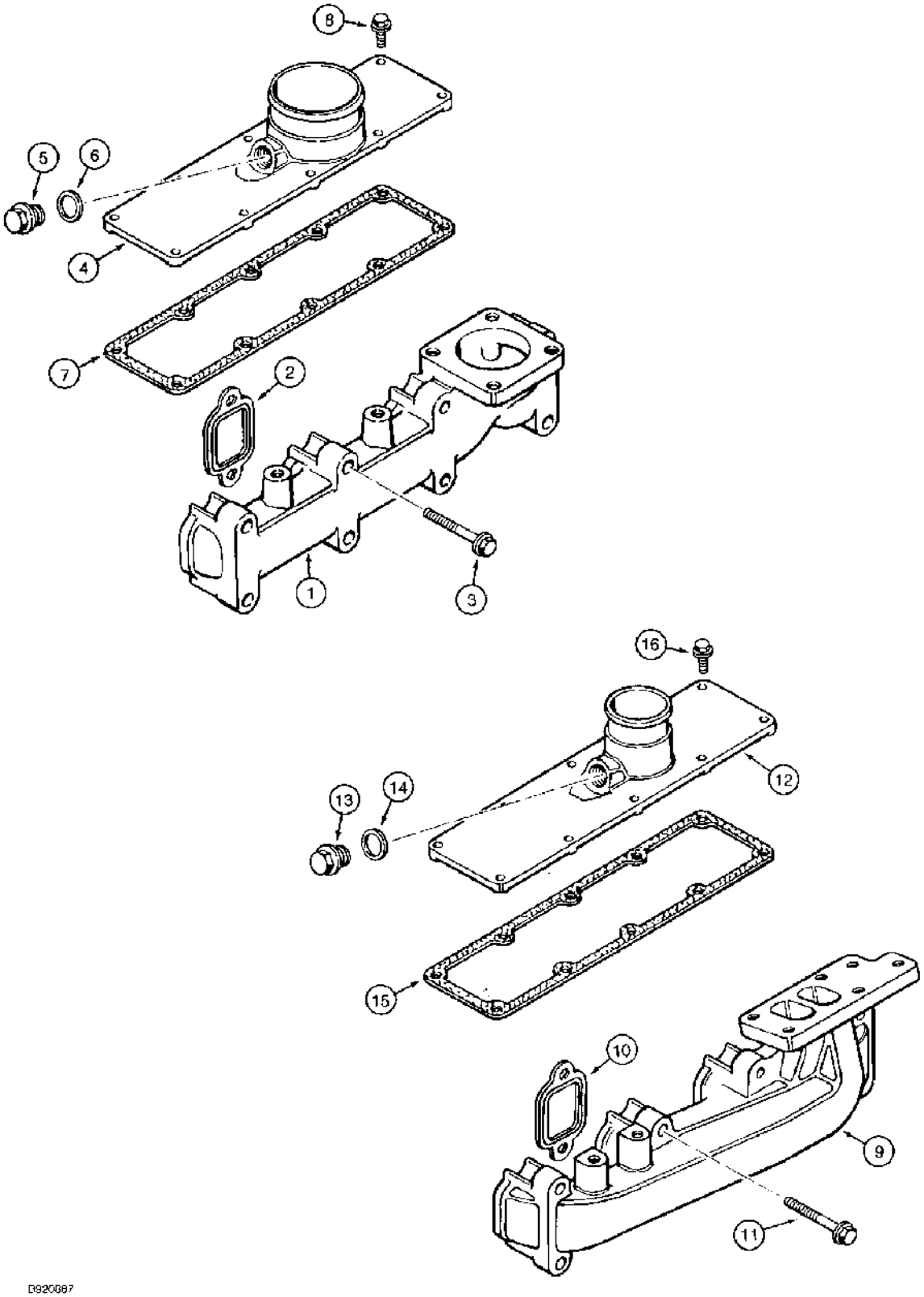

(580SK) - CASE SUPER-K CONSTRUCTION KING LOADER BACKHOE > (2-24) - MANIFOLDS - EXHAUST AND INTAKE, EXHAUST - 4-390 ENGINE

Diag #	Part #	Name	Description	Qty
1	J901223	MANIFOLD	exhaust, Naturally Aspirated, exhaust - 4 - 390 engine	1
2	J905443	MANIFOLD GASKET	exhaust manifold, exhaust - 4 - 390 engine	4
3	854-10065	BOLT,Hvy Hex, M10 x 65mm, Cl 10.9	- heavy hex flange, 10 - 1.50 x 65 mm, class 10.9, exhaust - 4 - 390 engine	8
	A77415	COVER	KIT intake manifold, Naturally Aspirated, order Ref. 4-6, intake - 4-390 engine, Includes: Ref. 4, 5 and 6.	1
4	J904340	COVER	intake, intake - 4-390 engine	1
5	J907185	PLUG	manifold, remove to install cold start, intake - 4-390 engine	1
6	J906773	WASHER	plug sealing, intake - 4-390 engine	1
7	J914028	GASKET	intake manifold, intake - 4-390 engine	1
8	J918109	FLANGE BOLT,Hex, M8 x 1.25 x 25mm	SCREW, , Intake manifold, Intake - 4-390 engine Hex Flg Hd, M8 x 1.25 x 25	10
9	J901919	MANIFOLD	exhaust, Turbocharged, exhaust - 4t - 390 engine	1
10	J905443	MANIFOLD GASKET	exhaust manifold, exhaust - 4t - 390 engine	4
11	854-10065	BOLT,Hvy Hex, M10 x 65mm, Cl 10.9	- heavy hex flange, 10 - 1.50 x 65 mm, class 10.9, exhaust - 4t - 390 engine	8
	A77416	COVER	KIT intake manifold, Turbocharged, order items 12-14, intake - 4t - 390 engine, Includes: Ref. 12, 13 and 14.	1
12	J904339	COVER	MANIFOLD intake, intake - 4t - 390 engine	1
13	J907185	PLUG	manifold, remove to install cold start, intake - 4t - 390 engine	1
14	J906773	WASHER	plug sealing, intake - 4t - 390 engine	1
15	J914028	GASKET	intake manifold, intake - 4t - 390 engine	1
16	J918109	FLANGE BOLT,Hex, M8 x 1.25 x 25mm	SCREW, , Intake manifold, Intake - 4T-390 engine Hex Flg Hd, M8 x 1.25 x 25	10

http://www.minnparbackhoeparts.com/

(580SK) - CASE SUPER-K CONSTRUCTION KING LOADER BACKHOE > (2-26) - TURBOCHARGER SYSTEM, 4T-390 ENGINE

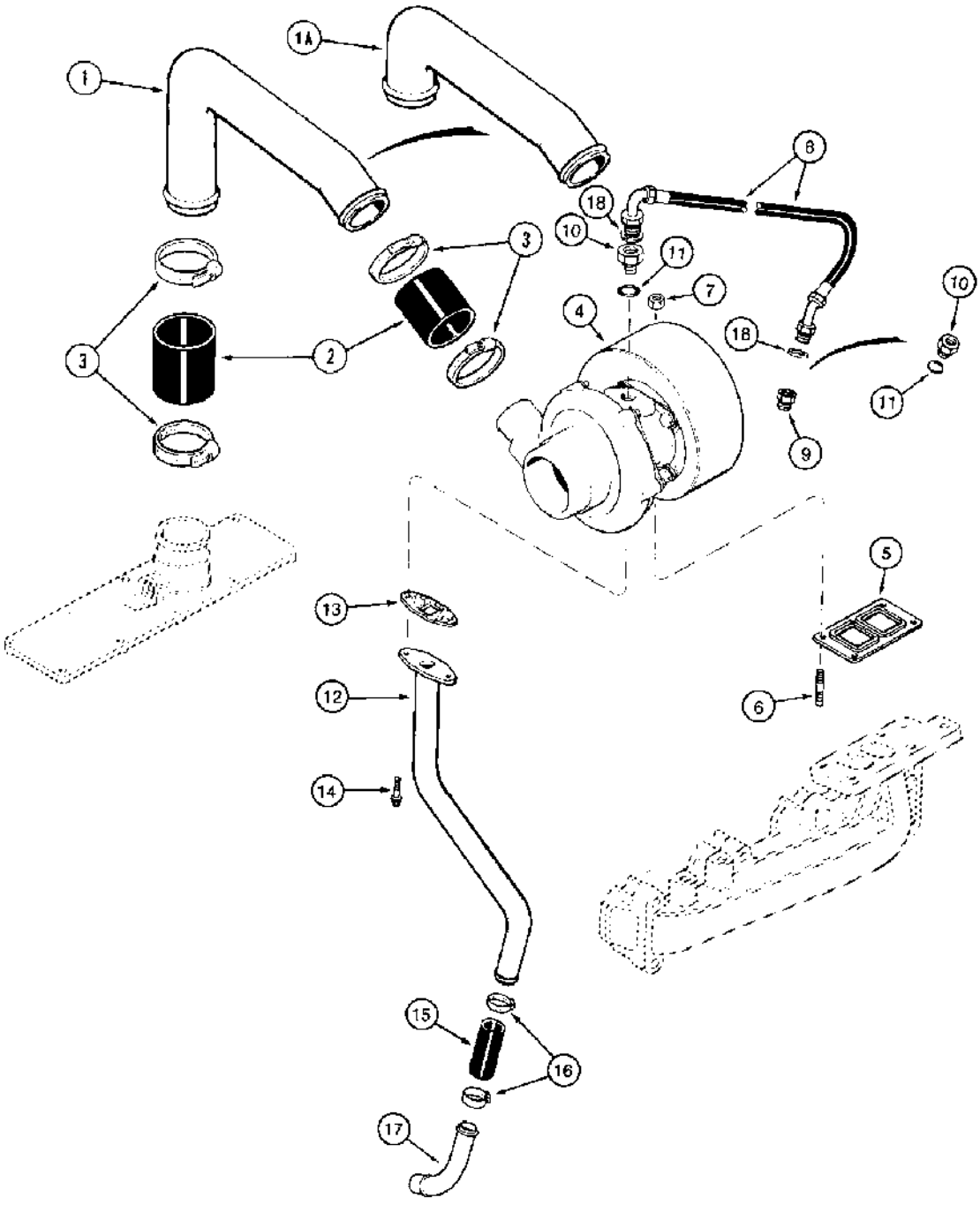

http://www.minnparbackhoeparts.com/

(580SK) - CASE SUPER-K CONSTRUCTION KING LOADER BACKHOE > (2-26) - TURBOCHARGER SYSTEM, 4T-390 ENGINE

Diag #	Part #	Name	Description	Qty
1	J912240	TUBE,50.8 mm OD x 321.6 mm L	air intake, prior to tractor P.I.N. JJG0173468	1
1A	J906623	TUBE,2 mm OD x 299.8 mm L	air intake, tractor P.I.N. JJG0173468 and after	1
2	J916166	INTAKE AIR HOSE	HOSE crossover	2
3	214-1428	HOSE CLAMP,#28, 1.31/2.25 Type F Worm	CLAMP, HOSE, , Adjustable #28, 1.31/2.25 Type F Worm	4
4	REF	INSTRUCTION	TURBOCHARGER ASSEMBLY engine, parts list Figure 2-28	1
5	J901356	GASKET	, Serial Range: turbocharger-manifold	1
6	J818823	STUD	turbocharger mounting	4
7	J818824	BEARING LOCK NUT	hex, stud	4
8	J913759	HOSE	Turbocharger Oil Supply	1
9	A77457	CONNECTOR, ELEC	ADAPTER female hex, used on J915243 oil filter head, prior to Engine Serial Number 44475085	1
10	J919687	HYD CONNECTOR	ADAPTER female hex, replaces J916857 adapter, one used to connect turbocharger oil supply hose to J919135 turbocharger, one used on J918954 oil filter head, Engine Serial Number 44475085 and after, Includes: Ref. 11.	1-2
11	238-5013	O-RING,0.426" ID x 0.566" OD x 0.07"	-013, 70 Duro, .426" ID x .070" Thk	1
12	J903740	TUBE	turbocharger oil drain	1
13	J914388	GASKET	drain tube	1
14	845-8020	BOLT,Hvy Hex, M8 x 20mm, Cl 8.8	heavy hex flange, 8 - 1.25 x 20 mm	2
15	J903745	LARGE HOSE	HOSE turbocharger oil drain	1
16	214-1416	HOSE CLAMP,#16, 0.81/1.50 Type F Worm	CLAMP, HOSE, , Adj. #16, 0.81/1.50 Type F Worm	2
17	J903744	PIPE FITTING,22.42 mm ID x 28 mm OD x 90.2, 64 mm L	TUBE oil drain, turbocharger, pressed into block	1
18	222-993	GASKET,3/8 Tube, Fl, Copper	GASKET,3/8 Tube, Fl, Copper	2

http://www.minnparbackhoeparts.com/

(580SK) - CASE SUPER-K CONSTRUCTION KING LOADER BACKHOE > (2-28) - TURBOCHARGER ASSEMBLY, 4T-390 ENGINE

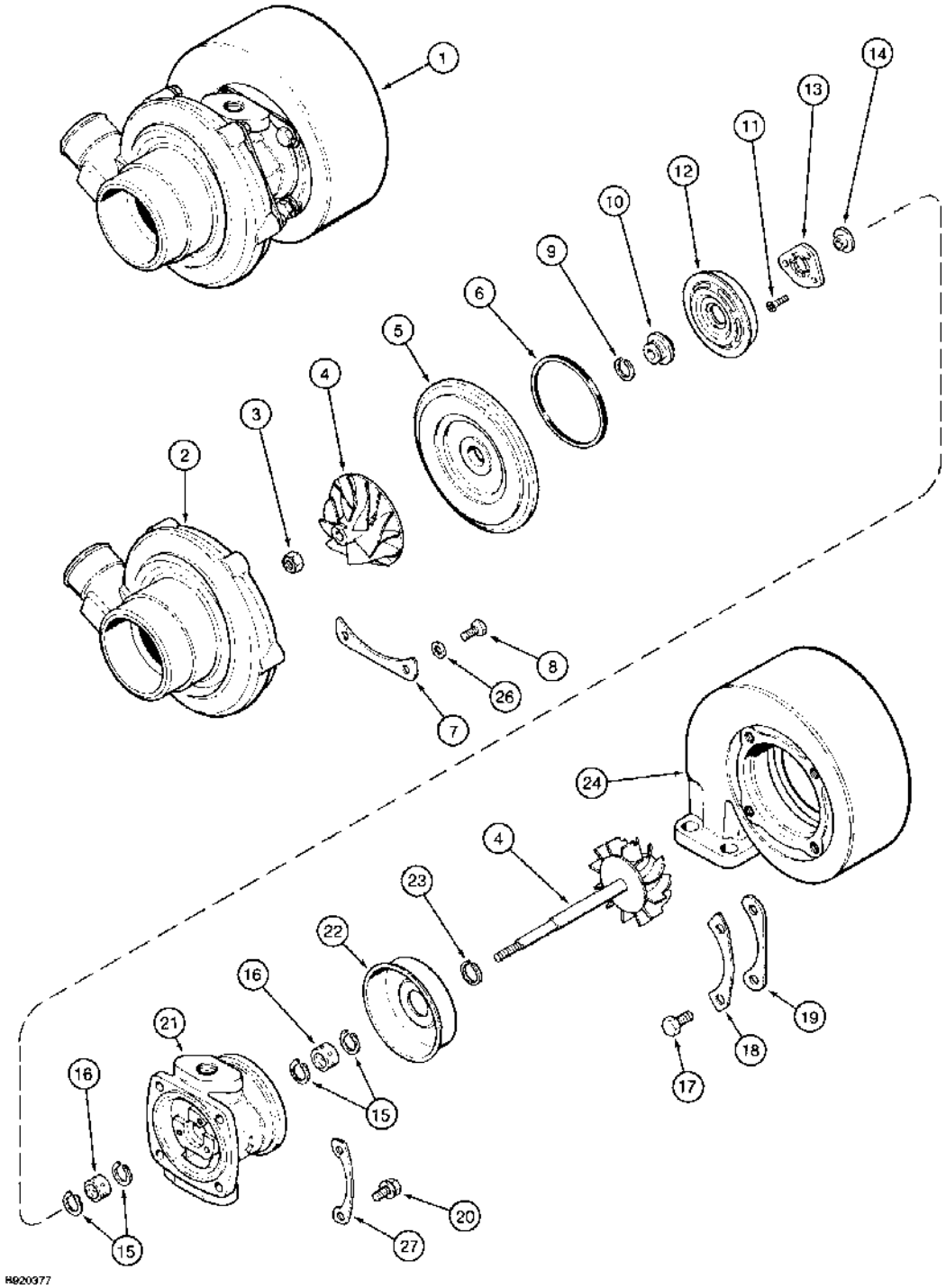

http://www.minnparbackhoeparts.com/

(580SK) - CASE SUPER-K CONSTRUCTION KING LOADER BACKHOE > (2-28) - TURBOCHARGER ASSEMBLY, 4T-390 ENGINE

Diag #	Part #	Name	Description	Qty
1	JR802290	REMAN-TURBOCHARGER	Remanufactured Turbocharger	1
1	JC535381	CORE-TURBOCHARGER	Return number	1
1	J908293	TURBOCHARGER	TURBOCHARGER ASSEMBLY engine, new, 1/4 inch PT port in bearing housing, no longer available, for service order J919135 turbocharger assembly plus one J919687 adapter and 238-5013 O-ring, Fig. 10 and 11 on Figure 2-26	1
1	JR908293	REMAN-TURBOCHARGER	TURBOCHARGER ASSEMBLY remanufactured, North America only, component parts shown on this page do not apply to the remanufactured assembly	1
1	JC908293	CORE	RETURN NUMBER, use this part number to return turbocharger core for credit when using a remanufactured assembly	1
1	J919135	TURBOCHARGER	TURBOCHARGER ASSEMBLY engine, new, 12 mm straight thread port in bearing housing, Includes: Ref. 2 through 27.	1
2	NSS	NOT SERVICED SEPARATELY	HOUSING compressor	1
3	NSS	NOT SERVICED SEPARATELY	NUT hex, lock	1
		Part of turbocharger overhaul kit P/N J904772.	Part of turbocharger overhaul kit P/N J904772.	1
4	NSS	NOT SERVICED SEPARATELY	ROTOR ASSEMBLY turbocharger	1
5	NSS	NOT SERVICED SEPARATELY	DIFFUSER compressor	1
6	NSS	NOT SERVICED SEPARATELY	SEAL diffuser	1
		Part of turbocharger overhaul kit P/N J904772.	Part of turbocharger overhaul kit P/N J904772.	1
7	NSS	NOT SERVICED SEPARATELY	PLATE diffuser clamping	3
8	NSS	NOT SERVICED SEPARATELY	SCREW cap	6
		Part of turbocharger overhaul kit P/N J904772.	Part of turbocharger overhaul kit P/N J904772.	1
9	NSS	NOT SERVICED SEPARATELY	SEAL split ring, compressor	1
		Part of turbocharger overhaul kit P/N J904772.	Part of turbocharger overhaul kit P/N J904772.	1
10	NSS	NOT SERVICED SEPARATELY	SLINGER oil	1

Diag #	Part #	Name	Description	Qty
11	NSS	NOT SERVICED SEPARATELY	SCREW flat head Torx	3
		Part of turbocharger overhaul kit P/N J904772.	Part of turbocharger overhaul kit P/N J904772.	1
12	NSS	NOT SERVICED SEPARATELY	BAFFLE oil	1
13	NSS	NOT SERVICED SEPARATELY	BEARING thrust	1
		Part of turbocharger overhaul kit P/N J904772.	Part of turbocharger overhaul kit P/N J904772.	1
14	NSS	NOT SERVICED SEPARATELY	COLLAR thrust	1
15	NSS	NOT SERVICED SEPARATELY	RING snap, retaining	4
		Part of turbocharger overhaul kit P/N J904772.	Part of turbocharger overhaul kit P/N J904772.	1
16	NSS	NOT SERVICED SEPARATELY	BEARING impeller shaft	2
		Part of turbocharger overhaul kit P/N J904772.	Part of turbocharger overhaul kit P/N J904772.	1
17	NSS	NOT SERVICED SEPARATELY	BOLT plate retaining	4
		Part of turbocharger overhaul kit P/N J904772.	Part of turbocharger overhaul kit P/N J904772.	1
18	NSS	NOT SERVICED SEPARATELY	PLATE lock, turbine housing	2
		Part of turbocharger overhaul kit P/N J904772.	Part of turbocharger overhaul kit P/N J904772.	1
19	NSS	NOT SERVICED SEPARATELY	PLATE clamping, turbine housing	2
20	NSS	NOT SERVICED SEPARATELY	BOLT ASSEMBLY hex, lock, includes washer	4
		Part of turbocharger overhaul kit P/N J904772.	Part of turbocharger overhaul kit P/N J904772.	1
21	NSS	NOT SERVICED SEPARATELY	HOUSING turbine bearing	1
22	NSS	NOT SERVICED SEPARATELY	SHIELD heat, turbine	1
23	NSS	NOT SERVICED SEPARATELY	SEAL piston ring, turbine	1
		Part of turbocharger overhaul kit P/N J904772.	Part of turbocharger overhaul kit P/N J904772.	1
24	NSS	NOT SERVICED SEPARATELY	HOUSING turbine	1
26	NSS	NOT SERVICED SEPARATELY	WASHER internal tooth lock	6
		Part of turbocharger overhaul kit P/N J904772.	Part of turbocharger overhaul kit P/N J904772.	1

Diag #	Part #	Name	Description	Qty
27	NSS	NOT SERVICED SEPARATELY	PLATE lock, turbine bearing housing	2
		Part of turbocharger overhaul kit P/N J904772.	Part of turbocharger overhaul kit P/N J904772.	1
	J904772	PACKAGE, REPAIR	KIT overhaul, turbocharger, Includes: Ref. 3, 6, 8, 9, 11, 13, 15 - 18, 20, 23, 26 and 27	1

http://www.minnparbackhoeparts.com/

(580SK) - CASE SUPER-K CONSTRUCTION KING LOADER BACKHOE > (2-30) - OIL FILTER AND COOLER, 4-390 ENGINE, 4T-390 ENGINE

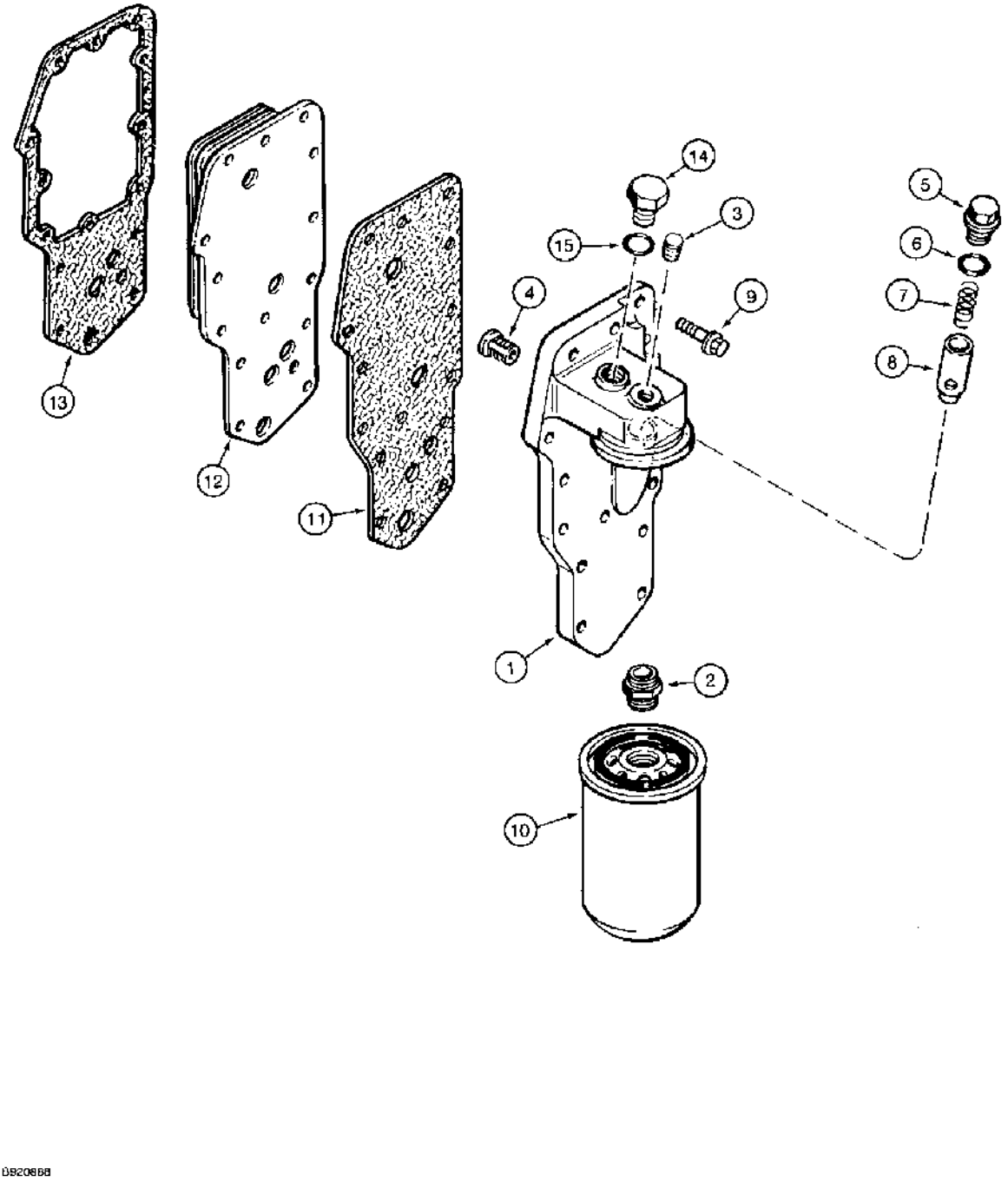

DB20868

(580SK) - CASE SUPER-K CONSTRUCTION KING LOADER BACKHOE > (2-30) - OIL FILTER AND COOLER, 4-390 ENGINE, 4T-390 ENGINE

Diag #	Part #	Name	Description	Qty
	J915243	FILTER COVER	HEAD ASSEMBLY oil filter and cooler, prior to Engine Serial Number 44475085, no longer available, for service order J918954 head assembly	1
	J918954	HEAD	ASSEMBLY oil filter and cooler, Engine Serial Number 44475085 and after, Includes: Ref. 1 and 2.	1
1	NSS	NOT SERVICED SEPARATELY	HEAD oil filter and cooler	1
2	J909355	ADAPTER	filter head	1
3	J906619	PLUG	hex, 1/8 inch PT	1
4	J902338	VALVE, PRESSURE RELI	VALVE relief, pressure	1
5	J915787	PLUG	pipe	1
6	J909397	O-RING,17.12 mm x 2.62 mm Thk	sealing	1
7	J918427	SPRING	compression	1
8	J918428	PLUNGER	regulator, pressure	1
9	845-8035	BOLT,Hvy Hex, M8 x 35mm, Cl 8.8	- heavy hex flange, 8 - 1.25 x 35 mm	14
10	J908616	ENGINE OIL FILTER,Single pkg qty. For multi pkg [qty.12] order J908616MP	FILTER lube oil, cartridge	1
11	J918257	GASKET	filter head	1
12	J921557	COOLER	CORE oil, replaces J918292 core	1
13	J918256	GASKET	cooler core	1
14	J919686	PLUG	hex, 12 mm threaded, used on engines without a turbocharger oil supply, Includes: Ref. 15.	1
15	238-5013	O-RING,0.426" ID x 0.566" OD x 0.07"	-013, 70 Duro, .426" ID x .070" Thk	1

http://www.minnparbackhoeparts.com/

(580SK) - CASE SUPER-K CONSTRUCTION KING LOADER BACKHOE > (2-32) - OIL PUMP AND OIL PAN, 4-390 ENGINE, 4T-390 ENGINE, ENGINE

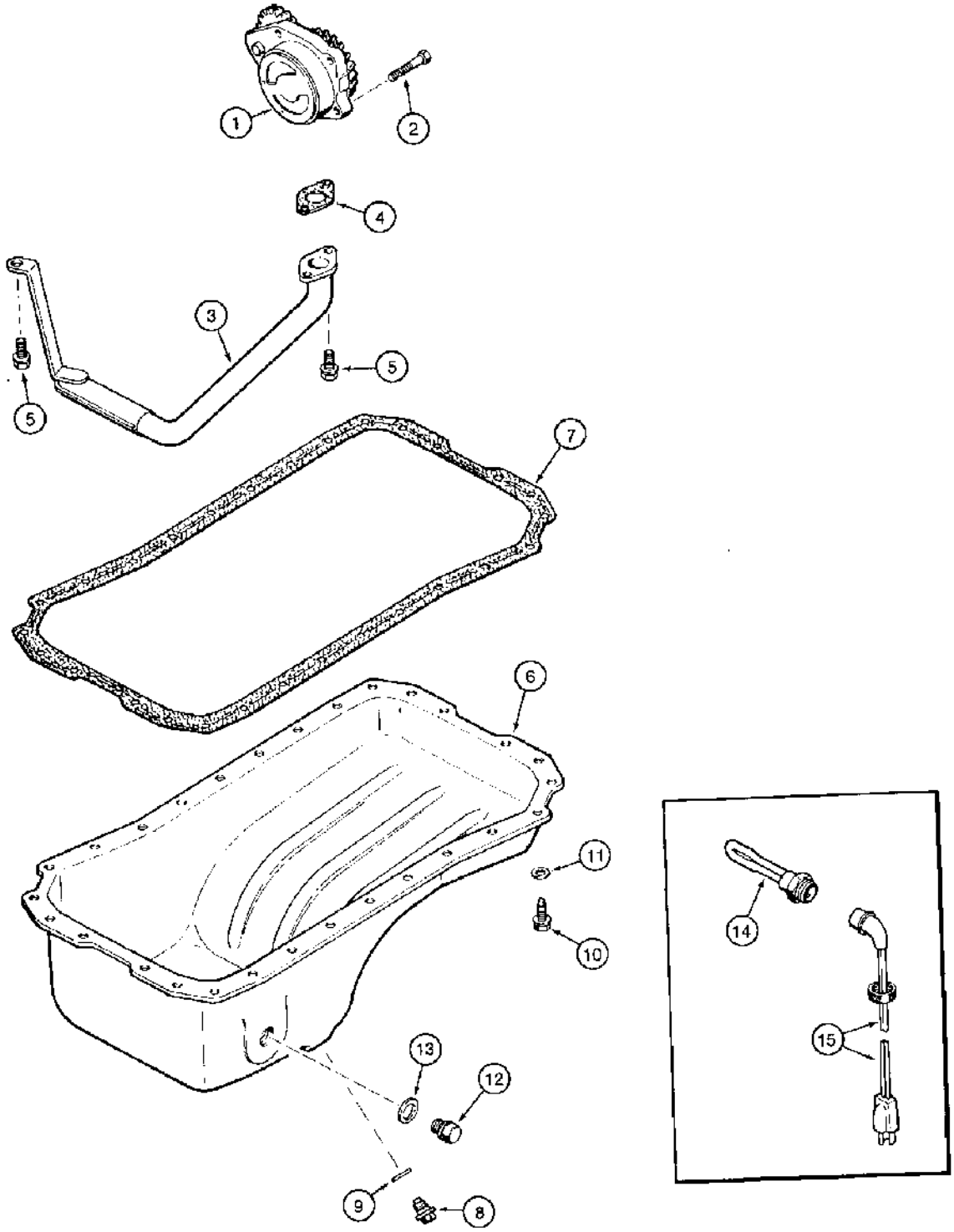

http://www.minnparbackhoeparts.com/

(580SK) - CASE SUPER-K CONSTRUCTION KING LOADER BACKHOE > (2-32) - OIL PUMP AND OIL PAN, 4-390 ENGINE, 4T-390 ENGINE, ENGINE

Diag #	Part #	Name	Description	Qty
1	J926202	PUMP, ENGINE OIL	PUMP oil, engine, replaces J918211 and J924719 oil pump	1
	JR926202	PUMP	PUMP oil, remanufactured, North America only, component parts shown on this page do not apply to the remanufactured assembly, replaces JR918211 and JR924719 oil pump	1
	JR930336	REMAN-ENG OIL PUMP	REMAN-ENGINE OIL PUMP Remanufactured Oil Pump; For N.A. only	1
	JC926202	CORE PUMP, ENGINE OIL	CORE-ENGINE OIL PUMP RETURN NUMBER, use this part number to return pump core for credit when using a remanufactured assembly, replaces JC918211 and JC924719	1
2	614-8030	BOLT,Hex, M8 x 1.25 x 30mm, Cl 8.8, Full Thd	BOLT, HH, CL 8.8, M8 x 1.25 x 30	4
3	J905206	TUBE,1" OD	TUBE suction, oil	1
4	J914383	GASKET	GASKET mounting, tube	1
		Part of oil pan gasket kit P/N A77673.	Part of oil pan gasket kit P/N A77673.	1
5	845-8016	BOLT,Hvy Hex, M8 x 16mm, Cl 8.8	BOLT - heavy hex flange, 8 - 1.25 x 16 mm	3
6	J901049	PAN, ENGINE OIL	PAN, OIL PAN oil, engine	1
7	NSS	NOT SERVICED SEPARATELY	GASKET oil pan, order A77673 kit shown below	1
		Part of oil pan gasket kit P/N A77673.	Part of oil pan gasket kit P/N A77673.	1
8	J924147	PLUG	PLUG drain, oil, magnetic, replaces J911638 plug	1
9	J920773	SEALING WASHER	WASHER seal, drain plug, replaces J900216 washer	1
		Part of oil pan gasket kit P/N A77673.	Part of oil pan gasket kit P/N A77673.	1
10	J920400	FLANGE BOLT,Hex, M8 x 1.25 x 21mm, Gr 8.8	SCREW hex flange, 8 - 1.25 x 25 mm, Replaces J907860 bolt	28
11	J907537	BELLEVILLE SPRING	WASHER Belleville, pan bolt, if used	28
12	J924148	PLUG	PLUG pipe, heater hole, replaces J904386 plug	1
13	J902425	SEALING WASHER	WASHER seal, plug	1
		When engine oil heater kit is ordered, Ref. 13, J902425 washer must also be ordered.	When engine oil heater kit is ordered, Ref. 13, J902425 washer must also be ordered.	1

Diag #	Part #	Name	Description	Qty
	A77673	GASKET KIT	KIT gasket, oil pan, Includes: Ref. 4, 7 and 9	1
	A77490	KIT	KIT heater, engine oil, Includes Ref. 14 and 15.	1
		When engine oil heater kit is ordered, Ref. 13, J902425 washer must also be ordered.	When engine oil heater kit is ordered, Ref. 13, J902425 washer must also be ordered.	1
14	NSS	NOT SERVICED SEPARATELY	ELEMENT heater, 120 volt	1
15	J905113	CABLE	CABLE engine oil heater	1

http://www.minnparbackhoeparts.com/

(580SK) - CASE SUPER-K CONSTRUCTION KING LOADER BACKHOE > (2-34) - CYLINDER HEAD AND COVERS, 4-390 ENGINE, 4T-390 ENGINE

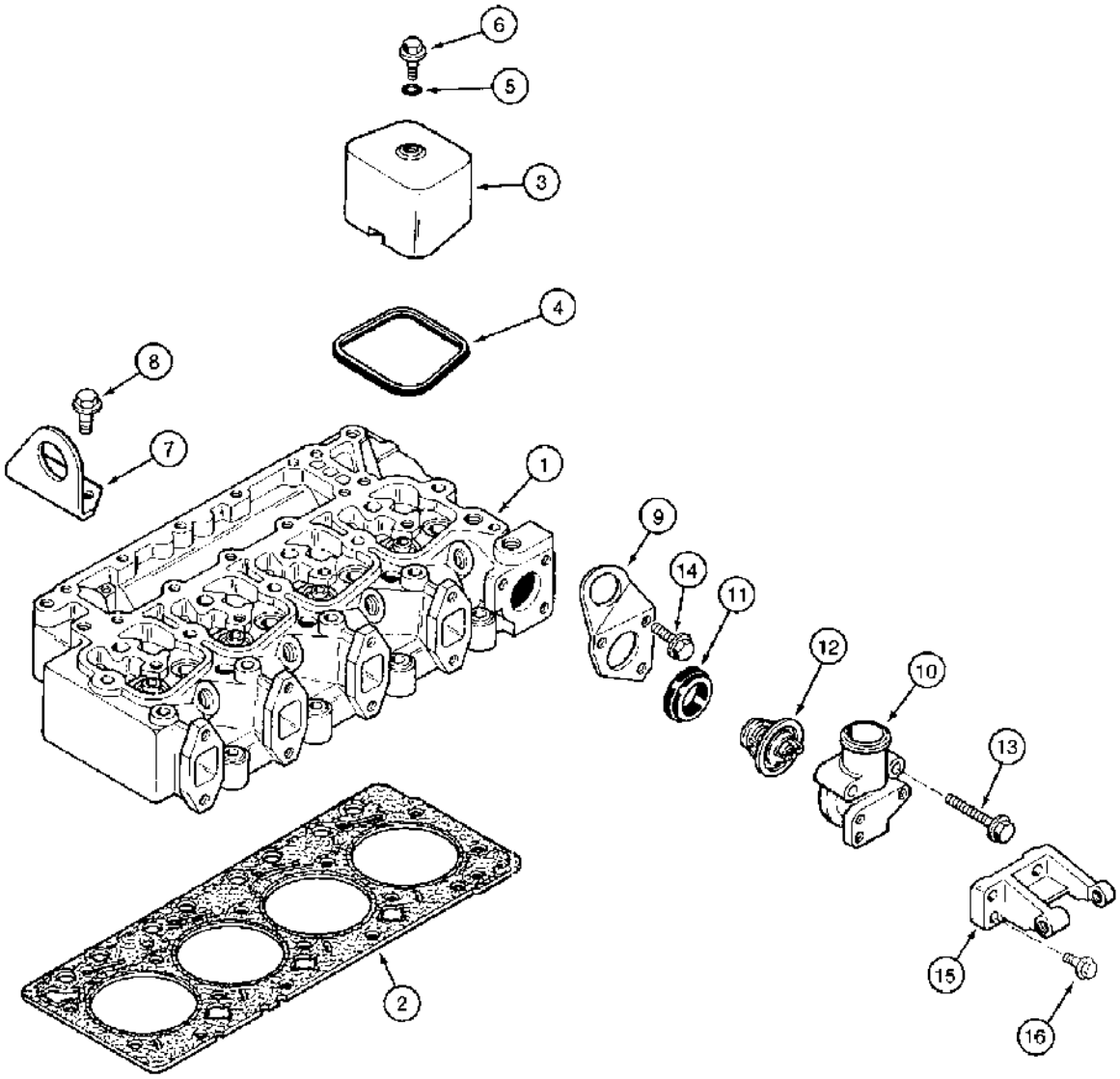

(580SK) - CASE SUPER-K CONSTRUCTION KING LOADER BACKHOE > (2-34) - CYLINDER HEAD AND COVERS, 4-390 ENGINE, 4T-390 ENGINE

Diag #	Part #	Name	Description	Qty
1	REF	INSTRUCTION	HEAD cylinder, engine, part list Figure 2-36, cylinder head and covers 4 - 390 engine, 4t - 390 engine	1
2	J282999	GASKET	cylinder head, standard, replaces J918302 gasket, replaced J921393, cylinder head and covers 4 - 390 engine, 4t - 390 engine	1
2	J921395	CYLINDER HEAD GASKET	cylinder head, 0.25 mm thicker, replaces J917355 and J918303 gasket, cylinder head and covers 4 - 390 engine, 4t - 390 engine	1
2	J921397	GASKET	cylinder head, 0.50 mm thicker, replaces J915721 and J918304 gasket, cylinder head and covers 4 - 390 engine, 4t - 390 engine	1
3	J902604	COVER	rocker arm, cylinder head and covers 4 - 390 engine, 4t - 390 engine	4
4	J902666	GASKET	SEAL rocker arm cover, cylinder head and covers 4 - 390 engine, 4t - 390 engine	4
5	J282133	O-RING	cover bolt, replaces J910824 O-ring, cylinder head and covers 4 - 390 engine, 4t - 390 engine	4
6	J907049	BOLT,Hex	hex flange, special, cylinder head and covers 4 - 390 engine, 4t - 390 engine	4
7	J908118	BRACKET	lifting, rear, cylinder head and covers 4 - 390 engine, 4t - 390 engine	1
8	854-12025	BOLT,Hvy Hex, M12 x 25mm, Cl 10.9	heavy hex flange, 12 - 1.75 x 25 mm, class 10.9, cylinder head and covers 4 - 390 engine, 4t - 390 engine	2
9	J903757	BRACKET	lifting, front, thermostat and housing	1
10	J914409	HOUSING	thermostat, thermostat and housing	1
	A77736	THERMOSTAT	KIT water, thermostat, thermostat and housing, Includes: Ref. 11 and 12	1
11	J923331	GASKET	thermostat housing, replaces J920020 gasket, thermostat and housing	1
12	NSS	NOT SERVICED SEPARATELY	THERMOSTAT water, thermostat and housing	1
13	845-8070	BOLT,Hvy Hex, M8 x 70mm, Cl 8.8	- heavy hex flange, 8 - 1.25 x 70 mm, Thermostat and housing	2
14	845-8035	BOLT,Hvy Hex, M8 x 35mm, Cl 8.8	- heavy hex flange, 8 - 1.25 x 35 mm, Thermostat and housing	1
15	J910713	SUPPORT	alternator mounting, thermostat and housing	1

Diag #	Part #	Name	Description	Qty
16	845-8025	BOLT,Hex Flg, M8 x 25mm, Cl 8.8	- heavy hex flange, 8 - 1.25 x 25 mm, Thermostat and housing	3

http://www.minnparbackhoeparts.com/

(580SK) - CASE SUPER-K CONSTRUCTION KING LOADER BACKHOE > (2-36) - CYLINDER HEAD AND VALVE MECHANISM, 4-390 ENGINE, 4T-390 ENGINE

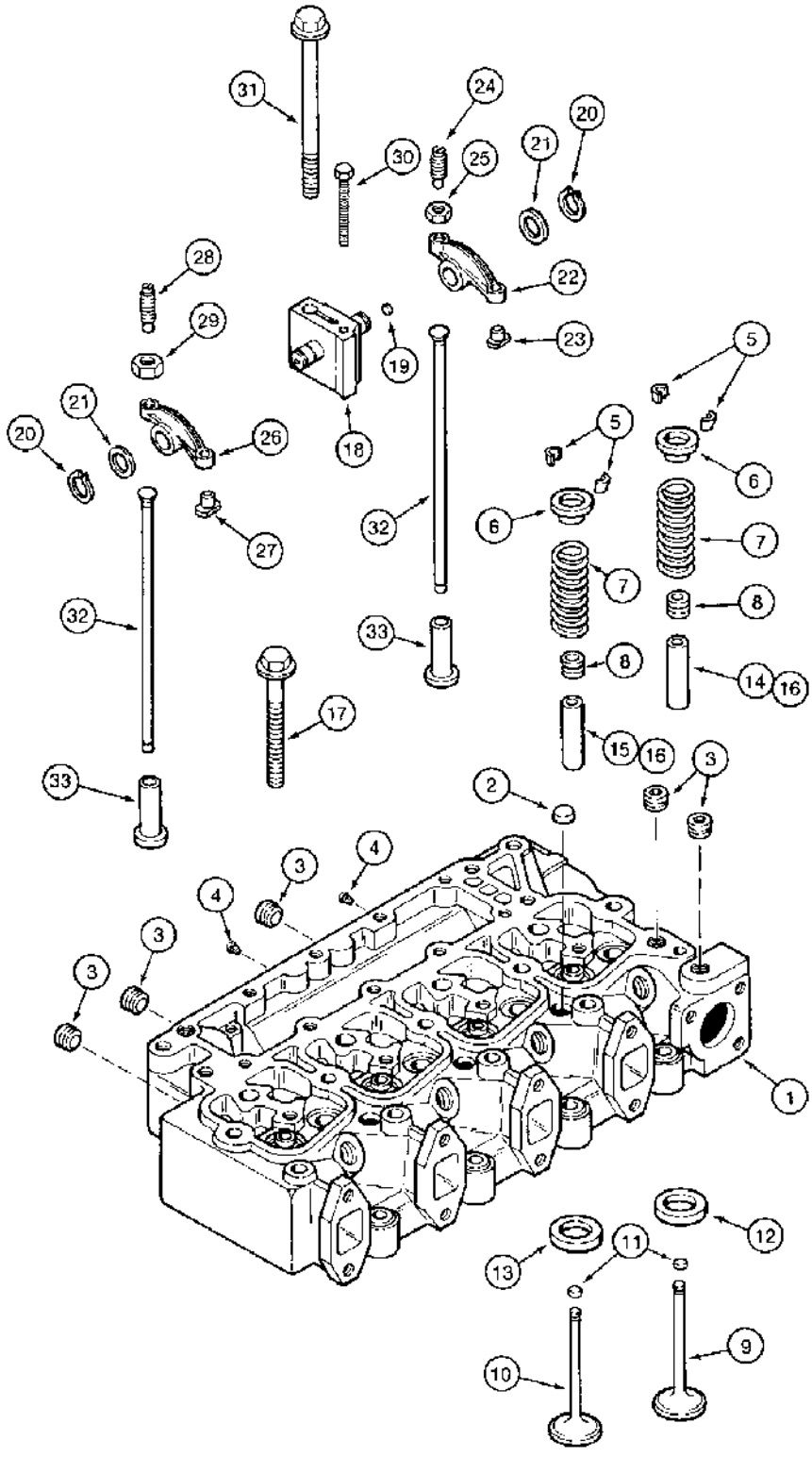

http://www.minnparbackhoeparts.com/

(580SK) - CASE SUPER-K CONSTRUCTION KING LOADER BACKHOE > (2-36) - CYLINDER HEAD AND VALVE MECHANISM, 4-390 ENGINE, 4T-390 ENGINE

Diag #	Part #	Name	Description	Qty
	JR920611	REMAN-CYLINDER HEAD	HEAD cylinder, remanufactured, North America only, component parts shown on this page do not apply to the remanufactured assembly	1
	JC920611	CORE-CYLINDER HEAD	RETURN NUMBER, use this part number to return head core for credit when using a remanufactured assembly	1
1	J920611	HEAD (CYLINDER)	HEAD ASSEMBLY cylinder, new, with valves, Includes: Ref. 2 through 10 and P/N J920005	1
1	J920005	HEAD (CYLINDER)	HEAD ASSEMBLY cylinder, without valves, Includes: Ref. 2.	1
2	A77783	PLUG	expansion, 21 mm OD, replaces J902606 plug	3
3	A77429	PLUG	hex socket, 1/2 inch PT, one removed to install temperature sending unit	5
4	J906619	PLUG	hex, 1/8 inch PT	2
5	J900250		KEEPER valve	16
6	J900299	RETAINER	valve spring	8
7	J900276	VALVE SPRING	SPRING valve	8
8	J901097	SEAL	valve	8
9	J920867	VALVE	intake, replaces J901117 valve	4
10	J920868	VALVE	exhaust, replaces J901607 valve	4
11	J280911	WEAR PAD	PAD wear, valve stem tip, for use on intake and exhaust valves, service repair only, replaces J910412	1
12	J906854	SEAT, VALVE	SEAT insert, intake valve, service repair only	4
13	J904105	SEAT, VALVE	SEAT insert, exhaust valve, service repair only	4
14	J904408	GUIDE	valve, intake, 14 mm OD, service repair only, if used	4
		These parts are semi-finished valve guides.	These parts are semi-finished valve guides.	1
15	J904409	GUIDE	valve, exhaust, 14 mm OD, service repair only, if used	4
		These parts are semi-finished valve guides.	These parts are semi-finished valve guides.	1
16	J906206	GUIDE	valve, intake and exhaust, 11 mm OD, service repair only, if used	8
		These parts are semi-finished valve guides.	These parts are semi-finished valve guides.	1

Diag #	Part #	Name	Description	Qty
17	J920779	SCREW	BOLT, SPECIAL - cylinder head, 70 mm long, replaces J903938 and J918471 bolts	4
17	J920780	SCREW	- cylinder head, 120 mm long, replaces J903939 and J918472 bolts	10
18	J910814	SUPPORT	AND SHAFT ASSEMBLY rocker arm, Includes: Ref. 19	4
19	J907555	PLUG	rocker arm shaft, 1/4-18 PT	1
20	J900242	SNAP RING	RING retaining, rocker arm	8
21	J900245	WASHER	thrust, rocker arm	8
22	J910811	ROCKER	ARM ASSEMBLY rocker, intake, Includes: Ref. 23, 24 and 25.	4
23	NSS	NOT SERVICED SEPARATELY	INSERT rocker arm	1
24	J937438	ADJUSTMENT SCREW,Hex Skt, 3/8"-24 x 33mm, Adj, Ball Point	SCREW set, adjusting, special	1
25	425-116	NUT,3/8"-24, G5	- hex, 3/8 inch NF	1
26	J910810	ROCKER	ARM ASSEMBLY rocker, exhaust, Includes: Ref. 27, 28 and 29.	4
27	NSS	NOT SERVICED SEPARATELY	INSERT rocker arm	1
28	J937438	ADJUSTMENT SCREW,Hex Skt, 3/8"-24 x 33mm, Adj, Ball Point	SCREW set, adjusting, special	1
29	425-116	NUT,3/8"-24, G5	- hex, 3/8 inch NF	1
30	814-8075	BOLT,Hex, M8 x 1.25 x 75mm, Cl 8.8	BOLT,Hex, M8 x 1.25 x 75mm, Cl 8.8	4
31	J920781	SCREW	BOLT, SPECIAL cylinder head and rocker arm, replaces J903940 and J918473 bolts	4
32	J923262	PUSH ROD	ROD push, rocker arm, replaces J904679 rod	8
33	J925031	TAPPET	valve, push rod, replaces J907240 tappet	8

http://www.minnparbackhoeparts.com/

(580SK) - CASE SUPER-K CONSTRUCTION KING LOADER BACKHOE > (2-38) - CAMSHAFT, 4-390 ENGINE, 4T-390 ENGINE

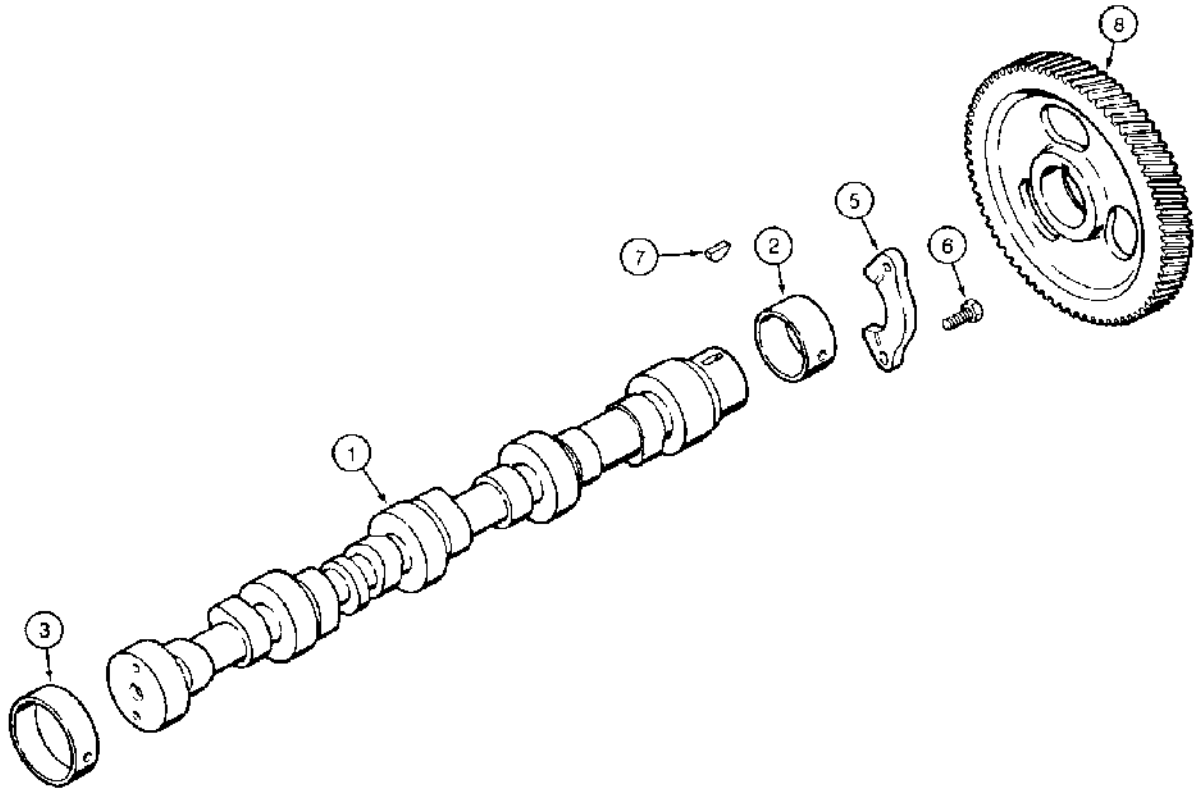

8920381

(580SK) - CASE SUPER-K CONSTRUCTION KING LOADER BACKHOE > (2-38) - CAMSHAFT, 4-390 ENGINE, 4T-390 ENGINE

Diag #	Part #	Name	Description	Qty
1	J925582	CAMSHAFT	engine, replaces J914638	1
	J929039R	REMAN-CAMSHAFT	580SK, Reman For New P/N J925582	1
	J929039C	CORE-CAMSHAFT	Return Number	1
2	J901306	BUSHING	camshaft, front, standard	1
2	J904369	BUSHING	camshaft, front, oversize, 58 mm OD	1
3	J903242	BUSHING	camshaft, intermediate and rear, service repair only	4
		When the intermediate and rear cylinder block camshaft bores are reamed in engine repair, order and install Ref. 3, J903242 bushings shown above	When the intermediate and rear cylinder block camshaft bores are reamed in engine repair, order and install Ref. 3, J903242 bushings shown above	1
5	J914641	SUPPORT	thrust, camshaft	1
6	J900227	SCREW,Hex, M8 x 1.25 x 22mm, Cl 10.9	SCREW,Hex, M8 x 1.25 x 22mm, Cl 10.9	2
7	126-112	WOODRUFF KEY,#6, 5/32" x 5/8", HT	Camshaft gear, replaces J902332 #6, 5/32" x 5/8", HT	1
8	J907431	CAMSHAFT BEARING	GEAR camshaft	1

http://www.minnparbackhoeparts.com/

(580SK) - CASE SUPER-K CONSTRUCTION KING LOADER BACKHOE > (2-40) - CYLINDER BLOCK, 4-390 ENGINE

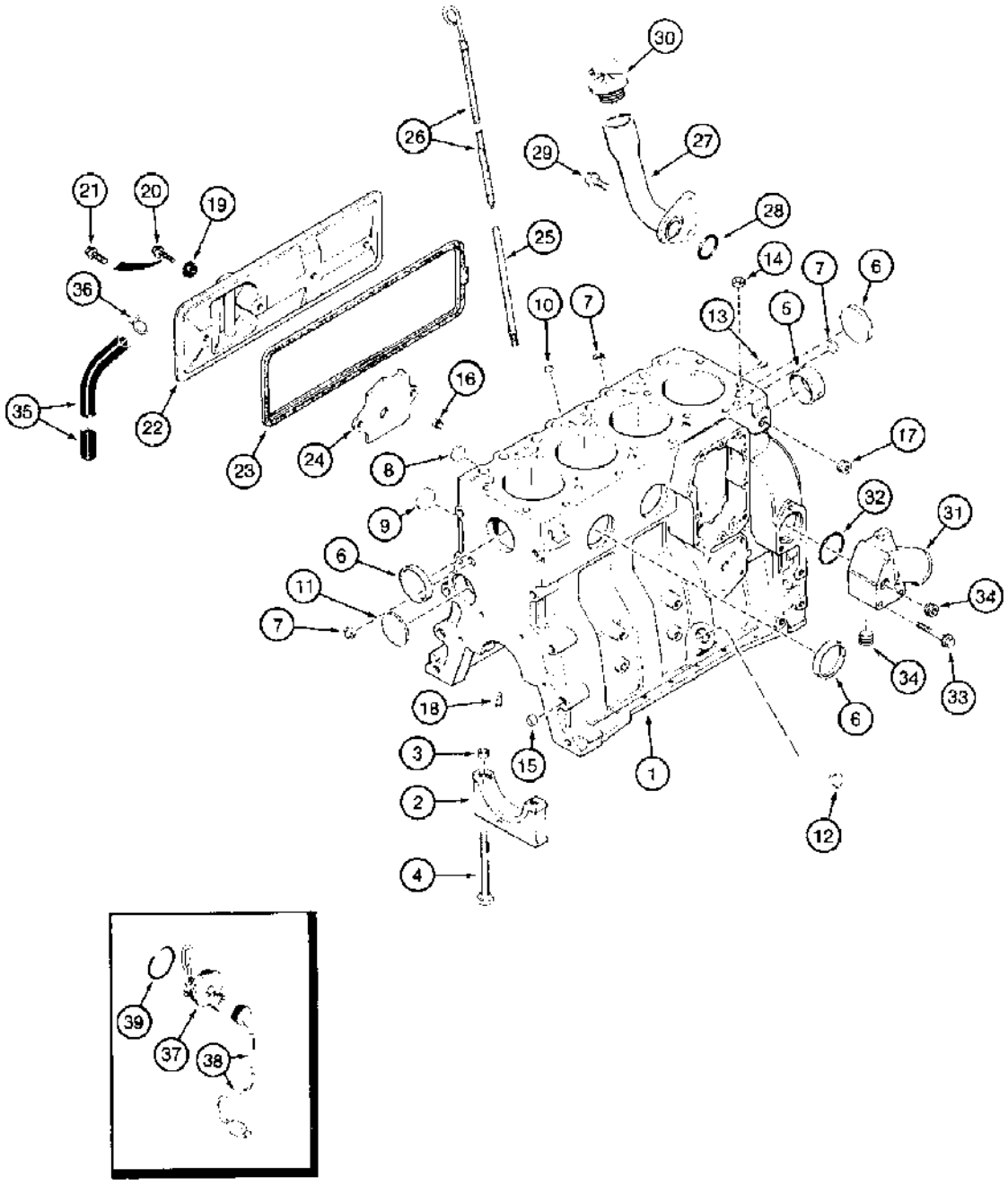

(580SK) - CASE SUPER-K CONSTRUCTION KING LOADER BACKHOE > (2-40) - CYLINDER BLOCK, 4-390 ENGINE

Diag #	Part #	Name	Description	Qty
	1989067C2	ENGINE ASSEMBLY	ENGINE ASSY ENGINE ASSEMBLY, 4-390 standard, Naturally Aspirtated complete, new, includes all parts except starter, alternator, fan, fan belt, air cleaner, muffler and exhaust pipe, for service order 1989091C2 basic engine, below, cylinder block 4 - 390 engine	1
	1989067C2R	REMAN-REPLACEMENT ENGINE	Remanufactured, For N.A. Only	1
	4-390C	CORE-REPLACEMENT ENGINE	Return Number, Complete, For N.A. Only	1
	1989091C2R	ENGINE, EXCHANGE	ENGINE (EXCHANGE) ENGINE ASSEMBLY, remanufactured, North America only, component parts shown on this page do not apply to the remanufactured assembly, cylinder block 4 - 390 engine	1
	1989091C2C	CORE-ENGINE	RETURN NUMBER, use this part number to return engine assembly core for credit when using a remanufactured assembly, cylinder block 4 - 390 engine	1
	1989091C2	BASIC ENGINE	ENGINE ASSEMBLY - basic, new	1
		includes all parts except: starter, alternator, fan, fan belt, fan bracket, air cleaner, muffler, exhaust manifold, flywheel and housing, oil fill and dipstick, fuel injection pump, injectors and lines, front crank pulley, belt tensioner, and turbocharger, cylinder block 4 - 390 engine	includes all parts except: starter, alternator, fan, fan belt, fan bracket, air cleaner, muffler, exhaust manifold, flywheel and housing, oil fill and dipstick, fuel injection pump, injectors and lines, front crank pulley, belt tensioner, and turbocharger, cylinder block 4 - 390 engine	1
	1989091C3R	REMAN-BASIC ENGINE	Remanufactured, For N.A. Only	1
	AR77758	BLOCK ASSY.	BLOCK ASSEMBLY short, engine, remanufactured, North America only, component parts shown on this page do not apply to the remanufactured assembly, cylinder block 4 - 390 engine	1
	AC77758	CORE-ENGINE	RETURN NUMBER, use this part number to return short block core for credit when using a remanufactured assembly, cylinder block 4 - 390 engine	1
	A77758	SKELETON ENGINE	KIT short block assembly, engine, new, includes stripped block, pistons, connecting rods and bearings, crankshaft and bearings, no longer available, order components J920384 short block and	1

Diag #	Part #	Name	Description	Qty
			J920399 hardware kit separately, cylinder block 4 - 390 engine	
	J920384	BLOCK ASSY.	BLOCK ASSEMBLY short, engine, new, includes stripped block, pistons, connecting rods and bearings, crankshaft and bearings, cylinder block 4 - 390 engine	1
		Order J920399 hardware kit when ordering J920384 block assembly or J916254 stripped block.	Order J920399 hardware kit when ordering J920384 block assembly or J916254 stripped block.	1
	A77757	CRANKCASE	KIT stripped engine, no longer available, order components J916254 stripped engine and J920399 hardware kit separately, cylinder block 4 - 390 engine, Includes: Ref. 1 through 8.	1
1	J916254	BLOCK ASSY.	BLOCK ASSEMBLY stripped, engine, cylinder block 4 - 390 engine, Includes: Ref. 2 through 8.	1
		Order J920399 hardware kit when ordering J920384 block assembly or J916254 stripped block.	Order J920399 hardware kit when ordering J920384 block assembly or J916254 stripped block.	1
2	J900967	BEARING CAP	CAP main bearing, cylinder block 4 - 390 engine	5
3	J900068	BEARING WASHER	RING dowel, 18 mm OD, cylinder block 4 - 390 engine	10
4	J904217	BOLT,Hex, M14 - 2 x 119 mm, Cl 12.9	BOLT bearing cap, special, cylinder block 4 - 390 engine	10
5	REF	INSTRUCTION	BUSHING camshaft front, see Figure 2-38, Ref. 2, cylinder block 4 - 390 engine	1
6	A77782	PLUG	PLUG expansion, 58 mm OD, replaces J900965 plug, cylinder block 4 - 390 engine	4
7	J900956	PLUG	PLUG expansion, 18 mm OD, cylinder block 4 - 390 engine	3
8	41-1616	PLUG,Cup, 1", Stainless	PLUG, , Expansion, Replaces A77539, Cylinder block 4 - 390 engine Cup, 1", Stainless	2
	J802641	PACKAGE, REPAIR	KIT block hardware, cylinder block 4 - 390 engine, Includes: Ref. 9 through 18.	1
		Order J920399 hardware kit when ordering J920384 block assembly or J916254 stripped block.	Order J920399 hardware kit when ordering J920384 block assembly or J916254 stripped block.	1
9	J900958	PLUG	PLUG expansion, 32 mm OD, cylinder block 4 - 390 engine	2
10	J900955	PLUG	PLUG expansion, 10 mm OD, cylinder block 4 - 390 engine	1
11	172599	PLUG,Exp, 2 3/8"	PLUG expansion, Welch, 60 mm OD, replaces J900687, cylinder block 4 - 390 engine	1

Diag #	Part #	Name	Description	Qty
12	A77439	PLUG	PLUG expansion, 22 mm OD, cylinder block 4 - 390 engine	1
13	J900257	PIN	PIN dowel, 16 mm long, cylinder block 4 - 390 engine	2
14	J902343	DOWEL	RING dowel, 16 mm OD, cylinder block 4 - 390 engine	2
15	J900068	BEARING WASHER	RING dowel, 18 mm OD, cylinder block 4 - 390 engine	2
16	J906619	PLUG	PLUG hex, 1/8 inch PT, cylinder block 4 - 390 engine	2
17	A77429	PLUG	PLUG hex socket, 1/2 inch PT, cylinder block 4 - 390 engine	1
18	J919002	NOZZLE CAP	NOZZLE piston cooling, cylinder block 4 - 390 engine	4
19	J900267	SEAL	SEAL cover bolt, cylinder block 4 - 390 engine	4
20	845-8016	BOLT,Hvy Hex, M8 x 16mm, Cl 8.8	BOLT - heavy hex flange, 8 - 1.25 x 16 mm, If used, cylinder block 4 - 390 engine	4
21	845-8020	BOLT,Hvy Hex, M8 x 20mm, Cl 8.8	BOLT heavy hex flange, 8 - 1.25 x 20 mm, If used, cylinder block 4-390 engine	4
22	J925680	COVER	COVER tappet, replaces J916441 cover, cylinder block 4 - 390 engine	1
23	J922078	GASKET	GASKET tappet cover, replaces J904056 gasket, cylinder block 4 - 390 engine	1
24	J907586	BAFFLE	BAFFLE tappet cover, cylinder block 4 - 390 engine	1
25	J905779	TUBE,9.52 mm OD x 228 mm L	TUBE dipstick, cylinder block 4 - 390 engine	1
26	J905781	DIPSTICK	DIPSTICK oil level gauge, cylinder block 4 - 390 engine	1
27	J905440	TUBE	TUBE oil fill, cylinder block 4 - 390 engine	1
28	J906696	SEAL	O-RING sealing, 38 mm ID, cylinder block 4 - 390 engine	1
29	854-12025	BOLT,Hvy Hex, M12 x 25mm, Cl 10.9	BOLT heavy hex flange, 12 - 1.75 x 25 mm, class 10.9, cylinder block 4 - 390 engine	2
30	A77424	PLUG	CAP fill, oil, cylinder block 4 - 390 engine	1
31	J903102	CONNECTION	CONNECTION water inlet, cylinder block 4 - 390 engine	1
32	J906697	SEAL	O-RING sealing, 50 mm ID, cylinder block 4 - 390 engine	1
33	854-10075	BOLT,Hvy Hex, M10 x 75mm, Cl 10.9	BOLT heavy hex flange, 10 - 1.50 x 75 mm, class 10.9, cylinder block 4 - 390 engine	3
34	A77429	PLUG	PLUG hex socket, 1/2 inch PT, cylinder block 4 - 390 engine	2
35	J918612	HOSE,360.00 mm	Breather, Replaces J906593, Cylinder Block 4 - 390 Engine	1
36	J904230	CLAMP	CLAMP spring, hose, cylinder block 4 - 390 engine	1

Diag #	Part #	Name	Description	Qty
	A77634	KIT	KIT engine block heater, engine block heater, engine block heater, Includes: Ref. 37, 38 and 39.	1
37	NSS	NOT SERVICED SEPARATELY	ELEMENT engine block heater	1
38	J905113	CABLE	CABLE heater block, engine block heater	1
39	J910517	O-RING	O-RING heater, sealing, engine block heater	1

http://www.minnparbackhoeparts.com/

(580SK) - CASE SUPER-K CONSTRUCTION KING LOADER BACKHOE > (2-44) - CYLINDER BLOCK, 4T-390 ENGINE

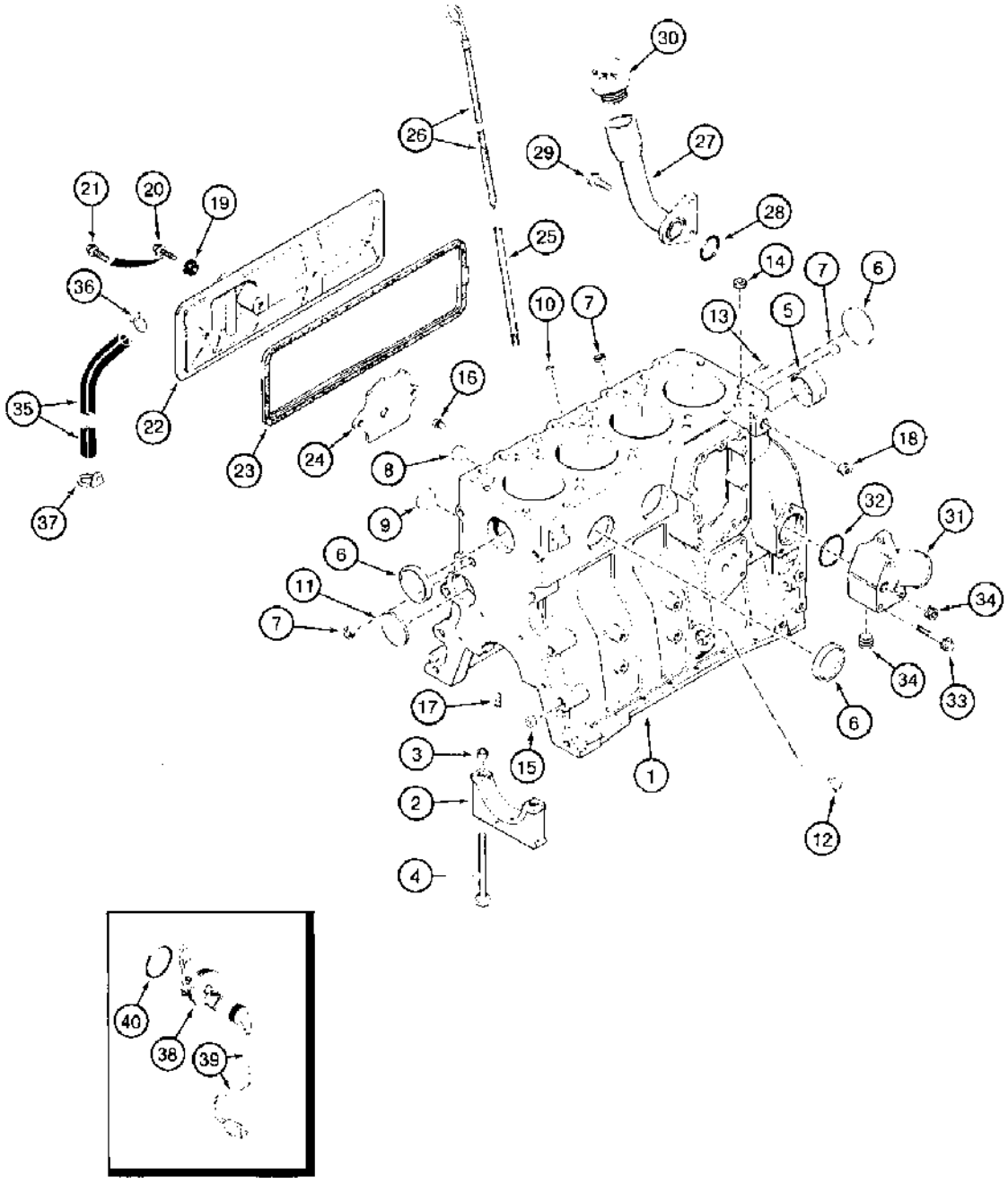

B920890

(580SK) - CASE SUPER-K CONSTRUCTION KING LOADER BACKHOE > (2-44) - CYLINDER BLOCK, 4T-390 ENGINE

Diag #	Part #	Name	Description	Qty
	1989068C2	ENGINE ASSEMBLY	ENGINE ASSY ENGINE ASSEMBLY, 4T-390 standard, Turbocharged, complete, new, includes all parts except: starter, alternator, fan, fan belt, air cleaner, muffler and exhaust pipe, prior to tractor P.I.N. JJG0173468, for service order 1989092C2 basic engine, below	1
	1989068C2R	REMAN-REPLACEMENT ENGINE	Remanufactured, For N.A. Only	1
	4T-390C	CORE-REPLACEMENT ENGINE	Return Number, Complete, For N.A. Only	1
	1989071C2	ENGINE ASSEMBLY	ENGINE ASSY ENGINE ASSEMBLY, 4T-390 standard, Turbocharged, complete, new, includes all parts except: starter, alternator, fan, fan belt, air cleaner, muffler and exhaust pipe, tractor P.I.N. JJG0173468 and after, for service order 1989092C2 basic engine, below	1
	1989071C2R	REMAN-REPLACEMENT ENGINE	Remanufactured, For N.A. Only	1
	4T-390C	CORE-REPLACEMENT ENGINE	Return Number, Complete, For N.A. Only	1
	1989092C2	BASIC ENGINE	ENGINE ASSEMBLY basic, new, 4T-390 engine	1
	1989092C2R	ENGINE, EXCHANGE	ENGINE (EXCHANGE) ENGINE ASSEMBLY, 4T-390, remanufactured, North America only, component parts on this page do not apply to the remanufactured assembly	1
	1989092C2C	CORE-ENGINE	RETURN NUMBER, 4T-390 enginge, use this part number to return engine assembly core for credit when using a remanufactured assembly	1
		includes all parts except: starter, alternator, fan, fan belt, fan bracket, air cleaner, muffler, exhaust manifold, flywheel and housing, oil fill and dipstick, fuel injection pump, injectors and lines, front crank pulley, belt tensioner, and turbocharger	includes all parts except: starter, alternator, fan, fan belt, fan bracket, air cleaner, muffler, exhaust manifold, flywheel and housing, oil fill and dipstick, fuel injection pump, injectors and lines, front crank pulley, belt tensioner, and turbocharger	1
	1989092C3R	REMAN-BASIC ENGINE	Remanufactured, For N.A. Only	1
	AC77758	CORE-ENGINE	RETURN NUMBER, 4T-390, use this part number to return short block core for credit when using a remanufactured assembly	1

Diag #	Part #	Name	Description	Qty
	J920387	SKELETON ENGINE	BLOCK ASSEMBLY short, engine, includes stripped block, pistons, connecting rods and bearings, crankshaft and bearings, Includes: Ref. 1 through 8.	1
		Order J920399 hardware kit when ordering J920384 block assembly or J916254 stripped block.	Order J920399 hardware kit when ordering J920384 block assembly or J916254 stripped block.	1
	JR920387	SKELETON ENGINE	BLOCK ASSEMBLY short, engine, 4T-390, remanufactured, North America only, component parts on this page do not apply to the remanufactured assembly, replaces AR77759	1
	JR933236	REMAN-SHORT ENGINE	Remanufactured, For N.A. Only	1
	JC933236	CORE-SHORT ENGINE	Return Number, For N.A. Only	1
1	J916254	BLOCK ASSY.	BLOCK ASSEMBLY stripped, engine, cylinder blcok 4T - 390 engine, Includes: Ref. 2 through 8.	1
		Order J920399 hardware kit when ordering J920384 block assembly or J916254 stripped block.	Order J920399 hardware kit when ordering J920384 block assembly or J916254 stripped block.	1
2	J900967	BEARING CAP	CAP main bearing, cylinder block 4T - 390 engine	5
3	J900068	BEARING WASHER	RING dowel, 18 mm OD, cylinder block 4T - 390 engine	10
4	J904217	BOLT,Hex, M14 - 2 x 119 mm, Cl 12.9	BOLT bearing cap, special, cylinder block 4T - 390 engine	10
5	REF	INSTRUCTION	BUSHING camshaft front, see Figure 2-38, Ref. 2, cylinder block 4T - 390 engine	1
6	A77782	PLUG	PLUG expansion, 58 mm OD, replaces J900965 plug, cylinder block 4T - 390 engine	4
7	J900956	PLUG	PLUG expansion, 18 mm OD, cylinder block 4T - 390 engine	3
8	41-1616	PLUG,Cup, 1", Stainless	PLUG, , Expansion, Replaces A77539, Cylinder block 4T - 390 engine Cup, 1", Stainless	2
	J802641	PACKAGE, REPAIR	KIT block hardware, cylinder block 4T - 390 engine, Includes: Ref. 9 through 18.	1
		Order J920399 hardware kit when ordering J920384 block assembly or J916254 stripped block.	Order J920399 hardware kit when ordering J920384 block assembly or J916254 stripped block.	1
9	J900958	PLUG	PLUG expansion, 32 mm OD, cylinder block 4T - 390 engine	2
10	J900955	PLUG	PLUG expansion, 10 mm OD, cylinder block 4T - 390 engine	1
11	172599	PLUG,Exp, 2 3/8"	PLUG expansion, Welch, 60 mm OD, replaces J900687, cylinder block 4T - 390 engine	1

Diag #	Part #	Name	Description	Qty
12	A77439	PLUG	PLUG expansion, 22 mm OD, cylinder block 4T - 390 engine	1
13	J900257	PIN	PIN dowel, 16 mm long, cylinder block 4T - 390 engine	2
14	J902343	DOWEL	RING dowel, 16 mm OD, cylinder block 4T - 390 engine	2
15	J900068	BEARING WASHER	RING dowel, 18 mm OD, cylinder block 4T - 390 engine	2
16	J906619	PLUG	PLUG hex, 1/8 inch PT, cylinder block 4T - 390 engine	2
17	J919002	NOZZLE CAP	NOZZLE piston cooling, cylinder block 4T - 390 engine	6
18	A77429	PLUG	PLUG hex socket, 1/2 inch PT, cylinder block 4T - 390 engine	1
19	J900267	SEAL	SEAL cover bolt, cylinder block 4T - 390 engine	4
20	845-8016	BOLT,Hvy Hex, M8 x 16mm, Cl 8.8	BOLT - heavy hex flange, 8 - 1.25 x 16 mm, If used, cylinder block 4T - 390 engine	4
21	845-8020	BOLT,Hvy Hex, M8 x 20mm, Cl 8.8	BOLT heavy hex flange, 8 - 1.25 x 20 mm, If used, cylinder block 4T-390 engine	4
22	J925680	COVER	COVER tappet, replaces J916441 and J905023 cover, cylinder block 4T - 390 engine	1
23	J922078	GASKET	GASKET tappet cover, replaces J904056 gasket, cylinder block 4T - 390 engine	1
24	J907586	BAFFLE	BAFFLEtappet cover, cylinder block 4T - 390 engine	1
25	J905779	TUBE,9.52 mm OD x 228 mm L	TUBE dipstick, cylinder block 4T - 390 engine	1
26	J905781	DIPSTICK	DIPSTICK oil level gauge, cylinder block 4T - 390 engine	1
27	J905440	TUBE	TUBE oil fill, cylinder block 4T - 390 engine	1
28	J906696	SEAL	O-RING sealing, 38 mm ID, cylinder block 4T - 390 engine	1
29	854-12025	BOLT,Hvy Hex, M12 x 25mm, Cl 10.9	BOLT heavy hex flange, 12- 1.75 x 25 mm, class 10.9, cylinder block 4T - 390 engine	2
30	A77424	PLUG	CAP fill, oil, cylinder block 4T - 390 engine	1
31	J903102	CONNECTION	CONNECTION water inlet, cylinder block 4T - 390 engine	1
32	J906697	SEAL	O-RING sealing, 50 mm ID, cylinder block 4T - 390 engine	1
33	854-10075	BOLT,Hvy Hex, M10 x 75mm, Cl 10.9	BOLT heavy hex flange, 10 - 1.50 x 75 mm, class 10.9, cylinder block 4T - 390 engine	3
34	A77429	PLUG	PLUG hex socket, 1/2 inch PT, cylinder block 4T - 390 engine	2
35	J918612	HOSE,360.00 mm	Breather, Replaces J906593, Cylinder Block 4T - 390 Engine	1

Diag #	Part #	Name	Description	Qty
36	J904230	CLAMP	CLAMP spring, hose, cylinder block 4T - 390 engine	1
37	J909670	CLIP	CLIP retaining, cylinder block 4T - 390 engine	1
	A77634	KIT	KIT engine block heater, engine block heater, Includes: Ref. 38, 39 and 40.	1
38	NSS	NOT SERVICED SEPARATELY	ELEMENT engine heater, 120 volt, engine block heater	1
39	J905113	CABLE	CABLE heater, block, engine block heater	1
40	J910517	O-RING	O-RING heater, sealing, engine block heater	1

http://www.minnparbackhoeparts.com/

(580SK) - CASE SUPER-K CONSTRUCTION KING LOADER BACKHOE > (2-48) - CRANKSHAFT, 4-390 ENGINE, 4T-390 ENGINE

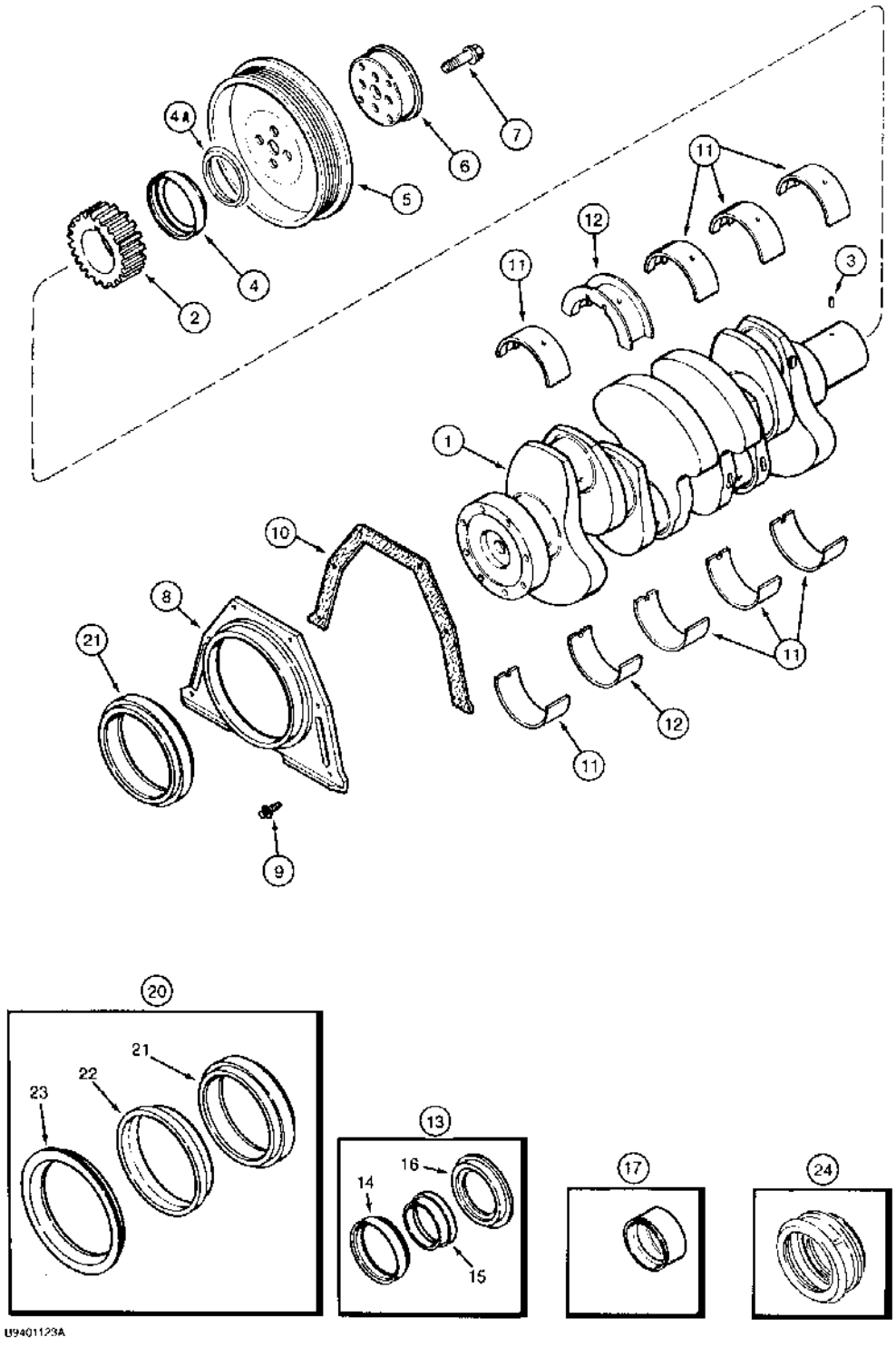

http://www.minnparbackhoeparts.com/

(580SK) - CASE SUPER-K CONSTRUCTION KING LOADER BACKHOE > (2-48) - CRANKSHAFT, 4-390 ENGINE, 4T-390 ENGINE

Diag #	Part #	Name	Description	Qty
	JR918323	CRANKSHAFT	ASSEMBLY, remanufactured, North America only, component parts shown on this page do not apply to the remanufactured assembly, part will no longer be remanufactured, order J918323	1
	J929036R	REMAN-CRANKSHAFT	580SK, Reman For New P/N JR918323	1
	J929036C	CORE-CRANKSHAFT	Return Number	1
	JC908031	CORE-CRANKSHAFT	RETURN NUMBER, use this part number to return crankshaft for credit when using a remanufactured assembly	1
1	J918323	CRANKSHAFT	ASSEMBLY engine, new, Includes: Ref. 2 and 3.	1
	J929036R	REMAN-CRANKSHAFT	580SK, Reman for New P/N J918323	1
	J929036C	CORE-CRANKSHAFT	Return Number	1
2	J919681	PINION	GEAR crankshaft, replaces J912883 gear	1
3	J904483	PIN	dowel	1
4	NSS	NOT SERVICED SEPARATELY	SEAL oil, crankshaft front, order Ref. 13 Kit	1
4A	J926430	SHAFT SEAL	SHIELD crank seal, dust, service repair only	1
5	J914494	PULLEY	crankshaft dampener	1
6	J905820	SPACER	FLANGE adapter, pulley	1
7	J903857	BOLT,Hex, M12 x 1.25 x 36mm	hex flange, 12 - 1.75 x 36 mm	4
8	J921043	REAR COVER	RETAINER rear seal, replaces J913447 retainer	1
9	845-6015	BOLT,Hvy Hex, M6 x 15mm, Cl 8.8	BOLT,Hvy Hex, M6 x 15mm, Cl 8.8	6
10	J914386	GASKET	seal retainer	1
11	A77405	CRANKSHAFT BEARING	BEARING main, standard, upper and lower set	4
11	A77472	BEARING SET	BEARING main, 0.25 mm undersize, upper and lower	4
11	A77474	BEARING SET	BEARING main, 0.50 mm undersize, upper and lower	4
11	A77476	BEARING SET	BEARING main, 0.75 mm undersize, upper and lower	4
11	A77478	BEARING SET	BEARING main, 1.00 mm undersize, upper and lower	4
12	A77406	CRANKSHAFT BEARING	BEARING main thrust, standard, upper and lower set	1
12	A77473	THRUST BEARING	BEARING main thrust, 0.25 mm undersize, upper and lower set	1

Diag #	Part #	Name	Description	Qty
12	A77475	THRUST BEARING	BEARING main thrust, 0.50 mm undersize, upper and lower set	1
12	A77477	THRUST BEARING	BEARING main thrust, 0.75 mm undersize, upper and lower set	1
12	A77479	THRUST BEARING	BEARING main thrust, 1.00 mm undersize, upper and lower set	1
13	J904353	GASKET KIT	KIT oil seal, crankshaft front, Includes: Ref. 14, 15 and 16.	1
14	NSS	NOT SERVICED SEPARATELY	SEAL oil, front	1
15	NSS	NOT SERVICED SEPARATELY	TOOL installation	1
16	NSS	NOT SERVICED SEPARATELY	TOOL installation	1
17	J906080	PACKAGE, REPAIR	SLEEVE wear, crankshaft front	1
20	J909411	SEAL	KIT oil seal, crankshaft rear, Includes: Ref. 21, 22 and 23.	1
21	NSS	NOT SERVICED SEPARATELY	SEAL oil, rear	1
22	NSS	NOT SERVICED SEPARATELY	TOOL installation	1
23	NSS	NOT SERVICED SEPARATELY	TOOL installation	1
24	J906081	SLEEVE	wear, crankshaft rear	1

http://www.minnparbackhoeparts.com/

(580SK) - CASE SUPER-K CONSTRUCTION KING LOADER BACKHOE > (2-50) - FLEX PLATE AND HOUSING, 4-390 ENGINE, 4T-390 ENGINE

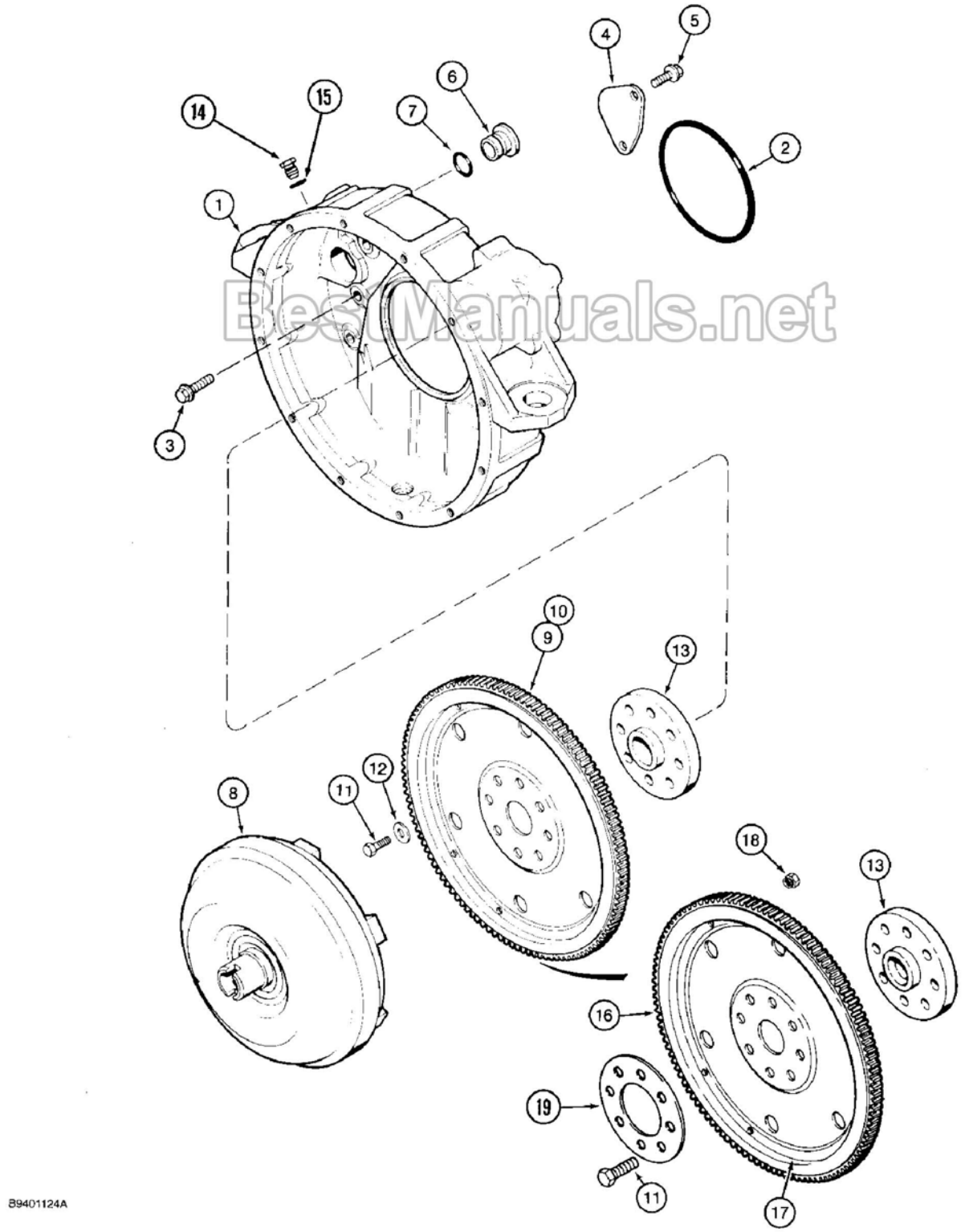

BestManuals.net

http://www.minnparbackhoeparts.com/

(580SK) - CASE SUPER-K CONSTRUCTION KING LOADER BACKHOE > (2-50) - FLEX PLATE AND HOUSING, 4-390 ENGINE, 4T-390 ENGINE

Diag #	Part #	Name	Description	Qty
1	J903287	CASE	HOUSING flywheel	1
2	J912473	SEAL	O-RING, Serial Range: housing-block	1
3	854-12040	BOLT,Hvy Hex, M12 x 40mm, Cl 10.9	- heavy hex flange, 12 - 1.75 x 40 mm, class 10.9	8
4	J908095	PLATE	cover	1
5	J902735	BOLT,M8 - 1.25 x 21 mm	hex, flange, plate retaining	2
6	J910248	PLUG	housing	1
7	238-5212	O-RING,-212, 70 Duro, .859" ID x .139" Thk	O-RING,-212, 70 Duro, .859" ID x .139" Thk	1
8	REF	INSTRUCTION	CONVERTER torque, see Section 6	1
9	J918961	FLYWHEEL	PLATE ASSEMBLY flex, no longer available, for service order J922595 plate assembly, Ref. 16 - 18, Includes: Ref. 10.	1
10	NSS	NOT SERVICED SEPARATELY	GEAR flex plate, 159 teeth	1
11	J901395	SCREW,Hex, M12 x 1.25 x 32mm, Cl 12.9	BOLT - hex, special, M12 x 32	8
12	J900269	WASHER	flat, flex plate bolt, if used	8
13	J913689	FLANGE	ADAPTER crankshaft	1
14	214389	PLUG,Hex Hd, 3/4"-16 ORB	Includes Ref. 15. Hex Hd, 3/4"-16 ORB	1
15	237-6008	O-RING,0.176" ID x 0.316" OD x 0.07"	15/32 ID x 5/64 inch	1
	J922595	FLYWHEEL	PLATE ASSEMBLY flex, Includes: Ref. 16, 17 and 18.	1
16	NSS	NOT SERVICED SEPARATELY	GEAR ring, flywheel	1
17	NSS	NOT SERVICED SEPARATELY	PLATE flex	1
18	NSS	NOT SERVICED SEPARATELY	NUT sealing	6
19	J904361	WASHER	RING clamping, if used	1

http://www.minnparbackhoeparts.com/

(580SK) - CASE SUPER-K CONSTRUCTION KING LOADER BACKHOE > (2-52) - PISTONS AND CONNECTING RODS, 4-390 ENGINE, CONNECTING RODS

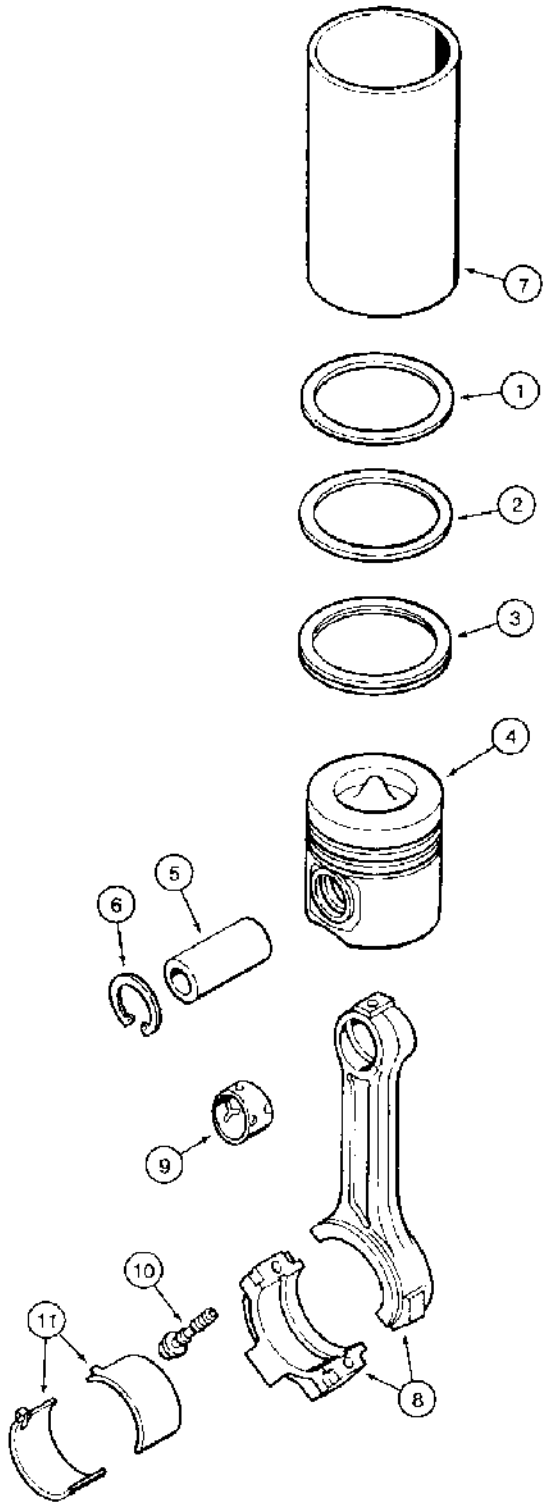

http://www.minnparbackhoeparts.com/

(580SK) - CASE SUPER-K CONSTRUCTION KING LOADER BACKHOE > (2-52) - PISTONS AND CONNECTING RODS, 4-390 ENGINE, CONNECTING RODS

Diag #	Part #	Name	Description	Qty
	A77410	PISTON	KIT piston, standard, pistons and connection rods 4-390 engine, Includes: Ref. 1 through 6 and P/N A77401	4
		A77410/411/412 are short pin piston kits, stamped 6223,6209, and 6208 on piston - A77818/819/820 are long pin piston kits, stamped 1880, 1882, 1881 on piston, do not mix	A77410/411/412 are short pin piston kits, stamped 6223,6209, and 6208 on piston - A77818/819/820 are long pin piston kits, stamped 1880, 1882, 1881 on piston, do not mix	1
	A77401	PISTON RING SET	KIT ring, standard, pistons and connection rods 4-390 engine, Includes: Ref. 1, 2 and 3.	1
1	NSS	NOT SERVICED SEPARATELY	RING compression, top, pistons and connection rods 4-390 engine	1
2	NSS	NOT SERVICED SEPARATELY	RING compression, middle, pistons and connection rods 4-390 engine	1
3	NSS	NOT SERVICED SEPARATELY	RING oil, bottom, pistons and connection rods 4-390 engine	1
4	NSS	NOT SERVICED SEPARATELY	PISTON - cylinder, standard, Stamped 6223, pistons and connection rods 4-390 engine	1
5	J901793	PISTON PIN	PIN - piston, pistons and connection rods 4-390 engine	1
6	J901706	RING	retainer, pin, pistons and connection rods 4-390 engine	2
	A77411	PISTON	KIT piston, 0.5 mm oversize, pistons and connection rods 4-390 engine, Includes: Ref. 1 through 6 and P/N A77463	4
		A77410/411/412 are short pin piston kits, stamped 6223,6209, and 6208 on piston - A77818/819/820 are long pin piston kits, stamped 1880, 1882, 1881 on piston, do not mix	A77410/411/412 are short pin piston kits, stamped 6223,6209, and 6208 on piston - A77818/819/820 are long pin piston kits, stamped 1880, 1882, 1881 on piston, do not mix	1
	A77463	PISTON RING SET	KIT ring, 0.5 mm oversize, pistons and connection rods 4-390 engine, Includes: Ref. 1, 2 and 3.	1
1	NSS	NOT SERVICED SEPARATELY	RING compression, top, pistons and connection rods 4-390 engine	1
2	NSS	NOT SERVICED SEPARATELY	RING compression, middle, pistons and connection rods 4-390 engine	1
3	NSS	NOT SERVICED SEPARATELY	RING oil, bottom, pistons and connection rods 4-390 engine	1

Diag #	Part #	Name	Description	Qty
4	NSS	NOT SERVICED SEPARATELY	PISTON cylinder, 0.5 mm oversize, Stamped 6209, pistons and connection rods 4-390 engine	1
5	J901793	PISTON PIN	PIN - piston, pistons and connection rods 4-390 engine	1
6	J901706	RING	retainer, pin, pistons and connection rods 4-390 engine	2
	A77412	PISTON	KIT piston, 1.0 mm oversize, pistons and connection rods 4-390 engine, Includes: Ref. 1 through 6 and P/N A77464	4
		A77410/411/412 are short pin piston kits, stamped 6223,6209, and 6208 on piston - A77818/819/820 are long pin piston kits, stamped 1880, 1882, 1881 on piston, do not mix	A77410/411/412 are short pin piston kits, stamped 6223,6209, and 6208 on piston - A77818/819/820 are long pin piston kits, stamped 1880, 1882, 1881 on piston, do not mix	1
	A77464	PISTON RING SET	KIT ring, 1.0 mm oversize, pistons and connection rods 4-390 engine, Includes: Ref. 1, 2 and 3.	1
1	NSS	NOT SERVICED SEPARATELY	RING compression, top, pistons and connection rods 4-390 engine	1
2	NSS	NOT SERVICED SEPARATELY	RING compression, middle, pistons and connection rods 4-390 engine	1
3	NSS	NOT SERVICED SEPARATELY	RING oil, bottom, pistons and connection rods 4-390 engine	1
4	NSS	NOT SERVICED SEPARATELY	PISTON cylinder, 1.0 mm oversize, Stamped 6208, pistons and connection rods 4-390 engine	1
5	J901793	PISTON PIN	PIN - piston, pistons and connection rods 4-390 engine	1
6	J901706	RING	retainer, pin, pistons and connection rods 4-390 engine	2
7	J904166	SLEEVE	LINER piston, used only in engine block repair, When liner is installed, use A77410 piston kit, pistons and connection rods 4-390 engine	1
	J925232	ROD, CONNECTING	ROD ASSEMBLY connecting, replaces J901569 rod assembly, connection rods, Includes: Ref. 8, 9 and 10.	4
	84145405R		580SK, Reman For New P/N J925232	4
	84145405C	CORE-ROD CONNECTING	Return Number	1
	JR925232	ROD	ASSEMBLY connecting, remanufactured, North America only, component parts on this page to not apply to the remanufactured assembly, replaces JR901569 rod assembly, connection rods	1
	JR942581	REMAN-CONNECTING ROD	Remanufactured CONNECTING ROD - N.A. Only	1
	JC925232	CORE-ROD CONNECTING	RETURN NUMBER use this part number to return connecting rod for credit when	1

Diag #	Part #	Name	Description	Qty
			using a remanufactured assembly, replaces JC901569, connection rods	
	JC901569	CORE-ROD CONNECTING	Return No, CONNECTING ROD - N.A. Only	1
8	NSS	NOT SERVICED SEPARATELY	ROD connecting, includes both halves, connection rods	1
9	J901085	BUSHING	- rod to piston pin, connection rods	1
10	J900919	SCREW,Hex Flg, M11 x 1.25 x 59mm, Cl 12.9	BOLT hex, special, connection rods	2
11	A77465	BEARING SET	KIT bearing, standard, upper and lower set, connection rods	4
11	A77466	BEARING SET	KIT bearing, 0.25 mm undersize, upper and lower set, connection rods	4
11	A77467	BEARING SET	KIT bearing, 0.50 mm undersize, upper and lower set, connection rods	4
11	A77468	BEARING SET	KIT bearing, 0.75 mm undersize, upper and lower set, connection rods	4
11	A77469	BEARING SET	KIT bearing, 1.00 mm undersize, upper and lower set, connection rods	4

http://www.minnparbackhoeparts.com/

(580SK) - CASE SUPER-K CONSTRUCTION KING LOADER BACKHOE > (2-54) - PISTONS, 4T-390 ENGINE, CONNECTING RODS

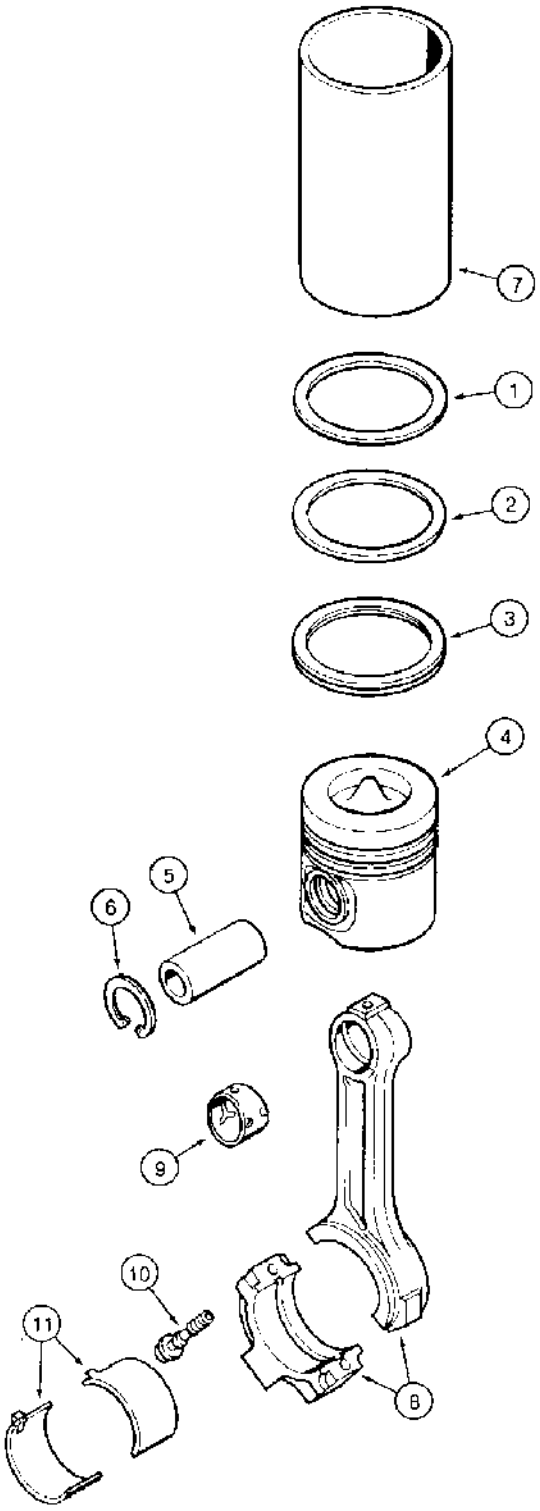

84203B3

http://www.minnparbackhoeparts.com/

(580SK) - CASE SUPER-K CONSTRUCTION KING LOADER BACKHOE > (2-54) - PISTONS, 4T-390 ENGINE, CONNECTING RODS

Diag #	Part #	Name	Description	Qty
	A77730	PISTON	KIT piston, standard, pistons 4T-390 engine, Includes: Ref. 1 through 6 and P/N A77727	4
	A77727	PISTON RING SET	KIT ring, standard, pistons 4T-390 engine, Includes: Ref. 1, 2 and 3.	1
1	NSS	NOT SERVICED SEPARATELY	RING compression, top, pistons 4T-390 engine	1
2	NSS	NOT SERVICED SEPARATELY	RING compression, middle, pistons 4T-390 engine	1
3	NSS	NOT SERVICED SEPARATELY	RING oil, bottom, pistons 4T-390 engine	1
4	NSS	NOT SERVICED SEPARATELY	PISTON cylinder, standard, Stamped 7163, pistons 4T-390 engine	1
5	J901793	PISTON PIN	PIN - piston, pistons 4T-390 engine	1
6	J901706	RING	retainer, pin, pistons 4T-390 engine	2
	A77731	PISTON & RINGS KIT	KIT piston, 0.5 mm oversize, pistons 4T-390 engine, Includes: Ref. 1 through 6 and P/N A77728	4
	A77728	PISTON RING SET	KIT ring, 0.5 mm oversize, pistons 4T-390 engine, Includes: Ref. 1, 2 and 3.	1
1	NSS	NOT SERVICED SEPARATELY	RING compression, top, pistons 4T-390 engine	1
2	NSS	NOT SERVICED SEPARATELY	RING compression, middle, pistons 4T-390 engine	1
3	NSS	NOT SERVICED SEPARATELY	RING oil, bottom, pistons 4T-390 engine	1
4	NSS	NOT SERVICED SEPARATELY	PISTON cylinder, 0.5 mm oversize, Stamped 8815, pistons 4T-390 engine	1
5	J901793	PISTON PIN	PIN - piston, pistons 4T-390 engine	1
6	J901706	RING	retainer, pin, pistons 4T-390 engine	2
	A77732	PISTON	KIT piston, 1.0 mm oversize, pistons 4T-390 engine, Includes: Ref. 1 through 6 and P/N A77729	4
	A77729	PISTON RING SET	KIT ring, 1.0 mm oversize, pistons 4T-390 engine, Includes: Ref. 1, 2 and 3.	1
1	NSS	NOT SERVICED SEPARATELY	RING compression, top, pistons 4T-390 engine	1
2	NSS	NOT SERVICED SEPARATELY	RING compression, middle, pistons 4T-390 engine	1
3	NSS	NOT SERVICED SEPARATELY	RING oil, bottom, pistons 4T-390 engine	1

Diag #	Part #	Name	Description	Qty
4	NSS	NOT SERVICED SEPARATELY	PISTON cylinder, 1.0 mm oversize, Stamped 8816, pistons 4T-390 engine	1
5	J901793	PISTON PIN	PIN - piston, pistons 4T-390 engine	1
6	J901706	RING	retainer, pin, pistons 4T-390 engine	2
7	J904166	SLEEVE	LINER piston, used only in engine block repair, When liner is installed, use A77730 piston kit, pistons 4T-390 engine	1
	J925232	ROD, CONNECTING	ROD ASSEMBLY connecting, replaces J901569 rod assembly, connection rods, Includes: Ref. 8, 9, and 10.	4
	84145405R		580SK, Reman For New P/N J925232	4
	84145405C	CORE-ROD CONNECTING	Return Number	1
	JR925232	ROD	ASSEMBLY connecting, remanufactured, North America only, component parts shown on this page do not apply to the remanufactured assembly, replaces JR901569 rod assembly, connection rods	1
	JR942581	REMAN-CONNECTING ROD	Remanufactured CONNECTING ROD - N.A. Only	1
	JC925232	CORE-ROD CONNECTING	RETURN NUMBER use this part number to return connecting rod for credit when using a remanufactured assembly, replaces JC901569, connection rods	1
	JC901569	CORE-ROD CONNECTING	Return No, CONNECTING ROD - N.A. Only	1
8	NSS	NOT SERVICED SEPARATELY	ROD connecting, includes both halves, connection rods	1
9	J901085	BUSHING	- rod to piston pin, connection rods	1
10	J900919	SCREW,Hex Flg, M11 x 1.25 x 59mm, Cl 12.9	BOLT hex, special, connection rods	2
11	A77465	BEARING SET	KIT bearing, standard, upper and lower set, connection rods	4
11	A77466	BEARING SET	KIT bearing, 0.25 mm undersize, upper and lower set, connection rods	4
11	A77467	BEARING SET	KIT bearing, 0.50 mm undersize, upper and lower set, connection rods	4
11	A77468	BEARING SET	KIT bearing, 0.75 mm undersize, upper and lower set, connection rods	4
11	A77469	BEARING SET	KIT bearing, 1.00 mm undersize, upper and lower set, connection rods	4

http://www.minnparbackhoeparts.com/

(580SK) - CASE SUPER-K CONSTRUCTION KING LOADER BACKHOE > (2-56) - ENGINE GASKET KITS, 4-390 ENGINE, 4T-390 ENGINE, VALVE GRIND

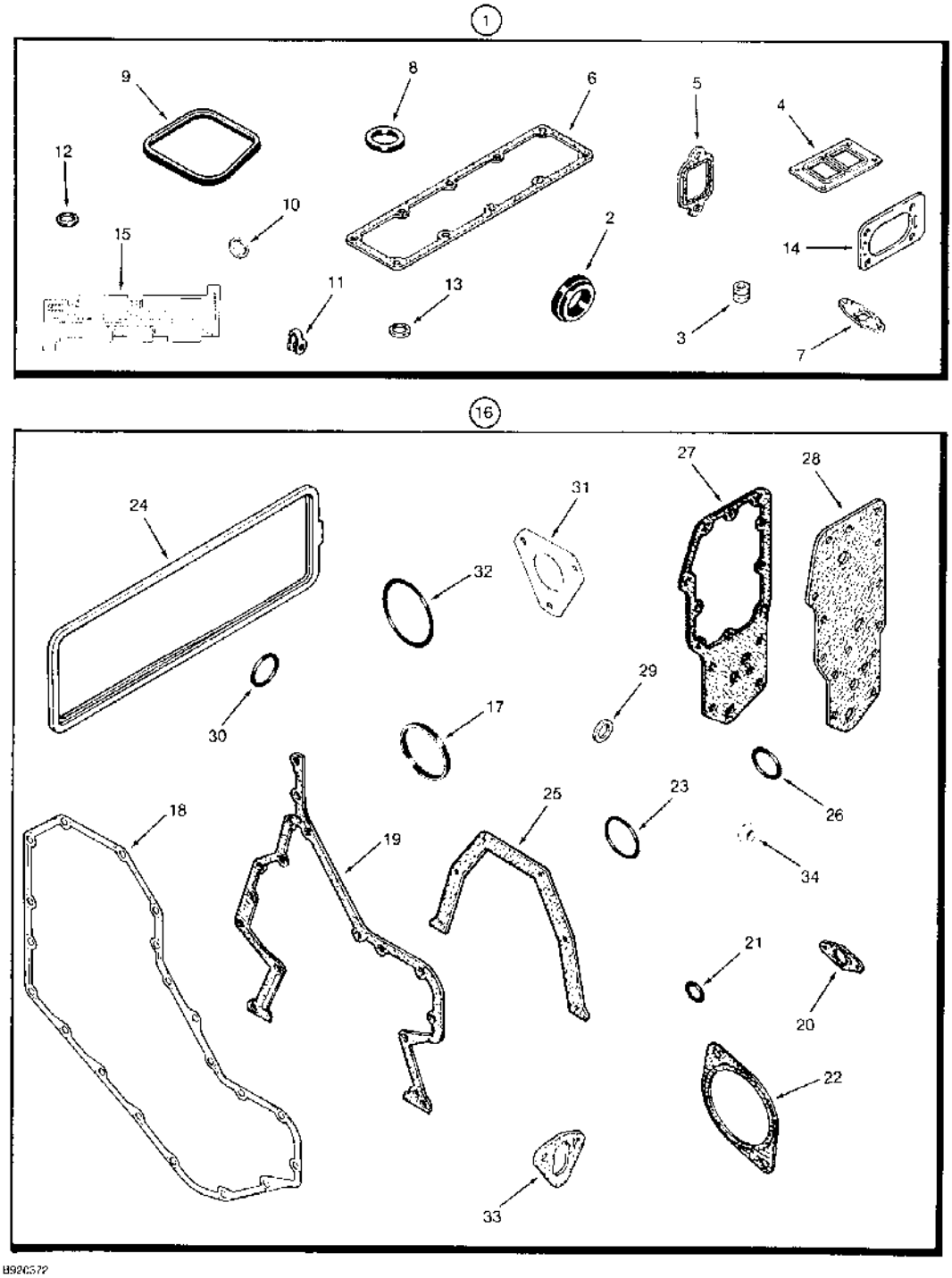

http://www.minnparbackhoeparts.com/

(580SK) - CASE SUPER-K CONSTRUCTION KING LOADER BACKHOE > (2-56) - ENGINE GASKET KITS, 4-390 ENGINE, 4T-390 ENGINE, VALVE GRIND

Diag #	Part #	Name	Description	Qty
1	A77792	GASKET KIT	KIT gasket, valve grind, valve grind kit, Includes: Ref. 2 through 15	1
		When just the valve grind gasket kit is used, also order the required cylinder head gasket, Ref. 2, Figure 2-34.	When just the valve grind gasket kit is used, also order the required cylinder head gasket, Ref. 2, Figure 2-34.	1
2	J923331	GASKET	thermostat housing, replaces J920020 gasket, valve grind kit	1
3	J901097	SEAL	intake and exhaust valve guides, valve grind kit	8
4	J901356	GASKET	turbocharger to manifold, valve grind kit	1
5	J905443	MANIFOLD GASKET	exhaust manifold, valve grind kit	4
6	J914028	GASKET	intake manifold, valve grind kit	1
7	J914388	GASKET	oil drain tube, valve grind kit	1
8	J902363	O-RING,30 mm ID x 48 mm OD	oil fill cap, valve grind kit	1
9	J902666	GASKET	SEAL rocker cover, valve grind kit	4
10	J900808	SEAL	9 mm, injector, not used in this application, valve grind kit	4
11	J903380	SEAL	connector, fuel return manifold tube, valve grind kit	4
12	J906659	SEAL	7 mm, injector tip, replaces J920174 seal, valve grind kit	4
13	J909356	SEAL	injector body, valve grind kit	4
14	J914856	GASKET	air crossover connection, valve grind kit	1
15	J823921	GAUGE	bolt length, cylinder head, valve grind kit	1
16	A77671	GASKET KIT	KIT gasket, cylinder block, cylinder block kit, Includes: Ref. 17 through 34	1
		For complete engine overhaul, order, 1, cylinder block kit, 1, valve grind kit, 1, oil pan kit, Ref. 2-32, front and rear crankshaft seal kit, Ref. 2-48, and required cylinder head gasket, Ref. 2-34.	For complete engine overhaul, order, 1, cylinder block kit, 1, valve grind kit, 1, oil pan kit, Ref. 2-32, front and rear crankshaft seal kit, Ref. 2-48, and required cylinder head gasket, Ref. 2-34.	1
17	J903475	SEALING RING	front access cover, cylinder block kit	1
18	J914385	GASKET	front gear cover to housing, cylinder block kit	1
19	J916131	GASKET	timing gear housing, cylinder block kit	1
20	J905595	GASKET	timing pin housing, not used in this application, cylinder block kit	1

Diag #	Part #	Name	Description	Qty
21	J913994	O-RING	sealing, timing pin, cylinder block kit	1
22	J919601	GASKET	accessory drive cover plate, replaces J913192 gasket, cylinder block kit	1
23	238-5341	O-RING,-341, 70 Duro, 3.475" ID x .210" Thk	Water pump, cylinder block kit -341, 70 Duro, 3.475" ID x .210" Thk	1
24	J922078	GASKET	tappet cover, replaces J904056 gasket, cylinder block kit	1
25	J914386	GASKET	seal retainer, crankshaft, cylinder block kit	1
26	J906697	SEAL	O-RING sealing, 50 mm ID, water inlet connection, cylinder block kit	1
27	J918256	GASKET	cooler core, oil, cylinder block kit	1
28	J918257	GASKET	filter head, cylinder block kit	1
29	J902425	SEALING WASHER	seal, plug, oil pan, cylinder block kit	1
30	J906696	SEAL	O-RING sealing, engine oil fill tube, cylinder block kit	1
31	J914389	GASKET	fuel injection pump mounting, cylinder block kit	1
32	J912473	SEAL	O-RING flywheel housing to block, cylinder block kit	1
33	J914304	GASKET	fuel lift pump, cylinder block kit	1
34	J900267	SEAL	tappet cover bolt, cylinder block kit	4

http://www.minnparbackhoeparts.com/



FUEL

3

http://www.minnparbackhoeparts.com/

(580SK) - CASE SUPER-K CONSTRUCTION KING LOADER BACKHOE > (3-02) - FUEL RESERVOIR LINES AND FUEL LEVEL SENDER

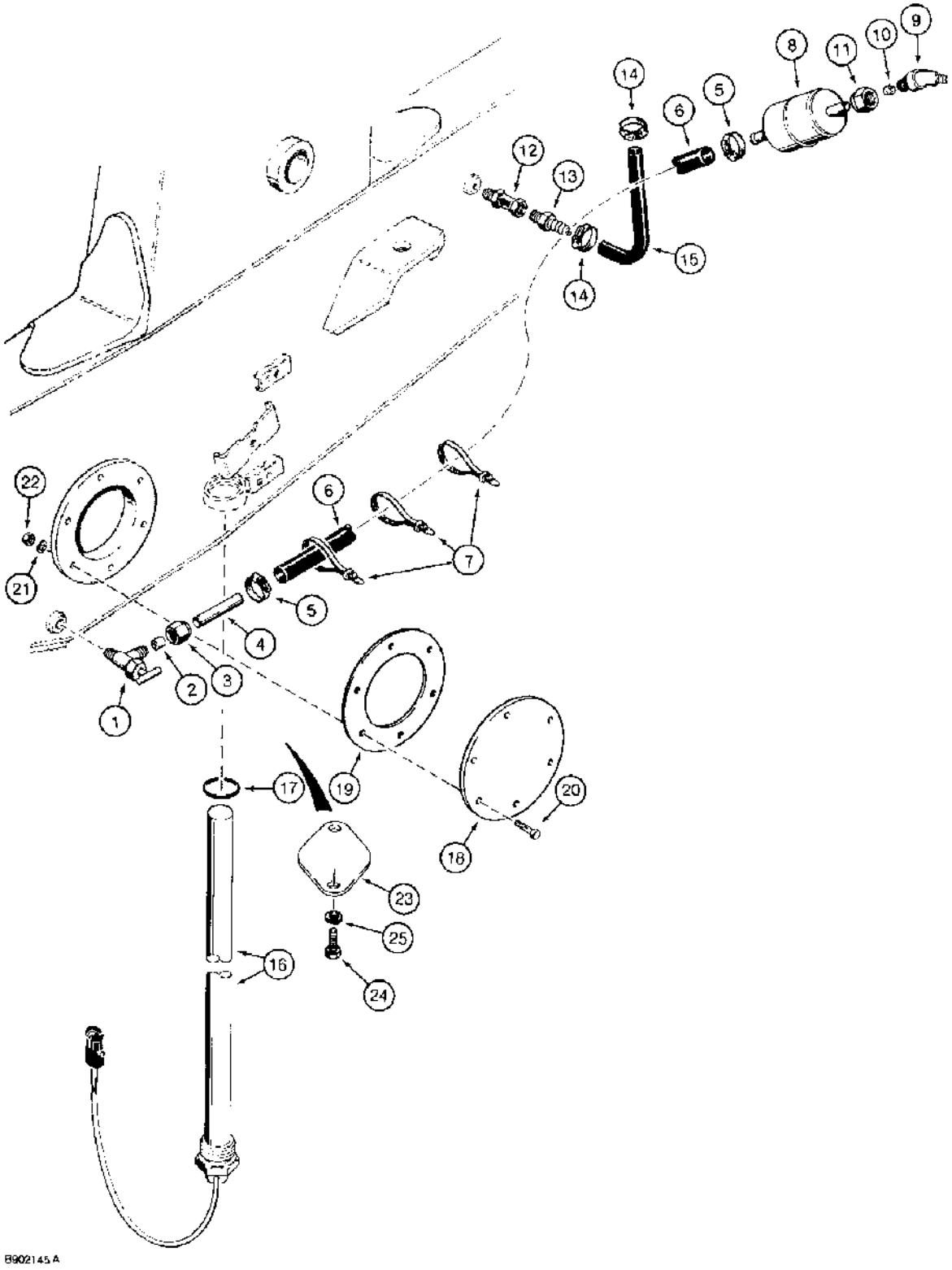

(580SK) - CASE SUPER-K CONSTRUCTION KING LOADER BACKHOE > (3-02) - FUEL RESERVOIR LINES AND FUEL LEVEL SENDER

Diag #	Part #	Name	Description	Qty
	D74027	VALVE	ASSEMBLY shutoff, fuel tank outlet, Includes: Ref. 1, 2 and 3.	1
1	NSS	NOT SERVICED SEPARATELY	BODY shutoff valve	1
2	222-654	SLEEVE,3/8" Tube, Comp	tapered, 3/8 inch tube OD	1
3	222-664	TUBE NUT,9/16"-24, 45º Fl, Comp	NUT hex, 3/8 tube OD x 9/16-24 inch	1
4	D145358	TUBE	fuel line	1
5	214-1704	HOSE CLAMP,#4, 0.25/0.62 Type M Worm	CLAMP, HOSE, , Adjustable #4, 0.25/0.62 Type M Worm	2
6	L79833	LARGE HOSE	HOSE, 3/8 inch ID x 46 inch long, fuel line, replaces D145096, cut to required length from S118400 bulk hose, see below	1
7	L18337	CABLE TIE,9.95"-12.1" lg	STRAP tie, 15 inch, nylon, retaining, attaches fuel line hose to loader inlet valve tube	3
8	D145357	FILTER	fuel, in-line	1
	222-95	ELBOW,45º, 5/8"-24 x 1/4" NPT	45 degree, compression, 3/8 tube OD x 1/4 inch PT to engine fuel pump, Includes: Ref. 9, 10 and 11	1
9	NSS	NOT SERVICED SEPARATELY	BODY elbow	1
10	222-104	SLEEVE,3/8" Tube	3/8 inch tube OD	1
11	222-114	NUT,5/8"-24	NUT hex, 3/8 tube OD x 5/8-24 inch	1
12	A177556	VALVE POPPET	VALVE check, anti-drain	1
13	217-119	FITTING,1/4" Hose x 1/4" NPTF, Barbed	ADAPTER straight, 1/4 barb end x 1/4 inch PT	1
14	214-1404	HOSE CLAMP,#4, 0.25/0.62 Type M Worm	CLAMP adj, 1/4 - 5/8 inch dia	2
15	D141617	FUEL HOSE,6.35 mm ID x 241.00 mm, SAE J30, 30R6 or SAE 30R7	6.35 mm ID x 241.00 mm SAE J30, 30R6 Or SAE 30R7, Cut From A21561 Bulk Hose, See Below, Engine Injector Return Line	1
	120380A1	FUEL GAUGE	SENDER ASSEMBLY fuel level, models without auxiliary fuel tank, has red dot, registers 24 gallons full, replaces D147998	1
	120379A1	SENDER UNIT	SENDER ASSEMBLY fuel level, models with auxiliary fuel tank, registers 31 gallons full, replaces D144819, Includes: Ref. 16 and 17	1
16	NSS	NOT SERVICED SEPARATELY	SENDER electronic	1

Diag #	Part #	Name	Description	Qty
17	237-6024	O-RING,1.114" ID x 1.254" OD x 0.07"	24-1, 90 Duro, 1.72" ID x .118" Thk	1
18	D150213	COVER	fuel flange, 1 used if 3 mm thick, 2 used if 2 mm thick	1-2
19	D129228	GASKET	fuel flange cover	1
20	413-416	BOLT,Hex, 1/4" - 20 x 1", Gr 5	hex, 1/4 NC x 1 inch	6
21	492-11025	LOCK WASHER,1/4"	WASHER, LOCK, 1/4"	6
22	425-104	NUT,1/4"-20, G5	hex, 1/4 inch NC	6
	A21561	HOSE,0.25" ID x 25.00"	0.25" ID x 25.00' - Bulk, Used on Ref. 15	1
	S118400	HOSE,0.38" ID x 300.00"	- Bulk 0.38" ID x 300.00"	1
23	D145581	COVER	fuel sender	1
24	413-612	BOLT,Hex, 3/8" - 16 x 3/4", Gr 5	BOLT,Hex, 3/8" - 16 x 3/4", Gr 5	1
25	492-11038	LOCK WASHER,3/8"	LOCK WASHER,3/8"	1

http://www.minnparbackhoeparts.com/

(580SK) - CASE SUPER-K CONSTRUCTION KING LOADER BACKHOE > (3-04) - AUXILIARY FUEL RESERVOIR

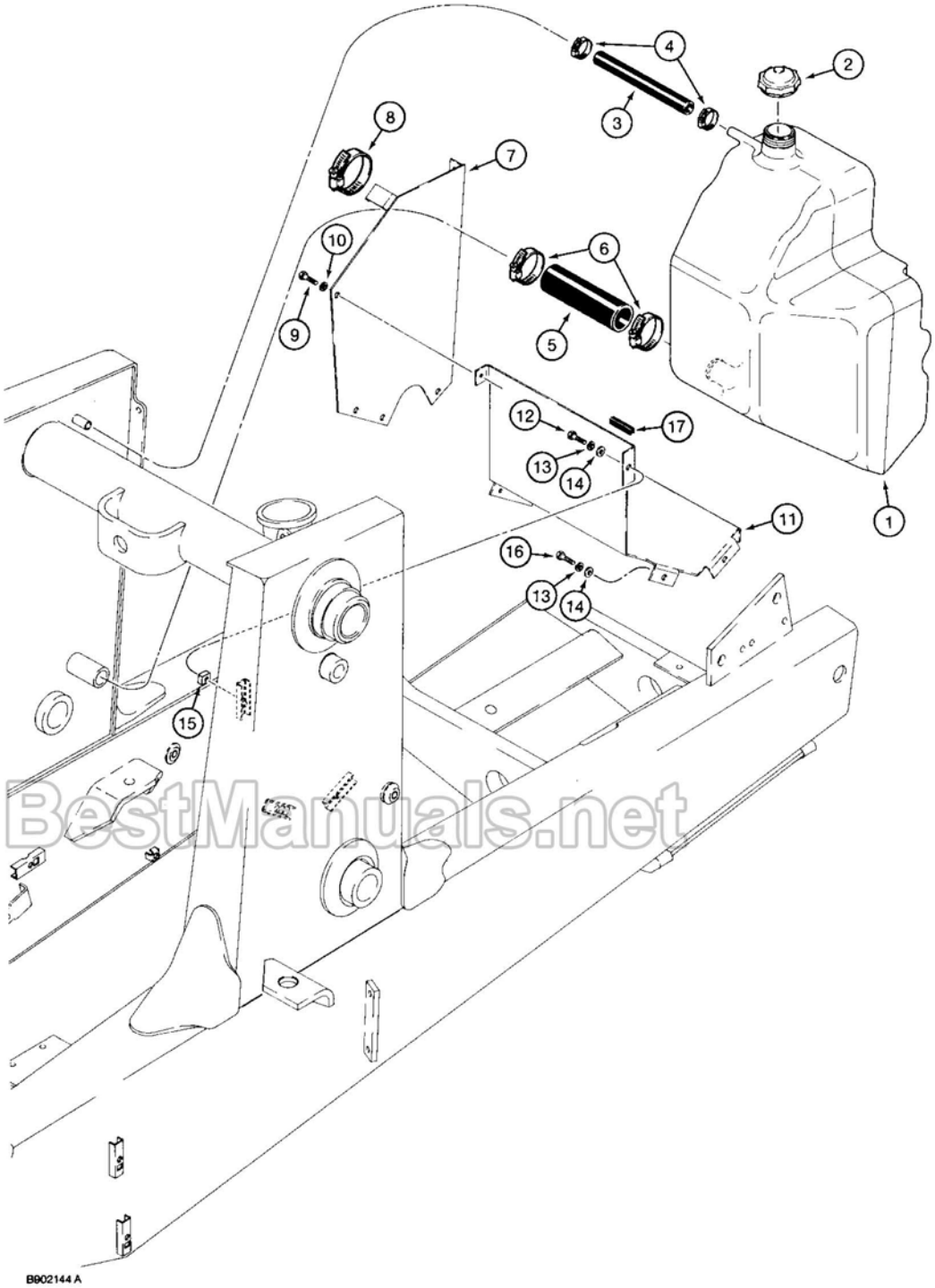

BestManuals.net

(580SK) - CASE SUPER-K CONSTRUCTION KING LOADER BACKHOE > (3-04) - AUXILIARY FUEL RESERVOIR

Diag #	Part #	Name	Description	Qty
1	D150281	FUEL TANK	RESERVOIR fuel, auxiliary	1
2	D150282	CAP	fuel reservoir	1
3	D145006	FUEL HOSE	HOSE, 16 mm ID x 225 mm long, vent, auxiliary tank to main tank	1
4	214-1410	HOSE CLAMP,#10, 0.56/1.06 Type F Worm	CLAMP, HOSE, , Adjustable, Replaces 214-255, 214-253 #10, 0.56/1.06 Type F Worm	2
5	D144922	FUEL HOSE	HOSE, 38 mm ID x 195 mm long, fuel fill, auxiliary tank to main fuel tank	1
6	214-1428	HOSE CLAMP,#28, 1.31/2.25 Type F Worm	CLAMP, HOSE, , Adjustable #28, 1.31/2.25 Type F Worm	2
7	D145020	PLATE	auxiliary tank mounting, side	1
8	214-1464	HOSE CLAMP,#64, 3.56/4.50 Type F Worm	CLAMP, HOSE, , Adj., Plate to cross tube #64, 3.56/4.50 Type F Worm	1
9	281-14812	SELF-TAP SCREW,Hex Washer, 5/16" - 18 x 3/4"	BOLT hex washer head, self-tapping, 5/16 NC x 3/4 inch replaces D141589	4
10	492-11031	LOCK WASHER,5/16"	WASHER, LOCK, 5/16"	4
11	D145018	BRACKET	auxiliary tank mounting, lower	1
12	413-614	BOLT,Hex, 3/8" - 16 x 7/8", Gr 5	BOLT,Hex, 3/8" - 16 x 7/8", Gr 5	1
13	492-11038	LOCK WASHER,3/8"	LOCK WASHER,3/8"	3
14	495-11041	WASHER,3/8", SAE	flat, (13/32 x 13/16 x 1/16")	3
15	84899	SQUARE NUT,Sq, 3/8"-16, G2	square, 3/8 inch NC	3
16	413-612	BOLT,Hex, 3/8" - 16 x 3/4", Gr 5	BOLT,Hex, 3/8" - 16 x 3/4", Gr 5	2
17	D36180	LINING	TRIM edge, 2-1/4 inch, 57 mm, long, cut to required length from F42827 trim, see below	1
	F42827	RUBBER STRIP	TRIM edge, 116 inch, 2946 mm, long, bulk	1

http://www.minnparbackhoeparts.com/

(580SK) - CASE SUPER-K CONSTRUCTION KING LOADER BACKHOE > (3-06) - THROTTLE CONTROL LINKAGE, HAND CONTROL

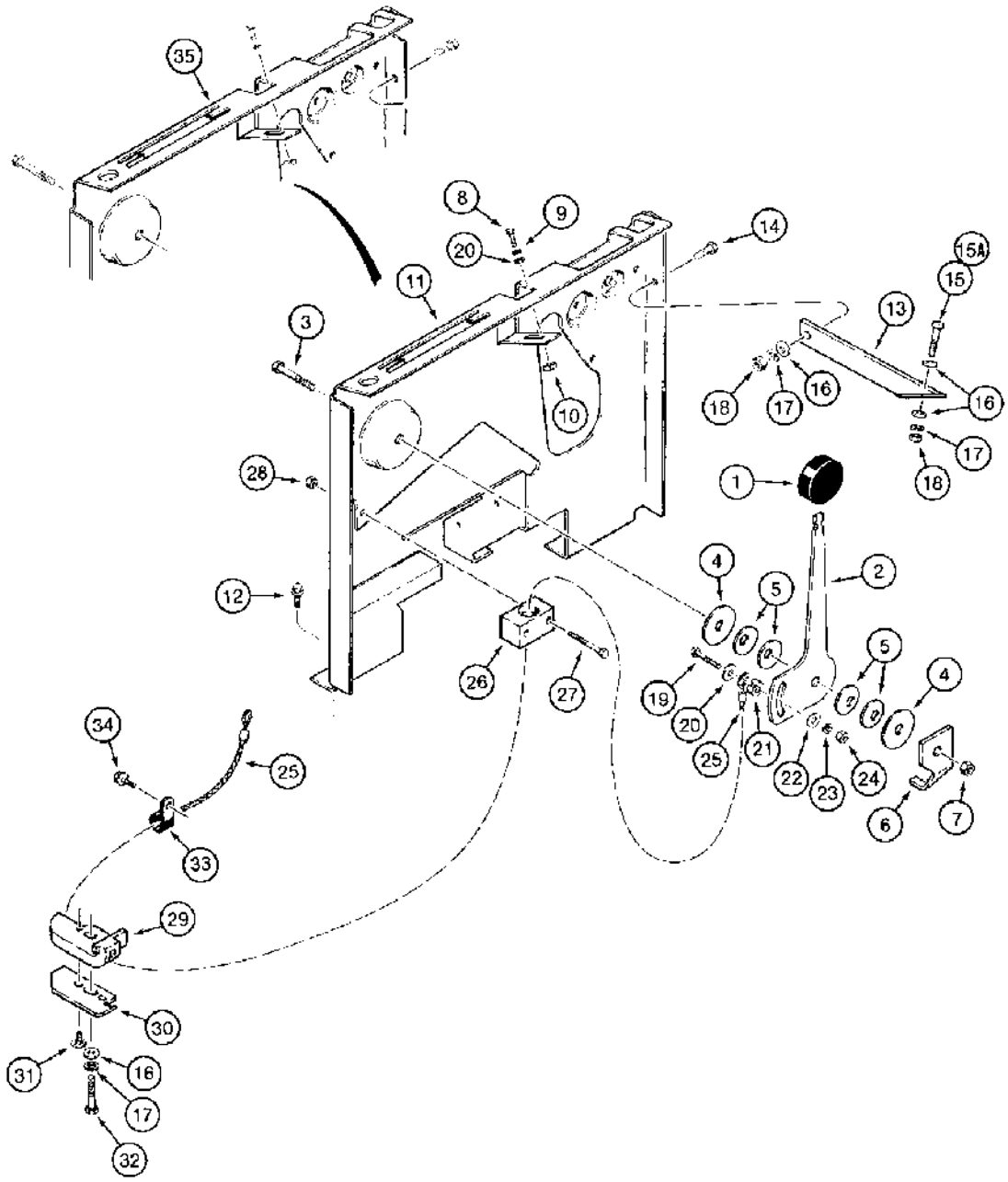

B902115B

(580SK) - CASE SUPER-K CONSTRUCTION KING LOADER BACKHOE > (3-06) - THROTTLE CONTROL LINKAGE, HAND CONTROL

Diag #	Part #	Name	Description	Qty
1	A177435	BALL KNOB	KNOB lever	1
2	D135409	LEVER	hand throttle	1
3	413-828	BOLT,Hex, 1/2" - 13 x 1 3/4", Gr 5	BOLT,Hex, 1/2" - 13 x 1 3/4", Gr 5	1
4	96-81005	WASHER,.521" x 2" x .134", HDN	flat, 1/2 x 2 x 9/64 inch	2
5	D148962	WASHER	spring, Bellville type	4
6	D149136	HOLDER	BRACKET throttle lever	1
7	231-1448	NUT,1/2"-13, GB	light hex, self-locking, 1/2 inch NC	1
8	413-514	BOLT,Hex, 5/16" - 18 x 7/8", Gr 5	BOLT,Hex, 5/16" - 18 x 7/8", Gr 5	1
9	492-11031	LOCK WASHER,5/16"	WASHER, LOCK, 5/16"	1
10	224-2245	SQUARE NUT,Sq, 5/16"-18, G2	square, 5/16 inch NC, if used	1
11	D147161	SUPPORT	BRACKET throttle control, no longer available, order 102963A1 bracket, Fig. 35	1
12	112865A1	SCREW	BOLT hex washer, self-tapping, 5/16 NC x 3/4 inch, replaces A141589	5
13	D142395	LARGE PLATE	SUPPORT throttle brace, mounts at hole in right fender	1
14	413-612	BOLT,Hex, 3/8" - 16 x 3/4", Gr 5	BOLT,Hex, 3/8" - 16 x 3/4", Gr 5	1
15	413-616	BOLT,Hex, 3/8" - 16 x 1", Gr 5	hex, 3/8 NC x 1 inch, if used	1
15A	413-624	BOLT,Hex, 3/8" - 16 x 1 1/2", Gr 5	hex, 3/8 NC x 1-1/2 inch, if used	1
16	495-21044	WASHER,3/8"	(flat, 7/16 x 1 x 5/64 inch) 3/8"	3-4
17	492-11038	LOCK WASHER,3/8"	LOCK WASHER,3/8"	3
18	425-106	NUT,3/8"-16, G5	NUT,3/8"-16, G5	2
19	413-520	BOLT,Hex, 5/16" - 18 x 1 1/4", Gr 5	hex, 5/16 NC x 1-1/4 inch	1
20	495-21038	WASHER,5/16"	(flat, 3/8 x 7/8 x 5/64") 5/16"	1-2
21	D124865	SPACER	cable to throttle control lever	1
22	495-11034	WASHER,5/16", SAE	5/16" SAE (flat, 11/32 x 11/16 x 1/16")	1
23	492-11031	LOCK WASHER,5/16"	WASHER, LOCK, 5/16"	1
24	425-105	NUT,5/16"-18, G5	- hex, 5/16 inch NC	1
25	D150863	CABLE	control, hand throttle, replaces D149124 cable	1
26	D148961	BLOCK	guide, throttle cable	1

Diag #	Part #	Name	Description	Qty
27	413-428	BOLT,Hex, 1/4" - 20 x 1 3/4", Gr 5	hex, 1/4 NC x 1-3/4 inch	2
28	231-5144	SERRATED NUT,Flg, USR, 1/4"-20	SERRATED NUT,Flg, USR, 1/4"-20	2
29	D148966	GUIDE	throttle cable	1
30	D149032	STOP LOCK	RETAINER, Serial Range: cable-guide	1
31	281-4556	SELF-TAP SCREW,Hex Wash Hd, #10 x 3/8"	SCREW self-tapping, hex washer head, No. 10 - 24 x 3/8 inch	2
32	276-24924	SELF-TAP SCREW,3/8" - 16 x 1 1/2"	BOLT hex, self-tapping, 3/8 NC x 1-1/2 inch	1
33	515-22127	CLAMP,1/2", Insul, 5/16" Bolt	cable, closed, 12.7 mm ID	2
34	D141589	SELF-TAP SCREW,Hex Wash Hd, 5/16" x 3/4"	BOLT hex washer head, self-tapping, 5/16 NC x 3/4 inch	2
35	102963A1	SUPPORT	BRACKET throttle control	1

http://www.minnparbackhoeparts.com/

(580SK) - CASE SUPER-K CONSTRUCTION KING LOADER BACKHOE > (3-08) - THROTTLE CONTROL LINKAGE, FOOT CONTROLS

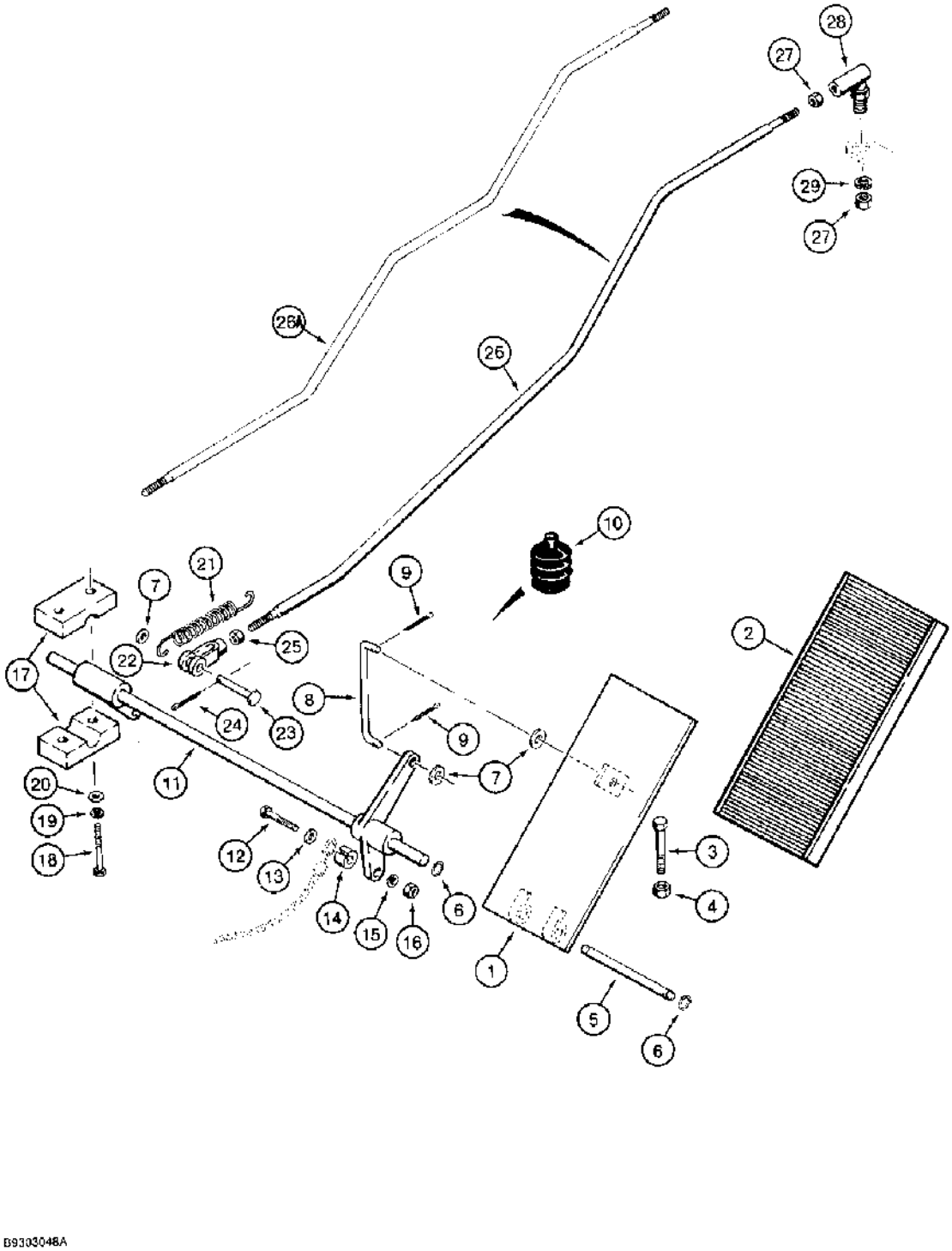

(580SK) - CASE SUPER-K CONSTRUCTION KING LOADER BACKHOE > (3-08) - THROTTLE CONTROL LINKAGE, FOOT CONTROLS

Diag #	Part #	Name	Description	Qty
1	D124863	PEDAL	accelerator	1
2	D137499	COVER	PAD cover, accelerator pedal	1
3	D150505	BOLT	BOLT hex, special, pedal stop, replaces 413-648	1
4	425-106	NUT,3/8"-16, G5	NUT,3/8"-16, G5	1
5	D143413	PIN	pedal base	1
6	D143414	CIRCLIP	RING snap	2
7	495-11034	WASHER,5/16", SAE	5/16" SAE (flat, 11/32 x 11/16 x 1/16")	3
8	D143428	STEM	ROD bent, accelerator pedal	1
9	432-612	COTTER PIN,3/32" x 3/4"	PIN , SPLIT (COTTER), 3/32" x 3/4"	2
10	D85869	BELLOWS	BOOT, accelerator pedal rod, at floor plate	1
11	D150687	SHAFT	throttle, replaces D146126 shaft	1
12	413-520	BOLT,Hex, 5/16" - 18 x 1 1/4", Gr 5	hex, 5/16 NC x 1-1/4 inch	1
13	495-21038	WASHER,5/16"	(flat, 3/8 x 7/8 x 5/64") 5/16"	1
14	D124865	SPACER	cable	1
15	492-11031	LOCK WASHER,5/16"	WASHER, LOCK, 5/16"	1
16	425-105	NUT,5/16"-18, G5	- hex, 5/16 inch NC	1
17	D124857	CLAMP	BLOCK cross shaft	4
18	413-532	BOLT,Hex, 5/16" - 18 x 2", Gr 5	BOLT,Hex, 5/16" - 18 x 2", Gr 5	4
19	492-11031	LOCK WASHER,5/16"	WASHER, LOCK, 5/16"	4
20	495-11034	WASHER,5/16", SAE	5/16" SAE (flat, 11/32 x 11/16 x 1/16")	4
21	D93823	SPRING	throttle return	1
22	213-125	ADJUSTABLE CLEVIS,5/16"-24	CLEVIS - adjustable, 5/16 inch NF	1
23	427-5112	CLEVIS PIN,5/16" x 1 1/8"	PIN - clevis, 5/16 x 1-1/8 inch	1
24	432-612	COTTER PIN,3/32" x 3/4"	PIN , SPLIT (COTTER), 3/32" x 3/4"	1
25	425-115	NUT,5/16"-24, G5	- hex, 5/16 inch NF	1
26	D147425	ROD	throttle, to injection pump, used on models without turbocharged engines, and models with turbocharged changes prior to tractor P.I.N. JJG0173468	1
26A	D144108	ROD	throttle, to injection pump, used on models with turbocharged engines on tractor P.I.N. JJG0173468 and after	1
27	425-114	NUT,1/4"-28, G5	NUT,1/4"-28, G5	2
28	A10329	BALL JOINT	JOINT ball, at injection pump	1
29	492-11025	LOCK WASHER,1/4"	WASHER, LOCK, 1/4"	1

http://www.minnparbackhoeparts.com/

(580SK) - CASE SUPER-K CONSTRUCTION KING LOADER BACKHOE > (3-10) - FUEL INJECTION SYSTEM, 4-390 ENGINE, 4T-390 ENGINE PRIOR TO TRAC PIN JJG0173468

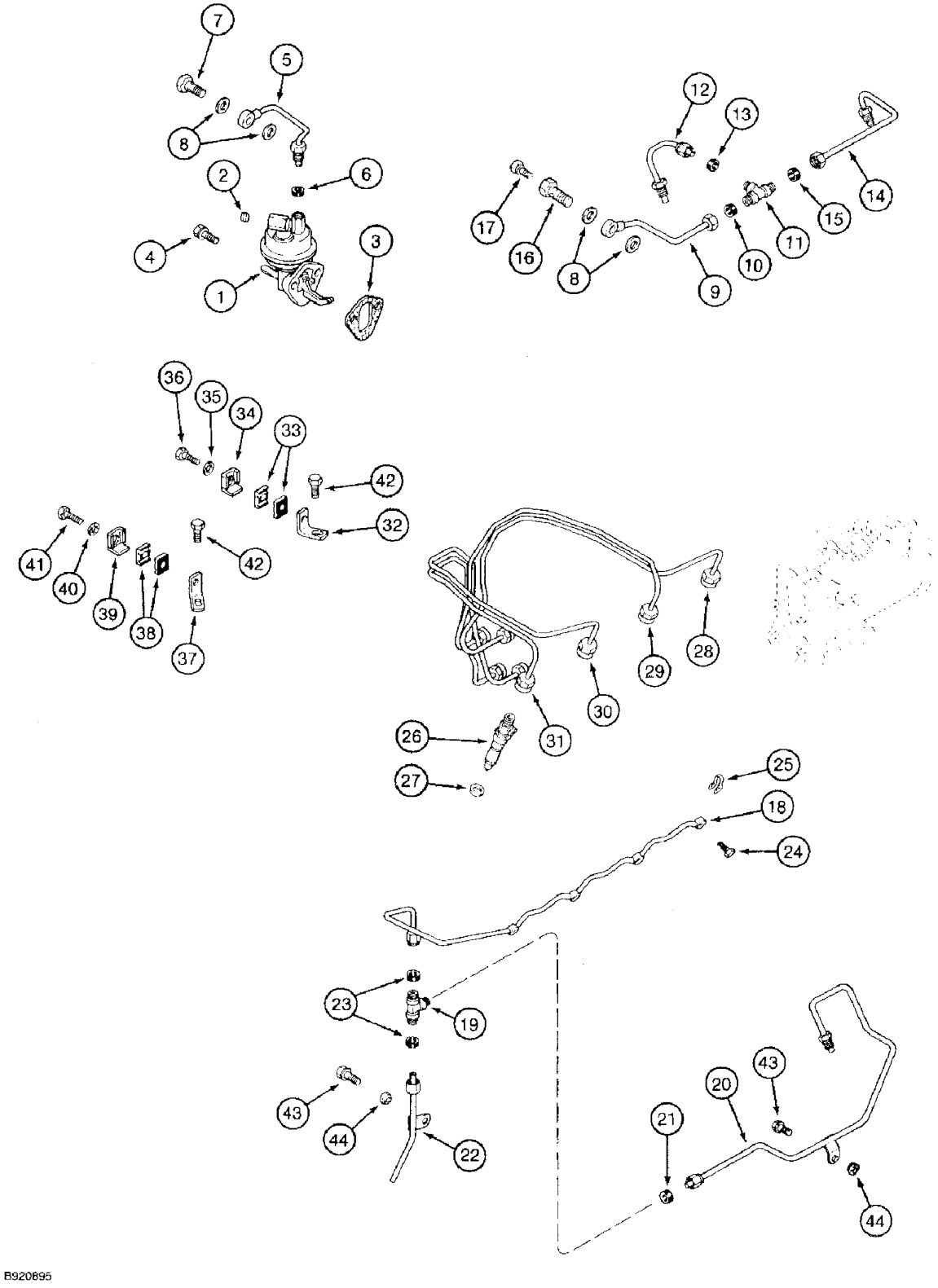

(580SK) - CASE SUPER-K CONSTRUCTION KING LOADER BACKHOE > (3-10) - FUEL INJECTION SYSTEM, 4-390 ENGINE, 4T-390 ENGINE PRIOR TO TRAC PIN JJG0173468

Diag #	Part #	Name	Description	Qty
1	J904374	PUMP	lift, fuel	1
2	221-841	PLUG	square socket, 1/4 inch PT, fuel inlet	1
3	J914304	GASKET	fuel lift pump	1
4	845-8020	BOLT,Hvy Hex, M8 x 20mm, Cl 8.8	heavy hex flange, 8 - 1.25 x 20 mm	2
5	J905649	FUEL TUBE,8 mm OD x 233.5 mm L	TUBE ASSEMBLY fuel, lift pump to filter, Includes: Ref. 6	1
6	222-101	SLEEVE,3/16" Tube	3/16 inch tube OD	1
7	J903035	BANJO BOLT	BOLT banjo hex, 12 - 1.5 x 24 mm	1
8	J918191	PACKING RING	WASHER sealing, replaces J903037 washer	4
9	J905364	FUEL TUBE	TUBE ASSEMBLY fuel supply, filter to tee, Includes: Ref. 10	1
10	222-103	SLEEVE,5/16" Tube	5/16 inch tube OD	1
11	222-123	TEE,5/16" Flex Tubing	Remove and discard nuts before assembly 5/16" Flex Tubing	1
12	J905375	FUEL TUBE,8 mm OD x 137.6 mm L	TUBE ASSEMBLY fuel supply, tee to rear of injection pump, Includes: Ref. 13	1
13	222-103	SLEEVE,5/16" Tube	5/16 inch tube OD	1
14	J905363	FUEL TUBE,8 mm OD x 256.8 mm L	TUBE ASSEMBLY fuel supply, tee to front of injection pump, Includes: Ref. 15	1
15	222-103	SLEEVE,5/16" Tube	5/16 inch tube OD	1
	J905860	BANJO BOLT	BOLT ASSEMBLY banjo hex, special, Includes: Ref. 16 and 17	1
16	NSS	NOT SERVICED SEPARATELY	BOLT connector, banjo hex, special	1
17	NSS	NOT SERVICED SEPARATELY	SCREW hex, special, vent	1
18	J909695	FUEL TUBE	MANIFOLD fuel return	1
19	222-121	TEE,3/16", Flex Tubing	3/16", Flex Tubing, Remove and discard nuts before assembly	1
20	J905703	FUEL TUBE,4.76 mm OD x 661 mm L	TUBE ASSEMBLY fuel return, tee to pump, Includes: Ref. 21	1
21	222-103	SLEEVE,5/16" Tube	5/16 inch tube OD	1
22	J905692	FUEL TUBE	TUBE ASSEMBLY fuel return, tee to fuel tank, Includes: Ref. 23	1
23	222-101	SLEEVE,3/16" Tube	3/16 inch tube OD	2
24	J905307	BANJO BOLT,M6 x 1 x 14.3	BOLT, BANJO, , Drain, Special M6 x 1 x 14.3	4
25	J903380	SEAL	connector	4

Diag #	Part #	Name	Description	Qty
26	REF	INSTRUCTION	INJECTOR ASSEMBLY fuel, see Figures 3-16 and 3-18	4
27	J906659	SEAL	injector	1
28	J903522	FUEL TUBE,2 mm ID x 6.4 mm OD x 643.1 mm L	TUBE ASSEMBLY fuel injector, No. 1 cylinder	1
29	J903523	FUEL TUBE,2 mm ID x 6.4 mm OD x 645.3 mm L	TUBE ASSEMBLY fuel injector, No. 2 cylinder	1
30	J903524	FUEL TUBE	TUBE ASSEMBLY fuel injector, No. 3 cylinder	1
31	J903525	FUEL TUBE	TUBE ASSEMBLY fuel injector, No. 4 cylinder	1
	A77484	SUPPORT ASSY.	BRACKET ASSEMBLY injection supply tube No. 1 and 2, no longer available, order components separately, Includes: Ref. 32 through 36	1
32	J930689	SUPPORT	BRACKET fuel tube No. 1 and 2, replaced J919294	1
33	J917746	CLAMP	fuel tube	2
34	J904711		BRACE clamp, fuel tube	1
35	895-11005	WASHER,M5 x 10 x 1	Special, Replaced J903723 M5 x 10 x 1	1
36	J920854	CAPTIVE WASHER SCREW,Hex, M5 x 0.8 x 20mm, Gr 8.8	SCREW, , Replaced J917712 Hex Hd, M5 x .8 x 20, w/LW	1
	A77485	SUPPORT ASSY.	BRACKET ASSEMBLY injection supply tube No. 3 and 4, no longer available, order components separately, Includes: Ref. 37 through 41	1
37	J930688	SUPPORT	BRACKET fuel tube, replaced J919292	1
38	J917746	CLAMP	fuel tube	2
39	J904711		BRACE clamp, fuel tube	1
40	895-11005	WASHER,M5 x 10 x 1	Special, Replaced J903723 M5 x 10 x 1	1
41	J920854	CAPTIVE WASHER SCREW,Hex, M5 x 0.8 x 20mm, Gr 8.8	SCREW, , Replaced J917712 Hex Hd, M5 x .8 x 20, w/LW	1
42	J918109	FLANGE BOLT,Hex, M8 x 1.25 x 25mm	SCREW, , Special Hex Flg Hd, M8 x 1.25 x 25	2
43	845-8016	BOLT,Hvy Hex, M8 x 16mm, Cl 8.8	- heavy hex flange, 8 - 1.25 x 16 mm	2
44	J900267	SEAL	cover bolt	2

http://www.minnparbackhoeparts.com/

(580SK) - CASE SUPER-K CONSTRUCTION KING LOADER BACKHOE > (3-11A) - FUEL INJECTION SYSTEM, 4T-390 ENGINE, TRACTOR P.I.N.JJG0173468 AND AFTER

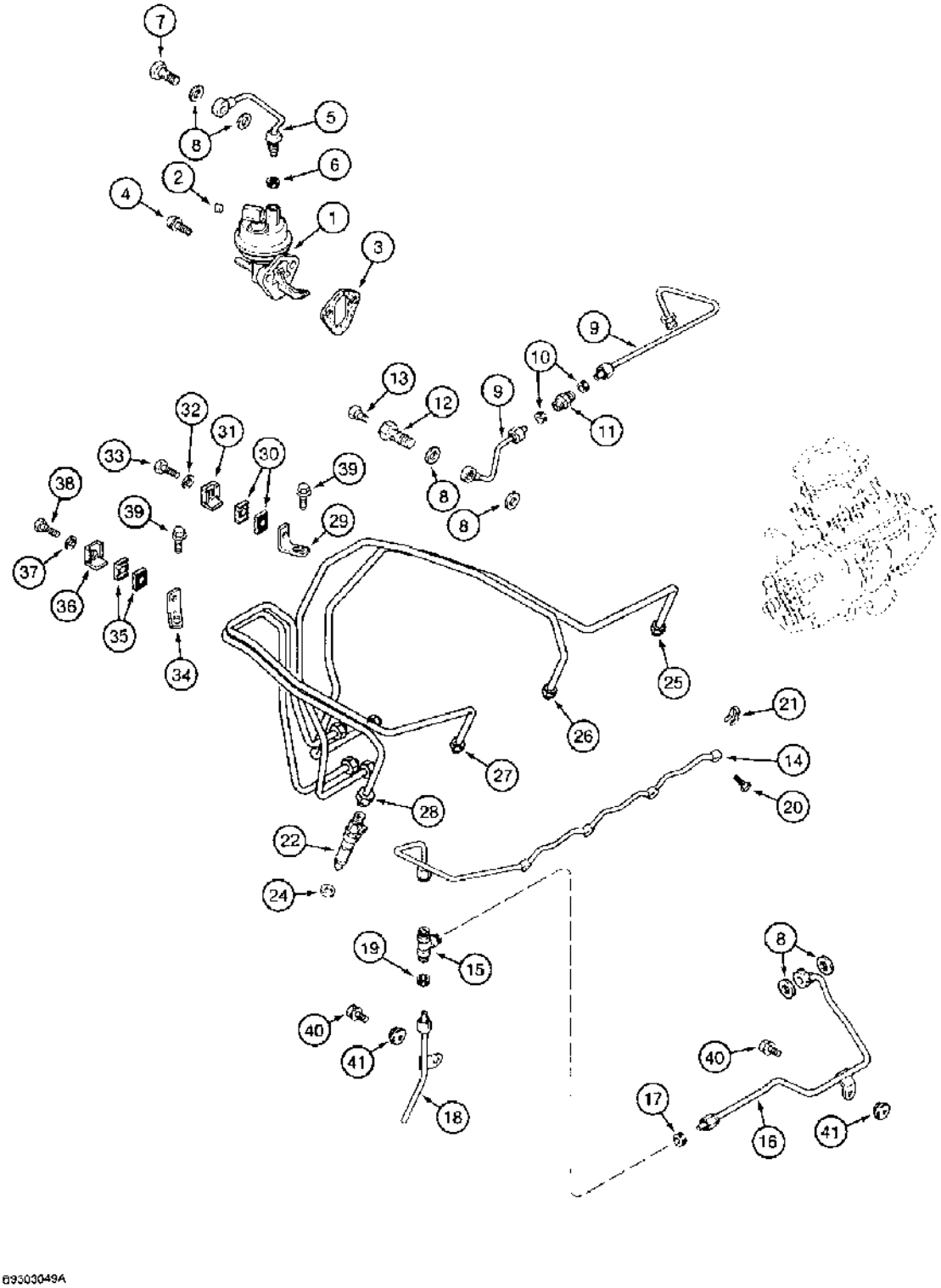

69303049A

(580SK) - CASE SUPER-K CONSTRUCTION KING LOADER BACKHOE > (3-11A) - FUEL INJECTION SYSTEM, 4T-390 ENGINE, TRACTOR P.I.N.JJG0173468 AND AFTER

Diag #	Part #	Name	Description	Qty
1	J904374	PUMP	lift, fuel	1
2	221-841	PLUG	square socket, 1/4 inch PT, fuel inlet	1
3	J914304	GASKET	fuel lift pump	1
4	845-8020	BOLT,Hvy Hex, M8 x 20mm, Cl 8.8	heavy hex flange, 8 - 1.25 x 20 mm	2
5	J905649	FUEL TUBE,8 mm OD x 233.5 mm L	TUBE ASSEMBLY fuel, lift pump to filter, Includes: Ref. 6	1
6	222-101	SLEEVE,3/16" Tube	3/16 inch tube OD	1
7	J903035	BANJO BOLT	BOLT banjo hex, 12 - 1.5 x 24 mm	1
8	J918191	PACKING RING	WASHER sealing	6
9	J918640	FUEL TUBE	TUBE ASSEMBLY fuel supply, two-piece, Includes: Ref. 10 and 11.	1
10	222-103	SLEEVE,5/16" Tube	5/16 inch tube OD	2
11	222-4	FITTING,9/16"-24, Flex Tube	CONNECTOR compression, 5/16 inch tube OD	1
	J905860	BANJO BOLT	BOLT ASSEMBLY banjo hex, special Includes: Ref. 12 and 13.	1
12	NSS	NOT SERVICED SEPARATELY	BOLT connector, banjo hex, special	1
13	NSS	NOT SERVICED SEPARATELY	SCREW hex, special, vent	1
14	J909695	FUEL TUBE	TUBE manifold, tee to fuel tank return	1
15	222-121	TEE,3/16", Flex Tubing	3/16", Flex Tubing, Remove and discard hex nuts before assembly	1
16	J905699	FUEL TUBE,4.76 mm OD	TUBE ASSEMBLY fuel return, tee to fuel injector pump, Includes: Ref. 17	1
		Fuel tubes, Ref. 16 and 18, bolt to tappet cover, see Figure 2-44, Ref. 22.	Fuel tubes, Ref. 16 and 18, bolt to tappet cover, see Figure 2-44, Ref. 22.	1
17	222-103	SLEEVE,5/16" Tube	5/16 inch tube OD	1
18	J905692	FUEL TUBE	TUBE ASSEMBLY fuel return, tee to fuel tank, Includes: Ref. 19	1
		Fuel tubes, Ref. 16 and 18, bolt to tappet cover, see Figure 2-44, Ref. 22.	Fuel tubes, Ref. 16 and 18, bolt to tappet cover, see Figure 2-44, Ref. 22.	1
19	222-101	SLEEVE,3/16" Tube	for 3/16 inch tube	1
20	J905307	BANJO BOLT,M6 x 1 x 14.3	BOLT, BANJO, , Drain, Special M6 x 1 x 14.3	4
21	J903380	SEAL	connector	4
22	REF	INSTRUCTION	INJECTOR ASSEMBLY fuel, see Figure 3-17A	4

Diag #	Part #	Name	Description	Qty
24	J906659	SEAL	injector	4
25	J903480	FUEL TUBE,21 mm ID x 64 mm OD	TUBE ASSEMBLY fuel injector, No. 1 cylinder	1
26	J903481	FUEL TUBE,21 mm ID x 64 mm OD	TUBE ASSEMBLY fuel injector, No. 2 cylinder	1
27	J903482	FUEL TUBE,21 mm ID x 64 mm OD	TUBE ASSEMBLY fuel injector, No. 3 cylinder	1
28	J903483	FUEL TUBE,21 mm ID x 64 mm OD	TUBE ASSEMBLY fuel injector, No. 4 cylinder	1
29	J919294	SUPPORT	BRACKET fuel tubes No. 1 and 2	1
30	J917746	CLAMP	fuel tube	2
31	CURJ904711	CLAMP	BRACE clamp, fuel tube	1
32	J903723	WASHER	lock, 5 mm	1
33	J920854	CAPTIVE WASHER SCREW,Hex, M5 x 0.8 x 20mm, Gr 8.8	SCREW, Hex Hd, M5 x .8 x 20, w/LW	1
34	J919292	SUPPORT	BRACKET fuel tube No. 3 and 4	1
35	J917746	CLAMP	fuel tube	2
36	CURJ904711	CLAMP	BRACE clamp, fuel tube	1
37	J903723	WASHER	lock, 5 mm	1
38	J920854	CAPTIVE WASHER SCREW,Hex, M5 x 0.8 x 20mm, Gr 8.8	SCREW, Hex Hd, M5 x .8 x 20, w/LW	1
39	J918109	FLANGE BOLT,Hex, M8 x 1.25 x 25mm	SCREW, , Special Hex Flg Hd, M8 x 1.25 x 25	2
40	845-8016	BOLT,Hvy Hex, M8 x 16mm, Cl 8.8	- heavy hex flange, 8 - 1.25 x 16 mm	2
41	J900267	SEAL	cover bolt	2

http://www.minnparbackhoeparts.com/

(580SK) - CASE SUPER-K CONSTRUCTION KING LOADER BACKHOE > (3-12) - FUEL FILTER, 4-390 ENGINE, 4T-390 ENGINE

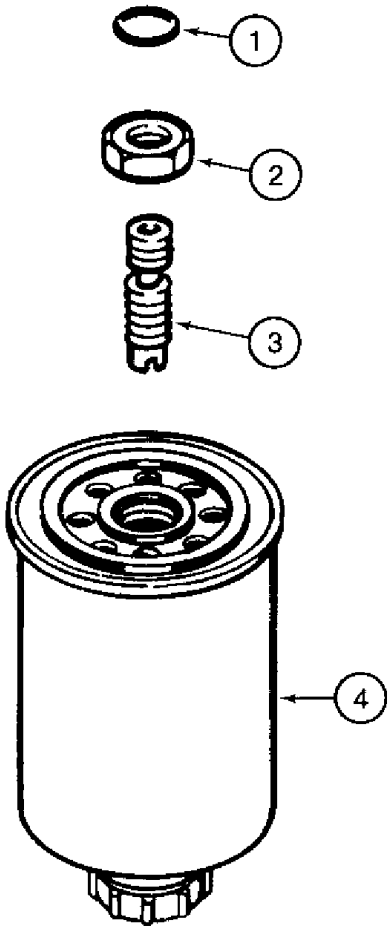

B920891

(580SK) - CASE SUPER-K CONSTRUCTION KING LOADER BACKHOE > (3-12) - FUEL FILTER, 4-390 ENGINE, 4T-390 ENGINE

Diag #	Part #	Name	Description	Qty
1	J906695	SEAL	O-RING sealing, 14 mm ID	1
2	J903293	JAM NUT	hex, 16 mm - 2.0	1
3	J903845	BANJO BOLT	ADAPTER fuel	1
4	J843760	FILTER	fuel, replaces J903202 filter; Filter Head Is Cast Into the Cylinder Head	1

http://www.minnparbackhoeparts.com/

(580SK) - CASE SUPER-K CONSTRUCTION KING LOADER BACKHOE > (3-14) - FUEL INJECTION PUMP AND DRIVE, 4-390 ENGINE, 4T-390 ENGINE,PRIOR TO TRAC PIN JJG0173468

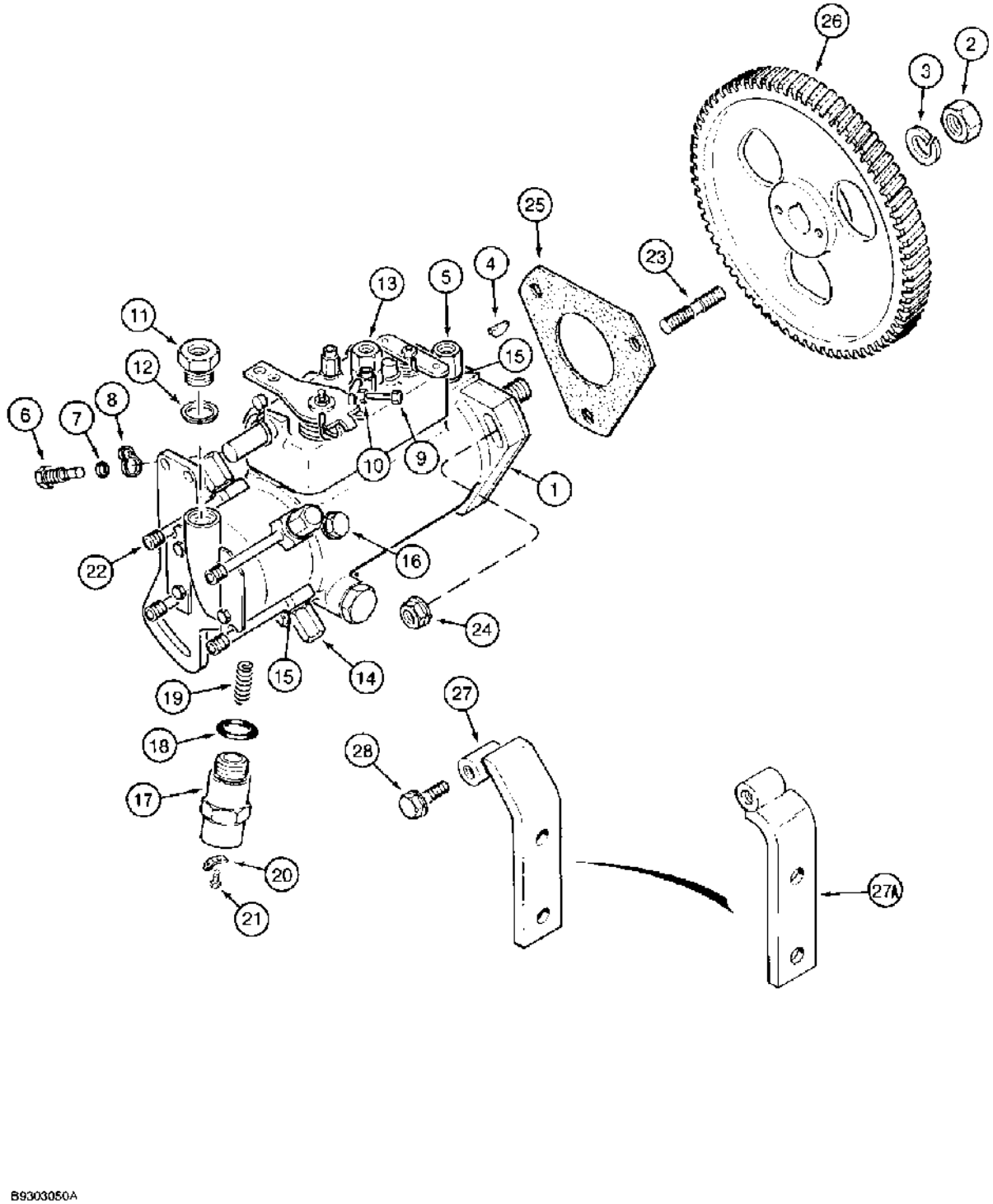

(580SK) - CASE SUPER-K CONSTRUCTION KING LOADER BACKHOE > (3-14) - FUEL INJECTION PUMP AND DRIVE, 4-390 ENGINE, 4T-390 ENGINE,PRIOR TO TRAC PIN JJG0173468

Diag #	Part #	Name	Description	Qty
1	J916523	PUMP, FUEL INJECTION	PUMP, INJECTION PUMP ASSEMBLY fuel injection, new, 4-390 engine	1
	JR916523	REMAN-INJECTION PUMP	PUMP ASSEMBLY fuel injection, remanufactured, 4-390 engine, North America only, component parts shown on this page do not apply to the remanufactured assembly	1
		Ref pump assy. s/n break may not be precise. Customer with after s/n used j916523 pump.	Ref pump assy. s/n break may not be precise. Customer with after s/n used j916523 pump.	1
	JC916523	CORE-INJECTION PUMP	RETURN NUMBER use this part number to return pump core for credit when using a remanufactured assembly	1
1	J917063	PUMP, FUEL INJECTION	PUMP, INJECTION PUMP ASSEMBLY fuel injection, new, 4T-390 engine, Includes: Ref. 2 through 22	1
	JR917063	REMAN-INJECTION PUMP	PUMP ASSEMBLY fuel injection, remanufactured, 4T-390 engine North America only, component parts shown on this page do not apply to the remanufactured assembly	1
	JC917063	CORE-INJECTION PUMP	Return number - For N.A. only	1
	JC915883	CORE-INJECTION PUMP	RETURN NUMBER use this part number to return pump core for credit when using a remanufactured assembly	1
2	J903738	NUT	NUT hex	1
3	492-11056	LOCK WASHER,9/16"	WASHER, LOCK, 9/16"	1
4	836-4065	WOODRUFF KEY,M4 x 6.5 x 15.72	WOODRUFF KEY, , Pump gear M4 x 6.5 x 15.72	1
5	J904643	FITTING	FITTING return	1
6	J904778	BOLT	BOLT hex, locking device	1
7	J904780	SEAL	SEAL locking bolt	1
8	J904779	WASHER	WASHER locking	1
9	J904637	SCREW	SCREW adjusting, low idle	1
10	131-1144	LOCK NUT,Jam, #10-24	NUT hex, self-locking, No. 10 inch NF	1
11	J904641	FITTING	FITTING inlet	1
12	K962748	WASHER	WASHER inlet fitting, copper	1
13	J904640	VENT	ORIFICE bleed	1
14	J904646	BANJO BOLT	BOLT banjo	4
15	J904644	WASHER	WASHER sealing	9
16	K963867	SCREW	SCREW bleed, pump head	1

Diag #	Part #	Name	Description	Qty
17	J904630	SOLENOID	SOLENOID shut down, 12 volt	1
18	J904635	O-RING	O-RING solenoid	1
19	J904777	SPRING	SPRING solenoid	1
20	A187990	TERMINAL CONNECTOR,Male	TERMINAL adapter	1
21	A77413	SCREW,Hex, M5 x 8mm	SCREW terminal	1
22	K962755	ADAPTER	FITTING banjo	4
23	J902501	STUD	STUD pump mounting	3
24	J900589	NUT	NUT hex flange, M8	3
25	J914389	GASKET	GASKET pump mounting	1
26	J920594	PINION	GEAR pump drive, replaces J912885 gear	1
27	J905387	BRACE	BRACE fuel pump, 4-390 engine only	1
27A	J916024	BRACE	BRACE fuel pump, 4T-390 engine only	1
28	845-8020	BOLT,Hvy Hex, M8 x 20mm, Cl 8.8	BOLT heavy hex flange, 8 - 1.25 x 20 mm	3

http://www.minnparbackhoeparts.com/

(580SK) - CASE SUPER-K CONSTRUCTION KING LOADER BACKHOE > (3-15A) - FUEL INJECTION PUMP AND DRIVE, 4T-390 ENGINE, TRACTOR P.I.N. JJG0173468 AND AFTER

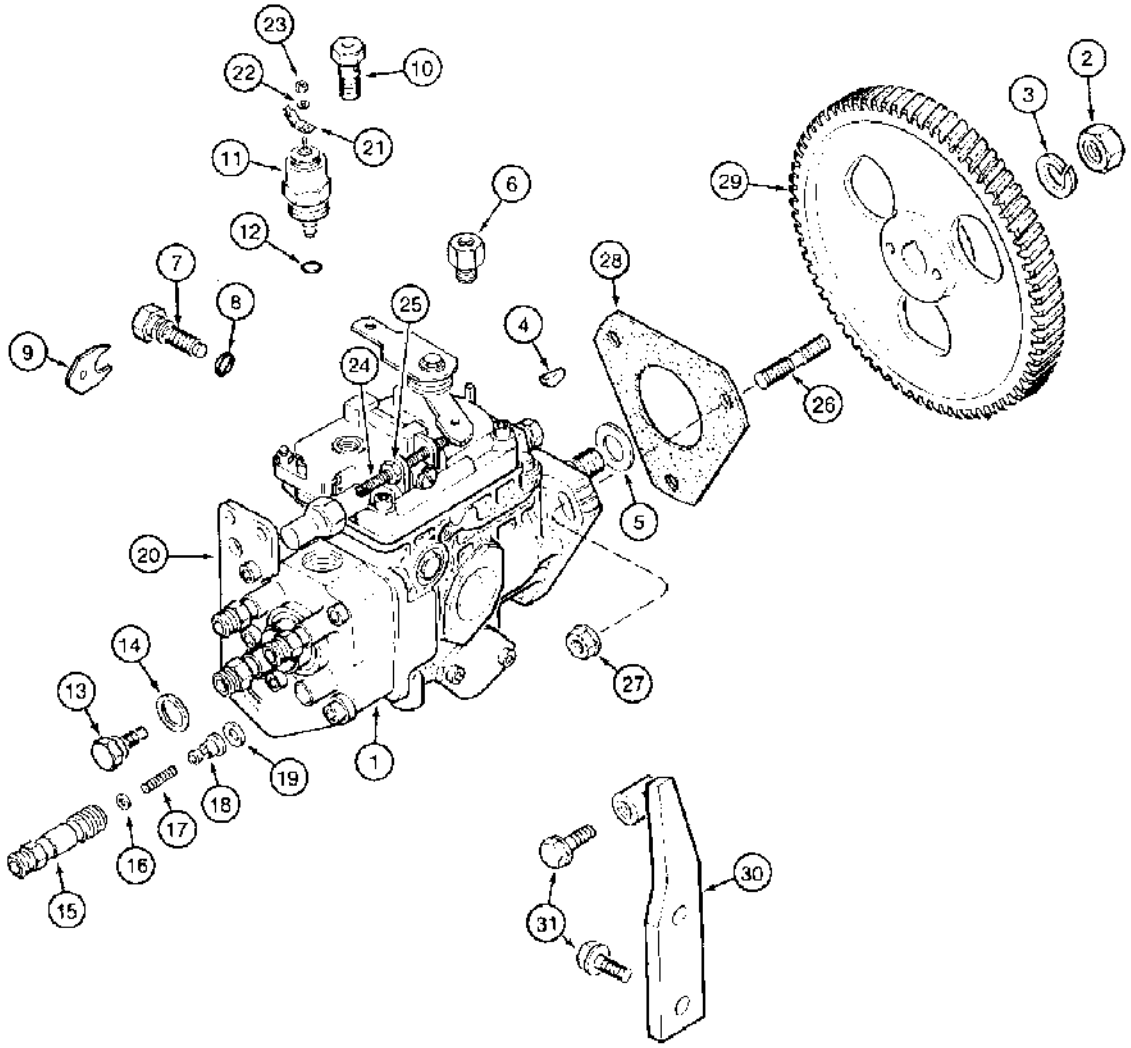

B9401126A

(580SK) - CASE SUPER-K CONSTRUCTION KING LOADER BACKHOE > (3-15A) - FUEL INJECTION PUMP AND DRIVE, 4T-390 ENGINE, TRACTOR P.I.N. JJG0173468 AND AFTER

Diag #	Part #	Name	Description	Qty
1	J919846	PUMP, FUEL INJECTION	PUMP, INJECTION PUMP ASSEMBLY fuel injection, Includes: Ref. 2 through 25.	1
	JR919846	REMAN-INJECTION PUMP	PUMP ASSEMBLY fuel injection, remanufactured, North America only, component parts shown on this page do not apply to the remanufactured assembly	1
	JC919846	CORE-INJECTION PUMP	Return number - For N.A. only	1
	JC917500	PUMP, FUEL INJECTION	PUMP, INJECTION RETURN NUMBER use this part number to return pump core for credit when using a remanufactured assembly	1
2	J903738	NUT	NUT hex, 14 mm	1
3	92-11056	LOCK WASHER,9/16"	WASHER, LOCK, 9/16"	1
4	126-112	WOODRUFF KEY,#6, 5/32" x 5/8", HT	WOODRUFF KEY, , Pump gear, replaces J902332 #6, 5/32" x 5/8", HT	1
5	J920393	SEAL	SEAL shaft	1
6	J903382	TUBE	ADAPTER tube	1
7	J904784	SCREW,Hex Skt, M10 x 1 x 35mm	SCREW timing lock	1
8	J904785	O-RING,8 mm ID x 2.5 mm	O-RING timing lock screw	1
9	J904786	PLATE	PLATE timing lock	1
10	J905465	BANJO BOLT	SCREW overflow, banjo	1
11	A77753	SOLENOID VALVE	SOLENOID ASSEMBLY shut down, 12 volt, component parts not serviced separately	1
12	J903577	SEAL	SEAL solenoid	1
13	J903572	BLEED SCREW,M8 x 1 x 23.10mm	SCREW vent	1
14	3053133R1	SEALING RING,M8 x 11.5 x 1	RING vent screw	1
15	J910794	FITTING	FITTING bypass delivery valve	4
16	3059066R1	WASHER	WASHER delivery valve	4
17	J910796	SPRING	SPRING delivery valve	4
18	J910795	BY-PASS VALVE	VALVE bypass delivery	4
19	J903570	GASKET	GASKET delivery valve	4
20	J905696	SUPPORT	BRACKET pump support	1
21	A187990	TERMINAL CONNECTOR,Male	TERMINAL adapter	1
22	J907481	WASHER	WASHER lock	1
23	J907480	NUT	NUT terminal	1
24	J904782	SET SCREW,Sltd Hd, M5 x 40, Spc	SCREW low idle stop	1

Diag #	Part #	Name	Description	Qty
25	J904783	NUT	NUT idle screw	1
26	J902501	STUD	STUD pump mounting, 8 - 1.25 x 48 mm	3
27	J900589	NUT	NUT hex flange, 8 mm	3
28	J914389	GASKET	GASKET pump mounting	1
29	J920594	PINION	GEAR pump drive	1
30	J905313	LEVER	BRACE fuel pump, if used	1
31	845-8020	BOLT,Hvy Hex, M8 x 20mm, Cl 8.8	BOLT heavy hex flange, 8 - 1.25 x 20 mm, If used	3

http://www.minnparbackhoeparts.com/

(580SK) - CASE SUPER-K CONSTRUCTION KING LOADER BACKHOE > (3-16) - FUEL INJECTION NOZZLE, 4T-390 ENGINE, PRIOR TO TRACTOR P.I.N JJG0173468

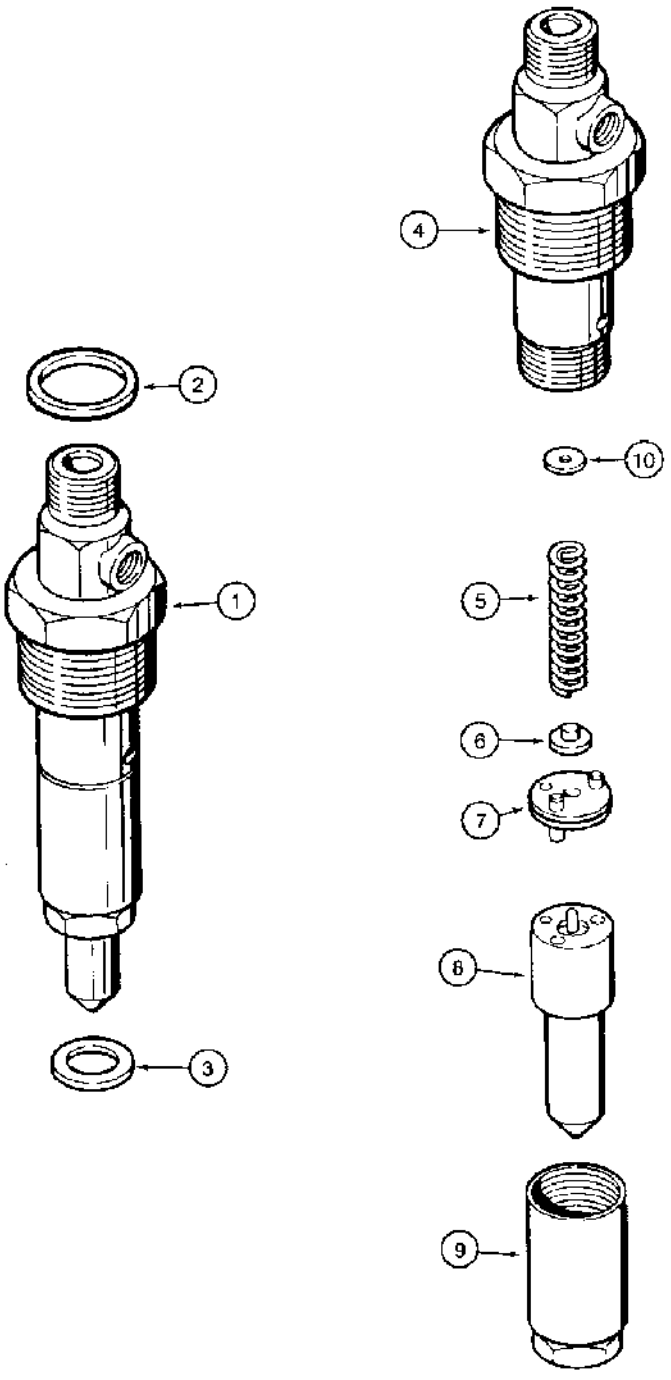

B920890

http://www.minnparbackhoeparts.com/

(580SK) - CASE SUPER-K CONSTRUCTION KING LOADER BACKHOE > (3-16) - FUEL INJECTION NOZZLE, 4T-390 ENGINE, PRIOR TO TRACTOR P.I.N JJG0173468

Diag #	Part #	Name	Description	Qty
1	J919331	NOZZLE INJECTION	NOZZLE ASSEMBLY fuel injection, CAV	4
1	J919300	NOZZLE INJECTION	NOZZLE ASSEMBLY fuel injection, Bosch, Includes: Ref. 2 through 9	4
	J914472	NOZZLE INJECTION	NOZZLE ASSEMBLY	1
	JR914472	REMAN-INJECT NOZZLE	REMAN-INJECTION NOZZLE REMANUFACTURED NOZZLE ASSY. - for N.A. Only	1
	JC914472	CORE-INJECTION PUMP	Return Number, NOZZLE ASSY. - for N.A. Only	1
2	J909356	SEAL	O-RING injector body	1
3	J906659	SEAL	SEAL injector tip, replaces J920174 seal	1
		Whenever a nozzle is removed from the cylinder head, J906659 seal must be replaced.	Whenever a nozzle is removed from the cylinder head, J906659 seal must be replaced.	1
4	NSS	NOT SERVICED SEPARATELY	BODY injector	1
5	NSS	NOT SERVICED SEPARATELY	SPRING nozzle pressure, CAV injectors	1
5	J905152	SPRING	SPRING nozzle pressure, Bosch injectors	1
6	NSS	NOT SERVICED SEPARATELY	SEAT nozzle pressure spring, CAV injectors	1
6	J905153	SPINDLE	SEAT nozzle pressure spring, Bosch injectors	1
7	NSS	NOT SERVICED SEPARATELY	STOP nozzle valve, CAV injectors	1
7	J905154	PLATE	STOP nozzle valve, Bosch injectors	1
8	NSS	NOT SERVICED SEPARATELY	TIP nozzle injector	1
9	NSS	NOT SERVICED SEPARATELY	NUT cap, nozzle tip, CAV injectors	1
9	A48201	NUT	NUT cap, nozzle tip, Bosch injectors	1
	A48186	KIT	KIT shim, nozzle opening pressure, used with Bosch injectors only, use one shim of the thickness required, Includes: Ref. 10	1
10	1806233C1	SHIM,1.00mm Thk	SHIM, , Nozzle 1.00mm Thk	5
10	1806234C1	SHIM,1.04mm Thk	SHIM, , Nozzle 1.04mm Thk	5
10	1806235C1	SHIM,1.08mm Thk	SHIM, , Nozzle 1.08mm Thk	5
10	1806236C1	SHIM,1.10mm Thk	SHIM, , Nozzle 1.10mm Thk	5
10	1806237C1	SHIM,1.14mm Thk	SHIM, , Nozzle 1.14mm Thk	5
10	1806238C1	SHIM,1.18mm Thk	SHIM, , Nozzle 1.18mm Thk	5

Diag #	Part #	Name	Description	Qty
10	1806239C1	SHIM,1.20mm Thk	SHIM, , Nozzle 1.20mm Thk	5
10	1806240C1	SHIM,1.24mm Thk	SHIM, , Nozzle 1.24mm Thk	5
10	1806241C1	SHIM,1.28mm Thk	SHIM, , Nozzle 1.28mm Thk	5
10	1806242C1	SHIM,1.30mm Thk	SHIM, , Nozzle 1.30mm Thk	5
10	1806243C1	SHIM,1.34mm Thk	SHIM, , Nozzle 1.34mm Thk	5
10	1806244C1	SHIM,1.38mm Thk	SHIM, , Nozzle 1.38mm Thk	5
10	1806245C1	SHIM,1.40mm Thk	SHIM, , Nozzle 1.40mm Thk	5
10	1806246C1	SHIM,1.44mm Thk	SHIM, , Nozzle 1.44mm Thk	5
10	1806247C1	SHIM,1.48mm Thk	SHIM, , Nozzle 1.48mm Thk	5
10	1806248C1	SHIM,1.50mm Thk	SHIM, , Nozzle 1.50mm Thk	5
10	1806249C1	SHIM,1.54mm Thk	SHIM, , Nozzle 1.54mm Thk	5
10	1806250C1	SHIM,1.58mm Thk	SHIM, , Nozzle 1.58mm Thk	5
10	1806251C1	SHIM,1.60mm Thk	SHIM, , Nozzle 1.60mm Thk	5
10	1806252C1	SHIM,1.64mm Thk	SHIM, , Nozzle 1.64mm Thk	5
10	1806253C1	SHIM,1.68mm Thk	SHIM, , Nozzle 1.68mm Thk	5
10	1806254C1	SHIM,1.70mm Thk	SHIM, , Nozzle 1.70mm Thk	5
10	1806255C1	SHIM,1.74mm Thk	SHIM, , Nozzle 1.74mm Thk	5
10	1806256C1	SHIM,1.78mm Thk	SHIM, , Nozzle 1.78mm Thk	5
10	1806257C1	SHIM,1.80mm Thk	SHIM, , Nozzle 1.80mm Thk	5
10	1806258C1	SHIM,1.84mm Thk	SHIM, , Nozzle 1.84mm Thk	5
10	1806259C1	SHIM,1.88mm Thk	SHIM, , Nozzle 1.88mm Thk	5
10	1806260C1	SHIM,1.90mm Thk	SHIM, , Nozzle 1.90mm Thk	5
10	1806261C1	SHIM,1.94mm Thk	SHIM, , Nozzle 1.94mm Thk	5
10	1806262C1	SHIM,1.98mm Thk	SHIM, , Nozzle 1.98mm Thk	5

http://www.minnparbackhoeparts.com/

(580SK) - CASE SUPER-K CONSTRUCTION KING LOADER BACKHOE > (3-17A) - FUEL INJECTION NOZZLE, 4T-390 ENGINE, TRACTOR P.I.N. JJG0173468 AND AFTER

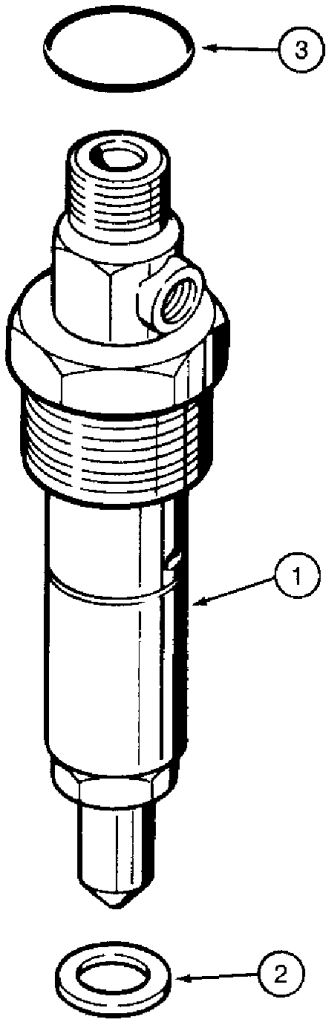

B923177

http://www.minnparbackhoeparts.com/

(580SK) - CASE SUPER-K CONSTRUCTION KING LOADER BACKHOE > (3-17A) - FUEL INJECTION NOZZLE, 4T-390 ENGINE, TRACTOR P.I.N. JJG0173468 AND AFTER

Diag #	Part #	Name	Description	Qty
1	J919343	NOZZLE INJECTION	NOZZLE ASSEMBLY fuel injection, components not serviced separately, replaced J919322 , Includes: Ref. 2	4
2	J906659	SEAL	injector tip	1
		Whenever a nozzle is removed from the cylinder head, J906659 seal must be replaced before nozzle is installed in cylinder head.	Whenever a nozzle is removed from the cylinder head, J906659 seal must be replaced before nozzle is installed in cylinder head.	1
3	J909356	SEAL	O-RING sealing, Serial Range: body-nut	4

http://www.minnparbackhoeparts.com/

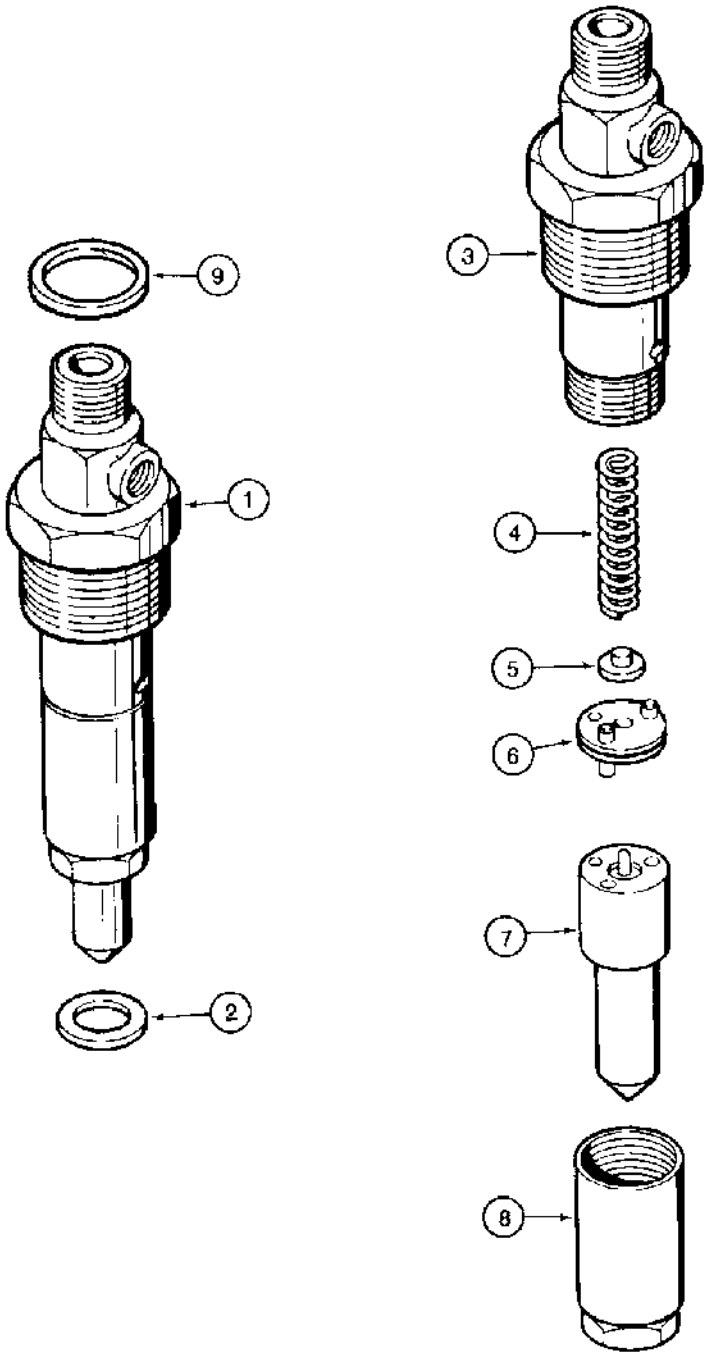

B920803

http://www.minnparbackhoeparts.com/

(580SK) - CASE SUPER-K CONSTRUCTION KING LOADER BACKHOE > (3-18) - FUEL INJECTION NOZZLE, 4-390 ENGINE

Diag #	Part #	Name	Description	Qty
1	J919336	INJECTOR ASSY.	NOZZLE ASSEMBLY fuel injection, CAV, Includes: Ref. 2 through 8	4
1	JR919336	REMAN-FUEL INJECTOR	Remanufactured INJECTION NOZZLE - NA Only	4
1	JC919336	CORE-FUEL INJECTOR	Return No, INJECTION NOZZLE - N.A. Only	4
2	J906659	SEAL	injector tip, replaces J920174 seal	1
		Whenever a nozzle is removed from the cylinder head, J906659 seal must be replaced.	Whenever a nozzle is removed from the cylinder head, J906659 seal must be replaced.	1
3	NSS	NOT SERVICED SEPARATELY	BODY injector	1
4	NSS	NOT SERVICED SEPARATELY	SPRING nozzle pressure	1
5	NSS	NOT SERVICED SEPARATELY	SEAT nozzle pressure spring	1
6	NSS	NOT SERVICED SEPARATELY	STOP nozzle valve	1
7	NSS	NOT SERVICED SEPARATELY	TIP nozzle injector	1
8	NSS	NOT SERVICED SEPARATELY	NUT cap, nozzle tip	1
9	J909356	SEAL	O-RING injector body	4

http://www.minnparbackhoeparts.com/



ELECTRICAL 4

http://www.minnparbackhoeparts.com/

(580SK) - CASE SUPER-K CONSTRUCTION KING LOADER BACKHOE > (4-02) - STARTER

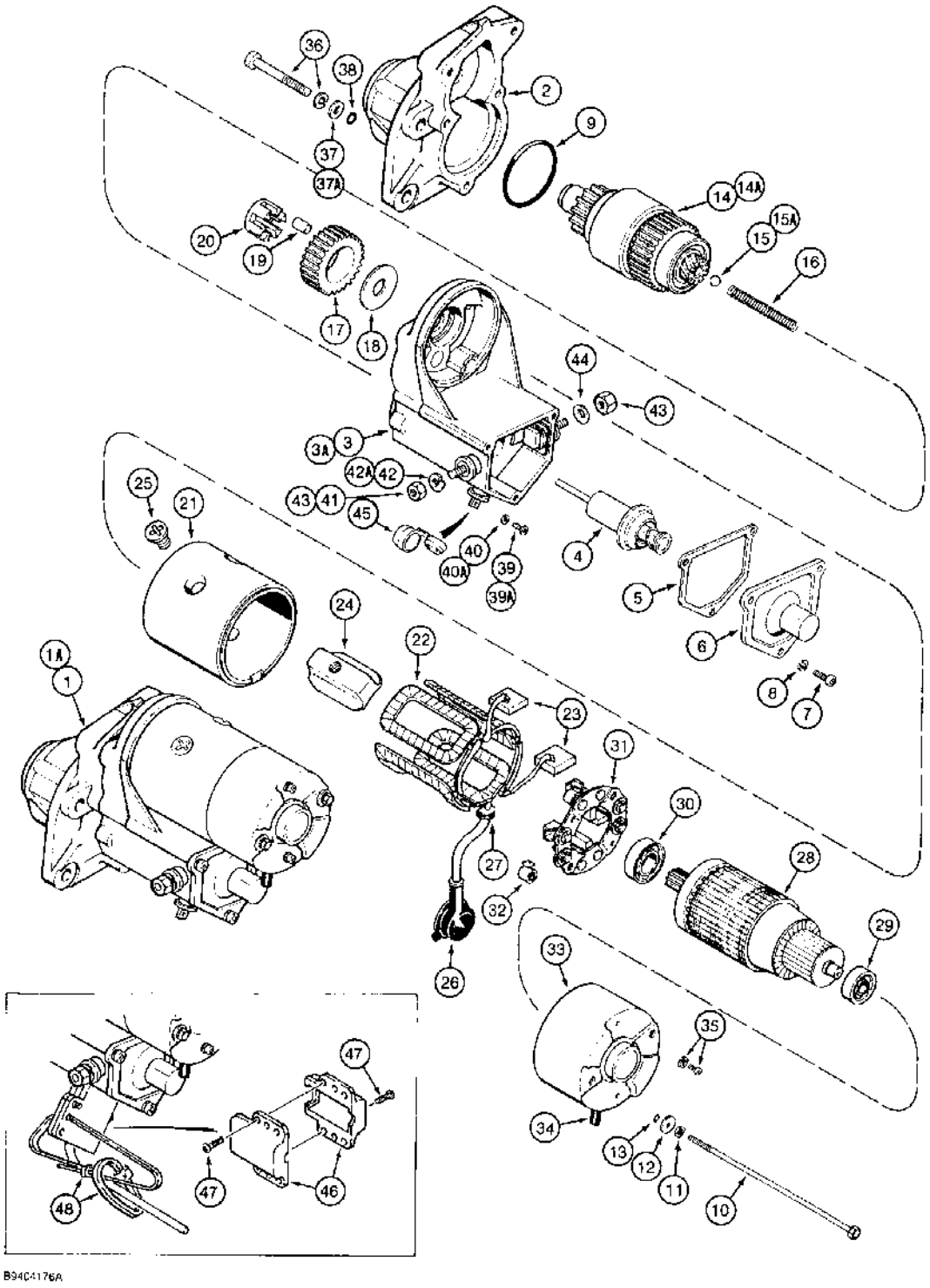

(580SK) - CASE SUPER-K CONSTRUCTION KING LOADER BACKHOE > (4-02) - STARTER

Diag #	Part #	Name	Description	Qty
1	A170746	STARTING MOTOR	STARTER ASSEMBLY new, Nippondenso No. 128000-0210, no longer available, order 1987559C1 starter assembly	1
1	AR170746	STARTING MOTOR	STARTER ASSEMBLY engine, remanufactured, North America only, no longer available, order 1987559C1 starter	1
		Ref #1 - a170746 is a dry clutch starter	Ref #1 - a170746 is a dry clutch starter	1
1	AC170746	CORE-STARTER	RETURN NUMBER use this number when returning starter for credit	1
1A	1987559C1	STARTING MOTOR	STARTER ASSEMBLY new, Nippondenso No. 128000-0211, Includes: Ref. 2 through 45	1
		Ref #1A - a181056 is a wet clutch starter, sealed, and should be used on 580SK with pto	Ref #1A - a181056 is a wet clutch starter, sealed, and should be used on 580SK with pto	1
	86982709R	REMAN-STARTER	Remanufactured, STARTER, For N.A. Only	1
	86982709C	CORE-STARTER	Return Number, For N.A. Only	1
2	A46948	HOUSING	HOUSING drive end	1
3	A46949	IGNITION SWITCH	SWITCH ASSEMBLY magnetic, includes Ref. 4-8, A170746 starter	1
3A	104588A1	SOLENOID	SWITCH ASSEMBLY magnetic, includes Ref. 4-8, 1987559C1, Includes: Ref. 4 through 8 starter	1
4	NSS	NOT SERVICED SEPARATELY	SOLENOID switch	1
5	NSS	NOT SERVICED SEPARATELY	GASKET solenoid cover	1
6	NSS	NOT SERVICED SEPARATELY	COVER solenoid	1
7	NSS	NOT SERVICED SEPARATELY	SCREW, Serial Range: cover-switch	3
8	NSS	NOT SERVICED SEPARATELY	WASHER cover screw	3
9	1546500C1	SEAL	O-RING switch to housing, replaces A47229	1
	A47243	BOLT	BOLT ASSEMBLY through, Includes: Ref. 10 through 13	2
10	A47128	BOLT	BOLT through	1
11	892-11006	LOCK WASHER,M6	WASHER, LOCK, , 1/4 inch M6	1
12	195-516	WASHER,#12	WASHER flat, 1/4 x 9/16 x 1/16 inch	1
13	A47127	O-RING	O-RING bolt seal	1

Diag #	Part #	Name	Description	Qty
14	A47231	CLUTCH	CLUTCH drive, A170746 starter	1
14A	104587A1	CLUTCH	CLUTCH drive, 1987559C1 starter	1
15	211-209	BALL	BALL, 11/32 inch, grade 25, chrome alloy steel, A170746 starter	1
15A	211-10	BALL	BALL, 11/32 inch, grade 200, chrome alloy steel, 1987559C1 starter	1
16	A47232	SPRING	SPRING clutch drive, 2-13/16 inch free length	1
17	A47233	GEAR	PINION idler	1
18	A47234	WASHER	WASHER thrust, idler pinion	1
19	A47235	ROLLER BEARING	ROLLER idler pinion bearing	5
20	A47236	RETAINER	RETAINER roller bearings	1
	A47240	HOUSING	HOUSING ASSEMBLY with coil and brushes, Includes: Ref. 21 through 26	1
21	NSS	NOT SERVICED SEPARATELY	HOUSING starter	1
22	NSS	NOT SERVICED SEPARATELY	COIL field	1
23	NSS	NOT SERVICED SEPARATELY	BRUSHES starter	2
24	NSS	NOT SERVICED SEPARATELY	SHOE pole	4
25	NSS	NOT SERVICED SEPARATELY	SCREW pole shoes	4
26	NSS	NOT SERVICED SEPARATELY	BOOT magnetic switch terminal	1
27	A47241	PLATE	PLATE lock	1
28	A47242	ARMATURE	ARMATURE ASSEMBLY, Includes: Ref. 29 and 30	1
29	452698C1	BALL BEARING,10 mm ID x 30 mm OD x 9 mm	BEARING, BALL - Commutator end, Replaces A47248	1
30	A47247	BALL BEARING,17 mm ID x 35 mm OD x 10 mm	BEARING drive end	1
31	A47239	HOLDER	HOLDER ASSEMBLY brush, Includes 2 brushes, Includes: Ref. 32	1
32	A47249	SPRING	SPRING brush tension	4
33	A47237	FRAME	FRAME commutator end	1
34	A47238	COVER	COVER end frame	1
35	A47244	CAPTIVE WASHER SCREW,Cross Pan Hd, M5 x 0.8 x 8mm	SCREW with lock washer, brush, Serial Range: holder-cover	2
	A47230	BOLT	BOLT ASSEMBLY commutator end cover to drive end housing, Includes: Ref. 36 through 38	3
36	A47129	CAPTIVE WASHER SCREW	BOLT with lockwasher	1

Diag #	Part #	Name	Description	Qty
37	195-516	WASHER,#12	WASHER, flat, 1/4 x 9/16 x 1/16 inch, if used	1
37A	195-2015	WASHER	WASHER flat, 9/32 x 1/2 x 1/32 inch, if used	1
38	A47130	O-RING	O-RING bolt seal	1
39	440-1086	SCREW,Cross Pan Hd, #8-32 x 3/8"	SCREW - machine, pan Phillips head, No. 8-32 x 3/8", A170746 starter	1
39A	A46950	SCREW,M5 x 0.8 x 0.8mm	SCREW machine, pan Phillips head, 5 x 8 mm, 1987559C1 starter	1
40	493-21017	LOCK WASHER,Int Tooth, #8	WASHER No. 8 internal lock, A170746 starter	1
40A	892-11005	LOCK WASHER,M5	WASHER, LOCK, , 1987559C1 starter M5	1
41	425-146	JAM NUT,Jam, 3/8"-16, G5	NUT hex, jam, 3/8 inch NC, A170746 starter, battery terminal	1
42	492-11038	LOCK WASHER,3/8"	LOCK WASHER, , A170746 starter 3/8"	1
42A	892-11010	LOCK WASHER,M10	LOCK WASHER, , 1987559C1 starter M10	1
43	825-1410	NUT,M10, Cl 8	Nut, , Field coil terminal, 1 used on A170746 starter, 2 used on 1987559C1 starter M10, Cl 8	1-2
44	A10454	WAVE WASHER	WASHER spring, field coil terminal	1
45	104589A1	BUSHING	BUSHING insulator, 1987559C1 starter	1
	B92730	COVER	KIT anti by-pass start	1
		for use on any starter that is not equipped with an anti by-pass cover, also includes 321-6872 and 321-7040 decals shown on Figure 9-168 Ref. 19 and 19A, and an application chart and installation instructions, if used, Includes: Ref. 46, 47 and 48	for use on any starter that is not equipped with an anti by-pass cover, also includes 321-6872 and 321-7040 decals shown on Figure 9-168 Ref. 19 and 19A, and an application chart and installation instructions, if used, Includes: Ref. 46, 47 and 48	1
46	NSS	NOT SERVICED SEPARATELY	COVER solenoid, starter switch terminal	2
47	260-5448	SELF-TAP SCREW,Cross Pan Hd, #8 x 1/2"	SCREW - self-tapping, pan Phillips, No. 8-18 x 1/2 inch	2
48	L18337	CABLE TIE,9.95"-12.1" lg	CABLE STRAP STRAP tie, 15 inch, nylon, 381 mm long	2

http://www.minnparbackhoeparts.com/

(580SK) - CASE SUPER-K CONSTRUCTION KING LOADER BACKHOE > (4-06) - ALTERNATOR

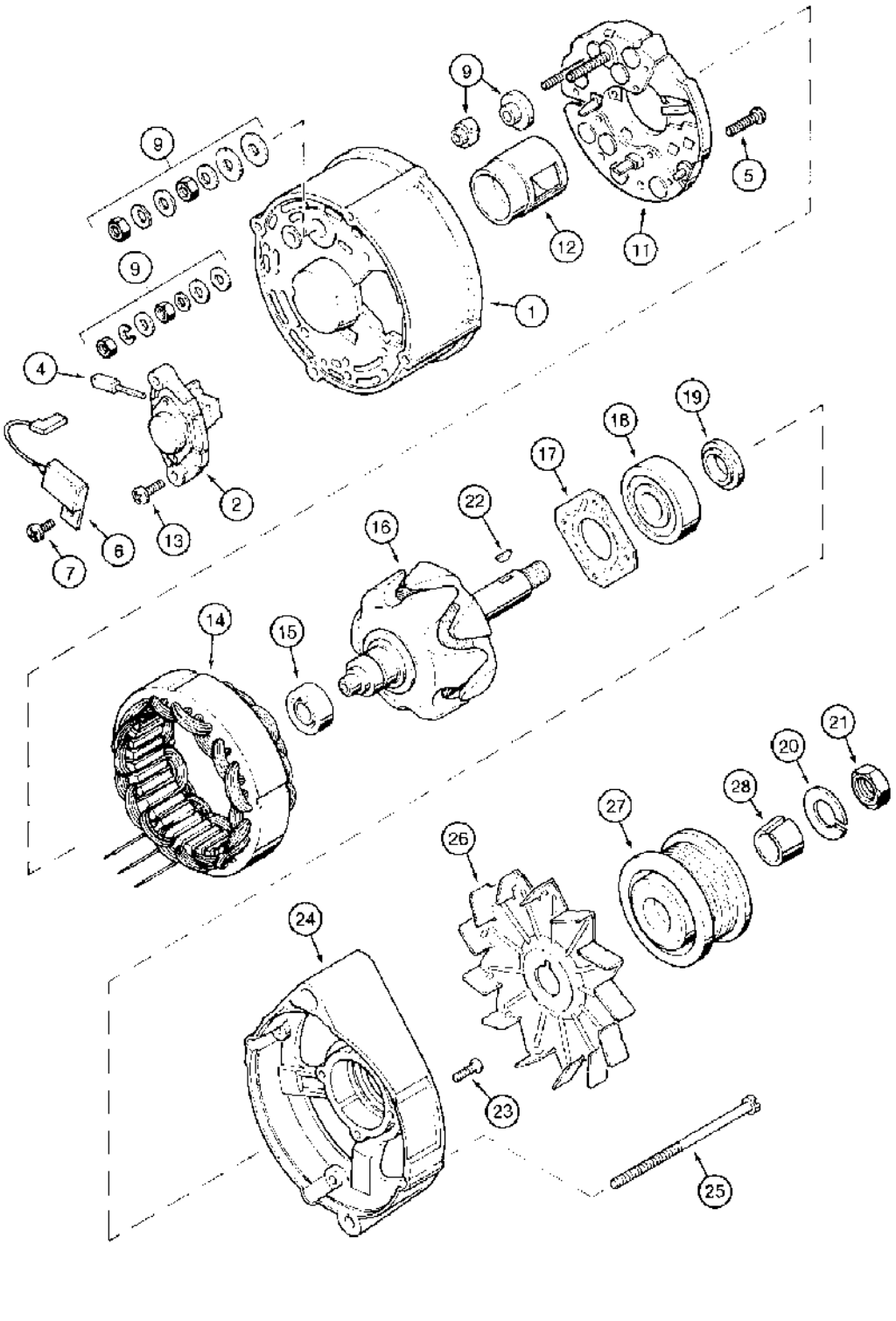

H901029-45

http://www.minnparbackhoeparts.com/

(580SK) - CASE SUPER-K CONSTRUCTION KING LOADER BACKHOE > (4-06) - ALTERNATOR

Diag #	Part #	Name	Description	Qty
	A187873	ALTERNATOR	ALTERNATOR ASSEMBLY electrical, 65 ampere, Includes: Ref. 1 through 25	1
	AR187873	REMAN-ALTERNATOR	For N.A. only	1
	AC187873	CORE-ALTERNATOR	Return number - For N.A. only	1
1	A187903	COVER	HOUSING collector ring end	1
2	A187906	VOLTAGE REGULATOR	REGULATOR voltage	1
4	1964968C1	COMMUTATOR BRUSH	BRUSH ASSEMBLY alternator	1
5	1530431C1	BOLT,Hex, 1 1/4" - 7 x 7", Gr 8	BOLT, with washer, rectifier bridge retaining replaces A187898	2
6	3079134R1	CAPACITOR	CAPACITOR alternator	1
7	1964969C1	SCREW	SCREW - Fillister, capacitor retaining	1
9	A187904	ALTERNATOR REPAIR KIT	SET hardware, terminal	1
11	A187917	RECTIFIER	BRIDGE rectifier, alternator	1
12	A187899	INNER SHIELD	SHIELD alternator	1
13	A187504	SCREW	BOLT with washer, voltage regulator retaining replaces A187907	2
14	1964966C1	STATOR	STATOR alternator	1
15	A186186	BALL BEARING,12 mm ID x 32 mm OD x 10 mm	BEARING ball, rotor, collector ring end replaces A187908	1
16	1964964C1	ROTOR	ROTOR alternator	1
17	A187901	FIXING PLATE	PLATE bearing retaining	1
18	A186183	BALL BEARING,17 mm ID x 47 mm OD x 14 mm	BEARING ball, rotor, drive end	1
	3078897R1	SET OF PARTS	KIT retaining, rotor, Includes: Ref. 19 through 23	1
19	NSS	NOT SERVICED SEPARATELY	RING spacer	1
20	NSS	NOT SERVICED SEPARATELY	WASHER rotor shaft	1
21	NSS	NOT SERVICED SEPARATELY	NUT rotor shaft	1
22	NSS	NOT SERVICED SEPARATELY	KEY pulley retainer, not used in A187873 alternator	1
23	NSS	NOT SERVICED SEPARATELY	SCREW bearing retaining plate	4
24	A186182	HOUSING	COVER drive end	1
25	A186193	BOLT,Pan, Cross Recess Phillips, M5 x 110mm	BOLT special, cover retaining	4
26	221425R1	FAN	FAN alternator, not included with alternator assembly, order separately	1

Diag #	Part #	Name	Description	Qty
27	J908560	PULLEY	PULLEY drive, not included with alternator assembly, order separately	1
28	J908563	RETAINER	RETAINER pulley, not included with alternator assembly, order separately	1
		order separately	order separately	1

http://www.minnparbackhoeparts.com/

(580SK) - CASE SUPER-K CONSTRUCTION KING LOADER BACKHOE > (4-08) - ALTERNATOR

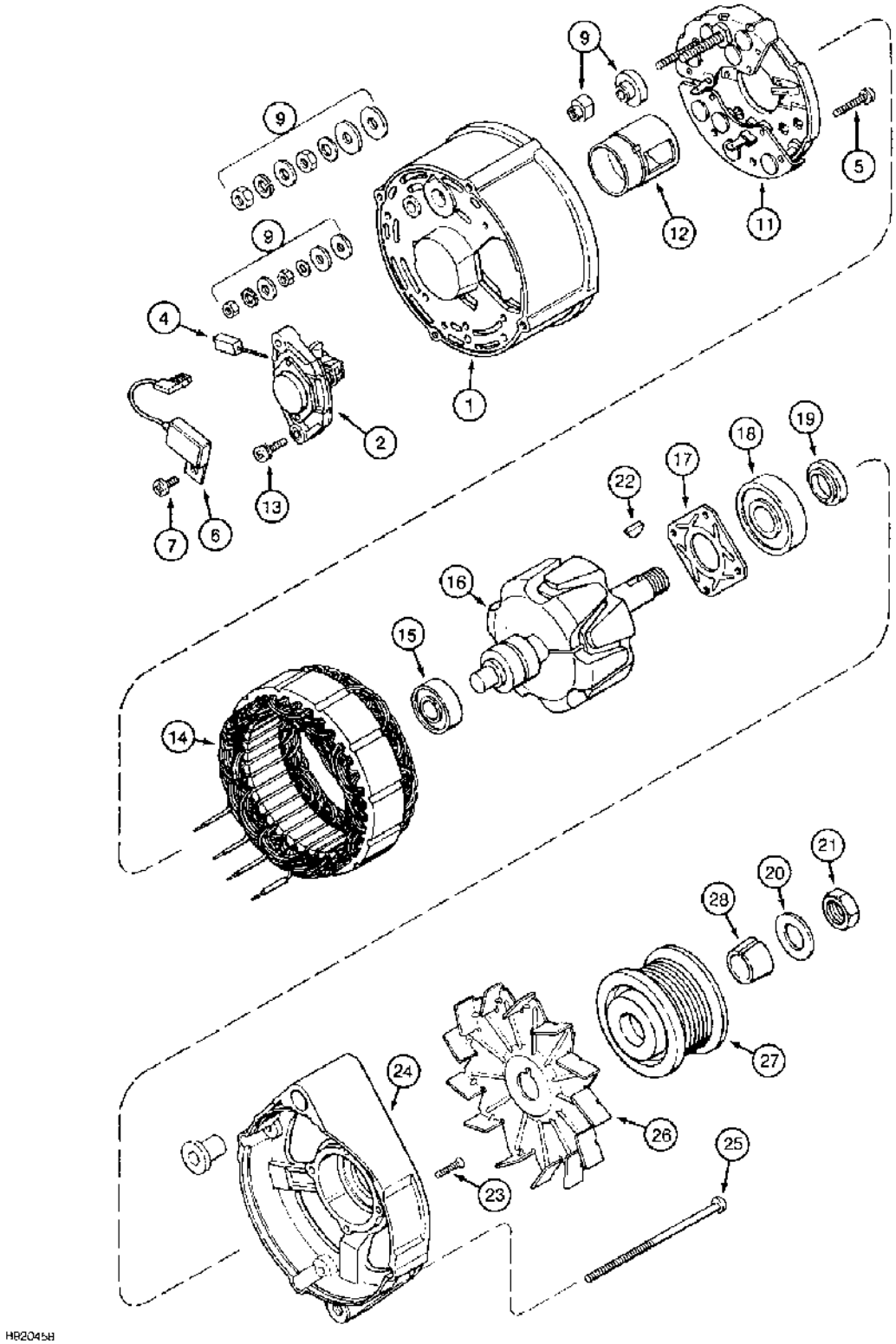

(580SK) - CASE SUPER-K CONSTRUCTION KING LOADER BACKHOE > (4-08) - ALTERNATOR

Diag #	Part #	Name	Description	Qty
	A187623	ALTERNATOR	ALTERNATOR ASSEMBLY engine, 95 ampere, Includes: Ref. 1 through 25	1
	AR187623	REMAN-ALTERNATOR	For N.A. only	1
	AC187623	CORE-ALTERNATOR	Return number - For N.A. only	1
1	A187903	COVER	HOUSING collector ring end	1
2	A187906	VOLTAGE REGULATOR	REGULATOR voltage	1
4	1964968C1	COMMUTATOR BRUSH	BRUSH ASSEMBLY alternator	1
5	1530431C1	BOLT,Hex, 1 1/4" - 7 x 7", Gr 8	BOLT retaining, with washer, replaces A187898	2
6	3079134R1	CAPACITOR	CAPACITOR alternator	1
7	1964969C1	SCREW	SCREW - capacitor retaining	1
9	A187904	ALTERNATOR REPAIR KIT	SET hardware, terminal	1
11	A187905	DIODE ELEMENT	BRIDGE rectifier, alternator	1
12	A187899	INNER SHIELD	SHIELD alternator	1
13	A187504	SCREW	BOLT retaining, with washer, replaces A187907	2
14	A187902	STATOR	STATOR ASSEMBLY alternator	1
15	A186186	BALL BEARING,12 mm ID x 32 mm OD x 10 mm	BEARING ball, rotor, collector ring end replaces A187908	1
16	A187900	ROTOR	ROTOR ASSEMBLY alternator	1
17	A187901	FIXING PLATE	PLATE bearing retaining	1
18	A186183	BALL BEARING,17 mm ID x 47 mm OD x 14 mm	BEARING ball, rotor, drive end	1
	3078897R1	SET OF PARTS	KIT rotor retaining, Includes: Ref. 19 through 23	1
19	NSS	NOT SERVICED SEPARATELY	RING spacer	1
20	NSS	NOT SERVICED SEPARATELY	WASHER lock, rotor shaft	1
21	NSS	NOT SERVICED SEPARATELY	NUT rotor shaft	1
22	NSS	NOT SERVICED SEPARATELY	KEY pulley retainer, not used in A187623 alternator	1
23	NSS	NOT SERVICED SEPARATELY	SCREW bearing retaining plate	1
24	A186182	HOUSING	HOUSING drive end	1
25	A186193	BOLT,Pan, Cross Recess Phillips, M5 x 110mm	BOLT cover retaining	4
26	221425R1	FAN	FAN alternator	1
27	J908560	PULLEY	PULLEY alternator	1
28	J908563	RETAINER	RETAINER alternator pulley	1

http://www.minnparbackhoeparts.com/

(580SK) - CASE SUPER-K CONSTRUCTION KING LOADER BACKHOE > (4-10) - AIR CONDITIONER COMPRESSOR

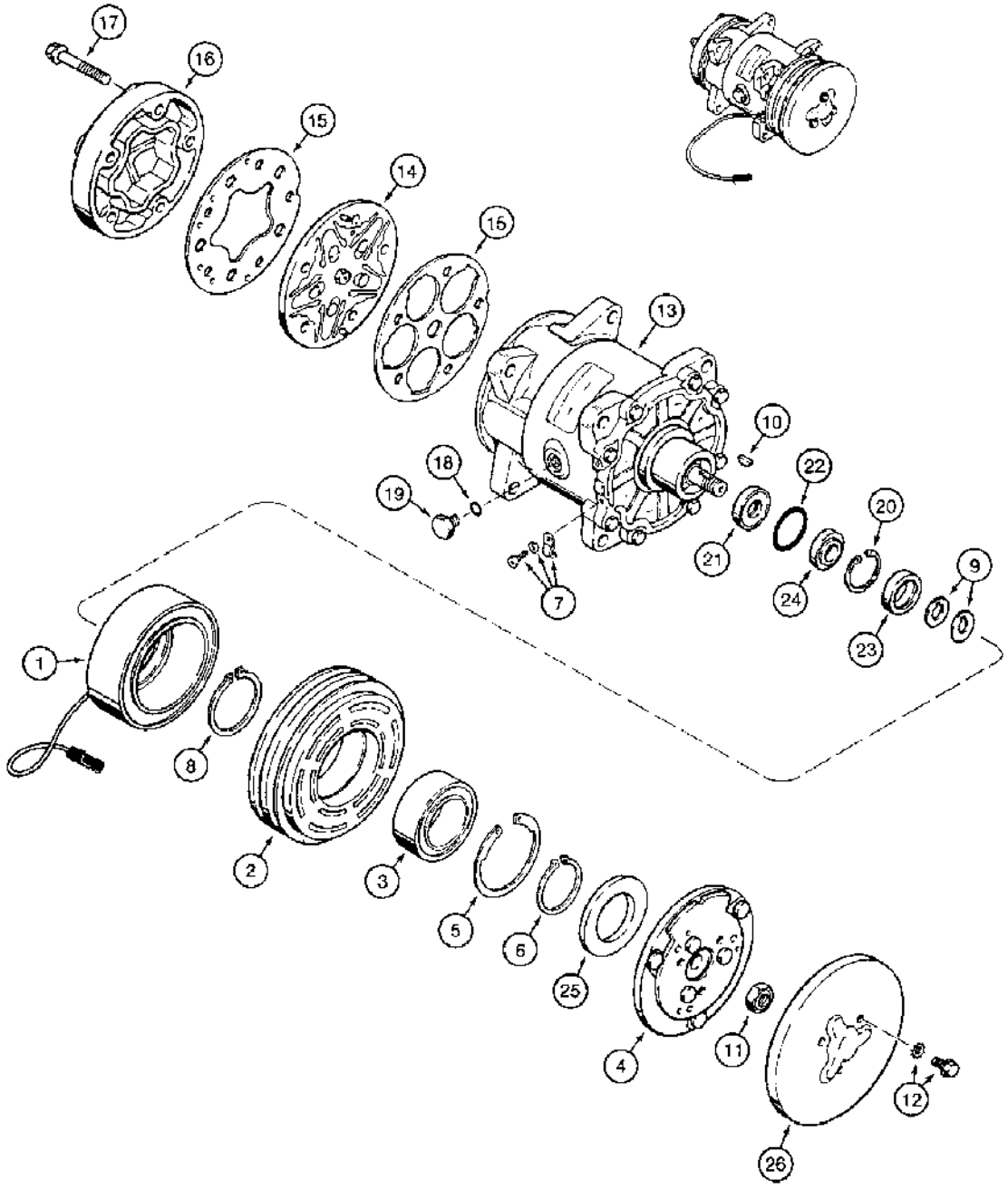

B1220A88W

(580SK) - CASE SUPER-K CONSTRUCTION KING LOADER BACKHOE > (4-10) - AIR CONDITIONER COMPRESSOR

Diag #	Part #	Name	Description	Qty
	97204C1	COMPRESSOR	ASSEMBLY air conditioning, Complete, Sankyo-Sanden, Includes: Ref. 1 through 26 and P/N 83935C1	1
	83935C1	CLUTCH	ASSEMBLY compressor, Includes: Ref. 1 through 24	1
1	NSS	NOT SERVICED SEPARATELY	COIL ASSEMBLY field, 12 volt	1
2	NSS	NOT SERVICED SEPARATELY	PULLEY ASSEMBLY drive, two groove, Includes: Ref. 3, 4 and 5.	1
3	NSS	NOT SERVICED SEPARATELY	BEARING pulley	1
4	NSS	NOT SERVICED SEPARATELY	PLATE front	1
5	NSS	NOT SERVICED SEPARATELY	RING snap	1
	A49673	KIT	accessory, clutch, Includes: Ref. 6 through 12	1
6	NSS	NOT SERVICED SEPARATELY	RING snap, pulley	1
7	NSS	NOT SERVICED SEPARATELY	CLAMP lead wire, includes hardware	1
8	NSS	NOT SERVICED SEPARATELY	RING snap, clutch	1
9	NSS	NOT SERVICED SEPARATELY	SHIM clutch	1
10	NSS	NOT SERVICED SEPARATELY	KEY clutch drive	1
11	NSS	NOT SERVICED SEPARATELY	NUT retainer	1
12	NSS	NOT SERVICED SEPARATELY	SCREW retainer	1
13	NSS	NOT SERVICED SEPARATELY	BLOCK compressor	1
14	NSS	NOT SERVICED SEPARATELY	PLATE ASSEMBLY valve, Includes: Ref. 15	1
15	A49668	GASKET KIT	KIT gasket, valve plate	1
16	1958959C1	COVER	HEAD cylinder, includes Ref. 15	1
17	A49669	SCREW,Cylinder	BOLT hex flanged, head	5
18	A49666	O-RING	rubber	1
19	A49667	PLUG	oil filler	1
	A49665	GASKET KIT	KIT seal, compressor, Includes: Ref. 20 through 23	1
20	A49664	CIRCLIP	RING snap	1

Diag #	Part #	Name	Description	Qty
21	NSS	NOT SERVICED SEPARATELY	SEAL shaft	1
22	NSS	NOT SERVICED SEPARATELY	O-RING housing	1
23	NSS	NOT SERVICED SEPARATELY	RING felt	1
24	NSS	NOT SERVICED SEPARATELY	SEAT seal, shaft	1
25	A49674	BEARING COVER,36 mm ID x 62 mm OD x 1.2, 4.2 mm	COVER dust, bearing	1
26	1958961C1	COVER	dust, clutch	1

http://www.minnparbackhoeparts.com/

(580SK) - CASE SUPER-K CONSTRUCTION KING LOADER BACKHOE > (4-12) - STARTER AND ALTERNATOR MOUNTING

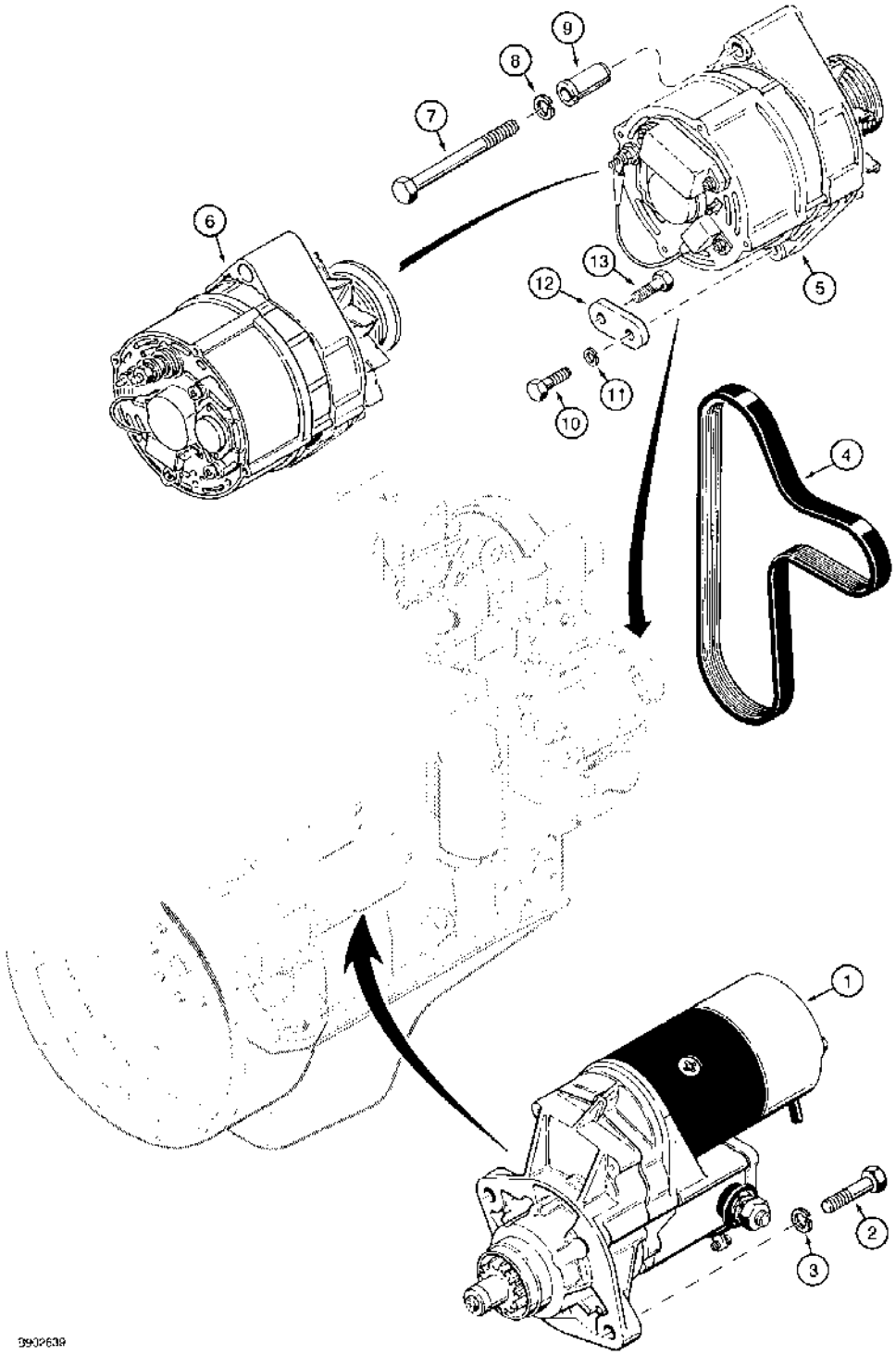

http://www.minnparbackhoeparts.com/

(580SK) - CASE SUPER-K CONSTRUCTION KING LOADER BACKHOE > (4-12) - STARTER AND ALTERNATOR MOUNTING

Diag #	Part #	Name	Description	Qty
1	REF	INSTRUCTION	STARTER ASSEMBLY engine, for correct assembly and components, see Figure 4-02	1
2	814-10040	BOLT,Hex, M10 x 1.5 x 40mm, Cl 8.8	BOLT hex, 10 - 1.5 x 40 mm	2
3	892-11010	LOCK WASHER,M10	LOCK WASHER, M10	2
4	J911559	V-BELT,3.56 mm W x 1574.80 mm L, 8 Ribs	Fan and Alternator	1
5	A187873	ALTERNATOR	ALTERNATOR ASSEMBLY, 65 ampere, parts list Figure 4-06, if used	1
6	A187623	ALTERNATOR	ALTERNATOR ASSEMBLY, 95 ampere, parts list Figure 4-08, if used	1
6	AR187623	REMAN-ALTERNATOR	For N.A. only	1
6	AC187623	CORE-ALTERNATOR	Return number - For N.A. only	1
7	814-10100	BOLT,Hex, M10 x 1.5 x 100mm, Cl 8.8	BOLT - hex, 10 mm x 100 mm	1
8	892-11010	LOCK WASHER,M10	LOCK WASHER, M10	1
9	J902469	SPACER	SPACER alternator mounting	1
10	614-8025	BOLT,Hex, M8 x 1.25 x 25mm, Cl 8.8, Full Thd	BOLT hex, 8 - 1.25 x 25 mm	1
11	492-11031	LOCK WASHER,5/16"	WASHER, LOCK, 5/16"	1
12	J903089	SUPPORT	BRACE alternator mounting	1
13	614-8020	BOLT,Hex, M8 x 1.25 x 20mm, Cl 8.8, Full Thd	BOLT hex, 8 mm x 20 mm	1

http://www.minnparbackhoeparts.com/

(580SK) - CASE SUPER-K CONSTRUCTION KING LOADER BACKHOE > (4-14) - AIR CONDITIONING COMPRESSOR MOUNTING

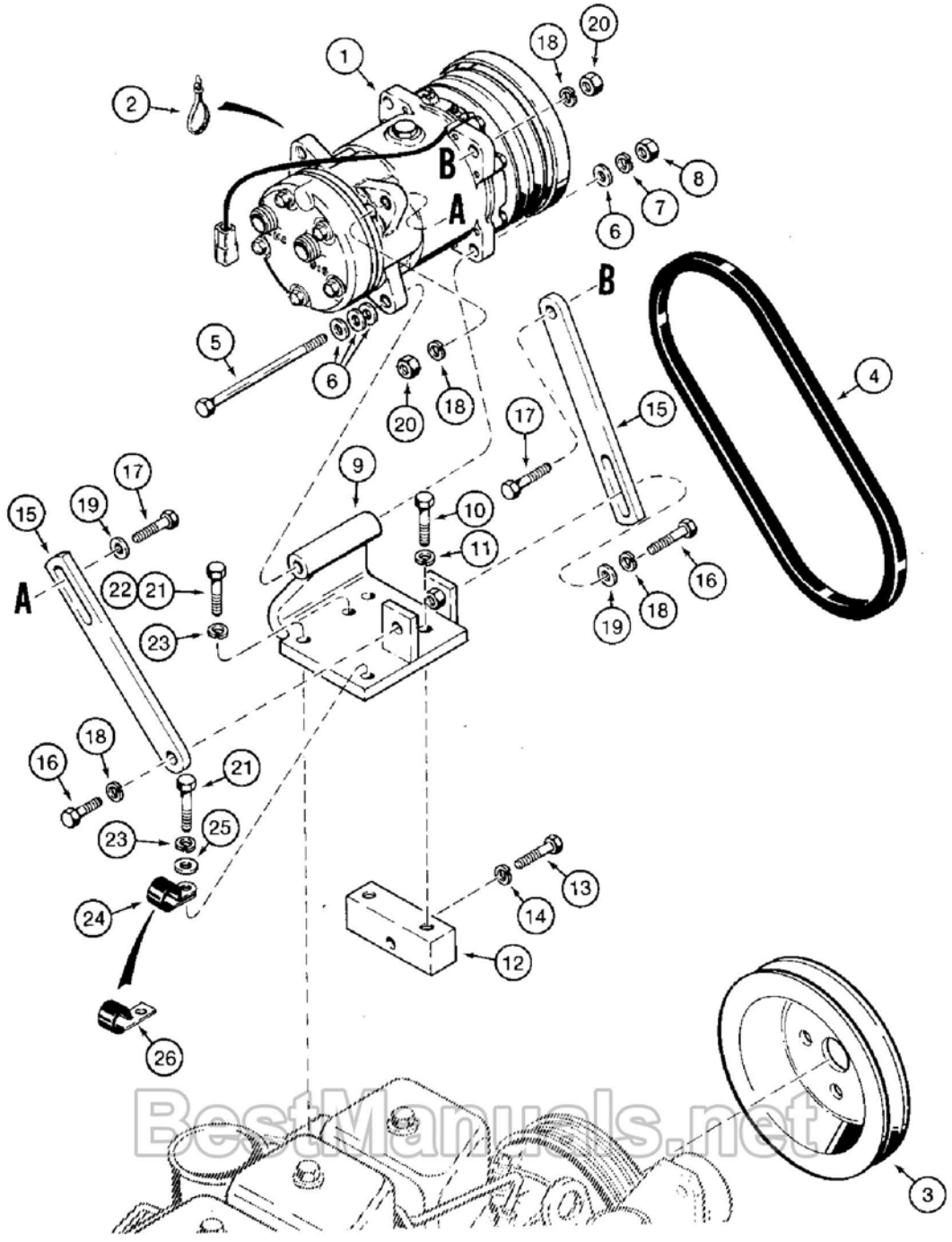

B920477

http://www.minnparbackhoeparts.com/

(580SK) - CASE SUPER-K CONSTRUCTION KING LOADER BACKHOE > (4-14) - AIR CONDITIONING COMPRESSOR MOUNTING

Diag #	Part #	Name	Description	Qty
1	97204C1	COMPRESSOR	ASSEMBLY air conditioning, parts list Figure 4-10	1
2	L18337	CABLE TIE,9.95"-12.1" lg	STRAP tie, 15 inch, nylon, compressor wire	2
3	A189284	PULLEY	air conditioner compressor drive	1
4	A189285	V-BELT,12.70 mm W x 1060.00 mm L	Drive, Compressor 12.70 mm W x 1060.00 mm L	1
5	827-10130	BOLT,Hex, M10 x 1.5 x 130mm, Cl 10.9	- hex, 10 - 1.5 x 130 mm, class 10.9	1
6	895-11010	WASHER,M10 x 20 x 2	flat, 11 x 21 x 2 mm	4
7	892-11010	LOCK WASHER,M10	LOCK WASHER,M10	1
8	825-1410	NUT,M10, Cl 8	NUT,M10, Cl 8	1
9	A189274	SUPPORT	BRACKET compressor mounting	1
10	614-10030	BOLT,Hex, M10 x 1.5 x 30mm, Cl 8.8, Full Thd	BOLT,Hex, M10 x 1.5 x 30mm, Cl 8.8, Full Thd	2
11	892-11010	LOCK WASHER,M10	LOCK WASHER,M10	2
12	A184614	SUPPORT	BLOCK bracket support	1
13	814-10040	BOLT,Hex, M10 x 1.5 x 40mm, Cl 8.8	hex, 10 - 1.5 x 40 mm	1
14	892-11010	LOCK WASHER,M10	LOCK WASHER,M10	1
15	A184932	TENSIONER	STRAP compressor adjusting	2
16	614-10030	BOLT,Hex, M10 x 1.5 x 30mm, Cl 8.8, Full Thd	BOLT,Hex, M10 x 1.5 x 30mm, Cl 8.8, Full Thd	2
17	614-10035	BOLT,Hex, M10 x 1.5 x 35mm, Cl 8.8, Full Thd	hex, 10 - 1.5 x 35 mm	2
18	892-11010	LOCK WASHER,M10	LOCK WASHER,M10	4
19	895-11010	WASHER,M10 x 20 x 2	flat, 11 x 21 x 2 mm	2
20	825-1410	NUT,M10, Cl 8	NUT,M10, Cl 8	2
21	614-10030	BOLT,Hex, M10 x 1.5 x 30mm, Cl 8.8, Full Thd	3 used on naturally aspirated engines and 1 used on turbocharged engines Hex, M10 x 30, 8.8	1-3
22	614-10035	BOLT,Hex, M10 x 1.5 x 35mm, Cl 8.8, Full Thd	hex, 10 - 1.5 x 35 mm, turbocharged engines	2
23	892-11010	LOCK WASHER,M10	LOCK WASHER,M10	3
24	515-2363	CLAMP,M6.3, Insul, 3/8" Bolt	P-type, closed, 6.35 mm ID, main engine harness to compressor bracket, if used	1
25	895-11010	WASHER,M10 x 20 x 2	flat, 11 x 21 x 2 mm	1
26	D147383	CLIP	CLAMP J-type, if used	1

http://www.minnparbackhoeparts.com/

(580SK) - CASE SUPER-K CONSTRUCTION KING LOADER BACKHOE > (4-16) - ENGINE ELECTRICAL CIRCUIT, PRIOR TO P.I.N. JJG0167019

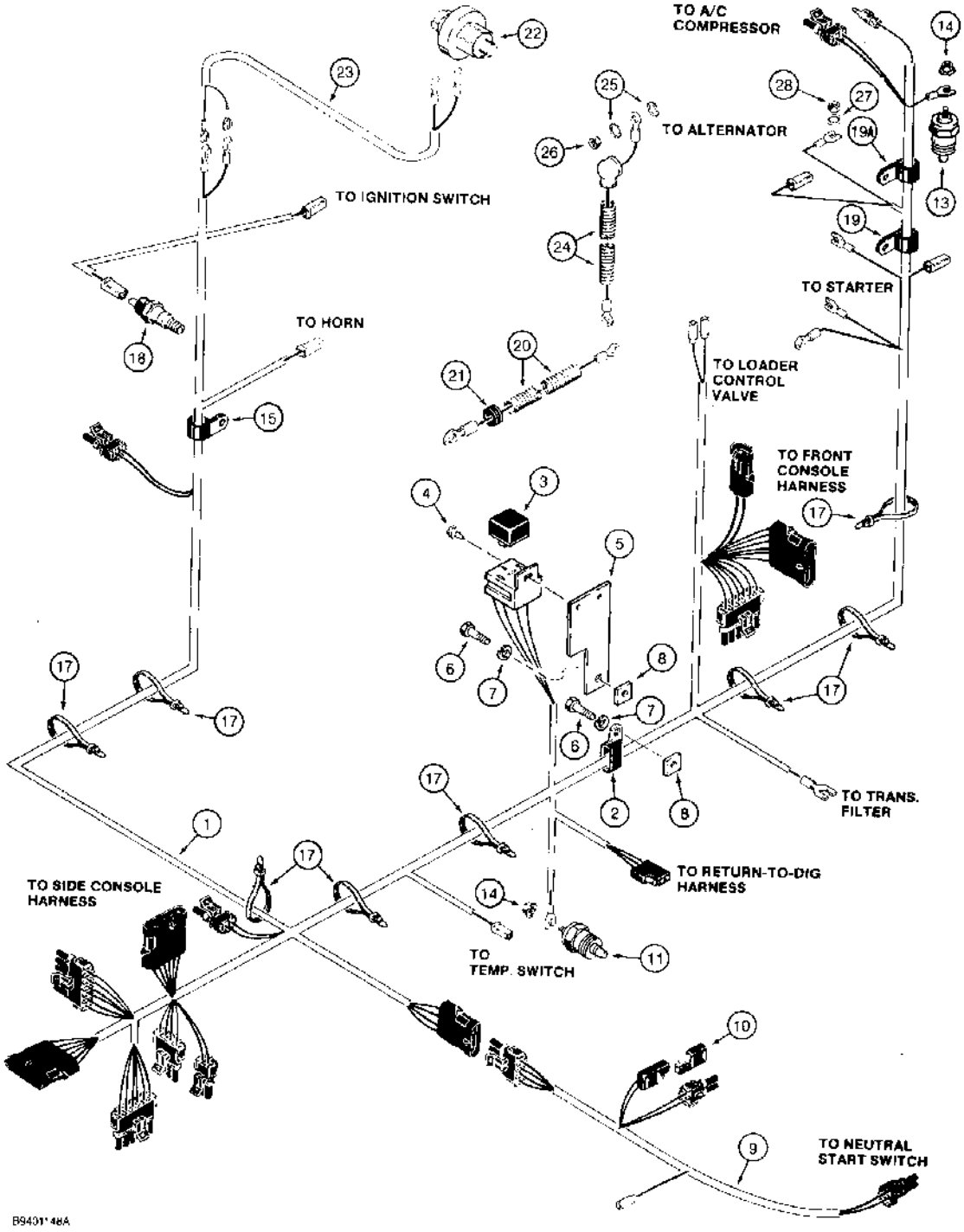

(580SK) - CASE SUPER-K CONSTRUCTION KING LOADER BACKHOE > (4-16) - ENGINE ELECTRICAL CIRCUIT, PRIOR TO P.I.N. JJG0167019

Diag #	Part #	Name	Description	Qty
1	D150515	HARNESS	engine, main, replaces D146028 harness, models with or without air conditioning	1
2	D39696	CLAMP,Double, 25.40mm Dia, Coated	double, harness, use existing hardware	2
3	D128310	RELAY	30 amperes, starter	1
		Ref. 3: D128310 Relay is marked 40 amp on the relay-this is the RESISTANCE rating. The INDUCTIVE rating is 30 amps. We use this inductive rating in our literature.	Ref. 3: D128310 Relay is marked 40 amp on the relay-this is the RESISTANCE rating. The INDUCTIVE rating is 30 amps. We use this inductive rating in our literature.	1
4	281-4556	SELF-TAP SCREW,Hex Wash Hd, #10 x 3/8"	SCREW self-tapping, hex washer head, No. 10 NC x 3/8 inch	1
5	D149376	SUPPORT	PLATE relay mounting	1
6	413-612	BOLT,Hex, 3/8" - 16 x 3/4", Gr 5	BOLT,Hex, 3/8" - 16 x 3/4", Gr 5	2
7	492-11038	LOCK WASHER,3/8"	LOCK WASHER,3/8"	2
8	84899	SQUARE NUT,Sq, 3/8"-16, G2	square, 3/8 inch NC	2
9	D144986	HARNESS	transaxle	1
10	L71879	DIODE ELEMENT	DIODE alternator protecting	1
11	A166057	TEMPERATURE SENDER	SENDER transaxle temperature	1
13	A166057	TEMPERATURE SENDER	SENDER engine water coolant temperature	1
14	193-1000	NUT,Keps, w/LW,#10-32	hex, with external tooth lock washer, No. 10 NF	2
15	49859		P-type, harness, left-hand side of engine, uses existing engine hardware	1
17	L18337	CABLE TIE,9.95"-12.1" lg	STRAP tie, 15 inch, nylon, retaining, harness	1
18	A162297	SWITCH	SENDER oil pressure	1
19	49858		P-type, harness, uses existing engine hardware	1
19A	D147383	CLIP	CLAMP J-type	1
20	D150519	ELECTRICAL WIRE	WIRE, 1950 mm long, power, battery terminal on starter to cab relay, replaces D147514 2200 mm long wire	1
21	D141118	GROMMET	power wire	1
22	1983233C1	RESTRICTION SWITCH	SENDER, air filter restriction indicator	1
23	D140449	HARNESS	WIRE jumper, restriction, Serial Range: indicator-harness	1

Diag #	Part #	Name	Description	Qty
24	D143830	CABLE	WIRE, 675 mm long, Serial Range: alternator-starter	1
25	493-21033	LOCK WASHER,Int Tooth, 5/16"	WASHER external tooth lock, 5/16 inch	2
26	825-1408	NUT,M8, Cl 8	NUT,M8, Cl 8	1
27	493-21020	LOCK WASHER,Int Tooth, #10	WASHER, LOCK, (3/16") Int Tooth, #10	1
28	825-1405	NUT,M5, Cl 8	NUT,M5, Cl 8	1

http://www.minnparbackhoeparts.com/

(580SK) - CASE SUPER-K CONSTRUCTION KING LOADER BACKHOE > (4-17A) - ENGINE ELECTRICAL CIRCUIT, P.I.N. JJG0167019 AND AFTER

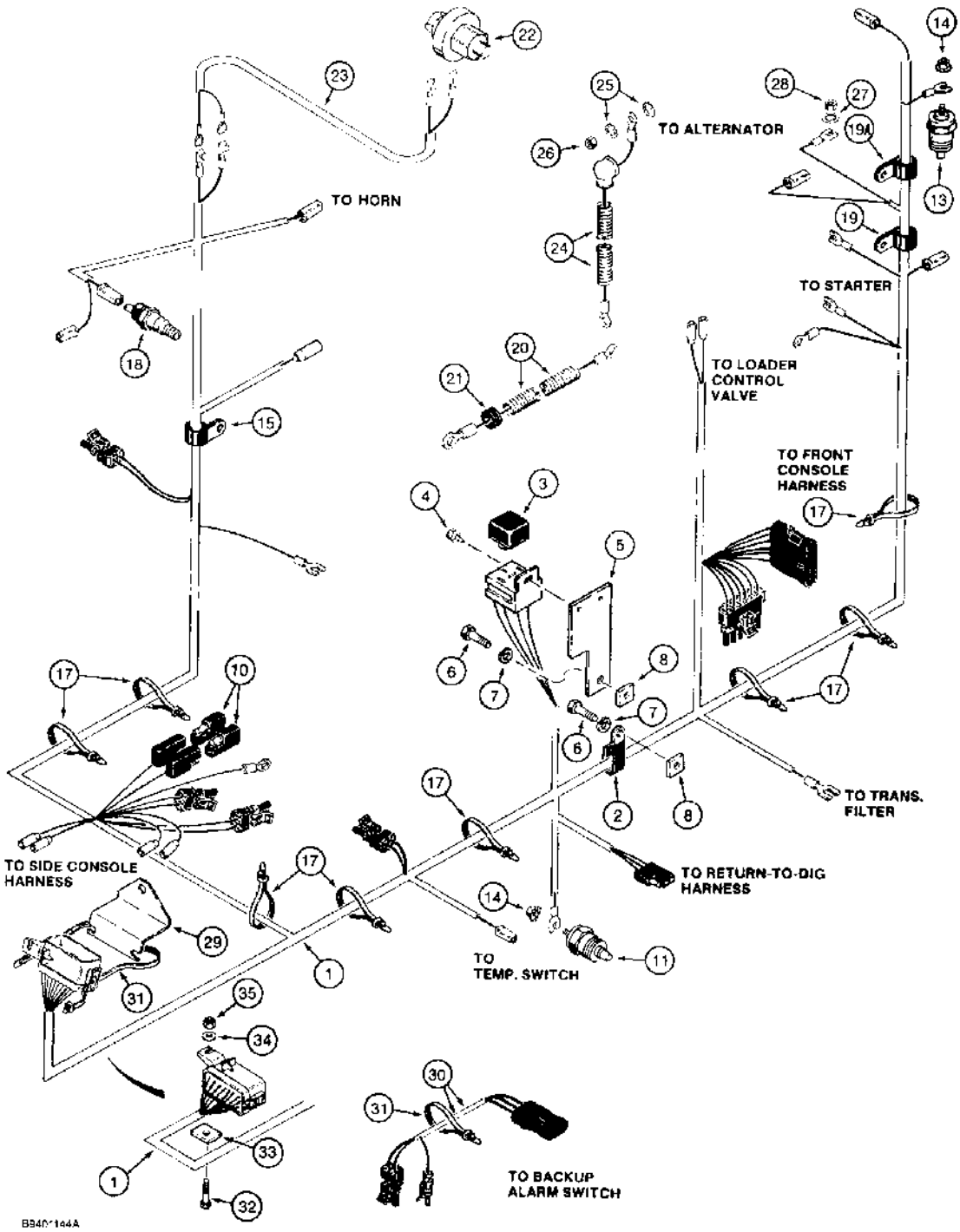

(580SK) - CASE SUPER-K CONSTRUCTION KING LOADER BACKHOE > (4-17A) - ENGINE ELECTRICAL CIRCUIT, P.I.N. JJG0167019 AND AFTER

Diag #	Part #	Name	Description	Qty
1	109646A1	HARNESS	engine, main, includes transaxle connections, replaces 101596A1 harness	1
2	D39696	CLAMP,Double, 25.40mm Dia, Coated	double, harness, use existing hardware	1
3	D128310	RELAY	30 amperes, starter	1
		Ref. 3: D128310 Relay is marked 40 amp on the relay-this is the RESISTANCE rating. The INDUCTIVE rating is 30 amps. We use this inductive rating in our literature.	Ref. 3: D128310 Relay is marked 40 amp on the relay-this is the RESISTANCE rating. The INDUCTIVE rating is 30 amps. We use this inductive rating in our literature.	1
		Harness connector that Ref. 3, D128310 relay plugs into is S237214, terminals for connector should be 2 each 225178C1 and 225180C1	Harness connector that Ref. 3, D128310 relay plugs into is S237214, terminals for connector should be 2 each 225178C1 and 225180C1	1
4	281-4556	SELF-TAP SCREW,Hex Wash Hd, #10 x 3/8"	SCREW self-tapping, hex washer head, No. 10 NC x 3/8 inch	1
5	D149376	SUPPORT	PLATE relay mounting	1
6	413-612	BOLT,Hex, 3/8" - 16 x 3/4", Gr 5	BOLT,Hex, 3/8" - 16 x 3/4", Gr 5	2
7	492-11038	LOCK WASHER,3/8"	LOCK WASHER,3/8"	2
8	84899	SQUARE NUT,Sq, 3/8"-16, G2	square, 3/8 inch NC	2
10	L71879	DIODE ELEMENT	DIODE alternator protecting	2
11	A166057	TEMPERATURE SENDER	SENDER transaxle temperature	1
13	A166057	TEMPERATURE SENDER	SENDER engine, water coolant temperature	1
		Ref #13 - for differential sender refer to Figure 4-52 Ref #2A.	Ref #13 - for differential sender refer to Figure 4-52 Ref #2A.	1
14	193-1000	NUT,Keps, w/LW,#10-32	hex, with external tooth lock washer, No. 10 NF	2
15	515-23127	CLAMP,1/2", Insul, 3/8" Bolt	P-type, harness, left-hand side of engine, uses existing engine hardware	1
17	L18337	CABLE TIE,9.95"-12.1" lg	STRAP tie, 15 inch, nylon, retaining, harness	1
18	A162297	SWITCH	SENDER oil pressure	1
19	515-23190	CLAMP,3/4", Insul, 3/8" Bolt	P-type, harness, uses existing engine hardware	1
19A	D147383	CLIP	CLAMP J-type	1

Diag #	Part #	Name	Description	Qty
20	D150519	ELECTRICAL WIRE	WIRE, 1950 mm long, power, battery terminal on starter to cab relay	1
21	D141118	GROMMET	power wire	1
22	1983233C1	RESTRICTION SWITCH	SENDER, air filter restriction indicator	1
23	D140449	HARNESS	WIRE jumper, restriction, Serial Range: indicator-harness	1
24	D143830	CABLE	WIRE, 675 mm long, Serial Range: alternator-starter	1
25	493-21033	LOCK WASHER,Int Tooth, 5/16"	WASHER external tooth lock, 5/16 inch	2
26	825-1408	NUT,M8, Cl 8	NUT,M8, Cl 8	1
27	493-21020	LOCK WASHER,Int Tooth, #10	WASHER, LOCK, (3/16") Int Tooth, #10	1
28	825-1405	NUT,M5, Cl 8	NUT,M5, Cl 8	1
29	103271A1	BRACKET	101596A1 harness connector mounting, if used	1
30	D150126	HARNESS	air conditioning, chassis	1
31	L18337	CABLE TIE,9.95"-12.1" lg	STRAP tie, 15 inch, nylon, harness	5
32	413-416	BOLT,Hex, 1/4" - 20 x 1", Gr 5	hex, 1/4 NC x 1 inch	1
33	108535A1	WASHER	special	1
34	495-11028	WASHER,1/4", SAE	(flat, 9/32 x 5/8 x 1/16") 1/4", SAE	1
35	231-1444	NUT,1/4"-20, GB	NUT, LOCK, 1/4"-20, GB	1

http://www.minnparbackhoeparts.com/

(580SK) - CASE SUPER-K CONSTRUCTION KING LOADER BACKHOE > (4-18) - BATTERY, BATTERY BOX, TOOL BOX, AND MOUNTING PARTS

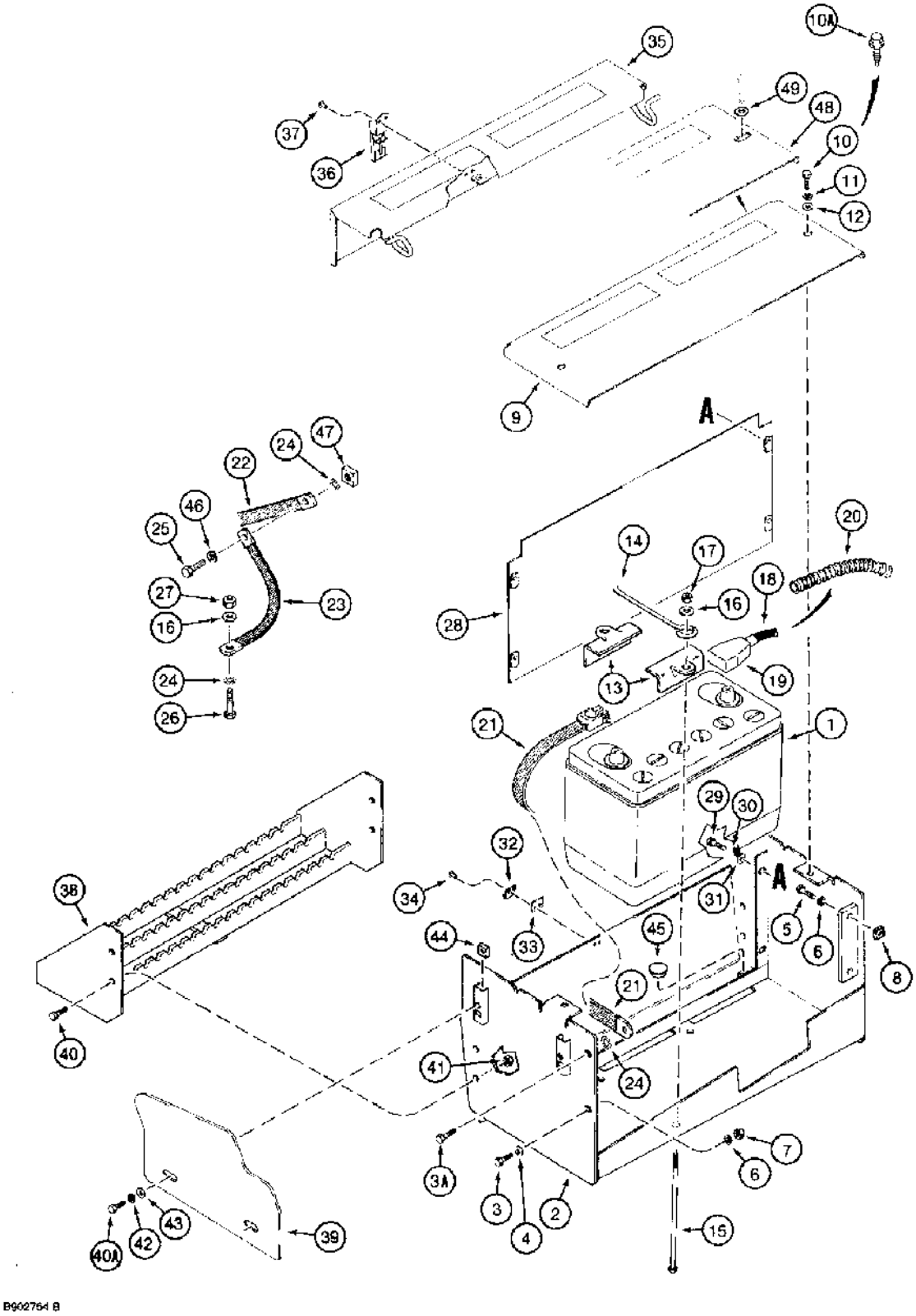

B902754 B

http://www.minnparbackhoeparts.com/

(580SK) - CASE SUPER-K CONSTRUCTION KING LOADER BACKHOE > (4-18) - BATTERY, BATTERY BOX, TOOL BOX, AND MOUNTING PARTS

Diag #	Part #	Name	Description	Qty
1	BMF31E	DRY BATTERY	BATTERY, 12 volt, dry, models without cold start	1
		For models with a dual battery cold start system, see Figure 4-22.	For models with a dual battery cold start system, see Figure 4-22.	1
2	D147084	PLATE	BOX battery and tool	1
3	413-620	BOLT,Hex, 3/8" - 16 x 1 1/4", Gr 5	hex, 3/8 NC x 1-1/4 inch, lower mounting hole	1
3A	413-624	BOLT,Hex, 3/8" - 16 x 1 1/2", Gr 5	hex, 3/8 NC x 1-1/2 inch, upper mounting hole	1
4	495-21044	WASHER,3/8"	(flat, 7/16 x 1 x 5/64 inch) 3/8"	2
5	413-616	BOLT,Hex, 3/8" - 16 x 1", Gr 5	hex, 3/8 NC x 1 inch	2
6	492-11038	LOCK WASHER,3/8"	LOCK WASHER,3/8"	4
7	425-106	NUT,3/8"-16, G5	NUT,3/8"-16, G5	2
8	84899	SQUARE NUT,Sq, 3/8"-16, G2	square, 3/8 inch NC	2
9	D146879	COVER	battery box, 29/64 x 19/32 inch slot, no longer available, order D150818 cover and two 495-81002 washers, Ref. 48 and 49	1
10	413-616	BOLT,Hex, 3/8" - 16 x 1", Gr 5	hex, 3/8 NC x 1 inch, if used	2
10A	118978A1	FLANGE BOLT	SCREW pointed, self-aligning, special, if used service with 458-616	2
11	492-11038	LOCK WASHER,3/8"	LOCK WASHER,3/8"	2
12	495-21044	WASHER,3/8"	(flat, 7/16 x 1 x 5/64 inch), D146879 cover, if used 3/8"	2
13	D125079	BRACKET	battery, hold down	2
14	D55561	RETAINER	battery	1
15	424-6160	BOLT,Hex, 3/8" - 16 x 10", Gr 2	- hex, 3/8 NC x 10 inch, grade 2	2
16	495-11041	WASHER,3/8", SAE	flat, (13/32 x 13/16 x 1/16")	3
17	231-1446	NUT,3/8"-16, GB	NUT hex, self-locking, 3/8 inch NC, grade 8	2
18	D150244	CABLE	1650 mm long, positive, battery, replaces D146864 1600 mm long cable, Includes: Ref. 19	1
19	383619R1	COVER	cable, battery end, replaces A27072	1
20	D150223	GUARD	SLEEVE, 1525 mm long, positive cable, guard	1
21	D83485	CABLE	STRAP negative, at battery	1

Diag #	Part #	Name	Description	Qty
22	D127018	STRAP	ground, engine	1
23	D140369	CABLE PULLING GRIP	STRAP ground, pod and chassis	1
24	493-11039	LOCK WASHER,3/8", Int-Ext Tooth	WASHER - internal-external tooth lock, 3/8 inch	4
25	413-614	BOLT,Hex, 3/8" - 16 x 7/8", Gr 5	BOLT,Hex, 3/8" - 16 x 7/8", Gr 5	1
26	413-616	BOLT,Hex, 3/8" - 16 x 1", Gr 5	hex, 3/8 NC x 1 inch	1
27	425-106	NUT,3/8"-16, G5	NUT,3/8"-16, G5	1
28	D147669	DIVIDER	PLATE divider, tool box	1
29	413-612	BOLT,Hex, 3/8" - 16 x 3/4", Gr 5	BOLT,Hex, 3/8" - 16 x 3/4", Gr 5	4
30	492-11038	LOCK WASHER,3/8"	LOCK WASHER,3/8"	4
31	495-11041	WASHER,3/8", SAE	flat, (13/32 x 13/16 x 1/16")	4
32	D131941	PLATE	STRIKER tool box latch	1
33	D150059	SPACER	latch	1
34	151-538	RIVET,Pop, 3/16" x .575"	pop, 3/16 x 9/16 inch	2
35	D147083	LID	COVER tool box	1
36	D150176	LATCH	tool box	1
37	151-539	RIVET,Pop, 3/16" x .450"	pop, 3/16 x 13/32 inch	2
38	D149922	STEP	operator compartment access, left-hand, see Figure 9-094, Ref. 16, for right-hand step	1
39	113158A1	GUARD	mud, tool box, replaces D150028 and 104132A1 guard	1
40	413-616	BOLT,Hex, 3/8" - 16 x 1", Gr 5	hex, 3/8 NC x 1 inch	4
40A	413-614	BOLT,Hex, 3/8" - 16 x 7/8", Gr 5	BOLT,Hex, 3/8" - 16 x 7/8", Gr 5	2
41	231-1446	NUT,3/8"-16, GB	NUT hex, self-locking, 3/8 inch NC, grade 8	4
42	492-11038	LOCK WASHER,3/8"	LOCK WASHER,3/8"	2
43	495-21044	WASHER,3/8"	(flat, 7/16 x 1 x 5/64 inch) 3/8"	2
44	84899	SQUARE NUT,Sq, 3/8"-16, G2	square, 3/8 inch NC	2
		The small cages that P/N 224-2246 Nut gets inserted into are P/N D88417.	The small cages that P/N 224-2246 Nut gets inserted into are P/N D88417.	1
	D88417	CAGE ASSY.	CAGE ASSY.	1
		located directly below Ref. 44 in the illustration.	located directly below Ref. 44 in the illustration.	1
45	1340318C1	PLUG,1" Hole, Nylon	PLUG,1" Hole, Nylon	2
46	492-11038	LOCK WASHER,3/8"	LOCK WASHER,3/8"	1
47	84899	SQUARE NUT,Sq, 3/8"-16, G2	square, 3/8 inch NC	1
48	D150818	COVER	battery box, 29/64 x 3/4 inch slot	1

Diag #	Part #	Name	Description	Qty
49	495-81002	WASHER,3/8"	flat, 7/16 x 1-3/8 x 5/64 inch, D150818 cover, if needed	2

http://www.minnparbackhoeparts.com/

(580SK) - CASE SUPER-K CONSTRUCTION KING LOADER BACKHOE > (4-22) - DUAL BATTERIES AND CABLES, MODELS WITH COLD START SYSTEM

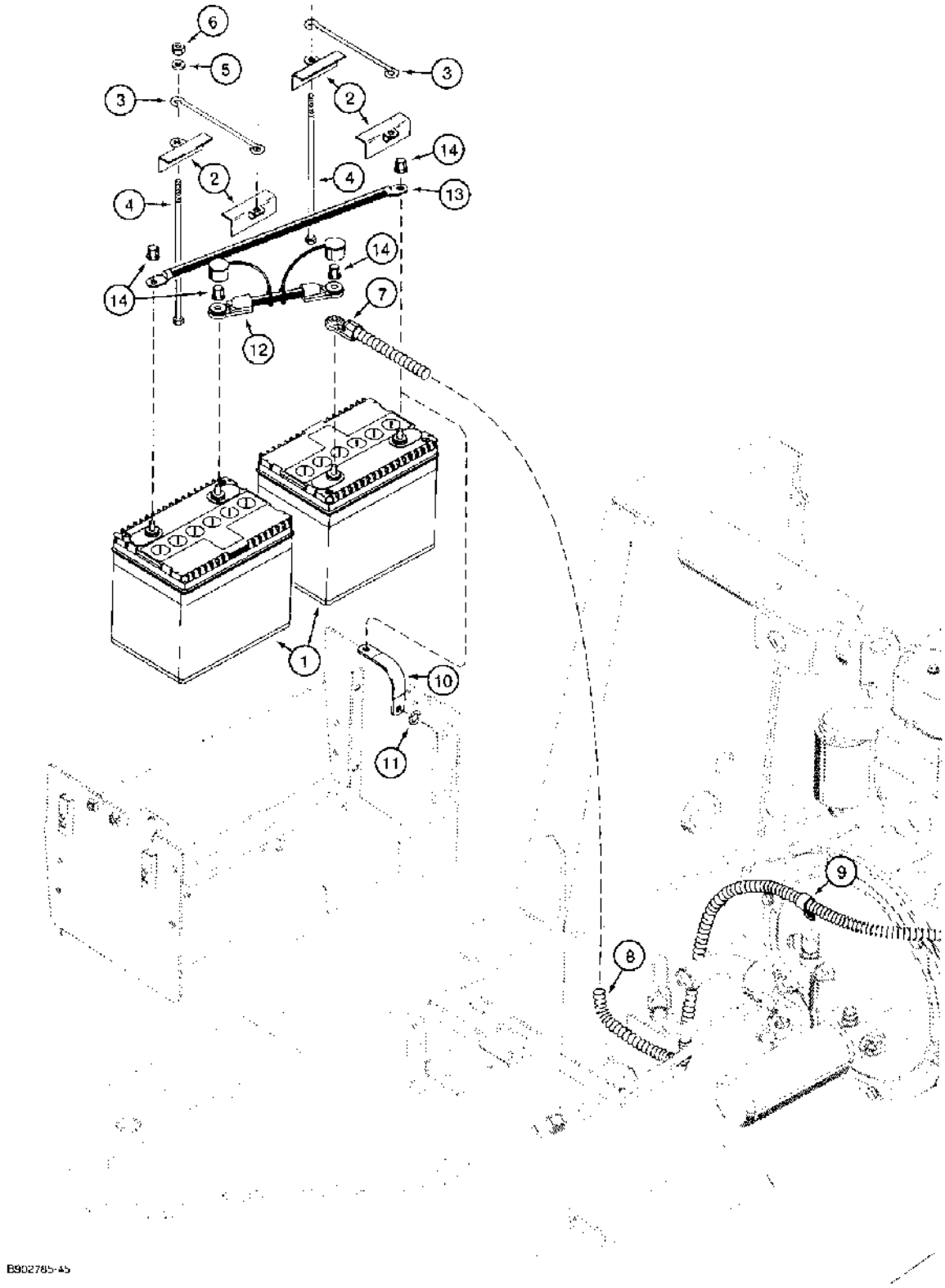

(580SK) - CASE SUPER-K CONSTRUCTION KING LOADER BACKHOE > (4-22) - DUAL BATTERIES AND CABLES, MODELS WITH COLD START SYSTEM

Diag #	Part #	Name	Description	Qty
1	BMF28S	BATTERY, DRY	BATTERY, 12 volt, dry, models with cold start	2
		For battery used on models without cold start system, see Figure 4-18.	For battery used on models without cold start system, see Figure 4-18.	1
2	D125079	BRACKET	battery hold down	4
3	D55561	RETAINER	battery	2
4	424-6160	BOLT,Hex, 3/8" - 16 x 10", Gr 2	- hex, 3/8 NC x 10 inch, grade 2	4
5	495-11041	WASHER,3/8", SAE	flat, (13/32 x 13/16 x 1/16")	4
6	231-1446	NUT,3/8"-16, GB	NUT hex, self-locking, 3/8 inch NC, grade 8	4
7	D150245	CABLE	1650 mm long, positive to starter, replaces D146863 1600 mm long cable	1
8	D150223	GUARD	SLEEVE, 1525 mm long, positive cable, guard	1
9	D150224	CLAMP	cable to torque converter housing	1
10	D140369	CABLE PULLING GRIP	STRAP, 260 mm long, negative ground to battery box	1
11	493-11039	LOCK WASHER,3/8", Int-Ext Tooth	WASHER - internal-external tooth lock, 3/8 inch, at ground strap mounting to battery box	1
12	D145898	CABLE	170 mm long, positive jumper	1
13	D150516	CABLE	500 mm long, negative jumper, replaces D145899 425 mm long cable	1
14	D126409	NUT	hex, 3/8 NC, special, battery terminal	4
	D103988	KIT	converter, dual battery	1

http://www.minnparbackhoeparts.com/

(580SK) - CASE SUPER-K CONSTRUCTION KING LOADER BACKHOE > (4-24) - FRONT CONSOLE WIRING HARNESS AND CONNECTIONS

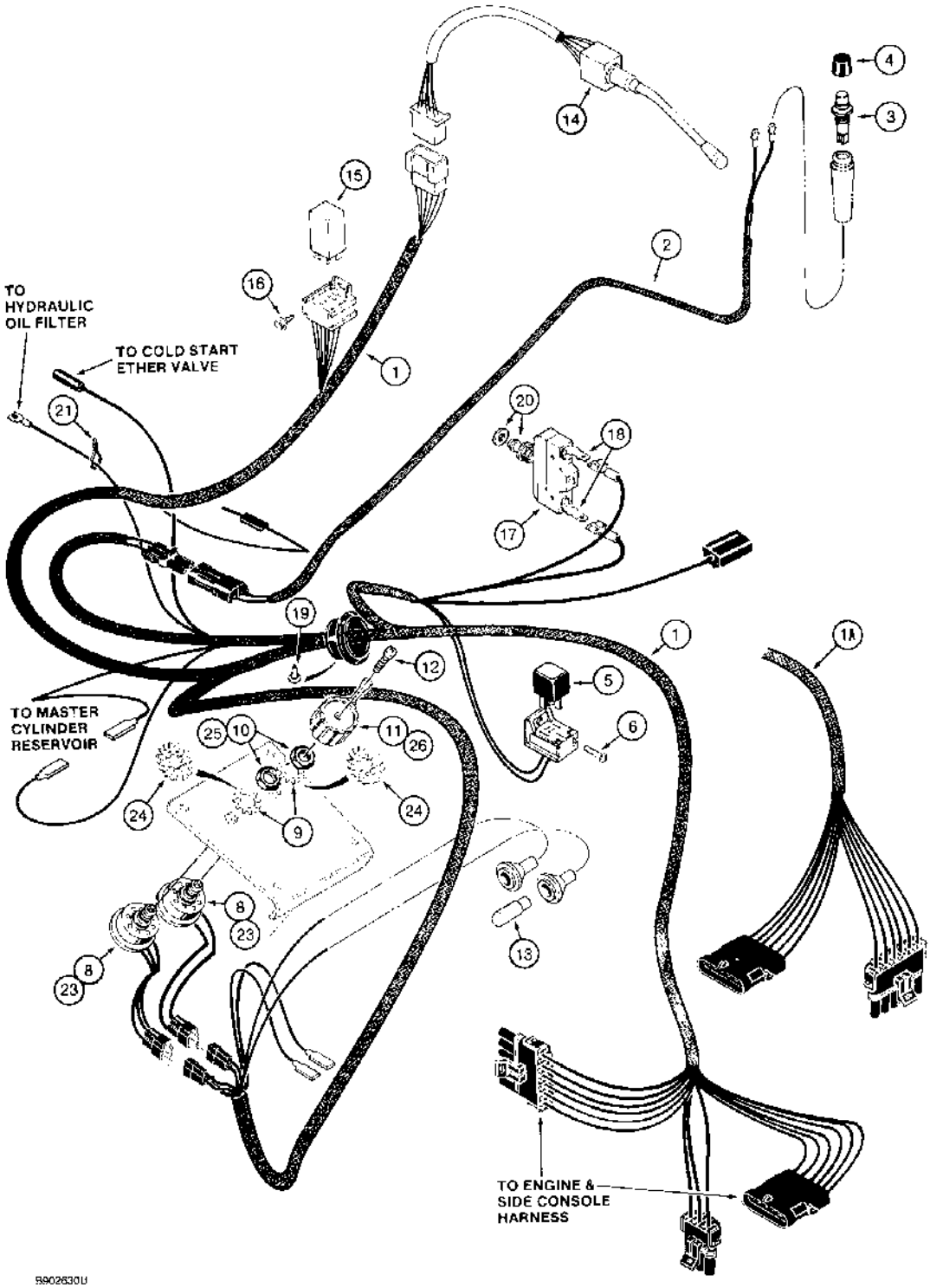

(580SK) - CASE SUPER-K CONSTRUCTION KING LOADER BACKHOE > (4-24) - FRONT CONSOLE WIRING HARNESS AND CONNECTIONS

Diag #	Part #	Name	Description	Qty
1	D150199	HARNESS	front console, prior to P.I.N. JJG0167019	1
1A	101595A1	HARNESS	front console, P.I.N. JJG0167019 and after	1
2	D147050	HARNESS	loader control lever, to fast cycle switch, D150199 or 101595A1 harness	1
3	D141486	SWITCH	fast cycle, loader control lever	1
4	D138252	BOOT	COVER switch	1
5	D128310	RELAY	30 amperes, used on models with horn	1
		Relay is marked 40 amp on the relay-this is the RESISTANCE rating. The INDUCTIVE rating is 30 amps. We use this inductive rating in our literature.	Relay is marked 40 amp on the relay-this is the RESISTANCE rating. The INDUCTIVE rating is 30 amps. We use this inductive rating in our literature.	1
6	281-4556	SELF-TAP SCREW,Hex Wash Hd, #10 x 3/8"	SCREW self-tapping, hex washer head, No. 10 NC x 3/8 inch, harness, relay socket mounting	1
	D138376	SWITCH	ASSEMBLY front driving and rear flood lamps, three position with octagonal shaft, no longer available, order 133820A1 switch and D149932 knob	1
		See Ref. 9 on Figure 4-28 for switch mounting plate.	See Ref. 9 on Figure 4-28 for switch mounting plate.	1
	D138377	SWITCH	ASSEMBLY flasher lamps, two position with octagonal shaft, no longer available, order 133818A1 switch and D149932 knob, Includes: Ref. 8, 9 and 10	1
		See Ref. 9 on Figure 4-28 for switch mounting plate.	See Ref. 9 on Figure 4-28 for switch mounting plate.	1
8	NSS	NOT SERVICED SEPARATELY	SWITCH, D138376 or D138377 switch	1
9	193-58	LOCK WASHER,Ext Tooth, 1/2"	WASHER external tooth lock, 1/2 inch, D138376 or D138377 switch	1
10	425-118	NUT,1/2"-20, G5	hex, 1/2 inch NF	1
11	A141735	KNOB	D138376 work lamp and D138377 flasher switches, with octagonal shaft, see Figure 9-172 for lamp and flasher symbol decals, if used	2
12	470-1088	SCREW,Slotted Pan Hd, #8-32 x 1/2"	machine, pan head slotted, No. 8 NC x 1/2 inch	2
13	D71346	TAIL LAMP	BULB light, No. 168	2
14	E46938	FLASHER SWITCH	LEVER switch, turn signal and horn	1
15	D147166	FLASHER UNIT	SWITCH flasher, see Figure 5-02, Ref. 14, for socket mounting plate	1

Diag #	Part #	Name	Description	Qty
16	281-4556	SELF-TAP SCREW,Hex Wash Hd, #10 x 3/8"	SCREW self-tapping, hex washer head, No. 10 NC x 3/8 inch, mounts flasher socket to plate on Figure 5-02	1
17	D148108	SWITCH	brake lamp	1
18	A187990	TERMINAL CONNECTOR,Male	TERMINAL Male	2
19	187-1325	SELF-TAP SCREW,Sltd Pan Hd, #10 x 1/2"	SCREW self-tapping, pan head slotted, No. 10-16 x 1/2 inch	1
20	495-81153	WASHER,.469" x 3/4" x .030"	flat, 15/32 x 3/4 x 1/32 inch	2
21	L18337	CABLE TIE,9.95"-12.1" lg	STRAP tie, 15 inch, nylon	1
	133820A1	SWITCH	ASSEMBLY front driving and rear flood lamps, three position with square shaft, includes Ref. 23-25, replaces D138376, D149931 switch	1
	133818A1	SWITCH	ASSEMBLY flasher lamps, two position with square shaft, includes Ref. 23-25, replaces D138377, D149893 switch, Includes: Ref. 23 and 24	1
23	NSS	NOT SERVICED SEPARATELY	SWITCH, 133820A1 or 133818A1 switch	1
24	493-11052	LOCK WASHER,Ext-Int Tooth, 1/2"	WASHER internal-external tooth lock, 1/2 inch	1
25	425-148	JAM NUT,Jam, 1/2"-13, G5	- hex, jam, 1/2 inch NC	1
26	D149932	BUTTON	KNOB, D149931, D149893, 133820A1 and 133818A1 switch with square shaft, if used	2

http://www.minnparbackhoeparts.com/

(580SK) - CASE SUPER-K CONSTRUCTION KING LOADER BACKHOE > (4-26) - SIDE CONSOLE WIRING HARNESS AND CONNECTIONS

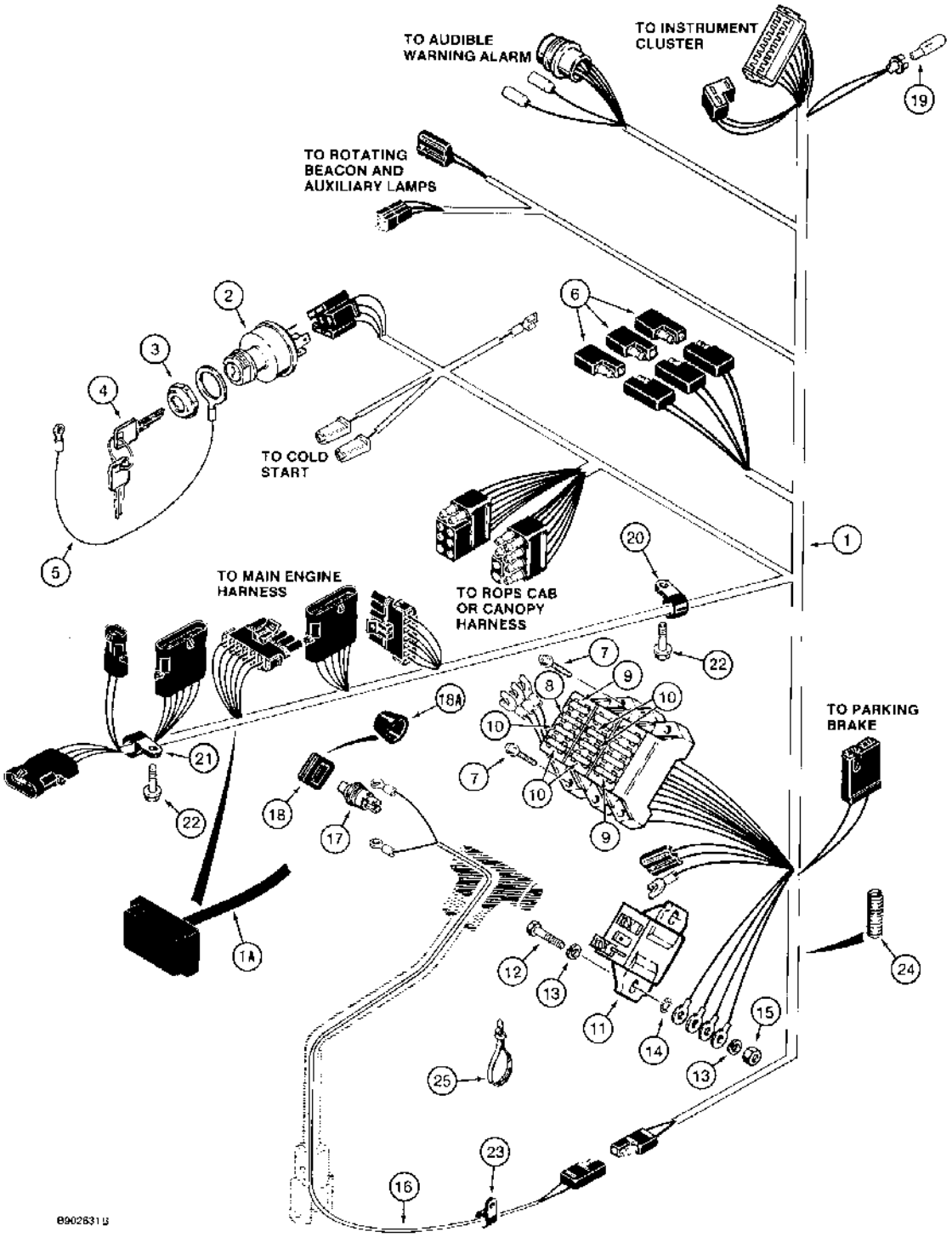

(580SK) - CASE SUPER-K CONSTRUCTION KING LOADER BACKHOE > (4-26) - SIDE CONSOLE WIRING HARNESS AND CONNECTIONS

Diag #	Part #	Name	Description	Qty
1	D147040	HARNESS	side console, used with D146664 alarm wire, Ref. 12 on Figure 4-52 on models with audible warning alarm, prior to P.I.N. JJG0167019	1
1A	110884A1	HARNESS	side console, includes wiring for audible warning alarm, D146664 wire, Ref. 12 on Figure 4-52, not required with this harness, P.I.N. JJG0167019 and after, replaces 101597A1	1
	D134737	IGNITION SWITCH	SWITCH ASSEMBLY key, includes keys, Includes: Ref. 2, 3 and 4.	1
2	NSS	NOT SERVICED SEPARATELY	SWITCH key, without keys	1
		PLASTIC PLUG THE IGNITION SWITCH GOES INTO IS P/N 225253C1, PACKARD NUMBER IS 2984017 PER PRINT.	PLASTIC PLUG THE IGNITION SWITCH GOES INTO IS P/N 225253C1, PACKARD NUMBER IS 2984017 PER PRINT.	1
3	A77314	NUT	key switch mounting	1
4	A77313	SET OF 2 KEYS	KEY, set of two; metal without padding	1
5	D144977	ELECTRICAL WIRE	WIRE ground, key switch, uses existing hardware	1
6	L71879	DIODE ELEMENT	DIODE alternator protecting	3
7	281-45510	SELF-TAP SCREW,Hex Wash Hd, #10 x 5/8"	SCREW self-tapping, hex washer head, No. 10 NF x 5/8 inch	6
8	A149803	FUSE	25 amperes	1
		THE FUSE BLOCK THAT REF. 8, 9 and 10 FUSES GO IN IS 245435C1. THERE WOULD BE 3 USED AS PICTURED HERE.	THE FUSE BLOCK THAT REF. 8, 9 and 10 FUSES GO IN IS 245435C1. THERE WOULD BE 3 USED AS PICTURED HERE.	1
		COVER FOR THE FUSE BLOCK IS ON Fig. 9-130.	COVER FOR THE FUSE BLOCK IS ON Fig. 9-130.	1
9	A149800	FUSE	10 ampere, red	2
		THE FUSE BLOCK THAT REF. 8, 9 and 10 FUSES GO IN IS 245435C1. THERE WOULD BE 3 USED AS PICTURED HERE.	THE FUSE BLOCK THAT REF. 8, 9 and 10 FUSES GO IN IS 245435C1. THERE WOULD BE 3 USED AS PICTURED HERE.	1
10	A149801	FUSE	15 ampere, light blue	5
		THE FUSE BLOCK THAT REF. 8, 9 and 10 FUSES	THE FUSE BLOCK THAT REF. 8, 9 and 10 FUSES GO IN IS 245435C1. THERE	1

Diag #	Part #	Name	Description	Qty
		GO IN IS 245435C1. THERE WOULD BE 3 USED AS PICTURED HERE.	WOULD BE 3 USED AS PICTURED HERE.	
11	1546541C1	RELAY	switch, 75 ampere, replaces D144471 relay	1
12	413-416	BOLT,Hex, 1/4" - 20 x 1", Gr 5	hex, 1/4 NC x 1 inch	2
13	492-11025	LOCK WASHER,1/4"	WASHER, LOCK, , 2 of the 3 washers are at the lower mounting hole 1/4"	3
14	493-11026	LOCK WASHER,Ext-Int Tooth, 1/4"	lower mounting hole only Ext-Int Tooth, 1/4"	1
15	193-1006	NUT,Keps, w/LW, 1/4"-20	ASSEMBLY, includes washer, 1/4 inch, NC	2
16	D150166	HARNESS	transaxle shift lever switch to side console harness	1
17	D141486	SWITCH	clutch cutout, transaxle shift lever handle	1
18	D140149	PROTECTOR	COVER square, switch, if used	1
18A	D138252	BOOT	COVER round, switch, if used	1
19	D71346	TAIL LAMP	BULB warning, No. 168, transmission filter	1
20	515-23254	CLAMP,1", Insul, 3/8" Bolt	P-type 1", Insul, 3/8" Bolt	1
21	515-23190	CLAMP,3/4", Insul, 3/8" Bolt	P-type, 3/4 inch	1
22	281-14812	SELF-TAP SCREW,Hex Washer, 5/16" - 18 x 3/4"	SCREW self-tapping, hex washer head, 5/16 NC x 3/4 inch, retains, side console harness clamps to underside of chassis, replaces D141589 bolt	1-2
23	515-23190	CLAMP,3/4", Insul, 3/8" Bolt	harness, closed, 3/4 inch ID, uses side console hardware for mounting, replaces 49771	1
24	D150427	SLEEVE	GUARD, 150 mm long, sleeve, harness, cut to required length from D99461 bulk guard, see below	1
25	L18337	CABLE TIE,9.95"-12.1" lg	STRAP tie, 15 inch, nylon	1
	D99461	LOOM	GUARD, 2032 mm long, sleeve, bulk	1

http://www.minnparbackhoeparts.com/

(580SK) - CASE SUPER-K CONSTRUCTION KING LOADER BACKHOE > (4-28) - FRONT INSTRUMENT PANEL AND COVERS

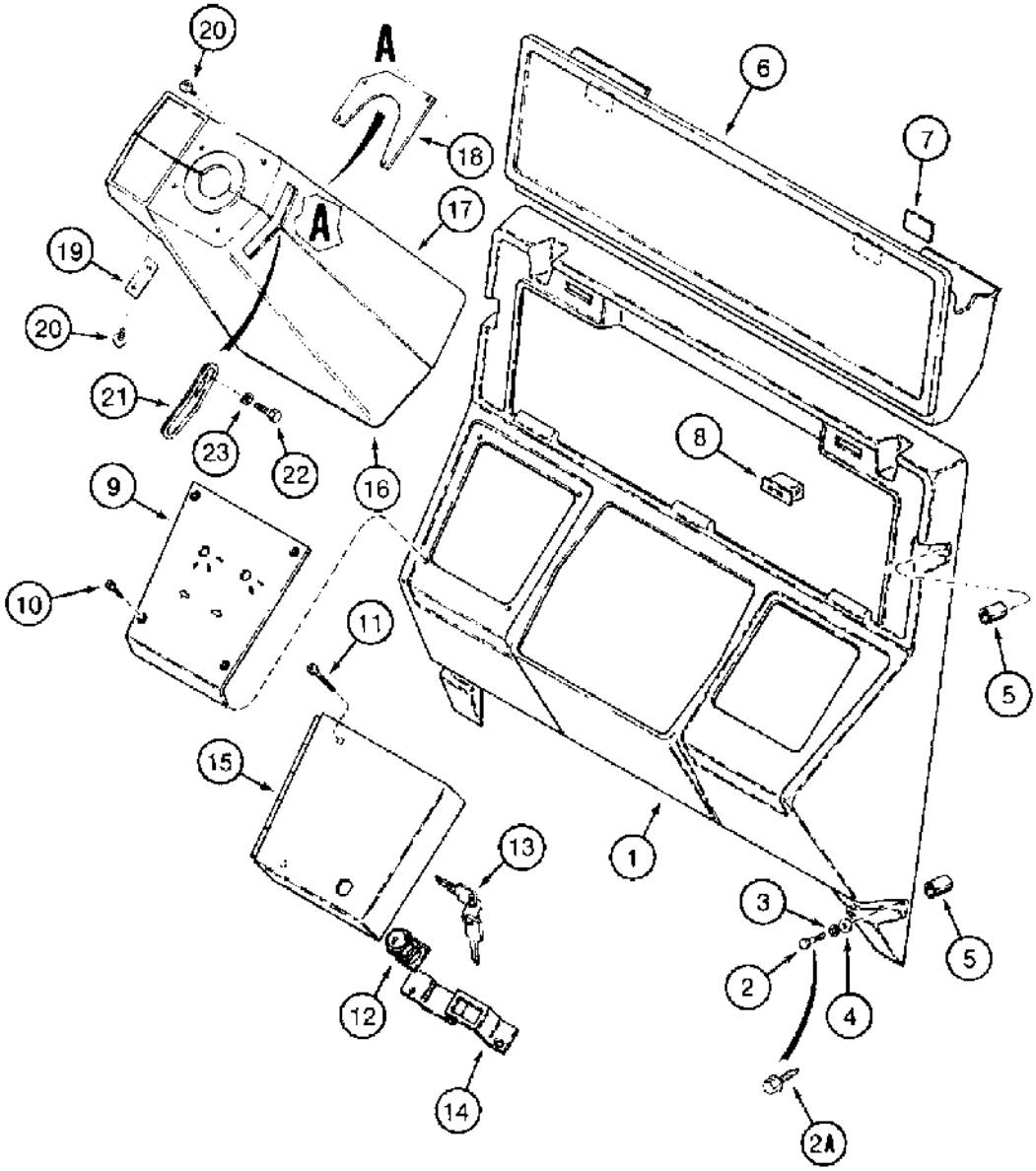

B902632 A

(580SK) - CASE SUPER-K CONSTRUCTION KING LOADER BACKHOE > (4-28) - FRONT INSTRUMENT PANEL AND COVERS

Diag #	Part #	Name	Description	Qty
1	D134389	BRACKET	PANEL instrument, front	1
2	413-516	BOLT,Hex, 5/16" - 18 x 1", Gr 5	hex, 5/16 NC x 1 inch, if used	6
2A	114921A1	SCREW	pointed, self-aligning, special, if used	6
3	492-11031	LOCK WASHER,5/16"	WASHER, LOCK, , if used 5/16"	6
4	495-11034	WASHER,5/16", SAE	5/16" SAE (flat, 11/32 x 11/16 x 1/16")	6
5	102439A1	SPACER	13/32 x 1/2 x 3/8 inch	2-4
6	D134256	BOX	COMPARTMENT storage, operators manual, see Figure 9-172, Ref. 38, for decal	1
7	D135903	PLATE	steel, striker	2
8	D127335	CATCH	Magnetic, Storage compartment	2
9	D146194	LARGE PLATE	PLATE switch mounting	1
10	440-1108	SCREW,Cross Pan Hd, #10-24 x 1/2"	machine, pan head Phillips, No. 10 NC x 1/2 inch	4
11	140-117	SCREW,Cross Pan Hd, #10-24 x 1"	Used with Ref. 14 and 15 Cross Pan Hd, #10-24 x 1"	4
12	D136738	LOCK	ASSEMBLY includes two keys, anti-vandalism cover, ROPS canopy models, Includes: Ref. 13	1
		P/N D136738 Does not include keys per print.	P/N D136738 Does not include keys per print.	1
13	N14440	KEY	cover lock	2
14	D140938	BRACKET	lower, switch plate, anti-vandalism, ROPS canopy models	1
15	D140937	COVER	front instrument panel, anti-vandalism, ROPS canopy models	1
	D143963	COVER	ASSEMBLY, two piece, steering column, see Figure 9-172 for arrow decal, Includes: Ref. 16 through 20	1
16	NSS	NOT SERVICED SEPARATELY	COVER steering column, rear	1
17	NSS	NOT SERVICED SEPARATELY	COVER steering column, front	1
18	D143710	LARGE PLATE	PLATE retaining, upper	1
19	D143711	LARGE PLATE	PLATE retaining, side	1
20	D148607	SCREW,#10 - 16 x 5/8"	Phillips flat head, No. 10 NC x 5/8 inch, special	6
21	E47509	SUPPORT	PLATE cover, turn signal and horn lever mounting	1
22	614-4008	BOLT,Hex, M4 x 0.7 x 8mm, Cl 8.8, Full Thd	hex, 4 - 7 x 8 mm	2

Diag #	Part #	Name	Description	Qty
23	892-11004	LOCK WASHER,M4	WASHER, LOCK, M4	2
	FOOTNOTE			1

http://www.minnparbackhoeparts.com/

(580SK) - CASE SUPER-K CONSTRUCTION KING LOADER BACKHOE > (4-30) - SIDE INSTRUMENT PANEL AND COVERS

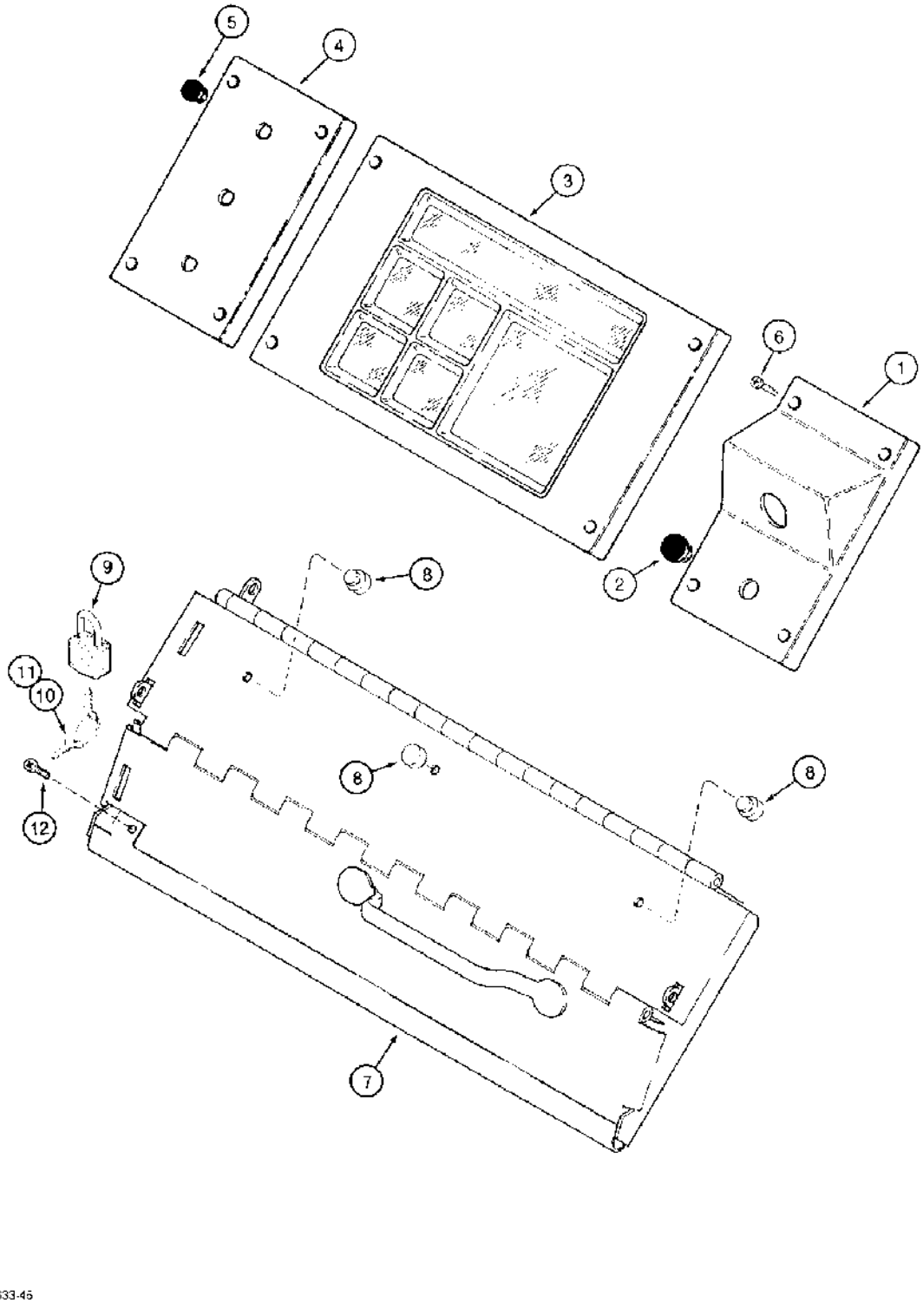

(580SK) - CASE SUPER-K CONSTRUCTION KING LOADER BACKHOE > (4-30) - SIDE INSTRUMENT PANEL AND COVERS

Diag #	Part #	Name	Description	Qty
1	D135675	PLATE	rear, key switch	1
2	353-406	PLUG,Dome, .625" hole, Nylon	nylon, 5/8 inch, not required on models with cold start	1
3	A187965	CLUSTER	ASSEMBLY instrument, parts list Figure 4-32	1
	A187965R	REMAN-INSTR CLUSTER	580SK	1
	A187965C	CORE-CLUSTER, INSTR	Return Number	1
4	D141501	LARGE PLATE	PLATE front, accessory switches, see Figure 9-172 for decals	1
5	353-404	PLUG,Dome, .500" hole, Nylon	PLUG,Dome, .500" hole, Nylon	3
6	440-1108	SCREW,Cross Pan Hd, #10-24 x 1/2"	machine, pan head Phillips, No. 10 NC x 1/2 inch	12
	D149553	COVER	ASSEMBLY side instrument panel, anti-vandalism, ROPS canopy models, Includes: Ref. 7 and 8	1
7	NSS	NOT SERVICED SEPARATELY	COVER side instrument panel, anti-vandalism	1
8	F22426	STOP	BUMPER rubber	3
9	D93753	PADLOCK	includes keys, if used, Includes: Ref. 10 and 11	2
10	R29555	KEY	for Master padlock only, if used	2
11	D93751	SET OF 2 KEYS	KEY, for Yale padlock, if used	2
12	140-117	SCREW,Cross Pan Hd, #10-24 x 1"	SCREW,Cross Pan Hd, #10-24 x 1"	8

http://www.minnparbackhoeparts.com/

(580SK) - CASE SUPER-K CONSTRUCTION KING LOADER BACKHOE > (4-32) - INSTRUMENT CLUSTER

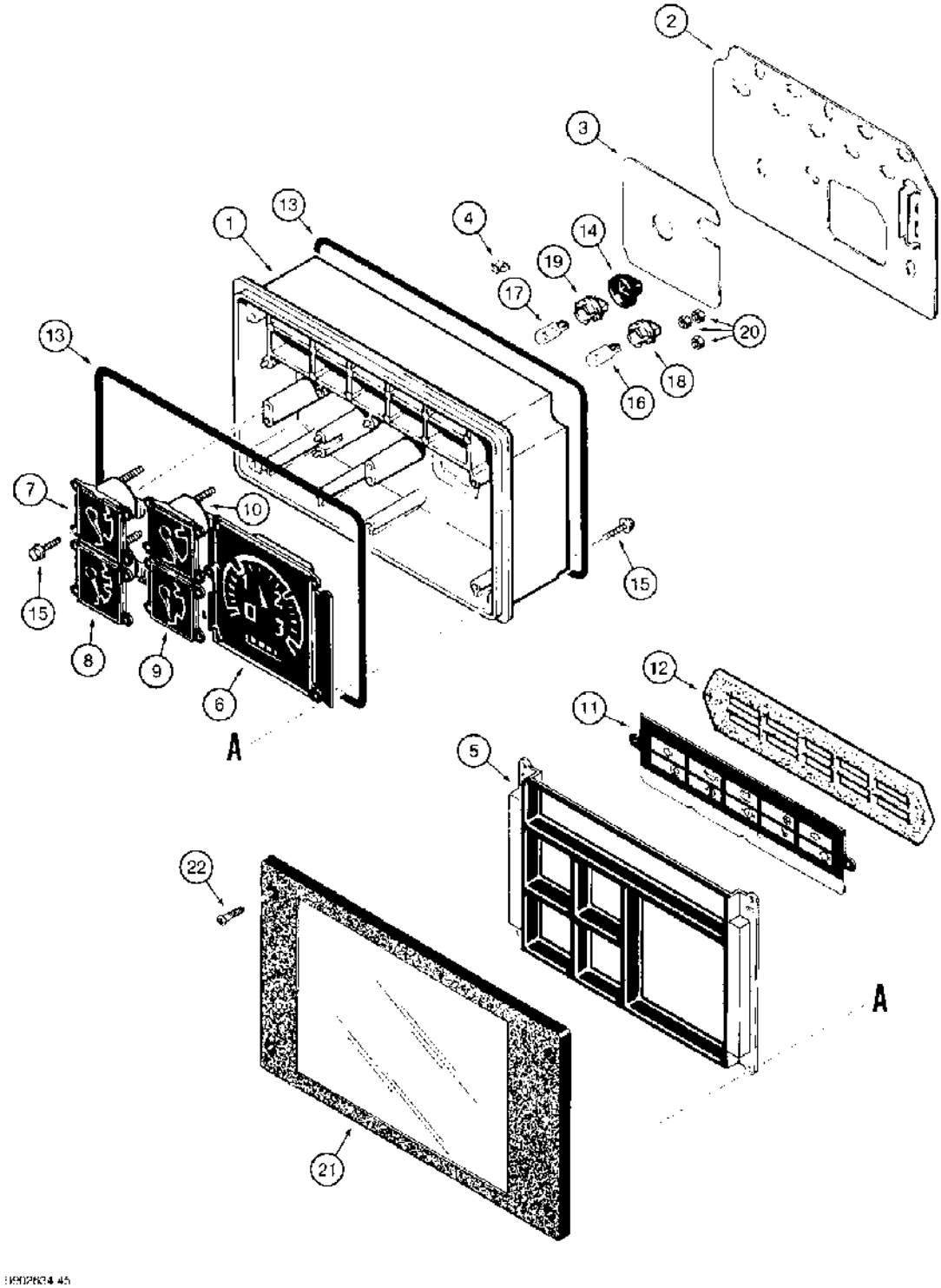

(580SK) - CASE SUPER-K CONSTRUCTION KING LOADER BACKHOE > (4-32) - INSTRUMENT CLUSTER

Diag #	Part #	Name	Description	Qty
	A187965	CLUSTER	ASSEMBLY instrument, tractor, Includes: Ref. 1 through 21 and P/N A191114	1
	A187965R	REMAN-INSTR CLUSTER	580SK	1
	A187965C	CORE-CLUSTER, INSTR	Return Number	1
	A191114	HOUSING	ASSEMBLY instrument cluster, Includes: Ref. 1 through 4	1
1	N13545	HOUSING	instrument cluster	1
2	H422774	BOARD, PRINTED CIRCU	BOARD printed circuit, instrument cluster	1
3	H422758	GASKET	housing	1
4	H422766	CLIP, SPRING	CLIP gauges	12
5	N14227	COVER	instrument cluster tachometer, Includes: hourmeter	1
		Dealer called looking for sender for the tachometer. This runs off the alternator and does not have one.	Dealer called looking for sender for the tachometer. This runs off the alternator and does not have one.	1
6	N13543	TACHOMETER	Includes Hourmeter	1
7	N13542	GAUGE	water temperature	1
8	A47688	ELECTRICAL GAUGE	GAUGE fuel level	1
9	N6807	ELECTRICAL GAUGE	GAUGE voltmeter	1
10	N13546	GAUGE	oil temperature	1
11	D146335	BAND	LENS identification, warning lamps	1
12	D71342	GASKET	lens	1
13	D71343	GASKET	instrument cluster	2
14	D71344	COVER	BOOT lamp socket, rubber	3
15	A45093	SCREW,Hex Slotted, 12.70"	special	12
16	D71346	TAIL LAMP	BULB warning, No.168	8
17	W10478	LAMP	BULB illumination, No.194	3
18	A47123	SOCKET/RECEPTACLE	SOCKET lamp	8
19	A47125	PEDESTAL	SOCKET lamp, green	3
20	225-14106	NUT,#6-32	NUT,#6-32	3
21	N14225	SHIELD	instrument cluster	1
22	440-1108	SCREW,Cross Pan Hd, #10-24 x 1/2"	machine, pan head Phillips, No. 10 NC x 1/2 inch	4

http://www.minnparbackhoeparts.com/

(580SK) - CASE SUPER-K CONSTRUCTION KING LOADER BACKHOE > (4-34) - TRACTOR LAMP ELECTRICAL CIRCUIT, WITH CANOPY

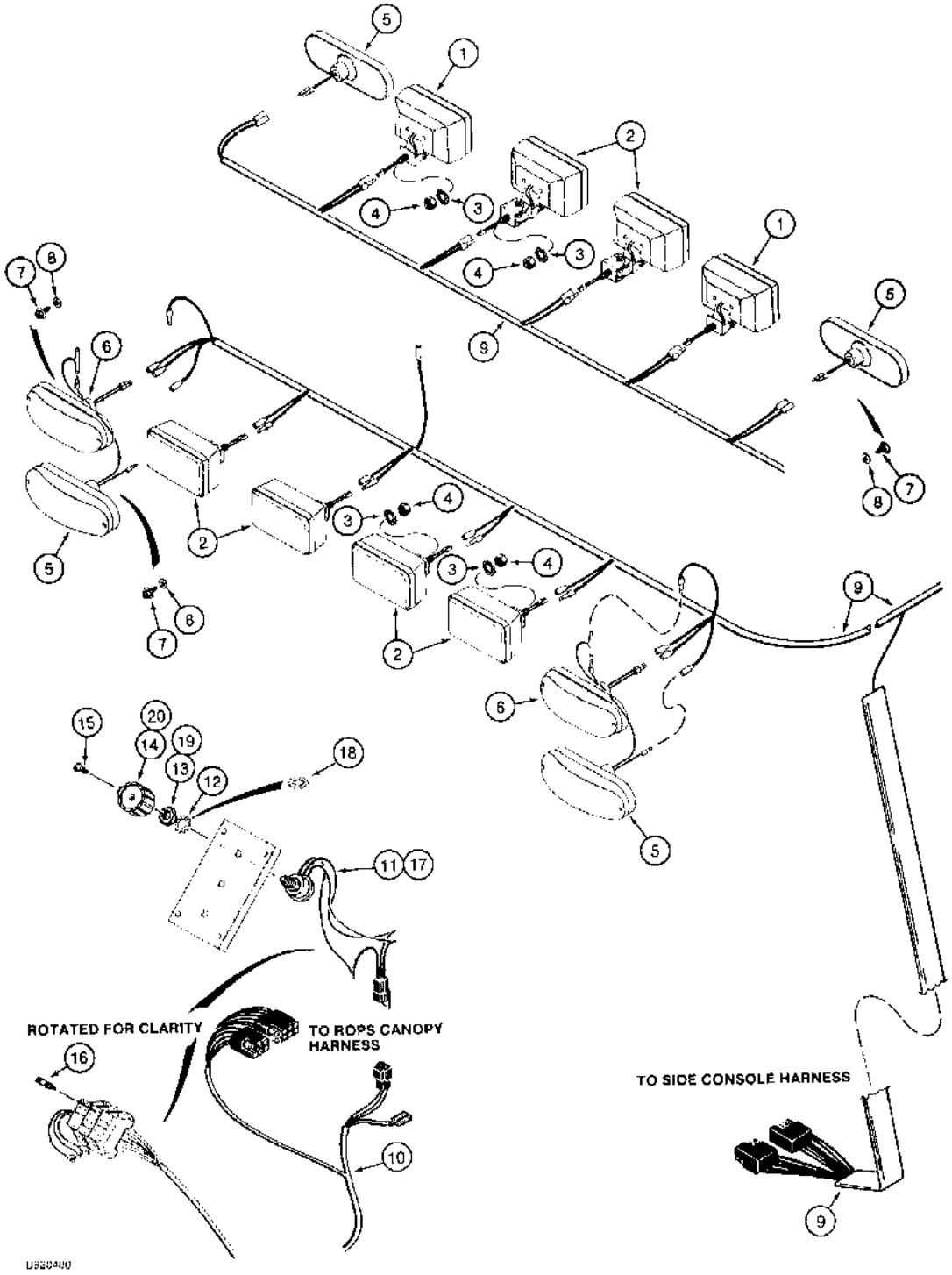

(580SK) - CASE SUPER-K CONSTRUCTION KING LOADER BACKHOE > (4-34) - TRACTOR LAMP ELECTRICAL CIRCUIT, WITH CANOPY

Diag #	Part #	Name	Description	Qty
1	D132681	LAMP	ASSEMBLY front driving, outer, parts list Figure 4-38	2
2	D132682	HEADLIGHT	LAMP ASSEMBLY rear flood, outet, and optional front and rear work lamps center, parts list Figure 4-38	2-6
3	493-11052	LOCK WASHER,Ext-Int Tooth, 1/2"	WASHER internal-external tooth lock, 1/2 inch	4-8
4	425-148	JAM NUT,Jam, 1/2"-13, G5	- hex, jam, 1/2 inch NC	4-8
5	D135384	LAMP	ASSEMBLY turn signal and flasher, front and rear, amber, parts list Figure 4-42	4
6	D121152	LAMP	ASSEMBLY stop and tail, rear, red, parts list Figure 4-42	2
7	187-576	SELF-TAP SCREW,Hex Wash Hd, #10 x 3/8"	SCREW self-tapping, hex washer head, No. 10 NC x 3/8 inch, lamp, base to ROPS canopy frame	12
8	495-31022	WASHER,#10	WASHER,#10	12
9	D146580	HARNESS	ROPS canopy, lamps, attaches to side console instrument harness, see Figure 9-162 for harness cover that mounts to the ROPS canopy	1
10	REF	INSTRUCTION	HARNESS instrument, side console, see Figure 4-26 for harness options and mounting	1
		Harness is glued to the rops post... Purchase locally as Loctite 409	Harness is glued to the rops post... Purchase locally as Loctite 409	1
	D141394	SWITCH	ASSEMBLY four-position, separate switching of optional front and rear work lamps, with octagonal shaft, no longer available, order D151015 switch and D149932 knob, Ref. 17-20, Includes: Ref. 11, 12 and 13	1
11	NSS	NOT SERVICED SEPARATELY	SWITCH, optional front and rear work lamps	1
12	193-58	LOCK WASHER,Ext Tooth, 1/2"	WASHER external tooth lock, 1/2 inch	1
13	425-118	NUT,1/2"-20, G5	hex, 1/2 inch NF	1
14	A141735	KNOB	D141394 optional work lamp switch with octagonal shaft, see Figure 9-172, Ref. 50, for work lamp symbol decal, if used	1
15	470-1088	SCREW,Slotted Pan Hd, #8-32 x 1/2"	machine, pan head slotted, No. 8 NC x 1/2 inch	1
16	A149802	FUSE	20 amperes, mounts in fuse holder in side console harness	1

Diag #	Part #	Name	Description	Qty
	D151015	SWITCH	ASSEMBLY four-position, separate switching of optional front and rear work lamps, with square shaft, Includes: Ref. 17, 18 and 19	1
17	NSS	NOT SERVICED SEPARATELY	SWITCH, optional front and rear work lamps	1
18	493-11052	LOCK WASHER,Ext-Int Tooth, 1/2"	WASHER internal-external tooth lock, 1/2 inch	1
19	425-148	JAM NUT,Jam, 1/2"-13, G5	- hex, jam, 1/2 inch NC	1
20	D149932	BUTTON	KNOB, D151015 optional work lamp switch with square shaft, if used	1
		if used	if used	1

http://www.minnparbackhoeparts.com/

(580SK) - CASE SUPER-K CONSTRUCTION KING LOADER BACKHOE > (4-36) - TRAC LAMP ELECT CIRCUIT,WITH CAB,CAB MODELS W/PLASTIC ROOF CAP,PRIOR TO CAB SN JAB0023786

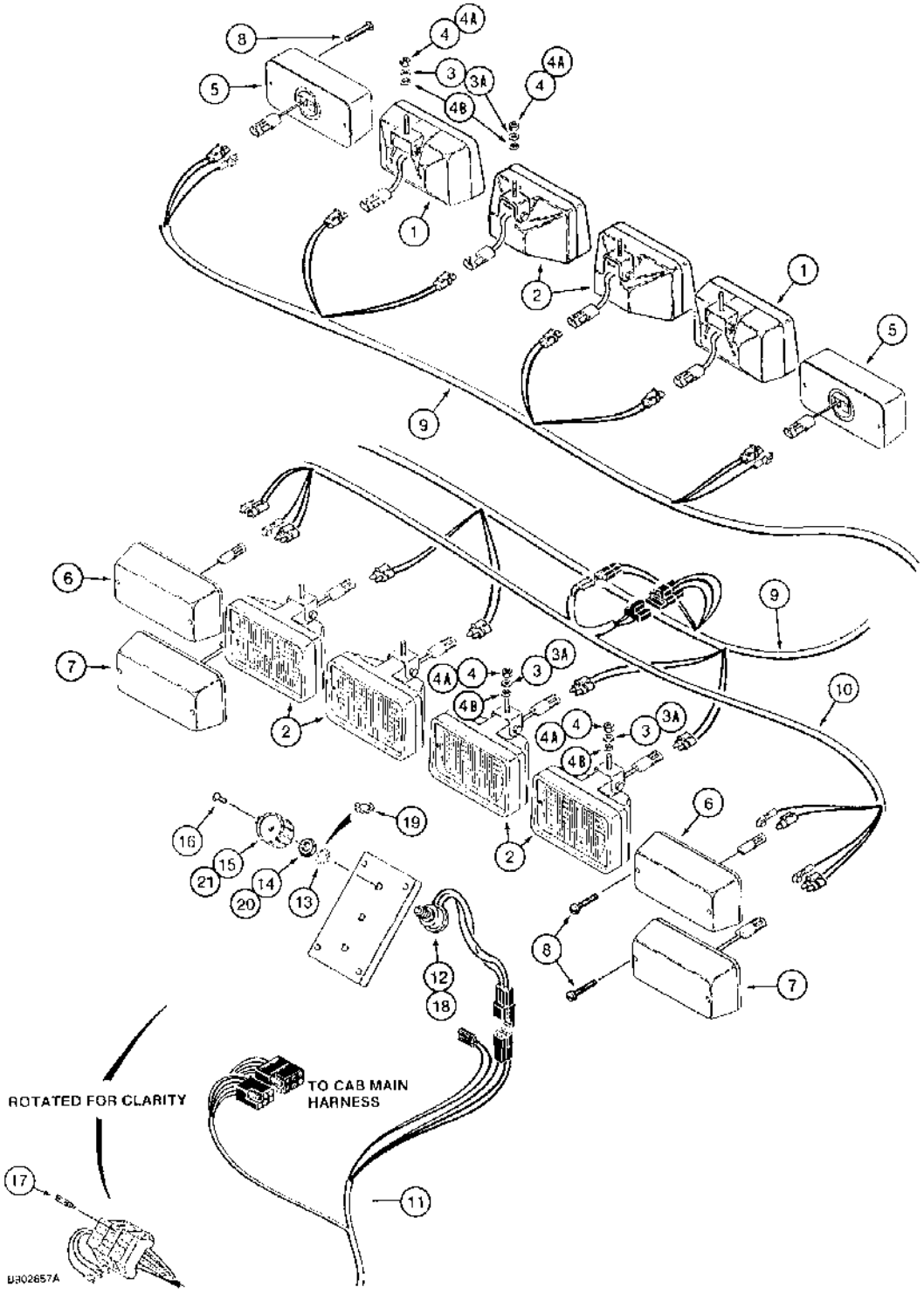

http://www.minnparbackhoeparts.com/

(580SK) - CASE SUPER-K CONSTRUCTION KING LOADER BACKHOE > (4-36) - TRAC LAMP ELECT CIRCUIT,WITH CAB,CAB MODELS W/PLASTIC ROOF CAP,PRIOR TO CAB SN JAB0023786

Diag #	Part #	Name	Description	Qty
1	R54411	LAMP	ASSEMBLY front driving, parts list Figure 4-40	2
2	R54412	LAMP, WORK	LAMP ASSEMBLY rear flood, outer, and optional front and rear work lamps, center, parts list Figure 4-40	2-6
3	495-11041	WASHER,3/8", SAE	flat, (13/32 x 13/16 x 1/16"), Used with Hobbs, SW, lamps	4-8
3A	895-11010	WASHER,M10 x 20 x 2	flat, 11 x 21 x 2 mm, Used with ABL lamps	4-8
4	131-203	LOCK NUT,3/8"-16, GB, LH	NUT light hex, self-locking, 3/8 inch NC, used with Hobbs, SW, lamps	4-8
4A	832-10410	NUT,M10 x 1.5, Cl 8	NUT, LOCK, , Used with ABL lamps M10 x 1.5, Cl 8	4-8
4B	131-415	JAM NUT,Push, Bolt Retainer, 3/8" x 25/32"	Hex, Used in addition to flat washer and nut on some models Push, Bolt Retainer, 3/8" x 25/32"	4-8
5	92259C1	LIGHT, WARNING	LAMP ASSEMBLY flasher and turn signal, front of cab only, parts list Fig. 4-44	2
6	92258C1	LIGHT, WARNING	LAMP ASSEMBLY flasher and turn signal, rear of cab only, parts list Fig. 4-44	2
7	92260C1	LAMP	ASSEMBLY stop and tail lamp, parts list Figure 4-44	2
8	132-080	SCREW machine, Fillister head, No. 10 NC x 2 inch, replaced 169-170	SCREW machine, Fillister head, No. 10 NC x 2 inch, replaced 169-170	12
9	REF	INSTRUCTION	HARNESS cab, main, see Figure 9-140 for harness options and control panel	1
10	R53636	HARNESS	rear lamp, attaches to main cab harness	1
11	REF	INSTRUCTION	HARNESS instrument, side console, see Figure 4-26 for harness options	1
	D141394	SWITCH	ASSEMBLY four-position, separate switching of optional front and rear work lamps, with octagonal shaft, no longer available, order D151015 switch and D149932 knob, Ref. 18-21, Includes: Ref. 12, 13 and 14	1
12	NSS	NOT SERVICED SEPARATELY	SWITCH, optional front and rear work lamps	1
13	193-58	LOCK WASHER,Ext Tooth, 1/2"	WASHER external tooth lock, 1/2 inch	1
14	425-118	NUT,1/2"-20, G5	hex, 1/2 inch NF	1
15	A141735	KNOB	D141394 optional work lamp switch with octagonal shaft, see Figure 9-172, Ref. 50, for work lamp symbol decal, if used	1

Diag #	Part #	Name	Description	Qty
16	470-1088	SCREW,Slotted Pan Hd, #8-32 x 1/2"	machine, pan head slotted, No. 8 NC x 1/2 inch	1
17	A149802	FUSE	20 amperes, mounts in fuse holder in side console harness	1
	D151015	SWITCH	ASSEMBLY four-position, separate switching of optional front and rear work lamps, with square shaft, Includes: Ref. 18, 19 and 20	1
18	NSS	NOT SERVICED SEPARATELY	SWITCH, optional front and rear work lamps	1
19	493-11052	LOCK WASHER,Ext-Int Tooth, 1/2"	WASHER internal-external tooth lock, 1/2 inch	1
20	425-148	JAM NUT,Jam, 1/2"-13, G5	- hex, jam, 1/2 inch NC	1
21	D149932	BUTTON	KNOB, D151015 optional work lamp switch with square shaft, if used	1
		if used	if used	1

http://www.minnparbackhoeparts.com/

(580SK) - CASE SUPER-K CONSTRUCTION KING LOADER BACKHOE > (4-37A) - TRAC LAMP ELECT CIRCUIT,WITH CAB,CAB MODELS W/O PLASTIC ROOF CAP,PRIOR TO CAB SN JAB0023786

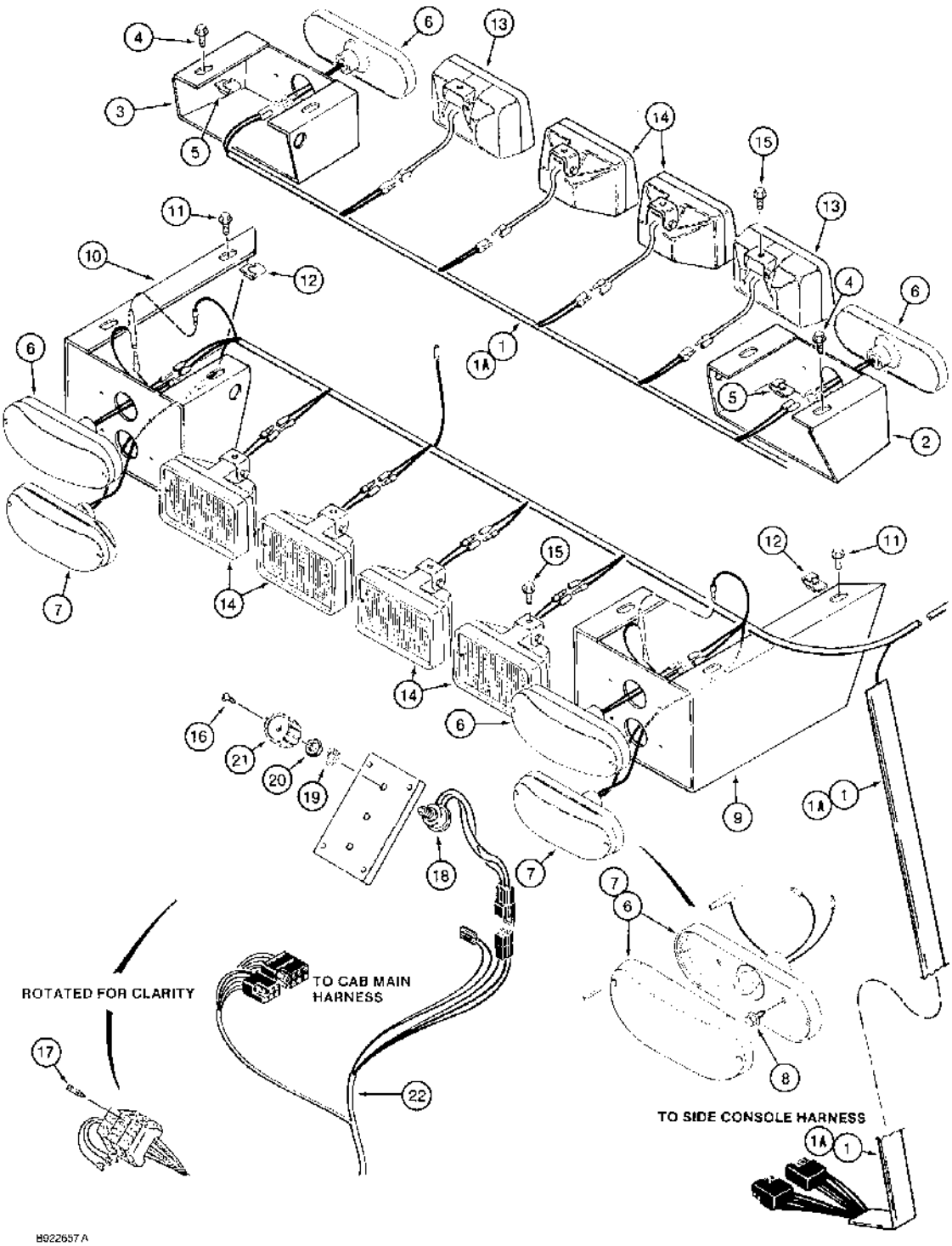

(580SK) - CASE SUPER-K CONSTRUCTION KING LOADER BACKHOE > (4-37A) - TRAC LAMP ELECT CIRCUIT,WITH CAB,CAB MODELS W/O PLASTIC ROOF CAP,PRIOR TO CAB SN JAB0023786

Diag #	Part #	Name	Description	Qty
1	108961A1	HARNESS	cab, main, with tapered rubber grommets, no longer available, order Ref. 1A, 133526A1, harness and four Ref. 23, 353-498, bushings	1
1A	133526A1	HARNESS	cab, main, without tapered rubber grommets, used with four Ref. 23, 353-498 bushings, see Figure 9-140 for control panel	1
2	108831A1	BRACKET	right-hand front lamp	1
3	108957A1	BRACKET	left-hand front lamp	1
4	409-7612	BOLT,Hex Serr Flg, 3/8" - 16 x 3/4", Spcl	hex flanged, 3/8 NC x 3/4 inch	4
5	131-880	NUT,J, Ret, 3/8"-16	J-type, 3/8 inch NC	4
6	D135384	LAMP	ASSEMBLY turn signal and flasher, front and rear, amber, parts list Figure 4-42	4
7	D121152	LAMP	ASSEMBLY stop and tail, rear, red, parts list Figure 4-42	2
8	281-4556	SELF-TAP SCREW,Hex Wash Hd, #10 x 3/8"	SCREW self-tapping, hex washer head, No. 10 NC x 3/8 inch	12
9	108834A1	BRACKET	right-hand rear lamp	1
10	108959A1	BRACKET	left-hand rear lamp	1
11	409-7612	BOLT,Hex Serr Flg, 3/8" - 16 x 3/4", Spcl	hex flange, 3/8 NC x 3/4 inch	6
12	131-880	NUT,J, Ret, 3/8"-16	J-type, 3/8 inch NC	6
13	109080A1	LAMP	ASSEMBLY front driving, outer, parts list Figure 4-41A	2
14	109081A1	SPOTLIGHT	LAMP ASSEMBLY, front center and rear flood, parts list Figure 4-41A	6
15	409-768	BOLT,Hex Flg, 3/8" - 16 x 1/2", SPL	hex flange, 3/8 NC x 1/2 inch	8
16	470-1088	SCREW,Slotted Pan Hd, #8-32 x 1/2"	machine, pan head slotted, No. 8 NC x 1/2 inch	1
17	A149802	FUSE	20 amperes, mounts in fuse holder in side console harness	1
	D151015	SWITCH	ASSEMBLY four-position, separate switching of optional front and rear work lamps, with square shaft, Includes: Ref. 18, 19 and 20	1
18	NSS	NOT SERVICED SEPARATELY	SWITCH, optional front and rear work lamps	1
19	493-11052	LOCK WASHER,Ext-Int Tooth, 1/2"	WASHER internal-external tooth lock, 1/2 inch	1

http://www.minnparbackhoeparts.com/

Diag #	Part #	Name	Description	Qty
20	425-148	JAM NUT,Jam, 1/2"-13, G5	- hex, jam, 1/2 inch NC	1
21	D149932	BUTTON	KNOB, D151015 optional work lamp switch with square shaft, if used	1
22	REF	INSTRUCTION	HARNESS instrument, side console, see Figure 4-26 for harness options	1
23	353-498	BUSHING	snap, 11/16 ID, used as a grommet, cab lamp mounting bracket	4

http://www.minnparbackhoeparts.com/

(580SK) - CASE SUPER-K CONSTRUCTION KING LOADER BACKHOE > (4-38) - CANOPY TRACTOR LAMPS, FRONT DRIVING, REAR FLOOD, AND OPTIONAL FRONT

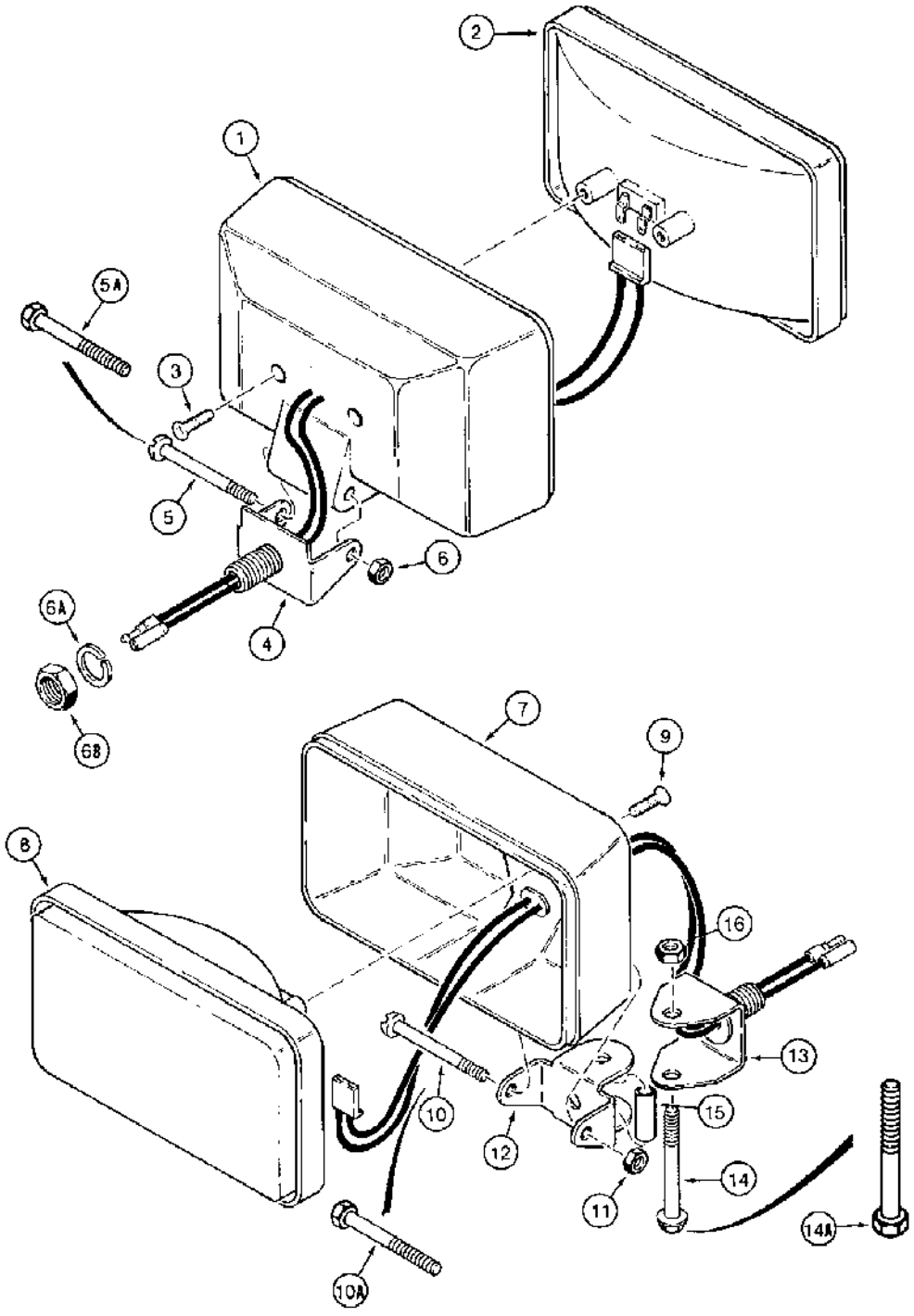

B9402006A

(580SK) - CASE SUPER-K CONSTRUCTION KING LOADER BACKHOE > (4-38) - CANOPY TRACTOR LAMPS, FRONT DRIVING, REAR FLOOD, AND OPTIONAL FRONT

Diag #	Part #	Name	Description	Qty
	D132681	LAMP	ASSEMBLY front driving, front driving lamp assembly, Includes: Ref. 1 through 6B	2
		D132681, AND D132682-LAMP ASSEMBLIES, ARE AVAILABLE IN THE DEPOTS, AS D132681, AND D132682.	D132681, AND D132682-LAMP ASSEMBLIES, ARE AVAILABLE IN THE DEPOTS, AS D132681, AND D132682.	1
1	NSS	NOT SERVICED SEPARATELY	HOUSING lamp, front driving lamp assembly	1
2	91946C1	LAMP	BULB sealed beam, front driving lamp assembly	1
3	273-10510	SELF-TAP SCREW,Slotted Flat Hd, #10 x 5/8"	SCREW self-tapping, flat slotted, No. 10-16 x 5/8 inch, front driving lamp assembly	2
4	N14284	BRACKET	lamp, front driving lamp assembly	1
5	182-211	SCREW,Slotted Pan Hd, 1/4"-20 x 2"	machine, pan head slotted, 1/4 NC x 2 inch, housing to bracket, production, front driving lamp assembly	1
5A	413-432	BOLT,Hex, 1/4" - 20 x 2", Gr 5	Service, front driving lamp assembly Hex, 1/4"-20 x 2", G5	1
6	231-1444	NUT,1/4"-20, GB	NUT, LOCK, , Replaces 131-71, Front Driving Lamp Assembly 1/4"-20, GB	1
6A	80679	LOCK WASHER,1/2"	WASHER, LOCK, , Front driving lamp assembly 1/2"	1
6B	425-108	NUT,1/2"-13, G5	NUT, , Hex, Front driving lamp assembly 1/2"-13, G5	1
	D132682	HEADLIGHT	LAMP ASSEMBLY, rear flood, outer, and optional front and rear work lamps, rear floor lamp assembly and optional front and rear work lamps, Includes: Ref. 7 through 16	2-6
		D132681, AND D132682-LAMP ASSEMBLIES, ARE AVAILABLE IN THE DEPOTS, AS D132681, AND D132682.	D132681, AND D132682-LAMP ASSEMBLIES, ARE AVAILABLE IN THE DEPOTS, AS D132681, AND D132682.	1
7	NSS	NOT SERVICED SEPARATELY	HOUSING lamp, rear floor lamp assembly and optional front and rear work lamps	1
8	91947C1	LAMP	BULB sealed beam, rear floor lamp assembly and optional front and rear work lamps	1

Diag #	Part #	Name	Description	Qty
9	273-10510	SELF-TAP SCREW,Slotted Flat Hd, #10 x 5/8"	SCREW self-tapping, flat slotted, No. 10-16 x 5/8 inch, rear floor lamp assembly and optional front and rear work lamps	2
10	182-211	SCREW,Slotted Pan Hd, 1/4"-20 x 2"	machine, pan head slotted, 1/4 NC x 2 inch housing to bracket, production, rear floor lamp assembly and optional front and rear work lamps	1
10A	413-432	BOLT,Hex, 1/4" - 20 x 2", Gr 5	Service, rear floor lamp assembly and optional front and rear work lamps Hex, 1/4"-20 x 2", G5	1
11	231-1444	NUT,1/4"-20, GB	NUT, LOCK, , Replaces 131-71, Rear Floor Lamp Assembly and Optional Front and Rear Work Lamps 1/4"-20, GB	1
12	N14285	SUPPORT	BRACKET mounting, lamp, rear floor lamp assembly and optional front and rear work lamps	1
13	A52216	SUPPORT	BRACKET mounting, lamp, includes stud, rear floor lamp assembly and optional front and rear work lamps	1
14	413-536	BOLT,Hex, 5/16" - 18 x 2 1/4", Gr 5	hex flange, self-locking, 5/16 NC x 2-1/4 inch, black, special, production, rear floor lamp assembly and optional front and rear work lamps	1
14A	413-536	BOLT,Hex, 5/16" - 18 x 2 1/4", Gr 5	hex, 5/16 NC x 2-1/4 inch, service, rear floor lamp assembly and optional front and rear work lamps	1
15	A52219	SPACER	bracket, rear floor lamp assembly and optional front and rear work lamps	1
16	231-1445	NUT,5/16"-18, GB	NUT hex, self-locking, 5/16 inch NC, replaces 131-69, rear floor lamp assembly and optional front and rear work lamps	1

http://www.minnparbackhoeparts.com/

(580SK) - CASE SUPER-K CONSTRUCTION KING LOADER BACKHOE > (4-40) - CAB TRACTOR LAMPS - PLASTIC CONNECTORS, PRIOR TO CAB SERIAL NUMBER JAB0023786

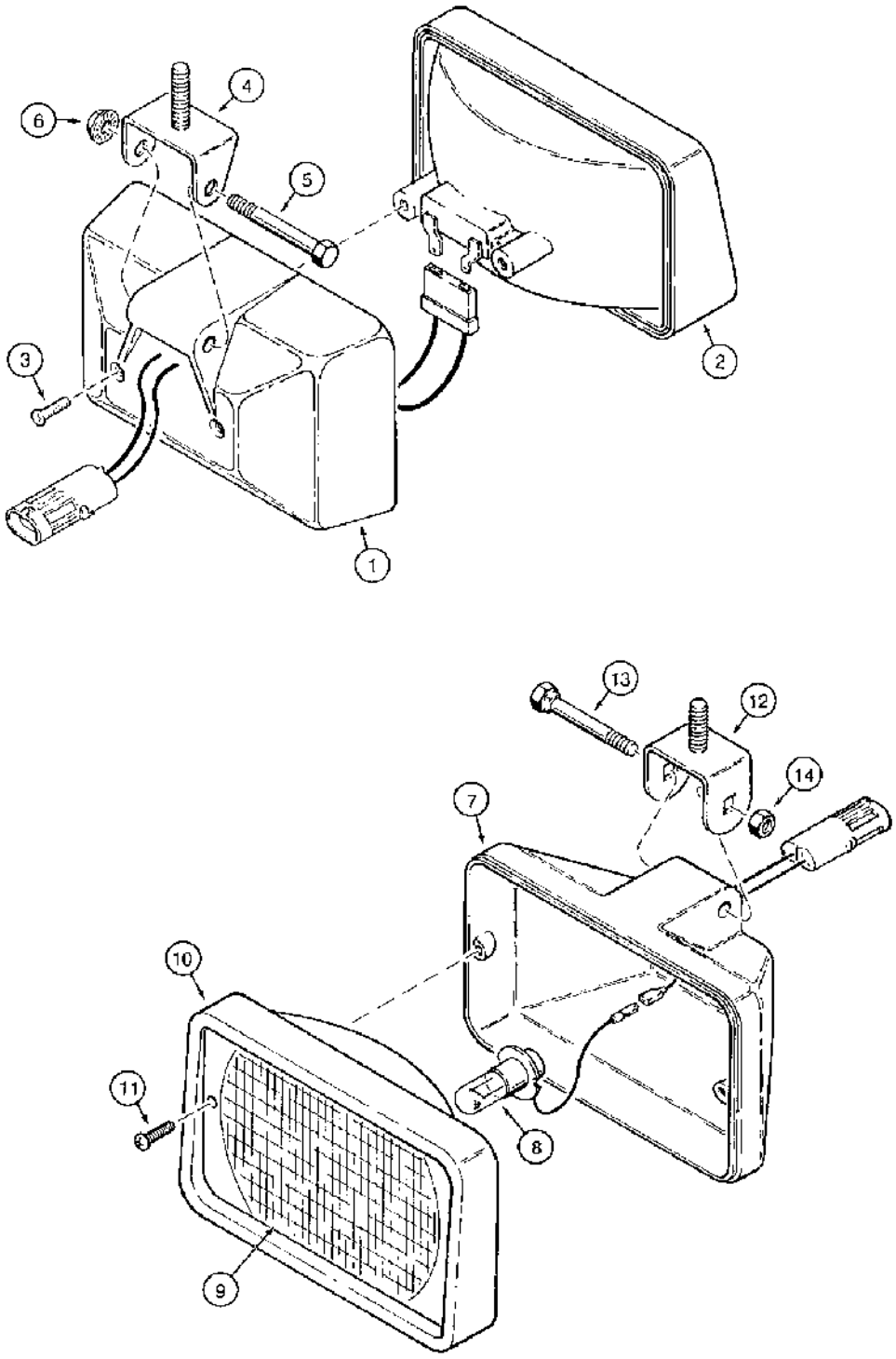

(580SK) - CASE SUPER-K CONSTRUCTION KING LOADER BACKHOE > (4-40) - CAB TRACTOR LAMPS - PLASTIC CONNECTORS, PRIOR TO CAB SERIAL NUMBER JAB0023786

Diag #	Part #	Name	Description	Qty
	R54411	LAMP	ASSEMBLY front driving, may receive either Hobbs or ABL complete lamp assembly, see below for service, front driving lamp assembly, Includes: Ref. 1 through 14, P/N A187666 and P/N 92264C1	2
	A187666	LIGHT ASSY.	LAMP ASSEMBLY Hobbs, with glare guard, with 3/8 inch mounting stud, order R54411, front driving lamp assembly, Includes: Ref. 1 through 6	2
1	NSS	NOT SERVICED SEPARATELY	HOUSING lamp, front driving lamp assembly	1
2	A187912	LAMP	sealed beam, Hobbs lamp, designated on lens as SW, front driving lamp assembly	1
3	273-5048	SELF-TAP SCREW,Slotted Flat Hd, #8 x 1/2"	SCREW self-tapping, flat slotted, No. 8-18 x 1/2 inch, front driving lamp assembly	2
4	A187914	BRACKET	mounting, lamp, front driving lamp assembly	1
5	413-432	BOLT,Hex, 1/4" - 20 x 2", Gr 5	Housing to bracket, front driving lamp assembly Hex, 1/4"-20 x 2", G5	1
6	231-5144	SERRATED NUT,Flg, USR, 1/4"-20	hex, self-locking, 3/8 inch NC, front driving lamp assembly	1
	92264C1	LAMP	ASSEMBLY ABL, without glare guard, with 10 mm, mounting stud, order R54411, front driving lamp assembly, Includes: Ref. 7 through 14	2
7	NSS	NOT SERVICED SEPARATELY	HOUSING lamp, front driving lap assembly	1
8	1312210C1	BULB	lamp, front driving assembly	1
9	1983290C1	LENS	lamp, front driving assembly	1
10	1964806C1	BEZEL	RETAINER lens, front driving lamp assembly	1
11	187-1916	SELF-TAP SCREW,Cross Pan Hd, #6 x 3/4"	SCREW self-tapping, pan Phillips, No. 8-16 x 3/4 inch, front driving lamp assembly	2
12	A187915	BRACKET	mounting, lamp, front driving assembly	1
13	814-8045	BOLT,Hex, M8 x 1.25 x 45mm, Cl 8.8	shoulder, hex, 8 mm x 45 mm, housing to bracket, front driving lamp assembly	1
14	832-41308	NUT,M8 x 1.25, Cl 10	hex, self-locking, 8 mm, class 10.9, front driving lamp assembly	1
	R54412	LAMP, WORK	LAMP ASSEMBLY rear flood and optional front and rear work lamps, may receive, either Hobbs or ABL complete lamp assembly, see below for service, rear flood	2-6

Diag #	Part #	Name	Description	Qty
			lamp assembly and optional front and rear work lamps	
	A187665	LIGHT ASSY.	LAMP ASSEMBLY Hobbs, with glare guard with 3/8 inch mounting stud, order R54412, rear flood lamp assembly and optional front and rear work lamps, Includes: Ref. 1 through 6	2-6
1	NSS	NOT SERVICED SEPARATELY	HOUSING lamp, rear flood lamp assembly and optional front and rear work lamps	1
2	A187911	LAMP	sealed beam, Hobbs lamp, designated on lens as SW, rear flood lamp assembly and optional front and rear work lamps	1
3	273-5048	SELF-TAP SCREW,Slotted Flat Hd, #8 x 1/2"	SCREW self-tapping, flat slotted, No. 8-18 x 1/2 inch, rear flood lamp assembly and optional front and rear work lamps	2
4	A187914	BRACKET	mounting, lamp, rear flood lamp assembly and optional front and rear work lamps	1
5	413-432	BOLT,Hex, 1/4" - 20 x 2", Gr 5	Housing to bracket, rear flood lamp assembly and optional front and rear work lamps Hex, 1/4"-20 x 2", G5	1
6	231-5144	SERRATED NUT,Flg, USR, 1/4"-20	hex, self-locking, 3/8 inch NC, rear flood lamp assembly and optional front and rear work lamps	1
	92263C1	LIGHT ASSY.	LAMP ASSEMBLY ABL, without glare guard, with 10 mm mounting stud, order R54412, rear flood lamp assembly and optional front and rear work lamps, Includes: Ref. 7 through 14	2-6
7	NSS	NOT SERVICED SEPARATELY	HOUSING lamp, rear flood lamp assembly and optional front and rear work lamps	1
8	1312210C1	BULB	lamp, rear flood lamp assembly and optional front and rear work lamps	1
9	1964807C1	LAMP BASE	LENS reflector, lamp, rear flood lamp assembly and optional front and rear work lamps	1
10	1964806C1	BEZEL	RETAINER lens, rear flood lamp assembly and optional front and rear work lamps	1
11	187-1916	SELF-TAP SCREW,Cross Pan Hd, #6 x 3/4"	SCREW self-tapping, pan Phillips, No. 8-16 x 3/4 inch, rear flood lamp assembly and optional front and rear work lamps	2
12	A187915	BRACKET	mounting, lamp, rear flood lamp assembly and optional front and rear work lamps	1
13	814-8045	BOLT,Hex, M8 x 1.25 x 45mm, Cl 8.8	shoulder, hex, 8 mm x 45 mm, housing to bracket, rear flood lamp assembly and optional front and rear work lamps	1
14	832-41308	NUT,M8 x 1.25, Cl 10	hex, self-locking, 8 mm, class 10.9, rear flood lamp assembly and optional front and rear work lamps	1

http://www.minnparbackhoeparts.com/

(580SK) - CASE SUPER-K CONSTRUCTION KING LOADER BACKHOE > (4-41A) - CAB TRAC LAMPS-BULLET CONNECTOR,FR DRIVING,REAR FLOOD

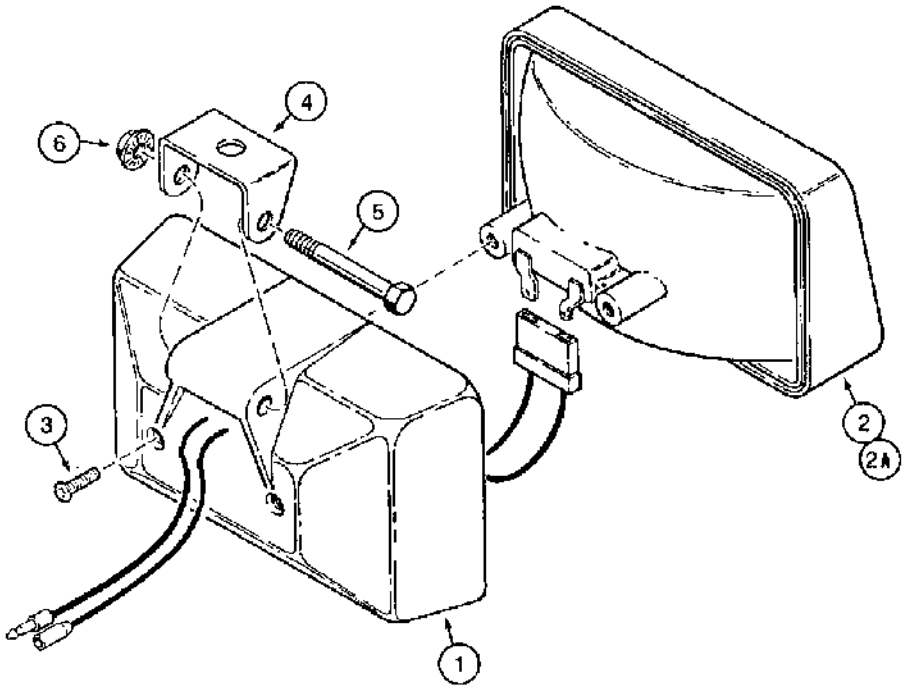

B922658

(580SK) - CASE SUPER-K CONSTRUCTION KING LOADER BACKHOE > (4-41A) - CAB TRAC LAMPS-BULLET CONNECTOR,FR DRIVING,REAR FLOOD

Diag #	Part #	Name	Description	Qty
	109080A1	LAMP	ASSEMBLY front driving	2
	109081A1	SPOTLIGHT	LAMP ASSEMBLY rear flood and front and rear work lamps, Includes: Ref. 1 through 6	6
1	NSS	NOT SERVICED SEPARATELY	HOUSING lamp	1
2	A187912	LAMP	sealed beam, 109080A1 lamp	1
2A	A187911	LAMP	sealed beam, 109081A1 lamp	1
3	273-5048	SELF-TAP SCREW,Slotted Flat Hd, #8 x 1/2"	SCREW self-tapping, flat slotted, No. 8-18 x 1/2 inch	2
4	A187914	BRACKET	mounting, lamp	1
5	413-432	BOLT,Hex, 1/4" - 20 x 2", Gr 5	BOLT,Hex, 1/4" - 20 x 2", Gr 5	1
6	231-5144	SERRATED NUT,Flg, USR, 1/4"-20	SERRATED NUT,Flg, USR, 1/4"-20	1

http://www.minnparbackhoeparts.com/

(580SK) - CASE SUPER-K CONSTRUCTION KING LOADER BACKHOE > (4-42) - CANOPY TRACTOR LAMPS, STOP AND TAIL LAMPS AND, TURN SIGNAL

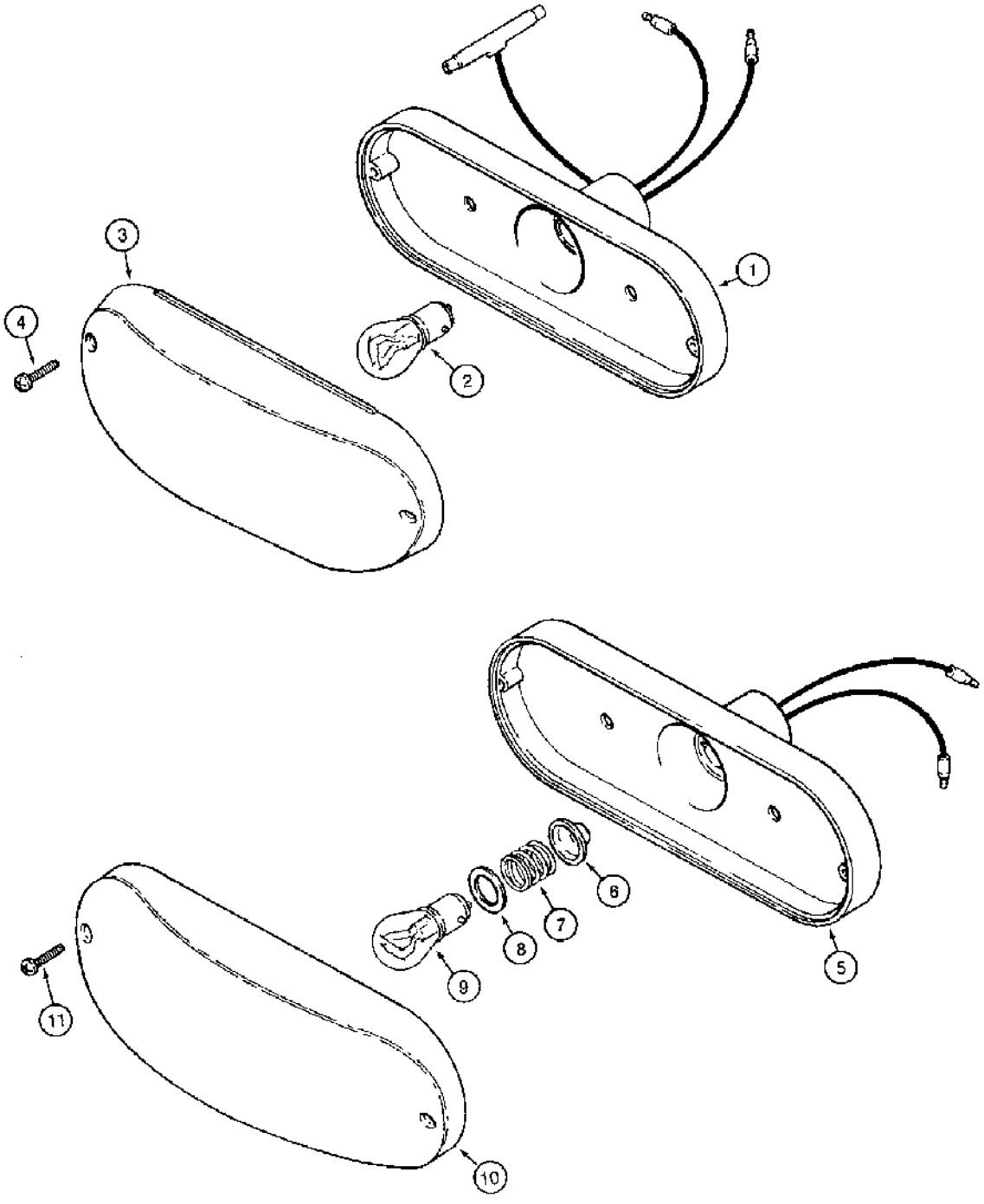

870240

(580SK) - CASE SUPER-K CONSTRUCTION KING LOADER BACKHOE > (4-42) - CANOPY TRACTOR LAMPS, STOP AND TAIL LAMPS AND, TURN SIGNAL

Diag #	Part #	Name	Description	Qty
	D121152	LAMP	ASSEMBLY stop and tail, with red lens, stop and tail lamp, Includes: Ref. 1 through 4	2
1	NSS	NOT SERVICED SEPARATELY	BODY lamp, complete, stop and tail lamp	1
2	T34857	BULB,C6, #1157, 12.8V	- lamp, No. 1157, stop and tail, stop and tail lamp	1
3	N6836	LENS	red, lamp, stop and tail lamp	1
4	261-14310	SELF-TAP SCREW,Cross Pan Hd, #6 x 5/8"	SCREW self-tapping, pan head Phillips, No. 6 NC x 5/8 inch, stop and tail lamp	2
	D135384	LAMP	ASSEMBLY turn signal and flasher, with amber lens, turn signal and flasher, Includes: Ref. 5 through 11	4
5	NSS	NOT SERVICED SEPARATELY	BODY AND SOCKET lamp, turn signal and flasher	1
6	NSS	NOT SERVICED SEPARATELY	SEAL rubber, spring retaining, turn signal and flasher	1
7	NSS	NOT SERVICED SEPARATELY	SPRING lamp, turn signal and flasher	1
8	NSS	NOT SERVICED SEPARATELY	INSULATOR lamp, turn signal and flasher	1
9	A41264	BULB,#1156, 12V	Lamp, Turn signal and flasher #1156, 12V	1
10	N14283	LENS	amber, lamp, turn signal and flasher	1
11	261-14310	SELF-TAP SCREW,Cross Pan Hd, #6 x 5/8"	SCREW self-tapping, pan head Phillips, No. 6 NC x 5/8 inch, turn signal and flasher	2

http://www.minnparbackhoeparts.com/

(580SK) - CASE SUPER-K CONSTRUCTION KING LOADER BACKHOE > (4-44) - CAB TRACTOR LAMPS, STOP AND TAIL LAMPS AND, TURN SIGNAL AND FLASHER LAMPS

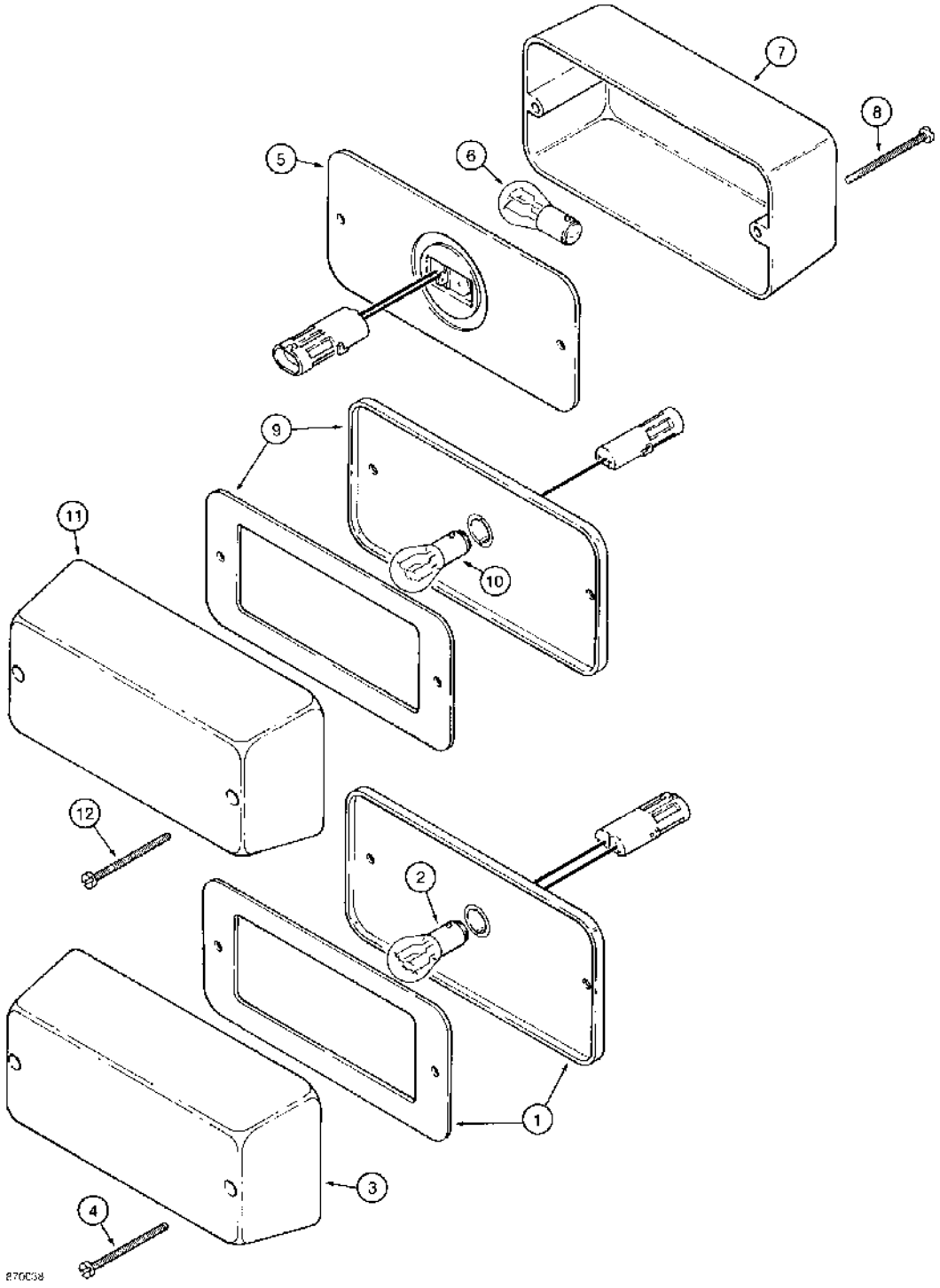

(580SK) - CASE SUPER-K CONSTRUCTION KING LOADER BACKHOE > (4-44) - CAB TRACTOR LAMPS, STOP AND TAIL LAMPS AND, TURN SIGNAL AND FLASHER LAMPS

Diag #	Part #	Name	Description	Qty
	92260C1	LAMP	ASSEMBLY stop and tail, with red lens, stop and tail lamp, Includes: Ref. 1 through 4A	2
1	NSS	NOT SERVICED SEPARATELY	BODY lamp, complete, stop and tail lamp	1
2	T34857	BULB,C6, #1157, 12.8V	- lamp, No. 1157, stop and tail, stop and tail lamp	1
3	216045C1	LENS	red, lamp, stop and tail lamp	1
4	86982775	SCREW,Slotted Fil Hd, #10-24 x 2"	machine, Fillister head, No. 10 NC x 2 inch, lens retaining, replaced by Ref. 4A, 261-54536, screw, stop and tail lamp	2
4A	261-54536	SELF-TAP SCREW,Cross Pan Hd, #10 x 2 1/4"	SCREW pan head machine, No. 10-24 NC x 2-1/4 inch, if used, not shown, stop and tail lamp	2
	92259C1	LIGHT, WARNING	LAMP ASSEMBLY turn signal and flasher, front, with amber lens, turn signal and flasher - front, Includes: Ref. 5 through 8	2
5	NSS	NOT SERVICED SEPARATELY	BODY AND SOCKET lamp, complete, turn signal and flasher - front	1
6	T34857	BULB,C6, #1157, 12.8V	- lamp, No. 1157, turn signal and flasher, front	1
7	130883C1	LENS	amber, lamp, turn signal and flasher - front	1
8	86982775	SCREW,Slotted Fil Hd, #10-24 x 2"	machine, Fillister head, No. 10 NC x 2 inch, lens retaining, turn signal and flasher - front	2
	92258C1	LIGHT, WARNING	LAMP ASSEMBLY turn signal and flasher, rear, with amber lens, turn signal and flasher - rear, Includes: Ref. 9 through 12	2
9	NSS	NOT SERVICED SEPARATELY	BODY AND SOCKET lamp, complete, turn signal and flasher - rear	1
10	A41264	BULB,#1156, 12V	Lamp, Turn signal and flasher, Rear, Replaces 9417866 #1156, 12V	1
11	130883C1	LENS	amber, lamp, turn signal and flasher - rear	1
12	86982775	SCREW,Slotted Fil Hd, #10-24 x 2"	machine, Fillister head, No. 10 NC x 2 inch, lens retaining, turn signal and flasher - rear	2
		lens retaining	lens retaining	2

http://www.minnparbackhoeparts.com/

(580SK) - CASE SUPER-K CONSTRUCTION KING LOADER BACKHOE > (4-46) - HORN

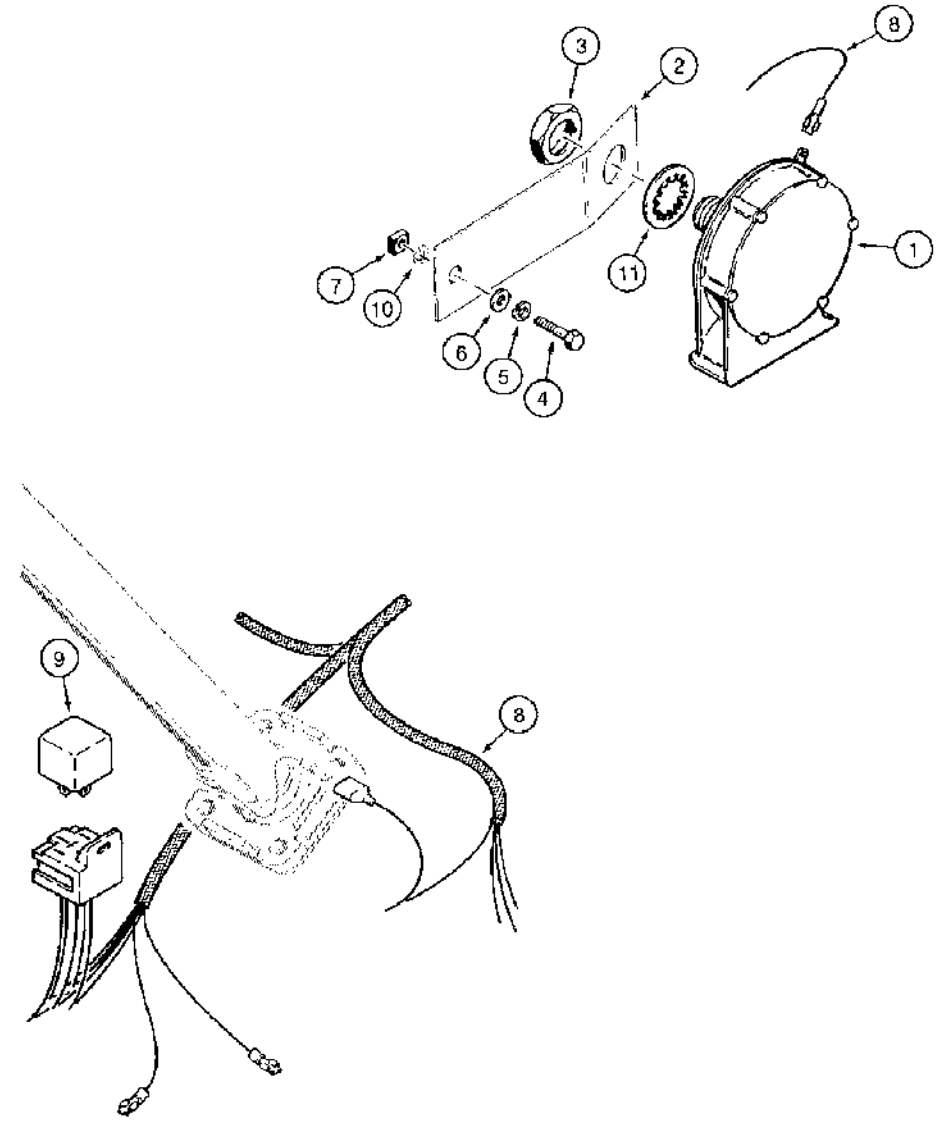

B902697-45

http://www.minnparbackhoeparts.com/

(580SK) - CASE SUPER-K CONSTRUCTION KING LOADER BACKHOE > (4-46) - HORN

Diag #	Part #	Name	Description	Qty
1	D123205	HORN	12 volt	1
2	D147455	BRACKET	horn mounting	1
3	L30866	LOCK NUT	hex, 7/8 NC, special	1
4	413-512	BOLT,Hex, 5/16" - 18 x 3/4", Gr 5	hex, 5/16 NC x 3/4 inch	1
5	492-11031	LOCK WASHER,5/16"	WASHER, LOCK, 5/16"	1
6	495-21038	WASHER,5/16"	(flat, 3/8 x 7/8 x 5/64") 5/16"	1
7	224-2245	SQUARE NUT,Sq, 5/16"-18, G2	square, 5/16 inch NC	1
8	REF	INSTRUCTION	HARNESS instrument, front console, see Figure 4-24 for front harness options and mounting	1
9	D128310	RELAY	horn, attaches to front console instrument harness	1
		Relay is marked 40 amp on the relay-this is the RESISTANCE rating. The INDUCTIVE rating is 30 amps. We use this inductive rating in our literature.	Relay is marked 40 amp on the relay-this is the RESISTANCE rating. The INDUCTIVE rating is 30 amps. We use this inductive rating in our literature.	1
10	493-11033	LOCK WASHER,Ext-Int Tooth, 5/16"	WASHER, LOCK, Ext-Int Tooth, 5/16"	1
11	493-21091	LOCK WASHER,Int Tooth, 7/8"	WASHER lock, internal tooth, 7/8 inch	1

http://www.minnparbackhoeparts.com/

(580SK) - CASE SUPER-K CONSTRUCTION KING LOADER BACKHOE > (4-48) - BACKUP ALARM, MODELS WITHOUT PTO, PRIOR TO P.I.N. JJG0168600

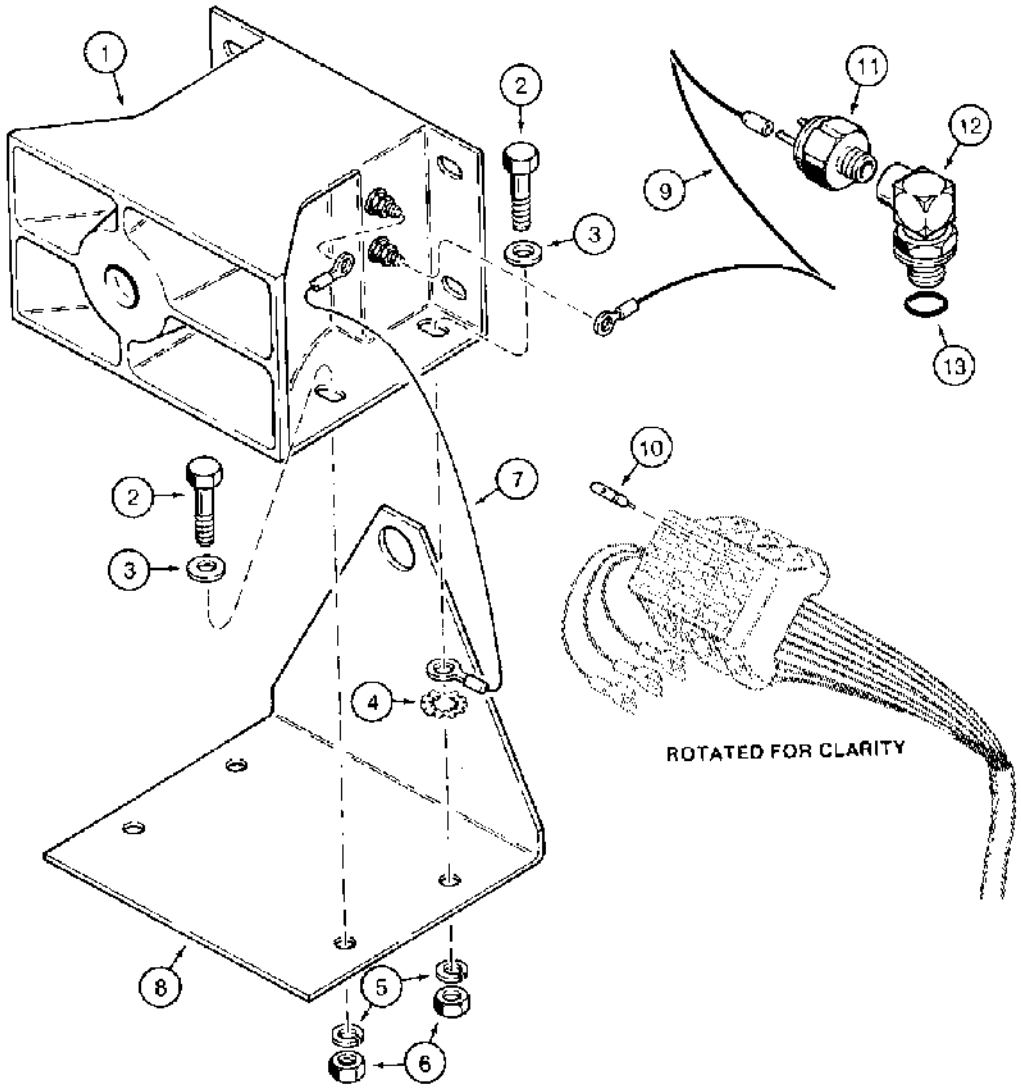

D902628 45

(580SK) - CASE SUPER-K CONSTRUCTION KING LOADER BACKHOE > (4-48) - BACKUP ALARM, MODELS WITHOUT PTO, PRIOR TO P.I.N. JJG0168600

Diag #	Part #	Name	Description	Qty
1	D121972	ALARM	backup	1
2	413-516	BOLT,Hex, 5/16" - 18 x 1", Gr 5	hex, 5/16 NC x 1 inch	4
3	495-11034	WASHER,5/16", SAE	5/16" SAE (flat, 11/32 x 11/16 x 1/16")	4
4	493-11039	LOCK WASHER,3/8", Int-Ext Tooth	WASHER - internal-external tooth lock, 3/8 inch	1
5	492-11031	LOCK WASHER,5/16"	WASHER, LOCK, 5/16"	4
6	425-105	NUT,5/16"-18, G5	- hex, 5/16 inch NC	4
7	D70125	ELECTRICAL WIRE	WIRE ground	1
8	D145812	SUPPORT	BRACKET backup alarm mounting, mounts to transaxle with existing bolt	1
9	D144517	ELECTRICAL WIRE	WIRE backup alarm, prior to P.I.N. JJG0167019, if used	1
10	A149798	FUSE	5 ampere, tan, at fuse block	1
11	D139904	SWITCH	pressure, backup alarm	1
12	D144477	FITTING	ELBOW, 90 degree, at transaxle, Includes: Ref. 13	1
13	237-6006	O-RING,0.114" ID x 0.254" OD x 0.07"	6-1, 90 Duro, .468" ID x .078" Thk	1

http://www.minnparbackhoeparts.com/

(580SK) - CASE SUPER-K CONSTRUCTION KING LOADER BACKHOE > (4-49A) - BACKUP ALARM, MODELS WITHOUT PTO, P.I.N. JJG0168600 AND AFTER

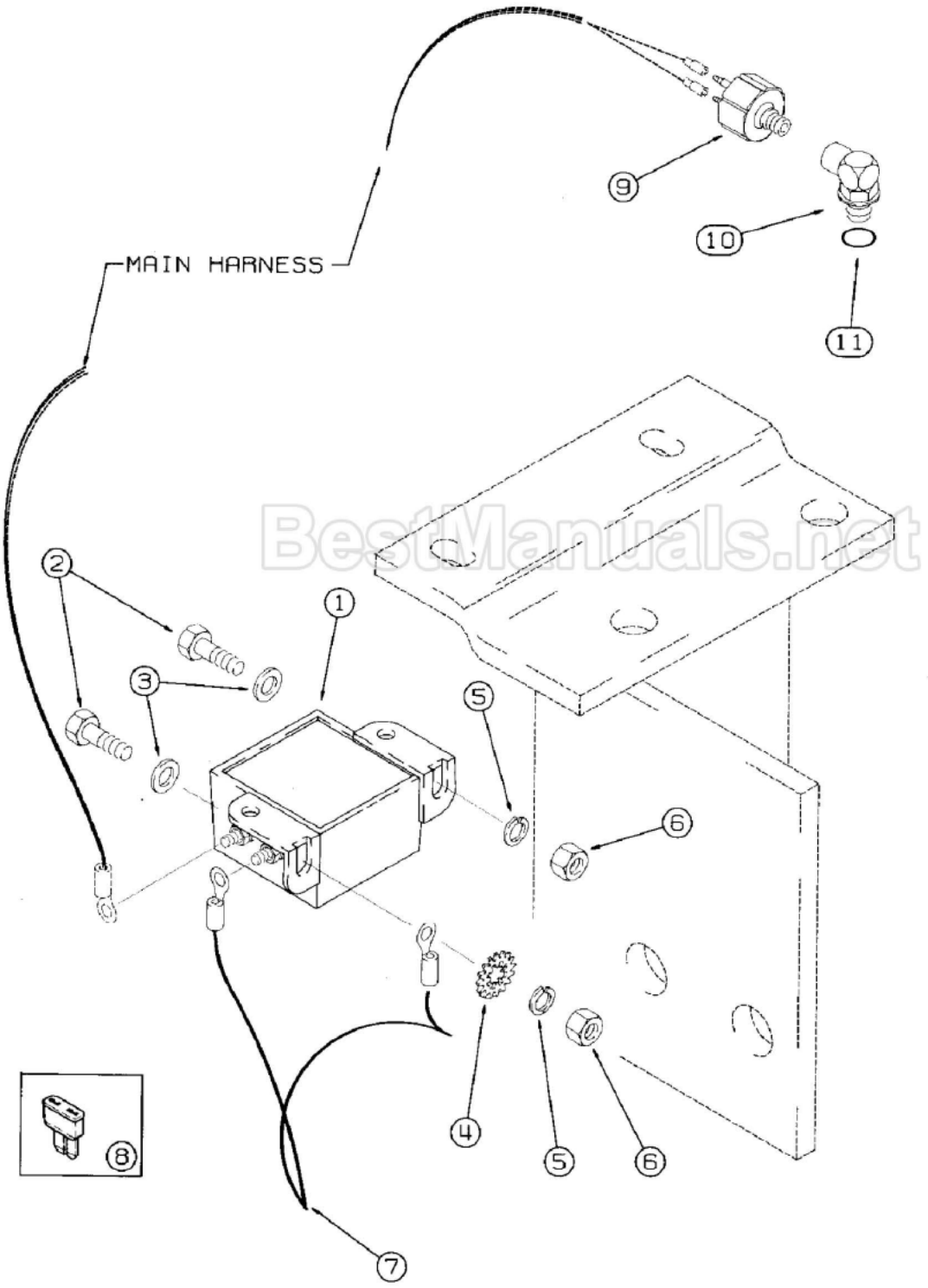

BestManuals.net

(580SK) - CASE SUPER-K CONSTRUCTION KING LOADER BACKHOE > (4-49A) - BACKUP ALARM, MODELS WITHOUT PTO, P.I.N. JJG0168600 AND AFTER

Diag #	Part #	Name	Description	Qty
1	109511A1	ALARM	backup, mounts to 109689A1, backhoe valve mounting bracket, Figure 9-020	1
2	413-516	BOLT,Hex, 5/16" - 18 x 1", Gr 5	hex, 5/16 NC x 1 inch	2
3	495-11034	WASHER,5/16", SAE	5/16" SAE (flat, 11/32 x 11/16 x 1/16")	2
4	493-11039	LOCK WASHER,3/8", Int-Ext Tooth	WASHER - internal-external tooth lock, 3/8 inch	1
5	492-11031	LOCK WASHER,5/16"	WASHER, LOCK, 5/16"	2
6	425-105	NUT,5/16"-18, G5	- hex, 5/16 inch NC	2
7	D70125	ELECTRICAL WIRE	WIRE ground	1
8	A149798	FUSE	5 ampere, tan, at fuse block	1
9	D139904	SWITCH	pressure, backup alarm	1
10	D144477	FITTING	ELBOW, 90 degree, at transaxle, Includes: Ref. 11	1
11	237-6006	O-RING,0.114" ID x 0.254" OD x 0.07"	6-1, 90 Duro, .468" ID x .078" Thk	1

http://www.minnparbackhoeparts.com/

(580SK) - CASE SUPER-K CONSTRUCTION KING LOADER BACKHOE > (4-50) - BACKUP ALARM, MODELS WITH PTO

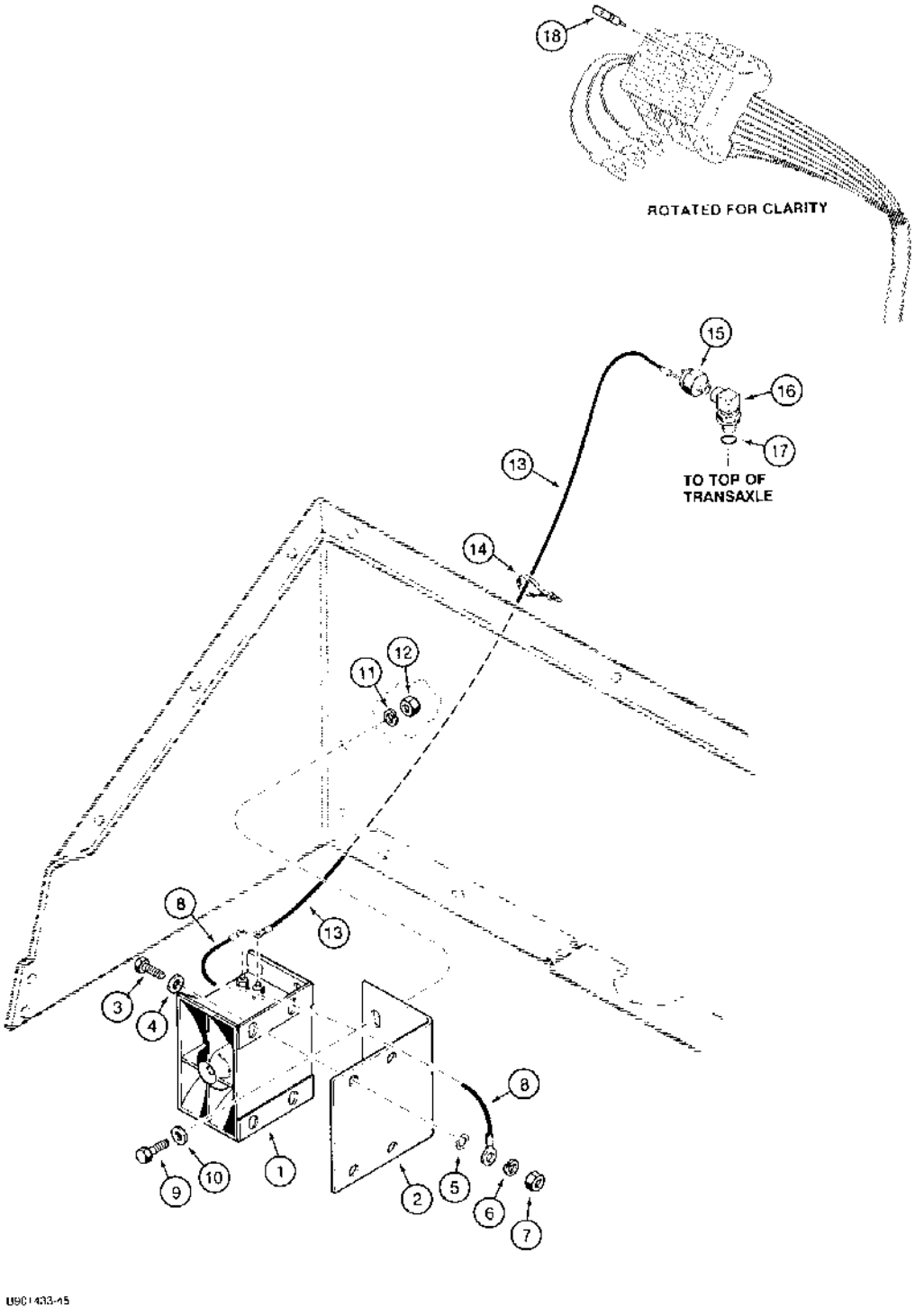

(580SK) - CASE SUPER-K CONSTRUCTION KING LOADER BACKHOE > (4-50) - BACKUP ALARM, MODELS WITH PTO

Diag #	Part #	Name	Description	Qty
1	D121972	ALARM	backup, electric, rectangular type	1
2	D75815	BRACKET	backup alarm, mounts to closure panel	1
3	413-516	BOLT,Hex, 5/16" - 18 x 1", Gr 5	hex, 5/16 NC x 1 inch	4
4	495-11034	WASHER,5/16", SAE	5/16" SAE (flat, 11/32 x 11/16 x 1/16")	4
5	493-11033	LOCK WASHER,Ext-Int Tooth, 5/16"	WASHER, LOCK, Ext-Int Tooth, 5/16"	1
6	492-11031	LOCK WASHER,5/16"	WASHER, LOCK, 5/16"	4
7	425-105	NUT,5/16"-18, G5	- hex, 5/16 inch NC	4
8	D70125	ELECTRICAL WIRE	WIRE alarm ground	1
9	413-616	BOLT,Hex, 3/8" - 16 x 1", Gr 5	hex, 3/8 NC x 1 inch	2
10	495-11041	WASHER,3/8", SAE	flat, (13/32 x 13/16 x 1/16")	2
11	492-11038	LOCK WASHER,3/8"	LOCK WASHER,3/8"	2
12	425-106	NUT,3/8"-16, G5	NUT,3/8"-16, G5	2
13	D131326	ELECTRICAL WIRE	WIRE, Serial Range: switch-alarm	1
14	L18337	CABLE TIE,9.95"-12.1" lg	STRAP tie, 15 inch, nylon, retaining	1
15	D139904	SWITCH	pressure	1
16	D144477	FITTING	ELBOW, street, 90 degree	1
18	A149798	FUSE	5 ampere, at fuse block	1
17	237-6006	O-RING,0.114" ID x 0.254" OD x 0.07"	6-1, 90 Duro, .468" ID x .078" Thk	1

http://www.minnparbackhoeparts.com/

(580SK) - CASE SUPER-K CONSTRUCTION KING LOADER BACKHOE > (4-52) - SPECIAL PARTS USED ON MODELS W/AUDIBLE WARNING ALARM FOR WATER TEMP.,ENG OIL PRESS.

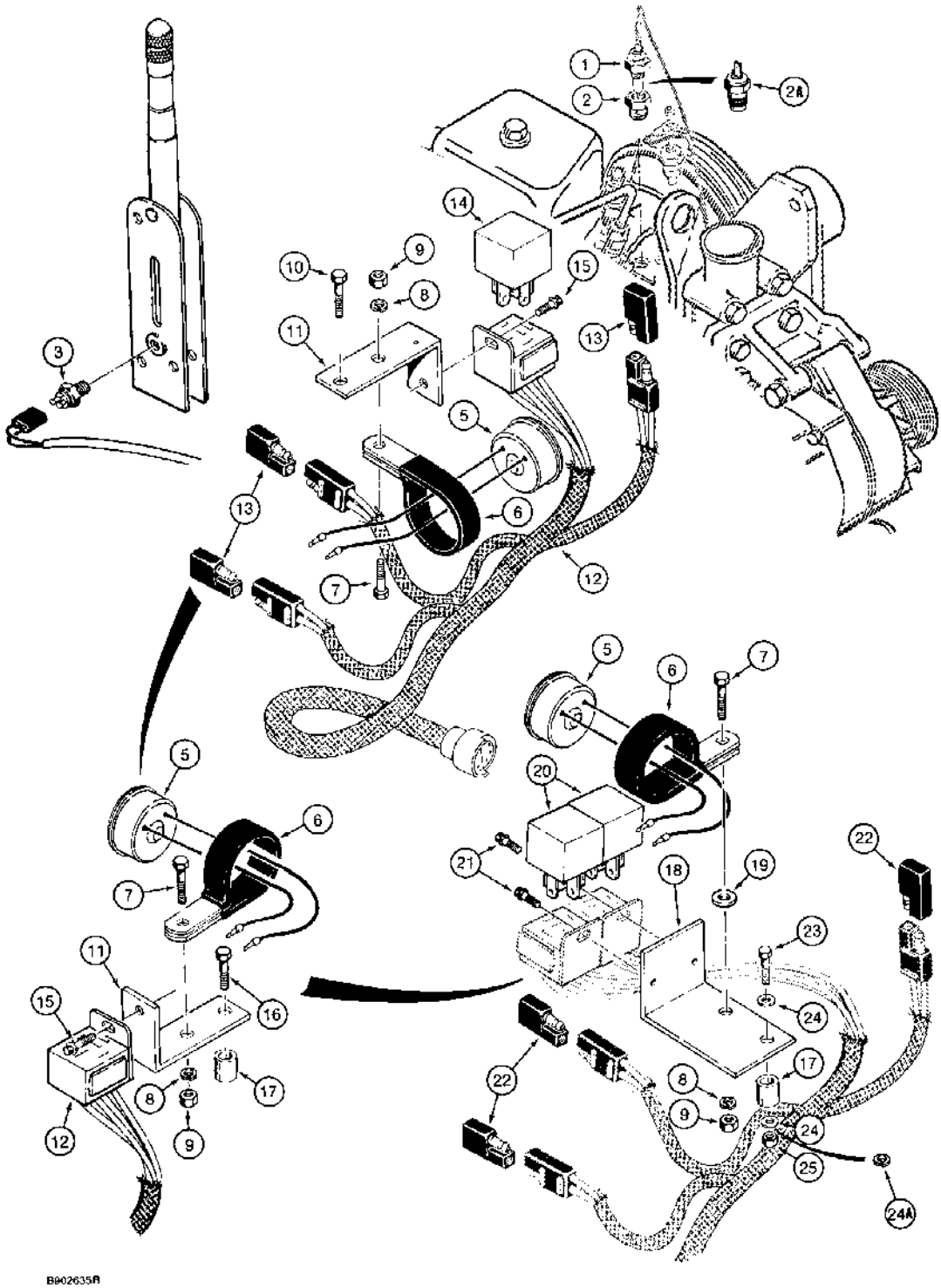

(580SK) - CASE SUPER-K CONSTRUCTION KING LOADER BACKHOE > (4-52) - SPECIAL PARTS USED ON MODELS W/AUDIBLE WARNING ALARM FOR WATER TEMP.,ENG OIL PRESS.

Diag #	Part #	Name	Description	Qty
1	D70163	SWITCH	engine coolant temperature, replaces existing engine block plug, used with 221-1088 reducer, no longer used, order 1345488C2 switch, Ref. 2A and remove 221-1088 reducer	1
2	221-1088	REDUCER,Hex, 1/2" x 1/4" NPT	pipe, 1/2 male x 1/4 inch female, used with D70163 switch, if used	1
2A	1345488C2	PRESSURE SWITCH	SWITCH, 225 degree, engine coolant temperature, replaces Ref. 1 and 2 on some models, replaces 1345488C1 235 degree switch	1
3	D136514	SWITCH	parking brake, mounts in parking brake lever on Figure 7-12 and attaches to front instrument panel harness	1
5	D137468	BUZZER	ALARM warning, for engine water temperature, engine oil pressure, and parking brake	1
6	D120561	CLAMP	warning alarm, Serial Range: mounting-bracket	1
7	413-612	BOLT,Hex, 3/8" - 16 x 3/4", Gr 5	Alarm clamp to bracket Hex, 3/8"-16 x 3/4", G5, Full Thd	1
8	492-11038	LOCK WASHER,3/8"	LOCK WASHER,3/8"	1
9	425-106	NUT,3/8"-16, G5	NUT,3/8"-16, G5	1
10	413-514	BOLT,Hex, 5/16" - 18 x 7/8", Gr 5	If used Hex, 5/16"-18 x 7/8", G5, Full Thd	1
	D103387	KIT	service, audible warning alarm, includes instructions, if used, order Ref. 11 - 15 and 8-76100 instruction sheet, Includes: Ref. 11 through 15	1
11	D143873	SUPPORT	BRACKET alarm mounting, uses existing mounting bolt, mounts under side console	1
12	D146664	HARNESS	WIRE alarm, uses three diodes, attaches to D147040 side instrument console harness on Figure 4-26, prior to P.I.N. JJG0167019, if used	1
13	L71879	DIODE ELEMENT	DIODE isolation	3
14	D128310	RELAY	alarm	1
		Relay is marked 40 amp on the relay-this is the RESISTANCE rating. The INDUCTIVE rating is 30 amps. We use this inductive rating in our literature.	Relay is marked 40 amp on the relay-this is the RESISTANCE rating. The INDUCTIVE rating is 30 amps. We use this inductive rating in our literature.	1

Diag #	Part #	Name	Description	Qty
15	281-4556	SELF-TAP SCREW,Hex Wash Hd, #10 x 3/8"	SCREW self-tapping, hex washer head, No. 10 NC x 3/8 inch, relay mounting	1-2
16	413-624	BOLT,Hex, 3/8" - 16 x 1 1/2", Gr 5	hex, 5/16 NC x 1-1/2 inch, if used	1
17	D146035	SPACER	bracket, if used, replaces D76209	1
18	103393A1	BRACKET	alarm mounting, mounts under side console, if used	1
19	495-11041	WASHER,3/8", SAE	flat, (13/32 x 13/16 x 1/16"), If used	1
20	D128310	RELAY	alarm, attaches to 101597A1 side console harness	2
21	281-4556	SELF-TAP SCREW,Hex Wash Hd, #10 x 3/8"	SCREW self-tapping, hex washer head, No. 10 NC x 3/8 inch, relay mounting	2
22	L71879	DIODE ELEMENT	DIODE isolation, 101597A1 side console harness, P.I.N. JJG0167019 and after	3
23	413-624	BOLT,Hex, 3/8" - 16 x 1 1/2", Gr 5	hex, 3/8 NC x 1-1/2 inch	1
24	495-21044	WASHER,3/8"	(flat, 7/16 x 1 x 5/64 inch), if used 3/8"	2
24A	492-11038	LOCK WASHER,3/8"	LOCK WASHER,3/8"	1
25	425-106	NUT,3/8"-16, G5	NUT,3/8"-16, G5	1

http://www.minnparbackhoeparts.com/

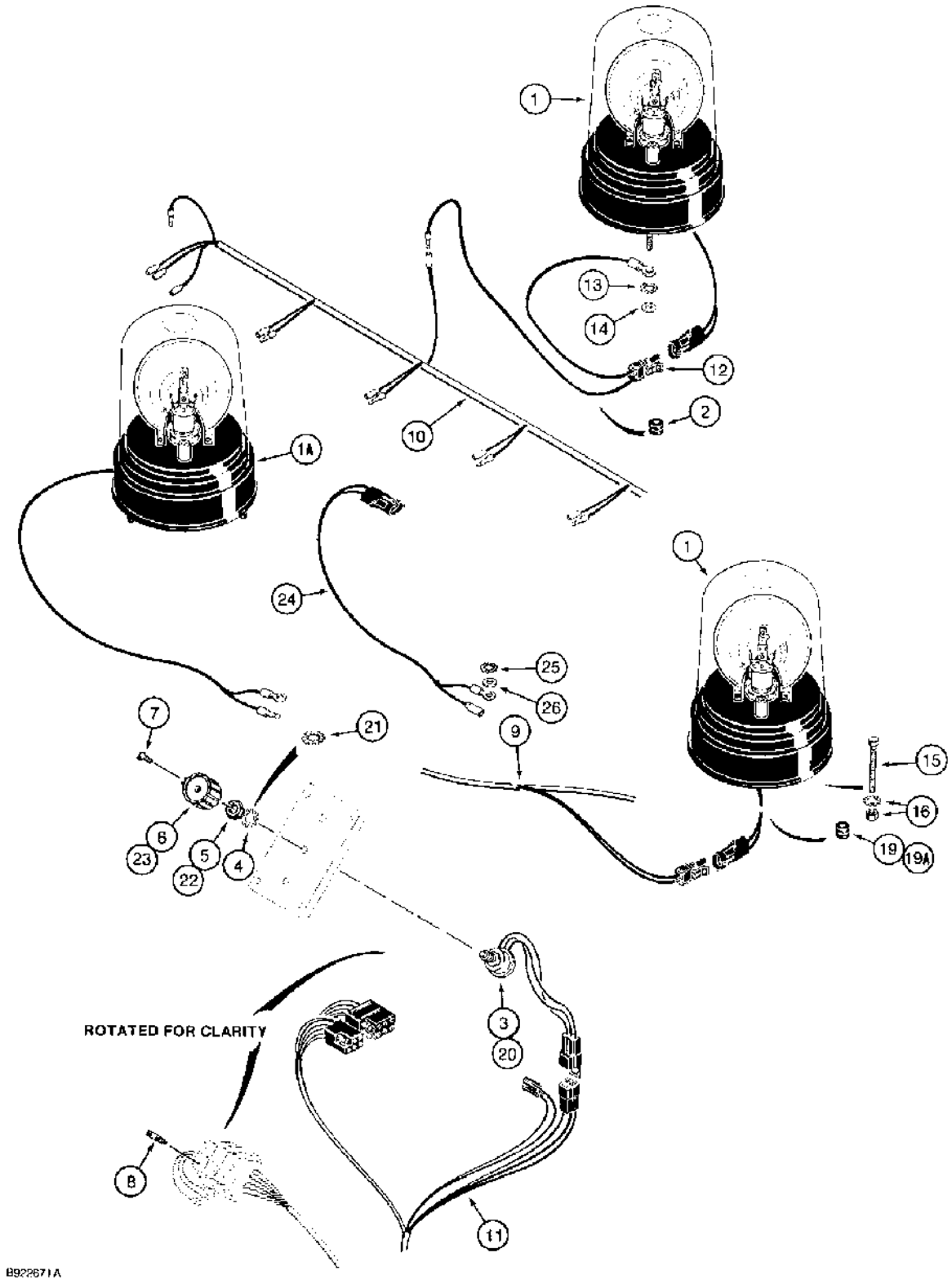

(580SK) - CASE SUPER-K CONSTRUCTION KING LOADER BACKHOE > (4-54) - ROTATING BEACON AND CIRCUIT

Diag #	Part #	Name	Description	Qty
1	D147114	LIGHT, WARNING	BEACON ASSEMBLY rotating, with plastic connector, used on cab or canopy models, parts list Figure 4-56, no longer available, order 108366A1	1
1A	108366A1	BEACON	Assy, Rotating, with eyelet and bullet connector, Cab or canopy models, Parts list Figure 4-56, if used	1
2	A23870	GROMMET	rear wire, used on canopy models	1
	D138377	SWITCH	ASSEMBLY two position, rotating beacon, with octagonal shaft, no longer available, order 133818A1 switch and D149932 knob, Ref. 20-23, Includes: Ref. 3, 4 and 5	1
3	NSS	NOT SERVICED SEPARATELY	SWITCH rotating beacon	1
4	193-58	LOCK WASHER,Ext Tooth, 1/2"	WASHER external tooth lock, 1/2 inch	1
5	425-118	NUT,1/2"-20, G5	hex, 1/2 inch NF	1
6	A141735	KNOB	D138377 rotating beacon switch, with octagonal shaft, see Figure 9-172 for rotating beacon symbol decal, if used	1
7	470-1088	SCREW,Slotted Pan Hd, #8-32 x 1/2"	machine, pan head slotted, No. 8 NC x 1/2 inch	1
8	A149801	FUSE	15 amperes, light blue, mounts in fuse holder in side instrument console harness	1
9	REF	INSTRUCTION	HARNESS cab models, see Figure 9-140 for harness options	1
10	D146580	HARNESS	ROPS canopy models	1
11	REF	INSTRUCTION	HARNESS side console, right-hand, see Figure 4-26 for harness options	1
12	D148584	ELECTRICAL WIRE	WIRE adapting, used on canopy models, if used	1
13	193-73	LOCK WASHER,Ext-Int Tooth, 1/4"	WASHER internal-external tooth lock, 1/4 inch, ground, used with D148584 wire on canopy models, if used	1
14	495-21031	WASHER,1/4"	flat, 5/16 x 47/64 x 1/16 inch, used with D148584 wire on canopy models, if used	1
15	113-75	BOLT,Hex, 1/4"-20 x 3", G5, Full Thd	hex, full thread, 1/4 NC x 3 inch, replaces existing beacon studs, used on cab models	3
16	193-1006	NUT,Keps, w/LW, 1/4"-20	hex, with external tooth lock washer, 1/4 inch NC, used with item 15 bolt on cab models	3
19	L77821	GROMMET,1/2" ID x 1 1/4" Groove Dia, Str Cut	rear wire, used on cab models with plastic roof cap	1

Diag #	Part #	Name	Description	Qty
19A	A23870	GROMMET	rear wire, used on cab models without plastic roof cap	1
	133818A1	SWITCH	ASSEMBLY, two position, rotating beacon, with square shaft, replaces D138377, D149893, Includes: Ref. 20, 21 and 22	1
20	NSS	NOT SERVICED SEPARATELY	SWITCH rotating beacon	1
21	493-11052	LOCK WASHER,Ext-Int Tooth, 1/2"	WASHER internal-external tooth lock, 1/2 inch	1
22	425-148	JAM NUT,Jam, 1/2"-13, G5	- hex, jam, 1/2 inch NC	1
23	D149932	BUTTON	KNOB, D149893 rotating beacon switch, with square shaft, if used	1
24	109202A1	ELECTRICAL WIRE	WIRE adapting, if used	1
25	493-11026	LOCK WASHER,Ext-Int Tooth, 1/4"	ground, used with 109202A1 wire, if used Ext-Int Tooth, 1/4"	1
26	495-21031	WASHER,1/4"	flat, 5/16 x 47/64 x 1/16 inch, ground, used with 109202A1 wire, if used	1
		with 109202A1 wire, if used	with 109202A1 wire, if used	1

http://www.minnparbackhoeparts.com/

(580SK) - CASE SUPER-K CONSTRUCTION KING LOADER BACKHOE > (4-56) - ROTATING BEACON, USED ON CAB OR CANOPY MODELS

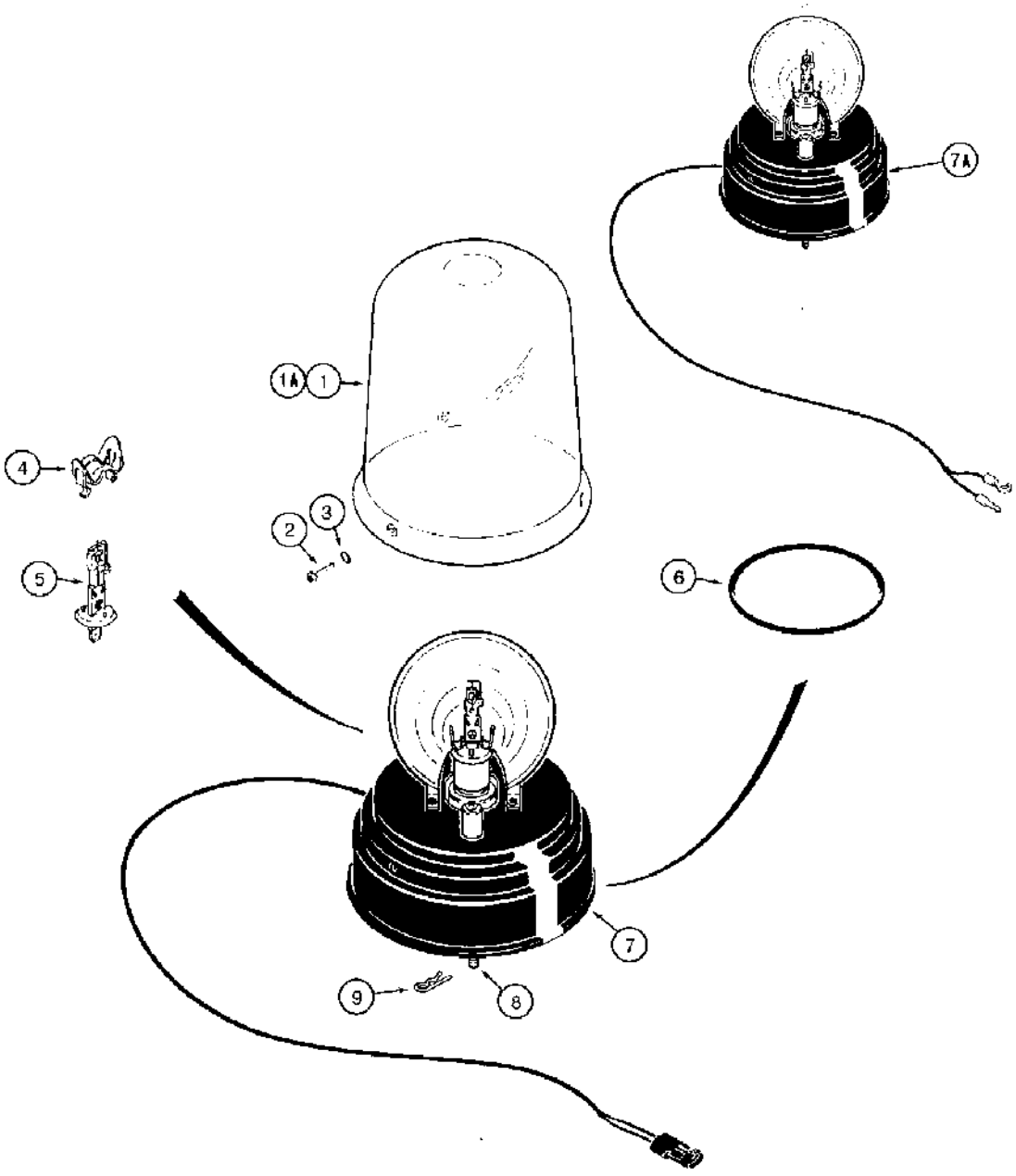

R94001414A

(580SK) - CASE SUPER-K CONSTRUCTION KING LOADER BACKHOE > (4-56) - ROTATING BEACON, USED ON CAB OR CANOPY MODELS

Diag #	Part #	Name	Description	Qty
	D147114	LIGHT, WARNING	BEACON ASSEMBLY rotating, with plastic connector, no longer available, order 108366A1	1
	108366A1	BEACON	Assy, Rotating, with eyelet and bullet connector, if used, Includes: Ref. 1 through 9	1
1	A187542	LENS	beacon, amber, if used	1
1A	127158A1	LENS	beacon, blue, if used	1
2	168-71	SCREW,Drive, #8 x 1/2"	- drive, round head, No. 8 x 1/2 inch, Lens mounting	3
3	238-5005	O-RING,0.094" ID x 0.062" Width	-005, 70 Duro, .101" ID x .070" Thk, Lens mounting screw (Replaces S5598 O-ring)	3
4	101531A1	CLIP	bulb	1
5	3217312R1	BULB,H1, 12V, 55W	12V - 55W, Halogen, Rotating beacon	1
6	A187575	BELT	Drive Motor, Rotating Beacon	1
7	NSS	NOT SERVICED SEPARATELY	BASE with drive motor, D147114 rotating beacon	1
7A	NSS	NOT SERVICED SEPARATELY	BASE with drive motor, 108366A1 rotating beacon	1
8	614-6020	BOLT,Hex, M6 x 1 x 20mm, Cl 8.8, Full Thd	BOLT,Hex, M6 x 1 x 20mm, Cl 8.8, Full Thd	3
9	136-54	PIN	hair, 1/4 x 11/16 inch, bolt retaining	3

http://www.minnparbackhoeparts.com/



STEERING/ TRACK

5

http://www.minnparbackhoeparts.com/

(580SK) - CASE SUPER-K CONSTRUCTION KING LOADER BACKHOE > (5-02) - STEERING WHEEL, COLUMN, AND TURN SIGNAL

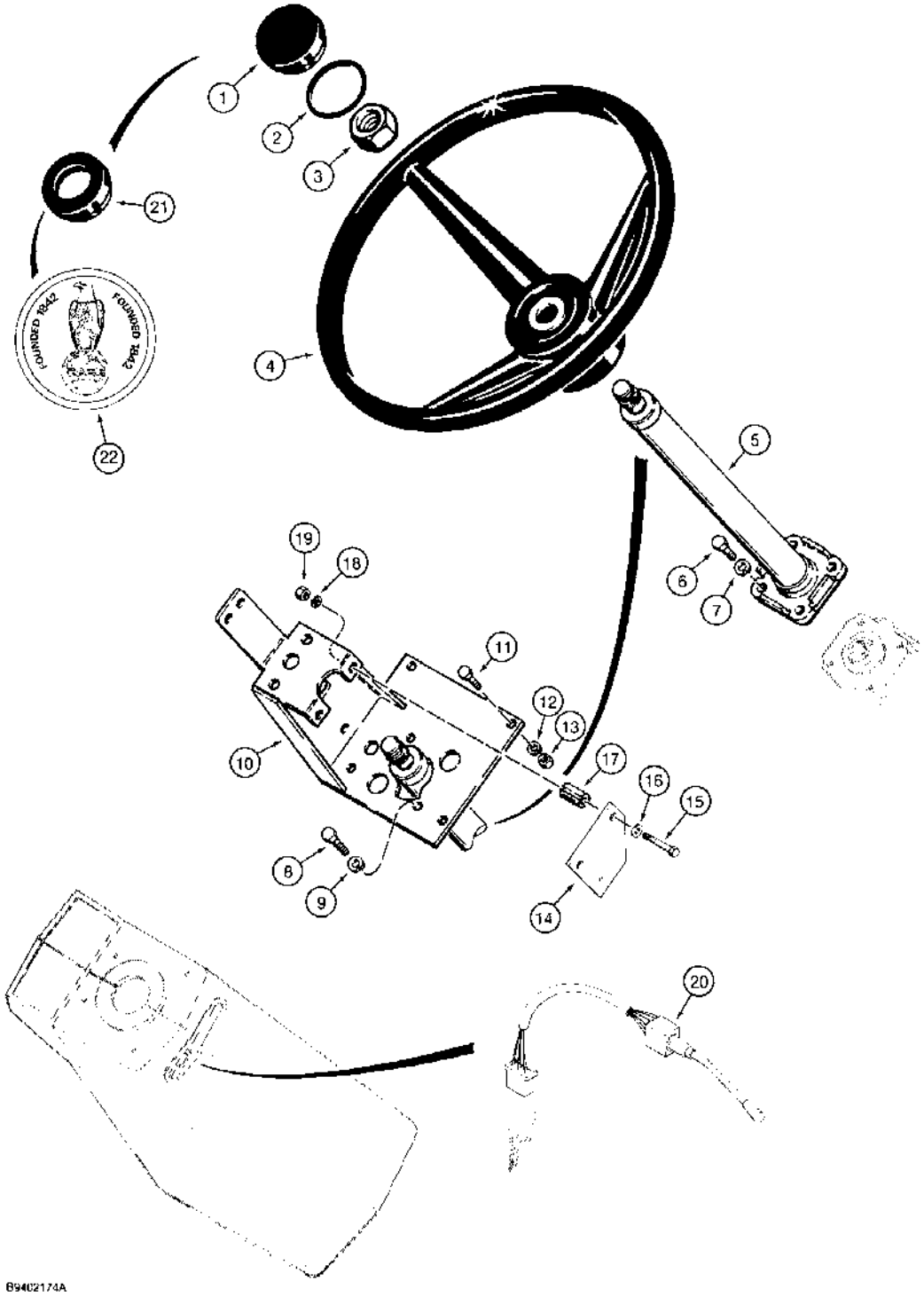

(580SK) - CASE SUPER-K CONSTRUCTION KING LOADER BACKHOE > (5-02) - STEERING WHEEL, COLUMN, AND TURN SIGNAL

Diag #	Part #	Name	Description	Qty
1	A62210	PLUG	CAP steering wheel, no longer available, order Ref. 21 and 22	1
2	238-5227	O-RING,-227, 70 Duro, 2.109" ID x .139" Thk	Cap (Replaces D26115) -227, 70 Duro, 2.109" ID x .139" Thk	1
3	F19646	LOCK NUT,13/16"-20, Thin	NUT lock, special, steering wheel retaining	1
4	A65544	STEERING WHEEL	Tractor	1
5	REF	INSTRUCTION	COLUMN ASSEMBLY steering, for correct assembly and components, see Figure 5-08	1
6	413-612	BOLT,Hex, 3/8" - 16 x 3/4", Gr 5	BOLT,Hex, 3/8" - 16 x 3/4", Gr 5	2
7	492-11038	LOCK WASHER,3/8"	LOCK WASHER,3/8"	2
8	413-620	BOLT,Hex, 3/8" - 16 x 1 1/4", Gr 5	hex, 3/8 NC x 1-1/4 inch	2
9	492-11038	LOCK WASHER,3/8"	LOCK WASHER,3/8"	2
10	D134527	BRACKET	steering column	1
11	413-512	BOLT,Hex, 5/16" - 18 x 3/4", Gr 5	hex, 5/16 NC x 3/4 inch	4
12	492-11031	LOCK WASHER,5/16"	WASHER, LOCK, 5/16"	4
13	425-105	NUT,5/16"-18, G5	- hex, 5/16 inch NC	4
14	D147686	BRACKET	PLATE mounting, turn signal flasher socket	1
15	413-536	BOLT,Hex, 5/16" - 18 x 2 1/4", Gr 5	hex, 5/16 NC x 2-1/4 inch	2
16	495-11034	WASHER,5/16", SAE	5/16" SAE (flat, 11/32 x 11/16 x 1/16")	2
17	D121476	BUSHING	SPACER bracket	2
18	492-11031	LOCK WASHER,5/16"	WASHER, LOCK, 5/16"	2
19	425-105	NUT,5/16"-18, G5	- hex, 5/16 inch NC	2
20	E46938	FLASHER SWITCH	LEVER switch, turn signal and horn, attaches to front console harness, see Figure 4-24 for harness options	1
21	114882A1	CAP	steering wheel, used with Ref. 22	1
22	A180055	CAP ASSY.	INSERT medallion, Case globe and eagle	1

http://www.minnparbackhoeparts.com/

(580SK) - CASE SUPER-K CONSTRUCTION KING LOADER BACKHOE > (5-04) - STEERING HYDRAULIC CIRCUIT

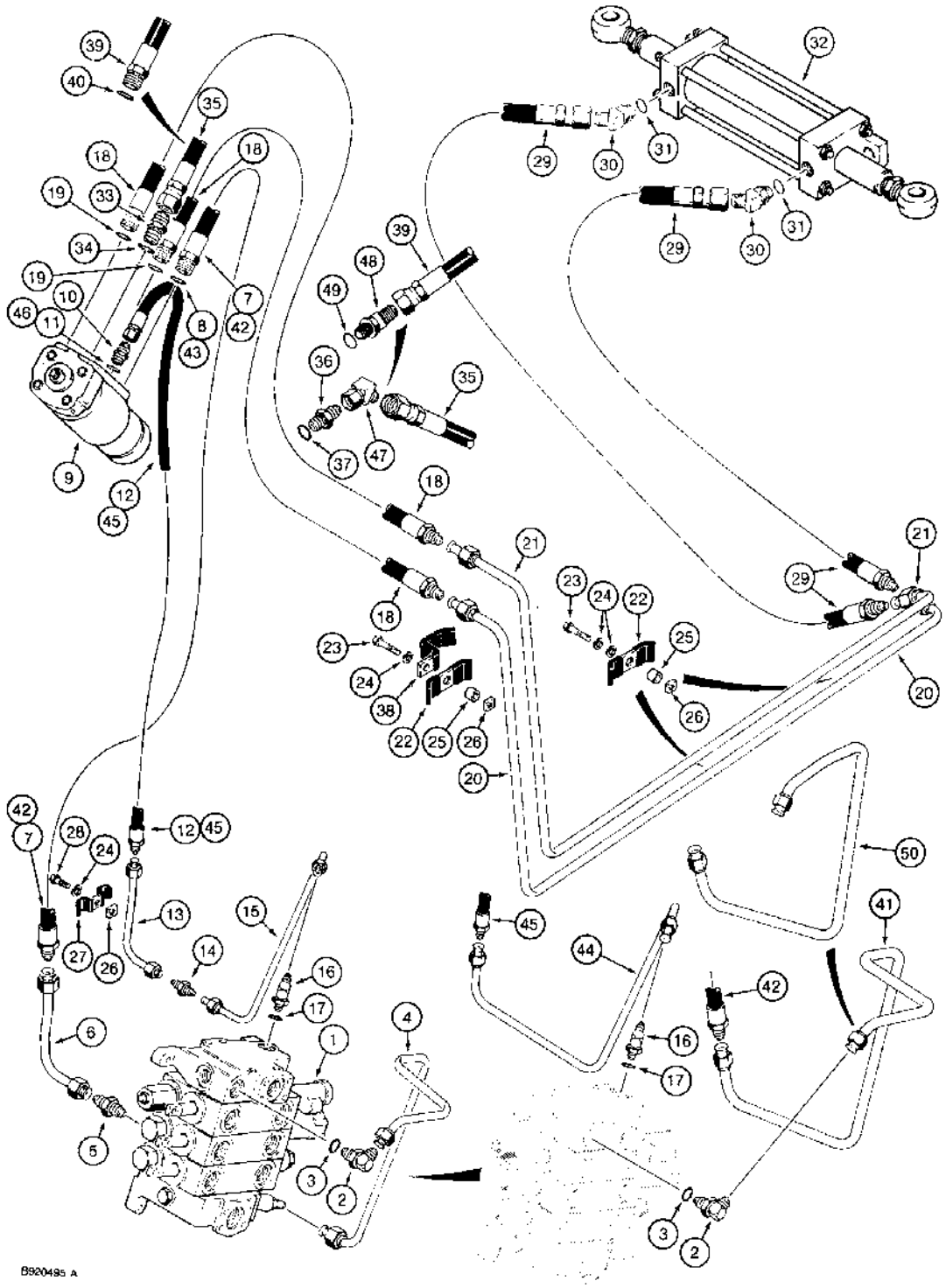

(580SK) - CASE SUPER-K CONSTRUCTION KING LOADER BACKHOE > (5-04) - STEERING HYDRAULIC CIRCUIT

Diag #	Part #	Name	Description	Qty
1	REF	INSTRUCTION	VALVE ASSEMBLY loader control, for correct assembly and components, see Figure 8-064 or 8-066	1
2	218-5106	ELBOW,90º, 3/4"-16, 37º x 3/4"-16, O-Ring	90 degree, 3/4-16 inch flare x adj O-ring boss, Includes: Ref. 3	1
3	237-6008	O-RING,0.176" ID x 0.316" OD x 0.07"	8-1, 90 Duro, .644" ID x .087" Thk	1
4	D147584	PIPE	TUBE steering pressure, at loader valve, used with Ref. 5-7, if used	1
5	218-735	UNION,3/4"-16, 37º x 3/4"-16, 37º	CONNECTOR straight, 3/4-16 inch flare, used with Ref. 4, 6, and 7, if used	1
6	D147588	PIPE	TUBE steering pressure, to hose at steering valve, used with Ref. 4, 5, and 7, if used	1
7	D146135	HOSE	1000 mm long, steering pressure, loader control valve to steering control valve lower right-hand port, used with Ref. 4-6, if used, Includes: Ref. 8	1
8	237-6008	O-RING,0.176" ID x 0.316" OD x 0.07"	8-1, 90 Duro, .644" ID x .087" Thk	1
9	REF	INSTRUCTION	VALVE ASSEMBLY steering control, for correct assembly and components, see Figures 5-10 - 5-13A	1
10	218-5053	HYD CONNECTOR,7/16"-20, 37º x 7/16"-20, O-Ring	ADAPTER straight, 7/16-20 inch flare x O-ring boss, if used, Incl. Ref. 11	1
11	237-6004	O-RING,0.351" ID	4-1, 90 Duro, .351" ID x .072" Thk	1
12	D146136	HOSE	1000 mm long, steering pilot, steering control valve small center port to loader control valve, used with Ref. 10 and 13-15, if used	1
13	D147590	PIPE	TUBE steering pilot, to tube at steering control valve, used with Ref. 10-12, 14 and 15, if used	1
14	218-734	UNION,9/16"-18, 37º x 9/16"-18, 37º	CONNECTOR straight, 9/16-18 inch flare, used with Ref. 10-13 and 15, if used	1
15	D147586	PIPE	TUBE steering pilot, to loader control valve, used with Ref. 10-14, if used	1
16	218-5105	ELBOW,90º, 9/16"-18, 37º x 9/16"-18, O-Ring	90 degree, 9/16-18 inch flare x adj O-ring boss, Includes: Ref. 17	1
17	237-6006	O-RING,0.114" ID x 0.254" OD x 0.07"	6-1, 90 Duro, .468" ID x .078" Thk	1
18	D143188	HOSE ASSY.	HOSE, 570 mm long, steering control valve upper and lower left-hand ports to tubes, Includes: Ref. 19	2

Diag #	Part #	Name	Description	Qty
19	237-6008	O-RING,0.176" ID x 0.316" OD x 0.07"	8-1, 90 Duro, .644" ID x .087" Thk	1
20	D146282	PIPE	TUBE lower, to steering cylinder right-hand port hose	1
		Tube lines are different configuration than those shown in parts book 8-3462. There are no serial breaks so be sure the parts being ordered are similar looking to the ones required.	Tube lines are different configuration than those shown in parts book 8-3462. There are no serial breaks so be sure the parts being ordered are similar looking to the ones required.	1
21	D146280	PIPE	TUBE upper, to steering cylinder left-hand port hose	1
		Tube lines are different configuration than those shown in parts book 8-3462. There are no serial breaks so be sure the parts being ordered are similar looking to the ones required.	Tube lines are different configuration than those shown in parts book 8-3462. There are no serial breaks so be sure the parts being ordered are similar looking to the ones required.	1
22	D143846	CLAMP	- Tube	3
23	413-624	BOLT,Hex, 3/8" - 16 x 1 1/2", Gr 5	hex, 3/8 NC x 1-1/2 inch	3
24	492-11038	LOCK WASHER,3/8"	LOCK WASHER,3/8"	6
25	D149139	SPACER	special, tube clamp	3
26	84899	SQUARE NUT,Sq, 3/8"-16, G2	square, 3/8 inch NC	4
27	D146520	CLAMP	tube	1
28	413-612	BOLT,Hex, 3/8" - 16 x 3/4", Gr 5	BOLT,Hex, 3/8" - 16 x 3/4", Gr 5	1
29	D124648	HOSE	500 mm long, at steering cylinder	2
30	218-5136	ELBOW,45º, 3/4"-16, 37º x 3/4"-16, O-Ring	45 degree, 3/4-16 inch flare x adj O-ring boss, Incl. Ref 31	2
		P/N 218-5136 is for 2 wheel drive only. For 4 wheel drive P/N 218-5280, Fig. 6-38 Ref. 4, is used to plumb the tubes to Cylinder P/N D149729, located on the front axle.	P/N 218-5136 is for 2 wheel drive only. For 4 wheel drive P/N 218-5280, Fig. 6-38 Ref. 4, is used to plumb the tubes to Cylinder P/N D149729, located on the front axle.	1
31	237-6008	O-RING,0.176" ID x 0.316" OD x 0.07"	8-1, 90 Duro, .644" ID x .087" Thk	1
		P/N 237-6008 O-ring is to be used with P/N 218-5136 for 2 wheel drive only.	P/N 237-6008 O-ring is to be used with P/N 218-5136 for 2 wheel drive only.	1
32	G107720	CYLINDER	ASSEMBLY steering, for correct assembly and components, see Figure 5-14	1
	G107720R	REMAN-HYD CYLINDER	580SK, N.A. Only	1
	G107720C	CORE-HYD CYLINDER	Return Number, For N.A. Only	1

Diag #	Part #	Name	Description	Qty
33	218-5059	HYD CONNECTOR,3/4"-16, 37º x 3/4"-16, O-Ring	ADARefef. 34	1
34	237-6008	O-RING,0.176" ID x 0.316" OD x 0.07"	8-1, 90 Duro, .644" ID x .087" Thk	1
35	D150056	HOSE	1200 mm long, steering return, steering control valve upper right-hand port to hydraulic oil filter, used with 218-5059 adapter, Ref. 33	1
36	218-5351	HYD CONNECTOR,3/4"-16, 37º x 9/16"-18, O-Ring	ADAPTER straight, 3/4-16 flare x 9/16-18 inch O-ring boss, may be used with or without Ref. 47 elbow, if used, Includes: Ref. 37	1
37	237-6006	O-RING,0.114" ID x 0.254" OD x 0.07"	6-1, 90 Duro, .468" ID x .078" Thk	1
38	D150345	GUIDE	hose, steering pressure and steering pilot hoses, Ref. 7 and 12	1
39	D150829	HOSE	1200 mm long, steering return, steering control valve upper right-hand port to hydraulic oil filter, replaces hose and adapter on some models, Ref. 33 and 35, Includes: Ref. 40	1
40	237-6008	O-RING,0.176" ID x 0.316" OD x 0.07"	8-1, 90 Duro, .644" ID x .087" Thk	1
41	D150741	TUBE	steering pressure, at loader valve, used with Ref. 42 and 43, replaces two piece tube on some models, if used	1
42	D149871		1125 mm long, steering pressure, loader control valve to steering control valve lower right-hand port, used with Ref. 41 tube, Includes: Ref. 43	1
43	237-6008	O-RING,0.176" ID x 0.316" OD x 0.07"	8-1, 90 Duro, .644" ID x .087" Thk	1
44	D150739	TUBE	steering pilot, to loader control valve, used with Ref. 45 and 46, replaces two piece tube on some models	1
45	D150828	HOSE	1125 mm long, steering pilot, steering control valve small center port to loader control valve, used with Ref. 44, Includes: Ref. 46	1
46	237-6004	O-RING,0.351" ID	4-1, 90 Duro, .351" ID x .072" Thk	1
47	218-5173	ELBOW,45º, 3/4"-16, 37º x 3/4"-16, 37º Fem Sw	45 deg, 3/4-16 inch flare x swivel straight thread, used with Ref. 36 adapter on some models, if used	1
48	218-5529	ELBOW,45º, 3/4"-16, 37º x 9/16"-18, O-Ring	45 deg, 3/4-16 flare x 9/16-18 inch adj O-ring boss, replaces Ref. 36 and 47 adapter and elbow on some models, if used, Includes: Ref. 49	1
49	237-6006	O-RING,0.114" ID x 0.254" OD x 0.07"	6-1, 90 Duro, .468" ID x .078" Thk	1
50	D151077	TUBE ASSY.	TUBE steering pressure, at loader valve, used with Ref. 42 and 43, may replace Ref.	1

Diag #	Part #	Name	Description	Qty
			41 on some models, if used Ref. 42 and 43, may replace Ref. 41 on some models, if used	

http://www.minnparbackhoeparts.com/

(580SK) - CASE SUPER-K CONSTRUCTION KING LOADER BACKHOE > (5-08) - STEERING COLUMN

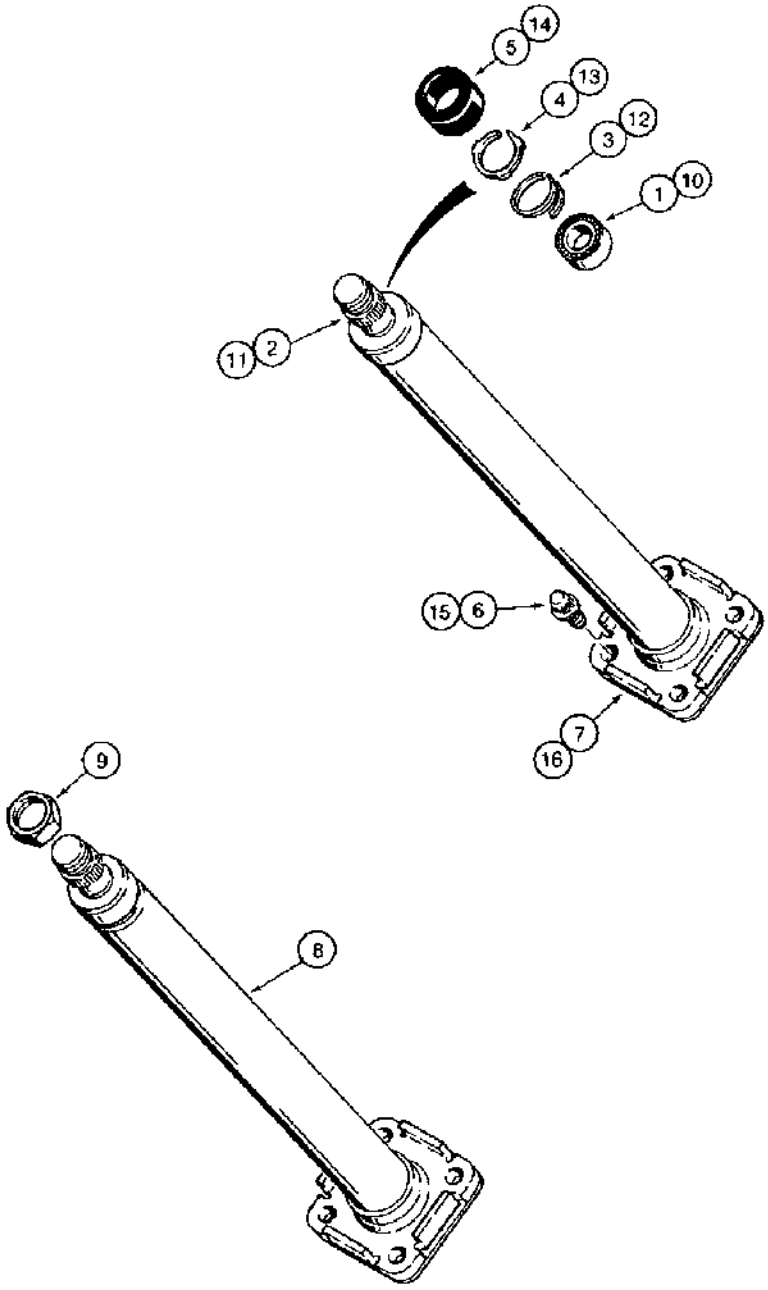

BS20483

http://www.minnparbackhoeparts.com/

(580SK) - CASE SUPER-K CONSTRUCTION KING LOADER BACKHOE > (5-08) - STEERING COLUMN

Diag #	Part #	Name	Description	Qty
	D135411	STEERING COLUMN	COLUMN ASSEMBLY steering, may receive either Eaton or Danfoss complete steering column assembly, see below for service, replaced D135411 of internal parts, if used, Includes: Ref. 1 through 9 and P/N NSS above Ref. 1	1
	NSS	NOT SERVICED SEPARATELY	COLUMN ASSEMBLY steering, Eaton No. 204-1031-006, 460 mm long, if used, Includes: Ref. 1 through 7	1
1	L30881	BALL BEARING	roller, steering shaft	1
2	NSS	NOT SERVICED SEPARATELY	COLUMN steering shaft	1
3	F53335	RING, SNAP	RING retaining, bearing	1
4	NSS	NOT SERVICED SEPARATELY	RETAINER bearing	1
5	S115351	CAP	shaft	1
6	166-43	12 PT SCREW,12 Pt Flg, 3/8"-16 x 3/4", G8	BOLT, 12 point, 3/8 NC x 3/4 inch, grade 8, not required, uses Ref. 6 and 7 shown on Figure 5-02	2
7	NSS	NOT SERVICED SEPARATELY	FLANGE tube	1
	NSS	NOT SERVICED SEPARATELY	COLUMN ASSEMBLY steering, Danfoss Type No. OTPB400, Code No. 150X0058, 454 mm long, if used, Includes: Ref. 8 and 9	1
8	NSS	NOT SERVICED SEPARATELY	COLUMN steering shaft	1
9	N14118	NUT	special, used on Danfoss steering columns	1
	D150774	STEERING COLUMN	COLUMN ASSEMBLY steering, Eaton No. 204-1104-006, 469 mm long, if used, Includes: Ref. 10 through 16	1
10	L30881	BALL BEARING	roller, steering shaft	1
11	NSS	NOT SERVICED SEPARATELY	COLUMN steering shaft	1
12	F53335	RING, SNAP	RING retaining, bearing	1
13	NSS	NOT SERVICED SEPARATELY	RETAINER bearing	1
14	S115351	CAP	shaft	1
15	166-43	12 PT SCREW,12 Pt Flg, 3/8"-16 x 3/4", G8	BOLT, 12 point, 3/8 NC x 3/4 inch, grade 8, not required, uses Ref. 6 and 7 shown on Figure 5-02	2
16	NSS	NOT SERVICED SEPARATELY	FLANGE tube	1

http://www.minnparbackhoeparts.com/

(580SK) - CASE SUPER-K CONSTRUCTION KING LOADER BACKHOE > (5-10) - STEERING CONTROL VALVE

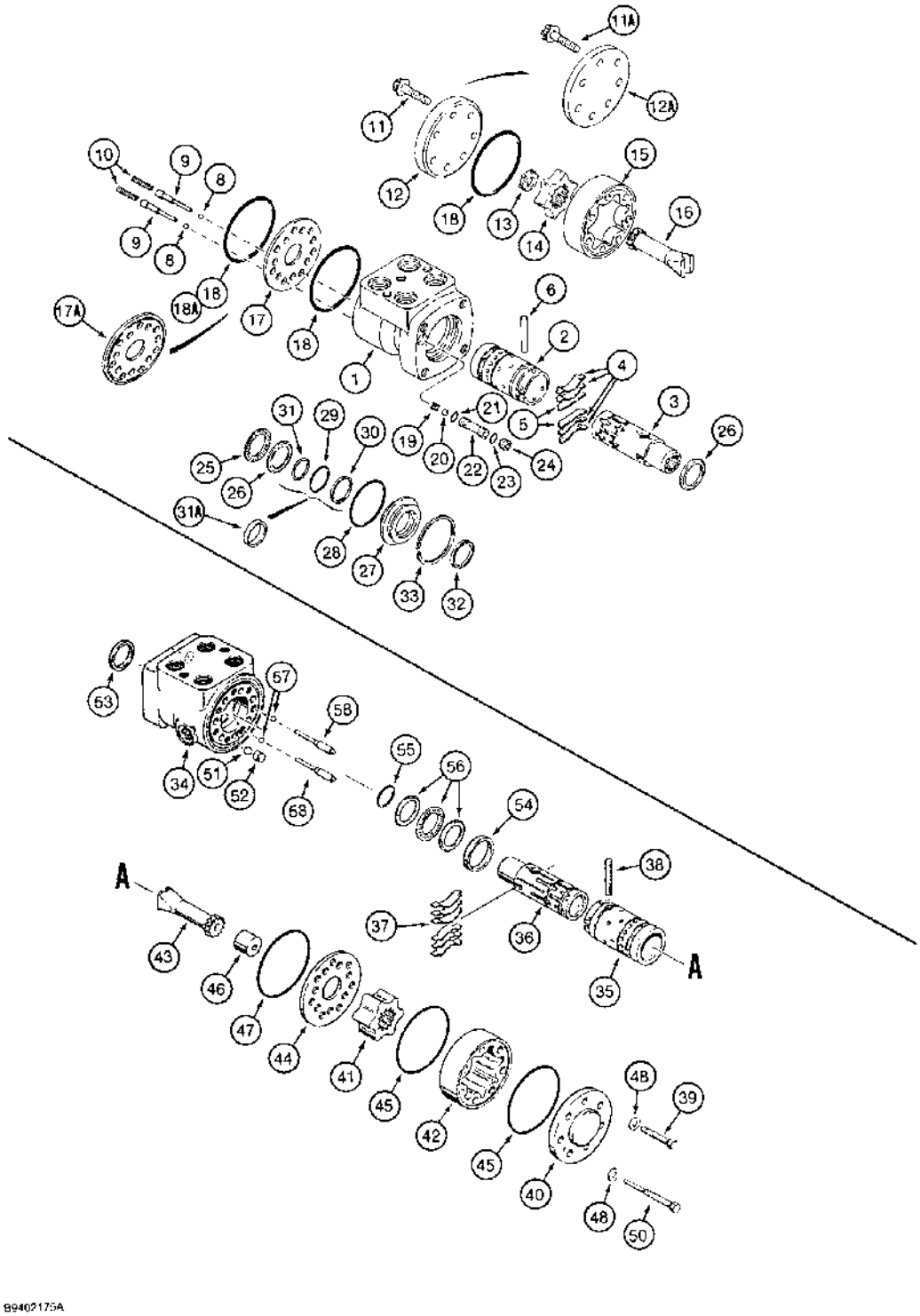

B9402175A

(580SK) - CASE SUPER-K CONSTRUCTION KING LOADER BACKHOE > (5-10) - STEERING CONTROL VALVE

Diag #	Part #	Name	Description	Qty
	D135338	PUMP, HYDRAULIC	VALVE ASSEMBLY steering control	1
		may receive either Eaton or Danfoss complete control valve assembly, see below for service of internal parts, no longer available, order 135999A1 valve assembly on Figure 5-13A, Includes: Ref. 1 through 58, P/N D140225, P/N above the Ref. 1, P/N N14250, P/N N14154, P/N NSS above Ref. 34 and P/N 14221.	may receive either Eaton or Danfoss complete control valve assembly, see below for service of internal parts, no longer available, order 135999A1 valve assembly on Figure 5-13A, Includes: Ref. 1 through 58, P/N D140225, P/N above the Ref. 1, P/N N14250, P/N N14154, P/N NSS above Ref. 34 and P/N 14221.	1
	D140225	VALVE, CONTROL	VALVE ASSEMBLY steering control, Eaton No. 263-1061-004, Includes: Ref. 1 - 33, no longer available, order 135999A1 valve assembly on Figure 5-13A, Includes: Ref. 1 through 58, P/N above Ref. 1, P/N N14250, PN N14154, P/N NSS above Ref. 34 and P/N 14221.	1
	NSS	NOT SERVICED SEPARATELY	VALVE ASSEMBLY steering control, D135338 valve, Eaton No. 263-1061-004, if used, Includes: Ref. 1 through 33, P/N 14250 and P/N N14154.	1
1	NSS	NOT SERVICED SEPARATELY	HOUSING control valve	1
2	NSS	NOT SERVICED SEPARATELY	SLEEVE control valve	1
3	NSS	NOT SERVICED SEPARATELY	SPOOL control valve	1
	N14250	KIT	centering spring, Includes: Ref. 4 and 5	1
4	NSS	NOT SERVICED SEPARATELY	SPRING centering, six in kit	4
5	NSS	NOT SERVICED SEPARATELY	SPACER spring	2
6	L30888	PIN	centering	1
7	NSS	NOT SERVICED SEPARATELY	VALVE check, control valve, not shown	1
8	211-204	BALL	3/16 inch, grade 25, chrome alloy steel, anticavitation	2
9	136494A1	PLUG	RETAINER spring, anticavitation, replaces N14764	2
10	N14763	SPRING	anticavitation	2
11	H189555	BOLT,M6 x 20mm, Cl 8.8	Ferry head, 12 point, 5/16 NF x 1-5/8 inch, used with Ref. 12 and 17, if used	7

Diag #	Part #	Name	Description	Qty
11A	136586A1	SCREW	BOLT Torx head, 6 point, 5/16 NF x 1-3/4 inch, used with Ref. 12A and 17A, if used	7
		Part of repair end cap kit P/N 136493A1	Part of repair end cap kit P/N 136493A1	1
12	D82809	COVER	CAP end, with O-ring groove, upon depletion of service parts, when replacing end cap or spacer plate, Ref. 12 or 17, order 136493A1 repair kit, see below	1
12A	135867A1	CAP	end, without O-ring groove, 3/8 inch thick	1
		Part of repair end cap kit P/N 136493A1	Part of repair end cap kit P/N 136493A1	1
13	K964246	SPACER	drive shaft	1
	N14154	ROTOR	SET gerotor, control valve, Includes: Ref. 14 and 15	1
14	NSS	NOT SERVICED SEPARATELY	ROTOR control valve	1
15	NSS	NOT SERVICED SEPARATELY	STATOR control valve	1
16	L30878	DRIVE SHAFT	SHAFT drive, steering control valve	1
17	S113037	PLATE	spacer, without O-ring groove, upon depletion service parts, when replacing end cap or spacer plate, Ref. 12 or 17, order 136493A1 repair kit, see below	1
17A	135869A1	PLATE	spacer, with O-ring groove facing end cap	1
		Part of repair end cap kit P/N 136493A1	Part of repair end cap kit P/N 136493A1	1
18	238-5040	O-RING,2.864" ID x 3.004" OD x 0.07"	-040, 70 Duro, 2.864" ID x .070" Thk, Cover and housing (Replaces N6392 square cut seal)	3
		Part of low torque seal kit P/N 1343658C3.	Part of low torque seal kit P/N 1343658C3.	1
	136493A1	COVER	KIT - repair, end cap and spacer plate, includes seven 136586A1 bolts, 135867A1 end cap and 135869A1 spacer plate, Includes: Ref. 11A, 12A and 17A	1
		When the end cap repair kit is installed, 'flip' outer gerotor ring, Ref. 15. Also, order two of Ref. 9 retainers and reinstall it so that the O-ring groove faces the end cap.	When the end cap repair kit is installed, 'flip' outer gerotor ring, Ref. 15. Also, order two of Ref. 9 retainers and reinstall it so that the O-ring groove faces the end cap.	1
19	L35368	RETAINER	check ball	1
20	211-208	BALL,5/16" Dia	5/16 inch, grade 25, chrome alloy steel, check	1
21	L30893	O-RING	7/16 x 5/16 x 1/16 in, seat, inner	1
		Part of low torque seal kit P/N 1343658C3.	Part of low torque seal kit P/N 1343658C3.	1
22	D82806	VALVE SEAT	SEAT check ball	1

Diag #	Part #	Name	Description	Qty
23	238-5012	O-RING,0.364" ID x 0.504" OD x 0.07"	-012, 70 Duro, .364" ID x .070" Thk, Seat, outer (Replaces N8539 seal)	1
		Part of low torque seal kit P/N 1343658C3.	Part of low torque seal kit P/N 1343658C3.	1
24	D82805	PLUG	hex socket, special	1
25	G13609	THRUST BEARING	BEARING, THRUST - Needle, Spool	1
26	D82804	RACE	WASHER thrust, bearing	2
27	N13312	CYLINDER END CAP	RETAINER spool seal	1
28	238-5225	O-RING,-225, 70 Duro, 1.859" ID x .139" Thk	Seal retainer (Replaces A14515 -225, 70 Duro, 1.859" ID x .139" Thk	1
		Part of low torque seal kit P/N 1343658C3.	Part of low torque seal kit P/N 1343658C3.	1
29	N13313	SEAL	teflon, spool, inner, if used	1
30	50-2703T1	BACK-UP RING	RING backup, seal, if used, replaces N13314	1
31	238-5121	O-RING,-121, 70 Duro, 1.049" ID x .103" Thk	Spool, inner, if used -121, 70 Duro, 1.049" ID x .103" Thk	1
31A	NSS	NOT SERVICED SEPARATELY	SEAL may replace three piece seal arrangement, Ref. 29 - 31	1
		Part of low torque seal kit P/N 1343658C3.	Part of low torque seal kit P/N 1343658C3.	1
32	A28211	OIL SEAL	1 inch ID, spool, outer	1
		Part of low torque seal kit P/N 1343658C3.	Part of low torque seal kit P/N 1343658C3.	1
33	S110169	WASHER	RING retaining, seal retainer	1
	NSS	NOT SERVICED SEPARATELY	VALVE ASSEMBLY steering control, Danfoss Type No. OSPC125LS, Code No. 150-0122, if used, Includes: Ref. 34 through 58 and P/N N14221	1
34	NSS	NOT SERVICED SEPARATELY	HOUSING control valve	1
35	NSS	NOT SERVICED SEPARATELY	SLEEVE control valve	1
36	NSS	NOT SERVICED SEPARATELY	SPOOL control valve	1
37	N14219	SET OF PARTS	SPRING centering, set of six	1
38	3112269R1	PIN	centering	1
39	814-8040	BOLT,Hex, M8 x 1.25 x 40mm, Cl 8.8	BOLT,Hex, M8 x 1.25 x 40mm, Cl 8.8	6
40	3112273R1	COVER	end	1
	N14221	ROTOR	SET gerotor, control valve, Includes: Ref. 41 and 42	1
41	NSS	NOT SERVICED SEPARATELY	ROTOR control valve	1
42	NSS	NOT SERVICED SEPARATELY	STATOR control valve	1
43	538915R1	DRIVE SHAFT	SHAFT drive, steering control valve	1

Diag #	Part #	Name	Description	Qty
44	3112276R1	PLATE	spacer	1
45	3141536R1	O-RING	cover and housing, replaces V35605	2
46	N14220	SPACER	shaft	1
47	538931R1	O-RING,80.5mm ID x 1.5mm Width	plate, replaces V35603	1
48	538920R1	WASHER	end cover	7
50	D145254	BOLT special, with pin	BOLT special, with pin	1
51	3112270R1	BALL	plate	1
52	3112272R1	BUSHING	plate	1
53	538930R1	SEAL	spool, outer, replaces V35600	1
54	3112264R1	RING	retaining	1
55	D145253	O-RING	special	1
56	N14218	BEARING ASSY	BEARING spool, includes roller bearing and two thrust washers	1
57	N14222	BALL	housing, not shown	2
58	D145278	PIN, SPLIT (COTTER)	PIN with bushing	2
	1343658C3	SEAL KIT	KIT seal, low torque, Includes: Ref. 18, 21, 23, 28, 31A and 32	1

http://www.minnparbackhoeparts.com/

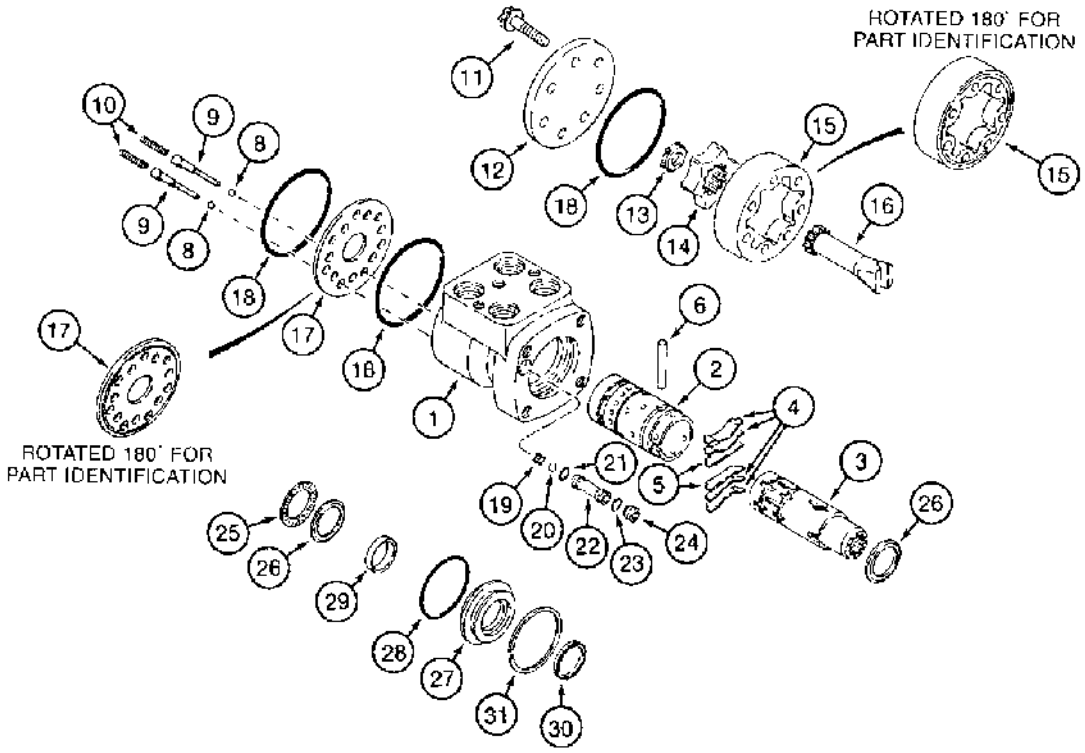

B94021/6A

(580SK) - CASE SUPER-K CONSTRUCTION KING LOADER BACKHOE > (5-13A) - STEERING CONTROL VALVE

Diag #	Part #	Name	Description	Qty
	135999A1	PUMP, HYDRAULIC	VALVE ASSEMBLY steering control, Eaton No. 263-1146-002, Includes: Ref. 1 through 31	1
1	NSS	NOT SERVICED SEPARATELY	HOUSING control valve	1
2	NSS	NOT SERVICED SEPARATELY	SLEEVE control valve	1
3	NSS	NOT SERVICED SEPARATELY	SPOOL control valve	1
	N14250	KIT	centering spring, Includes: Ref. 4 and 5	1
4	NSS	NOT SERVICED SEPARATELY	SPRING centering, six in kit	4
5	NSS	NOT SERVICED SEPARATELY	SPACER spring	2
6	L30888	PIN	centering	1
8	211-204	BALL	3/16 inch, grade 25, chrome alloy steel, anticavitation	2
9	136494A1	PLUG	RETAINER spring, anticavitation	2
10	N14763	SPRING	anticavitation	2
11	136586A1	SCREW	BOLT Torx head, 6 point, 5/16 NF x 1-3/4 inch	7
12	135867A1	CAP	end, without O-ring groove	1
13	K964246	SPACER	drive shaft	1
	N14154	ROTOR	SET gerotor, control valve, Includes: Ref. 14 and 15	1
14	NSS	NOT SERVICED SEPARATELY	ROTOR control valve	1
15	NSS	NOT SERVICED SEPARATELY	STATOR control valve	1
16	L30878	DRIVE SHAFT	SHAFT drive, steering control valve	1
17	135869A1	PLATE	spacer, with O-ring groove	1
18	238-5040	O-RING,2.864" ID x 3.004" OD x 0.07"	-040, 70 Duro, 2.864" ID x .070" Thk, Cover and housing	3
		Part of low torque seal kit P/N 1343658C3.	Part of low torque seal kit P/N 1343658C3.	1
19	L35368	RETAINER	check ball	1
20	211-208	BALL,5/16" Dia	5/16 inch, grade 25, chrome alloy steel, check	1
21	L30893	O-RING	7/16 x 5/16 x 1/16 in, seat, inner	1
		Part of low torque seal kit P/N 1343658C3.	Part of low torque seal kit P/N 1343658C3.	1
22	D82806	VALVE SEAT	SEAT check ball	1

Diag #	Part #	Name	Description	Qty
23	238-5012	O-RING,0.364" ID x 0.504" OD x 0.07"	-012, 70 Duro, .364" ID x .070" Thk, Seat, outer (Replaces N8539 seal)	1
		Part of low torque seal kit P/N 1343658C3.	Part of low torque seal kit P/N 1343658C3.	1
24	D82805	PLUG	hex socket, special	1
25	G13609	THRUST BEARING	BEARING, THRUST - Needle, Spool	1
26	D82804	RACE	WASHER thrust, bearing	2
27	N13312	CYLINDER END CAP	RETAINER spool seal	1
28	238-5225	O-RING,-225, 70 Duro, 1.859" ID x .139" Thk	Seal retainer -225, 70 Duro, 1.859" ID x .139" Thk	1
		Part of low torque seal kit P/N 1343658C3.	Part of low torque seal kit P/N 1343658C3.	1
29	NSS	NOT SERVICED SEPARATELY	SEAL spool, inner	1
		Part of low torque seal kit P/N 1343658C3.	Part of low torque seal kit P/N 1343658C3.	1
30	A28211	OIL SEAL	1 inch ID, spool, outer	1
		Part of low torque seal kit P/N 1343658C3.	Part of low torque seal kit P/N 1343658C3.	1
31	S110169	WASHER	RING retaining, seal retainer	1
	1343658C3	SEAL KIT	KIT seal, low torque, Includes: Ref. 18, 21, 23 and 28 - 30	1

http://www.minnparbackhoeparts.com/

(580SK) - CASE SUPER-K CONSTRUCTION KING LOADER BACKHOE > (5-14) - STEERING CYLINDER, TWO WHEEL DRIVE FRONT AXLE

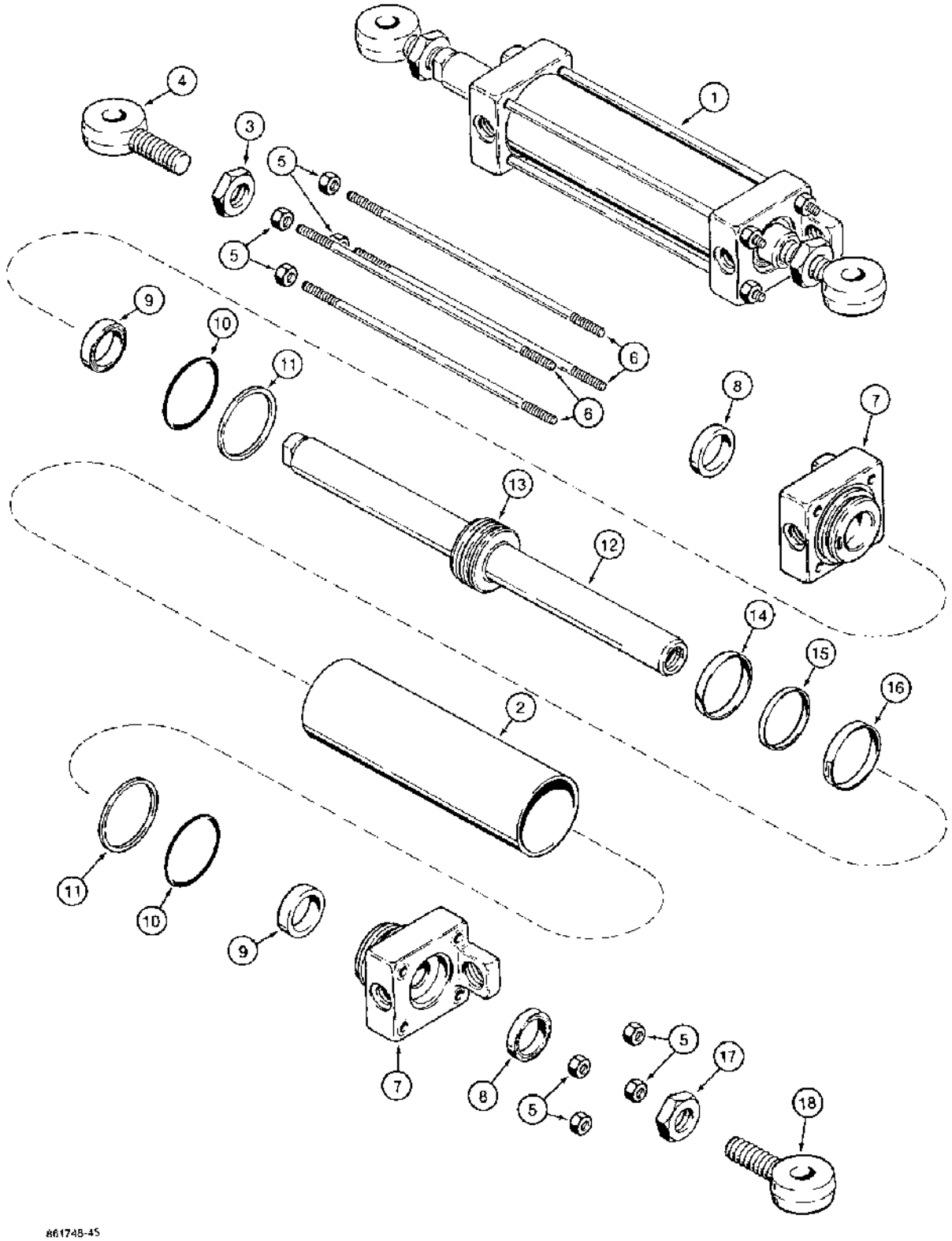

(580SK) - CASE SUPER-K CONSTRUCTION KING LOADER BACKHOE > (5-14) - STEERING CYLINDER, TWO WHEEL DRIVE FRONT AXLE

Diag #	Part #	Name	Description	Qty
1	G107720	CYLINDER	ASSEMBLY, 2-3/4, 70, ID x 6-45/64 inch, 170 mm, stroke, steering, two-wheel drive front axle, Includes: Ref. 2 through 18	1
	G107720R	REMAN-HYD CYLINDER	580SK - 2WD, N.A. Only	1
	G107720C	CORE-HYD CYLINDER	Return Number, For N.A. Only	1
2	G106808	TUBE,69.85 mm ID x 79.76 mm OD x 233.60 mm L	cylinder	1
3	129-369	JAM NUT,Jam, 7/8"-14, G5	LH thread Jam, 7/8"-14, G5	1
4	G106832	BALL JOINT	EYE rod, left-hand thread	1
5	425-106	NUT,3/8"-16, G5	NUT,3/8"-16, G5	8
6	G106817	TIE-ROD	ROD tie, 13-5/16 inch, 338 mm long, cylinder	4
	G109996	GLAND	ASSEMBLY cylinder, no longer available, order Ref. 7, G106810 gland and G110045 seal kit, Includes: Ref. 7 through 11	2
7	G106810	CYLINDER END CAP	GLAND cylinder	1
8	D95142	WIPER SEAL	WIPER piston rod, outer	1
		Part of seal kit P/N G110045.	Part of seal kit P/N G110045.	1
9	G107921	SEAL	U-cup, with O-ring, piston rod, wide	1
		Part of seal kit P/N G110045.	Part of seal kit P/N G110045.	1
10	238-5230	O-RING,-230, 70 Duro, 2.484" ID x .139" Thk	Gland (Replaces A28318) -230, 70 Duro, 2.484" ID x .139" Thk	1
		Part of seal kit P/N G110045.	Part of seal kit P/N G110045.	1
11	G32129	RING	backup, gland O-ring	1
		Part of seal kit P/N G110045.	Part of seal kit P/N G110045.	1
	G107721	ROD ASSY.	ROD ASSEMBLY piston, 1-1/2 inch, 38 mm, diameter, Includes: Ref. 12 and 13	1
12	NSS	NOT SERVICED SEPARATELY	ROD piston	1
13	NSS	NOT SERVICED SEPARATELY	PISTON cylinder	1
14	G105187	RING	wear, piston	1
		Part of seal kit P/N G110045.	Part of seal kit P/N G110045.	1
15	G104439	RING	seal, inner	1
		Part of seal kit P/N G110045.	Part of seal kit P/N G110045.	1

Diag #	Part #	Name	Description	Qty
16	G104454	SEALING RING	expandable, outer, piston	1
		Part of seal kit P/N G110045.	Part of seal kit P/N G110045.	1
17	425-1514	JAM NUT,Jam, 7/8"-14, G5	hex, jam, 7/8 inch NF	1
18	G106813	BALL JOINT	EYE rod, right-hand thread	1
	G110045	KIT	seal, Includes: Ref. 8 - 11 and 14 - 16	1

http://www.minnparbackhoeparts.com/

(580SK) - CASE SUPER-K CONSTRUCTION KING LOADER BACKHOE > (5-16) - FRONT AXLE AND SPINDLES

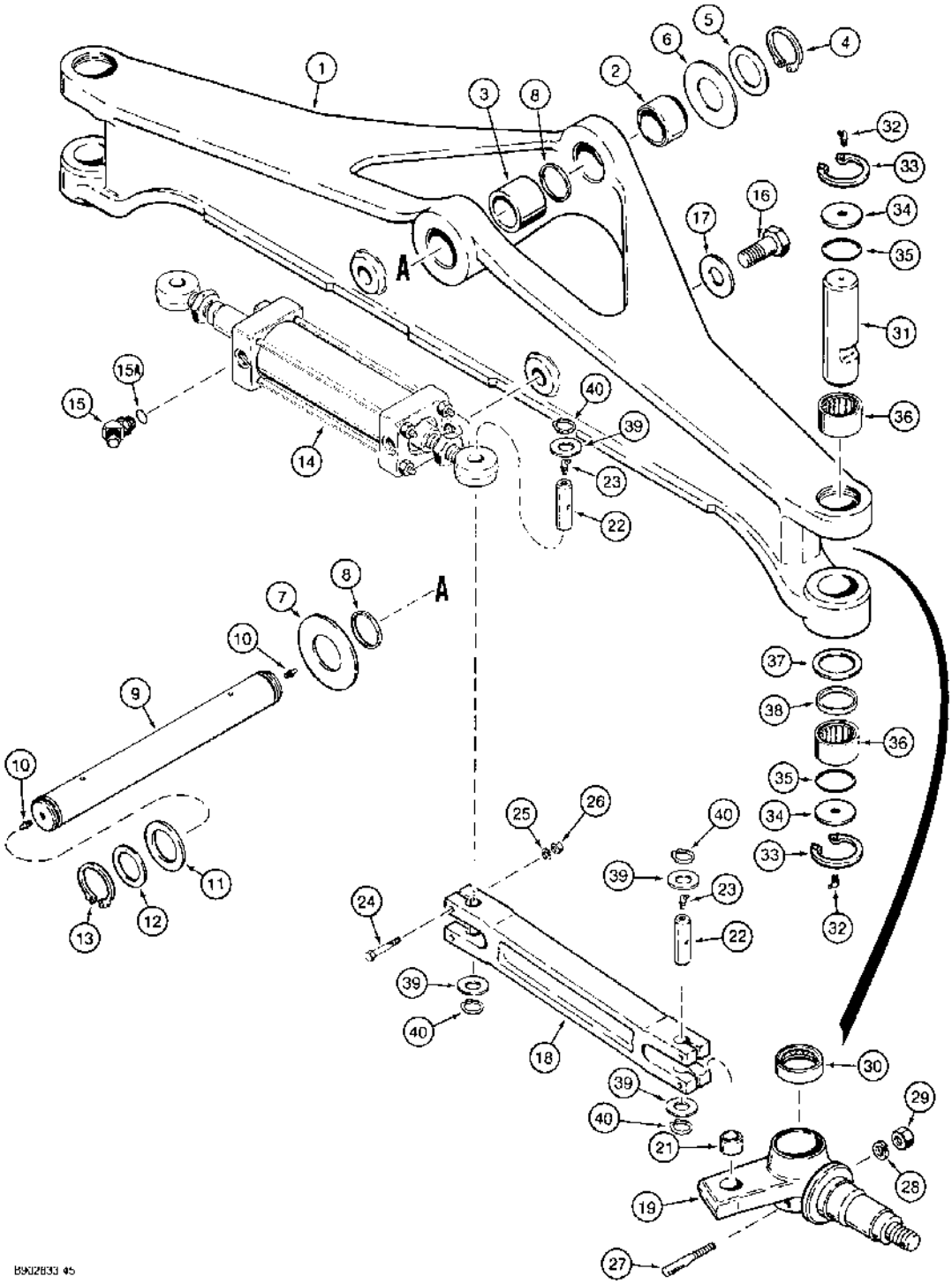

(580SK) - CASE SUPER-K CONSTRUCTION KING LOADER BACKHOE > (5-16) - FRONT AXLE AND SPINDLES

Diag #	Part #	Name	Description	Qty
1	D138954	AXLE, FRONT	AXLE ASSEMBLY front, with single rear bushing, Includes: Ref. 2 and 3	1
	D138954R	REMAN-FRONT AXLE, w/o DIFF LOCK	580SK	1
	D138954C	CORE-FRONT AXLE	Return Number	1
2	D137345	BUSHING	axle, front	1
3	D138047	BUSHING	axle, rear	1
4	800-44050	SNAP RING,M50, Ext	RING snap, axle pivot pin retaining, front	1
5	495-81282	WASHER,2 1/16" x 3" x .109"	flat, 2-1/16 x 3 x 1/8 inch	1
6	D143408	WASHER	flat, special, used as spacer	1
7	D123684	WASHER	thrust, 2-1/16 x 4-1/2 x 3/16 inch, front	1
8	D123655	SEAL	grease	2
9	D127445	PIVOT PIN	PIN axle pivot	1
10	219-1	LUBE NIPPLE,1/8"-27 x .66 lg	FITTING grease, straight, 1/8 PT x 21/32 inch	2
11	D143431	WASHER	special	1
12	495-81226	WASHER,1 13/16" x 2 1/2" x .109"	- flat, 1-13/16 x 2-1/2 x 1/8 inch	1
13	103-16175	SNAP RING,#175, Ext	Ring, Snap, , Axle pivot pin, rear (Replaces D25280) #175, Ext	1
14	G107720	CYLINDER	ASSEMBLY two-wheel drive front axle, parts list Fig. 5-14	1
	G107720R	REMAN-HYD CYLINDER	580SK, 2WD, N.A. Only	1
	G107720C	CORE-HYD CYLINDER	Return Number, For N.A. Only	1
15	218-5136	ELBOW,45º, 3/4"-16, 37º x 3/4"-16, O-Ring	45 degree, 3/4-16 inch flare x adj O-ring boss, Incl. Ref 15A	2
15A	237-6008	O-RING,0.176" ID x 0.316" OD x 0.07"	8-1, 90 Duro, .644" ID x .087" Thk	1
16	13-1638	BOLT,Hex, 1"-8 x 2 3/8", G5, Full Thd	; No Longer Used, For Service Order 446106A1 Bolt Hex, 1"-8 x 2 3/8", G5, Full Thd	2
16	446106A1	BOLT (MACHINE),Hex, 1" - 8 x 2 3/8", Gr 5	BOLT (MACHINE),Hex, 1" - 8 x 2 3/8", Gr 5	2
17	D36505	WASHER	1-1/16 x 1-7/8 x 9/64	2
18	D123806	LINK, CONNECTING	LINK steering	2
19	D125340	SPINDLE	ASSEMBLY right-hand	1
20	D125341	SPINDLE	ASSEMBLY left-hand, not shown, Includes: Ref. 21	1
21	D127507	BUSHING	D125340 or D125341 spindle	1
22	D150155	PIN	steering link	4

Diag #	Part #	Name	Description	Qty
23	219-89	LUBE NIPPLE,45º, 1/8" NPT x .78" lg, Drive	FITTING - grease, 45º, 1/8 PT self-tapping x 25/32 inch	4
24	413-632	BOLT,Hex, 3/8" - 16 x 2", Gr 5	- hex, 3/8 NC x 2 inch	8
25	492-11038	LOCK WASHER,3/8"	LOCK WASHER,3/8"	8
26	425-106	NUT,3/8"-16, G5	NUT,3/8"-16, G5	8
27	D57486	PIN	- kingpin lock	2
		Part of kingpin kit P/N D103626.	Part of kingpin kit P/N D103626.	1
28	80679	LOCK WASHER,1/2"	WASHER, LOCK, 1/2"	2
29	425-118	NUT,1/2"-20, G5	hex, 1/2 inch NF	2
30	A27602	THRUST BEARING,2.041" ID x 2.9475" OD x 0.635"	BEARING roller, spindle	2
		Part of kingpin kit P/N D103626.	Part of kingpin kit P/N D103626.	1
31	D123865	PIVOT PIN	KINGPIN front axle	2
		Part of kingpin kit P/N D103626.	Part of kingpin kit P/N D103626.	1
32	219-89	LUBE NIPPLE,45º, 1/8" NPT x .78" lg, Drive	FITTING - grease, 45º, 1/8 PT self-tapping x 25/32 inch	4
		Part of kingpin kit P/N D103626.	Part of kingpin kit P/N D103626.	1
33	100-21237	SNAP RING,2.375", Int, #237	Ring, Snap, , Brg (Replaces A27463) 2.375", Int, #237	4
		Part of kingpin kit P/N D103626.	Part of kingpin kit P/N D103626.	1
34	D72371	WASHER	SPACER kingpin	4
		Part of kingpin kit P/N D103626.	Part of kingpin kit P/N D103626.	1
35	238-5139	O-RING,-139, 90 Duro, 2.175" ID x .103" Thk	Kingpin seal -139, 90 Duro, 2.175" ID x .103" Thk	4
		Part of kingpin kit P/N D103626.	Part of kingpin kit P/N D103626.	1
36	A28230	NEEDLE BEARING,2" ID x 2.3755" OD x 1"	BEARING needle, kingpin	4
		Part of kingpin kit P/N D103626.	Part of kingpin kit P/N D103626.	1
37	D72372	WASHER	thrust, bearing	2
		Part of kingpin kit P/N D103626.	Part of kingpin kit P/N D103626.	1
38	D61297	SEAL	oil	2
		Part of kingpin kit P/N D103626.	Part of kingpin kit P/N D103626.	1
39	495-11094	WASHER,7/8", SAE	flat, 15/16 x 1-3/4 x 1/8 inch	8
40	100-1687	SNAP RING,#87, Ext	Ring, Snap, , Pin (Replaces D71829) #87, Ext	8

Diag #	Part #	Name	Description	Qty
	D103626	PACKAGE	KIT kingpin, Includes: Ref. 27 and 30 - 38, quantity in kit services one side of axle	1

http://www.minnparbackhoeparts.com/

(580SK) - CASE SUPER-K CONSTRUCTION KING LOADER BACKHOE > (5-18) - FRONT WHEEL HUB AND BEARINGS

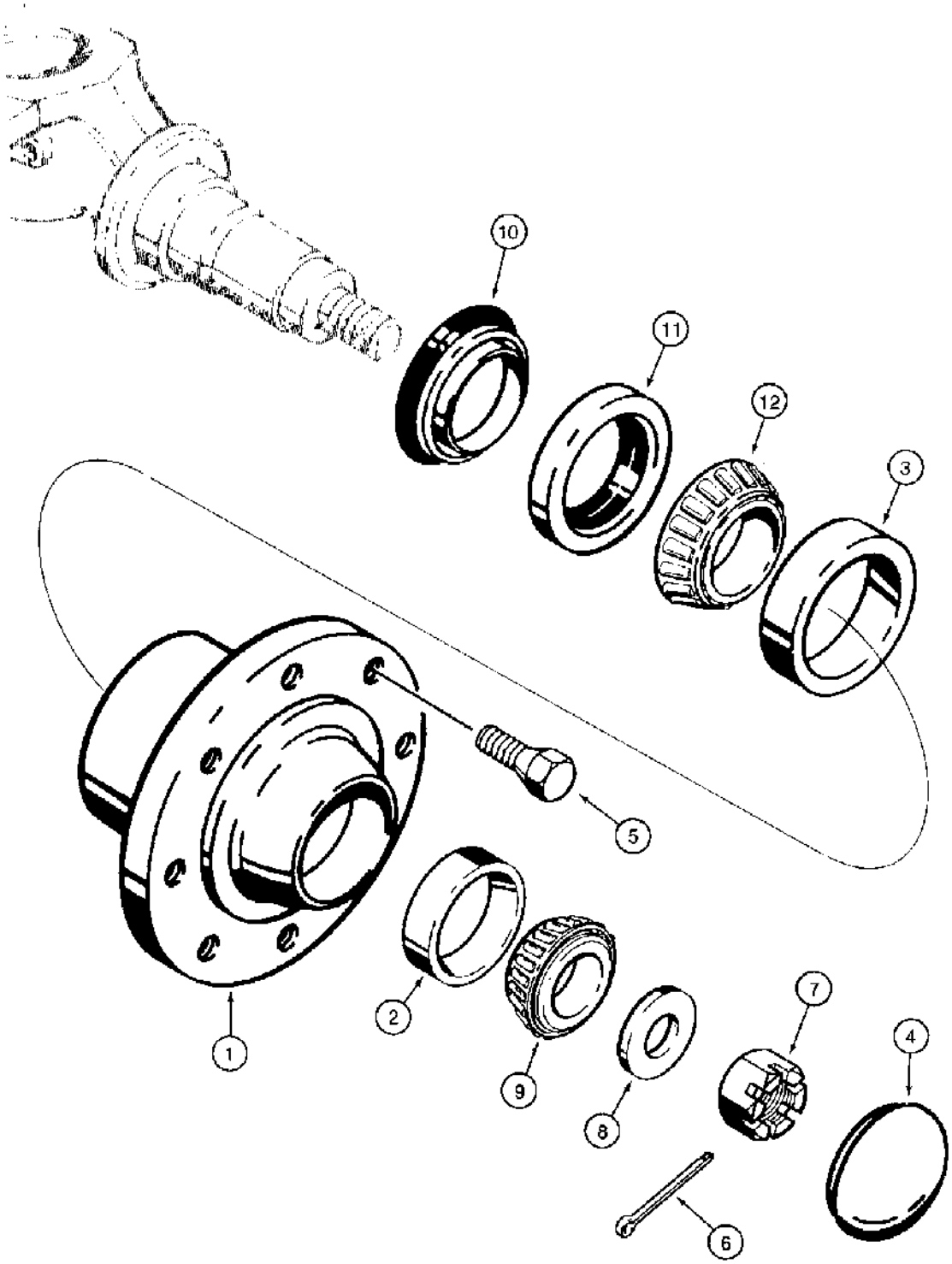

850390

(580SK) - CASE SUPER-K CONSTRUCTION KING LOADER BACKHOE > (5-18) - FRONT WHEEL HUB AND BEARINGS

Diag #	Part #	Name	Description	Qty
	A66759	HUB	ASSEMBLY front wheel, Includes: Ref. 1, 2 and 3	2
1	NSS	NOT SERVICED SEPARATELY	HUB front wheel	1
2	619387R1	BEARING CUP	CUP outer, tapered roller bearing	1
		Part of wheel bearing kit P/N D103157.	Part of wheel bearing kit P/N D103157.	1
		Part of kit P/N B93222.	Part of kit P/N B93222.	1
3	625743C1	BEARING CUP	CUP inner, tapered roller bearing	1
		Part of wheel bearing kit P/N D103157.	Part of wheel bearing kit P/N D103157.	1
		Part of kit P/N B93222.	Part of kit P/N B93222.	1
4	D143405	CAP	hub	2
5	A38208	WHEEL BOLT	Retaining, See Figure 5-20 for bolt or nut options	16
6	432-1232	COTTER PIN,3/16" x 2"	3/16" x 2"	2
7	425-1918	SLOTTED NUT,1 1/8"-12, G5, Thk	NUT hex, slotted, 1-1/8 inch NF	2
8	D74949	WASHER	flat, 1-1/8 inch	2
9	G15215	ROLLER BEARING	BEARING tapered roller, outer	2
		Part of wheel bearing kit P/N D103157.	Part of wheel bearing kit P/N D103157.	1
		Part of kit P/N B93222.	Part of kit P/N B93222.	1
10	A61449	SEAL	spindle	2
		Part of wheel bearing kit P/N D103157.	Part of wheel bearing kit P/N D103157.	1
		Part of kit P/N B93222.	Part of kit P/N B93222.	1
11	A61448	OIL SEAL	hub	2
		Part of wheel bearing kit P/N D103157.	Part of wheel bearing kit P/N D103157.	1
		Part of kit P/N B93222.	Part of kit P/N B93222.	1
12	A61447	ROLLER BEARING,55 mm ID x 25 mm	BEARING tapered roller, inner	2
		Part of wheel bearing kit P/N D103157.	Part of wheel bearing kit P/N D103157.	1
		Part of kit P/N B93222.	Part of kit P/N B93222.	1
	D103157	WHEEL BEARING KIT	KIT wheel bearing, two kits required per tractor, Includes: Ref. 2, 3 and 9 - 12	1
	B93222	KIT	contains one each of Ref. 2, 3 and 9 - 12	1

http://www.minnparbackhoeparts.com/

(580SK) - CASE SUPER-K CONSTRUCTION KING LOADER BACKHOE > (5-20) - FRONT WHEELS AND TIRES, FOR TWO WHEEL OR 4 WHEEL DRIVE MODELS



BestManuals.net

(580SK) - CASE SUPER-K CONSTRUCTION KING LOADER BACKHOE > (5-20) - FRONT WHEELS AND TIRES, FOR TWO WHEEL OR 4 WHEEL DRIVE MODELS

Diag #	Part #	Name	Description	Qty
1	D125223	WHEEL	rim, for 11L x 16 - 10 PR F3 tires 2WD Models	2
2	REF	INSTRUCTION	TIRE front, purchase locally, for 11L x 16 - 10 PR F3 tires two wheel drive models	2
		CONSULT YOUR PARTS BUYER'S GUIDE FOR APPLICABLE TIRE PROGRAMS CURRENTLY BEING OFFERED.	CONSULT YOUR PARTS BUYER'S GUIDE FOR APPLICABLE TIRE PROGRAMS CURRENTLY BEING OFFERED.	1
3	A38261	VALVE	STEM valve, wheel, for 11L x 16 - 10 PR F3 tires two wheel drive models	2
4	D126930	RIM	WHEEL rim, 8-hole pattern , for 12 x 16.5 - 8 PR tires four wheel drive models	2
5	REF	INSTRUCTION	TIRE front, purchase locally, for 12 x 16.5 - 8 PR tires four wheel drive models	2
		CONSULT YOUR PARTS BUYER'S GUIDE FOR APPLICABLE TIRE PROGRAMS CURRENTLY BEING OFFERED.	CONSULT YOUR PARTS BUYER'S GUIDE FOR APPLICABLE TIRE PROGRAMS CURRENTLY BEING OFFERED.	1
6	A38261	VALVE	STEM valve, wheel, for 12 x 16.5 - 8 PR tires four wheel drive models	2
7	A38208	WHEEL BOLT	Retaining, 2WD models	16
8	K395089	WHEEL NUT	hex, wheel retaining, wheel nuts four wheel drive models	16
9	496-81000	WASHER,25/32" x 1 3/8" x .134", HDN	flat, 25/32 x 1-3/8 x 1/8 inch, hardened, wheel nuts four wheel drive models	16

http://www.minnparbackhoeparts.com/



POWER TRAIN 6

http://www.minnparbackhoeparts.com/

(580SK) - CASE SUPER-K CONSTRUCTION KING LOADER BACKHOE > (6-02) - REAR WHEELS AND TIRES, FOR TWO WHEEL OR FOUR WHEEL DRIVE MODELS

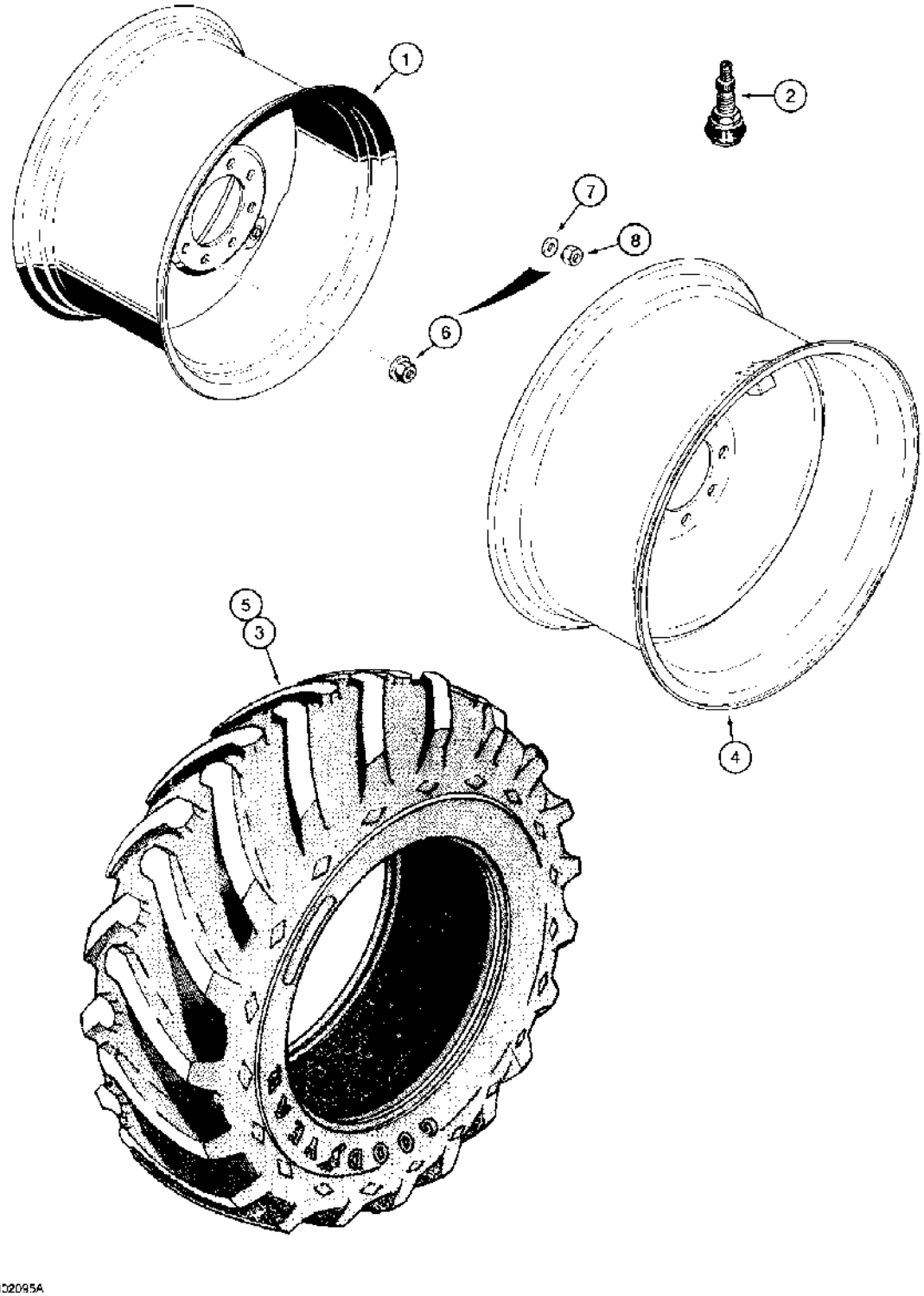

http://www.minnparbackhoeparts.com/

(580SK) - CASE SUPER-K CONSTRUCTION KING LOADER BACKHOE > (6-02) - REAR WHEELS AND TIRES, FOR TWO WHEEL OR FOUR WHEEL DRIVE MODELS

Diag #	Part #	Name	Description	Qty
1	115488A1	RIM	WHEEL rim, replaces D144999 wheel, for 16.9 or 17.5L x 24 tires - 10 ply, 82 inch width bucket, two wheel or four wheel drive models	2
2	A20058	VALVE STEM	Wheel, for 16.9 or 17.5L x 24 tires - 10 ply, 82 inch width bucket, two wheel or four wheel drive models	2
3	REF	INSTRUCTION	TIRE rear, purchase locally, for 16.9 or 17.5L x 24 tires - 10 ply, 82 inch width bucket, two wheel or four wheel drive models	2
1	115489A1	RIM	WHEEL rim, replaces D144998 wheel, for 19.5L x 24 tires - 10 ply, 82 inch width bucket, two wheel or four wheel drive models	2
2	A20058	VALVE STEM	Wheel, for 19.5L x 24 tires - 10 ply, 82 inch width bucket, two wheel or four wheel drive models	2
3	REF	INSTRUCTION	TIRE rear, purchase locally, for 19.5L x 24 tires - 10 ply, 82 inch width bucket, two wheel or four wheel drive models	2
1	115490A1	RIM	WHEEL rim, replaces D144996 wheel, for 19.5L x 24 tires - 10 ply, 90 inch width bucket, two wheel or four wheel drive models	2
2	A20058	VALVE STEM	Wheel, for 19.5L x 24 tires - 10 ply, 90 inch width bucket, two wheel or four wheel drive models	2
3	REF	INSTRUCTION	TIRE rear, purchase locally, for 19.5L x 24 tires - 10 ply, 90 inch width bucket, two wheel or four wheel drive models	2
4	D127437	RIM	WHEEL rim, for 16.9L x 28 tires - 8 ply two wheel drive models	2
5	REF	INSTRUCTION	TIRE rear, with tubes, purchase locally, for 16.9L x 28 tires - 8 ply two wheel drive models	2
6	98783C1	WHEEL NUT,Wheel, Flg, M20 x 1.5	Special, If used, Wheel nuts Wheel, Flg, M20 x 1.5	16
7	138076A1	WASHER	flat, 51/64 x 1-3/8 x 1/8 inch, hardened, special, if used, wheel nuts	16
8	829-11420	NUT,M20 x 1.5, Cl 10	hex, 20 mm - 1.5, class 10, if used, wheel nuts	16

http://www.minnparbackhoeparts.com/

(580SK) - CASE SUPER-K CONSTRUCTION KING LOADER BACKHOE > (6-04) - TORQUE CONVERTER AND TRANSAXLE, SHUTTLE COOLING SYSTEM

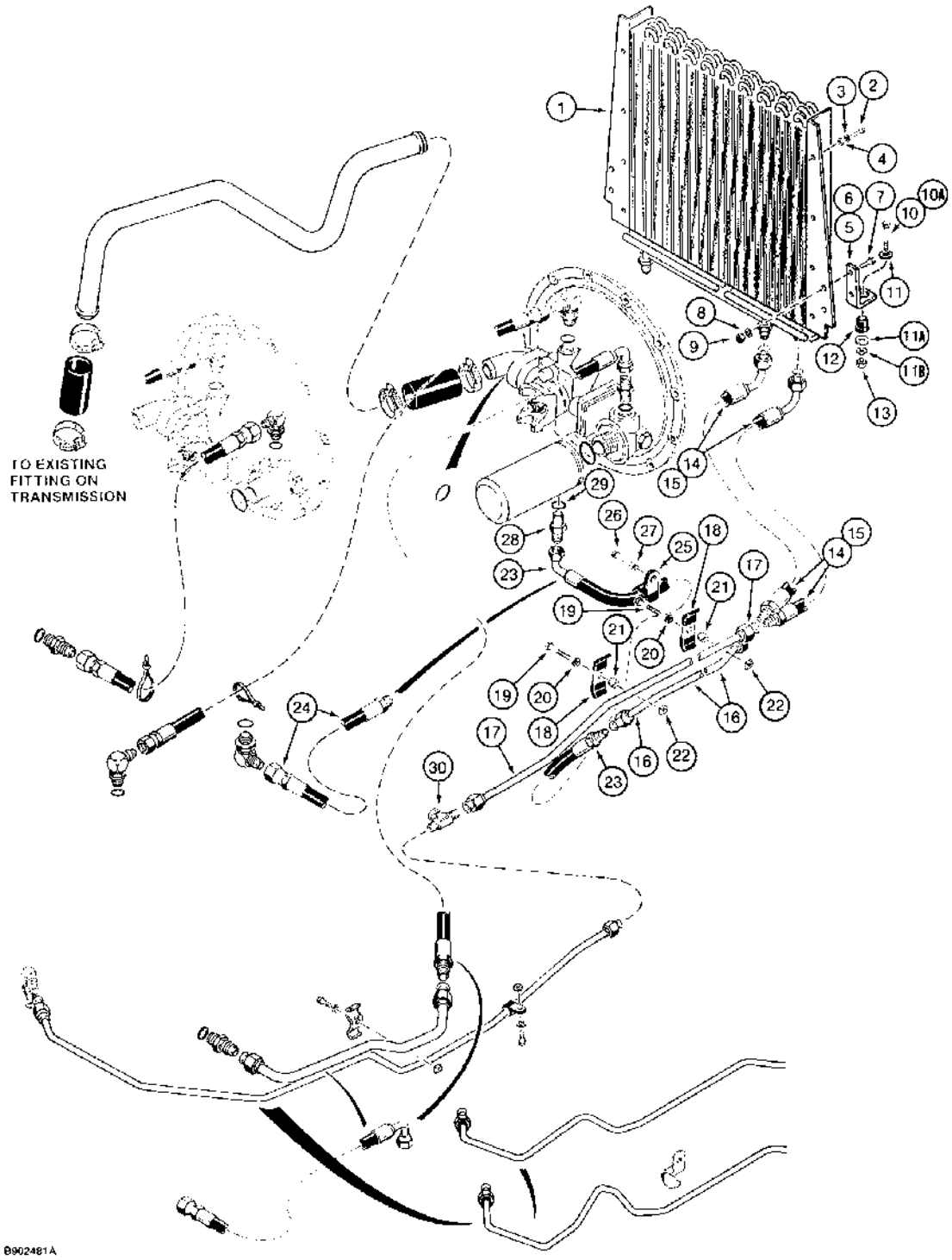

(580SK) - CASE SUPER-K CONSTRUCTION KING LOADER BACKHOE > (6-04) - TORQUE CONVERTER AND TRANSAXLE, SHUTTLE COOLING SYSTEM

Diag #	Part #	Name	Description	Qty
1	A184542	COOLER, OIL	COOLER oil, transaxle shuttle	1
		torque converter, and equipment hydraulic oil, for equipment hydraulic oil cooler lines, see Figures 8-012 and 8-014, for oil cooler used on models with auxiliary hydraulics for optional rear hydraulics attachments, see Ref. 29 cooler on Fig. 8-14	torque converter, and equipment hydraulic oil, for equipment hydraulic oil cooler lines, see Figures 8-012 and 8-014, for oil cooler used on models with auxiliary hydraulics for optional rear hydraulics attachments, see Ref. 29 cooler on Fig. 8-14	1
2	614-8016	BOLT,Hex, M8 x 1.25 x 16mm, Cl 8.8, Full Thd	hex, 8 - 1.25 x 16 mm	8
3	492-11031	LOCK WASHER,5/16"	WASHER, LOCK, 5/16"	8
4	495-11034	WASHER,5/16", SAE	5/16" SAE (flat, 11/32 x 11/16 x 1/16")	8
5	114353A1	BRACKET	mounting, oil cooler to radiator shroud, left-hand, replaces D131921 bracket	1
6	114352A1	BRACKET	mounting, oil cooler to radiator shroud, right-hand, replaces D131920 bracket	1
7	413-616	BOLT,Hex, 3/8" - 16 x 1", Gr 5	hex, 3/8 NC x 1 inch, Bracket to oil cooler	4
8	492-11038	LOCK WASHER,3/8"	LOCK WASHER,3/8"	4
9	425-106	NUT,3/8"-16, G5	NUT,3/8"-16, G5	4
10	413-628	BOLT,Hex, 3/8" - 16 x 1 3/4", Gr 5	Bracket to radiator shroud, radiator shroud may have mounting hole or slot, this bolt used without Ref. 11A or 11B in mounting hole Hex, 3/8"-16 x 1 3/4", G5	2
10A	413-632	BOLT,Hex, 3/8" - 16 x 2", Gr 5	- hex, 3/8 NC x 2 inch, For radiator shroud with slot, used with Ref. 11A and 11B	2
11	D52275	WASHER	flat, 25/64 x 1-1/4 x 7/64 inch, hardened	2
11A	D41740	WASHER	flat, hardened	2
11B	495-11041	WASHER,3/8", SAE	flat, (13/32 x 13/16 x 1/16"), Used with Ref. 10A in radiator shroud slot	2
12	D52276	ISOLATOR	INSULATOR vibration, rubber mount	2
13	231-1446	NUT,3/8"-16, GB	NUT hex, self-locking, 3/8 inch NC, grade 8	2
14	D146438	HOSE	365 mm long, at cooler inlet and outlet, models without auxiliary hydraulics for optional rear hydraulic attachments, if used	2
15	D146772	HOSE	400 mm long, at cooler inlet and outlet, models with auxiliary hydraulics for optional rear hydraulic attachments, if used	2
16	D146437	TUBE	torque converter hose to cooler inlet hose	1

Diag #	Part #	Name	Description	Qty
17	D146435	TUBE	transaxle tube to cooler outlet hose	1
18	D143846	CLAMP	- Double Tube	2
19	413-620	BOLT,Hex, 3/8" - 16 x 1 1/4", Gr 5	hex, 3/8 NC x 1-1/4 inch	2
20	492-11038	LOCK WASHER,3/8"	LOCK WASHER,3/8"	2
21	D149139	SPACER	tube	2
22	84899	SQUARE NUT,Sq, 3/8"-16, G2	square, 3/8 inch NC	2
23	D134007	HOSE	525 mm long, torque converter to cooler inlet, not used on models with PTO, uses Ref. 28 adapter on this page	1
24	D150129	HOSE ASSY.	HOSE, 600 mm long, torque converter to cooler inlet, replaces Ref. 23 hose on models with PTO, uses Ref. 57 elbow on Figure 6-06	1
25	515-23190	CLAMP,3/4", Insul, 3/8" Bolt	P, 3/4 inch diameter, models with PTO and without heater	1
26	413-620	BOLT,Hex, 3/8" - 16 x 1 1/4", Gr 5	hex, 3/8 NC x 1-1/4 inch	1
27	492-11038	LOCK WASHER,3/8"	LOCK WASHER,3/8"	1
28	218-5059	HYD CONNECTOR,3/4"-16, 37° x 3/4"-16, O-Ring	ADAPTER straight, 3/4-16 inch flare x O-ring boss, use with item 23, D134007 hose, Incl. Ref 29	1
29	237-6008	O-RING,0.176" ID x 0.316" OD x 0.07"	8-1, 90 Duro, .644" ID x .087" Thk	1
30	218-585	TEE,3/4"-16, 37° x 1/2"-14, NPTF Fem Br	1/2 female PT branch x 3/4-16 inch flare	1

http://www.minnparbackhoeparts.com/

(580SK) - CASE SUPER-K CONSTRUCTION KING LOADER BACKHOE > (6-06) - TORQUE CONVERTER AND TRANSAXLE, SHUTTLE COOLING SYSTEM

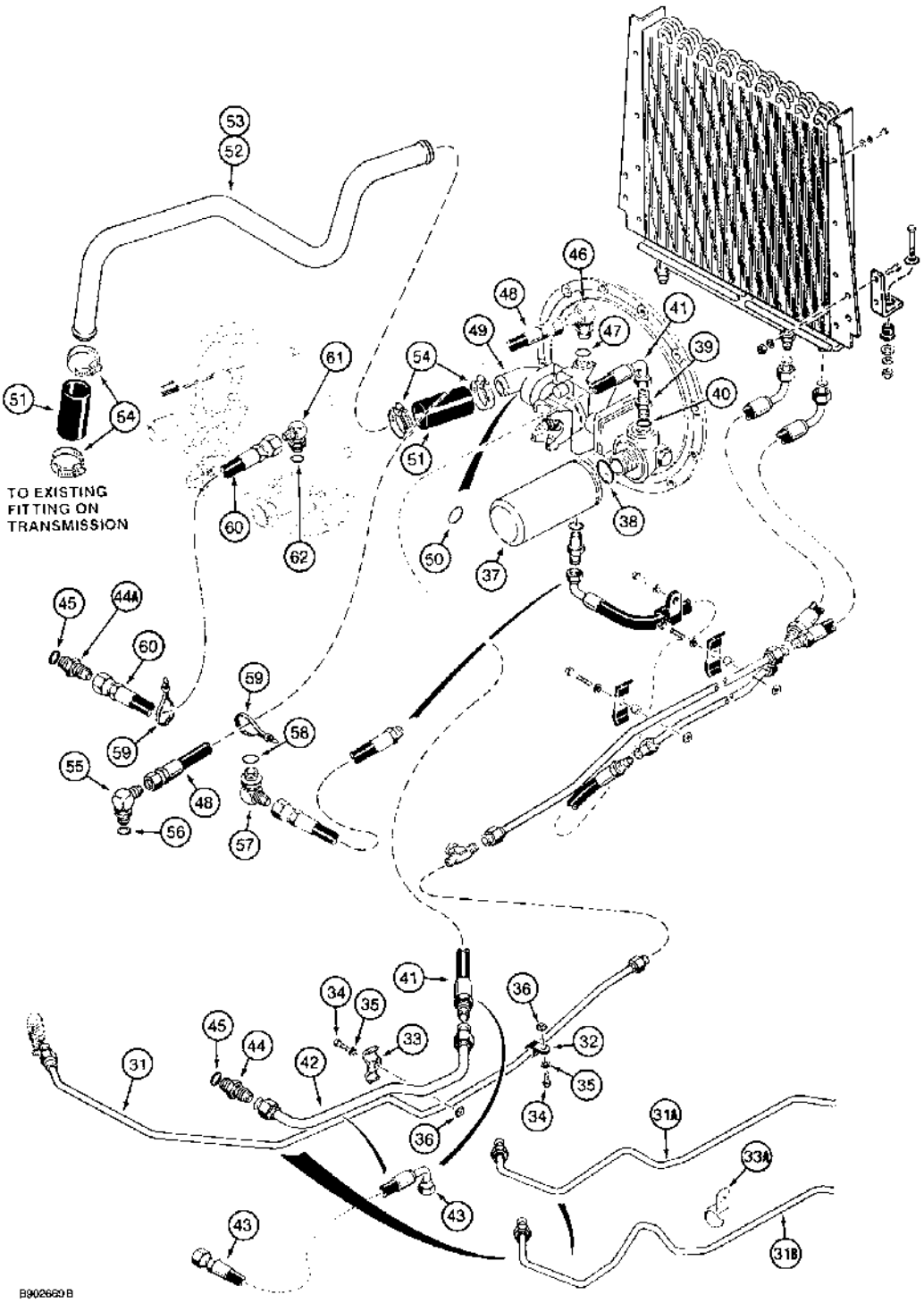

(580SK) - CASE SUPER-K CONSTRUCTION KING LOADER BACKHOE > (6-06) - TORQUE CONVERTER AND TRANSAXLE, SHUTTLE COOLING SYSTEM

Diag #	Part #	Name	Description	Qty
31	D145952	PIPE	TUBE cooler outlet tube to transaxle, no longer available, order D151126 tube, Ref. 31B	1
31A	D150887	TUBE	cooler outlet tube to transaxle, no longer available, order D151126 tube, Ref. 31B	1
31B	D151126	TUBE	cooler outlet tube to transaxle, attaches to elbow on transaxle, see Figure 7-02, Ref. 12, for elbow, used with Ref. 33A clamp	1
32	D140709	CLAMP	P-type, tube	1
33	D139956	CLAMP	double tube, if used	1
33A	D140709	CLAMP	single tube, if used	1
34	413-612	BOLT,Hex, 3/8" - 16 x 3/4", Gr 5	BOLT,Hex, 3/8" - 16 x 3/4", Gr 5	2
35	492-11038	LOCK WASHER,3/8"	LOCK WASHER,3/8"	2
36	84899	SQUARE NUT,Sq, 3/8"-16, G2	square, 3/8 inch NC	2
37	N9025	HYDRAULIC OIL FILTER	ELEMENT filter, at torque converter, order 1346028C1	1
37	1346028C1	HYDRAULIC OIL FILTER	ELEMENT filter, at torque converter, replaces N9025 element, Includes: Ref. 38	1
38	238-5230	O-RING,-230, 70 Duro, 2.484" ID x .139" Thk	N9025 element -230, 70 Duro, 2.484" ID x .139" Thk	1
38	1986552C2	O-RING,2.484mm ID x 1.39mm Width	2-31/64 ID x 9/64 inch, 1346028C1 element	1
39	218-5062	HYD CONNECTOR,7/8"-14, 37° x 7/8"-14, O-Ring	ADAPTER straight, 7/8-14 inch flare x O-ring boss, if used, Includes: Ref. 40	1
40	237-6010	O-RING,0.239" ID x 0.379" OD x 0.07"	10-1, 90 Duro, .755" ID x .097" Thk	1
41	D141502	HOSE	625 mm long, torque converter charge outlet, not used on models with PTO, see Ref. 43 hose, used with Ref. 42 tube, replaced by one piece hose on some models, Ref. 60, if used	1
42	D150742	TUBE	torque converter to transaxle, charge, not used on models with PTO, see Ref. 43 hose, if used	1
43	D149339	HOSE ASSY.	HOSE, 1030 mm long, torque converter to transaxle, charge, replaces Ref. 41 and 42 on models with PTO	1
44	218-5065	HYD CONNECTOR,1 1/16"-12, 37° x 7/8"-14, O-Ring	ADAPTER straight, 1-1/16-12 flare x 7/8-14 inch O-ring, at transaxle, used with Ref. 42 tube or Ref. 43 hose	1

Diag #	Part #	Name	Description	Qty
44A	218-5062	HYD CONNECTOR,7/8"-14, 37º x 7/8"-14, O-Ring	ADAPTER straight, 7/8-14 inch fl x O-ring boss, Ref. 60 hose, Includes: Ref. 45	1
45	237-6010	O-RING,0.239" ID x 0.379" OD x 0.07"	10-1, 90 Duro, .755" ID x .097" Thk, 218-5062 or 218-5065 adapter	1
46	218-5117	ELBOW,90º, 7/8"-14, 37º x 3/4"-16, O-Ring	90 degree, 7/8-14 flare x 3/4-16 inch adj O-ring, Includes: Ref. 47	1
47	237-6008	O-RING,0.176" ID x 0.316" OD x 0.07"	8-1, 90 Duro, .644" ID x .087" Thk	1
48	E49602	HOSE	1130 mm long, torque converter to transaxle lube, replaces D146201 1075 mm hose	1
49	A186721	FITTING	ELBOW barb stem, 90 degree, Includes: Ref. 50	1
50	237-6024	O-RING,1.114" ID x 1.254" OD x 0.07"	24-1, 90 Duro, 1.72" ID x .118" Thk	1
51	D125962	HOSE	100 mm long, suction, cut to required length from D129185 bulk hose	2
52	D145948	TUBE	suction, models without PTO, see Figure 6-32 for tube guard	1
53	D149883	TUBE	suction, models with PTO, see Figure 6-32 for tube guard	1
54	214-1428	HOSE CLAMP,#28, 1.31/2.25 Type F Worm	CLAMP, HOSE, , Adjustable #28, 1.31/2.25 Type F Worm	4
55	218-5107	ELBOW,90º, 7/8"-14, 37º x 7/8"-14, O-Ring	90 degree, 7/8-14 inch flare x adj O-ring boss, transaxle lube, included with power shuttle, see Figure 6-26, Incl. Ref. 56	1
56	237-6010	O-RING,0.239" ID x 0.379" OD x 0.07"	10-1, 90 Duro, .755" ID x .097" Thk	1
57	218-5106	ELBOW,90º, 3/4"-16, 37º x 3/4"-16, O-Ring	90 degree, 3/4-16 inch flare x adj O-ring boss, use with Ref. 24, D150129 hose on Figure 6-04, Includes: Ref. 58	1
58	237-6008	O-RING,0.176" ID x 0.316" OD x 0.07"	8-1, 90 Duro, .644" ID x .087" Thk	1
59	L18337	CABLE TIE,9.95"-12.1" lg	STRAP tie, 15 inch, nylon	2
60	D150280	HOSE	1220 mm long, torque converter charge outlet to transaxle, replaces hose and tube, Ref. 41 and 42, used on some models	1
61	218-5107	ELBOW,90º, 7/8"-14, 37º x 7/8"-14, O-Ring	90 degree, 7/8-14 inch flare x adj O-ring boss, Incl. Ref. 62	1
62	237-6010	O-RING,0.239" ID x 0.379" OD x 0.07"	10-1, 90 Duro, .755" ID x .097" Thk	1
	D129185	HOSE,38.1 mm ID x 863.60 mm	HOSE,38.1 mm ID x 863.60 mm	1

http://www.minnparbackhoeparts.com/

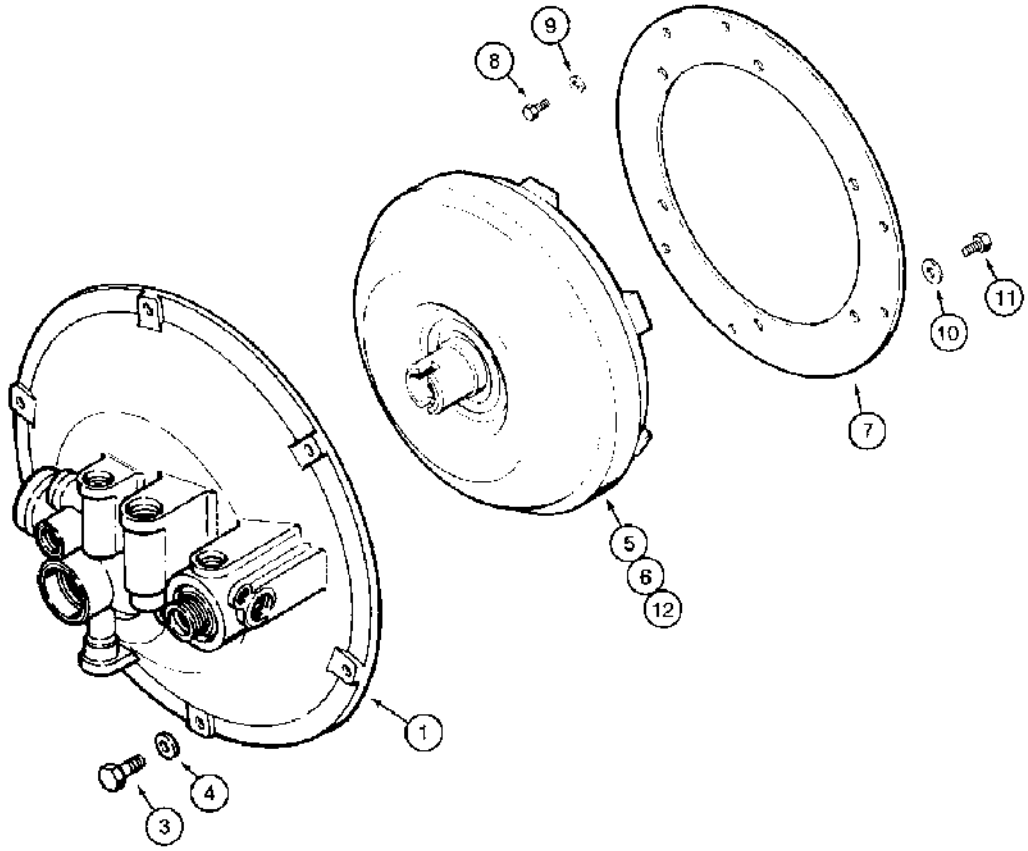

B9303051A

(580SK) - CASE SUPER-K CONSTRUCTION KING LOADER BACKHOE > (6-08) - TORQUE CONVERTER MOUNTING

Diag #	Part #	Name	Description	Qty
	1995137C1R	REMAN-TORQUE CONVERT	ER REMAN - Torque Converter	1
1	A186700	HOUSING ASSY.	HOUSING ASSEMBLY torque converter, models without PTO, see parts list Figure 6-12	1
2	A186706	CONVERTER	HOUSING ASSEMBLY torque converter, models with PTO, not shown, parts lists Figures 6-14 and 6-16	1
3	614-10030	BOLT,Hex, M10 x 1.5 x 30mm, Cl 8.8, Full Thd	Bolt, Hex, M10 x 30, 8.8	6
4	895-11010	WASHER,M10 x 20 x 2	WASHER flat, 11 x 21 x 2 mm	6
5	1995135C1	CONVERTER	CONVERTER torque, models without PTO, replaces A186701 converter, used on models without turbocharged engines; and models with turbocharged engines prior to tractor P.I.N. JJG0173468	1
	1995135C1R	REMAN-TORQUE CONVERT	ER REMAN - Torque Converter, For N.A. Only	1
		Ref #5 - 1995135C1 has 1 green and 1 brown mark for identification.	Ref #5 - 1995135C1 has 1 green and 1 brown mark for identification.	1
		1995135C1, Std, and 1995136C1, PTO, are NOT interchangeable. The PTO version has provision for direct, flywheel / crankshaft, drive out of the converter housing and into the transmission, through a second driveshaft, for the PTO. It will not fit-up with the non-PTO converter housing / charge pump	1995135C1, Std, and 1995136C1, PTO, are NOT interchangeable. The PTO version has provision for direct, flywheel / crankshaft, drive out of the converter housing and into the transmission, through a second driveshaft, for the PTO. It will not fit-up with the non-PTO converter housing / charge pump	1
	1995135C1C	CORE-TORQUE CONVERTR	CORE-TORQUE CONVERTER Return Number, For N.A. Only	1
6	1995136C1	CONVERTER	CONVERTER torque, models with PTO, replaces A186704 converter	1
		Ref #6 - 1995136C1 has 2 black marks for identification.	Ref #6 - 1995136C1 has 2 black marks for identification.	1
		1995135C1, Std, and 1995136C1, PTO, are NOT interchangeable. The PTO version has provision for direct, flywheel / crankshaft, drive out of the converter	1995135C1, Std, and 1995136C1, PTO, are NOT interchangeable. The PTO version has provision for direct, flywheel / crankshaft, drive out of the converter housing and into the transmission, through a second driveshaft, for the PTO. It will not	1

Diag #	Part #	Name	Description	Qty
		housing and into the transmission, through a second driveshaft, for the PTO. It will not fit-up with the non-PTO converter housing / charge pump	fit-up with the non-PTO converter housing / charge pump	
7	A178706	PLATE	PLATE adapter, torque converter, Serial Range: housing-engine	1
8	428-510	BOLT,Hex, 5/16" - 24 x 5/8", Gr 8	BOLT hex, 5/16 NF x 5/8 inch, grade 8	6
9	A15672	WASHER	WASHER flat, hardened, special	6
10	895-11010	WASHER,M10 x 20 x 2	WASHER flat, 11 x 21 x 2 mm	6
11	626-10016	BOLT,Hex, M10 x 1.5 x 16mm, Cl 10.9, Full Thd	BOLT hex, 10 - 1.5 x 16 mm, class 10.9	6
12	1995137C1	CONVERTER	CONVERTER torque, models without PTO, used on models with turbocharged engine on tractor P.I.N. JJG0173468 and after	1
	1995137C1R	REMAN-TORQUE CONVERT	ER Remanufactured, TORQUE CONVERTER, For N.A. Only	1
	1995137C1C	CORE-TORQUE CONVERTR	CORE-TORQUE CONVERTER Return Number, For N.A. Only	1
		Ref #12 - 1995137C1 has 2 orange and 1 brown mark for identification.	Ref #12 - 1995137C1 has 2 orange and 1 brown mark for identification.	1

http://www.minnparbackhoeparts.com/

(580SK) - CASE SUPER-K CONSTRUCTION KING LOADER BACKHOE > (6-10) - PTO TORQUE CONVERTER DRAIN LINE

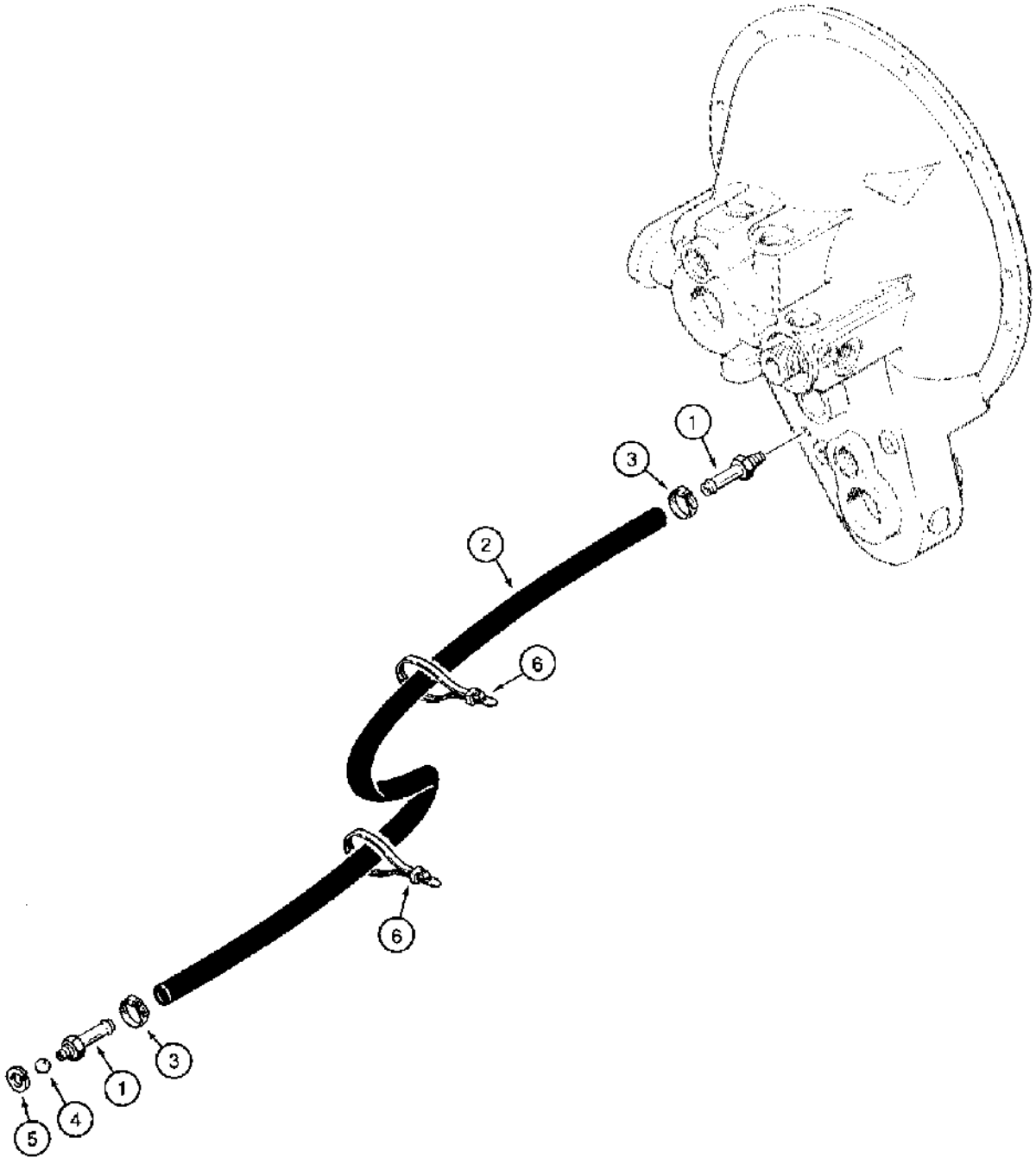

8901437

(580SK) - CASE SUPER-K CONSTRUCTION KING LOADER BACKHOE > (6-10) - PTO TORQUE CONVERTER DRAIN LINE

Diag #	Part #	Name	Description	Qty
1	217-150	FITTING,1/4" Hose X 1/8" NPTF Beaded	ADAPTER straight, 1/4 stem end x 1/8 inch PT	2
2	L60515	HOSE	1/4 ID x 41 inch long, drain, torque, Serial Range: converter-transaxle	1
3	214-1404	HOSE CLAMP,#4, 0.25/0.62 Type M Worm	CLAMP adj, 1/4 - 5/8 inch dia	2
4	211-206	BALL,1/4" Dia	1/4 inch, grade 50, chrome alloy steel, check replaces 211-257	1
5	492-11010	LOCK WASHER,#10	WASHER, LOCK, , Ball #10	1
6	L18337	CABLE TIE,9.95"-12.1" lg	STRAP tie, 15 inch, nylon, retaining	2

http://www.minnparbackhoeparts.com/

(580SK) - CASE SUPER-K CONSTRUCTION KING LOADER BACKHOE > (6-12) - TORQUE CONVERTER HOUSING, PUMP AND OUTPUT SHAFT, WITHOUT PTO

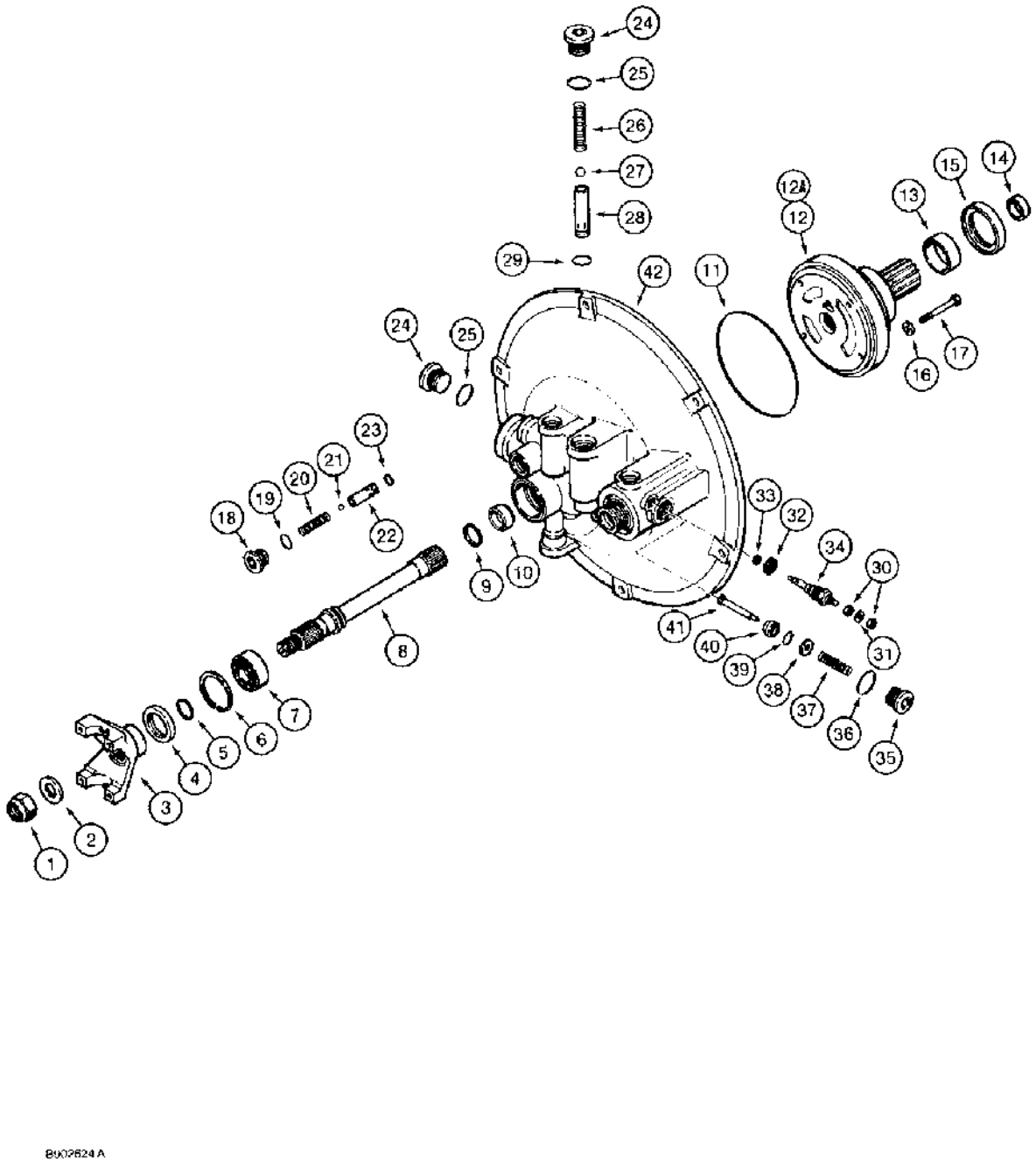

(580SK) - CASE SUPER-K CONSTRUCTION KING LOADER BACKHOE > (6-12) - TORQUE CONVERTER HOUSING, PUMP AND OUTPUT SHAFT, WITHOUT PTO

Diag #	Part #	Name	Description	Qty
	A186700	HOUSING ASSY.	HOUSING ASSEMBLY torque converter, without PTO, Includes: Ref. 1 through 42, P/N N6755, P/N 6941 and P/N A183347	1
1	3173953R1	LOCK NUT,M20 x 2.5, Cl 8	NUT lock, special	1
2	H312652	WASHER	flat, 23 x 38 x 3 mm, if used	1
2	896-12020	WASHER,M20 x 37.5 x 4, HT	flat, 22 x 37 x 4 mm, if used	1
3	A159663	YOKE	output, converter	1
4	A175651	SEAL	oil, yoke	1
5	238-5212	O-RING,-212, 70 Duro, .859" ID x .139" Thk	Yoke sealing (Replaces A159665 O-ring) -212, 70 Duro, .859" ID x .139" Thk	1
6	456736R1	SNAP RING,2.062", Int, #206	Ring, Snap, , ball brg, replaces A31078 ring 2.062", Int, #206	1
7	A31260	BALL BEARING,25 mm ID x 52 mm OD x 15 mm	BEARING ball	1
8	A186527	SHAFT	output	1
9	A158354	RING	oil seal	1
10	A178745	SLEEVE	wear, housing	1
11	238-5255	O-RING,-255, 70 Duro, 5.609" ID x .139" Thk	O-RING,-255, 70 Duro, 5.609" ID x .139" Thk	1
12	A186674	PUMP	ASSEMBLY converter, includes Ref. 13 - 15, no longer available, order Ref. 12A, 119994A1 pump	1
	119994A1R	REMAN-HYD PUMP	580SK CASE SUPER-K CONSTRUCTION KING LOADER BACKHOE, Reman for New PN A186674	1
	119994A1C	CORE-HYDRAULIC PUMP	Return Number	1
12A	119994A1	PUMP	ASSEMBLY converter, includes Ref. 13 and 14, does not include Ref. 15, A186708 seal, replaces 111482A1 pump, Includes: Ref. 13 and 14	1
	119994A1R	REMAN-HYD PUMP	580SK CASE SUPER-K CONSTRUCTION KING LOADER BACKHOE	1
	119994A1C	CORE-HYDRAULIC PUMP	Return Number	1
13	A178375	BUSHING	pump housing	1
14	A178367	BUSHING	stator shaft	1
15	A186708	OIL SEAL	SEAL oil, pump housing	1
16	895-11008	WASHER,M8 x 16 x 1.6	WASHER,M8 x 16 x 1.6	4
17	826-8065	BOLT,Hex, M8 x 1.25 x 65mm, Cl 10.9	- hex, 8 - 1.25 x 65 mm, class 10.9	4

Diag #	Part #	Name	Description	Qty
18	86625138	PLUG,Hex Soc, 7/8"-14 ORB	Includes Ref. 19 Hex Soc, 7/8"-14 ORB	1
19	237-6010	O-RING,0.239" ID x 0.379" OD x 0.07"	10-1, 90 Duro, .755" ID x .097" Thk	1
20	A188918	VALVE SPRING	SPRING converter relief valve	1
21	211-1012	BALL,3/8" Dia	3/8 inch, gr 50, chrome alloy steel, replaces 211-104	1
22	A183025	VALVE	CARTRIDGE converter relief valve	1
23	238-5015	O-RING,0.551" ID x 0.691" OD x 0.07"	-015, 70 Duro, .551" ID x .070" Thk	1
24	9841223	PLUG,Hex Soc, 1 1/16"-12 ORB	Incl. Ref. 25 Hex Soc, 1 1/16"-12 ORB	2
25	237-6012	O-RING,0.924" x 0.116"	12-1, 90 Duro, .924 ID x .116" Thk	1
26	A190345	SPRING	pump relief valve	1
27	211-214	BALL,1/2" Dia	1/2 inch, gr 50, chrome alloy steel, replaces 211-102	1
28	A183336	VALVE	CARTRIDGE pump relief valve	1
29	238-5017	O-RING,0.676" ID x 0.816" OD x 0.07"	-017, 70 Duro, .676" ID x .070" Thk	1
	N6755	INDICATOR	ASSEMBLY restriction, electric, Includes: Ref. 30 through 34 and P/N N6941	1
	N6941	KIT	repair, restriction indicator, no longer available, order Ref. 30 - 33, Includes: Ref. 30 through 33	1
30	129-667	NUT,#10-32, LH	NUT,#10-32, LH	2
31	493-21020	LOCK WASHER,Int Tooth, #10	WASHER, LOCK, (3/16") Int Tooth, #10	1
33	238-5011	O-RING,0.301" ID x 0.441" OD x 0.07"	-011, 70 Duro, .301" ID x .070" Thk	1
34	NSS	NOT SERVICED SEPARATELY	INDICATOR restriction, electric	1
	A183347	VALVE	ASSEMBLY filter bypass, Includes: Ref. 35 through 41	1
35	NSS	NOT SERVICED SEPARATELY	PLUG bypass valve	1
36	237-6012	O-RING,0.924" x 0.116"	12-1, 90 Duro, .924 ID x .116" Thk	1
37	NSS	NOT SERVICED SEPARATELY	SPRING bypass valve	1
38	NSS	NOT SERVICED SEPARATELY	WASHER bypass valve	1
39	238-5012	O-RING,0.364" ID x 0.504" OD x 0.07"	-012, 70 Duro, .364" ID x .070" Thk, Valve poppet	1
40	NSS	NOT SERVICED SEPARATELY	POPPET bypass valve	1
41	NSS	NOT SERVICED SEPARATELY	GUIDE valve spring	1
42	A186703	HOUSING	torque converter	1

Diag #	Part #	Name	Description	Qty
32	237-6006	O-RING,0.114" ID x 0.254" OD x 0.07"	6-1, 90 Duro, .468" ID x .078" Thk	1

http://www.minnparbackhoeparts.com/

(580SK) - CASE SUPER-K CONSTRUCTION KING LOADER BACKHOE > (6-14) - TORQUE CONVERTER PUMP AND OUTPUT SHAFT, WITH PTO

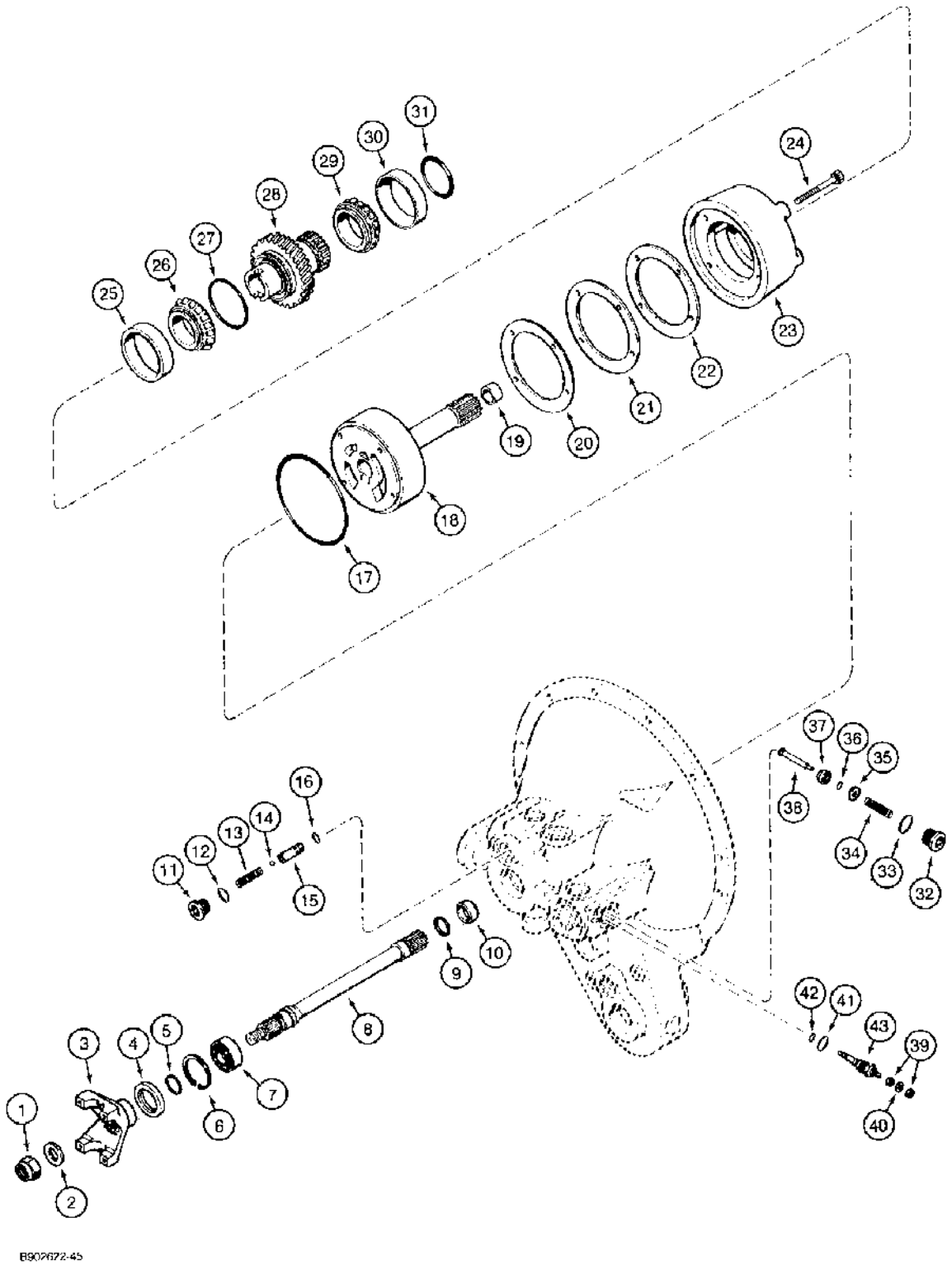

(580SK) - CASE SUPER-K CONSTRUCTION KING LOADER BACKHOE > (6-14) - TORQUE CONVERTER PUMP AND OUTPUT SHAFT, WITH PTO

Diag #	Part #	Name	Description	Qty
	A186706	CONVERTER	HOUSING ASSEMBLY torque converter, with PTO, complete parts list on this Figure and Figure 6-16, order component parts, Includes: Ref. 1 through 43, P/N A183347, P/N N6755 and N6941	1
1	3173953R1	LOCK NUT,M20 x 2.5, Cl 8	NUT lock, special	1
2	H312652	WASHER	flat, 23 x 38 x 3 mm, if used	1
2	896-12020	WASHER,M20 x 37.5 x 4, HT	flat, 22 x 37 x 4 mm, if used	1
3	A159663	YOKE	output, converter	1
4	A175651	SEAL	oil, yoke	1
5	238-5212	O-RING,-212, 70 Duro, .859" ID x .139" Thk	Yoke sealing (Replaces A159665 O-ring) -212, 70 Duro, .859" ID x .139" Thk	1
6	456736R1	SNAP RING,2.062", Int, #206	Ring, Snap, , ball brg, replaces A31078 ring 2.062", Int, #206	1
7	A31260	BALL BEARING,25 mm ID x 52 mm OD x 15 mm	BEARING ball	1
8	A186735	SHAFT	output	1
9	A158354	RING	oil seal	1
10	A178745	SLEEVE	wear, housing	1
11	86625138	PLUG,Hex Soc, 7/8"-14 ORB	Includes Ref. 12 Hex Soc, 7/8"-14 ORB	1
12	237-6010	O-RING,0.239" ID x 0.379" OD x 0.07"	10-1, 90 Duro, .755" ID x .097" Thk	1
13	A188918	VALVE SPRING	SPRING converter relief valve	1
14	211-1012	BALL,3/8" Dia	3/8 inch, gr 50, chrome alloy steel, replaces 211-104	1
15	A183025	VALVE	CARTRIDGE converter relief valve	1
16	238-5015	O-RING,0.551" ID x 0.691" OD x 0.07"	-015, 70 Duro, .551" ID x .070" Thk	1
17	238-5255	O-RING,-255, 70 Duro, 5.609" ID x .139" Thk	O-RING,-255, 70 Duro, 5.609" ID x .139" Thk	1
18	A190102	PUMP	ASSEMBLY torque converter, Includes: Ref. 19	1
19	A178367	BUSHING	pump	1
20	A190155	SHIM,0.05mm Thk	PTO input shaft 0.05mm Thk	1
21	A190151	SHIM,.254mm Thk	PTO input shaft .254mm Thk	1
22	A190110	SHIM,.457mm Thk	PTO input shaft, 0.30 mm	1
23	A190005	SUPPORT ASSY.	SUPPORT PTO input shaft bearing	1
24	864-8080	HEX SOC SCREW,M8 x 80mm, Cl 8.8	BOLT hex socket, 8 - 1.25 x 80 mm	4

Diag #	Part #	Name	Description	Qty
25	3216620R1	BEARING, CUP	CUP tapered roller bearing, input gear rear	1
26	A190113	CONE	BEARING tapered roller, input gear rear	1
27	A190101	SEAL	SEAL PTO input gear	1
28	A190012	GEAR WHEEL	GEAR PTO input	1
29	A61447	ROLLER BEARING,55 mm ID x 25 mm	BEARING tapered roller, input gear front	1
30	625743C1	BEARING CUP	CUP tapered roller bearing, input gear front, replaces A61446	1
31	238-5136	O-RING,-136, 90 Duro, 1.987" ID x .103" Thk	2 ID x 3/32 inch wide, input gear to converter hub	1
	A183347	VALVE	ASSEMBLY filter bypass, Includes: Ref. 32 through 38	1
32	NSS	NOT SERVICED SEPARATELY	PLUG bypass valve	1
33	237-6012	O-RING,0.924" x 0.116"	12-1, 90 Duro, .924 ID x .116" Thk	1
34	NSS	NOT SERVICED SEPARATELY	SPRING bpass valve	1
35	NSS	NOT SERVICED SEPARATELY	WASHER bypass valve	1
36	238-5012	O-RING,0.364" ID x 0.504" OD x 0.07"	-012, 70 Duro, .364" ID x .070" Thk, Valve poppet	1
37	NSS	NOT SERVICED SEPARATELY	POPPET bypass valve	1
38	NSS	NOT SERVICED SEPARATELY	GUIDE valve spring	1
	N6755	INDICATOR	ASSEMBLY restriction, electric, Includes: Ref. 39 through 43 and P/N N6941	1
	N6941	KIT	repair, restriction indicator, no longer available, order items 39 - 42, Includes: Ref. 39 through 42	1
39	129-667	NUT,#10-32, LH	Chamferred #10-32, LH	2
40	493-21020	LOCK WASHER,Int Tooth, #10	WASHER, LOCK, (3/16") Int Tooth, #10	1
42	238-5011	O-RING,0.301" ID x 0.441" OD x 0.07"	-011, 70 Duro, .301" ID x .070" Thk, Inner	1
43	NSS	NOT SERVICED SEPARATELY	INDICATOR restriction, electric	1
41	237-6006	O-RING,0.114" ID x 0.254" OD x 0.07"	6-1, 90 Duro, .468" ID x .078" Thk	1

http://www.minnparbackhoeparts.com/

(580SK) - CASE SUPER-K CONSTRUCTION KING LOADER BACKHOE > (6-16) - TORQUE CONVERTER HOUSING AND GEARS, WITH PTO

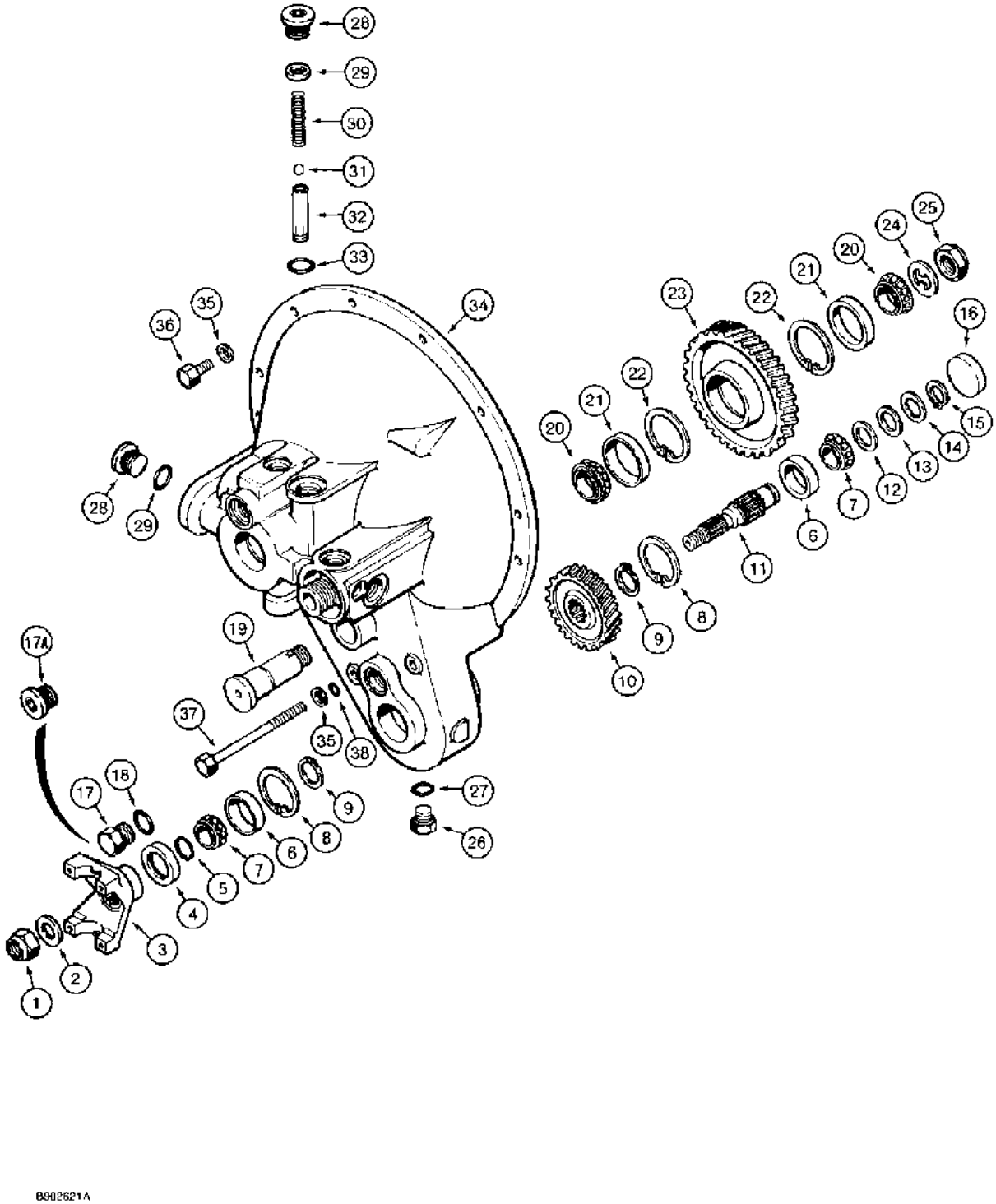

(580SK) - CASE SUPER-K CONSTRUCTION KING LOADER BACKHOE > (6-16) - TORQUE CONVERTER HOUSING AND GEARS, WITH PTO

Diag #	Part #	Name	Description	Qty
	A186706	CONVERTER	HOUSING ASSEMBLY torque converter, with PTO, continued, complete parts list on Figure 6-14 and this Figure, order component parts, Includes: 1 through 34	1
1	3173953R1	LOCK NUT,M20 x 2.5, Cl 8	NUT lock, prevailing torque	1
2	H312652	WASHER	flat, 23 x 38 x 3 mm, if used	1
2	896-12020	WASHER,M20 x 37.5 x 4, HT	flat, 22 x 37 x 4 mm, if used	2
3	A159663	YOKE	output shaft	1
4	A175651	SEAL	oil	1
5	238-5212	O-RING,-212, 70 Duro, .859" ID x .139" Thk	Yoke sealing (Replaces A159665 O-ring) -212, 70 Duro, .859" ID x .139" Thk	1
6	572564R1	BEARING CUP	CUP tapered roller bearing, PTO output shaft, replaces D29267	2
7	D29266	ROLLER BEARING,1" ID x 0.58"	BEARING tapered roller, PTO output shaft	2
8	103-21200	SNAP RING,2", Int, #200	Ring, Snap, , PTO output shaft (Replaces D28436) 2", Int, #200	2
9	1277307C1	RING	snap, output, Serial Range: gear-shaft	2
10	A190022	GEAR WHEEL	GEAR PTO output	1
11	A190054	GEAR WHEEL	GEAR PTO idler	1
12	A190179	SHIM	PTO output shaft front bearing, 0.1 mm	1
13	A190180	SHIM	PTO output shaft, front bearing, 0.15 mm	1
14	A190181	SHIM	PTO output shaft front bearing, 1.0 mm	1
15	A34428	SNAP RING,#98, Ext	Ring, Snap, , order 100-1698 #98, Ext	1
15	100-1698	SNAP RING,#98, Ext	Ring, Snap, , PTO output shaft (Replaces A34428) #98, Ext	1
16	41-1036	PLUG,Cup, 2 1/4"	core hole, 2-1/4", PTO output shaft opening	1
17	218-5158	PLUG,Hex Hd, 1 1/16"-12 ORB	If used, Includes Ref. 18, O-ring Hex Hd, 1 1/16"-12 ORB	1
17A	9841223	PLUG,Hex Soc, 1 1/16"-12 ORB	If used, Incl. Ref. 18 Hex Soc, 1 1/16"-12 ORB	1
18	237-6012	O-RING,0.924" x 0.116"	12-1, 90 Duro, .924 ID x .116" Thk	1
19	A190112	SHAFT	PTO idler	1
20	651818R91	ROLLER BEARING,31.77 mm ID x 16.08 mm	BEARING tapered roller, inner input shaft, replaces B12409	2
21	651817R1	BEARING CUP	CUP tapered roller bearing, inner input shaft, replaces B12408	2
22	100-21231	SNAP RING,2.312", Int, #231	Ring, Snap, , Idler gear to brgs (Replaces 216389R1) 2.312", Int, #231	2
23	A190021	GEAR WHEEL	GEAR PTO idler	1

Diag #	Part #	Name	Description	Qty
24	A175799	WASHER	PTO idler shaft	1
25	A175798	NUT	adjusting	1
26	76349	PLUG,Hex Hd, 9/16"-18 ORB	Incl. Ref. 27 Hex Hd, 9/16"-18 ORB	1
27	237-6008	O-RING,0.176" ID x 0.316" OD x 0.07"	8-1, 90 Duro, .644" ID x .087" Thk	1
28	9841223	PLUG,Hex Soc, 1 1/16"-12 ORB	Incl. Ref. 29 Hex Soc, 1 1/16"-12 ORB	2
29	237-6012	O-RING,0.924" x 0.116"	12-1, 90 Duro, .924 ID x .116" Thk	1
30	A190345	SPRING	pump relief valve	1
31	211-214	BALL,1/2" Dia	1/2 inch, grade 50, chrome alloy steel	1
32	A183336	VALVE	CARTRIDGE pump relief valve	1
33	238-5017	O-RING,0.676" ID x 0.816" OD x 0.07"	-017, 70 Duro, .676" ID x .070" Thk, Spring guide	1
34	A190081	HOUSING	torque converter	1
35	895-11010	WASHER,M10 x 20 x 2	flat, 11 x 21 x 2 mm	12
36	628-10030	BOLT,Hex, M10 x 1.5 x 30mm, Cl 10.9, Full Thd	BOLT,Hex, M10 x 1.5 x 30mm, Cl 10.9, Full Thd	10
37	814-10160	BOLT,Hex, M10 x 1.5 x 160mm, Cl 8.8	hex, 10 - 1.5 x 160 mm	2
38	K626521	SEALING WASHER	O-RING sealing	2

http://www.minnparbackhoeparts.com/

(580SK) - CASE SUPER-K CONSTRUCTION KING LOADER BACKHOE > (6-18) - TRANSAXLE ASSEMBLY, POWER SHUTTLE, INPUT SHAFT AND FORWARD CLUTCH

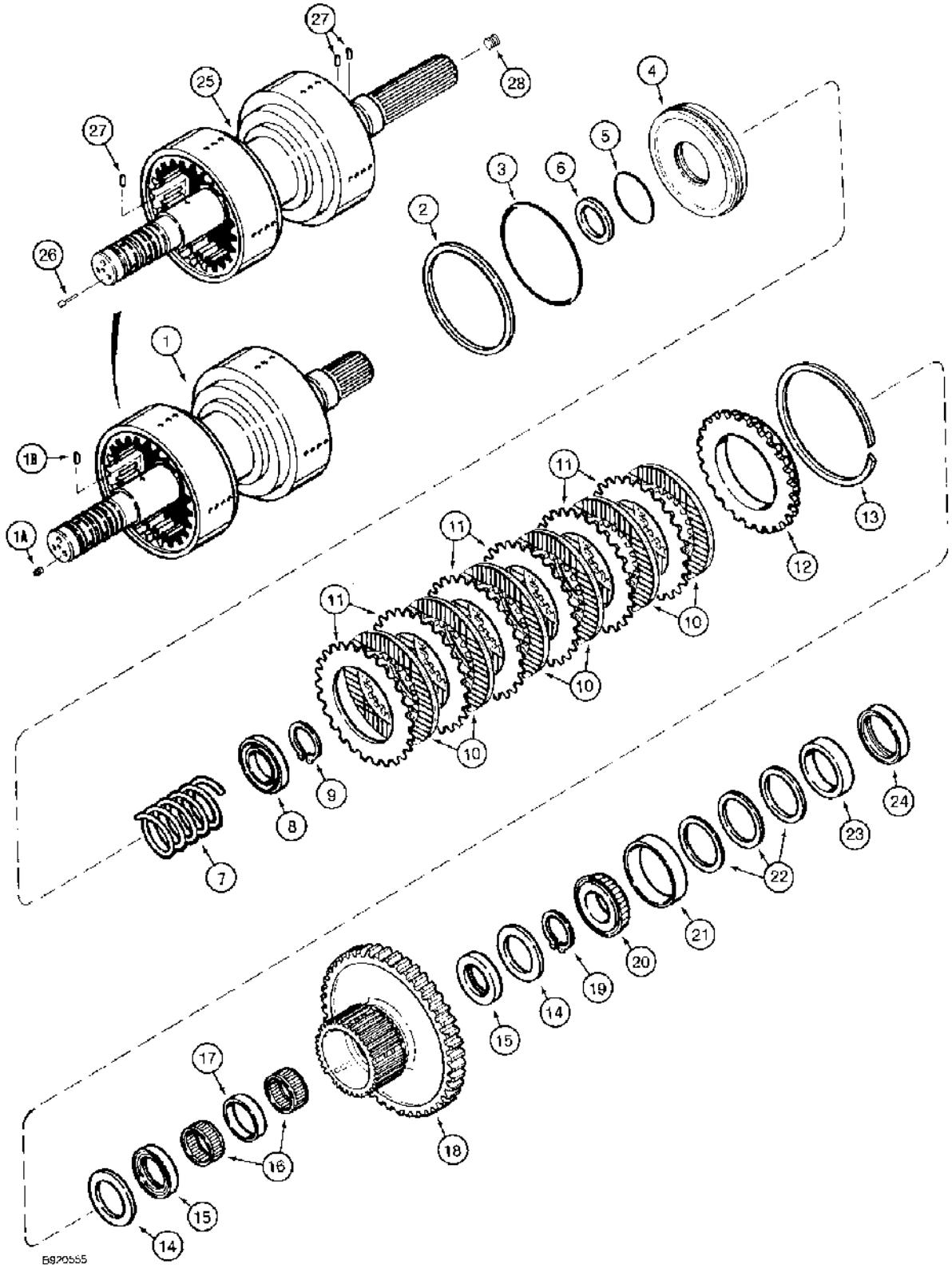

(580SK) - CASE SUPER-K CONSTRUCTION KING LOADER BACKHOE > (6-18) - TRANSAXLE ASSEMBLY, POWER SHUTTLE, INPUT SHAFT AND FORWARD CLUTCH

Diag #	Part #	Name	Description	Qty
	A190502	TRANSMISSION	TRANSAXLE ASSEMBLY complete, 2 wheel drive without PTO only, includes parts listed on Figures 6-18 - 6-26 and 6-62 - 7-04, order component parts	1
	1345899C1	TRANSMISSION	TRANSAXLE ASSEMBLY complete, 2 wheel drive with PTO only, includes parts listed on Figures 6-18 - 6-26 and 6-62 - 7-04, order component parts	1
	1345875C1	TRANSMISSION	TRANSAXLE ASSEMBLY complete, 4 wheel drive without PTO only, includes parts listed on Figures 6-18 - 6-26 and 6-62 - 7-04, order component parts	1
	1345898C1	TRANSAXLE ASSEMBLY complete, 4 wheel drive with PTO only, includes parts listed on Figures 6-18 - 6-26 and 6-62 - 7-04, order component parts, Includes: Ref. 1 through 28 and P/N A190449	TRANSAXLE ASSEMBLY complete, 4 wheel drive with PTO only, includes parts listed on Figures 6-18 - 6-26 and 6-62 - 7-04, order component parts, Includes: Ref. 1 through 28 and P/N A190449	1
	A190449	INVERTER SHAFT	SHAFT ASSEMBLY input, 440 mm long, if used, order 1995409C1, see Ref. 25-28, Includes: Ref. 1 through 13	1
1	A190342	SHAFT	input spline 44 mm long, shuttle, Includes: Ref. 1A and 1B	1
1A	83-3446	SET SCREW,Hex Soc, 7/16"-14 x 3/8"	SCREW set, hex socket, 7/16 NC x 3/8 inch	3
1B	138-294	LOCK PIN,1/8" x 1/4", Slotted	Pin, , Cam 1/8" x 1/4", Slotted	2
2	A158051	SEAL	piston, external	1
3	238-5156	O-RING,-156, 70 Duro, 4.237" ID x .103" Thk	Piston, external (Replaces A158050) -156, 70 Duro, 4.237" ID x .103" Thk	1
4	A159292	PISTON	clutch	1
5	238-5137	O-RING,-137, 90 Duro, 2.05" ID x .103" Thk	Piston, internal (Replaces A159296) -137, 90 Duro, 2.05" ID x .103" Thk	1
6	A159297	SEAL	SEAL piston, internal	1
7	A188842	VALVE SPRING	SPRING piston, return	1
8	A186965	RETAINER	spring	1
9	100-16156	SNAP RING,#156, Ext	Ring, Snap, (Replaces A144595 ring) #156, Ext	1
10	A188946	DRIVE PLATE	PLATE clutch, friction	6
11	A175806	PLATE	clutch, separator	6
12	1997122C1	PLATE	clutch, backing, replaces A178020 plate	1

Diag #	Part #	Name	Description	Qty
13	A158227	CIRCLIP	RING retaining, backing plate	1
14	A159463	SHIM	WASHER thrust	2
15	A175486	THRUST BEARING	BEARING thrust	2
16	A175487	NEEDLE BEARING	BEARING roller, needle	2
17	A175489	SPACER	bearing	1
18	1995222C1	SPROCKET ASSY.	GEAR forward, with hub, 81 teeth, welded, replaces A190296 cast gear	1
19	100-16150	SNAP RING,#150, Ext	Ring, Snap, (Replaces T37909 ring) #150, Ext	1
20	A188709	BEARING,38 mm ID x 17.2 mm	tapered roller	1
21	61801C1	BEARING CUP	CUP tapered roller bearing	1
22	A159443	SHIM,0.076mm Thk	Input shaft bearing 0.076mm Thk	1
22	A159442	SHIM,0.127mm Thk	Input shaft bearing 0.127mm Thk	1
22	A159441	SHIM,0.177mm Thk	Input shaft bearing 0.177mm Thk	1
22	A188792	SHIM,0.508mm Thk	Input shaft bearing 0.508mm Thk	1
23	A175690	SPACER	input shaft	1
24	A158371	OIL SEAL	oil, input shaft	1
	1995409C1	INVERTER SHAFT	SHAFT ASSEMBLY input, 466 mm long, also includes Ref. 2-13 above, if used, Includes: Ref. 25 through 28	1
25	1995408C1	DRIVE SHAFT	SHAFT input spline 70 mm long, shuttle, Includes: Ref. 26, 27 and 28	1
26	1342851C1	PLUG	expansion	3
27	38-1804	LOCK PIN,1/8" x 1/4", Slotted	PIN, LOCK, 1/8" x 1/4", Slotted	3
28	178-495	SCREW	set, hex socket, 5/8 NC x 5/8 inch	1

http://www.minnparbackhoeparts.com/

(580SK) - CASE SUPER-K CONSTRUCTION KING LOADER BACKHOE > (6-20) - TRANSAXLE ASSEMBLY, POWER SHUTTLE, REVERSE CLUTCH

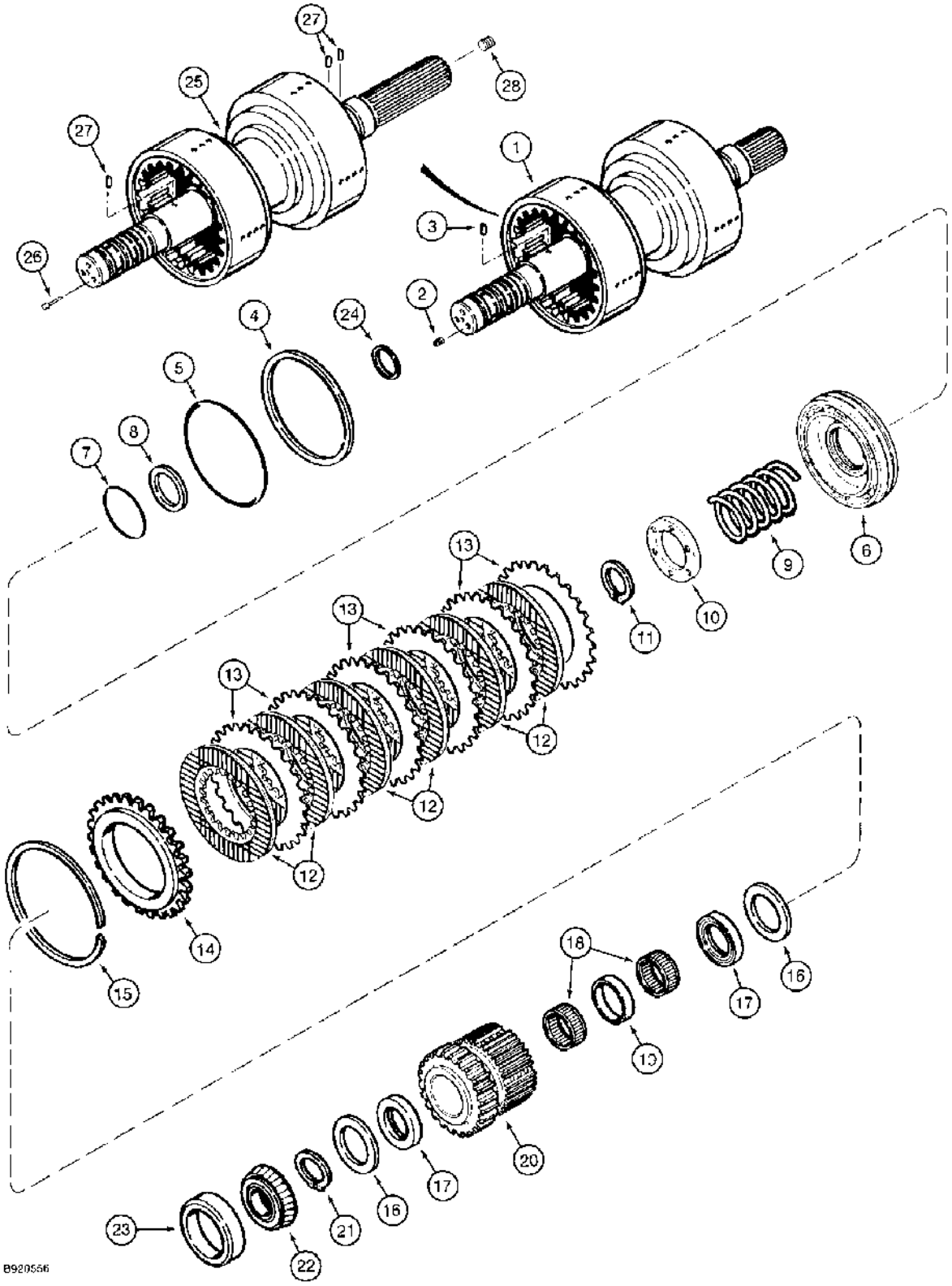

(580SK) - CASE SUPER-K CONSTRUCTION KING LOADER BACKHOE > (6-20) - TRANSAXLE ASSEMBLY, POWER SHUTTLE, REVERSE CLUTCH

Diag #	Part #	Name	Description	Qty
	A190449	INVERTER SHAFT	SHAFT ASSEMBLY reverse clutch, 440 mm long, if used, order 1995409C1, see Ref. 25-28, Includes: Ref. 1 through 15	1
1	A190342	SHAFT	input spline 44 mm long, reverse clutch, shuttle, Includes: Ref. 2 and 3	1
2	83-3446	SET SCREW,Hex Soc, 7/16"-14 x 3/8"	SCREW set, hex socket, 7/16 NC x 3/8 inch	3
3	138-294	LOCK PIN,1/8" x 1/4", Slotted	Pin, , Cam 1/8" x 1/4", Slotted	2
4	A158051	SEAL	piston, external	1
5	238-5156	O-RING,-156, 70 Duro, 4.237" ID x .103" Thk	Piston, external (Replaces A158050) -156, 70 Duro, 4.237" ID x .103" Thk	1
6	A159292	PISTON	clutch	1
7	238-5137	O-RING,-137, 90 Duro, 2.05" ID x .103" Thk	Piston, internal (Replaces A159296) -137, 90 Duro, 2.05" ID x .103" Thk	1
8	A159297	SEAL	SEAL piston, internal	1
9	A188842	VALVE SPRING	SPRING piston, return	1
10	A186965	RETAINER	spring	1
11	100-16156	SNAP RING,#156, Ext	Ring, Snap, (Replaces A144595 ring) #156, Ext	1
12	A188946	DRIVE PLATE	PLATE clutch, friction	6
		Service P/N A188946 with P/N1997129c1 "waffle" pattern friction plate.	Service P/N A188946 with P/N1997129c1 "waffle" pattern friction plate.	1
13	A175806	PLATE	clutch, separator	6
14	1997122C1	PLATE	clutch, backing, replaces A178020 plate	1
15	A158227	CIRCLIP	RING retaining, backing plate	1
16	A159463	SHIM	WASHER thrust	2
17	A175486	THRUST BEARING	BEARING thrust	2
18	A175487	NEEDLE BEARING	BEARING roller, needle	2
19	A175489	SPACER	bearing	1
20	1995220C1	SPROCKET ASSY.	GEAR reverse, with hub, 25 teeth, welded, replaces A190297 cast gear	1
21	100-16150	SNAP RING,#150, Ext	Ring, Snap, (Replaces T37909 ring) #150, Ext	1
22	A188709	BEARING,38 mm ID x 17.2 mm	tapered roller	1
23	61801C1	BEARING CUP	CUP tapered roller bearing	1
24	A175509	SEALING RING	RING sealing, shaft	4

Diag #	Part #	Name	Description	Qty
	1995409C1	INVERTER SHAFT	SHAFT ASSEMBLY reverse clutch, 466 mm long, also includes Ref. 4-15 above, if used, Includes: Ref. 25 through 28	1
25	1995408C1	DRIVE SHAFT	SHAFT input spline 70 mm long, reverse clutch, shuttle, Includes: Ref. 26, 27 and 28	1
26	1342851C1	PLUG	expansion	3
27	38-1804	LOCK PIN,1/8" x 1/4", Slotted	PIN, LOCK, 1/8" x 1/4", Slotted	3
28	178-495	SCREW	set, hex socket, 5/8 NC x 5/8 inch	1

http://www.minnparbackhoeparts.com/

(580SK) - CASE SUPER-K CONSTRUCTION KING LOADER BACKHOE > (6-22) - TRANSAXLE ASSEMBLY, POWER SHUTTLE, VALVE ASSEMBLY WITH PTO

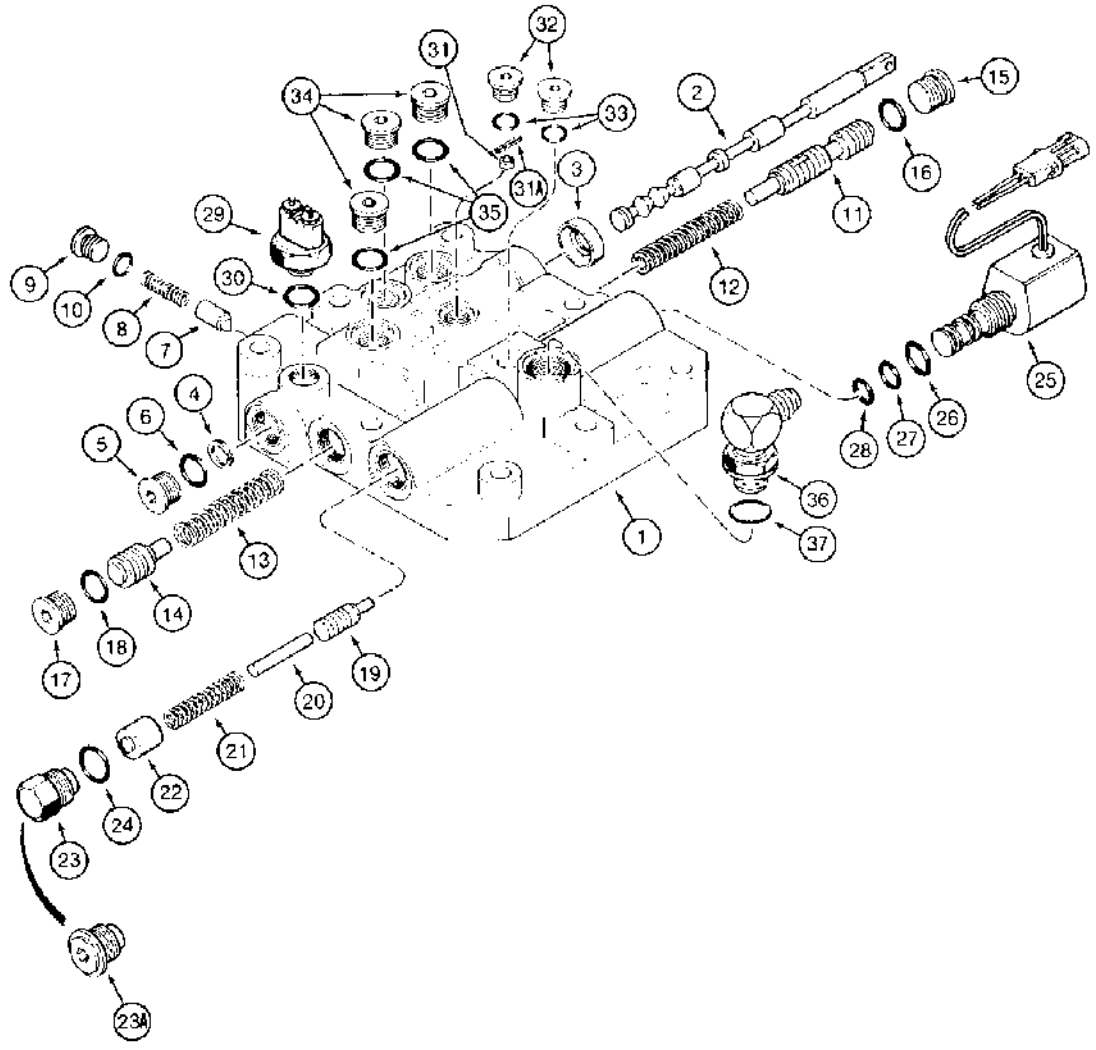

(580SK) - CASE SUPER-K CONSTRUCTION KING LOADER BACKHOE > (6-22) - TRANSAXLE ASSEMBLY, POWER SHUTTLE, VALVE ASSEMBLY WITH PTO

Diag #	Part #	Name	Description	Qty
	1343544C3	VALVE	ASSEMBLY power shuttle, Includes: Ref. 1 through 35	1
1	NSS	NOT SERVICED SEPARATELY	BODY shuttle valve	1
2	1343540C1	SPOOL	selector	1
3	A37558	SEAL	oil, shuttle valve	1
4	A175093	SNAP RING,#56, Ext, Spiral	RING retaining, spool	1
5	71100209	PLUG,Hex Soc, 3/4"-16 ORB	Incl Ref 6 Hex Soc, 3/4"-16 ORB	1
6	237-6008	O-RING,0.176" ID x 0.316" OD x 0.07"	8-1, 90 Duro, .644" ID x .087" Thk	1
7	1343539C1	SPOOL	PLUNGER detent	1
8	1343535C1	SPRING	detent	1
9	9625178	PLUG,Hex Soc, 9/16"-18 ORB	Incl. Ref. 10 Hex Soc, 9/16"-18 ORB	1
10	237-6006	O-RING,0.114" ID x 0.254" OD x 0.07"	6-1, 90 Duro, .468" ID x .078" Thk	1
11	1986755C1	SPOOL	modulator	1
12	1343533C1	VALVE SPRING	SPRING modulator, inner	1
13	1343532C1	SPRING	modulator, outer	1
14	1343541C1	PISTON	modulator	1
15	71100209	PLUG,Hex Soc, 3/4"-16 ORB	Incl Ref 16 Hex Soc, 3/4"-16 ORB	1
16	237-6008	O-RING,0.176" ID x 0.316" OD x 0.07"	8-1, 90 Duro, .644" ID x .087" Thk	1
17	86625138	PLUG,Hex Soc, 7/8"-14 ORB	Includes Ref. 18 Hex Soc, 7/8"-14 ORB	1
18	237-6010	O-RING,0.239" ID x 0.379" OD x 0.07"	10-1, 90 Duro, .755" ID x .097" Thk	1
19	1343537C1	SPOOL	pressure regulator	1
20	20133R1	DOWEL,5/16" x 1 3/4"	PIN pressure regulator	1
21	1343534C1	SPRING	pressure regulator	1
22	A188228	PISTON	regulator	1
23	1980155C1	PLUG	hex, 7/8-14 inch thread, no longer available, order Ref. 23A, 1542607C1 plug	1
23A	1542607C1	PLUG	hex socket, 7/8-14 inch thread	1
24	237-6010	O-RING,0.239" ID x 0.379" OD x 0.07"	10-1, 90 Duro, .755" ID x .097" Thk	1
25	1971438C3	SOLENOID	VALVE ASSEMBLY solenoid, Includes: 26, 27 and 28	1

Diag #	Part #	Name	Description	Qty
26	237-6010	O-RING,0.239" ID x 0.379" OD x 0.07"	10-1, 90 Duro, .755" ID x .097" Thk	1
27	238-5015	O-RING,0.551" ID x 0.691" OD x 0.07"	-015, 70 Duro, .551" ID x .070" Thk	1
28	238-5014	O-RING,0.489" ID x 0.629" OD x 0.07"	-014, 70 Duro, .489" ID x .070" Thk	1
29	1983241C1	SWITCH	neutral start, Includes: Ref. 30	1
30	237-6006	O-RING,0.114" ID x 0.254" OD x 0.07"	6-1, 90 Duro, .468" ID x .078" Thk	1
31	1343538C1	PLUG	cup, oil restrictor	1
31A	38-12008	LOCK PIN,5/16" x 1/2", Slotted	Pin, 5/16" x 1/2", Slotted	1
32	86529630	PLUG,Hex Soc, 3/8"-24 ORB	Includes Ref. 33 Hex Soc, 3/8"-24 ORB	2
33	237-6003	O-RING,0.301" ID	3-1, .301" ID x .064" Thk	1
34	9625178	PLUG,Hex Soc, 9/16"-18 ORB	Incl. Ref. 35 Hex Soc, 9/16"-18 ORB	3
		pressure switch #d139904 are installed in place of plugs Ref. 34 at the forward and reverse test ports serial # jjg0167019 and up.these are for the warning buzzer.	pressure switch #d139904 are installed in place of plugs Ref. 34 at the forward and reverse test ports serial # jjg0167019 and up.these are for the warning buzzer.	1
		If valve with external tubing is replaced with 1343543C2, do not use the external tube. Install a cap plug on tee fitting where tube was installed.	If valve with external tubing is replaced with 1343543C2, do not use the external tube. Install a cap plug on tee fitting where tube was installed.	1
35	237-6006	O-RING,0.114" ID x 0.254" OD x 0.07"	6-1, 90 Duro, .468" ID x .078" Thk	1
36	218-5107	ELBOW,90º, 7/8"-14, 37º x 7/8"-14, O-Ring	90 degree, 7/8-14 inch flare x adj O-ring boss, Incl. Ref. 37	1
37	237-6010	O-RING,0.239" ID x 0.379" OD x 0.07"	10-1, 90 Duro, .755" ID x .097" Thk	1

http://www.minnparbackhoeparts.com/

(580SK) - CASE SUPER-K CONSTRUCTION KING LOADER BACKHOE > (6-24) - TRANSAXLE ASSEMBLY, POWER SHUTTLE, VALVE ASSEMBLY WITHOUT PTO

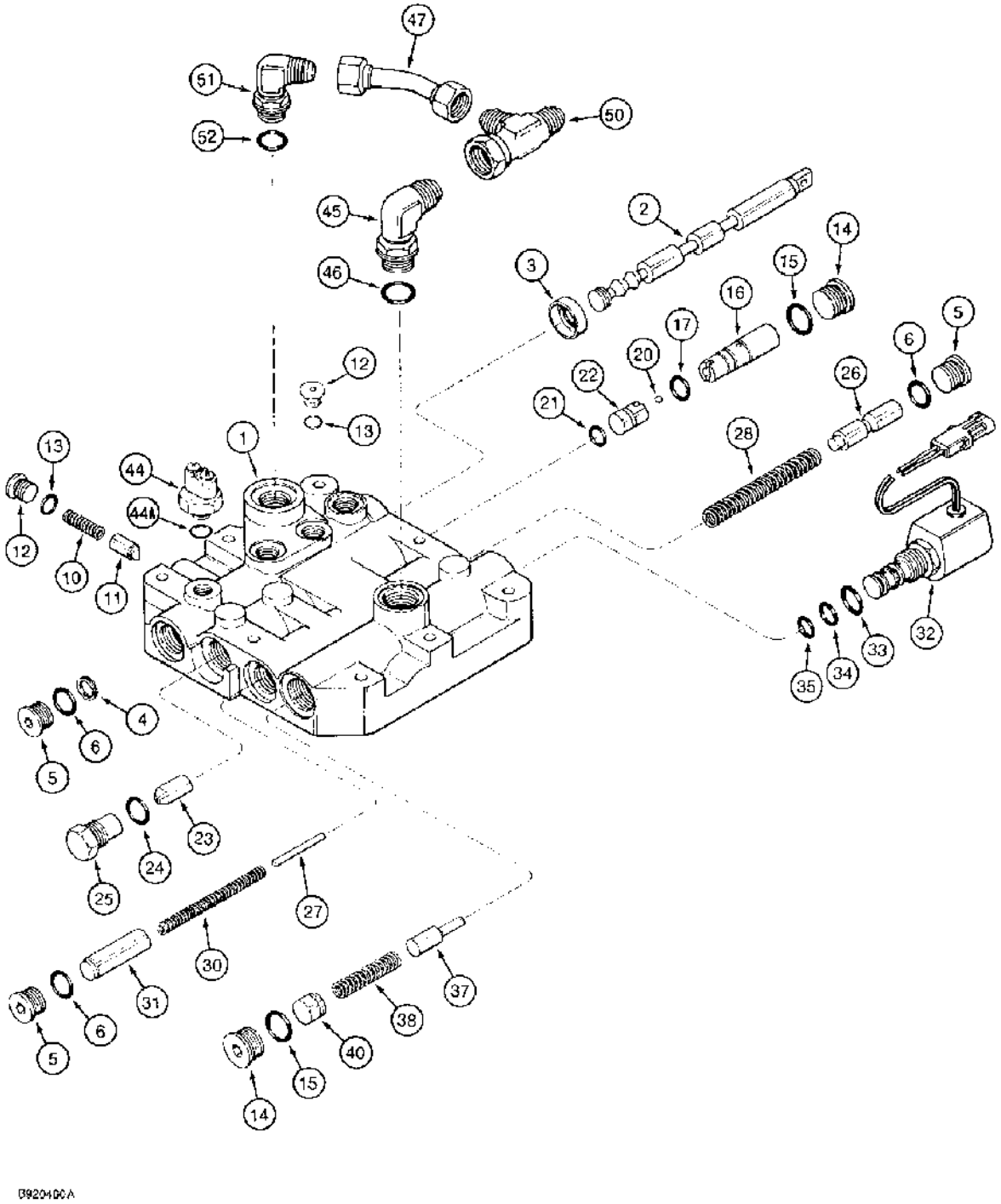

(580SK) - CASE SUPER-K CONSTRUCTION KING LOADER BACKHOE > (6-24) - TRANSAXLE ASSEMBLY, POWER SHUTTLE, VALVE ASSEMBLY WITHOUT PTO

Diag #	Part #	Name	Description	Qty
	1978113C2	VALVE BLOCK	VALVE ASSEMBLY power shuttle, if used, see valve assembly on Fig. 6-26, no longer available, order 1343543C2 on Fig. 6-26, Includes: Ref. 1 through 52	1
		If valve with external tubing is replaced with 1343543C2, do not use the external tube. Install a cap plug on tee fitting where tube was installed.	If valve with external tubing is replaced with 1343543C2, do not use the external tube. Install a cap plug on tee fitting where tube was installed.	1
		If the 1978113C2 valve is replaced by the 1343543C2 valve as a direct sub, the A1833919 restrictor must be removed from the transmission.	If the 1978113C2 valve is replaced by the 1343543C2 valve as a direct sub, the A1833919 restrictor must be removed from the transmission.	1
1	NSS	NOT SERVICED SEPARATELY	BODY shuttle valve, Order 1978113C2	1
2	A178266	SPOOL	selector	1
3	A37558	SEAL	oil	1
4	A175093	SNAP RING,#56, Ext, Spiral	RING retaining	1
5	71100209	PLUG,Hex Soc, 3/4"-16 ORB	Assy, Incl Ref 6 Hex Soc, 3/4"-16 ORB	3
6	237-6008	O-RING,0.176" ID x 0.316" OD x 0.07"	8-1, 90 Duro, .644" ID x .087" Thk	1
10	A183672	SPRING	detent	1
11	A175081	PLUNGER	detent	1
12	9625178	PLUG,Hex Soc, 9/16"-18 ORB	Assy, Incl. Ref. 13 Hex Soc, 9/16"-18 ORB	4
		in place of the plugs Ref. 12 for checking forward and reverse clutch pressure; pressure switchs d139904 were installed after vin # jjg0167019 for use in the warning system.	in place of the plugs Ref. 12 for checking forward and reverse clutch pressure; pressure switchs d139904 were installed after vin # jjg0167019 for use in the warning system.	1
14	86625138	PLUG,Hex Soc, 7/8"-14 ORB	Assy, Includes Ref. 15 Hex Soc, 7/8"-14 ORB	2
15	237-6010	O-RING,0.239" ID x 0.379" OD x 0.07"	10-1, 90 Duro, .755" ID x .097" Thk	1
16	A178349	SEAT	shuttle	1
17	A179308	O-RING,0.614" ID x 0.754" OD x 0.07"	5/8 ID x 3/4 OD x 1/16 inch	1
20	211-206	BALL,1/4" Dia	steel, 1/4 inch OD	1

Diag #	Part #	Name	Description	Qty
21	238-5015	O-RING,0.551" ID x 0.691" OD x 0.07"	-015, 70 Duro, .551" ID x .070" Thk (Replaces D26265)	1
22	A178384	SEAT	shuttle	1
23	A186846	SPOOL	auto modulator unloading	1
24	237-6008	O-RING,0.176" ID x 0.316" OD x 0.07"	8-1, 90 Duro, .644" ID x .087" Thk	1
25	A178264	SEAT	unloading spool	1
26	A178265	SPOOL	modulator pressure regulator, replaces 1980336C1	1
27	A188112	PIN	spacer	1
28	1978109C1	SPRING	modulator, primary	1
30	1978108C1	VALVE SPRING	SPRING modulator, secondary	1
31	A186439	PISTON	ASSEMBLY accumulator	1
32	1971438C3	SOLENOID	VALVE ASSEMBLY solenoid, Includes: Ref. 33, 34 and 35	1
33	237-6010	O-RING,0.239" ID x 0.379" OD x 0.07"	10-1, 90 Duro, .755" ID x .097" Thk	1
34	238-5015	O-RING,0.551" ID x 0.691" OD x 0.07"	-015, 70 Duro, .551" ID x .070" Thk (Replaces 371544R1)	1
35	238-5014	O-RING,0.489" ID x 0.629" OD x 0.07"	-014, 70 Duro, .489" ID x .070" Thk	1
37	1978388C1	SPOOL	pressure regulator	1
		REF.#37: 1978388C1-SPOOL, PRESSURE REGULATOR. ILLUSTRATION IS OF A 1343537C1.	REF.#37: 1978388C1-SPOOL, PRESSURE REGULATOR. ILLUSTRATION IS OF A 1343537C1.	1
38	A175782	SPRING	pressure regulator	1
40	A188228	PISTON	regulator	1
44	1983241C1	SWITCH	neutral start, Includes: Ref. 44A	1
45	218-5107	ELBOW,90º, 7/8"-14, 37º x 7/8"-14, O-Ring	90 degree, 5/8 tube x 7/8-14 inch thread, Incl. Ref. 46	1
46	237-6010	O-RING,0.239" ID x 0.379" OD x 0.07"	5/8 x 3/4 x 3/32 inch	1
47	A186964	TUBE	lube crossover	1
50	218-5486	TEE,37º, 7/8"-14 x 7/8"-14, Fem Sw Run x 3/4"-16 Br	adj, 7/8-14 inch thread x 5/8 tube x 3/4-16 inch thread	1
51	218-5106	ELBOW,90º, 3/4"-16, 37º x 3/4"-16, O-Ring	90 degree, 1/2 tube x 3/4-16 inch thread, Includes: Ref. 52	1
52	237-6008	O-RING,0.176" ID x 0.316" OD x 0.07"	8-1, 90 Duro, .644" ID x .087" Thk	1
13	237-6006	O-RING,0.114" ID x 0.254" OD x 0.07"	6-1, 90 Duro, .468" ID x .078" Thk	1
44A	237-6006	O-RING,0.114" ID x 0.254" OD x 0.07"	6-1, 90 Duro, .468" ID x .078" Thk	1

http://www.minnparbackhoeparts.com/

(580SK) - CASE SUPER-K CONSTRUCTION KING LOADER BACKHOE > (6-26) - TRANSAXLE ASSEMBLY, POWER SHUTTLE, VALVE ASSEMBLY WITHOUT PTO

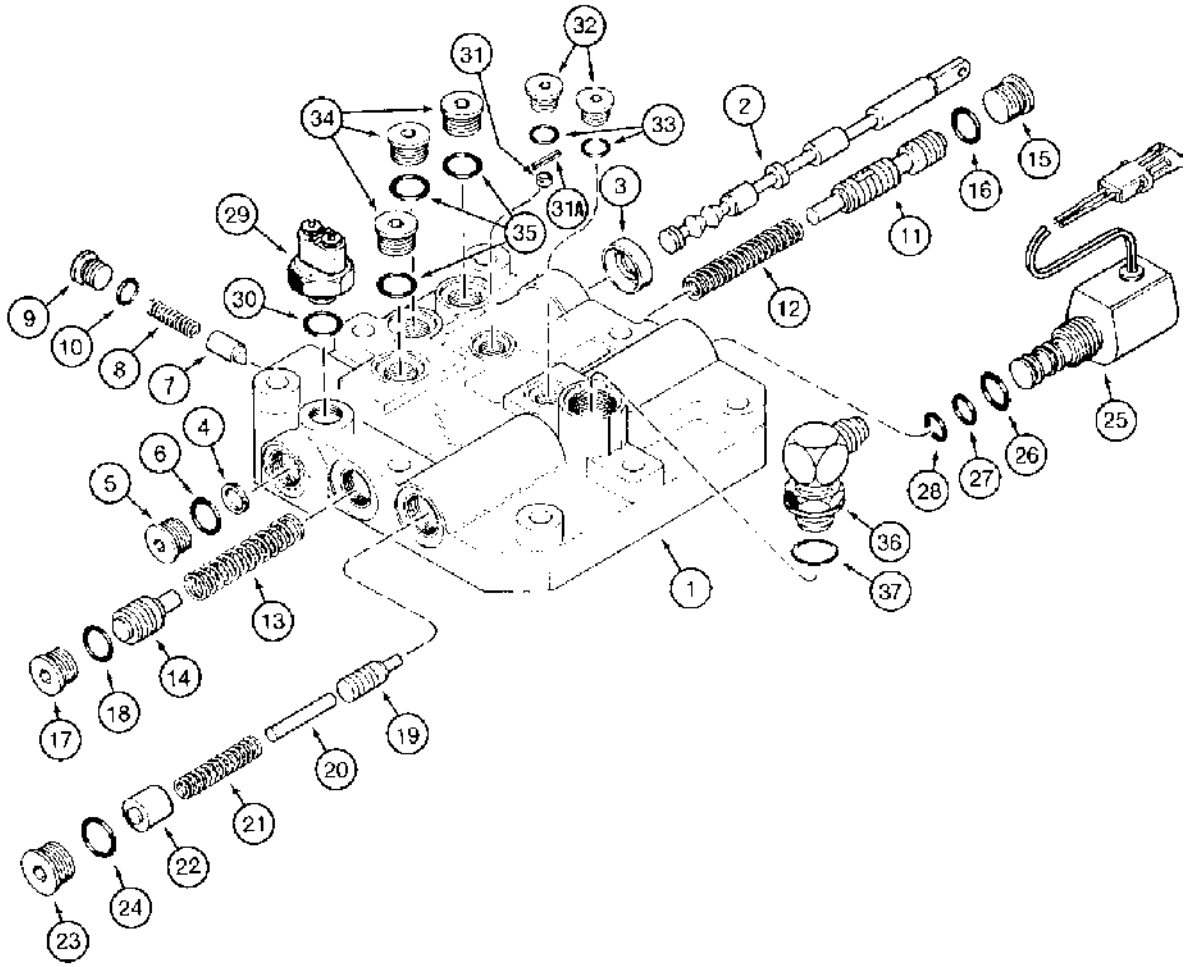

B902556A

(580SK) - CASE SUPER-K CONSTRUCTION KING LOADER BACKHOE > (6-26) - TRANSAXLE ASSEMBLY, POWER SHUTTLE, VALVE ASSEMBLY WITHOUT PTO

Diag #	Part #	Name	Description	Qty
	1343543C2	VALVE	ASSEMBLY power shuttle, if used, see valve on Figure 6-24, Includes: Ref. 1 through 35	1
		If valve with external tubing is replaced with 1343543C2, do not use the external tube. Install a cap plug on tee fitting where tube was installed.	If valve with external tubing is replaced with 1343543C2, do not use the external tube. Install a cap plug on tee fitting where tube was installed.	1
1	NSS	NOT SERVICED SEPARATELY	BODY shuttle valve	1
2	1343540C1	SPOOL	selector	1
3	A37558	SEAL	oil, shuttle valve	1
4	A175093	SNAP RING,#56, Ext, Spiral	RING retaining, spool	1
5	71100209	PLUG,Hex Soc, 3/4"-16 ORB	Incl Ref 6 Hex Soc, 3/4"-16 ORB	1
6	237-6008	O-RING,0.176" ID x 0.316" OD x 0.07"	8-1, 90 Duro, .644" ID x .087" Thk	1
7	1343539C1	SPOOL	PLUNGER detent	1
8	1343535C1	SPRING	detent	1
9	9625178	PLUG,Hex Soc, 9/16"-18 ORB	Incl. Ref. 10 Hex Soc, 9/16"-18 ORB	1
10	237-6006	O-RING,0.114" ID x 0.254" OD x 0.07"	6-1, 90 Duro, .468" ID x .078" Thk	1
11	1986755C1	SPOOL	modulator pressure	1
12	1343533C1	VALVE SPRING	SPRING modulator, inner	1
13	1343532C1	SPRING	modulator, outer	1
14	1343541C1	PISTON	modulator	1
15	71100209	PLUG,Hex Soc, 3/4"-16 ORB	Incl Ref 16 Hex Soc, 3/4"-16 ORB	1
16	237-6008	O-RING,0.176" ID x 0.316" OD x 0.07"	8-1, 90 Duro, .644" ID x .087" Thk	1
17	86625138	PLUG,Hex Soc, 7/8"-14 ORB	Includes Ref. 18 Hex Soc, 7/8"-14 ORB	1
18	237-6010	O-RING,0.239" ID x 0.379" OD x 0.07"	10-1, 90 Duro, .755" ID x .097" Thk	1
19	1343537C1	SPOOL	pressure regulator	1
20	20133R1	DOWEL,5/16" x 1 3/4"	PIN pressure regulator	1
21	1343534C1	SPRING	pressure regulator	1
22	A188228	PISTON	regulator	1

Diag #	Part #	Name	Description	Qty
23	86625138	PLUG,Hex Soc, 7/8"-14 ORB	Includes Ref. 24 Hex Soc, 7/8"-14 ORB	1
24	237-6008	O-RING,0.176" ID x 0.316" OD x 0.07"	8-1, 90 Duro, .644" ID x .087" Thk	1
25	1971438C3	SOLENOID	VALVE ASSEMBLY solenoid, Includes: Ref. 26, 27 and 28	1
26	237-6010	O-RING,0.239" ID x 0.379" OD x 0.07"	10-1, 90 Duro, .755" ID x .097" Thk	1
27	238-5015	O-RING,0.551" ID x 0.691" OD x 0.07"	-015, 70 Duro, .551" ID x .070" Thk	1
28	238-5014	O-RING,0.489" ID x 0.629" OD x 0.07"	-014, 70 Duro, .489" ID x .070" Thk	1
29	1983241C1	SWITCH	neutral start, Includes: Ref. 30	1
30	237-6006	O-RING,0.114" ID x 0.254" OD x 0.07"	6-1, 90 Duro, .468" ID x .078" Thk	1
31	1343538C1	PLUG	cup, oil restrictor	1
31A	38-12008	LOCK PIN,5/16" x 1/2", Slotted	Pin, 5/16" x 1/2", Slotted	1
32	86529630	PLUG,Hex Soc, 3/8"-24 ORB	Includes Ref. 33 Hex Soc, 3/8"-24 ORB	2
33	237-6003	O-RING,0.301" ID	3-1, .301" ID x .064" Thk	1
34	9625178	PLUG,Hex Soc, 9/16"-18 ORB	Incl. Ref. 35 Hex Soc, 9/16"-18 ORB	3
		in place of the plugs Ref. 34 for checking forward and reverse clutch pressure; pressure switchs d139904 were installed after vin # jjg0167019 for use in the warning system.	in place of the plugs Ref. 34 for checking forward and reverse clutch pressure; pressure switchs d139904 were installed after vin # jjg0167019 for use in the warning system.	1
35	237-6006	O-RING,0.114" ID x 0.254" OD x 0.07"	6-1, 90 Duro, .468" ID x .078" Thk	1
36	218-5107	ELBOW,90º, 7/8"-14, 37º x 7/8"-14, O-Ring	90 degree, 7/8-14 inch flare x adj O-ring boss, Incl. Ref. 37	1
37	237-6010	O-RING,0.239" ID x 0.379" OD x 0.07"	10-1, 90 Duro, .755" ID x .097" Thk	1

http://www.minnparbackhoeparts.com/

(580SK) - CASE SUPER-K CONSTRUCTION KING LOADER BACKHOE > (6-28) - SHUTTLE CONTROL AND LINKAGE

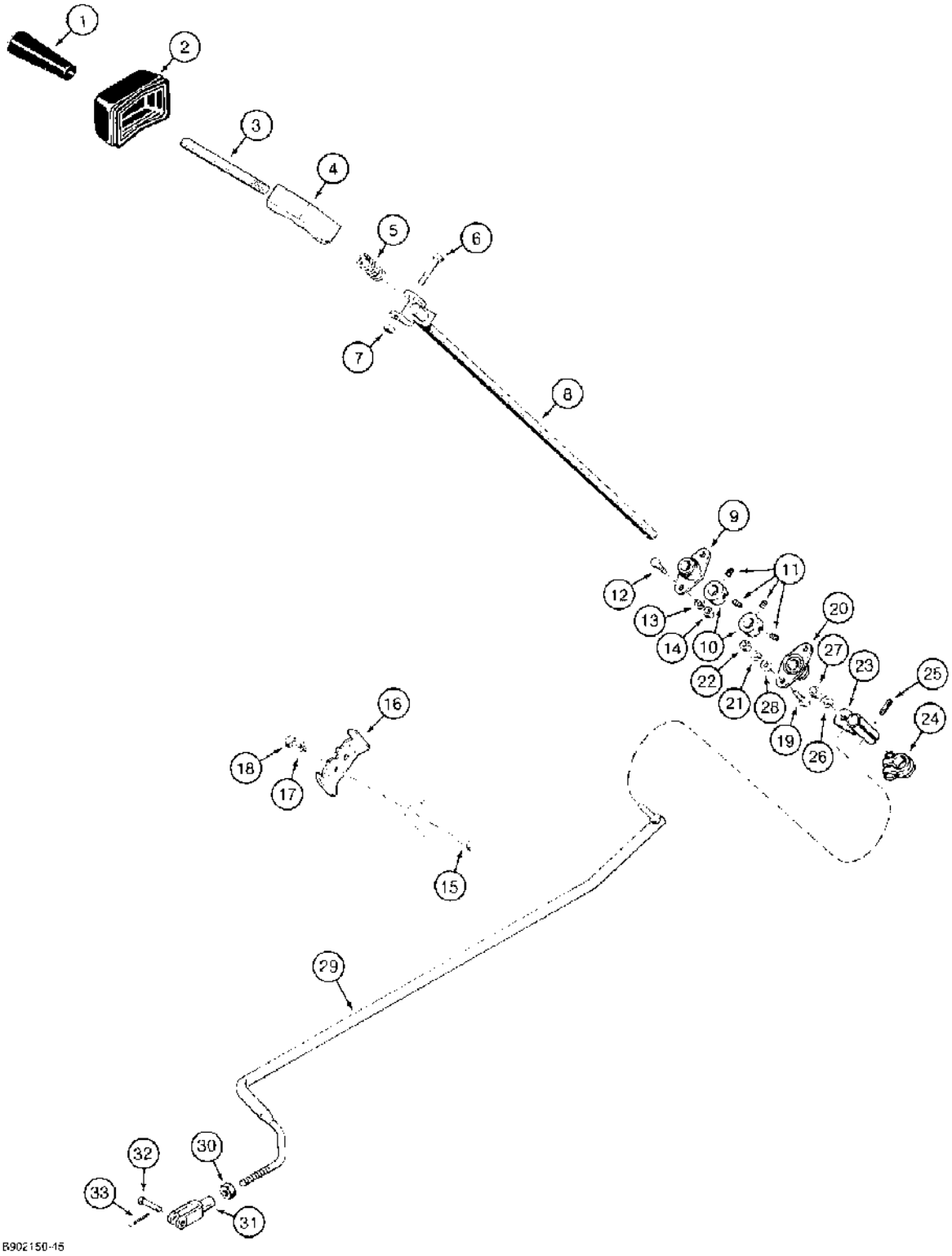

(580SK) - CASE SUPER-K CONSTRUCTION KING LOADER BACKHOE > (6-28) - SHUTTLE CONTROL AND LINKAGE

Diag #	Part #	Name	Description	Qty
1	D86694	KNOB	shuttle control lever	1
2	D141958	BELLOWS	BOOT shuttle control rod	1
3	D131414	ROD	shuttle control lever	1
4	D134343	LEVER	shuttle control, upper	1
5	D124906	SPRING	detent	1
6	413-636	BOLT,Hex, 3/8" - 16 x 2 1/4", Gr 5	- hex, 3/8 NC x 2-1/4 inch	1
7	231-1446	NUT,3/8"-16, GB	NUT hex, self-locking, 3/8 inch NC, grade 8	1
8	D136701	ROD	control lever	1
9	L15401	BEARING	steering valve bracket	1
10	D142939	COLLAR	ASSEMBLY locking, with 5/16 inch set screw, Includes: Ref. 11	2
11	D143603	SCREW,5/16" - 18 x 8mm, Alloy Steel	set, torx socket headless, 5/16 NC x 5/16 inch, cup point, special	2
12	413-512	BOLT,Hex, 5/16" - 18 x 3/4", Gr 5	hex, 5/16 NC x 3/4 inch	2
13	492-11031	LOCK WASHER,5/16"	WASHER, LOCK, 5/16"	2
14	425-105	NUT,5/16"-18, G5	- hex, 5/16 inch NC	2
15	413-612	BOLT,Hex, 3/8" - 16 x 3/4", Gr 5	BOLT,Hex, 3/8" - 16 x 3/4", Gr 5	2
16	D140692	LARGE PLATE	PLATE detent	1
17	492-11038	LOCK WASHER,3/8"	LOCK WASHER,3/8"	2
18	425-106	NUT,3/8"-16, G5	NUT,3/8"-16, G5	2
19	413-512	BOLT,Hex, 5/16" - 18 x 3/4", Gr 5	hex, 5/16 NC x 3/4 inch	2
20	L15401	BEARING	steering valve bracket	1
21	492-11031	LOCK WASHER,5/16"	WASHER, LOCK, 5/16"	2
22	425-105	NUT,5/16"-18, G5	- hex, 5/16 inch NC	2
23	D136702	LEVER	shuttle, lower	1
24	D71880	CLAMP	adjustable, includes hardware	1
25	138-150	LOCK PIN,5/16" x 13/16", Slotted	PIN, 5/16" x 13/16", Slotted	1
26	492-11038	LOCK WASHER,3/8"	LOCK WASHER,3/8"	1
27	425-116	NUT,3/8"-24, G5	- hex, 3/8 inch NF	1
28	495-21038	WASHER,5/16"	(flat, 3/8 x 7/8 x 5/64") 5/16"	2
	144272A1	STEM	ROD ASSEMBLY shuttle control, replaces D147492 rod, replaced D150736, Includes: Ref. 29, 30 and 31	1

Diag #	Part #	Name	Description	Qty
		this part has a replaceable ball joint that part number is d149295.	this part has a replaceable ball joint that part number is d149295.	1
29	NSS	NOT SERVICED SEPARATELY	ROD shuttle control	1
30	425-116	NUT,3/8"-24, G5	- hex, 3/8 inch NF	1
31	D150720	CLEVIS	special, replaces D148029 clevis	1
32	427-4121	CLEVIS PIN,1/4" x 1.219"	PIN clevis, 1/4 x 1-7/32 inch, hardened, replaces 141-62	1
33	432-48	COTTER PIN,1/16" x 1/2"	PIN, SPLIT (COTTER), 1/16" x 1/2"	1

http://www.minnparbackhoeparts.com/

(580SK) - CASE SUPER-K CONSTRUCTION KING LOADER BACKHOE > (6-30) - DRIVE SHAFT, POWER SHUTTLE TO TRANSAXLE

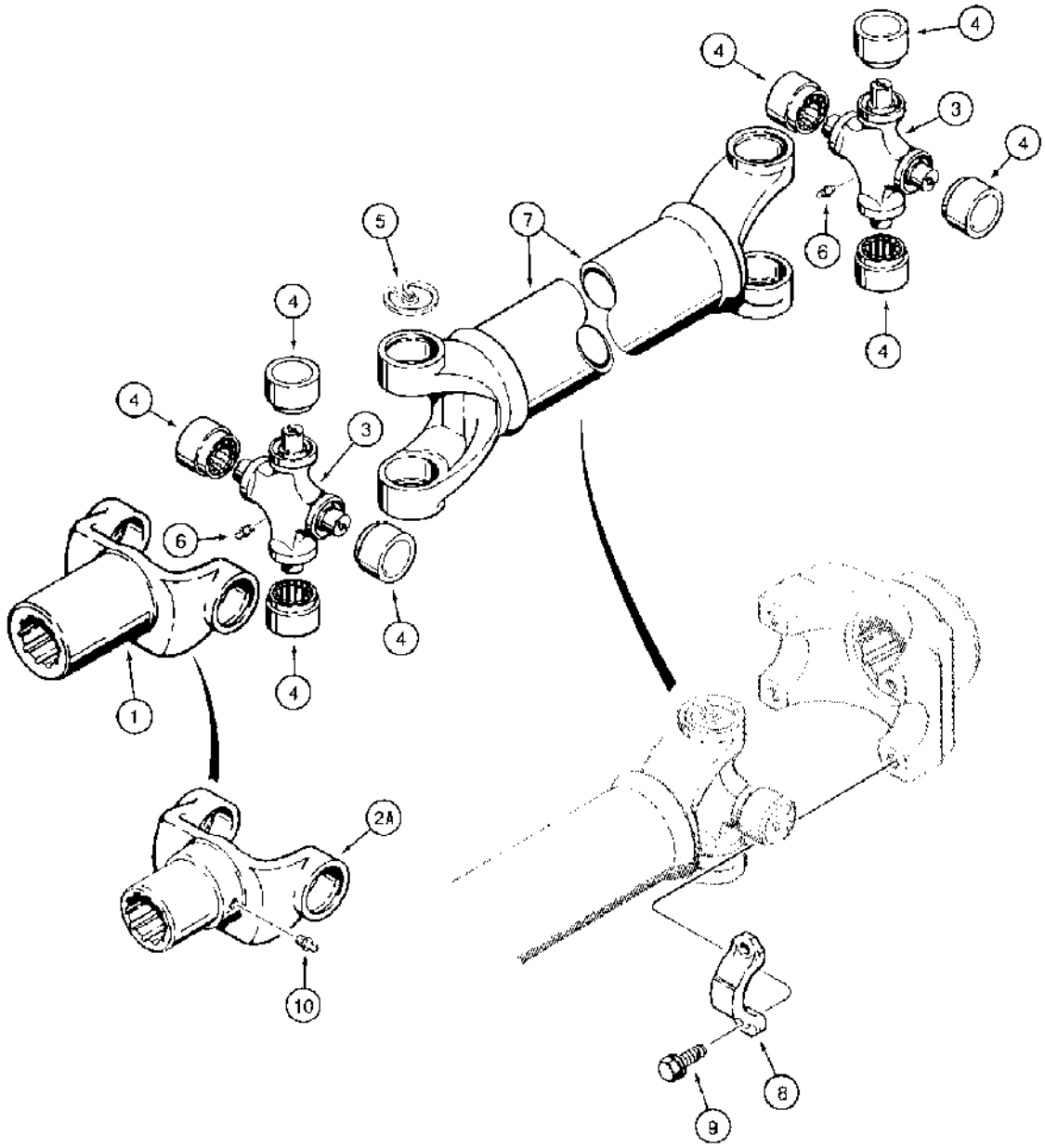

B9811438 45

(580SK) - CASE SUPER-K CONSTRUCTION KING LOADER BACKHOE > (6-30) - DRIVE SHAFT, POWER SHUTTLE TO TRANSAXLE

Diag #	Part #	Name	Description	Qty
	D129436	DRIVE SHAFT	SHAFT ASSEMBLY primary, drive, to transaxle, used on models without PTO	1
	D147314	DRIVE SHAFT	SHAFT ASSEMBLY primary, drive, to transaxle, used in addition to D148969 shaft on models with PTO	1
	D148969	DRIVE SHAFT	SHAFT ASSEMBLY drive, input, to transaxle, used in addition to D147314 shaft on models with PTO. Includes: Ref. 1 through 7	1
1	N14231	YOKE	end, to transaxle, D129436 or D147314 drive shaft, Includes: Ref. 2	1
2	N13653	PLUG	grease, not shown	1
2A	D149263	FORK	YOKE end, to transaxle, D148969 drive shaft only	1
	N14230	KIT	universal joint, Includes: Ref. 3 through 6	2
3	NSS	NOT SERVICED SEPARATELY	JOINT universal, drive shaft	1
4	NSS	NOT SERVICED SEPARATELY	BEARING universal joint	4
5	11256	SNAP RING	retaining	4
6	219-10	LUBE NIPPLE,1/4"-28 NPT x .68" lg	FITTING grease, straight, 1/4-28 taper x 11/16 inch	1
7	NSS	NOT SERVICED SEPARATELY	SHAFT drive, power shuttle	1
8	D124146	CLAMP	STRAP bearing	2
9	D124151	BOLT	special	4
10	86636814	LUBE NIPPLE,1/4"-28 x .52" lg	FITTING - grease, straight, 1/4-28 x 1/2 inch, D148969 drive shaft yoke only	1

http://www.minnparbackhoeparts.com/

(580SK) - CASE SUPER-K CONSTRUCTION KING LOADER BACKHOE > (6-32) - TRANSAXLE AND DIFFERENTIAL LOCK

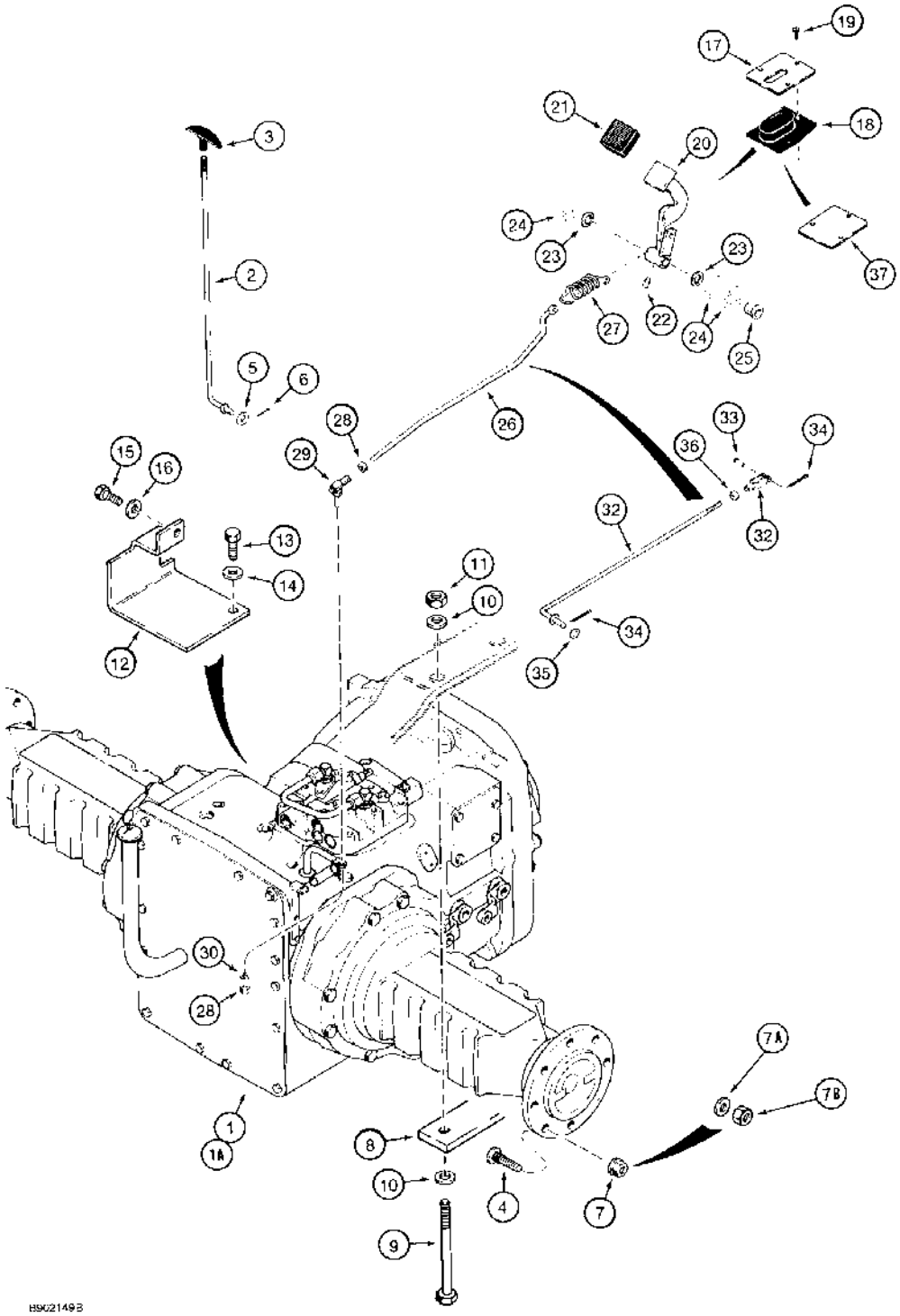

(580SK) - CASE SUPER-K CONSTRUCTION KING LOADER BACKHOE > (6-32) - TRANSAXLE AND DIFFERENTIAL LOCK

Diag #	Part #	Name	Description	Qty
1	A190502	TRANSMISSION	TRANSAXLE ASSEMBLY two wheel drive, used on models without PTO, parts list Figures 6-18 - 6-26 and 6-62 - 7-04, order component parts	1
1	1345899C1	TRANSMISSION	TRANSAXLE ASSEMBLY two wheel drive, used on models with PTO, parts list Figures 6-18 - 6-26 and 6-62 - 7-04 not shown, order component parts	1
1A	1345875C1	TRANSMISSION	TRANSAXLE ASSEMBLY four wheel drive, used on models without PTO, parts list Figures 6-18 - 6-26 and 6-62 - 7-04, not shown, order component parts	1
1A	1345898C1	TRANSAXLE ASSEMBLY- four wheel drive, used on models with PTO, parts list Figures 6-18 - 6-26 and 6-62 - 7-04, not shown, order component parts	TRANSAXLE ASSEMBLY- four wheel drive, used on models with PTO, parts list Figures 6-18 - 6-26 and 6-62 - 7-04, not shown, order component parts	1
2	D146237	ROD	PTO control, if used	1
3	D148971	HANDLE	tee, PTO rod, if used	1
4	3220372R2	STUD,M20 x 1.5 x 58mm, Cl 30	BOLT hex, special	16
5	495-21038	WASHER,5/16"	(flat, 3/8 x 7/8 x 5/64") 5/16"	1
6	732-1616	COTTER PIN,M1.6 x 16	PIN cotter, 1.6 x 16 mm	1
7	98783C1	WHEEL NUT,Wheel, Flg, M20 x 1.5	Special, If used Wheel, Flg, M20 x 1.5	16
7A	138076A1	WASHER	flat, 51/64 x 1-3/8 x 1/8 inch, hardened, special, if used	16
7B	829-11420	NUT,M20 x 1.5, Cl 10	hex, 20 mm - 1.5, class 10, if used	16
8	D127596	PLATE	spacer	2
9	326-16144	BOLT,Hex, 1" - 8 x 9", Gr 8	BOLT,Hex, 1" - 8 x 9", Gr 8	4
10	D36505	WASHER	flat, 1-1/16 x 1-7/8 x 9/64 inch, hardened	8
11	329-1016	NUT,1"-8, G8	NUT,1"-8, G8	4
12	D142862	PROTECTOR	GUARD suction tube, mounts to tapped holes in transaxle	1
13	D142942	BOLT,Hex, M20 x 2 x 30mm, Cl 8.8	BOLT hex, 20 - 2 x 30 mm	1
14	895-11020	WASHER,M20 x 37 x 3	flat, 22 x 37 x 3 mm	1
15	614-16030	BOLT,Hex, M16 x 2 x 30mm, Cl 8.8, Full Thd	BOLT,Hex, M16 x 2 x 30mm, Cl 8.8, Full Thd	1
16	895-11016	WASHER,M16 x 30 x 3	Flat M16 x 30 x 3	1
17	D146214	LARGE PLATE	PLATE differential lock boot	1

Diag #	Part #	Name	Description	Qty
		Part of differential lock kit P/N 115146A1.	Part of differential lock kit P/N 115146A1.	1
18	D129670	BOOT	differential lock	1
		Part of differential lock kit P/N 115146A1.	Part of differential lock kit P/N 115146A1.	1
19	281-18712	SELF-TAP SCREW,Hex Wash Hd, 1/4" x 3/4"	SCREW self-tapping, hex washer head, 1/4 NC x 3/4 inch	3
20	D142718	PEDAL	differential lock	1
		Part of differential lock kit P/N 115146A1.	Part of differential lock kit P/N 115146A1.	1
21	A75351	SKID/SHOE	COVER differential lock pedal, if used	1
		Part of differential lock kit P/N 115146A1.	Part of differential lock kit P/N 115146A1.	1
22	219-36	LUBE NIPPLE,45º, 1/8" NPT x 7/8" lg	FITTING grease, 45 degree, 1/8 PT x 7/8 inch	1
		Part of differential lock kit P/N 115146A1.	Part of differential lock kit P/N 115146A1.	1
23	A30881	SEALING WASHER,49" ID x 40558" OD	WASHER flat, spacer	2
		Part of differential lock kit P/N 115146A1.	Part of differential lock kit P/N 115146A1.	1
24	D143416	CIRCLIP	RETAINER pedal to pivot shaft bracket, two in kit	2-3
		Part of differential lock kit P/N 115146A1.	Part of differential lock kit P/N 115146A1.	1
25	D124452	BUSHING	pedal	1
26	D141951	ROD	differential lock, used with items 28-30, if used	1
27	A190341	SPRING	return, differential lock pedal	1
		Part of differential lock kit P/N 115146A1.	Part of differential lock kit P/N 115146A1.	1
28	425-116	NUT,3/8"-24, G5	- hex, 3/8 inch NF, If used	2
29	D121417	BALL JOINT	JOINT ball, 3/8 inch, if used, replaces D38296	1
30	492-11038	LOCK WASHER,3/8"	if used 3/8"	1
31	D150368	ROD	differential lock, used with Ref. 32-34, if used	1
		Part of differential lock kit P/N 115146A1.	Part of differential lock kit P/N 115146A1.	1
32	213-126	ADJUSTABLE CLEVIS,3/8"-24 x 2 1/2"	CLEVIS adjustable, 3/8 inch NF, if used	1
		Part of differential lock kit P/N 115146A1.	Part of differential lock kit P/N 115146A1.	1
33	427-6106	CLEVIS PIN,3/8" x 1 1/16"	PIN, CLEVIS, , Hardened, If used 3/8" x 1 1/16"	1
		Part of differential lock kit P/N 115146A1.	Part of differential lock kit P/N 115146A1.	1

Diag #	Part #	Name	Description	Qty
34	432-612	COTTER PIN,3/32" x 3/4"	PIN , SPLIT (COTTER), , If used 3/32" x 3/4"	2
		Part of differential lock kit P/N 115146A1.	Part of differential lock kit P/N 115146A1.	1
35	495-21044	WASHER,3/8"	(flat, 7/16 x 1 x 5/64 inch) 3/8"	1
		Part of differential lock kit P/N 115146A1.	Part of differential lock kit P/N 115146A1.	1
36	425-116	NUT,3/8"-24, G5	- hex, 3/8 inch NF, If used	1
		Part of differential lock kit P/N 115146A1.	Part of differential lock kit P/N 115146A1.	1
37	109512A1	PLATE	cover, used on models without differential lock	1
	115146A1	KIT	differential lock, Includes: Ref. 17, 18, 20 - 24, 27, 31 - 36 and instructions	1

http://www.minnparbackhoeparts.com/

(580SK) - CASE SUPER-K CONSTRUCTION KING LOADER BACKHOE > (6-34) - TRANSAXLE SHIFT LEVER

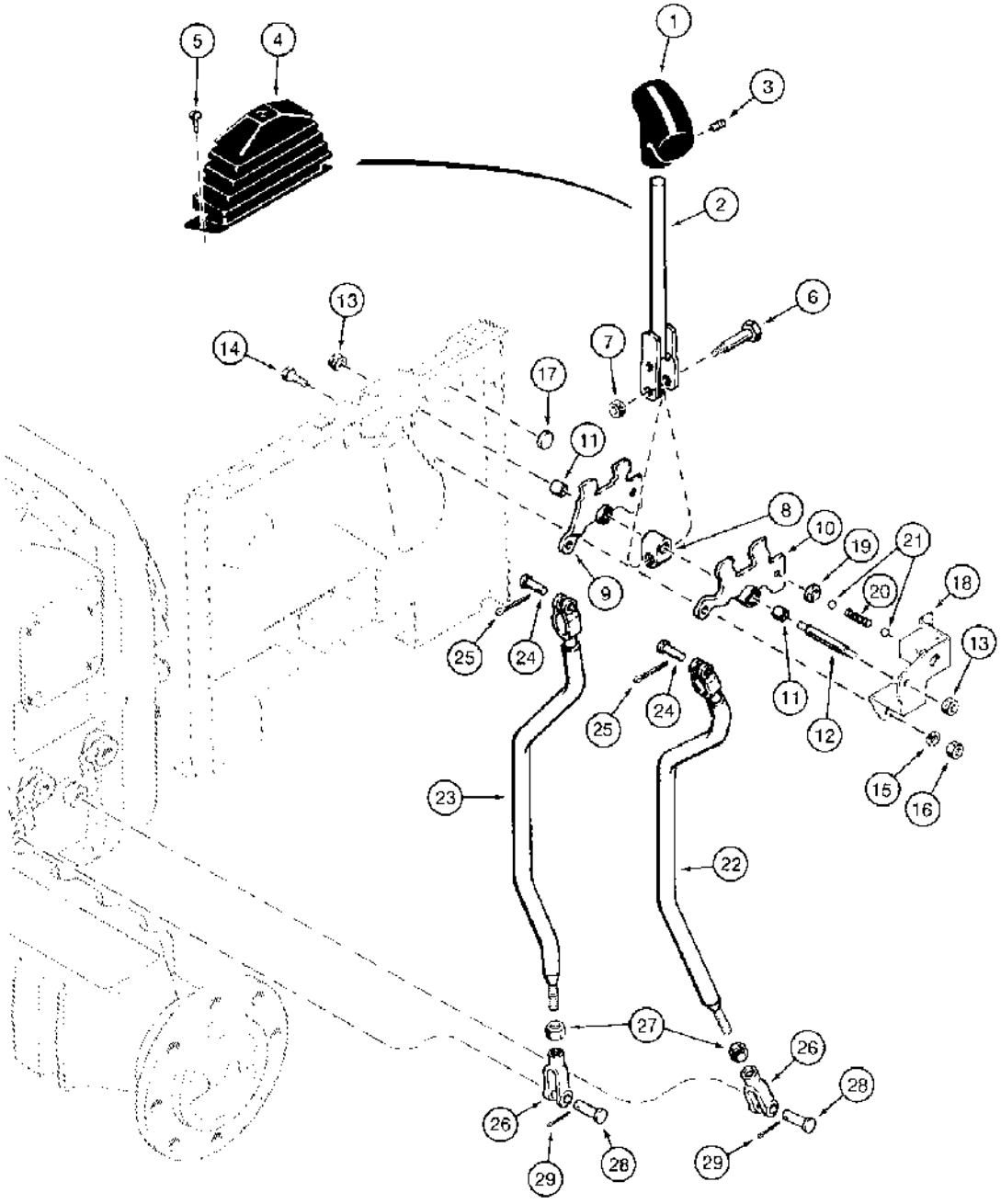

(580SK) - CASE SUPER-K CONSTRUCTION KING LOADER BACKHOE > (6-34) - TRANSAXLE SHIFT LEVER

Diag #	Part #	Name	Description	Qty
1	D147596	HANDLE	KNOB shift lever, T-handle	1
		See Figure 4-26, Ref. 17, for clutch cutout switch and wire.	See Figure 4-26, Ref. 17, for clutch cutout switch and wire.	1
2	D146337	LEVER	control, shift, transaxle	1
		See Figure 4-26, Ref. 17, for clutch cutout switch and wire.	See Figure 4-26, Ref. 17, for clutch cutout switch and wire.	1
3	178-892	SET SCREW,Hex Soc, 5/16"-24 x 3/8"	SCREW set, hex headless, 5/16 NF x 3/8 inch, half dog point	1
4	D143303	BOOT	transaxle control lever, mounts to side console	1
5	140-107	SCREW,Cross Pan Hd, #10-24 x 3/4"	SCREW,Cross Pan Hd, #10-24 x 3/4"	1
6	D142167	STEP BOLT,Shoulder, Hex, 3/8" - 16 - 12.70mm Dia x 45.75mm	BOLT shoulder, special	1
7	425-146	JAM NUT,Jam, 3/8"-16, G5	hex, jam, 3/8 inch NC	1
8	D136635	BLOCK	shifter pivot, plastic	1
9	D147051	LARGE PLATE	LEVER shift, Serial Range: first-second	1
10	D147052	LARGE PLATE	LEVER shift, third to fourth, Includes: Ref. 11	1
11	D147737	BUSHING	D147051 or D147052 shift lever	1
12	D142166	STUD	pivot	1
13	231-1446	NUT,3/8"-16, GB	NUT hex, self-locking, 3/8 inch NC, grade 8	2
14	413-612	BOLT,Hex, 3/8" - 16 x 3/4", Gr 5	BOLT,Hex, 3/8" - 16 x 3/4", Gr 5	2
15	492-11038	LOCK WASHER,3/8"	LOCK WASHER,3/8"	2
16	425-106	NUT,3/8"-16, G5	NUT,3/8"-16, G5	2
17	D142577	STOP	PLUG retainer, 5 mm thick head	1
18	D146892	SUPPORT	BELLCRANK shift detent, see Figure 3-06 for mounting	1
19	D146895	STOP	PLUG retainer, 9 mm thick head	1
20	D148684	SPRING	detent	1
21	D146449	BALL	1/2 inch, grade 200, carbon steel	2
22	D147060	ROD	shift, Serial Range: third-fourth	1
23	D147058	ROD	shift, Serial Range: first-second	1
		If D147058 does not work, use P/N D142148.	If D147058 does not work, use P/N D142148.	1
24	427-6088	CLEVIS PIN,3/8" x 3/4"	PIN clevis, 3/8", short	2

Diag #	Part #	Name	Description	Qty
25	432-612	COTTER PIN,3/32" x 3/4"	PIN , SPLIT (COTTER), 3/32" x 3/4"	2
26	213-126	ADJUSTABLE CLEVIS,3/8"-24 x 2 1/2"	CLEVIS adjustable, 3/8 inch NF	2
27	425-116	NUT,3/8"-24, G5	- hex, 3/8 inch NF	2
28	427-6106	CLEVIS PIN,3/8" x 1 1/16"	PIN, CLEVIS, , Hardened 3/8" x 1 1/16"	2
29	432-612	COTTER PIN,3/32" x 3/4"	PIN , SPLIT (COTTER), 3/32" x 3/4"	2

http://www.minnparbackhoeparts.com/

(580SK) - CASE SUPER-K CONSTRUCTION KING LOADER BACKHOE > (6-36) - FRONT DRIVE AXLE CONTROL, WITH SHIFT LEVER WELDED TO BELLCRANK

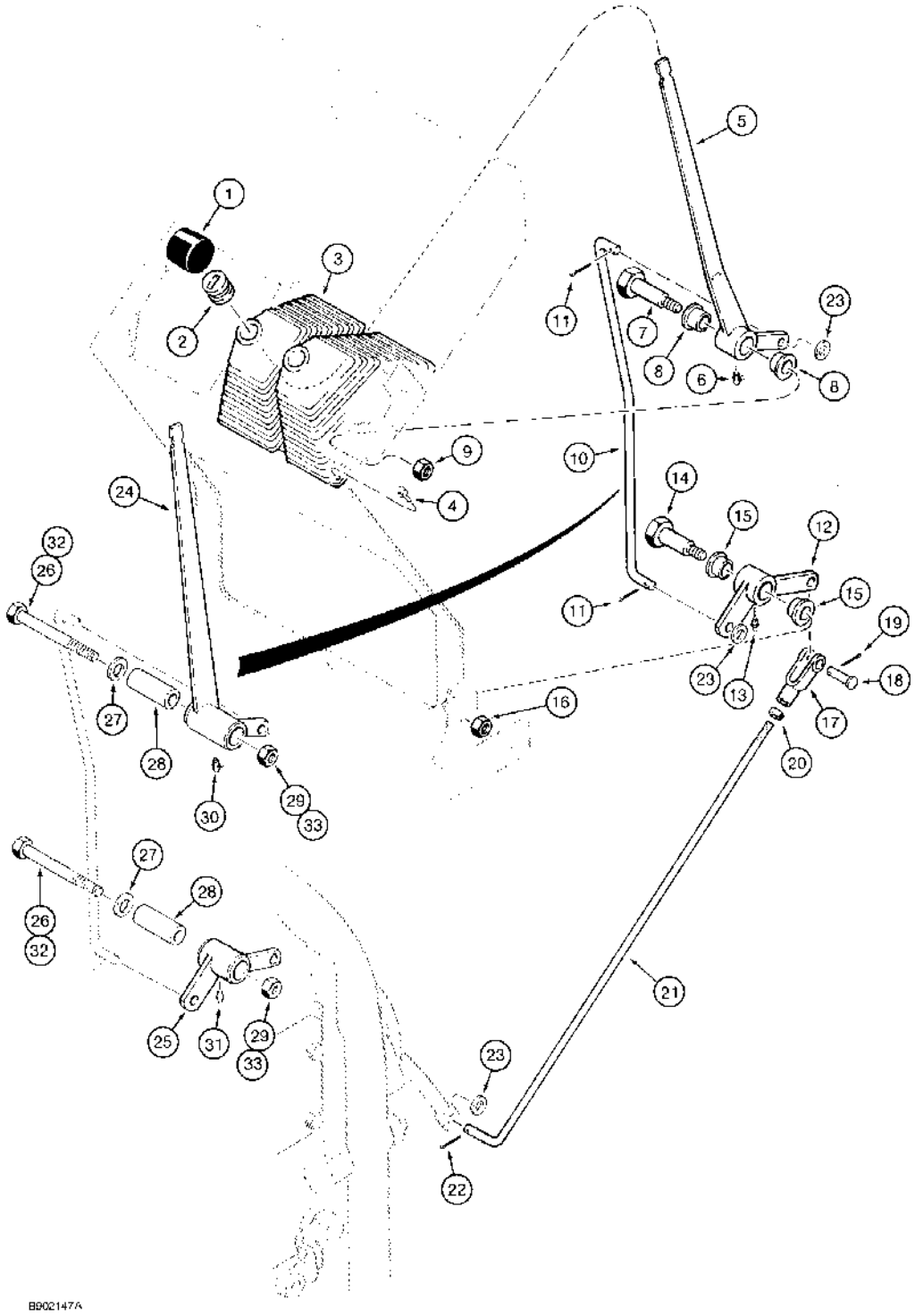

(580SK) - CASE SUPER-K CONSTRUCTION KING LOADER BACKHOE > (6-36) - FRONT DRIVE AXLE CONTROL, WITH SHIFT LEVER WELDED TO BELLCRANK

Diag #	Part #	Name	Description	Qty
1	A177435	BALL KNOB	KNOB shift control lever	1
2	D147946	BUSHING	- boot	1
3	D137465	BOOT	dual lever, shift control and parking brake levers, see Figure 7-12 for parking brake lever	1
4	281-18712	SELF-TAP SCREW,Hex Wash Hd, 1/4" x 3/4"	SCREW self-tapping, hex washer head, 1/4 NC x 3/4 inch	4
5	D147062	CONTROL LEVER	LEVER offset with bend, 1 inch long pivot tube, shift control, no longer available, order Ref. 24-31	1
6	219-57	LUBE NIPPLE,90º, 1/4" NPT x .75" lg	FITTING grease, 90 degree, 1/4-28 taper x 3/4 inch, used with D147062 lever, if used	1
7	D147812	BOLT	BOLT special, shoulder, D147062 lever, if used	1
8	D144602	BUSHING	- pivot, D147062 lever, if used	2
9	131-1247	LOCK NUT,7/16"-20, GC	NUT hex, self-locking, 7/16 inch NF, if used, replaces 425-157 jam nut	1
10	D146919	ROD	shift control, Serial Range: lever-bellcrank	1
11	432-612	COTTER PIN,3/32" x 3/4"	PIN , SPLIT (COTTER), 3/32" x 3/4"	2
12	D146909	DRIVE, ANGLE	BELLCRANK, 1 inch pivot tube, used with D147062 lever, no longer available, order Ref. 24-31	1
13	86636814	LUBE NIPPLE,1/4"-28 x .52" lg	FITTING - grease, straight, 1/4-28 x 1/2 inch, D146909 bellcrank, if used	1
14	D147812	BOLT	BOLT special, shoulder, D146909 bellcrank, if used	1
15	D144602	BUSHING	- pivot, bellcrank, D146909 bellcrank, if used	2
16	131-1247	LOCK NUT,7/16"-20, GC	NUT hex, self-locking, 7/16 inch NF, if used, replaces 425-157 jam nut	1
17	213-126	ADJUSTABLE CLEVIS,3/8"-24 x 2 1/2"	CLEVIS adjustable, 3/8 inch NF	1
18	427-6106	CLEVIS PIN,3/8" x 1 1/16"	PIN, CLEVIS, , Hardened 3/8" x 1 1/16"	1
19	432-612	COTTER PIN,3/32" x 3/4"	PIN , SPLIT (COTTER), 3/32" x 3/4"	1
20	425-156	JAM NUT,Jam, 3/8"-24, G5	hex jam, 3/8 inch NF	1
21	D146918	ROD	shift control, Serial Range: bellcrank-transaxle	1
22	432-612	COTTER PIN,3/32" x 3/4"	PIN , SPLIT (COTTER), 3/32" x 3/4"	1
23	495-11041	WASHER,3/8", SAE	flat, (13/32 x 13/16 x 1/16")	3
24	D151089	LEVER	straight, 2 inch pivot tube, shift control	1

Diag #	Part #	Name	Description	Qty
25	D151100	PIVOT ASSY.	BELLCRANK, 2 inch pivot tube, used with D151089 lever	1
26	413-748	BOLT,Hex, 7/16" - 14 x 3", Gr 5	hex, 7/16 NC x 3 inch, if used	2
27	495-11053	WASHER,1/2", SAE	(17/32" x 1-1/16" x 3/32"), If used 1/2", SAE	2
28	D149292	SPACER	BUSHING pivot, lever and bellcrank, if used	2
29	231-1447	NUT,7/16"-14, GB	NUT, LOCK, , If used 7/16"-14, GB	2
30	219-55	LUBE NIPPLE,90º, 1/8" NPT x .84" lg	NIPPLE, LUBE, , If used 90º, 1/8" NPT x .84" lg	1
31	219-1	LUBE NIPPLE,1/8"-27 x .66 lg	FITTING grease, straight, 1/8 PT x 21/32 inch, if used, replaces 219-4 9/16 inch long fitting	1
32	413-848	BOLT,Hex, 1/2" - 13 x 3", Gr 5	hex, 1/2 NC x 3 inch, if used	2
33	131-208	NUT,1/2"-13	NUT heavy hex, self-locking, 1/2 inch NC, if used	2

http://www.minnparbackhoeparts.com/

(580SK) - CASE SUPER-K CONSTRUCTION KING LOADER BACKHOE > (6-37A) - FRONT DRIVE AXLE CONTROL, WITH SHIFT LEVER THREADED TO BELLCRANK

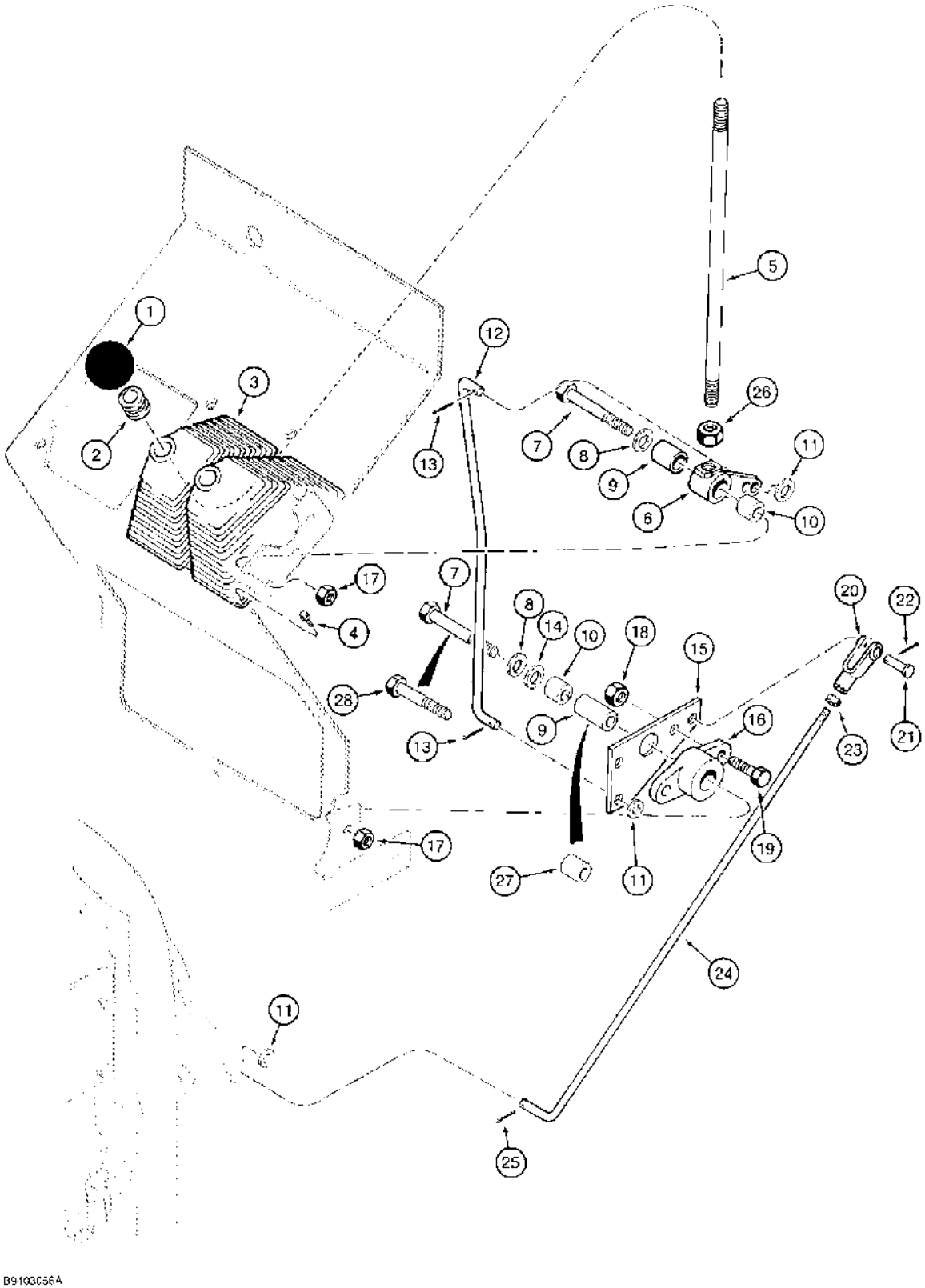

http://www.minnparbackhoeparts.com/

(580SK) - CASE SUPER-K CONSTRUCTION KING LOADER BACKHOE > (6-37A) - FRONT DRIVE AXLE CONTROL, WITH SHIFT LEVER THREADED TO BELLCRANK

Diag #	Part #	Name	Description	Qty
1	L54563	KNOB	shift control lever	1
2	D121047	GROMMET	BUSHING boot	1
3	D137465	BOOT	dual lever, shift control and parking brake levers, see Figure 7-12 for parking brake lever	1
4	281-18712	SELF-TAP SCREW,Hex Wash Hd, 1/4" x 3/4"	SCREW self-tapping, hex washer head, 1/4 NC x 3/4 inch	4
5	136261A1	THREADED ROD	LEVER straight, shift control	1
6	D150397	CRANK LEVER	BELLCRANK shift control lever	1
7	413-848	BOLT,Hex, 1/2" - 13 x 3", Gr 5	hex, 1/2 NC x 3 inch, used with Ref. 9, D149292 bushing	1-2
8	495-11053	WASHER,1/2", SAE	(17/32" x 1-1/16" x 3/32") 1/2", SAE	2
9	D149292	SPACER	BUSHING, 2 inch long, pivot, bellcrank and pedal shaft bearing, replaced by Ref. 27, 120900A1, 1-1/8 inch bushing at pedal shaft bearing	1-2
10	105815A1	SPACER	43/64 inch wide, pivot, used with Ref. 9, D149292 bushing	1-2
11	495-11041	WASHER,3/8", SAE	flat, (13/32 x 13/16 x 1/16")	3
12	105816A1	ROD	shift control, pivot, Serial Range: plate-bellcrank	1
13	432-612	COTTER PIN,3/32" x 3/4"	PIN , SPLIT (COTTER), 3/32" x 3/4"	2
14	495-11081	WASHER,3/4", SAE	Used with Ref. 9, D149292 bushing 3/4", SAE	1-2
15	D150330	SUPPORT	PLATE pivot mounting, pedal shaft bearing and control rod	1
16	A77310	BEARING,0.754" ID x 1.375" OD x 0.81"	pedal shaft	1
17	131-208	NUT,1/2"-13	NUT heavy hex, self-locking, 1/2 inch NC	2
18	231-1446	NUT,3/8"-16, GB	NUT hex, self-locking, 3/8 inch NC, grade 8	2
19	413-616	BOLT,Hex, 3/8" - 16 x 1", Gr 5	hex, 3/8 NC x 1 inch	2
20	213-126	ADJUSTABLE CLEVIS,3/8"-24 x 2 1/2"	CLEVIS adjustable, 3/8 inch NF	1
21	427-6106	CLEVIS PIN,3/8" x 1 1/16"	PIN, CLEVIS, , Hardened 3/8" x 1 1/16"	1
22	432-612	COTTER PIN,3/32" x 3/4"	PIN , SPLIT (COTTER), 3/32" x 3/4"	1
23	425-156	JAM NUT,Jam, 3/8"-24, G5	hex jam, 3/8 inch NF	1
24	106589A1	ROD	shift control, pivot, Serial Range: plate-transaxle	1
25	432-612	COTTER PIN,3/32" x 3/4"	PIN , SPLIT (COTTER), 3/32" x 3/4"	1

Diag #	Part #	Name	Description	Qty
26	425-118	NUT,1/2"-20, G5	hex, 1/2 inch NF	1
27	120900A1	SLEEVE	BUSHING, 1-1/8 inch long, pivot, replaces Ref. 9, D149292, 2 inch bushing at pedal shaft bearing	1
28	413-832	BOLT,Hex, 1/2" - 13 x 2", Gr 5	Used with Ref. 27, 120900A1, bushing Hex, 1/2"-13 x 2", G5	1

http://www.minnparbackhoeparts.com/

(580SK) - CASE SUPER-K CONSTRUCTION KING LOADER BACKHOE > (6-38) - FRONT DRIVE AXLE MOUNTING AND DRIVE SHAFT

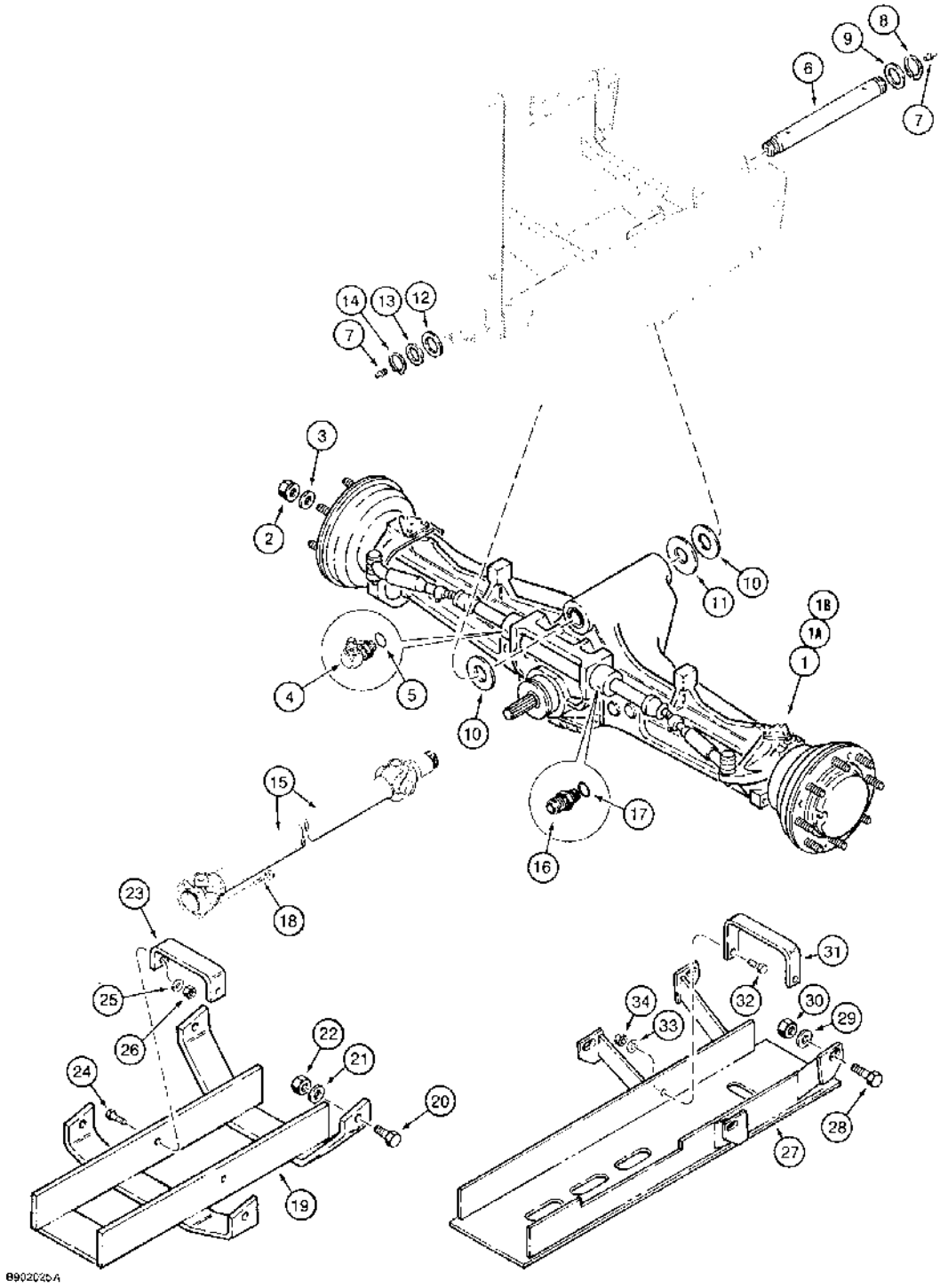

(580SK) - CASE SUPER-K CONSTRUCTION KING LOADER BACKHOE > (6-38) - FRONT DRIVE AXLE MOUNTING AND DRIVE SHAFT

Diag #	Part #	Name	Description	Qty
1	D146847	AXLE	ASSEMBLY front drive, Carraro No. 126140, parts list Figures 6-42 - 6-58, no longer available, order D149673 axle	1
1A	D149673	AXLE	ASSEMBLY front drive, Carraro No. 127085, parts list Figures 6-42 - 6-58, does not include hydraulic fittings at steering cylinder, Ref. 4 and 16, purchase separately, if used	1
1B	127767A1	AXLE	ASSEMBLY front drive, Carraro No. CAV91-767, parts list Figures 6-42 - 6-60, includes hydraulic fittings at steering cylinder, Ref. 4 and 16, replaces 109937A1 axle, if used	1
2	K395089	WHEEL NUT	hex	16
3	496-81000	WASHER,25/32" x 1 3/8" x .134", HDN	flat, 25/32 x 1-3/8 x 1/8 inch, hardened	16
4	218-5280	ELBOW,90º, 3/4"-16, 37º x 9/16"-18, O-Ring	90 degree, 3/4-16 flare x 9/16-18 inch adj O-ring, Includes: Ref. 5	1
6	D127445	PIVOT PIN	SHAFT axle pivot	1
7	219-1	LUBE NIPPLE,1/8"-27 x .66 lg	FITTING grease, straight, 1/8 PT x 21/32 inch	2
8	800-44050	SNAP RING,M50, Ext	RING snap, shaft retaining, front	1
9	495-81282	WASHER,2 1/16" x 3" x .109"	flat, 2-1/16 x 3 x 1/8 inch	1
10	D143408	WASHER	flat, 2-1/32 ID x 4 OD x 1/16 inch thick, special	1
11	D123684	WASHER	thrust, 2-1/16 x 4-1/2 x 3/16 inch	1
12	D143431	WASHER	special	1
13	495-81226	WASHER,1 13/16" x 2 1/2" x .109"	- flat, 1-13/16 x 2-1/2 x 1/8 inch	1
14	103-16175	SNAP RING,#175, Ext	Ring, Snap, , Pivot shaft, rear (Replaces D25280) #175, Ext	1
15	1349244C1	SHAFT	ASSEMBLY drive, front drive axle, parts list Figure 6-40	1
16	218-5351	HYD CONNECTOR,3/4"-16, 37º x 9/16"-18, O-Ring	ADAPTER straight, 3/4-16 flare x 9/16-18 inch O-ring boss, Includes: Ref. 17	1
18	806-10030	BOLT,Hex, M10 x 1.5 x 30mm, Cl 10.9	hex, 10 mm - 1.5 x 30 mm, special, flange mounting	4
19	D149468	GUARD	drive shaft, 10 mm, 3/8 inch, thick, used on four wheel drive models without PTO and with Ref. 23, D149465, strap, no longer available, order Ref. 19A, 104658A1, guard	1

Diag #	Part #	Name	Description	Qty
19A	104658A1	GUARD	drive shaft, used on four wheel drive models without PTO, not shown, is identical to Ref. 19 except there are no holes in side bars	1
20	413-1640	BOLT,Hex, 1" - 8 x 2 1/2", Gr 5	BOLT,Hex, 1" - 8 x 2 1/2", Gr 5	4
21	495-11106	WASHER,1", SAE	flat, 1-1/16 x 2 x 1/8 inch	4
22	425-1016	NUT,1"-8, G5	- hex, 1 inch NC	4
23	D149465	BAR	STRAP shaft guard, used with Ref. 19, D149468 guard	1
24	413-1232	BOLT,Hex, 3/4" - 10 x 2", Gr 5	hex, 3/4 NC x 2 inch, If used	2
25	495-11081	WASHER,3/4", SAE	If used 3/4", SAE	2
26	425-1012	NUT,3/4"-10, G5	hex, 3/4 inch NC, if used	2
27	D151103	GUARD	drive shaft, used on two wheel drive and four wheel drive models with PTO, replaces D149594	1
28	413-1640	BOLT,Hex, 1" - 8 x 2 1/2", Gr 5	BOLT,Hex, 1" - 8 x 2 1/2", Gr 5	4
29	495-11106	WASHER,1", SAE	flat, 1-1/16 x 2 x 1/8 inch	4
30	425-1016	NUT,1"-8, G5	- hex, 1 inch NC	4
31	D149593	STRAP	shaft guard, used with Ref. 27, D151103 guard	1
32	413-1232	BOLT,Hex, 3/4" - 10 x 2", Gr 5	hex, 3/4 NC x 2 inch	2
33	495-11081	WASHER,3/4", SAE	WASHER,3/4", SAE	2
34	425-1012	NUT,3/4"-10, G5	hex, 3/4 inch NC	2
5	237-6006	O-RING,0.114" ID x 0.254" OD x 0.07"	6-1, 90 Duro, .468" ID x .078" Thk	1
17	237-6006	O-RING,0.114" ID x 0.254" OD x 0.07"	6-1, 90 Duro, .468" ID x .078" Thk	1

http://www.minnparbackhoeparts.com/

(580SK) - CASE SUPER-K CONSTRUCTION KING LOADER BACKHOE > (6-40) - DRIVE SHAFT FOR FRONT DRIVE AXLE, FRONT DRIVE AXLE TO TRANSAXLE

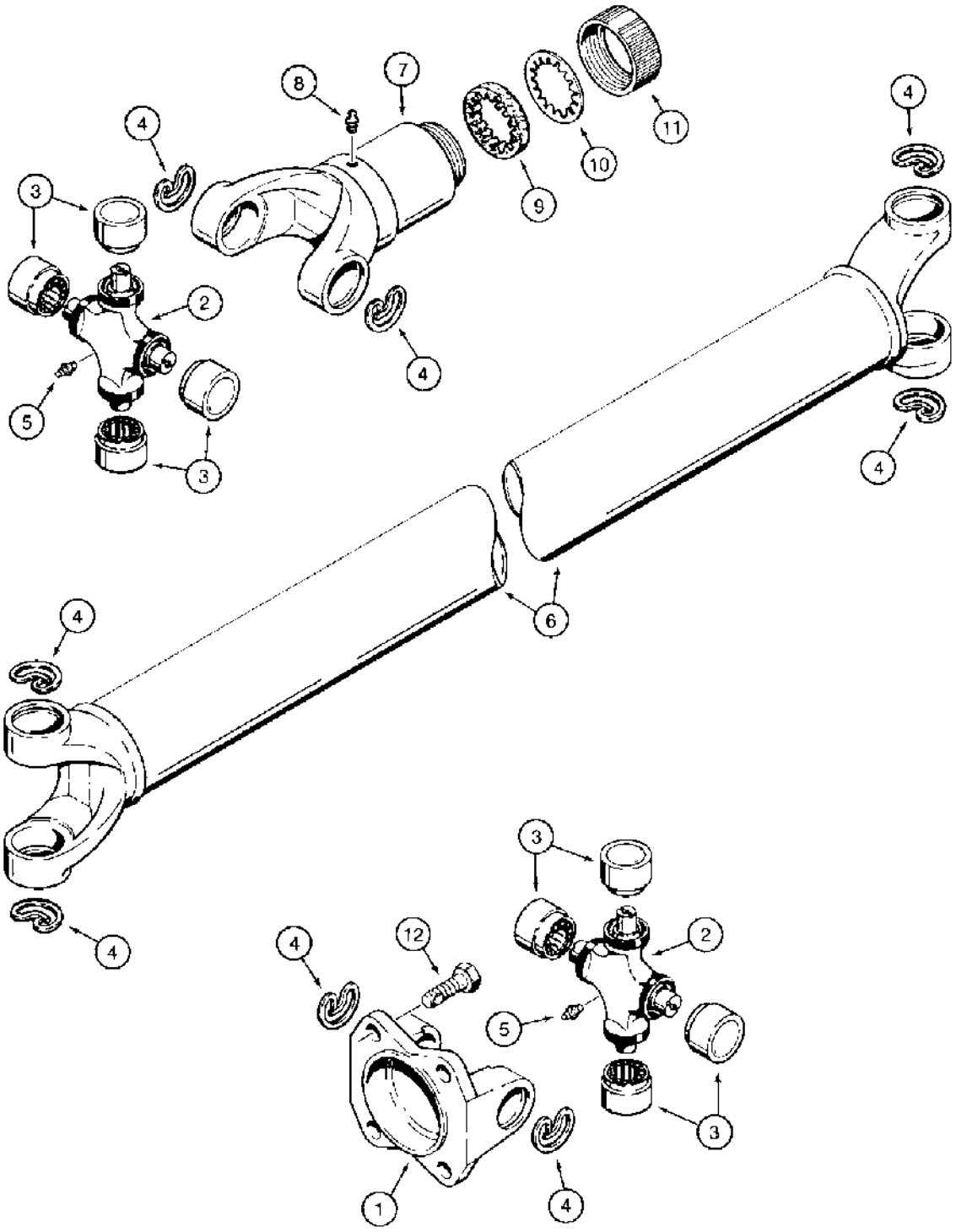

B901742-40

(580SK) - CASE SUPER-K CONSTRUCTION KING LOADER BACKHOE > (6-40) - DRIVE SHAFT FOR FRONT DRIVE AXLE, FRONT DRIVE AXLE TO TRANSAXLE

Diag #	Part #	Name	Description	Qty
	1349244C1	SHAFT	ASSEMBLY drive, Includes: Ref. 1 through 11	1
		Refer to service bulletin NLBSB1690 for optional drive shaft P/N 1975595c1. When using P/N 1975595c1 the dust cap kit is P/N D150025.	Refer to service bulletin NLBSB1690 for optional drive shaft P/N 1975595c1. When using P/N 1975595c1 the dust cap kit is P/N D150025.	1
1	S80726	YOKE	flange	1
	D144306	PACKAGE, REPAIR	KIT universal joint, Includes: Ref. 2 through 5	2
2	NSS	NOT SERVICED SEPARATELY	JOINT universal, drive shaft	1
3	NSS	NOT SERVICED SEPARATELY	BEARING universal joint	4
4	R13992	RING, SNAP	RING retaining	4
5	219-10	LUBE NIPPLE,1/4"-28 NPT x .68" lg	FITTING grease, straight, 1/4-28 taper x 11/16 inch	1
6	NSS	NOT SERVICED SEPARATELY	SHAFT drive, front drive axle	1
7	D149861	YOKE	tube, splined, to front drive axle	1
8	219-10	LUBE NIPPLE,1/4"-28 NPT x .68" lg	FITTING grease, straight, 1/4-28 taper x 11/16 inch	1
	D149860	SERVICE KIT	KIT, SERVICE - Dust cap, Incl. Ref 9 - 11	1
9	NSS	NOT SERVICED SEPARATELY	WASHER cork	1
10	NSS	NOT SERVICED SEPARATELY	WASHER steel	1
11	NSS	NOT SERVICED SEPARATELY	CAP dust seal retaining	1
12	806-10030	BOLT,Hex, M10 x 1.5 x 30mm, Cl 10.9	hex, 10 mm - 1.5 x 30 mm, special	4

http://www.minnparbackhoeparts.com/

(580SK) - CASE SUPER-K CONSTRUCTION KING LOADER BACKHOE > (6-42) - FRONT DRIVE AXLE, AXLE HOUSING

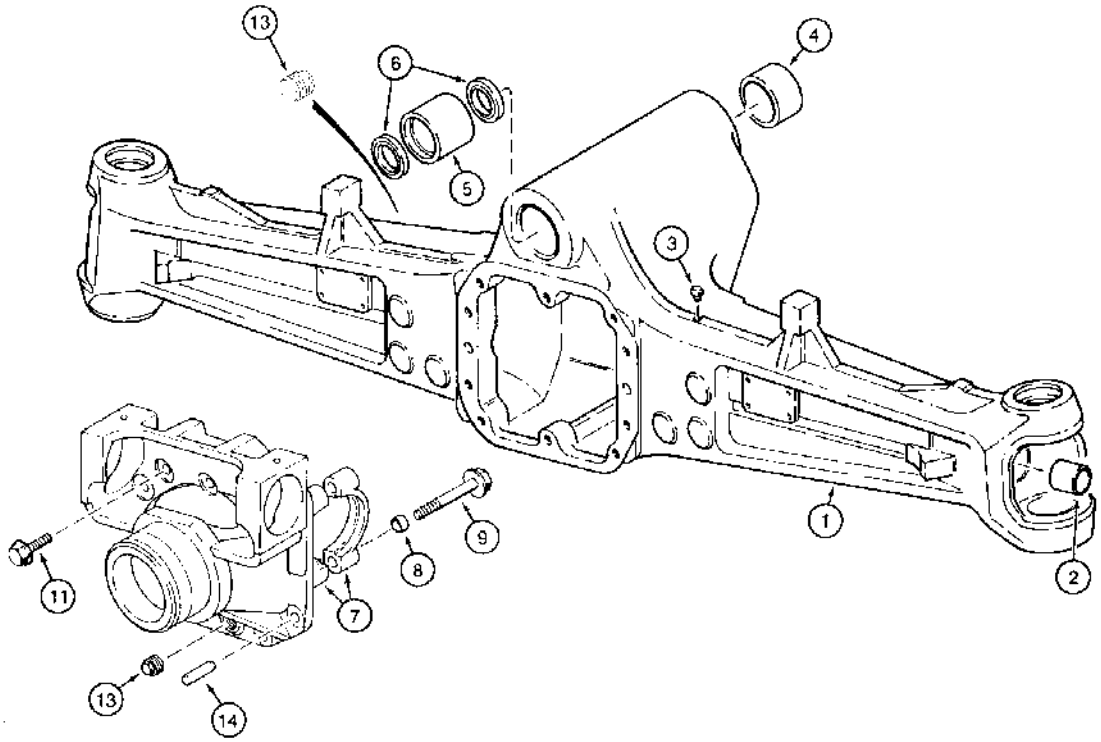

(580SK) - CASE SUPER-K CONSTRUCTION KING LOADER BACKHOE > (6-42) - FRONT DRIVE AXLE, AXLE HOUSING

Diag #	Part #	Name	Description	Qty
	D146847	AXLE	ASSEMBLY front drive, Carraro No. 126140, parts list Figures 6-42 - 6-58, no longer available, order D149673 axle	1
	D149673	AXLE	ASSEMBLY front drive, Carraro No. 127085, parts list Figures 6-42 - 6-58, does not include hydraulic fittings at steering cylinder, Ref. 4 and 16 on Figure 6-38, purchase separately, if used	1
	127767A1	AXLE	ASSEMBLY front drive, Carraro No. CAV91-767, parts list Figures 6-42 - 6-60, includes hydraulic fittings at steering cylinder, Ref. 4 and 16 on Figure 6-38, replaces 109937A1 axle, if used, Includes: Ref. 1 through 14 and P/N D149714	1
1	D149727	HOUSING	front axle	1
2	K395019	BUSHING	housing	2
3	1966149C1	BREATHER	axle housing, replaces K965231 breather	1
4	D149726	BUSHING	front pivot	1
5	D149725	BUSHING	rear pivot	1
6	N14367	SEALING RING	rear bushing	2
	D149714	SUPPORT	CARRIER ASSEMBLY differential, for 3-1/32 inch, 77 mm, OD steering cylinder, 7, 8 and 9	1
7	NSS	NOT SERVICED SEPARATELY	CARRIER differential	1
8	K965259	RING	BUSHING centering, carrier	4
9	S301065	BOLT,Hex Flg, M14 x 75, 12.9	BOLT, , Carrier Hex Flg, M14 x 75, 12.9	4
11	5194169	SCREW,Hex Flg, M12 x 33, 12.9	BOLT, , Carrier to housing Hex Flg, M12 x 33, 12.9	10
13	A156873	PLUG, DRAIN,M22 x 1.5	PLUG, DRAIN,M22 x 1.5	1-2
14	K965252	PIN	dowel, Serial Range: housing-carrier	2
	M20704	ADHESIVE	SEALANT, 3 oz, 89 ml, of sealant in a tube, differential carrier to axle housing, not shown, order B17575	1

http://www.minnparbackhoeparts.com/

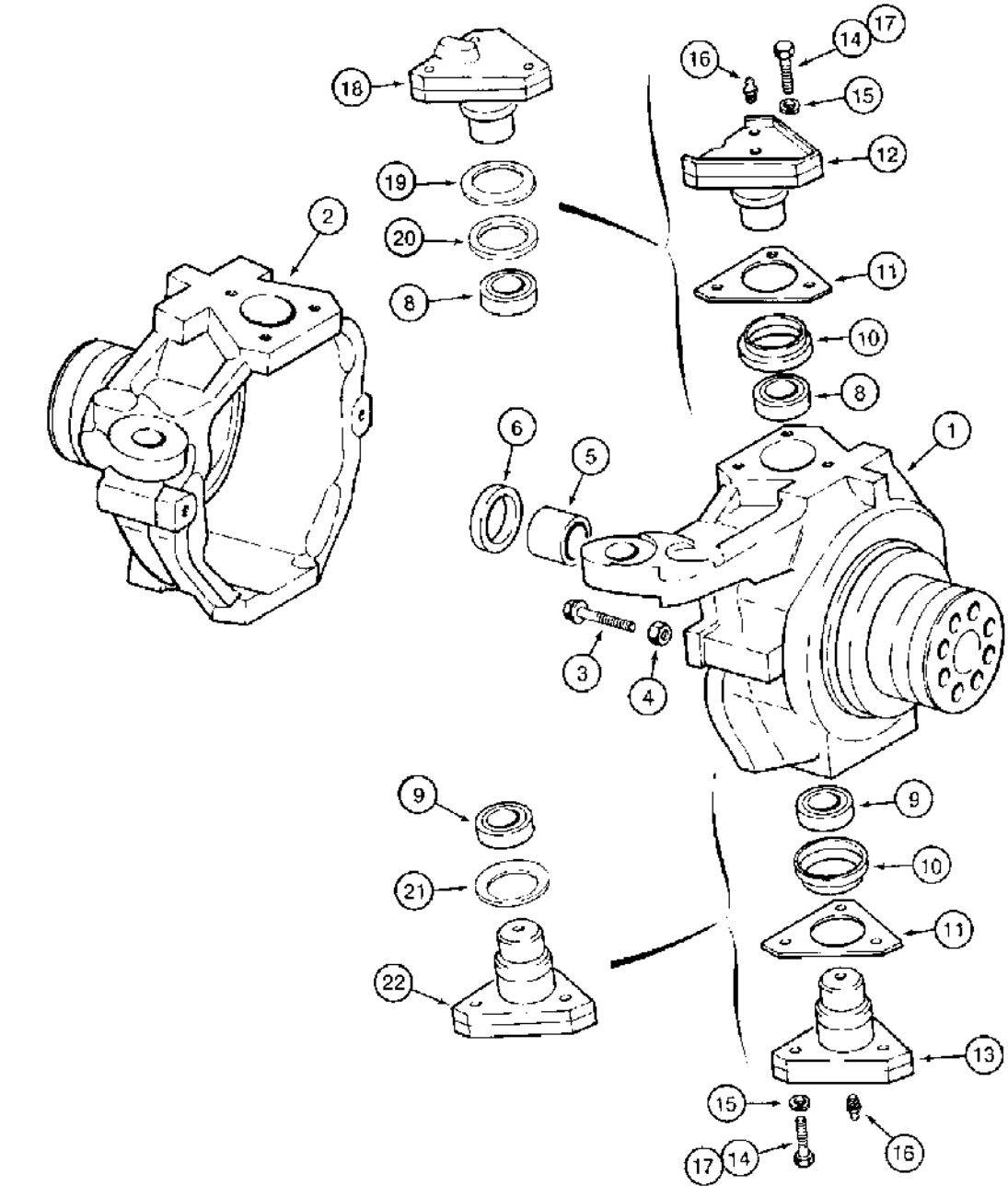

B9016b3 B

(580SK) - CASE SUPER-K CONSTRUCTION KING LOADER BACKHOE > (6-44) - FRONT DRIVE AXLE, SWIVEL HOUSING

Diag #	Part #	Name	Description	Qty
	D146847	AXLE	ASSEMBLY front drive, Carraro No. 126140, parts list Figures 6-42 - 6-58, no longer available, order D149673 axle	1
	D149673	AXLE	ASSEMBLY front drive, Carraro No. 127085, parts list Figures 6-42 - 6-58, does not include hydraulic fittings at steering cylinder, Ref. 4 and 16 on Figure 6-38, purchase separately, if used	1
	127767A1	AXLE	ASSEMBLY front drive, Carraro No. CAV91-767, parts list Figures 6-42 - 6-60, includes hydraulic fittings at steering cylinder, Ref. 4 and 16 on Figure 6-38, replaces 109937A1 axle, if used, Includes: Ref. 1 through 22	1
		108762A1 is a cab frame made up of 108532A1 frame, 151-525 Rivet, and 1990696C2 S/N and model plate. This is part of D104066 complete cab which is no longer available through whole goods. Dealer needs to order the 108762A1 frame and all other primes seperately and build up the cab complete. This frame will fit the 580K-I, 580K-III, and 580 Super K.	108762A1 is a cab frame made up of 108532A1 frame, 151-525 Rivet, and 1990696C2 S/N and model plate. This is part of D104066 complete cab which is no longer available through whole goods. Dealer needs to order the 108762A1 frame and all other primes seperately and build up the cab complete. This frame will fit the 580K-I, 580K-III, and 580 Super K.	1
1	D150204	HOUSING	swivel, right-hand, replaces N14375 housing	1
2	D150203	HOUSING	swivel, left-hand, replaces N14374 housing	1
3	F3333050	SCREW	BOLT, 14 mm, steering stop, special, replaces D142907	4
4	K395148	NUT	hex, 14 mm, special, replaces D142908 nut	4
5	1967535C1	BUSHING	swivel housing, replaces K395033 bushing	2
6	K262143	SEAL	oil, swivel housing	2
8	N14372	BUSHING	BEARING swivel cap, upper	2
		If swivel housing has a two-piece upper bearing, you must order both N14372 upper bearing and N14376 upper king pin.	If swivel housing has a two-piece upper bearing, you must order both N14372 upper bearing and N14376 upper king pin.	1
9	N14373	BUSHING,28mm ID x 52mm OD x 16mm	BEARING swivel cap, lower, two-piece bearing	2
10	K395039	SEAL	bearing	4

Diag #	Part #	Name	Description	Qty
		Used on axles prior to Carraro serial number CAR/4253.	Used on axles prior to Carraro serial number CAR/4253.	1
11	K395036	SHIM,0.10mm Thk	Swivel cap 0.10mm Thk	1
		Used on axles prior to Carraro serial number CAR/4253.	Used on axles prior to Carraro serial number CAR/4253.	1
11	K395037	SHIM,0.19mm Thk	Swivel cap 0.19mm Thk	1
		Used on axles prior to Carraro serial number CAR/4253.	Used on axles prior to Carraro serial number CAR/4253.	1
11	K395038	SHIM,0.35mm Thk	Swivel cap 0.35mm Thk	1
		Used on axles prior to Carraro serial number CAR/4253.	Used on axles prior to Carraro serial number CAR/4253.	1
12	N14376	SPINDLE	PIN king, swivel housing cap, upper	2
		If swivel housing has a two-piece upper bearing, you must order both N14372 upper bearing and N14376 upper king pin.	If swivel housing has a two-piece upper bearing, you must order both N14372 upper bearing and N14376 upper king pin.	1
		Used on axles prior to Carraro serial number CAR/4253.	Used on axles prior to Carraro serial number CAR/4253.	1
13	N13504	PIVOT	PIN king, swivel housing cap, lower	2
		Used on axles prior to Carraro serial number CAR/4253.	Used on axles prior to Carraro serial number CAR/4253.	1
14	K965247	SCREW,M14 x 35mm	BOLT hex head, 14 - 2 x 35 mm, special, used with Ref. 15 lock washer, if used	12
15	K965248	WASHER	lock, 14 mm, special, not required with Ref. 17 bolt, if used	12
16	321204	LUBE NIPPLE,M6 x 1, 16mm lg	NIPPLE, LUBE, , Swivel cap, Replaces K965246 fitting M6 x 1, 16mm lg	4
17	D150214	BOLT,Lock, Hex, M14 x 2 x 35mm, Cl 10.9	BOLT hex, self-locking, 14 - 2 x 35 mm, special, if used	12
18	122260A1	PIVOT	PIN king, swivel housing cap, upper	2
		Used on axles Carraro serial number CAR/4253 and after.	Used on axles Carraro serial number CAR/4253 and after.	1
19	122262A1	BELLEVILLE WASHER	Belleville, upper	2
		Used on axles Carraro serial number CAR/4253 and after.	Used on axles Carraro serial number CAR/4253 and after.	1
20	144611A1	SHIM	SPACER bearing to upper king pin	2
		Used on axles Carraro serial number CAR/4253 and after.	Used on axles Carraro serial number CAR/4253 and after.	1
21	122261A1	BELLEVILLE WASHER	Belleville, lower	2

Diag #	Part #	Name	Description	Qty
		Used on axles Carraro serial number CAR/4253 and after.	Used on axles Carraro serial number CAR/4253 and after.	1
22	122259A1	PIVOT	PIN king, swivel housing cap, lower	2
		Used on axles Carraro serial number CAR/4253 and after.	Used on axles Carraro serial number CAR/4253 and after.	1
	M20704	ADHESIVE	SEALANT, 3 oz, 89 ml, of sealant in a tube, wear ring to swivel housing, not shown, order B17575	1

http://www.minnparbackhoeparts.com/

(580SK) - CASE SUPER-K CONSTRUCTION KING LOADER BACKHOE > (6-46) - FRONT DRIVE AXLE, STEERING CYLINDER

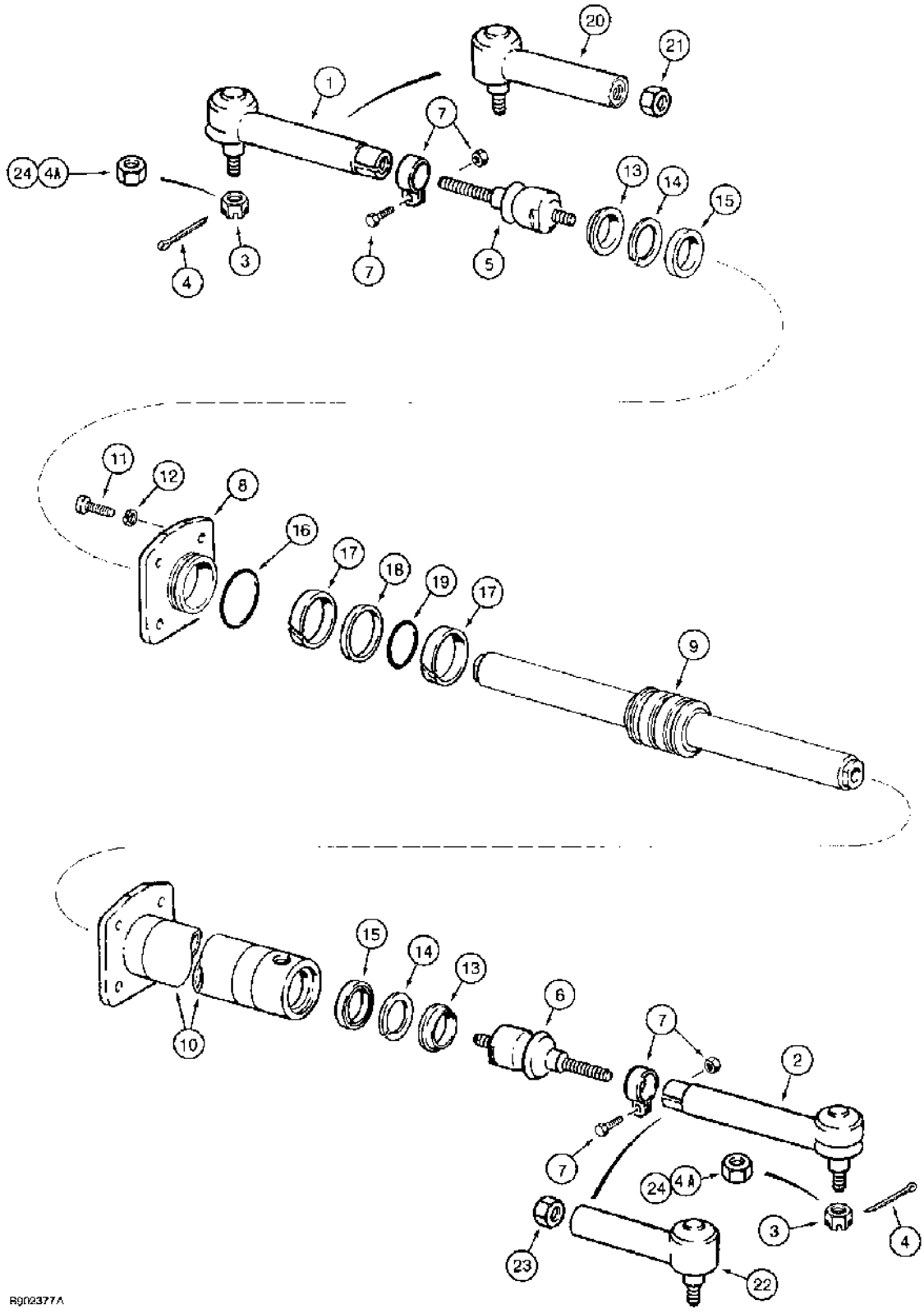

(580SK) - CASE SUPER-K CONSTRUCTION KING LOADER BACKHOE > (6-46) - FRONT DRIVE AXLE, STEERING CYLINDER

Diag #	Part #	Name	Description	Qty
	D146847	AXLE	ASSEMBLY front drive, Carraro No. 126140, parts list Figures 6-42 - 6-58, no longer available, order D149673 axle	1
	D149673	AXLE	ASSEMBLY front drive, Carraro No. 127085, parts list Figures 6-42 - 6-58, does not include hydraulic fittings at steering cylinder, Ref. 4 and 16 on Figure 6-38, purchase separately, if used	1
	127767A1	AXLE	ASSEMBLY front drive, Carraro No. 128732, parts list Figures 6-42 - 6-60, includes hydraulic fittings at steering cylinder, Ref. 4 and 16 on Figure 6-38, replaces 109937A1 axle, if used, Includes: Ref. 1 through 24, P/N D149730 and P/N D149728	1
		108762A1 is a cab frame made up of 108532A1 frame, 151-525 Rivet, and 1990696C2 S/N and model plate. This is part of D104066 complete cab which is no longer available through whole goods. Dealer needs to order the 108762A1 frame and all other primes seperately and build up the cab complete. This frame will fit the 580K-I, 580K-III, and 580 Super K.	108762A1 is a cab frame made up of 108532A1 frame, 151-525 Rivet, and 1990696C2 S/N and model plate. This is part of D104066 complete cab which is no longer available through whole goods. Dealer needs to order the 108762A1 frame and all other primes seperately and build up the cab complete. This frame will fit the 580K-I, 580K-III, and 580 Super K.	1
	D149730	BALL JOINT	JOINT ASSEMBLY ball, left-hand, Includes: Ref. 1, 3 and 4, no longer available, order Ref. 20 ball joint, 21 and 24 nuts	1
	D149728	BALL JOINT	JOINT ASSEMBLY ball, right-hand, Includes: Ref. 2 - 4, no longer longer available, order Ref. 22 ball joint, 23 and 24 nuts, Includes: Ref. 1 through 4A	1
1	NSS	NOT SERVICED SEPARATELY	JOINT ball, left-hand, used with Ref. 7, D142924 clamp	1
2	NSS	NOT SERVICED SEPARATELY	JOINT ball, right-hand, used with Ref. 7, D142924 clamp	1
3	N14380	JAM NUT	hex, slotted, 20 x 1.5 mm, ball joint, if used	1
4	733-4036	COTTER PIN,M4 x 36	PIN cotter, 4 x 36 mm, used with Ref. 3, N14380 nut, replaces 632-656 pin	1
4A	107070A1	LOCK NUT	NUT self-locking, 20 x 1.5 mm, ball joint, if used	1
5	N14388	BALL JOINT	ROD tie, steering, adjuster, left-hand	1

Diag #	Part #	Name	Description	Qty
6	N14377	ARTICULATION	ROD tie, steering, adjuster, right-hand	1
7	D142924	CLAMP	ball joint to tie rod, includes hardware	2
	D149729	STEERING CYLINDER	CYLINDER steering, order D149739 kit to service seals, see below, Includes: Ref. 8, 9 and 10	1
8	D149737	GLAND	cylinder	1
9	D149736	ROD	piston	1
10	D149738	STEERING CYLINDER	TUBE cylinder	1
11	814-12050	BOLT,Hex, M12 x 1.75 x 50mm, Cl 8.8	(Replaces D142929 bolt) Hex, M12 x 50, 8.8	4
12	892-11012	LOCK WASHER,M12	WASHER, LOCK, , Steering Cylinder, Replaces K965425 washer M12	4
13	NSS	NOT SERVICED SEPARATELY	WIPER rod	2
		Part of steering cylinder seal kit P/N D149739.	Part of steering cylinder seal kit P/N D149739.	1
14	NSS	NOT SERVICED SEPARATELY	RING backup	2
		Part of steering cylinder seal kit P/N D149739.	Part of steering cylinder seal kit P/N D149739.	1
15	NSS	NOT SERVICED SEPARATELY	SEAL rod	2
		Part of steering cylinder seal kit P/N D149739.	Part of steering cylinder seal kit P/N D149739.	1
16	NSS	NOT SERVICED SEPARATELY	O-RING gland	1
		Part of steering cylinder seal kit P/N D149739.	Part of steering cylinder seal kit P/N D149739.	1
17	NSS	NOT SERVICED SEPARATELY	RING wear	2
		Part of steering cylinder seal kit P/N D149739.	Part of steering cylinder seal kit P/N D149739.	1
18	NSS	NOT SERVICED SEPARATELY	SEAL piston	1
		Part of steering cylinder seal kit P/N D149739.	Part of steering cylinder seal kit P/N D149739.	1
19	NSS	NOT SERVICED SEPARATELY	O-RING expander	1
		Part of steering cylinder seal kit P/N D149739.	Part of steering cylinder seal kit P/N D149739.	1
20	126144A1	BALL JOINT	JOINT ball, left-hand, used with Ref. 21, 126141A1 nut	1
21	126141A1	NUT	NUT hex, self-locking, used with Ref. 20, 126144A1 ball joint	1
22	126145A1	BALL JOINT	JOINT ball, right-hand, used with Ref. 23, 126143A1 nut	1
22	126145A1GV	JOINT ball, right-hand, used with Ref. 23, 126143A1 nut	TIE-ROD	1

Diag #	Part #	Name	Description	Qty
23	126143A1	NUT	NUT hex, self-locking, used with Ref. 22, 126145A1 ball joint	1
24	107070A1	LOCK NUT	NUT self-locking, 20 x 1.5 mm, ball joint	2
	M20704	ADHESIVE	SEALANT, 3 oz, 89 ml, of sealant in a tube, cylinder flange to cylinder, not shown, order B17575	1
	D149739	SEAL PACKAGE	KIT seal, steering cylinder, for rod, gland, and piston, Includes: Ref. 13 - 19	1

http://www.minnparbackhoeparts.com/

(580SK) - CASE SUPER-K CONSTRUCTION KING LOADER BACKHOE > (6-48) - FRONT DRIVE AXLE, AXLE SHAFTS

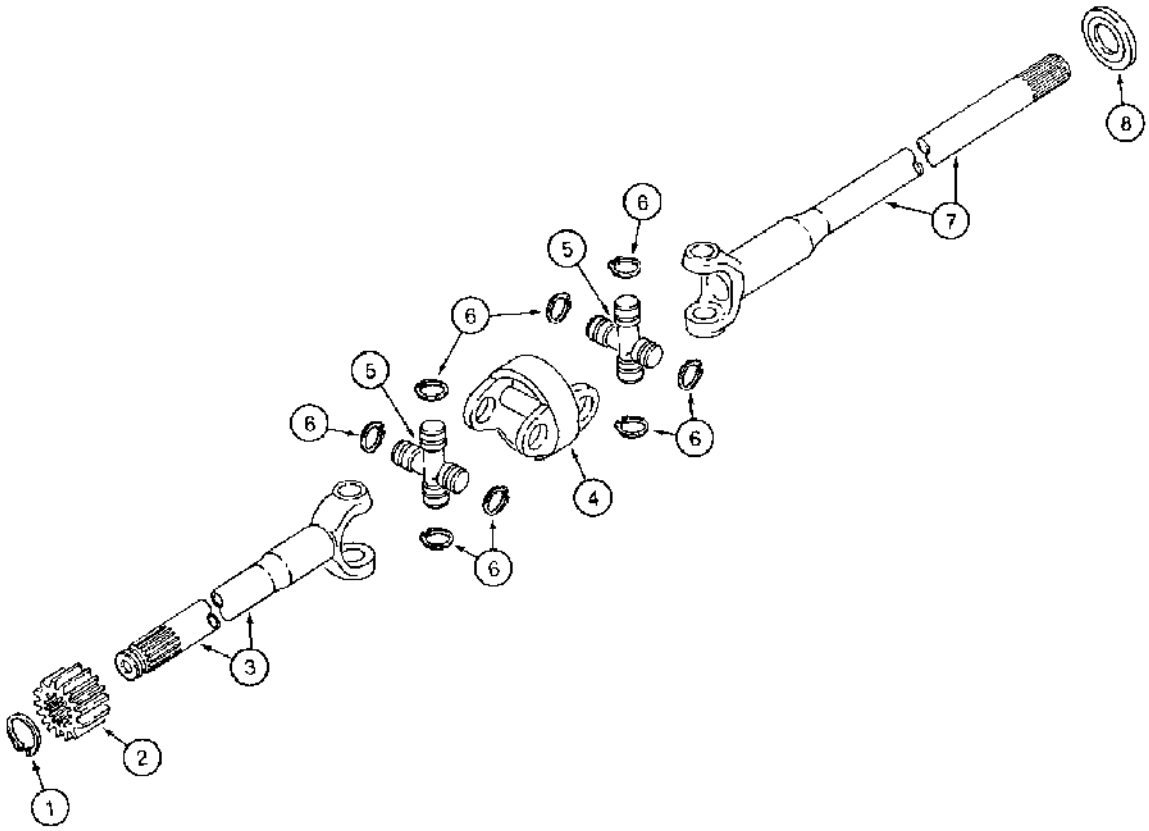

http://www.minnparbackhoeparts.com/

(580SK) - CASE SUPER-K CONSTRUCTION KING LOADER BACKHOE > (6-48) - FRONT DRIVE AXLE, AXLE SHAFTS

Diag #	Part #	Name	Description	Qty
	D146847	AXLE	ASSEMBLY front drive, Carraro No. 126140, parts list Figures 6-42 - 6-58, no longer available, order D149673 axle	1
	D149673	AXLE	ASSEMBLY front drive, Carraro No. 127085, parts list Figures 6-42 - 6-58, does not include hydraulic fittings at steering cylinder, items 4 and 16 on Figure 6-38, purchase separately, if used	1
	127767A1	AXLE	ASSEMBLY front drive, Carraro No. CAV91-767, parts list Figures 6-42 - 6-60, includes hydraulic fittings at steering cylinder, Ref. 4 and 16 on Figure 6-38, replaces 109937A1 axle, if used, Includes: Ref. 1 through 8	1
		108762A1 is a cab frame made up of 108532A1 frame, 151-525 Rivet, and 1990696C2 S/N and model plate. This is part of D104066 complete cab which is no longer available through whole goods. Dealer needs to order the 108762A1 frame and all other primes seperately and build up the cab complete. This frame will fit the 580K-I, 580K-III, and 580 Super K.	108762A1 is a cab frame made up of 108532A1 frame, 151-525 Rivet, and 1990696C2 S/N and model plate. This is part of D104066 complete cab which is no longer available through whole goods. Dealer needs to order the 108762A1 frame and all other primes seperately and build up the cab complete. This frame will fit the 580K-I, 580K-III, and 580 Super K.	1
1	K261897	RING, SNAP	RING snap, axle shaft	2
2	K395114	GEAR	pinion, axle shaft	2
3	N14409	SHAFT	axle, wheel side, short	2
4	N14412	BODY	connecting	2
5	N14411	U-JOINT SPIDER	JOINT universal, axle shaft, cross	4
6	N14410	RING	snap, universal joint	16
7	D149735	SHAFT	axle, differential side, long	2
8	1966164C1	OIL SEAL	SEAL oil, axle shaft, replaces K395103	2

http://www.minnparbackhoeparts.com/

(580SK) - CASE SUPER-K CONSTRUCTION KING LOADER BACKHOE > (6-50) - FRONT DRIVE AXLE, PLANETARY

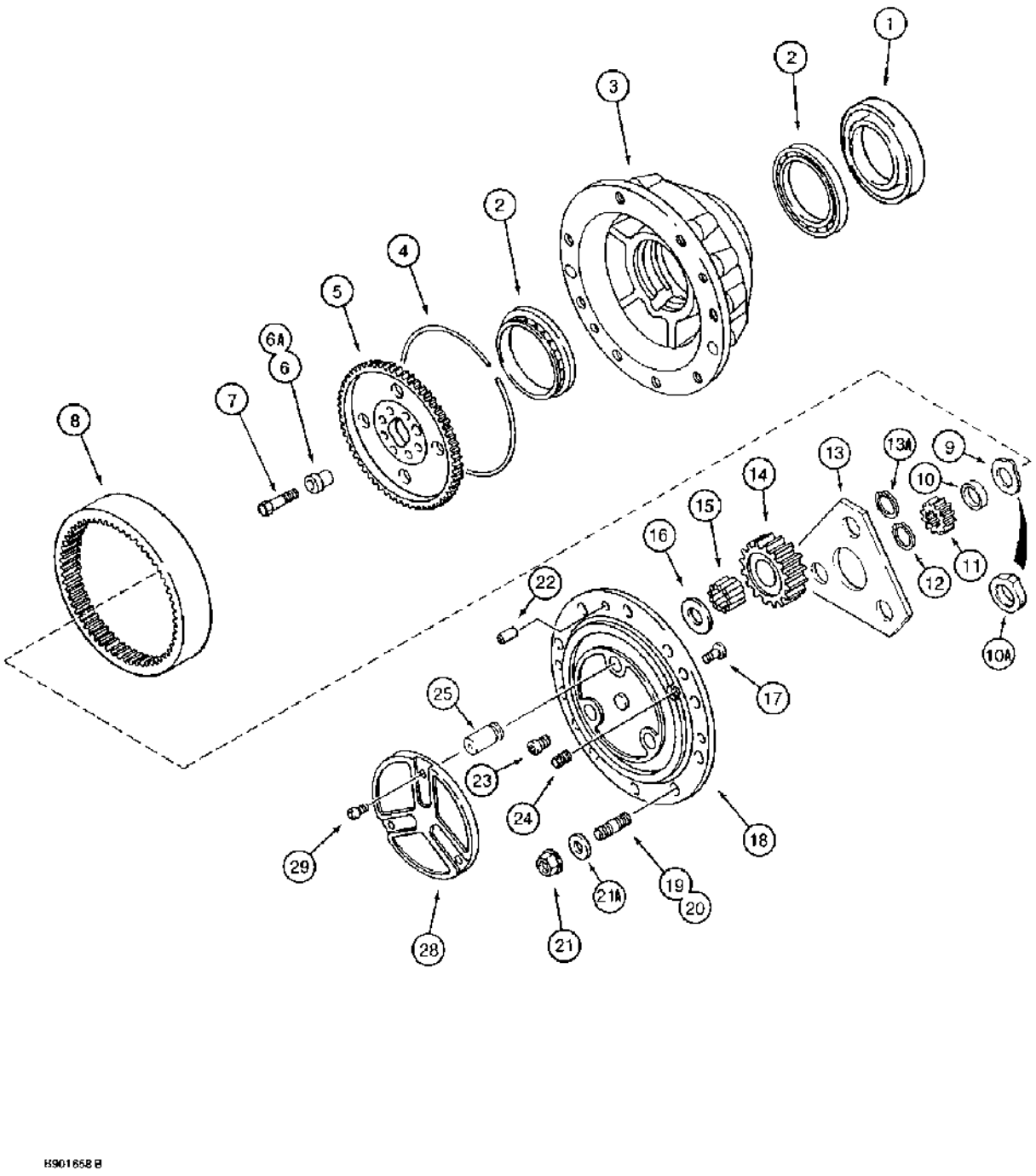

B901658 B

http://www.minnparbackhoeparts.com/

(580SK) - CASE SUPER-K CONSTRUCTION KING LOADER BACKHOE > (6-50) - FRONT DRIVE AXLE, PLANETARY

Diag #	Part #	Name	Description	Qty
	D146847	AXLE	ASSEMBLY front drive, Carraro No. 126140, parts list Figures 6-42 - 6-58, no longer available, order D149673 axle, see Figure 6-52 for axle, Includes: Ref. 1 through 29	1
		See Figure 6-52 for planetary used on D149673, 109937A1 or 127767A1 axle assembly.	See Figure 6-52 for planetary used on D149673, 109937A1 or 127767A1 axle assembly.	1
1	1349265C1	OIL SEAL	oil, hub, 149 x 176 x 16	2
2	K395101	TAPERED ROLLER BEARING	BEARING ball, hub	4
3	K395123	HUB	wheel attaching	2
4	H437679	RING, SNAP	RING lock	2
5	H437678	RING, FLYWHEEL	HUB ring gear	2
6	107071A1	BUSHING	- Centering, 20 mm OD, Replaces K395105)	6
6A	107072A1	CENTERING RING	BUSHING, 24 mm OD, centering, replaces K395104 bushing	2
7	K395131	SCREW,Hex, M14 x 65, Cl 10.9	BOLT, , Special Hex, M14 x 65, Cl 10.9	8
8	H437677	GEAR, RING	GEAR ring, planetary	2
9	K395115	WASHER	tab locking, special, used with Ref. 10 spacer, if used	2
10	K395121	SPACER	pinion gear, used with Ref. 9 washer, no longer available, order 107073A1	2
10A	107073A1	WASHER	SPACER pinion gear, one piece part, replaces Ref. 9 and 10 on some models	2
11	K395114	GEAR	pinion, axle shaft	2
12	K261897	RING, SNAP	RING snap, pinion gear retaining	2
13	K395122	PLATE	WASHER thrust, pinion gear, inner	2
13A	K395028	RING, SNAP	RING snap	6
14	K395110	GEAR	pinion, planetary	6
15	119685A1	10 NEEDLE BRG KIT	BEARING needle, planetary gear, replaces K395092	180
		Package quantity 1 contains 10 bearings	Package quantity 1 contains 10 bearings	1
16	K395091	THRUST WASHER	WASHER, THRUST, Pinion gear, Outer	6
17	K395093	HEADED PIN	PIN lock, planetary cover	2
18	K395111	PINION CARRIER	COVER planetary, no longer available, order K262251 and N13515, Ref. 18A and 20	2

Diag #	Part #	Name	Description	Qty
18A	K262251	PINION CARRIER	COVER planetary, not shown	2
19	K260218	STUD	special, without collar	12
20	N13515	STUD	special, with collar, for recessed bolt holes	4
21	K395089	WHEEL NUT	hex, special, wheel mounting	16
21A	K395083	WASHER	lock, special, wheel mounting	16
22	K395094	DOWEL,M18 x 36	Pin, Planetary cover M18 x 36	4
23	K395029	SCREW	special, planetary cover	4
24	A156873	PLUG, DRAIN,M22 x 1.5	PLUG, DRAIN,M22 x 1.5	2
25	K395124	SHAFT	pinion gear	6
28	K395135	COVER	PLATE planetary cover	2
		SEE ECN H93SR54. EFFECTIVE WITH AXLE SERIAL NUMBERS WA1368 AND WP1368, CARRARO REMOVED COVER AND SCREWS FROM PLANETARY'S AND REPLACED THE SCREWS WITH PLUGS. THE NEW PLUGS CAN BE USED PRIOR TO THESE AXLE S/N BREAKS. PLUG IS 138866A1 SIX PER. ALSO EFF. WITH AXLE S/N WA1219 AND WP1218, THE COMBINATION OF 2 892-11006 6 mm LOCKWASHERS AND 2 614-6012 BOLTS, NOT SHOWN, WERE REPLACED BY 2 PCS OF 112486A1 SELF-LOCKING BOLT. ALL OLD PARTS ARE RETAINED FOR SERVICE FOR MACHINES WITH AXLES BUILT PRIOR TO THE ABOVE S/N BREAKS.	SEE ECN H93SR54. EFFECTIVE WITH AXLE SERIAL NUMBERS WA1368 AND WP1368, CARRARO REMOVED COVER AND SCREWS FROM PLANETARY'S AND REPLACED THE SCREWS WITH PLUGS. THE NEW PLUGS CAN BE USED PRIOR TO THESE AXLE S/N BREAKS. PLUG IS 138866A1 SIX PER. ALSO EFF. WITH AXLE S/N WA1219 AND WP1218, THE COMBINATION OF 2 892-11006 6 mm LOCKWASHERS AND 2 614-6012 BOLTS, NOT SHOWN, WERE REPLACED BY 2 PCS OF 112486A1 SELF-LOCKING BOLT. ALL OLD PARTS ARE RETAINED FOR SERVICE FOR MACHINES WITH AXLES BUILT PRIOR TO THE ABOVE S/N BREAKS.	1
29	905876R1	SCREW,Flat Hd, CSK, M8 x 20mm, Cl 10.9	Special, Planetary cover plate, Replaces K395082 screw Hex Soc Flat Hd, M8 x 20, 10.9	6
		SEE ECN H93SR54. EFFECTIVE WITH AXLE SERIAL NUMBERS WA1368 AND WP1368, CARRARO REMOVED COVER AND SCREWS FROM PLANETARY'S AND REPLACED THE SCREWS WITH PLUGS. THE NEW PLUGS CAN BE USED PRIOR TO THESE AXLE S/N BREAKS. PLUG IS	SEE ECN H93SR54. EFFECTIVE WITH AXLE SERIAL NUMBERS WA1368 AND WP1368, CARRARO REMOVED COVER AND SCREWS FROM PLANETARY'S AND REPLACED THE SCREWS WITH PLUGS. THE NEW PLUGS CAN BE USED PRIOR TO THESE AXLE S/N BREAKS. PLUG IS 138866A1 SIX PER. ALSO EFF. WITH AXLE S/N WA1219 AND WP1218, THE COMBINATION OF 2 892-11006 6 mm LOCKWASHERS AND 2 614-6012 BOLTS, NOT SHOWN, WERE REPLACED BY 2	1

Diag #	Part #	Name	Description	Qty
		138866A1 SIX PER. ALSO EFF. WITH AXLE S/N WA1219 AND WP1218, THE COMBINATION OF 2 892-11006 6 mm LOCKWASHERS AND 2 614-6012 BOLTS, NOT SHOWN, WERE REPLACED BY 2 PCS OF 112486A1 SELF-LOCKING BOLT. ALL OLD PARTS ARE RETAINED FOR SERVICE FOR MACHINES WITH AXLES BUILT PRIOR TO THE ABOVE S/N BREAKS.	PCS OF 112486A1 SELF-LOCKING BOLT. ALL OLD PARTS ARE RETAINED FOR SERVICE FOR MACHINES WITH AXLES BUILT PRIOR TO THE ABOVE S/N BREAKS.	
		In later pin units for Ref. 29 instead of a screw, there is a rubber plug part no. 138866a1.	In later pin units for Ref. 29 instead of a screw, there is a rubber plug part no. 138866a1.	1
	M20704	ADHESIVE	SEALANT, 3 oz, 89 ml, of sealant in a tube, planetary cover to hub, not shown, order B17575	1

http://www.minnparbackhoeparts.com/

(580SK) - CASE SUPER-K CONSTRUCTION KING LOADER BACKHOE > (6-52) - FRONT DRIVE AXLE, PLANETARY

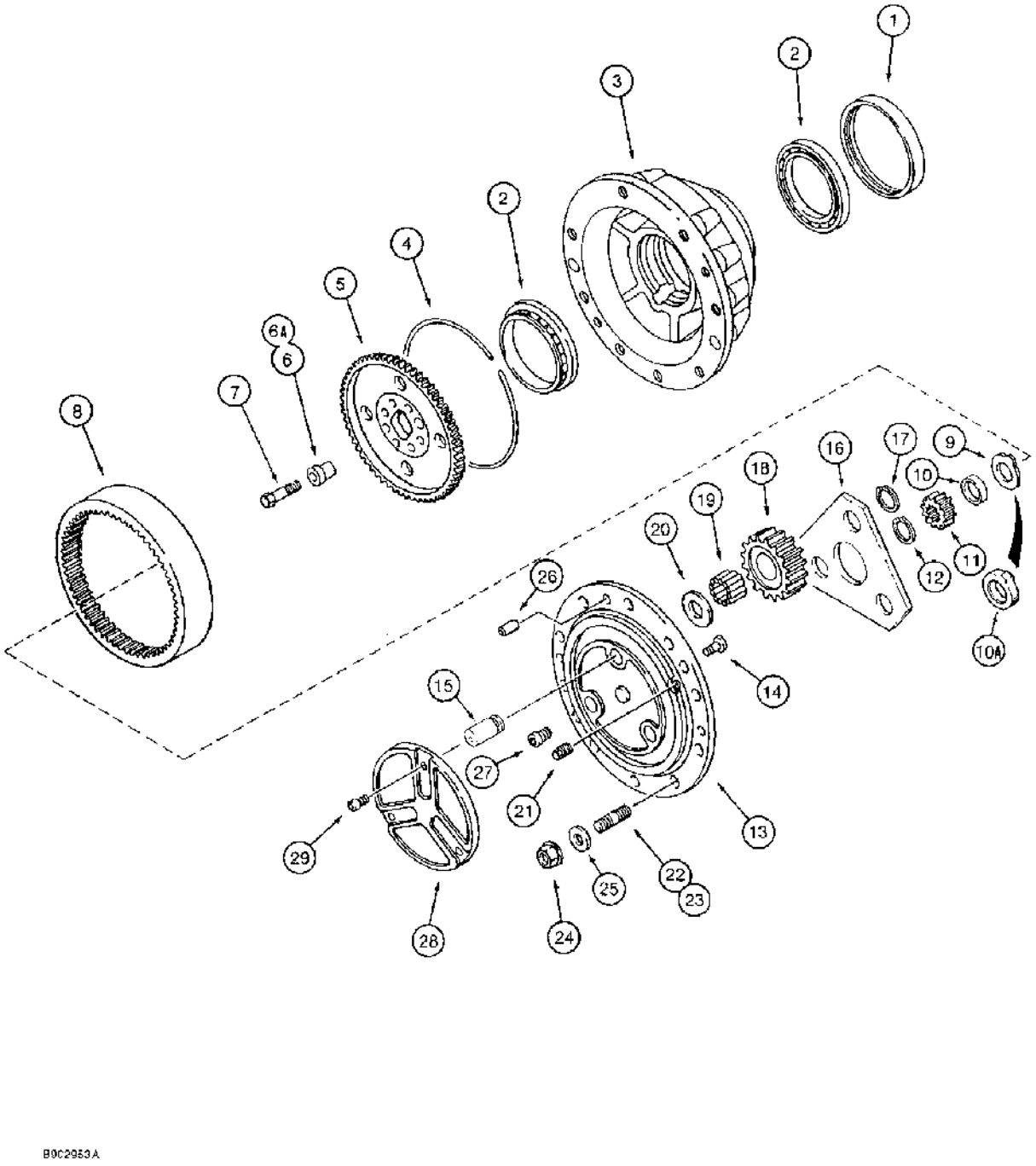

(580SK) - CASE SUPER-K CONSTRUCTION KING LOADER BACKHOE > (6-52) - FRONT DRIVE AXLE, PLANETARY

Diag #	Part #	Name	Description	Qty
	D149673	AXLE	ASSEMBLY front drive, Carraro No. 127085, parts list Figures 6-42 - 6-58, does not include hydraulic fittings at steering cylinder, Ref. 4 and 16 on Figure 6-38, purchase separately, if used	1
		See Figure 6-50 for planetary used on D146847 axle assembly.	See Figure 6-50 for planetary used on D146847 axle assembly.	1
	127767A1	AXLE	ASSEMBLY front drive, Carraro No. CAV91-767, parts list Figures 6-42 - 6-60, includes hydraulic fittings at steering cylinder, Ref. 4 and 16 on Figure 6-38, replaces 109937A1 axle, if used, Includes: Ref. 1 through 29	1
		See Figure 6-50 for planetary used on D146847 axle assembly.	See Figure 6-50 for planetary used on D146847 axle assembly.	1
		108762A1 is a cab frame made up of 108532A1 frame, 151-525 Rivet, and 1990696C2 S/N and model plate. This is part of D104066 complete cab which is no longer available through whole goods. Dealer needs to order the 108762A1 frame and all other primes seperately and build up the cab complete. This frame will fit the 580K-I, 580K-III, and 580 Super K.	108762A1 is a cab frame made up of 108532A1 frame, 151-525 Rivet, and 1990696C2 S/N and model plate. This is part of D104066 complete cab which is no longer available through whole goods. Dealer needs to order the 108762A1 frame and all other primes seperately and build up the cab complete. This frame will fit the 580K-I, 580K-III, and 580 Super K.	1
1	1349265C1	OIL SEAL	oil, hub, 149 x 176 x 16, replaces D149680 seal	2
2	K395101	TAPERED ROLLER BEARING	BEARING ball, hub	4
3	K395123	HUB	wheel attaching	2
4	H437679	RING, SNAP	RING lock	2
5	H437678	RING, FLYWHEEL	HUB ring gear	2
6	107071A1	BUSHING	- Centering, 20 mm OD, Replaces K395105)	6
6A	107072A1	CENTERING RING	BUSHING, 24 mm OD, centering, replaces K395104 bushing	2
7	K395131	SCREW,Hex, M14 x 65, Cl 10.9	BOLT, , Special Hex, M14 x 65, Cl 10.9	8
8	H437677	GEAR, RING	GEAR ring, planetary	2

Diag #	Part #	Name	Description	Qty
9	K395115	WASHER	tab locking, special, used with Ref. 10 spacer, if used	2
10	K395121	SPACER	pinion gear, used with Ref. 9 washer, no longer available, order 107073A1	2
10A	107073A1	WASHER	SPACER pinion gear, one piece, replaces Ref. 9 and 10 on some models	2
11	K395114	GEAR	pinion, axle shaft	2
12	K261897	RING, SNAP	RING snap, pinion gear retaining	2
	D150218	PLANETARY REDUCER	PLANETARY ASSEMBLY front drive axle, no longer available, order component parts separately, Includes: Ref. 13 through 21 and P/N D150217	2
	D150217	PINION CARRIER	CARRIER ASSEMBLY planetary, Includes: Ref. 13, 14 and 15	2
13	NSS	NOT SERVICED SEPARATELY	CARRIER planetary	1
14	K395093	HEADED PIN	PIN lock, planetary carrier	2
15	K395124	SHAFT	pinion gear	3
		Package quantity 1 contains 10 bearings	Package quantity 1 contains 10 bearings	1
16	K395122	PLATE	WASHER thrust, pinion gear, inner	1
17	K395028	RING, SNAP	RING snap	3
18	K395110	GEAR	pinion, planetary	3
19	119685A1	10 NEEDLE BRG KIT	BEARING needle, planetary gear, replaces K395092	90
		Package quantity 1 contains 10 bearings	Package quantity 1 contains 10 bearings	1
20	K395091	THRUST WASHER	WASHER, THRUST, Pinion gear, Outer	3
21	A156873	PLUG, DRAIN,M22 x 1.5	PLUG, DRAIN,M22 x 1.5	2
22	K260218	STUD	special, without collar	12
23	N13515	STUD	special, with collar, for recessed bolt holes	4
24	K395089	WHEEL NUT	hex, special, wheel mounting	16
25	K395083	WASHER	lock, special, wheel mounting	16
25	496-81000	WASHER,25/32" x 1 3/8" x .134", HDN	flat, 25/32 x 1-3/8 x 1/8 inch, hardened, wheel mounting, replaces K395083 washer	16
26	K395094	DOWEL,M18 x 36	Pin, Planetary cover M18 x 36	4
27	K395029	SCREW	special, planetary cover	4
28	K395135	COVER	PLATE planetary cover	2
		SEE ECN H93SR54. EFFECTIVE WITH AXLE SERIAL NUMBERS WA1368 AND WP1368, CARRARO REMOVED COVER AND SCREWS FROM PLANETARY'S AND REPLACED THE SCREWS WITH PLUGS. THE NEW PLUGS CAN BE USED	SEE ECN H93SR54. EFFECTIVE WITH AXLE SERIAL NUMBERS WA1368 AND WP1368, CARRARO REMOVED COVER AND SCREWS FROM PLANETARY'S AND REPLACED THE SCREWS WITH PLUGS. THE NEW PLUGS CAN BE USED PRIOR TO THESE AXLE S/N BREAKS. PLUG IS 138866A1 SIX PER. ALSO EFF. WITH AXLE S/N WA1219 AND WP1218, THE COMBINATION OF 2 892-11006 6 mm	1

Diag #	Part #	Name	Description	Qty
		PRIOR TO THESE AXLE S/N BREAKS. PLUG IS 138866A1 SIX PER. ALSO EFF. WITH AXLE S/N WA1219 AND WP1218, THE COMBINATION OF 2 892-11006 6 mm LOCKWASHERS AND 2 614-6012 BOLTS, NOT SHOWN, WERE REPLACED BY 2 PCS OF 112486A1 SELF-LOCKING BOLT. ALL OLD PARTS ARE RETAINED FOR SERVICE FOR MACHINES WITH AXLES BUILT PRIOR TO THE ABOVE S/N BREAKS.	LOCKWASHERS AND 2 614-6012 BOLTS, NOT SHOWN, WERE REPLACED BY 2 PCS OF 112486A1 SELF-LOCKING BOLT. ALL OLD PARTS ARE RETAINED FOR SERVICE FOR MACHINES WITH AXLES BUILT PRIOR TO THE ABOVE S/N BREAKS.	
		Ref. #28 & 29 may not be on some units. Plug #138866A1 may be used to plug the screw hole	Ref. #28 & 29 may not be on some units. Plug #138866A1 may be used to plug the screw hole	1
29	905876R1	SCREW,Flat Hd, CSK, M8 x 20mm, Cl 10.9	Special, Planetary cover plate, Replaces K395082 screw Hex Soc Flat Hd, M8 x 20, 10.9	6
	M20704	ADHESIVE	SEALANT, 3 oz, 89 ml, of sealant in a tube, planetary cover to hub, not shown, order B17575	1
		SEE ECN H93SR54. EFFECTIVE WITH AXLE SERIAL NUMBERS WA1368 AND WP1368, CARRARO REMOVED COVER AND SCREWS FROM PLANETARY'S AND REPLACED THE SCREWS WITH PLUGS. THE NEW PLUGS CAN BE USED PRIOR TO THESE AXLE S/N BREAKS. PLUG IS 138866A1 SIX PER. ALSO EFF. WITH AXLE S/N WA1219 AND WP1218, THE COMBINATION OF 2 892-11006 6 mm LOCKWASHERS AND 2 614-6012 BOLTS, NOT SHOWN, WERE REPLACED BY 2 PCS OF 112486A1 SELF-LOCKING BOLT. ALL OLD PARTS ARE RETAINED FOR SERVICE FOR MACHINES WITH AXLES BUILT PRIOR	SEE ECN H93SR54. EFFECTIVE WITH AXLE SERIAL NUMBERS WA1368 AND WP1368, CARRARO REMOVED COVER AND SCREWS FROM PLANETARY'S AND REPLACED THE SCREWS WITH PLUGS. THE NEW PLUGS CAN BE USED PRIOR TO THESE AXLE S/N BREAKS. PLUG IS 138866A1 SIX PER. ALSO EFF. WITH AXLE S/N WA1219 AND WP1218, THE COMBINATION OF 2 892-11006 6 mm LOCKWASHERS AND 2 614-6012 BOLTS, NOT SHOWN, WERE REPLACED BY 2 PCS OF 112486A1 SELF-LOCKING BOLT. ALL OLD PARTS ARE RETAINED FOR SERVICE FOR MACHINES WITH AXLES BUILT PRIOR TO THE ABOVE S/N BREAKS.	1

Diag #	Part #	Name	Description	Qty
		TO THE ABOVE S/N BREAKS.		
		Ref. #28 & 29 may not be on some units. Plug #138866A1 may be used to plug the screw hole	Ref. #28 & 29 may not be on some units. Plug #138866A1 may be used to plug the screw hole	1

http://www.minnparbackhoeparts.com/

(580SK) - CASE SUPER-K CONSTRUCTION KING LOADER BACKHOE > (6-54) - FRONT DRIVE AXLE, DIFFERENTIAL

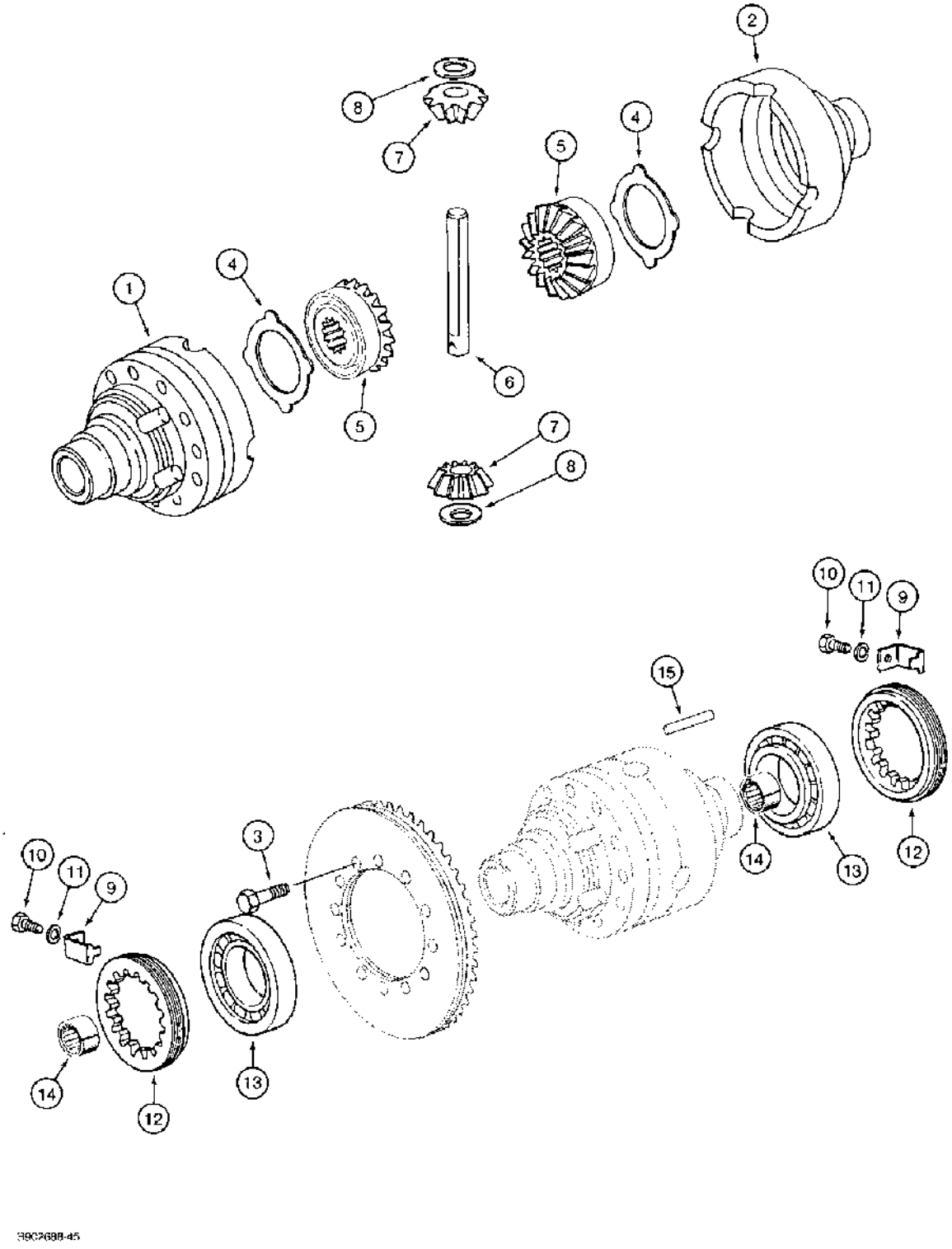

http://www.minnparbackhoeparts.com/

(580SK) - CASE SUPER-K CONSTRUCTION KING LOADER BACKHOE > (6-54) - FRONT DRIVE AXLE, DIFFERENTIAL

Diag #	Part #	Name	Description	Qty
	D146847	AXLE	ASSEMBLY front drive, Carraro No. 126140, parts list Figures 6-42 - 6-58, no longer available, order D149673 axle, see Figure 6-42 for axles, Includes: Ref. 1 through 15 and P/N 109686A1	1
		See Figure 6-56 for differential used on D149673, 109937A1 or 127767A1 axle.	See Figure 6-56 for differential used on D149673, 109937A1 or 127767A1 axle.	1
	109686A1	HOUSING ASSY.	HOUSING ASSEMBLY differential, replaces 1349056C1 housing, Includes: Ref. 1 and 2	1
1	NSS	NOT SERVICED SEPARATELY	HOUSING differential, flange half	1
2	NSS	NOT SERVICED SEPARATELY	HOUSING differential, plain half	1
3	827-10075	BOLT,Hex, M10 x 1.5 x 75mm, Cl 10.9	- hex, 10 - 1.5 x 75 mm, class 10.9	12
4	1967003C1	THRUST WASHER	WASHER thrust, differential housing, replaces N13618 washer	2
5	N14407	GEAR	side, differential	2
6	K395087	SHAFT	- Pinion gear	1
7	N14408	SUN GEAR	GEAR pinion, differential	2
8	K395075	THRUST WASHER	WASHER, THRUST, Pinion gear	2
9	K261869	LOCK	BRACKET lock	2
10	614-6012	BOLT,Hex, M6 x 1 x 12mm, Cl 8.8, Full Thd	Replaces K261871 bolt Hex, M6 x 12, 8.8	2
11	892-11006	LOCK WASHER,M6	WASHER, LOCK, , Replaces K261870 Washer M6	2
12	1966559C1	NUT	RING, LOCKING, Replaces K261868 ring	2
13	K395027	TAPERED ROLLER BEARING	BEARING, ROLLER, TAPERED, Differential	2
14	1967625C1	BUSHING	housing	2
15	K395086	PIN	dowel	1
	M20704	ADHESIVE	SEALANT, 3 oz, 89 ml, of sealant in a tube, bolt to differental housing, not shown, order B17575	1

http://www.minnparbackhoeparts.com/

(580SK) - CASE SUPER-K CONSTRUCTION KING LOADER BACKHOE > (6-56) - FRONT DRIVE AXLE, DIFFERENTIAL

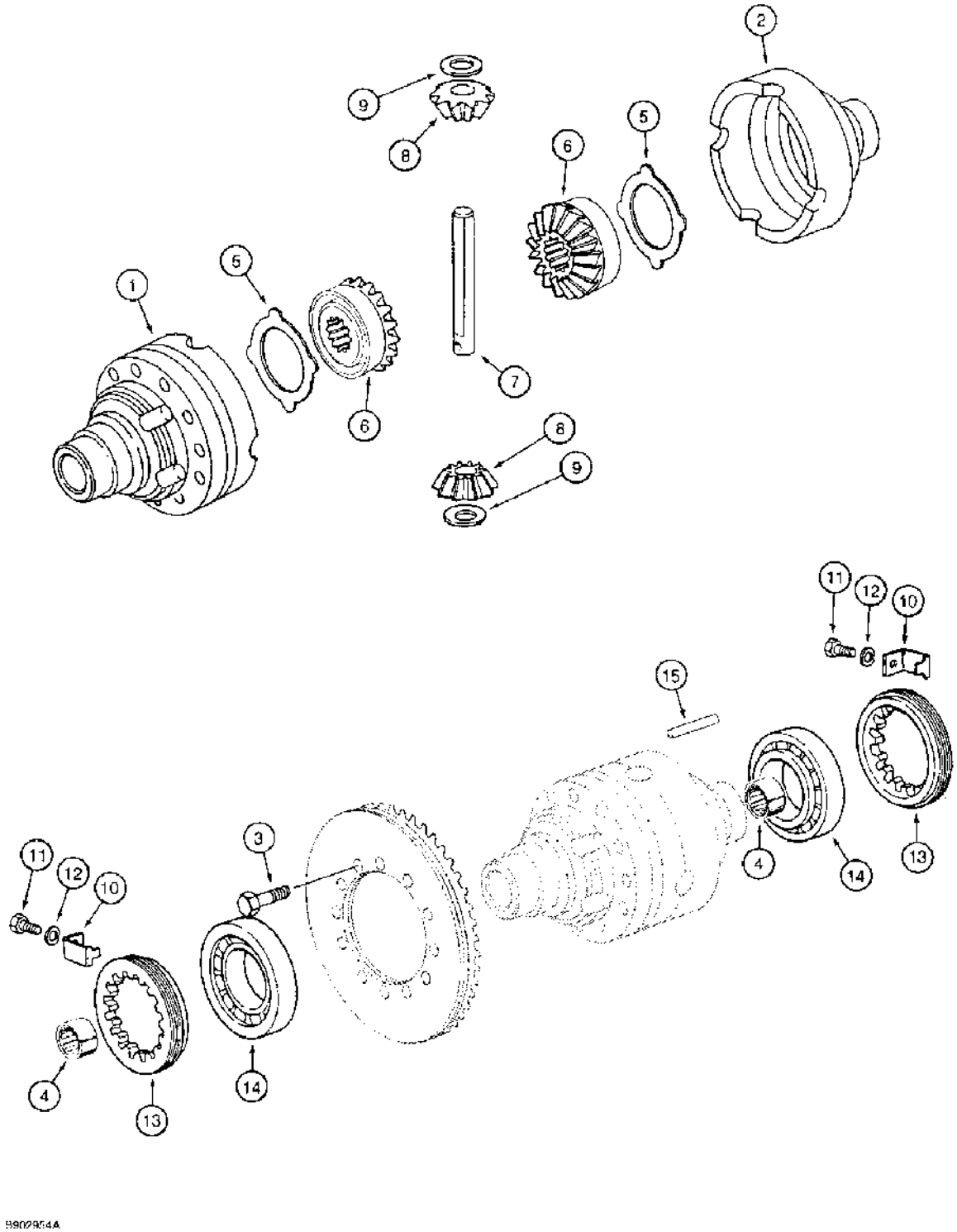

http://www.minnparbackhoeparts.com/

(580SK) - CASE SUPER-K CONSTRUCTION KING LOADER BACKHOE > (6-56) - FRONT DRIVE AXLE, DIFFERENTIAL

Diag #	Part #	Name	Description	Qty
	D149673	AXLE	ASSEMBLY front drive, Carraro No. 127085, parts list Figures 6-42 - 6-60, does not include hydraulic fittings at steering cylinder, Ref. 4 and 16 on Figure 6-38, purchase separately, if used	1
		See Figure 6-54 for differential used on D146847 axle.	See Figure 6-54 for differential used on D146847 axle.	1
		Carraro No. 127085, parts list Figures 6-42 - 6-60, does not include hydraulic fittings at steering cylinder, Ref. 4 and 16 on Figure 6-38, purchase separately, if used	Carraro No. 127085, parts list Figures 6-42 - 6-60, does not include hydraulic fittings at steering cylinder, Ref. 4 and 16 on Figure 6-38, purchase separately, if used	1
	127767A1	AXLE	ASSEMBLY front drive	1
		See Figure 6-54 for differential used on D146847 axle.	See Figure 6-54 for differential used on D146847 axle.	1
		108762A1 is a cab frame made up of 108532A1 frame, 151-525 Rivet, and 1990696C2 S/N and model plate. This is part of D104066 complete cab which is no longer available through whole goods. Dealer needs to order the 108762A1 frame and all other primes seperately and build up the cab complete. This frame will fit the 580K-I, 580K-III, and 580 Super K.	108762A1 is a cab frame made up of 108532A1 frame, 151-525 Rivet, and 1990696C2 S/N and model plate. This is part of D104066 complete cab which is no longer available through whole goods. Dealer needs to order the 108762A1 frame and all other primes seperately and build up the cab complete. This frame will fit the 580K-I, 580K-III, and 580 Super K.	1
		Carraro No. CAV91-767, parts list Figures 6-42 - 6-60, includes hydraulic fittings at steering cylinder, Ref. 4 and 16 on Figure 6-38, replaces 109937A1 axle, if used, Includes: Ref. 1 through 15, P/N D150216, P/N 150215 and P/N 109686A1	Carraro No. CAV91-767, parts list Figures 6-42 - 6-60, includes hydraulic fittings at steering cylinder, Ref. 4 and 16 on Figure 6-38, replaces 109937A1 axle, if used, Includes: Ref. 1 through 15, P/N D150216, P/N 150215 and P/N 109686A1	1
	D150216		DIFFERENTIAL ASSEMBLY - front drive axle, also includes Ref. 7-9 on Figure 6-42 and Ref. 1-11 on Figure 6-60, Includes: Ref. 1 through 15, P/N 150215 and 109686A1	1

Diag #	Part #	Name	Description	Qty
	D150215	HOUSING ASSY.	HOUSING ASSEMBLY differential, with bushings, no longer available, order 109686A1 housing	1
	109686A1	HOUSING ASSY.	HOUSING ASSEMBLY differential, without bushings, Ref. 4 bushing not used with this assembly, Includes: Ref. 1 through 4	1
1	NSS	NOT SERVICED SEPARATELY	HOUSING differential, flange half	1
2	NSS	NOT SERVICED SEPARATELY	HOUSING differential, plain half	1
3	827-10075	BOLT,Hex, M10 x 1.5 x 75mm, Cl 10.9	- hex, 10 - 1.5 x 75 mm, class 10.9	12
4	1967625C1	BUSHING	D150215 housing	2
5	1967003C1	THRUST WASHER	WASHER thrust, differential housing, replaces N13618 washer	2
6	N14407	GEAR	side, differential	2
7	K395087	SHAFT	- Pinion gear	1
8	N14408	SUN GEAR	GEAR pinion, differential	2
9	K395075	THRUST WASHER	WASHER, THRUST, Pinion gear	2
10	K261869	LOCK	BRACKET lock	2
11	614-6012	BOLT,Hex, M6 x 1 x 12mm, Cl 8.8, Full Thd	Replaces K261871 bolt Hex, M6 x 12, 8.8	2
12	892-11006	LOCK WASHER,M6	WASHER, LOCK, , Replaces K261870 Washer M6	2
13	1966559C1	NUT	RING, LOCKING, Replaces K261868 ring	2
14	K395027	TAPERED ROLLER BEARING	BEARING, ROLLER, TAPERED, Differential	2
15	K395086	PIN	dowel	1
	M20704	ADHESIVE	SEALANT, 3 oz, 89 ml, of sealant in a tube, bolt to differental housing, not shown, order B17575	1

http://www.minnparbackhoeparts.com/

(580SK) - CASE SUPER-K CONSTRUCTION KING LOADER BACKHOE > (6-58) - FRONT DRIVE AXLE, RING AND PINION GEAR SET

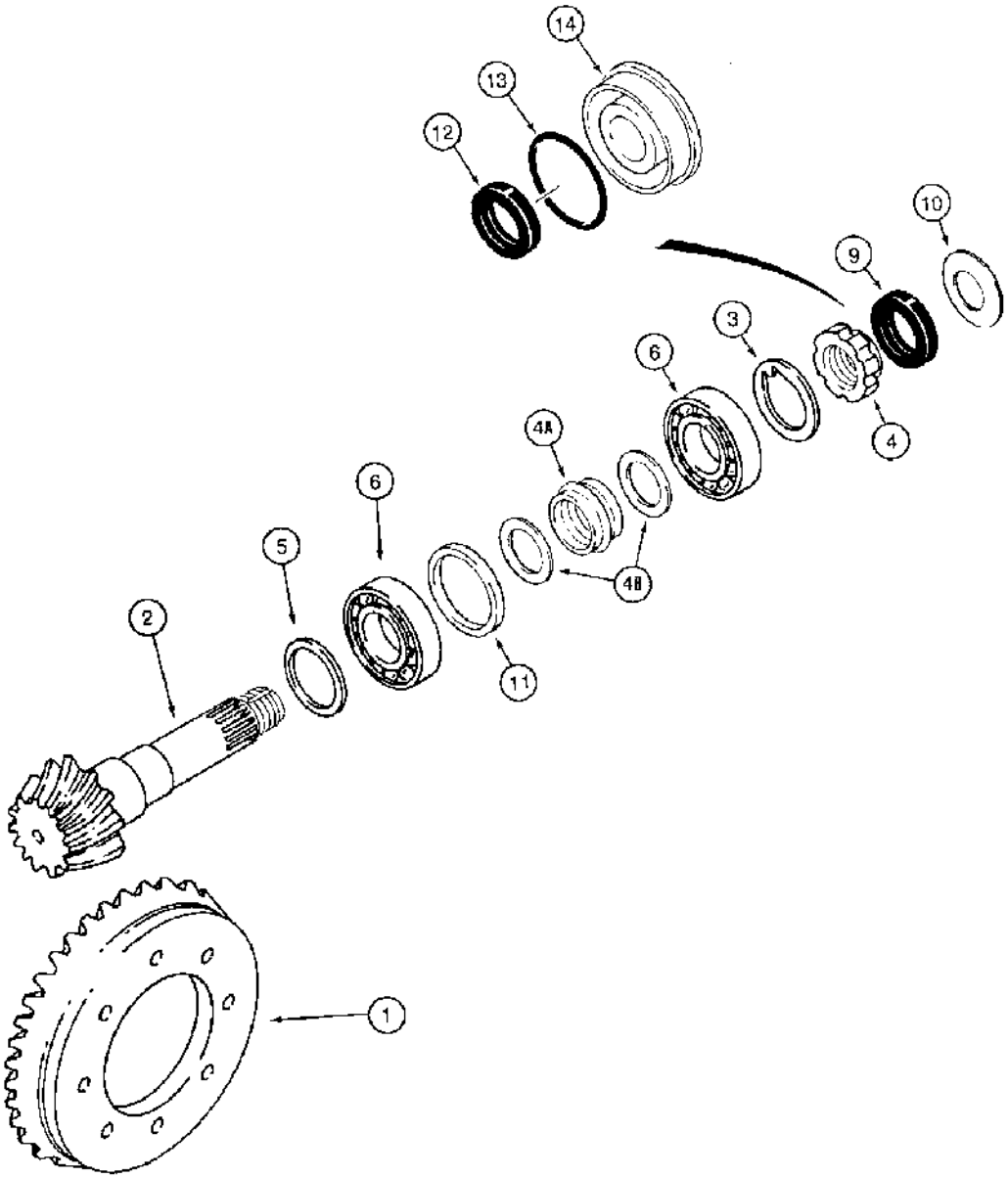

B902472 A

http://www.minnparbackhoeparts.com/

(580SK) - CASE SUPER-K CONSTRUCTION KING LOADER BACKHOE > (6-58) - FRONT DRIVE AXLE, RING AND PINION GEAR SET

Diag #	Part #	Name	Description	Qty
1	D146847	AXLE	ASSEMBLY front drive, Carraro No. 126140, parts list Figures 6-42 - 6-58, no longer available, order D149673 axle, Includes: Ref. 1 through 14 and D149266	1
		See Figure 6-60 for ring and pinion gear set used on D149673, 109937A1 or 127767A1 axle.	See Figure 6-60 for ring and pinion gear set used on D149673, 109937A1 or 127767A1 axle.	1
	D149266	GEAR, BEVEL	GEAR SET ring and pinion, includes Ref. 1 - 4B and 11, Includes: Ref. 1 through 4B 11/32	1
		refer P/N d149266 gear set, Ref. 11, n14405 spacer is not included per print, this catalog is in error	refer P/N d149266 gear set, Ref. 11, n14405 spacer is not included per print, this catalog is in error	1
1	NSS	NOT SERVICED SEPARATELY	GEAR ring, differential, replacement gear ring may look like Ref. 1 ring, shown on Figure 6-60	1
2	NSS	NOT SERVICED SEPARATELY	GEAR pinion, differential	1
		GEAR IS NOT AS ILLUSTRATED. THE THREADS ARE INSIDE THE SPLINES, NOT AT THE END OF THE GEAR.	GEAR IS NOT AS ILLUSTRATED. THE THREADS ARE INSIDE THE SPLINES, NOT AT THE END OF THE GEAR.	1
3	K261065	LOCK WASHER	special, replaces N7536	1
4	K261014	RING NUT	RING nut, pinion gear, replaces K261852 ring	1
4A	1349058C1	SPACER	collapsible	1
4B	1349059C1	WASHER	spacer	2
5	K965280	SHIM,2.50mm Thk	SHIM,2.50mm Thk	1
5	K965282	SHIM,2.60mm Thk	SHIM,2.60mm Thk	1
5	K965284	SHIM,2.70mm Thk	SHIM,2.70mm Thk	1
5	K965286	SHIM,2.80mm Thk	SHIM,2.80mm Thk	1
5	K965288	SHIM,2.90mm Thk	SHIM,2.90mm Thk	1
5	K965290	SPACER	SHIM 3.00 mm thick	1
5	K965292	SHIM,3.10mm Thk	SHIM,3.10mm Thk	1
5	K965294	SHIM,3.20mm Thk	SHIM,3.20mm Thk	1
5	K965296	SHIM,3.30mm Thk	SHIM,3.30mm Thk	1
5	K965298	SHIM,3.40mm Thk	SHIM,3.40mm Thk	1
6	K395090	BEARING ASSY	BEARING, ROLLER, TAPERED, Pinion gear	2

Diag #	Part #	Name	Description	Qty
9	D149731	OIL SEAL	SEAL oil, used with Ref. 10, D149732 cover, no longer available, order Ref. 12, K262143 seal, 13, 238-5152 O-ring and 14, 128570A1 cover	1
10	D149732	SHROUD	COVER differential, does not require an O-ring, used with Ref. 9, D149731 seal, if used	1
11	N14405	SPACER	bearing cup, included with D149266 gear set	1
		refer P/N d149266 gear set, Ref. 11, n14405 spacer is not included per print, this catalog is in error	refer P/N d149266 gear set, Ref. 11, n14405 spacer is not included per print, this catalog is in error	1
12	K262143	SEAL	oil, used with Ref. 14, 128570A1 cover	1
13	238-5152	O-RING,-152, 70 Duro, 3.237" ID x .103" Thk	used with Ref. 14, 128570A1 cover -152, 70 Duro, 3.237" ID x .103" Thk	1
14	128570A1	FLANGE	COVER differential, used with Ref. 12, K262143 oil seal and 13, 238-5152 O-ring	1
	M20704	ADHESIVE	SEALANT, 3 oz, 89 ml, of sealant in a tube, differental cover to differential carrier, not shown, order B17575	1

http://www.minnparbackhoeparts.com/

(580SK) - CASE SUPER-K CONSTRUCTION KING LOADER BACKHOE > (6-60) - FRONT DRIVE AXLE, RING AND PINION GEAR SET

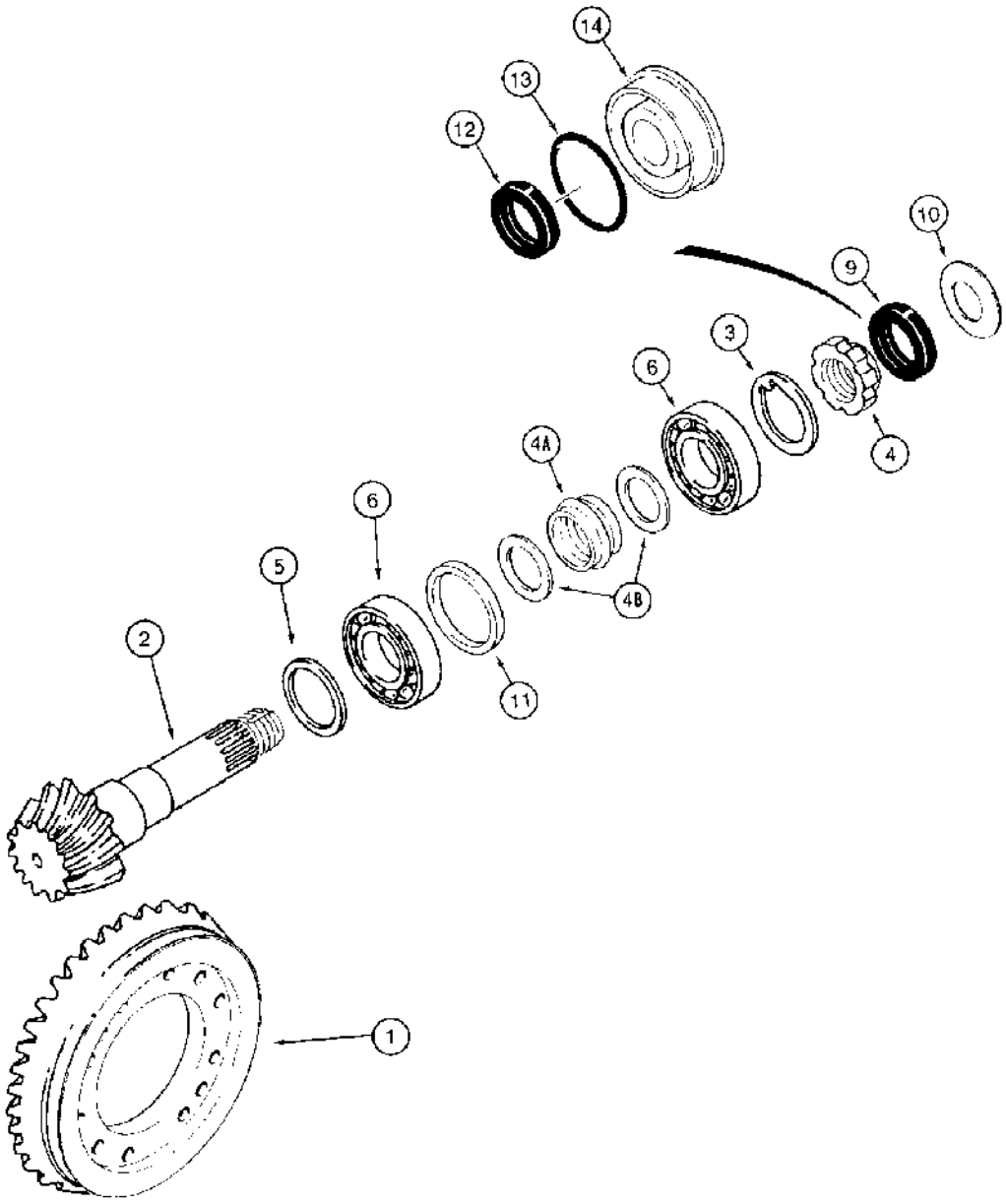

http://www.minnparbackhoeparts.com/

(580SK) - CASE SUPER-K CONSTRUCTION KING LOADER BACKHOE > (6-60) - FRONT DRIVE AXLE, RING AND PINION GEAR SET

Diag #	Part #	Name	Description	Qty
	D149673	AXLE	ASSEMBLY front drive, Carraro No. 127085, parts list Figures 6-42 - 6-60, does not include hydraulic fittings at steering cylinder, Ref. 4 and 16 on Figure 6-38, purchase separately, if used	1
		See Figure 6-58 for ring and pinion gear set used on D146847 axle.	See Figure 6-58 for ring and pinion gear set used on D146847 axle.	1
	127767A1	AXLE	ASSEMBLY front drive, Carraro No. CAV91-767, parts list Figures 6-42 - 6-60, includes hydraulic fittings at steering cylinder, Ref. 4 and 16 on Figure 6-38, replaces 109937A1 axle, if used, Includes: Ref. 1 through 14, P/N D150216 and P/N D149266	1
		See Figure 6-58 for ring and pinion gear set used on D146847 axle.	See Figure 6-58 for ring and pinion gear set used on D146847 axle.	1
		108762A1 is a cab frame made up of 108532A1 frame, 151-525 Rivet, and 1990696C2 S/N and model plate. This is part of D104066 complete cab which is no longer available through whole goods. Dealer needs to order the 108762A1 frame and all other primes seperately and build up the cab complete. This frame will fit the 580K-I, 580K-III, and 580 Super K.	108762A1 is a cab frame made up of 108532A1 frame, 151-525 Rivet, and 1990696C2 S/N and model plate. This is part of D104066 complete cab which is no longer available through whole goods. Dealer needs to order the 108762A1 frame and all other primes seperately and build up the cab complete. This frame will fit the 580K-I, 580K-III, and 580 Super K.	1
	CASD150216	DIFFERENTIAL ASSY	DIFFERENTIAL ASSEMBLY front dive axle, also includes Ref. 7-9 on Figure 6-42 and Ref. 1-15 on Figure 6-56, Includes: Ref. 1 through 14 and P/N D149266	1
	D149266	GEAR, BEVEL	GEAR set, ring and pinion, includes Ref. 1 - 4B and 11, Includes: Ref. 1 through 4B	1
1	NSS	NOT SERVICED SEPARATELY	GEAR ring, differential	1
2	NSS	NOT SERVICED SEPARATELY	GEAR pinion, differential	1
3	K261065	LOCK WASHER	special, replaces N7536	1
4	K261014	RING NUT	RING nut, pinion gear, replaces K261852 ring	1
4A	1349058C1	SPACER	collapsible	1

Diag #	Part #	Name	Description	Qty
4B	1349059C1	WASHER	spacer	2
5	K965280	SHIM,2.50mm Thk	SHIM,2.50mm Thk	1
5	K965282	SHIM,2.60mm Thk	SHIM,2.60mm Thk	1
5	K965284	SHIM,2.70mm Thk	SHIM,2.70mm Thk	1
5	K965286	SHIM,2.80mm Thk	SHIM,2.80mm Thk	1
5	K965288	SHIM,2.90mm Thk	SHIM,2.90mm Thk	1
5	K965290	SPACER	SHIM 3.00 mm thick	1
5	K965292	SHIM,3.10mm Thk	SHIM,3.10mm Thk	1
5	K965294	SHIM,3.20mm Thk	SHIM,3.20mm Thk	1
5	K965296	SHIM,3.30mm Thk	SHIM,3.30mm Thk	1
5	K965298	SHIM,3.40mm Thk	SHIM,3.40mm Thk	1
6	K395090	BEARING ASSY	BEARING, ROLLER, TAPERED, Pinion gear	2
9	D149731	OIL SEAL	SEAL oil, used with Ref. 10, D149732 cover, no longer available, order iRef. 12, K262143 seal, 13, 238-5152 O-ring and 14, 128570A1 cover	1
10	D149732	SHROUD	COVER differential, does not require an O-ring, used with Ref. 9, D149731 seal, if used	1
11	N14405	SPACER	bearing cup, included with D149266 gear set	1
12	K262143	SEAL	oil, used with Ref.14, 128570A1 cover	1
13	238-5152	O-RING,-152, 70 Duro, 3.237" ID x .103" Thk	used with Ref. 14, 128570A1 cover -152, 70 Duro, 3.237" ID x .103" Thk	1
14	128570A1	FLANGE	COVER differential, used with Ref. 12, K262143 oil seal and 3, 238-5152 O-ring	1
	M20704	ADHESIVE	SEALANT - 3 oz, 89 ml, of sealant in a tube, differental cover to differential carrier, not shown, order B17575	1

http://www.minnparbackhoeparts.com/

(580SK) - CASE SUPER-K CONSTRUCTION KING LOADER BACKHOE > (6-62) - TRANSAXLE ASSEMBLY, TRANSAXLE TRANSMISSION HOUSING, TWO AND FOUR WHEEL DRIVE

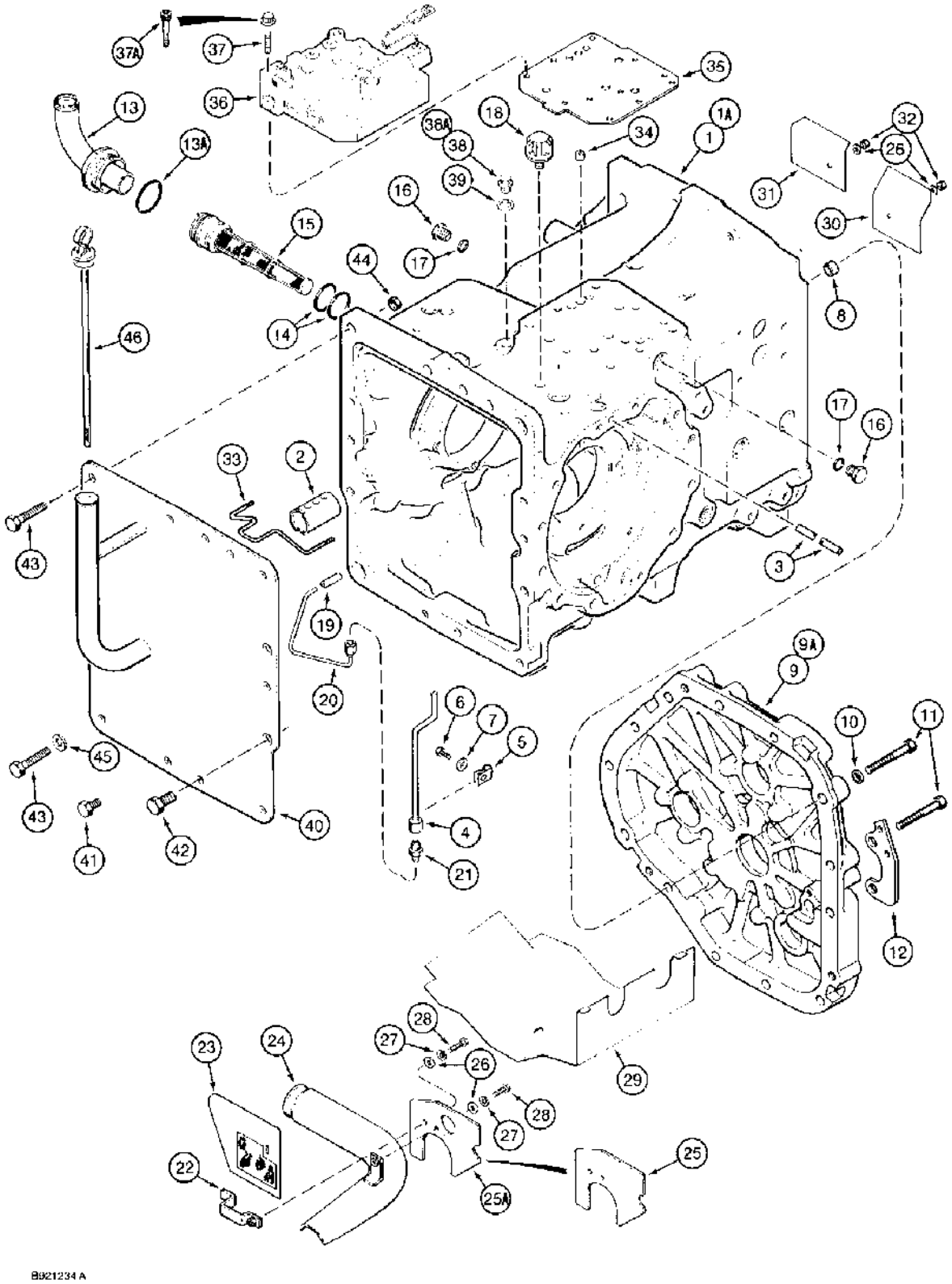

(580SK) - CASE SUPER-K CONSTRUCTION KING LOADER BACKHOE > (6-62) - TRANSAXLE ASSEMBLY, TRANSAXLE TRANSMISSION HOUSING, TWO AND FOUR WHEEL DRIVE

Diag #	Part #	Name	Description	Qty
1	A183561	HOUSING	ASSEMBLY transaxle, prior to transaxle SN 202016, no longer available, order 1995141C1 housing and 1995142C1 shift rail, Ref. 1A below and Ref. 21A on Figure 6-66	1
1A	1995141C1	HOUSING ASSY.	HOUSING ASSEMBLY transaxle SN 202016 and after, used with 1995142C1 shift rail, Ref. 21A on Figure 6-66, Includes: Ref. 2 through 7	1
2	A183013	BUSHING	SLEEVE wear, shuttle clutch shaft	1
3	A188564	TUBE	cooling, brake	1
4	A188001	TUBE	pinion lubrication	1
5	A183210	CLAMP	tube	1
6	614-10016	BOLT,Hex, M10 x 1.5 x 16mm, Cl 8.8, Full Thd	BOLT,Hex, M10 x 1.5 x 16mm, Cl 8.8, Full Thd	1
7	895-11010	WASHER,M10 x 20 x 2	flat, 11 x 21 x 2 mm	1
8	A175944	DOWEL	SLEEVE dowel, front housing	2
9	A188903	COVER	housing, front, without PTO	1
9A	A188904	COVER	housing, front, with PTO	1
10	96-31066	WASHER,21/32" x 1 5/16" x .188", HDN	WASHER,21/32" x 1 5/16" x .188", HDN	11
11	828-16080	BOLT,Hex, M16 x 2 x 80mm, Cl 10.9	BOLT,Hex, M16 x 2 x 80mm, Cl 10.9	13
12	A186976	BRACKET	parking brake cable	1
13	A188031	ELBOW	hose fitting, Includes: Ref. 13A	1
13A	218-5013	O-RING,1.864" ID x 2.004" OD x 0.07"	elbow	1
14	238-6135	O-RING,-135, 90 Duro, 1.925" ID x .103" Thk	O-RING,-135, 90 Duro, 1.925" ID x .103" Thk	2
15	A188034	SCREEN	FILTER oil suction inlet	1
16	214389	PLUG,Hex Hd, 3/4"-16 ORB	Drain, Includes Ref. 17 Hex Hd, 3/4"-16 ORB	2
17	237-6008	O-RING,0.176" ID x 0.316" OD x 0.07"	8-1, 90 Duro, .644" ID x .087" Thk	1
18	1971726C1	BREATHER	housing	1
19	A190247	HALF-BUSHING	BUSHING pinion lubrication tube	1
20	A186996	TUBE ASSY.	TUBE pinion lubrication	1
21	A188454	ADAPTER	lube tube	1
22	A186733	SUPPORT	BRACKET lower baffle	1
23	A186606	FILTER SCREEN	BAFFLE with screen	1
24	A188032	TUBE	suction, oil pick-up	1

Diag #	Part #	Name	Description	Qty
25	A186993	BAFFLE	lower right, without PTO	1
25A	A186992	BAFFLE	lower right, with PTO	1
26	895-11006	WASHER,M6	WASHER,M6	4
27	892-11006	LOCK WASHER,M6	WASHER, LOCK, M6	2
28	614-6030	BOLT,Hex, M6 x 1 x 30mm, Cl 8.8, Full Thd	BOLT,Hex, M6 x 1 x 30mm, Cl 8.8, Full Thd	2
29	A186612	BAFFLE	main	1
30	A186602	BRACKET	BAFFLE upper right	1
31	A186603	PLATE	BAFFLE upper left	1
32	832-41306	NUT,M6 x 1, Cl 10	NUT - hex, self-locking, 6 mm - 1, class 10, prevailing torque	2
33	A186601	BRACKET	RETAINER threaded, upper baffle	1
34	A183319	ORIFICE	clutch pack lubrication, if used	1
35	1341102C1	GASKET	, Serial Range: valve-housing	1
36	REF	INSTRUCTION	VALVE ASSEMBLY power shuttle, for correct assembly and components, see Figures 6-22 - 6-26	1
37	828-10060	BOLT,Hex, M10 x 1.5 x 60mm, Cl 10.9	- hex, 10 - 1.5 x 60 mm, class 10.9	7-8
37A	861-10060	HEX SOC SCREW,M10 x 60mm, Cl 12.9	BOLT hex socket, 10 - 1.5 x 60 mm, class 10.9, if used	1
38	J924147	PLUG	magnetic, oil drain, if used, replaces J911638	1
38A	934164R1	PLUG,Hex Soc, M18 x 1.5	18 mm, non-magnetic, oil drain, if used	1
39	J920773	SEALING WASHER	WASHER sealing, replaces J900216 washer	1
40	A190137	COVER ASSY	COVER housing, rear, without PTO	1
41	806-16025	BOLT,Hex, M16 x 2 x 25mm, Cl 10.9	hex, 16 - 2 x 25 mm, class 10.9, without PTO	5
42	628-20030	SCREW,Hex, M20 x 2.5 x 30mm, Cl 10.9, Full Thd	BOLT hex, 20 - 2.5 x 30 mm, class 10.9, without PTO	4
43	828-16060	BOLT,Hex, M16 x 2 x 60mm, Cl 10.9	without PTO Hex, M16 x 60, 10.9, Full Thd	6
44	829-1316	NUT,M16, Cl 10	hex, 16 mm, without PTO	5
45	96-81009	WASHER,11/16" x 1 1/2" x .134", HDN	lower LH and upper RH corner of rear housing cover, without PTO 11/16" x 1 1/2" x .134", HDN	2
46	A183331	DIPSTICK	oil level, without PTO	1

http://www.minnparbackhoeparts.com/

(580SK) - CASE SUPER-K CONSTRUCTION KING LOADER BACKHOE > (6-66) - TRANSAXLE ASSEMBLY, TRANSAXLE SHIFTER MECHANISM

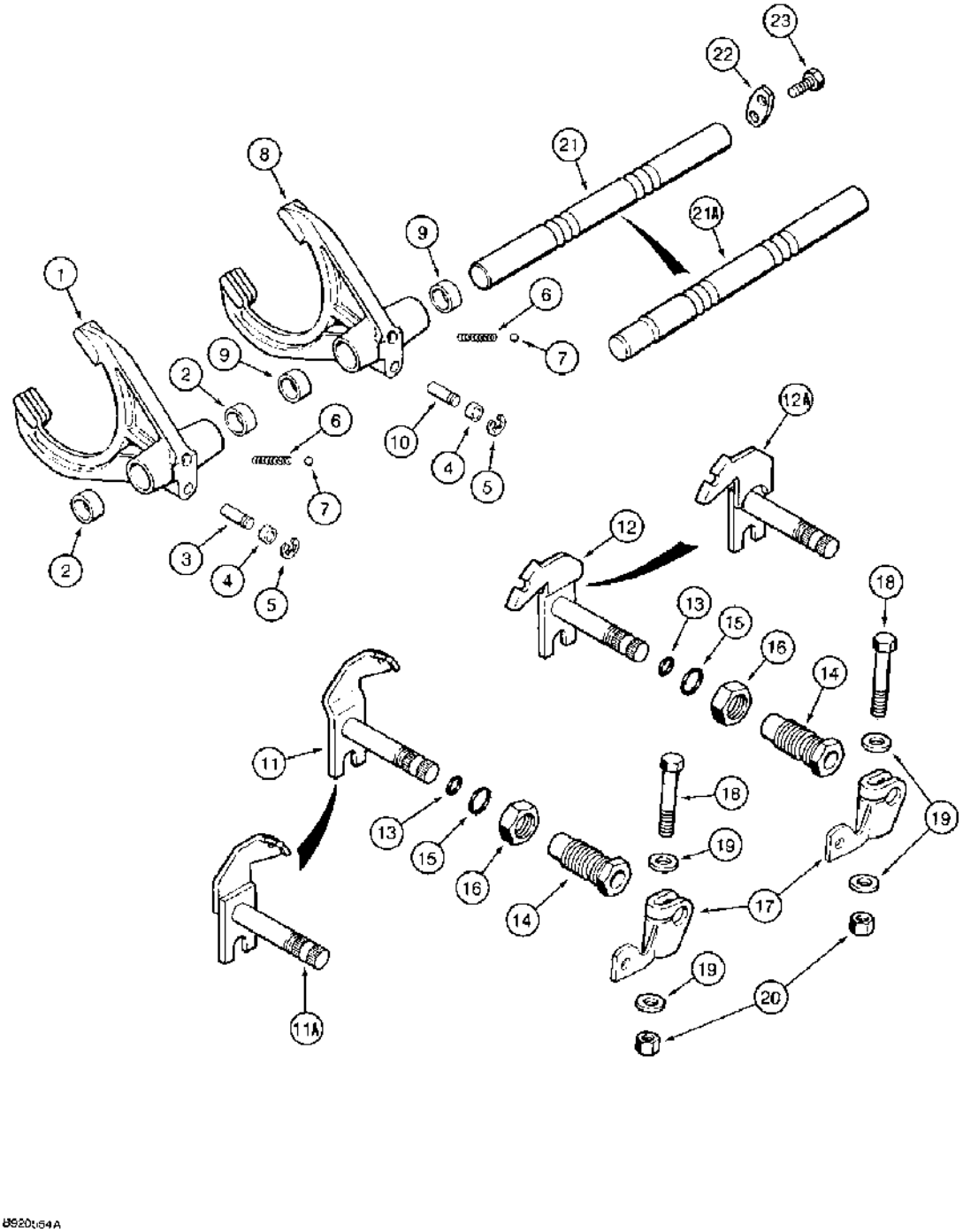

(580SK) - CASE SUPER-K CONSTRUCTION KING LOADER BACKHOE > (6-66) - TRANSAXLE ASSEMBLY, TRANSAXLE SHIFTER MECHANISM

Diag #	Part #	Name	Description	Qty
1	A183009	FORK	ASSEMBLY gear shift, first and second, Includes: Ref. 2 and 3	1
2	A178367	BUSHING	shift fork	2
3	A183146	SPLIT PIN/SAFETY PIN	PIN shift fork	1
4	A178954	SLEEVE	shift fork pin	2
5	381478R1	SNAP RING,#X43, .375" Dia, E-Type	Ring, Retaining, , shift fork pin, replaces A183147 #X43, .375" Dia, E-Type	2
6	A175971	SPRING	detent	2
7	211-212	BALL	7/16 inch, grade 50, chrome alloy steel	2
8	A183009	FORK	ASSEMBLY gear shift, third and fourth, Includes: Ref. 9 and 10	1
9	A178367	BUSHING	shift fork	2
10	A183146	SPLIT PIN/SAFETY PIN	PIN shift fork	1
11	A190285	LEVER	ARM gear shift, first and second, no longer available, order one Ref. 11A, 1964326C1 and one Ref. 12A, 1964325C1 arms	1
11A	1964326C1	LEVER ASSY.	ARM gear shift, first and second	1
12	A190286	LEVER	ARM gear shift, third and fourth, no longer available, order one Ref. 11A, 1964326C1 and one Ref. 12A, 1964325C1 arms	1
12A	1964325C1	LEVER ASSY.	ARM gear shift, third and fourth	1
13	A178252	O-RING,15.2 mm ID x 1.88 mm	acuator shaft	2
14	A188301	BUSHING	shift mechanism	2
15	237-6012	O-RING,0.924" x 0.116"	12-1, 90 Duro, .924 ID x .116" Thk	2
16	218-1280	JAM NUT,Blkhd, 1 1/16"-12	NUT - hex, self-locking, 1-1/16 inch NF	2
17	1995109C1	LEVER	shaft actuating, replaces A190370 lever	2
18	827-12070	BOLT,Hex, M12 x 1.75 x 70mm, Cl 10.9	- hex head, 12 - 1.75 x 70 mm	2
19	896-11012	WASHER,M13.5 x 24.5 x 3, HT	WASHER,M13.5 x 24.5 x 3, HT	4
20	829-1412	NUT,M12, Cl 10	- hex, 12 mm - 1.75, class 10	2
21	A188348	RAIL	shifter fork, used with A183561 housing, Ref. 1 on Figure 6-62, prior to transaxle SN 202016, if used	1
21A	1995142C1	SLIPPER	RAIL shifter fork, used with 1995141C1 housing, Ref. 1A on Figure 6-62, transaxle SN 202016 and after, if used	1
22	A178279	SEALING STRIP	PLATE shift rail lock	1
23	626-10020	BOLT,Hex, M10 x 1.5 x 20mm, Cl 10.9, Full Thd	hex, 10 - 1.5 x 20 mm, class 10.9	2

http://www.minnparbackhoeparts.com/

(580SK) - CASE SUPER-K CONSTRUCTION KING LOADER BACKHOE > (6-68) - TRANSAXLE ASSEMBLY, TRANSAXLE INTERMEDIATE SHAFT

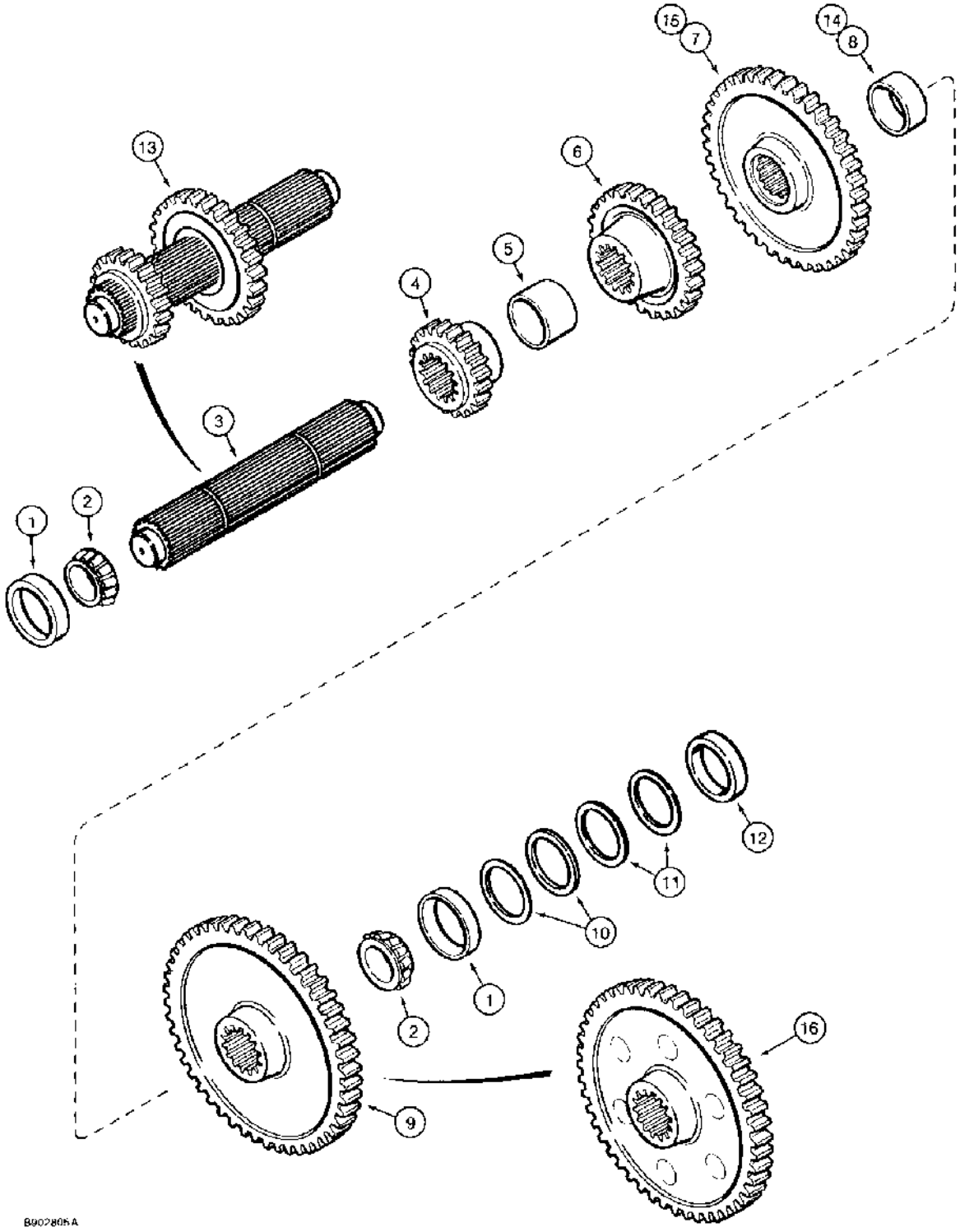

http://www.minnparbackhoeparts.com/

(580SK) - CASE SUPER-K CONSTRUCTION KING LOADER BACKHOE > (6-68) - TRANSAXLE ASSEMBLY, TRANSAXLE INTERMEDIATE SHAFT

Diag #	Part #	Name	Description	Qty
1	618024R1	BEARING CUP	- Tapered roller, Replaces G57451 cup	2
2	618023R91	BEARING ASSY,34.9315 mm ID x 18.199 mm	BEARING tapered roller, replaces G57452 bearing	2
3	A183911	SHAFT	intermediate, transaxle, if used	1
		Ref. 4 through 9 must be used with Ref. 3, A183911, shaft. Individual parts are not interchangeable with Ref. 13 - 16.	Ref. 4 through 9 must be used with Ref. 3, A183911, shaft. Individual parts are not interchangeable with Ref. 13 - 16.	1
4	A190078	PINION	GEAR drive, first, 25 teeth	1
		Ref. 4 through 9 must be used with Ref. 3, A183911, shaft. Individual parts are not interchangeable with Ref. 13 - 16.	Ref. 4 through 9 must be used with Ref. 3, A183911, shaft. Individual parts are not interchangeable with Ref. 13 - 16.	1
5	A186385	SPACER	first and second gear	1
		Ref. 4 through 9 must be used with Ref. 3, A183911, shaft. Individual parts are not interchangeable with Ref. 13 - 16.	Ref. 4 through 9 must be used with Ref. 3, A183911, shaft. Individual parts are not interchangeable with Ref. 13 - 16.	1
6	A190087	GEAR WHEEL	GEAR drive, second, 35 teeth	1
		Ref. 4 through 9 must be used with Ref. 3, A183911, shaft. Individual parts are not interchangeable with Ref. 13 - 16.	Ref. 4 through 9 must be used with Ref. 3, A183911, shaft. Individual parts are not interchangeable with Ref. 13 - 16.	1
7	A190086	PINION	GEAR drive, third, 53 teeth	1
		Ref. 4 through 9 must be used with Ref. 3, A183911, shaft. Individual parts are not interchangeable with Ref. 13 - 16.	Ref. 4 through 9 must be used with Ref. 3, A183911, shaft. Individual parts are not interchangeable with Ref. 13 - 16.	1
8	A186384	SPACER	1-3/4 inch ID, third and fourth gear	1
		Ref. 4 through 9 must be used with Ref. 3, A183911, shaft. Individual parts are not interchangeable with Ref. 13 - 16.	Ref. 4 through 9 must be used with Ref. 3, A183911, shaft. Individual parts are not interchangeable with Ref. 13 - 16.	1
9	A190085	PINION	GEAR drive, fourth, 97 teeth, no longer available, order one each of Ref. 13, shaft, 14, spacer, 15 and 16, gears	1

Diag #	Part #	Name	Description	Qty
		Ref. 4 through 9 must be used with Ref. 3, A183911, shaft. Individual parts are not interchangeable with Ref. 13 - 16.	Ref. 4 through 9 must be used with Ref. 3, A183911, shaft. Individual parts are not interchangeable with Ref. 13 - 16.	1
10	A175453	SHIM,0.178mm Thk	Bearing adjusting 0.178mm Thk	1
10	A175454	SHIM,0.508mm Thk	Bearing adjusting 0.508mm Thk	1
11	K915558	SHIM,0.076mm Thk	Bearing adjusting 0.076mm Thk	1
11	K915559	SHIM,0.127mm Thk	Bearing adjusting 0.127mm Thk	1
12	A175689	SPACER	intermediate shaft	1
13	A190304	SHAFT	intermediate, with first and second drive gears, transaxle, if used	1
		Ref. 14 through 16 must be used with Ref. 13, A190304, shaft. Individual parts are not interchangeable with Ref. 3 - 9.	Ref. 14 through 16 must be used with Ref. 13, A190304, shaft. Individual parts are not interchangeable with Ref. 3 - 9.	1
14	A190327	SPACER	1-21/32 inch ID, third and fourth gear	1
		Ref. 14 through 16 must be used with Ref. 13, A190304, shaft. Individual parts are not interchangeable with Ref. 3 - 9.	Ref. 14 through 16 must be used with Ref. 13, A190304, shaft. Individual parts are not interchangeable with Ref. 3 - 9.	1
15	A190310	PINION	GEAR drive, third, 53 teeth	1
		Ref. 14 through 16 must be used with Ref. 13, A190304, shaft. Individual parts are not interchangeable with Ref. 3 - 9.	Ref. 14 through 16 must be used with Ref. 13, A190304, shaft. Individual parts are not interchangeable with Ref. 3 - 9.	1
16	A190312	PINION	GEAR drive, fourth, 97 teeth	1
		Ref. 14 through 16 must be used with Ref. 13, A190304, shaft. Individual parts are not interchangeable with Ref. 3 - 9.	Ref. 14 through 16 must be used with Ref. 13, A190304, shaft. Individual parts are not interchangeable with Ref. 3 - 9.	1

http://www.minnparbackhoeparts.com/

(580SK) - CASE SUPER-K CONSTRUCTION KING LOADER BACKHOE > (6-70) - TRANSAXLE ASSEMBLY, TRANSAXLE COUNTERSHAFT

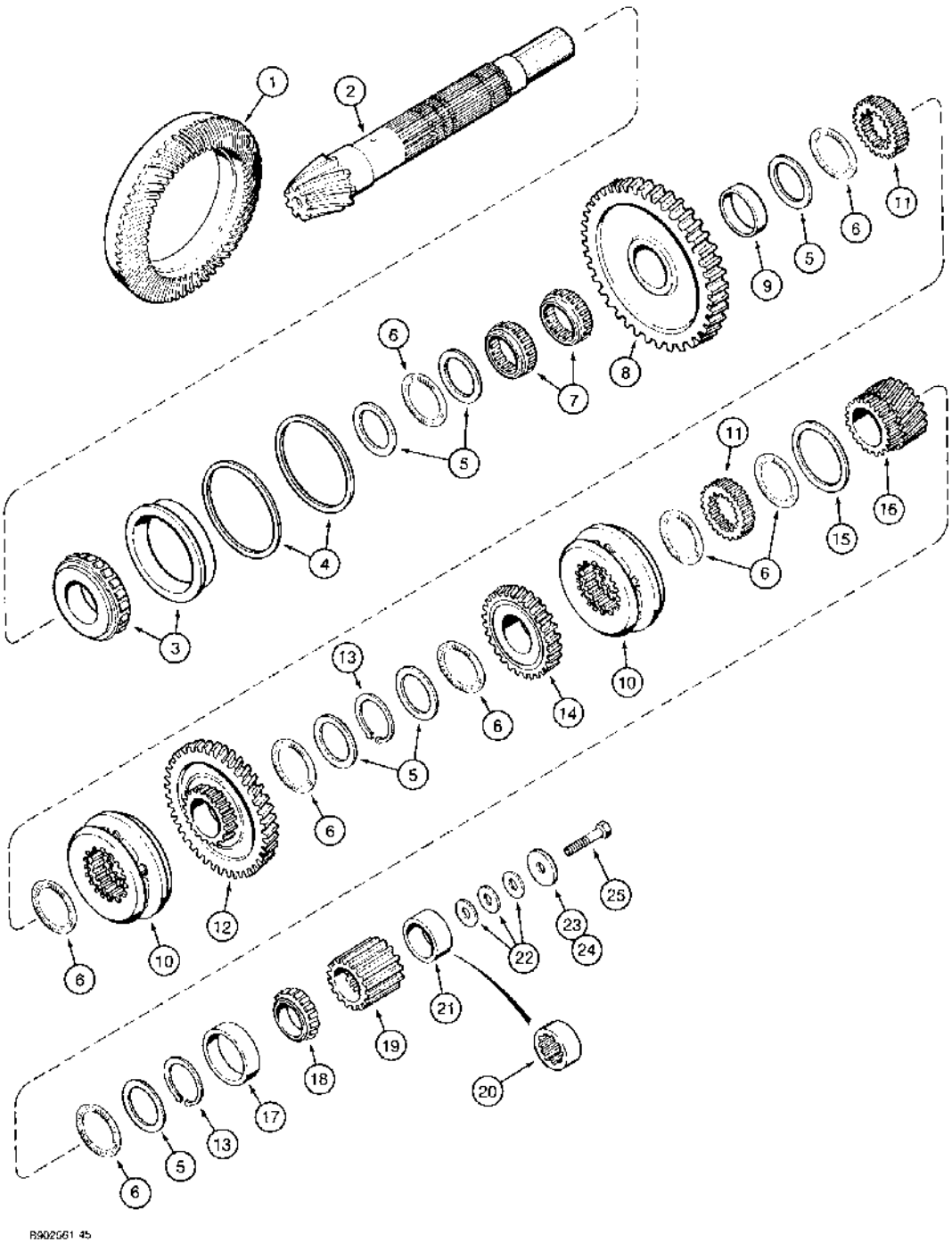

(580SK) - CASE SUPER-K CONSTRUCTION KING LOADER BACKHOE > (6-70) - TRANSAXLE ASSEMBLY, TRANSAXLE COUNTERSHAFT

Diag #	Part #	Name	Description	Qty
	A190330	GEAR, BEVEL	GEAR ASSEMBLY ring and pinion, matched set, includes bearing assembly, Includes: Ref. 1, 2 and 3	1
1	NSS	NOT SERVICED SEPARATELY	GEAR ring	1
2	NSS	NOT SERVICED SEPARATELY	PINION bevel	1
3	A190455	BEARING ASSY,63.513 mm ID x 138.25 mm OD x 36.539 mm	BEARING ASSEMBLY cup and tapered roller bearing, rear cover	1
4	A188020	SHIM,0.08mm Thk	Pinion adjusting 0.08mm Thk	1
4	A188021	SHIM,0.18mm Thk	Pinion adjusting 0.18mm Thk	1
4	A188022	SHIM,0.25mm Thk	Pinion adjusting 0.25mm Thk	1
4	A188023	SHIM,0.51mm Thk	Pinion adjusting 0.51mm Thk	1
5	A150067	WASHER, THRUST	WASHER thrust, needle bearing	6
6	K620185	THRUST BEARING	BEARING needle, thrust	8
7	80907C1	BEARING ASSY	BEARING needle, radial, replaces A175430	2
8	A190077	PINION	GEAR driven, first, 64 teeth	1
9	A175708	SPACER	bearing	1
10	A188592	SYNCHRONIZER	countershaft	2
11	A188630	HUB	sliding collar, synchronizer	2
12	A190335	PINION	GEAR driven, second, 54 teeth	1
		Ref #12. 51 tooth is a190336, european	Ref #12. 51 tooth is a190336, european	1
13	103-11225	SNAP RING,#225, Ext	Ring, Snap, (Replaces F40807) #225, Ext	2
14	A190338	PINION	GEAR driven, third, 36 teeth	1
15	A183747	WASHER, THRUST	WASHER fourth gear	1
16	A190339	PINION	GEAR driven, fourth, 37 teeth	1
17	181251C1	CUP,84 mm OD x 22.2 mm	tapered roller bearing	1
18	181250C91	ROLLER BEARING,50 mm ID x 22.2 mm	BEARING tapered roller, front cover	1
19	A186646	GEAR	HUB parking brake	1
20	1995134C1	SPACER	pinion shaft, 4 wheel drive only ,replaces A175481 spacer	1
21	1345869C1	SPACER	pinion shaft, 2 wheel drive only	1
22	A188344	SHIM,0.051mm Thk	Pinion shaft spacer 0.051mm Thk	1
22	A188345	SHIM,0.127mm Thk	Pinion shaft spacer 0.127mm Thk	1
22	A186917	SHIM,0.305mm Thk	Pinion shaft spacer 0.305mm Thk	1
22	A186918	SHIM,1.016mm Thk	Pinion shaft spacer 1.016mm Thk	1

Diag #	Part #	Name	Description	Qty
23	A186924	WASHER, THRUST	WASHER pinion shaft, 4 wheel drive only	1
24	A188584	WASHER, THRUST	WASHER pinion shaft, 2 wheel drive only	1
25	828-16110	BOLT,Hex, M16 x 2 x 110mm, Cl 10.9	- hex, 16 - 2.0 x 110 mm, class 10.9, 2 wheel drive only	1
25	1345879C1	SCREW	BOLT hex, 16 - 2 x 110 mm, class 10.9, 4 wheel drive only, replaces 826-16110 bolt on 4 wheel drive models	1

http://www.minnparbackhoeparts.com/

(580SK) - CASE SUPER-K CONSTRUCTION KING LOADER BACKHOE > (6-72) - TRANSAXLE ASSY,TRANSAXLE DIFF,MODELS W/O THRUST WASHER @ PINION

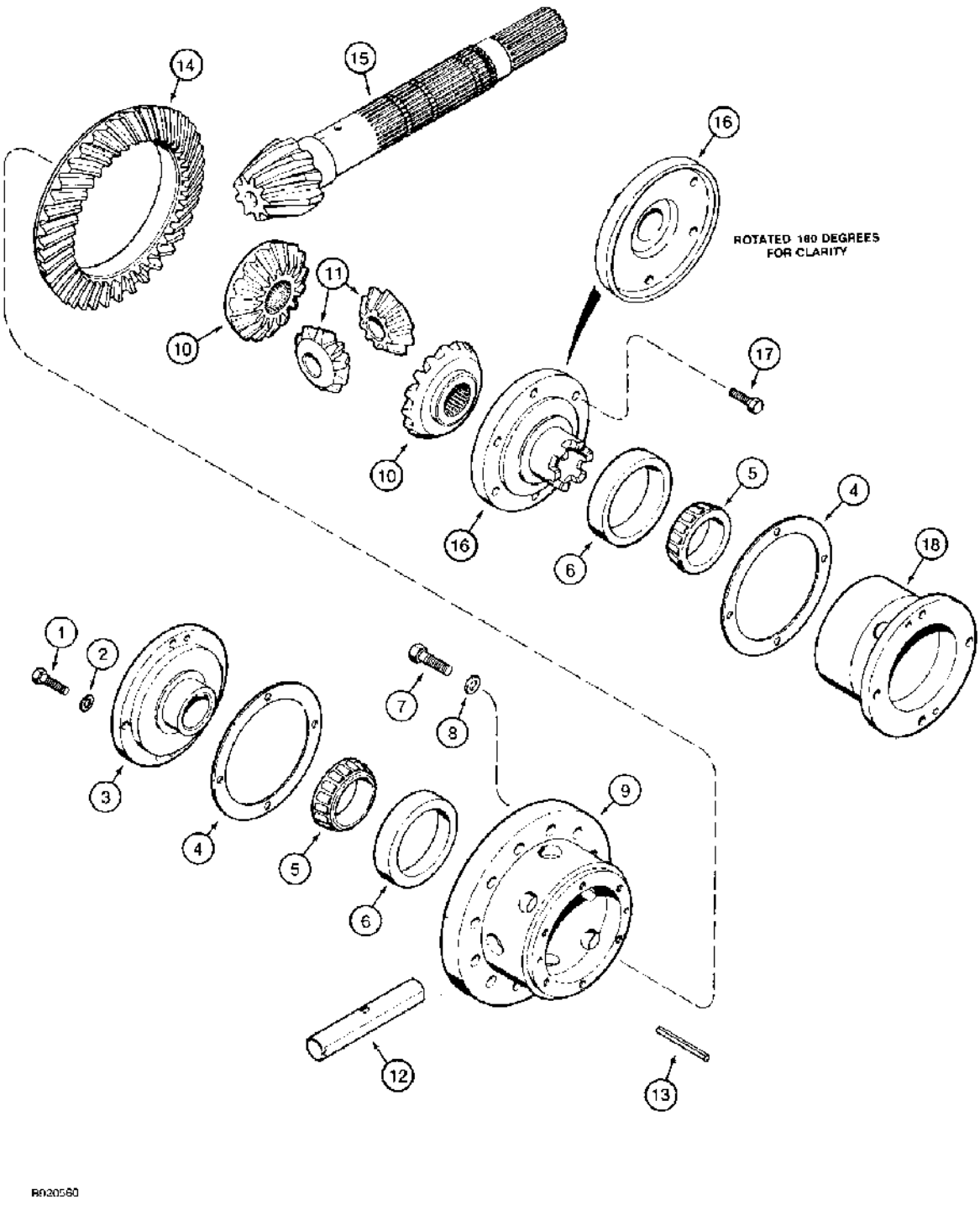

(580SK) - CASE SUPER-K CONSTRUCTION KING LOADER BACKHOE > (6-72) - TRANSAXLE ASSY,TRANSAXLE DIFF,MODELS W/O THRUST WASHER @ PINION

Diag #	Part #	Name	Description	Qty
1	628-10030	BOLT,Hex, M10 x 1.5 x 30mm, Cl 10.9, Full Thd	BOLT,Hex, M10 x 1.5 x 30mm, Cl 10.9, Full Thd	8
2	A63995	WASHER	hardened	8
3	A175200	CARRIER,180 mm ID x 45 mm OD x 53 mm	bearing, differential, left	1
		No longer available, for service order 1345865C1 bearing carrier, 1345864C1 differential carrier, and 1345909C1 kit, Ref. 3, 9-11, and 14-18 on Figure 6-74.	No longer available, for service order 1345865C1 bearing carrier, 1345864C1 differential carrier, and 1345909C1 kit, Ref. 3, 9-11, and 14-18 on Figure 6-74.	1
4	A175236	SHIM,0.08mm Thk	Bearing carrier (0.003") 0.08mm Thk	1
4	A175237	SHIM,0.18mm Thk	Bearing carrier (0.007") 0.18mm Thk	1
4	A175238	SHIM,0.25mm Thk	Bearing carrier (0.010") 0.25mm Thk	1
4	A175239	SHIM,0.63mm Thk	Bearing carrier (0.025") 0.63mm Thk	1
5	25695HO	ROLLER BEARING,66.688 mm ID x 30.124 mm	CONE bearing, replaces A37160	2
6	22396V	BEARING, CUP,112.739 mm OD x 30.37 mm	CUP bearing, replaces A7890	2
7	826-12045	BOLT,Hex, M12 x 1.75 x 45mm, Cl 10.9	hex, 12 - 1.75 x 45 mm	12
8	26273R1	WASHER	flat, 17/32 x 1-1/16 x 1/8 inch	12
9	A178135	CAGE	CARRIER differential, flanged half	1
		No longer available, for service order 1345865C1 bearing carrier, 1345864C1 differential carrier, and 1345909C1 kit, Ref. 3, 9-11, and 14-18 on Figure 6-74.	No longer available, for service order 1345865C1 bearing carrier, 1345864C1 differential carrier, and 1345909C1 kit, Ref. 3, 9-11, and 14-18 on Figure 6-74.	1
10	A186833	GEAR	side, 16 tooth	2
		No longer available, for service order 1345865C1 bearing carrier, 1345864C1 differential carrier, and 1345909C1 kit, Ref. 3, 9-11, and 14-18 on Figure 6-74.	No longer available, for service order 1345865C1 bearing carrier, 1345864C1 differential carrier, and 1345909C1 kit, Ref. 3, 9-11, and 14-18 on Figure 6-74.	1
11	A188633	GEAR	pinion, 10 tooth	2
12	A178132	PIN	differential spider	1
		No longer available, for service order 1345865C1 bearing carrier, 1345864C1 differential carrier, and	No longer available, for service order 1345865C1 bearing carrier, 1345864C1 differential carrier, and 1345909C1 kit, Ref. 3, 9-11, and 14-18 on Figure 6-74.	1

Diag #	Part #	Name	Description	Qty
		1345909C1 kit, Ref. 3, 9-11, and 14-18 on Figure 6-74.		
13	38-11652	LOCK PIN,1/4" x 3 1/4", Slotted	PIN, LOCK, 1/4" x 3 1/4", Slotted	1
	A190010	GEAR, BEVEL	PINION AND RING GEAR matched set, Includes: Ref.14 and 15; See Figure 07-04, Ref 23 For Pinion Seal	1
14	NSS	NOT SERVICED SEPARATELY	GEAR ring	1
15	NSS	NOT SERVICED SEPARATELY	PINION bevel	1
16	A186835	CAGE	CARRIER differential half	1
		No longer available, for service order 1345865C1 bearing carrier, 1345864C1 differential carrier, and 1345909C1 kit, Ref. 3, 9-11, and 14-18 on Figure 6-74.	No longer available, for service order 1345865C1 bearing carrier, 1345864C1 differential carrier, and 1345909C1 kit, Ref. 3, 9-11, and 14-18 on Figure 6-74.	1
17	628-10030	BOLT,Hex, M10 x 1.5 x 30mm, Cl 10.9, Full Thd	BOLT,Hex, M10 x 1.5 x 30mm, Cl 10.9, Full Thd	6
18	A175242	BEARING CARRIER,98 mm ID x 180 mm OD x 109.75 mm	CARRIER bearing, differential, right	1

http://www.minnparbackhoeparts.com/

(580SK) - CASE SUPER-K CONSTRUCTION KING LOADER BACKHOE > (6-74) - TRANSAXLE ASSY,TRANSAXLE DIFF, TRANSAXLE SN JKA0202074 AND AFTER

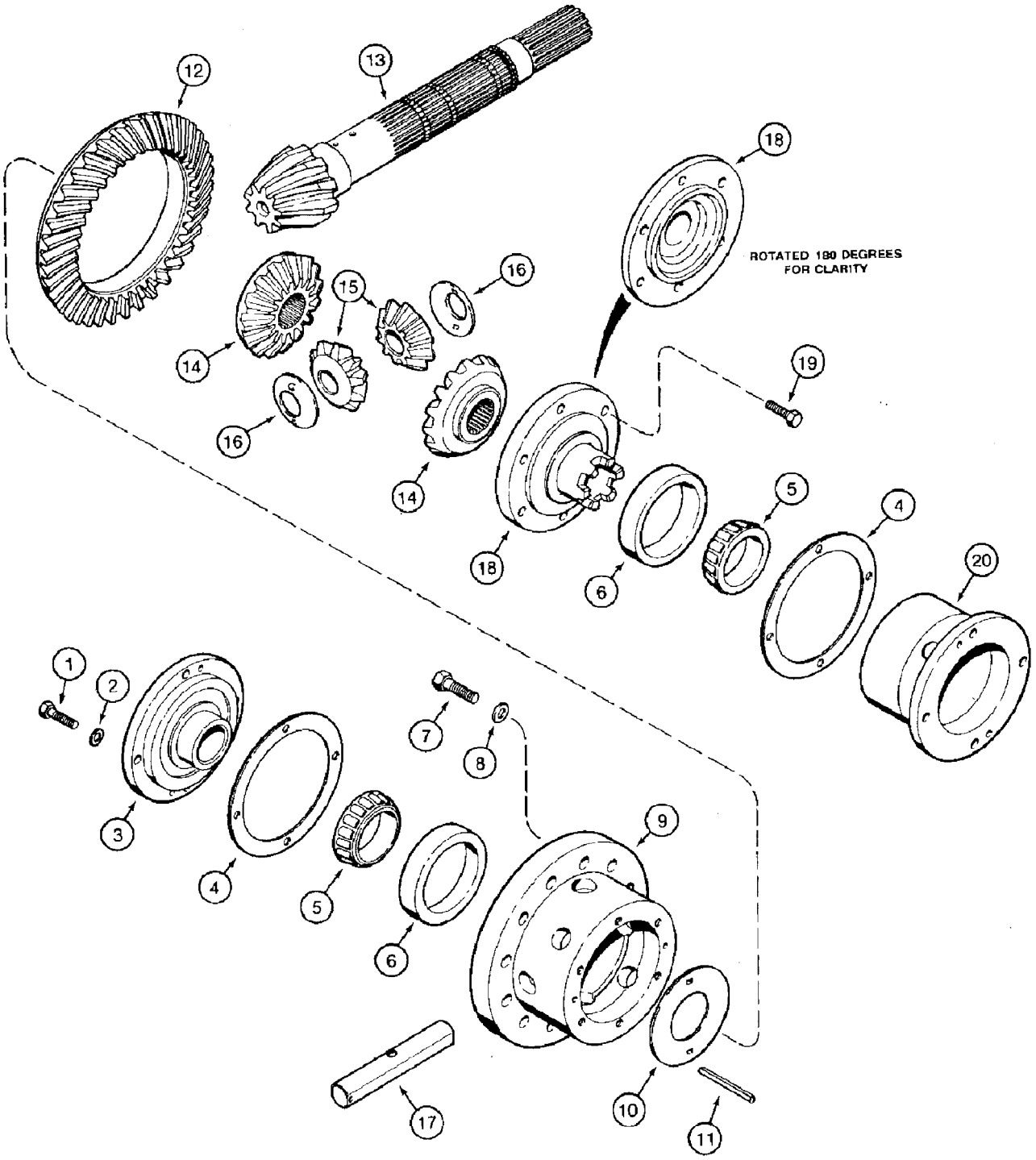

http://www.minnparbackhoeparts.com/

(580SK) - CASE SUPER-K CONSTRUCTION KING LOADER BACKHOE > (6-74) - TRANSAXLE ASSY,TRANSAXLE DIFF, TRANSAXLE SN JKA0202074 AND AFTER

Diag #	Part #	Name	Description	Qty
1	628-10030	BOLT,Hex, M10 x 1.5 x 30mm, Cl 10.9, Full Thd	BOLT,Hex, M10 x 1.5 x 30mm, Cl 10.9, Full Thd	8
2	A63995	WASHER	hardened	8
3	1345865C1	DIFF CARRIER & GEARS	CARRIER bearing, differential, left-hand	1
4	A175236	SHIM,0.08mm Thk	Bearing carrier (0.003") 0.08mm Thk	1
4	A175237	SHIM,0.18mm Thk	Bearing carrier (0.007") 0.18mm Thk	1
4	A175238	SHIM,0.25mm Thk	Bearing carrier (0.010") 0.25mm Thk	1
4	A175239	SHIM,0.63mm Thk	Bearing carrier (0.025") 0.63mm Thk	1
5	25695HO	ROLLER BEARING,66.688 mm ID x 30.124 mm	BEARING tapered roller, replaces ST2007A	2
6	22396V	BEARING, CUP,112.739 mm OD x 30.37 mm	CUP tapered roller bearing, replaces 13363D	2
7	826-12045	BOLT,Hex, M12 x 1.75 x 45mm, Cl 10.9	hex, 12 - 1.75 x 45 mm, class 10.9	12
8	396-21053	WASHER,17/32" x 1 1/16" x .134"	WASHER,17/32" x 1 1/16" x .134"	12
9	1345864C1	CASE	CARRIER differential, flanged half, with internal groove	1
10	A183870	WASHER, THRUST	WASHER thrust, flat, replaces 1345640C1	1
		Part of differential service kit P/N 1345909C1.	Part of differential service kit P/N 1345909C1.	1
11	38-11652	LOCK PIN,1/4" x 3 1/4", Slotted	PIN, LOCK, (Replaces 138-147 pin) 1/4" x 3 1/4", Slotted	1
		Part of differential service kit P/N 1345909C1.	Part of differential service kit P/N 1345909C1.	1
	A190330	GEAR, BEVEL	GEAR ASSEMBLY ring and pinion, matched set, includes: Ref. 12 and 13	1
12	NSS	NOT SERVICED SEPARATELY	GEAR ring	1
13	NSS	NOT SERVICED SEPARATELY	PINION bevel	1
14	1345894C1	GEAR	side, 16 teeth	2
		Part of differential service kit P/N 1345909C1.	Part of differential service kit P/N 1345909C1.	1
15	A188633	GEAR	pinion, 10 teeth	2
		Part of differential service kit P/N 1345909C1.	Part of differential service kit P/N 1345909C1.	1
16	1345639C1	THRUST WASHER	WASHER thrust, spherical	2
		Part of differential service kit P/N 1345909C1.	Part of differential service kit P/N 1345909C1.	1
17	1345893C1	PIN	differential spider	1

Diag #	Part #	Name	Description	Qty
		Part of differential service kit P/N 1345909C1.	Part of differential service kit P/N 1345909C1.	1
18	129905A1	CASE	CARRIER bearing, right-hand, replaces 1345866C1 carrier	1
		Part of differential service kit P/N 1345909C1.	Part of differential service kit P/N 1345909C1.	1
19	628-10030	BOLT,Hex, M10 x 1.5 x 30mm, Cl 10.9, Full Thd	BOLT,Hex, M10 x 1.5 x 30mm, Cl 10.9, Full Thd	6
20	A175242	BEARING CARRIER,98 mm ID x 180 mm OD x 109.75 mm	CARRIER differential, right-hand	1
	1345909C1	KIT	differential service, Includes: Ref. 10, 11 and 14 - 18	1

http://www.minnparbackhoeparts.com/

(580SK) - CASE SUPER-K CONSTRUCTION KING LOADER BACKHOE > (6-76) - TRANSAXLE ASSEMBLY, TRANSAXLE DIFFERENTIAL LOCK

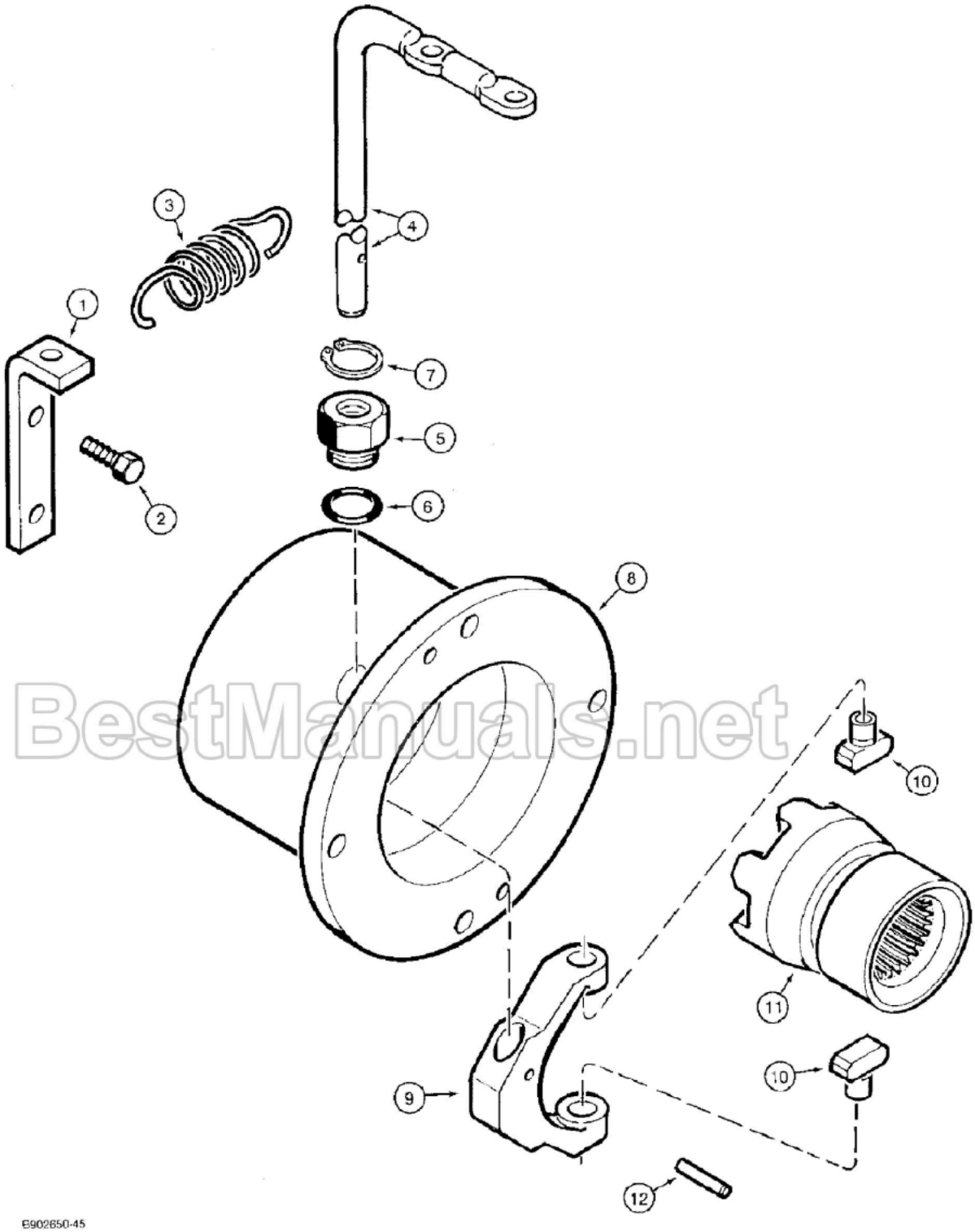

BestManuals.net

(580SK) - CASE SUPER-K CONSTRUCTION KING LOADER BACKHOE > (6-76) - TRANSAXLE ASSEMBLY, TRANSAXLE DIFFERENTIAL LOCK

Diag #	Part #	Name	Description	Qty
1	A190233	PLATE ASSY.	BRACKET spring anchor	1
2	613-8020	BOLT,Hex, M8 x 1.25 x 20mm, Cl 8.8, Full Thd	- hex, full threads, 8 - 1.25 x 20 mm	2
3	A190340	SPRING	lock, Serial Range: shaft-bracket	1
4	A190317	SHAFT	differential lock rod, to differential lock pedal, Ref. 20, shown on Figure 6-32	1
5	A175295	PLUG	ADAPTER shaft, Includes: Ref. 6	1
		The external o'ring is 237-6010 Ref. 6 is the internal "o" ring.	The external o'ring is 237-6010 Ref. 6 is the internal "o" ring.	1
7	26593R1	SNAP RING,#50, Ext	Ring, Snap, #50, Ext	1
8	A175242	BEARING CARRIER,98 mm ID x 180 mm OD x 109.75 mm	CARRIER differential	1
9	A190263	FORK	ASSEMBLY shift, Includes: Ref. 10	1
10	A190265	FINGER	shift fork	2
11	A190264	COLLAR	COLLAR differential lock	1
12	138-2067	PIN,3/16" x 1", Coiled	PIN,3/16" x 1", Coiled	1
6	237-6006	O-RING,0.114" ID x 0.254" OD x 0.07"	6-1, 90 Duro, .468" ID x .078" Thk	1

http://www.minnparbackhoeparts.com/

(580SK) - CASE SUPER-K CONSTRUCTION KING LOADER BACKHOE > (6-78) - TRANSAXLE ASSEMBLY, TRANSAXLE REAR AXLE AND PLANETARY GEARS

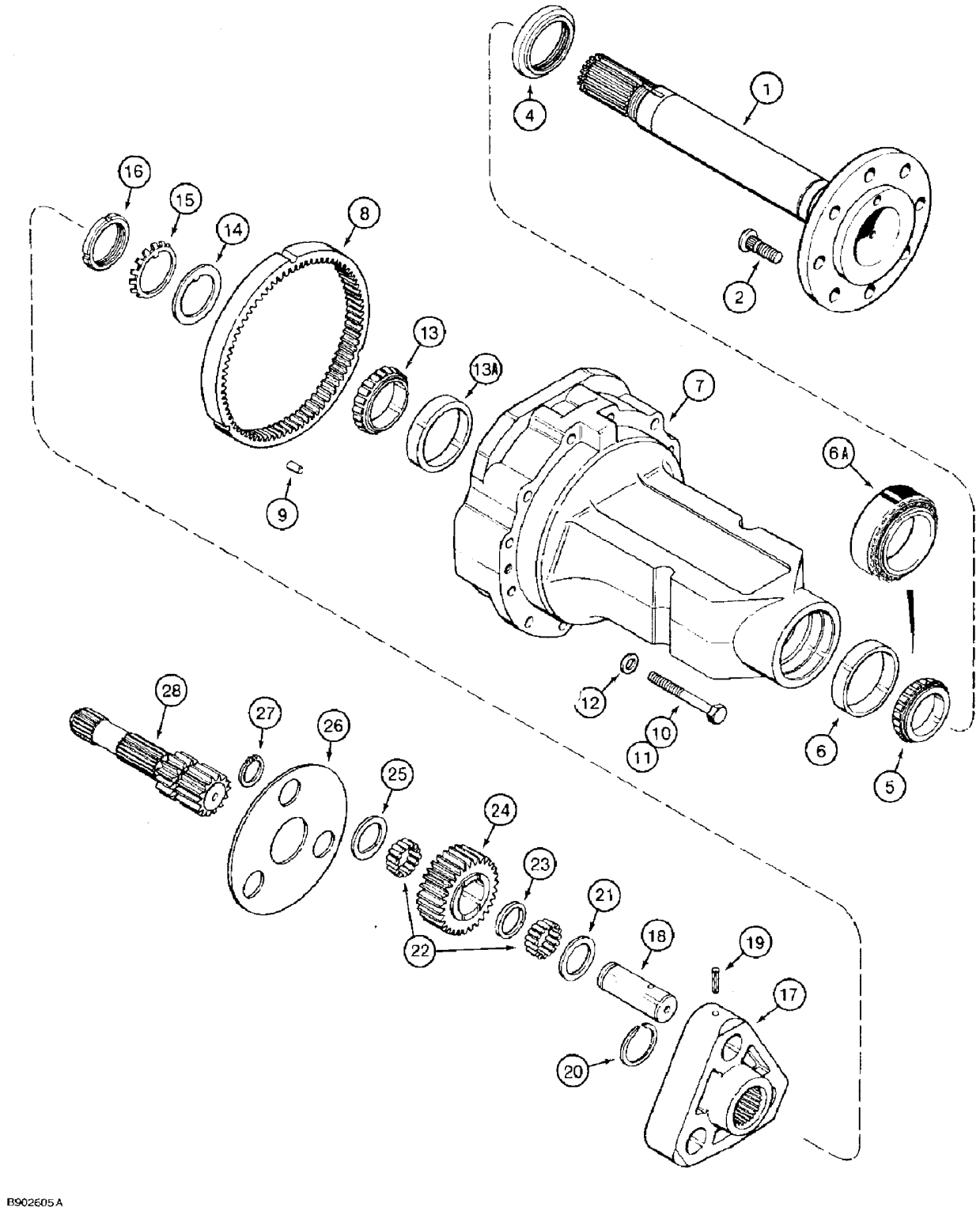

(580SK) - CASE SUPER-K CONSTRUCTION KING LOADER BACKHOE > (6-78) - TRANSAXLE ASSEMBLY, TRANSAXLE REAR AXLE AND PLANETARY GEARS

Diag #	Part #	Name	Description	Qty
	1995094C1	SHAFT ASSY.	SHAFT ASSEMBLY flanged, rear axle, replaces A188556 shaft, Includes: Ref. 1 and 2	2
1	NSS	NOT SERVICED SEPARATELY	SHAFT rear axle	1
2	3220372R2	STUD,M20 x 1.5 x 58mm, Cl 30	BOLT rear axle	8
4	A183953	OIL SEAL	SEAL axle shaft	2
5	102161H	BEARING ASSY,68.262mm ID x 21.996mm	BEARING tapered roller, outer, production only, order Ref. 6A, 1997134C1 bearing assembly for service, after August 1994	2
6	29214H	BEARING CUP	CUP tapered roller bearing, production only with Ref. 5, outer bearing, for service of the outer cup and bearing, order Ref. 6A, 1997134C1, bearing assembly	2
6A	1997134C1	BEARING ASSY,68.275 mm ID x 110.025 mm OD x 22.2 mm	BEARING tapered roller, includes cup, service replace- ment for Ref. 5 bearing and Ref. 6 cup, not available until August 1994	2
7	A190130	AXLE CARRIER	HOUSING rear axle, Includes: Ref. 8 and 9	2
		See fig. 6-32 for mounting hardware for P/N A190130 housing.	See fig. 6-32 for mounting hardware for P/N A190130 housing.	1
8	NSS	NOT SERVICED SEPARATELY	GEAR planetary ring, was part number A175955 which is no longer serviced separately, order A190130 housing	2
9	A175335	PIN	planetary ring gear	6
10	828-16130	BOLT,Hex, M16 x 2 x 130mm, Cl 10.9	- hex, 16 - 2 x 130 mm, class 10.9	2
11	828-16140	BOLT,Hex, M16 x 2 x 140mm, Cl 10.9	hex, 16 - 2 x 140 mm, class 10.9	22
12	96-31066	WASHER,21/32" x 1 5/16" x .188", HDN	WASHER,21/32" x 1 5/16" x .188", HDN	24
13	190585R91	TAPERED ROLLER BEARING,66.68 mm ID x 22.2 mm	BEARING tapered roller, inner	2
13A	29214H	BEARING CUP	CUP tapered roller bearing, replaces A26744 bearing cup	2
14	A175230	WASHER, THRUST	WASHER thrust bearing	2
15	192-364	LOCK WASHER	WASHER bearing lock, SAE No. TW-113	2
16	131-1064	BEARING LOCK NUT	tapered roller bearing, TN13	2

Diag #	Part #	Name	Description	Qty
17	A186686	CARRIER	ASSEMBLY planetary gear, Includes: Ref.18 and 19	2
18	A186685	PIN	planetary gear carrier	3
19	135-376	GROOVED PIN,3/8" x 1 1/2", Type F	Pin, Grooved, 3/8" x 1 1/2", Type F	3
20	A175241	RING, SNAP	RING retaining, carrier to rear axle	2
21	A186642	WASHER	carrier pin	6
22	A178187	ROLLER	BEARING roller	384
23	A178189	SEPARATOR	SPACER roller bearing separator	6
24	A178193	GEAR	planetary, 28 teeth	6
25	A175338	WASHER	D-WASHER carrier pin	6
26	A186651	DISC	SHIELD planetary gear	2
27	103-16175	SNAP RING,#175, Ext	Ring, Snap, , Planet gear (Replaces D25280) #175, Ext	6
28	A188558	SHAFT	sun gear, right-hand	1
29	A188559	SHAFT	sun gear, left-hand, not shown	1

http://www.minnparbackhoeparts.com/

(580SK) - CASE SUPER-K CONSTRUCTION KING LOADER BACKHOE > (6-80) - TRANSAXLE ASSEMBLY, SHIFT MECHANISM OUTPUT SHAFT, 4 WHEEL DRIVE MODELS

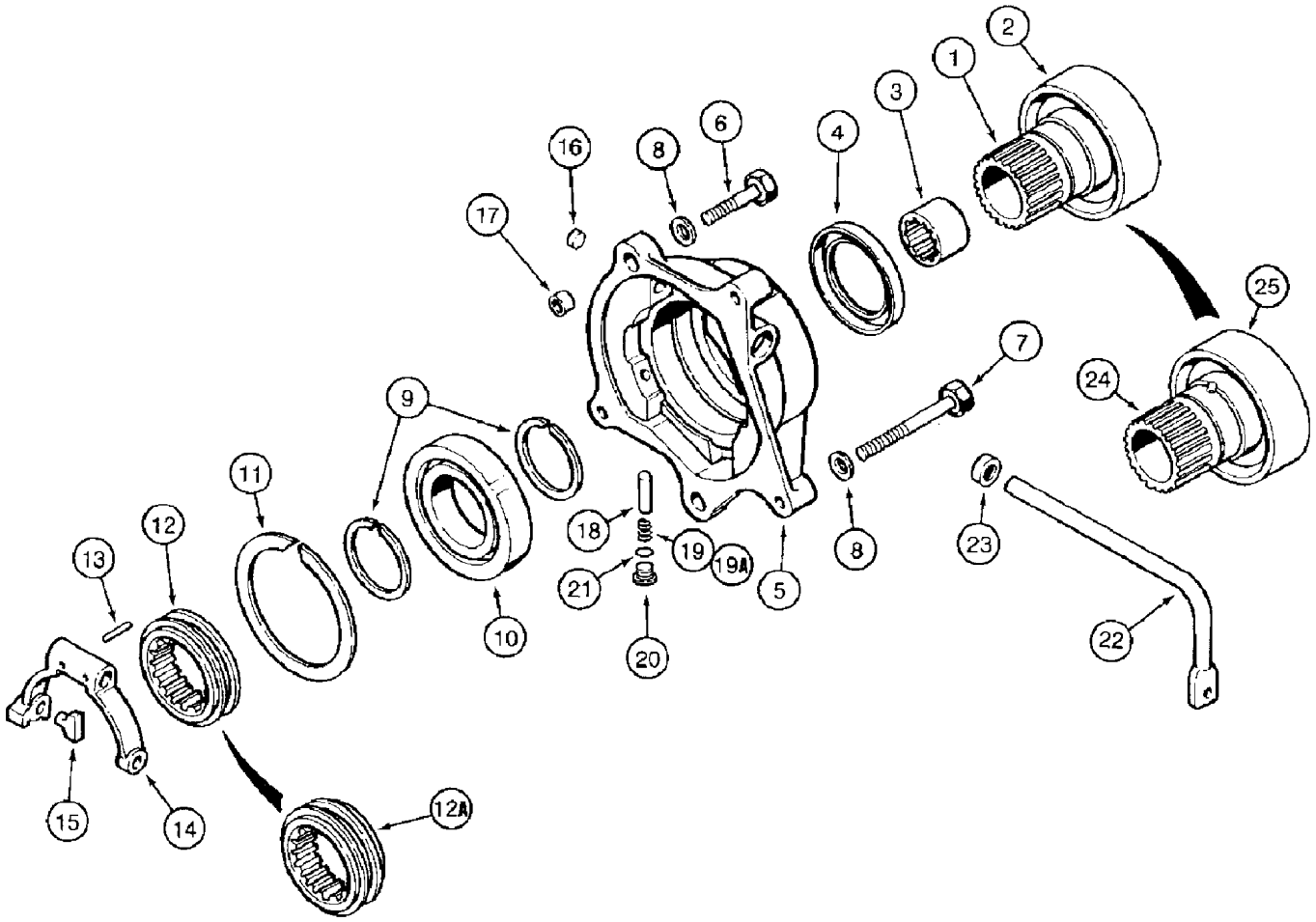

B920576

(580SK) - CASE SUPER-K CONSTRUCTION KING LOADER BACKHOE > (6-80) - TRANSAXLE ASSEMBLY, SHIFT MECHANISM OUTPUT SHAFT, 4 WHEEL DRIVE MODELS

Diag #	Part #	Name	Description	Qty
1	A188864	FLANGE	YOKE output, 4-wheel drive, without lube port, no longer used, order 1995266C1 yoke, Ref. 24, Includes: Ref. 2	1
2	A188865	SLINGER	yoke	1
3	1995134C1	SPACER	pinion shaft, replaces A175481 spacer	1
		Part of lube service kit P/N 1995265C1.	Part of lube service kit P/N 1995265C1.	1
4	A186909	OIL SEAL	SEAL oil	1
		Part of lube service kit P/N 1995265C1.	Part of lube service kit P/N 1995265C1.	1
5	A188304	HOUSING	4-wheel drive	1
6	828-12060	BOLT,Hex, M12 x 1.75 x 60mm, Cl 10.9	- hex, 12 - 1.75 x 60 mm, class 10.9	1
7	828-12110	BOLT,Hex, M12 x 1.75 x 110mm, Cl 10.9	- hex, 12 - 1.75 x 110 mm, class 10.9	4
8	895-11012	WASHER,M13.5 x 24 x 2.5	- flat, 13.5 x 24 x 2.5 mm	5
9	100-11275	SNAP RING,#275, Ext	Ring, Snap, , ball bearing (Replaces A31227) #275, Ext	2
10	ST273A	BALL BEARING,70 mm ID x 125 mm OD x 24 mm	BEARING ball, 4-wheel drive output, replaces A186910	1
11	100-21500	SNAP RING,5.00", Int, #500	Ring, Snap, (Replaces T38110) 5.00", Int, #500	1
12	A190322	RING	COLLAR 4-wheel drive shift, with lip flange, no longer available, order 1995025C1 collar, Ref. 12A	1
12A	1995025C1	RING	COLLAR 4-wheel drive shift, grooved both sides	1
13	138-2067	PIN,3/16" x 1", Coiled	PIN,3/16" x 1", Coiled	2
14	A188334	FORK	front drive engagement	1
15	A188527	FINGER	differential lock collar	2
16	41-1010	PLUG,Cup, 5/8"	cup, 5/8 inch	1
17	A188330	SLEEVE	dowel	2
18	A188074	PIN	shift fork	1
19	G47039	SPRING	shift fork pin, 25/64 inch hole, 19/32 inch compressed length, if used	1
19A	1995200C1	SPRING	shift fork pin, 3/8 inch hole, 11/16 inch compressed length, if used	1
20	9625178	PLUG,Hex Soc, 9/16"-18 ORB	Incl. Ref. 21 Hex Soc, 9/16"-18 ORB	1
22	A190448	CONTROL LEVER	LEVER, engagement, front drive	1
23	A178864	OIL SEAL	oil, engagement lever	1

Diag #	Part #	Name	Description	Qty
24	1995266C1	FLANGE	YOKE, output, 4-wheel drive, with lube port	1
		Part of lube service kit P/N 1995265C1.	Part of lube service kit P/N 1995265C1.	1
25	A188865	SLINGER	yoke	1
	1995265C1	SERVICE KIT	KIT service, lube, Includes: Ref. 3, 4 and 24 on this figure, plus Ref. 22 shims on Figure 6-70 and 1345879C1 bolt, Ref. 25 on Figure 6-70	1
21	237-6006	O-RING,0.114" ID x 0.254" OD x 0.07"	6-1, 90 Duro, .468" ID x .078" Thk	1

http://www.minnparbackhoeparts.com/

(580SK) - CASE SUPER-K CONSTRUCTION KING LOADER BACKHOE > (6-82) - TRANSAXLE ASSEMBLY, PTO CONTROL VALVE LINKAGE

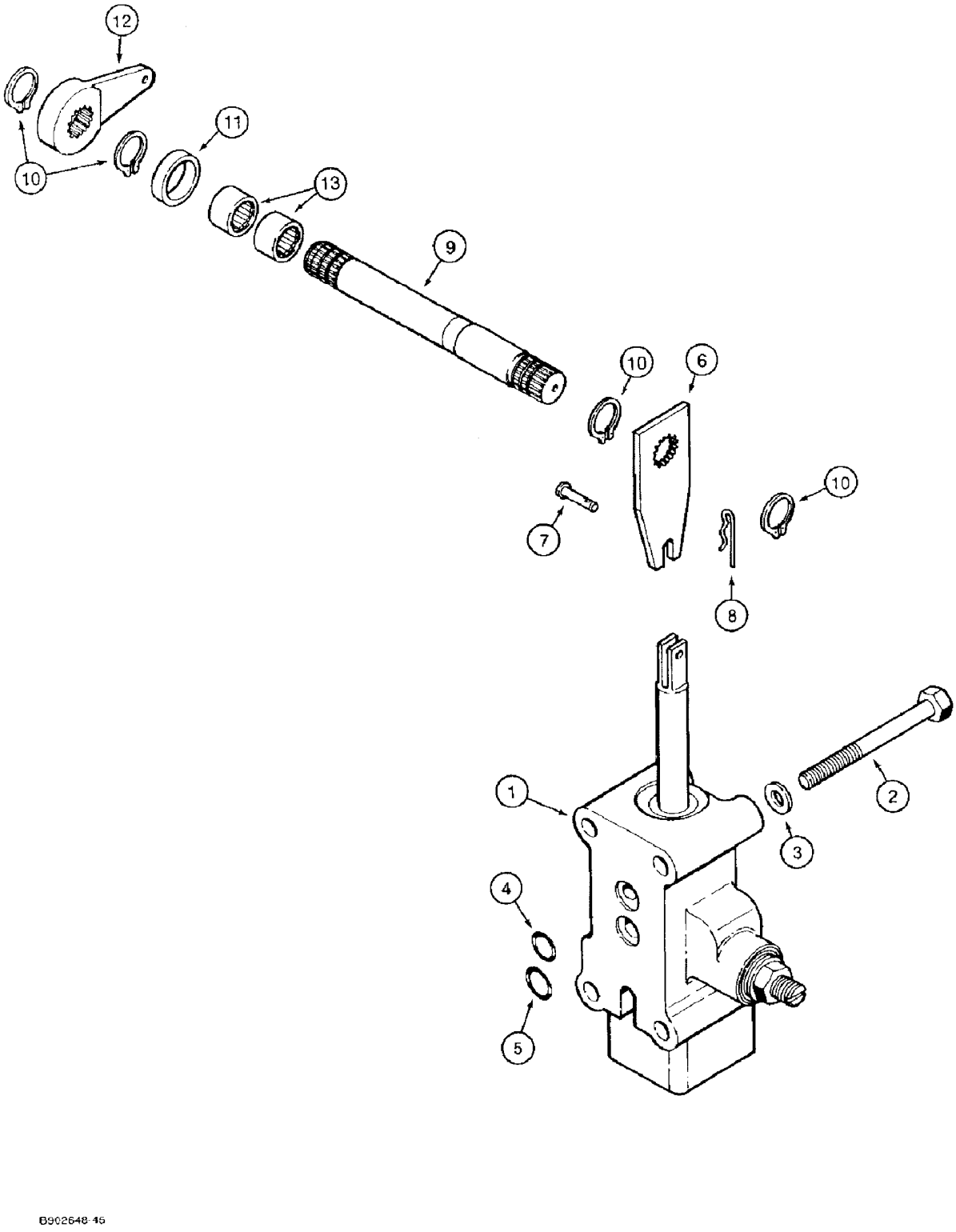

(580SK) - CASE SUPER-K CONSTRUCTION KING LOADER BACKHOE > (6-82) - TRANSAXLE ASSEMBLY, PTO CONTROL VALVE LINKAGE

Diag #	Part #	Name	Description	Qty
1	1971419C3	VALVE	PTO control, see parts list Figure 6-84	1
2	828-10090	BOLT,Hex, M10 x 1.5 x 90mm, Cl 10.9	- hex, 10 - 1.5 x 90 mm, class 10.9	4
3	895-10010	WASHER,M10 x 20 x 2	flat, 11 x 21 x 2 mm	4
4	238-5112	O-RING,-112, 70 Duro, .487" ID x .103" Thk	Valve to PTO housing sealing -112, 70 Duro, .487" ID x .103" Thk	1
5	238-5113	O-RING,-113, 70 Duro, .549" ID x .103" Thk	Valve to PTO housing sealing -113, 70 Duro, .549" ID x .103" Thk	1
6	A186743	CONTROL LEVER	LEVER PTO valve linkage internal	1
7	H343822	AXLE PIN	PIN clevis valve spool	1
8	132-2	SPLIT PIN/SAFETY PIN	PIN cotter, 1/16 x 5/16 inch	1
9	1345685C1	SHAFT	PTO valve linkage	1
10	A27521	SNAP RING,#68, Ext	Ring, Snap, , no longer used, order 100-1168 ring #68, Ext	4
10	100-1168	SNAP RING,#68, Ext	Ring, Snap, , lever (Replaces A27521) #68, Ext	4
11	A186635	SEAL	PTO linkage shaft	1
12	1345849C1	LEVER	PTO valve linkage external	1
13	359955R91	BEARING, NEEDLE	BEARING needle	2

http://www.minnparbackhoeparts.com/

(580SK) - CASE SUPER-K CONSTRUCTION KING LOADER BACKHOE > (6-84) - TRANSAXLE ASSEMBLY, PTO CONTROL VALVE

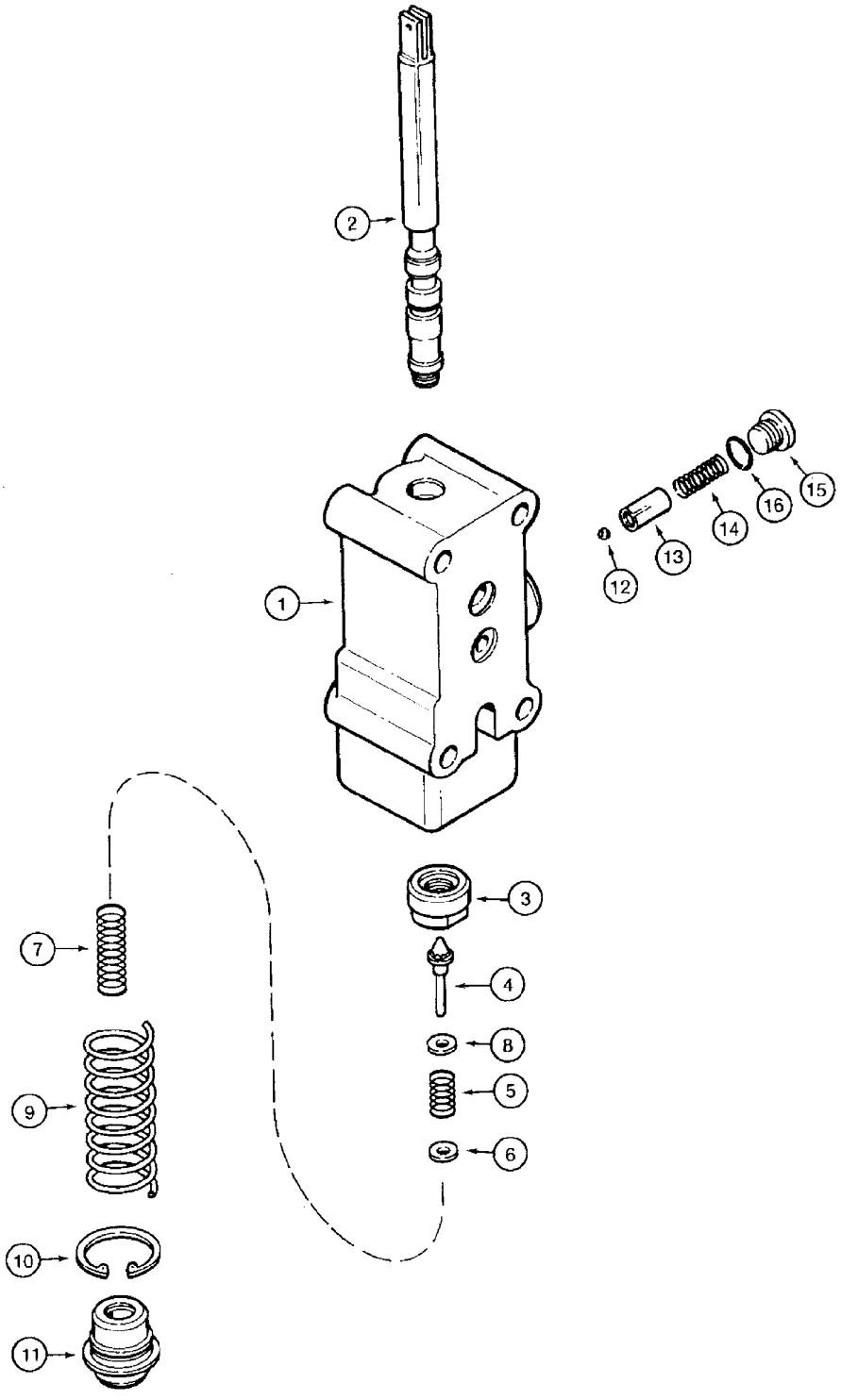

(580SK) - CASE SUPER-K CONSTRUCTION KING LOADER BACKHOE > (6-84) - TRANSAXLE ASSEMBLY, PTO CONTROL VALVE

Diag #	Part #	Name	Description	Qty
	1971419C3	VALVE	ASSEMBLY PTO control, Includes: Ref. 1 through 16	1
1	G110344	VALVE BODY	BODY PTO control valve	1
2	1957880C3	SPOOL	ASSEMBLY PTO control valve, Includes: Ref. 3	1
3	1957864C2	STOP	spool	1
4	G108809	VALVE POPPET	POPPET valve	1
5	G110335	SPRING	modulator	1
6	G108810	WASHER	poppet	1
7	G108816	SPRING	primary, modulator	1
8	G108811	WASHER	poppet	1
9	G110342	SPRING	return	1
10	A32181	SNAP RING,1.375", Int, #137	Ring, Snap, , cap 1.375", Int, #137	1
11	G108808	CAP	end	1
12	211-206	BALL,1/4" Dia	1/4 inch, grade 25, chrome alloy steel	1
13	1341948C3	GUIDE	detent	1
14	1341952C1	SPRING	detent	1
15	9625178	PLUG,Hex Soc, 9/16"-18 ORB	Incl. Ref. 16 Hex Soc, 9/16"-18 ORB	1
16	237-6006	O-RING,0.114" ID x 0.254" OD x 0.07"	6-1, 90 Duro, .468" ID x .078" Thk	1

http://www.minnparbackhoeparts.com/

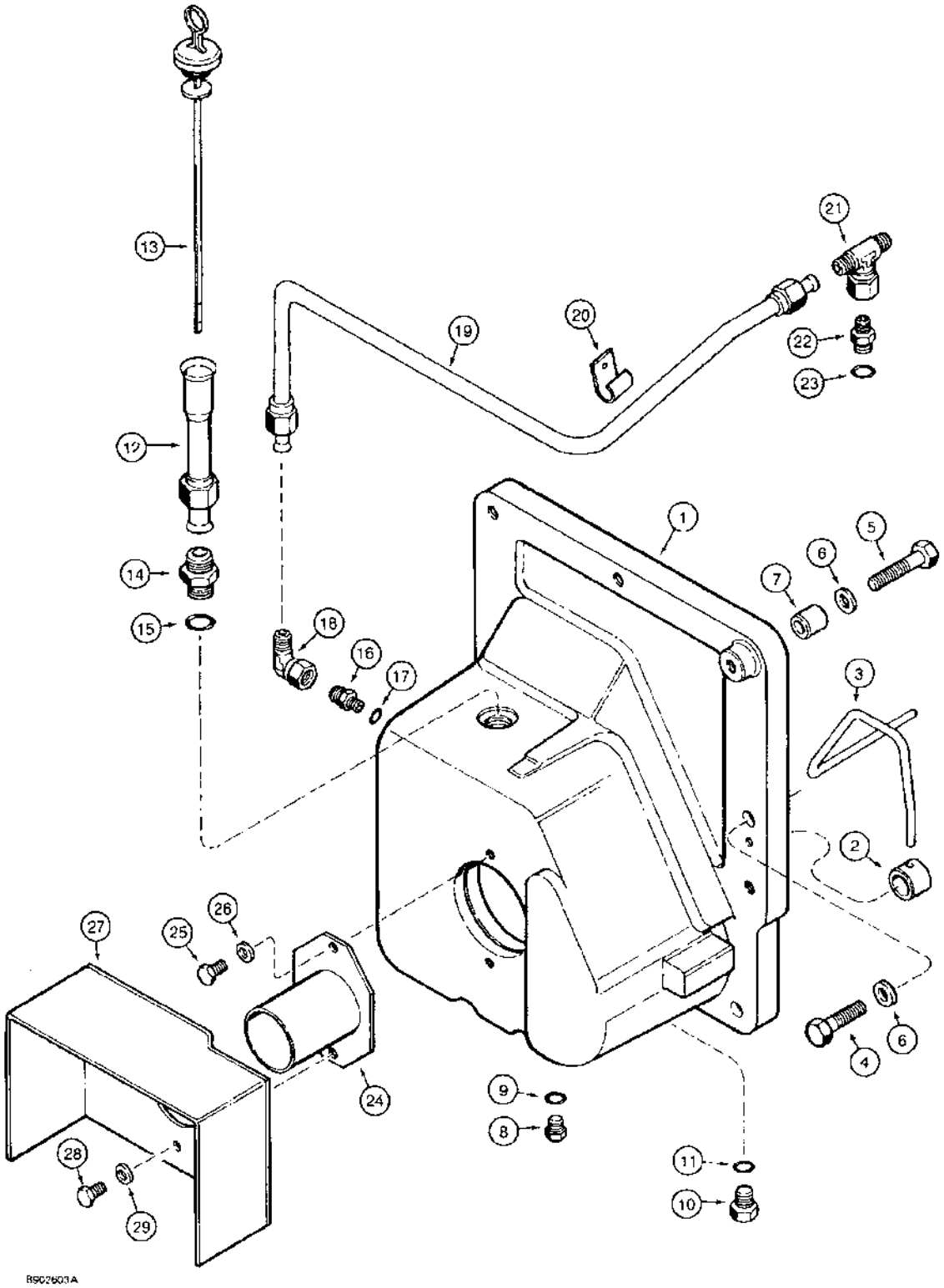

(580SK) - CASE SUPER-K CONSTRUCTION KING LOADER BACKHOE > (6-86) - TRANSAXLE ASSEMBLY, PTO HOUSING

Diag #	Part #	Name	Description	Qty
	1345847C1	HOUSING	ASSEMBLY PTO pressed, Includes: Ref. 1, 2 and 3	1
1	NSS	NOT SERVICED SEPARATELY	HOUSING PTO	1
2	1345679C1	SLEEVE	seal, input shaft	1
3	NSS	NOT SERVICED SEPARATELY	TUBE PTO clutch pressure	1
4	828-16060	BOLT,Hex, M16 x 2 x 60mm, Cl 10.9	BOLT,Hex, M16 x 2 x 60mm, Cl 10.9	7
5	828-16080	BOLT,Hex, M16 x 2 x 80mm, Cl 10.9	BOLT,Hex, M16 x 2 x 80mm, Cl 10.9	2
6	896-12016	WASHER,M17.5 x 30 x 4, HT	- flat, 17.5 x 30 x 4 mm, hardened	9
7	A175769	DOWEL	PTO housing to transaxle housing	2
8	9625178	PLUG,Hex Soc, 9/16"-18 ORB	Incl. Ref. 9 Hex Soc, 9/16"-18 ORB	1
10	214389	PLUG,Hex Hd, 3/4"-16 ORB	Includes Ref. 11 Hex Hd, 3/4"-16 ORB	1
11	237-6008	O-RING,0.176" ID x 0.316" OD x 0.07"	8-1, 90 Duro, .644" ID x .087" Thk	1
12	A183270	TUBE	ASSEMBLY dipstick, Includes: Ref. 13	1
13	A183273	DIPSTICK	PTO breather	1
14	218-5064	HYD CONNECTOR,1 1/16"-12, 37º x 1 1/16"-12, O-Ring	ADAPTER straight, 1-1/16-12 inch flare x O-ring boss, Incl. Ref. 15	1
15	237-6012	O-RING,0.924" x 0.116"	59/64 ID x 7/8 inch wide	1
16	218-5351	HYD CONNECTOR,3/4"-16, 37º x 9/16"-18, O-Ring	ADAPTER straight, 3/4-16 flare x 9/16-18 inch O-ring boss, Includes: Ref. 17	1
18	218-5230	ELBOW,90º, 3/4"-16, 37º x 3/4"-16, 37º Fem Sw	90 degree, 3/4-16 inch flare x swivel flare	1
19	A188874	TUBE	PTO oil supply	1
20	T31034	CLAMP	tube	1
21	218-840	TEE,37º, 3/4"-16 x 3/4"-16, Fem Sw Br	3/4-16 inch swivel straight thread branch x flare x flare	1
22	218-5060	HYD CONNECTOR,3/4"-16, 37º x 7/8"-14, O-Ring	Adapter, straight, O-ring boss, Incl. Ref 23 3/4"-16, 37º x 7/8"-14, O-Ring	1
23	237-6010	O-RING,0.239" ID x 0.379" OD x 0.07"	10-1, 90 Duro, .755" ID x .097" Thk	1
24	A190208	GUARD ASSY.	COVER protective, not used when PTO shield is used	1
25	626-10020	BOLT,Hex, M10 x 1.5 x 20mm, Cl 10.9, Full Thd	hex, 10 - 1.5 x 20 mm, class 10.9, if used	2
26	895-10010	WASHER,M10 x 20 x 2	flat, 11 x 21 x 2 mm, if used	2

Diag #	Part #	Name	Description	Qty
27	D149986	SHIELD	PTO, if used	1
28	814-10020	BOLT,Hex, M10 x 1.5 x 20mm, Cl 8.8, Full Thd	If Used Hex, M10 x 20, 8.8, Full Thd	2
29	895-11010	WASHER,M10 x 20 x 2	flat, 11 x 21 x 2 mm, If used	2
17	237-6006	O-RING,0.114" ID x 0.254" OD x 0.07"	41/64 ID x 5/64 inch wide	1
9	237-6006	O-RING,0.114" ID x 0.254" OD x 0.07"	6-1, 90 Duro, .468" ID x .078" Thk	1

http://www.minnparbackhoeparts.com/

(580SK) - CASE SUPER-K CONSTRUCTION KING LOADER BACKHOE > (6-88) - TRANSAXLE ASSEMBLY, PTO CLUTCH AND BRAKE

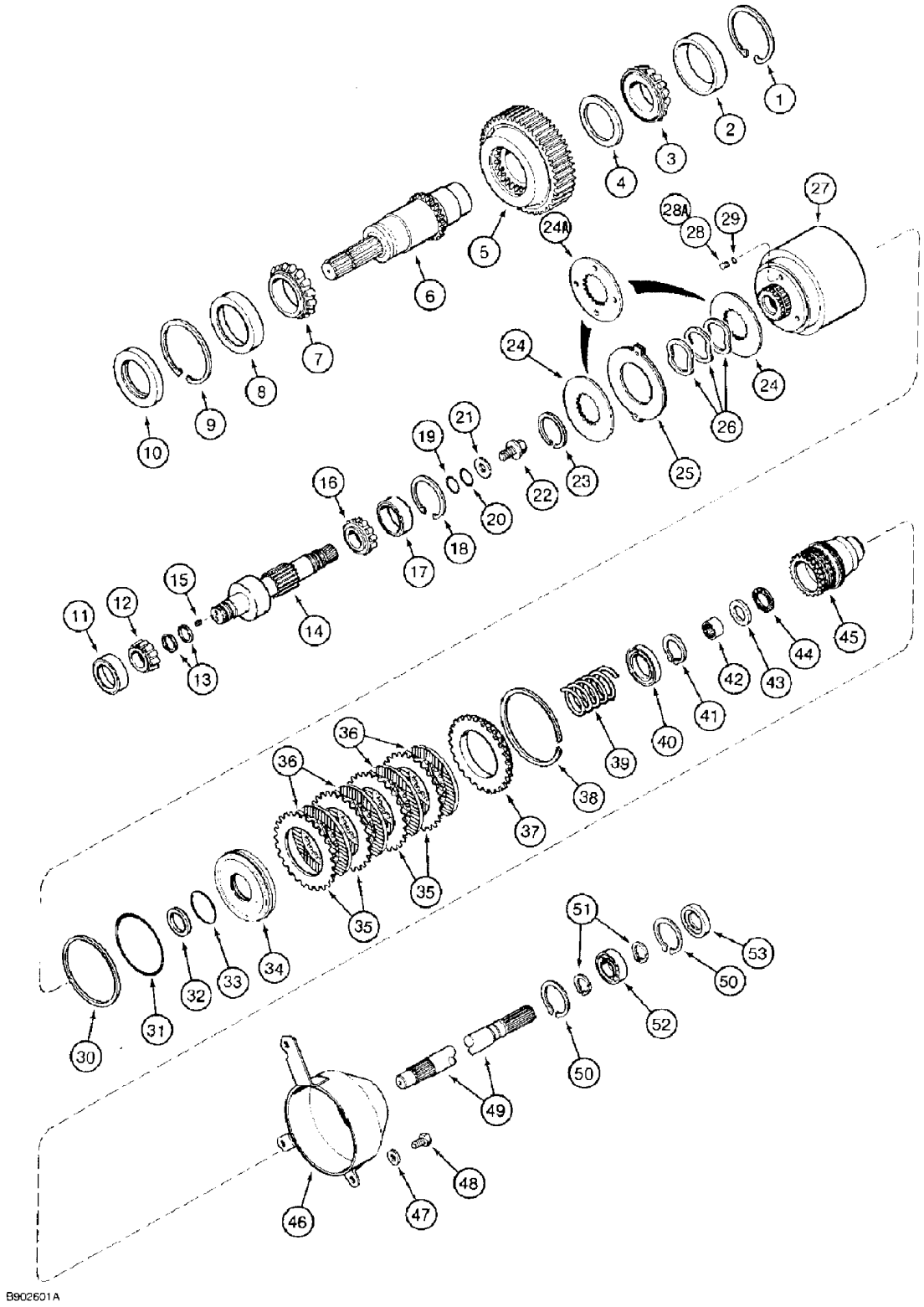

(580SK) - CASE SUPER-K CONSTRUCTION KING LOADER BACKHOE > (6-88) - TRANSAXLE ASSEMBLY, PTO CLUTCH AND BRAKE

Diag #	Part #	Name	Description	Qty
1	A152252	RING	snap, output shimming, if used	1
1	1345620C1	CIRCLIP	RING snap, output shimming, 2.7 mm, if used	1
1	1345621C1	SNAP RING	RING snap, output shimming, 2.6 mm, if used	1
1	1345622C1	SNAP RING	RING snap, output shimming, 2.5 mm, if used	1
1	1345623C1	SNAP RING	RING snap, output shimming, 2.4 mm, if used	1
2	659459R1	BEARING, CUP	CUP tapered roller bearing, output shaft front	1
3	158359C91	ROLLER BEARING,2.25" ID x 3.875" OD x 0.8268"	BEARING tapered roller, output shaft front, replaces A150146	1
4	1341177C1	THRUST WASHER	WASHER thrust, PTO output gear	1
5	1341172C3	PINION	GEAR driven, 540 RPM	1
6	1995036C1	SHAFT	output, PTO	1
7	102161H	BEARING ASSY,68.262mm ID x 21.996mm	BEARING tapered roller, output shaft rear	1
8	29214H	BEARING CUP	CUP tapered roller bearing, output shaft rear	1
9	R32220	SNAP RING,4.331", Int, #433	Ring, Snap, , output shaft rear 4.331", Int, #433	1
10	A175136	OIL SEAL	oil, output shaft	1
11	671033R1	BEARING, CUP	CUP tapered roller bearing, rear input shaft, replaces A153748	1
12	671032R1	TAPERED ROLLER BEARING	BEARING tapered roller, rear input shaft, replaces A153749	1
13	A188295	SEALING RING	RING sealing, input shaft	2
14	1341276C2	SHAFT ASSY.	SHAFT ASSEMBLY input, service for shaft with or without rear splines, Includes: Ref. 15	1
15	83-3314	SET SCREW,Hex Soc, 5/16"-18 x 1/4"	SCREW set, 7/16 NC x 3/8 inch	1
16	50212VA	BEARING, CONE,33.35 mm ID x 24.01, 25.36 mm	BEARING tapered roller, front input shaft	1
17	50213V	BEARING CUP	CUP tapered roller bearing, front input shaft	1
18	100-21275	SNAP RING,2.75", Int, #275	Ring, Snap, , Front brg shimming, if used (Replaces 31538 ring) 2.75", Int, #275	1
18	1345614C1	SPECIAL RING	RING snap, front bearing shimming, 2.3 mm, if used	1
18	1345615C1	SPECIAL RING	RING snap, front bearing shimming, 2.2 mm, if used	1

Diag #	Part #	Name	Description	Qty
18	1345616C1	SPECIAL RING	RING snap, front bearing shimming, 2.1 mm, if used	1
18	1345617C1	SNAP RING	RING snap, front bearing shimming, 2 mm, if used	1
19	238-5215	O-RING,-215, 70 Duro, 1.046" ID x .139" Thk	1-1/16 ID x 1/8 inch wide, distributor seal front	1
20	238-5214	O-RING,-214, 70 Duro, .984" ID x .139" Thk	Distributor seal front -214, 70 Duro, .984" ID x .139" Thk	1
21	A175129	WASHER, THRUST	WASHER retainer, clutch hub	1
22	853-12025	BOLT,Hvy Hex, M12 x 25mm, Cl 10.9	hex, 12 - 1.75 x 25 mm, class 10.9, clutch assembly retainer	1
23	N6263	SNAP RING,M55, Ext	RING retaining, plate	1
24	A183439	BRAKE PLATE	PLATE brake steel, without friction material, no longer available, order 112627A1 kit shown below	2
24A	1995264C1	BRAKE DISC	PLATE brake friction, with friction material, no longer available, order 112627A1 kit shown below	2
		Part of PTO brake kit P/N 112627A1.	Part of PTO brake kit P/N 112627A1.	1
25	1345606C1	BRAKE DISC	PLATE brake reaction, no longer available, order 112627A1 kit shown below	1
		Part of PTO brake kit P/N 112627A1.	Part of PTO brake kit P/N 112627A1.	1
26	1345690C1	SPRING	wave washer, three included in kit	2-3
		Part of PTO brake kit P/N 112627A1.	Part of PTO brake kit P/N 112627A1.	1
27	A188685	HOUSING	clutch	1
28	A183438	PIN	piston, used with item 24, A183439, plate	3
28A	1995268C1	PISTON	PIN piston, used with item 24A, 1345606C1, plate	3
		Part of PTO brake kit P/N 112627A1.	Part of PTO brake kit P/N 112627A1.	1
29	238-5008	O-RING,0.176" ID x 0.176" OD x 0.07"	-008, 70 Duro, .176" ID x .070" Thk, Piston pin	3
		Part of PTO brake kit P/N 112627A1.	Part of PTO brake kit P/N 112627A1.	1
	112627A1	PACKAGE, REPAIR	KIT PTO brake, Includes: Ref. 24A - 26, 28A and 29	1
30	A158051	SEAL	piston, external	1
31	238-5156	O-RING,-156, 70 Duro, 4.237" ID x .103" Thk	Piston, external (Replaces A158050) -156, 70 Duro, 4.237" ID x .103" Thk	1
32	A159297	SEAL	SEAL piston, internal	1
33	238-5137	O-RING,-137, 90 Duro, 2.05" ID x .103" Thk	Piston, internal (Replaces A159296) -137, 90 Duro, 2.05" ID x .103" Thk	1
34	A159292	PISTON	clutch	1
35	A175806	PLATE	clutch, separator	4

Diag #	Part #	Name	Description	Qty
36	A188946	DRIVE PLATE	PLATE clutch, friction	4
		Service with 1997129C1 waffle-pattern friction plate.	Service with 1997129C1 waffle-pattern friction plate.	1
37	A178020	PLATE	clutch, backing	1
38	A158227	CIRCLIP	RING retaining, backing plate	1
39	A183508	SPRING	PTO piston return	1
40	A183436	RETAINER	spring	1
41	103-16175	SNAP RING,#175, Ext	Ring, Snap, , Planet gear (Replaces D25280) #175, Ext	1
42	A175839	NEEDLE BEARING,25 mm ID x 32 mm OD x 16 mm	BEARING input shaft	1
43	A146625	WASHER, THRUST	WASHER thrust	1
44	T36441	THRUST BEARING,1.127" ID x 1.74" OD x 0.0781"	BEARING rear input shaft	1
45	A188600	YOKE	inner hub	1
46	A190146	BAFFLE	PTO clutch	1
47	895-11008	WASHER,M8 x 16 x 1.6	WASHER,M8 x 16 x 1.6	3
48	627-8020	BOLT,Hex, M8 x 1.25 x 20mm, Cl 10.9, Full Thd	hex, 8 - 1.25 x 20 mm, class 10.9, PTO baffles to housing	3
49	A188245	SHAFT	PTO rear input	1
50	S62213	SNAP RING,2.165", Int, #216	Ring, Snap, , PTO input shaft, replaces 452166R1 2.165", Int, #216	2
51	301020R1	SNAP RING,#118, Ext	Ring, Snap, , idler gear and bearing retainer, replaces A8218 #118, Ext	2
52	451590R91	BALL BEARING,30 mm ID x 55 mm OD x 13 mm	ball, replaces A158333	1
53	A186767	OIL SEAL	PTO input shaft oil	1

http://www.minnparbackhoeparts.com/



BRAKES 7

http://www.minnparbackhoeparts.com/

(580SK) - CASE SUPER-K CONSTRUCTION KING LOADER BACKHOE > (7-02) - TRANSAXLE ASSEMBLY, DIFFERENTIAL BRAKE

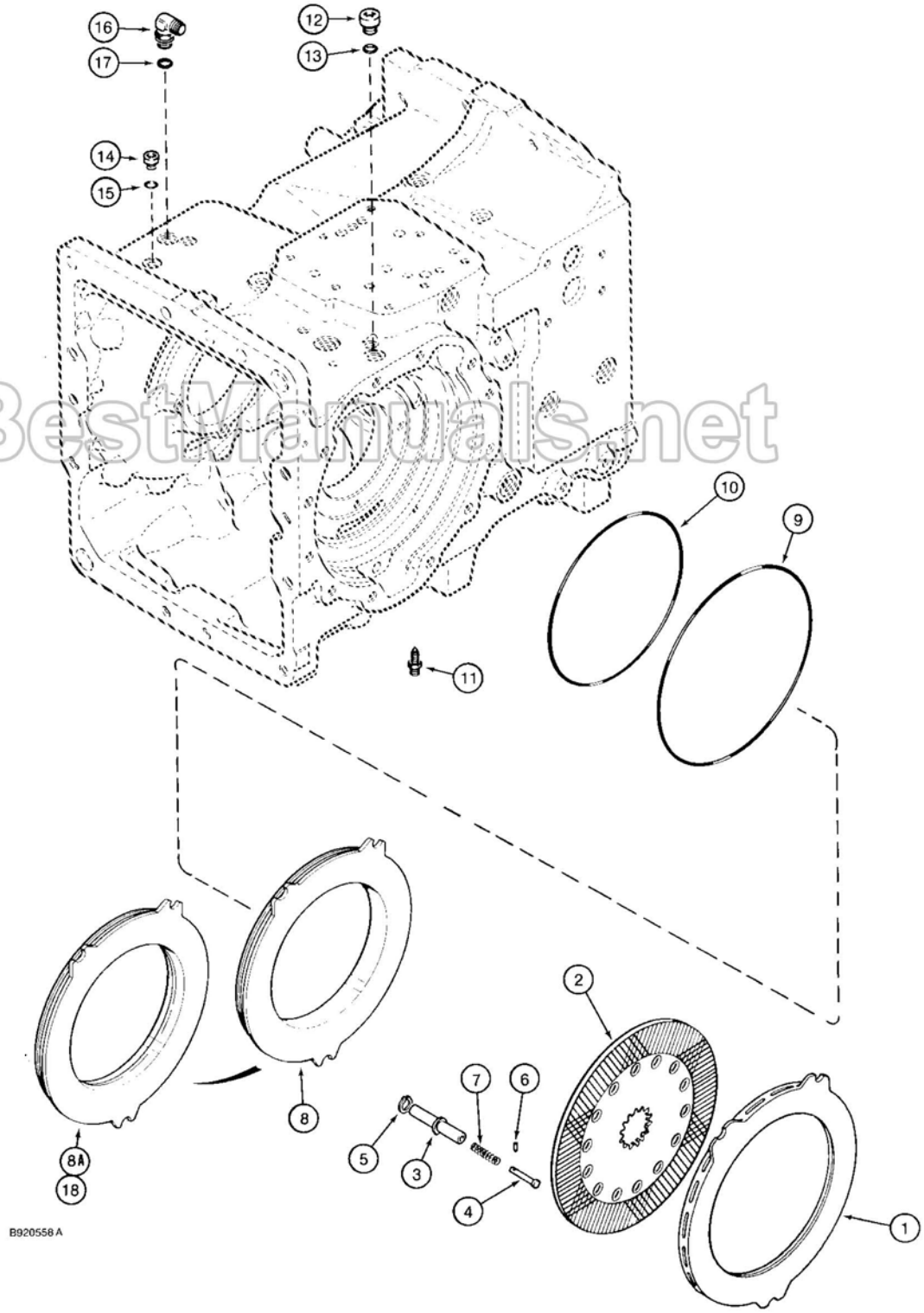

BestManuals.net

(580SK) - CASE SUPER-K CONSTRUCTION KING LOADER BACKHOE > (7-02) - TRANSAXLE ASSEMBLY, DIFFERENTIAL BRAKE

Diag #	Part #	Name	Description	Qty
1	1995365C1	PLATE	backing, brake, replaces A188736 plate	2
2	A188412	PLATE	friction, brake	2
	1345810C1	DOWEL	TUBE ASSEMBLY brake adjuster, Includes: Ref. 3 through 7	6
3	A186555	TUBE	brake adjuster	1
4	NSS	NOT SERVICED SEPARATELY	PLUNGER brake adjuster	1
5	100-1462	SNAP RING,#62, Ext	Ring, Snap, #62, Ext	2
6	NSS	NOT SERVICED SEPARATELY	PIN brake adjuster	1
7	A190295	SPRING	piston return	1
8	1341069C1	PISTON	brake, without internal groove, no longer used, order 1995361C1 piston, Ref. 8A	2
8A	1995361C1	PISTON	brake, with internal groove, see Ref. 18 for service replacement on transaxles with damage to brake piston bores	2
9	238-5277	O-RING,-277, 70 Duro, 11.484" ID x .139" Thk	Brake piston (Replaces A178873 O-ring) -277, 70 Duro, 11.484" ID x .139" Thk	2
10	238-5273	O-RING,-273, 70 Duro, 9.734" ID x .139" Thk	Brake piston (Replaces A178874 O-ring) -273, 70 Duro, 9.734" ID x .139" Thk	2
11	A188637	BLEEDER	VALVE brake bleeder	2-4
12	71100209	PLUG,Hex Soc, 3/4"-16 ORB	Incl Ref 13 Hex Soc, 3/4"-16 ORB	1
13	237-6008	O-RING,0.176" ID x 0.316" OD x 0.07"	8-1, 90 Duro, .644" ID x .087" Thk	1
14	87035062	PLUG,Hex Soc, 1/2"-20 ORB	Includes Ref. 15 Hex Soc, 1/2"-20 ORB	2
16	218-5106	ELBOW,90º, 3/4"-16, 37º x 3/4"-16, O-Ring	90 degree, adj, 3/4-16 inch flare x O-ring boss, Includes: Ref. 17	1
17	237-6008	O-RING,0.176" ID x 0.316" OD x 0.07"	8-1, 90 Duro, .644" ID x .087" Thk	1
18	121039A1S	PISTON	brake, oversize with internal grove, use as service replacement for Ref. 8, 1341069C1, or item 8A, 1995361C1, pistons on transaxles that have incurred damage to brake piston bores	2
15	237-6005	O-RING,0.414" ID	5-1, 90 Duro, .414" ID x .072" Thk	1

http://www.minnparbackhoeparts.com/

(580SK) - CASE SUPER-K CONSTRUCTION KING LOADER BACKHOE > (7-04) - TRANSAXLE ASSEMBLY, PARKING BRAKE

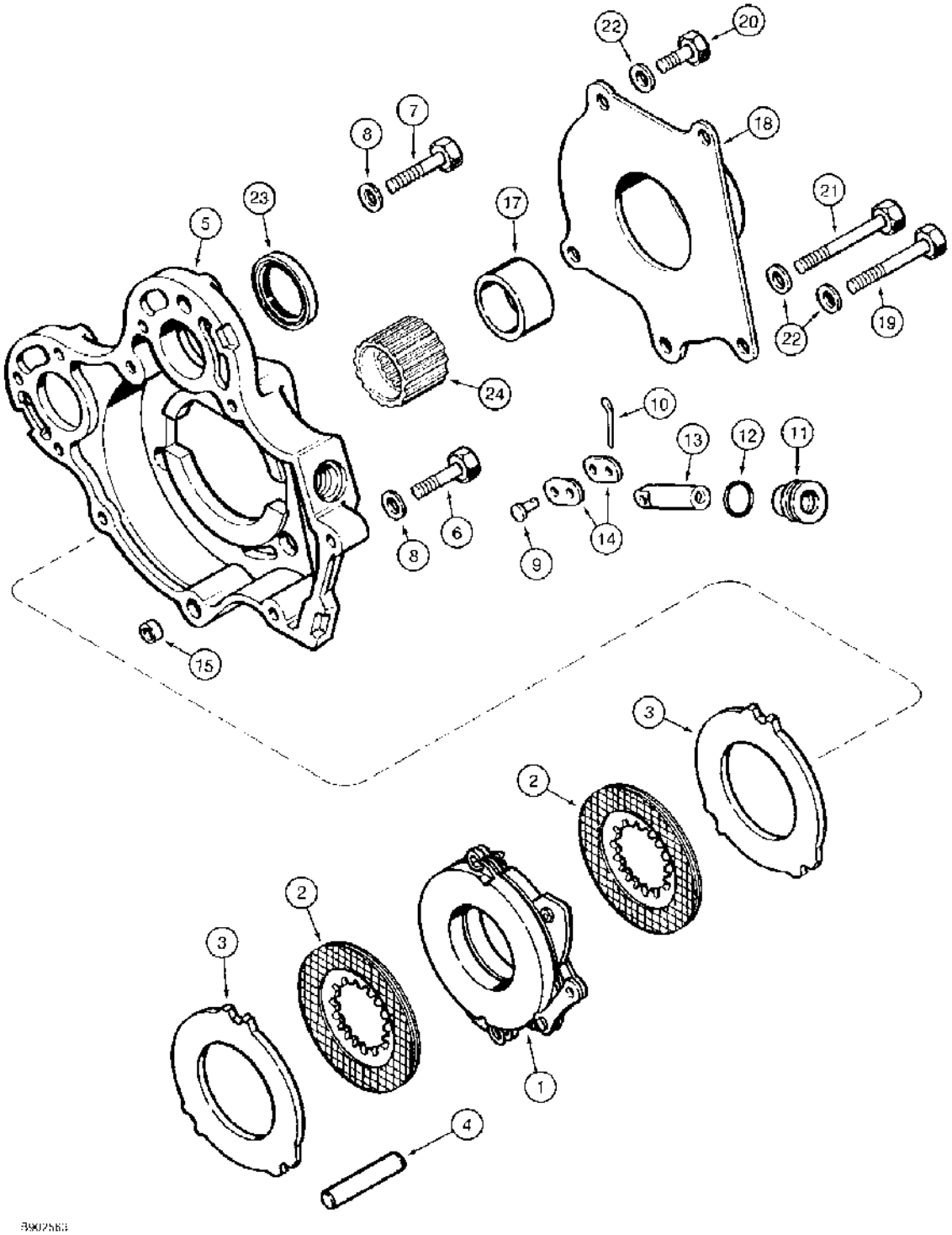

(580SK) - CASE SUPER-K CONSTRUCTION KING LOADER BACKHOE > (7-04) - TRANSAXLE ASSEMBLY, PARKING BRAKE

Diag #	Part #	Name	Description	Qty
1	A158090	BRAKE ASSY.	BRAKE emergency parking	1
2	1341170C1	BRAKE DISC	PLATE friction	2
3	A178856	BACK PLATE	PLATE backing	2
4	A183228	PIN	brake locating	3
5	A188025	HOUSING	brake	1
6	826-12050	BOLT,Hex, M12 x 1.75 x 50mm, Cl 10.9	hex, 12 - 1.75 x 50 mm, class 10.9	5
7	828-12060	BOLT,Hex, M12 x 1.75 x 60mm, Cl 10.9	- hex, 12 - 1.75 x 60 mm, class 10.9	1
8	895-11012	WASHER,M13.5 x 24 x 2.5	- flat, 13.5 x 24 x 2.5 mm	6
9	427-6106	CLEVIS PIN,3/8" x 1 1/16"	PIN, CLEVIS, 3/8" x 1 1/16"	2
10	32-612	COTTER PIN,3/32" x 3/4"	PIN, SPLIT (COTTER), 3/32" x 3/4"	2
11	A190099	PLUG	ADAPTER brake actuator	1
		External O-ring included with this part is 237-6012. Ref. 12 is the internal "o" ring.	External O-ring included with this part is 237-6012. Ref. 12 is the internal "o" ring.	1
12	237-6012	O-RING,0.924" x 0.116"	11/16 ID x 3/32 inch wide, replaced 238-7115	1
13	A190100	SHAFT	brake actuator	1
14	A186973	LINK	parking brake	2
15	A188330	SLEEVE	dowel	2
16	1995134C1	SPACER	pinion shaft, 4 wheel drive, not shown, replaces A175481 spacer	1
17	1345869C1	SPACER	pinion shaft, 2 wheel drive	1
		Used on 2 wheel drive models only.	Used on 2 wheel drive models only.	1
18	A188960	COVER ASSY	COVER parking brake	1
		Used on 2 wheel drive models only.	Used on 2 wheel drive models only.	1
19	826-12090	BOLT,Hex, M12 x 1.75 x 90mm, Cl 10.9	hex, 12 - 1.75 x 90 mm, class 10.9	3
		Used on 2 wheel drive models only.	Used on 2 wheel drive models only.	1
20	626-12040	BOLT,Hex, M12 x 1.75 x 40mm, Cl 10.9, Full Thd	BOLT,Hex, M12 x 1.75 x 40mm, Cl 10.9, Full Thd	1
		Used on 2 wheel drive models only.	Used on 2 wheel drive models only.	1
21	828-12100	BOLT,Hex, M12 x 1.75 x 100mm, Cl 10.9	- hex, 12 - 1.75 x 100 mm, class 10.9	1
		Used on 2 wheel drive models only.	Used on 2 wheel drive models only.	1

Diag #	Part #	Name	Description	Qty
22	895-11012	WASHER,M13.5 x 24 x 2.5	- flat, 13.5 x 24 x 2.5 mm	5
		Used on 2 wheel drive models only.	Used on 2 wheel drive models only.	1
23	A158371	OIL SEAL	oil, input shaft	1
24	A186646	GEAR	HUB parking brake	1

http://www.minnparbackhoeparts.com/

(580SK) - CASE SUPER-K CONSTRUCTION KING LOADER BACKHOE > (7-06) - BRAKE PEDALS AND BRAKE MASTER CYLINDER MOUNTING

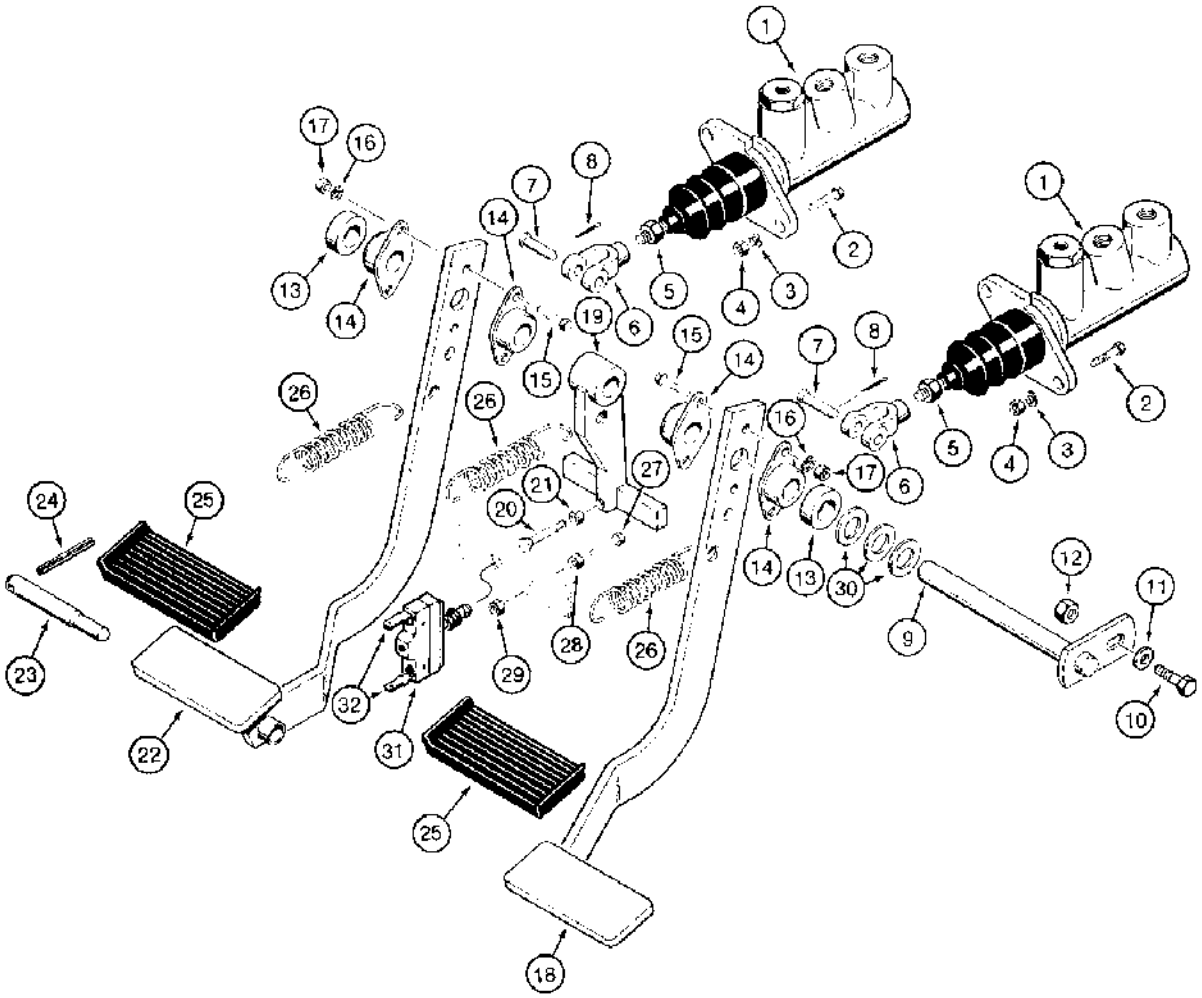

(580SK) - CASE SUPER-K CONSTRUCTION KING LOADER BACKHOE > (7-06) - BRAKE PEDALS AND BRAKE MASTER CYLINDER MOUNTING

Diag #	Part #	Name	Description	Qty
1	D143162	MASTER CYLINDER	CYLINDER ASSEMBLY brake master, parts list Figure 7-10	2
2	413-516	BOLT,Hex, 5/16" - 18 x 1", Gr 5	hex, 5/16 NC x 1 inch	4
3	492-11031	LOCK WASHER,5/16"	WASHER, LOCK, 5/16"	4
4	425-105	NUT,5/16"-18, G5	- hex, 5/16 inch NC	4
5	425-156	JAM NUT,Jam, 3/8"-24, G5	hex, jam, 3/8 inch NF	2
6	D137077	CLEVIS	female, master cylinder	2
7	L26209	PIN	clevis, 3/8 inch	2
8	432-612	COTTER PIN,3/32" x 3/4"	PIN , SPLIT (COTTER), 3/32" x 3/4"	2
9	D140035	SHAFT	Brake pedal	1
10	413-616	BOLT,Hex, 3/8" - 16 x 1", Gr 5	hex, 3/8 NC x 1 inch	1
11	495-11041	WASHER,3/8", SAE	flat, (13/32 x 13/16 x 1/16")	1
12	231-1446	NUT,3/8"-16, GB	NUT hex, self-locking, 3/8 inch NC, grade 8	1
13	D124529	SPACER	pedal	2
14	A77310	BEARING,0.754" ID x 1.375" OD x 0.81"	pivot, brake pedal	4
15	413-524	BOLT,Hex, 5/16" - 18 x 1 1/2", Gr 5	- hex, 5/16 NC x 1-1/2 inch	4
16	492-11031	LOCK WASHER,5/16"	WASHER, LOCK, 5/16"	4
17	425-105	NUT,5/16"-18, G5	- hex, 5/16 inch NC	4
18	D124521	PEDAL	brake, right-hand	1
19	D124528	LEVER	brake lamp	1
20	121-140	FLANGE BOLT,Elevator, Flat Csk, 5/16" - 18 x 2"	BOLT flat countersunk head, 5/16 NC x 2 inch, grade 2, special, brake switch actuator	1
21	425-105	NUT,5/16"-18, G5	- hex, 5/16 inch NC	1
22	D124522	PEDAL	brake, left-hand	1
23	D124530	PIN	pedal lock	1
24	438-12040	LOCK PIN,5/16" x 2 1/2", Slotted	Pin, 5/16" x 2 1/2", Slotted	1
25	F9197	PAD	COVER pedal, rubber	2
26	D120911	SPRING	pedal and lever return, attaches to brake pedal spring rod in firewall frame	3
27	413-524	BOLT,Hex, 5/16" - 18 x 1 1/2", Gr 5	- hex, 5/16 NC x 1-1/2 inch, attaches to brake pedal stop bar in firewall frame	2
28	425-145	JAM NUT,Jam, 5/16"-18, G5	JAM NUT,Jam, 5/16"-18, G5	2
29	425-105	NUT,5/16"-18, G5	- hex, 5/16 inch NC	2

Diag #	Part #	Name	Description	Qty
30	495-81261	WASHER,13/16" x 1 1/2" x .067", HDN	flat, 13/16 x 1-1/2 x 1/16 inch, use as a shim	1
31	D148108	SWITCH	brake lamp, attaches to front console wiring harness, mounts in brake pedal stop bar in firewall frame	1
32	A187990	TERMINAL CONNECTOR,Male	TERMINAL Male	2

http://www.minnparbackhoeparts.com/

(580SK) - CASE SUPER-K CONSTRUCTION KING LOADER BACKHOE > (7-08) - BRAKE MASTER CYLINDER HYDRAULIC CIRCUIT

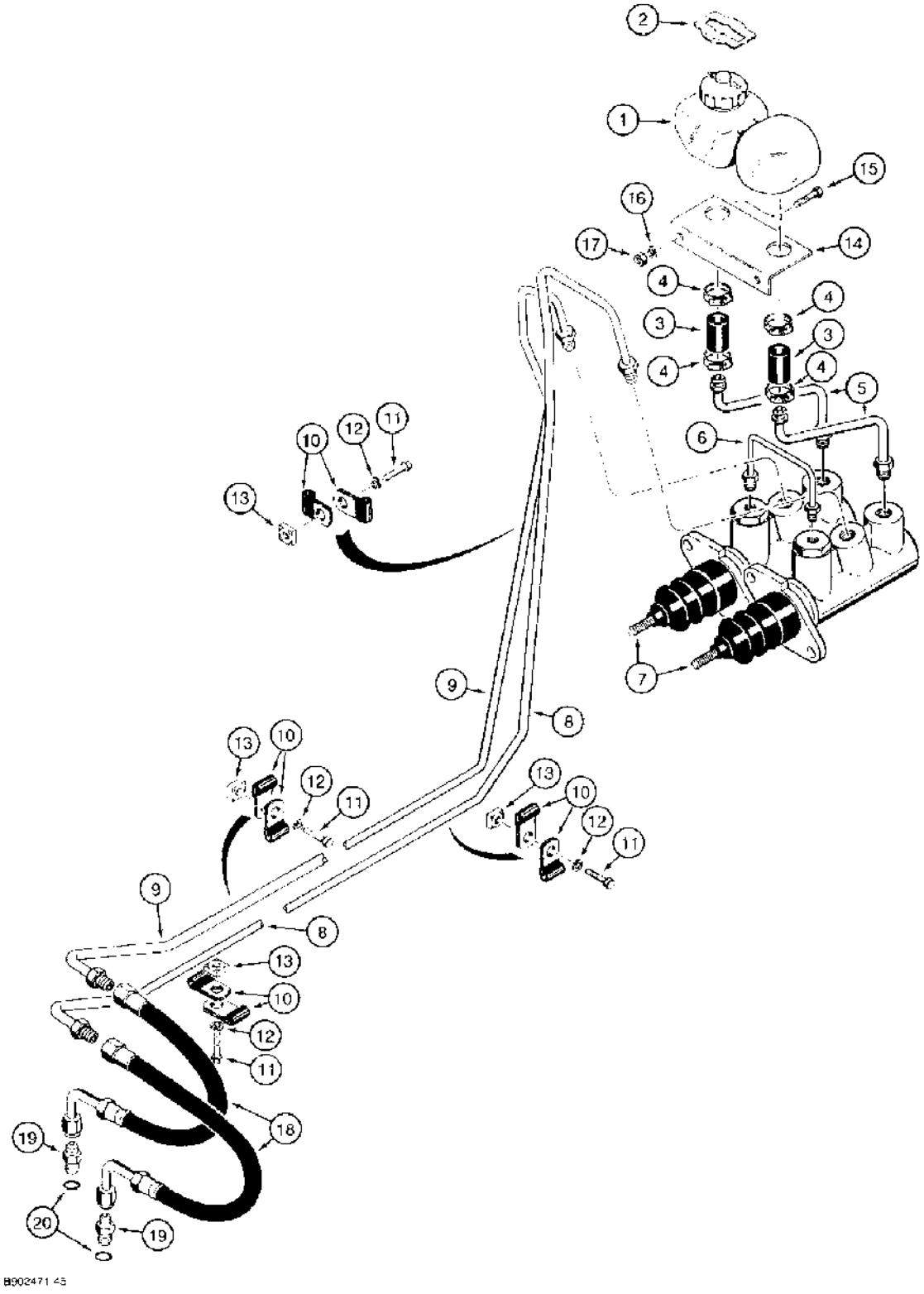

(580SK) - CASE SUPER-K CONSTRUCTION KING LOADER BACKHOE > (7-08) - BRAKE MASTER CYLINDER HYDRAULIC CIRCUIT

Diag #	Part #	Name	Description	Qty
	E46719	RESERVOIR	ASSEMBLY brake master cylinder, no longer available, order Ref. 1 and 2, Includes: Ref. 1 and 2	1
1	E44082	RESERVOIR	brake master cylinder, includes cap	1
2	E44062	TAG	reservoir fluid identification	1
3	E44083	HOSE	13 mm ID x 30 mm long, Reservoir to tube, Cut to required length from D128279 bulk hose	2
4	D140877	HOSE CLAMP,#6, 0.44/0.78 Type M Worm	CLAMP worm screw, includes hardware, reservoir hose	4
5	D136854	TUBE	reservoir to master cylinder	2
6	D136430	TUBE	crossover	1
7	D143162	MASTER CYLINDER	CYLINDER ASSEMBLY master, parts list Figure 7-10	2
8	D146723	PIPE ASSY.	TUBE brake, right-hand	1
9	D146725	PIPE ASSY.	TUBE brake, left-hand	1
10	515-23127	CLAMP,1/2", Insul, 3/8" Bolt	P-type	8
11	413-512	BOLT,Hex, 5/16" - 18 x 3/4", Gr 5	hex, 5/16 NC x 3/4 inch	4
12	492-11031	LOCK WASHER,5/16"	WASHER, LOCK, 5/16"	4
13	224-2245	SQUARE NUT,Sq, 5/16"-18, G2	square, 5/16 inch NC	4
14	D135229	BRACKET	brake reservoir support, Serial Range: attaches-firewall	1
15	413-512	BOLT,Hex, 5/16" - 18 x 3/4", Gr 5	hex, 5/16 NC x 3/4 inch	2
16	492-11031	LOCK WASHER,5/16"	WASHER, LOCK, 5/16"	2
17	425-105	NUT,5/16"-18, G5	- hex, 5/16 inch NC	2
18	D147572	HOSE	385 mm long, brake tube to transaxle brake actuator	2
19	218-5088	HYD CONNECTOR,7/16"-20, 37° x 1/2"-20, O-Ring	ADAPTER straight, 7/16-20 flare x 1/2-20 inch O-ring boss, Includes: Ref. 20	2
	D128279	HOSE,12.7 mm ID x 100.00 mm, SAE 30R1	HOSE,12.7 mm ID x 100.00 mm, SAE 30R1	1
20	237-6005	O-RING,0.414" ID	5-1, 90 Duro, .414" ID x .072" Thk	1

http://www.minnparbackhoeparts.com/

(580SK) - CASE SUPER-K CONSTRUCTION KING LOADER BACKHOE > (7-10) - BRAKE MASTER CYLINDER

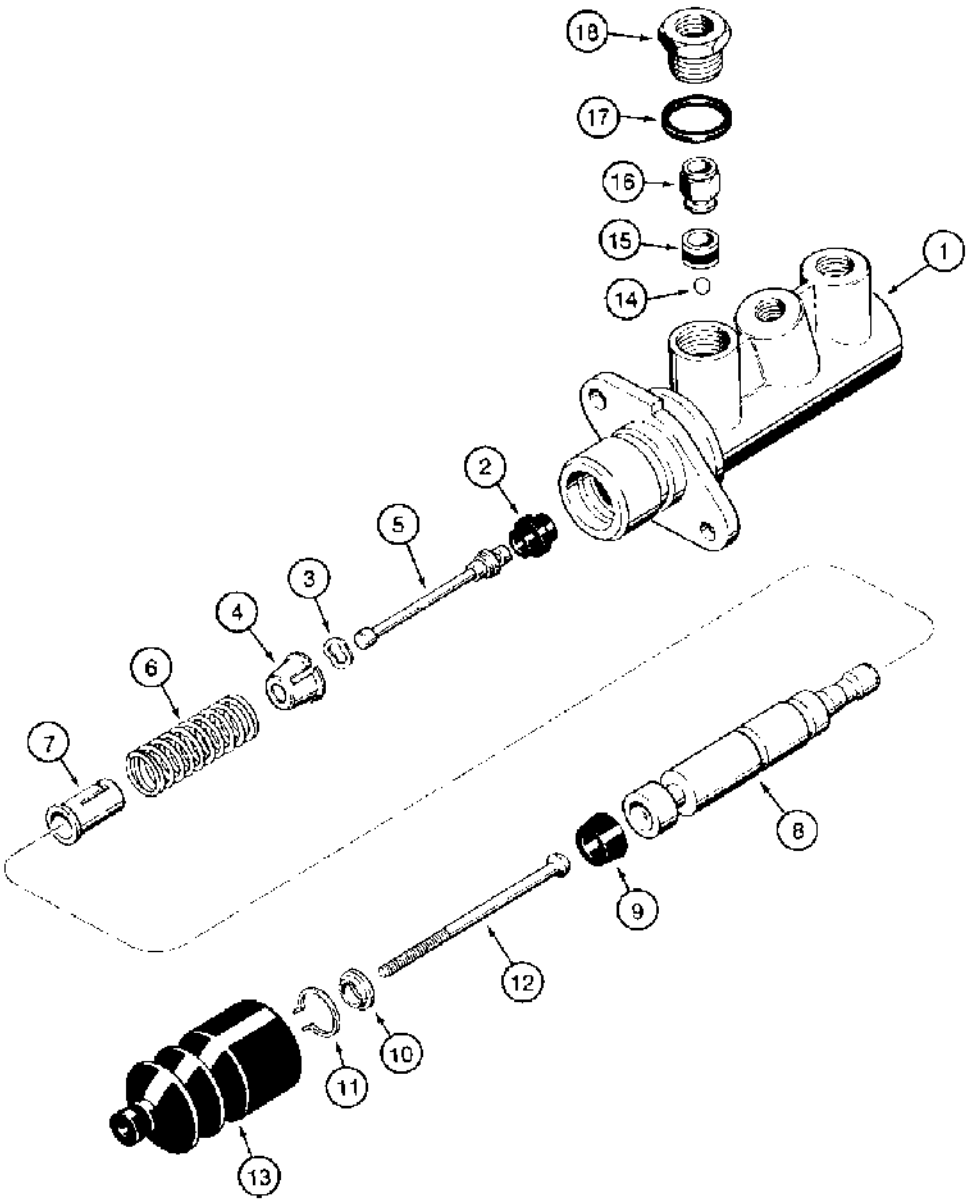

870552

(580SK) - CASE SUPER-K CONSTRUCTION KING LOADER BACKHOE > (7-10) - BRAKE MASTER CYLINDER

Diag #	Part #	Name	Description	Qty
	D143162	MASTER CYLINDER	CYLINDER ASSEMBLY master, Includes: Ref. 1 through 18	2
1	NSS	NOT SERVICED SEPARATELY	BODY master cylinder	1
2	NSS	NOT SERVICED SEPARATELY	SEAL plunger	1
		Part of seal service cylinder kit P/N N14784.	Part of seal service cylinder kit P/N N14784.	1
3	NSS	NOT SERVICED SEPARATELY	WASHER special	1
		Part of seal service cylinder kit P/N N14784.	Part of seal service cylinder kit P/N N14784.	1
4	NSS	NOT SERVICED SEPARATELY	SEAT spring, short	1
5	NSS	NOT SERVICED SEPARATELY	PLUNGER piston	1
6	NSS	NOT SERVICED SEPARATELY	SPRING return	1
7	NSS	NOT SERVICED SEPARATELY	SEAT spring, long	1
8	NSS	NOT SERVICED SEPARATELY	PISTON master cylinder	1
9	NSS	NOT SERVICED SEPARATELY	SEAL piston	1
		Part of seal service cylinder kit P/N N14784.	Part of seal service cylinder kit P/N N14784.	1
10	NSS	NOT SERVICED SEPARATELY	WASHER seal, special	1
11	NSS	NOT SERVICED SEPARATELY	RING retaining, washer	1
		Part of seal service cylinder kit P/N N14784.	Part of seal service cylinder kit P/N N14784.	1
12	NSS	NOT SERVICED SEPARATELY	ROD push	1
13	NSS	NOT SERVICED SEPARATELY	BOOT push rod	1
		Part of seal service cylinder kit P/N N14784.	Part of seal service cylinder kit P/N N14784.	1
14	NSS	NOT SERVICED SEPARATELY	BALL flow valve	1
		Part of seal service cylinder kit P/N N14784.	Part of seal service cylinder kit P/N N14784.	1

Diag #	Part #	Name	Description	Qty
15	NSS	NOT SERVICED SEPARATELY	SEAL flow valve	1
		Part of seal service cylinder kit P/N N14784.	Part of seal service cylinder kit P/N N14784.	1
16	NSS	NOT SERVICED SEPARATELY	VALVE flow	1
17	NSS	NOT SERVICED SEPARATELY	GASKET flow valve	1
		Part of seal service cylinder kit P/N N14784.	Part of seal service cylinder kit P/N N14784.	1
18	NSS	NOT SERVICED SEPARATELY	ADAPTER flow valve	1
	N14784	KIT	cylinder, service, seal, Includes: Ref. 2, 3, 9, 11, 13 - 15 and 17	1

http://www.minnparbackhoeparts.com/

(580SK) - CASE SUPER-K CONSTRUCTION KING LOADER BACKHOE > (7-12) - PARKING BRAKE LEVER AND LINKAGE

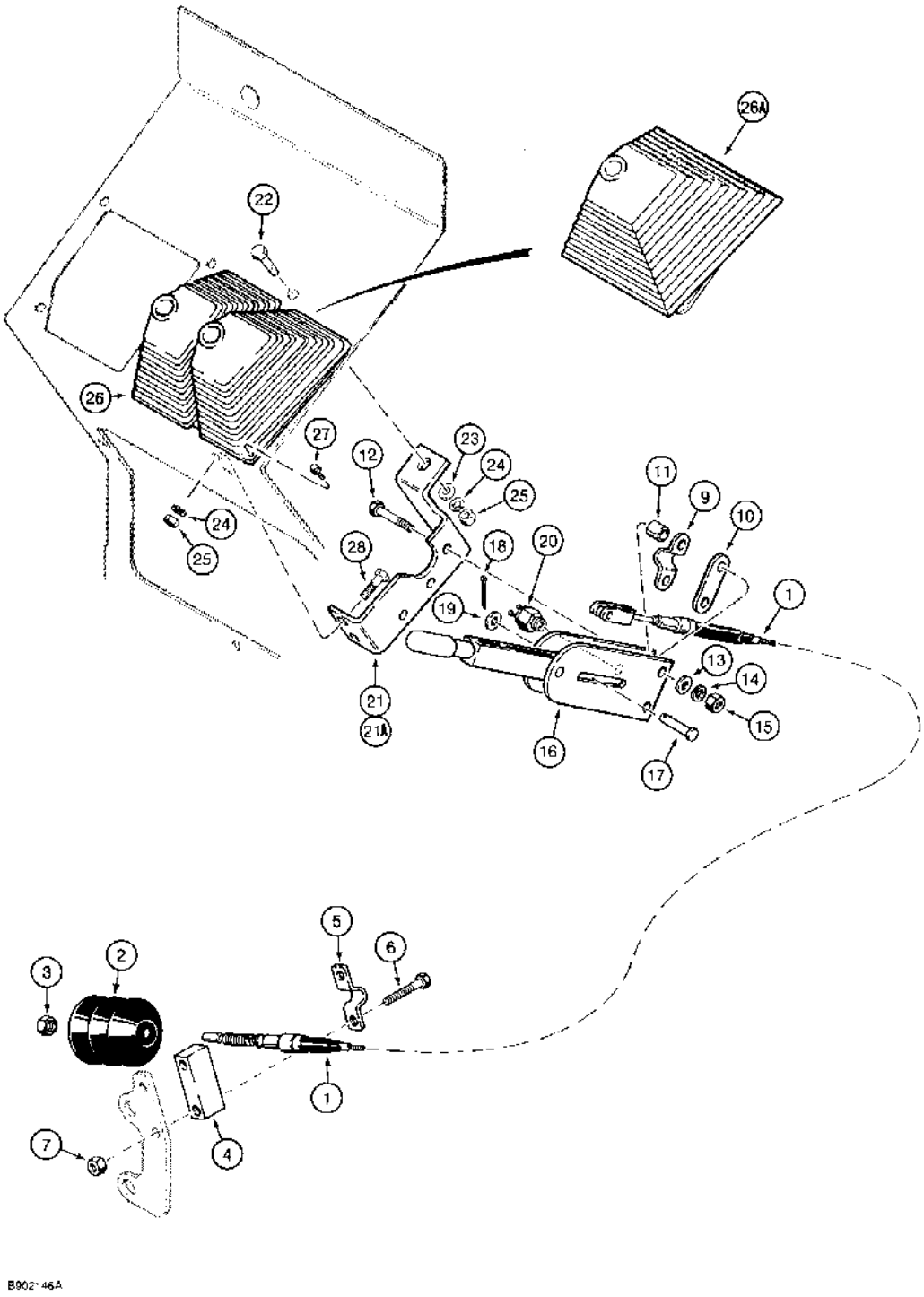

(580SK) - CASE SUPER-K CONSTRUCTION KING LOADER BACKHOE > (7-12) - PARKING BRAKE LEVER AND LINKAGE

Diag #	Part #	Name	Description	Qty
1	D145877	CABLE	parking brake	1
2	D141049	BOOT	parking brake cable	1
3	829-1112	JAM NUT	hex, jam, 12 mm - 1.75	1
4	A188027	SPACER	BLOCK spacer, brake cable mounting	1
5	A188028	CLAMP	cable, rear	1
6	828-10045	BOLT,Hex, M10 x 1.5 x 45mm, Cl 10.9	BOLT,Hex, M10 x 1.5 x 45mm, Cl 10.9	2
7	829-1410	NUT,M10, Cl 10	NUT,M10, Cl 10	2
9	D121608	CLAMP	parking brake cable	1
10	D129747	PLATE	oval spacer, plated	1
11	D150633	SPACER	parking brake lever, front	2
12	413-532	BOLT,Hex, 5/16" - 18 x 2", Gr 5	BOLT,Hex, 5/16" - 18 x 2", Gr 5	2
13	495-11034	WASHER,5/16", SAE	5/16" SAE (flat, 11/32 x 11/16 x 1/16")	2
14	492-11031	LOCK WASHER,5/16"	WASHER, LOCK, 5/16"	2
15	425-105	NUT,5/16"-18, G5	- hex, 5/16 inch NC	2
	D121555	LEVER ASSY.	LEVER ASSEMBLY parking brake, without bossed hole for audible warning alarm parking brake switch, for service order D139909 lever	1
	D139909	LEVER ASSY.	LEVER ASSEMBLY parking brake, with bossed hole for brake switch, replaces D121555 lever for service, Includes: Ref. 16 through 19	1
16	NSS	NOT SERVICED SEPARATELY	LEVER parking brake	1
17	D42458	PIN	clevis, lever to brake cable	1
18	432-612	COTTER PIN,3/32" x 3/4"	PIN , SPLIT (COTTER), 3/32" x 3/4"	1
19	495-21038	WASHER,5/16"	(flat, 3/8 x 7/8 x 5/64") 5/16"	1
20	D136514	SWITCH	parking brake, used on models with audible warning alarm	1
		See Figure 4-52 for other special parts used on models with audible warning alarm for water temperature, engine oil pressure, and parking brake.	See Figure 4-52 for other special parts used on models with audible warning alarm for water temperature, engine oil pressure, and parking brake.	1
21	D146905	SUPPORT	BRACKET mounting, parking brake lever, with a 7/16 inch mounting hole for front drive axle control lever mounting, Ref. 5 and 12 on Figure 6-36, if used	1
21A	102446A1	BRACKET	mounting, parking brake lever, with a 1/2 inch mounting hole for front drive axle	1

Diag #	Part #	Name	Description	Qty
			control lever mounting, Ref. 24 and 25 on Figure 6-36, if used	
22	413-616	BOLT,Hex, 3/8" - 16 x 1", Gr 5	hex, 3/8 NC x 1 inch	1
23	495-11041	WASHER,3/8", SAE	flat, (13/32 x 13/16 x 1/16")	1
24	492-11038	LOCK WASHER,3/8"	LOCK WASHER,3/8"	3
25	425-106	NUT,3/8"-16, G5	NUT,3/8"-16, G5	3
26	D137465	BOOT	dual lever, parking brake and shift control levers, use on models with four wheel drive front axle, see Figure 6-36, Ref. 5, for shift control lever	1
26A	D137466	BOOT	single lever, use on models with two wheel drive front axle	1
27	281-18712	SELF-TAP SCREW,Hex Wash Hd, 1/4" x 3/4"	SCREW self-tapping, hex washer head, 1/4 NC x 3/4 inch	4
28	413-614	BOLT,Hex, 3/8" - 16 x 7/8", Gr 5	BOLT,Hex, 3/8" - 16 x 7/8", Gr 5	2

http://www.minnparbackhoeparts.com/



HYDRAULICS 8

http://www.minnparbackhoeparts.com/

(580SK) - CASE SUPER-K CONSTRUCTION KING LOADER BACKHOE > (8-002) - EQUIPMENT HYDRAULIC SYSTEM, RESERVOIR TO LOADER CONTROL VALVE

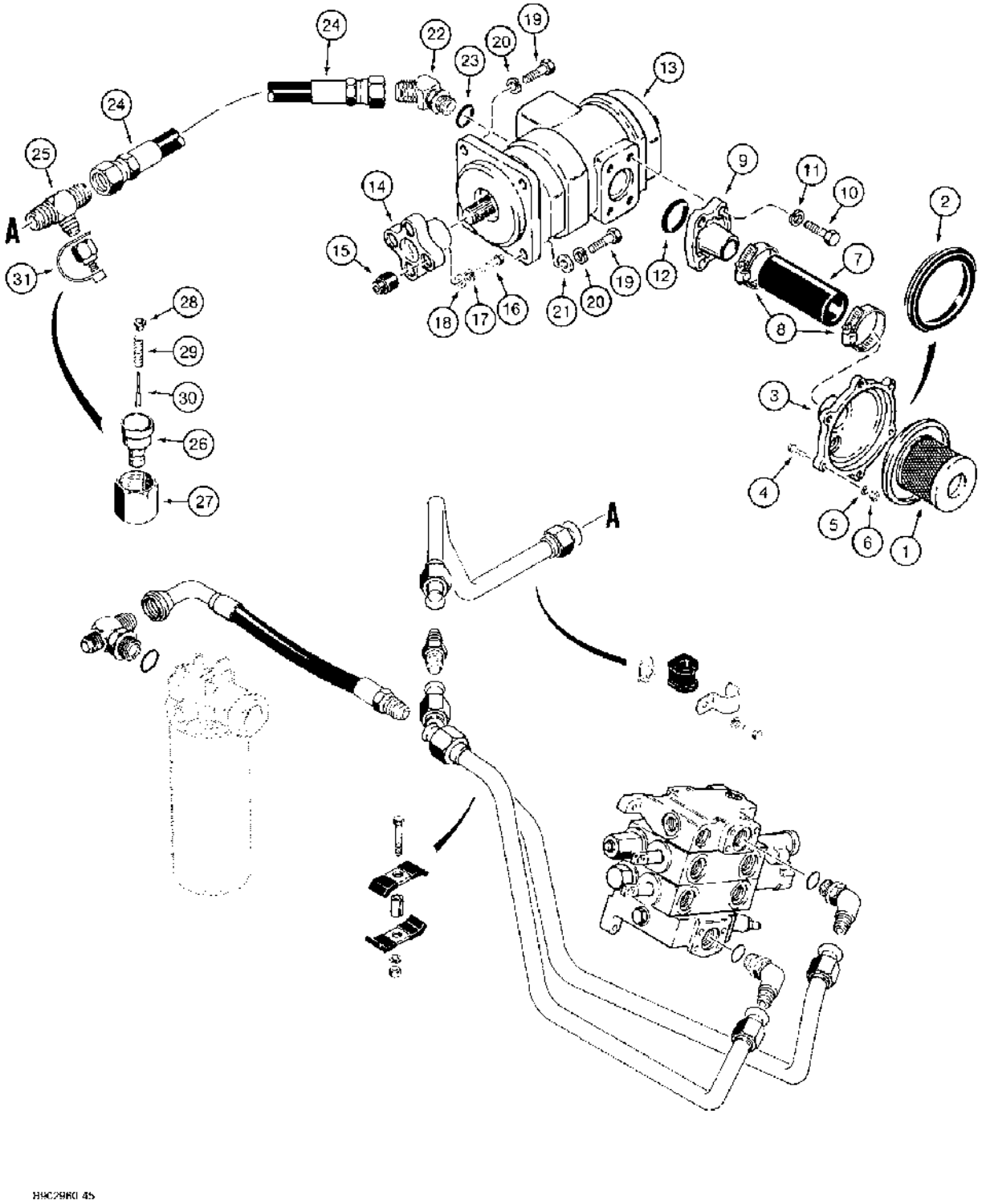

(580SK) - CASE SUPER-K CONSTRUCTION KING LOADER BACKHOE > (8-002) - EQUIPMENT HYDRAULIC SYSTEM, RESERVOIR TO LOADER CONTROL VALVE

Diag #	Part #	Name	Description	Qty
1	D145017	STRAINER ASSY.	SCREEN suction, Includes: Ref. 2	1
2	D145356	GASKET	SEAL suction screen	1
3	D129581	FLANGE	reservoir, suction	1
4	413-416	BOLT,Hex, 1/4" - 20 x 1", Gr 5	hex, 1/4 NC x 1 inch	6
5	492-11025	LOCK WASHER,1/4"	WASHER, LOCK, 1/4"	6
6	425-104	NUT,1/4"-20, G5	hex, 1/4 inch NC	6
7	D129580	HOSE	38 ID x 54 OD x 130 mm long, equipment pump inlet, cut to required length from D129185 bulk hose	1
8	214-1428	HOSE CLAMP,#28, 1.31/2.25 Type F Worm	CLAMP, HOSE, , Adjustable #28, 1.31/2.25 Type F Worm	2
9	D137343	FLANGE	pump inlet	1
10	413-824	BOLT,Hex, 1/2" - 13 x 1 1/2", Gr 5	BOLT,Hex, 1/2" - 13 x 1 1/2", Gr 5	4
11	80679	LOCK WASHER,1/2"	WASHER, LOCK, 1/2"	4
12	238-5225	O-RING,-225, 70 Duro, 1.859" ID x .139" Thk	1-7/8 x 2-1/8 inch, pump inlet flange, replaces A14515	1
13	D149283	PUMP, HYDRAULIC	PUMP ASSEMBLY hydraulic, equipment, parts list Figure 8-062	1
	D149283R	REMAN-HYD PUMP	580SK	1
	D149283C	CORE-HYDRAULIC PUMP	Return Number	1
	D136083	COUPLING	flex, hydraulic pump, Includes: Ref. 14 and 15	1
14	NSS	NOT SERVICED SEPARATELY	COUPLING pump	1
15	N14330	BUSHING	coupling	4
16	413-728	BOLT,Hex, 7/16" - 14 x 1 3/4", Gr 5	BOLT,Hex, 7/16" - 14 x 1 3/4", Gr 5	4
17	492-11044	LOCK WASHER,7/16"	WASHER, LOCK, 7/16"	4
18	A30013	WASHER	flat, hardened	4
19	413-824	BOLT,Hex, 1/2" - 13 x 1 1/2", Gr 5	BOLT,Hex, 1/2" - 13 x 1 1/2", Gr 5	4
20	80679	LOCK WASHER,1/2"	WASHER, LOCK, 1/2"	4
21	D64050	WASHER	flat, 1/2 inch, hardened, special, lower mounting bolts only	2
22	218-5140	ELBOW,45º, 1 5/16"-12 x 1 5/16"-12, O-Ring	45 degree, 1-5/16-12 inch flare x adj O-ring boss, large pump section outlet port, Includes: Ref. 23	1
23	237-6016	O-RING,0.614" ID x 0.754" OD x 0.07"	16-1, 90 Duro, 1.171" ID x .118" Thk	1

Diag #	Part #	Name	Description	Qty
24	D149036	HOSE	940 mm long, large pump section outlet port	1
25	218-587	TEE,37º, 1 5/16"-12 x 1 1/16"-12, Br	1-1/16-12 flare branch x 1-5/16-12 inch flare x flare, pump outlet hose to loader valve inlet tube	1
	D137625	QUICK MALE COUPLING	COUPLING Assy quick disconnect, Includes Ref. 26 through 30	1
		Use Molykote Type G on pump splines.	Use Molykote Type G on pump splines.	1
		Ref D137625 coupling assy. - Mating female coupling to be ordered from service tools, nbr 213165	Ref D137625 coupling assy. - Mating female coupling to be ordered from service tools, nbr 213165	1
26	NSS	NOT SERVICED SEPARATELY	BODY coupling	1
27	425-1120	NUT,1 1/4"-12, G5	hex, 1-1/4 inch NF	1
28	NSS	NOT SERVICED SEPARATELY	SEAT spring	1
29	NSS	NOT SERVICED SEPARATELY	SPRING coupling	1
30	NSS	NOT SERVICED SEPARATELY	POPPET coupling	1
31	H434163	DUST CAP	CAP - dust, coupling	1
	D129185	HOSE,38.1 mm ID x 863.60 mm	HOSE,38.1 mm ID x 863.60 mm	1

http://www.minnparbackhoeparts.com/

(580SK) - CASE SUPER-K CONSTRUCTION KING LOADER BACKHOE > (8-004) - EQUIPMENT HYDRAULIC SYSTEM, RESERVOIR TO LOADER CONTROL

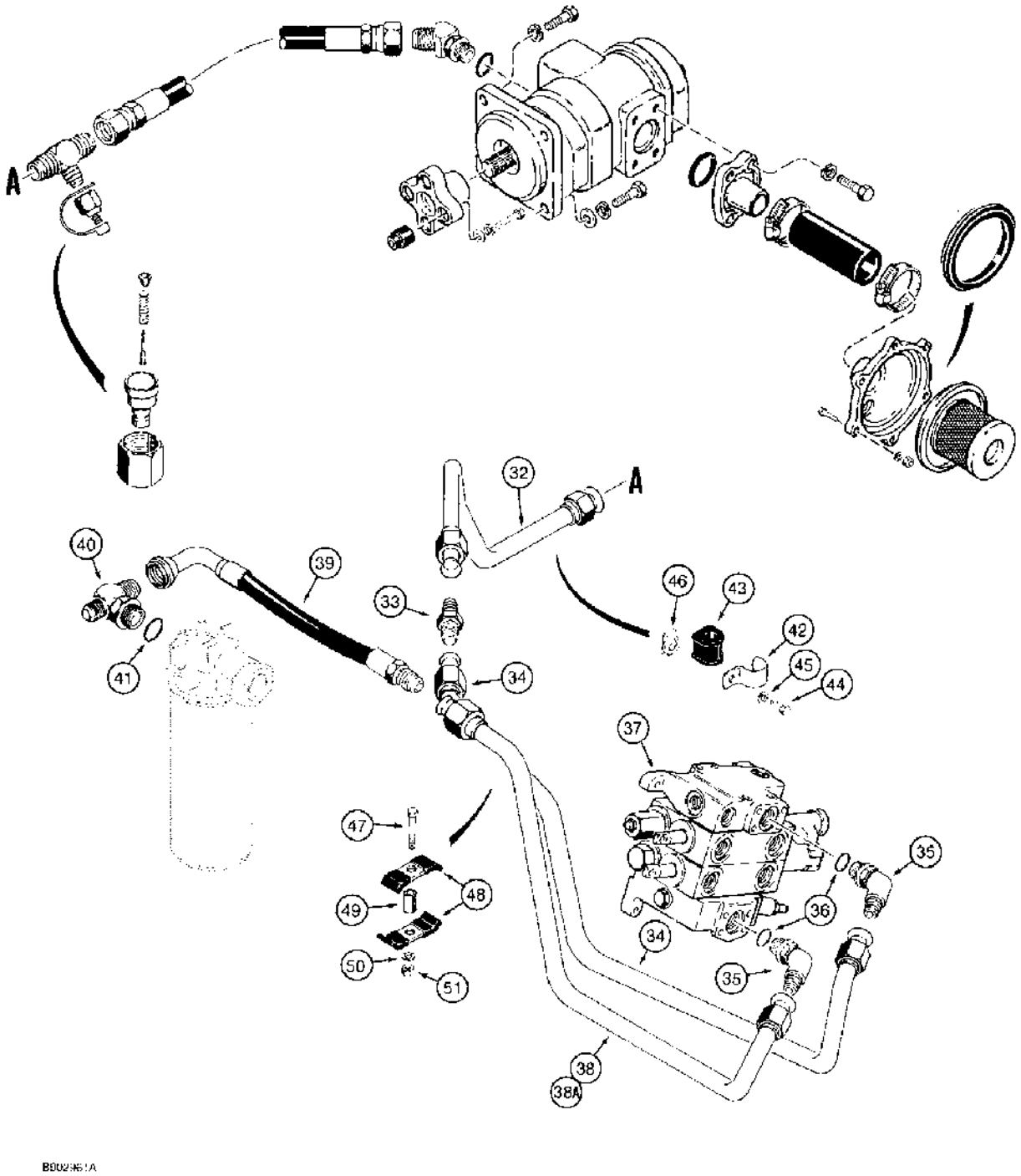

(580SK) - CASE SUPER-K CONSTRUCTION KING LOADER BACKHOE > (8-004) - EQUIPMENT HYDRAULIC SYSTEM, RESERVOIR TO LOADER CONTROL

Diag #	Part #	Name	Description	Qty
32	D151009	TUBE	pump outlet, hose to loader valve, replaces D149123	1
33	218-739	UNION,1 5/16"-12, 37° x 1 5/16"-12, 37°	CONNECTOR straight, 1-5/16-12 inch flare	1
34	D145940	TUBE	pump outlet, at loader valve inlet	1
35	218-5110	ELBOW,90°, 1 5/16"-12, 37° x 1 5/16"-12, O-Ring	90°, 1-5/16-12 inch flare x adj O-ring boss, Incl. Ref. 36	2
36	237-6016	O-RING,0.614" ID x 0.754" OD x 0.07"	16-1, 90 Duro, 1.171" ID x .118" Thk	1
37	REF	INSTRUCTION	VALVE ASSEMBLY loader control, for correct assembly and components, see Figure 8-064 or 8-066	1
38	D149754	TUBE	loader return, at loader valve outlet, two spool loader control valve	1
38A	D145942	TUBE ASSY.	TUBE loader return, at loader valve outlet, three spool loader control valve	1
39	D146132	HOSE ASSY.	HOSE, 405 mm long, loader return, loader valve, Serial Range: outlet-filter	1
40	218-5197	TEE,1 5/16"-12, 37°x1 1/16"-12 x 1 5/16"-12, O-Ring Br	1-5/16-12 adj O-ring branch x fl x 1-1/16-12 inch fl, at hydraulic oil filter fitting, Includes: Ref. 41	1
41	237-6016	O-RING,0.614" ID x 0.754" OD x 0.07"	16-1, 90 Duro, 1.171" ID x .118" Thk	1
42	D143410	CLAMP	1 inch, loader valve inlet tube	1
43	D67297	BLOCK	INSULATOR tube	1
44	413-616	BOLT,Hex, 3/8" - 16 x 1", Gr 5	hex, 3/8 NC x 1 inch	1
45	492-11038	LOCK WASHER,3/8"	LOCK WASHER,3/8"	1
46	D122307	NUT	NUT U-type, 3/8 inch NC, special	1
47	413-632	BOLT,Hex, 3/8" - 16 x 2", Gr 5	- hex, 3/8 NC x 2 inch	1
48	D143846	CLAMP	- Tube	2
49	D143412	SPACER	tube clamp	1
50	492-11038	LOCK WASHER,3/8"	LOCK WASHER,3/8"	1
51	425-106	NUT,3/8"-16, G5	NUT,3/8"-16, G5	1

http://www.minnparbackhoeparts.com/

(580SK) - CASE SUPER-K CONSTRUCTION KING LOADER BACKHOE > (8-006) - EQUIPMENT HYDRAULIC SYSTEM, EQUIPMENT PUMP TO REAR EQUIPMENT LINES, MODELS WITH BACKHOE

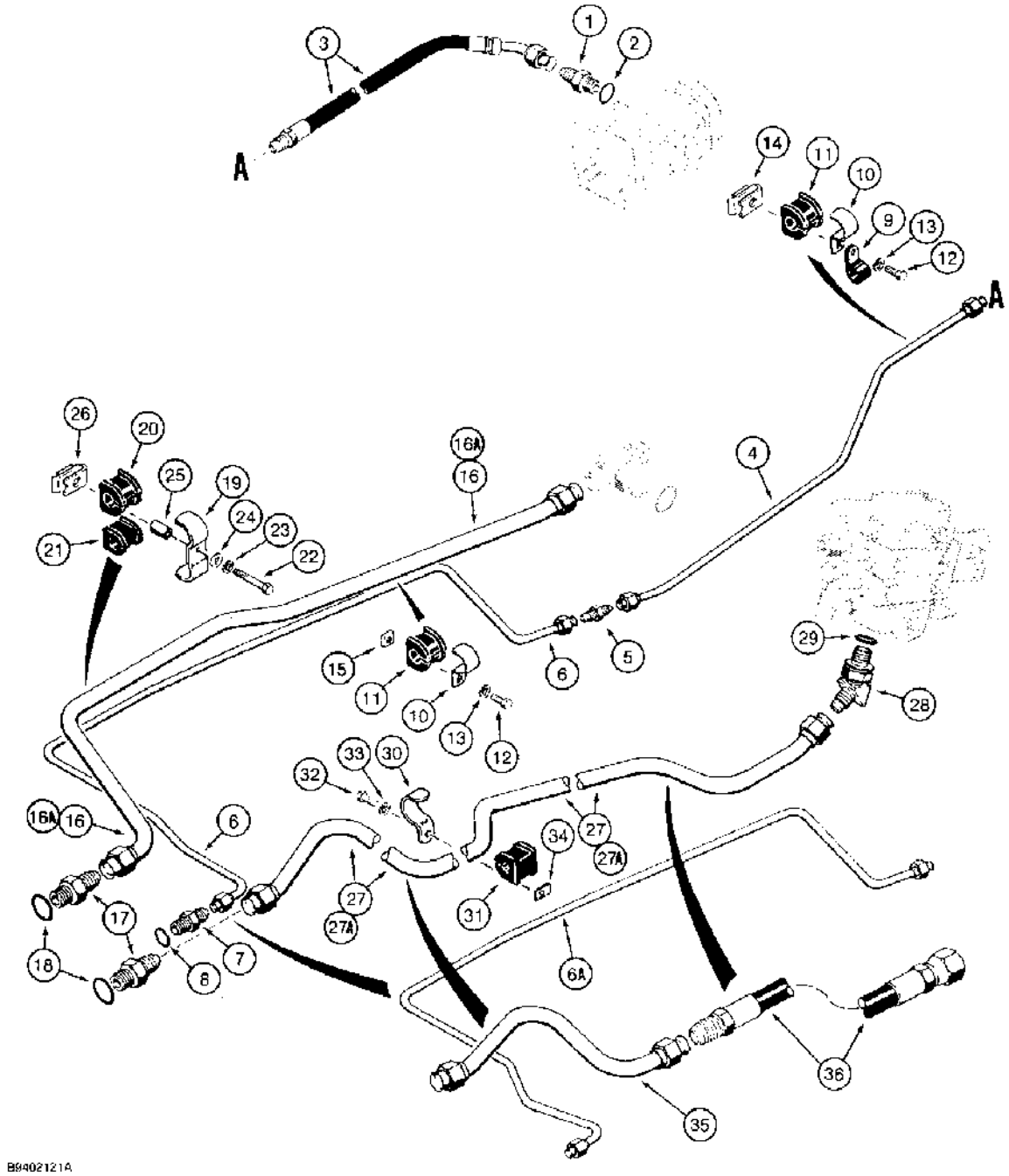

(580SK) - CASE SUPER-K CONSTRUCTION KING LOADER BACKHOE > (8-006) - EQUIPMENT HYDRAULIC SYSTEM, EQUIPMENT PUMP TO REAR EQUIPMENT LINES, MODELS WITH BACKHOE

Diag #	Part #	Name	Description	Qty
1	218-5063	HYD CONNECTOR,7/8"-14, 37° x 1 1/16"-12, O-Ring	ADAPTER straight, 7/8-14 flare x 1-1/16-12 inch O-ring, small pump section outlet port, Includes: Ref. 2	1
2	237-6012	O-RING,0.924" x 0.116"	12-1, 90 Duro, .924 ID x .116" Thk	1
3	D140802	HOSE	513 mm long, small pump section outlet port	1
4	D149121	TUBE	small pump section hose to backhoe swing section inlet tube	1
5	218-736	UNION,7/8"-14, 37° x 7/8"-14, 37°	CONNECTOR straight, 7/8-14 inch flare	1
6	D146225	TUBE	to backhoe control valve swing section inlet, prior to P.I.N. JJG0162204, if used	1
6A	D150834	TUBE	to backhoe control valve swing section inlet, P.I.N. JJG0162204 and after, if used	1
7	218-5062	HYD CONNECTOR,7/8"-14, 37° x 7/8"-14, O-Ring	ADAPTER straight, 7/8-14 inch flare x O-ring boss, Includes: Ref. 8	1
8	237-6010	O-RING,0.239" ID x 0.379" OD x 0.07"	10-1, 90 Duro, .755" ID x .097" Thk	1
9	R24840	CLAMP	tube, lower	1
10	D143411	CLAMP	backhoe valve swing section inlet and return tubes	2
11	D143797	SHOCK ABSORBER	INSULATOR, 5/8 inch, tube	2
12	413-616	BOLT,Hex, 3/8" - 16 x 1", Gr 5	hex, 3/8 NC x 1 inch	2
13	492-11038	LOCK WASHER,3/8"	LOCK WASHER,3/8"	2
14	D122307	NUT	NUT U-type, 3/8 inch NC, special	1
15	84899	SQUARE NUT,Sq, 3/8"-16, G2	square, 3/8 inch NC	1
16	D150483	TUBE	backhoe return to filter, used with 6 spool backhoe control valve, replaces D145709 tube	1
16A	D150488	TUBE	backhoe return to filter, used with 7 spool backhoe control valve, replaces D145711 tube	1
17	218-5069	HYD CONNECTOR,1 5/16"-12, 37° x 1 5/16"-12, O-Ring	Adapter straight, 1-5/16-12 inch flare x O-ring boss, Incl. Ref. 18	2
18	237-6016	O-RING,0.614" ID x 0.754" OD x 0.07"	16-1, 90 Duro, 1.171" ID x .118" Thk	1
19	D143422	SHIN	CLAMP double tube	1
20	D67297	BLOCK	INSULATOR, 1 inch, backhoe return tube	1

Diag #	Part #	Name	Description	Qty
21	D143797	SHOCK ABSORBER	INSULATOR, 5/8 inch, backhoe swing section inlet tube	1
22	413-632	BOLT,Hex, 3/8" - 16 x 2", Gr 5	- hex, 3/8 NC x 2 inch	1
23	492-11038	LOCK WASHER,3/8"	LOCK WASHER,3/8"	1
24	495-11041	WASHER,3/8", SAE	flat, (13/32 x 13/16 x 1/16")	1
25	R46493	SPACER	tube clamp	1
26	D122307	NUT	NUT U-type, 3/8 inch NC, special	1
27	D149751	PIPE	TUBE, loader valve power beyond, to backhoe inlet section, 2 spool valve, production only, for service order Ref. 35, 122426A1, tube and Ref. 36, 122427A1, hose	1
27A	D150478	TUBE ASSY.	TUBE, loader valve power beyond, to backhoe inlet section, 3 spool valve, production only, for service order Ref. 35, 122426A1, tube and Ref. 36, 122427A1, hose	1
28	218-5140	ELBOW,45º, 1 5/16"-12 x 1 5/16"-12, O-Ring	45 degree, 1-5/16-12 inch flare x adj O-ring boss, Includes: Ref. 29	1
29	237-6016	O-RING,0.614" ID x 0.754" OD x 0.07"	16-1, 90 Duro, 1.171" ID x .118" Thk	1
30	D143410	CLAMP	power beyond tube	1
31	D67297	BLOCK	INSULATOR, 5/8 inch, tube	1
32	413-616	BOLT,Hex, 3/8" - 16 x 1", Gr 5	hex, 3/8 NC x 1 inch	1
33	492-11038	LOCK WASHER,3/8"	LOCK WASHER,3/8"	1
34	D122307	NUT	NUT U-type, 3/8 inch NC, special	1
35	122426A1	TUBE	loader valve power beyond, to backhoe inlet section, service replacement, used with Ref.36, hose	1
36	122427A1	HOSE ASSY.	HOSE, 1320 mm long, loader valve power beyond, to backhoe inlet section, service replacement, used with Ref. 35, tube	1

http://www.minnparbackhoeparts.com/

(580SK) - CASE SUPER-K CONSTRUCTION KING LOADER BACKHOE > (8-008) - EQUIPMENT HYDRAULIC SYSTEM, EQUIPMENT PUMP TO REAR EQUIPMENT LINES,MODELS W/BACKHOE-LOADER ONLY

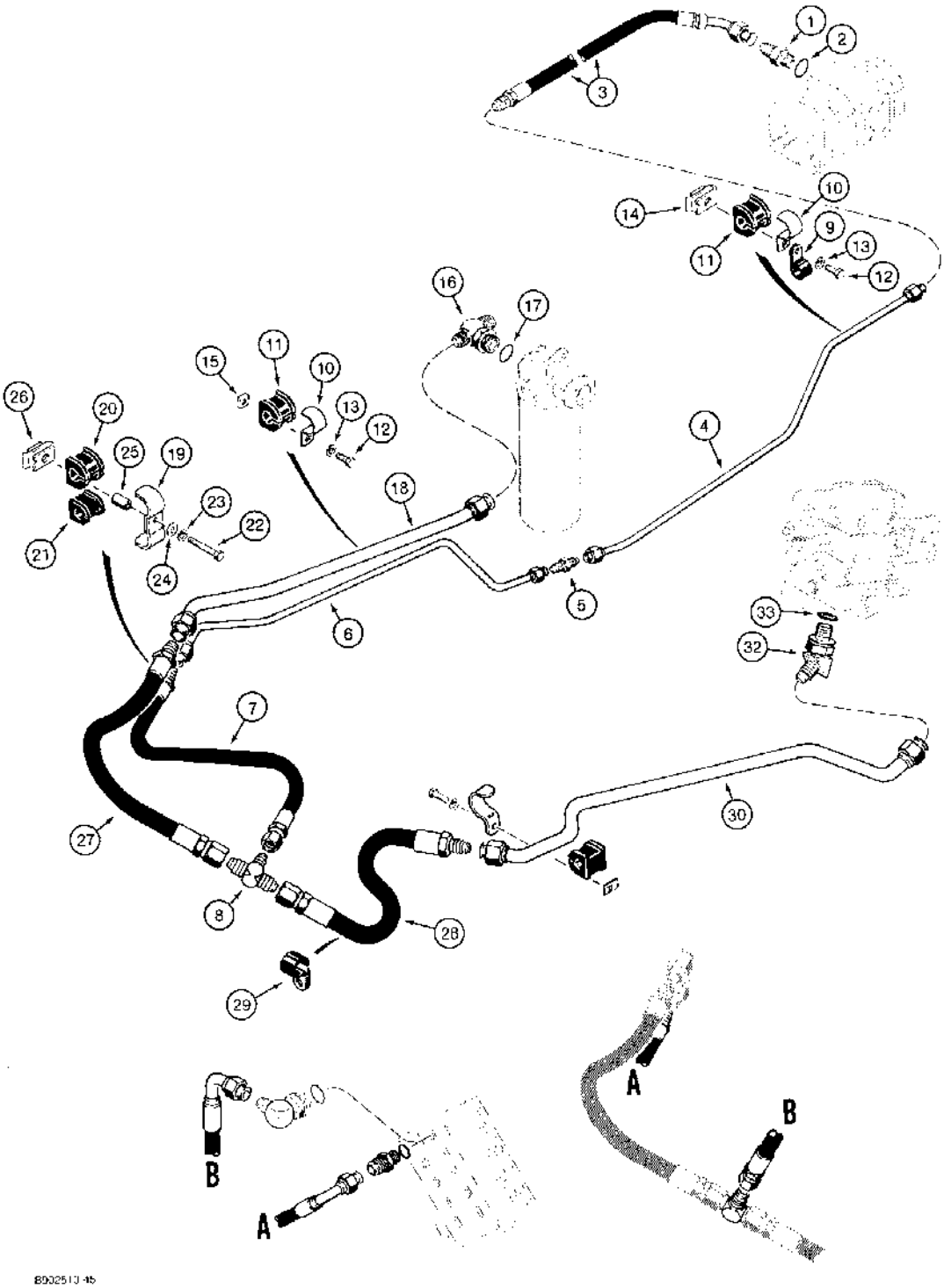

(580SK) - CASE SUPER-K CONSTRUCTION KING LOADER BACKHOE > (8-008) - EQUIPMENT HYDRAULIC SYSTEM, EQUIPMENT PUMP TO REAR EQUIPMENT LINES,MODELS W/BACKHOE-LOADER ONLY

Diag #	Part #	Name	Description	Qty
1	218-5063	HYD CONNECTOR,7/8"-14, 37° x 1 1/16"-12, O-Ring	ADAPTER straight, 7/8-14 flare x 1-1/16-12 inch O-ring, small pump section outlet port, euqipment hydraulic system equipment pump to rear equipment lines models without bachoe - loader only, Includes: Ref. 2	1
2	237-6012	O-RING,0.924" x 0.116"	12-1, 90 Duro, .924 ID x .116" Thk, Equipment hydraulic system equipment pump to rear equipment lines models without bachoe - loader only	1
3	D140802	HOSE	513 mm long, small pump section outlet port, euqipment hydraulic system equipment pump to rear equipment lines models without bachoe - loader only	1
4	D149121	TUBE	small pump section hose to small pressure hose, euqipment hydraulic system equipment pump to rear equipment lines models without bachoe - loader only	1
5	218-736	UNION,7/8"-14, 37° x 7/8"-14, 37°	CONNECTOR straight, 7/8-14 inch flare, euqipment hydraulic system equipment pump to rear equipment lines models without bachoe - loader only	1
6	D147923	TUBE ASSY.	TUBE pressure, small pump section tube to hose, lower left-hand side of chassis, euqipment hydraulic system equipment pump to rear equipment lines models without bachoe - loader only	1
7	D147937	HOSE	675 mm long, pressure, small pump section tube to return tee, models with rear counterweight, for models with three point hitch see Ref.41 and 44 on Figure 8-010, euqipment hydraulic system equipment pump to rear equipment lines models without bacho	1
		See Figure 8-006 for rear hydraulic tubes used on models with backhoe.	See Figure 8-006 for rear hydraulic tubes used on models with backhoe.	1
8	218-588	TEE,37°, 1 5/16"-12 x 7/8"-14, Br	7/8-14 flare branch x 1-5/16-12 inch flare x flare, use with Ref. 7 hose on models with rear counterweight, euqipment hydraulic system equipment pump to rear equipment lines models without bachoe - loader only	1
		See Figure 8-006 for rear hydraulic tubes used on models with backhoe.	See Figure 8-006 for rear hydraulic tubes used on models with backhoe.	1

Diag #	Part #	Name	Description	Qty
9	R24840	CLAMP	tube, lower, euqipment hydraulic system equipment pump to rear equipment lines models without bachoe - loader only	1
10	D143411	CLAMP	tube, euqipment hydraulic system equipment pump to rear equipment lines models without bachoe - loader only	2
11	D143797	SHOCK ABSORBER	INSULATOR, 5/8 inch, tube, euqipment hydraulic system equipment pump to rear equipment lines models without bachoe - loader only	2
12	413-616	BOLT,Hex, 3/8" - 16 x 1", Gr 5	hex, 3/8 NC x 1 inch, Equipment hydraulic system equipment pump to rear equipment lines models without backhoe - loader only	2
13	492-11038	LOCK WASHER,3/8"	equipment hydraulic system equipment pump to rear equipment lines models without bachoe - loader only 3/8"	2
14	D122307	NUT	NUT U-type, 3/8 inch NC, special, euqipment hydraulic system equipment pump to rear equipment lines models without bachoe - loader only	1
15	84899	SQUARE NUT,Sq, 3/8"-16, G2	square, 3/8 inch NC, euqipment hydraulic system equipment pump to rear equipment lines models without bachoe - loader only	1
16	218-5197	TEE,1 5/16"-12, 37°x1 1/16"-12 x 1 5/16"-12, O-Ring Br	1-5/16-12 adj O-ring branch x fl x 1-1/16-12 inch fl, at hydraulic oil filter, Includes: Ref. 17, euqipment hydraulic system equipment pump to rear equipment lines models without bachoe - loader only	1
17	237-6016	O-RING,0.614" ID x 0.754" OD x 0.07"	16-1, 90 Duro, 1.171" ID x .118" Thk, Equipment hydraulic system equipment pump to rear equipment lines models without bachoe - loader only	1
18	D147925	TUBE ASSY.	TUBE return to filter, euqipment hydraulic system equipment pump to rear equipment lines models without bachoe - loader only	1
		See Figure 8-006 for rear hydraulic tubes used on models with backhoe.	See Figure 8-006 for rear hydraulic tubes used on models with backhoe.	1
19	D143422	SHIN	CLAMP double tube, euqipment hydraulic system equipment pump to rear equipment lines models without bachoe - loader only	1
20	D67297	BLOCK	INSULATOR, 1 inch, return tube, euqipment hydraulic system equipment pump to rear equipment lines models without bachoe - loader only	1
21	D143797	SHOCK ABSORBER	INSULATOR, 5/8 inch, pressure tube, euqipment hydraulic system equipment pump to rear equipment lines models without bachoe - loader only	1
22	413-632	BOLT,Hex, 3/8" - 16 x 2", Gr 5	- hex, 3/8 NC x 2 inch, Equipment hydraulic system equipment pump to rear equipment lines models without backhoe - loader only	1

Diag #	Part #	Name	Description	Qty
23	492-11038	LOCK WASHER,3/8"	equipment hydraulic system equipment pump to rear equipment lines models without bachoe - loader only 3/8"	1
24	495-11041	WASHER,3/8", SAE	flat, (13/32 x 13/16 x 1/16"), Equipment hydraulic system equipment pump to rear equipment lines models without bachoe - loader only	1
25	R46493	SPACER	tube clamp, euqipment hydraulic system equipment pump to rear equipment lines models without bachoe - loader only	1
26	D122307	NUT	NUT U-type, 3/8 inch NC, special, euqipment hydraulic system equipment pump to rear equipment lines models without bachoe - loader only	1
27	D136968		625 mm long, tee to return to filter tube, euqipment hydraulic system equipment pump to rear equipment lines models without bachoe - loader only	1
		See Figure 8-006 for rear hydraulic tubes used on models with backhoe.	See Figure 8-006 for rear hydraulic tubes used on models with backhoe.	1
28	D136966	HOSE	800 mm long, to tee, right-hand side of chassis, euqipment hydraulic system equipment pump to rear equipment lines models without bachoe - loader only	1
		See Figure 8-006 for rear hydraulic tubes used on models with backhoe., euqipment hydraulic system equipment pump to rear equipment lines models without bachoe - loader only	See Figure 8-006 for rear hydraulic tubes used on models with backhoe., euqipment hydraulic system equipment pump to rear equipment lines models without bachoe - loader only	1
29	D34163	CLAMP	hose, uses existing transaxle hardware, euqipment hydraulic system equipment pump to rear equipment lines models without bachoe - loader only	1
30	D149899	PIPE	TUBE loader valve power beyond, used with two spool loader control valve, euqipment hydraulic system equipment pump to rear equipment lines models without bachoe - loader only	1
31	D147927	PIPE	TUBEloader valve power beyond, used with three spool loader control valve, not shown, euqipment hydraulic system equipment pump to rear equipment lines models without bachoe - loader only	1
32	218-5140	ELBOW,45º, 1 5/16"-12 x 1 5/16"-12, O-Ring	45 degree, 1-5/16-12 inch flare x adj O-ring boss, Includes: Ref. 33, euqipment hydraulic system equipment pump to rear equipment lines models without bachoe - loader only	1
33	237-6016	O-RING,0.614" ID x 0.754" OD x 0.07"	16-1, 90 Duro, 1.171" ID x .118" Thk, Equipment hydraulic system equipment	1

Diag #	Part #	Name	Description	Qty
			pump to rear equipment lines models without bachoe - loader only	

http://www.minnparbackhoeparts.com/

(580SK) - CASE SUPER-K CONSTRUCTION KING LOADER BACKHOE > (8-010) - EQUIPMENT HYDRAULIC SYSTEM, EQUIPMENT PUMP TO REAR EQUIPMENT

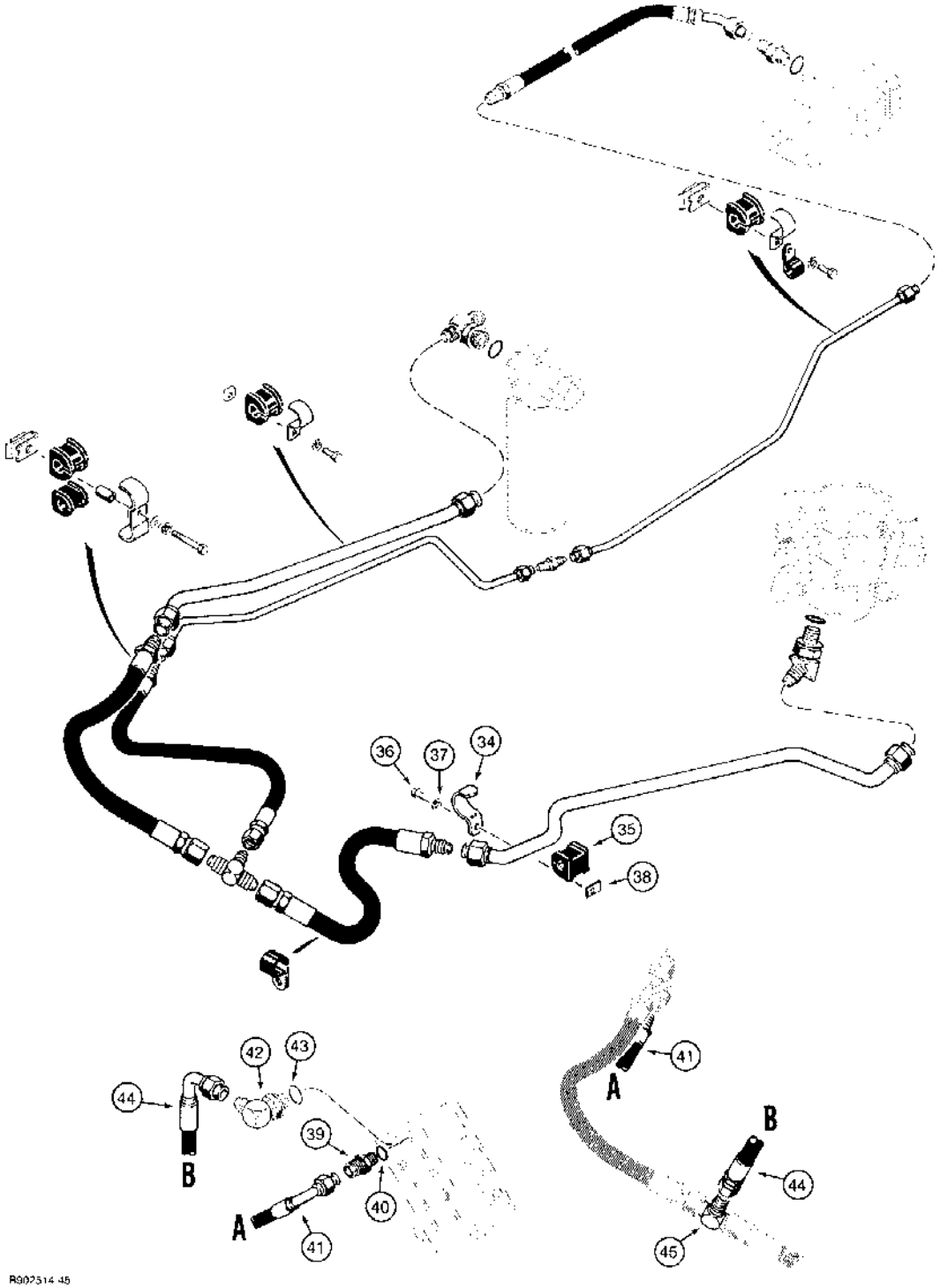

(580SK) - CASE SUPER-K CONSTRUCTION KING LOADER BACKHOE > (8-010) - EQUIPMENT HYDRAULIC SYSTEM, EQUIPMENT PUMP TO REAR EQUIPMENT

Diag #	Part #	Name	Description	Qty
34	D143410	CLAMP	power beyond tube, euqipment hydraulic system equipment pump to rear equipment lines models without bachoe - loader only	1
35	D67297	BLOCK	INSULATOR, 5/8 inch, tube, euqipment hydraulic system equipment pump to rear equipment lines models without bachoe - loader only	1
36	413-616	BOLT,Hex, 3/8" - 16 x 1", Gr 5	hex, 3/8 NC x 1 inch, Equipment hydraulic system equipment pump to rear equipment lines models without backhoe - loader only	1
37	492-11038	LOCK WASHER,3/8"	equipment hydraulic system equipment pump to rear equipment lines models without bachoe - loader only 3/8"	1
38	D122307	NUT	NUT U-type, 3/8 inch NC, special, special parts to adapt three-point hitch to loader models	1
39	218-5066	HYD CONNECTOR,7/8"-14, 37º x 3/4"-16, O-Ring	CONNECTOR, HYD., straight, 7/8-14 flare x 3/4-16 inch O-ring boss, at hitch valve inlet port, upper, special parts to adapt three-point hitch to loader models, Incl. Ref. 40	1
40	237-6008	O-RING,0.176" ID x 0.316" OD x 0.07"	8-1, 90 Duro, .644" ID x .087" Thk, Special parts to adapt three-point hitch to loader models	1
41	D150819	HOSE ASSY.	HOSE, 975 mm long, pressure, to hitch valve inlet, upper port, special parts to adapt three-point hitch to loader models	1
42	218-5108	ELBOW,90º, 1 1/16"-12, 37º x 1 1/16"-12, O-Ring	90º, 1-1/16-12 inch flare x adj O-ring boss, at hitch valve return port, lower, Incl. Ref. 43, special parts to adapt three-point hitch to loader models	1
43	237-6012	O-RING,0.924" x 0.116"	12-1, 90 Duro, .924 ID x .116" Thk, Special parts to adapt three-point hitch to loader models	1
44	D141265	HOSE ASSY.	HOSE, 850 mm long, return from hitch valve outlet, lower port, special parts to adapt three-point hitch to loader models	1
45	218-587	TEE,37º, 1 5/16"-12 x 1 1/16"-12, Br	1-1/16-12 flare branch x 1-5/16-12 inch flare x flare, special parts to adapt three-point hitch to loader models	1

http://www.minnparbackhoeparts.com/

(580SK) - CASE SUPER-K CONSTRUCTION KING LOADER BACKHOE > (8-012) - EQUIPMENT HYDRAULIC SYSTEM, OIL COOLER LINES, RETURN LINES,AND FILTER

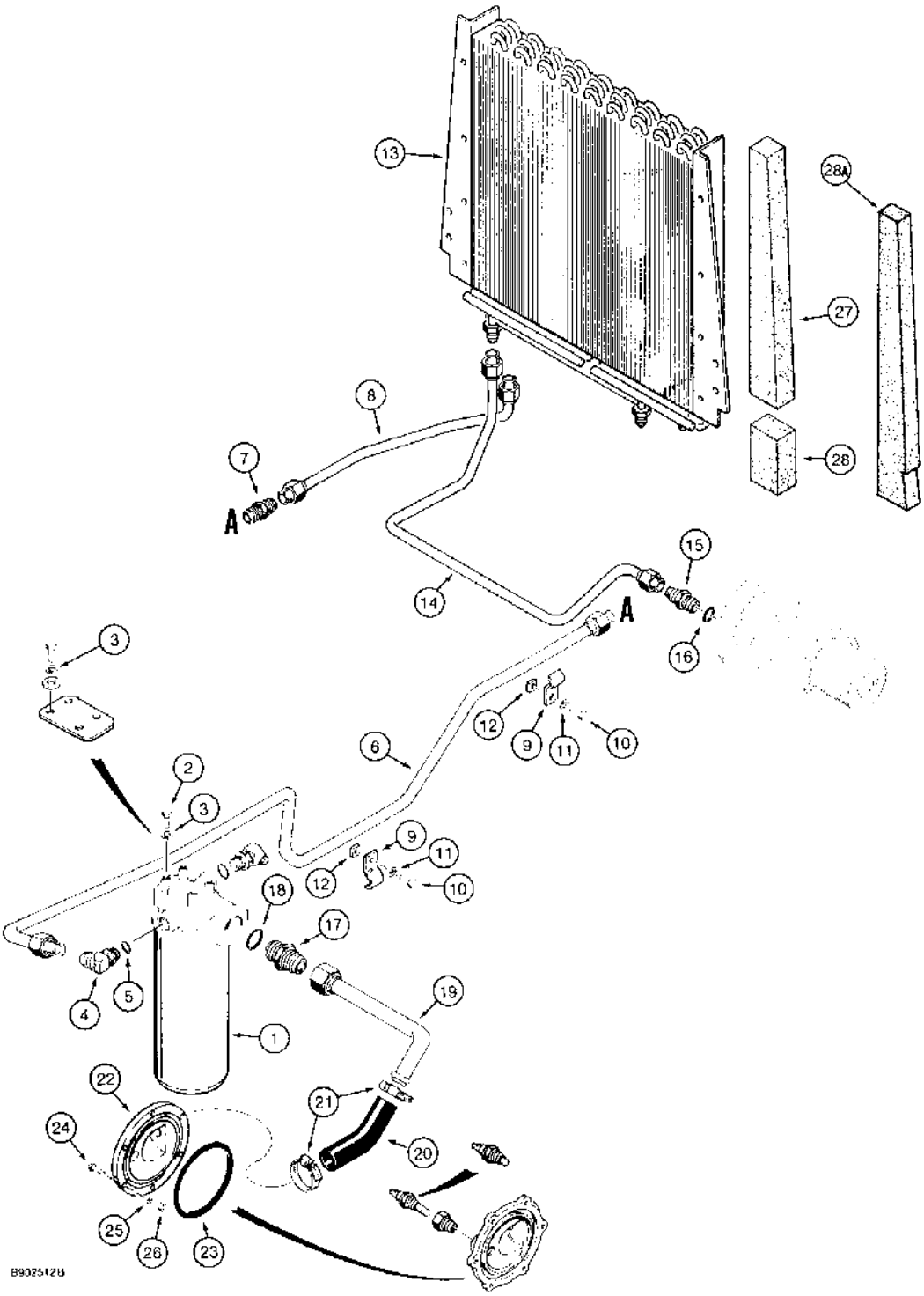

(580SK) - CASE SUPER-K CONSTRUCTION KING LOADER BACKHOE > (8-012) - EQUIPMENT HYDRAULIC SYSTEM, OIL COOLER LINES, RETURN LINES,AND FILTER

Diag #	Part #	Name	Description	Qty
1	REF	INSTRUCTION	FILTER ASSEMBLY hydraulic oil, see Figure 8-114 for correct assembly and components, equipment hydraulic system oil cooler lines, return lines, and filter	1
2	413-614	BOLT,Hex, 3/8" - 16 x 7/8", Gr 5	Used on models without spacer plate, Ref. 29 below, equipment hydraulic system oil cooler lines, return lines, and filter Hex, 3/8"-16 x 7/8", G5, Full Thd	4
3	492-11038	LOCK WASHER,3/8"	equipment hydraulic system oil cooler lines, return lines, and filter 3/8"	4
4	218-5107	ELBOW,90º, 7/8"-14, 37º x 7/8"-14, O-Ring	90 degree, 7/8-14 inch flare x adj O-ring boss, equipment hydraulic system oil cooler lines, return lines, and filter, Incl. Ref. 5	1
5	237-6010	O-RING,0.239" ID x 0.379" OD x 0.07"	10-1, 90 Duro, .755" ID x .097" Thk, Equipment hydraulic system oil cooler lines, return lines, and filter	1
6	D145954	TUBE ASSY.	TUBE oil filter to cooler inlet tube, equipment hydraulic system oil cooler lines, return lines, and filter	1
7	218-736	UNION,7/8"-14, 37º x 7/8"-14, 37º	CONNECTOR straight, 7/8-14 inch flare, equipment hydraulic system oil cooler lines, return lines, and filter	1
8	D150995	TUBE	cooler inlet, equipment hydraulic system oil cooler lines, return lines, and filter	1
9	D143430	CLAMP	tube, equipment hydraulic system oil cooler lines, return lines, and filter	2
10	413-612	BOLT,Hex, 3/8" - 16 x 3/4", Gr 5	Equipment hydraulic system oil cooler lines, return lines, and filter Hex, 3/8"-16 x 3/4", G5, Full Thd	2
11	492-11038	LOCK WASHER,3/8"	equipment hydraulic system oil cooler lines, return lines, and filter 3/8"	2
12	84899	SQUARE NUT,Sq, 3/8"-16, G2	square, 3/8 inch NC, equipment hydraulic system oil cooler lines, return lines, and filter	2
13	A184542	COOLER, OIL	COOLER oil, power shuttle and equipment hydraulic oil, see Figure 6-04 for oil cooler mounting hardware, equipment hydraulic system oil cooler lines, return lines, and filter	1
14	D147488	PIPE	TUBE cooler return to reservoir, equipment hydraulic system oil cooler lines, return lines, and filter	1
15	218-5062	HYD CONNECTOR,7/8"-14, 37º x 7/8"-14, O-Ring	ADAPTER straight, 7/8-14 inch flare x O-ring boss, equipment hydraulic system	1

Diag #	Part #	Name	Description	Qty
			oil cooler lines, return lines, and filter, Includes: Ref. 16	
16	237-6010	O-RING,0.239" ID x 0.379" OD x 0.07"	10-1, 90 Duro, .755" ID x .097" Thk, Equipment hydraulic system oil cooler lines, return lines, and filter	1
17	218-5086	HYD CONNECTOR,1 5/16"-12, 37° x 1 5/8"-12, O-Ring	ADAPTER straight, 1-5/16-12 flare x 1-5/8-12 inch O-ring, return to tank, equipment hydraulic system oil cooler lines, return lines, and filter, Includes: Ref. 18	1
18	237-6020	O-RING,0.864" ID x 1.004" OD x 0.07"	20-1, 90 Duro, 1.475" ID x .118" Thk, Equipment hydraulic system oil cooler lines, return lines, and filter	1
19	D150518	TUBE	return to tank, replaces D145944 tube, equipment hydraulic system oil cooler lines, return lines, and filter	1
20	D146034	HOSE	25 ID x 35 OD x 102 mm long, return, at tank inlet, equipment hydraulic system oil cooler lines, return lines, and filter	1
21	214-1416	HOSE CLAMP,#16, 0.81/1.50 Type F Worm	CLAMP, HOSE, , Adj., Equipment hydraulic system oil cooler lines, return lines, and filter #16, 0.81/1.50 Type F Worm	2
22	D125694	FLANGE	reservoir, return, equipment hydraulic system oil cooler lines, return lines, and filter	1
23	238-5425	O-RING,-425, 70 Duro, 4.475" ID x .210" Thk	reservoir return flange, replaces T53326, equipment hydraulic system oil cooler lines, return lines, and filter	1
24	413-416	BOLT,Hex, 1/4" - 20 x 1", Gr 5	hex, 1/4 NC x 1 inch, equipment hydraulic system oil cooler lines, return lines, and filter	6
25	492-11025	LOCK WASHER,1/4"	WASHER, LOCK, , Equipment hydraulic system oil cooler lines, return lines, and filter 1/4"	6
26	425-104	NUT,1/4"-20, G5	hex, 1/4 inch NC, equipment hydraulic system oil cooler lines, return lines, and filter	6
27	D140840	FOAM	BAFFLE base size is 2-3/16, 55 x 17-3/4 inch, 450 mm, high, cut from D92228 bulk pad, see below, no longer available, replaced by 111996A1, Ref. 28A, equipment hydraulic system oil cooler lines, return lines, and filter	2
		These baffles are shown installed next to the oil cooler on models without air conditioner. On models with air conditioner they are installed next to the condenser coil, see Figure 9-158.	These baffles are shown installed next to the oil cooler on models without air conditioner. On models with air conditioner they are installed next to the condenser coil, see Figure 9-158.	1
28	D140841	FOAM	BAFFLE base size is 2-3/8, 60 x 3-15/16 inch, 100 mm, high, cut from D92228 bulk	2

Diag #	Part #	Name	Description	Qty
			pad, see below, no longer available, replaced by 111996A1, Ref. 28A, equipment hydraulic system oil cooler lines, return lines, and filter	
		These baffles are shown installed next to the oil cooler on models without air conditioner. On models with air conditioner they are installed next to the condenser coil, see Figure 9-158.	These baffles are shown installed next to the oil cooler on models without air conditioner. On models with air conditioner they are installed next to the condenser coil, see Figure 9-158.	1
28A	111996A1	BAFFLE	base size is 3-3/16, 81 x 24-39/64 inch, 625 mm, high, cut from D92228 bulk pad, see below, equipment hydraulic system oil cooler lines, return lines, and filter	2
		These baffles are shown installed next to the oil cooler on models without air conditioner. On models with air conditioner they are installed next to the condenser coil, see Figure 9-158.	These baffles are shown installed next to the oil cooler on models without air conditioner. On models with air conditioner they are installed next to the condenser coil, see Figure 9-158.	1
	D92228	BAFFLE	bulk pad, 900 x 1400 x 38 mm, equipment hydraulic system oil cooler lines, return lines, and filter	1
	345-44	ADHESIVE	spray can, for attaching foam pads to metal surfaces, purchase locally, equipment hydraulic system oil cooler lines, return lines, and filter	1

http://www.minnparbackhoeparts.com/

(580SK) - CASE SUPER-K CONSTRUCTION KING LOADER BACKHOE > (8-014) - EQUIPMENT HYDRAULIC SYSTEM, OIL COOLER LINES, RETURN LINES,AND FILTER

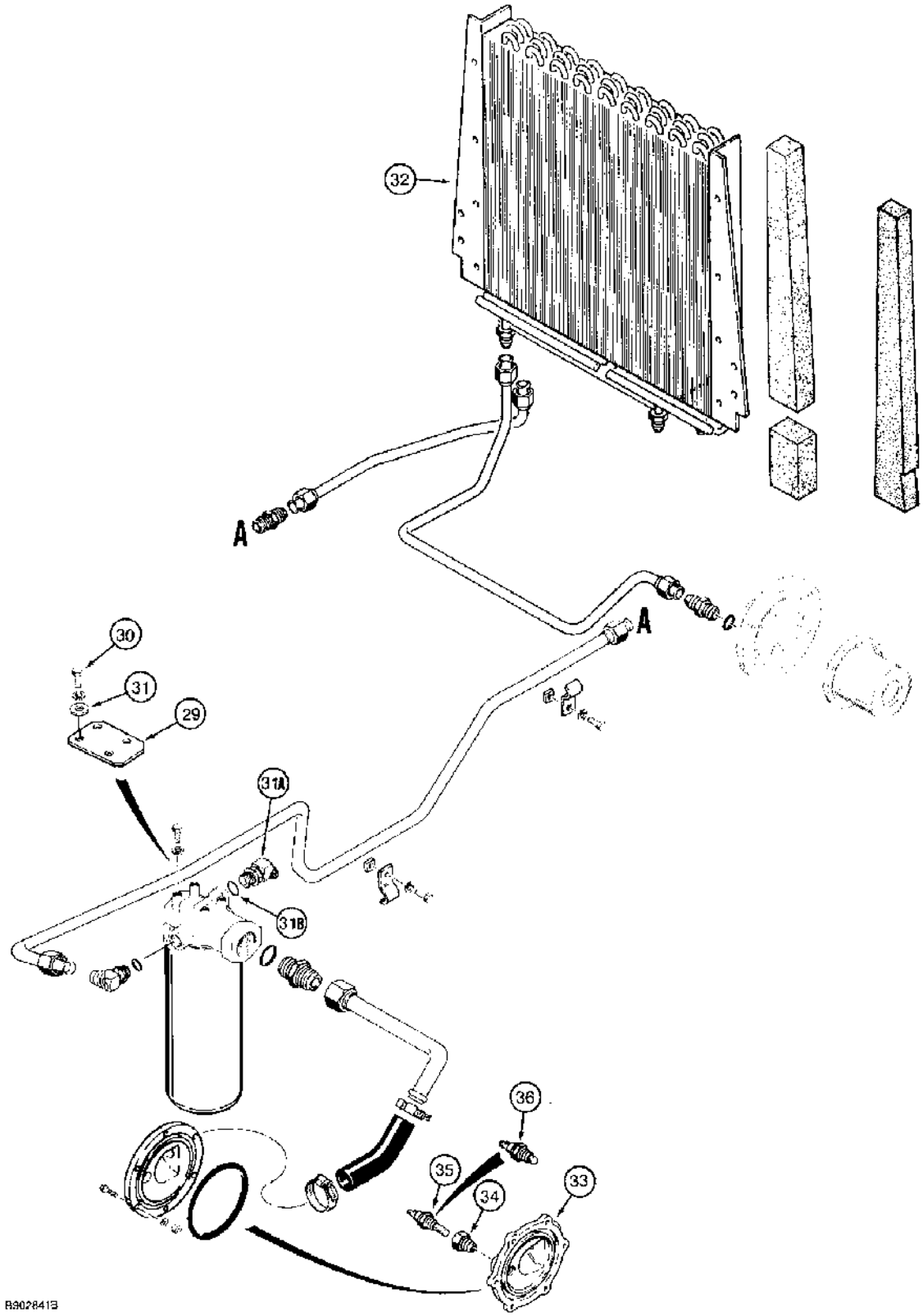

(580SK) - CASE SUPER-K CONSTRUCTION KING LOADER BACKHOE > (8-014) - EQUIPMENT HYDRAULIC SYSTEM, OIL COOLER LINES, RETURN LINES,AND FILTER

Diag #	Part #	Name	Description	Qty
29	D150794	SPACER	PLATE spacer, filter	1
		equipment hydraulic system oil cooler lines, return lines, and filter	equipment hydraulic system oil cooler lines, return lines, and filter	1
30	413-616	BOLT,Hex, 3/8" - 16 x 1", Gr 5	hex, 3/8 NC x 1 inch	4
		equipment hydraulic system oil cooler lines, return lines, and filter	equipment hydraulic system oil cooler lines, return lines, and filter	1
31	495-11041	WASHER,3/8", SAE	flat, (13/32 x 13/16 x 1/16")	4
		equipment hydraulic system oil cooler lines, return lines, and filter	equipment hydraulic system oil cooler lines, return lines, and filter	1
31A	218-5529	ELBOW,45º, 3/4"-16, 37º x 9/16"-18, O-Ring	45 deg, 3/4-16 flare x 9/16-18 inch adj O-ring boss, replaces Ref. 36 and 47 adapter and elbow on Figure 5-04 on some models, see Figure 5-04 for attaching parts, Includes: Ref. 31B	1
		equipment hydraulic system oil cooler lines, return lines, and filter	equipment hydraulic system oil cooler lines, return lines, and filter	1
32	A184190	COOLER	oil, heavy duty, power shuttle and equipment hydraulic oil, see Figure 6-04 for oil cooler mounting hardware, replaces Ref. 13 cooler on models with auxiliary hydraulics	1
		special parts used on models with auxiliary hydraulics for optional rear hydraulic attachments	special parts used on models with auxiliary hydraulics for optional rear hydraulic attachments	1
33	D139268	SHOULDER	FLANGE return, replaces Ref. 22 flange on models with auxiliary hydraulics	1
		special parts used on models with auxiliary hydraulics for optional rear hydraulic attachments	special parts used on models with auxiliary hydraulics for optional rear hydraulic attachments	1
34	221-88	REDUCER,Hex, 1/2" x 1/4" NPT	pipe, 1/2 male x 1/4 inch female, used with D70163 switch, if used	1
		special parts used on models with auxiliary hydraulics for optional rear hydraulic attachments	special parts used on models with auxiliary hydraulics for optional rear hydraulic attachments	1
35	D70163	SWITCH	oil temperature, attaches to main harness, used with Ref. 34 reducer, no longer used,	1

Diag #	Part #	Name	Description	Qty
			order 1345488C2 switch, Ref. 36 and remove 221-1088 reducer, Ref. 34	
		special parts used on models with auxiliary hydraulics for optional rear hydraulic attachments	special parts used on models with auxiliary hydraulics for optional rear hydraulic attachments	1
36	1345488C2	PRESSURE SWITCH	SWITCH, 225 degree, oil temperature, attaches to main harness, replaces 1345488C1 235 degree switch	1
		special parts used on models with auxiliary hydraulics for optional rear hydraulic attachments	special parts used on models with auxiliary hydraulics for optional rear hydraulic attachments	1
31B	237-6006	O-RING,0.114" ID x 0.254" OD x 0.07"	6-1, 90 Duro, .468" ID x .078" Thk	1
		equipment hydraulic system oil cooler lines, return lines, and filter	equipment hydraulic system oil cooler lines, return lines, and filter	1

http://www.minnparbackhoeparts.com/

(580SK) - CASE SUPER-K CONSTRUCTION KING LOADER BACKHOE > (8-016) - LOADER LIFT CYLINDER HYDRAULIC CIRCUIT, PRIOR TO P.I.N. JJG0169931

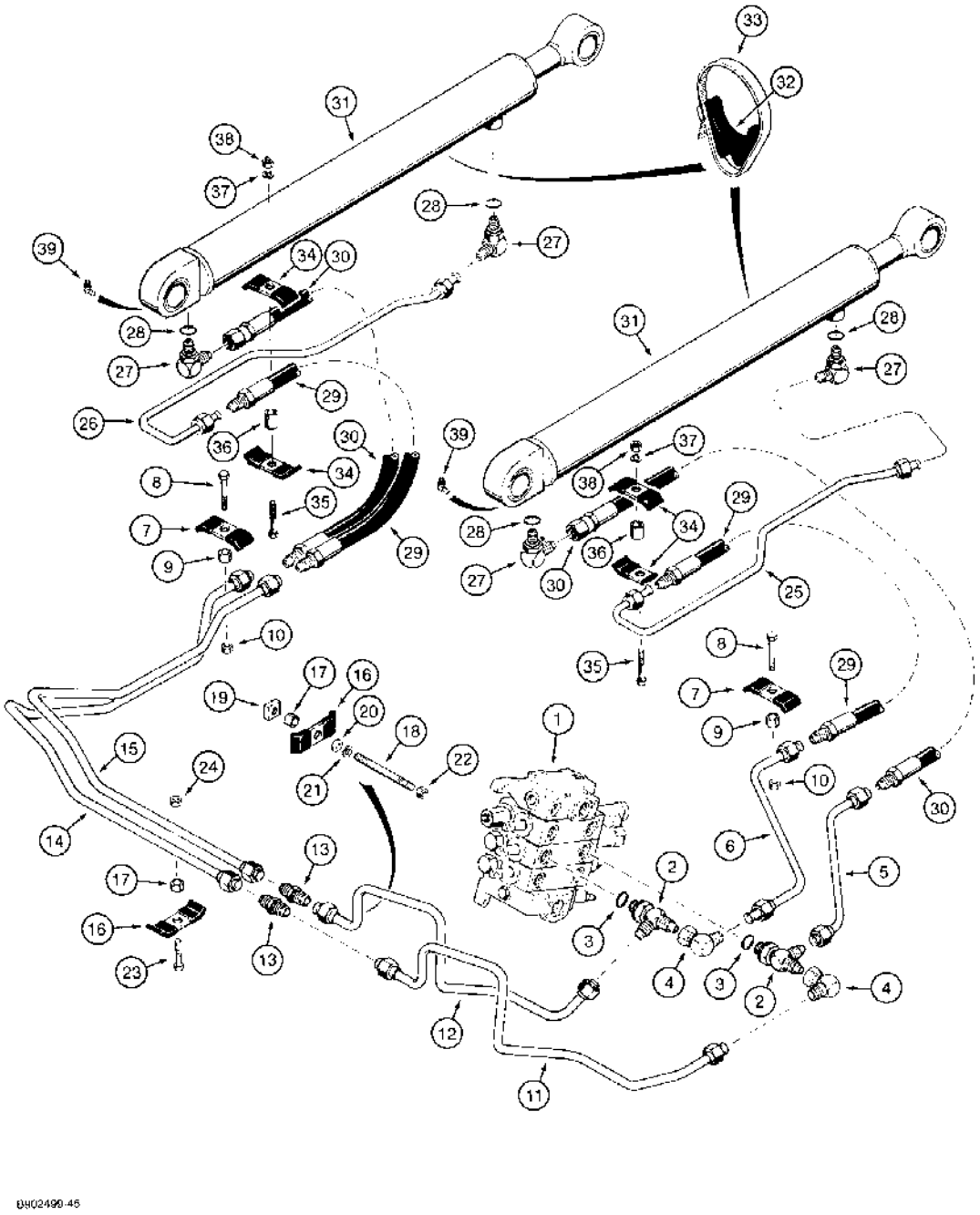

http://www.minnparbackhoeparts.com/

(580SK) - CASE SUPER-K CONSTRUCTION KING LOADER BACKHOE > (8-016) - LOADER LIFT CYLINDER HYDRAULIC CIRCUIT, PRIOR TO P.I.N. JJG0169931

Diag #	Part #	Name	Description	Qty
1	REF	INSTRUCTION	VALVE ASSEMBLY loader control, for correct assembly and components, see Figure 8-064 or 8-066, for mounting see Figure 9-002	1
2	218-5241	TEE,7/8"-14, 37º x 7/8"-14, O-Ring Run	7/8-14 inch flare branch x flare x adj O-ring boss, Includes: Ref. 3	2
3	237-6010	O-RING,0.239" ID x 0.379" OD x 0.07"	10-1, 90 Duro, .755" ID x .097" Thk	1
4	218-5232	ELBOW,90º, 7/8"-14, 37º x 7/8"-14, 37º Fem Sw	90 degree, 7/8-14 inch flare x swivel flare	2
5	D145928	PIPE	TUBE, tee to closed end of right-hand lift cylinder	1
6	D145922	PIPE	TUBE, tee to rod end of right-hand lift cylinder	1
7	D143846	CLAMP	- Metal, Tube	2
8	413-632	BOLT,Hex, 3/8" - 16 x 2", Gr 5	- hex, 3/8 NC x 2 inch	2
9	D146035	SPACER	tube clamp	2
10	231-1446	NUT,3/8"-16, GB	NUT hex, self-locking, 3/8 inch NC, grade 8	2
11	D149357	TUBE	at tee, to closed end of left-hand lift cylinder	1
12	D149359	TUBE	at tee, to rod end of left-hand lift cylinder	1
13	218-736	UNION,7/8"-14, 37º x 7/8"-14, 37º	CONNECTOR straight, 7/8-14 inch flare	2
14	D145924	TUBE	crossover, to closed end of left-hand lift cylinder	1
15	D145918	TUBE ASSY.	TUBE crossover, to rod end of left-hand lift cylinder	1
16	D138055	CLAMP	tube	2
17	D146035	SPACER	tube clamp	2
18	R46227	STUD	special, tube clamp to chassis bracket	1
19	84899	SQUARE NUT,Sq, 3/8"-16, G2	square, 3/8 inch NC	1
20	495-21044	WASHER,3/8"	(flat, 7/16 x 1 x 5/64 inch) 3/8"	1
21	492-11038	LOCK WASHER,3/8"	LOCK WASHER,3/8"	1
22	425-106	NUT,3/8"-16, G5	NUT,3/8"-16, G5	1
23	413-628	BOLT,Hex, 3/8" - 16 x 1 3/4", Gr 5	BOLT,Hex, 3/8" - 16 x 1 3/4", Gr 5	1
24	231-1446	NUT,3/8"-16, GB	NUT hex, self-locking, 3/8 inch NC, grade 8	1
25	D149044	PIPE	TUBE, at rod end of right-hand lift cylinder	1

Diag #	Part #	Name	Description	Qty
26	D149046	PIPE	TUBE, at rod end of left-hand lift cylinder	1
27	218-5107	ELBOW,90º, 7/8"-14, 37º x 7/8"-14, O-Ring	90 degree, 7/8-14 inch flare x adj O-ring boss, Incl. Ref. 28	4
28	237-6010	O-RING,0.239" ID x 0.379" OD x 0.07"	10-1, 90 Duro, .755" ID x .097" Thk	1
29	D131496	HOSE	690 mm long, to rod end of lift cylinders replaces D143828	2
30	D131497	HOSE	725 mm long, to closed end of lift cylinders replaces D140951	2
31	1340976C1	CYLINDER ASSY.	CYLINDER ASSEMBLY lift, right-hand and left-hand, parts list Figure 8-116, no longer available, order 110303A1 cylinder on Figure 8-117C	2
32	D38648	BLOCK	SPACER rubber, single tube	2
33	214-1464	HOSE CLAMP,#64, 3.56/4.50 Type F Worm	CLAMP, HOSE, , Adj., Tube to cylinder #64, 3.56/4.50 Type F Worm	2
34	D143846	CLAMP	- Metal, Hose	4
35	413-632	BOLT,Hex, 3/8" - 16 x 2", Gr 5	- hex, 3/8 NC x 2 inch	2
36	D143412	SPACER	hose, at, Serial Range: tubes-cylinders	2
37	492-11038	LOCK WASHER,3/8"	LOCK WASHER,3/8"	2
38	425-106	NUT,3/8"-16, G5	NUT,3/8"-16, G5	2
39	219-55	LUBE NIPPLE,90º, 1/8" NPT x .84" lg	NIPPLE, LUBE, 90º, 1/8" NPT x .84" lg	2

http://www.minnparbackhoeparts.com/

(580SK) - CASE SUPER-K CONSTRUCTION KING LOADER BACKHOE > (8-017A) - LOADER LIFT CYLINDER HYDRAULIC CIRCUIT, P.I.N. JJG0169931 AND AFTER

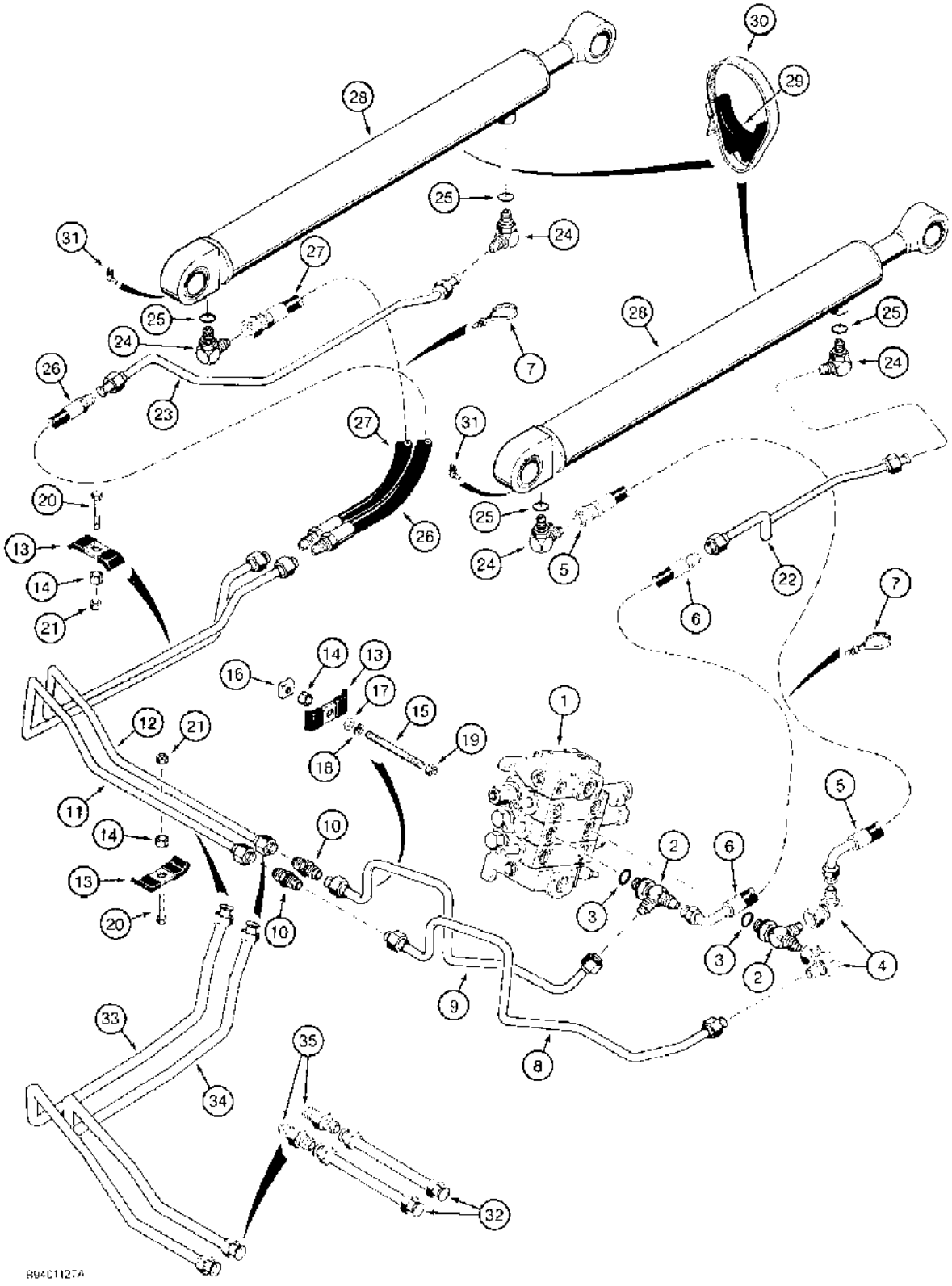

(580SK) - CASE SUPER-K CONSTRUCTION KING LOADER BACKHOE > (8-017A) - LOADER LIFT CYLINDER HYDRAULIC CIRCUIT, P.I.N. JJG0169931 AND AFTER

Diag #	Part #	Name	Description	Qty
1	REF	INSTRUCTION	VALVE ASSEMBLY loader control, for correct assembly and components, see Figure 8-064 or 8-066, for mounting see Figure 9-002	1
2	218-5241	TEE,7/8"-14, 37° x 7/8"-14, O-Ring Run	7/8-14 inch flare branch x flare x adj O-ring boss, Includes: Ref. 3	2
3	237-6010	O-RING,0.239" ID x 0.379" OD x 0.07"	10-1, 90 Duro, .755" ID x .097" Thk	1
4	218-5232	ELBOW,90°, 7/8"-14, 37° x 7/8"-14, 37° Fem Sw	90 degree, 7/8-14 inch flare x swivel flare	2
5	D150669	HOSE	813 mm long, to closed end of right-hand lift cylinder	1
		IF LOOKING FOR THE HOSE WITH A 90 DEGREE FITTING ON ONE END ORDER P/N 104262A1 PER TECH.	IF LOOKING FOR THE HOSE WITH A 90 DEGREE FITTING ON ONE END ORDER P/N 104262A1 PER TECH.	1
6	D150668	HOSE	722 mm long, to rod end of right-hand lift cylinder	1
7	L18337	CABLE TIE,9.95"-12.1" lg	STRAP tie, 15 inch, nylon	3
8	D149357	TUBE	at tee, to closed end of left-hand lift cylinder	1
9	D149359	TUBE	at tee, to rod end of left-hand lift cylinder	1
10	218-736	UNION,7/8"-14, 37° x 7/8"-14, 37°	CONNECTOR straight, 7/8-14 inch flare	2
11	D151095	TUBE	to closed end of left-hand lift cylinder, production only, for service order one each of Ref. 32, D151021 tube, Ref. 33, D151023 tube and Ref. 35, 218-736 connector	1
12	D151093	TUBE	to rod end of left-hand lift cylinder, production only for service order one each of Ref. 32, D151021 tube, Ref. 34, D151025 tube and Ref. 35, 218-736 connector	1
13	D138055	CLAMP	tube	3
14	D146035	SPACER	tube clamp	3
15	R46227	STUD	special, tube clamp to chassis bracket	1
16	84899	SQUARE NUT,Sq, 3/8"-16, G2	square, 3/8 inch NC	1
17	495-21044	WASHER,3/8"	(flat, 7/16 x 1 x 5/64 inch) 3/8"	1
18	492-11038	LOCK WASHER,3/8"	LOCK WASHER,3/8"	1
19	425-106	NUT,3/8"-16, G5	NUT,3/8"-16, G5	1

Diag #	Part #	Name	Description	Qty
20	413-628	BOLT,Hex, 3/8" - 16 x 1 3/4", Gr 5	BOLT,Hex, 3/8" - 16 x 1 3/4", Gr 5	2
21	231-1446	NUT,3/8"-16, GB	NUT hex, self-locking, 3/8 inch NC, grade 8	2
22	D150993	TUBE	at rod end of right-hand lift cylinder	1
23	D150991	TUBE	at rod end of left-hand lift cylinder	1
24	218-5107	ELBOW,90º, 7/8"-14, 37º x 7/8"-14, O-Ring	90 degree, 7/8-14 inch flare x adj O-ring boss, Incl. Ref. 25	4
25	237-6010	O-RING,0.239" ID x 0.379" OD x 0.07"	10-1, 90 Duro, .755" ID x .097" Thk	1
26	D150667	HOSE	457 mm long, to rod end of left-hand lift cylinder	1
27	D150670	HOSE	762 mm long, to closed end of left-hand lift cylinder	1
28	REF	INSTRUCTION	CYLINDER ASSEMBLY lift, right-hand and left-hand, for correct assembly and components, see Figures 8-116 - 8-117C	2
29	D38648	BLOCK	SPACER rubber, single tube	2
30	214-1464	HOSE CLAMP,#64, 3.56/4.50 Type F Worm	CLAMP, HOSE, , Adj. #64, 3.56/4.50 Type F Worm	2
31	219-55	LUBE NIPPLE,90º, 1/8" NPT x .84" lg	NIPPLE, LUBE, 90º, 1/8" NPT x .84" lg	2
32	D151021	TUBE	straight, used with Ref. 33 or 34, and 35	2
33	D151023	TUBE	to closed end of left-hand lift cylinder, used with Ref. 32 and 35	1
34	D151025	TUBE	to rod end of left-hand lift cylinder, used with Ref. 32 and 35	1
35	218-736	UNION,7/8"-14, 37º x 7/8"-14, 37º	CONNECTOR straight, 7/8-14 inch flare, used Ref. 32, and Ref. 33 or 34	2

http://www.minnparbackhoeparts.com/

(580SK) - CASE SUPER-K CONSTRUCTION KING LOADER BACKHOE > (8-018A) - LOADER BUCKET CYLINDER HYDRAULIC CIRCUIT

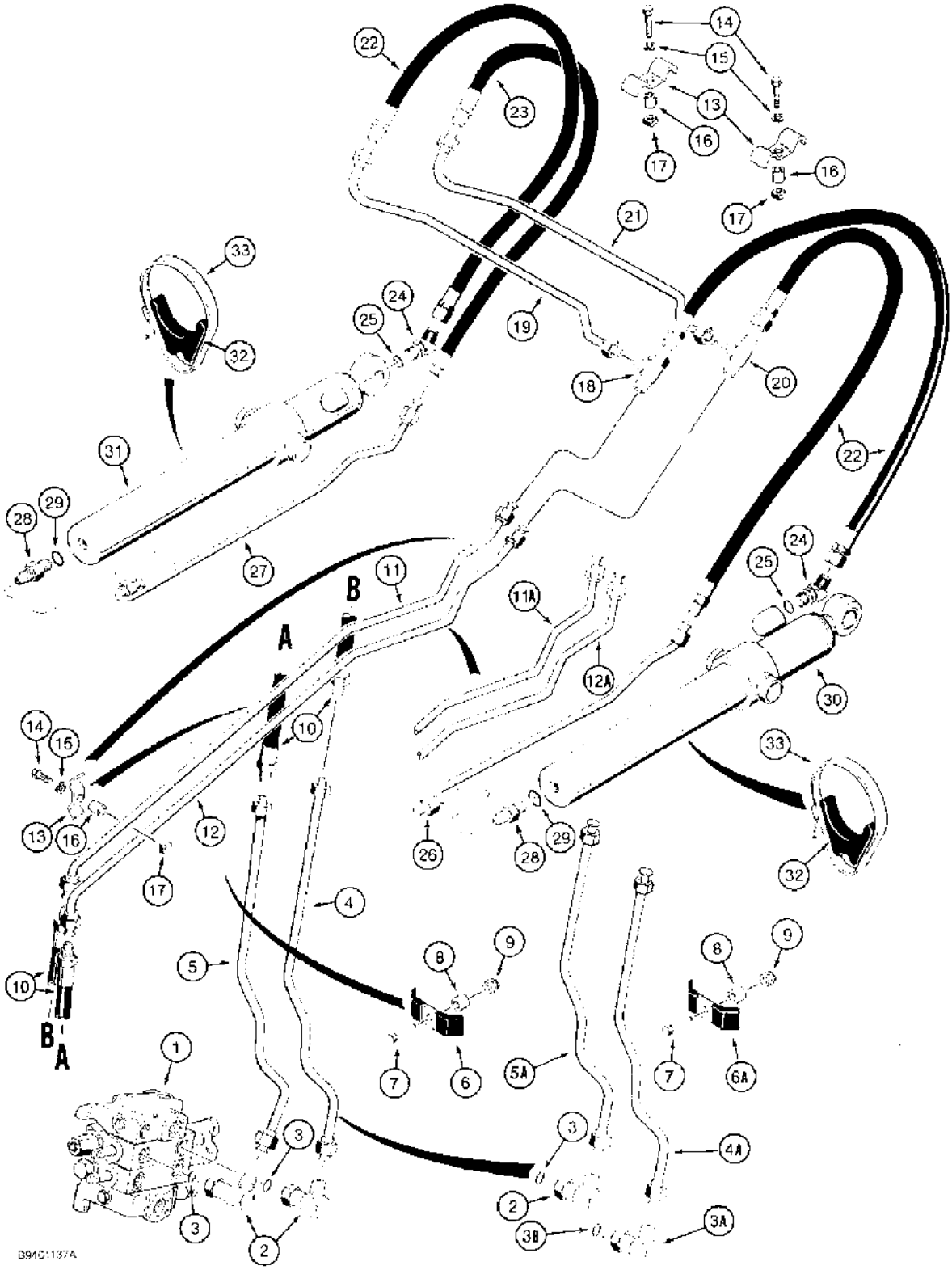

(580SK) - CASE SUPER-K CONSTRUCTION KING LOADER BACKHOE > (8-018A) - LOADER BUCKET CYLINDER HYDRAULIC CIRCUIT

Diag #	Part #	Name	Description	Qty
1	REF	INSTRUCTION	VALVE ASSEMBLY loader control, for correct assembly and components, see Figure 8-062 or 8-066, for mounting see Figure 9-002	1
2	R20894	FITTING	ELBOW, 90 degree, special, two used prior to P.I.N. JJG0169931, one used P.I.N. JJG0169931 and after, Includes: Ref. 3	1-2
3	237-6010	O-RING,0.239" ID x 0.379" OD x 0.07"	10-1, 90 Duro, .755" ID x .097" Thk	1
3A	218-5107	ELBOW,90º, 7/8"-14, 37º x 7/8"-14, O-Ring	90 degree, 7/8-14 inch flare x adj O-ring boss, P.I.N. JJG0169931 and after, Incl. Ref. 3B	1
3B	237-6010	O-RING,0.239" ID x 0.379" OD x 0.07"	10-1, 90 Duro, .755" ID x .097" Thk	1
4	D147961	PIPE	TUBE, lower port of control valve, prior to P.I.N. JJG0169931	1
4A	D150989	TUBE ASSY.	TUBE, lower port of control valve, P.I.N. JJG0169931 and after	1
5	D147963	PIPE	TUBE, upper port of control valve, prior to P.I.N. JJG0169931	1
5A	D151079	TUBE ASSY.	TUBE, upper port of control valve, P.I.N. JJG0169931 and after	1
6	D143846	CLAMP	- Tube to chassis, prior to P.I.N. JJG0169931	1
6A	D138055	CLAMP	tube to chassis, P.I.N. JJG0169931 and after	1
7	413-632	BOLT,Hex, 3/8" - 16 x 2", Gr 5	- hex, 3/8 NC x 2 inch	1
8	D146035	SPACER	clamp	1
9	231-1446	NUT,3/8"-16, GB	NUT hex, self-locking, 3/8 inch NC, grade 8	1
10	D125995	HOSE	750 mm long, at loader lift frame pivot	2
11	D146250	PIPE	TUBE upper, on right-hand lift arm, no longer available, order D150598 and D150600 tubes, Ref. 11A and 12A	1
11A	D150598	TUBE ASSY.	TUBE upper, on right-hand lift arm	1
12	D146254	PIPE	TUBE lower, on right-hand lift arm, no longer available, order D150598 and D150600 tubes, Ref. 11A and 12A	1
12A	D150600	TUBE ASSY.	TUBE lower, on right-hand lift arm	1
13	D143427	CLAMP	tubes to lift arm	5
14	413-616	BOLT,Hex, 3/8" - 16 x 1", Gr 5	hex, 3/8 NC x 1 inch	5

Diag #	Part #	Name	Description	Qty
15	492-11038	LOCK WASHER,3/8"	LOCK WASHER,3/8"	5
16	D143417	SPACER	10 ID x 16 OD x 6 mm long, plated	5
17	84899	SQUARE NUT,Sq, 3/8"-16, G2	square, 3/8 inch NC	5
18	218-5220	TEE,37º, 7/8"-14 x 7/8"-14, Fem Sw Run	7/8-14 inch flare branch x flare x adj straight thread, at upper lift frame crossover tube	1
19	D146552	PIPE	TUBE lower, crossover, at upper lift frame, to rod end of bucket cylinders	1
20	218-595	TEE,7/8"-14, 37º	7/8-14 inch flare, at upper lift frame crossover tube	1
21	D146550	PIPE	TUBE upper, crossover, at upper lift frame, to closed end of bucket cylinders	1
22	D131497	HOSE	725 mm long, to rod end of left-hand and right-hand bucket cylinders and to closed end of right-hand bucket cylinder, replaces D140951	3
23	D125995	HOSE	750 mm long, to closed end of left-hand bucket cylinder replaces D140949	1
24	218-5137	ELBOW,45º, 7/8"-14 x 7/8"-14, O-Ring	45 degree, 7/8-14 inch flare x adj O-ring boss, Incl. Ref 25	2
25	237-6010	O-RING,0.239" ID x 0.379" OD x 0.07"	10-1, 90 Duro, .755" ID x .097" Thk	1
26	D127940	PIPE	TUBE, to closed end of right-hand bucket cylinder	1
27	D127942	PIPE	TUBE, to closed end of left-hand bucket cylinder	1
28	218-5062	HYD CONNECTOR,7/8"-14, 37º x 7/8"-14, O-Ring	ADAPTER straight, 7/8-14 inch flare x O-ring boss, Includes: Ref. 29	2
29	237-6010	O-RING,0.239" ID x 0.379" OD x 0.07"	10-1, 90 Duro, .755" ID x .097" Thk	1
30	REF	INSTRUCTION	CYLINDER ASSEMBLY bucket, right-hand, for correct assembly and components, see Figure 8-118 or 8-119A	1
31	REF	INSTRUCTION	CYLINDER ASSEMBLY bucket, left-hand, for correct assembly and components, see Figure 8-118 or 8-119A	1
32	D38648	BLOCK	INSULATOR rubber, tube clamp	2
33	214-1464	HOSE CLAMP,#64, 3.56/4.50 Type F Worm	CLAMP, HOSE, , Adj., Tube to cylinder #64, 3.56/4.50 Type F Worm	2

http://www.minnparbackhoeparts.com/

(580SK) - CASE SUPER-K CONSTRUCTION KING LOADER BACKHOE > (8-020) - LOADER CLAM CYLINDER HYDRAULIC CIRCUIT

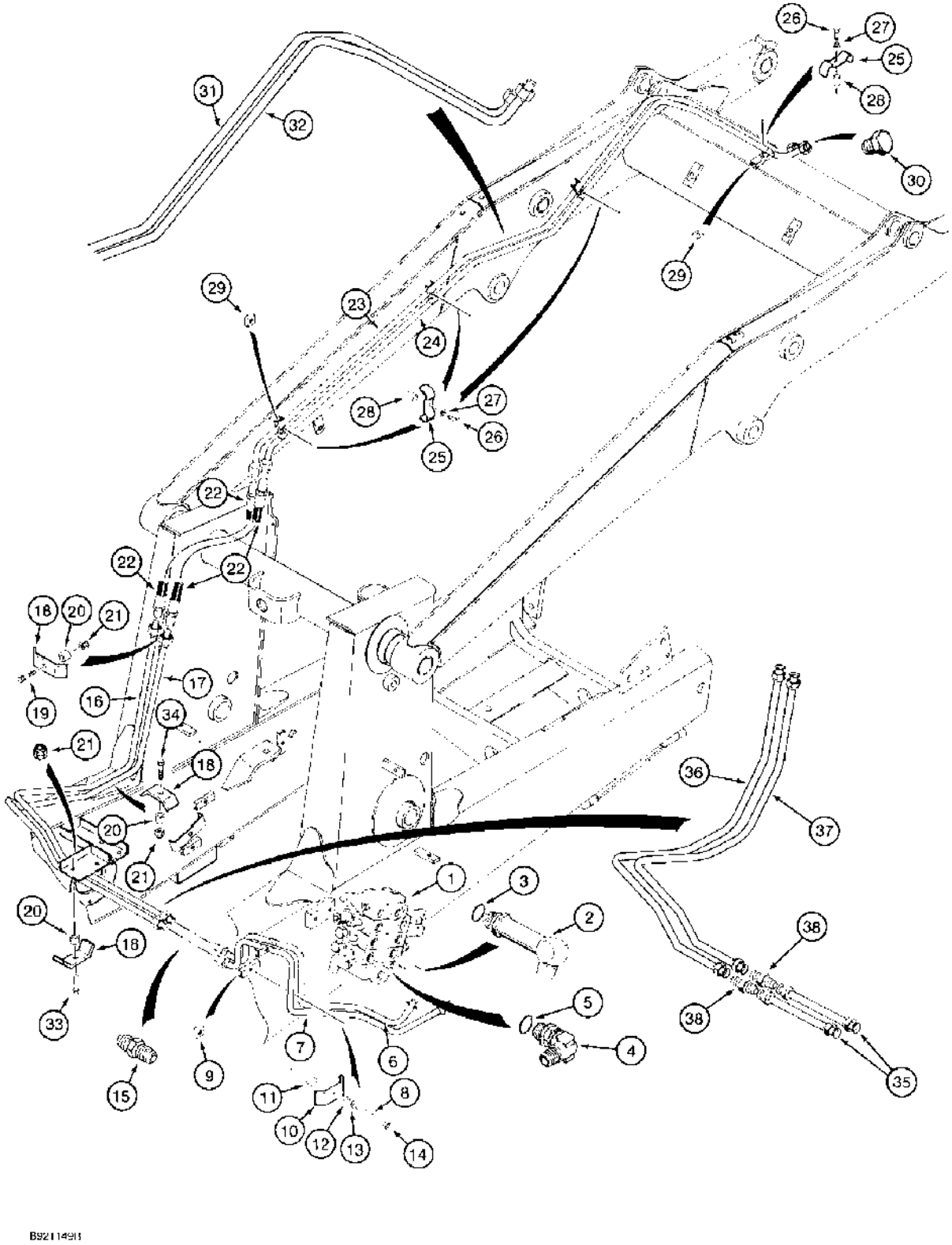

(580SK) - CASE SUPER-K CONSTRUCTION KING LOADER BACKHOE > (8-020) - LOADER CLAM CYLINDER HYDRAULIC CIRCUIT

Diag #	Part #	Name	Description	Qty
1	1346393C1	VALVE	ASSEMBLY loader control, three-spool, parts list Figure 8-066, for mounting see Figure 9-002	1
2	D23143	FITTING	ELBOW, 90 degree, special, lower port of valve, Includes: Ref. 3	1
3	237-6010	O-RING,0.239" ID x 0.379" OD x 0.07"	10-1, 90 Duro, .755" ID x .097" Thk	1
4	218-5107	ELBOW,90º, 7/8"-14, 37º x 7/8"-14, O-Ring	90 degree, 7/8-14 inch flare x adj O-ring boss, upper port of valve, Incl. Ref. 5	1
5	237-6010	O-RING,0.239" ID x 0.379" OD x 0.07"	10-1, 90 Duro, .755" ID x .097" Thk	1
6	D145916	TUBE	at upper port auxiliary section of loader control valve	1
7	D145912	TUBE	at lower port auxiliary section of loader control valve	1
8	R46227	STUD	special, tube clamp to chassis bracket	1
9	84899	SQUARE NUT,Sq, 3/8"-16, G2	square, 3/8 inch NC	1
10	D143846	CLAMP	- Tubes to right-hand side of chassis	1
11	D146035	SPACER	tube clamp	1
12	495-21044	WASHER,3/8"	(flat, 7/16 x 1 x 5/64 inch) 3/8"	1
13	492-11038	LOCK WASHER,3/8"	LOCK WASHER,3/8"	1
14	425-106	NUT,3/8"-16, G5	NUT,3/8"-16, G5	1
15	218-736	UNION,7/8"-14, 37º x 7/8"-14, 37º	CONNECTOR straight, 7/8-14 inch flare	2
16	D145914	TUBE	upper port loader valve tube to lift frame tube, prior to P.I.N. JJG0169931	1
16A	D151097	TUBE ASSY.	TUBE, upper port loader valve tube to lift frame tube, P.I.N. JJG0169931 and after, not shown, production only, for service order (1) each of Ref. 35, D151021 tube, Ref. 36, D151027 tube and Ref. 38, 218-736 connector on Figure 8-020	1
17	D145910	TUBE	lower port loader valve tube to lift frame tube, prior to P.I.N. JJG0169931	1
17A	D151099	TUBE ASSY.	TUBE, lower port loader valve tube to lift frame tube, P.I.N. JJG0169931 and after, not shown, production only, for service order (1) each of Ref. 35, D151021 tube, Ref. 37, D151029 tube and Ref.38, 218-736 connector on Figure 8-020	1
		TUBE THAT GOES IN TOP PORT OF LDR CONTROL	TUBE THAT GOES IN TOP PORT OF LDR CONTROL VALVE, NEAR WHERE REF 1	1

Diag #	Part #	Name	Description	Qty
		VALVE, NEAR WHERE REF 1 IS POINTING, IS D147586. SHOWN WITH STEERING HYDRAULICS ON FIGURE 5-04.	IS POINTING, IS D147586. SHOWN WITH STEERING HYDRAULICS ON FIGURE 5-04.	
18	D138055	CLAMP	tubes to left-hand side of chassis	3
19	413-632	BOLT,Hex, 3/8" - 16 x 2", Gr 5	- hex, 3/8 NC x 2 inch	1
20	D146035	SPACER	tube clamps	3
21	231-1446	NUT,3/8"-16, GB	NUT hex, self-locking, 3/8 inch NC, grade 8	3
22	D125995	HOSE	750 mm long, at loader arm pivot	2
23	D146246	PIPE	TUBE upper, on loader lift frame, no longer available, order D150691 and D150693 tubes, Ref.31 and 32	1
24	D146248	PIPE	TUBE lower, on loader lift frame, no longer available, order D150691 and D150693 tubes, Ref.31 and 32	1
25	D143427	CLAMP	tube, on loader lift frame	4
26	413-616	BOLT,Hex, 3/8" - 16 x 1", Gr 5	hex, 3/8 NC x 1 inch	4
27	492-11038	LOCK WASHER,3/8"	LOCK WASHER,3/8"	4
28	D143417	SPACER	10 mm ID x 16 mm OD x 6 mm long, replaces D123539	4
29	84899	SQUARE NUT,Sq, 3/8"-16, G2	square, 3/8 inch NC	4
30	218-776	PLUG,7/8"-14, 37°	hex, 7/8-14 inch flare, not used on models with clam bucket, if used	2
31	D150691	TUBE ASSY.	TUBE upper, on loader lift frame	1
32	D150693	PIPE	TUBE lower, on loader lift frame	1
33	413-628	BOLT,Hex, 3/8" - 16 x 1 3/4", Gr 5	BOLT,Hex, 3/8" - 16 x 1 3/4", Gr 5	1
34	413-640	BOLT,Hex, 3/8" - 16 x 2 1/2", Gr 5	hex, 3/8 NC x 2-1/2 inch	1
35	D151021	TUBE	straight, used with Ref. 36 or 37, and 38	2
36	D151027	TUBE ASSY.	TUBE clam section, port A, used with Ref. 35 and 38	1
37	D151029	TUBE ASSY.	TUBE clam section, port B, used with Ref. 35 and 38	1
38	218-736	UNION,7/8"-14, 37° x 7/8"-14, 37°	CONNECTOR straight, 7/8-14 inch flare, used with Ref. 35, and Ref. 36 or 37	2

http://www.minnparbackhoeparts.com/

(580SK) - CASE SUPER-K CONSTRUCTION KING LOADER BACKHOE > (8-022) - LOADER CLAM CYLINDER HYDRAULIC CIRCUIT, AT LOADER BUCKET

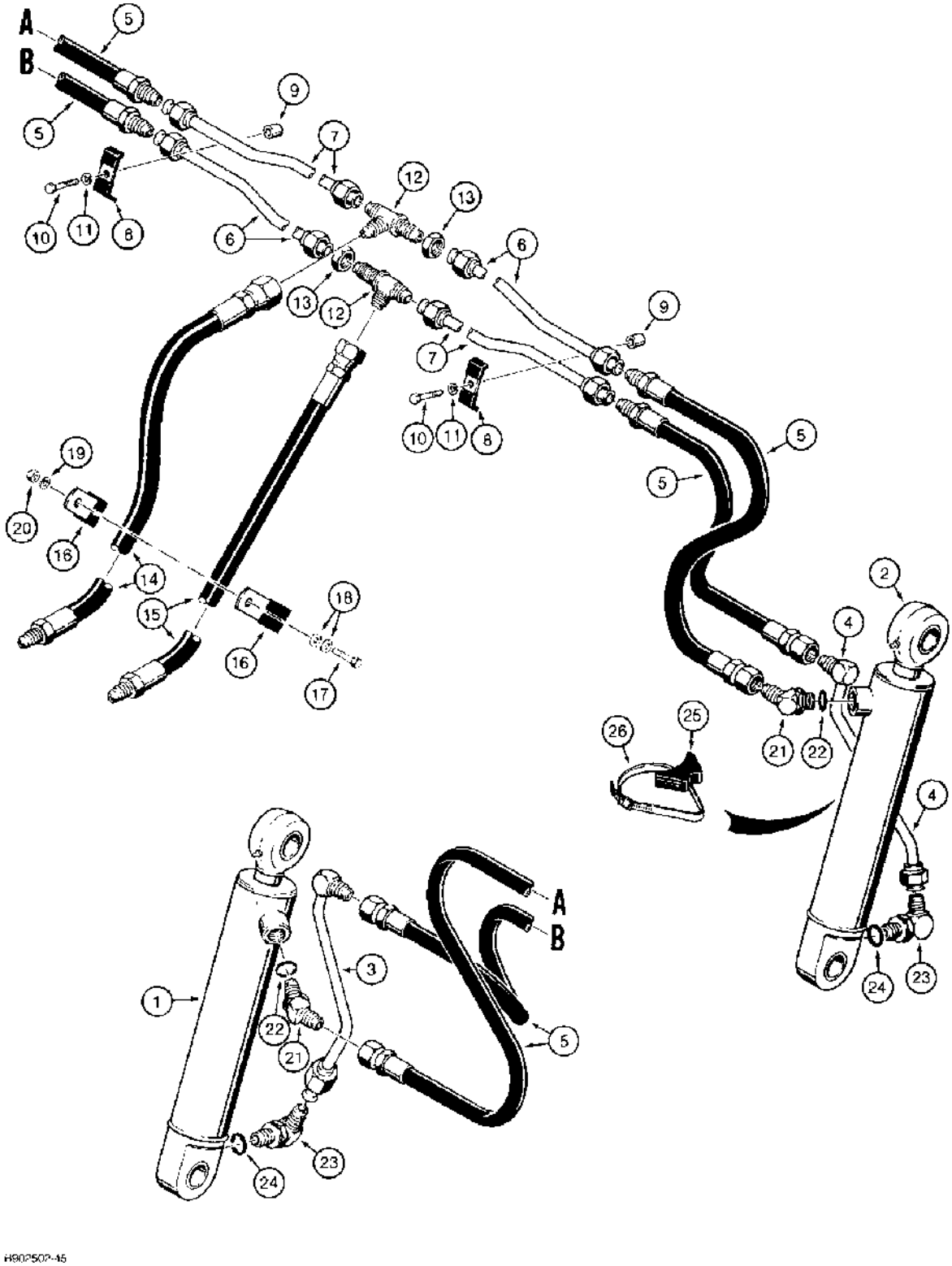

(580SK) - CASE SUPER-K CONSTRUCTION KING LOADER BACKHOE > (8-022) - LOADER CLAM CYLINDER HYDRAULIC CIRCUIT, AT LOADER BUCKET

Diag #	Part #	Name	Description	Qty
1	1346190C1	CYLINDER ASSY.	CYLINDER ASSEMBLY clam, left-hand, parts list Figure 8-120	1
2	1346189C1	CYLINDER ASSY.	CYLINDER ASSEMBLY clam, right-hand, parts list Figure 8-120	1
	87454017R	REMAN-HYD CYLINDER	580SK CASE SUPER-K CONSTRUCTION KING; Reman for New P/N 1346189C1	1
	87454017C	CORE-HYD CYLINDER	Return Number	1
3	D148192	PIPE	TUBE left-hand cylinder	1
4	D148190	TUBE	right-hand cylinder	1
5	D27984	HOSE	26 inch long, right-hand and left-hand cylinders	4
6	D134461	TUBE	horizontal, right-hand upper and left-hand lower	2
7	D134459	TUBE	horizontal, right-hand lower and left-hand upper	2
8	D40236	CLAMP	horizontal tubing	2
9	D146035	SPACER	tube clamps	2
10	413-624	BOLT,Hex, 3/8" - 16 x 1 1/2", Gr 5	hex, 3/8 NC x 1-1/2 inch	2
11	492-11038	LOCK WASHER,3/8"	LOCK WASHER,3/8"	2
12	218-1237	TEE,7/8"-14, 37º, Blkhd	7/8-14 inch flare branch x flare x bulkhead flare, connecting horizontal and vertical tubes and hoses	2
13	218-1251	JAM NUT,Blkhd, 7/8"-14	NUT, LOCK, Blkhd, 7/8"-14	2
14	D148252	HOSE	1000 mm long, clam cylinder, rod end	1
15	D148251	HOSE	895 mm long, clam cylinder, closed end	1
16	S88820	CLAMP	vertical hoses	2
17	413-520	BOLT,Hex, 5/16" - 18 x 1 1/4", Gr 5	hex, 5/16 NC x 1-1/4 inch	1
18	495-21038	WASHER,5/16"	(flat, 3/8 x 7/8 x 5/64") 5/16"	2
19	492-11031	LOCK WASHER,5/16"	WASHER, LOCK, 5/16"	1
20	425-105	NUT,5/16"-18, G5	- hex, 5/16 inch NC	1
21	218-5137	ELBOW,45º, 7/8"-14 x 7/8"-14, O-Ring	45 degree, 7/8-14 inch flare x adj O-ring boss, clam cylinders, rod end, Incl. Ref 22	2
22	237-6010	O-RING,0.239" ID x 0.379" OD x 0.07"	10-1, 90 Duro, .755" ID x .097" Thk	1
23	218-5107	ELBOW,90º, 7/8"-14, 37º x 7/8"-14, O-Ring	90 degree, 7/8-14 inch flare x adj O-ring boss, adjustable, clam cylinders, closed end, Incl. Ref. 24	2
24	237-6010	O-RING,0.239" ID x 0.379" OD x 0.07"	10-1, 90 Duro, .755" ID x .097" Thk	1

Diag #	Part #	Name	Description	Qty
25	D38648	BLOCK	INSULATOR rubber, clamp	2
26	214-1464	HOSE CLAMP,#64, 3.56/4.50 Type F Worm	CLAMP, HOSE, , Adj., Clam cylinder tubing #64, 3.56/4.50 Type F Worm	2

http://www.minnparbackhoeparts.com/

(580SK) - CASE SUPER-K CONSTRUCTION KING LOADER BACKHOE > (8-024) - BACKHOE STABILIZER CYLINDER HYDRAULIC CIRCUIT

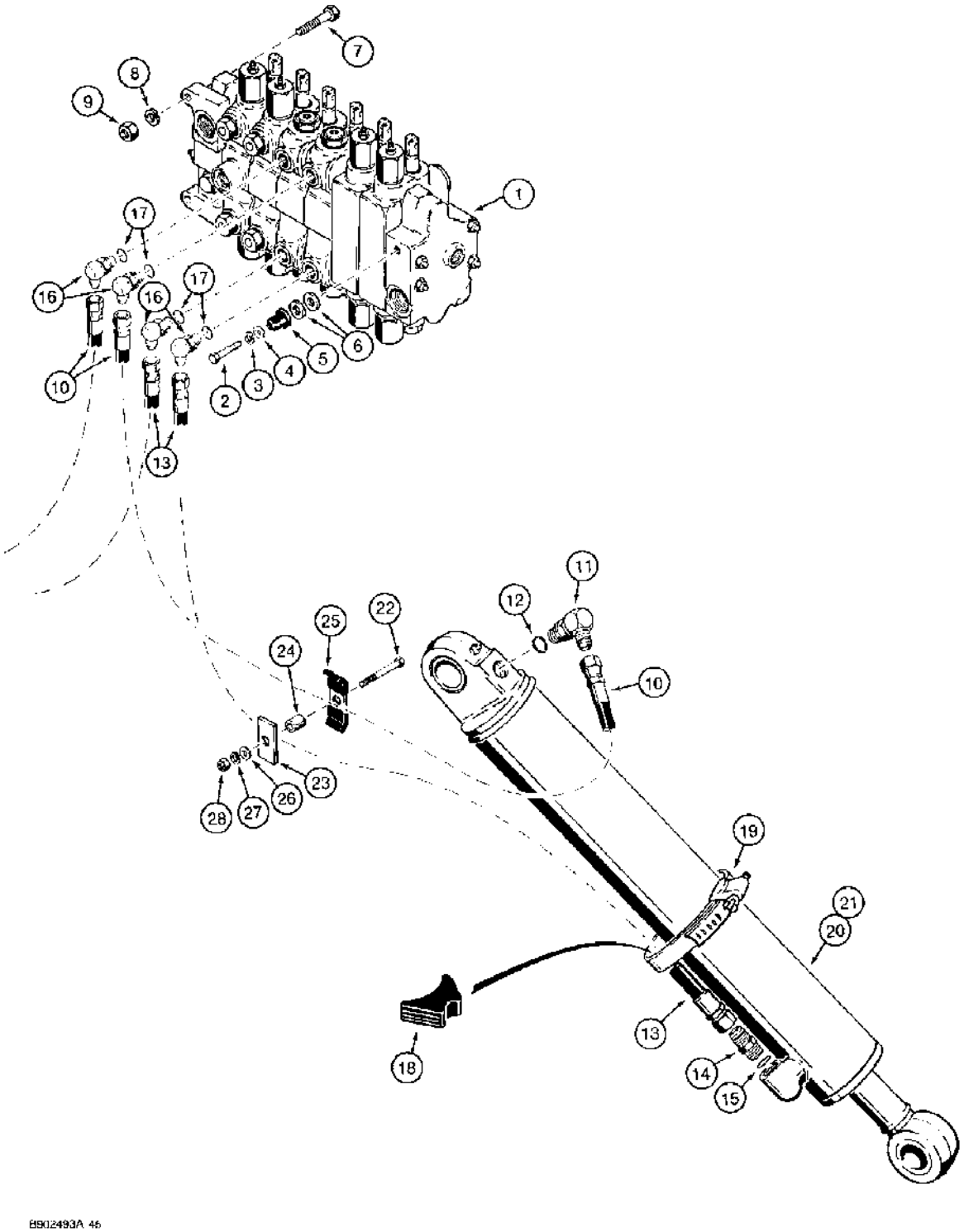

(580SK) - CASE SUPER-K CONSTRUCTION KING LOADER BACKHOE > (8-024) - BACKHOE STABILIZER CYLINDER HYDRAULIC CIRCUIT

Diag #	Part #	Name	Description	Qty
1	REF	INSTRUCTION	VALVE ASSEMBLY backhoe control, for correct assembly and components, see Figure 8-080 or 8-082	1
2	413-624	BOLT,Hex, 3/8" - 16 x 1 1/2", Gr 5	hex, 3/8 NC x 1-1/2 inch	1
3	492-11038	LOCK WASHER,3/8"	LOCK WASHER,3/8"	1
4	D52275	WASHER	flat, 25/64 x 1-1/4 x 7/64 inch, hardened	1
5	D52276	ISOLATOR	INSULATOR rubber	1
6	495-81266	WASHER,13/32" x 7/8" x .065"	flat, 13/32 x 7/8 x 1/16 inch, if used	2
7	413-828	BOLT,Hex, 1/2" - 13 x 1 3/4", Gr 5	BOLT,Hex, 1/2" - 13 x 1 3/4", Gr 5	2
8	80679	LOCK WASHER,1/2"	WASHER, LOCK, 1/2"	2
9	425-108	NUT,1/2"-13, G5	NUT, , Hex 1/2"-13, G5	2
10	D146492	HOSE	1140 mm long, stabilizer sections upper ports to stabilizer cylinders, closed ends	2
11	218-5106	ELBOW,90º, 3/4"-16, 37º x 3/4"-16, O-Ring	90 degree, 3/4-16 inch flare x adj O-ring boss, hose to stabilizer cylinders closed end, Includes: Ref. 12.	2
12	237-6008	O-RING,0.176" ID x 0.316" OD x 0.07"	8-1, 90 Duro, .644" ID x .087" Thk	1
13	D150812	HOSE	1273 mm long, stabilizer cylinders, rod end to stabilizer sections lower ports, replaces D147943	2
14	218-5059	HYD CONNECTOR,3/4"-16, 37º x 3/4"-16, O-Ring	ADAPTER straight, 3/4-16 inch flare x O-ring boss, stabilizer cylinder rod ends, Incl. Ref 15	2
15	237-6008	O-RING,0.176" ID x 0.316" OD x 0.07"	8-1, 90 Duro, .644" ID x .087" Thk	1
16	218-5106	ELBOW,90º, 3/4"-16, 37º x 3/4"-16, O-Ring	90 degree, 3/4-16 inch flare x adj O-ring boss, stabilizer sections upper and lower ports, Includes: Ref. 17	4
17	237-6008	O-RING,0.176" ID x 0.316" OD x 0.07"	8-1, 90 Duro, .644" ID x .087" Thk	1
18	D142787	SPACER	INSULATOR rubber	2
19	214-3188	HOSE CLAMP,4.75/5.625 HD Worm	CLAMP, HOSE, , Adj. 4.75/5.625 HD Worm	2
20	REF	INSTRUCTION	CYLINDER ASSEMBLY right-hand stabilizer, for correct assembly and components, see Figure 8-122 or 8-123A	1
21	REF	INSTRUCTION	CYLINDER ASSEMBLY left-hand stabilizer, for correct assembly and components, see Figure 8-122 or 8-123A	1

Diag #	Part #	Name	Description	Qty
22	413-640	BOLT,Hex, 3/8" - 16 x 2 1/2", Gr 5	hex, 3/8 NC x 2-1/2 inch	2
23	D150099	SHIN	PLATE spacer, hose	2
24	D146035	SPACER	hose clamp	2
25	D143846	CLAMP	- Plastic, 5/8 inch hose	2
26	495-21044	WASHER,3/8"	(flat, 7/16 x 1 x 5/64 inch) 3/8"	2
27	492-11038	LOCK WASHER,3/8"	LOCK WASHER,3/8"	2
28	425-106	NUT,3/8"-16, G5	NUT,3/8"-16, G5	2

http://www.minnparbackhoeparts.com/

(580SK) - CASE SUPER-K CONSTRUCTION KING LOADER BACKHOE > (8-026) - BACKHOE SWING CYLINDER AND, SWING SEQUENCE VALVE HYDRAULIC CIRCUIT

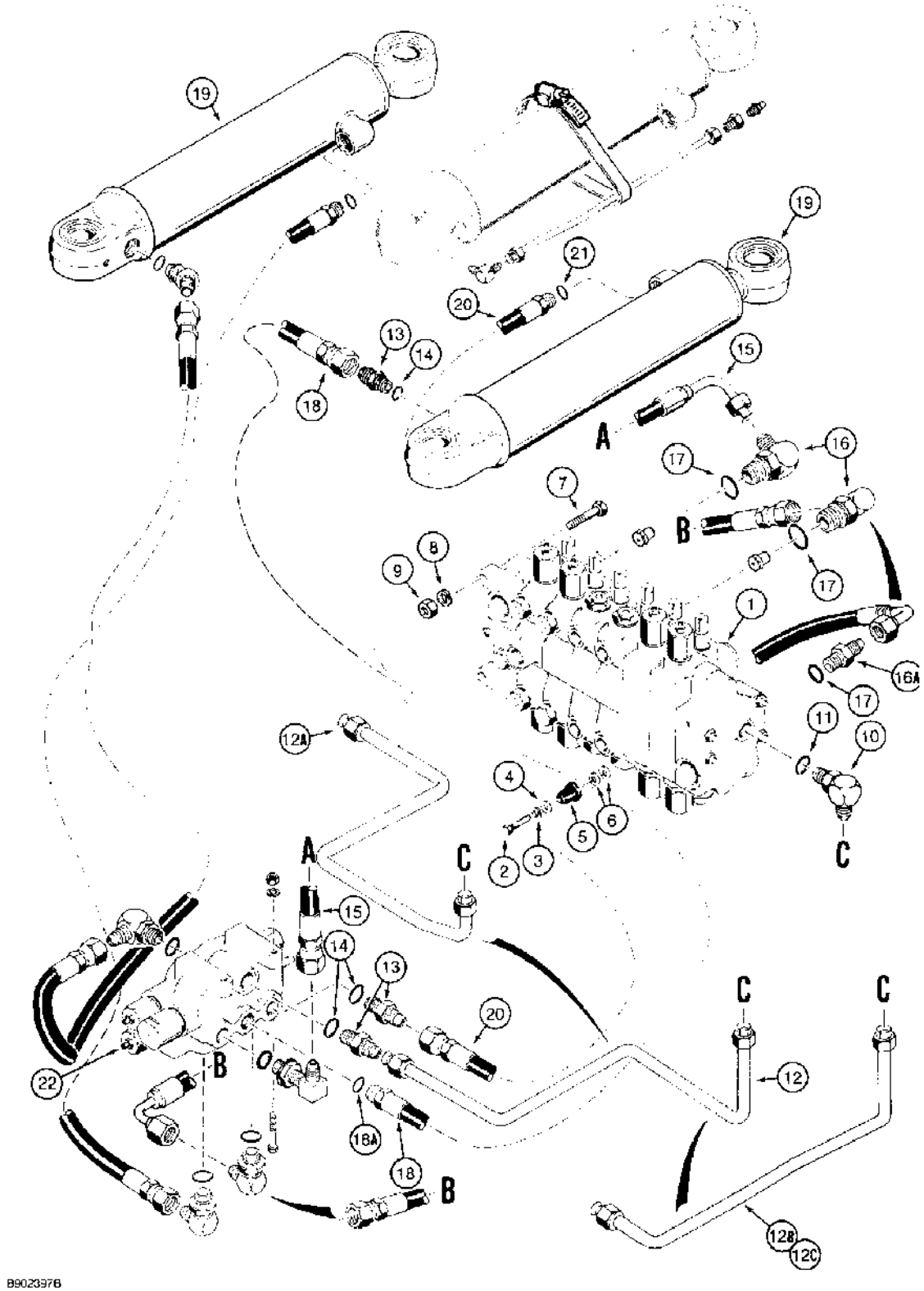

(580SK) - CASE SUPER-K CONSTRUCTION KING LOADER BACKHOE > (8-026) - BACKHOE SWING CYLINDER AND, SWING SEQUENCE VALVE HYDRAULIC CIRCUIT

Diag #	Part #	Name	Description	Qty
1	REF	INSTRUCTION	VALVE ASSEMBLY backhoe control, for correct assembly and components, see Figure 8-080 or 8-082	1
2	413-624	BOLT,Hex, 3/8" - 16 x 1 1/2", Gr 5	hex, 3/8 NC x 1-1/2 inch	1
3	492-11038	LOCK WASHER,3/8"	LOCK WASHER,3/8"	1
4	D52275	WASHER	flat, 25/64 x 1-1/4 x 7/64 inch, hardened	1
5	D52276	ISOLATOR	INSULATOR rubber	1
6	495-81266	WASHER,13/32" x 7/8" x .065"	flat, 13/32" ID x 7/8" OD x 1/16" thick, if used	2
7	413-828	BOLT,Hex, 1/2" - 13 x 1 3/4", Gr 5	BOLT,Hex, 1/2" - 13 x 1 3/4", Gr 5	2
8	80679	LOCK WASHER,1/2"	WASHER, LOCK, 1/2"	2
9	425-108	NUT,1/2"-13, G5	NUT, , Hex 1/2"-13, G5	2
10	218-5107	ELBOW,90º, 7/8"-14, 37º x 7/8"-14, O-Ring	90 degree, 7/8-14 inch flare x adj O-ring boss, Incl. Ref. 11	1
11	237-6010	O-RING,0.239" ID x 0.379" OD x 0.07"	10-1, 90 Duro, .755" ID x .097" Thk	1
12	D145473	HOSE	TUBE, 1980440C1 swing sequence valve, drain, used on models with six spool backhoe valve, if used	1
12A	D145475	TUBE	UBE, 1980440C1 swing sequence valve, drain, used on models with seven spool backhoe valve and models with optional rear hydraulic attachments, if used	1
		Ref. 12A tubes pass under the valve body and enter on the opposite side of the valve from the old Ref. 12. The adjustable 90 must be turned to line up.	Ref. 12A tubes pass under the valve body and enter on the opposite side of the valve from the old Ref. 12. The adjustable 90 must be turned to line up.	1
12B	D150889	PIPE	TUBE, 1346067C1 swing sequence valve, drain, used on models with six spool backhoe valve, if used	1
		Ref. 12B tubes pass under the valve body and enter on the opposite side of the valve from the old Ref. 12. The adjustable 90 must be turned to line up.	Ref. 12B tubes pass under the valve body and enter on the opposite side of the valve from the old Ref. 12. The adjustable 90 must be turned to line up.	1
12C	D150896	PIPE	TUBE, 1346067C1 swing sequence valve, drain, used on models with seven spool backhoe valve and models with optional rear hydraulic attachments, if used	1

Diag #	Part #	Name	Description	Qty
13	218-5062	HYD CONNECTOR,7/8"-14, 37º x 7/8"-14, O-Ring	ADAPTER straight, 7/8-14 inch flare x O-ring boss, Includes: Ref. 14	3
14	237-6010	O-RING,0.239" ID x 0.379" OD x 0.07"	10-1, 90 Duro, .755" ID x .097" Thk	1
15	D149547	HOSE	550 mm long, swing section upper port to sequence valve	1
16	218-5119	ELBOW,90º, 7/8"-14, 37º x 1 1/16"-12, O-Ring	90 degree, 7/8-14 inch flare x 1-1/16-12 inch adj O-ring	1-2
		If straight female end of Ref. 29 hose is at backhoe valve lower port, use Ref. 16 elbow; however, if elbow end of Ref. 29 hose is at backhoe valve lower port, use Ref. 16A adapter.	If straight female end of Ref. 29 hose is at backhoe valve lower port, use Ref. 16 elbow; however, if elbow end of Ref. 29 hose is at backhoe valve lower port, use Ref. 16A adapter.	1
16A	218-5063	HYD CONNECTOR,7/8"-14, 37º x 1 1/16"-12, O-Ring	ADAPTER straight, 7/8-14 flare x 1-1/16-12 inch O-ring, swing section lower port, if used, Includes: Ref. 17	1
		If straight female end of Ref. 29 hose is at backhoe valve lower port, use Ref. 16 elbow; however, if elbow end of Ref. 29 hose is at backhoe valve lower port, use Ref. 16A adapter.	If straight female end of Ref. 29 hose is at backhoe valve lower port, use Ref. 16 elbow; however, if elbow end of Ref. 29 hose is at backhoe valve lower port, use Ref. 16A adapter.	1
17	237-6012	O-RING,0.924" x 0.116"	59/64 ID x 7/8 inch wide, 218-5119 or 218-5063 fitting	1
18	D143685	HOSE	633 mm long, swing sequence valve to right-hand swing cylinder closed end, Includes: Ref. 18A	1
18A	237-6010	O-RING,0.239" ID x 0.379" OD x 0.07"	10-1, 90 Duro, .755" ID x .097" Thk	1
19	REF	INSTRUCTION	CYLINDER ASSEMBLY swing, right-hand and left-hand, for correct assembly and components, see Figure 8-124 - 8-127A	2
20	D31368	HOSE	29-3/4 inch long, swing sequence valve to right-hand swing cylinder rod end, Includes: Ref. 21	1
21	237-6010	O-RING,0.239" ID x 0.379" OD x 0.07"	10-1, 90 Duro, .755" ID x .097" Thk	1
22	REF	INSTRUCTION	VALVE ASSEMBLY swing sequence, for correct assembly and components, see Figure 8-100 or 8-101A	1

http://www.minnparbackhoeparts.com/

(580SK) - CASE SUPER-K CONSTRUCTION KING LOADER BACKHOE > (8-028) - BACKHOE SWING CYLINDER AND, SWING SEQUENCE VALVE HYDRAULIC

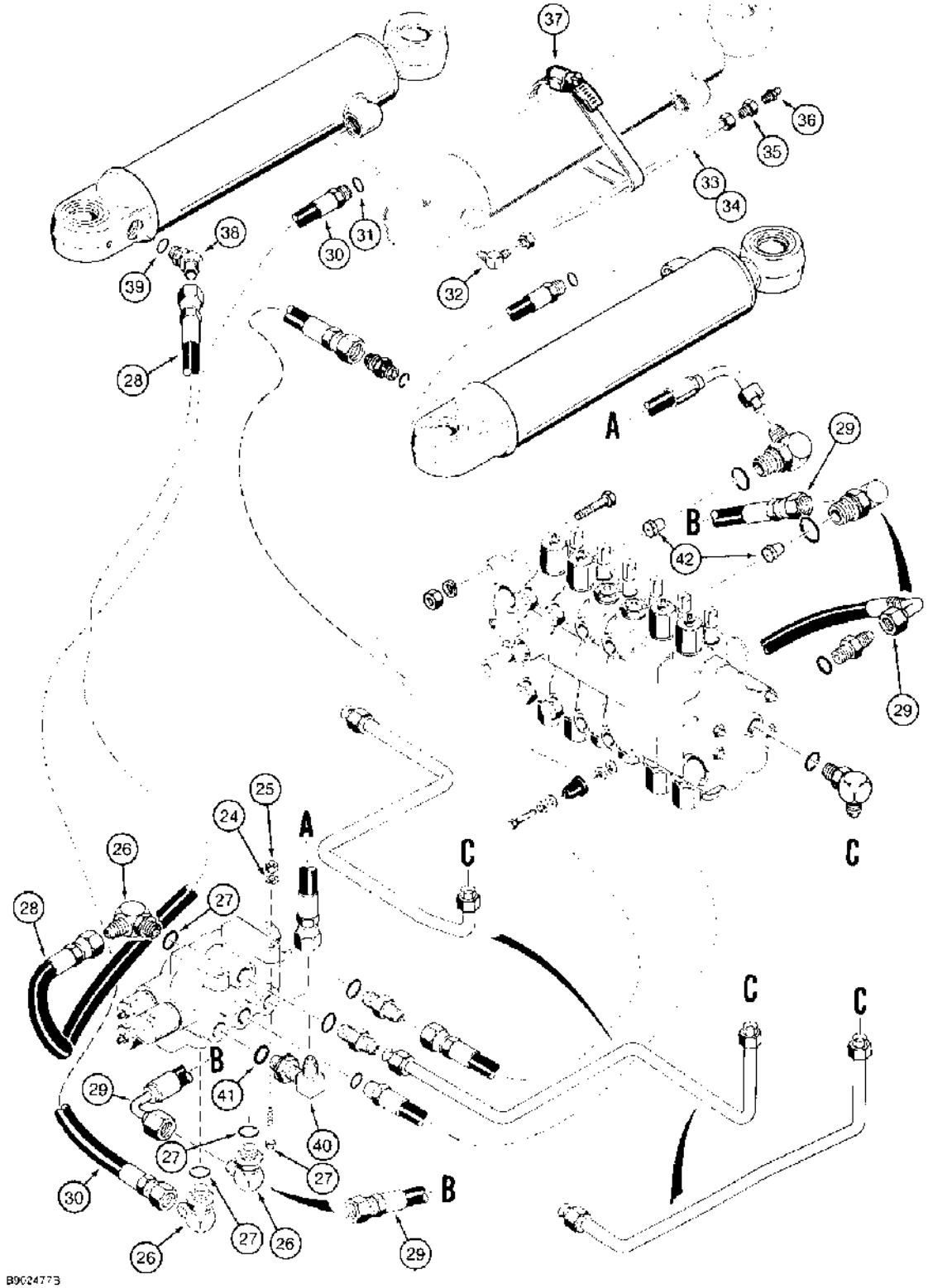

(580SK) - CASE SUPER-K CONSTRUCTION KING LOADER BACKHOE > (8-028) - BACKHOE SWING CYLINDER AND, SWING SEQUENCE VALVE HYDRAULIC

Diag #	Part #	Name	Description	Qty
23	413-632	BOLT,Hex, 3/8" - 16 x 2", Gr 5	- hex, 3/8 NC x 2 inch	2
24	492-11038	LOCK WASHER,3/8"	LOCK WASHER,3/8"	2
25	425-106	NUT,3/8"-16, G5	NUT,3/8"-16, G5	2
26	218-5107	ELBOW,90º, 7/8"-14, 37º x 7/8"-14, O-Ring	90 degree, 7/8-14 inch flare x adj O-ring boss, Incl. Ref. 27	3
27	237-6010	O-RING,0.239" ID x 0.379" OD x 0.07"	10-1, 90 Duro, .755" ID x .097" Thk	1
28	D146726	HOSE	550 mm long, swing sequence valve to left-hand swing cylinder closed end	1
29	D149547	HOSE	550 mm long, swing section lower port to swing sequence valve lower port	1
		If straight female end of Ref. 29 hose is at backhoe valve lower port, use Ref. 16 elbow; however, if elbow end of Ref. 29 hose is at backhoe valve lower port, use Ref. 16A adapter.	If straight female end of Ref. 29 hose is at backhoe valve lower port, use Ref. 16 elbow; however, if elbow end of Ref. 29 hose is at backhoe valve lower port, use Ref. 16A adapter.	1
30	D143685	HOSE	633 mm long, swing sequence valve to left-hand swing cylinder rod end, Includes: Ref. 31	1
31	237-6010	O-RING,0.239" ID x 0.379" OD x 0.07"	10-1, 90 Duro, .755" ID x .097" Thk	1
32	218-481	ELBOW,90º, 7/16"-20, 37º x 1/8"-27, NPTF	90 degree, 7/16-20 flare x 1/8 inch PT, grease tube to cylinder	2
33	D134964	TUBE	grease, left-hand swing cylinder	1
34	D134966	TUBE	grease, right-hand swing cylinder	1
35	218-461	HYD CONNECTOR,7/16"-20, 37º x 1/8"-27, Fem Pipe	ADAPTER straight, 7/16-20 flare x 1/8 inch female PT, grease tube coupler	2
36	219-1	LUBE NIPPLE,1/8"-27 x .66 lg	FITTING grease, straight, 1/8 inch PT	2
37	214-1464	HOSE CLAMP,#64, 3.56/4.50 Type F Worm	CLAMP, HOSE, , Adj., Grease tube #64, 3.56/4.50 Type F Worm	2
38	218-5137	ELBOW,45º, 7/8"-14 x 7/8"-14, O-Ring	45 degree, 7/8-14 inch flare x adj O-ring boss, left-hand swing cylinder closed end, Incl. Ref 39	1
39	237-6010	O-RING,0.239" ID x 0.379" OD x 0.07"	10-1, 90 Duro, .755" ID x .097" Thk	1
40	R20894	FITTING	ELBOW, 90 degree, Includes:Ref. 41	1
41	237-6010	O-RING,0.239" ID x 0.379" OD x 0.07"	10-1, 90 Duro, .755" ID x .097" Thk	1

Diag #	Part #	Name	Description	Qty
42	D142394	RESTRICTOR	check, if used	2

http://www.minnparbackhoeparts.com/

(580SK) - CASE SUPER-K CONSTRUCTION KING LOADER BACKHOE > (8-030) - BACKHOE BOOM CYLINDER HYDRAULIC CIRCUIT

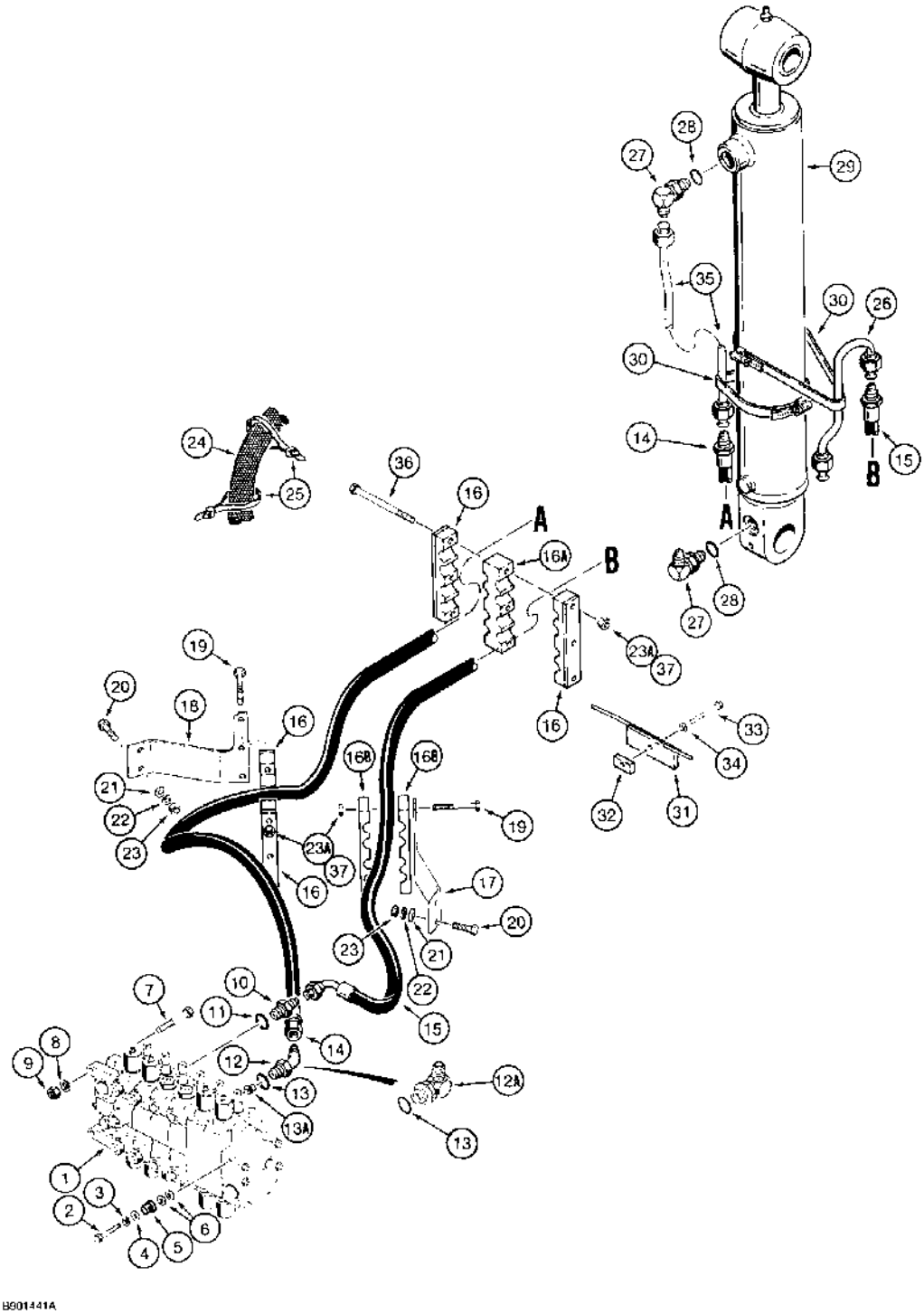

(580SK) - CASE SUPER-K CONSTRUCTION KING LOADER BACKHOE > (8-030) - BACKHOE BOOM CYLINDER HYDRAULIC CIRCUIT

Diag #	Part #	Name	Description	Qty
1	REF	INSTRUCTION	VALVE ASSEMBLY backhoe control, for correct assembly and components see Figure 8-080 or 8-082	1
2	413-624	BOLT,Hex, 3/8" - 16 x 1 1/2", Gr 5	hex, 3/8 NC x 1-1/2 inch	1
3	492-11038	LOCK WASHER,3/8"	LOCK WASHER,3/8"	1
4	D52275	WASHER	flat, 25/64 x 1-1/4 x 7/64 inch, hardened	1
5	D52276	ISOLATOR	INSULATOR vibration	1
6	495-81266	WASHER,13/32" x 7/8" x .065"	flat, 13/32 x 7/8 x 1/16 inch, if used	2
7	413-828	BOLT,Hex, 1/2" - 13 x 1 3/4", Gr 5	BOLT,Hex, 1/2" - 13 x 1 3/4", Gr 5	2
8	80679	LOCK WASHER,1/2"	WASHER, LOCK, 1/2"	2
9	425-108	NUT,1/2"-13, G5	NUT, , Hex 1/2"-13, G5	2
10	218-5063	HYD CONNECTOR,7/8"-14, 37° x 1 1/16"-12, O-Ring	ADAPTER straight, 7/8-14 flare x 1-1/16-12 inch O-ring, boom section upper port, Includes: Ref. 11	1
11	237-6012	O-RING,0.924" x 0.116"	59/64 ID x 7/8 inch wide	1
12	218-5149	ELBOW,45°, 7/8"-14 x 1 1/16"-12, O-Ring	45°, 7/8"-14 flare x 1-1/16"-12 adj. O-ring, boom section lower port, if used	1
12A	218-5119	ELBOW,90°, 7/8"-14, 37° x 1 1/16"-12, O-Ring	90 degree, 7/-14 flare x 1-1/16-12 inch adj O-ring, boom section lower port, if used, Includes: Ref. 13	1
13	237-6012	O-RING,0.924" x 0.116"	59/64 ID x 7/8 inch wide, 218-5149 or 218-5119 elbow	1
13A	D77182	FITTING	RESTRICTOR boom section lower port	1
14	D143313	HOSE	1275 mm long, without hose sleeves, boom cylinder rod end to boom section lower port	1
15	D143312	HOSE	1475 mm long, without hose sleeves, boom cylinder closed end to boom section upper port	1
16	D145309	CLAMP	hose, rubber	4
16A	D145139	CLAMP	center, hose, rubber	1
16B	D144881	CLAMP	hose, rubber	2
17	D145208	BRACKET	right-hand side, support, rear hose clamps	1
18	D145209	BRACKET	left-hand side, support, rear hose clamps	1
19	413-644	BOLT,Hex, 3/8" - 16 x 2 3/4", Gr 5	- hex, 3/8 NC x 2-3/4 inch	6
20	413-828	BOLT,Hex, 1/2" - 13 x 1 3/4", Gr 5	BOLT,Hex, 1/2" - 13 x 1 3/4", Gr 5	4
21	495-11053	WASHER,1/2", SAE	(17/32" x 1-1/16" x 3/32") 1/2", SAE	4

Diag #	Part #	Name	Description	Qty
22	80679	LOCK WASHER,1/2"	WASHER, LOCK, 1/2"	4
23	425-108	NUT,1/2"-13, G5	NUT, , Hex 1/2"-13, G5	4
23A	231-1446	NUT,3/8"-16, GB	NUT hex, self-locking, 3/8 inch NC	9
24	D134728	PROTECTIVE COVER	SLEEVE hose guard	2
25	L18337	CABLE TIE,9.95"-12.1" lg	STRAP tie, 15 inch, nylon	4
26	D139401	TUBE	boom cylinder closed end	1
		See Figure 8-058, Ref. 12, 15, and 22, for tubes used on models with hydraulic boom lock.	See Figure 8-058, Ref. 12, 15, and 22, for tubes used on models with hydraulic boom lock.	1
27	218-5108	ELBOW,90º, 1 1/16"-12, 37º x 1 1/16"-12, O-Ring	90º, 1-1/16-12 inch flare x adj O-ring boss, Incl. Ref. 28	2
28	237-6012	O-RING,0.924" x 0.116"	59/64 ID x 7/8 inch wide	1
29	REF	INSTRUCTION	CYLINDER ASSEMBLY boom, for correct assembly and components, see Figure 8-128 - 8-131C	1
30	214-14100	HOSE CLAMP,#100, 5.88/6.75 Type F Worm	CLAMP adj, 5-7/8 - 6-3/4 inch dia, tube to cylinder	2
31	D140105	BRACKET	hose guide	1
32	D143425	BAR	PLATE bracket retainer	1
33	413-632	BOLT,Hex, 3/8" - 16 x 2", Gr 5	- hex, 3/8 NC x 2 inch	1
34	492-11038	LOCK WASHER,3/8"	LOCK WASHER,3/8"	1
35	D141614	TUBE	at boom cylinder rod end	1
		See Figure 8-058, Ref. 12, 15, and 22, for tubes used on models with hydraulic boom lock.	See Figure 8-058, Ref. 12, 15, and 22, for tubes used on models with hydraulic boom lock.	1
36	413-672	BOLT,Hex, 3/8" - 16 x 4 1/2", Gr 5	hex, 3/8 NC x 4-1/2 inch	3
37	131-203	LOCK NUT,3/8"-16, GB, LH	NUT light hex, self-locking, 3/8 inch NC, models with backhoe boom lock	3

http://www.minnparbackhoeparts.com/

(580SK) - CASE SUPER-K CONSTRUCTION KING LOADER BACKHOE > (8-034) - BACKHOE DIPPER CYLINDER HYDRAULIC CIRCUIT

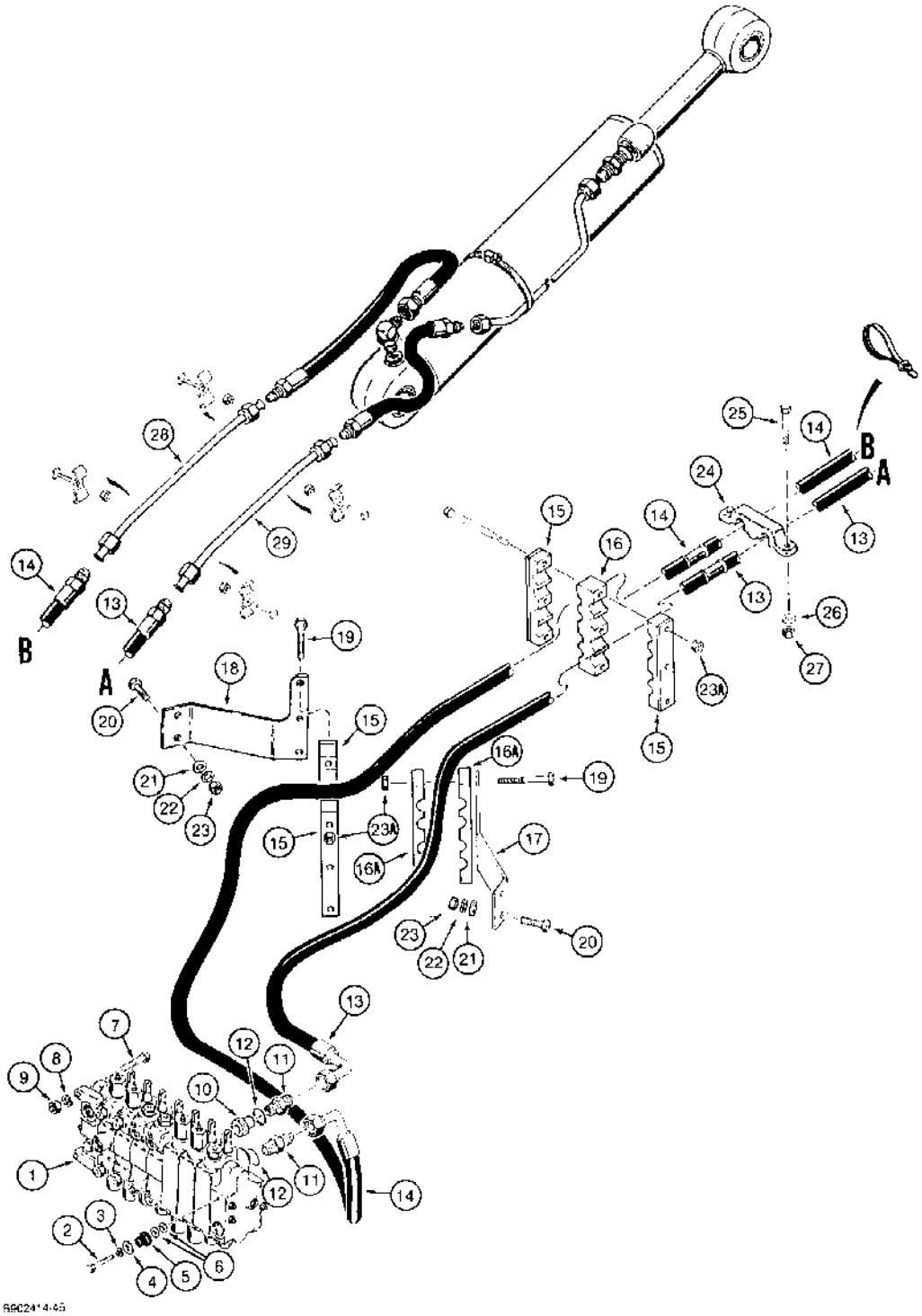

(580SK) - CASE SUPER-K CONSTRUCTION KING LOADER BACKHOE > (8-034) - BACKHOE DIPPER CYLINDER HYDRAULIC CIRCUIT

Diag #	Part #	Name	Description	Qty
1	REF	INSTRUCTION	VALVE ASSEMBLY backhoe control, for correct assembly and components, see Figure 8-080 or 8-082	1
2	413-624	BOLT,Hex, 3/8" - 16 x 1 1/2", Gr 5	hex, 3/8 NC x 1-1/2 inch	1
3	492-11038	LOCK WASHER,3/8"	LOCK WASHER,3/8"	1
4	D52275	WASHER	flat, 25/64 x 1-1/4 x 7/64 inch, hardened	1
5	D52276	ISOLATOR	INSULATOR vibration	1
6	495-81266	WASHER,13/32" x 7/8" x .065"	flat, 13/32 x 7/8 x 1/16 inch, if used	2
7	413-828	BOLT,Hex, 1/2" - 13 x 1 3/4", Gr 5	BOLT,Hex, 1/2" - 13 x 1 3/4", Gr 5	2
8	80679	LOCK WASHER,1/2"	WASHER, LOCK, 1/2"	2
9	425-108	NUT,1/2"-13, G5	NUT, , Hex 1/2"-13, G5	2
10	D140183	RESTRICTOR	dipper section upper port	1
11	218-5063	HYD CONNECTOR,7/8"-14, 37° x 1 1/16"-12, O-Ring	ADAPTER straight, 7/8-14 flare x 1-1/16-12 inch O-ring, dipper section upper and lower ports, Includes: Ref. 12	2
12	237-6012	O-RING,0.924" x 0.116"	59/64 ID x 7/8 inch wide	1
13	D143315	HOSE	1400 mm long, includes one hose sleeve, dipper section upper port	1
14	D143316	HOSE	1450 mm long, includes one hose sleeve, dipper section lower port	1
15	D145309	CLAMP	hose, rubber	4
16	D145139	CLAMP	center, rubber, hose	1
16A	D144881	CLAMP	hose, rubber	2
17	D145208	BRACKET	right-hand side, support, rear hose clamps	1
18	D145209	BRACKET	left-hand side, support, rear hose clamps	1
19	413-644	BOLT,Hex, 3/8" - 16 x 2 3/4", Gr 5	- hex, 3/8 NC x 2-3/4 inch	6
20	413-828	BOLT,Hex, 1/2" - 13 x 1 3/4", Gr 5	BOLT,Hex, 1/2" - 13 x 1 3/4", Gr 5	4
21	495-11053	WASHER,1/2", SAE	(17/32" x 1-1/16" x 3/32") 1/2", SAE	4
22	80679	LOCK WASHER,1/2"	WASHER, LOCK, 1/2"	4
23	425-108	NUT,1/2"-13, G5	NUT, , Hex 1/2"-13, G5	4
23A	231-1446	NUT,3/8"-16, GB	NUT hex, self-locking, 3/8 inch NC	9
24	D127250	CLAMP	hose, mounts to swing tower	1
25	413-748	BOLT,Hex, 7/16" - 14 x 3", Gr 5	hex, 7/16 NC x 3 inch	2
26	495-11053	WASHER,1/2", SAE	(17/32" x 1-1/16" x 3/32") 1/2", SAE	2

Diag #	Part #	Name	Description	Qty
27	231-1447	NUT,7/16"-14, GB	NUT, LOCK, 7/16"-14, GB	2
28	D139901	TUBE	left-hand side of boom, from dipper section lower port hose	1
29	D139903	TUBE	right-hand side of boom, from dipper section upper port hose	1

http://www.minnparbackhoeparts.com/

(580SK) - CASE SUPER-K CONSTRUCTION KING LOADER BACKHOE > (8-036) - BACKHOE DIPPER CYLINDER HYDRAULIC CIRCUIT

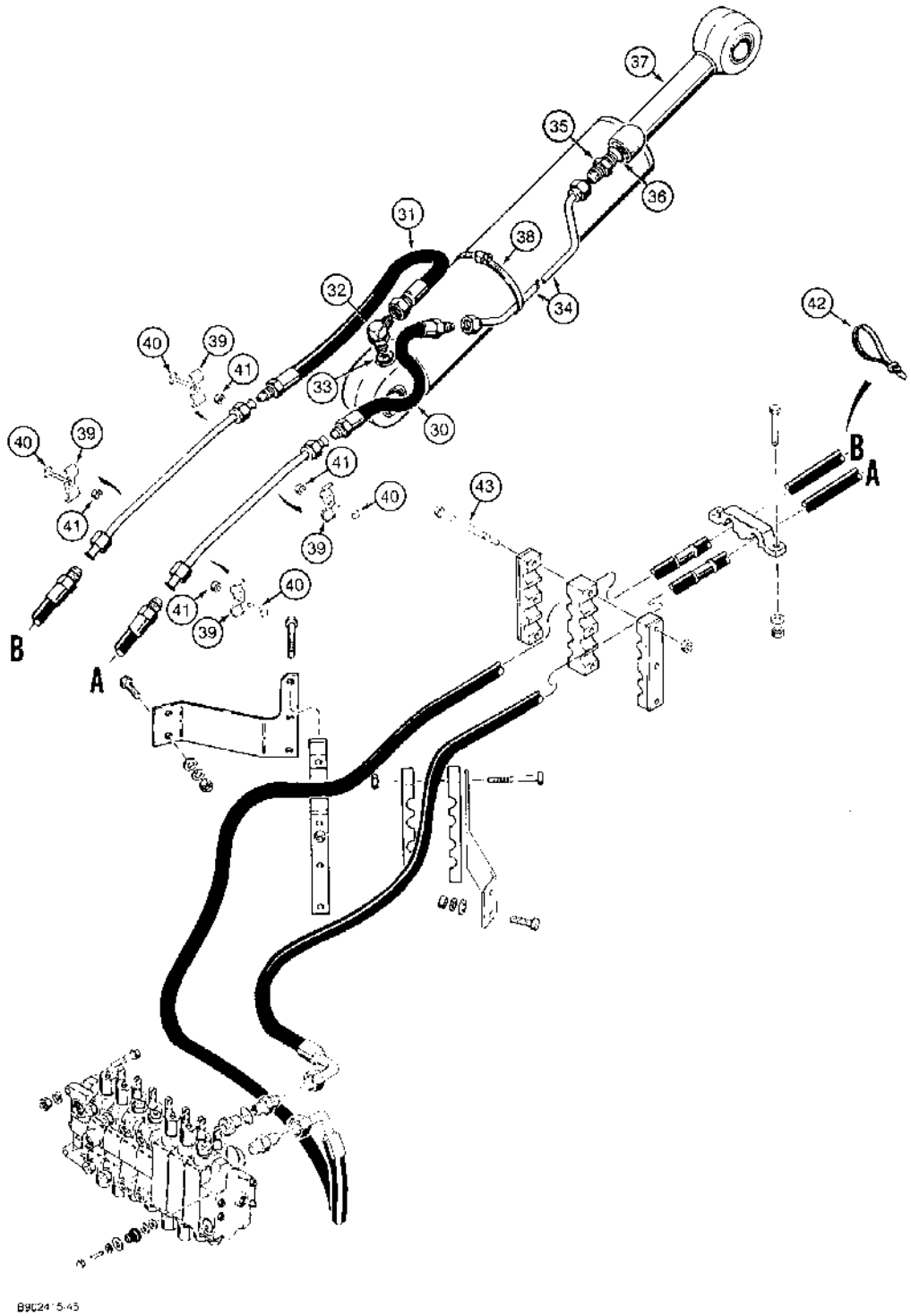

(580SK) - CASE SUPER-K CONSTRUCTION KING LOADER BACKHOE > (8-036) - BACKHOE DIPPER CYLINDER HYDRAULIC CIRCUIT

Diag #	Part #	Name	Description	Qty
30	D127687	HOSE	400 mm long, at dipper cylinder rod end tube	1
31	D140157	HOSE	750 mm long, dipper cylinder closed end	1
32	218-5108	ELBOW,90º, 1 1/16"-12, 37º x 1 1/16"-12, O-Ring	90º, 1-1/16-12 inch flare x adj O-ring boss, dipper cylinder closed end, Incl. Ref. 33	1
33	237-6012	O-RING,0.924" x 0.116"	59/64 ID x 7/8 inch wide	1
34	D139898	PIPE	TUBE, dipper cylinder rod end	1
35	218-5064	HYD CONNECTOR,1 1/16"-12, 37º x 1 1/16"-12, O-Ring	ADAPTER straight, 1-1/16-12 inch flare x O-ring boss, dipper cylinder rod end, Incl. Ref. 36	1
36	237-6012	O-RING,0.924" x 0.116"	59/64 ID x 7/8 inch wide	1
37	REF	INSTRUCTION	CYLINDER ASSEMBLY dipper, for correct assembly and components, see Figure 8-132 - 8-135C	1
38	214-1488	HOSE CLAMP,#88, 5.12/6.00 Type F Worm	CLAMP, HOSE, , Adj., Tube to cylinder #88, 5.12/6.00 Type F Worm	1
39	D149143	SHIN	CLAMP, Serial Range: tube-boom	4
40	117-208	SQUARE BOLT,Sq Hd, 3/8"-16 x 1", G8	square, 3/8 NC x 1 inch, grade 8	4
41	231-4116	NUT,3/8"-16, GB	NUT hex, self-locking, 3/8 inch NC, replaces 131-666	4
42	L18337	CABLE TIE,9.95"-12.1" lg	STRAP tie, 15 inch, nylon	1
43	413-672	BOLT,Hex, 3/8" - 16 x 4 1/2", Gr 5	hex, 3/8 NC x 4-1/2 inch	3

http://www.minnparbackhoeparts.com/

(580SK) - CASE SUPER-K CONSTRUCTION KING LOADER BACKHOE > (8-038) - BACKHOE BUCKET CYLINDER HYDRAULIC CIRCUIT, MODELS WITHOUT EXTENDABLE DIPPER

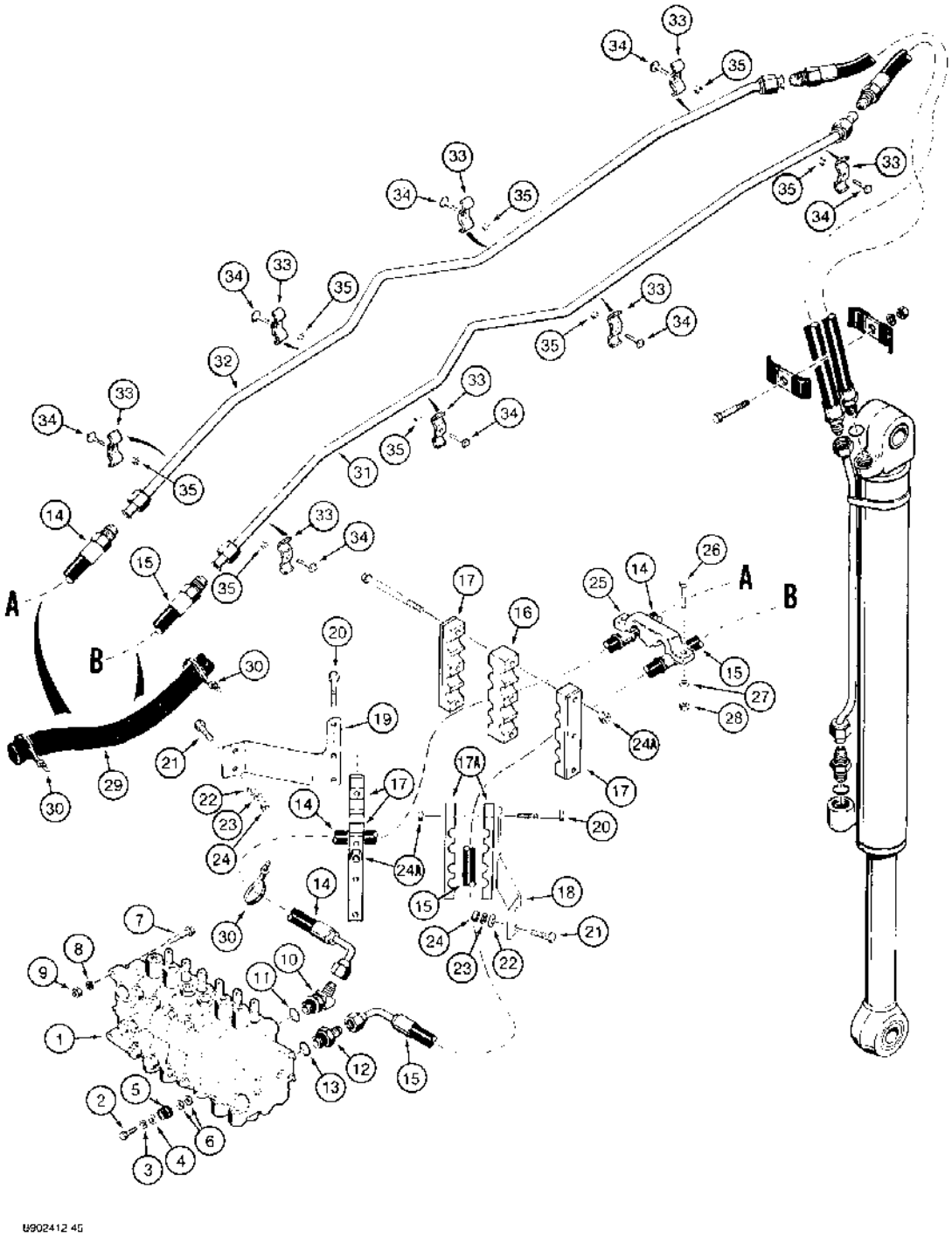

(580SK) - CASE SUPER-K CONSTRUCTION KING LOADER BACKHOE > (8-038) - BACKHOE BUCKET CYLINDER HYDRAULIC CIRCUIT, MODELS WITHOUT EXTENDABLE DIPPER

Diag #	Part #	Name	Description	Qty
1	REF	INSTRUCTION	VALVE ASSEMBLY backhoe control, for correct assembly and components see Figure 8-08	1
2	413-624	BOLT,Hex, 3/8" - 16 x 1 1/2", Gr 5	hex, 3/8 NC x 1-1/2 inch	1
3	492-11038	LOCK WASHER,3/8"	LOCK WASHER,3/8"	1
4	D52275	WASHER	flat, 25/64 x 1-1/4 x 7/64 inch, hardened	1
5	D52276	ISOLATOR	INSULATOR vibration	1
6	495-81266	WASHER,13/32" x 7/8" x .065"	flat, 13/32 x 7/8 x 1/16 inch, if used	2
7	413-828	BOLT,Hex, 1/2" - 13 x 1 3/4", Gr 5	BOLT,Hex, 1/2" - 13 x 1 3/4", Gr 5	2
8	80679	LOCK WASHER,1/2"	WASHER, LOCK, 1/2"	2
9	425-108	NUT,1/2"-13, G5	NUT, , Hex 1/2"-13, G5	2
10	218-5149	ELBOW,45º, 7/8"-14 x 1 1/16"-12, O-Ring	45º, 7/8"-14 flare x 1-1/16"-12 adj. O-ring, bucket section upper port, Incl. Ref 11	1
11	237-6012	O-RING,0.924" x 0.116"	59/64 ID x 7/8 inch wide	1
12	218-5063	HYD CONNECTOR,7/8"-14, 37º x 1 1/16"-12, O-Ring	ADAPTER, straight, 7/8-14 flare x 1-1/16-12 inch O-ring, bucket section lower port, Includes: Ref. 13	1
13	237-6012	O-RING,0.924" x 0.116"	59/64 ID x 7/8 inch wide	1
14	D143310	HOSE	1900 mm long, bucket section upper port	1
15	D143311	HOSE	1525 mm long, bucket section lower port	1
16	D145139	CLAMP	center, rubber	1
17	D145309	CLAMP	hose, rubber	4
17A	D144881	CLAMP	hose, rubber	2
18	D145208	BRACKET	right-hand side, support, rear hose clamps	1
19	D145209	BRACKET	left-hand side, support, rear hose clamps	1
20	413-644	BOLT,Hex, 3/8" - 16 x 2 3/4", Gr 5	- hex, 3/8 NC x 2-3/4 inch	6
21	413-828	BOLT,Hex, 1/2" - 13 x 1 3/4", Gr 5	BOLT,Hex, 1/2" - 13 x 1 3/4", Gr 5	4
22	495-11053	WASHER,1/2", SAE	(17/32" x 1-1/16" x 3/32") 1/2", SAE	4
23	80679	LOCK WASHER,1/2"	WASHER, LOCK, 1/2"	4
24	425-108	NUT,1/2"-13, G5	NUT, , Hex 1/2"-13, G5	4
24A	231-1446	NUT,3/8"-16, GB	NUT hex, self-locking, 3/8 inch NC	9
25	D127250	CLAMP	hose, mounts to swing tower	1
26	413-748	BOLT,Hex, 7/16" - 14 x 3", Gr 5	hex, 7/16 NC x 3 inch	2
27	495-11053	WASHER,1/2", SAE	(17/32" x 1-1/16" x 3/32") 1/2", SAE	2

Diag #	Part #	Name	Description	Qty
28	231-1447	NUT,7/16"-14, GB	NUT, LOCK, 7/16"-14, GB	2
29	D132054	SLEEVE	hose guard, 500 mm long, cut to required length from D134728 bulk sleeve	2
30	L18337	CABLE TIE,9.95"-12.1" lg	STRAP tie, 15 inch, nylon, hose	5
31	D140156	TUBE	right-hand side of boom, to bucket cylinder closed end hose	1
32	D140154	TUBE	left-hand side of boom, to bucket cylinder rod end hose	1
33	D149143	SHIN	CLAMP, Serial Range: tube-boom	8
34	117-208	SQUARE BOLT,Sq Hd, 3/8"-16 x 1", G8	square, 3/8 NC x 1 inch, grade 8	8
35	231-4116	NUT,3/8"-16, GB	NUT hex, self-locking, 3/8 inch NC, replaces 131-666	8
	D134728	PROTECTIVE COVER	SLEEVE, 725 mm long, bulk	1

http://www.minnparbackhoeparts.com/

(580SK) - CASE SUPER-K CONSTRUCTION KING LOADER BACKHOE > (8-040) - BACKHOE BUCKET CYLINDER HYDRAULIC CIRCUIT, MODELS WITHOUT

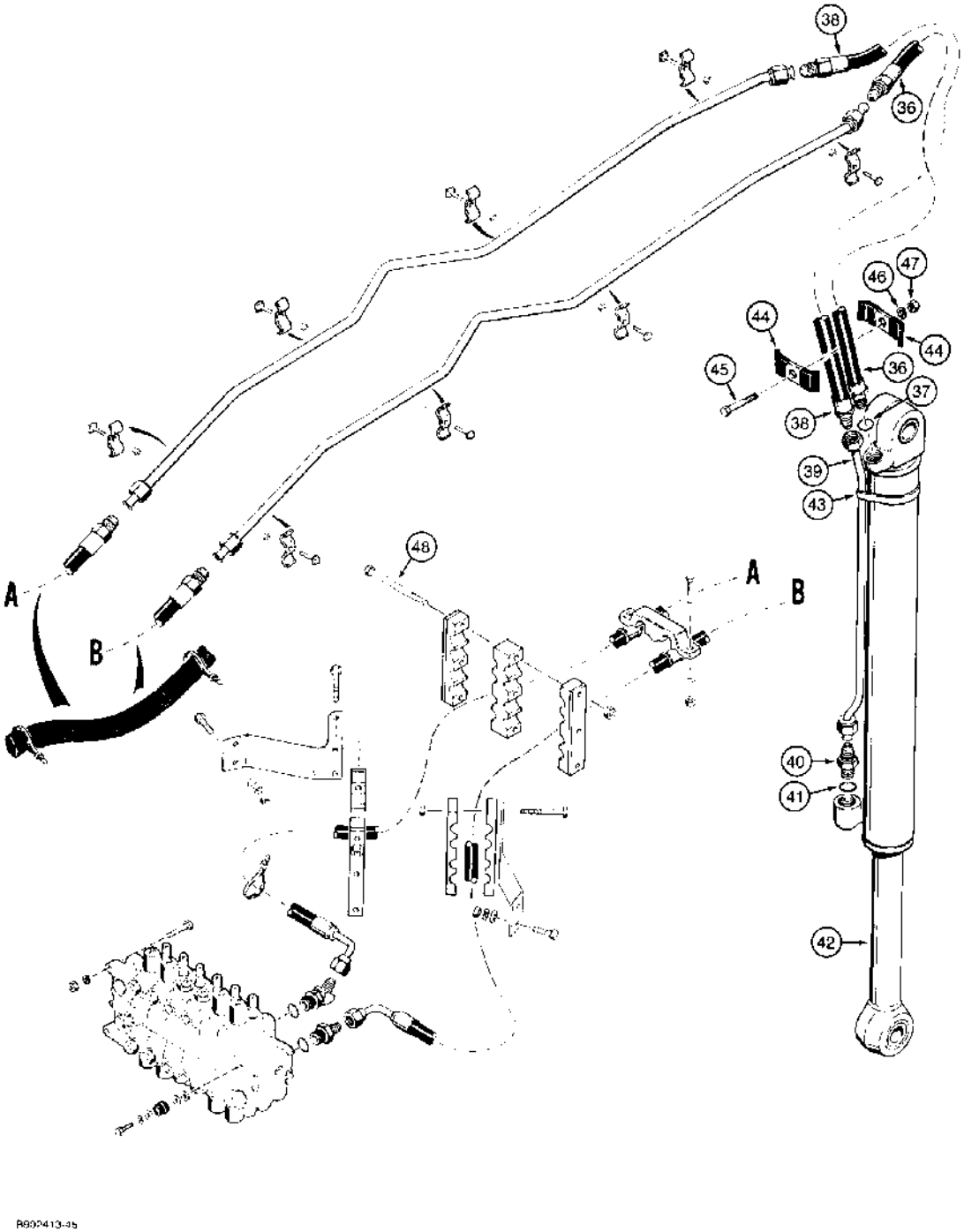

(580SK) - CASE SUPER-K CONSTRUCTION KING LOADER BACKHOE > (8-040) - BACKHOE BUCKET CYLINDER HYDRAULIC CIRCUIT, MODELS WITHOUT

Diag #	Part #	Name	Description	Qty
36	D136489	HOSE	640 mm long, to closed end of bucket cylinder, Includes: Ref. 37	1
		For hoses used on models with auxiliary hydraulics for optional rear hydraulic attachments, see Figure 8-048.	For hoses used on models with auxiliary hydraulics for optional rear hydraulic attachments, see Figure 8-048.	1
37	237-6012	O-RING,0.924" x 0.116"	59/64 ID x 7/8 inch wide	1
38	D136488	HOSE	640 mm long, to bucket cylinder rod end tube	1
		For hoses used on models with auxiliary hydraulics for optional rear hydraulic attachments, see Figure 8-048.	For hoses used on models with auxiliary hydraulics for optional rear hydraulic attachments, see Figure 8-048.	1
39	D141248	TUBE	to rod end of bucket cylinder	1
40	218-5064	HYD CONNECTOR,1 1/16"-12, 37º x 1 1/16"-12, O-Ring	CONNECTOR straight, 1-1/16-12 inch flare x O-ring boss, at rod end of bucket cylinder, Incl. Ref. 41	1
41	237-6012	O-RING,0.924" x 0.116"	59/64 ID x 7/8 inch wide	1
42	REF	INSTRUCTION	CYLINDER ASSEMBLY bucket, for correct assembly and components, see Figure 8-136 - 8-139C	1
43	214-1472	HOSE CLAMP,#72, 4.06/5.00 Type F Worm	CLAMP, HOSE, , Adj., Tube to cylinder #72, 4.06/5.00 Type F Worm	1
44	D40236	CLAMP	hose	2
45	413-636	BOLT,Hex, 3/8" - 16 x 2 1/4", Gr 5	- hex, 3/8 NC x 2-1/4 inch	1
46	492-11038	LOCK WASHER,3/8"	LOCK WASHER,3/8"	1
47	425-106	NUT,3/8"-16, G5	NUT,3/8"-16, G5	1
48	413-672	BOLT,Hex, 3/8" - 16 x 4 1/2", Gr 5	hex, 3/8 NC x 4-1/2 inch	3

http://www.minnparbackhoeparts.com/

(580SK) - CASE SUPER-K CONSTRUCTION KING LOADER BACKHOE > (8-042) - BACKHOE BUCKET CYLINDER HYDRAULIC CIRCUIT, MODELS WITH EXTENDABLE DIPPER

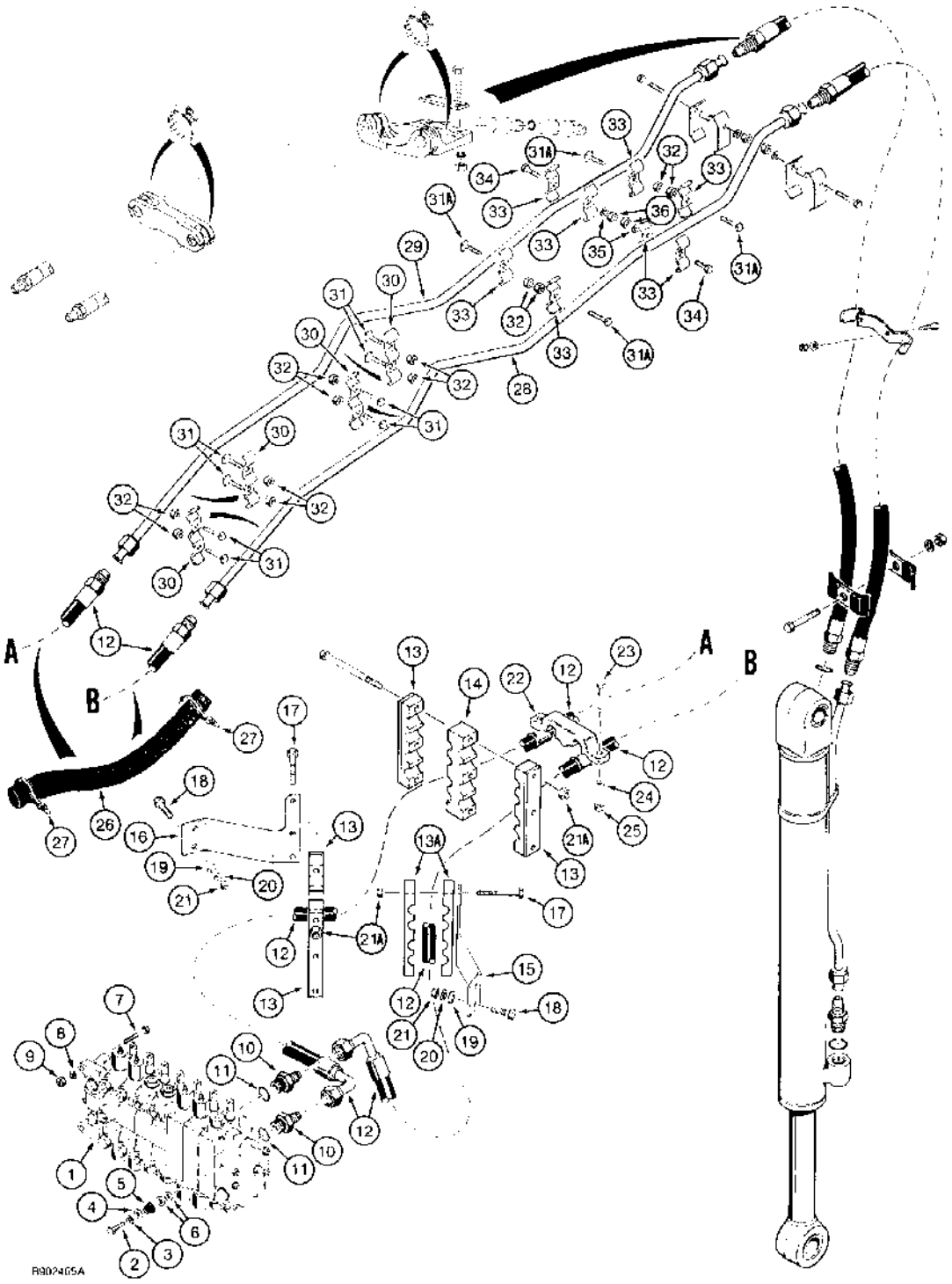

(580SK) - CASE SUPER-K CONSTRUCTION KING LOADER BACKHOE > (8-042) - BACKHOE BUCKET CYLINDER HYDRAULIC CIRCUIT, MODELS WITH EXTENDABLE DIPPER

Diag #	Part #	Name	Description	Qty
1	REF	INSTRUCTION	VALVE ASSEMBLY backhoe control, for correct assembly and components see Figure 8-082	1
2	413-624	BOLT,Hex, 3/8" - 16 x 1 1/2", Gr 5	hex, 3/8 NC x 1-1/2 inch	1
3	492-11038	LOCK WASHER,3/8"	LOCK WASHER,3/8"	1
4	D52275	WASHER	flat, 25/64 x 1-1/4 x 7/64 inch, hardened	1
5	D52276	ISOLATOR	INSULATOR vibration	1
6	495-81266	WASHER,13/32" x 7/8" x .065"	flat, 13/32 x 7/8 x 1/16 inch, if used	2
7	413-828	BOLT,Hex, 1/2" - 13 x 1 3/4", Gr 5	BOLT,Hex, 1/2" - 13 x 1 3/4", Gr 5	2
8	80679	LOCK WASHER,1/2"	WASHER, LOCK, 1/2"	2
9	425-108	NUT,1/2"-13, G5	NUT, , Hex 1/2"-13, G5	2
10	218-5063	HYD CONNECTOR,7/8"-14, 37° x 1 1/16"-12, O-Ring	ADAPTER straight, 7/8-14 flare x 1-1/16-12 inch O-ring, bucket section, Includes: Ref. 11	2
11	237-6012	O-RING,0.924" x 0.116"	12-1, 90 Duro, .924 ID x .116" Thk	1
12	D143311	HOSE	1525 mm long, includes one metal hose sleeve, at backhoe valve bucket section	2
13	D145309	CLAMP	hose, rubber	4
13A	D144881	CLAMP	hose, rubber	2
14	D145139	CLAMP	center, rubber	1
15	D145208	BRACKET	right-hand side, support, rear hose clamps	1
16	D145209	BRACKET	left-hand side, support, rear hose clamps	1
17	413-644	BOLT,Hex, 3/8" - 16 x 2 3/4", Gr 5	- hex, 3/8 NC x 2-3/4 inch	6
18	413-828	BOLT,Hex, 1/2" - 13 x 1 3/4", Gr 5	BOLT,Hex, 1/2" - 13 x 1 3/4", Gr 5	4
19	495-11053	WASHER,1/2", SAE	(17/32" x 1-1/16" x 3/32") 1/2", SAE	4
20	80679	LOCK WASHER,1/2"	WASHER, LOCK, 1/2"	4
21	425-108	NUT,1/2"-13, G5	NUT, , Hex 1/2"-13, G5	4
21A	231-1446	NUT,3/8"-16, GB	NUT hex, self-locking, 3/8 inch NC	9
22	D127250	CLAMP	hose, mounts to swing tower	1
23	413-748	BOLT,Hex, 7/16" - 14 x 3", Gr 5	hex, 7/16 NC x 3 inch	2
24	495-11053	WASHER,1/2", SAE	(17/32" x 1-1/16" x 3/32") 1/2", SAE	2
25	231-1447	NUT,7/16"-14, GB	NUT, LOCK, 7/16"-14, GB	2
26	D132054	SLEEVE	hose guard, 500 mm long, cut to required length from D134728 bulk sleeve	2

Diag #	Part #	Name	Description	Qty
27	L18337	CABLE TIE,9.95"-12.1" lg	STRAP tie, 15 inch, nylon	4
28	D138057	TUBE	right-hand side of boom, to bucket cylinder rod end hose	1
29	D138059	TUBE	left-hand side of boom, to bucket cylinder closed end hose	1
30	D149144	CLAMP	, Serial Range: tube-boom	4
31	117-209	SQUARE BOLT,Sq Hd, 3/8"-16 x 1 1/4", G8	square, 3/8 NC x 1-1/4 inch, grade 8, replaces 117-208 1 inch bolt	8
31A	117-208	SQUARE BOLT,Sq Hd, 3/8"-16 x 1", G8	square, 3/8 NC x 1 inch, grade 8	4
32	231-4116	NUT,3/8"-16, GB	NUT hex, self-locking, 3/8 inch NC	12
33	D149143	SHIN	CLAMP, Serial Range: tube-boom	8
34	413-624	BOLT,Hex, 3/8" - 16 x 1 1/2", Gr 5	hex, 3/8 NC x 1-1/2 inch	2
35	492-11038	LOCK WASHER,3/8"	LOCK WASHER,3/8"	2
36	425-106	NUT,3/8"-16, G5	NUT,3/8"-16, G5	2
	D134728	PROTECTIVE COVER	SLEEVE, 725 mm long, bulk	1

http://www.minnparbackhoeparts.com/

(580SK) - CASE SUPER-K CONSTRUCTION KING LOADER BACKHOE > (8-044) - BACKHOE BUCKET CYLINDER HYDRAULIC CIRCUIT, MODELS WITH

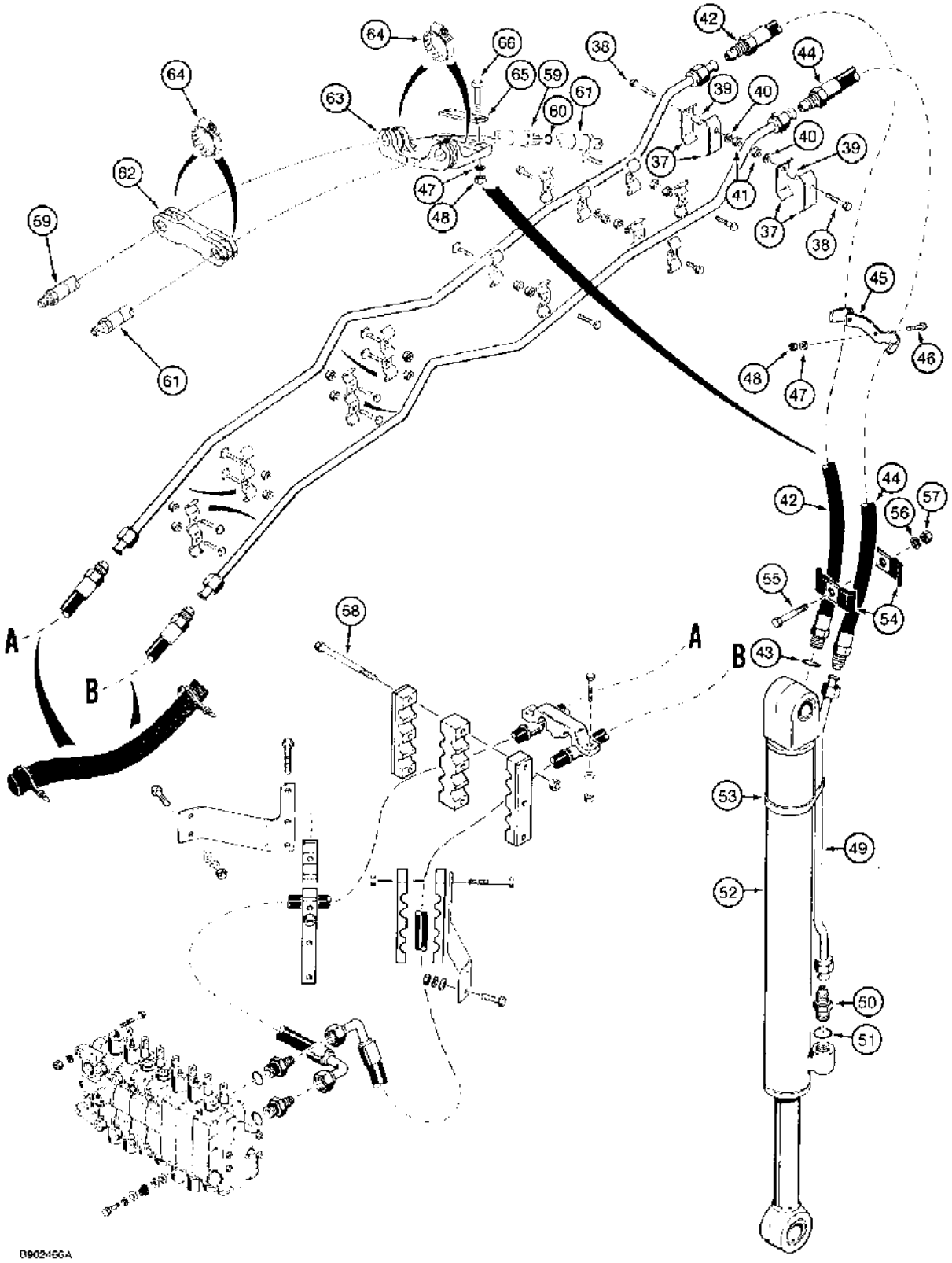

(580SK) - CASE SUPER-K CONSTRUCTION KING LOADER BACKHOE > (8-044) - BACKHOE BUCKET CYLINDER HYDRAULIC CIRCUIT, MODELS WITH

Diag #	Part #	Name	Description	Qty
37	D143426	CLAMP	bucket tube to boom, plated	4
38	413-636	BOLT,Hex, 3/8" - 16 x 2 1/4", Gr 5	- hex, 3/8 NC x 2-1/4 inch	2
39	D143412	SPACER	tube clamp, plated	2
40	492-11038	LOCK WASHER,3/8"	LOCK WASHER,3/8"	2
41	425-106	NUT,3/8"-16, G5	NUT,3/8"-16, G5	2
42	D143895	HOSE	2027 mm long, to closed end of bucket cylinder, used with metal clamps, Ref. 45, if used	1
43	237-6012	O-RING,0.924" x 0.116"	12-1, 90 Duro, .924 ID x .116" Thk	1
44	D143894	HOSE	2057 mm long, to bucket cylinder rod end tube, used with metal clamps, Ref. 45, if used	1
45	D140221	CLAMP	hose to dipper, if used	1
46	413-616	BOLT,Hex, 3/8" - 16 x 1", Gr 5	hex, 3/8 NC x 1 inch, if used	2
47	492-11038	LOCK WASHER,3/8"	LOCK WASHER,3/8"	2
48	425-106	NUT,3/8"-16, G5	NUT,3/8"-16, G5	2
49	D141248	TUBE	to rod end of bucket cylinder	1
50	218-5064	HYD CONNECTOR,1 1/16"-12, 37° x 1 1/16"-12, O-Ring	ADAPTER straight, 1-1/16-12 inch flare x O-ring boss, at rod end of bucket cylinder, Incl. Ref. 51	1
51	237-6012	O-RING,0.924" x 0.116"	12-1, 90 Duro, .924 ID x .116" Thk	1
52	REF	INSTRUCTION	CYLINDER ASSEMBLY bucket, for correct assembly and components, see Figure 8-136 - 8-139C	1
53	214-1472	HOSE CLAMP,#72, 4.06/5.00 Type F Worm	CLAMP, HOSE, , Adj., Tube to cylinder #72, 4.06/5.00 Type F Worm	1
54	D40236	CLAMP	hose	2
55	413-636	BOLT,Hex, 3/8" - 16 x 2 1/4", Gr 5	- hex, 3/8 NC x 2-1/4 inch	1
56	492-11038	LOCK WASHER,3/8"	LOCK WASHER,3/8"	1
57	425-106	NUT,3/8"-16, G5	NUT,3/8"-16, G5	1
58	413-672	BOLT,Hex, 3/8" - 16 x 4 1/2", Gr 5	hex, 3/8 NC x 4-1/2 inch	3
59	108336A1	HYDRAULIC HOSE	HOSE, HYDRAULIC, 1930 mm long, to closed end of bucket cylinder, used with rubber clamp, Ref 62, if used, Incl Ref 60	1
60	237-6012	O-RING,0.924" x 0.116"	12-1, 90 Duro, .924 ID x .116" Thk	1

Diag #	Part #	Name	Description	Qty
61	108335A1	HYDRAULIC HOSE	HOSE, HYDRAULIC, 1960 mm long, to bucket cylinder rod end tube, used with rubber clamp, Ref 62, if used	1
62	103670A1	HOSE CLAMP	CLAMP hose, rubber, if used	1
63	103270A1	SHIN	SUPPORT hose, if used	1
64	214-3132	HOSE CLAMP,1.25/2.125 HD Worm	CLAMP hose, if used	4
65	101479A1	SUPPORT	PLATE hose support, if used	1
66	413-628	BOLT,Hex, 3/8" - 16 x 1 3/4", Gr 5	If used Hex, 3/8"-16 x 1 3/4", G5	2

http://www.minnparbackhoeparts.com/

(580SK) - CASE SUPER-K CONSTRUCTION KING LOADER BACKHOE > (8-046) - BACKHOE EXTENDABLE DIPPER HYDRAULIC CIRCUIT

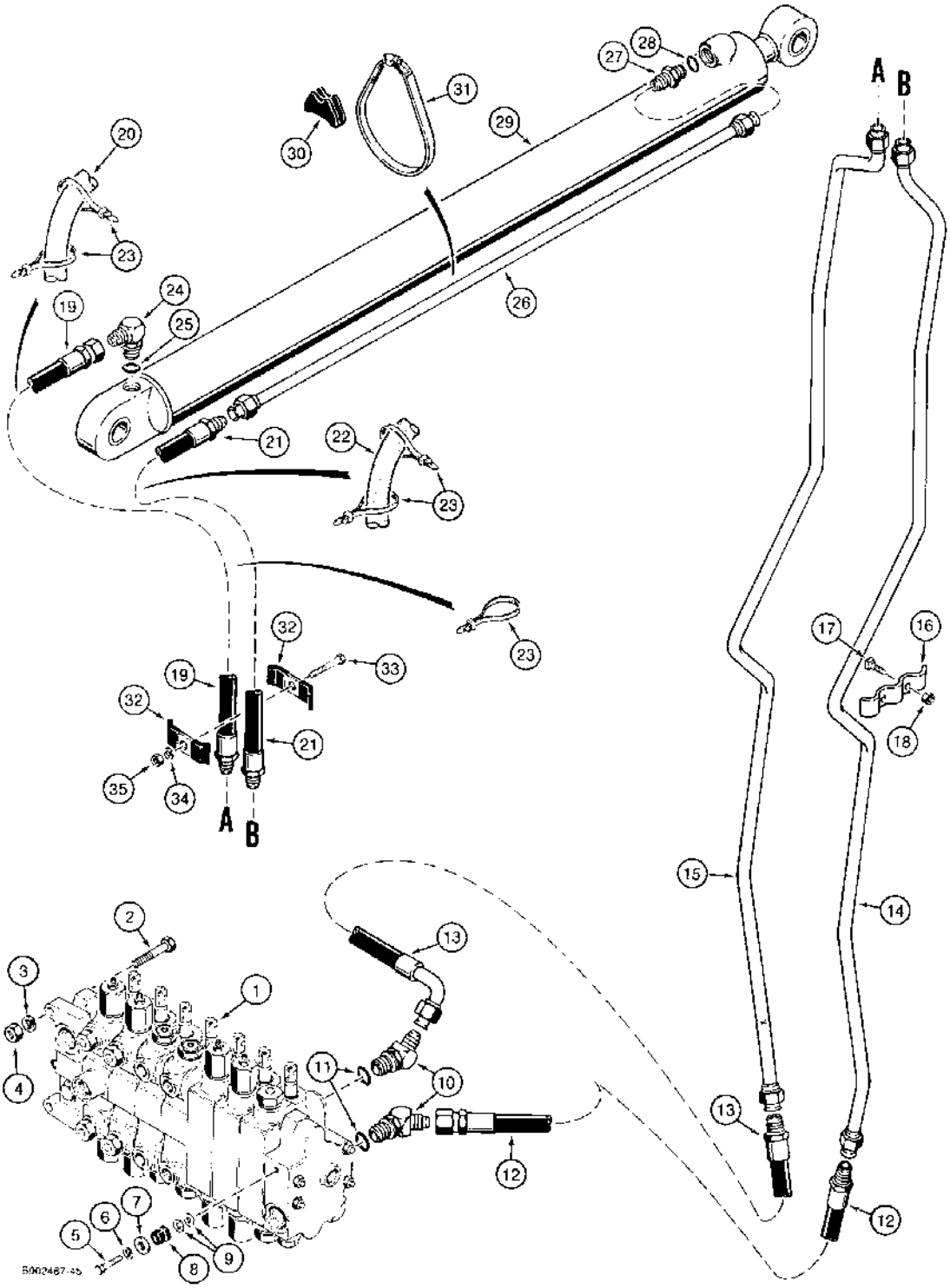

http://www.minnparbackhoeparts.com/

(580SK) - CASE SUPER-K CONSTRUCTION KING LOADER BACKHOE > (8-046) - BACKHOE EXTENDABLE DIPPER HYDRAULIC CIRCUIT

Diag #	Part #	Name	Description	Qty
1	REF	INSTRUCTION	VALVE ASSEMBLY backhoe control, extendahoe, for correct assembly and components see Figure 8-082	1
2	413-828	BOLT,Hex, 1/2" - 13 x 1 3/4", Gr 5	BOLT,Hex, 1/2" - 13 x 1 3/4", Gr 5	2
3	80679	LOCK WASHER,1/2"	WASHER, LOCK, 1/2"	2
4	425-108	NUT,1/2"-13, G5	NUT, , Hex 1/2"-13, G5	2
5	413-624	BOLT,Hex, 3/8" - 16 x 1 1/2", Gr 5	hex, 3/8 NC x 1-1/2 inch	1
6	492-11038	LOCK WASHER,3/8"	LOCK WASHER,3/8"	1
7	D52275	WASHER	flat, 25/64 x 1-1/4 x 7/64 inch, hardened	1
8	D52276	ISOLATOR	INSULATOR vibration	1
9	495-81266	WASHER,13/32" x 7/8" x .065"	flat, 13/32 x 7/8 x 1/16 inch, if used	2
10	218-5149	ELBOW,45º, 7/8"-14 x 1 1/16"-12, O-Ring	45º, 7/8"-14 flare x 1-1/16"-12 adj. O-ring, extendable dipper section upper and lower ports, Incl. Ref 11	2
11	237-6012	O-RING,0.924" x 0.116"	12-1, 90 Duro, .924 ID x .116" Thk	1
12	D143317	HOSE	1350 mm long, includes one metal hose sleeve, extendahoe section lower port to boom extendable dipper right-hand tube	1
13	D143310	HOSE	1900 mm long, includes one metal hose sleeve, extendahoe section upper port to boom extendable dipper left-hand tube	1
14	D147791	PIPE	TUBE right-hand side of boom, to extendable dipper cylinder rod end hose	1
		For tubes used on models with auxiliary hydraulics for optional rear attachments, see Figure 8-052.	For tubes used on models with auxiliary hydraulics for optional rear attachments, see Figure 8-052.	1
15	D147789	PIPE	TUBE left-hand side of boom, to extendable dipper cylinder closed end hose	1
		For tubes used on models with auxiliary hydraulics for optional rear attachments, see Figure 8-052.	For tubes used on models with auxiliary hydraulics for optional rear attachments, see Figure 8-052.	1
16	D149144	CLAMP	boom tubes, plated	4
17	117-209	SQUARE BOLT,Sq Hd, 3/8"-16 x 1 1/4", G8	square head, 3/8 NC x 1-1/4 inch, grade 8	8
18	231-4116	NUT,3/8"-16, GB	NUT hex, self-locking, 3/8 inch NC	8
19	D134095	HOSE	700 mm long, extendable dipper cylinder closed end	1

Diag #	Part #	Name	Description	Qty
20	D134729	SLEEVE	hose guard, 625 mm long, cylinder closed end hose, cut to required length from D134728 bulk sleeve	1
21	D140708	HOSE	850 mm long, extendable dipper cylinder rod end	1
22	D134728	PROTECTIVE COVER	SLEEVE hose guard, 725 mm long, cylinder rod end hose	1
23	L18337	CABLE TIE,9.95"-12.1" lg	STRAP tie, 15 inch, nylon	5
24	218-5107	ELBOW,90º, 7/8"-14, 37º x 7/8"-14, O-Ring	90 degree, 7/8-14 inch flare x adj O-ring boss, cylinder closed end	1
25	237-6010	O-RING,0.239" ID x 0.379" OD x 0.07"	10-1, 90 Duro, .755" ID x .097" Thk	1
26	D140706	PIPE	TUBE extendable dipper cylinder rod end	1
27	218-5062	HYD CONNECTOR,7/8"-14, 37º x 7/8"-14, O-Ring	ADAPTER straight, 7/8-14 inch flare x O-ring boss, Includes: Ref. 28	1
28	237-6010	O-RING,0.239" ID x 0.379" OD x 0.07"	10-1, 90 Duro, .755" ID x .097" Thk	1
29	1340969C1	CYLINDER ASSY.	CYLINDER ASSEMBLY extendable dipper, parts list Figure 8-140	1
30	D38648	BLOCK	INSULATOR rubber	1
31	214-1464	HOSE CLAMP,#64, 3.56/4.50 Type F Worm	CLAMP, HOSE, , Adj., Tube to cylinder #64, 3.56/4.50 Type F Worm	1
32	D40236	CLAMP	hose	2
33	413-632	BOLT,Hex, 3/8" - 16 x 2", Gr 5	- hex, 3/8 NC x 2 inch	1
34	492-11038	LOCK WASHER,3/8"	LOCK WASHER,3/8"	1
35	425-106	NUT,3/8"-16, G5	NUT,3/8"-16, G5	1
	D134728	PROTECTIVE COVER	SLEEVE, 725 mm long, bulk	1

http://www.minnparbackhoeparts.com/

(580SK) - CASE SUPER-K CONSTRUCTION KING LOADER BACKHOE > (8-048) - BACKHOE AUXILIARY HYDRAULIC CIRCUIT, FOR OPTIONAL REAR HYDRAULIC ATTACHMENTS W/O EXTENDABLE DIPPER

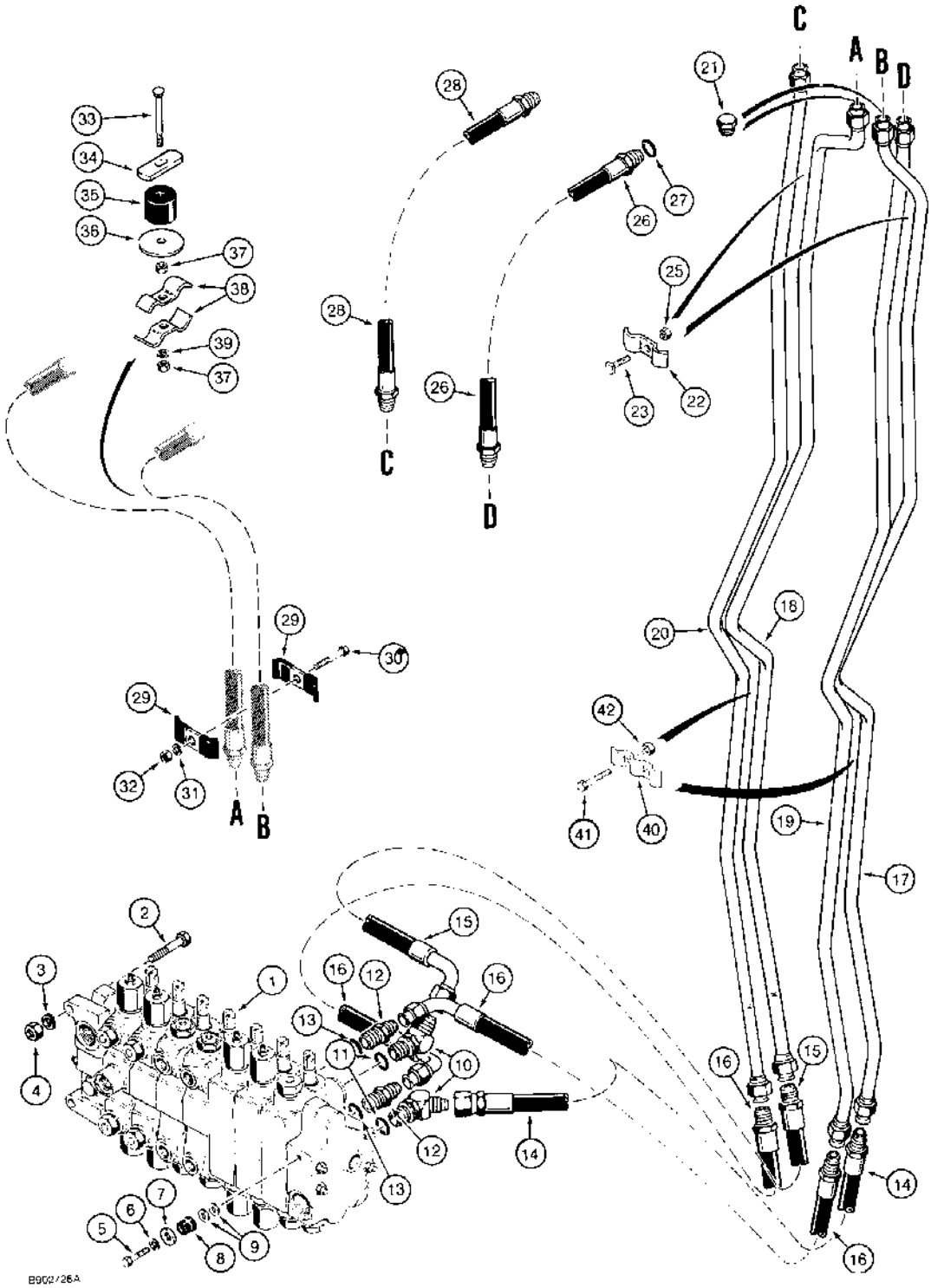

(580SK) - CASE SUPER-K CONSTRUCTION KING LOADER BACKHOE > (8-048) - BACKHOE AUXILIARY HYDRAULIC CIRCUIT, FOR OPTIONAL REAR HYDRAULIC ATTACHMENTS W/O EXTENDABLE DIPPER

Diag #	Part #	Name	Description	Qty
1	REF	INSTRUCTION	VALVE ASSEMBLY backhoe control, 7-spool, for correct assembly and components see Figure 8-082, models with extendable dipper or auxiliary hydraulics	1
2	413-828	BOLT,Hex, 1/2" - 13 x 1 3/4", Gr 5	BOLT,Hex, 1/2" - 13 x 1 3/4", Gr 5	2
3	80679	LOCK WASHER,1/2"	WASHER, LOCK, 1/2"	2
4	425-108	NUT,1/2"-13, G5	NUT, , Hex 1/2"-13, G5	2
5	413-624	BOLT,Hex, 3/8" - 16 x 1 1/2", Gr 5	hex, 3/8 NC x 1-1/2 inch	1
6	492-11038	LOCK WASHER,3/8"	LOCK WASHER,3/8"	1
7	D52275	WASHER	flat, 25/64 x 1-1/4 x 7/64 inch, hardened	1
8	D52276	ISOLATOR	INSULATOR vibration	1
9	495-81266	WASHER,13/32" x 7/8" x .065"	flat, 13/32 x 7/8 x 1/16 inch, if used	2
10	218-5149	ELBOW,45º, 7/8"-14 x 1 1/16"-12, O-Ring	45º, 7/8"-14 flare x 1-1/16"-12 adj. O-ring, auxiliary section upper and lower ports, Incl. Ref 11	2
11	237-6012	O-RING,0.924" x 0.116"	12-1, 90 Duro, .924 ID x .116" Thk	1
12	218-5063	HYD CONNECTOR,7/8"-14, 37º x 1 1/16"-12, O-Ring	ADAPTER straight, 7/8-14 flare x 1-1/16-12 inch O-ring, bucket section upper and lower ports, Includes: Ref. 13	2
13	237-6012	O-RING,0.924" x 0.116"	12-1, 90 Duro, .924 ID x .116" Thk	1
14	D143317	HOSE	1350 mm long, includes one metal hose sleeve, auxiliary section lower port to boom auxiliary right-hand tube	1
15	D143310	HOSE	1900 mm long, includes one metal hose sleeve, auxiliary section upper port to boom auxiliary left-hand tube	1
16	D143311	HOSE	1525 mm long, includes one metal hose sleeve, bucket section upper and lower ports	2
17	D147791	PIPE	TUBE, right-hand side of boom to rear attachment hose	1
		Connecting hoses at dipper shall be supplied by the customer for use with their particular optional rear hydraulic attachment.	Connecting hoses at dipper shall be supplied by the customer for use with their particular optional rear hydraulic attachment.	1
18	D147789	PIPE	TUBE, left-hand side of boom to rear attachment hose	1
		Connecting hoses at dipper shall be supplied by the	Connecting hoses at dipper shall be supplied by the customer for use with their	1

Diag #	Part #	Name	Description	Qty
		customer for use with their particular optional rear hydraulic attachment.	particular optional rear hydraulic attachment.	
19	D140156	TUBE	right-hand side of boom to bucket cylinder closed end hose	1
20	D140154	TUBE	left-hand side of boom to bucket cylinder rod end hose	1
21	218-777	PLUG,1 1/16"-12, 37º	hex, 1-1/16-12 inch flare, tube, not required when rear attachment hoses are installed	2
22	D149143	SHIN	CLAMP boom tubes	2
23	117-208	SQUARE BOLT,Sq Hd, 3/8"-16 x 1", G8	square head, 3/8 NC x 1 inch, grade 8	2
25	231-4116	NUT,3/8"-16, GB	NUT hex, self-locking, 3/8 inch NC	2
26	D140303	HOSE ASSY.	HOSE, 875 mm long, to closed end of bucket cylinder, Includes: Ref. 27	1
27	237-6012	O-RING,0.924" x 0.116"	12-1, 90 Duro, .924 ID x .116" Thk	1
28	D140302	HOSE	875 mm long, to rod end of bucket cylinder	1
29	D143846	CLAMP	- Hose	2
30	413-632	BOLT,Hex, 3/8" - 16 x 2", Gr 5	- hex, 3/8 NC x 2 inch	1
31	492-11038	LOCK WASHER,3/8"	LOCK WASHER,3/8"	1
32	425-106	NUT,3/8"-16, G5	NUT,3/8"-16, G5	1
33	111-380	CARRIAGE BOLT,Short NK, 3/8"-16 x 3 1/2", G2	BOLT round head square neck, 3/8 NC x 3-1/2 inch, full thread	1
34	D140188	ANGLE	PLATE anchor, mounts hoses to underside of dipper frame	1
35	D140187	SPACER	hose	1
36	D140189	WASHER	special	1
37	425-106	NUT,3/8"-16, G5	NUT,3/8"-16, G5	2
38	D149143	SHIN	CLAMP hose	2
39	492-11038	LOCK WASHER,3/8"	LOCK WASHER,3/8"	1
40	D149144	CLAMP	tube	4
41	117-209	SQUARE BOLT,Sq Hd, 3/8"-16 x 1 1/4", G8	square head, 3/8 NC x 1-1/4 inch, grade 8	8
42	231-4116	NUT,3/8"-16, GB	NUT hex, self-locking, 3/8 inch NC	8

http://www.minnparbackhoeparts.com/

(580SK) - CASE SUPER-K CONSTRUCTION KING LOADER BACKHOE > (8-052) - BACKHOE AUXILIARY HYDRAULIC CIRCUIT, FOR OPTIONAL REAR HYDRAULIC ATTACHMENTS W/EXTENDABLE DIPPER

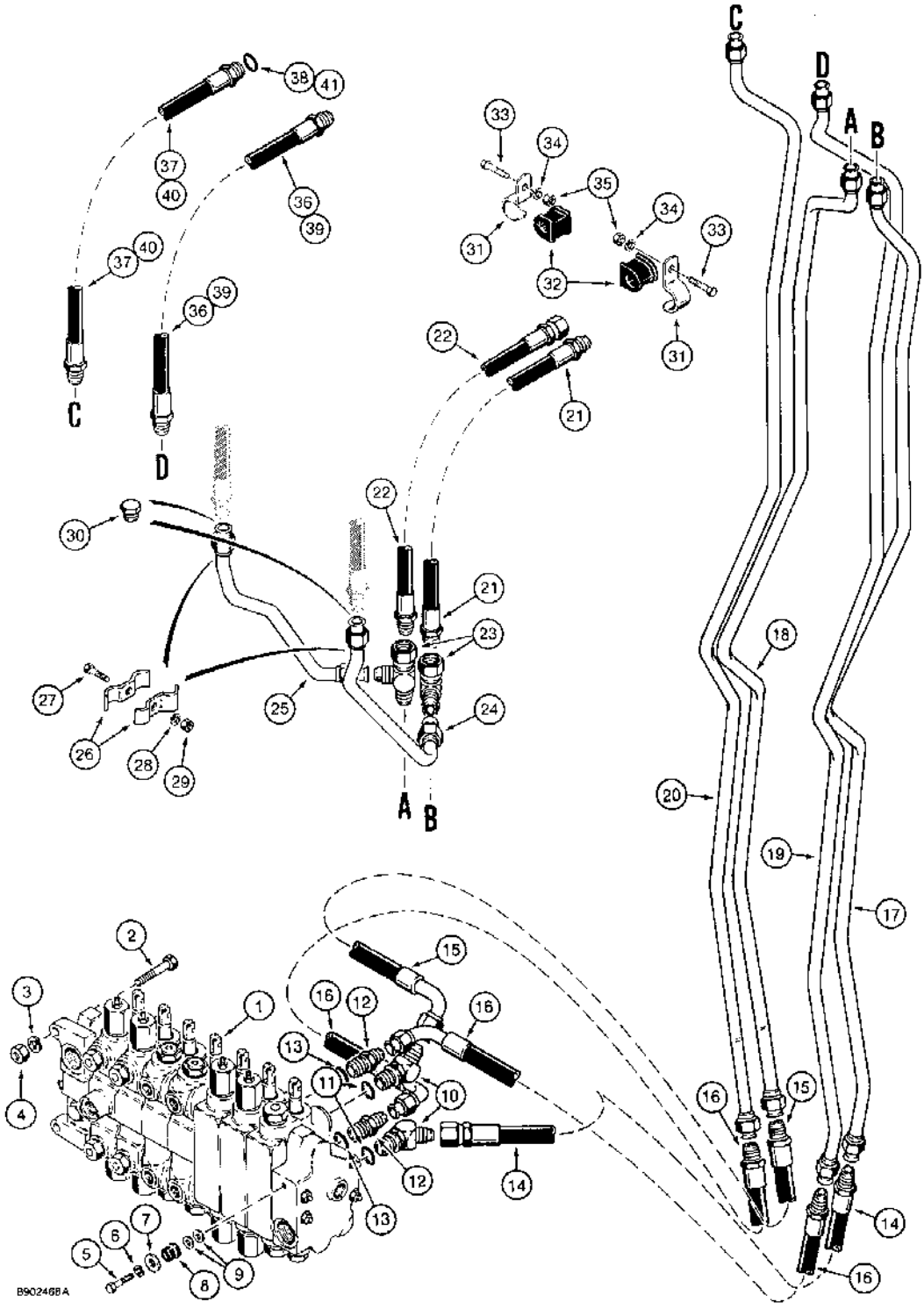

http://www.minnparbackhoeparts.com/

(580SK) - CASE SUPER-K CONSTRUCTION KING LOADER BACKHOE > (8-052) - BACKHOE AUXILIARY HYDRAULIC CIRCUIT, FOR OPTIONAL REAR HYDRAULIC ATTACHMENTS W/EXTENDABLE DIPPER

Diag #	Part #	Name	Description	Qty
1	REF	INSTRUCTION	VALVE ASSEMBLY backhoe control, 7-spool, for correct assembly and components, see Figure 8-082, models with extendable dipper or auxiliary hydraulics	1
2	413-828	BOLT,Hex, 1/2" - 13 x 1 3/4", Gr 5	BOLT,Hex, 1/2" - 13 x 1 3/4", Gr 5	2
3	80679	LOCK WASHER,1/2"	WASHER, LOCK, 1/2"	2
4	425-108	NUT,1/2"-13, G5	NUT, , Hex 1/2"-13, G5	2
5	413-624	BOLT,Hex, 3/8" - 16 x 1 1/2", Gr 5	hex, 3/8 NC x 1-1/2 inch	1
6	492-11038	LOCK WASHER,3/8"	LOCK WASHER,3/8"	1
7	D52275	WASHER	flat, 25/64 x 1-1/4 x 7/64 inch, hardened	1
8	D52276	ISOLATOR	INSULATOR vibration	1
9	495-81266	WASHER,13/32" x 7/8" x .065"	flat, 13/32 x 7/8 x 1/16 inch, if used	2
10	218-5149	ELBOW,45º, 7/8"-14 x 1 1/16"-12, O-Ring	45º, 7/8"-14 flare x 1-1/16"-12 adj. O-ring, auxiliary section ports, Incl. Ref 11	2
11	237-6012	O-RING,0.924" x 0.116"	12-1, 90 Duro, .924 ID x .116" Thk	1
12	218-5063	HYD CONNECTOR,7/8"-14, 37º x 1 1/16"-12, O-Ring	ADAPTER straight, 7/8-14 flare x 1-1/16-12 inch O-ring, bucket section ports, Includes: Ref. 13	2
13	237-6012	O-RING,0.924" x 0.116"	12-1, 90 Duro, .924 ID x .116" Thk	1
14	D143317	HOSE	1350 mm long, includes one metal hose sleeve, auxiliary section lower port to boom auxiliary right-hand tube	1
15	D143310	HOSE	1900 mm long, includes one metal hose sleeve, auxiliary section upper port to boom auxiliary left-hand tube	1
16	D143311	HOSE	1525 mm long, includes one metal hose sleeve, bucket section upper and lower ports	2
17	D149724	TUBE	right-hand side of boom to rear attachment hose	1
18	D149722	TUBE	left-hand side of boom to rear attachment hose	1
19	D138057	TUBE	right-hand side of boom to bucket cylinder rod end hose	1
20	D138059	TUBE	left-hand side of boom to bucket cylinder closed end hose	1
21	D140708	HOSE	850 mm long, to extendable dipper cylinder rod end tube	1

Diag #	Part #	Name	Description	Qty
22	D134095	HOSE	700 mm long, to extendable dipper cylinder closed end	1
23	218-5221	TEE,37º, 1 1/16"-12 x 1 1/16"-12, Fem Sw Run	1-1/16-12 inch fl branch x flare x adj straight thread	2
24	D140322	PIPE	TUBE right-hand side of boom, for connecting optional rear attachment hose	1
		Connecting hoses at these tubes shall be supplied by the customer for use with their particular optional rear hydraulic attachment.	Connecting hoses at these tubes shall be supplied by the customer for use with their particular optional rear hydraulic attachment.	1
25	D140324	PIPE	TUBE left-hand side of boom, for connecting optional rear attachment hose	1
		Connecting hoses at these tubes shall be supplied by the customer for use with their particular optional rear hydraulic attachment.	Connecting hoses at these tubes shall be supplied by the customer for use with their particular optional rear hydraulic attachment.	1
26	D149143	SHIN	CLAMP tubes	4
27	413-624	BOLT,Hex, 3/8" - 16 x 1 1/2", Gr 5	hex, 3/8 NC x 1-1/2 inch	2
28	492-11038	LOCK WASHER,3/8"	LOCK WASHER,3/8"	2
29	425-106	NUT,3/8"-16, G5	NUT,3/8"-16, G5	2
30	218-777	PLUG,1 1/16"-12, 37º	hex, 1-1/16-12 inch flare not required when rear attachment hoses are installed	2
31	D143410	CLAMP	hose, replaces D68846	4
32	D67297	BLOCK	INSULATOR, 1 inch	4
33	413-616	BOLT,Hex, 3/8" - 16 x 1", Gr 5	hex, 3/8 NC x 1 inch	4
34	492-11038	LOCK WASHER,3/8"	LOCK WASHER,3/8"	4
35	425-106	NUT,3/8"-16, G5	NUT,3/8"-16, G5	4
36	D143894	HOSE	2057 mm long, to bucket cylinder rod end tube, used with metal clamps, Ref. 45, on Figure 8-044, if used	1
		See Figure 8-044 for hose and tube clamps.	See Figure 8-044 for hose and tube clamps.	1
37	D143895	HOSE	2027 mm long, to closed end of bucket cylinder, used with metal clamps, Ref. 45, on Figure 8-044, if used, Includes: Ref. 38	1
		See Figure 8-044 for hose and tube clamps.	See Figure 8-044 for hose and tube clamps.	1
38	237-6012	O-RING,0.924" x 0.116"	12-1, 90 Duro, .924 ID x .116" Thk	1
39	108335A1	HYDRAULIC HOSE	HOSE, HYDRAULIC, 1960 mm long, to bucket cylinder rod end tube, used with rubber clamp, Ref 62 on Figure 8-044, if used	1
		See Figure 8-044 for hose and tube clamps.	See Figure 8-044 for hose and tube clamps.	1

Diag #	Part #	Name	Description	Qty
40	108336A1	HYDRAULIC HOSE	HOSE, HYDRAULIC, 1930 mm long, to closed end of bucket cylinder, used with rubber clamp, Ref 62 on Figure 8-044, if used, Incl Ref 41	1
		See Figure 8-044 for hose and tube clamps.	See Figure 8-044 for hose and tube clamps.	1
41	237-6012	O-RING,0.924" x 0.116"	12-1, 90 Duro, .924 ID x .116" Thk	1

http://www.minnparbackhoeparts.com/

(580SK) - CASE SUPER-K CONSTRUCTION KING LOADER BACKHOE > (8-056) - BACKHOE BOOM LOCK HYDRAULIC AND ELECTRICAL CIRCUIT, AT CONTROL TOWER AND BACKHOE VALVE

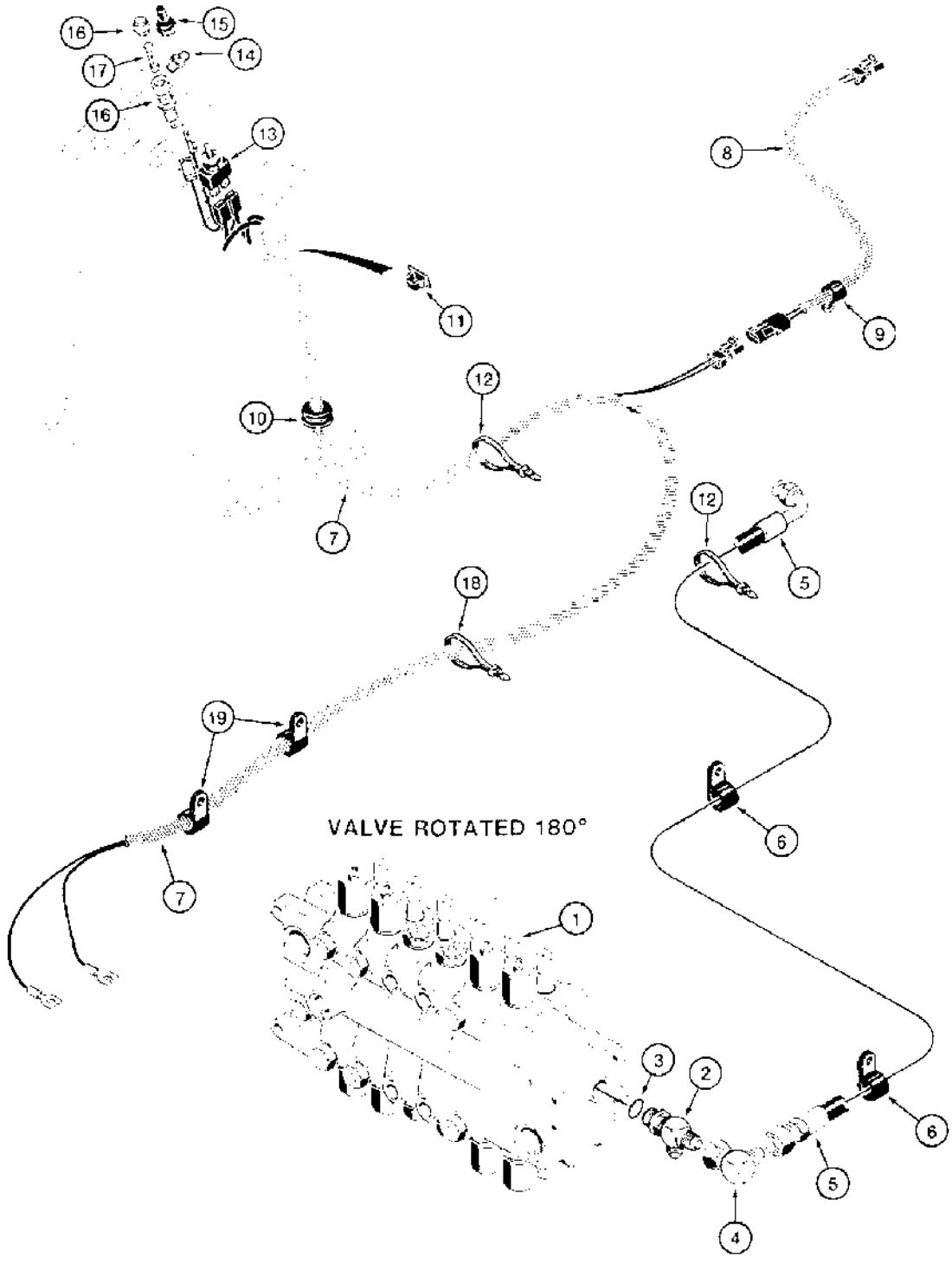

(580SK) - CASE SUPER-K CONSTRUCTION KING LOADER BACKHOE > (8-056) - BACKHOE BOOM LOCK HYDRAULIC AND ELECTRICAL CIRCUIT, AT CONTROL TOWER AND BACKHOE VALVE

Diag #	Part #	Name	Description	Qty
	D104408	KIT	backhoe boom lock, also includes parts on Figure 8-058, L111356 decal on Figure 9-174 and 131-203 nut, Ref. 37, on Figure 8-030 plus an instruction sheet, Includes: Ref. 1 through 19	1
		Not included in D104408 kit, may purchase separately.	Not included in D104408 kit, may purchase separately.	1
1	REF	INSTRUCTION	VALVE ASSEMBLY backhoe control, for correct assembly and components, see Figure 8-080 or 8-082, for valve mounting see Figure 8-024	1
2	218-5241	TEE,7/8"-14, 37° x 7/8"-14, O-Ring Run	7/8-14 inch flare branch x flare x adj O-ring boss, Includes: Ref. 3	1
3	237-6010	O-RING,0.239" ID x 0.379" OD x 0.07"	10-1, 90 Duro, .755" ID x .097" Thk	1
4	218-5232	ELBOW,90°, 7/8"-14, 37° x 7/8"-14, 37° Fem Sw	90 degree, 7/8-14 inch flare x swivel flare	1
5	D149555	HOSE ASSY.	HOSE, 1750 mm long, backhoe valve return to boom lock valve	1
6	T50103	CLAMP	P-type, return hose	2
7	D150390	HARNESS	boom lock, at control tower to relay under side console	1
8	D149552	HARNESS	boom lock, boom lock valve solenoid to control tower boom lock harness	1
9	49836	CLAMP	P-type, harness	2
		Not included in D104408 kit, may purchase separately.	Not included in D104408 kit, may purchase separately.	1
10	D139845	GROMMET,3/4" ID x 1 1/16" Groove Dia, Str Cut	harness	1
		Not included in D104408 kit, may purchase separately.	Not included in D104408 kit, may purchase separately.	1
11	L100659	CLIP	harness	2
12	L18337	CABLE TIE,9.95"-12.1" lg	STRAP tie, 15 inch, nylon	9
13	D67251	SWITCH	toggle, boom lock	1
14	L105735	PLATE ASSY.	PLATE trim	1
15	L101998	BOOT	toggle switch	1
16	A22874	HOLDER	RETAINER fuse, at backhoe control tower	1
17	223-26	FUSE,5 Amp, Type 3AG	5 ampere, boom lock	1
18	D147773	CLAMP	STRAP tie, nylon	3
19	49836	CLAMP	P-type, harness	2
		Not included in D104408 kit, may purchase separately.	Not included in D104408 kit, may purchase separately.	1

http://www.minnparbackhoeparts.com/

(580SK) - CASE SUPER-K CONSTRUCTION KING LOADER BACKHOE > (8-058) - BACKHOE BOOM LOCK HYDRAULIC AND ELECTRICAL CIRCUIT, AT BOOM CYLINDER

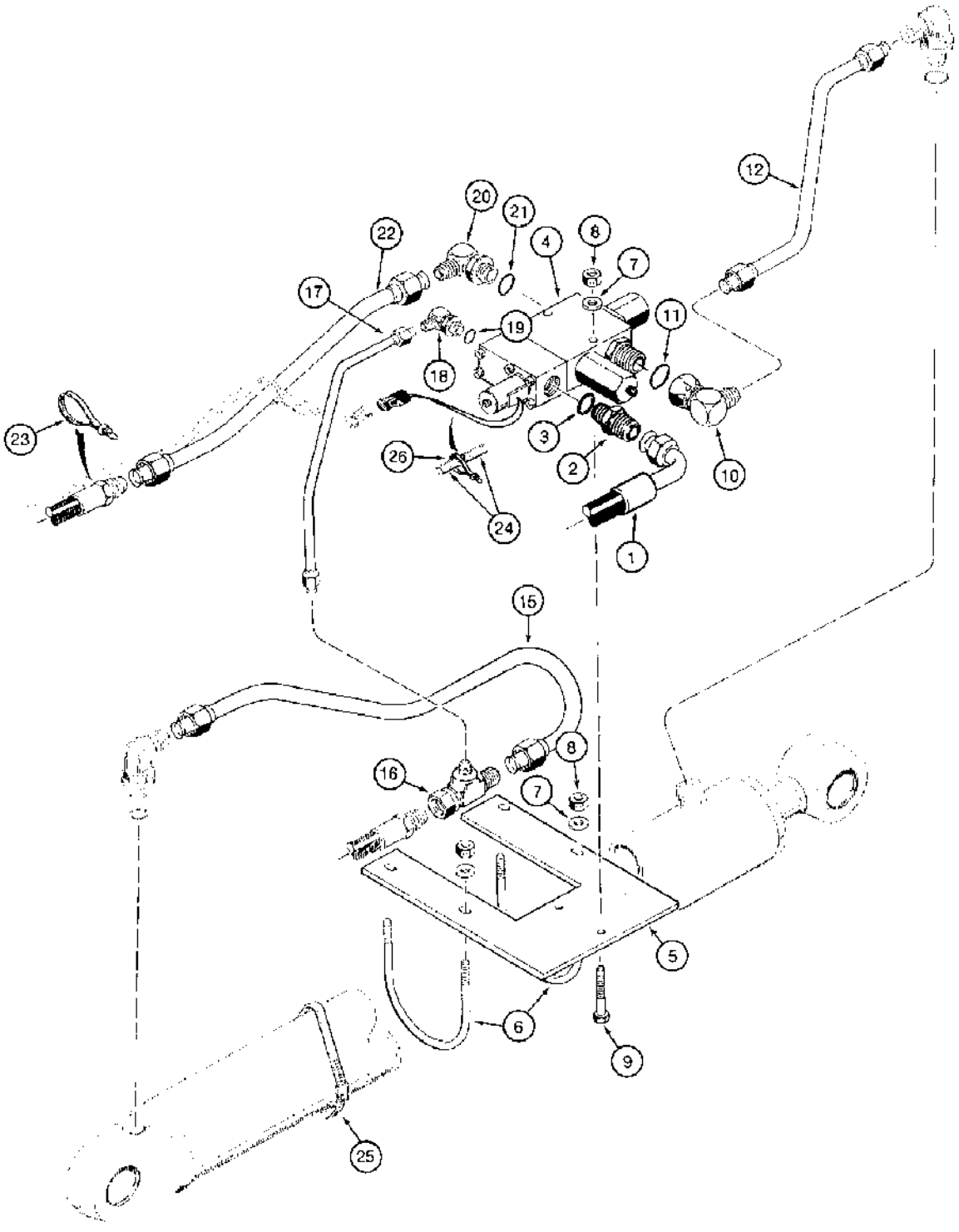

(580SK) - CASE SUPER-K CONSTRUCTION KING LOADER BACKHOE > (8-058) - BACKHOE BOOM LOCK HYDRAULIC AND ELECTRICAL CIRCUIT, AT BOOM CYLINDER

Diag #	Part #	Name	Description	Qty
	D104408	KIT	backhoe boom lock, continued from previous page, Includes: Ref. 1 through 26	1
1	D149555	HOSE ASSY.	HOSE, 1750 mm long, backhoe valve return to boom lock valve	1
2	218-5059	HYD CONNECTOR,3/4"-16, 37º x 3/4"-16, O-Ring	ADAPTER straight, 3/4-16 inch flare x O-ring boss, Incl. Ref 3	1
3	237-6008	O-RING,0.176" ID x 0.316" OD x 0.07"	8-1, 90 Duro, .644" ID x .087" Thk	1
4	D150443	VALVE	ASSEMBLY boom lock, parts list Figure 8-102, solenoid wire connector attaches to Ref. 8 boom lock harness on Figure 8-056	1
5	D150054	PLATE	- Valve mounting	1
6	D150053	BOLT	U-BOLT, 3/8 inch	2
7	495-11041	WASHER,3/8", SAE	flat, 3/8 inch	6
8	231-1446	NUT,3/8"-16, GB	NUT hex, self-locking, 3/8 inch NC, grade 8	6
9	413-648	BOLT,Hex, 3/8" - 16 x 3", Gr 5	BOLT,Hex, 3/8" - 16 x 3", Gr 5	2
10	218-5382	ELBOW,90º, 1 1/16"-12, 37º x 1 5/16"-12, 37º Fem Sw	90 deg, 1-1/16-12 flare x 1-5/16-12 inch swivel flare, Includes: Ref. 11	1
11	237-6016	O-RING,0.614" ID x 0.754" OD x 0.07"	16-1, 90 Duro, 1.171" ID x .118" Thk	1
12	D149524	TUBE ASSY.	TUBE, lock valve to right-hand boom cylinder rod end, see Figure 8-030, Ref. 27 for elbow	1
15	D149533	TUBE ASSY.	TUBE, boom cylinder closed end	1
16	218-5411	TEE,37º, 7/8"-14 x 3/4"-16, Fem Sw Run x 7/16"-20 Br	7/16-20 fl branch x 1-1/16-12 inch fl x adj str thread	1
17	D149528	TUBE ASSY.	TUBE, cylinder closed end to pilot port on boom lock valve	1
18	218-5283	ELBOW,90º, 7/16"-20, 37º x 9/16"-18, O-Ring	90 degree, 7/16-20 flare x 9/16-18 inch adj O-ring, Includes: Ref. 19	1
20	218-5118	ELBOW,90º, 1 1/16"-12, 37º x 1 5/16"-12, O-Ring	90 deg, 1-1/16-12 flare x 1-5/16-12 inch adj O-ring, Includes: Ref. 21	1
21	237-6016	O-RING,0.614" ID x 0.754" OD x 0.07"	16-1, 90 Duro, 1.171" ID x .118" Thk	1
22	D150136	TUBE	attaches to hose at lower boom port of backhoe valve, see Figure 8-030, Ref. 14 for hose	1
23	D147773	CLAMP	STRAP tie, double hose	1
24	D121385	PLASTIC-RUBBER TUBE	GUARD harness protection	1

Diag #	Part #	Name	Description	Qty
25	214-31104	HOSE CLAMP,5.75/6.625 HD Worm	CLAMP, tube to cylinder eye	2
26	L18337	CABLE TIE,9.95"-12.1" lg	STRAP tie, 15 inch, nylon	1
19	237-6006	O-RING,0.114" ID x 0.254" OD x 0.07"	6-1, 90 Duro, .468" ID x .078" Thk	1

http://www.minnparbackhoeparts.com/

(580SK) - CASE SUPER-K CONSTRUCTION KING LOADER BACKHOE > (8-059A) - 107992A1 HAND HELD TOOL ATTACHMENT HYDRAULIC KIT, FOR HAND HELD TOOLS REQUIRING 10 GPM

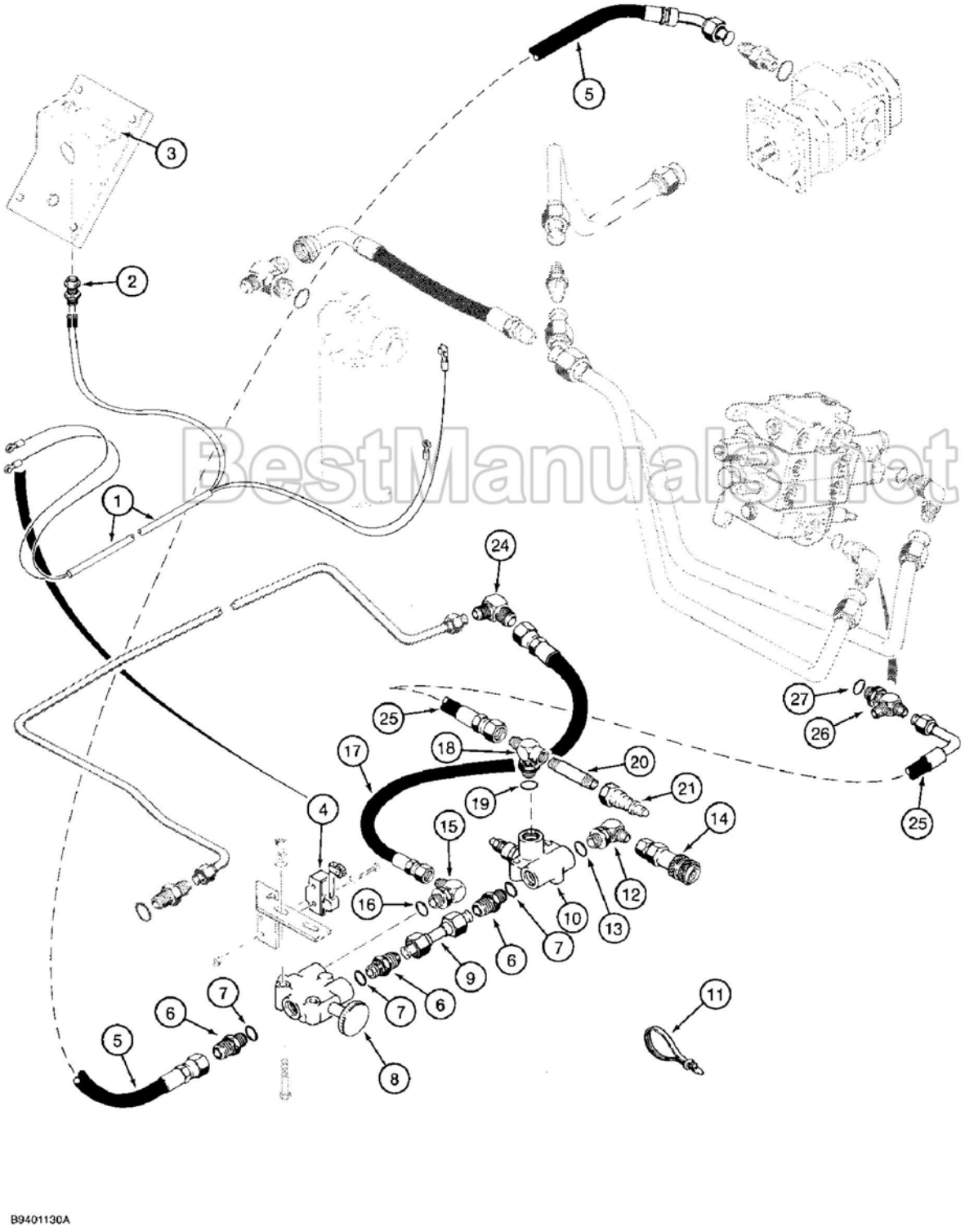

BestManuals.net

(580SK) - CASE SUPER-K CONSTRUCTION KING LOADER BACKHOE > (8-059A) - 107992A1 HAND HELD TOOL ATTACHMENT HYDRAULIC KIT, FOR HAND HELD TOOLS REQUIRING 10 GPM

Diag #	Part #	Name	Description	Qty
	107992A1	KIT	hand held tool attachment, includes 8-80580 installation instructions, Includes: Ref. 1 through 27	1
1	D151083	HARNESS	warning lamp	1
2	H603852	LIGHT	LAMP warning, oil temperature, mounts in key switch plate	1
2A	114323A1	LENS	red, not shown	1
3	D150925	DECAL	Caution, Do not operate unit with red light on, at warning lamp on key switch plate	1
4	D137363	SWITCH	lamp	1
5	D150799	HOSE	106 inch, 2700 mm, long, uses existing tube clamp hardware, replaces hose, tube, and adapter at small section of equipment pump, Ref. 3-5 on Figure 8-006	1
6	218-5062	HYD CONNECTOR,7/8"-14, 37° x 7/8"-14, O-Ring	ADAPTER straight, 7/8-14 inch flare x O-ring boss, Includes: Ref. 7	3
7	237-6010	O-RING,0.239" ID x 0.379" OD x 0.07"	10-1, 90 Duro, .755" ID x .097" Thk	1
8	D150656	VALVE	selector, component parts not serviced separately	1
9	D150746	PIPE	TUBE selector valve to relief valve	1
10	D150657	VALVE	relief, component parts not serviced separately	1
11	L18337	CABLE TIE,9.95"-12.1" lg	STRAP tie, 15 inch, nylon	10
12	218-5304	FITTING	ELBOW, 90 degree, 7/8-14 inch adj O-ring boss x 1/2 inch PT, Includes: Ref. 13	1
13	237-6010	O-RING,0.239" ID x 0.379" OD x 0.07"	10-1, 90 Duro, .755" ID x .097" Thk	1
14	H436396	COUPLING	QUICK DISCONNECT female, includes F62075 O-ring	1
15	218-5121	ELBOW,90°, 3/4"-16, 37° x 7/8"-14, O-Ring	90 degree, 3/4-16 flare x 7/8-14 inch adj O-ring, Includes: Ref. 16	1
16	237-6010	O-RING,0.239" ID x 0.379" OD x 0.07"	10-1, 90 Duro, .755" ID x .097" Thk	1
17	D150800	HOSE	61 inch, 1550 mm, long, selector valve to backhoe tube	1
18	D150797	FITTING	TEE return, Includes: Ref. 19	1
19	237-6010	O-RING,0.239" ID x 0.379" OD x 0.07"	10-1, 90 Duro, .755" ID x .097" Thk	1
20	221-192	PIPE,Nipple, 1/2" NPT x 3"	NIPPLE straight, 1/2 PT x 3 inch	1
21	1272770C2	COUPLING, BREAK AWAY	QUICK DISCONNECT male	1
22	T40274	CAP	PLUG dust, not shown	1

Diag #	Part #	Name	Description	Qty
23	T40759	PLUG	dust, quick disconnect, not shown	1
24	218-475	ELBOW,90º, 1 5/8"-12, 37º x 1 5/8"-12, 37º	90 degree, 7/8-14 inch flare, attaches to existing tube at backhoe valve, Ref. 6 on Figure 8-006	1
25	D150801	HOSE	16 inch, 425 mm, long, relief valve to loader valve	1
26	D150778	TEE	return, at loader valve, Includes: Ref. 27	1
27	237-6016	O-RING,0.614" ID x 0.754" OD x 0.07"	16-1, 90 Duro, 1.171" ID x .118" Thk	1

http://www.minnparbackhoeparts.com/

(580SK) - CASE SUPER-K CONSTRUCTION KING LOADER BACKHOE > (8-059C) - 107992A1 HAND HELD TOOL ATTACHMENT HYDRAULIC KIT, FOR HAND HELD TOOLS REQ. 10GPM OR LESS HYD FLUID

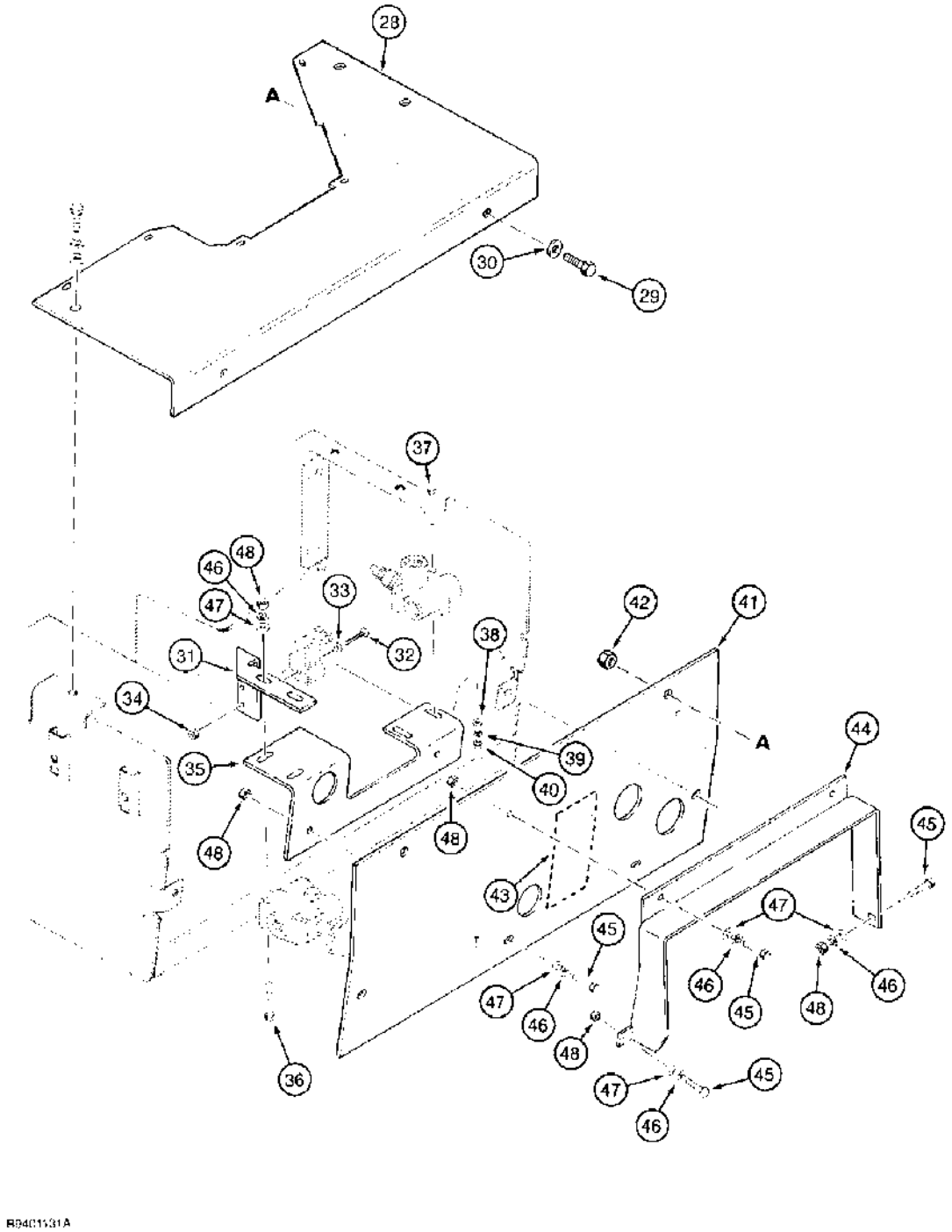

(580SK) - CASE SUPER-K CONSTRUCTION KING LOADER BACKHOE > (8-059C) - 107992A1 HAND HELD TOOL ATTACHMENT HYDRAULIC KIT, FOR HAND HELD TOOLS REQ. 10GPM OR LESS HYD FLUID

Diag #	Part #	Name	Description	Qty
	107992A1	KIT	hand held tool attachment, includes 8-80580 installation instructions, continued from previous page, Includes: Ref. 28 through 48	1
28	D150858	COVER	top, replaces right-hand valve cover plate, Ref. 8 on Figure 9-094	1
29	413-612	BOLT,Hex, 3/8" - 16 x 3/4", Gr 5	BOLT,Hex, 3/8" - 16 x 3/4", Gr 5	2
30	495-11041	WASHER,3/8", SAE	flat, (13/32 x 13/16 x 1/16")	2
31	D150914	BRACKET	switch mounting	1
32	470-10620	SCREW,Slotted Pan Hd, #6-32 x 1 1/4"	- machine, pan head slotted, No. 6 NC x 1-1/4 inch	2
33	495-31016	WASHER,#6	WASHER,#6	2
34	193-1003	NUT,Keps, w/LW,#6-32	hex, with external tooth lock washer, No. 6 NC	2
35	D150861	BRACKET	valve mounting	1
36	413-528	BOLT,Hex, 5/16" - 18 x 1 3/4", Gr 5	BOLT,Hex, 5/16" - 18 x 1 3/4", Gr 5	2
37	413-432	BOLT,Hex, 1/4" - 20 x 2", Gr 5	BOLT,Hex, 1/4" - 20 x 2", Gr 5	2
38	495-11028	WASHER,1/4", SAE	(flat, 9/32 x 5/8 x 1/16") 1/4", SAE	2
39	492-11025	LOCK WASHER,1/4"	WASHER, LOCK, 1/4"	2
40	425-104	NUT,1/4"-20, G5	hex, 1/4 inch NC	2
41	D150857	COVER	front	1
42	131-851	SPRING NUT,Ret, J, 3/8"-16	SPRING NUT,Ret, J, 3/8"-16	2
43	D150873	DECAL	instructional	1
44	D150922	GUARD ASSY.	GUARD control	1
45	413-516	BOLT,Hex, 5/16" - 18 x 1", Gr 5	hex, 5/16 NC x 1 inch	5
46	492-11031	LOCK WASHER,5/16"	WASHER, LOCK, 5/16"	7
47	495-11034	WASHER,5/16", SAE	5/16" SAE (flat, 11/32 x 11/16 x 1/16")	7
48	425-105	NUT,5/16"-18, G5	- hex, 5/16 inch NC	7

http://www.minnparbackhoeparts.com/

(580SK) - CASE SUPER-K CONSTRUCTION KING LOADER BACKHOE > (8-060) - THREE-POINT HITCH CYLINDER HYDRAULIC CIRCUIT

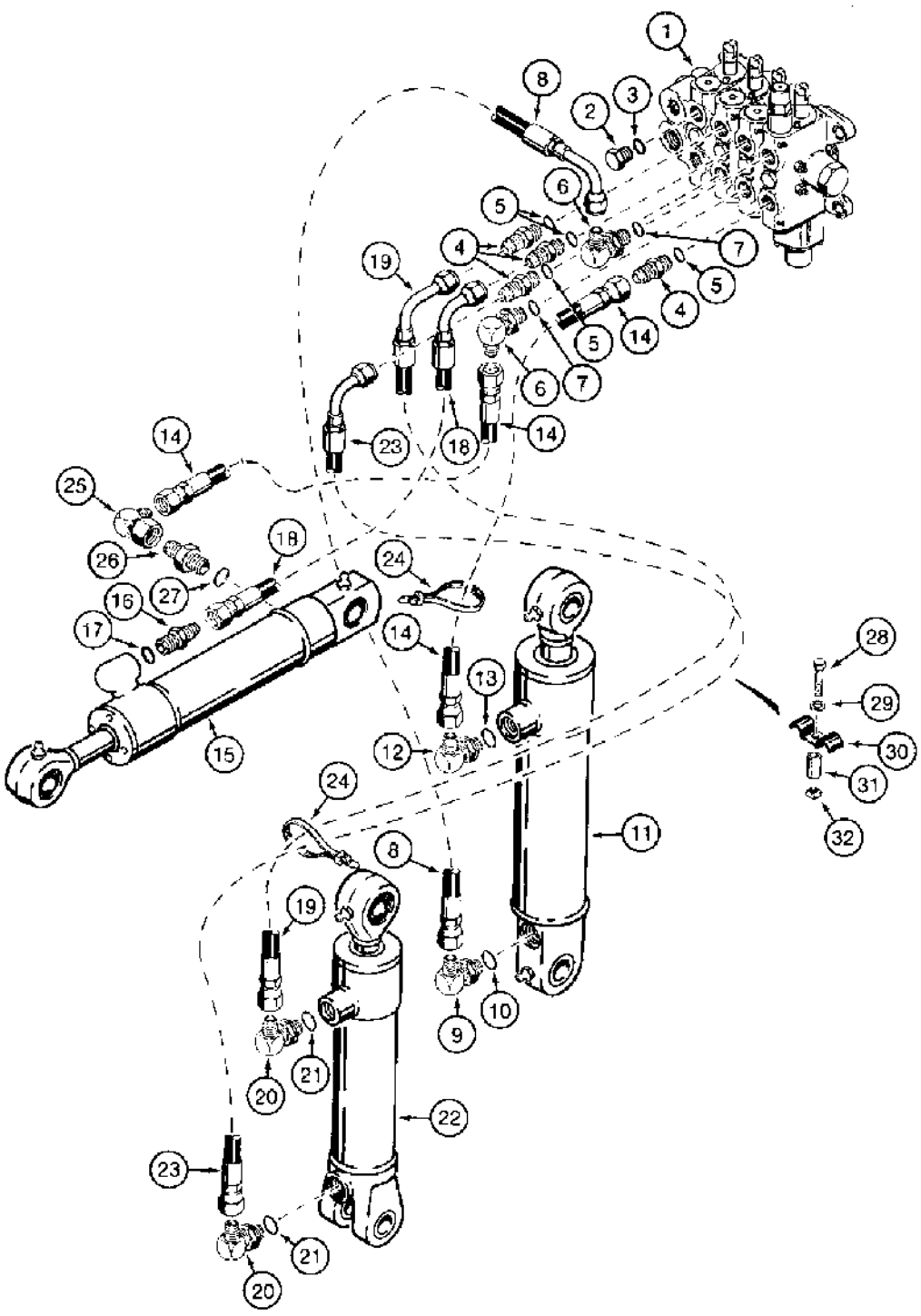

R902469-45

http://www.minnparbackhoeparts.com/

(580SK) - CASE SUPER-K CONSTRUCTION KING LOADER BACKHOE > (8-060) - THREE-POINT HITCH CYLINDER HYDRAULIC CIRCUIT

Diag #	Part #	Name	Description	Qty
1	D141297	VALVE	ASSEMBLY three-point hitch control, parts list Figure 8-104, see Figure 9-072 for valve mounting	1
2	214389	PLUG,Hex Hd, 3/4"-16 ORB	Upper and lower implement section, if used, Includes Ref. 3 Hex Hd, 3/4"-16 ORB	2
3	237-6008	O-RING,0.176" ID x 0.316" OD x 0.07"	8-1, 90 Duro, .644" ID x .087" Thk	1
4	218-5059	HYD CONNECTOR,3/4"-16, 37° x 3/4"-16, O-Ring	ADAPTER straight, 3/4-16 inch flare x O-ring boss, male, upper and lower port tilt section, pitch section upper port, and lift section lower port, Incl. Ref 5	4
5	237-6008	O-RING,0.176" ID x 0.316" OD x 0.07"	8-1, 90 Duro, .644" ID x .087" Thk	1
6	218-5106	ELBOW,90°, 3/4"-16, 37° x 3/4"-16, O-Ring	90 degree, 3/4-16 inch flare x adj O-ring boss, adjustable, upper port lift section and lower port pitch section, Includes: Ref. 7	2
7	237-6008	O-RING,0.176" ID x 0.316" OD x 0.07"	8-1, 90 Duro, .644" ID x .087" Thk	1
8	D141271	HOSE ASSY.	HOSE, 1350 mm long, upper port lift section to closed end of lift cylinder	1
9	D135096	ELBOW	90 degree, restriction, closed end of lift cylinder, Includes: Ref. 10	1
10	237-6010	O-RING,0.239" ID x 0.379" OD x 0.07"	10-1, 90 Duro, .755" ID x .097" Thk	1
11	G101189	CYLINDER ASSY.	CYLINDER ASSEMBLY lift, parts list Figure 8-142	1
12	218-5121	ELBOW,90°, 3/4"-16, 37° x 7/8"-14, O-Ring	90 degree, 3/4-16 flare x 7/8-14 inch adj O-ring, rod end of lift cylinder, Includes: Ref. 13	1
13	237-6010	O-RING,0.239" ID x 0.379" OD x 0.07"	10-1, 90 Duro, .755" ID x .097" Thk	1
14	D141267	HOSE ASSY.	HOSE, 550 mm long, lower port lift section to rod end of lift cylinder and pitch section lower port to closed end of pitch cylinder	2
15	1976884C1	JACK BODY	CYLINDER ASSEMBLY pitch, parts list Figure 8-146	1
	138235A1R	REMAN-HYD CYLINDER	580SK, Reman For New P/N 1976884C1	1
	138235A1C	CORE-HYD CYLINDER	Return Number	1
16	218-5059	HYD CONNECTOR,3/4"-16, 37° x 3/4"-16, O-Ring	ADAPTER straight, 3/4-16 inch flare x O-ring boss, rod end of pitch cylinder, Incl. Ref 17	1
17	237-6008	O-RING,0.176" ID x 0.316" OD x 0.07"	8-1, 90 Duro, .644" ID x .087" Thk	1

Diag #	Part #	Name	Description	Qty
18	D141268	HOSE	900 mm long, upper port pitch section to rod end of pitch cylinder	1
19	D141270	HOSE	1250 mm long, upper port tilt section to rod end of tilt cylinder	1
20	218-5121	ELBOW,90º, 3/4"-16, 37º x 7/8"-14, O-Ring	90 degree, 3/4-16 flare x 7/8-14 inch adj O-ring, closed end and rod end of tilt cylinder, Includes: Ref. 21	2
21	237-6010	O-RING,0.239" ID x 0.379" OD x 0.07"	10-1, 90 Duro, .755" ID x .097" Thk	1
22	G101188	JACK BODY	CYLINDER ASSEMBLY tilt, parts list Figure 8-144	1
23	D141269	HOSE ASSY.	HOSE, 1450 mm long, tilt section lower port to closed end of tilt cylinder	1
24	L18337	CABLE TIE,9.95"-12.1" lg	STRAP tie, 15 inch, nylon	2
25	218-5230	ELBOW,90º, 3/4"-16, 37º x 3/4"-16, 37º Fem Sw	90 degree, 3/4-16 inch flare x swivel flare, closed end of pitch cylinder	1
26	218-5059	HYD CONNECTOR,3/4"-16, 37º x 3/4"-16, O-Ring	ADAPTERstraight, 3/4-16 inch flare x O-ring boss, closed end of pitch cylinder, Incl. Ref 27	1
27	237-6008	O-RING,0.176" ID x 0.316" OD x 0.07"	8-1, 90 Duro, .644" ID x .087" Thk	1
28	413-620	BOLT,Hex, 3/8" - 16 x 1 1/4", Gr 5	hex, 3/8 NC x 1-1/4 inch	1
29	492-11038	LOCK WASHER,3/8"	LOCK WASHER,3/8"	1
30	D143846	CLAMP	- Hose	1
31	D149139	SPACER	hose clamp	1
32	84899	SQUARE NUT,Sq, 3/8"-16, G2	square, 3/8 inch NC	1

http://www.minnparbackhoeparts.com/

(580SK) - CASE SUPER-K CONSTRUCTION KING LOADER BACKHOE > (8-062) - EQUIPMENT HYDRAULIC PUMP

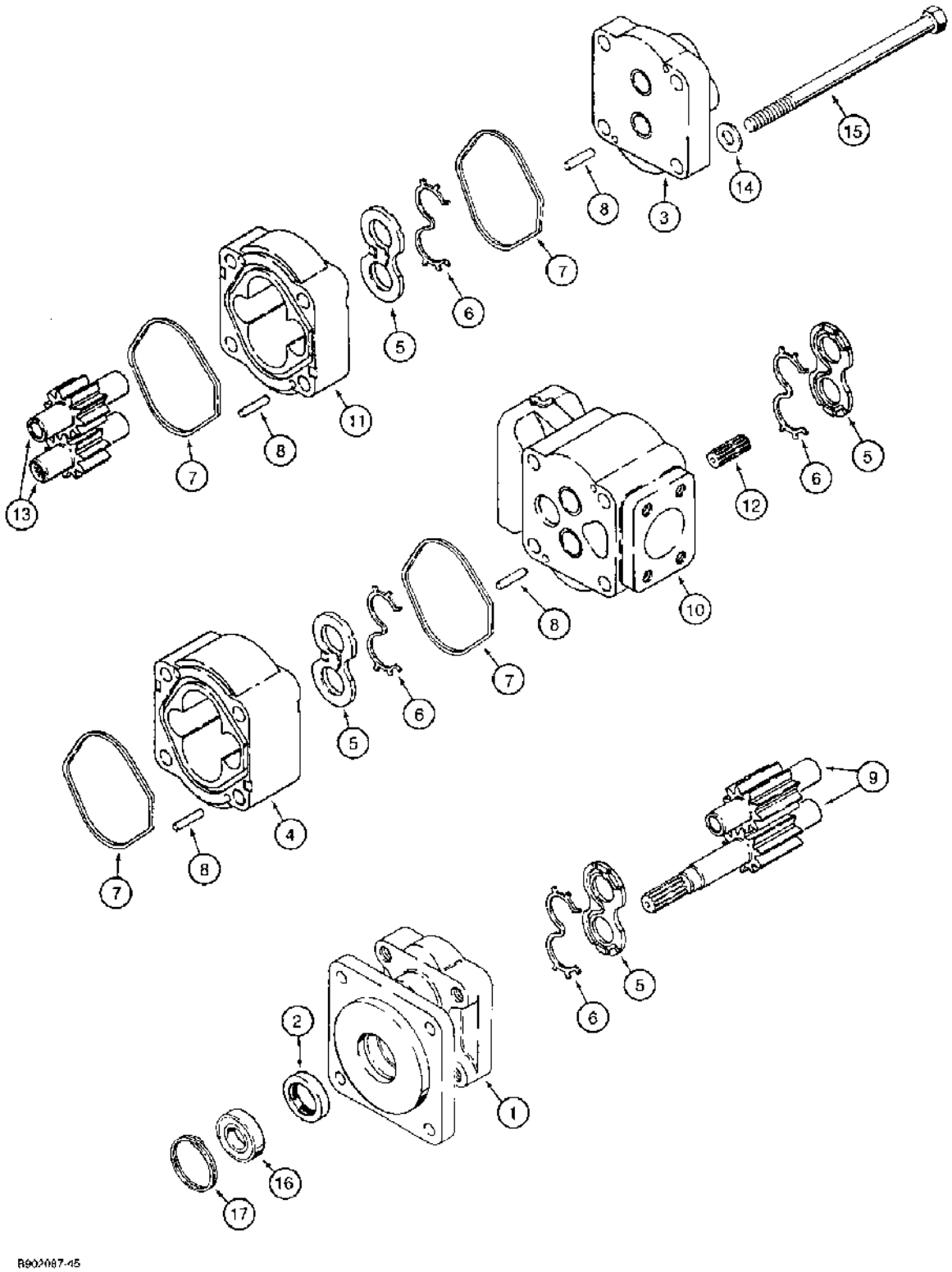

(580SK) - CASE SUPER-K CONSTRUCTION KING LOADER BACKHOE > (8-062) - EQUIPMENT HYDRAULIC PUMP

Diag #	Part #	Name	Description	Qty
	D149283	PUMP, HYDRAULIC	PUMP ASSEMBLY hydraulic equipment, Includes: Ref. 1 through 17	1
	D149283R	REMAN-HYD PUMP	580SK	1
	D149283C	CORE-HYDRAULIC PUMP	Return Number	1
1	NSS	NOT SERVICED SEPARATELY	COVER shaft end, includes a bushing which is not serviced separately	1
2	L32418	SEAL	shaft	1
3	NSS	NOT SERVICED SEPARATELY	COVER closed end, includes a bushing which is not serviced separately	1
4	N14115	HOUSING	gear, shaft end	1
5	N13582	THRUST PLATE	PLATE, THRUST	4
6	N13583	SEAL	RETAINER wear plate	4
7	L32100	SEAL	housing, large	4
8	W16323	DOWEL	PIN dowel, gear housing	8
9	NSS	NOT SERVICED SEPARATELY	SET gear, shaft end	1
10	NSS	NOT SERVICED SEPARATELY	HOUSING center, with ports, includes bushings which are not serviced separately	1
11	D147209	HOUSING	gear, closed end, pump	1
12	N13586	SHAFT	connecting	1
13	NSS	NOT SERVICED SEPARATELY	SET gear, closed end	1
14	524443R1	WASHER	flat, 5/8 inch, hardened	4
15	326-10144	BOLT,Hex, 5/8" - 11 x 9", Gr 8	BOLT,Hex, 5/8" - 11 x 9", Gr 8	4
16	3139296R1	BALL BEARING	ball, sealed	1
17	71466	SNAP RING,#206, 2.190", Int, Spiral	RING retaining, spring lock	1

http://www.minnparbackhoeparts.com/

(580SK) - CASE SUPER-K CONSTRUCTION KING LOADER BACKHOE > (8-064) - LOADER CONTROL VALVE, TWO SPOOL

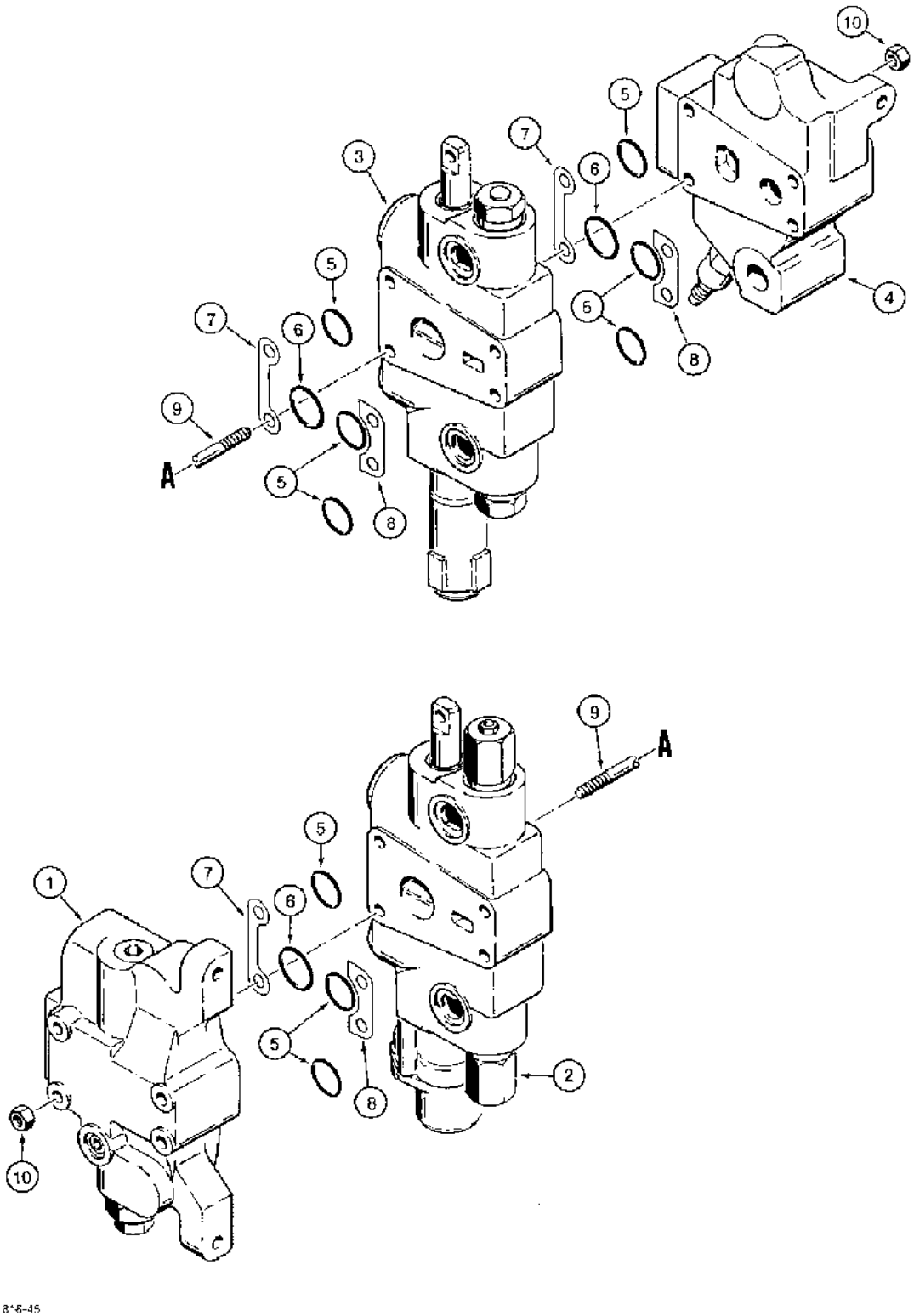

8B13*8-45

(580SK) - CASE SUPER-K CONSTRUCTION KING LOADER BACKHOE > (8-064) - LOADER CONTROL VALVE, TWO SPOOL

Diag #	Part #	Name	Description	Qty
	1346392C1	VALVE	ASSEMBLY control, loader, two spool, Includes: Ref. 1 through 10	1
1	1980434C1	VALVE	SECTION ASSEMBLY inlet, with steering relief valve, parts list Figure 8-068	1
2	1986594C1	VALVE	SECTION ASSEMBLY bucket, with magnetic detent and circuit relief valve, parts list Figure 8-070	1
3	1986591C1	VALVE	SECTION ASSEMBLY lift, with manual detent, parts list Fig. 8-72	1
4	1346396C1	VALVE	SECTION ASSEMBLY valve, outlet, with main relief, parts list Figure 8-074	1
5	238-6119	O-RING,-119, 90 Duro, .924" ID x .103" Thk	Section ports, small -119, 90 Duro, .924" ID x .103" Thk	9
		Part of seal kit P/N 1346108C1.	Part of seal kit P/N 1346108C1.	1
6	238-6127	O-RING,-127, 90 Duro, 1.424" ID x .103" Thk	Section ports -127, 90 Duro, 1.424" ID x .103" Thk	3
		Part of seal kit P/N 1346108C1.	Part of seal kit P/N 1346108C1.	1
7	G107251	SHIM,0.051mm Thk	Section, Port side of control valve 0.051mm Thk	3
8	G33965	SHIM,0.051mm Thk	Section, Non-port side of control valve 0.051mm Thk	3
9	G108870	STUD	tie, 3/8 NC x 9-3/4 inch	4
10	425-106	NUT,3/8"-16, G5	NUT,3/8"-16, G5	8
	1346108C1	SEAL KIT	KIT seal, Includes: Ref. 5 and 6, plus additional O-rings not required for this application	1

http://www.minnparbackhoeparts.com/

(580SK) - CASE SUPER-K CONSTRUCTION KING LOADER BACKHOE > (8-066) - LOADER CONTROL VALVE, THREE SPOOL

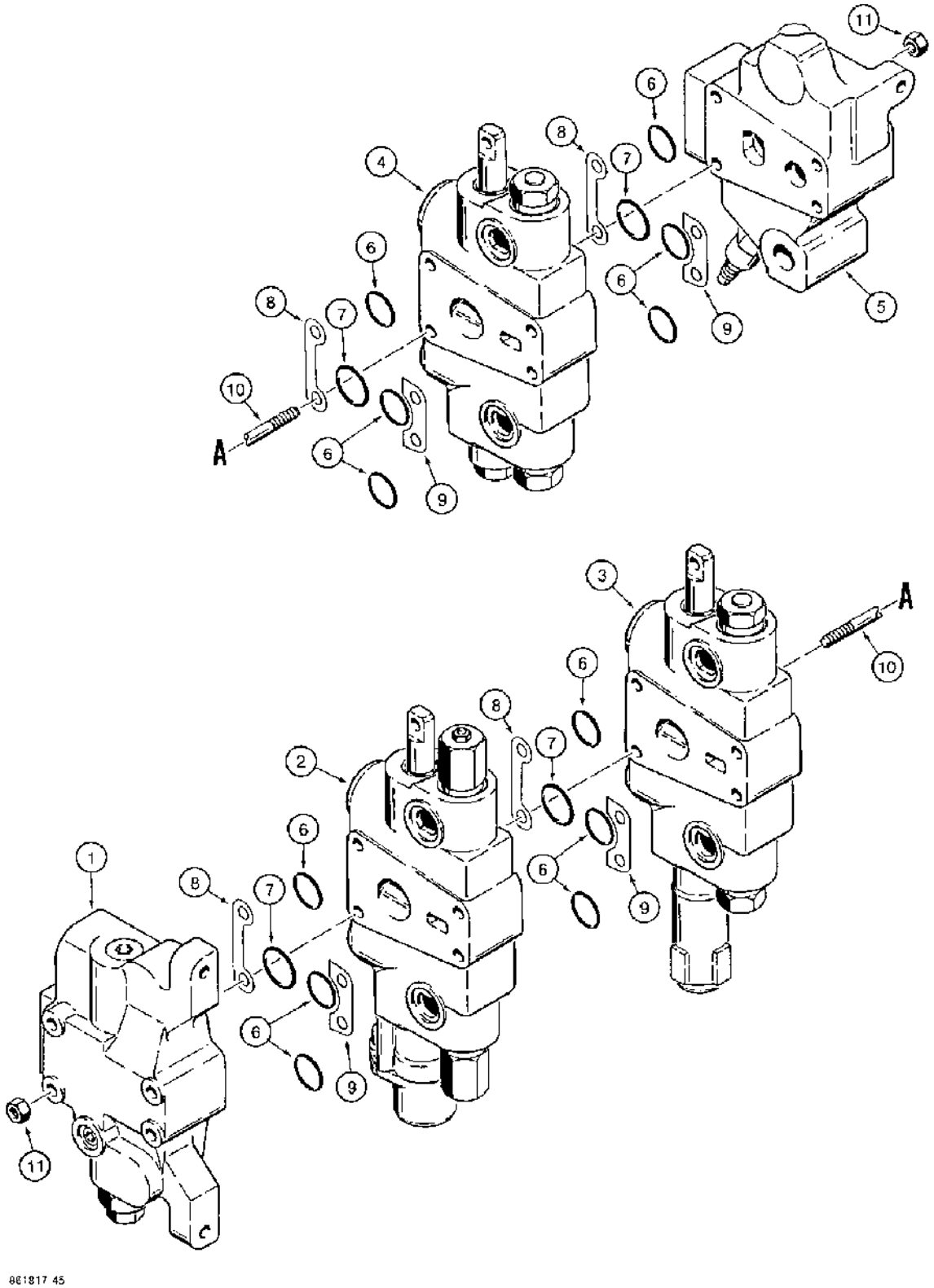

861817 45

(580SK) - CASE SUPER-K CONSTRUCTION KING LOADER BACKHOE > (8-066) - LOADER CONTROL VALVE, THREE SPOOL

Diag #	Part #	Name	Description	Qty
	1346393C1	VALVE	ASSEMBLY control, loader, three spool, Includes: Ref. 1 through 11	1
1	1980434C1	VALVE	SECTION ASSEMBLY inlet, with steering relief valve, parts list Figure 8-068	1
2	1986594C1	VALVE	SECTION ASSEMBLY bucket, with magnetic detent and circuit relief valve, parts list Figure 8-070	1
3	1986591C1	VALVE	SECTION ASSEMBLY lift, with manual detent, parts list Figure 8-072	1
4	1986593C1	VALVE	SECTION ASSEMBLY clam, all valves, parts list Figure 8-076	1
5	1346396C1	VALVE	SECTION ASSEMBLY outlet, all valves, with main relief valve, parts list Figure 8-074	1
6	238-6119	O-RING,-119, 90 Duro, .924" ID x .103" Thk	Section ports, small -119, 90 Duro, .924" ID x .103" Thk	12
		Part of seal kit P/N 1346108C1.	Part of seal kit P/N 1346108C1.	1
7	238-6127	O-RING,-127, 90 Duro, 1.424" ID x .103" Thk	Section ports -127, 90 Duro, 1.424" ID x .103" Thk	4
		Part of seal kit P/N 1346108C1.	Part of seal kit P/N 1346108C1.	1
8	G107251	SHIM,0.051mm Thk	Section, Port side of control valve 0.051mm Thk	4
9	G33965	SHIM,0.051mm Thk	Section, Non-port side of control valve 0.051mm Thk	4
10	G108805	STUD	tie, 3/8 NC x 11-3/4 inch	4
11	425-106	NUT,3/8"-16, G5	NUT,3/8"-16, G5	8
	1346108C1	SEAL KIT	KIT seal, Includes: Ref. 6 and 7, plus additional O-rings not required for this application	1

http://www.minnparbackhoeparts.com/

(580SK) - CASE SUPER-K CONSTRUCTION KING LOADER BACKHOE > (8-068) - LOADER CONTROL VALVE, INLET SECTION - WITH STEERING RELIEF VALVE

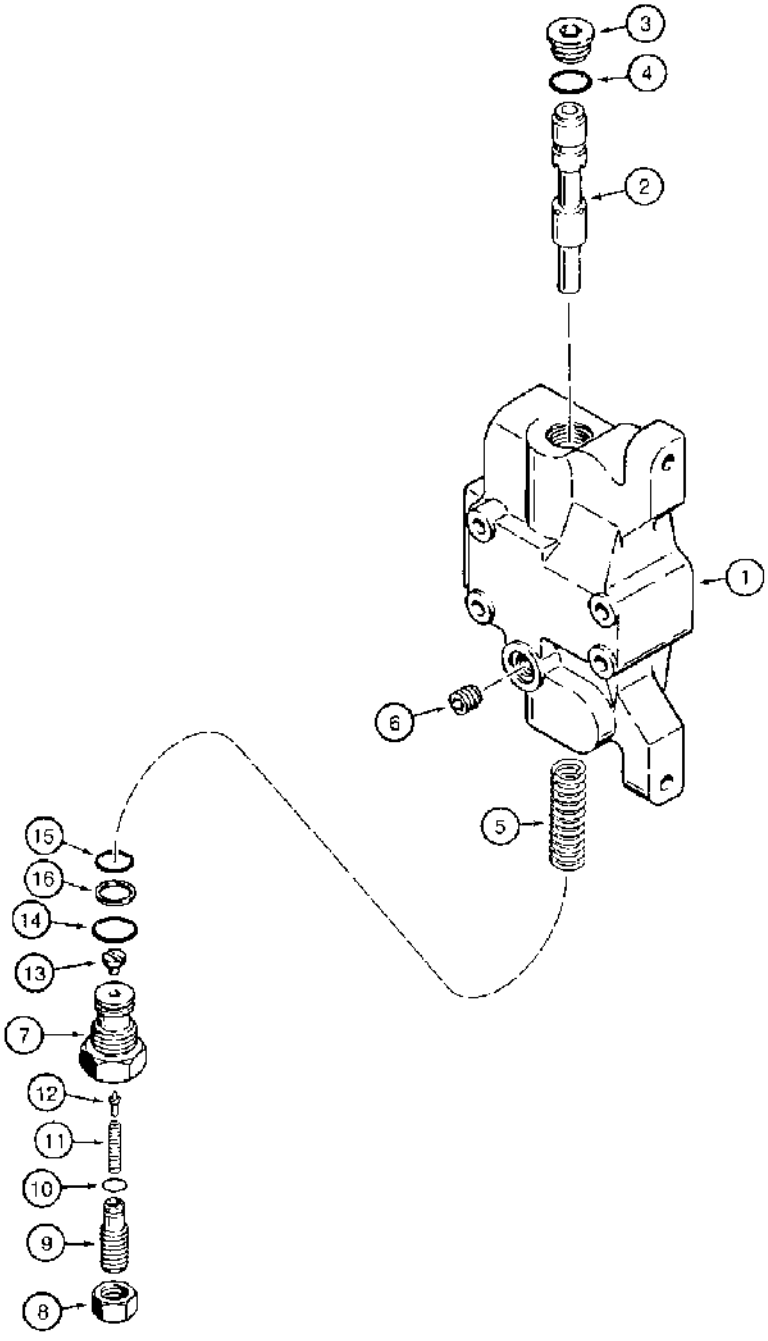

B902060-45

(580SK) - CASE SUPER-K CONSTRUCTION KING LOADER BACKHOE > (8-068) - LOADER CONTROL VALVE, INLET SECTION - WITH STEERING RELIEF VALVE

Diag #	Part #	Name	Description	Qty
	1980434C1	VALVE	SECTION ASSEMBLY inlet, with steering relief valve, Includes: Ref. 1 through 16 and P/N G108868	1
1	NSS	NOT SERVICED SEPARATELY	HOUSING inlet section	1
2	NSS	NOT SERVICED SEPARATELY	SPOOL inlet section	1
3	86625138	PLUG,Hex Soc, 7/8"-14 ORB	Includes Ref. 4 Hex Soc, 7/8"-14 ORB	1
4	237-6010	O-RING,0.239" ID x 0.379" OD x 0.07"	10-1, 90 Duro, .755" ID x .097" Thk	1
5	G108877	SPRING	centering, spool	1
6	1994566C1	PLUG	orifice, steering port, not required	1
	G108868	PRESSURE RELIEF VALVE	VALVE ASSEMBLY relief, steering, Includes: Ref. 7 through 16	1
7	G108866	HOUSING	steering relief valve	1
8	86637932	JAM NUT,Jam, 5/8"-18, G5	NUT hex, jam, 5/8 NF	1
9	G108867	PLUG	adjusting, relief valve	1
10	238-6012	O-RING,-012, 90 Duro, .364" ID x .070" Thk	O-RING,-012, 90 Duro, .364" ID x .070" Thk	1
11	G109275	SPRING	steering relief	1
12	G108556	VALVE POPPET	POPPET steering relief	1
13	G108869	SEAT	poppet, relief valve	1
14	237-6012	O-RING,0.924" x 0.116"	12-1, 90 Duro, .924 ID x .116" Thk, Housing	1
15	238-6018	O-RING,-018, 90 Duro, .739" ID x .070" Thk	Housing -018, 90 Duro, .739" ID x .070" Thk	1
16	G35540	RING	backup, small O-ring, housing	1

http://www.minnparbackhoeparts.com/

(580SK) - CASE SUPER-K CONSTRUCTION KING LOADER BACKHOE > (8-070) - LOADER CONTROL VALVE, BUCKET SECTION, WITH MAGNETIC DETENT AND CIRCUIT RELIEF VALVE

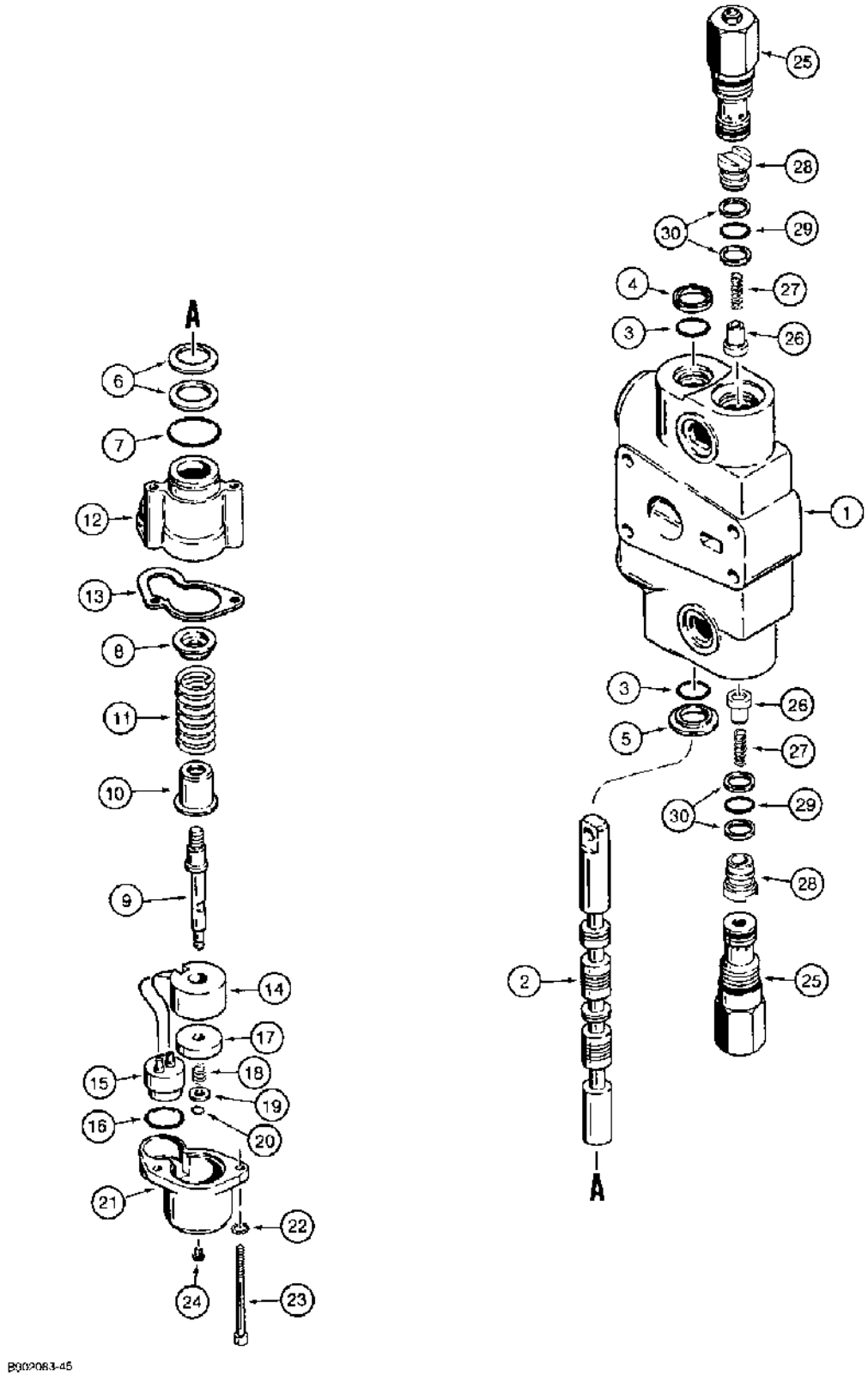

http://www.minnparbackhoeparts.com/

(580SK) - CASE SUPER-K CONSTRUCTION KING LOADER BACKHOE > (8-070) - LOADER CONTROL VALVE, BUCKET SECTION, WITH MAGNETIC DETENT AND CIRCUIT RELIEF VALVE

Diag #	Part #	Name	Description	Qty
	1986594C1	VALVE	SECTION ASSEMBLY bucket, with magnetic detent and circuit relief valve, Includes: Ref. 1 through 30, P/N G110079 and P/N 1346219C2	1
1	NSS	NOT SERVICED SEPARATELY	HOUSING bucket section	1
2	NSS	NOT SERVICED SEPARATELY	SPOOL bucket section	1
3	1994608C1	O-RING,0.737" ID x 0.943" OD x 0.103"	spool, replaces G108461 O-ring	2
		Part of seal kit P/N 1346105C1.	Part of seal kit P/N 1346105C1.	1
4	65457C1	SEAL	oil, spool, replaces A32309	1
		Part of seal kit P/N 1346105C1.	Part of seal kit P/N 1346105C1.	1
5	G102711	O-RING,19.3 mm ID x 32.97 mm OD	O-ring	1
6	G106452	SPRING WASHER	SPRING belleville, washer	2
7	238-5026	O-RING,1.239" ID x 1.379" OD x 0.07"	-026, 70 Duro, 1.239" ID x .070" Thk, Retainer	1
		Part of seal kit P/N 1346105C1.	Part of seal kit P/N 1346105C1.	1
8	G106442	SEAT	centering spring, upper	1
9	G107445	SHAFT	magnetic detent	1
10	G106441	SEAT	centering spring, lower	1
11	1986611C1	SPRING	centering, spool	1
12	G106423	HOUSING	magnetic detent	1
13	G106443	GASKET	magnetic detent housing	1
	G110079	COIL ASSY.	COIL ASSEMBLY magnetic detent, Includes: Ref. 14 and 15	1
14	NSS	NOT SERVICED SEPARATELY	COIL magnetic detent	1
		Coil resistance for return to dig coil is 19.5 ohms.	Coil resistance for return to dig coil is 19.5 ohms.	1
15	G106450	COIL	CONNECTOR coil	1
16	238-5020	O-RING,0.864" ID x 1.004" OD x 0.07"	-020, 70 Duro, .864" ID x .070" Thk, Coil connector	1
		Part of seal kit P/N 1346105C1.	Part of seal kit P/N 1346105C1.	1
17	G109295	WASHER	detent	1
18	G107447	SPRING	detent washer	1

Diag #	Part #	Name	Description	Qty
19	A50778	WASHER	shaft	1
20	100-1125	SNAP RING,#25, Ext	Ring, Snap, , washer (Replaces A7111) #25, Ext	1
21	G106424	CAP	magnetic detent	1
22	493-41020	LOCK WASHER,Ext Tooth, #10	WASHER, LOCK, Ext Tooth, #10	2
23	165-46	HEX SOC SCREW,Hex Soc Hd, #10-24 x 2 3/4"	BOLT hex socket, No. 10 NC x 2-3/4 inch	2
24	G107780	VALVE, CHECK	VALVE check, magnetic detent	1
25	G107786	VALVE, PRESSURE RELI	VALVE ASSEMBLY circuit relief, one-piece cap, used in production, parts list Figure 8-078, order G109449 circuit relief valve kit for service, see Figure 8-078 for kit	2
	1346219C2	PACKAGE	VALVE ASSEMBLY load check, hollow poppet pin, Includes: Ref. 26 through 30	2
26	1343777C1	VALVE POPPET	POPPET, hollow poppet pin with orifice	1
27	1346175C1	SPRING	load check	1
28	1343708C1	PLUG	load check	1
29	238-6016	O-RING,-016, 90 Duro, .614" ID x .070" Thk	Plug (Replaces G110020) -016, 90 Duro, .614" ID x .070" Thk	1
		Part of seal kit P/N 1346105C1.	Part of seal kit P/N 1346105C1.	1
30	G103862	RING	backup, plug O-ring	2
		Part of seal kit P/N 1346105C1.	Part of seal kit P/N 1346105C1.	1
	1346105C1	SEAL KIT	KIT seal, Includes: Ref. 3, 4, 7, 16, 29 and 30, plus additional O-rings not required for this application	1

http://www.minnparbackhoeparts.com/

(580SK) - CASE SUPER-K CONSTRUCTION KING LOADER BACKHOE > (8-072) - LOADER CONTROL VALVE, LIFT SECTION, WITH MANUAL DETENT

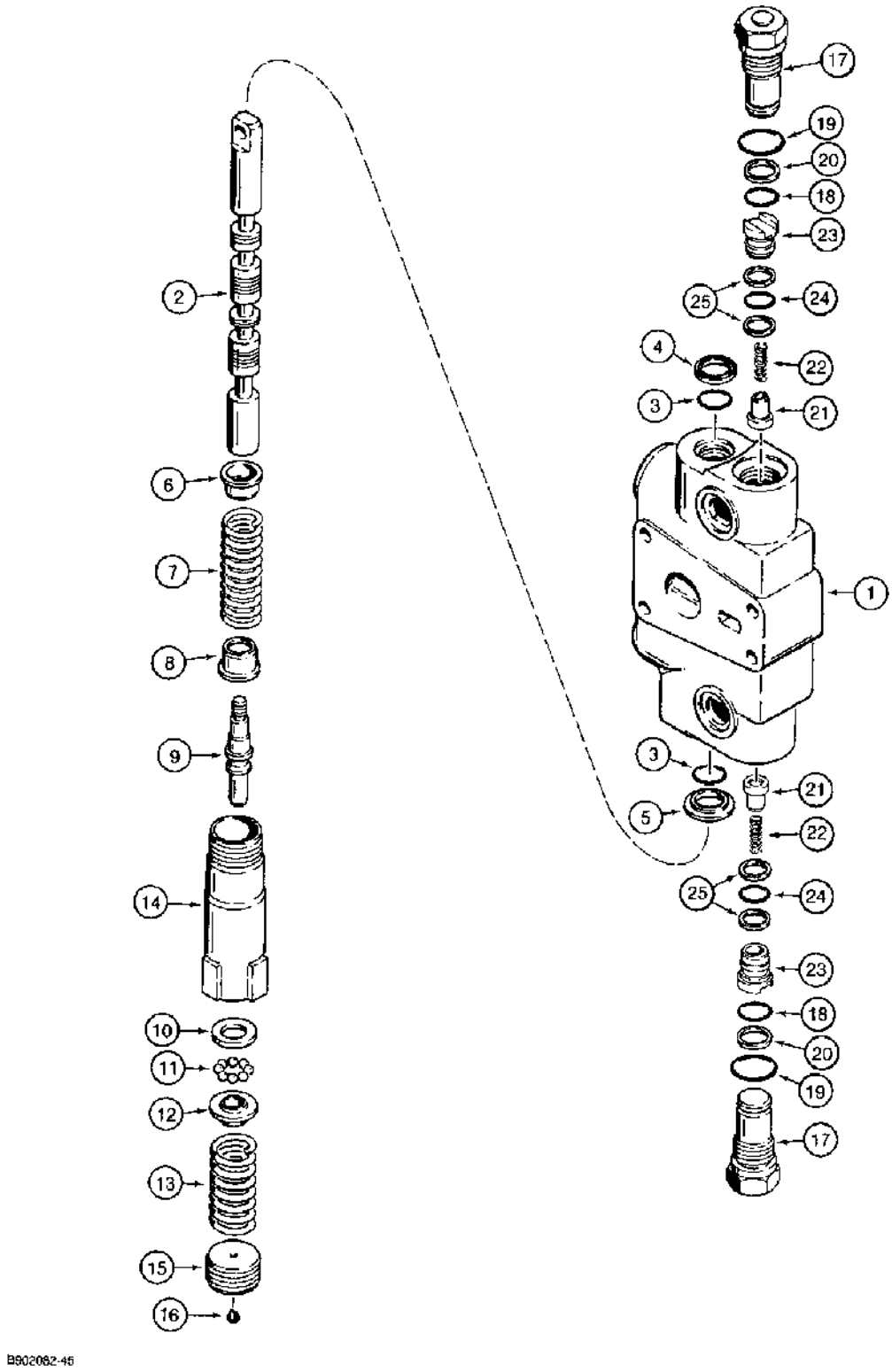

(580SK) - CASE SUPER-K CONSTRUCTION KING LOADER BACKHOE > (8-072) - LOADER CONTROL VALVE, LIFT SECTION, WITH MANUAL DETENT

Diag #	Part #	Name	Description	Qty
	1986591C1	VALVE	SECTION ASSEMBLY lift, with manual detent, Includes: Ref. 1 through 25, P/N G33122 and P/N 1346219C2	1
1	NSS	NOT SERVICED SEPARATELY	HOUSING lift section	1
2	NSS	NOT SERVICED SEPARATELY	SPOOL lift section	1
3	1994608C1	O-RING,0.737" ID x 0.943" OD x 0.103"	spool, replaces G108461 O-ring	2
		Part of seal kit P/N 1346105C1.	Part of seal kit P/N 1346105C1.	1
4	65457C1	SEAL	oil, spool	1
		Part of seal kit P/N 1346105C1.	Part of seal kit P/N 1346105C1.	1
5	G102711	O-RING,19.3 mm ID x 32.97 mm OD	O-ring	1
6	G33075	RETAINER	SEAT centering spring, upper, small	1
7	1986612C1	SPRING	centering, spool	1
8	G106395	RETAINER	SEAT centering spring, lower, large	1
9	G106396	SHAFT	detent	1
10	G109127	WASHER	detent, ball retainer	1
11	211-258	BALL	9/32 inch, grade 50, chrome alloy steel	8
12	G106398	RETAINER	ball stop	1
13	1986568C1	SPRING	detent	1
14	G106425	HOUSING	detent	1
15	G109384	PLUG	detent housing	1
16	G107780	VALVE, CHECK	VALVE check, detent plug	1
	G33122	PLUG	ASSEMBLY load check valve port, Includes: Ref. 17 through 20	2
17	NSS	NOT SERVICED SEPARATELY	PLUG load check valve	1
18	238-6018	O-RING,-018, 90 Duro, .739" ID x .070" Thk	O-RING,-018, 90 Duro, .739" ID x .070" Thk	1
		Part of seal kit P/N 1346105C1.	Part of seal kit P/N 1346105C1.	1
19	237-6012	O-RING,0.924" x 0.116"	12-1, 90 Duro, .924 ID x .116" Thk	1
		Part of seal kit P/N 1346105C1.	Part of seal kit P/N 1346105C1.	1
20	G35540	RING	backup, small O-ring	1
		Part of seal kit P/N 1346105C1.	Part of seal kit P/N 1346105C1.	1

Diag #	Part #	Name	Description	Qty
	1346219C2	PACKAGE	VALVE ASSEMBLY load check, hollow poppet pin, Includes: Ref. 21 through 25	2
21	1343777C1	VALVE POPPET	POPPET hollow poppet pin with orifice, load check	1
22	1346175C1	SPRING	load check	1
23	1343708C1	PLUG	load check	1
24	238-6016	O-RING,-016, 90 Duro, .614" ID x .070" Thk	Plug (Replaces G110020) -016, 90 Duro, .614" ID x .070" Thk	1
		Part of seal kit P/N 1346105C1.	Part of seal kit P/N 1346105C1.	1
25	G103862	RING	backup, plug O-ring	2
		Part of seal kit P/N 1346105C1.	Part of seal kit P/N 1346105C1.	1
	1346105C1	SEAL KIT	KIT seal, Includes: Ref. 3, 4, 18 - 20, 24 and 25, plus additional O-rings not required for this application	1

http://www.minnparbackhoeparts.com/

(580SK) - CASE SUPER-K CONSTRUCTION KING LOADER BACKHOE > (8-074) - LOADER CONTROL VALVE, OUTLET SECTION, WITH MAIN RELIEF VALVE

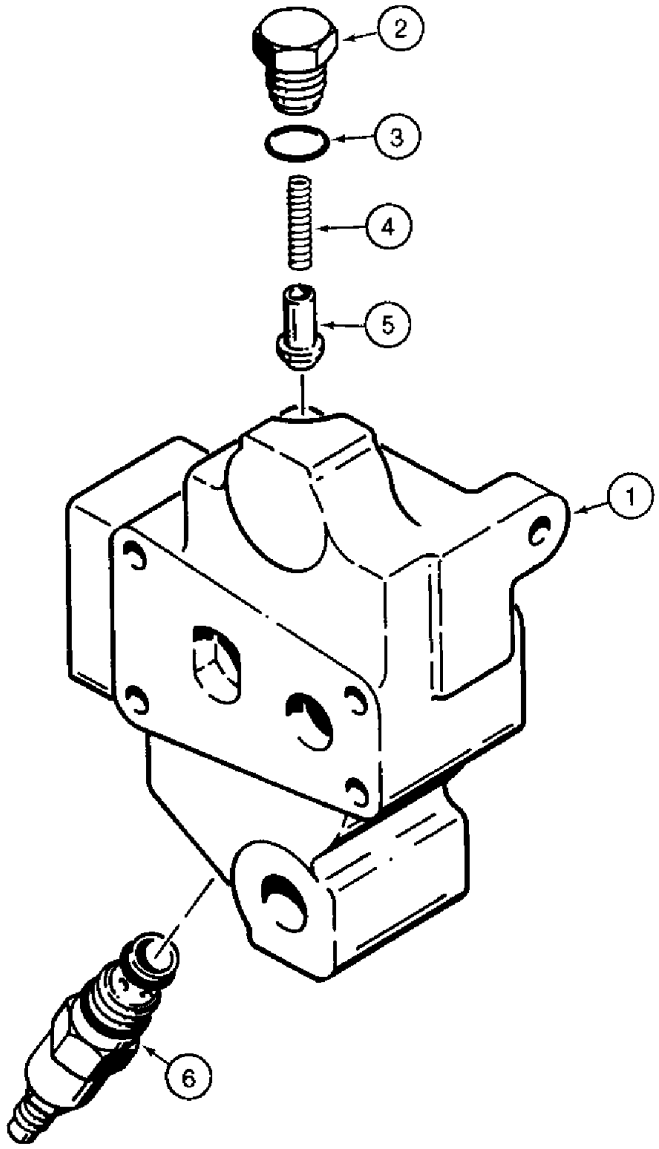

861821-45

(580SK) - CASE SUPER-K CONSTRUCTION KING LOADER BACKHOE > (8-074) - LOADER CONTROL VALVE, OUTLET SECTION, WITH MAIN RELIEF VALVE

Diag #	Part #	Name	Description	Qty
	1346396C1	VALVE	SECTION ASSEMBLY all valves, outlet, with main relief valve, Includes: Ref. 1 through 6	1
1	NSS	NOT SERVICED SEPARATELY	HOUSING outlet section	1
2	G109644	PLUG	load check	1
3	237-6008	O-RING,0.176" ID x 0.316" OD x 0.07"	8-1, 90 Duro, .644" ID x .087" Thk	1
4	G109646	SPRING	load check	1
5	G109645	VALVE POPPET	POPPET load check	1
6	1343688C1	VALVE	ASSEMBLY outlet section, main relief, cartridge, loader control valve, components parts not serviced separately, cartridge must be serviced complete, external O-rings only may be serviced by ordering G110098 seal kit, see below	1
	G110098	KIT	seal, service for external relief valve cartridge seals only, includes two O-rings and one backup ring which are not serviced separately	1

http://www.minnparbackhoeparts.com/

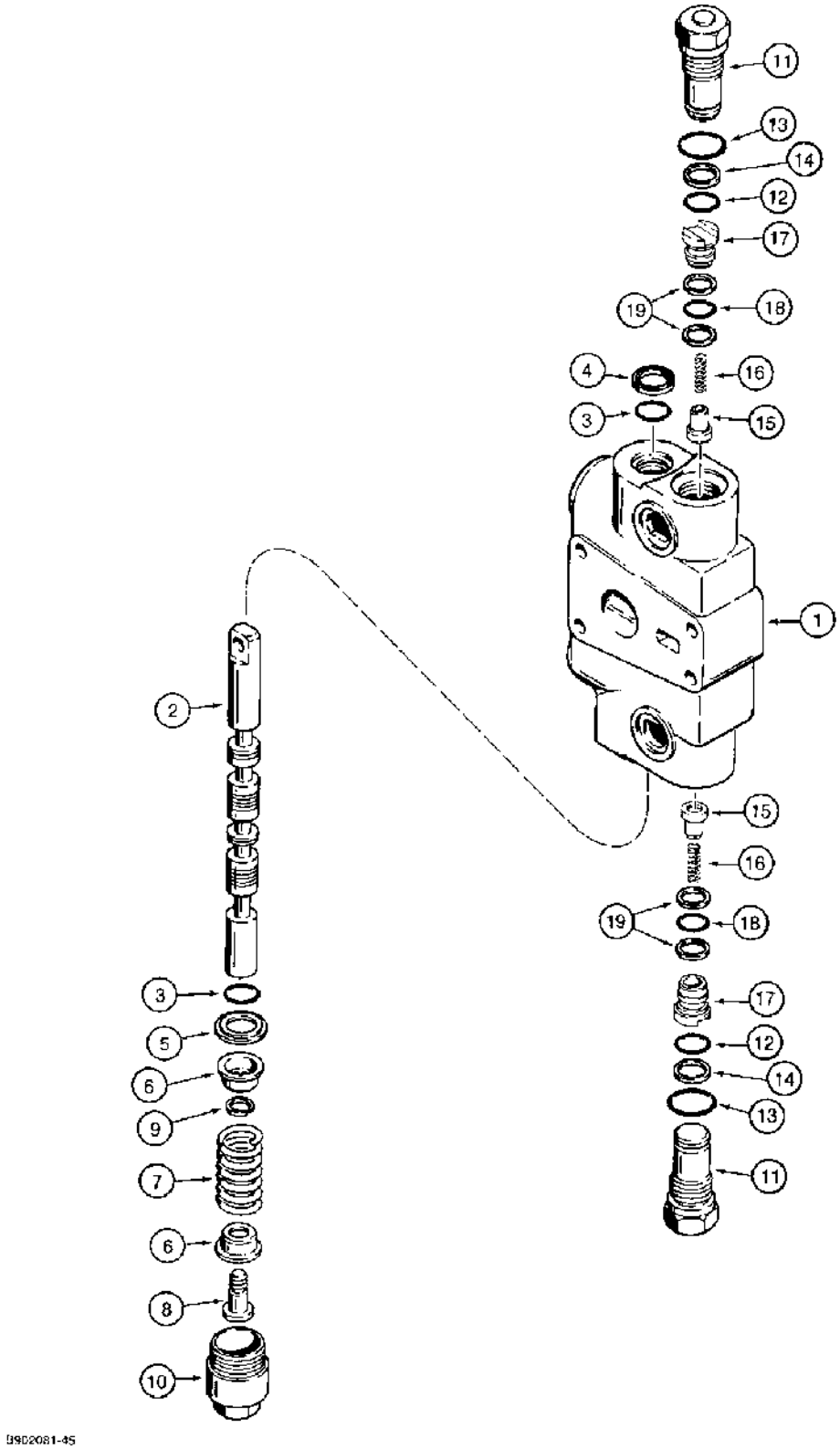

(580SK) - CASE SUPER-K CONSTRUCTION KING LOADER BACKHOE > (8-076) - LOADER CONTROL VALVE, CLAM SECTION

Diag #	Part #	Name	Description	Qty
	1986593C1	VALVE	SECTION ASSEMBLY clam, three spool valve, Includes: Ref. 1 through 19, P/N G33122 and P/N 1346219C2	1
1	NSS	NOT SERVICED SEPARATELY	HOUSING clam section	1
2	NSS	NOT SERVICED SEPARATELY	SPOOL clam section	1
3	1994608C1	O-RING,0.737" ID x 0.943" OD x 0.103"	spool, replaces G108461 O-ring	2
		Part of seal kit P/N 1346105C1.	Part of seal kit P/N 1346105C1.	1
4	65457C1	SEAL	oil, spool	1
		Part of seal kit P/N 1346105C1.	Part of seal kit P/N 1346105C1.	1
5	G102711	O-RING,19.3 mm ID x 32.97 mm OD	O-ring	1
6	G33075	RETAINER	SEAT centering spring	2
7	1986611C1	SPRING	centering, spool, clam section	1
8	G106409	SEAT	SCREW spool end	1
9	G106410	SPACER	screw	1
10	G33080		spool end, lower	1
	G33122	PLUG	ASSEMBLY load check valve port, Includes: Ref. 11 through 14	2
11	NSS	NOT SERVICED SEPARATELY	PLUG load check valve	1
12	238-6018	O-RING,-018, 90 Duro, .739" ID x .070" Thk	O-RING,-018, 90 Duro, .739" ID x .070" Thk	1
		Part of seal kit P/N 1346105C1.	Part of seal kit P/N 1346105C1.	1
13	237-6012	O-RING,0.924" x 0.116"	12-1, 90 Duro, .924 ID x .116" Thk	1
		Part of seal kit P/N 1346105C1.	Part of seal kit P/N 1346105C1.	1
14	G35540	RING	backup, small O-ring	1
		Part of seal kit P/N 1346105C1.	Part of seal kit P/N 1346105C1.	1
	1346219C2	PACKAGE	VALVE ASSEMBLY load check, hollow poppet pin, Includes Ref. 15 through 19	2
15	1343777C1	VALVE POPPET	POPPET hollow poppet pin with orifice, load check	1
16	1346175C1	SPRING	load check	1
17	1343708C1	PLUG	load check	1

Diag #	Part #	Name	Description	Qty
18	238-6016	O-RING,-016, 90 Duro, .614" ID x .070" Thk	Plug (Replaces G110020) -016, 90 Duro, .614" ID x .070" Thk	1
		Part of seal kit P/N 1346105C1.	Part of seal kit P/N 1346105C1.	1
19	G103862	RING	backup, plug O-ring	2
		Part of seal kit P/N 1346105C1.	Part of seal kit P/N 1346105C1.	1
	1346105C1	SEAL KIT	KIT seal, Includes: Ref. 3, 4, 12 - 14, 18 and 19, plus additional O-rings not required for this application	1

http://www.minnparbackhoeparts.com/

(580SK) - CASE SUPER-K CONSTRUCTION KING LOADER BACKHOE > (8-078) - LOADER CONTROL VALVE, CIRCUIT RELIEF VALVE

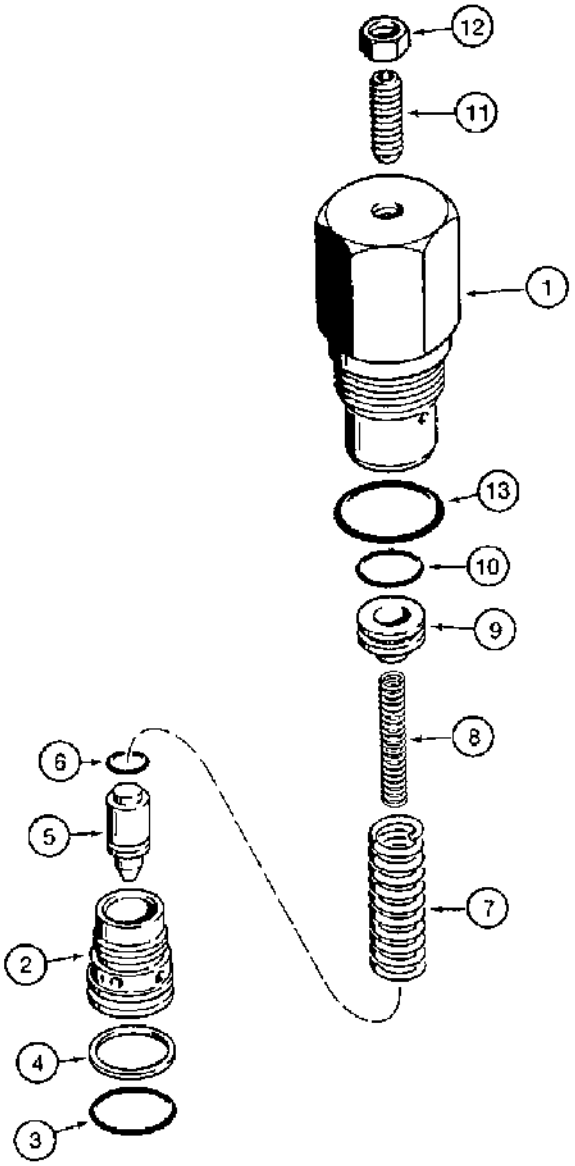

861823-45

http://www.minnparbackhoeparts.com/

(580SK) - CASE SUPER-K CONSTRUCTION KING LOADER BACKHOE > (8-078) - LOADER CONTROL VALVE, CIRCUIT RELIEF VALVE

Diag #	Part #	Name	Description	Qty
	G107786	VALVE, PRESSURE RELI	VALVE ASSEMBLY circuit relief, one piece cap, bucket section two spool valve, used in production, order G109449 kit for service, Includes: Ref. 1 through 13	2
1	NSS	NOT SERVICED SEPARATELY	HOUSING circuit relief valve	1
2	NSS	NOT SERVICED SEPARATELY	SEAT circuit relief valve	1
3	238-6018	O-RING,-018, 90 Duro, .739" ID x .070" Thk	O-RING,-018, 90 Duro, .739" ID x .070" Thk	1
4	G35540	RING	backup	1
5	NSS	NOT SERVICED SEPARATELY	POPPET circuit relief valve	1
6	NSS	NOT SERVICED SEPARATELY	O-RING poppet	1
7	NSS	NOT SERVICED SEPARATELY	SPRING relief, outer	1
8	NSS	NOT SERVICED SEPARATELY	SPRING relief, inner	1
9	NSS	NOT SERVICED SEPARATELY	PISTON circuit relief valve	1
10	NSS	NOT SERVICED SEPARATELY	O-RING piston	1
11	484-43116	SET SCREW,Hex Soc, 5/16"-24 x 1"	SCREW - set, hex socket headless, 5/16 NF x 1 inch, oval point	1
12	425-155	JAM NUT,Jam, 5/16"-24, G5	- hex jam, 5/16 inch NF	1
13	237-6012	O-RING,0.924" x 0.116"	12-1, 90 Duro, .924 ID x .116" Thk	1
	G109449	KIT	service for G107786 circuit relief valve, kit includes an instruction sheet and G109447 circuit relief valve, items 1-13, which is the same as G107786 except with a different pressure setting	1

http://www.minnparbackhoeparts.com/

(580SK) - CASE SUPER-K CONSTRUCTION KING LOADER BACKHOE > (8-080) - BACKHOE CONTROL VALVES, MODELS WITHOUT EXTENDABLE DIPPER

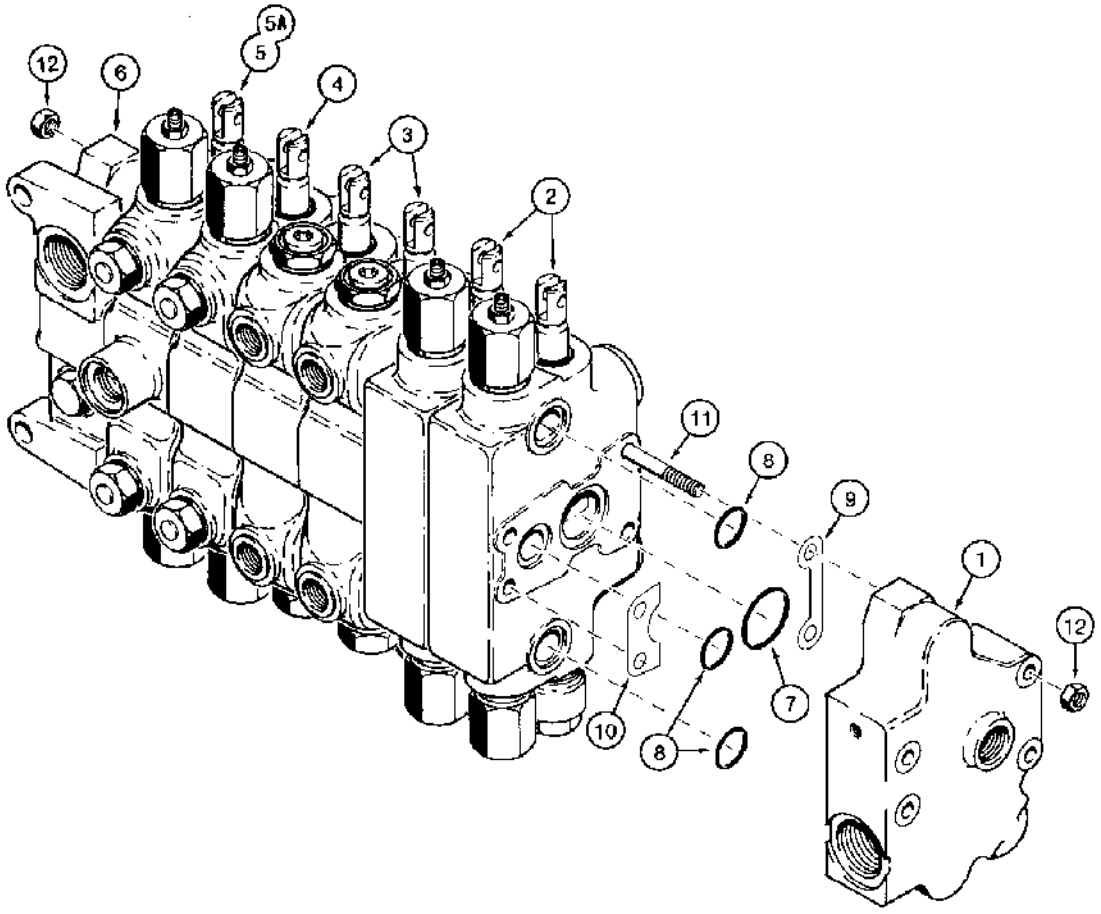

881878-45

(580SK) - CASE SUPER-K CONSTRUCTION KING LOADER BACKHOE > (8-080) - BACKHOE CONTROL VALVES, MODELS WITHOUT EXTENDABLE DIPPER

Diag #	Part #	Name	Description	Qty
	1986801C3	VALVE	ASSEMBLY backhoe control, 6 spool, foot swing, replaces 1986801C2	1
	1986800C3	VALVE	ASSEMBLY backhoe control, 6 spool, hand swing, replaces 1986800C2, Includes: Ref. 1 through 12	1
1	G109759	VALVE	SECTION ASSEMBLY outlet, parts list Figure 8-084	1
2	1986504C4	VALVE	SECTION ASSEMBLY bucket and dipper, parts list Figure 8-086	2
3	G109567	ELEMENT	SECTION ASSEMBLY stabilizer, left-hand and right-hand, parts list Figure 8-088	2
4	1986832C3	VALVE	SECTION ASSEMBLY boom, parts list Figure 8-090, replaces 1986832C2	1
5	1986833C2	VALVE	SECTION ASSEMBLY swing, used with 1986801C2 or 1986801C3 foot swing control valve assembly, with heavy swing spring, parts list Figure 8-094	1
5A	1986834C2	VALVE	SECTION ASSEMBLY swing, used with 1986800C2 or 1986800C3 hand swing control valve assembly, parts list Figure 8-094	1
6	REF	INSTRUCTION	SECTION ASSEMBLY inlet, for correct assembly and components, see Figure 8-084	1
7	238-6127	O-RING,-127, 90 Duro, 1.424" ID x .103" Thk	Section ports -127, 90 Duro, 1.424" ID x .103" Thk	7
		Part of seal kit P/N 1346107C1.	Part of seal kit P/N 1346107C1.	1
8	238-6119	O-RING,-119, 90 Duro, .924" ID x .103" Thk	Section ports, small -119, 90 Duro, .924" ID x .103" Thk	21
		Part of seal kit P/N 1346107C1.	Part of seal kit P/N 1346107C1.	1
9	G107251	SHIM,0.051mm Thk	Section 0.051mm Thk	7
10	G33965	SHIM,0.051mm Thk	Section 0.051mm Thk	7
11	G108900	STUD	tie, 3/8 NC x 16-15/16 inch	4
12	425-106	NUT,3/8"-16, G5	NUT,3/8"-16, G5	8
	1346107C1	SEAL KIT	KIT seal, Includes: Ref. 7 and 8, plus additional O-rings not required in this application	1

http://www.minnparbackhoeparts.com/

(580SK) - CASE SUPER-K CONSTRUCTION KING LOADER BACKHOE > (8-082) - BACKHOE CONTROL VALVES, MODELS WITH EXTENDABLE DIPPER OR AUX. HYD. FOR OPT. REAR HYD. ATTACHMENTS

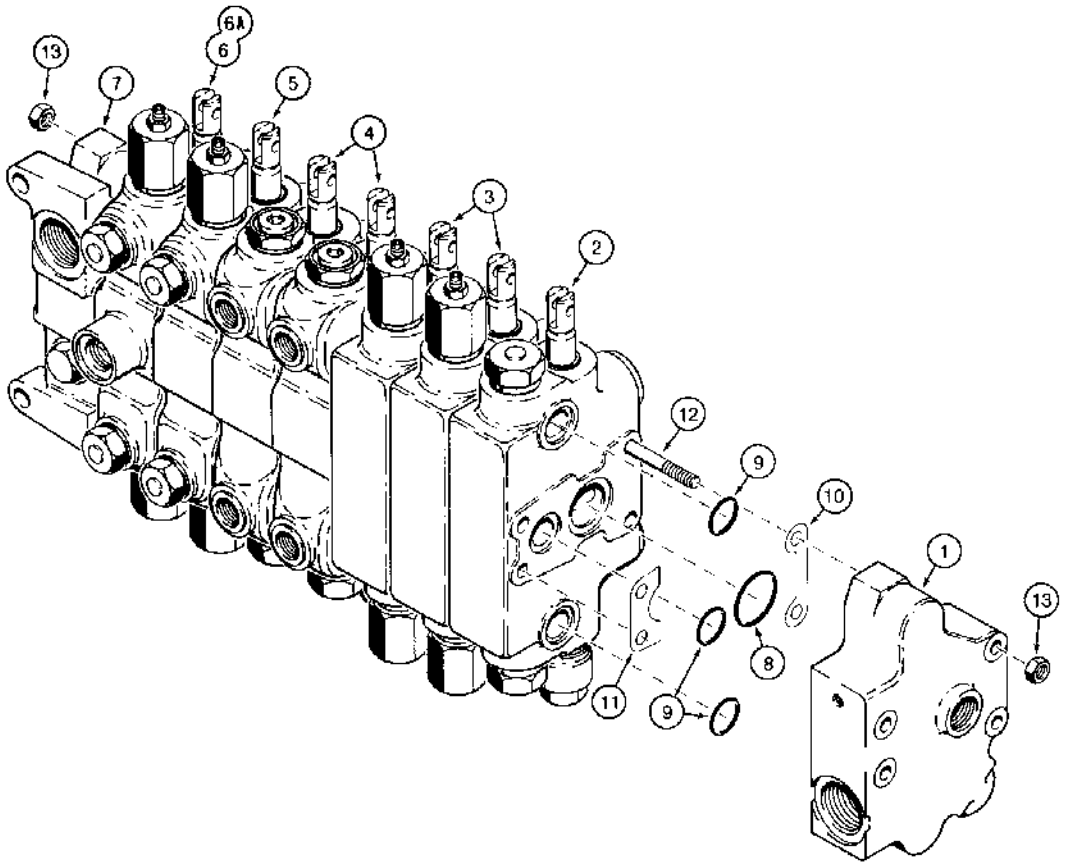

561878-45

(580SK) - CASE SUPER-K CONSTRUCTION KING LOADER BACKHOE > (8-082) - BACKHOE CONTROL VALVES, MODELS WITH EXTENDABLE DIPPER OR AUX. HYD. FOR OPT. REAR HYD. ATTACHMENTS

Diag #	Part #	Name	Description	Qty
	1986803C3	VALVE	ASSEMBLY backhoe control, 7 spool, foot swing, replaces 1986803C2	1
	1986802C3	VALVE	ASSEMBLY backhoe control, 7 spool, hand swing, replaces 1986802C2, Includes: Ref. 1 through 13	1
1	G109759	VALVE	SECTION ASSEMBLY outlet, parts list Figure 8-084	1
2	1986584C3	ELEMENT	SECTION ASSEMBLY dipper extension, parts list Figure 8-098	1
3	1986504C4	VALVE	SECTION ASSEMBLY bucket and dipper, parts list Figure 8-086	2
4	G109567	ELEMENT	SECTION ASSEMBLY stabilizer, left-hand and right-hand, parts list Figure 8-088	2
5	1986832C3	VALVE	SECTION ASSEMBLY boom, parts list Figure 8-090, replaces 1986832C2	1
6	1986833C2	VALVE	SECTION ASSEMBLY swing, used with 1986803C2 or 1986803C3 foot swing control valve assembly, with heavy swing spring, parts list Figure 8-094	1
6A	1986834C2	VALVE	SECTION ASSEMBLY swing, used with 1986802C2 or 1986802C3 hand swing control valve assembly, parts list Figure 8-094	1
7	REF	INSTRUCTION	SECTION ASSEMBLY inlet, for correct assembly and components, see Figure 8-084	1
8	238-6127	O-RING,-127, 90 Duro, 1.424" ID x .103" Thk	Section ports -127, 90 Duro, 1.424" ID x .103" Thk	8
		Part of seal kit P/N 1346107C1.	Part of seal kit P/N 1346107C1.	1
9	238-6119	O-RING,-119, 90 Duro, .924" ID x .103" Thk	Section ports, small -119, 90 Duro, .924" ID x .103" Thk	24
		Part of seal kit P/N 1346107C1.	Part of seal kit P/N 1346107C1.	1
10	G107251	SHIM,0.051mm Thk	Section 0.051mm Thk	8
11	G33965	SHIM,0.051mm Thk	Section 0.051mm Thk	8
12	G108899	STUD	tie, 3/8 NC x 18-15/16 inch	4
13	425-106	NUT,3/8"-16, G5	NUT,3/8"-16, G5	8
	1346107C1	SEAL KIT	KIT seal, Includes: Ref. 8 and 9, plus additional O-rings not required for this application	1

http://www.minnparbackhoeparts.com/

(580SK) - CASE SUPER-K CONSTRUCTION KING LOADER BACKHOE > (8-084) - BACKHOE CONTROL VALVE, INLET AND OUTLET SECTIONS

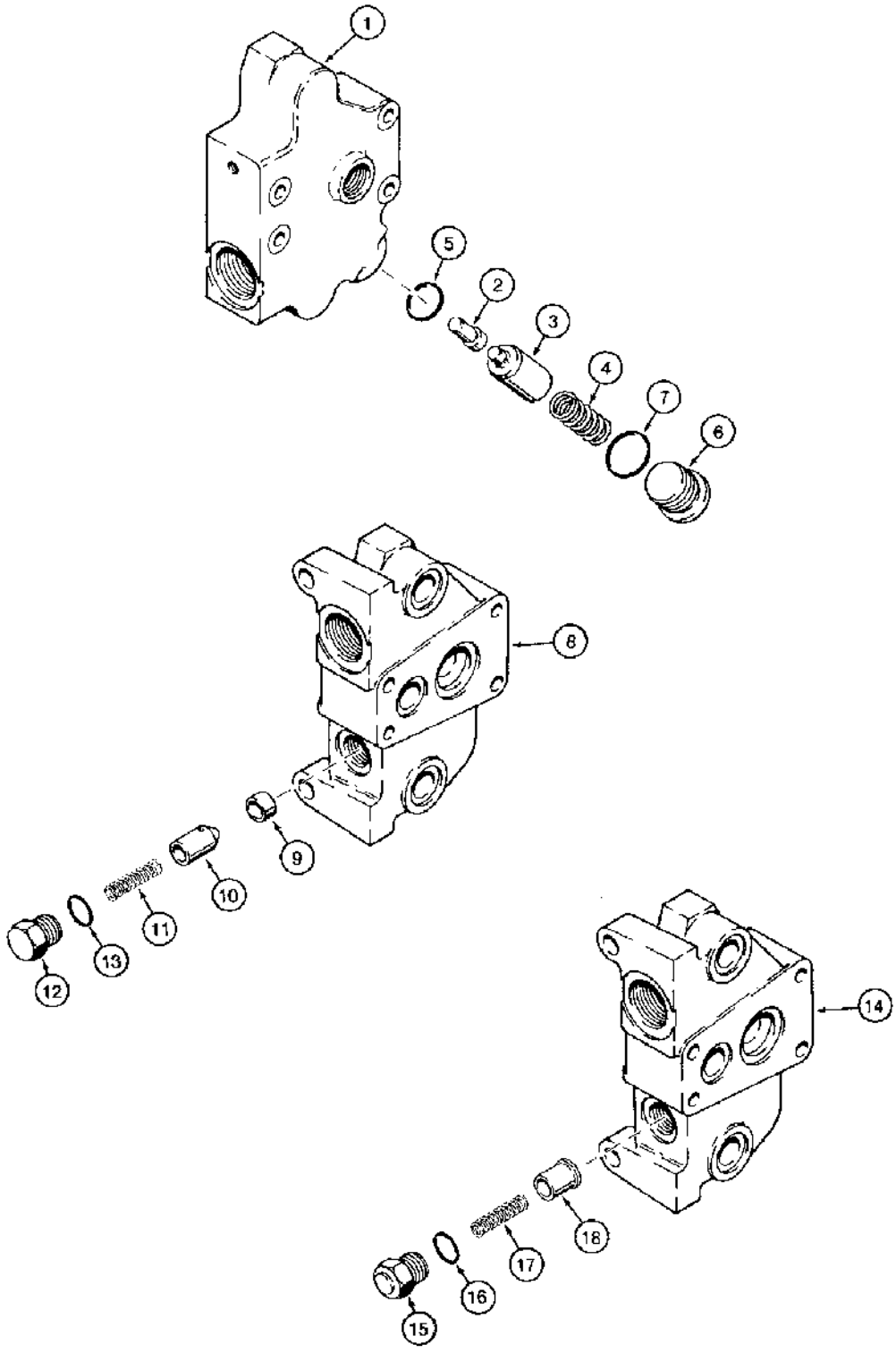

(580SK) - CASE SUPER-K CONSTRUCTION KING LOADER BACKHOE > (8-084) - BACKHOE CONTROL VALVE, INLET AND OUTLET SECTIONS

Diag #	Part #	Name	Description	Qty
	G109759	VALVE	SECTION ASSEMBLY outlet, outlet section, Includes: Ref. 1 through 7	1
1	G109760	HOUSING	MANIFOLD section body, outlet section	1
2	G108902	PISTON	regeneration sensing, outlet section	1
3	G34586	SPOOL	regeneration, outlet section	1
4	G33112	SPRING	regeneration spool, outlet section	1
5	238-5118	O-RING,-118, 70 Duro, .862" ID x .103" Thk	Outlet section -118, 70 Duro, .862" ID x .103" Thk	1
6	218-5213	PLUG,Hex Soc, 1 3/16"-12 ORB	- hex socket, 1-3/16-12 inch O-ring boss, outlet section, Includes Ref 7	1
7	237-6014	O-RING,0.489" ID x 0.629" OD x 0.07"	1-3/64 ID x 1/64 inch wide, outlet section	1
	G109719	ELEMENT	SECTION ASSEMBLY inlet, if used, inlet section, Includes: Ref. 8 through 13	1
8	G109718	HOUSING	MANIFOLD section body, inlet section	1
9	G33104	SEAT	check valve poppet, inlet section	1
10	G33105	VALVE POPPET	POPPET check valve, inlet section	1
11	1542669C1	SPRING	check valve, replaces G33106 spring, inlet section	1
12	A39586	PLUG	check valve, inlet section	1
13	237-6010	O-RING,0.239" ID x 0.379" OD x 0.07"	10-1, 90 Duro, .755" ID x .097" Thk, Inlet section	1
	1542829C1	HYD VALVE SECTION	SECTION ASSEMBLY inlet, if used, inlet section, Includes: Ref. 14 through 18 and P/N 1346221C1	1
14	NSS	NOT SERVICED SEPARATELY	MANIFOLD section body, inlet section	1
	1346221C1	VALVE	anticavitation, order Ref. 15 - 18, inlet section, Includes: Ref. 15 through 18	1
15	G34937	PLUG	check valve, inlet section	1
16	237-6010	O-RING,0.239" ID x 0.379" OD x 0.07"	10-1, 90 Duro, .755" ID x .097" Thk, Inlet section	1
17	G34458	SPRING	check valve, inlet section	1
18	G34938	VALVE POPPET	POPPET check valve, inlet section	1

http://www.minnparbackhoeparts.com/

(580SK) - CASE SUPER-K CONSTRUCTION KING LOADER BACKHOE > (8-086) - BACKHOE CONTROL VALVE, BUCKET AND DIPPER SECTIONS

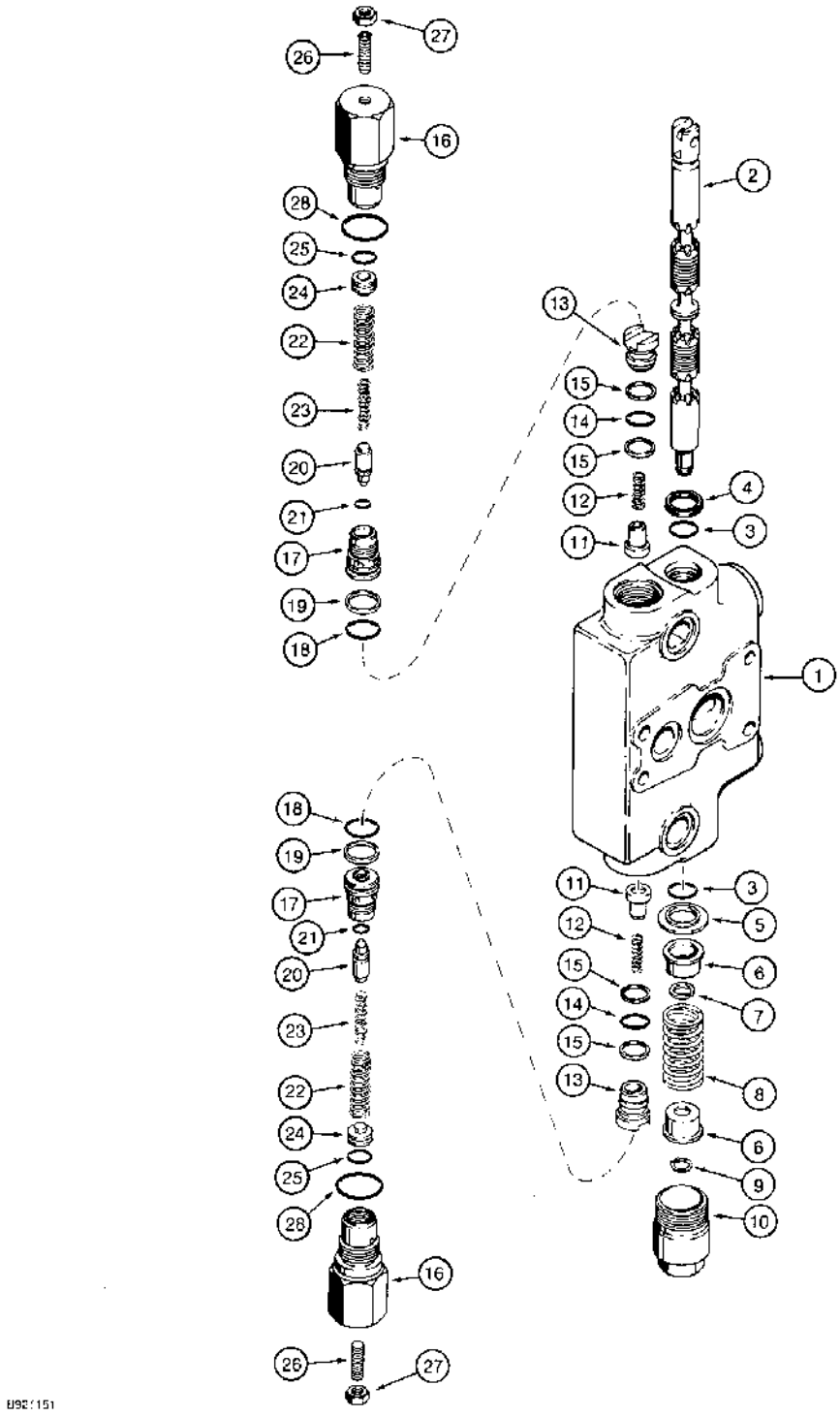

(580SK) - CASE SUPER-K CONSTRUCTION KING LOADER BACKHOE > (8-086) - BACKHOE CONTROL VALVE, BUCKET AND DIPPER SECTIONS

Diag #	Part #	Name	Description	Qty
	1986504C4	VALVE	SECTION ASSEMBLY bucket and dipper, with circuit relief valves, Includes: Ref. 1 through 28, P/N 1346219C2 and P/N G109391	2
1	NSS	NOT SERVICED SEPARATELY	HOUSING, bucket and dipper sections	1
2	NSS	NOT SERVICED SEPARATELY	SPOOL, bucket and dipper sections	1
3	1994608C1	O-RING,0.737" ID x 0.943" OD x 0.103"	spool, replaces G108461 O-ring	2
		Part of seal kit P/N 1346105C1.	Part of seal kit P/N 1346105C1.	1
4	65457C1	SEAL	oil, spool	1
		Part of seal kit P/N 1346105C1.	Part of seal kit P/N 1346105C1.	1
5	G102711	O-RING,19.3 mm ID x 32.97 mm OD	O-ring	1
6	G33075	RETAINER	SEAT centering spring	2
7	G106410	SPACER	spool	1
8	1994596C1	SPRING	centering, spool	1
9	G33077	SNAP RING,#47, Ext	Ring, Snap, , spool end #47, Ext	1
10	G33080		spool end	1
	1346219C2	PACKAGE	VALVE ASSEMBLY load check, hollow poppet pin, Includes: Ref. 11 through 15	2
11	1343777C1	VALVE POPPET	POPPET hollow poppet pin with orifice, load check	1
12	1346175C1	SPRING	load check	1
13	1343708C1	PLUG	load check	1
14	238-6016	O-RING,-016, 90 Duro, .614" ID x .070" Thk	Plug (Replaces G110020) -016, 90 Duro, .614" ID x .070" Thk	1
		Part of seal kit P/N 1346105C1.	Part of seal kit P/N 1346105C1.	1
15	G103862	RING	backup, plug O-ring	2
		Part of seal kit P/N 1346105C1.	Part of seal kit P/N 1346105C1.	1
	G109391	VALVE	ASSEMBLY circuit relief, bucket and dipper sections, used in production, order G109449 kit for service, Includes: Ref. 16 through 28	2
		Part of Kit P/N G109449	Part of Kit P/N G109449	1
16	NSS	NOT SERVICED SEPARATELY	HOUSING circuit relief valve	1

Diag #	Part #	Name	Description	Qty
17	NSS	NOT SERVICED SEPARATELY	SEAT circuit relief valve	1
18	238-6018	O-RING,-018, 90 Duro, .739" ID x .070" Thk	Circuit relief valve seat -018, 90 Duro, .739" ID x .070" Thk	1
		Part of seal kit P/N 1346105C1.	Part of seal kit P/N 1346105C1.	1
19	G35540	RING	backup, seat O-ring	1
		Part of seal kit P/N 1346105C1.	Part of seal kit P/N 1346105C1.	1
20	NSS	NOT SERVICED SEPARATELY	POPPET circuit relief valve	1
21	238-5011	O-RING,0.301" ID x 0.441" OD x 0.07"	-011, 70 Duro, .301" ID x .070" Thk, Poppet (Replaces A28090 O-ring)	1
22	NSS	NOT SERVICED SEPARATELY	SPRING relief, outer	1
23	NSS	NOT SERVICED SEPARATELY	SPRING relief, inner	1
24	NSS	NOT SERVICED SEPARATELY	PISTON circuit relief valve	1
25	238-6014	O-RING,-014, 90 Duro, .489" ID x .070" Thk	O-RING,-014, 90 Duro, .489" ID x .070" Thk	1
26	484-43116	SET SCREW,Hex Soc, 5/16"-24 x 1"	SCREW - set, hex socket headless, 5/16 NF x 1 inch, oval point	1
27	425-155	JAM NUT,Jam, 5/16"-24, G5	- hex jam, 5/16 inch NF	1
28	237-6012	O-RING,0.924" x 0.116"	12-1, 90 Duro, .924 ID x .116" Thk, Housing	1
		Part of seal kit P/N 1346105C1.	Part of seal kit P/N 1346105C1.	1
	1346105C1	SEAL KIT	KIT seal, Includes: Ref. 3, 4, 14, 15, 18, 19 and 28, plus additional O-rings not required for this application	1
	G109449	KIT	service for G109391 circuit relief valve, kit includes an instruction sheet and G109447 circuit relief valve, Ref. 16 - 28, which is the same as G109391 except with a different pressure setting	1

http://www.minnparbackhoeparts.com/

(580SK) - CASE SUPER-K CONSTRUCTION KING LOADER BACKHOE > (8-088) - BACKHOE CONTROL VALVE, LEFT-HAND AND RIGHT-HAND STABILIZER SECTIONS

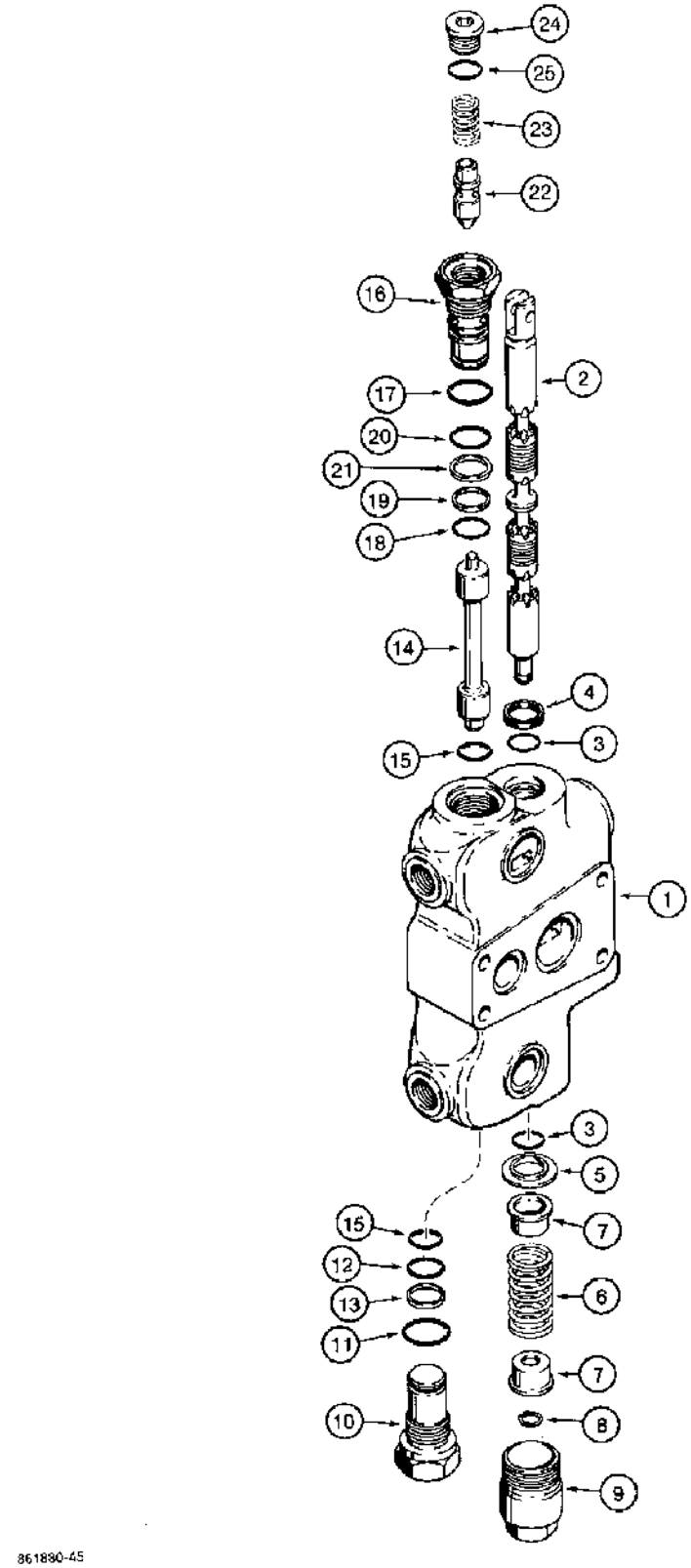

(580SK) - CASE SUPER-K CONSTRUCTION KING LOADER BACKHOE > (8-088) - BACKHOE CONTROL VALVE, LEFT-HAND AND RIGHT-HAND STABILIZER SECTIONS

Diag #	Part #	Name	Description	Qty
	G109567	ELEMENT	SECTION ASSEMBLY left-hand and right-hand stabilizer, with lock check, Includes: Ref. 1 through 25, G109627 and P/N NSS above Ref. 11	2
1	NSS	NOT SERVICED SEPARATELY	HOUSING, left-hand and right-hand stabilizer sections	1
2	NSS	NOT SERVICED SEPARATELY	SPOOL, left-hand and right-hand stabilizer sections	1
3	1994608C1	O-RING,0.737" ID x 0.943" OD x 0.103"	spool, replaces G108461 O-ring	2
		Part of seal kit P/N 1346106C1.	Part of seal kit P/N 1346106C1.	1
4	65457C1	SEAL	oil, spool	1
		Part of seal kit P/N 1346106C1.	Part of seal kit P/N 1346106C1.	1
5	G102711	O-RING,19.3 mm ID x 32.97 mm OD	O-ring	1
6	G34463	SPRING	centering, spool	1
7	G33075	RETAINER	SEAT centering spring	2
8	G33077	SNAP RING,#47, Ext	Ring, Snap, , spool end #47, Ext	1
9	G33080		spool end	1
	G33122	PLUG	ASSEMBLY relief, Includes: Ref. 10 through 13	1
10	NSS	NOT SERVICED SEPARATELY	PLUG relief	1
11	237-6012	O-RING,0.924" x 0.116"	12-1, 90 Duro, .924 ID x .116" Thk	1
		Part of seal kit P/N 1346106C1.	Part of seal kit P/N 1346106C1.	1
12	238-6018	O-RING,-018, 90 Duro, .739" ID x .070" Thk	O-RING,-018, 90 Duro, .739" ID x .070" Thk	1
		Part of seal kit P/N 1346106C1.	Part of seal kit P/N 1346106C1.	1
13	G35540	RING	backup, small O-ring	1
14	1986754C1	SPOOL	shuttle, lock check	1
15	238-6018	O-RING,-018, 90 Duro, .739" ID x .070" Thk	Shuttle spool -018, 90 Duro, .739" ID x .070" Thk	2
		Part of seal kit P/N 1346106C1.	Part of seal kit P/N 1346106C1.	1
	G109627	PLUG	ASSEMBLY lock check, Includes: Ref. 16 through 25	1
16	NSS	NOT SERVICED SEPARATELY	SEAT lock check body	1

Diag #	Part #	Name	Description	Qty
17	237-6012	O-RING,0.924" x 0.116"	12-1, 90 Duro, .924 ID x .116" Thk, Seat plug end	1
		Part of seal kit P/N 1346106C1.	Part of seal kit P/N 1346106C1.	1
18	238-6018	O-RING,-018, 90 Duro, .739" ID x .070" Thk	Seat lock check end -018, 90 Duro, .739" ID x .070" Thk	1
		Part of seal kit P/N 1346106C1.	Part of seal kit P/N 1346106C1.	1
19	G35540	RING	backup, small O-ring	1
		Part of seal kit P/N 1346106C1.	Part of seal kit P/N 1346106C1.	1
20	238-6019	O-RING,-019, 90 Duro, .801" ID x .070" Thk	Seat, center -019, 90 Duro, .801" ID x .070" Thk	1
		Part of seal kit P/N 1346106C1.	Part of seal kit P/N 1346106C1.	1
21	G110468	RING	backup, center O-ring	1
		Part of seal kit P/N 1346106C1.	Part of seal kit P/N 1346106C1.	1
22	NSS	NOT SERVICED SEPARATELY	POPPET lock check	1
23	G109630	SPRING	lock check	1
24	71100209	PLUG,Hex Soc, 3/4"-16 ORB	Incl Ref 25 Hex Soc, 3/4"-16 ORB	1
25	237-6008	O-RING,0.176" ID x 0.316" OD x 0.07"	8-1, 90 Duro, .644" ID x .087" Thk	1
	1346106C1	GASKET KIT	KIT seal, Includes: Ref. 3, 4, 11, 12, 15 and 17 - 21, plus additional O-rings not required for this application	1

http://www.minnparbackhoeparts.com/

(580SK) - CASE SUPER-K CONSTRUCTION KING LOADER BACKHOE > (8-090) - BACKHOE CONTROL VALVE, BOOM SECTION

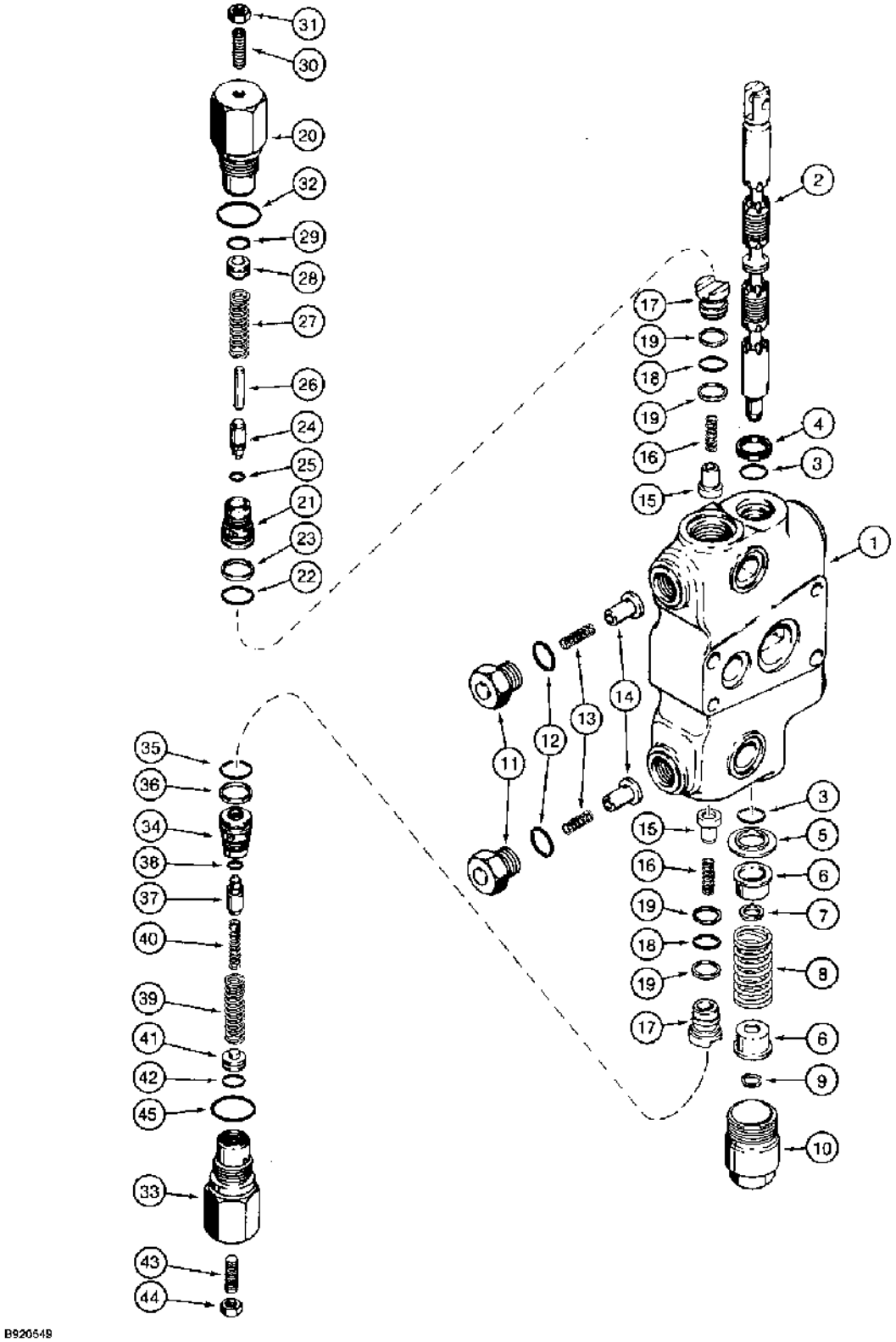

http://www.minnparbackhoeparts.com/

(580SK) - CASE SUPER-K CONSTRUCTION KING LOADER BACKHOE > (8-090) - BACKHOE CONTROL VALVE, BOOM SECTION

Diag #	Part #	Name	Description	Qty
	1986832C3	VALVE	SECTION ASSEMBLY boom, with circuit relief valves and anticavitation valves, replaces 1986832C2, Includes: Ref. 1 through 18, P/N 1346221C1 and P/N 1346219C2	1
1	NSS	NOT SERVICED SEPARATELY	HOUSING boom section, may have one or two anticavitation ports	1
2	NSS	NOT SERVICED SEPARATELY	SPOOL boom section	1
3	1994608C1	O-RING,0.737" ID x 0.943" OD x 0.103"	spool, replaces G108461 O-ring	2
		Part of seal kit P/N 1346105C1.	Part of seal kit P/N 1346105C1.	1
4	65457C1	SEAL	oil, spool	1
		Part of seal kit P/N 1346105C1.	Part of seal kit P/N 1346105C1.	1
5	G102711	O-RING,19.3 mm ID x 32.97 mm OD	O-ring	1
6	G33075	RETAINER	SEAT centering spring	2
7	G106410	SPACER	spool	1
8	1994596C1	SPRING	centering, spool	1
9	G33077	SNAP RING,#47, Ext	Ring, Snap, , spool end #47, Ext	1
10	G33080		spool end	1
	1346221C1	VALVE	ASSEMBLY anticavitation, order Ref. 11 - 14, Includes: Ref. 11 through 14	1-2
		The original section body used two of these valves. This was later changed to one. If the old two-valve style came off the machine, it can be replaced with the one-valve style.	The original section body used two of these valves. This was later changed to one. If the old two-valve style came off the machine, it can be replaced with the one-valve style.	1
11	G34937	PLUG	anticavitation valve	1
12	237-6010	O-RING,0.239" ID x 0.379" OD x 0.07"	10-1, 90 Duro, .755" ID x .097" Thk	1
		Part of seal kit P/N 1346105C1.	Part of seal kit P/N 1346105C1.	1
13	G34458	SPRING	anticavitation valve	1
14	G34938	VALVE POPPET	POPPET anticavitation valve	1
	1346219C2	PACKAGE	VALVE ASSEMBLY load check, hollow poppet pin, Includes: Ref. 15 through 19	2
15	1343777C1	VALVE POPPET	POPPET hollow poppet pin with orifice, load check	1

Diag #	Part #	Name	Description	Qty
16	1346175C1	SPRING	load check	1
17	1343708C1	PLUG	load check	1
18	238-6016	O-RING,-016, 90 Duro, .614" ID x .070" Thk	Plug (Replaces G110020) -016, 90 Duro, .614" ID x .070" Thk	1
		Part of seal kit P/N 1346105C1.	Part of seal kit P/N 1346105C1.	1
19	G103862	RING	backup, plug O-ring	2
		Part of seal kit P/N 1346105C1.	Part of seal kit P/N 1346105C1.	1
	G110253	VALVE, PRESSURE RELI	VALVE ASSEMBLY circuit relief, upper, boom section, used in production, order G109448 kit for service, see below, Includes: Ref. 20 through 32	1
20	NSS	NOT SERVICED SEPARATELY	HOUSING circuit relief valve	1
21	NSS	NOT SERVICED SEPARATELY	SEAT circuit relief valve	1
22	238-6018	O-RING,-018, 90 Duro, .739" ID x .070" Thk	Circuit relief valve seat -018, 90 Duro, .739" ID x .070" Thk	1
		Part of seal kit P/N 1346105C1.	Part of seal kit P/N 1346105C1.	1
23	G35540	RING	backup, seat O-ring	1
		Part of seal kit P/N 1346105C1.	Part of seal kit P/N 1346105C1.	1
24	NSS	NOT SERVICED SEPARATELY	POPPET circuit relief valve	1
25	NSS	NOT SERVICED SEPARATELY	O-RING poppet	1
26	NSS	NOT SERVICED SEPARATELY	PIN stop, relief	1
27	NSS	NOT SERVICED SEPARATELY	SPRING circuit relief valve	1
28	NSS	NOT SERVICED SEPARATELY	PISTON circuit relief valve	1
29	NSS	NOT SERVICED SEPARATELY	O-RING piston	1
30	484-43116	SET SCREW,Hex Soc, 5/16"-24 x 1"	SCREW - set, hex socket headless, 5/16 NF x 1 inch, oval point	1
31	425-155	JAM NUT,Jam, 5/16"-24, G5	- hex jam, 5/16 inch NF	1
32	237-6012	O-RING,0.924" x 0.116"	12-1, 90 Duro, .924 ID x .116" Thk, Housing	1
		Part of seal kit P/N 1346105C1.	Part of seal kit P/N 1346105C1.	1
	G109448	KIT	service for G110253 circuit relief valve, kit includes an instruction sheet and G109446 circuit relief valve, Ref. 20 - 32, which is the same as G110253 except with a different pressure setting	1

Diag #	Part #	Name	Description	Qty
	G110467	VALVE, PRESSURE RELI	VALVE ASSEMBLY circuit relief, lower, boom section, used in production, order G110077 kit for service, see below, Includes: Ref. 33 through 45	1
33	NSS	NOT SERVICED SEPARATELY	HOUSING circuit relief valve	1
34	NSS	NOT SERVICED SEPARATELY	SEAT circuit relief valve	1
35	238-6018	O-RING,-018, 90 Duro, .739" ID x .070" Thk	Circuit relief valve seat -018, 90 Duro, .739" ID x .070" Thk	1
		Part of seal kit P/N 1346105C1.	Part of seal kit P/N 1346105C1.	1
36	G35540	RING	backup, seat O-ring	1
		Part of seal kit P/N 1346105C1.	Part of seal kit P/N 1346105C1.	1
37	NSS	NOT SERVICED SEPARATELY	POPPET circuit relief valve	1
38	NSS	NOT SERVICED SEPARATELY	O-RING poppet	1
39	NSS	NOT SERVICED SEPARATELY	SPRING relief, outer	1
40	NSS	NOT SERVICED SEPARATELY	SPRING relief, inner	1
41	NSS	NOT SERVICED SEPARATELY	PISTON circuit relief valve	1
42	NSS	NOT SERVICED SEPARATELY	O-RING piston	1
43	484-43120	SET SCREW,Hex Soc, 5/16"-24 x 1 1/4"	SCREW set, hex socket headless, 5/16 NF x 1-1/4 inch, oval point	1
44	425-155	JAM NUT,Jam, 5/16"-24, G5	- hex jam, 5/16 inch NF	1
45	237-6012	O-RING,0.924" x 0.116"	12-1, 90 Duro, .924 ID x .116" Thk, Housing	1
		Part of seal kit P/N 1346105C1.	Part of seal kit P/N 1346105C1.	1
	G110077	KIT	service for G110467 circuit relief valve, kit includes an instruction sheet and G110078 circuit relief valve, Ref. 33 - 45, which is the same as G110467 except with a different pressure setting	1
	1346105C1	SEAL KIT	KIT seal, Includes: Ref. 3, 4, 12, 18, 19, 22, 23, 32, 35, 36 and 45, plus additional O-rings not required for this application	1

http://www.minnparbackhoeparts.com/

(580SK) - CASE SUPER-K CONSTRUCTION KING LOADER BACKHOE > (8-094) - BACKHOE CONTROL VALVE, SWING SECTIONS

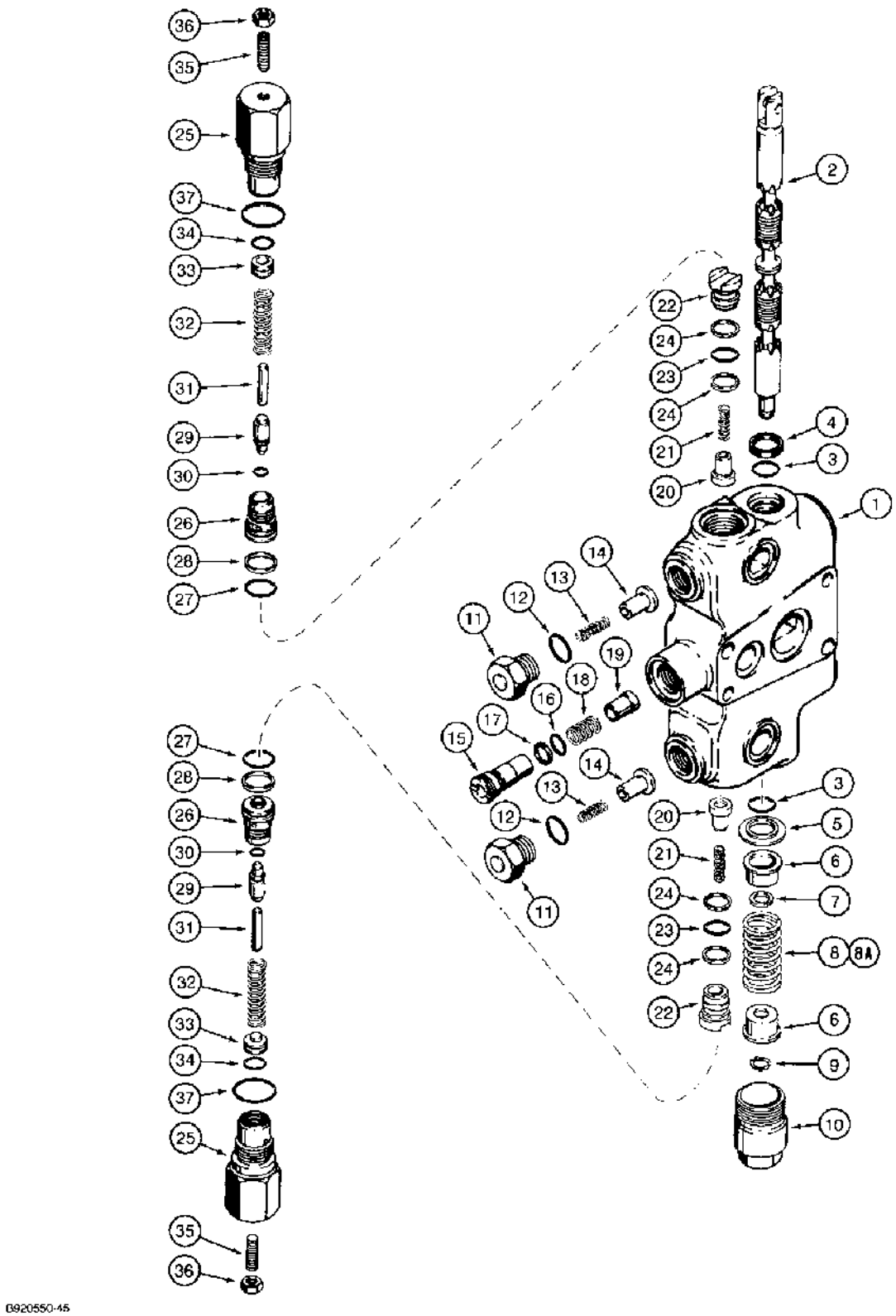

(580SK) - CASE SUPER-K CONSTRUCTION KING LOADER BACKHOE > (8-094) - BACKHOE CONTROL VALVE, SWING SECTIONS

Diag #	Part #	Name	Description	Qty
	1986833C2	VALVE	SECTION ASSEMBLY swing, with heavy swing spring, Ref. 8, used in 1986801C2, 1986801C3, 1986803C2 or 1986803C3 foot swing control valves, with circuit relief and anticavitation valves	1
	1986834C2	VALVE	SECTION ASSEMBLY swing, uses Ref. 8A spring, used in 1986800C2, 1986800C3, 1986802C2 or 1986802C3 hand swing control valves, with circuit relief and anticavitation valves, Includes: Ref. 1 through 37, P/N 1346221C1, P/N 1346222C1 and P/N 1346219C2	1
1	NSS	NOT SERVICED SEPARATELY	HOUSING swing section	1
2	NSS	NOT SERVICED SEPARATELY	SPOOL swing section	1
3	1994608C1	O-RING,0.737" ID x 0.943" OD x 0.103"	spool, replaces G108461 O-ring	2
		Part of seal kit P/N 1346105C1.	Part of seal kit P/N 1346105C1.	1
4	65457C1	SEAL	oil, spool	1
		Part of seal kit P/N 1346105C1.	Part of seal kit P/N 1346105C1.	1
5	G102711	O-RING,19.3 mm ID x 32.97 mm OD	O-ring	1
6	G33075	RETAINER	SEAT centering spring	2
7	G106410	SPACER	spool	1
8	1986722C1	SPRING	centering, spool, black, 2-1/4 inch free length, used in 1986833C2 swing section	1
8A	1994596C1	SPRING	centering, spool, purple, 2-15/16 inch free length, used in 1986834C2 swing section	1
9	G33077	SNAP RING,#47, Ext	Ring, Snap, , spool end #47, Ext	1
10	G33080		spool end	1
	1346221C1	VALVE	ASSEMBLY anticavitation, order Ref. 11 - 14, Includes: Ref. 11 through 14	2
11	G34937	PLUG	anticavitation valve	1
12	237-6010	O-RING,0.239" ID x 0.379" OD x 0.07"	10-1, 90 Duro, .755" ID x .097" Thk	1
		Part of seal kit P/N 1346105C1.	Part of seal kit P/N 1346105C1.	1
13	G34458	SPRING	anticavitation valve	1
14	G34938	VALVE POPPET	POPPET anticavitation valve	1

Diag #	Part #	Name	Description	Qty
	1346222C1	VALVE	ASSEMBLY check, Includes: Ref. 15, 16 and 17	1
15	G109964	HOUSING	valve check	1
16	238-6015	O-RING,-015, 90 Duro, .551" ID x .070" Thk	O-RING,-015, 90 Duro, .551" ID x .070" Thk	1
17	G108723	RING	backup, O-ring	1
		Part of seal kit P/N 1346105C1.	Part of seal kit P/N 1346105C1.	1
18	G109971	SPRING	valve check	1
19	1978068C1	VALVE POPPET	POPPET valve check	1
	1346219C2	PACKAGE	VALVE ASSEMBLY load check, hollow poppet pin, Includes: Ref. 20 through 24	2
20	1343777C1	VALVE POPPET	POPPET hollow poppet pin with orifice, load check	1
21	1346175C1	SPRING	load check	1
22	1343708C1	PLUG	load check	1
23	238-6016	O-RING,-016, 90 Duro, .614" ID x .070" Thk	Plug (Replaces G110020) -016, 90 Duro, .614" ID x .070" Thk	1
		Part of seal kit P/N 1346105C1.	Part of seal kit P/N 1346105C1.	1
24	G103862	RING	backup, plug O-ring	2
		Part of seal kit P/N 1346105C1.	Part of seal kit P/N 1346105C1.	1
	G110253	VALVE, PRESSURE RELI	VALVE ASSEMBLY circuit relief, swing section, used in production, order G109448 kit for service, see below, Includes: Ref. 25 through 37	2
25	NSS	NOT SERVICED SEPARATELY	HOUSING circuit relief valve	1
26	NSS	NOT SERVICED SEPARATELY	SEAT circuit relief valve	1
27	238-6018	O-RING,-018, 90 Duro, .739" ID x .070" Thk	O-RING,-018, 90 Duro, .739" ID x .070" Thk	1
		Part of seal kit P/N 1346105C1.	Part of seal kit P/N 1346105C1.	1
28	G35540	RING	backup, seat O-ring	1
		Part of seal kit P/N 1346105C1.	Part of seal kit P/N 1346105C1.	1
29	NSS	NOT SERVICED SEPARATELY	POPPET circuit relief valve	1
30	NSS	NOT SERVICED SEPARATELY	O-RING poppet	1
31	NSS	NOT SERVICED SEPARATELY	PIN stop, relief	1
32	NSS	NOT SERVICED SEPARATELY	SPRING circuit relief valve	1
33	NSS	NOT SERVICED SEPARATELY	PISTON circuit relief valve	1

Diag #	Part #	Name	Description	Qty
34	NSS	NOT SERVICED SEPARATELY	O-RING piston	1
35	484-43116	SET SCREW,Hex Soc, 5/16"-24 x 1"	SCREW - set, hex socket headless, 5/16 NF x 1 inch, oval point	1
36	425-155	JAM NUT,Jam, 5/16"-24, G5	- hex jam, 5/16 inch NF	1
37	237-6012	O-RING,0.924" x 0.116"	12-1, 90 Duro, .924 ID x .116" Thk, Housing	1
		Part of seal kit P/N 1346105C1.	Part of seal kit P/N 1346105C1.	1
	G109448	KIT	service for G110253 circuit relief valve, kit includes an instruction sheet and G109446 circuit relief valve, Ref. 25 - 37, which is the same as G110253 except with a different pressure setting	1
	1346105C1	SEAL KIT	KIT seal, Includes: Ref. 3, 4, 12, 17, 23, 24, 27, 28 and 37, plus additional O-rings not required for this application	1

http://www.minnparbackhoeparts.com/

(580SK) - CASE SUPER-K CONSTRUCTION KING LOADER BACKHOE > (8-098) - BACKHOE CONTROL VALVE, DIPPER EXTENSION SECTION

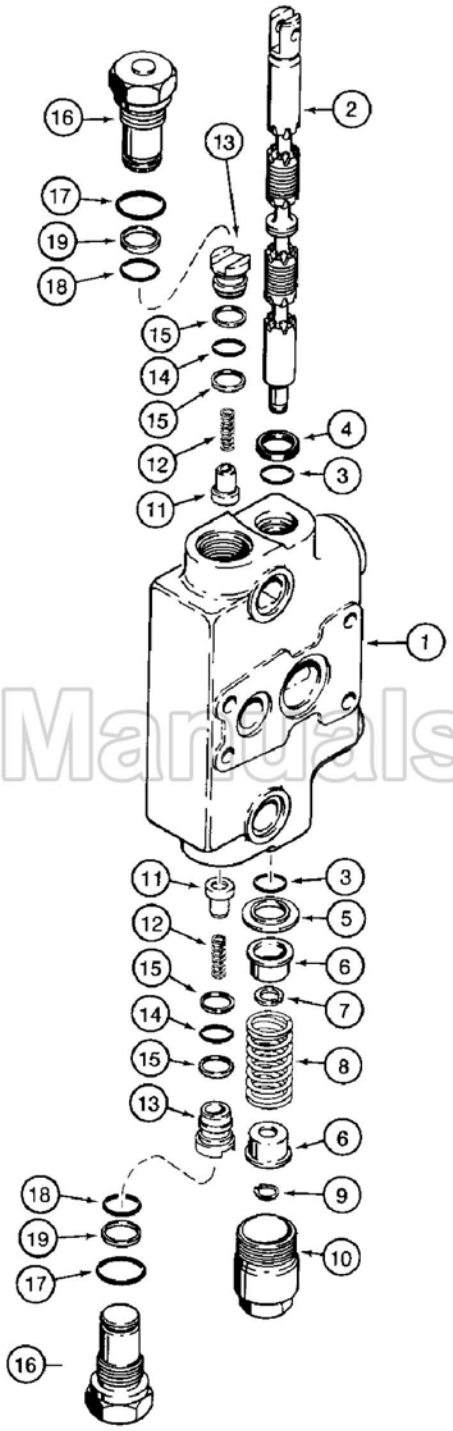

BestManuals.net

B920551

(580SK) - CASE SUPER-K CONSTRUCTION KING LOADER BACKHOE > (8-098) - BACKHOE CONTROL VALVE, DIPPER EXTENSION SECTION

Diag #	Part #	Name	Description	Qty
	1986584C3	ELEMENT	SECTION ASSEMBLY dipper extension, Includes: Ref. 1 through 19, P/N 1346219C2 and P/N G33122	1
1	NSS	NOT SERVICED SEPARATELY	HOUSING dipper extension section	1
2	NSS	NOT SERVICED SEPARATELY	SPOOL, dipper extension section	1
3	1994608C1	O-RING,0.737" ID x 0.943" OD x 0.103"	spool, replaces G108461 O-ring	2
		Part of seal kit P/N 1346105C1.	Part of seal kit P/N 1346105C1.	1
4	65457C1	SEAL	oil, spool	1
		Part of seal kit P/N 1346105C1.	Part of seal kit P/N 1346105C1.	1
5	G102711	O-RING,19.3 mm ID x 32.97 mm OD	O-ring	1
6	G33075	RETAINER	SEAT centering spring	2
7	G106410	SPACER	spool	1
8	1994596C1	SPRING	centering, spool	1
9	G33077	SNAP RING,#47, Ext	Ring, Snap, , spool end #47, Ext	1
10	G33080		spool end	1
	1346219C2	PACKAGE	VALVE ASSEMBLY load check, hollow poppet pin, Includes: Ref. 11 through 15	2
11	1343777C1	VALVE POPPET	POPPET hollow poppet pin with orifice, load check	1
12	1346175C1	SPRING	load check	1
13	1343708C1	PLUG	load check	1
14	238-6016	O-RING,-016, 90 Duro, .614" ID x .070" Thk	Plug (Replaces G110020) -016, 90 Duro, .614" ID x .070" Thk	1
		Part of seal kit P/N 1346105C1.	Part of seal kit P/N 1346105C1.	1
15	G103862	RING	backup, plug O-ring	2
		Part of seal kit P/N 1346105C1.	Part of seal kit P/N 1346105C1.	1
	G33122	PLUG	ASSEMBLY relief, Includes: Ref. 16 through 19	2
16	NSS	NOT SERVICED SEPARATELY	PLUG relief	1
17	237-6012	O-RING,0.924" x 0.116"	12-1, 90 Duro, .924 ID x .116" Thk, Plug	1
		Part of seal kit P/N 1346105C1.	Part of seal kit P/N 1346105C1.	1

Diag #	Part #	Name	Description	Qty
18	238-6018	O-RING,-018, 90 Duro, .739" ID x .070" Thk	Plug -018, 90 Duro, .739" ID x .070" Thk	1
		Part of seal kit P/N 1346105C1.	Part of seal kit P/N 1346105C1.	1
19	G35540	RING	backup, small O-ring	1
		Part of seal kit P/N 1346105C1.	Part of seal kit P/N 1346105C1.	1
	1346105C1	SEAL KIT	KIT seal, Includes: Ref. 3, 4, 14, 15 and 17 - 19, plus additional O-rings not required for this application	1

http://www.minnparbackhoeparts.com/

(580SK) - CASE SUPER-K CONSTRUCTION KING LOADER BACKHOE > (8-100) - BACKHOE SWING SEQUENCE VALVE

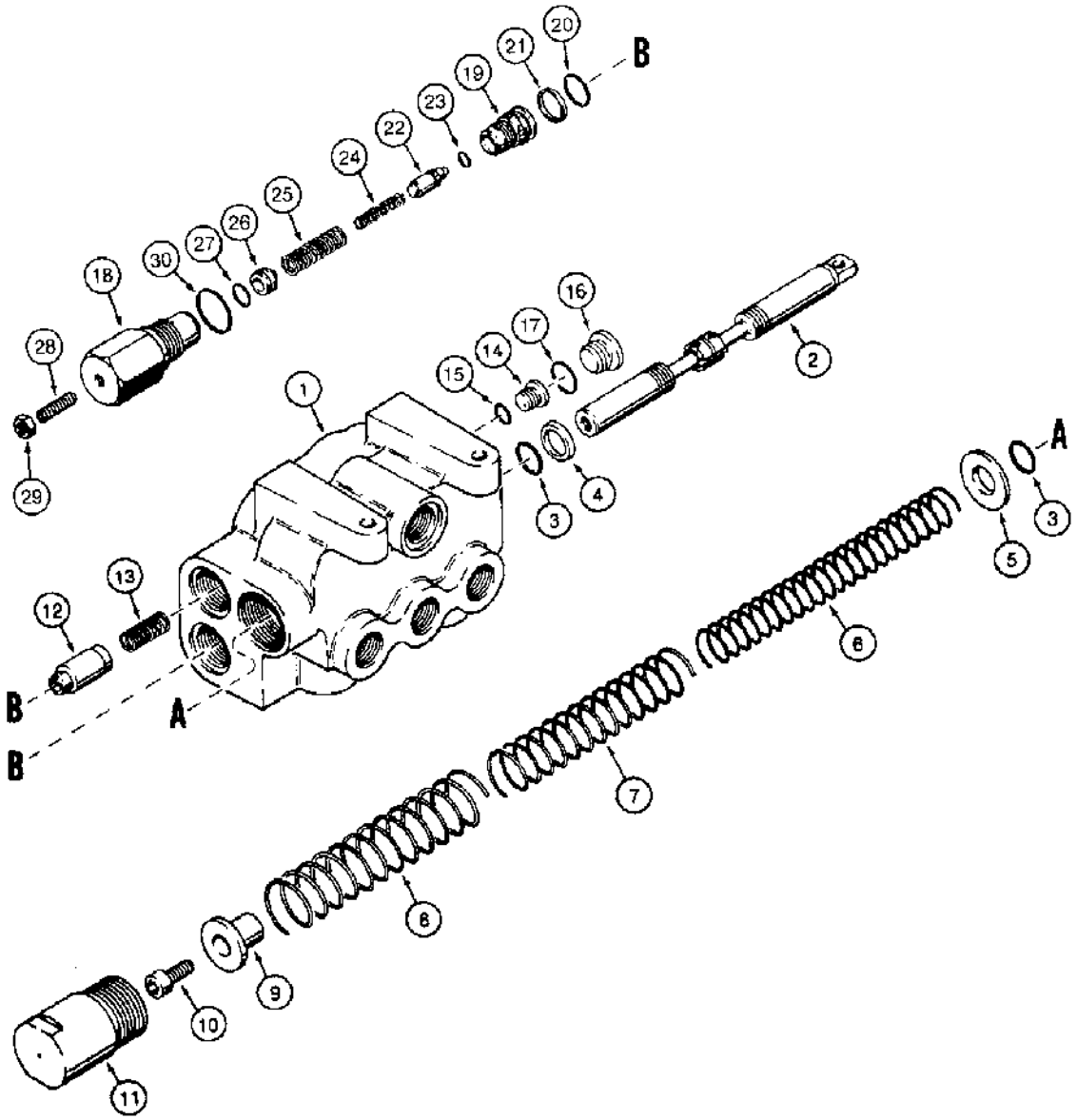

B891081-45

(580SK) - CASE SUPER-K CONSTRUCTION KING LOADER BACKHOE > (8-100) - BACKHOE SWING SEQUENCE VALVE

Diag #	Part #	Name	Description	Qty
	1980440C1	VALVE	ASSEMBLY backhoe swing sequence, no longer available, order 1346067C1 valve on Figure 8-101A, plus D150889 tube for six spool backhoe valves or D150896 tube for seven spool backhoe valves, see Figure 8-026 for tubes, Includes: Ref. 1-30, P/N G110467	1
		The new valve has only 3 ports on the side instead of 4 as shown. the drain tube is installed on the end under the spool on the replacement valve. instrall a 218-5062 straight fitting and run the new tube under the back hoe valve	The new valve has only 3 ports on the side instead of 4 as shown. the drain tube is installed on the end under the spool on the replacement valve. instrall a 218-5062 straight fitting and run the new tube under the back hoe valve	1
1	NSS	NOT SERVICED SEPARATELY	HOUSING backhoe swing sequence valve	1
2	NSS	NOT SERVICED SEPARATELY	SPOOL backhoe swing sequence valve	1
3	1994608C1	O-RING,0.737" ID x 0.943" OD x 0.103"	spool, replaces G108461 O-ring	2
4	65457C1	SEAL	oil, spool	1
5	G108896	O-RING	O-ring	1
6	G108895	SPRING	inner	1
7	G108892	SPRING	center	1
8	G108891	SPRING	outer	1
9	G108893	SEAT	spring	1
10	61-612	HEX SOC SCREW,Hex Soc Hd, 3/8"-16 x 3/4"	BOLT hex socket head, 3/8 NC x 3/4 inch	1
11	G108894	CAP	spool end	1
12	G108017	SPOOL	shuttle, orifice	1
13	G107174	SPRING	shuttle spool	1
14	9625178	PLUG,Hex Soc, 9/16"-18 ORB	Incl. Ref. 15 Hex Soc, 9/16"-18 ORB	1
16	9841223	PLUG,Hex Soc, 1 1/16"-12 ORB	Incl. Ref. 17 Hex Soc, 1 1/16"-12 ORB	1
17	237-6012	O-RING,0.924" x 0.116"	12-1, 90 Duro, .924 ID x .116" Thk	1
	G110467	VALVE, PRESSURE RELI	VALVE ASSEMBLY circuit relief, 4400 psi, spool capped end, used in production, order G110077 kit for service, Includes: Ref. 18 through 30	2
18	NSS	NOT SERVICED SEPARATELY	HOUSING circuit relief valve	1

Diag #	Part #	Name	Description	Qty
19	NSS	NOT SERVICED SEPARATELY	SEAT circuit relief valve	1
20	238-6018	O-RING,-018, 90 Duro, .739" ID x .070" Thk	Circuit relief valve seat (Replaces G107675) -018, 90 Duro, .739" ID x .070" Thk	1
21	G35540	RING	backup, seat O-ring	1
22	NSS	NOT SERVICED SEPARATELY	POPPET circuit relief valve	1
23	NSS	NOT SERVICED SEPARATELY	O-RING poppet	1
24	NSS	NOT SERVICED SEPARATELY	SPRING relief, inner	1
25	NSS	NOT SERVICED SEPARATELY	SPRING relief, outer	1
26	NSS	NOT SERVICED SEPARATELY	PISTON circuit relief valve	1
27	NSS	NOT SERVICED SEPARATELY	O-RING piston	1
28	484-43120	SET SCREW,Hex Soc, 5/16"-24 x 1 1/4"	SCREW set, hex socket headless, 5/16 NF x 1-1/4 inch, oval point	1
29	425-155	JAM NUT,Jam, 5/16"-24, G5	- hex jam, 5/16 inch NF	1
30	237-6012	O-RING,0.924" x 0.116"	12-1, 90 Duro, .924 ID x .116" Thk, Housing	1
30	237-6012	O-RING,0.924" x 0.116"	12-1, 90 Duro, .924 ID x .116" Thk, Housing	1
	G110077	KIT	service for G110467 circuit relief valve, kit includes an instruction sheet and G110078 circuit relief valve, Ref. 18-30, which is the same as G110467 except with a different pressure setting	1
15	237-6006	O-RING,0.114" ID x 0.254" OD x 0.07"	6-1, 90 Duro, .468" ID x .078" Thk	1

http://www.minnparbackhoeparts.com/

(580SK) - CASE SUPER-K CONSTRUCTION KING LOADER BACKHOE > (8-101A) - BACKHOE SWING SEQUENCE VALVE

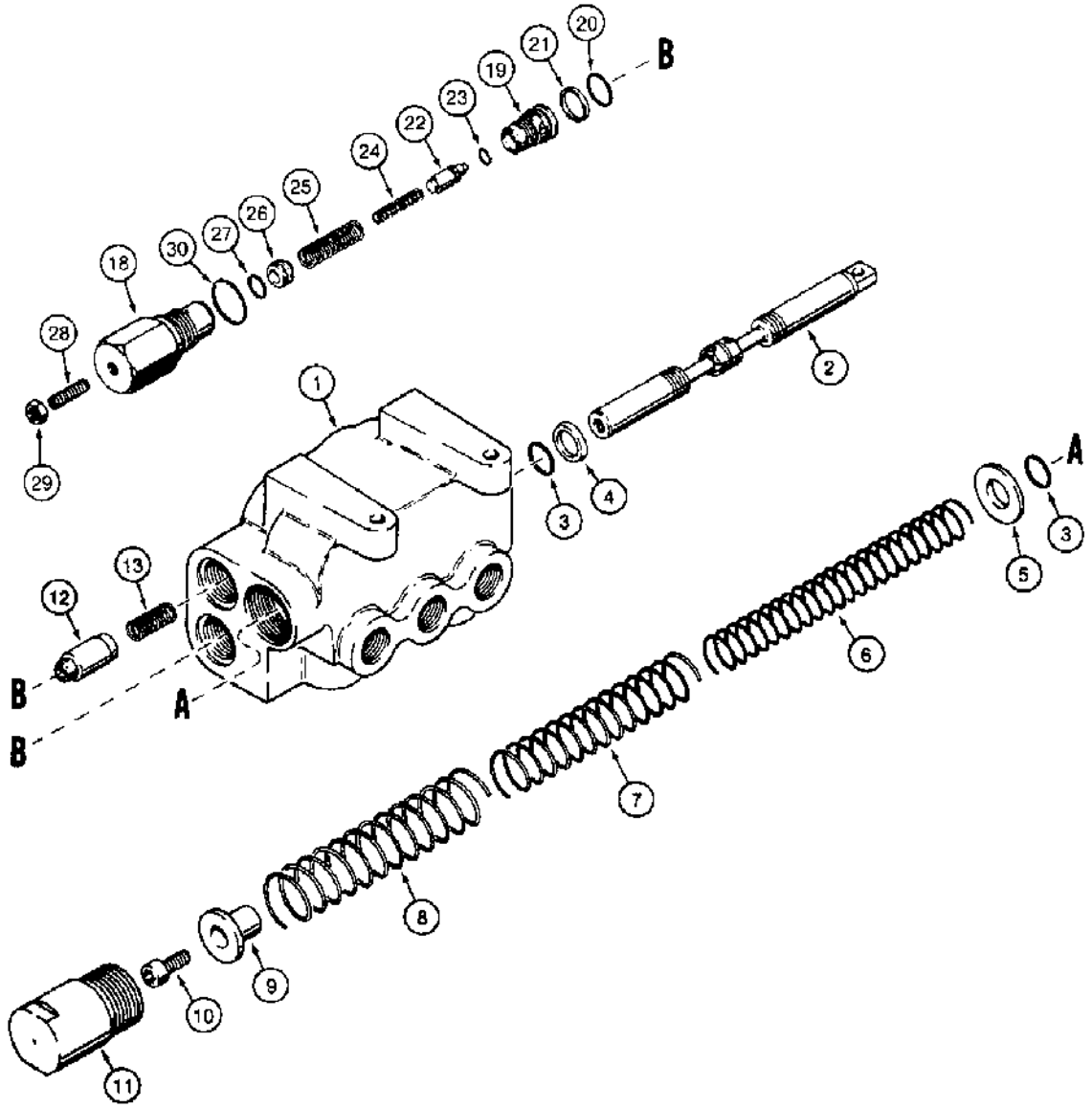

B9402104A

(580SK) - CASE SUPER-K CONSTRUCTION KING LOADER BACKHOE > (8-101A) - BACKHOE SWING SEQUENCE VALVE

Diag #	Part #	Name	Description	Qty
	1346067C1	VALVE	ASSEMBLY backhoe swing sequence, used with D150889 tube for six spool backhoe valves or D150896 tube for seven spool backhoe valves, see Figure 8-026 for tubes, Includes: Ref. 1 through 30 and P/N G110467	1
		The new valve has only 3 ports on the side instead of 4 as shown. the drain tube is installed on the end under the spool on the replacement valve. install a 218-5062 straight fitting and run the new tube under the back hoe valve	The new valve has only 3 ports on the side instead of 4 as shown. the drain tube is installed on the end under the spool on the replacement valve. install a 218-5062 straight fitting and run the new tube under the back hoe valve	1
1	NSS	NOT SERVICED SEPARATELY	HOUSING backhoe swing sequence valve	1
		Ref. 1 valve ass'y. doesn't have the 4th hole on the side facing you in this picture. Please see Figure 8-026 for notes on how to install the new tubeline.	Ref. 1 valve ass'y. doesn't have the 4th hole on the side facing you in this picture. Please see Figure 8-026 for notes on how to install the new tubeline.	1
2	NSS	NOT SERVICED SEPARATELY	SPOOL backhoe swing sequence valve	1
3	1994608C1	O-RING,0.737" ID x 0.943" OD x 0.103"	spool, replaces G108461 O-ring	2
4	65457C1	SEAL	oil, spool	1
5	G108896	O-RING	O-ring	1
6	G108895	SPRING	inner	1
7	G108892	SPRING	center	1
8	G108891	SPRING	outer	1
9	G108893	SEAT	spring	1
10	61-33812	HEX SOC SCREW,Hex Soc Hd, 3/8"-16 x 3/4"	BOLT hex socket head, 3/8 NC x 3/4 inch	1
11	G108894	CAP	spool end	1
12	G108017	SPOOL	shuttle, orifice	1
13	G107174	SPRING	shuttle spool	1
	G110467	VALVE, PRESSURE RELI	VALVE ASSEMBLY circuit relief, 4400 psi, spool capped end, used in production, order G110077 kit for service, Includes: Ref. 18 through 30	2
18	NSS	NOT SERVICED SEPARATELY	HOUSING circuit relief valve	1

http://www.minnparbackhoeparts.com/

Diag #	Part #	Name	Description	Qty
19	NSS	NOT SERVICED SEPARATELY	SEAT circuit relief valve	1
20	238-6018	O-RING,-018, 90 Duro, .739" ID x .070" Thk	Circuit relief valve seat (Replaces G107675) -018, 90 Duro, .739" ID x .070" Thk	1
21	G35540	RING	backup, seat O-ring	1
22	NSS	NOT SERVICED SEPARATELY	POPPET circuit relief valve	1
23	NSS	NOT SERVICED SEPARATELY	O-RING poppet	1
24	NSS	NOT SERVICED SEPARATELY	SPRING relief, inner	1
25	NSS	NOT SERVICED SEPARATELY	SPRING relief, outer	1
26	NSS	NOT SERVICED SEPARATELY	PISTON circuit relief valve	1
27	NSS	NOT SERVICED SEPARATELY	O-RING piston	1
28	484-43120	SET SCREW,Hex Soc, 5/16"-24 x 1 1/4"	SCREW set, hex socket headless, 5/16 NF x 1-1/4 inch, oval point	1
29	425-155	JAM NUT,Jam, 5/16"-24, G5	- hex jam, 5/16 inch NF	1
30	237-6012	O-RING,0.924" x 0.116"	12-1, 90 Duro, .924 ID x .116" Thk, Housing	1
	G110077	KIT	service for G110467 circuit relief valve, kit includes an instruction sheet and G110078 circuit relief valve, Ref. 18-30, which is the same as G110467 except with a different pressure setting	1

http://www.minnparbackhoeparts.com/

(580SK) - CASE SUPER-K CONSTRUCTION KING LOADER BACKHOE > (8-102) - BOOM LOCK SOLENOID VALVE

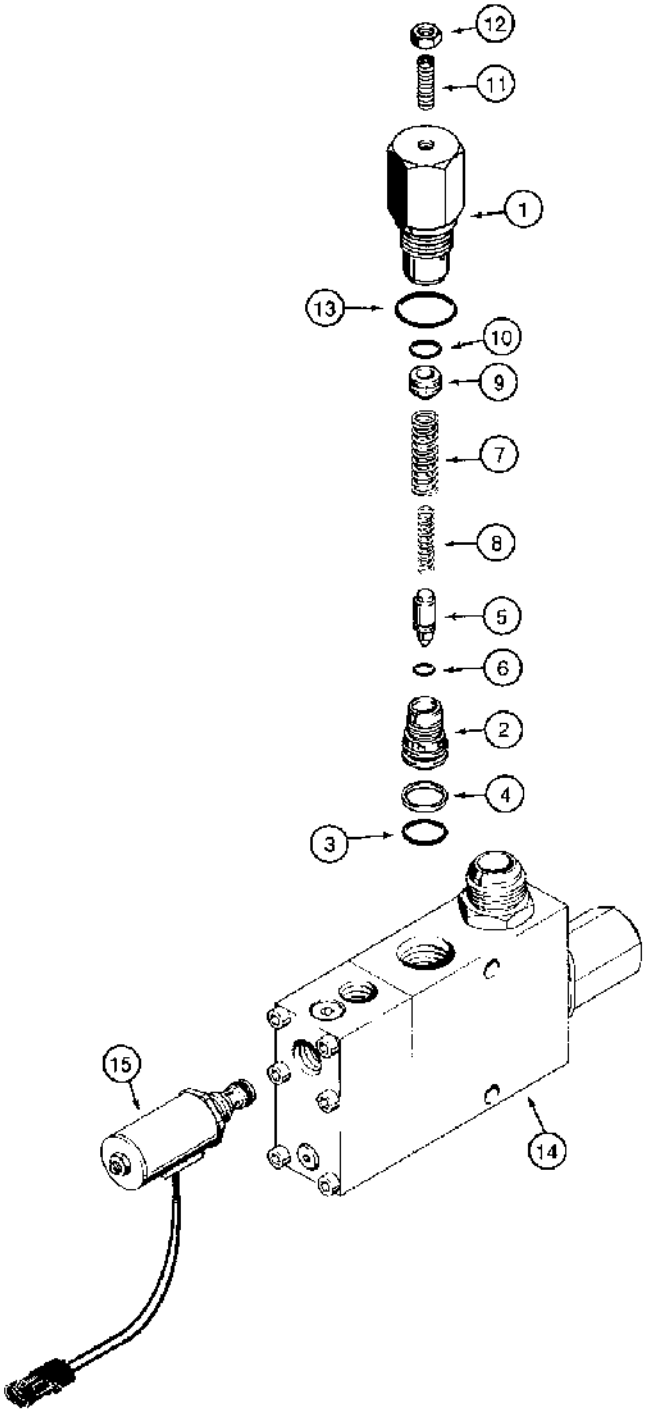

B910459 45

(580SK) - CASE SUPER-K CONSTRUCTION KING LOADER BACKHOE > (8-102) - BOOM LOCK SOLENOID VALVE

Diag #	Part #	Name	Description	Qty
	D150443	VALVE	ASSEMBLY solenoid, backhoe boom lock, includes two 321-6046 warning decals, see Figure 9-170 for decal, Ref. 25, Includes: Ref. 1 through 15, P/N G110467, P/N D150781 and P/N D150810	1
	G110467	VALVE, PRESSURE RELI	RELIEF ASSEMBLY circuit, solenoid, used in production, order G110077 kit for service, Includes: Ref. 1 through 12	1
		The pressure setting of the repair circuit relief valve is not preset for this application. Adjust the setting according to the instructions sent with the repair valve.	The pressure setting of the repair circuit relief valve is not preset for this application. Adjust the setting according to the instructions sent with the repair valve.	1
1	NSS	NOT SERVICED SEPARATELY	BODY relief valve	1
2	NSS	NOT SERVICED SEPARATELY	SEAT relief valve	1
3	238-6018	O-RING,-018, 90 Duro, .739" ID x .070" Thk	Relief valve seat (Replaces G107675) -018, 90 Duro, .739" ID x .070" Thk	1
4	G35540	RING	backup, seat O-ring	1
5	NSS	NOT SERVICED SEPARATELY	POPPET relief valve	1
6	NSS	NOT SERVICED SEPARATELY	O-RING poppet	1
7	NSS	NOT SERVICED SEPARATELY	SPRING relief, outer	1
8	NSS	NOT SERVICED SEPARATELY	SPRING relief, inner	1
9	NSS	NOT SERVICED SEPARATELY	PISTON relief valve	1
10	NSS	NOT SERVICED SEPARATELY	O-RING piston	1
11	484-43116	SET SCREW,Hex Soc, 5/16"-24 x 1"	SCREW - set, hex socket headless, 5/16 NF x 1 inch, oval point	1
12	86637933	JAM NUT,5/16" - 24, G5	JAM NUT,5/16" - 24, G5	1
13	237-6012	O-RING,0.924" x 0.116"	12-1, 90 Duro, .924 ID x .116" Thk, Body	1
14	NSS	NOT SERVICED SEPARATELY	BODY solenoid	1
15	D150809	SOLENOID	relief, 12 volt, with connector	1
	D150781	REPAIR KIT	KIT, REPAIR, Incl. (3) springs, (1) ball, (1) poppet, and (1) plug which are not serviced separately and D150810 seal kit, not	1

Diag #	Part #	Name	Description	Qty
			shown, see your 580 Super K Service Manual for location of seals and springs, Incl.: P/N D150810	
	D150810	SEAL	KIT seal, includes nine O-rings and two backup rings which are not serviced separately, not shown	1
	G110077	KIT	service for G110467 circuit relief valve, includes G110078 circuit relief valve assembly, Ref. 1 through 13 and an instruction sheet	1
		The pressure setting of the repair circuit relief valve is not preset for this application. Adjust the setting according to the instructions sent with the repair valve.	The pressure setting of the repair circuit relief valve is not preset for this application. Adjust the setting according to the instructions sent with the repair valve.	1

http://www.minnparbackhoeparts.com/

(580SK) - CASE SUPER-K CONSTRUCTION KING LOADER BACKHOE > (8-104) - THREE-POINT HITCH CONTROL VALVE

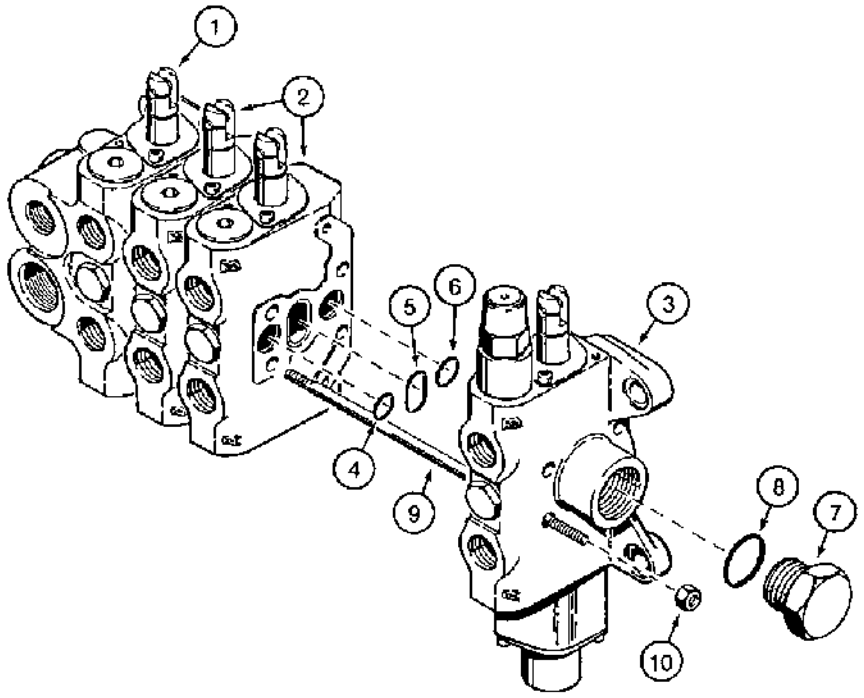

B88115 45

(580SK) - CASE SUPER-K CONSTRUCTION KING LOADER BACKHOE > (8-104) - THREE-POINT HITCH CONTROL VALVE

Diag #	Part #	Name	Description	Qty
	D141297	VALVE	ASSEMBLY three-point hitch control, four spool, Includes: Ref. 1 through 10, P/N N14286 and P/N N14287	1
1	N14263	VALVE	SECTION ASSEMBLY inlet-outlet and implement, parts list Figure 8-106	1
2	N14268	KNIFE SECTION	SECTION ASSEMBLY tilt and pitch, parts list Figure 8-108	2
3	N14269	VALVE	SECTION ASSEMBLY lift, parts list Figures 8-110 - 8-112	1
	N14286	SEAL KIT	KIT seal, Includes: Ref. 4, 5 and 6	3
4	NSS	NOT SERVICED SEPARATELY	O-RING between sections, port side of control valve	1
5	NSS	NOT SERVICED SEPARATELY	O-RING between sections, center	1
6	NSS	NOT SERVICED SEPARATELY	O-RING between sections, non-port side of control valve	1
7	218-5158	PLUG,Hex Hd, 1 1/16"-12 ORB	Lift section, Includes: Ref. 8 Hex Hd, 1 1/16"-12 ORB	1
8	237-6012	O-RING,0.924" x 0.116"	12-1, 90 Duro, .924 ID x .116" Thk	1
	N14287	KIT	tie bolt, Includes: Ref. 9 and 10	1
9	NSS	NOT SERVICED SEPARATELY	BOLT tie, special, to internal threaded bolt holes in inlet-outlet section	4
10	NSS	NOT SERVICED SEPARATELY	NUT self-locking, 6 mm - 1.25, tie bolt	4

http://www.minnparbackhoeparts.com/

(580SK) - CASE SUPER-K CONSTRUCTION KING LOADER BACKHOE > (8-106) - THREE-POINT HITCH CONTROL VALVE, INLET-OUTLET AND IMPLEMENT SECTION

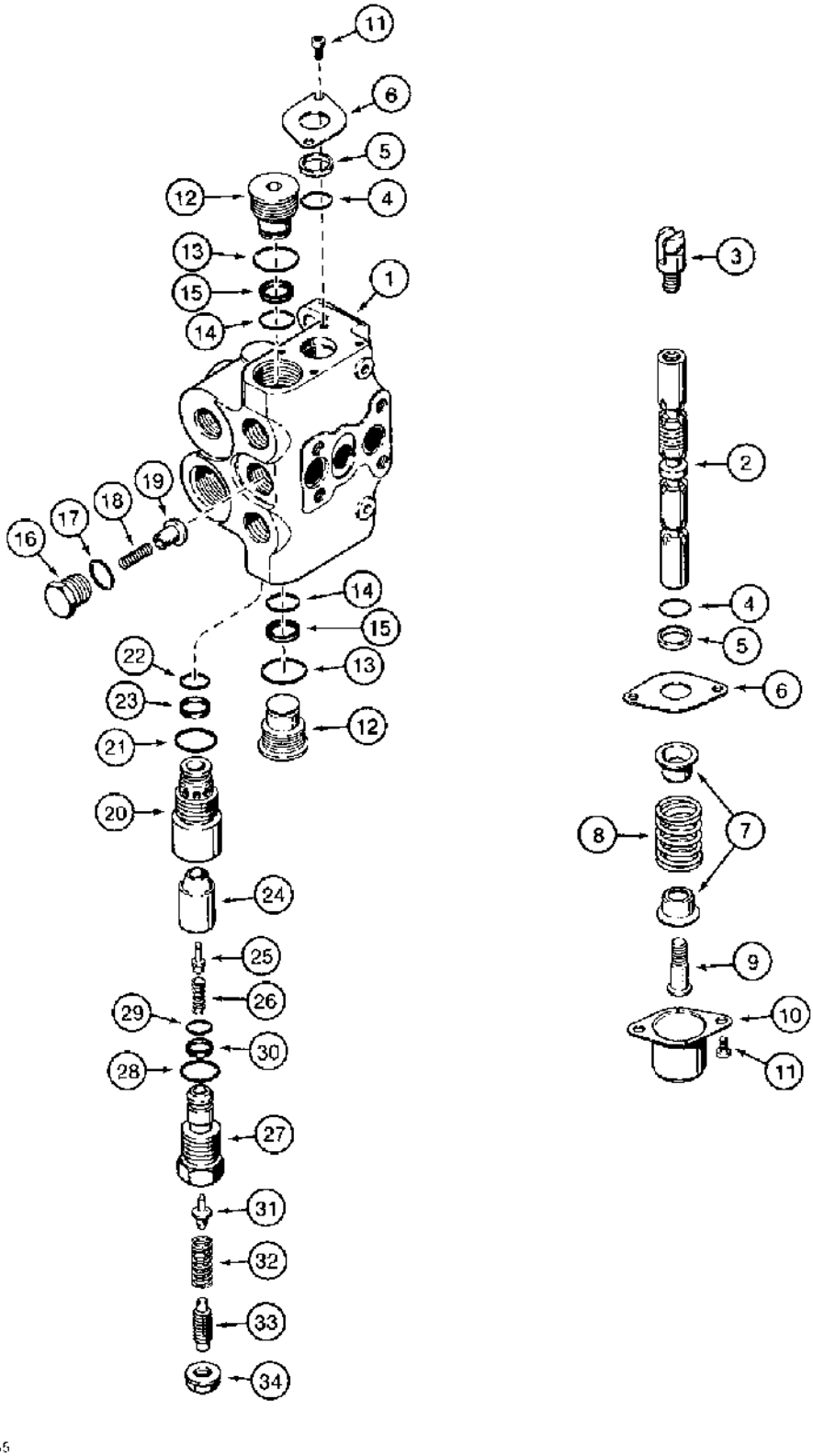

(580SK) - CASE SUPER-K CONSTRUCTION KING LOADER BACKHOE > (8-106) - THREE-POINT HITCH CONTROL VALVE, INLET-OUTLET AND IMPLEMENT SECTION

Diag #	Part #	Name	Description	Qty
	N14263	VALVE	SECTION ASSEMBLY inlet-outlet and implement, Includes: Ref. 1 through 34, P/N N14288, P/N N14265, P/N N14271, P/N 14266 and P/N N14267	1
1	NSS	NOT SERVICED SEPARATELY	HOUSING inlet-outlet and implement section	1
2	NSS	NOT SERVICED SEPARATELY	SPOOL inlet-outlet and implement section	1
3	N14264	EYE	spool	1
	N14288	KIT	wiper, spool, Includes: Ref.4 and 5	1
4	NSS	NOT SERVICED SEPARATELY	O-RING spool	2
5	NSS	NOT SERVICED SEPARATELY	WIPER spool	2
6	NSS	NOT SERVICED SEPARATELY	RETAINER plate, spool wiper	2
	N14265	KIT	spool, cap end, Includes: Ref. 7 through 10	1
7	NSS	NOT SERVICED SEPARATELY	SEAT spring	2
8	NSS	NOT SERVICED SEPARATELY	SPRING centering, spool	1
9	NSS	NOT SERVICED SEPARATELY	BOLT spool, cap end	1
10	NSS	NOT SERVICED SEPARATELY	CAP valve spool	1
11	NSS	NOT SERVICED SEPARATELY	BOLT cap and retainer plate	4
	N14271	PLUG	ASSEMBLY valve, upper and lower, if used, Includes: Ref. 12 through 15	2
12	NSS	NOT SERVICED SEPARATELY	PLUG valve	1
13	238-5020	O-RING,0.864" ID x 1.004" OD x 0.07"	-020, 70 Duro, .864" ID x .070" Thk, Plug, outer, large	1
14	238-5015	O-RING,0.551" ID x 0.691" OD x 0.07"	-015, 70 Duro, .551" ID x .070" Thk, Small	1
15	A34493	RING	backup, small O-ring	1
	N14266	VALVE	ASSEMBLY load check valve, section, Includes: Ref. 16 through 19	1
16	NSS	NOT SERVICED SEPARATELY	PLUG load check valve	1
17	N14653	O-RING	plug	1
18	N14652	SPRING	load check valve	1

Diag #	Part #	Name	Description	Qty
19	NSS	NOT SERVICED SEPARATELY	POPPET load check	1
	N14267	VALVE	ASSEMBLY main relief section, Includes: Ref. 20 through 34	1
20	NSS	NOT SERVICED SEPARATELY	HOUSING main relief valve	1
21	238-5020	O-RING,0.864" ID x 1.004" OD x 0.07"	-020, 70 Duro, .864" ID x .070" Thk, Housing, outer, large	1
22	238-5015	O-RING,0.551" ID x 0.691" OD x 0.07"	-015, 70 Duro, .551" ID x .070" Thk	1
23	A34493	RING	backup, small O-ring	1
24	NSS	NOT SERVICED SEPARATELY	PISTON relief valve	1
25	NSS	NOT SERVICED SEPARATELY	PLUNGER piston	1
26	NSS	NOT SERVICED SEPARATELY	SPRING plunger, small	1
27	NSS	NOT SERVICED SEPARATELY	BODY relief valve	1
28	238-5016	O-RING,0.614" ID x 0.754" OD x 0.07"	-016, 70 Duro, .614" ID x .070" Thk, Outer	1
29	238-5012	O-RING,0.364" ID x 0.504" OD x 0.07"	-012, 70 Duro, .364" ID x .070" Thk	1
30	L31330	RING,109mm ID x 12mm Width	backup, small O-ring	1
31	NSS	NOT SERVICED SEPARATELY	POPPET relief valve	1
32	NSS	NOT SERVICED SEPARATELY	SPRING poppet	1
33	NSS	NOT SERVICED SEPARATELY	SCREW adjusting	1
34	NSS	NOT SERVICED SEPARATELY	NUT lock, special	1

http://www.minnparbackhoeparts.com/

(580SK) - CASE SUPER-K CONSTRUCTION KING LOADER BACKHOE > (8-108) - THREE-POINT HITCH CONTROL VALVE, PITCH AND TILT SECTIONS

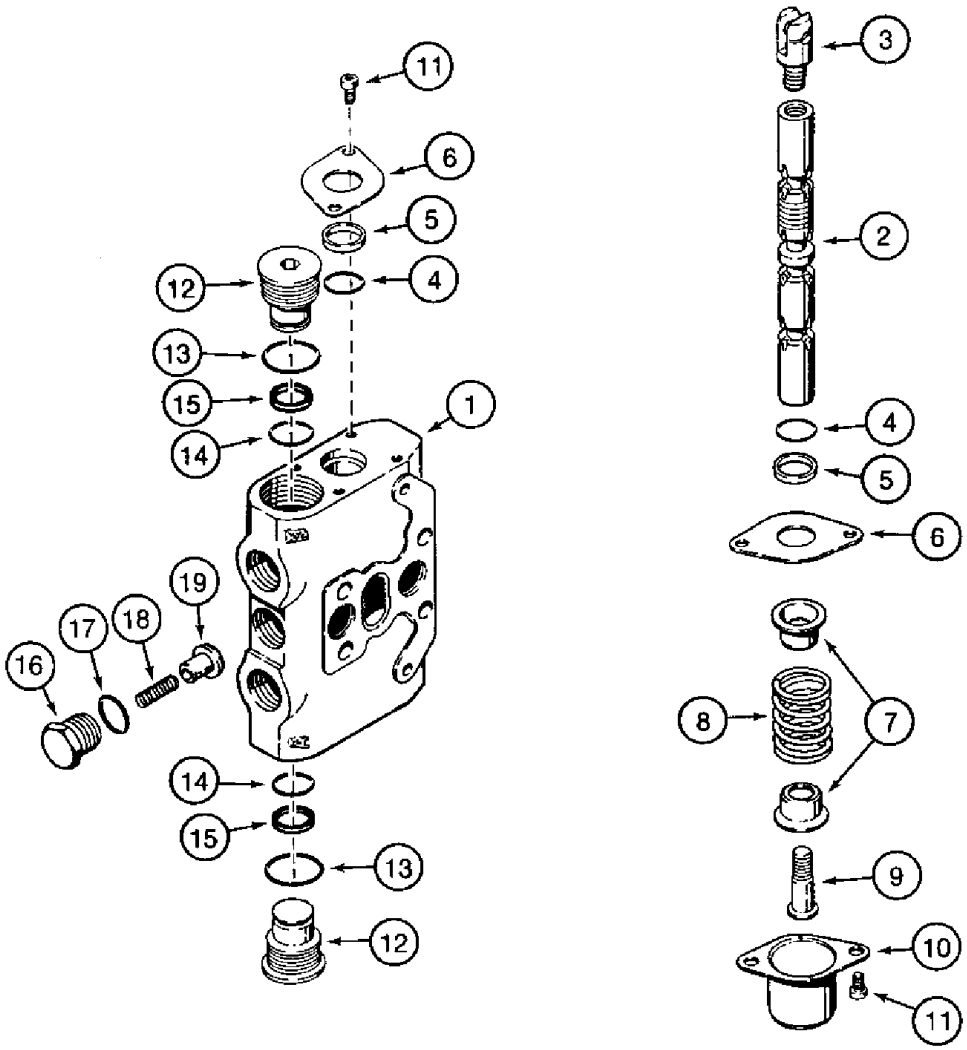

B88117-45

(580SK) - CASE SUPER-K CONSTRUCTION KING LOADER BACKHOE > (8-108) - THREE-POINT HITCH CONTROL VALVE, PITCH AND TILT SECTIONS

Diag #	Part #	Name	Description	Qty
	N14268	KNIFE SECTION	SECTION ASSEMBLY pitch and tilt, Includes: Ref. 1 through 19, P/N N14288, P/N N14265, P/N N14271 and P/N N14266	2
1	NSS	NOT SERVICED SEPARATELY	HOUSING pitch and tilt section	1
2	NSS	NOT SERVICED SEPARATELY	SPOOL pitch and tilt section	1
3	N14264	EYE	spool	1
	N14288	KIT	wiper, spool, Includes: Ref. 4 and 5	1
4	NSS	NOT SERVICED SEPARATELY	O-RING spool	2
5	NSS	NOT SERVICED SEPARATELY	WIPER spool	2
6	NSS	NOT SERVICED SEPARATELY	RETAINER plate, spool wiper	2
	N14265	KIT	spool, cap end, Includes: Ref. 7 through 10	1
7	NSS	NOT SERVICED SEPARATELY	SEAT spring	2
8	NSS	NOT SERVICED SEPARATELY	SPRING centering, spool	1
9	NSS	NOT SERVICED SEPARATELY	BOLT spool, cap end	1
10	NSS	NOT SERVICED SEPARATELY	CAP valve spool	1
11	NSS	NOT SERVICED SEPARATELY	BOLT cap and retainer plate	4
	N14271	PLUG	ASSEMBLY valve, upper and lower, if used, Includes: Ref. 12 through 15	2
12	NSS	NOT SERVICED SEPARATELY	PLUG valve	1
13	238-5020	O-RING,0.864" ID x 1.004" OD x 0.07"	-020, 70 Duro, .864" ID x .070" Thk, Plug, outer, large	1
14	238-5015	O-RING,0.551" ID x 0.691" OD x 0.07"	-015, 70 Duro, .551" ID x .070" Thk	1
15	A34493	RING	backup, small O-ring	1
	N14266	VALVE	ASSEMBLY load check valve, section, Includes: Ref 16 through 19	1
16	NSS	NOT SERVICED SEPARATELY	PLUG load check valve	1
17	N14653	O-RING	plug	1
18	N14652	SPRING	load check valve	1

Diag #	Part #	Name	Description	Qty
19	NSS	NOT SERVICED SEPARATELY	POPPET load check	1

http://www.minnparbackhoeparts.com/

(580SK) - CASE SUPER-K CONSTRUCTION KING LOADER BACKHOE > (8-110) - THREE-POINT HITCH CONTROL VALVE, LIFT SECTION

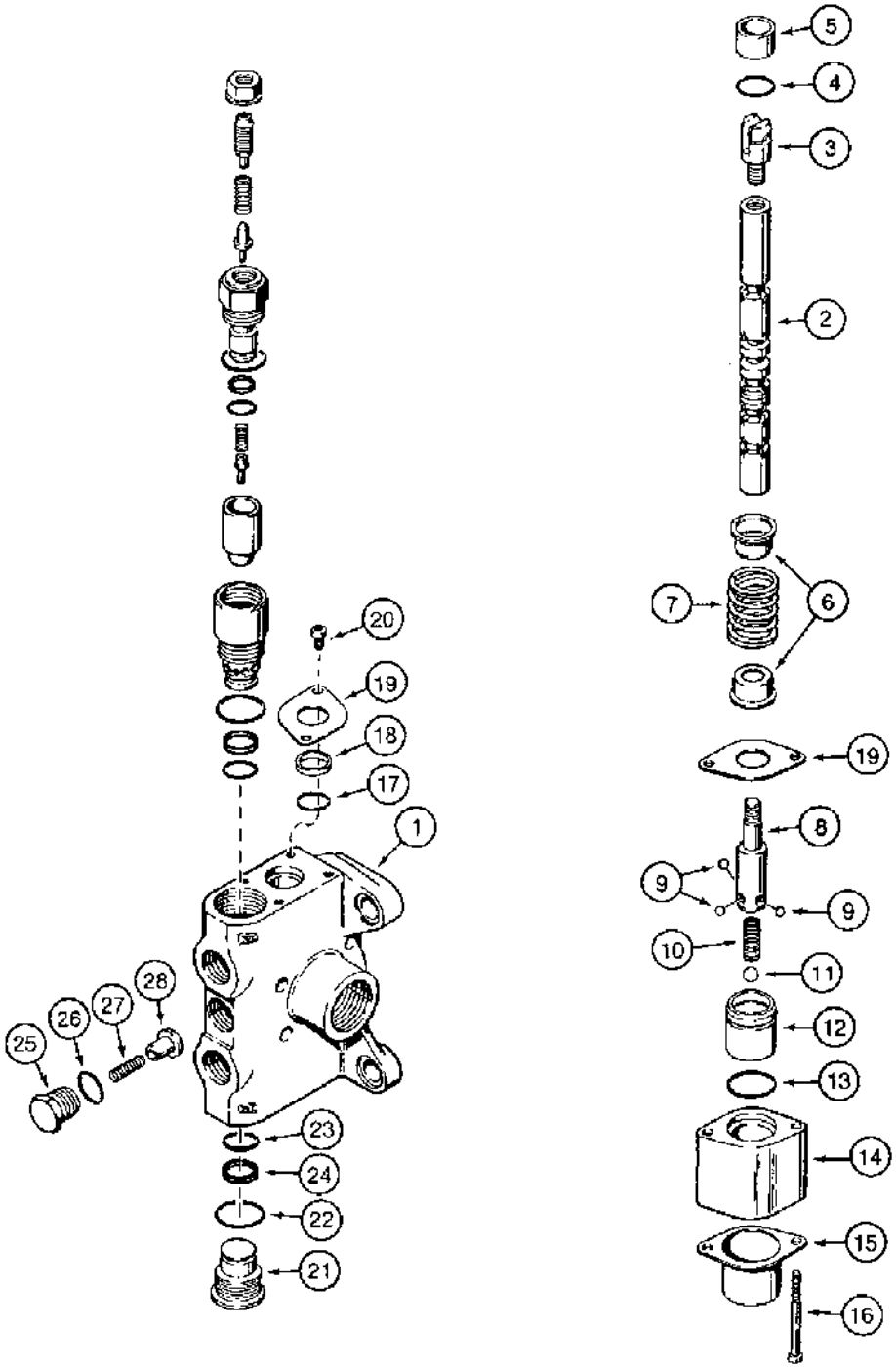

B902028 45

(580SK) - CASE SUPER-K CONSTRUCTION KING LOADER BACKHOE > (8-110) - THREE-POINT HITCH CONTROL VALVE, LIFT SECTION

Diag #	Part #	Name	Description	Qty
	N14269	VALVE	SECTION ASSEMBLY lift, Includes: Ref. 1 through 28, P/N N14270, P/N N14288, P/N N14271 and P/N N14266	1
1	NSS	NOT SERVICED SEPARATELY	HOUSING lift section	1
2	NSS	NOT SERVICED SEPARATELY	SPOOL lift section	1
3	N14264	EYE	spool	1
	N14270	KIT	spool, cap end, Includes: Ref. 4 through 16	1
4	N14657	SEAL	bushing, spool eye end	1
5	NSS	NOT SERVICED SEPARATELY	BUSHING spool	1
6	NSS	NOT SERVICED SEPARATELY	SEAT spring	2
7	NSS	NOT SERVICED SEPARATELY	SPRING centering, spool	1
8	NSS	NOT SERVICED SEPARATELY	RETAINER detent, spool cap end	1
9	N14654	BALL	small	3
10	N14656	SPRING	detent, small	1
11	N14655	BALL	large	1
12	NSS	NOT SERVICED SEPARATELY	SLEEVE detent	1
13	N14658	SEAL	detent housing	1
14	NSS	NOT SERVICED SEPARATELY	HOUSING detent, spool cap end	1
15	NSS	NOT SERVICED SEPARATELY	CAP valve spool	1
16	864-5055	HEX SOC SCREW,M5 x 55mm, Cl 8.8	BOLT hex socket, 5 - 8 x 55 mm, cap retaining	2
	N14288	KIT	wiper, spool, upper, only one O-ring and wiper used in this application, Includes: Ref. 17 and 18	1
17	NSS	NOT SERVICED SEPARATELY	O-RING spool	2
18	NSS	NOT SERVICED SEPARATELY	WIPER spool	2
19	N14659	RETAINER	plate, spool wiper	2
20	864-5008	BOLT hex socket, 5 - 8 x 8 mm	BOLT hex socket, 5 - 8 x 8 mm	2
	N14271	PLUG	ASSEMBLY valve, lower, Includes: Ref. 21 through 24	1

Diag #	Part #	Name	Description	Qty
21	NSS	NOT SERVICED SEPARATELY	PLUG valve	1
22	238-5020	O-RING,0.864" ID x 1.004" OD x 0.07"	-020, 70 Duro, .864" ID x .070" Thk, Plug, outer, large	1
23	238-5015	O-RING,0.551" ID x 0.691" OD x 0.07"	-015, 70 Duro, .551" ID x .070" Thk, Small	1
24	A34493	RING	backup, small O-ring	1
	N14266	VALVE	ASSEMBLY load check valve, section, Includes: Ref. 25 through 28	1
25	NSS	NOT SERVICED SEPARATELY	PLUG load check valve	1
26	N14653	O-RING	plug	1
27	N14652	SPRING	load check valve	1
28	NSS	NOT SERVICED SEPARATELY	POPPET load check	1

http://www.minnparbackhoeparts.com/

(580SK) - CASE SUPER-K CONSTRUCTION KING LOADER BACKHOE > (8-112) - THREE-POINT HITCH CONTROL VALVE, LIFT SECTION

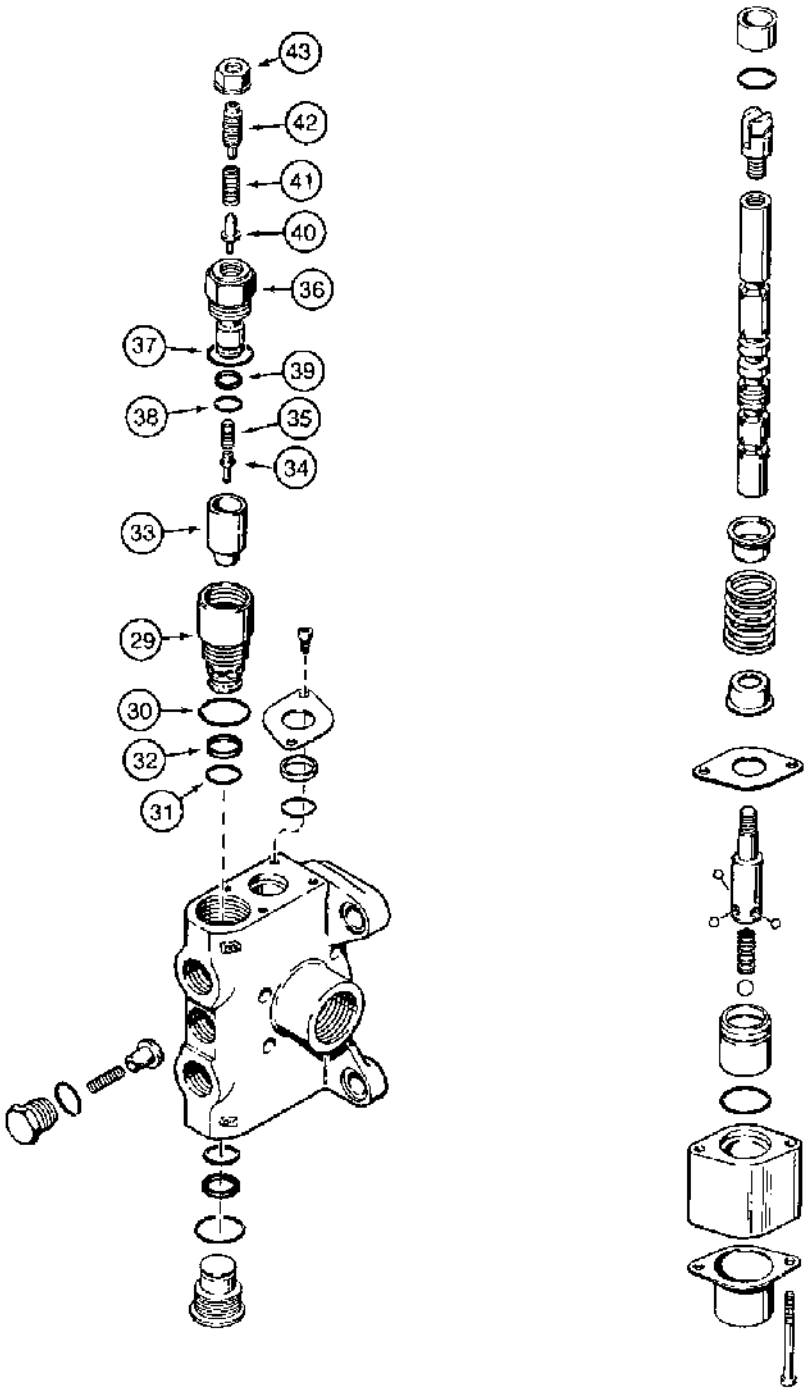

B902029-45

(580SK) - CASE SUPER-K CONSTRUCTION KING LOADER BACKHOE > (8-112) - THREE-POINT HITCH CONTROL VALVE, LIFT SECTION

Diag #	Part #	Name	Description	Qty
	N14269	VALVE	SECTION lift, Includes: Ref. 29 through 43 and P/N N14267	1
	N14267	VALVE	MAIN RELIEF VALVE ASSEMBLY section, Includes: Ref. 29 through 43	1
29	NSS	NOT SERVICED SEPARATELY	HOUSING main relief valve	1
30	238-5020	O-RING,0.864" ID x 1.004" OD x 0.07"	-020, 70 Duro, .864" ID x .070" Thk, Housing, outer, large	1
31	238-5015	O-RING,0.551" ID x 0.691" OD x 0.07"	-015, 70 Duro, .551" ID x .070" Thk, Small	1
32	A34493	RING	backup, small O-ring	1
33	NSS	NOT SERVICED SEPARATELY	PISTON relief valve	1
34	NSS	NOT SERVICED SEPARATELY	PLUNGER piston	1
35	NSS	NOT SERVICED SEPARATELY	SPRING plunger, small	1
36	NSS	NOT SERVICED SEPARATELY	BODY relief valve	1
37	238-5016	O-RING,0.614" ID x 0.754" OD x 0.07"	-016, 70 Duro, .614" ID x .070" Thk, Outer, Large	1
38	238-5012	O-RING,0.364" ID x 0.504" OD x 0.07"	-012, 70 Duro, .364" ID x .070" Thk, Small	1
39	L31330	RING,109mm ID x 12mm Width	backup, small O-ring	1
40	NSS	NOT SERVICED SEPARATELY	POPPET relief valve	1
41	NSS	NOT SERVICED SEPARATELY	SPRING poppet	1
42	NSS	NOT SERVICED SEPARATELY	SCREW adjusting	1
43	NSS	NOT SERVICED SEPARATELY	NUT lock, special	1

http://www.minnparbackhoeparts.com/

(580SK) - CASE SUPER-K CONSTRUCTION KING LOADER BACKHOE > (8-114) - HYDRAULIC OIL FILTER

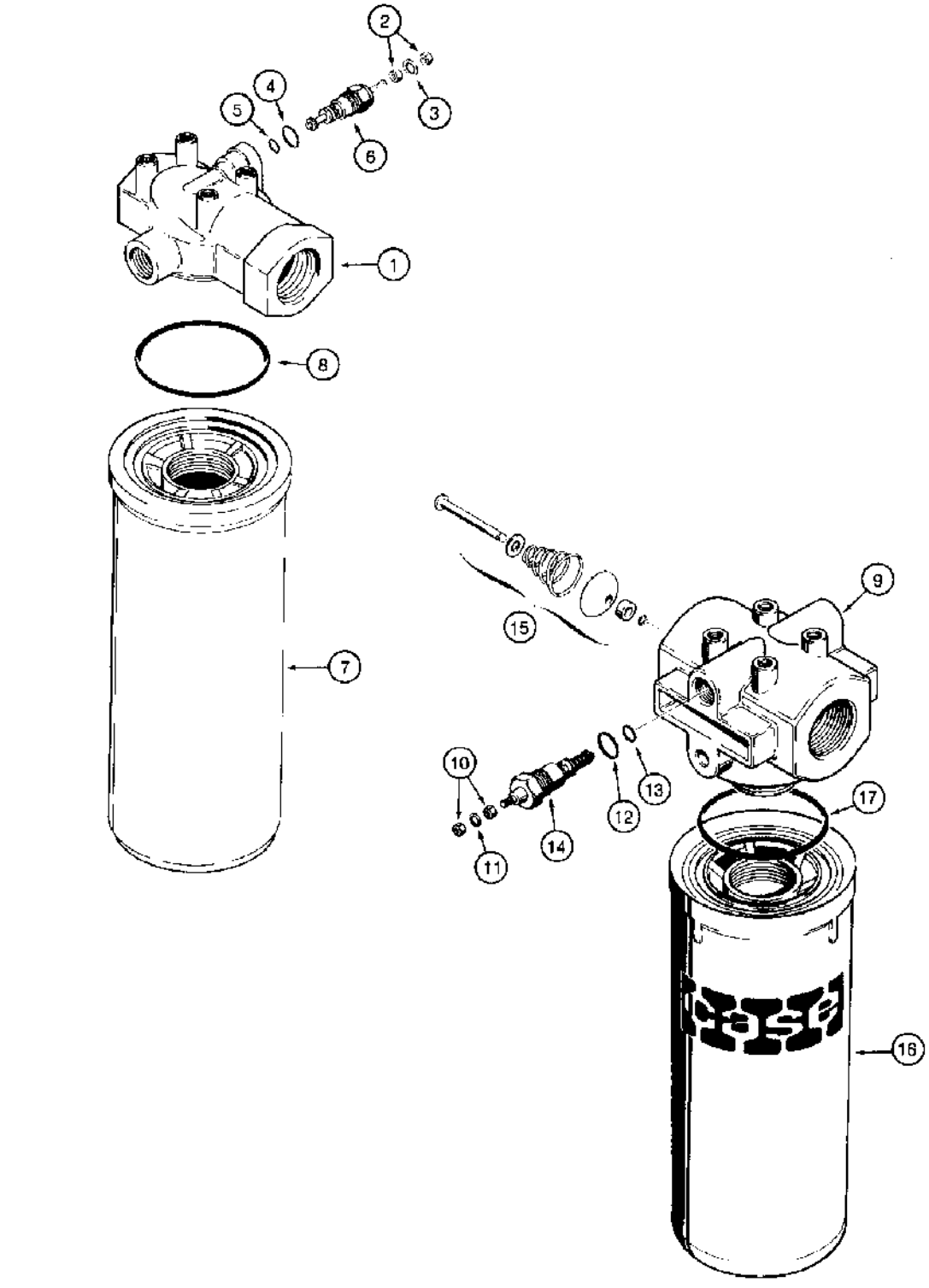

(580SK) - CASE SUPER-K CONSTRUCTION KING LOADER BACKHOE > (8-114) - HYDRAULIC OIL FILTER

Diag #	Part #	Name	Description	Qty
	D148151	FILTER	ASSEMBLY hydraulic oil, no longer available, order D132933 filter assembly	1
1	NSS	NOT SERVICED SEPARATELY	HEAD filter, internal bypass valve not serviceable, Includes: Ref. 2 through 8, P/N N6755, P/N N6941 and P/N 1346028C1	1
	N6755	INDICATOR	ASSEMBLY restriction, electric, Includes: Ref. 2 through 6 and P/N N6941	1
	N6941	KIT	restriction indicator repair, order Ref. 2 - 5, Includes: Ref. 2 through 5	1
2	129-667	NUT,#10-32, LH	Chamferred #10-32, LH	2
3	493-21020	LOCK WASHER,Int Tooth, #10	WASHER, LOCK, (3/16") Int Tooth, #10	1
5	238-5011	O-RING,0.301" ID x 0.441" OD x 0.07"	-011, 70 Duro, .301" ID x .070" Thk, Inner	1
6	NSS	NOT SERVICED SEPARATELY	INDICATOR restriction, electric	1
	1346028C1	HYDRAULIC OIL FILTER	ELEMENT ASSEMBLY filter replacement, replaces N9025, Includes: Ref. 7 and 8	1
7	NSS	NOT SERVICED SEPARATELY	ELEMENT filter	1
8	238-5230	O-RING,-230, 70 Duro, 2.484" ID x .139" Thk	Filter to head, N9025 element -230, 70 Duro, 2.484" ID x .139" Thk	1
8	1986552C2	O-RING,2.484mm ID x 1.39mm Width	2-31/64 ID x 9/64 inch, filter to head, 1346028C1 element	1
	D132933	FILTER ASSY	FILTER ASSEMBLY hydraulic oil, if used	1
9	NSS	NOT SERVICED SEPARATELY	HEAD filter, Includes: Ref. 10 through 17, P/N N6755 and P/N N6941	1
	N6755	INDICATOR	ASSEMBLY restriction, electric, Includes: Ref. 10 through 14 and P/N N6941	1
	N6941	KIT	restriction indicator repair, order Ref. 10-13, Includes: Ref. 10 through 13	1
10	129-667	NUT,#10-32, LH	NUT,#10-32, LH	2
11	493-21020	LOCK WASHER,Int Tooth, #10	WASHER, LOCK, (3/16") Int Tooth, #10	1
13	238-5011	O-RING,0.301" ID x 0.441" OD x 0.07"	-011, 70 Duro, .301" ID x .070" Thk, Inner	1
14	NSS	NOT SERVICED SEPARATELY	INDICATOR restriction, electric	1
15	NSS	NOT SERVICED SEPARATELY	VALVE bypass	1
	1346028C1	HYDRAULIC OIL FILTER	ELEMENT ASSEMBLY filter, replaces N9025, Includes: Ref. 16 and 17	1

Diag #	Part #	Name	Description	Qty
16	NSS	NOT SERVICED SEPARATELY	ELEMENT filter	1
17	238-5230	O-RING,-230, 70 Duro, 2.484" ID x .139" Thk	Filter to head, N9025 element -230, 70 Duro, 2.484" ID x .139" Thk	1
17	1986552C2	O-RING,2.484mm ID x 1.39mm Width	2-31/64 ID x 9/64 inch, filter to head, 1346028C1 element	1
12	237-6006	O-RING,0.114" ID x 0.254" OD x 0.07"	6-1, 90 Duro, .468" ID x .078" Thk	1
4	237-6006	O-RING,0.114" ID x 0.254" OD x 0.07"	6-1, 90 Duro, .468" ID x .078" Thk	1

http://www.minnparbackhoeparts.com/

(580SK) - CASE SUPER-K CONSTRUCTION KING LOADER BACKHOE > (8-116) - LOADER LIFT CYLINDERS

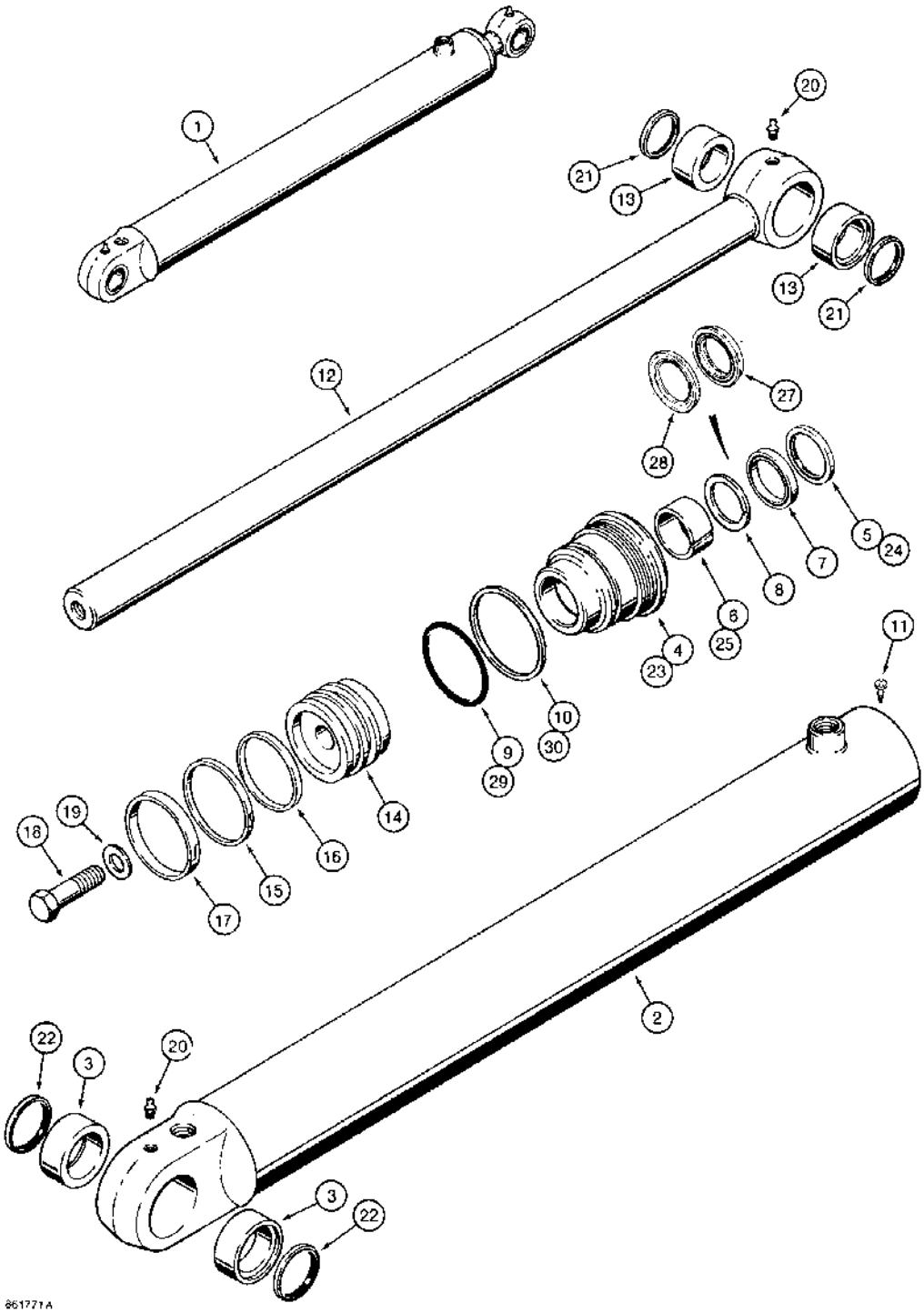

(580SK) - CASE SUPER-K CONSTRUCTION KING LOADER BACKHOE > (8-116) - LOADER LIFT CYLINDERS

Diag #	Part #	Name	Description	Qty
1	1340976C1	CYLINDER ASSY.	CYLINDER ASSEMBLY, 3-1/4, 82, ID x 29 inch, 740 mm, stroke, lift, right-hand and left-hand, with grease seals, Ref. 21 and 22, at rod and tube eyes, no longer available, order 110303A1 cylinder on Figure 8-117C, Includes: Ref. 1-30, P/N 1980322C1, P/N NSS	2
2	1340977C1	TUBE	ASSEMBLY cylinder, Includes: Ref. 3	1
3	1980335C1	BUSHING	tube	2
	1980322C1	GLAND	ASSEMBLY cylinder, no longer available, order Ref. 23, 1980321C2 gland and 1543260C1 seal kit, Includes: Ref. 4 through 10	1
4	NSS	NOT SERVICED SEPARATELY	GLAND cylinder	1
5	D95143	WIPER SEAL	WIPER piston rod, outer	1
		Part of seal kit P/N G110053.	Part of seal kit P/N G110053.	1
6	G102425	BUSHING	center	1
		Part of seal kit P/N G110053.	Part of seal kit P/N G110053.	1
7	G107922	SEAL	U-cup, with O-ring, piston rod, wide	1
		Part of seal kit P/N G110053.	Part of seal kit P/N G110053.	1
8	G109094	SEAL	buffer, grooved, piston rod, narrow	1
		Part of seal kit P/N G110053.	Part of seal kit P/N G110053.	1
9	238-5233	O-RING,-233, 70 Duro, 2.859" ID x .139" Thk	Gland -233, 70 Duro, 2.859" ID x .139" Thk	1
		Part of seal kit P/N G110053.	Part of seal kit P/N G110053.	1
10	G32122	RING	backup, gland O-ring	1
		Part of seal kit P/N G110053.	Part of seal kit P/N G110053.	1
11	276-2446	SELF-TAP SCREW,Hex Hd, #8 x 3/8"	SCREW - self-tapping, hex hd, No. 8 NC x 3/8 "	1
12	1341852C2	PISTON ROD	ROD ASSEMBLY piston, 1-3/4 inch, 44 mm, diameter, cylinder, Includes: Ref. 13	1
13	D144895	BUSHING	- piston rod	2
14	G108184	PISTON	cylinder	1
15	G102287	SEAL	piston	1
		Part of seal kit P/N G110053.	Part of seal kit P/N G110053.	1

Diag #	Part #	Name	Description	Qty
		Part of seal kit P/N 1543260C1.	Part of seal kit P/N 1543260C1.	1
16	S109444	RING	backup, piston seal	1
		Part of seal kit P/N G110053.	Part of seal kit P/N G110053.	1
		Part of seal kit P/N 1543260C1.	Part of seal kit P/N 1543260C1.	1
17	S109445	RING	wear, piston	1
		Part of seal kit P/N G110053.	Part of seal kit P/N G110053.	1
		Part of seal kit P/N 1543260C1.	Part of seal kit P/N 1543260C1.	1
18	25863R1	BOLT,Hex, 3/4" - 16 x 2 1/2", Gr 8	- hex, 3/4 NF x 2-1/2 inch, grade 8, replaces 28-1240	1
19	G32317	WASHER	flat, special	1
20	219-1	LUBE NIPPLE,1/8"-27 x .66 lg	FITTING grease, straight, 1/8 PT x 21/32 inch	2
21	D127833	SEAL	rod eye	2
22	D123655	SEAL	tube eye, cylinder	2
	NSS	NOT SERVICED SEPARATELY	GLAND ASSEMBLY cylinder, Includes: Ref. 23 through 30	1
23	1980321C2	CYLINDER END CAP	GLAND cylinder	1
24	D95143	WIPER SEAL	WIPER piston rod	1
		Part of seal kit P/N 1543260C1.	Part of seal kit P/N 1543260C1.	1
25	G102425	BUSHING	center	1
		Part of seal kit P/N 1543260C1.	Part of seal kit P/N 1543260C1.	1
26	1542875C1	SEAL KIT	KIT, SEALS, NSS, Not shown	1
		Part of seal kit P/N 1543260C1.	Part of seal kit P/N 1543260C1.	1
27	1542999C1	SEAL	rod, NSS, order 1543260C1 kit below	1
		Part of seal kit P/N 1543260C1.	Part of seal kit P/N 1543260C1.	1
28	1542998C1	SEALING RING	buffer, NSS, order 1543260C1 kit below	1
		Part of seal kit P/N 1543260C1.	Part of seal kit P/N 1543260C1.	1
29	238-5233	O-RING,-233, 70 Duro, 2.859" ID x .139" Thk	Gland -233, 70 Duro, 2.859" ID x .139" Thk	1
		Part of seal kit P/N 1543260C1.	Part of seal kit P/N 1543260C1.	1
30	G32122	RING	backup, gland O-ring	1
		Part of seal kit P/N 1543260C1.	Part of seal kit P/N 1543260C1.	1
	G110053	GASKET KIT	KIT seal, Includes: Ref. 5 - 10 and 15 - 17, no longer available, order 1543260C1 kit below	1

Diag #	Part #	Name	Description	Qty
	1543260C1	SEAL KIT	KIT, SEALS, Incl Ref 15 - 17, 24 - 30 and an instruction sheet	1

http://www.minnparbackhoeparts.com/

(580SK) - CASE SUPER-K CONSTRUCTION KING LOADER BACKHOE > (8-117A) - LOADER LIFT CYLINDERS

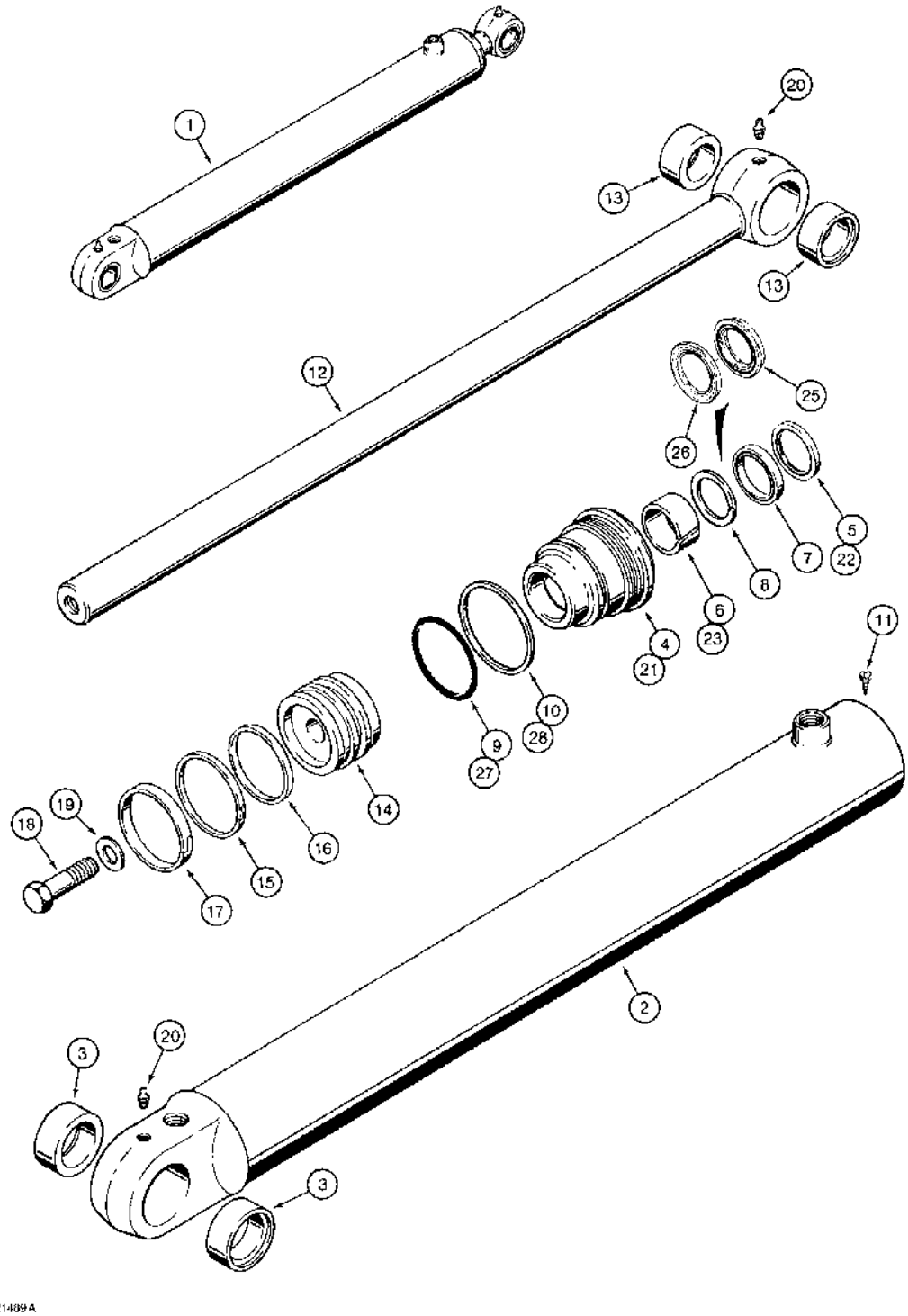

http://www.minnparbackhoeparts.com/

(580SK) - CASE SUPER-K CONSTRUCTION KING LOADER BACKHOE > (8-117A) - LOADER LIFT CYLINDERS

Diag #	Part #	Name	Description	Qty
1	1340976C2	CYLINDER ASSY.	CYLINDER ASSEMBLY, 3-1/4, 82, ID x 29 inch, 740 mm, stroke, lift, right-hand and left-hand, without grease seals at rod and tube eyes, no longer available, order 110303A1 cylinder on Figure 8-117C, Includes: Ref. 2 - 28, P/N 1980322C1, P/N above Ref. 21	2
2	1340977C2	TUBE	ASSEMBLY cylinder, Includes: Ref. 3	1
3	1980335C1	BUSHING	tube	2
	1980322C1	GLAND	ASSEMBLY cylinder, no longer available, order Ref. 21, 1980321C2 gland and 1543260C1 seal kit, Includes: Ref. 4 through 10	1
4	NSS	NOT SERVICED SEPARATELY	GLAND cylinder	1
5	D95143	WIPER SEAL	WIPER piston rod, outer	1
		Part of seal kit P/N G110053.	Part of seal kit P/N G110053.	1
6	G102425	BUSHING	center	1
		Part of seal kit P/N G110053.	Part of seal kit P/N G110053.	1
7	G107922	SEAL	U-cup, with O-ring, piston rod, wide	1
		Part of seal kit P/N G110053.	Part of seal kit P/N G110053.	1
8	G109094	SEAL	buffer, grooved, piston rod, narrow	1
		Part of seal kit P/N G110053.	Part of seal kit P/N G110053.	1
9	238-5233	O-RING,-233, 70 Duro, 2.859" ID x .139" Thk	Gland -233, 70 Duro, 2.859" ID x .139" Thk	1
		Part of seal kit P/N G110053.	Part of seal kit P/N G110053.	1
10	G32122	RING	backup, gland O-ring	1
		Part of seal kit P/N G110053.	Part of seal kit P/N G110053.	1
11	276-2446	SELF-TAP SCREW,Hex Hd, #8 x 3/8"	SCREW - self-tapping, hex hd, No. 8 NC x 3/8 "	1
12	1341852C2	PISTON ROD	ROD ASSEMBLY piston, 1-3/4 inch, 44 mm, diameter, cylinder, no longer available, order 110304A1 rod on page 8-117C, Includes: Ref. 13	1
13	D144895	BUSHING	- piston rod	2
14	G108184	PISTON	cylinder	1
15	G102287	SEAL	piston	1

Diag #	Part #	Name	Description	Qty
		Part of seal kit P/N G110053.	Part of seal kit P/N G110053.	1
		Part of seal kit P/N 1543260C1.	Part of seal kit P/N 1543260C1.	1
16	S109444	RING	backup, piston seal	1
		Part of seal kit P/N G110053.	Part of seal kit P/N G110053.	1
		Part of seal kit P/N 1543260C1.	Part of seal kit P/N 1543260C1.	1
17	S109445	RING	wear, piston	1
		Part of seal kit P/N G110053.	Part of seal kit P/N G110053.	1
		Part of seal kit P/N 1543260C1.	Part of seal kit P/N 1543260C1.	1
18	25863R1	BOLT,Hex, 3/4" - 16 x 2 1/2", Gr 8	- hex, 3/4 NF x 2-1/2 inch, grade 8, replaces 28-1240	1
19	G32317	WASHER	flat, special	1
20	219-1	LUBE NIPPLE,1/8"-27 x .66 lg	FITTING grease, straight, 1/8 PT x 21/32 inch	2
	NSS	NOT SERVICED SEPARATELY	GLAND ASSEMBLY cylinder, Includes: Ref. 21 through 28	1
21	1980321C2	CYLINDER END CAP	GLAND cylinder	1
22	D95143	WIPER SEAL	WIPER piston rod	1
		Part of seal kit P/N 1543260C1.	Part of seal kit P/N 1543260C1.	1
23	G102425	BUSHING	center	1
		Part of seal kit P/N 1543260C1.	Part of seal kit P/N 1543260C1.	1
24	1542875C1	SEAL KIT	KIT, SEALS, NSS, Not shown, Incl Ref 25 and 26	1
		Part of seal kit P/N 1543260C1.	Part of seal kit P/N 1543260C1.	1
25	1542999C1	SEAL	rod, NSS, order 1543260C1 kit below	1
		Part of seal kit P/N 1543260C1.	Part of seal kit P/N 1543260C1.	1
26	1542998C1	SEALING RING	buffer, NSS, order 1543260C1 kit below	1
		Part of seal kit P/N 1543260C1.	Part of seal kit P/N 1543260C1.	1
27	238-5233	O-RING,-233, 70 Duro, 2.859" ID x .139" Thk	Gland -233, 70 Duro, 2.859" ID x .139" Thk	1
		Part of seal kit P/N 1543260C1.	Part of seal kit P/N 1543260C1.	1
28	G32122	RING	backup, gland O-ring	1
		Part of seal kit P/N 1543260C1.	Part of seal kit P/N 1543260C1.	1

Diag #	Part #	Name	Description	Qty
	G110053	GASKET KIT	KIT seal, Includes: Ref. 5 - 10 and 15 - 17, no longer available, order 1543260C1 kit below	1
	1543260C1	SEAL KIT	KIT, SEALS, Incl Ref 15 - 17, 22 - 28 and an instruction sheet	1

http://www.minnparbackhoeparts.com/

(580SK) - CASE SUPER-K CONSTRUCTION KING LOADER BACKHOE > (8-117C) - LOADER LIFT CYLINDERS

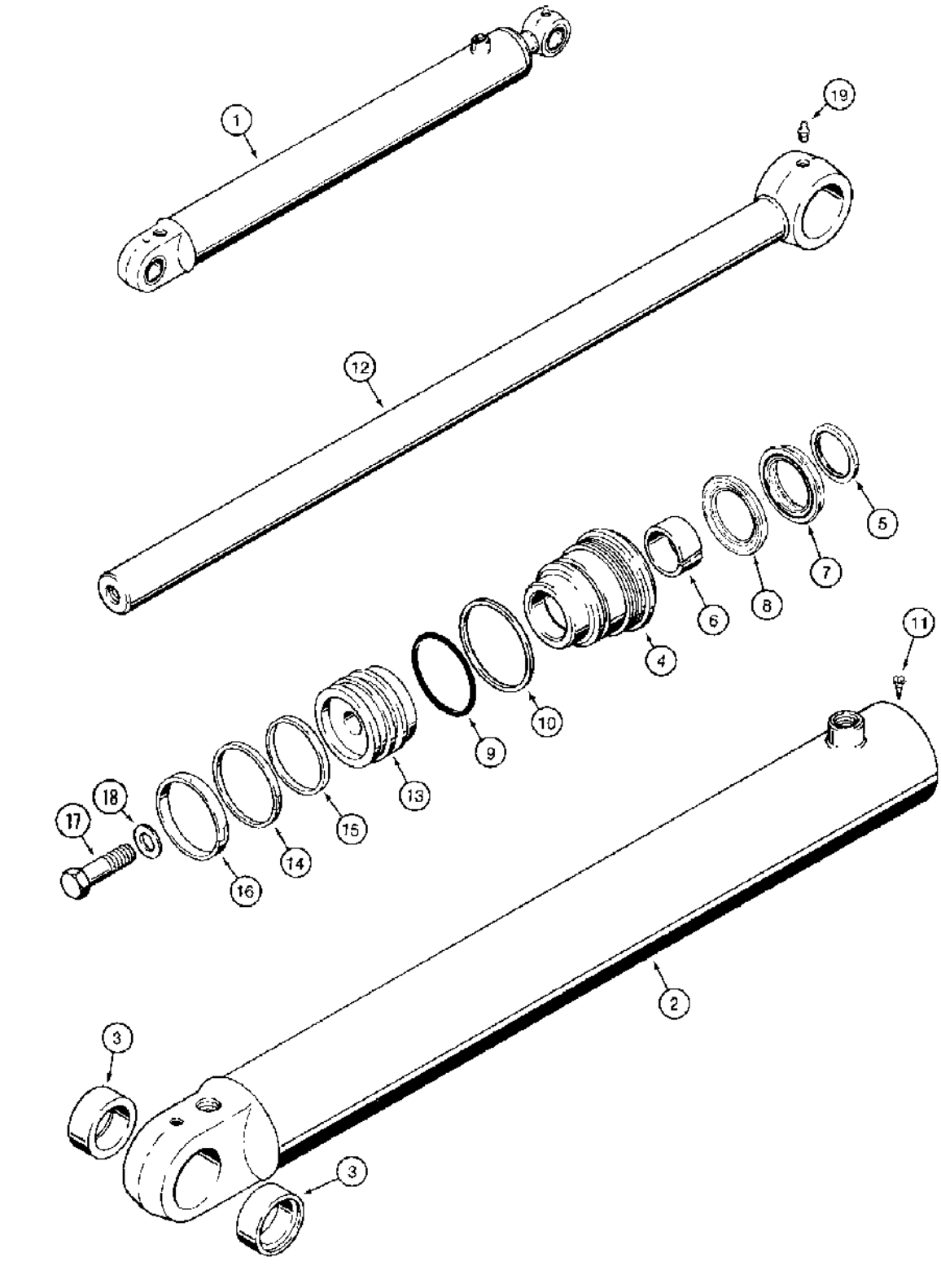

(580SK) - CASE SUPER-K CONSTRUCTION KING LOADER BACKHOE > (8-117C) - LOADER LIFT CYLINDERS

Diag #	Part #	Name	Description	Qty
1	110303A1	CYLINDER ASSY.	CYLINDER ASSEMBLY, 3-1/4, 82, ID x 29 inch, 740 mm, stroke, lift, right-hand and left-hand, without bushings at rod eyes, if used, Includes: Ref. 2 through 19, P/N NSS above Ref. 4 and P/N 1542875C1	2
2	1340977C2	TUBE	ASSEMBLY cylinder, Includes: Ref. 3	1
3	1980335C1	BUSHING	tube	2
	NSS	NOT SERVICED SEPARATELY	GLAND ASSEMBLY cylinder, Includes: Ref. 4 through 10	1
4	1980321C2	CYLINDER END CAP	GLAND cylinder	1
5	D95143	WIPER SEAL	WIPER piston rod	1
		Part of seal kit P/N 1543260C1.	Part of seal kit P/N 1543260C1.	1
6	G102425	BUSHING	center	1
		Part of seal kit P/N 1543260C1.	Part of seal kit P/N 1543260C1.	1
	1542875C1	SEAL KIT	KIT, SEALS, NSS, Order 1543260C1 kit below, Incl Ref 7 and 8	1
7	1542999C1	SEAL	rod, NSS, order 1543260C1 kit below	1
		Part of seal kit P/N 1543260C1.	Part of seal kit P/N 1543260C1.	1
8	1542998C1	SEALING RING	buffer, NSS, order 1543260C1 kit below	1
		Part of seal kit P/N 1543260C1.	Part of seal kit P/N 1543260C1.	1
9	238-5233	O-RING,-233, 70 Duro, 2.859" ID x .139" Thk	Gland -233, 70 Duro, 2.859" ID x .139" Thk	1
		Part of seal kit P/N 1543260C1.	Part of seal kit P/N 1543260C1.	1
10	G32122	RING	backup, gland O-ring	1
		Part of seal kit P/N 1543260C1.	Part of seal kit P/N 1543260C1.	1
11	276-2446	SELF-TAP SCREW,Hex Hd, #8 x 3/8"	SCREW - self-tapping, hex hd, No. 8 NC x 3/8 "	1
12	110304A1	PISTON ROD	ROD piston, 1-3/4 inch, 44 mm, diameter, cylinder, without bushings	1
13	G108184	PISTON	cylinder	1
14	G102287	SEAL	piston	1
		Part of seal kit P/N 1543260C1.	Part of seal kit P/N 1543260C1.	1
15	S109444	RING	backup, piston seal	1
		Part of seal kit P/N 1543260C1.	Part of seal kit P/N 1543260C1.	1

Diag #	Part #	Name	Description	Qty
16	S109445	RING	wear, piston	1
		Part of seal kit P/N 1543260C1.	Part of seal kit P/N 1543260C1.	1
17	25863R1	BOLT,Hex, 3/4" - 16 x 2 1/2", Gr 8	- hex, 3/4 NF x 2-1/2 inch, grade 8, replaces 28-1240	1
18	G32317	WASHER	flat, special	1
19	219-1	LUBE NIPPLE,1/8"-27 x .66 lg	FITTING grease, straight, 1/8 PT x 21/32 inch	1
	1543260C1	SEAL KIT	KIT, SEALS, Incl Ref 5 - 10, 14 - 16 and an instruction sheet	1

http://www.minnparbackhoeparts.com/

(580SK) - CASE SUPER-K CONSTRUCTION KING LOADER BACKHOE > (8-118) - LOADER BUCKET CYLINDERS

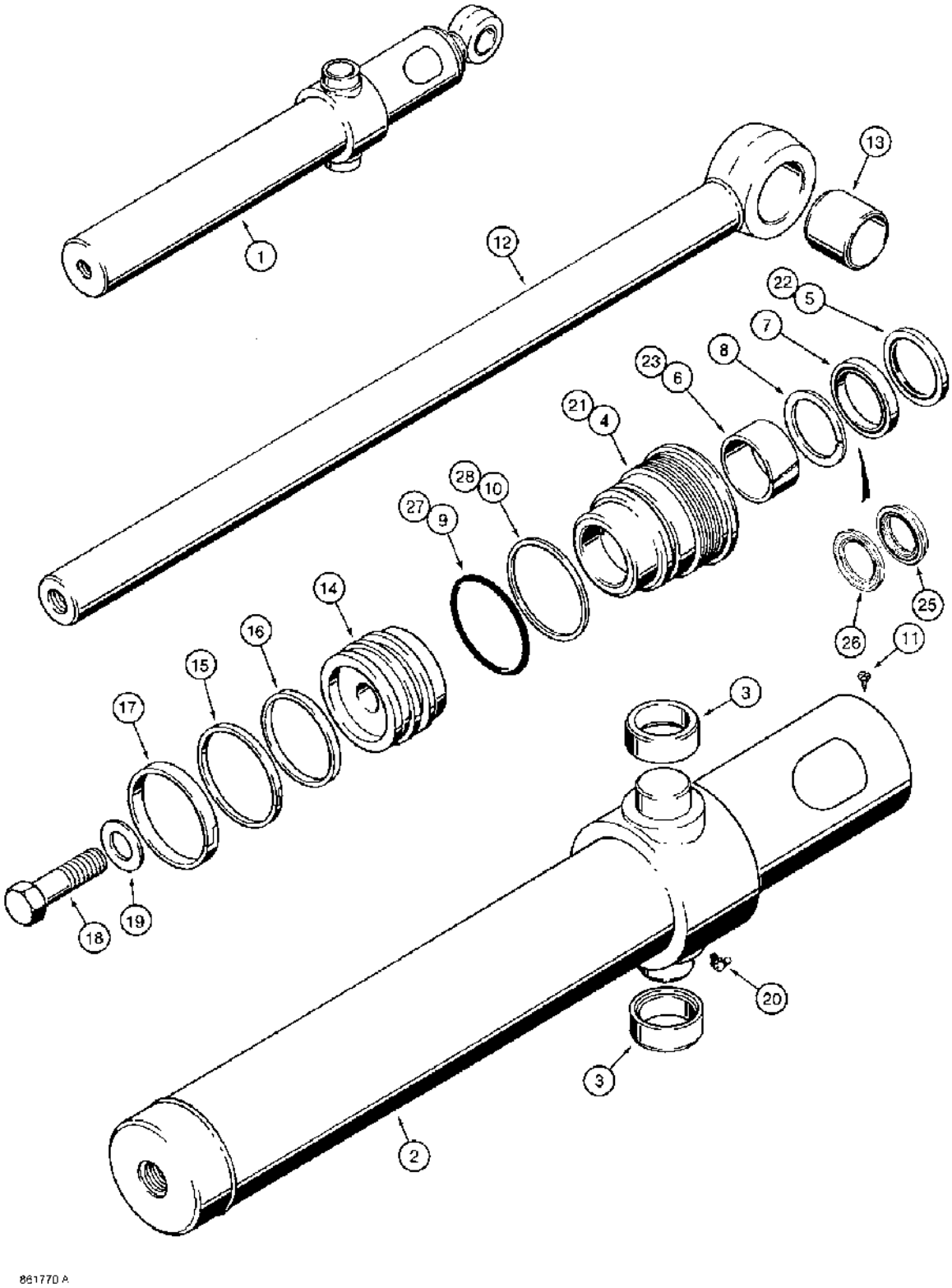

http://www.minnparbackhoeparts.com/

(580SK) - CASE SUPER-K CONSTRUCTION KING LOADER BACKHOE > (8-118) - LOADER BUCKET CYLINDERS

Diag #	Part #	Name	Description	Qty
1	G108486	CYLINDER ASSY.	CYLINDER ASSEMBLY, 76 mm ID x 522 mm stroke, bucket, right-hand, includes bushings in cylinder tube	1
		The cylinder assembly part number is stamped on some cylinder glands or tubes.	The cylinder assembly part number is stamped on some cylinder glands or tubes.	1
1	G108487	CYLINDER ASSY.	CYLINDER ASSEMBLY, 76 mm ID x 522 mm stroke, bucket, left-hand, includes bushings in cylinder tube, Includes: Ref. 2 through 28, P/N G109882, P/N G109880 and P/N NSS above Ref. 21	1
		The cylinder assembly part number is stamped on some cylinder glands or tubes.	The cylinder assembly part number is stamped on some cylinder glands or tubes.	1
2	G108508	TUBE,76.1 mm ID x 76.2 mm DIA x 695 mm L	ASSEMBLY cylinder, right-hand	1
2	G108509	TUBE,76.1 mm ID x 76.2 mm DIA x 695 mm L	ASSEMBLY cylinder, left-hand, Includes: Ref. 3	1
3	G108512	BUSHING	G108508 or G108509 tube	2
	G109882	GLAND	ASSEMBLY cylinder, no longer available, order Ref. 21, G109881 gland and 1543256C1 seal kit	1
	G109880	GLAND	ASSEMBLY cylinder, no longer available, order Ref. 21, G109881 gland and 1543256C1 seal kit, Includes: Ref. 4 through 10	1
4	NSS	NOT SERVICED SEPARATELY	GLAND cylinder	1
5	D95142	WIPER SEAL	WIPER piston rod, outer	1
		Part of seal kit P/N G110050.	Part of seal kit P/N G110050.	1
6	G102424	BUSHING	- Center	1
		Part of seal kit P/N G110050.	Part of seal kit P/N G110050.	1
7	G107921	SEAL	U-cup, with O-ring, piston rod, wide	1
		Part of seal kit P/N G110050.	Part of seal kit P/N G110050.	1
8	G109093	SEAL	buffer, grooved, piston rod, narrow	1
		Part of seal kit P/N G110050.	Part of seal kit P/N G110050.	1
9	238-5231	O-RING,-231, 70 Duro, 2.609" ID x .139" Thk	Gland -231, 70 Duro, 2.609" ID x .139" Thk	1
		Part of seal kit P/N G110050.	Part of seal kit P/N G110050.	1

Diag #	Part #	Name	Description	Qty
10	G109298	RING	backup, gland O-ring	1
		Part of seal kit P/N G110050.	Part of seal kit P/N G110050.	1
11	276-2446	SELF-TAP SCREW,Hex Hd, #8 x 3/8"	SCREW - self-tapping, hex hd, No. 8 NC x 3/8 "	1
12	1978056C1	PISTON ROD	ROD ASSEMBLY piston, 38 mm diameter, no longer available, order 110307A1 on Figure 8-119A, Includes: Ref. 13	1
13	G108507	BUSHING	piston rod	1
14	G108518	PISTON	cylinder	1
15	G102288	SEAL	- Piston	1
		Part of seal kit P/N G110050.	Part of seal kit P/N G110050.	1
		Part of seal kit P/N 1543256C1.	Part of seal kit P/N 1543256C1.	1
16	G100444	SEALING RING	RING backup, piston seal	1
		Part of seal kit P/N G110050.	Part of seal kit P/N G110050.	1
		Part of seal kit P/N 1543256C1.	Part of seal kit P/N 1543256C1.	1
17	G100449	WEAR RING	RING wear, piston	1
		Part of seal kit P/N G110050.	Part of seal kit P/N G110050.	1
		Part of seal kit P/N 1543256C1.	Part of seal kit P/N 1543256C1.	1
18	25863R1	BOLT,Hex, 3/4" - 16 x 2 1/2", Gr 8	- hex, 3/4 NF x 2-1/2 inch, grade 8, replaces 28-1240	1
19	S94643	WASHER	flat, special	1
20	219-55	LUBE NIPPLE,90º, 1/8" NPT x .84" lg	NIPPLE, LUBE, 90º, 1/8" NPT x .84" lg	1
	NSS	NOT SERVICED SEPARATELY	GLAND ASSEMBLY cylinder, Includes: Ref. 21 through 28	1
21	G109881	GLAND	cylinder	1
22	D95142	WIPER SEAL	WIPER piston rod	1
		Part of seal kit P/N 1543256C1.	Part of seal kit P/N 1543256C1.	1
23	G102424	BUSHING	- Center	1
		Part of seal kit P/N 1543256C1.	Part of seal kit P/N 1543256C1.	1
24	1542874C1	SEAL KIT	KIT, SEALS, NSS, Not shown, Incl Ref 25 and 26	1
		Part of seal kit P/N 1543256C1.	Part of seal kit P/N 1543256C1.	1
25	1542997C1	SEALING RING	rod, NSS, order 1543256C1 kit below	1
		Part of seal kit P/N 1543256C1.	Part of seal kit P/N 1543256C1.	1
26	1542996C1	SEAL	buffer, NSS, order 1543256C1 kit below	1

Diag #	Part #	Name	Description	Qty
		Part of seal kit P/N 1543256C1.	Part of seal kit P/N 1543256C1.	1
27	238-5231	O-RING,-231, 70 Duro, 2.609" ID x .139" Thk	Gland -231, 70 Duro, 2.609" ID x .139" Thk	1
		Part of seal kit P/N 1543256C1.	Part of seal kit P/N 1543256C1.	1
28	G109298	RING	backup, gland O-ring	1
		Part of seal kit P/N 1543256C1.	Part of seal kit P/N 1543256C1.	1
	G110050	KIT	seal, Includes: Ref. 5 - 10 and 15 - 17, no longer available, order 1543256C1 kit below	1
	1543256C1	SEAL KIT	KIT, SEALS, Incl Ref 15 - 17, 22 - 28 and an instruction sheet	1

http://www.minnparbackhoeparts.com/

(580SK) - CASE SUPER-K CONSTRUCTION KING LOADER BACKHOE > (8-119A) - LOADER BUCKET CYLINDERS

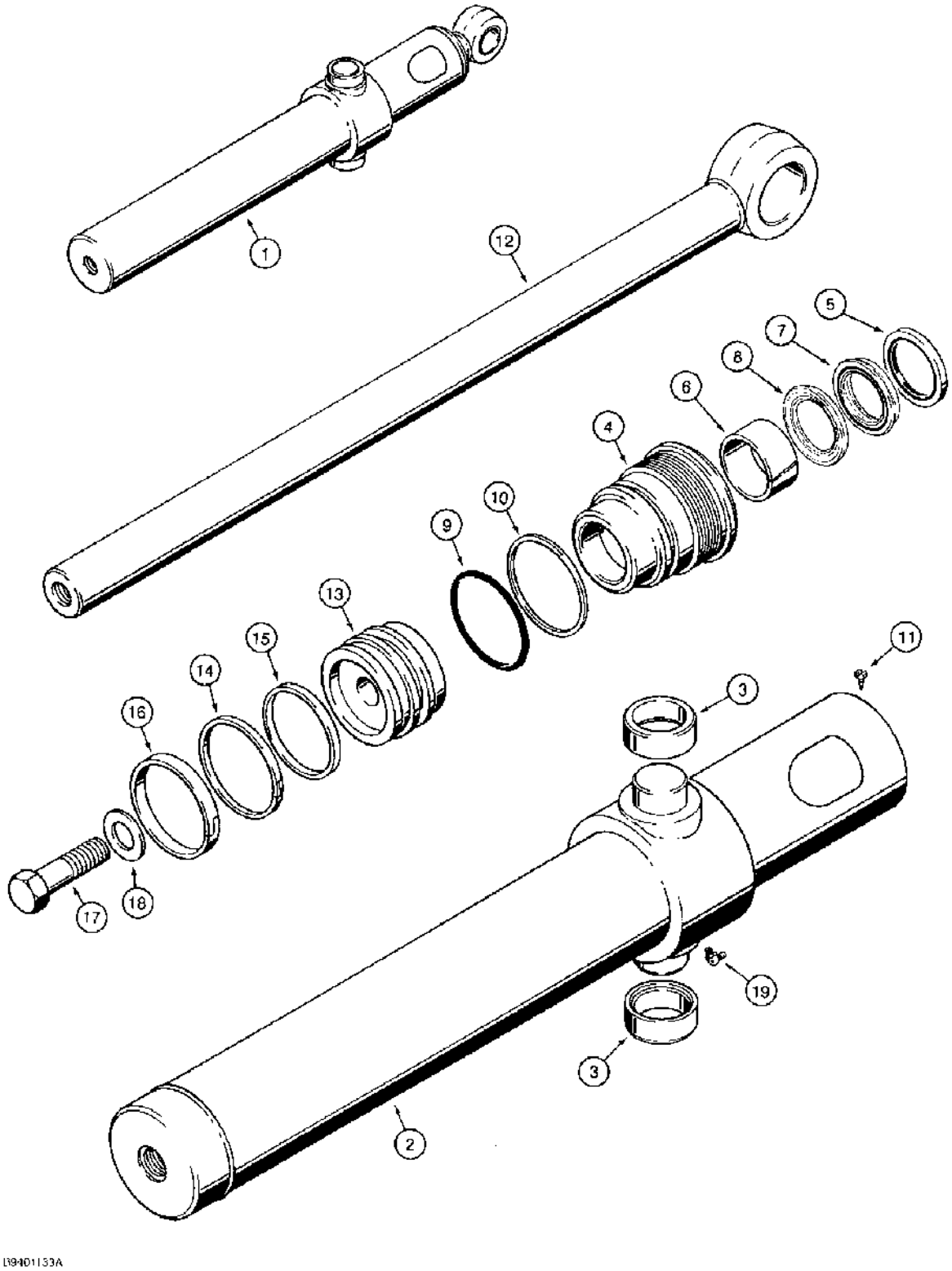

(580SK) - CASE SUPER-K CONSTRUCTION KING LOADER BACKHOE > (8-119A) - LOADER BUCKET CYLINDERS

Diag #	Part #	Name	Description	Qty
1	110306A1	CYLINDER ASSY.	CYLINDER ASSEMBLY, 76 mm ID x 522 mm stroke, bucket, right-hand, includes bushings in cylinder tube and without bushings at rod eye	1
1	110309A1	CYLINDER ASSY.	CYLINDER ASSEMBLY, 76 mm ID x 522 mm stroke, bucket, left-hand, includes bushings in cylinder tube and without bushings at rod eye, Includes: Ref. 2 through 19, P/N NSS above Ref. 4 and P/N 1542874C1	1
2	G108508	TUBE,76.1 mm ID x 76.2 mm DIA x 695 mm L	ASSEMBLY cylinder, right-hand	1
2	G108509	TUBE,76.1 mm ID x 76.2 mm DIA x 695 mm L	ASSEMBLY cylinder, left-hand, Includes: Ref. 3	1
3	G108512	BUSHING	G108508 or G108509 tube	2
	NSS	NOT SERVICED SEPARATELY	GLAND ASSEMBLY cylinder, Includes: Ref. 4 through 10	1
4	G109881	GLAND	cylinder	1
5	D95142	WIPER SEAL	WIPER piston rod	1
		Part of seal kit P/N 1543256C1.	Part of seal kit P/N 1543256C1.	1
6	G102424	BUSHING	- Center	1
		Part of seal kit P/N 1543256C1.	Part of seal kit P/N 1543256C1.	1
	1542874C1	SEAL KIT	KIT, SEALS, NSS, Order 1543256C1 kit below, Incl Ref 7 and 8	1
7	1542997C1	SEALING RING	rod, NSS, order 1543256C1 kit below	1
		Part of seal kit P/N 1543256C1.	Part of seal kit P/N 1543256C1.	1
8	1542996C1	SEAL	buffer, NSS, order 1543256C1 kit below	1
		Part of seal kit P/N 1543256C1.	Part of seal kit P/N 1543256C1.	1
9	238-5231	O-RING,-231, 70 Duro, 2.609" ID x .139" Thk	Gland -231, 70 Duro, 2.609" ID x .139" Thk	1
		Part of seal kit P/N 1543256C1.	Part of seal kit P/N 1543256C1.	1
10	G109298	RING	backup, gland O-ring	1
		Part of seal kit P/N 1543256C1.	Part of seal kit P/N 1543256C1.	1
11	276-2446	SELF-TAP SCREW,Hex Hd, #8 x 3/8"	SCREW - self-tapping, hex hd, No. 8 NC x 3/8 "	1
12	110307A1	PISTON ROD	ROD piston, 38 mm diameter, without bushings in eye	1

Diag #	Part #	Name	Description	Qty
13	G108518	PISTON	cylinder	1
14	G102288	SEAL	- Piston	1
		Part of seal kit P/N 1543256C1.	Part of seal kit P/N 1543256C1.	1
15	G100444	SEALING RING	RING backup, piston seal	1
		Part of seal kit P/N 1543256C1.	Part of seal kit P/N 1543256C1.	1
16	G100449	WEAR RING	RING wear, piston	1
		Part of seal kit P/N 1543256C1.	Part of seal kit P/N 1543256C1.	1
17	25863R1	BOLT,Hex, 3/4" - 16 x 2 1/2", Gr 8	- hex, 3/4 NF x 2-1/2 inch, grade 8, replaces 28-1240	1
18	S94643	WASHER	flat, special	1
19	219-55	LUBE NIPPLE,90º, 1/8" NPT x .84" lg	NIPPLE, LUBE, 90º, 1/8" NPT x .84" lg	1
	1543256C1	SEAL KIT	KIT, SEALS, Incl Ref 5 - 10, 14 - 16 and an instruction sheet	1

http://www.minnparbackhoeparts.com/

(580SK) - CASE SUPER-K CONSTRUCTION KING LOADER BACKHOE > (8-120) - LOADER CLAM CYLINDERS

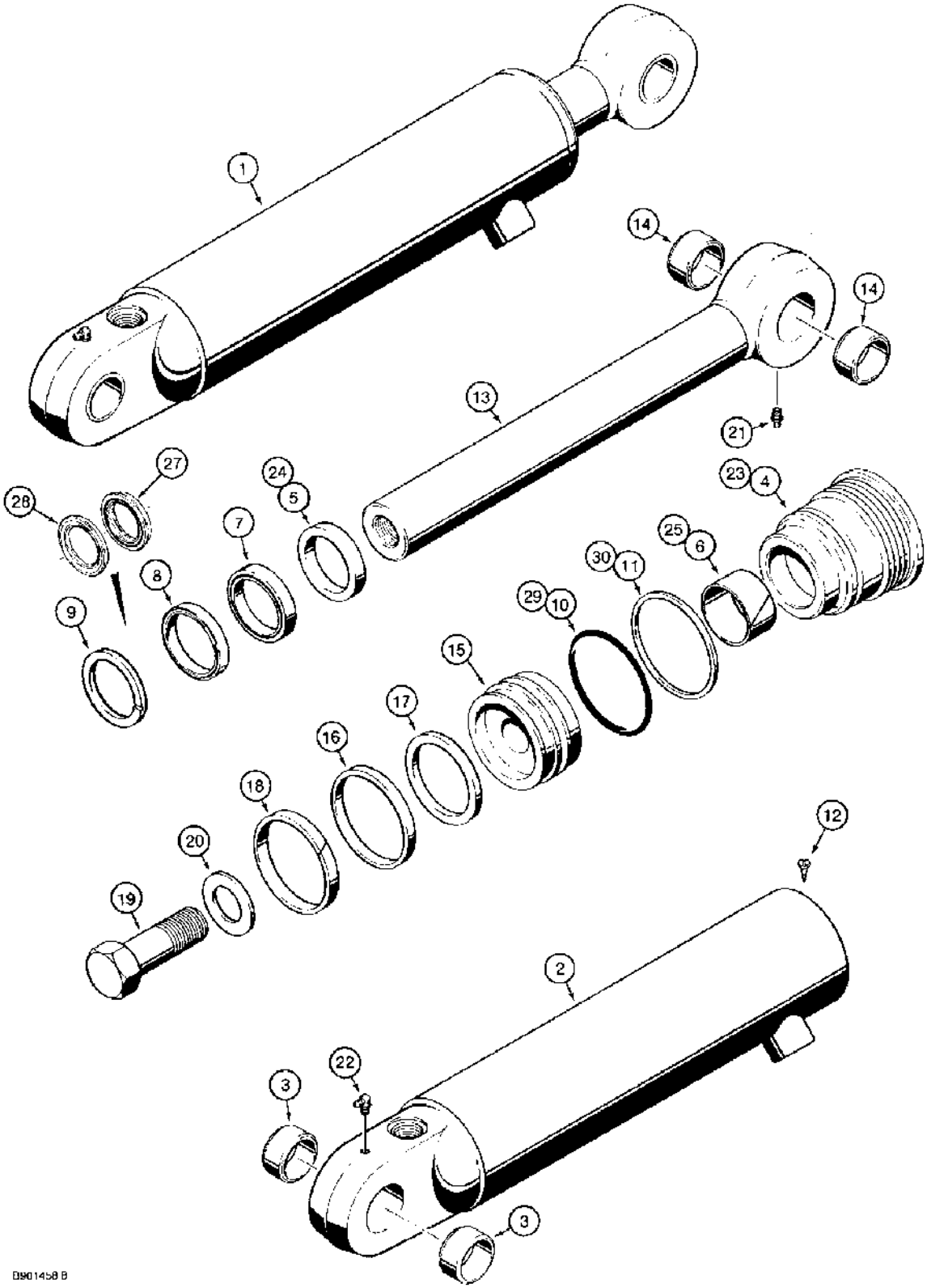

(580SK) - CASE SUPER-K CONSTRUCTION KING LOADER BACKHOE > (8-120) - LOADER CLAM CYLINDERS

Diag #	Part #	Name	Description	Qty
1	1346189C1	CYLINDER ASSY.	CYLINDER ASSEMBLY, 3, 76, ID x 9 inch, 229 mm, stroke, clam, right-hand	1
	87454017R	REMAN-HYD CYLINDER	580SK CASE SUPER-K CONSTRUCTION KING; Reman for New P/N 1346189C1	1
	87454017C	CORE-HYD CYLINDER	Return Number	1
1	1346190C1	CYLINDER ASSY.	CYLINDER ASSEMBLY, 3, 76, ID x 9 inch, 229 mm, stroke, clam, left-hand 2 through 30, P/N G109885 and P/N NSS above Ref. 23	1
2	1346191C1	TUBE	ASSEMBLY right-hand cylinder	1
2	1346192C1	TUBE	ASSEMBLY left-hand cylinder, Includes: Ref. 3	1
3	30634	BUSHING	1346191C1 or 1346192C1 tube	2
	G109885	GLAND	ASSEMBLY cylinder, no longer available, order Ref. 23, G109884 gland and 1543267C1 seal kit, Includes: Ref. 4 through 11	1
4	NSS	NOT SERVICED SEPARATELY	GLAND cylinder	1
5	D95143	WIPER SEAL	WIPER piston rod	1
		Part of seal kit P/N G110049.	Part of seal kit P/N G110049.	1
6	G102425	BUSHING	center	1
		Part of seal kit P/N G110049.	Part of seal kit P/N G110049.	1
7	G107922	SEAL	U-cup, with O-ring, piston rod, wide	1
		Part of seal kit P/N G110049.	Part of seal kit P/N G110049.	1
8	G100777	SEAL	U-cup, piston rod, service option - severe heat or cold	1
9	G109094	SEAL	buffer, grooved, piston rod, narrow	1
		Part of seal kit P/N G110049.	Part of seal kit P/N G110049.	1
10	238-5231	O-RING,-231, 70 Duro, 2.609" ID x .139" Thk	Gland -231, 70 Duro, 2.609" ID x .139" Thk	1
		Part of seal kit P/N G110049.	Part of seal kit P/N G110049.	1
11	G109298	RING	backup, gland O-ring	1
		Part of seal kit P/N G110049.	Part of seal kit P/N G110049.	1
12	276-2446	SELF-TAP SCREW,Hex Hd, #8 x 3/8"	SCREW - self-tapping, hex hd, No. 8 NC x 3/8 "	1

Diag #	Part #	Name	Description	Qty
13	1346195C1	PISTON ROD	ROD ASSEMBLY piston, 44 mm diameter, Includes: Ref. 14	1
14	30634	BUSHING	piston rod	2
15	1340798C1	PISTON	cylinder	1
16	G102288	SEAL	- Piston	1
		Part of seal kit P/N G110049.	Part of seal kit P/N G110049.	1
		Part of seal kit P/N 1543267C1.	Part of seal kit P/N 1543267C1.	1
17	G100444	SEALING RING	RING backup, piston seal	1
		Part of seal kit P/N G110049.	Part of seal kit P/N G110049.	1
		Part of seal kit P/N 1543267C1.	Part of seal kit P/N 1543267C1.	1
18	G100449	WEAR RING	RING wear, piston	1
		Part of seal kit P/N G110049.	Part of seal kit P/N G110049.	1
		Part of seal kit P/N 1543267C1.	Part of seal kit P/N 1543267C1.	1
19	25974R1	BOLT,Hex, 1" - 14 x 2 1/2", Gr 8	hex, 1 NS x 2-1/2 inch, grade 8, replaces 28-1640	1
20	G32303	WASHER	flat, 1 inch, hardened	1
21	219-1	LUBE NIPPLE,1/8"-27 x .66 lg	FITTING grease, straight, 1/8 PT x 21/32 inch	1
22	219-55	LUBE NIPPLE,90º, 1/8" NPT x .84" lg	NIPPLE, LUBE, 90º, 1/8" NPT x .84" lg	1
	NSS	NOT SERVICED SEPARATELY	GLAND ASSEMBLY cylinder, Includes: Ref. 23 through 30	1
23	G109884	CYLINDER END CAP	GLAND cylinder	1
24	D95143	WIPER SEAL	WIPER piston rod	1
		Part of seal kit P/N 1543267C1.	Part of seal kit P/N 1543267C1.	1
25	G102425	BUSHING	center	1
		Part of seal kit P/N 1543267C1.	Part of seal kit P/N 1543267C1.	1
26	1542875C1	SEAL KIT	KIT, SEALS, NSS, Not shown, Incl Ref 27 and 28	1
		Part of seal kit P/N 1543267C1.	Part of seal kit P/N 1543267C1.	1
27	1542999C1	SEAL	rod, NSS, order 1543267C1 kit below	1
		Part of seal kit P/N 1543267C1.	Part of seal kit P/N 1543267C1.	1
28	1542998C1	SEALING RING	buffer, NSS, order 1543267C1 kit below	1
		Part of seal kit P/N 1543267C1.	Part of seal kit P/N 1543267C1.	1
29	238-5231	O-RING,-231, 70 Duro, 2.609" ID x .139" Thk	Gland -231, 70 Duro, 2.609" ID x .139" Thk	1

Diag #	Part #	Name	Description	Qty
		Part of seal kit P/N 1543267C1.	Part of seal kit P/N 1543267C1.	1
30	G109298	RING	backup, gland O-ring	1
		Part of seal kit P/N 1543267C1.	Part of seal kit P/N 1543267C1.	1
	G110049	KIT	seal, Includes: Ref. 5 - 7, 9 - 11 and 16 - 18, no longer available, order 1543267C1 kit below	1
	1543267C1	SEAL KIT	KIT, SEALS, Incl Ref 16 - 18, 24 - 30 and an instruction sheet	1

http://www.minnparbackhoeparts.com/

(580SK) - CASE SUPER-K CONSTRUCTION KING LOADER BACKHOE > (8-122) - BACKHOE STABILIZER CYLINDERS

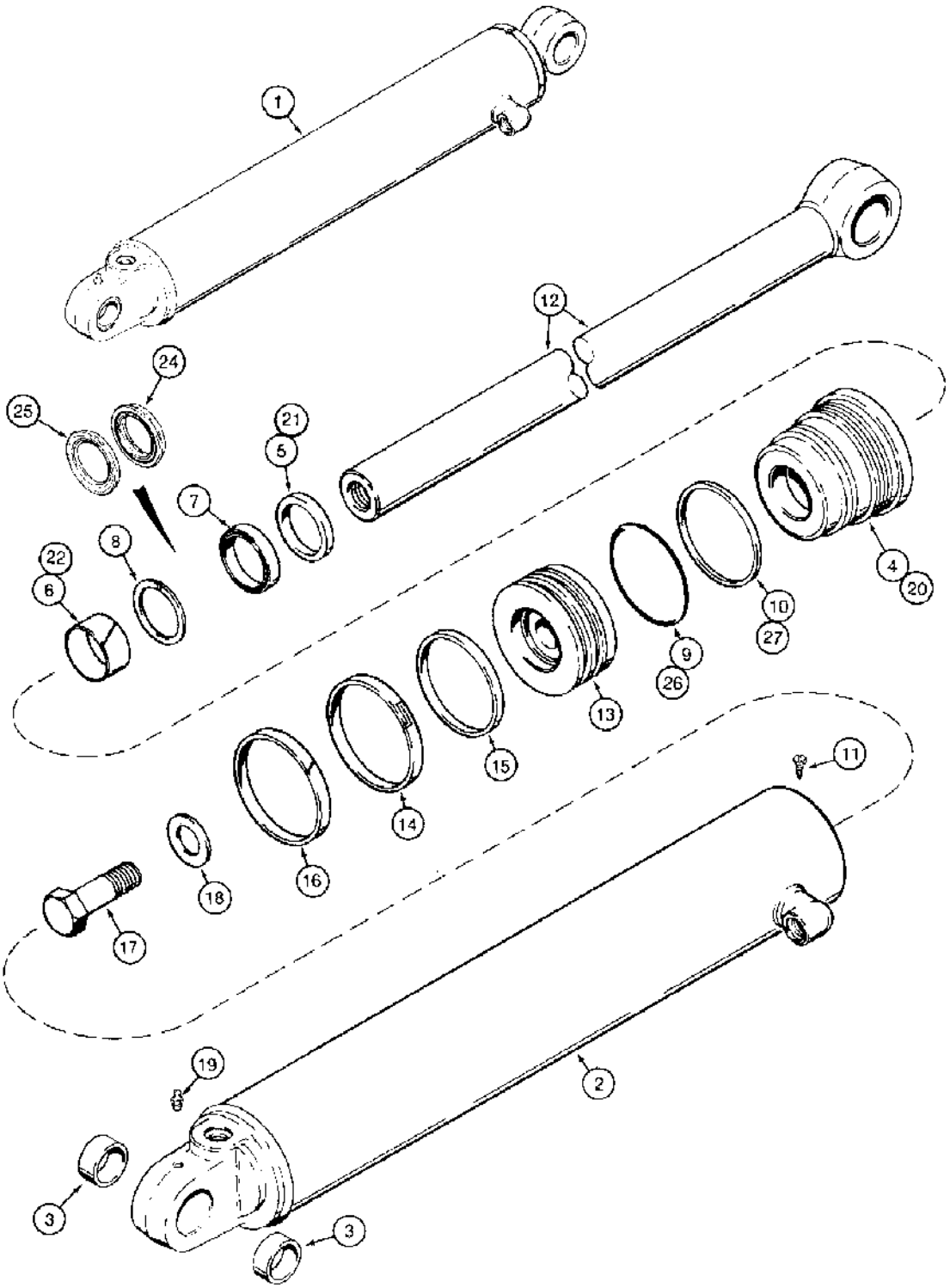

(580SK) - CASE SUPER-K CONSTRUCTION KING LOADER BACKHOE > (8-122) - BACKHOE STABILIZER CYLINDERS

Diag #	Part #	Name	Description	Qty
1	1986804C1	CYLINDER ASSY.	CYLINDER ASSEMBLY, 4-1/4, 108, ID x 21-3/4 inch, 553 mm, stroke, stabilizer, right-hand, without rod bushings, no longer available, order 110298A1 cylinder on Figure 8-123A	1
1	1986805C1	CYLINDER ASSY.	CYLINDER ASSEMBLY, 4-1/4, 108, ID x 21-3/4 inch, 553 mm, stroke, stabilizer, left-hand, without rod bushings, no longer available, order 110301A1 cylinder on Figure 8-123A, Includes: Ref. 2 through 27, P/N G110520 and P/N NSS above Ref. 20	1
2	1986806C1	HYD. TUBE	TUBE ASSEMBLY cylinder, right-hand, no longer available, order 110299A1 tube on Figure 8-123A	1
2	1986807C1	HYD. TUBE	TUBE ASSEMBLY cylinder, left-hand, no longer available, order 110302A1 tube on Figure 8-123A, Includes: Ref. 3	1
3	D33047	BUSHING	1986806C1 or 1986807C1 tube	2
	G110520	GLAND	ASSEMBLY cylinder, no longer available, order Ref. 20, G110519 gland and 1543275C1 seal kit, Includes: Ref. 4 through 10	1
4	NSS	NOT SERVICED SEPARATELY	GLAND cylinder	1
5	D95144	WIPER SEAL	Wiper - piston rod	1
		Part of seal kit P/N G110537.	Part of seal kit P/N G110537.	1
6	G101533	WEAR RING	BUSHING center	1
		Part of seal kit P/N G110537.	Part of seal kit P/N G110537.	1
7	G107923	SEAL	U-cup, with O-ring, piston rod, wide	1
		Part of seal kit P/N G110537.	Part of seal kit P/N G110537.	1
8	G107997	SEAL	buffer, grooved, piston rod, narrow	1
		Part of seal kit P/N G110537.	Part of seal kit P/N G110537.	1
9	238-5241	O-RING,-241, 70 Duro, 3.859" ID x .139" Thk	O-RING,-241, 70 Duro, 3.859" ID x .139" Thk	1
		Part of seal kit P/N G110537.	Part of seal kit P/N G110537.	1
10	G32176	BACK-UP RING	Gland O-Ring	1
		Part of seal kit P/N G110537.	Part of seal kit P/N G110537.	1

Diag #	Part #	Name	Description	Qty
11	276-2446	SELF-TAP SCREW,Hex Hd, #8 x 3/8"	SCREW - self-tapping, hex hd, No. 8 NC x 3/8 "	1
12	1978060C1	PISTON ROD	ROD piston, 2 inch, 51 mm, diameter	1
13	G110522	PISTON	cylinder	1
13	G110522	PISTON	cylinder	1
14	G110531	SEALING RING	piston	1
		Part of seal kit P/N G110537.	Part of seal kit P/N G110537.	1
		Part of seal kit P/N 1543275C1.	Part of seal kit P/N 1543275C1.	1
15	G110529	RING	backup, piston seal	1
		Part of seal kit P/N G110537.	Part of seal kit P/N G110537.	1
		Part of seal kit P/N 1543275C1.	Part of seal kit P/N 1543275C1.	1
16	G110530	RING	wear, piston	1
		Part of seal kit P/N G110537.	Part of seal kit P/N G110537.	1
		Part of seal kit P/N 1543275C1.	Part of seal kit P/N 1543275C1.	1
17	28-1648	BOLT,Hex, 1" - 14 x 3", Gr 8	hex, 1 National Superfine x 3 inch, grade 8	1
18	G32303	WASHER	flat, 1 inch, hardened	1
19	219-1	LUBE NIPPLE,1/8"-27 x .66 lg	FITTING grease, straight, 1/8 PT x 21/32 inch	1
	NSS	NOT SERVICED SEPARATELY	GLAND ASSEMBLY cylinder, Includes: Ref. 20 through 27	1
20	G110519	CYLINDER END CAP	GLAND cylinder	1
21	D95144	WIPER SEAL	Wiper - piston rod	1
		Part of seal kit P/N 1543275C1.	Part of seal kit P/N 1543275C1.	1
22	G101533	WEAR RING	BUSHING center	1
		Part of seal kit P/N 1543275C1.	Part of seal kit P/N 1543275C1.	1
23	1542876C1	SEAL KIT	KIT, SEALS, NSS, Not shown, Incl Ref 24 and 25	1
		Part of seal kit P/N 1543275C1.	Part of seal kit P/N 1543275C1.	1
24	1543001C1	SEAL	rod, NSS, order 1543275C1 kit below	1
		Part of seal kit P/N 1543275C1.	Part of seal kit P/N 1543275C1.	1
25	1543000C1	SEAL	buffer, NSS, order 1543275C1 kit below	1
		Part of seal kit P/N 1543275C1.	Part of seal kit P/N 1543275C1.	1
26	238-5241	O-RING,-241, 70 Duro, 3.859" ID x .139" Thk	Gland -241, 70 Duro, 3.859" ID x .139" Thk	1

Diag #	Part #	Name	Description	Qty
		Part of seal kit P/N 1543275C1.	Part of seal kit P/N 1543275C1.	1
27	G32176	BACK-UP RING	Gland O-Ring	1
		Part of seal kit P/N 1543275C1.	Part of seal kit P/N 1543275C1.	1
	G110537	KIT	seal, Includes: Ref. 5 - 10 and 14 - 16, no longer available, order 1543275C1 kit below	1
	1543275C1	SEAL KIT	KIT, SEALS, Incl Ref 14 - 16, 21 - 27 and an instruction sheet	1

http://www.minnparbackhoeparts.com/

(580SK) - CASE SUPER-K CONSTRUCTION KING LOADER BACKHOE > (8-123A) - BACKHOE STABILIZER CYLINDERS

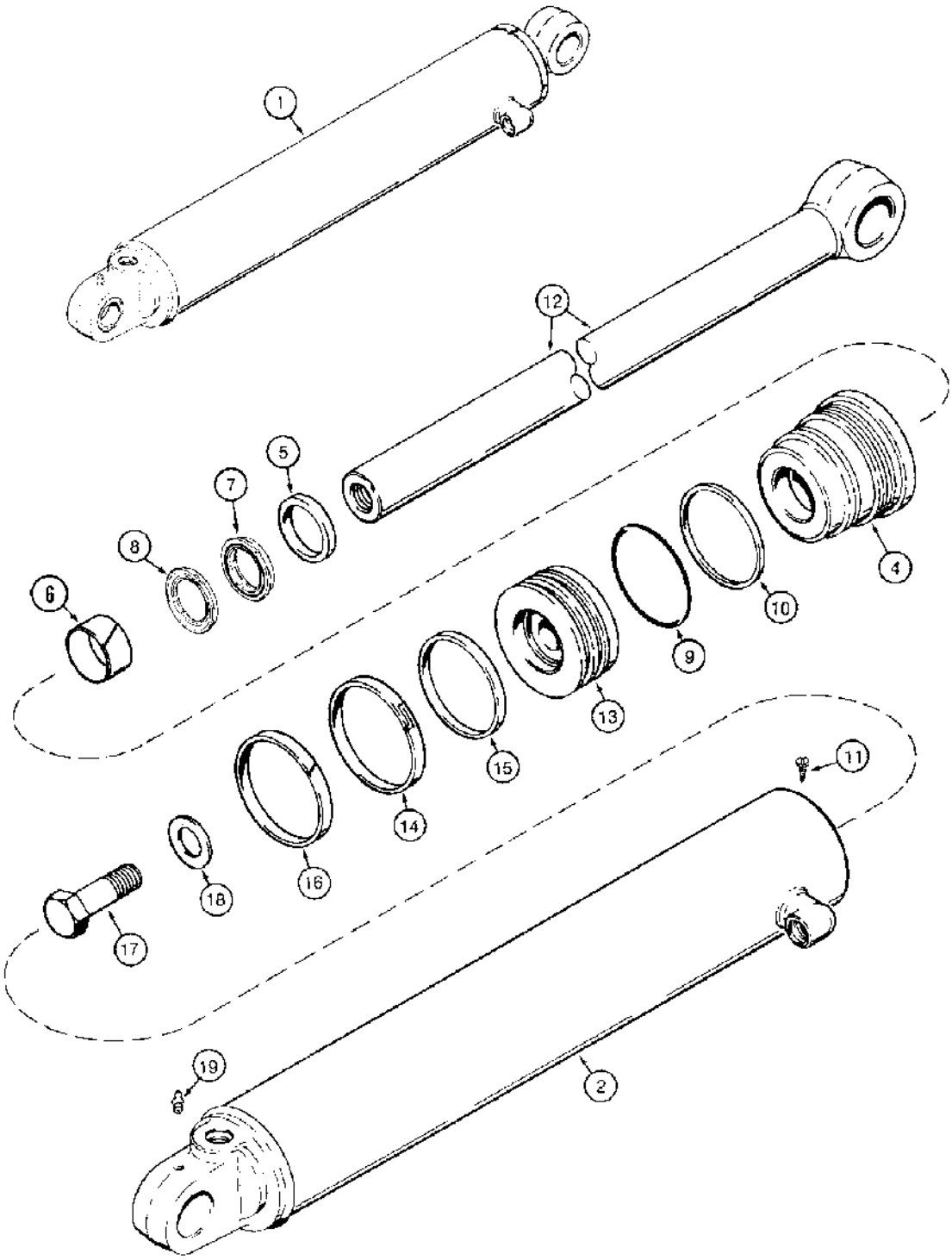

(580SK) - CASE SUPER-K CONSTRUCTION KING LOADER BACKHOE > (8-123A) - BACKHOE STABILIZER CYLINDERS

Diag #	Part #	Name	Description	Qty
1	110298A1	CYLINDER ASSY.	CYLINDER ASSEMBLY, 4-1/4, 108, ID x 21-3/4 inch, 553 mm, stroke, stabilizer, right-hand, without tube or rod bushings, see note	1
1	110301A1	CYLINDER ASSY.	CYLINDER ASSEMBLY, 4-1/4, 108, ID x 21-3/4 inch, 553 mm, stroke, stabilizer, left-hand, without tube or rod bushings, see note, Includes: Ref. 2 through 19 and P/N NSS above Ref. 4	1
2	110299A1	TUBE,107.82 mm ID, 780 mm Length	ASSEMBLY cylinder, right-hand	1
2	110302A1	TUBE,107.82 mm ID, 780 mm Length	ASSEMBLY cylinder, left-hand	1
	NSS	NOT SERVICED SEPARATELY	GLAND ASSEMBLY cylinder, Includes: Ref. 4 through 10	1
4	G110519	CYLINDER END CAP	GLAND cylinder	1
5	D95144	WIPER SEAL	Wiper - piston rod	1
		Part of seal kit P/N 1543275C1.	Part of seal kit P/N 1543275C1.	1
6	G101533	WEAR RING	BUSHING center	1
		Part of seal kit P/N 1543275C1.	Part of seal kit P/N 1543275C1.	1
	1542876C1	SEAL KIT	KIT, SEALS, NSS, Incl Ref 7 and 8	1
		Part of seal kit P/N 1543275C1.	Part of seal kit P/N 1543275C1.	1
7	1543001C1	SEAL	rod, NSS, order 1543275C1 kit below	1
		Part of seal kit P/N 1543275C1.	Part of seal kit P/N 1543275C1.	1
8	1543000C1	SEAL	buffer, NSS, order 1543275C1 kit below	1
		Part of seal kit P/N 1543275C1.	Part of seal kit P/N 1543275C1.	1
9	238-5241	O-RING,-241, 70 Duro, 3.859" ID x .139" Thk	Gland -241, 70 Duro, 3.859" ID x .139" Thk	1
		Part of seal kit P/N 1543275C1.	Part of seal kit P/N 1543275C1.	1
10	G32176	BACK-UP RING	Gland O-Ring	1
		Part of seal kit P/N 1543275C1.	Part of seal kit P/N 1543275C1.	1
11	276-2446	SELF-TAP SCREW,Hex Hd, #8 x 3/8"	SCREW - self-tapping, hex hd, No. 8 NC x 3/8 "	1
12	1978060C1	PISTON ROD	ROD piston, 2 inch, 51 mm, diameter	1
13	G110522	PISTON	cylinder	1
14	G110531	SEALING RING	piston	1

Diag #	Part #	Name	Description	Qty
		Part of seal kit P/N 1543275C1.	Part of seal kit P/N 1543275C1.	1
15	G110529	RING	backup, piston seal	1
		Part of seal kit P/N 1543275C1.	Part of seal kit P/N 1543275C1.	1
16	G110530	RING	wear, piston	1
		Part of seal kit P/N 1543275C1.	Part of seal kit P/N 1543275C1.	1
17	28-1648	BOLT,Hex, 1" - 14 x 3", Gr 8	hex, 1 National Superfine x 3 inch, grade 8	1
18	G32303	WASHER	flat, 1 inch, hardened	1
19	219-1	LUBE NIPPLE,1/8"-27 x .66 lg	FITTING grease, straight, 1/8 PT x 21/32 inch	1
	1543275C1	SEAL KIT	KIT, SEALS, Incl Ref 5 - 10, 14 - 16 and an instruction sheet	1

http://www.minnparbackhoeparts.com/

(580SK) - CASE SUPER-K CONSTRUCTION KING LOADER BACKHOE > (8-124) - BACKHOE SWING CYLINDERS

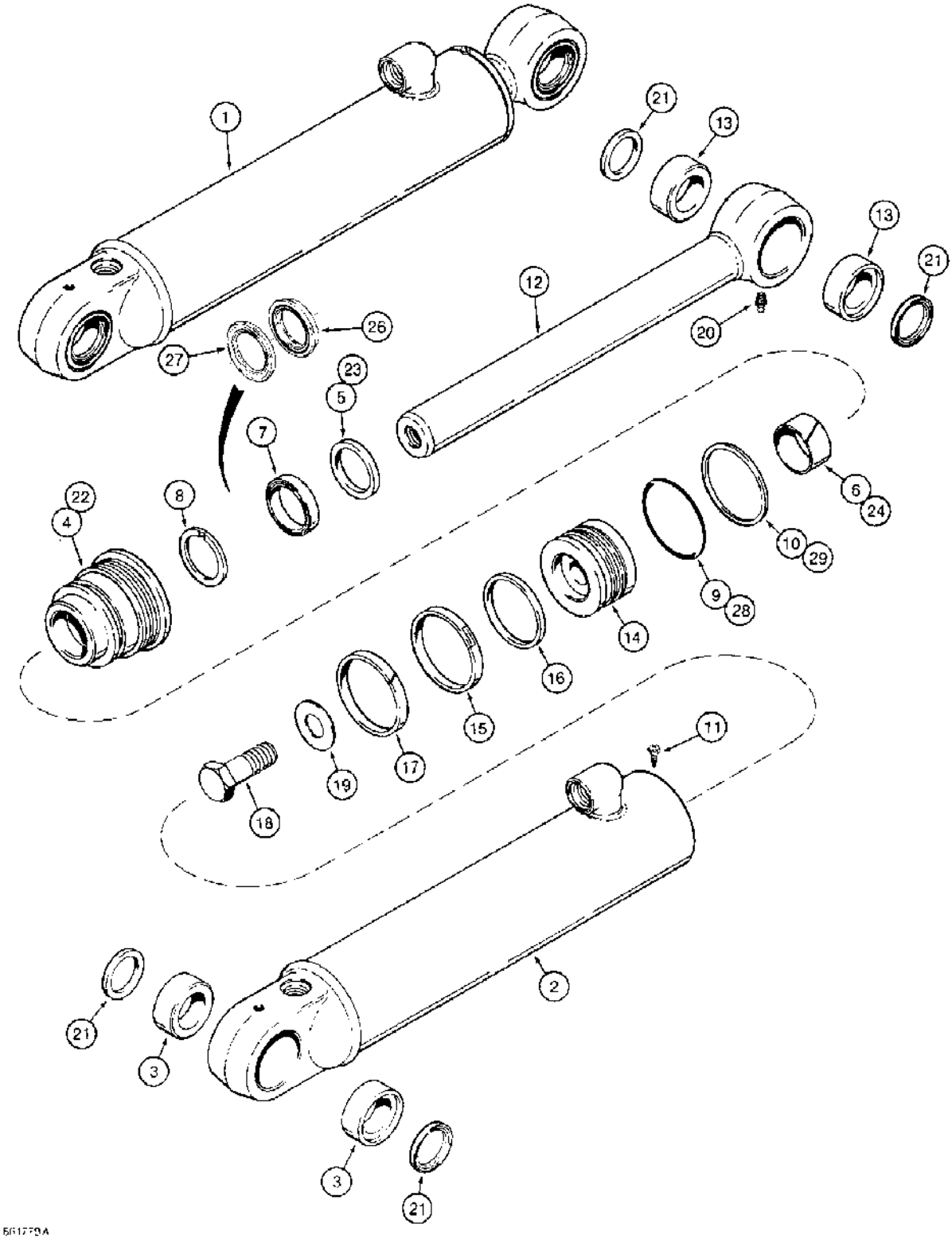

(580SK) - CASE SUPER-K CONSTRUCTION KING LOADER BACKHOE > (8-124) - BACKHOE SWING CYLINDERS

Diag #	Part #	Name	Description	Qty
1	1971702C2	CYLINDER ASSY.	CYLINDER ASSEMBLY, 3-1/2, 89, ID x 12 inch, 305 mm, stroke, swing, with grease seals (Ref. 21) at rod and tube eyes, if used, Includes: Ref. 2 through 29 and P/N NSS above Ref. 22	2
2	1971704C1	TUBE	ASSEMBLY cylinder, order 1971704C2 tube on Figure 8-126, Includes: Ref. 3	1
3	G108526	BUSHING	tube	2
	1978135C1	JACK PISTON	GLAND ASSEMBLY cylinder, no longer available, order Ref. 22, 1971707C1 gland and 1543266C1 seal kit, Includes: Ref. 4 through 10	1
4	NSS	NOT SERVICED SEPARATELY	GLAND cylinder	1
5	D95143	WIPER SEAL	WIPER piston rod, outer	1
		Part of seal kit P/N G110621.	Part of seal kit P/N G110621.	1
6	G102425	BUSHING	center	1
		Part of seal kit P/N G110621.	Part of seal kit P/N G110621.	1
7	G107922	SEAL	U-cup, with O-ring, piston rod, wide	1
		Part of seal kit P/N G110621.	Part of seal kit P/N G110621.	1
8	G109094	SEAL	buffer, grooved, piston rod, narrow	1
		Part of seal kit P/N G110621.	Part of seal kit P/N G110621.	1
9	238-5235	O-RING,-235, 70 Duro, 3.109" ID x .139" Thk	Gland -235, 70 Duro, 3.109" ID x .139" Thk	1
		Part of seal kit P/N G110621.	Part of seal kit P/N G110621.	1
10	D38858	BACK-UP RING,82.93 mm ID	RING backup, gland O-ring	1
		Part of seal kit P/N G110621.	Part of seal kit P/N G110621.	1
11	276-2446	SELF-TAP SCREW,Hex Hd, #8 x 3/8"	SCREW - self-tapping, hex hd, No. 8 NC x 3/8 "	1
12	1978061C1	PISTON ROD	ROD ASSEMBLY piston, 1-3/4 inch, 44 mm, diameter, order 1978061C3 rod on Figure 8-127A, Includes: Ref. 13	1
13	1542668C1	BUSHING	piston rod	2
		This Ref. is the same except there is no groove for the seal because the	This Ref. is the same except there is no groove for the seal because the 1542668C1 does not need the seal. When replacing	1

Diag #	Part #	Name	Description	Qty
		1542668C1 does not need the seal. When replacing G108526 with 1542668C1, the seals are no longer required.	G108526 with 1542668C1, the seals are no longer required.	
14	G110110	PISTON	cylinder	1
15	G102286	SEAL	- piston	1
		Part of seal kit P/N G110621.	Part of seal kit P/N G110621.	1
		Part of seal kit P/N 1543266C1.	Part of seal kit P/N 1543266C1.	1
16	G100710	RING	backup, piston seal	1
		Part of seal kit P/N G110621.	Part of seal kit P/N G110621.	1
		Part of seal kit P/N 1543266C1.	Part of seal kit P/N 1543266C1.	1
17	G100711	WEAR RING	Piston	1
		Part of seal kit P/N G110621.	Part of seal kit P/N G110621.	1
		Part of seal kit P/N 1543266C1.	Part of seal kit P/N 1543266C1.	1
18	25863R1	BOLT,Hex, 3/4" - 16 x 2 1/2", Gr 8	- hex, 3/4 NF x 2-1/2 inch, grade 8, replaces 28-1240	1
19	S94643	WASHER	flat, special	1
20	219-1	LUBE NIPPLE,1/8"-27 x .66 lg	FITTING grease, straight, 1/8 PT x 21/32 inch	1
21	D127833	SEAL	rod and tube eye	4
	NSS	NOT SERVICED SEPARATELY	GLAND ASSEMBLY cylinder, Includes: Ref. 22 through 29	1
22	1971707C1	CYLINDER END CAP	GLAND cylinder	1
23	D95143	WIPER SEAL	WIPER piston rod	1
		Part of seal kit P/N 1543266C1.	Part of seal kit P/N 1543266C1.	1
24	G102425	BUSHING	center	1
		Part of seal kit P/N 1543266C1.	Part of seal kit P/N 1543266C1.	1
25	1542875C1	SEAL KIT	KIT, SEALS, NSS, Not shown, Incl Ref 26 and 27	1
		Part of seal kit P/N 1543266C1.	Part of seal kit P/N 1543266C1.	1
26	1542999C1	SEAL	rod, NSS, order 1543266C1 kit below	1
		Part of seal kit P/N 1543266C1.	Part of seal kit P/N 1543266C1.	1
27	1542998C1	SEALING RING	buffer, NSS, order 1543266C1 kit below	1
		Part of seal kit P/N 1543266C1.	Part of seal kit P/N 1543266C1.	1

Diag #	Part #	Name	Description	Qty
28	238-5235	O-RING,-235, 70 Duro, 3.109" ID x .139" Thk	Gland -235, 70 Duro, 3.109" ID x .139" Thk	1
		Part of seal kit P/N 1543266C1.	Part of seal kit P/N 1543266C1.	1
29	D38858	BACK-UP RING,82.93 mm ID	RING backup, gland O-ring	1
		Part of seal kit P/N 1543266C1.	Part of seal kit P/N 1543266C1.	1
	G110621	SEAL PACKAGE	KIT seal, Includes: Ref. 5 - 10 and 15 - 17, no longer available, order 1543266C1 kit below	1
	1543266C1	SEAL KIT	KIT seal, Includes: Ref. 15 - 17, 23 - 29 and an instruction sheet	1

http://www.minnparbackhoeparts.com/

(580SK) - CASE SUPER-K CONSTRUCTION KING LOADER BACKHOE > (8-126) - BACKHOE SWING CYLINDERS

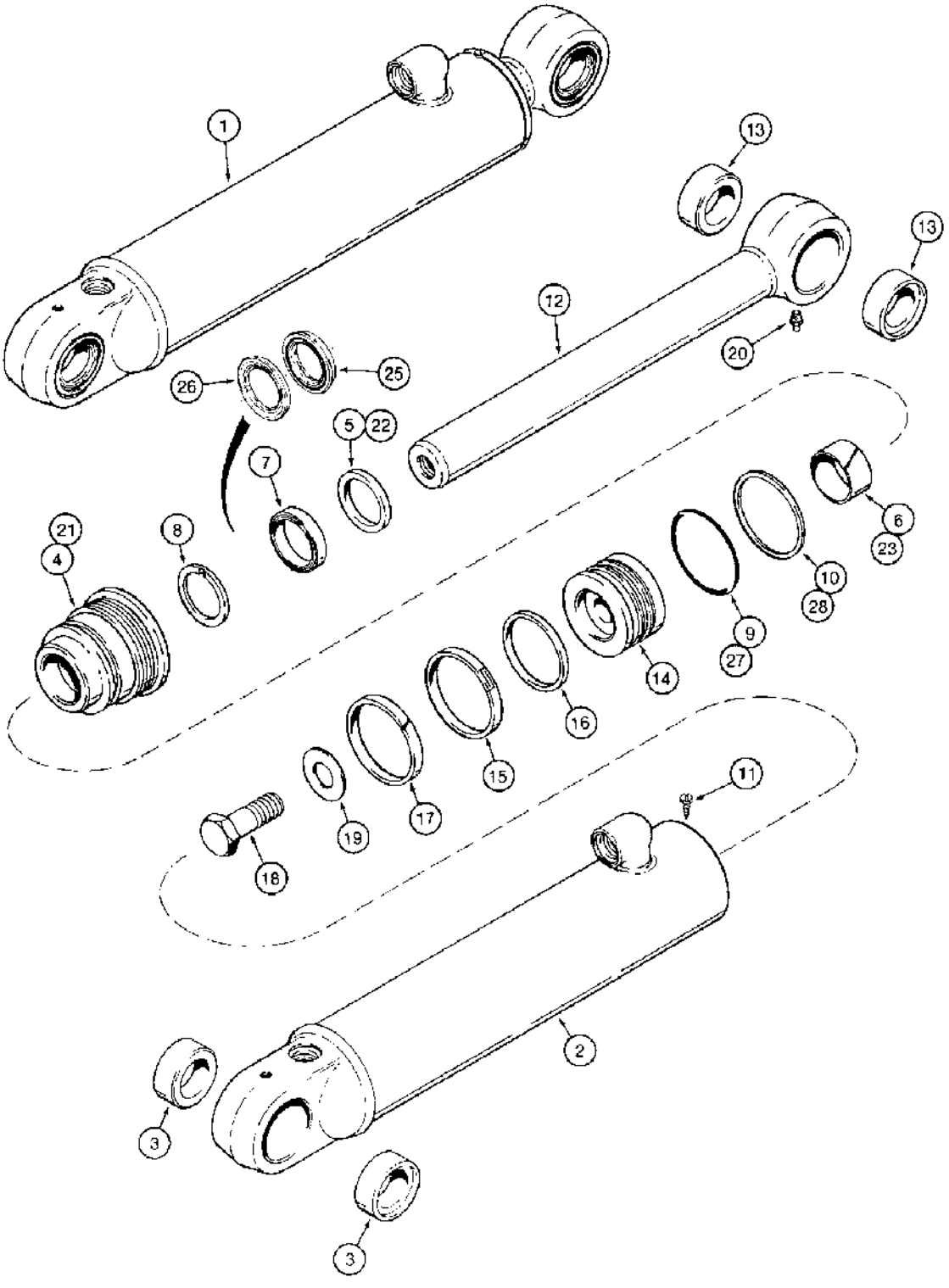

(580SK) - CASE SUPER-K CONSTRUCTION KING LOADER BACKHOE > (8-126) - BACKHOE SWING CYLINDERS

Diag #	Part #	Name	Description	Qty
1	1971702C3	CYLINDER ASSY.	CYLINDER ASSEMBLY, 3-1/2, 89, ID x 12 inch, 305 mm, stroke, swing, without grease seals at rod and tube eyes, if used, Includes: Ref. 2 through 28, P/N 1971703C1 and P/N NSS above Ref. 21	2
2	1971704C2	TUBE	ASSEMBLY cylinder, Includes: Ref. 3	1
3	1542668C1	BUSHING	tube	2
	1971703C1	CYLINDER END CAP	GLAND ASSEMBLY cylinder, no longer available, order Ref. 21, 1971707C1 gland and 1543266C1 seal kit, Includes: Ref. 4 through 10	1
4	NSS	NOT SERVICED SEPARATELY	GLAND cylinder	1
5	D95143	WIPER SEAL	WIPER piston rod, outer	1
		Part of seal kit P/N G110621.	Part of seal kit P/N G110621.	1
6	G102425	BUSHING	center	1
		Part of seal kit P/N G110621.	Part of seal kit P/N G110621.	1
7	G107922	SEAL	U-cup, with O-ring, piston rod, wide	1
		Part of seal kit P/N G110621.	Part of seal kit P/N G110621.	1
8	G109094	SEAL	buffer, grooved, piston rod, narrow	1
		Part of seal kit P/N G110621.	Part of seal kit P/N G110621.	1
9	238-5235	O-RING,-235, 70 Duro, 3.109" ID x .139" Thk	Gland -235, 70 Duro, 3.109" ID x .139" Thk	1
		Part of seal kit P/N G110621.	Part of seal kit P/N G110621.	1
10	D38858	BACK-UP RING,82.93 mm ID	RING backup, gland O-ring	1
		Part of seal kit P/N G110621.	Part of seal kit P/N G110621.	1
11	276-2446	SELF-TAP SCREW,Hex Hd, #8 x 3/8"	SCREW - self-tapping, hex hd, No. 8 NC x 3/8 "	1
12	1978061C1	PISTON ROD	ROD ASSEMBLY piston, 1-3/4 inch, 44 mm, diameter, order 1978061C3 rod on page 8-127A, Includes: Ref. 13	1
13	1542668C1	BUSHING	piston rod	2
14	G110110	PISTON	cylinder	1
15	G102286	SEAL	- piston	1
		Part of seal kit P/N G110621.	Part of seal kit P/N G110621.	1

Diag #	Part #	Name	Description	Qty
		Part of seal kit P/N 1543266C1.	Part of seal kit P/N 1543266C1.	1
16	G100710	RING	backup, piston seal	1
		Part of seal kit P/N G110621.	Part of seal kit P/N G110621.	1
		Part of seal kit P/N 1543266C1.	Part of seal kit P/N 1543266C1.	1
17	G100711	WEAR RING	Piston	1
		Part of seal kit P/N G110621.	Part of seal kit P/N G110621.	1
		Part of seal kit P/N 1543266C1.	Part of seal kit P/N 1543266C1.	1
18	25863R1	BOLT,Hex, 3/4" - 16 x 2 1/2", Gr 8	- hex, 3/4 NF x 2-1/2 inch, grade 8, replaces 28-1240	1
19	S94643	WASHER	flat, special	1
20	219-1	LUBE NIPPLE,1/8"-27 x .66 lg	FITTING grease, straight, 1/8 PT x 21/32 inch	1
	NSS	NOT SERVICED SEPARATELY	GLAND ASSEMBLY cylinder, Includes: Ref. 21 through 28	1
21	1971707C1	CYLINDER END CAP	GLAND cylinder	1
22	D95143	WIPER SEAL	WIPER piston rod	1
		Part of seal kit P/N 1543266C1.	Part of seal kit P/N 1543266C1.	1
23	G102425	BUSHING	center	1
		Part of seal kit P/N 1543266C1.	Part of seal kit P/N 1543266C1.	1
24	1542875C1	SEAL KIT	KIT, SEALS, NSS, Not shown, Incl Ref 25 and 26	1
		Part of seal kit P/N 1543266C1.	Part of seal kit P/N 1543266C1.	1
25	1542999C1	SEAL	rod, NSS, order 1543266C1 kit below	1
		Part of seal kit P/N 1543266C1.	Part of seal kit P/N 1543266C1.	1
26	1542998C1	SEALING RING	buffer, NSS, order 1543266C1 kit below	1
		Part of seal kit P/N 1543266C1.	Part of seal kit P/N 1543266C1.	1
27	238-5235	O-RING,-235, 70 Duro, 3.109" ID x .139" Thk	Gland -235, 70 Duro, 3.109" ID x .139" Thk	1
		Part of seal kit P/N 1543266C1.	Part of seal kit P/N 1543266C1.	1
28	D38858	BACK-UP RING,82.93 mm ID	RING backup, gland O-ring	1
		Part of seal kit P/N 1543266C1.	Part of seal kit P/N 1543266C1.	1
	G110621	SEAL PACKAGE	KIT seal, Includes: Ref. 5 - 10 and 15 - 17, no longer available, order 1543266C1 kit below	1

Diag #	Part #	Name	Description	Qty
	1543266C1	SEAL KIT	KIT seal, Includes: Ref. 15 - 17, 22 - 28 and an instruction sheet	1

http://www.minnparbackhoeparts.com/

(580SK) - CASE SUPER-K CONSTRUCTION KING LOADER BACKHOE > (8-127A) - BACKHOE SWING CYLINDERS

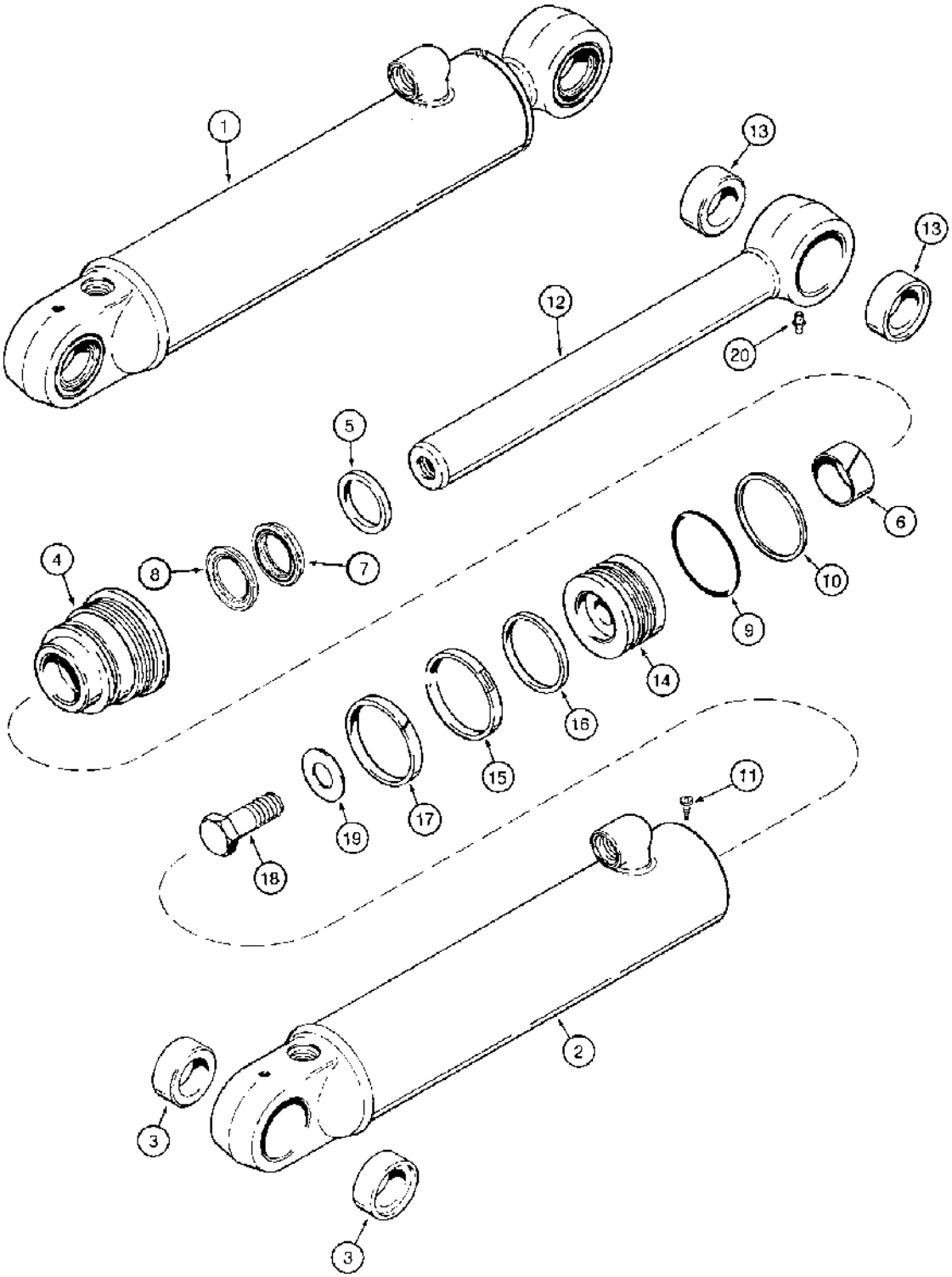

(580SK) - CASE SUPER-K CONSTRUCTION KING LOADER BACKHOE > (8-127A) - BACKHOE SWING CYLINDERS

Diag #	Part #	Name	Description	Qty
1	1971702C4	CYLINDER ASSY.	CYLINDER ASSEMBLY, 3-1/2, 89, ID x 12 inch, 305 mm, stroke, swing, without grease seals at rod and tube eyes, if used, Includes: Ref. 2 through 20 and P/N NSS above Ref. 4	2
2	1971704C2	TUBE	ASSEMBLY cylinder, Includes: Ref. 3	1
3	1542668C1	BUSHING	tube	2
	NSS	NOT SERVICED SEPARATELY	GLAND ASSEMBLY cylinder, Includes: Ref. 4 through 10	1
4	1971707C1	CYLINDER END CAP	GLAND cylinder	1
5	D95143	WIPER SEAL	WIPER piston rod	1
		Part of seal kit P/N 1543266C1.	Part of seal kit P/N 1543266C1.	1
6	G102425	BUSHING	center	1
		Part of seal kit P/N 1543266C1.	Part of seal kit P/N 1543266C1.	1
	1542875C1	SEAL KIT	KIT, SEALS, NSS, Not shown, Incl Ref 7 and 8	1
		Part of seal kit P/N 1543266C1.	Part of seal kit P/N 1543266C1.	1
7	1542999C1	SEAL	rod, NSS, order 1543266C1 kit below	1
		Part of seal kit P/N 1543266C1.	Part of seal kit P/N 1543266C1.	1
8	1542998C1	SEALING RING	buffer, NSS, order 1543266C1 kit below	1
		Part of seal kit P/N 1543266C1.	Part of seal kit P/N 1543266C1.	1
9	238-5235	O-RING,-235, 70 Duro, 3.109" ID x .139" Thk	Gland -235, 70 Duro, 3.109" ID x .139" Thk	1
		Part of seal kit P/N 1543266C1.	Part of seal kit P/N 1543266C1.	1
10	D38858	BACK-UP RING,82.93 mm ID	RING backup, gland O-ring	1
		Part of seal kit P/N 1543266C1.	Part of seal kit P/N 1543266C1.	1
11	276-2446	SELF-TAP SCREW,Hex Hd, #8 x 3/8"	SCREW - self-tapping, hex hd, No. 8 NC x 3/8 "	1
12	1978061C3	PISTON ROD	ROD ASSEMBLY piston, 1-3/4 inch, 44 mm, diameter, Includes: Ref. 13	1
13	1542668C1	BUSHING	piston rod	2
14	G110110	PISTON	cylinder	1
15	G102286	SEAL	- piston	1

Diag #	Part #	Name	Description	Qty
		Part of seal kit P/N 1543266C1.	Part of seal kit P/N 1543266C1.	1
16	G100710	RING	backup, piston seal	1
		Part of seal kit P/N 1543266C1.	Part of seal kit P/N 1543266C1.	1
17	G100711	WEAR RING	Piston	1
		Part of seal kit P/N 1543266C1.	Part of seal kit P/N 1543266C1.	1
18	25863R1	BOLT,Hex, 3/4" - 16 x 2 1/2", Gr 8	- hex, 3/4 NF x 2-1/2 inch, grade 8, replaces 28-1240	1
19	S94643	WASHER	flat, special	1
20	219-1	LUBE NIPPLE,1/8"-27 x .66 lg	FITTING grease, straight, 1/8 PT x 21/32 inch	1
	1543266C1	SEAL KIT	KIT seal, Includes: Ref. 5 - 10, 15 - 17 and an instruction sheet	1

http://www.minnparbackhoeparts.com/

(580SK) - CASE SUPER-K CONSTRUCTION KING LOADER BACKHOE > (8-128) - BACKHOE BOOM CYLINDER

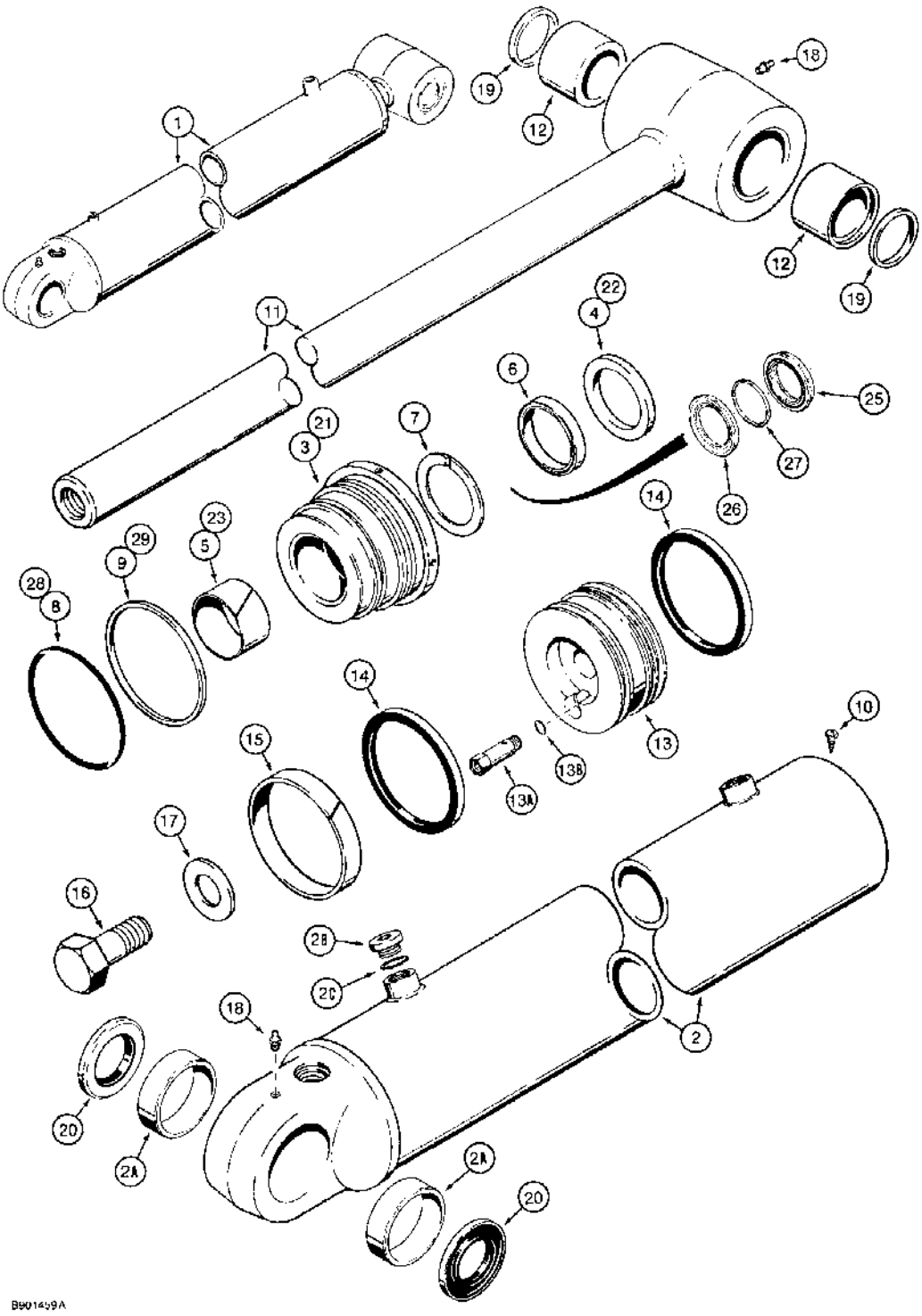

(580SK) - CASE SUPER-K CONSTRUCTION KING LOADER BACKHOE > (8-128) - BACKHOE BOOM CYLINDER

Diag #	Part #	Name	Description	Qty
1	1346217C1	CYLINDER ASSY.	CYLINDER ASSEMBLY, 5, 127, ID x 33-3/16 inch, 843 mm, stroke, boom, with grease seals (Ref. 19 and 20) at rod and tube eyes, no longer available, order 1543391C1 cylinder on Figure 8-131C, Includes: Ref. 2 through 29, P/N G110575 and P/N NSS above Ref. 21	1
2	1346015C1	TUBE,1069 mm Length	cylinder, Includes: Ref. 2A, 2B and 2 C	1
2A	D144421	BUSHING	tube	2
2B	86625138	PLUG,Hex Soc, 7/8"-14 ORB	Includes Ref. 2C Hex Soc, 7/8"-14 ORB	1
2C	237-6010	O-RING,0.239" ID x 0.379" OD x 0.07"	10-1, 90 Duro, .755" ID x .097" Thk	1
	G110575	GLAND	ASSEMBLY cylinder, has smooth outer lip, no longer available, order Ref. 21, 1542918C1 gland and 1542919C2 seal kit, Includes: Ref. 3 through 9	1
3	NSS	NOT SERVICED SEPARATELY	GLAND cylinder	1
4	G108712	WIPER	piston rod	1
		Part of seal kit P/N G110583.	Part of seal kit P/N G110583.	1
		Part of seal kit P/N 1542919C2.	Part of seal kit P/N 1542919C2.	1
5	G102426	BUSHING	- Center	1
		Part of seal kit P/N G110583.	Part of seal kit P/N G110583.	1
6	G107924	SEAL	U-cup, piston rod, with O-ring, wide	1
		Part of seal kit P/N G110583.	Part of seal kit P/N G110583.	1
7	G109086	RING	SEAL buffer, grooved, piston rod, narrow	1
		Part of seal kit P/N G110583.	Part of seal kit P/N G110583.	1
8	238-5247	O-RING,-247, 70 Duro, 4.609" ID x .139" Thk	Gland -247, 70 Duro, 4.609" ID x .139" Thk	1
		Part of seal kit P/N G110583.	Part of seal kit P/N G110583.	1
9	G107970	BACK-UP RING	Gland O-Ring	1
		Part of seal kit P/N G110583.	Part of seal kit P/N G110583.	1
10	276-2446	SELF-TAP SCREW,Hex Hd, #8 x 3/8"	SCREW - self-tapping, hex hd, No. 8 NC x 3/8 "	1

Diag #	Part #	Name	Description	Qty
11	1346224C1	PISTON ROD	ROD piston, 2-1/4 inch, 57 mm, diameter, Includes: Ref. 12	1
12	D141555	BUSHING	Rod	2
13	1346018C1	JACK PISTON	PISTON cylinder, used with 1958028C1 relief valve cartridge	1
13A	1958028C1	VALVE	ASSEMBLY relief, cartridge, internal component parts not serviced separately, Includes: Ref. 13B	1
14	G110269	SEAL	piston	2
		Part of seal kit P/N G110583.	Part of seal kit P/N G110583.	1
		Part of seal kit P/N 1542919C2.	Part of seal kit P/N 1542919C2.	1
15	G102090	RING	wear, piston	1
		Part of seal kit P/N G110583.	Part of seal kit P/N G110583.	1
		Part of seal kit P/N 1542919C2.	Part of seal kit P/N 1542919C2.	1
16	28-2048	BOLT,Hex, 1 1/4" - 12 x 3", Gr 8	BOLT,Hex, 1 1/4" - 12 x 3", Gr 8	1
17	G104989	WASHER	flat, 1-1/4 inch, hardened	1
18	219-1	LUBE NIPPLE,1/8"-27 x .66 lg	FITTING grease, straight, 1/8 PT x 21/32 inch	2
19	D123655	SEAL	rod end	2
20	D127974	SEAL	closed end	2
	NSS	NOT SERVICED SEPARATELY	GLAND ASSEMBLYcylinder, Includes: Ref. 21 through 29	1
21	1542918C1	CYLINDER END CAP	GLAND cylinder, has identification groove on outer lip	1
22	D95145	WIPER SEAL	WIPER piston rod	1
		Part of seal kit P/N 1542919C2.	Part of seal kit P/N 1542919C2.	1
23	G102426	BUSHING	- Center	1
		Part of seal kit P/N 1542919C2.	Part of seal kit P/N 1542919C2.	1
24	1542877C1	SEAL KIT	KIT seal, NSS, not shown, Includes: Ref. 25, 26 and 27	1
		Part of seal kit P/N 1542919C2.	Part of seal kit P/N 1542919C2.	1
25	1542929C1	SEAL	rod, NSS, order 1542919C2 kit below	1
		Part of seal kit P/N 1542919C2.	Part of seal kit P/N 1542919C2.	1
26	1542928C1	SEAL	buffer, NSS, order 1542919C2 kit below	1
		Part of seal kit P/N 1542919C2.	Part of seal kit P/N 1542919C2.	1
27	1543351C1	O-RING	RING back up, NSS, no longer included in kit	1

Diag #	Part #	Name	Description	Qty
		Part of seal kit P/N 1542919C2.	Part of seal kit P/N 1542919C2.	1
28	238-5247	O-RING,-247, 70 Duro, 4.609" ID x .139" Thk	Gland -247, 70 Duro, 4.609" ID x .139" Thk	1
		Part of seal kit P/N 1542919C2.	Part of seal kit P/N 1542919C2.	1
29	G107970	BACK-UP RING	Gland O-Ring	1
		Part of seal kit P/N 1542919C2.	Part of seal kit P/N 1542919C2.	1
	G110583	KIT	seal, Includes: Ref. 4 - 9, 14 and 15, no longer available, order 1542919C2 kit below	1
	1542919C2	SEAL KIT	KIT seal, Includes: Ref. 4, 14, 15, 22 - 29 and an instruction sheet	1
13B	237-6006	O-RING,0.114" ID x 0.254" OD x 0.07"	6-1, 90 Duro, .468" ID x .078" Thk, Relief valve cartridge, external	1

http://www.minnparbackhoeparts.com/

(580SK) - CASE SUPER-K CONSTRUCTION KING LOADER BACKHOE > (8-130) - BACKHOE BOOM CYLINDER

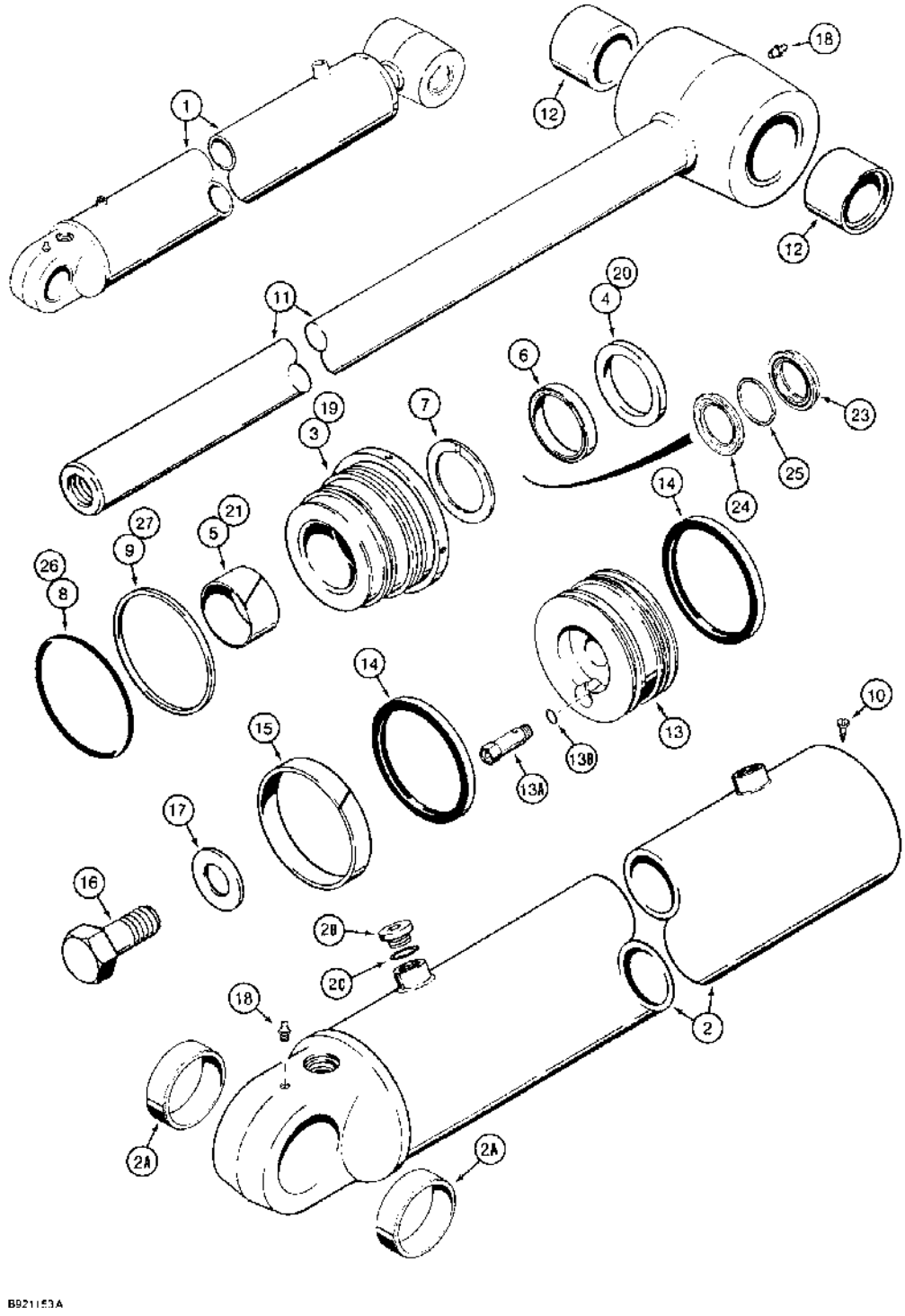

(580SK) - CASE SUPER-K CONSTRUCTION KING LOADER BACKHOE > (8-130) - BACKHOE BOOM CYLINDER

Diag #	Part #	Name	Description	Qty
1	1542635C1	CYLINDER ASSY.	CYLINDER ASSEMBLY, 5, 127, ID x 33-3/16 inch, 843 mm, stroke, boom, without grease seals at rod and tube eyes, no longer available, order 1543391C1 cylinder on Figure 8-131C, Includes: Ref. 2 through 27, P/N G110575 and P/N NSS above Ref. 19	1
2	1542636C1	TUBE,126.87 mm ID, 1069.3 mm Length	cylinder, order 132519A1 tube on Figure 8-131C, Includes: Ref. 2A, 2B and 2 C	1
2A	D144421	BUSHING	tube	2
2B	86625138	PLUG,Hex Soc, 7/8"-14 ORB	Includes Ref. 2C Hex Soc, 7/8"-14 ORB	1
2C	237-6010	O-RING,0.239" ID x 0.379" OD x 0.07"	10-1, 90 Duro, .755" ID x .097" Thk	1
	G110575	GLAND	ASSEMBLY cylinder, has smooth outer lip, no longer available, order Ref. 19, 1542918C1 gland and 1542919C2 seal kit, Includes: Ref. 3 through 9	1
3	NSS	NOT SERVICED SEPARATELY	GLAND cylinder	1
4	G108712	WIPER	piston rod	1
		Part of seal kit P/N G110583.	Part of seal kit P/N G110583.	1
		Part of seal kit P/N 1542919C2.	Part of seal kit P/N 1542919C2.	1
5	G102426	BUSHING	- Center	1
		Part of seal kit P/N G110583.	Part of seal kit P/N G110583.	1
6	G107924	SEAL	U-cup, piston rod, with O-ring, wide	1
		Part of seal kit P/N G110583.	Part of seal kit P/N G110583.	1
7	G109086	RING	SEAL buffer, grooved, piston rod, narrow	1
		Part of seal kit P/N G110583.	Part of seal kit P/N G110583.	1
8	238-5247	O-RING,-247, 70 Duro, 4.609" ID x .139" Thk	Gland -247, 70 Duro, 4.609" ID x .139" Thk	1
		Part of seal kit P/N G110583.	Part of seal kit P/N G110583.	1
9	G107970	BACK-UP RING	Gland O-Ring	1
		Part of seal kit P/N G110583.	Part of seal kit P/N G110583.	1
10	276-2446	SELF-TAP SCREW,Hex Hd, #8 x 3/8"	SCREW - self-tapping, hex hd, No. 8 NC x 3/8 "	1

Diag #	Part #	Name	Description	Qty
11	1542638C1	PISTON ROD	ROD piston, 2-1/4 inch, 57 mm, diameter, Includes: Ref. 12	1
12	D141555	BUSHING	Rod	2
13	1346018C1	JACK PISTON	PISTON cylinder, used with 1958028C1 relief valve cartridge	1
13A	1958028C1	VALVE	ASSEMBLY relief, cartridge, internal component parts not serviced separately, Includes: Ref. 13B	1
14	G110269	SEAL	piston	2
		Part of seal kit P/N G110583.	Part of seal kit P/N G110583.	1
		Part of seal kit P/N 1542919C2.	Part of seal kit P/N 1542919C2.	1
15	G102090	RING	wear, piston	1
		Part of seal kit P/N G110583.	Part of seal kit P/N G110583.	1
		Part of seal kit P/N 1542919C2.	Part of seal kit P/N 1542919C2.	1
16	28-2048	BOLT,Hex, 1 1/4" - 12 x 3", Gr 8	BOLT,Hex, 1 1/4" - 12 x 3", Gr 8	1
17	G104989	WASHER	flat, 1-1/4 inch, hardened	1
18	219-1	LUBE NIPPLE,1/8"-27 x .66 lg	FITTING grease, straight, 1/8 PT x 21/32 inch	2
	NSS	NOT SERVICED SEPARATELY	GLAND ASSEMBLY cylinder, Includes: Ref. 19 through 27	1
19	1542918C1	CYLINDER END CAP	GLAND cylinder, has identification groove on outer lip	1
20	D95145	WIPER SEAL	WIPER piston rod	1
		Part of seal kit P/N 1542919C2.	Part of seal kit P/N 1542919C2.	1
21	G102426	BUSHING	- Center	1
		Part of seal kit P/N 1542919C2.	Part of seal kit P/N 1542919C2.	1
22	1542877C1	SEAL KIT	KIT seal, NSS, not shown, Includes: Ref. 23, 24 and 25	1
		Part of seal kit P/N 1542919C2.	Part of seal kit P/N 1542919C2.	1
23	1542929C1	SEAL	rod, NSS, order 1542919C2 kit below	1
		Part of seal kit P/N 1542919C2.	Part of seal kit P/N 1542919C2.	1
24	1542928C1	SEAL	buffer, NSS, order 1542919C2 kit below	1
		Part of seal kit P/N 1542919C2.	Part of seal kit P/N 1542919C2.	1
25	1543351C1	O-RING	RING back up, NSS, no longer included in kit	1
		Part of seal kit P/N 1542919C2.	Part of seal kit P/N 1542919C2.	1

Diag #	Part #	Name	Description	Qty
26	238-5247	O-RING,-247, 70 Duro, 4.609" ID x .139" Thk	Gland -247, 70 Duro, 4.609" ID x .139" Thk	1
		Part of seal kit P/N 1542919C2.	Part of seal kit P/N 1542919C2.	1
27	G107970	BACK-UP RING	Gland O-Ring	1
		Part of seal kit P/N 1542919C2.	Part of seal kit P/N 1542919C2.	1
	G110583	KIT	seal, Includes: Ref. 4 - 9, 14 and 15, no longer available, order 1542919C2 kit below	1
	1542919C2	SEAL KIT	KIT seal, Includes: Ref. 4, 14, 15, 20 - 27 and an instruction sheet	1
13B	237-6006	O-RING,0.114" ID x 0.254" OD x 0.07"	6-1, 90 Duro, .468" ID x .078" Thk, Relief valve cartridge, external	1

http://www.minnparbackhoeparts.com/

(580SK) - CASE SUPER-K CONSTRUCTION KING LOADER BACKHOE > (8-131A) - BACKHOE BOOM CYLINDER

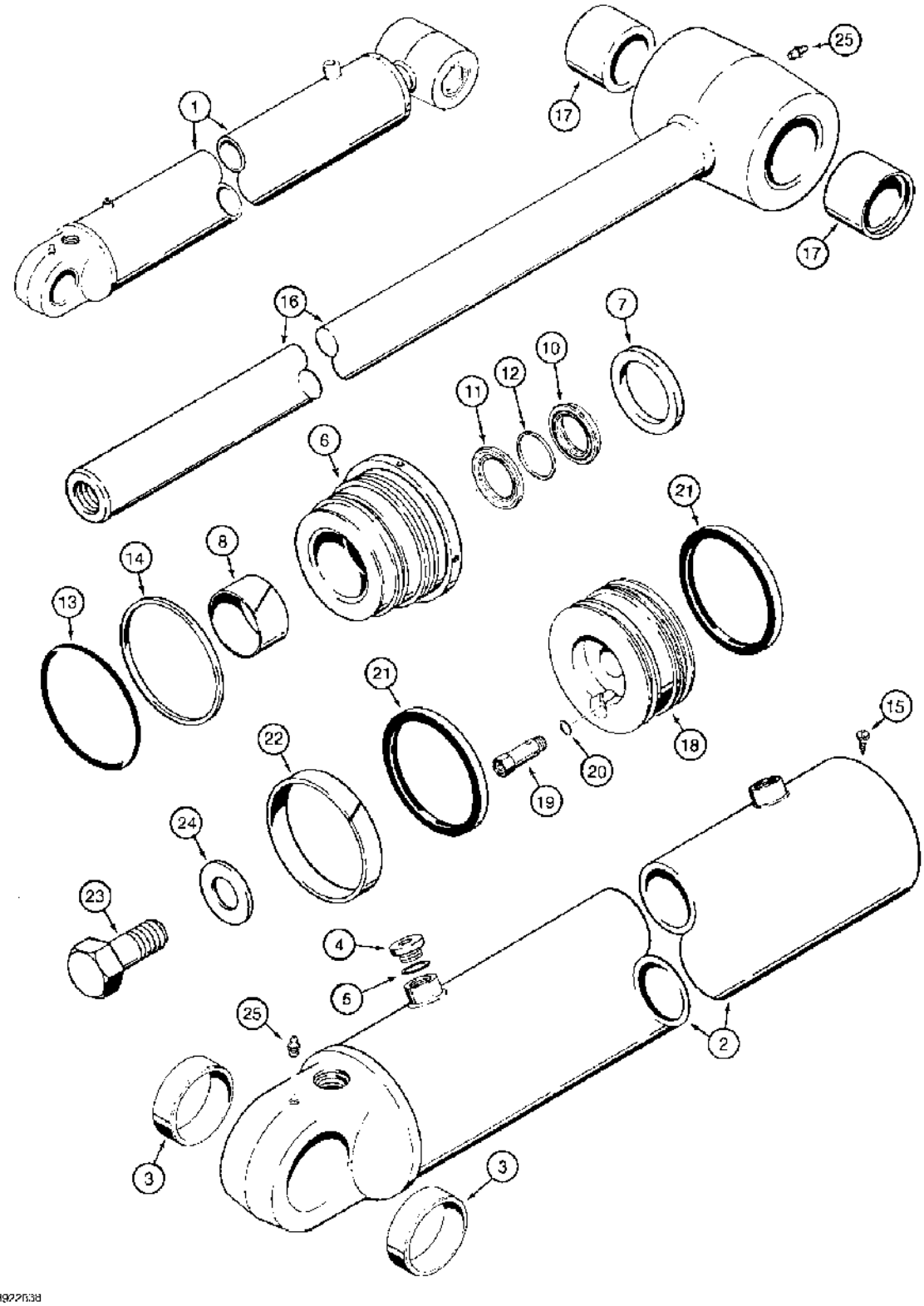

(580SK) - CASE SUPER-K CONSTRUCTION KING LOADER BACKHOE > (8-131A) - BACKHOE BOOM CYLINDER

Diag #	Part #	Name	Description	Qty
1	1542916C1	CYLINDER ASSY.	CYLINDER ASSEMBLY, 5, 127, ID x 33-3/16 inch, 843 mm, stroke, boom, without grease seals at rod and tube eyes, see note, no longer available, order 1543391C1 cylinder on Figure 8-131C, Includes: Ref. 2 through 25 and P/N NSS above Ref. 6	1
2	1542636C1	TUBE,126.87 mm ID, 1069.3 mm Length	cylinder, order 132519A1 tube on Figure 8-131C, Includes: Ref. 3, 4 and 5	1
3	D144421	BUSHING	tube	2
4	86625138	PLUG,Hex Soc, 7/8"-14 ORB	Includes Ref. 5 Hex Soc, 7/8"-14 ORB	1
5	237-6010	O-RING,0.239" ID x 0.379" OD x 0.07"	10-1, 90 Duro, .755" ID x .097" Thk	1
	NSS	NOT SERVICED SEPARATELY	GLAND ASSEMBLY cylinder, Includes: Ref. 6 through 14	1
6	1542918C1	CYLINDER END CAP	GLAND cylinder, has identification groove on outer lip	1
7	D95145	WIPER SEAL	WIPER piston rod	1
		Part of seal kit P/N 1542919C2.	Part of seal kit P/N 1542919C2.	1
8	G102426	BUSHING	- Center	1
		Part of seal kit P/N 1542919C2.	Part of seal kit P/N 1542919C2.	1
9	1542877C1	SEAL KIT	KIT seal, NSS, not shown, Includes: Ref. 10, 11 and 12	1
		Part of seal kit P/N 1542919C2.	Part of seal kit P/N 1542919C2.	1
10	1542929C1	SEAL	rod, NSS, order 1542919C2 kit below	1
		Part of seal kit P/N 1542919C2.	Part of seal kit P/N 1542919C2.	1
11	1542928C1	SEAL	buffer, NSS, order 1542919C2 kit below	1
		Part of seal kit P/N 1542919C2.	Part of seal kit P/N 1542919C2.	1
12	1543351C1	O-RING	RING back up, NSS, no longer included in kit	1
		Part of seal kit P/N 1542919C2.	Part of seal kit P/N 1542919C2.	1
13	238-5247	O-RING,-247, 70 Duro, 4.609" ID x .139" Thk	Gland -247, 70 Duro, 4.609" ID x .139" Thk	1
		Part of seal kit P/N 1542919C2.	Part of seal kit P/N 1542919C2.	1
14	G107970	BACK-UP RING	Gland O-Ring	1

Diag #	Part #	Name	Description	Qty
		Part of seal kit P/N 1542919C2.	Part of seal kit P/N 1542919C2.	1
15	276-2446	SELF-TAP SCREW,Hex Hd, #8 x 3/8"	SCREW - self-tapping, hex hd, No. 8 NC x 3/8 "	1
16	1542638C1	PISTON ROD	ROD piston, 2-1/4 inch, 57 mm, diameter, Includes: Ref. 17	1
17	D141555	BUSHING	Rod	2
18	1346018C1	JACK PISTON	PISTON cylinder, used with 1958028C1 relief valve cartridge	1
19	1958028C1	VALVE	ASSEMBLY relief, cartridge, internal component parts not serviced separately, Includes: Ref. 20	1
21	G110269	SEAL	piston	2
		Part of seal kit P/N 1542919C2.	Part of seal kit P/N 1542919C2.	1
22	G102090	RING	wear, piston	1
		Part of seal kit P/N 1542919C2.	Part of seal kit P/N 1542919C2.	1
23	28-2048	BOLT,Hex, 1 1/4" - 12 x 3", Gr 8	BOLT,Hex, 1 1/4" - 12 x 3", Gr 8	1
24	G104989	WASHER	flat, 1-1/4 inch, hardened	1
25	219-1	LUBE NIPPLE,1/8"-27 x .66 lg	FITTING grease, straight, 1/8 PT x 21/32 inch	2
	1542919C2	SEAL KIT	KIT seal, Includes Ref. 7 through 14, 21, and 22, also includes G108712 piston rod wiper, and an instruction sheet	1
20	237-6006	O-RING,0.114" ID x 0.254" OD x 0.07"	6-1, 90 Duro, .468" ID x .078" Thk, Relief valve cartridge, external	1

http://www.minnparbackhoeparts.com/

(580SK) - CASE SUPER-K CONSTRUCTION KING LOADER BACKHOE > (8-131C) - BACKHOE BOOM CYLINDER

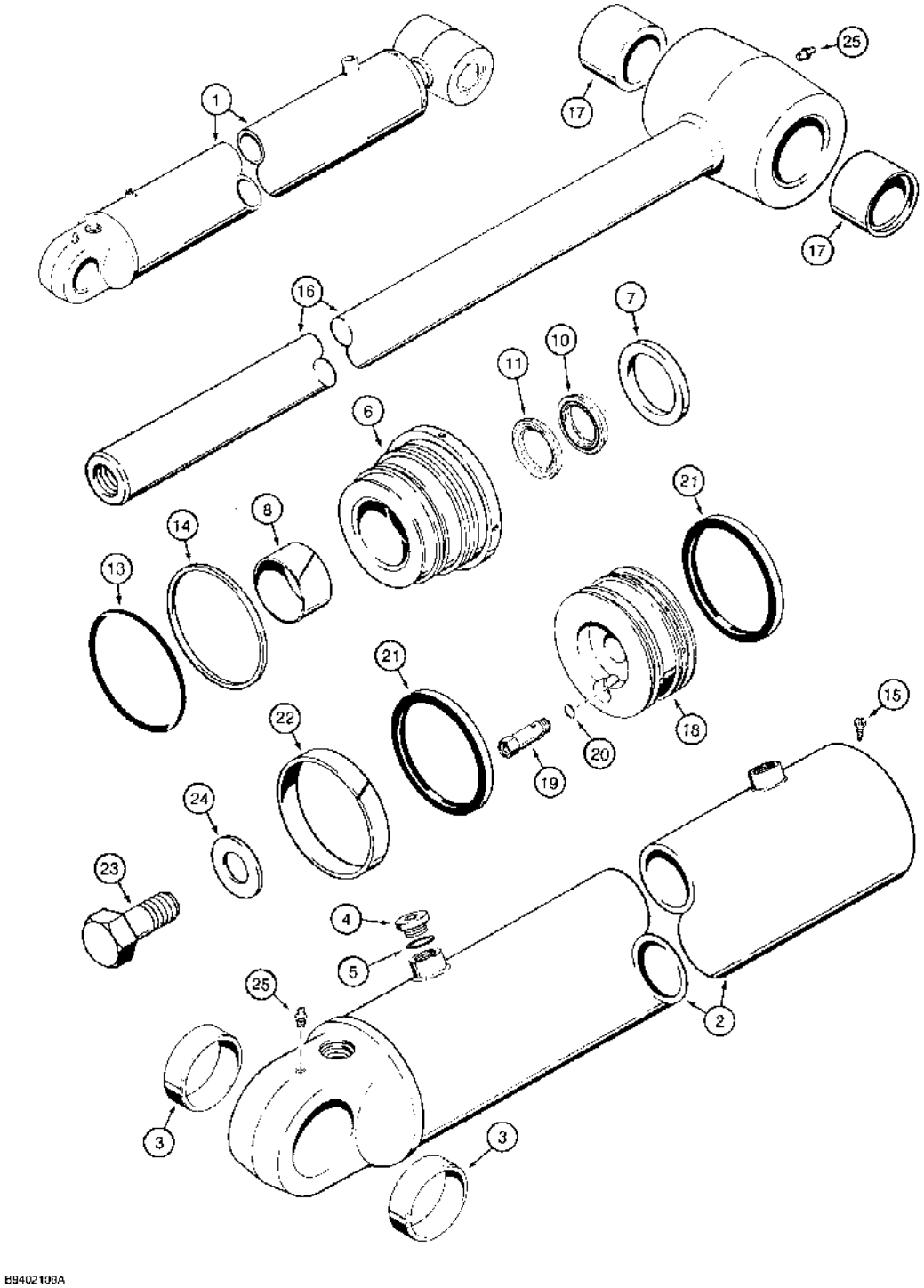

(580SK) - CASE SUPER-K CONSTRUCTION KING LOADER BACKHOE > (8-131C) - BACKHOE BOOM CYLINDER

Diag #	Part #	Name	Description	Qty
1	1543391C1	CYLINDER ASSY.	CYLINDER ASSEMBLY, 5, 127, ID x 33-3/16 inch, 843 mm, stroke, boom, without grease seals at rod and tube eyes, Includes: Ref. 2 through 25, P/N NSS above Ref. 6 and P/N 1542877C1	1
2	132519A1	TUBE,1069.3 mm Length	cylinder, replaces 1543390C1, Includes: Ref. 3, 4 and 5	1
3	D151075	BUSHING	tube	2
4	86625138	PLUG,Hex Soc, 7/8"-14 ORB	Includes Ref. 5 Hex Soc, 7/8"-14 ORB	1
5	237-6010	O-RING,0.239" ID x 0.379" OD x 0.07"	10-1, 90 Duro, .755" ID x .097" Thk	1
	NSS	NOT SERVICED SEPARATELY	GLAND ASSEMBLY cylinder, Includes: Ref. 6 through 14 and P/N 1542877C1	1
6	1542918C1	CYLINDER END CAP	GLAND cylinder, has identification groove on outer lip	1
7	D95145	WIPER SEAL	WIPER piston rod	1
		Part of seal kit P/N 1542919C2.	Part of seal kit P/N 1542919C2.	1
8	G102426	BUSHING	- Center	1
		Part of seal kit P/N 1542919C2.	Part of seal kit P/N 1542919C2.	1
	1542877C1	SEAL KIT	KIT seal, NSS, Includes: Ref. 10 and 11	1
		Part of seal kit P/N 1542919C2.	Part of seal kit P/N 1542919C2.	1
10	1542929C1	SEAL	rod, NSS, order 1542919C2 kit below	1
		Part of seal kit P/N 1542919C2.	Part of seal kit P/N 1542919C2.	1
11	1542928C1	SEAL	buffer, NSS, order 1542919C2 kit below	1
		Part of seal kit P/N 1542919C2.	Part of seal kit P/N 1542919C2.	1
13	238-5247	O-RING,-247, 70 Duro, 4.609" ID x .139" Thk	Gland -247, 70 Duro, 4.609" ID x .139" Thk	1
		Part of seal kit P/N 1542919C2.	Part of seal kit P/N 1542919C2.	1
14	G107970	BACK-UP RING	Gland O-Ring	1
		Part of seal kit P/N 1542919C2.	Part of seal kit P/N 1542919C2.	1
15	276-2446	SELF-TAP SCREW,Hex Hd, #8 x 3/8"	SCREW - self-tapping, hex hd, No. 8 NC x 3/8 "	1
16	1542638C1	PISTON ROD	ROD piston, 2-1/4 inch, 57 mm, diameter, Includes: Ref. 17	1
17	D141555	BUSHING	Rod	2

Diag #	Part #	Name	Description	Qty
18	1346018C1	JACK PISTON	PISTON cylinder, used with 1958028C1 relief valve cartridge	1
19	1958028C1	VALVE	ASSEMBLY relief, cartridge, internal component parts not serviced separately, Includes: Ref. 20	1
21	G110269	SEAL	piston	2
		Part of seal kit P/N 1542919C2.	Part of seal kit P/N 1542919C2.	1
22	G102090	RING	wear, piston	1
		Part of seal kit P/N 1542919C2.	Part of seal kit P/N 1542919C2.	1
23	28-2048	BOLT,Hex, 1 1/4" - 12 x 3", Gr 8	BOLT,Hex, 1 1/4" - 12 x 3", Gr 8	1
24	G104989	WASHER	flat, 1-1/4 inch, hardened	1
25	219-1	LUBE NIPPLE,1/8"-27 x .66 lg	FITTING grease, straight, 1/8 PT x 21/32 inch	2
	1542919C2	SEAL KIT	KIT seal, Includes: Ref. 7 - 14, 21 and 22; also includes G108712 piston rod wiper not used in this application, and an instruction sheet	1
20	237-6006	O-RING,0.114" ID x 0.254" OD x 0.07"	6-1, 90 Duro, .468" ID x .078" Thk, Relief valve cartridge, external	1

http://www.minnparbackhoeparts.com/

(580SK) - CASE SUPER-K CONSTRUCTION KING LOADER BACKHOE > (8-132) - BACKHOE DIPPER CYLINDER

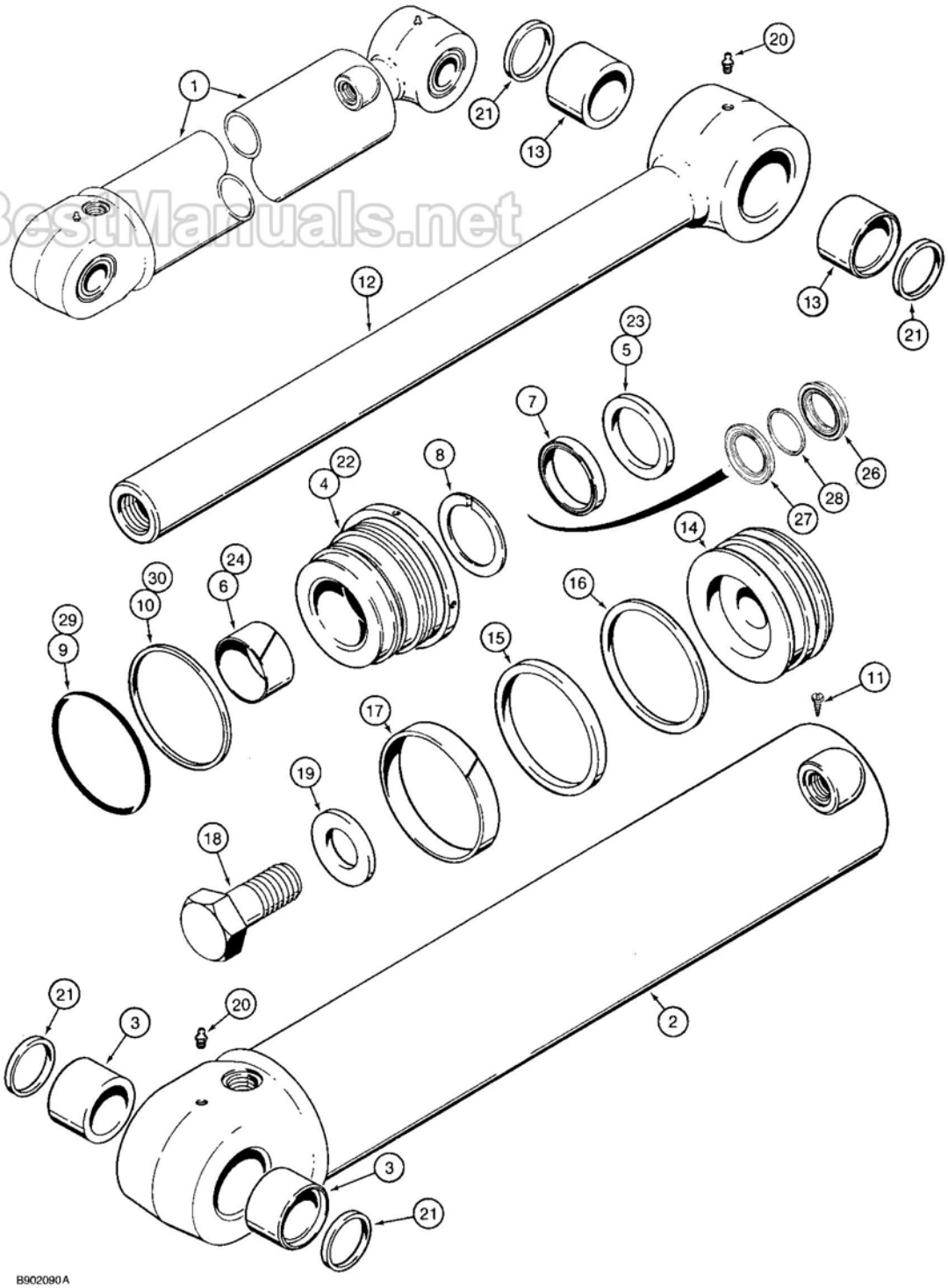

BestManuals.net

http://www.minnparbackhoeparts.com/

(580SK) - CASE SUPER-K CONSTRUCTION KING LOADER BACKHOE > (8-132) - BACKHOE DIPPER CYLINDER

Diag #	Part #	Name	Description	Qty
1	1340984C1	CYLINDER ASSY.	CYLINDER ASSEMBLY, 5, 127, ID x 22-15/16 inch, 583 mm, stroke, dipper, with grease seals, Ref. 21, at rod and tube eyes, no longer available, order 1542663C1 cylinder on Figure 8-134, Includes: Ref. 2 through 30, P/N G110687 and P/N NSS above Ref. 22	1
2	1340985C1	TUBE	cylinder, order 110295A1 tube on Figure 8-135C, Includes: Ref. 3	1
3	D141555	BUSHING	Tube	2
	G110687	GLAND	ASSEMBLY cylinder, has smooth outer lip, no longer available, order Ref. 22, 1542914C1 gland and 1542915C2 seal kit, Includes: Ref. 4 through 10	1
4	NSS	NOT SERVICED SEPARATELY	GLAND cylinder	1
5	G108713	WIPER	piston rod	1
		Part of seal kit P/N G110582.	Part of seal kit P/N G110582.	1
6	G102427	BUSHING	center	1
		Part of seal kit P/N G110582.	Part of seal kit P/N G110582.	1
7	G109228	SEAL	U-cup, with O-ring, piston rod, wide	1
		Part of seal kit P/N G110582.	Part of seal kit P/N G110582.	1
8	G107998	SEAL	buffer, grooved, piston rod, narrow	1
		Part of seal kit P/N G110582.	Part of seal kit P/N G110582.	1
9	238-5247	O-RING,-247, 70 Duro, 4.609" ID x .139" Thk	Gland -247, 70 Duro, 4.609" ID x .139" Thk	1
		Part of seal kit P/N G110582.	Part of seal kit P/N G110582.	1
10	G107970	BACK-UP RING	Gland O-Ring	1
		Part of seal kit P/N G110582.	Part of seal kit P/N G110582.	1
11	276-2446	SELF-TAP SCREW,Hex Hd, #8 x 3/8"	SCREW - self-tapping, hex hd, No. 8 NC x 3/8 "	1
12	1341853C1	PISTON ROD	ROD ASSEMBLY piston, 2-1/2 inch, 64 mm, diameter, cylinder, Includes: Ref. 13	1
13	D141555	BUSHING	Rod	2
14	G110569	PISTON	cylinder	1
15	1986753C1	SEAL	piston	1

Diag #	Part #	Name	Description	Qty
		Part of seal kit P/N G110582.	Part of seal kit P/N G110582.	1
		Part of seal kit P/N 1542915C2.	Part of seal kit P/N 1542915C2.	1
16	G102092	RING	backup, piston seal	1
		Part of seal kit P/N G110582.	Part of seal kit P/N G110582.	1
		Part of seal kit P/N 1542915C2.	Part of seal kit P/N 1542915C2.	1
17	G102090	RING	wear, piston	1
		Part of seal kit P/N G110582.	Part of seal kit P/N G110582.	1
		Part of seal kit P/N 1542915C2.	Part of seal kit P/N 1542915C2.	1
18	25987R1	BOLT,Hex, 1 1/2" - 12 x 3 1/2", Gr 8	hex, 1-1/2 NF x 3-1/2 inch, grade 8, replaces 28-2456	1
19	G104990	WASHER	flat, 1-1/2 inch, hardened	1
20	219-1	LUBE NIPPLE,1/8"-27 x .66 lg	FITTING grease, straight, 1/8 PT x 21/32 inch	2
21	D123655	SEAL	rod and tube eyes	4
	NSS	NOT SERVICED SEPARATELY	GLAND ASSEMBLY cylinder, Includes: Ref. 22 through 30	1
22	1542914C1	GLAND	cylinder, has identification groove on outer lip	1
23	D95146	WIPER SEAL	WIPER piston rod	1
		Part of seal kit P/N 1542915C2.	Part of seal kit P/N 1542915C2.	1
24	G102427	BUSHING	center	1
		Part of seal kit P/N 1542915C2.	Part of seal kit P/N 1542915C2.	1
25	1542879C1	SEAL KIT	KIT seal, NSS, not shown, Includes: Ref. 26, 27 and 28	1
		Part of seal kit P/N 1542915C2.	Part of seal kit P/N 1542915C2.	1
26	1542931C1	SEAL	rod, NSS, order 1542915C2 kit below	1
		Part of seal kit P/N 1542915C2.	Part of seal kit P/N 1542915C2.	1
27	1542930C1	SEAL	buffer, NSS, order 1542915C2 kit below	1
		Part of seal kit P/N 1542915C2.	Part of seal kit P/N 1542915C2.	1
28	1543352C1	RING back up, NSS, no longer included in kit	RING back up, NSS, no longer included in kit	1
		Part of seal kit P/N 1542915C2.	Part of seal kit P/N 1542915C2.	1
29	238-5247	O-RING,-247, 70 Duro, 4.609" ID x .139" Thk	Gland -247, 70 Duro, 4.609" ID x .139" Thk	1

Diag #	Part #	Name	Description	Qty
		Part of seal kit P/N 1542915C2.	Part of seal kit P/N 1542915C2.	1
30	G107970	BACK-UP RING	Gland O-Ring	1
		Part of seal kit P/N 1542915C2.	Part of seal kit P/N 1542915C2.	1
	G110582	KIT	seal, Includes: Ref. 6 - 10 and 15 - 17, no longer available, order 1542915C2, Also requires G108713	1
	1542915C2	SEAL KIT	KIT seal, Includes: Ref. 15 - 17, 23 - 30, plus a seal and wiper not used in this application, and an instruction sheet	1

http://www.minnparbackhoeparts.com/

(580SK) - CASE SUPER-K CONSTRUCTION KING LOADER BACKHOE > (8-134) - BACKHOE DIPPER CYLINDER

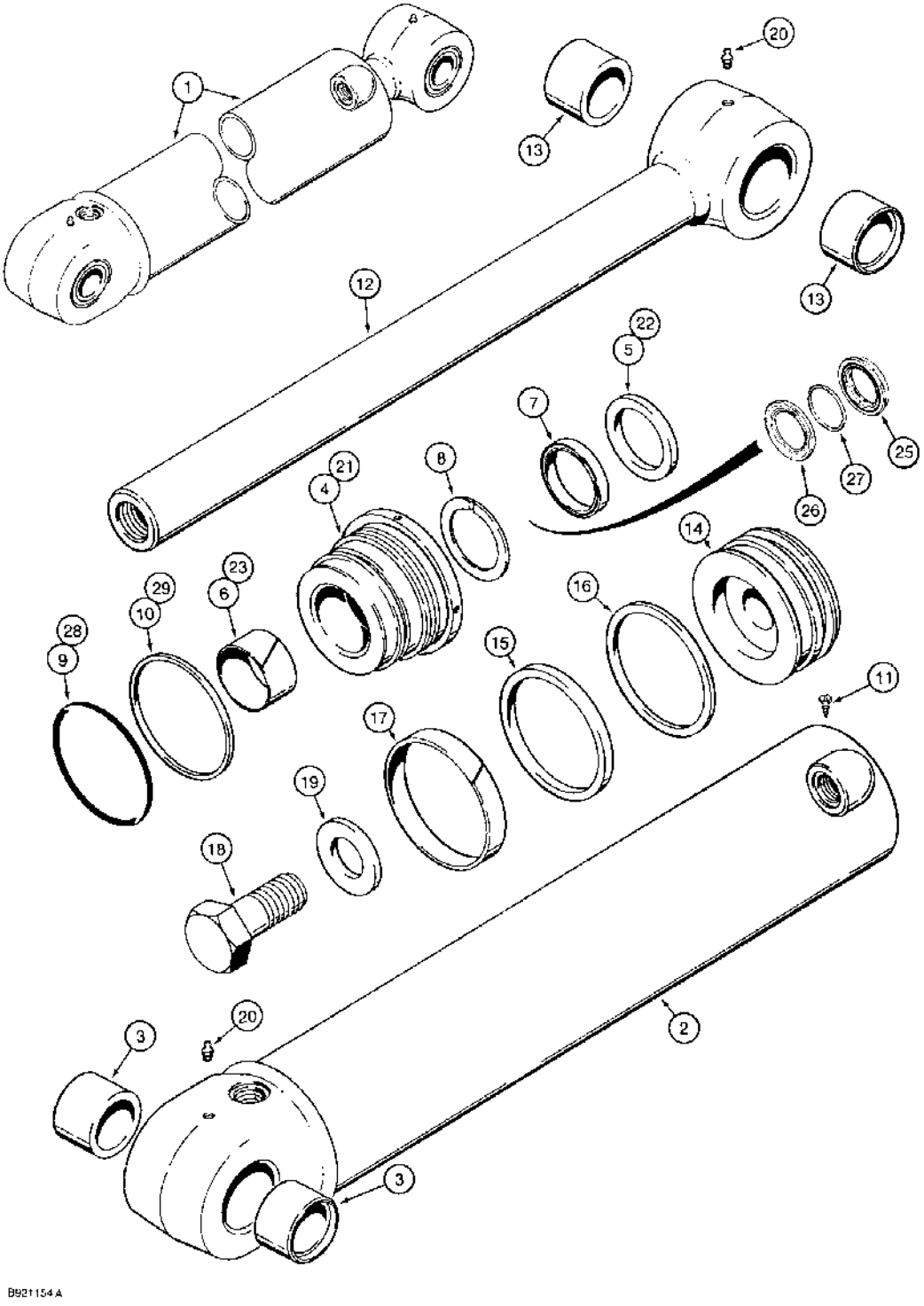

(580SK) - CASE SUPER-K CONSTRUCTION KING LOADER BACKHOE > (8-134) - BACKHOE DIPPER CYLINDER

Diag #	Part #	Name	Description	Qty
1	1542663C1	CYLINDER ASSY.	CYLINDER ASSEMBLY, 5, 127, ID x 22-15/16 inch, 583 mm, stroke, dipper, without grease seals at rod and tube eyes, if used, Includes: Ref. 2 through 29, P/N G110687 and P/N NSS above Ref. 21	1
	110294A1R	REMAN-HYD CYLINDER	580SK	1
	110294A1C	CORE-HYD CYLINDER	Return Number	1
	110294A1R	REMAN-HYD CYLINDER	580SK, Reman For New P/N's 1542663C1, 1542912C1, 110294A1	1
	110294A1C	CORE-HYD CYLINDER	Return Number	1
2	1542664C1	TUBE	cylinder, order 110295A1 tube on Figure 8-135C, Includes: Ref. 3	1
3	D141555	BUSHING	Tube	2
	G110687	GLAND	ASSEMBLY cylinder, has smooth outer lip, no longer available, order Ref. 21, 1542914C1 gland and 1542915C2 seal kit, Includes: Ref. 4 through 10	1
4	NSS	NOT SERVICED SEPARATELY	GLAND cylinder	1
5	G108713	WIPER	piston rod	1
		Part of seal kit P/N G110582.	Part of seal kit P/N G110582.	1
6	G102427	BUSHING	center	1
		Part of seal kit P/N G110582.	Part of seal kit P/N G110582.	1
7	G109228	SEAL	U-cup, with O-ring, piston rod, wide	1
		Part of seal kit P/N G110582.	Part of seal kit P/N G110582.	1
8	G107998	SEAL	buffer, grooved, piston rod, narrow	1
		Part of seal kit P/N G110582.	Part of seal kit P/N G110582.	1
9	238-5247	O-RING,-247, 70 Duro, 4.609" ID x .139" Thk	Gland -247, 70 Duro, 4.609" ID x .139" Thk	1
		Part of seal kit P/N G110582.	Part of seal kit P/N G110582.	1
10	G107970	BACK-UP RING	Gland O-Ring	1
		Part of seal kit P/N G110582.	Part of seal kit P/N G110582.	1
11	276-2446	SELF-TAP SCREW,Hex Hd, #8 x 3/8"	SCREW - self-tapping, hex hd, No. 8 NC x 3/8 "	1
12	1542665C1	PISTON ROD	ROD ASSEMBLY piston, 2-1/2 inch, 64 mm, diameter, cylinder, Includes: Ref. 13	1
13	D141555	BUSHING	Rod	2

Diag #	Part #	Name	Description	Qty
14	G110569	PISTON	cylinder	1
15	1986753C1	SEAL	piston	1
		Part of seal kit P/N G110582.	Part of seal kit P/N G110582.	1
		Part of seal kit P/N 1542915C2.	Part of seal kit P/N 1542915C2.	1
16	G102092	RING	backup, piston seal	1
		Part of seal kit P/N G110582.	Part of seal kit P/N G110582.	1
		Part of seal kit P/N 1542915C2.	Part of seal kit P/N 1542915C2.	1
17	G102090	RING	wear, piston	1
		Part of seal kit P/N G110582.	Part of seal kit P/N G110582.	1
		Part of seal kit P/N 1542915C2.	Part of seal kit P/N 1542915C2.	1
18	25987R1	BOLT,Hex, 1 1/2" - 12 x 3 1/2", Gr 8	hex, 1-1/2 NF x 3-1/2 inch, grade 8, replaces 28-2456	1
19	G104990	WASHER	flat, 1-1/2 inch, hardened	1
20	219-1	LUBE NIPPLE,1/8"-27 x .66 lg	FITTING grease, straight, 1/8 PT x 21/32 inch	2
	NSS	NOT SERVICED SEPARATELY	GLAND ASSEMBLY cylinder, Includes: Ref. 21 through 29	1
21	1542914C1	GLAND	cylinder, has identification groove on outer lip	1
22	D95146	WIPER SEAL	WIPER piston rod	1
		Part of seal kit P/N 1542915C2.	Part of seal kit P/N 1542915C2.	1
23	G102427	BUSHING	center	1
		Part of seal kit P/N 1542915C2.	Part of seal kit P/N 1542915C2.	1
24	1542879C1	SEAL KIT	KIT seal, NSS, not shown, Includes: Ref. 25, 26 and 27	1
		Part of seal kit P/N 1542915C2.	Part of seal kit P/N 1542915C2.	1
25	1542931C1	SEAL	rod, NSS, order 1542915C2 kit below	1
		Part of seal kit P/N 1542915C2.	Part of seal kit P/N 1542915C2.	1
26	1542930C1	SEAL	buffer, NSS, order 1542915C2 kit below	1
		Part of seal kit P/N 1542915C2.	Part of seal kit P/N 1542915C2.	1
27	1543352C1	RING back up, NSS, no longer included in kit	RING back up, NSS, no longer included in kit	1
		Part of seal kit P/N 1542915C2.	Part of seal kit P/N 1542915C2.	1
28	238-5247	O-RING,-247, 70 Duro, 4.609" ID x .139" Thk	Gland -247, 70 Duro, 4.609" ID x .139" Thk	1

Diag #	Part #	Name	Description	Qty
		Part of seal kit P/N 1542915C2.	Part of seal kit P/N 1542915C2.	1
29	G107970	BACK-UP RING	Gland O-Ring	1
		Part of seal kit P/N 1542915C2.	Part of seal kit P/N 1542915C2.	1
	G110582	KIT	seal, Includes: Ref. 6- 10 and 15 - 17, no longer available, order 1542915C2, Also requires G108713	1
	1542915C2	SEAL KIT	KIT seal, Includes: Ref. 15 - 17 and 22 - 29, plus a seal and wiper not used in this application, and an instruction sheet	1

http://www.minnparbackhoeparts.com/

(580SK) - CASE SUPER-K CONSTRUCTION KING LOADER BACKHOE > (8-135A) - BACKHOE DIPPER CYLINDER

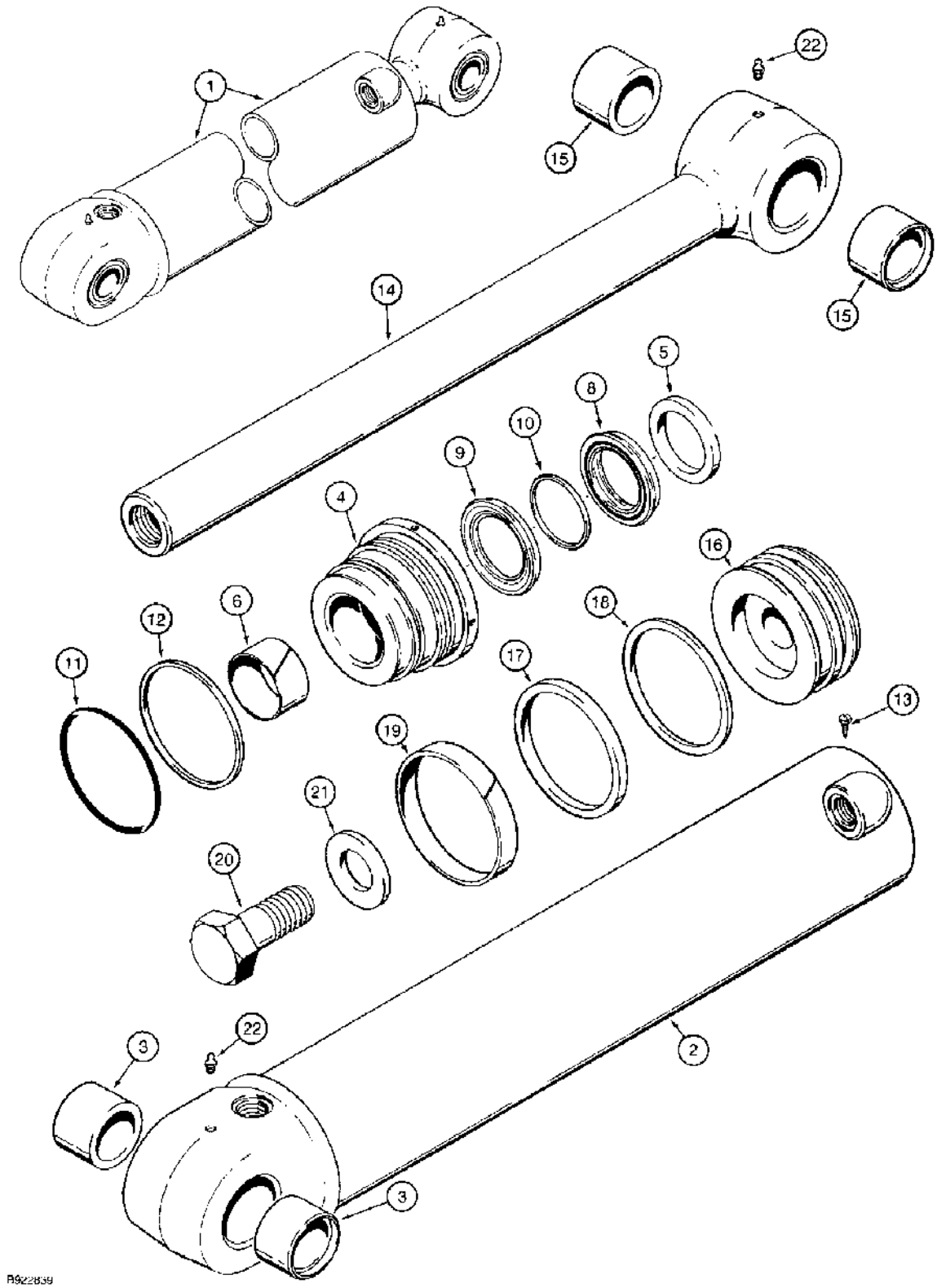

(580SK) - CASE SUPER-K CONSTRUCTION KING LOADER BACKHOE > (8-135A) - BACKHOE DIPPER CYLINDER

Diag #	Part #	Name	Description	Qty
1	1542912C1	CYLINDER ASSY.	CYLINDER ASSEMBLY, 5, 127, ID x 22-15/16 inch, 583 mm, stroke, dipper, no longer available, order 1542663C1 cylinder on Figure 8-134, Includes: Ref. 2 through 22 and P/N NSS above Ref. 4	1
	110294A1R	REMAN-HYD CYLINDER	580SK	1
	110294A1C	CORE-HYD CYLINDER	Return Number	1
	110294A1R	REMAN-HYD CYLINDER	580SK, Reman For New P/N's 1542912C1	1
	110294A1C	CORE-HYD CYLINDER	Return Number	1
2	1542664C1	TUBE	cylinder, order 110295A1 tube on Figure 8-135C, Includes: Ref. 3	1
3	D141555	BUSHING	Tube	2
	NSS	NOT SERVICED SEPARATELY	GLAND ASSEMBLY cylinder, Includes: Ref. 4 through 12	1
4	1542914C1	GLAND	cylinder	1
5	D95146	WIPER SEAL	WIPER piston rod	1
		Part of seal kit P/N 1542915C2.	Part of seal kit P/N 1542915C2.	1
6	G102427	BUSHING	center	1
		Part of seal kit P/N 1542915C2.	Part of seal kit P/N 1542915C2.	1
7	1542879C1	SEAL KIT	KIT seal, NSS, not shown, Includes: Ref. 8, 9 and 10	1
		Part of seal kit P/N 1542915C2.	Part of seal kit P/N 1542915C2.	1
8	1542931C1	SEAL	rod, NSS, order 1542915C2 kit below	1
9	1542930C1	SEAL	buffer, NSS, order 1542915C2 kit below	1
10	1543352C1	RING back up, NSS, no longer included in kit	RING back up, NSS, no longer included in kit	1
11	238-5247	O-RING,-247, 70 Duro, 4.609" ID x .139" Thk	Gland -247, 70 Duro, 4.609" ID x .139" Thk	1
		Part of seal kit P/N 1542915C2.	Part of seal kit P/N 1542915C2.	1
12	G107970	BACK-UP RING	Gland O-Ring	1
		Part of seal kit P/N 1542915C2.	Part of seal kit P/N 1542915C2.	1
13	276-2446	SELF-TAP SCREW,Hex Hd, #8 x 3/8"	SCREW - self-tapping, hex hd, No. 8 NC x 3/8 "	1
14	1542665C1	PISTON ROD	ROD ASSEMBLY piston, 2-1/2 inch, 64 mm, diameter, cylinder, Includes: Ref. 15	1
15	D141555	BUSHING	Rod	2
16	G110569	PISTON	cylinder	1

Diag #	Part #	Name	Description	Qty
17	1986753C1	SEAL	piston	1
		Part of seal kit P/N 1542915C2.	Part of seal kit P/N 1542915C2.	1
18	G102092	RING	backup, piston seal	1
		Part of seal kit P/N 1542915C2.	Part of seal kit P/N 1542915C2.	1
19	G102090	RING	wear, piston	1
		Part of seal kit P/N 1542915C2.	Part of seal kit P/N 1542915C2.	1
20	25987R1	BOLT,Hex, 1 1/2" - 12 x 3 1/2", Gr 8	hex, 1-1/2 NF x 3-1/2 inch, grade 8, replaces 28-2456	1
21	G104990	WASHER	flat, 1-1/2 inch, hardened	1
22	219-1	LUBE NIPPLE,1/8"-27 x .66 lg	FITTING grease, straight, 1/8 PT x 21/32 inch	2
	1542915C2	SEAL KIT	KIT seal, Includes: Ref. 5 - 12, 17 - 19, plus a seal and wiper not used in this application, and an instruction sheet	1

http://www.minnparbackhoeparts.com/

(580SK) - CASE SUPER-K CONSTRUCTION KING LOADER BACKHOE > (8-135C) - BACKHOE DIPPER CYLINDER

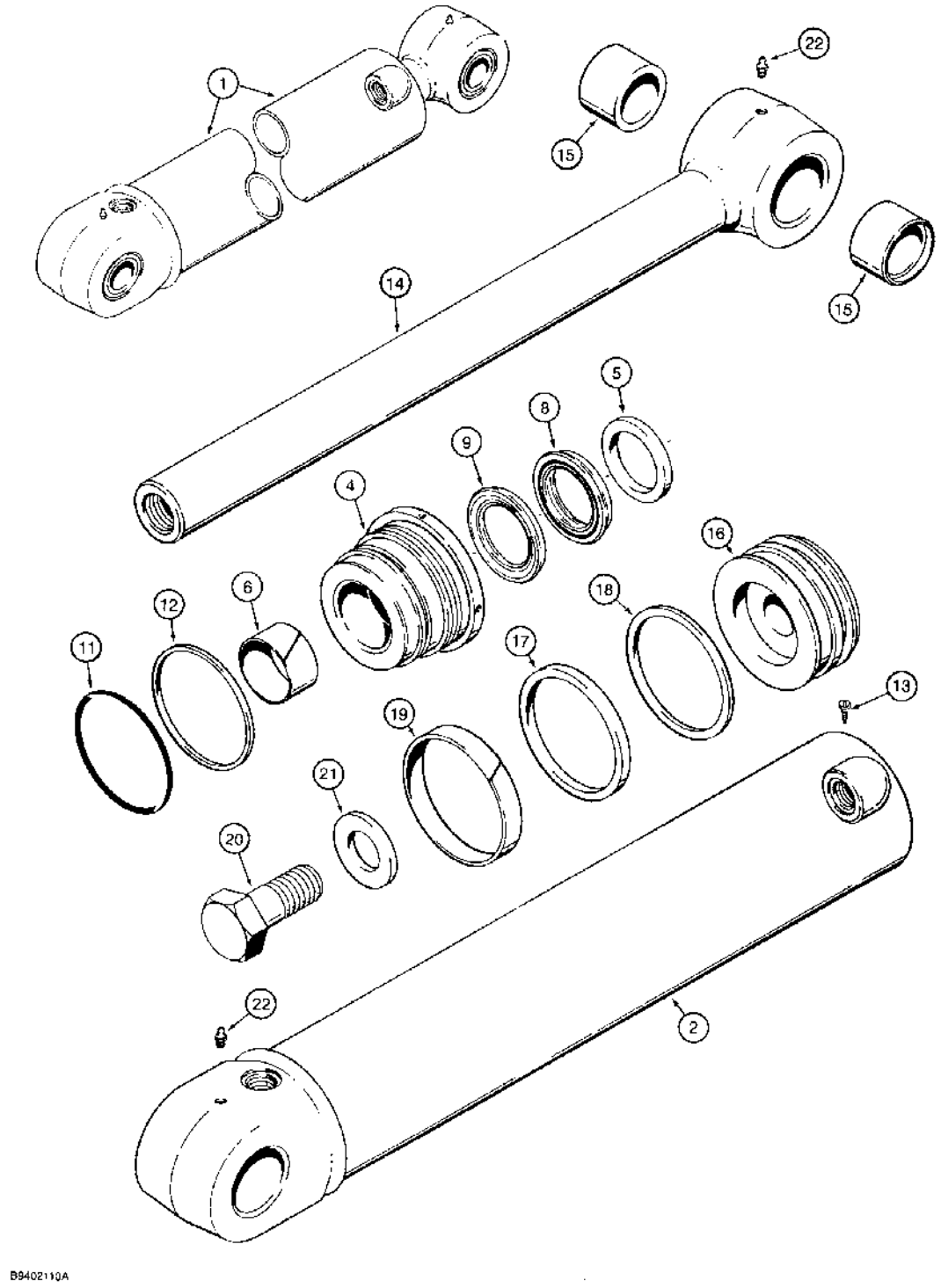

(580SK) - CASE SUPER-K CONSTRUCTION KING LOADER BACKHOE > (8-135C) - BACKHOE DIPPER CYLINDER

Diag #	Part #	Name	Description	Qty
1	110294A1	CYLINDER ASSY.	CYLINDER ASSEMBLY, 5, 127, ID x 22-15/16 inch, 583 mm, stroke, dipper, if used, Includes: Ref. 2 through 22 and P/N NSS above Ref. 4	1
	110294A1R	REMAN-HYD CYLINDER	580SK	1
	110294A1C	CORE-HYD CYLINDER	Return Number	1
2	110295A1	TUBE,126.87 mm ID, 818.4 mm Length	cylinder	1
	NSS	NOT SERVICED SEPARATELY	GLAND ASSEMBLY cylinder, Includes: Ref. 4 through 12	1
4	1542914C1	GLAND	cylinder	1
5	D95146	WIPER SEAL	WIPER piston rod	1
		Part of seal kit P/N 1542915C2.	Part of seal kit P/N 1542915C2.	1
6	G102427	BUSHING	center	1
		Part of seal kit P/N 1542915C2.	Part of seal kit P/N 1542915C2.	1
7	1542879C1	SEAL KIT	KIT seal, NSS, not shown, Includes: Ref. 8 and 9	1
		Part of seal kit P/N 1542915C2.	Part of seal kit P/N 1542915C2.	1
8	1542931C1	SEAL	rod, NSS, order 1542915C2 kit below	1
9	1542930C1	SEAL	buffer, NSS, order 1542915C2 kit below	1
11	238-5247	O-RING,-247, 70 Duro, 4.609" ID x .139" Thk	Gland -247, 70 Duro, 4.609" ID x .139" Thk	1
		Part of seal kit P/N 1542915C2.	Part of seal kit P/N 1542915C2.	1
12	G107970	BACK-UP RING	Gland O-Ring	1
		Part of seal kit P/N 1542915C2.	Part of seal kit P/N 1542915C2.	1
13	276-2446	SELF-TAP SCREW,Hex Hd, #8 x 3/8"	SCREW - self-tapping, hex hd, No. 8 NC x 3/8 "	1
14	1542665C1	PISTON ROD	ROD ASSEMBLY piston, 2-1/2 inch, 64 mm, diameter, cylinder, Includes: Ref. 15	1
15	D141555	BUSHING	Rod	2
16	G110569	PISTON	cylinder	1
17	1986753C1	SEAL	piston	1
		Part of seal kit P/N 1542915C2.	Part of seal kit P/N 1542915C2.	1
18	G102092	RING	backup, piston seal	1
		Part of seal kit P/N 1542915C2.	Part of seal kit P/N 1542915C2.	1

Diag #	Part #	Name	Description	Qty
19	G102090	RING	wear, piston	1
		Part of seal kit P/N 1542915C2.	Part of seal kit P/N 1542915C2.	1
20	25987R1	BOLT,Hex, 1 1/2" - 12 x 3 1/2", Gr 8	hex, 1-1/2 NF x 3-1/2 inch, grade 8, replaces 28-2456	1
21	G104990	WASHER	flat, 1-1/2 inch, hardened	1
22	219-1	LUBE NIPPLE,1/8"-27 x .66 lg	FITTING grease, straight, 1/8 PT x 21/32 inch	2
	1542915C2	SEAL KIT	KIT seal, Includes: Ref. 5 - 12, 17 - 19, plus a seal and wiper not used in this application, and an instruction sheet	1

(580SK) - CASE SUPER-K CONSTRUCTION KING LOADER BACKHOE > (8-136) - BACKHOE BUCKET CYLINDER

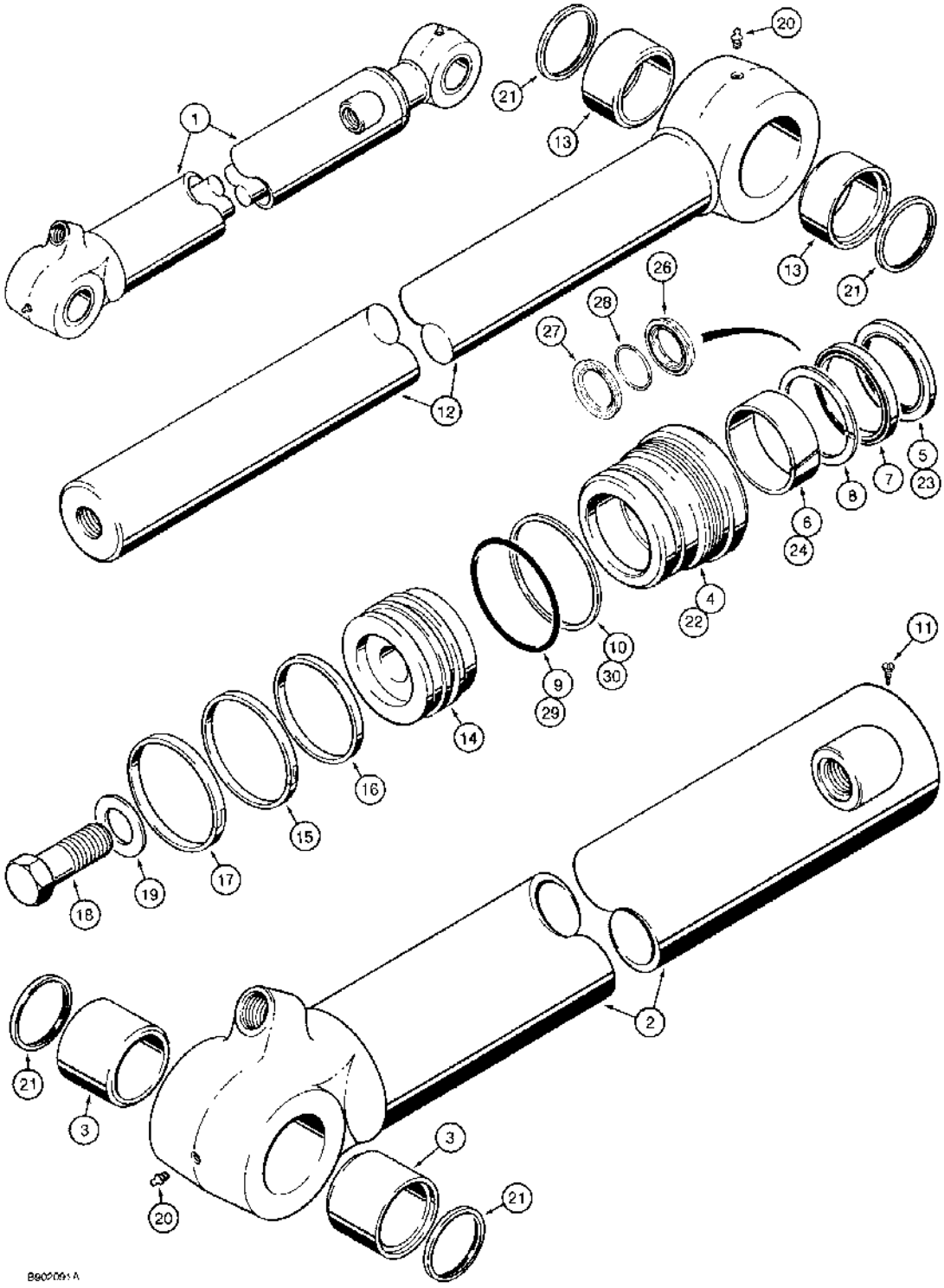

(580SK) - CASE SUPER-K CONSTRUCTION KING LOADER BACKHOE > (8-136) - BACKHOE BUCKET CYLINDER

Diag #	Part #	Name	Description	Qty
1	1986901C1	CYLINDER	ASSEMBLY, 3-1/2, 89, ID x 34-5/16 inch, 872 mm, stroke, bucket, with grease seals (Ref. 21) at rod and tube eyes, no longer available, order 110290A1 cylinder on Figure 8-139C, Includes: Ref. 2 through 30, P/N G109894 and P/N NSS above Ref. 22	1
2	1340992C1	TUBE	ASSEMBLY cylinder, order 110292A1 tube on Figure 8-139C, Includes: Ref. 3	1
3	D141555	BUSHING	Tube	2
	G109894	GLAND	ASSEMBLY cylinder, has smooth outer lip, no longer available, order Ref. 22, 1542922C1 gland and 1542923C2 seal kit, Includes: Ref. 4 through 10	1
4	NSS	NOT SERVICED SEPARATELY	GLAND cylinder	1
5	D95146	WIPER SEAL	WIPER piston rod	1
		Part of seal kit P/N G110046.	Part of seal kit P/N G110046.	1
6	G109908	BUSHING	center	1
		Part of seal kit P/N G110046.	Part of seal kit P/N G110046.	1
7	G109228	SEAL	U-cup, with O-ring, piston rod, wide	1
		Part of seal kit P/N G110046.	Part of seal kit P/N G110046.	1
8	G107998	SEAL	buffer, grooved, piston rod, narrow	1
		Part of seal kit P/N G110046.	Part of seal kit P/N G110046.	1
9	238-5235	O-RING,-235, 70 Duro, 3.109" ID x .139" Thk	Gland -235, 70 Duro, 3.109" ID x .139" Thk	1
		Part of seal kit P/N G110046.	Part of seal kit P/N G110046.	1
10	D38858	BACK-UP RING,82.93 mm ID	RING backup, gland O-ring	1
		Part of seal kit P/N G110046.	Part of seal kit P/N G110046.	1
11	276-2446	SELF-TAP SCREW,Hex Hd, #8 x 3/8"	SCREW - self-tapping, hex hd, No. 8 NC x 3/8 "	1
12	1986903C1	PISTON ROD	ROD ASSEMBLY piston, 2-1/2 inch, 64 mm, diameter, cylinder, order 1542658C1 rod on Figure 8-139C, Includes: Ref. 13	1
13	D140029	BUSHING	piston rod	2
14	1986906C1	PISTON	cylinder	1
15	G102286	SEAL	- piston	1

Diag #	Part #	Name	Description	Qty
		Part of seal kit P/N G110046.	Part of seal kit P/N G110046.	1
		Part of seal kit P/N 1542923C2.	Part of seal kit P/N 1542923C2.	1
16	G100710	RING	backup, piston seal	1
		Part of seal kit P/N G110046.	Part of seal kit P/N G110046.	1
		Part of seal kit P/N 1542923C2.	Part of seal kit P/N 1542923C2.	1
17	G100711	WEAR RING	Piston	1
		Part of seal kit P/N G110046.	Part of seal kit P/N G110046.	1
		Part of seal kit P/N 1542923C2.	Part of seal kit P/N 1542923C2.	1
18	28-2052	BOLT,Hex, 1 1/4" - 12 x 3 1/4", Gr 8	- hex, 1-1/4 NF x 3-1/4 inch, grade 8	1
19	G104989	WASHER	flat, 1-1/4 inch, hardened, special	1
20	219-1	LUBE NIPPLE,1/8"-27 x .66 lg	FITTING grease, straight, 1/8 PT x 21/32 inch	2
21	D123655	SEAL	tube and rod eyes	4
	NSS	NOT SERVICED SEPARATELY	GLAND ASSEMBLY cylinder, Includes: Ref. 22 through 30	1
22	1542922C1	GLAND	cylinder, has identification groove on outer lip	1
23	D95146	WIPER SEAL	WIPER piston rod	1
		Part of seal kit P/N 1542923C2.	Part of seal kit P/N 1542923C2.	1
24	G109908	BUSHING	center	1
		Part of seal kit P/N 1542923C2.	Part of seal kit P/N 1542923C2.	1
25	1542879C1	SEAL KIT	KIT seal, NSS, not shown, Includes: Ref. 26, 27 and 28	1
		Part of seal kit P/N 1542923C2.	Part of seal kit P/N 1542923C2.	1
26	1542931C1	SEAL	rod, NSS, order 1542923C2 kit below	1
		Part of seal kit P/N 1542923C2.	Part of seal kit P/N 1542923C2.	1
27	1542930C1	SEAL	buffer, NSS, order 1542923C2 kit below	1
		Part of seal kit P/N 1542923C2.	Part of seal kit P/N 1542923C2.	1
28	1543352C1	RING back up, NSS, no longer included in kit	RING back up, NSS, no longer included in kit	1
		Part of seal kit P/N 1542923C2.	Part of seal kit P/N 1542923C2.	1
29	238-5235	O-RING,-235, 70 Duro, 3.109" ID x .139" Thk	Gland -235, 70 Duro, 3.109" ID x .139" Thk	1

Diag #	Part #	Name	Description	Qty
		Part of seal kit P/N 1542923C2.	Part of seal kit P/N 1542923C2.	1
30	D38858	BACK-UP RING,82.93 mm ID	RING backup, gland O-ring	1
		Part of seal kit P/N 1542923C2.	Part of seal kit P/N 1542923C2.	1
	G110046	KIT	seal, Includes: Ref. 5 - 10 and 15 - 17, no longer available, order 1542923C2 kit below	1
	1542923C2	SEAL KIT	KIT seal, Includes: Ref. 15 - 17, 23 - 30 and an instruction sheet	1

http://www.minnparbackhoeparts.com/

(580SK) - CASE SUPER-K CONSTRUCTION KING LOADER BACKHOE > (8-138) - BACKHOE BUCKET CYLINDER

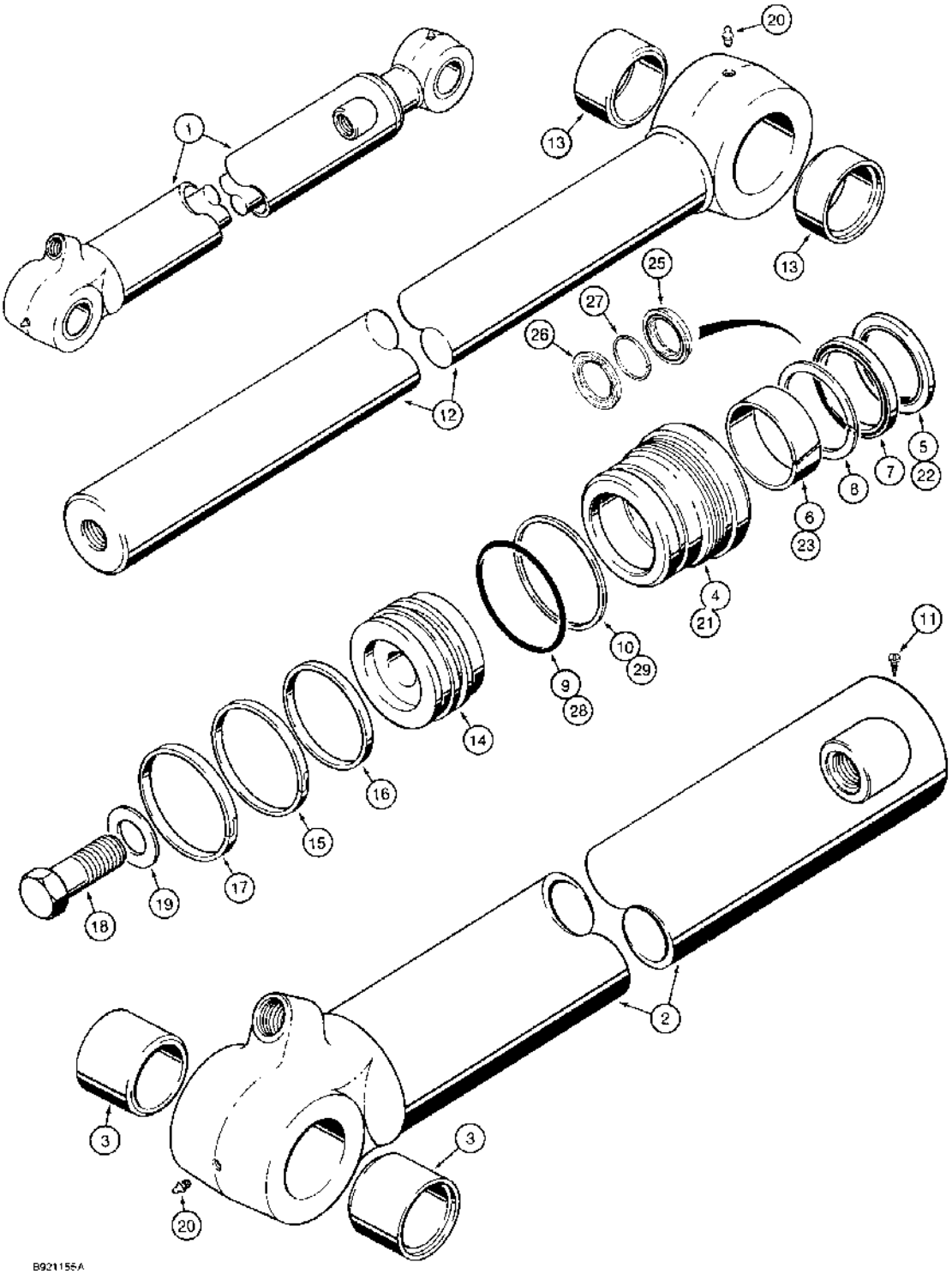

(580SK) - CASE SUPER-K CONSTRUCTION KING LOADER BACKHOE > (8-138) - BACKHOE BUCKET CYLINDER

Diag #	Part #	Name	Description	Qty
1	1542655C1	CYLINDER ASSY.	CYLINDER ASSEMBLY, 3-1/2, 89, ID x 34-5/16 inch, 872 mm, stroke, bucket, without grease seals at rod and tube eyes, no longer available, order 110290A1 cylinder on Figure 8-139C, Includes: Ref. 2 through 29, P/N G109894 and P/N NSS above Ref. 21	1
2	1542656C1	TUBE,88.77 mm ID, 1086.9 mm Length	ASSEMBLY cylinder, order 110292A1 tube on Figure 8-139C, Includes: Ref. 3	1
3	D141555	BUSHING	Tube	2
	G109894	GLAND	ASSEMBLY cylinder, has smooth outer lip, no longer available, order Ref. 21, 1542922C1 gland and 1542923C2 seal kit, Includes: Ref. 4 through 10	1
4	NSS	NOT SERVICED SEPARATELY	GLAND cylinder	1
5	D95146	WIPER SEAL	WIPER piston rod	1
		Part of seal kit P/N G110046.	Part of seal kit P/N G110046.	1
6	G109908	BUSHING	center	1
		Part of seal kit P/N G110046.	Part of seal kit P/N G110046.	1
7	G109228	SEAL	U-cup, with O-ring, piston rod, wide	1
		Part of seal kit P/N G110046.	Part of seal kit P/N G110046.	1
8	G107998	SEAL	buffer, grooved, piston rod, narrow	1
		Part of seal kit P/N G110046.	Part of seal kit P/N G110046.	1
9	238-5235	O-RING,-235, 70 Duro, 3.109" ID x .139" Thk	Gland -235, 70 Duro, 3.109" ID x .139" Thk	1
		Part of seal kit P/N G110046.	Part of seal kit P/N G110046.	1
10	D38858	BACK-UP RING,82.93 mm ID	RING backup, gland O-ring	1
		Part of seal kit P/N G110046.	Part of seal kit P/N G110046.	1
11	276-2446	SELF-TAP SCREW,Hex Hd, #8 x 3/8"	SCREW - self-tapping, hex hd, No. 8 NC x 3/8 "	1
12	1542658C1	PISTON ROD	ROD ASSEMBLY piston, 2-1/2 inch, 64 mm, diameter, cylinder, Includes: Ref. 13	1
13	D140029	BUSHING	piston rod	2
14	1986906C1	PISTON	cylinder	1
15	G102286	SEAL	- piston	1

Diag #	Part #	Name	Description	Qty
		Part of seal kit P/N G110046.	Part of seal kit P/N G110046.	1
		Part of seal kit P/N 1542923C2.	Part of seal kit P/N 1542923C2.	1
16	G100710	RING	backup, piston seal	1
		Part of seal kit P/N G110046.	Part of seal kit P/N G110046.	1
		Part of seal kit P/N 1542923C2.	Part of seal kit P/N 1542923C2.	1
17	G100711	WEAR RING	Piston	1
		Part of seal kit P/N G110046.	Part of seal kit P/N G110046.	1
		Part of seal kit P/N 1542923C2.	Part of seal kit P/N 1542923C2.	1
18	28-2052	BOLT,Hex, 1 1/4" - 12 x 3 1/4", Gr 8	- hex, 1-1/4 NF x 3-1/4 inch, grade 8	1
19	G104989	WASHER	flat, 1-1/4 inch, hardened, special	1
20	219-1	LUBE NIPPLE,1/8"-27 x .66 lg	FITTING grease, straight, 1/8 PT x 21/32 inch	2
	NSS	NOT SERVICED SEPARATELY	GLAND ASSEMBLY cylinder, Includes: Ref. 21 through 29	1
21	1542922C1	GLAND	cylinder, has identification groove on outer lip	1
22	D95146	WIPER SEAL	WIPER piston rod	1
		Part of seal kit P/N 1542923C2.	Part of seal kit P/N 1542923C2.	1
23	G109908	BUSHING	center	1
		Part of seal kit P/N 1542923C2.	Part of seal kit P/N 1542923C2.	1
24	1542879C1	SEAL KIT	KIT seal, NSS, not shown, Includes: Ref. 25, 26 and 27	1
		Part of seal kit P/N 1542923C2.	Part of seal kit P/N 1542923C2.	1
25	1542931C1	SEAL	rod, NSS, order 1542923C2 kit below	1
		Part of seal kit P/N 1542923C2.	Part of seal kit P/N 1542923C2.	1
26	1542930C1	SEAL	buffer, NSS, order 1542923C2 kit below	1
		Part of seal kit P/N 1542923C2.	Part of seal kit P/N 1542923C2.	1
27	1543352C1	RING back up, NSS, no longer included in kit	RING back up, NSS, no longer included in kit	1
		Part of seal kit P/N 1542923C2.	Part of seal kit P/N 1542923C2.	1
28	238-5235	O-RING,-235, 70 Duro, 3.109" ID x .139" Thk	Gland -235, 70 Duro, 3.109" ID x .139" Thk	1
		Part of seal kit P/N 1542923C2.	Part of seal kit P/N 1542923C2.	1

Diag #	Part #	Name	Description	Qty
29	D38858	BACK-UP RING,82.93 mm ID	RING backup, gland O-ring	1
		Part of seal kit P/N 1542923C2.	Part of seal kit P/N 1542923C2.	1
	G110046	KIT	seal, Includes: Ref. 5 - 10 and 15 - 17, no longer available, order 1542923C2 kit below	1
	1542923C2	SEAL KIT	KIT seal, Includes: Ref. 15 - 17, 22 - 29 and an instruction sheet	1

http://www.minnparbackhoeparts.com/

(580SK) - CASE SUPER-K CONSTRUCTION KING LOADER BACKHOE > (8-139A) - BACKHOE BUCKET CYLINDER

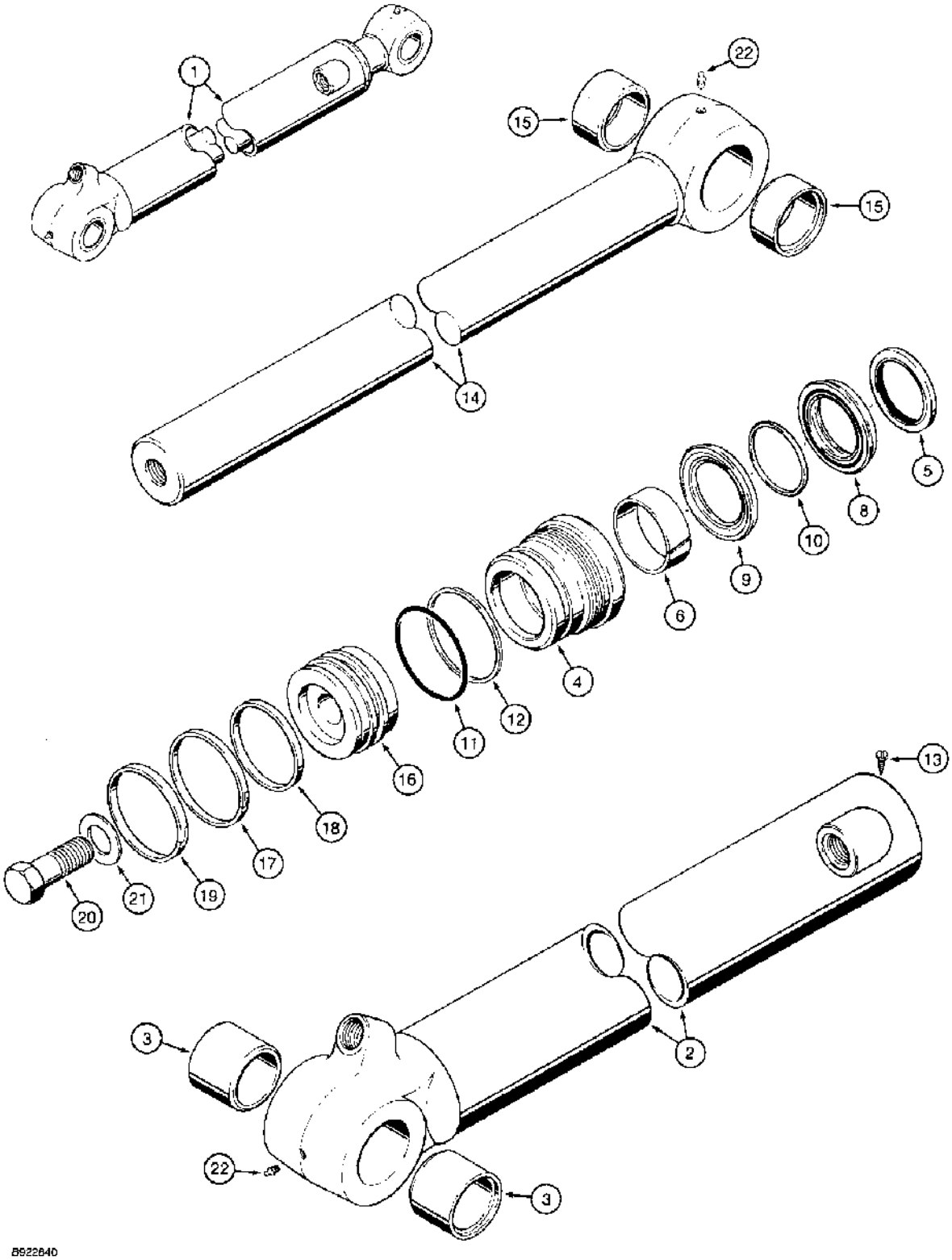

(580SK) - CASE SUPER-K CONSTRUCTION KING LOADER BACKHOE > (8-139A) - BACKHOE BUCKET CYLINDER

Diag #	Part #	Name	Description	Qty
1	1542920C1	CYLINDER ASSY.	CYLINDER ASSEMBLY, 3-1/2, 89, ID x 34-5/16 inch, 872 mm, stroke, bucket, no longer available, order 110290A1 cylinder on Figure 8-139C, Includes: Ref. 2 through 22 and P/N NSS above Ref. 4	1
2	1542656C1	TUBE,88.77 mm ID, 1086.9 mm Length	ASSEMBLY cylinder, order 110292A1 tube on Figure 8-139C, Includes: Ref. 3	1
3	D141555	BUSHING	Tube	2
	NSS	NOT SERVICED SEPARATELY	GLAND ASSEMBLY cylinder, Includes: Ref. 4 through 12	1
4	1542922C1	GLAND	cylinder	1
5	D95146	WIPER SEAL	WIPER piston rod	1
		Part of seal kit P/N 1542923C2.	Part of seal kit P/N 1542923C2.	1
6	G109908	BUSHING	center	1
		Part of seal kit P/N 1542923C2.	Part of seal kit P/N 1542923C2.	1
7	1542879C1	SEAL KIT	KIT seal, NSS, not shown, Includes: Ref. 8, 9 and 10	1
		Part of seal kit P/N 1542923C2.	Part of seal kit P/N 1542923C2.	1
8	1542931C1	SEAL	rod, NSS, order 1542923C2 kit below	1
9	1542930C1	SEAL	buffer, NSS, order 1542923C2 kit below	1
10	1543352C1	RING back up, NSS, no longer included in kit	RING back up, NSS, no longer included in kit	1
11	238-5235	O-RING,-235, 70 Duro, 3.109" ID x .139" Thk	Gland -235, 70 Duro, 3.109" ID x .139" Thk	1
		Part of seal kit P/N 1542923C2.	Part of seal kit P/N 1542923C2.	1
12	D38858	BACK-UP RING,82.93 mm ID	RING backup, gland O-ring	1
		Part of seal kit P/N 1542923C2.	Part of seal kit P/N 1542923C2.	1
13	276-2446	SELF-TAP SCREW,Hex Hd, #8 x 3/8"	SCREW - self-tapping, hex hd, No. 8 NC x 3/8 "	1
14	1986903C1	PISTON ROD	ROD ASSEMBLY piston, 2-1/2 inch, 64 mm, diameter, cylinder, order 1542658C1 rod on Figure 8-139C, Includes: Ref. 15	1
15	D140029	BUSHING	piston rod	2
16	1986906C1	PISTON	cylinder	1
17	G102286	SEAL	- piston	1
		Part of seal kit P/N 1542923C2.	Part of seal kit P/N 1542923C2.	1

Diag #	Part #	Name	Description	Qty
18	G100710	RING	backup, piston seal	1
		Part of seal kit P/N 1542923C2.	Part of seal kit P/N 1542923C2.	1
19	G100711	WEAR RING	Piston	1
		Part of seal kit P/N 1542923C2.	Part of seal kit P/N 1542923C2.	1
20	28-2052	BOLT,Hex, 1 1/4" - 12 x 3 1/4", Gr 8	- hex, 1-1/4 NF x 3-1/4 inch, grade 8	1
21	G104989	WASHER	flat, 1-1/4 inch, hardened, special	1
22	219-1	LUBE NIPPLE,1/8"-27 x .66 lg	FITTING grease, straight, 1/8 PT x 21/32 inch	2
	1542923C2	SEAL KIT	KIT seal, Includes: Ref. 5 - 12, 17 - 19 and an instruction sheet	1

http://www.minnparbackhoeparts.com/

(580SK) - CASE SUPER-K CONSTRUCTION KING LOADER BACKHOE > (8-139C) - BACKHOE BUCKET CYLINDER

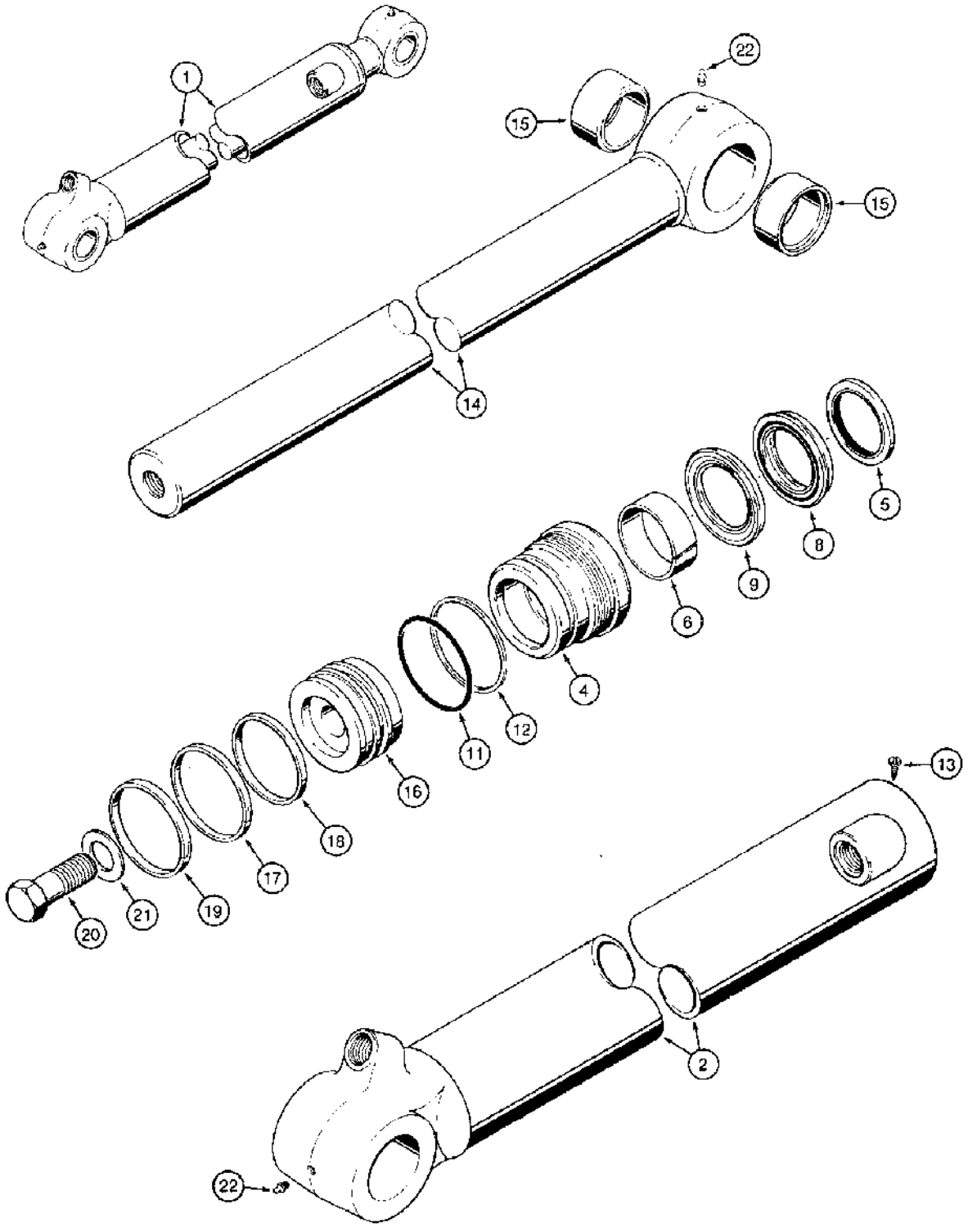

(580SK) - CASE SUPER-K CONSTRUCTION KING LOADER BACKHOE > (8-139C) - BACKHOE BUCKET CYLINDER

Diag #	Part #	Name	Description	Qty
1	110290A1	CYLINDER ASSY.	CYLINDER ASSEMBLY, 3-1/2, 89, ID x 34-5/16 inch, 872 mm, stroke, bucket, if used, Includes: Ref. 2 through 22 and P/N NSS above Ref. 4	1
2	110292A1	TUBE,50 mm ID, 1086.9 mm Length	ASSEMBLY cylinder	1
	NSS	NOT SERVICED SEPARATELY	GLAND ASSEMBLY cylinder, Includes: Ref. 4 through 12	1
4	1542922C1	GLAND	cylinder	1
5	D95146	WIPER SEAL	WIPER piston rod	1
		Part of seal kit P/N 1542923C2.	Part of seal kit P/N 1542923C2.	1
6	G109908	BUSHING	center	1
		Part of seal kit P/N 1542923C2.	Part of seal kit P/N 1542923C2.	1
7	1542879C1	SEAL KIT	KIT seal, NSS, not shown, Includes: Ref. 8 and 9	1
		Part of seal kit P/N 1542923C2.	Part of seal kit P/N 1542923C2.	1
8	1542931C1	SEAL	rod, NSS, order 1542923C2 kit below	1
9	1542930C1	SEAL	buffer, NSS, order 1542923C2 kit below	1
11	238-5235	O-RING,-235, 70 Duro, 3.109" ID x .139" Thk	Gland -235, 70 Duro, 3.109" ID x .139" Thk	1
		Part of seal kit P/N 1542923C2.	Part of seal kit P/N 1542923C2.	1
12	D38858	BACK-UP RING,82.93 mm ID	RING backup, gland O-ring	1
		Part of seal kit P/N 1542923C2.	Part of seal kit P/N 1542923C2.	1
13	276-2446	SELF-TAP SCREW,Hex Hd, #8 x 3/8"	SCREW - self-tapping, hex hd, No. 8 NC x 3/8 "	1
14	1542658C1	PISTON ROD	ROD ASSEMBLY piston, 2-1/2 inch, 64 mm, diameter, cylinder, Includes: Ref. 15	1
15	D140029	BUSHING	piston rod	2
16	1986906C1	PISTON	cylinder	1
17	G102286	SEAL	- piston	1
		Part of seal kit P/N 1542923C2.	Part of seal kit P/N 1542923C2.	1
18	G100710	RING	backup, piston seal	1
		Part of seal kit P/N 1542923C2.	Part of seal kit P/N 1542923C2.	1
19	G100711	WEAR RING	Piston	1

Diag #	Part #	Name	Description	Qty
		Part of seal kit P/N 1542923C2.	Part of seal kit P/N 1542923C2.	1
20	28-2052	BOLT,Hex, 1 1/4" - 12 x 3 1/4", Gr 8	- hex, 1-1/4 NF x 3-1/4 inch, grade 8	1
21	G104989	WASHER	flat, 1-1/4 inch, hardened, special	1
22	219-1	LUBE NIPPLE,1/8"-27 x .66 lg	FITTING grease, straight, 1/8 PT x 21/32 inch	2
	1542923C2	SEAL KIT	KIT seal, Includes: Ref. 5 - 12, 17 - 19 and an instruction sheet	1

http://www.minnparbackhoeparts.com/

(580SK) - CASE SUPER-K CONSTRUCTION KING LOADER BACKHOE > (8-140) - BACKHOE DIPPER EXTENSION CYLINDER

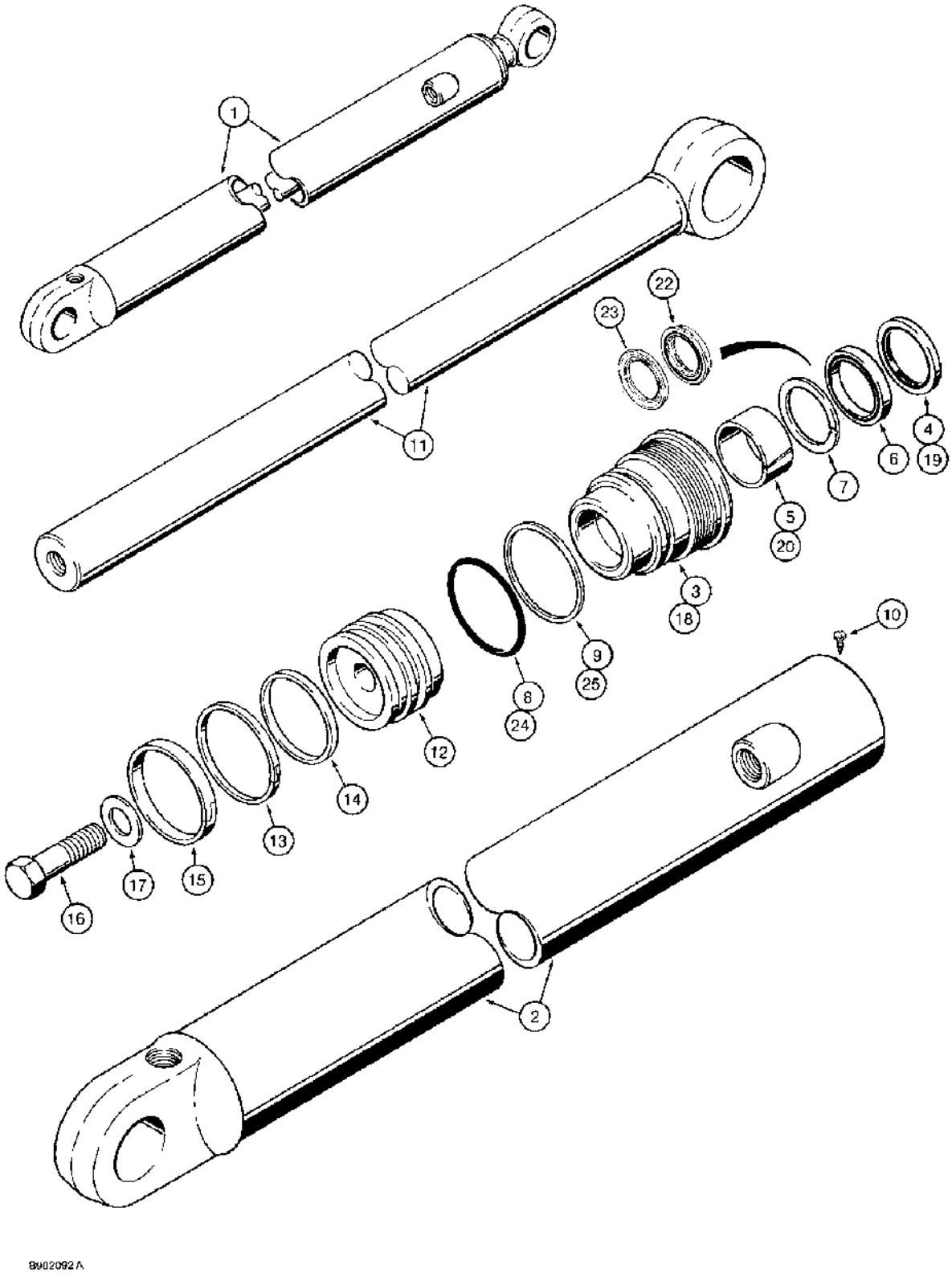

(580SK) - CASE SUPER-K CONSTRUCTION KING LOADER BACKHOE > (8-140) - BACKHOE DIPPER EXTENSION CYLINDER

Diag #	Part #	Name	Description	Qty
1	1340969C1	CYLINDER ASSY.	CYLINDER ASSEMBLY, 3, 76, ID x 42-1/16 inch, 1068 mm, stroke, dipper extension, Includes: Ref. 2 through 25, P/N G109885 and P/N NSS above Ref. 18	1
2	1340970C1	TUBE	BARREL, Tube cylinder, without bushing	1
	G109885	GLAND	ASSEMBLY cylinder, no longer available, order Ref. 18, G109884 gland and 1543267C1 seal kit, Includes: Ref. 3 through 9	1
3	NSS	NOT SERVICED SEPARATELY	GLAND cylinder	1
4	D95143	WIPER SEAL	WIPER piston rod	1
		Part of seal kit P/N G110049.	Part of seal kit P/N G110049.	1
5	G102425	BUSHING	center	1
		Part of seal kit P/N G110049.	Part of seal kit P/N G110049.	1
6	G107922	SEAL	U-cup, with O-ring, piston rod, wide	1
		Part of seal kit P/N G110049.	Part of seal kit P/N G110049.	1
7	G109094	SEAL	buffer, grooved, piston rod, narrow	1
		Part of seal kit P/N G110049.	Part of seal kit P/N G110049.	1
8	238-5231	O-RING,-231, 70 Duro, 2.609" ID x .139" Thk	Gland -231, 70 Duro, 2.609" ID x .139" Thk	1
		Part of seal kit P/N G110049.	Part of seal kit P/N G110049.	1
9	G109298	RING	backup, gland O-ring	1
		Part of seal kit P/N G110049.	Part of seal kit P/N G110049.	1
10	276-2446	SELF-TAP SCREW,Hex Hd, #8 x 3/8"	SCREW - self-tapping, hex hd, No. 8 NC x 3/8 "	1
11	1980296C1	PISTON ROD	ROD piston, 1-3/4 inch, 44 mm, diameter, without bushing	1
12	G107277	PISTON	cylinder	1
13	G102288	SEAL	- Piston	1
		Part of seal kit P/N G110049.	Part of seal kit P/N G110049.	1
		Part of seal kit P/N 1543267C1.	Part of seal kit P/N 1543267C1.	1
14	G100444	SEALING RING	RING backup, piston seal	1
		Part of seal kit P/N G110049.	Part of seal kit P/N G110049.	1

Diag #	Part #	Name	Description	Qty
		Part of seal kit P/N 1543267C1.	Part of seal kit P/N 1543267C1.	1
15	G100449	WEAR RING	RING wear, piston	1
		Part of seal kit P/N G110049.	Part of seal kit P/N G110049.	1
		Part of seal kit P/N 1543267C1.	Part of seal kit P/N 1543267C1.	1
16	25863R1	BOLT,Hex, 3/4" - 16 x 2 1/2", Gr 8	- hex, 3/4 NF x 2-1/2 inch, grade 8, replaces 28-1240	1
17	S94643	WASHER	flat, special	1
	NSS	NOT SERVICED SEPARATELY	GLAND ASSEMBLY cylinder, Includes: Ref. 18 through 25	1
18	G109884	CYLINDER END CAP	GLAND cylinder	1
19	D95143	WIPER SEAL	WIPER piston rod	1
		Part of seal kit P/N 1543267C1.	Part of seal kit P/N 1543267C1.	1
20	G102425	BUSHING	center	1
		Part of seal kit P/N 1543267C1.	Part of seal kit P/N 1543267C1.	1
21	1542875C1	SEAL KIT	KIT, SEALS, NSS, Not shown, Incl Ref 22 and 23	1
		Part of seal kit P/N 1543267C1.	Part of seal kit P/N 1543267C1.	1
22	1542999C1	SEAL	rod, NSS, order 1543267C1 kit below	1
		Part of seal kit P/N 1543267C1.	Part of seal kit P/N 1543267C1.	1
23	1542998C1	SEALING RING	buffer, NSS, order 1543267C1 kit below	1
		Part of seal kit P/N 1543267C1.	Part of seal kit P/N 1543267C1.	1
24	238-5231	O-RING,-231, 70 Duro, 2.609" ID x .139" Thk	Gland -231, 70 Duro, 2.609" ID x .139" Thk	1
		Part of seal kit P/N 1543267C1.	Part of seal kit P/N 1543267C1.	1
25	G109298	RING	backup, gland O-ring	1
		Part of seal kit P/N 1543267C1.	Part of seal kit P/N 1543267C1.	1
	G110049	KIT	seal, Includes: Ref. 4 - 9 and 13 - 15, no longer available, order 1543267C1 kit below	1
	1543267C1	SEAL KIT	KIT, SEALS, Incl Ref 13 - 15, 19 - 25 and an instruction sheet	1

http://www.minnparbackhoeparts.com/

(580SK) - CASE SUPER-K CONSTRUCTION KING LOADER BACKHOE > (8-142) - THREE-POINT HITCH LIFT CYLINDER

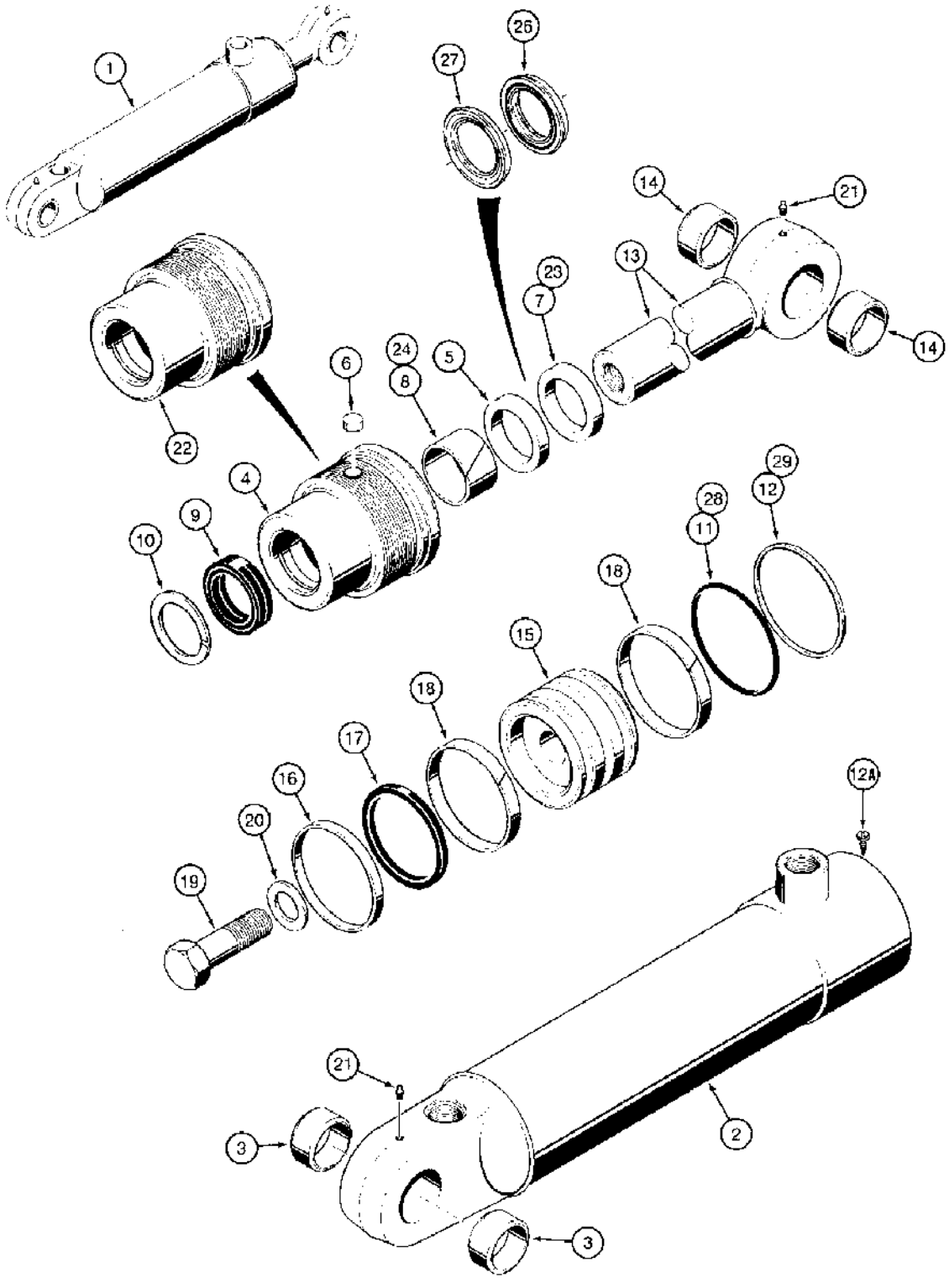

(580SK) - CASE SUPER-K CONSTRUCTION KING LOADER BACKHOE > (8-142) - THREE-POINT HITCH LIFT CYLINDER

Diag #	Part #	Name	Description	Qty
1	G101189	CYLINDER ASSY.	CYLINDER ASSEMBLY, 3, 76, ID x 8-3/8 inch, 213 mm, stroke, lift, Includes: Ref. 2 through 29, P/N G104222 and P/N NSS above Ref. 22	1
2	G32330	TUBE,16.59" L	ASSEMBLY cylinder, Includes: Ref. 3	1
3	30634	BUSHING	tube	2
	G104222	GLAND	ASSEMBLY cylinder, has smooth outer lip, no longer available, order Ref. 22, 1542962C1 gland and 1543252C1 seal kit, Includes: Ref. 4 through 12	1
4	NSS	NOT SERVICED SEPARATELY	GLAND cylinder	1
5	NSS	NOT SERVICED SEPARATELY	RING retaining, bushing	1
6	G102569	PLUG	nylon, thread locking, gland, if used	1
7	D95142	WIPER SEAL	WIPER piston rod	1
		Part of seal kit P/N G109452.	Part of seal kit P/N G109452.	1
8	G102424	BUSHING	- Center	1
		Part of seal kit P/N G109452.	Part of seal kit P/N G109452.	1
9	G107921	SEAL	U-cup, with O-ring, piston rod, wide	1
		Part of seal kit P/N G109452.	Part of seal kit P/N G109452.	1
9	G100776	SEAL	U-cup, piston rod, service option - severe heat or cold	1
10	G109093	SEAL	buffer, grooved, piston rod, narrow	1
		Part of seal kit P/N G109452.	Part of seal kit P/N G109452.	1
		Part of seal kit P/N 1543252C1.	Part of seal kit P/N 1543252C1.	1
11	238-5234	O-RING,-234, 70 Duro, 2.984" ID x .139" Thk	O-RING,-234, 70 Duro, 2.984" ID x .139" Thk	1
		Part of seal kit P/N G109452.	Part of seal kit P/N G109452.	1
12	G32122	RING	backup, gland O-ring	1
		Part of seal kit P/N G109452.	Part of seal kit P/N G109452.	1
12A	276-2446	SELF-TAP SCREW,Hex Hd, #8 x 3/8"	SCREW - self-tapping, hex hd, No. 8 NC x 3/8 ", If used	1
13	G33457	PISTON ROD	ROD ASSEMBLY piston, 1-1/2 inch, 38 mm, diameter, Includes: Ref. 14	1
14	30634	BUSHING	piston rod	2

Diag #	Part #	Name	Description	Qty
15	G100442	PISTON	cylinder	1
16	G102288	SEAL	- Piston	1
		Part of seal kit P/N G109452.	Part of seal kit P/N G109452.	1
		Part of seal kit P/N 1543252C1.	Part of seal kit P/N 1543252C1.	1
17	G100444	SEALING RING	RING backup, piston seal	1
		Part of seal kit P/N G109452.	Part of seal kit P/N G109452.	1
		Part of seal kit P/N 1543252C1.	Part of seal kit P/N 1543252C1.	1
18	G100449	WEAR RING	RING wear, piston	2
		Part of seal kit P/N G109452.	Part of seal kit P/N G109452.	1
		Part of seal kit P/N 1543252C1.	Part of seal kit P/N 1543252C1.	1
19	25863R1	BOLT,Hex, 3/4" - 16 x 2 1/2", Gr 8	- hex, 3/4 NF x 2-1/2 inch, grade 8, replaces 28-1240	1
20	G32317	WASHER	hardened	1
21	219-1	LUBE NIPPLE,1/8"-27 x .66 lg	FITTING grease, straight, 1/8 PT x 21/32 inch	2
	NSS	NOT SERVICED SEPARATELY	GLAND ASSEMBLY cylinder, Includes: Ref. 22 through 29	1
22	1542962C1	GLAND	cylinder, has identification groove on outer lip	1
23	D95142	WIPER SEAL	WIPER piston rod	1
		Part of seal kit P/N 1543252C1.	Part of seal kit P/N 1543252C1.	1
24	G102424	BUSHING	- Center	1
		Part of seal kit P/N 1543252C1.	Part of seal kit P/N 1543252C1.	1
25	1542874C1	SEAL KIT	KIT, SEALS, NSS, Not shown, Incl Ref 26 and 27	1
		Part of seal kit P/N 1543252C1.	Part of seal kit P/N 1543252C1.	1
26	1542997C1	SEALING RING	rod, NSS, order 1543252C1 kit below	1
		Part of seal kit P/N 1543252C1.	Part of seal kit P/N 1543252C1.	1
27	1542996C1	SEAL	buffer, NSS, order 1543252C1 kit below	1
		Part of seal kit P/N 1543252C1.	Part of seal kit P/N 1543252C1.	1
28	238-5234	O-RING,-234, 70 Duro, 2.984" ID x .139" Thk	O-RING,-234, 70 Duro, 2.984" ID x .139" Thk	1
		Part of seal kit P/N 1543252C1.	Part of seal kit P/N 1543252C1.	1
29	G32122	RING	backup, gland O-ring	1

Diag #	Part #	Name	Description	Qty
		Part of seal kit P/N 1543252C1.	Part of seal kit P/N 1543252C1.	1
	G109452	GASKET KIT	KIT seal, Includes: Ref. 7, 8, 9 of P/N G107921, 10 - 12 and 16 - 18, no longer available, order 1543252C1 seal kit below	1
	1543252C1	SEAL KIT	KIT seal, Includes: Ref. 10, 16 - 18, 23 - 29 and an instruction sheet	1

http://www.minnparbackhoeparts.com/

(580SK) - CASE SUPER-K CONSTRUCTION KING LOADER BACKHOE > (8-144) - THREE-POINT HITCH LIFT CYLINDER

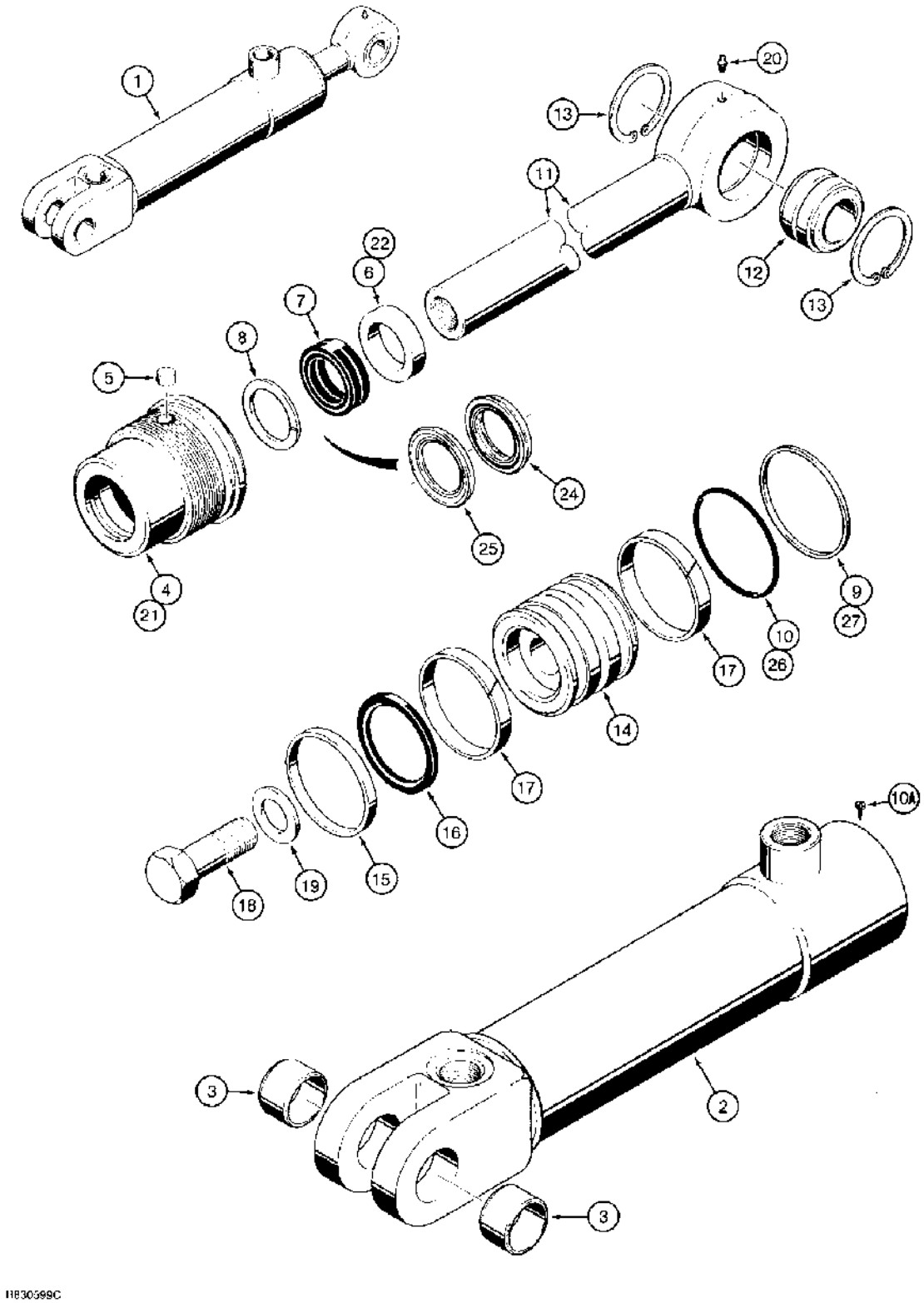

(580SK) - CASE SUPER-K CONSTRUCTION KING LOADER BACKHOE > (8-144) - THREE-POINT HITCH LIFT CYLINDER

Diag #	Part #	Name	Description	Qty
1	G101188	JACK BODY	CYLINDER ASSEMBLY, 2-1/2, 64, ID x 6-19/64 inch, 160 mm, stroke, tilt, Includes: Ref. 2 through 27, P/N G104915 and P/N NSS above Ref. 21	1
2	G32313	TUBE,14.43" L	ASSEMBLY cylinder, Includes: Ref. 3	1
3	D34359	BUSHING	tube	2
	G104915	GLAND	ASSEMBLY cylinder, has smooth outer lip, no longer available, order Ref. 21, 1542939C1 gland and 1543250C1 seal kit, Includes: Ref. 4 through 10	1
4	NSS	NOT SERVICED SEPARATELY	GLAND cylinder	1
5	G102569	PLUG	nylon, thread locking, gland, if used	1
6	D95141	WIPER SEAL	WIPER piston rod	1
		Part of seal kit P/N G109475.	Part of seal kit P/N G109475.	1
7	D36968	SEAL	U-cup, piston rod, wide	1
		Part of seal kit P/N G109475.	Part of seal kit P/N G109475.	1
7	G100775	SEAL	U-cup, piston rod, service option - severe heat or cold	1
8	G109092	SEAL	buffer, grooved, piston rod, narrow	1
		Part of seal kit P/N G109475.	Part of seal kit P/N G109475.	1
		Part of seal kit P/N 1543250C1.	Part of seal kit P/N 1543250C1.	1
9	G32129	RING	backup, gland O-ring	1
		Part of seal kit P/N G109475.	Part of seal kit P/N G109475.	1
10	A28318	O-RING,2.484" ID x 2.762" OD x 0.139"	gland	1
		Part of seal kit P/N G109475.	Part of seal kit P/N G109475.	1
10A	276-2446	SELF-TAP SCREW,Hex Hd, #8 x 3/8"	SCREW - self-tapping, hex hd, No. 8 NC x 3/8 ", If used	1
11	G33352	ROD	ASSEMBLY- piston, 1-1/4 inch, 32 mm, diameter, Includes: Ref. 12 and 13	1
12	D22200	BEARING	BUSHING piston rod, self-aligning	1
13	100-21162	SNAP RING,1.625", Int, #162	Ring, Snap, (Replaces D27833) 1.625", Int, #162	2
14	G100708	PISTON	cylinder	1
15	G102289	SEAL	piston	1

Diag #	Part #	Name	Description	Qty
		Part of seal kit P/N G109475.	Part of seal kit P/N G109475.	1
		Part of seal kit P/N 1543250C1.	Part of seal kit P/N 1543250C1.	1
16	G100713	SEALING RING	RING backup, piston seal	1
		Part of seal kit P/N G109475.	Part of seal kit P/N G109475.	1
		Part of seal kit P/N 1543250C1.	Part of seal kit P/N 1543250C1.	1
17	G100714	RING	wear, piston	2
		Part of seal kit P/N G109475.	Part of seal kit P/N G109475.	1
		Part of seal kit P/N 1543250C1.	Part of seal kit P/N 1543250C1.	1
18	25863R1	BOLT,Hex, 3/4" - 16 x 2 1/2", Gr 8	- hex, 3/4 NF x 2-1/2 inch, grade 8, replaces 28-1240	1
19	G32317	WASHER	hardened	1
20	219-1	LUBE NIPPLE,1/8"-27 x .66 lg	FITTING grease, straight, 1/8 PT x 21/32 inch	1
	NSS	NOT SERVICED SEPARATELY	GLAND ASSEMBLY cylinder, Includes: Ref. 21 through 27	1
21	1542939C1	CYLINDER END CAP	GLAND cylinder, has identification groove on outer lip	1
22	D95141	WIPER SEAL	WIPER piston rod	1
		Part of seal kit P/N 1543250C1.	Part of seal kit P/N 1543250C1.	1
23	1542873C1	PACKAGE	KIT seal, NSS, not shown, Includes: Ref. 24 and 25	1
		Part of seal kit P/N 1543250C1.	Part of seal kit P/N 1543250C1.	1
24	1543006C1	SEAL rod, NSS, order 1543250C1 kit below	SEAL rod, NSS, order 1543250C1 kit below	1
		Part of seal kit P/N 1543250C1.	Part of seal kit P/N 1543250C1.	1
25	1543005C1	SEAL buffer, NSS, order 1543250C1 kit below	SEAL buffer, NSS, order 1543250C1 kit below	1
		Part of seal kit P/N 1543250C1.	Part of seal kit P/N 1543250C1.	1
26	238-5230	O-RING,-230, 70 Duro, 2.484" ID x .139" Thk	O-RING,-230, 70 Duro, 2.484" ID x .139" Thk	1
		Part of seal kit P/N 1543250C1.	Part of seal kit P/N 1543250C1.	1
27	G32129	RING	backup, gland O-ring	1
		Part of seal kit P/N 1543250C1.	Part of seal kit P/N 1543250C1.	1
	G109475	GASKET KIT	KIT seal, Includes: Ref. 6, 7 of P/N D36968, 8 - 10 and 15 - 17, no longer available, order 1543250C1 seal kit below	1

Diag #	Part #	Name	Description	Qty
	1543250C1	SEAL KIT	KIT seal, Includes: Ref. 8, 15 - 17, 22 - 27 and an instruction sheet	1

http://www.minnparbackhoeparts.com/

(580SK) - CASE SUPER-K CONSTRUCTION KING LOADER BACKHOE > (8-146) - THREE-POINT HITCH PITCH CYLINDER

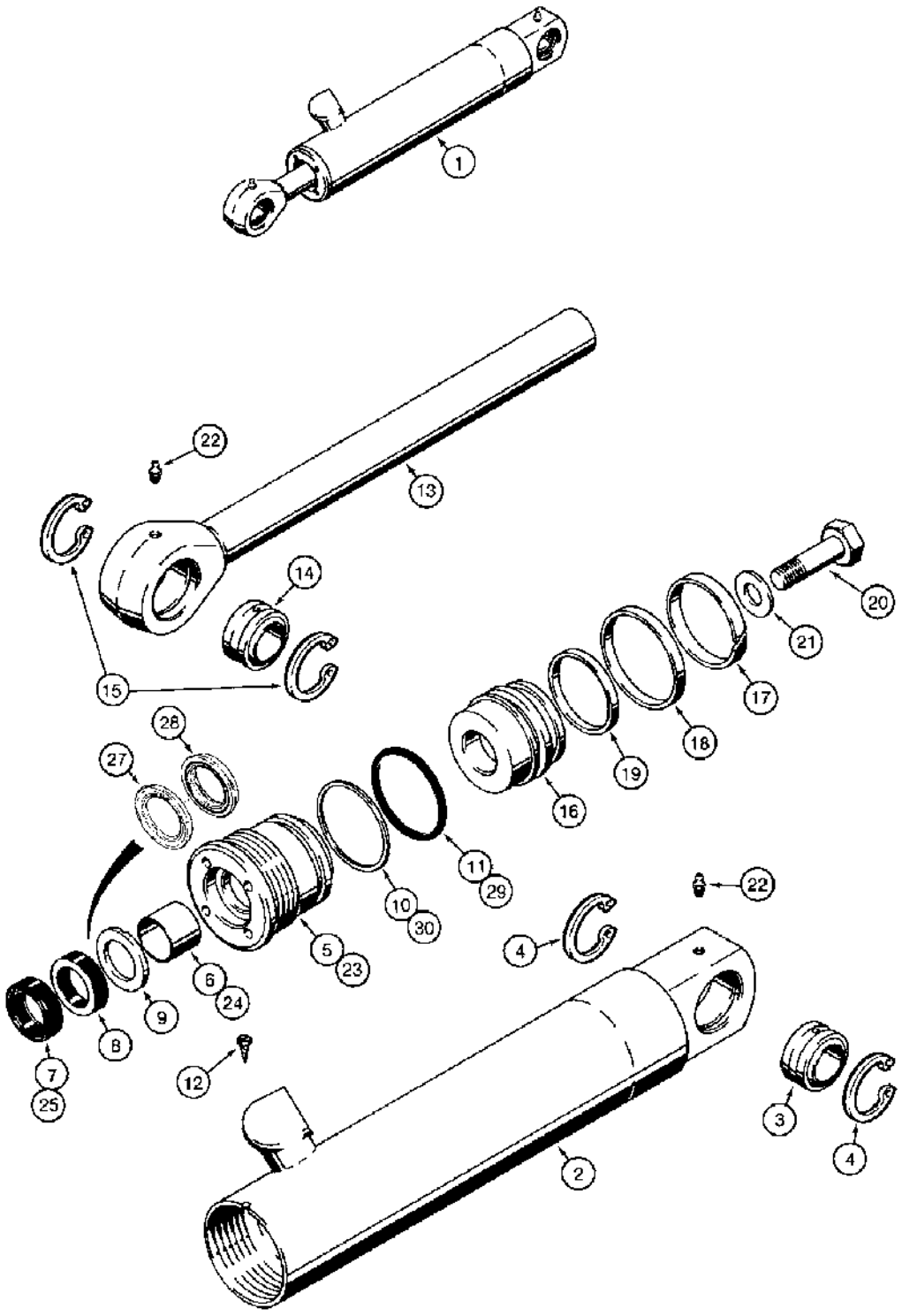

861793B

(580SK) - CASE SUPER-K CONSTRUCTION KING LOADER BACKHOE > (8-146) - THREE-POINT HITCH PITCH CYLINDER

Diag #	Part #	Name	Description	Qty
1	1976884C1	JACK BODY	CYLINDER ASSEMBLY, 2-1/2, 64, ID x 7 inch, 178 mm, stroke, pitch, Includes: Ref. 2 through 30, P/N G108971 and P/N NSS above Ref. 23	1
	138235A1R	REMAN-HYD CYLINDER	580SK, P/N G108971	1
	138235A1C	CORE-HYD CYLINDER	Return Number	1
2	G109852	TUBE,63.42 mm ID x 63.5 mm DIA x 411.2 mm L	ASSEMBLY cylinder, Includes: Ref. 3 and 4	1
3	D22200	BEARING	BUSHING tube, self-aligning	1
4	100-21162	SNAP RING,1.625", Int, #162	Ring, Snap, , Bushing (Replaces D27833) 1.625", Int, #162	2
	G108971	GLAND	ASSEMBLY cylinder, has smooth outer lip, no longer available, order Ref. 23, 1542933C1 gland and 1543249C1 seal kit, Includes: Ref. 5 through 11	1
5	NSS	NOT SERVICED SEPARATELY	GLAND cylinder	1
6	G102864	BEARING	BUSHING center	1
		Part of seal kit P/N G109475.	Part of seal kit P/N G109475.	1
7	D95141	WIPER SEAL	WIPER piston rod	1
		Part of seal kit P/N G109475.	Part of seal kit P/N G109475.	1
8	D36968	SEAL	U-cup, piston rod, wide	1
		Part of seal kit P/N G109475.	Part of seal kit P/N G109475.	1
9	G109092	SEAL	buffer, grooved, piston rod, narrow	1
		Part of seal kit P/N G109475.	Part of seal kit P/N G109475.	1
		Part of seal kit P/N 1543249C1.	Part of seal kit P/N 1543249C1.	1
10	G109297	BACK-UP RING	RING backup, gland O-ring	1
		Part of seal kit P/N G109475.	Part of seal kit P/N G109475.	1
11	238-5228	O-RING,-228, 70 Duro, 2.234" ID x .139" Thk	O-RING,-228, 70 Duro, 2.234" ID x .139" Thk	1
		Part of seal kit P/N G109475.	Part of seal kit P/N G109475.	1
12	276-2446	SELF-TAP SCREW,Hex Hd, #8 x 3/8"	SCREW - self-tapping, hex hd, No. 8 NC x 3/8 "	1
13	1976902C1	ROD	ASSEMBLY piston, 1-1/4 inch, 32 mm, diameter, Includes: Ref. 14 and 15	1
14	D22200	BEARING	BUSHING rod, self-aligning	1

Diag #	Part #	Name	Description	Qty
15	100-21162	SNAP RING,1.625", Int, #162	Ring, Snap, , Bushing (Replaces D27833) 1.625", Int, #162	2
16	G108977	PISTON	cylinder	1
17	G100714	RING	wear, piston	1
		Part of seal kit P/N G109475.	Part of seal kit P/N G109475.	1
		Part of seal kit P/N 1543249C1.	Part of seal kit P/N 1543249C1.	1
18	G102289	SEAL	piston	1
		Part of seal kit P/N G109475.	Part of seal kit P/N G109475.	1
		Part of seal kit P/N 1543249C1.	Part of seal kit P/N 1543249C1.	1
19	G100713	SEALING RING	RING backup, piston seal	1
		Part of seal kit P/N G109475.	Part of seal kit P/N G109475.	1
		Part of seal kit P/N 1543249C1.	Part of seal kit P/N 1543249C1.	1
20	28-1036	BOLT,Hex, 5/8" - 18 x 2 1/4", Gr 8	hex, 5/8 NF x 2-1/4 inch, grade 8	1
21	T53567	BEARING WASHER,0.656" ID x 1.312" OD x 0.135"	WASHER flat, 21/32 x 1-5/16 x 9/64 inch, hardened	1
22	219-1	LUBE NIPPLE,1/8"-27 x .66 lg	FITTING grease, straight, 1/8 PT x 21/32 inch	2
	NSS	NOT SERVICED SEPARATELY	GLAND ASSEMBLY cylinder, Includes: Ref. 23 through 30	1
23	1542933C1	GLAND	cylinder, has identification groove on outer lip	1
24	G102864	BEARING	BUSHING center	1
		Part of seal kit P/N 1543249C1.	Part of seal kit P/N 1543249C1.	1
25	D95141	WIPER SEAL	WIPER piston rod	1
		Part of seal kit P/N 1543249C1.	Part of seal kit P/N 1543249C1.	1
26	1542873C1	PACKAGE	KIT seal, NSS, not shown, Includes: Ref. 27 and 28	1
		Part of seal kit P/N 1543249C1.	Part of seal kit P/N 1543249C1.	1
27	1543006C1	SEAL rod, NSS, order 1543249C1 kit below	SEAL rod, NSS, order 1543249C1 kit below	1
		Part of seal kit P/N 1543249C1.	Part of seal kit P/N 1543249C1.	1
28	1543005C1	SEAL buffer, NSS, order 1543249C1 kit below	SEAL buffer, NSS, order 1543249C1 kit below	1
		Part of seal kit P/N 1543249C1.	Part of seal kit P/N 1543249C1.	1
29	238-5228	O-RING,-228, 70 Duro, 2.234" ID x .139" Thk	O-RING,-228, 70 Duro, 2.234" ID x .139" Thk	1

Diag #	Part #	Name	Description	Qty
		Part of seal kit P/N 1543249C1.	Part of seal kit P/N 1543249C1.	1
30	G109297	BACK-UP RING	RING backup, gland O-ring	1
		Part of seal kit P/N 1543249C1.	Part of seal kit P/N 1543249C1.	1
	G109475	GASKET KIT	KIT seal, Includes: Ref. 6 - 11 and 17 - 19, no longer available, order 1543249C1 seal kit below	1
	1543249C1	SEAL KIT	KIT seal, Includes: Ref. 9, 17 - 19, 24 - 30 and an instruction sheet	1

http://www.minnparbackhoeparts.com/



CHASSIS/ MOUNTED EQUIPMENT

9

http://www.minnparbackhoeparts.com/

(580SK) - CASE SUPER-K CONSTRUCTION KING LOADER BACKHOE > (9-002) - LOADER LIFT CONTROL

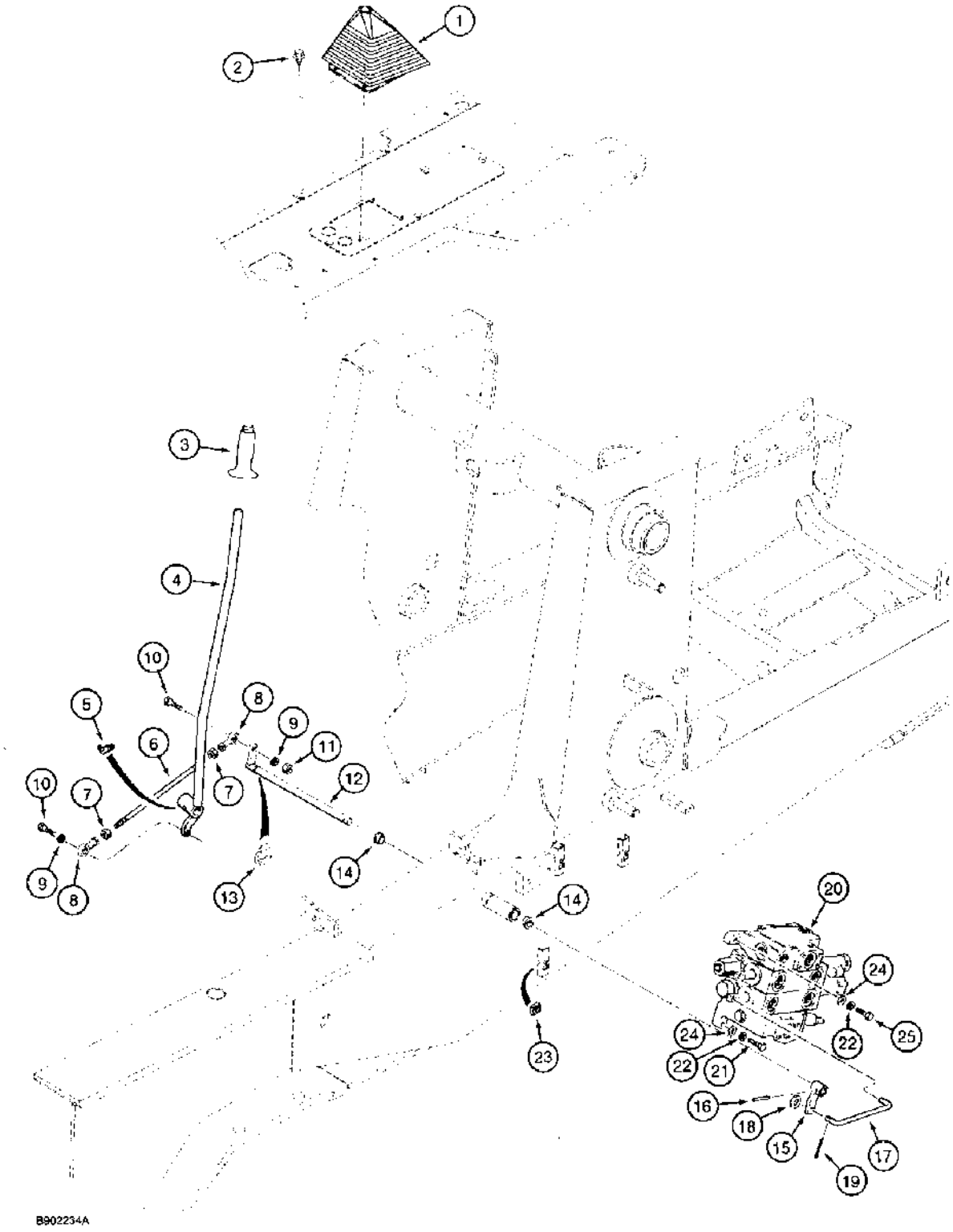

(580SK) - CASE SUPER-K CONSTRUCTION KING LOADER BACKHOE > (9-002) - LOADER LIFT CONTROL

Diag #	Part #	Name	Description	Qty
1	D137466	BOOT	control lever, models without clam control lever, see Figure 9-006 for boot used on models with clam control lever	1
2	281-1478	SELF-TAP SCREW,Hex Washer, 1/4" - 20 x 1/2"	SCREW self-tapping, hex washer head, 1/4 NC x 1/2 inch	4
3	D147443	HANDLE	KNOB lever, loader control, see Figure 4-24 for fast cycle switch and cover	1
4	D149132	LEVER	loader lift and bucket control, see Figure 9-004 for bucket control linkage	1
5	219-36	LUBE NIPPLE,45º, 1/8" NPT x 7/8" lg	FITTING grease, 45 degree, 1/8 PT x 7/8 inch	1
6	D148005	ROD	lift, loader control	1
7	425-116	NUT,3/8"-24, G5	- hex, 3/8 inch NF	2
8	D136773	BALL JOINT	JOINT ball, 3/8 inch NF, replaces S108030 ball joint	2
9	492-11038	LOCK WASHER,3/8"	LOCK WASHER,3/8"	2
10	413-624	BOLT,Hex, 3/8" - 16 x 1 1/2", Gr 5	hex, 3/8 NC x 1-1/2 inch	2
11	425-106	NUT,3/8"-16, G5	NUT,3/8"-16, G5	1
12	D149802	SHAFT	lift and bucket control, see Figure 9-004, Ref. 18 through Ref. 24 for bucket control pivot and related parts	1
13	D95096	RING	5/8 inch, shaft retaining, special, replaces D143591	1
14	D149799	BUSHING	- pivot, chassis right-hand side	2
15	49066	BELLCRANK lift control	SHIM,.036" Thk	1
16	138-136	LOCK PIN,1/4" x 1 1/4", Slotted	PIN, 1/4" x 1 1/4", Slotted	1
17	D148826	PITMAN	ROD lift, bellcrank to lift section	1
18	495-21038	WASHER,5/16"	(flat, 3/8 x 7/8 x 5/64") 5/16"	1
19	432-610	COTTER PIN,3/32" x 5/8"	PIN, SPLIT (COTTER), 3/32" x 5/8"	2
20	1346392C1	VALVE	ASSEMBLY loader control, two spool, see parts list Figure 8-064	1
21	413-620	BOLT,Hex, 3/8" - 16 x 1 1/4", Gr 5	hex, 3/8 NC x 1-1/4 inch	1-3
22	492-11038	LOCK WASHER,3/8"	LOCK WASHER,3/8"	3
23	84899	SQUARE NUT,Sq, 3/8"-16, G2	square, 3/8 inch NC	3
		CAGE NUT WELDED TO FRAME THAT REF 23 GOES INTO IS D88417.	CAGE NUT WELDED TO FRAME THAT REF 23 GOES INTO IS D88417.	1
24	495-11041	WASHER,3/8", SAE	flat, (13/32 x 13/16 x 1/16")	1

Diag #	Part #	Name	Description	Qty
25	413-622	BOLT,Hex, 3/8" - 16 x 1 3/8", Gr 5	hex, 3/8 NC x 1-3/8 inch	2

http://www.minnparbackhoeparts.com/

(580SK) - CASE SUPER-K CONSTRUCTION KING LOADER BACKHOE > (9-004) - LOADER BUCKET CONTROL

BestManuals.net

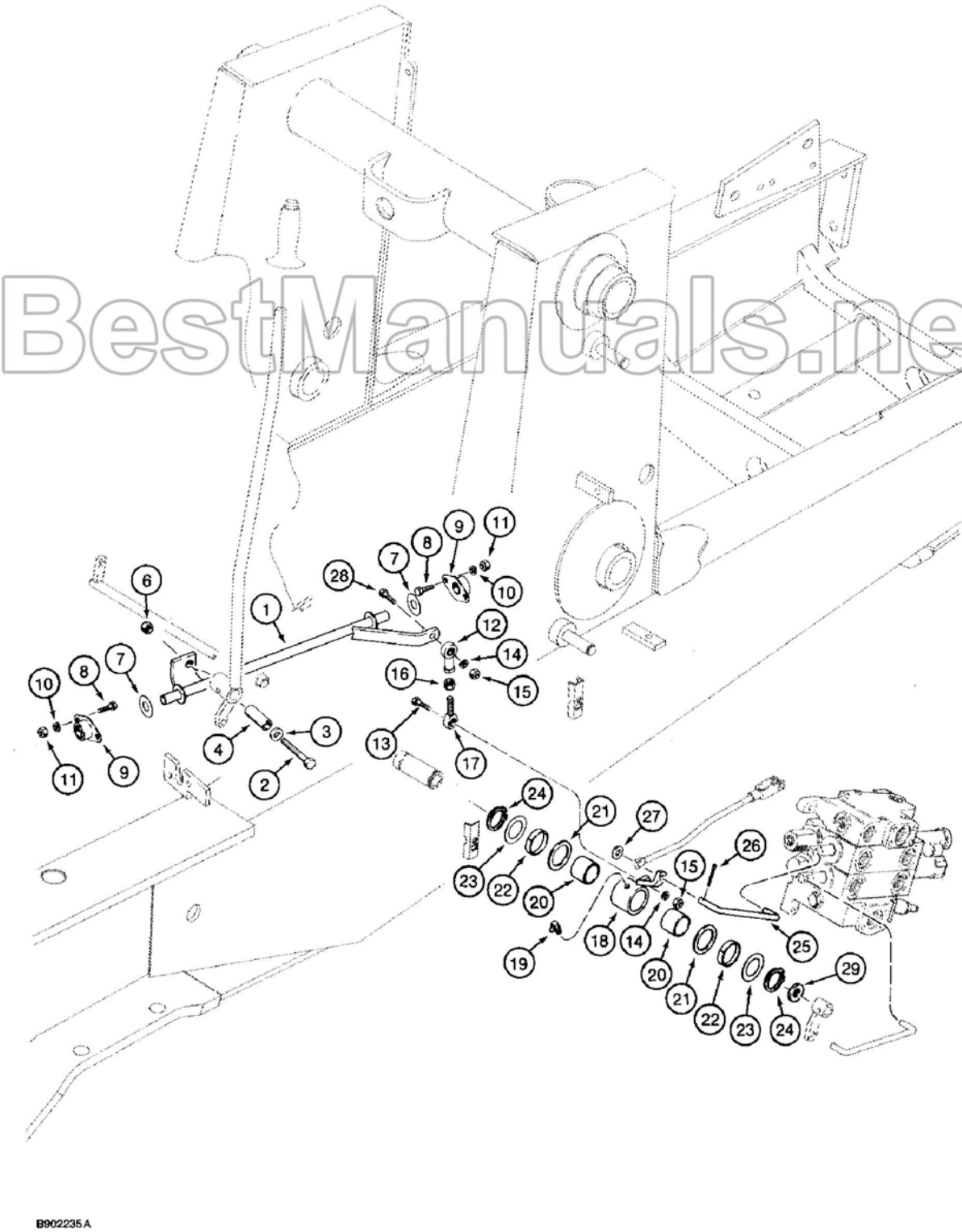

(580SK) - CASE SUPER-K CONSTRUCTION KING LOADER BACKHOE > (9-004) - LOADER BUCKET CONTROL

Diag #	Part #	Name	Description	Qty
1	D149220	SHAFT	control, loader bucket, see Figure 9-002, Ref. 4, for lever	1
2	413-848	BOLT,Hex, 1/2" - 13 x 3", Gr 5	hex, 1/2 NC x 3 inch	1
3	495-11053	WASHER,1/2", SAE	(17/32" x 1-1/16" x 5/64") 1/2", SAE	1
4	D149292	SPACER	SLEEVE rod mounting hardware	1
6	131-208	NUT,1/2"-13	NUT heavy hex, self-locking, 1/2 inch NC	1
7	495-81182	WASHER,21/32" x 1 1/4" x .060"	flat, 21/32 x 1-1/4 x 3/64 inch, use as a spacer	1
7	495-81184	WASHER,21/32" x 1 1/2" x .030"	flat, 21/32 x 1-1/2 x 1/32 inch, use as a spacer	1
8	413-616	BOLT,Hex, 3/8" - 16 x 1", Gr 5	hex, 3/8 NC x 1 inch	4
9	L15401	BEARING	pivot	2
10	492-11038	LOCK WASHER,3/8"	LOCK WASHER,3/8"	4
11	425-106	NUT,3/8"-16, G5	NUT,3/8"-16, G5	4
12	D136773	BALL JOINT	JOINT ball, 3/8 inch NF, female, replaces S108030 ball joint	1
13	413-620	BOLT,Hex, 3/8" - 16 x 1 1/4", Gr 5	hex, 3/8 NC x 1-1/4 inch	1
14	492-11038	LOCK WASHER,3/8"	LOCK WASHER,3/8"	2
15	425-106	NUT,3/8"-16, G5	NUT,3/8"-16, G5	2
16	425-116	NUT,3/8"-24, G5	- hex, 3/8 inch NF	1
17	D144606	BALL JOINT	JOINT ball, 3/8 inch NF	1
18	D149299	LEVER	bucket control, see Figure 9-002, Ref. 12, for lift and bucket control shaft	1
19	219-55	LUBE NIPPLE,90º, 1/8" NPT x .84" lg	NIPPLE, LUBE, 90º, 1/8" NPT x .84" lg	1
20	D149025	BUSHING	- lever	2
21	495-81293	WASHER,1 17/32" x 2 1/16" x .109"	flat, 1-17/32 x 2-1/16 x 1/8 inch	2
22	D149361	SPACER	lever, models with two-spool valve	2
23	495-81204	WASHER,1 9/32" x 2" x .036"	flat, 1-9/32 x 2 x 1/32 inch	2
24	103-16125	SNAP RING,#125, Ext	Ring, Snap, , Lever (Replaces D26918) #125, Ext	2
25	D149297	PITMAN	ROD lift, lever to bucket section, see Figure 9-008, Ref. 25, for rollback control rod	1
26	432-610	COTTER PIN,3/32" x 5/8"	PIN, SPLIT (COTTER), 3/32" x 5/8"	2
27	495-21038	WASHER,5/16"	(flat, 3/8 x 7/8 x 5/64") 5/16"	1

Diag #	Part #	Name	Description	Qty
28	413-624	BOLT,Hex, 3/8" - 16 x 1 1/2", Gr 5	hex, 3/8 NC x 1-1/2 inch	1
29	495-11066	WASHER,5/8", SAE	flat, 21/32 x 1-5/16 x 3/32 inch	1

http://www.minnparbackhoeparts.com/

(580SK) - CASE SUPER-K CONSTRUCTION KING LOADER BACKHOE > (9-006) - LOADER CLAM CONTROL

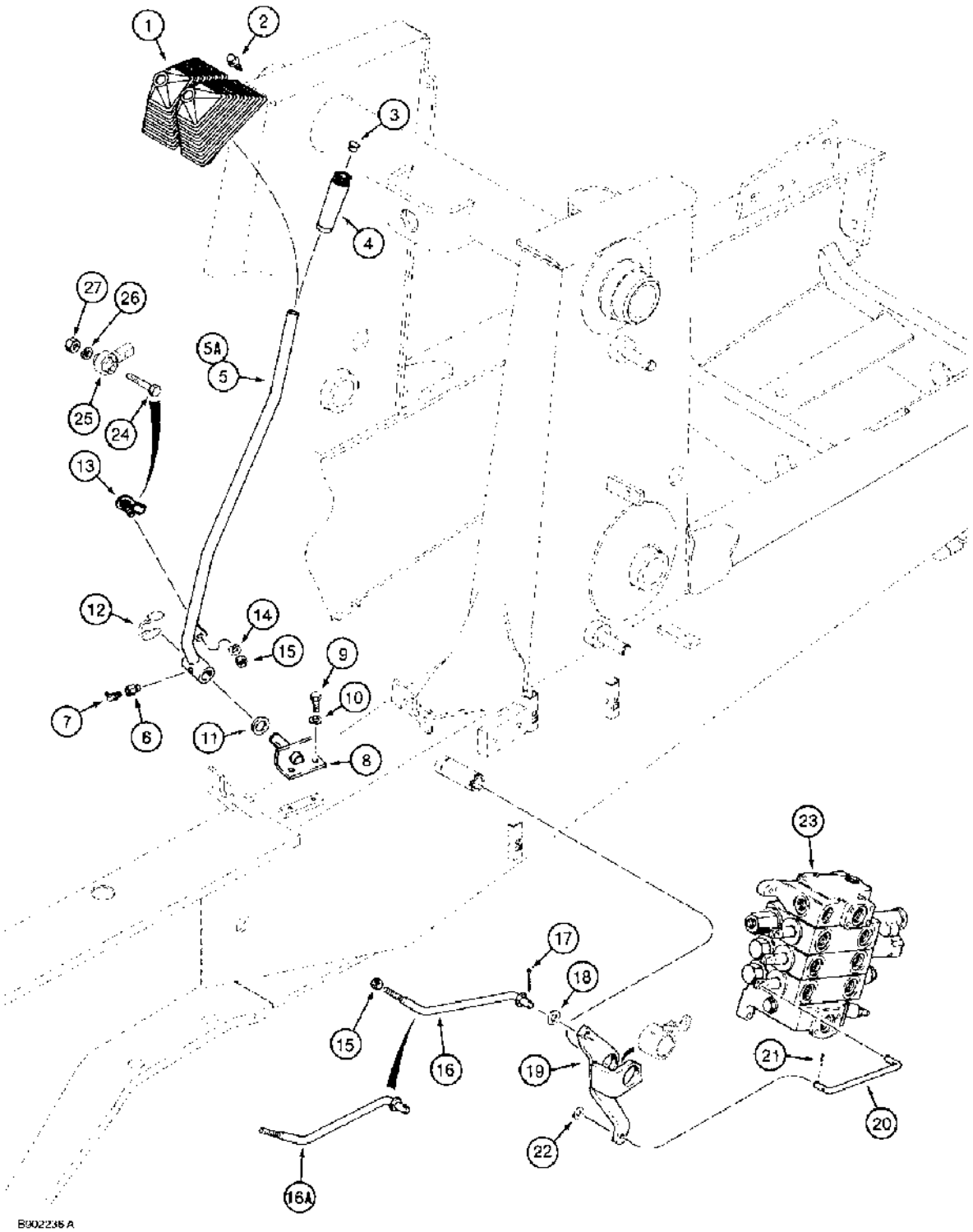

(580SK) - CASE SUPER-K CONSTRUCTION KING LOADER BACKHOE > (9-006) - LOADER CLAM CONTROL

Diag #	Part #	Name	Description	Qty
1	D137465	BOOT	two lever, used on models with clam control lever, see Figure 9-002 for boot used on models without clam control lever	1
2	281-1478	SELF-TAP SCREW,Hex Washer, 1/4" - 20 x 1/2"	SCREW self-tapping, hex washer head, 1/4 NC x 1/2 inch	4
3	353-406	PLUG,Dome, .625" hole, Nylon	nylon, 5/8 inch	1
4	D91439	TUBE	KNOB lever, loader clam control	1
5	D149291	LEVER	loader clam control, used with Ref. 13-15, if used	1
5A	D150634	LEVER ASSY.	LEVER loader clam control, used with Ref. 24-27, if used	1
6	D149327	ADAPTER	grease fitting, special	1
7	219-36	LUBE NIPPLE,45º, 1/8" NPT x 7/8" lg	FITTING grease, 45 degree, 1/8 PT x 7/8 inch	1
8	D149119	BRACKET	mounting, control lever	1
9	413-510	BOLT,Hex, 5/16" - 18 x 5/8", Gr 5	- hex, 5/16 NC x 5/8 inch	2
10	492-11031	LOCK WASHER,5/16"	WASHER, LOCK, 5/16"	2
11	A30881	SEALING WASHER,49" ID x 40558" OD	WASHER flat, spacer	1
12	D143416	CIRCLIP	RING lever retaining, special	1
13	R47940	BALL JOINT	JOINT ball, control lever, if used	1
14	492-11038	LOCK WASHER,3/8"	LOCK WASHER,3/8"	1
15	425-116	NUT,3/8"-24, G5	- hex, 3/8 inch NF	1-2
16	D149372	ROD	loader clam control, with formed washer, 45 degree bend at bellcrank, used with Ref. 13-15, no longer available, order D150636, Ref. 16A	1
16A	D150636	ROD	loader clam control, with welded-on washer, 90 degree bend at bellcrank, used with Ref. 24-27, if used	1
17	432-612	COTTER PIN,3/32" x 3/4"	PIN , SPLIT (COTTER), 3/32" x 3/4"	1
18	495-81020	WASHER,17/32" x 1" x .030"	flat, 25/32 x 1-1/4 x 19/64 inch	1
19	D149183	DRIVE, ANGLE	BELLCRANK loader clam control	1
20	D149038	PITMAN	ROD lift, bellcrank to clam section	1
21	432-612	COTTER PIN,3/32" x 3/4"	PIN , SPLIT (COTTER), 3/32" x 3/4"	2
22	495-21038	WASHER,5/16"	(flat, 3/8 x 7/8 x 5/64") 5/16"	1
23	1346393C1	VALVE	ASSEMBLY loader control, three spool, see parts list Figure 8-066, for mounting see Figure 9-002	1

Diag #	Part #	Name	Description	Qty
24	413-624	BOLT,Hex, 3/8" - 16 x 1 1/2", Gr 5	hex, 3/8 NC x 1-1/2 inch, if used	1
25	D136773	BALL JOINT	JOINT ball, control lever, if used	1
26	492-11038	LOCK WASHER,3/8"	if used 3/8"	1
27	425-106	NUT,3/8"-16, G5	If used 3/8"-16, G5	1

http://www.minnparbackhoeparts.com/

(580SK) - CASE SUPER-K CONSTRUCTION KING LOADER BACKHOE > (9-008) - LOADER ANTIROLLBACK CONTROL

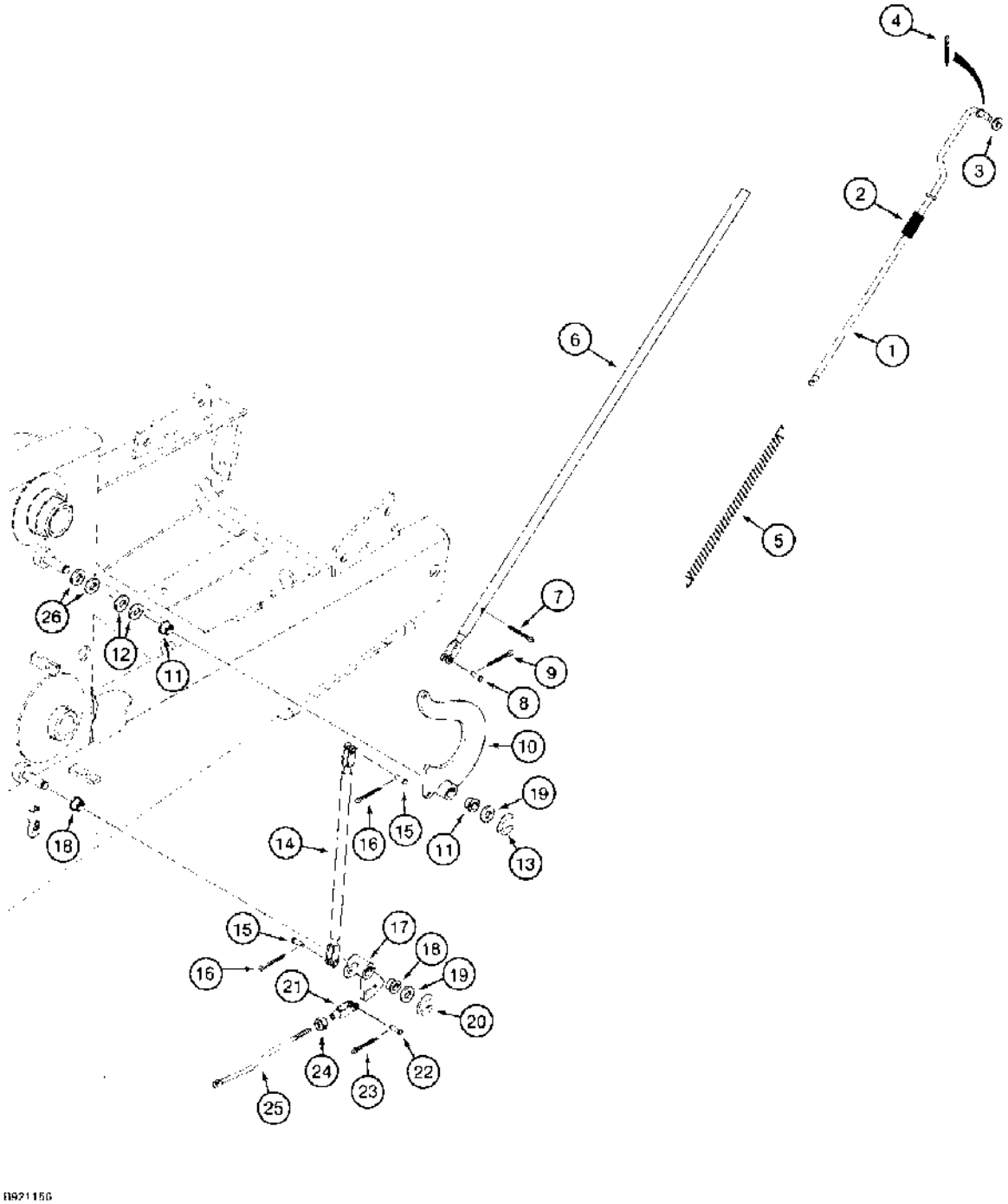

(580SK) - CASE SUPER-K CONSTRUCTION KING LOADER BACKHOE > (9-008) - LOADER ANTIROLLBACK CONTROL

Diag #	Part #	Name	Description	Qty
1	D149882	ROD	rollback, attaches to bucket cylinder link	1
2	D140612	SPRING	76 mm long, rollback rod	1
3	495-11053	WASHER,1/2", SAE	(17/32" x 1-1/16" x 5/64") 1/2", SAE	1
4	432-816	COTTER PIN,1/8" x 1"	1/8" x 1"	2
5	D145098	SPRING	285 mm long	1
6	D149881	TUBE	rollback, rod	1
7	432-824	COTTER PIN,1/8" x 1 1/2"	PIN, SPLIT (COTTER), 1/8" x 1-1/2"	1
8	427-6106	CLEVIS PIN,3/8" x 1 1/16"	PIN, CLEVIS, , Hardened 3/8" x 1 1/16"	1
9	432-612	COTTER PIN,3/32" x 3/4"	PIN , SPLIT (COTTER), 3/32" x 3/4"	1
10	D150491	ARM	LEVER rollback, upper, mounts to chassis upright	1
11	D124452	BUSHING	lever, upper, at chassis upright	2
12	A30881	SEALING WASHER,49" ID x 40558" OD	WASHER flat, spacer	1
13	D143416	CIRCLIP	RING retaining, lever	1
14	D145151	STEM	TUBE rollback, upper lever to lower lever	1
15	427-6106	CLEVIS PIN,3/8" x 1 1/16"	PIN, CLEVIS, , Hardened 3/8" x 1 1/16"	2
16	432-610	COTTER PIN,3/32" x 5/8"	PIN, SPLIT (COTTER), 3/32" x 5/8"	2
17	D149993	DRIVE, ANGLE	LEVER rollback, lower, mounts to chassis upright	1
18	D124452	BUSHING	lever, lower, at chassis upright	2
19	A30881	SEALING WASHER,49" ID x 40558" OD	WASHER flat, spacer	2
20	D143416	CIRCLIP	RING retaining, lever	1
21	213-126	ADJUSTABLE CLEVIS,3/8"-24 x 2 1/2"	CLEVIS adjustable, 3/8 inch NF	1
22	427-6106	CLEVIS PIN,3/8" x 1 1/16"	PIN, CLEVIS, , Hardened 3/8" x 1 1/16"	1
23	432-610	COTTER PIN,3/32" x 5/8"	PIN, SPLIT (COTTER), 3/32" x 5/8"	1
24	425-116	NUT,3/8"-24, G5	- hex, 3/8 inch NF	1
25	D149322	ROD	rollback control, see Figure 9-004, Ref. 25 through 27 for mounting	1
26	496-81000	WASHER,25/32" x 1 3/8" x .134", HDN	flat, 25/32 x 1-3/8 x 1/8 inch, hardened, used as a shim	1

http://www.minnparbackhoeparts.com/

(580SK) - CASE SUPER-K CONSTRUCTION KING LOADER BACKHOE > (9-010) - LOADER RETURN-TO-DIG CONTROL

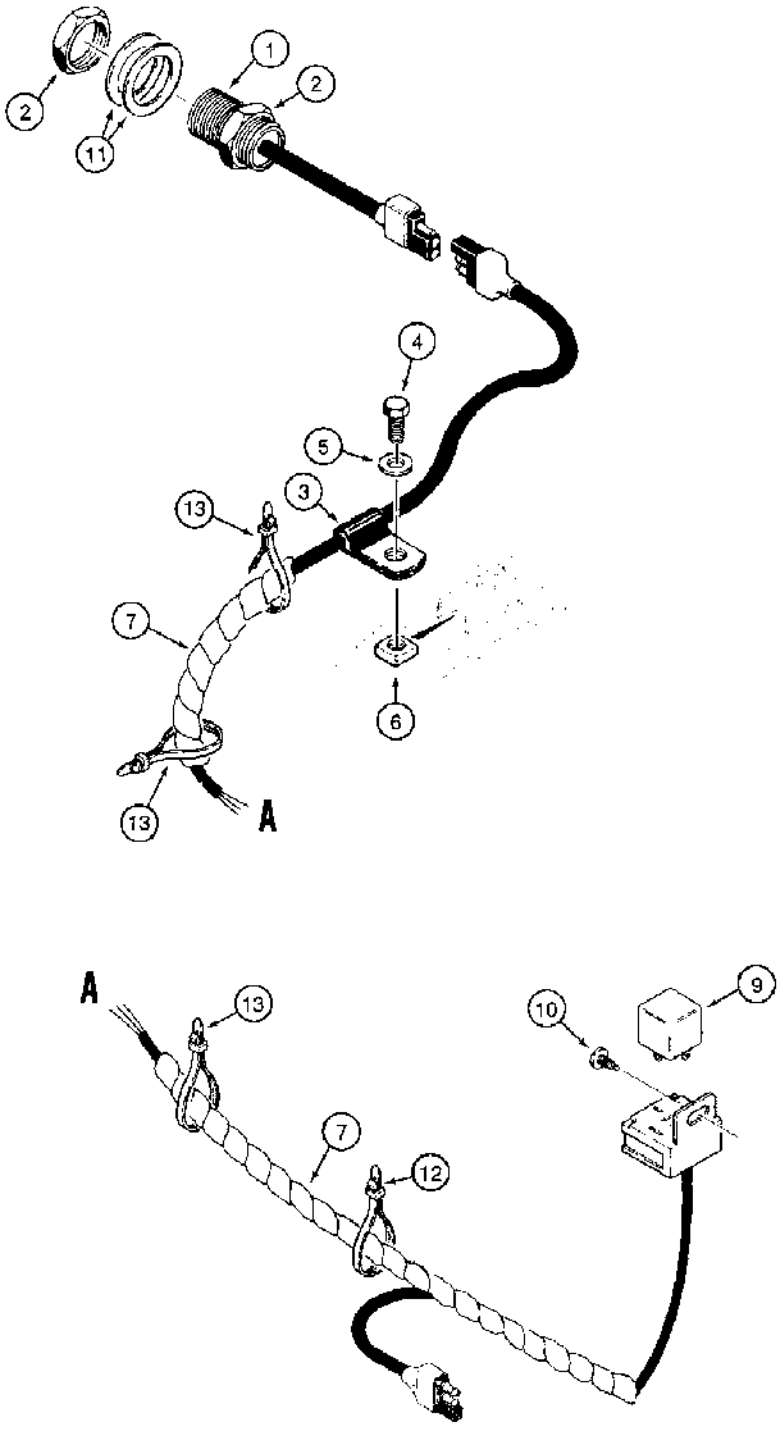

B902239A

(580SK) - CASE SUPER-K CONSTRUCTION KING LOADER BACKHOE > (9-010) - LOADER RETURN-TO-DIG CONTROL

Diag #	Part #	Name	Description	Qty
1	D136898	SWITCH	proximity, return-to-dig, includes nuts, Includes: Ref. 2	1
2	N14113	NUT	hex, return-to-dig switch	2
3	49838	CLAMP	harness, closed, 12.7 mm ID, mounts to cage on top of right-hand loader lift frame	1
4	413-510	BOLT,Hex, 5/16" - 18 x 5/8", Gr 5	- hex, 5/16 NC x 5/8 inch	1
5	495-21038	WASHER,5/16"	(flat, 3/8 x 7/8 x 5/64") 5/16"	1
6	224-2245	SQUARE NUT,Sq, 5/16"-18, G2	square, 5/16 inch NC	1
7	D150027	HARNESS	return-to-dig, attaches to main harness	1
8	D147773	CLAMP	STRAP tie, harness to inside hoses, not shown	4
9	D128310	RELAY	30 amperes, return-to-dig harness	1
		Relay is marked 40 amp on the relay-this is the RESISTANCE rating. The INDUCTIVE rating is 30 amps. We use this inductive rating in our literature.	Relay is marked 40 amp on the relay-this is the RESISTANCE rating. The INDUCTIVE rating is 30 amps. We use this inductive rating in our literature.	1
10	281-4556	SELF-TAP SCREW,Hex Wash Hd, #10 x 3/8"	SCREW self-tapping, hex washer head, No. 10 NC x 3/8 inch	1
11	495-81237	WASHER,1 17/64" x 1 7/8" x 048"	flat, 1-17/64 x 1-7/8 x 3/64 inch	2
12	L18337	CABLE TIE,9.95"-12.1" lg	STRAP tie, 15 inch, nylon	2
13	D150798	STRAP	nylon, harness to lift arm hydraulic tubes	3

http://www.minnparbackhoeparts.com/

(580SK) - CASE SUPER-K CONSTRUCTION KING LOADER BACKHOE > (9-014) - LOADER FRAME AND MOUNTING PARTS

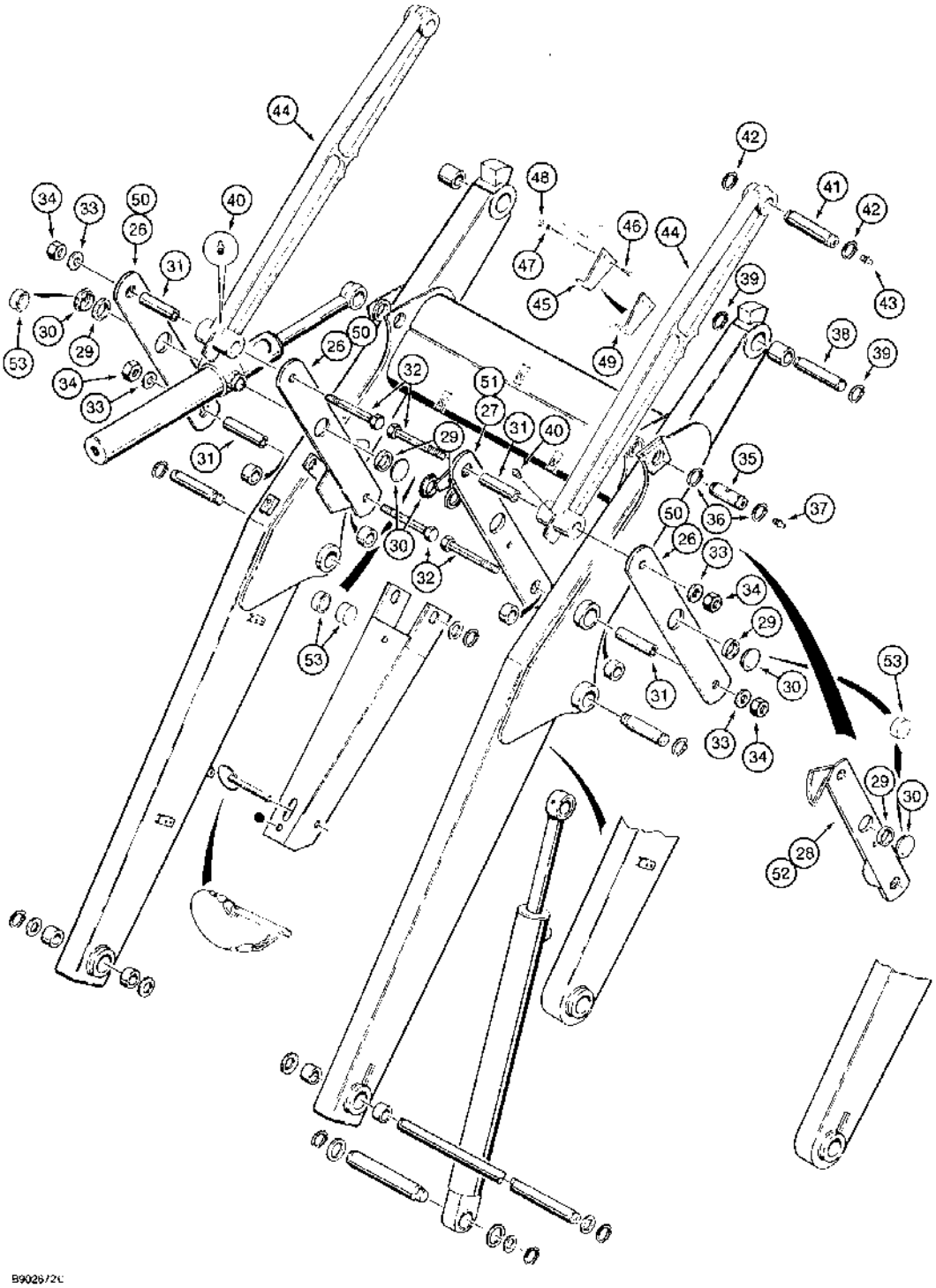

(580SK) - CASE SUPER-K CONSTRUCTION KING LOADER BACKHOE > (9-014) - LOADER FRAME AND MOUNTING PARTS

Diag #	Part #	Name	Description	Qty
26	D139125	LINK ASSY.	LINK bucket cylinder, outer right-hand and inner and outer left-hand, no longer available, replaced by Ref. 50, D151148 link, see note below	3
27	D150951	LINK ASSY.	LINK bucket cylinder, inner right-hand, with extra hole for antirollback rod, models without clam bucket, replaces D148384 link, see Ref. 28 for models with clam bucket, no longer available, replaced by Ref. 51, D151149 link, see note below	1
28	D150937	LINK ASSY.	LINK bucket cylinder, inner right-hand, with extra hole for antirollback rod, models with clam bucket, replaces D149171 link, see Ref. 27 for models without clam bucket, no longer available, replaced by Ref. 52, D151147 link, see note below	1
		Includes: Ref. 29 and 30	Includes: Ref. 29 and 30	1
29	D129272	BUSHING	one per each link, Ref. 26-28, no longer available, order D151034 bushing, Ref. 53	1
30	NSS	NOT SERVICED SEPARATELY	CAP one per each link, Ref. 26-28	1
		THE CAP ON LINKS WAS ORIGINALLY NSS DUE TO THE WELD. WE HAVE FOUND THAT IF A CAP IS REQUIRED IT IS OK TO USE D151034 CLOSED END BUSHING. REMOVE OLD BUSHING FROM LINK AND REPLACE WITH D151034 CLOSED END BUSHING WHICH IS A ONE PIECE CAP AND BUSHING, NO WELD REQUIRED, - PJD 4-18-96 PER NOTE ON D150937	THE CAP ON LINKS WAS ORIGINALLY NSS DUE TO THE WELD. WE HAVE FOUND THAT IF A CAP IS REQUIRED IT IS OK TO USE D151034 CLOSED END BUSHING. REMOVE OLD BUSHING FROM LINK AND REPLACE WITH D151034 CLOSED END BUSHING WHICH IS A ONE PIECE CAP AND BUSHING, NO WELD REQUIRED, - PJD 4-18-96 PER NOTE ON D150937	1
31	D132076	SPACER	BUSHING cylinder links, spacer	4
		PER TECH, THE SIZE DIFFERENCE BETWEEN THE BUSHING,REF. 31, AND THE BOLT, REF. 32, IS SUPPOSED TO BE THAT WAY. THE ID OF THE BUSHING IS 1" AND THE BOLT IS 3/4".	PER TECH, THE SIZE DIFFERENCE BETWEEN THE BUSHING,REF. 31, AND THE BOLT, REF. 32, IS SUPPOSED TO BE THAT WAY. THE ID OF THE BUSHING IS 1" AND THE BOLT IS 3/4".	1
32	426-12120	BOLT,Hex, 3/4" - 10 x 7 1/2", Gr 8	- hex, 3/4 NC x 7-1/2 inch, grade 8	4

Diag #	Part #	Name	Description	Qty
33	496-81000	WASHER,25/32" x 1 3/8" x .134", HDN	flat, 25/32 x 1-3/8 x 1/8 inch, hardened	4
34	429-1012	NUT,3/4"-10, G8	- hex, 3/4 inch NC, grade 8	4
35	D129279	PIN	bucket cylinder rod end	2
36	800-44040	SNAP RING,M40, Ext	RING snap, pin retaining, bucket cylinder rod end	4
37	219-1	LUBE NIPPLE,1/8"-27 x .66 lg	FITTING grease, straight, 1/8 PT x 21/32 inch	2
38	D129256	PIN	loader lift frame to lower bucket mounting hole	2
39	800-44040	SNAP RING,M40, Ext	RING snap, pin retaining, lift frame to lower bucket mounting hole	4
40	219-1	LUBE NIPPLE,1/8"-27 x .66 lg	FITTING grease, straight, 1/8 PT x 21/32 inch	2
41	D129257	PIN	link to upper bucket mounting hole	2
42	800-44040	SNAP RING,M40, Ext	RING snap, pin retaining, link to bucket	4
43	219-1	LUBE NIPPLE,1/8"-27 x .66 lg	FITTING grease, straight, 1/8 PT x 21/32 inch	2
44	D139595	PITMAN	LINK bucket, without bushings, left-hand or right-hand, with or without clam bucket	2
45	D121194	POINTER	bucket position, models without clam bucket	1
46	413-520	BOLT,Hex, 5/16" - 18 x 1 1/4", Gr 5	hex, 5/16 NC x 1-1/4 inch	2
47	492-11031	LOCK WASHER,5/16"	WASHER, LOCK, 5/16"	2
48	425-105	NUT,5/16"-18, G5	- hex, 5/16 inch NC	2
49	D123157	SUPPORT	POINTER bucket position, models with clam bucket	1
50	D151148	LINK	bucket cylinder, outer right-hand and inner and outer left-hand, see note below	3
51	D151149	LINK ASSY.	LINK bucket cylinder, inner right-hand, with extra hole for antirollback rod, models without clam bucket, see Ref. 52 for models with clam bucket, see note below	1
52	D151147	LINK	bucket cylinder, inner right-hand, with extra hole for antirollback rod, models with clam bucket, see Ref. 51 for models without clam bucket, see note below, Includes: Ref. 53	1
53	D151034	BUSHING	- closed, one per each link, Ref 50-52	1

http://www.minnparbackhoeparts.com/

(580SK) - CASE SUPER-K CONSTRUCTION KING LOADER BACKHOE > (9-016) - LOADER BUCKET, SHORT LIP BUCKET, LONG LIP BUCKET, BUCKET

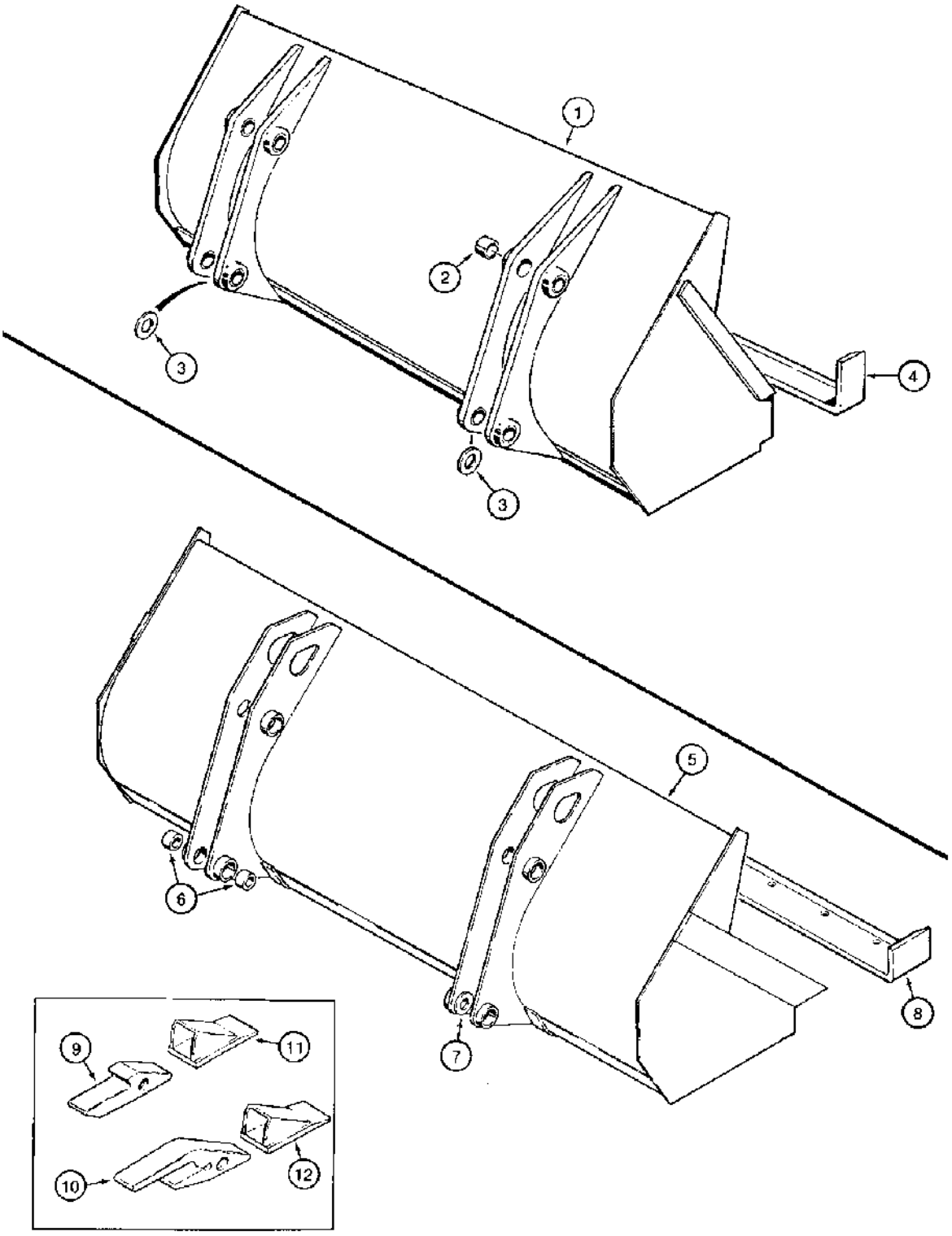

B921157

(580SK) - CASE SUPER-K CONSTRUCTION KING LOADER BACKHOE > (9-016) - LOADER BUCKET, SHORT LIP BUCKET, LONG LIP BUCKET, BUCKET

Diag #	Part #	Name	Description	Qty
	D134142	BUCKET	ASSEMBLY loader, 90 inch, 2286 mm, wide, without teeth, machinery item, order from Machinery Price List, short lip bucket, Includes: Ref. 1 through 4	1
1	NSS	NOT SERVICED SEPARATELY	BUCKET loader, short lip bucket	1
2	D129264	BUSHING	bucket ear, short lip bucket	8
3	D135602	WASHER	hardened, special, used as a spacer, welded to inner ear at lower pin hole only, short lip bucket	2
4	D65287	EDGE, CUTTING	EDGE cutting, front, 90 inch, 2285 mm, bucket, short lip bucket	1
4A	D147323	EDGE	cutting, front, 90 inch, 2285 mm, bucket, bolt-on type, not shown, short lip bucket	1
4B	420-21240	CARRIAGE BOLT,#3, 3/4" - 10 x 2 1/2", Gr 8	BOLT plow, 3/4 NC x 2-1/2 inch, grade 8, used with D147323 cutting, edge, not shown, short lip bucket	15
4C	429-1012	NUT,3/4"-10, G8	- hex, 3/4 inch NC, grade 8, used with D147323 cutting edge, not shown, short lip bucket	15
	D146364	BUCKET	ASSEMBLY loader, 82 inch, 2083 mm, wide, without teeth, machinery item, order from Machinery Price List, long lip bucket, Includes: Ref. 5 through 8	1
		82 inch bolt-on can be ordered	82 inch bolt-on can be ordered	1
		Order The following 82 inch cutting edges thru Ship Direct Central: ZPC215381 - 82" bolt-on edge w/ 10 holes to accept 3/4" plow bolts and ZPC21612 - 82" weld-on edge, and ZPC2238317 is reversible bolt on cutting edge with 5/8 inch holes. D147323 is same with 3/4 holes.	Order The following 82 inch cutting edges thru Ship Direct Central: ZPC215381 - 82" bolt-on edge w/ 10 holes to accept 3/4" plow bolts and ZPC21612 - 82" weld-on edge, and ZPC2238317 is reversible bolt on cutting edge with 5/8 inch holes. D147323 is same with 3/4 holes.	1
5	NSS	NOT SERVICED SEPARATELY	BUCKET loader, long lip bucket	1
6	D129264	BUSHING	bucket ear, long lip bucket	8
7	D135602	WASHER	hardened, special, welded to lower inner bucket ear, long lip bucket	2
8	D145680	EDGE, CUTTING	EDGE cutting, front, 82 inch, 2083 mm, bucket, weld-on type, long lip bucket	1

Diag #	Part #	Name	Description	Qty
8A	D145681	EDGE	cutting, front, 82 inch, 2083 mm, long, 8 inch wide, 3/4 inch thick bolt-on type, not shown	1
		P/N D145681 has10 holes countersunk to accept 3/4" plow bolts P/N 118-503 and nuts P/N 429-1012.	P/N D145681 has10 holes countersunk to accept 3/4" plow bolts P/N 118-503 and nuts P/N 429-1012.	1
8B	20-21236	CARRIAGE BOLT,#3, 3/4" - 10 x 2 1/4", Gr 8	BOLT, plow, 3/4 NC x 2-1/4 inch, grade 8, used with D145681 cutting edge, not shown, long lip bucket	10
8C	429-1012	NUT,3/4"-10, G8	- hex, 3/4 inch NC, grade 8, used with D145681 cutting edge, not shown, long lip bucket	10
9	D26368	SUPPORT	SHANK tooth, original equipment, bucket teeth	10-11
10	D58499	SUPPORT	SHANK tooth, heavy duty service option, bucket teeth	10-11
11	D27748	TOOTH	POINT tooth, original equipment, bucket teeth	10-11
12	D36720	TOOTH	POINT tooth, heavy duty service option, bucket teeth	10-11

http://www.minnparbackhoeparts.com/

(580SK) - CASE SUPER-K CONSTRUCTION KING LOADER BACKHOE > (9-018) - CLAM BUCKET, OPTIONAL BUCKET TEETH

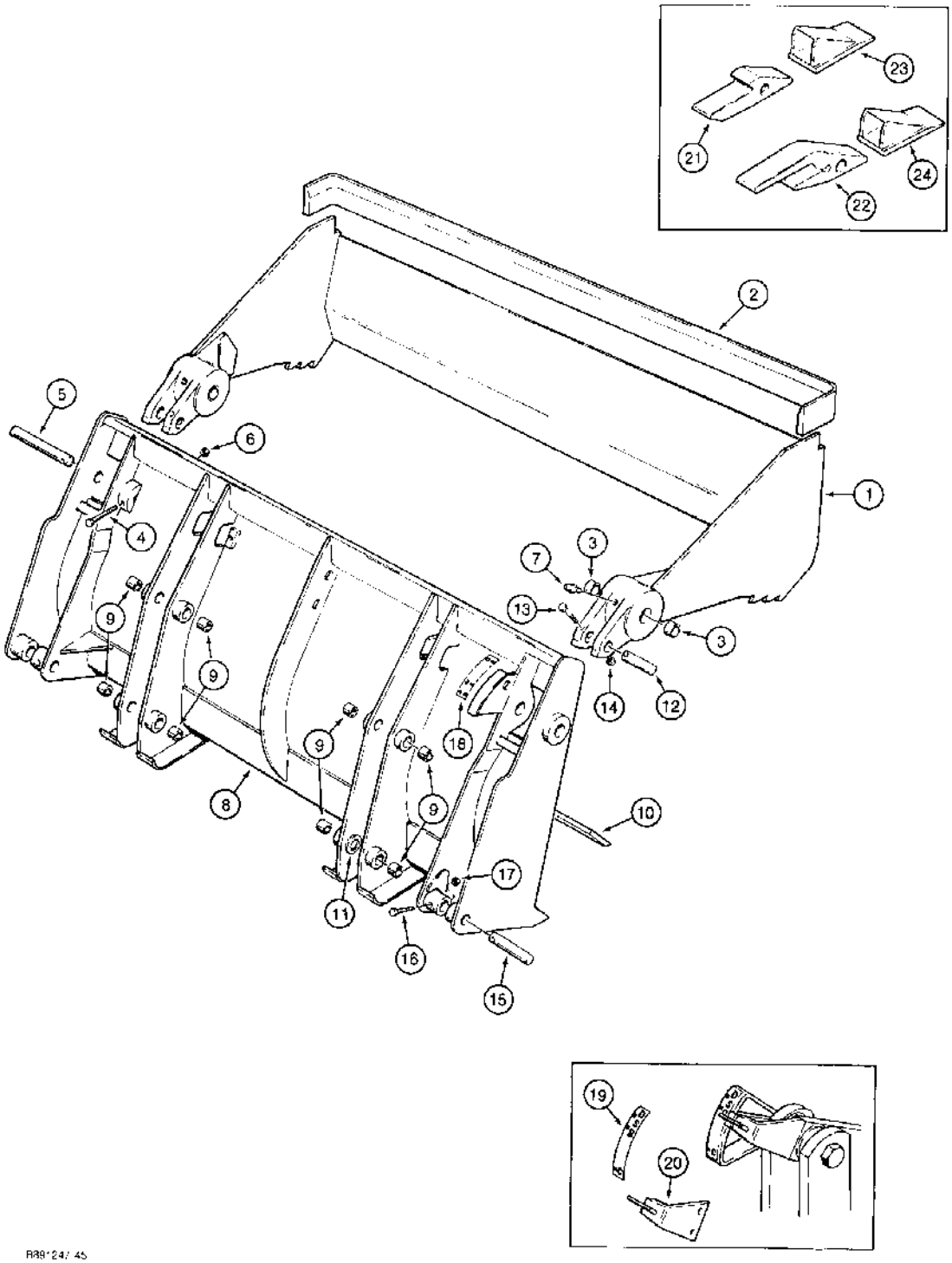

R89124/45

(580SK) - CASE SUPER-K CONSTRUCTION KING LOADER BACKHOE > (9-018) - CLAM BUCKET, OPTIONAL BUCKET TEETH

Diag #	Part #	Name	Description	Qty
	D102070	BUCKET ASSEMBLY clam, 82 inch, 2083 mm wide, machinery item, order from Machinery Price List, clam bucket, Includes: Ref. 1 through 11, P/N D133816 and D133817	BUCKET ASSEMBLY clam, 82 inch, 2083 mm wide, machinery item, order from Machinery Price List, clam bucket, Includes: Ref. 1 through 11, P/N D133816 and D133817	1
	D133816	SHELL	CLAM ASSEMBLY bucket, clam bucket, Includes: Ref. 1, 2 and 3	1
		Reference D133816 clam assembly - compaction plate for this part is D75630	Reference D133816 clam assembly - compaction plate for this part is D75630	1
1	NSS	NOT SERVICED SEPARATELY	CLAM bucket	1
2	D76258	EDGE, CUTTING	EDGE cutting, bucket, clam bucket	1
3	D31140	BUSHING	clam pivot, clam bucket	4
4	413-664	BOLT,Hex, 3/8" - 16 x 4", Gr 5	hex, 3/8 NC x 4 inch, clam bucket	2
5	D51391	PIN	Pivot, clam to blade, clam bucket	2
6	231-4116	NUT,3/8"-16, GB	NUT hex, self-locking, 3/8 inch NC, clam bucket	2
7	219-1	LUBE NIPPLE,1/8"-27 x .66 lg	FITTING grease, straight, 1/8 inch NPT, clam bucket	2
	D133817	BLADE	ASSEMBLY clam bucket, Includes: Ref. 8 through 11	1
8	NSS	NOT SERVICED SEPARATELY	BLADE bucket, clam bucket	1
9	D129264	BUSHING	bucket ear, clam bucket	8
10	D75636	EDGE, CUTTING	EDGE cutting, blade, clam bucket	1
11	D135602	WASHER	flat, 1-5/8 ID x 2-3/8 inch OD, hardened, special, welded to lower inner bucket ears, clam bucket	2
12	D51392	PIN	cylinder mounting, upper, clam bucket	2
13	413-656	BOLT,Hex, 3/8" - 16 x 3 1/2", Gr 5	hex, 3/8 NC x 3-1/2 inch, clam bucket	2
14	231-4116	NUT,3/8"-16, GB	NUT hex, self-locking, 3/8 inch NC, clam bucket	2
15	D51393	PIN	Cylinder mounting, lower, clam bucket	2
16	413-644	BOLT,Hex, 3/8" - 16 x 2 3/4", Gr 5	- hex, 3/8 NC x 2-3/4 inch, Clam bucket	2
17	231-4116	NUT,3/8"-16, GB	NUT hex, self-locking, 3/8 inch NC, clam bucket	2

Diag #	Part #	Name	Description	Qty
18	321-1708	DECAL	0 - 2 - 4, clam bucket opening indicator, clam bucket	1
19	321-1707	DECAL	clam bucket position, clam bucket	1
20	D123157	SUPPORT	POINTER bucket position, bolts to clam bucket link, see Figure 9-014 for link and mounting hardware, clam bucket	1
21	D26368	SUPPORT	SHANK tooth, original equipment, optional bucket teeth	10
22	D58499	SUPPORT	SHANK tooth, heavy duty service option, optional bucket teeth	10
23	D27748	TOOTH	POINT tooth, original equipment, optional bucket teeth	10
24	D36720	TOOTH	POINT tooth, heavy duty service option, optional bucket teeth	10

http://www.minnparbackhoeparts.com/

(580SK) - CASE SUPER-K CONSTRUCTION KING LOADER BACKHOE > (9-020) - BACKHOE CONTROL TOWER

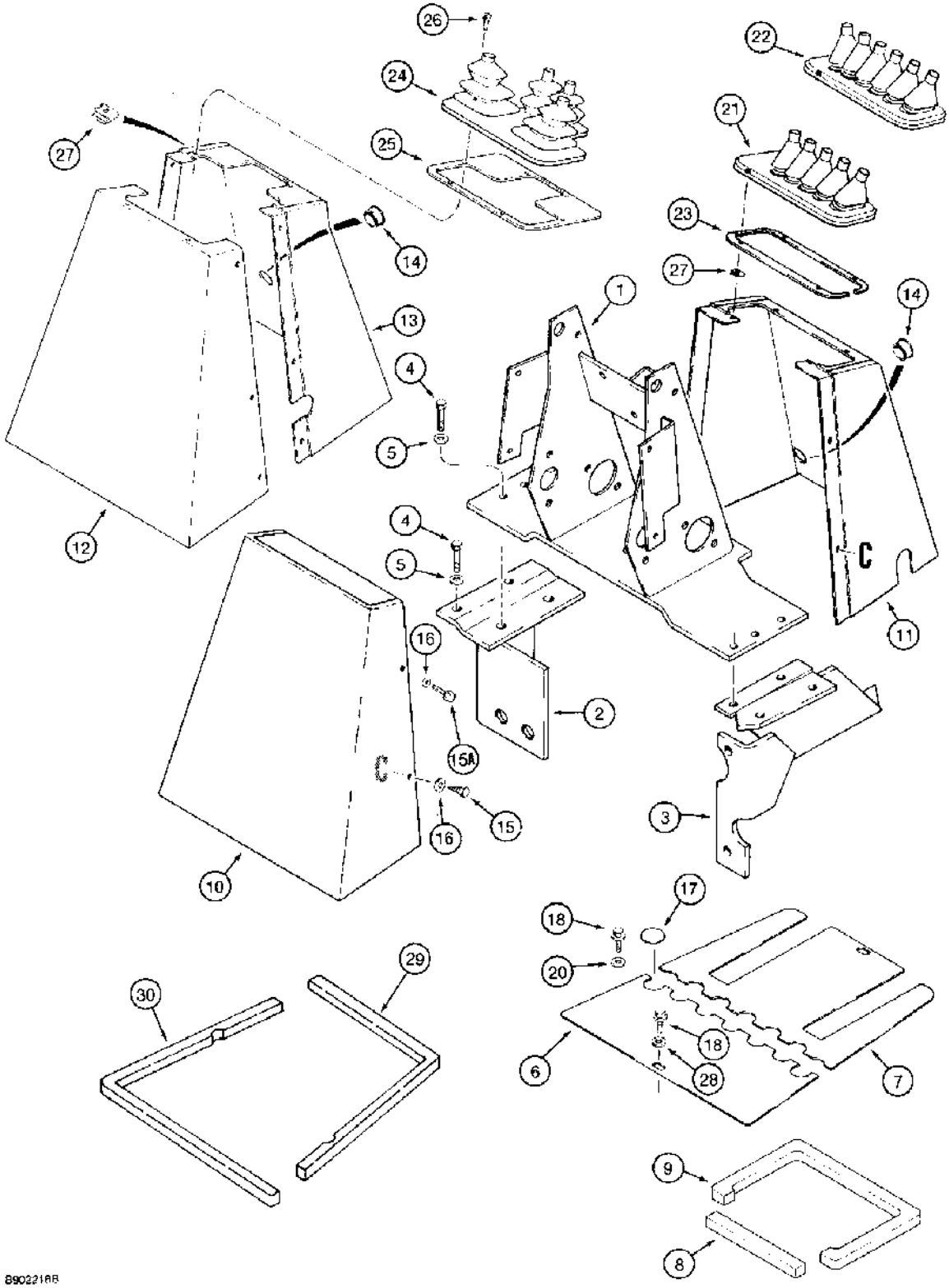

(580SK) - CASE SUPER-K CONSTRUCTION KING LOADER BACKHOE > (9-020) - BACKHOE CONTROL TOWER

Diag #	Part #	Name	Description	Qty
1	108937A1	BRACKET	SUPPORT backhoe control mounting, replaces D149035	1
2	109689A1	BRACKET	valve mounting, left-hand, replaces D140816	1
3	D140820	BRACKET	valve mounting, right-hand	1
4	413-620	BOLT,Hex, 3/8" - 16 x 1 1/4", Gr 5	hex, 3/8 NC x 1-1/4 inch	8
5	495-11041	WASHER,3/8", SAE	flat, (13/32 x 13/16 x 1/16")	8
6	D140101	PLATE	floor, backhoe control tower, if used	1
7	D140100	PLATE	floor, backhoe control tower, if used	1
8	D137902	GASKET	7 inch, 178 mm, long, gasket, if used	1
9	D133491	GASKET	gasket, backhoe control floor plate, if used	1
10	D134085	COVER	console, rear, used on all models with foot swing	1
11	D149668	COVER	console, front, used on all models with foot swing	1
12	D149669	COVER	console, rear, used on all models with hand swing	1
13	D149670	COVER	console, front, used on all models with hand swing	1
14	353-411	PLUG,Dome, 1.000" hole, Nylon	1 used with D149670 console - 2 used with D149668 console cover Dome, 1.000" hole, Nylon	1-2
15	281-1878	SELF-TAP SCREW,Hex Wash Hd, 1/4" x 1/2"	SCREW self-tapping, hex washer head, 1/4 NC x 1/2 inch, lower	2
15A	281-18712	SELF-TAP SCREW,Hex Wash Hd, 1/4" x 3/4"	SCREW self-tapping, hex washer head, 1/4 NC x 3/4 inch,upper	3
16	195-140	WASHER,1/4"	flat, 9/32 x 5/8 x 1/16 inch	5
17	D140267	PLUG	button, 1-3/16 inch, 30 mm, diameter, tan, if used	1
18	D141589	SELF-TAP SCREW,Hex Wash Hd, 5/16" x 3/4"	BOLT hex washer head, self-tapping, 5/16 NC x 3/4 inch, if used	4
20	495-81001	WASHER,5/16"	flat, 3/8 x 1-1/8 x 1/64 inch, if used	2
21	D149866	BOOT	used with D149668 console cover with 5 control levers	1
22	D149867	BOOT	used with D149668 console cover with 6 control levers	1
23	D149509	OIL SEAL	RETAINER boot, used with Ref. 21 and 22	1
24	D149868	BOOT	Used with D149670 console cover with 4 control levers	1
25	D149512	PLATE	RETAINER boot, used with Ref. 24 only	1

Diag #	Part #	Name	Description	Qty
26	140-107	SCREW,Cross Pan Hd, #10-24 x 3/4"	(4) used with D149509 retainer, (6) used with D149512 retainer Cross Pan Hd, #10-24 x 3/4"	4-6
27	131-861	SPRING NUT,Tinn, U, #10-24	4 used with D149509 retainer, 6 used with D149512 retainer Tinn, U, #10-24	4-6
28	495-21038	WASHER,5/16"	(flat, 3/8 x 7/8 x 5/64"), If used 5/16"	2
29	104540A1	SEAL	foam, self-adhesive back, control mounting support, used in place of Ref. 6-9 on some models, if used	1
30	104541A1	SEALING RING	foam, self-adhesive back, control mounting support, used in place of Ref. 6-9 on some models, if used	1
		used in place of items 6-9 on some models, if used	used in place of items 6-9 on some models, if used	1

http://www.minnparbackhoeparts.com/

(580SK) - CASE SUPER-K CONSTRUCTION KING LOADER BACKHOE > (9-022) - BACKHOE CONTROLS WITH FOOT SWING, WITH NON-EXTENDABLE DIPPER

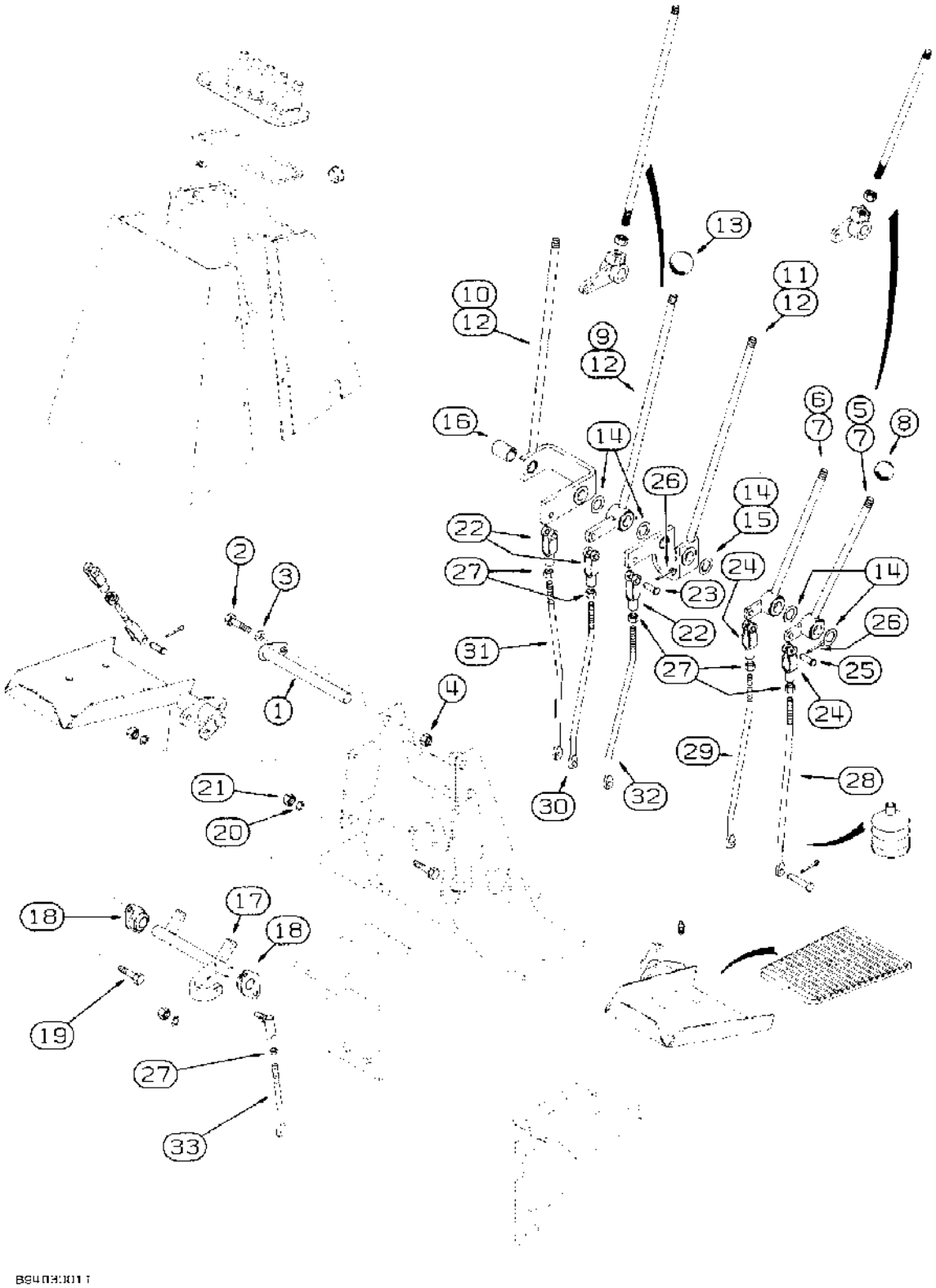

(580SK) - CASE SUPER-K CONSTRUCTION KING LOADER BACKHOE > (9-022) - BACKHOE CONTROLS WITH FOOT SWING, WITH NON-EXTENDABLE DIPPER

Diag #	Part #	Name	Description	Qty
1	D147932	SHAFT	pivot, control levers	1
2	413-516	BOLT,Hex, 5/16" - 18 x 1", Gr 5	hex, 5/16 NC x 1 inch	1
3	495-11034	WASHER,5/16", SAE	5/16" SAE (flat, 11/32 x 11/16 x 1/16")	1
4	231-1445	NUT,5/16"-18, GB	NUT light hex, self-locking, 5/16 inch NC	1
5	D149082	LEVER	left-hand stabilizer control, if used, may be replaced with D150434 bellcrank, 101526A1 lever and 425-118 nut, Ref. 53, 55 and 56 on Figure 9-024	1
6	D149083	LEVER	right-hand stabilizer control, if used, may be replaced with D150435 bellcrank, 101526A1 lever and 425-118 nut, Ref. 53, 55 and 57 Figure 9-024, Includes: Ref. 7	1
7	D148992	BUSHING	Lever, used with D149082 and D149083 levers	2
8	D59912	KNOB	stabilizer control levers	2
9	D149085	LEVER	dipper control, no longer available, order D150397 bellcrank, 121613A1 lever and 425-118 nut, Ref. 54, 55 and 58 on Figure 9-024	1
10	D149086	LEVER	boom control	1
11	D149084	LEVER ASSY.	LEVER bucket control, Includes: Ref. 12	1
12	D148992	BUSHING	Lever, used with D149085, D149086 and D149084 control levers	3
13	L54563	KNOB	boom, dipper and bucket control levers	3
14	A30881	SEALING WASHER,49" ID x 40558" OD	WASHER flat, used as a shim between control levers	1
15	D34666	WASHER	flat, special, hardened	1
16	D150486	SPACER	control lever, not used on models with extendable dipper or optional rear hydraulic attachments control lever replaces D128615 spacer	1
17	D148994	SHAFT	swing control	1
18	D148993	BEARING,19.09 mm ID x 20.6	self-aligning, shaft	2
19	413-512	BOLT,Hex, 5/16" - 18 x 3/4", Gr 5	hex, 5/16 NC x 3/4 inch	4
20	492-11031	LOCK WASHER,5/16"	WASHER, LOCK, 5/16"	4
21	425-105	NUT,5/16"-18, G5	- hex, 5/16 inch NC	4
22	213-126	ADJUSTABLE CLEVIS,3/8"-24 x 2 1/2"	CLEVIS adjustable, 3/8 inch NF	3
23	D149288	PIN	- Clevis, Special	3

Diag #	Part #	Name	Description	Qty
24	D150493	END	stabilizer control rod, special, replaces D134900 clevis	2
25	427-6088	CLEVIS PIN,3/8" x 3/4"	PIN clevis, 3/8 x 7/8 inch, hardened	2
26	432-612	COTTER PIN,3/32" x 3/4"	PIN , SPLIT (COTTER), 3/32" x 3/4"	5
27	425-156	JAM NUT,Jam, 3/8"-24, G5	hex, jam, 3/8 inch NF	6
28	D149005	ROD	left-hand stabilizer control	1
29	D149006	ROD	right-hand stabilizer control	1
30	D149007	ROD	dipper control	1
31	D149004	ROD	boom control	1
32	D149008	ROD	bucket control	1
33	D148981	ROD	swing control	1

http://www.minnparbackhoeparts.com/

(580SK) - CASE SUPER-K CONSTRUCTION KING LOADER BACKHOE > (9-024) - BACKHOE CONTROLS WITH FOOT SWING, WITH NON-EXTENDABLE DIPPER

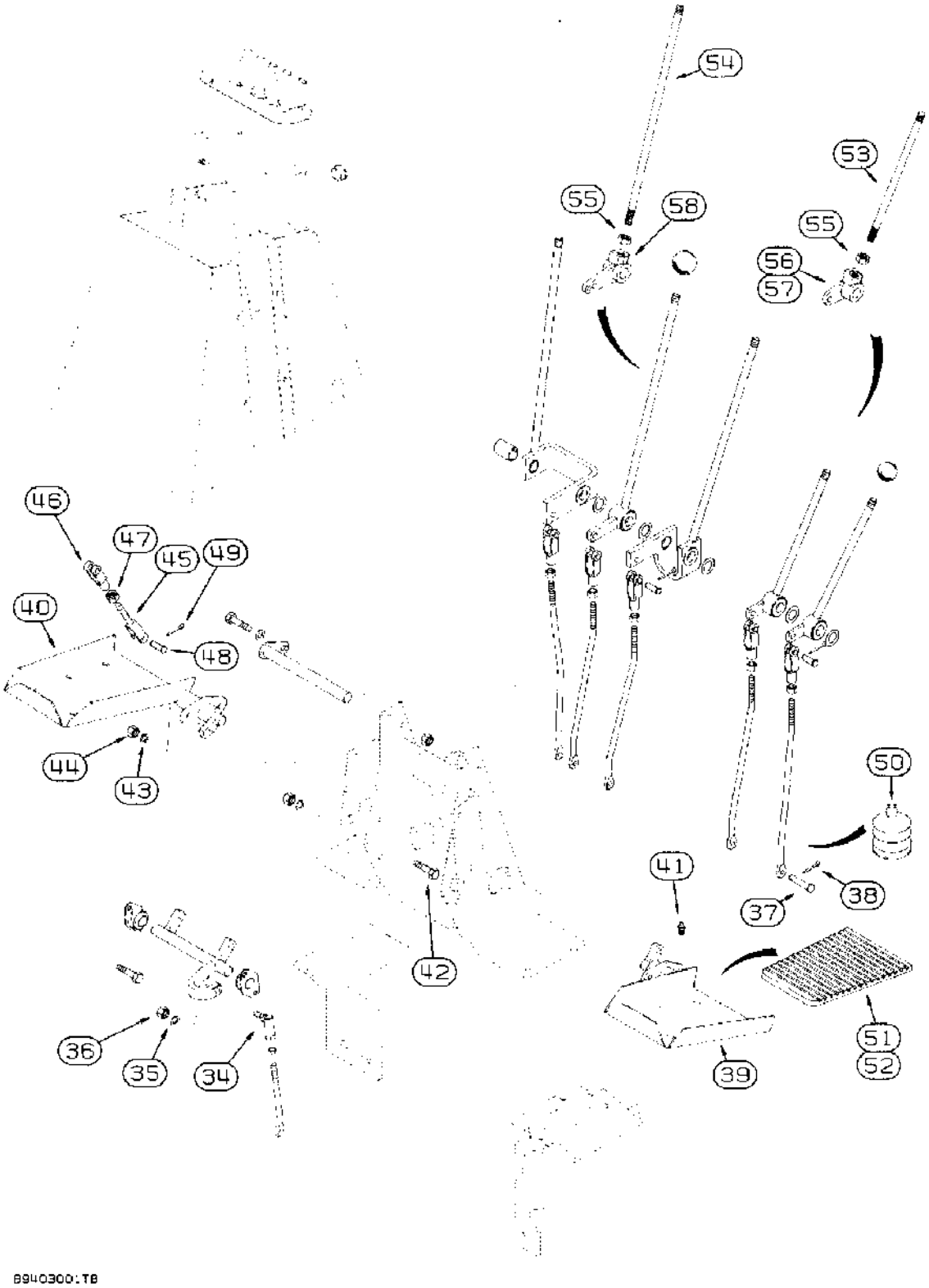

(580SK) - CASE SUPER-K CONSTRUCTION KING LOADER BACKHOE > (9-024) - BACKHOE CONTROLS WITH FOOT SWING, WITH NON-EXTENDABLE DIPPER

Diag #	Part #	Name	Description	Qty
34	D149295	BALL JOINT	JOINT ball, swing control, Serial Range: rod-shaft	1
35	492-11038	LOCK WASHER,3/8"	LOCK WASHER,3/8"	1
36	425-116	NUT,3/8"-24, G5	- hex, 3/8 inch NF	1
37	D149287	PIN	- Clevis, Special, Serial Range: rods-valve	6
38	432-612	COTTER PIN,3/32" x 3/4"	PIN , SPLIT (COTTER), 3/32" x 3/4"	6
39	D148997	PEDAL	left-hand swing	1
40	D149002	PEDAL	right-hand swing	1
41	219-1	LUBE NIPPLE,1/8"-27 x .66 lg	FITTING grease, straight, 1/8 PT x 21/32 inch	2
42	413-616	BOLT,Hex, 3/8" - 16 x 1", Gr 5	hex, 3/8 NC x 1 inch	4
43	492-11038	LOCK WASHER,3/8"	LOCK WASHER,3/8"	4
44	425-106	NUT,3/8"-16, G5	NUT,3/8"-16, G5	4
45	D150503	END	ROD with clevis, swing pedal to cross shaft, replaces R20187 rod	2
46	D149262	CLEVIS	special, swing pedal rod	2
47	425-156	JAM NUT,Jam, 3/8"-24, G5	hex, jam, 3/8 inch NF	2
48	D149288	PIN	- Clevis, Special, Swing pedal rod	4
49	432-612	COTTER PIN,3/32" x 3/4"	PIN , SPLIT (COTTER), 3/32" x 3/4"	4
50	D85869	BELLOWS	BOOT control rods, if used	6
51	D137492	LINING	PAD rubber, left-hand swing pedal, optional deluxe interior	1
52	D137491	LINING	PAD rubber, right-hand swing pedal, optional deluxe interior	1
53	101526A1	ROD	LEVER stabilizer control, if used	2
54	121613A1	ROD	LEVER dipper control, replaces 101525A1	1
55	425-118	NUT,1/2"-20, G5	hex, 1/2 inch NF, if used	3
56	D150434	CRANK LEVER	ROD left-hand stabilizer control, if used	1
57	D150435	CRANK LEVER	ROD right-hand stabilizer control, if used	1
58	D150397	CRANK LEVER	ROD dipper control, if used	1

http://www.minnparbackhoeparts.com/

(580SK) - CASE SUPER-K CONSTRUCTION KING LOADER BACKHOE > (9-026) - BACKHOE CONTROLS WITH HAND SWING

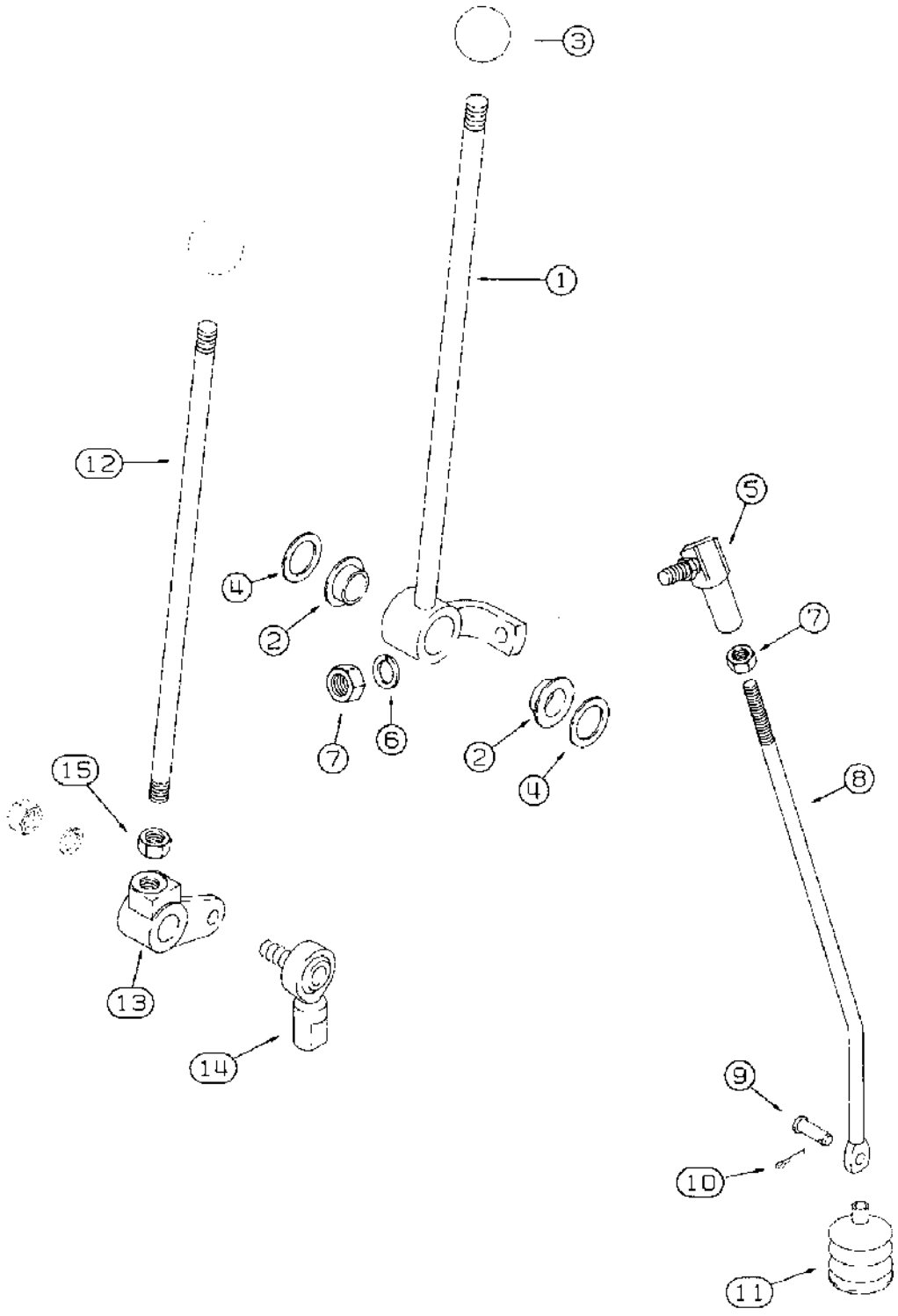

(580SK) - CASE SUPER-K CONSTRUCTION KING LOADER BACKHOE > (9-026) - BACKHOE CONTROLS WITH HAND SWING

Diag #	Part #	Name	Description	Qty
1	D149087	LEVER	extendahoe control, no longer available, order 121613A1 lever, D150436 bellcrank and 425-118 nut, Ref. 12, 13 and 15, Includes: Ref. 2	1
2	D148992	BUSHING	Control lever, if used	2
3	L54563	KNOB	extendahoe control lever	1
4	A30881	SEALING WASHER,49" ID x 40558" OD	WASHER flat, spacer	1
5	D149295	BALL JOINT	JOINT ball, control rod, if used	1
6	492-11038	LOCK WASHER,3/8"	LOCK WASHER,3/8"	1
7	425-156	JAM NUT,Jam, 3/8"-24, G5	hex, jam, 3/8 inch NF	2
8	D149009	ROD	extendahoe control, Serial Range: lever-valve	1
9	D149287	PIN	- Clevis, Special, Serial Range: rod-valve	1
10	432-612	COTTER PIN,3/32" x 3/4"	PIN , SPLIT (COTTER), 3/32" x 3/4"	1
11	D85869	BELLOWS	BOOT control rod, if used	1
12	121613A1	ROD	LEVER extendahoe control, if used, replaces 101525A1	1
13	D150436	CRANK LEVER	BELLCRANK extendahoe control lever, if used	1
14	D64925	JOINT	ball, used with item 12 or 13 only, if used	1
15	425-118	NUT,1/2"-20, G5	hex, 1/2 inch NF, if used	1

http://www.minnparbackhoeparts.com/

(580SK) - CASE SUPER-K CONSTRUCTION KING LOADER BACKHOE > (9-028) - BACKHOE CONTROLS WITH HAND SWING, WITH NON-EXTENDABLE DIPPER

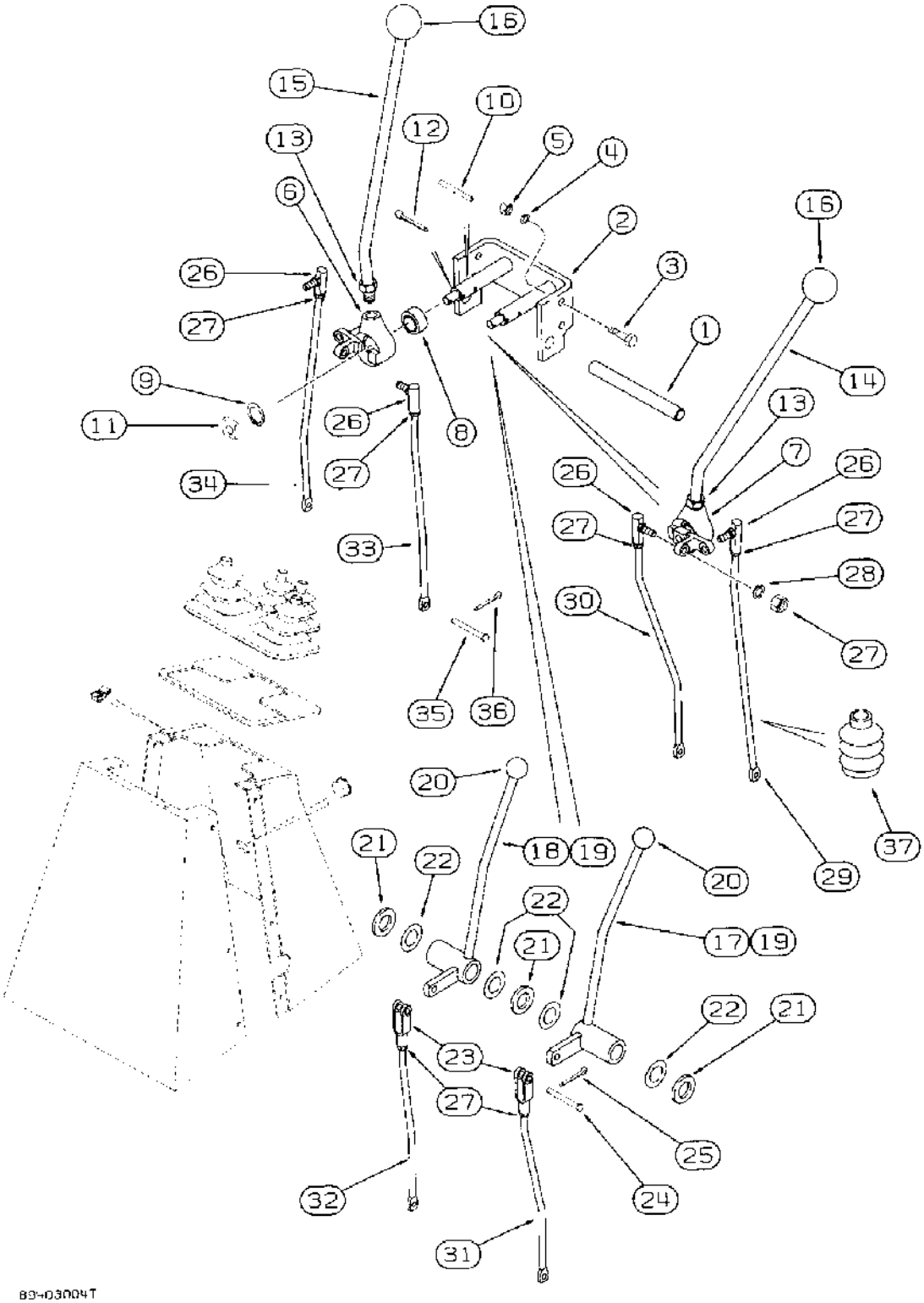

(580SK) - CASE SUPER-K CONSTRUCTION KING LOADER BACKHOE > (9-028) - BACKHOE CONTROLS WITH HAND SWING, WITH NON-EXTENDABLE DIPPER

Diag #	Part #	Name	Description	Qty
1	D148947	PIN	SHAFT pivot, stabilizer control levers	1
2	D148946	BRACKET	mounting, control lever	1
3	413-620	BOLT,Hex, 3/8" - 16 x 1 1/4", Gr 5	hex, 3/8 NC x 1-1/4 inch	4
4	492-11038	LOCK WASHER,3/8"	LOCK WASHER,3/8"	4
5	425-106	NUT,3/8"-16, G5	NUT,3/8"-16, G5	4
6	L109118	LEVER	pivot, right-hand, bucket and dipper	1
7	L105056	LEVER	pivot, left-hand, boom and swing	1
8	D38297	BUSHING	self-aligning	2
9	D38298		Ring, Snap, 1.438", Int, #143, self-aligning bushing	2
10	138-303	LOCK PIN,3/16" x 1 1/8", Slotted	Pin, 3/16" x 1 1/8", Slotted	4
11	D38305	BLOCK	wear	2
12	432-610	COTTER PIN,3/32" x 5/8"	PIN, SPLIT (COTTER), 3/32" x 5/8"	2
13	425-1110	NUT,5/8"-18, G5	NUT,5/8"-18, G5	2
14	D149891	LEVER	left-hand, boom and swing control	1
15	D149891	LEVER	right-hand, bucket and dipper control	1
16	D39118	KNOB	control levers	2
17	D149013	LEVER	left-hand stabilizer control	1
18	D149012	LEVER	right-hand stabilizer control, Includes: Ref. 19	1
19	D148992	BUSHING	Control lever, used with D149012 and D149013 levers	2
20	D59912	KNOB	stabilizer control levers	2
21	495-11081	WASHER,3/4", SAE	WASHER,3/4", SAE	3
22	A30881	SEALING WASHER,49" ID x 40558" OD	WASHER flat, spacer	1
23	213-126	ADJUSTABLE CLEVIS,3/8"-24 x 2 1/2"	CLEVIS adjustable, 3/8 inch NF	2
24	D149288	PIN	- Clevis, Special	2
25	432-612	COTTER PIN,3/32" x 3/4"	PIN , SPLIT (COTTER), 3/32" x 3/4"	2
26	D149295	BALL JOINT	JOINT ball, control rod	4
27	425-116	NUT,3/8"-24, G5	- hex, 3/8 inch NF	10
28	492-11038	LOCK WASHER,3/8"	LOCK WASHER,3/8"	4
29	D148954	LEVER	ROD swing control	1
30	D148955	ROD	boom control	1
31	D148959	LEVER	ROD left-hand stabilizer control	1
32	D148958	LEVER	ROD right-hand stabilizer control	1

Diag #	Part #	Name	Description	Qty
33	D148956	LEVER	ROD dipper control	1
34	D148957	LEVER	ROD bucket control	1
35	D149287	PIN	- Clevis, Special, Serial Range: rods-valve	6
36	432-612	COTTER PIN,3/32" x 3/4"	PIN , SPLIT (COTTER), 3/32" x 3/4"	6
37	D85869	BELLOWS	BOOT control rods, if used	6

http://www.minnparbackhoeparts.com/

(580SK) - CASE SUPER-K CONSTRUCTION KING LOADER BACKHOE > (9-030) - BACKHOE CONTROLS WITH FOOT SWING

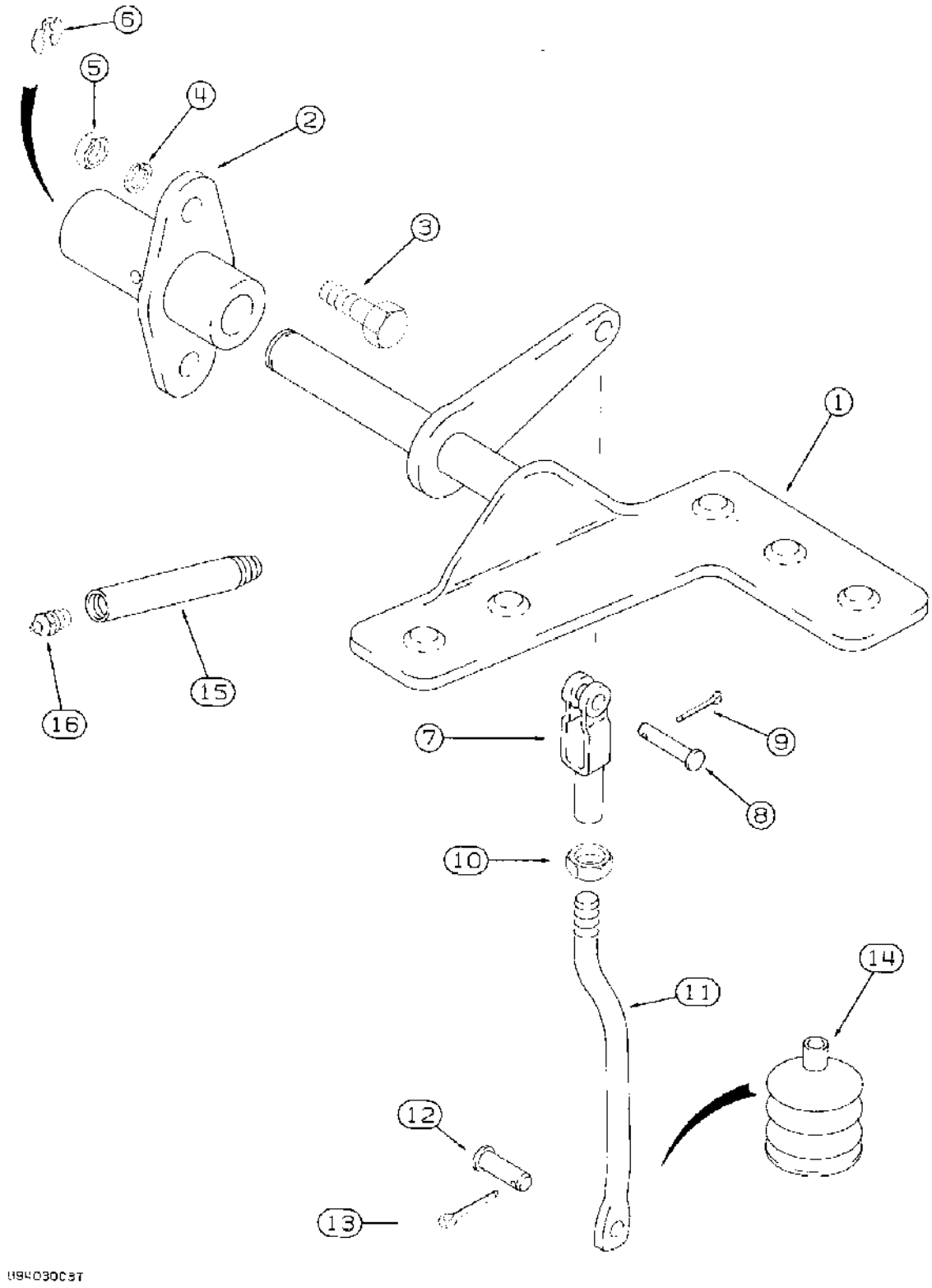

(580SK) - CASE SUPER-K CONSTRUCTION KING LOADER BACKHOE > (9-030) - BACKHOE CONTROLS WITH FOOT SWING

Diag #	Part #	Name	Description	Qty
1	D150477	PEDAL	right-hand, extendahoe control, replaces D148843 pedal	1
2	D140933	SUPPORT	pedal, with hole for tube and grease fitting	1
3	413-620	BOLT,Hex, 3/8" - 16 x 1 1/4", Gr 5	hex, 3/8 NC x 1-1/4 inch	2
4	492-11038	LOCK WASHER,3/8"	LOCK WASHER,3/8"	2
5	425-106	NUT,3/8"-16, G5	NUT,3/8"-16, G5	2
6	D143416	CIRCLIP	RETAINER clip ring, special	1
7	D150493	END	3/8 inch, special, replaces D134900 clevis	1
8	427-6088	CLEVIS PIN,3/8" x 3/4"	PIN clevis, 3/8 inch	1
9	432-612	COTTER PIN,3/32" x 3/4"	PIN , SPLIT (COTTER), 3/32" x 3/4"	1
10	425-156	JAM NUT,Jam, 3/8"-24, G5	hex, jam, 3/8 inch NF	1
11	D140610	ROD	extendahoe control	1
12	D149287	PIN	- Clevis, Special, Serial Range: rod-valve	1
13	432-612	COTTER PIN,3/32" x 3/4"	PIN , SPLIT (COTTER), 3/32" x 3/4"	1
14	D85869	BELLOWS	BOOT control rod, if used	1
15	D150032	TUBE	pedal lube	1
16	219-1	LUBE NIPPLE,1/8"-27 x .66 lg	FITTING grease, straight, 1/8 PT x 21/32 inch	1

http://www.minnparbackhoeparts.com/

(580SK) - CASE SUPER-K CONSTRUCTION KING LOADER BACKHOE > (9-032) - BACKHOE SWING SEQUENCE VALVE CONTROL

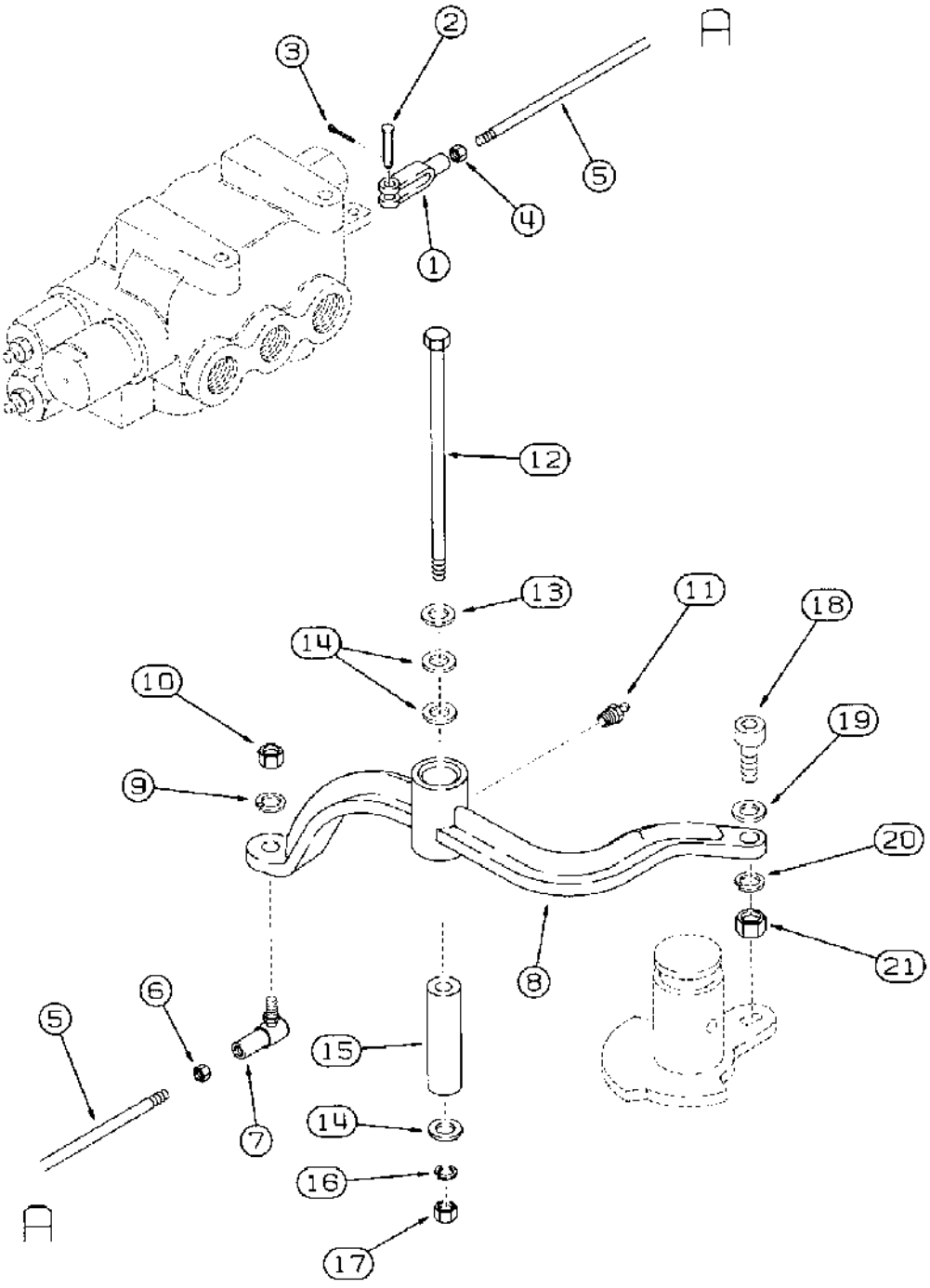

(580SK) - CASE SUPER-K CONSTRUCTION KING LOADER BACKHOE > (9-032) - BACKHOE SWING SEQUENCE VALVE CONTROL

Diag #	Part #	Name	Description	Qty
1	213-125	ADJUSTABLE CLEVIS,5/16"-24	CLEVIS - adjustable, 5/16 inch NF, Attaches to swing sequence valve spool	1
2	D149287	PIN	- Clevis, 5/16 x 15/16 inch, hardened	1
3	432-612	COTTER PIN,3/32" x 3/4"	PIN , SPLIT (COTTER), 3/32" x 3/4"	1
4	425-115	NUT,5/16"-24, G5	- hex, 5/16 inch NF	1
5	D143594	ROD	control	1
6	129-215	NUT,3/8"-24, G5, LH	hex, 3/8 inch NF, left-hand thread, ball joint end	1
7	D133522	BALL JOINT	JOINT ball, 3/8 inch, left-hand thread	1
8	D145218	POWER ARM	LEVER crank, swing sequence	1
9	492-11038	LOCK WASHER,3/8"	LOCK WASHER,3/8"	1
10	425-116	NUT,3/8"-24, G5	- hex, 3/8 inch NF	1
11	219-1	LUBE NIPPLE,1/8"-27 x .66 lg	FITTING grease, straight, 1/8 PT x 21/32 inch	1
12	413-888	BOLT,Hex, 1/2" - 13 x 5 1/2", Gr 5	hex, 1/2 NC x 5-1/2 inch	1
13	D73296	WASHER	flat, special, hardened	1
14	495-21056	WASHER,1/2"	flat, 9/16 x 1-3/8 x 3/32 inch	1
15	D145249	SPACER	pivot	1
16	80679	LOCK WASHER,1/2"	WASHER, LOCK, 1/2"	1
17	425-108	NUT,1/2"-13, G5	NUT, , Hex 1/2"-13, G5	1
18	D145113	SHIFTER ROLLER	FOLLOWER cam, hex socket	1
19	495-11047	WASHER,7/16", SAE	(15/32 x 59/64 x 1/16") 7/16", SAE	1
20	492-11044	LOCK WASHER,7/16"	WASHER, LOCK, 7/16"	1
21	425-117	NUT,7/16"-20, G5	hex, 7/16 inch NF	1

http://www.minnparbackhoeparts.com/

(580SK) - CASE SUPER-K CONSTRUCTION KING LOADER BACKHOE > (9-034) - BACKHOE STABILIZERS, PLATES AND PADS

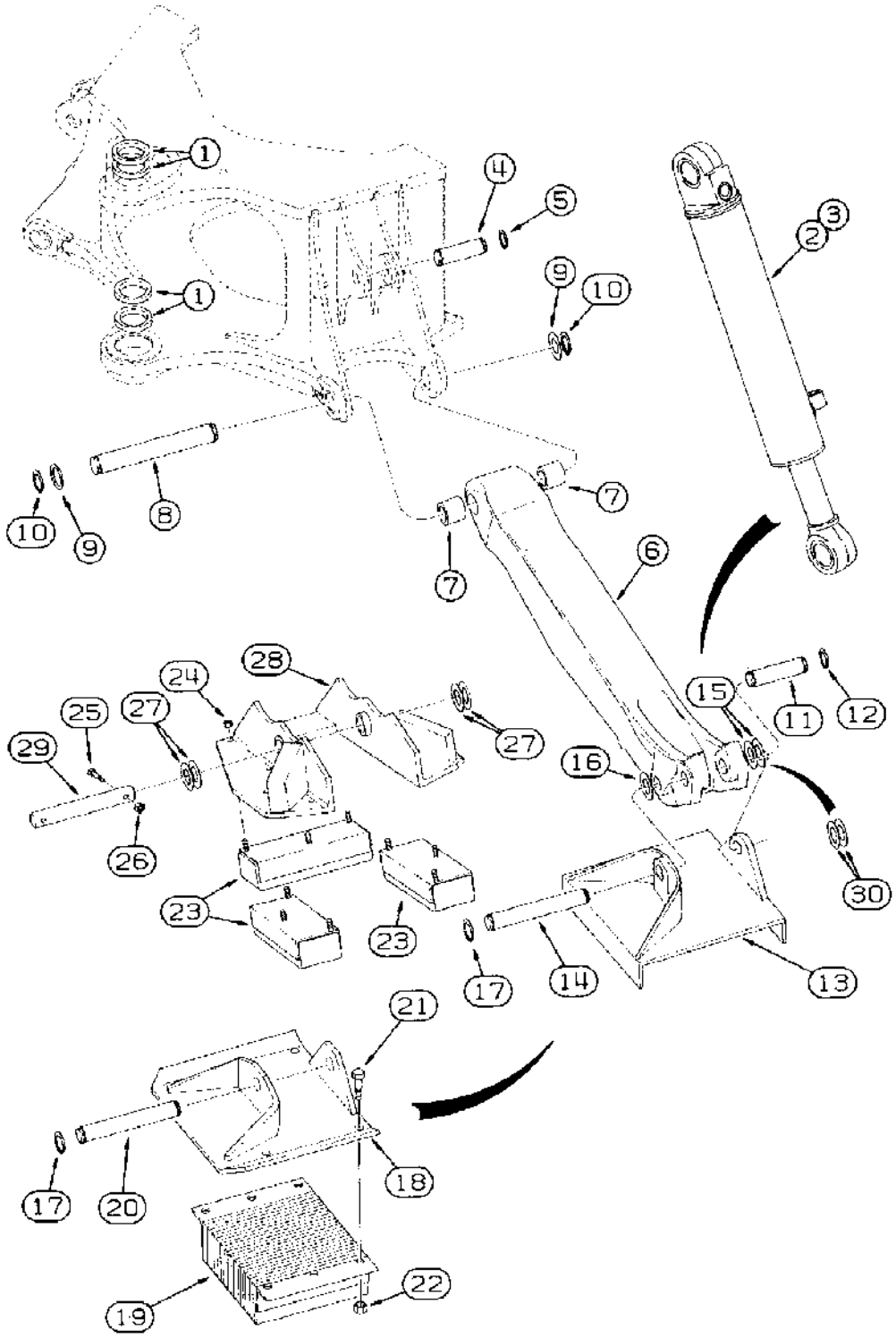

(580SK) - CASE SUPER-K CONSTRUCTION KING LOADER BACKHOE > (9-034) - BACKHOE STABILIZERS, PLATES AND PADS

Diag #	Part #	Name	Description	Qty
1	D127974	SEAL	frame, at swing tower mounting	4
2	REF	INSTRUCTION	CYLINDER ASSEMBLY stabilizer, right-hand, for correct assembly and components, see Figure 8-122 or 8-123A	1
3	REF	INSTRUCTION	CYLINDER ASSEMBLY stabilizer, left-hand, for correct assembly and components, see Figure 8-122 or 8-123A	1
4	D38907	PIN	stabilizer, Serial Range: cylinder-frame	2
5	103-16175	SNAP RING,#175, Ext	Ring, Snap, , Pin #175, Ext	4
6	D133428	STABILIZER	LEG stabilizer, Includes: Ref. 7	2
7	D50146	BUSHING,1.760" x 2.250" x 1.50"	leg to frame	2
8	D89838	PIN	stabilizer, Serial Range: leg-frame	2
9	495-81226	WASHER,1 13/16" x 2 1/2" x .109"	- flat, 1-13/16 x 2-1/2 x 1/8 inch	4
10	103-16175	SNAP RING,#175, Ext	Ring, Snap, , Pin #175, Ext	4
11	D26002	PIN	stabilizer, Serial Range: cylinder-leg	2
12	D25279	SNAP RING	RING snap, pin retaining	4
13	D88427	PLATE	stabilizer, cleated, if used	2
14	D28648	PIN	D88427 stabilizer, Serial Range: plate-leg	2
15	D31312	WASHER	spacer, 70 mm OD x 1.6 mm thick, hardened, no longer used, order D143406 washer, Ref. 30	1
16	D28610	WASHER	spacer, 1-1/2 x 2-1/2 x 7/64 thick, no longer used, order D143406 washer, Ref. 30	2
17	D25279	SNAP RING	RING snap, pin retaining	4
18	D142519	SHOE (ASSY)	PLATE stabilizer, street or cemetery, if used	2
19	D61368	PAD	Rubber, if used	2
20	D39256	AXLE PIN	PIN, 9-3/8 inch, 238 mm, long, D142519, Serial Range: plate-leg	2
21	413-1228	BOLT,Hex, 3/4" - 10 x 1 3/4", Gr 5	hex, 3/4 NC x 1-3/4 inch	8
22	425-1012	NUT,3/4"-10, G5	hex, 3/4 inch NC	8
	D147316	PAD	PLATE ASSEMBLY stabilizer flip over, Includes: Ref. 23 through 29	2
23	D142314	SKID/SHOE	PAD rubber, used with D147317 plate	3
24	425-107	NUT,7/16"-14, G5	- hex, 7/16 inch NC	9
25	413-632	BOLT,Hex, 3/8" - 16 x 2", Gr 5	- hex, 3/8 NC x 2 inch, If used	2
26	230-4216	LOCK NUT,3/8"-16, GA	NUT hex, self-locking, 3/8 inch NC, If used	2

Diag #	Part #	Name	Description	Qty
27	495-81293	WASHER,1 17/32" x 2 1/16" x .109"	flat, 1-17/32 x 2-1/16 x 1/8 inch, no longer used, not required	4
28	D147317	SKID/SHOE	PLATE stabilizer, flip over, Category III, if used	1
29	D149033	PIN	12-1/2 inch long, Plate to stabilizer leg, if used	1
30	D143406	WASHER	flat, 1-17/32 x 2-23/64 x 1/8 inch, used as a spacer	1
		spacer	spacer	1

http://www.minnparbackhoeparts.com/

(580SK) - CASE SUPER-K CONSTRUCTION KING LOADER BACKHOE > (9-036) - BACKHOE SWING CYLINDERS AND SWING TOWER

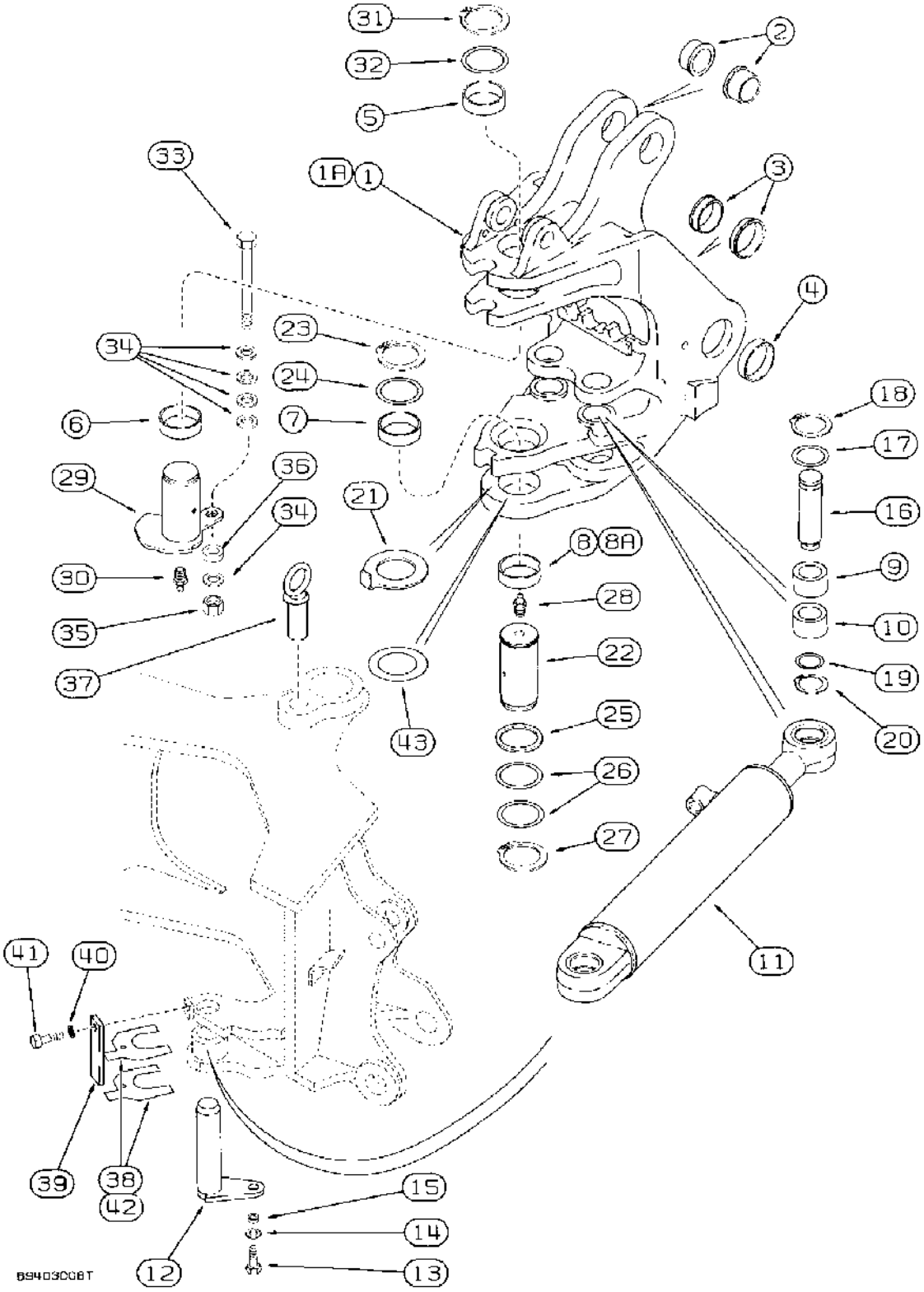

(580SK) - CASE SUPER-K CONSTRUCTION KING LOADER BACKHOE > (9-036) - BACKHOE SWING CYLINDERS AND SWING TOWER

Diag #	Part #	Name	Description	Qty
1	D147804	FRAME	TOWER ASSEMBLY backhoe swing, prior to P.I.N. JJG0171285, no longer available, order 105929A1 tower, Ref. 1A	1
1A	105929A1	FRAME	TOWER ASSEMBLY backhoe swing, P.I.N. JJG0171285 and after, Includes: Ref. 2 through 10	1
2	D151072	BUSHING	32 mm wide, boom cylinder pivot, replaces D144422	2
3	D135742	BUSHING	inner, boom pivot	2
4	D135741	BUSHING	outer, boom pivot	2
5	D135557	BUSHING	upper, swing tower pivot	1
6	D135559	BUSHING	upper, tower pivot	1
7	D151073	BUSHING	tower pivot, replaces D138042	1
8	D135559	BUSHING	70 x 86 x 28 mm long, D147804 tower pivot, lower	1
8A	D151074	BUSHING	70 x 86 x 28 mm long, 105929A1 tower pivot, lower	1
9	D136570	BUSHING	upper, swing cylinder pivot	2
10	D136571	BUSHING	lower, swing cylinder pivot	2
11	REF	INSTRUCTION	CYLINDER ASSEMBLY swing, for correct assembly and components, see Figures 8-124 - 8-127A	2
12	D147894	PIN	swing cylinder mounting, closed end	2
13	413-816	BOLT,Hex, 1/2" - 13 x 1", Gr 5	BOLT,Hex, 1/2" - 13 x 1", Gr 5	2
14	495-11053	WASHER,1/2", SAE	(17/32" x 1-1/16" x 3/32") 1/2", SAE	2
15	D23740	BUSHING	bolt	2
16	D146779	PIN	swing cylinder rod end to swing tower	2
17	D144592	WASHER	flat, 41 mm ID	2
18	800-44040	SNAP RING,M40, Ext	RING snap	2
19	495-81276	WASHER,1 5/16" x 1 3/4" x .065"	flat, 1-5/16 x 1-3/4 x 1/16 inch	2
20	103-16125	SNAP RING,#125, Ext	Ring, Snap, , Pin #125, Ext	2
21	D136699	WASHER	bearing, special, swing tower	1
22	D151065	PIN	Lower, swing tower to frame, grease fitting mounts in top of pin, without groove pin, replaces D138038	1
23	800-40070	SNAP RING,M70 Ext	RING snap, pin retaining, upper	1
24	D136392	SHIM,3.05mm Thk	(M72 ID x 89 OD), Upper 3.05mm Thk	1
25	D136700	SHIM,1.57mm Thk	67 mm x 83 mm x 2 mm, lower	1

Diag #	Part #	Name	Description	Qty
26	D136391	SHIM,1.57mm Thk	(M72 ID x 89 OD) 1.57mm Thk	1
27	800-40065	SNAP RING,M65, Ext	RING snap, pin retaining, lower	1
28	219-1	LUBE NIPPLE,1/8"-27 x .66 lg	FITTING grease, straight, 1/8 PT x 21/32 inch	1
29	105749A1	PIN	swing tower to frame, upper, replaces D140657	1
30	219-1	LUBE NIPPLE,1/8"-27 x .66 lg	FITTING grease, straight, 1/8 PT x 21/32 inch	1
31	800-40065	SNAP RING,M65, Ext	RING snap, pin retaining	1
32	D136700	SHIM,1.57mm Thk	67 mm x 83 mm x 2 mm	1
33	426-888	BOLT,Hex, 1/2" - 13 x 5 1/2", Gr 8	hex, 1/2 NC x 5-1/2 inch, grade 8	1
34	495-11053	WASHER,1/2", SAE	(17/32" x 1-1/16" x 5/64") 1/2", SAE	1
35	231-1448	NUT,1/2"-13, GB	light hex, self-locking, 1/2 inch NC	1
36	D139603	SPACER	pin mounting	1
37	D149239	PIN	swing stop, without snap ring	1
38	D150498	SHIM,3mm Thk	Pin, Swing cylinder 3mm Thk	1
39	D150452	PLATE	shim retaining	2
40	80679	LOCK WASHER,1/2"	WASHER, LOCK, 1/2"	2
41	413-814	BOLT,Hex, 1/2" - 13 x 7/8", Gr 5	hex, 1/2 NC x 7/8 inch	2
42	D150497	SHIM,1.6mm Thk	Pin, Swing cylinder 1.6mm Thk	1
43	134167A1	SHIM	2.05 mm thick, if used	1

http://www.minnparbackhoeparts.com/

(580SK) - CASE SUPER-K CONSTRUCTION KING LOADER BACKHOE > (9-038) - BACKHOE SWING TOWER AND BOOM

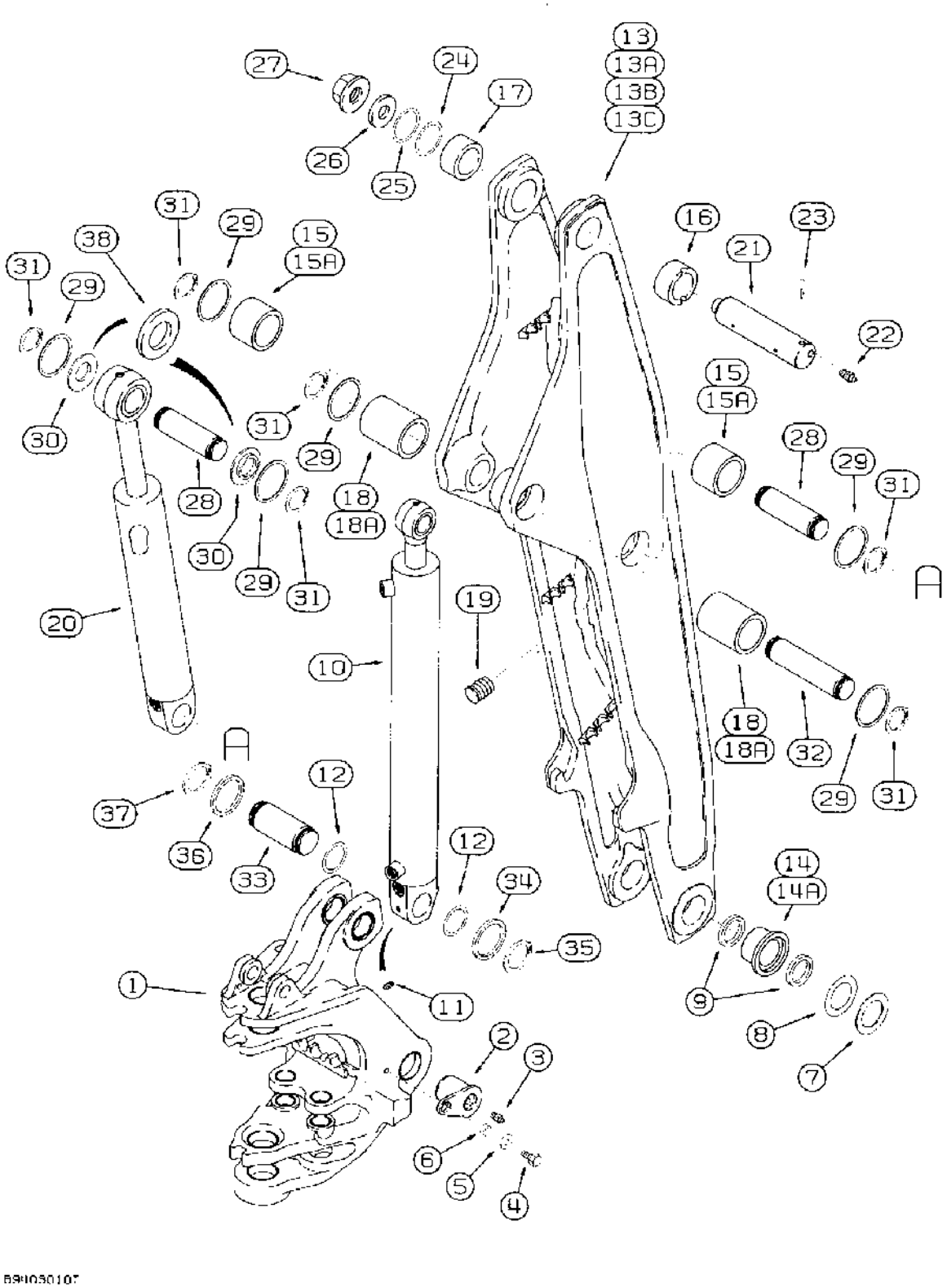

B9H030107

(580SK) - CASE SUPER-K CONSTRUCTION KING LOADER BACKHOE > (9-038) - BACKHOE SWING TOWER AND BOOM

Diag #	Part #	Name	Description	Qty
1	REF	INSTRUCTION	SWING TOWER backhoe, with inner ears, see Figure 9-036 for swing tower and bushings	1
2	105752A1	PIN	swing tower to boom, replaces D140093	2
3	219-1	LUBE NIPPLE,1/8"-27 x .66 lg	FITTING grease, straight, 1/8 PT x 21/32 inch	2
4	413-1224	BOLT,Hex, 3/4" - 10 x 1 1/2", Gr 5	hex, 3/4 NC x 1-1/2 inch	2
5	T53681	WASHER	flat, 20 x 44 x 6 mm, hardened	2
6	D132045	SPACER	25/32 inch ID x 1-1/4 inch OD x 1/2 inch thick	2
7	H71514	WASHER	boom to swing tower	1
8	R32119	WASHER	SHIM, 2-13/16 x 4-1/2 x 1/16 inch	1
9	D127974	SEAL	grease, used with D136569 bushing, Ref. 14, if used	4
10	REF	INSTRUCTION	CYLINDER ASSEMBLY boom, for correct assembly and components, see Figure 8-128 - 8-131C	1
11	219-1	LUBE NIPPLE,1/8"-27 x .66 lg	FITTING grease, straight, 1/8 PT x 21/32 inch	2
12	D127974	SEAL	grease, if used	4
13	D147729	BOOM	backhoe, includes grooved bushing used with Ref. 9 grease seal at boom to swing tower pivot, prior to P.I.N. JJG0163952, no longer available, order 105928A1 boom	1
13A	D150606	BOOM	backhoe, without grease seal at boom to swing tower pivot, P.I.N. JJG0163952 thru JJG0169122, no longer available, order 105928A1 boom	1
13B	101630A1	BOOM	backhoe, without grease seal at boom to swing tower pivot, P.I.N. JJG0169123 thru JJG0171284, no longer available, order 105928A1 boom	1
13C	105928A1	BOOM	backhoe, service replacement, Includes: Ref. 14 through 19	1
14	D136569	BUSHING	70 x 90 x 34 mm long, with grease seal groove, D147729 boom to swing tower pivot	2
14A	D151071	BUSHING	70 x 90 x 34 mm long, without groove for grease seal, D150606, 101630A1 or 105928A1 boom, replaces D150120	2
15	D137217	BUSHING	50 x 70 x 54 mm long, without slot for groove pin, dipper cylinder closed end pivot, D147729 or D150606 boom	2

Diag #	Part #	Name	Description	Qty
15A	D138047	BUSHING	50 x 60 x 54 mm long, 101630A1 or 105928A1 boom	2
16	D135739	BUSHING	70 mm ID x 44 mm long, with slot for groove pin, right-hand side of boom at boom to dipper pivot	1
17	D137218	BUSHING	70 mm ID x 44 mm long, without slot for groove pin, left-hand side of boom at boom to dipper pivot	1
18	D145080	BUSHING	50 x 70 x 78 mm long, boom cylinder rod end pivot, D147729 or D150606 boom	2
18A	D148798	BUSHING	50 x 60 x 78 mm long, boom cylinder rod end pivot, 101630A1 or 105928A1 boom	2
19	D120450	PLUG	plastic	7
20	REF	INSTRUCTION	CYLINDER ASSEMBLY dipper, for correct assembly and components, see Figure 8-132 - 8-135C	1
21	D132494	PIN	, Serial Range: Boom-dipper	1
22	219-1	LUBE NIPPLE,1/8"-27 x .66 lg	FITTING grease, straight, 1/8 PT x 21/32 inch	2
23	135-823	GROOVED PIN,1/2" x 3 1/4", Type E, Hardened	PIN GROOVED, 1/2" x 3 1/4", Type E, Hardened	1
24	D136391	SHIM,1.57mm Thk	(M72 ID x 89 OD), Boom to dipper 1.57mm Thk	1
25	D136392	SHIM,3.05mm Thk	(M72 ID x 89 OD), Boom to dipper 3.05mm Thk	1
26	D133632	WASHER	flat, hardened, special	1
27	D120610	NUT	hex, 1-3/4 NF special	1
28	D138022	PIN	Dipper cylinder to boom and dipper	2
		Either use two of Ref. 29 or two of Ref. 30 for D138022 dipper cylinder mounting pin, Ref. 28, on the dipper cylinder rod end to dipper.	Either use two of Ref. 29 or two of Ref. 30 for D138022 dipper cylinder mounting pin, Ref. 28, on the dipper cylinder rod end to dipper.	1
29	495-81226	WASHER,1 13/16" x 2 1/2" x .109"	- flat, 1-13/16 x 2-1/2 x 1/8 inch	1
		Either use two of Ref. 29 or two of Ref. 30 for D138022 dipper cylinder mounting pin, Ref. 28, on the dipper cylinder rod end to dipper.	Either use two of Ref. 29 or two of Ref. 30 for D138022 dipper cylinder mounting pin, Ref. 28, on the dipper cylinder rod end to dipper.	1
30	D141164	SPACER	1-13/16 x 3 x 1/8 inch, no longer used, order 495-81227 washer, Ref. 38	1
		Either use two of Ref. 29 or two of Ref. 30 for D138022 dipper cylinder mounting pin, Ref. 28, on the dipper cylinder rod end to dipper.	Either use two of Ref. 29 or two of Ref. 30 for D138022 dipper cylinder mounting pin, Ref. 28, on the dipper cylinder rod end to dipper.	1
31	103-16175	SNAP RING,#175, Ext	Ring, Snap, , Pin #175, Ext	6
32	D138023	PIN	boom cylinder rod, Serial Range: end-boom	1

Diag #	Part #	Name	Description	Qty
33	D151068	PIN	boom cylinder closed end to swing tower, replaces D144420	1
34	D144423	WASHER	2-5/8 x 3-3/8 x 1/8 inch, used as a shim	1
35	800-40065	SNAP RING,M65, Ext	RING snap, pin retaining, right-hand side of swing tower	1
36	D136391	SHIM,1.57mm Thk	(2-27/32" x 3-1/2" x 1/16") 1.57mm Thk	1
37	800-40070	SNAP RING,M70 Ext	RING snap, pin retaining, left-hand side of swing tower	1
38	495-81227	WASHER,2 1/16" x 2 15/16" x .060"	- flat, 2-1/16 x 2-15/16 x 1/16 inch	1

http://www.minnparbackhoeparts.com/

(580SK) - CASE SUPER-K CONSTRUCTION KING LOADER BACKHOE > (9-042) - BOOM LATCH

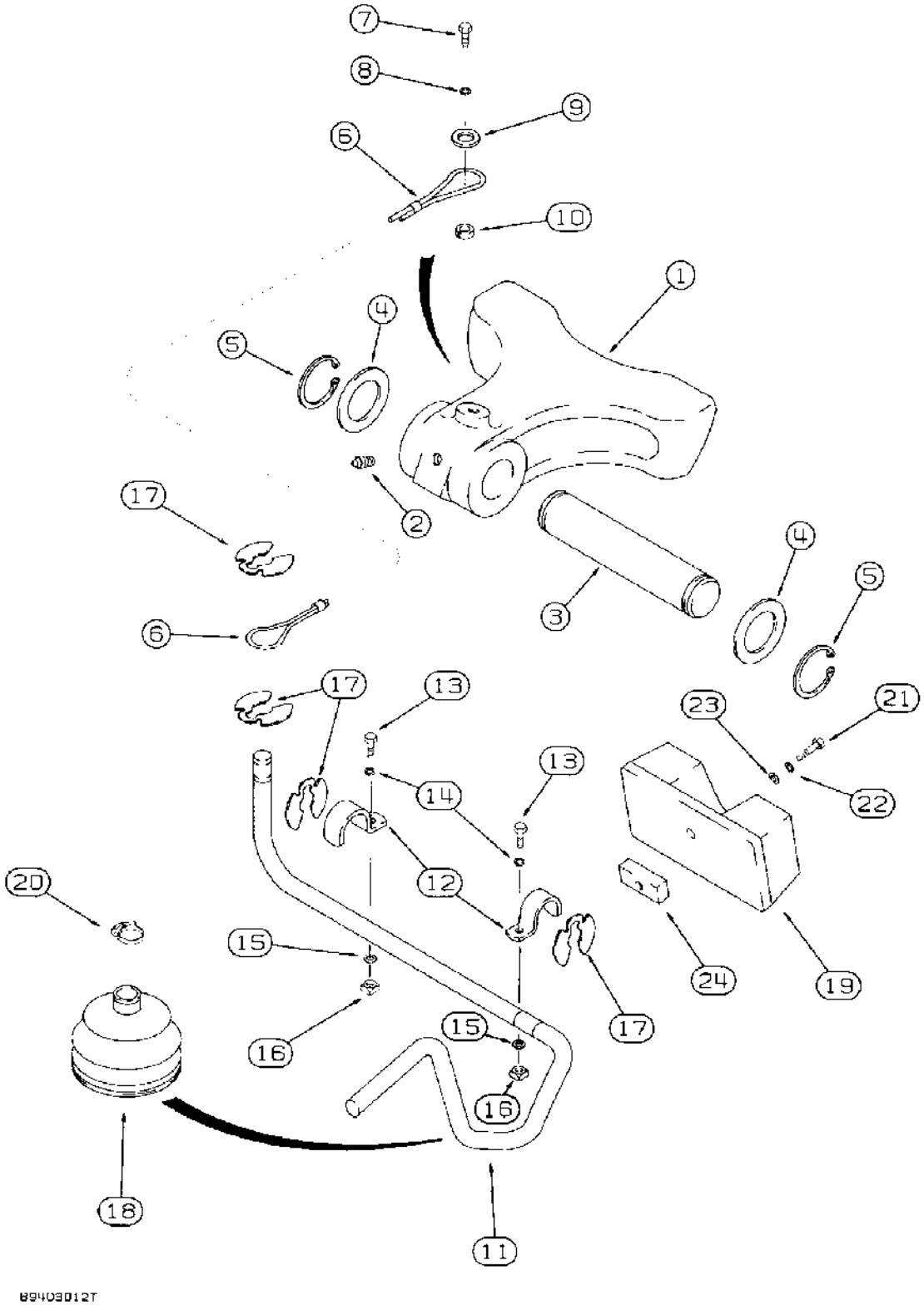

(580SK) - CASE SUPER-K CONSTRUCTION KING LOADER BACKHOE > (9-042) - BOOM LATCH

Diag #	Part #	Name	Description	Qty
1	D143296	ARRESTER	LATCH backhoe boom	1
2	219-1	LUBE NIPPLE,1/8"-27 x .66 lg	FITTING grease, straight, 1/8 PT x 21/32 inch	1
3	D129227	PIN	- Boom latch to swing tower	1
4	D144592	WASHER	flat, special	2
5	800-44040	SNAP RING,M40, Ext	RING snap, pin retaining	2
6	D129641	CABLE	latch control	1
7	413-616	BOLT,Hex, 3/8" - 16 x 1", Gr 5	hex, 3/8 NC x 1 inch	1
8	492-11038	LOCK WASHER,3/8"	LOCK WASHER,3/8"	1
9	496-81003	WASHER,13/32" x 1 1/16" x .095", HDN	flat, 13/32 x 1-1/16 x 3/32 inch, hardened	1
10	D143417	SPACER	10 mm x 16 mm x 6 mm	1
11	D148136	THREADED ROD	ROD boom latch control	1
12	D143723	SHIN	CLAMP rod	2
13	413-612	BOLT,Hex, 3/8" - 16 x 3/4", Gr 5	BOLT,Hex, 3/8" - 16 x 3/4", Gr 5	2
14	492-11038	LOCK WASHER,3/8"	LOCK WASHER,3/8"	2
15	495-11041	WASHER,3/8", SAE	flat, (13/32 x 13/16 x 1/16")	2
16	84899	SQUARE NUT,Sq, 3/8"-16, G2	square, 3/8 inch NC	2
17	D95096	RING	RETAINER clip ring, replaces D143591	4
18	D86664	BOOT	rod	1
19	102923A1	RUBBER BLOCK	BUMPER boom, used without shims, replaces D149779 bumper	1
20	D143735	CLAMP	boot	1
21	413-632	BOLT,Hex, 3/8" - 16 x 2", Gr 5	- hex, 3/8 NC x 2 inch	1
22	492-11038	LOCK WASHER,3/8"	LOCK WASHER,3/8"	1
23	495-11041	WASHER,3/8", SAE	flat, (13/32 x 13/16 x 1/16")	1
24	D143425	BAR	PLATE boom stop	1

http://www.minnparbackhoeparts.com/

(580SK) - CASE SUPER-K CONSTRUCTION KING LOADER BACKHOE > (9-044) - BACKHOE DIPPER AND BUCKET

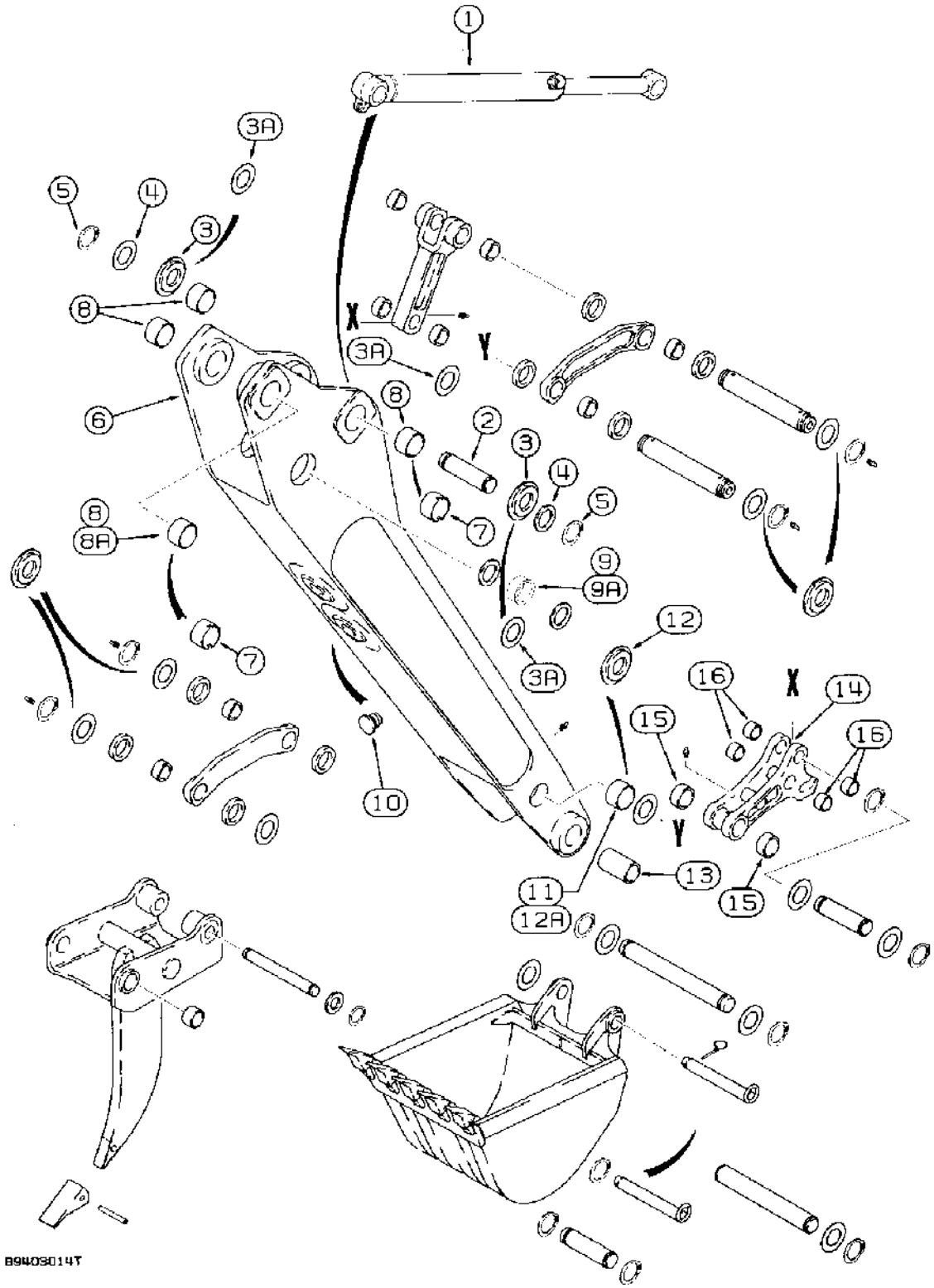

(580SK) - CASE SUPER-K CONSTRUCTION KING LOADER BACKHOE > (9-044) - BACKHOE DIPPER AND BUCKET

Diag #	Part #	Name	Description	Qty
1	REF	INSTRUCTION	CYLINDER ASSEMBLY bucket, for correct assembly and components, see Figure 8-136 - 8-139C	1
2	D138022	PIN	Bucket cylinder closed, Serial Range: end-dipper	1
		Either use two of Ref. 3 or two of Ref. 4 with D138022 pin.	Either use two of Ref. 3 or two of Ref. 4 with D138022 pin.	1
3	D141164	SPACER	1-13/16 x 3 x 1/8 inch, no longer used, order 495-81227 washer, Ref. 3A	1
		Either use two of Ref. 3 or two of Ref. 4 with D138022 pin.	Either use two of Ref. 3 or two of Ref. 4 with D138022 pin.	1
3A	495-81227	WASHER,2 1/16" x 2 15/16" x .060"	- flat, 2-1/16 x 2-15/16 x 1/16 inch	1
4	495-81226	WASHER,1 13/16" x 2 1/2" x .109"	- flat, 1-13/16 x 2-1/2 x 1/8 inch	1
		Either use two of Ref. 3 or two of Ref. 4 with D138022 pin.	Either use two of Ref. 3 or two of Ref. 4 with D138022 pin.	1
5	103-16175	SNAP RING,#175, Ext	Ring, Snap, , Pin #175, Ext	2
	D145902	DIPPER ASSEMBLY backhoe, used in production, for service order 102434A1 dipper kit on Figure 9-047A	DIPPER ASSEMBLY backhoe, used in production, for service order 102434A1 dipper kit on Figure 9-047A	1
	D145904	BOOM	DIPPER ASSEMBLY backhoe, includes seals, Ref. 23 below and Ref. 41 on Figure 9-046, no longer available, for service order 102434A1 dipper kit on Figure 9-047A	1
	D150784	DIPPER	ASSEMBLY backhoe, without grease seals, no longer available, for service order 102434A1 dipper kit on Figure 9-047A	1
	101631A1	DIPPER	ASSEMBLY backhoe, used in production on tractor P.I.N. JJG0169123 and after, includes Ref. 10 and 12A only, for service order 102434A1 dipper kit on Figure 9-047A, Includes: Ref. 6 through 12A	1
6	NSS	NOT SERVICED SEPARATELY	DIPPER backhoe	1
7	D136565	BUSHING	50 ID x 54 mm long, with slot for groove pin, right-hand side of dipper at dipper cylinder rod end pivot and bucket cylinder closed end pivot, D145904 dipper	2

Diag #	Part #	Name	Description	Qty
8	D137217	BUSHING	50 x 70 x 54 mm long, without slot for groove pin, dipper cylinder rod end pivot and bucket cylinder closed end pivot, 2-4, on D145902, (two on D145904 dipper, four used on D150784 dipper	2-4
8A	D138047	BUSHING	50 x 60 x 54 mm long, dipper cylinder rod end, used with 101631A1 dipper only, not included in 101631A1 dipper assembly, order separately	2
9	D135740	BUSHING	70 ID x 36 mm long, to boom pivot, with groove for grease seals, D145902 or D145904 dipper, no longer used on D145902 dipper	2
9A	D150121	BUSHING	70 ID x 36 mm long, without groove for grease seals, if used; D150784 or 101631A1 dipper, not included in 101631A1 dipper assembly, order separately	2
10	D120450	PLUG	plastic	6
11	D141249	BUSHING	50 ID x 25 mm long, bucket link pivot, D145902 or D150784 dipper	2
12	D136573	BUSHING	50 ID x 36 mm long, bucket link pivot, D145904 dipper	2
12A	D140029	BUSHING	50 x 60 x 25.5 mm long, 101631A1 dipper only	2
13	D127168	BUSHING	45 ID x 94 mm long, bucket coupler pivot, no longer included with dipper assembly, may need to order separately	2
	134437A1	COUPLING	COUPLER ASSEMBLY bucket, replaces D139084, Includes: Ref. 14, 15 and 16	1
14	NSS	NOT SERVICED SEPARATELY	COUPLER backhoe bucket	1
15	D127167	BUSHING	30 mm long, special, at dipper	2
16	D127172	BUSHING	28 mm long, at bucket link	4

http://www.minnparbackhoeparts.com/

(580SK) - CASE SUPER-K CONSTRUCTION KING LOADER BACKHOE > (9-046) - BACKHOE DIPPER AND BUCKET

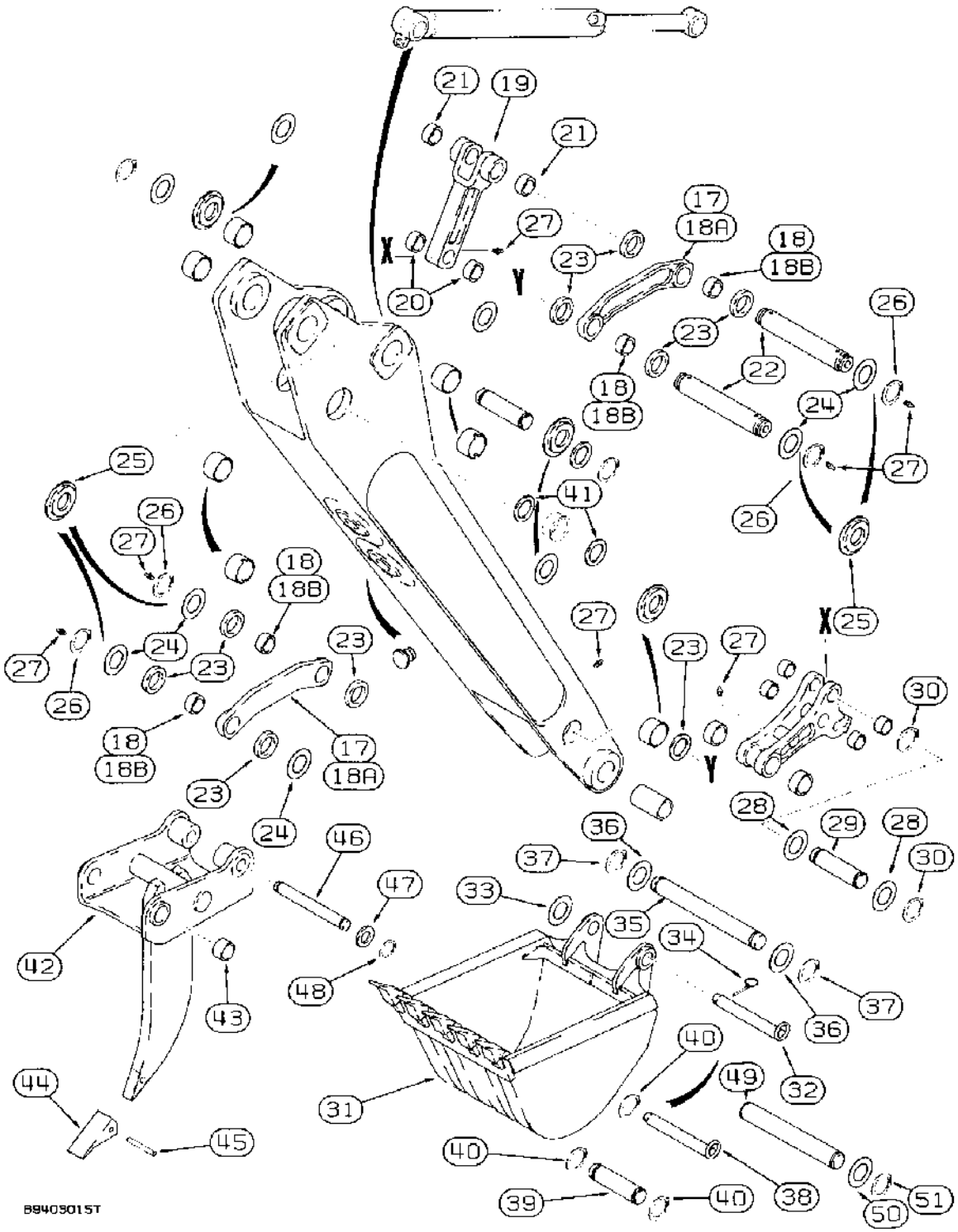

(580SK) - CASE SUPER-K CONSTRUCTION KING LOADER BACKHOE > (9-046) - BACKHOE DIPPER AND BUCKET

Diag #	Part #	Name	Description	Qty
17	D141468	PITMAN	LINK, 25 mm wide bushing, bucket guide, with groove for grease seals, Ref. 23, prior to P.I.N. JJG0163952, no longer available, order D150608, Ref. 18A, Includes: Ref.18	2
		See Figure 9-047C for optional backhoe bucket links for rear attachments.	See Figure 9-047C for optional backhoe bucket links for rear attachments.	1
18	D140029	BUSHING	50 x 60 x 25.5 mm	2
18A	D150608	PITMAN	LINK, 33 mm wide bushing, used without grease seals, bucket guide, P.I.N. JJG0163952 and after, Includes: Ref.18B	2
18B	D150122	BUSHING	50 x 60 x 33 mm	2
19	D150080	PITMAN	LINK bucket dump, with two bushings at forked end, replaces D140007 link, Includes: Ref. 20 and 21	1
		See Figure 9-047C for optional backhoe bucket links for rear attachments.	See Figure 9-047C for optional backhoe bucket links for rear attachments.	1
20	D127172	BUSHING	28 mm long	2
21	D138047	BUSHING	54 mm long	2
22	D141142	PIN	306 mm long	2
23	D123655	SEAL	grease	8
24	495-81282	WASHER,2 1/16" x 3" x .109"	flat, 2-1/16 x 3 x 1/8 inch	1
25	D141164	SPACER	1-13/16 x 3 x 1/8 inch	4
26	103-16175	SNAP RING,#175, Ext	Ring, Snap, , Pin #175, Ext	4
27	219-1	LUBE NIPPLE,1/8"-27 x .66 lg	FITTING grease, straight, 1/8 PT x 21/32 inch	7
28	495-81226	WASHER,1 13/16" x 2 1/2" x .109"	- flat, 1-13/16 x 2-1/2 x 1/8 inch	2
29	D146288	PIN	Dump Link to Bucket Coupler	1
30	103-16175	SNAP RING,#175, Ext	Ring, Snap, #175, Ext	2
31	REF	INSTRUCTION	BUCKET backhoe, see Figures 9-052 - 9-068 for bucket options	1
32	D140655	PIN	dipper to bucket, all buckets except 12 inch, 305 mm, buckets, for models with 12 inch bucket see Ref. 38 pin; D140655 pin is no longer used, order D150619 pin, two 103-16175 rings, and 495-81226 washer, Ref. 49-51 below	1
33	495-81226	WASHER,1 13/16" x 2 1/2" x .109"	- flat, 1-13/16 x 2-1/2 x 1/8 inch	1
34	392181R1	SPLIT PIN/SAFETY PIN	PIN lock, if used	1

Diag #	Part #	Name	Description	Qty
35	D37614	PIN	, Serial Range: bucket-coupler	1
36	D143324	WASHER	spacer, 38 mm x 64 mm x 2 mm	2
37	D25279	SNAP RING	RING snap, pin retaining	2
38	D135690	PIN	dipper to bucket, 12 inch, 305 mm, buckets only, not used on the Universal 12 inch bucket, see Ref. 39	1
39	D149298	PIN	dipper to bucket, 12 inch, 305 mm, Universal bucket only	1
40	103-16175	SNAP RING,#175, Ext	Ring, Snap, , Pin, Used with either ref. 38 or 39 pin #175, Ext	1-2
41	D127974	SEAL	grease	4
	D140679	BRACKET	POINT ASSEMBLY frost, backhoe, Includes: Ref. 42 through 45	1
42	NSS	NOT SERVICED SEPARATELY	BODY frost point	1
43	D37495	BUSHING	front point pivot	2
44	D83306	POINT	tooth	1
45	D43417	PIN	tooth point	1
46	D54218	PIN	link to frost point	1
47	495-81292	WASHER,1 5/8" x 3 1/4" x .180"	flat, 1-9/16 x 3-1/4 x 3/16 inch	2
48	D25279	SNAP RING	RING snap, pin retaining	2
49	D150619	PIN	- Dipper to bucket, all buckets except 12 inch, 305 mm buckets, for models with 12 inch bucket see Ref. 38 pin	1
50	495-81226	WASHER,1 13/16" x 2 1/2" x .109"	- flat, 1-13/16 x 2-1/2 x 1/8 inch	1
51	103-16175	SNAP RING,#175, Ext	Ring, Snap, , Dipper to bucket pin #175, Ext	2

http://www.minnparbackhoeparts.com/

(580SK) - CASE SUPER-K CONSTRUCTION KING LOADER BACKHOE > (9-047A) - BACKHOE DIPPER ASSEMBLY KIT

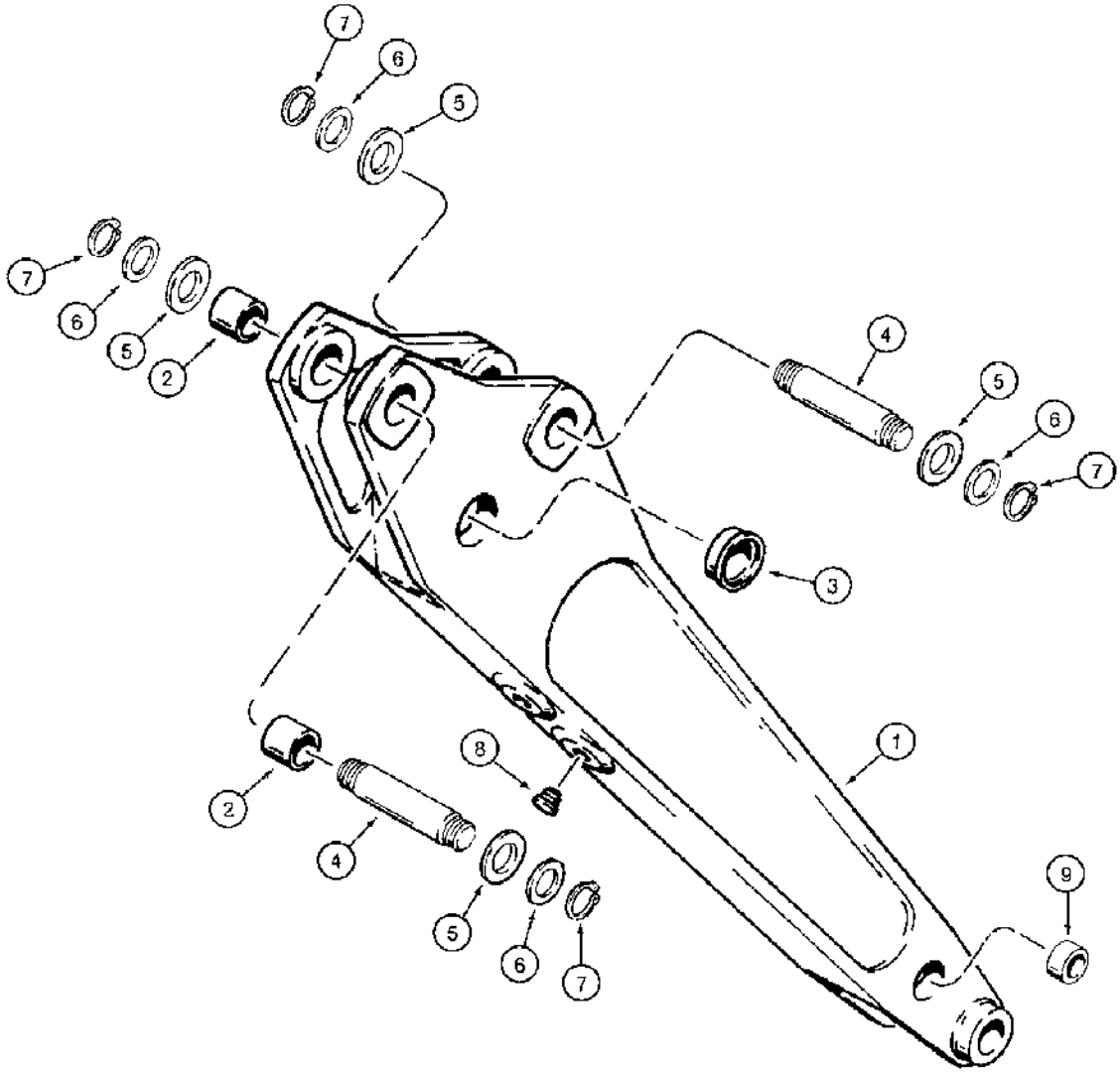

(580SK) - CASE SUPER-K CONSTRUCTION KING LOADER BACKHOE > (9-047A) - BACKHOE DIPPER ASSEMBLY KIT

Diag #	Part #	Name	Description	Qty
	102434A1	DIPPER	ASSEMBLY backhoe, service replacement, Includes: Ref. 1 through 9	1
1	NSS	NOT SERVICED SEPARATELY	DIPPER backhoe	1
2	D138047	BUSHING	50 x 60 x 54 mm long, dipper cylinder rod end pivot	2
3	D150121	BUSHING	70 x 36 mm long, Serial Range: dipper-boom	2
4	D138022	PIN	Bucket cylinder closed end and dipper cylinder rod end	2
5	495-81227	WASHER,2 1/16" x 2 15/16" x .060"	- flat, 2-1/16 x 2-15/16 x 1/16 inch	1
6	495-81226	WASHER,1 13/16" x 2 1/2" x .109"	- flat, 1-13/16 x 2-1/2 x 1/8 inch	4
7	103-16175	SNAP RING,#175, Ext	Ring, Snap, #175, Ext	4
8	D120450	PLUG	plastic	6
9	D140029	BUSHING	50 x 60 x 25.5 mm long, bucket link pivot	2

http://www.minnparbackhoeparts.com/

(580SK) - CASE SUPER-K CONSTRUCTION KING LOADER BACKHOE > (9-047C) - OPTIONAL BACKHOE BUCKET LINKS, FOR REAR ATTACHMENTS

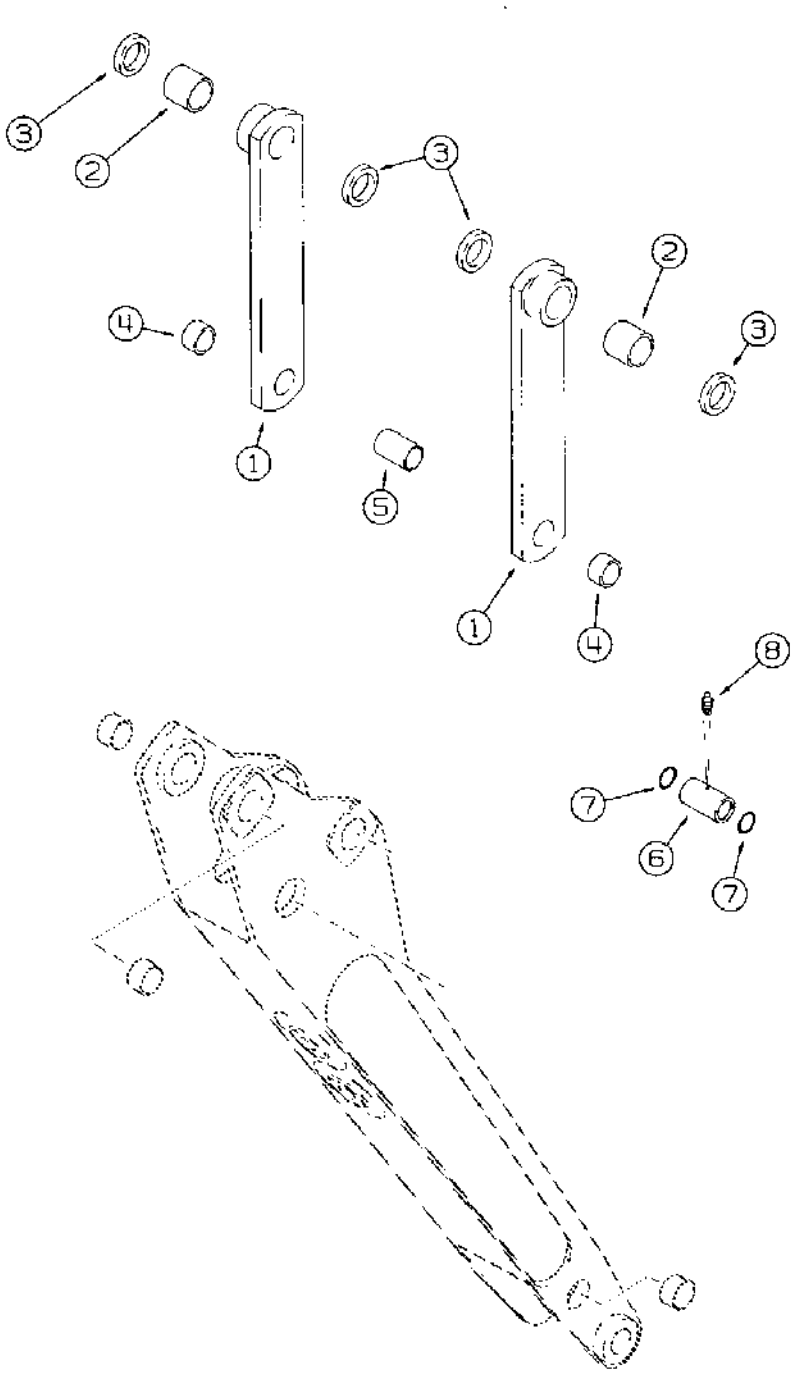

B94D3018T

(580SK) - CASE SUPER-K CONSTRUCTION KING LOADER BACKHOE > (9-047C) - OPTIONAL BACKHOE BUCKET LINKS, FOR REAR ATTACHMENTS

Diag #	Part #	Name	Description	Qty
	D141074	PITMAN	LINK ASSEMBLY bucket, used with Ref. 17 link on Figure 9-046, may replace Ref. 14 coupler, Figure 9-044, and Ref. 19 link, Figure 9-046, for some attachments, Includes: Ref. 1 through 4	2
1	NSS	NOT SERVICED SEPARATELY	LINK attachment	1
2	D138047	BUSHING	2-1/8 inch, 54 mm, long, cylinder pivot	1
3	D123655	SEAL	grease	2
4	D31140	BUSHING	1 inch, 25 mm, long, pivot	1
5	D141075	SPACER	2-25/32 inch, 71 mm, long, links	1
6	D141076	SPACER	5-7/16 inch, 138 mm, long, dipper end	1
7	A14506	O-RING,2.234" ID x 2.512" OD x 0.139"	spacer	2
8	219-1	LUBE NIPPLE,1/8"-27 x .66 lg	FITTING grease, straight, 1/8 PT x 21/32 inch	1

http://www.minnparbackhoeparts.com/

(580SK) - CASE SUPER-K CONSTRUCTION KING LOADER BACKHOE > (9-048) - EXTENDABLE DIPPER

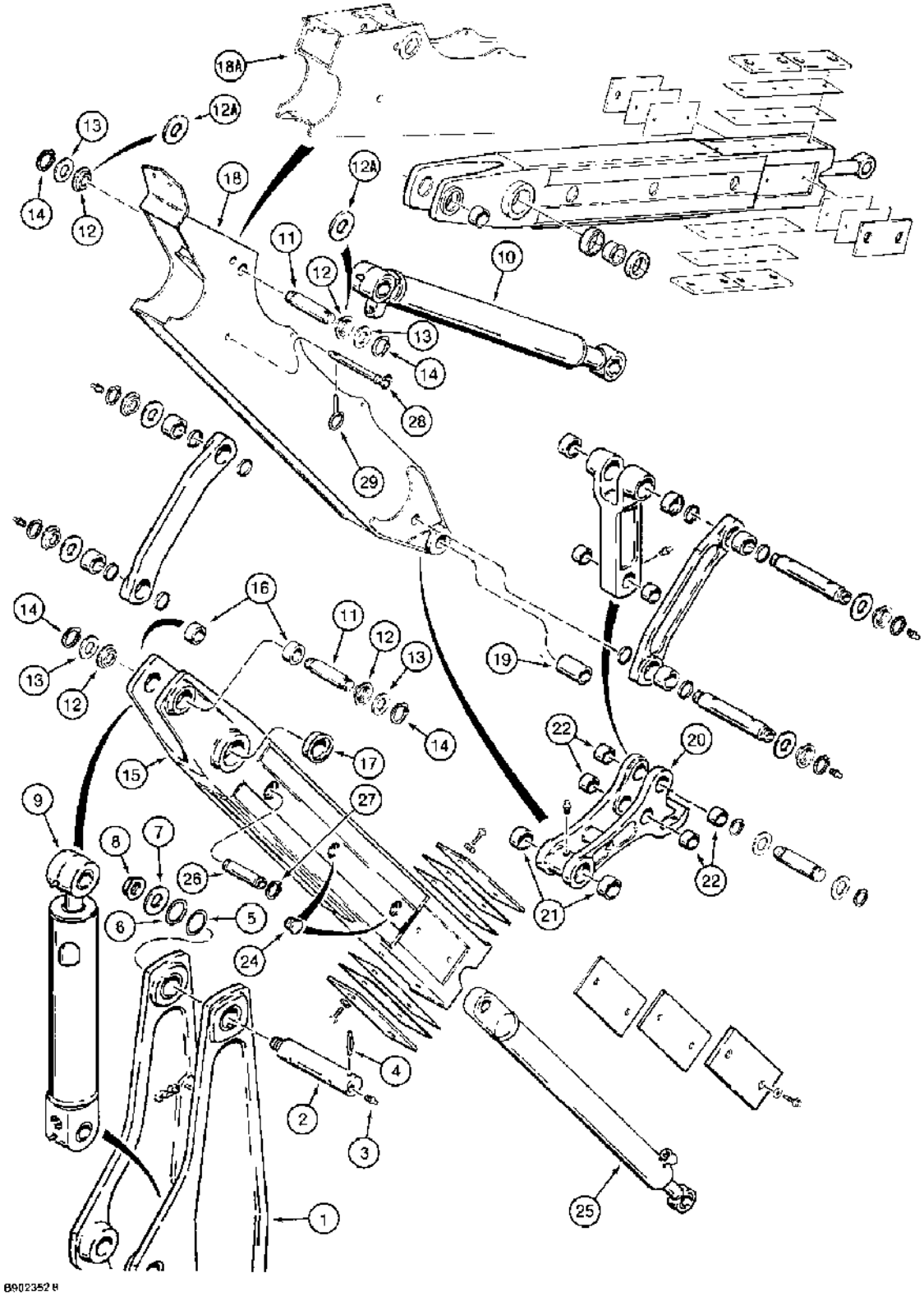

(580SK) - CASE SUPER-K CONSTRUCTION KING LOADER BACKHOE > (9-048) - EXTENDABLE DIPPER

Diag #	Part #	Name	Description	Qty
1	REF	INSTRUCTION	BOOM backhoe, for correct assembly and components, see Figure 9-038	1
2	D132494	PIN	, Serial Range: Boom-dipper	1
3	219-1	LUBE NIPPLE,1/8"-27 x .66 lg	FITTING grease, straight, 1/8 PT x 21/32 inch	2
4	135-823	GROOVED PIN,1/2" x 3 1/4", Type E, Hardened	PIN GROOVED, 1/2" x 3 1/4", Type E, Hardened	1
5	D136391	SHIM,1.57mm Thk	(M72 ID x 89 OD), Boom to dipper 1.57mm Thk	2
6	D136392	SHIM,3.05mm Thk	(M72 ID x 89 OD) 3.05mm Thk	1
7	D133632	WASHER	flat, hardened, special	1
8	D120610	NUT	hex, 1-3/4 NF, special	1
9	REF	INSTRUCTION	CYLINDER ASSEMBLY dipper, for correct assembly and components, see Figure 8-132 - 8-135C	1
10	REF	INSTRUCTION	CYLINDER ASSEMBLY bucket, for correct assembly and components, see Figure 8-136 - 8-139C	1
11	D141666	PIN	dipper and bucket, Serial Range: cylinder-dippers	2
		Part of extendahoe inner dipper assembly kit P/N D103366.	Part of extendahoe inner dipper assembly kit P/N D103366.	1
12	D141164	SPACER	1/13/16 x 3 x 1/8 inch, no longer used, order 495-81227 washer, Ref. 12A	4
		Part of extendahoe inner dipper assembly kit P/N D103366.	Part of extendahoe inner dipper assembly kit P/N D103366.	1
12A	495-81227	WASHER,2 1/16" x 2 15/16" x .060"	- flat, 2-1/16 x 2-15/16 x 1/16 inch	1
13	495-81226	WASHER,1 13/16" x 2 1/2" x .109"	- flat, 1-13/16 x 2-1/2 x 1/8 inch	4
14	103-16175	SNAP RING,#175, Ext	Ring, Snap, , Pin (Replaces D25280) #175, Ext	4
		Part of extendahoe inner dipper assembly kit P/N D103366.	Part of extendahoe inner dipper assembly kit P/N D103366.	1
	244536A1	DIPPER	ASSEMBLY extension, inner, without grease seals at dipper pivot, Replaces: P/N D140889, Includes four P/N 132716A1 pads, one P/N 132842A1 shim, one P/N 132844A1 shim, one P/N 183443A1 pin, two P/N 183509A1 pin, Includes: Ref. 15, 16 and 17	1

Diag #	Part #	Name	Description	Qty
		Part of extendahoe inner dipper assembly kit P/N D103366.	Part of extendahoe inner dipper assembly kit P/N D103366.	1
15	NSS	NOT SERVICED SEPARATELY	DIPPER inner	1
16	D149079	BUSHING	50 mm x 34 mm long, dipper cylinder rod end pivot	2
17	D150121	BUSHING	70 mm x 36 mm long, to dipper pivot	2
18	D147989	BOOM	HOUSING dipper, outer, 8 mm thick side plates, without inner cylinder mounting reinforcement ears at bucket end, if used	1
		The two washers welded to the inside of Ref. 18 and 18A at the coupler end are 495-81230.	The two washers welded to the inside of Ref. 18 and 18A at the coupler end are 495-81230.	1
18A	102649A1	BOOM	HOUSING dipper, outer, if used	1
		The two washers welded to the inside of Ref. 18 and 18A at the coupler end are 495-81230.	The two washers welded to the inside of Ref. 18 and 18A at the coupler end are 495-81230.	1
19	D127168	BUSHING	45 mm ID x 94 mm long, bucket coupler pivot	2
	134437A1	COUPLING	COUPLER ASSEMBLY bucket, replaces D139084, Includes: Ref. 21 and 22	1
20	NSS	NOT SERVICED SEPARATELY	COUPLER backhoe bucket	1
21	D127167	BUSHING	1-3/16 inch, 30 mm long, special, at dipper	2
22	D127172	BUSHING	1-1/8 inch, 28 mm, long, at bucket link	4
24	D133865	PLUG	plastic	4
25	1340969C1	CYLINDER ASSY.	CYLINDER ASSEMBLY dipper extension, parts list Figure 8-140	1
26	D129892	PIN	dipper extension cylinder closed end	1
27	800-44040	SNAP RING,M40, Ext	RING snap, pin retaining	2
28	D140247	LOCK PIN	PIN, LOCK, Used at dipper extension cylinder closed end when transporting only, Used with Ref. 29 lock pin	1
29	A33509	PIN	lock	1
	D103366	KEY	KIT extendahoe inner dipper assembly, Includes: Ref. 11, 12, 14, P/N 244536A1 on this figure and Ref. 43 - 48, 55, 56 on Figure 9-050 and an instruction sheet	1

http://www.minnparbackhoeparts.com/

(580SK) - CASE SUPER-K CONSTRUCTION KING LOADER BACKHOE > (9-050) - EXTENDABLE DIPPER

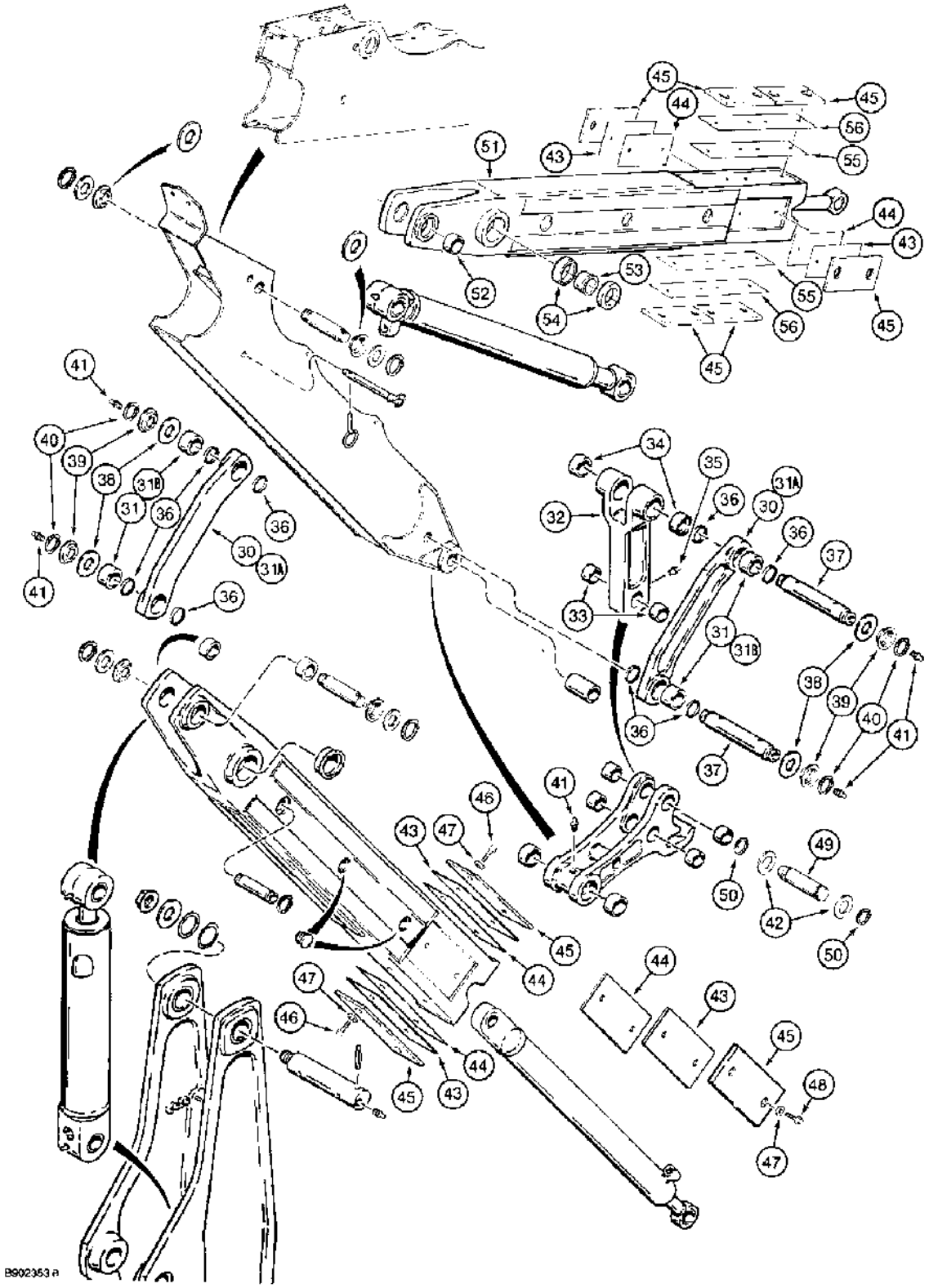

(580SK) - CASE SUPER-K CONSTRUCTION KING LOADER BACKHOE > (9-050) - EXTENDABLE DIPPER

Diag #	Part #	Name	Description	Qty
30	D141468	PITMAN	LINK, 25 mm wide bushing, bucket guide, with groove for grease seals, Ref. 36, prior to P.I.N. JJG0163952, no longer available, order D150608, Ref. 31A, Includes: Ref. 31	2
31	D140029	BUSHING	50 mm x 60 mm x 25 mm	2
31A	D150608	PITMAN	LINK, 33 mm wide bushing, used without grease seals, bucket guide, P.I.N. JJG0163952 and after, Includes: Ref. 31B	2
31B	D150122	BUSHING	50 x 60 x 33 mm	2
32	D150080	PITMAN	LINK bucket dump, with two bushings at forked end, replaces D140007, Includes: Ref. 33 and 34	1
33	D127172	BUSHING	1-1/8 inch, 28 mm, long	2
34	D138047	BUSHING	2-1/8 inch, 54 mm, long	2
35	219-1	LUBE NIPPLE,1/8"-27 x .66 lg	FITTING grease, straight, 1/8 PT x 21/32 inch	1
36	D123655	SEAL	grease, if used	8
37	D141142	PIN	306 mm long, Bucket cylinder rod end to links and, Serial Range: links-dipper	2
38	495-81282	WASHER,2 1/16" x 3" x .109"	flat, 2-1/16 x 3 x 1/8 inch	4
39	D141164	SPACER	1-13/16 x 3 x 1/8	4
40	103-16175	SNAP RING,#175, Ext	Ring, Snap, , Pin #175, Ext	4
41	219-1	LUBE NIPPLE,1/8"-27 x .66 lg	FITTING grease, straight, 1/8 PT x 21/32 inch	5
42	495-81226	WASHER,1 13/16" x 2 1/2" x .109"	- flat, 1-13/16 x 2-1/2 x 1/8 inch	2
43	D140886	BLOCK	SHIM, 1.6 mm thick, wear plate, D149018 inner dipper, Ref. 15 on Figure 9-048	1
		Part of extendahoe inner dipper assembly kit P/N D103366.	Part of extendahoe inner dipper assembly kit P/N D103366.	1
44	D140885	BLOCK	SHIM, 0.8 mm thick, wear plate, D149018 inner dipper, Ref. 15 on Figure 9-048	1
		Part of extendahoe inner dipper assembly kit P/N D103366.	Part of extendahoe inner dipper assembly kit P/N D103366.	1
45	D141998	LARGE PLATE	PLATE wear, plastic, outer	4-6
		Part of extendahoe inner dipper assembly kit P/N D103366.	Part of extendahoe inner dipper assembly kit P/N D103366.	1

Diag #	Part #	Name	Description	Qty
46	409-7612	BOLT,Hex Serr Flg, 3/8" - 16 x 3/4", Spcl	hex flange, self-locking, 3/8 NC x 3/4 inch, Replaces 121-228	4-8
		Part of extendahoe inner dipper assembly kit P/N D103366.	Part of extendahoe inner dipper assembly kit P/N D103366.	1
47	D143167	WASHER	special	8-12
		Part of extendahoe inner dipper assembly kit P/N D103366.	Part of extendahoe inner dipper assembly kit P/N D103366.	1
48	D143961	FLANGE BOLT,Hex Flg, 3/8"-16 x 1/2", Serr	BOLT hex flange, self-locking, 3/8 NC x 1/2 inch	4
		Part of extendahoe inner dipper assembly kit P/N D103366.	Part of extendahoe inner dipper assembly kit P/N D103366.	1
49	D146288	PIN	Dump Link to Bucket Coupler, if used	1
50	103-16175	SNAP RING,#175, Ext	Ring, Snap, , If used #175, Ext	2
	D140889	HYDRAULIC VALVE	DIPPER ASSEMBLY extension, inner, with grease seals at dipper pivot, no longer available, order D149018 dipper on Figure 9-048, Includes: Ref. 51 through 54	1
51	NSS	NOT SERVICED SEPARATELY	DIPPER inner	1
52	D141389	BUSHING	50 x 34 mm long, dipper cylinder rod end pivot	2
53	D135740	BUSHING	70 x 36 mm long, to dipper pivot	2
54	D127974	SEAL	grease, 70 mm, dipper pivot	4
55	D140873	BLOCK	SHIM, .8 mm thick, wear plate, D140889 inner dipper, Ref. 51	1
		Part of extendahoe inner dipper assembly kit P/N D103366.	Part of extendahoe inner dipper assembly kit P/N D103366.	1
56	D140874	BLOCK	SHIM, 1.6 mm thick, wear plate, D140889 inner dipper, Ref. 51	1
		Part of extendahoe inner dipper assembly kit P/N D103366.	Part of extendahoe inner dipper assembly kit P/N D103366.	1
	D103366	KEY	KIT extendahoe inner dipper assembly, Includes: Ref. 11, 12, 14 and P/N 244536A1 on Figure 9-048 and Ref. 43 - 48, 55 and 56 on this figure and an instruction sheet	1

http://www.minnparbackhoeparts.com/

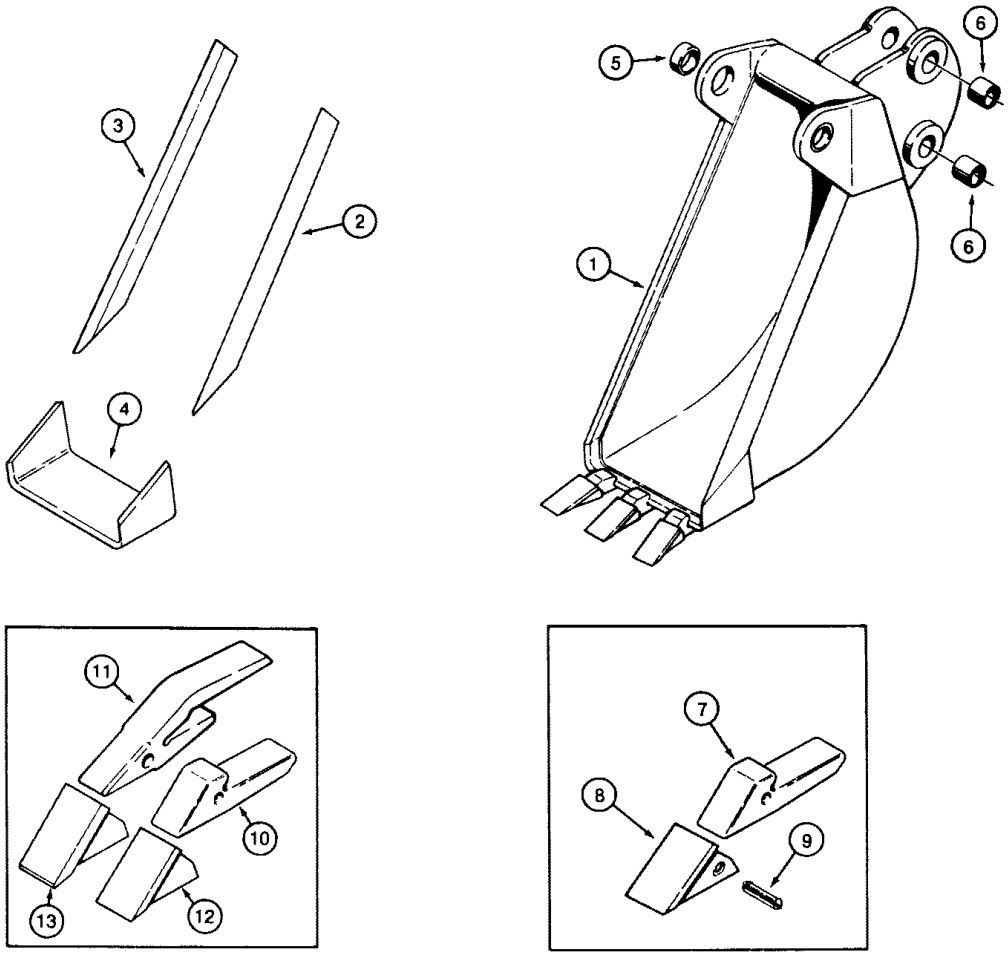

861761A-45

(580SK) - CASE SUPER-K CONSTRUCTION KING LOADER BACKHOE > (9-052) - BACKHOE BUCKET, 12 INCH, 305 MM, WIDE, 12 INCH, 305 MM, WIDE

Diag #	Part #	Name	Description	Qty
1	D52642	BUCKET	ASSEMBLY, 12 inch, 305 mm, machinery item, order from Machinery Price List, 12 inch, 305 mm, wide trenching bucket and teeth, Includes: Ref. 2 through 9	1
2	D29424	EDGE, CUTTING	EDGE cutting, bucket, right-hand side, 12 inch, 305 mm, wide trenching bucket and teeth	1
3	D29423	EDGE, CUTTING	EDGE cutting, bucket, left-hand side, 12 inch, 305 mm, wide trenching bucket and teeth	1
4	D37464	EDGE, CUTTING	EDGE cutting, bucket, center, 12 inch, 305 mm, wide trenching bucket and teeth	1
5	D40243	BUSHING	bucket, at dipper, 12 inch, 305 mm, wide trenching bucket and teeth	2
6	D30933	BUSHING	bucket, at bucket links	4
	D41659	TOOTH	ASSEMBLY trenching bucket, pinned-on, 12 inch, 305 mm, wide trenching bucket and teeth, Includes: Ref. 7, 8 and 9	3
7	NSS	NOT SERVICED SEPARATELY	SHANK tooth, 12 inch, 305 mm, wide trenching bucket and teeth	1
8	D39093	TOOTH	POINT tooth, 12 inch, 305 mm, wide trenching bucket and teeth	1
9	D39094	BUCKET TOOTH KEY	PIN flex, point, 12 inch, 305 mm, wide trenching bucket and teeth	1
10	D26368	SUPPORT	SHANK tooth, original equipment, if used, crimped-on bucket teeth	1
11	D58499	SUPPORT	SHANK tooth, service option, if used, crimped-on bucket teeth	1
12	D27748	TOOTH	POINT tooth, original equipment, if used, crimped-on bucket teeth	1
13	D36720	TOOTH	POINT tooth, heavy duty service option, if used, crimped-on bucket teeth	1

http://www.minnparbackhoeparts.com/

(580SK) - CASE SUPER-K CONSTRUCTION KING LOADER BACKHOE > (9-054) - BACKHOE BUCKETS, 18 INCH, 457 MM, AND 24 INCH, 610 MM, WIDE

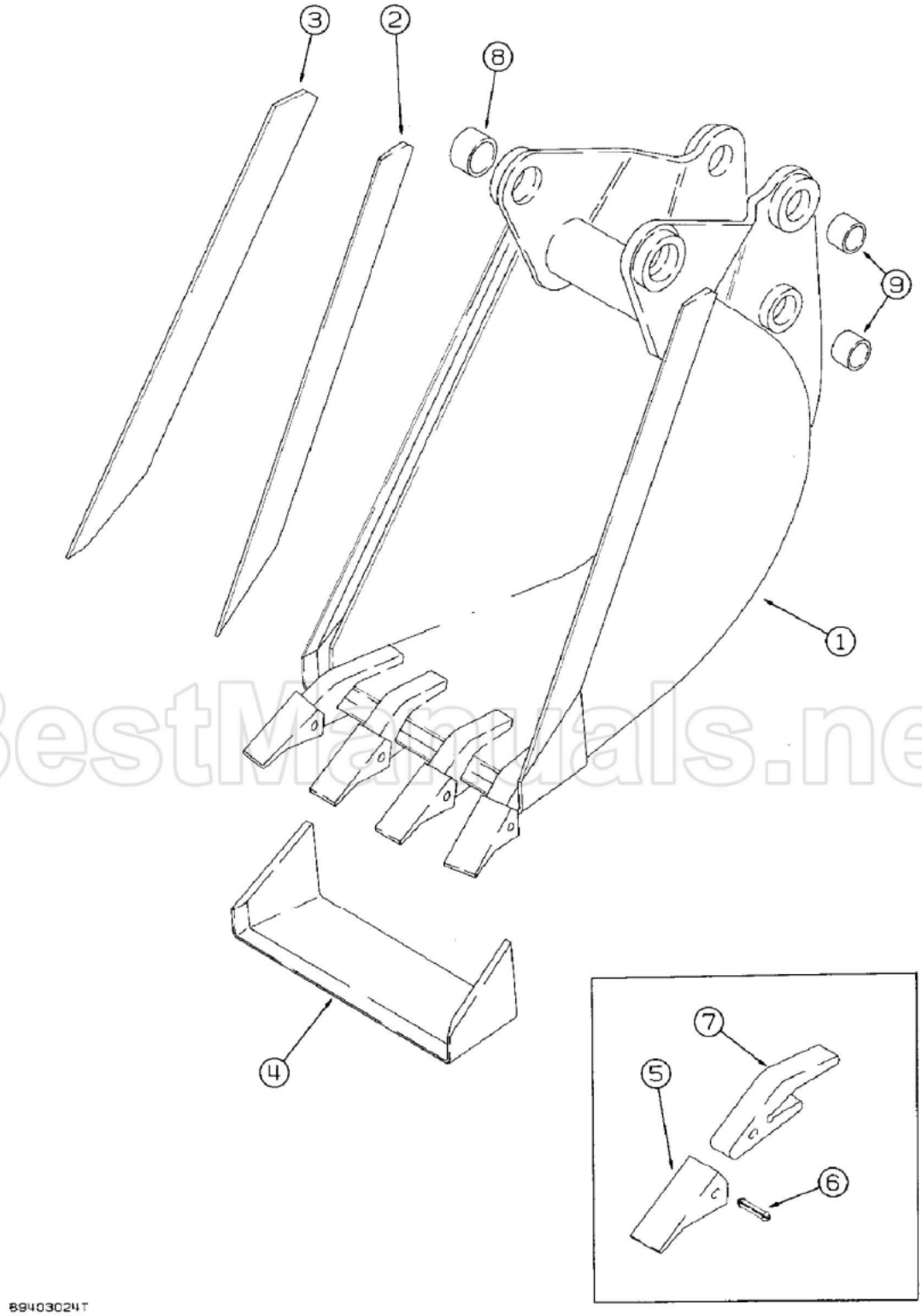

BestManuals.net

(580SK) - CASE SUPER-K CONSTRUCTION KING LOADER BACKHOE > (9-054) - BACKHOE BUCKETS, 18 INCH, 457 MM, AND 24 INCH, 610 MM, WIDE

Diag #	Part #	Name	Description	Qty
1	D139795	BUCKET	ASSEMBLY, 18 inch, 457 mm, with 4 teeth, machinery item, order from the Machinery Price List, 18 inch, 457 mm, wide treching buckets and teeth, Includes: Ref. 2 through 9	1
2	D21606	EDGE, CUTTING	EDGE cutting, bucket, right-hand side, 18 inch, 457 mm, wide treching buckets and teeth	1
3	D21605	EDGE, CUTTING	EDGE cutting, bucket, left-hand side, 18 inch, 457 mm, wide treching buckets and teeth	1
4	D37642	EDGE, CUTTING	EDGE cutting, center, 18 inch, 457 mm, bucket, 18 inch, 457 mm, wide treching buckets and teeth	1
	D41659	TOOTH	ASSEMBLY trenching bucket, 18 inch, 457 mm, wide treching buckets and teeth, Includes: Ref. 5, 6 and 7	4
5	D39093	TOOTH	POINT tooth, 18 inch, 457 mm, wide treching buckets and teeth	1
6	D39094	BUCKET TOOTH KEY	PIN flex, point, 18 inch, 457 mm, wide treching buckets and teeth	1
7	NSS	NOT SERVICED SEPARATELY	SHANK tooth, 18 inch, 457 mm, wide treching buckets and teeth	1
8	D37495	BUSHING	1-3/4 x 2-1/4 x 1-1/4 inch, 18 inch, 457 mm, wide treching buckets and teeth	2
9	D30933	BUSHING	1-1/2 x 1-7/8 x 1-1/4 inch, 18 inch, 457 mm, wide treching buckets and teeth	4
1	D139796	BUCKET	ASSEMBLY, 24 inch, 610 mm, with 5 teeth, not shown, machinery item, order from the Machinery Price List, 24 inch, 640 mm, wide trenching buckets and teeth, Includes: Ref. 2 through 9	1
2	D21606	EDGE, CUTTING	EDGE cutting, bucket, right-hand side, 24 inch, 640 mm, wide trenching buckets and teeth	1
3	D21605	EDGE, CUTTING	EDGE cutting, bucket, left-hand side, 24 inch, 640 mm, wide trenching buckets and teeth	1
4	D37507	EDGE	cutting, center, 24 inch, 610 mm, bucket, 24 inch, 640 mm, wide trenching buckets and teeth	1
	D41659	TOOTH	ASSEMBLY trenching bucket, 24 inch, 640 mm, wide trenching buckets and teeth, Includes: Ref. 5, 6 and 7	5

Diag #	Part #	Name	Description	Qty
5	D39093	TOOTH	POINT tooth, 24 inch, 640 mm, wide trenching buckets and teeth	1
6	D39094	BUCKET TOOTH KEY	PIN flex, point, 24 inch, 640 mm, wide trenching buckets and teeth	1
7	NSS	NOT SERVICED SEPARATELY	SHANK tooth, 24 inch, 640 mm, wide trenching buckets and teeth	1
8	D37495	BUSHING	1-3/4 x 2-1/4 x 1-1/4 inch, 24 inch, 640 mm, wide trenching buckets and teeth	2
9	D30933	BUSHING	1-1/2 x 1-7/8 x 1-1/4 inch, 24 inch, 640 mm, wide trenching buckets and teeth	4

http://www.minnparbackhoeparts.com/

(580SK) - CASE SUPER-K CONSTRUCTION KING LOADER BACKHOE > (9-056) - UNIVERSAL BACKHOE BUCKET, 12 INCH, 305 MM, WIDE, 12 INCH

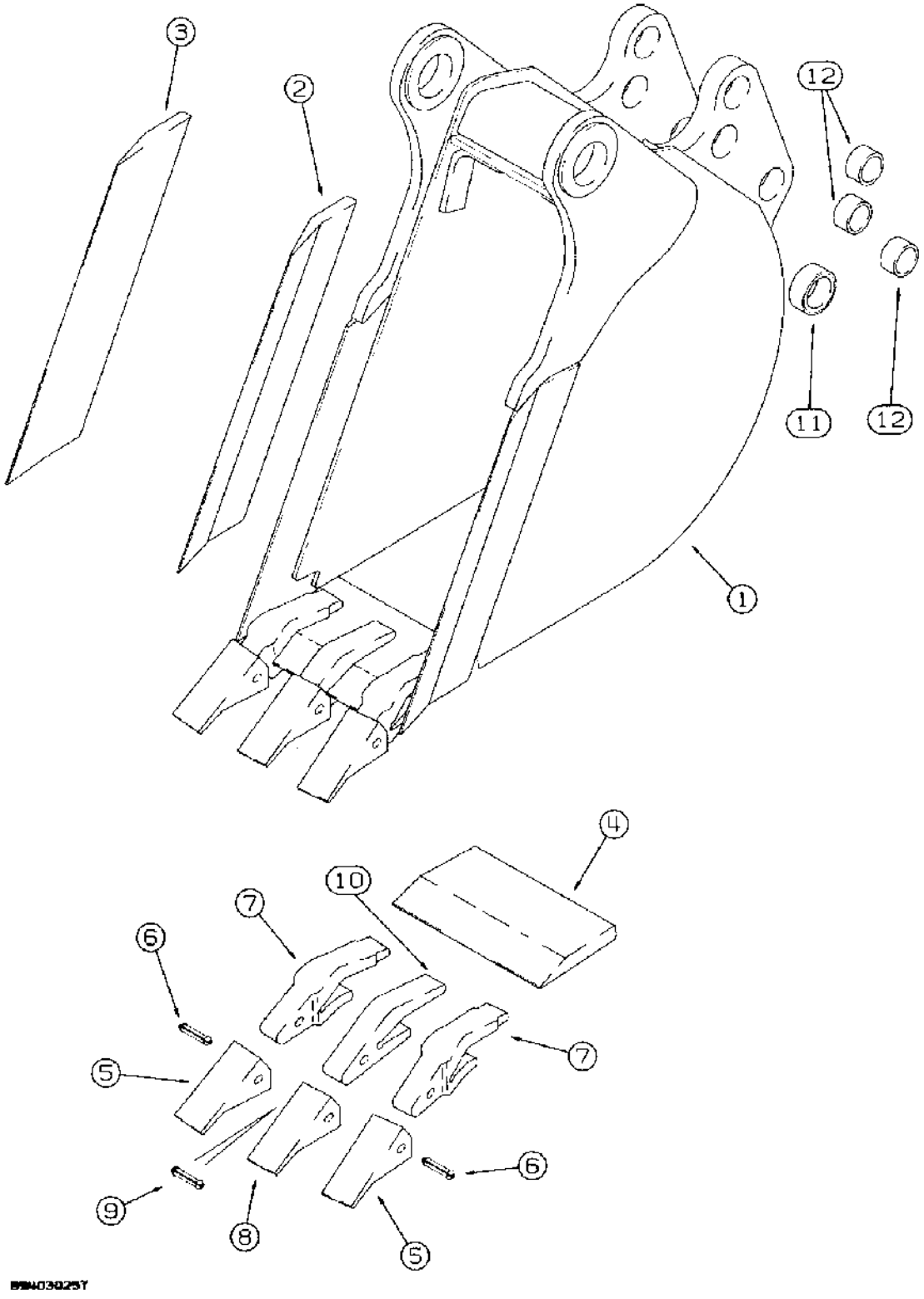

(580SK) - CASE SUPER-K CONSTRUCTION KING LOADER BACKHOE > (9-056) - UNIVERSAL BACKHOE BUCKET, 12 INCH, 305 MM, WIDE, 12 INCH

Diag #	Part #	Name	Description	Qty
1	D147418	BUCKET	ASSEMBLY, 12 inch, 305 mm, with 3 teeth, machinery item, order from the Machinery Price List, Includes: Ref. 2 through 12 and P/N D139851	1
		See Ref. 39 on Figure 9-046 for pin used on 12 inch Universal bucket.	See Ref. 39 on Figure 9-046 for pin used on 12 inch Universal bucket.	1
2	D147411	EDGE, CUTTING	EDGE cutting, bucket, right-hand side	1
3	D147410	EDGE	cutting, bucket, left-hand side	1
4	D147409	EDGE, CUTTING	EDGE cutting, center, 12 inch, 305 mm, bucket	1
	D139851	BUCKET TOOTH	TOOTH, BUCKET, Assy, outer corners, Includes Ref 5, 6 and 7	2
5	D39093	TOOTH	POINT tooth, outer corners	1
6	D134686	SPLIT PIN/SAFETY PIN	PIN flex, outer point and shank	1
7	D138157	SHANK	tooth, outer corners	1
	D139849	BUCKET TOOTH	TOOTH, BUCKET, Assy, Center, order Ref 8, 9 and 10	1
8	D51750	BUCKET TOOTH POINT	POINT tooth, center	1
9	D134686	SPLIT PIN/SAFETY PIN	PIN flex, center point and shank	1
10	D48212	SHANK	tooth, center	1
11	D40243	BUSHING	1-3/4 ID x 2.250 OD x 3/4 inch long	2
12	D30933	BUSHING	1-1/2 ID x 1-7/8 OD x 1-1/4 inch long	6

(580SK) - CASE SUPER-K CONSTRUCTION KING LOADER BACKHOE > (9-058) - UNIVERSAL BACKHOE BUCKETS, 16 INCH, 406 MM, AND 18 INCH, 457MM, WIDE

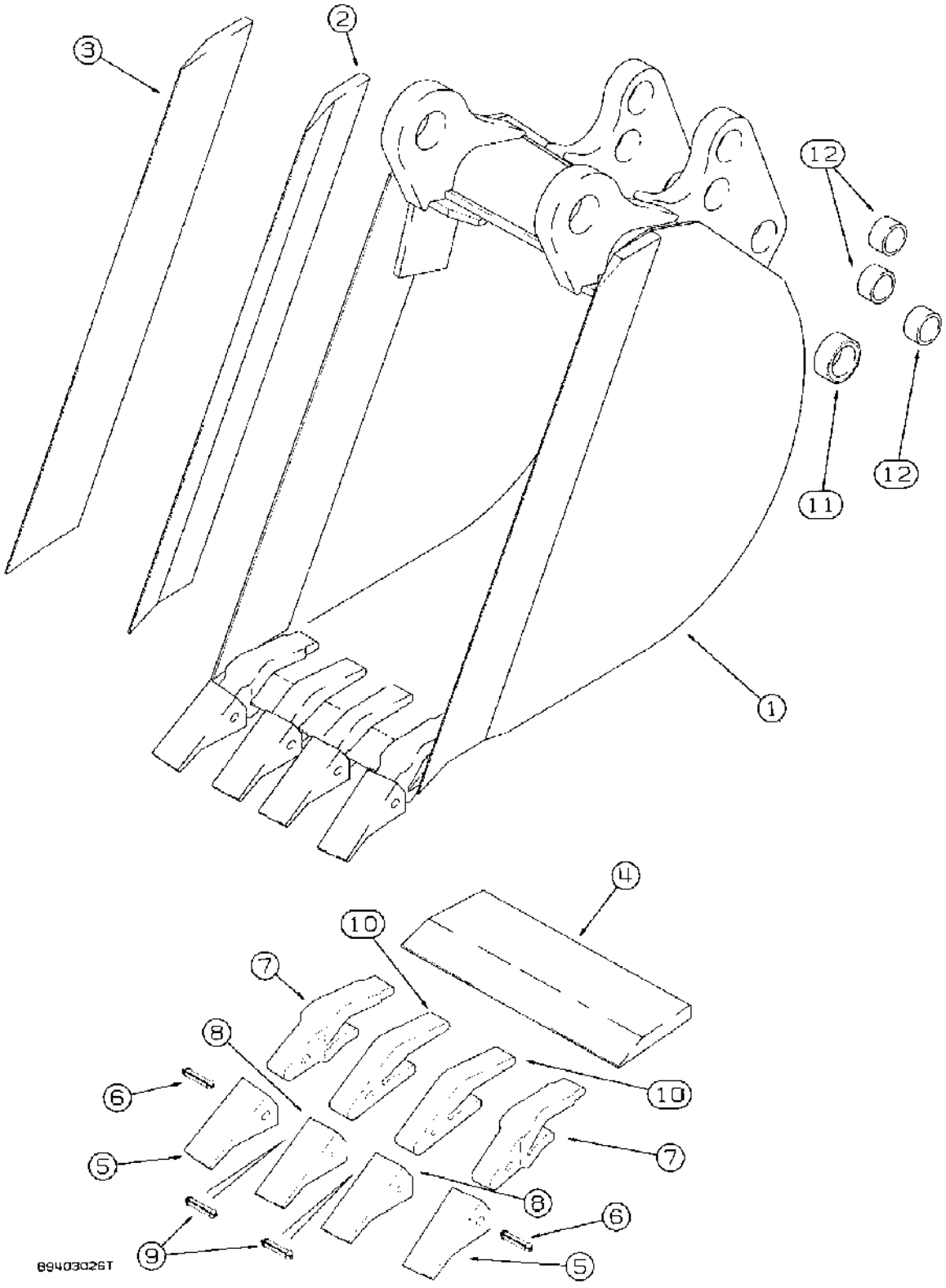

(580SK) - CASE SUPER-K CONSTRUCTION KING LOADER BACKHOE > (9-058) - UNIVERSAL BACKHOE BUCKETS, 16 INCH, 406 MM, AND 18 INCH, 457MM, WIDE

Diag #	Part #	Name	Description	Qty
1	D147247	BUCKET	ASSEMBLY, 16 inch, 406 mm, with 3 teeth, not shown, machinery item, order from the Machinery Price List, 16 inch, 406 mm, wide trenching bucket and teeth - heavy duty, Includes: Ref. 2 through 12	1
2	D146421	EDGE, CUTTING	EDGE cutting, bucket, right-hand side, 16 inch, 406 mm, wide trenching bucket and teeth - heavy duty	1
3	D146420	EDGE, CUTTING	EDGE cutting, bucket, left-hand side, 16 inch, 406 mm, wide trenching bucket and teeth - heavy duty	1
4	D147249	EDGE	cutting, center, 6 inch, 406 mm, bucket, 16 inch, 406 mm, wide trenching bucket and teeth - heavy duty	1
	D139851	BUCKET TOOTH	TOOTH, BUCKET, Assy, outer corners, 16 inch, 406 mm, wide trenching bucket and teeth - heavy duty, Includes Ref 5, 6 and 7	2
5	D39093	TOOTH	POINT tooth, outer corners, 16 inch, 406 mm, wide trenching bucket and teeth - heavy duty	1
6	D134686	SPLIT PIN/SAFETY PIN	PIN flex, outer point and shank, 16 inch, 406 mm, wide trenching bucket and teeth - heavy duty	1
7	D138157	SHANK	tooth, outer corners, 16 inch, 406 mm, wide trenching bucket and teeth - heavy duty	1
	D139849	BUCKET TOOTH	TOOTH, BUCKET, Assy, Center (order Ref 8-10), 16 inch, 406 mm, wide trenching bucket	1
8	D51750	BUCKET TOOTH POINT	POINT tooth, center, 16 inch, 406 mm, wide trenching bucket and teeth - heavy duty	1
9	D134686	SPLIT PIN/SAFETY PIN	PIN flex, center point and shank, 16 inch, 406 mm, wide trenching bucket and teeth - heavy duty	1
10	D48212	SHANK	tooth, center, 16 inch, 406 mm, wide trenching bucket and teeth - heavy duty	1
11	D37495	BUSHING	1-3/4 x 2-1/4 x 1-1/4 inch, 16 inch, 406 mm, wide trenching bucket and teeth - heavy duty	2
12	D30933	BUSHING	1-1/2 x 1-7/8 x 1-1/4 inch, 16 inch, 406 mm, wide trenching bucket and teeth - heavy duty	6
1	D146588	BUCKET	ASSEMBLY, 18 inch, 457 mm, with 4 teeth, machinery item, order from the Machinery Price List, 18 inch, 457 mm, wide trenching	1

Diag #	Part #	Name	Description	Qty
			bucket and teeth - heavy duty, Includes: Ref. 2 through 12	
2	D146421	EDGE, CUTTING	EDGE cutting, bucket, right-hand side, 18 inch, 457 mm, wide trenching bucket and teeth - heavy duty	1
3	D146420	EDGE, CUTTING	EDGE cutting, bucket, left-hand side, 18 inch, 457 mm, wide trenching bucket and teeth - heavy duty	1
4	D145060	EDGE, CUTTING	EDGE cutting, center, 18 inch, 457 mm, bucket, 18 inch, 457 mm, wide trenching bucket and teeth - heavy duty	1
	D139851	BUCKET TOOTH	TOOTH, BUCKET, Assy, outer corners, 18 inch, 457 mm, wide trenching bucket and teeth - heavy duty, Includes Ref 5, 6 and 7	2
5	D39093	TOOTH	POINT tooth, outer corners, 18 inch, 457 mm, wide trenching bucket and teeth - heavy duty	1
6	D134686	SPLIT PIN/SAFETY PIN	PIN flex, outer point and shank, 18 inch, 457 mm, wide trenching bucket and teeth - heavy duty	1
7	D138157	SHANK	tooth, outer corners, 18 inch, 457 mm, wide trenching bucket and teeth - heavy duty	1
	D139849	BUCKET TOOTH	TOOTH, BUCKET, Assy, Center (order Ref 8-10), 18 inch, 457 mm, wide trenching bucket	2
8	D51750	BUCKET TOOTH POINT	POINT tooth, center, 18 inch, 457 mm, wide trenching bucket and teeth - heavy duty	1
9	D134686	SPLIT PIN/SAFETY PIN	PIN flex, center point and shank, 18 inch, 457 mm, wide trenching bucket and teeth - heavy duty	1
10	D48212	SHANK	tooth, center, 18 inch, 457 mm, wide trenching bucket and teeth - heavy duty	1
11	D37495	BUSHING	1-3/4 x 2-1/4 x 1-1/4 inch, 18 inch, 457 mm, wide trenching bucket and teeth - heavy duty	2
12	D30933	BUSHING	1-1/2 x 1-7/8 x 1-1/4 inch, 18 inch, 457 mm, wide trenching bucket and teeth - heavy duty	6

(580SK) - CASE SUPER-K CONSTRUCTION KING LOADER BACKHOE > (9-060) - BACKHOE BUCKETS, 18 INCH, 457 MM, WIDE AND 24 INCH, 610 MM, WIDE

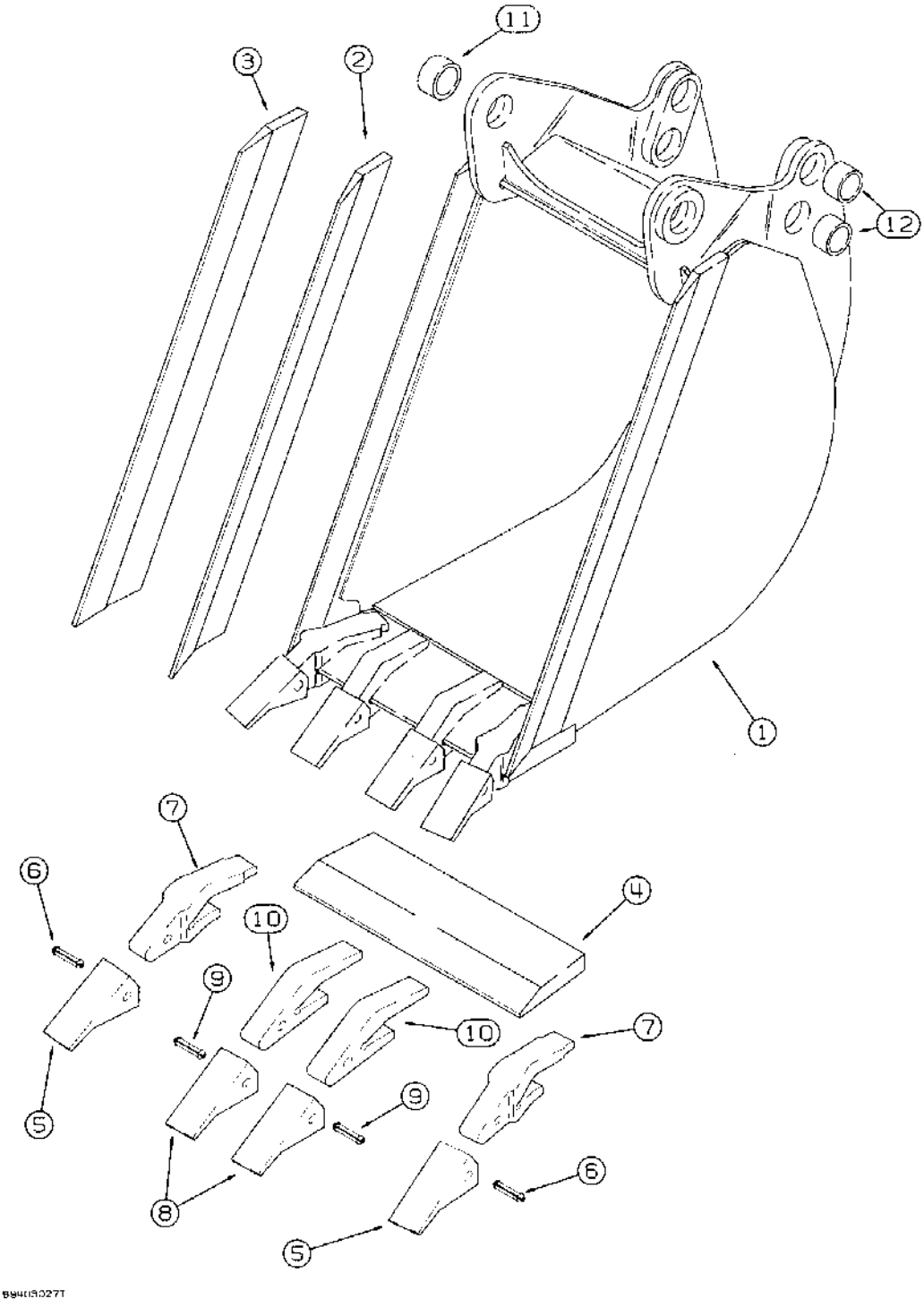

(580SK) - CASE SUPER-K CONSTRUCTION KING LOADER BACKHOE > (9-060) - BACKHOE BUCKETS, 18 INCH, 457 MM, WIDE AND 24 INCH, 610 MM, WIDE

Diag #	Part #	Name	Description	Qty
1	D145050	BUCKET	ASSEMBLY, 18 inch, 457 mm, with 4 teeth, machinery item, order from the Machinery Price List, also see Figure 9-058 for 18 inch Universal bucket, 18 inch, 457 mm, wide trenching buckets and teeth - heavy duty, Includes: Ref. 2 through 12	1
2	D134982	EDGE, CUTTING	EDGE cutting, bucket, right-hand side, 18 inch, 457 mm, wide trenching buckets and teeth - heavy duty	1
3	D134983	EDGE, CUTTING	EDGE cutting, bucket, left-hand side, 18 inch, 457 mm, wide trenching buckets and teeth - heavy duty	1
4	D145060	EDGE, CUTTING	EDGE cutting, center,18 inch, 457 mm, bucket, 18 inch, 457 mm, wide trenching buckets and teeth - heavy duty	1
	D139851	BUCKET TOOTH	TOOTH, BUCKET, Assy, outer corners, 18 inch, 457 mm, wide trenching buckets and teeth - heavy duty, Includes Ref 5, 6 and 7	2
5	D39093	TOOTH	POINT tooth, outer corners, 18 inch, 457 mm, wide trenching buckets and teeth - heavy duty	1
6	D134686	SPLIT PIN/SAFETY PIN	PIN flex, outer point and shank, 18 inch, 457 mm, wide trenching buckets and teeth - heavy duty	1
7	D138157	SHANK	tooth, outer corners, 18 inch, 457 mm, wide trenching buckets and teeth - heavy duty	1
	D139849	BUCKET TOOTH	TOOTH, BUCKET, Assy, Center (order Ref 8-10), 18 inch, 457 mm, wide trenching bucket	2
8	D51750	BUCKET TOOTH POINT	POINT tooth, center, 18 inch, 457 mm, wide trenching buckets and teeth - heavy duty	1
9	D134686	SPLIT PIN/SAFETY PIN	PIN flex, center point and shank, 18 inch, 457 mm, wide trenching buckets and teeth - heavy duty	1
10	D48212	SHANK	tooth, center, 18 inch, 457 mm, wide trenching buckets and teeth - heavy duty	1
11	D37495	BUSHING	1-3/4 ID x 2-1/4 OD x 1-1/4 inch, 18 inch, 457 mm, wide trenching buckets and teeth - heavy duty	2
12	D30933	BUSHING	1-1/2 ID x 1-7/8 OD x 1-1/4 inch, 18 inch, 457 mm, wide trenching buckets and teeth - heavy duty	4
1	D145051	BUCKET	ASSEMBLY, 24 inch, 610 mm, with 5 teeth, not shown, machinery item, order from the Machinery Price List, also see Figure 9-062	1

Diag #	Part #	Name	Description	Qty
			for 24 inch Universal bucket, 24 inch, 610 mm, wide trenching buckets and teeth - heavy duty, Includes: Ref. 2 through 12	
2	D134982	EDGE, CUTTING	EDGE cutting, bucket, right-hand side, 24 inch, 610 mm, wide trenching buckets and teeth - heavy duty	1
3	D134983	EDGE, CUTTING	EDGE cutting, bucket, left-hand side, 24 inch, 610 mm, wide trenching buckets and teeth - heavy duty	1
4	D142012	EDGE, CUTTING	EDGE cutting, center, 24 inch, 610 mm, bucket, 24 inch, 610 mm, wide trenching buckets and teeth - heavy duty	1
	D139851	BUCKET TOOTH	TOOTH, BUCKET, Assy, outer corners, 24 inch, 610 mm, wide trenching buckets and teeth - heavy duty, Includes Ref 5, 6 and 7	2
5	D39093	TOOTH	POINT tooth, outer corners, 24 inch, 610 mm, wide trenching buckets and teeth - heavy duty	1
6	D134686	SPLIT PIN/SAFETY PIN	PIN flex, outer point and shank, 24 inch, 610 mm, wide trenching buckets and teeth - heavy duty	1
7	D138157	SHANK	tooth, outer corners, 24 inch, 610 mm, wide trenching buckets and teeth - heavy duty	1
	D139849	BUCKET TOOTH	TOOTH, BUCKET, Assy, Center (order Ref 8-10), 24 inch, 610 mm, wide trenching bucket	3
8	D51750	BUCKET TOOTH POINT	POINT tooth, center, 24 inch, 610 mm, wide trenching buckets and teeth - heavy duty	1
9	D134686	SPLIT PIN/SAFETY PIN	PIN flex, center point and shank, 24 inch, 610 mm, wide trenching buckets and teeth - heavy duty	1
10	D48212	SHANK	tooth, center, 24 inch, 610 mm, wide trenching buckets and teeth - heavy duty	1
11	D37495	BUSHING	1-3/4 ID x 2-1/4 OD x 1-1/4 inch	2
12	D30933	BUSHING	1-1/2 ID x 1-7/8 OD x 1-1/4 inch	4

http://www.minnparbackhoeparts.com/

(580SK) - CASE SUPER-K CONSTRUCTION KING LOADER BACKHOE > (9-062) - UNIVERSAL BACKHOE BUCKETS, 24 INCH, 610 MM, AND 30 INCH, 762MM, WIDE

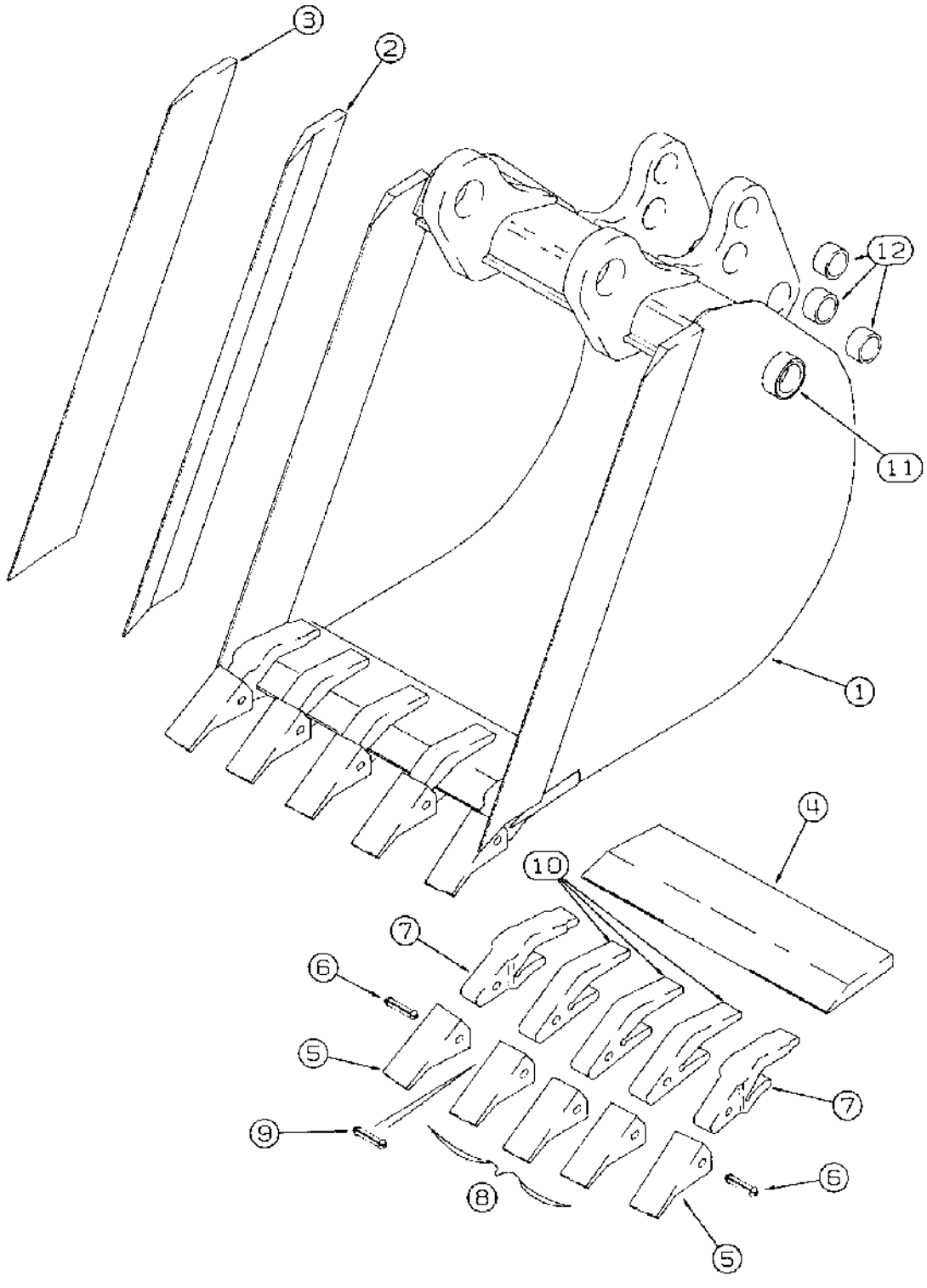

(580SK) - CASE SUPER-K CONSTRUCTION KING LOADER BACKHOE > (9-062) - UNIVERSAL BACKHOE BUCKETS, 24 INCH, 610 MM, AND 30 INCH, 762MM, WIDE

Diag #	Part #	Name	Description	Qty
1	D150348	BUCKET	ASSEMBLY, 24 inch, 610 mm, with 5 teeth, machinery item, order from the Machinery Price List, replaces D146355 bucket, 24 inch, 610 mm, wide trenching bucket and teeth - heavy duty, Includes: Ref. 2 through 12	1
2	D146421	EDGE, CUTTING	EDGE cutting, bucket, right-hand side, 24 inch, 610 mm, wide trenching bucket and teeth - heavy duty	1
2	D146421	EDGE, CUTTING	EDGE cutting, bucket, right-hand side, 24 inch, 610 mm, wide trenching bucket and teeth - heavy duty	1
3	D146420	EDGE, CUTTING	EDGE cutting, bucket, left-hand side, 24 inch, 610 mm, wide trenching bucket and teeth - heavy duty	1
4	D142012	EDGE, CUTTING	EDGE cutting, center, 24 inch, 610 mm, bucket, 24 inch, 610 mm, wide trenching bucket and teeth - heavy duty	1
	D139851	BUCKET TOOTH	TOOTH, BUCKET, Assy, outer corners, 24 inch, 610 mm, wide trenching bucket and teeth - heavy duty, Includes Ref 5, 6 and 7	2
5	D39093	TOOTH	POINT tooth, outer corners, 24 inch, 610 mm, wide trenching bucket and teeth - heavy duty	1
6	D134686	SPLIT PIN/SAFETY PIN	PIN flex, outer point and shank, 24 inch, 610 mm, wide trenching bucket and teeth - heavy duty	1
7	D138157	SHANK	tooth, outer corners, 24 inch, 610 mm, wide trenching bucket and teeth - heavy duty	1
	D139849	BUCKET TOOTH	TOOTH, BUCKET, Assy, Center (order Ref 8-10), 24 inch, 610 mm, wide trenching bucket	3
8	D51750	BUCKET TOOTH POINT	POINT tooth, center, 24 inch, 610 mm, wide trenching bucket and teeth - heavy duty	1
9	D134686	SPLIT PIN/SAFETY PIN	PIN flex, center point and shank, 24 inch, 610 mm, wide trenching bucket and teeth - heavy duty	1
10	D48212	SHANK	tooth, center, 24 inch, 610 mm, wide trenching bucket and teeth - heavy duty	1
11	D37495	BUSHING	1-3/4 x 2-1/4 x 1-1/4 inch, 24 inch, 610 mm, wide trenching bucket and teeth - heavy duty	2
12	D30933	BUSHING	1-1/2 x 1-7/8 x 1-1/4 inch, 24 inch, 610 mm, wide trenching bucket and teeth - heavy duty	6

Diag #	Part #	Name	Description	Qty
1	D150364	BUCKET	ASSEMBLY, 30 inch, 762 mm, with 5 teeth, not shown, machinery item, order from the Machinery Price List, replaces D147350 bucket, 30 inch, 762 mm, wide trenching bucket and teeth - heavy duty, Includes: Ref. 2 through 12	1
2	D146421	EDGE, CUTTING	EDGE cutting, bucket, right-hand side, 30 inch, 762 mm, wide trenching bucket and teeth - heavy duty	1
3	D146420	EDGE, CUTTING	EDGE cutting, bucket, left-hand side, 30 inch, 762 mm, wide trenching bucket and teeth - heavy duty	1
4	D145061	EDGE, CUTTING	EDGE cutting, center, 30 inch, 762 mm, bucket, 30 inch, 762 mm, wide trenching bucket and teeth - heavy duty	1
	D139851	BUCKET TOOTH	TOOTH, BUCKET, Assy, outer corners, 30 inch, 762 mm, wide trenching bucket and teeth - heavy duty, Includes Ref 5, 6 and 7	2
5	D39093	TOOTH	POINT tooth, outer corners, 30 inch, 762 mm, wide trenching bucket and teeth - heavy duty	1
6	D134686	SPLIT PIN/SAFETY PIN	PIN flex, outer point and shank, 30 inch, 762 mm, wide trenching bucket and teeth - heavy duty	1
7	D138157	SHANK	tooth, outer corners, 30 inch, 762 mm, wide trenching bucket and teeth - heavy duty	1
	D139849	BUCKET TOOTH	TOOTH, BUCKET, Assy, Center (order Ref 8-10), 30 inch, 762 mm, wide trenching bucket	3
8	D51750	BUCKET TOOTH POINT	POINT tooth, center, 30 inch, 762 mm, wide trenching bucket and teeth - heavy duty	1
9	D134686	SPLIT PIN/SAFETY PIN	PIN flex, center point and shank, 30 inch, 762 mm, wide trenching bucket and teeth - heavy duty	1
10	D48212	SHANK	tooth, center, 30 inch, 762 mm, wide trenching bucket and teeth - heavy duty	1
11	D37495	BUSHING	1-3/4 x 2-1/4 x 1-1/4 inch	2
12	D30933	BUSHING	1-1/2 x 1-7/8 x 1-1/4 inch	6

http://www.minnparbackhoeparts.com/

(580SK) - CASE SUPER-K CONSTRUCTION KING LOADER BACKHOE > (9-064) - UNIVERSAL BACKHOE BUCKETS, 36 INCH, 914 MM, WIDE, 36 INCH, 914MM, WIDE

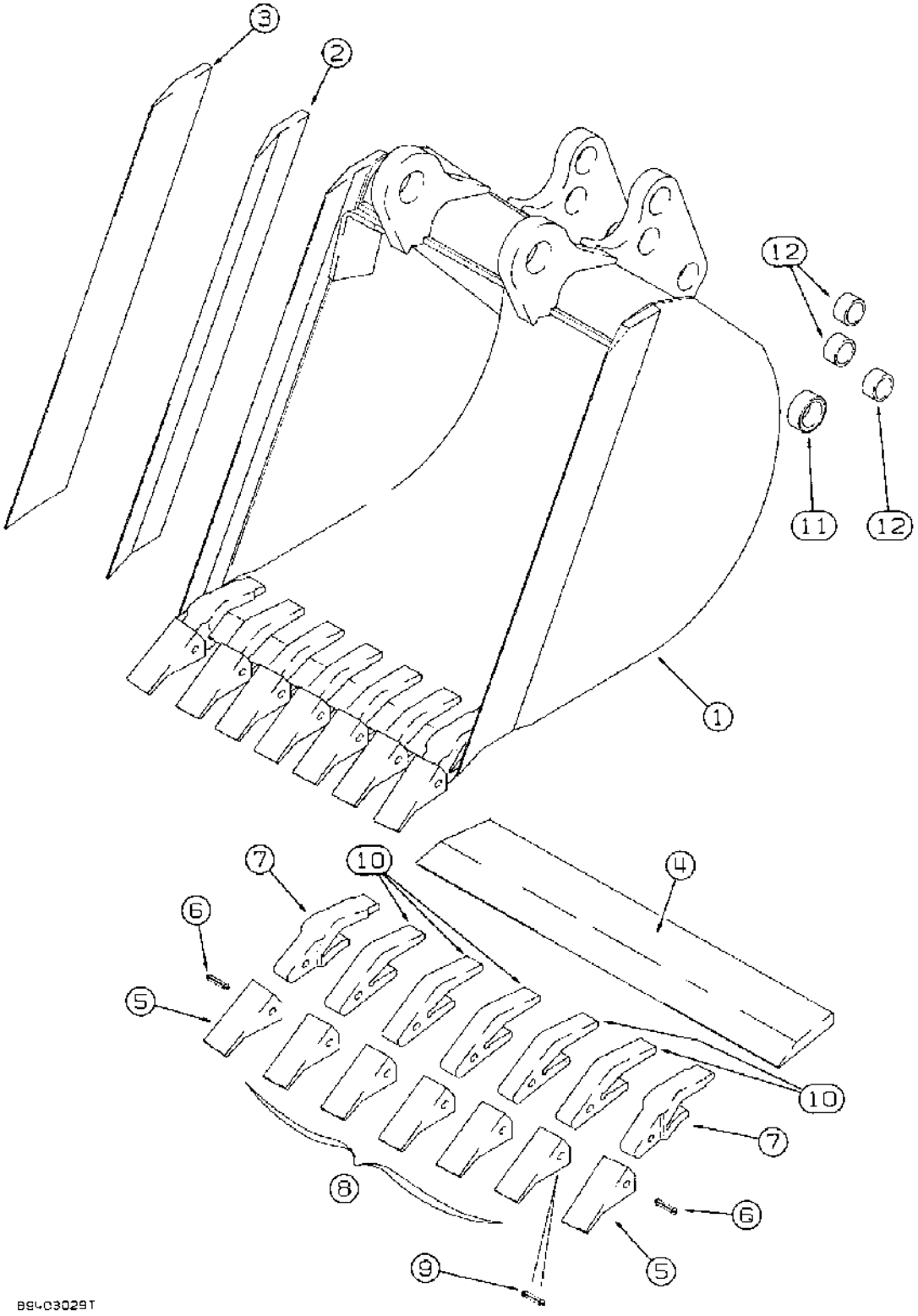

(580SK) - CASE SUPER-K CONSTRUCTION KING LOADER BACKHOE > (9-064) - UNIVERSAL BACKHOE BUCKETS, 36 INCH, 914 MM, WIDE, 36 INCH, 914MM, WIDE

Diag #	Part #	Name	Description	Qty
1	D150365	BUCKET	ASSEMBLY, 36 inch, 914 mm, with 7 teeth, machinery item, order from the Machinery Price List, replaces D147358 bucket, Includes: Ref. 2 - 12	1
2	D146421	EDGE, CUTTING	EDGE cutting, bucket, right-hand side	1
3	D146420	EDGE, CUTTING	EDGE cutting, bucket, left-hand side	1
4	D145062	EDGE, CUTTING	EDGE cutting, center, 36 inch, 914 mm, bucket	1
	D139851	BUCKET TOOTH	TOOTH, BUCKET, Assy, outer corners, Includes Ref 5 - 7	2
5	D39093	TOOTH	POINT tooth, outer corners	1
6	D134686	SPLIT PIN/SAFETY PIN	PIN flex, outer point and shank	1
7	D138157	SHANK	tooth, outer corners	1
	D139849	BUCKET TOOTH	TOOTH, BUCKET, Assy, Center, order items 8-10, Includes Ref 8, 9 and 10	5
8	D51750	BUCKET TOOTH POINT	POINT tooth, center	1
9	D134686	SPLIT PIN/SAFETY PIN	PIN flex, center point and shank	1
10	D48212	SHANK	tooth, center	1
11	D37495	BUSHING	1-3/4 x 2-1/4 x 1-1/4 inch	2
12	D30933	BUSHING	1-1/2 x 1-7/8 x 1-1/4 inch	6

http://www.minnparbackhoeparts.com/

(580SK) - CASE SUPER-K CONSTRUCTION KING LOADER BACKHOE > (9-066) - BACKHOE BUCKET, 24 INCH, 610 MM, WIDE, 24 INCH, 610 MM, WIDE

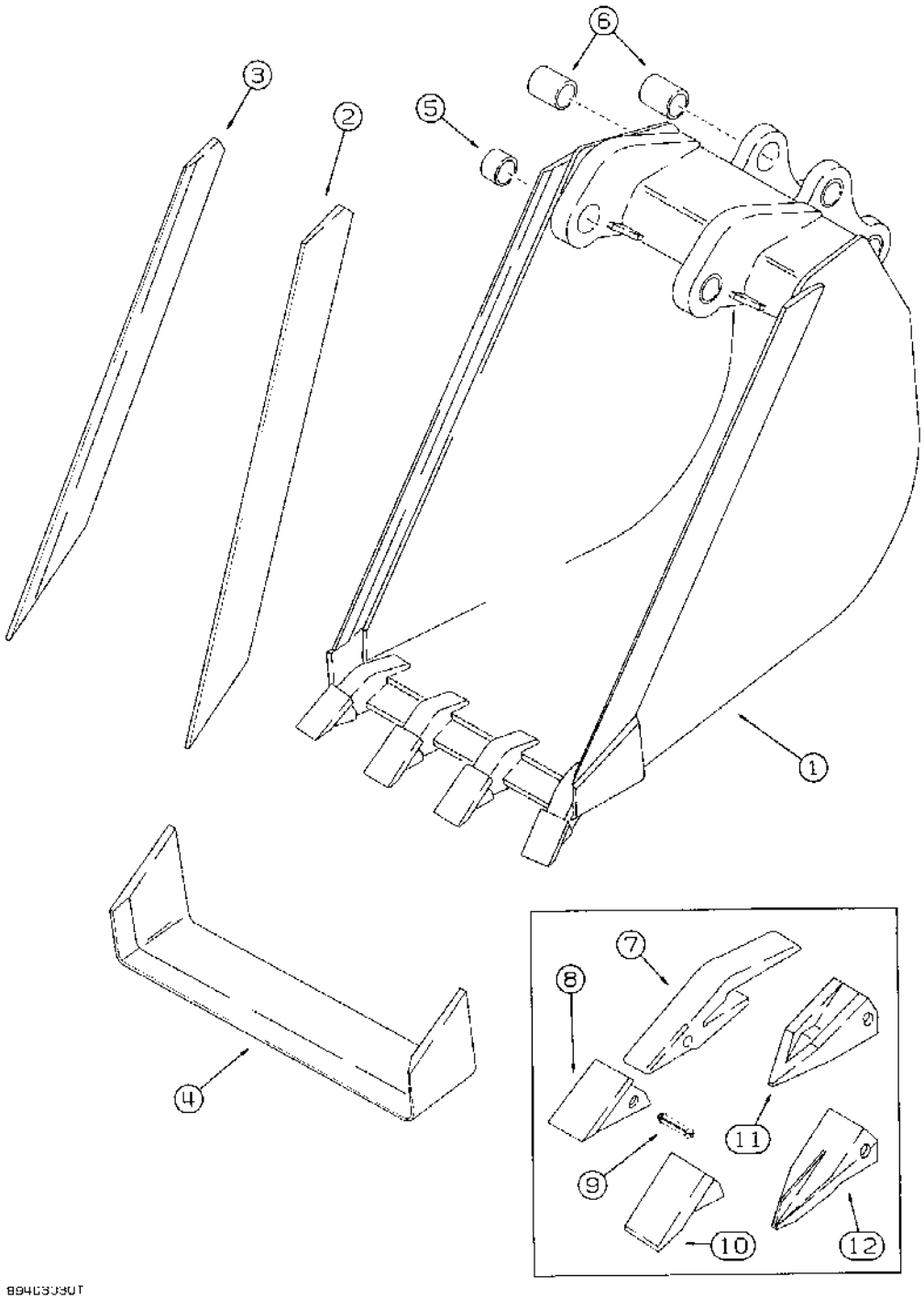

(580SK) - CASE SUPER-K CONSTRUCTION KING LOADER BACKHOE > (9-066) - BACKHOE BUCKET, 24 INCH, 610 MM, WIDE, 24 INCH, 610 MM, WIDE

Diag #	Part #	Name	Description	Qty
1	L107618	BUCKET	ASSEMBLY, 24 inch, 610 mm, with 4 teeth, machinery item, order from the Machinery Price List, 24 inch, 610 mm, wide high capacitiy trenching bucket, Includes: Ref. 2 through 9	1
2	L70084	EDGE, CUTTING	EDGE cutting, bucket, right-hand side, 24 inch, 610 mm, wide high capacitiy trenching bucket	1
3	L70083	EDGE, CUTTING	EDGE cutting, bucket, left-hand side, 24 inch, 610 mm, wide high capacitiy trenching bucket	1
4	D41673	EDGE, CUTTING	EDGE cutting, bucket, center, 24 inch, 610 mm, wide high capacitiy trenching bucket	1
5	D37495	BUSHING	bucket, at dipper, 24 inch, 610 mm, wide high capacitiy trenching bucket	2
6	D30933	BUSHING	bucket, at bucket links, 24 inch, 610 mm, wide high capacitiy trenching bucket	4
	L43266	TOOTH	ASSEMBLY high capacity bucket, 24 inch, 610 mm, wide high capacitiy trenching bucket, Includes: Ref. 7, 8 and 9	4
7	NSS	NOT SERVICED SEPARATELY	SHANK tooth, 24 inch, 610 mm, wide high capacitiy trenching bucket	1
8	D39093	TOOTH	POINT tooth, 24 inch, 610 mm, wide high capacitiy trenching bucket	1
9	D39094	BUCKET TOOTH KEY	PIN flex, point, 24 inch, 610 mm, wide high capacitiy trenching bucket	1
10	D44193	TOOTH	POINT tooth, heavy duty, flat end, service option, optional bucket teeth	1
11	D80119	TOOTH	POINT tooth, heavy duty, pointed end, service option, optional bucket teeth	1
12	D79100	TOOTH	POINT tooth, heavy duty, star point, service option, optional bucket teeth	1

http://www.minnparbackhoeparts.com/

(580SK) - CASE SUPER-K CONSTRUCTION KING LOADER BACKHOE > (9-068) - BACKHOE BUCKET, 36 INCH, 914 MM, WIDE, COMBINATION BELLHOLE

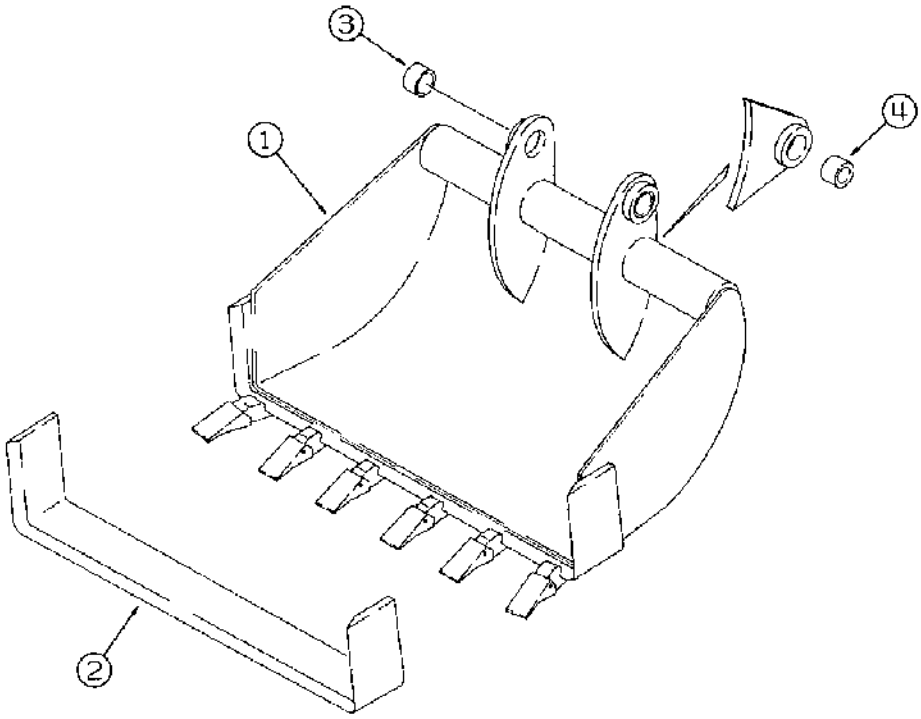

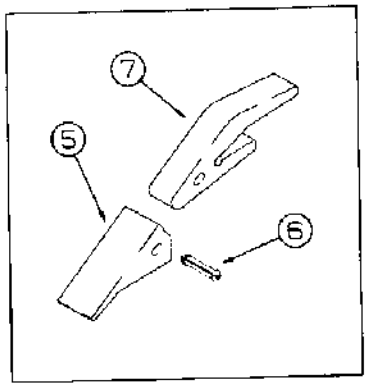

89v03031T

http://www.minnparbackhoeparts.com/

(580SK) - CASE SUPER-K CONSTRUCTION KING LOADER BACKHOE > (9-068) - BACKHOE BUCKET, 36 INCH, 914 MM, WIDE, COMBINATION BELLHOLE

Diag #	Part #	Name	Description	Qty
1	D140576	BUCKET	ASSEMBLY, 36 inch, 914 mm, with 6 teeth, machinery item, order from the Machinery Price List, Includes: Ref. 2 through 7	1
2	D37516		EDGE cutting, bucket	1
3	D37495	BUSHING	bucket, at dipper, upper	2
4	D30933	BUSHING	bucket, at bucket link pin hole, lower	2
	D41659	TOOTH	ASSEMBLY bucket, Includes: Ref. 5, 6 and 7	6
5	D39093	TOOTH	POINT tooth	1
6	D39094	BUCKET TOOTH KEY	PIN flex, point	1
7	NSS	NOT SERVICED SEPARATELY	SHANK tooth	1

http://www.minnparbackhoeparts.com/

(580SK) - CASE SUPER-K CONSTRUCTION KING LOADER BACKHOE > (9-070) - CONCRETE BREAKER FORK

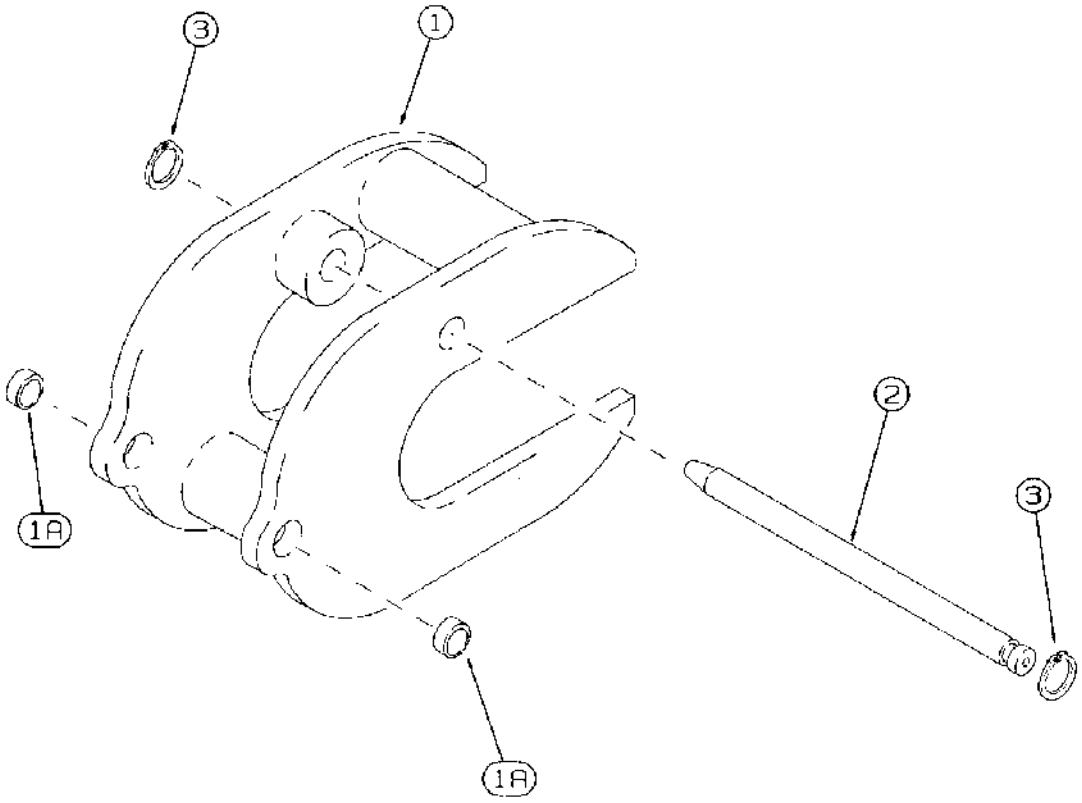

8904080421

(580SK) - CASE SUPER-K CONSTRUCTION KING LOADER BACKHOE > (9-070) - CONCRETE BREAKER FORK

Diag #	Part #	Name	Description	Qty
1	D140080	FORK	concrete breaker, Includes: Ref. 1A	1
1A	D52521	BUSHING	fork	2
2	D37793	PIN	fork mounting	1
3	D25279	SNAP RING	RING snap, pin retaining	2

http://www.minnparbackhoeparts.com/

(580SK) - CASE SUPER-K CONSTRUCTION KING LOADER BACKHOE > (9-072) - THREE-POINT HITCH CONTROLS

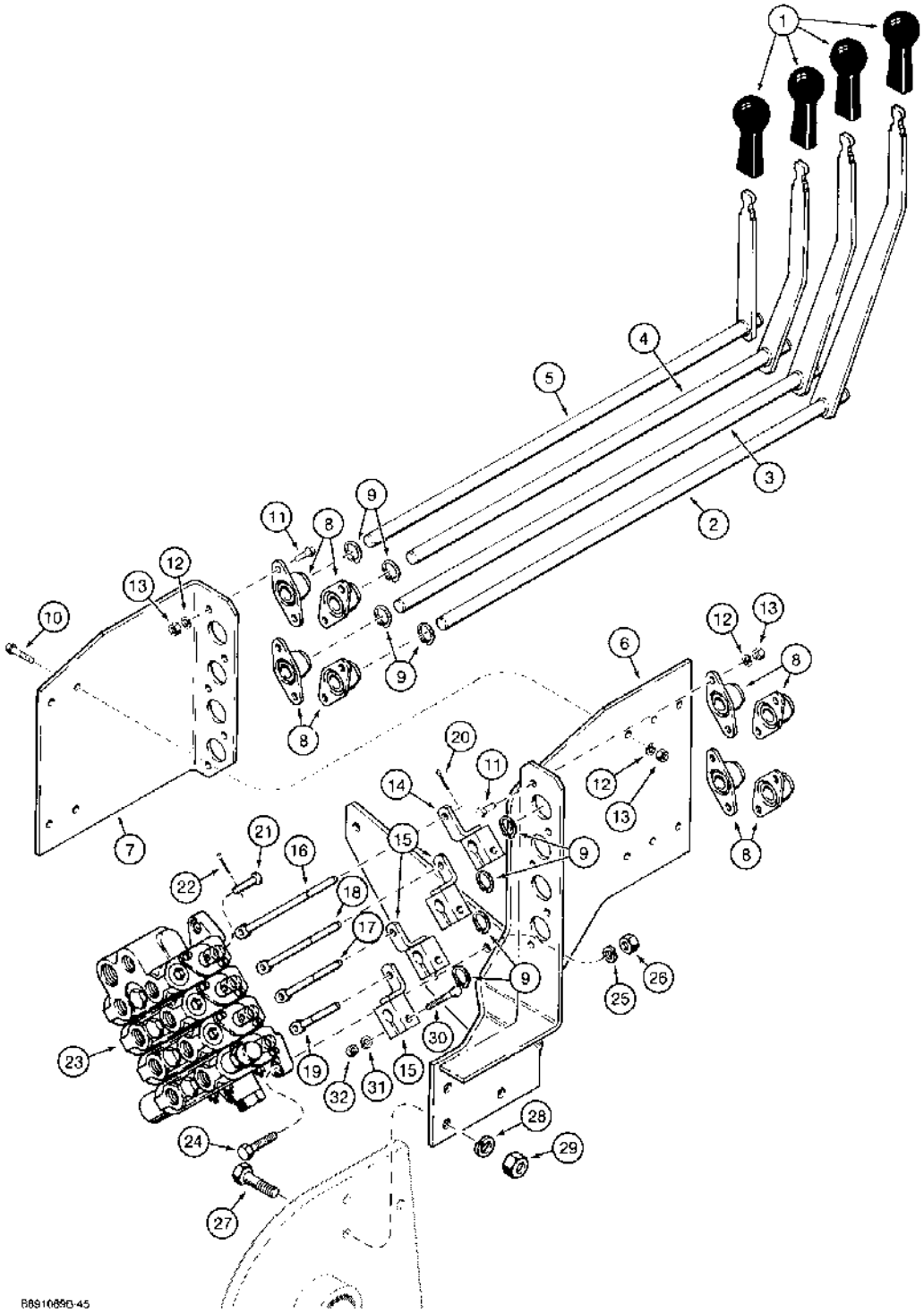

(580SK) - CASE SUPER-K CONSTRUCTION KING LOADER BACKHOE > (9-072) - THREE-POINT HITCH CONTROLS

Diag #	Part #	Name	Description	Qty
1	D135387	GRIP	KNOB control lever	4
2	D149234	HANDLE	LEVER lift control	1
3	D149233	HANDLE	LEVER tilt control	1
4	D149232	HANDLE	LEVER pitch control	1
5	D149231	HANDLE	LEVER implement control	1
6	D149228	BRACKET	valve and control lever mounting	1
7	D149229	BRACKET	front adjustment	1
8	L15401	BEARING	pivot	8
9	100-1462	SNAP RING,#62, Ext	Ring, Snap, , Brg #62, Ext	8
10	413-516	BOLT,Hex, 5/16" - 18 x 1", Gr 5	hex, 5/16 NC x 1 inch	4
11	413-512	BOLT,Hex, 5/16" - 18 x 3/4", Gr 5	hex, 5/16 NC x 3/4 inch	10
12	495-21044	WASHER,3/8"	(flat, 7/16 x 1 x 5/64 inch) 3/8"	14
13	425-105	NUT,5/16"-18, G5	- hex, 5/16 inch NC	14
14	D143923	SPECIAL CLAMP	RETAINER long pivot	1
15	D143922	SPECIAL CLAMP	RETAINER short pivot	3
16	D136359	LINK	ROD lift control, Serial Range: shaft-valve	1
17	D136358	LINK	ROD tilt control, Serial Range: shaft-valve	1
18	D136357	LINK	ROD pitch control, Serial Range: shaft-valve	1
19	D136356	LINK	ROD implement control, Serial Range: shaft-valve	1
20	432-612	COTTER PIN,3/32" x 3/4"	PIN , SPLIT (COTTER), 3/32" x 3/4"	4
21	427-4077	CLEVIS PIN,1/4" x .770"	PIN clevis, 1/4 x 43/64 inch, hardened	4
22	432-412	COTTER PIN,1/16" x 3/4"	PIN, SPLIT (COTTER), 1/16" x 3/4"	4
23	D141297	VALVE	ASSEMBLY three-point hitch control, four spool, parts list Figure 8-104	1
24	413-624	BOLT,Hex, 3/8" - 16 x 1 1/2", Gr 5	hex, 3/8 NC x 1-1/2 inch, valve mounting	3
25	492-11038	LOCK WASHER,3/8"	LOCK WASHER,3/8"	3
26	425-106	NUT,3/8"-16, G5	NUT,3/8"-16, G5	3
27	413-824	BOLT,Hex, 1/2" - 13 x 1 1/2", Gr 5	Valve mounting bracket to three-point hitch frame Hex, 1/2"-13 x 1 1/2", G5, Full Thd	3
28	80679	LOCK WASHER,1/2"	WASHER, LOCK, 1/2"	3
29	425-108	NUT,1/2"-13, G5	NUT, , Hex 1/2"-13, G5	3
30	413-528	BOLT,Hex, 5/16" - 18 x 1 3/4", Gr 5	BOLT,Hex, 5/16" - 18 x 1 3/4", Gr 5	4
31	495-21044	WASHER,3/8"	(flat, 7/16 x 1 x 5/64 inch) 3/8"	4
32	425-105	NUT,5/16"-18, G5	- hex, 5/16 inch NC	4

http://www.minnparbackhoeparts.com/

(580SK) - CASE SUPER-K CONSTRUCTION KING LOADER BACKHOE > (9-074) - THREE-POINT HITCH FRAME, DRAFT ARMS, LINKAGE AND CYLINDER MOUNTING

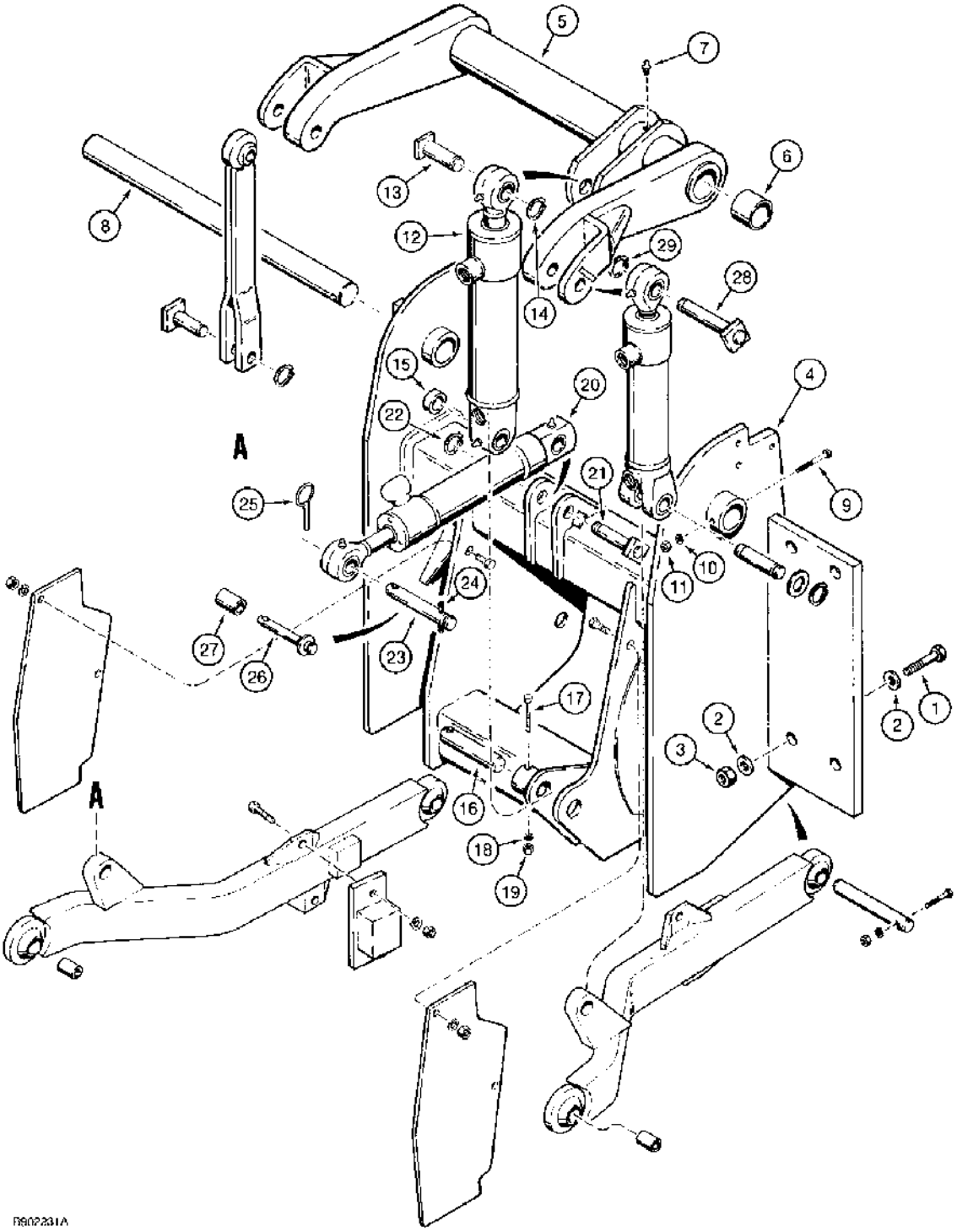

(580SK) - CASE SUPER-K CONSTRUCTION KING LOADER BACKHOE > (9-074) - THREE-POINT HITCH FRAME, DRAFT ARMS, LINKAGE AND CYLINDER MOUNTING

Diag #	Part #	Name	Description	Qty
1	326-1248	BOLT,Hex, 3/4" - 10 x 3", Gr 8	BOLT,Hex, 3/4" - 10 x 3", Gr 8	8
2	D34666	WASHER	flat, 3/4 inch hardened	16
3	429-1012	NUT,3/4"-10, G8	- hex, 3/4 inch NC, grade 8	8
4	D149215	FRAME	three-point hitch	1
5	D146067	SHAFT	TUBE rockshaft, Includes: Ref. 6	1
6	D50146	BUSHING,1.760" x 2.250" x 1.50"	tube	2
7	219-1	LUBE NIPPLE,1/8"-27 x .66 lg	FITTING grease, straight, 1/8 PT x 21/32 inch	1
8	D146070	SHAFT	ROCKSHAFT three-point hitch	1
9	413-648	BOLT,Hex, 3/8" - 16 x 3", Gr 5	BOLT,Hex, 3/8" - 16 x 3", Gr 5	1
10	492-11038	LOCK WASHER,3/8"	LOCK WASHER,3/8"	1
11	425-106	NUT,3/8"-16, G5	NUT,3/8"-16, G5	1
12	G101189	CYLINDER ASSY.	CYLINDER ASSEMBLY lift, parts list Figure 8-142	1
13	D51302	PIN	mounting, lift cylinder, upper, Includes: Ref. 14	1
14	103-16125	SNAP RING,#125, Ext	Ring, Snap, , Pin #125, Ext	1
15	D51692	SPACER	lift cylinder mounting pin, lower	1
16	D51695	PIN	mounting, lift cylinder, lower	1
17	413-640	BOLT,Hex, 3/8" - 16 x 2 1/2", Gr 5	hex, 3/8 NC x 2-1/2 inch	1
18	492-11038	LOCK WASHER,3/8"	LOCK WASHER,3/8"	1
19	425-106	NUT,3/8"-16, G5	NUT,3/8"-16, G5	1
20	1976884C1	JACK BODY	CYLINDER ASSEMBLY pitch, parts list Figure 8-146	1
	138235A1R	REMAN-HYD CYLINDER	580SK, Reman For New P/N 1976884C1	1
	138235A1C	CORE-HYD CYLINDER	Return Number	1
21	D141090	PIN	mounting, pitch cylinder at mounting frame	1
22	D25277	SNAP RING	RING snap, pin retaining	1
23	115749A1	PIN	1 inch diameter, pitch cylinder to equipment, for use with Category II hitch, if used, replaces D140990, Includes: Ref. 24	1
24	138-140	LOCK PIN,1/4" x 1 3/4", Slotted	PIN, 1/4" x 1 3/4", Slotted	1
25	D33805	PIN	lock	1

Diag #	Part #	Name	Description	Qty
26	D141292	PIN	3/4 inch diameter, pitch cylinder to equipment, for use with Category I hitch, if used	1
27	D141156	TUBE	BUSHING pivot, pitch cylinder rod eye, used with D141292 pin to adapt for use with Category I hitch, if used	1
28	D51299	PIN	mounting, tilt cylinder and strut, upper	2
29	D25277	SNAP RING	RING snap, pin retaining	2

http://www.minnparbackhoeparts.com/

(580SK) - CASE SUPER-K CONSTRUCTION KING LOADER BACKHOE > (9-076) - THREE-POINT HITCH, FRAME, DRAFT ARMS, LINKAGE AND CYLINDER

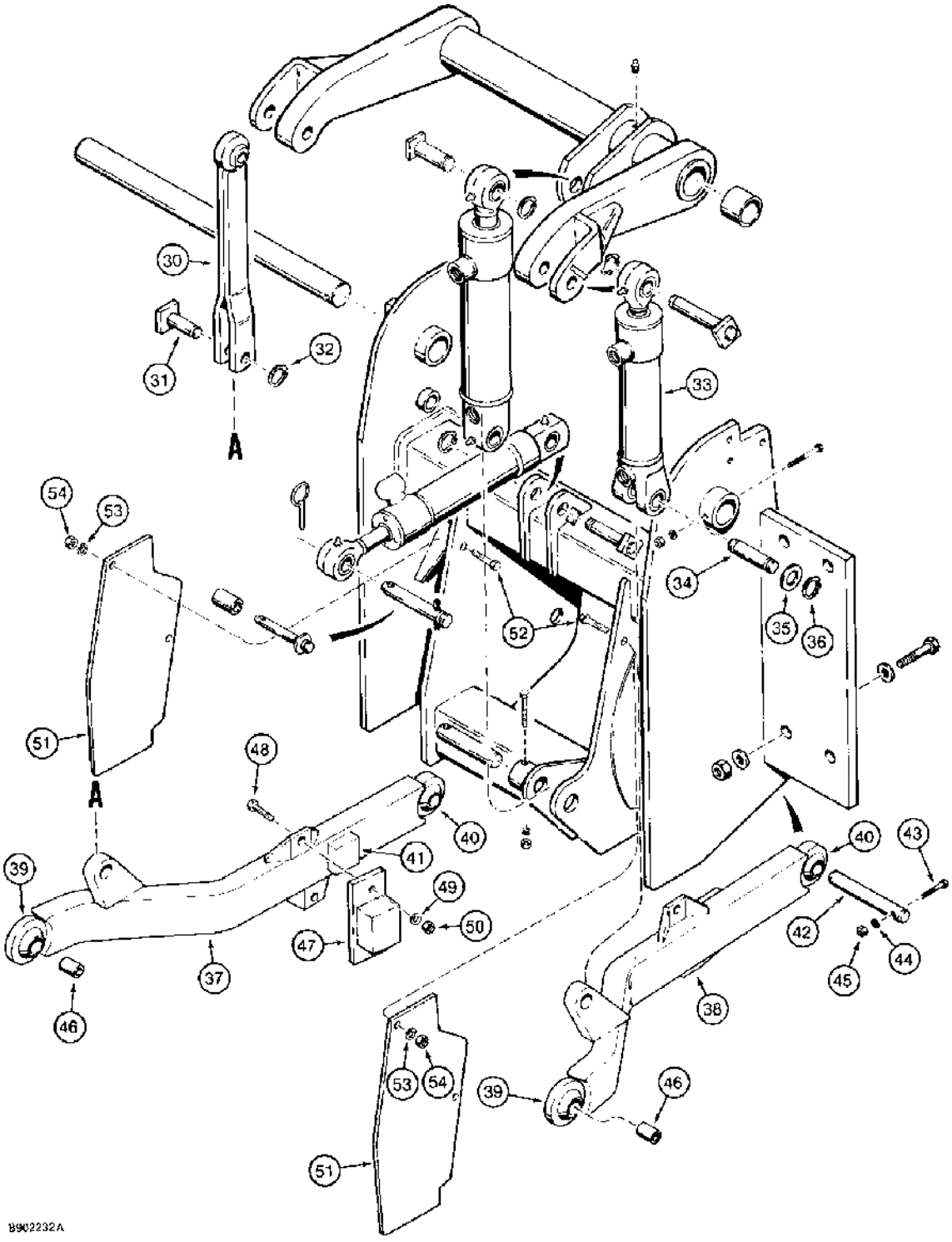

(580SK) - CASE SUPER-K CONSTRUCTION KING LOADER BACKHOE > (9-076) - THREE-POINT HITCH, FRAME, DRAFT ARMS, LINKAGE AND CYLINDER

Diag #	Part #	Name	Description	Qty
30	D51276	STAND	STRUT stationary	1
31	D51297	PIN	mounting, strut, lower	1
32	D25277	SNAP RING	RING snap, pin retaining	1
33	G101188	JACK BODY	CYLINDER ASSEMBLY tilt, parts list Figure 8-144	1
34	D30609	PIN	mounting, tilt cylinder, lower	1
35	495-11106	WASHER,1", SAE	flat, 1-1/16 x 2 x 1/8 inch	2
36	D25277	SNAP RING	RING snap, pin retaining	2
37	D149514	ARM	draft, left-hand, includes Ref. 39-41 below	1
38	D149513	ARM	draft, right-hand, Includes: Ref. 39, 40 and 41	1
39	H363424	BALL JOINT	BUSHING - self-aligning, 1-1/8 inch pin size	1
40	D149451	BALL JOINT	BUSHING - self-aligning, 1 inch pin size	1
41	D146073	STOP	BLOCK wear	1
42	D146078	PIN	mounting, draft arm to mounting frame	2
		REF 42 - THERE ARE NO BUSHINGS IN THE FRAME WHERE REF 42, D146078 PIN GOES. WELDED BOSSES IN FRAME ARE DESIGNED TO ACCEPT PIN WITH NO BUSHING REQUIRED. PIN DOES NOT PIVOT, THE DRAFT ARM DOES.	REF 42 - THERE ARE NO BUSHINGS IN THE FRAME WHERE REF 42, D146078 PIN GOES. WELDED BOSSES IN FRAME ARE DESIGNED TO ACCEPT PIN WITH NO BUSHING REQUIRED. PIN DOES NOT PIVOT, THE DRAFT ARM DOES.	1
43	413-640	BOLT,Hex, 3/8" - 16 x 2 1/2", Gr 5	hex, 3/8 NC x 2-1/2 inch	2
44	492-11038	LOCK WASHER,3/8"	LOCK WASHER,3/8"	2
45	425-106	NUT,3/8"-16, G5	NUT,3/8"-16, G5	2
46	D140991	BUSHING	draft arm to equipment, for use with Category I hitch, if used	2
47	D149156	BLOCK	RETAINER sway, draft arm	2
48	413-824	BOLT,Hex, 1/2" - 13 x 1 1/2", Gr 5	BOLT,Hex, 1/2" - 13 x 1 1/2", Gr 5	4
49	80679	LOCK WASHER,1/2"	WASHER, LOCK, 1/2"	4
50	425-108	NUT,1/2"-13, G5	NUT, , Hex 1/2"-13, G5	4
51	D149504	LARGE PLATE	PLATE wear	2
52	413-620	BOLT,Hex, 3/8" - 16 x 1 1/4", Gr 5	hex, 3/8 NC x 1-1/4 inch	4
53	492-11038	LOCK WASHER,3/8"	LOCK WASHER,3/8"	4
54	425-106	NUT,3/8"-16, G5	NUT,3/8"-16, G5	4

http://www.minnparbackhoeparts.com/

(580SK) - CASE SUPER-K CONSTRUCTION KING LOADER BACKHOE > (9-078) - RIGID DRAWBAR, USED WITH THREE-POINT HITCH

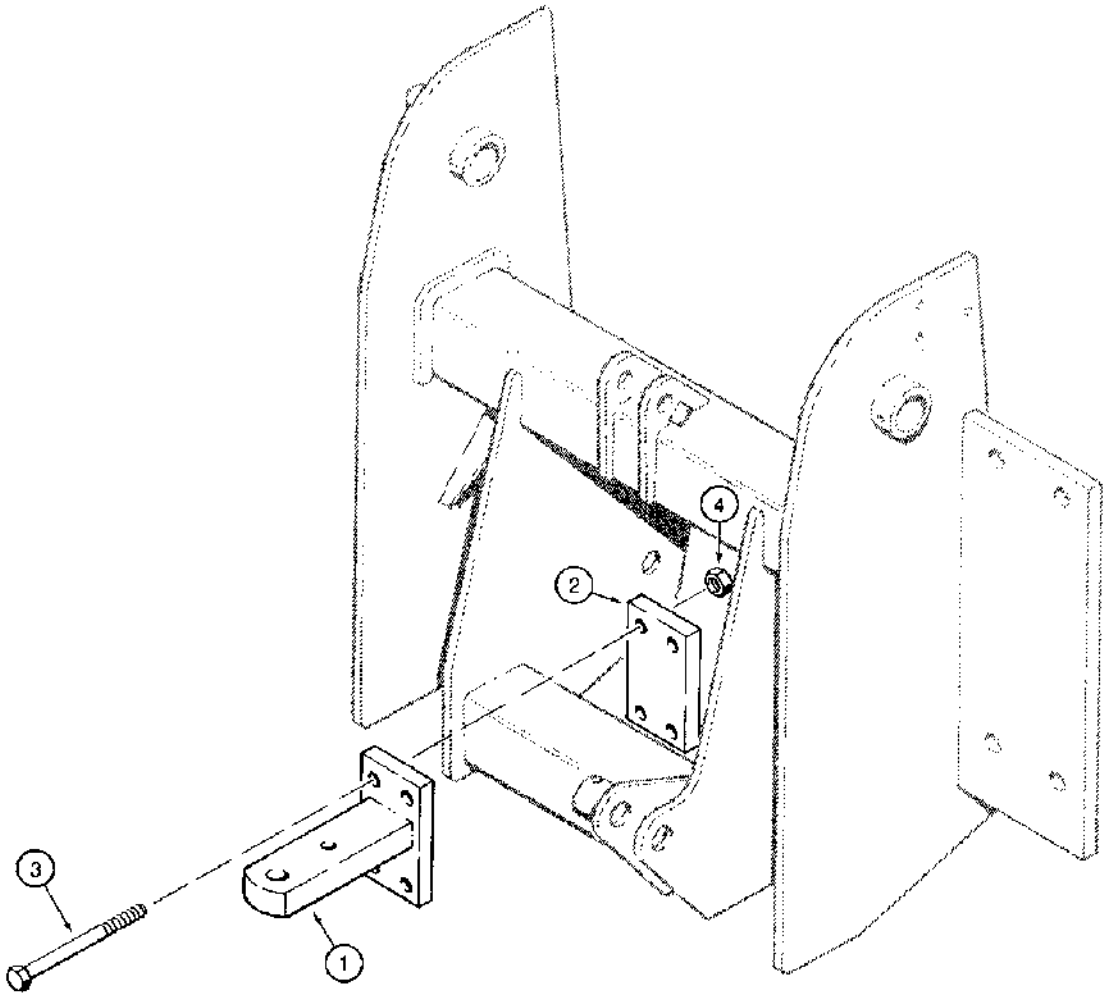

BB91076-45

(580SK) - CASE SUPER-K CONSTRUCTION KING LOADER BACKHOE > (9-078) - RIGID DRAWBAR, USED WITH THREE-POINT HITCH

Diag #	Part #	Name	Description	Qty
1	D146243	PLATE ASSY.	DRAWBAR rigid, tractor	1
2	D136893	LARGE PLATE	PLATE mounting, replaces D73231	1
3	413-10104	BOLT,Hex, 5/8" - 11 x 6 1/2", Gr 5	- hex, 5/8 NC x 6-1/2 inch	4
4	425-1010	NUT,5/8"-11, G5	NUT,5/8"-11, G5	4

http://www.minnparbackhoeparts.com/

(580SK) - CASE SUPER-K CONSTRUCTION KING LOADER BACKHOE > (9-080) - FRONT COUNTERWEIGHT

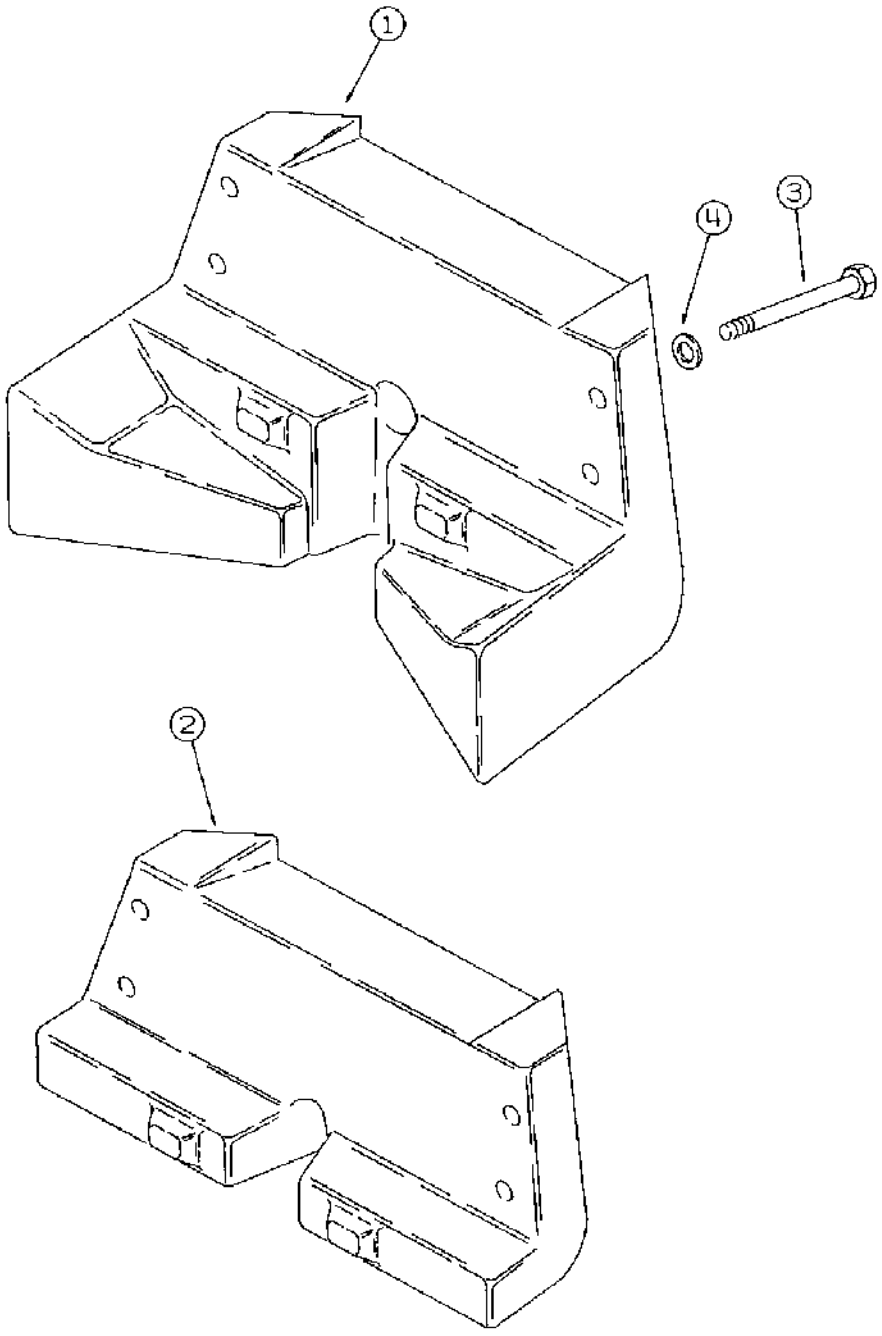

http://www.minnparbackhoeparts.com/

(580SK) - CASE SUPER-K CONSTRUCTION KING LOADER BACKHOE > (9-080) - FRONT COUNTERWEIGHT

Diag #	Part #	Name	Description	Qty
1	D141716	BALANCER	COUNTERWEIGHT, front, 900 lbs, 408 kg, not used if front pump guard is used, see Figure 9-086, Ref. 10 through 12, for pump guard and mounting hardware	1
2	D141717	BALANCER	COUNTERWEIGHT front, 400 lbs, 181 kg, if used	1
3	413-1272	BOLT,Hex, 3/4" - 10 x 4 1/2", Gr 5	hex, 3/4 NC x 4-1/2 inch	4
4	496-81000	WASHER,25/32" x 1 3/8" x .134", HDN	flat, 25/32 x 1-3/8 x 1/8 inch, hardened	4

http://www.minnparbackhoeparts.com/

(580SK) - CASE SUPER-K CONSTRUCTION KING LOADER BACKHOE > (9-082) - REAR COUNTERWEIGHT AND DRAWBAR, SPECIAL PARTS USED TO MOUNT

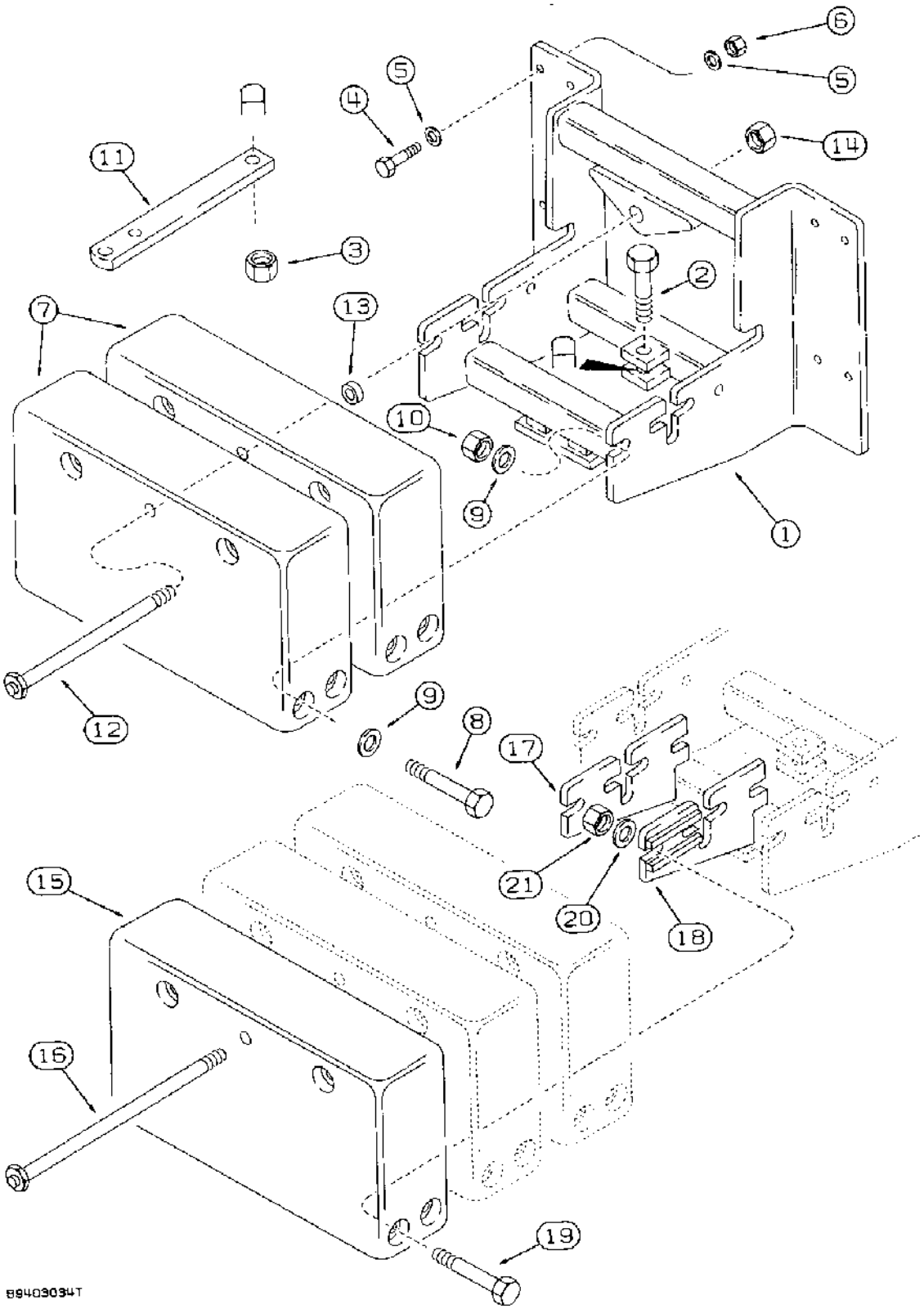

(580SK) - CASE SUPER-K CONSTRUCTION KING LOADER BACKHOE > (9-082) - REAR COUNTERWEIGHT AND DRAWBAR, SPECIAL PARTS USED TO MOUNT

Diag #	Part #	Name	Description	Qty
1	D136658	FRAME	rear counterweight, rear counterweight and drawbar	1
2	426-1880	BOLT,Hex, 1 1/8" - 7 x 5", Gr 8	hex, 1-1/8 NC x 5 inch, grade 8, rear counterweight and drawbar	1
3	131-1413	LOCK NUT,1 1/8"-7, GC	NUT light hex, self-locking, 1-1/8 inch NC, rear counterweight and drawbar	1
4	326-1248	BOLT,Hex, 3/4" - 10 x 3", Gr 8	Rear counterweight and drawbar Hex, 3/4"-10 x 3", G8	8
5	D34666	WASHER	flat, 3/4 inch hardened, rear counterweight and drawbar	16
6	129-572	NUT,3/4"-10, G8	Rear counterweight and drawbar 3/4"-10, G8	8
7	D31204	BALANCER	COUNTERWEIGHT rear, each 1425 lbs, 646 kg, rear counterweight and drawbar	2
8	413-16112	BOLT,Hex, 1" - 8 x 7", Gr 5	hex, 1 NC x 7 inch, rear counterweight and drawbar	8
9	495-11106	WASHER,1", SAE	flat, 1-1/16 x 2 x 1/8 inch, Rear counterweight and drawbar	16
10	425-1016	NUT,1"-8, G5	- hex, 1 inch NC, Rear counterweight and drawbar	8
11	D93293	DRAWBAR, SWINGING	DRAWBAR tractor, rear counterweight and drawbar	1
12	D139275	BOLT	special, rear counterweight and drawbar	1
13	H62406	SPACER	counterweight, rear counterweight and drawbar	1
14	131-1412	LOCK NUT,1"-8, GC	NUT light hex, self-locking, 1 inch NC, rear counterweight and drawbar	1
15	D31204	BALANCER	COUNTERWEIGHT rear, 1425 lbs, 646 kg, used with 2800 lbs rear counterweight, if used, special parts used to mount additional 1400 pound near counterweight	1
16	D140548	SCREW	BOLT special, special parts used to mount additional 1400 pound near counterweight	1
17	D93344	PLATE	BRACKET left-hand, additional counterweight adapter, special parts used to mount additional 1400 pound near counterweight	1
18	D93345	PLATE	BRACKET right-hand, additional counterweight adapter, special parts used to mount additional 1400 pound near counterweight	1

Diag #	Part #	Name	Description	Qty
19	113-974	BOLT,Hex, 1"-8 x 6 3/4", G5	Special parts used to mount additional 1400 pound near counterweight Hex, 1"-8 x 6 3/4", G5	4
20	195-553	WASHER,1", SAE	flat, 1-1/16 x 2 x 1/8 inch, special parts used to mount additional 1400 pound near counterweight	4
21	425-1016	NUT,1"-8, G5	- hex, 1 inch NC, Special parts used to mount additional 1400 pound near counterweight	4

http://www.minnparbackhoeparts.com/

(580SK) - CASE SUPER-K CONSTRUCTION KING LOADER BACKHOE > (9-084) - CHASSIS

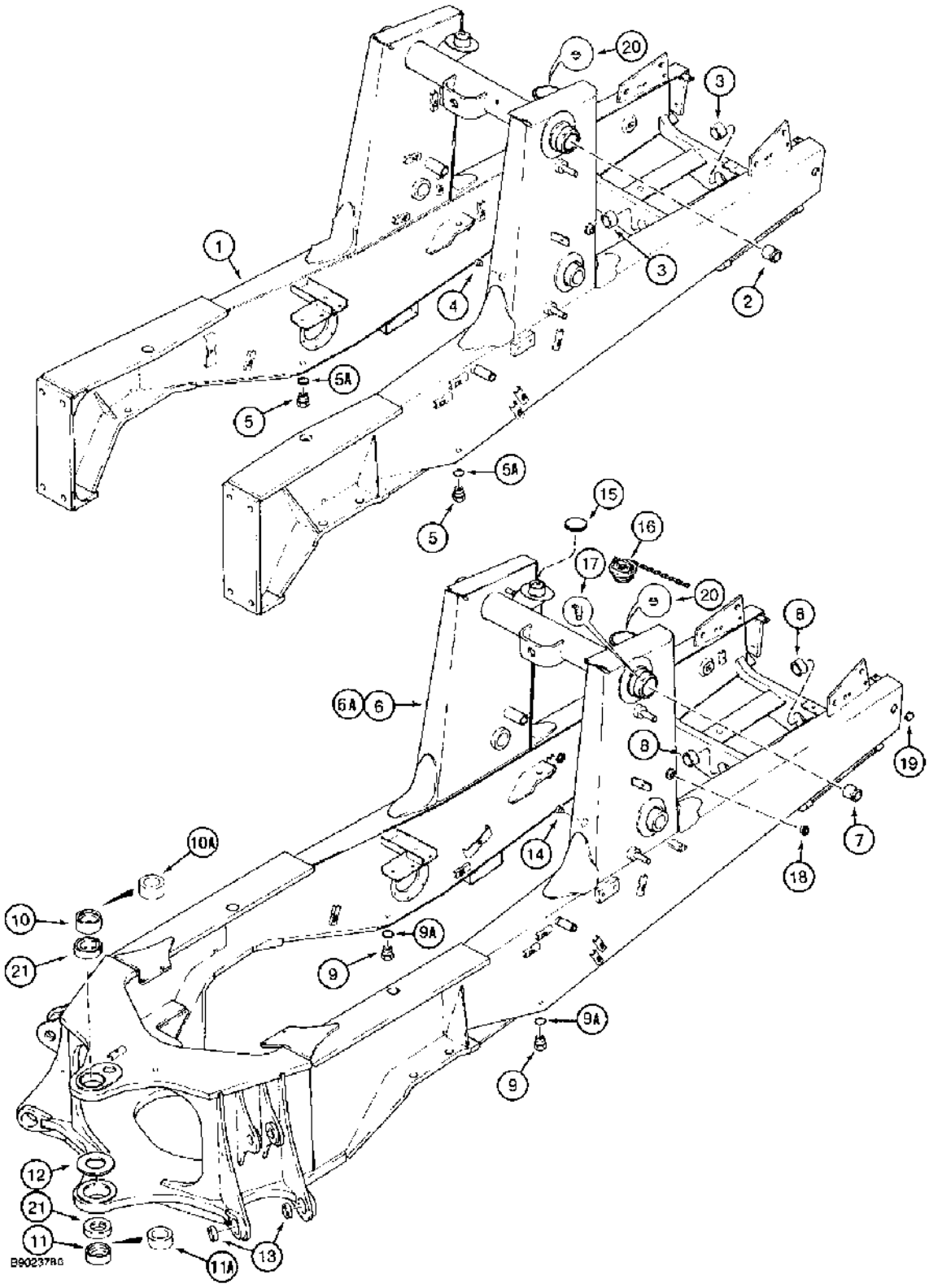

(580SK) - CASE SUPER-K CONSTRUCTION KING LOADER BACKHOE > (9-084) - CHASSIS

Diag #	Part #	Name	Description	Qty
1	D150716	CHASSIS	loader models, replaces D147935, Includes: Ref. 2 through 5A	1
2	D129061	BUSHING	loader frame pivot	2
3	D127542	BUSHING	front axle pivot	2
4	444789	PLUG,Sq Soc, 1/2"-14 NPTF	square socket, 1/2 inch PT	1
5	218-5161	PLUG,Hex Hd, 1 5/8"-12 ORB	hex, 1-5/8-12 inch O-ring boss, Includes: Ref. 5A	2
5A	237-6020	O-RING,0.864" ID x 1.004" OD x 0.07"	20-1, 90 Duro, 1.475" ID x .118" Thk	1
6	D147688	CHASSIS	loader with integral backhoe models, uses Ref. 10, D135555, and Ref. 11, D135556, bushings and four Ref. 21, D127974, grease seals, prior to P.I.N. JJG0163952, see Note A	1
6A	D150715	FRAME	CHASSIS loader with integral backhoe, uses Ref. 10A, D150118, and 11A, D150119, bushings without grease seals, P.I.N. JJG0163952 through JJG0169930, see Note A, no longer available, order 111607A1 chassis	1
6B	D151192	FRAME	CHASSIS loader with integral backhoe, not shown, uses Ref. 10A, D150118, and 11A, D150119, bushings without grease seals, P.I.N. JJG0169931 through JJG0171614, see Note A, no longer available, order 111607A1 chassis	1
6C	111607A1	CHASSIS	loader with integral backhoe, not shown, uses Ref. 10A, D150118, and 11A, D150119, bushings without grease seals, P.I.N. JJG0171615 and after, if used, see Note B, Includes: Ref. 7 through 14	1
7	D129061	BUSHING	loader frame pivot	2
8	D127542	BUSHING	front axle pivot	2
9	218-5161	PLUG,Hex Hd, 1 5/8"-12 ORB	hex, 1-5/8-12 inch O-ring boss, Includes: Ref. 9A	2
9A	237-6020	O-RING,0.864" ID x 1.004" OD x 0.07"	20-1, 90 Duro, 1.475" ID x .118" Thk	1
10	D135555	BUSHING	upper, backhoe frame, swing tower mounting, has grease seal retaining groves, used with two Ref. 21, D127974 grease seals, D147688 chassis	1
10A	D150118	BUSHING	upper, backhoe frame, swing tower mounting, D150715, D151192, and 111607A1 chassis	1

Diag #	Part #	Name	Description	Qty
11	D135556	BUSHING	lower, backhoe frame, swing tower mounting has grease seal retaining groves, used with two Ref. 21, D127974 grease seals, D147688 chassis	1
11A	D150119	BUSHING	lower, backhoe frame, swing tower mounting, D150715, D151192, and 111607A1 chassis	1
12	D144112	SPACER	93 mm x 135 mm x 6 mm, bearing, Serial Range: welds-frame	1
13	D37495	BUSHING	lower, side, backhoe frame, at stabilizer leg mounting	4
14	221-844	PLUG,Hex Soc, 1/2"-14	square socket, 1/2 inch PT, replaces 444789	1
15	A51390	CAP	diesel fuel reservoir, left-hand, order D93757	1
16	D93981	FILLER CAP	CAP hydraulic oil reservoir, right-hand	1
17	219-36	LUBE NIPPLE,45º, 1/8" NPT x 7/8" lg	FITTING grease, 45 degree, 1/8 PT x 7/8 inch, loader frame pivot	2
18	D63875	PLUG	GAUGE sight, hydraulic oil level	1
18	D63875	PLUG	GAUGE sight, hydraulic oil level	1
19	41-1020	PLUG,Cup, 1 1/4"	cup, 1-1/4 inch diameter	2
20	N8796	PLUG	BREATHER hydraulic oil fill tube	1
21	D127974	SEAL	backhoe frame, at swing tower mounting, D147688 chassis	4

http://www.minnparbackhoeparts.com/

(580SK) - CASE SUPER-K CONSTRUCTION KING LOADER BACKHOE > (9-086) - RADIATOR SHROUD, PUMP GUARD AND FRONT COVERS

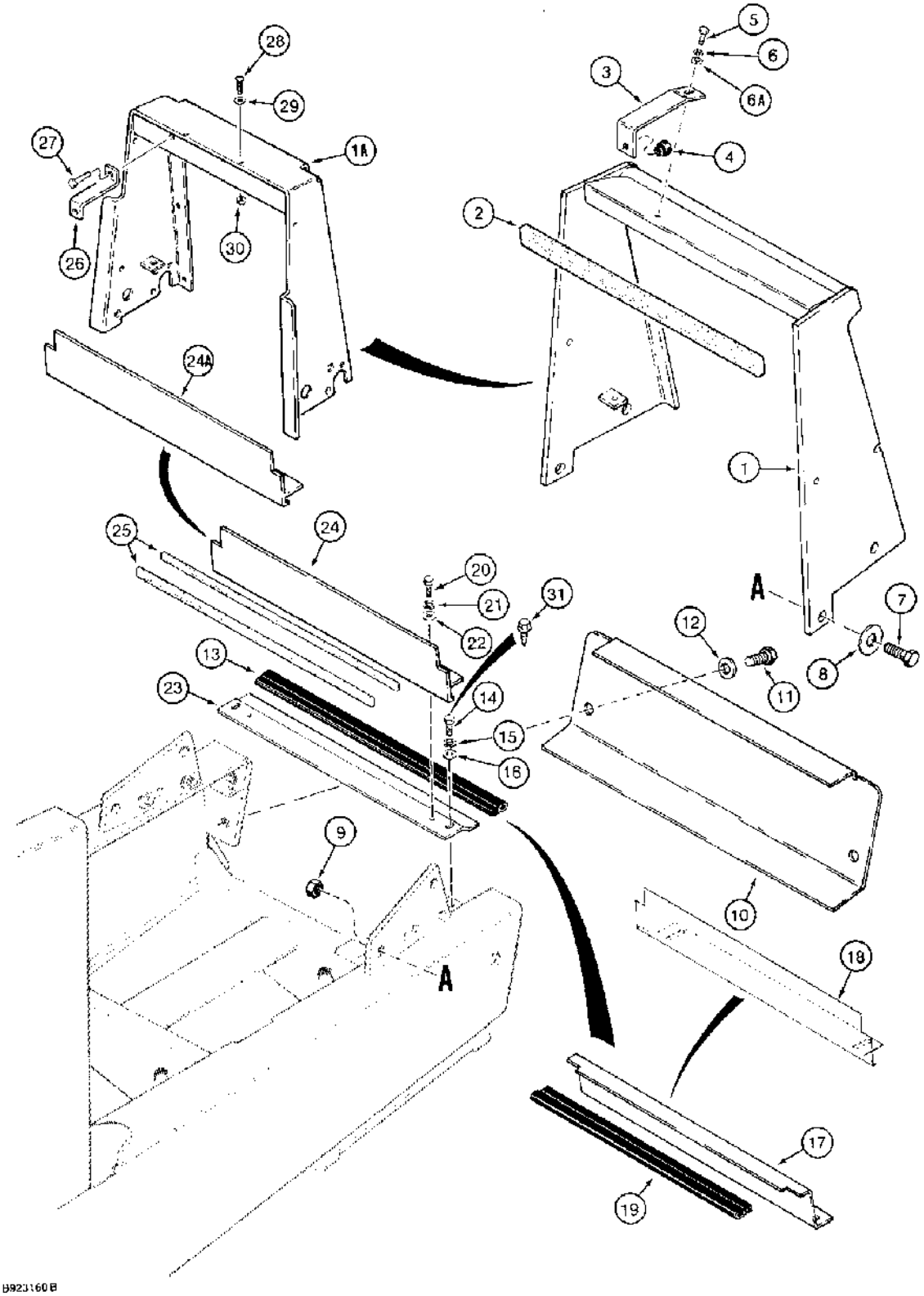

(580SK) - CASE SUPER-K CONSTRUCTION KING LOADER BACKHOE > (9-086) - RADIATOR SHROUD, PUMP GUARD AND FRONT COVERS

Diag #	Part #	Name	Description	Qty
1	D148409	SUPPORT	SHROUD radiator, used with D144397 or D144409 hood on Ref. 9-88, if used	1
1A	109380A1	PLATE	SHROUD radiator, used with 109270A1 or 111565A1 hood on Figure 9-091A, if used	1
2	D135947	SEAL	foam, adhesive back on one side, attaches to upper rear cross tube of shroud	1
3	D132477	BRACKET	radiator retaining, used with Ref. 1 shroud, if used	1
4	L60224	BUMPER	rubber	1
5	413-512	BOLT,Hex, 5/16" - 18 x 3/4", Gr 5	hex, 5/16 NC x 3/4 inch, if used	1
6	492-11031	LOCK WASHER,5/16"	WASHER, LOCK, ", if used 5/16"	1
6A	195-521	WASHER,5/16", SAE	flat, 11/32 x 11/16 x 1/16 inch, if used	1
7	413-1228	BOLT,Hex, 3/4" - 10 x 1 3/4", Gr 5	hex, 3/4 NC x 1-3/4 inch, replaces 13-1232 2 inch bolt	4
8	495-11081	WASHER,3/4", SAE	WASHER,3/4", SAE	4
9	425-1012	NUT,3/4"-10, G5	hex, 3/4 inch NC	4
10	D141011	PROTECTOR	GUARD pump, not used on models with front counterweight	1
11	413-1220	BOLT,Hex, 3/4" - 10 x 1 1/4", Gr 5	hex, 3/4 NC x 1-1/4 inch	2
12	495-11081	WASHER,3/4", SAE	WASHER,3/4", SAE	2
13	D135944	SEAL	576 mm long, cut from F43117 bulk seal, see below, lower baffle plate, used only on models with front counterweight	1
14	413-512	BOLT,Hex, 5/16" - 18 x 3/4", Gr 5	hex, 5/16 NC x 3/4 inch, if used	2
15	492-11031	LOCK WASHER,5/16"	WASHER, LOCK, , if used 5/16"	2
16	495-21038	WASHER,5/16"	(flat, 3/8 x 7/8 x 5/64"), If used 5/16"	2
17	D145479	BAFFLE	PLATE baffle, upper, not used on models with air conditioning	1
18	D138355	PLATE	baffle, upper, used only on models with air conditioning, if used	1
19	D128489	LINING	SEAL, 496 mm long, cut from F43117 bulk seal, see below, upper baffle plate	1
20	413-512	BOLT,Hex, 5/16" - 18 x 3/4", Gr 5	hex, 5/16 NC x 3/4 inch	2
21	492-11031	LOCK WASHER,5/16"	WASHER, LOCK, 5/16"	2
22	495-11034	WASHER,5/16", SAE	5/16" SAE (flat, 11/32 x 11/16 x 1/16")	2
23	D141013	PLATE	baffle, lower, used on models with air conditioning or models with auxiliary	1

Diag #	Part #	Name	Description	Qty
			hydraulics for optional rear hydraulic attachments	
24	D140971	SHEET	PLATE baffle, lower, used with Ref. 25 seal and Ref. 23 plate on models with air conditioning or models with auxiliary hydraulics for optional rear hydraulic attachments, no longer available, order 111980A1, Ref. 24A	1
24A	111980A1	LARGE PLATE	PLATE baffle, lower, used with Ref. 25 seal and Ref. 23 plate on models with turbocharged engines on tractor P.I.N. JJG0173468 and after, on models with air conditioning or models with auxiliary hydraulics for optional rear hydraulic attachments, if used	1
25	D140871	BAND	SEAL, 560 mm long, cut from D126201 bulk, used with Ref. 24 or 24A plate, 2 used on models with air conditioning, if used	1-2
	D126201	BAND	SEAL, 912 mm long, adhesive back, bulk	1
	F43117	SEAL	100 ft, 3048 cm, long, bulk	1
26	116129A1	BRACKET	radiator retaining, used with item 1A shroud, if used, replaces 107237A1	1
27	413-616	BOLT,Hex, 3/8" - 16 x 1", Gr 5	hex, 3/8 NC x 1 inch, if used	1
28	440-11012	SCREW,Cross Pan Hd, #10-24 x 3/4"	- machine, pan head Phillips, No. 10 NC x 3/4 inch, if used	4
29	109879A1	SPACER	plastic, hood, if used	4
30	86625057	NUT,#10-24, GB	NUT, LOCK, , If used #10-24, GB	4
31	112865A1	SCREW	hex flange, self-tapping, replaces Ref. 14-16 on some models	2
		on some models	on some models	2

http://www.minnparbackhoeparts.com/

(580SK) - CASE SUPER-K CONSTRUCTION KING LOADER BACKHOE > (9-088) - HOOD, ENGINE SIDE PANELS AND GRILLE UNIT

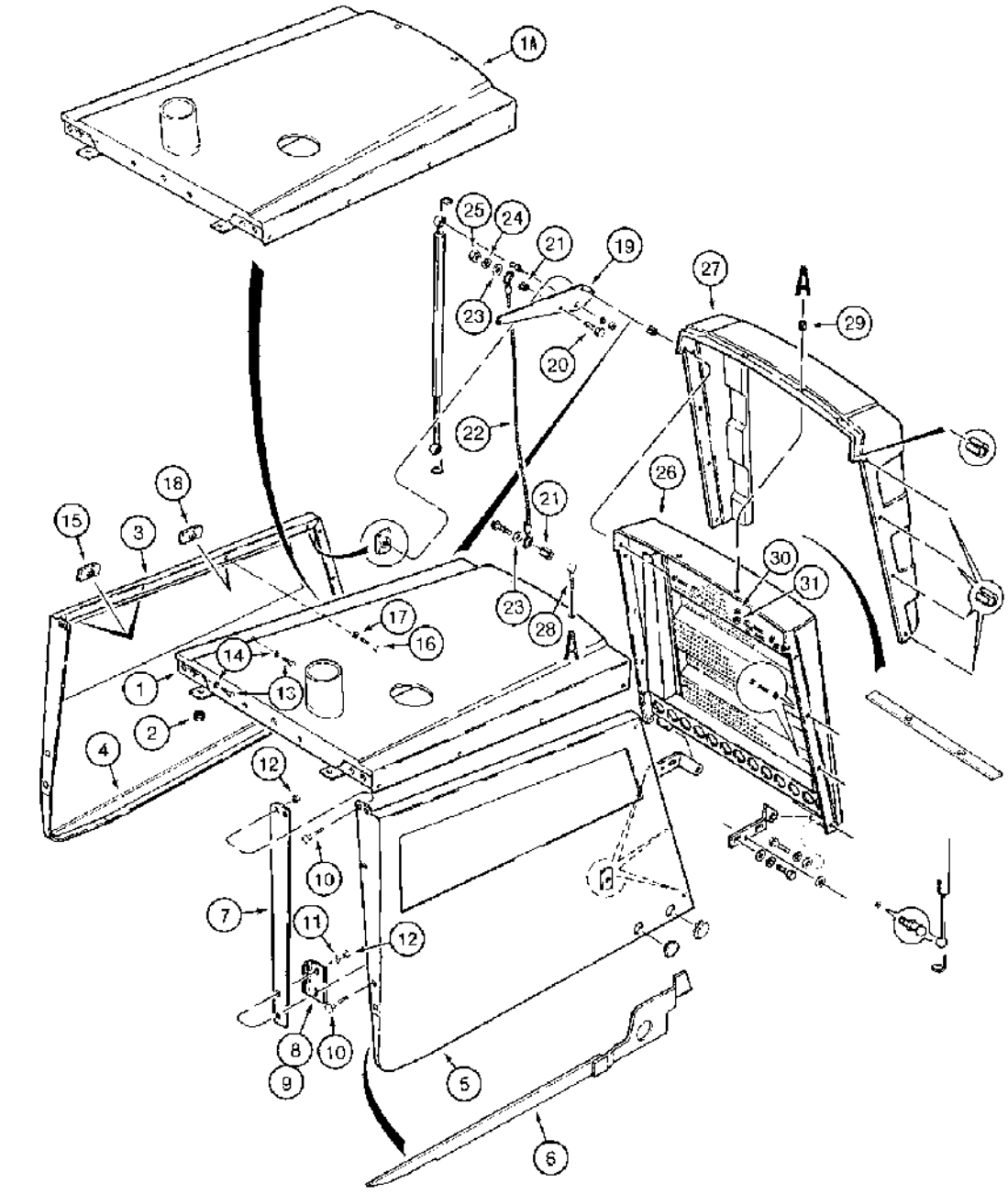

B902674

(580SK) - CASE SUPER-K CONSTRUCTION KING LOADER BACKHOE > (9-088) - HOOD, ENGINE SIDE PANELS AND GRILLE UNIT

Diag #	Part #	Name	Description	Qty
1	D144397	COWL	HOOD, used on models without turbocharged engine, if used	1
		Also see Figure 9-091A for hood.	Also see Figure 9-091A for hood.	1
1A	D144409	COWL	HOOD, used on models with turbocharged engine, if used	1
		Also see Figure 9-091A for hood.	Also see Figure 9-091A for hood.	1
2	D145721	BUMPER	hood to air cleaner mounting bracket	2
3	D143245	COWL	PANEL engine, left-hand side, Includes: Ref. 4	1
4	D143260	SUPPORT	PLATE support, side panel stiffener	1
5	D143244	PANEL, SIDE	PANEL engine, right-hand side, Includes: Ref. 6	1
6	D143259	SUPPORT	PLATE support, side panel stiffener	1
7	D134654	PLATE	engine side panels, rear guide	2
8	D143714	SUPPORT	BRACKET rear guide, right-hand side panel	1
9	D143715	SUPPORT	BRACKET rear guide, left-hand side panel	1
10	111-364	CARRIAGE BOLT,Short NK, 3/8"-16 x 1 1/4", G5	BOLT, CARRIAGE, Short NK, 3/8"-16 x 1 1/4", G5	8
11	495-11041	WASHER,3/8", SAE	flat, (13/32 x 13/16 x 1/16"), At rear guide brackets	4
12	232-1446	NUT,3/8"-16, GC	NUT, LOCK, 3/8"-16, GC	8
13	413-48	BOLT,Hex, 1/4" - 20 x 1/2", Gr 5	- hex, 1/4 NC x 1/2 inch	4
14	492-11025	LOCK WASHER,1/4"	WASHER, LOCK, 1/4"	4
15	129-468	NUT	weld, 1/4 inch NC	4
16	413-412	BOLT,Hex, 1/4" - 20 x 3/4", Gr 5	- hex, 1/4 NC x 3/4 inch	2
17	492-11025	LOCK WASHER,1/4"	WASHER, LOCK, 1/4"	2
18	129-468	NUT	weld, 1/4 inch NC	2
19	D143903	SUPPORT	BRACKET cylinder retaining, hood	2
20	413-620	BOLT,Hex, 3/8" - 16 x 1 1/4", Gr 5	hex, 3/8 NC x 1-1/4 inch, upper cable mounting	2
21	D143417	SPACER	cable	4
22	D133403	CABLE	steel, hood retaining	2
23	495-21044	WASHER,3/8"	(flat, 7/16 x 1 x 5/64 inch) 3/8"	4
24	492-11038	LOCK WASHER,3/8"	LOCK WASHER,3/8"	2
25	425-106	NUT,3/8"-16, G5	NUT,3/8"-16, G5	2
26	D143506	GRILLE ASSY	GRILLE tilt	1

Diag #	Part #	Name	Description	Qty
27	D143461	GRILLE	GUARD grille, rubber	1
28	434-520	CARRIAGE BOLT,Sht Sq Nk, 5/16" - 18 x 1 1/4", Gr 5	BOLT carriage, 5/16 NC x 1-1/4 inch	2
29	D76195	SPACER	13/32 x 5/8 x 45/64 inch	2
30	492-11031	LOCK WASHER,5/16"	WASHER, LOCK, 5/16"	2
31	425-105	NUT,5/16"-18, G5	- hex, 5/16 inch NC	2

http://www.minnparbackhoeparts.com/

(580SK) - CASE SUPER-K CONSTRUCTION KING LOADER BACKHOE > (9-090) - HOOD, ENGINE SIDE PANELS AND GRILLE UNIT

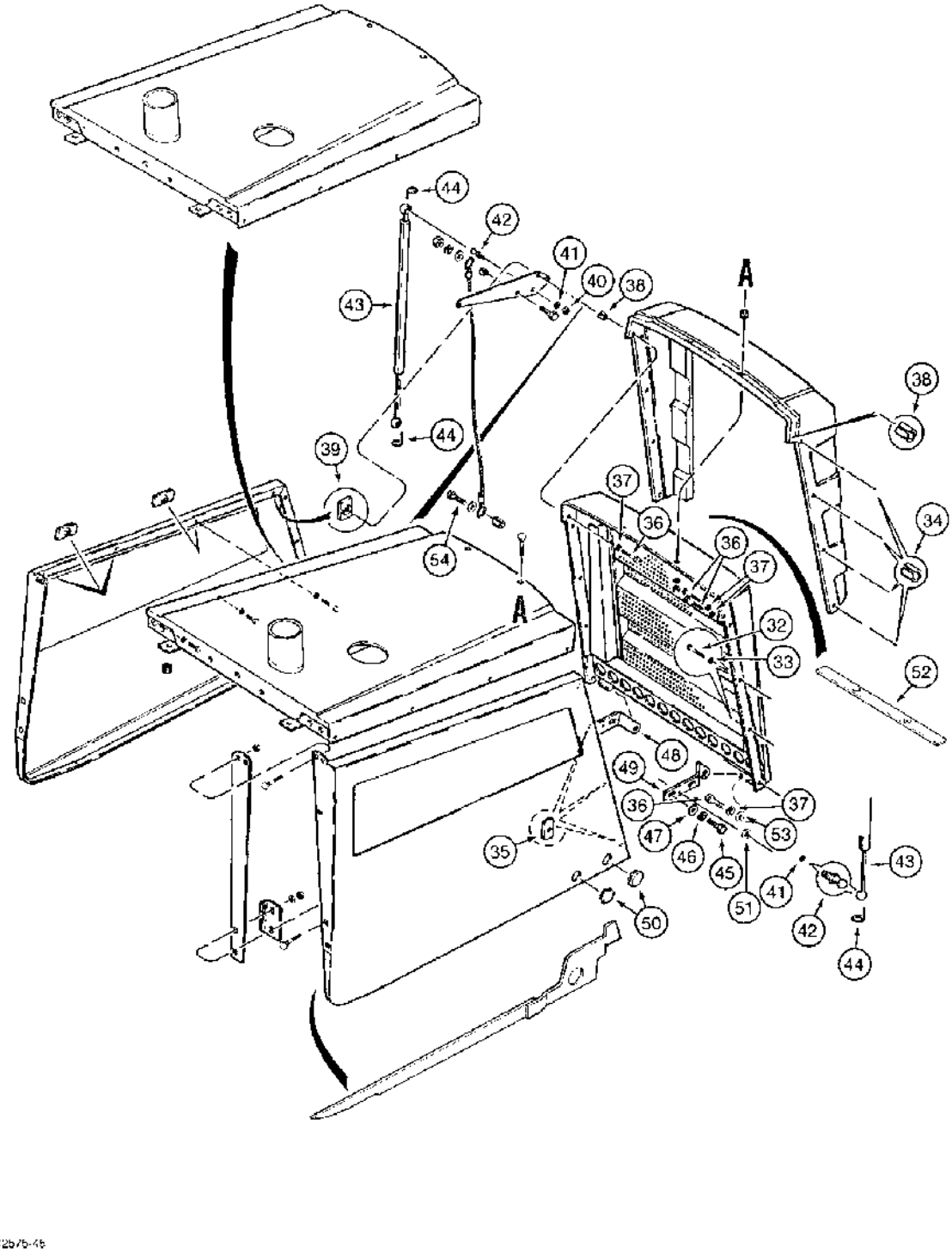

(580SK) - CASE SUPER-K CONSTRUCTION KING LOADER BACKHOE > (9-090) - HOOD, ENGINE SIDE PANELS AND GRILLE UNIT

Diag #	Part #	Name	Description	Qty
33	492-11025	LOCK WASHER,1/4"	WASHER, LOCK, 1/4"	4
34	D136619	SPACER	7 mm x 10 mm x 13 mm	8
35	129-468	NUT	weld, 1/4 inch NC	6
36	413-424	BOLT,Hex, 1/4" - 20 x 1 1/2", Gr 5	BOLT,Hex, 1/4" - 20 x 1 1/2", Gr 5	6
37	492-11025	LOCK WASHER,1/4"	WASHER, LOCK, 1/4"	6
38	D136620	SPACER	7 mm x 10 mm x 10 mm, one each side of grille to grille guard uppermost mounting holes only	2
39	129-468	NUT	weld, 1/4 inch NC	4
40	425-105	NUT,5/16"-18, G5	- hex, 5/16 inch NC	2
41	492-11031	LOCK WASHER,5/16"	WASHER, LOCK, 5/16"	4
42	1340345C1	BALL STUD	STUD ball	4
43	D132726	CYLINDER ASSY.	CYLINDER spring, counterbalance, hood	2
44	F44883	CLIP	ball stud retainer	4
45	413-624	BOLT,Hex, 3/8" - 16 x 1 1/2", Gr 5	hex, 3/8 NC x 1-1/2 inch	4
46	492-11038	LOCK WASHER,3/8"	LOCK WASHER,3/8"	4
47	495-11041	WASHER,3/8", SAE	flat, (13/32 x 13/16 x 1/16")	4
48	D134669	BRACKET	hinge, left-hand, attaches, Serial Range: grille-chassis	1
49	D134668	BRACKET	hinge, right-hand, attaches, Serial Range: grille-chassis	1
50	D140267	PLUG	side panels, if used	4
51	495-21038	WASHER,5/16"	(flat, 3/8 x 7/8 x 5/64") 5/16"	2
52	D146866	PLATE	spacer	1
53	495-11028	WASHER,1/4", SAE	(flat, 9/32 x 5/8 x 1/16") 1/4", SAE	2
54	276-24916	SELF-TAP SCREW,Hex Hd, 3/8" x 1"	SCREW self-tapping, hex head, 3/8 NC x 1 inch, lower cable mounting	2
32	413-420	BOLT,Hex, 1/4" - 20 x 1 1/4", Gr 5	BOLT,Hex, 1/4" - 20 x 1 1/4", Gr 5	4

http://www.minnparbackhoeparts.com/

(580SK) - CASE SUPER-K CONSTRUCTION KING LOADER BACKHOE > (9-091A) - HOOD, ENGINE SIDE PANELS AND GRILLE UNIT

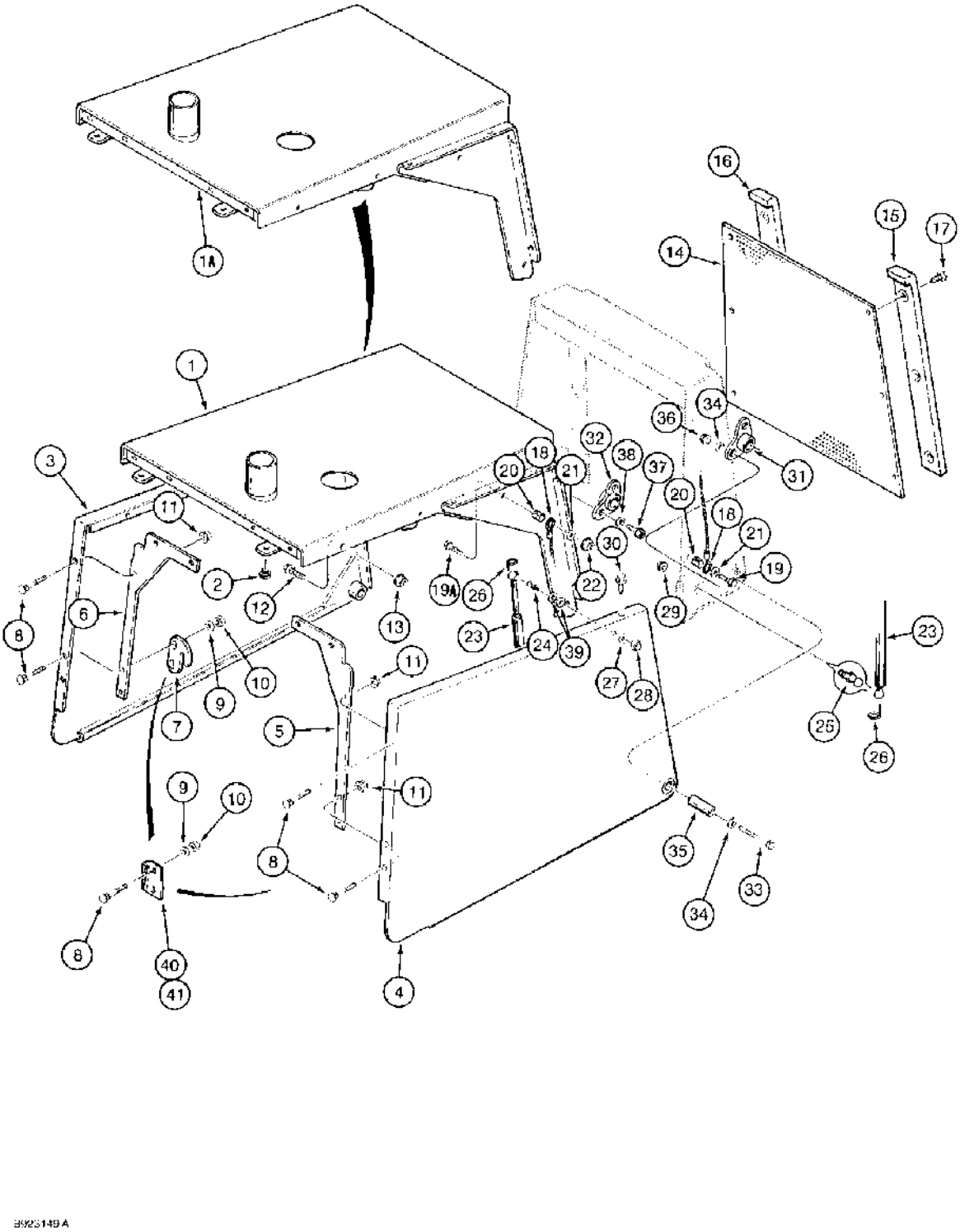

B923149A

http://www.minnparbackhoeparts.com/

(580SK) - CASE SUPER-K CONSTRUCTION KING LOADER BACKHOE > (9-091A) - HOOD, ENGINE SIDE PANELS AND GRILLE UNIT

Diag #	Part #	Name	Description	Qty
1	109270A1	HOOD ASSY.	HOOD, used on models without turbocharged engine, if used	1
		Also see Figures 9-088 and 9-090 for hood.	Also see Figures 9-088 and 9-090 for hood.	1
1A	111565A1	HOOD ASSY.	HOOD, used on models with turbocharged engine, if used	1
		Also see Figures 9-088 and 9-090 for hood.	Also see Figures 9-088 and 9-090 for hood.	1
2	D145721	BUMPER	hood to air cleaner mounting bracket	2
3	123102A1	PANEL	engine, left-hand side, replaces 109395A1	1
4	123101A1	PANEL	engine, right-hand side, replaces 109280A1	1
5	125892A1	BRACE	right-hand rear side panels, replaces 109308A1	1
6	125894A1	BRACE	left-hand rear side panels, replaces 109313A1	1
7	E48286	SUPPORT	BRACKET brace, guide, left-hand side panel, if used	1
8	434-620	CARRIAGE BOLT,Sht Sq Nk, 3/8" - 16 x 1 1/4", Gr 5	BOLT, CARRIAGE, Short NK, 3/8"-16 x 1 1/4", G5, Full Thd	10
9	495-21044	WASHER,3/8"	(flat, 7/16 x 1 x 5/64 inch), Rear guide brackets 3/8"	2-4
10	230-4216	LOCK NUT,3/8"-16, GA	NUT hex, self-locking, 3/8 inch NC	2-4
11	425-286	BEARING LOCK NUT,Flg, 3/8"-16, G5	BEARING LOCK NUT,Flg, 3/8"-16, G5	6-8
12	458-512	BOLT,Hex, 5/16" - 18 x 3/4", Gr 5	BOLT,Hex, 5/16" - 18 x 3/4", Gr 5	4
13	425-285	BEARING LOCK NUT,Flg, 5/16"-18, G5	hex flange, 5/16 inch NC	4
14	109383A1	GRILLE	tilt, perforated, mounting holes may be holes or slots	1
15	110598A1	MOLDING	BUMPER grille, right-hand	1
16	110335A1	BAR	BUMPER grille, left-hand	1
17	118978A1	FLANGE BOLT	SCREW hex flange, self-tapping	6
18	113292A1	CABLE	hood retaining	1
19	413-612	BOLT,Hex, 3/8" - 16 x 3/4", Gr 5	BOLT,Hex, 3/8" - 16 x 3/4", Gr 5	1
19A	413-620	BOLT,Hex, 3/8" - 16 x 1 1/4", Gr 5	hex, 3/8 NC x 1-1/4 inch	1
20	D143417	SPACER	cable	2
21	495-21044	WASHER,3/8"	(flat, 7/16 x 1 x 5/64 inch) 3/8"	2

Diag #	Part #	Name	Description	Qty
22	425-286	BEARING LOCK NUT,Flg, 3/8"-16, G5	Cable retaining, upper Flg, 3/8"-16, G5	1
23	114980A1	GAS STRUT	Cylinder spring, Hood counterbalance	2
24	1340345C1	BALL STUD	STUD ball, upper, replaced 238-7115	2
		F44882 subs to 1340345C1	F44882 subs to 1340345C1	1
25	109498A1	STUD	ball, lower	2
26	F44883	CLIP	ball stud retainer	4
27	495-21038	WASHER,5/16"	(flat, 3/8 x 7/8 x 5/64") 5/16"	2
28	234-10431	BEARING LOCK NUT,Crown, 5/16"-18	Upper Crown, 5/16"-18	2
29	425-285	BEARING LOCK NUT,Flg, 5/16"-18, G5	hex, flange, 5/16 inch NC, lower	2
30	112865A1	SCREW	hex flange, self-tapping	8
31	110977A1	PLATE	PIVOT right-hand side panel	1
32	111003A1	PLATE	PIVOT left-hand side panel	1
33	413-864	BOLT,Hex, 1/2" - 13 x 4", Gr 5	hex, 1/2 NC x 4 inch	2
34	495-21056	WASHER,1/2"	flat, 9/16 x 1-3/8 x 3/32 inch	4
35	110974A1	TUBE,14.275 mm ID, 25.4 mm OD, 74 mm Length	SPACER hood pivot	2
36	425-108	NUT,1/2"-13, G5	NUT, , Hex 1/2"-13, G5	2
37	458-616	BOLT,Hex Flg, 3/8" - 16 x 1", Gr 5	hex flange, 3/8 NC x 1 inch	4
38	496-41041	WASHER,13/32" x 1 1/8" x .134"	flat, 13/32 x 1-1/8 x 9/64 inch, hardened	4
39	495-81001	WASHER,5/16"	flat, 3/8 x 1-1/8 x 1/16 inch	4
40	D143714	SUPPORT	BRACKET rear guide, right-hand side panel, if used	1
41	D143715	SUPPORT	BRACKET rear guide, left-hand side panel, if used	1

http://www.minnparbackhoeparts.com/

(580SK) - CASE SUPER-K CONSTRUCTION KING LOADER BACKHOE > (9-092) - UPRIGHT COVER AND HOOD LATCH RELEASE

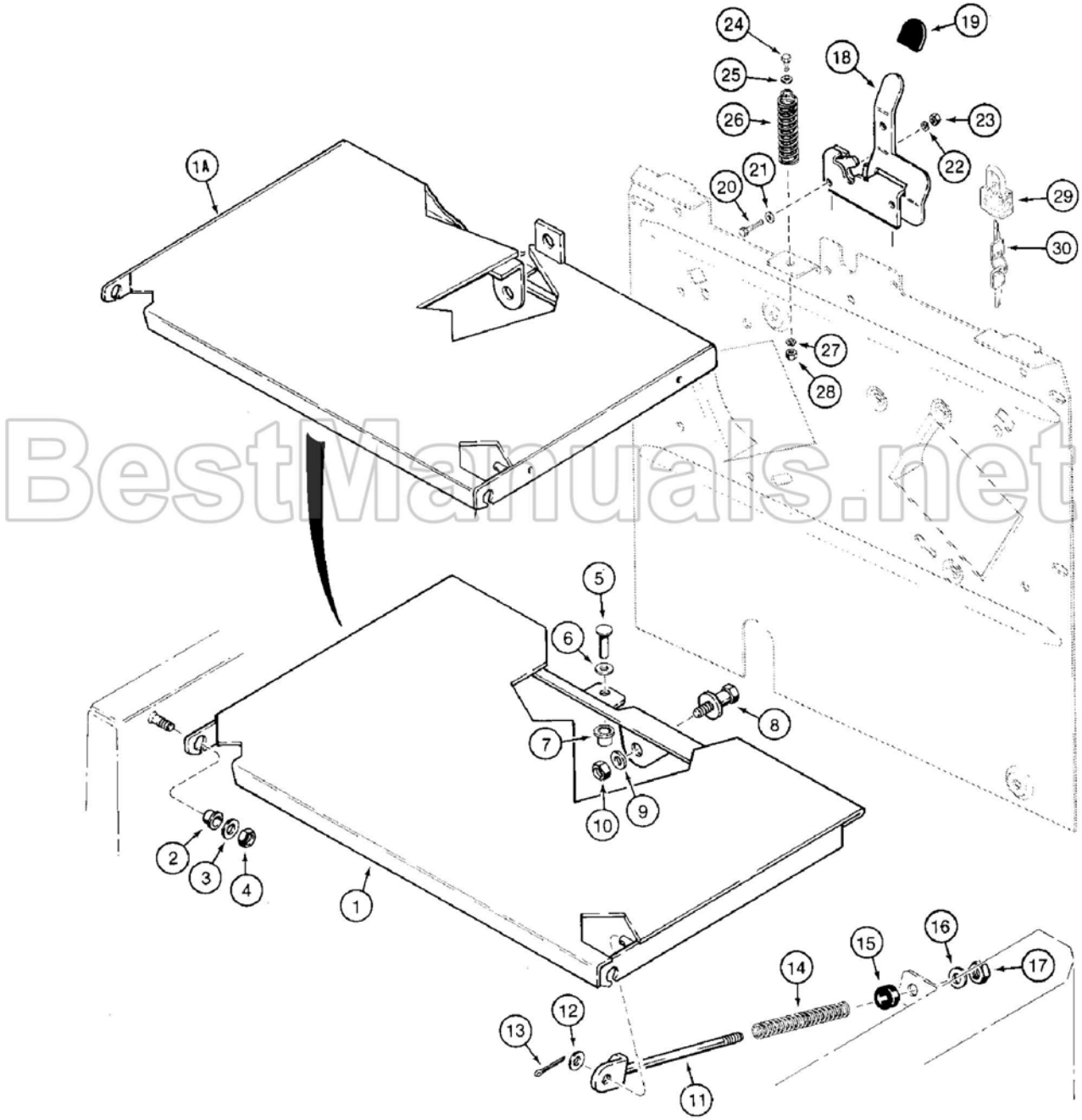

BestManuals.net

(580SK) - CASE SUPER-K CONSTRUCTION KING LOADER BACKHOE > (9-092) - UPRIGHT COVER AND HOOD LATCH RELEASE

Diag #	Part #	Name	Description	Qty
1	D144452	COWL	COVER chassis upright, used with D144397 or D144409 hood on Figure 9-088, no longer available, order 110824A1 cover	1
1A	110824A1	COVER ASSY	COVER chassis upright, used with 109270A1 or 111565A1 hood on Figure 9-091A, if used	1
2	D134837	BEARING,10 mm ID x 26 mm OD x 8 mm	cover pivot	2
3	495-11041	WASHER,3/8", SAE	flat, (13/32 x 13/16 x 1/16")	2
4	231-1446	NUT,3/8"-16, GB	NUT light hex, self-locking, 3/8 inch NC, grade 8	2
5	427-4077	CLEVIS PIN,1/4" x .770"	PIN clevis, 1/4 x 43/64 inch, hardened	1
6	495-11028	WASHER,1/4", SAE	(flat, 9/32 x 5/8 x 1/16") 1/4", SAE	1
7	131-867	JAM NUT,1/4"-20, Push-on	push-on type, 1/4 inch	1
8	D136115	LATCH	STRIKER upright cover	1
9	D52275	WASHER	flat, 25/64 x 1-1/4 x 7/64 inch, hardened, if used	1
9	496-41041	WASHER,13/32" x 1 1/8" x .134"	flat, 13/32 x 1-1/8 x 9/64 inch, hardened, If used	1
10	230-4216	LOCK NUT,3/8"-16, GA	NUT hex, self-locking, 3/8 inch NC	1
11	D134872	ROD	upright cover support	1
12	495-11034	WASHER,5/16", SAE	5/16" SAE (flat, 11/32 x 11/16 x 1/16")	1
13	432-68	COTTER PIN,3/32" x 1/2"	PIN, SPLIT (COTTER), 3/32" x 1/2"	1
14	D125336	COIL SPRING	SPRING return, upright cover	1
15	D125335	BUMPER	spring stop	1
16	495-11028	WASHER,1/4", SAE	(flat, 9/32 x 5/8 x 1/16") 1/4", SAE	1
17	231-1444	NUT,1/4"-20, GB	NUT, LOCK, 1/4"-20, GB	1
18	D144414	LATCH	hood release	1
19	D144519	CAP	latch lever	1
21	495-21031	WASHER,1/4"	flat, 5/16 x 47/64 x 1/16 inch	2
22	492-11025	LOCK WASHER,1/4"	WASHER, LOCK, , If used 1/4"	2
23	425-104	NUT,1/4"-20, G5	hex, 1/4 inch NC	2
24	413-412	BOLT,Hex, 1/4" - 20 x 3/4", Gr 5	- hex, 1/4 NC x 3/4 inch	1
25	495-11028	WASHER,1/4", SAE	(flat, 9/32 x 5/8 x 1/16") 1/4", SAE	1
26	D136113	SPRING	hood pop-up	1
27	492-11025	LOCK WASHER,1/4"	WASHER, LOCK, , If used 1/4"	1
28	425-104	NUT,1/4"-20, G5	hex, 1/4 inch NC	1

Diag #	Part #	Name	Description	Qty
29	D93753	PADLOCK	hood latch, if used, Includes: Ref. 30	1
30	R29555	KEY	for Master padlock only	2
30	D93751	SET OF 2 KEYS	KEY for Yale padlock only	2
20	413-420	BOLT,Hex, 1/4" - 20 x 1 1/4", Gr 5	BOLT,Hex, 1/4" - 20 x 1 1/4", Gr 5	2

http://www.minnparbackhoeparts.com/

(580SK) - CASE SUPER-K CONSTRUCTION KING LOADER BACKHOE > (9-094) - LOADER VALVE BOX, COVERS AND STEPS

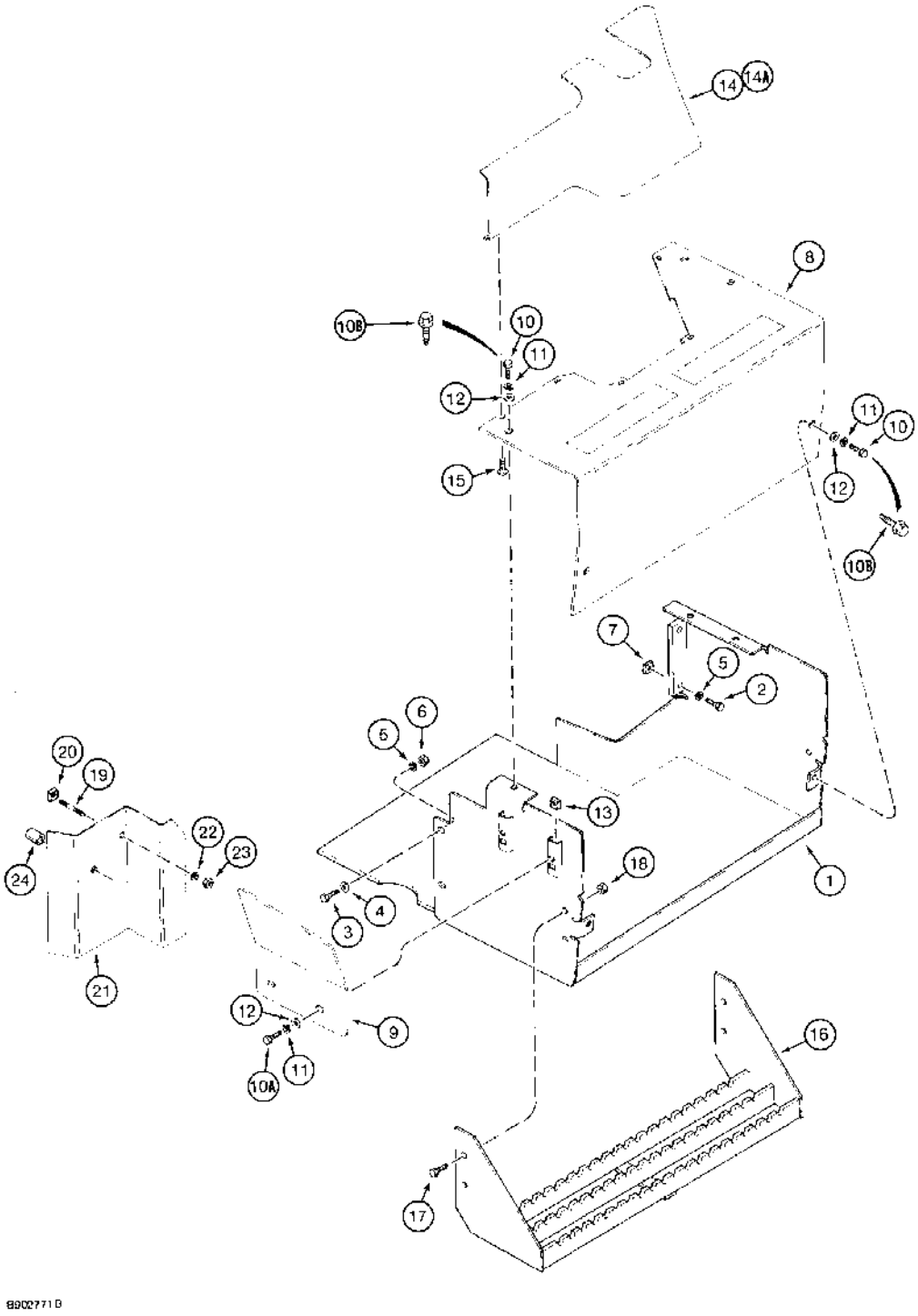

(580SK) - CASE SUPER-K CONSTRUCTION KING LOADER BACKHOE > (9-094) - LOADER VALVE BOX, COVERS AND STEPS

Diag #	Part #	Name	Description	Qty
1	D147089	PLATE ASSY.	BOX enclosure, loader valve	1
		D147089 loader valve enclosure box -3/8" cage nuts welded on box are D88417	D147089 loader valve enclosure box -3/8" cage nuts welded on box are D88417	1
2	413-616	BOLT,Hex, 3/8" - 16 x 1", Gr 5	hex, 3/8 NC x 1 inch	2
3	413-620	BOLT,Hex, 3/8" - 16 x 1 1/4", Gr 5	hex, 3/8 NC x 1-1/4 inch	2
4	495-21044	WASHER,3/8"	(flat, 7/16 x 1 x 5/64 inch) 3/8"	2
5	492-11038	LOCK WASHER,3/8"	LOCK WASHER,3/8"	4
		Between Ref 5 & 7, the vertical bracket shown is part # D132013, which is NSS.	Between Ref 5 & 7, the vertical bracket shown is part # D132013, which is NSS.	1
6	425-106	NUT,3/8"-16, G5	NUT,3/8"-16, G5	2
7	84899	SQUARE NUT,Sq, 3/8"-16, G2	square, 3/8 inch NC	2
		Between Ref 5 & 7, the vertical bracket shown is part # D132013, which is NSS.	Between Ref 5 & 7, the vertical bracket shown is part # D132013, which is NSS.	1
8	D147402	LID	COVER valve enclosure box, front	1
9	D150029	GUARD	mud, valve enclosure box	1
10	413-616	BOLT,Hex, 3/8" - 16 x 1", Gr 5	hex, 3/8 NC x 1 inch, if used	5
10A	413-614	BOLT,Hex, 3/8" - 16 x 7/8", Gr 5	BOLT,Hex, 3/8" - 16 x 7/8", Gr 5	2
10B	458-616	BOLT,Hex Flg, 3/8" - 16 x 1", Gr 5	SCREW pointed, self-aligning, special, if used, replaces 118978A1	5
11	492-11038	LOCK WASHER,3/8"	LOCK WASHER,3/8"	7
12	495-21044	WASHER,3/8"	(flat, 7/16 x 1 x 5/64 inch) 3/8"	7
13	84899	SQUARE NUT,Sq, 3/8"-16, G2	square, 3/8 inch NC	2
14	D147520	COVER	valve enclosure box, rear, plastic, with opening for hydraulic tubes, prior to P.I.N. JJG0169931, no longer available, order D150792 cover, Ref. 14A, and modify as required	1
14A	D150792	COVER	valve enclosure box, rear, plastic, without opening for hydraulic tubes, P.I.N. JJC0169931 and after	1
15	260-14512	SCREW,Cross Pan Hd, #10 x 3/4"	self-tapping, pan Phillips, No. 10-16 x 3/4 inch	5

Diag #	Part #	Name	Description	Qty
16	D149922	STEP	operator compartment access, right-hand, see Figure 4-18, Ref. 38, for left-hand step	1
17	413-616	BOLT,Hex, 3/8" - 16 x 1", Gr 5	hex, 3/8 NC x 1 inch	4
18	231-1446	NUT,3/8"-16, GB	NUT hex, self-locking, 3/8 inch NC, grade 8	4
19	R46227	STUD	special, tube clamp and cover to chassis bracket	2
20	84899	SQUARE NUT,Sq, 3/8"-16, G2	square, 3/8 inch NC	2
21	D146883	PROTECTOR	GUARD rear, tubes at chassis	1
22	492-11038	LOCK WASHER,3/8"	LOCK WASHER,3/8"	2
23	425-106	NUT,3/8"-16, G5	NUT,3/8"-16, G5	2
24	D150735	SPACER	rear guard, left-hand mounting hole only, if used	1

http://www.minnparbackhoeparts.com/

(580SK) - CASE SUPER-K CONSTRUCTION KING LOADER BACKHOE > (9-096) - OPERATORS COMPARTMENT FRAME AND MOUNTING

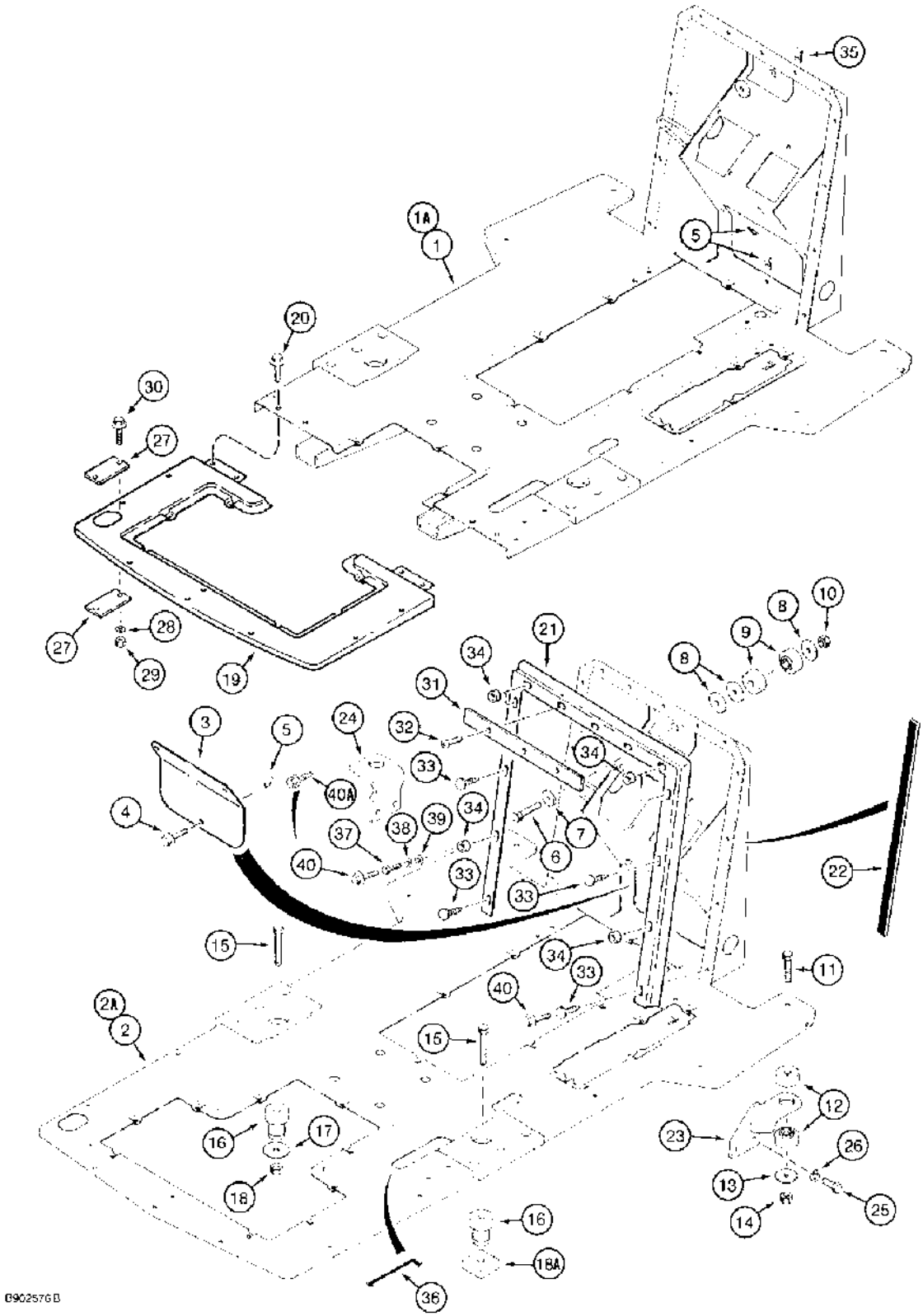

(580SK) - CASE SUPER-K CONSTRUCTION KING LOADER BACKHOE > (9-096) - OPERATORS COMPARTMENT FRAME AND MOUNTING

Diag #	Part #	Name	Description	Qty
1	D148051	ROD	FRAME operators compartment	1
		loader models only, has a 7/16 inch mounting hole on front of lower channel for front drive axle control lever mounting, Ref. 5 and 12 on Figure 6-36, frame no longer available, 2WD units order 102452A1 frame, Ref. 1A below; 4WD units order 102452A1 frame, Ref. 1A below, 102446A1 bracket, Ref. 21A on Figure 7-012, and Ref. 24,25,27,28, and 30-33 on Fig. 6-36	loader models only, has a 7/16 inch mounting hole on front of lower channel for front drive axle control lever mounting, Ref. 5 and 12 on Figure 6-36, frame no longer available, 2WD units order 102452A1 frame, Ref. 1A below; 4WD units order 102452A1 frame, Ref. 1A below, 102446A1 bracket, Ref. 21A on Figure 7-012, and Ref. 24,25,27,28, and 30-33 on Fig. 6-36	1
1A	102452A1	ROD ASSY.	FRAME operators compartment, loader models only, has 1/2 inch mounting hole on front of lower channel for front drive axle control lever mounting, Ref. 24 and 25 on Figure 6-36	1
2	D146159	ROD ASSY.	FRAME operators compartment	1
		loader integral backhoe models, has a 7/16 inch mounting hole on front of lower channel for front drive axle control lever mounting, Ref. 5 and 12 on Fig. 6-36, frame no longer available, 2WD units order 102451A1 frame, Ref. 2A below; 4WD units order 102451A1 frame, Ref. 2A below, 102446A1 bracket, Ref. 21A on Fig. 7-13, and Ref. 24,25,27,28, and 30-33 on Fig. 6-36	loader integral backhoe models, has a 7/16 inch mounting hole on front of lower channel for front drive axle control lever mounting, Ref. 5 and 12 on Fig. 6-36, frame no longer available, 2WD units order 102451A1 frame, Ref. 2A below; 4WD units order 102451A1 frame, Ref. 2A below, 102446A1 bracket, Ref. 21A on Fig. 7-13, and Ref. 24,25,27,28, and 30-33 on Fig. 6-36	1
2A	117920A1	BRACKET	FRAME operators compartment, loader integral backhoe models, has 1/2 inch mounting hole on front of lower channel for front drive axle control lever mounting, Ref. 24 and 25 on Figure 6-36, replaces 102451A1 frame	1
3	D139180	COVER	PLATE access, in firewall	1
4	281-14812	SELF-TAP SCREW,Hex Washer, 5/16" - 18 x 3/4"	SCREW self-tapping, hex washer head, 5/16 NC x 3/4 inch	3
5	131-97	SPRING NUT,Tinn, U, 5/16"-18	U-type, 5/16 inch NC	3

Diag #	Part #	Name	Description	Qty
6	426-1060	BOLT,Hex, 5/8" - 11 x 3 3/4", Gr 8	hex, 5/8 NC x 3-3/4 inch	1
7	D90873	WASHER	flat, 1/4 inch, 6 mm, thick	1
8	D89007	WASHER	flat, 5/8 x 2-3/4 inch, special	3
9	D138565	SHOCK ABSORBER	INSULATOR frame mounting, front	2
10	429-1010	NUT,5/8"-11, G8	NUT,5/8"-11, G8	1
11	426-1064	BOLT,Hex, 5/8" - 11 x 4", Gr 8	hex, 5/8 NC x 4 inch, grade 8	2
12	D138565	SHOCK ABSORBER	INSULATOR frame mounting, front	4
13	D89007	WASHER	flat, 5/8 x 2-3/4 inch, special	2
14	429-1010	NUT,5/8"-11, G8	NUT,5/8"-11, G8	2
15	D147377	BOLT	hex, 5/8 NC x 5 inch, special thread length	2
16	A141451	SHOCK ABSORBER	INSULATOR frame mount, rear, rubber	2
17	D89007	WASHER	flat, 5/8 x 2-3/4 inch, special, used with Ref. 16 insulator on left-hand side of frame	1
18	429-1010	NUT,5/8"-11, G8	Used with Ref. 17 washer 5/8"-11, G8	1
18A	D148525	BLOCK	tapped, 2-3/4 inch square, used with Ref. 16 insulator on right-hand side of frame	1
19	D141960	PLATFORM ASSY.	FRAME rear, used with Ref. 1, D148051 frame, cab or canopy loader only models with rear counterweight	1
20	281-14812	SELF-TAP SCREW,Hex Washer, 5/16" - 18 x 3/4"	SCREW self-tapping, hex washer head, 5/16 NC x 3/4 inch, if used	4
21	D132290	SEAL	firewall, used on models without cab	1
22	D150055	STRIP	SEAL, 300 inch, 7620 mm, long, cut from L35819, firewall and chassis, used on models with cab	1
	L35819	RUBBER SEAL	SEAL, 50 foot long, bulk	1
23	D144671	SUPPORT	BRACKET frame mount, right-hand front	1
24	D140555	SUPPORT	BRACKET frame mount, left-hand front	1
25	426-820	BOLT,Hex, 1/2" - 13 x 1 1/4", Gr 8	BOLT,Hex, 1/2" - 13 x 1 1/4", Gr 8	4
26	80679	LOCK WASHER,1/2"	WASHER, LOCK, 1/2"	4
27	D140261	PLATE ASSY.	PLATE boom latch hole, used on models without backhoe, with rear counterweight	2
28	492-11031	LOCK WASHER,5/16"	WASHER, LOCK, 5/16"	2
29	425-105	NUT,5/16"-18, G5	- hex, 5/16 inch NC	2
30	281-14812	SELF-TAP SCREW,Hex Washer, 5/16" - 18 x 3/4"	SCREW self-tapping, hex washer head, 5/16 NC x 3/4 inch	2
31	D143659	PLATE	steel	1
32	440-13112	SCREW,Cross Pan Hd, 5/16"-18 x 3/4"	machine, pan head Phillps, 5/16 NC x 3/4 inch	3
33	D143242	PLUG	RETAINER push-in, plastic	4
34	102439A1	SPACER	13/32 x 1/2 x 3/8 inch, seal to front instrument panel, replaces D35217 spacer	6
35	131-874	NUT,Ret, J, 5/16"-18	J-type, 5/16 inch NC, if used	13

Diag #	Part #	Name	Description	Qty
36	D35424	LINING	SEAL trim, edge, 16 inch, cut to required length from bulk seal F42827, see below	1
37	413-516	BOLT,Hex, 5/16" - 18 x 1", Gr 5	hex, 5/16 NC x 1 inch	6
38	492-11031	LOCK WASHER,5/16"	WASHER, LOCK, 5/16"	6
39	495-11034	WASHER,5/16", SAE	5/16" SAE (flat, 11/32 x 11/16 x 1/16")	6
40	281-14812	SELF-TAP SCREW,Hex Washer, 5/16" - 18 x 3/4"	SCREW self-tapping, hex washer head, 5/16 NC x 3/4 inch, replaces D141589 screw, if used	3-7
40A	112865A1	SCREW	pointed, self-aligning, if used	7
	F42827	RUBBER STRIP	SEAL trim, edge, 116 inch	1

http://www.minnparbackhoeparts.com/

(580SK) - CASE SUPER-K CONSTRUCTION KING LOADER BACKHOE > (9-100) - FLOOR PLATES AND FLOORMATS

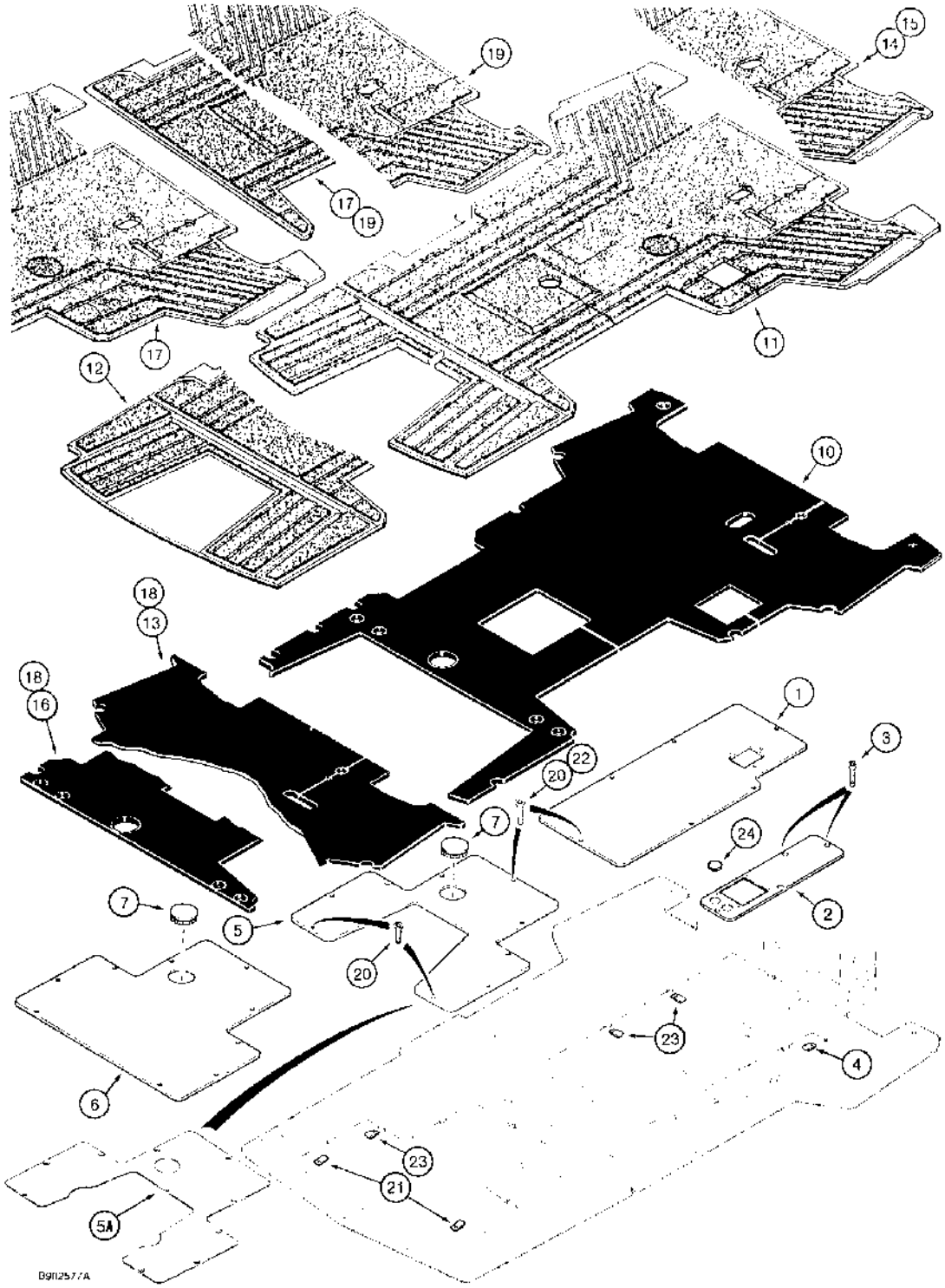

(580SK) - CASE SUPER-K CONSTRUCTION KING LOADER BACKHOE > (9-100) - FLOOR PLATES AND FLOORMATS

Diag #	Part #	Name	Description	Qty
1	D146215	COVER	PLATE floor, front cover, with or without backhoe	1
2	D149324	PLATE	floor, cover, loader control lever mounting	1
3	461-43116	HEX SOC SCREW,Hex Soc Flat Hd, 5/16"-18 x 1"	BOLT hex socket flat, 5/16 NC x 1 inch	10
4	131-97	SPRING NUT,Tinn, U, 5/16"-18	U-type, 5/16 inch NC	10
5	D133813	PLATE	floor, rear cover, with plug hole, cab or canopy models with backhoe, if used	1
5A	104539A1	PLATE	floor, rear cover, with plug hole, if used	1
6	D135978	COVER	PLATE floor, rear cover, cab or canopy models without backhoe, with rear counterweight	1
7	D143595	PLUG	button, 3 inch, steel, rear floor plate	1
10	D147784	PAD	floormat, service replacement, if used	1
11	D147766	FLOORMAT, used with D147784 pad, cab models with backhoe, for service order 109747A1 floormat, shown on Fig. 9-101A	FLOORMAT, used with D147784 pad, cab models with backhoe, for service order 109747A1 floormat, shown on Fig. 9-101A	1
12	D147767	FLOOR MAT	FLOORMAT, used with D147784 pad, cab models without backhoe, also service replacement for Ref. 11, 14, 15, 17, and 19, no longer available, order 109747A1 floormat, Ref. 1, shown on Fig. 9-101A	1
		Mat with cut-out area for seat switch wire is 117539A1.	Mat with cut-out area for seat switch wire is 117539A1.	1
13	D147785	PAD floormat, used on canopy models with or without backhoe, for service order D147784 pad, if used	PAD floormat, used on canopy models with or without backhoe, for service order D147784 pad, if used	1
14	D147780	FLOORMAT, used with D147785 pad, canopy models with backhoe, for service order 109747A1 floormat, shown on Figure 9-101A	FLOORMAT, used with D147785 pad, canopy models with backhoe, for service order 109747A1 floormat, shown on Figure 9-101A	1
15	D147781	FLOORMAT, used with D147785 pad, canopy models without backhoe, for service order 109747A1 floormat, shown on Figure 9-101A	FLOORMAT, used with D147785 pad, canopy models without backhoe, for service order 109747A1 floormat, shown on Figure 9-101A	1

Diag #	Part #	Name	Description	Qty
16	D147786	PAD, used with D147782 floormat, cab models with three-point hitch, for service order D147784 pad, if used	PAD, used with D147782 floormat, cab models with three-point hitch, for service order D147784 pad, if used	1
17	D147782	FLOORMAT, used with D147786 pad, cab models with three-point hitch, for service order 109747A1 floormat, shown on Figure 9-101A	FLOORMAT, used with D147786 pad, cab models with three-point hitch, for service order 109747A1 floormat, shown on Figure 9-101A	1
18	D147787	PAD, used with D147783 floormat, canopy models with three-point hitch, for service order D147784 pad, if used	PAD, used with D147783 floormat, canopy models with three-point hitch, for service order D147784 pad, if used	1
19	D147783	FLOORMAT, used with D147787 pad, canopy models with three-point hitch, for service order 109747A1 floormat, shown on Figure 9-101A	FLOORMAT, used with D147787 pad, canopy models with three-point hitch, for service order 109747A1 floormat, shown on Figure 9-101A	1
20	461-43112	HEX SOC SCREW,Hex Soc Flat Hd, 5/16"-18 x 3/4"	BOLT hex socket flat, 5/16 NC x 3/4 inch	2
21	131-637	SPRING NUT,Ret, J, 5/16"-18	- J-type, 5/16" NC	2
22	461-43116	HEX SOC SCREW,Hex Soc Flat Hd, 5/16"-18 x 1"	BOLT hex socket flat head, 5/16 NC x 1 inch	7
23	131-97	SPRING NUT,Tinn, U, 5/16"-18	U-type, 5/16 inch NC, replaces J-type nut	7
24	D150737	PLUG	button, 1-1/4 inch, replaces 205-56	2

http://www.minnparbackhoeparts.com/

(580SK) - CASE SUPER-K CONSTRUCTION KING LOADER BACKHOE > (9-101A) - FLOORMATS

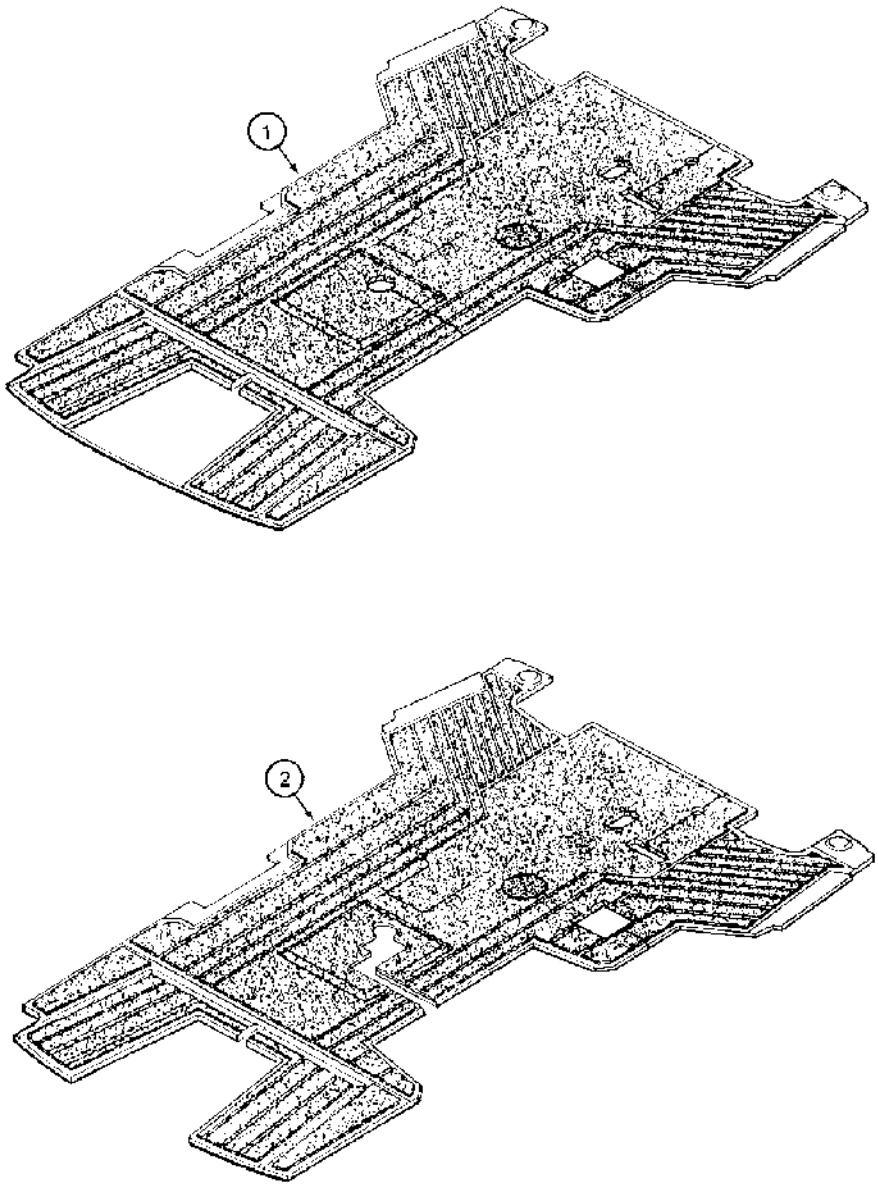

B240201A

(580SK) - CASE SUPER-K CONSTRUCTION KING LOADER BACKHOE > (9-101A) - FLOORMATS

Diag #	Part #	Name	Description	Qty
1	109747A1	FLOOR MAT	FLOORMAT service replacement, used on cab or canopy models with seats without electrical alarm switch	1
2	117539A1	FLOOR MAT	FLOORMAT used on cab or canopy models with seats with electrical alarm switch	1

http://www.minnparbackhoeparts.com/

(580SK) - CASE SUPER-K CONSTRUCTION KING LOADER BACKHOE > (9-102) - REAR FENDERS, ROPS CANOPY MODELS

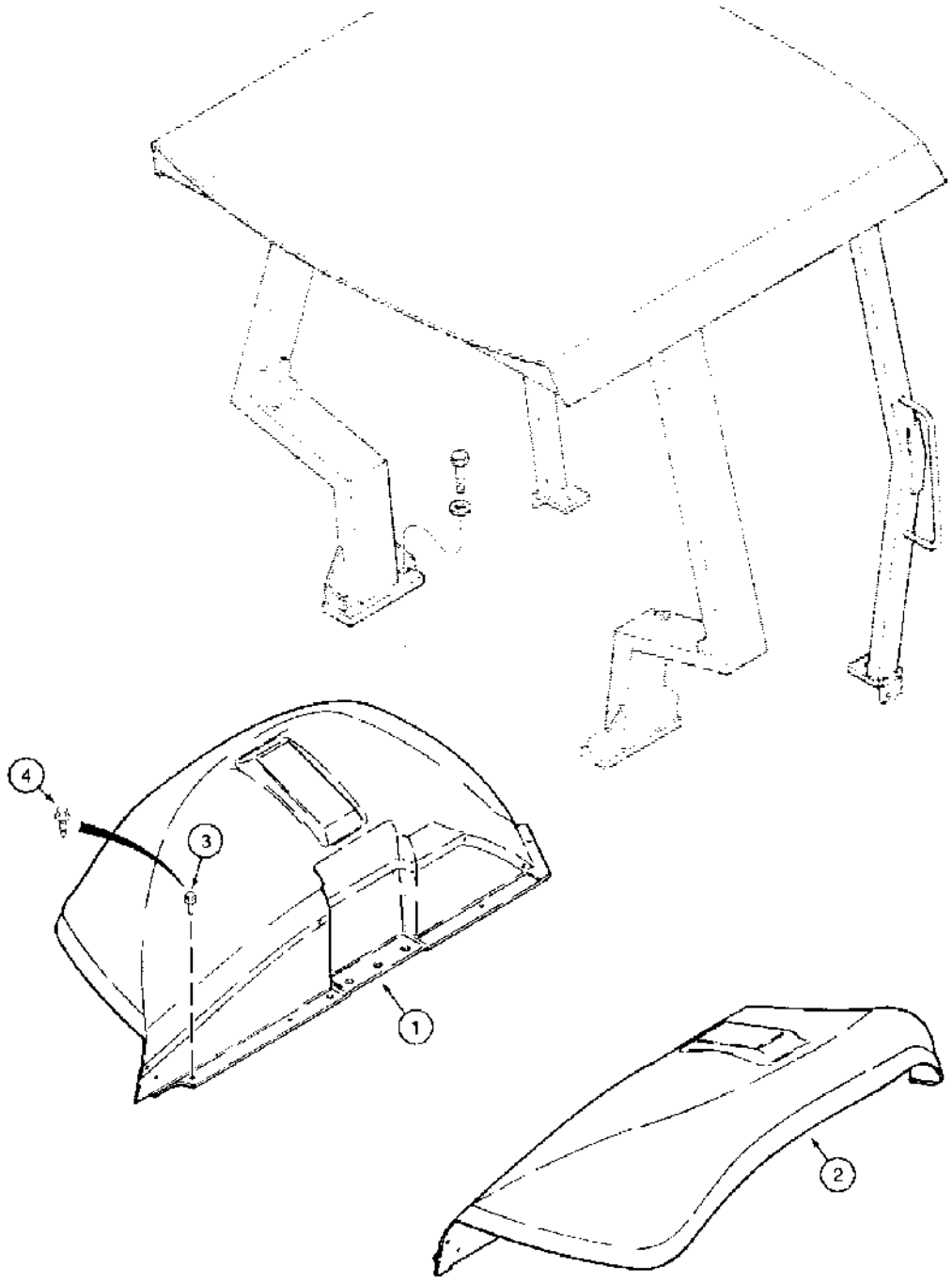

B691073A

(580SK) - CASE SUPER-K CONSTRUCTION KING LOADER BACKHOE > (9-102) - REAR FENDERS, ROPS CANOPY MODELS

Diag #	Part #	Name	Description	Qty
1	R52549	FENDER	left-hand	1
2	R52550	FENDER	right-hand	1
3	281-14812	SELF-TAP SCREW,Hex Washer, 5/16" - 18 x 3/4"	SCREW self-tapping, hex washer head, 5/16 NC x 3/4 inch, replaces D141589 bolt, if used	8
4	112865A1	SCREW	pointed, self-aligning, if used	8

http://www.minnparbackhoeparts.com/

(580SK) - CASE SUPER-K CONSTRUCTION KING LOADER BACKHOE > (9-104) - REAR CLOSURE PANELS, CANOPY MODELS - WITH BACKHOE OR, REAR

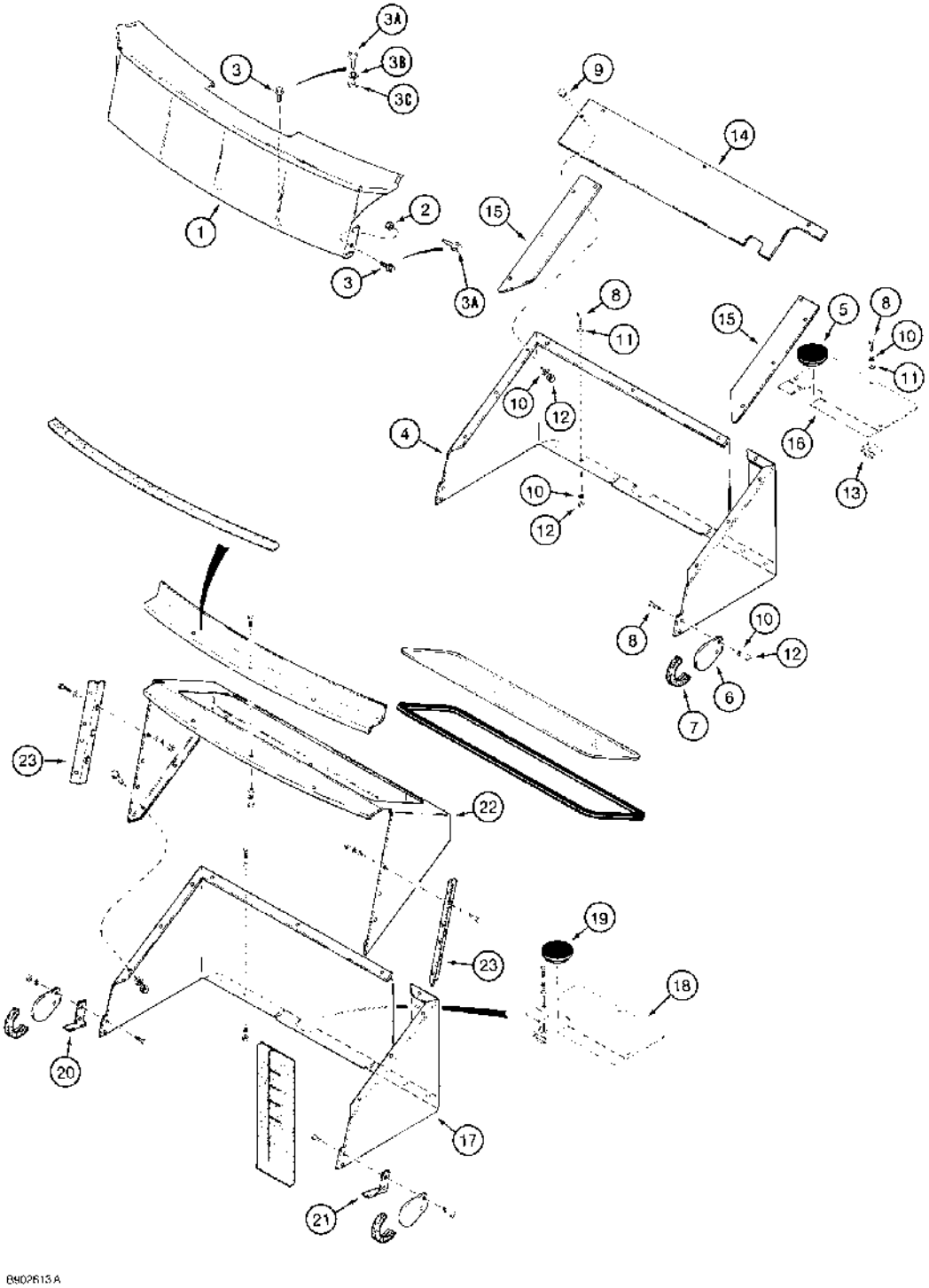

http://www.minnparbackhoeparts.com/

(580SK) - CASE SUPER-K CONSTRUCTION KING LOADER BACKHOE > (9-104) - REAR CLOSURE PANELS, CANOPY MODELS - WITH BACKHOE OR, REAR

Diag #	Part #	Name	Description	Qty
1	D135244	PANEL	rear closure, canopy models with backhoe or canopy models without backhoe but with rear counterweight, see Figure 9-168 for decal, canopy models - with backhoe or rear counterweight	1
2	425-105	NUT,5/16"-18, G5	- hex, 5/16 inch NC, Canopy models - with backhoe or rear counterweight	2
3	281-14812	SELF-TAP SCREW,Hex Washer, 5/16" - 18 x 3/4"	SCREW self-tapping, hex washer head, 5/16 NC x 3/4 inch, replaces D141589 screw, if used, canopy models - with backhoe or rear counterweight	7
3A	112865A1	SCREW	pointed, self-aligning, if used, canopy models - with backhoe or rear counterweight	7
3B	492-11031	LOCK WASHER,5/16"	WASHER, LOCK, , Canopy models - with backhoe or rear counterweight 5/16"	2
3C	495-21038	WASHER,5/16"	(flat, 3/8 x 7/8 x 5/64"), Canopy models - with backhoe or rear counterweight 5/16"	4
4	D147480	PANEL	rear closure, canopy models without backhoe with three-point hitch, canopy models - with three-point hitch	1
5	D143595	PLUG	3 inch diameter, if used, canopy models - with three-point hitch	1
6	D141390	GUARD	PLATE corner guard, canopy models - with three-point hitch	2
7	D33500	LINING	TRIM edge, 7 inch long, cut from bulk trim, see Parts Substitution List for bulk trim options, canopy models - with three-point hitch	2
8	413-516	BOLT,Hex, 5/16" - 18 x 1", Gr 5	hex, 5/16 NC x 1 inch, canopy models - with three-point hitch	11
9	413-512	BOLT,Hex, 5/16" - 18 x 3/4", Gr 5	hex, 5/16 NC x 3/4 inch, canopy models - with three-point hitch	10
10	492-11031	LOCK WASHER,5/16"	WASHER, LOCK, , Canopy models - with three-point hitch 5/16"	21
11	495-11034	WASHER,5/16", SAE	5/16" SAE (flat, 11/32 x 11/16 x 1/16"), Canopy models - with three-point hitch	7
12	425-105	NUT,5/16"-18, G5	- hex, 5/16 inch NC, Canopy models - with three-point hitch	18
13	131-97	SPRING NUT,Tinn, U, 5/16"-18	U-type, 5/16 inch NC, used on some models, canopy models - with three-point hitch	3
14	D141574	COVER	panel, at right-hand corner, canopy models - with three-point hitch	1

Diag #	Part #	Name	Description	Qty
15	D141573	COVER	PLATE panel, canopy models - with three-point hitch	2
16	D147442	COVER	lower, canopy models - with three-point hitch	1
17	D147480	PANEL	rear closure, cab models without backhoe with three-point hitch	1
18	D147442	COVER	lower, cab models - with three-point hitch	1
19	D143595	PLUG	3 inch diameter, if used, cab models - with three-point hitch	1
20	D136688	BRACKET	window track stop, left-hand, cab models - with three-point hitch	1
21	D136689	BRACKET	window track stop, right-hand, cab models - with three-point hitch	1
22	D141945	PANEL	rear closure, upper, cab models - with three-point hitch	1
23	D136690	BRACKET	angle, window, closure support, cab models - with three-point hitch	2

http://www.minnparbackhoeparts.com/

(580SK) - CASE SUPER-K CONSTRUCTION KING LOADER BACKHOE > (9-106) - REAR CLOSURE PANELS, CAB MODELS - WITH THREE-POINT HITCH

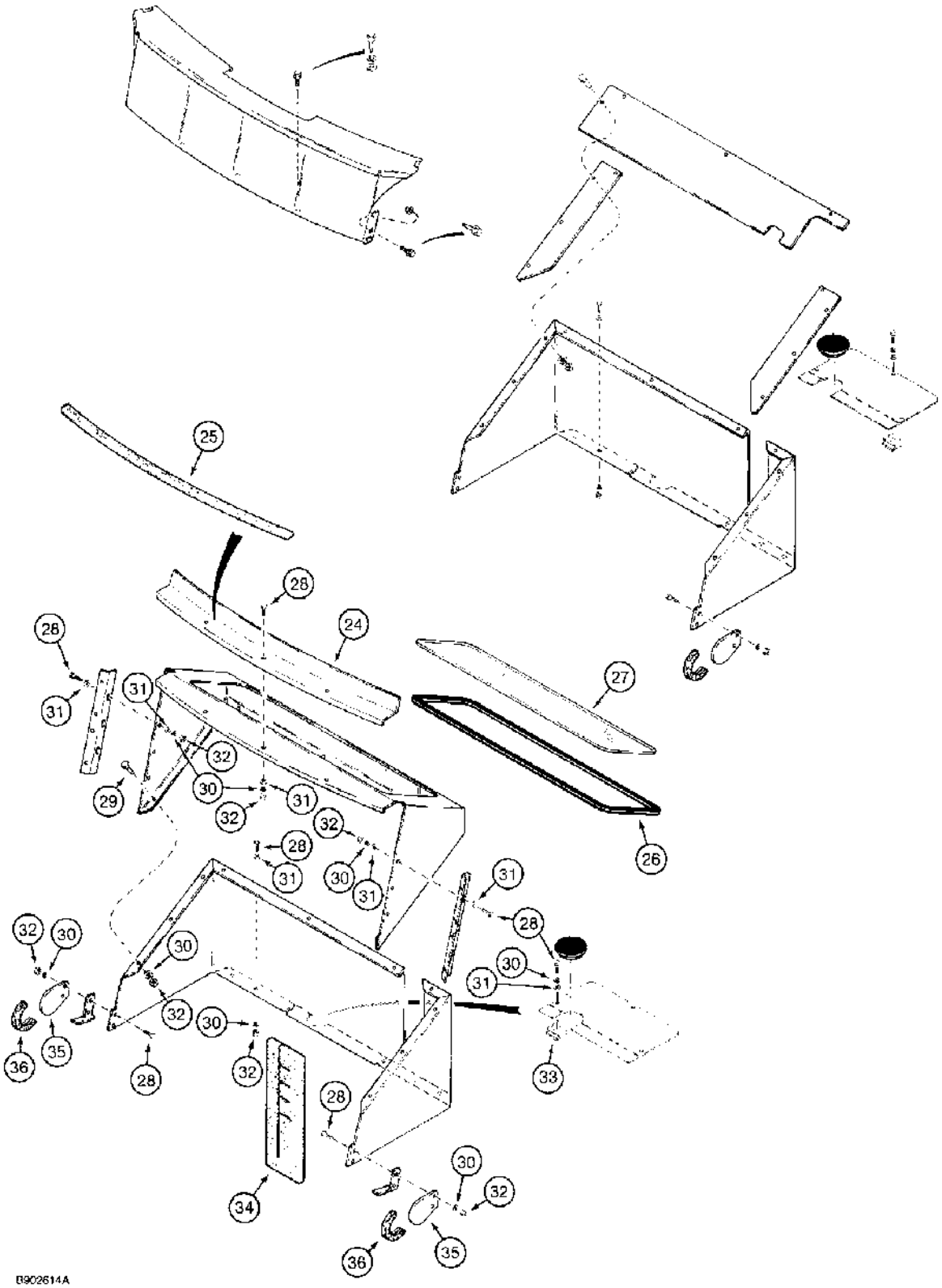

(580SK) - CASE SUPER-K CONSTRUCTION KING LOADER BACKHOE > (9-106) - REAR CLOSURE PANELS, CAB MODELS - WITH THREE-POINT HITCH

Diag #	Part #	Name	Description	Qty
24	D136651	BRACKET	threshold, window, rear	1
25	D126201	BAND	SEAL, 20 mm x 10 mm x 912 mm, adhesive back	1
26	D90207	SEAL, 79 inch, 2006 mm, long, cut from A42677 bulk seal, molding, window, see below	SEAL, 79 inch, 2006 mm, long, cut from A42677 bulk seal, molding, window, see below	1
27	D90206	GLASS	closure panel	1
28	413-516	BOLT,Hex, 5/16" - 18 x 1", Gr 5	hex, 5/16 NC x 1 inch	20
29	413-512	BOLT,Hex, 5/16" - 18 x 3/4", Gr 5	hex, 5/16 NC x 3/4 inch	10
30	492-11031	LOCK WASHER,5/16"	WASHER, LOCK, 5/16"	30
31	495-11034	WASHER,5/16", SAE	5/16" SAE (flat, 11/32 x 11/16 x 1/16")	22
32	425-105	NUT,5/16"-18, G5	- hex, 5/16 inch NC	27
33	131-97	SPRING NUT,Tinn, U, 5/16"-18	U-type, 5/16 inch NC	3
34	D141585	SEAL	panel	1
35	D141390	GUARD	PLATE corner guard	2
36	D33500	LINING	TRIM edge, 7 inch, 178 mm, long, cut from bulk trim, see Parts Substitution List for bulk trim options	2
	A42677	MOLDING	SEAL, 600 inch, 1524 mm, long, bulk roll	1

http://www.minnparbackhoeparts.com/

(580SK) - CASE SUPER-K CONSTRUCTION KING LOADER BACKHOE > (9-108) - SEATS AND MOUNTING PARTS, STANDARD SEAT AND MOUNTING PARTS,

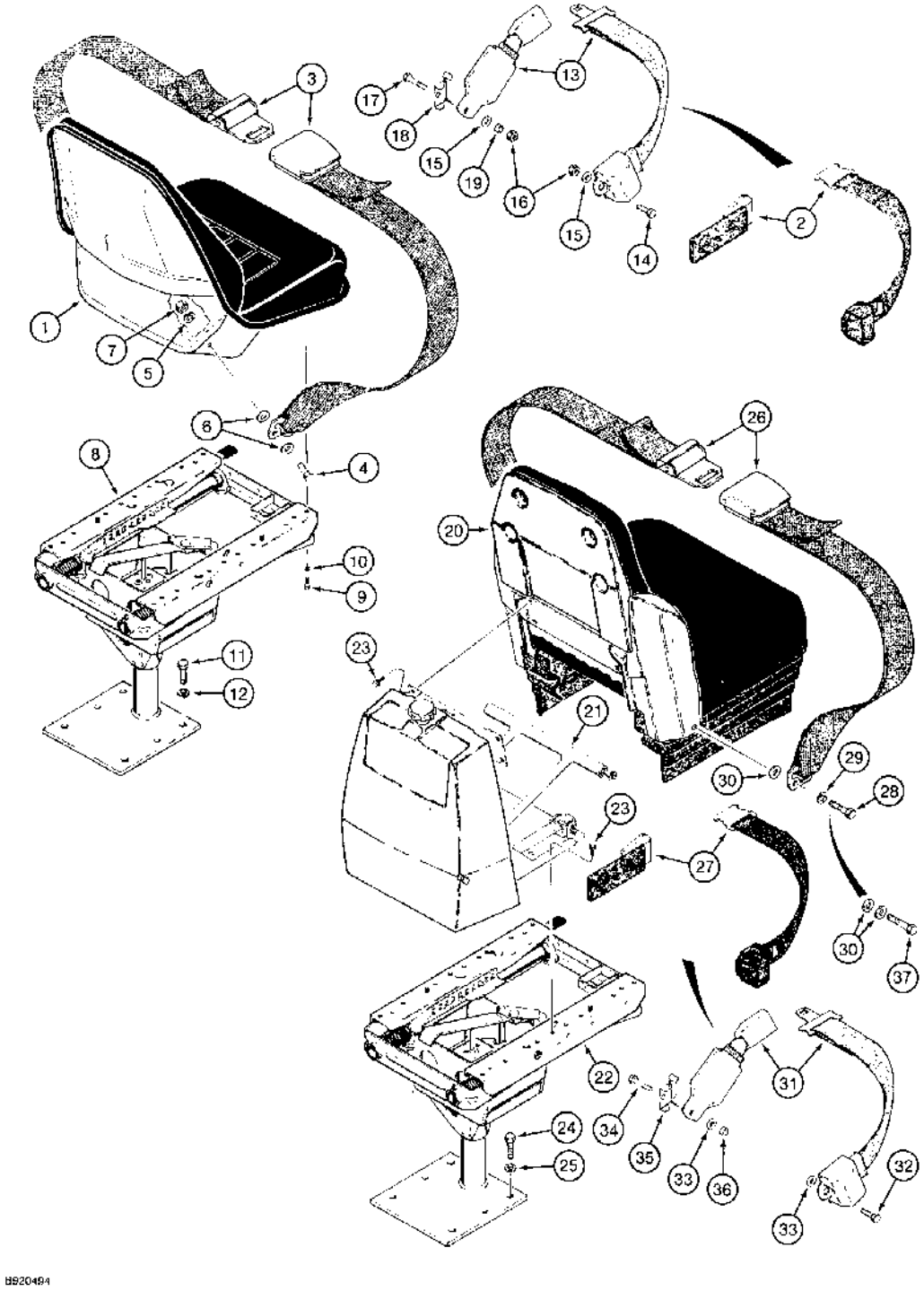

(580SK) - CASE SUPER-K CONSTRUCTION KING LOADER BACKHOE > (9-108) - SEATS AND MOUNTING PARTS, STANDARD SEAT AND MOUNTING PARTS,

Diag #	Part #	Name	Description	Qty
1	D123196	SEAT ASSY.	SEAT ASSEMBLY standard, parts list Figure 9-112, if used, standard seat and mounting parts	1
2	D135623	SAFETY BELT	BELT seat, 2 inch, 51 mm, wide, with retractor, no longer available, order D150377 belt, Ref. 13, standard seat and mounting parts	1
		When mounting the seat belt on a model with a three point hitch, the retractor end of the belt is to be mounted on the left side of the seat. This will provide clearance for the hitch controls.	When mounting the seat belt on a model with a three point hitch, the retractor end of the belt is to be mounted on the left side of the seat. This will provide clearance for the hitch controls.	1
3	D150010	SAFETY BELT	BELT seat, 3 inch, 76 mm, wide, if used, standard seat and mounting parts	1
		When mounting the seat belt on a model with a three point hitch, the retractor end of the belt is to be mounted on the left side of the seat. This will provide clearance for the hitch controls.	When mounting the seat belt on a model with a three point hitch, the retractor end of the belt is to be mounted on the left side of the seat. This will provide clearance for the hitch controls.	1
4	414-716	BOLT,Hex, 7/16" - 20 x 1", Gr 5	D135623 or D150010 belt, If used, Standard seat and mounting parts Hex, 7/16"-20 x 1", G5, Full Thd	2
5	492-11044	LOCK WASHER,7/16"	WASHER, LOCK, , D135623 or D150010 belt, if used, standard seat and mounting parts 7/16"	2
6	495-11047	WASHER,7/16", SAE	(15/32 x 59/64 x 1/16"), D135623 or D150010 belt, if used, standard seat and mounting parts 7/16", SAE	4
7	425-117	NUT,7/16"-20, G5	hex, 7/16 inch NF, D135623 or D150010 belt, if used, standard seat and mounting parts	2
8	D147644	PEDESTAL	SUPPORT ASSEMBLY standard seat, parts list Figure 9-118, standard seat and mounting parts	1
9	413-512	BOLT,Hex, 5/16" - 18 x 3/4", Gr 5	hex, 5/16 NC x 3/4 inch, standard seat and mounting parts	4
10	492-11031	LOCK WASHER,5/16"	WASHER, LOCK, , Standard seat and mounting parts 5/16"	4
11	413-824	BOLT,Hex, 1/2" - 13 x 1 1/2", Gr 5	Standard seat and mounting parts Hex, 1/2"-13 x 1 1/2", G5, Full Thd	4

Diag #	Part #	Name	Description	Qty
12	80679	LOCK WASHER,1/2"	WASHER, LOCK, , Standard seat and mounting parts 1/2"	4
13	D150377	SAFETY BELT ,2.00" W	If used, Standard seat and Mounting parts 2.00" W	1
14	414-720	BOLT,Hex, 7/16" - 20 x 1 1/4", Gr 5	hex, 7/16 NF x 1-1/4 inch, D150377 belt, right-hand side, if used, standard seat and mounting parts	1
15	496-81010	WASHER	flat, 15/32 x 1 x 7/64 inch, hardened, D150377 belt, if used, standard seat and mounting parts	2
16	131-1247	LOCK NUT,7/16"-20, GC	NUT hex, self-locking, 7/16 inch NF, D150377 belt, if used, standard seat and mounting parts	2
17	414-728	BOLT,Hex, 7/16" - 20 x 1 3/4", Gr 5	hex, 7/16 NF x 1-3/4 inch, D150377 belt, left-hand side, if used, standard seat and mounting parts	1
18	D150392	BRACKET	D150377 belt, left-hand side, if used, standard seat and mounting parts	1
19	D150391	SPACER	D150377 belt, left-hand side, if used, standard seat and mounting parts	1
	101796A1	SEAT ASSY.	SEAT ASSEMBLY suspension, cloth, with armrests shown on Figure 9-124, cab models only, see Figures 9-114 and 9-116 for seat, also includes Ref. 30A-40 on Figure 9-122, replaces D147689 seat, no longer available, order 102795A2 seat on Figure 9-125A	1
		suspension seats and mounting parts	suspension seats and mounting parts	1
	101795A1	SEAT	ASSEMBLY suspension, vinyl, with armrests shown on Figure 9-124, see Figures 9-114 and 9-116 for seat assembly, also includes Ref. 30A-40 on Figure 9-122, replaces D147690 seat, no longer available, order 108114A2 seat on Figure 9-125A	1
		suspension seats and mounting parts	suspension seats and mounting parts	1
	D147692	SEAT	ASSEMBLY suspension, vinyl, without armrests, see Figures 9-114 and 9-116 for seat, also includes Ref. 30A-40 on Figure 9-122, no longer available, order 108114A2 seat on Figure 9-125A, Includes: Ref. 20 through 23	1
		suspension seats and mounting parts	suspension seats and mounting parts	1
20	NSS	NOT SERVICED SEPARATELY	SEAT ASSEMBLY suspension seat, without armrests, parts list Figures 9-114 and 9-116	1
		suspension seats and mounting parts	suspension seats and mounting parts	1

Diag #	Part #	Name	Description	Qty
21	N14297	SUSPENSION	ADJUSTER ASSEMBLY suspension seat, parts list Figure 9-122	1
		suspension seats and mounting parts	suspension seats and mounting parts	1
22	D147655	PEDESTAL	SUPPORT ASSEMBLY suspension seat, parts list Figure 9-120	1
		suspension seats and mounting parts	suspension seats and mounting parts	1
23	121-133	SERRATED BOLT,Hex Serr, 5/16" - 18 x 5/8", Gr 5	SERRATED BOLT,Hex Serr, 5/16" - 18 x 5/8", Gr 5	8
		suspension seats and mounting parts	suspension seats and mounting parts	1
24	413-824	BOLT,Hex, 1/2" - 13 x 1 1/2", Gr 5	BOLT,Hex, 1/2" - 13 x 1 1/2", Gr 5	4
		suspension seats and mounting parts	suspension seats and mounting parts	1
25	80679	LOCK WASHER,1/2"	WASHER, LOCK, 1/2"	4
		suspension seats and mounting parts	suspension seats and mounting parts	1
26	D150010	SAFETY BELT	BELT seat, 3 inch, 76 mm, wide, if used	1
		suspension seats and mounting parts	suspension seats and mounting parts	1
27	D135623	SAFETY BELT	BELT seat, 2 inch, 51 mm, wide, no longer available, order D150377 belt, Ref. 31	1
		suspension seats and mounting parts	suspension seats and mounting parts	1
28	414-724	BOLT,Hex, 7/16" - 20 x 1 1/2", Gr 5	- hex, 7/16 NF x 1-1/2 inch, D135623 or D150010 belt, if used	2
		suspension seats and mounting parts	suspension seats and mounting parts	1
29	492-11044	LOCK WASHER,7/16"	WASHER, LOCK, , If used 7/16"	2
		suspension seats and mounting parts	suspension seats and mounting parts	1
30	495-11047	WASHER,7/16", SAE	(15/32 x 59/64 x 1/16"), If used 7/16", SAE	2-4
		suspension seats and mounting parts	suspension seats and mounting parts	1
31	D150377	SAFETY BELT ,2.00" W	If used 2.00" W	1
		suspension seats and mounting parts	suspension seats and mounting parts	1
32	109-9	PREV TORQUE BOLT,Locking, 7/16"-20 x 1 1/4", G5	BOLT hex, self-locking, 7/16 NF x 1-1/4 inch, D150377 belt, right-hand side, if used	1
		suspension seats and mounting parts	suspension seats and mounting parts	1
33	496-81010	WASHER	flat, 15/32 x 1 x 7/64 inch, hardened, D150377 belt, if used	2
		suspension seats and mounting parts	suspension seats and mounting parts	1

Diag #	Part #	Name	Description	Qty
34	109-10	PREV TORQUE BOLT,Locking, 7/16"-20 x 1 3/4", G5	BOLT hex, self-locking, 7/16 NF x 1-3/4 inch, D150377 belt, left-hand side, if used	1
		suspension seats and mounting parts	suspension seats and mounting parts	1
35	D150392	BRACKET	D150377 belt, left-hand side, if used	1
		suspension seats and mounting parts	suspension seats and mounting parts	1
36	D150391	SPACER	D150377 belt, left-hand side, if used	1
		suspension seats and mounting parts	suspension seats and mounting parts	1
37	109-10	PREV TORQUE BOLT,Locking, 7/16"-20 x 1 3/4", G5	BOLT hex, self-locking, 7/16 NF x 1-3/4 inch, used with four flat washers with D150010 3 inch belt, if used	2
		suspension seats and mounting parts	suspension seats and mounting parts	1

http://www.minnparbackhoeparts.com/

(580SK) - CASE SUPER-K CONSTRUCTION KING LOADER BACKHOE > (9-112) - STANDARD SEAT ASSEMBLY, D123196 STANDARD SEAT ASSEMBLY

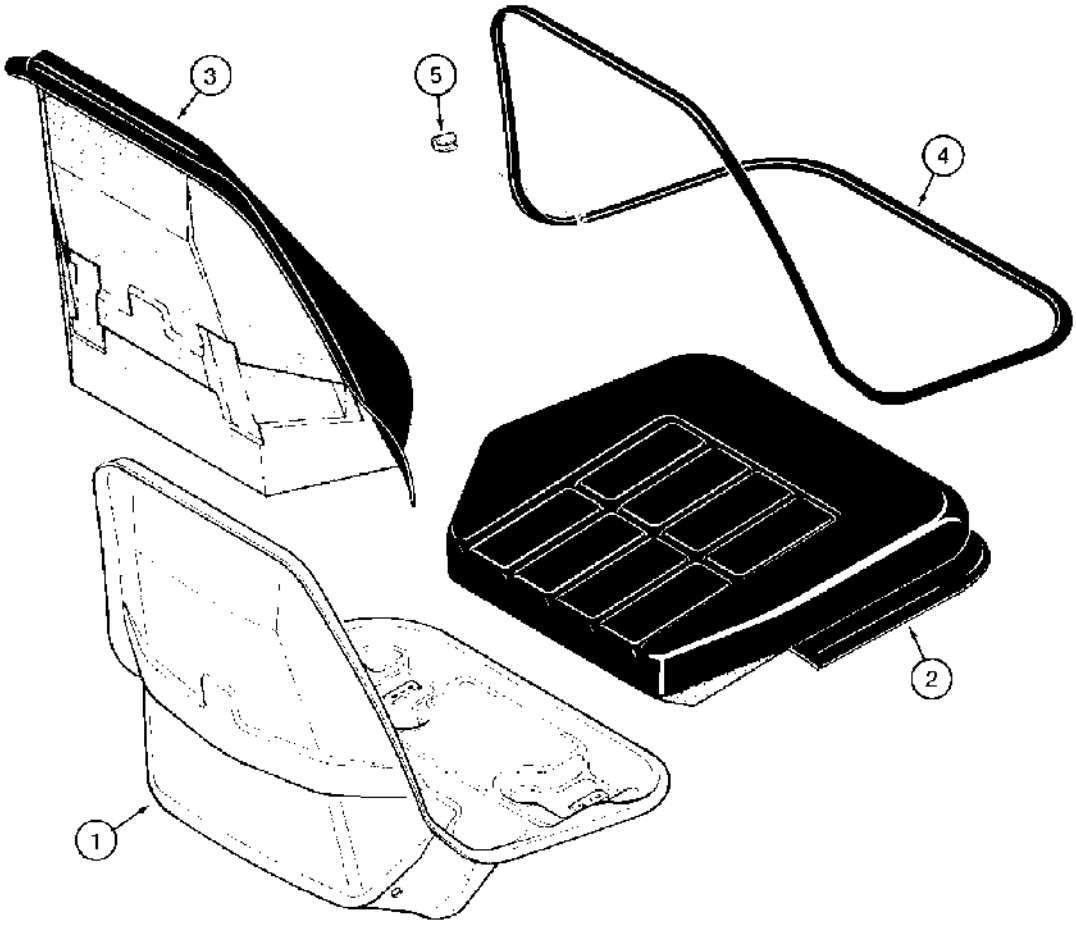

570162

http://www.minnparbackhoeparts.com/

(580SK) - CASE SUPER-K CONSTRUCTION KING LOADER BACKHOE > (9-112) - STANDARD SEAT ASSEMBLY, D123196 STANDARD SEAT ASSEMBLY

Diag #	Part #	Name	Description	Qty
	D123196	SEAT ASSY.	SEAT ASSEMBLY standard, for seat support see page 9-119, if used, Includes: Ref. 1 through 5	1
		P/N D123196 does not have kick plate, used as trip mechanism for swivel, welded to bottom. If seat has kick plate welded to bottom you have seat 102796A2, Fig. 9-125C.	P/N D123196 does not have kick plate, used as trip mechanism for swivel, welded to bottom. If seat has kick plate welded to bottom you have seat 102796A2, Fig. 9-125C.	1
1	NSS	NOT SERVICED SEPARATELY	SHELL seat	1
2	N8462	CUSHION	seat, includes N7802 clip kit, see below	1
3	N8461	CUSHION	backrest, includes N7802 clip kit, see below	1
4	N14614	GASKET	RETAINER strip, cushion to shell	1
5	NSS	NOT SERVICED SEPARATELY	CLIP retainer, order N7802 clip kit, see below	1
		Part of clip kit P/N N7802.	Part of clip kit P/N N7802.	1
	345-44	ADHESIVE	pad retaining, in a can, 23 fl. ounces, 680 ml, not shown, purchase locally	1
	N7802	CLIP	KIT clip, Includes: Ref. 5 clip above plus 6 additional narrow clips	1

http://www.minnparbackhoeparts.com/

(580SK) - CASE SUPER-K CONSTRUCTION KING LOADER BACKHOE > (9-114) - SUSPENSION SEAT ASSEMBLIES

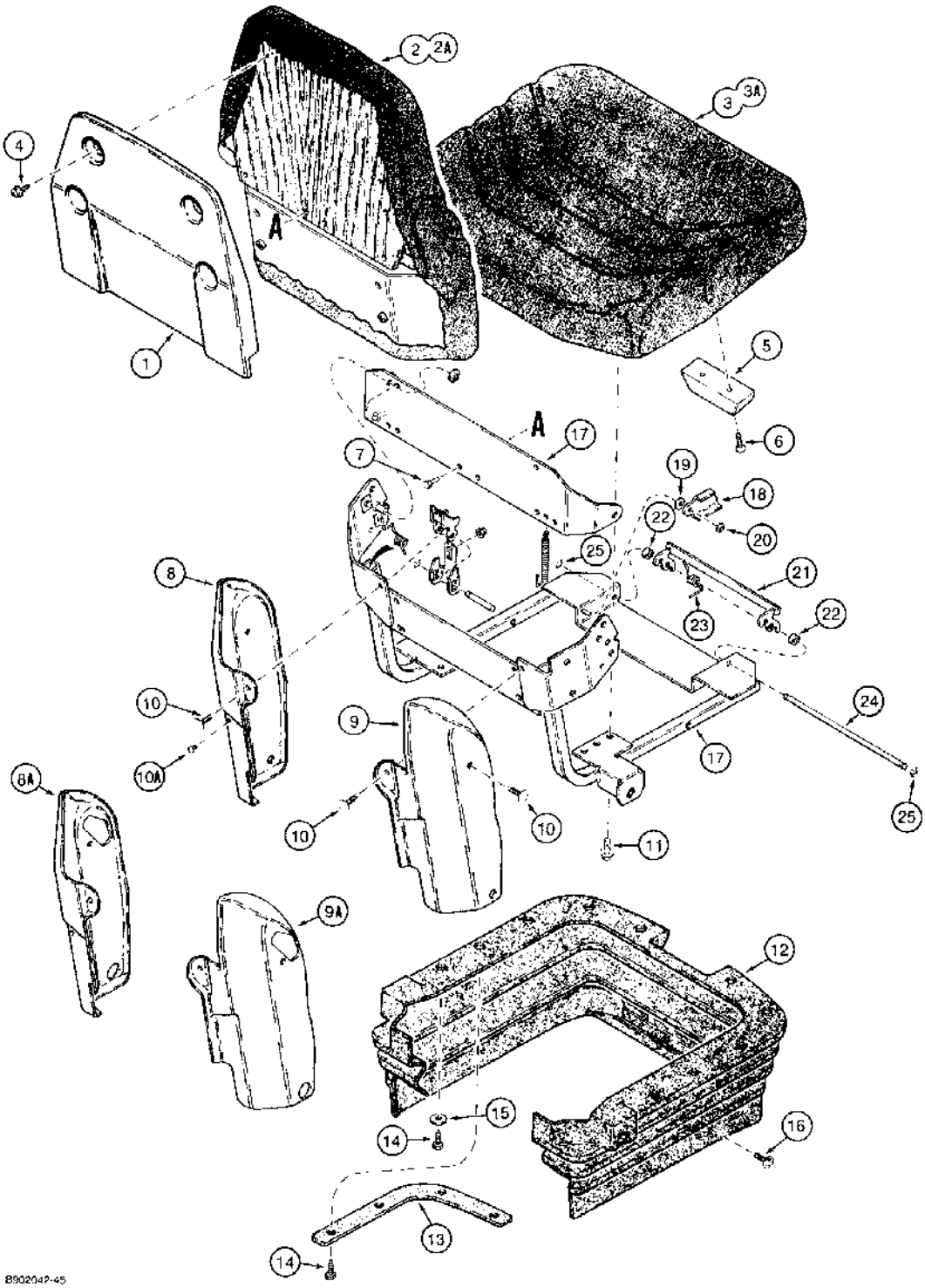

(580SK) - CASE SUPER-K CONSTRUCTION KING LOADER BACKHOE > (9-114) - SUSPENSION SEAT ASSEMBLIES

Diag #	Part #	Name	Description	Qty
	NSS	NOT SERVICED SEPARATELY	SEAT ASSEMBLY suspension, see Figure 9-108 for suspension seat options, for seat support and adjuster, see Figures 9-120 and 9-122, no longer available, order cloth or vinyl seat assembly on Figure 9-125E, Includes: Ref. 1 through 25 and P/N N14852	1
1	D144559	SHROUD	COVER backrest, upper, shield	1
2	N14321	CUSHION	BACKREST seat, cloth	1
2A	N14341	CUSHION	BACKREST seat, vinyl	1
3	N14318	CUSHION	seat, cloth	1
3A	N14340	CUSHION	seat, vinyl	1
4	280-13512	SELF-TAP SCREW,Hex Wash Hd, #10 x 3/4"	SCREW Phillips, hex washer head, special, replaced NSS	4
5	N14322	HANDLE	seat cushion adjustment	1
6	413-516	BOLT,Hex, 5/16" - 18 x 1", Gr 5	hex, 5/16 NC x 1 inch	2
7	113-2	BOLT,Hex, 1/4" - 20 x 5/8", Gr 5	BOLT,Hex, 1/4" - 20 x 5/8", Gr 5	5
8	D144721	SHROUD	COVER frame, left-hand shroud, used on seats without armrests	1
8A	D144920	SHROUD	COVER frame, left-hand shroud, used on seats with armrests	1
9	D144720	SHROUD	COVER frame, right-hand shroud, used on seats without armrests	1
9A	D144919	SHROUD	COVER frame, right-hand shroud, used on seats with armrests	1
10	N14323	CLIP	RETAINER plastic	4
10A	N8487	RIVET	plastic, yellow	1
11	413-516	BOLT,Hex, 5/16" - 18 x 1", Gr 5	hex, 5/16 NC x 1 inch	2
12	N14320	BOOT	seat, protective covering	1
13	N14319	SUPPORT	BRACKET boot support	2
14	N13703	CLIP,ELECTRICAL	SCREW hex head, special	10
15	495-21038	WASHER,5/16"	(flat, 3/8 x 7/8 x 5/64") 5/16"	2
16	D144429	CLIP	RETAINER plastic, black	9
	N14852	FUNNEL	FRAME ASSEMBLY seat, Includes: Ref. 17 through 25	1
17	NSS	NOT SERVICED SEPARATELY	FRAME seat	1
18	N14325	TOGGLE	BRACKET toggle	1
19	495-21031	WASHER,1/4"	flat, 5/16 x 47/64 x 1/16 inch	1

Diag #	Part #	Name	Description	Qty
20	131-433	JAM NUT,Push, 1/4"	NUT push-on type, 1/4 inch	1
21	N14324	LATCH	BRACKET latch, cushion adjustment	1
22	N14334	SPACER	nylon	2
23	N14335	SPRING	torsion	1
24	N14332	SHAFT	front seat bracket latch	1
25	D95092	RING	C-type, retaining, replaces N14331	2

http://www.minnparbackhoeparts.com/

(580SK) - CASE SUPER-K CONSTRUCTION KING LOADER BACKHOE > (9-116) - SUSPENSION SEAT ASSEMBLIES

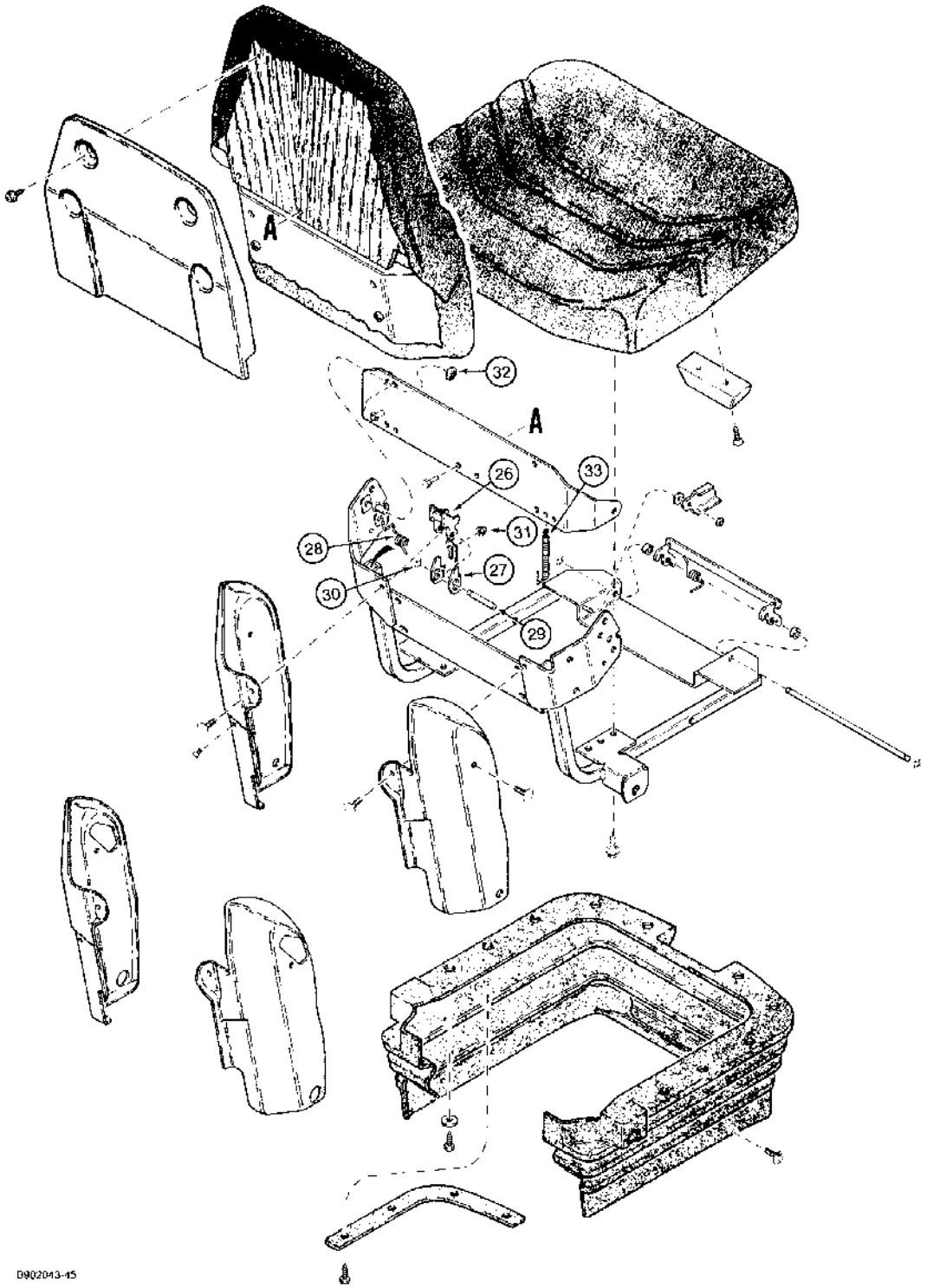

(580SK) - CASE SUPER-K CONSTRUCTION KING LOADER BACKHOE > (9-116) - SUSPENSION SEAT ASSEMBLIES

Diag #	Part #	Name	Description	Qty
	REF	INSTRUCTION	SEAT ASSEMBLY suspension, continued from previous page, Includes: Ref. 26 through 33 and P/N N14852	1
	N14852	FUNNEL	FRAME ASSEMBLY seat, continued from previous page, Includes: Ref. 26 through 33	1
26	N14326	LATCH	BRACKET latch, upper, backrest adjustment	1
27	N14327	BACK	BRACKET latch, lower, backrest adjustment	1
28	N14335	SPRING	torsion, backrest	1
29	N14333	SHAFT	PIN backrest latch	1
30	D95092	RING	C-type, retaining, replaces N14331	1
31	N14336	NUT	push-on type, special	1
32	131-435	JAM NUT,Push, 3/8"	NUT push-on type, 3/8 inch	2
33	N14337	SPRING	extension	1

http://www.minnparbackhoeparts.com/

(580SK) - CASE SUPER-K CONSTRUCTION KING LOADER BACKHOE > (9-118) - STANDARD SEAT SUPPORT

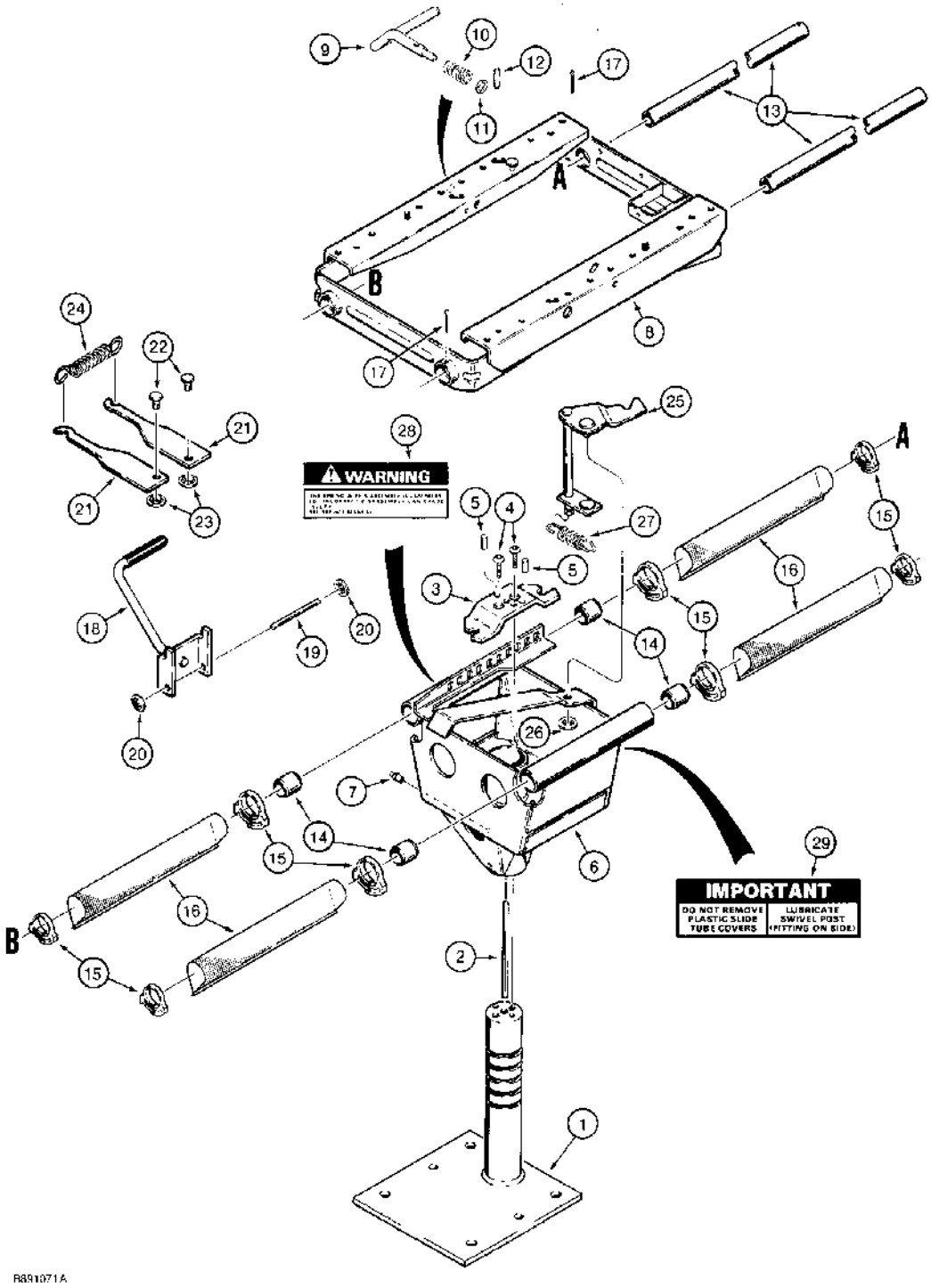

(580SK) - CASE SUPER-K CONSTRUCTION KING LOADER BACKHOE > (9-118) - STANDARD SEAT SUPPORT

Diag #	Part #	Name	Description	Qty
	D147644	PEDESTAL	SUPPORT ASSEMBLY, D123196 standard seat, Includes: Ref. 1 through 29	1
1	N14289	BASE	seat support	1
2	N8340	SHAFT	seat support	1
3	NSS	NOT SERVICED SEPARATELY	LATCH seat swivel	1
		Part of latch kit P/N D147776.	Part of latch kit P/N D147776.	1
4	164-407	HEX SOC SCREW,Hex Soc But Hd, 5/16"-18 x 1/2"	BOLT hex socket button head, 5/16 NC x 1/2 inch, grade 8	2
		Part of latch kit P/N D147776.	Part of latch kit P/N D147776.	1
5	435-11012	GROOVED PIN,5/16" x 3/4", Type A	Pin, Grooved, 5/16" x 3/4", Type A	2
		Part of latch kit P/N D147776.	Part of latch kit P/N D147776.	1
6	N14290	SUPPORT	RISER seat support	1
7	219-16	LUBE NIPPLE,5/16" x .56" lg, Drive	FITTING grease, straight, 5/16 drive type x 19/32 inch	1
8	N14291	SLIDE	seat	1
9	D144387	HANDLE	slide release, side mounted	1
10	D144430	SPRING	compression	1
11	D144431	WASHER	flat, special	1
12	D144432	PIN	slide lock	1
13	N14292	TUBE	slide	2
14	N6950	TUBE,1.015" ID x 1.1905" OD x 1"	BEARING slide tube	4
15	N14105	CLAMP	bellows	8
16	D147877	BELLOWS	slide tube	4
17	432-824	COTTER PIN,1/8" x 1 1/2"	PIN, SPLIT (COTTER), 1/8" x 1-1/2"	2
18	N14294	HANDLE	seat height adjustment	1
19	N6962	SHAFT	pivot	1
20	131-434	LOCK NUT,Push, 5/16"	NUT push-on type, 5/16 inch	2
21	N6963	LATCH	seat height adjustment	2
22	N6964	PIN	latch	2
23	131-435	JAM NUT,Push, 3/8"	NUT push-on type, 3/8 inch	2
24	N6970	CATCH	SPRING latch, seat height adjustment	1
25	NSS	NOT SERVICED SEPARATELY	LEVER seat swivel	1

Diag #	Part #	Name	Description	Qty
		Part of latch kit P/N D147776.	Part of latch kit P/N D147776.	1
26	131-435	JAM NUT,Push, 3/8"	NUT push-on type, 3/8 inch	1
		Part of latch kit P/N D147776.	Part of latch kit P/N D147776.	1
27	D145790	SPRING KIT	SPRING seat swivel, 2-3/8 inch long, replaces N8341	1
		Part of latch kit P/N D147776.	Part of latch kit P/N D147776.	1
28	321-6774	WARNING DECAL	DECAL, WARNING, The spring in this assembly is compressed, See Fig. 9-170, Ref. 30, for decal	1
29	N14295	DECAL	Important, do not remove plastic slide tube covers, lubricate swivel post, see Figure 9-170, Ref. 29, for decal	1
	D147776	LATCH	KIT latch, Includes: Ref. 3 - 5 and 25 - 27	1

http://www.minnparbackhoeparts.com/

(580SK) - CASE SUPER-K CONSTRUCTION KING LOADER BACKHOE > (9-120) - SUSPENSION SEAT SUPPORT

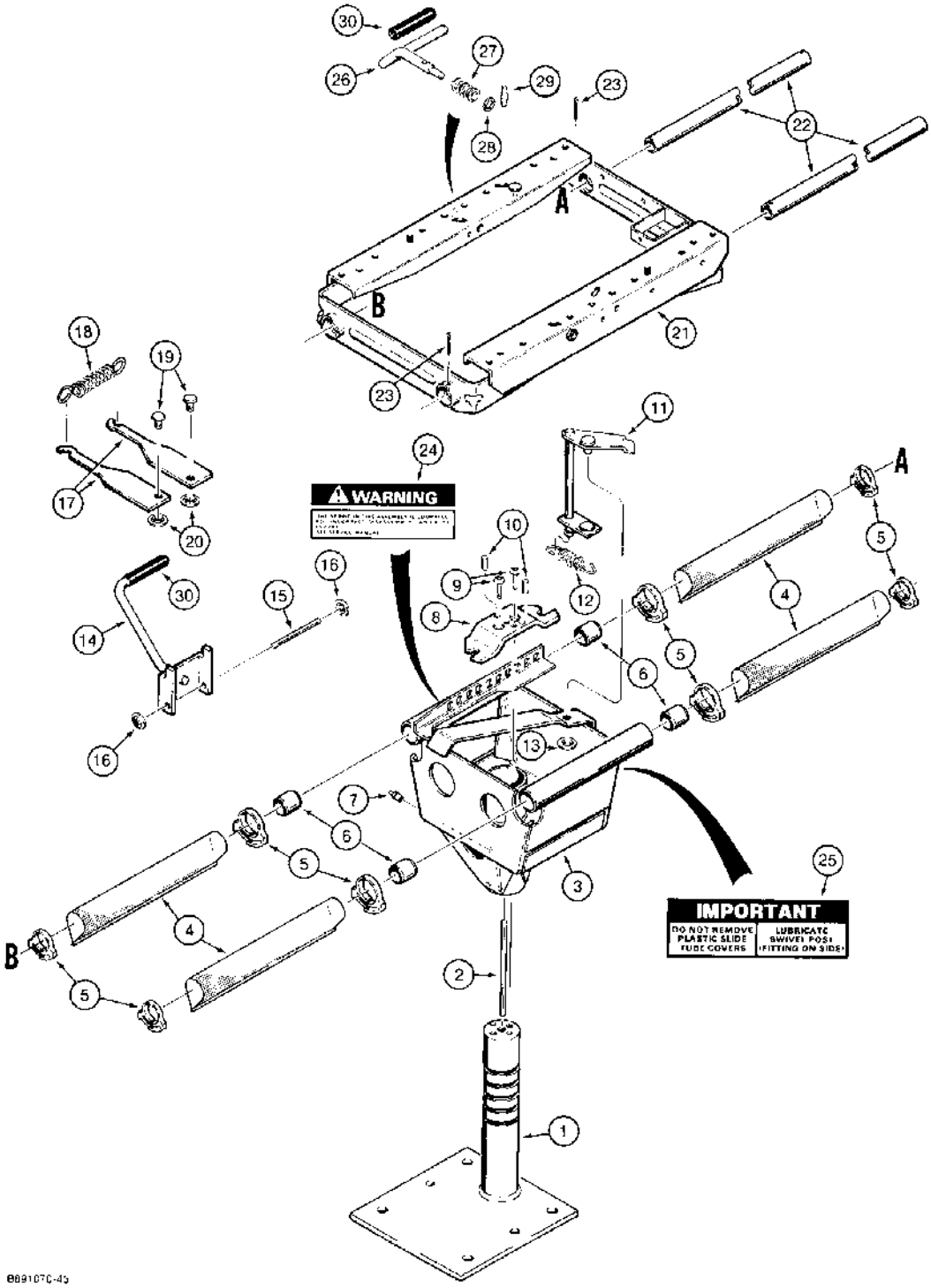

(580SK) - CASE SUPER-K CONSTRUCTION KING LOADER BACKHOE > (9-120) - SUSPENSION SEAT SUPPORT

Diag #	Part #	Name	Description	Qty
	D147655	PEDESTAL	SUPPORT ASSEMBLY suspension seat, see Figure 9-108 for seat options, Includes: Ref. 1 though 29	1
1	N14299	BASE	seat support	1
2	N14300	SHAFT	seat support	1
3	N14301	SUPPORT ASSY.	RISER seat support	1
4	D147877	BELLOWS	slide tube	4
5	N14105	CLAMP	bellows	8
6	N6950	TUBE,1.015" ID x 1.1905" OD x 1"	BEARING slide tube	4
7	219-16	LUBE NIPPLE,5/16" x .56" lg, Drive	FITTING grease, straight, 5/16 drive type x 19/32 inch	1
8	NSS	NOT SERVICED SEPARATELY	LATCH seat swivel	1
		Part of latch kit P/N D147775.	Part of latch kit P/N D147775.	1
9	461-7318	HEX SOC SCREW,Hex Soc But Hd, 5/16"-18 x 1/2"	BOLT hex socket button head, 5/16 NC x 1/2 inch	2
		Part of latch kit P/N D147775.	Part of latch kit P/N D147775.	1
10	435-11012	GROOVED PIN,5/16" x 3/4", Type A	Pin, Grooved, 5/16" x 3/4", Type A	2
		Part of latch kit P/N D147775.	Part of latch kit P/N D147775.	1
11	NSS	NOT SERVICED SEPARATELY	LEVER seat swivel	1
		Part of latch kit P/N D147775.	Part of latch kit P/N D147775.	1
12	N8341	SPRING	seat swivel	1
		Part of latch kit P/N D147775.	Part of latch kit P/N D147775.	1
13	131-435	JAM NUT,Push, 3/8"	NUT push-on type, 3/8 inch	1
		Part of latch kit P/N D147775.	Part of latch kit P/N D147775.	1
14	N14294	HANDLE	seat height adjustment	1
15	N6962	SHAFT	pivot	1
16	131-434	LOCK NUT,Push, 5/16"	NUT push-on type, 5/16 inch	2
17	N6963	LATCH	seat height adjustment	2
18	N6970	CATCH	SPRING latch, seat height adjustment	1
19	N6964	PIN	latch	2
20	131-435	JAM NUT,Push, 3/8"	NUT push-on type, 3/8 inch	2

Diag #	Part #	Name	Description	Qty
21	N14302	SLIDE	seat	1
22	N14305	TUBE	slide	2
23	432-824	COTTER PIN,1/8" x 1 1/2"	PIN, SPLIT (COTTER), 1/8" x 1-1/2"	2
24	321-6774	WARNING DECAL	DECAL, WARNING, The spring in this assembly is compressed, See Fig. 9-170, Ref. 30, for decal	1
25	N14295	DECAL	Important, do not remove plastic slide tube covers, lubricate swivel post, see Figure 9-170, Ref. 29, for decal	1
26	D144387	HANDLE	slide release, side mounted	1
27	D144430	SPRING	compression	1
28	D144431	WASHER	flat, special	1
29	D144432	PIN	slide lock	1
30	N14311	COVER	GRIP seat levers, included with seat assembly	2
	D147775	LATCH	KIT latch, Includes: Ref. 8 - 13	1

http://www.minnparbackhoeparts.com/

(580SK) - CASE SUPER-K CONSTRUCTION KING LOADER BACKHOE > (9-122) - SUSPENSION SEAT ADJUSTER ASSEMBLY

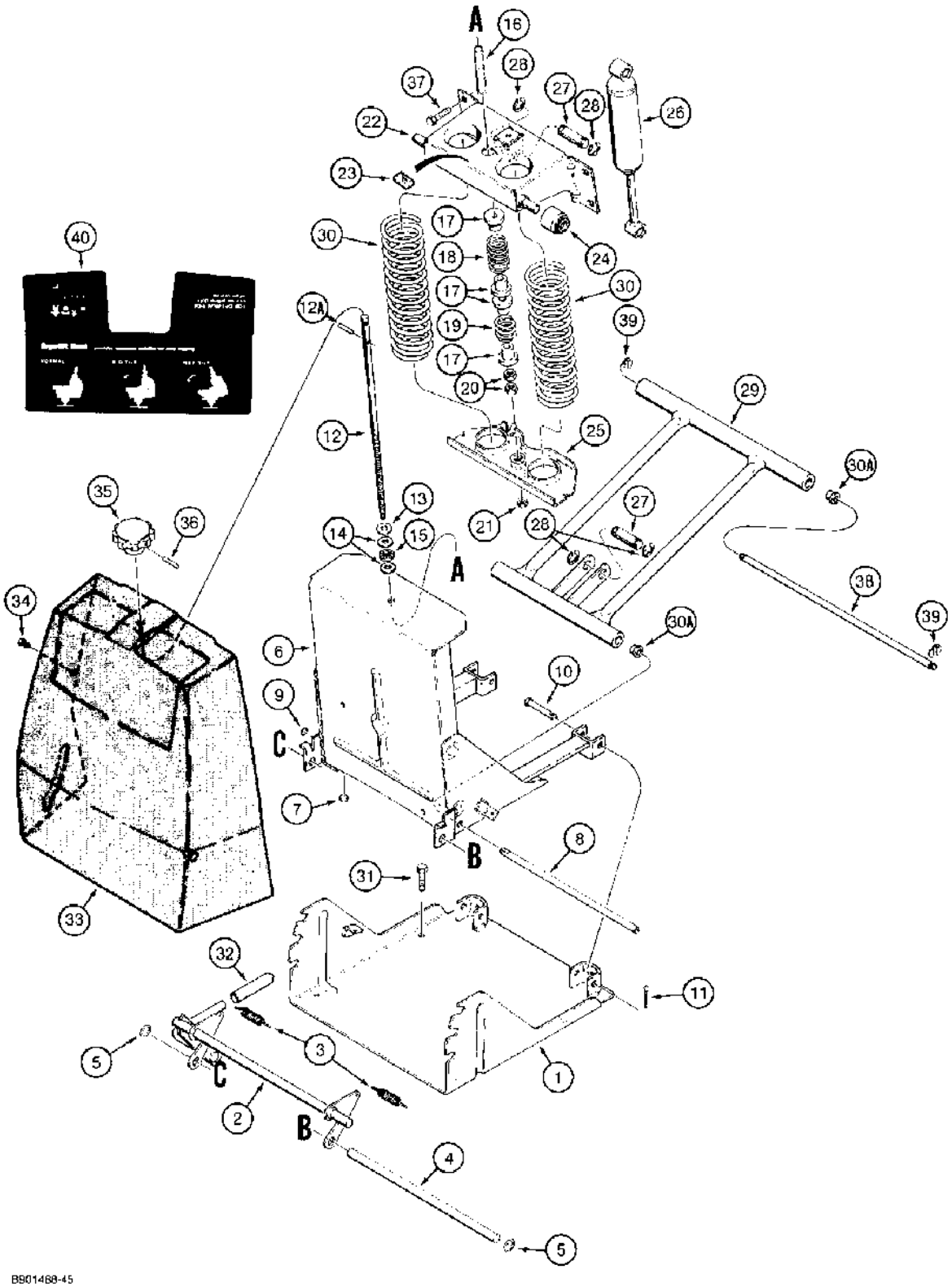

(580SK) - CASE SUPER-K CONSTRUCTION KING LOADER BACKHOE > (9-122) - SUSPENSION SEAT ADJUSTER ASSEMBLY

Diag #	Part #	Name	Description	Qty
	N14297	SUSPENSION	ADJUSTER ASSEMBLY suspension seat, see Figure 9-108 for seat options, Includes: Ref. 1 through 30	1
1	NSS	NOT SERVICED SEPARATELY	BASE support	1
2	N14310	LEVER	seat tilt	1
3	N9240	VALVE SPRING	SPRING extension	2
4	N9242	SHAFT	rear, seat tilt lever, replaces N14312	1
5	N14313	OIL SEAL	RING snap, shaft retaining	2
6	NSS	NOT SERVICED SEPARATELY	HOUSING adjuster assembly	1
7	N14316	BUMPER	housing	2
8	N8492	SHAFT	seat adjuster arm, rear	1
9	N14306	OIL SEAL	RING snap, shaft retaining	1
10	N14309	PIN	clevis, Serial Range: housing-base	2
11	432-824	COTTER PIN,1/8" x 1 1/2"	PIN, SPLIT (COTTER), 1/8" x 1-1/2"	2
12	N14307	ADJUSTMENT SCREW	adjusting, seat	1
12A	D144457	PIN	spring	1
13	495-21038	WASHER,5/16"	(flat, 3/8 x 7/8 x 5/64") 5/16"	1
14	N8502	WASHER	thrust, adjuster knob	2
15	F13537	THRUST BEARING	BEARING thrust, adjuster knob	1
16	N8501	SPACER	7/16 x 9/16 x 3-1/64 inch, vinyl, seat adjuster	1
17	N8495	RETAINER	SEAT springs, seat adjuster	4
18	N8496	VALVE SPRING	SPRING compression, upper, seat adjuster	1
19	N8494	VALVE SPRING	SPRING compression, lower, seat adjuster	1
20	N8497	NUT	special, seat adjuster, upper	2
21	131-1280	JAM NUT,Jam, 1/4"-20	NUT hex, jam, self-locking, 1/4 inch NC	1
22	NSS	NOT SERVICED SEPARATELY	BRACKET springs, upper	1
23	N8484	INSULATOR BLOCK	BUMPER rubber	1
24	N8500	ROLLER	upper bracket, seat adjustment	2
25	N8493	SUPPORT ASSY.	BRACKET springs, lower, replaced NSS	1
		Ref. 5 nss bracket - spring lower is now serviced under N8493	Ref. 5 nss bracket - spring lower is now serviced under N8493	1
26	N8488	SHOCK ABSORBER	ABSORBER shock, adjuster assembly	1
27	N8485	AXLE PIN	PIN shock absorber mounting	2
28	100-3362	SNAP RING,#62, .480" Dia, E-Type	Ring, Retaining, #62, .480" Dia, E-Type	4

Diag #	Part #	Name	Description	Qty
29	NSS	NOT SERVICED SEPARATELY	ARM seat adjuster	1
30	N8498	VALVE SPRING	SPRING compression	2
30A	N13754	BUSHING	BEARING flanged	4
31	113-118	BOLT,Hex, 5/16" - 18 x 5/8", Gr 5	BOLT,Hex, 5/16" - 18 x 5/8", Gr 5	4
32	N14311	COVER	HANDLE seat tilt lever	1
33	N14314	COVER	shroud, housing	1
34	N8487	RIVET	plastic, yellow, weight indicator	1
35	N14308	KNOB	seat adjuster	1
36	138-75	LOCK PIN,5/32" x 7/8", Slotted	PIN, 5/32" x 7/8", Slotted	1
37	113-118	BOLT,Hex, 5/16" - 18 x 5/8", Gr 5	BOLT,Hex, 5/16" - 18 x 5/8", Gr 5	4
38	N14430	SHAFT	seat adjuster arm, front	1
39	D95093	RING	shaft retaining	2
40	N14315	DECAL	seat tilt adjustment, Ref. 28 shown on Figure 9-170	1

http://www.minnparbackhoeparts.com/

(580SK) - CASE SUPER-K CONSTRUCTION KING LOADER BACKHOE > (9-124) - ARMRESTS

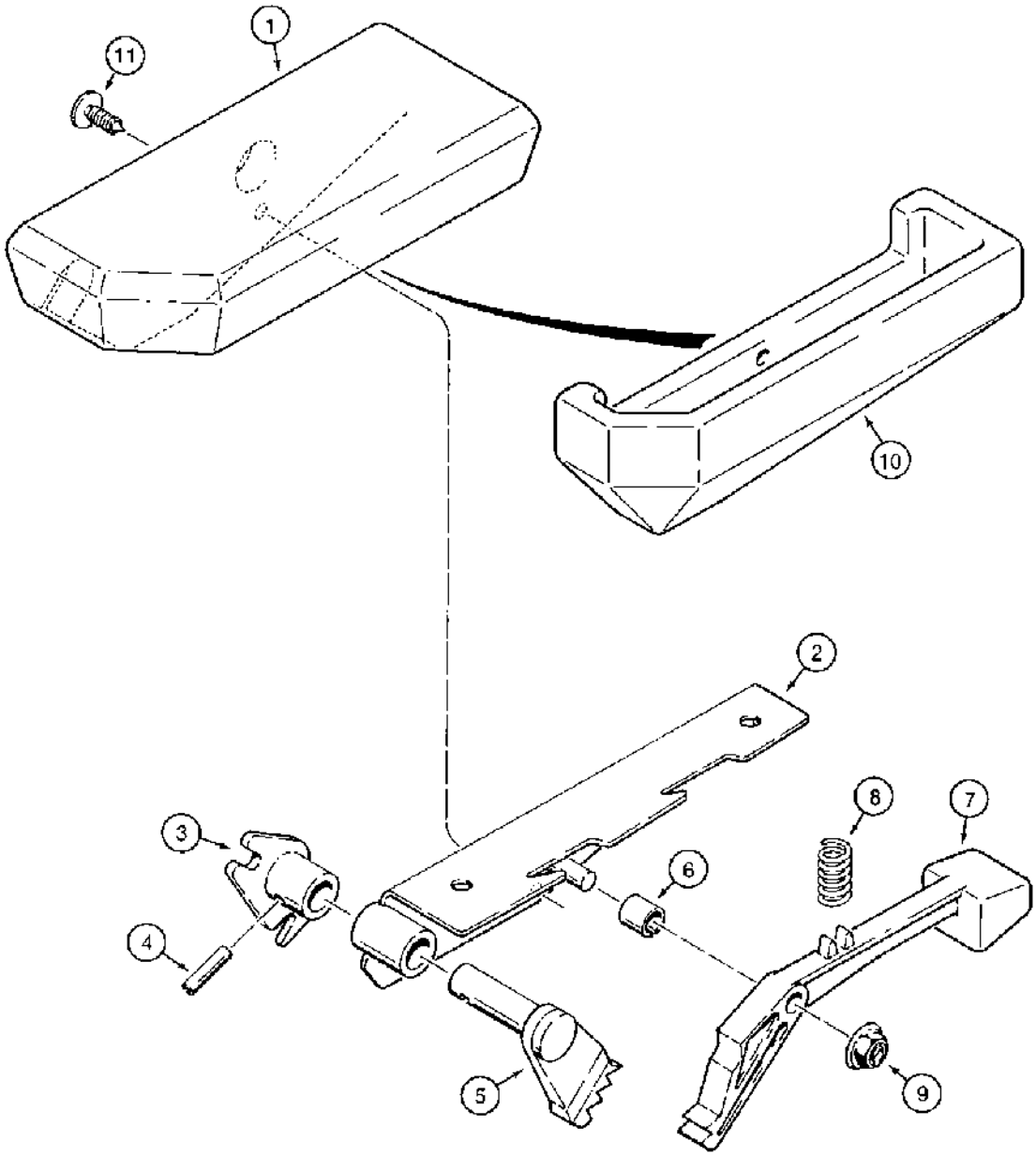

688263A-45

(580SK) - CASE SUPER-K CONSTRUCTION KING LOADER BACKHOE > (9-124) - ARMRESTS

Diag #	Part #	Name	Description	Qty
	N14853	ARMREST	ASSEMBLY, D147689 or D147690 seat, left-hand, not shown, no longer available, order 101577A1 armrest	1
	N14854	ARMREST	ASSEMBLY, D147689 or D147690 seat, right-hand, no longer available, order 101578A1 armrest	1
	101577A1	ARMREST	ASSEMBLY, 101795A1 or 101796A1 seat, left-hand, not shown	1
	101578A1	ARMREST	ASSEMBLY, 101795A1 or 101796A1 seat, right-hand, not shown, Includes: Ref. 1 through 11, P/N N14856, P/N N14862, P/N 101575A1 and P/N 101576A1	1
1	N14861	PAD	ARMREST lower, retainer, right-hand	1
1A	N14860	SHROUD	COVER armrest, upper, left hand, not shown	1
	N14856	RETAINER	ASSEMBLY armrest, left-hand, not shown, includes Ref. 2-5A, no longer available, order 101575A1 retainer	1
	N14862	PAN	RETAINER ASSEMBLY armrest, right-hand, includes Ref. 2-5A, no longer available, order 101576A1 retainer	1
	101575A1	PAN	RETAINER complete, does not disassemble, 101577A1 armrest, left-hand, component parts not serviced separately	1
	101576A1	PAN	RETAINER complete, does not disassemble, 101578A1 armrest, right-hand, component parts not serviced separately, Includes: Ref. 2 through 5A	1
2	NSS	NOT SERVICED SEPARATELY	RETAINER armrest	1
3	D149164	PAN	BRACKET retainer mounting, right hand, no longer available, order 101576A1 retainer	1
3A	D149163	PAN	BRACKET retainer mounting, left-hand, not shown, no longer available, order 101575A1 retainer	1
4	138-134	LOCK PIN,1/4" x 1", Slotted	PIN, 1/4" x 1", Slotted	1
5	D149162	PAN	LEVER stop, right-hand, no longer available, order 101576A1 retainer	1
5A	D149161	LEVER	stop, left-hand, not shown, no longer available, order 101575A1 retainer	1
6	N14857	SPACER	split	1
7	N14858	LATCH	lever, armrest	1
8	N14859	SPRING	compression	1

Diag #	Part #	Name	Description	Qty
9	131-435	JAM NUT,Push, 3/8"	NUT push-on type, 3/8 inch	1
10	N14863	SHROUD	COVER armrest, upper, right-hand	1
10A	N14855	PAD	ARMREST lower, retainer, left-hand, not shown	1
11	N14323	CLIP	RETAINER brown, plastic	1

http://www.minnparbackhoeparts.com/

(580SK) - CASE SUPER-K CONSTRUCTION KING LOADER BACKHOE > (9-125A) - SEATS AND MOUNTING PARTS, SEAT BELT MOUNTING - STANDARD

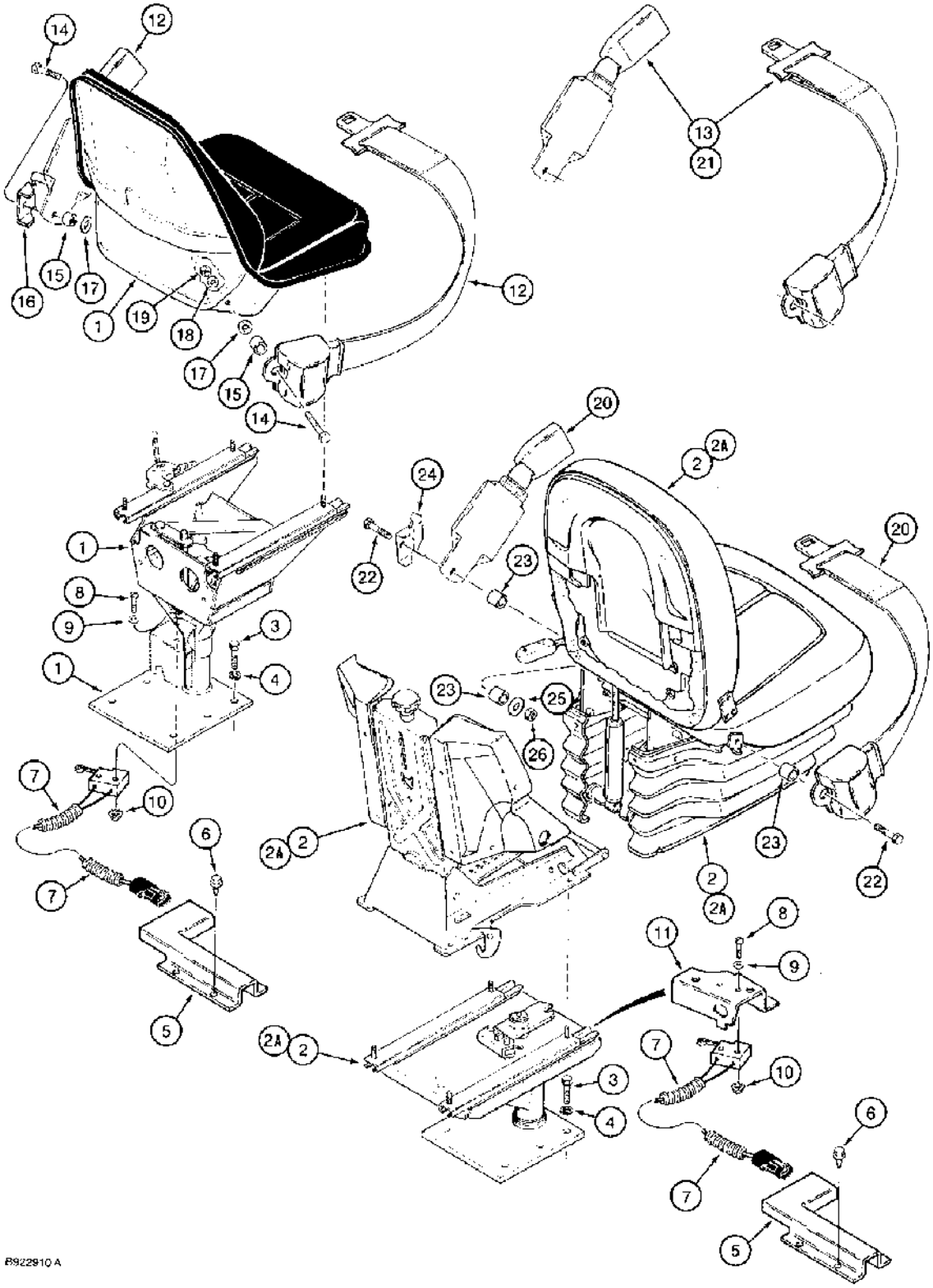

(580SK) - CASE SUPER-K CONSTRUCTION KING LOADER BACKHOE > (9-125A) - SEATS AND MOUNTING PARTS, SEAT BELT MOUNTING - STANDARD

Diag #	Part #	Name	Description	Qty
1	102796A2	SEAT ASSY.	SEAT ASSEMBLY standard, vinyl, includes seat, pedestal, and support, see parts list Figure 9-125C for seat and Figure 9-125G for support and pedestal, replaces 102796A1, seats and mounting parts	1
		REF #1 PER PAM IF YOU NEED SHELL OF 102796A3 W/SWIVEL TRIP BRACKET. CAN USE GRAY SEAT 234223A1 FROM L MODELS AND CHANGE CUSHIONS TO MATCH	REF #1 PER PAM IF YOU NEED SHELL OF 102796A3 W/SWIVEL TRIP BRACKET. CAN USE GRAY SEAT 234223A1 FROM L MODELS AND CHANGE CUSHIONS TO MATCH	1
2	102795A2	SEAT	ASSEMBLY suspension, cloth, includes seat, armrests, suspension, pedestal, and weight adjuster, see parts list Figure 9-125E for seat, Figure 9-125J for pedestal, weight adjuster, and suspension, and Figure 9-125L for armrests, replaces 102795A1, sea	1
2A	108114A2	SEAT	ASSEMBLY suspension, vinyl, includes seat, armrests, suspension, pedestal, and weight adjuster, see parts list Figure 9-125E for seat, Figure 9-125J for pedestal, weight adjuster, and suspension, and Figure 9-125L for armrests, replaces 108114A1, sea	1
3	413-824	BOLT,Hex, 1/2" - 13 x 1 1/2", Gr 5	Standard or suspension seat, seats and mounting parts Hex, 1/2"-13 x 1 1/2", G5, Full Thd	4
4	80679	LOCK WASHER,1/2"	WASHER, LOCK, , Standard or suspension seat, seats and mounting parts 1/2"	4
5	118593A1	GUARD	seat switch harness, seats and mounting parts	1
6	281-1478	SELF-TAP SCREW,Hex Washer, 1/4" - 20 x 1/2"	SCREW self-tapping, hex washer head, 1/4 NC x 1/2 inch, seats and mounting parts	4
7	118769A1	SWITCH	limit, with harness, attaches to side console harness, seats and mounting parts	1
8	470-10620	SCREW,Slotted Pan Hd, #6-32 x 1 1/4"	- machine, pan head slotted, No. 6 NC x 1-1/4 inch, seats and mounting parts	2
9	495-31016	WASHER,#6	Seats and mounting parts #6	2
10	193-1003	NUT,Keps, w/LW,#6-32	hex, with external tooth lock washer, No. 6 NC, seats and mounting parts	2
11	119211A1	BRACKET	switch mounting, suspension seat only, seats and mounting parts	1

Diag #	Part #	Name	Description	Qty
12	D150377	SAFETY BELT ,2.00" W	If used, Seat mounting, Standard seat 2.00" W	1
13	R58418	SAFETY BELT ,3.00" W	If used, Replaces 109518A1, Seat belt mounting - Standard seat 3.00" W	1
14	414-724	BOLT,Hex, 7/16" - 20 x 1 1/2", Gr 5	- hex, 7/16 NF x 1-1/2 inch, seat belt mounting - standard seat	2
15	D150391	SPACER	belt, seat belt mounting - standard seat	2
16	D150392	BRACKET	left-hand belt, seat belt mounting - standard seat	1
17	495-81169	WASHER,17/32" x 2 1/2" x .120"	- flat, 17/32 x 2-1/2 x 1/8 inch, seat belt mounting - standard seat	2
18	496-81010	WASHER	flat, 15/32 x 1 x 7/64 inch, hardened, seat belt mounting - standard seat	2
19	131-1247	LOCK NUT,7/16"-20, GC	NUT hex, self-locking, 7/16 inch NF, seat belt mounting - standard seat	2
20	D150377	SAFETY BELT ,2.00" W	If used, Seat belt mounting, Suspension seat 2.00" W	1
21	R58418	SAFETY BELT ,3.00" W	If used, Replaces 109518A1, Seat belt mounting - Suspension seat 3.00" W	1
22	414-728	BOLT,Hex, 7/16" - 20 x 1 3/4", Gr 5	hex, 7/16 NF x 1-3/4 inch, seat belt mounting - suspension seat	2
23	D150391	SPACER	belt, seat belt mounting - suspension seat	4
24	D150392	BRACKET	left-hand belt, seat belt mounting - suspension seat	1
25	495-81267	WASHER,.469" x 1 1/2" x .134"	flat, 15/32 x 1-1/2 x 5/32 inch, seat belt mounting - suspension seat	2
26	131-1247	LOCK NUT,7/16"-20, GC	NUT hex, self-locking, 7/16 inch NF, seat belt mounting - suspension seat	2

http://www.minnparbackhoeparts.com/

(580SK) - CASE SUPER-K CONSTRUCTION KING LOADER BACKHOE > (9-125C) - STANDARD SEAT ASSEMBLY

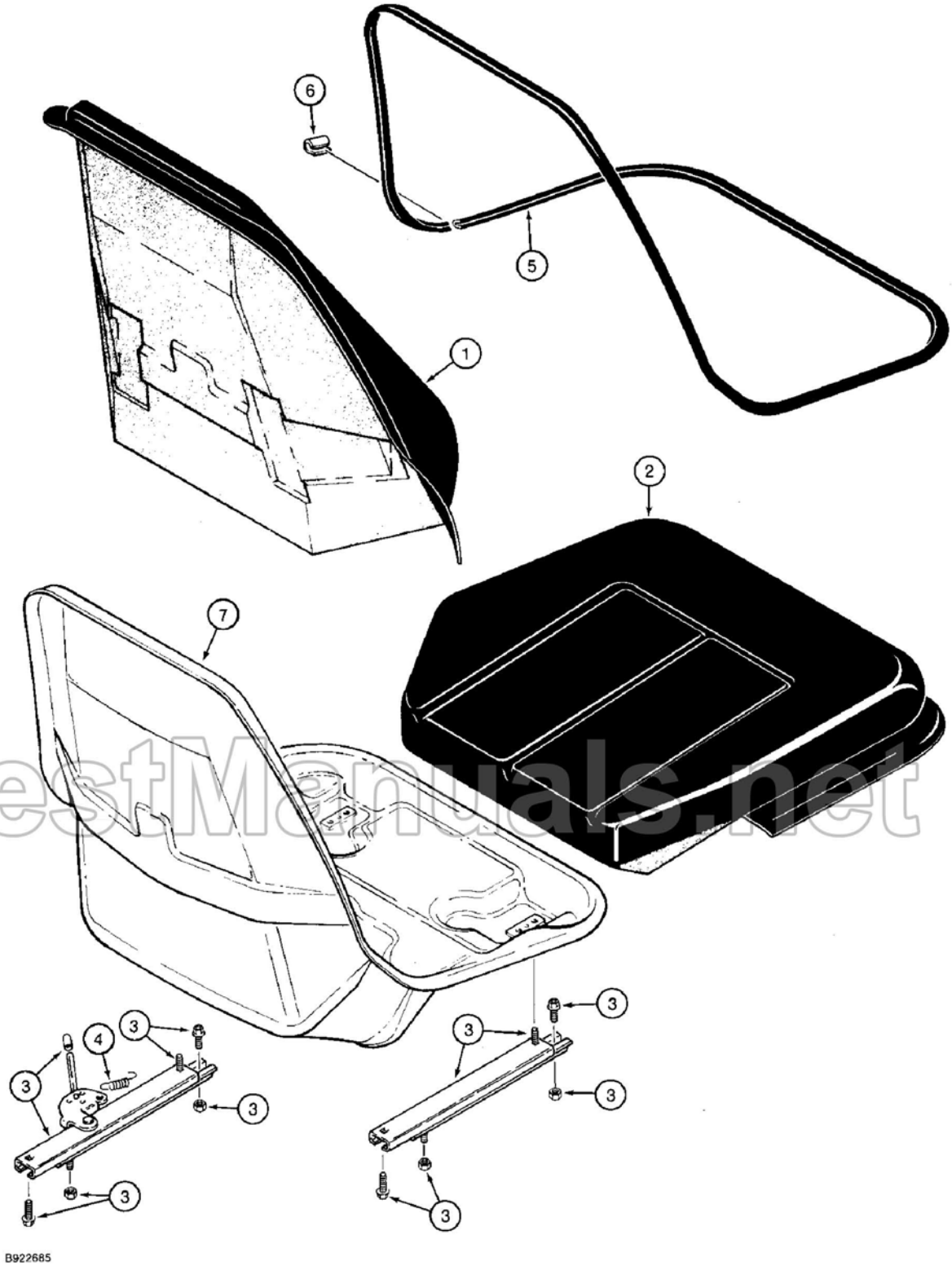

BestManuals.net

(580SK) - CASE SUPER-K CONSTRUCTION KING LOADER BACKHOE > (9-125C) - STANDARD SEAT ASSEMBLY

Diag #	Part #	Name	Description	Qty
	102796A2	SEAT ASSY.	SEAT ASSEMBLY standard, vinyl, Includes: Ref. 1 through 4	1
		REF 102796A2 PER PAM IF YOU NEED SHELL OF 102796A3 W/SWIVEL TRIP BRACKET. CAN USE GRAY SEAT 234223A1 FROM L MODELS AND CHANGE CUSHIONS TO MATCH	REF 102796A2 PER PAM IF YOU NEED SHELL OF 102796A3 W/SWIVEL TRIP BRACKET. CAN USE GRAY SEAT 234223A1 FROM L MODELS AND CHANGE CUSHIONS TO MATCH	1
		includes seat below and support and pedestal on Figure 9-125G, individual component parts not serviced separately, for service order respective component kits, see Figure 9-125G for standard support and pedestal, replaces 102796A1	includes seat below and support and pedestal on Figure 9-125G, individual component parts not serviced separately, for service order respective component kits, see Figure 9-125G for standard support and pedestal, replaces 102796A1	1
1	116762A1	KIT	backrest cushion	1
2	116765A1	KIT	seat cushion	1
3	116760A1	KIT	adjuster, seat slide, fore/aft	1
		REF 3, 116760A1 INCLUDES THE SPRING THAT ATTACHES TO ADJUSTER ON THE LH SLIDE MECHANISM. SPRING IS APPROX 3 5/8" LONG. REF 4, 119171A1 DOES NOT INCLUDE THIS SPRING. PER MIKE HARRIS AT VENDOR, THAT SPRING CAN ONLY BE PURCHASED AS PART OF THE 116760A1 KIT, IS NOT SERVICED SEPERATELY.	REF 3, 116760A1 INCLUDES THE SPRING THAT ATTACHES TO ADJUSTER ON THE LH SLIDE MECHANISM. SPRING IS APPROX 3 5/8" LONG. REF 4, 119171A1 DOES NOT INCLUDE THIS SPRING. PER MIKE HARRIS AT VENDOR, THAT SPRING CAN ONLY BE PURCHASED AS PART OF THE 116760A1 KIT, IS NOT SERVICED SEPERATELY.	1
4	119171A1	KIT	spring, seat adjuster slide, also includes vertical latch and extension springs used in the standard pedestal on Figure 9-125G	1
5	N14614	GASKET	RETAINER strip, Serial Range: cushion-shell	1
6	NSS	NOT SERVICED SEPARATELY	CLIP retainer, order N7802 clip kit	1
		Part of clip kit P/N N7802.	Part of clip kit P/N N7802.	1

Diag #	Part #	Name	Description	Qty
7	NSS	NOT SERVICED SEPARATELY	SHELL seat frame, order 102796A1 complete seat assembly	1
	N7802	CLIP	KIT clip, includes Ref. 6 clip above, plus 6 additional narrow clips	1

http://www.minnparbackhoeparts.com/

(580SK) - CASE SUPER-K CONSTRUCTION KING LOADER BACKHOE > (9-125E) - SUPPENSION SEAT ASSEMBLIES

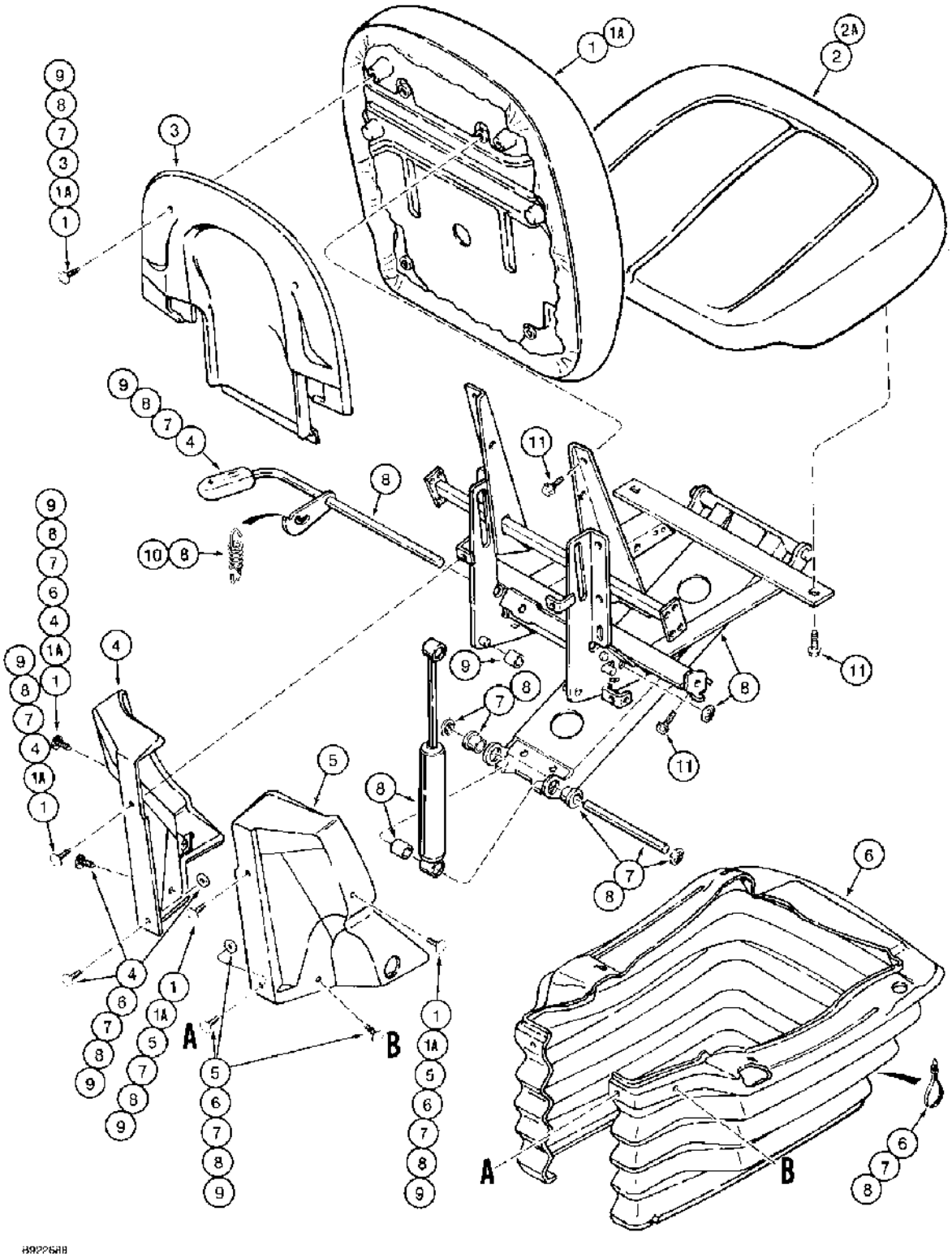

http://www.minnparbackhoeparts.com/

(580SK) - CASE SUPER-K CONSTRUCTION KING LOADER BACKHOE > (9-125E) - SUSPENSION SEAT ASSEMBLIES

Diag #	Part #	Name	Description	Qty
	102795A2	SEAT	ASSEMBLY suspension, cloth, includes seat, armrests, suspension, pedestal, and weight adjuster on Figures 9-125J and 9-125L, individual component parts not serviced separately, for service order respective component kits, replaces 102795A1	1
	108114A2	SEAT	ASSEMBLY suspension, vinyl, includes seat, armrests, suspension, pedestal, and weight adjuster on Figures 9-125J and 9-125L, individual component parts not serviced separately, for service order respective component kits, replaces 108114A1	1
		Includes: Ref. 1 through 10	Includes: Ref. 1 through 10	1
1	116528A1	KIT	backrest cushion, cloth, 102795A1 or 102795A2 seat	1
1A	116531A1	KIT	backrest cushion, vinyl, 108114A1 or 108114A2 seat	1
2	116540A1	KIT	seat cushion, cloth, 102795A1 or 102795A2 seat	1
2A	116541A1	KIT	seat cushion, vinyl, 108114A1 or 108114A2 seat	1
3	116542A1	KIT	backrest shroud	1
4	116543A1	KIT	left-hand shroud	1
5	116544A1	KIT	right-hand shroud	1
6	116532A1	KIT	boot, rubber	1
7	116536A1	KIT	swing arm pivot shaft	1
8	116549A1	KIT	suspension, includes parts from seat frame to adjuster slides, see additional kit parts on Figure 9-125J, Ref. 1	1
9	116539A1	KIT	plastic components, also see additional kit parts on Figure 9-125J, Ref. 2	1
10	116547A1	KIT	height adjusting spring, also includes ten shroud plastic retainers, see additional kit parts on Figure 9-125J, Ref. 6	1
11	NSS	NOT SERVICED SEPARATELY	BOLT, 5/16 inch thread, length as needed, purchase locally, seat cushion and backrest	8

http://www.minnparbackhoeparts.com/

(580SK) - CASE SUPER-K CONSTRUCTION KING LOADER BACKHOE > (9-125G) - STANDARD SEAT SUPPORT AND PEDESTAL

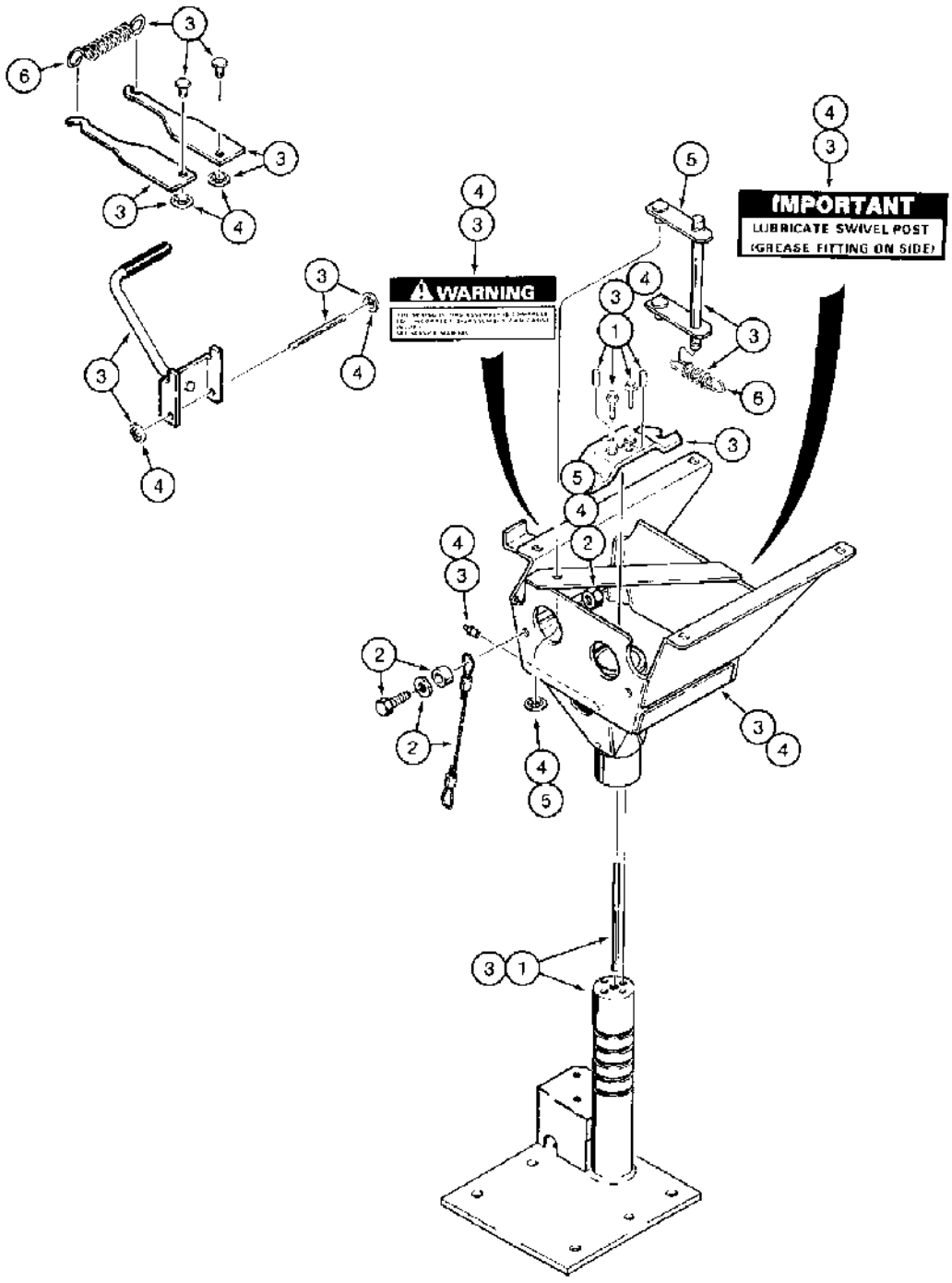

D922589 A

http://www.minnparbackhoeparts.com/

(580SK) - CASE SUPER-K CONSTRUCTION KING LOADER BACKHOE > (9-125G) - STANDARD SEAT SUPPORT AND PEDESTAL

Diag #	Part #	Name	Description	Qty
	102796A2	SEAT ASSY.	SEAT ASSEMBLY standard, vinyl, includes seat on Figure 9-125C and support and pedestal below, individual component parts not serviced separately, for service order respective kits, replaces 102796A1, Includes: Ref. 1 through 6	1
1	116761A2	KIT	support, base, replaces 116761A1, pedestal base without switch mounting bracket	1
		Also includes, 4, lock nuts for seat adjuster slide on Figure 9-125C.	Also includes, 4, lock nuts for seat adjuster slide on Figure 9-125C.	1
		THE SUPPORT KIT DOES NOT INCLUDE THE LITTLE SHAFT PICTURED GOING THRU THE CENTER HOLE OF THE SUPPORT.	THE SUPPORT KIT DOES NOT INCLUDE THE LITTLE SHAFT PICTURED GOING THRU THE CENTER HOLE OF THE SUPPORT.	1
		The switch mounting bracket is in kit 116764a2, Ref. 3 and not Ref. 1.	The switch mounting bracket is in kit 116764a2, Ref. 3 and not Ref. 1.	1
2	116763A1	KIT	cable, anchor, includes hardware for both ends of cable	1
3	116764A2	KIT	pedestal, replaces 116764A1, pedestal base without switch mounting bracket	1
		Also includes, 4, lock nuts for seat adjuster slide on Figure 9-125C.	Also includes, 4, lock nuts for seat adjuster slide on Figure 9-125C.	1
		The switch mounting bracket is in kit 116764a2, Ref. 3 and not Ref. 1.	The switch mounting bracket is in kit 116764a2, Ref. 3 and not Ref. 1.	1
		GREASE ZERK SHOWN INCLUDED WITH REF 3/4 IS 219-16	GREASE ZERK SHOWN INCLUDED WITH REF 3/4 IS 219-16	1
4	116766A2	KIT	pedestal box, replaces 116766A1	1
		Also includes, 4, lock nuts for seat adjuster slide on Figure 9-125C.	Also includes, 4, lock nuts for seat adjuster slide on Figure 9-125C.	1
		GREASE ZERK SHOWN INCLUDED WITH REF 3/4 IS 219-16	GREASE ZERK SHOWN INCLUDED WITH REF 3/4 IS 219-16	1
5	116767A1	KIT	swivel latch	1
		Also includes, 4, lock nuts for seat adjuster slide on Figure 9-125C.	Also includes, 4, lock nuts for seat adjuster slide on Figure 9-125C.	1

Diag #	Part #	Name	Description	Qty
6	119171A1	KIT	spring, also includes seat slide adjuster spring on Fiugre 9-125C	1

http://www.minnparbackhoeparts.com/

(580SK) - CASE SUPER-K CONSTRUCTION KING LOADER BACKHOE > (9-125J) - SUSPENSION SEAT PEDESTAL, WEIGHT ADJUSTER, AND SUSPENSION

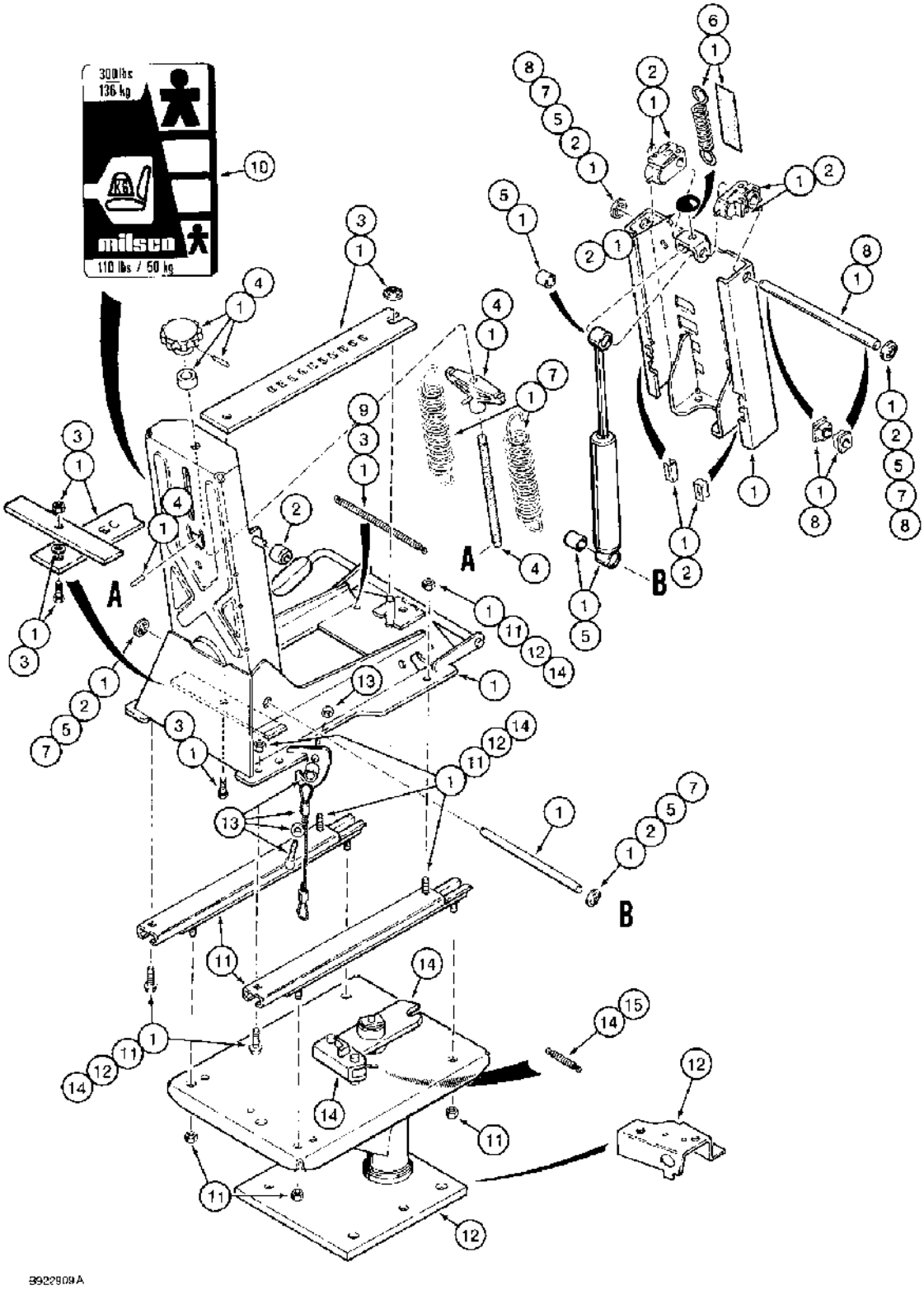

(580SK) - CASE SUPER-K CONSTRUCTION KING LOADER BACKHOE > (9-125J) - SUSPENSION SEAT PEDESTAL, WEIGHT ADJUSTER, AND SUSPENSION

Diag #	Part #	Name	Description	Qty
	102795A2	SEAT	ASSEMBLY suspension, cloth, includes seat, armrests, suspension, pedestal, and weight adjuster on Figures 9-125E and 9-125L, individual component parts not serviced separately, for service order respective component kits, replaces 102795A1	1
	108114A2	SEAT	ASSEMBLY suspension, vinyl, includes seat, armrests, suspension, pedestal, and weight adjuster on Figures 9-125E and 9-125L, individual component parts not serviced separately, for service order respective component kits, replaces 108114A1	1
		Includes: Ref. 1 through 15	Includes: Ref. 1 through 15	1
1	116549A1	KIT	suspension, includes parts from seat frame to adjuster slides, see additional parts on Figure 9-125E, Ref. 8	1
2	116539A1	KIT	plastic components, also see additional kit parts on Figure 9-125E, Ref. 9	1
3	116521A1	KIT	fore/aft, adjuster latch, also includes tie straps shown on Figure 9-125E	1
4	116535A1	KIT	weight adjusting, also includes rubber height control handle grip and ten shroud plastic retainers shown on Fig. 9-125E	1
		Also includes ten shroud plastic retainers, two washers, and two tie straps shown on page 9-125E	Also includes ten shroud plastic retainers, two washers, and two tie straps shown on page 9-125E	1
5	116533A1	KIT	suspension damper, Includes:(10) shroud plastic retainers, (2) washers, and (2) tie straps shown on Figure 9-125E and rubber height control handle grip.	1
		Also includes ten shroud plastic retainers, two washers, and two tie straps shown on page 9-125E	Also includes ten shroud plastic retainers, two washers, and two tie straps shown on page 9-125E	1
6	116547A1	KIT	height adjusting spring, see additional kit parts on Figure 9-125E, Ref. 10	1
7	116537A1	KIT	main extension springs, suspension, Includes: (10) shroud plastic retainers, (2) washers, and (2) tie straps shown on Figure 9-125E and rubber height control handle grip.	1

Diag #	Part #	Name	Description	Qty
		Also includes ten shroud plastic retainers, two washers, and two tie straps shown on page 9-125E	Also includes ten shroud plastic retainers, two washers, and two tie straps shown on page 9-125E	1
8	116551A1	WHEEL BEARING KIT	KIT upper suspension tower shaft, also includes (10) shroud plastic retainers and (2) washers shown on Figure 9-125E	1
9	116545A1	KIT	fore/aft latch spring, also includes (2) tie straps shown on Figure 9-125E	1
10	116534A1	KIT	decal, weight	1
11	116522A1	KIT	fore/aft adjuster slides, also includes (2) tie straps shown on Figure 9-125E	1
12	116538A2	KIT	pedestal, seat support, includes 119211A1 switch mounting bracket, Ref. 11 on Figure 9-125A, replaces 116538A1	1
13	116552A1	KIT	cable, includes hardware for both ends of cable	1
14	116550A1	KIT	swivel latch bar, pedestal	1
15	116548A1	KIT	swivel latch spring only	1

http://www.minnparbackhoeparts.com/

(580SK) - CASE SUPER-K CONSTRUCTION KING LOADER BACKHOE > (9-125L) - SUSPENSION SEAT ARMRESTS

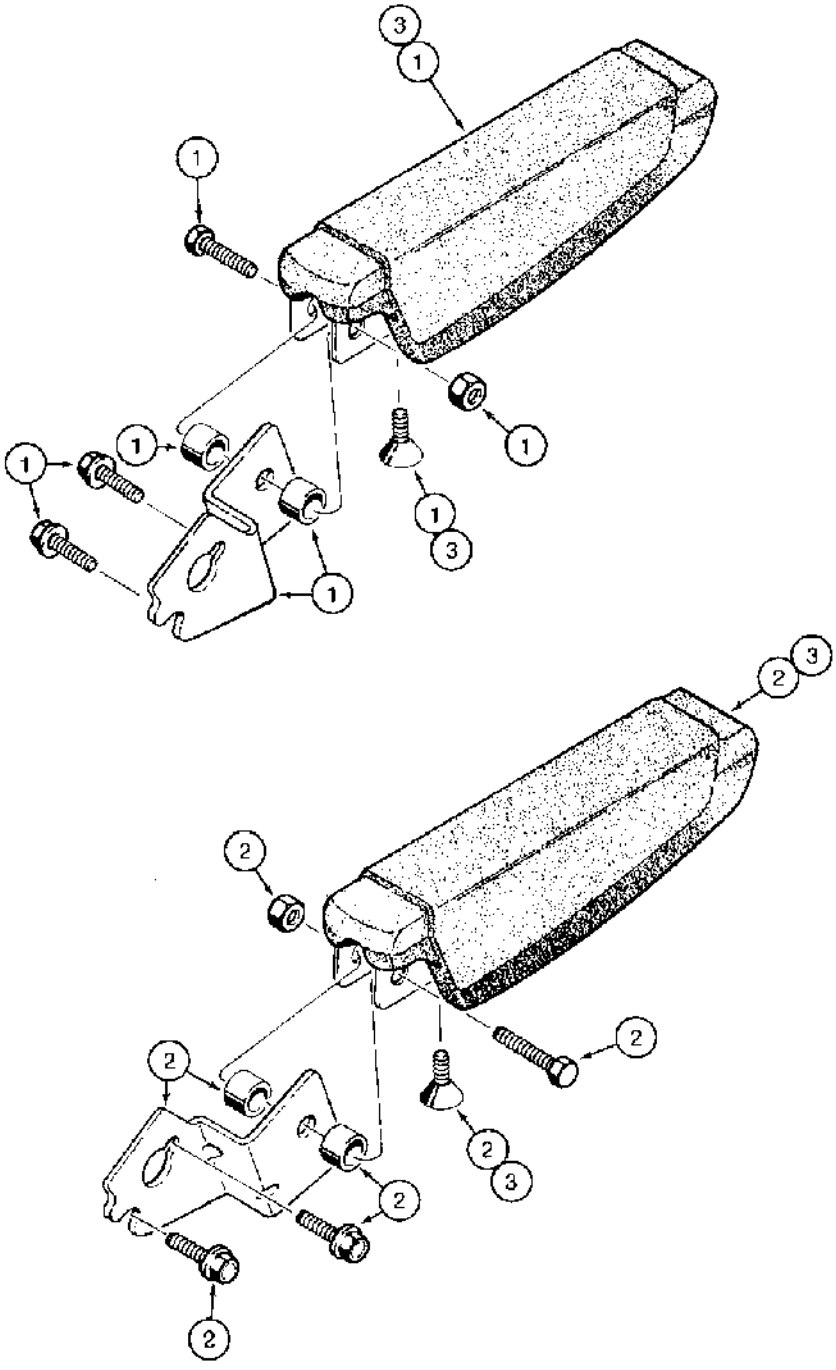

B922911

(580SK) - CASE SUPER-K CONSTRUCTION KING LOADER BACKHOE > (9-125L) - SUSPENSION SEAT ARMRESTS

Diag #	Part #	Name	Description	Qty
	102795A2	SEAT	ASSEMBLY suspension, cloth, includes seat, armrests, suspension, pedestal, and weight adjuster on Figures 9-125E and 9-125J, individual component parts not serviced separately, for service order respective component kits, replaces 102795A1	1
	108114A2	SEAT	ASSEMBLY suspension, vinyl, includes seat, armrests, suspension, pedestal, and weight adjuster on Figures 9-125E and 9-125J, individual component parts not serviced separately, for service order respective component kits, replaces 108114A1	1
		Includes: Ref. 1, 2 and 3	Includes: Ref. 1, 2 and 3	1
1	116523A1	KIT	left-hand armrest and mounting hardware, also includes one shroud upper left side plastic retainer, shown on Figure 9-125E	1
2	116524A1	KIT	right-hand armrest and mounting hardware, also includes one shroud upper right side plastic retainer, shown on Figure 9-125E	1
3	116759A1	KIT	armrest pad, includes one mounting bolt	1

http://www.minnparbackhoeparts.com/

(580SK) - CASE SUPER-K CONSTRUCTION KING LOADER BACKHOE > (9-126) - ROPS CAB AND MOUNTING PARTS

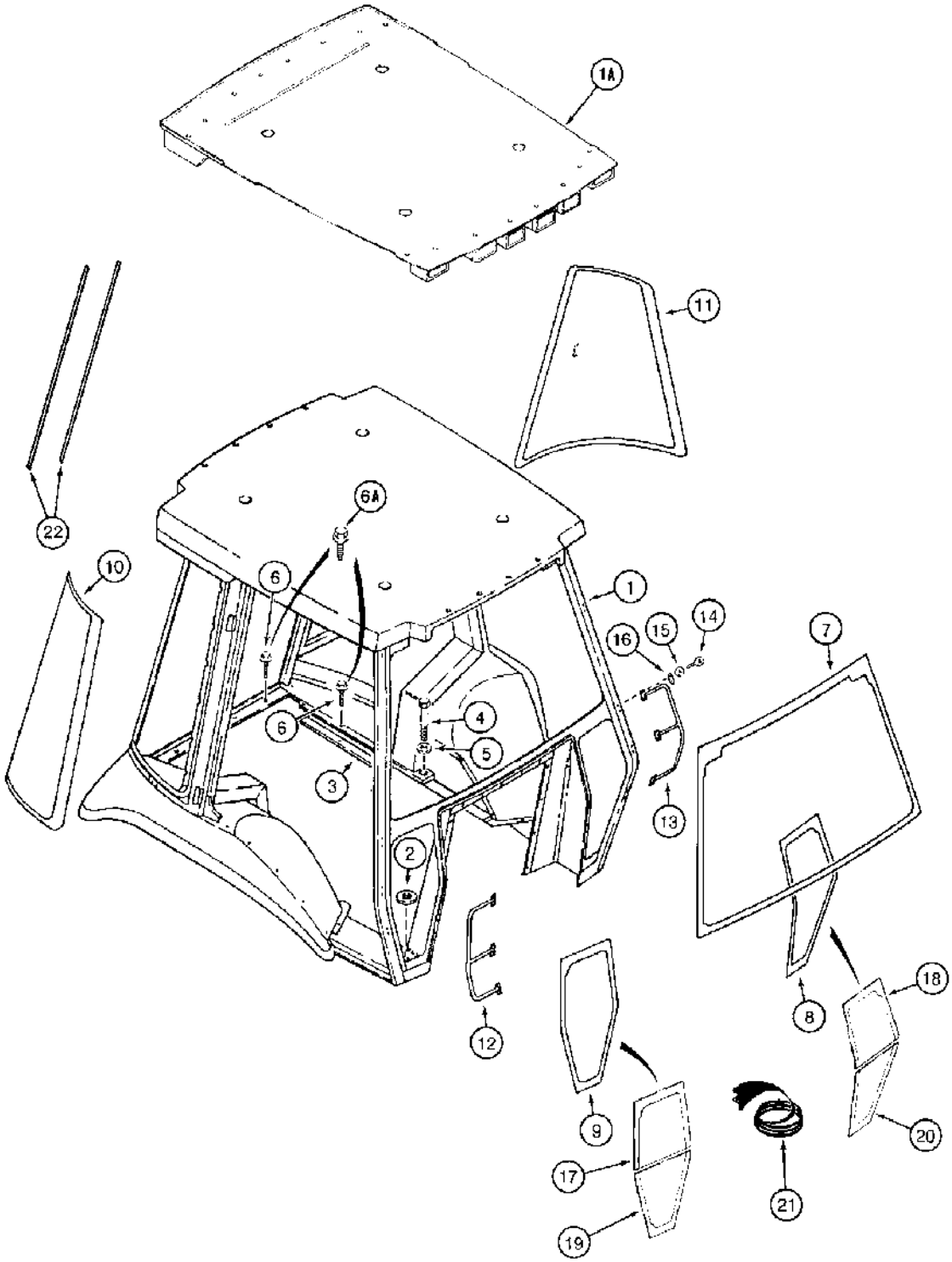

B902693 B

(580SK) - CASE SUPER-K CONSTRUCTION KING LOADER BACKHOE > (9-126) - ROPS CAB AND MOUNTING PARTS

Diag #	Part #	Name	Description	Qty
1	REF	INSTRUCTION	CAB ROPS, operators, with plastic roof cap, machinery item, order from Machinery Price List, parts list Figures 9-126 thru 9-158	1
1A	REF	INSTRUCTION	CAB ROPS, operators, without plastic roof cap, machinery item, order from Machinery Price List, parts list Figures 9-126 thru 9-158	1
2	495-81259	WASHER,21/32" x 2" x .238"	flat, 21/32 x 2 x 1/4 inch, see Figure 9-096, Ref.11 and 12, for bolt and insulator	2
3	D90936	BAND	SEAL, 112 inch long, adhesive one side, cut from L35819 bulk, rear fender to operator compartment frame	2
4	426-1452	BOLT,Hex, 7/8" - 9 x 3 1/4", Gr 8	hex, 7/8 NC x 3-1/4 inch, grade 8	4
5	496-11094	WASHER,15/16" x 1 3/4" x .134", HDN	flat, 15/16 x 1-3/4 x 1/8 inch	4
6	281-14812	SELF-TAP SCREW,Hex Washer, 5/16" - 18 x 3/4"	SCREW self-tapping, hex washer head, 5/16 NC x 3/4 inch, replaces D141589 screw, if used	11
6A	112865A1	SCREW	pointed, self-aligning, if used	11
7	97290C1	GLASS	front windshield	1
8	D131289	GLASS	lower left-hand front window, one-piece, if used	1
9	D131288	GLASS	lower right-hand front window, one-piece, if used	1
10	D126204	GLASS	right-hand rear quarter panel window	1
11	D126205	GLASS	left-hand rear quarter panel window	1
12	R53960	HANDLE	grab, right-hand, if used	1
13	R53961	HANDLE	grab, left-hand, if used	1
14	165-180	HEX SOC SCREW,Hex Soc Hd, 1/4"-20 x 7/8"	BOLT hex socket, 1/4 NC x 7/8 inch, grade 8, if used	12
15	195-516	WASHER,#12	flat, 1/4 x 9/16 x 1/16 inch, if used	12
16	1971368C1	PLATE ASSY.	PLATE retainer, grab handle, if used	6
17	107230A1	GLASS	knee, upper, right-hand, if used	1
18	107233A1	GLASS	knee, upper, left-hand, if used	1
19	107232A1	GLASS	knee, lower, right-hand, if used	1
20	107234A1	GLASS	knee, lower, left-hand, if used	1
21	108513A1	SEAL	290 mm long, front knee glass, if used	2
22	108963A1	LINING	SEAL trim, left-hand ROPS post, if used	2
	L35819	RUBBER SEAL	SEAL foam rubber, bulk roll, adhesive-back, 1 x 1/8 inch x 50 ft long	1

http://www.minnparbackhoeparts.com/

(580SK) - CASE SUPER-K CONSTRUCTION KING LOADER BACKHOE > (9-128) - CAB FRAME, ROOF CAP, COVERS, AND INSULATION

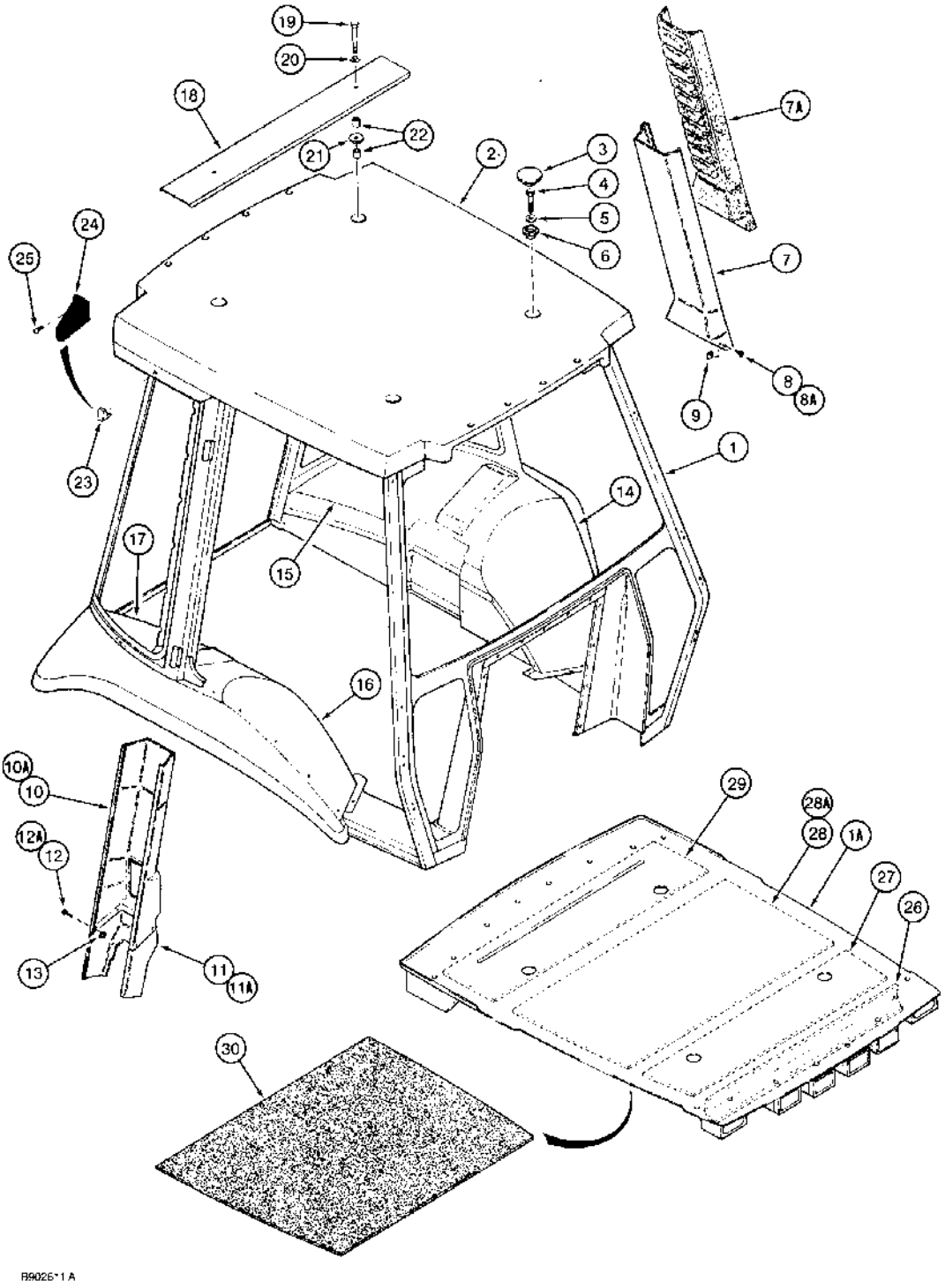

(580SK) - CASE SUPER-K CONSTRUCTION KING LOADER BACKHOE > (9-128) - CAB FRAME, ROOF CAP, COVERS, AND INSULATION

Diag #	Part #	Name	Description	Qty
1	108762A1	FRAME ASSY	FRAME cab, with plastic roof cap prior to, Start Serial: JAB0023786	1
		Fenders are available as a seoerate item. Old fenders must be cut off to weld the new ones on.The part numbers are P/N R52549 LH AND P/N R52550 RH.	Fenders are available as a seoerate item. Old fenders must be cut off to weld the new ones on.The part numbers are P/N R52549 LH AND P/N R52550 RH.	1
		108762A1 is a cab frame made up of 108532A1 frame, 151-525 Rivet, and 1990696C2 S/N and model plate. This is part of D104066 complete cab which is no longer available through whole goods. Dealer needs to order the 108762A1 frame and all other primes seperately and build up the cab complete. This frame will fit the 580K-I, 580K-III, and 580 Super K.	108762A1 is a cab frame made up of 108532A1 frame, 151-525 Rivet, and 1990696C2 S/N and model plate. This is part of D104066 complete cab which is no longer available through whole goods. Dealer needs to order the 108762A1 frame and all other primes seperately and build up the cab complete. This frame will fit the 580K-I, 580K-III, and 580 Super K.	1
1A	108762A1	FRAME ASSY	FRAME cab, without plastic roof cap JAB0023786 and, Start Serial: after	1
		108762A1 is a cab frame made up of 108532A1 frame, 151-525 Rivet, and 1990696C2 S/N and model plate. This is part of D104066 complete cab which is no longer available through whole goods. Dealer needs to order the 108762A1 frame and all other primes seperately and build up the cab complete. This frame will fit the 580K-I, 580K-III, and 580 Super K.	108762A1 is a cab frame made up of 108532A1 frame, 151-525 Rivet, and 1990696C2 S/N and model plate. This is part of D104066 complete cab which is no longer available through whole goods. Dealer needs to order the 108762A1 frame and all other primes seperately and build up the cab complete. This frame will fit the 580K-I, 580K-III, and 580 Super K.	1
2	R52559	COVER	CAP roof, plastic, if used	1
		P/N R52559 Plastic Roof was eliminated.	P/N R52559 Plastic Roof was eliminated.	1
3	R54262	PLUG	2-5/64 inch, 53 mm, diameter, cap mounting holes	4
4	113-2460	BOLT,Locking, 1/2"-13 x 2 1/4", G8	Locking, 1/2"-13 x 2 1/4", G8	4
5	495-21056	WASHER,1/2"	flat, 9/16 x 1-3/8 x 3/32 inch	4

Diag #	Part #	Name	Description	Qty
6	1344187C1	SPACER	special	4
7	97293C1	COVER	plastic, left-hand post, if used	1
7A	D138178	PANEL	COVER padded, left-hand post, optional deluxe interior	1
8	F64519	SELF-TAP SCREW,Cross Wash Hd, #10-16 x 3/4"	SCREW with washer, order F64315 washer and 265-16512 screw	2
8A	F45174	SCREW,#10 - 16 x 3/4"	with washer, order F64315 washer and 265-16512 screw, used with optional deluxe interior covers	2
9	131-861	SPRING NUT,Tinn, U, #10-24	SPRING NUT,Tinn, U, #10-24	2
10	R53851	COVER	plastic, right-hand post, upper	1
10A	D138179	PANEL	COVER padded, right-hand post, upper, optional deluxe interior	1
11	97292C1	COVER	plastic, right-hand post, lower	1
11A	D138180	PANEL	COVER padded, right-hand post, lower, optional deluxe interior	1
12	F64519	SELF-TAP SCREW,Cross Wash Hd, #10-16 x 3/4"	SCREW with washer, order F64315 washer and 265-16512 screw	4
12A	F45174	SCREW,#10 - 16 x 3/4"	with washer, order F64315 washer and 265-16512 screw, used with optional deluxe interior covers	4
13	131-861	SPRING NUT,Tinn, U, #10-24	SPRING NUT,Tinn, U, #10-24	4
14	D138181	LINING	COVER padded, left-hand front fender, optional deluxe interior	1
15	D138182	LINING	COVER padded, left-hand rear fender, optional deluxe interior	1
16	D138183	LINING	COVER padded, right-hand front fender, optional deluxe interior	1
17	D138184	LINING	COVER padded, right-hand rear fender, optional deluxe interior	1
18	97377C1	CHANNEL	PLATE mounting, used with Ref. 19 through 22, used on cab models with rotating beacon, if used	1
19	413-856	BOLT,Hex, 1/2" - 13 x 3 1/2", Gr 5	hex, 1/2 NC x 3-1/2 inch, if used	2
20	80679	LOCK WASHER,1/2"	WASHER, LOCK, , If used 1/2"	2
21	195-2205	WASHER,17/32" x 2" x .238"	flat, 17/32 x 2 x 1/4 inch, if used	2
22	D48528	SPACER	mounting plate, if used	4
23	1977504C1	HITCH DAMPER	BUMPER rubber, door stop, models with plastic roof cap, if used	2
24	119731A1	STOP	BUMPER rubber, door stop, models without plastic roof cap, if used, Replaces: R53632	2
25	140-111	SCREW,Cross Pan Hd, 1/4"-20 x 1/2"	Used with Ref. 24 bumper, if used Cross Pan Hd, 1/4"-20 x 1/2"	2

http://www.minnparbackhoeparts.com/

Diag #	Part #	Name	Description	Qty
26	108798A1	INSULATOR	PAD, 165 x 813 x 1.6 mm, insulation, blower support, front, vertical, if used	1
27	108794A1	INSULATOR	PAD, 152 x 813 x 6.4 mm, insulation, front, if used	1
		Cut to required length from 108794A2 pad, Ref. 30.	Cut to required length from 108794A2 pad, Ref. 30.	1
28	108795A1	INSULATOR	PAD, 254 x 813 x 6.4 mm, insulation, center, models with heat and air conditioning, if used	1
		Cut to required length from 108794A2 pad, Ref. 30.	Cut to required length from 108794A2 pad, Ref. 30.	1
28A	108796A1	PANEL	PAD, 343 x 813 x 6.4 mm, insulation, center, models with heat only, if used	1
		Cut to required length from 108794A2 pad, Ref. 30.	Cut to required length from 108794A2 pad, Ref. 30.	1
29	108797A1	PANEL	PAD, 200 x 813 x 6.4 mm, insulation, rear, may need to trim the 200 mm dimension to 190 mm on some models, if used	1
		Cut to required length from 108794A2 pad, Ref. 30.	Cut to required length from 108794A2 pad, Ref. 30.	1
30	108794A2	ISOLATOR	PAD, 577 x 813 x 6.4 mm, insulation, used with Ref. 26 and 29, Replaces: Ref. 27 thru 28A on some models, if used	1

http://www.minnparbackhoeparts.com/

(580SK) - CASE SUPER-K CONSTRUCTION KING LOADER BACKHOE > (9-130) - LEFT-HAND AND RIGHT-HAND CONSOLES, FOR ROPS CAB OR CANOPY MODELS

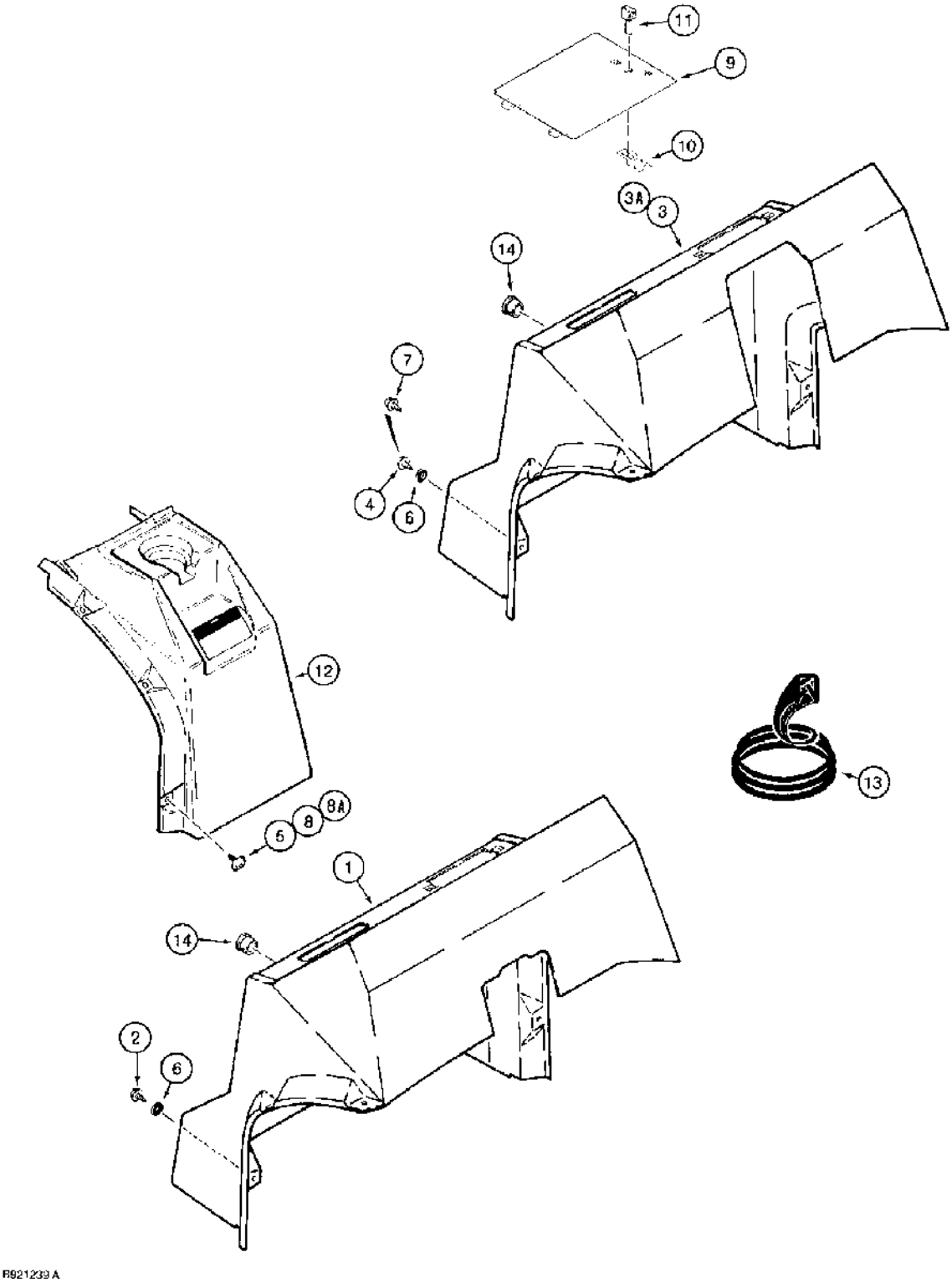

(580SK) - CASE SUPER-K CONSTRUCTION KING LOADER BACKHOE > (9-130) - LEFT-HAND AND RIGHT-HAND CONSOLES, FOR ROPS CAB OR CANOPY MODELS

Diag #	Part #	Name	Description	Qty
1	117647A1	BRACKET	CONSOLE side instrument, right-hand, ROPS canopy models only, replaces D147457 or 102871A1 consoles	1
2	281-18712	SELF-TAP SCREW,Hex Wash Hd, 1/4" x 3/4"	SCREW self-tapping, hex washer head, 1/4 NC x 3/4 inch, replaces 187-575 screw	6
3	102873A1	BRACKET	CONSOLE side instrument, right-hand, ROPS cab models only, replaces D147459 console, used on models without seat alarm	1
3A	117648A1	BRACKET	CONSOLE side instrument, right-hand, ROPS cab models only, used on models with seat alarm	1
4	281-18712	SELF-TAP SCREW,Hex Wash Hd, 1/4" x 3/4"	SCREW self-tapping, hex washer head, 1/4 NC x 3/4 inch, replaces 187-575 screw	6
5	F64519	SELF-TAP SCREW,Cross Wash Hd, #10-16 x 3/4"	SCREW self-tapping, Phillips, with washer, No. 10-16 x 3/4 inch, order F64315 washer and 265-16512 screw	6
6	195-81004	WASHER,5/16" x 3/4" x .065"	flat, 5/16 x 3/4 x 1/16 inch	6
7	281-18716	SELF-TAP SCREW,Hex Wash Hd, 1/4" x 1"	SCREW self-tapping, hex washer head, 1/4 NC x 1 inch, used on models with optional deluxe interior	6
8	112867A1	SCREW self-tapping, oval Phillips, with washer, No. 10-16 x 1 inch, used on models with optional deluxe interior, replaces F45174 screw, if used	SCREW self-tapping, oval Phillips, with washer, No. 10-16 x 1 inch, used on models with optional deluxe interior, replaces F45174 screw, if used	6
8A	113319A1	CAPTIVE WASHER SCREW	SCREW self-tapping, oval Phillips, with washer, No. 10-16 x 3/4 inch, if used	6
9	D145601	COVER	fuse box, mounts in right-hand side instrument console, cab or canopy models, see Figure 9-172 for fuse location decal	1
10	D145206	CLASP	PAWL knob retainer	1
11	D145207	BUTTON	KNOB lock	1
12	D143491	SUPPORT	CONSOLE left-hand side, with cup holder, cab models only, includes D150899 decal, Ref. 47, shown on Figure 9-172	1
13	D33500	LINING	SEAL edge, 7 inch, side console, cut to required length from bulk seal F42827, see below	1
14	353-413	PLUG,Dome, 1.187" hole, Nylon	nylon, 1-3/16 inch, 30 mm, if used	1
	F42827	RUBBER STRIP	EDGE trim, 116 inch, 2946 mm, long	1

http://www.minnparbackhoeparts.com/

(580SK) - CASE SUPER-K CONSTRUCTION KING LOADER BACKHOE > (9-132) - LEFT-HAND AND RIGHT-HAND CAB DOORS - EXTERIOR

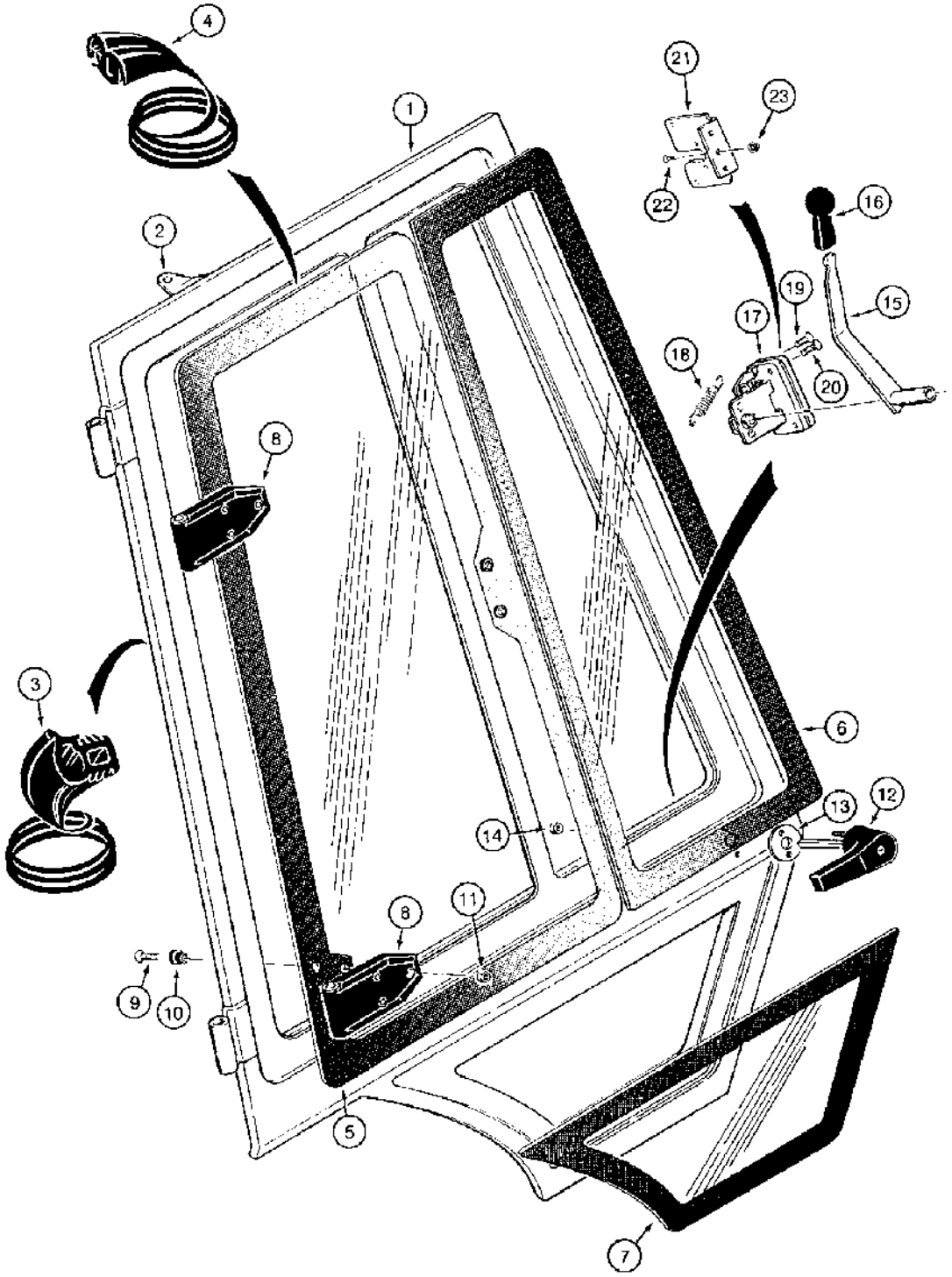

Bsk0201045

(580SK) - CASE SUPER-K CONSTRUCTION KING LOADER BACKHOE > (9-132) - LEFT-HAND AND RIGHT-HAND CAB DOORS - EXTERIOR

Diag #	Part #	Name	Description	Qty
1	97401C2	DOOR ASSY.	FRAME right-hand door, replaces 97401C1 frame	1
1A	97402C2	DOOR ASSY.	FRAME left-hand door, not shown, replaces 97402C1 frame, Includes: Ref. 2	1
2	R53562	BRACKET	cable, welded to left-hand or right-hand door frame	1
3	R52936	SEAL	181-1/2 inch, 4610 mm, long, bulb type, left-hand and right-hand door frames	2
		Sealant used to retain Ref. 3 into the channel of door is 345-157 Loctite adhesive. Make sure the surfaces are free of all dust and oil.	Sealant used to retain Ref. 3 into the channel of door is 345-157 Loctite adhesive. Make sure the surfaces are free of all dust and oil.	1
4	R53444	SEAL	105-7/8 inch, 2689 mm, long, bulb type, left-hand and right-hand window frames	2
5	R52882	GLASS	right-hand door, rear, window, tinted	1
5A	R52881	GLASS	left-hand door, rear, window, tinted, not shown	1
6	R52880	GLASS	right-hand door, front, tinted	1
6A	R52879	GLASS	left-hand door, front, tinted, not shown	1
7	R52884	GLASS	right-hand door, lower, tinted	1
7A	R52883	GLASS	left-hand door, lower, tinted, not shown	1
8	R52917	HINGE	glass, left-hand and right-hand door window	4
9	142-103	SCREW,Cross Oval Hd, #10-24 x 3/4"	machine, oval head Phillips, No. 10 NC x 3/4 inch, left-hand and right-hand door window hinge	12
10	F64198	BUMPER	nylon, black, glass to hinge, left-hand and right-hand door window hinge	12
11	F45165	NUT	NUT hex, self-locking, No. 10 NC, Teflon coated, left-hand and right-hand door window hinge	12
12	R53001	HANDLE	right-hand door, outer	1
		Ref #12 - use ignition key # A77313	Ref #12 - use ignition key # A77313	1
12A	R53002	HANDLE	left-hand door, outer, not shown	1
13	F64342	GASKET	door handle, left-hand and right-hand	2
14	86625057	NUT,#10-24, GB	NUT, LOCK, , LH and RH door handles #10-24, GB	4
15	R54625	LEVER	inner left-hand and right-hand door latch handle	2
16	D135387	GRIP	KNOB lever, inner door latch	2
17	R55000	LATCH ASSY.	LATCH ASSEMBLY door, right-hand, rotary	1

Diag #	Part #	Name	Description	Qty
17A	R55001	LATCH ASSY.	LATCH ASSEMBLY door, left-hand, rotary, not shown, Includes: Ref. 18	1
18	A180163	SPRING	extension, left-hand or right-hand door latch	1
19	265-16512	SELF-TAP SCREW,Cross Oval Hd, #10 x 3/4"	SCREW self-tapping, oval Phillips, No. 10-16 x 3/4 inch, left-hand and right-hand door latch	4
20	143-101	SCREW,Cross Flat Hd, 1/4"-20 x 1"	LH and RH and RH door latch Cross Flat Hd, 1/4"-20 x 1"	8
21	1977401C1	SUPPORT	BRACKET latch, right-hand rotary	1
21A	1977402C1	SUPPORT	BRACKET latch, left-hand rotary, not shown	1
22	473-13112	SCREW,Slotted Flat Hd, 5/16"-18 x 3/4"	machine, flat head slotted, 5/16 NC x 3/4 inch	6
23	231-5145	SERRATED NUT,Flg, USR, 5/16"-18	NUT, Flg, USR, 5/16"-18	6

http://www.minnparbackhoeparts.com/

(580SK) - CASE SUPER-K CONSTRUCTION KING LOADER BACKHOE > (9-134) - LEFT-HAND AND RIGHT-HAND CAB DOORS - INTERIOR

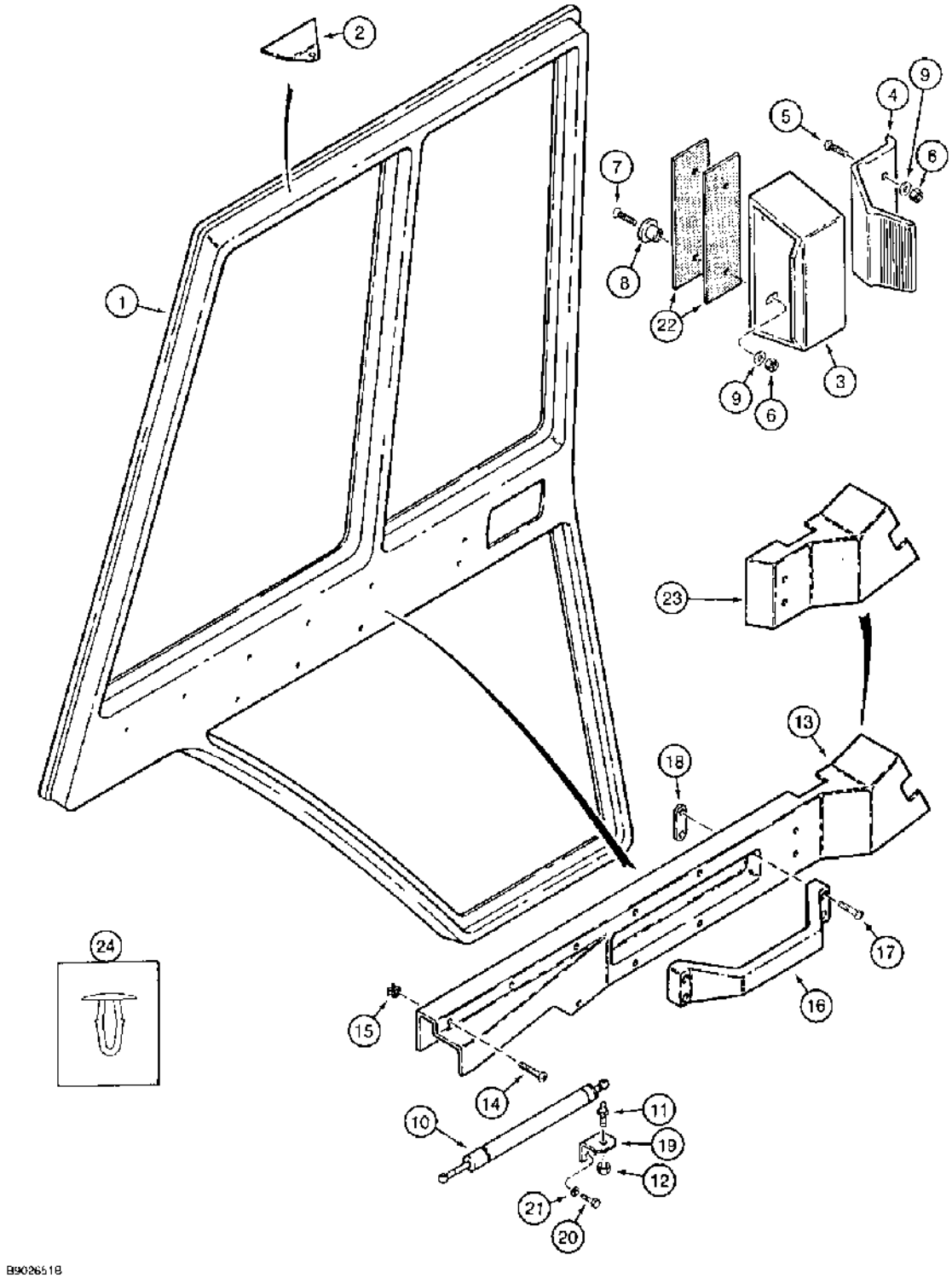

(580SK) - CASE SUPER-K CONSTRUCTION KING LOADER BACKHOE > (9-134) - LEFT-HAND AND RIGHT-HAND CAB DOORS - INTERIOR

Diag #	Part #	Name	Description	Qty
1	97402C2	DOOR ASSY.	FRAME left-hand door, replaces 97402C1 frame which uses Ref. 13 long door panel	1
1A	97401C2	DOOR ASSY.	FRAME right-hand door, not shown, replaces 97401C1 frame which uses Ref. 13A long door panel, Includes: Ref. 2	1
2	R53562	BRACKET	cable, welded to left-hand or right-hand door frame	1
3	97399C1	HANDLE	door window	2
4	97398C1	LOCK ASSY	LATCH push type, door window	2
5	140-107	SCREW,Cross Pan Hd, #10-24 x 3/4"	(Replaces 182-584 screw) Cross Pan Hd, #10-24 x 3/4"	4
6	F45165	NUT	NUT hex, self-locking, No. 10 NC	8
7	179-163	SCREW,Cross Oval Hd, #10-24 x 1"	machine, oval head Phillips, No. 10 NC x l inch	4
8	F64198	BUMPER	nylon, black, Serial Range: glass-bracket	4
9	195-81023	WASHER,#12	(1/4 x 9/16 x 3/64") #12	8
10	F44881	CYLINDER ASSY.	CYLINDER left-hand and right-hand doors	2
11	1340345C1	BALL STUD	STUD ball, cylinder	2
12	131-176	LOCK NUT,5/16"-18, GA	NUT hex, self-locking, 5/16 inch NC	2
13	1344034C2	PANEL	left-hand door, used with 97402C1 frame, if used	1
13A	1344033C2	PANEL	right-hand door, not shown, used with 97401C1 frame, if used	1
14	260-16524	SELF-TAP SCREW,Cross Pan Hd, #10 x 1 1/2"	SCREW, SELF TAPPING, pan Phillips, No. 10-16 x 1-1/2", Black, LH and RH door panels, replaces 187-371 screw	4-20
15	R53000	GROMMET	RETAINER screw, left-hand and right-hand door panels	4-20
16	1958970C1	HANDLE	left-hand and right-hand inner door	2
17	165-129	HEX SOC SCREW,Hex soc Hd, 1/4"-20 x 3/4"	SCREW machine, pan head slotted, self-locking, 1/4 NC x 3/4 inch, black, left-hand and right-hand inner door handles	8
18	1971368C1	PLATE ASSY.	PLATE retainer, left-hand and right-hand inner door handle	4
19	1977399C1	SUPPORT ASSY.	BRACKET cylinder	2
20	413-48	BOLT,Hex, 1/4" - 20 x 1/2", Gr 5	- hex, 1/4 NC x 1/2 inch	4
21	492-11025	LOCK WASHER,1/4"	WASHER, LOCK, 1/4"	4
22	R54047	PAD	SHIM latch bracket, left-hand and right-hand door window	4

Diag #	Part #	Name	Description	Qty
23	108938A1	PANEL	left-hand door, used with 97402C2 frame, if used	1
23A	108936A1	PANEL	right-hand door, used with 97401C2 frame, if used, not shown	1
24	120865A1	PLUG	plastic, used with Ref. 23, 108938A1, or Ref. 23A, 108936A1, panels and 97402C1 or 97401C1 door frames, if used	1
		Some cabs were built using 97402C1 or 97401C1 frames and Ref. 23 or 23A, 108938A1 or 108936A1, panels. Ref. 24 plug is used for those cabs.	Some cabs were built using 97402C1 or 97401C1 frames and Ref. 23 or 23A, 108938A1 or 108936A1, panels. Ref. 24 plug is used for those cabs.	1

http://www.minnparbackhoeparts.com/

(580SK) - CASE SUPER-K CONSTRUCTION KING LOADER BACKHOE > (9-136) - LEFT-HAND AND RIGHT-HAND CAB DOOR MOUNTING

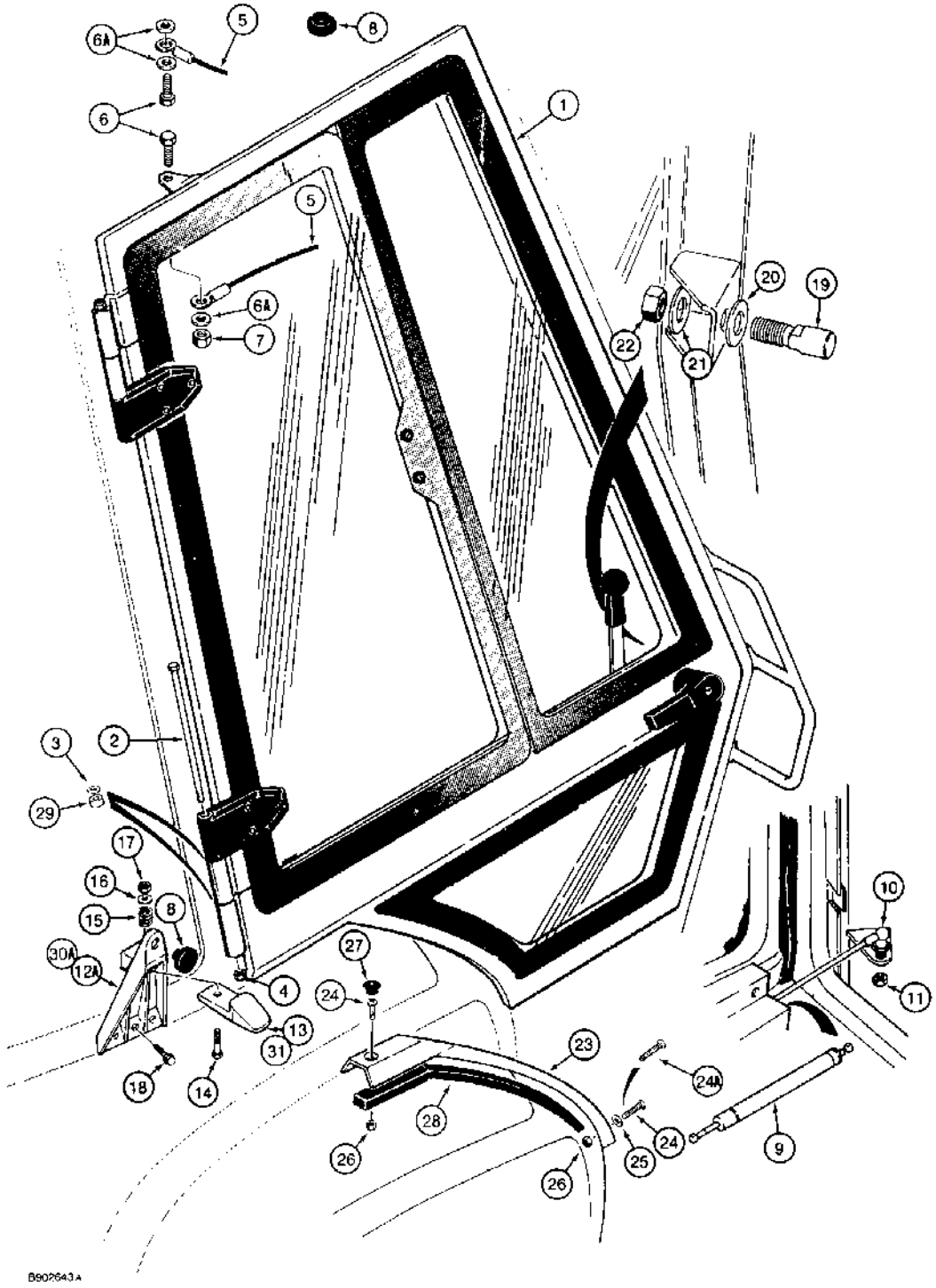

(580SK) - CASE SUPER-K CONSTRUCTION KING LOADER BACKHOE > (9-136) - LEFT-HAND AND RIGHT-HAND CAB DOOR MOUNTING

Diag #	Part #	Name	Description	Qty
1	REF	INSTRUCTION	DOOR cab, see Figures 9-132 thru 9-136	1
2	413-6152	BOLT,Hex, 3/8" - 16 x 9 1/2", Gr 5	hex, 3/8 NC x 9-1/2 inch	4
3	F64046	WASHER	thrust, plastic, hinge	8
4	131-203	LOCK NUT,3/8"-16, GB, LH	NUT light hex, self-locking, 3/8 inch NC	4
5	R53560	CABLE	door, upper	2
6	113-174	PREV TORQUE BOLT,Locking, 5/16"-18 x 3/4", G5, Full Thd	BOLT, Locking, 5/16"-18 x 3/4", G5, Full Thd	4
6A	495-21038	WASHER,5/16"	(flat, 3/8 x 7/8 x 5/64") 5/16"	6
7	131-176	LOCK NUT,5/16"-18, GA	NUT hex, self-locking, 5/16 inch NC	2
8	L60224	BUMPER	rubber, cab door frame and window latch	4
9	F44881	CYLINDER ASSY.	CYLINDER left-hand and right-hand doors	2
10	1340345C1	BALL STUD	STUD ball, cylinder	2
11	131-176	LOCK NUT,5/16"-18, GA	NUT hex, self-locking, 5/16 inch NC	2
12	R53957	SUPPORT	BRACKET left-hand cab door window retaining, mounts to frame, brown, not shown, used on cab models with plastic roof cap, no longer available, order 106971A1, Ref. 30	1
12A	R53956	SUPPORT	BRACKET right-hand cab door window retaining, mounts to frame, brown, used on cab models with plastic roof cap, no longer available, order 106972A1, Ref. 30A	1
13	1344229C1	LATCH	door window to cab frame, used with Ref. 12 and 12A brackets, brown, no longer available, order 106973A1, Ref. 31	2
15	1344321C1	SPRING	compression, left-hand and right-hand window latch release, replaces D36669	2
16	495-21031	WASHER,1/4"	flat, 5/16 x 47/64 x 1/16 inch, if used	2
17	230-4214	LOCK NUT,1/4"-20, GA	NUT, LOCK, 1/4"-20, GA	2
18	458-412	BOLT,Hex, 1/4" - 20 x 3/4", Gr 5	- hex flange, 1/4 NC x 3/4 inch, Bracket to frame	6
19	R52735	LATCH	STRIKER door latch	2
20	F44748	SPRING WASHER	SPRING Belleville, washer	2
21	495-81148	WASHER,7/16" x 1 1/4" x .134"	flat, 7/16 x 1-1/4 x 1/8 inch	2
22	131-1129	LOCK NUT,7/16"-14, GA	NUT hex, self-locking, 7/16 inch NC	2
23	1344394C1	SUPPORT	BRACKET plastic, right-hand fender sill	1
23A	1344395C1	SUPPORT	BRACKET plastic, left-hand fender sill, not shown	1

Diag #	Part #	Name	Description	Qty
24	140-111	SCREW,Cross Pan Hd, 1/4"-20 x 1/2"	(2) used on models with optional deluxe interior and ten used on models with standard interior, if used Cross Pan Hd, 1/4"-20 x 1/2"	2-10
24A	140-112	SCREW,Cross Pan Hd, 1/4"-20 x 3/4"	(8) used on models with optional deluxe interioir and (10) used on models with standard interior, if used Cross Pan Hd, 1/4"-20 x 3/4"	8-10
25	195-81026	WASHER,.266" x 13/16" x .079"	flat, 17/64 x 13/16 x 5/64 inch	8
26	230-4214	LOCK NUT,1/4"-20, GA	NUT, LOCK, 1/4"-20, GA	10
27	353-405	PLUG,Dome, .562" hole, Nylon	button, 9/16 inch, fender bracket	2
28	1343949C1	DOOR SEAL	rubber, 730 mm long, door sill	2
29	107949A1	BUSHING	door hinge	8
30	106971A1	SUPPORT	BRACKET left-hand cab door window retaining, mounts to frame, black, not shown, used on cab models without plastic roof cap, if used	1
30A	106972A1	SUPPORT	BRACKET right-hand cab door window retaianing, mounts to frame, black, used on cab models without plastic roof cap, if used	1
31	106973A1	LATCH	door window to cab frame, used with Ref. 30 and 30A brackets, black, if used	2
		brackets, black, if used	brackets, black, if used	1
14	413-420	BOLT,Hex, 1/4" - 20 x 1 1/4", Gr 5	Latch to bracket Hex, 1/4"-20 x 1 1/4", G5	2

http://www.minnparbackhoeparts.com/

(580SK) - CASE SUPER-K CONSTRUCTION KING LOADER BACKHOE > (9-138) - CAB REAR WINDOW

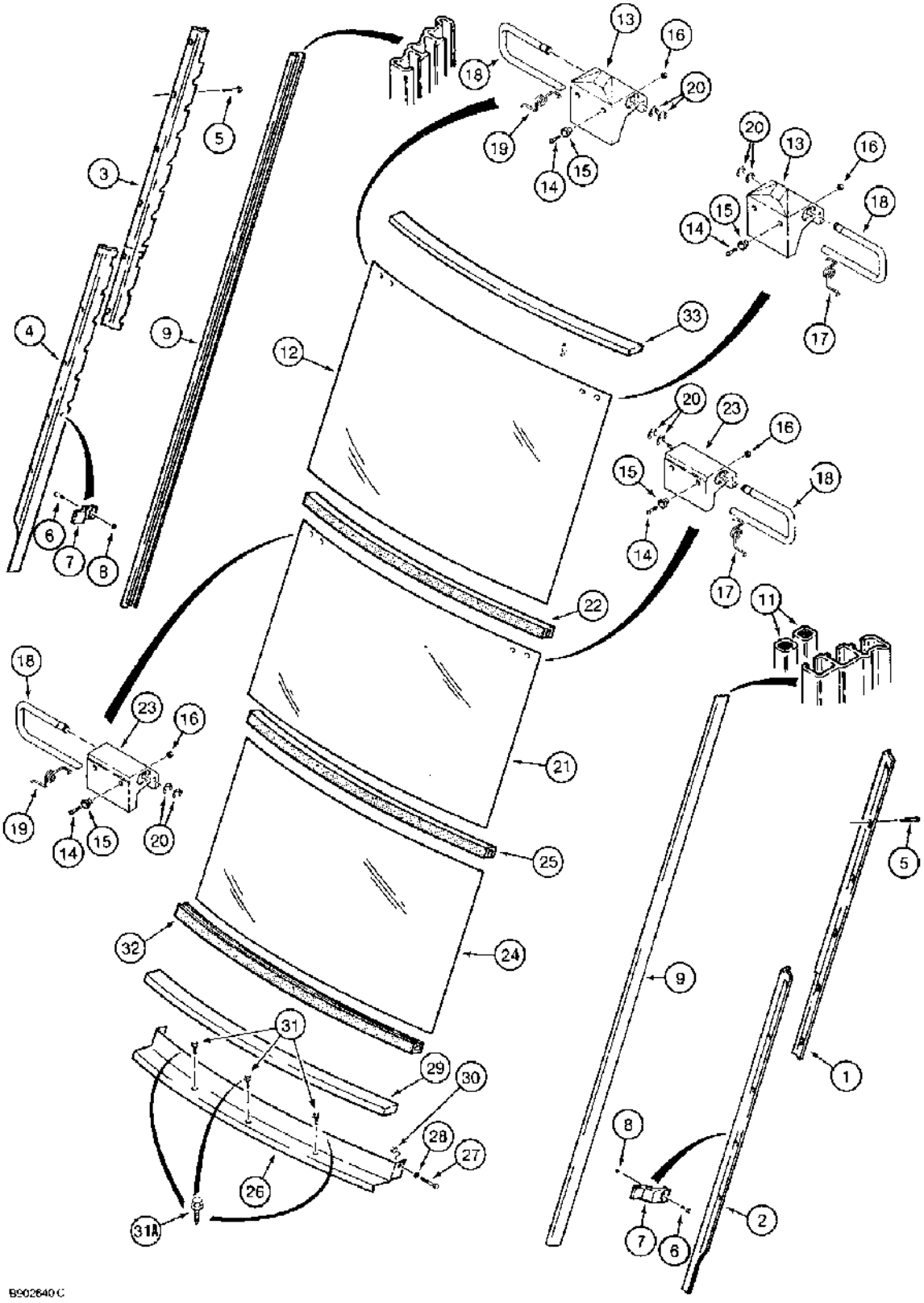

(580SK) - CASE SUPER-K CONSTRUCTION KING LOADER BACKHOE > (9-138) - CAB REAR WINDOW

Diag #	Part #	Name	Description	Qty
1	97256C3	SUPPORT	BRACKET right-hand, upper	1
2	97257C3	SUPPORT	BRACKET right-hand, lower	1
3	97258C3	SUPPORT	BRACKET left-hand, upper	1
4	97259C3	SUPPORT	BRACKET left-hand, lower	1
5	281-54512	SCREW,Hex Wash Hd, #10-24 x 3/4"	self-tapping, hex washer, No. 10 NC x 3/4 inch	18
6	458-412	BOLT,Hex, 1/4" - 20 x 3/4", Gr 5	- hex flange, 1/4 NC x 3/4 inch	2
7	D129974	BRACKET	lower rear window	2
8	231-5344	BEARING LOCK NUT,Flg, 1/4"-20	NUT, LOCK, Flg, 1/4"-20	2
9	1989960C1	SLIPPER	CHANNEL track, replaces R52939 and R52940	2
11	R52942	SEAL	SEAL, 60-15/32 inch, 1536 mm, long, foam, adhesive back, special, right-hand track channel only	2
12	D129967	GLASS	upper rear window only	1
13	97278C1	LATCH	upper rear window only	2
14	442-11016	SCREW,Cross Oval Hd, #10-24 x 1"	machine, oval head Phillips, No. 10 NC x 1 inch	8
15	F64198	BUMPER	special	8
16	230-42409	NUT,#10-24, GA	NUT hex, self-locking, No. 10 NC	8
17	1990727C1	SPRING	right-hand latch	2
18	1344232C1	LEVER	latch, metal, left-hand and right-hand	4
19	1990728C1	SPRING	left-hand latch	2
20	A27795	RING	retaining, latch lever	8
		IF LOOKING FOR PLASTIC TWO FINGER LEVER #20- 580K BOOK 8-3462 PG 9-603 PART # 97255C1 FOR LEFT/ 97254C1 FOR RIGHT SIDE.	IF LOOKING FOR PLASTIC TWO FINGER LEVER #20- 580K BOOK 8-3462 PG 9-603 PART # 97255C1 FOR LEFT/ 97254C1 FOR RIGHT SIDE.	1
21	D129968	GLASS	center rear window only	1
22	D126198	SEAL	35-29/32 inch, 912 mm, long, center window glass	1
23	97277C1	LATCH	center window only	2
24	D129969	GLASS	lower rear window only	1
25	D126198	SEAL	35-29/32 inch, 912 mm, long, lower window glass	1
26	R54206	CROSSBAR	BRACKET horizontal, lower, mounts to cab frame	1

Diag #	Part #	Name	Description	Qty
27	413-58	BOLT,Hex, 5/16" - 18 x 1/2", Gr 5	hex, 5/16 NC x 1/2 inch	2
28	495-21038	WASHER,5/16"	(flat, 3/8 x 7/8 x 5/64") 5/16"	2
29	D126201	BAND	SEAL, 20 mm x 10 mm x 912 mm, neoprene sponge, adhesive back, lower rear glass	1
30	131-176	LOCK NUT,5/16"-18, GA	NUT hex, self-locking, 5/16 inch NC	2
31	281-14812	SELF-TAP SCREW,Hex Washer, 5/16" - 18 x 3/4"	SCREW self-tapping, hex washer head, 5/16 NC x 3/4 inch, replaces D141589 bolt, if used	3
31A	112865A1	SCREW	pointed, self-aligning, if used	3
32	111471A1	EDGE	SEAL lower rear glass	1
33	106974A1	SEAL	20 mm x 10 mm x 912 mm, PVC foam, black, adhesive back, upper rear glass, replaces D126201 seal for upper rear glass	1

http://www.minnparbackhoeparts.com/

(580SK) - CASE SUPER-K CONSTRUCTION KING LOADER BACKHOE > (9-140) - CAB CONTROL PANEL AND WIRING

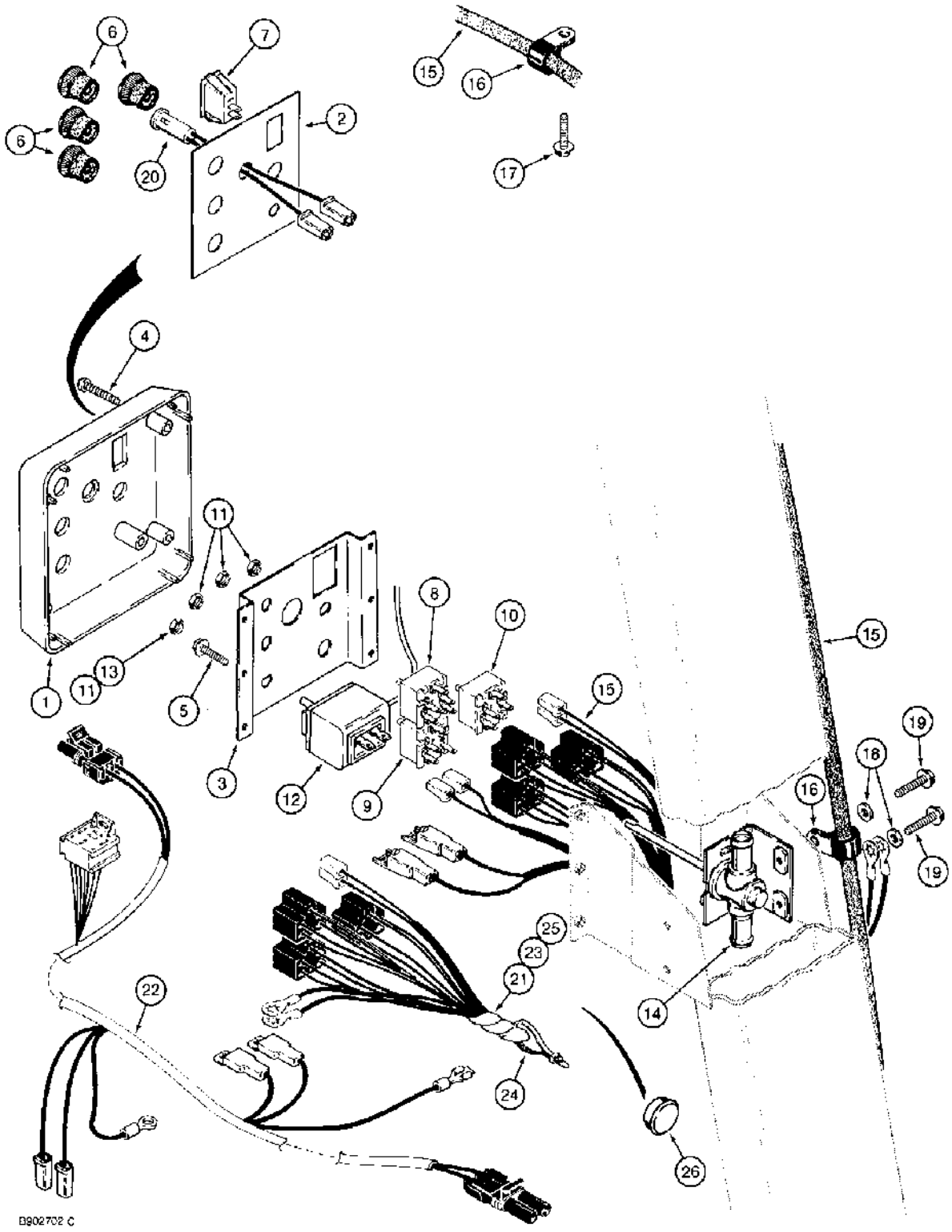

(580SK) - CASE SUPER-K CONSTRUCTION KING LOADER BACKHOE > (9-140) - CAB CONTROL PANEL AND WIRING

Diag #	Part #	Name	Description	Qty
1	1343898C1	COVER	PANEL cab control, mounts on right-hand ROPS post	1
2	REF	INSTRUCTION	DECAL instrument panel, cab control, Ref. 48 or 49 shown on Figure 9-172	1
3	R52436	BRACKET	switch support	1
4	286-56520	SELF-TAP SCREW,Cross Fil Hd, #10-24 x 1 1/4"	- self-tapping, Fillister head, No. 10 NC x 1-1/4 inch	4
5	281-54512	SCREW,Hex Wash Hd, #10-24 x 3/4"	self-tapping, hex washer head, No. 10 NC x 3/4 inch	2
6	111282C1	KNOB	switch, front and rear wiper, heater, blower, and air conditioner	4-5
7	F45393	SWITCH	cab lamp, dome	1
8	A42622	SWITCH	blower	1
9	R52440	SWITCH	rear wiper	1
10	R52415	SWITCH	front wiper	1
11	A42561	JAM NUT	retaining, switch	3-4
12	1340287C1	SWITCH	temperature control, air conditioning	1
13	25-157	JAM NUT,Jam, 7/16"-20, G5	hex jam, 7/16 inch NF, if used	1
14	R52483	VALVE	temperature control, heater	1
15	1987344C2	HARNESS	cab, main, includes air conditioning connection, prior to P.I.N. JJG0167019	1
16	515-23190	CLAMP,3/4", Insul, 3/8" Bolt	P, 3/4 inch diameter, harness	2
17	281-54712	SCREW,Hex Wash Hd, 1/4"-20 x 3/4"	- Self tapping, hex washer, 1/4 NC x 3/4 inch, Lower harness clamp uses existing heater temperature control valve mounting bolt	1
18	495-21031	WASHER,1/4"	flat, 5/16 x 47/64 x 1/16 inch	2
19	458-412	BOLT,Hex, 1/4" - 20 x 3/4", Gr 5	- hex flange, 1/4 NC x 3/4 inch, Mounts heater temperature control valve to ROPS post	2
20	1964672C1	LIGHT	LAMP amber, 14 volt, indicator, air conditioning	1
21	103844A1	HARNESS	cab, main, without air conditioning connections, used with 1987521C1 air conditioning harness on models with air conditioning, P.I.N. JJG0167019 and after on models with plastic roof cap	1
22	1987521C1	HARNESS	air conditioning, cab, used with 103844A1 or 108961A1 cab harness, P.I.N. JJG0167019 and after	1
23	108961A1	HARNESS	cab, main	1
		with tapered rubber grommets and without air	with tapered rubber grommets and without air conditioning connections, used with	1

Diag #	Part #	Name	Description	Qty
		conditioning connections, used with 1987521C1 air conditioning harness on models with air conditioning, models without plastic roof cap, no longer available, order Ref. 25, 133526A1, harness and four Ref. 26, 353-498, bushings	1987521C1 air conditioning harness on models with air conditioning, models without plastic roof cap, no longer available, order Ref. 25, 133526A1, harness and four Ref. 26, 353-498, bushings	
24	473321C1	CABLE TIE,.098" x 8"	STRAP, CABLE, , 108961A1 harness, If used .098" x 8"	4
25	133526A1	HARNESS	cab, main, without tapered rubber grommets, used with four Ref. 26, 353-498 bushings	1
26	353-498	BUSHING	snap, 11/16 ID, used as a grommet, cab lamp mounting bracket	4

http://www.minnparbackhoeparts.com/

(580SK) - CASE SUPER-K CONSTRUCTION KING LOADER BACKHOE > (9-142) - CAB FRONT WINDSHIELD WIPER

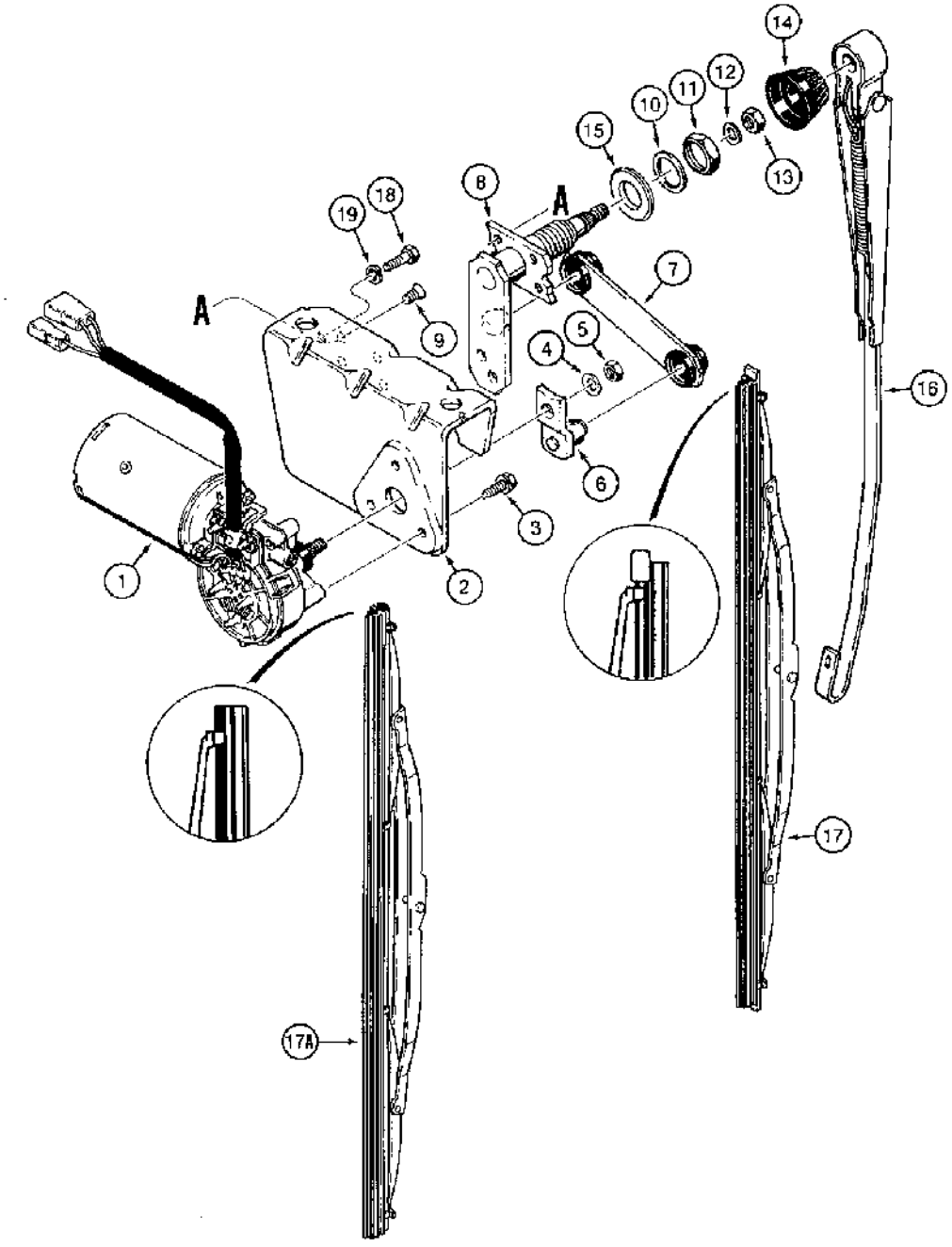

(580SK) - CASE SUPER-K CONSTRUCTION KING LOADER BACKHOE > (9-142) - CAB FRONT WINDSHIELD WIPER

Diag #	Part #	Name	Description	Qty
	A186171	WIPER MOTOR	MOTOR ASSEMBLY with bracket, front windshield wiper, 12 volt, Includes: Ref. 1 through 9	1
1	A186256	WIPER MOTOR	MOTOR, 12 volt, windshield wiper	1
2	N8359	SUPPORT	BRACKET windshield wiper assembly	1
3	N8362	CAPTIVE WASHER SCREW,Hex, M6 x 18.50mm, Gr 10.9	SCREW with washer, special, motor to bracket	3
4	N8361	BELLEVILLE SPRING	SPRING Belleville, washer	1
5	L112090	NUT	hex, special, 8 mm	1
6	N8360	SUPPORT	ARM drive	1
7	N8358	ROD	LINK wiper	1
8	N14112	SHAFT	pivot	1
9	N8356	SCREW,Flat , M5 x 8mm	special, pivot shaft to bracket	4
10	L112088	WASHER	special, large, shaft	1
11	L112087	NUT	special, large, shaft	1
12	L112089	WASHER	wave, special, shaft end	1
13	L112090	NUT	hex, special, 8 mm, shaft end	1
14	L112081	CAP	pivot shaft end	1
15	R54241	SPACER	pivot shaft, replaced R54504	1
16	D128745	WIPER ARM	ARM windshield wiper, 22-7/16 inch, 570 mm, long, complete	1
17	A187909	WIPER BLADE	BLADE windshield wiper, complete, no longer available, for complete blade, order Ref. 17A, 132024A1, for blade only, order 1983335C1 blade refill, shown below	1
		See the blade ends in the illustrations for Ref. 17 and 17A to determine which blade to order.	See the blade ends in the illustrations for Ref. 17 and 17A to determine which blade to order.	1
17A	132024A1	WIPER BLADE	BLADE windshield wiper, complete, for blade only, order 132025A1 blade refill, shown below	1
		See the blade ends in the illustrations for Ref. 17 and 17A to determine which blade to order.	See the blade ends in the illustrations for Ref. 17 and 17A to determine which blade to order.	1
18	414-412	BOLT,Hex, 1/4" - 28 x 3/4", Gr 5	hex, 1/4 NF x 3/4 inch	2
19	492-11025	LOCK WASHER,1/4"	WASHER, LOCK, 1/4"	2
	1983335C1	WIPER	BLADE rubber, 500 mm long, refill for A187909 complete blade, see note	1

Diag #	Part #	Name	Description	Qty
		See the blade ends in the illustrations for Ref. 17 and 17A to determine which blade to order.	See the blade ends in the illustrations for Ref. 17 and 17A to determine which blade to order.	1
	132025A1	WIPER BLADE	BLADE rubber, 500 mm long, refill for 132024A1 complete blade, see note	1
		See the blade ends in the illustrations for Ref. 17 and 17A to determine which blade to order.	See the blade ends in the illustrations for Ref. 17 and 17A to determine which blade to order.	1

http://www.minnparbackhoeparts.com/

(580SK) - CASE SUPER-K CONSTRUCTION KING LOADER BACKHOE > (9-144) - CAB REAR WINDSHIELD WIPER

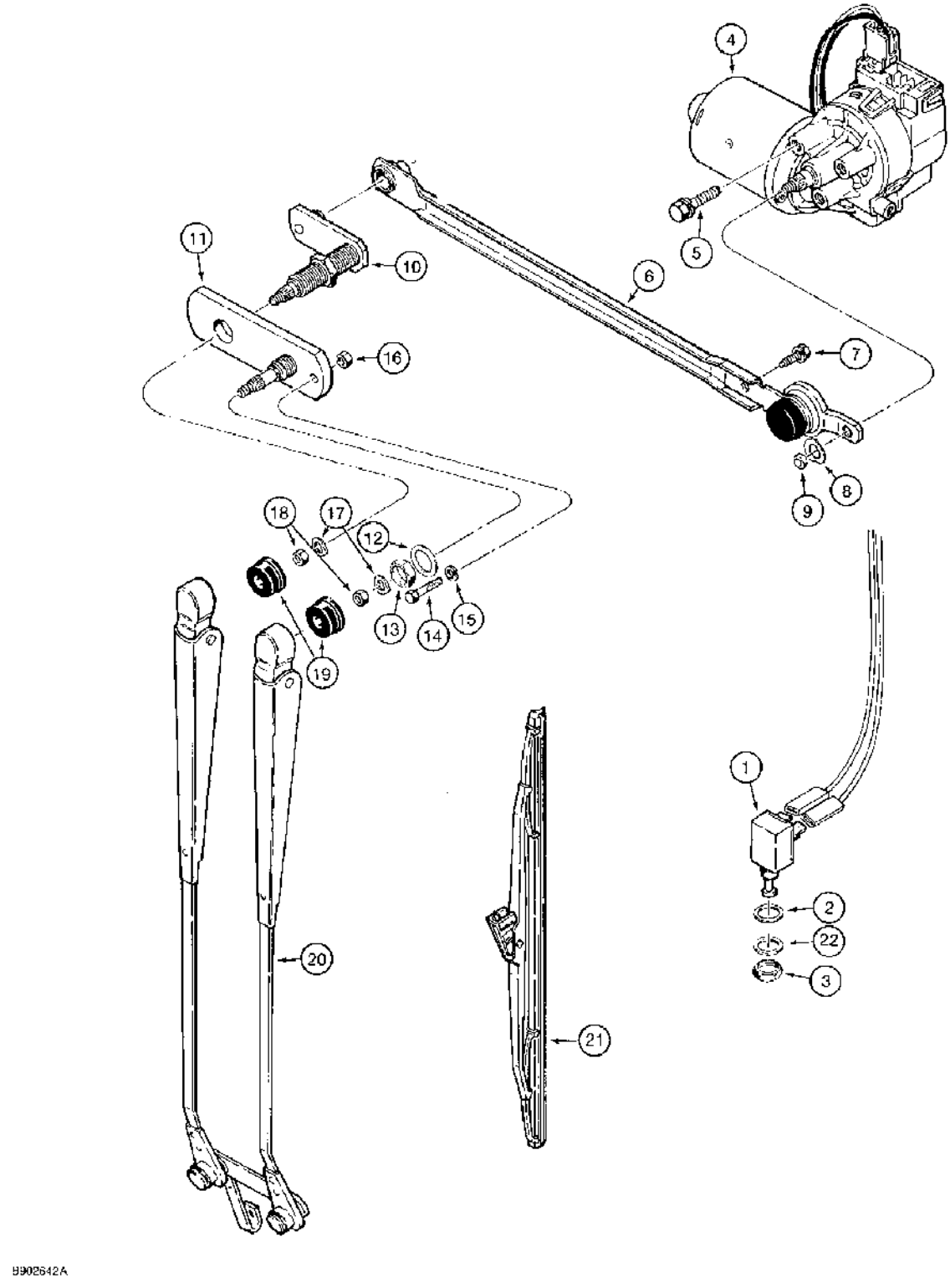

(580SK) - CASE SUPER-K CONSTRUCTION KING LOADER BACKHOE > (9-144) - CAB REAR WINDSHIELD WIPER

Diag #	Part #	Name	Description	Qty
1	A187714	SWITCH	- wiper stop, mounts to window frame inside filter compartment	1
2	A165395	WASHER	flat, 1/2 x 1 x 1/16 inch, used as a seal	1
3	425-157	JAM NUT,Jam, 7/16"-20, G5	JAM NUT,Jam, 7/16"-20, G5	1
4	D128017	WIPER MOTOR	MOTOR rear windshield wiper, 12 volt	1
5	N8362	CAPTIVE WASHER SCREW,Hex, M6 x 18.50mm, Gr 10.9	SCREW with washer, special, motor to cab frame	3
	D128018	LINK	rear wiper, motor to wiper pivot shafts, Includes: Ref. 6 and 7	1
6	NSS	NOT SERVICED SEPARATELY	LINK crank	1
7	N8362	CAPTIVE WASHER SCREW,Hex, M6 x 18.50mm, Gr 10.9	SCREW with washer special	1
8	N8361	BELLEVILLE SPRING	wave, special	1
9	L112090	NUT	hex, special, 8 mm	1
10	D128020	SHAFT	pivot, with ball, includes nut	1
11	D128021	SHAFT	pivot	1
12	L112088	WASHER	special, large, shaft	1
13	L112087	NUT	special, large, shaft	1
14	413-416	BOLT,Hex, 1/4" - 20 x 1", Gr 5	hex, 1/4 NC x 1 inch	1
15	492-11025	LOCK WASHER,1/4"	WASHER, LOCK, 1/4"	1
16	425-104	NUT,1/4"-20, G5	hex, 1/4 inch NC	1
17	L112089	WASHER	wave, special, shaft end	2
18	L112090	NUT	hex, special, 8 mm, shaft end	2
19	L112081	CAP	pivot shaft end	2
20	R52408	WIPER ARM	ARM rear windshield wiper	1
21	D128022	WIPER BLADE	BLADE rear windshield wiper	1
22	495-21044	WASHER,3/8"	(flat, 7/16 x 1 x 5/64 inch) 3/8"	1

http://www.minnparbackhoeparts.com/

(580SK) - CASE SUPER-K CONSTRUCTION KING LOADER BACKHOE > (9-146) - CAB HEADLINER, LOUVERS, AND DOME LAMPS

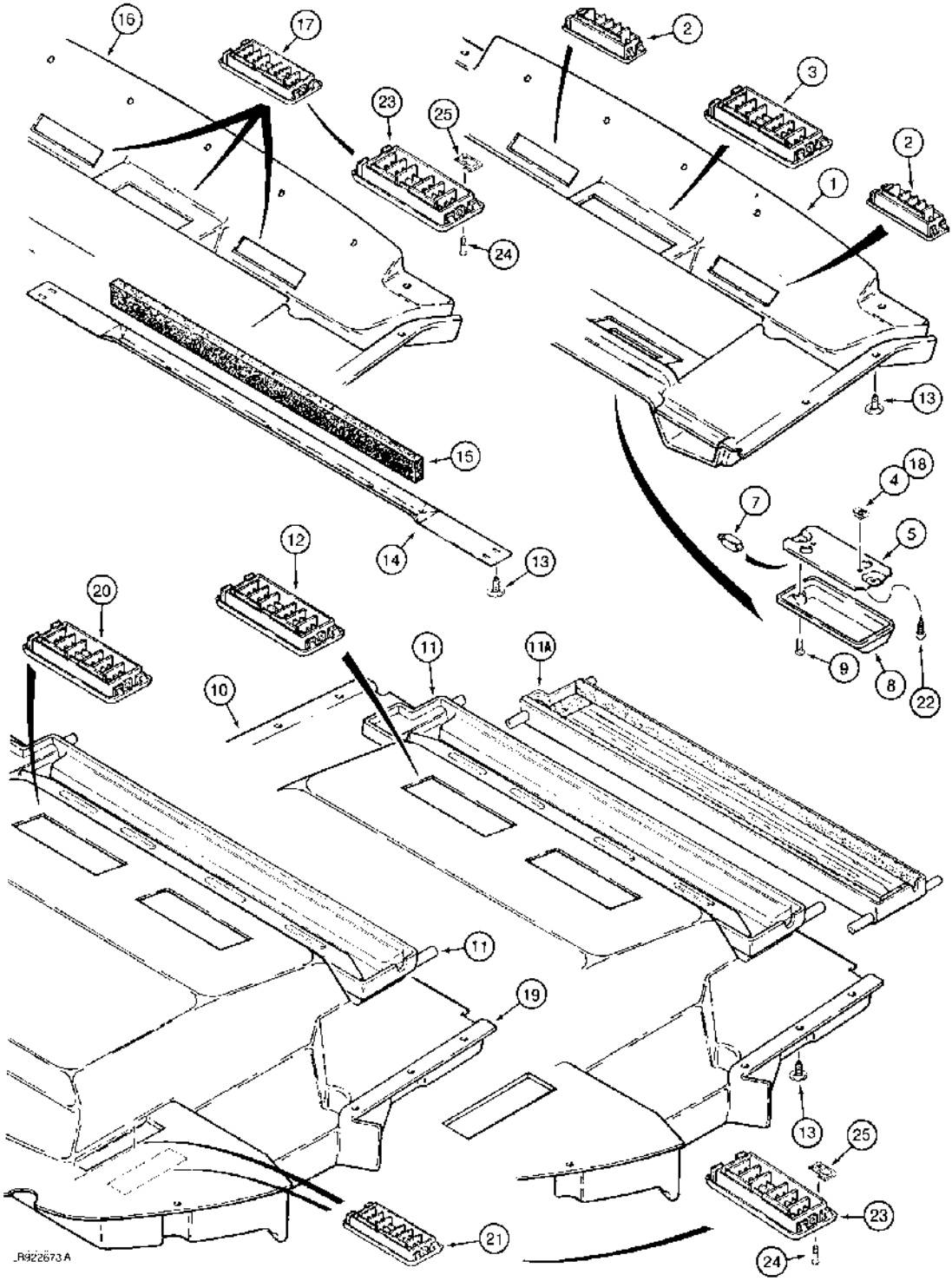

(580SK) - CASE SUPER-K CONSTRUCTION KING LOADER BACKHOE > (9-146) - CAB HEADLINER, LOUVERS, AND DOME LAMPS

Diag #	Part #	Name	Description	Qty
	1987099C1	ROOF	HEADLINER ASSEMBLY front section, with two sizes of louvers, prior to cab serial number JAB0023786, Includes: Ref. 1 through 4	1
1	NSS	NOT SERVICED SEPARATELY	HEADLINER front section	1
2	R54201	GUARD	LOUVER front defrost	2
3	L109555	GUARD	LOUVER main, front headliner	3
4	131-861	SPRING NUT,Tinn, U, #10-24	No threads, Cab dome lamp retaining Tinn, U, #10-24	2
	R53755	LIGHT ASSY.	LAMP ASSEMBLY dome, 12 volt, front headliner, Inlcudes: Ref. 5 through 8	1
5	NSS	NOT SERVICED SEPARATELY	BASE dome lamp	1
7	N14466	BULB	dome lamp	1
8	N14465	LENS	dome lamp	1
9	470-1108	SCREW,Slotted Pan Hd, #10-24 x 1/2"	machine, pan head Phillips, No. 10 NC x 1/2 inch, base to lens	2
10	R54009	LINING	HEADLINER rear section, uses 4 louvers, Ref. 12, prior to cab serial number JAB0023786, no longer available, order 108822A1 headliner, Ref. 19-21	1
11	1344430C1	HOUSING	PAN condensation, purchase seals separately, see Figure 9-156, Ref. 25-28 for foam seals, no longer available, order 1990990C1 pan, Ref. 11A	1
11A	1990990C1	HOUSING	PAN condensation, includes Ref. 25-28 seals on Figure 9-156	1
12	L109555	GUARD	LOUVER recirculation and rear defrost, R54009 rear headliner	4
13	F64519	SELF-TAP SCREW,Cross Wash Hd, #10-16 x 3/4"	SCREW self-tapping, Phillips, with washer, No. 10-16 x 3/4 inch, order F64315 washer and 265-16512 screw, headliner to cab frame	26
14	1981928C2	SUPPORT	headliner	1
15	1987095C1	STRIP	SEAL, 19 x 13 x 600 mm, adhesive backed, cut from 98355C1 bulk seal	1
	109340A1	ROOF	HEADLINER ASSEMBLY front section, with same size louvers, cab serial number JAB0023786 and after, Includes: Ref. 16, 17 and 18	1
16	NSS	NOT SERVICED SEPARATELY	HEADLINER front section	1

Diag #	Part #	Name	Description	Qty
17	1958752C1	PORT	LOUVER headliner, snap-in, may be replaced with screw-in louver, Ref. 23-25	5
18	131-861	SPRING NUT,Tinn, U, #10-24	Cab dome lamp retaining Tinn, U, #10-24	2
	108822A1	ROOF LINING	HEADLINER ASSEMBLY rear section, with 6 louvers, cab serial number JAB0023786 and after, Includes: Ref. 19, 20 and 21	1
19	NSS	NOT SERVICED SEPARATELY	HEADLINER rear section	1
20	L109555	GUARD	LOUVER headliner	2
21	1958752C1	PORT	LOUVER headliner, snap-in, may be replaced with screw-in louver, Ref. 23-25	4
22	281-54512	SCREW,Hex Wash Hd, #10-24 x 3/4"	hex washer head, self-tapping, No. 10-24 x 3/4 inch	2
23	125688A1	DIFFUSER	LOUVER headliner, screw-in, if used	9
24	140-103	SCREW,Cross Pan Hd, #6-32 x 3/4"	If used Cross Pan Hd, #6-32 x 3/4"	18
25	125749A1	SPRING NUT	J-type, No. 6 NC, if used	18
	98355C1	FOAM INSULATION	SEAL, 32 x 163 x 810 mm, foam, adhesive back	1

http://www.minnparbackhoeparts.com/

(580SK) - CASE SUPER-K CONSTRUCTION KING LOADER BACKHOE > (9-148) - CAB AIR FILTER

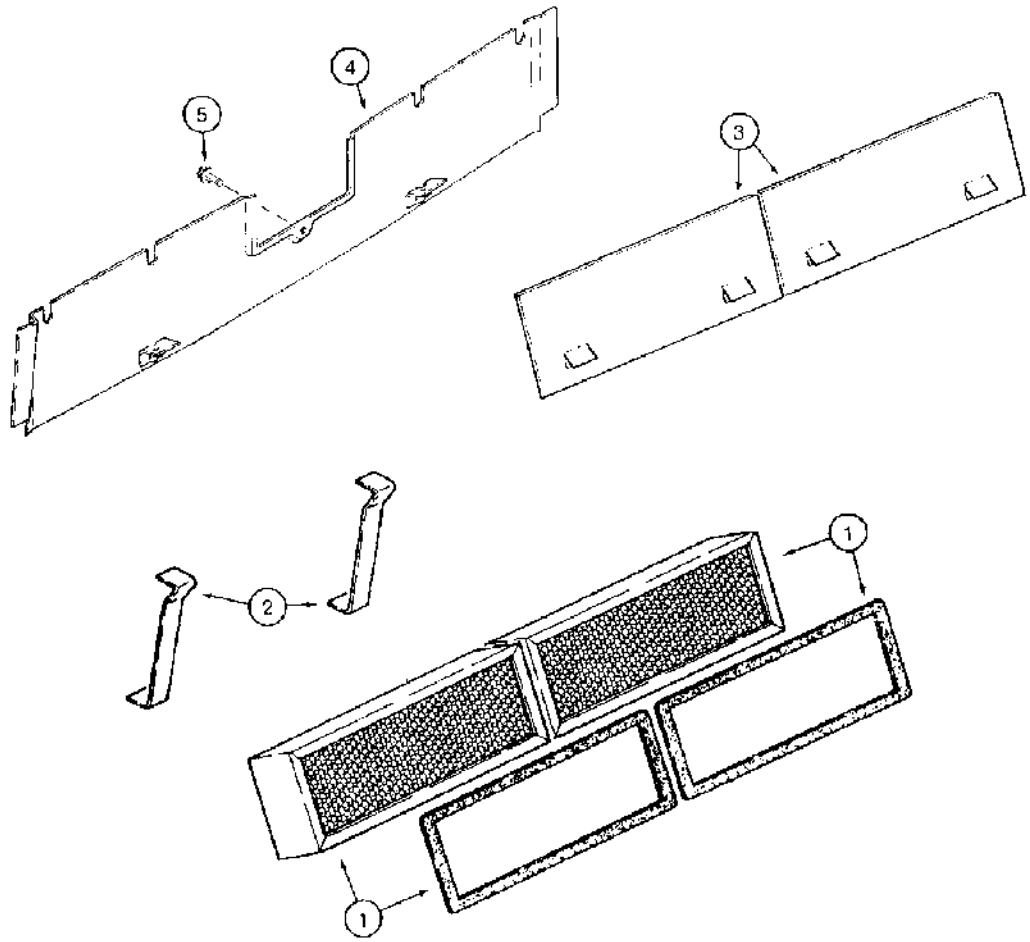

B9C2701

(580SK) - CASE SUPER-K CONSTRUCTION KING LOADER BACKHOE > (9-148) - CAB AIR FILTER

Diag #	Part #	Name	Description	Qty
1	R53519	AIR CLEANER	FILTER air, complete, includes gasket	2
2	R55108	SUPPORT	BRACKET air filter	2
3	R54941	PLATE	filter blockoff, if used	1-2
4	1975880C1	SIEVE	COVER air filter, rear	1
5	281-54712	SCREW,Hex Wash Hd, 1/4"-20 x 3/4"	- Self tapping, hex washer, 1/4 NC x 3/4 inch	1

http://www.minnparbackhoeparts.com/

(580SK) - CASE SUPER-K CONSTRUCTION KING LOADER BACKHOE > (9-150) - CAB BLOWER

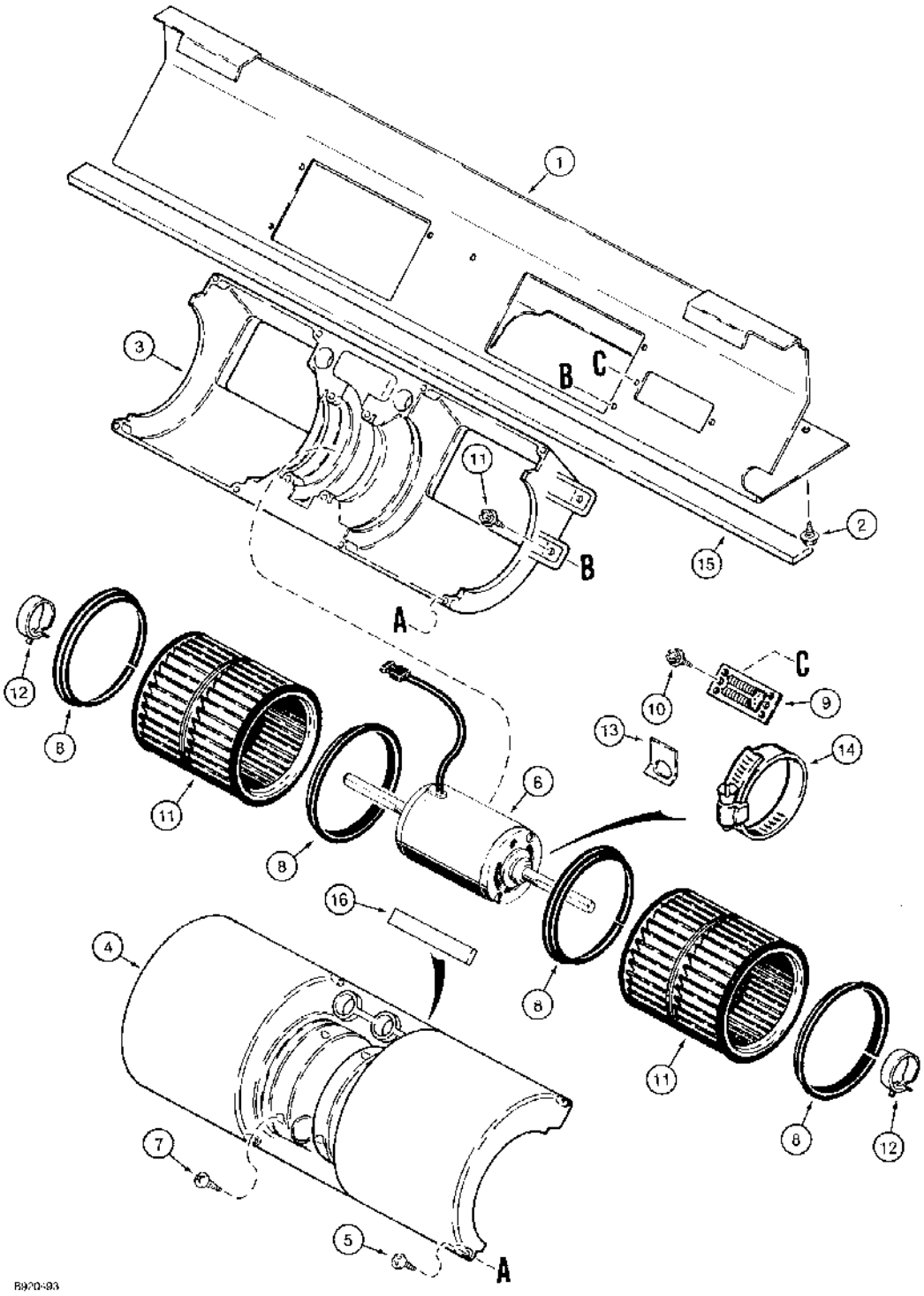

(580SK) - CASE SUPER-K CONSTRUCTION KING LOADER BACKHOE > (9-150) - CAB BLOWER

Diag #	Part #	Name	Description	Qty
1	D126301	BRACKET	blower mounting	1
2	281-54712	SCREW,Hex Wash Hd, 1/4"-20 x 3/4"	- Self tapping, hex washer, 1/4 NC x 3/4 inch	5
3	F64740	HOUSING	fans, lower	1
4	F64741	HOUSING	fans, upper	1
5	1327506C1	SELF-TAP SCREW,Cross Pan Hd, M4.8 x 19, Coated	SCREW, SELF TAP, Cross Pan Hd, M4.8 x 19, Coated	8
6	R54415	MOTOR, ELECTRIC	MOTOR blower, 12 volt	1
7	187-1928	SELF-TAP SCREW,Cross Pan Hd, #10 x 1"	SCREW self-tapping, pan Phillips, No. 10-16 x 1 inch	4
8	F64739	RING	plastic, fan retaining	4
9	F44900	RESISTOR	blower	1
10	280-1458	SELF-TAP SCREW,Hex Wash Hd, #10 x 1/2"	SCREW self-tapping, hex washer head, No. 10-16 x 1/2 inch	2
11	F64935	TURBINE	FAN blower	2
12	F64936	CLAMP	steel spring	2
13	R51563	CLIP,ELECTRICAL	CLIP motor retaining clamp	1
14	214-1440	HOSE CLAMP,#40, 2.06/3.00 Type F Worm	CLAMP adj, 2-1/16 - 3 inch dia, motor retaining	1
15	1987098C1	FOAM	SEAL, 1-1/16, 25, x 15/64, 6, x 37-51/64 inch, 960 mm, cut from 1340329C1 bulk seal, see below, foam, blower mounting, Serial Range: bracket-cab	1
16	1999608C1	GASKET	38 x 102 x 2 mm thick	2
	1340329C1	SEAL	bulk, foam, 600 inch, 15240 mm, long	1

http://www.minnparbackhoeparts.com/

(580SK) - CASE SUPER-K CONSTRUCTION KING LOADER BACKHOE > (9-152) - CAB HEATER

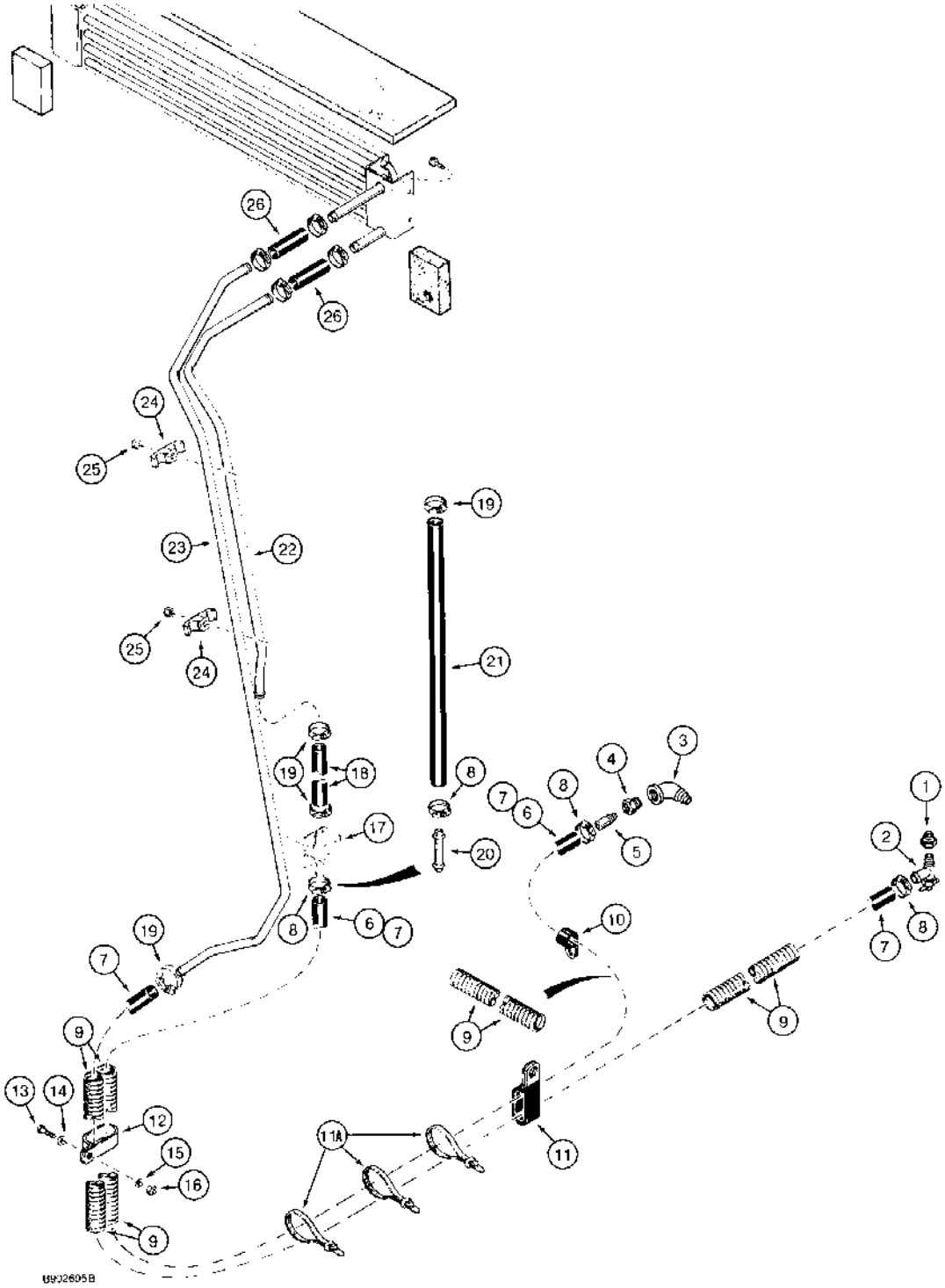

(580SK) - CASE SUPER-K CONSTRUCTION KING LOADER BACKHOE > (9-152) - CAB HEATER

Diag #	Part #	Name	Description	Qty
1	221-89	REDUCER,Hex, 1/2" x 3/8" NPT	pipe, 1/2 male x 3/8 inch female, replaces existing plugs	1
2	3018031	VALVE shutoff, right-hand side of engine, at water pump, replaces A16764	VALVE shutoff, right-hand side of engine, at water pump, replaces A16764	1
3	221-1414	ELBOW,90º, 1/2"-14, NPT	street, 90 degree, 1/2 inch PT	1
4	221-89	REDUCER,Hex, 1/2" x 3/8" NPT	pipe, 1/2 male x 3/8 inch female	1
5	L17985	FITTING	NIPPLE, 3/8 inch NPT, left-hand side of engine	1
6	D136068	LARGE HOSE,0.63" ID, SAE 20R3 Class D1	HEATER HOSE - 104-1/16" (2643 mm), Cut to required length from 97252CX bulk hose, See below, LH, Mounts to heater temperature control valve, No longer used, Order D132977 hose, Ref. 7 0.63" ID, SAE 20R3 Class D1	1
		1301342C1 tube and R54969 hose, Ref. 20 and 21, are used in production with D136068 104 inch hose, Ref. 6, for ease of pod assembly; however, Ref. 20 and 21 are not required for service if Ref, 6 hose is cut to 146 inches instead of 104-1/16 inches.	1301342C1 tube and R54969 hose, Ref. 20 and 21, are used in production with D136068 104 inch hose, Ref. 6, for ease of pod assembly; however, Ref. 20 and 21 are not required for service if Ref, 6 hose is cut to 146 inches instead of 104-1/16 inches.	1
7	D132977	LARGE HOSE,0.63" ID, SAE 20R3 Class D1	HEATER HOSE - RH (112-21/64", 2853 mm), Cut to required length from 97252CX bulk hose, See below 0.63" ID, SAE 20R3 Class D1	1-2
8	214-1410	HOSE CLAMP,#10, 0.56/1.06 Type F Worm	CLAMP, HOSE, , Adjustable, Heater hoses #10, 0.56/1.06 Type F Worm	4
9	D134399	LOOM	SLEEVE hose guard, replaces D132982	4
10	515-23254	CLAMP,1", Insul, 3/8" Bolt	LH hose, Uses existing mounting hardware replaces R14668 1", Insul, 3/8" Bolt	1
11	D39696	CLAMP,Double, 25.40mm Dia, Coated	hose	1
11A	L18337	CABLE TIE,9.95"-12.1" lg	STRAP tie, 15 inch, nylon	3
12	D132978	CLAMP	hose, at right-hand console	1
13	413-612	BOLT,Hex, 3/8" - 16 x 3/4", Gr 5	BOLT,Hex, 3/8" - 16 x 3/4", Gr 5	1
14	495-11041	WASHER,3/8", SAE	flat, (13/32 x 13/16 x 1/16")	1
15	492-11038	LOCK WASHER,3/8"	LOCK WASHER,3/8"	1
16	425-106	NUT,3/8"-16, G5	NUT,3/8"-16, G5	1

Diag #	Part #	Name	Description	Qty
17	R52483	VALVE	temperature control, heater, see Figure 9-140 for mounting	1
18	R54968	HEATER HOSE,15.50 mm ID x 205.00 mm	- Cut to required length from 97252CX bulk hose, See below, Heater temperature control valve to heater inlet tube 15.50 mm ID x 205.00 mm	1
19	1954736C1	HOSE CLAMP,#24	CLAMP, HOSE, , Special (11/16 - 1-1/4" dia.) #24	4
20	1301342C1	FITTING	TUBE, 5/8, 16, ID x 22 inch, 559 mm, long, used in production, not required for service	1
		1301342C1 tube and R54969 hose, Ref. 20 and 21, are used in production with D136068 104 inch hose, Ref. 6, for ease of pod assembly; however, Ref. 20 and 21 are not required for service if Ref, 6 hose is cut to 146 inches instead of 104-1/16 inches.	1301342C1 tube and R54969 hose, Ref. 20 and 21, are used in production with D136068 104 inch hose, Ref. 6, for ease of pod assembly; however, Ref. 20 and 21 are not required for service if Ref, 6 hose is cut to 146 inches instead of 104-1/16 inches.	1
21	R54969	HEATER HOSE,15.50 mm ID x 292.00 mm	Cut to Required Length from Bulk Hose, Used in Production, Not Required for Service 15.50 mm ID x 292.00 mm	1
		1301342C1 tube and R54969 hose, Ref. 20 and 21, are used in production with D136068 104 inch hose, Ref. 6, for ease of pod assembly; however, Ref. 20 and 21 are not required for service if Ref, 6 hose is cut to 146 inches instead of 104-1/16 inches.	1301342C1 tube and R54969 hose, Ref. 20 and 21, are used in production with D136068 104 inch hose, Ref. 6, for ease of pod assembly; however, Ref. 20 and 21 are not required for service if Ref, 6 hose is cut to 146 inches instead of 104-1/16 inches.	1
22	R52504	HEATER TUBE,15.88 mm OD	TUBE heater inlet	1
23	R52505	HEATER TUBE,15.88 mm OD	TUBE heater outlet	1
24	D120613	CLAMP	plastic, tube, mounts on stud on ROPS post replaces R52657	2
25	131-206	NUT,3/8"-16	NUT heavy hex, self-locking, 3/8 inch NC	2
26	R54967	HEATER HOSE,15.50 mm ID x 70.00 mm	- Cut to required length from bulk hose 97252CX, See below, Heater core to tubes 15.50 mm ID x 70.00 mm	2
	97252CX	HOSE	bulk, 5/8, 16, x 15/16, 24, x 50 ft, 15240 mm, long, sold by the foot	1

(580SK) - CASE SUPER-K CONSTRUCTION KING LOADER BACKHOE > (9-154) - CAB HEATER

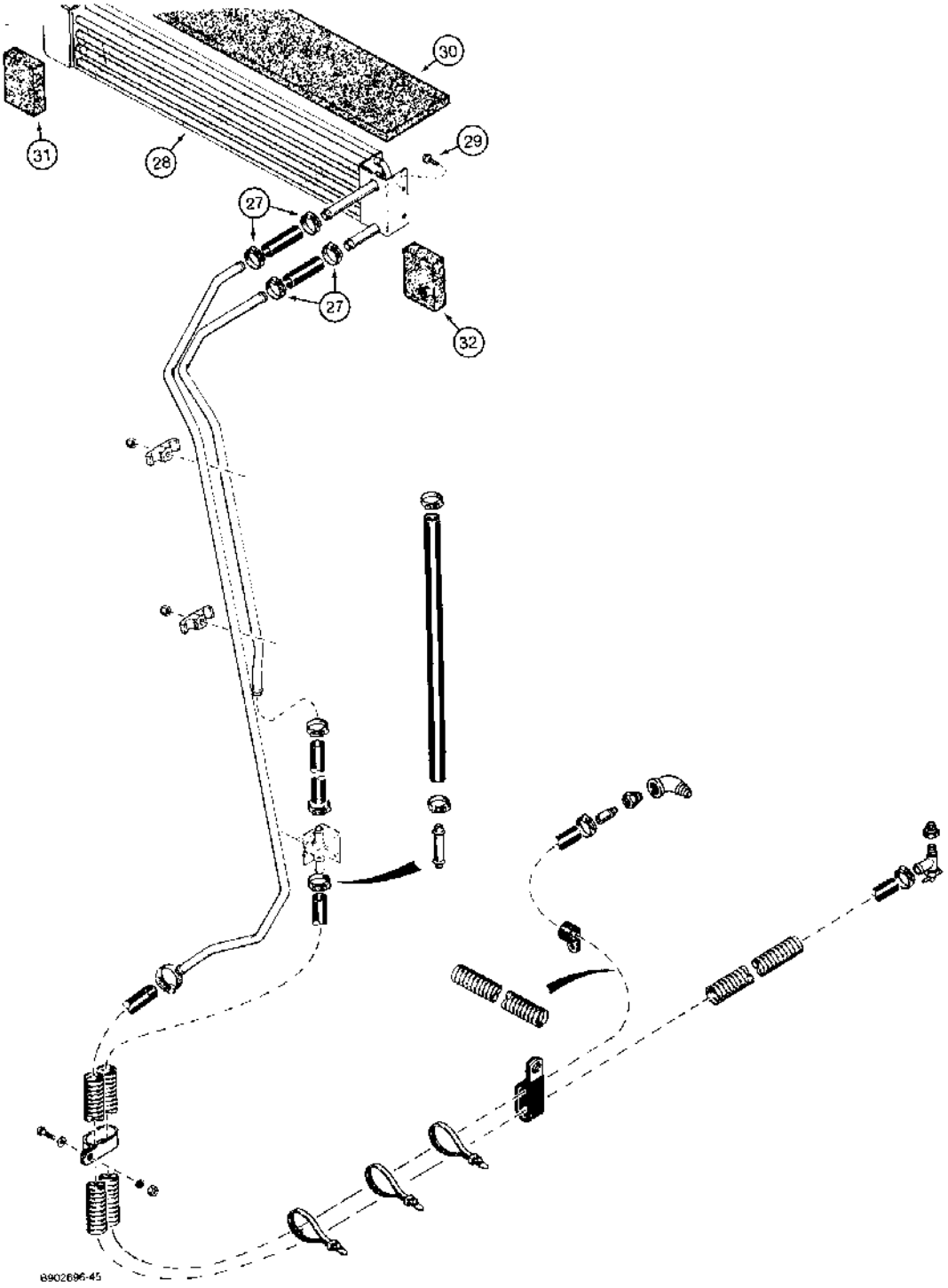

(580SK) - CASE SUPER-K CONSTRUCTION KING LOADER BACKHOE > (9-154) - CAB HEATER

Diag #	Part #	Name	Description	Qty
27	1954736C1	HOSE CLAMP,#24	CLAMP, HOSE, , Special (11/16 - 1-1/4" dia.) #24	4
28	1338312C2	HEATER	CORE heater, mounts to cab frame	1
29	281-54712	SCREW,Hex Wash Hd, 1/4"-20 x 3/4"	- Self tapping, hex washer, 1/4 NC x 3/4 inch	4
30	1338301C1	SEAL	SEAL, 1/2, 13, x 3-5/32, 80, x 32-1/2 inch, 825 mm, heater and air conditioner, order 1340329C1 bulk seal and cut to required size	1
31	1987093C1	STRIP	SEAL, 1, 25 x 2-3/4, 70, x 4 inch, 100 mm, heater core, left-hand, cut from 98355C1 bulk	1
32	1987094C1	FOAM	SEAL, 2-3/4, 70, x 4, 100, x 1 inch, 25 mm, heater core, right-hand, cut from 98355C1 bulk	1
	98355C1	FOAM INSULATION	SEAL, 1-1/4, 32, x 6-13/32, 163, x 31-7/8 inch, 810 mm, foam, adhesive back, bulk	1
	1340329C1	SEAL	68 ft, foam, adhesive back, bulk	1

http://www.minnparbackhoeparts.com/

(580SK) - CASE SUPER-K CONSTRUCTION KING LOADER BACKHOE > (9-156) - CAB AIR CONDITIONER

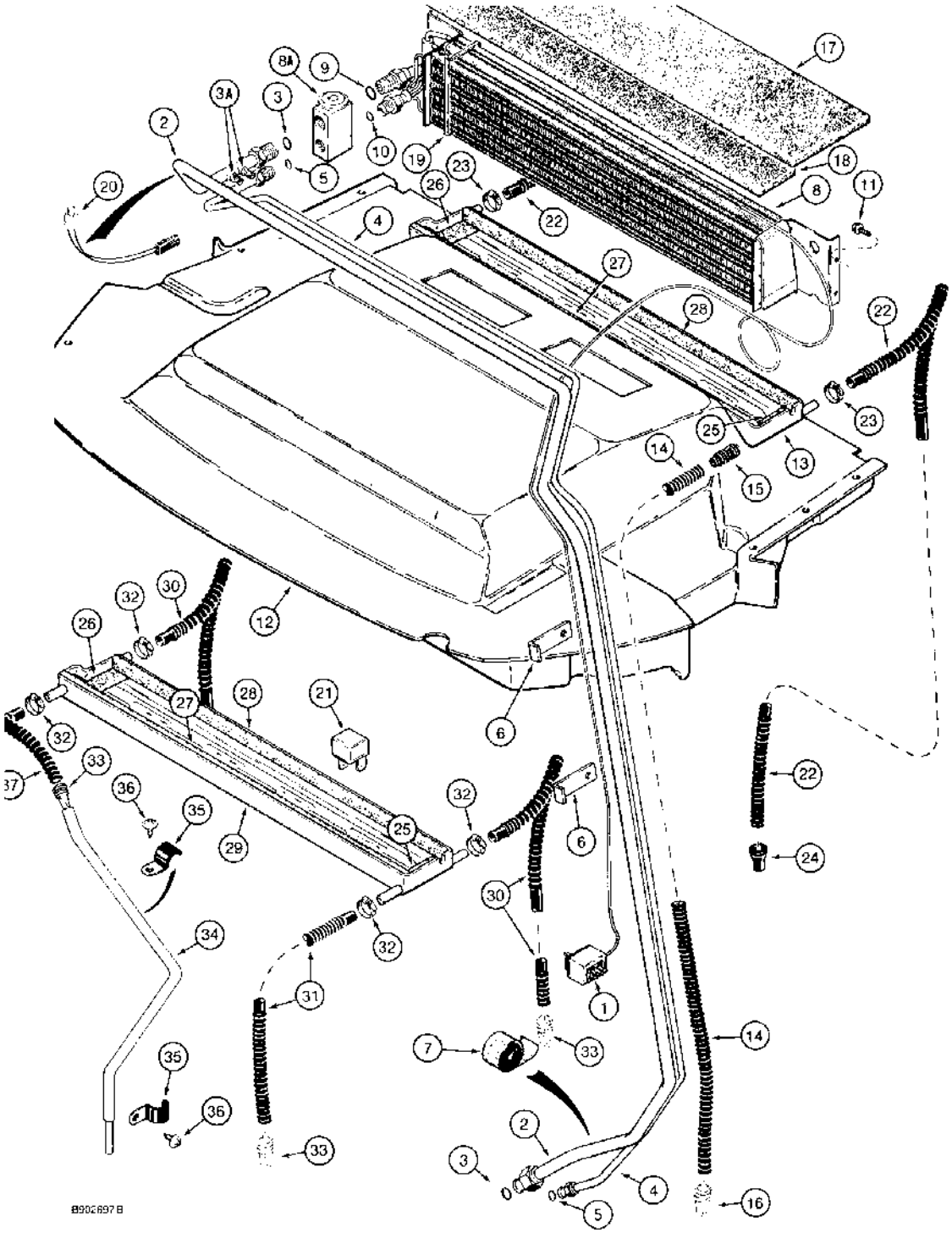

(580SK) - CASE SUPER-K CONSTRUCTION KING LOADER BACKHOE > (9-156) - CAB AIR CONDITIONER

Diag #	Part #	Name	Description	Qty
1	1340287C1	SWITCH	temperature control, air conditioning	1
2	1977421C1	TUBE	suction, Includes: Ref. 3 and 3A	1
3	238-5015	O-RING,0.551" ID x 0.691" OD x 0.07"	-015, 70 Duro, .551" ID x .070" Thk (Replaces 371544R1)	2
3A	1250594C1	CORE	VALVE internal	2
4	1977422C1	TUBE	pressure, Includes: Ref. 5	1
5	238-5011	O-RING,0.301" ID x 0.441" OD x 0.07"	-011, 70 Duro, .301" ID x .070" Thk	2
6	R53634	SHIN	CLAMP bracket, mounts to ROPS post stud with existing nut	2
7	1954475C1	ROLL	TAPE cork, insulating, bulk roll, 360 inch, 9144 mm, long	1
8	1340493C3	EVAPORATOR	CORE evaporator, Includes: Ref. 8A, 9 and 10	1
8A	98370C3	VALVE	evaporator	1
9	238-5015	O-RING,0.551" ID x 0.691" OD x 0.07"	-015, 70 Duro, .551" ID x .070" Thk, Upper, core	1
10	238-5013	O-RING,0.426" ID x 0.566" OD x 0.07"	-013, 70 Duro, .426" ID x .070" Thk, Lower core	1
11	281-54712	SCREW,Hex Wash Hd, 1/4"-20 x 3/4"	- Self tapping, hex washer, 1/4 NC x 3/4 inch	4
12	REF	INSTRUCTION	HEADLINER rear section, see Figure 9-146	1
13	1344430C1	HOUSING	PAN condensation drain, purchase seals separately, Ref. 25-28, no longer available, order 1990990C1 pan, Ref. 29	1
14	1276252C1	HOSE ASSY.	HOSE, 90 inch, 2286 mm, long, cut to required length from 198091C2 bulk hose, rear drain, 1344430C1 pan, Ref. 13, if used	2
15	1250522C3	FITTING	TUBE adapter, drain, if used	2
16	109239C2	CHECK VALVE	VALVE, CHECK, Rubber, Rear drain hose	2
17	1338301C1	SEAL	SEAL, 13 x 80 x 825 mm, heater and air conditioner cores, cut from 1340329C1 bulk	1
18	1338301C1	SEAL	SEAL, 13 x 80 x 825 mm, core, cut from 1340329C1 bulk	1
19	386170C1	CABLE TIE,.30" x 27 1/2"	STRAP cable lock, 28-1/4 inch	2
20	92153C1	SWITCH	low pressure	1
21	146461C1	RELAY	30 ampere, connects to cab harness	1
22	F45410	TUBE	HOSE, 5/8, 15, OD x 110 inch, 2794 mm, long, front drain, 1344430C1 pan, Ref. 13, cut from F64508, see below, if used	2
23	214-1404	HOSE CLAMP,#4, 0.25/0.62 Type M Worm	CLAMP adj, 1/4 - 5/8 inch dia	2

Diag #	Part #	Name	Description	Qty
24	F44790	VALVE	END rubber, Ref. 22 front drain hose, if used	2
25	1987091C2	FOAM	SEAL, 55 x 150 x 9 mm, right-hand, cut from 1987092C1 bulk	1
26	1987092C2	FOAM	SEAL foam, adhesive backed, pan, left-hand	1
27	1987096C1	PLATE	(Seal), 9 x 19 x 765 mm, Pan, Rear, Cut from 98355C1 bulk	1
28	1987097C1	PANEL	SEAL, 9 x 19 x 735 mm, pan, front, cut from 98355C1 bulk	1
29	1990990C1	HOUSING	PAN condensation drain, includes seals, Ref. 25-28	1
30	1990983C1	HOSE,11.00 mm ID, 13.30 mm ID x 2794.00 mm	Front drain, 1990990C1 Pan 11.00 mm ID, 13.30 mm ID x 2794.00 mm	2
31	1990999C1	HOSE,11.00 mm ID, 13.30 mm ID x 2286.00 mm	Rear drain, 1990990C1 Pan, Cut to required length from 1990983C1 hose, Ref. 30 11.00 mm ID, 13.30 mm ID x 2286.00 mm	1-2
32	214-1404	HOSE CLAMP,#4, 0.25/0.62 Type M Worm	CLAMP adj, 1/4 - 5/8 inch dia	4
33	109239C2	CHECK VALVE	VALVE, CHECK, Rubber, Drain hose	4
34	112468A1	TUBE	drain, left-hand rear, if used, replaces Ref. 31 hose on some models	1
35	112726A1	CLIP	CLAMP drain tube, if used	2
36	113319A1	CAPTIVE WASHER SCREW	SCREW oval Phillips, with washer, self-tapping, No. 10-16 x 3/4 inch, if used	2
37	112506A1	A/C HOSE,11.00 mm ID, 13.30 mm ID x 1778.00 mm	- Drain, LH rear, Cut to required length from F64508 hose, See below, If used 11.00 mm ID, 13.30 mm ID x 1778.00 mm	1
	98355C1	FOAM INSULATION	SEAL, 32 x 163 x 810 mm, foam, adhesive back	1
	198091C1	HOSE	11/16, 17, x 1 ft long, bulk, drain	1
	1340329C1	SEAL	68 ft long, bulk	1
	1987092C1	FOAM	SEAL, 65 x 95 x 150 x 9 mm, foam, adhesive back	1
	F64508	HOSE,0.43" ID x 100' Bulk	front drain 0.43" ID x 100' Bulk	1

http://www.minnparbackhoeparts.com/

(580SK) - CASE SUPER-K CONSTRUCTION KING LOADER BACKHOE > (9-158) - CONDENSER, RECEIVER-DRIER AND AIR CONDITIONER LINES

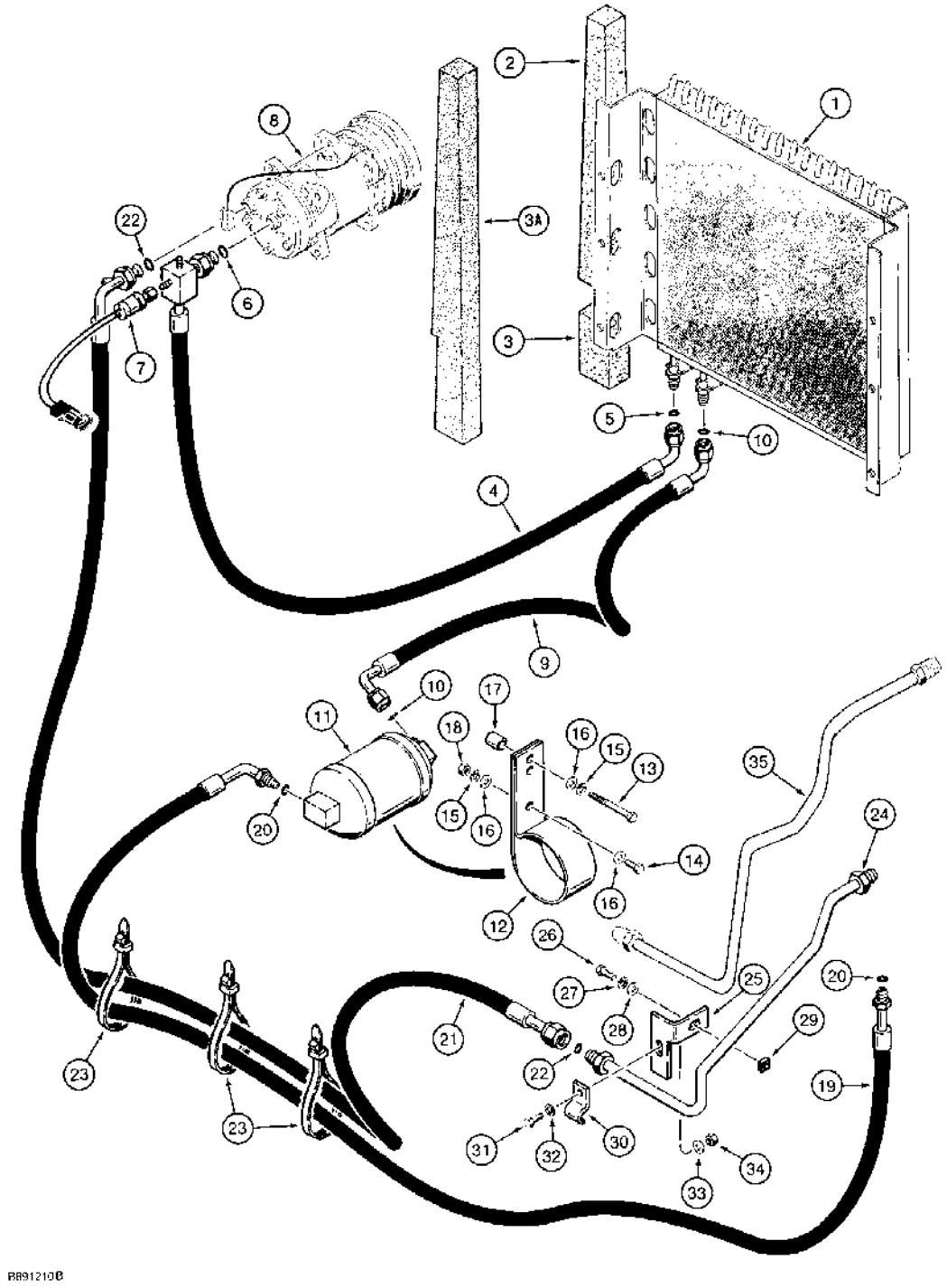

(580SK) - CASE SUPER-K CONSTRUCTION KING LOADER BACKHOE > (9-158) - CONDENSER, RECEIVER-DRIER AND AIR CONDITIONER LINES

Diag #	Part #	Name	Description	Qty
1	A189260	CONDENSER	coil, refrigerant cooler, uses existing oil cooler to radiator hardware	1
2	D140840	FOAM	BAFFLE base size is 2-3/16 inch, 55 mm, x 17-3/4 inch, 450 mm, high, cut from D92228 bulk pad, see below, no longer available, replaced by Ref. 3A, 111996A1 baffle	2
3	D140841	FOAM	BAFFLE base size is 2-3/8 inch, 60 mm, x 3-15/16 inch, 100 mm, high, cut from D92228 bulk pad, see below, no longer available, replaced by Ref. 3A 111996A1 baffle	2
3A	111996A1	BAFFLE	base size is 3-3/16, 81, x 24-39-64 inch, 625 mm, high, cut from D92228 bulk pad, see below	2
4	1977418C1	HOSE	1160 mm long, compressor to condenser, Includes: Ref. 5 and 6	1
5	238-5013	O-RING,0.426" ID x 0.566" OD x 0.07"	-013, 70 Duro, .426" ID x .070" Thk	1
6	238-5015	O-RING,0.551" ID x 0.691" OD x 0.07"	-015, 70 Duro, .551" ID x .070" Thk (Replaces 371544R1)	1
7	92038C1	A/C HIGH PRESSURE SWITCH	SWITCH air conditioning, high pressure cutout, attaches to main engine harness	1
8	97204C1	COMPRESSOR	ASSEMBLY air conditioning, parts list Figure 4-10, see Figure 4-14 for mounting	1
9	1977419C1	HOSE	660 mm long, condenser to receiver-drier, Includes: Ref. 10	1
10	238-5011	O-RING,0.301" ID x 0.441" OD x 0.07"	-011, 70 Duro, .301" ID x .070" Thk	2
11	143469C2	RESERVOIR	RECEIVER-DRIER system	1
12	D145289	SUPPORT	BRACKET receiver-drier	1
13	413-640	BOLT,Hex, 3/8" - 16 x 2 1/2", Gr 5	hex, 3/8 NC x 2-1/2 inch	1
14	413-616	BOLT,Hex, 3/8" - 16 x 1", Gr 5	hex, 3/8 NC x 1 inch	1
15	492-11038	LOCK WASHER,3/8"	LOCK WASHER,3/8"	2
16	495-11041	WASHER,3/8", SAE	flat, (13/32 x 13/16 x 1/16")	3
17	D123485	SPACER	bracket	1
18	425-106	NUT,3/8"-16, G5	NUT,3/8"-16, G5	1
19	1977420C1	HOSE	3322 mm long, receiver-drier to cab tube, Includes: Ref. 20	1
20	238-5011	O-RING,0.301" ID x 0.441" OD x 0.07"	-011, 70 Duro, .301" ID x .070" Thk	2

Diag #	Part #	Name	Description	Qty
21	1977417C1	HOSE	3050 mm long, compressor to cab base, Includes: Ref. 22	1
22	238-5015	O-RING,0.551" ID x 0.691" OD x 0.07"	-015, 70 Duro, .551" ID x .070" Thk (Replaces 371544R1)	2
23	L18337	CABLE TIE,9.95"-12.1" lg	STRAP tie, 15 inch, nylon	3
	D92228	BAFFLE	bulk pad, 900 mm x 1400 mm x 38 mm	1
	345-44	ADHESIVE	spray can, for attaching foam pads to metal surfaces purchase locally	1
24	D147486	PIPE	TUBE to cab tube, no longer available, order D150571 tube, Ref. 35	1
25	D144908	SUPPORT	BRACKET air conditioner tube	1
26	413-512	BOLT,Hex, 5/16" - 18 x 3/4", Gr 5	hex, 5/16 NC x 3/4 inch	1
27	492-11031	LOCK WASHER,5/16"	WASHER, LOCK, 5/16"	1
28	495-11034	WASHER,5/16", SAE	5/16" SAE (flat, 11/32 x 11/16 x 1/16")	1
29	224-2245	SQUARE NUT,Sq, 5/16"-18, G2	square, 5/16 inch NC	1
30	D143430	CLAMP	tube	1
31	413-616	BOLT,Hex, 3/8" - 16 x 1", Gr 5	hex, 3/8 NC x 1 inch	1
32	492-11038	LOCK WASHER,3/8"	LOCK WASHER,3/8"	1
33	495-11041	WASHER,3/8", SAE	flat, (13/32 x 13/16 x 1/16")	1
34	425-106	NUT,3/8"-16, G5	NUT,3/8"-16, G5	1
35	D150571	PIPE	TUBE to cab tube	1

http://www.minnparbackhoeparts.com/

(580SK) - CASE SUPER-K CONSTRUCTION KING LOADER BACKHOE > (9-162) - ROPS CANOPY

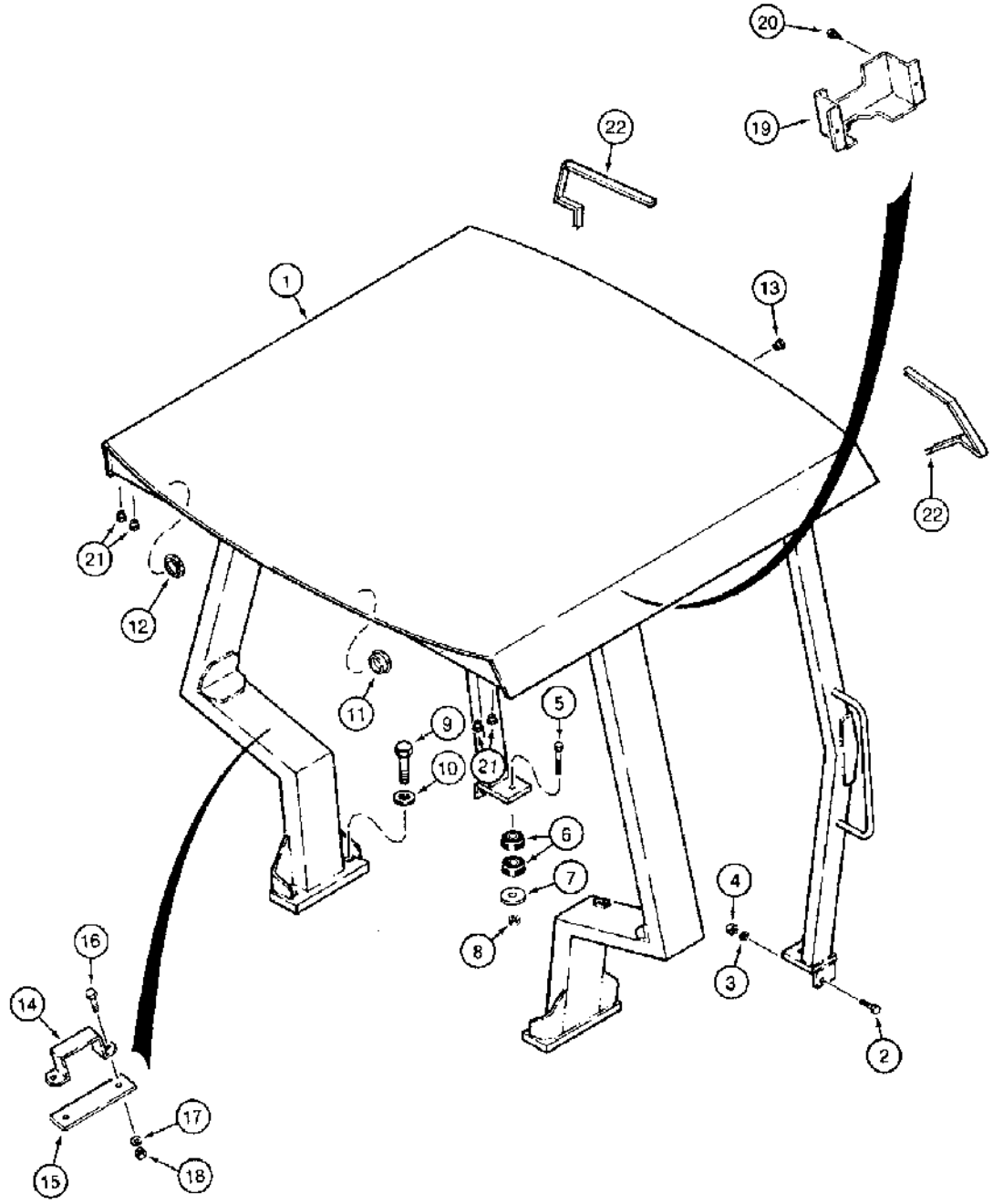

870249B-45

(580SK) - CASE SUPER-K CONSTRUCTION KING LOADER BACKHOE > (9-162) - ROPS CANOPY

Diag #	Part #	Name	Description	Qty
1	D104591	KIT	CANOPY ROPS, machinery item, order from Machinery Price List replaced REF	1
2	413-820	BOLT,Hex, 1/2" - 13 x 1 1/4", Gr 5	- hex, 1/2 NC x 1-1/4 inch, attaches canopy to front corner of operator compartment frame	2
3	80679	LOCK WASHER,1/2"	WASHER, LOCK, 1/2"	2
4	425-108	NUT,1/2"-13, G5	NUT, , Hex 1/2"-13, G5	2
5	426-1064	BOLT,Hex, 5/8" - 11 x 4", Gr 8	hex, 5/8 NC x 4 inch, grade 8, mounts canopy to front of operator compartment frame	2
6	D138565	SHOCK ABSORBER	INSULATOR frame mounting	4
7	D89007	WASHER	flat, 5/8 x 2-3/4 inch, hardened, special	2
8	429-1010	NUT,5/8"-11, G8	NUT,5/8"-11, G8	2
9	426-1452	BOLT,Hex, 7/8" - 9 x 3 1/4", Gr 8	hex, 7/8 NC x 3-1/4 inch, grade 8, rear ROPS post mounting to rear plate of operator compartment frame	4
10	496-11094	WASHER,15/16" x 1 3/4" x .134", HDN	flat, 15/16 x 1-3/4 x 1/8 inch, hardened	4
11	D93716	PLUG	button, 3 inch, if used	4
12	353-417	PLUG,Dome, 2.000" hole, Nylon	nylon, 2 inch, if used	8
13	353-405	PLUG,Dome, .562" hole, Nylon	button, 9/16 inch, if used	4
14	D136652	BRACKET	support, Serial Range: mounts-fenders	2
15	D136653	PLATE	support bracket, mounts under fender	2
16	413-620	BOLT,Hex, 3/8" - 16 x 1 1/4", Gr 5	hex, 3/8 NC x 1-1/4 inch	4
17	492-11038	LOCK WASHER,3/8"	LOCK WASHER,3/8"	4
18	425-106	NUT,3/8"-16, G5	NUT,3/8"-16, G5	4
19	D132337	COVER	wiring	1
20	281-4556	SELF-TAP SCREW,Hex Wash Hd, #10 x 3/8"	SCREW self-tapping, hex washer head, No. 10 NC x 3/8 inch	2
21	353-405	PLUG,Dome, .562" hole, Nylon	button, 9/16 inch	4
22	D60180	STRIP	TRIM edge, 14-1/2 inch long, cut from F42827 bulk	2
	F42827	RUBBER STRIP	TRIM edge, 116 inch	1

http://www.minnparbackhoeparts.com/

(580SK) - CASE SUPER-K CONSTRUCTION KING LOADER BACKHOE > (9-164) - REAR VIEW MIRROR, ROPS CAB MODELS - INTERIOR, ROPS CAB

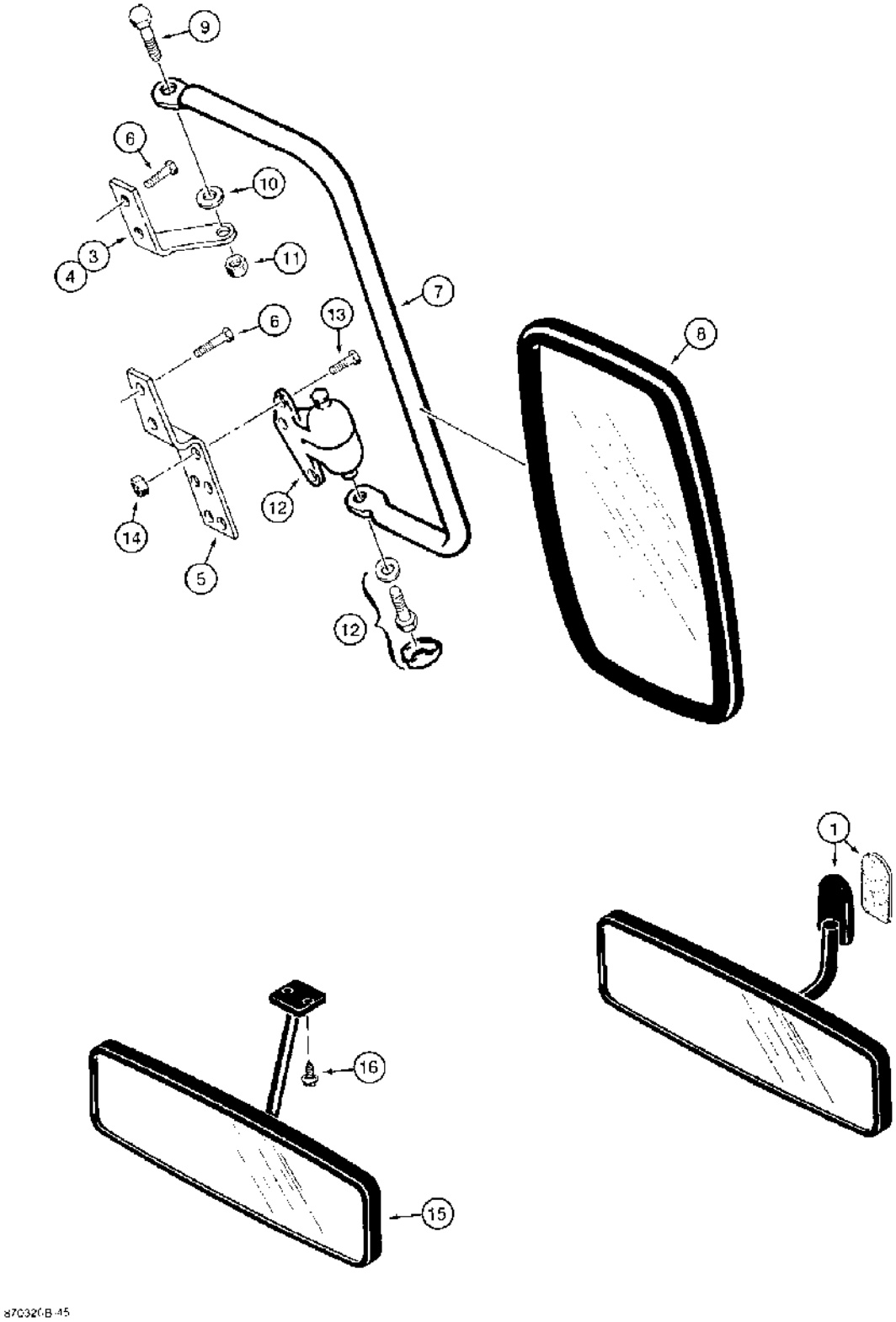

(580SK) - CASE SUPER-K CONSTRUCTION KING LOADER BACKHOE > (9-164) - REAR VIEW MIRROR, ROPS CAB MODELS - INTERIOR, ROPS CAB

Diag #	Part #	Name	Description	Qty
1	R54689	MIRROR	rear view, interior, includes spacer, rops cab models - interior	1
3	D142084	BRACKET	mirror, right-hand upper, rops cab models - exterior	1
4	D142085	BRACKET	mirror, left-hand upper, not shown, rops cab models - exterior	1
5	D142083	BRACKET	mirror, lower, rops cab models - exterior	2
6	281-54712	SCREW,Hex Wash Hd, 1/4"-20 x 3/4"	- Self tapping, hex washer, 1/4 NC x 3/4 inch, ROPS cab models - exterior	8
7	D142086	TUBE	SUPPORT mirror, rops cab models - exterior	2
8	R54682	MIRROR	rear view, exterior, rops cab models - exterior	2
9	413-516	BOLT,Hex, 5/16" - 18 x 1", Gr 5	hex, 5/16 NC x 1 inch, rops cab models - exterior	2
10	A167037	WASHER	nylon, rops cab models - exterior	2
11	231-4115	NUT,5/16"-18, GB	NUT - hex, self-locking, 5/16 inch NC, ROPS cab models, exterior	2
12	D142144	HINGE	KNUCKLE support pivot, includes hardware, rops cab models - exterior	2
13	413-412	BOLT,Hex, 1/4" - 20 x 3/4", Gr 5	- hex, 1/4 NC x 3/4 inch, ROPS cab models - exterior	6
14	231-1444	NUT,1/4"-20, GB	NUT, LOCK, , ROPS Cab Models - Exterior 1/4"-20, GB	6
15	D138952	MIRROR	rear view, interior, rops canopy models - interior	1
16	281-45510	SELF-TAP SCREW,Hex Wash Hd, #10 x 5/8"	SCREW self-tapping, hex washer head, No. 10 NC x 5/8 inch, replaces 187-576, 3/8 inch long screw, rops canopy models - interior	2

http://www.minnparbackhoeparts.com/

(580SK) - CASE SUPER-K CONSTRUCTION KING LOADER BACKHOE > (9-166) - SLOW MOVING VEHICLE EMBLEM, USED ON MODELS WITH BACKHOE

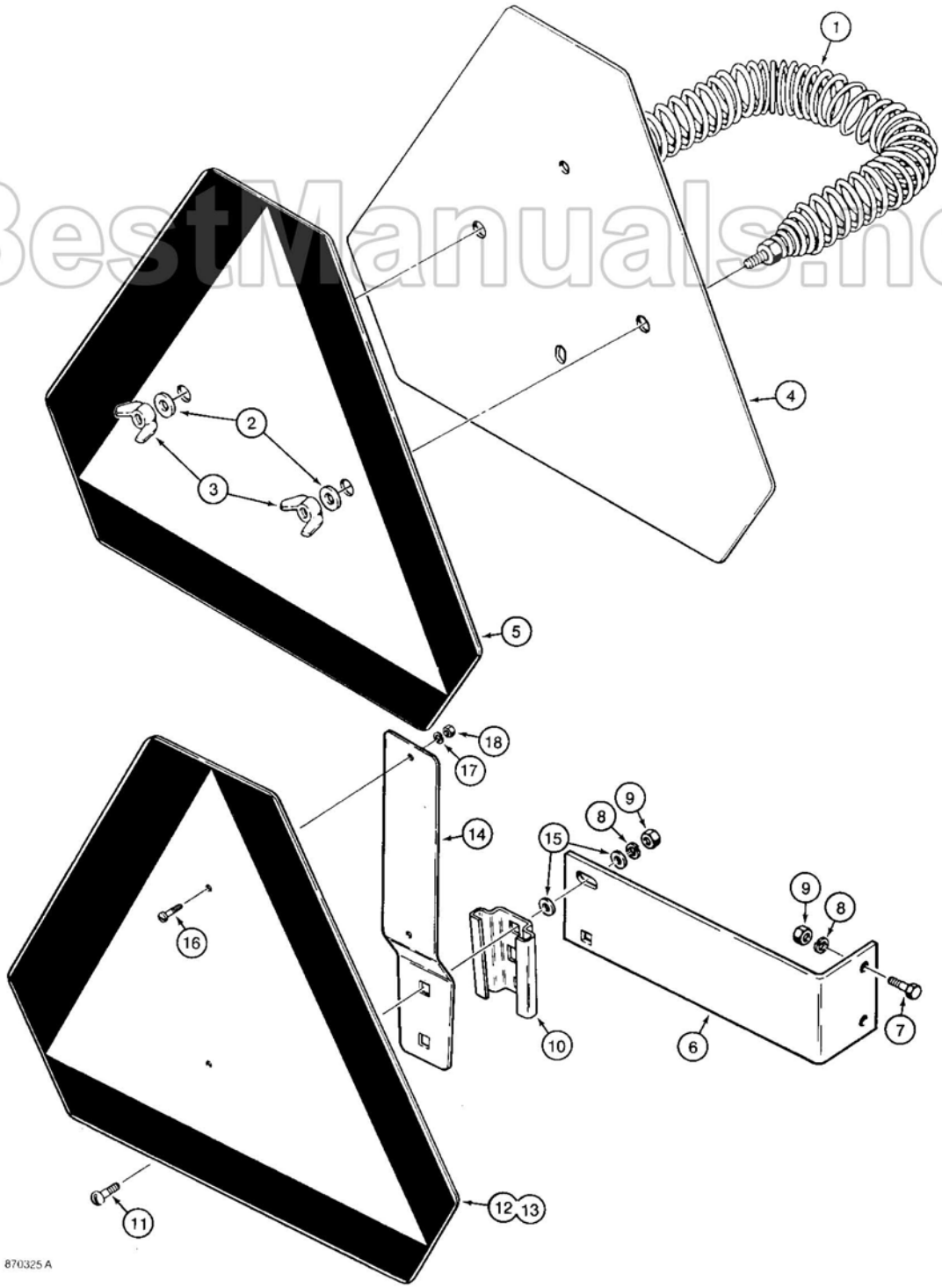

BestManuals.net

(580SK) - CASE SUPER-K CONSTRUCTION KING LOADER BACKHOE > (9-166) - SLOW MOVING VEHICLE EMBLEM, USED ON MODELS WITH BACKHOE

Diag #	Part #	Name	Description	Qty
1	D52564	SPRING	emblem retaining, used on models with backhoe	1
2	495-11028	WASHER,1/4", SAE	(flat, 9/32 x 5/8 x 1/16"), Used on models with backhoe 1/4", SAE	2
3	129-409	WING NUT,1/4"-20	NUT, WING, , Used on models with backhoe 1/4"-20	2
4	D123347	WARNING SIGN	EMBLEM plate and decal, slow moving vehicle, used on models with backhoe, Includes: Ref. 5	1
5	321-4311	DECAL	slow moving vehicle emblem, used on models with backhoe	1
6	D140308	BRACKET	slow moving vehicle emblem mounting, horizontal, used on models without backhoe	1
7	413-512	BOLT,Hex, 5/16" - 18 x 3/4", Gr 5	hex, 5/16 NC x 3/4 inch, used on models without backhoe	2
8	492-11031	LOCK WASHER,5/16"	WASHER, LOCK, , Used on models without backhoe 5/16"	3
9	425-105	NUT,5/16"-18, G5	- hex, 5/16 inch NC, Used on models without backhoe	3
10	A59457	BRACKET	emblem mounting, short, used on models without backhoe	1
11	111-215	CARRIAGE BOLT,Short NK, 5/16"-18 x 3/4", G2, Full Thd	BOLT carriage, short neck, 5/16 inch - 18 NC x 3/4 inch, used on models without backhoe	2
	D123347	WARNING SIGN	EMBLEM ASSEMBLY plate and decal, used on models without backhoe, Includes: Ref. 12 and 13	1
12	NSS	NOT SERVICED SEPARATELY	PLATE SMV emblem, used on models without backhoe	1
13	321-4311	DECAL	slow moving vehicle emblem, used on models without backhoe	1
14	A59451	BRACKET	emblem mounting, vertical, used on models without backhoe	1
15	495-11034	WASHER,5/16", SAE	5/16" SAE (flat, 11/32 x 11/16 x 1/16"), Used on models without backhoe	2
16	470-1108	SCREW,Slotted Pan Hd, #10-24 x 1/2"	machine, pan head slotted, No. 10 NC x 1/2 inch, used on models without backhoe	2
17	492-11010	LOCK WASHER,#10	WASHER, LOCK, , Used on models without backhoe #10	2
18	129-17	NUT,#10-24	NUT hex, No. 10 NC, used on models without backhoe	2

http://www.minnparbackhoeparts.com/

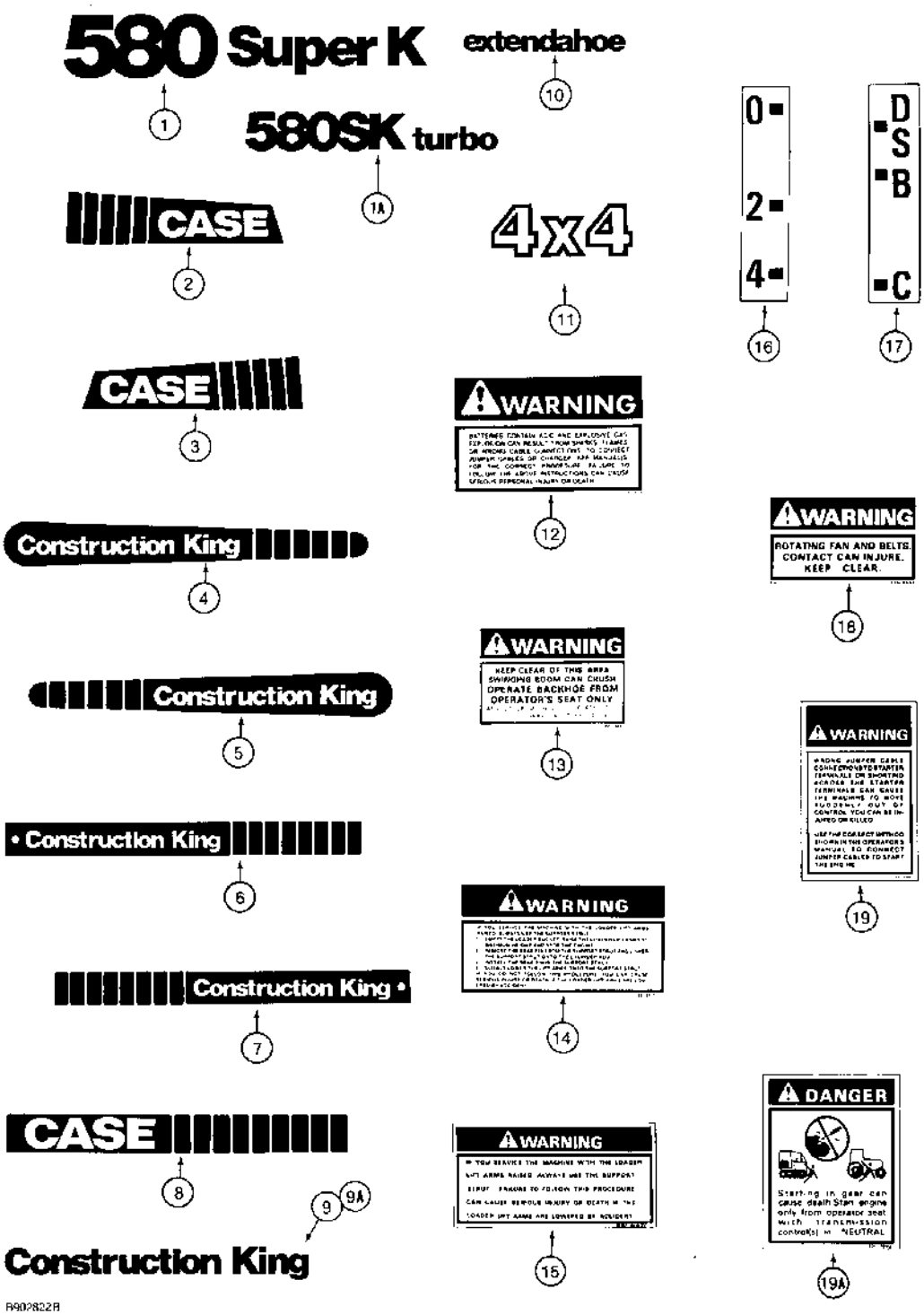

http://www.minnparbackhoeparts.com/

(580SK) - CASE SUPER-K CONSTRUCTION KING LOADER BACKHOE > (9-168) - DECALS

Diag #	Part #	Name	Description	Qty
1	D149904	DECAL	580 Super K, if used	2
1A	116290A1	DECAL	580SK turbo, if used	2
2	D136977	DECAL	Case, with treads, right-hand side of machine, side panel	1
2A	D140338	DECAL	Case, with treads, right-hand side of machine, side panel, white color	1
		White decals for use on dark painted tractors are not illustrated. Order separately, if required.	White decals for use on dark painted tractors are not illustrated. Order separately, if required.	1
3	D136978	DECAL	Case, with treads, left-hand side of machine, side panel	1
3A	D140339	DECAL	Case, with treads, left-hand side of machine, side panel, white color	1
		White decals for use on dark painted tractors are not illustrated. Order separately, if required.	White decals for use on dark painted tractors are not illustrated. Order separately, if required.	1
4	D150036	DECAL	Construction King, with right-hand treads, standard dipper	1
5	D150035	DECAL	Construction King, with left-hand treads, standard dipper	1
6	D150038	DECAL	Construction King, with right-hand treads, extendable dipper	1
7	D150037	DECAL	Construction King, with left-hand treads, extendable dipper	1
8	D136981	DECAL	Case, with right-hand treads, rear closure panel	1
8A	D140342	DECAL	Case, with right-hand treads, rear closure panel, white color	1
		White decals for use on dark painted tractors are not illustrated. Order separately, if required.	White decals for use on dark painted tractors are not illustrated. Order separately, if required.	1
9	D149903	DECAL	Construction King, brown, ROPS cab or canopy units	2
9A	D149905	DECAL	Construction King, tan, ROPS cab units, if used	2
9	321-5586	DECAL	White	2
10	D123945	DECAL	extendahoe	2
11	D149902	DECAL	4x4, four wheel drive models	2
11A	D140345	DECAL	4x4, four wheel drive models only, white color	2

Diag #	Part #	Name	Description	Qty
		White decals for use on dark painted tractors are not illustrated. Order separately, if required.	White decals for use on dark painted tractors are not illustrated. Order separately, if required.	1
12	321-6714	DECAL	Warning, batteries contain acid and explosive gas	1
13	321-4481	DECAL	Warning, keep clear of this area swinging boom can crush	2
14	321-6413	DECAL	Warning, left-hand loader lift arm support strut usage	1
15	321-6671	DECAL	Warning, right-hand chassis channel	1
16	321-1708	DECAL	0 - 2 - 4, clam bucket opening indicator	1
17	321-1707	DECAL	clam bucket position	1
18	321-3596	DECAL	Warning, rotating fan and belts	2
19	321-6872	DECAL	Warning, wrong jumper cable connections to starter terminals, 3-3/16 inch high	1
19A	321-7040	DANGER DECAL	DECAL, DANGER, Starting in gear can cause death	1

http://www.minnparbackhoeparts.com/

(580SK) - CASE SUPER-K CONSTRUCTION KING LOADER BACKHOE > (9-170) - DECALS

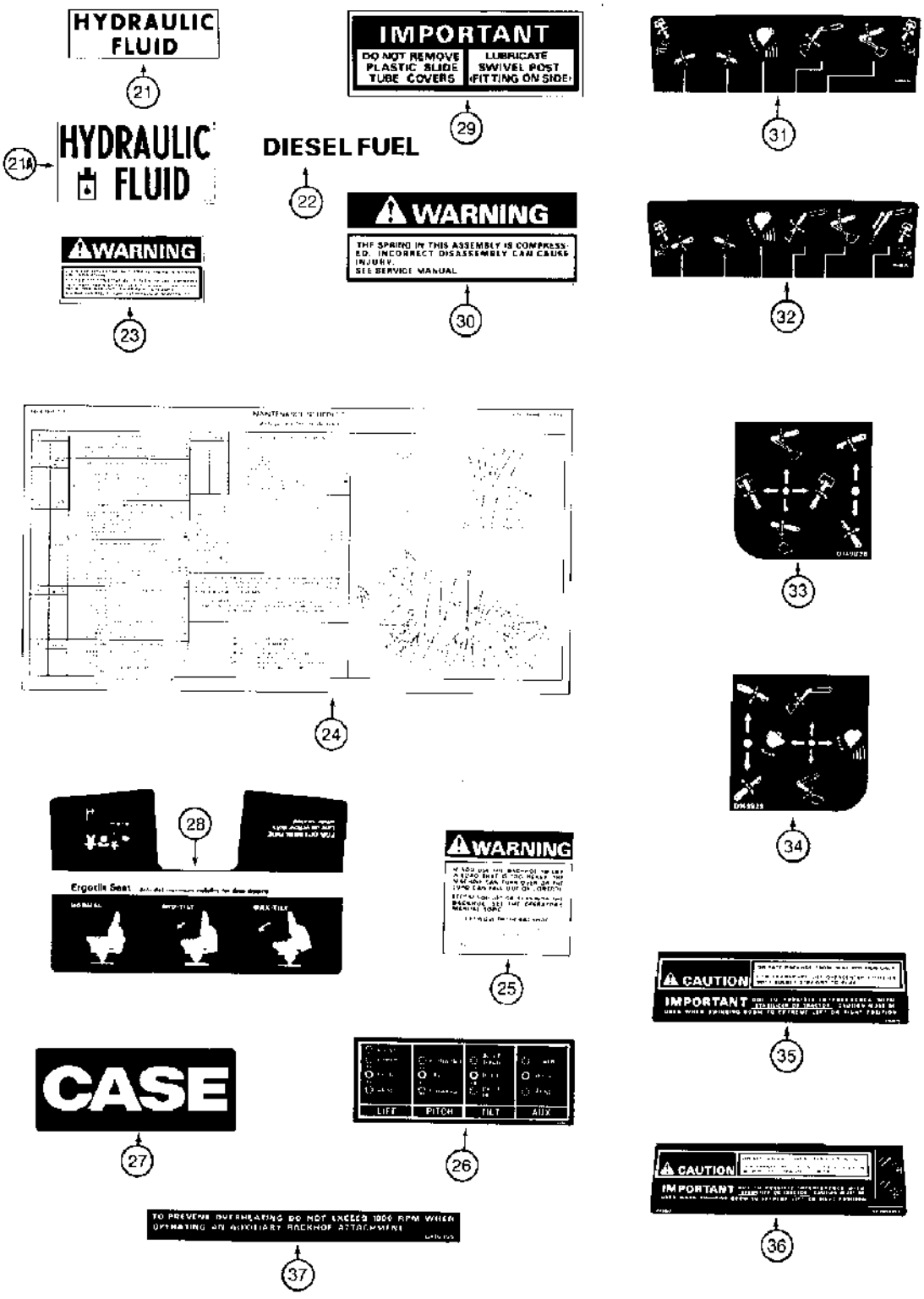

R002801A

http://www.minnparbackhoeparts.com/

(580SK) - CASE SUPER-K CONSTRUCTION KING LOADER BACKHOE > (9-170) - DECALS

Diag #	Part #	Name	Description	Qty
21	321-229	DECAL	Hydraulic Fluid, no longer available, order 321-6376, Ref. 21A	1
21A	321-6376	DECAL	Hydraulic Fluid	1
22	321-230	DECAL	Diesel Fuel	1
23	321-6672	DECAL	Warning, check and service cooling system	1
24	8-80905	DECAL	Maintenance Schedule, 580 Super K, supplied by Parts and Components	1
25	321-6046	WARNING DECAL	DECAL, WARNING, Backhoe lifting load	1-2
26	321-6059	DECAL	three-point hitch control pattern, if used	1
27	D124115	DECAL	Case, three-point hitch frame, if used	2
28	N14315	DECAL	seat tilt adjustment, suspension seats only, if used	1
29	N14295	DECAL	Important, do not remove plastic slide tube covers, if used	1
30	321-6774	WARNING DECAL	DECAL, WARNING, The spring in this assembly is compressed, if used	1
31	D149824	DECAL	standard backhoe control pattern, with foot swing, upper, for models with auxiliary hydraulics for optional rear hydraulic attachments order D149825 decal	1
32	D149825	DECAL	extendahoe control pattern, with foot swing, upper, or models with auxiliary hydraulics for optional rear hydraulic attachments	1
33	D149828	DECAL	standard backhoe control pattern, with hand swing, upper, left-hand side of control console	1
34	D149829	DECAL	standard backhoe control pattern, with hand swing, upper, right-hand side of control console	1
35	D149826	IMPORTANT DECAL	DECAL - Caution, operate backhoe from seat position only, lower, for all models with foot swing backhoe controls and standard backhoe models with hand swing	1
36	D149827	IMPORTANT DECAL	DECAL - Caution, operate backhoe from seat position only, lower, for extendahoe backhoe models with hand swing only	1
37	D140355	DECAL	to prevent overheating do not exceed 1800 rpm when operating an auxiliary backhoe attachment, used on models with auxiliary hydraulics for optional rear hydraulic attachments, on side console	1

http://www.minnparbackhoeparts.com/

(580SK) - CASE SUPER-K CONSTRUCTION KING LOADER BACKHOE > (9-172) - DECALS

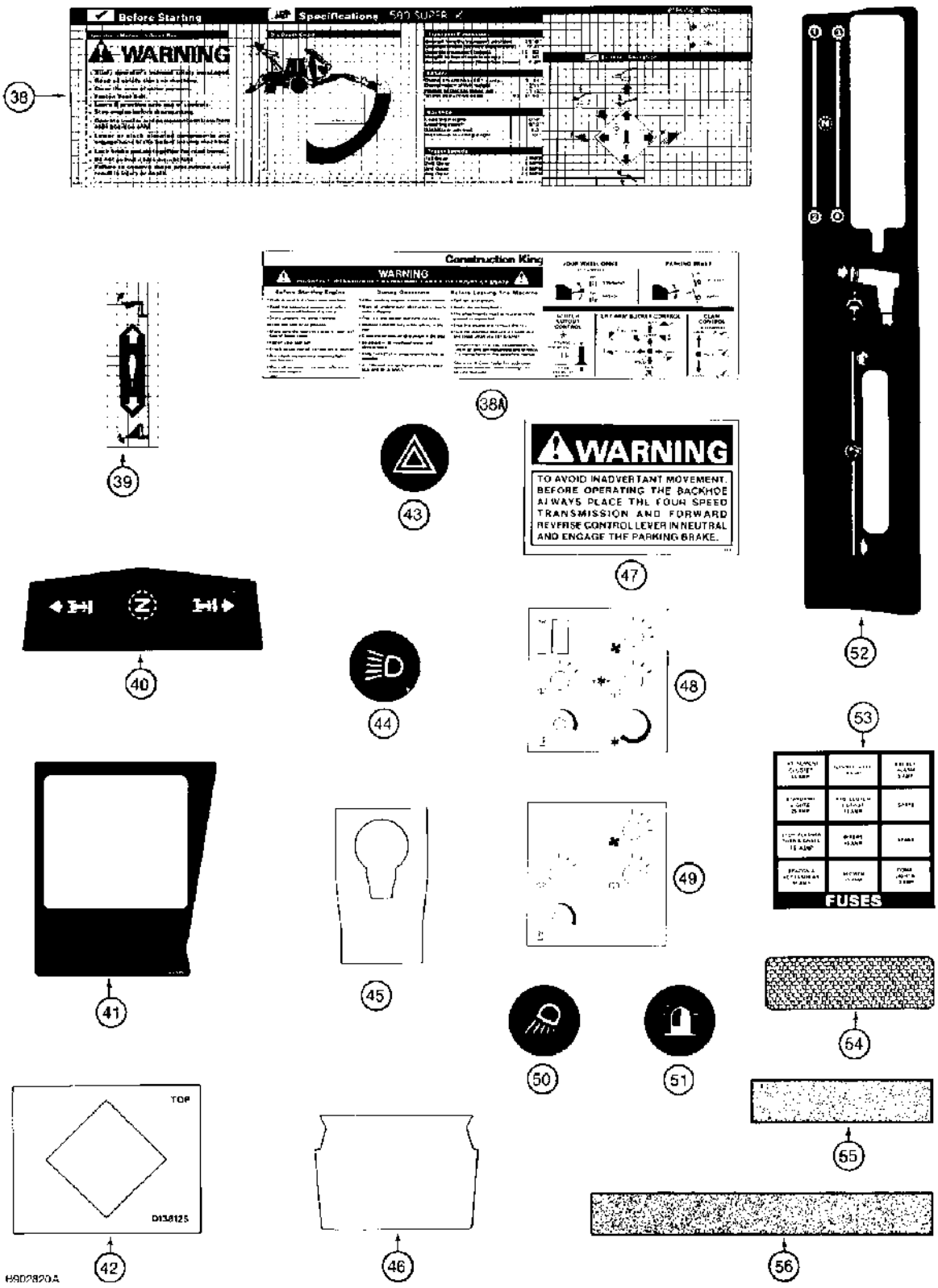

http://www.minnparbackhoeparts.com/

(580SK) - CASE SUPER-K CONSTRUCTION KING LOADER BACKHOE > (9-172) - DECALS

Diag #	Part #	Name	Description	Qty
38	D150235	DECAL	Warning, before starting engine study operator's manual messages/dig depth specs/loader control pattern, front instrument panel, storage compartment, used with Ref. 39 and 66 on Figure 9-174, no longer available, order D150832, Ref. 38A	1
38A	D150832	DECAL	Warning, before starting engine study operator's manual messages/dig depth specs/loader control pattern, front instrument panel, storage compartment, also includes 4WD engagement and clam bucket control, if used	1
39	D147981	DECAL	clam bucket control pattern, front instrument panel, storage compartment, if used	1
40	D137615	DECAL	shuttle shift lever control pattern, on steering column cover	1
41	D137399	DECAL	at loader control lever boot, front console, if used	1
42	D138125	DECAL	transparent green, under turn signal arrow symbols	2
43	D141643	DECAL	flasher lamp symbol, front console switch plate	1
44	D137272	DECAL	driving lamp symbol, front console switch plate	1
45	R53911	DECAL	left-hand cab console, upper, at cup holder, if used	1
46	R53912	DECAL	left-hand cab console, lower	1
47	D150899	DECAL	Warning, to avoid inadvertant movement before operating the backhoe, replaces 321-6958 decal	1
48	97300C2	DECAL	instrument symbols, heater, air conditioner, blower, wipers, and dome lamp, cab control panel, models with air conditioning	1
49	97301C2	DECAL	instrument symbols, heater, blower, wipers, and dome lamp, cab control panel, models without air conditioning	1
50	D137273	DECAL	optional work lamp symbol, right-hand console switch plate	1
51	D137279	DECAL	rotating beacon symbol, right-hand console switch plate	1
52	D140826	DECAL	hand throttle control pattern, right-hand side console	1
53	D148058	DECAL	fuse location, fuse box cover	1

Diag #	Part #	Name	Description	Qty
54	D87870	DECAL	REFLECTOR red	2
55	D55216	ANTI-SKID STRIP	STRIP anti-skid	6
56	D80270	ANTI-SKID STRIP	STRIP, ANTI-SKID, Operators compartment	1

http://www.minnparbackhoeparts.com/

(580SK) - CASE SUPER-K CONSTRUCTION KING LOADER BACKHOE > (9-174) - DECALS



57



61



66



58



62

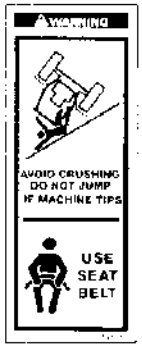

67

59





63

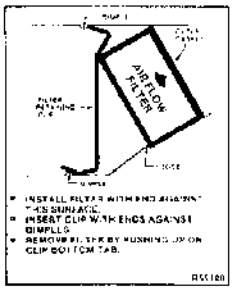

60

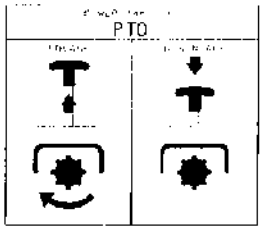

64

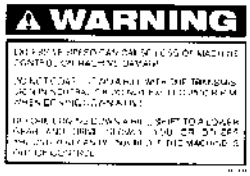

68



65

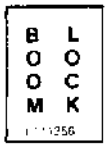

69



70

B902819R

(580SK) - CASE SUPER-K CONSTRUCTION KING LOADER BACKHOE > (9-174) - DECALS

Diag #	Part #	Name	Description	Qty
57	321-4739	EMBLEM	Case, on grille	1
58	131-431	JAM NUT,Self, Threading, 1/4"	NUT self-threading, 1/4 inch	2
59	321-4614	TAG	Do Not Operate	1
60	R55180	DECAL	Air Flow Filter, cab models	1
61	D145370	DECAL	strip, prevents latch from scratching upright cover and hood	2
62	321-3710	DECAL	Warning, rotating machine parts, stay clear keep shields installed, for use on models with PTO, if used	1
63	321-7008	DECAL	Warning, drawbar attachments using rotating PTO shaft, if used	1
64	D148643	DECAL	PTO selector, if used	1
65	321-7007	DECAL	Danger, rotating machine parts can cause injury, for use on models with PTO, if used	2
66	D149075	DECAL	engage 4 wheel drive, if used	1
67	321-7030	WARNING DECAL	DECAL, WARNING, Do Not Jump - Use Seat Belt	1
68	D150900	DECAL	Warning, excessive speed can cause loss of machine control, replaces 321-7022 and 321-7033 decals	1
69	L111356	DECAL	Boom Lock	1
70	112236A1	DECAL	Caution, this is an insulated roof system, cab models	1