FEVEREIRO 1998

580 Super L Series 2 Loader Backhoe Parts Catalog

Bur 7-3350

RUTHZIL TRATOR COMERCIAL DE PEÇAS LTDA 11 97083-6812 ROLANDO CITRANGULO



BP97N058

This unit first became available February, 1998.

Copyright © 1998 Case Corporation
CASE and IH are registered trademarks of Case Corporation

LOCATION OF SERIAL AND PRODUCT IDENTIFICATION NUMBERS

Please use the horizontal lines provided to record these important serial numbers, product identification number, and part number.

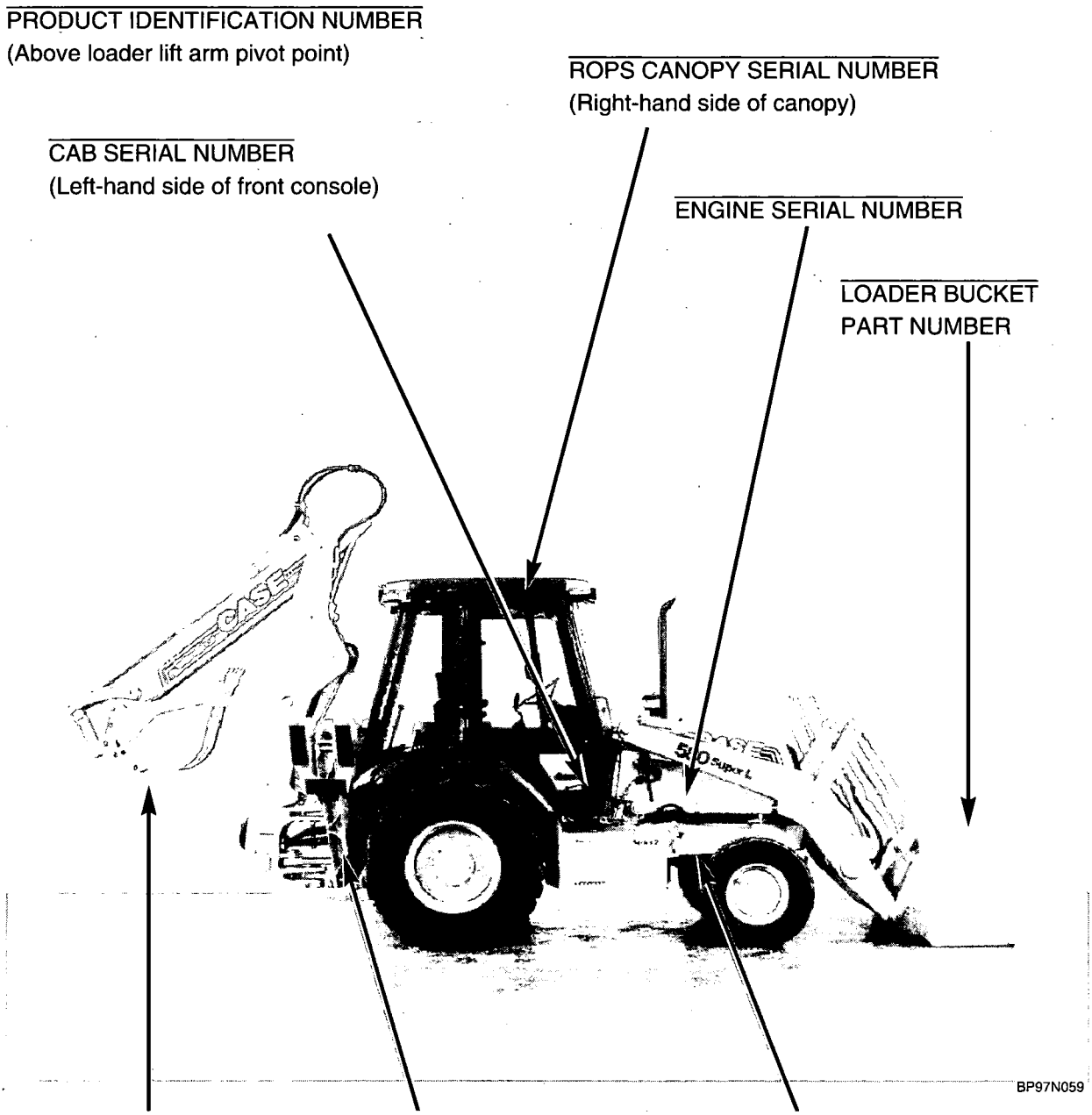

PICTORIAL SECTION INDEX

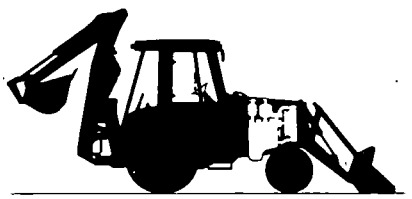

GENERAL 1

ENGINE 2



FUEL 3

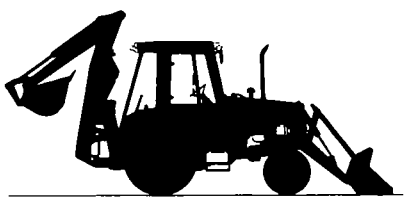

ELECTRICAL 4

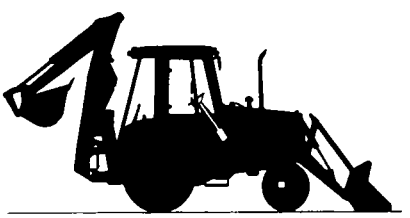

STEERING 5



POWER TRAIN 6

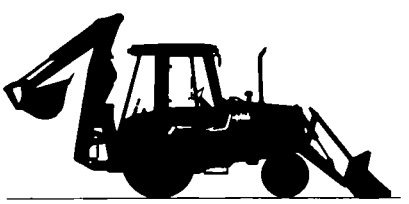

BRAKES 7

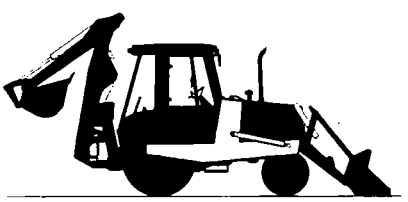

HYDRAULICS 8

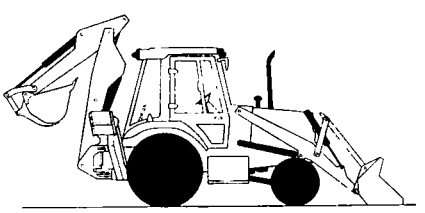

CHASSIS AND MOUNTED EQUIPMENT 9

NUMERICAL INDEX 10

GENERAL INFORMATION

Indexes

Section 1 of this catalog contains a SN and P.I.N. location guide, alphabetical index, pictorial index of the sections included, and pictorial index(es) for quick location of hoses and tubes (and other system components in some catalogs). An alphabetical index also appears at the beginning of each section. Section 10 is the Numerical Index which lists all part numbers in alpha/numeric order with their page location and reference number.

Illustrations

The arrangement of this parts catalog is for easy identification of parts. All parts are illustrated in "exploded views" in proper relation to each other. Reference numbers used in the illustrations refer to those on the text pages. The text pages list reference number, part number, part description and the quantity required.

Abbreviations

P.I.N. "Product Identification Number"

SN "Serial Number"

NSS "Not Serviced Separately" in the part number column indicates this part is not available for service.

REF "Reference" in the part number column indicates this part has special service information. The page where this information can be found is given in the part description column.

UAR "Use As Required" in the quantity required column indicates the number of parts used is determined by service needs.

Right-Hand and Left-Hand Identification

The reference to right-hand and left-hand in this catalog is identified by the operator standing at the rear of the basic unit (without rear attachment), looking toward the front of the machine (in normal forward travel). For pages covering any machine attachments, right-hand and left-hand are defined by the operator sitting in the position for proper operation of the attachment.

Catalog Revisions and Supplements

Changes to the product may make it necessary to revise or add pages to this catalog. A cover sheet will list all pages released in a revision or supplement. Each new or revised page will have a new issue date. All revised and new pages must be put into the parts catalog as soon as they are received.

Parts Orders

Orders must specify product model, all necessary serial numbers, correct part number, complete description, quantity required, method of shipment, and shipping address.

Text Format Explanation

An assembly may contain service items. The component parts of an assembly or subassembly are indented. The quantity required column lists the number of assemblies required for a completed machine, and the number of components required in a complete assembly or subassembly.

The example below illustrates the use of indents and other text page elements explained on this page.

HYDRAULIC FILTER

REF.	PART NO.	DESCRIPTION	REQ'D.
1	D4356734	FILTER ASSEMBLY - hydraulic oil, P.I.N. 7534840 and after	1
	D61903	HEAD ASSEMBLY - filter	1
2	NSS	HEAD - filter, order D61903 head assembly	1
3	D58199	VALVE - bypass	1
	D43800	KIT - filter element, replaces D35700 element kit	1
4	NSS	ELEMENT - filter, order D43800 element kit	1
5	A27994	O-RING - filter	1
6	D61948	HOUSING -filter	1
7	REF	CANOPY - ROPS, order form Machinery Price List	1
8	843065C1	HOSE - 3353 mm (132 inch) long, reservoir to pump	1
9	113-323	BOLT - hex, 7/16 NC x 1-3/4 inch	2
10	814-8030	BOLT - hex, 8 - 1.25 x 30 mm	4

ALPHABETICAL INDEX

A

Accumulator, Ride Control....8-123
Air Cleaner....2-9
Air Cleaner Mounting....2-7
Air Conditioner
  Blower....9-137
  Compressor and Mounting....9-145
  Condenser....9-143
  Controls....9-125
  Drain Lines....9-137
  Evaporator Core....9-141
  Filter - air....9-135
  Receiver-Drier....9-143
  Ventilation Ducts....9-137
Air Filter - cab....9-135
Alarm - backup....4-41
Alarm - warning, engine oil pressure....4-19
Alarm - warning, engine water temp....4-19
Alarm - warning, parking brake....4-19
Alternator - electrical....4-7
Alternator Mounting....4-9
Antenna - radio....4-45
Antirollback - loader....9-11
Auxiliary Hydraulics
  Backhoe....4-47,8-51 - 8-55,9-43
  Hand Held....4-21,8-41 - 8-49
Axle - Front - four wheel drive
  Differential....6-15
  Drive Shaft....6-19
  Housing....6-5
  Mounting....6-3
  Planetary....6-13
  Ring and Pinion....6-17
  Shafts....6-11
  Steering Cylinder....6-9
  Swivel Housing....6-7
Axle - Front - two wheel drive....5-15
Axle - Rear Drive
  Differential....6-61
  Differential Brake....7-3
  Differential Lock....6-57,6-65
  Drive Shaft....6-69
  Housing....6-59
  Mounting....6-55
  Parking Brake....7-5
  Planetary....6-67
  Ring and Pinion Gear Set....6-63

B

Backhoe
  Boom....9-49
  Boom Latch....9-53
  Boom Lock....8-57,8-59

B

Backhoe-Cont.
  Buckets....9-63 - 9-71
  Controls (See Controls)
  Control Tower and Covers....9-25,9-27
  Coupler - bucket....9-55 - 9-59
  Dipper....9-55
  Extendable Dipper....9-59
  Frost Point Assembly....9-73
  Hydraulics (See Hydraulic Systems)
  Stabilizers....9-45
  Swing Tower....9-47
  Valves (See Valves)
Backhoe Auxiliary Hydraulics....8-51 - 8-55
Backup Alarm....4-41
Baffle Plates - front covers....9-85 - 9-89
Battery - with cold start....4-15
Battery - without cold start....4-13
Battery Box....9-79
Beacon - rotating....4-43
Bearings - front wheel....5-17
Belts - fan, alternator, and
  compressor....2-3,4-9,9-145
Belts - seat....9-103
Block - cylinder....2-39
Blower - air conditioner....9-137
Boom Latch....9-53
Boom Lock....8-57,8-59
Boots
  Accelerator Pedal....3-9
  Backhoe Levers....9-25
  Boom Latch Lever....9-53
  Brake Master Cylinder....7-11
  Lamp Socket, instrument
    cluster....4-27
  Loader Lever....4-21,9-3,9-5,9-7
  Transmission Gear Shift Lever....6-23
  Transmission Shifter Mechanism....6-35
  Transmission Shuttle Shift Lever - FNR....4-17
Box - battery....9-79
Box - tool....9-81
Brake - differential, rear axle....7-3
Brake - parking, lever....7-13
Brake - parking, rear axle....7-5
Brake Alarm - parking....4-19
Brake Master Cylinder
  Assembly....7-11
  Hydraulic Circuit....7-9
  Mounting....7-7
Brake Pedals....7-7
Buckets - backhoe....9-63 - 9-71
Buckets - loader....9-15 - 9-19

ALPHABETICAL INDEX

C

Cab
- Air Conditioner ....9-135 - 9-145
- Air Filter....9-135
- Blower Housing....9-137
- Condenser - air conditioning....9-143
- Covers - interior 9-115
- Doors and Windows....9-117 - 9-123
- Drain Lines - air conditioning 9-137
- Electrical and Lighting....4-31,9-125
- Evaporator Core....9-141
- Frame....9-115
- Glass....9-113
- Headliner, Louvers, and Dome Lamp 9-133
- Heater 9-137,9-139
- Insulation....9-115
- Panel - cab control....9-125
- Receiver-Drier - A/C....9-143
- Ventilation Ducts....9-137
- Windshield Washers 9-127
- Windshield Wipers 9-129,9-131

Cables - battery 4-13,4-15
Camshaft - engine 2-37
Canopy - ROPS....9-147
Chaff Screen....9-93
Chassis - tractor 9-77
Cluster - instrument 4-27
Clutch Cutout....4-11,4-21
Coat Hook....9-115,9-147
Cold Start - dual battery....4-15
Cold Start System - ether 2-13
Column - steering 5-9
Compressor and Mounting - A/C 9-145
Controls
- Antirollback - loader 9-11
- Backhoe
  - Excavator Control Pattern 9-39
  - Foot Swing ....9-29 - 9-33
  - Hand Swing....9-35 ,9-37,9-41
- Backhoe Auxiliary 9-43
- Boom Latch....9-53
- Boom Lock....8-57,8-59
- Brake....7-7,7-13
- Clutch Cutout 4-11,4-21
- Differential Lock - rear axle 6-57,6-65
- Extendable Dipper 9-33,9-41
- Hand Held Auxiliary 8-49
- Loader
  - Bucket 9-3
  - Clam....9-5,9-7
  - Lift....9-3
  - Self-Leveling....9-9

C

Controls-Cont.
- Parking Brake....7-13
- Return-to-Dig - loader....9-11
- Ride Control 8-61,8-63
- Self-Leveling - loader 9-9
- Steering....5-3
- Throttle 3-7,3-9
- Transmission Gear Shift....6-23
- Transmission Shifter Mechanism 6-35
- Transmission Shuttle Shift (F/N/R)....4-17

Control Tower and Covers - backhoe .. 9-25,9-27
Cooler - hydraulic oil 6-21,8-9
Cooling Systems
- Engine 2-3
- Engine Oil....2-29
- Hydraulic Oil....8-9
- Transmission 6-21

Core - evaporator, air conditioner 9-141
Counterweight - front 9-75
Coupler - backhoe bucket.... 9-55 - 9-61
Coupler - quick, loader hydraulic tool....9-23
Couplings - auxiliary hydraulics, hand held.... 8-45,8-47
Couplings - hydraulic line disconnect....8-3
Couplings - hydraulic pump to engine....8-3
Covers
- Anti-Vandalism
  - Instrument Panel - front 4-23
  - Instrument Panel - side....4-25
- Auxiliary Hydraulic Control 9-25
- Backhoe Control Tower....9-25
- Baffle Plates - front.... 9-87,9-89
- Battery Box....9-79
- Cab Interior....9-115
- Chassis Upright....9-93
- Cylinder Head....2-33
- Fender - plastic/velcro 9-97,9-99
- Front Gear....2-19
- Instrument Panel 4-23,4-25
- Loader Control....4-25
- Loader Lift Frame Tubing 3-3,9-79
- Pump Guard - front....9-85
- Rear Closure Panel - canopy 9-97
- ROPS Canopy Post....9-147
- Steering Column....4-23

Crankshaft....2-43
Cylinder - brake master....7-11
Cylinder Block....2-39
Cylinder Head 2-33

ALPHABETICAL INDEX

C

Cylinders - hydraulic
- Boom - backhoe 8-137
- Bucket - backhoe 8-141
- Bucket - loader 8-129
- Clam - loader 8-131
- Dipper - backhoe 8-139
- Dipper Extension - backhoe 8-143
- Lift - loader 8-127
- Stabilizer - backhoe 8-133
- Steering - 2WD 5-13
- Steering - 4WD 6-9
- Swing - backhoe 8-135

D

Decals ..... 9-153 - 9-157
Differential and Differential Lock - rear axle 6-57,6-61,6-65
Differential - front axle 6-15
Dipper 9-55,9-57
Dipper - extendable 9-59,9-61
Dipsticks
- Oil Level - engine 2-41
- Transmission 6-23

Dome Lamp 9-133
Drive Shaft
- Front Drive Axle to Transmission 6-19
- Rear Drive Axle to Transmission 6-69

Drive Shaft Guards 6-3

E

Electrical Circuits and Components
- Alternator 4-7
- Backhoe Auxiliary Hydraulics 4-47
- Backup Alarm 4-41
- Battery 4-13,4-15
- Blower - cab 9-137
- Boom Lock 8-57,8-59
- Cold Start System 2-13,4-15
- Compressor - air conditioner 9-145
- Control Panel - cab 9-125
- Coupler - quick, loader hydraulic tool 8-65,8-67
- Hand Held Auxiliary Hydraulics 4-21
- Harness - engine 4-11
- Harness - front console 4-17
- Harness - lamp, cab 4-31
- Harness - lamp, canopy 4-29
- Harness - side console 4-19,4-21
- Horn 4-41
- Instrument Cluster 4-27
- Lamp - cab 4-35,4-39
- Lamp - ROPS canopy 4-33,4-37

E

Electrical Circuits and Components-Cont.
- Outlet - power plug 4-21
- Radio Ready Package 4-45
- Return-to-Dig 9-11
- Ride Control 8-61,8-63
- Rotating Beacon 4-43
- Starter 4-3,4-5
- Washer - windshield 9-127
- Wipers 9-129,9-131

Engine and Fuel Injection Components
- Aneroid 3-15
- Camshaft 2-37
- Crankshaft 2-43
- Cylinder Block/Block Heater 2-39,2-41
- Cylinder Head and Cover/Thermostat 2-33
- Flywheel and Housing 2-45
- Fuel Filter 3-11
- Fuel Injection Nozzle 3-19
- Fuel Injection Pump and Drive 3-17
- Fuel Injection System 3-13
- Gasket Kits 2-49,2-51
- Gear Cover 2-19
- Heater - engine oil 2-41
- Manifolds 2-21
- Oil Filter and Cooler 2-29
- Oil Pump and Pan 2-31
- Pistons/Connecting Rods 2-47
- Pump - transfer, fuel 3-11
- Turbocharger Assembly 2-25
- Turbocharger System 2-23
- Valve Mechanism 2-35
- Wastegate Actuator 2-27
- Wastegate System 3-15
- Water Pump Systems 2-17

Engine Mounting 2-15
Equipment Pump
- Assembly 8-71
- Mounting 8-3

Evaporator - core, air conditioner 9-141
Exhaust/Intake Manifolds 2-21
Exhaust System and Muffler 2-11

F

Fans
- Alternator 4-7
- Engine Cooling 2-3

Fenders - cab 9-99
Fenders - ROPS canopy, rear 9-97
Filters
- Air - engine 2-9
- Cab Air 9-135
- Engine Oil 2-29

ALPHABETICAL INDEX

F

Filters-Cont.
- Fuel 3-11
- Fuel - In-line 3-3
- Hydraulic Oil 8-125
- Precleaner 2-9
- Transmission Oil 6-27

Floor Plates and Mats 9-95
Flywheel and Housing 2-45
Frame
- Backhoe (See Backhoe)
- Cab 9-115
- Canopy 9-147
- Coupler - quick tool 9-23
- Doors - cab ..... 9-117 - 9-121
- Loader 9-11
- Tractor (chassis) 9-77

Frost Point Assembly 9-73
Fuel Filter 3-11
Fuel Injection Nozzle 3-19
Fuel Injection Pump 3-17
Fuel Injection System 3-13
Fuel Level Sensor 3-3
Fuel Reservoir Lines 3-3
Fuses
- Auxiliary Hydraulics, Backhoe 4-47
- Auxiliary Hydraulics, Hand Held 4-21,8-43
- Boom Lock 8-57
- Coupler - quick, loader hydraulic tool 8-67
- Instruments and Equipment 4-19
- Ride Control 8-61
- Seat - deluxe air suspension 9-105

G

Gaskets - engine 2-49,2-51
Gauges
- Cylinder Head Bolt Length - engine gaskets 2-49
- Instrument Panel Cluster 4-27
- Oil Level - sight 9-79

Grille - chaff screen 9-93
Grille Unit 9-93
Guards
- Baffle Plates 9-87,9-89
- Drive Shaft 6-3
- Loader Crossover Tube 8-15
- Loader Self-Leveling Cable 9-9
- Mud 9-101
- Pump 9-85
- Valve - loader control 9-21

H

Hand Held Auxiliary Hydraulics ..... 8-41 - 8-49

H

Harness - electrical
- Adapter - cab 4-19
- Adapter - engine 4-19
- Auxiliary Hydraulics - Backhoe 4-47
- Auxiliary Hydraulics - Hand Held 4-21
- Backup Alarm 4-41
- Blower Jumper 9-137
- Boom Lock 8-57
- Cab 4-31,9-125
- Canopy 4-29
- Chassis Options 4-19,4-47,8-63,8-67
- Coupler - quick, loader hydraulic tool 8-67
- Engine 4-11
- Front Console 4-17
- Horn 4-41
- Optional Equipment 4-19
- Radio 4-45
- Ride Control 8-63
- Seat 9-105
- Side Console 4-19,4-21
- Side Console Options 4-19,4-47,8-63,8-67
- Transmission Lever - clutch cutout 4-11

Head - cylinder and cover 2-33
Headliner - cab 9-133
Heater - cab 9-137,9-139
Heater - engine block 2-41
Heater - engine oil 2-31
Hood and Latch Release 9-93
Hook, Coat 9-115,9-147
Horn - electric 4-41
Hub - front wheel 5-17
Hydraulic Systems
- Auxiliary
  - Backhoe ..... 8-51 - 8-55
  - Hand Held ..... 8-41 - 8-49
- Backhoe Boom 8-25
- Backhoe Bucket ..... 8-29 - 8-35
- Backhoe Dipper 8-27
- Backhoe Dipper Extension 8-37
- Backhoe Stabilizer 8-21
- Backhoe Swing 8-23
- Boom Lock 8-57,8-59
- Brake Master Cylinder 7-9
- Coupler - quick, loader hydraulic tool ..... 8-65 - 8-69
- Differential Lock, rear axle 6-57
- Equipment Primary
  - Oil Cooler Lines and Filter 8-9
  - Pump and Loader Valve to Backhoe Valve 8-7

ALPHABETICAL INDEX

H

Hydraulic Systems-Cont.
Equipment Primary-Cont.
Reservoir to Loader Valve and Loader Valve to Filter....8-3,8-5
Return Lines....8-9
Loader Bucket....8-13,8-15
Loader Clam....8-17,8-19
Loader Lift....8-11
Loader Valve to Backhoe Valve - without auxiliary hydraulics, with or without extendahoe....8-39
Ride Control....8-61,8-63
Steering....5-5,5-7

I

Index - numerical....10-2
Injection Nozzle - fuel....3-19
Injection Pump - fuel....3-17
Injection System - fuel....3-13
Injector Nozzle - ether....2-13
Instrument Cluster....4-27
Instrument Panels and Covers....4-23,4-25
Intake/Exhaust Manifolds....2-21

K

Kits
Axle, Kingpin - two-wheel drive front....5-15
Backhoe Control - excavator control pattern....9-39
Boom Lock....8-57,8-59
Boom Lock Solenoid Valve....8-121
Brake Discs - rear axle....7-3
Brake Master Cylinder....7-11
Brake Self-Adjuster - Rear Drive Axle....7-3
Cylinders (See Cylinder - Hydraulic)
Equipment Pump....8-71
Filter, Oil - hydraulic....8-125
Harness - non-air conditioned to air conditioned....4-19
Mirror - rear view....9-149
Radio Ready Package....4-25,4-45,9-133
Seat (See Seat - Operators)
Steering Control Valve - low torque....5-11
Steering Cylinder - front drive axle....6-9
Steering Cylinder - two wheel drive axle....5-13
Transmission
Oil Pump Piston Valve....6-33
Synchronizer....6-35,6-37,6-41 - 6-45
Universal Joint - drive shaft....6-19,6-69
Valve (See Valves)
Wheel Bearing, front axle....5-17

L

Lamp - dome, cab....9-133
Lamps - tractor....4-33 - 4-39
Latch Release - hood....9-93
Levers - control (See Controls)
Loader
Antirollback....9-11
Bucket and Cylinder Links....9-13
Buckets....9-15 - 9-19
Controls (see Controls)
Hydraulics (See Hydraulic Systems)
Lift Frame....9-11
Return-to-Dig....9-11
Self-Leveling....9-9
Support Strut....9-11
Valve Guard....9-21
Valves (See Valves)
Louvers - cab....9-133

M

Manifold - intake/exhaust....2-21
Master Cylinder - brake and mounting....7-7,7-11
Mats and Floor Plates....9-95
Mirror - rear view....9-113,9-147,9-149
Motor - wiper....9-129,9-131
Mud Guard....9-101
Muffler - engine exhaust....2-11

N

Nozzle - ether injection, cold start....2-13
Nozzle - fuel injection....3-19
Nozzle - windshield washers....9-127
Numerical Index....10-2

O

Oil Cooler - engine....2-29
Oil Cooler - hydraulic....6-21,8-9
Oil Filter - engine....2-29
Oil Filter - hydraulic....8-125
Oil Pump and Pan....2-31
Outlet - power plug....4-21

P

Pads - stabilizers....9-45
Pan - oil....2-31
Panel - cab control....9-125
Panel - closure, rear - canopy....9-97
Panel - engine side....9-91
Panel - instrument, front and side....4-23,4-25
Parking Brake....7-13
Parking Brake - rear axle....7-5

ALPHABETICAL INDEX

P

Pedals
- Accelerator 3-9
- Brake 7-7
- Extendahoe Control 9-33
- Swing 9-31

Pistons and Connecting Rods 2-47
Plate - pump guard 9-85
Plates - baffle, front covers 9-87,9-89
Plates - floor and mats 9-95
Plug - power outlet 4-21
Precleaner 2-9
Pulley
- Alternator 4-7
- Compressor Drive 9-145
- Crankshaft 2-43
- Fan and Water Pump 2-17

Pump
- Engine Oil 2-31
- Fuel Injection 3-17
- Fuel Transfer 3-11
- Hydraulic Equipment 8-71
- Transmission Oil 6-33
- Water 2-17
- Windshield Washer 9-127

Pump Guard 9-85

R

Radiator - engine 2-5
Radiator Shroud 9-83
Radio Ready Package 4-25,4-45,9-133
Reflector - red 9-153
Relays 4-19
Reservoir
- Brake Master Cylinder 7-9
- Coolant Recovery Bottle 2-3
- Fuel 3-3
- Hydraulic Oil 9-79
- Radiator 2-5
- Windshield Washer 9-127

Reservoir Lines - fuel 3-3
Return-to-Dig 9-11
Ride Control 8-61,8-63
Roll Over Protective
- Structure 9-115,9-147

Rotating Beacon 4-43

S

Screen - Chaff 9-93
Seat - operators ..... 9-103 - 9-111
Self-Leveling Control 9-9
Sender
- Air Filter Restriction 2-9

S

Sender-Cont.
- Transmission Temperature 4-11
- Water Coolant Temperature - engine 4-11

Sensor - fuel level 3-3
Shift Lever - FNR - transmission 4-17
Shifter Mechanism - transmission 6-35
Shroud - radiator 9-83
Side Panels - engine 9-91
Slow Moving Vehicle Emblem 9-151
Solenoids
- Boom Lock 8-121
- Coupler - quick, loader hydraulic tool 8-65
- Four-Wheel Drive, transmission 6-51
- Fuel Injection Pump 3-17
- Ride Control 8-61

Speakers - radio and tape player 4-45
Spindles - front axle 5-15
Stabilizers 9-45
Starter - engine 4-3,4-5
Starter - mounting 4-9
Steering - two wheel drive
- Column 5-9
- Control Valve 5-11
- Cylinder 5-13
- Hydraulic Circuit 5-5,5-7
- Wheel 5-3

Steps 3-3,9-79
Stereo - radio 4-45
Sunvisor 9-115,9-147
Support Strut - loader lift frame 9-11
Switches
- Air Cleaner Restriction 2-9,4-11
- Air Conditioning Control 9-125,9-141
- Auxiliary Hydraulics - Backhoe 4-47
- Auxiliary Hydraulics - Hand Held 4-21,8-43
- Blower 9-125
- Boom Lock 8-57
- Brake Lamps 4-17,7-7
- Clutch Cutout - gear shift lever handle 4-11
- Cold Start 2-13
- Coupler - quick, loader hydraulic tool 8-67
- Declutch and Differential Lock 4-21
- Differential Lock 4-21
- Dome Lamp 4-17
- Four Wheel Drive 4-21
- High Pressure Cutout - air conditioner 9-143
- Horn 4-17
- Key and Starter 4-21
- Lamps - driving, work and flood 4-21

ALPHABETICAL INDEX

S

Switches-Cont.
- Lamps - hazard, flasher 4-17
- Low Pressure - air conditioner 9-141
- Oil Pressure 4-11
- Parking Brake 7-5
- Return-To-Dig 4-11,9-11
- Ride Control 8-63
- Rotating Beacon 4-21
- Seat - operators, limit 9-103
- Temperature - engine coolant 4-11
- Temperature Oil - rear axle 6-59
- Transmission Control Solenoid 4-11,6-35
- Transmission Shuttle Shift (FNR) 4-17
- Turn Signal 4-17
- Windshield Washer 9-127
- Windshield Wiper 9-129,9-131

T

Tachometer - electric 4-27
Tank - fuel 3-3
Tank - hydraulic oil 9-79
Teeth - buckets ..... 9-63 - 9-71
Thermostat - engine 2-33
Throttle - engine 3-7,3-9
Tires and Wheels 5-19,6-53
Tool Box 9-81
Tool Coupler - quick disconnect 9-23
Tool Tray 4-25
Tower - backhoe control and covers 9-25,9-27
Tower - swing 9-47
Transmission
- Cooling System 6-21
- Dipstick 6-23
- Filter - oil 6-27
- Housing 6-29,6-31
- Idler and Primary Shaft 6-39
- Input Shaft 6-41
- Mounting 6-23
- Output Shaft 6-47
- Pump - oil 6-33
- Secondary Shaft 6-43,6-45
- Shift Lever 6-23
- Shifter Mechanism 6-35,6-37
- Valve - control 6-49
- Valve - solenoid 6-51

Turbocharger and System 2-23,2-25
Turn Signal Switch 4-17

V

Valve Mechanism - engine 2-35

V

Valves
- Auxiliary - Backhoe 8-51
- Auxiliary - Hand Held 8-117,8-119
- Backhoe Control
  - Assembly - with extendable dipper, with auxiliary hydraulics 8-95
  - Assembly - with extendable dipper, without auxiliary hydraulics 8-93
  - Assembly - without extendable dipper, with auxiliary hydraulics 8-91
  - Assembly - without extendable dipper, without auxiliary hydraulics 8-89
  - Mounting 8-21
  - Sections
    - Auxiliary Option 8-115
    - Boom 8-105,8-107
    - Bucket 8-99
    - Dipper 8-101
    - Dipper Extension 8-113
    - Inlet/Outlet 8-97
    - Stabilizer 8-103
    - Swing 8-109,8-111
- Loader Control
  - Assembly - three spool 8-75
  - Assembly - two spool 8-73
  - Circuit Relief - bucket section 8-87
  - Guard - loader valve 9-21
  - Mounting 9-3
  - Sections
    - Bucket 8-79
    - Clam 8-85
    - Inlet 8-77
    - Lift 8-81
    - Outlet 8-83
- Solenoid Valves
  - Auxiliary Hydraulics - hand held 8-41
  - Boom Lock 8-121
  - Coupler - quick, loader tool 8-65
  - Differential Lock, rear axle 6-57
  - Four-Wheel Drive, transmission 6-51
  - Ride Control 8-61
- Steering Control 5-11
- Transmission Control 6-49

Valve Stem - wheel 5-19,6-53
Vents - louvers, cab 9-137
Visor - sun 9-115,9-147

W

Washer - Windshield 9-127
Wheel - steering 5-3
Wheels and Tires 5-19,6-53
Wiper - cab window 9-129,9-131

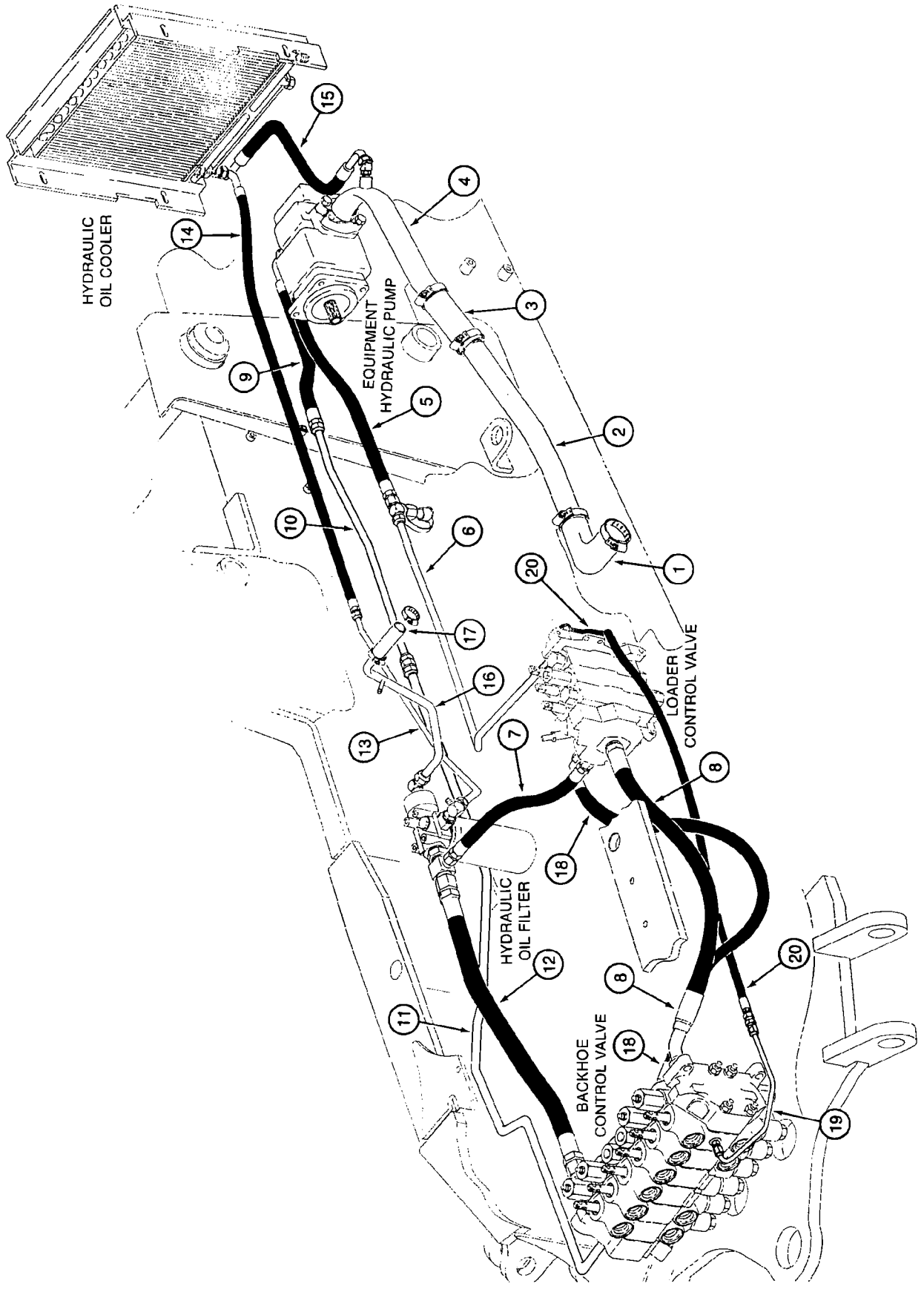
HYDRAULIC OIL COOLER
EQUIPMENT HYDRAULIC PUMP
LOADER CONTROL VALVE
HYDRAULIC OIL FILTER
BACKHOE CONTROL VALVE
1
2
3
4
5
6
7
8
9
10
11
12
13
14
15
16
17
18
19
20

PICTORIAL INDEX

EQUIPMENT HYDRAULICS
HYDRAULIC PUMP TO OIL FILTER, CONTROL VALVES AND RETURN TO TANK

REF.	DESCRIPTION	PAGE
1	Suction hose at hydraulic tank	8-3
2	Suction tube at hydraulic tank	8-3
3	Coupler hose	8-3
4	Suction tube at hydraulic equipment pump	8-3
5	Hose at large pump section port	8-3
6	Tube at tee to loader control valve inlet	8-3
7	Loader valve to filter hose	8-5
8	Hose at loader valve power beyond port to backhoe control valve inlet	8-7
9	Hose at small pump section outlet port	8-7
10	Tube between small pump section hose to tube at backhoe valve outlet section	8-7
11	Tube to inlet port on backhoe control valve outlet section	8-7
12	Return hose at backhoe control valve to filter	8-9
13	Oil filter to oil cooler tube	8-9
14	Hose at oil cooler	8-9
15	Oil cooler return hose	8-9
16	Return to tank tube	8-9
17	Return to tank hose	8-9
18	Swing supply hose at loader valve inlet section lower port to backhoe valve swing section	8-39
19	Pilot tube at backhoe valve swing section center port to loader control valve inlet section	8-39
20	Signal hose at backhoe control valve swing section to loader control valve inlet section	8-39

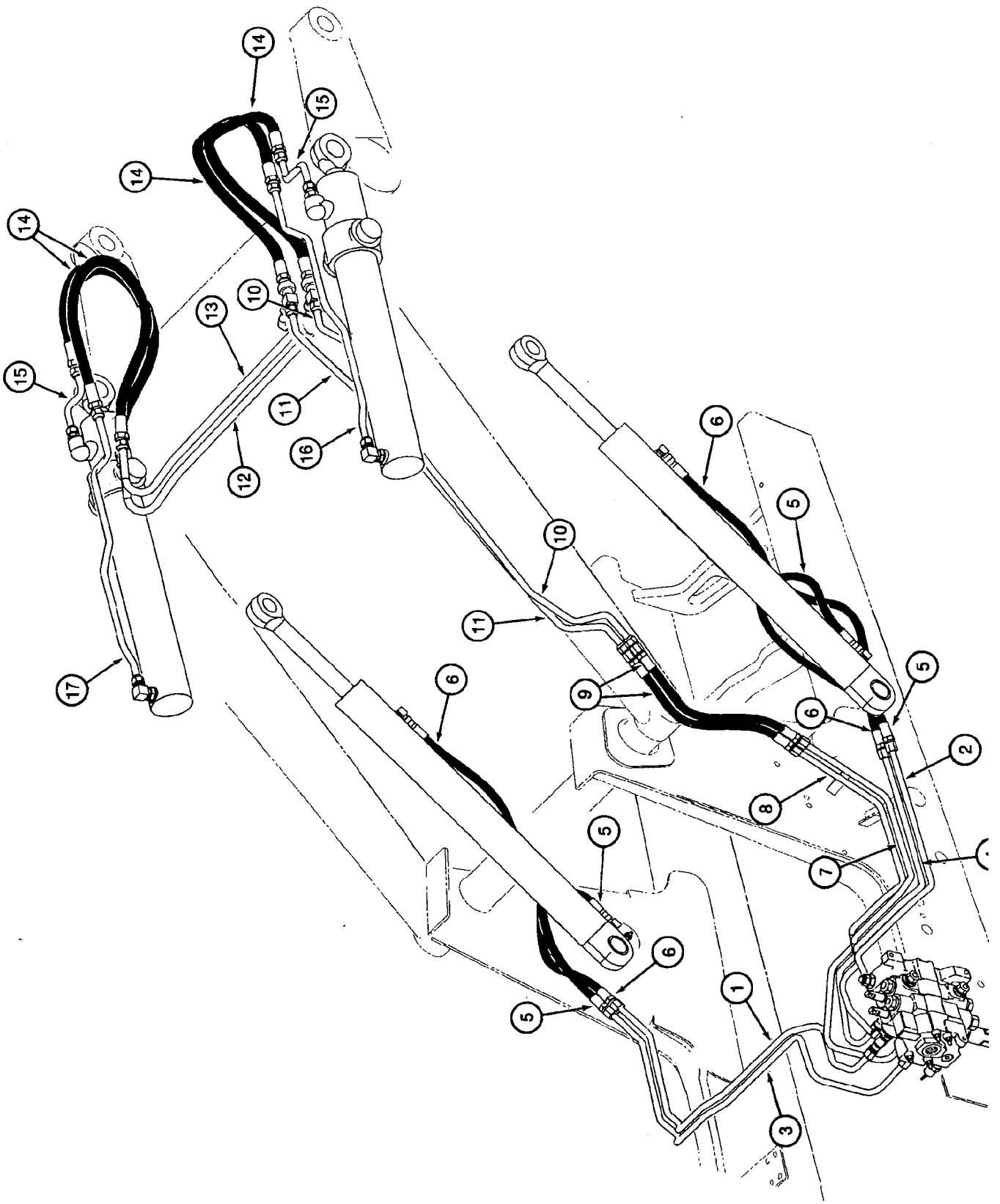
14
15
14
14
10
13
15
11
16
12
17
6
5
10
11
9
6
5
2
8
7
6
5
5
6
1
3

PICTORIAL INDEX
LOADER HYDRAULICS
LIFT AND BUCKET CYLINDERS

REF.	DESCRIPTION	PAGE
1	Tube from upper lift port of loader control valve to rod end of left-hand lift cylinder	8-11
2	Tube from lower lift port of loader control valve to closed end of right-hand lift cylinder	8-11
3	Tube from lower lift port of loader control valve to closed end of left-hand lift cylinder	8-11
4	Tube from upper lift port of loader control valve to rod end of right-hand lift cylinder	8-11
5	Hoses at lift cylinder closed end	8-11
6	Hose at upper port of control valve to lift cylinder rod end	8-11
7	Tube at bucket section upper port	8-13
8	Tube at bucket section lower port	8-13
9	Hose at loader arm pivot	8-13
10	Lower tube on right-hand lift arm from bucket section upper port to closed end of bucket cylinders	8-13
11	Upper tube on right-hand lift arm from bucket section lower port to bucket cylinder rod end	8-13
12	Rear crossover tube at upper lift frame tube to rod end of bucket cylinder	8-13
13	Front crossover tube at lower lift frame tube to bucket cylinder closed end	8-13
14	Hose at bucket cylinders	8-13
15	Tube at bucket cylinder rod end	8-13
16	Tube to right-hand bucket cylinder closed end	8-13
17	Tube at left-hand bucket cylinder closed end	8-13

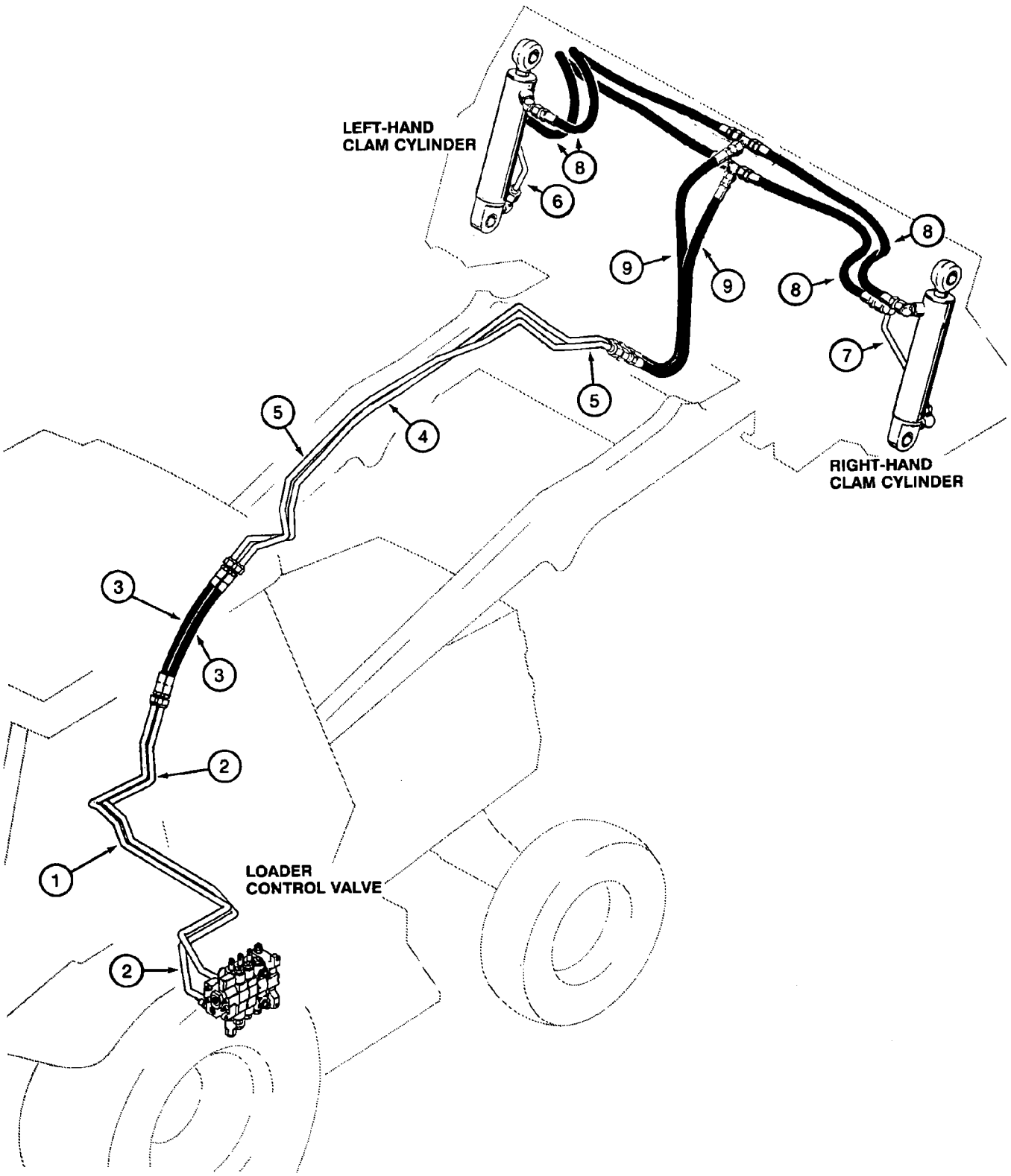
LEFT-HAND
CLAM CYLINDER
RIGHT-HAND
CLAM CYLINDER
LOADER
CONTROL VALVE
1
2
2
3
3
4
5
5
6
7
8
8
8
9
9

PICTORIAL INDEX
LOADER HYDRAULICS
CLAM CYLINDER

REF.	DESCRIPTION	PAGE
1	Tube at upper port auxiliary section of loader control valve to hose at loader arm pivot	8-17
2	Tube at lower port auxiliary section of loader control valve to hose at loader arm pivot	8-17
3	Hose at loader arm pviot	8-17
4	Lower tube on loader lift frame	8-17
5	Upper tube on loader lift frame	8-17
6	Tube at left-hand clam cylinder	8-19
7	Tube at right-hand clam cylinder	8-19
8	Right-hand and left-hand clam cylinder hoses	8-19
9	Lift arm hoses	8-19

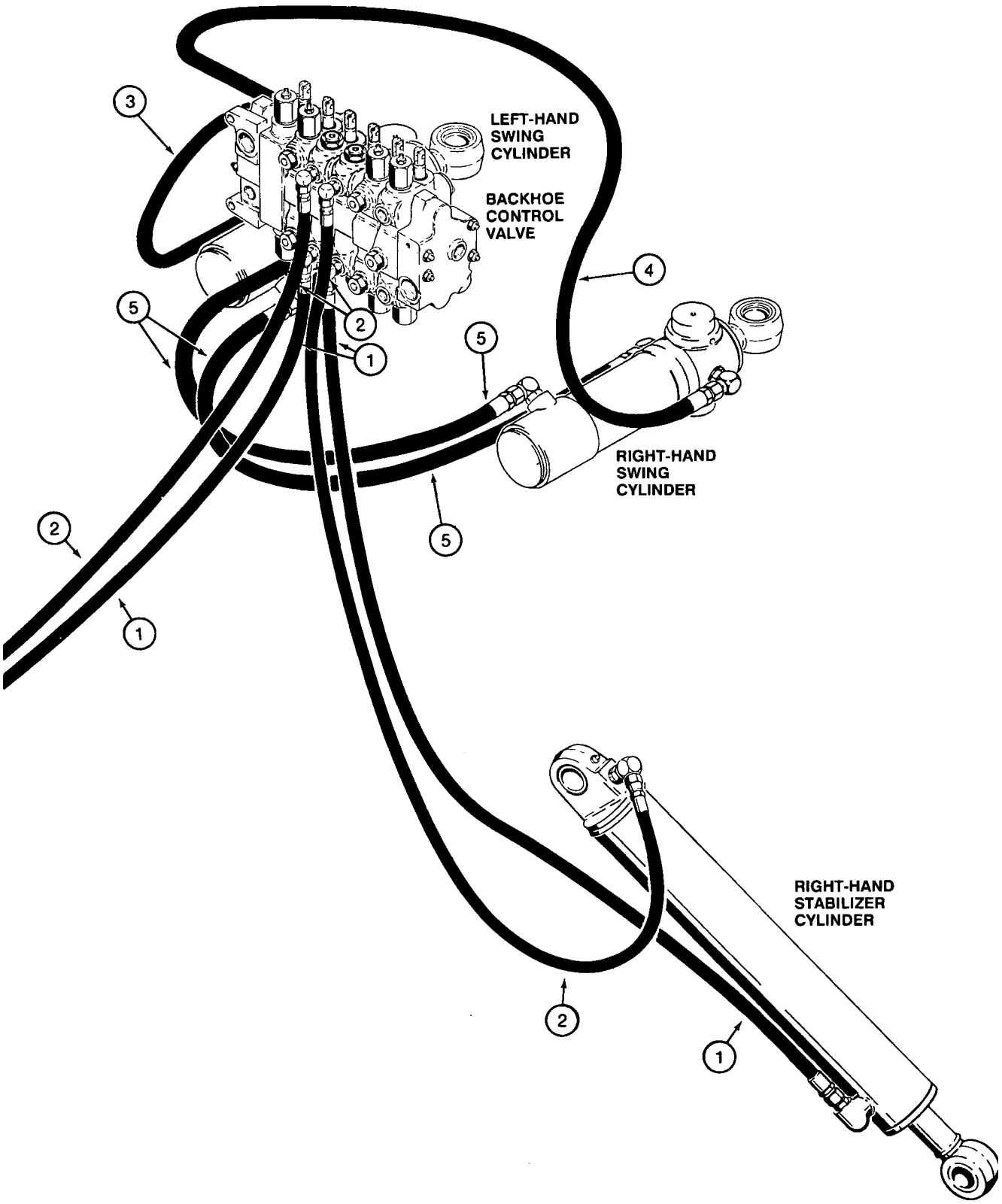
3
LEFT-HAND
SWING
CYLINDER
BACKHOE
CONTROL
VALVE
4
5
2
1
5
RIGHT-HAND
SWING
CYLINDER
5
2
1
RIGHT-HAND
STABILIZER
CYLINDER
2
1

PICTORIAL INDEX
BACKHOE HYDRAULICS
STABILIZER CYLINDER AND SWING CYLINDER

REF.	DESCRIPTION	PAGE
1	Hose at stabilizer cylinder rod ends to backhoe control valve stabilizer section lower ports	8-21
2	Hose at stabilizer cylinder closed ends to backhoe control valve stabilizer section upper ports	8-21
3	Hose at backhoe control valve swing section upper port to outer rod end of left-hand swing cylinder	8-23
4	Hose at backhoe control valve swing section lower port to outer rod end of right-hand swing cylinder	8-23
5	Crossover hose	8-23

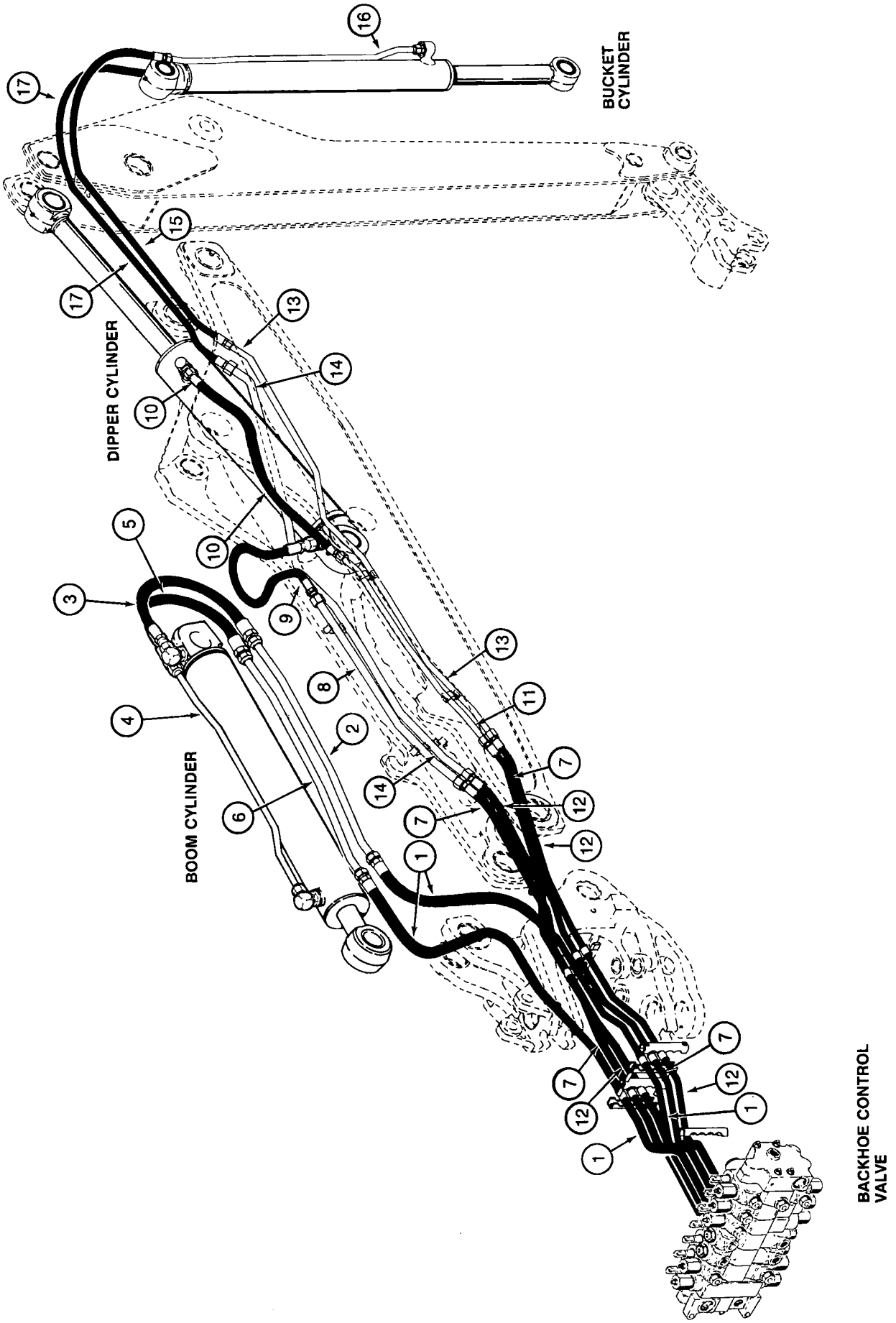
BUCKET CYLINDER
DIPPER CYLINDER
BOOM CYLINDER
BACKHOE CONTROL VALVE
16
17
15
13
14
10
5
3
9
8
11
4
2
6
7
12
1

PICTORIAL INDEX
BACKHOE HYDRAULICS
*BOOM, DIPPER, AND BUCKET

REF.	DESCRIPTION	PAGE
1	Hoses at control valve through swing tower to boom	8-25
2	Tube to boom cylinder closed end hose	8-25
3	Boom cylinder closed end hose	8-25
4	Boom cylinder rod end tube	8-25
5	Hose to boom cylinder rod end tube	8-25
6	Tube to boom cylinder rod end hose	8-25
7	Hoses at control valve through swing tower to boom for dipper	8-27
8	Tube to dipper cylinder closed end hose	8-27
9	Hose at dipper cylinder closed end	8-27
10	Hose at dipper cylinder rod end	8-27
11	Tube to dipper cylinder rod end hose	8-27
12	Hoses at control valve through swing tower to boom for bucket	8-29
13	Tube on right-hand side of boom, to bucket cylinder rod end hose	8-29
14	Tube on left-hand side of boom, to bucket cylinder closed end hose	8-29
15	Hose to bucket cylinder rod end tube	8-29
16	Bucket cylinder rod end tube	8-29
17	Hose at bucket cylinder closed end	8-31

*__NOTES:__ See page 1-23 for tubes and hoses used on models with extendable dipper.

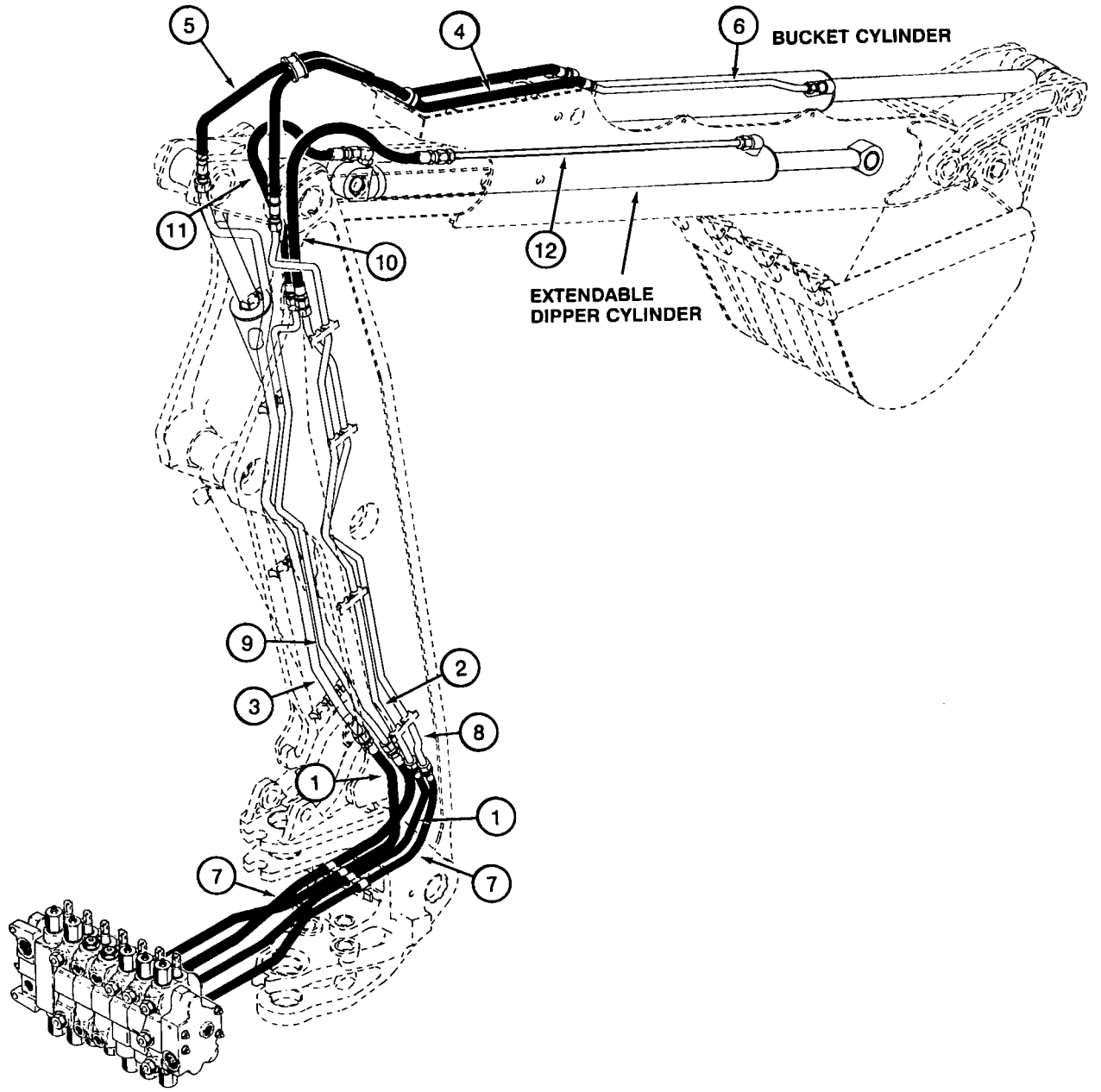

BACKHOE
CONTROL VALVE

PICTORIAL INDEX
BACKHOE HYDRAULICS
EXTENDABLE DIPPER

REF.	DESCRIPTION	PAGE
1	Hoses at control valve through swing tower to boom	8-33
2	Tube on right-hand side of boom to bucket cylinder rod end hose	8-33
3	Tube on left-hand side of boom to bucket cylinder closed end hose	8-33
4	Hose to bucket cylinder rod end tube	8-33
5	Hose to bucket cylinder closed end	8-33
6	Bucket cylinder rod end tube	8-35
7	Hoses at control valve through swing tower to boom for extendable dipper circuit	8-37
8	Tube on boom to extendable dipper cylinder rod end hose	8-37
9	Tube on boom to extendable dipper cylinder closed end hose	8-37
10	Hose at extendable dipper cylinder rod end tube	8-37
11	Hose at extendable dipper cylinder closed end	8-37
12	Tube at extendable dipper cylinder rod end	8-37

ALPHABETICAL INDEX
ENGINE

DESCRIPTION	PAGE
Air Cleaner and Air Intake Parts	2-7
Air Cleaner Assembly	2-9
Camshaft	2-37
Cold Start System	2-13
Cooler - Oil	2-29
Cover - Gear, Front	2-19
Crankshaft	2-43
Cylinder Block and Block Heater	2-39,2-41
Cylinder Head and Valve Mechanism	2-35
Cylinder Head, Cover, and Thermostat	2-33
Engine Mounting	2-15
Fan	2-3
Filter - Oil	2-29
Flywheel and Housing	2-45
Gasket Kits	2-49,2-51
Heater	
Engine Block	2-41
Engine Oil	2-31
Manifold - Exhaust/Intake	2-21
Muffler and Exhaust System	2-11
Pan - Oil	2-31
Pistons and Connecting Rods	2-47
Precleaner Assembly	2-9
Pump	
Oil	2-31
Water	2-17
Radiator and Mounting Parts	2-3
Radiator Assembly	2-5
Thermostat	2-33
Turbocharger Assembly	2-25
Turbocharger System	2-23
Wastegate Actuator	2-27

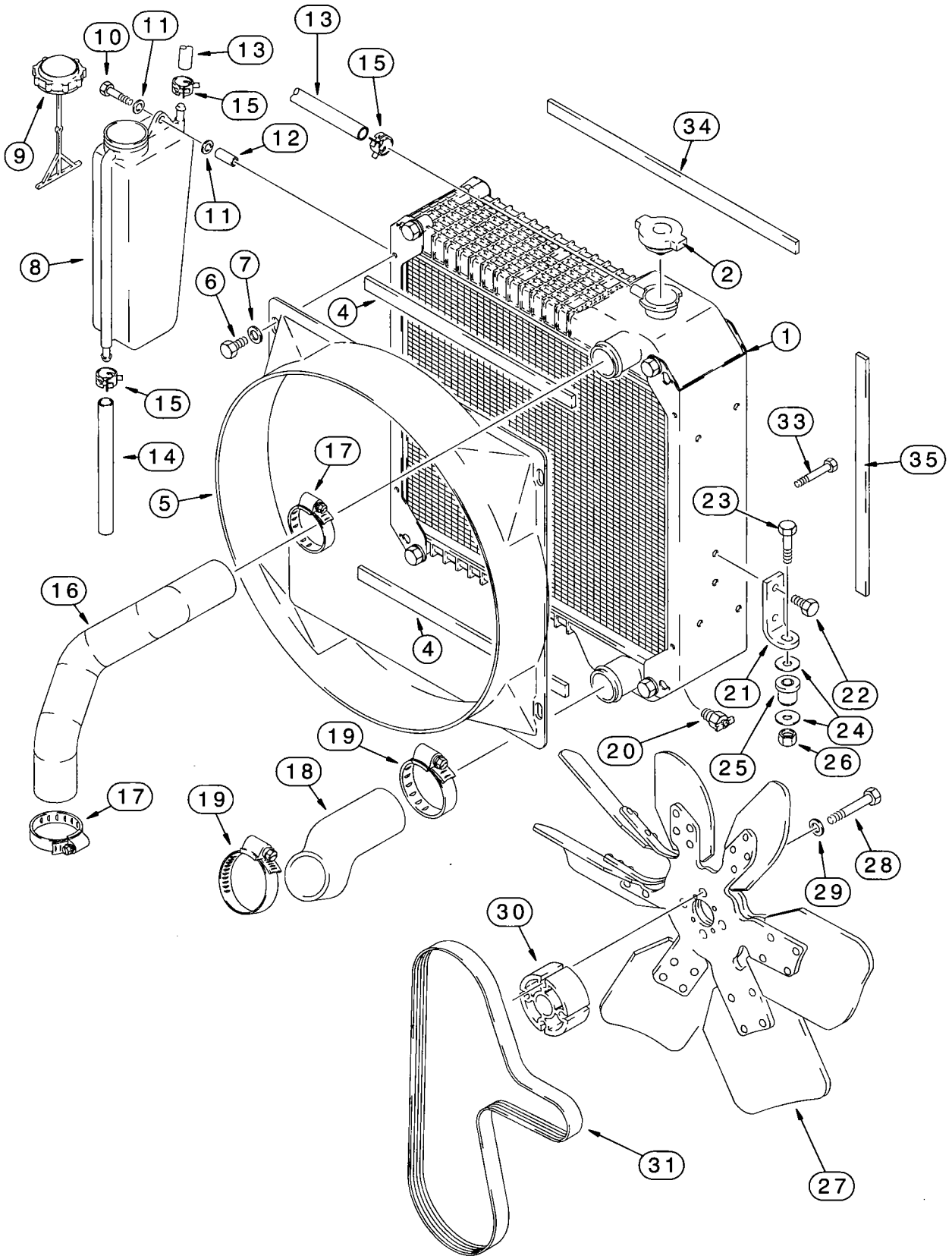
10
11
13
15
9
12
34
11
8
7
6
2
4
1
15
14
17
33
35
5
23
16
4
21
22
24
20
25
26
19
18
17
19
28
29
30
31
27

RADIATOR, FAN AND MOUNTING PARTS
USED WITH 291288A1 HEAVY DUTY OIL COOLER

REF.	PART NO.	DESCRIPTION	REQ'D.
1	239739A1	RADIATOR ASSEMBLY - engine coolant, heavy duty, parts list page 2-5, used with 291288A1 heavy duty oil cooler, see page 6-21 for cooler and baffles	1
2	A170241	CAP - radiator, 15 psi	1
4	233272A1	SEAL - adhesive-backed, 6 (1/4) x 20 (25/32) x 404 mm (15-29/32 inch) long, radiator to shroud, upper and lower	2
5	186433A1	SHROUD - fan	1
6	806-8016	BOLT - hex, self-locking, 8 - 1.25 x 16 mm, class 10.9	4
7	895-15008	WASHER - flat, 9 x 20 x 1.6 mm	4
8	131084A1	RESERVOIR - coolant recovery bottle	1
9	1547924C1	CAP - recovery bottle	1
10	806-8050	BOLT - hex, self-locking, 8 - 1.25 x 50 mm, class 10.9,	2
11	895-11008	WASHER - flat, 9 x 17 x 1.6 mm	4
12	132215A1	SPACER - bottle	2
13	132218A1	HOSE - 591 mm (23-1/4 inch) long, coolant recovery, cut from L126767 hose	1
14	132217A1	HOSE - 125 mm (4-15/16 inch) long, coolant overflow	1
15	A171099	CLAMP - spring-type, hose, retaining	3
16	232366A1	HOSE - radiator, upper	1
17	214-1432	CLAMP - adj, 1-9/16 - 2-1/2 inch dia	2
18	141513A1	HOSE - radiator, lower	1
19	214-1440	CLAMP - adj, 2-1/16 - 3 inch dia	2
20	217-92	VALVE - drain, 1/4 inch PT, drain	1
21	121501A1	BRACKET - radiator mounting, lower, see page 9-83 for upper bracket that attaches to the radiator shroud	2
22	614-8016	BOLT - hex, full threads, 8 - 1.25 x 16 mm	4
23	814-10050	BOLT - hex, 10 - 1.5 x 50 mm	2
24	K691987	WASHER - flat, special	4
25	D52276	INSULATOR - rubber, mount, radiator	2
26	832-10410	NUT - hex, self-locking, 10 mm - 1.5	2
27	185377A1	FAN - engine cooling, without air conditioning	1
27	228133A1	FAN - engine cooling, 39 degree, with white identification dot	1
28	814-10070	BOLT - hex, 10 - 1.5 x 70 mm	4
29	496-21041	WASHER - flat, 13/32 x 13/16 x 3/32 inch, hardened	4
30	A184545	SPACER - fan	1
31	J925953	BELT - fan, V-ribbed, alternator and fan, see page 9-145 for belt used on air conditioning compressor	1
33	614-8016	BOLT - hex, full threads, 8 - 1.25 x 16 mm, if used	2
34	235040A1	SEAL - foam, adhesive-backed, 20 (25/32) x 542 (21-11/32) x 6 mm (1/4 inch), horizontal, radiator to cooler	2
35	235038A1	SEAL - foam, adhesive-backed, 20 (25/32) x 480 (18-29/32) x 10 mm (3/8 inch), vertical, radiator to cooler	2
	L126767	HOSE - bulk, 8 (5/16) ID x 2336 mm (92 inch) long	1

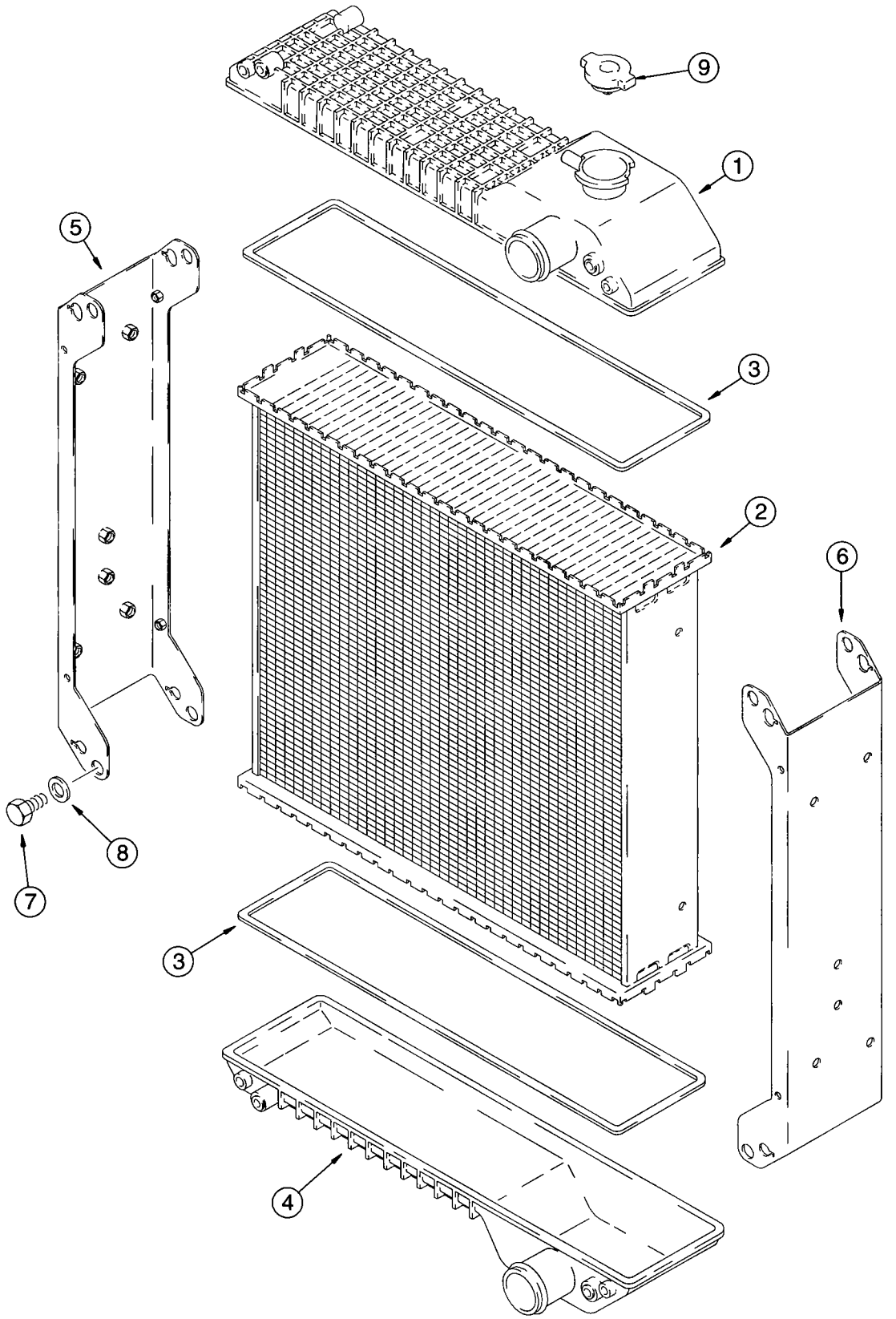
9
1
5
3
2
6
8
7
3
4

RADIATOR ASSEMBLIES

REF.	PART NO.	DESCRIPTION	REQ'D.
	239739A1	RADIATOR ASSEMBLY - engine coolant, heavy duty, 5 row, used with 291288A1 heavy duty oil cooler, see page 6-21 for cooler	1
1	175161A1	TANK - upper	1
2	257434A1	CORE - radiator, 5 row	1
3	175163A1	GASKET - core, upper and lower	2
4	175162A1	TANK - lower	1
5	175164A1	BRACKET - left-hand, radiator	1
6	175165A1	BRACKET - right-hand, radiator	1
7	614-8012	BOLT - hex, full threads, 8 - 1.25 x 12 mm	8
8	895-11008	WASHER - flat, 9 x 17 x 1.6 mm	8
9	A170241	CAP - radiator, 15 psi	1
10	NSS	SEAL - foam, side channel brackets, not shown	2
11	NSS	SEAL - foam, corners, side channel brackets, not shown	4

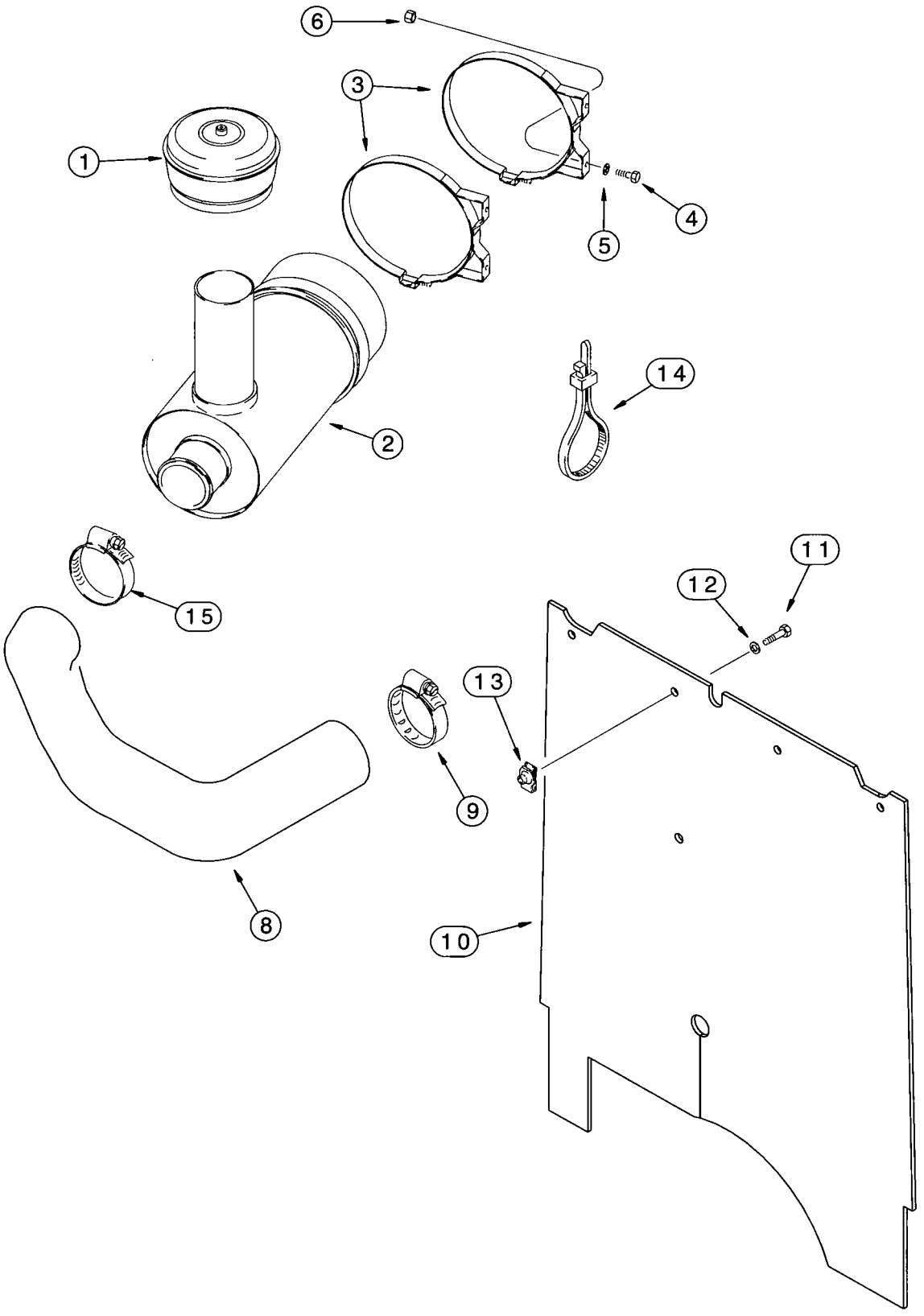
6
3
1
4
5
2
14
15
11
12
13
9
8
10

AIR CLEANER AND AIR INTAKE PARTS

REF.	PART NO.	DESCRIPTION	REQ'D.
1	228120A1	PRECLEANER ASSEMBLY - air, parts list page 2-9	1
2	293571A1	CLEANER ASSEMBLY - air, engine, parts list page 2-9	1
3	70973	BAND - air cleaner mounting	2
4	614-8020	BOLT - hex, full threads, 8 - 1.25 x 20 mm	4
5	895-11008	WASHER - flat, 9 x 17 x 1.6 mm	4
6	829-1408	NUT - hex, 8 mm - 1.25, class 10	4
8	223944A1	HOSE - air cleaner to engine	1
9	214-1456	CLAMP - adj, 3-1/16 - 4 inch dia	2
10	275464A1	PAD - heat and noise reduction	1
11	806-8025	BOLT - hex, self-locking, 8 - 1.25 x 25 mm, class 10.9	4
12	895-15008	WASHER - flat, 9 x 20 x 1.6 mm	4
13	833-40408	NUT - U-type, 8 mm - 1.25	4
14	L18337	STRAP - tie, 15 inch, barrier curtain	2
15	214-1464	CLAMP - adj, 3-9/16 - 4-1/2 inch dia	1

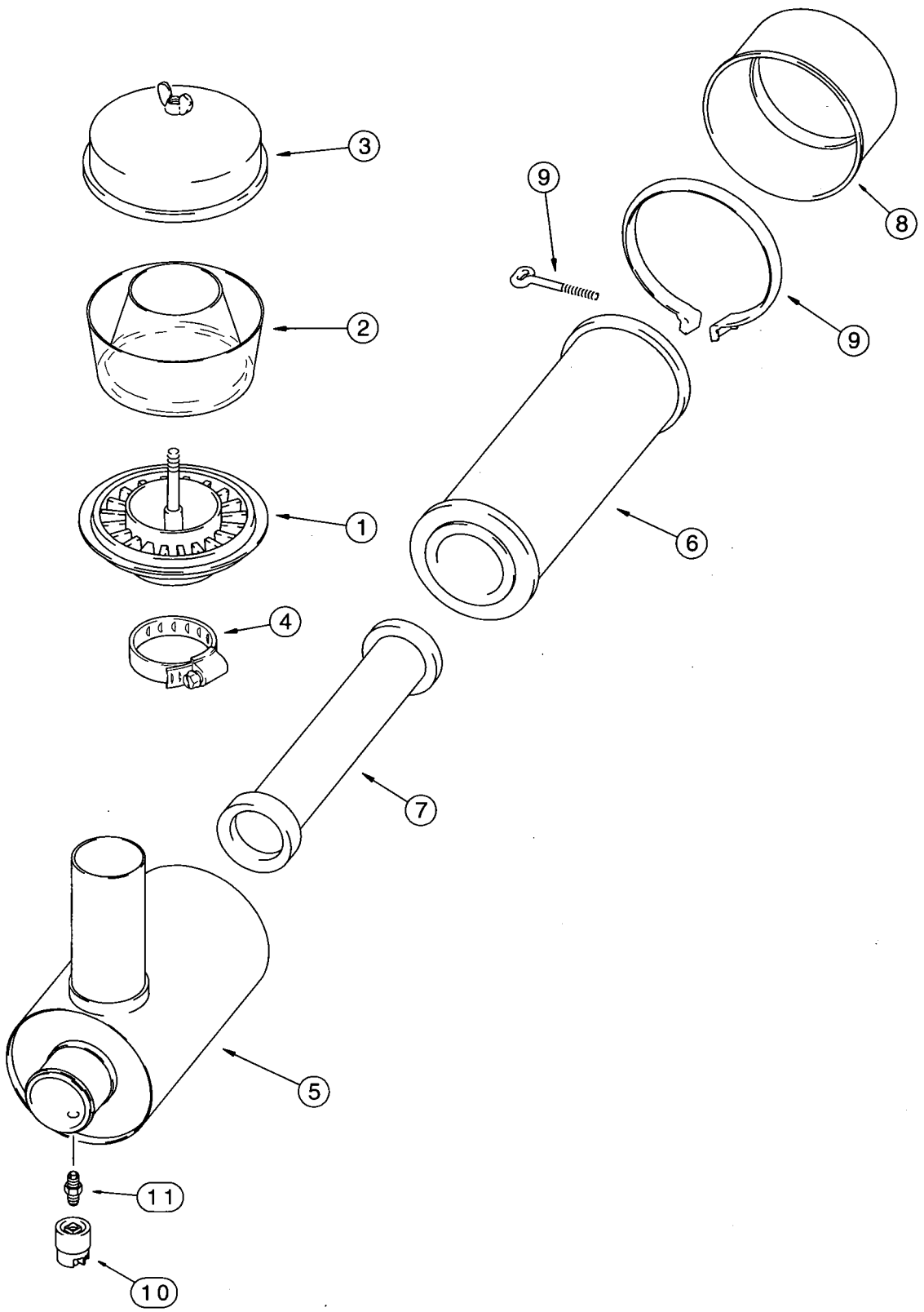
3
2
1
4
5
11
10
7
6
9
9
8

AIR CLEANER AND PRECLEANER ASSEMBLIES

REF.	PART NO.	DESCRIPTION	REQ'D.
		PRECLEANER ASSEMBLY	
	228120A1	PRECLEANER ASSEMBLY - air	1
1	NSS	BODY - precleaner	1
2	277377R1	BOWL - precleaner	1
3	A42465	COVER - precleaner	1
4	214-1464	CLAMP - adj, 3-9/16 - 4-1/2 inch dia	1
		AIR CLEANER ASSEMBLY	
	293571A1	CLEANER ASSEMBLY - air, engine	1
	226378A1	CLEANER ASSEMBLY - air, engine	1
5	NSS	HOUSING - air cleaner	1
6	222421A1	ELEMENT - primary	1
7	222422A1	ELEMENT - secondary	1
8	247743A1	COVER - end cap	1
9	R21391	CLAMP - air filter, housing to end cover, includes bolt	1
10	292740A1	SWITCH - air restriction	1
11	D36264	ADAPTER - air restriction indicator	1

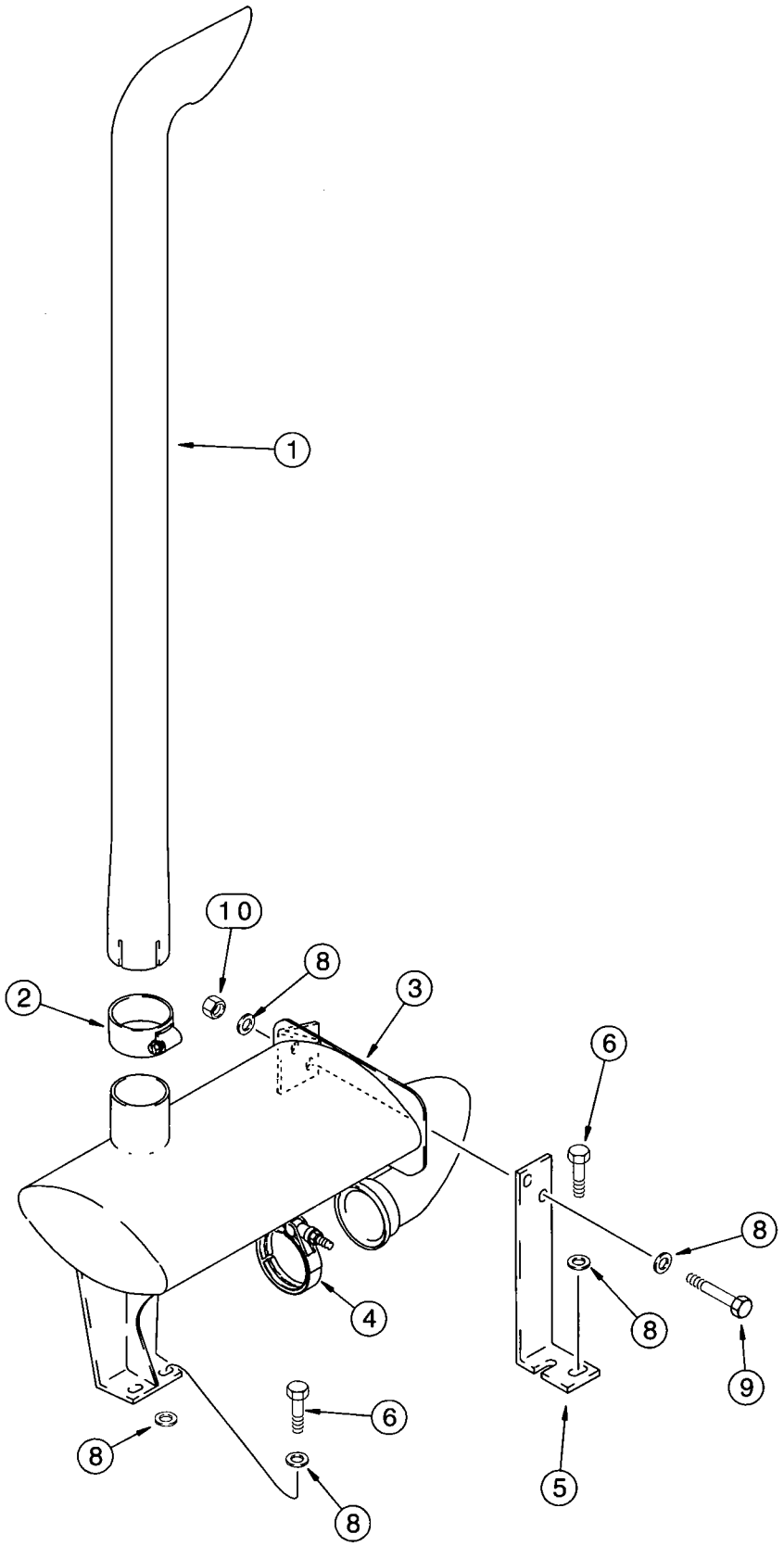
1
10
8
2
3
6
8
4
8
9
6
8
5
8

MUFFLER AND EXHAUST SYSTEM

REF.	PART NO.	DESCRIPTION	REQ'D.
1	275967A1	PIPE - exhaust, muffler extension	1
2	176437A1	CLAMP - exhaust pipe to muffler, includes hardware	1
3	227293A1	MUFFLER - engine exhaust	1
4	A170467	CLAMP - includes hardware, muffler tube to engine	1
5	225033A1	BRACKET - muffler, front	1
6	627-10030	BOLT - hex, full threads, 10 - 1.5 x 30 mm, class 10.9	4
8	896-11010	WASHER - flat, 11 x 21 x 2.5 mm, hardened	10
9	627-10030	BOLT - hex, full threads, 10 - 1.5 x 30 mm, class 10.9	2
10	829-1410	NUT - hex, 10 mm - 1.5, class 10.9	2

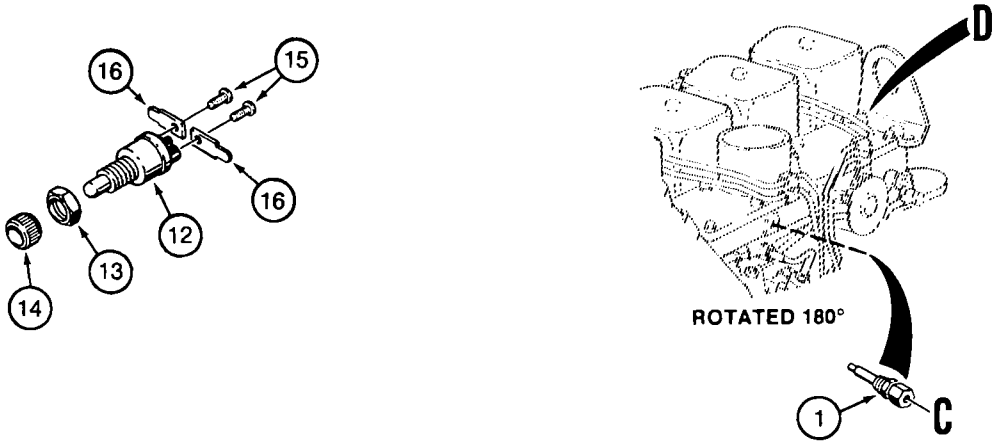
16
15
16
12
13
14
D
ROTATED 180°
1
C

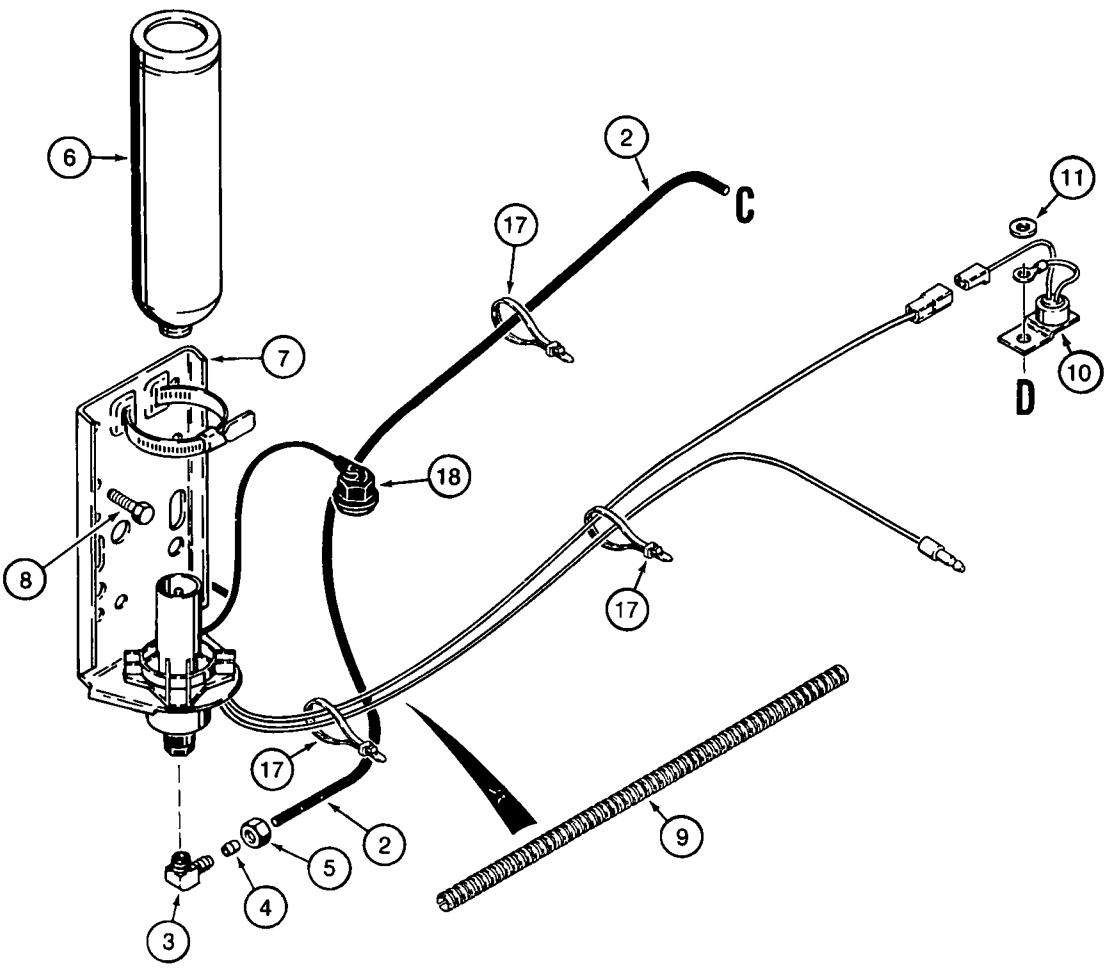
6
2
C
17
11
7
D
10
18
8
17
17
2
5
4
3
9

COLD START SYSTEM

REF.	PART NO.	DESCRIPTION	REQ'D.
1	A189154	NOZZLE ASSEMBLY - cold start injector, .008 dual orifice nozzle, component parts not serviced seperately	1
2	D145367	TUBE - 762 mm (30 inch) long, cut from L60539X bulk tube, valve to injector nozzle, see below	1
	222-615	ELBOW - 90 degree, compression, 1/8 tube OD x 1/8 inch PT	1
3	NSS	BODY - elbow	1
4	222-650	SLEEVE - tapered, 1/8 inch tube OD	1
5	222-660	NUT - hex, 1/8 tube OD x 5/16-24 inch	1
6	A171940	CYLINDER - starting fluid, ether	1
7	A172116	VALVE ASSEMBLY - cold start, 3 cc, starting fluid injection, component parts not serviced separately, mounts to inner left-hand chassis upright	1
8	276-24916	SCREW - self-tapping, hex head, 3/8 NC x 1 inch	2
9	D128402	SLEEVE - wire guard, 380 mm (15 inch) long	1
10	A187923	SWITCH - temperature, circuit breaking, includes lead wires, uses existing intake manifold mounting hardware	1
11	495-11034	WASHER - flat, 11/32 x 11/16 x 1/16 inch	1
	L72776	SWITCH ASSEMBLY - push button, cold start, must also order (2) L59682 blade terminals (item 16)	1
12	NSS	SWITCH - cold start	1
13	H275784	NUT - hex, special	1
14	D73741	NUT - hex, special	1
15	174-93	SCREW - machine, round head slotted, No. 10 NF x 1/4 inch	2
16	L59682	TERMINAL - blade, straight, use with L72776 switch	2
17	L18337	STRAP - tie, 15 inch, nylon	UAR
18	254729A1	KIT - cap and cord, 1 inch threaded cap	1
	L60539X	TUBE - bulk, nylon, 3 (1/8) ID x 4267 mm (168 inch) long	1

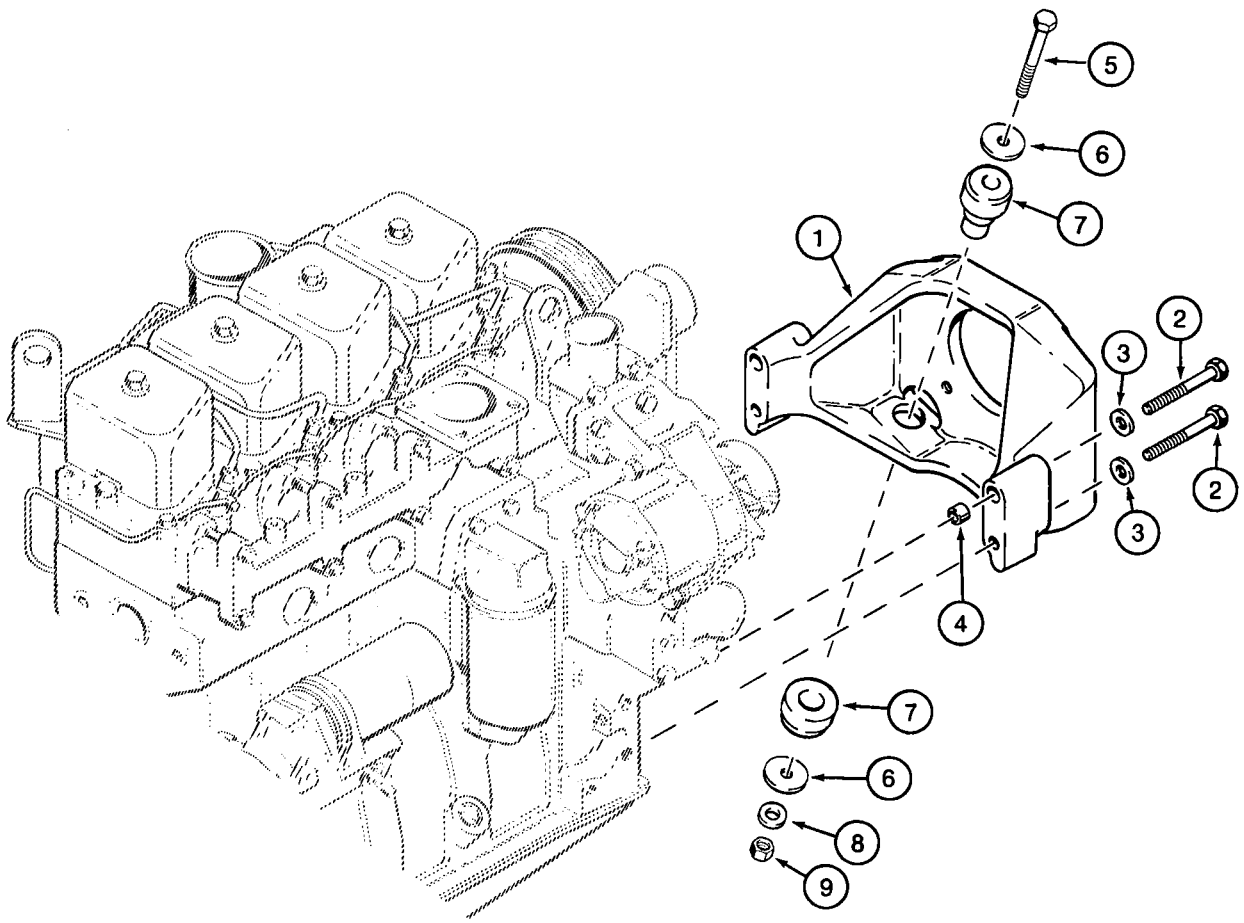
5
6
7
1
2
3
2
3
4
7
6
8
9

ENGINE MOUNTING

REF.	PART NO.	DESCRIPTION	REQ'D.
1	175637A1	SUPPORT - engine, front	1
2	814-12110	BOLT - hex, 12 - 1.75 x 110 mm	4
3	896-15012	WASHER - flat, 13.5 x 28 x 4 mm, hardened	4
4	A170309	SPACER - engine mount, upper bolt holes	2
5	814-12085	BOLT - hex, 12 - 1.75 x 85 mm	2
6	496-81018	WASHER - flat, 33/64 x 2 x 1/8 inch, hardened	4
7	117844A1	INSULATOR - engine mount, front	2
8	896-15012	WASHER - flat, 13.5 x 28 x 4 mm, hardened	2
9	832-10412	NUT - hex, self-locking, 12 mm - 1.75	2

NOTE: See page 6-21 for rear engine/transmission mounts.

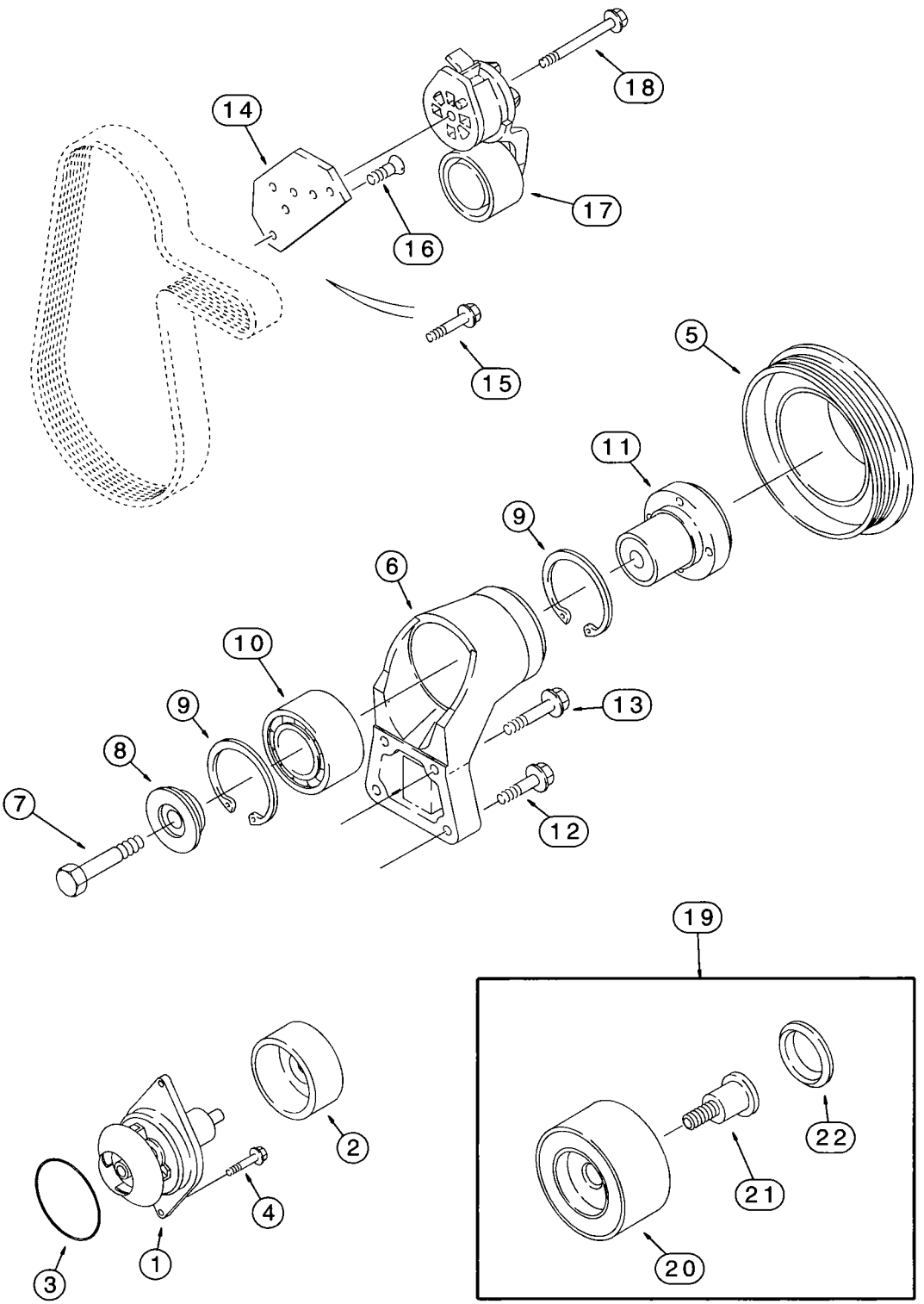
18
14
17
16
15
5
11
9
6
10
9
13
8
12
7
19
2
4
3
1
22
21
20

WATER PUMP SYSTEM

4T-390 EMISSIONS CERTIFIED ENGINE

REF.	PART NO.	DESCRIPTION	REQ'D.
	J802358	KIT - water pump	1
1	NSS	PUMP ASSEMBLY - water	1
2	NSS	PULLEY - water pump	1
3	238-5341	O-RING - 3-1/2 ID x 3/16 inch wide	1
4	J900227	BOLT - hex, special, 8 - 1.25 x 22 mm	2
5	J914462	PULLEY - fan, 1.1 to 1 ratio	1
6	J911205	SUPPORT - fan	1
7	J907769	BOLT - hex, special, 10 - 1.5 x 70 mm, class 12.9	1
8	J923044	RETAINER - fan hub	1
9	100-21250	RING - internal retaining, No. 250	2
10	J910739	BEARING - ball	1
11	J911924	HUB - fan	1
12	845-8040	BOLT - heavy hex flange, 8 - 1.25 x 40 mm	2
13	845-8030	BOLT - heavy hex flange, 8 - 1.25 x 30 mm	2
14	J925195	BRACKET - belt tensioner	1
15	845-8025	BOLT - heavy hex flange, 8 - 1.25 x 25 mm	1
16	J925186	SCREW - flat head cap, torx, special, 8 - 1.25 x 25 mm	1
17	J918944	TENSIONER - belt	1
18	854-10070	BOLT - heavy hex flange, 10 - 1.5 x 70 mm, class 10.9	1
19	A77817	KIT - belt tensioner pulley, used to replace pulley of J918944 belt tensioner, item 17	1
20	NSS	PULLEY - belt tensioner	1
21	NSS	BOLT - pulley	1
22	NSS	SEAL - dust	1

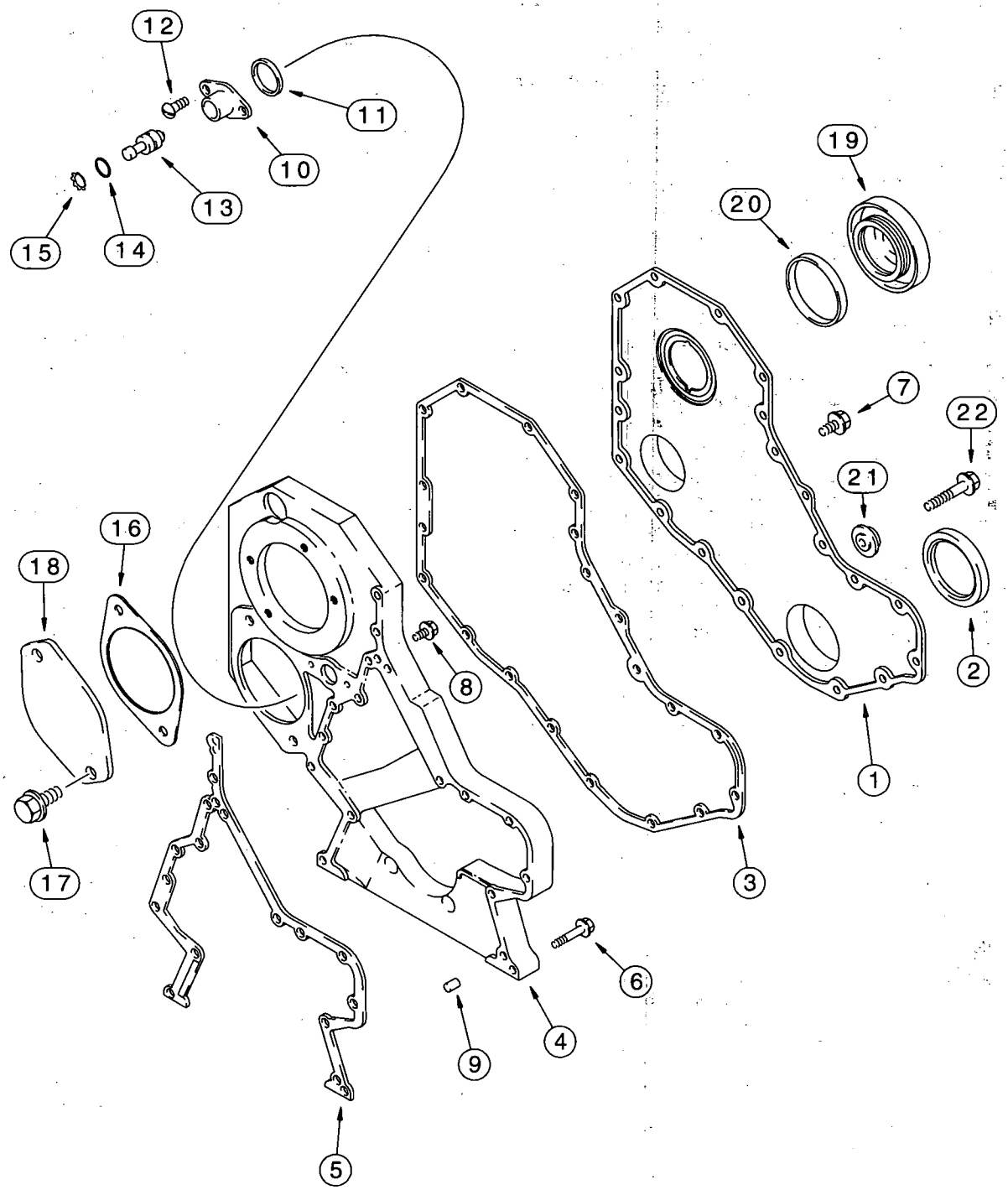
12
11
10
13
15
14
19
20
7
22
21
16
18
8
2
1
17
3
6
4
9
5

FRONT GEAR COVER

4T-390 EMISSIONS CERTIFIED ENGINE

REF.	PART NO.	DESCRIPTION	REQ'D.
1	J918675	COVER - gear, front	1
2	NSS	SEAL - oil, crankcase front, order A77889 seal kit on page 2-43	1
3	J918673	GASKET - front cover	1
4	J932120	HOUSING - timing gear	1
5	J931351	GASKET - gear housing	1
6	845-8050	BOLT - heavy hex flange, 8 - 1.25 x 50 mm	10
7	J924962	BOLT - hex flange, special, 8 - 1.25 x 16 mm, external, retains item 1 to item 4	8
8	J924962	BOLT - hex flange, special, 8 - 1.25 x 16 mm, internal, retains item 4 to block	5
9	J900257	PIN - dowel, 16 mm long, locating	2
10	J919683	HOUSING - timing pin	1
11	J915772	RING - quad, timing pin housing	1
12	J907998	SCREW - round head cap, torx, special, 5 - 0.8 x 17 mm	2
13	J903924	PIN - timing	1
14	J913994	O-RING - sealing	1
15	J904849	RING - retaining, timing pin	1
16	J929751	GASKET - access cover plate	1
17	854-12025	BOLT - heavy hex flange, 12 - 1.75 x 25 mm, class 10.9	2
18	J914868	PLATE - access cover, flat	1
19	J903463	COVER - front access, fuel pump drive gear	1
20	J903475	SEAL - front access cover, fuel pump drive gear	1
21	J912772	RETAINER - bolt	1
22	845-8060	BOLT - heavy hex flange, 8 - 1.25 x 60 mm	1

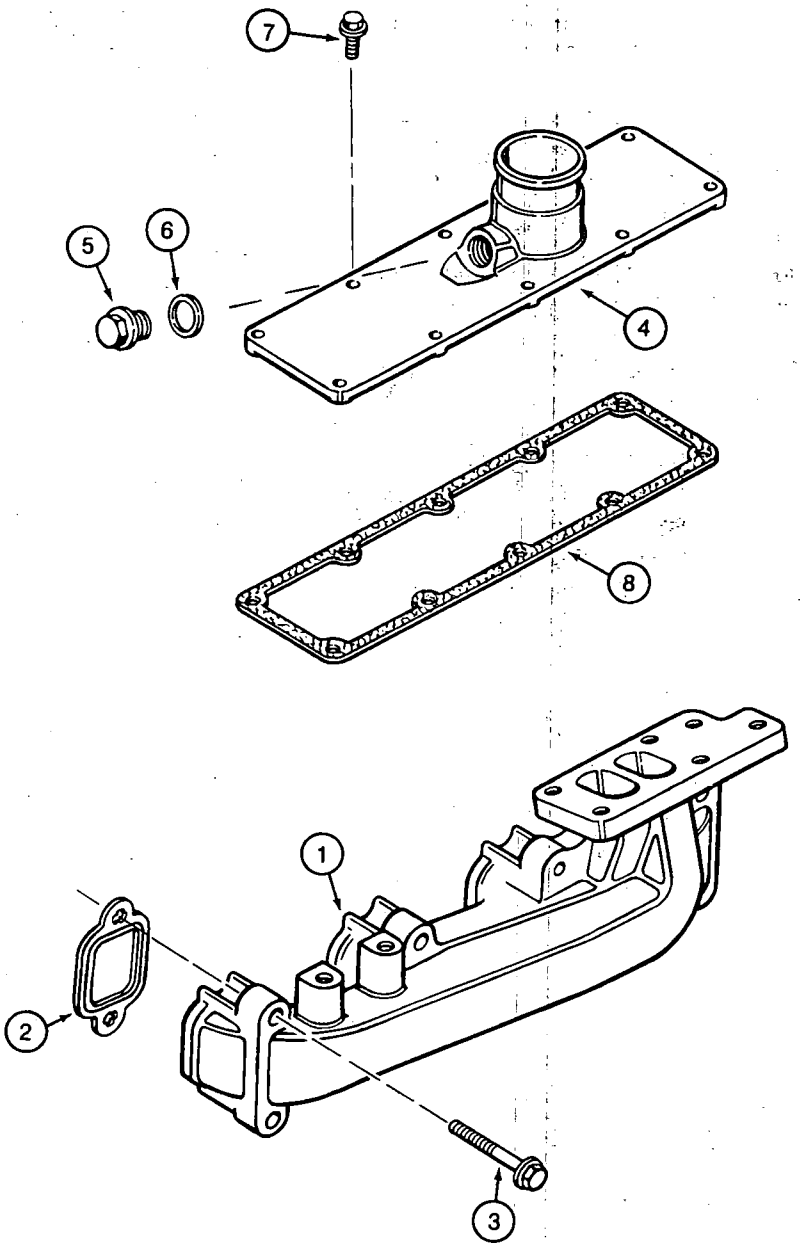
7
5
6
4
8
1
2
3

MANIFOLDS

4T-390 EMISSIONS CERTIFIED ENGINE

REF.	PART NO.	DESCRIPTION	REQ'D.
		EXHAUST	
1	J901919	MANIFOLD - exhaust	1
2	J905443	GASKET - exhaust manifold	4
3	854-10065	BOLT - heavy hex flange, 10 - 1.50 x 65 mm, class 10.9	8
		INTAKE	
	A77416	KIT - intake manifold, no longer available, order components separately, items 4 - 6	1
4	J904339	COVER - intake	1
5	J907185	PLUG - manifold	1
6	J906773	WASHER - plug sealing	1
7	J918109	BOLT - hex flange, special, 8 - 1.25 x 25 mm, intake manifold	10
8	J931605	GASKET - intake manifold	1

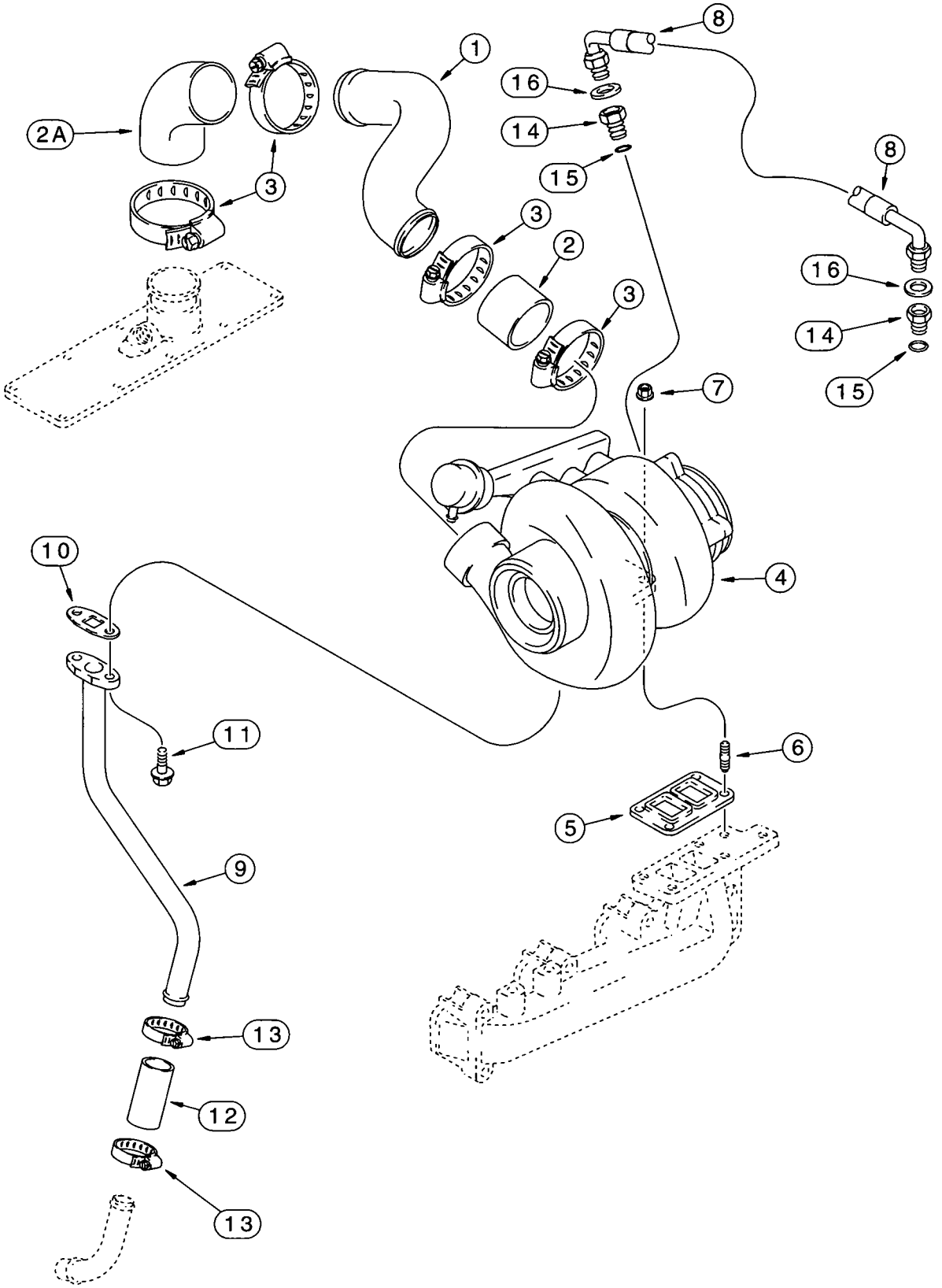
1
2
2A
3
4
5
6
7
8
9
10
11
12
13
14
15
16

TURBOCHARGER SYSTEM

4T-390 EMISSIONS CERTIFIED ENGINE

REF.	PART NO.	DESCRIPTION	REQ'D.
1	J931784	TUBE - crossover	1
2	J931804	HOSE - 58 mm (2-1/4 inch) long, air intake	1
2A	J933026	HOSE - 76 mm (3 inch) long, air intake	1
3	214-3240	CLAMP - adj, 1-3/4 - 2-5/8 inch dia	4
4	REF	TURBOCHARGER ASSEMBLY - engine, new, see page 2-25 for correct assembly and component parts	1
5	J919369	GASKET - turbocharger to manifold	
6	J818823	STUD - turbocharger mounting	1
7	J818824	NUT - hex flange, special, 10 mm - 1.5, stud	4
8	J913759	HOSE - turbocharger oil supply	1
9	J903740	TUBE - turbocharger oil drain	1
10	J931350	GASKET - turbo oil drain tube	1
11	845-8020	BOLT - heavy hex flange, 8 - 1.25 x 20 mm	2
12	J931970	HOSE - 76 mm (3 inch) long, turbocharger oil drain	1
13	214-1416	CLAMP - adj, 13/16 - 1-1/2 inch dia, hose	2
14	J919687	ADAPTER - female hex, special (1) used to connect turbocharger oil supply hose to turbocharger, (1) used to connect turbocharger oil supply hose to J918954 oil filter head	2
15	238-5013	O-RING - 7/16 ID x 1/16 inch wide	1
16	222-993	GASKET - flare, copper, 3/8 inch tube OD	2

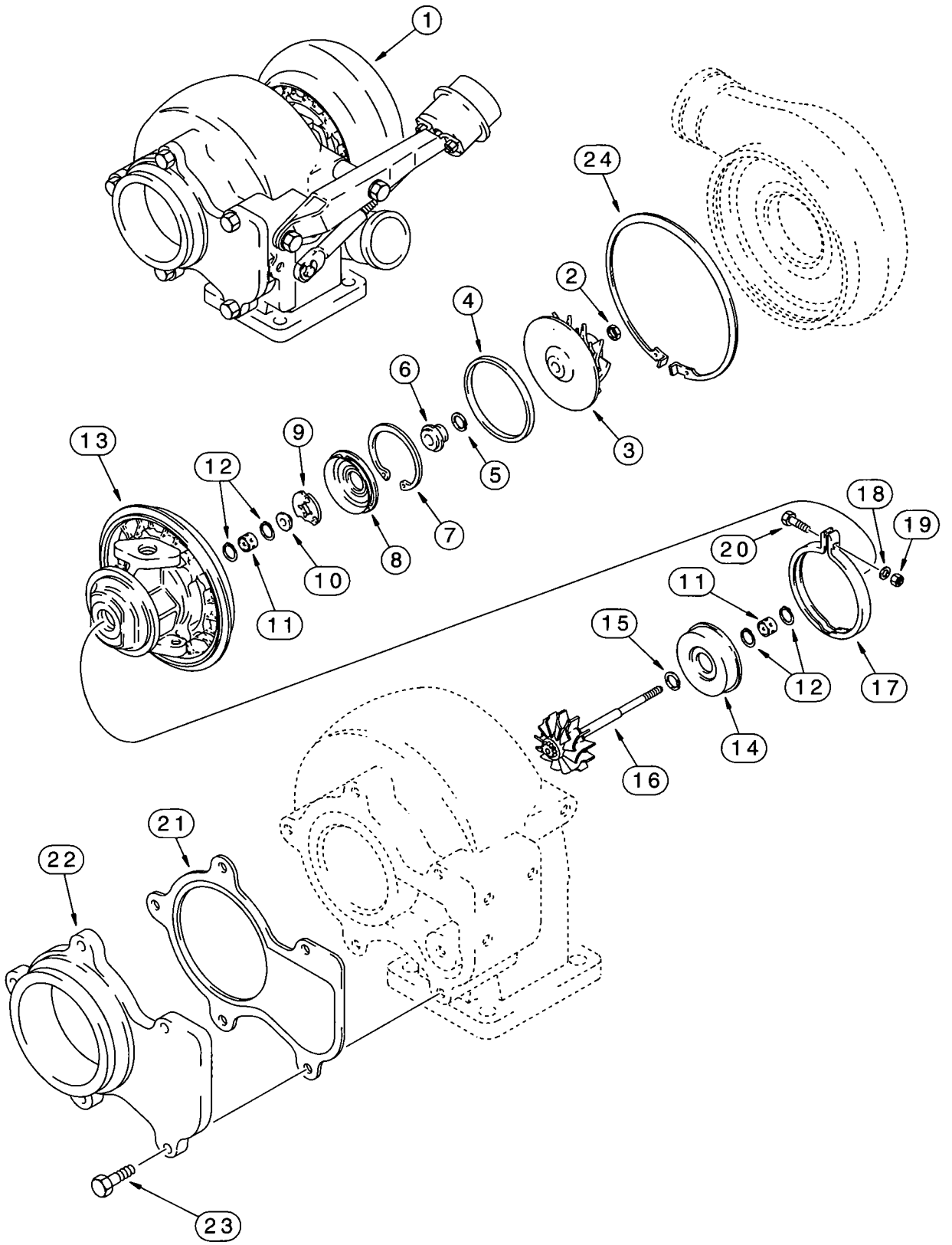
1
24
2
4
6
9
13
12
5
3
7
8
10
11
18
19
20
11
15
12
17
14
16
21
22
23

TURBOCHARGER ASSEMBLY

4T-390 EMISSIONS CERTIFIED ENGINE

REF.	PART NO.	DESCRIPTION	REQ'D.
	JR802798	KIT - turbocharger, engine, remanufactured, North America only, component parts shown on this page do not apply to the remanufactured assembly	1
	JC537562	RETURN NUMBER - use this part number to return turbocharger core for credit when using a remanufactured assembly	1
	**J802798	KIT - turbocharger, large frame, includes new turbocharger assembly, (1) J519807 turbo oil drain tube gasket and (1) J709861 turbocharger mounting gasket, not shown	1
1	J580234	CENTER HOUSING ASSEMBLY - turbocharger	1
2	*NSS	NUT - hex, lock	1
3	NSS	IMPELLER - turbocharger	1
4	NSS	SEAL - plate	1
5	*NSS	SEAL - slit ring	1
6	NSS	SLINGER - oil	1
7	*NSS	RING - snap	1
8	*NSS	BAFFLE - oil	1
9	*NSS	BEARING - turbocharger thrust	1
10	NSS	COLLAR - thrust	1
11	*NSS	BEARING - turbocharger	2
12	*NSS	RING - retaining	4
13	NSS	HOUSING - turbo bearing	1
14	NSS	SHIELD - turbo heat	1
15	*NSS	SEAL - split ring	1
15A	*NSS	SEAL - oil, not shown	1
16	NSS	ROTOR ASSEMBLY - with shaft	1
17	J531670	CLAMP - adjustable	1
18	J535971	WASHER - flat, special	1
19	*J531582	NUT - hex	1
20	*J531598	BOLT - hex	1
21	J535001	GASKET - adapter	1
22	J527759	ADAPTER - connection	1
23	614-8020	BOLT - hex, full threads, 8 - 1.25 x 20 mm	5
24	J535800	RING - snap	1
	*J575205	KIT - overhaul, turbocharger, includes all items with an asterisk	1

NOTE: See items 1 - 11 on page 2-27.

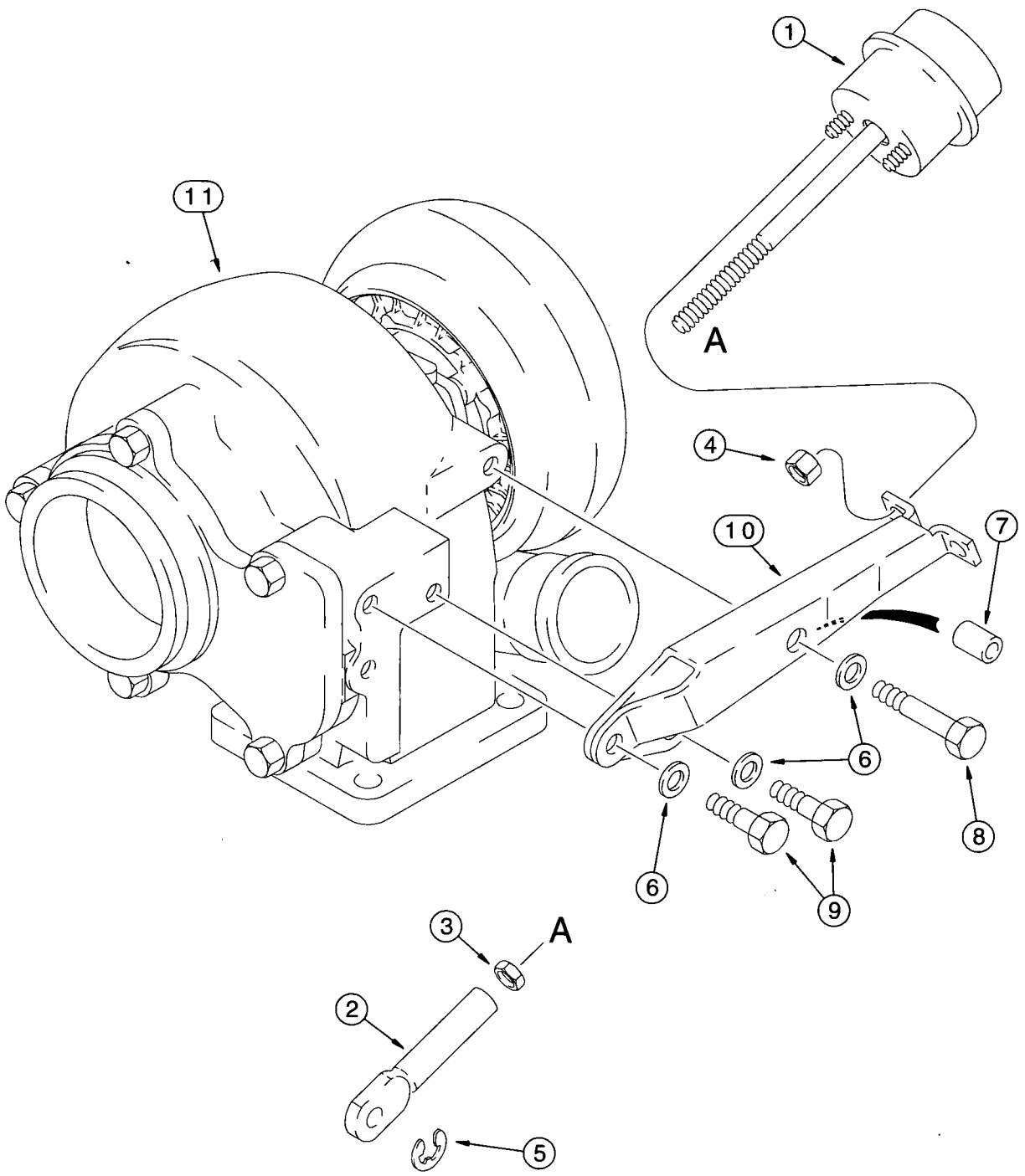
1
11
A
4
10
7
6
6
8
9
3
A
2
5

WASTEGATE ACTUATOR

4T-390 EMISSIONS CERTIFIED ENGINE

REF.	PART NO.	DESCRIPTION	REQ'D.
	J802798	KIT - turbocharger, includes all parts shown below and on page 2-25	1
1	J537560	ACTUATOR - turbo wastegate	1
2	J528177	LINK - adjusting	1
3	425-155	NUT - hex, jam, 5/16 inch NF	1
4	J528204	NUT - lock	2
5	J528221	RING - retaining	1
6	895-11008	WASHER - flat, 9 x 17 x 1.6 mm	3
7	J532195	SPACER - mounting, short	1
8	814-8035	BOLT - hex, 8 - 1.25 x 35 mm	1
9	614-8020	BOLT - hex, full threads, 8 - 1.25 x 20 mm	2
10	J535203	BRACKET - wastegate actuator	1
11	NSS	HOUSING - turbine	1

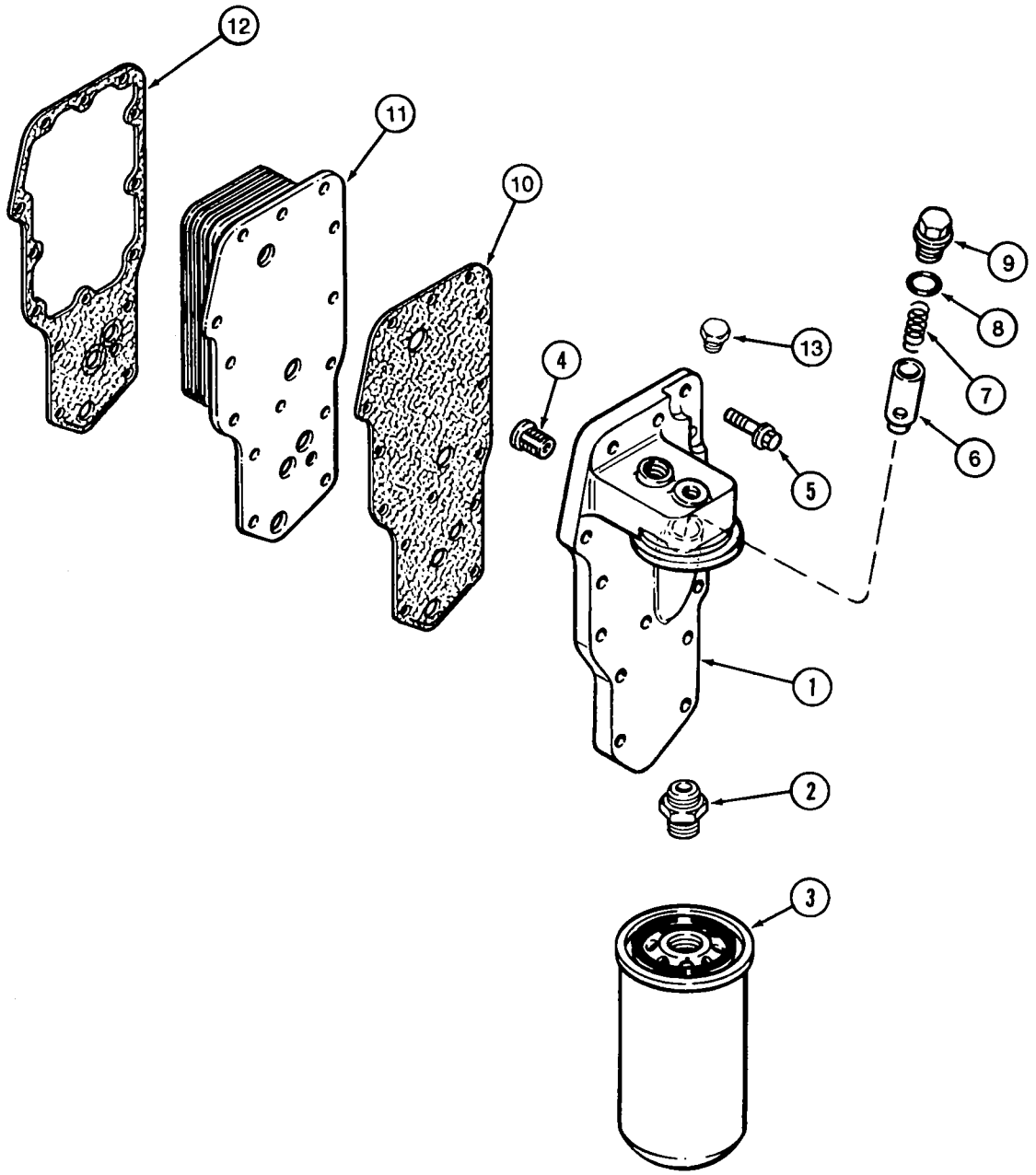
12
11
10
9
8
13
4
7
6
5
1
2
3

OIL FILTER AND COOLER

4T-390 EMISSIONS CERTIFIED ENGINE

REF.	PART NO.	DESCRIPTION	REQ'D.
	J918954	HEAD ASSEMBLY - oil filter and cooler	1
1	NSS	HEAD - lube oil filter	1
2	J909355	ADAPTER - filter head	1
3	J908616	FILTER - engine oil, cartridge, if used	1
3	J934429	FILTER - engine oil, cartridge, premium oil filter, if used	
4	J927622	VALVE - relief, pressure	1
5	845-8035	BOLT - heavy hex flange, 8 - 1.25 x 35 mm	14
6	J918428	PLUNGER - regulator, pressure	1
7	J925009	SPRING - compression	1
8	J929457	O-RING - plug	1
9	J915787	PLUG - threaded, pipe	1
10	J929792	GASKET - filter head	1
11	J921557	CORE - cooler, oil	1
12	J942914	GASKET - oil cooler core	1
13	J906619	PLUG - hex, 1/8 inch PT	1

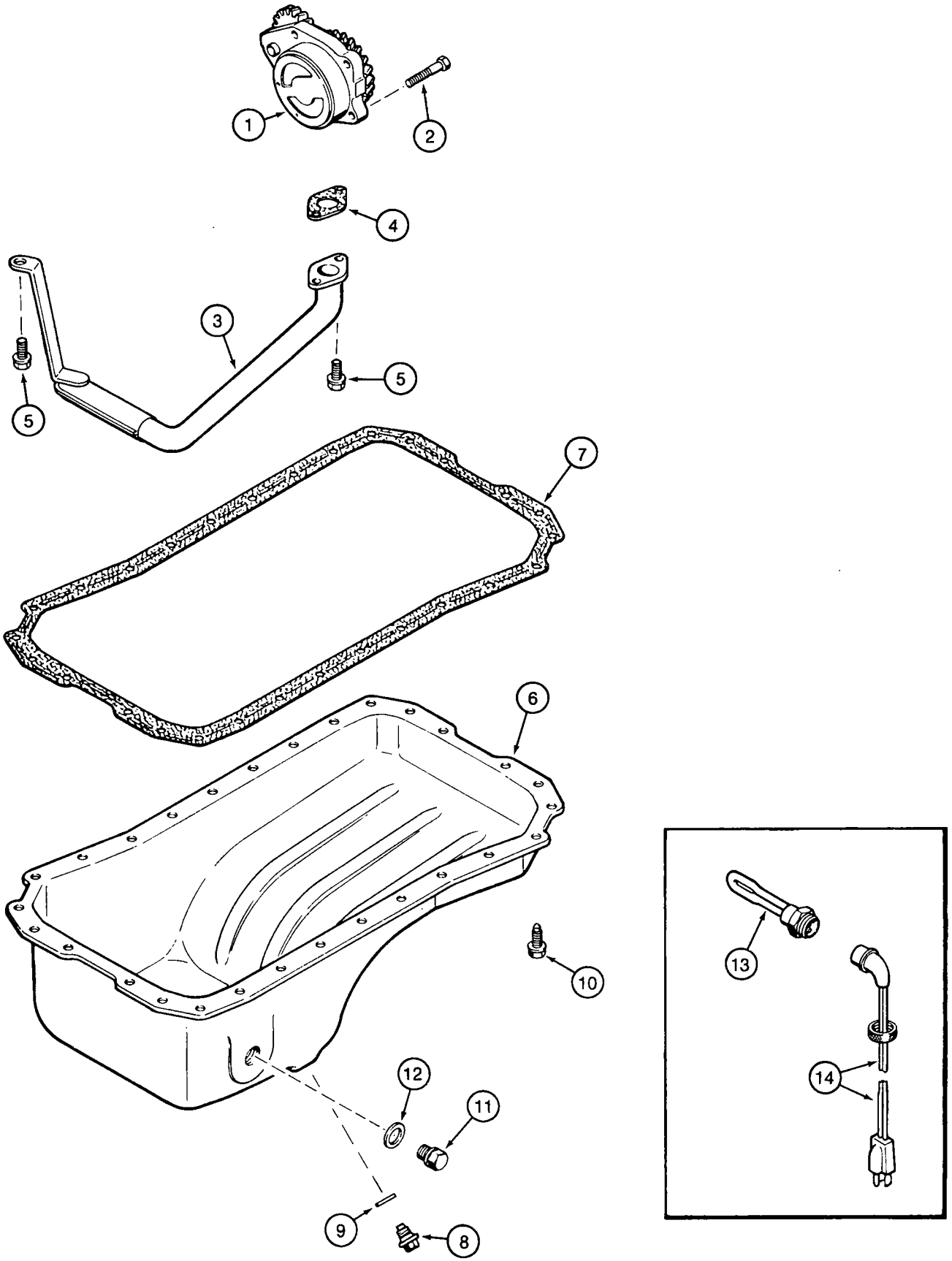
1
2
4
3
5
5
7
6
10
12
11
9
8
13
14

OIL PUMP AND OIL PAN

4T-390 EMISSIONS CERTIFIED ENGINE

REF.	PART NO.	DESCRIPTION	REQ'D.
	JR930336	PUMP - oil, remanufactured, North America only, component parts shown on this page do not apply to the remanufactured assembly	1
	JC926202	RETURN NUMBER - use this part number to return pump core for credit when using a remanufactured assembly	1
1	J930336	PUMP - oil, engine, new	1
2	J900677	BOLT - hex, full threads, 8 - 1.25 x 30 mm	4
3	J905206	TUBE - suction, oil	1
4	*J931349	GASKET - mounting, oil suction tube	1
5	845-8016	BOLT - heavy hex flange, 8 - 1.25 x 16 mm	3
6	J901049	PAN - oil, engine	1
7	*NSS	GASKET - oil pan, order A77673 gasket kit for service	1
8	J924147	PLUG - hex magnetic, special, 12 mm - 1.5, drain, oil	1
9	*J920773	WASHER - sealing, drain plug	1
10	J920400	SCREW - hex flange cap, special, 8 - 1.25 x 25 mm	28
11	J924148	PLUG - hex magnetic, special, 22 mm - 1.5, pipe, heater hole	1
12	**J902425	WASHER - sealing, plug	1
	*A77673	KIT - gasket, oil pan, includes all items shown above with an asterisk	1

ENGINE OIL HEATER

	**A77490	KIT - heater, engine oil	1
13	NSS	ELEMENT - heater, 120 volt	1
14	196466A1	CABLE - engine block heater	1

** **NOTE:** When engine oil heater kit is ordered, item 12, J902425 washer must also be ordered.

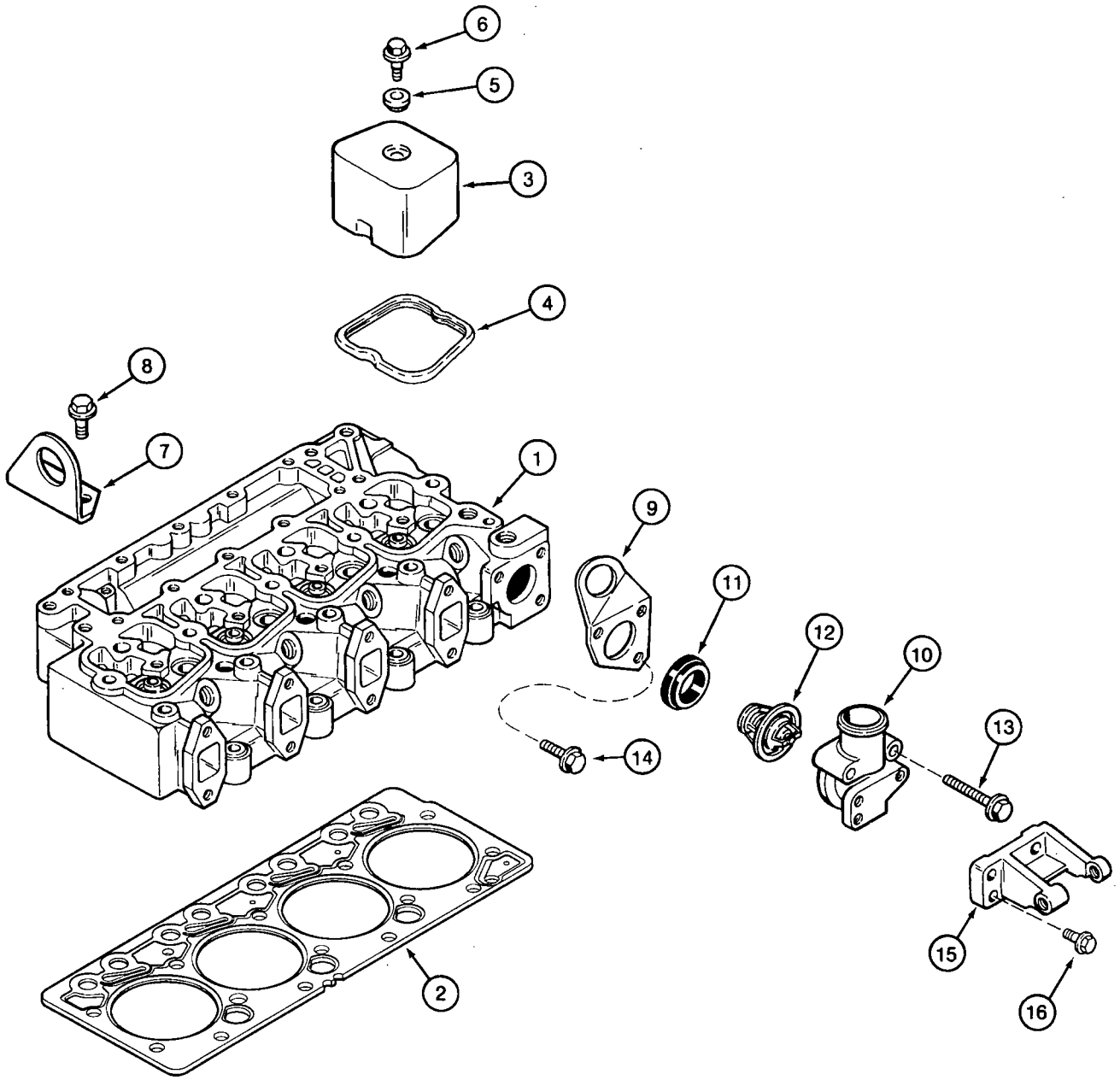
6
5
3
4
8
7
1
9
11
12
10
13
14
15
16
2

CYLINDER HEAD COVERS

4T-390 EMISSIONS CERTIFIED ENGINE

REF.	PART NO.	DESCRIPTION	REQ'D.
1	REF	HEAD - cylinder, see page 2-35 for correct cylinder head and parts list	1
2	J283333	GASKET - head, standard	1
2	J283336	GASKET - head, 2 notches, 0.25 mm overthick	1
2	J283338	GASKET - head, 3 notches, 0.50 mm overthick	1
3	J928404	COVER - rocker arm	4
4	J930906	SEAL - rocker arm cover	4
5	J928406	ISOLATOR - noise	4
6	J907049	BOLT - hex flange, special, 8 - 1.25 x 21.25 mm	4
7	J908118	BRACKET - lifting, rear	1
8	854-12030	BOLT - heavy hex flange, 12 - 1.75 x 30 mm, class 10.9	2

THERMOSTAT AND HOUSING

9	J903757	BRACKET - lifting, front	1
10	J914409	HOUSING - thermostat	1
	A77736	KIT - coolant thermostat	1
11	J923331	GASKET - thermostat housing	1
12	NSS	THERMOSTAT - coolant	1
13	845-8070	BOLT - heavy hex flange, 8 - 1.25 x 70 mm	2
14	845-8035	BOLT - heavy hex flange, 8 - 1.25 x 35 mm	1
15	J923387	SUPPORT - alternator mounting	1
16	845-8025	BOLT - heavy hex flange, 8 - 1.25 x 25 mm	3

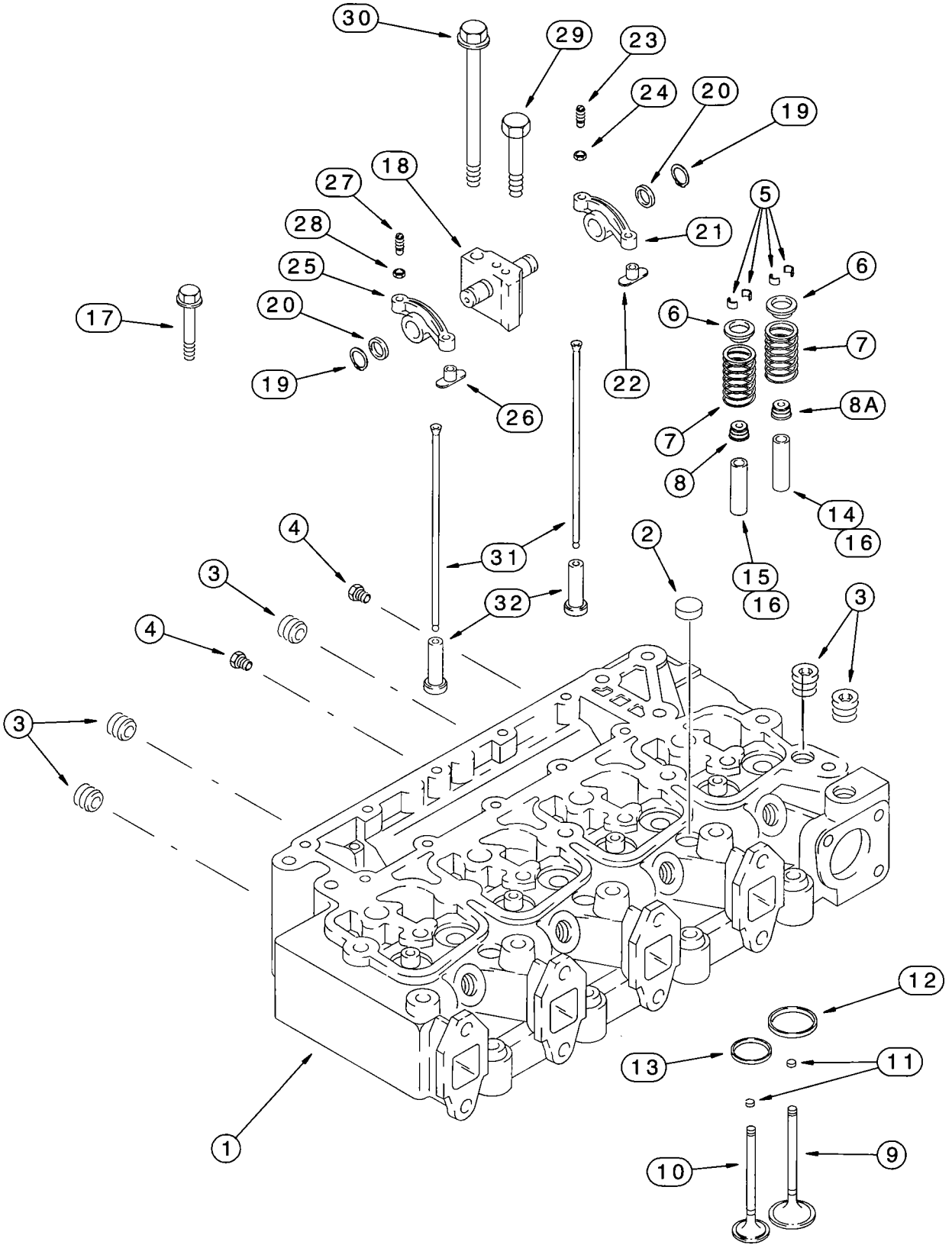
30
29
23
24
20
19
18
27
28
25
20
19
17
26
22
21
5
6
6
7
8A
7
8
14
16
15
16
4
3
4
31
32
2
3
3
12
13
11
1
10
9

CYLINDER HEAD AND VALVE MECHANISM

4T-390 EMISSIONS CERTIFIED ENGINE

REF.	PART NO.	DESCRIPTION	REQ'D.
	JR927330	HEAD ASSEMBLY - cylinder, remanufactured, North America only, component parts shown on this page do not apply to the remanufactured assembly	1
	JC927330	RETURN NUMBER - use this part number to return head for credit when using a remanufactured assembly	1
1	J927330	HEAD ASSEMBLY - cylinder, new, with valves	1
1	J917433	HEAD ASSEMBLY - cylinder, new, without valves	1
2	A77783	PLUG - expansion, 21 mm OD	3
3	217-466	PLUG - square socket headless, 1/2 inch PT, one removed to install temperature sending unit	5
4	J906619	PLUG - hex, 1/8 inch PT	2
5	J900250	KEEPER - valve	16
6	J900299	RETAINER - valve spring	8
7	J926700	SPRING - valve	8
8	J901097	SEAL - valve stem	4
8A	J921640	SEAL - valve, intake	4
9	J920867	VALVE - intake	4
10	J920868	VALVE - exhaust	4
11	J280911	PAD - wear, service repair only for valve stem tip, for use on intake and exhaust valves	UAR
12	J906854	SEAT - insert, intake valve, service repair only	4
13	J904105	SEAT - insert, exhaust valve, service repair only	4
14	*J904408	GUIDE - valve, intake, service repair only, 14 mm OD	4
15	*J904409	GUIDE - valve, exhaust, service repair only, 14 mm OD	4
16	*J906206	GUIDE - valve, intake and exhaust, service repair only, 11 mm OD	8
17	J920779	BOLT - cylinder head, 70 mm long	4
17	J920780	BOLT - cylinder head, 120 mm long	10
18	J922488	SUPPORT AND SHAFT ASSEMBLY - rocker arm	4
19	J900242	RING - retaining, rocker arm	8
20	J900245	WASHER - thrust, rocker arm	8
21	J910811	ARM ASSEMBLY - rocker, intake	4
22	NSS	INSERT - rocker arm	1
23	J900706	SCREW - slotted set, adjusting, special	1
24	425-116	NUT - hex, 3/8 inch NF	1
25	J910810	ARM ASSEMBLY - rocker, exhaust	4
26	NSS	INSERT - rocker arm	1
27	J900706	SCREW - slotted set, adjusting, special	1
28	425-116	NUT - hex, 3/8 inch NF	1
29	814-8075	BOLT - hex, 8 - 1.25 x 75 mm	4
30	J920781	BOLT - rocker arm and cylinder head, 180 mm long	4
31	J923262	ROD - push, rocker arm	8
32	J931623	TAPPET - valve, push rod	8

***NOTE:** These parts are semi-finished valve guides.

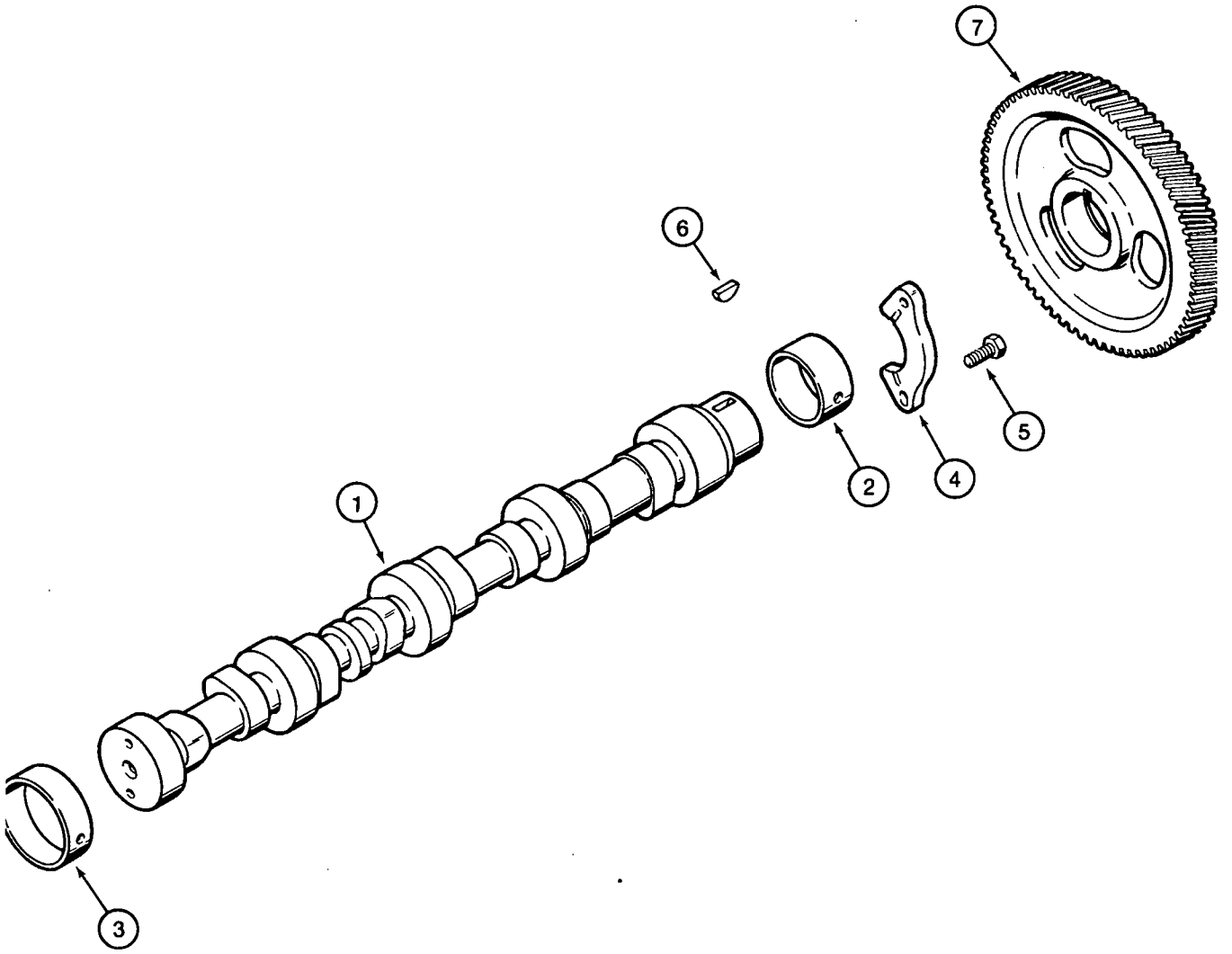
7
6
5
4
2
1
3

CAMSHAFT

4T-390 EMISSIONS CERTIFIED ENGINE

REF.	PART NO.	DESCRIPTION	REQ'D.
1	J929885	CAMSHAFT - engine	1
2	J940059	BUSHING - camshaft, front	1
3	*J903242	BUSHING - camshaft, intermediate and rear, service repair only	4
4	J927155	SUPPORT - thrust, camshaft	1
5	J900227	BOLT - hex, special, 8 - 1.25 x 22 mm	2
6	836-4065	KEY - Woodruff, 4 x 6.5 mm, camshaft gear	1
7	J929028	GEAR - camshaft	1

***NOTE:** When the intermediate and rear cylinder block camshaft bores are reamed in engine repair, order and install item 3, J903242 bushings shown above.

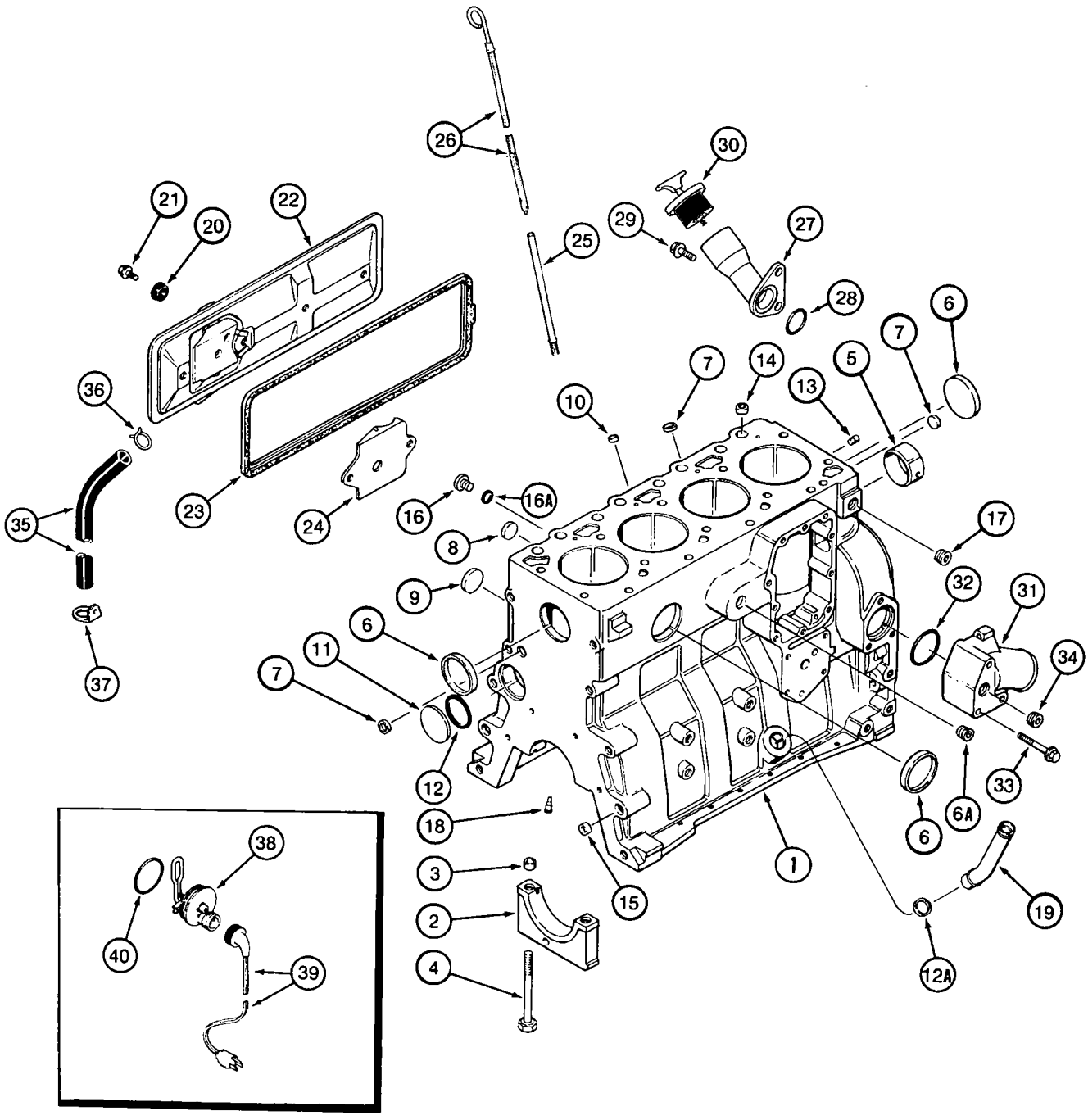
1
2
3
4
5
6
6A
7
8
9
10
11
12
12A
13
14
15
16
16A
17
18
19
20
21
22
23
24
25
26
27
28
29
30
31
32
33
34
35
36
37
38
39
40

CYLINDER BLOCK

4T-390 EMISSIONS CERTIFIED ENGINE

REF.	PART NO.	DESCRIPTION	REQ'D.
	*236300A1	ENGINE ASSEMBLY - 4T-390 Emissions Certified, complete, for service order 234277A2 basic engine below	1
	234277A2R	ENGINE ASSEMBLY - basic, remanufactured, North America only, component parts shown on this page do not apply to the remanufactured assembly	1
	234277A1C	RETURN NUMBER - use this part number to return basic engine core for credit when using a remanufactured assembly	1
	234277A2	ENGINE ASSEMBLY - basic, includes all parts except starter, alternator, fan, fan belt, air cleaner, muffler, exhaust manifold, flywheel and housing, oil fill and dipstick, fuel injection pump, injectors and lines, front pulley, belt tensioner, turbocharger and aftercooler	1
	JR933648	BLOCK ASSEMBLY - short, remanufactured, North America only, component parts shown on this page do not apply to the remanufactured assembly	1
	AC77752	RETURN NUMBER - use this part number to return short block core for credit when using a remanufactured assembly	1
	J933648	BLOCK ASSEMBLY - short, new, includes stripped block, pistons, connecting rods and bearings, crankshaft and bearings	1
1	J932012	BLOCK ASSEMBLY - stripped, engine, order J933220 block hardware kit shown below also	1
2	J900967	CAP - main bearing	5
3	J900068	RING - dowel, 18 mm OD, main bearing cap to block	10
4	J927948	BOLT - hex flange, main bearing cap, special	10
5	REF	BUSHING - camshaft front, see page 2-37, item 2	1
6	A77782	PLUG - expansion, 58 mm OD	1
6A	A77505	PLUG - hex socket, 3/4 inch PT	1
7	J900956	PLUG - expansion, 18 mm OD	3
8	41-1616	PLUG - cup, 1 inch diameter, expansion	2
	J933220	KIT - block hardware, includes items 9 - 18.	1
9	J900958	PLUG - expansion, 32 mm OD	2
10	J900955	PLUG - expansion, 10 mm OD	1
11	172599	PLUG - expansion, Welch, 60 mm OD	1
12	J926047	O-RING - sealing, 57 mm ID	1
12A	J920706	PLUG - expansion, 22 mm OD, not used in this application, item 19, J903744 turbocharger oil drain tube is installed in this port	1
13	J900257	PIN - dowel, 16 mm long, locating	2
14	J902343	RING - dowel, 16 mm OD	2
15	J900068	RING - dowel, 18 mm OD	2
16	J678923	PLUG - hex socket, 10 mm	3
16A	637-72081	O-RING - 8.1 ID x 1.6 mm wide, plug	1
17	A77429	PLUG - hex socket, 1/2 inch PT	1
17A	**J678921	PLUG - hex socket, 14 mm, not shown	1
17B	**J678912	O-RING - sealing, not shown	1
17C	**J932296	PLUG - timing sensor hole, not shown	1
17D	**J330478	O-RING - sealing, not shown	1
17E	**844-8016	BOLT - heavy hex flange, 8 - 1.25 x 16 mm, not shown	1

***NOTE:** The engine part number is stamped on a metal tag which is mounted on the front gear cover.

****NOTE:** Items 17A - 17E are not used in this application.

Continued on next page

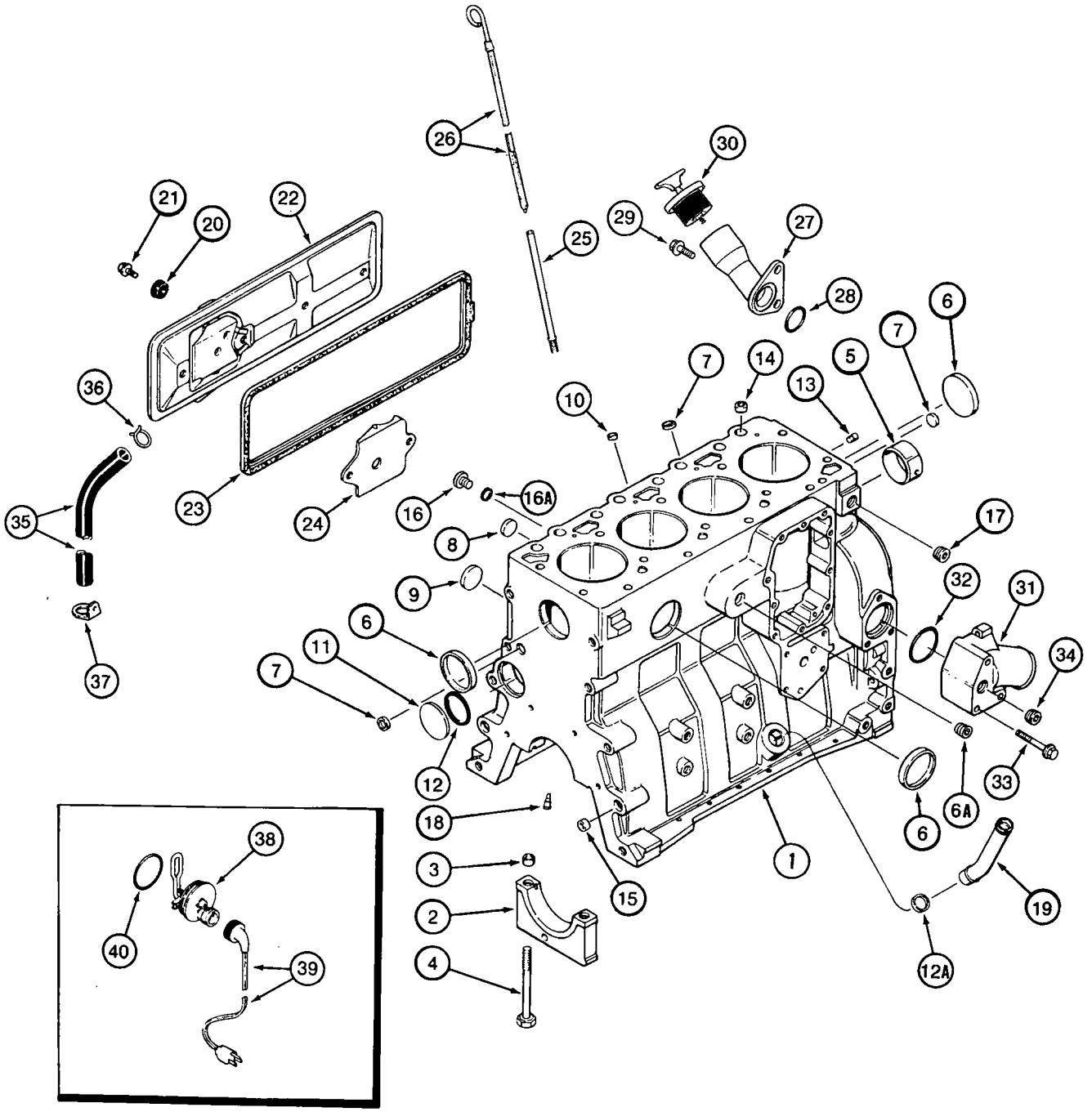
1
2
3
4
5
6
6A
7
8
9
10
11
12
12A
13
14
15
16
16A
17
18
19
20
21
22
23
24
25
26
27
28
29
30
31
32
33
34
35
36
37
38
39
40

CYLINDER BLOCK

4T-390 EMISSIONS CERTIFIED ENGINE

REF.	PART NO.	DESCRIPTION	REQ'D.
18	J930139	NOZZLE - piston cooling	4
19	J903744	TUBE - turbocharger oil drain	1
20	J928759	SEAL - cover bolt	4
21	845-8016	BOLT - heavy hex flange, 8 - 1.25 x 16 mm	2
22	J925680	COVER - tappet	1
23	J283767	GASKET - tappet cover	1
24	J907586	BAFFLE - tappet cover	1
25	J905127	TUBE - dipstick	1
26	J904287	DIPSTICK - oil level gauge	1
27	J934190	TUBE - oil fill	1
28	J906696	O-RING - 38 mm (1-1/2 inch) ID	1
29	854-12025	BOLT - heavy hex flange, 12 - 1.75 x 25 mm, class 10.9	2
30	A77424	CAP - oil fill tube	1
31	J903102	CONNECTION - water inlet	1
32	J906697	O-RING - sealing, 50 mm ID	1
33	854-10075	BOLT - heavy hex flange, 10 - 1.5 x 75 mm, class 10.9	3
34	A77429	PLUG - hex socket, 1/2 inch PT	2
35	J918612	HOSE - 360 mm (14-3/16 inch) long, breather	1
36	J904230	CLAMP - spring, hose	1
37	J928989	CLIP - retaining	1

ENGINE BLOCK HEATER

	196803A1	KIT - engine block heater	1
38	NSS	ELEMENT - engine heater, 120 volt	1
39	196466A1	CABLE - engine block heater	1
40	J910517	O-RING - heater sealing	1

ENGINE OVERHAUL KIT

	A77887	KIT - engine overhaul, includes items 41 - 48, not shown	1
41	J802747	KIT - piston, standard, see page 2-47	4
42	J919053	PIN - piston, see page 2-47	4
43	A77465	KIT - bearing, upper and lower set, standard, see page 2-47	4
44	A77405	BEARING - main, upper and lower set, standard, see page 2-43	4
45	A77406	BEARING - main thrust, upper and lower set, standard, see page 2-43	1
46	A77870	KIT - gasket, valve grind, see page 2-49	1
47	J283333	GASKET - head, standard, see page 2-33	1
48	A77673	KIT - gasket, oil pan, see page 2-31	1

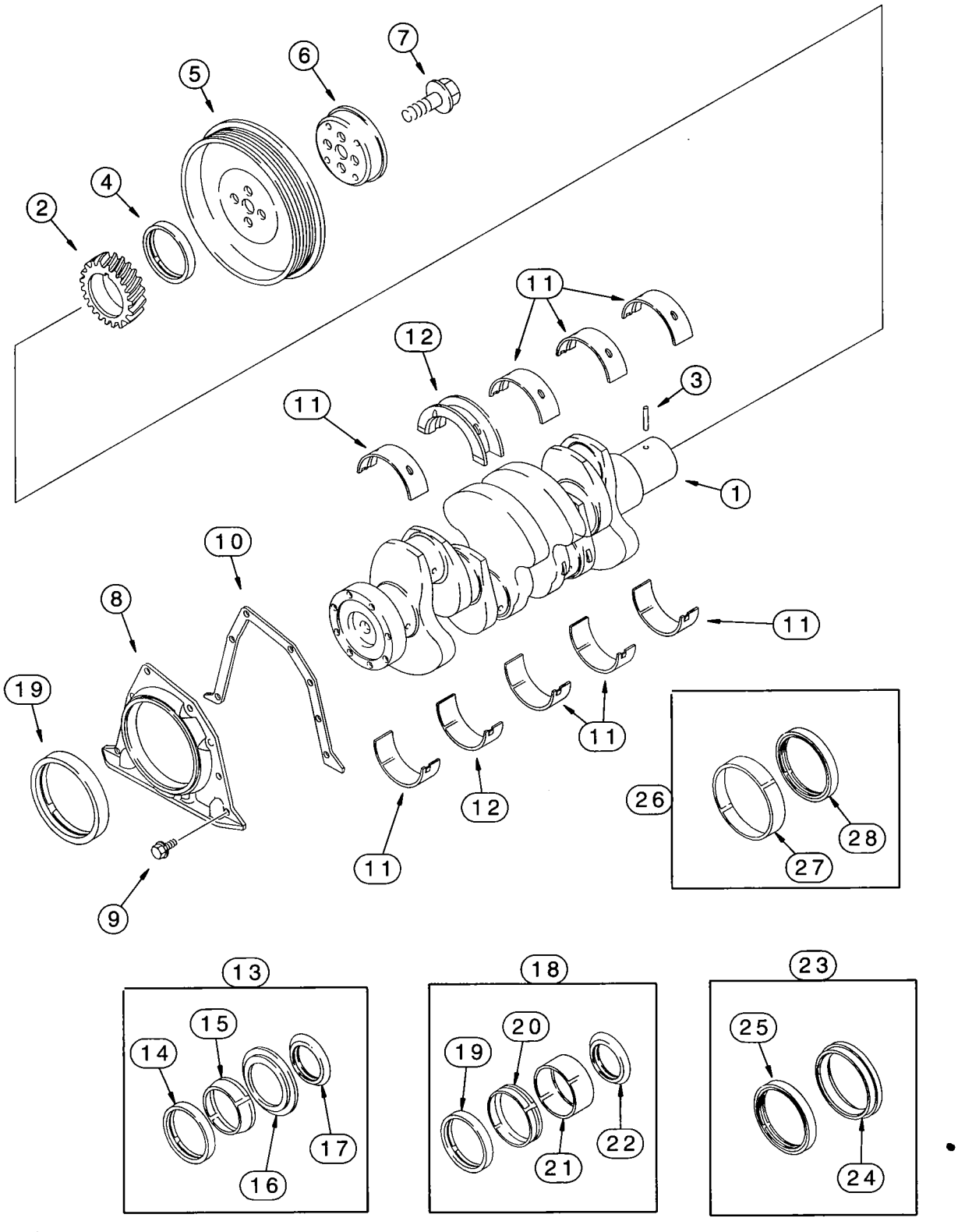
1
2
3
4
5
6
7
8
9
10
11
12
13
14
15
16
17
18
19
20
21
22
23
24
25
26
27
28

CRANKSHAFT

4T-390 EMISSIONS CERTIFIED ENGINE

REF.	PART NO.	DESCRIPTION	REQ'D.
	JR908031	CRANKSHAFT - engine, remanufactured, North America only, component parts shown on this page do not apply to the remanufactured assembly, for service order J908031 crankshaft assembly, item 1	1
	JC908031	RETURN NUMBER - use this part number to return crankshaft for credit when using a remanufactured assembly	1
1	J908031	CRANKSHAFT ASSEMBLY - engine	1
2	J929027	GEAR - crankshaft	1
3	J904483	PIN - dowel	1
4	NSS	SEAL - oil, crankshaft front, order item 13 kit	1
5	J914494	PULLEY - crankshaft vibration damper	1
6	J905820	FLANGE - adapter, pulley	1
7	J903857	BOLT - hex flange, special, 12 - 1.25 x 36 mm	4
8	J921043	RETAINER - seal, rear cover	1
9	845-6015	BOLT - heavy hex flange, 6 - 1.0 x 15 mm	6
10	J928493	GASKET - rear cover retainer	1
11	A77405	BEARING - main, upper and lower set, standard	4
11	A77472	BEARING - main, upper and lower set, 0.25 mm undersize	4
11	A77474	BEARING - main, upper and lower set, 0.50 mm undersize	4
11	A77476	BEARING - main, upper and lower set, 0.75 mm undersize	4
11	A77478	BEARING - main, upper and lower set, 1.00 mm undersize	4
12	A77406	BEARING - main thrust, upper and lower set, standard	1
12	A77473	BEARING - main thrust, upper and lower set, 0.25 mm undersize	1
12	A77475	BEARING - main thrust, upper and lower set, 0.50 mm undersize	1
12	A77477	BEARING - main thrust, upper and lower set, 0.75 mm undersize	1
12	A77479	BEARING - main thrust, upper and lower set, 1.00 mm undersize	1
12	A77841	BEARING - main thrust, upper and lower set, 0.50 mm undersize, 0.50 mm oversize thrust	1
12	A77840	BEARING - main thrust, upper and lower set, 1.00 mm undersize, 1.00 mm oversize thrust	1
13	A77889	KIT - oil seal, crankshaft front	1
14	NSS	SEAL - oil, front	1
15	NSS	TOOL - installation	1
16	NSS	TOOL - installation	1
17	NSS	SHIELD - dust	1
18	A77890	KIT - oil seal, crankshaft front, includes wear sleeve	1
19	NSS	SEAL - oil, front	1
20	NSS	SLEEVE - wear, not shown	1
21	NSS	TOOL - installation	1
22	NSS	SHIELD - dust	1
23	A77809	KIT - oil seal, crankshaft rear	1
24	NSS	TOOL - installation	1
25	NSS	SEAL - oil, rear	1
26	A77810	KIT - oil seal, crankshaft rear, includes wear sleeve	1
27	NSS	SLEEVE - wear	1
28	NSS	SEAL - oil, rear	1

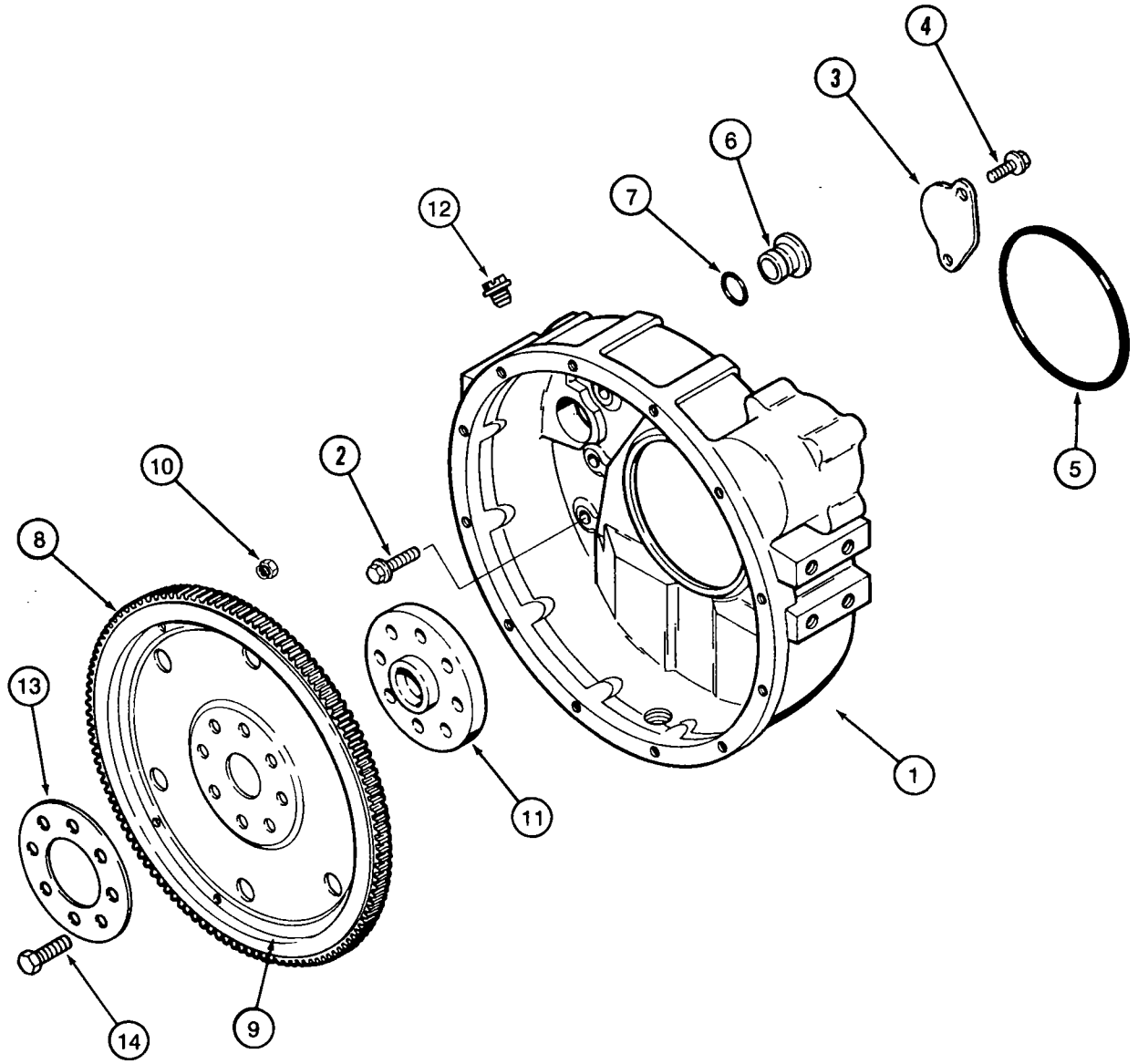
1
2
3
4
5
6
7
8
9
10
11
12
13
14

FLYWHEEL AND HOUSING

4T-390 EMISSIONS CERTIFIED ENGINE

REF.	PART NO.	DESCRIPTION	REQ'D.
1	J930886	HOUSING - flywheel	1
2	854-12040	BOLT - heavy hex flange, 12 - 1.75 x 40 mm, class 10.9	8
3	J925234	PLATE - cover	1
4	613-8016	BOLT - hex, 8 - 1.25 x 16 mm, retaining plate	2
5	J912473	O-RING - flywheel housing to block	1
6	J910248	PLUG - flywheel housing	1
7	238-5212	O-RING - 7/8 ID x 1/8 inch wide, sealing	1
	J922595	PLATE ASSEMBLY - flex	1
8	NSS	GEAR - ring, flywheel	1
9	NSS	PLATE - flex	1
10	NSS	NUT - sealing	6
11	J913689	ADAPTER - crankshaft	1
12	353-225	PLUG - slotted hex, 3/4 inch NF	1
13	J904361	RING - clamping	1
14	J901395	BOLT - hex, special, 12 - 1.25 x 32 mm	8

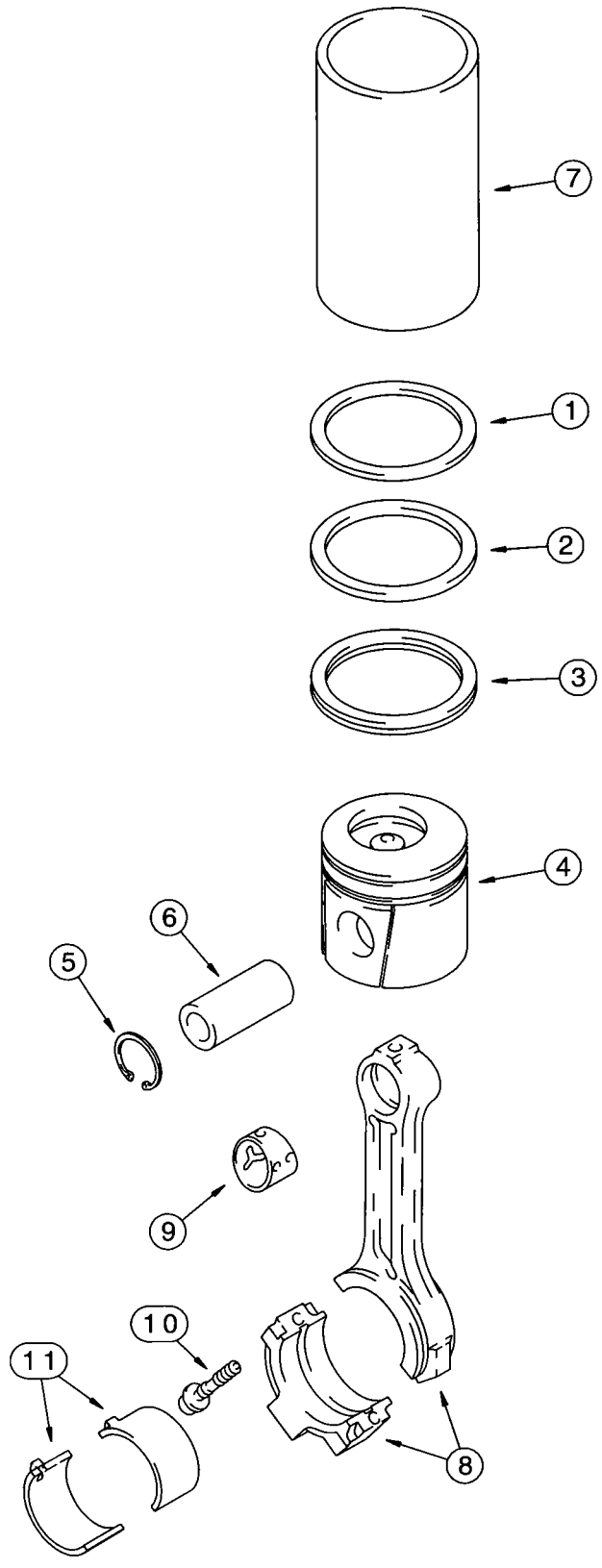
7
1
2
3
4
6
5
9
10
11
8

PISTONS AND CONNECTING RODS

4T-390 EMISSIONS CERTIFIED ENGINE

REF.	PART NO.	DESCRIPTION	REQ'D.
		PISTONS	
	J802747	KIT - piston, standard	4
	J802746	KIT - ring, standard	1
1	NSS	RING - compression, top	1
2	NSS	RING - compression, middle	1
3	NSS	RING - oil, bottom	1
4	NSS	PISTON - cylinder, standard	1
5	J901706	RING - snap	2
6	J919053	PIN - piston	1
	J802764	KIT - piston, 0.5 mm oversize	4
	J802422	KIT - ring, 0.5 mm oversize	1
1	NSS	RING - compression, top	1
2	NSS	RING - compression, middle	1
3	NSS	RING - oil, bottom	1
4	NSS	PISTON - cylinder, 0.5 mm oversize	1
5	J901706	RING - snap	2
6	J919053	PIN - piston	1
	J802765	KIT - piston, 1.0 mm oversize	4
	J802423	KIT - ring, 1.0 mm oversize	1
1	NSS	RING - compression, top	1
2	NSS	RING - compression, middle	1
3	NSS	RING - oil, bottom	1
4	NSS	PISTON - cylinder, 1.0 mm oversize	1
5	J901706	RING - snap	2
6	J919053	PIN - piston	1
7	J904166	LINER - piston, used only in engine block repair (When liner is installed, use J802747 standard piston kit)	UAR
		CONNECTING RODS	
	JR942581	ROD ASSEMBLY - connecting, remanufactured, North America only, component parts shown on this page do not apply to the remanufactured assembly	1
	JC901569	RETURN NUMBER - use this part number to return connecting rod for credit when using a remanufactured assembly	1
	J942581	ROD ASSEMBLY - connecting, new, includes both halves	4
8	NSS	ROD - connecting	1
9	J941476	BUSHING - connecting rod	1
10	J900919	BOLT - hex, special	2
11	A77465	KIT - bearing, upper and lower set, standard	4
11	A77466	KIT - bearing, upper and lower set, 0.25 mm oversize	4
11	A77467	KIT - bearing, upper and lower set, 0.50 mm oversize	4
11	A77468	KIT - bearing, upper and lower set, 0.75 mm oversize	4
11	A77469	KIT - bearing, upper and lower set, 1.00 mm oversize	4

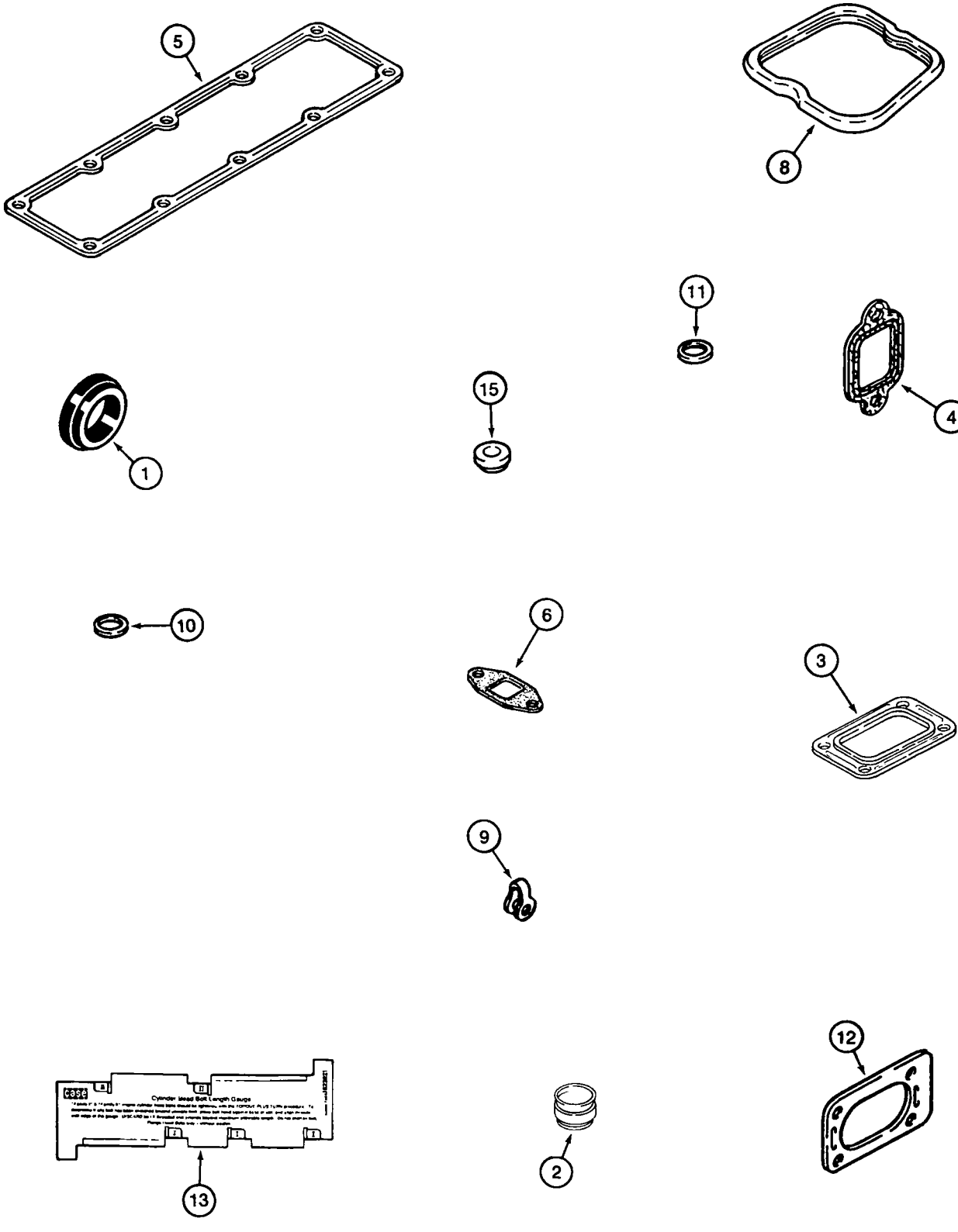
5
8
11
4
15
1
10
6
3
9
12
2
13

GASKET KIT

4T-390 EMISSIONS CERTIFIED ENGINE

REF.	PART NO.	DESCRIPTION	REQ'D.
		VALVE GRIND	
	*A77870	KIT - gasket, valve grind	1
1	J923331	GASKET - thermostat housing	1
2	J901097	SEAL - valve, intake, identified by color black with orange band	4
2	J921640	SEAL - valve, intake, identified by color orange with silver band	4
3	J919369	GASKET - turbocharger to manifold	1
4	J905443	GASKET - exhaust manifold	4
5	J931605	GASKET - intake manifold	1
6	J931350	GASKET - turbo oil drain tube	1
8	J930906	SEAL - rocker arm cover	4
9	J903380	SEAL - connector, fuel drain manifold tube	4
10	J906659	SEAL - injector nozzle, 7 mm injector tip	4
11	J909356	O-RING - sealing, body to nut	4
12	J914856	GASKET - air crossover connection	1
13	J823921	GAUGE - cylinder head, bolt length	1
15	J928406	ISOLATOR - noise, rocker arm cover	4

***NOTE:** When just the valve grind gasket kit is used, also order the required cylinder head gasket, item 2, page 2-33.

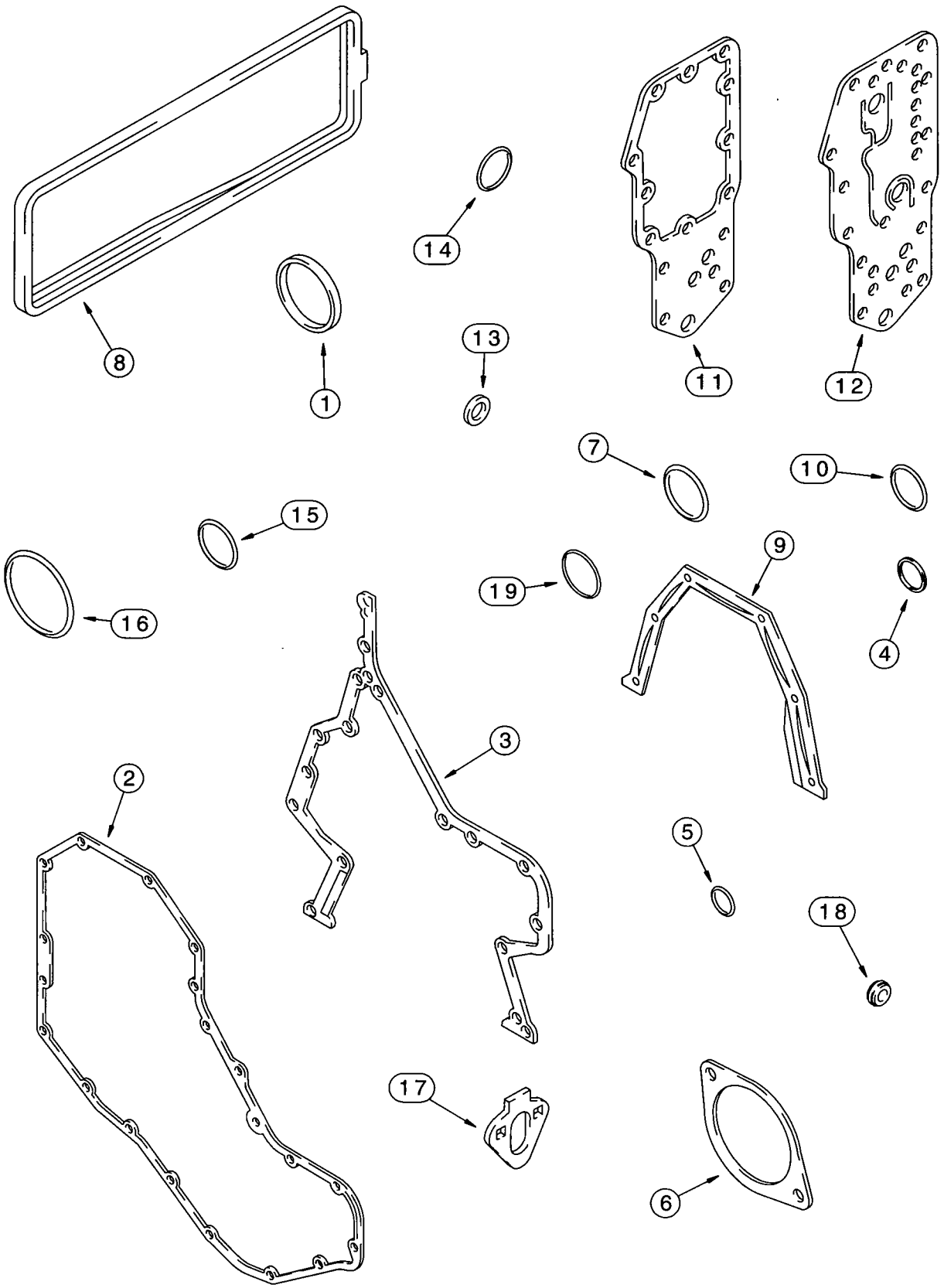
8
1
14
13
11
12
7
10
15
16
19
9
4
3
2
5
18
17
6

GASKET KIT

4T-390 EMISSIONS CERTIFIED ENGINE

REF.	PART NO.	DESCRIPTION	REQ'D.
		CYLINDER BLOCK	
	*A77864	KIT - gasket, cylinder block	1
1	J903475	SEAL - front access cover	1
2	J918673	GASKET - front cover, to housing	1
3	J931351	GASKET - gear housing, timing	1
4	J915772	RING - quad, timing pin housing	1
5	J913994	O-RING - sealing, timing pin	1
6	J929751	GASKET - access cover plate, accessory drive	1
7	238-5341	O-RING - 3-1/2 ID x 3/16 inch wide, water pump to cylinder block	1
8	J283767	GASKET - tappet cover	1
9	J928493	GASKET - rear cover retainer, crankshaft	1
10	J906697	O-RING - sealing, 50 mm ID, water inlet connection	1
11	J942914	GASKET - oil cooler core	1
12	J929792	GASKET - filter head, oil	1
13	J902425	WASHER - sealing, plug, oil pan	1
14	J906696	O-RING - 38 mm (1-1/2 inch) ID, engine oil fill tube	1
15	J929457	O-RING - oil filter plug	1
16	J912473	O-RING - flywheel housing to block	1
17	J931348	GASKET - mounting, fuel transfer pump	1
18	J928759	SEAL - cover bolt	4
19	J930993	O-RING - sealing	1

***NOTE:** For complete engine overhaul, order 1 - cylinder block kit, 1 - valve grind kit on page 2-49, 1 - oil pan kit on page 2-31, 1 - front and rear crankshaft seal kit on page 2-43 and the required cylinder head gasket on page 2-33.

ALPHABETICAL INDEX
FUEL SYSTEM

DESCRIPTION	PAGE
Cover - Loader Lift Frame Tubing	3-3
Filter	3-11
Fuel Reservoir	3-3
Fuel Reservoir Lines	3-3,3-5
Injection System	3-13
Nozzle - Injection	3-19
Pump and Drive - Injection	3-17
Sensor - Fuel Level	3-3
Throttle Control Linkage	
Foot Controls	3-9
Hand Control	3-7

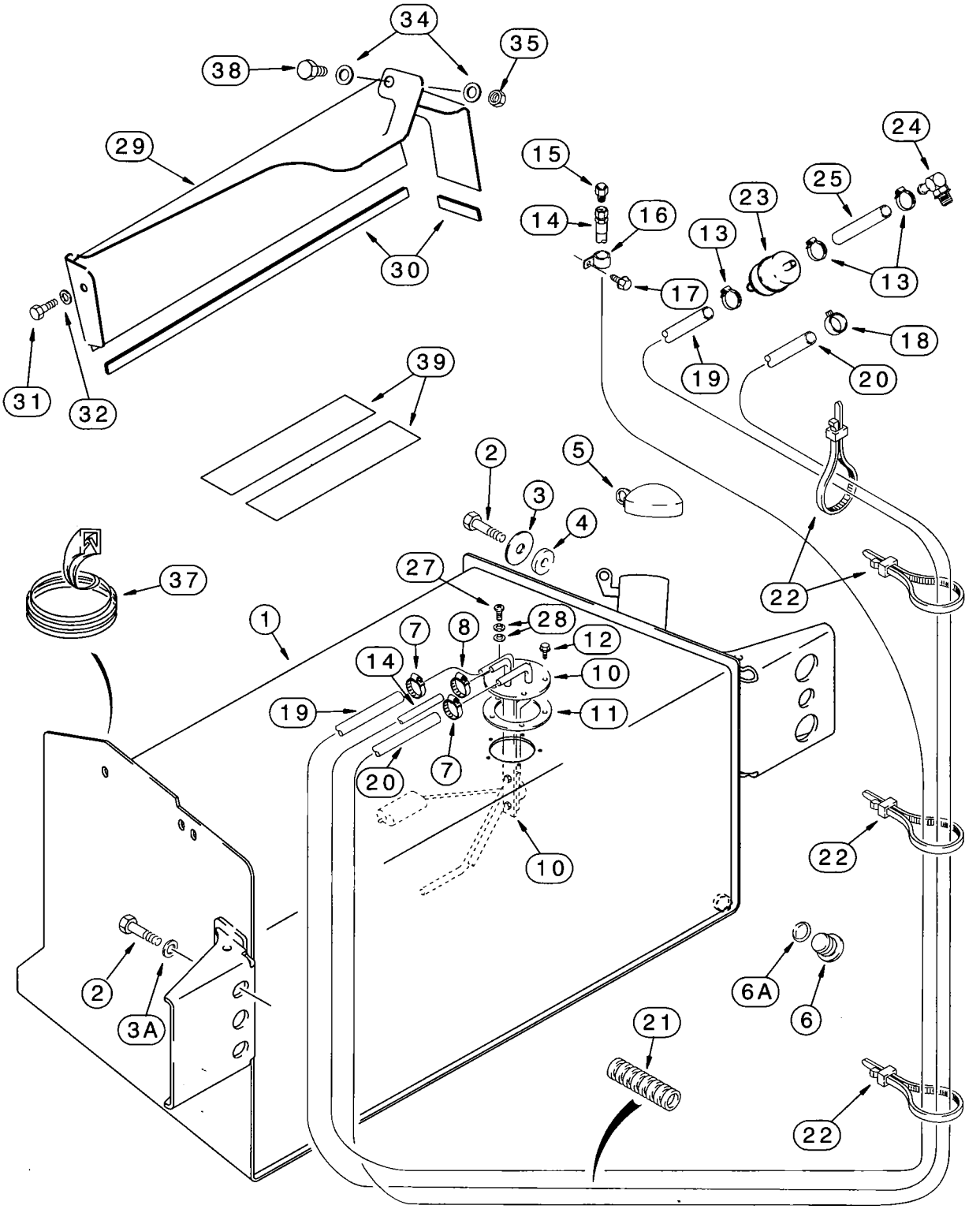
34
35
38
29
15
24
25
14
16
23
13
13
30
17
18
31
32
39
19
20
2
5
3
4
37
27
22
1
28
7
8
12
14
10
19
11
7
20
10
22
2
3A
6A
6
21
22

FUEL RESERVOIR AND FUEL LEVEL SENSOR

REF.	PART NO.	DESCRIPTION	REQ'D.
1	284041A3	TANK - fuel reservoir, 31 gallon, includes left-hand steps, mounts to left-hand side of chassis, also includes Ref 6 plug	1
1A	281819A4	TANK - fuel reservoir, 40 gallon, optional, includes left-hand steps, mounts to left-hand side of chassis, includes Ref 6 plug, if used, not shown	1
2	627-20040	BOLT - hex, full threads, 20 - 2.5 x 40 mm, class 10.9	4
3	302358A1	WASHER - flat, hardened, special	2
3A	896-11020	WASHER - flat, 22 x 37 x 4 mm, hardened	2
4	185926A1	SPACER - bushing, left-hand side of tank	2
5	130049A1	CAP - fuel tank, non-vented	1
6	218-5211	PLUG - hex socket, 7/8-14 inch O-ring boss, drain, included with Ref 1 or 1A fuel tank	1
6A	237-6010	O-RING - 3/4 ID x 3/32 inch wide	1
7	214-1708	CLAMP - adj, 1/2 - 29/32 inch dia	2
8	214-1704	CLAMP - adj, 1/4 - 5/8 inch dia, center hose	1
10	284431A1	SENSOR - fuel level, 31 gallon tank, Ref 1	1
10	298463A1	SENSOR - fuel level, 40 gallon tank, Ref 1A	1
11	188311A2	GASKET - fuel sensor	1
12	D75465	SCREW - self-tapping, hex washer head, special, No. 10 NF x 5/8 inch	4
13	196252A1	CLAMP - hose	3
14	234892A1	HOSE - 1100 mm (43-5/16 inch) long, vent	1
15	130047A1	VENT - fuel, 1/4 inch PTF short	1
16	515-23127	CLAMP - P-type, 1/2 inch ID	1
17	121856A1	BOLT - hex washer, special, 10 - 1.5 x 30 mm	1
18	1348264C1	CLAMP - hose, 3/8 inch	1
19	234888A1	HOSE - 1280 mm (50-7/16 inch) long, fuel supply, to fuel lift pump	1
20	284452A2	HOSE - 1900 mm (74-13/16 inch) long, fuel return, attaches to injector return line on engine	1
21	130048A1	SLEEVE - 203 mm (8 inch) long, fuel line hose guard	1
22	L18337	STRAP - tie, 15 inch, nylon, retaining	UAR
23	194199A1	FILTER - fuel, in-line	1
24	217-372	ELBOW - 90 degree, 1/2 stem end x 1/4 inch PT, to engine fuel lift pump	1
25	196247A1	HOSE - 13 (1/2) x 20 (25/32) x 78 mm (3-5/64 inch) long, fuel filter to lift pump	1
27	490-11010	SCREW - machine, pan Phillips, No. 10 NF x 5/8 inch, fuel sensor ground	1
28	D83885	WASHER - flat, copper, special	2
29	189602A1	COVER - left-hand loader lift frame tubing, mounted above fuel reservoir, models without clam bucket or auxiliary hydraulics	1
29A	188009A1	COVER - left-hand loader lift frame tubing, mounted above fuel reservoir, models with clam bucket, not shown	1

Continued on next page

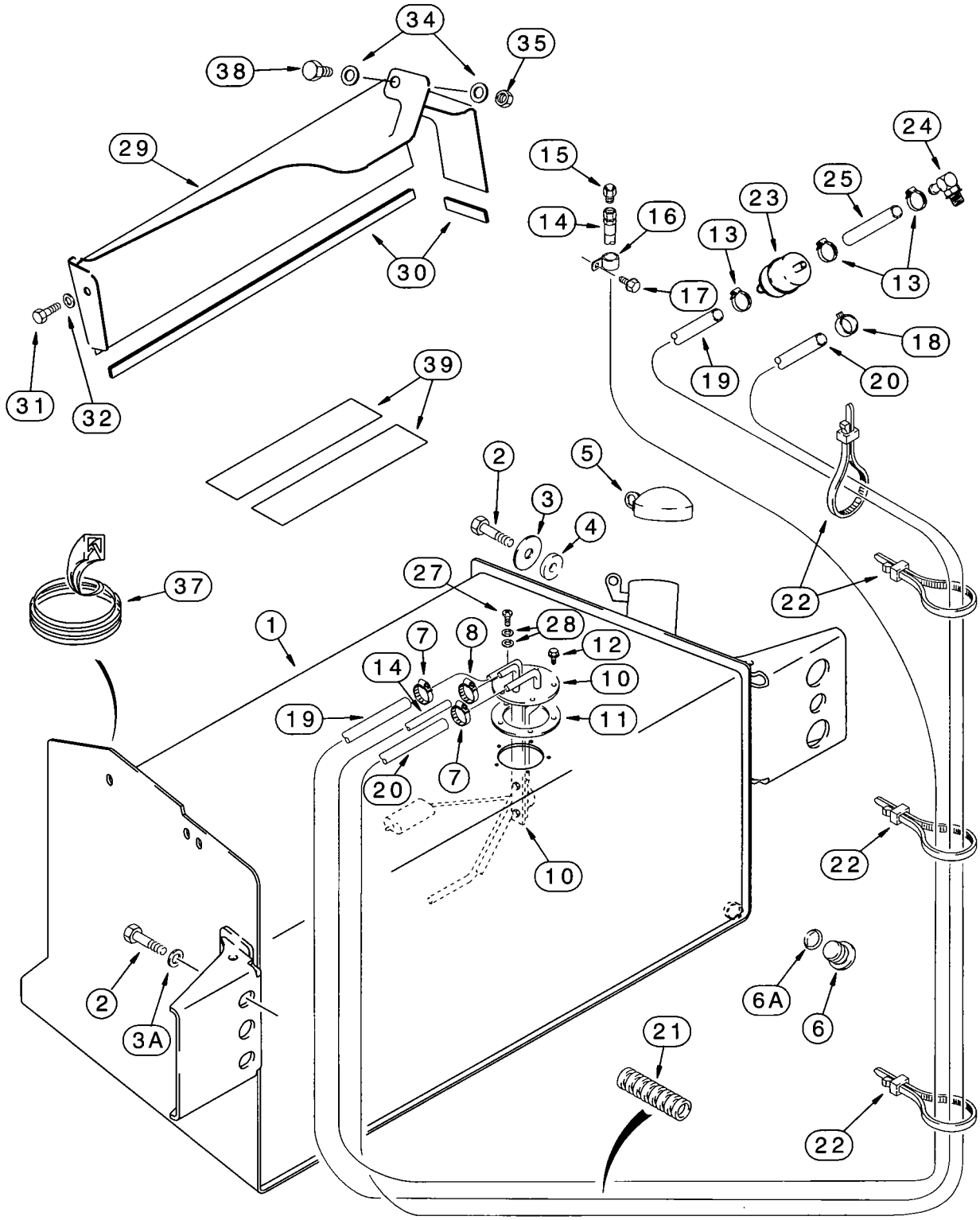
34
35
38
29
15
24
14
16
23
25
13
13
30
17
18
39
31
32
19
20
2
5
3
4
37
27
22
1
7
8
28
12
14
10
19
11
20
7
10
22
2
3A
6A
6
21
22

FUEL RESERVOIR AND FUEL LEVEL SENSOR

REF.	PART NO.	DESCRIPTION	REQ'D.
30	*191046A1	TRIM - edge, 650 mm (25-19/32 inch) long, cut from A165860 bulk trim	1
31	614-8016	BOLT - hex, full threads, 8 - 1.25 x 16 mm	1
32	895-15008	WASHER - flat, 9 x 20 x 1.6 mm	1
34	895-11010	WASHER - flat, 11 x 20 x 2 mm	1-2
35	829-1410	NUT - hex, 10 mm - 1.5, class 10.9, 189602A1 cover	1
37	D40442	TRIM - edge, 305 mm (12 inch) long, cut from F42827 bulk trim	1
38	814-10045	BOLT - hex, 10 - 1.5 x 45 mm	1
39	307348A1	PAD - anti-skid, 700 mm (27-9/16 inch) long	2
	A165860	TRIM - edge, bulk, 696 mm (27-3/8 inch) long	1
	F42827	TRIM - edge, bulk, 2946 mm (116 inch) long	UAR

***NOTE:** Apply 75 mm (3 inch) of trim to front lower edge and 570 mm (22-7/16 inch) of trim to outside lower edge of cover.

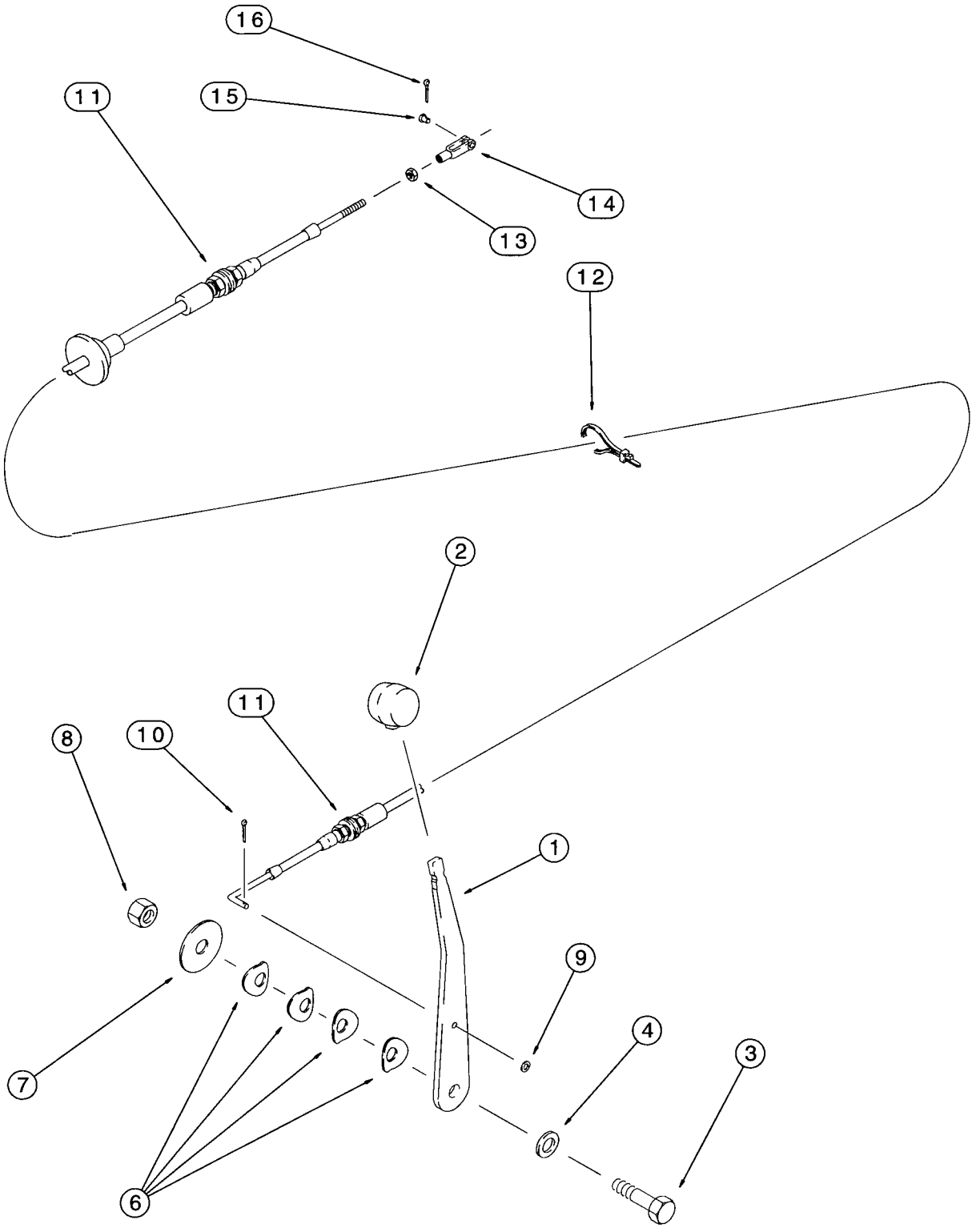
16
15
11
14
13
12
2
11
10
8
1
9
4
3
7
6

THROTTLE CONTROL LINKAGE

HAND CONTROL

REF.	PART NO.	DESCRIPTION	REQ'D.
1	305067A1	LEVER - hand throttle	1
2	A177435	KNOB - lever, lever	1
3	814-12045	BOLT - hex, 12 - 1.75 x 45 mm	1
4	896-11012	WASHER - flat, 13.5 x 24 x 3 mm, hardened	1
6	D148962	WASHER - Belleville	4
7	496-81018	WASHER - flat, 33/64 x 2 x 1/8 inch, hardened	1
8	832-10412	NUT - hex, self-locking, 12 mm - 1.75	1
9	495-31022	WASHER - flat, 7/32 x 1/2 x 3/64 inch	1
10	432-48	PIN - cotter, 1/16 x 1/2 inch	1
11	121335A1	CABLE - control, hand throttle	1
12	L18337	STRAP - tie, 15 inch, nylon, retaining	1
13	225-14210	NUT - hex, No. 10 NF	1
14	213-123	CLEVIS - adjustable, No. 10 NF	1
15	427-3058	PIN - clevis, 3/16 x 9/16 inch, hardened	1
16	432-48	PIN - cotter, 1/16 x 1/2 inch	1

bill

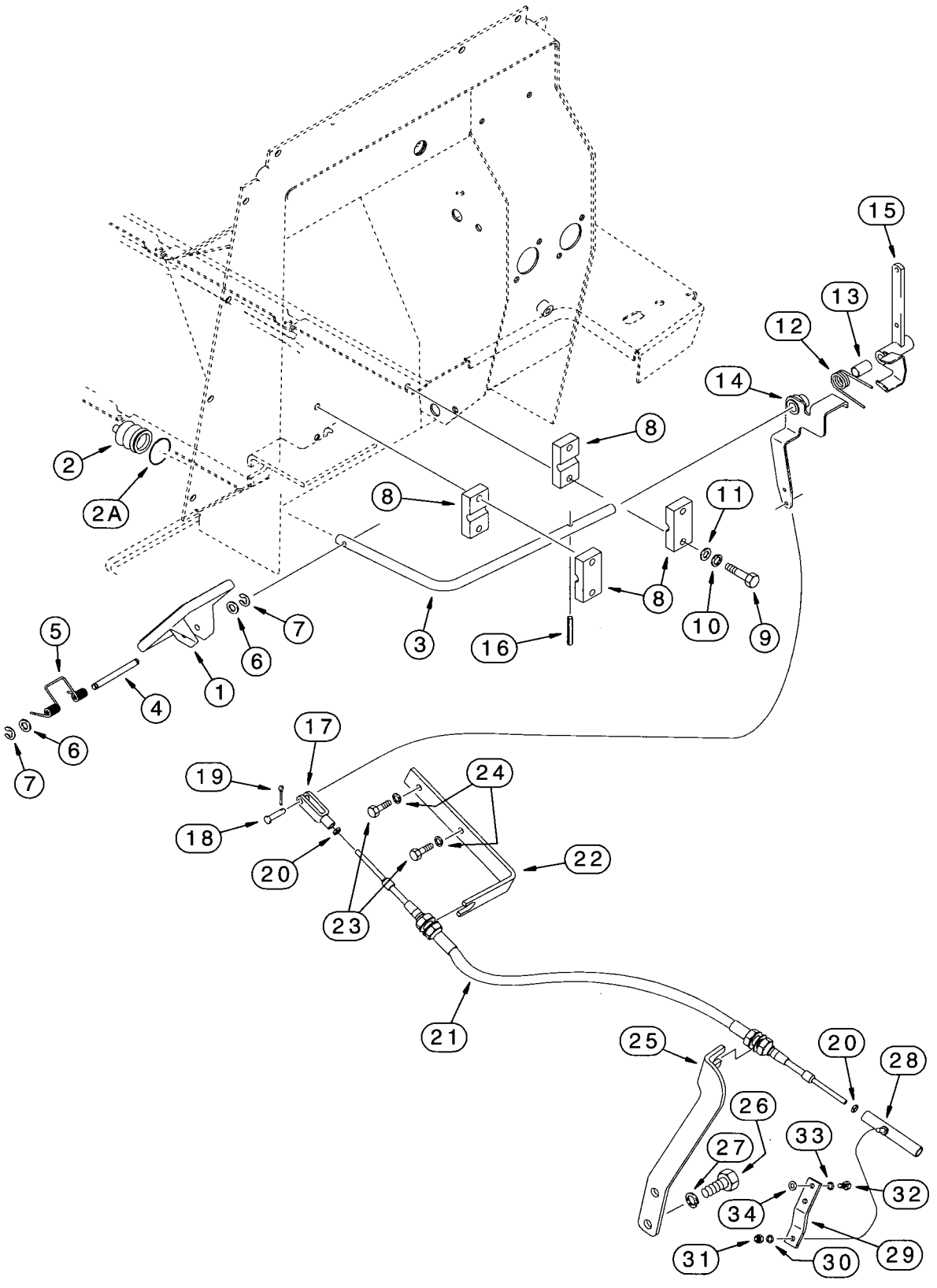
15
13
12
14
8
2
2A
8
11
8
10
9
5
7
3
16
6
1
4
6
7
17
19
24
18
20
22
23
21
25
20
28
26
27
33
32
34
31
30
29

THROTTLE CONTROL LINKAGE

FOOT CONTROLS

REF.	PART NO.	DESCRIPTION	REQ'D.
1	282242A1	PEDAL - accelerator, plastic	1
2	132931A1	BOOT - 1/2 inch rod, accelerator pedal rod	1
2A	189109A1	RETAINER - boot spring	1
3	282931A1	ROD - accelerator pedal shaft	1
4	255291A1	PIN - throttle pedal	1
5	256776A1	SPRING - 1/16 x 1/2 inch	1
6	895-11005	WASHER - flat, 5.5 x 10 x 1 mm	2
7	800-435	RING - E-type, external retaining, No. 5	2
8	D124857	BLOCK - cross shaft	4
9	814-8050	BOLT - hex, 8 - 1.25 x 50 mm	4
10	892-11008	WASHER - lock, 8 mm	4
11	895-11008	WASHER - flat, 9 x 17 x 1.6 mm	4
12	123558A1	SPRING - throttle return	1
13	123392A1	SPACER - spring retaining	1
14	245287A1	BRACKET - spring return	1
15	302846A1	LEVER - throttle control	1
16	838-3640	PIN - roll, 6 x 40 mm	1
17	213-123	CLEVIS - adjustable, No. 10 NF	1
18	427-3058	PIN - clevis, 3/16 x 9/16 inch, hardened	1
19	432-48	PIN - cotter, 1/16 x 1/2 inch	1
20	225-14210	NUT - hex, No. 10 NF	1
21	275454A1	CABLE - throttle, to injection pump	1
22	275456A1	BRACKET - throttle, mounts on firewall weld nuts	1
23	614-8025	BOLT - hex, full threads, 8 - 1.25 x 25 mm	2
24	892-11008	WASHER - lock, 8 mm	2
25	275455A1	BRACKET - throttle	1
26	627-12030	BOLT - hex, full threads, 12 - 1.75 x 30 mm, class 10.9	2
27	892-11012	WASHER - lock, 12 mm	2
28	278183A1	JOINT - ball	1
29	275457A1	BAR - throttle lever	1
30	492-11025	WASHER - lock, 1/4 inch	1
31	425-154	NUT - hex, jam, 1/4 inch NF	1
32	614-6016	BOLT - hex, full threads, 6 - 1.0 x 16 mm	2
33	892-11006	WASHER - lock, 6 mm	2
34	895-11006	WASHER - flat, 6.6 x 12 x 1.6 mm	2

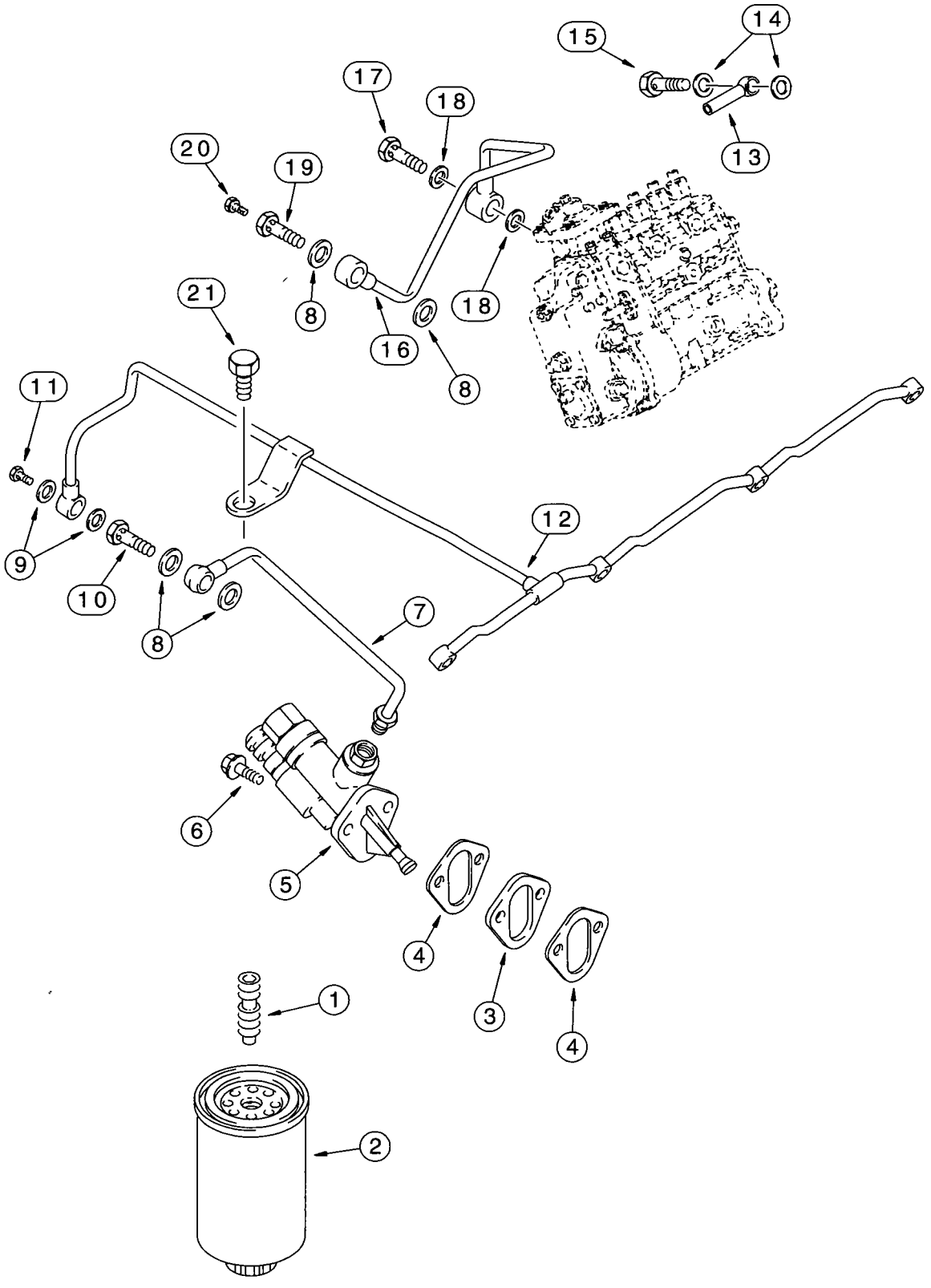
15
14
17
18
13
20
19
8
18
21
16
8
11
12
9
10
8
7
6
5
4
3
4
1
2

FUEL FILTER AND TRANSFER PUMP

4T-390 EMISSIONS CERTIFIED ENGINE

REF.	PART NO.	DESCRIPTION	REQ'D.
1	J925955	ADAPTER - fuel filter	1
2	J931062	FILTER - fuel	1
3	J914284	SPACER - fuel transfer pump mounting	1
4	J931348	GASKET - mounting, fuel transfer pump	1
5	J933254	PUMP - fuel transfer	1
6	845-8025	BOLT - heavy hex flange, 8 - 1.25 x 25 mm	2
7	J917280	TUBE - supply	1
8	J918191	WASHER - sealing, special, 12 x 18 x 1 mm	4
9	J918188	WASHER - sealing	2
10	J916361	BOLT - banjo connector, 12 - 1.5 x 24 mm	1
11	J924726	VALVE - check	1
12	J927633	TUBE - manifold, fuel	1
13	J933250	BOLT - banjo connector	1
14	J918192	WASHER - sealing, special, 14 x 20 x 1 mm	2
15	J932096	VALVE - overflow	1
16	J932035	TUBE - supply, fuel	1
17	J924725	BOLT - banjo connector	1
18	J918192	WASHER - sealing, special, 14 x 20 x 1 mm	2
	J905860	BOLT ASSEMBLY - banjo hex, special	1
19	J911446	BOLT - banjo connector, 12 - 1.50 x 24 mm	1
20	J905403	SCREW - hex, special, vent	1
21	844-8025	BOLT - heavy hex flange, 8 - 1.25 x 25 mm	1

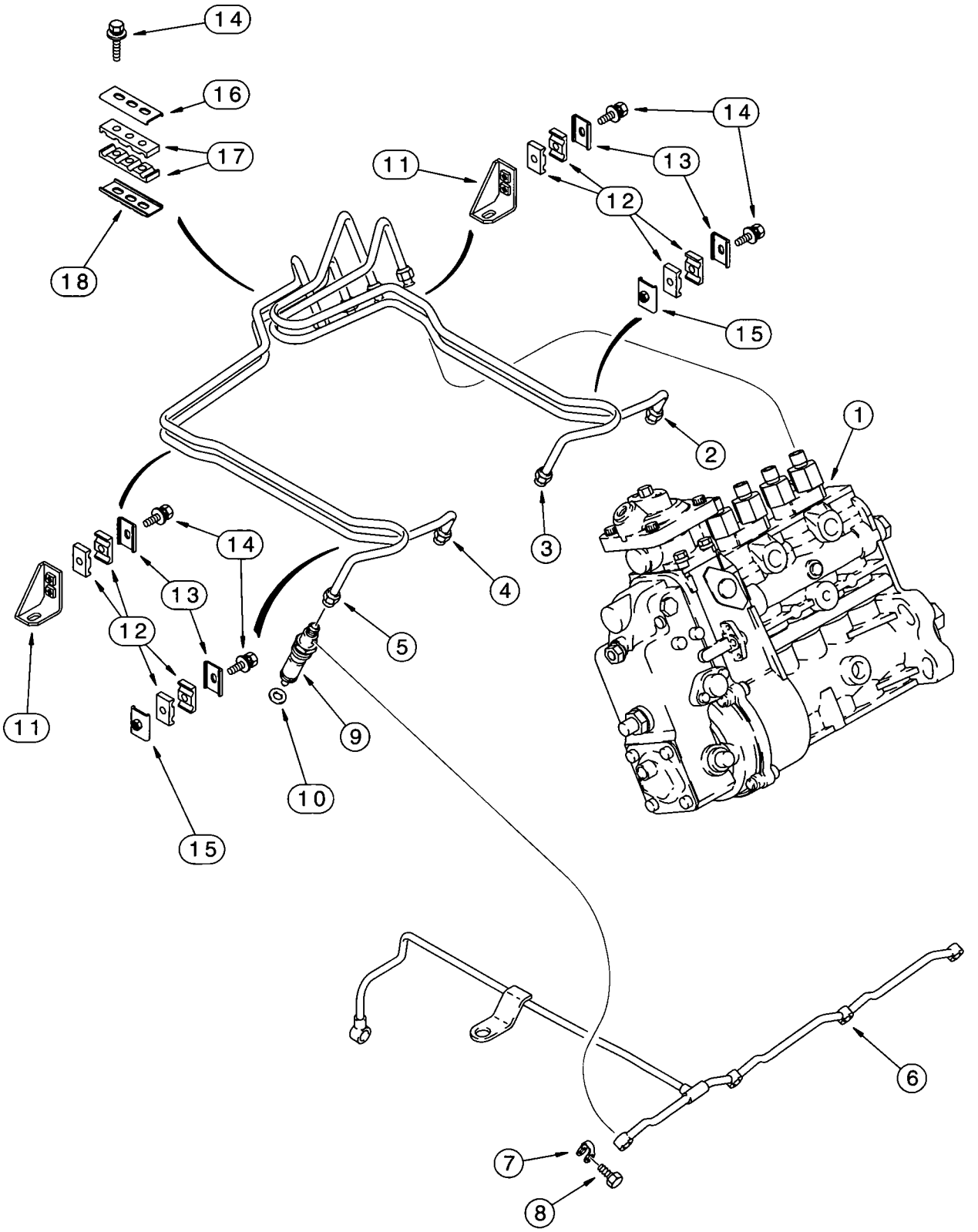
14
16
17
18
11
14
13
12
15
1
2
3
4
14
13
12
11
5
9
10
15
6
7
8

FUEL INJECTION SYSTEM

4T-390 EMISSIONS CERTIFIED ENGINE

REF.	PART NO.	DESCRIPTION	REQ'D.
1	J930152	PUMP ASSEMBLY - fuel injection, parts list page 3-17	1
2	J929393	TUBE - fuel injector, No. 1 cylinder	1
3	J929394	TUBE - fuel injector, No. 2 cylinder	1
4	J929395	TUBE - fuel injector, No. 3 cylinder	1
5	J929396	TUBE - fuel injector, No. 4 cylinder	1
6	J927633	TUBE - manifold, fuel	1
7	J903380	SEAL - connector	4
8	J905307	BOLT - banjo drain, special	4
9	J929490	NOZZLE ASSEMBLY - fuel injection, parts list page 3-19	4
10	J906659	SEAL - injector nozzle, 7 mm injector tip	4
11	J920414	BRACE - fuel tube	2
12	J917746	CLAMP - fuel tube	8
13	J904711	BRACKET - fuel tube	4
14	J920854	BOLT - hex, captive washer, special, 5 - 0.8 x 20 mm	7
15	J917717	BRACKET - fuel tube	2
16	J918785	BRACE - tube	1
17	J918786	CLAMP - vibration	2
18	J918784	BRACE - tube	1

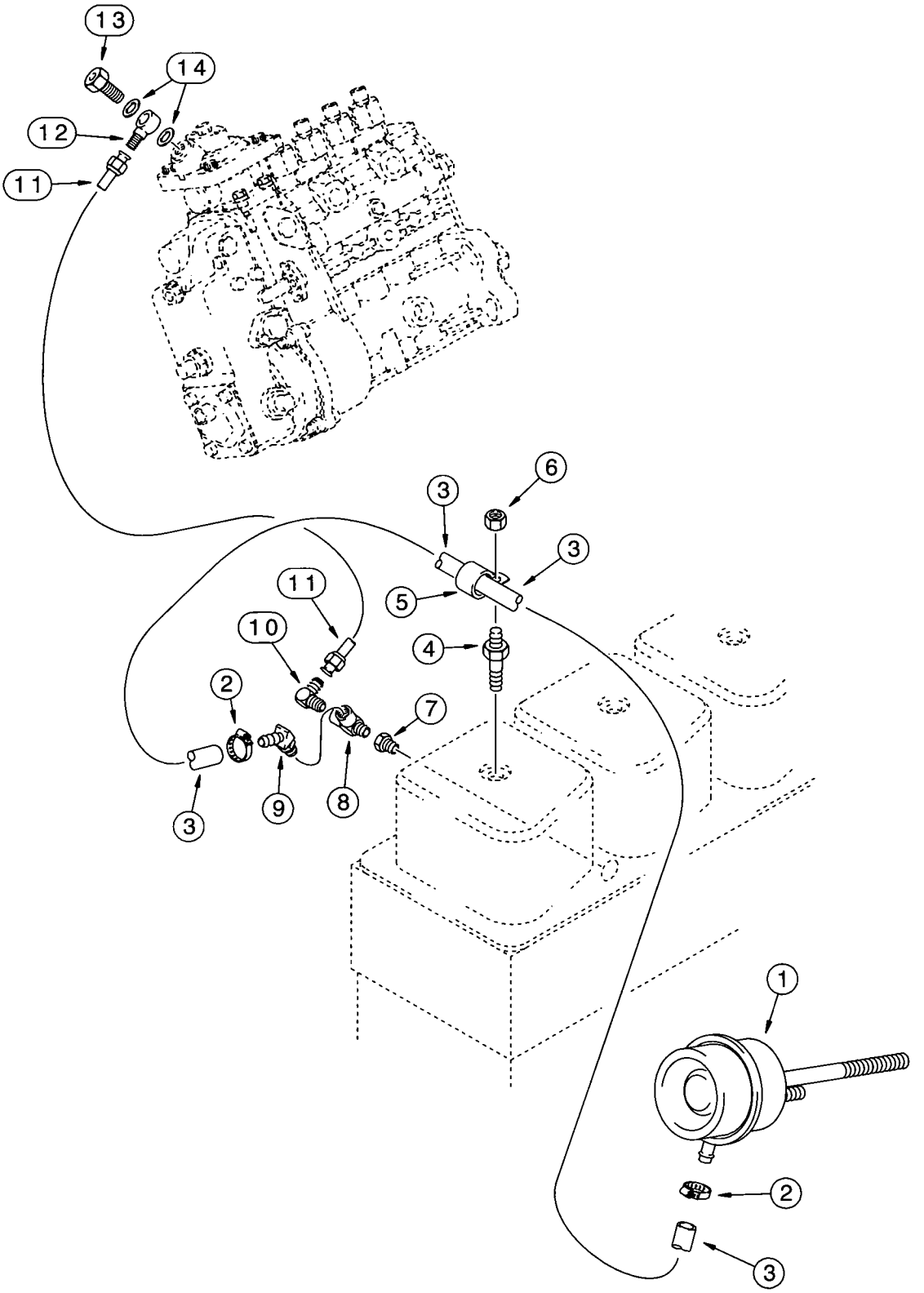
13
14
12
11
6
3
3
5
11
10
4
2
7
3
9
8
1
2
3

ANEROID AND WASTEGATE SYSTEM

4T-390 EMISSIONS CERTIFIED ENGINE

REF.	PART NO.	DESCRIPTION	REQ'D.
1	J537560	ACTUATOR - turbo wastegate, see page 2-27 for mounting of actuator	1
2	214-1404	CLAMP - adj, 1/4 - 5/8 inch dia	2
3	J926113	HOSE - 466 mm (18-3/8 inch) long, aneroid to wastegate	1
4	J920344	STUD - valve cover and hose, wastegate actuator mounting	1
5	J920348	CLAMP - hose	1
6	825-2408	NUT - hex flange, 8 mm - 1.25	1
7	221-87	REDUCER - pipe, 1/2 male x 1/8 inch female	1
8	J282406	TEE - 1/8-27 str thread x fem str thread x fem str thread	1
9	217-281	ELBOW - 45 degree, 1/4 barb end x 1/8 inch PT	1
10	222-41	ELBOW - 90 degree, compression, 3/16 tube OD x 1/8 inch PT	1
11	J926738	TUBE - aneroid, nylon	1
12	J919644	CONNECTOR - banjo	1
13	J903035	BOLT - banjo hex, 12 - 1.5 x 24 mm	1
14	J918191	WASHER - sealing, special, 12 x 18 x 1 mm	2

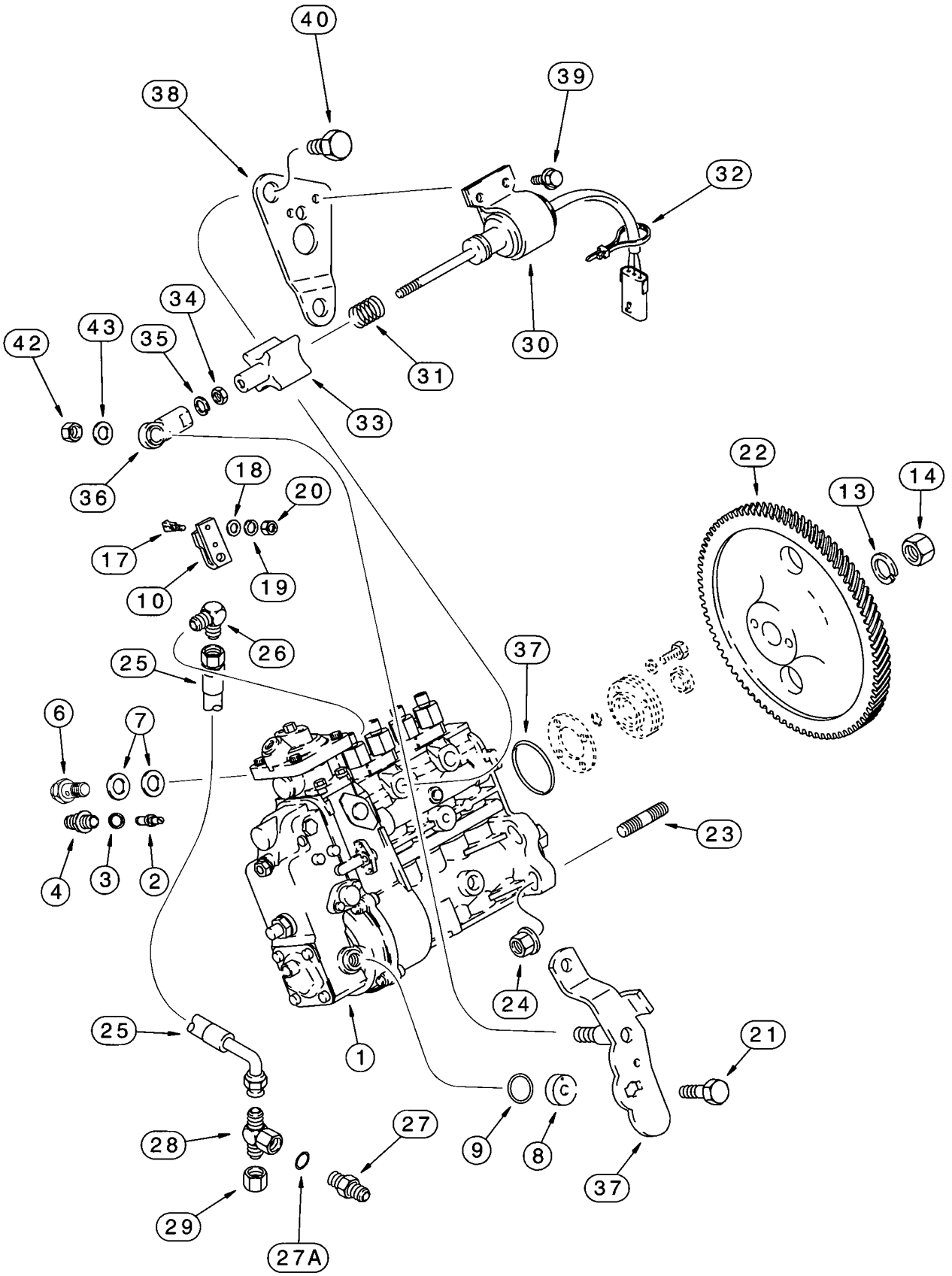
40
38
39
32
34
43
35
42
31
30
33
36
22
18
20
13
14
17
19
10
26
25
37
6
7
23
4
3
2
24
25
21
28
27
9
8
37
29
27A

BT97K167

FUEL INJECTION PUMP AND DRIVE

4T-390 EMISSIONS CERTIFIED ENGINE

REF.	PART NO.	DESCRIPTION	REQ'D.
	JR930152	PUMP ASSEMBLY - fuel injection, remanufactured, North America only, component parts shown on this page do not apply to the remanufactured assembly, for service order J930152 pump assembly, item 1	1
	JC930153	RETURN NUMBER - use this part number to return pump core for credit when using a remanufactured assembly	1
1	J930152	PUMP ASSEMBLY - fuel injection	1
2	A77720	PIN - timing	1
3	J928981	WASHER - lock, timing plug	1
4	J912888	PLUG - timing	1
6	J932096	VALVE - overflow	1
7	933697R1	WASHER - valve sealing	2
8	691292C1	HOUSING - spring return	1
9	680187C1	O-RING - sealing, special	1
10	1808728C1	LEVER - throttle control	1
13	A77775	WASHER - lock	1
14	A41852	NUT - hex, self-locking	1
17	1808822C1	BOLT - throttle lever	1
18	895-11006	WASHER - flat, 6.6 x 12 x 1.6 mm	1
19	892-11006	WASHER - lock, 6 mm	1
20	829-1306	NUT - hex, 6 mm - 1.0, class 10	1
21	628-6016	BOLT - hex, full threads, 6 - 1.0 x 16 mm, class 10.9	1
22	J931450	GEAR - fuel pump	1
23	J915036	STUD - pump mounting	4
24	825-2410	NUT - hex flange, 10 mm - 1.5	4
25	J918536	HOSE - flexible	1
26	A77512	ELBOW - 90 degree	1
27	J941472	NIPPLE - hex, 7/16-20 inch flare x 10 - 1.0 mm str thread	1
27A	637-72081	O-RING - 8.1 ID x 1.6 mm wide	1
28	J933291	TEE - 7/16-20 flare x flare x fem swivel	1
29	218-752	CAP - hex, 7/16-20 inch	1
30	J932529	SOLENOID - fuel shutoff, 12 volt	1
31	NSS	SPRING - return, plunger	1
32	NSS	STRAP - tie, boot to solenoid	1
33	NSS	BOOT - protective, plunger	1
34	NSS	NUT - hex, jam	1
35	NSS	WASHER - lock	1
36	NSS	JOINT - ball	1
37	J930993	O-RING - sealing	1
38	J930590	BRACKET - solenoid mounting	1
39	845-6012	BOLT - heavy hex flange, 6 - 1.0 x 12 mm	2
40	J929456	BOLT - hex, 16 - 2.0 x 12 mm	2
	J802998	KIT - pump shutoff lever	1
41	NSS	LEVER - pump shutoff	1
42	832-41306	NUT - hex, self-locking, 6 mm - 1.0, class 10	1
43	J934022	WASHER - flat, special	1

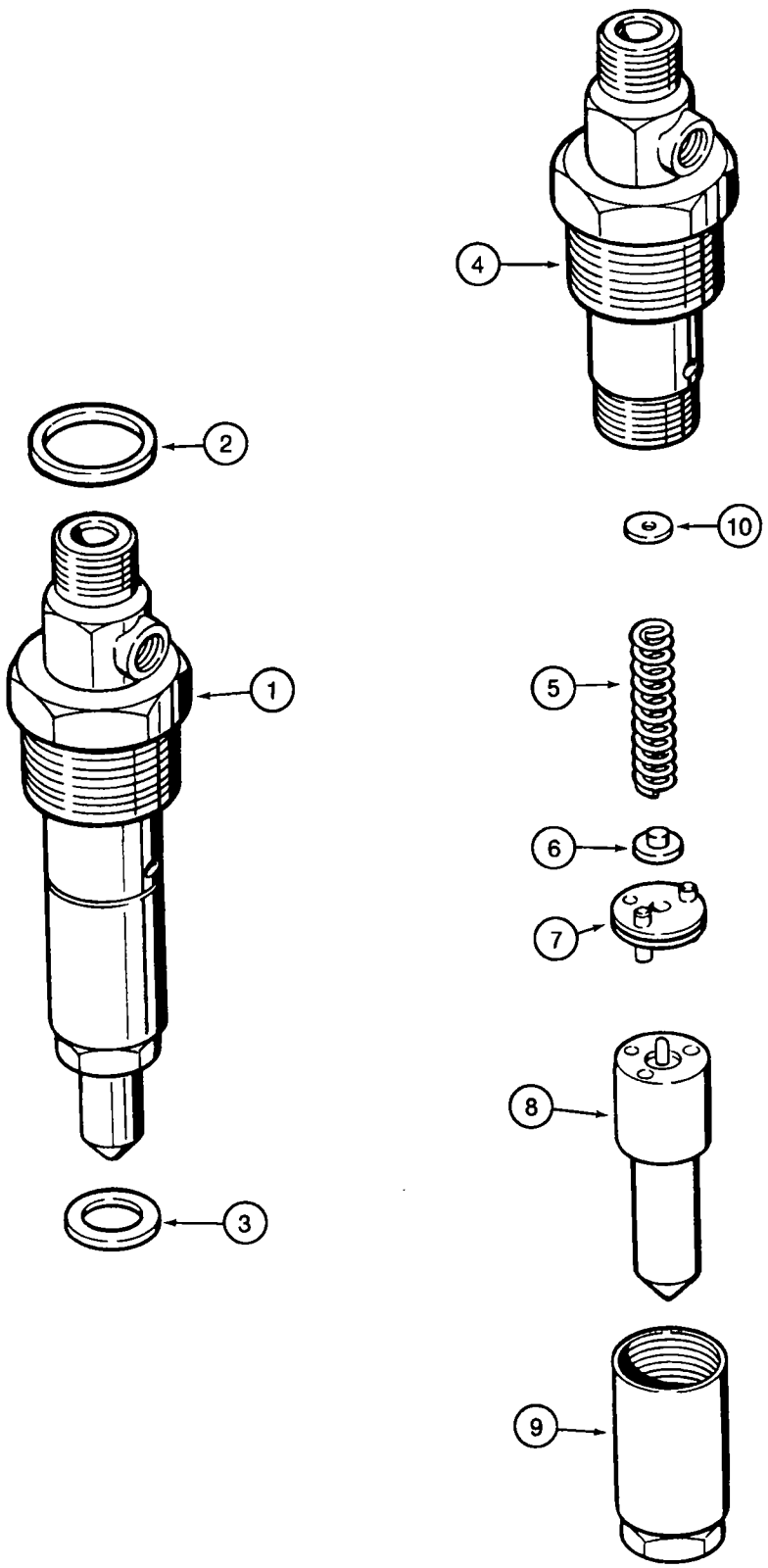
4
2
10
1
5
6
7
8
3
9

FUEL INJECTION NOZZLE

4T-390 EMISSIONS CERTIFIED ENGINE

REF.	PART NO.	DESCRIPTION	REQ'D.
	JR929490	NOZZLE ASSEMBLY - fuel injection, remanufactured, North America only, component parts shown on this page do not apply to the remanufactured assembly	4
	JC929490	RETURN NUMBER - use this part number to return nozzle assembly core for credit when using a remanufactured assembly	4
1	J929490	NOZZLE ASSEMBLY - fuel injection	4
2	J909356	O-RING - sealing, body to nut	1
3	*J906659	SEAL - injector nozzle, 7 mm injector tip	1
4	NSS	BODY - injector	1
5	NSS	SPRING - nozzle pressure	1
6	NSS	SEAT - nozzle pressure spring	1
7	NSS	STOP - nozzle valve	1
8	NSS	TIP - nozzle injector	1
9	NSS	NUT - cap, nozzle tip	1
10	1806233C1	SHIM - nozzle, 1.00 mm	UAR
10	1806234C1	SHIM - nozzle, 1.04 mm	UAR
10	1806235C1	SHIM - nozzle, 1.08 mm	UAR
10	1806236C1	SHIM - nozzle, 1.10 mm	UAR
10	1806237C1	SHIM - nozzle, 1.14 mm	UAR
10	1806238C1	SHIM - nozzle, 1.18 mm	UAR
10	1806239C1	SHIM - nozzle, 1.20 mm	UAR
10	1806240C1	SHIM - nozzle, 1.24 mm	UAR
10	1806241C1	SHIM - nozzle, 1.28 mm	UAR
10	1806242C1	SHIM - nozzle, 1.30 mm	UAR
10	1806243C1	SHIM - nozzle, 1.34 mm	UAR
10	1806244C1	SHIM - nozzle, 1.38 mm	UAR
10	1806245C1	SHIM - nozzle, 1.40 mm	UAR
10	1806246C1	SHIM - nozzle, 1.44 mm	UAR
10	1806247C1	SHIM - nozzle, 1.48 mm	UAR
10	1806248C1	SHIM - nozzle, 1.50 mm	UAR
10	1806249C1	SHIM - nozzle, 1.54 mm	UAR
10	1806250C1	SHIM - nozzle, 1.58 mm	UAR
10	1806251C1	SHIM - nozzle, 1.60 mm	UAR
10	1806252C1	SHIM - nozzle, 1.64 mm	UAR
10	1806253C1	SHIM - nozzle, 1.68 mm	UAR
10	1806254C1	SHIM - nozzle, 1.70 mm	UAR
10	1806255C1	SHIM - nozzle, 1.74 mm	UAR
10	1806256C1	SHIM - nozzle, 1.78 mm	UAR
10	1806257C1	SHIM - nozzle, 1.80 mm	UAR
10	1806258C1	SHIM - nozzle, 1.84 mm	UAR
10	1806259C1	SHIM - nozzle, 1.88 mm	UAR
10	1806260C1	SHIM - nozzle, 1.90 mm	UAR
10	1806261C1	SHIM - nozzle, 1.94 mm	UAR
10	1806262C1	SHIM - nozzle, 1.98 mm	UAR

***NOTE:** Whenever a nozzle is removed from the cylinder head, J906659 seal must be replaced before nozzle is installed in cylinder head.

ALPHABETICAL INDEX
ELECTRICAL

DESCRIPTION	PAGE
Alarm - Backup	4-41
Alternator	4-7
Alternator Mounting	4-9
Antenna - Radio	4-45
Batteries and Cables	
Models with Cold Start	4-15
Models without Cold Start	4-13
Beacon - Rotating	4-43
Cluster - Instrument	4-27
Consoles - Instrument	4-23,4-25
Electrical Circuits	
Auxiliary Hydraulics - Backhoe	4-47
Engine	4-11
Front Console	4-17
Side Console	4-19,4-21
Tractor Lamp - Cab	4-31
Tractor Lamp - Canopy	4-29
Harness - Electrical	
Adapter - Cab	4-19
Adapter - Engine	4-19
Auxiliary Hydraulics - Backhoe	4-47
Auxiliary Hydraulics - Hand Held	4-21
Cab	4-31
Canopy	4-29
Clutch Cutout	
Transmission Gear Shift	4-11
Loader Control Lever	4-21
Engine	4-11
Front Console	4-17
Horn	4-41
Optional Equipment - Side and Chassis	4-19
Radio	4-45
Side Console	4-19,4-21
Horn	4-41
Instrument Cluster	4-27
Instrument Panel and Covers - Front	4-23
Instrument Panel and Covers - Side	4-25
Lamps - Cab	4-35,4-39
Lamps - Canopy	4-33,4-37
Outlets - Power Plug	4-21
Radio Ready Kit	4-45
Starter	4-3,4-5
Starter Mounting	4-9
Tape Player	4-45

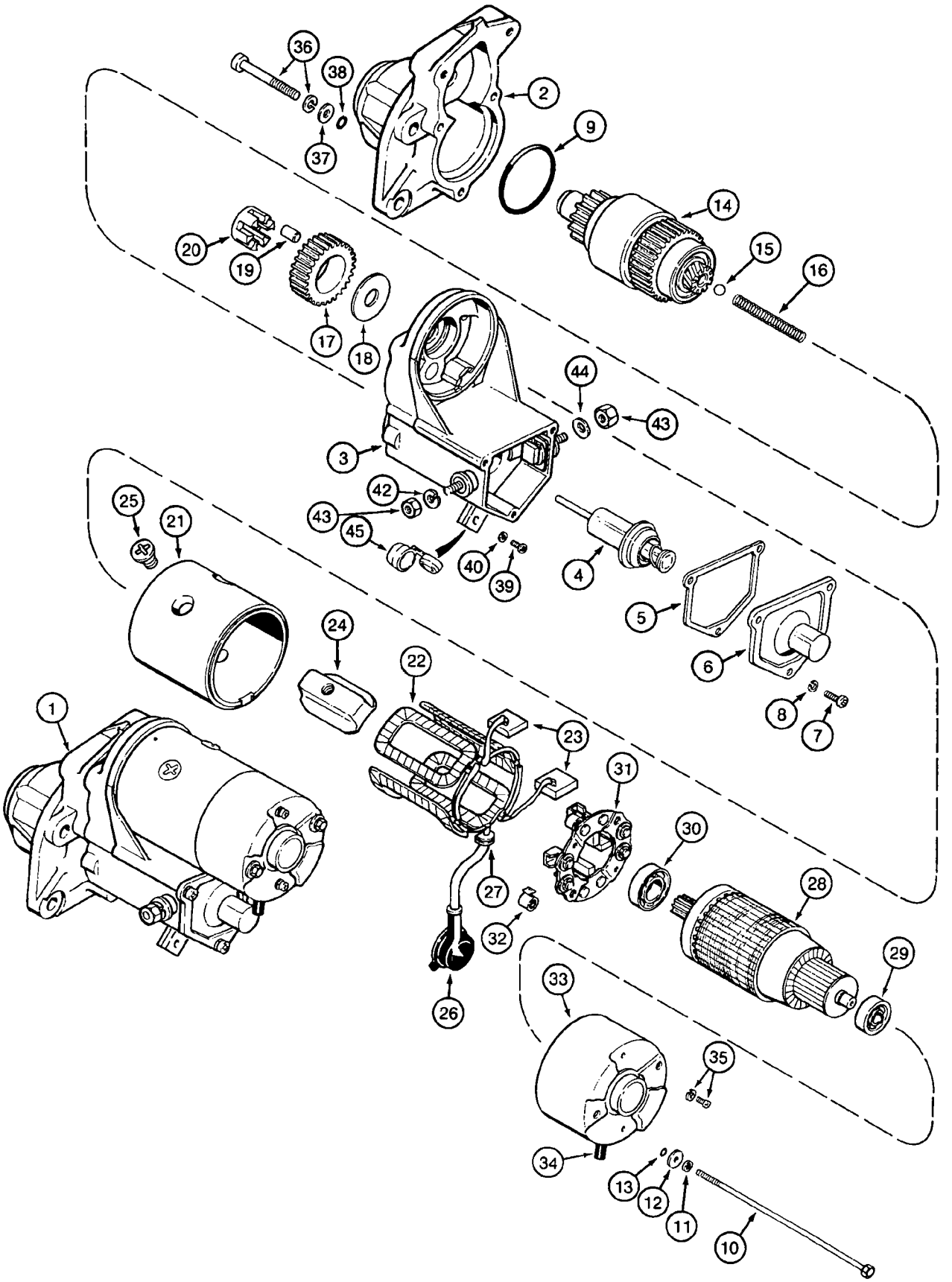
36
38
37
2
9
14
20
19
15
16
17
18
44
43
3
42
43
45
40
39
4
25
21
5
6
8
7
24
22
1
23
31
30
27
32
28
29
26
33
35
34
13
12
11
10

STARTER

REF.	PART NO.	DESCRIPTION	REQ'D.
1	1987559C1	STARTER ASSEMBLY - engine, new	1
2	A46948	HOUSING - drive end	1
3	104588A1	SWITCH ASSEMBLY - magnetic, includes items 4-8	1
4	NSS	SOLENOID - switch	1
5	NSS	GASKET - solenoid cover	1
6	NSS	COVER - solenoid	1
7	NSS	SCREW - cover to switch	3
8	NSS	WASHER - cover screw	3
9	1546500C1	O-RING - switch to housing	1
	A47243	BOLT ASSEMBLY - through	2
10	A47128	BOLT - tie, starter, through	1
11	892-11006	WASHER - lock, 6 mm	1
12	495-81252	WASHER - flat, 1/4 x 9/16 x 1/16 inch	1
13	A47127	O-RING - bolt seal	1
14	104587A1	CLUTCH - drive	1
15	211-1311	BALL - chrome alloy steel, 11/32 inch, grade 200	1
16	A47232	SPRING - compression, 2-13/16 inch free length, clutch drive	1
17	A47233	PINION - idler	1
18	A47234	WASHER - thrust, idler pinion	1
19	A47235	ROLLER - pinion bearing, idler	5
20	A47236	RETAINER - roller bearing	1
	A47240	HOUSING ASSEMBLY - with coil and brushes	1
21	NSS	HOUSING - starter	1
22	NSS	COIL - field	1
23	NSS	BRUSHES - starter	2
24	NSS	SHOE - pole	4
25	NSS	SCREW - pole shoes	4
26	NSS	BOOT - magnetic switch terminal	1
27	A47241	PLATE - lock	1

Continued on next page

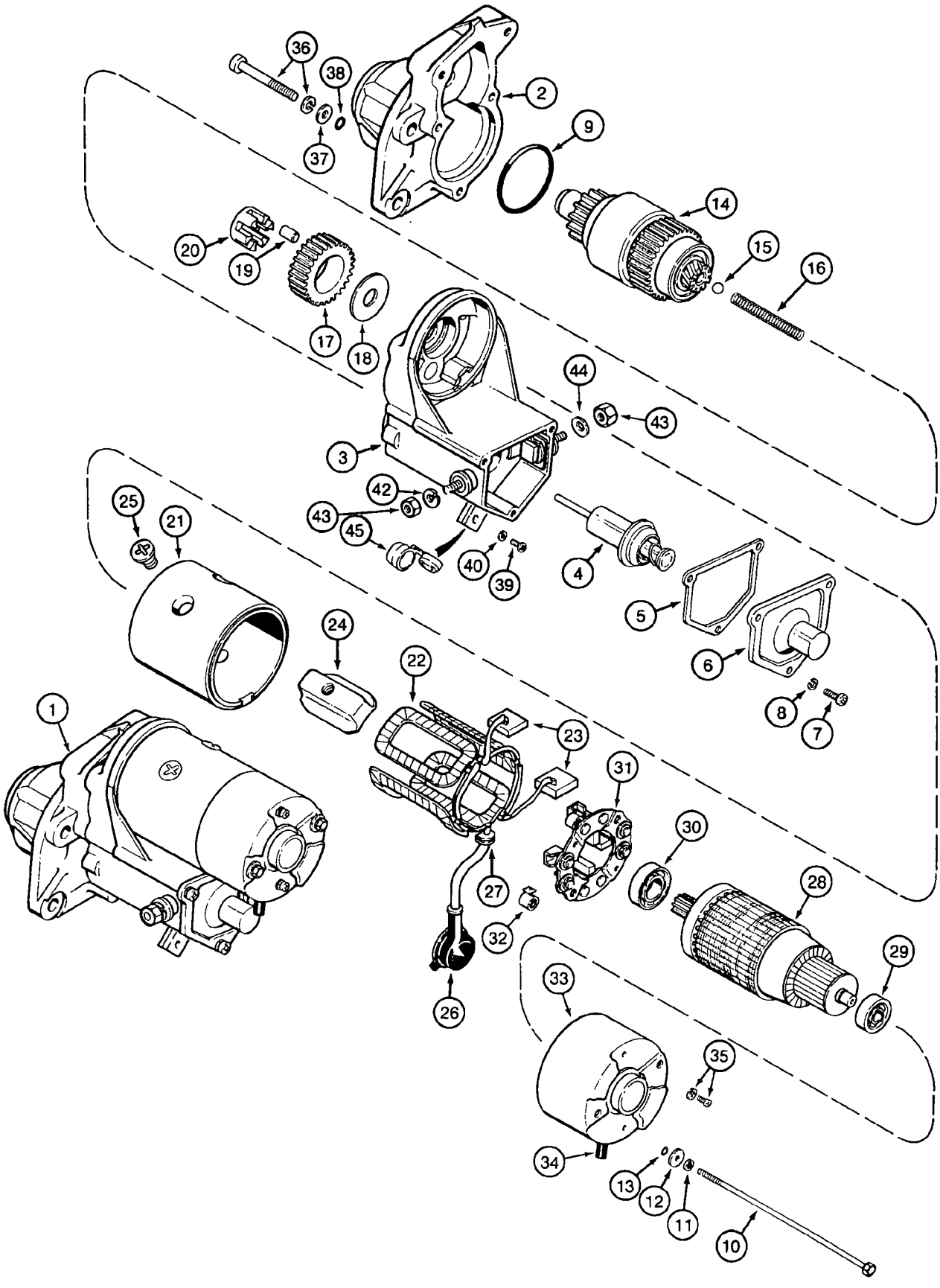
36
38
37
2
9
14
20
19
15
16
17
18
44
43
3
42
43
45
40
39
4
25
21
5
6
8
7
24
22
1
23
31
30
27
28
32
29
26
33
35
34
13
12
11
10

STARTER

REF.	PART NO.	DESCRIPTION	REQ'D.
	REF	STARTER ASSEMBLY - engine (continued from previous page)	1
28	A47242	ARMATURE ASSEMBLY - starter	1
29	452698C1	BEARING - ball	1
30	A47247	BEARING - drive end	1
31	A47239	HOLDER ASSEMBLY - brush (Includes 2 brushes)	1
32	A47249	SPRING - brush tension	4
33	A47237	FRAME - commutator end	1
34	A47238	COVER - end frame	1
35	A47244	SCREW ASSEMBLY - with washer, brush retaining, brush holder to cover	2
	A47230	BOLT ASSEMBLY - commutator end cover to drive end housing	3
36	A47129	BOLT ASSEMBLY - with washer	1
37	195-2015	WASHER - flat, 1/4 x 1-3/4 x 1/16 inch	1
38	A47130	O-RING - bolt seal	1
39	A46950	SCREW - terminal, special, 5 x 8 mm	1
40	892-11005	WASHER - lock, 5 mm	1
42	892-11010	WASHER - lock, 10 mm	1
43	825-1410	NUT - hex, 10 mm - 1.5, field coil terminal	2
44	A10454	WASHER - spring, field coil terminal	1
45	104589A1	BUSHING - insulation	1

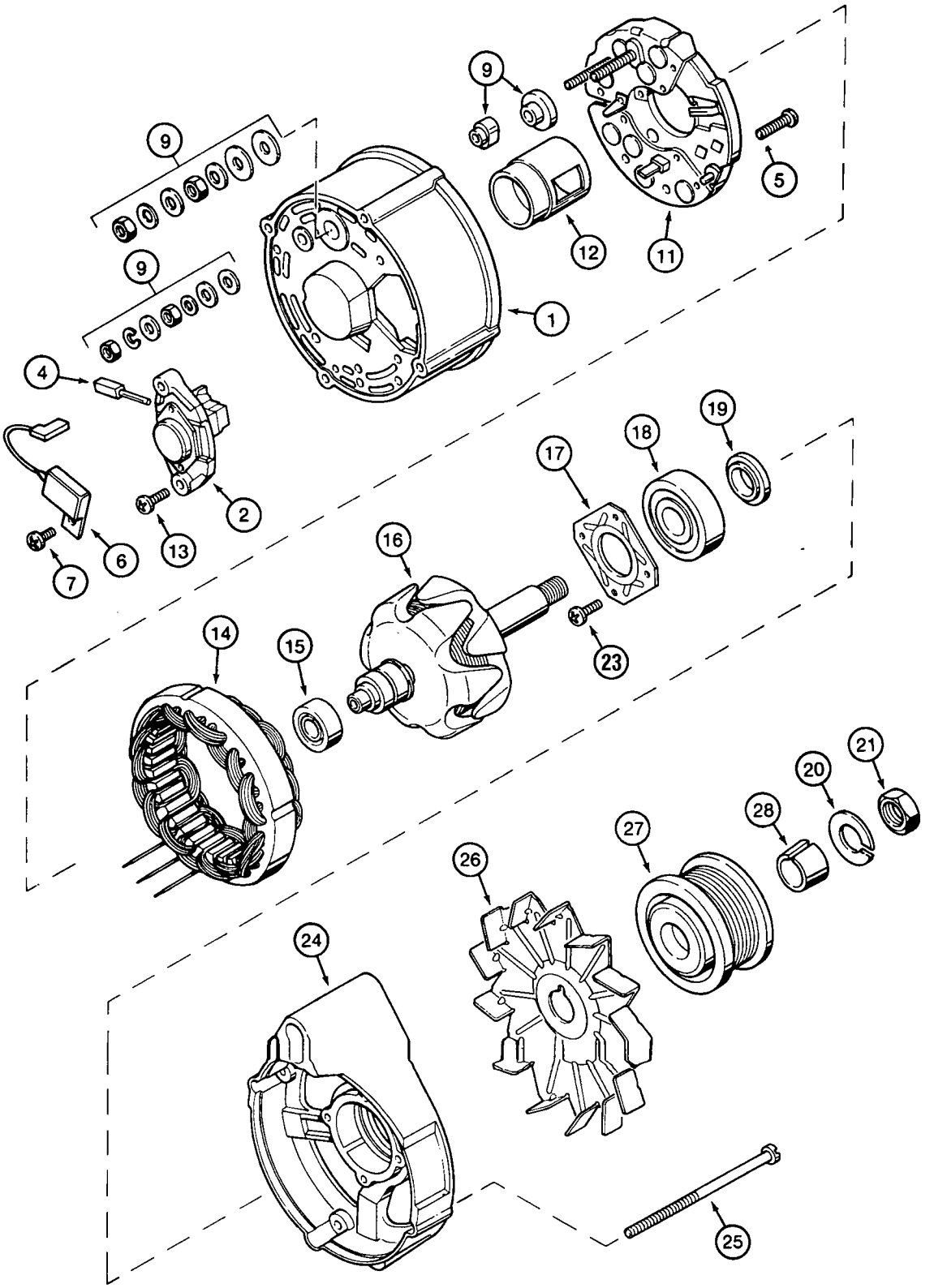
9
9
9
1
12
11
5
4
2
13
6
7
19
18
17
16
23
14
15
21
20
28
27
26
24
25

ALTERNATOR

REF.	PART NO.	DESCRIPTION	REQ'D.
	A187873	ALTERNATOR ASSEMBLY - engine, 65 ampere, electrical	1
1	A187903	HOUSING - collector ring end	1
2	A187906	REGULATOR - voltage	1
4	1964968C1	BRUSH - alternator, set of two	1
5	1530431C1	BOLT - with washer, rectifier bridge retaining	2
6	3079134R1	CAPACITOR - alternator	1
7	1964969C1	SCREW - special, Fillister, capacitor retaining	1
9	A187904	SET - hardware, terminal	1
11	A187917	RECTIFIER - alternator	1
12	A187899	SHIELD - alternator	1
13	A187504	BOLT - hex flange, special, voltage regulator retaining	2
14	1964966C1	STATOR - alternator	1
15	A186186	BEARING - ball, rotor, collector ring end	1
16	1964964C1	ROTOR - alternator	1
17	A187901	PLATE - bearing retaining	1
18	A186183	BEARING - ball, rotor, drive end	1
	3078897R1	KIT - rotor retaining	1
19	NSS	RING - spacer	1
20	NSS	WASHER - rotor shaft	1
21	NSS	NUT - rotor shaft	1
22	NSS	KEY - pulley retainer, not used in A187873 alternator	1
23	NSS	SCREW - bearing retaining plate	4
24	A186182	HOUSING - drive end	1
25	A186193	BOLT - slotted, special, cover retaining	4
26	221425R1	FAN - alternator, not included with alternator assembly, order separately	1
27	J908560	PULLEY - drive, not included with alternator assembly, order separately	1
28	J908563	RETAINER - pulley, not included with alternator assembly, order separately	1

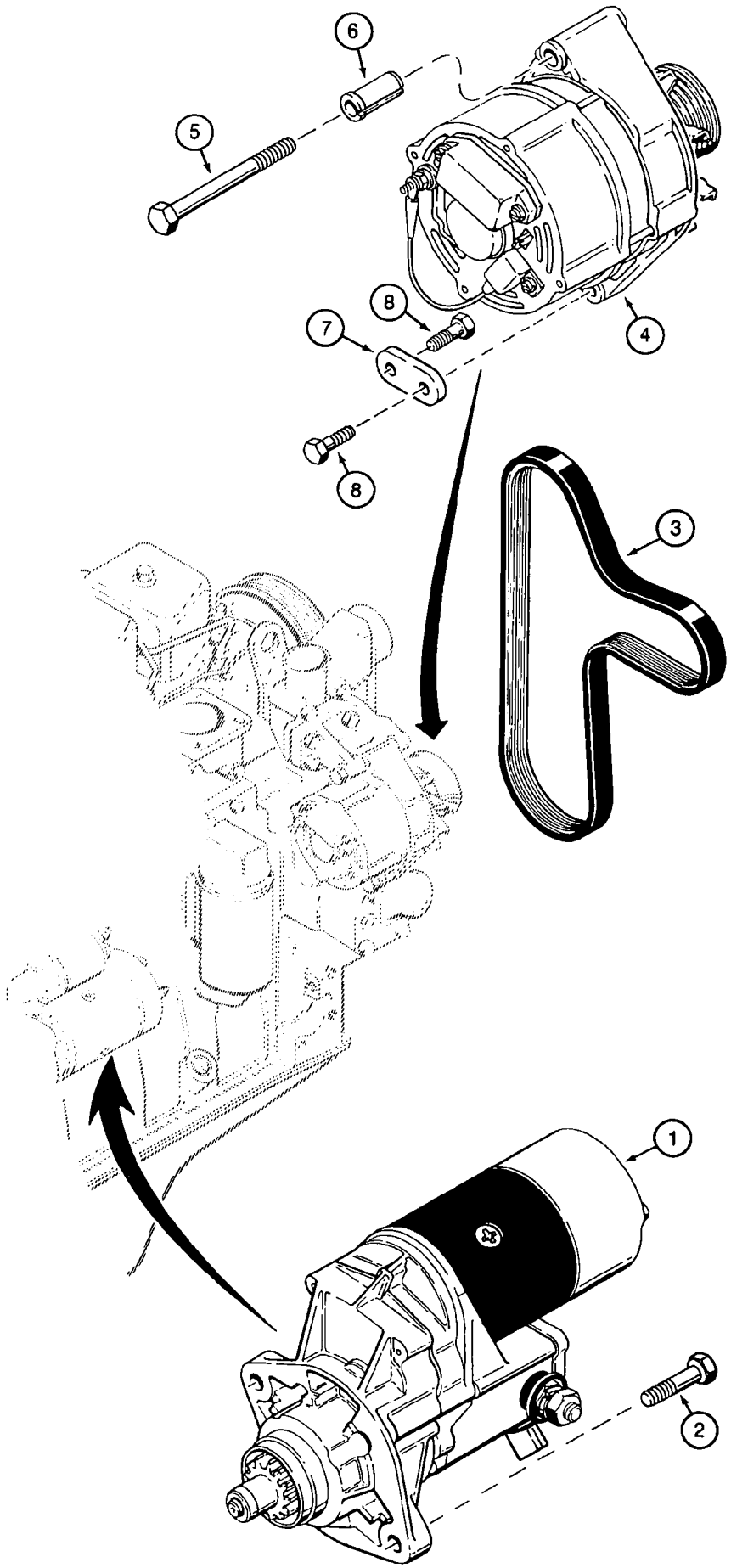
6
5
4
8
7
8
3
1
2

STARTER AND ALTERNATOR MOUNTING

REF.	PART NO.	DESCRIPTION	REQ'D.
1	1987559C1	STARTER ASSEMBLY - engine, new, parts list pages 4-3 and 4-5	1
2	814-10040	BOLT - hex, 10 - 1.5 x 40 mm	2
3	J921603	BELT - fan, V-ribbed, alternator and fan	1
4	A187873	ALTERNATOR ASSEMBLY - engine, 65 ampere, parts list page 4-7	1
5	814-10100	BOLT - hex, 10 - 1.5 x 100 mm	1
6	J902469	SPACER - alternator mounting	1
7	J903089	BRACE - alternator mounting	1
8	614-8020	BOLT - hex, full threads, 8 - 1.25 x 20 mm	2

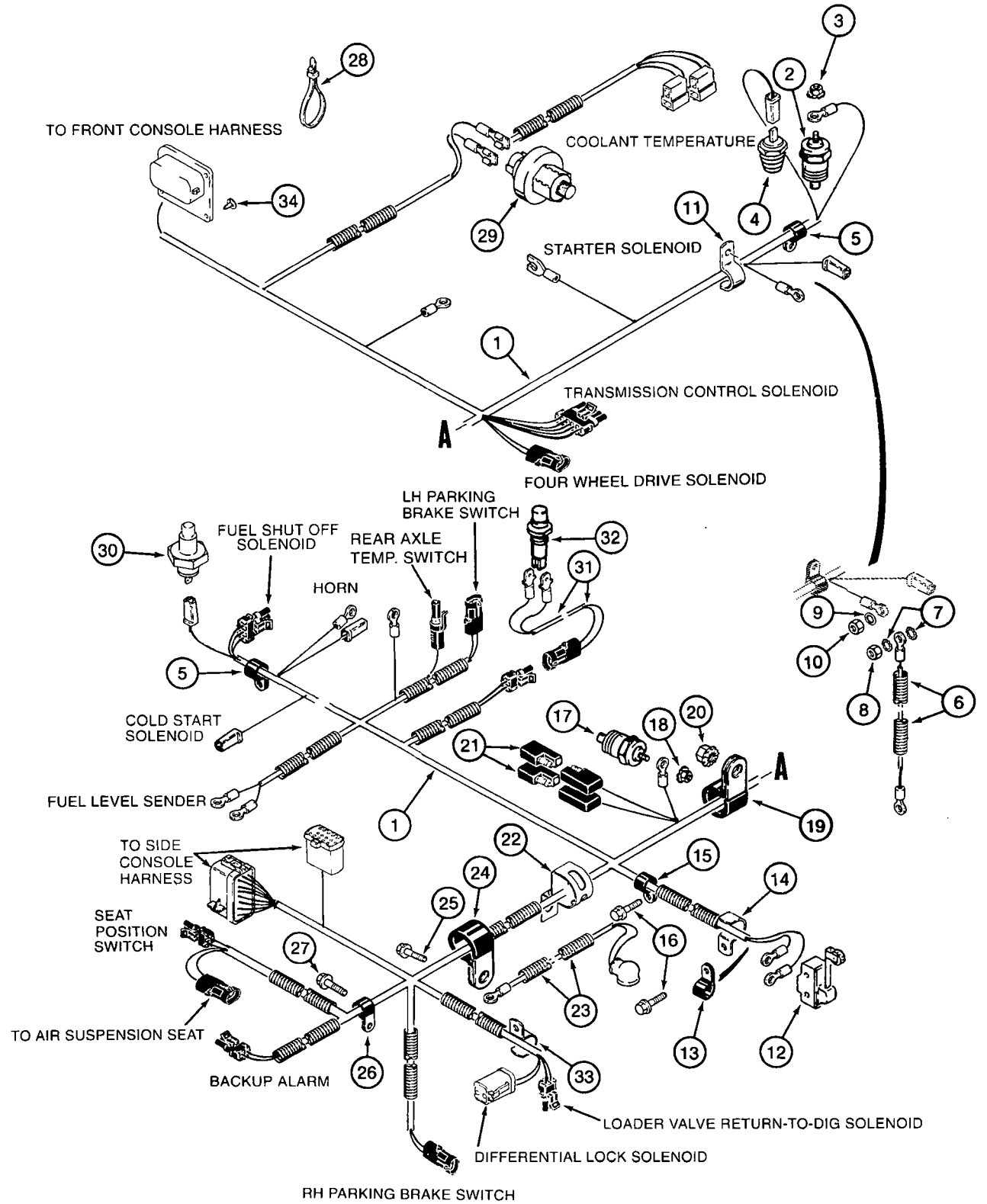
TO FRONT CONSOLE HARNESS
COOLANT TEMPERATURE
STARTER SOLENOID
TRANSMISSION CONTROL SOLENOID
FOUR WHEEL DRIVE SOLENOID
LH PARKING BRAKE SWITCH
FUEL SHUT OFF SOLENOID
REAR AXLE TEMP. SWITCH
HORN
COLD START SOLENOID
FUEL LEVEL SENDER
TO SIDE CONSOLE HARNESS
SEAT POSITION SWITCH
TO AIR SUSPENSION SEAT
BACKUP ALARM
LOADER VALVE RETURN-TO-DIG SOLENOID
DIFFERENTIAL LOCK SOLENOID
RH PARKING BRAKE SWITCH
A
A

ENGINE WIRING HARNESS AND CONNECTIONS

REF.	PART NO.	DESCRIPTION	REQ'D.
1	282015A3	HARNESS - engine, main, models without air conditioning	1
1A	282016A3	HARNESS - engine, main, models with air conditioning, not shown, used in production, for service order 282015A3 engine harness above and 186607A1 air conditioning adapter harness on page 4-19	1
2	A166057	SENDER - engine water coolant temperature	1
3	193-1000	NUT - hex, with external tooth lock washer, No. 10 NF	1
4	1345488C3	SWITCH - coolant temperature	1
5	515-23127	CLAMP - P-type, 1/2 inch ID, uses existing engine hardware	2
6	D143830	WIRE - 675 mm long, alternator to starter	1
7	493-21033	WASHER - internal tooth lock, 5/16 inch	2
8	829-1408	NUT - hex, 8 mm - 1.25, class 10	1
9	493-21020	WASHER - internal tooth lock, 3/16 inch	1
10	824-1405	NUT - hex, 5 mm - 0.8	1
11	D147383	CLAMP - J-type, uses existing engine hardware	1
12	D137363	SWITCH - return-to-dig, see page 9-11 for switch mounting	1
13	515-23127	CLAMP - P-type, 1/2 inch ID	1
14	D147383	CLAMP - J-type	1
15	515-23127	CLAMP - P-type, 1/2 inch ID	1
16	844-10020	BOLT - heavy hex flange, 10 - 1.5 x 20 mm	2
17	A166057	SENDER - transmission temperature	1
18	193-1000	NUT - hex, with external tooth lock washer, No. 10 NF	1
19	D39696	CLAMP - P-type, double	1
20	829-2410	NUT - hex, flange, 10 mm - 1.5, class 10	1
21	L71879	DIODE - harness, isolation	2
22	192196A2	CLAMP - P-type, spring lock	1
23	184188A1	WIRE - power, starter to fuseblock, see page 4-21 item 8 for nut at relay block	1
24	49773	CLAMP - P-type, 1-1/4 inch ID	1
25	844-10025	BOLT - heavy hex flange, 10 - 1.5 x 25 mm	1
26	515-23127	CLAMP - P-type, 1/2 inch ID, see page 7-13, Ref 29 for brake cable bracket	1
27	814-10060	BOLT - hex, 10 - 1.5 x 60 mm, see page 7-13, Ref 29 for brake cable support bracket and additional hardware	1
28	L18337	STRAP - tie, 15 inch, nylon, retaining	27
29	1983233C1	SWITCH - restriction, air cleaner	1
30	277016A1	SENDER - oil pressure, 10 mm - 1 O-ring thread (part number is stamped on sender)	1
30A	637-62081	O-RING - 8.1 ID x 1.6 mm wide, 277016A1 sender, not shown	1
31	123809A2	HARNESS - clutch cutout, transmission gear shift lever	1
32	123097A1	SWITCH - push-button, clutch cutout, gear shift lever, see page 6-23 for lever and knob	1
33	D147383	CLAMP - J-type, uses existing loader valve mounting hardware	1
34	781-24613	BOLT - hex flange, self-tapping, 6 - 1.0 x 13 mm	2

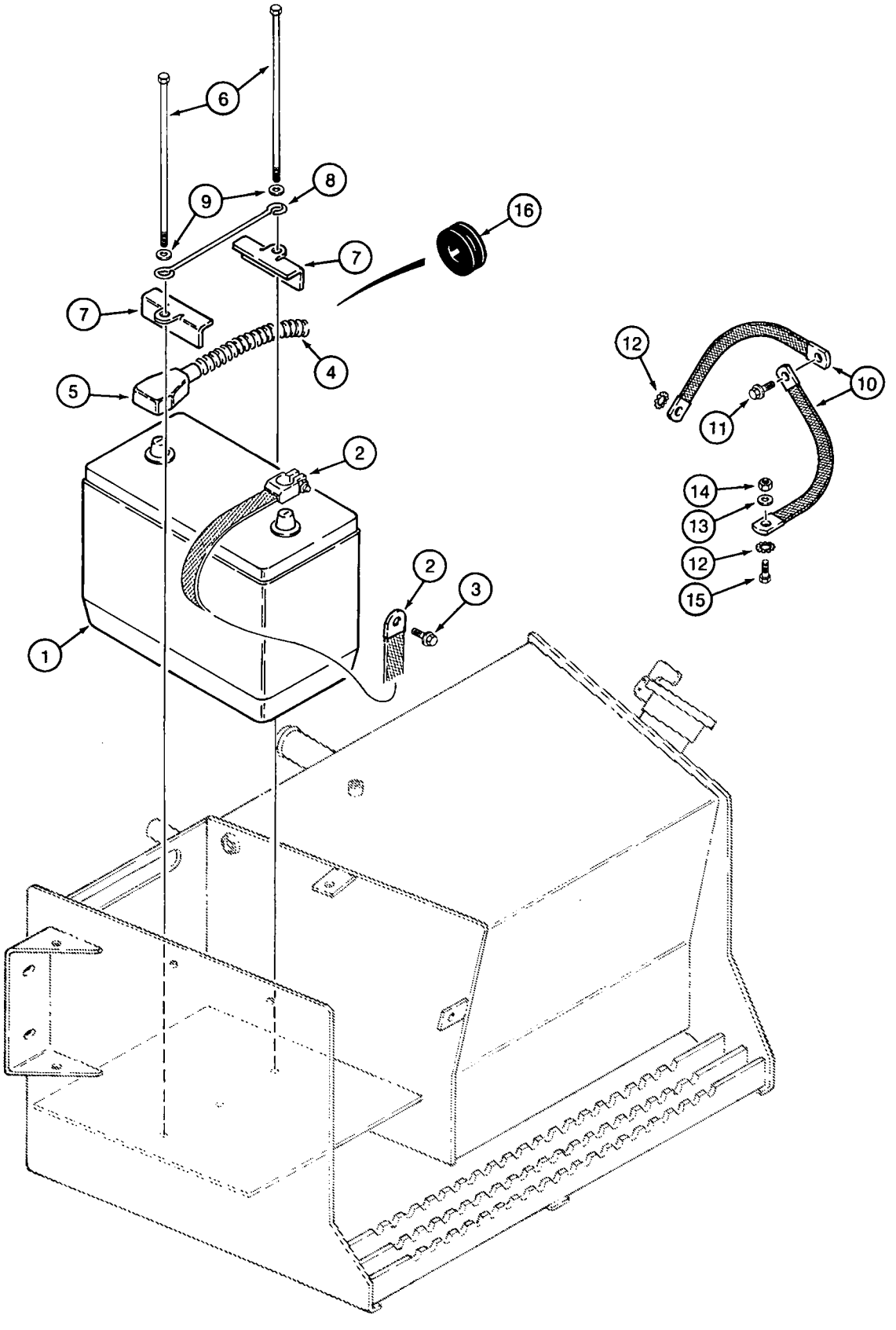
6
8
9
16
7
7
4
5
12
10
11
2
14
13
12
15
2
3
1

BATTERY AND BATTERY CABLES

MODELS WITHOUT COLD START

REF.	PART NO.	DESCRIPTION	REQ'D.
1	BMF31E	BATTERY - dry, 12 volt, models without cold start	1
2	D83485	STRAP - battery, negative ground	1
3	844-10020	BOLT - heavy hex flange, 10 - 1.5 x 20 mm, negative battery cable ground bolt to chassis	1
4	144171A1	CABLE - positive, 1500 mm long	1
5	383619R1	BOOT - positive battery cable	1
6	814-10245	BOLT - hex, 10 - 1.5 x 245 mm	2
7	D125079	BRACKET - battery hold-down	2
8	D55561	RETAINER - battery	1
9	495-11041	WASHER - flat, 13/32 x 13/16 x 1/16 inch	2
10	D127018	STRAP - ground	2
11	844-10025	BOLT - heavy hex flange, 10 - 1.5 x 25 mm	1
12	493-11039	WASHER - internal-external tooth lock, 3/8 inch	2
13	895-15008	WASHER - flat, 9 x 20 x 1.6 mm	1
14	829-1408	NUT - hex, 8 mm - 1.25, class 10	1
15	814-8035	BOLT - hex, 8 - 1.25 x 35 mm	1
16	257279A1	GROMMET - battery cable, mounts in chassis side channel	2

NOTE: See page 9-79 for battery box.

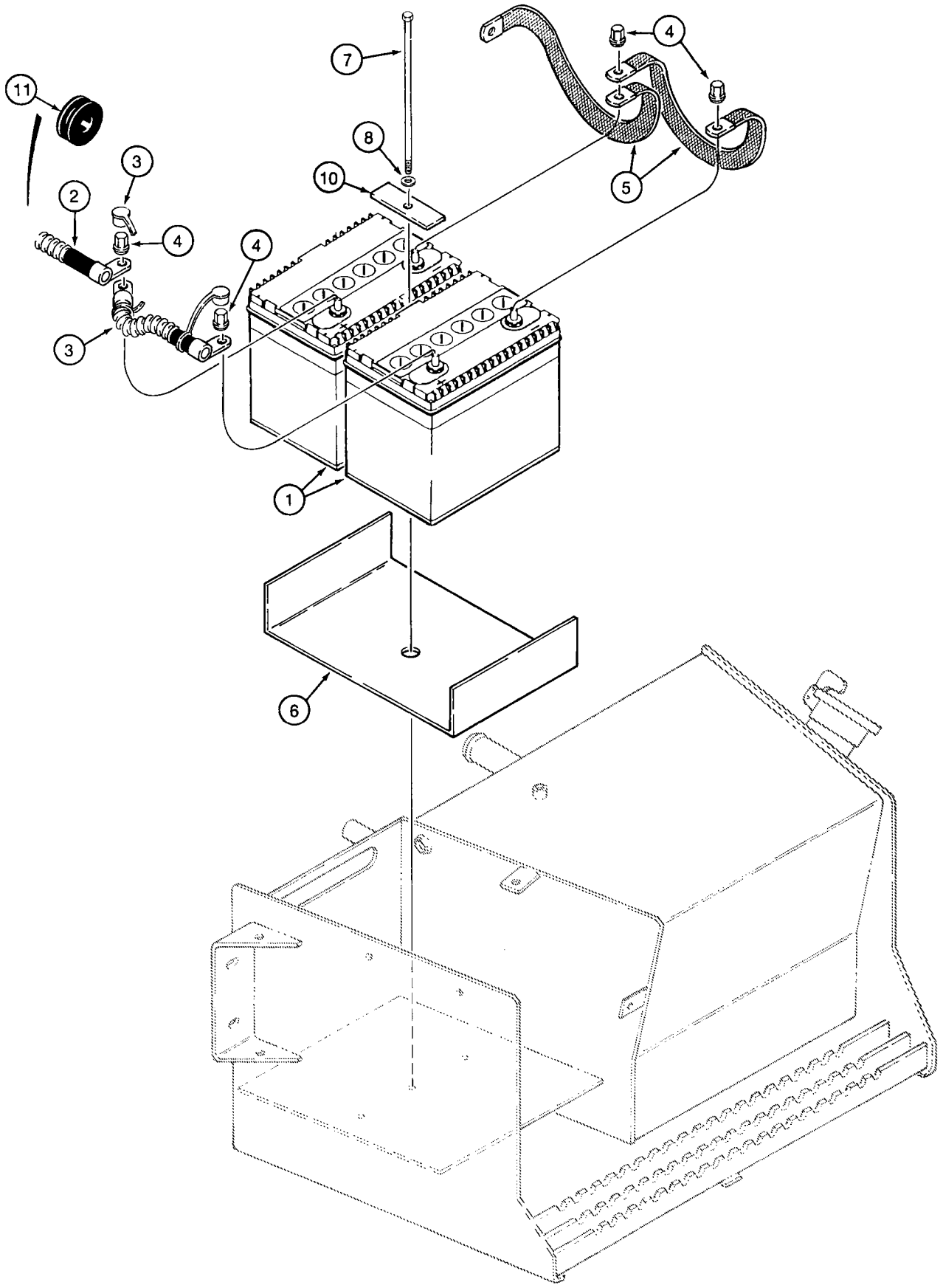
11
7
4
8
3
10
2
5
4
4
3
1
6

DUAL BATTERY COLD START

REF.	PART NO.	DESCRIPTION	REQ'D.
1	BMF28S	BATTERY - dry charged, 12 volt, models with cold start	2
2	184498A1	CABLE - positive, 1460 mm long	1
3	184497A1	CABLE - positive jumper, 227 mm long	1
4	D126409	NUT - hex, special, 3/8 inch NC, battery terminal	4
5	D73383	STRAP - ground, flat	2
6	181338A1	PLATE - battery mounting	1
7	814-10245	BOLT - hex, 10 - 1.5 x 245 mm	1
8	495-11041	WASHER - flat, 13/32 x 13/16 x 1/16 inch	1
10	250854A1	RETAINER - battery plate, top	1
11	257279A1	GROMMET - battery cable, mounts in chassis side channel	2

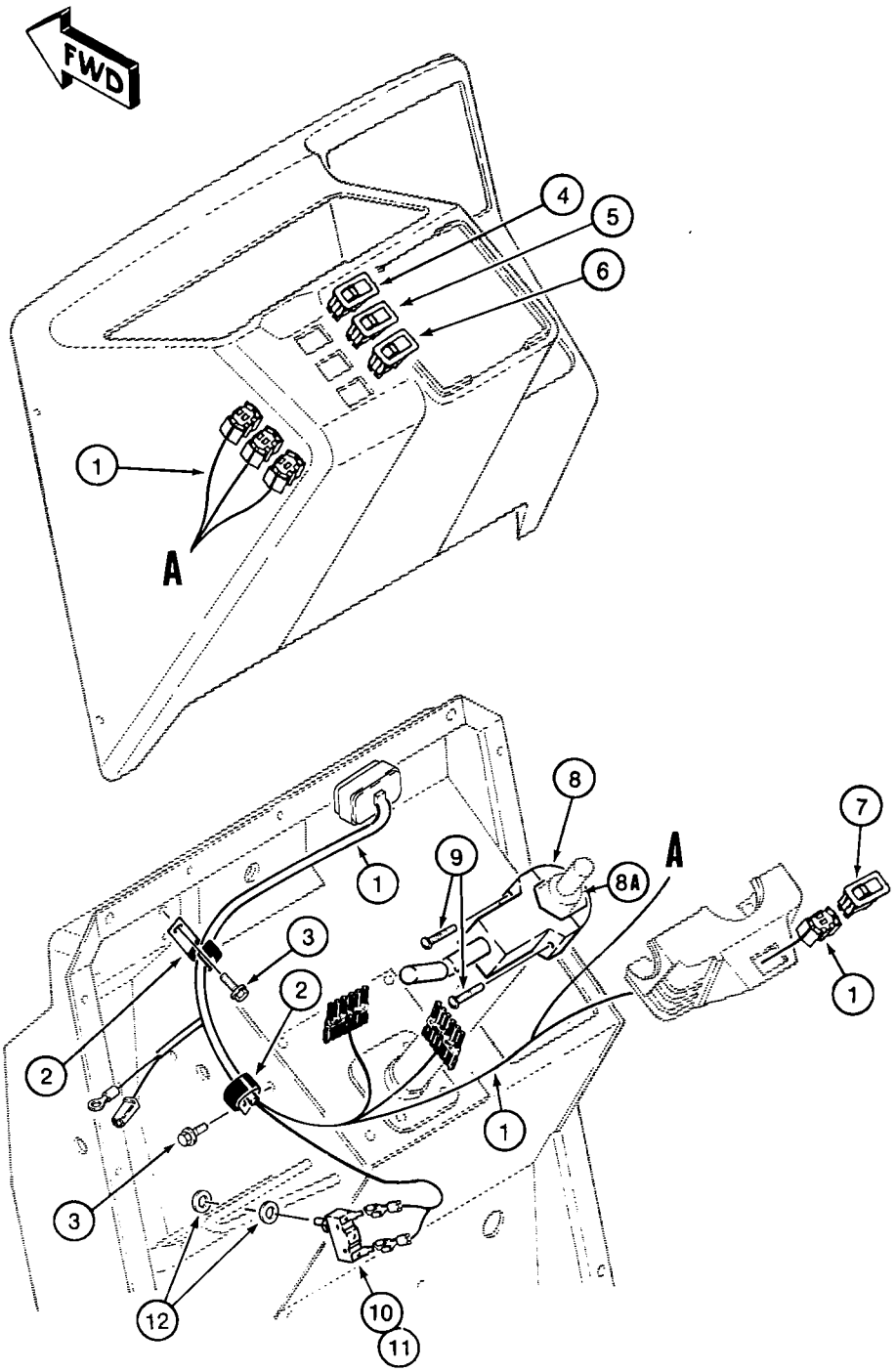
FWD
4
5
6
1
A
8
7
9
A
8A
3
2
2
1
1
3
12
10
11

FRONT CONSOLE WIRING HARNESS AND CONNECTIONS

REF.	PART NO.	DESCRIPTION	REQ'D.
1	282014A2	HARNESS - front console	1
2	D147383	CLAMP - J-type, harness to firewall	2
3	781-24820	BOLT - hex flange, self-tapping, 8 - 1.25 x 20 mm	2
4	123538A1	SWITCH - rocker, dome lamp, if used, see page 4-23 for plug used in place of switch	1
5	122736A1	SWITCH - rocker, hazard, flasher lamps	1
6	131691A1	SWITCH - rocker, turn signal	1
7	122740A1	SWITCH - rocker, horn	1
8	278328A1	LEVER - shuttle shift, transmission, forward/neutral/reverse switch, standard transmission	1
8	231520A2	LEVER - shuttle shift, transmission, forward/neutral/reverse switch, powershift transmission	1
8A	236521A1	COLLAR - shuttle lever, includes clamp and (2) nuts	1
	279520A1	BOOT - rubber, handle, shuttle shift lever, not shown	1
9	840-1535	SCREW - machine, pan Phillips, 5 - 0.8 x 35 mm	2
10	D148108	SWITCH - rocker, brake lamp	1
11	A187990	TERMINAL - male	2
12	495-81153	WASHER - flat, 15/32 x 3/4 x 1/32 inch	2

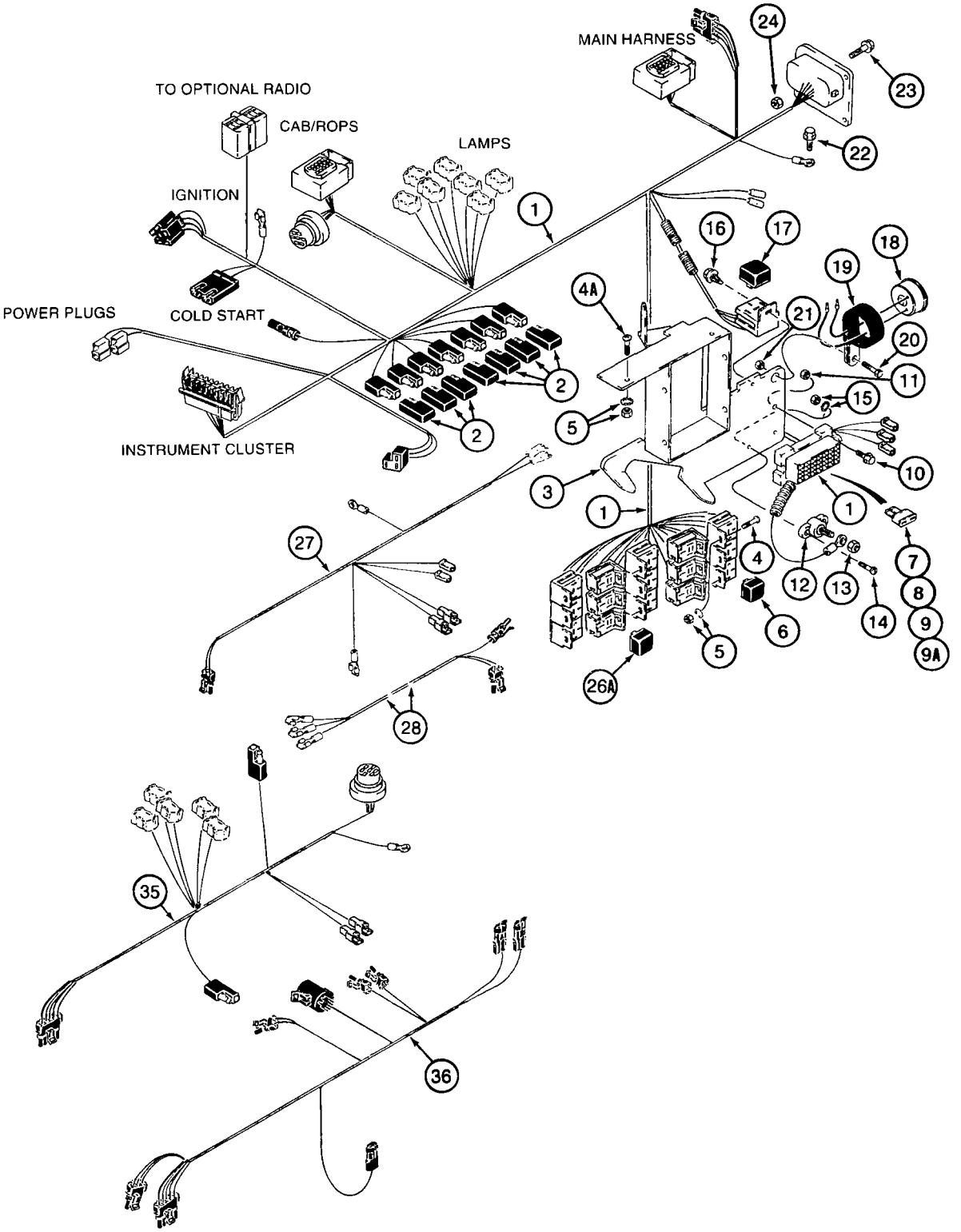
MAIN HARNESS
TO OPTIONAL RADIO
CAB/ROPS
LAMPS
IGNITION
POWER PLUGS
COLD START
INSTRUMENT CLUSTER
1
2
2
3
4
4A
5
5
6
7
8
9
9A
10
11
12
13
14
15
16
17
18
19
20
21
22
23
24
26A
27
28
35
36

SIDE CONSOLE INSTRUMENT HARNESS

REF.	PART NO.	DESCRIPTION	REQ'D.
1	282013A3	HARNESS - side instrument console, used with Ref 26A relay	1
2	L71879	DIODE - harness, isolation	7
3	181378A3	BRACKET - fuse and relay mounting	1
4	490-1108	SCREW - machine, pan Phillips, No. 10 NF x 1/2 inch	4
4A	490-1106	SCREW - machine, pan head Phillips, No. 10 NF x 3/8 inch	2
5	193-1000	NUT - hex, with external tooth lock washer, No. 10 NF	6
6	D128310	RELAY - 30 ampere, mini, 12 volt	13
7	121412A1	FUSE - mini, 10 ampere, red	5
8	121414A1	FUSE - mini, 20 ampere, yellow	1
9	121413A1	FUSE - mini, 15 ampere, blue	3
9A	121416A1	FUSE - mini, 30 ampere, green	1
10	844-6025	BOLT - heavy hex flange, 6 - 1.0 x 25 mm	1
11	832-10406	NUT - hex, self-locking, 6 mm - 1.0	1
12	184277A1	BLOCK - junction, power	1
13	425-106	NUT - hex, 3/8 inch NC	1
14	490-1108	SCREW - machine, pan Phillips, No. 10 NF x 1/2 inch	2
15	193-1000	NUT - hex, with external tooth lock washer, No. 10 NF	2
16	281-4556	SCREW - self-tapping, hex washer head, No. 10 NC x 3/8 inch	1
17	D147166	SWITCH - flasher, hazard and turn signal	1
18	D137468	ALARM - warning, for engine water temperature, engine oil pressure and parking brake	1
19	D120561	CLAMP - P-type, warning alarm mounting to bracket	1
20	614-10025	BOLT - hex, full threads, 10 - 1.5 x 25 mm	1
21	829-1410	NUT - hex, 10 mm - 1.5, class 10.9	1
22	844-10020	BOLT - heavy hex flange, 10 - 1.5 x 20 mm, ground at loader control bracket brace	1
23	844-6025	BOLT - heavy hex flange, 6 - 1.0 x 25 mm	2
24	832-10406	NUT - hex, self-locking, 6 mm - 1.0	2
26	L18337	STRAP - tie, 15 inch	UAR
26A	278665A4	RELAY - sealed time delay, shuttle interlock timing relay	1
	133041A1	KIT - harness, field, to install air conditioning on units not presently equipped with air conditioning, order items 27 and 28	1
27	130876A1	HARNESS - adapter, cab, attaches to side console instrument harness for air conditioning connections	1
28	186607A1	HARNESS - adpater, engine, attaches to side console instrument harness for air conditioning connections	1

*OPTIONAL EQUIPMENT HARNESSES

35	*296508A2	HARNESS - side console options	1
36	*302803A1	HARNESS - chassis options	1

***NOTE:** Optional equipment consists of ride control, hand held auxiliary hydraulics, auxiliary backhoe hydraulics and hydraulic quick coupler.

NOTE: See page 4-21 for additional side console instrument harness and connections.

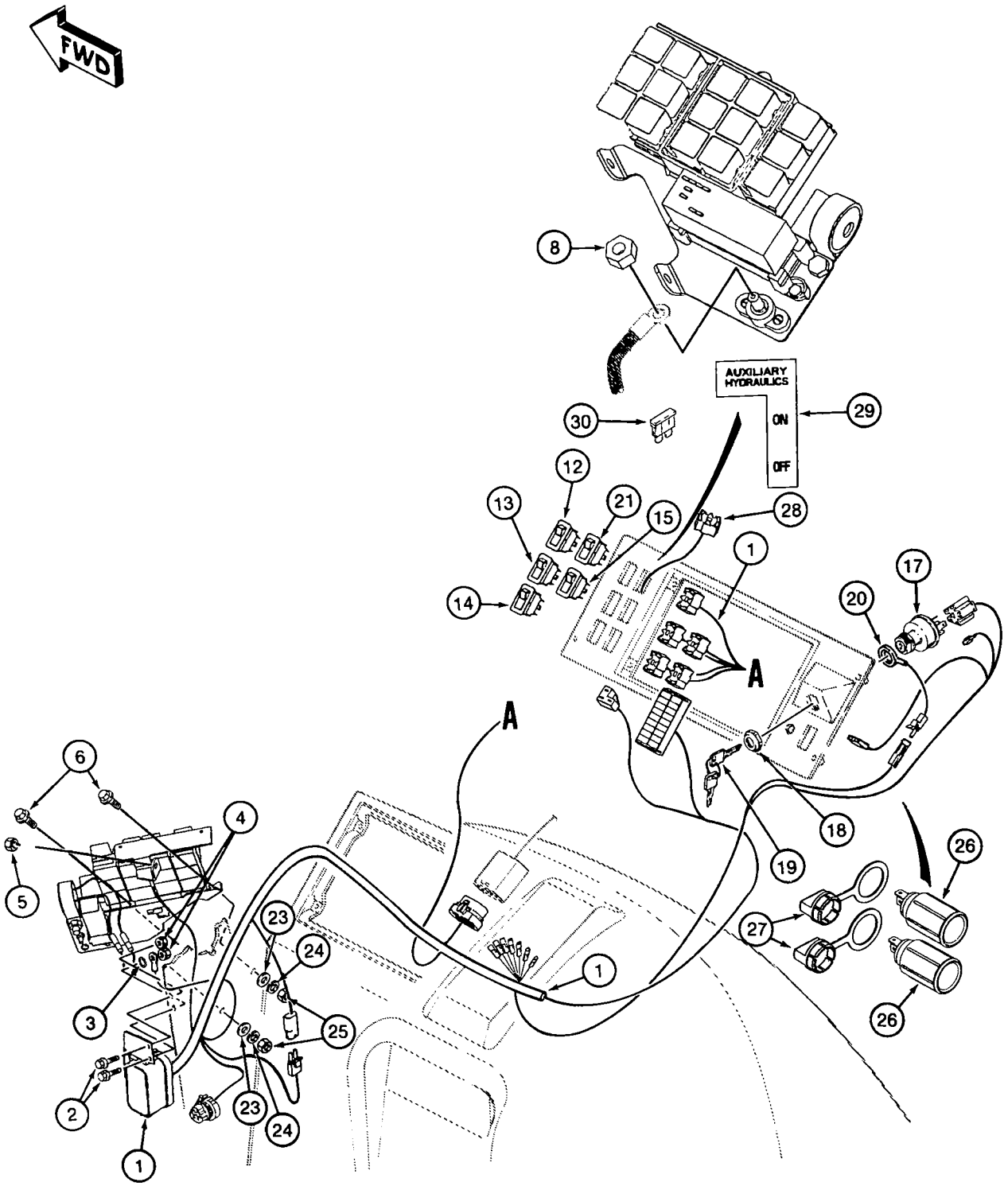
FWD
AUXILIARY HYDRAULICS
ON
OFF
A
A
1
2
3
4
5
6
8
12
13
14
15
17
18
19
20
21
23
24
25
26
27
28
29
30

SIDE CONSOLE INSTRUMENT HARNESS AND CONNECTIONS

REF.	PART NO.	DESCRIPTION	REQ'D.
1	282013A3	HARNESS - side instrument console	1
2	844-6025	BOLT - heavy hex flange, 6 - 1.0 x 25 mm	2
3	893-11006	WASHER - external tooth lock, 6 mm	1
4	825-2406	NUT - hex flange, 6 mm - 1	2
5	832-10408	NUT - hex, self-locking, 8 mm - 1.25, attaches fuse and relay mounting bracket to parking brake lever mounting bolt	1
6	844-8025	BOLT - heavy hex flange, 8 - 1.25 x 25 mm	2
8	425-106	NUT - hex, 3/8 inch NC, attaches power wire from starter, item 23 on page 4-11, to power junction block	1
12	133711A1	SWITCH - rocker, driving lamps	1
13	133713A1	SWITCH - rocker, front work lamps	1
14	133716A1	SWITCH - rocker, four-wheel drive, if used, see page 4-25 for plug used in place of switch	1
15	133715A1	SWITCH - rocker, rear flood lamps	1
	D134737	SWITCH ASSEMBLY - ignition, includes keys	1
17	NSS	SWITCH - key, without keys	1
18	A77314	NUT - hex, special, key switch mounting	1
19	A77313	KEY - set of two	1
20	D137820	WIRE - ignition switch to ground	1
21	191532A1	SWITCH - rocker, hand held auxiliary hydraulics, if used, see page 4-25 for plug used in place of switch	1
23	495-11041	WASHER - flat, 13/32 x 13/16 x 1/16 inch	2
24	892-11008	WASHER - lock, 8 mm	2
25	829-1408	NUT - hex, 8 mm - 1.25, class 10	2
26	283779A1	OUTLET - power plug	2
27	283781A1	CAP - power plug outlet	2
28	187013A1	HARNESS - auxiliary hydraulics, hand held	1
29	192299A1	DECAL - auxiliary hydraulics	1
30	121413A1	FUSE - mini, 15 ampere, auxiliary hydraulics	1

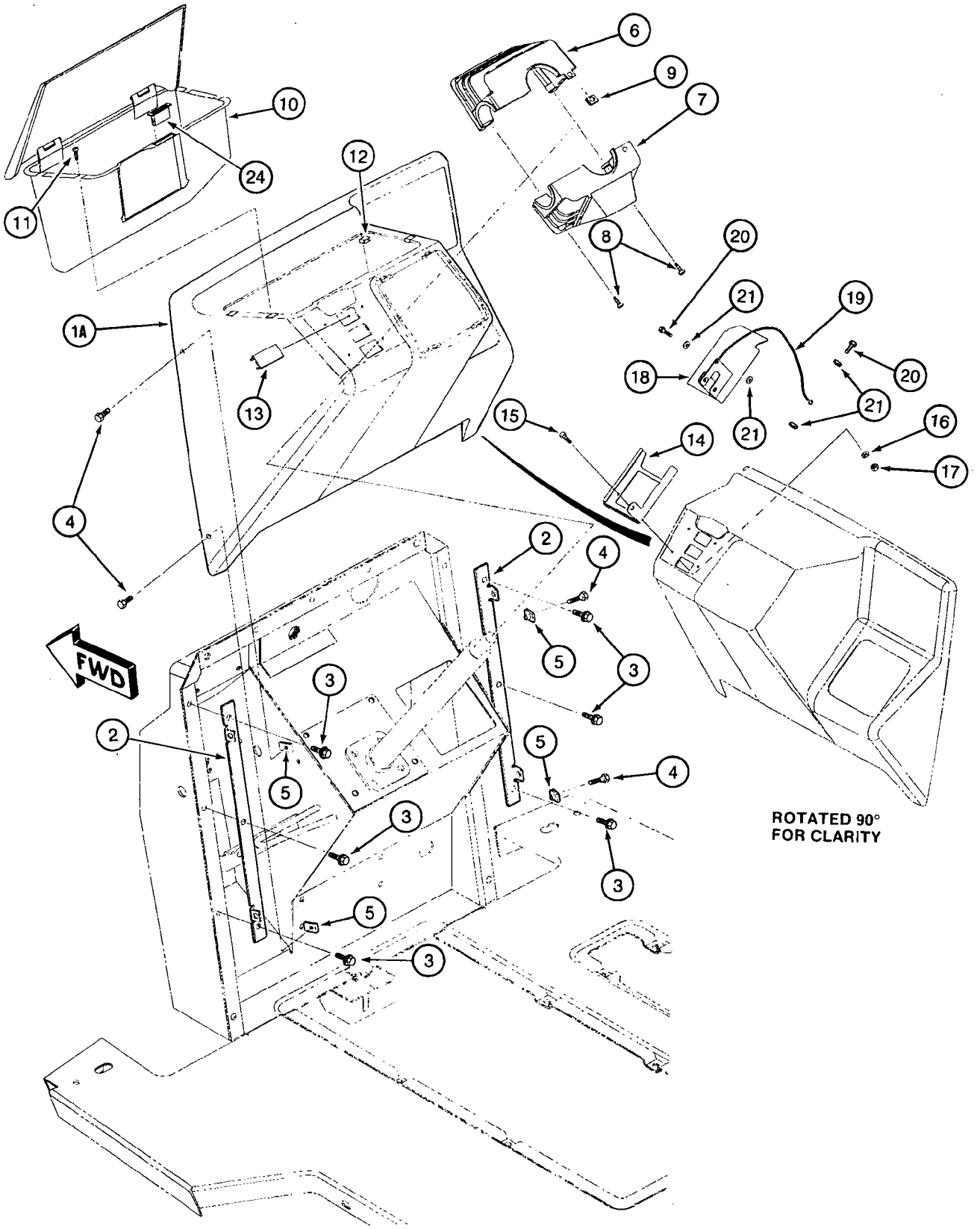
FWD
ROTATED 90°
FOR CLARITY

FRONT INSTRUMENT PANEL AND COVERS

REF.	PART NO.	DESCRIPTION	REQ'D.
1	119266A1	PANEL - instrument, front, cab models, item 1A shown	1
1A	181316A1	PANEL - instrument, front, ROPS canopy models, with four bolt holes for anti-vandalism cover	1
2	137851A1	PLATE - bar, front console mounting to firewall, not included in cab frame	2
3	844-8020	BOLT - heavy hex flange, 8 - 1.25 x 20 mm	10
4	555-2	BOLT - heavy hex flange, 6 - 1.0 x 20 mm, special, instrument panel to firewall	4
5	833-40406	NUT - U-type, 6 mm - 1.0	4
6	119267A2	COVER - upper, steering column	1
7	119268A1	COVER - lower, steering column	1
8	140-107	SCREW - machine, pan head Phillips, No. 10 NC x 3/4 inch	3
9	131-623	NUT - U-type, No. 10 NC	1
10	177164A1	BOX - storage compartment (service with 122641A1 box and 120029A1 cover, not shown)	1
11	140-107	SCREW - machine, pan head Phillips, No. 10 NC x 3/4 inch	4
12	176857A1	NUT - J-type, No. 10	4
13	126844A1	PLUG - upper, used in place of dome lamp switch, if used	1
14	136450A1	BRACKET - front instrument panel, anti-vandalism, ROPS canopy models	1
15	140-107	SCREW - machine, pan head Phillips, No. 10 NC x 3/4 inch	4
16	495-31022	WASHER - flat, 7/32 x 1/2 x 3/64 inch	4
17	225-14110	NUT - hex, No. 10 NC	4
18	136454A1	COVER - anti-vandalism, front instrument panel, ROPS canopy models	1
19	D126821	CORD - manual retaining, anti-vandalism cover	1
20	151-522	RIVET - break mandrel, 3/16 x 9/16 inch	2
21	495-31022	WASHER - flat, 7/32 x 1/2 x 3/64 inch	4
24	D127335	RETAINER - magnetic catch, storage compartment	1

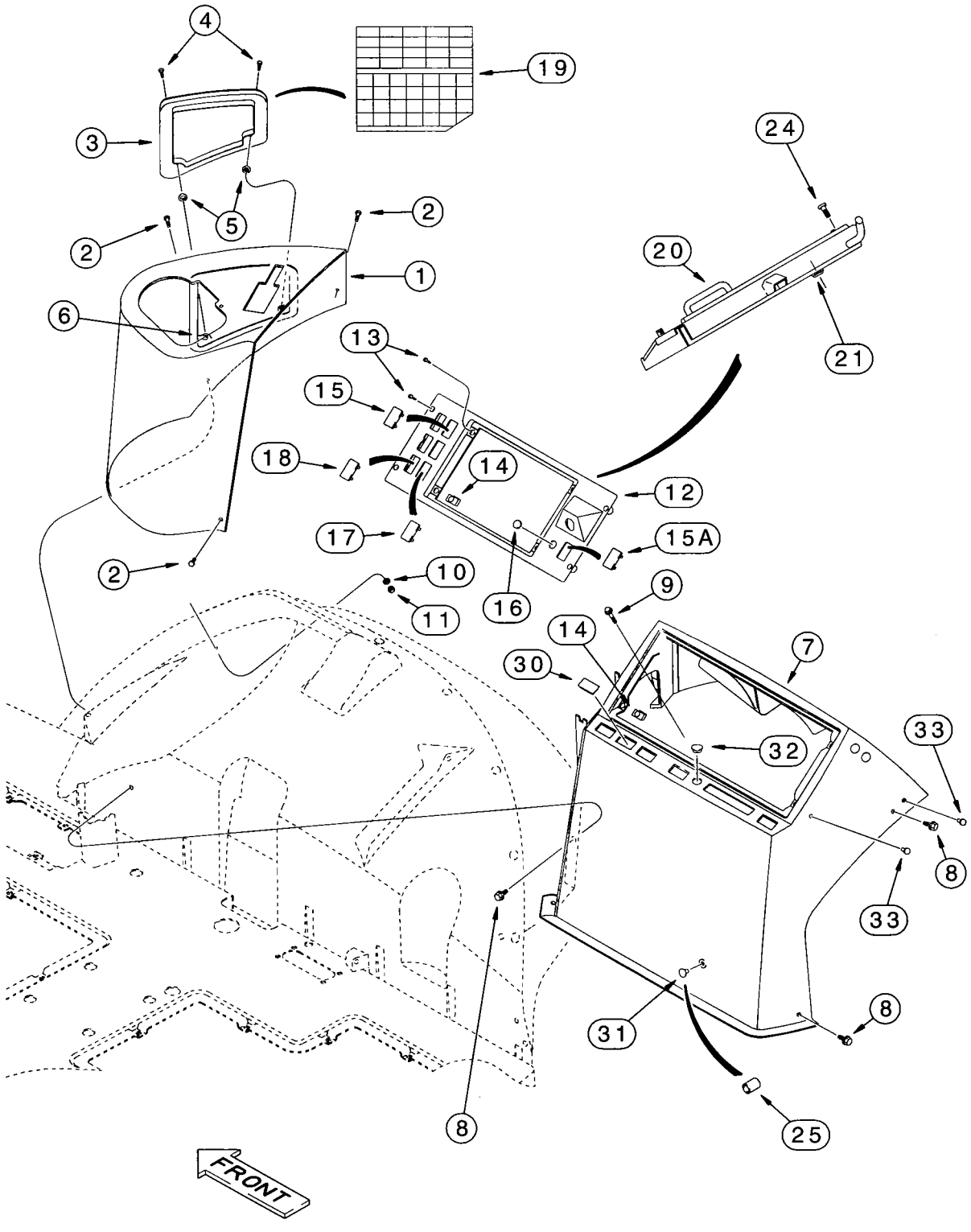
4
19
3
5
2
2
1
6
24
20
21
13
15
18
14
12
17
15A
2
10
11
16
9
14
30
7
32
33
8
33
31
8
8
25
FRONT

SIDE INSTRUMENT PANEL AND COVERS

REF.	PART NO.	DESCRIPTION	REQ'D.
1	245891A2	COVER - loader control	1
2	555-2	BOLT - heavy hex flange, 6 - 1.0 x 20 mm	3
3	120032A1	PANEL - fuse access	1
4	182276A1	SCREW - special, No. 10 NC x 3/4 inch	2
5	127009A1	RETAINER - screw, push-on	2
6	131-623	NUT - U-type, No. 10 NC	1
7	295378A1	PANEL - instrument, side, models without radio, if used, also order (1) 181385A1 threaded insert	1
7A	*294792A1	PANEL - instrument, side, models with radio, if used, also order (1) 181385A1 threaded insert, not shown	1
8	555-2	BOLT - heavy hex flange, 6 - 1.0 x 20 mm	3
9	844-6025	BOLT - heavy hex flange, 6 - 1.0 x 25 mm	1
10	895-15006	WASHER - flat, 6.6 x 25 x 1.6 mm	1
11	832-10406	NUT - hex, self-locking, 6 mm - 1.0	1
12	123615A2	PANEL - instrument cluster mounting	1
13	140-106	SCREW - machine, pan head Phillips, No. 10 NC x 1/2 inch	8
14	131-619	NUT - J-type, No. 10 NC	8
15	126844A1	PLUG - auxiliary hydraulics, if used	1
15A	126844A1	PLUG - accessory option, if used	1
16	353-406	PLUG - button, 5/8 inch, nylon, used in place of cold start button, if used	1
17	126844A1	PLUG - used in place of differential lock switch, if used	1
18	126844A1	PLUG - used in place of four-wheel drive switch, if used	1
19	REF	DECAL - fuses and relays, see page 9-155, Ref 4 for decal	1
	129586A1	COVER ASSEMBLY - instrument cluster panel, anti-vandalism, uses existing hardware, ROPS canopy models	1
20	NSS	COVER - instrument cluster panel	1
21	F22426	BUMPER - rubber	3
24	140-119	SCREW - machine, pan head Phillips, No. 10 NC x 1-1/4 inch	4
25	181385A1	INSERT - threaded, 8 mm - 1.25, if used	1
30	*126844A1	PLUG - ride control, if used	5
31	*1340319C1	PLUG - flat face, pry out, 7/16 inch diameter, if used, replaces 353-425 plug	1
32	*353-429	PLUG - flat face, pry out, 11/16 inch diameter	1
33	*353-401	PLUG - button, 5/16 inch	2
	F42827	TRIM - edge, bulk, 2946 mm (116 inch) long	1
	*292654A1	KIT - radio-ready package, includes above items marked with an asterisk, plus see parts on pages 4-45 and 9-133	1

NOTE: See page 4-21 for side console switches.

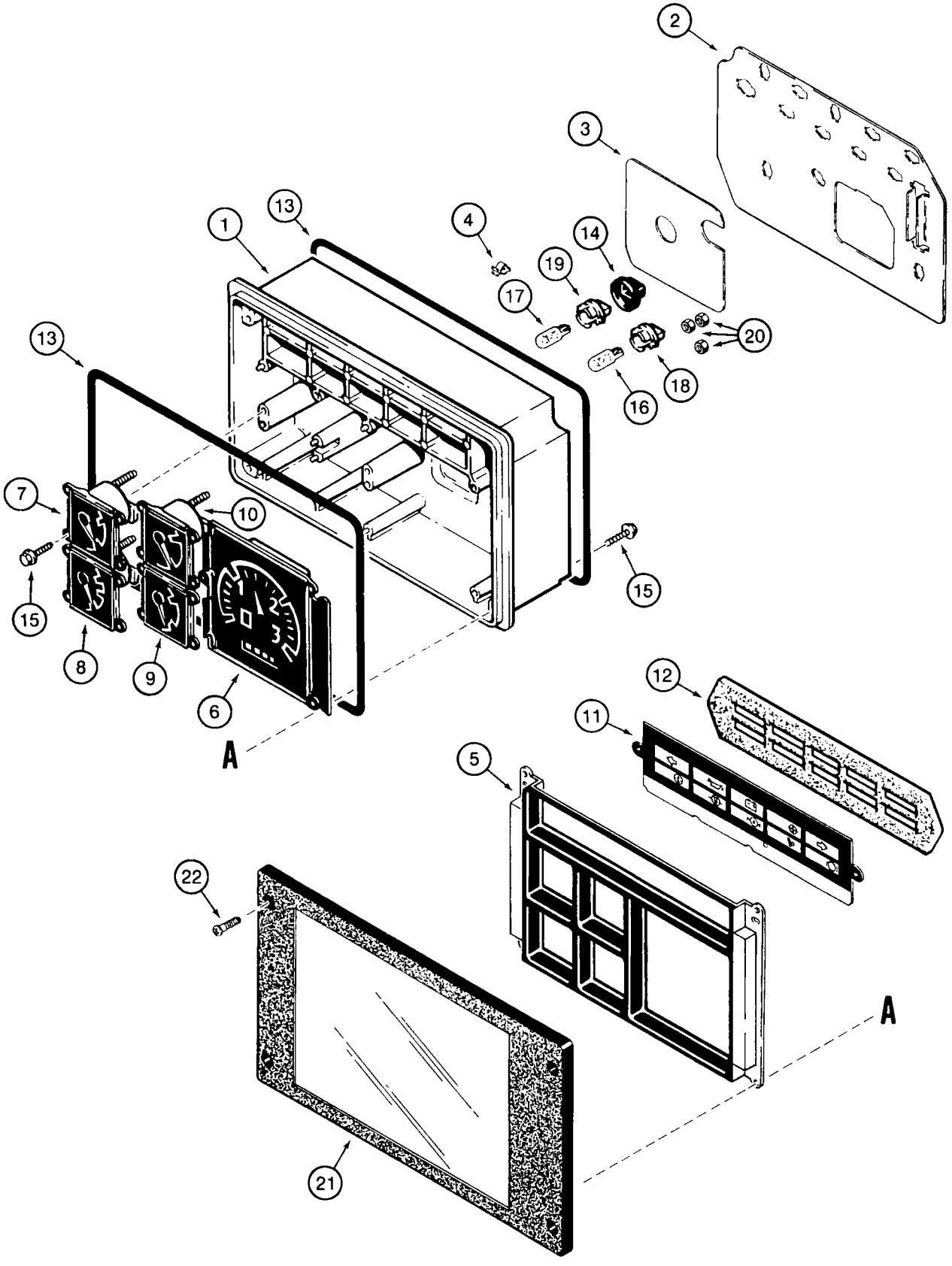
2
3
1
13
4
14
19
17
20
18
16
7
10
15
8
9
6
12
11
5
22
21
A
A

INSTRUMENT CLUSTER

REF.	PART NO.	DESCRIPTION	REQ'D.
	A187965	CLUSTER ASSEMBLY - instrument, tractor	1
	A191114	HOUSING ASSEMBLY - instrument cluster	1
1	N13545	HOUSING - instrument cluster	1
2	H422774	BOARD - circuit, printed, instrument cluster	1
3	H422758	GASKET - housing	1
4	H422766	CLIP - gauges	12
5	A45007	COVER - instrument cluster	1
6	N13543	GAUGE - tachometer, includes hourmeter	1
7	N13542	GAUGE - water temperature	1
8	A47688	GAUGE - fuel level	1
9	N6807	GAUGE - voltmeter	1
10	N13546	GAUGE - oil temperature	1
11	D146335	LENS - identification, warning lamps	1
12	D71342	GASKET - lens	1
13	D71343	GASKET - instrument cluster	2
14	D71344	BOOT - rubber, lamp socket	3
15	A45093	SCREW - special	12
16	D71346	BULB - lamp, No. 168	8
17	W10478	BULB - lamp, No. 194	3
18	A47123	SOCKET - lamp	8
19	A47125	SOCKET - lamp, green	3
20	225-14106	NUT - hex, No. 6 NC	3
21	N14225	SHIELD - instrument cluster	1
22	140-107	SCREW - machine, pan head Phillips, No. 10 NC x 3/4 inch	4

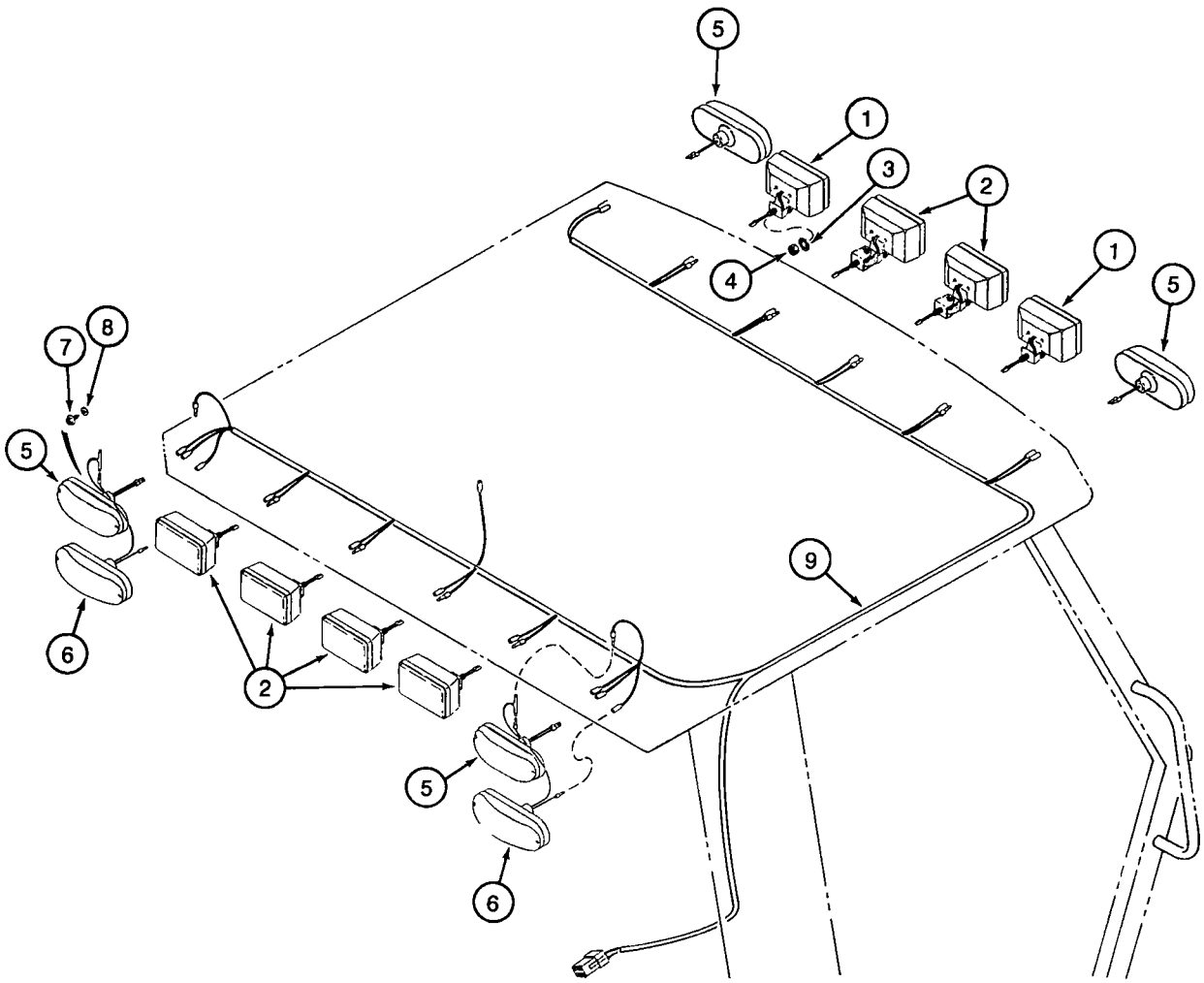
5
1
3
2
1
5
4
7
8
5
9
6
2
5
6

TRACTOR LAMP ELECTRICAL CIRCUIT
WITH ROPS CANOPY

REF.	PART NO.	DESCRIPTION	REQ'D.
1	D132681	LAMP ASSEMBLY - front driving, outer, parts list page 4-33, no longer available, order ZAA7376350 lamp package	2
2	D132682	LAMP ASSEMBLY - flood and work, rear flood (outer) and center front and rear work lamps, parts list page 4-33, no longer available, order ZAA7376150 lamp package and ZAA8066600 mounting kit	6
3	493-11052	WASHER - internal-external tooth lock, 1/2 inch	8
4	425-148	NUT - hex, jam, 1/2 inch NC	8
5	D135384	LAMP ASSEMBLY - turn signal and flasher, amber, front and rear, parts list page 4-37	4
6	D121152	LAMP ASSEMBLY - stop and tail, red, rear, parts list page 4-37	2
7	281-4556	SCREW - self-tapping, hex washer head, No. 10 NC x 3/8 inch	12
8	495-31022	WASHER - flat, 7/32 x 1/2 x 3/64 inch	12
9	283001A1	HARNESS - ROPS canopy, lamps, attaches to side console instrument harness, see page 9-147 for harness cover and clamps that mount to the right-hand ROPS post	1

NOTE: See side console harness page 4-19 for lamp fuses and page 4-21 for lamp switches.

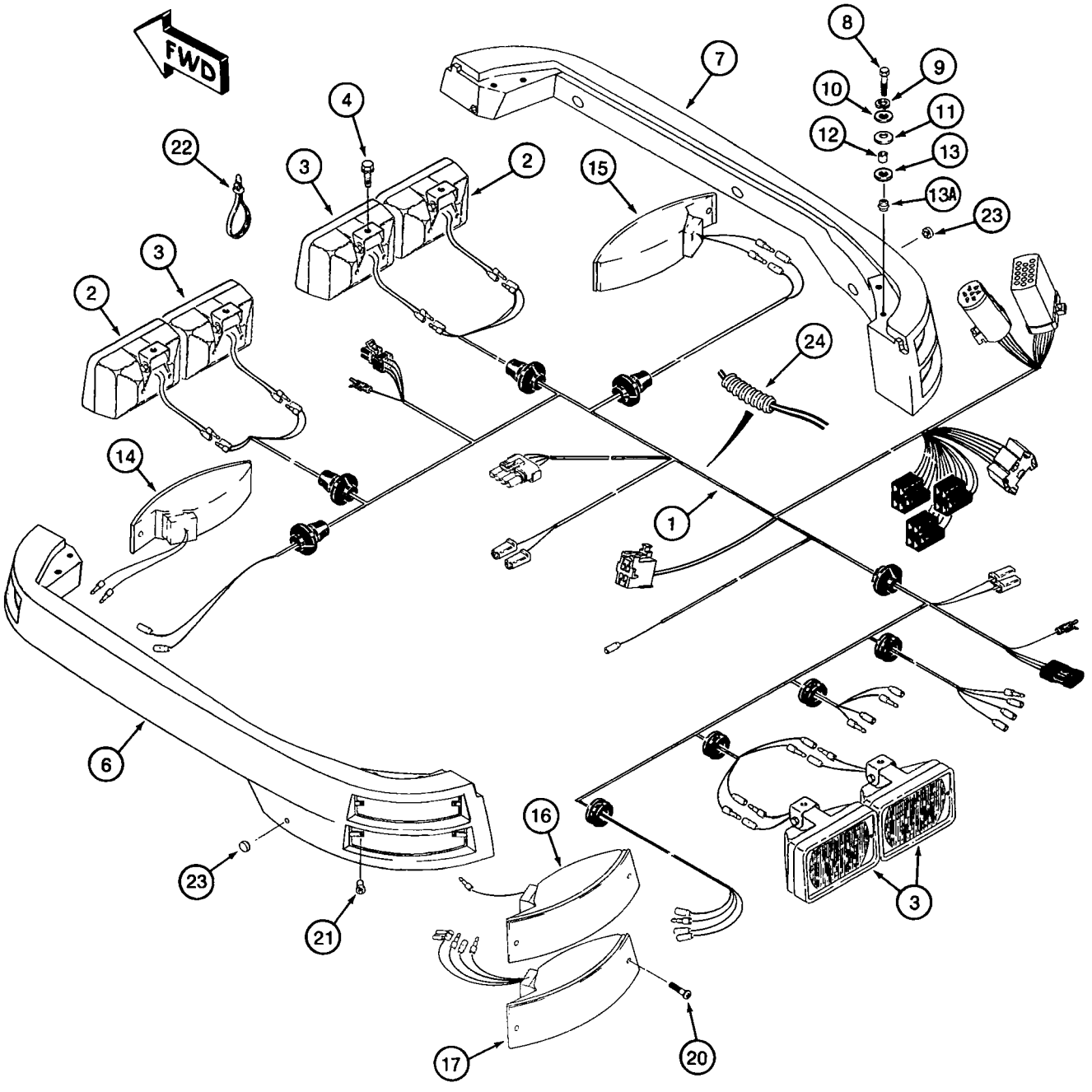
FWD
1
2
3
4
6
7
8
9
10
11
12
13
13A
14
15
16
17
20
21
22
23
24

TRACTOR LAMP ELECTRICAL CIRCUIT
WITH CAB

REF.	PART NO.	DESCRIPTION	REQ'D.
1	282017A2	HARNESS - cab, models without air conditioning, attaches to side console instrument harness	1
1A	282018A2	HARNESS - cab, models with air conditioning, not shown, attaches to side console instrument harness, used in production, for service order 282017A2 cab harness (item 1) and 130876A1 adapter harness, item 27 on page 4-19	1
2	109080A1	LAMP ASSEMBLY - front driving, parts list page 4-37	2
3	109081A1	LAMP ASSEMBLY - flood and work, rear flood and front and rear work lamps, parts list page 4-37	6
4	409-768	BOLT - hex serrated flange, 3/8 NC x 1/2 inch	8
6	187834A1	BRACKET - left-hand lamp, includes inserts, (4) Ref 13A and (6) Ref 21, cab models	1
7	187836A1	BRACKET - right-hand lamp, includes inserts, (4) Ref 13A and (6) Ref 21, cab models	1
8	814-8035	BOLT - hex, 8 - 1.25 x 35 mm, lamp bracket to cab frame	8
9	892-11008	WASHER - lock, 8 mm	8
10	495-81001	WASHER - flat, 3/8 x 1-1/8 x 1/16 inch	8
11	186756A1	WASHER - Belleville	8
12	183598A2	SPACER - cab lamp bracket mounting	8
13	495-21056	WASHER - flat, 9/16 x 1-3/8 x 7/64 inch	8
13A	181385A1	INSERT - threaded, 8 mm - 1.25	8
14	131797A1	LAMP ASSEMBLY - turn signal and flasher, amber lens, left-front, parts list page 4-43	1
15	131796A1	LAMP ASSEMBLY - turn signal and flasher, amber lens, right front, parts list page 4-43	1
16	183504A1	LAMP ASSEMBLY - turn signal and flasher, amber lens, left rear, upper, parts list page 4-43	1
17	131795A1	LAMP ASSEMBLY - stop and tail, red lens, left rear, lower, parts list page 4-43	1
18	183505A1	LAMP ASSEMBLY - turn signal and flasher, amber lens, right rear, upper, not shown, parts list page 4-43	1
19	131794A1	LAMP ASSEMBLY - stop and tail, red lens, right rear, lower, not shown, parts list page 4-43	1
20	190-105	SCREW - machine, pan Phillips, No. 10 NF x 1-3/4 inch, lamp to bracket	12
21	181459A1	INSERT - No. 10 NF	12
22	L18337	STRAP - tie, 15 inch, nylon, retaining	7
23	L60224	BUMPER - rubber	2
24	1202956C1	CONDUIT - convoluted insulation, 16 (5/8) x 21 (53/64) x 889 mm (35 inch) long, windshield	1

NOTE: See side console harness page 4-19 for lamp fuses and page 4-21 for lamp switches.

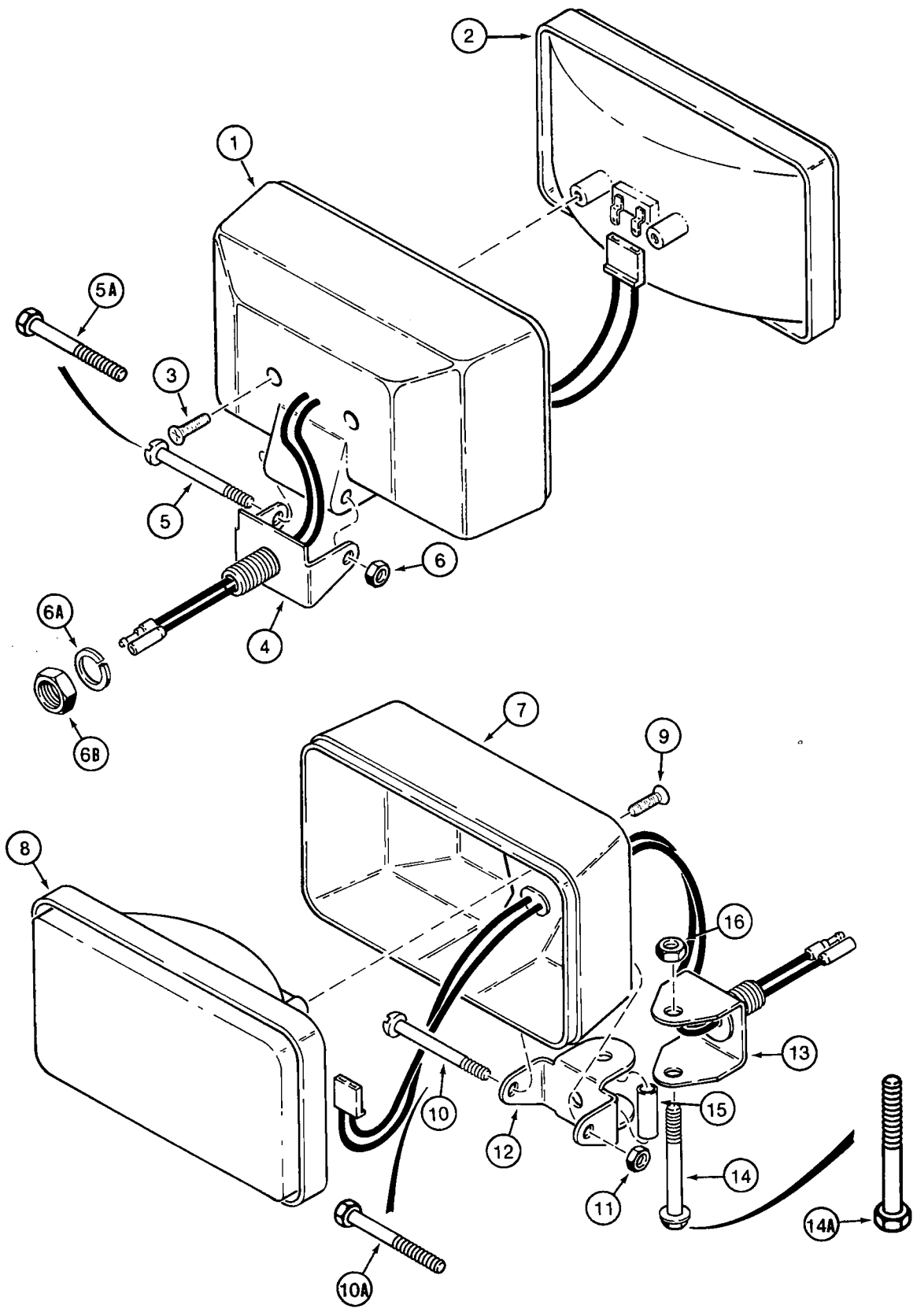
1
2
3
4
5
5A
6
6A
6B
7
8
9
10
10A
11
12
13
14
14A
15
16

CANOPY TRACTOR LAMPS

FRONT DRIVING, REAR FLOOD, AND FRONT AND REAR WORK LAMPS

REF.	PART NO.	DESCRIPTION	REQ'D.
		FRONT DRIVING LAMP ASSEMBLY	
	D132681	LAMP ASSEMBLY - front driving, no longer available, order ZAA7376350 lamp package	2
1	NSS	HOUSING - lamp	1
2	91946C1	BULB - sealed beam	1
3	273-10510	SCREW - self-tapping, flat head slotted, No. 10-16 x 5/8 inch	2
4	N14284	BRACKET - lamp	1
5	70-12532	SCREW - machine, pan head slotted, 1/4 NC x 2 inch, housing to bracket, production	1
5A	413-432	BOLT - hex, 1/4 NC x 2 inch, service	1
6	231-1444	NUT - hex, self-locking, 1/4 inch NC	1
6A	492-11050	WASHER - lock, 1/2 inch	1
6B	425-108	NUT - hex, 1/2 inch NC	1
		REAR FLOOD LAMP ASSEMBLY AND FRONT AND REAR WORK LAMPS	
	D132682	LAMP ASSEMBLY - flood and work, rear flood (outer) and center front and rear work lamps, no longer available, order ZAA7376150 lamp package and ZAA8066600 mounting kit package	6
7	NSS	HOUSING - lamp	1
8	91947C1	BULB - sealed beam	1
9	273-10510	SCREW - self-tapping, flat head slotted, No. 10-16 x 5/8 inch	2
10	70-12532	SCREW - machine, pan head slotted, 1/4 NC x 2 inch, housing to bracket, production	1
10A	413-432	BOLT - hex, 1/4 NC x 2 inch, service	1
11	231-1444	NUT - hex, self-locking, 1/4 inch NC	1
12	N14285	BRACKET - lamp, mounting	1
13	A52216	BRACKET - mounting, lamp, includes stud	1
14	121-119	BOLT - hex serrated flange, 5/16 NC x 2-1/4 inch, black, special, used in production, for service order item 14A	1
14A	413-536	BOLT - hex, 5/16 NC x 2-1/4 inch, service	1
15	65881H	SPACER - tubular, 1/4 x 1-1/4 inch	1
16	231-1445	NUT - hex, self-locking, 5/16 inch NC	1

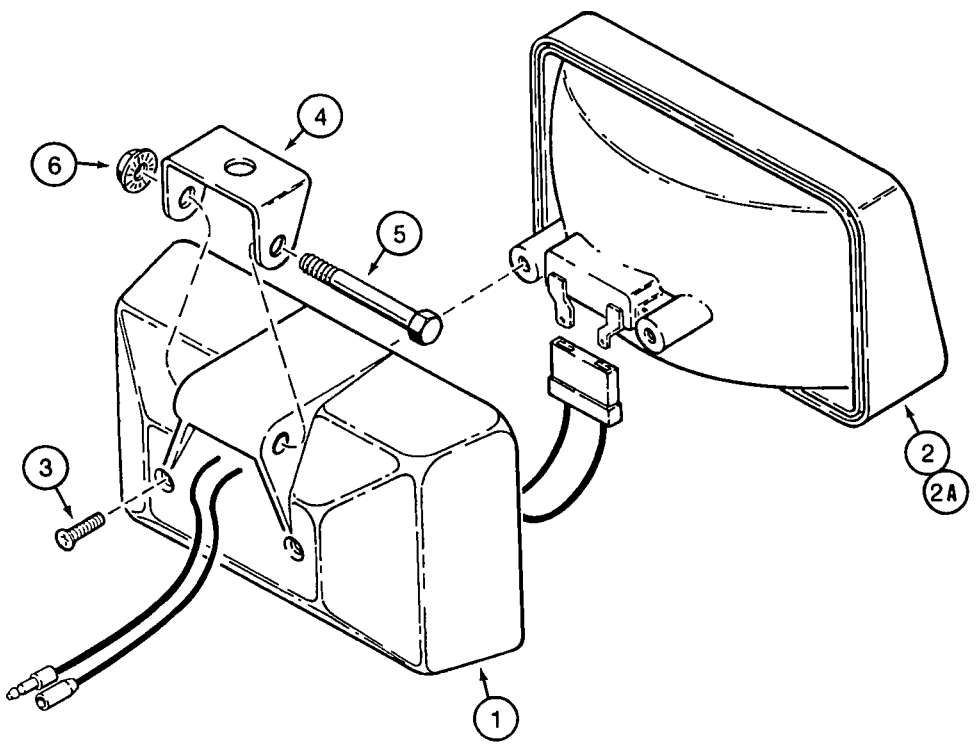
6
4
5
3
2
2A
1

CAB TRACTOR LAMPS

FRONT DRIVING, REAR FLOOD, AND FRONT AND REAR WORK LAMPS

REF.	PART NO.	DESCRIPTION	REQ'D.
	109080A1	LAMP ASSEMBLY - front driving	2
	109081A1	LAMP ASSEMBLY - flood and work, rear flood and front and rear work lamps	6
1	NSS	HOUSING - lamp	1
2	A187912	LAMP - sealed beam, 109080A1 lamp	1
2A	A187911	LAMP - sealed beam, 109081A1 lamp	1
3	273-5048	SCREW - self-tapping, flat head slotted, No. 8-18 x 1/2 inch	2
4	A187914	BRACKET - mounting, lamp	1
5	413-432	BOLT - hex, 1/4 NC x 2 inch	1
6	231-5144	NUT - hex serrated flange, 1/4 inch NC	1

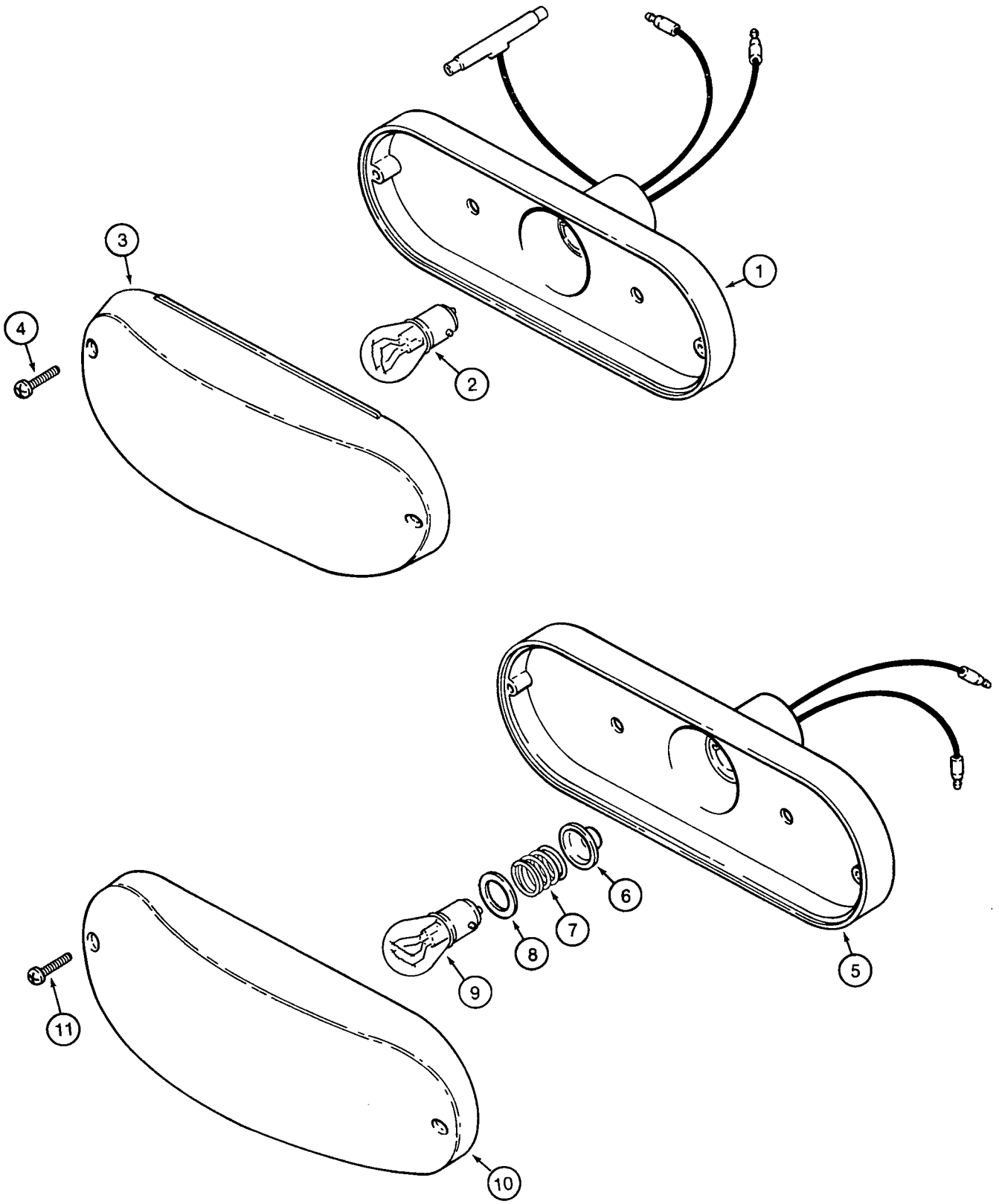
1
2
3
4
5
6
7
8
9
10
11

CANOPY TRACTOR LAMPS

STOP AND TAIL LAMPS AND TURN SIGNAL AND FLASHER LAMPS

REF.	PART NO.	DESCRIPTION	REQ'D.
		STOP AND TAIL LAMP	
	D121152	LAMP ASSEMBLY - stop and tail, red	2
1	NSS	BODY - lamp, complete	1
2	T34857	BULB - lamp, No. 1157, stop and tail	1
3	N6836	LENS - red, lamp	1
4	261-14310	SCREW - self-tapping, pan Phillips, No. 6 NC x 5/8 inch	2
		TURN SIGNAL AND FLASHER	
	D135384	LAMP ASSEMBLY - turn signal and flasher, amber	4
5	NSS	BODY AND SOCKET - lamp	1
6	NSS	SEAL - rubber, spring retaining	1
7	NSS	SPRING - lamp	1
8	NSS	INSULATOR - lamp	1
9	A41264	BULB - lamp, 12 volt, No. 1156, turn signal and flasher	1
10	N14283	LENS - amber, lamp	1
11	261-14310	SCREW - self-tapping, pan Phillips, No. 6 NC x 5/8 inch	2

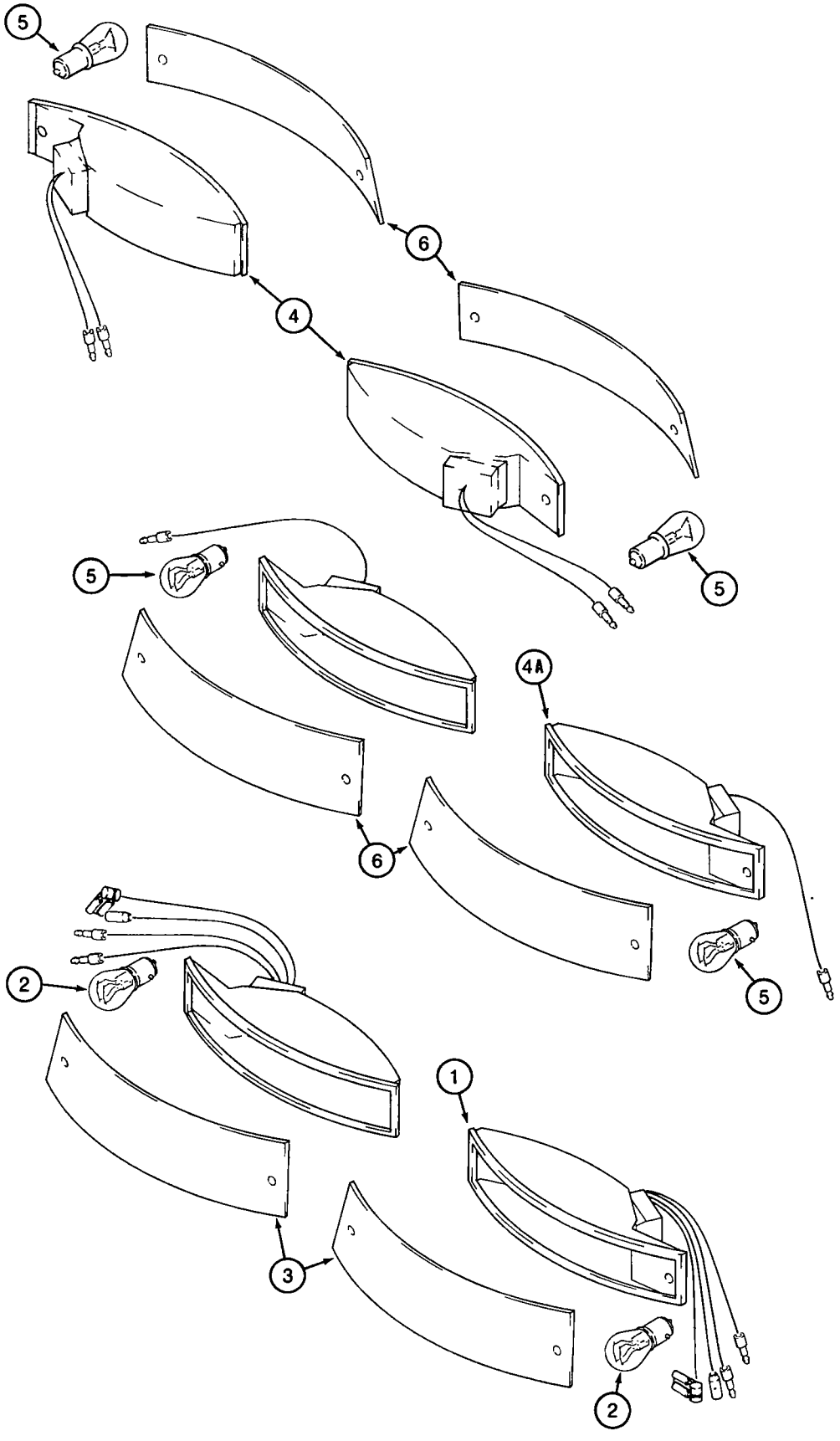
5
6
4
5
5
4A
6
5
2
1
3
2

CAB TRACTOR LAMPS

STOP AND TAIL LAMPS AND TURN SIGNAL AND FLASHER LAMPS

REF.	PART NO.	DESCRIPTION	REQ'D.
		STOP AND TAIL LAMP	
	131794A1	LAMP ASSEMBLY - stop and tail, red lens, right rear, lower	1
	131795A1	LAMP ASSEMBLY - stop and tail, red lens, left rear, lower	1
1	NSS	BODY - lamp, complete	1
2	T34857	BULB - lamp, No. 1157, stop and tail	1
3	183749A1	LENS - lamp, red	1
		TURN SIGNAL AND FLASHER	
	131796A1	LAMP ASSEMBLY - turn signal and flasher, amber lens, right front	1
	183505A1	LAMP ASSEMBLY - turn signal and flasher, amber lens, right rear, upper	1
	131797A1	LAMP ASSEMBLY - turn signal and flasher, amber lens, left front	1
	183504A1	LAMP ASSEMBLY - turn signal and flasher, amber lens, left rear, upper	1
4	NSS	BODY - 131796A1 or 131797A1 lamp	1
4A	NSS	BODY - 183504A1 or 183505A1 lamp	1
5	A41264	BULB - lamp, 12 volt, No. 1156, turn signal and flasher	1
6	183748A1	LENS - lamp, amber	1

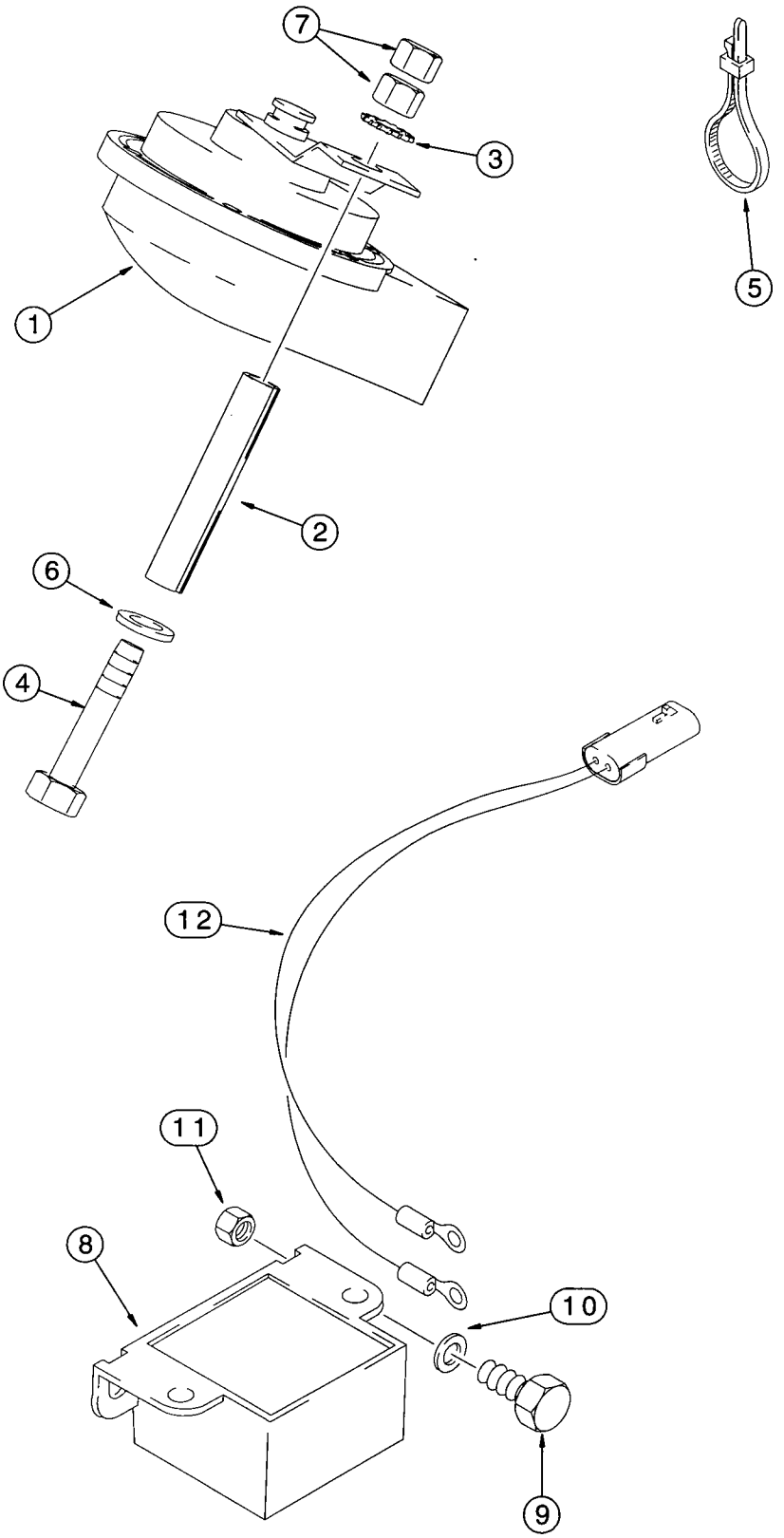
7
3
5
1
2
6
4
12
11
8
10
9

HORN AND BACKUP ALARM

REF.	PART NO.	DESCRIPTION	REQ'D.
		HORN	
1	190155A1	HORN - 12 volt, includes mounting bracket	1
2	116423A1	SPACER - split	1
3	893-11008	WASHER - external tooth lock, 8 mm	1
4	814-8110	BOLT - hex, 8 - 1.25 x 110 mm	1
5	L18337	STRAP - tie, 15 inch	2
6	895-11008	WASHER - flat, 9 x 17 x 1.6 mm, if used	1
7	829-1408	NUT - hex, 8 mm - 1.25, class 10, if used	2
		BACKUP ALARM	
8	109511A1	ALARM - backup, attaches to main engine harness, see page 4-11 for engine harness options	1
9	614-8025	BOLT - hex, full threads, 8 - 1.25 x 25 mm	2
10	895-11008	WASHER - flat, 9 x 17 x 1.6 mm	2
11	832-10408	NUT - hex, self-locking, 8 mm - 1.25	2
12	D139175	WIRE - pigtail, attaches main engine harness to alarm	1

NOTE: See front console instrument harness page 4-17 for horn switch.

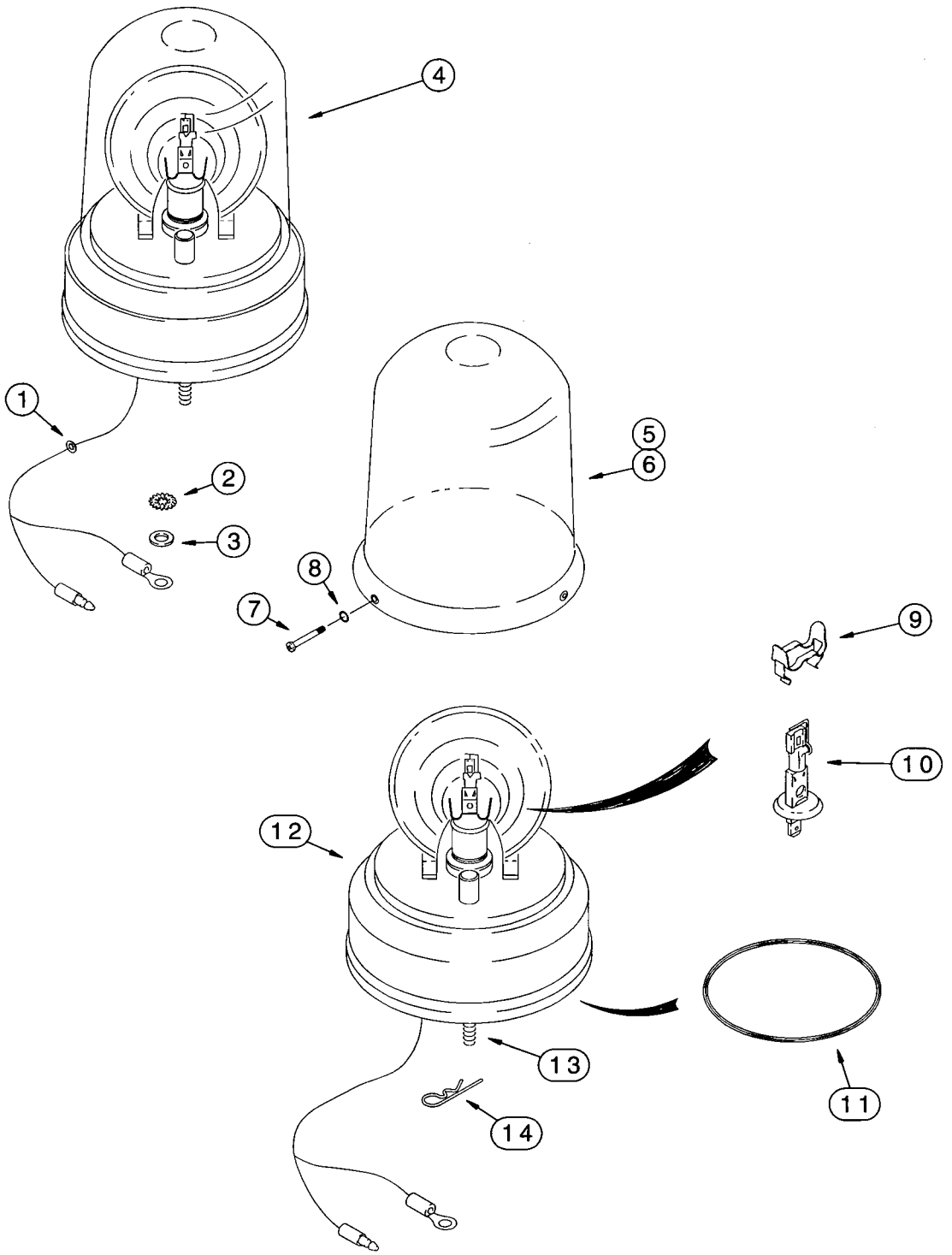
4
1
2
3
5
6
8
7
9
10
12
13
14
11

ROTATING BEACON

USED ON CAB OR CANOPY MODELS

REF.	PART NO.	DESCRIPTION	REQ'D.
1	A23870	GROMMET - wire	1
2	493-11026	WASHER - internal-external tooth lock, 1/4 inch, ground	1
3	495-21031	WASHER - flat, 5/16 x 3/4 x 1/16 inch, ground	1
4	108366A1	BEACON ASSEMBLY - rotating, attaches to cab or canopy harness	1
5	A187542	LENS - beacon, amber, if used	1
6	127158A1	LENS - beacon, blue, if used	1
7	168-71	SCREW - drive, round head, No. 8 x 1/2 inch, lens mounting	3
8	238-5005	O-RING - 3/32 ID x 1/16 inch wide, lens mounting screw	3
9	101531A1	CLIP - bulb	1
10	3125705R1	LAMP - beacon, 12 volt, 55 watt	1
11	A187575	BELT - drive motor, rotating beacon	1
12	NSS	BASE - with drive motor	1
13	614-6020	BOLT - hex, full threads, 6 - 1.0 x 20 mm	3
14	136-54	PIN - cotter, hair, 1/4 x 11/16 inch, bolt retaining	3

NOTE: See side console instrument harness page 4-21 for beacon switch and page 4-19 for fuse.

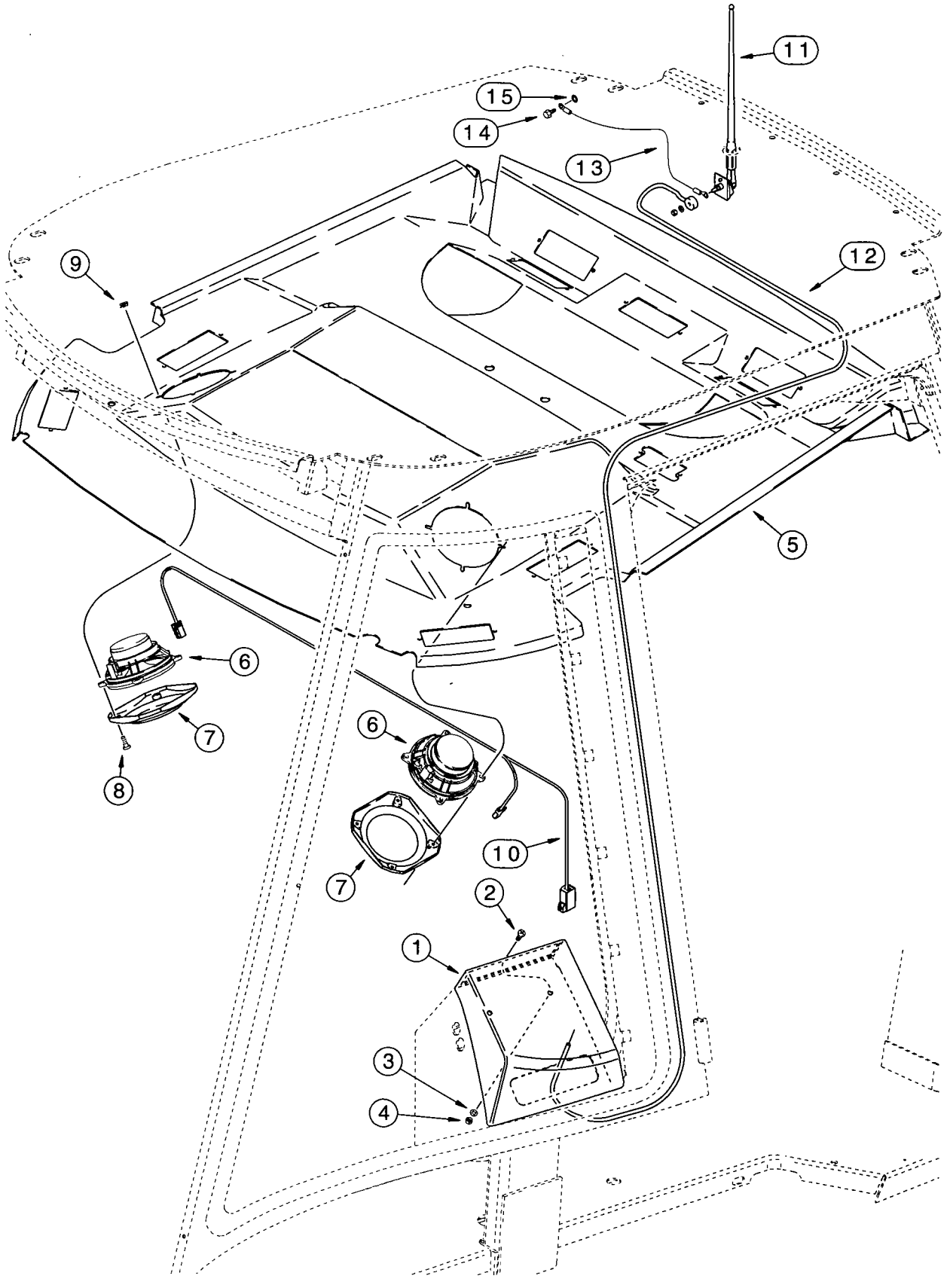
11
15
14
13
12
9
5
6
7
8
6
7
10
2
1
3
4

*RADIO, MOUNTING BOX, ANTENNA AND SPEAKERS

REF.	PART NO.	DESCRIPTION	REQ'D.
	*292654A1	KIT - radio-ready package, also includes right-hand side instrument panel, see page 4-25	1
1	221418A1	BOX - radio mounting	1
2	161-115	SCREW - hex socket button head, 1/4 NC x 3/4 inch	2
3	495-11028	WASHER - flat, 9/32 x 5/8 x 1/16 inch	2
4	231-1444	NUT - hex, self-locking, 1/4 inch NC	2
5	300157A1	HEADLINER ASSEMBLY - cab, models with radio-ready package, see page 9-133 for headliner components	1
6	182721A2	SPEAKER - radio, 5-1/4 inch, round	2
7	187281A1	GRILLE - speaker cover	2
8	761-17325	SCREW - self-tapping, pan Phillips, 4.2 - 1.4 x 25 mm	8
9	177269A1	NUT - U-type, spring	8
10	298228A1	HARNESS - speaker	1
11	197745A1	ANTENNA - radio, includes flat washer and nut which are not serviced separately	1
12	284549A1	CABLE - antenna	1
13	291010A1	WIRE - antenna ground, ground eyelet must be mounted on cab side of antenna cable or am radio will not operate	1
14	760-14413	SCREW - self-tapping, pan Phillips, 4.8 - 1.8 x 13 mm	1
15	893-11005	WASHER - external tooth lock, 5 mm	1

* **NOTE:** Does not include radio. For headliner used on models with the radio-ready kit, see page 9-133.

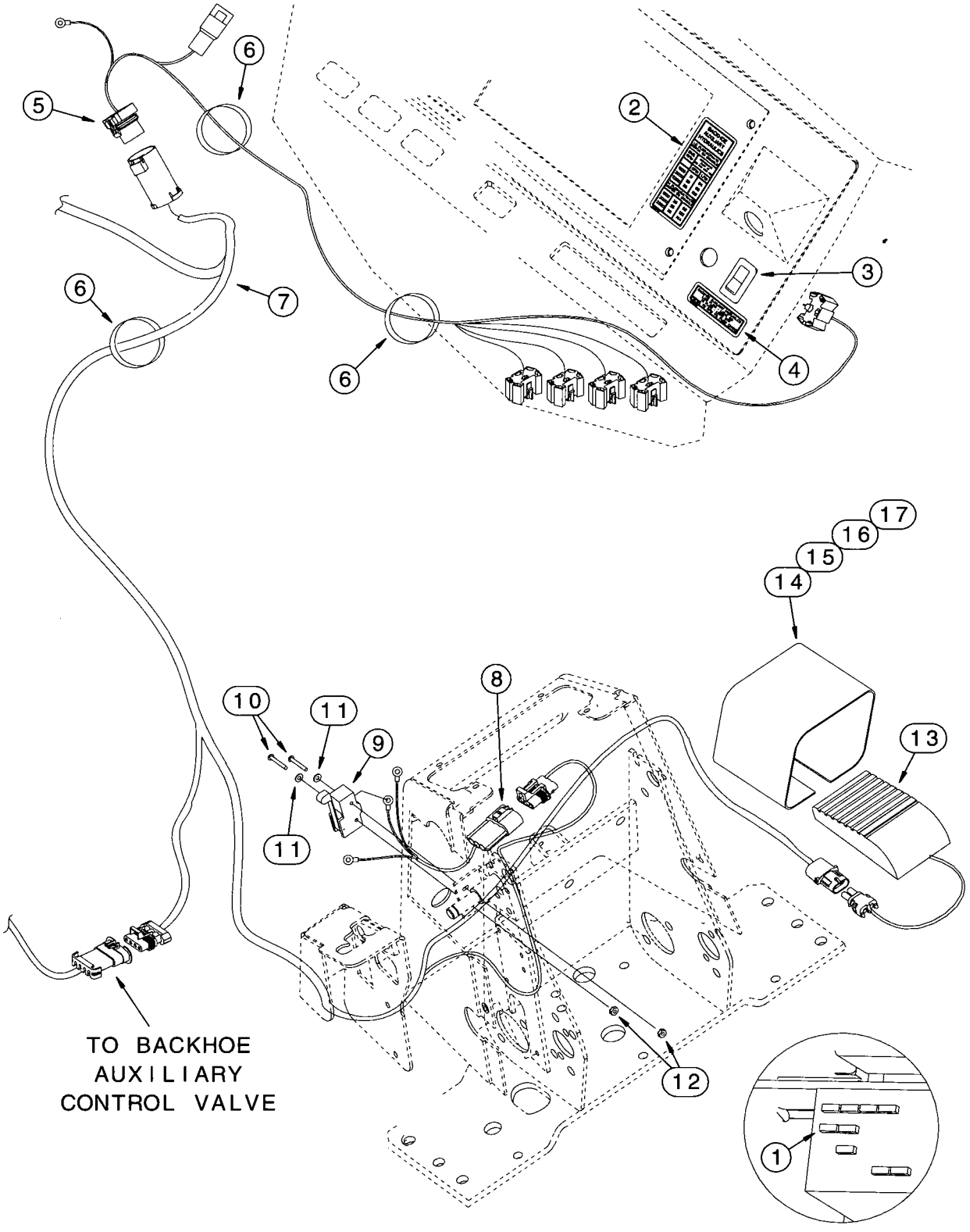
6
5
2
6
7
3
6
4
17
16
15
14
8
10
11
9
13
11
TO BACKHOE
AUXILIARY
CONTROL VALVE
12
1

BACKHOE AUXILIARY HYDRAULIC ELECTRICAL CIRCUIT

REF.	PART NO.	DESCRIPTION	REQ'D.
1	121413A1	FUSE - mini, 15 ampere	1
2	284479A1	DECAL - backhoe auxiliary hydraulics, hi flow/low flow	1
3	284058A1	SWITCH - rocker, backhoe auxiliary hydraulics, mounts below key switch	1
4	284627A1	DECAL - backhoe auxiliary hydraulics, low flow - light on/hi flow - light off	1
5	296508A2	HARNESS - side console options, attaches to side console harness and chassis options harness	1
6	L18337	STRAP - tie, 15 inch	4
7	302803A1	HARNESS - chassis options	1
8	298681A1	HARNESS - pigtail, detent lever	1
9	D137363	SWITCH - contact, limit	1
10	440-10616	SCREW - machine, pan Phillips, No. 6 NC x 1 inch	2
11	895-11004	WASHER - flat, 4.4 x 9 x 0.8 mm	2
12	193-1003	NUT - hex, with external tooth lock washer, No. 6 NC	2
13	137219A1	SWITCH - foot, backhoe auxiliary hydraulics	1
14	300030A1	GUARD - foot switch	1
15	843-1516	SCREW - machine, flat Phillips, 5 - 0.8 x 16 mm	2
16	892-11005	WASHER - lock, 5 mm	2
17	824-1405	NUT - hex, 5 mm - 0.8	2

NOTE: See pages 8-51 - 8-55 for backhoe auxiliary hydraulics, page 9-43 for auxiliary control lever and page 9-25 for the backhoe control tower cover used with auxiliary hydraulics.

ALPHABETICAL INDEX
STEERING

DESCRIPTION	PAGE
Axle and Spindles	5-15
Column - Steering	5-9
Cylinder - Two Wheel Drive	5-13
Hub and Bearings	5-17
Hydraulic Circuit	5-5,5-7
Valve - Steering Control	5-11
Wheel - Steering	5-3
Wheels and Tires	5-19

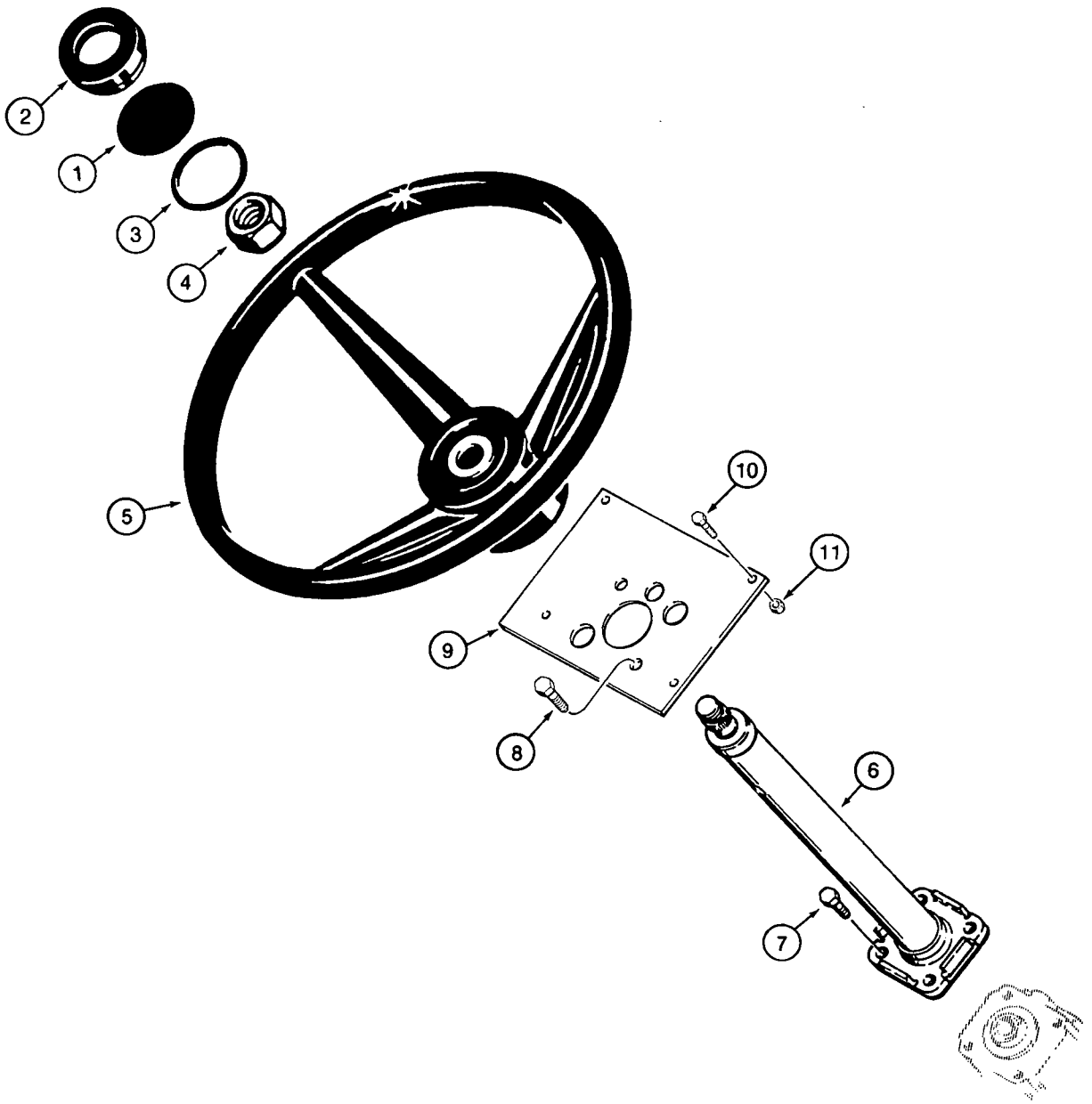
2
1
3
4
5
10
11
9
8
6
7

STEERING WHEEL AND STEERING COLUMN

REF.	PART NO.	DESCRIPTION	REQ'D.
1	1342054C1	INSERT - plastic, black	1
2	114882A1	CAP - steering wheel	1
3	238-5227	O-RING - 2-1/8 ID x 1/8 inch wide, cap	1
4	1959509C1	NUT - lock, special, steering wheel retaining	1
5	A65544	WHEEL - steering, tractor	1
6	142930A1	COLUMN ASSEMBLY - steering, parts list page 5-9	1
7	614-10020	BOLT - hex, full threads, 10 - 1.5 x 20 mm	2
8	614-10030	BOLT - hex, full threads, 10 - 1.5 x 30 mm	2
9	183085A2	PLATE - mounting, steering column	1
10	614-8020	BOLT - hex, full threads, 8 - 1.25 x 20 mm	4
11	829-1408	NUT - hex, 8 mm - 1.25, class 10	4

NOTE: See page 4-17 for turn signal rocker switch.

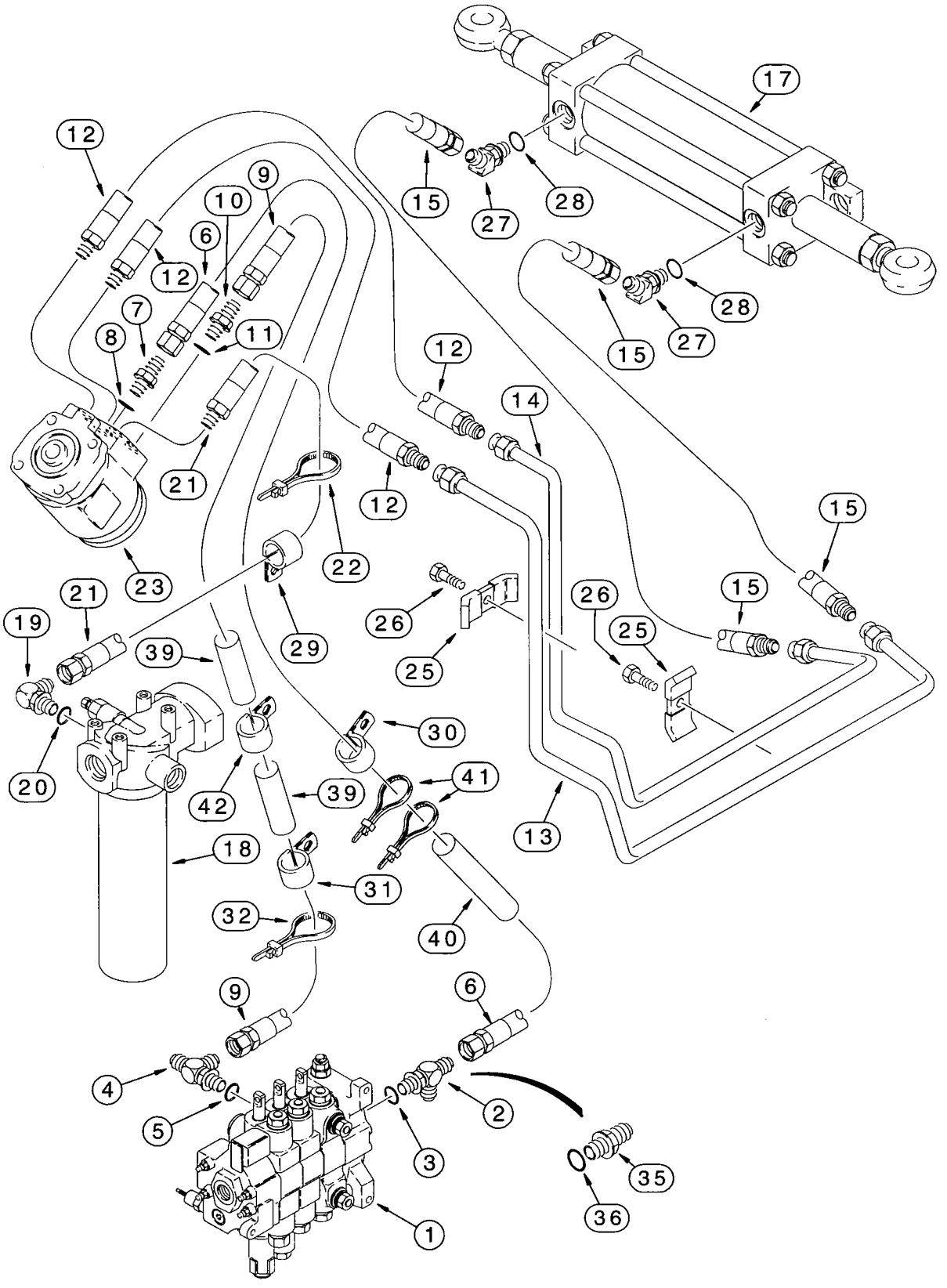
17
12
9
10
6
12
7
8
11
21
23
12
14
12
15
22
29
26
25
15
26
25
15
21
19
39
20
42
39
30
41
18
31
32
40
13
9
6
4
5
2
3
35
36
1

STEERING HYDRAULIC CIRCUIT

REF.	PART NO.	DESCRIPTION	REQ'D.
1	REF	VALVE ASSEMBLY - loader control, for correct assembly and components, see page 8-73 or 8-75	1
2	282428A1	VALVE - steering check, models with hand held auxiliary hydraulics	1
3	237-6006	O-RING - 15/32 ID x 5/64 inch wide	1
4	218-5576	TEE - 3/4-16 fl branch x 1-1/16-12 fl x 7/8-14 inch adj O-ring, lower inlet port, for 45 degree elbow used with this tee on models with ride control, see page 8-61	1
5	237-6010	O-RING - 3/4 ID x 3/32 inch wide, 218-5241 or 218-5576 tee	1
6	144221A1	HOSE - 1275 mm (50-3/16 inch) long, steering pilot, steering control valve small center port to loader control valve	1
7	218-5053	ADAPTER - straight, 7/16-20 flare x O-ring boss	1
8	237-6004	O-RING - 23/64 ID x 5/64 inch wide	1
9	224423A1	HOSE - 1300 mm (51-3/16 inch) long, steering pressure, loader control valve to steering control valve right-hand port	1
10	218-5059	ADAPTER - straight, 3/4-16 inch flare x O-ring boss	1
11	237-6008	O-RING - 41/64 ID x 3/32 inch wide	1
12	132929A1	HOSE - 730 mm (28-3/4 inch) long, steering control valve upper and lower left-hand ports to tubes	2
13	120386A1	TUBE - lower, to steering cylinder right-hand port hose	1
14	120388A1	TUBE - upper, to steering cylinder left-hand port hose	1
15	144219A1	HOSE - 485 mm (19-3/32 inch) long, to right-hand and left-hand port of steering cylinder	2
17	G107720	CYLINDER ASSEMBLY - 70 (2-3/4) ID x 170 mm (6-45/64 inch) stroke, steering, parts list page 5-13	1
18	122536A1	FILTER ASSEMBLY - hydraulic oil, parts list page 8-145	1
19	218-5280	ELBOW - 90 degree, 3/4-16 flare x 9/16-18 inch adj O-ring boss	1
20	237-6008	O-RING - 41/64 ID x 3/32 inch wide	1

Continued on next page

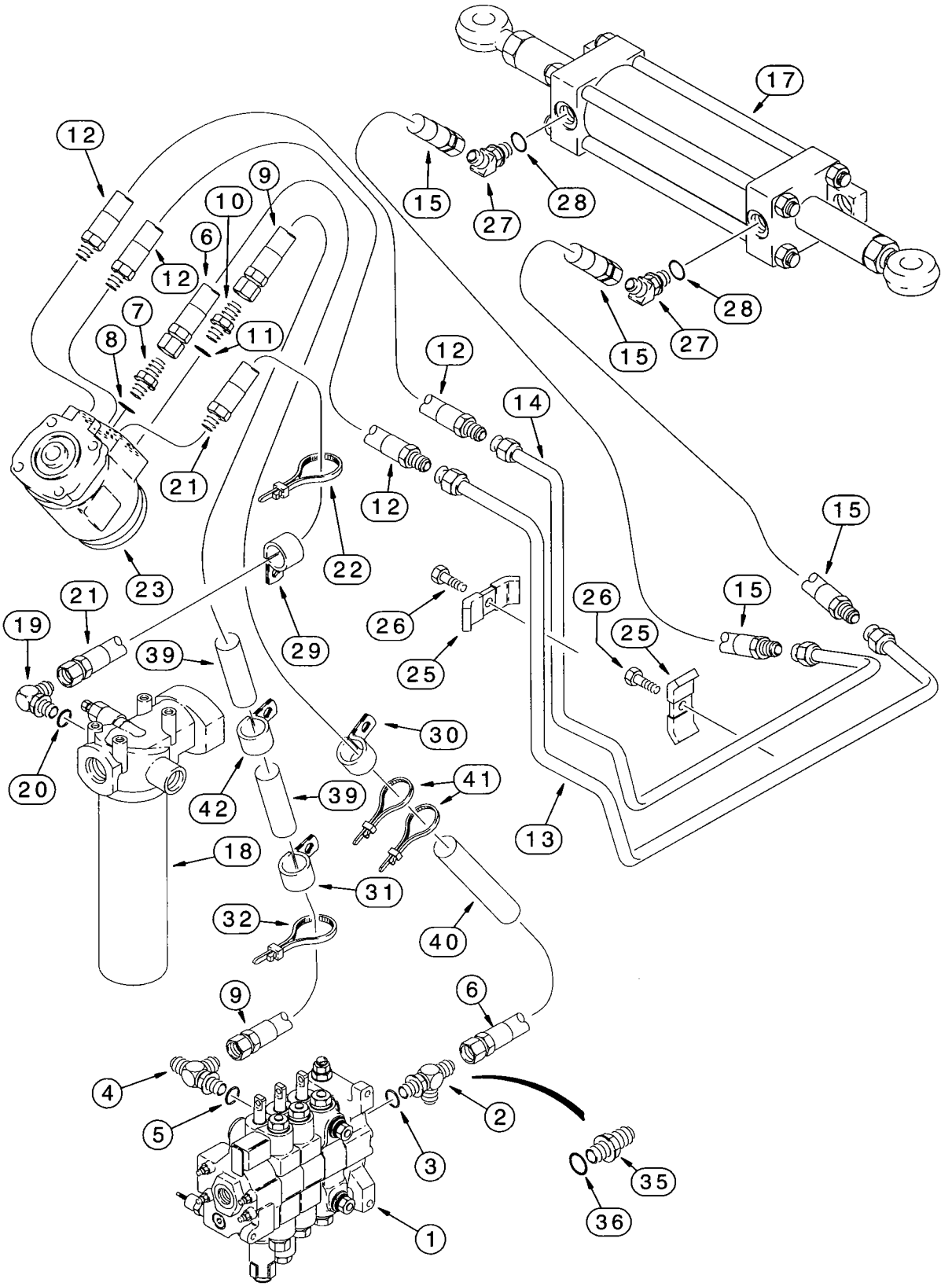
17
12
9
10
6
12
7
8
11
21
23
22
15
27
28
15
27
28
12
14
12
15
21
19
39
29
26
25
26
25
15
20
30
42
39
41
13
18
31
32
40
9
6
4
5
3
2
35
36
1

STEERING HYDRAULIC CIRCUIT

REF.	PART NO.	DESCRIPTION	REQ'D.
21	176328A1	HOSE - 1730 mm (68-1/8 inch) long, steering return, steering control valve upper right-hand port to hydraulic oil filter	1
22	L18337	STRAP - tie, 15 inch, nylon, retaining, use (1) to tie return hose, item 21, to corner of crossover tube, item 2, shown on page 7-9, use (1) to tie pilot hose, item 6, and pressure hose, item 9, together	5
23	120421A2	VALVE ASSEMBLY - steering control, parts list page 5-11	1
25	D40236	CLAMP - tube	2
26	614-10030	BOLT - hex, full threads, 10 - 1.5 x 30 mm	2
27	218-5136	ELBOW - 45 degree, 3/4-16 inch flare x adj O-ring boss, see page 6-3 for fittings used on four-wheel drive front axle	2
28	237-6008	O-RING - 41/64 ID x 3/32 inch wide	1
29	515-23190	CLAMP - P-type, 3/4 inch ID	1
30	515-22127	CLAMP - P-type, 1/2 inch ID, replaces 49854 clamp	1
31	515-23159	CLAMP - P-type, 5/8 inch ID, if used	1
32	L18337	STRAP - tie, 15 inch, if used	1
35	218-5057	ADAPTER - straight, 9/16-18 inch flare x O-ring boss, may be used on models without auxiliary hydraulics, if used	1
36	237-6006	O-RING - 15/32 ID x 5/64 inch wide	1
39	D132982	SLEEVE - hose guard	2
40	191704A1	SLEEVE - hose guard, 460 mm (18-1/8 inch) long	1
41	L18337	STRAP - tie, 15 inch	2
42	49773	CLAMP - P-type	1

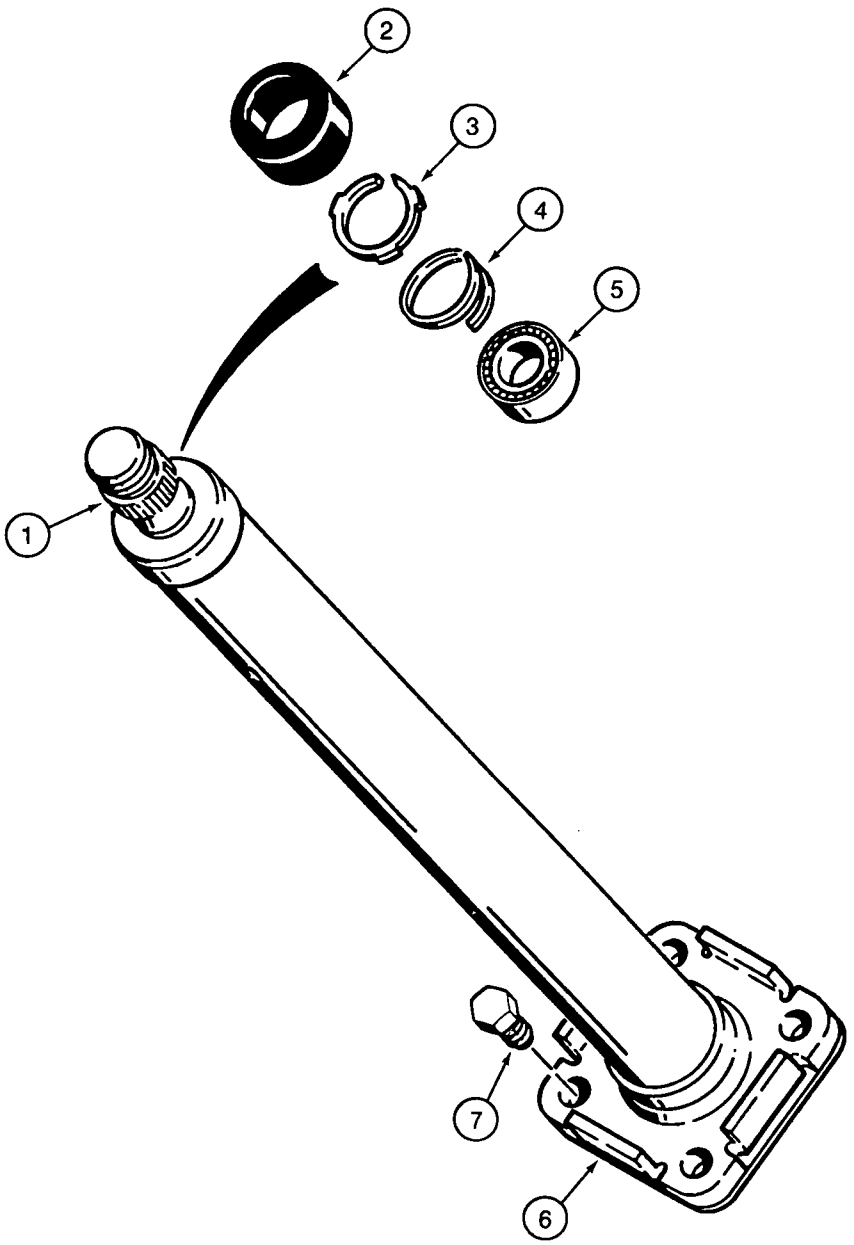
2
3
4
5
1
7
6

STEERING COLUMN

REF.	PART NO.	DESCRIPTION	REQ'D.
	142930A1	COLUMN ASSEMBLY - steering	1
1	NSS	COLUMN - steering shaft	1
2	S115351	CAP - shaft	1
3	NSS	RETAINER - bearing	1
4	102-1387	RING - external spiral retaining, No. 87, bearing	1
5	L30881	BEARING - roller, steering shaft	1
6	NSS	FLANGE - tube	1
7	614-10020	BOLT - hex, full threads, 10 - 1.5 x 20 mm	2

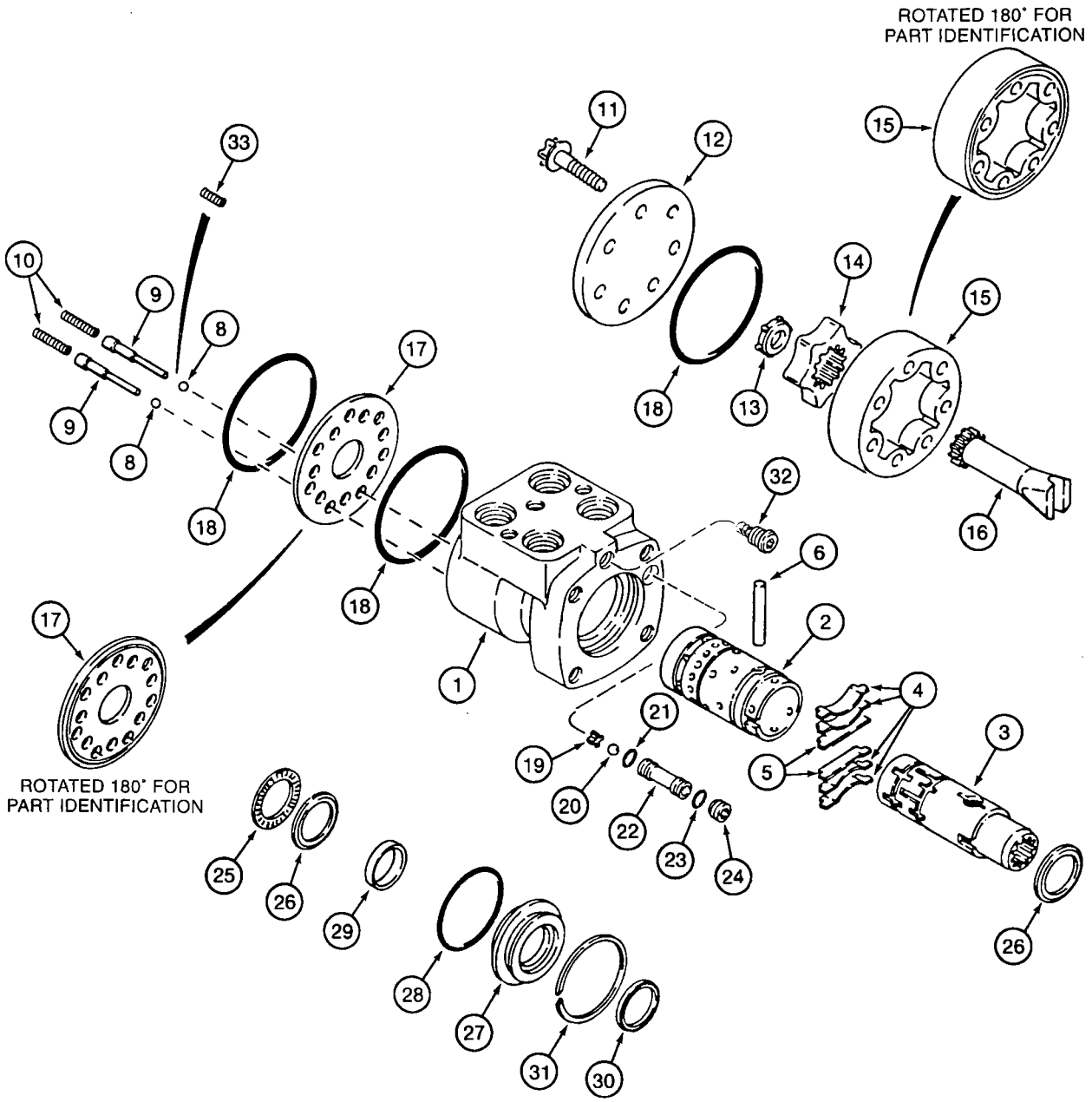
ROTATED 180° FOR
PART IDENTIFICATION
ROTATED 180° FOR
PART IDENTIFICATION
1
2
3
4
5
6
8
9
10
11
12
13
14
15
16
17
18
19
20
21
22
23
24
25
26
27
28
29
30
31
32
33

STEERING CONTROL VALVE

REF.	PART NO.	DESCRIPTION	REQ'D.
	120421A2	VALVE ASSEMBLY - steering control	1
1	#NSS	HOUSING - control valve	1
2	NSS	SLEEVE - control valve	1
3	NSS	SPOOL - control valve	1
	N14250	KIT - centering spring	1
4	L30889	SPRING - spool, centering, 6 in kit, order N14250 kit	4
5	NSS	SPACER - spring	2
6	L30888	PIN - roll, centering	1
8	211-1006	BALL - chrome alloy steel, 3/16 inch, grade 24, anticavitation	2
9	136494A1	RETAINER - spring, anticavitation	2
10	N14763	SPRING - anticavitation	2
11	143717A1	BOLT - 12 point flange, special, 5/16 NC x 2 inch	7
12	135867A1	CAP - end; without O-ring groove	1
13	143723A1	SPACER - gerotor, drive shaft	1
	143721A1	GEROTOR - pump, control valve	1
14	NSS	ROTOR - control valve	1
15	NSS	STATOR - control valve	1
16	L30878	SHAFT - drive, gerotor, steering control valve	1
17	135869A1	PLATE - spacer, with O-ring groove	1
18	*238-5040	O-RING - 2-7/8 ID x 1/16 inch wide, cover and housing	3
19	L35368	RETAINER - check ball	1
20	211-1010	BALL - chrome alloy steel, 5/16 inch, grade 24, check	1
21	*L30893	O-RING - 7/16 inch ID, seat, inner	1
22	D82806	SEAT - ball, check	1
23	*238-5012	O-RING - 3/8 ID x 1/16 inch wide, seat, outer	1
24	D82805	SCREW - set, hex socket, special	1
25	G13609	BEARING - needle, spool	1
26	D82804	RACE - thrust, bearing, bearing	2
27	S110170	GLAND - seal, spool, seal	1
28	*238-5225	O-RING - 1-7/8 ID x 1/8 inch wide, seal retainer	1
29	*NSS	SEAL - spool, inner	1
30	*697494R91	SEAL - 1 inch ID, spool, outer	1
31	S110169	RING - retaining, seal	1
32	NSS	VALVE ASSEMBLY - relief, factory preset, do not remove	1
33	196087A1	SPRING - detent, check ball	2
	*1343658C3	KIT - seal, low torque, includes above items marked with an asterisk	1

#**NOTE:** Housing may have a 5/16 - 24 inch hole tapped next to the center hole (steering pilot pressure). The 5/16 inch hole has a Parker Hannifin fitting #2 hp50n-2 installed in it. This is a hollow hex straight thread O-ring plug. The plug must be purchased from Parker Hannifin with the O-ring or use 218-5205 plug with 237-6002 O-ring.

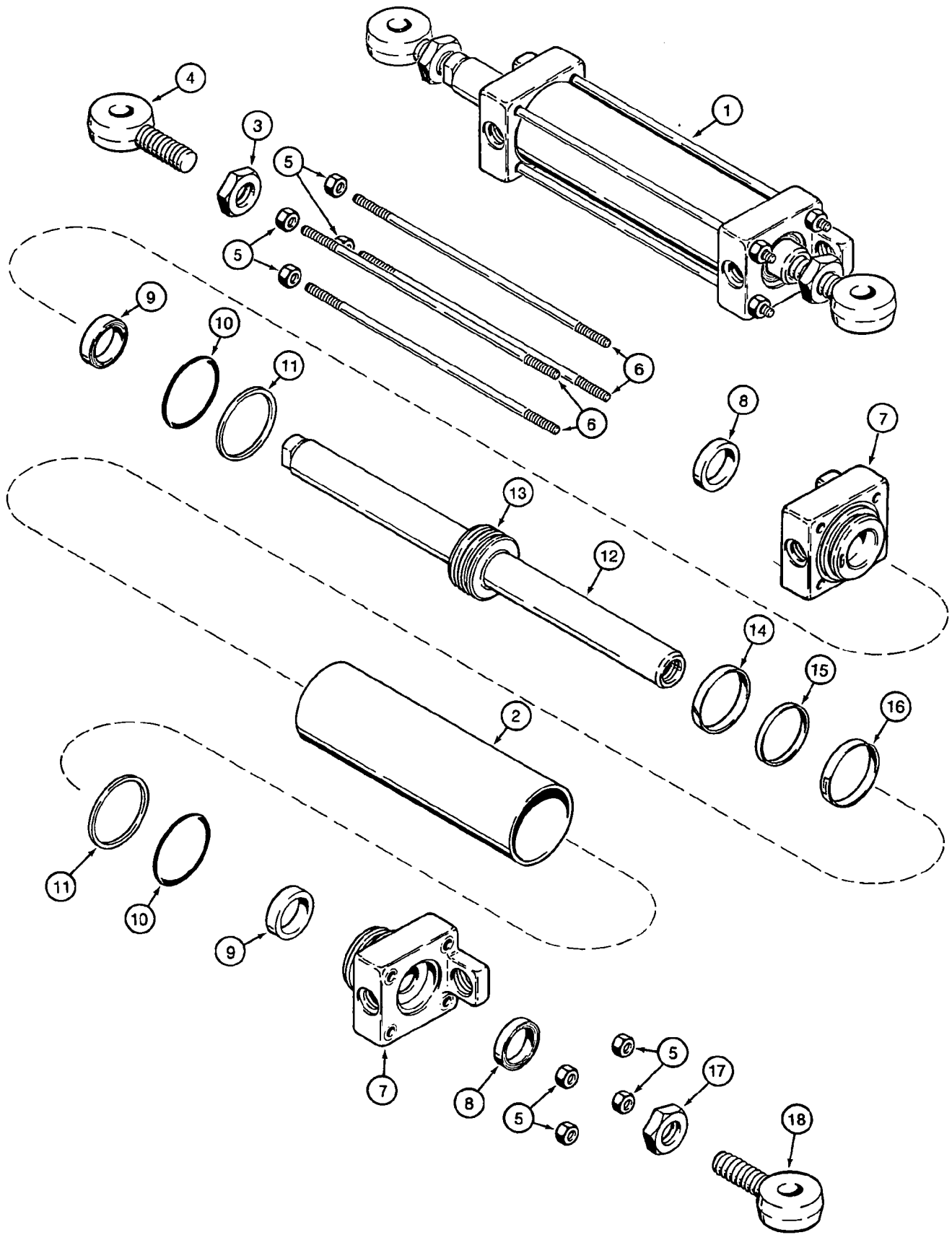
1
2
3
4
5
6
7
8
9
10
11
12
13
14
15
16
17
18

STEERING CYLINDER

*TWO WHEEL DRIVE FRONT AXLE

REF.	PART NO.	DESCRIPTION	REQ'D.
1	G107720	CYLINDER ASSEMBLY - 70 (2-3/4) ID x 170 mm (6-45/64 inch) stroke, see footnote, steering, two wheel drive front axle	1
2	G106808	TUBE - cylinder	1
3	129-369	NUT - hex, jam, left-hand thread, 7/8 inch NF	1
4	G106832	EYE - rod, left-hand thread	1
5	425-106	NUT - hex, 3/8 inch NC	8
6	G106817	ROD - tie, 338 mm (13-5/16 inch) long, cylinder	4
7	G106810	GLAND - cylinder	1
8	**D95142	WIPER - piston rod, outer	1
9	**G107921	SEAL - U-cup, piston rod, wide, with O-ring	1
10	**238-5230	O-RING - 2-1/2 ID x 1/8 inch wide, gland	1
11	**G32129	RING - backup, gland O-ring	1
	G107721	ROD ASSEMBLY - piston, 38 mm (1-1/2 inch) diameter	1
12	NSS	ROD - piston	1
13	NSS	PISTON - cylinder	1
14	**G105187	RING - wear, piston	1
15	**G104439	RING - seal, inner	1
16	**G104454	SEAL - piston, expandable, outer	1
17	425-1514	NUT - hex, jam, 7/8 inch NF	1
18	G106813	EYE - rod, right-hand thread	1
	**G110045	KIT - seal, includes all items with an asterisk	1

NOTE: The cylinder assembly part number is stamped on some cylinder glands or tubes.

*__NOTE:__ See page 6-9 for the four-wheel drive front axle steering cylinder.

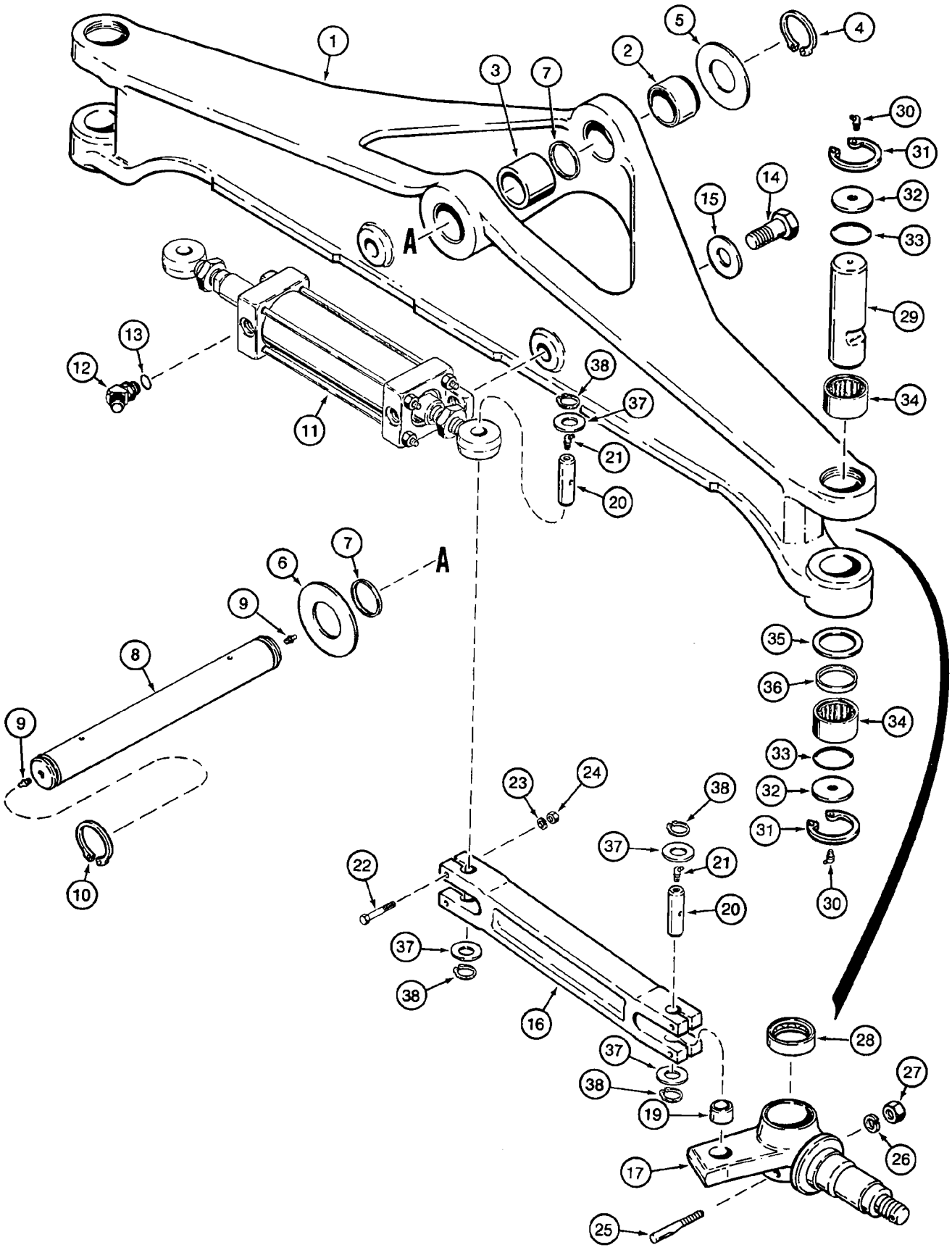
1
2
3
4
5
6
7
8
9
10
11
12
13
14
15
16
17
18
19
20
21
22
23
24
25
26
27
28
29
30
31
32
33
34
35
36
37
38
A
A

FRONT AXLE AND SPINDLES

TWO WHEEL DRIVE MODELS

REF.	PART NO.	DESCRIPTION	REQ'D.
1	D138954	AXLE ASSEMBLY - front, with single rear bushing	1
2	D137345	BUSHING - axle, front	1
3	D138047	BUSHING - 54 mm (2-1/8 inch) long, axle, rear	1
4	800-44050	RING - external retaining, No. 50, axle pivot pin retaining, front	1
5	191796A1	WASHER - flat, special, used as spacer	UAR
6	D123684	WASHER - thrust, 2-1/16 x 4-1/2 x 3/16 inch, front	1
7	D123655	SEAL - grease	2
8	138616A1	PIN - axle pivot	1
9	219-1	FITTING - grease, straight, 1/8 PT x 21/32 inch	2
10	800-44050	RING - external retaining, No. 50, axle pivot pin retaining, rear	1
11	G107720	CYLINDER ASSEMBLY - 70 (2-3/4) ID x 170 mm (6-45/64 inch) stroke, two wheel drive front axle, parts list page 5-13	1
12	218-5136	ELBOW - 45 degree, 3/4-16 inch flare x adj O-ring boss	2
13	237-6008	O-RING - 41/64 ID x 3/32 inch wide	1
14	13-1638	BOLT - hex, 1 NC x 2-3/8 inch	2
15	D36505	WASHER - flat, special, 1-1/16 x 1-7/8 x 9/64 inch, 1-1/16 x 1-7/8 x 9/64 inch, hardened	2
16	D123806	LINK - steering	2
17	D125340	SPINDLE ASSEMBLY - right-hand	1
18	D125341	SPINDLE ASSEMBLY - left-hand, not shown	1
19	D127507	BUSHING - spindle, used on D125340 or D125341 spindle	1
20	D150155	PIN - steering link	4
21	219-89	FITTING - grease, 45 degree, 1/8 PT self-tap x 25/32 inch	4
22	413-632	BOLT - hex, 3/8 NC x 2 inch	8
23	492-11038	WASHER - lock, 3/8 inch	8
24	425-106	NUT - hex, 3/8 inch NC	8
25	*D57486	PIN - kingpin lock	2
26	492-11050	WASHER - lock, 1/2 inch	2
27	425-118	NUT - hex, 1/2 inch NF	2
28	*A27602	BEARING - roller, steering knuckle, spindle	2
29	*D123865	KINGPIN - front axle	2
30	*219-89	FITTING - grease, 45 degree, 1/8 PT self-tap x 25/32 inch	4
31	*100-21237	RING - internal retaining, No. 237, bearing retaining	4
32	*D72371	SPACER - kingpin	4
33	*238-5139	O-RING - 2-3/16 ID x 3/32 inch wide, kingpin seal	4
34	*A28230	BEARING - needle, kingpin	4
35	*D72372	WASHER - thrust, bearing	2
36	*D61297	SEAL - oil	2
37	495-11094	WASHER - flat, 15/16 x 1-3/4 x 1/8 inch	8
38	103-1687	RING - heavy external retaining, No. 87, pin	8
	*D103626	KIT - kingpin, includes items marked with an asterisk, quantity in kit services one side of axle	1

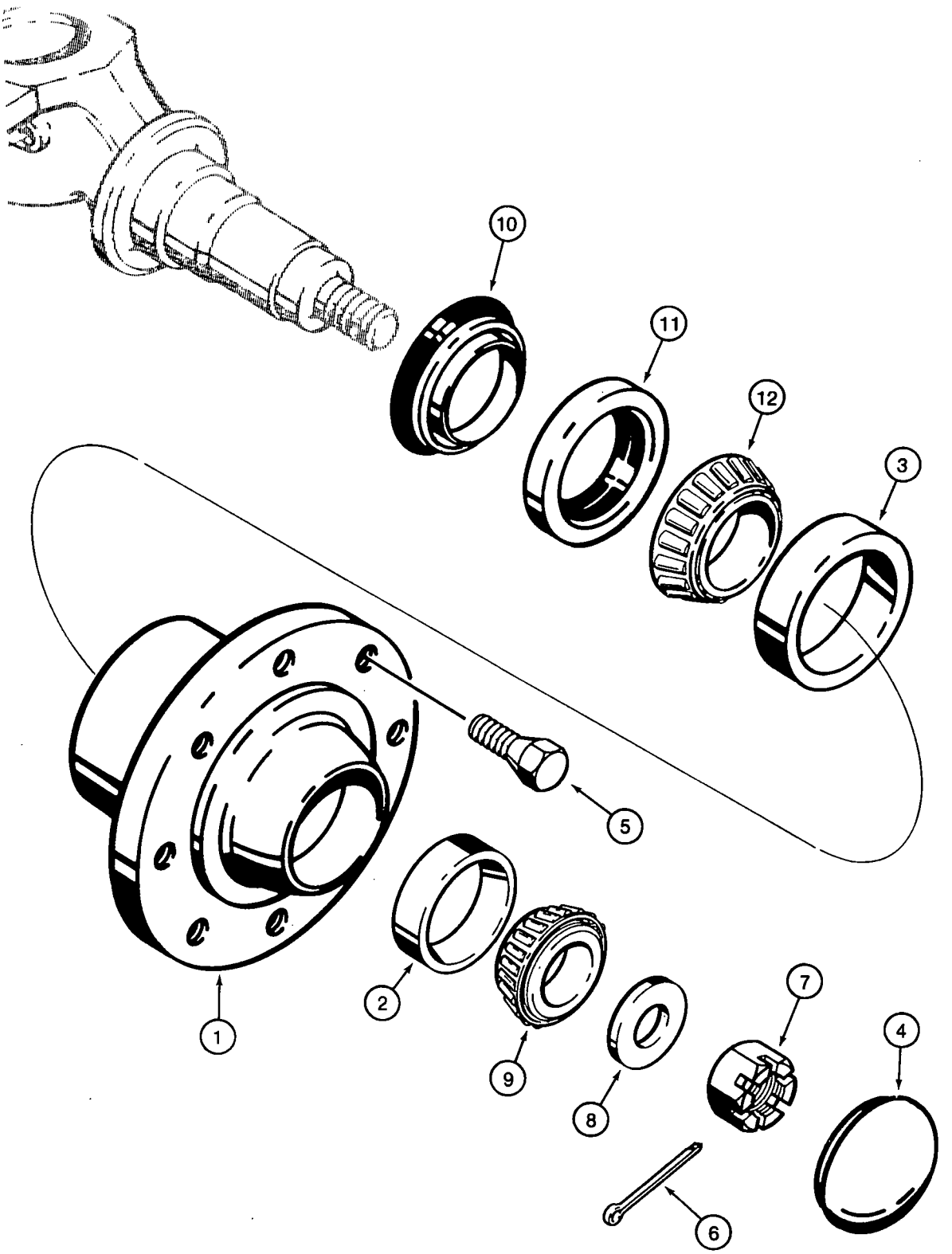
10
11
12
3
5
2
1
9
8
7
4
6

FRONT WHEEL HUB AND BEARINGS

REF.	PART NO.	DESCRIPTION	REQ'D.
	D75103	HUB ASSEMBLY - front wheel, order items 1-3	2
1	A66759	HUB - front wheel	1
2	*619387R1	CUP - tapered roller bearing, 3-1/16 inch OD, outer, tapered roller bearing	1
3	*625743C1	CUP - tapered roller bearing, 3-35/64 inch OD, inner, tapered roller bearing	1
4	D143405	CAP - hub	2
5	A38208	BOLT - wheel retaining	16
6	432-1232	PIN - cotter, 3/16 x 2 inch	2
7	425-1918	NUT - hex, thick slotted, 1-1/8 inch NF	2
8	D74949	WASHER - flat, special, 1-1/8 inch	2
9	*G15215	BEARING - tapered roller, outer	2
10	*A61449	SEAL - spindle	2
11	*A61448	SEAL - hub	2
12	*A61447	CONE - tapered roller bearing, 2-1/16 inch ID, inner	2
	*B93222	KIT - wheel bearing, includes above items marked with an asterisk, two kits required per tractor	1

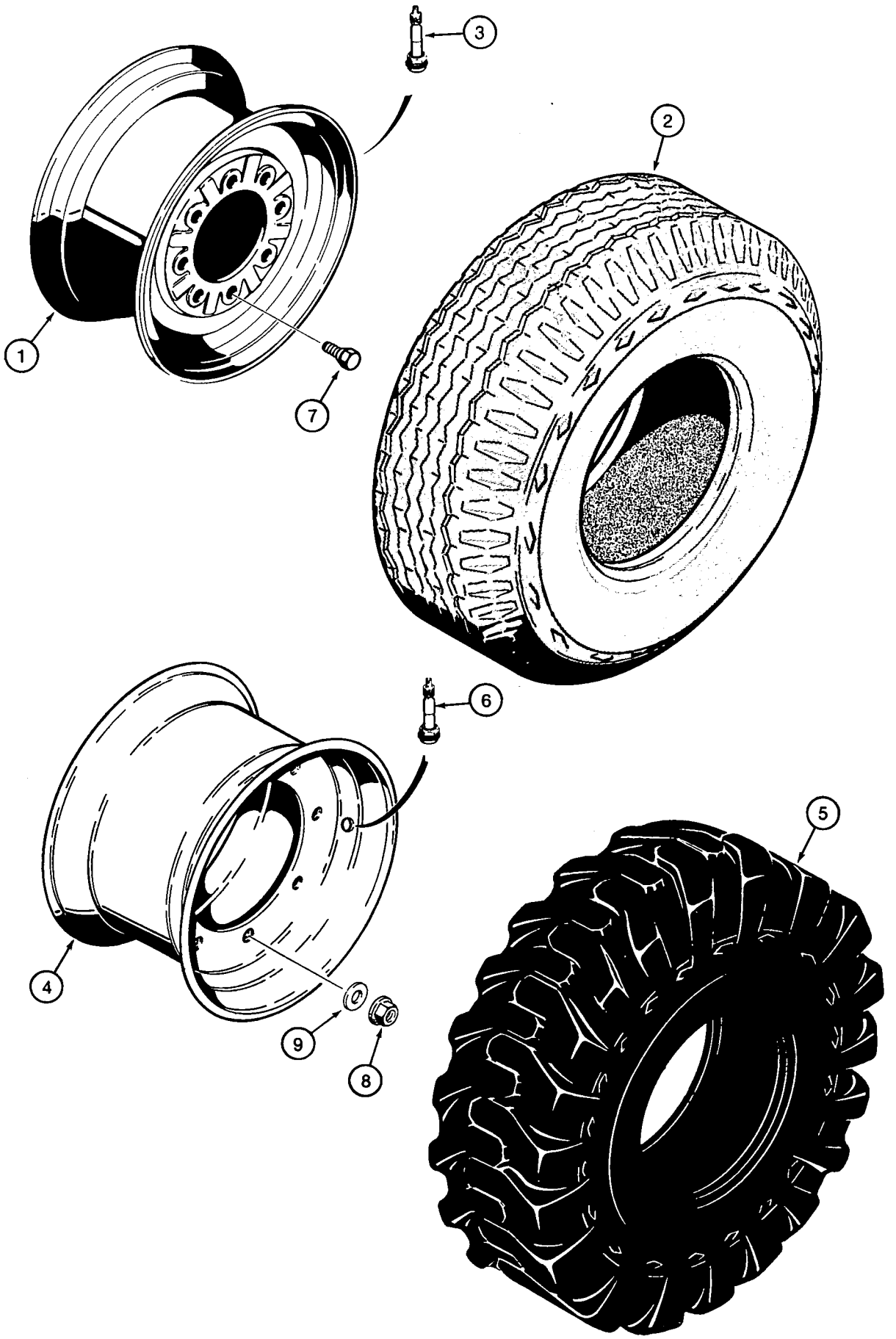
3
2
1
7
6
5
4
9
8

FRONT WHEELS AND TIRES

REF.	PART NO.	DESCRIPTION	REQ'D.
		FOR 11L x 16 - 10 PR F3 TIRES TWO WHEEL DRIVE MODELS	
1	D125223	WHEEL - rim	2
2	REF	TIRE - front, purchase locally	2
3	A38261	VALVE - stem, tire inflation	2
		FOR 12 x 16.5 - 8 PR TIRES FOUR WHEEL DRIVE MODELS	
4	119243A1	WHEEL - rim, 8-hole pattern	2
5	REF	TIRE - front, purchase locally	2
6	A38261	VALVE - stem, tire inflation	2
		WHEEL BOLTS TWO WHEEL DRIVE MODELS	
7	A38208	BOLT - wheel retaining	16
		WHEEL NUTS FOUR WHEEL DRIVE MODELS	
8	825-11418	NUT - hex, 18 mm - 1.5, special	16
9	496-81000	WASHER - flat, 25/32 x 1-3/8 x 1/8 inch, hardened	16

ALPHABETICAL INDEX
POWER TRAIN

DESCRIPTION	PAGE
Axle - Front Four-Wheel Drive	
Axle Housing	6-5
Axle Shafts	6-11
Cylinder - Steering	6-9
Differential	6-15
Drive Shaft - to Transmission	6-19
Mounting	6-3
Planetary	6-13
Ring and Pinion Gear Set	6-17
Swivel Housing	6-7
Axle - Rear Drive	
Differential	6-61
Differential Lock	6-57,6-65
Drive Shaft - to Transmission	6-69
Housing	6-59
Mounting	6-55
Planetary	6-67
Ring and Pinion Gear Set	6-63
Cooling System	6-21
Drive Shaft - Front Drive Axle to Transmission	6-19
Drive shaft - Rear Drive Axle to Transmission	6-69
Transmission	
Dipstick	6-23
Filter - Oil	6-27
Housing	6-29,6-31
Idler and Primary Shaft	6-39
Input Shaft	6-41
Mounting	6-23
Output Shaft	6-47
Pump - Oil	6-33
Secondary Shaft	6-43,6-45
Shift Lever	6-23
Shifter Mechanism	6-35,6-37
Valve - Control	6-49
Valve - Solenoid	6-51
Wheels and Tires - Rear	6-53

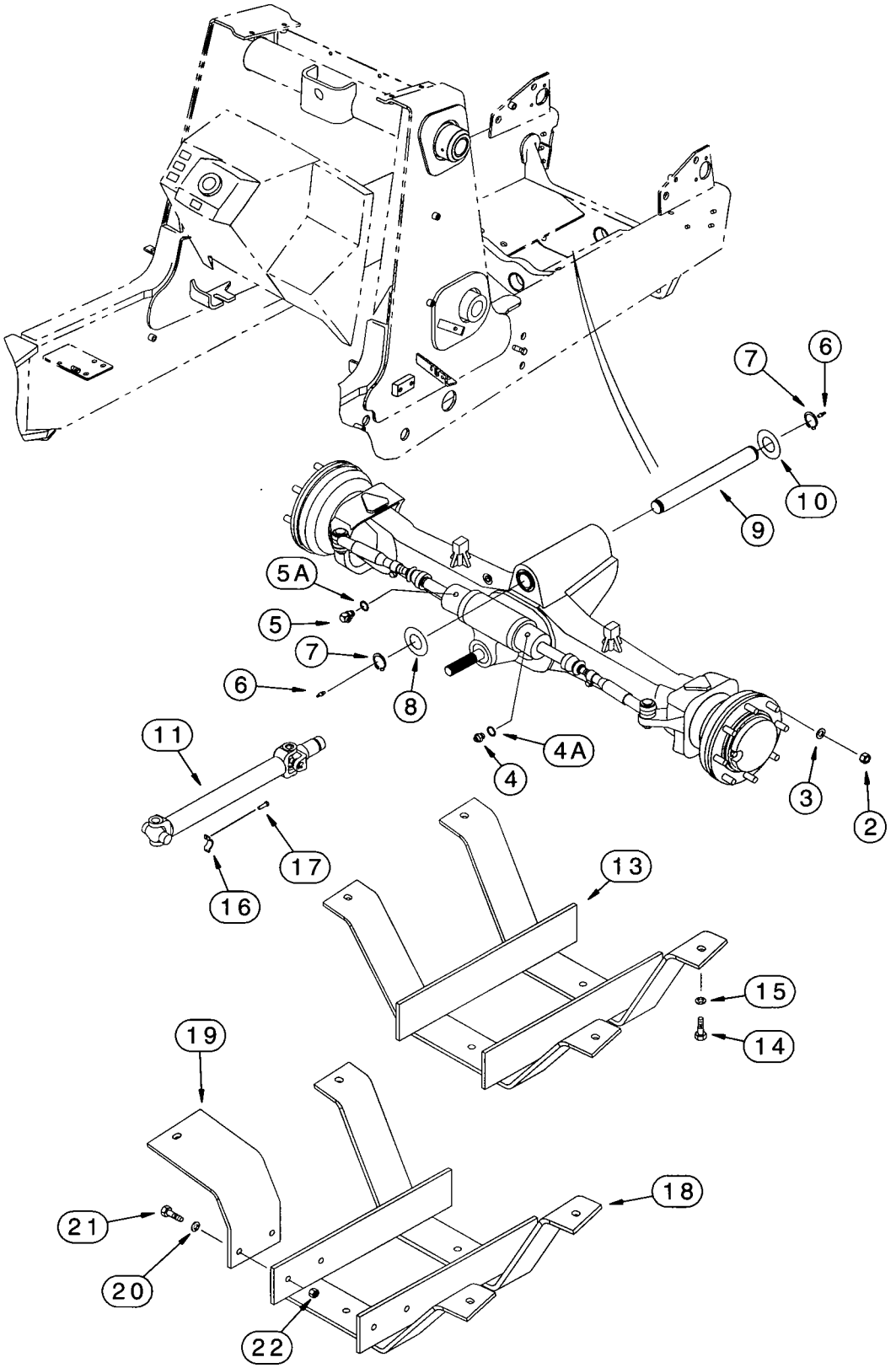
7
6
10
9
5A
5
7
6
8
11
4A
4
3
2
17
16
13
15
14
19
18
21
20
22

FRONT DRIVE AXLE MOUNTING AND DRIVE SHAFT

REF.	PART NO.	DESCRIPTION	REQ'D.
1	113561A1	AXLE ASSEMBLY - front drive, parts list pages 6-5 - 6-17	1
2	825-11418	NUT - hex, 18 mm - 1.5	16
3	496-81000	WASHER - flat, 25/32 x 1-3/8 x 1/8 inch, hardened	16
4	*218-5351	ADAPTER - straight, 3/4-16 flare x 9/16-18 inch O-ring boss	1
4A	237-6006	O-RING - 15/32 ID x 5/64 inch wide	1
5	*218-5280	ELBOW - 90 degree, 3/4-16 flare x 9/16-18 inch adj O-ring boss	1
5A	237-6006	O-RING - 15/32 ID x 5/64 inch wide	1
6	219-1	FITTING - grease, straight, 1/8 PT x 21/32 inch	2
7	800-44050	RING - external retaining, No. 50, 50 mm	2
8	191796A1	WASHER - flat, special, 2-1/32 ID x 4 OD x 1/16 inch thick	UAR
9	138616A1	PIN - axle pivot	1
10	D123684	WASHER - thrust, 2-1/16 x 4-1/2 x 3/16 inch	UAR
11	284713A1	SHAFT ASSEMBLY - drive, front drive axle, parts list page 6-19	1
12	608-12025	BOLT - hex, self-locking, 12 - 1.75 x 25 mm, class 10.9	4
13	137223A2	GUARD - drive shaft, used on models with 31 gallon fuel tank	1
14	827-12045	BOLT - hex, 12 - 1.75 x 45 mm, class 10.9	4
15	495-21056	WASHER - flat, 9/16 x 1-3/8 x 7/64 inch	4
16	90-6682T1	RETAINER - drive shaft, strap	2
17	D137627	BOLT - special	4
18	282038A1	GUARD - drive shaft, used on models with 40 gallon fuel tank	1
19	282033A1	BRACKET - guard	1
20	495-21056	WASHER - flat, 9/16 x 1-3/8 x 7/64 inch	8
21	827-12045	BOLT - hex, 12 - 1.75 x 45 mm, class 10.9	6
22	829-1412	NUT - hex, 12 mm - 1.75, class 10	2

***NOTE:** See page 5-5 for fittings used on two wheel drive steering hydraulics.

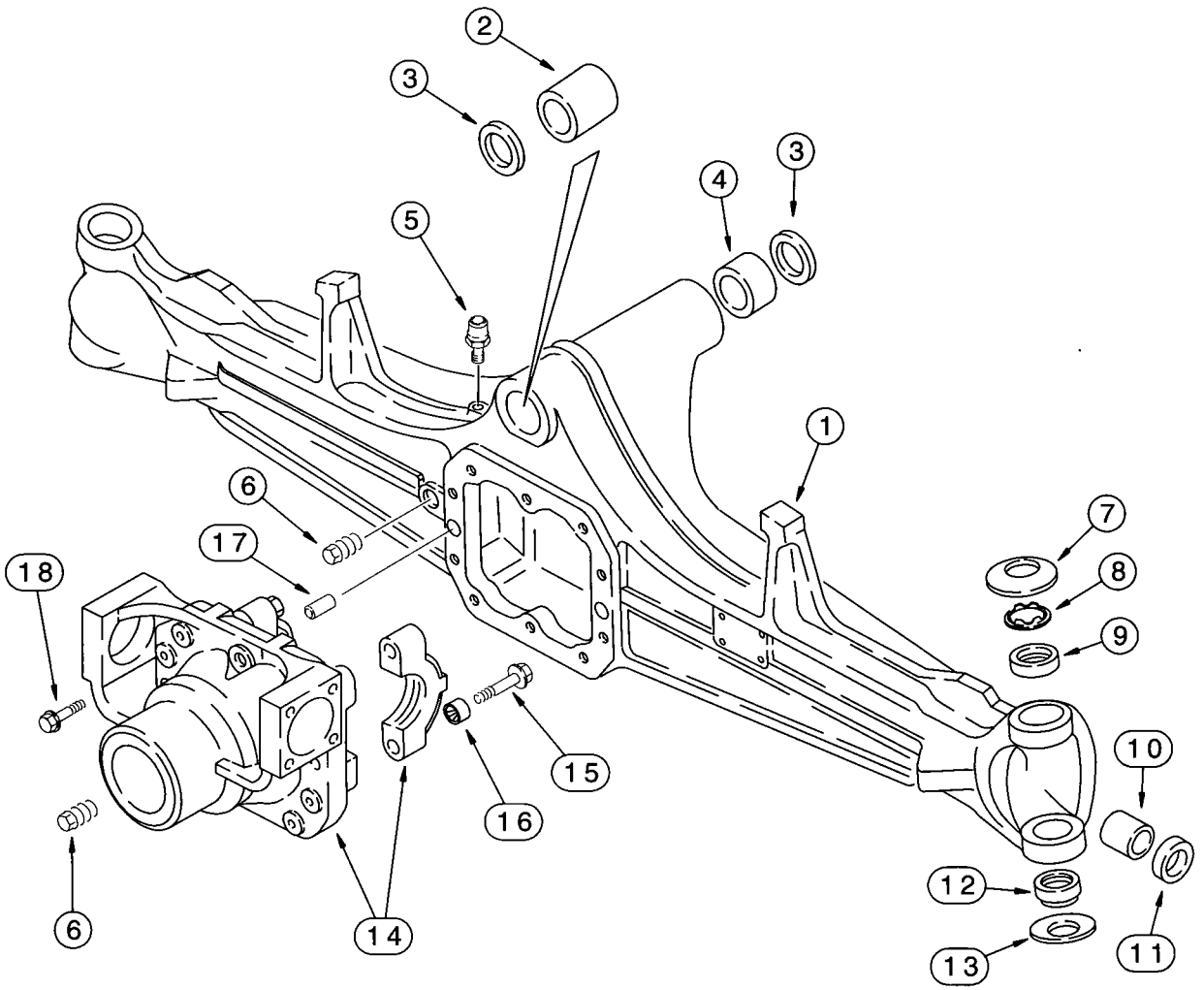
2
3
3
4
5
1
6
17
18
7
8
9
10
12
13
11
6
14
16
15

FRONT DRIVE AXLE

AXLE HOUSING

REF.	PART NO.	DESCRIPTION	REQ'D.
	113561A1	AXLE ASSEMBLY - front drive, Carraro No. 131204, parts list pages 6-5 - 6-17	1
1	144453A1	HOUSING - front axle	1
2	D149725	BUSHING - rear pivot	1
3	N14367	SEAL - bushing, front and rear	2
4	D149726	BUSHING - front pivot	1
5	1966149C1	BREATHER - axle housing	1
6	A156873	PLUG - drain, 22 mm, housing and carrier	2
7	122270A1	WASHER - Belleville, upper	2
8	136990A1	WASHER - spacer, front axle	2
9	100522A1	BUSHING - housing	2
10	1966186C1	BUSHING - housing	2
11	1966191C1	SEAL - oil	2
12	100520A1	BUSHING - spherical, housing, lower	2
13	122268A1	WASHER - Belleville, lower	2
	144454A1	CARRIER ASSEMBLY - differential	1
14	NSS	CARRIER - differentail	1
15	S301065	BOLT - hex, special, 14 mm x 75 mm	4
16	1966136C1	BUSHING - centering, carrier	4
17	1966138C1	PIN - dowel, housing to carrier	2
18	S301064	BOLT - hex flange, 12 x 33 mm, class 12.9, carrier to housing	10
	B17575	SEALANT - black RTV silicone, 89 ml (3 ounce) tube, differential carrier to axle housing, not shown	UAR

NOTE: See page 6-3 for axle mounting.

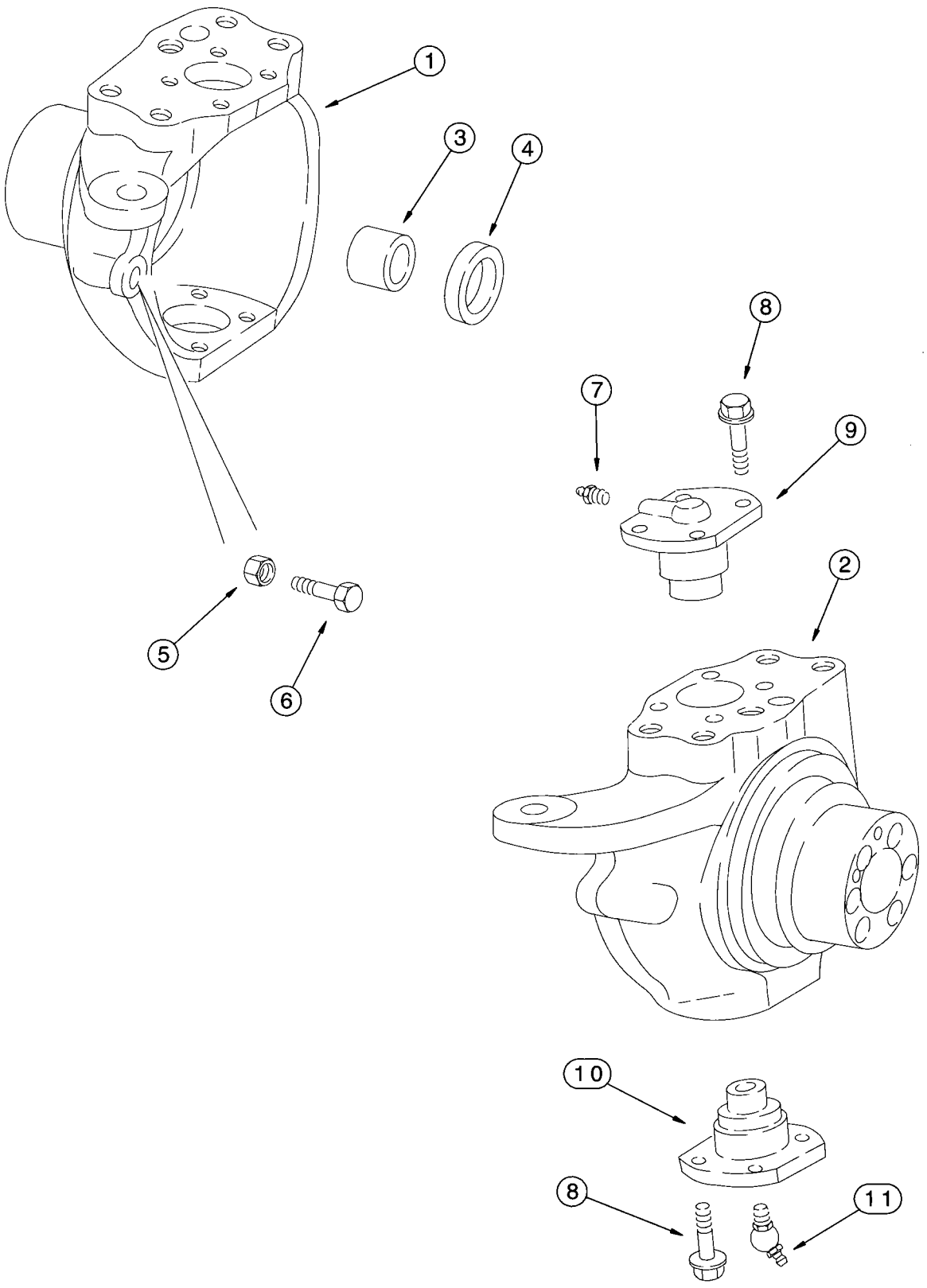
1
3
4
5
6
7
8
9
2
10
8
11

FRONT DRIVE AXLE

SWIVEL HOUSING

REF.	PART NO.	DESCRIPTION	REQ'D.
	113561A1	AXLE ASSEMBLY - front drive, Carraro No. 131204, parts list pages 6-5 - 6-17	1
1	144455A1	HOUSING - swivel, left-hand, includes item 3, 100532A1 bushing	1
2	144456A1	HOUSING - swivel, right-hand	1
3	100532A1	BUSHING - swivel housing, used with right-hand or left-hand swivel housing	1
4	100529A1	SEAL - oil, swivel housing	2
5	1537663C1	NUT - hex, special, 16 mm	2
6	1537664C1	BOLT - special, steering stop, 16 mm	2
7	712998R91	FITTING - grease, straight, swivel cap	2
8	100533A1	BOLT - hex, special	16
9	122265A1	PIN - king, swivel housing cap, upper	2
10	122264A1	PIN - king, swivel housing cap, lower	2
11	N13505	FITTING - grease, 45 degree, special, swivel cap	2
	B17575	SEALANT - black RTV silicone, 89 ml (3 ounce) tube, wear ring to swivel housing, not shown	UAR

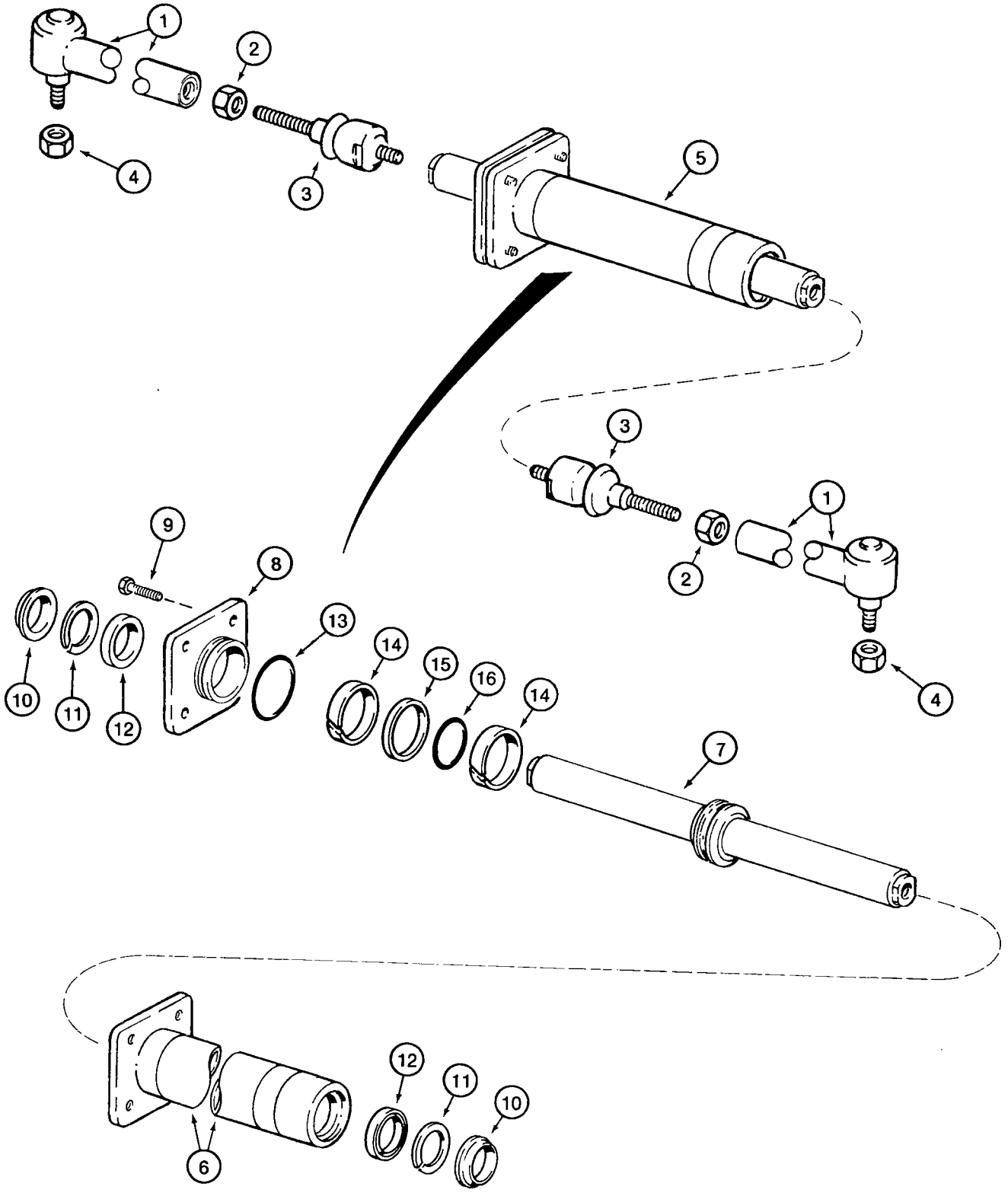
1
2
3
4
5
3
1
2
4
9
8
10
11
12
13
14
15
16
14
7
12
11
10
6

FRONT DRIVE AXLE

STEERING CYLINDER

REF.	PART NO.	DESCRIPTION	REQ'D.
	113561A1	AXLE ASSEMBLY - front drive, Carraro No. 131204, parts list pages 6-5 - 6-17	1
	144457A1	ARM ASSEMBLY - steering	2
1	NSS	JOINT - ball, swivel side	1
2	934727R1	NUT - hex, special	1
3	112509A1	JOINT - ball, right-hand threads	1
4	905839R1	NUT - hex, self-locking, 18 x 1.5 mm	2
5	144458A1	CYLINDER ASSEMBLY - steering, order D149739 kit to service seals, see below	1
6	D149738	TUBE - cylinder	1
7	144459A1	ROD - piston	1
8	D149737	GLAND - cylinder	1
9	114296A1	BOLT - self-locking, special, steering cylinder, for service order 100524A1 bolt and 892-11012 washer	4
10	*NSS	WIPER - rod	2
11	*NSS	RING - backup	2
12	*NSS	SEAL - rod	2
13	*NSS	O-RING - gland	1
14	*NSS	RING - wear	2
15	*NSS	SEAL - piston	1
16	*NSS	O-RING - expander	1
	*D149739	KIT - seal, steering cylinder, for rod, gland, and piston, includes all items with an asterisk	1
	B17575	SEALANT - black RTV silicone, 89 ml (3 ounce) tube, cylinder flange to cylinder, not shown	UAR

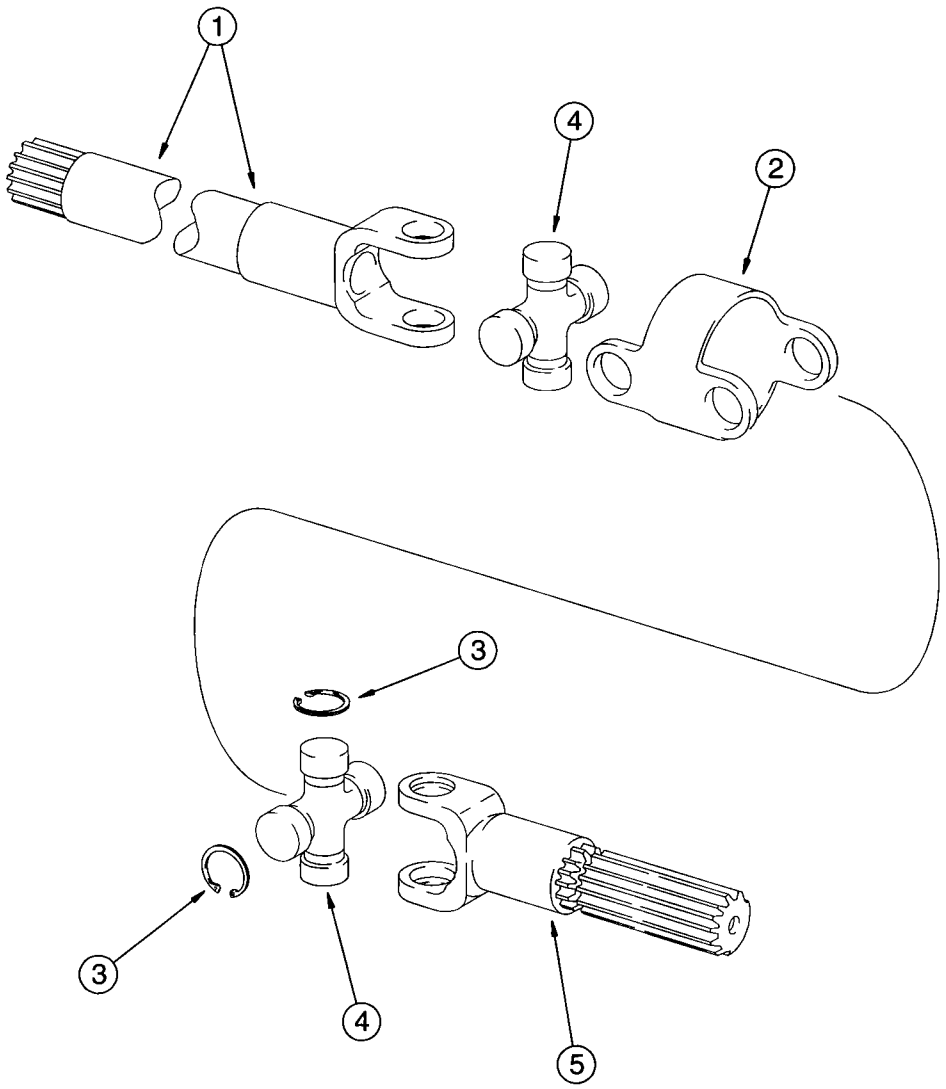
1
4
2
3
3
4
5

FRONT DRIVE AXLE

AXLE SHAFTS

REF.	PART NO.	DESCRIPTION	REQ'D.
	113561A1	AXLE ASSEMBLY - front drive, Carraro No. 131204, parts list pages 6-5 - 6-17, see page 6-3 for mounting	1
	144461A1	SHAFT ASSEMBLY - axle, front and rear, order items 1-5	2
1	144462A1	SHAFT - axle, differential side, long	2
2	144464A1	BODY - connecting	2
3	N14410	RING - snap, universal joint	16
4	144465A1	JOINT - universal, axle shaft, cross	4
5	144463A1	SHAFT - axle, wheel side, short	2

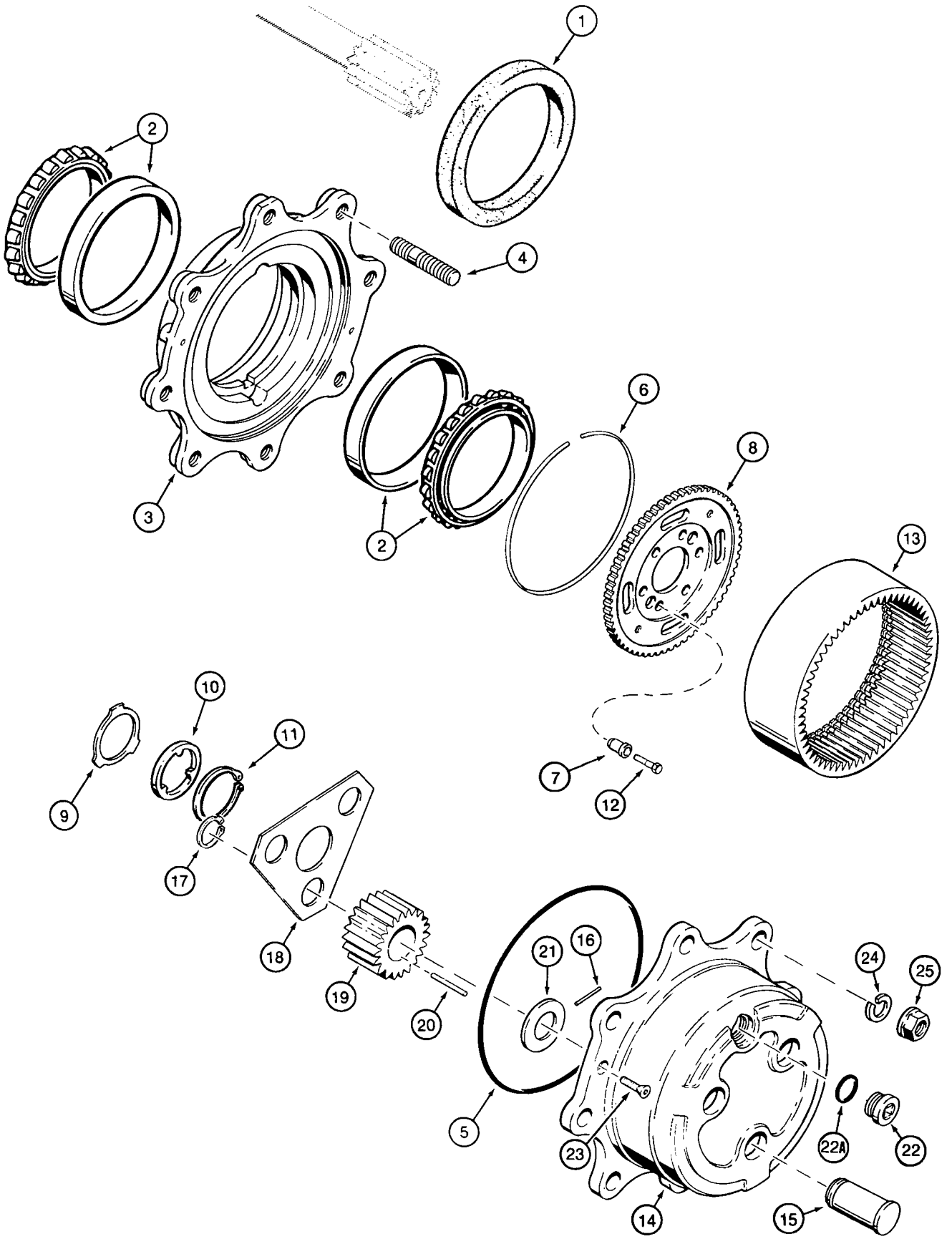
1
2
4
3
2
6
8
13
10
11
9
7
12
17
18
19
20
21
16
24
25
5
23
22A
22
14
15

FRONT DRIVE AXLE

PLANETARY

REF.	PART NO.	DESCRIPTION	REQ'D.
	113561A1	AXLE ASSEMBLY - front drive, Carraro No. 131204, parts list pages 6-5 - 6-17	1
1	1984938C1	SEAL - oil, hub	2
2	1966169C1	BEARING - tapered roller, hub	2
	144466A1	HUB ASSEMBLY - front drive axle	2
3	NSS	HUB - wheel attaching	1
4	100556A1	STUD - hub, special	8
5	100552A1	O-RING - wheel hub	2
6	100559A1	RING - backup, wheel hub O-ring	2
7	116426A1	BUSHING - carrier	12
8	116427A1	CARRIER - ring gear	2
9	190684A1	WASHER - thrust	2
10	190682A1	WASHER - thrust	2
11	A48041	RING - snap	2
12	116425A1	BOLT - hex, self-locking, special	12
13	100561A1	GEAR - ring, planetary	2
	100554A1	PLANETARY ASSEMBLY - front drive axle	2
	100553A1	CARRIER ASSEMBLY - planetary	2
14	NSS	CARRIER - planetary	1
15	NSS	SHAFT - pinion gear	3
16	K395093	PIN - locking	1
17	800-1134	RING - external retaining, No. 34	6
18	100555A1	RETAINER - pinion gear	2
19	100562A1	GEAR - pinion, planetary	6
20	114295A1	BEARING - needle, planetary gear, packet of 10	18
21	K395091	WASHER - thrust, pinion gear, outer	6
22	100557A1	PLUG - drain	2
22A	238-6121	O-RING - 1-1/16 ID x 3/32 inch wide	1
23	905876R1	SCREW - special, planetary cover plate	4
24	496-81000	WASHER - flat, 25/32 x 1-3/8 x 1/8 inch, hardened	16
25	825-11418	NUT - hex, 18 mm - 1.5	16
	B17575	SEALANT - black RTV silicone, 89 ml (3 ounce) tube, planetary cover to hub, not shown	UAR

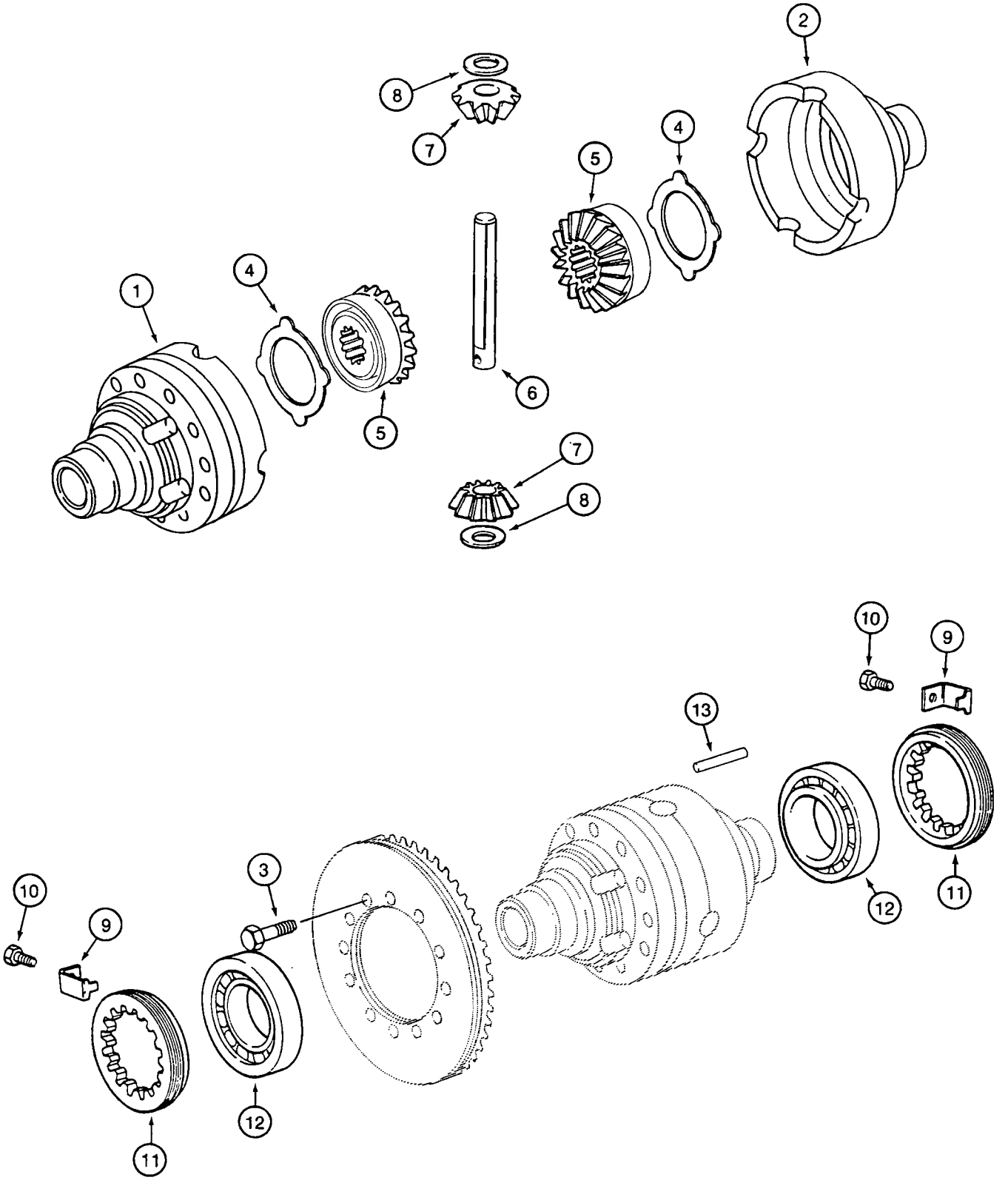
1
2
3
4
5
6
7
8
9
10
11
12
13

FRONT DRIVE AXLE

DIFFERENTIAL

REF.	PART NO.	DESCRIPTION	REQ'D.
	113561A1	AXLE ASSEMBLY - front drive, Carraro No. 131204, parts list pages 6-5 - 6-17	1
	109686A1	HOUSING ASSEMBLY - differential	1
1	NSS	HOUSING - differential, flange half	1
2	NSS	HOUSING - differential, plain half	1
3	827-10075	BOLT - hex, 10 - 1.5 x 75 mm, class 10.9	12
4	1967003C1	WASHER - thrust, differential housing	2
5	*N14407	GEAR - side, differential, no longer available, for service order 231397A1 set	2
6	*K395087	SHAFT - pinion gear, no longer available, for service order 231397A1 set	1
7	*N14408	GEAR - pinion, differential, no longer available, for service order 231397A1 set	2
8	*K395075	WASHER - thrust, pinion gear, no longer available, for service order 231397A1 set	2
9	1966153C1	BRACKET - lock	2
10	112486A1	BOLT - hex, self-locking, special, 6 - 1 x 12 mm	2
11	1966559C1	RING - locking, threaded	2
12	K395027	BEARING - tapered roller, differential	2
13	*K395086	PIN - dowel, no longer available, for service order 231397A1 set	1
	B17575	SEALANT - black RTV silicone, 89 ml (3 ounce) tube, bolt to differential housing, not shown	UAR
	*231397A1	SET - gear, differential, service replacement, includes Ref 5-8 and 13.	1

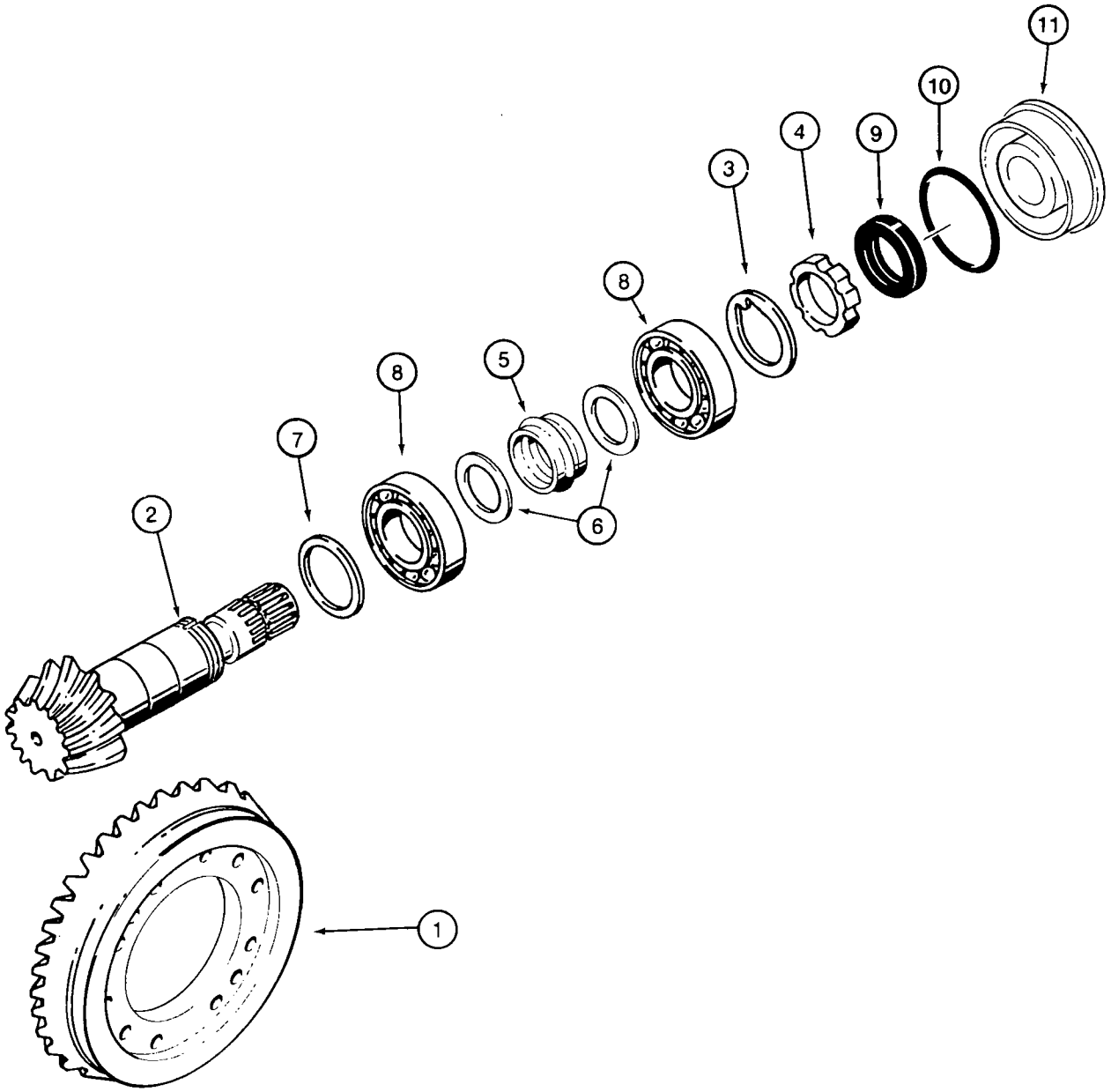
11
10
9
4
3
8
5
8
7
2
6
1

FRONT DRIVE AXLE

RING AND PINION GEAR SET

REF.	PART NO.	DESCRIPTION	REQ'D.
	113561A1	AXLE ASSEMBLY - front drive, Carraro No. 131204, parts list pages 6-5 - 6-17	1
	144460A1	GEAR - set, ring and pinion	1
1	NSS	GEAR - ring, differential	1
2	NSS	GEAR - pinion, differential	1
3	K261065	WASHER - special	1
4	K261014	RING - nut, pinion gear	1
5	1349058C1	SPACER - collapsible	1
6	1349059C1	WASHER - spacer	2
7	140954A1	SHIM - 2.5 mm (0.098 inch) thick	UAR
7	140953A1	SHIM - 2.6 mm (0.102 inch) thick	UAR
7	140951A1	SHIM - 2.7 mm (0.106 inch) thick	UAR
7	140949A1	SHIM - 2.8 mm (0.110 inch) thick	UAR
7	140948A1	SHIM - 2.9 mm (0.114 inch) thick	UAR
7	140943A1	SHIM - 3.0 mm (0.118 inch) thick	UAR
7	140944A1	SHIM - 3.1 mm (0.122 inch) thick	UAR
7	140945A1	SHIM - 3.2 mm (0.125 inch) thick	UAR
7	140946A1	SHIM - 3.3 mm (0.129 inch) thick	UAR
7	140947A1	SHIM - 3.4 mm (0.133 inch) thick	UAR
8	K395090	BEARING - tapered roller, pinion gear	2
9	K262143	SEAL - oil	1
10	238-5152	O-RING - 3-1/4 ID x 3/32 inch wide	1
11	128570A1	COVER - differential	1
	B17575	SEALANT - black RTV silicone, 89 ml (3 ounce) tube, differential cover to differential carrier, not shown	UAR

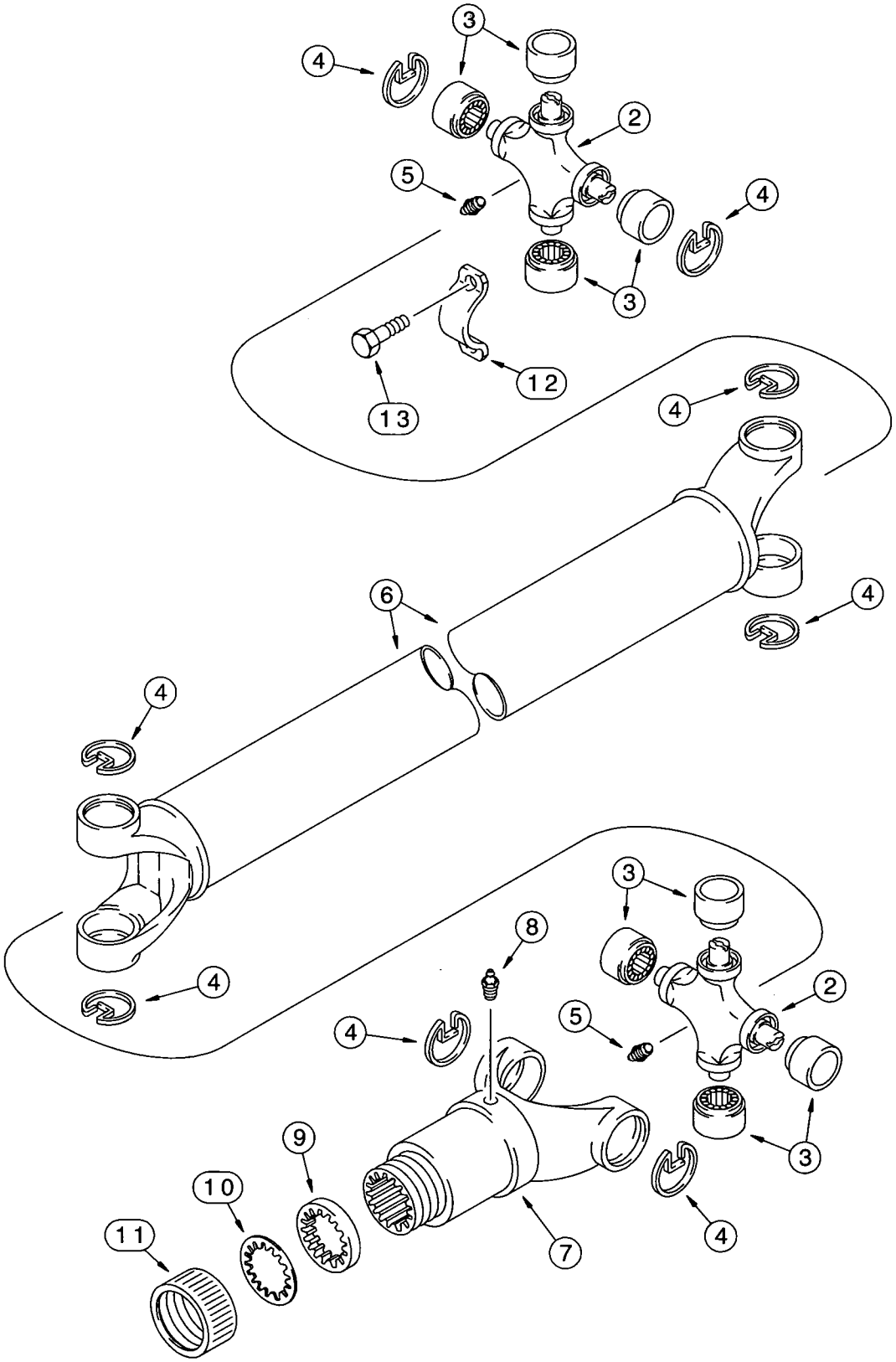
3
4
2
5
4
3
12
13
4
6
4
4
4
3
8
2
4
5
3
9
10
11
7
4

DRIVE SHAFT FOR FRONT DRIVE AXLE

FRONT DRIVE AXLE TO TRANSMISSION

REF.	PART NO.	DESCRIPTION	REQ'D.
	284713A1	SHAFT ASSEMBLY - drive, front drive axle	1
	144278A1	KIT - universal joint	2
2	NSS	JOINT - universal, drive shaft	1
3	NSS	BEARING - universal joint	4
4	NSS	RING - retaining	4
5	219-10	FITTING - grease, straight, 1/4-28 taper x 11/16 inch	2
6	NSS	SHAFT - drive, transmission to rear axle	1
7	144279A1	YOKE - tube, splined, to rear axle	1
8	219-10	FITTING - grease, straight, 1/4-28 taper x 11/16 inch	1
	D149860	KIT - dust cap	1
9	NSS	WASHER - cork	1
10	NSS	WASHER - steel	1
11	NSS	CAP - dust seal retaining	1
12	90-6682T1	RETAINER - drive shaft, strap, not included with the drive shaft assembly, purchase separately	2
13	D137627	BOLT - special	4

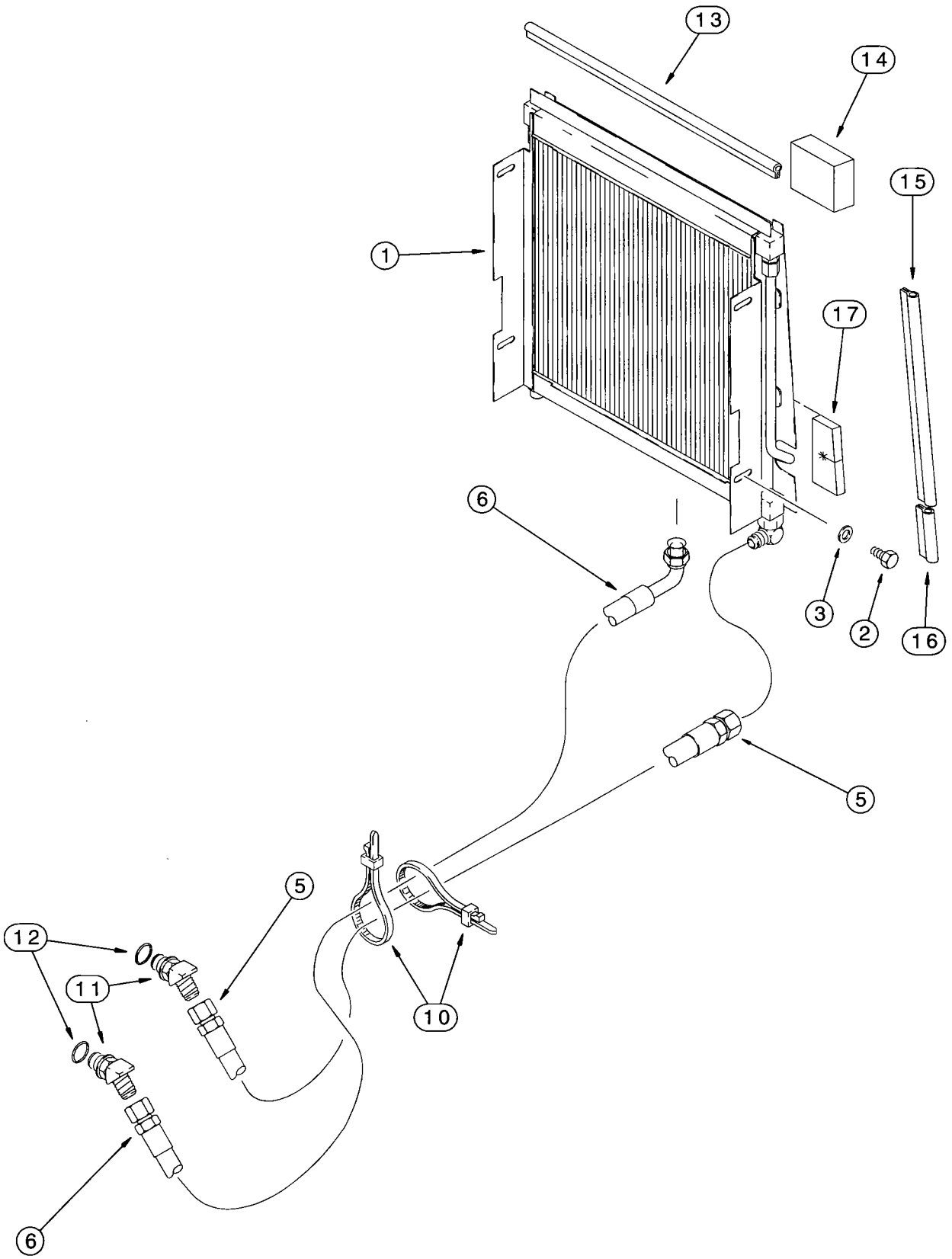
13
14
15
1
17
6
3
2
16
5
5
12
11
10
6

TRANSMISSION COOLING SYSTEM

USED WITH 239739A1 HEAVY DUTY RADIATOR ASSEMBLY

REF.	PART NO.	DESCRIPTION	REQ'D.
1	291288A1	COOLER - hydraulic oil, heavy duty, used with 239739A1 heavy duty radiator on page 2-5, uses radiator upper mounting bolts, see page 9-83 for hardware and page 8-9 for additional cooler hydraulic routing, includes Ref 17	1
2	614-10020	BOLT - hex, full threads, 10 - 1.5 x 20 mm	2
3	895-11010	WASHER - flat, 11 x 20 x 2 mm	2
5	292962A1	HOSE - 1240 mm (48-7/8 inch) long, transmission to cooler inlet	1
6	243805A2	HOSE - 1563 mm (61-9/16 inch) long, cooler outlet to transmission	1
10	L18337	STRAP - tie, 15 inch, nylon, retaining	3
11	218-5137	ELBOW - 45 degree, 7/8-14 inch flare x adj O-ring boss	2
12	237-6010	O-RING - 3/4 ID x 3/32 inch wide	1
13	233972A1	SEAL - 564 mm (22-7/32 inch) long, horizontal, cooler to wrapper	1
14	234719A1	SEAL - 70 x 100 x 32 mm, upper corner	2
	345-44	ADHESIVE - spray can, 3M No. 74, 23 ounce	UAR
15	233970A1	SEAL - 472 mm (18-5/8 inch) long, vertical, cooler to wrapper	2
16	233971A1	SEAL - 103 mm (4-1/16 inch) long, lower corner	2
17	234499A1	SEAL - 45 x 120 x 15 mm, furnished with cooler	2

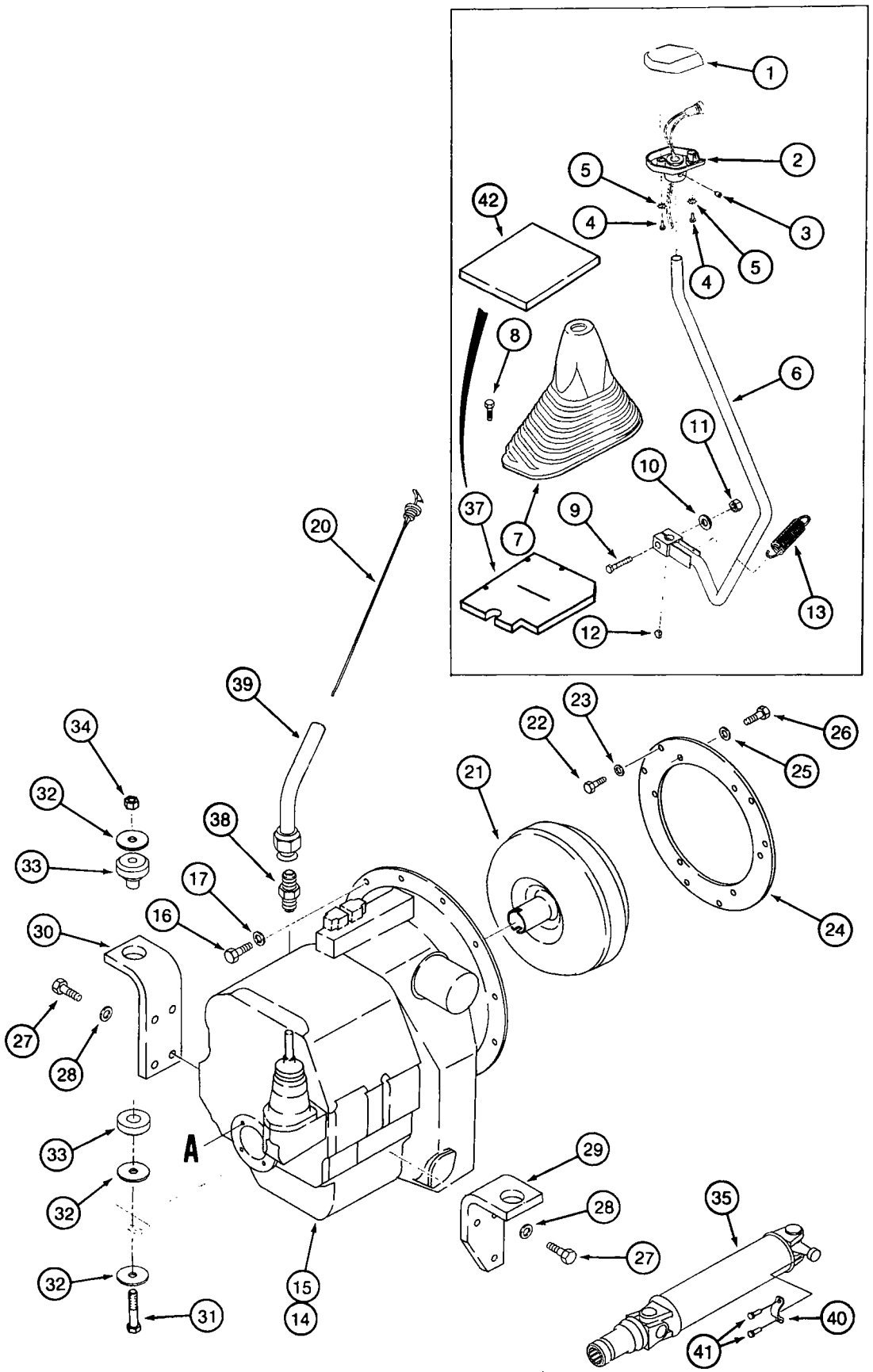
1
2
5
42
4
3
4
5
8
6
11
10
37
7
9
13
12
20
39
34
32
33
38
17
16
30
27
28
33
32
32
31
15
14
A
21
22
23
26
25
24
29
28
27
35
40
41

TRANSMISSION MOUNTING, DRIVE SHAFT, DIPSTICK AND GEAR SHIFT LEVER

REF.	PART NO.	DESCRIPTION	REQ'D.
1	+187714A1	KNOB - upper, cover	1
2	+187715A1	KNOB - lower	1
3	+484-6316	SCREW - set, hex socket headless, 5/16 NF x 3/8 inch, half dog point	1
4	+459-11014	SCREW - machine, pan head slotted, No. 10 NF x 7/8 inch	2
5	+493-41020	WASHER - external tooth lock, 3/16 inch	2
6	+179689A1	LEVER - transmission gear shift, see page 4-11 for clutch cutout harness and switch	1
7	+190618A1	BOOT - transmission gear shift lever	1
8	+280-16516	SCREW - self-tapping, hex washer head, No. 10 - 16 x 1 inch	4
9	+828-12055	BOLT - hex, 12 - 1.75 x 55 mm, class 10.9	1
10	+495-11053	WASHER - flat, 17/32 x 1-1/16 x 3/32 inch	1
11	+832-10412	NUT - hex, self-locking, 12 mm - 1.75	1
12	+126-116	KEY - Woodruff, 3/16 x 3/4 inch	1
13	+143370A1	SPRING - return, shift lever	1
14	*123842A2	TRANSMISSION ASSEMBLY - two wheel drive, parts list pages 6-27 - 6-49	1
15	*123843A2	TRANSMISSION ASSEMBLY - four wheel drive, parts list pages 6-27 - 6-51	1
16	627-10035	BOLT - hex, full threads, 10 - 1.5 x 35 mm, class 10.9	12
17	496-21041	WASHER - flat, 13/32 x 13/16 x 3/32 inch, hardened	12
20	121658A1	DIPSTICK - oil level, transmission	1
21	1995137C1	CONVERTER - torque, new	1
21	1995137C1C	RETURN NUMBER - torque converter core, use this part number to return torque converter for credit when using a remanufactured assembly	1
21	1995137C1R	CONVERTER - torque, remanufactured, North America only, component parts not serviced separately	1
22	428-510	BOLT - hex, 5/16 NF x 5/8 inch, grade 8	6
23	A15672	WASHER - flat, hardened, special	6
24	A178706	PLATE - adapter, torque converter to engine flywheel	1
25	496-21041	WASHER - flat, 13/32 x 13/16 x 3/32 inch, hardened	6
26	626-10016	BOLT - hex, full threads, 10 - 1.5 x 16 mm, class 10.9	6
27	614-12040	BOLT - hex, full threads, 12 - 1.75 x 40 mm	7
28	896-15012	WASHER - flat, 13.5 x 28 x 4 mm, hardened	7
29	284641A1	BRACKET - mounting, transmission, right-hand	1
30	284723A1	BRACKET - mounting, transmission, left-hand	1
31	814-16110	BOLT - hex, 16 - 2.0 x 110 mm	2
32	D35009	WASHER - flat, special, 5/8 inch, hardened	6
33	117846A1	INSULATOR - engine mount, rear	2
34	832-10416	NUT - hex, self-locking, 16 mm - 2.0	2

+ **NOTE:** Used on models without powershift transmissions.

* **NOTE:** See page 6-27 for remanufactured transmission part numbers.

Continued on next page

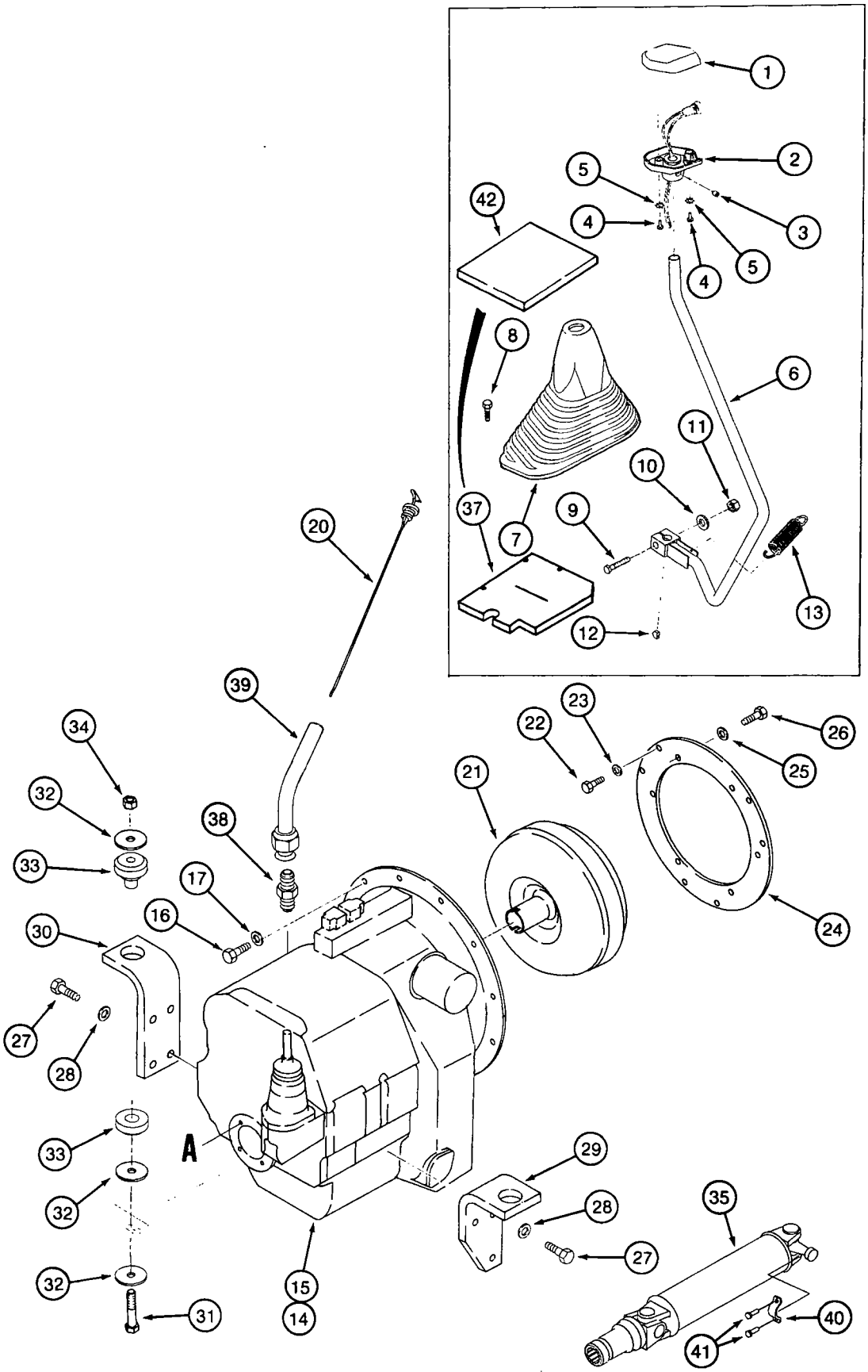
1
2
5
42
4
3
5
4
8
6
11
10
37
7
9
13
12
20
39
34
32
33
38
17
16
30
27
28
33
32
32
31
15
14
A
21
22
23
26
25
24
29
28
27
35
40
41

BS97M188

TRANSMISSION MOUNTING, DRIVE SHAFT, DIPSTICK AND GEAR SHIFT LEVER

REF.	PART NO.	DESCRIPTION	REQ'D.
35	284712A1	SHAFT ASSEMBLY - drive, transmission to rear axle, parts list page 6-69	1
37	298394A1	SEAL - foam, transmission control lever, installed between firewall and flange on four speed shift lever boot, cab models only	1
38	218-459	ADAPTER - straight, 1-5/16-12 flare x 3/4 inch PT	1
39	237948A1	TUBE - transmission dipstick	1
40	90-6682T1	RETAINER - drive shaft, strap	2
41	D137627	BOLT - special	4
42	292514A1	SEAL - foam, noise reduction, cab models	1

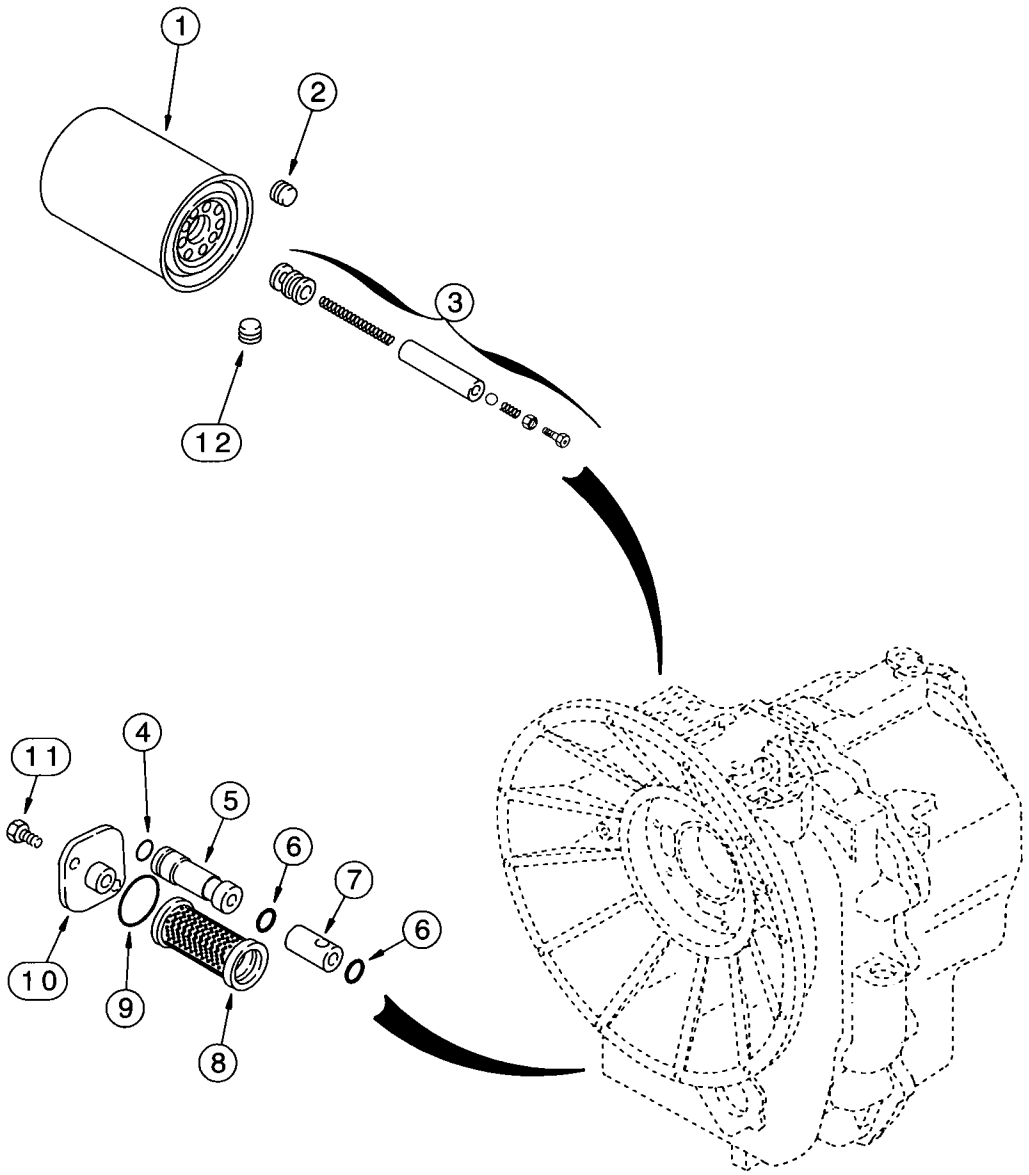
1
2
3
12
11
4
5
6
7
6
10
9
8

TRANSMISSION ASSEMBLY

OIL FILTERS

TWO WHEEL AND FOUR WHEEL DRIVE

REF.	PART NO.	DESCRIPTION	REQ'D.
	123842A2	TRANSMISSION ASSEMBLY - two wheel drive, new, parts list pages 6-27 - 6-49	1
	123842A2C	RETURN NUMBER - transmission core, use this part number to return transmission for credit when using a remanufactured assembly	1
	123842A2R	TRANSMISSION ASSEMBLY - remanufactured, North America only, component parts shown on this page do not apply to the remanufactured assembly	1
	123843A2	TRANSMISSION ASSEMBLY - four wheel drive, new, parts list pages 6-27 - 6-51	1
	123843A2C	RETURN NUMBER - transmission core, use this part number to return transmission for credit when using a remanufactured assembly	1
	123843A2R	TRANSMISSION ASSEMBLY - remanufactured, North America only, component parts shown on this page do not apply to the remanufactured assembly	1
1	254686A1	FILTER - oil, cartridge, transmission, 152 mm (6 inch) long	1
2	181101A1	PLUG - oil, 14 - 1.5 mm, used on four wheel drive models only	1
3	181274A1	KIT - valve, used on four wheel drive models only	1
4	181141A1	O-RING - small, used on four wheel drive models only	1
5	181196A1	PLUG - bypass valve, used on four wheel drive models only	1
6	190426A1	O-RING - bypass valve, cylinder, one (1) used at each end of item 7, cylinder bypass valve, used on four wheel drive models only	2
7	190433A1	CYLINDER - bypass valve, used on four wheel drive models only	1
8	278534A1	FILTER - oil	1
9	100748A1	O-RING - sealing	1
10	181219A1	COVER - access, oil filter	1
11	614-8018	BOLT - hex, full threads, 8 - 1.25 x 18 mm	2
12	181102A1	PLUG - oil, used on four wheel drive models only	1

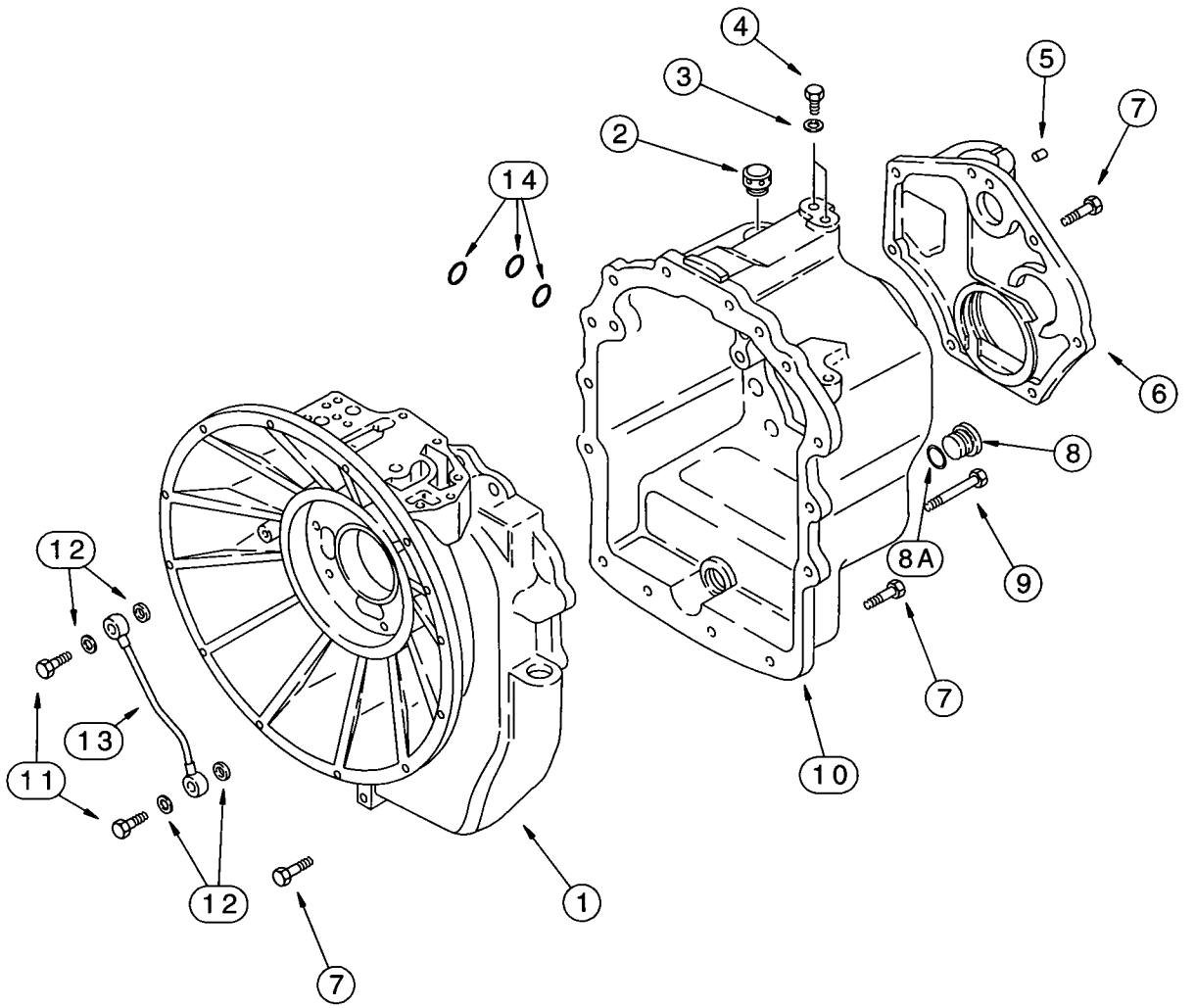
4
3
2
14
5
7
6
8
8A
9
7
10
12
13
11
12
7
1

TRANSMISSION ASSEMBLY

TRANSMISSION HOUSING - TWO WHEEL DRIVE

REF.	PART NO.	DESCRIPTION	REQ'D.
	123842A2	TRANSMISSION ASSEMBLY - two wheel drive, parts list pages 6-27 - 6-49, see page 6-27 for remanufactured transmission part numbers	1
1	181267A1	HOUSING - front half, use with Loctite 510 or 518 as a gasket eliminator	1
2	1530028C1	BREATHER - housing	1
3	934667R1	WASHER - flat, copper, special, 10 x 14 x 1.5 mm	2
4	181100A1	PLUG - housing	2
5	K260177	PIN - dowel, special, 10 x 25 mm	3
6	181197A1	COVER - housing, rear half, use with Loctite 510 or 518 as a gasket eliminator	1
7	614-10030	BOLT - hex, full threads, 10 - 1.5 x 30 mm	23
8	100557A1	PLUG - drain	1
8A	238-6121	O-RING - 1-1/16 ID x 3/32 inch wide	1
9	814-10150	BOLT - hex, 10 - 1.5 x 150 mm	2
10	181268A1	HOUSING - rear half, use with Loctite 510 or 518 as a gasket eliminator	1
11	181179A1	BOLT - hex, special	2
12	181105A1	WASHER - flat, copper, special, 14 x 20 x 1.5 mm	4
13	181232A1	TUBE - oil lubrication	1
14	181141A1	O-RING - housing	3

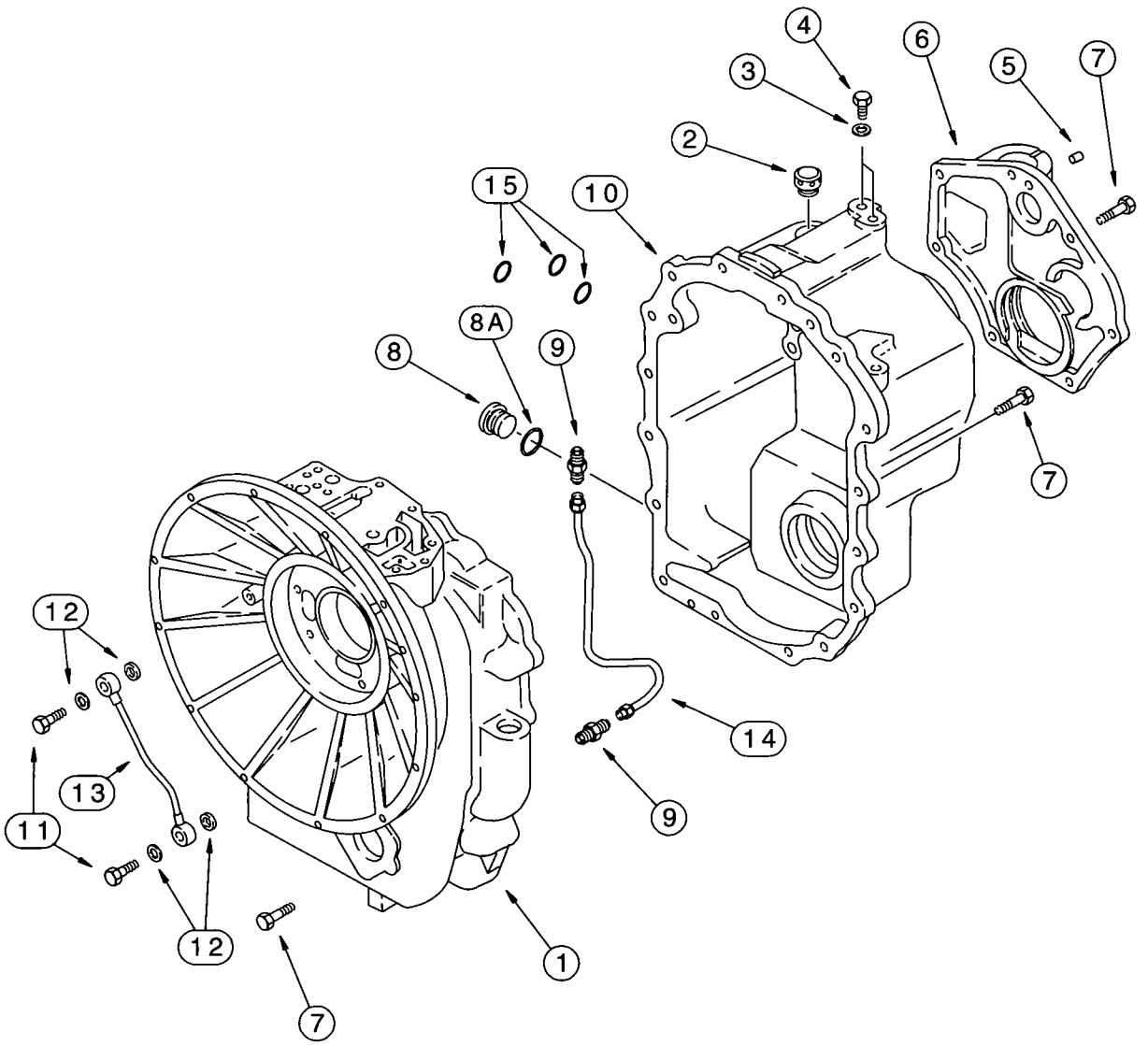
4
3
6
5
7
2
15
10
8A
8
9
7
12
13
11
14
9
12
7
1

TRANSMISSION ASSEMBLY

TRANSMISSION HOUSING - FOUR WHEEL DRIVE

REF.	PART NO.	DESCRIPTION	REQ'D.
	123843A2	TRANSMISSION ASSEMBLY - four wheel drive, parts list pages 6-27 - 6-51, see page 6-27 for remanufactured transmission part numbers	1
1	181200A1	HOUSING - front half, use with Loctite 510 or 518 as a gasket eliminator	1
1A	239606A1	PLUG - housing, oil passage port, not shown	1
2	1530028C1	BREATHER - housing	1
3	934667R1	WASHER - flat, copper, special, 10 x 14 x 1.5 mm	2
4	181100A1	PLUG - housing	2
5	K260177	PIN - dowel, special, 10 x 25 mm	3
6	181197A1	COVER - housing, rear half, use with Loctite 510 or 518 as a gasket eliminator	1
7	614-10030	BOLT - hex, full threads, 10 - 1.5 x 30 mm	23
8	100557A1	PLUG - drain	1
8A	238-6121	O-RING - 1-1/16 ID x 3/32 inch wide	1
9	218-1023	ADAPTER - straight, 1/2-20 flare x 1/4 inch PT	2
10	181201A1	HOUSING - rear half, use with Loctite 510 or 518 as a gasket eliminator	1
11	181179A1	BOLT - hex, special	2
12	181105A1	WASHER - flat, copper, special, 14 x 20 x 1.5 mm	4
13	181232A1	TUBE - oil lubrication	1
14	181176A1	TUBE - oil	1
15	181141A1	O-RING - housing	3

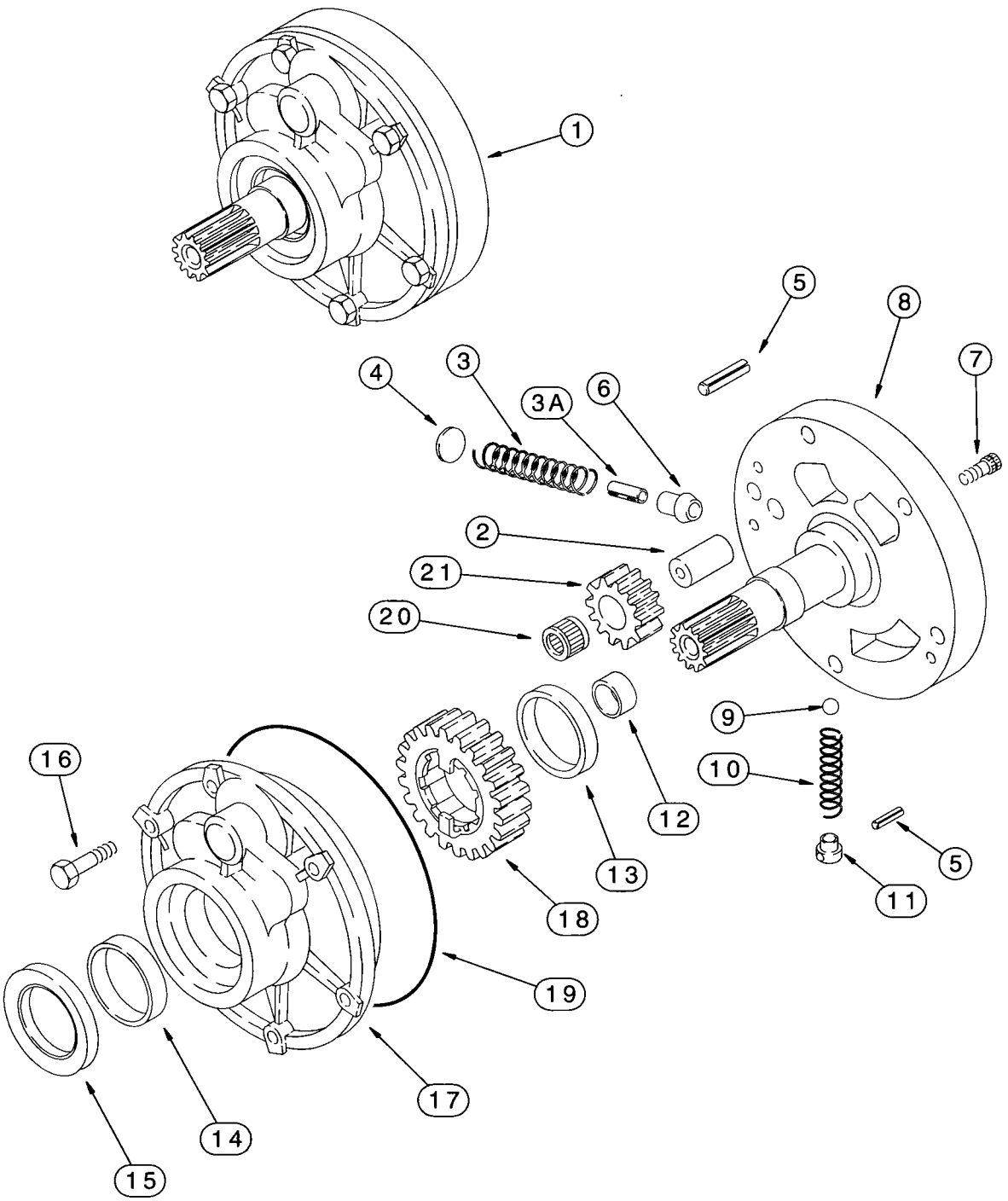
1
5
8
7
4
3
3A
6
2
21
20
9
10
5
11
12
13
18
16
19
17
14
15

TRANSMISSION ASSEMBLY
OIL PUMP
TWO WHEEL OR FOUR WHEEL DRIVE

REF.	PART NO.	DESCRIPTION	REQ'D.
	*123842A2	TRANSMISSION ASSEMBLY - two wheel drive, parts list pages 6-27 - 6-49	1
	*123843A2	TRANSMISSION ASSEMBLY - four wheel drive, parts list pages 6-27 - 6-51	1
1	181199A4	PUMP ASSEMBLY - oil, transmission	1
2	247744A1	SHAFT - small, not available for service, order 181199A4 pump	1
3	181270A1	SPRING - detent, not available for service, order 181199A4 pump	1
3A	%NSS	PIN - valve, order 247749A1 piston valve kit below	1
4	198713A1	STOP - spring, not available for service, order 181199A4 pump	1
5	181109A1	PIN - roll, 5 x 22 mm, not available for service, order 181199A4 pump	2
6	%NSS	VALVE - piston, order 247749A1 piston valve kit below	1
7	864-6025	BOLT - hex socket, 6 - 1.0 x 25 mm, not available for service, order 181199A4 pump	2
8	NSS	SUPPORT - pump	1
9	181145A1	BALL - check, not available for service, order 181199A4 pump	1
10	181214A1	SPRING - detent, not available for service, order 181199A4 pump	1
11	198712A1	GUIDE - spring, not available for service, order 181199A4 pump	1
12	181215A1	BUSHING - pump support, small, not available for service, order 181199A4 pump	1
13	247746A1	BUSHING - pump support, large, not available for service, order 181199A4 pump	1
14	181216A1	BUSHING - pump housing	1
15	181205A1	SEAL - oil, pump housing	1
16	814-8060	BOLT - hex, 8 - 1.25 x 60 mm	6
17	NSS	HOUSING - oil pump	1
18	247748A1	GEAR - 23 teeth, charge pump, large, not available for service, order 181199A4 pump	1
19	181142A1	O-RING - pump housing	1
20	246767A1	BEARING - needle, not available for service, order 181199A4 pump	1
21	181218A1	GEAR - small, 12 teeth, not available for service, order 181199A4 pump	1
	%247749A1	KIT - piston valve, not available for service, order 181199A4 pump	1

***NOTE:** See page 6-27 for remanufactured transmission part numbers.

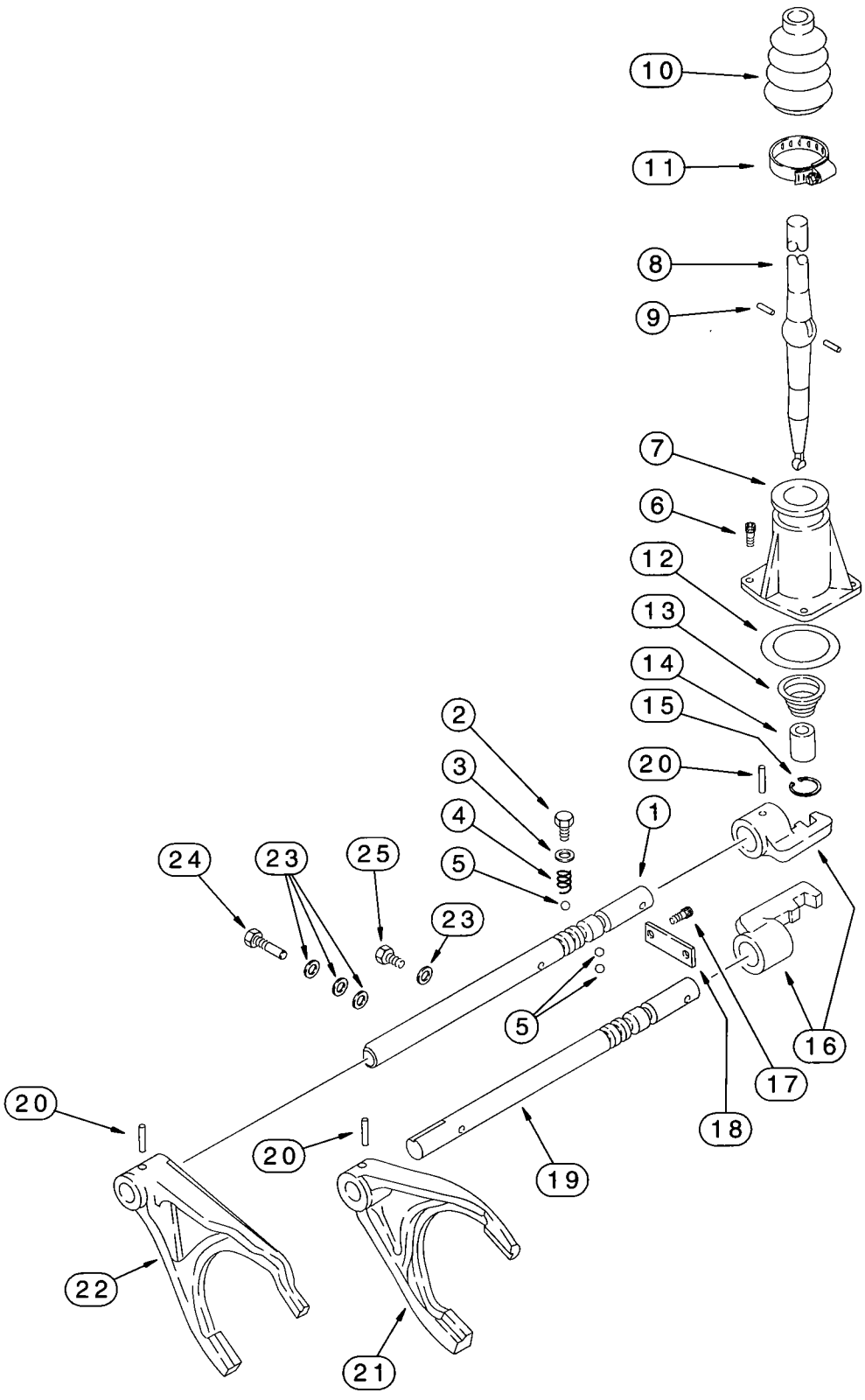
10
11
8
9
7
6
12
13
14
15
20
1
2
3
4
5
24
23
25
23
5
16
17
18
20
20
19
22
21

TRANSMISSION ASSEMBLY

TRANSMISSION SHIFTER MECHANISM
TWO WHEEL OR FOUR WHEEL DRIVE

REF.	PART NO.	DESCRIPTION	REQ'D.
	*123842A2	TRANSMISSION ASSEMBLY - two wheel drive, parts list pages 6-27 - 6-49	1
	*123843A2	TRANSMISSION ASSEMBLY - four wheel drive, parts list pages 6-27 - 6-51	1
1	%NSS	RAIL - shifter fork, third and fourth, no longer included in transmission assembly, order 256888A3 synchronizer kit, see below	1
2	614-12016	BOLT - hex, full threads, 12 - 1.75 x 16 mm	3
3	1966835C1	WASHER - flat, special, 12 x 16 x 1.5 mm	3
4	1966993C1	SPRING - detent	2
5	181139A1	BALL - detent	4
6	864-8025	BOLT - hex socket, 8 - 1.25 x 25 mm	3
7	181171A1	COVER - shift lever	1
8	%NSS	LEVER - shift, replaces 190428A1, 190428A2 and 190428A3 lever, includes bushing and retaining ring, no longer included in transmission assembly, order 256888A3 kit	1
9	%NSS	PIN - shift lever, replaces 1967585C1 pin, no longer included in transmission assembly, order 256888A3 synchronizer kit, see below	2
10	%NSS	BOOT - rubber, replaces 1967581C1 boot, no longer included in transmission assembly, order 256888A3 synchronizer kit, see below	1
11	181177A1	CLAMP - adjustable	1
12	181138A1	O-RING - sealing	1
13	%NSS	SPRING - shift lever, replaces 1967586C1 and 190436A1 spring, no longer included in transmission assembly, order 256888A3 kit	1
14	NSS	BUSHING - shift lever, replaces 181180A1 bushing, no longer included in transmission assembly, bushing is now part of 190428A3 lever, Ref 8, which is not serviced separately, order 256888A3 kit	1
15	NSS	RING - external retaining, replaces 800-1115 ring, no longer included in transmission assembly, ring is now part of 190428A3 lever, Ref 8, which is not serviced separately, order 256888A3 kit	1
16	181173A1	SHIFTER - rail	2
17	864-10025	BOLT - hex socket, 10 - 1.5 x 25 mm	2
18	181175A1	PLATE - retainer, detent ball	1
19	181245A2	RAIL - shifter fork, first and second	1
20	%905794R1	PIN - roll, 6 x 30 mm	2-4
	%256888A3	KIT - synchronizer service, replaces 256888A2 kit, includes parts on pages 6-35, 6-37, 6-41 and 6-43, also includes (1 each) 278531A1 washer, 278532A1 bushing, 278533A1 spring and 279039A1 shift lever snap ring which are not serviced separately and not shown	1

***NOTE:** See page 6-27 for remanufactured transmission part numbers.

Continued on next page

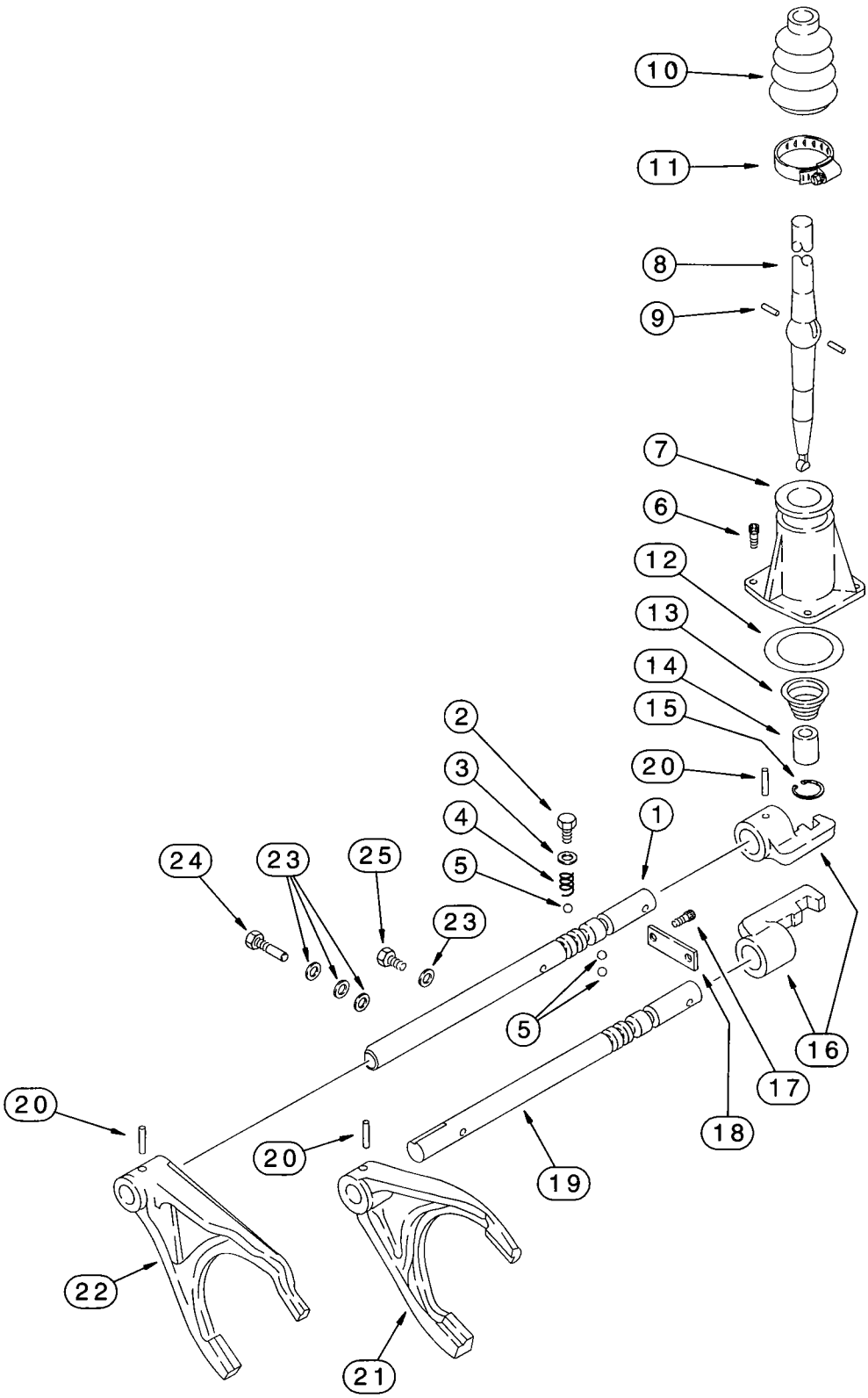
10
11
8
9
7
6
12
13
14
15
20
2
3
4
5
1
24
23
25
23
5
16
17
18
20
20
19
22
21

TRANSMISSION ASSEMBLY

TRANSMISSION SHIFTER MECHANISM
TWO WHEEL OR FOUR WHEEL DRIVE

REF.	PART NO.	DESCRIPTION	REQ'D.
	*123842A2	TRANSMISSION ASSEMBLY - two wheel drive, parts list pages 6-27 - 6-49	1
	*123843A2	TRANSMISSION ASSEMBLY - four wheel drive, parts list pages 6-27 - 6-51	1
21	181203A1	FORK - gear shift, first and second	1
22	%NSS	FORK - gear shift, third and fourth, replaces 181174A1 and 181174A2 fork, no longer included in transmission assembly, order 256888A3 kit	1
23	181104A1	WASHER - sealing, copper	4
24	181275A1	BOLT - hex, special	1
25	614-8016	BOLT - hex, full threads, 8 - 1.25 x 16 mm	1
	%256888A3	KIT - synchronizer service, replaces 256888A2 kit, includes parts on pages 6-35, 6-37, 6-41 and 6-43, also includes (1 each) 278531A1 washer, 278532A1 bushing, 278533A1 spring and 279039A1 shift lever snap ring which are not serviced separately and not shown	1

***NOTE:** See page 6-27 for remanufactured transmission part numbers.

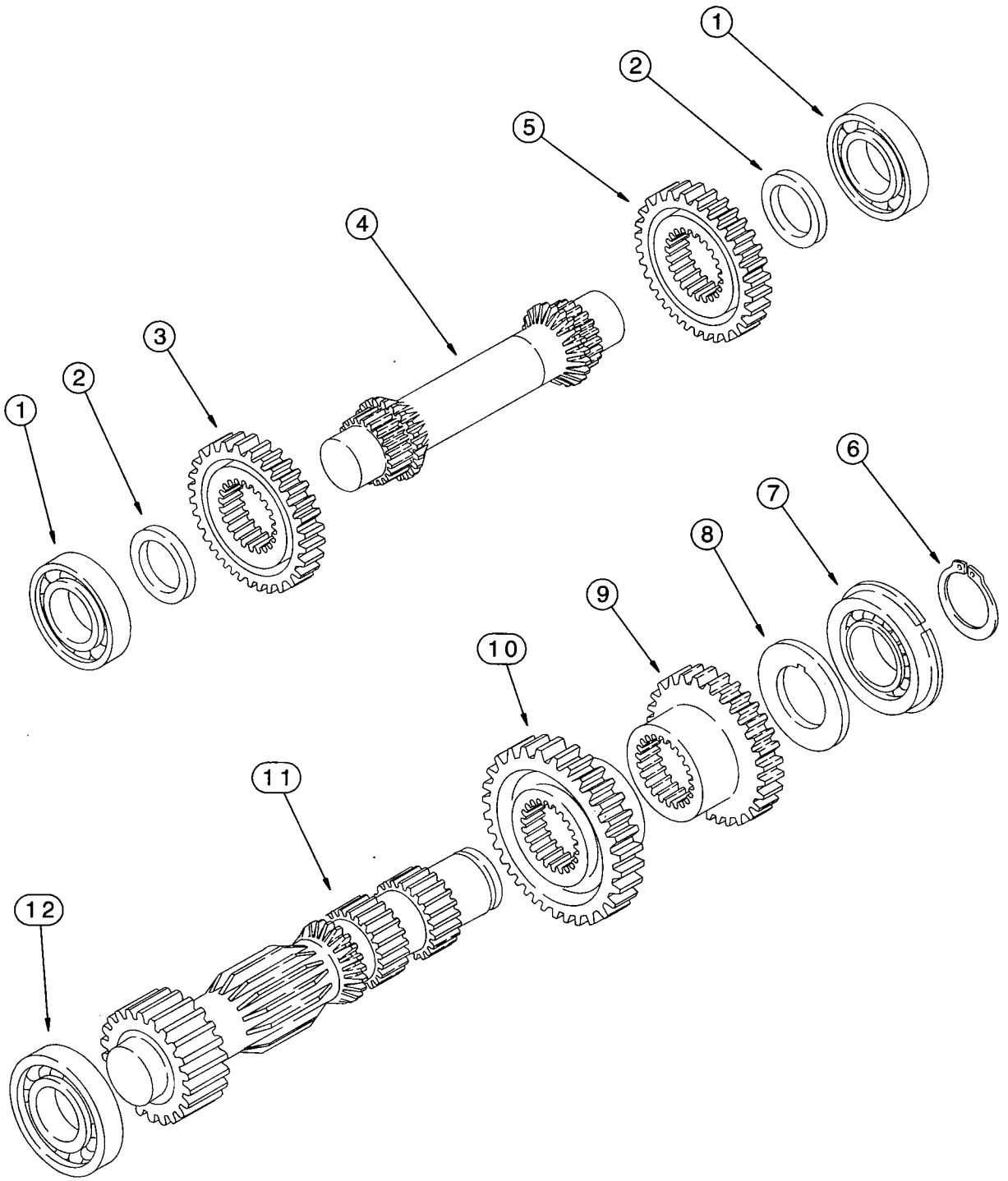
1
2
5
4
3
2
1
6
7
8
9
10
11
12

TRANSMISSION ASSEMBLY
IDLER AND PRIMARY SHAFT
TWO WHEEL OR FOUR WHEEL DRIVE

REF.	PART NO.	DESCRIPTION	REQ'D.
	*123842A2	TRANSMISSION ASSEMBLY - two wheel drive, parts list pages 6-27 - 6-49	1
	*123843A2	TRANSMISSION ASSEMBLY - four wheel drive, parts list pages 6-27 - 6-51	1
1	ST205A	BEARING - ball	2
2	181151A1	SHIM - bearing, 52 x 35.1 x 4 mm	2
3	181186A1	GEAR - idler, 27 teeth	1
4	181181A1	SHAFT - idler	1
5	181186A1	GEAR - idler, 27 teeth	1
6	A48041	RING - snap	1
7	181128A1	BEARING - ball	1
8	181154A1	WASHER - thrust, 65 x 45 mm	1
9	181188A1	GEAR - drive, third, 28 teeth	1
10	181187A1	GEAR - drive, fourth, 39 teeth	1
11	181184A1	SHAFT - primary	1
12	181132A1	BEARING - roller	1

***NOTE:** See page 6-27 for remanufactured transmission part numbers.

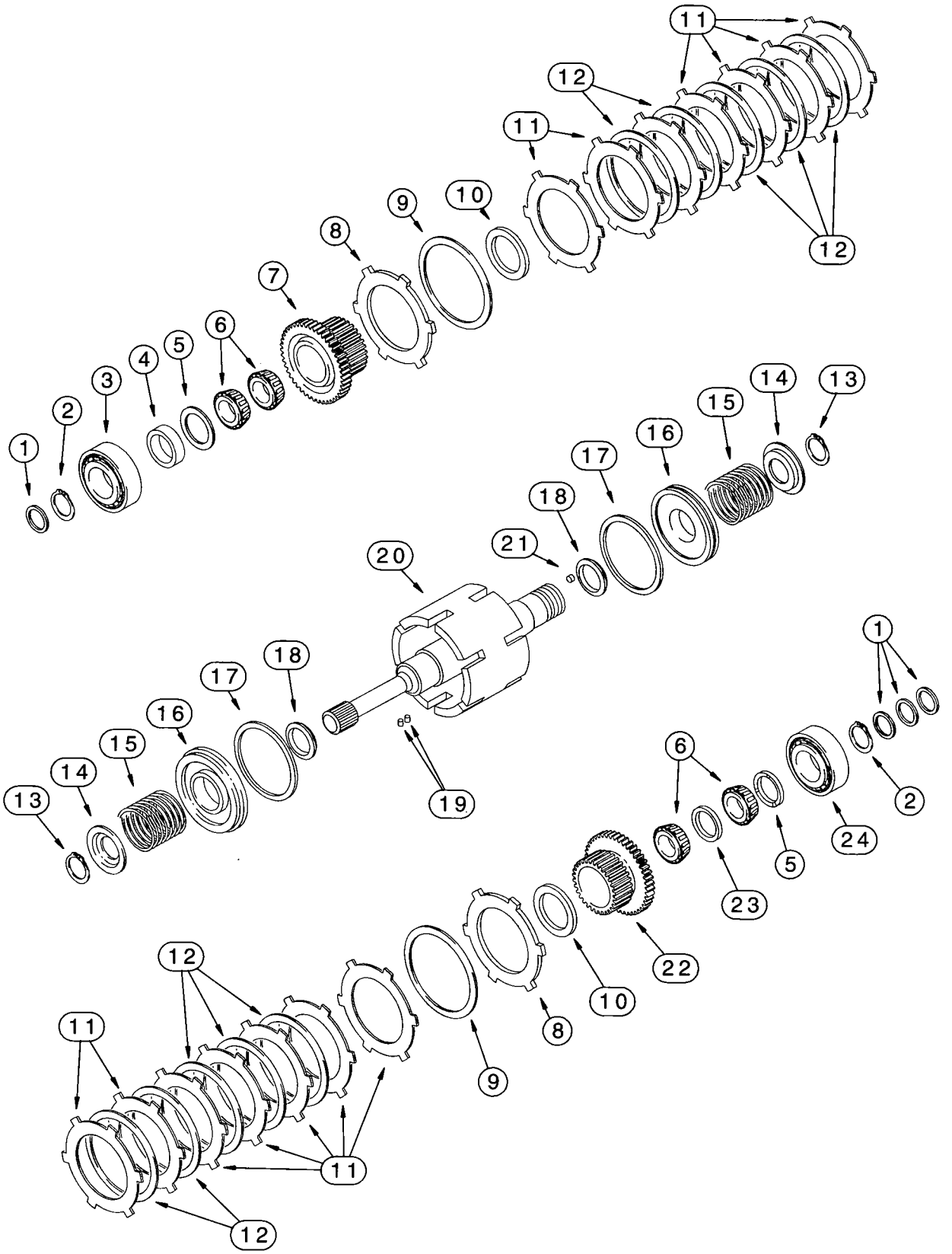
11
12
11
10
9
8
7
6
5
4
3
2
1
12
13
14
15
16
17
18
21
20
18
17
16
15
14
13
19
1
2
24
5
6
23
22
10
8
9
12
11
11
12

TRANSMISSION ASSEMBLY

INPUT SHAFT

TWO WHEEL OR FOUR WHEEL DRIVE

REF.	PART NO.	DESCRIPTION	REQ'D.
	*123842A2	TRANSMISSION ASSEMBLY - two wheel drive, parts list pages 6-27 - 6-49	1
	*123843A2	TRANSMISSION ASSEMBLY - four wheel drive, parts list pages 6-27 - 6-51	1
1	181152A3	SEAL - oil	4
2	A48041	RING - snap	2
3	181128A1	BEARING - ball	1
4	181153A1	SPACER - bearing	1
5	181154A1	WASHER - thrust, 65 x 45 mm	2
6	181135A1	BEARING - needle	4
7	181228A2	GEAR - input shaft, 35 teeth	1
8	181162A1	PLATE - thrust	2
9	181116A1	RING - lock	2
10	181163A1	WASHER - thrust	2
11	181159A1	PLATE - disc, intermediate	16
12	181158A1	PLATE - disc, clutch	12
13	181111A1	RING - snap	2
14	181161A1	PLATE - pressure	2
15	%NSS	SPRING - detent, replaces 181160A1 and 181160A2 spring, no longer included in transmission assembly, order 256888A3 synchronizer kit, see below	2
16	%NSS	PISTON - input shaft, replaces 181155A1 and 181155A2 piston, no longer included in transmission assembly, order 256888A3 synchronizer kit, see below	2
17	181157A3	RING - seal	2
18	181156A3	RING - seal, small	2
19	181108A1	PIN - roll	4
20	298203A1	SHAFT - input	1
21	D142898	PLUG - input shaft	1
22	181227A2	GEAR - shaft, 29 teeth	1
23	181164A1	SPACER - bearing	1
24	181126A1	BEARING - ball	1
	%256888A3	KIT - synchronizer service, replaces 256888A2 kit, includes parts on pages 6-35, 6-37, 6-41 and 6-43, also includes (1 each) 278531A1 washer, 278532A1 bushing, 278533A1 spring and 279039A1 shift lever snap ring which are not serviced separately and not shown	1

***NOTE:** See page 6-27 for remanufactured transmission part numbers.

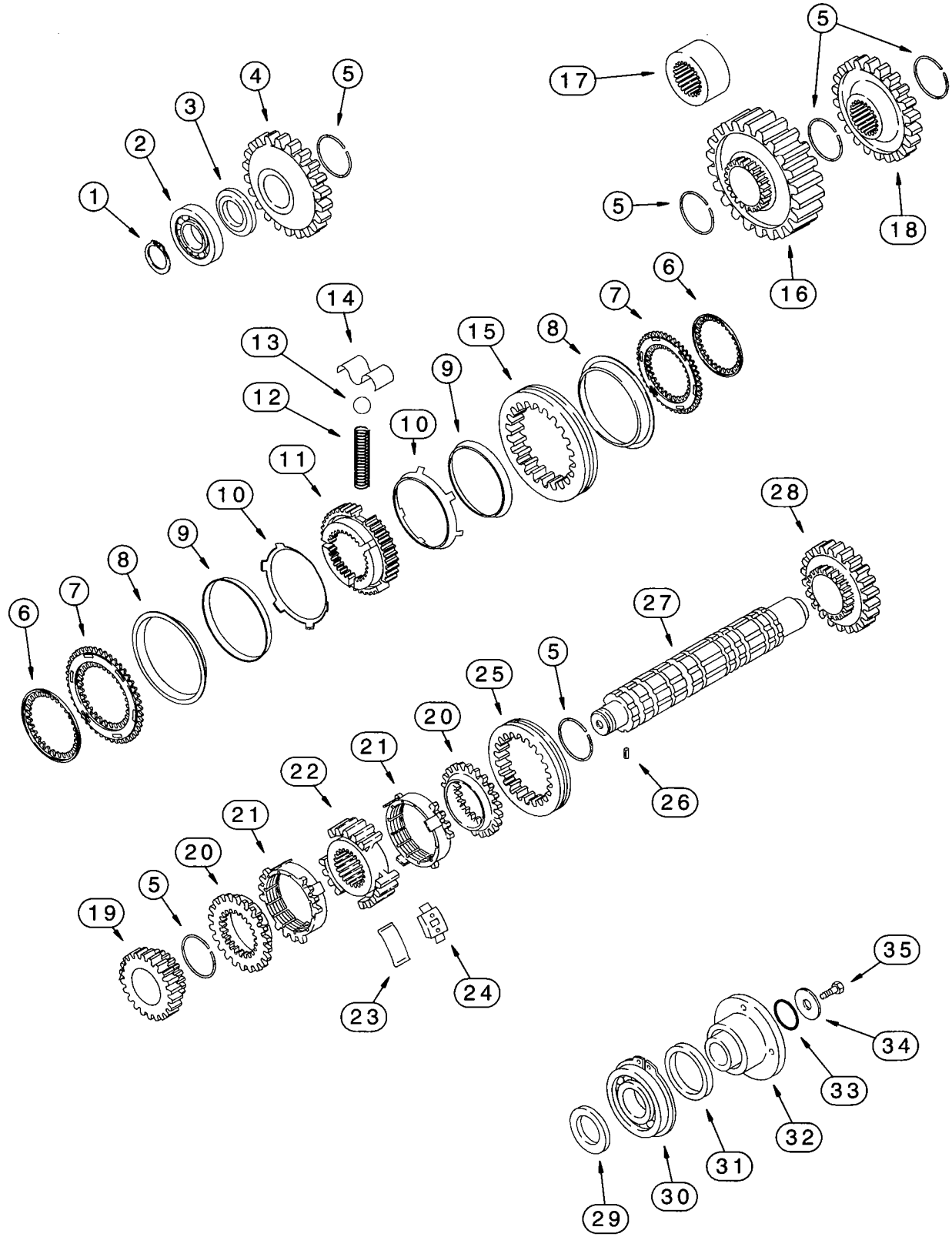
1
2
3
4
5
5
17
5
18
16
6
7
14
13
8
15
12
9
10
11
10
9
8
7
6
28
27
5
25
20
21
22
21
20
5
19
26
23
24
35
34
33
32
31
30
29

TRANSMISSION ASSEMBLY

SECONDARY SHAFT
TWO WHEEL OR FOUR WHEEL DRIVE

REF.	PART NO.	DESCRIPTION	REQ'D.
	*123842A2	TRANSMISSION ASSEMBLY - two wheel drive, parts list pages 6-27 - 6-49	1
	*123843A2	TRANSMISSION ASSEMBLY - four wheel drive, parts list pages 6-27 - 6-51	1
1	181118A1	RING - lock	1
2	181132A1	BEARING - roller	1
3	181193A1	WASHER - thrust, 64 x 40 mm	1
4	181190A1	GEAR - driven, second, 43 teeth	1
5	181114A1	RING - snap	6
	%NSS	KIT - synchronizing service, replaces 190427A1 kit, no longer included in transmission assembly or serviced separately, order 256888A3 synchronizer kit, see below	1
6	%NSS	SPACER - replaces 244109A1 spacer, gear to synchronizer ring, no longer included in kit or transmission assembly, order 256888A3 synchronizer kit, see below	2
7	NSS	RING - synchronizer	2
8	NSS	RING - synchronizer, flanged	2
9	NSS	SPACER - hub	2
10	NSS	RETAINER - spacer	2
11	NSS	HUB - synchronizer	1
12	NSS	SPRING - hub	3
13	NSS	BALL - hub	3
14	NSS	PLATE - spring	3
15	NSS	SLEEVE - hub	1
16	181189A1	GEAR - driven, first, 49 teeth	1
17	181226A1	SPACER - gear, two-wheel drive models	1
18	181224A1	GEAR - drive, MFD, 44 teeth	1
19	181192A1	GEAR - driven, fourth, 23 teeth	1
	%256888A3	KIT - synchronizer service, replaces 256888A2 kit, includes parts on pages 6-35, 6-37, 6-41 and 6-43, also includes (1 each) 278531A1 washer, 278532A1 bushing, 278533A1 spring and 279039A1 shift lever snap ring which are not serviced separately and not shown	1

***NOTE:** See page 6-27 for remanufactured transmission part numbers.

Continued on next page

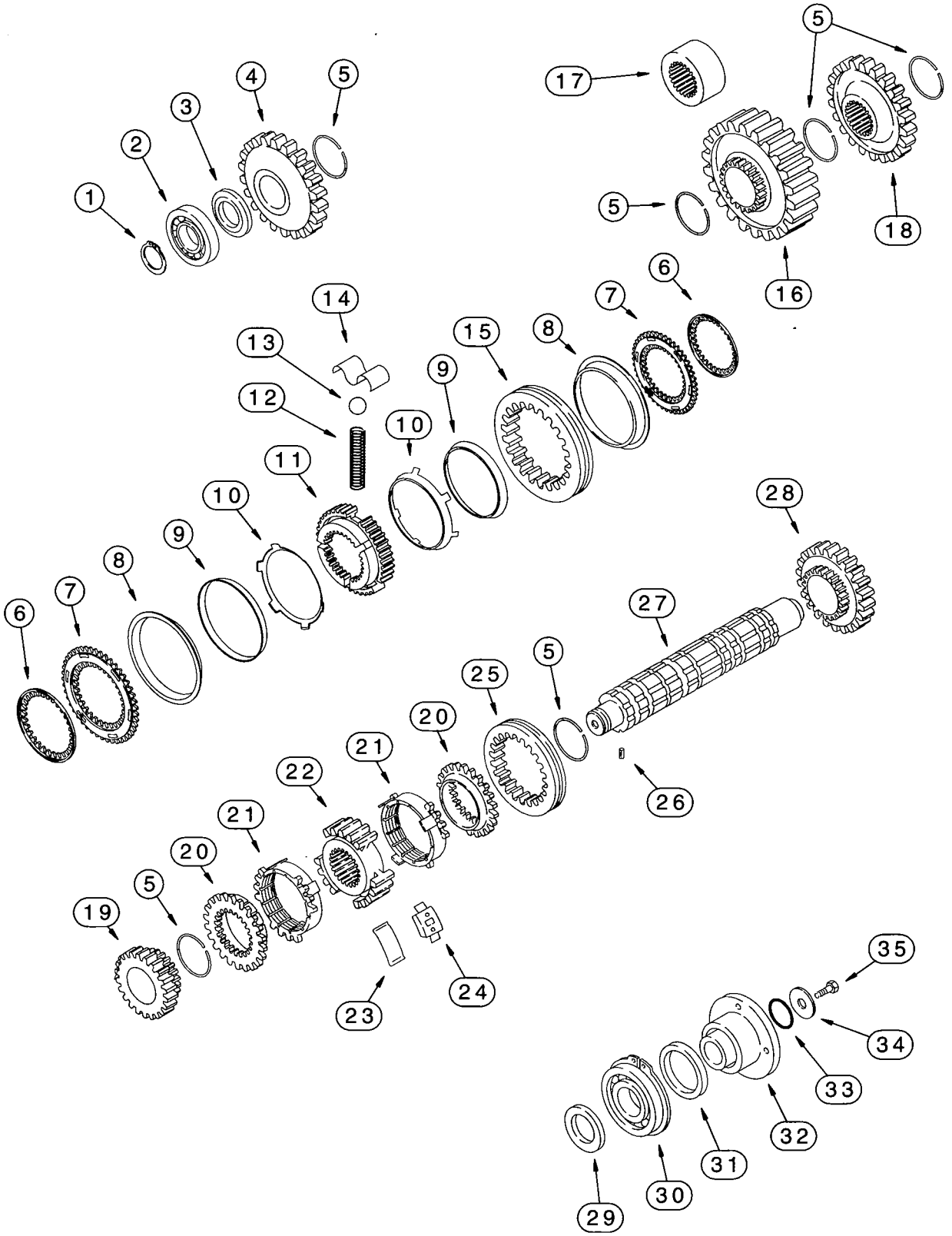
1
2
3
4
5
17
5
5
18
16
6
7
14
13
15
8
9
12
10
11
10
9
8
7
6
28
27
5
25
20
21
22
21
20
5
19
26
23
24
35
34
33
32
31
30
29

TRANSMISSION ASSEMBLY
SECONDARY SHAFT
TWO WHEEL OR FOUR WHEEL DRIVE

REF.	PART NO.	DESCRIPTION	REQ'D.
	* 123842A2	TRANSMISSION ASSEMBLY - two wheel drive, parts list pages 6-27 - 6-49	1
	* 123843A2	TRANSMISSION ASSEMBLY - four wheel drive, parts list pages 6-27 - 6-51	1
	181178A1	KIT - synchronizing service, kit no longer available, order 256888A3 synchronizer service kit, see below	1
20	241957A1	FLANGE - synchronizer, no longer included in kit, purchase separately	2
21	123800A1	RING - synchronizer	2
22	NSS	HUB - synchronizer	1
23	1967506C1	SPRING - hub, inner	3
24	123803A1	SPRING - hub, outer	3
25	1967537C1	SLEEVE - shift fork, no longer included in kit, purchase separately	1
26	181108A1	PIN - roll	1
27	181183A1	SHAFT - secondary	1
28	181191A1	GEAR - driven, third, 33 teeth	1
29	181154A1	WASHER - thrust, 65 x 45 mm	1
30	181130A1	BEARING - ball	1
31	181123A1	SEAL - oil, 60 x 75 x 8 mm	1
32	233284A1	YOLK - shaft, rear	1
33	181144A1	O-RING - flange sealing	1
34	181165A1	WASHER - flat, special, 52 x 12.5 x 5 mm	1
35	P3533055	SCREW - locking, special, 12 - 1.25 x 25 mm	1

* **NOTE:** See page 6-27 for remanufactured transmission part numbers.

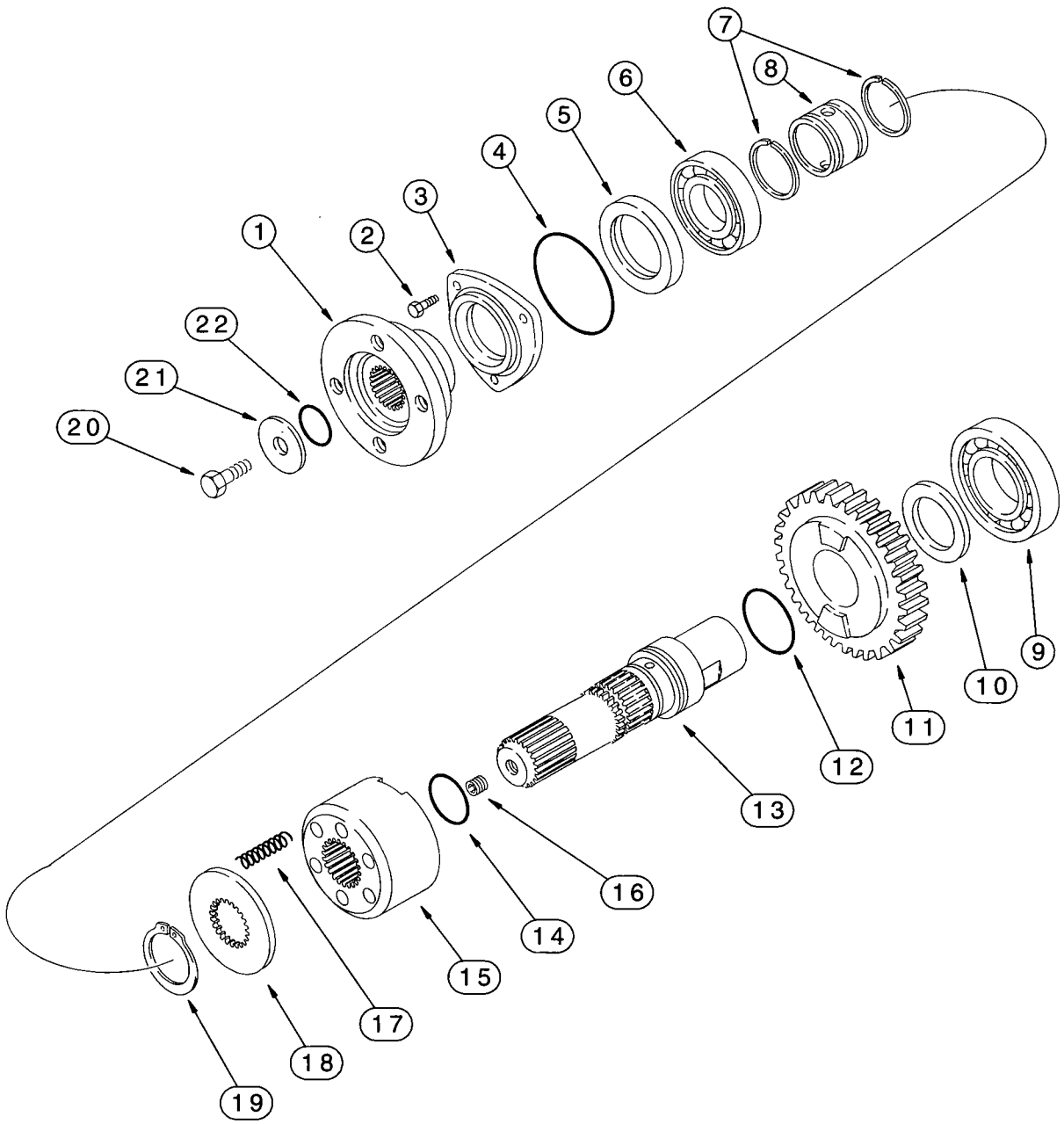
1
2
3
4
5
6
7
8
9
10
11
12
13
14
15
16
17
18
19
20
21
22

TRANSMISSION ASSEMBLY

FOUR WHEEL DRIVE OUTPUT SHAFT

REF.	PART NO.	DESCRIPTION	REQ'D.
	*123843A2	TRANSMISSION ASSEMBLY - four wheel drive, parts list pages 6-27 - 6-51	1
1	233283A1	YOLK - shaft, front	1
2	614-8022	BOLT - hex, full threads, 8 - 1.25 x 22 mm	3
3	181198A1	COVER - front	1
4	112517A1	O-RING - cover	1
5	181122A1	SEAL - oil, 50 x 65 x 8 mm	1
6	ST205A	BEARING - ball	1
7	181152A3	SEAL - oil	2
8	181194A1	BUSHING - grooved	1
9	181126A1	BEARING - ball	1
10	181154A1	WASHER - thrust, 65 x 45 mm	1
11	181223A1	GEAR - driven, MFD, 36 teeth	1
12	100747A1	O-RING - shaft, large	1
13	181182A1	SHAFT - output	1
14	100748A1	O-RING - shaft, small	2
15	181248A1	SLEEVE - shaft	1
16	D142898	PLUG - shaft, 10 x 1 mm	1
17	100753A1	SPRING - sleeve	6
18	181276A1	WASHER - flat, special	1
19	181120A1	RING - snap	1
20	P3533055	SCREW - locking, special, 12 - 1.25 x 25 mm	1
21	P2745466	WASHER - flat, special	1
22	238-8217	O-RING - 1-3/16 ID x 1/8 inch wide	1

* **NOTE:** See page 6-27 for remanufactured transmission part numbers.

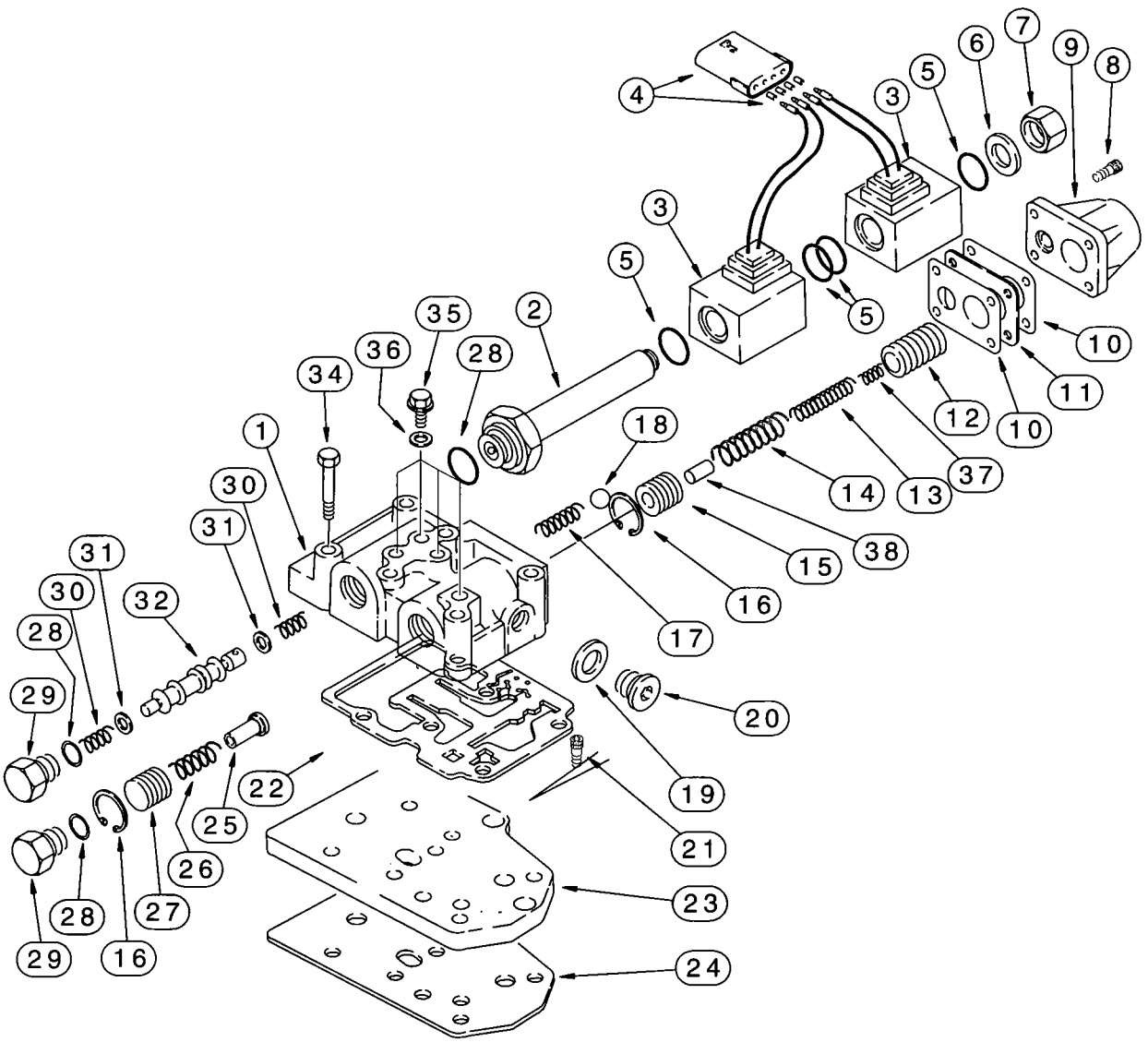
1
2
3
4
5
6
7
8
9
10
11
12
13
14
15
16
17
18
19
20
21
22
23
24
25
26
27
28
29
30
31
32
34
35
36
37
38

TRANSMISSION ASSEMBLY
TRANSMISSION CONTROL VALVE
TWO WHEEL OR FOUR WHEEL DRIVE

REF.	PART NO.	DESCRIPTION	REQ'D.
	*123842A2	TRANSMISSION ASSEMBLY - two wheel drive, parts list pages 6-27 - 6-49	1
	*123843A2	TRANSMISSION ASSEMBLY - four wheel drive, parts list pages 6-27 - 6-51	1
	190434A1	VALVE ASSEMBLY - transmission control	1
1	NSS	BODY - transmission control valve	1
2	190442A1	PLUNGER - solenoid	1
3	190443A1	COIL - solenoid	2
4	190437A1	CONNECTOR - solenoid	1
5	181136A1	O-RING - sealing	4
6	181273A1	WASHER - sealing, copper	1
7	181272A1	PLUG - hex, cap	1
8	864-6020	BOLT - hex socket, 6 - 1.0 x 20 mm	4
9	181251A1	COVER - modulation	1
10	181256A1	GASKET - cover	2
11	190439A1	SPACER - gasket	1
12	190438A1	PISTON - modulation, outer	1
13	190435A1	SPRING - inner	1
14	190441A1	SPRING - outer	1
15	181234A1	PISTON - modulation, inner	1
16	299324A1	RING - snap	2
17	181261A1	SPRING - check	1
18	181146A1	BALL - check	1
19	181107A1	WASHER - sealing, copper	1
20	181103A1	PLUG - oil	1
21	864-8020	BOLT - hex socket, 8 - 1.25 x 20 mm	3
22	181166A1	GASKET - body to valve plate	1
23	181207A1	PLATE - valve	1
24	181208A1	GASKET - valve plate to transmission housing	1
25	181254A1	SHAFT - flow divider	1
26	181260A1	SPRING - piston	1
27	181255A1	PISTON - flow divider	1
28	181137A1	O-RING - plug	3
29	181258A1	PLUG - valve	2
30	181262A1	SPRING - spool	2
31	181253A1	SPACER - spring	2
32	190444A1	SPOOL - forward/reverse	1
34	814-8080	BOLT - hex, 8 - 1.25 x 80 mm	6
35	181100A1	PLUG - valve	4
36	934667R1	WASHER - flat, copper, special, 10 x 14 x 1.5 mm	4
37	190436A1	SPRING - piston, outer modulation	1
38	190440A1	PIN - piston, inner modulation	1

* **NOTE:** See page 6-27 for remanufactured transmission part numbers.

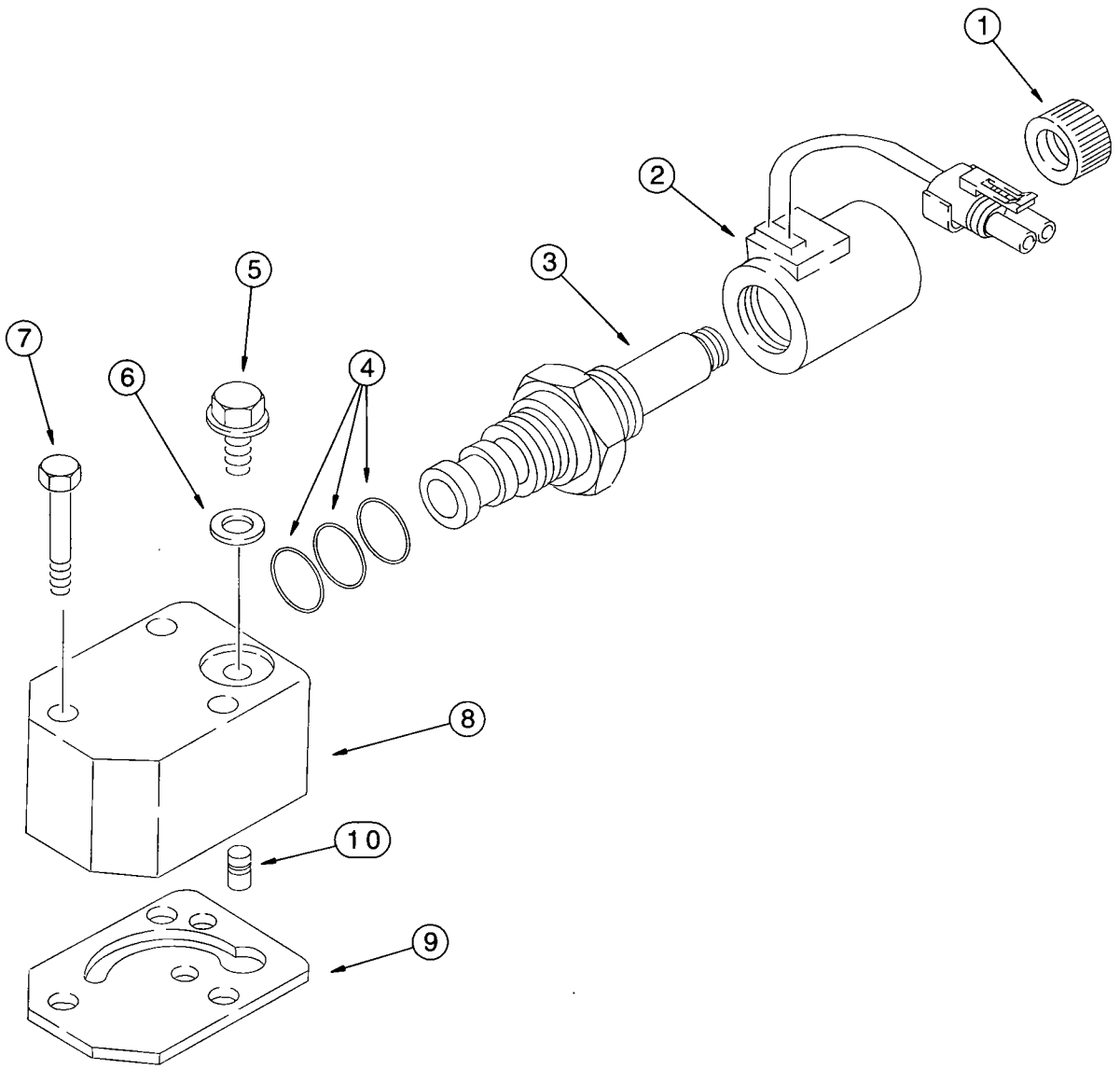
1
2
3
4
5
6
7
8
10
9

TRANSMISSION ASSEMBLY

SOLENOID VALVE - FOUR WHEEL DRIVE

REF.	PART NO.	DESCRIPTION	REQ'D.
	*123843A2	TRANSMISSION ASSEMBLY - four wheel drive, parts list pages 6-27 - 6-51	1
	190432A1	VALVE ASSEMBLY - solenoid	1
1	NSS	NUT - cap	1
2	NSS	COIL - solenoid	1
3	NSS	VALVE - solenoid	1
4	181149A1	KIT - seal, solenoid, includes (1 each) 238-5014, 238-5015 and 237-6010 O-ring; not available for service, order 190432A1 valve	1
5	181100A1	PLUG - valve	2
6	934667R1	WASHER - flat, copper, special, 10 x 14 x 1.5 mm	2
7	814-8060	BOLT - hex, 8 - 1.25 x 60 mm	3
8	190429A1	BODY - solenoid valve	1
9	190430A1	GASKET - body to transmission housing	1
10	190431A1	VALVE - solenoid, installed between item 8 and item 9	1

***NOTE:** See page 6-27 for remanufactured transmission part numbers.

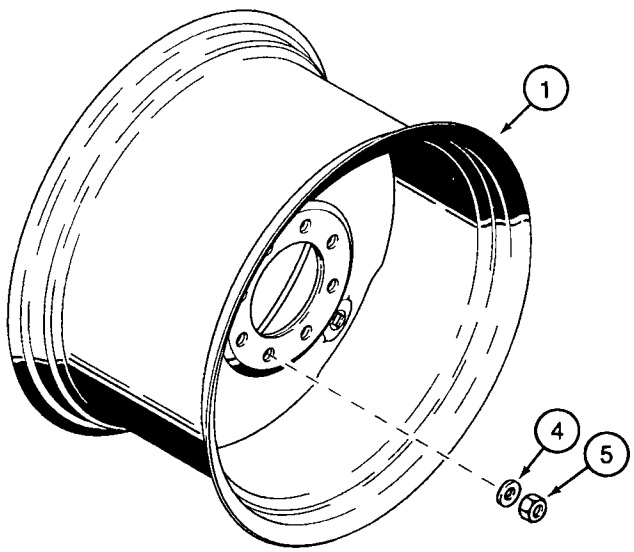
1
4
5

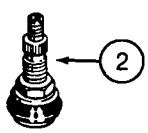
2

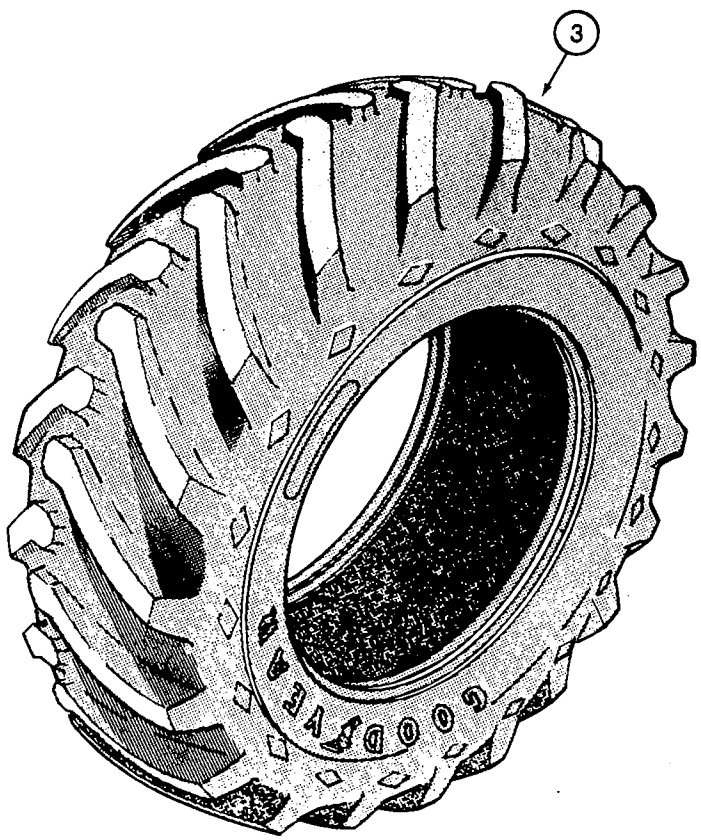
3

REAR WHEELS AND TIRES
TWO WHEEL OR FOUR WHEEL DRIVE

REF.	PART NO.	DESCRIPTION	REQ'D.
		19.5L x 24 TIRES - 10 PLY	
1	104907A1	WHEEL - rim	2
2	A20058	VALVE - stem, wheel	2
3	REF	TIRE - rear, purchase locally	2
		17.5L x 24 TIRES - 10 PLY	
1	119241A1	WHEEL - rim	2
2	A20058	VALVE - stem, wheel	2
3	REF	TIRE - rear, purchase locally	2
		WHEEL NUTS	
4	D138380	WASHER - flat, hardened, special	20
5	D138492	NUT - hex, special, 22 mm - 1.5	20

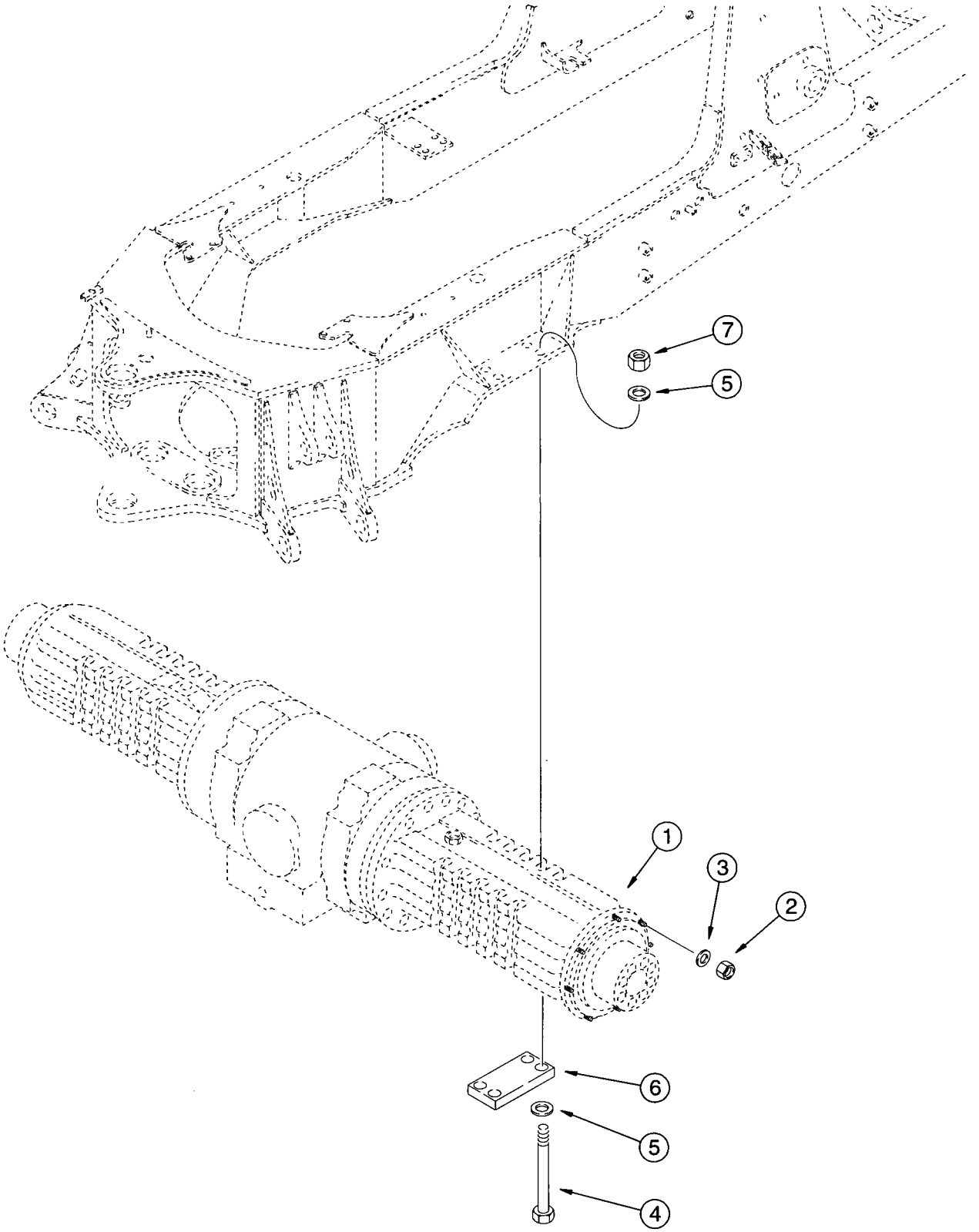
7
5
1
3
2
6
5
4

REAR DRIVE AXLE MOUNTING

REF.	PART NO.	DESCRIPTION	REQ'D.
1	279169A1	AXLE ASSEMBLY - rear drive, parts list pages 6-59 - 6-67, 7-3 and 7-5	1
2	D138492	NUT - hex, special, 22 mm - 1.5	20
3	D138380	WASHER - flat, hardened, special	20
4	827-20230	BOLT - hex, 20 - 2.5 x 230 mm, class 10.9	8
5	896-11020	WASHER - flat, 22 x 37 x 4 mm, hardened	16
6	117933A1	PLATE - axle mounting	2
7	829-1420	NUT - hex, 20 mm - 2.5, class 10	8

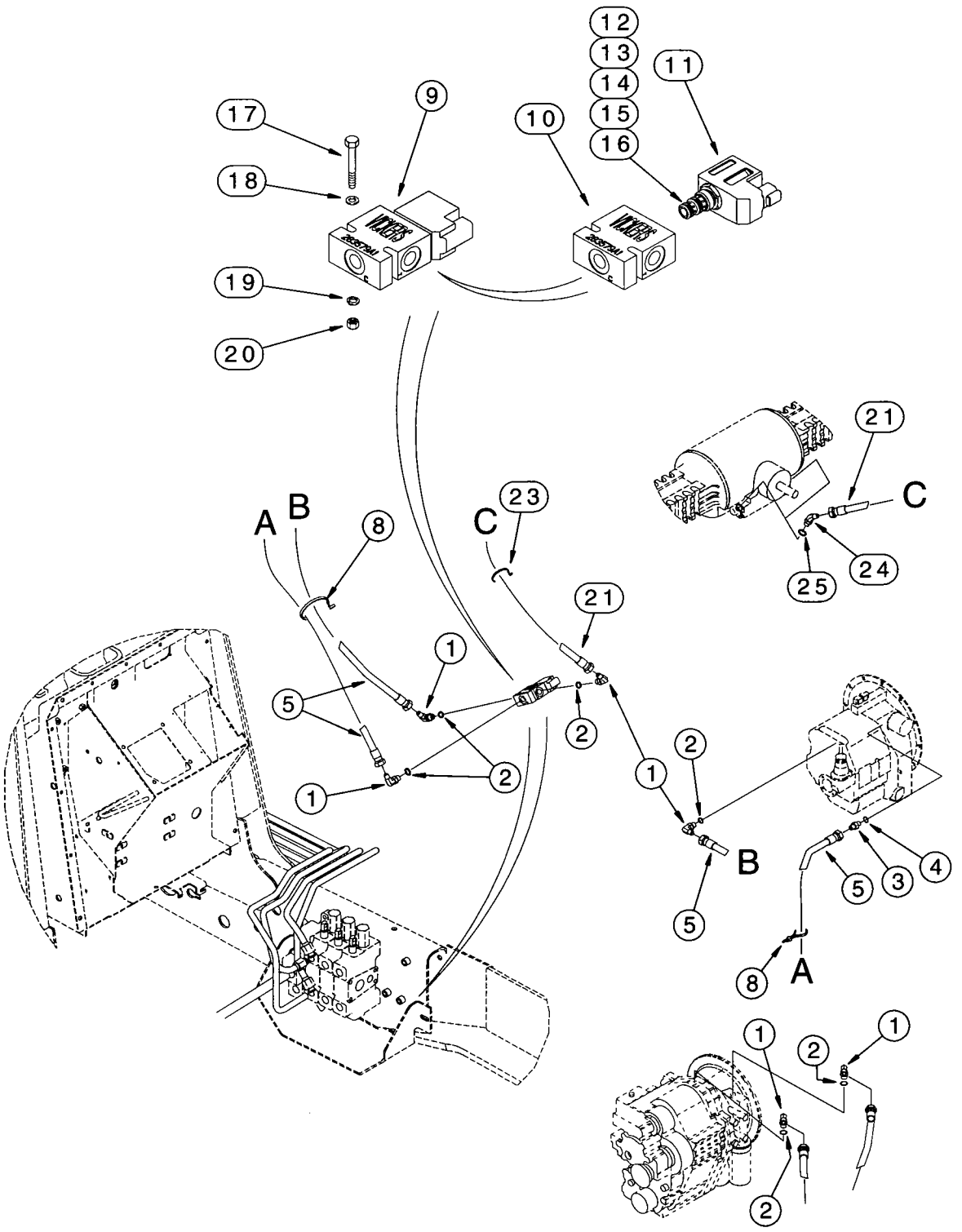
12
13
14
15
16
11
9
10
17
18
19
20
21
C
23
A
B
8
1
5
2
24
25
B
3
4
A

REAR AXLE DIFFERENTIAL LOCK

REF.	PART NO.	DESCRIPTION	REQ'D.
1	218-5105	ELBOW - 90 degree, 9/16-18 inch flare x adj O-ring boss, four used on models without powershift transmissions; five used on models with powershift transmissions	4-5
2	237-6006	O-RING - 15/32 ID x 5/64 inch wide	1
3	218-5057	ADAPTER - straight, 9/16-18 inch flare x O-ring boss	1
4	237-6006	O-RING - 15/32 ID x 5/64 inch wide	1
5	304019A1	HOSE - 1200 mm (47-1/4 inch) long, transmission supply and return lines, transmission to solenoid valve	2
8	L18337	STRAP - tie, 15 inch	2
9	283579A1	VALVE ASSEMBLY - solenoid, differential lock	1
10	297255A1	MANIFOLD - valve	1
11	184505A1	SOLENOID ASSEMBLY - valve, 12 volt	1
12	237-6008	O-RING - 41/64 ID x 3/32 inch wide	1
13	238-5013	O-RING - 7/16 ID x 1/16 inch wide	1
14	238-5014	O-RING - 1/2 ID x 1/16 inch wide	1
15	NSS	VALVE - solenoid, cartridge, component parts are not serviced separately	1
16	NSS	COIL - solenoid	1
17	614-6050	BOLT - hex, full threads, 6 - 1.0 x 50 mm	2
18	895-11006	WASHER - flat, 6.6 x 12 x 1.6 mm	2
19	892-11006	WASHER - lock, 6 mm	2
20	829-1406	NUT - hex, 6 mm - 1.0, class 10	2
21	304020A1	HOSE - 625 mm (24-5/8 inch) long, solenoid valve to rear axle	1
23	L18337	STRAP - tie, 15 inch	1
24	218-5135	ELBOW - 45 degree, 9/16-18 inch flare x adj O-ring boss, axle port location shown is for models without powershift transmission; for models with powershift the elbow is located on the opposite side of the axle input shaft	1
25	237-6006	O-RING - 15/32 ID x 5/64 inch wide	1

ART ROTATED
180 DEGREES

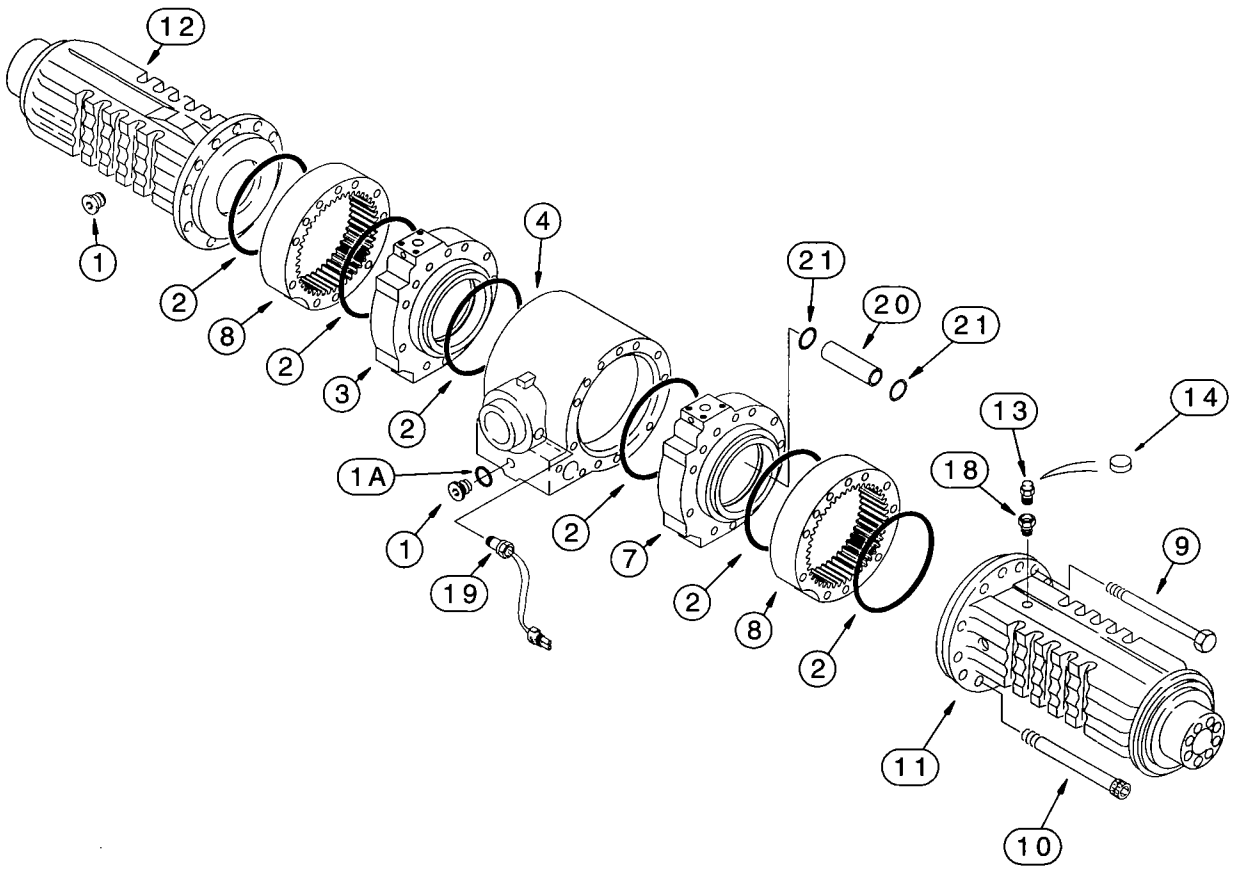

REAR DRIVE AXLE

AXLE HOUSING

REF.	PART NO.	DESCRIPTION	REQ'D.
	279169A1	AXLE ASSEMBLY - rear drive, parts list pages 6-59 - 6-67, 7-3 and 7-5	1
1	100557A1	PLUG - drain	2
1A	238-6121	O-RING - 1-1/16 ID x 3/32 inch wide	1
2	238-5270	O-RING - 9 ID x 1/8 inch wide	6
3	190457A2	CYLINDER - brake, right-hand	1
4	295114A1	HOUSING - center, axle	1
7	190458A2	CYLINDER - brake, left-hand	1
8	190459A1	SLEEVE - gear housing	2
9	814-14140	BOLT - hex, 14 - 2.0 x 140 mm	22
10	864-12130	BOLT - hex socket, 12 - 1.75 x 130 mm	4
11	295108A1	HOUSING - axle, left-hand side	1
12	295109A1	HOUSING - axle, right-hand side	1
13	1966149C2	BREATHER - axle housing	1
14	175955A1	COVER - breather, if used	1
18	E135750	EXTENSION - breather	1
19	192481A1	SWITCH - oil temperature, may have one or two wires	1
20	222688A1	TUBE - internal	1
21	100760A1	O-RING - sealing, tube	2

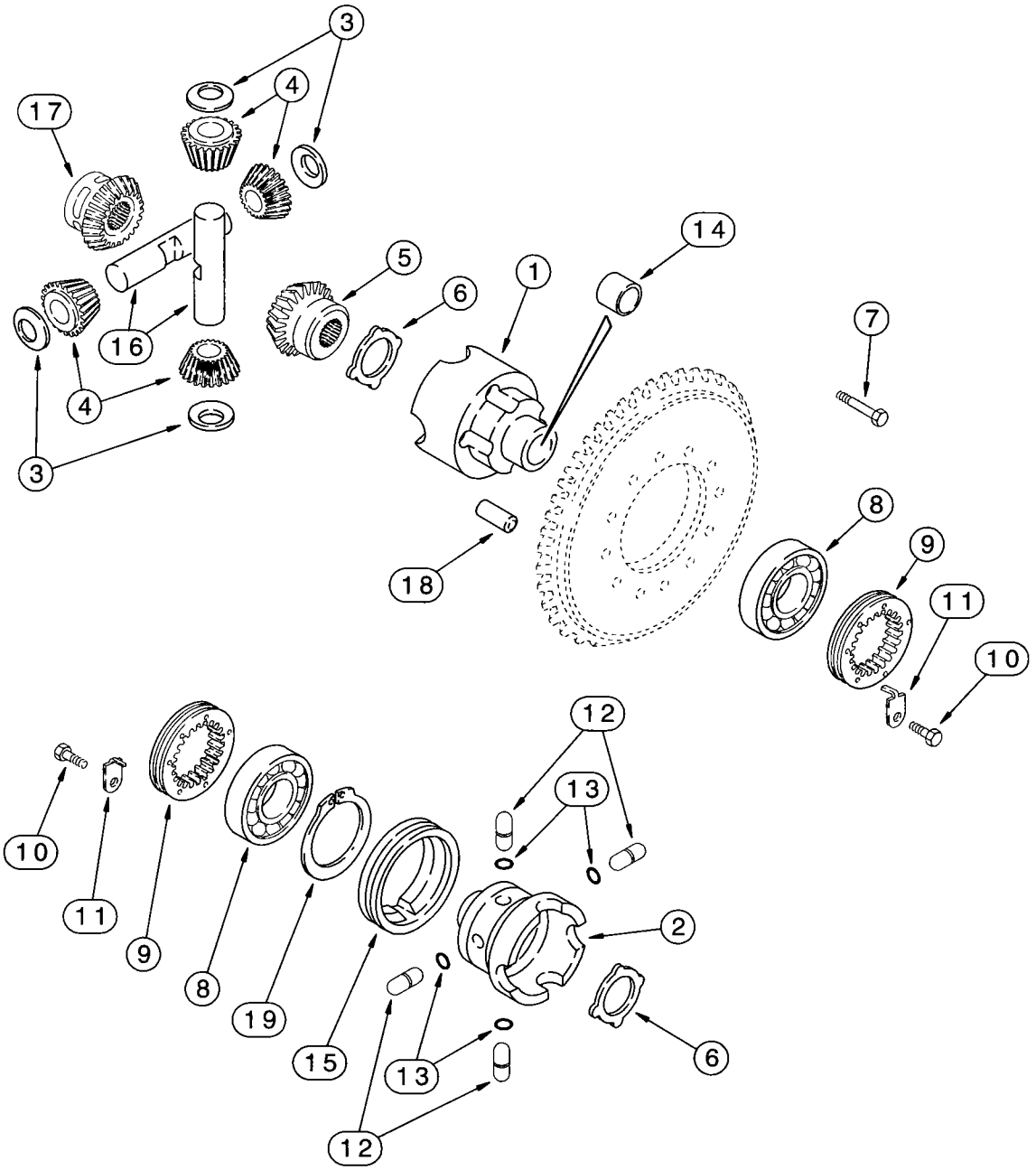
3
4
17
16
4
3
5
6
1
14
7
18
8
9
11
10
10
11
9
8
19
15
12
13
2
6
13
12

REAR DRIVE AXLE

DIFFERENTIAL

REF.	PART NO.	DESCRIPTION	REQ'D.
	279169A1	AXLE ASSEMBLY - rear drive, parts list pages 6-59 - 6-67, 7-3 and 7-5	1
	292268A1	HOUSING ASSEMBLY - differential	1
1	NSS	HOUSING - differential, flange half	1
2	NSS	HOUSING - differential, plain half	1
3	*E135777	WASHER - thrust	4
4	*190471A1	GEAR - sun, 12 teeth, no longer sold separately, must be replaced as a set, for service order 294192A1 gear set, see below	4
5	*D142971	GEAR - side, pinion, no longer sold separately, must be replaced as a set, for service order 294192A1 gear set, see below	1
6	*190469A1	WASHER - thrust	2
7	S300976	BOLT - hex, special, 12 - 1.75 x 90 mm, class 12.9	10
8	E135785	BEARING - cup and cone	2
9	P3034505	RING - locking, threaded	2
10	112486A1	BOLT - hex, self-locking, special, 6 - 1 x 12 mm	2
11	175959A1	BRACKET - lock	2
12	292207A1	PIN - housing	4
13	292208A1	O-RING - pin	4
14	190452A1	BUSHING - housing	2
15	191067A1	SLEEVE - housing	1
16	*190468A1	SHAFT - sun gear, no longer sold separately, must be replaced as a set, for service order 294192A1 gear set, see below	2
17	*292890A1	GEAR - side pinion, no longer sold separately, must be replaced as a set, for service order 294192A1 gear set, see below	1
18	D143033	PIN - dowel, 12 x 40 mm	2
19	175961A1	RING - lock	1
	*294192A1	SET - gear, differential, service replacement, includes items 3-6, 16 and 17	1

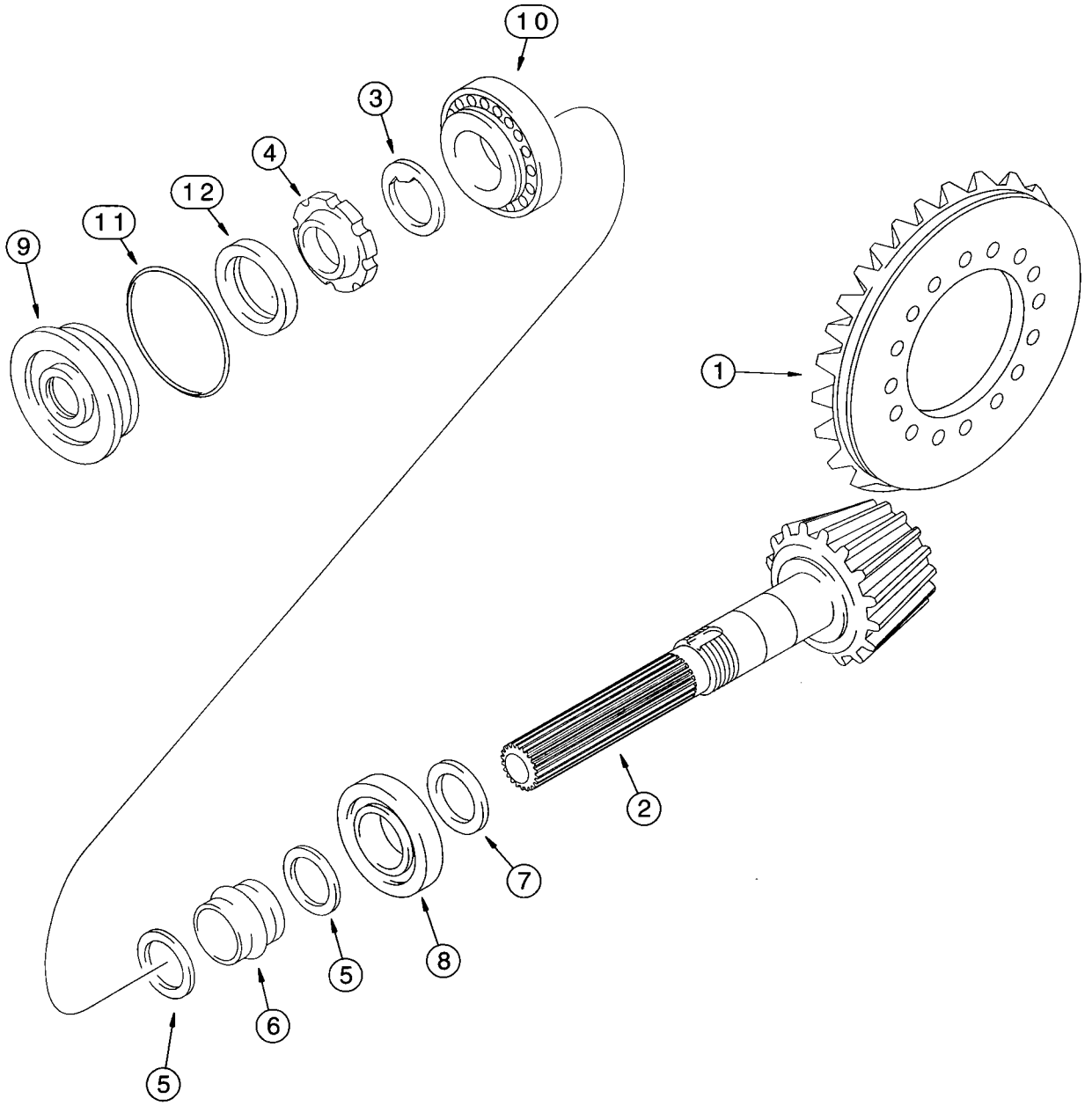
10
3
4
12
11
9
1
2
7
8
5
6
5

REAR DRIVE AXLE

RING AND PINION GEAR SET

REF.	PART NO.	DESCRIPTION	REQ'D.
	279169A1	AXLE ASSEMBLY - rear drive, parts list pages 6-59 - 6-67, 7-3 and 7-5	1
	294189A1	GEAR - set, ring and pinion	1
1	NSS	GEAR - ring, differential	1
2	NSS	GEAR - pinion, differential	1
3	K261065	WASHER - special	1
4	K261014	RING - nut, pinion gear	1
5	1349059C1	WASHER - spacer	2
6	295110A1	SPACER - collapsible	1
7	190506A1	SHIM - 2.5 mm (0.098 inch) thick	UAR
7	190508A1	SHIM - 2.6 mm (0.102 inch) thick	UAR
7	190509A1	SHIM - 2.7 mm (0.106 inch) thick	UAR
7	190510A1	SHIM - 2.8 mm (0.110 inch) thick	UAR
7	190511A1	SHIM - 2.9 mm (0.114 inch) thick	UAR
7	190512A1	SHIM - 3.0 mm (0.118 inch) thick	UAR
7	190513A1	SHIM - 3.1 mm (0.122 inch) thick	UAR
7	190514A1	SHIM - 3.2 mm (0.125 inch) thick	UAR
7	190515A1	SHIM - 3.3 mm (0.129 inch) thick	UAR
7	190516A1	SHIM - 3.4 mm (0.133 inch) thick	UAR
8	E135762	BEARING - 45 x 100 mm, pinion gear	1
9	128570A1	COVER - differential	1
10	K395090	BEARING - tapered roller, pinion gear	1
11	238-5152	O-RING - 3-1/4 ID x 3/32 inch wide, cover	1
12	K262143	SEAL - oil	1

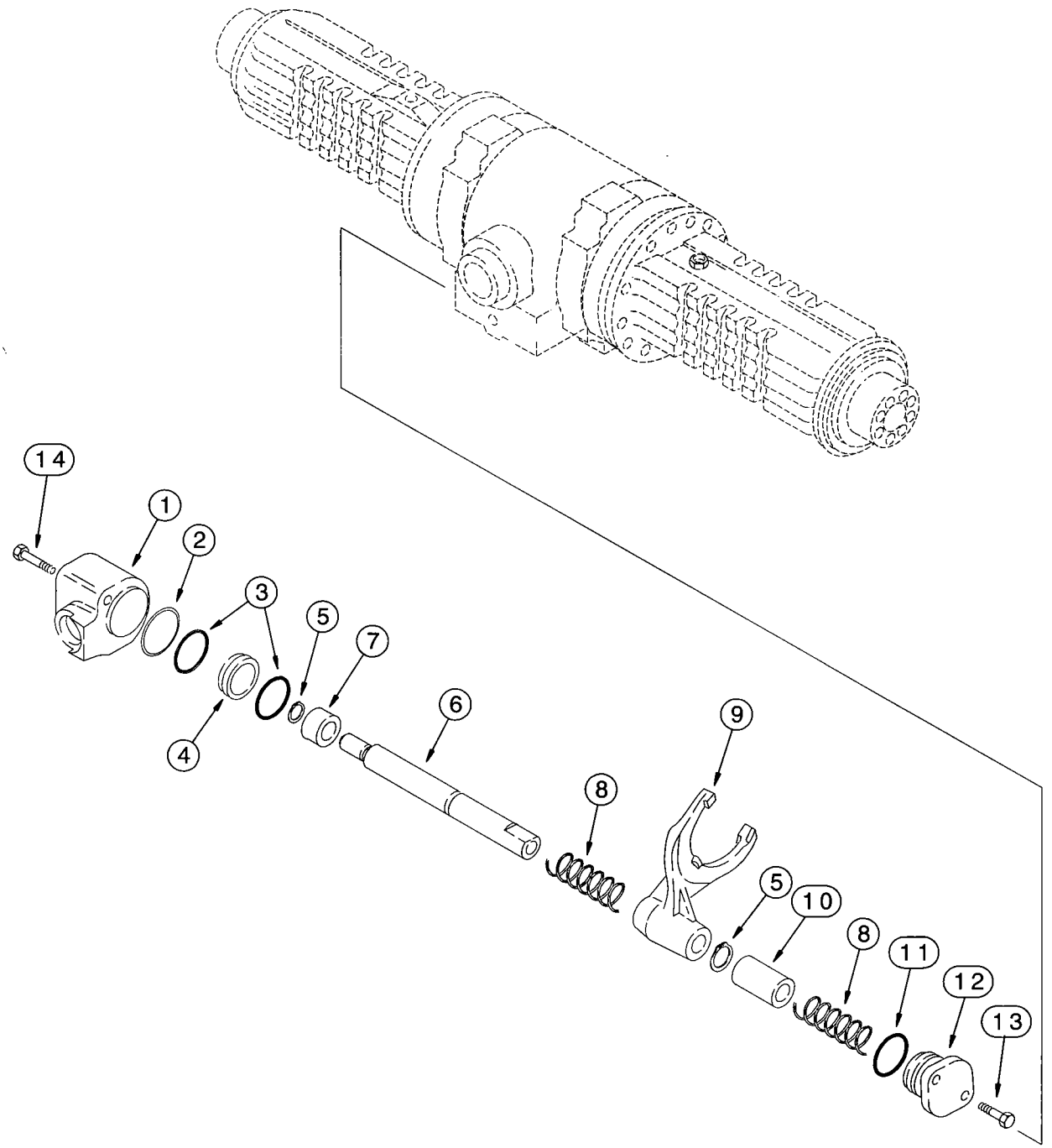
14
1
2
3
5
7
6
4
9
8
5
10
8
11
12
13

REAR DRIVE AXLE

DIFFERENTIAL LOCK

REF.	PART NO.	DESCRIPTION	REQ'D.
	279169A1	AXLE ASSEMBLY - rear drive, parts list pages 6-59 - 6-67, 7-3 and 7-5	1
1	292213A1	CYLINDER - differential lock	1
2	305152A1	O-RING - cylinder	1
3	292210A1	O-RING - seal, external, piston	2
4	292212A1	PISTON - differential lock	1
5	800-5120	RING - external heavy retaining, No. 20	2
6	292214A1	SHAFT - rail, shifter fork	1
7	292902A1	BUSHING - shaft	1
8	175966A1	SPRING - shaft	2
9	175964A2	FORK - shift	1
10	175965A1	BUSHING - rail	1
11	128376A1	O-RING - cover	1
12	175968A1	COVER - housing	1
13	614-8030	BOLT - hex, full threads, 8 - 1.25 x 30 mm	2
14	814-8080	BOLT - hex, 8 - 1.25 x 80 mm	2

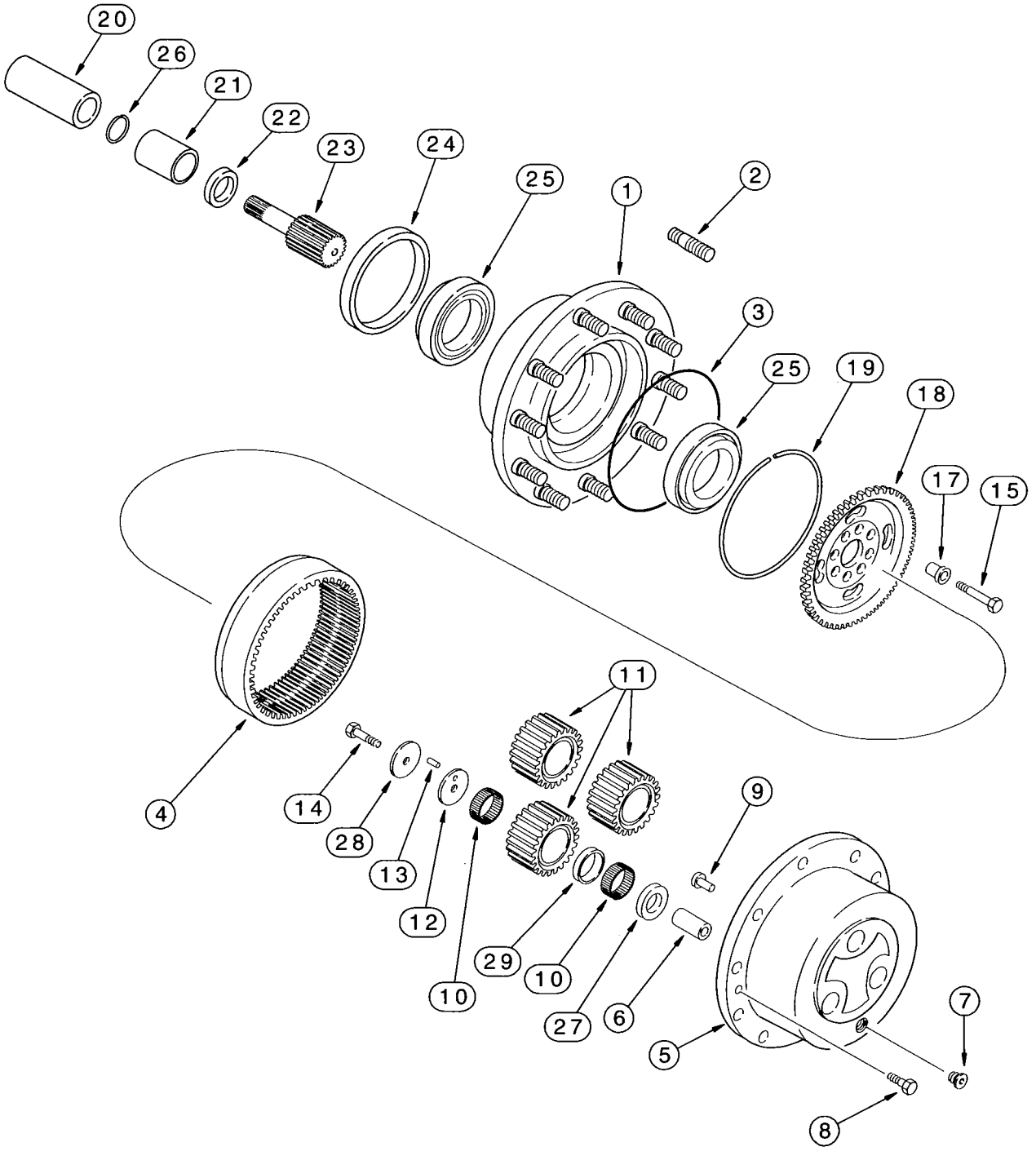
20
26
21
22
23
24
25
1
2
3
25
19
18
17
15
4
14
28
13
12
10
11
29
10
27
6
9
5
7
8

REAR DRIVE AXLE

PLANETARY

REF.	PART NO.	DESCRIPTION	REQ'D.
	279169A1	AXLE ASSEMBLY - rear drive, parts list pages 6-59 - 6-67, 7-3 and 7-5	1
1	175974A1	HUB ASSEMBLY - wheel attaching	2
2	D142986	STUD - special, without flanged collar	20
2	196090A1	STUD - special, with collar, for recessed bolt holes, if used	20
3	P2930467	O-RING - sealing	2
4	175976A1	GEAR - ring, planetary	2
5	292891A1	CARRIER ASSEMBLY - planetary	2
6	NSS	SHAFT - pinion gear	6
7	100557A1	PLUG - drain	2
7A	238-6121	O-RING - 1-1/16 ID x 3/32 inch wide, not shown	1
8	K395082	SCREW - special, planetary cover plate	4
9	K395093	PIN - locking, planetary carrier	2
10	292893A1	BEARING - needle (package of 10 needles) (372 needles required) planetary gear	38
11	292894A1	GEAR - pinion, planetary	6
12	292898A1	WASHER - thrust, pinion gear	6
13	247550A1	BEARING - needle (package of 10 used as pins)(6 required)	1
14	175982A1	BOLT - hex, self-locking, special, 10 - 1.25 x 50 mm, class 10.9	6
15	K395131	BOLT - hex head, special, 14 - 1.50 x 65 mm, self-locking	16
17	107071A1	BUSHING - centering, 20 mm OD	16
18	295580A1	HUB - ring gear	2
19	175984A1	RING - lock	2
20	NSS	COUPLING - drive, welded to and included with the differential brake oil auger	2
21	196065A1	BUSHING - axle housing, drive	2
22	196066A1	SEAL - oil, axle housing	2
23	292896A1	SHAFT - drive	2
24	247877A1	SEAL - oil, cassette, replaces 1349265C1 seal	2
25	K395101	BEARING - ball, hub	4
26	800-2136	RING - internal retaining, No. 36	2
27	292900A1	WASHER - thrust, pinion gear, outer	6
28	292899A1	WASHER - thrust, pinion gear, inner	6
29	292901A1	WASHER - needle bearing	6

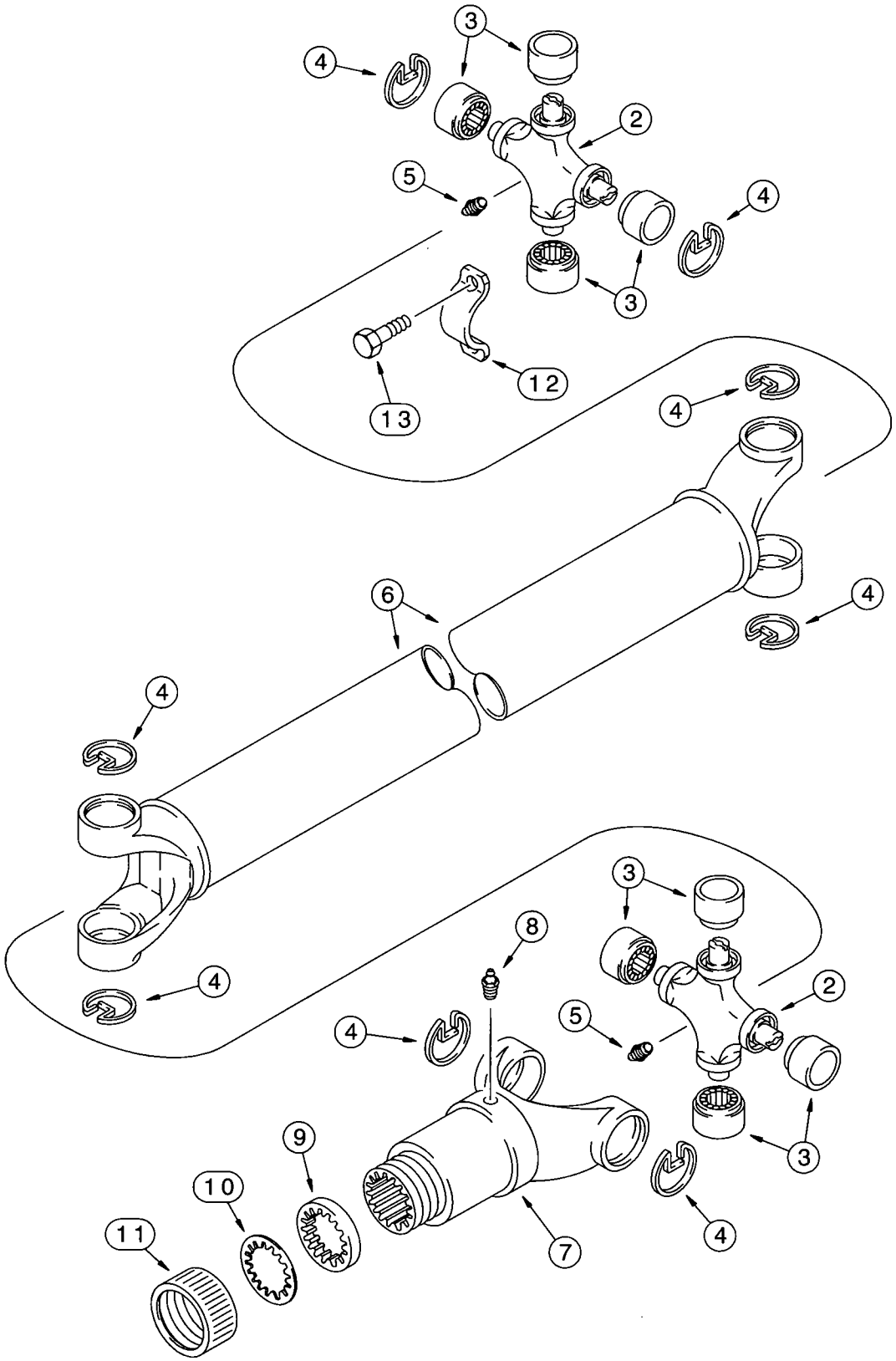
3
4
2
5
4
3
12
13
4
6
4
4
4
3
8
2
4
5
3
9
10
11
7
4

DRIVE SHAFT FOR REAR DRIVE AXLE

REAR DRIVE AXLE TO TRANSMISSION

REF.	PART NO.	DESCRIPTION	REQ'D.
	284712A1	SHAFT ASSEMBLY - drive	1
	144278A1	KIT - universal joint	2
2	NSS	JOINT - universal, drive shaft	1
3	NSS	BEARING - universal joint	4
4	NSS	RING - retaining	4
5	219-10	FITTING - grease, straight, 1/4-28 taper x 11/16 inch	2
6	NSS	SHAFT - drive, transmission to rear axle	1
7	144279A1	YOKE - tube, splined, to rear axle	1
8	219-10	FITTING - grease, straight, 1/4-28 taper x 11/16 inch	1
	D149860	KIT - dust cap	1
9	NSS	WASHER - cork	1
10	NSS	WASHER - steel	1
11	NSS	CAP - dust seal retaining	1
12	90-6682T1	RETAINER - drive shaft, strap, not included in drive shaft assembly, purchase separately	2
13	D137627	BOLT - special	4

ALPHABETICAL INDEX
BRAKES

DESCRIPTION	PAGE
Differential Brake - Rear Axle	7-3
Hydraulic Circuit	7-9
Master Cylinder	7-11
Master Cylinder Mounting	7-7
Parking Brake - Rear Axle	7-5
Parking Brake Lever and Linkage	7-13
Pedals	7-7

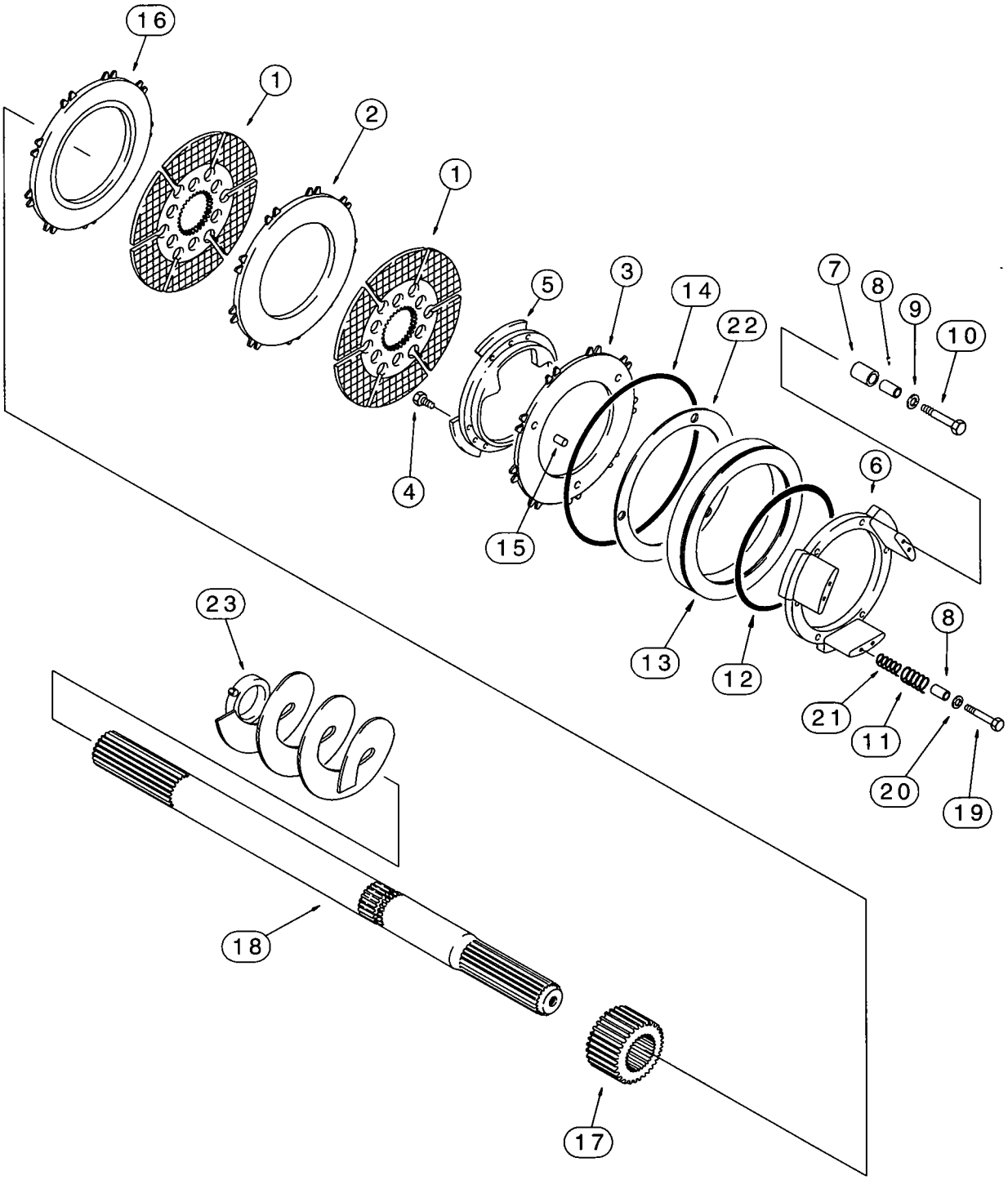
16
1
2
1
5
3
14
22
7
8
9
10
4
15
6
23
13
12
8
21
11
20
19
18
17

REAR DRIVE AXLE

DIFFERENTIAL BRAKE

REF.	PART NO.	DESCRIPTION	REQ'D.
	279169A1	AXLE ASSEMBLY - rear drive, parts list pages 6-59 - 6-67, 7-3 and 7-5	
1	*237021A1	DISC - brake	4
2	*237022A1	PLATE - friction, inner	2
3	*237023A1	PLATE - piston	2
4	864-8016	BOLT - hex socket, 8 - 1.25 x 16 mm	18
5	190461A1	FLANGE - inner	2
6	190460A1	FLANGE - outer	2
7	+190449A1	SPACER - split, 18 x 20 mm, no longer sold separately, order 248071A1 kit below	6
8	+295032A1	BUSHING - spacer, no longer sold separately, order 248071A1 kit below	12
9	190450A1	WASHER - flat, special	6
10	814-6035	BOLT - hex, 6 - 1.0 x 35 mm	6
11	*237026A1	SPRING - outer	6
12	190492A1	O-RING - small	2
13	190502A1	PISTON - brake	2
14	190493A1	O-RING - large	2
15	190447A1	PIN - split, 6 x 14 mm	6
16	*237024A1	PLATE - friction, outer	2
17	190453A1	SLEEVE - splined	2
18	295111A1	SHAFT - splined	2
19	864-6035	BOLT - hex socket, 6 - 1.0 x 35 mm	6
20	190500A1	COVER - spring	6
21	*237025A1	SPRING - inner	6
22	190504A1	GASKET - piston	2
23	295112A1	AUGER - oil, right-hand, includes weld-on clamp and bolt, also includes welded on drive coupling	1
24	295113A1	AUGER - oil, left-hand, includes weld-on clamp and bolt, also includes welded on drive coupling, not shown	1
25	863-6020	BOLT - hex socket, 6 - 1.0 x 20 mm, class 12.9, not shown, right-hand or left-hand auger	2
	+248071A1	KIT - brake self adjuster, includes spacer and bushing, plus an instruction sheet	1
	*243893A1	KIT - brake disc and plates, service replacement, includes above items marked with an asterisk	1

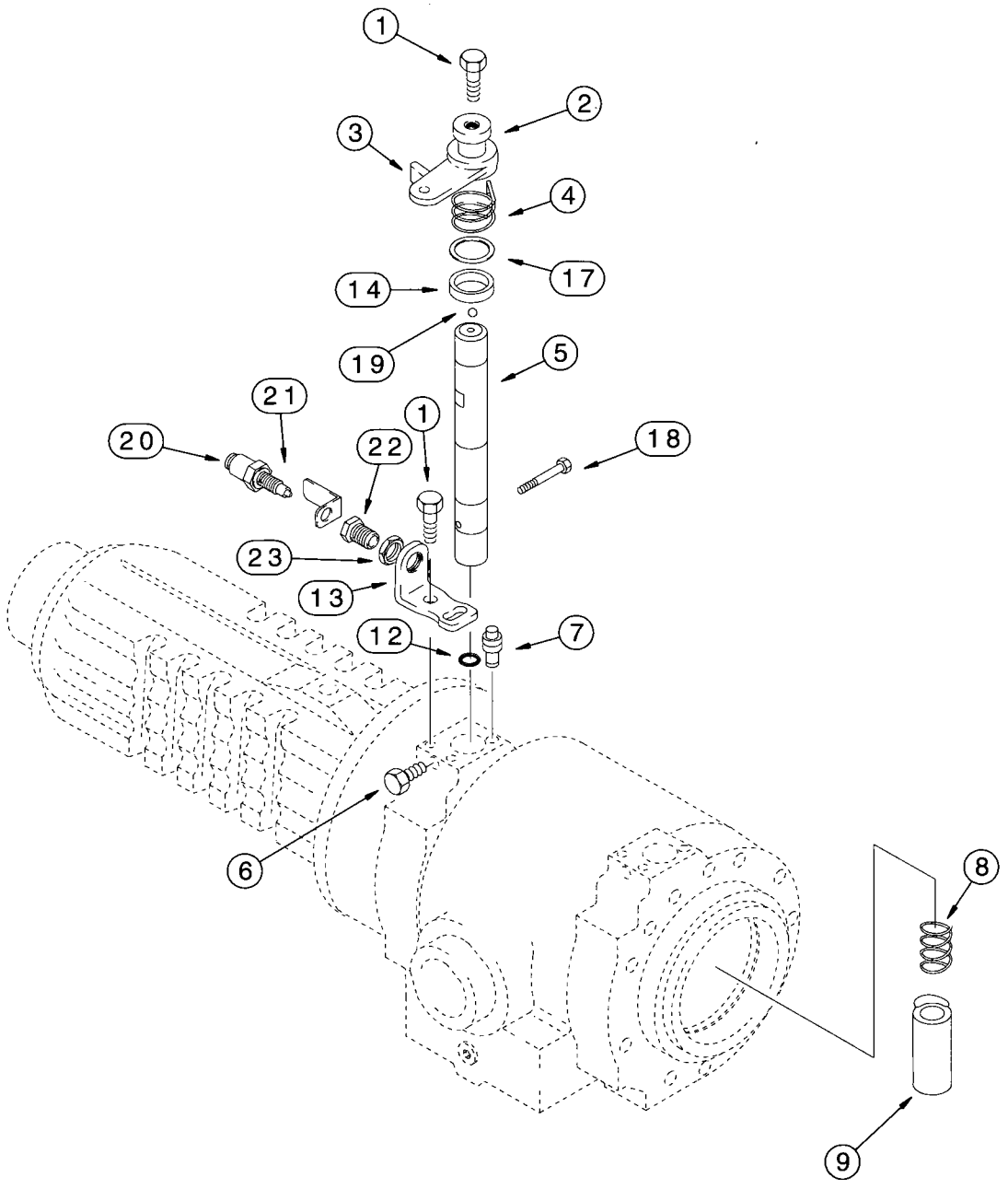
1
2
3
4
17
14
19
5
21
1
18
20
22
23
13
12
7
6
8
9

REAR DRIVE AXLE
PARKING BRAKE

REF.	PART NO.	DESCRIPTION	REQ'D.
	279169A1	AXLE ASSEMBLY - rear drive, parts list pages 6-59 - 6-67, 7-3 and 7-5	1
1	190451A1	BOLT - special, 8 x 20 mm	6
2	190463A1	WASHER - flat	2
3	280436A1	LEVER - brake, 100 mm	2
4	190476A2	SPRING - left-hand, shown	1
4	190477A2	SPRING - right-hand, not shown	1
5	256483A1	SHAFT - brake control	2
6	283462A1	BOLT - special, 8 - 1.0 x 23.5 mm	2
7	E135810	PLUG - brake bleeder, brake housing	2
8	190473A1	SPRING - cam	2
9	190456A1	CAM - brake	2
12	190448A1	O-RING - special	2
13	256478A1	BRACKET - stop	2
14	256481A1	BUSHING - shaft	2
17	256482A1	SHIM - shaft	2
18	256485A1	BOLT - special, 6 x 16 mm	2
19	283466A1	BALL - 6.5 mm	2
	281952A1	KIT - switch, park brake	2
20	280450A1	SWITCH - brake	1
21	280452A1	BRACKET - switch guard, lever	1
22	280457A1	SLEEVE - switch	1
23	281960A1	NUT - special, 16 mm - 1.5	1

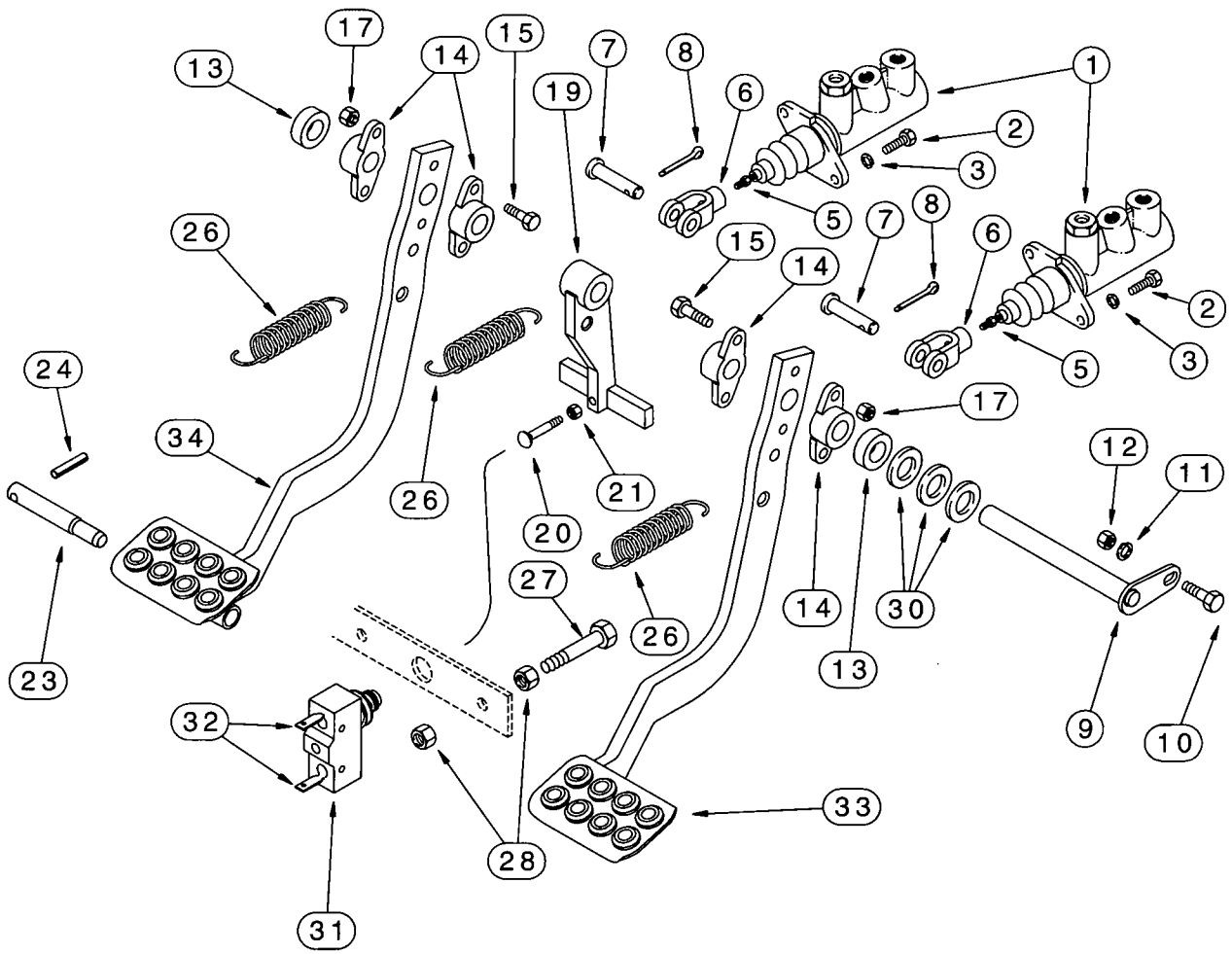
17
13
14
15
7
8
19
6
1
2
3
5
26
15
14
7
8
6
2
3
5
24
34
26
20
21
17
12
11
27
26
14
30
13
23
9
10
32
33
28
31

BRAKE PEDALS AND BRAKE MASTER CYLINDER MOUNTING

REF.	PART NO.	DESCRIPTION	REQ'D.
1	182445A1	CYLINDER ASSEMBLY - brake master, parts list page 7-11	2
2	614-8030	BOLT - hex, full threads, 8 - 1.25 x 30 mm	4
3	892-11008	WASHER - lock, 8 mm	4
5	425-156	NUT - hex, jam, 3/8 inch NF	2
6	D137077	CLEVIS - female, master cylinder	2
7	L26209	PIN - clevis, 3/8 inch	2
8	432-612	PIN - cotter, 3/32 x 3/4 inch	2
9	D140035	SHAFT - brake pedal	1
10	614-10025	BOLT - hex, full threads, 10 - 1.5 x 25 mm	1
11	892-11010	WASHER - lock, 10 mm	1
12	829-1410	NUT - hex, 10 mm - 1.5, class 10.9	1
13	D124529	SPACER - brake shaft, pedal	2
14	A77310	BEARING - pivot, foot pedal	4
15	814-8040	BOLT - hex, 8 - 1.25 x 40 mm	4
17	832-10408	NUT - hex, self-locking, 8 mm - 1.25	4
19	D124528	LEVER - brake lamp	1
20	121-145	BOLT - flat countersunk head, 5/16 NC x 2-1/2 inch, special, brake switch actuator	1
21	425-105	NUT - hex, 5/16 inch NC	1
23	D124530	PIN - pedal lock	1
24	438-12040	PIN - roll, 5/16 x 2-1/2 inch	1
26	230973A1	SPRING - pedal and lever return, attaches to brake pedal spring rod in firewall frame	3
27	614-8045	BOLT - hex, full threads, 8 - 1.25 x 45 mm, attaches to brake pedal stop bar in firewall frame	2
28	829-1408	NUT - hex, 8 mm - 1.25, class 10	4
30	495-81261	WASHER - flat, 13/16 x 1-1/2 x 1/16 inch, use as a shim	UAR
31	D148108	SWITCH - rocker, brake lamp, attaches to front console wiring harness, mounts in brake pedal stop bar in firewall frame	1
32	A187990	TERMINAL - male	2
33	234623A1	PEDAL - brake, right-hand	1
34	234622A1	PEDAL - brake, left-hand	1

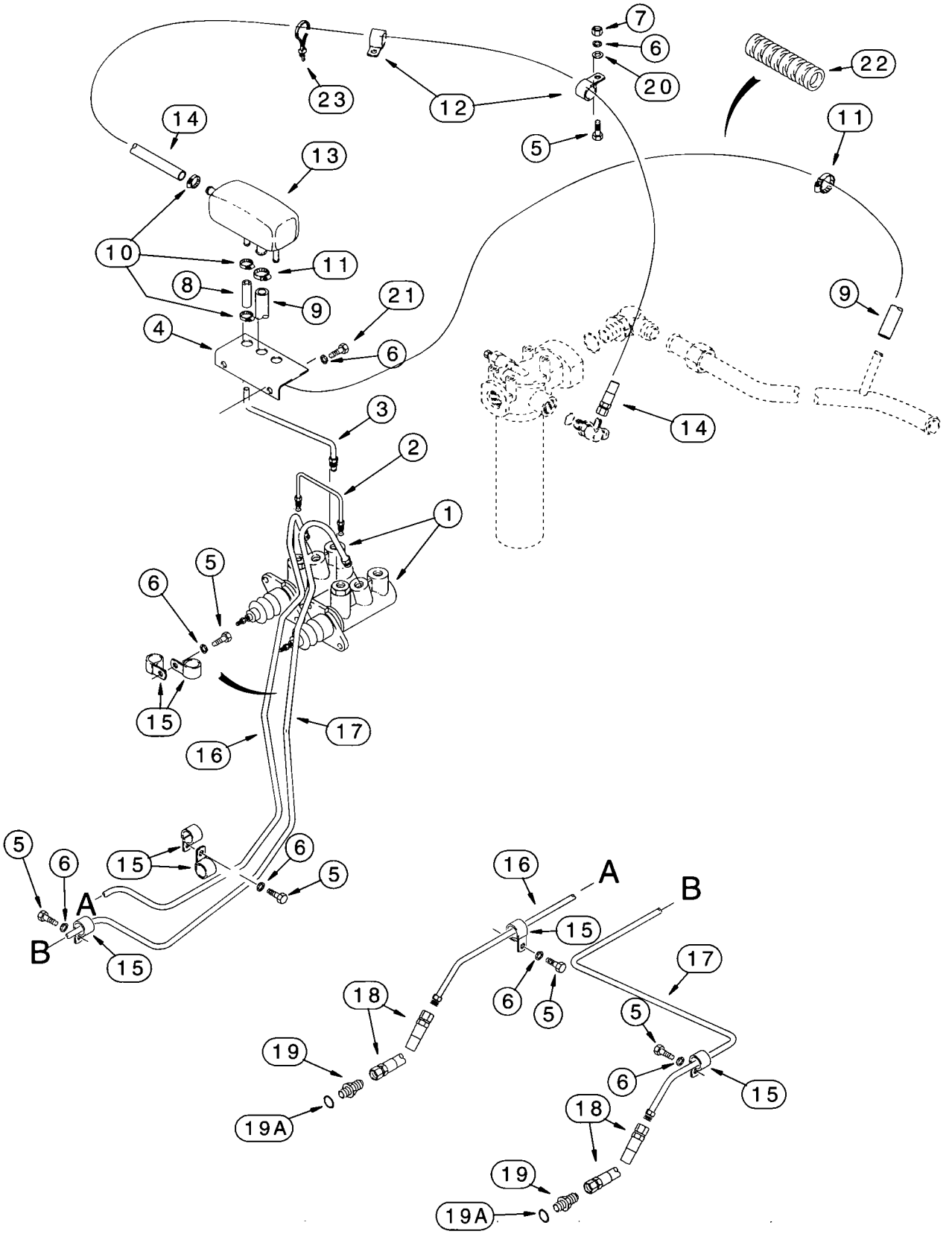
7
6
20
22
23
12
5
11
14
13
10
11
8
9
21
4
6
9
14
3
2
1
6
5
15
16
17
5
6
15
A
B
15
6
5
16
A
B
15
17
18
6
5
5
19
6
15
19A
18
19
19A

BRAKE MASTER CYLINDER HYDRAULIC CIRCUIT

REF.	PART NO.	DESCRIPTION	REQ'D.
1	182445A1	CYLINDER ASSEMBLY - brake master, parts list page 7-11	2
2	D136430	TUBE - crossover	1
3	142003A1	TUBE - reservoir to master cylinder	2
4	121730A2	BRACKET - brake reservoir support, attaches to firewall	1
5	614-8030	BOLT - hex, full threads, 8 - 1.25 x 30 mm	6
6	892-11008	WASHER - lock, 8 mm	8
7	829-1408	NUT - hex, 8 mm - 1.25, class 10	1
8	121729A1	HOSE - 50 mm (2 inch) long, reservoir to master cylinder	2
9	296171A1	HOSE - 1225 mm (48-1/4 inch) long, reservoir outlet, attaches to return to tank tube, item 22 on page 8-9	1
10	214-1704	CLAMP - adj, 1/4 - 5/8 inch dia	5
11	214-1706	CLAMP - adj, 7/16 - 3/4 inch dia, worm screw, attaches to return to tank tube	2
12	515-22127	CLAMP - P-type, 1/2 inch ID	2
13	1976943C1	RESERVOIR - brake master cylinder	1
14	131676A1	HOSE - 1590 mm (62-5/8 inch) long, reservoir inlet, attaches to tee at hydraulic oil filter, item 9 on page 8-9	1
15	515-23127	CLAMP - P-type, 1/2 inch ID	7
16	276743A1	TUBE - brake, left-hand	1
17	276746A1	TUBE - brake, right-hand	1
18	142007A1	HOSE - 625 mm (24-5/8 inch) long, brake tube to adapter on rear axle	2
18	247570A1	HOSE - 430 mm (16-15/16 inch) long, brake tube to adapter on rear axle, used in production, for service order 142007A1 hose	2
19	218-5053	ADAPTER - straight, 7/16-20 flare x O-ring boss	2
19A	237-6004	O-RING - 23/64 ID x 5/64 inch wide	1
20	895-11008	WASHER - flat, 9 x 17 x 1.6 mm	1
21	614-8016	BOLT - hex, full threads, 8 - 1.25 x 16 mm	2
22	D132982	SLEEVE - hose guard	1
23	L18337	STRAP - tie, 15 inch, if used	1

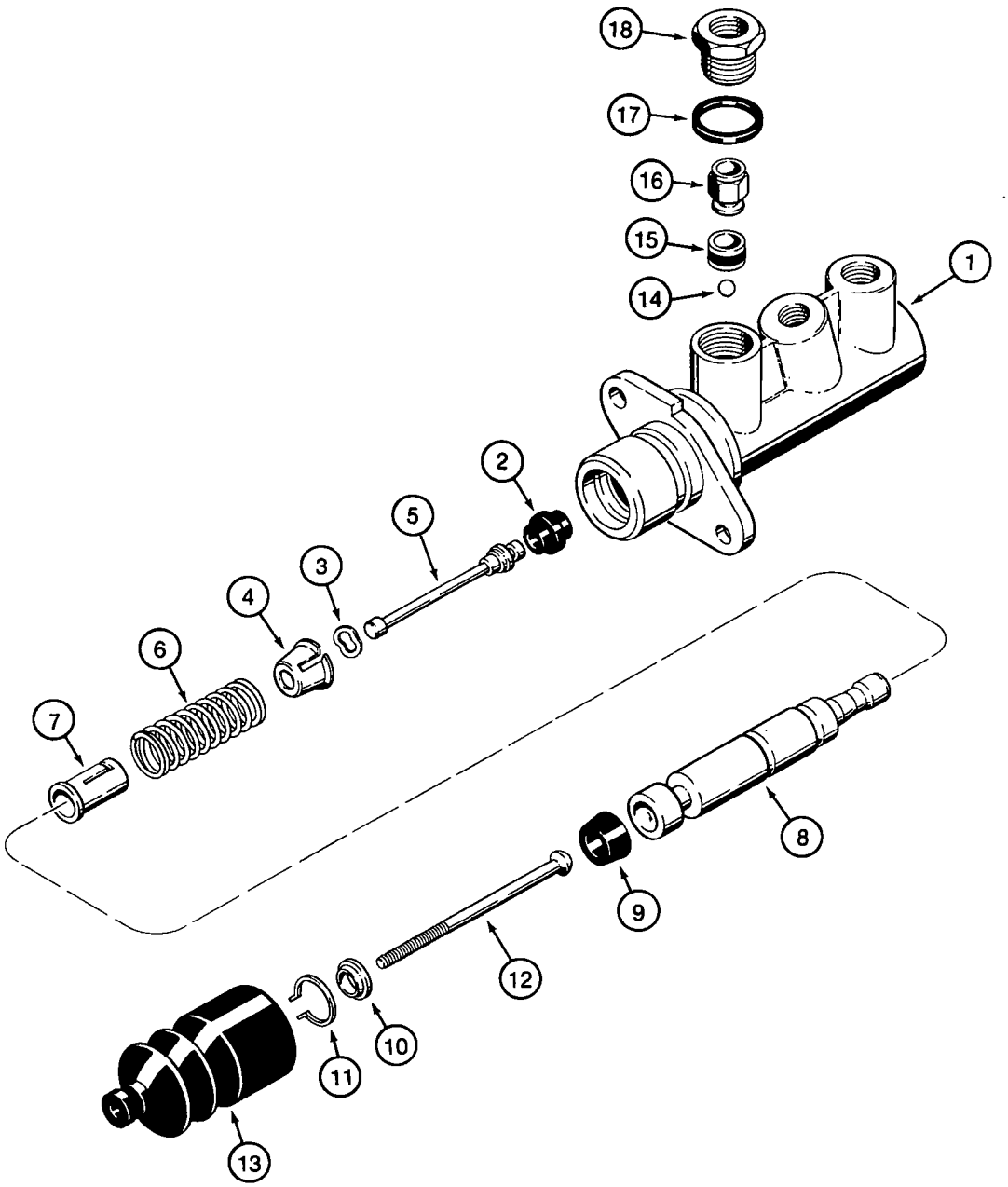
18
17
16
15
14
1
2
5
3
4
6
7
8
9
12
10
11
13

BRAKE MASTER CYLINDER

REF.	PART NO.	DESCRIPTION	REQ'D.
	182445A1	CYLINDER ASSEMBLY - brake master	2
1	NSS	BODY - master cylinder	1
2	*NSS	SEAL - plunger	1
3	*NSS	WASHER - special	1
4	NSS	SEAT - spring, short	1
5	NSS	PLUNGER - piston	1
6	NSS	SPRING - return	1
7	NSS	SEAT - spring, long	1
8	NSS	PISTON - master cylinder	1
9	*NSS	SEAL - piston	1
10	NSS	WASHER - seal, special	1
11	*NSS	RING - retaining, washer	1
12	NSS	ROD - push	1
13	*NSS	BOOT - push rod	1
14	*NSS	BALL - flow valve	1
15	*NSS	SEAL - flow valve	1
16	NSS	VALVE - flow	1
17	*NSS	GASKET - flow valve	1
18	NSS	ADAPTER - flow valve	1
	*N14784	KIT - seal, cylinder, service, includes all items marked with an asterisk	1

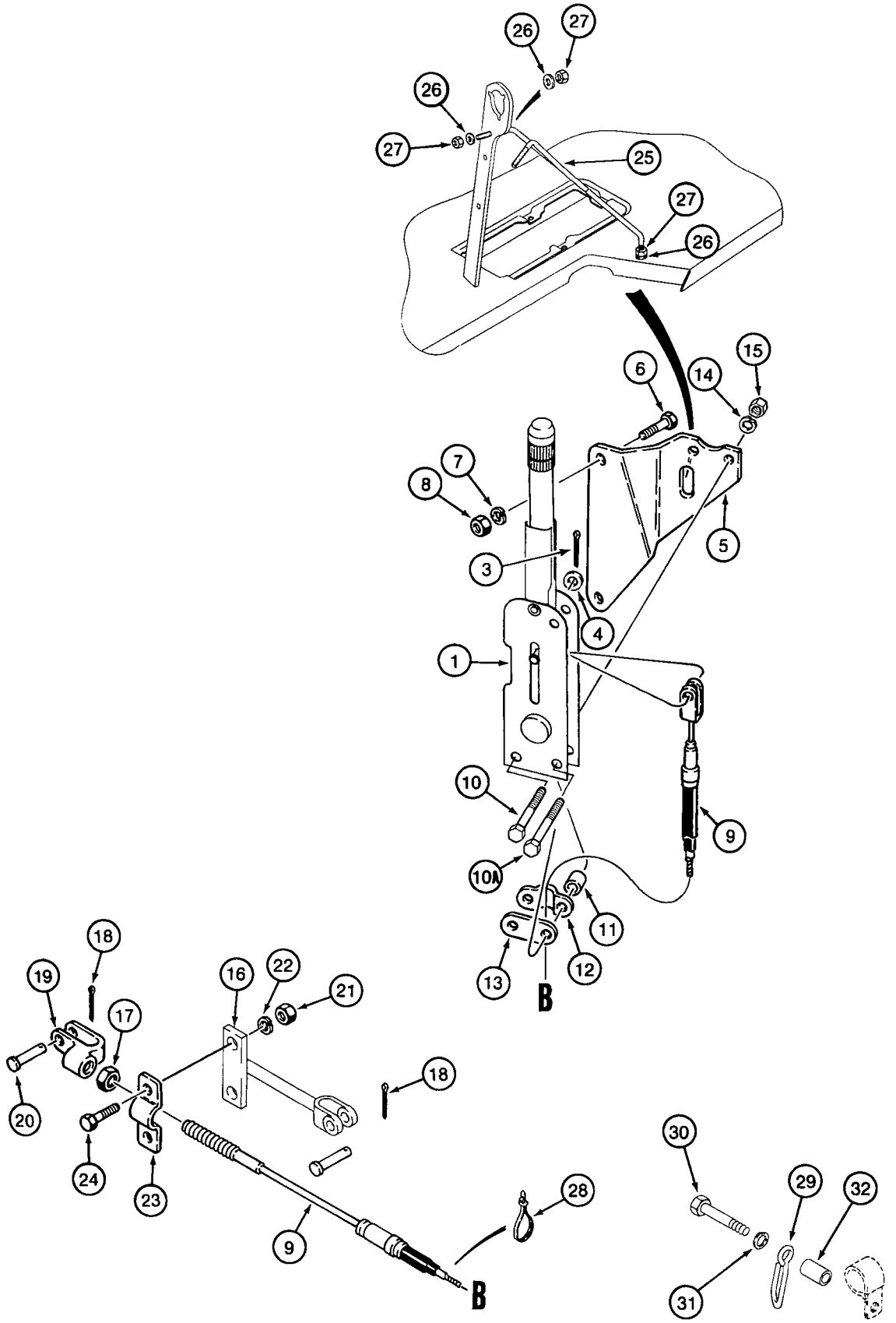
26
27
26
27
25
27
26
6
14
15
7
8
5
3
4
1
10
9
10A
11
12
13
B
18
19
16
22
21
17
18
20
24
23
9
28
B
30
29
32
31

PARKING BRAKE LEVER AND LINKAGE

REF.	PART NO.	DESCRIPTION	REQ'D.
	279261A1	LEVER ASSEMBLY - parking brake, with bossed hole for brake switch, 18-5/8 (474 mm) long	1
1	NSS	LEVER - 279261A1 parking brake	1
2	D42458	PIN - clevis, lever to brake cable	1
3	432-612	PIN - cotter, 3/32 x 3/4 inch	1
4	495-21038	WASHER - flat, 3/8 x 7/8 x 3/32 inch	1
5	124646A1	BRACKET - mounting, parking brake lever	1
6	614-10025	BOLT - hex, full threads, 10 - 1.5 x 25 mm	2
7	892-11010	WASHER - lock, 10 mm	2
8	829-1410	NUT - hex, 10 mm - 1.5, class 10.9	2
9	280681A1	CABLE - parking brake, 1325 mm (52-3/16 inch) long	1
10	827-8050	BOLT - hex, 8 - 1.25 x 50 mm, class 10.9	1
10A	827-8060	BOLT - hex, 8 - 1.25 x 60 mm, class 10.9	1
11	D150633	SPACER - split, clamp	2
12	D121608	CLAMP - cable	1
13	D129747	PLATE - oval spacer, plated	1
14	892-11008	WASHER - lock, 8 mm	2
15	829-1408	NUT - hex, 8 mm - 1.25, class 10	2
16	280886A1	YOKE - cable, 110 mm (4-3/8 inch) long	1
17	425-156	NUT - hex, jam, 3/8 inch NF	1
18	432-612	PIN - cotter, 3/32 x 3/4 inch	2
19	L11182	CLEVIS - offset, 3/8 inch	1
20	D149288	PIN - clevis	2
21	829-1410	NUT - hex, 10 mm - 1.5, class 10.9	2
22	892-11010	WASHER - lock, 10 mm	2
23	A188028	CLAMP - cable	1
24	614-10025	BOLT - hex, full threads, 10 - 1.5 x 25 mm	2
25	180801A1	BRACE - loader control bracket	1
26	495-11041	WASHER - flat, 13/32 x 13/16 x 1/16 inch	6
27	425-106	NUT - hex, 3/8 inch NC	6
28	L18337	STRAP - tie, 15 inch, if used	1
29	223722A1	BRACKET - combination, yield support, brake cable, mounts with P-clamp (Ref 26, page 4-11) to chassis frame	1
30	814-10060	BOLT - hex, 10 - 1.5 x 60 mm	1
31	895-11010	WASHER - flat, 11 x 20 x 2 mm	1
32	130245A1	SPACER - bracket	1

ALPHABETICAL INDEX
HYDRAULICS

DESCRIPTION	PAGE
Accumulator Assembly - Ride Control	8-123
Cylinders	
Boom - Backhoe	8-137
Bucket - Backhoe	8-141
Bucket - Loader	8-129
Clam - Loader	8-131
Dipper - Backhoe	8-139
Dipper Extension - Backhoe	8-143
Lift - Loader	8-127
Stabilizer - Backhoe	8-133
Swing - Backhoe	8-135
Equipment Hydraulic System	
Equipment Pump and Loader Valve to Backhoe Valve	8-7
Oil Cooler Lines, Return Lines, and Filter	8-9
Reservoir to Loader Valve and Loader Valve to Filter	8-3,8-5
Filter - Hydraulic Oil	8-125
Hydraulic Circuits	
Auxiliary	
Backhoe	8-51 - 8-55
Hand Held	8-41 - 8-49
Boom Cylinder - Backhoe	8-25
Boom Lock	8-57,8-59
Bucket Cylinder - Backhoe, With Extendable Dipper	8-33,8-35
Bucket Cylinder - Backhoe, Without Extendable Dipper	8-29,8-31
Bucket Cylinder - Loader	8-13,8-15
Clam Cylinder - Loader	8-17,8-19
Dipper Cylinder - Backhoe	8-27
Extendable Dipper - Backhoe	8-37
Lift Cylinder - Loader	8-11
Loader Valve to Backhoe Valve - Without Auxiliary Hydraulics and With or Without Extendahoe	8-39
Quick Coupler - Loader Hydraulic Tool	8-65 - 8-69
Ride Control	8-61,8-63
Stabilizer Cylinder - Backhoe	8-21
Swing Cylinder - Backhoe	8-23
Pump - Equipment	8-71
Valves	
Auxiliary	8-117,8-119
Backhoe Control	8-89 - 8-115
Boom Lock Solenoid	8-121
Loader Control	8-73 - 8-87

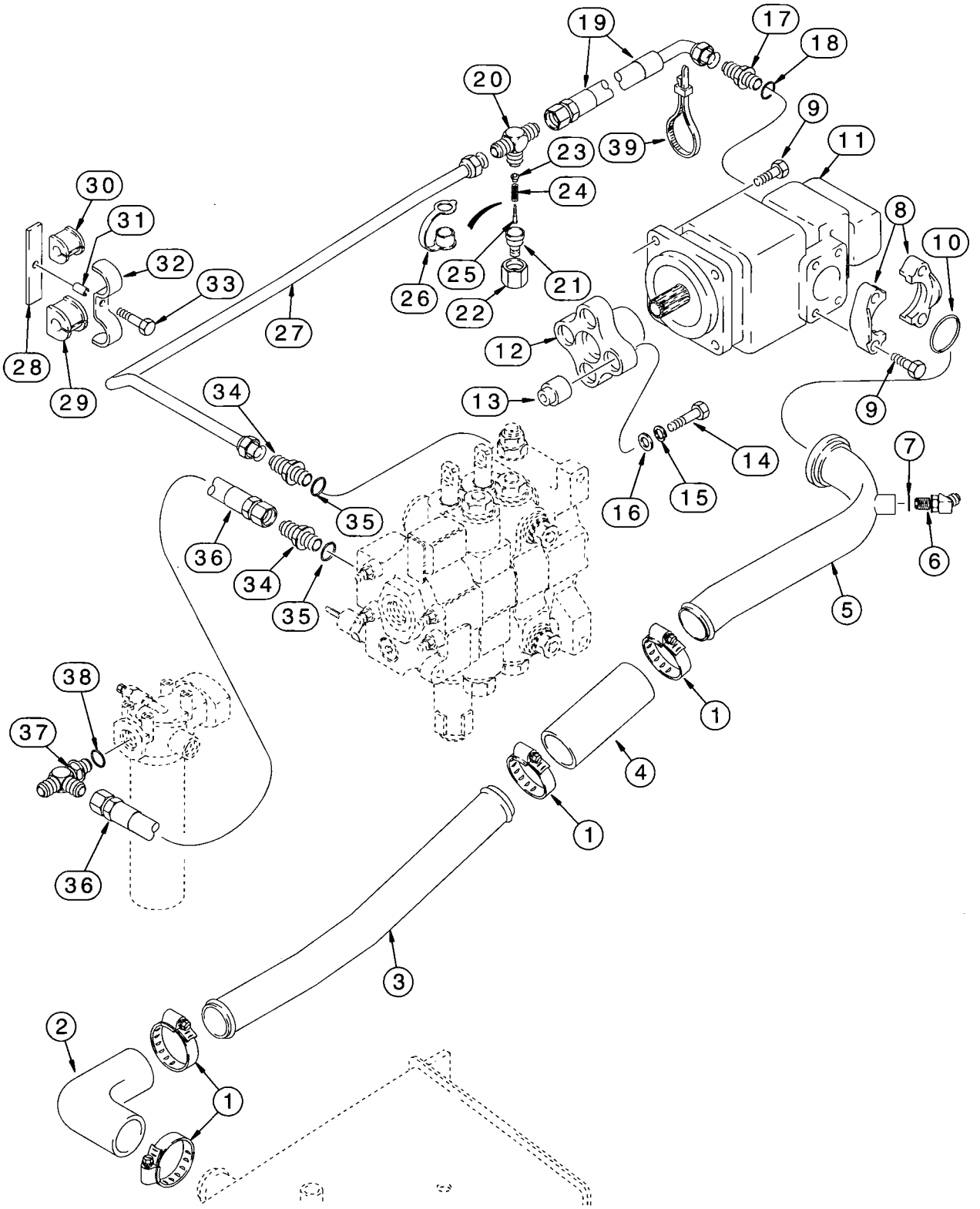
19
17
18
20
9
11
39
23
24
30
31
32
33
8
10
26
25
21
22
27
12
28
29
34
13
9
14
16
15
7
35
36
34
6
35
5
38
37
1
4
1
36
3
2
1

EQUIPMENT HYDRAULIC SYSTEM

RESERVOIR TO LOADER CONTROL VALVE AND LOADER VALVE TO FILTER

REF.	PART NO.	DESCRIPTION	REQ'D.
1	259044A1	CLAMP - tube	4
2	282497A1	HOSE - suction, at hydraulic tank	1
3	131586A1	TUBE - suction	1
4	282496A1	HOSE - coupler	1
5	121817A1	TUBE - suction, at hydraulic equipment pump	1
6	218-5137	ELBOW - 45 degree, 7/8-14 inch flare x adj O-ring boss, to cooler return hose	1
7	237-6010	O-RING - 3/4 ID x 3/32 inch wide	1
8	A14141	FLANGE - split, 2 inch	2
9	614-12035	BOLT - hex, full threads, 12 - 1.75 x 35 mm	8
10	238-5228	O-RING - 2-1/4 ID x 1/8 inch wide	1
11	257954A1	PUMP ASSEMBLY - hydraulic equipment, with 17 teeth shaft gear set, parts list page 8-71	1
	257948A1	COUPLING - flex, 17 teeth, with steel plug	1
12	NSS	COUPLING - pump	1
13	N14330	BUSHING - coupling	4
14	413-728	BOLT - hex, 7/16 NC x 1-3/4 inch	4
15	492-11044	WASHER - lock, 7/16 inch	4
16	A30013	WASHER - special, hardened	4
17	218-5077	ADAPTER - straight, 1-1/16-12 flare x 1-5/16-12 inch O-ring boss	1
18	237-6016	O-RING - 1-11/64 ID x 7/64 inch wide	1
19	144215A1	HOSE - 576 mm (22-11/16 inch) long, large pump section port	1
20	218-587	TEE - 1-1/16-12 flare branch x 1-5/16-12 inch flare x flare, pump outlet hose to loader valve inlet tube	1
	D137625	COUPLING - quick disconnect	1
21	NSS	BODY - coupling	1
22	425-1120	NUT - hex, 1-1/4 inch NF	1
23	NSS	SEAT - spring	1
24	NSS	SPRING - coupling	1
25	NSS	POPPET - coupling	1
26	H434163	CAP - dust, coupler	1
27	122125A1	TUBE - tee to loader control valve inlet, see page 8-13 items 19-23 for tube clamps near loader valve, used with Ref 34 adapter, used without loader hydraulic tool quick coupler	1
28	115507A1	PLATE - mounting	1
29	D67297	INSULATOR - rubber, tube	1
30	REF	INSULATOR - tube, small pump section tube to backhoe valve, see page 8-7, items 4 and 5, for tube and insulator	1

Continued on next page

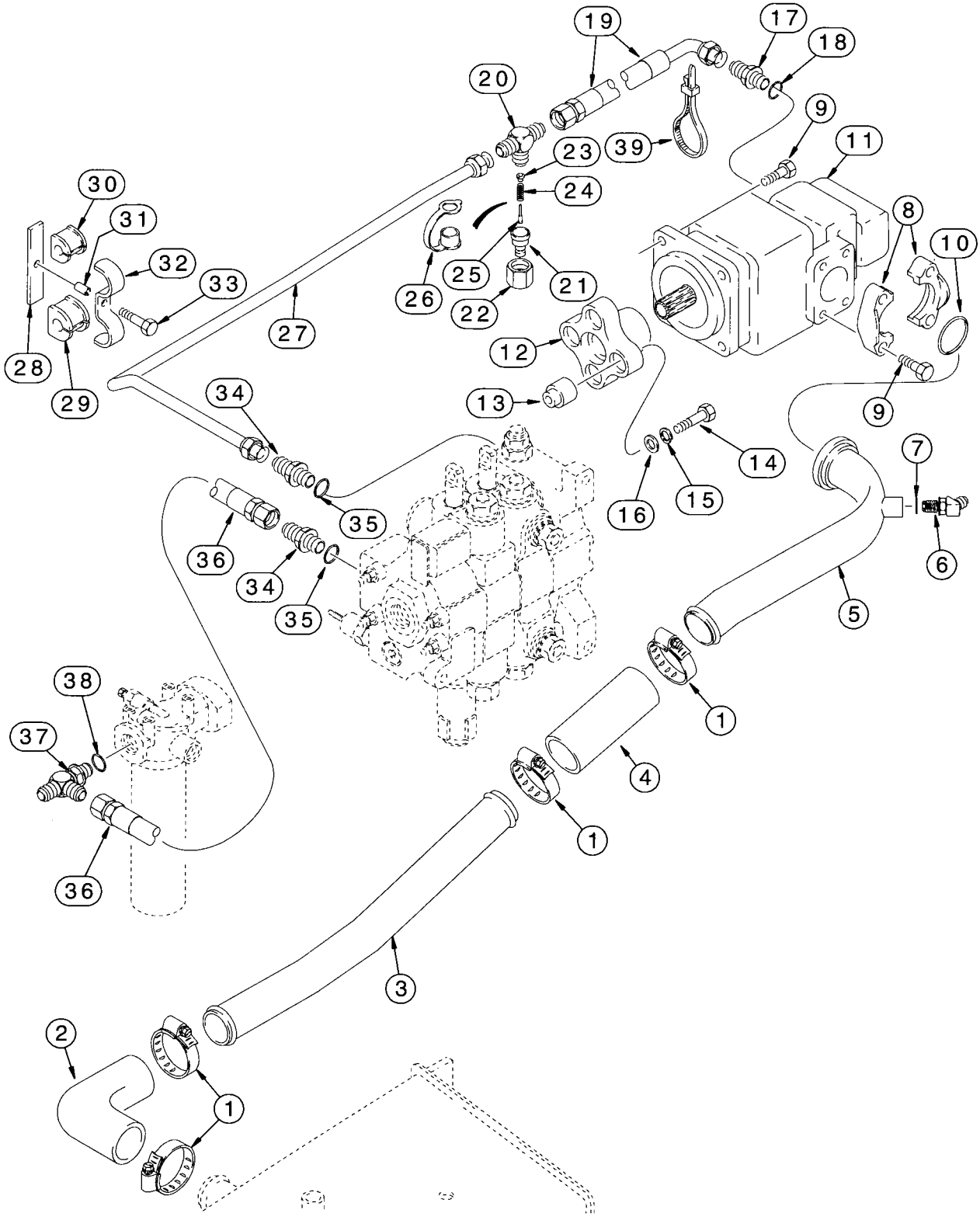
19
17
18
20
9
39
23
11
30
24
31
8
32
10
25
33
26
21
22
27
12
28
29
13
34
9
14
16
15
7
35
36
6
34
35
5
38
1
37
4
1
36
3
2
1

EQUIPMENT HYDRAULIC SYSTEM

RESERVOIR TO LOADER CONTROL VALVE AND LOADER VALVE TO FILTER

REF.	PART NO.	DESCRIPTION	REQ'D.
31	R46493	SPACER - split, 22 mm (7/8 inch) long	1
32	D143422	CLAMP - double tube	1
33	814-10050	BOLT - hex, 10 - 1.5 x 50 mm	1
34	218-5069	ADAPTER - straight, 1-5/16-12 inch flare x O-ring boss, at loader valve inlet and outlet ports, adapter at upper port is replaced by a tee on models with loader hydraulic tool quick coupler, see page 8-65, Ref 10	2
35	237-6016	O-RING - 1-11/64 ID x 7/64 inch wide	1
36	144227A1	HOSE - 520 mm (20-15/32 inch) long, loader valve to filter, models without ride control, see page 8-61 for parts used on models with ride control	1
37	218-5245	TEE - 1-5/16-12 inch flare branch x flare x adj O-ring boss, loader valve to filter and filter to backhoe control valve	1
38	237-6016	O-RING - 1-11/64 ID x 7/64 inch wide	1
39	L18337	STRAP - tie, 15 inch, if used	1

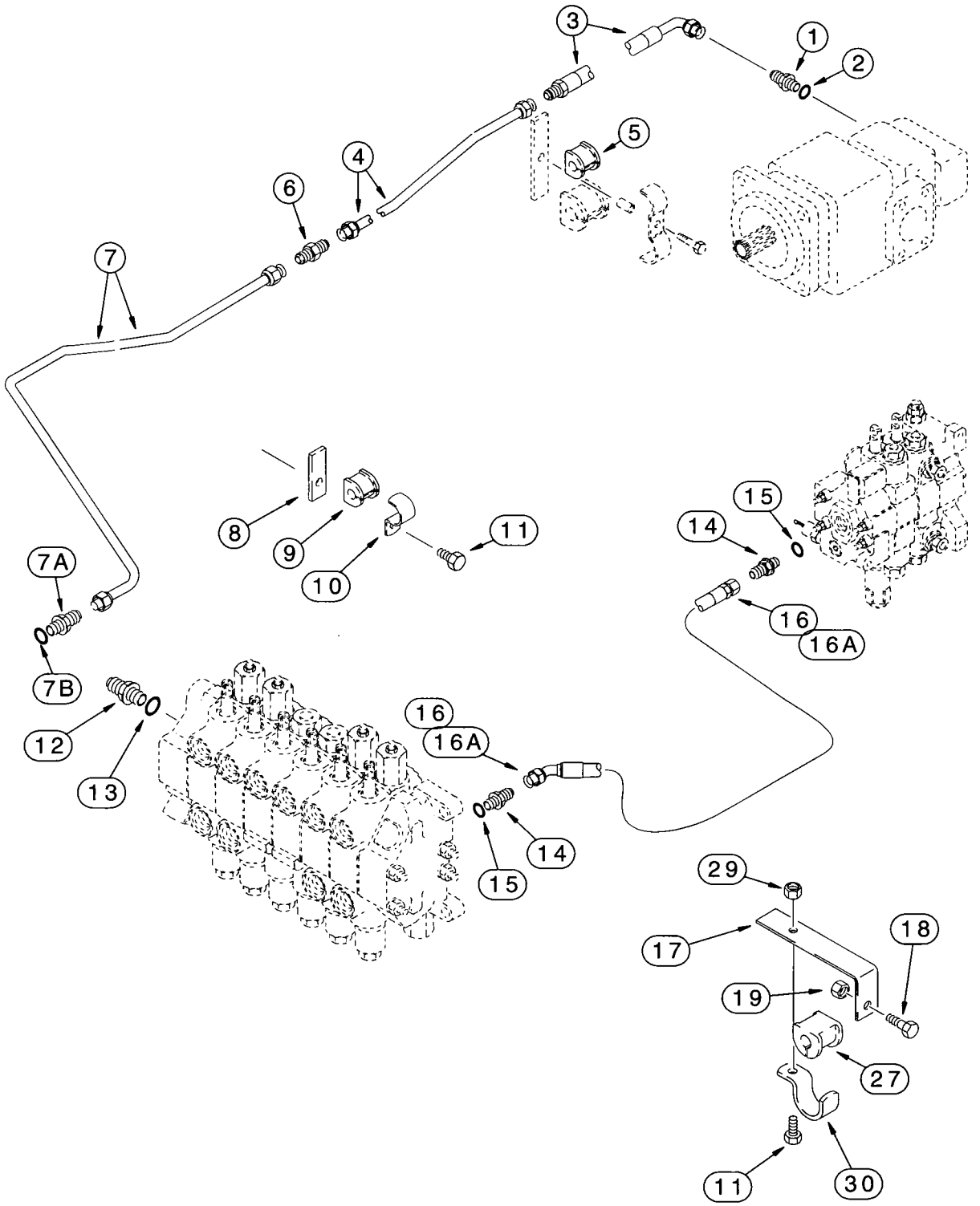
3
1
2
5
4
6
7
8
9
10
11
15
14
16
16A
7A
7B
12
13
16
16A
14
15
29
17
18
19
27
11
30

EQUIPMENT HYDRAULIC SYSTEM

EQUIPMENT PUMP AND LOADER CONTROL VALVE TO BACKHOE CONTROL VALVE

REF.	PART NO.	DESCRIPTION	REQ'D.
1	218-5063	ADAPTER - straight, 7/8-14 flare x 1-1/16-12 inch O-ring boss, small pump section outlet port	1
2	237-6012	O-RING - 59/64 ID x 7/64 inch wide	1
3	144216A1	HOSE - 800 mm (31-1/2 inch) long, small pump section outlet port	1
4	122127A1	TUBE - small pump section hose to backhoe	1
5	D143797	INSULATOR - 5/8 inch, small pump section tube, see page 8-3 and 8-5 items 28 - 33 for hardware	1
6	218-736	CONNECTOR - straight, 7/8-14 inch flare	1
7	243790A1	TUBE - swing supply, small pump tube to swing section inlet	1
7A	218-5062	ADAPTER - straight, 7/8-14 inch flare x O-ring boss	1
7B	237-6010	O-RING - 3/4 ID x 3/32 inch wide	1
8	115633A1	PLATE - mounting	1
9	D143797	INSULATOR - 5/8 inch, tube mounting	1
10	D143411	CLAMP - P-type, 3/4 inch ID, tube	1
11	614-10025	BOLT - hex, full threads, 10 - 1.5 x 25 mm	2
12	218-5062	ADAPTER - straight, 7/8-14 inch flare x O-ring boss	1
13	237-6010	O-RING - 3/4 ID x 3/32 inch wide	1
14	218-5069	ADAPTER - straight, 1-5/16-12 inch flare x O-ring boss	1
15	237-6016	O-RING - 1-11/64 ID x 7/64 inch wide	1
16	144240A1	HOSE - 1028 mm (40-1/2 inch) long, loader valve power beyond port to backhoe control valve inlet, models with two spool loader control valve	1
16A	144241A1	HOSE - 977 mm (38-15/32 inch) long, loader valve power beyond port to backhoe control valve inlet, models with three spool loader control valve	1
17	136008A1	BRACKET - mounting, hose	1
18	614-12030	BOLT - hex, full threads, 12 - 1.75 x 30 mm	1
19	829-1412	NUT - hex, 12 mm - 1.75, class 10	1
27	144477A1	INSULATOR - rubber, power beyond hose	1
29	829-1410	NUT - hex, 10 mm - 1.5, class 10.9	1
30	144479A1	CLAMP - isolation, if used	1

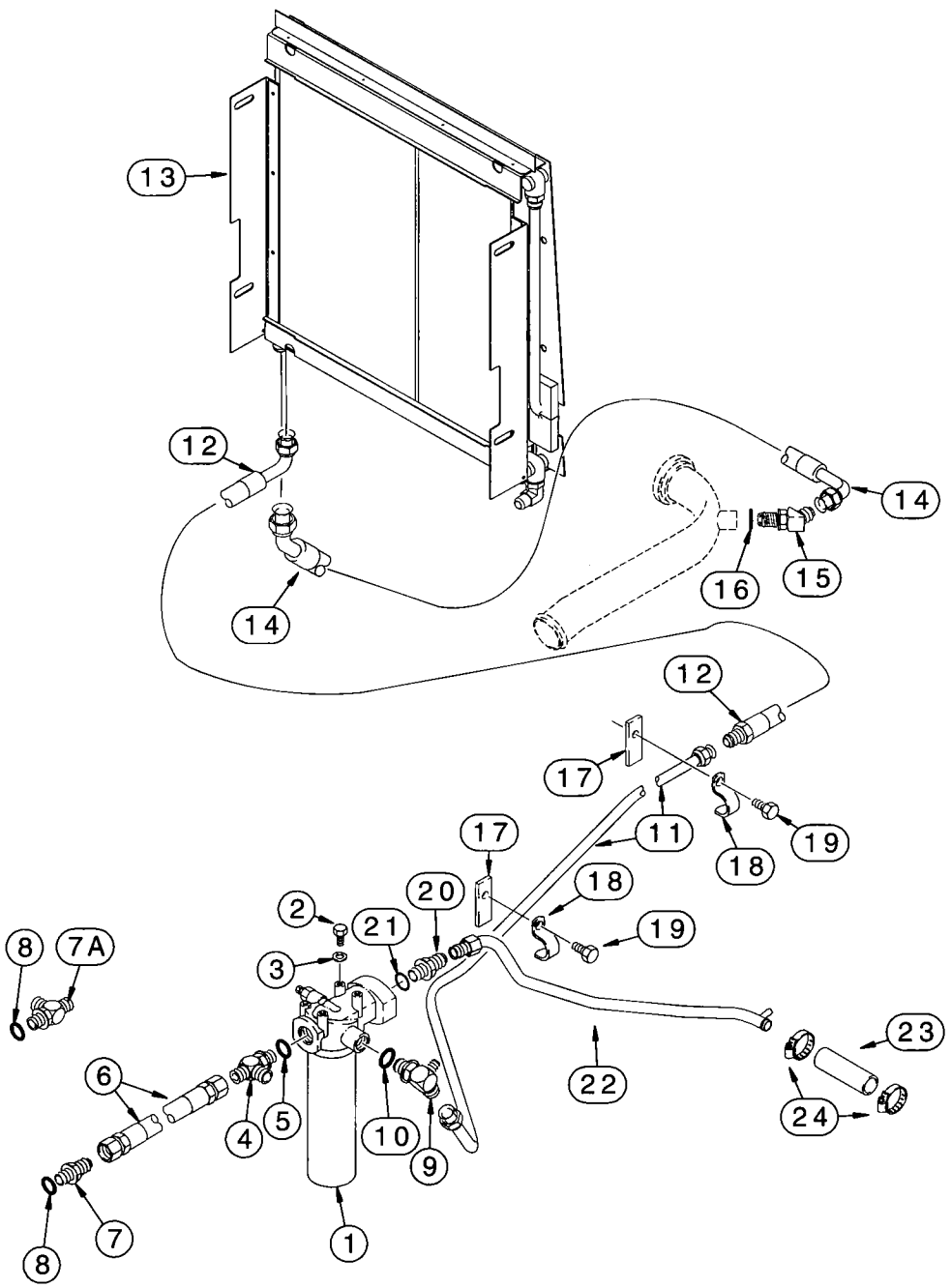
13
12
14
16
15
14
12
17
11
18
19
17
18
19
20
2
21
3
8
7A
6
4
5
10
9
22
23
24
8
7
1

EQUIPMENT HYDRAULIC SYSTEM

OIL COOLER LINES, RETURN LINES, AND FILTER

REF.	PART NO.	DESCRIPTION	REQ'D.
1	122536A1	FILTER ASSEMBLY - hydraulic oil, parts list page 8-125	1
2	614-10020	BOLT - hex, full threads, 10 - 1.5 x 20 mm	4
3	895-11010	WASHER - flat, 11 x 20 x 2 mm	4
4	218-5245	TEE - 1-5/16-12 inch flare branch x flare x adj O-ring boss, loader valve to filter and filter to backhoe control valve	1
5	237-6016	O-RING - 1-11/64 ID x 7/64 inch wide	1
6	144233A1	HOSE - 890 mm (35 inch) long, return, backhoe control valve to filter	1
7	218-5069	ADAPTER - straight, 1-5/16-12 inch flare x O-ring boss, backhoe control valve outlet port, models without extendable dipper	1
7A	218-5245	TEE - 1-5/16-12 inch flare branch x flare x adj O-ring boss, backhoe control valve outlet port, models with extendable dipper, if used	1
8	237-6016	O-RING - 1-11/64 ID x 7/64 inch wide, 218-5069 or 218-5245 fitting	1
9	228959A1	TEE - special	1
10	237-6010	O-RING - 3/4 ID x 3/32 inch wide	1
11	122176A1	TUBE - filter to cooler	1
12	144220A1	HOSE - 595 mm (23-7/16 inch) long, filter to cooler	1
13	291288A1	COOLER - hydraulic oil, heavy duty, see page 6-21 for cooler mounting hardware	1
14	236231A1	HOSE - 300 mm (11-13/16 inch) long	1
15	218-5137	ELBOW - 45 degree, 7/8-14 inch flare x adj O-ring boss	1
16	237-6010	O-RING - 3/4 ID x 3/32 inch wide	1
17	115633A1	PLATE - mounting	2
18	D143430	CLAMP - tube	2
19	614-10025	BOLT - hex, full threads, 10 - 1.5 x 25 mm	2
20	218-5086	ADAPTER - straight, 1-5/16-12 flare x 1-5/8 inch O-ring	1
21	237-6020	O-RING - 1-15/32 ID x 1/8 inch wide	1
22	295172A1	TUBE - return to tank	1
23	D38435	HOSE - 89 mm (3-1/2 inch) long, cut from S118383X bulk hose, return tube to tank, see page 7-9 for attaching brake line clamp	1
24	214-1420	CLAMP - adj, 13/16 - 1-3/4 inch dia.	2
	S118383X	HOSE - bulk, 25 (1) x 38 (1-1/2) x 4877 mm (192 inch) long	1

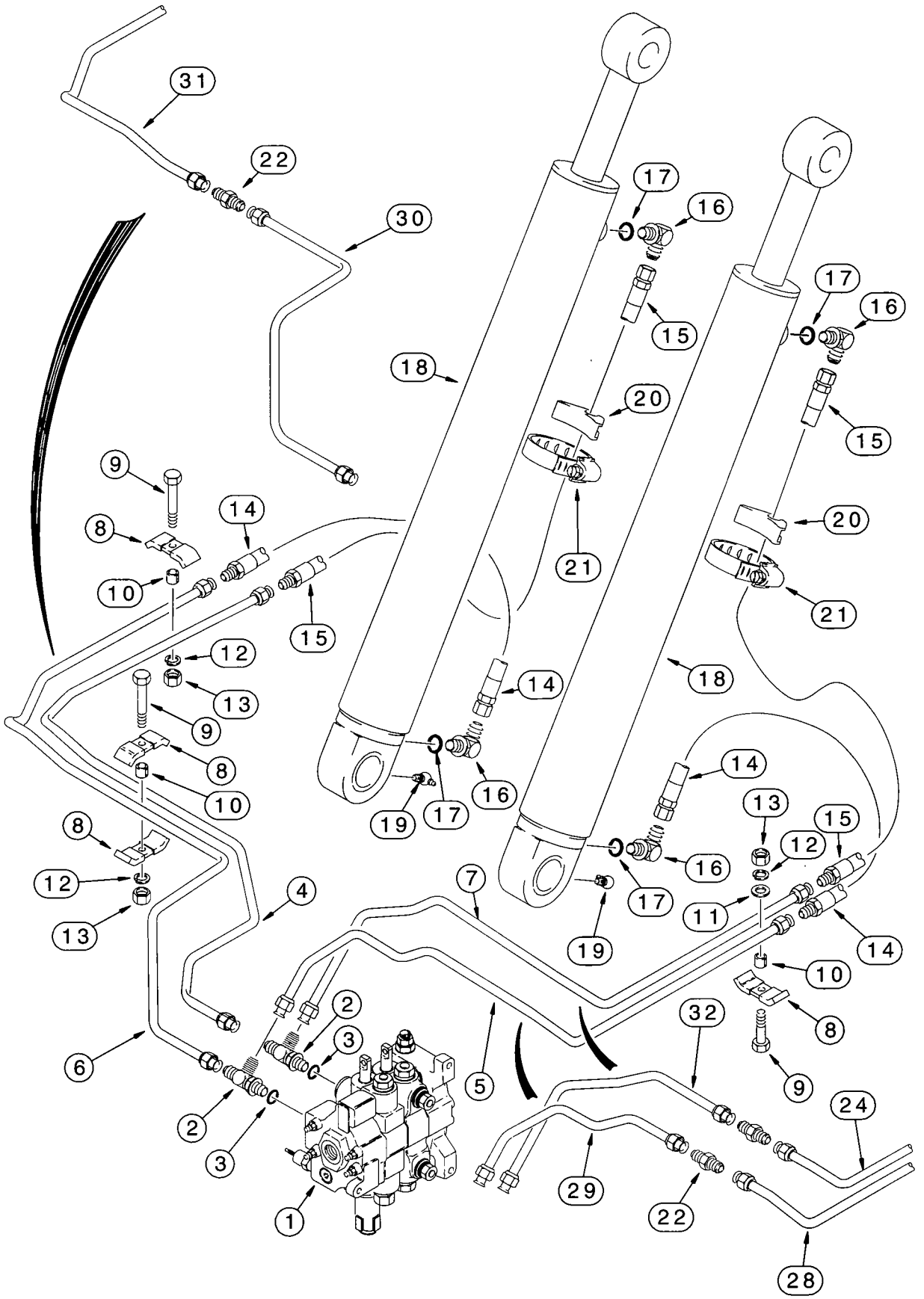
31
22
30
18
9
8
10
14
15
12
13
9
8
10
8
12
13
4
6
2
3
2
3
1
5
7
19
17
16
14
18
21
20
15
17
16
17
16
15
20
21
14
13
12
15
16
17
19
11
10
8
9
32
24
29
22
28

LOADER LIFT CYLINDER HYDRAULIC CIRCUIT

REF.	PART NO.	DESCRIPTION	REQ'D.
1	REF	VALVE ASSEMBLY - loader control, for correct assembly and components, see page 8-73 or 8-75	1
2	218-5241	TEE - 7/8-14 inch flare branch x flare x adj O-ring boss	2
3	237-6010	O-RING - 3/4 ID x 3/32 inch wide	1
4	225330A1	TUBE - upper lift port to left-hand loader lift cylinder rod end, used in production (services itself, for service order 225330A1 tube, Ref 4A), models without ride control, see page 8-61 for parts used on models with ride control	1
5	231984A1	TUBE - lower lift port to right-hand loader lift cylinder closed end, used in production (for service order 221158A1 and 232929A1 tubes and 218-435 connector, Ref 22, 28 and 29)	1
6	225332A1	TUBE - lower lift port to left-hand loader lift cylinder closed end, used in production (for service order 232939A1 and 232941A1 tubes and 218-435 connector, Ref 22, 30 and 31), models without ride control, see page 8-61 for parts used on models with ride control	1
7	231982A1	TUBE - upper lift port to right-hand loader lift cylinder rod end, used in production (for service order 221162A1 and 232931A1 tubes and 218-435 connector, Ref 22, 24 and 32)	1
8	D138055	CLAMP - tube	4
9	814-10040	BOLT - hex, 10 - 1.5 x 40 mm	3
10	120303A1	SPACER - tube	3
11	896-11010	WASHER - flat, 11 x 21 x 2.5 mm, hardened	1
12	892-11010	WASHER - lock, 10 mm	3
13	829-1410	NUT - hex, 10 mm - 1.5, class 10.9	3
14	187535A1	HOSE - 720 mm (28-11/32 inch) long, lift cylinder closed end	2
15	187536A1	HOSE - 1090 mm (43 inch) long, upper port of control valve to lift cylinder rod end	2
16	218-5107	ELBOW - 90 degree, 7/8-14 inch flare x adj O-ring boss	4
17	237-6010	O-RING - 3/4 ID x 3/32 inch wide	1
18	112366A2	CYLINDER ASSEMBLY - 83 (3-1/4) ID x 766 mm (30-1/8 inch) stroke, loader lift, parts list page 8-127	2
19	219-55	FITTING - grease, 90 degree, 1/8 PT x 27/32 inch	2
20	D142787	INSULATOR - rubber	2
21	214-1472	CLAMP - adj, 4-1/16 - 5 inch dia	2
22	218-435	CONNECTOR - straight, large hex, 7/8-14 inch flare	1-3
24	221162A1	TUBE - right-hand loader lift cylinder rod end	1
28	221158A1	TUBE - right-hand loader lift cylinder closed end	1
29	232929A1	TUBE - lower lift port to right-hand loader lift cylinder	1
30	232939A1	TUBE - lower lift port to left-hand loader lift cylinder, models without ride control, see page 8-61 for parts used on models with ride control	1
31	232941A1	TUBE - left-hand loader lift cylinder closed end, models without ride control, see page 8-61 for parts used on models with ride control	1
32	232931A1	TUBE - upper lift port to right-hand loader lift cylinder	1

NOTE: See pages 3-3 and 9-79 for hydraulic tubing covers above fuel and hydraulic oil reservoirs.

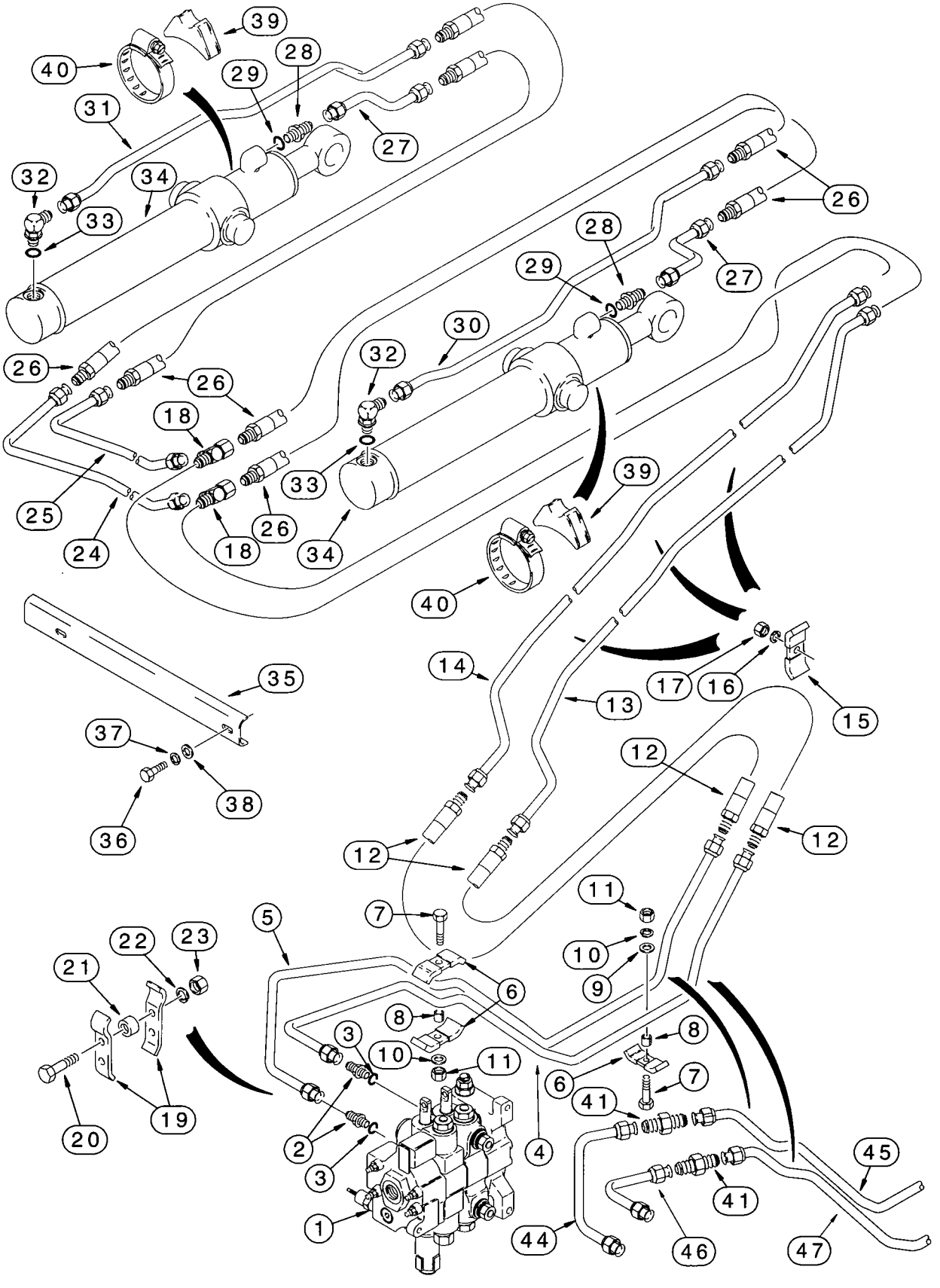
39
40
28
29
31
27
32
34
26
33
28
29
27
26
30
32
26
18
26
33
39
25
24
18
26
34
40
35
14
17
16
15
13
37
12
38
36
12
12
11
7
10
5
9
22
23
6
21
8
3
10
11
8
6
7
41
19
20
2
3
4
45
41
1
44
46
47

LOADER BUCKET CYLINDER HYDRAULIC CIRCUIT

REF.	PART NO.	DESCRIPTION	REQ'D.
1	REF	VALVE ASSEMBLY - loader control, for correct assembly and components, see page 8-73 or 8-75, for mounting see page 9-3	1
2	218-5062	ADAPTER - straight, 7/8-14 inch flare x O-ring boss	2
3	237-6010	O-RING - 3/4 ID x 3/32 inch wide	1
4	232447A1	TUBE - bucket section upper port, used in production (for service order 232934A1 and 232936A1 tubes and 218-435 connector, Ref 41, 46 and 47 on page 8-15)	1
5	220169A1	TUBE - bucket section lower port, used in production, replaces 192136A1 production tube (for service order 221143A1 and 221146A1 tubes and 218-435 connector, Ref 41, 44 and 45 on page 8-15)	1
6	D138055	CLAMP - tube	3
7	814-10040	BOLT - hex, 10 - 1.5 x 40 mm	2
8	120303A1	SPACER - tube	2
9	896-11010	WASHER - flat, 11 x 21 x 2.5 mm, hardened	2
10	892-11010	WASHER - lock, 10 mm	2
11	829-1410	NUT - hex, 10 mm - 1.5, class 10.9	2
12	138467A1	HOSE - 680 mm (26-3/4 inch) long, at loader arm pivot	2
13	196817A1	TUBE - lower, on right-hand lift arm, from bucket section upper port to closed end of bucket cyinders	1
14	196819A1	TUBE - upper, on right-hand lift arm, from bucket section lower port to bucket cyinder rod end	1
15	D138055	CLAMP - tube	3
16	892-11010	WASHER - lock, 10 mm	3
17	829-1410	NUT - hex, 10 mm - 1.5, class 10.9	3
18	218-5220	TEE - swivel, 7/8-14 inch flare branch x flare x swivel, at upper lift frame crossover tube	2
19	221733A1	CLAMP - tube, attaches to item 5 tube above and item 27 tube on page 8-3	2
20	814-10040	BOLT - hex, 10 - 1.5 x 40 mm	2
21	120303A1	SPACER - tube	2
22	892-11010	WASHER - lock, 10 mm	2
23	829-1410	NUT - hex, 10 mm - 1.5, class 10.9	2
24	196815A1	TUBE - crossover, rear, upper lift frame tube to rod end of bucket cylinder	1
25	196813A1	TUBE - crossover, front, lower lift frame tube to bucket cylinder closed end	1
26	136226A1	HOSE - 840 mm (33 inch) long, at bucket cylinders	4

NOTE: See pages 3-3 and 9-79 for hydraulic tubing covers above fuel and hydraulic oil reservoirs.

Continued on next page

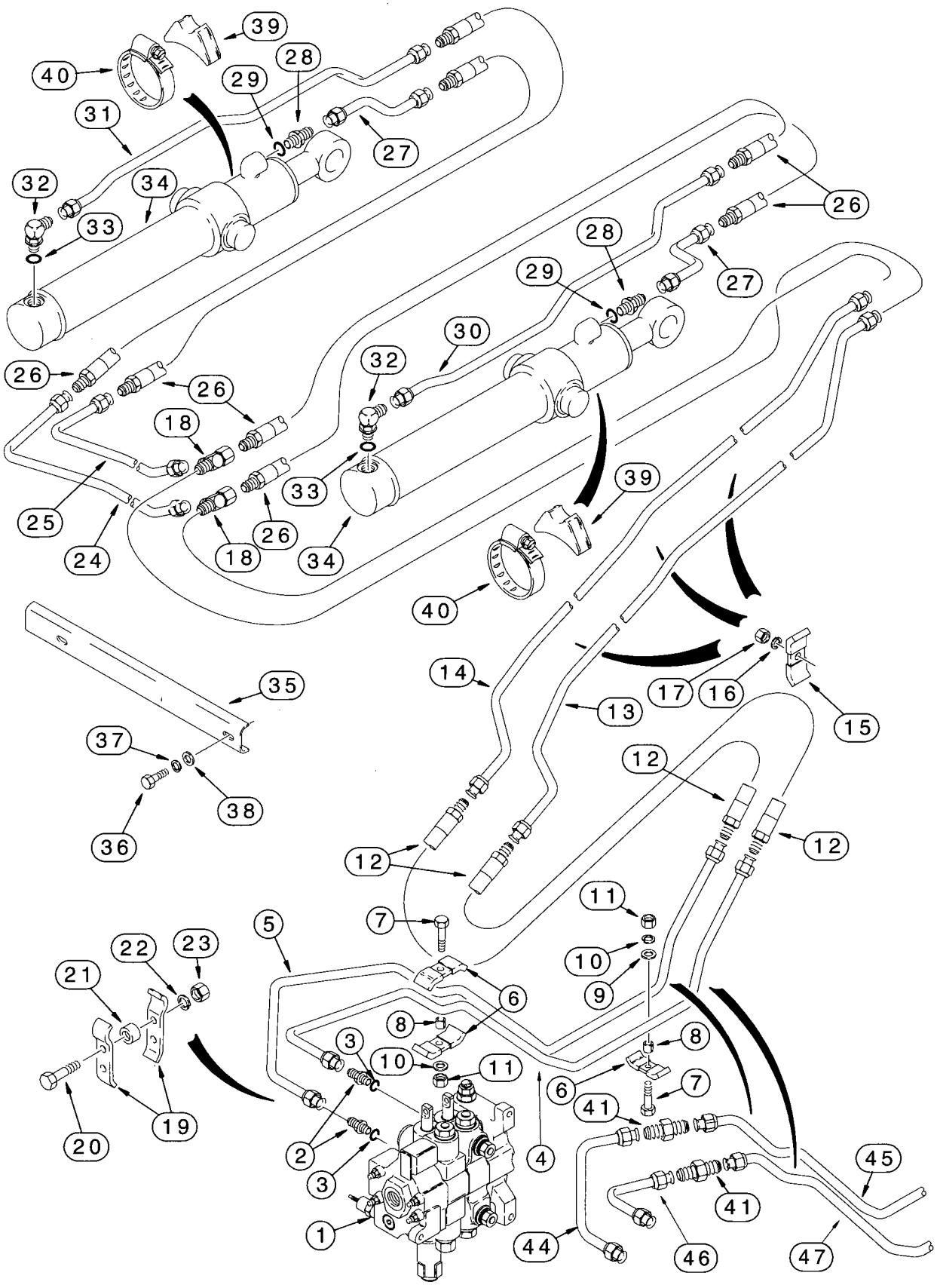
39
40
28
29
31
27
32
34
26
33
28
29
27
30
26
32
26
18
33
25
26
24
18
34
39
40
14
17
16
15
35
13
37
12
38
36
12
12
11
7
5
10
9
22
23
6
21
8
3
10
11
8
6
7
41
19
20
2
4
45
3
41
1
44
46
47

LOADER BUCKET CYLINDER HYDRAULIC CIRCUIT

REF.	PART NO.	DESCRIPTION	REQ'D.
27	192152A1	TUBE - bucket cylinder rod end	2
28	218-5062	ADAPTER - straight, 7/8-14 inch flare x O-ring boss	2
29	237-6010	O-RING - 3/4 ID x 3/32 inch wide	1
30	192156A1	TUBE - right-hand bucket cylinder closed end	1
31	192154A1	TUBE - left-hand bucket cylinder closed end	1
32	218-5107	ELBOW - 90 degree, 7/8-14 inch flare x adj O-ring boss	2
33	237-6010	O-RING - 3/4 ID x 3/32 inch wide	1
34	113133A2	CYLINDER ASSEMBLY - 76 (3) ID x 522 mm (20-9/16 inch) stroke, loader bucket, parts list page 8-129	2
35	250648A1	GUARD - crossover tube	1
36	814-10040	BOLT - hex, 10 - 1.5 x 40 mm	2
37	892-11010	WASHER - lock, 10 mm	2
38	895-11010	WASHER - flat, 11 x 20 x 2 mm	2
39	L79937	SPACER - rubber, tube	2
40	214-1464	CLAMP - adj, 3-9/16 - 4-1/2 inch dia	2
41	218-435	CONNECTOR - straight, large hex, 7/8-14 inch flare	1-2
44	221143A1	TUBE - bucket section lower port at valve	1
45	221146A1	TUBE - bucket section lower port tube to hose	1
46	232934A1	TUBE - bucket section upper port at valve	1
47	232936A1	TUBE - bucket section upper port tube to hose	1

NOTE: See pages 3-3 and 9-79 for hydraulic tubing covers above fuel and hydraulic oil reservoirs.

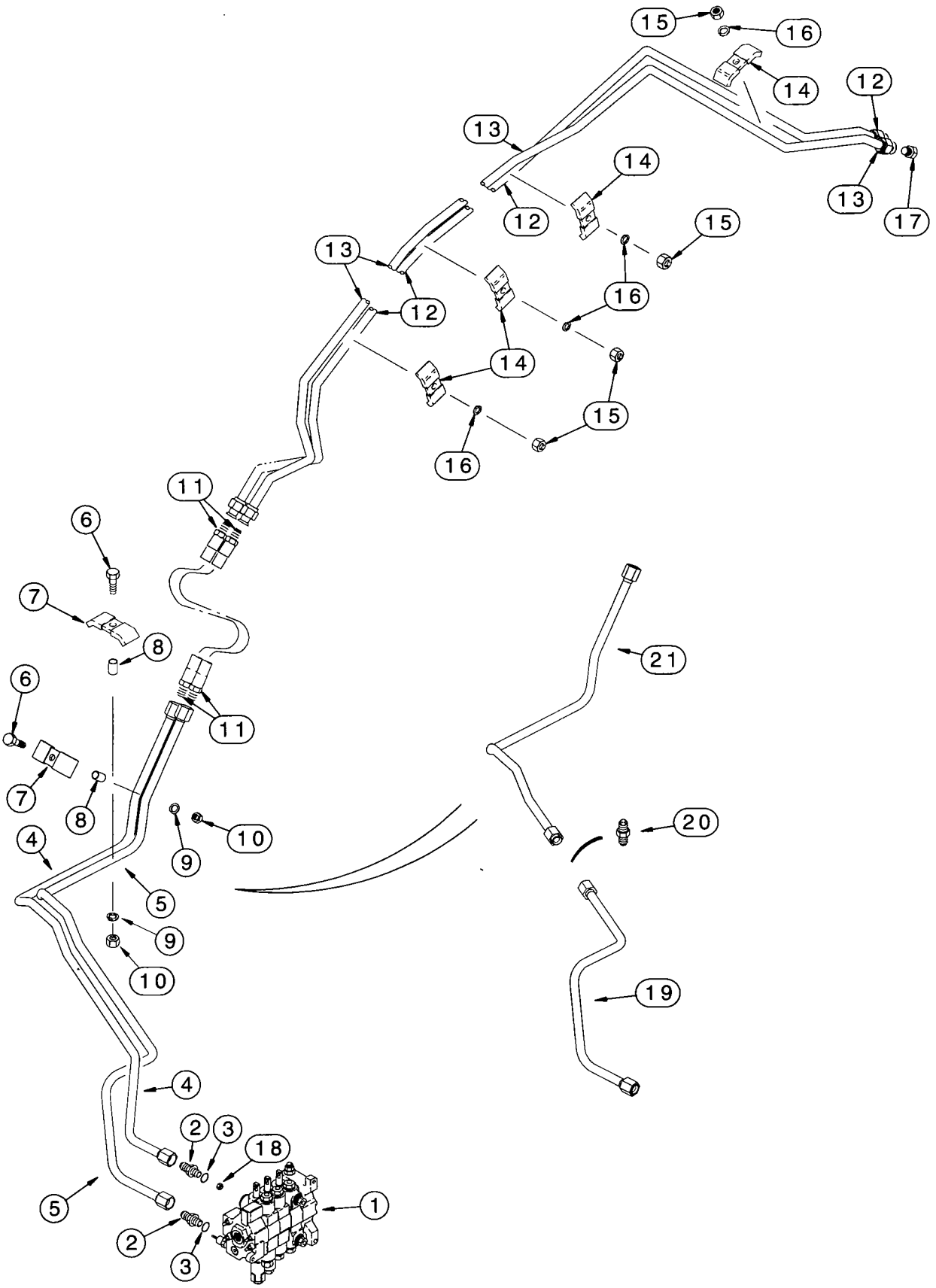
15
16
14
12
13
14
12
13
17
15
13
12
16
14
15
16
11
6
7
8
6
11
7
8
21
10
9
20
4
5
9
10
19
4
2
3
18
5
1
2
3

LOADER CLAM CYLINDER HYDRAULIC CIRCUIT

REF.	PART NO.	DESCRIPTION	REQ'D.
1	302966A1	VALVE ASSEMBLY - loader control, three-spool, parts list page 8-75, for mounting hardware see page 9-3	1
2	218-5062	ADAPTER - straight, 7/8-14 inch flare x O-ring boss	2
3	237-6010	O-RING - 3/4 ID x 3/32 inch wide	1
4	225326A1	TUBE - upper port loader valve clam section to hose at loader arm pivot (services itself)	1
5	225328A1	TUBE - lower port loader valve clam section to hose at loader arm pivot, used in production (for service order 232945A1 and 232947A1 tubes and 218-435 connector, Ref 19-21)	1
6	814-10040	BOLT - hex, 10 - 1.5 x 40 mm, mm	2
7	D138055	CLAMP - tube	2
8	120303A1	SPACER - tube	2
9	892-11010	WASHER - lock, 10 mm	2
10	829-1410	NUT - hex, 10 mm - 1.5, class 10.9	2
11	138467A1	HOSE - 680 mm (26-3/4 inch) long, at loader arm pivot	2
12	196824A1	TUBE - lower, on loader lift frame, port A	1
13	196821A1	TUBE - upper, on loader lift frame, port B	1
14	D138055	CLAMP - tube	4
15	829-1410	NUT - hex, 10 mm - 1.5, class 10.9	4
16	892-11010	WASHER - lock, 10 mm	4
17	218-776	PLUG - hex, 7/8-14 inch flare, not used on models with clam bucket, if used	2
18	188058A1	RESTRICTOR - check	1
19	232945A1	TUBE - lower port at loader valve	1
20	218-435	CONNECTOR - straight, large hex, 7/8-14 inch flare	1
21	232947A1	TUBE - lower port at loader valve	1

NOTE: See pages 3-3 and 9-79 for hydraulic tubing covers above fuel and hydraulic oil reservoirs.

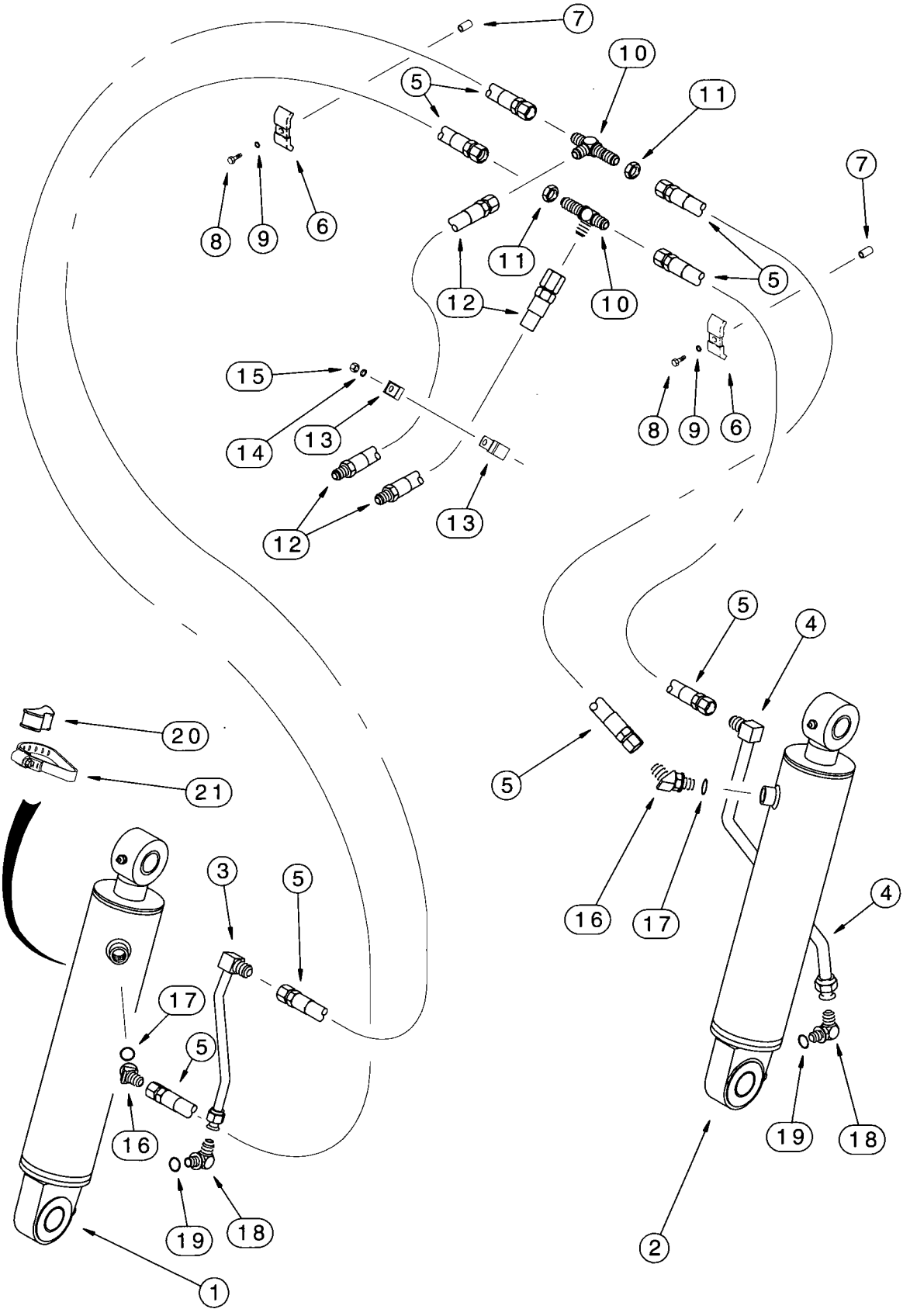
7
10
5
11
8
9
6
7
11
5
12
10
15
8
9
6
14
13
12
13
5
4
20
21
5
3
5
16
17
4
17
5
16
19
18
19
18
1
2

LOADER CLAM CYLINDER HYDRAULIC CIRCUIT
AT LOADER BUCKET

REF.	PART NO.	DESCRIPTION	REQ'D.
1	1346190C1	CYLINDER ASSEMBLY - 76 (3) ID x 231 mm (9 inch) stroke, clam, left-hand, parts list page 8-131	1
2	1346189C1	CYLINDER ASSEMBLY - 76 (3) ID x 231 mm (9 inch) stroke, clam, right-hand, parts list page 8-131	1
3	192352A1	TUBE - left-hand cylinder	1
4	192345A1	TUBE - right-hand cylinder	1
5	144242A1	HOSE - 1120 mm (44-3/32 inch) long, right-hand and left-hand cylinders	4
6	D40236	CLAMP - horizontal hose	2
7	R46493	SPACER - split, 22 mm (7/8 inch) long	2
8	814-10040	BOLT - hex, 10 - 1.5 x 40 mm	2
9	892-11010	WASHER - lock, 10 mm	2
10	218-1237	TEE - 7/8-14 inch flare branch x flare x bulkhead flare, connecting horizontal and vertical tubes and hoses	2
11	218-1251	NUT - hex, lock, bulkhead, 7/8 inch NF	2
12	144243A1	HOSE - 1167 mm (46 inch) long, lift arms	2
13	515-25254	CLAMP - P-type, 1 inch ID, vertical hoses	2
14	895-11010	WASHER - flat, 11 x 20 x 2 mm	1
15	832-10410	NUT - hex, self-locking, 10 mm - 1.5	1
16	218-5137	ELBOW - 45 degree, 7/8-14 inch flare x adj O-ring boss, clam cylinders, rod end	2
17	237-6010	O-RING - 3/4 ID x 3/32 inch wide	1
18	218-5107	ELBOW - 90 degree, 7/8-14 inch flare x adj O-ring boss, clam cylinders, closed end	2
19	237-6010	O-RING - 3/4 ID x 3/32 inch wide	1
20	D38648	SPACER - rubber, clamp	2
21	214-1464	CLAMP - adj, 3-9/16 - 4-1/2 inch dia, clam cylinder tubing	2

NOTE: To complete the clam cylinder hydraulic circuit see page 8-17.

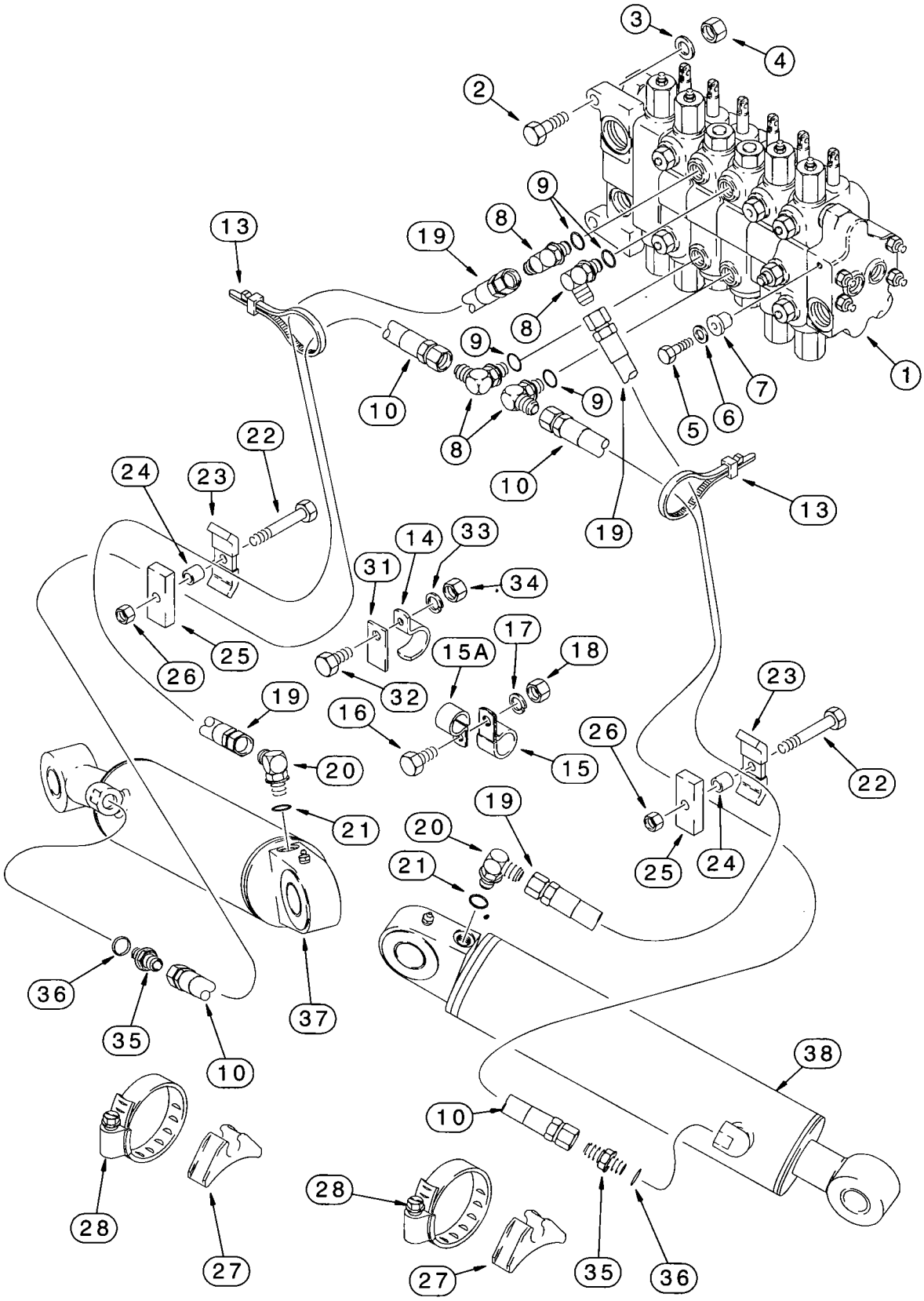
3
4
2
9
8
13
19
8
9
1
10
9
7
6
5
8
10
22
24
23
13
19
14
33
31
34
25
26
17
15A
18
32
19
16
23
20
15
26
22
21
19
20
25
24
21
36
38
35
37
10
10
28
27
28
35
36
27

BACKHOE STABILIZER CYLINDER HYDRAULIC CIRCUIT

REF.	PART NO.	DESCRIPTION	REQ'D.
1	REF	VALVE ASSEMBLY - backhoe control, for correct assembly and components, see page 8-89 - 8-95	1
2	814-12045	BOLT - hex, 12 - 1.75 x 45 mm	2
3	896-11012	WASHER - flat, 13.5 x 24 x 3 mm, hardened	2
4	829-1412	NUT - hex, 12 mm - 1.75, class 10	2
5	413-624	BOLT - hex, 3/8 NC x 1-1/2 inch	1
6	D52275	WASHER - flat, special, 25/64 x 1-1/4 x 7/64 inch, hardened	1
7	D52276	INSULATOR - rubber	1
8	218-5106	ELBOW - 90 degree, 3/4-16 inch flare x adj O-ring boss, stabilizer section upper and lower ports	4
9	237-6008	O-RING - 41/64 ID x 3/32 inch wide	1
10	144251A1	HOSE - 1240 mm (48-13/16 inch) long, stabilizer cylinder rod ends to stablizer section lower ports	2
13	L18337	STRAP - tie, 15 inch, nylon, retaining	2
14	D143411	CLAMP - P-type, 3/4 inch ID	1
15	515-23254	CLAMP - P-type, 1 inch ID	1
15A	515-23190	CLAMP - P-type, 3/4 inch ID	1
16	614-8025	BOLT - hex, full threads, 8 - 1.25 x 25 mm	1
17	892-11008	WASHER - lock, 8 mm	1
18	829-1408	NUT - hex, 8 mm - 1.25, class 10	1
19	143384A1	HOSE - 1025 mm (40-3/8 inch) long, stabilizer section upper ports to closed ends of stabilizer cylinders	2
20	218-5106	ELBOW - 90 degree, 3/4-16 inch flare x adj O-ring boss, stabilizer cylinder closed ends	2
21	237-6008	O-RING - 41/64 ID x 3/32 inch wide	1
22	814-10060	BOLT - hex, 10 - 1.5 x 60 mm	2
23	D40236	CLAMP - hose	2
24	D146035	SPACER - hose clamps	2
25	D150099	PLATE - spacer	2
26	829-1410	NUT - hex, 10 mm - 1.5, class 10.9	2
27	D142787	INSULATOR - rubber	2
28	214-3188	CLAMP - adj, 4-3/4 - 5-5/8 inch dia	2
31	191758A1	PLATE - spacer, clamp	1
32	614-10030	BOLT - hex, full threads, 10 - 1.5 x 30 mm	1
33	892-11010	WASHER - lock, 10 mm	1
34	829-1410	NUT - hex, 10 mm - 1.5, class 10.9	1
35	218-5351	ADAPTER - straight, 3/4-16 flare x 9/16-18 inch O-ring boss, stabilizer cylinder rod end	2
36	237-6006	O-RING - 15/32 ID x 5/64 inch wide	1
37	199721A1	CYLINDER ASSEMBLY - 108 (4-1/4) ID x 553 mm (21-3/4 inch) stroke, left-hand stabilizer, parts list page 8-133	1
38	199720A1	CYLINDER ASSEMBLY - 108 (4-1/4) ID x 553 mm (21-3/4 inch) stroke, right-hand stabilizer, parts list page 8-133	1

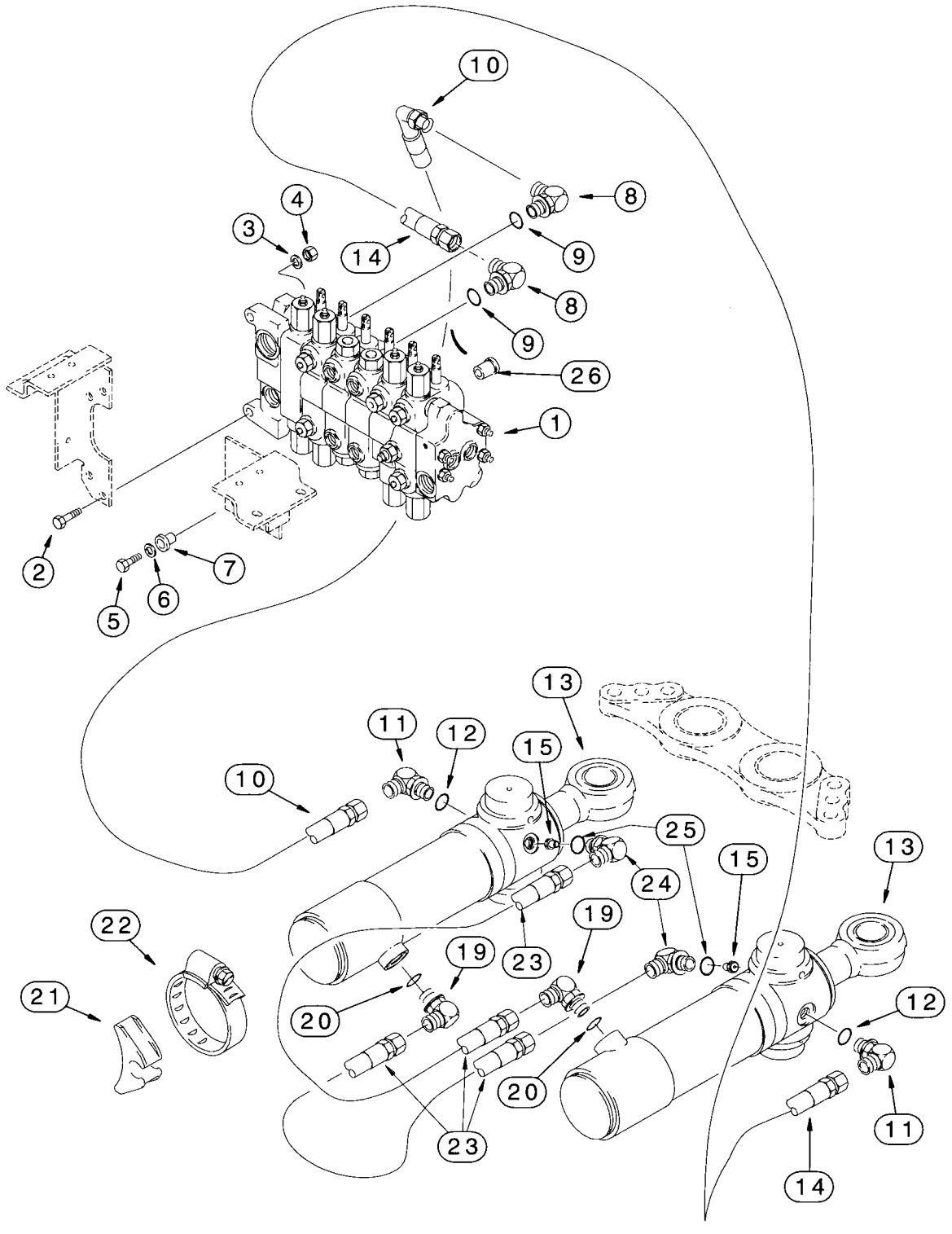
10
4
8
3
14
9
8
9
26
1
2
7
6
5
13
11
12
15
10
25
15
13
24
22
19
19
23
21
20
20
12
23
11
14

BACKHOE SWING CYLINDER HYDRAULIC CIRCUIT

REF.	PART NO.	DESCRIPTION	REQ'D.
1	REF	VALVE ASSEMBLY - backhoe control, for correct assembly and components, see page 8-89 - 8-95	1
2	814-12045	BOLT - hex, 12 - 1.75 x 45 mm	2
3	896-11012	WASHER - flat, 13.5 x 24 x 3 mm, hardened	2
4	829-1412	NUT - hex, 12 mm - 1.75, class 10	2
5	413-624	BOLT - hex, 3/8 NC x 1-1/2 inch	1
6	D52275	WASHER - flat, special, 25/64 x 1-1/4 x 7/64 inch, hardened	1
7	D52276	INSULATOR - rubber	1
8	218-5119	ELBOW - 90 degree, 7/8-14 flare x 1-1/16-12 inch adj O-ring boss, swing section upper and lower ports	2
9	237-6012	O-RING - 59/64 ID x 7/64 inch wide	1
10	196278A1	HOSE - 700 mm (27-9/16 inch) long, includes hose guard, swing section upper port to outer rod end of left-hand swing cylinder	1
11	218-5106	ELBOW - 90 degree, 3/4-16 inch flare x adj O-ring boss, outer rod end of swing cylinders	2
12	237-6008	O-RING - 41/64 ID x 3/32 inch wide	1
13	REF	CYLINDER ASSEMBLY - 102 (4) ID X 292 mm (11-1/2 inch) stroke, swing, parts list page 8-135	2
14	183243A1	HOSE - 1400 mm (55-1/8 inch) long, right-hand swing cylinder outer rod end to swing section lower port	1
15	124690A1	RESTRICTOR - check, 1/2 inch tube	2
19	218-5119	ELBOW - 90 degree, 7/8-14 flare x 1-1/16-12 inch adj O-ring boss	2
20	237-6012	O-RING - 59/64 ID x 7/64 inch wide	1
21	D142787	INSULATOR - rubber	2
22	214-1488	CLAMP - adj, 5-1/8 - 6 inch dia	2
23	255659A1	HOSE - 815 mm (32-3/32 inch) long, 1/2 inch ID, includes hose guard, crossover	2
24	218-5106	ELBOW - 90 degree, 3/4-16 inch flare x adj O-ring boss	2
25	237-6008	O-RING - 41/64 ID x 3/32 inch wide	1
26	182222A1	RESTRICTOR - check, 4.36 mm orifice, upper and lower ports	2

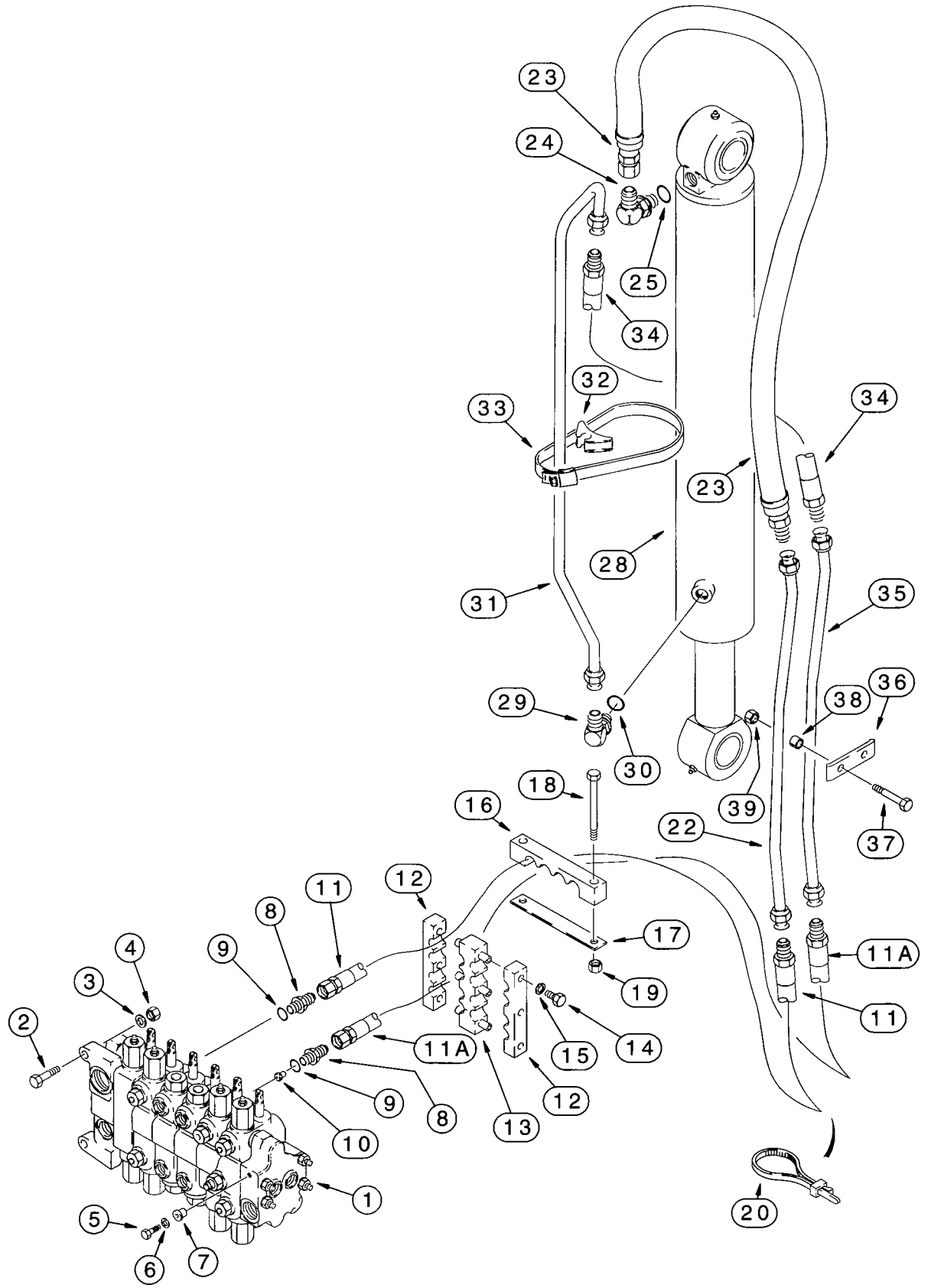
23
24
25
34
32
33
34
23
28
31
35
29
30
38
36
39
37
18
16
22
12
11
8
9
4
3
2
17
11A
19
11
15
14
11A
9
8
10
12
13
1
5
6
7
20

*BACKHOE BOOM CYLINDER HYDRAULIC CIRCUIT

REF.	PART NO.	DESCRIPTION	REQ'D.
1	REF	VALVE ASSEMBLY - backhoe control, for correct assembly and components, see page 8-89 - 8-95	1
2	814-12045	BOLT - hex, 12 - 1.75 x 45 mm	2
3	896-11012	WASHER - flat, 13.5 x 24 x 3 mm, hardened	2
4	829-1412	NUT - hex, 12 mm - 1.75, class 10	2
5	413-624	BOLT - hex, 3/8 NC x 1-1/2 inch	1
6	D52275	WASHER - flat, special, 25/64 x 1-1/4 x 7/64 inch, hardened	1
7	D52276	INSULATOR - rubber	1
8	218-5064	ADAPTER - straight, 1-1/16-12 inch flare x O-ring boss, boom section upper and lower ports	2
9	237-6012	O-RING - 59/64 ID x 7/64 inch wide	1
10	D77182	RESTRICTOR - check, boom section lower port, remove restrictor if equipped with boom lock valve circuit	1
11	193499A1	HOSE - 1295 mm (51 inch) long, includes hose guard and clamp, upper port control valve through swing tower to boom	1
11A	193117A1	HOSE - 1295 mm (51 inch) long, includes hose guard and clamp, lower port control valve through swing tower to boom	1
12	143439A1	CLAMP - hose, outer	2
13	176226A1	CLAMP - hose, center	1
14	614-8025	BOLT - hex, full threads, 8 - 1.25 x 25 mm	6
15	892-11008	WASHER - lock, 8 mm	6
16	143882A1	CLAMP - hose, at swing tower	1
17	132212A1	PLATE - hose clamp, at swing tower	1
18	814-12100	BOLT - hex, 12 - 1.75 x 100 mm	2
19	832-10412	NUT - hex, self-locking, 12 mm - 1.75	2
20	L18337	STRAP - tie, 15 inch, nylon, retaining	1
22	142120A1	TUBE - to boom cylinder closed end hose	1
23	187845A1	HOSE - 1000 mm (39-3/8 inch) long, includes sleeve and banded clamps, boom cylinder closed end	1
24	218-5108	ELBOW - 90 degree, 1-1/16-12 inch flare x adj O-ring boss, boom cylinder closed end, for models with boom lock valve, see page 8-59	1
25	237-6012	O-RING - 59/64 ID x 7/64 inch wide	1
28	144200A1	CYLINDER ASSEMBLY - 127 (5) ID x 842 mm (33-5/32 inch) stroke, boom, parts list page 8-137	1
29	218-5123	ELBOW - 90 degree, 1-1/16-12 flare x 7/8-14 inch adj O-ring boss, boom cylinder rod end	1
30	237-6010	O-RING - 3/4 ID x 3/32 inch wide	1
31	142815A1	TUBE - boom cylinder rod end	1
32	D142787	INSULATOR - rubber	1
33	214-14104	CLAMP - adj, 6-1/8 - 7 inch dia, tube to cylinder	1
34	177634A1	HOSE - 440 mm (17-3/8 inch) long, to boom cylinder rod end tube	1
35	142122A1	TUBE - to boom cylinder rod end hose	1
36	133605A1	CLAMP - boom cylinder tubes to inner left-hand side of boom	2
37	814-12080	BOLT - hex, 12 - 1.75 x 80 mm	4
38	132930A1	SPACER - split	4
39	832-10412	NUT - hex, self-locking, 12 mm - 1.75	4

* **NOTE:** See pages 8-57 and 8-59 for boom lock hydraulic and electrical circuit.

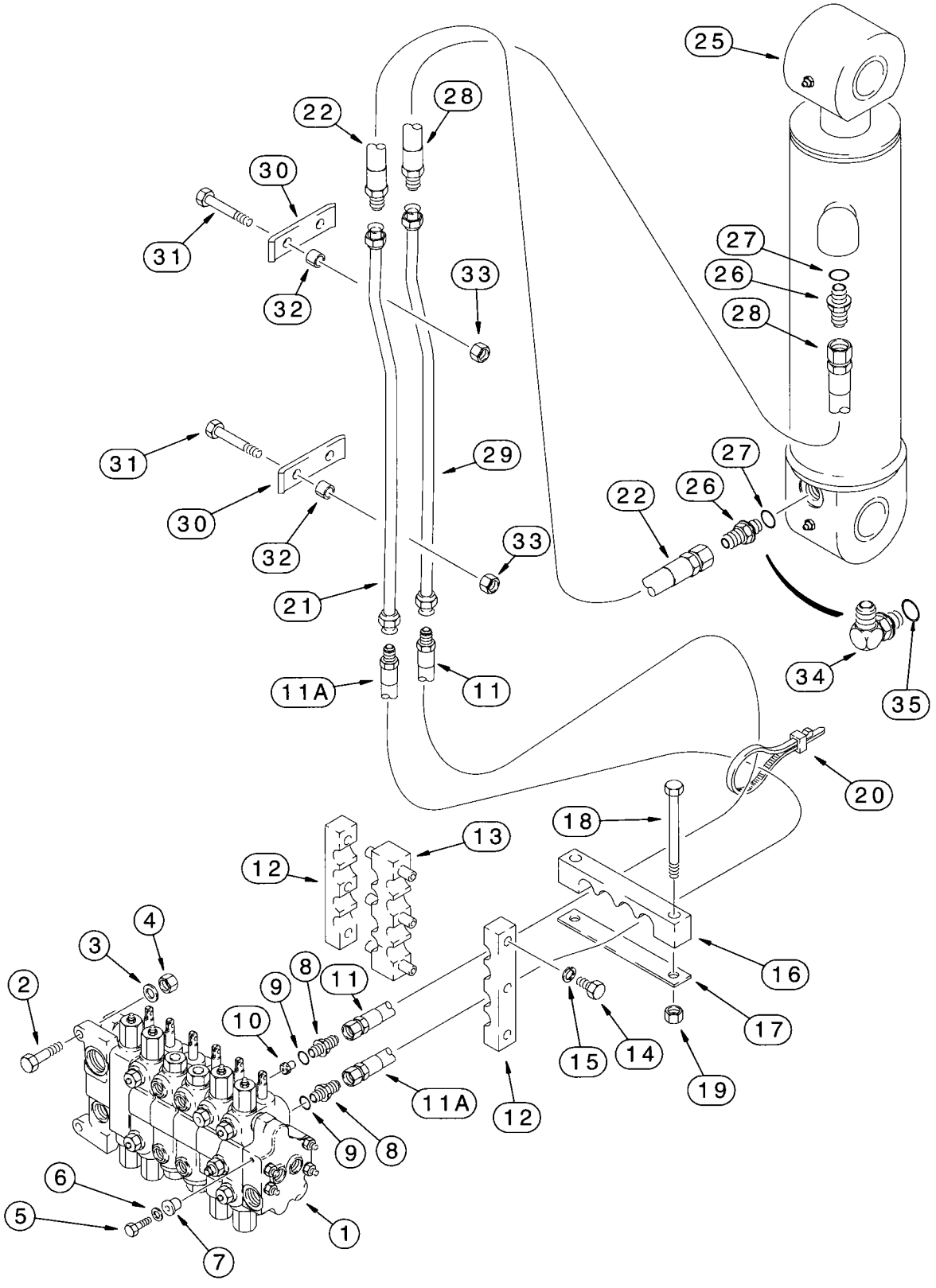
25
22
28
30
31
32
33
27
26
28
31
30
32
29
33
21
22
27
26
34
35
11A
11
20
18
13
12
16
17
15
14
19
4
3
2
8
9
11
10
11A
12
9
8
6
5
7
1

BACKHOE DIPPER CYLINDER HYDRAULIC CIRCUIT

REF.	PART NO.	DESCRIPTION	REQ'D.
1	REF	VALVE ASSEMBLY - backhoe control, for correct assembly and components, see page 8-89 - 8-95	1
2	814-12045	BOLT - hex, 12 - 1.75 x 45 mm	2
3	896-11012	WASHER - flat, 13.5 x 24 x 3 mm, hardened	2
4	829-1412	NUT - hex, 12 mm - 1.75, class 10	2
5	413-624	BOLT - hex, 3/8 NC x 1-1/2 inch	1
6	D52275	WASHER - flat, special, 25/64 x 1-1/4 x 7/64 inch, hardened	1
7	D52276	INSULATOR - rubber	1
8	218-5064	ADAPTER - straight, 1-1/16-12 inch flare x O-ring boss, dipper section upper and lower ports	2
9	237-6012	O-RING - 59/64 ID x 7/64 inch wide	1
10	D142366	RESTRICTOR - check, dipper section upper port	1
11	193499A1	HOSE - 1295 mm (51 inch) long, includes hose guard and clamp, upper port control valve through swing tower to boom	1
11A	193117A1	HOSE - 1295 mm (51 inch) long, includes hose guard and clamp, lower port control valve through swing tower to boom	1
12	143439A1	CLAMP - hose, outer	2
13	176226A1	CLAMP - hose, center	1
14	614-8025	BOLT - hex, full threads, 8 - 1.25 x 25 mm	6
15	892-11008	WASHER - lock, 8 mm	6
16	143882A1	CLAMP - hose, at swing tower	1
17	132212A1	PLATE - hose clamp, at swing tower	1
18	814-12100	BOLT - hex, 12 - 1.75 x 100 mm	2
19	832-10412	NUT - hex, self-locking, 12 mm - 1.75	2
20	L18337	STRAP - tie, 15 inch, nylon, retaining	1
21	142126A1	TUBE - to dipper cylinder closed end hose	1
22	193793A1	HOSE - 660 mm (26 inch) long, includes hose guard and clamp, dipper cylinder closed end	1
25	REF	CYLINDER ASSEMBLY - 5 (127) ID x 23 inch (583 mm) stroke, dipper, parts list page 8-139	1
26	218-5064	ADAPTER - straight, 1-1/16-12 inch flare x O-ring boss	1
27	237-6012	O-RING - 59/64 ID x 7/64 inch wide	1
28	144235A1	HOSE - 780 mm (30-3/4 inch) long, dipper cylinder rod end	1
29	142124A1	TUBE - to dipper cylinder rod end hose	1
30	133605A1	CLAMP - dipper cylinder tubes to inner right-hand side of boom	2
31	814-12080	BOLT - hex, 12 - 1.75 x 80 mm	4
32	132930A1	SPACER - split	4
33	832-10412	NUT - hex, self-locking, 12 mm - 1.75	4
34	218-5108	ELBOW - 90 degree, 1-1/16-12 inch flare x adj O-ring boss	1
35	237-6012	O-RING - 59/64 ID x 7/64 inch wide	1

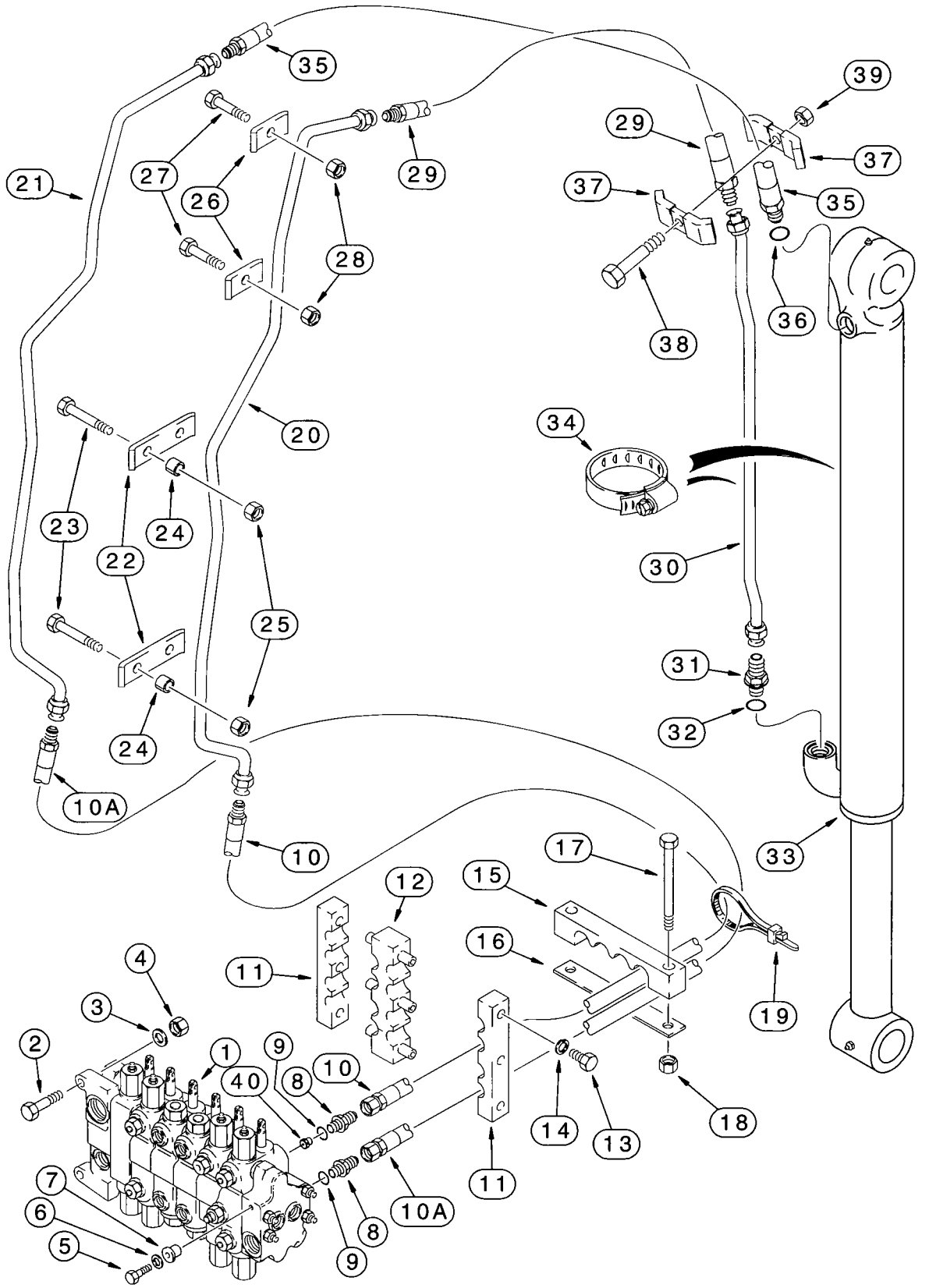
35
39
29
37
27
26
29
37
35
21
28
36
38
20
34
23
24
22
30
25
31
32
24
10A
10
33
17
12
15
16
11
19
4
3
2
1
40
9
8
10
14
13
18
11
10A
7
6
5
9
8

BACKHOE BUCKET CYLINDER HYDRAULIC CIRCUIT

MODELS WITHOUT EXTENDABLE DIPPER

REF.	PART NO.	DESCRIPTION	REQ'D.
1	REF	VALVE ASSEMBLY - backhoe control, for correct assembly and components, see page 8-89 or 8-91	1
2	814-12045	BOLT - hex, 12 - 1.75 x 45 mm	2
3	896-11012	WASHER - flat, 13.5 x 24 x 3 mm, hardened	2
4	829-1412	NUT - hex, 12 mm - 1.75, class 10	2
5	413-624	BOLT - hex, 3/8 NC x 1-1/2 inch	1
6	D52275	WASHER - flat, special, 25/64 x 1-1/4 x 7/64 inch, hardened	1
7	D52276	INSULATOR - rubber	1
8	218-5064	ADAPTER - straight, 1-1/16-12 inch flare x O-ring boss, bucket section upper and lower ports	2
9	237-6012	O-RING - 59/64 ID x 7/64 inch wide	1
10	193499A1	HOSE - 1295 mm (51 inch) long, includes hose guard and clamp, upper port control valve through swing tower to boom	1
10A	193117A1	HOSE - 1295 mm (51 inch) long, includes hose guard and clamp, lower port control valve through swing tower to boom	1
11	143439A1	CLAMP - hose, outer	2
12	176226A1	CLAMP - hose, center	1
13	614-8025	BOLT - hex, full threads, 8 - 1.25 x 25 mm	6
14	892-11008	WASHER - lock, 8 mm	6
15	143882A1	CLAMP - hose, at swing tower	1
16	132212A1	PLATE - hose clamp, at swing tower	1
17	814-12100	BOLT - hex, 12 - 1.75 x 100 mm	2
18	832-10412	NUT - hex, self-locking, 12 mm - 1.75	2
19	L18337	STRAP - tie, 15 inch, nylon, retaining	1
20	141806A1	TUBE - right-hand side of boom, to bucket cylinder rod end	1
21	141801A1	TUBE - left-hand side of boom, to bucket cylinder closed end	1
22	133605A1	CLAMP - bucket cylinder tubes to inner sides of boom	4
23	814-12080	BOLT - hex, 12 - 1.75 x 80 mm	8
24	132930A1	SPACER - split	8
25	832-10412	NUT - hex, self-locking, 12 mm - 1.75	8
26	133604A1	CLAMP - tube to boom	4
27	814-12060	BOLT - hex, 12 - 1.75 x 60 mm	4
28	832-10412	NUT - hex, self-locking, 12 mm - 1.75	4
29	183660A1	HOSE - 640 mm (25-3/16 inch) long, includes hose guard and clamp, right-hand bucket tube on boom to bucket cylinder rod end tube	1
30	256091A1	TUBE - bucket cylinder rod end	1
31	218-5064	ADAPTER - straight, 1-1/16-12 inch flare x O-ring boss, bucket cylinder rod end	1
32	237-6012	O-RING - 59/64 ID x 7/64 inch wide	1

Continued on next page

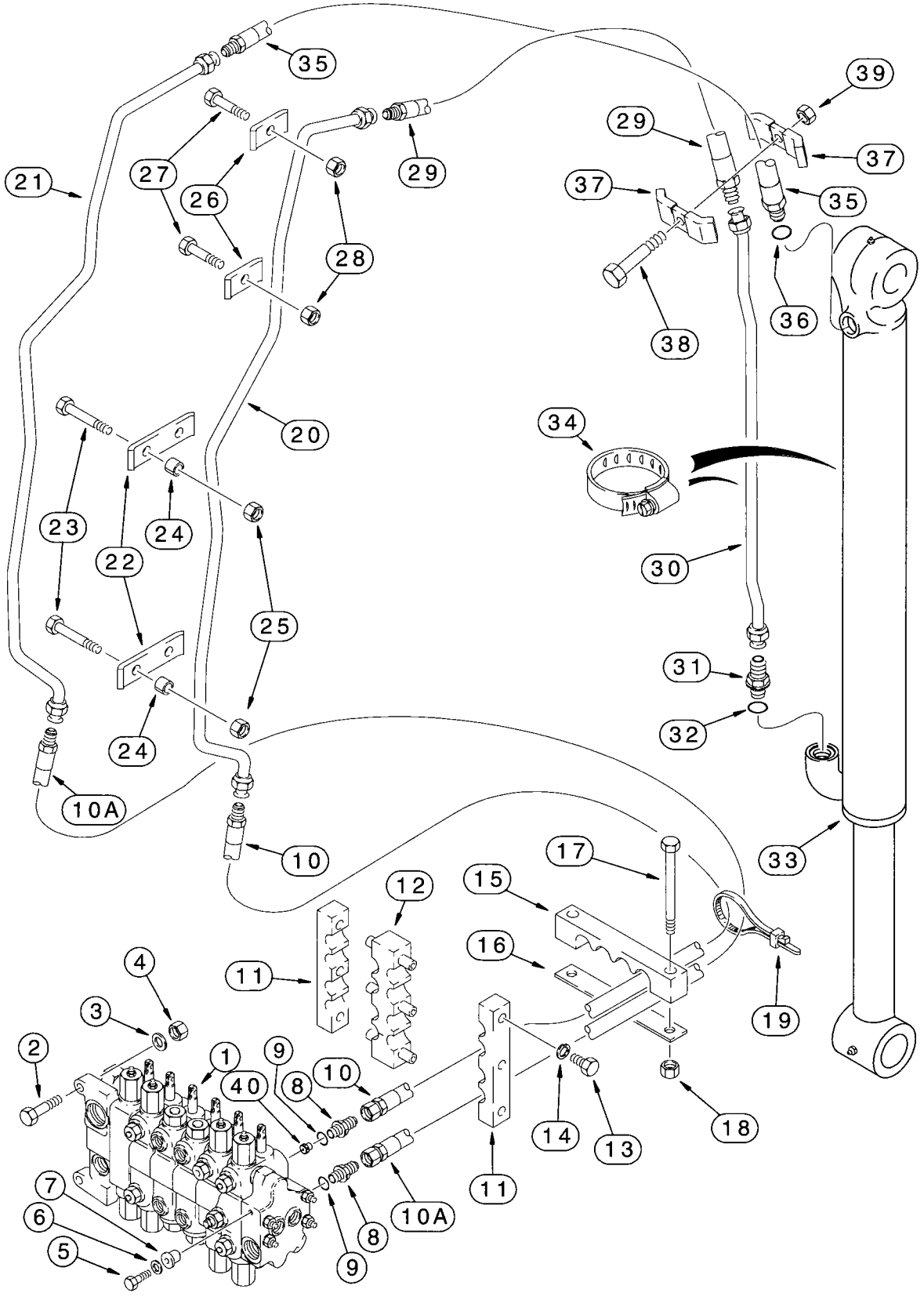
35
39
29
37
21
27
26
29
37
35
28
36
38
20
34
23
24
22
30
25
31
32
24
10A
10
33
17
12
15
16
11
19
4
3
2
1
9
40
8
10
14
13
18
11
7
6
5
10A
8
9

BACKHOE BUCKET CYLINDER HYDRAULIC CIRCUIT

MODELS WITHOUT EXTENDABLE DIPPER

REF.	PART NO.	DESCRIPTION	REQ'D.
33	REF	CYLINDER ASSEMBLY - 80 (3-1/2) ID x 872 mm (34-5/16 inch) stroke, bucket, parts list page 8-141	1
34	214-1472	CLAMP - adj, 4-1/16 - 5 inch dia	1
35	183658A1	HOSE - 640 mm (25-3/16 inch) long, includes hose guard and clamps, left-hand bucket tube on boom to bucket cylinder closed end	1
36	237-6012	O-RING - 59/64 ID x 7/64 inch wide	1
37	D40236	CLAMP - hose	2
38	814-10055	BOLT - hex, 10 - 1.5 x 55 mm	1
39	832-10410	NUT - hex, self-locking, 10 mm - 1.5	1
40	182222A1	RESTRICTOR - check, 4.36 mm orifice, bucket section upper port, if used	1

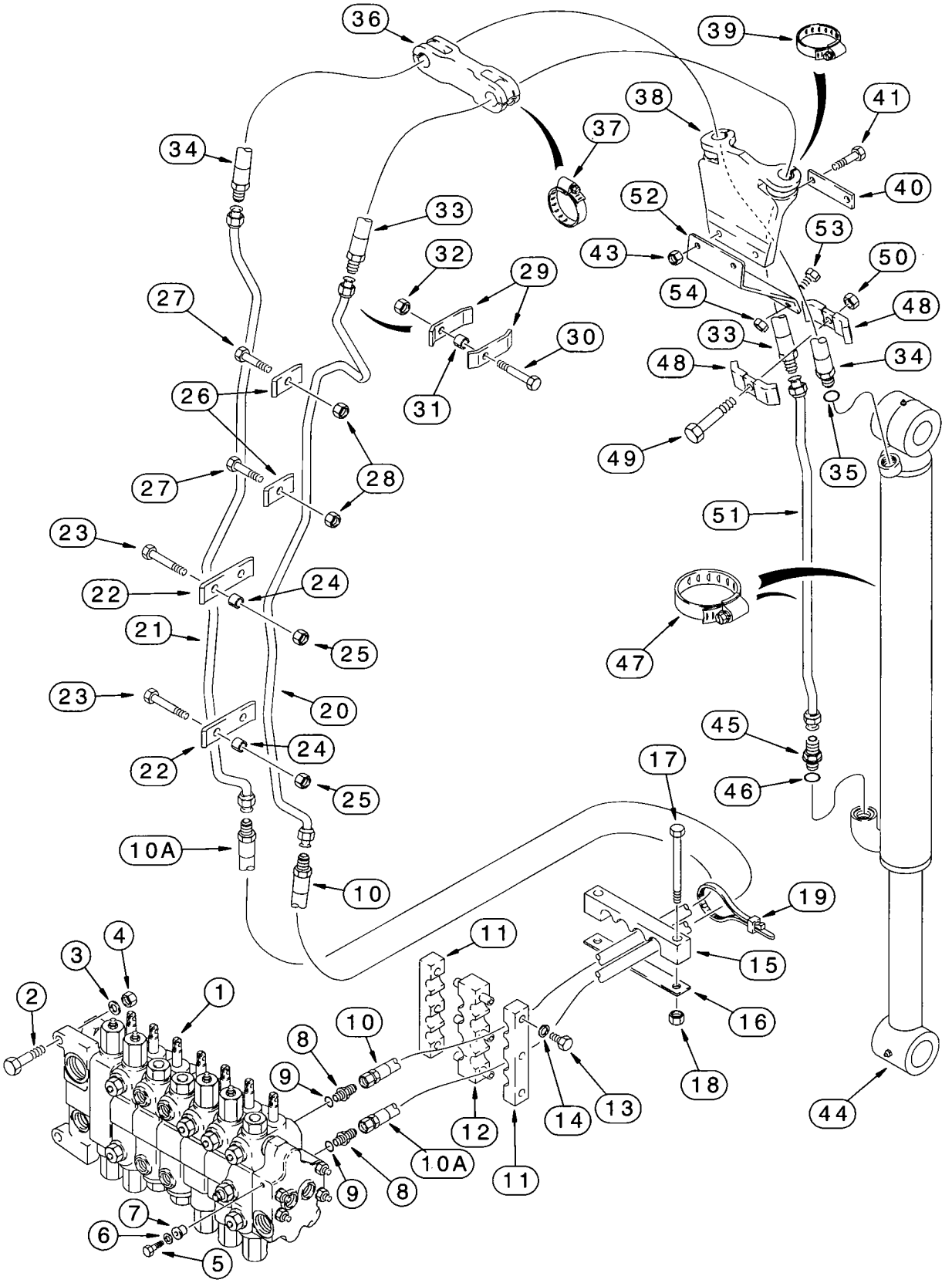
36
39
38
41
37
34
40
52
33
53
43
50
32
29
54
48
27
30
33
48
34
26
31
49
35
28
27
51
23
24
22
21
25
47
23
20
45
24
22
17
46
25
10A
19
10
11
4
3
15
2
1
16
10
8
18
9
12
14
13
10A
11
9
8
7
6
5
44

BACKHOE BUCKET CYLINDER HYDRAULIC CIRCUIT

MODELS WITH EXTENDABLE DIPPER

REF.	PART NO.	DESCRIPTION	REQ'D.
1	REF	VALVE ASSEMBLY - backhoe control, for correct assembly and components, see page 8-93 - 8-95	1
2	814-12045	BOLT - hex, 12 - 1.75 x 45 mm	2
3	896-11012	WASHER - flat, 13.5 x 24 x 3 mm, hardened	2
4	829-1412	NUT - hex, 12 mm - 1.75, class 10	2
5	413-624	BOLT - hex, 3/8 NC x 1-1/2 inch	1
6	D52275	WASHER - flat, special, 25/64 x 1-1/4 x 7/64 inch, hardened	1
7	D52276	INSULATOR - rubber	1
8	218-5064	ADAPTER - straight, 1-1/16-12 inch flare x O-ring boss, bucket section upper and lower ports	2
9	237-6012	O-RING - 59/64 ID x 7/64 inch wide	1
10	193499A1	HOSE - 1295 mm (51 inch) long, includes hose guard and clamp, upper port control valve through swing tower to boom	1
10A	193117A1	HOSE - 1295 mm (51 inch) long, includes hose guard and clamp, lower port control valve through swing tower to boom	1
11	143439A1	CLAMP - hose, outer	2
12	176226A1	CLAMP - hose, center	1
13	614-8025	BOLT - hex, full threads, 8 - 1.25 x 25 mm	6
14	892-11008	WASHER - lock, 8 mm	6
15	143882A1	CLAMP - hose, at swing tower	1
16	132212A1	PLATE - hose clamp, at swing tower	1
17	814-12100	BOLT - hex, 12 - 1.75 x 100 mm	2
18	832-10412	NUT - hex, self-locking, 12 mm - 1.75	2
19	L18337	STRAP - tie, 15 inch, nylon, retaining	1
20	187637A1	TUBE - right-hand side of boom, to bucket cylinder rod end	1
21	187639A1	TUBE - left-hand side of boom, to bucket cylinder closed end	1
22	133605A1	CLAMP - bucket cylinder tubes to inner sides of boom	4
23	814-12080	BOLT - hex, 12 - 1.75 x 80 mm	8
24	132930A1	SPACER - split	8
25	832-10412	NUT - hex, self-locking, 12 mm - 1.75	8
26	133604A1	CLAMP - tube to boom	4
27	814-12060	BOLT - hex, 12 - 1.75 x 60 mm	4
28	832-10412	NUT - hex, self-locking, 12 mm - 1.75	4
29	D143426	CLAMP - bucket tubes to boom	4
30	814-10055	BOLT - hex, 10 - 1.5 x 55 mm	2
31	D143412	SPACER - tube clamp	2
32	832-10410	NUT - hex, self-locking, 10 mm - 1.5	2
33	108335A1	HOSE - 1960 mm (77-1/8 inch) long, to bucket cylinder rod end tube	1
34	108336A1	HOSE - 1930 mm (76 inch) long, to bucket cylinder closed end	1
35	237-6012	O-RING - 59/64 ID x 7/64 inch wide	1
36	103670A1	CLAMP - rubber, hose	1
37	214-3132	CLAMP - adj, 1-1/4 - 2-1/8 inch dia	2

Continued on next page

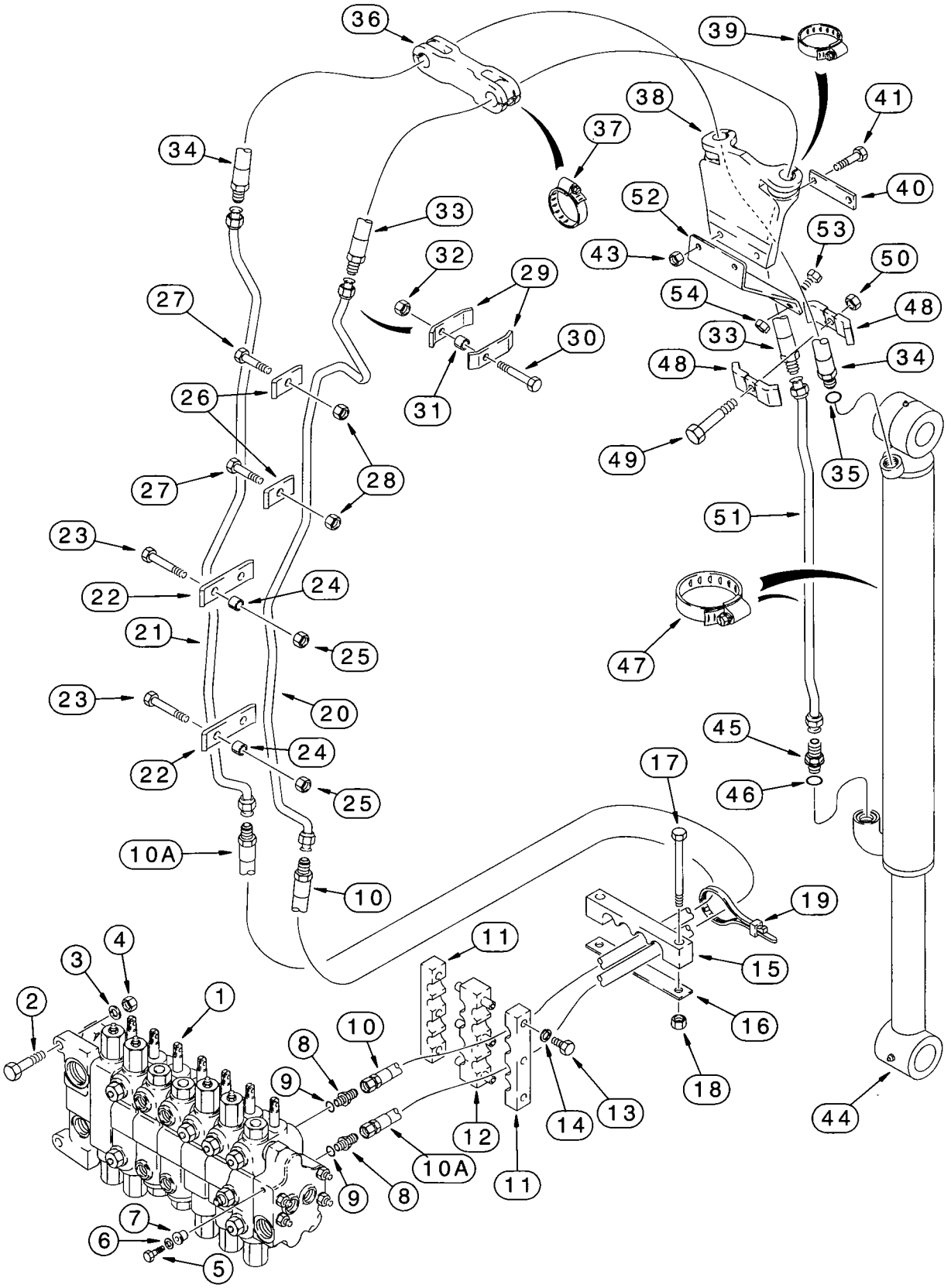
36
39
38
41
37
34
40
52
33
53
43
32
29
50
54
27
48
30
33
48
34
26
31
49
35
28
27
51
23
22
24
47
21
25
23
20
45
22
24
17
46
25
10A
10
19
11
4
3
15
2
1
16
10
8
18
9
12
14
13
44
10A
11
9
8
7
6
5

BACKHOE BUCKET CYLINDER HYDRAULIC CIRCUIT
MODELS WITH EXTENDABLE DIPPER

REF.	PART NO.	DESCRIPTION	REQ'D.
38	184297A1	SUPPORT - hose	1
39	214-3132	CLAMP - adj, 1-1/4 - 2-1/8 inch dia	2
40	101479A1	PLATE - hose support	1
41	814-10045	BOLT - hex, 10 - 1.5 x 45 mm	2
43	832-10410	NUT - hex, self-locking, 10 mm - 1.5	2
44	REF	CYLINDER ASSEMBLY - 80 (3-1/2) ID x 872 mm (34-5/16 inch) stroke, bucket, parts list page 8-141	1
45	218-5064	ADAPTER - straight, 1-1/16-12 inch flare x O-ring boss, bucket cylinder rod end	1
46	237-6012	O-RING - 59/64 ID x 7/64 inch wide	1
47	214-1472	CLAMP - adj, 4-1/16 - 5 inch dia	1
48	D40236	CLAMP - hose	2
49	814-10055	BOLT - hex, 10 - 1.5 x 55 mm	1
50	832-10410	NUT - hex, self-locking, 10 mm - 1.5	1
51	136436A1	TUBE - bucket cylinder rod end	1
52	183736A1	PLATE - hose support, mounts to dipper	1
53	614-10030	BOLT - hex, full threads, 10 - 1.5 x 30 mm	2
54	832-10410	NUT - hex, self-locking, 10 mm - 1.5	2

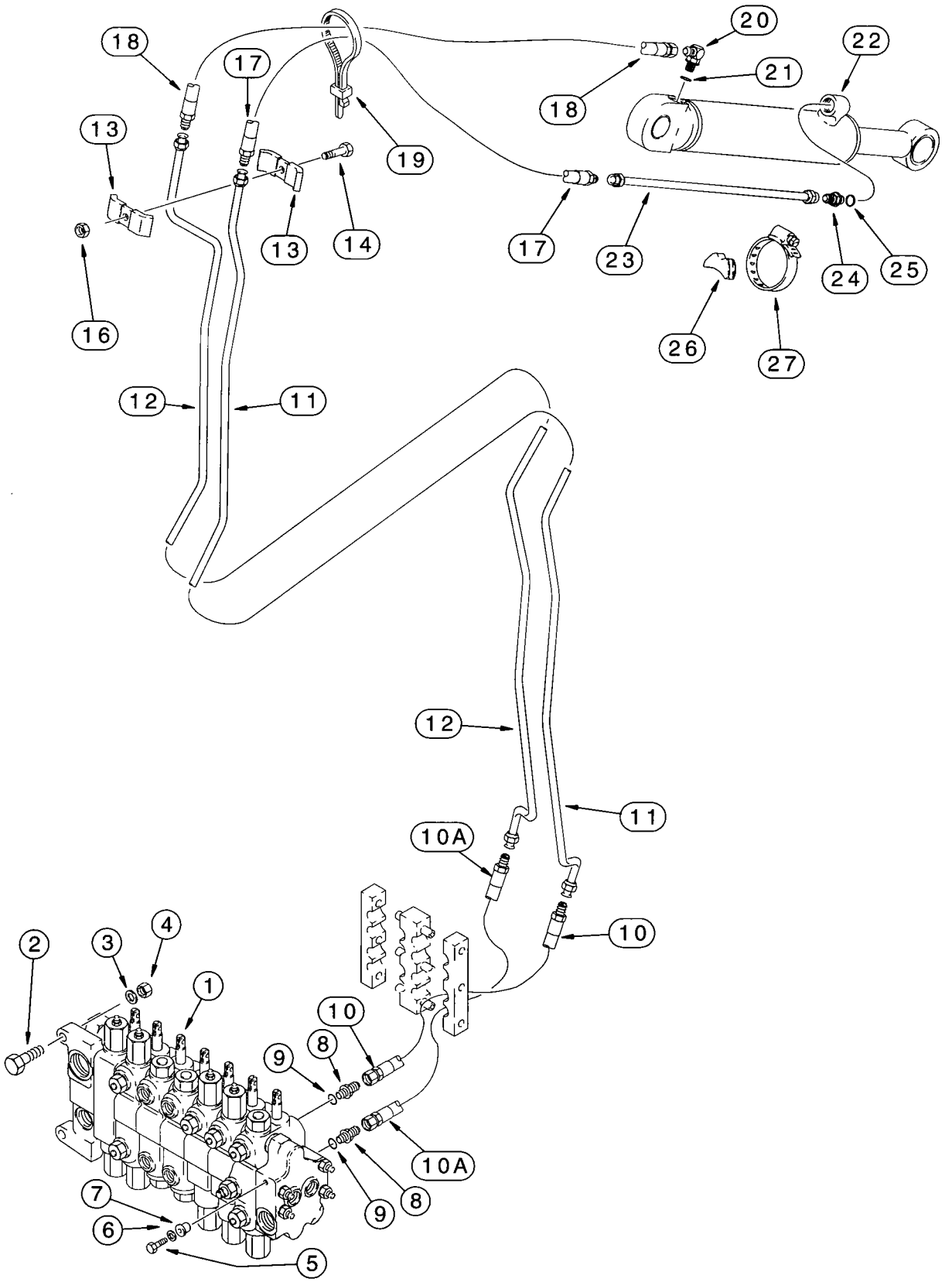
18
17
13
19
20
22
21
18
16
13
14
17
23
24
25
26
27
12
11
12
11
10A
10
2
3
4
1
10
8
9
10A
9
8
7
6
5

BACKHOE EXTENDABLE DIPPER HYDRAULIC CIRCUIT

REF.	PART NO.	DESCRIPTION	REQ'D.
1	REF	VALVE ASSEMBLY - backhoe control, for correct assembly and components, see page 8-93 - 8-95	1
2	814-12045	BOLT - hex, 12 - 1.75 x 45 mm	2
3	896-11012	WASHER - flat, 13.5 x 24 x 3 mm, hardened	2
4	829-1412	NUT - hex, 12 mm - 1.75, class 10	2
5	413-624	BOLT - hex, 3/8 NC x 1-1/2 inch	1
6	D52275	WASHER - flat, special, 25/64 x 1-1/4 x 7/64 inch, hardened	1
7	D52276	INSULATOR - rubber	1
8	218-5064	ADAPTER - straight, 1-1/16-12 inch flare x O-ring boss, extendable dipper section upper and lower ports	2
9	237-6012	O-RING - 59/64 ID x 7/64 inch wide	1
10	193499A1	HOSE - 1295 mm (51 inch) long, includes hose guard and clamp, upper port control valve through swing tower to boom, see page 8-33, items 11-19 for hose clamping	1
10A	193117A1	HOSE - 1295 mm (51 inch) long, includes hose guard and clamp, lower port control valve through swing tower to boom, see page 8-33, items 11-19 for hose clamping	1
11	141809A1	TUBE - on boom, to extendable dipper cylinder rod end	1
12	141811A1	TUBE - on boom, to extendable dipper cylinder closed end	1
13	D40236	CLAMP - tube, on boom	2
14	814-10050	BOLT - hex, 10 - 1.5 x 50 mm	1
16	832-10410	NUT - hex, self-locking, 10 mm - 1.5	1
17	184617A1	HOSE - 850 mm (33-1/2 inch) long, includes hose guard and clamp, extendable dipper cylinder rod end	1
18	184616A1	HOSE - 700 mm (27-9/16 inch) long, includes hose guard and clamp, extendable dipper cylinder closed end	1
19	L18337	STRAP - tie, 15 inch, nylon, retaining	1
20	218-5107	ELBOW - 90 degree, 7/8-14 inch flare x adj O-ring boss, extendable dipper cylinder closed end	1
21	237-6010	O-RING - 3/4 ID x 3/32 inch wide	1
22	1340969C2	CYLINDER ASSEMBLY - 76 (3) ID x 1068 mm (42 inch) stroke, extendable dipper, parts list page 8-143	1
23	D140706	TUBE - at extendable dipper cylinder rod end	1
24	218-5062	ADAPTER - straight, 7/8-14 inch flare x O-ring boss, extendable dipper cylinder rod end	1
25	237-6010	O-RING - 3/4 ID x 3/32 inch wide	1
26	D38648	SPACER - rubber	1
27	214-1464	CLAMP - adj, 3-9/16 - 4-1/2 inch dia	1

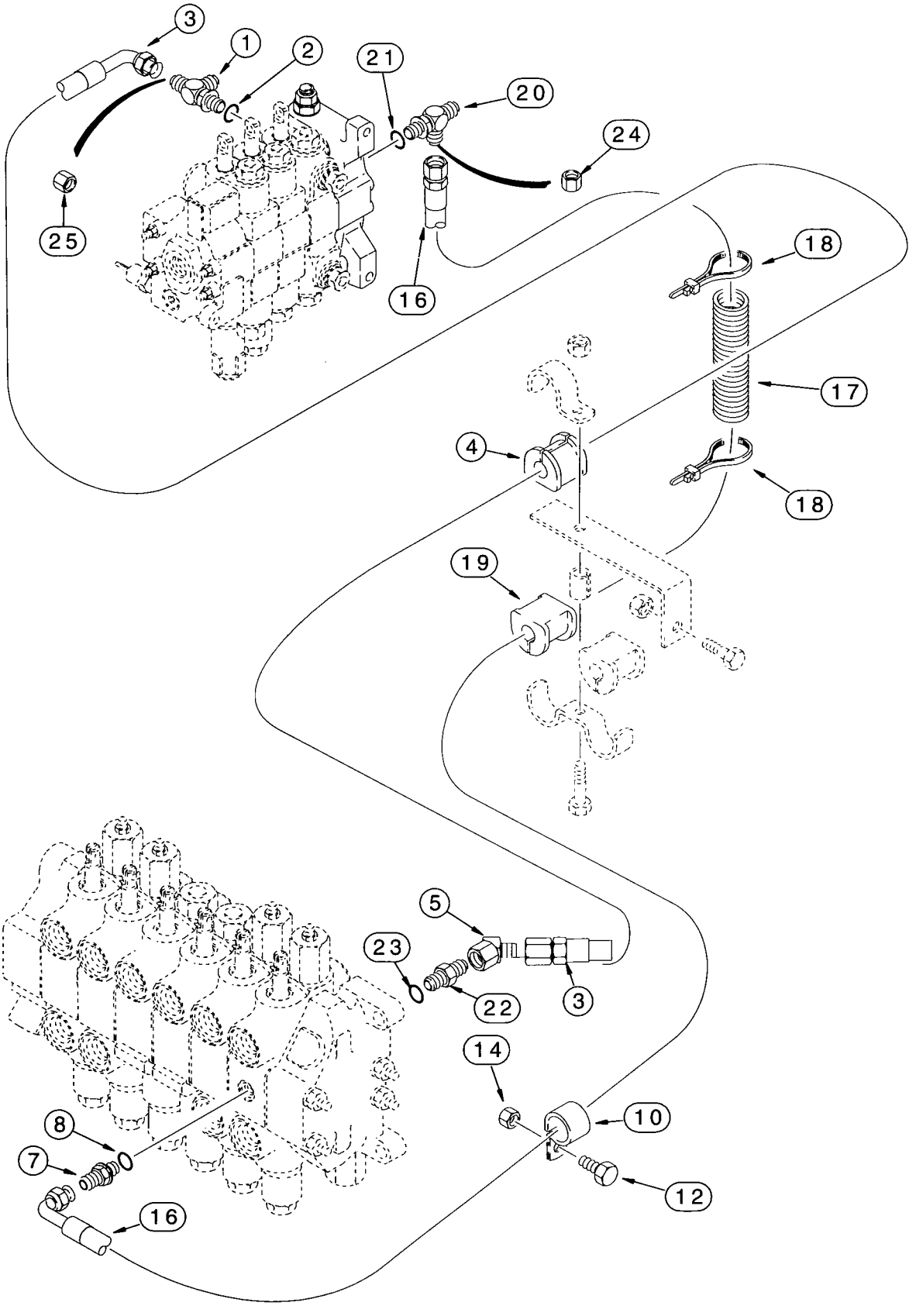
3
1
2
21
20
24
25
16
18
17
4
18
19
5
23
22
3
14
10
8
7
12
16

LOADER VALVE TO BACKHOE VALVE HYDRAULIC CIRCUIT

MODELS WITH OR WITHOUT EXTENDABLE DIPPER WITHOUT AUXILIARY HYDRAULICS

REF.	PART NO.	DESCRIPTION	REQ'D.
1	218-5576	TEE - 3/4-16 fl branch x 1-1/16-12 fl x 7/8-14 inch adj O-ring, inlet section lower port	1
2	237-6010	O-RING - 3/4 ID x 3/32 inch wide	1
3	243339A1	HOSE - 1210 mm (47-11/16 inch) long, swing supply, loader valve inlet section lower port to backhoe valve swing section	1
4	144477A1	INSULATOR - rubber, hose, see page 8-7, Ref 17-29 for mounting hardware and alternate mounting configuration	1
5	218-5174	ELBOW - 45 degree, 7/8-14 inch flare x swivel, at backhoe valve swing section	1
7	218-5057	ADAPTER - straight, 9/16-18 inch flare x O-ring boss	1
8	237-6006	O-RING - 15/32 ID x 5/64 inch wide	1
10	515-25159	CLAMP - P-type, 5/8 inch ID	1
12	614-10025	BOLT - hex, full threads, 10 - 1.5 x 25 mm	1
14	829-1410	NUT - hex, 10 mm - 1.5, class 10.9	1
16	221553A1	HOSE - 1860 mm (73-1/4 inch) long, signal, backhoe control valve swing section to loader control valve inlet section	1
17	D132982	SLEEVE - hose guard	2
18	L18337	STRAP - tie, 15 inch, nylon	4
19	D143797	INSULATOR - 5/8 inch, hose, see page 8-7, Ref 17-29 for power beyond hose and mounting hardware and alternate mounting configuration	1
20	218-5243	TEE - 9/16-18 inch flare branch x flare x adj O-ring boss, loader valve inlet section and steering pilot hose, see page 5-5 for steering hose	1
21	237-6006	O-RING - 15/32 ID x 5/64 inch wide	1
22	119895A3	SEAT - valve, swing section inlet	1
23	237-6010	O-RING - 3/4 ID x 3/32 inch wide	1
24	218-754	CAP - hex, 9/16-18 inch, if used	1
25	218-335	CAP - hex, 1-1/16-12 inch, if used	1

NOTE: See pages 8-41 - 8-55 for auxiliary hydraulics.

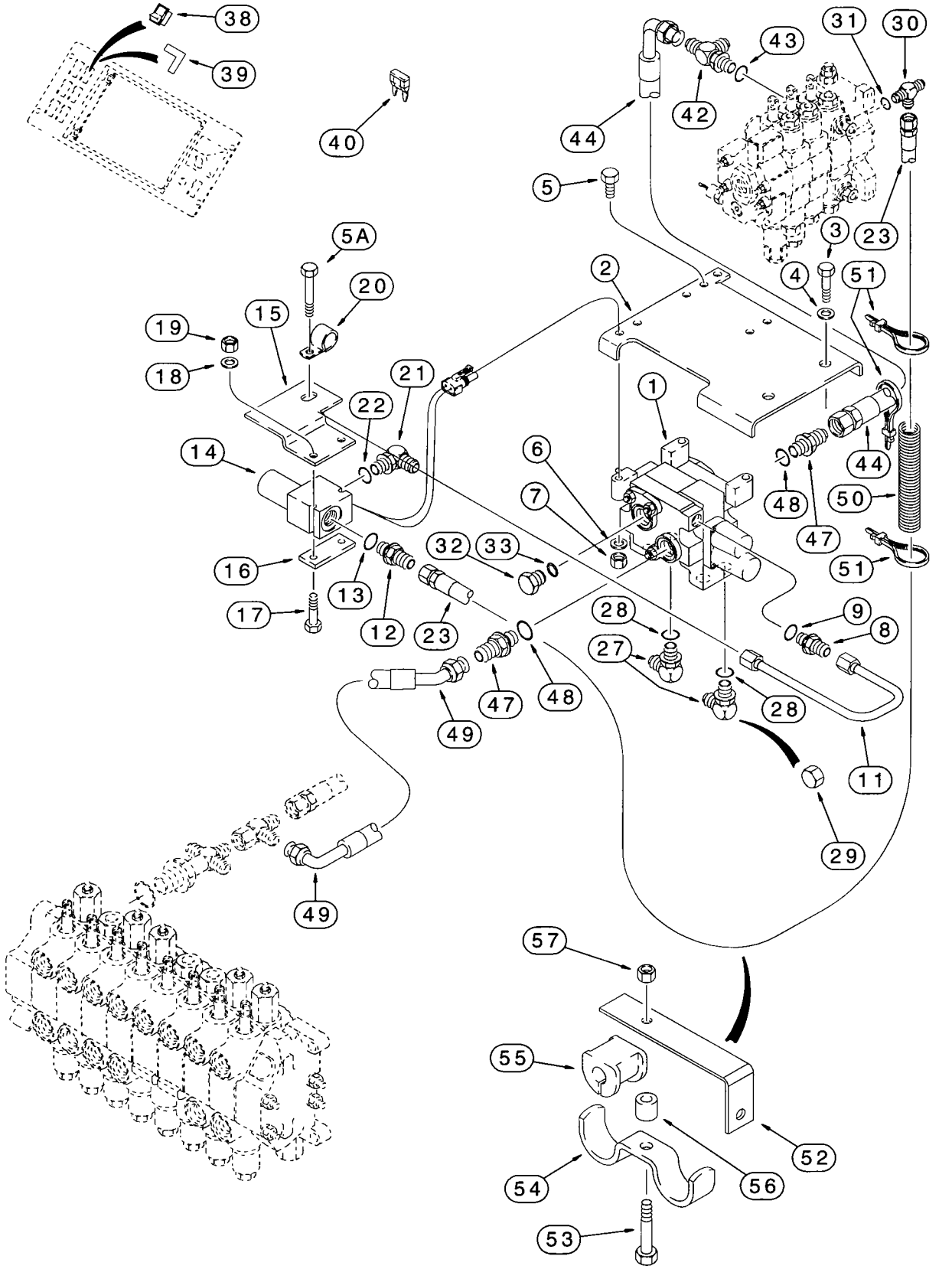
38
39
40
44
42
43
31
30
5
23
3
5A
20
4
51
2
19
15
18
21
22
1
14
6
7
44
48
50
47
32
33
16
13
12
23
17
51
28
9
8
27
28
47
48
49
11
29
49
57
55
52
54
56
53

HAND HELD AUXILIARY HYDRAULICS

MODELS WITH OR WITHOUT EXTENDABLE DIPPER

REF.	PART NO.	DESCRIPTION	REQ'D.
1	121741A1	VALVE ASSEMBLY - auxiliary, hand held, one spool, parts list page 8-117	1
2	224788A2	BRACKET - auxiliary valve mounting to chassis	1
3	814-12050	BOLT - hex, 12 - 1.75 x 50 mm	2
4	896-11012	WASHER - flat, 13.5 x 24 x 3 mm, hardened	2
5	814-10070	BOLT - hex, 10 - 1.5 x 70 mm	3
5A	614-10025	BOLT - hex, full threads, 10 - 1.5 x 25 mm	1
6	895-11010	WASHER - flat, 11 x 20 x 2 mm	4
7	829-1410	NUT - hex, 10 mm - 1.5, class 10.9	4
8	218-5057	ADAPTER - straight, 9/16-18 inch flare x O-ring boss	1
9	237-6006	O-RING - 15/32 ID x 5/64 inch wide	1
11	300983A1	TUBE - auxiliary valve to solenoid valve inlet	1
12	218-5058	ADAPTER - straight, 9/16-18 flare x 3/4-16 inch O-ring boss	1
13	237-6008	O-RING - 41/64 ID x 3/32 inch wide	1
14	137012A1	VALVE ASSEMBLY - solenoid, component parts are not serviced separately, attaches to 302803A1 chassis options harness, Ref 36 on page 4-19	1
15	137713A1	BRACKET - solenoid mounting	1
16	136977A1	PLATE - solenoid valve mounting	1
17	814-6060	BOLT - hex, 6 - 1.0 x 60 mm	2
18	895-11006	WASHER - flat, 6.6 x 12 x 1.6 mm	2
19	829-1406	NUT - hex, 6 mm - 1.0, class 10	2
20	515-2379	CLAMP - P-type, 5/16 inch ID	1
21	218-5128	ELBOW - 90 degree, 9/16-18 flare x 3/4-16 inch adj O-ring boss	1
22	237-6008	O-RING - 41/64 ID x 3/32 inch wide	1
23	192693A1	HOSE - 1490 mm (58-11/16 inch) long, solenoid valve outlet to check valve at loader control valve inlet section	1
27	218-5107	ELBOW - 90 degree, 7/8-14 inch flare x adj O-ring boss, hand held section of auxiliary valve, see hand held hydraulics on page 8-45 or 8-47 for attaching hoses	2
28	237-6010	O-RING - 3/4 ID x 3/32 inch wide	1
29	218-756	CAP - hex, if used, not required when hydraulic hoses for hand held hydraulics are attached to fittings	2
30	282428A1	VALVE - steering check, loader valve inlet section, see page 5-5 for attaching steering hose	1
31	237-6006	O-RING - 15/32 ID x 5/64 inch wide	1
32	218-5158	PLUG - hex, 1-1/16-12 inch O-ring boss, auxiliary valve inlet port	1
33	237-6012	O-RING - 59/64 ID x 7/64 inch wide	1

Continued on next page

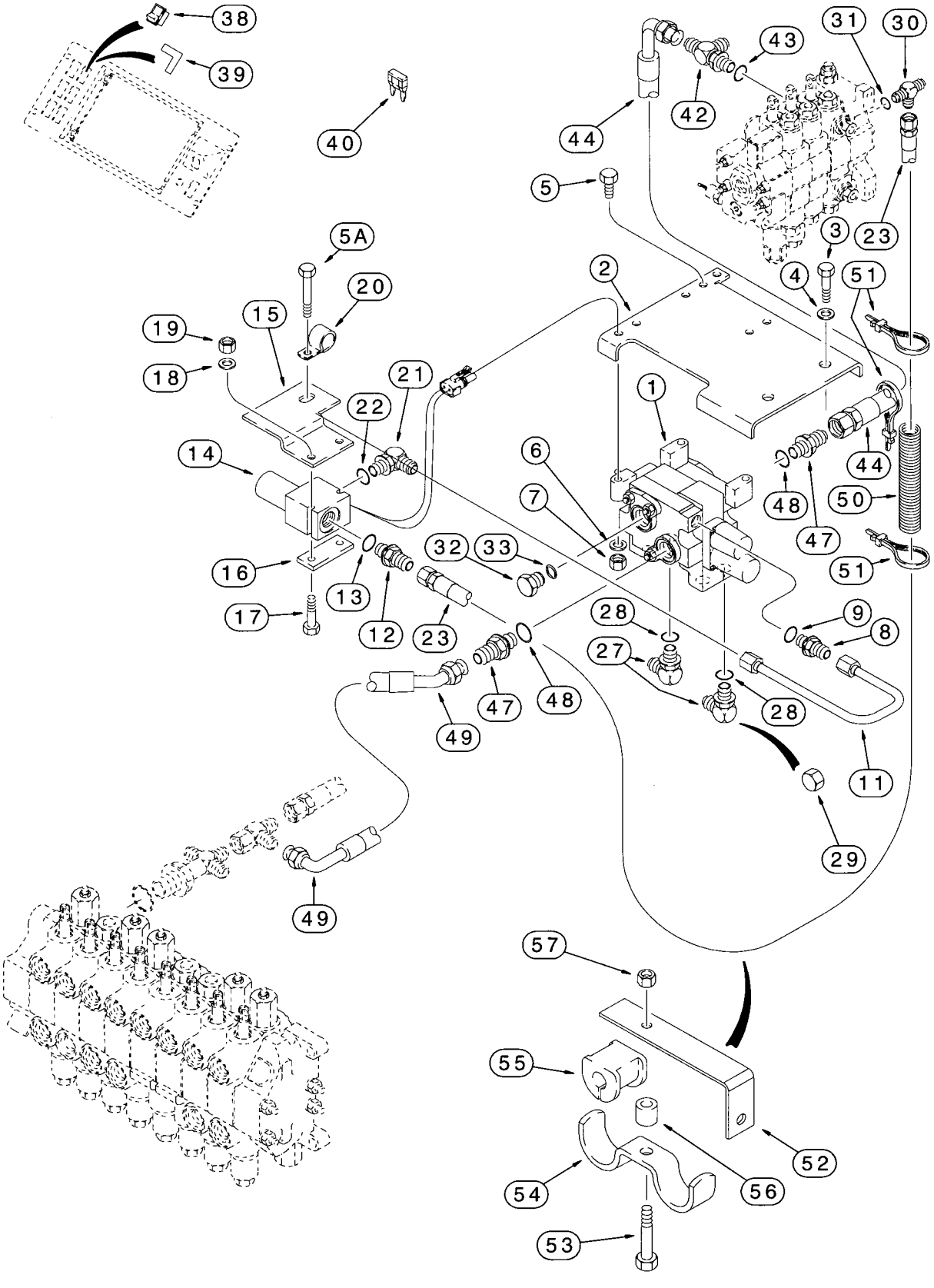
38
39
40
44
42
43
31
30
5
3
23
5A
20
4
51
2
19
15
18
21
22
1
14
6
7
44
48
50
47
51
16
13
12
32
33
23
17
28
9
8
27
28
47
48
49
11
29
49
57
55
52
54
56
53

HAND HELD AUXILIARY HYDRAULICS

MODELS WITH OR WITHOUT EXTENDABLE DIPPER

REF.	PART NO.	DESCRIPTION	REQ'D.
38	191532A1	SWITCH - rocker, auxiliary hydraulics, attaches to side options harness, Ref 35 on page 4-19	1
39	192299A1	DECAL - auxiliary hydraulics, switch on instrument panel, see page 9-157 for decal	1
40	121413A1	FUSE - mini, 15 ampere	1
42	218-5576	TEE - 3/4-16 fl branch x 1-1/16-12 fl x 7/8-14 inch adj O-ring, at loader valve inlet section lower port, see page 5-5 for attaching steering hose	1
43	237-6010	O-RING - 3/4 ID x 3/32 inch wide	1
44	243338A1	HOSE - 910 mm (35-7/8 inch) long, loader valve inlet section lower port to auxiliary valve port	1
47	218-5064	ADAPTER - straight, 1-1/16-12 inch flare x O-ring boss, outlet port at auxiliary valve	2
48	237-6012	O-RING - 59/64 ID x 7/64 inch wide	1
49	302474A1	HOSE - 500 mm (19-11/16 inch) long, return, auxiliary valve outlet port to tee at backhoe control valve	1
50	D132982	SLEEVE - hose guard	2
51	L18337	STRAP - tie, 15 inch	4
52	136008A1	BRACKET - mounting	1
53	814-10050	BOLT - hex, 10 - 1.5 x 50 mm	1
54	D143422	CLAMP - double tube	1
55	D143797	INSULATOR - 5/8 inch	1
56	R46493	SPACER - split, 22 mm (7/8 inch) long	1
57	829-1410	NUT - hex, 10 mm - 1.5, class 10.9	1

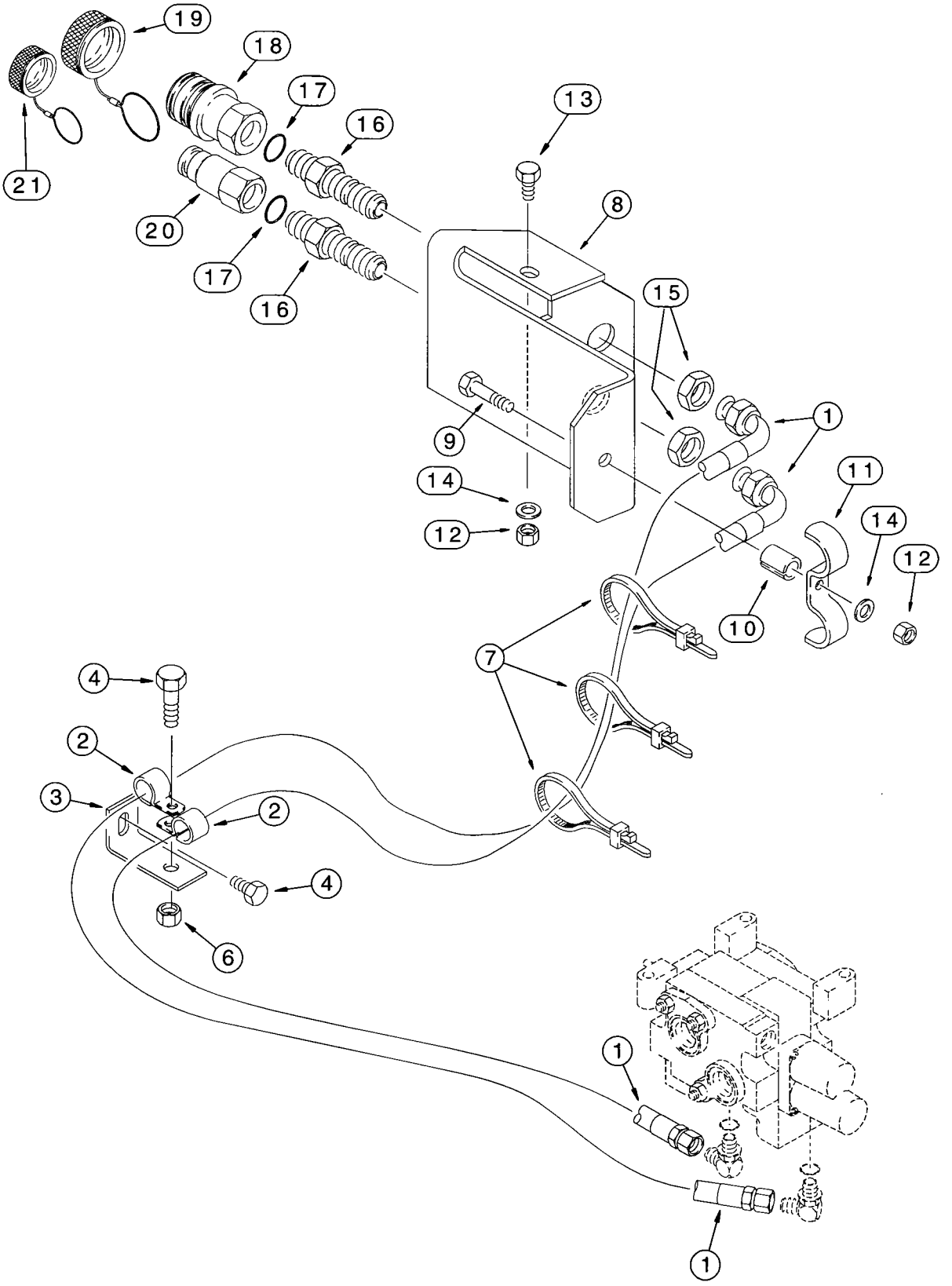
19
18
17
16
13
21
20
17
16
8
15
9
1
14
11
14
12
12
10
7
4
2
3
2
4
6
1
1

*HAND HELD AUXILIARY HYDRAULICS

AUXILIARY VALVE TO QUICK DISCONNECT COUPLINGS MODELS WITH 31 GALLON FUEL TANK

REF.	PART NO.	DESCRIPTION	REQ'D.
1	191215A1	HOSE - 2460 mm (96-7/8 inch) long, auxiliary valve to quick disconnect couplings, see page 8-41 for 218-5107 elbows at auxiliary valve	2
2	D34033	CLAMP - P-type, 1-3/16 inch ID	2
3	180318A1	BRACKET - hose support	1
4	614-10025	BOLT - hex, full threads, 10 - 1.5 x 25 mm	1
6	829-1410	NUT - hex, 10 mm - 1.5, class 10.9	1
7	L18337	STRAP - tie, 15 inch	3
8	297635A1	BRACKET - hose support to quick disconnect couplings	1
9	827-10050	BOLT - hex, 10 - 1.5 x 50 mm, class 10.9	1
10	131600A1	SPACER - clamp	1
11	191075A1	CLAMP - double	1
12	829-1410	NUT - hex, 10 mm - 1.5, class 10.9	2
13	614-10025	BOLT - hex, full threads, 10 - 1.5 x 25 mm	1
14	895-11010	WASHER - flat, 11 x 20 x 2 mm	2
15	218-1256	NUT - hex, lock, bulkhead, 1-1/16 inch NF	2
16	126155A1	CONNECTOR - straight, bulkhead	2
17	237-6012	O-RING - 59/64 ID x 7/64 inch wide	2
18	122179A1	COUPLING - quick disconnect, female, component parts are not serviced separately	1
19	137343A1	CAP - female coupling, aluminum, if used	1
19	193261A1	CAP - female coupling, black rubber, if used	1
20	122178A2	COUPLING - quick disconnect, male, component parts are not serviced separately	1
21	137344A1	CAP - male coupling, aluminum, if used	1
21	193262A1	CAP - male coupling, black rubber, if used	1

***NOTE:** For a continuation of special parts used on models with hand held auxiliary hydraulics, control cables to auxiliary valve, see page 8-49.

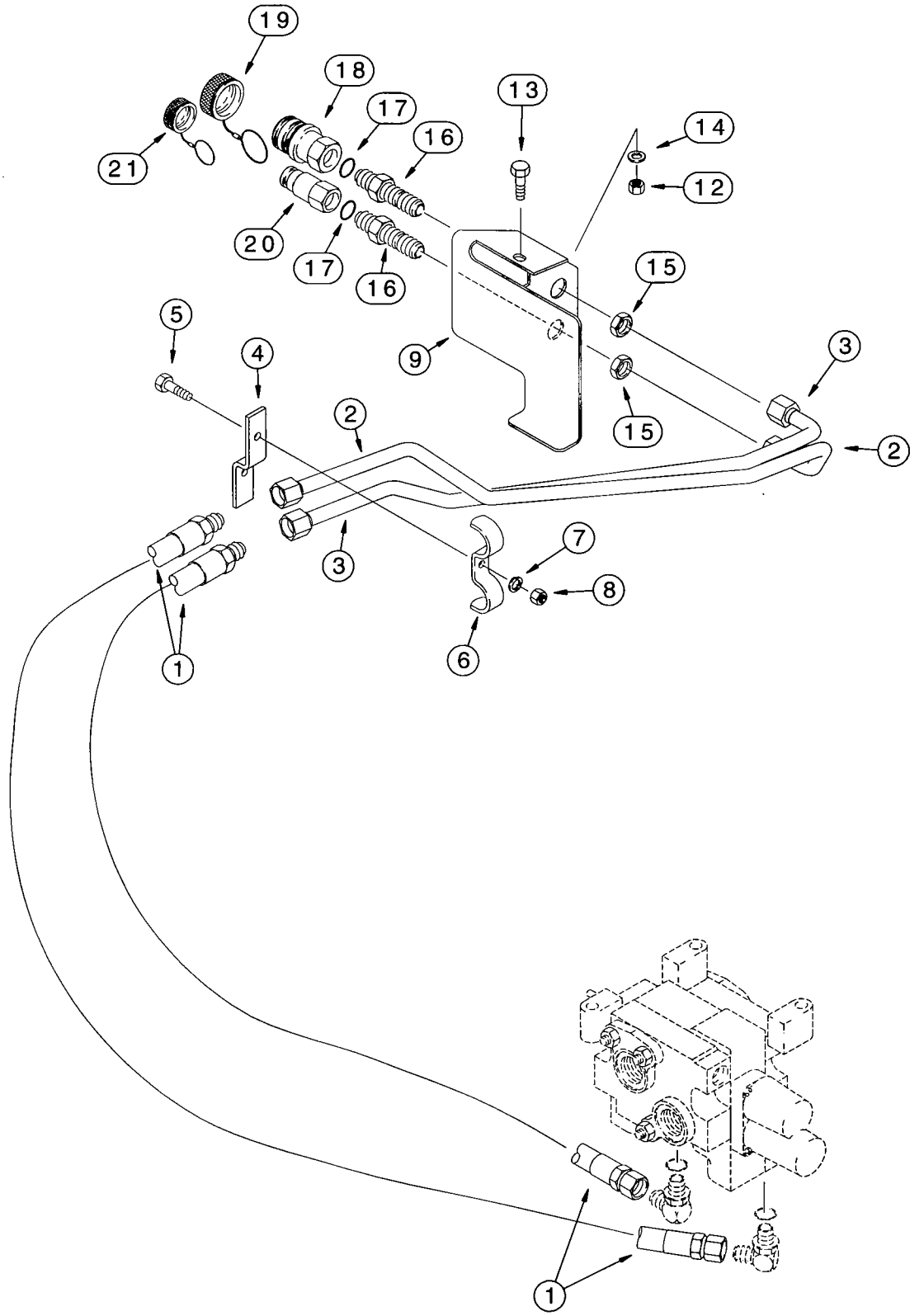
19
18
17
16
13
14
21
12
20
17
16
15
5
4
9
3
15
2
2
3
7
8
1
6
1

*HAND HELD AUXILIARY HYDRAULICS

AUXILIARY VALVE TO QUICK DISCONNECT COUPLINGS
MODELS WITH 40 GALLON FUEL TANK

REF.	PART NO.	DESCRIPTION	REQ'D.
1	302501A1	HOSE - 1340 mm (52-13/16 inch) long, auxiliary valve to quick disconnect couplings, see page 8-41 for 218-5107 elbows at auxiliary valve	2
2	301700A1	TUBE - to male coupling	1
3	301698A1	TUBE - to female coupling	1
4	301355A1	BRACKET - tube mounting	1
5	814-10050	BOLT - hex, 10 - 1.5 x 50 mm	1
6	D42833	CLAMP - tube	1
7	892-11010	WASHER - lock, 10 mm	1
8	829-1410	NUT - hex, 10 mm - 1.5, class 10.9	1
9	300490A1	BRACKET - hose support to quick disconnect couplings	1
12	829-1410	NUT - hex, 10 mm - 1.5, class 10.9	1
13	614-10025	BOLT - hex, full threads, 10 - 1.5 x 25 mm	1
14	895-11010	WASHER - flat, 11 x 20 x 2 mm	1
15	218-1256	NUT - hex, lock, bulkhead, 1-1/16 inch NF	2
16	126155A1	CONNECTOR - straight, bulkhead	2
17	237-6012	O-RING - 59/64 ID x 7/64 inch wide	2
18	122179A1	COUPLING - quick disconnect, female, component parts are not serviced separately	1
19	137343A1	CAP - female coupling, aluminum, if used	1
19	193261A1	CAP - female coupling, black rubber, if used	1
20	122178A2	COUPLING - quick disconnect, male, component parts are not serviced separately	1
21	137344A1	CAP - male coupling, aluminum, if used	1
21	193262A1	CAP - male coupling, black rubber, if used	1

***NOTE:** For a continuation of special parts used on models with hand held auxiliary hydraulics, control cables to auxiliary valve, see page 8-49.

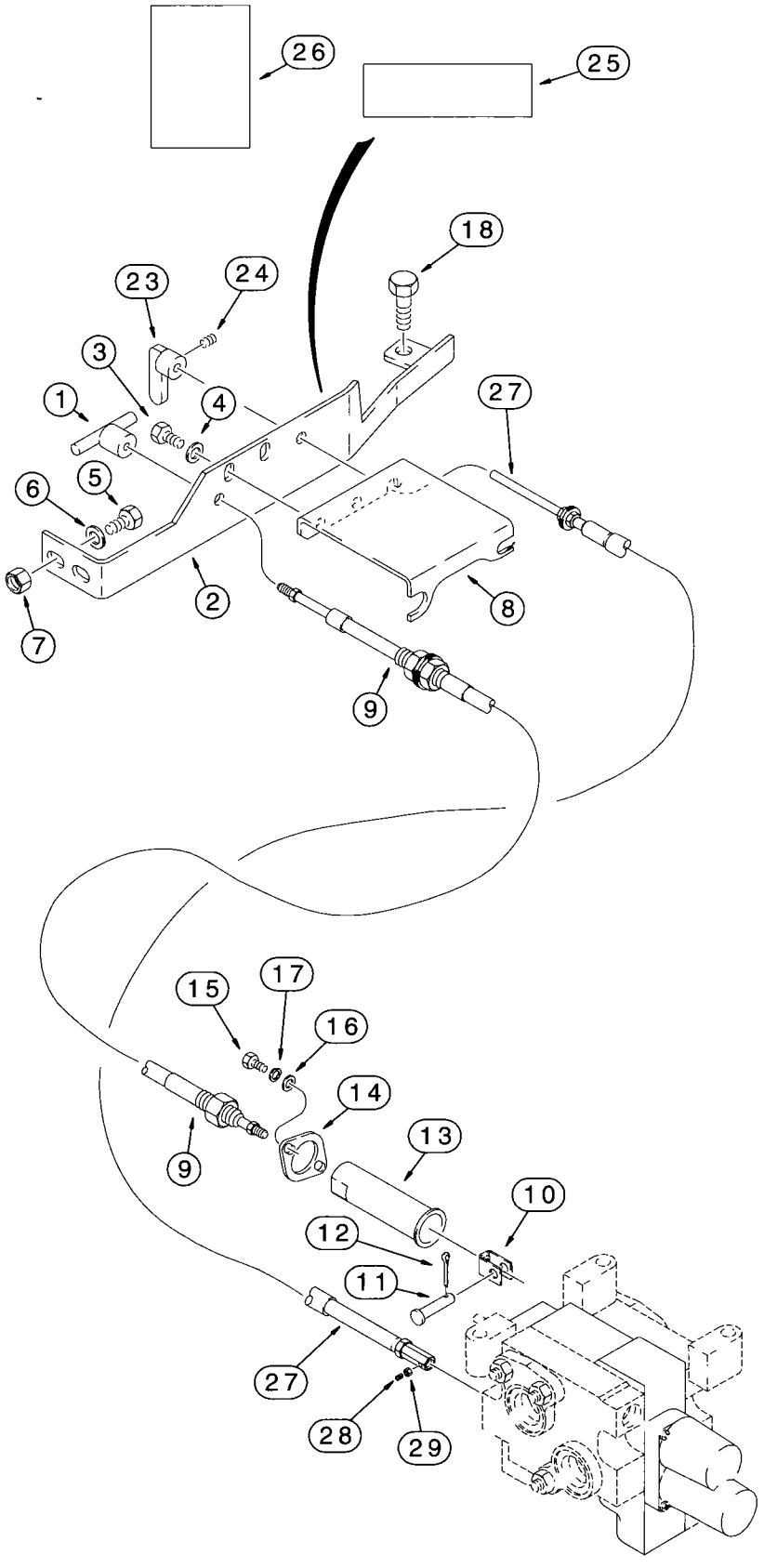
26
25
18
23
24
3
1
4
27
6
5
2
8
7
9
15
17
16
14
13
9
10
12
11
27
28
29

*HAND HELD AUXILIARY HYDRAULICS
CONTROL CABLES TO AUXILIARY VALVE
MODELS WITH 31 OR 40 GALLON FUEL TANK

REF.	PART NO.	DESCRIPTION	REQ'D.
1	139227A1	KNOB - push pull, detent	1
2	191076A1	PLATE - control panel, hand held auxiliary hydraulics, left-hand mounting hole uses existing mounting hardware	1
3	614-8025	BOLT - hex, full threads, 8 - 1.25 x 25 mm	2
4	895-11008	WASHER - flat, 9 x 17 x 1.6 mm	2
5	614-10025	BOLT - hex, full threads, 10 - 1.5 x 25 mm	2
6	895-11010	WASHER - flat, 11 x 20 x 2 mm	2
7	829-1410	NUT - hex, 10 mm - 1.5, class 10.9	2
8	139043A1	BRACKET - cable support	1
9	123942A1	CABLE - push pull detent, lower auxiliary valve spool	1
10	96790C2	CLEVIS - cable, push pull cable end	1
11	96846C2	PIN - clevis	1
12	733-2012	PIN - cotter, 2 x 12 mm	1
13	1340478C1	HOUSING - cable, lower auxiliary valve spool	1
14	1280055C2	FLANGE - cable support	1
15	614-6020	BOLT - hex, full threads, 6 - 1.0 x 20 mm	2
16	895-11006	WASHER - flat, 6.6 x 12 x 1.6 mm	2
17	892-11006	WASHER - lock, 6 mm	2
18	814-10045	BOLT - hex, 10 - 1.5 x 45 mm	1
23	139230A1	KNOB - rotary, flow control	1
24	83-1108	SCREW - set, hex socket headless, No. 10 NC x 1/2 inch, cup point, flow control knob	1
25	179683A1	DECAL - hand held auxilliary hydraulics, control panel plate, see page 9-157 for decal	1
26	192300A1	DECAL - remote auxiliary hydraulics, inside left-hand door on side of steering wheel panel, see page 9-157 for decal	1
27	123943A1	CABLE - flow control, rotary, upper auxiliary valve spool	1
28	84-2106	SCREW - set, hex socket headless, No. 10 NF x 3/8 inch, cone point	1
29	225-14210	NUT - hex, No. 10 NF	1

* **NOTE:** For a continuation of special parts used on models with hand held auxiliary hydraulics, auxiliary valve to quick disconnect couplings, see page 8-45 or 8-47.

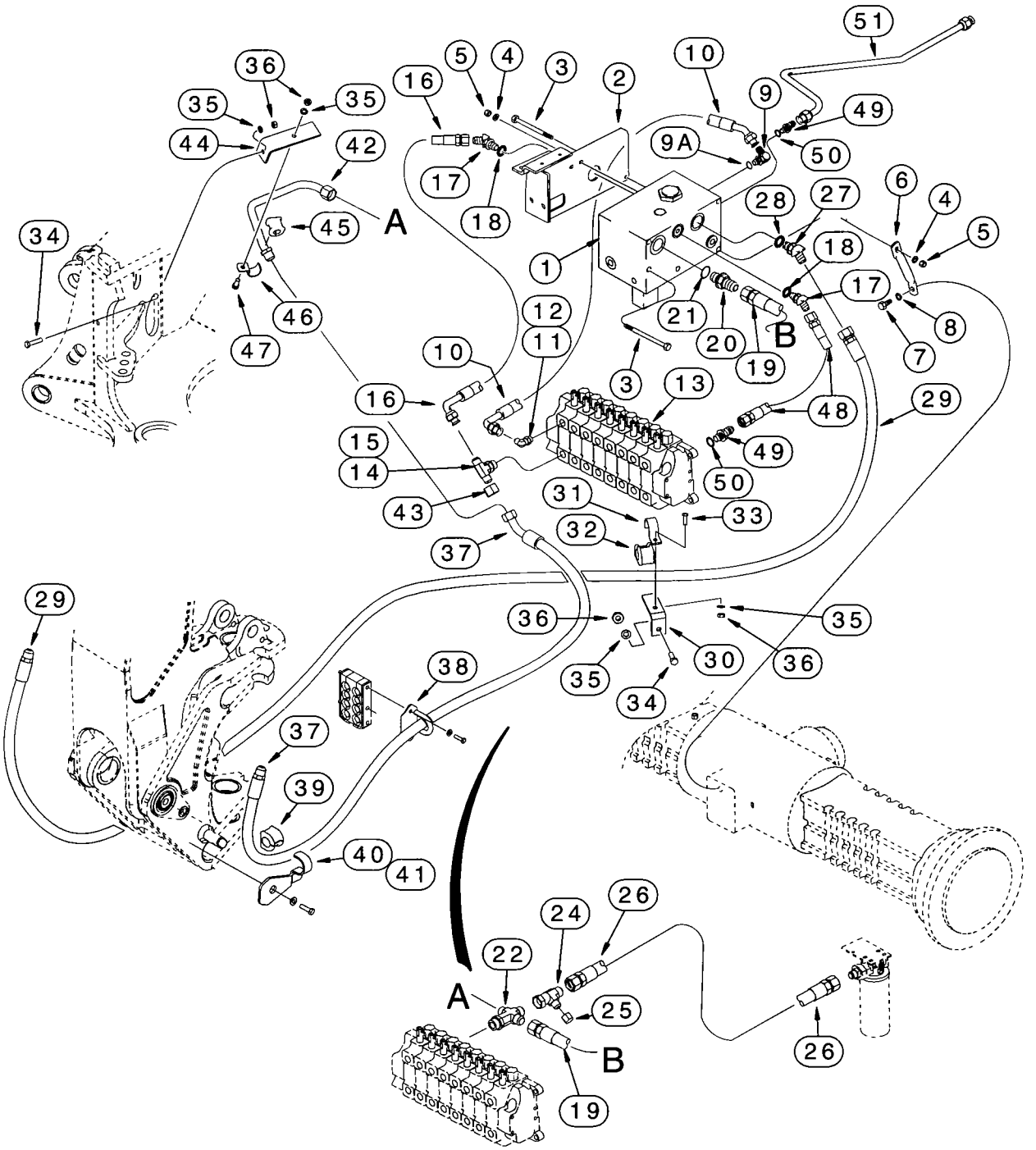
51
36
35
35
44
42
16
5
4
3
2
10
9
49
9A
50
17
18
A
45
1
28
27
6
4
5
34
18
17
8
7
46
47
12
11
21
20
19
B
10
3
13
48
29
16
15
14
43
49
50
31
33
32
37
29
36
35
30
36
35
34
38
37
39
40
41
26
24
22
A
25
B
19
26

BACKHOE AUXILIARY HYDRAULICS

AUXILIARY AND BACKHOE CONTROL VALVES TO SWING TOWER

REF.	PART NO.	DESCRIPTION	REQ'D.
1	298772A1	VALVE ASSEMBLY - auxiliary, backhoe, component parts not available at time of printing	1
2	300580A1	BRACKET - mounting	1
3	814-10180	BOLT - hex, 10 - 1.5 x 180 mm	2
4	895-11010	WASHER - flat, 11 x 20 x 2 mm	2
5	829-1410	NUT - hex, 10 mm - 1.5, class 10.9	2
6	302641A1	BRACKET - support	1
7	614-18035	BOLT - hex, full threads, 18 - 2.0 x 35 mm	1
8	892-11018	WASHER - lock, 18 mm	1
9	218-5108	ELBOW - 90 degree, 1-1/16-12 inch flare x adj O-ring boss	1
9A	237-6012	O-RING - 59/64 ID x 7/64 inch wide	1
10	300905A1	HOSE - 610 mm (24 inch) long, auxiliary valve to upper port of auxiliary section of backhoe control valve	1
11	218-5108	ELBOW - 90 degree, 1-1/16-12 inch flare x adj O-ring boss	1
12	237-6012	O-RING - 59/64 ID x 7/64 inch wide	1
13	REF	VALVE ASSEMBLY - backhoe control, 7 or 8 spool with auxiliary hydraulics, for correct assembly and components, see page 8-91 or 8-95	1
14	218-5185	TEE - 1-1/16-12 inch adj O-ring branch x flare x flare	1
15	237-6012	O-RING - 59/64 ID x 7/64 inch wide	1
16	300906A1	HOSE - 460 mm (18-1/8 inch) long	1
17	218-5137	ELBOW - 45 degree, 7/8-14 inch flare x adj O-ring boss	2
18	237-6010	O-RING - 3/4 ID x 3/32 inch wide	1
19	300907A1	HOSE - 720 mm (28-3/8 inch) long, return	1
20	218-5069	ADAPTER - straight, 1-5/16-12 inch flare x O-ring boss	1
21	237-6016	O-RING - 1-11/64 ID x 7/64 inch wide	1
22	302097A1	CROSS - special	1
23	237-6016	O-RING - 1-11/64 ID x 7/64 inch wide, not shown	1
24	218-5490	TEE - 7/8-14 flare branch x 1-5/16-12 inch flare x swivel	1
25	218-756	CAP - hex, if used, not required on models with hand held auxiliary hydraulics	1
26	293269A1	HOSE - 755 mm (29-3/4 inch) long, main return	1
27	218-5138	ELBOW - 45 degree, 1-1/16-12 inch flare x adj O-ring boss	1
28	237-6012	O-RING - 59/64 ID x 7/64 inch wide	1
29	302472A1	HOSE - 2603 mm (102-1/2 inch) long, includes hose guard and (2) banded clamps, pressure port	1
30	256412A1	BRACKET - mounting	1
31	144479A1	CLAMP - isolation	1
32	144477A1	INSULATOR - rubber	1
33	614-10030	BOLT - hex, full threads, 10 - 1.5 x 30 mm	1
34	814-10040	BOLT - hex, 10 - 1.5 x 40 mm	2
35	892-11010	WASHER - lock, 10 mm	4
36	829-1410	NUT - hex, 10 mm - 1.5, class 10.9	4

NOTE: For a continuation of the backhoe auxiliary hydraulics at boom and dipper, see page 8-55. For backhoe auxiliary hydraulics control lever see page 9-43 and page 9-25 for backhoe control tower cover used with auxiliary hydraulics. Electric foot control switch is on page 4-47.

Continued on next page

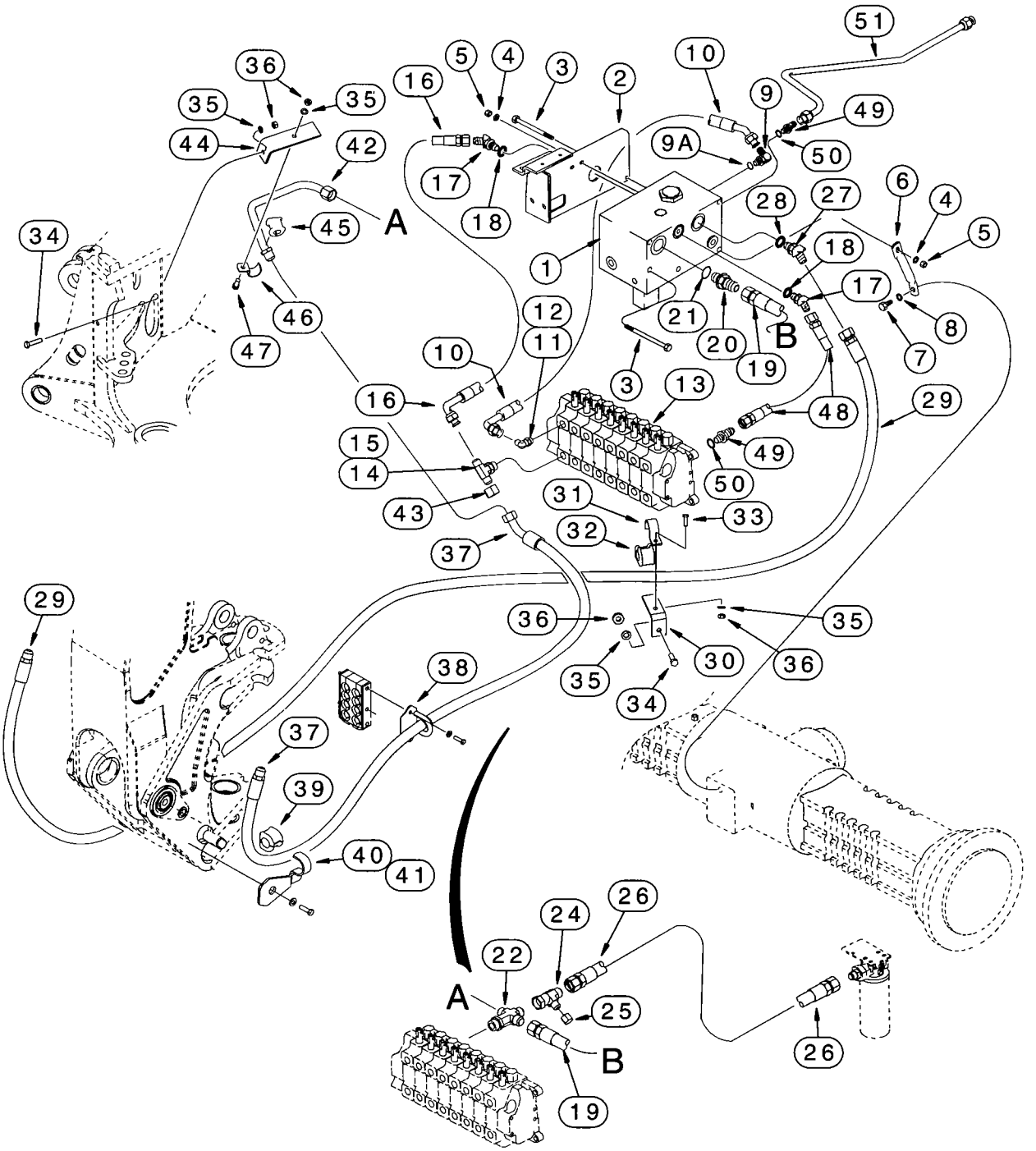
51
36
5
4
3
2
10
16
35
35
9
49
44
42
9A
50
17
18
A
45
28
27
6
4
34
1
18
5
46
21
20
B
17
12
11
8
47
10
19
7
3
13
16
48
29
15
14
49
50
43
31
33
32
37
29
36
35
38
30
36
35
34
37
39
40
41
24
26
22
A
25
B
19
26

BACKHOE AUXILIARY HYDRAULICS

AUXILIARY AND BACKHOE CONTROL VALVES TO SWING TOWER

REF.	PART NO.	DESCRIPTION	REQ'D.
37	253740A1	HOSE - 1760 mm (69-5/16 inch) long, includes hose guard and (2) banded clamps, lower port of backhoe control valve auxiliary section to left-hand side of dipper	1
38	252737A1	CLAMP - auxiliary hose, at pivot block	2
39	144477A1	INSULATOR - rubber, at swing tower	2
40	249775A1	CLAMP - hose, left-hand, at swing tower	1
41	249773A1	CLAMP - hose, right-hand, at swing tower	1
42	300939A1	TUBE - low pressure return	1
43	218-335	CAP - hex, 1-1/16-12 inch	1
44	282842A1	BRACKET - mounting, tube	1
45	D74182	INSULATOR - tube	1
46	D143411	CLAMP - P-type, 3/4 inch ID	1
47	614-10025	BOLT - hex, full threads, 10 - 1.5 x 25 mm	1
48	300952A1	HOSE - 335 mm (13-3/16 inch) long	1
49	218-5062	ADAPTER - straight, 7/8-14 inch flare x O-ring boss	2
50	237-6010	O-RING - 3/4 ID x 3/32 inch wide	1
51	300884A1	TUBE - small pump supply	1

NOTE: For a continuation of the backhoe auxiliary hydraulics at boom and dipper, see page 8-55. For backhoe auxiliary hydraulics control lever see page 9-43 and page 9-25 for backhoe control tower cover used with auxiliary hydraulics. Electric foot control switch is on page 4-47.

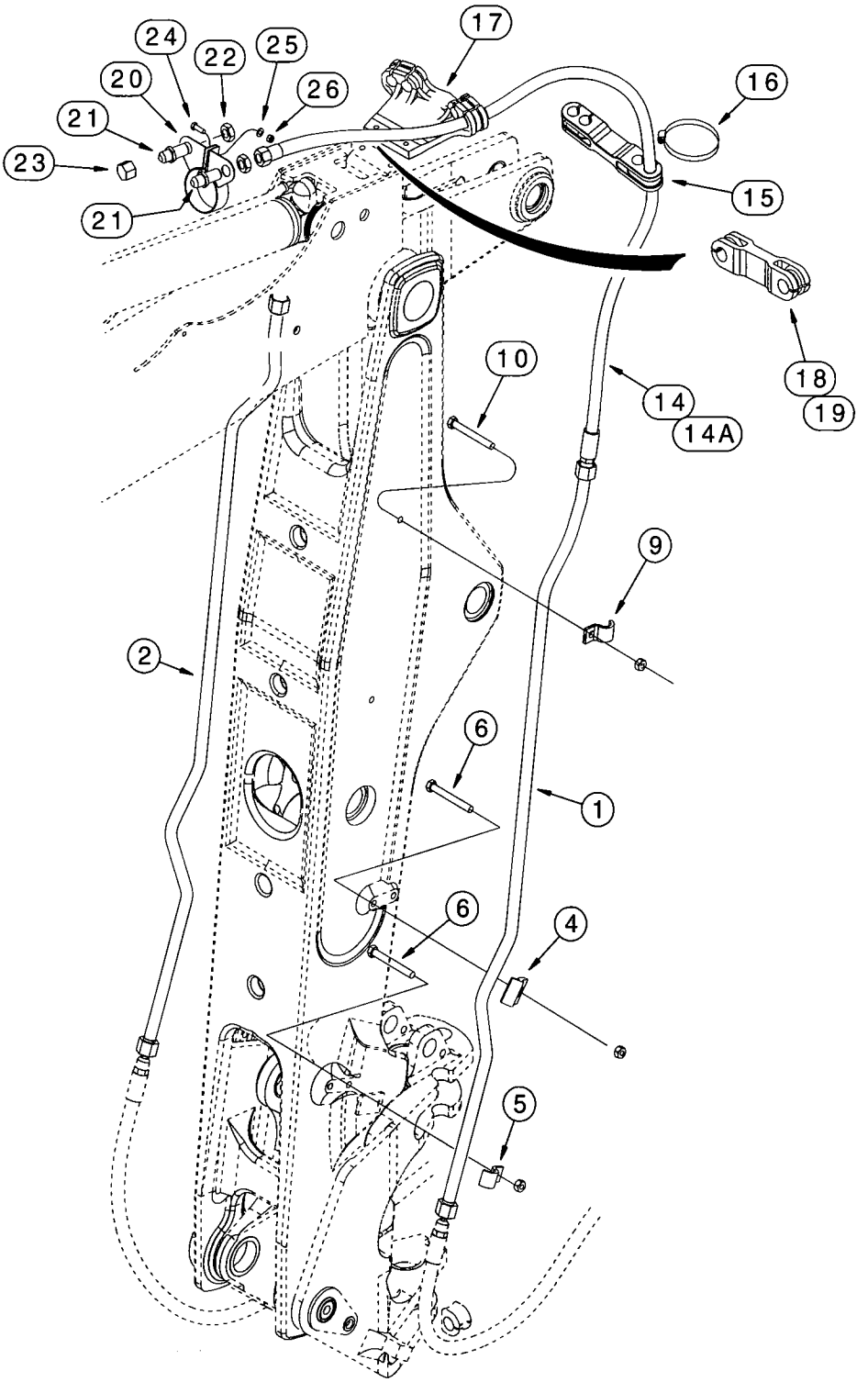
17
24
22
25
20
26
16
21
23
15
21
18
10
19
14
14A
9
2
6
1
6
4
5

BACKHOE AUXILIARY HYDRAULICS
AT BOOM AND DIPPER

REF.	PART NO.	DESCRIPTION	REQ'D.
1	252885A1	TUBE - on boom, right-hand side	1
2	252883A1	TUBE - on boom, left-hand side	1
4	253038A1	CLAMP - tube, uses existing nut	2
5	255051A1	CLAMP - tube, uses existing nut	2
6	814-12090	BOLT - hex, 12 - 1.75 x 90 mm	4
9	242459A1	CLAMP - tube, uses existing nut	2
10	814-10070	BOLT - hex, 10 - 1.5 x 70 mm	2
14	243679A1	HOSE - 2625 mm (103-3/8 inch) long, includes hose guard and (2) banded clamps, models with extendable dipper	2
14A	256210A1	HOSE - 1325 mm (52-3/16 inch) long, includes hose guard and (2) banded clamps, models without extendable dipper	2
15	246158A1	SUPPORT - hose, models with extendable dipper	1
16	214-3156	CLAMP - adj, 2-3/4 - 3-5/8 inch dia, models with extendable dipper	4
17	246151A1	SUPPORT - hose, models with extendable dipper	1
18	103670A1	CLAMP - rubber	1
19	214-3132	CLAMP - adj, 1-1/4 - 2-1/8 inch dia	2
20	243291A1	CLAMP - quick coupler	1
21	218-676	ADAPTER - straight, 1-1/16-12 inch flare x bulkhead flare	2
22	218-1256	NUT - hex, lock, bulkhead, 1-1/16 inch NF	2
23	218-335	CAP - hex, 1-1/16-12 inch	2
24	614-10030	BOLT - hex, full threads, 10 - 1.5 x 30 mm	1
25	896-11010	WASHER - flat, 11 x 21 x 2.5 mm, hardened	1
26	832-10410	NUT - hex, self-locking, 10 mm - 1.5	1

NOTE: For a continuation of the backhoe auxiliary hydraulics at the auxiliary and backhoe control valves, see pages 8-51 and 8-53. For backhoe auxiliary hydraulics control lever see page 9-43 and page 9-25 for backhoe control tower cover used with auxiliary hydraulics. Electric foot control switch is on page 4-47.

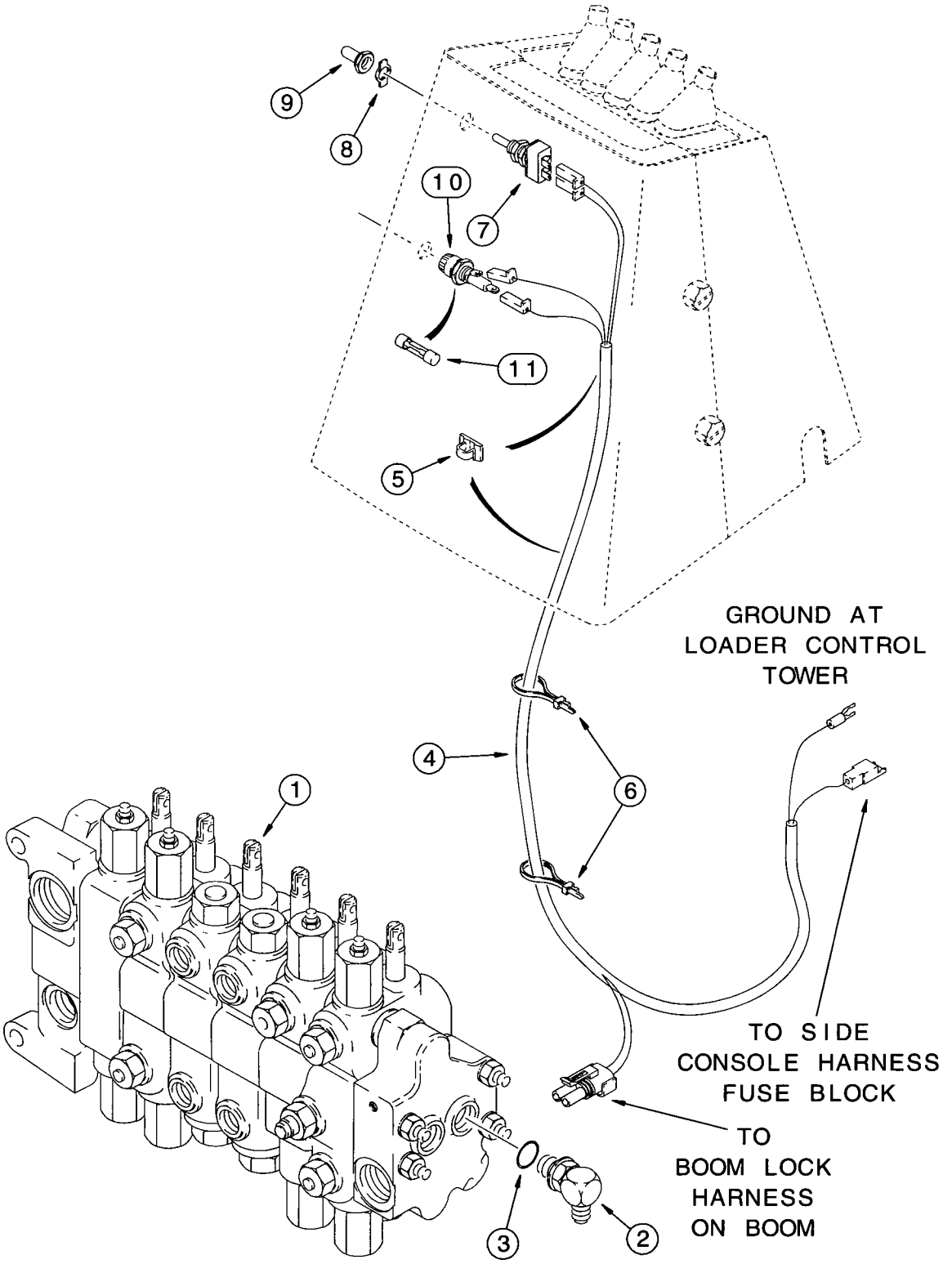
9
8
10
7
11
5
GROUND AT
LOADER CONTROL
TOWER
4
6
1
TO SIDE
CONSOLE HARNESS
FUSE BLOCK
TO
BOOM LOCK
HARNESS
ON BOOM
3
2

BACKHOE BOOM LOCK HYDRAULIC AND ELECTRICAL CIRCUIT
AT CONTROL TOWER AND BACKHOE VALVE

REF.	PART NO.	DESCRIPTION	REQ'D
	189111A1	KIT - backhoe boom lock, also includes parts on page 8-59, L111356 decal on page 9-157 and an instruction sheet, order components	1
1	*REF	VALVE ASSEMBLY - backhoe control, for correct assembly and components, see page 8-89 - 8-95, for valve mounting see page 8-23	1
2	189414A1	ELBOW - 90 degree, adjustable, see page 8-59 for attaching hose	1
3	237-6010	O-RING - 3/4 ID x 3/32 inch wide	1
4	189601A1	HARNESS - boom lock, at control tower to fuse block on side console harness	1
5	L100659	CLIP - harness	2
6	L18337	STRAP - tie, 15 inch	2
7	D67251	SWITCH - toggle, boom lock	1
8	L105735	PLATE - trim	1
9	L101998	BOOT - toggle switch	1
10	376852R91	HOLDER - fuse, includes cap, at backhoe control tower	1
11	223-26	FUSE - 3AG, 5 ampere, boom lock	1

NOTE: See page 8-59 for continuation of backhoe boom lock hydraulic and electrical circuit.

***NOTE:** Not included in 189111A1 kit, purchase separately.

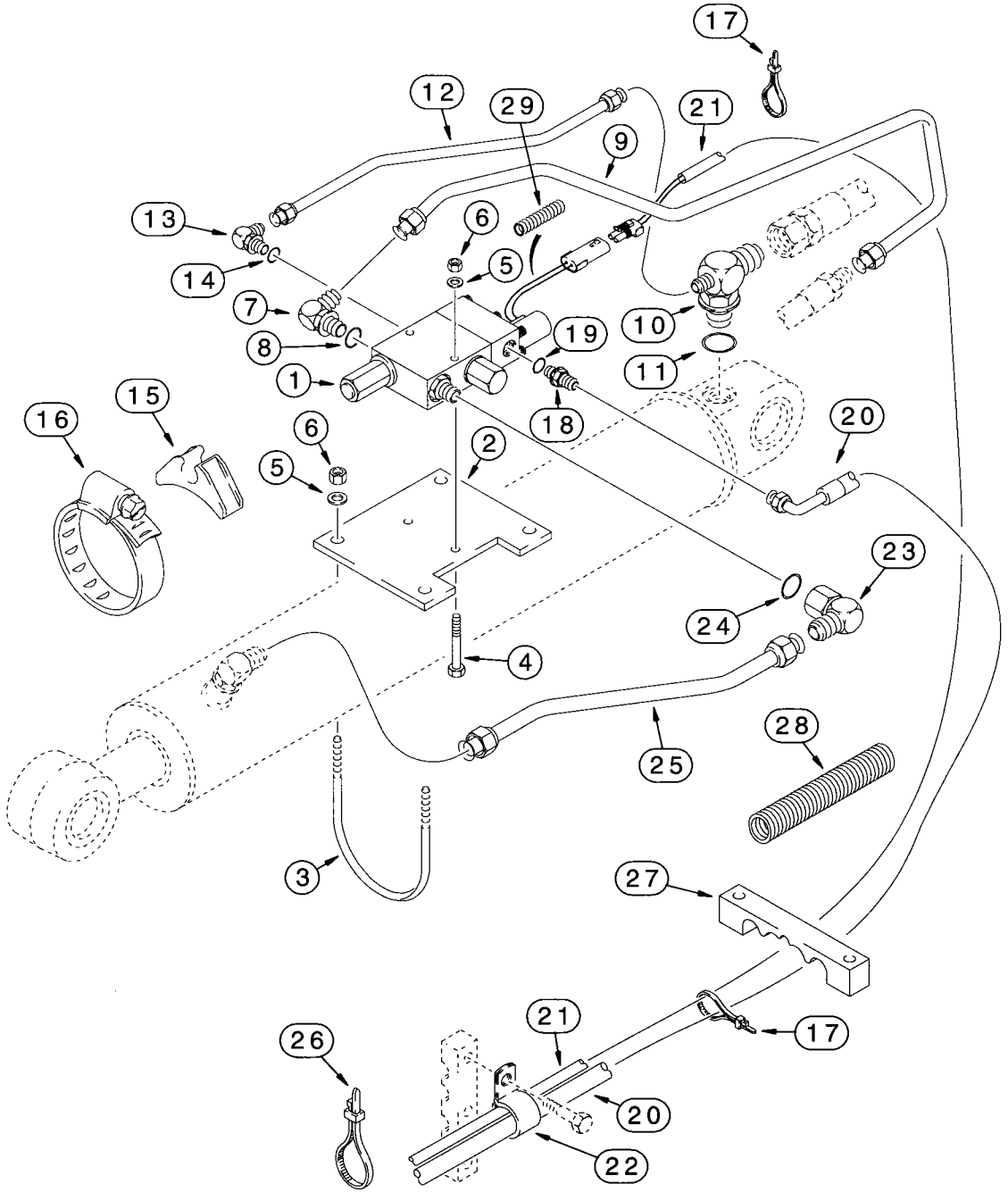
17
12
29
21
9
13
6
5
14
7
10
19
8
11
1
18
15
16
6
20
2
5
23
24
4
28
25
3
27
21
17
26
20
22

BACKHOE BOOM LOCK HYDRAULIC AND ELECTRICAL CIRCUIT
AT BOOM CYLINDER

REF.	PART NO.	DESCRIPTION	REQ'D.
	189111A1	KIT - backhoe boom lock, continued from previous page, order components	1
1	189957A1	VALVE ASSEMBLY - solenoid, backhoe boom lock, includes (2) 321-6046 warning decals, parts list page 8-121	1
2	D150054	PLATE - valve mounting	1
3	D150053	U-BOLT - 3/8 inch	2
4	413-648	BOLT - hex, 3/8 NC x 3 inch	2
5	495-11041	WASHER - flat, 13/32 x 13/16 x 1/16 inch	6
6	231-1446	NUT - hex, self-locking, 3/8 inch NC	6
7	218-5118	ELBOW - 90 degree, 1-1/16-12 flare x 1-5/16-12 inch adj O-ring boss	1
8	237-6016	O-RING - 1-11/64 ID x 7/64 inch wide	1
9	192025A1	TUBE - valve port, attaches to item 34 hose on page 8-25	1
10	187677A1	TEE - reducer, boom cylinder closed end, attaches to item 23 hose on page 8-25	1
11	237-6012	O-RING - 59/64 ID x 7/64 inch wide	1
12	189709A1	TUBE - pilot port	1
13	218-5283	ELBOW - 90 degree, 7/16-20 flare x 9/16-18 inch adj O-ring boss	1
14	237-6006	O-RING - 15/32 ID x 5/64 inch wide	1
15	D142787	INSULATOR - rubber	1
16	214-31104	CLAMP - adj, 5-3/4 - 6-5/8 inch dia	1
17	L18337	STRAP - tie, 15 inch	7
18	218-5359	ADAPTER - straight, 7/16-20 flare x 3/4-16 inch O-ring boss	1
19	237-6008	O-RING - 41/64 ID x 3/32 inch wide	1
20	189103A1	HOSE - 3700 mm (145-11/16 inch) long, return, attaches to elbow at backhoe valve, see item 2 on page 8-57	1
21	189263A1	HARNESS - boom lock valve to control tower harness	1
22	515-25190	CLAMP - P-type, 3/4 inch ID, return hose	1
23	218-5382	ELBOW - 90 degree, 1-1/16-12 flare x 1-5/16-12 inch swivel	1
24	237-6016	O-RING - 1-11/64 ID x 7/64 inch wide	1
25	187612A1	TUBE - boom lock valve to boom cylinder rod end, see page 8-25, item 29 for elbow	1
26	D147773	STRAP - tie	1
27	221330A1	CLAMP - hose and harness	1
28	220276A1	SLEEVE - hose guard	1
29	D121385	GUARD - harness protection	1

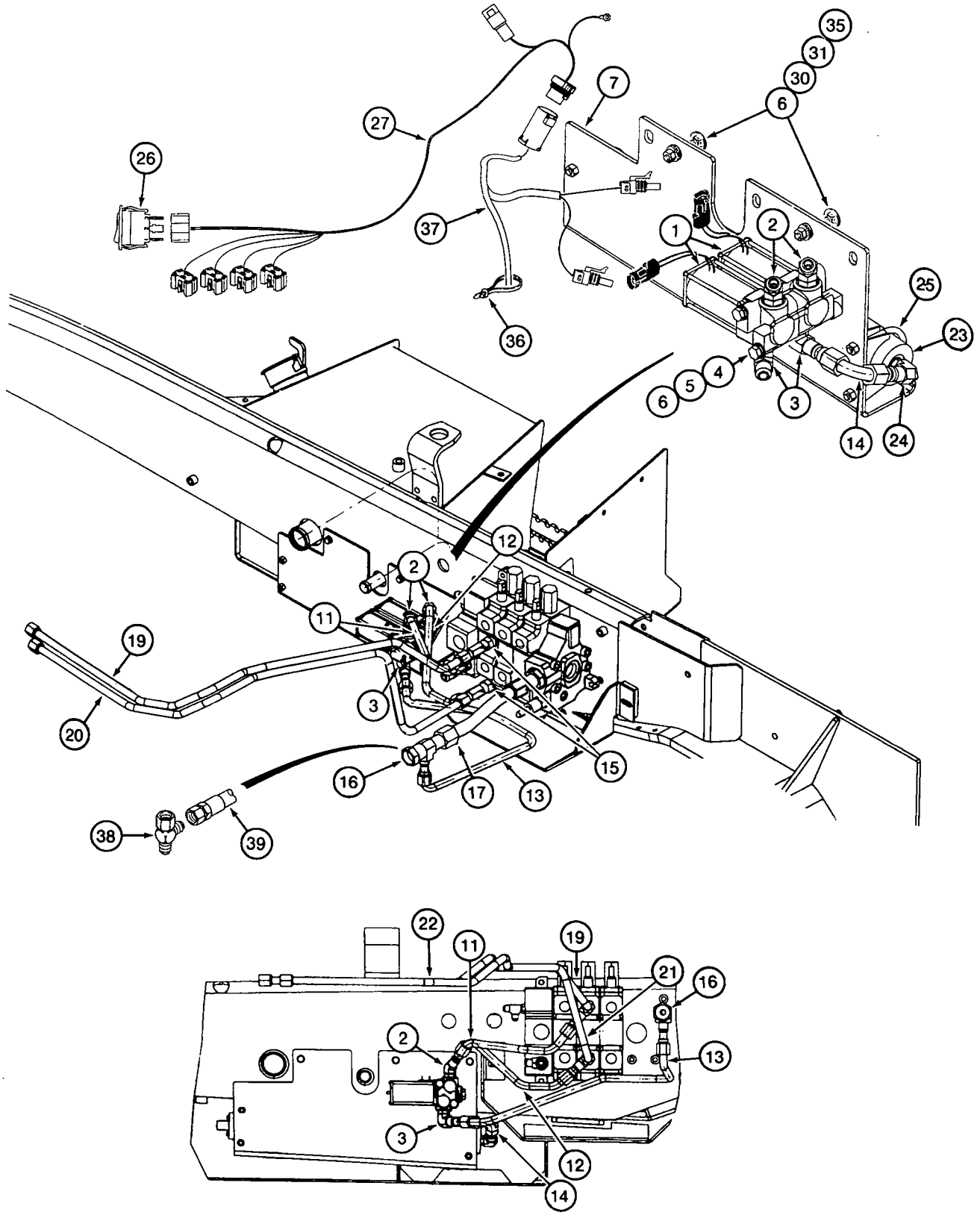
35
31
30
7
6
27
26
37
1
2
25
23
36
4
5
6
3
14
24
12
2
11
19
3
20
15
16
17
13
38
39
22
11
19
21
16
2
13
3
12
14

RIDE CONTROL HYDRAULIC AND ELECTRICAL CIRCUIT

REF.	PART NO.	DESCRIPTION	REQ'D.
1	297977A2	VALVE ASSEMBLY - solenoid, two-way, ride control, component parts list not available at time of printing	2
2	218-5145	ELBOW - 45 degree, 7/8-14 flare x 3/4-16 inch adj O-ring, upper port of solenoid valves	2
2A	237-6008	O-RING - 41/64 ID x 3/32 inch wide, not shown	1
3	218-5117	ELBOW - 90 degree, 7/8-14 flare x 3/4-16 inch adj O-ring boss, lower port of solenoid valves	2
3A	237-6008	O-RING - 41/64 ID x 3/32 inch wide, not shown	1
4	814-10140	BOLT - hex, 10 - 1.5 x 140 mm	2
5	895-11010	WASHER - flat, 11 x 20 x 2 mm	2
6	892-11010	WASHER - lock, 10 mm	4
7	240693A2	PLATE - mounting, two-way solenoid valve	1
11	240709A4	TUBE - left-hand solenoid valve upper port to tee at loader control valve lift section upper port	1
12	240711A4	TUBE - right-hand solenoid valve upper port to tee at loader control valve lift section lower port	1
13	240706A2	TUBE - left-hand solenoid valve lower port to tee at filter, models with ride control but without hydraulic tool quick coupler, see Ref 39 for models with both	1
14	240703A2	TUBE - accumulator to right-hand solenoid valve lower port	1
15	218-5220	TEE - swivel, 7/8-14 inch flare branch x flare x swivel, attaches to tees at loader control valve lift section, see page 8-11 for tee at lift section upper and lower ports	2
16	218-5490	TEE - 7/8-14 flare branch x 1-5/16-12 inch flare x swivel, attaches to existing tee at filter (Ref 35, page 8-5)	1
17	230078A2	HOSE - 415 mm (16-3/8 inch) long, replaces existing hose from loader valve to filter (Ref 34, page 8-5)	1
19	230072A1	TUBE - replaces existing tube (page 8-11) at loader valve upper lift port to left-hand loader lift cylinder rod end	1
20	230073A1	TUBE - replaces existing tube (page 8-11) at loader valve lower lift port to left-hand loader lift cylinder closed end	1

Continued on next page

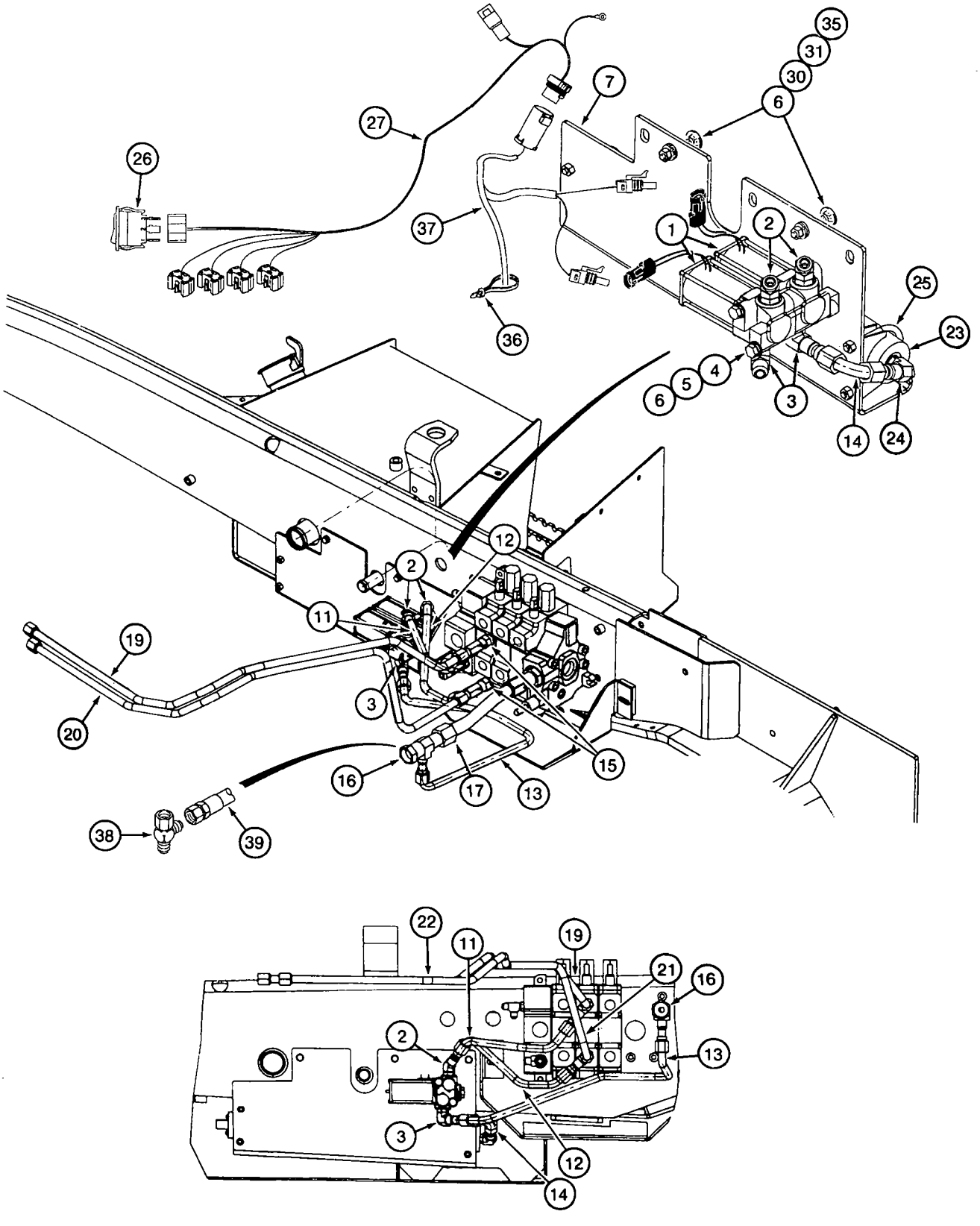
35
31
30
6
7
27
26
37
36
1
2
25
23
6
5
4
3
14
24
12
2
11
19
20
3
15
16
17
13
38
39
22
11
19
21
16
2
13
3
12
14

RIDE CONTROL HYDRAULIC AND ELECTRICAL CIRCUIT

REF.	PART NO.	DESCRIPTION	REQ'D.
23	234412A1	ACCUMULATOR ASSEMBLY - hydraulic, ride control, parts list page 8-123	1
24	218-5600	ELBOW - 90 degree, 7/8-14 flare x 3/4-16 inch adj O-ring boss	1
24A	237-6008	O-RING - 41/64 ID x 3/32 inch wide, not shown	1
25	A13240	CLAMP - two piece, includes hardware	2
26	235002A1	SWITCH - ride control, mounts in side instrument panel console	1
27	296508A2	HARNESS - side console options, ride control switch to chassis options harness and fuse block	1
30	711-10030	BOLT - carriage, 10 - 1.5 x 30 mm	2
31	829-1410	NUT - hex, 10 mm - 1.5, class 10.9	2
32	121413A1	FUSE - mini, 15 ampere, not shown	1
33	255927A1	DECAL - Warning, do not turn the ride control on, if the loader arms and bucket are holding the front of the machine off the ground, mounts on console by ride control switch, not shown, see page 9-157 for decal	1
34	256318A1	DECAL - Warning, pressure accumulator in loader hydraulic system, mounts on accumulator mounting plate, not shown, see page 9-157 for decal	1
35	895-15010	WASHER - flat, 11 x 24 x 2 mm	2
36	L18337	STRAP - tie, 15 inch	2
37	302803A1	HARNESS - chassis options, connects to side console options harness	1
38	218-5220	TEE - swivel, 7/8-14 inch flare branch x flare x swivel, models with both ride control and hydraulic tool quick coupler	1
39	293037A1	TUBE - left-hand solenoid valve lower port to tee at filter, models with both ride control and hydraulic tool quick coupler	1

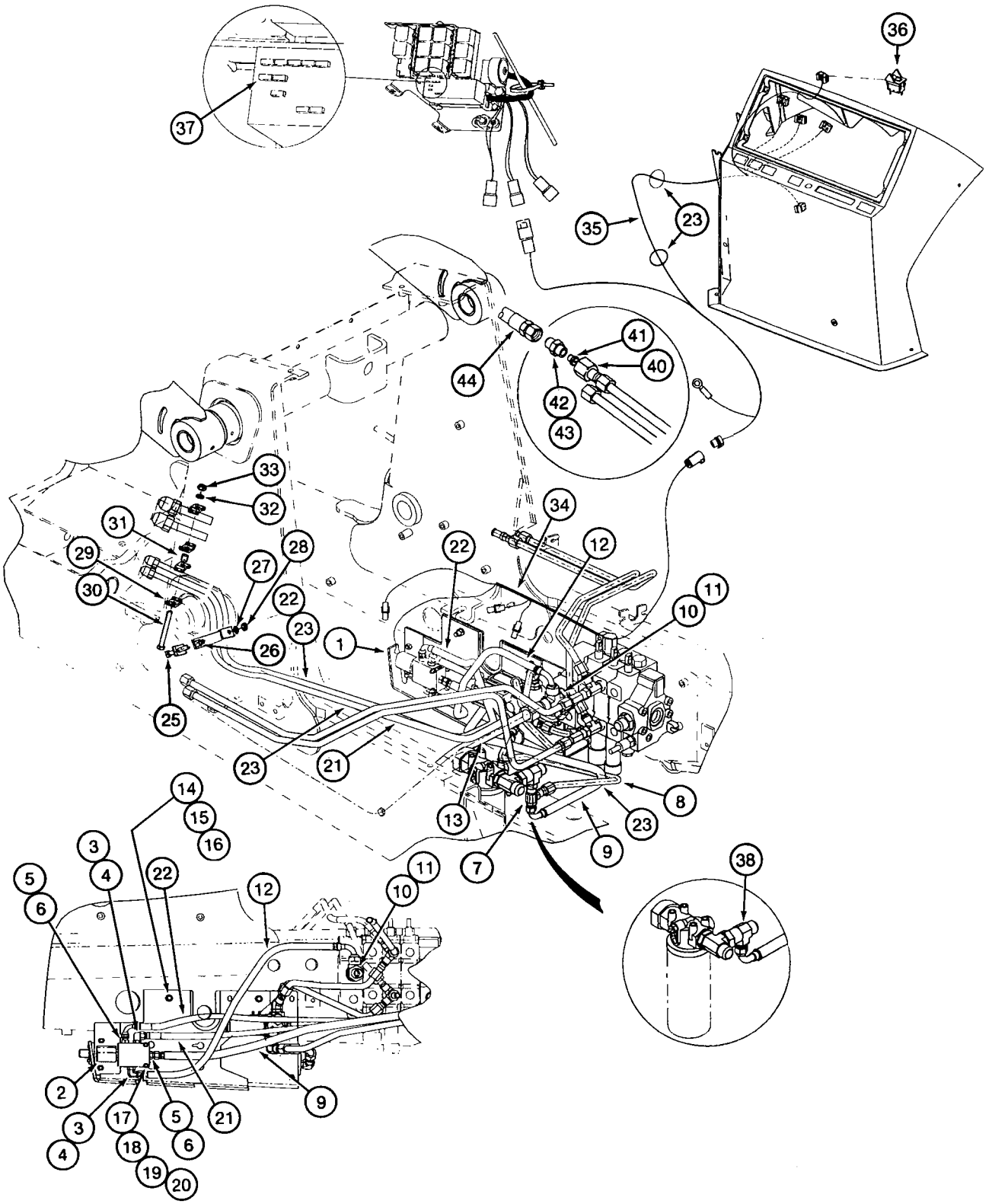
37
36
35
23
44
41
40
42
43
33
32
31
29
30
27
28
22
23
26
25
34
12
22
1
10
11
23
21
14
15
16
3
4
22
12
11
10
5
6
2
3
4
17
18
19
20
5
6
21
9
13
7
9
8
23
38

LOADER HYDRAULIC TOOL QUICK COUPLER

REF.	PART NO.	DESCRIPTION	REQ'D.
1	259777A3	PLATE - mounting, solenoid valve	1
2	277320A1	VALVE ASSEMBLY - solenoid, four-way, two position, quick coupler, component parts not serviced separately	1
3	218-5105	ELBOW - 90 degree, 9/16-18 inch flare x adj O-ring boss	2
4	237-6006	O-RING - 15/32 ID x 5/64 inch wide	1
5	218-5057	ADAPTER - straight, 9/16-18 inch flare x O-ring boss	2
6	237-6006	O-RING - 15/32 ID x 5/64 inch wide	1
7	218-5220	TEE - swivel, 7/8-14 inch flare branch x flare x swivel, used only on models with both ride control and hydraulic tool quick coupler	1
8	293037A1	TUBE - left-hand ride control solenoid valve to tee at filter, replaces Ref 13 on page 8-61 on models with both ride control and hydraulic tool quick coupler	1
9	292528A1	HOSE - 1220 mm (48-1/32 inch) long, return, filter to quick coupler solenoid valve	1
10	218-5577	TEE - 3/4-16 flare branch x 1-5/16-12 flare x adj O-ring, at inlet section upper port of loader control valve	1
11	237-6016	O-RING - 1-11/64 ID x 7/64 inch wide	1
12	276962A1	HOSE - 810 mm (31-29/32 inch) long, quick coupler solenoid valve lower port to tee at inlet section of loader control valve	1
13	292436A1	TUBE - tee at loader valve inlet upper port to large pump section	1
14	711-10040	BOLT - carriage, 10 - 1.5 x 40 mm	2
15	892-11010	WASHER - lock, 10 mm	2
16	829-1410	NUT - hex, 10 mm - 1.5, class 10.9	2
17	711-6050	BOLT - carriage, 6 - 1.0 x 50 mm	2
18	895-11006	WASHER - flat, 6.6 x 12 x 1.6 mm	2
19	892-11006	WASHER - lock, 6 mm	2
20	829-1406	NUT - hex, 6 mm - 1.0, class 10	2
21	301008A2	HOSE - 2677 mm (105-13/32 inch) long, includes hose guard, (2) banded clamps and white tie strap, quick coupler solenoid valve to loader lift frame	1
22	301009A2	HOSE - 2677 mm (105-13/32 inch) long, includes hose guard and (2) banded clamps, quick coupler solenoid valve to loader lift frame	1
23	L18337	STRAP - tie, 15 inch	14
24	D138055	CLAMP - tube	1
25	828-10060	BOLT - hex, 10 - 1.5 x 60 mm, class 10.9	1
26	120303A1	SPACER - clamp	1
27	892-11010	WASHER - lock, 10 mm	1
28	829-1410	NUT - hex, 10 mm - 1.5, class 10.9	1

NOTE: Also uses loader bucket tube clamping (Ref 19-23, page 8-13) and 139235A1 right-hand bucket cylinder link and D121194 bucket position pointer (Ref 13 and 6, page 8-13).

Continued on next page

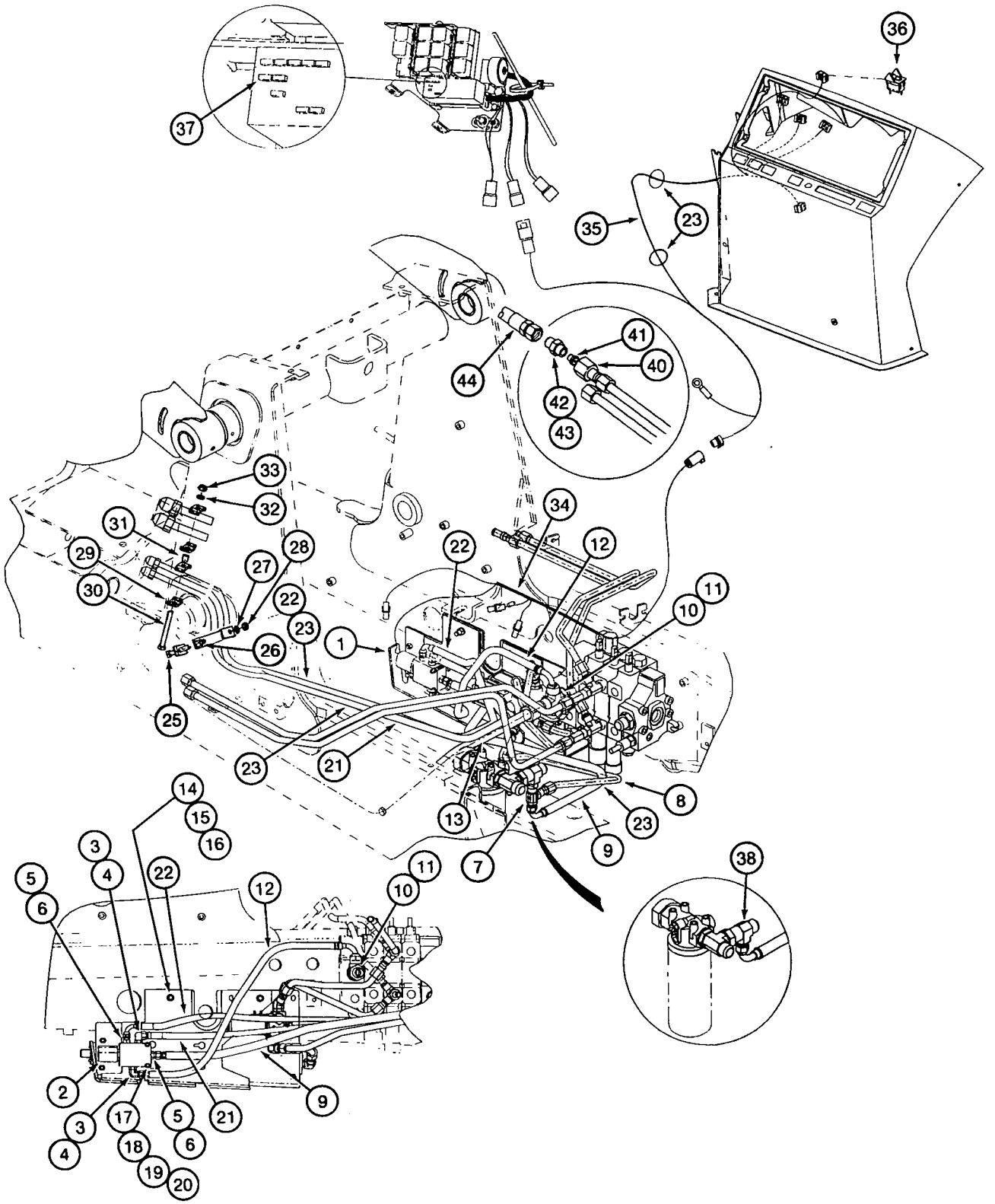
37
36
35
23
44
41
40
42
43
33
32
31
29
30
28
27
22
23
26
25
34
22
12
11
10
1
23
21
13
7
23
8
9
38
14
15
16
3
4
5
6
22
12
11
10
2
3
4
17
18
19
20
5
6
21
9

LOADER HYDRAULIC TOOL QUICK COUPLER

REF.	PART NO.	DESCRIPTION	REQ'D.
29	D138055	CLAMP - tube	4
30	828-10090	BOLT - hex, 10 - 1.5 x 90 mm, class 10.9	1
31	120303A1	SPACER - clamp, 381 mm (15 inch) long	1
32	892-11010	WASHER - lock, 10 mm	1
33	829-1410	NUT - hex, 10 mm - 1.5, class 10.9	1
34	302803A1	HARNESS - chassis options, connects to side console options harness	1
35	296508A2	HARNESS - side console options, connects to chassis options harness and fuse block	1
36	275488A2	SWITCH - rocker, yellow rocker and amber lens, quick coupler	1
37	121413A1	FUSE - mini, 15 ampere	1
38	218-5490	TEE - 7/8-14 flare branch x 1-5/16-12 inch flare x swivel, models without ride control	1
40	304424A1	CONNECTOR - straight	1
41	*304890A1	RESTRICTOR - check	1
42	218-5062	ADAPTER - straight, 7/8-14 inch flare x O-ring boss	1
43	237-6010	O-RING - 3/4 ID x 3/32 inch wide	1
44	304612A1	HOSE - 640 mm (25-1/4 inch) long, loader coupler	1

***NOTE:** Install restrictor on outer most dump cylinder tube, connects to closed end of cylinder.

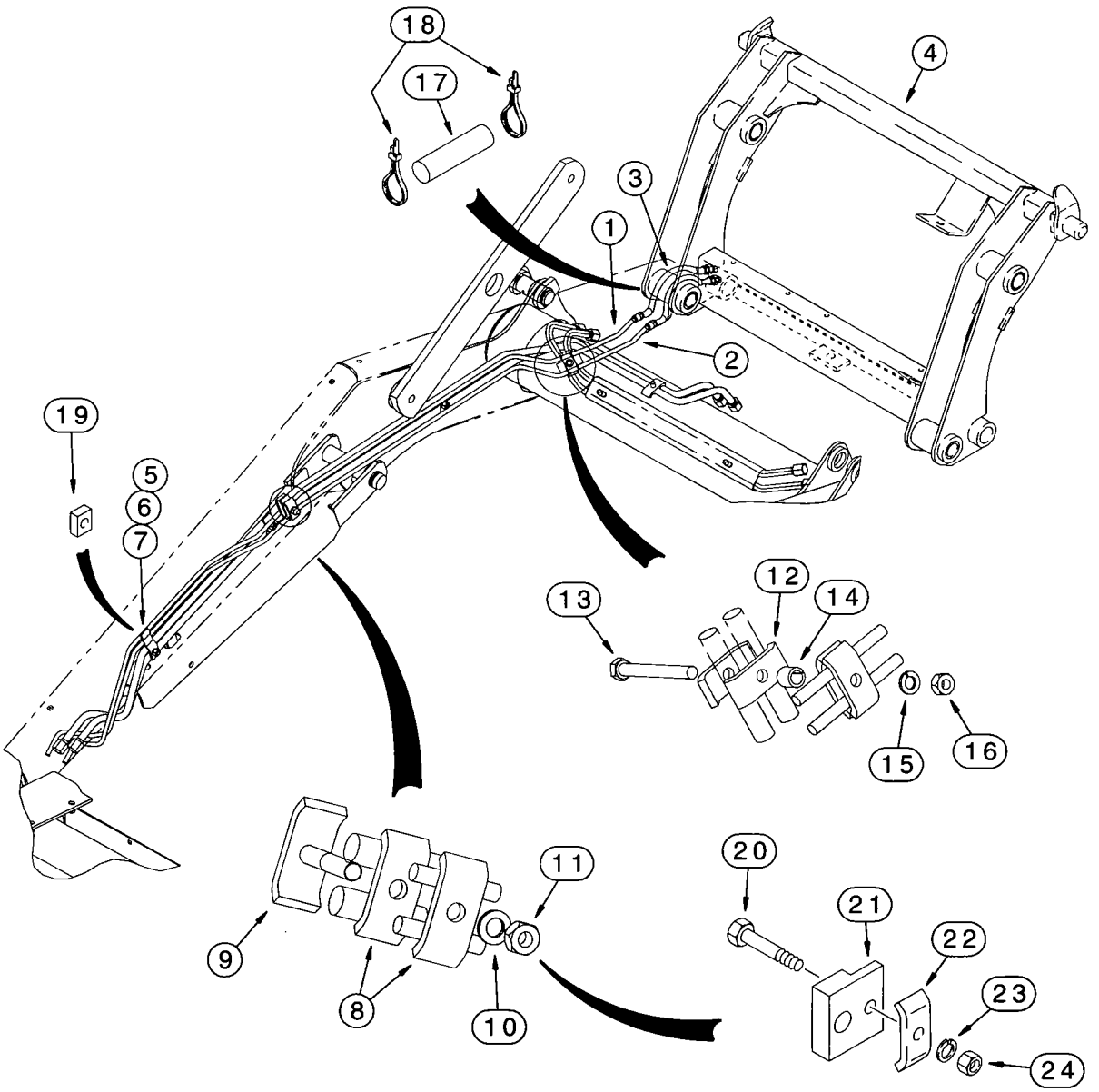
18
17
4
3
1
2
19
5
6
7
12
13
14
15
16
11
20
21
22
23
24
9
8
10

LOADER HYDRAULIC TOOL QUICK COUPLER
AT LOADER LIFT FRAME

REF.	PART NO.	DESCRIPTION	REQ'D.
1	304572A1	TUBE - loader lift frame to tool quick coupler frame	1
2	304574A1	TUBE - loader lift frame to tool quick coupler frame	1
3	300996A2	HOSE - 812 mm (32 inch) long, at tool quick coupler frame	2
4	292969A2	COUPLER - quick, tool, loader, hydraulic, see parts list page 9-23, use standard loader bucket pins to mount coupler	1
5	302820A1	CLAMP - extension	1
6	892-11010	WASHER - lock, 10 mm	1
7	829-1410	NUT - hex, 10 mm - 1.5, class 10.9	1
8	D138055	CLAMP - tube	2
9	302821A1	CLAMP - stud	1
10	892-11010	WASHER - lock, 10 mm	1
11	829-1410	NUT - hex, 10 mm - 1.5, class 10.9	1
12	D138055	CLAMP - tube	4
13	814-10090	BOLT - hex, 10 - 1.5 x 90 mm	1
14	120303A1	SPACER - clamp, 381 mm (15 inch) long	1
15	892-11010	WASHER - lock, 10 mm	1
16	829-1410	NUT - hex, 10 mm - 1.5, class 10.9	1
17	307277A1	SLEEVE - hose guard	1
18	L18337	STRAP - tie, 15 inch	2
19	*303804A1	BLOCK - spacer, if used	1
20	*627-10035	BOLT - hex, full threads, 10 - 1.5 x 35 mm, class 10.9	1
21	*303806A1	BLOCK - spacer.	1
22	*D138055	CLAMP - tube	1
23	*892-11010	WASHER - lock, 10 mm	1
24	*829-1410	NUT - hex, 10 mm - 1.5, class 10.9	1

NOTE: Also uses loader bucket tube clamping (Ref 19-23, page 8-13) and 139235A1 right-hand bucket cylinder link and D121194 bucket position pointer (Ref 13 and 6, page 9-13).

***NOTE:** Replaces loader auxiliary hydraulic tubes on models without loader auxiliary hydraulics (clam bucket), if used.

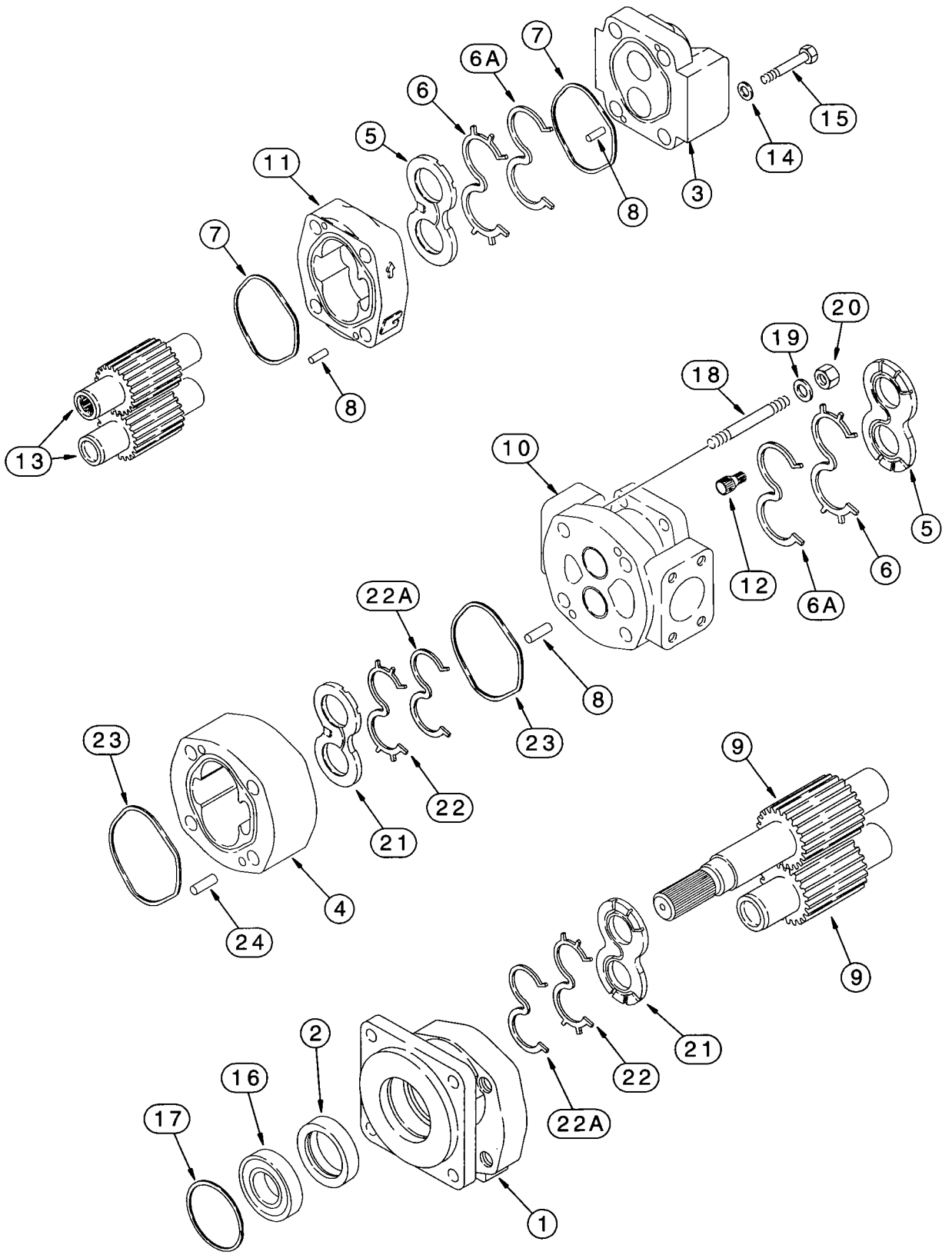
7
6A
6
5
11
7
8
3
14
15
13
8
20
19
18
10
12
6A
6
5
22A
8
23
23
22
21
9
4
24
9
21
22
22A
2
16
17
1

EQUIPMENT HYDRAULIC PUMP

REF.	PART NO.	DESCRIPTION	REQ'D.
	257954A1	PUMP ASSEMBLY - hydraulic equipment, 17 teeth shaft gear set, used with 257948A1 flex coupling on page 8-3	1
1	NSS	COVER - shaft end	1
2	+L32318	SEAL - shaft	1
3	NSS	COVER - closed end	1
4	142733A1	HOUSING - gear, shaft end	1
5	+111594A1	PLATE - thrust, closed end	2
6	+293926A1	SEAL - used with 293925A1 backup seal	2
6A	+293925A1	SEAL - backup, used with 293926A1 seal	2
7	+111596A1	SEAL - square ring, 3-1/4 ID x 3/32 inch wide, housing, closed end	2
8	111597A1	PIN - dowel, 1/4 x 1/16 inch, closed end, gear housing	4
9	NSS	SET - gear, shaft end, 17 teeth, 1-1/8 inch diameter shaft spline	1
10	NSS	HOUSING - center, with ports	1
11	142735A1	HOUSING - gear, closed end, pump	1
12	111593A1	SHAFT - connecting	1
13	NSS	SET - gear, closed end	1
14	111588A1	WASHER - flat, special, 17/32 x 15/16 x 3/16 inch	4
15	326-852	BOLT - hex, 1/2 NC x 3-1/4 inch, grade 8	4
16	S88754	BEARING - ball, sealed	1
17	S88756	RING - snap, retaining, spring lock	1
18	111583A1	STUD -	4
19	19-488	WASHER - flat	4
20	429-1010	NUT - hex, 5/8 inch NC, grade 8	4
21	+111589A1	PLATE - thrust, shaft end	2
22	+293927A1	SEAL - used with 293928A1 backup seal	2
22A	+293928A1	SEAL - backup, used with 293927A1 seal	2
23	+111592A1	SEAL - square ring, 4-31/64 ID x 1/8 inch wide, shaft end	2
24	W16323	PIN - dowel, shaft end	4
	+293924A1	KIT - seal, includes above items marked with a +	1

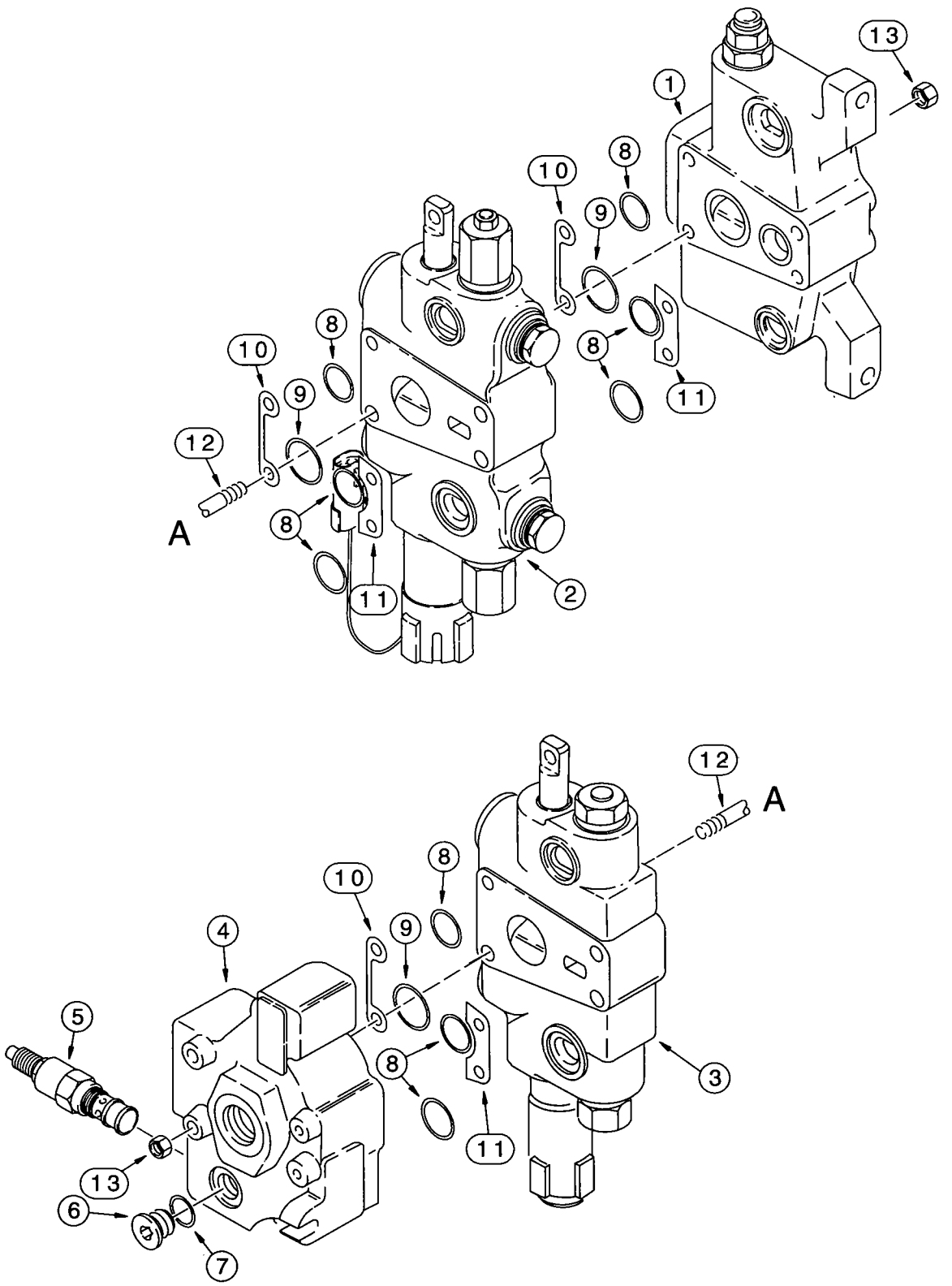
1
2
3
4
5
6
7
8
9
10
11
12
13
A
A

LOADER CONTROL VALVE

TWO SPOOL

REF.	PART NO.	DESCRIPTION	REQ'D.
	302965A1	VALVE ASSEMBLY - control, loader, two spool	1
1	121736A2	SECTION ASSEMBLY - inlet, with pilot relief valve, parts list page 8-77	1
2	302964A1	SECTION ASSEMBLY - bucket, with magnetic detent and circuit relief valve, parts list page 8-79	1
3	113793A4	SECTION ASSEMBLY - lift, with manual detent, parts list page 8-81	1
4	132004A2	SECTION ASSEMBLY - valve, outlet, parts list page 8-83	1
5	129842A2	VALVE ASSEMBLY - main relief, components parts are not serviced separately, for service of external seals order G110098 seal kit	1
6	218-5207	PLUG - hex socket, 7/16-20 inch O-ring boss, outlet section diagnostic port	1
7	237-6004	O-RING - 23/64 ID x 5/64 inch wide	1
8	*238-6119	O-RING - 15/16 ID x 3/32 inch wide, section ports, small	9
9	*238-6127	O-RING - 1-7/16 ID x 3/32 inch wide, section ports, large	3
10	G107251	SHIM - section, port side of control valve	3
11	G33965	SHIM - section, non-port side of control valve	3
12	G108870	STUD - tie, 3/8 NC x 9-3/4 inch	4
13	425-106	NUT - hex, 3/8 inch NC	8
	*1346108C2	KIT - seal, includes above items marked with an asterisk, plus additional O-rings not required for this application.	1

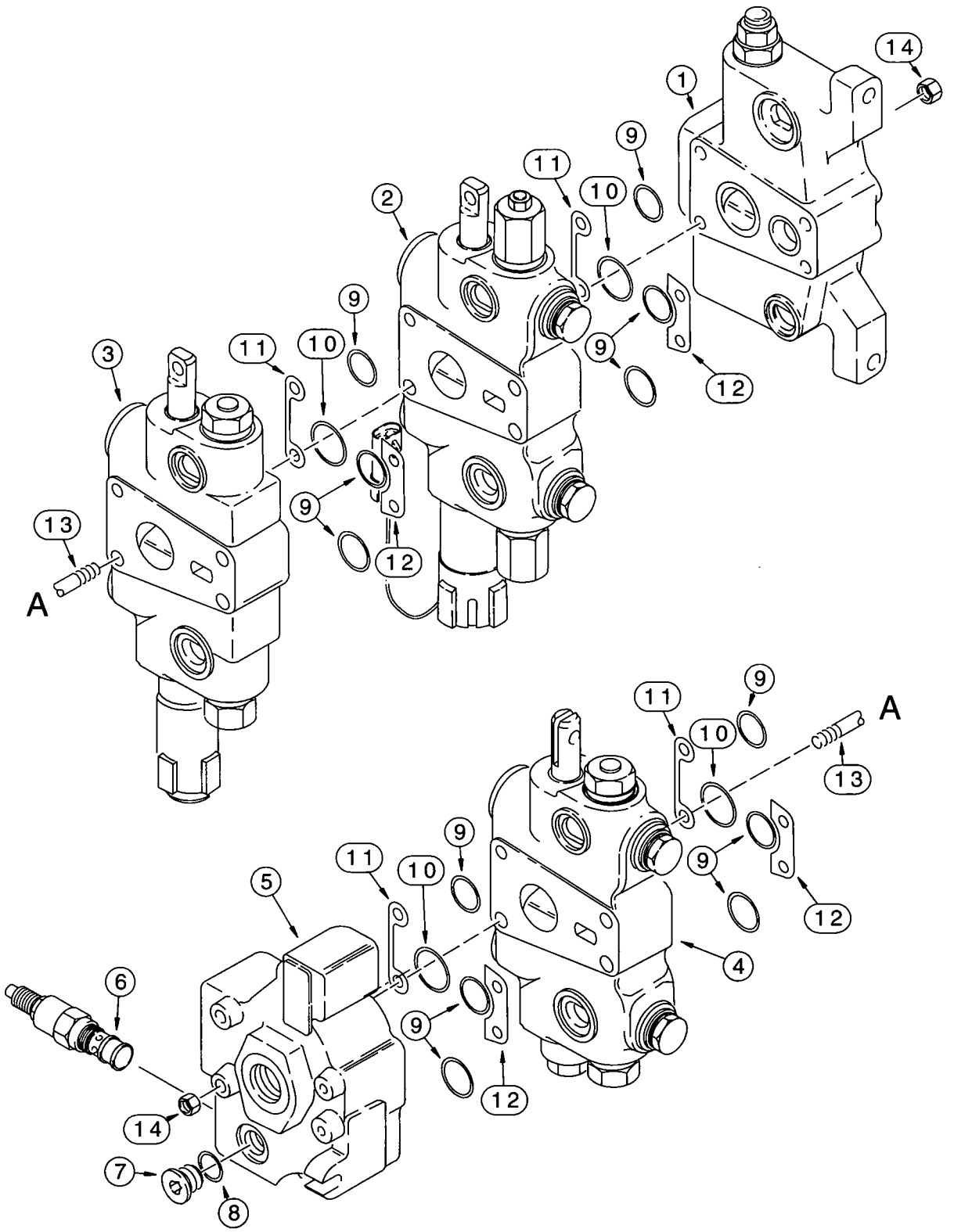
1
2
3
4
5
6
7
8
9
10
11
12
13
14
A
A

LOADER CONTROL VALVE
THREE SPOOL

REF.	PART NO.	DESCRIPTION	REQ'D.
	302966A1	VALVE ASSEMBLY - loader control, three-spool	1
1	121736A2	SECTION ASSEMBLY - inlet, with pilot relief valve, parts list page 8-77	1
2	302964A1	SECTION ASSEMBLY - bucket, with magnetic detent and circuit relief valve, parts list page 8-79	1
3	113793A4	SECTION ASSEMBLY - lift, with manual detent, parts list page 8-81	1
4	113794A4	SECTION ASSEMBLY - clam, all valves, parts list page 8-85	1
5	132004A2	SECTION ASSEMBLY - outlet, parts list page 8-83	1
6	129842A2	VALVE ASSEMBLY - main relief, component parts are not serviced separately, for service of external seals order G110098 seal kit	1
7	218-5207	PLUG - hex socket, 7/16-20 inch O-ring boss, outlet section diagnostic port	1
8	237-6004	O-RING - 23/64 ID x 5/64 inch wide	1
9	*238-6119	O-RING - 15/16 ID x 3/32 inch wide, section ports, small	12
10	*238-6127	O-RING - 1-7/16 ID x 3/32 inch wide, section ports, large	4
11	G107251	SHIM - section, port side of control valve	4
12	G33965	SHIM - section, non-port side of control valve	4
13	G108805	STUD - tie, 3/8 NC x 11-3/4 inch	4
14	425-106	NUT - hex, 3/8 inch NC	8
	*1346108C2	KIT - seal, includes above items marked with an asterisk, plus additional O-rings not required for this application	1

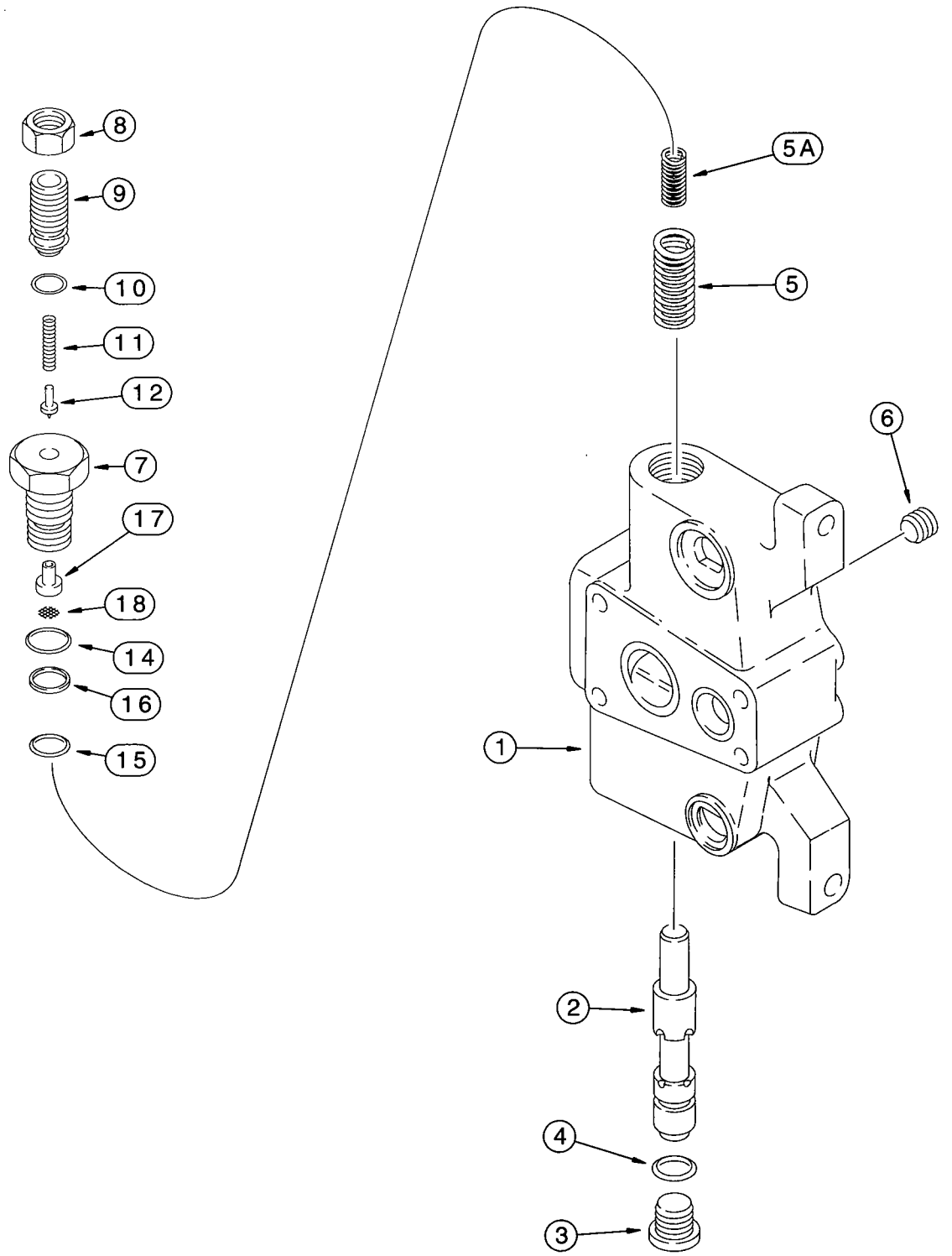
8
9
10
11
12
7
17
18
14
16
15
5A
5
6
1
2
4
3

LOADER CONTROL VALVE

INLET SECTION - WITH STEERING RELIEF VALVE

REF.	PART NO.	DESCRIPTION	REQ'D.
	121736A2	SECTION ASSEMBLY - inlet, with pilot relief valve	1
1	NSS	HOUSING - inlet section	1
2	NSS	SPOOL - inlet section	1
3	218-5211	PLUG - hex socket, 7/8-14 inch O-ring boss	1
4	237-6010	O-RING - 3/4 ID x 3/32 inch wide	1
5	122140A1	SPRING - outer	1
5A	122141A1	SPRING - inner	1
6	114903A1	PLUG - orifice, steering port	1
	130060A2	VALVE ASSEMBLY - relief, pilot, with screen filter (Ref 18)	1
7	G108866	BODY - pilot relief, valve	1
8	425-1510	NUT - hex, jam, 5/8 inch NF	1
9	G108867	PLUG - adjusting, relief valve	1
10	238-6012	O-RING - 3/8 ID x 1/16 inch wide	1
11	130059A1	SPRING - pilot relief	1
12	G108556	POPPET - relief, pilot	1
14	237-6012	O-RING - 59/64 ID x 7/64 inch wide, housing, large	1
15	238-6018	O-RING - 3/4 ID x 1/16 inch wide, housing, small	1
16	G35540	RING - backup, small O-ring, housing	1
17	196095A1	SEAT - poppet, relief valve, used with Ref 18 screen filter	1
18	196096A1	SCREEN - relief valve, filter	1

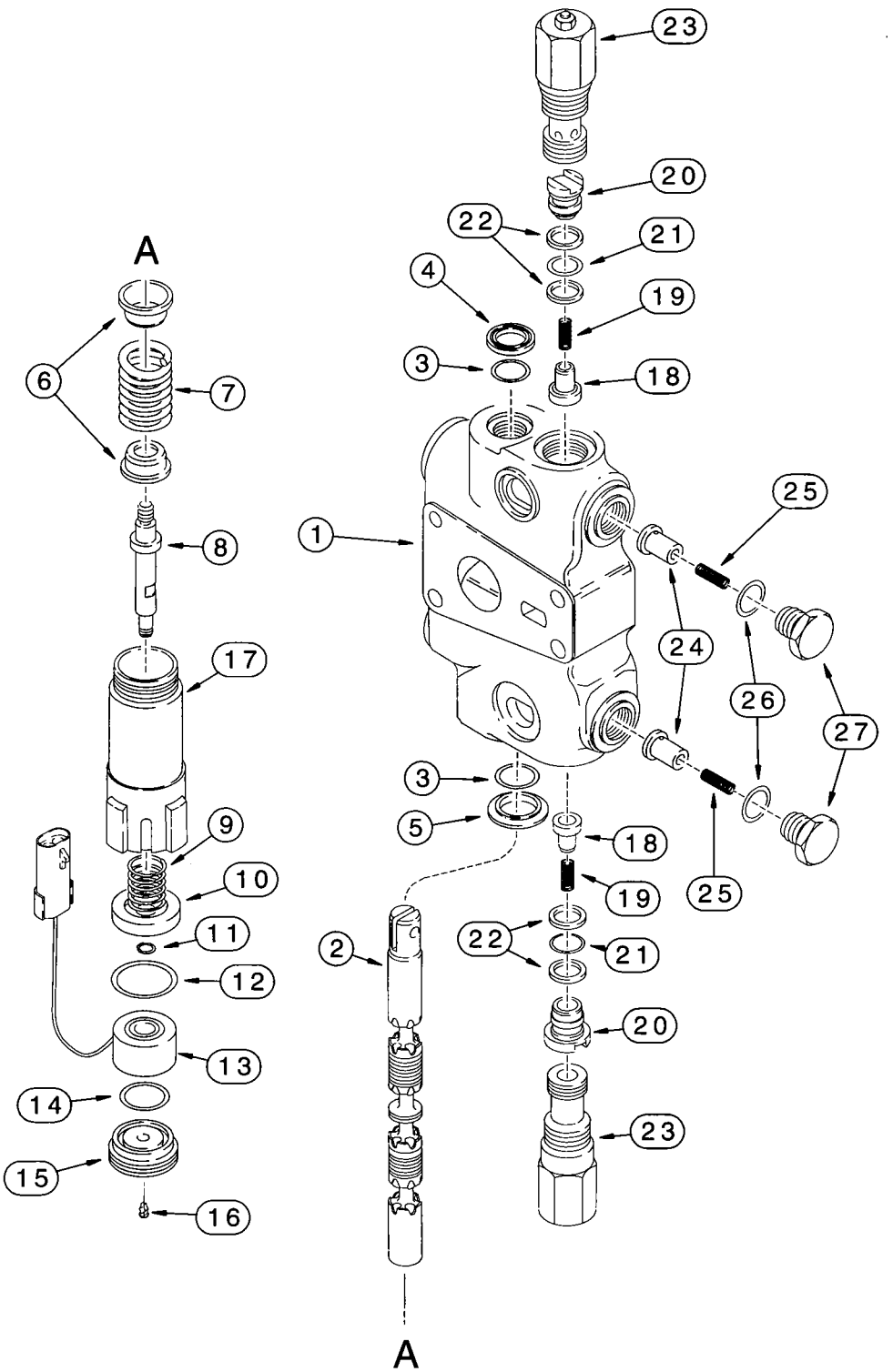
A
6
7
8
17
9
10
11
12
13
14
15
16
23
20
22
21
4
19
3
18
1
25
24
26
27
3
5
18
19
25
22
21
2
20
23
A

LOADER CONTROL VALVE

BUCKET SECTION - WITH MAGNETIC DETENT AND CIRCUIT RELIEF VALVE

REF.	PART NO.	DESCRIPTION	REQ'D.
	302964A1	SECTION ASSEMBLY - bucket, with magnetic detent and circuit relief valves	1
1	NSS	HOUSING - bucket section	1
2	NSS	SPOOL - bucket section	1
3	*1994608C1	O-RING - spool	2
4	*65457C1	SEAL - oil, spool	1
5	G102711	RETAINER - O-ring	1
6	G33075	SEAT - centering spring	2
7	302326A1	SPRING - centering, spool, used in 113786A4, 113786A5 or 113786A6 sections	1
8	118318A1	SHAFT - magnetic detent	1
9	G107447	SPRING - detent washer	1
10	G109295	WASHER - detent	1
11	100-1125	RING - external retaining, No. 25, washer retaining	1
12	238-5127	O-RING - 1-7/16 ID x 3/32 inch wide	1
13	120148A2	MAGNET - with connector	1
14	238-5120	O-RING - 1 ID x 3/32 inch wide	1
15	122330A1	PLUG - magnetic detent	1
16	G107780	PLUG - check, magnetic detent	1
17	113787A3	HOUSING - magnetic detent	1
	1346219C3	VALVE ASSEMBLY - load check, hollow poppet pin	2
18	302246A1	POPPET - hollow poppet pin with orifice	1
19	1346175C1	SPRING - load check	1
20	1343708C1	PLUG - load check	1
21	*238-6016	O-RING - 5/8 ID x 1/16 inch wide	1
22	*G103862	RING - backup, plug O-ring	2
23	G109391	VALVE ASSEMBLY - circuit relief, 3200 psi, one piece cap, used in production, parts list page 8-87, order G109449 circuit relief valve kit for service, see page 8-99 for kit	2
	129735A2	VALVE ASSEMBLY - anticavitation	2
24	302247A1	POPPET - anticavitation	1
25	G34458	SPRING - anticavitation	1
26	237-6010	O-RING - 3/4 ID x 3/32 inch wide	1
27	129699A1	PLUG - anticavitation	1
	*1346105C2	KIT - seal, includes above items marked with an asterisk, plus additional O-rings not required for this application	1

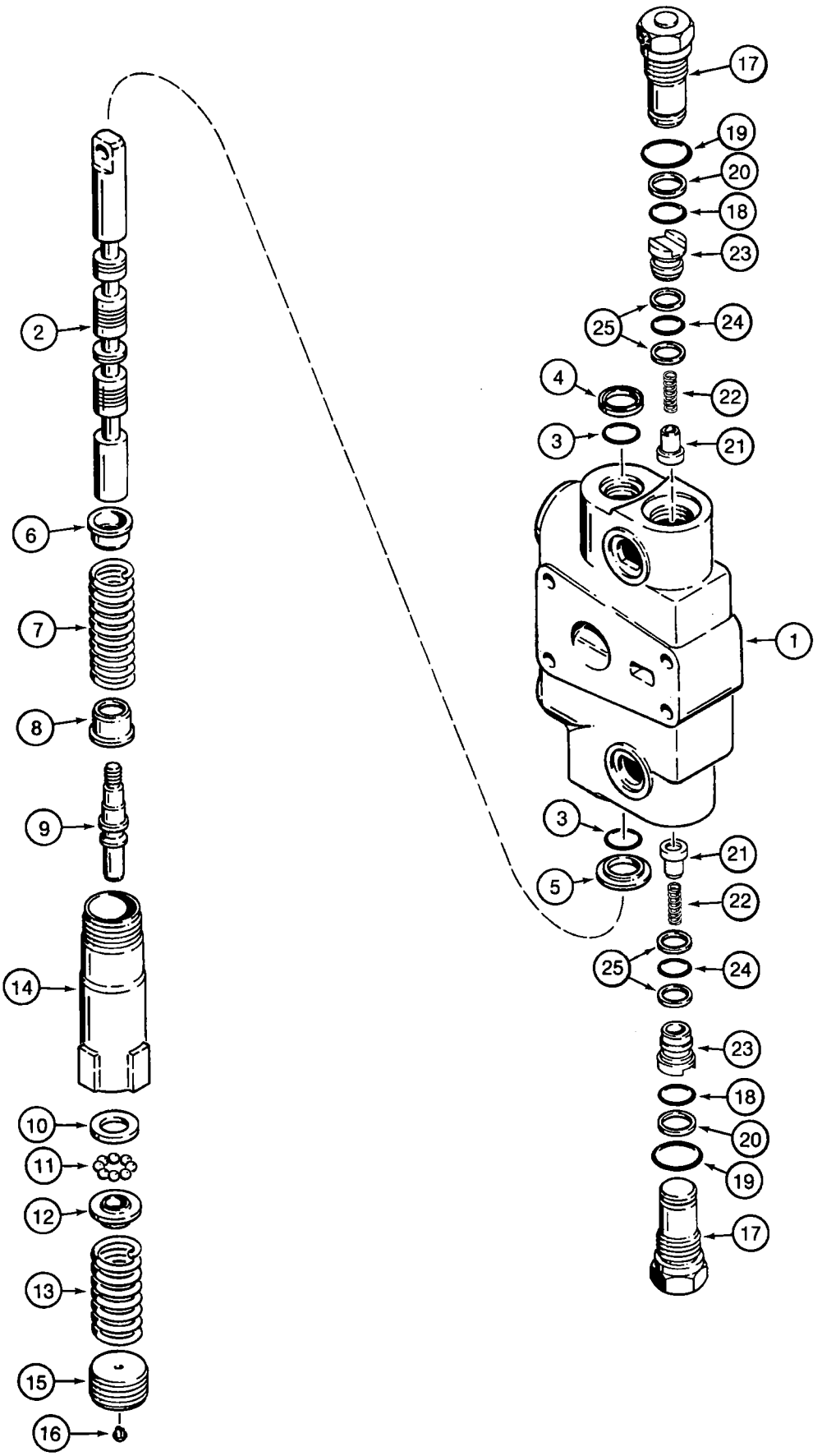
17
19
20
18
23
25
24
4
22
3
21
2
6
7
8
1
9
3
21
5
22
14
25
24
23
10
18
11
20
12
19
13
17
15
16

LOADER CONTROL VALVE

LIFT SECTION WITH MANUAL DETENT

REF.	PART NO.	DESCRIPTION	REQ'D.
	113793A4	SECTION ASSEMBLY - lift, with manual detent	1
1	NSS	HOUSING - lift section	1
2	NSS	SPOOL - lift section	1
3	*1994608C1	O-RING - spool	2
4	*65457C1	SEAL - oil, spool	1
5	G102711	RETAINER - O-ring	1
6	G33075	SEAT - centering spring, upper, small	1
7	1986612C1	SPRING - centering, spool	1
8	G106395	SEAT - centering spring, lower, large	1
9	G106396	SHAFT - detent	1
10	G109127	WASHER - detent, ball retainer	1
11	211-1009	BALL - chrome alloy steel, 9/32 inch, grade 24	8
12	G106398	RETAINER - ball stop	1
13	1986568C1	SPRING - detent	1
14	G106425	HOUSING - detent	1
15	G109384	PLUG - detent housing	1
16	G107780	PLUG - check, detent plug	1
	G33122	PLUG ASSEMBLY - load check valve port	2
17	NSS	PLUG - load check valve	1
18	*238-6018	O-RING - 3/4 ID x 1/16 inch wide, small	1
19	*237-6012	O-RING - 59/64 ID x 7/64 inch wide, large	1
20	*G35540	RING - backup, small O-ring	1
	1346219C2	VALVE ASSEMBLY - load check, hollow poppet pin	2
21	1343777C1	POPPET - hollow poppet pin with orifice, load check	1
22	1346175C1	SPRING - load check	1
23	1343708C1	PLUG - load check	1
24	*238-6016	O-RING - 5/8 ID x 1/16 inch wide, plug	1
25	*G103862	RING - backup, plug O-ring	2
	*1346105C2	KIT - seal, includes above items marked with an asterisk, plus additional O-rings not required for this application	1

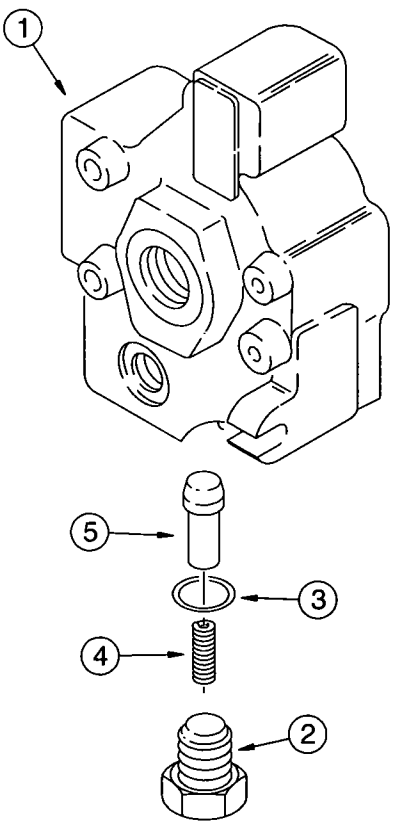
1
5
3
4
2

LOADER CONTROL VALVE

OUTLET SECTION

REF.	PART NO.	DESCRIPTION	REQ'D.
	132004A2	SECTION ASSEMBLY - outlet	1
1	NSS	HOUSING - outlet section	1
2	G109644	PLUG - load check	1
3	237-6008	O-RING - 41/64 ID x 3/32 inch wide	1
4	G109646	SPRING - load check	1
5	283417A1	POPPET - load check	1

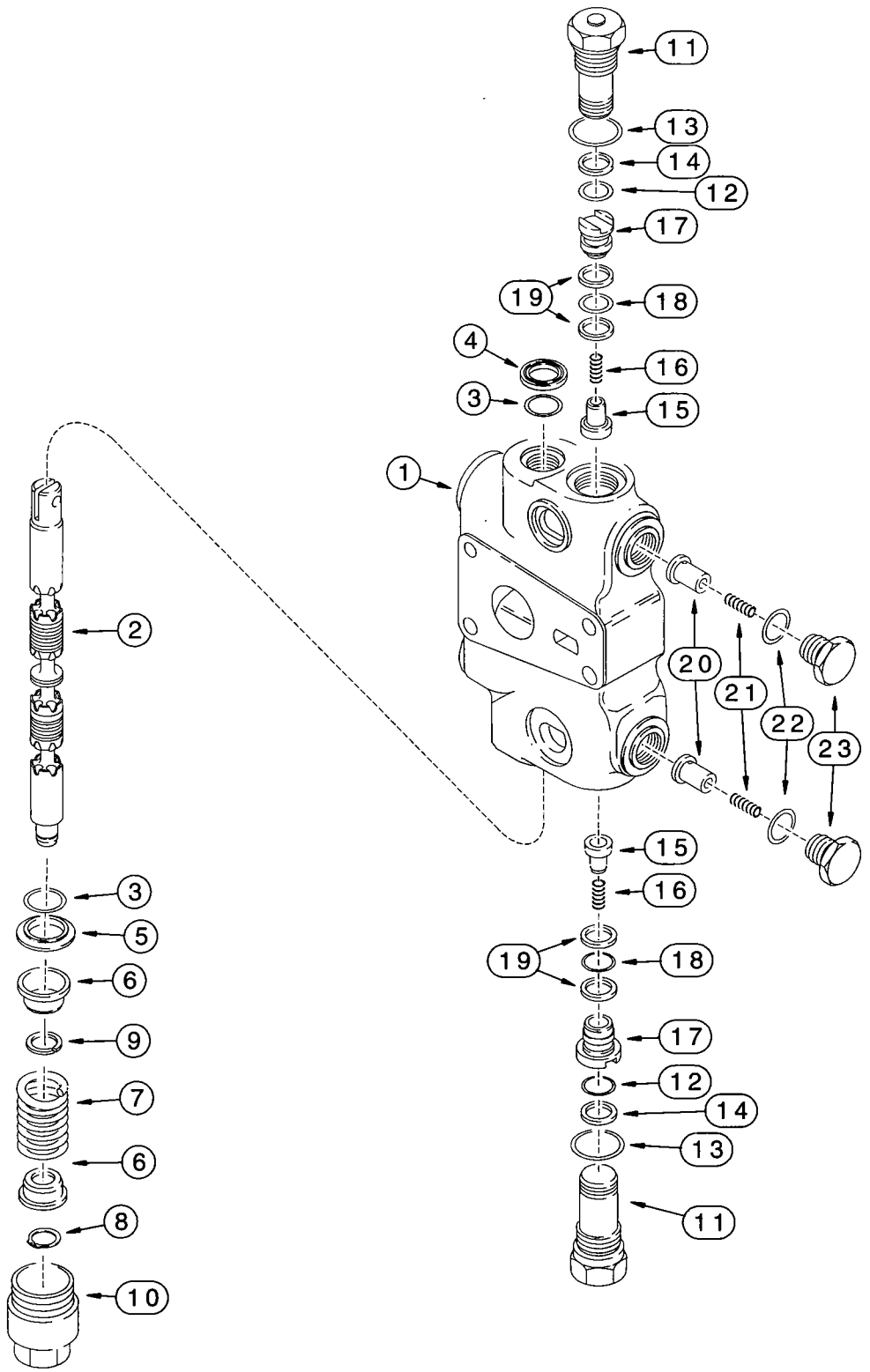
11
13
14
12
17
19
18
4
16
3
15
1
2
20
21
22
23
15
16
3
19
18
5
17
6
12
9
14
7
13
6
11
8
10

LOADER CONTROL VALVE

CLAM SECTION

REF.	PART NO.	DESCRIPTION	REQ'D.
	113794A4	SECTION ASSEMBLY - clam, three spool valve	1
1	NSS	HOUSING - clam section	1
2	NSS	SPOOL - clam section	1
3	*1994608C1	O-RING - spool	2
4	*65457C1	SEAL - oil, spool	1
5	G102711	RETAINER - O-ring	1
6	G33075	SEAT - centering spring	2
7	1994596C1	SPRING - centering, purple, 2-15/16 inch free length, spool, clam section	1
8	100-1647	RING - heavy external retaining, No. 47	1
9	G106410	SPACER - screw	1
10	G33080	CAP - centering spring, spool end, lower	1
	G33122	PLUG ASSEMBLY - load check valve port	2
11	NSS	PLUG - load check valve	1
12	*238-6018	O-RING - 3/4 ID x 1/16 inch wide, small	1
13	*237-6012	O-RING - 59/64 ID x 7/64 inch wide, large	1
14	*G35540	RING - backup, small O-ring	1
	1346219C2	VALVE ASSEMBLY - load check, hollow poppet pin	2
15	1343777C1	POPPET - hollow poppet pin with orifice, load check	1
16	1346175C1	SPRING - load check	1
17	1343708C1	PLUG - load check	1
18	*238-6016	O-RING - 5/8 ID x 1/16 inch wide, plug	1
19	*G103862	RING - backup, plug O-ring	2
	129735A1	VALVE ASSEMBLY - anticavitation	2
20	129698A1	POPPET - anticavitation	1
21	G34458	SPRING - anticavitation	1
22	237-6010	O-RING - 3/4 ID x 3/32 inch wide	1
23	129699A1	PLUG - anticavitation	1
	*1346105C2	KIT - seal, includes above items marked with an asterisk, plus additional O-rings not required for this application	1

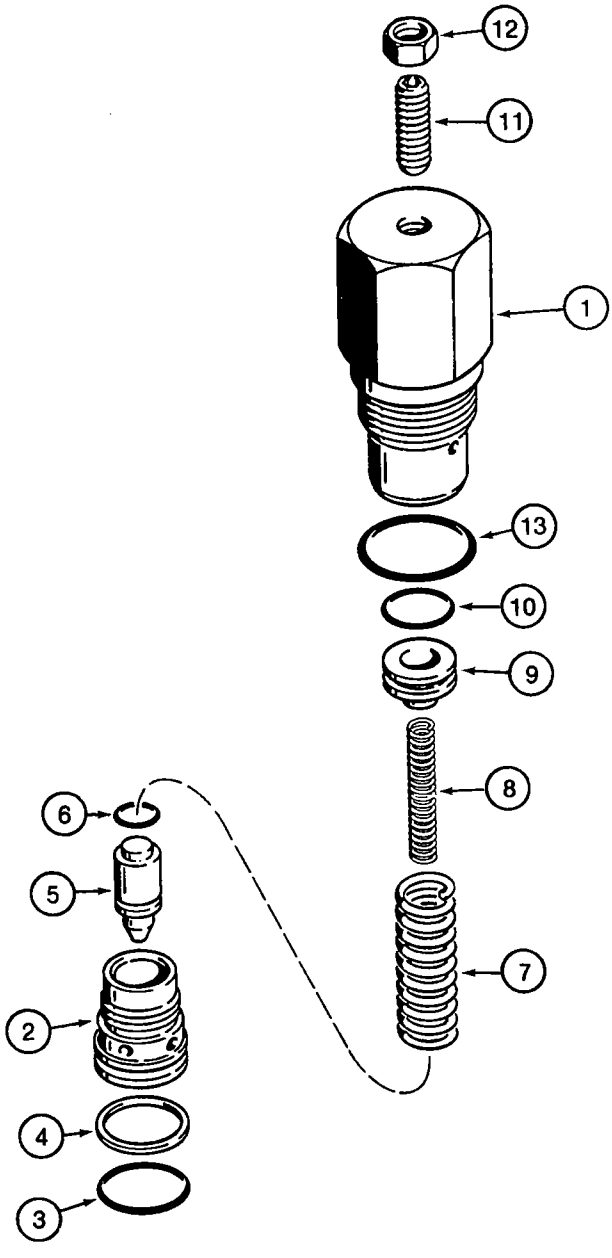
12
11
1
13
10
9
8
6
5
7
2
4
3

LOADER CONTROL VALVE

BUCKET SECTION CIRCUIT RELIEF VALVE

REF.	PART NO.	DESCRIPTION	REQ'D.
	*G109391	VALVE ASSEMBLY - circuit relief, 3200 psi, one piece cap, used in production, order G109449 kit for service	2
1	NSS	HOUSING - circuit relief valve	1
2	NSS	SEAT - circuit relief valve	1
3	238-6018	O-RING - 3/4 ID x 1/16 inch wide	1
4	G35540	RING - backup	1
5	NSS	POPPET - circuit relief valve	1
6	NSS	O-RING - poppet	1
7	NSS	SPRING - relief, outer	1
8	NSS	SPRING - relief, inner	1
9	NSS	PISTON - circuit relief valve	1
10	NSS	O-RING - piston	1
11	484-43116	SCREW - set, hex socket headless, 5/16 NF x 1 inch, oval point	1
12	425-155	NUT - hex, jam, 5/16 inch NF	1
13	237-6012	O-RING - 59/64 ID x 7/64 inch wide	1
	*G109449	KIT - service, for G109391 circuit relief valve, kit includes an instruction sheet and G109447 circuit relief valve (items 1-13) which is the same as G109391 except with a different pressure setting	1

NOTE: The pressure setting of the repair circuit relief valve is not preset for this application. Adjust the setting according to the instructions sent with the repair valve or according to the service manual.

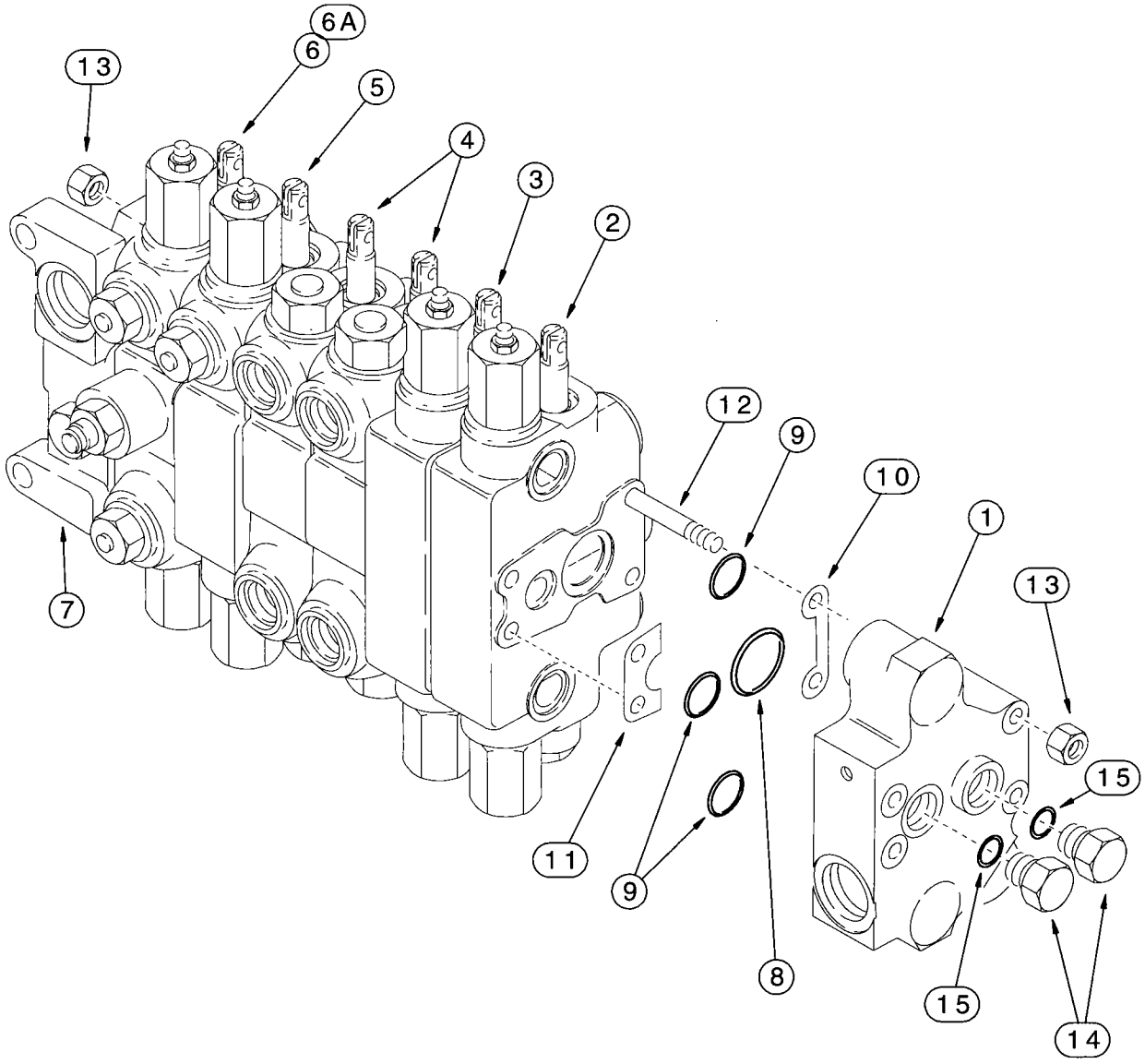
6A
6
13
5
4
3
2
12
9
10
1
13
7
11
9
8
15
15
14

BACKHOE CONTROL VALVES

MODELS WITHOUT EXTENDABLE DIPPER WITHOUT AUXILIARY HYDRAULICS

REF.	PART NO.	DESCRIPTION	REQ'D.
	243135A1	VALVE ASSEMBLY - backhoe control, 6 spool, foot swing, if used	1
	243136A1	VALVE ASSEMBLY - backhoe control, 6 spool, hand swing, if used	1
1	113248A2	SECTION ASSEMBLY - outlet, parts list page 8-97	1
2	129864A4	SECTION ASSEMBLY - bucket, parts list page 8-99	1
3	136610A5	SECTION ASSEMBLY - dipper, parts list page 8-101	1
4	253989A2	SECTION ASSEMBLY - stabilizer, left-hand and right-hand, parts list page 8-103	2
5	144321A5	SECTION ASSEMBLY - boom, parts list pages 8-105 and 8-107	1
6	241088A3	SECTION ASSEMBLY - swing, foot swing control valve, parts list pages 8-109 and 8-111	1
6A	243145A3	SECTION ASSEMBLY - swing, hand swing control valve, parts list pages 8-109 and 8-111	1
7	1542829C1	SECTION ASSEMBLY - inlet, parts list page 8-97	1
8	*238-6127	O-RING - 1-7/16 ID x 3/32 inch wide, section ports, large	7
9	*238-6119	O-RING - 15/16 ID x 3/32 inch wide, section ports, small	21
10	G107251	SHIM - section	7
11	G33965	SHIM - section	7
12	G108900	STUD - tie, 3/8 NC x 16-15/16 inch	4
13	425-106	NUT - hex, 3/8 inch NC	8
14	218-5157	PLUG - hex, 7/8-14 inch O-ring boss, outlet section	2
15	237-6010	O-RING - 3/4 ID x 3/32 inch wide	1
	*1346107C2	KIT - seal, includes above items marked with an asterisk, plus additional O-rings not required in this application	1

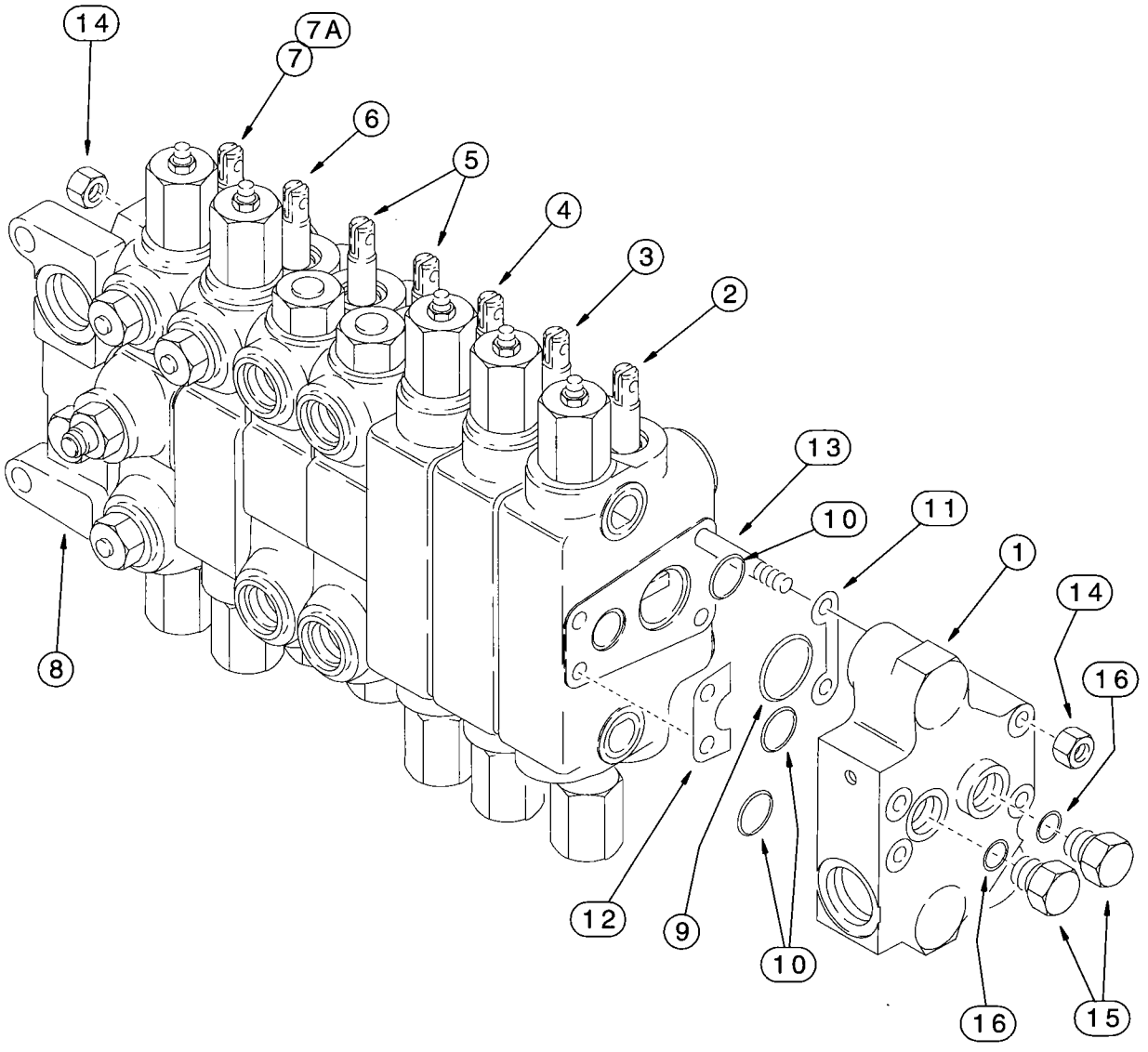
14
7A
7
6
5
4
3
2
13
10
11
1
14
16
8
12
9
10
16
15

BACKHOE CONTROL VALVES

MODELS WITHOUT EXTENDABLE DIPPER WITH AUXILIARY HYDRAULICS

REF.	PART NO.	DESCRIPTION	REQ'D.
	243139A2	VALVE ASSEMBLY - backhoe control, 7 spool, foot swing	1
	243141A2	VALVE ASSEMBLY - backhoe control, 7 spool, hand swing	1
1	113248A2	SECTION ASSEMBLY - outlet, parts list page 8-97	1
2	294198A1	SECTION ASSEMBLY - options, auxiliary hydraulics, parts list page 8-115	1
3	129864A4	SECTION ASSEMBLY - bucket, parts list page 8-99	1
4	136610A5	SECTION ASSEMBLY - dipper, parts list page 8-101	1
5	253989A2	SECTION ASSEMBLY - stabilizer, left-hand and right-hand, parts list page 8-103	2
6	144321A5	SECTION ASSEMBLY - boom, parts list pages 8-105 and 8-107	1
7	241088A3	SECTION ASSEMBLY - swing, foot swing control valve, parts list pages 8-109 and 8-111	1
7A	243145A3	SECTION ASSEMBLY - swing, hand swing control valve, parts list pages 8-109 and 8-111	1
8	1542829C1	SECTION ASSEMBLY - inlet, parts list page 8-97	1
9	*238-6127	O-RING - 1-7/16 ID x 3/32 inch wide, section ports, large	8
10	*238-6119	O-RING - 15/16 ID x 3/32 inch wide, section ports, small	24
11	G107251	SHIM - section	8
12	G33965	SHIM - section	8
13	G108899	STUD - tie, 3/8 NC x 18-15/16 inch	4
14	425-106	NUT - hex, 3/8 inch NC	8
15	218-5157	PLUG - hex, 7/8-14 inch O-ring boss	2
16	237-6010	O-RING - 3/4 ID x 3/32 inch wide	1
	*1346107C2	KIT - seal, includes above items marked with an asterisk, plus additional O-rings not required for this application	1

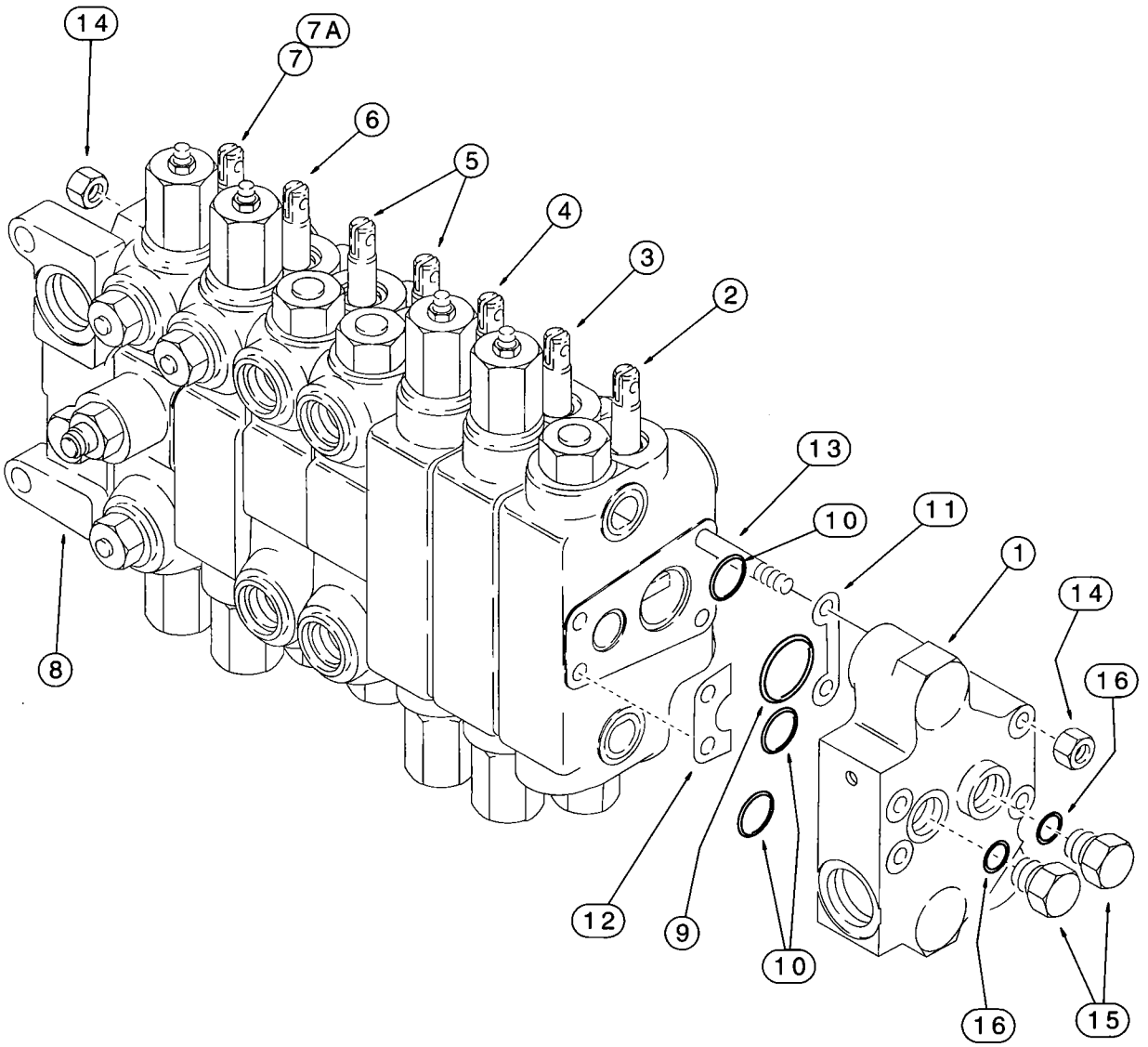
14
7A
7
6
5
4
3
2
13
10
11
1
14
16
8
12
9
10
16
15

BACKHOE CONTROL VALVES

MODELS WITH EXTENDABLE DIPPER WITHOUT AUXILIARY HYDRAULICS

REF.	PART NO.	DESCRIPTION	REQ'D.
	243137A1	VALVE ASSEMBLY - backhoe control, 7 spool, foot swing, if used	1
	243138A1	VALVE ASSEMBLY - backhoe control, 7 spool, hand swing, if used	1
1	113248A2	SECTION ASSEMBLY - outlet, parts list page 8-97	1
2	144324A4	SECTION ASSEMBLY - dipper extension, parts list page 8-113	1
3	129864A4	SECTION ASSEMBLY - bucket, parts list page 8-99	1
4	136610A5	SECTION ASSEMBLY - dipper, parts list page 8-101	1
5	253989A2	SECTION ASSEMBLY - stabilizer, left-hand and right-hand, parts list page 8-103	2
6	144321A5	SECTION ASSEMBLY - boom, parts list pages 8-105 and 8-107	1
7	241088A3	SECTION ASSEMBLY - swing, foot swing control valve, parts list pages 8-109 and 8-111	1
7A	243145A3	SECTION ASSEMBLY - swing, hand swing control valve, parts list pages 8-109 and 8-111	1
8	1542829C1	SECTION ASSEMBLY - inlet, parts list page 8-97	1
9	*238-6127	O-RING - 1-7/16 ID x 3/32 inch wide, section ports, large	8
10	*238-6119	O-RING - 15/16 ID x 3/32 inch wide, section ports, small	24
11	G107251	SHIM - section	8
12	G33965	SHIM - section	8
13	G108899	STUD - tie, 3/8 NC x 18-15/16 inch	4
14	425-106	NUT - hex, 3/8 inch NC	8
15	218-5157	PLUG - hex, 7/8-14 inch O-ring boss	2
16	237-6010	O-RING - 3/4 ID x 3/32 inch wide	1
	*1346107C2	KIT - seal, includes above items marked with an asterisk, plus additional O-rings not required for this application	1

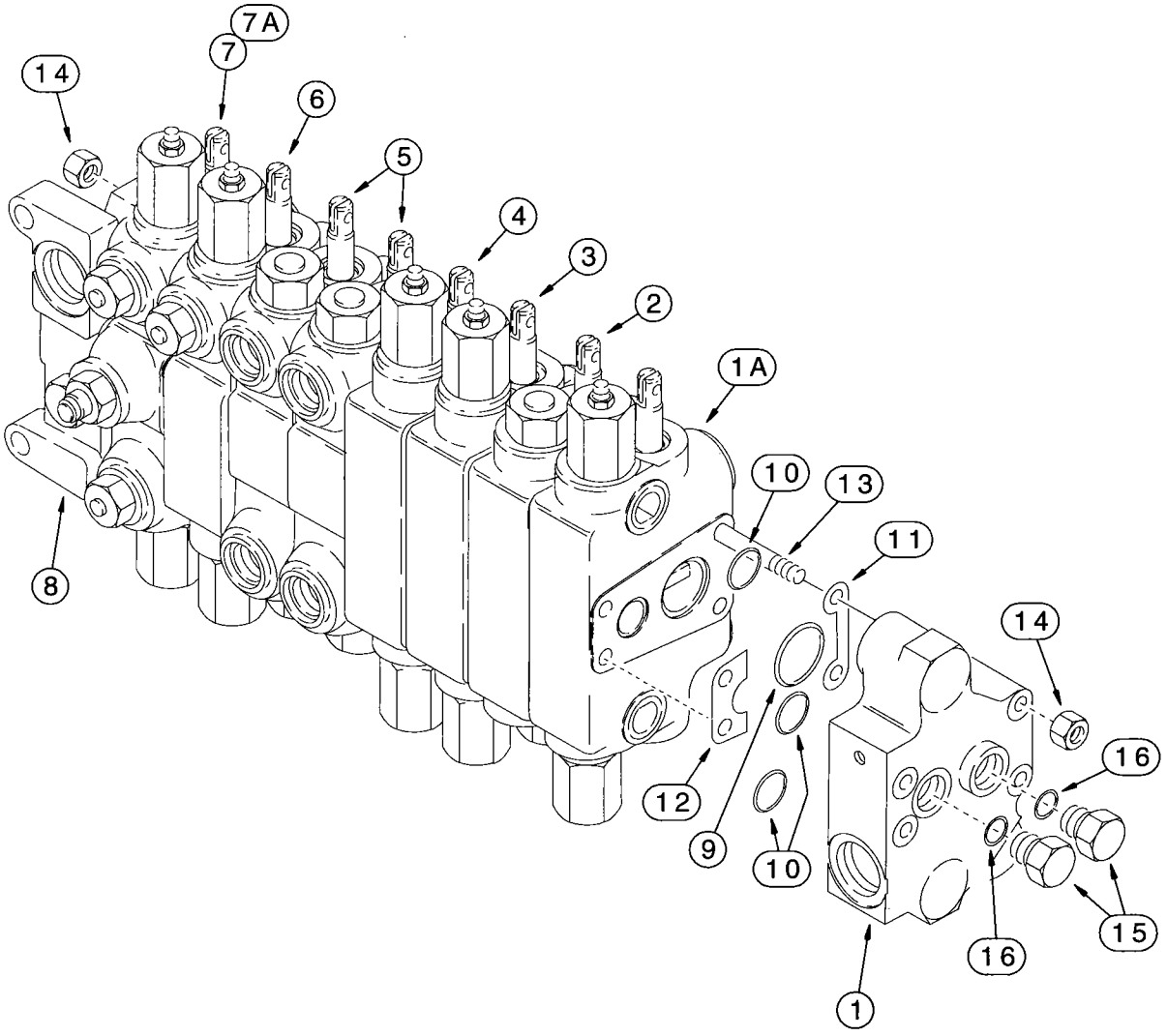
7A
7
14
6
5
4
3
2
1A
10
13
11
14
16
8
12
9
10
16
15
1

BACKHOE CONTROL VALVES

MODELS WITH EXTENDABLE DIPPER WITH AUXILIARY HYDRAULICS

REF.	PART NO.	DESCRIPTION	REQ'D.
	243142A2	VALVE ASSEMBLY - backhoe control, 8 spool, foot swing	1
	243143A2	VALVE ASSEMBLY - backhoe control, 8 spool, hand swing	1
1	113248A2	SECTION ASSEMBLY - outlet, parts list page 8-97	1
1A	294198A1	SECTION ASSEMBLY - options, auxiliary hydraulics, parts list page 8-115	1
2	144324A4	SECTION ASSEMBLY - dipper extension, parts list page 8-113	1
3	129864A4	SECTION ASSEMBLY - bucket, parts list page 8-99	1
4	136610A5	SECTION ASSEMBLY - dipper, parts list page 8-101	1
5	253989A2	SECTION ASSEMBLY - stabilizer, left-hand and right-hand, parts list page 8-103	2
6	144321A5	SECTION ASSEMBLY - boom, parts list pages 8-105 and 8-107	1
7	241088A3	SECTION ASSEMBLY - swing, foot swing control valve, parts list pages 8-109 and 8-111	1
7A	243145A3	SECTION ASSEMBLY - swing, hand swing control valve, parts list pages 8-109 and 8-111	1
8	1542829C1	SECTION ASSEMBLY - inlet, parts list page 8-97	1
9	*238-6127	O-RING - 1-7/16 ID x 3/32 inch wide, section ports, large	9
10	*238-6119	O-RING - 15/16 ID x 3/32 inch wide, section ports, small	27
11	G107251	SHIM - section	9
12	G33965	SHIM - section	9
13	229684A1	STUD - tie	4
14	425-106	NUT - hex, 3/8 inch NC	8
15	218-5157	PLUG - hex, 7/8-14 inch O-ring boss	2
16	237-6010	O-RING - 3/4 ID x 3/32 inch wide	1
	*1346107C2	KIT - seal, includes above items marked with an asterisk, plus additional O-rings not required for this application	1

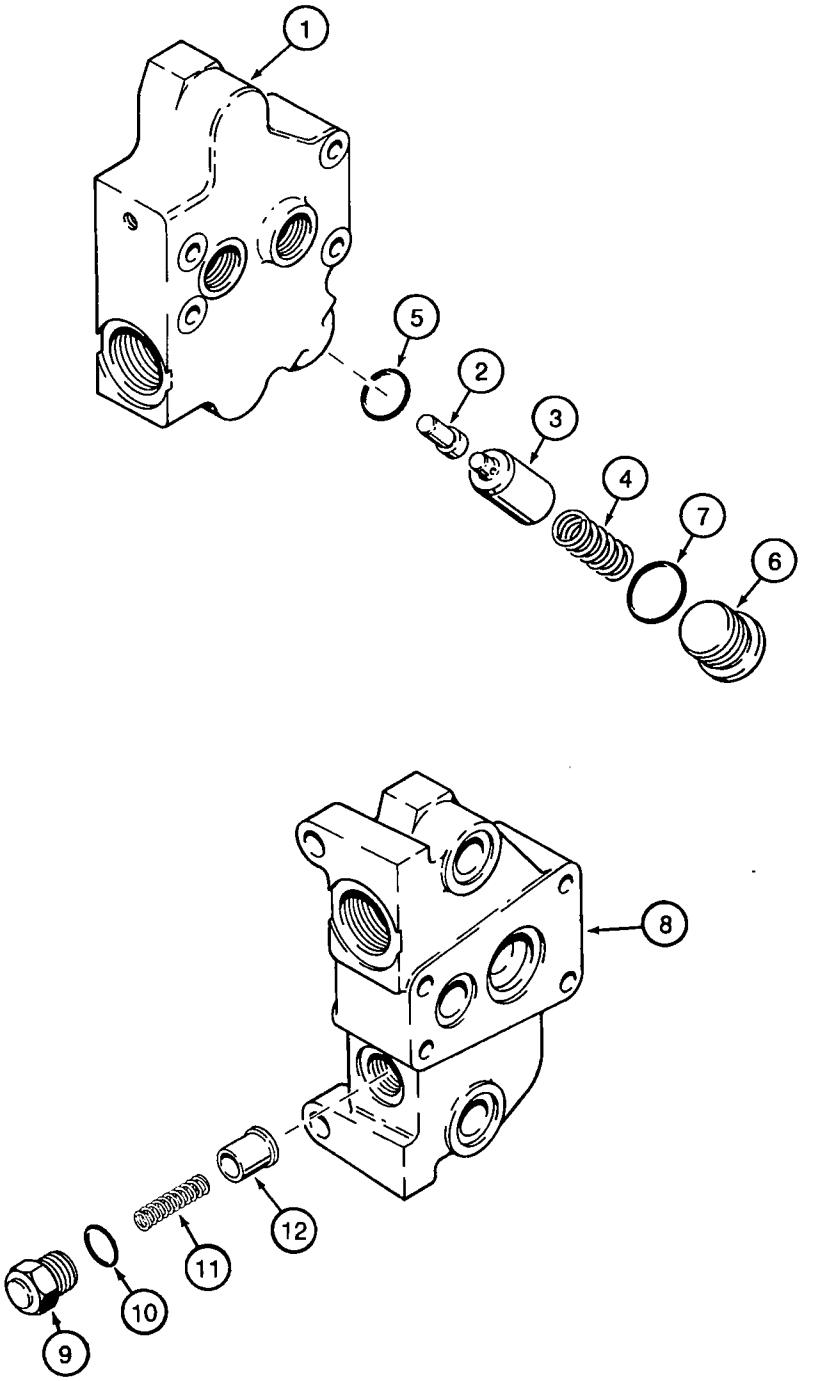
1
5
2
3
4
7
6
8
12
11
10
9

BACKHOE CONTROL VALVE
INLET AND OUTLET SECTIONS

REF.	PART NO.	DESCRIPTION	REQ'D.
		OUTLET SECTION	
	113248A2	SECTION ASSEMBLY - outlet	1
1	NSS	MANIFOLD - section body	1
2	G108902	PISTON - regeneration sensing	1
3	257387A1	SPOOL - regeneration	1
4	G33112	SPRING - regeneration spool	1
5	238-5118	O-RING - 7/8 ID x 3/32 inch wide	1
6	218-5213	PLUG - hex socket, 1-3/16-12 inch O-ring boss	1
7	237-6014	O-RING - 1-3/64 ID x 7/64 inch wide	1
		INLET SECTION	
	1542829C1	SECTION ASSEMBLY - inlet	1
8	NSS	MANIFOLD - section body	1
	1346221C2	VALVE ASSEMBLY - anticavitation (order items 9-12)	1
9	G34937	PLUG - check valve	1
10	237-6010	O-RING - 3/4 ID x 3/32 inch wide	1
11	G34458	SPRING - check valve	1
12	278735A1	POPPET - check valve	1

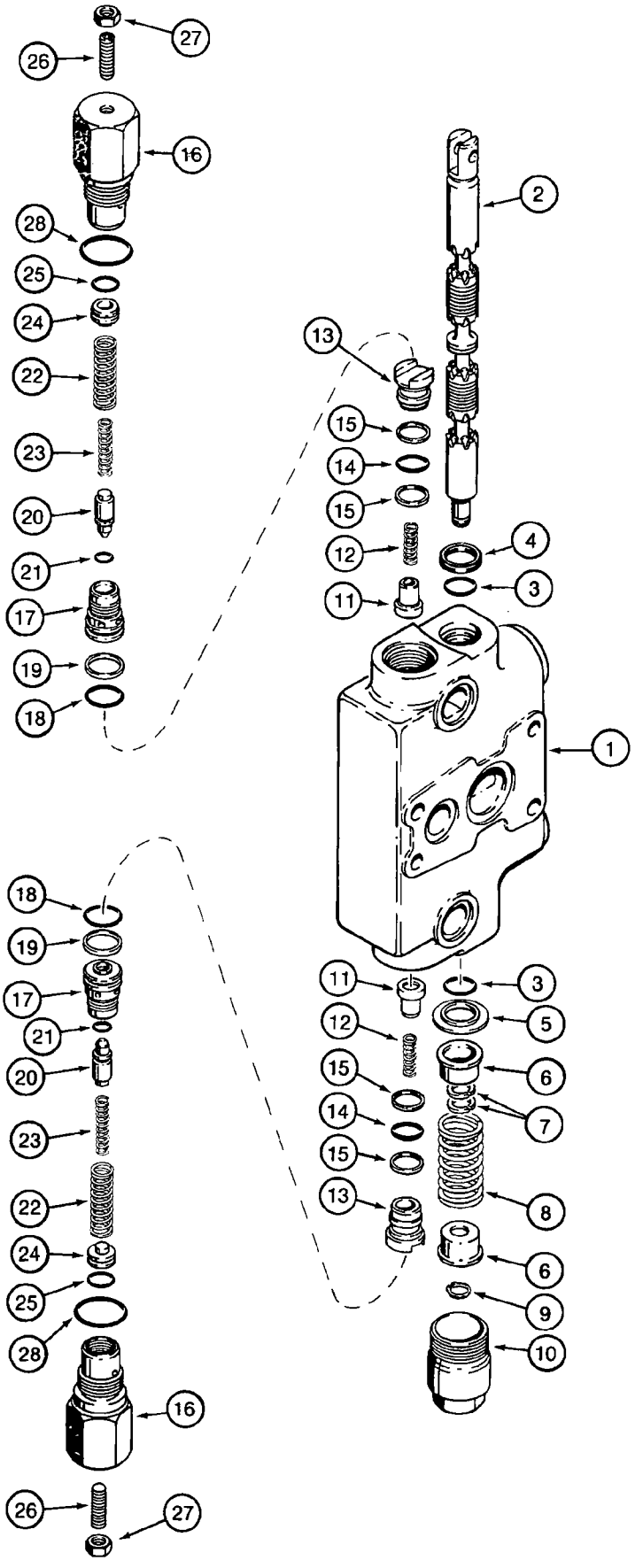
27
26
16
28
25
24
22
23
20
21
17
19
18
2
13
15
14
15
12
4
11
3
1
18
19
17
21
20
23
22
24
25
28
16
26
27
11
3
12
5
15
6
14
7
15
13
8
6
9
10

BACKHOE CONTROL VALVE

BUCKET SECTION

REF.	PART NO.	DESCRIPTION	REQ'D.
	129864A4	SECTION ASSEMBLY - bucket, with circuit relief valves	1
1	NSS	HOUSING - bucket section	1
2	NSS	SPOOL - bucket section	1
3	*1994608C1	O-RING - spool	2
4	*65457C1	SEAL - oil, spool	1
5	G102711	RETAINER - O-ring	1
6	G33075	SEAT - centering spring	2
7	G106410	SPACER - spool	2
8	1994596C1	SPRING - centering, purple, 2-15/16 inch free length, spool	1
9	100-1647	RING - heavy external retaining, No. 47, spool end	1
10	G33080	CAP - centering spring, spool end	1
	1346219C3	VALVE ASSEMBLY - load check, hollow poppet pin	2
11	302246A1	POPPET - hollow poppet pin with orifice, load check	1
12	1346175C1	SPRING - load check	1
13	1343708C1	PLUG - load check	1
14	*238-6016	O-RING - 5/8 ID x 1/16 inch wide, plug	1
15	*G103862	RING - backup, plug O-ring	2
	**129861A1	VALVE ASSEMBLY - circuit relief, bucket section, used in production, order G110077 kit for service	2
16	NSS	HOUSING - circuit relief valve	1
17	NSS	SEAT - circuit relief valve	1
18	*238-6018	O-RING - 3/4 ID x 1/16 inch wide, circuit relief valve seat	1
19	*G35540	RING - backup, seat O-ring	1
20	NSS	POPPET - circuit relief valve	1
21	NSS	O-RING - poppet	1
22	NSS	SPRING - relief, outer	1
23	NSS	SPRING - relief, inner	1
24	NSS	PISTON - circuit relief valve	1
25	NSS	O-RING - 1/2 ID x 1/16 inch wide	1
26	484-43116	SCREW - set, hex socket headless, 5/16 NF x 1 inch, oval point	1
27	425-155	NUT - hex, jam, 5/16 inch NF	1
28	*237-6012	O-RING - 59/64 ID x 7/64 inch wide, housing	1
	*1346105C2	KIT - seal, includes above items marked with an asterisk, plus additional O-rings not required for this application	1
	**G110077	KIT - service, for 129861A1 circuit relief valve, kit includes an instruction sheet and G110078 circuit relief valve (items 16-28) which is the same as 129861A1 except with a different pressure setting	1

NOTE: The pressure setting of the repair circuit relief valve is not preset for this application. Adjust the setting according to the instructions sent with the repair valve or according to the service manual.

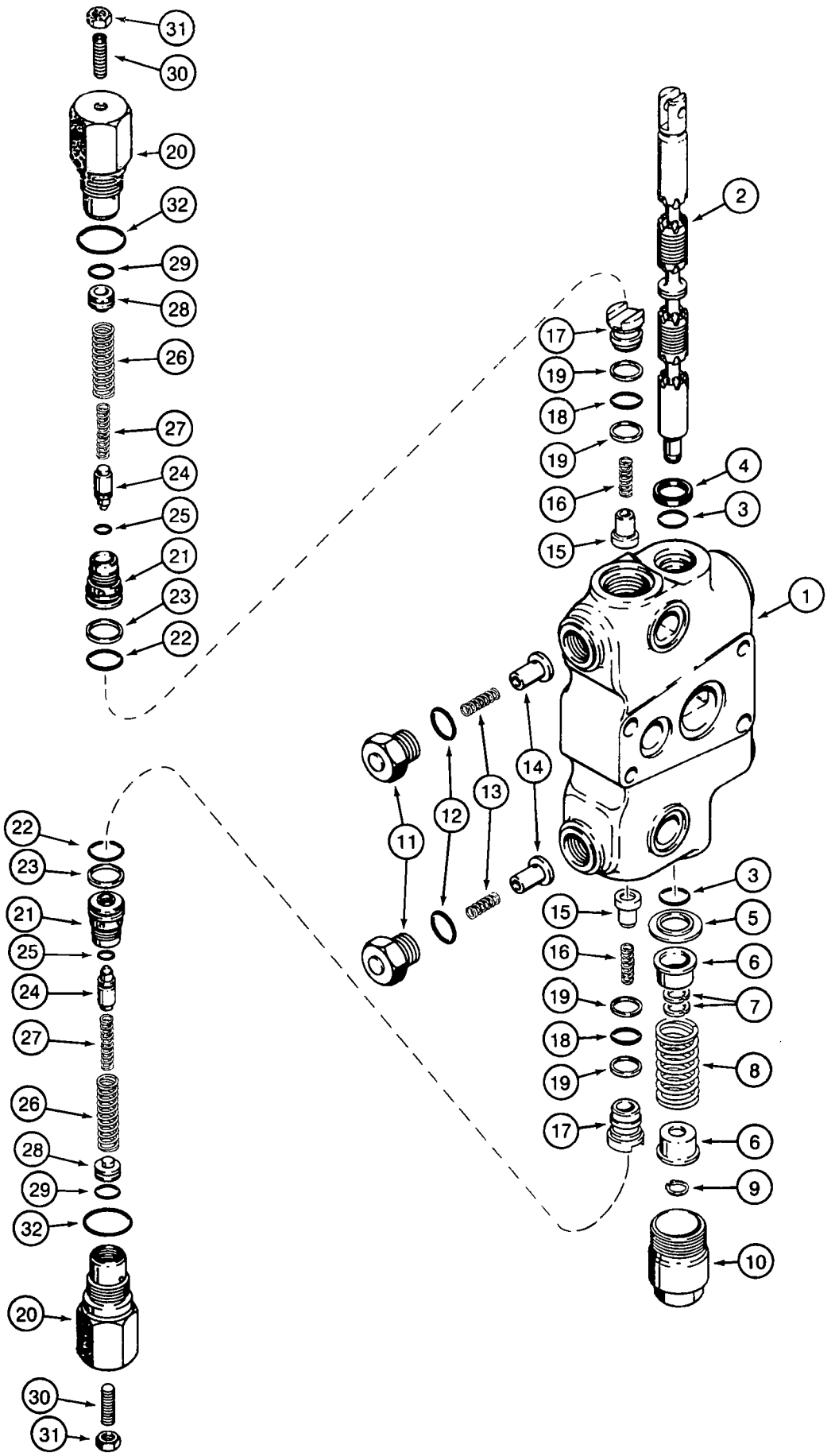
1
2
3
4
5
6
7
8
9
10
11
12
13
14
15
16
17
18
19
20
21
22
23
24
25
26
27
28
29
30
31
32

B9405149S

BACKHOE CONTROL VALVE

DIPPER SECTION

REF.	PART NO.	DESCRIPTION	REQ'D.
	136610A5	SECTION ASSEMBLY - dipper, with circuit relief valves and anticavitation valves	1
1	NSS	HOUSING - dipper section	1
2	NSS	SPOOL - dipper section	1
3	*1994608C1	O-RING - spool	2
4	*65457C1	SEAL - oil, spool	1
5	G102711	RETAINER - O-ring	1
6	G33075	SEAT - centering spring	2
7	G106410	SPACER - spool	2
8	1994596C1	SPRING - centering, purple, 2-15/16 inch free length, spool	1
9	100-1647	RING - heavy external retaining, No. 47, spool end	1
10	G33080	CAP - centering spring, spool end	1
	1346221C2	VALVE ASSEMBLY - anticavitation (order items 11-14)	2
11	G34937	PLUG - anticavitation valve	1
12	*237-6010	O-RING - 3/4 ID x 3/32 inch wide	1
13	G34458	SPRING - anticavitation valve	1
14	278735A1	POPPET - anticavitation valve	1
	1346219C3	VALVE ASSEMBLY - load check, hollow poppet pin	2
15	302246A1	POPPET - hollow poppet pin with orifice, load check	1
16	1346175C1	SPRING - load check	1
17	1343708C1	PLUG - load check	1
18	*238-6016	O-RING - 5/8 ID x 1/16 inch wide, plug	1
19	*G103862	RING - backup, plug O-ring	2
	**129861A1	VALVE ASSEMBLY - circuit relief, dipper section, used in production, order G110077 kit for service	2
20	NSS	HOUSING - circuit relief valve	1
21	NSS	SEAT - circuit relief valve	1
22	*238-6018	O-RING - 3/4 ID x 1/16 inch wide, circuit relief valve seat	1
23	*G35540	RING - backup, seat O-ring	1
24	NSS	POPPET - circuit relief valve	1
25	NSS	O-RING - poppet	1
26	NSS	SPRING - relief, outer	1
27	NSS	SPRING - relief, inner	1
28	NSS	PISTON - circuit relief valve	1
29	NSS	O-RING - piston	1
30	484-43116	SCREW - set, hex socket headless, 5/16 NF x 1 inch, oval point	1
31	425-155	NUT - hex, jam, 5/16 inch NF	1
32	*237-6012	O-RING - 59/64 ID x 7/64 inch wide, large, housing	1
	*1346105C2	KIT - seal, includes above items marked with an asterisk, plus additional O-rings not required in this application	1
	**G110077	KIT - service, for 129861A1 circuit relief valve, kit includes an instruction sheet and G110078 circuit relief valve (items 20-32) which is the same as 129861A1 except with a different pressure setting	1

NOTE: The pressure setting of the repair circuit relief valve is not preset for this application. Adjust the setting according to the instructions sent with the repair valve or according to the service manual.

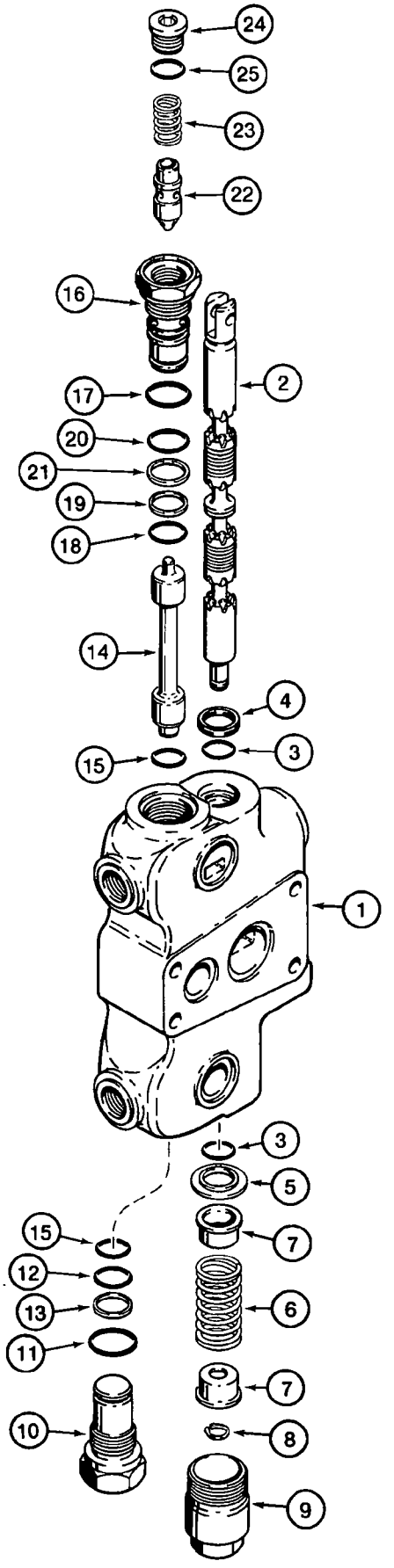
24
25
23
22
16
2
17
20
21
19
18
14
4
15
3
1
3
5
15
7
12
6
13
11
7
10
8
9

BACKHOE CONTROL VALVE

LEFT-HAND AND RIGHT-HAND STABILIZER SECTIONS

REF.	PART NO.	DESCRIPTION	REQ'D.
	253989A2	SECTION ASSEMBLY - left-hand and right-hand stabilizer, with lock check	2
1	NSS	HOUSING - left-hand and right-hand stabilizer sections	1
2	NSS	SPOOL - left-hand and right-hand stabilizer sections	1
3	*1994608C1	O-RING - spool	2
4	*65457C1	SEAL - oil, spool	1
5	G102711	RETAINER - O-ring	1
6	G34463	SPRING - centering, spool	1
7	G33075	SEAT - centering spring	2
8	100-1647	RING - heavy external retaining, No. 47, spool end	1
9	G33080	CAP - centering spring, spool end	1
	G33122	PLUG ASSEMBLY - relief	1
10	NSS	PLUG - relief	1
11	*237-6012	O-RING - 59/64 ID x 7/64 inch wide, large	1
12	*238-6018	O-RING - 3/4 ID x 1/16 inch wide, small	1
13	G35540	RING - backup, small O-ring	1
14	1986754C1	SPOOL - shuttle, lock check	1
15	*238-6018	O-RING - 3/4 ID x 1/16 inch wide, shuttle spool	2
	G109627	PLUG ASSEMBLY - lock check	1
16	NSS	SEAT - lock check body	1
17	*237-6012	O-RING - 59/64 ID x 7/64 inch wide, large, seat plug end	1
18	*238-6018	O-RING - 3/4 ID x 1/16 inch wide, small, seat lock check end	1
19	*G35540	RING - backup, small O-ring	1
20	*238-6019	O-RING - 13/16 ID x 1/16 inch wide, seat, center	1
21	*G110468	RING - backup, center O-ring	1
22	NSS	POPPET - lock check	1
23	G109630	SPRING - lock check	1
24	218-5210	PLUG - hex socket, 3/4-16 inch O-ring boss	1
25	237-6008	O-RING - 41/64 ID x 3/32 inch wide	1
	*1346106C1	KIT - seal, includes above items marked with an asterisk, plus additional O-rings not required for this application	1

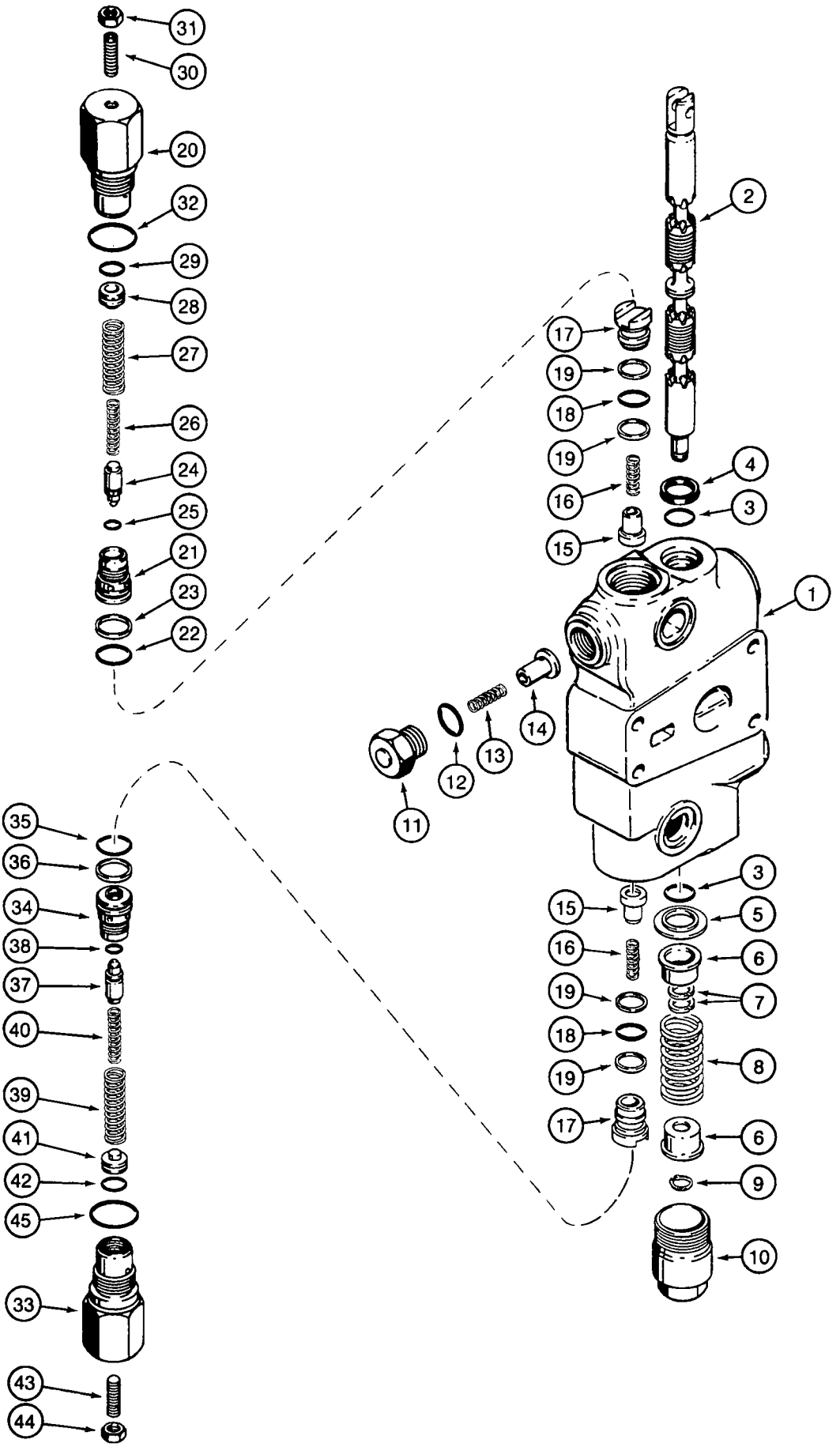
31
30
20
32
29
28
27
26
24
25
21
23
22
2
17
19
18
19
16
15
4
3
1
14
13
12
11
35
36
34
38
37
40
39
41
42
45
33
43
44
3
15
5
16
6
19
7
18
8
19
17
6
9
10

BACKHOE CONTROL VALVE
BOOM SECTION

REF.	PART NO.	DESCRIPTION	REQ'D.
	144321A5	SECTION ASSEMBLY - boom, with circuit relief valves and anticavitation valve	1
1	NSS	HOUSING - boom section	1
2	NSS	SPOOL - boom section	1
3	*1994608C1	O-RING - spool	2
4	*65457C1	SEAL - oil, spool	1
5	G102711	RETAINER - O-ring	1
6	G33075	SEAT - centering spring	2
7	G106410	SPACER - spool	2
8	1994596C1	SPRING - centering, purple, 2-15/16 inch free length, spool	1
9	100-1647	RING - heavy external retaining, No. 47, spool end	1
10	G33080	CAP - centering spring, spool end	1
	1346221C2	VALVE ASSEMBLY - anticavitation (order items 11-14)	1
11	G34937	PLUG - anticavitation valve	1
12	*237-6010	O-RING - 3/4 ID x 3/32 inch wide	1
13	G34458	SPRING - anticavitation valve	1
14	278735A1	POPPET - anticavitation valve	1
	1346219C3	VALVE ASSEMBLY - load check, hollow poppet pin	2
15	302246A1	POPPET - hollow poppet pin with orifice, load check	1
16	1346175C1	SPRING - load check	1
17	1343708C1	PLUG - load check	1
18	*238-6016	O-RING - 5/8 ID x 1/16 inch wide, plug	1
19	*G103862	RING - backup, plug O-ring	2
	**G109391	VALVE ASSEMBLY - circuit relief, 3200 psi, upper, boom section, used in production, order G109449 kit for service	1
20	NSS	HOUSING - circuit relief valve	1
21	NSS	SEAT - circuit relief valve	1
22	*238-6018	O-RING - 3/4 ID x 1/16 inch wide, circuit relief valve seat	1
23	*G35540	RING - backup, seat O-ring	1
24	NSS	POPPET - circuit relief valve	1
25	NSS	O-RING - poppet	1
26	NSS	SPRING - relief, outer	1
27	NSS	SPRING - relief, inner	1
	*1346105C2	KIT - seal, includes above items marked with an asterisk, plus additional O-rings not required in this application	1
	**G109449	KIT - service, for G109391 circuit relief valve, kit includes an instruction sheet and G109447 circuit relief valve (items 20-32) which is the same as G109391 except with a different pressure setting	1

NOTE: The pressure setting of the repair circuit relief valve is not preset for this application. Adjust the setting according to the instructions sent with the repair valve or according to the service manual.

Continued on next page

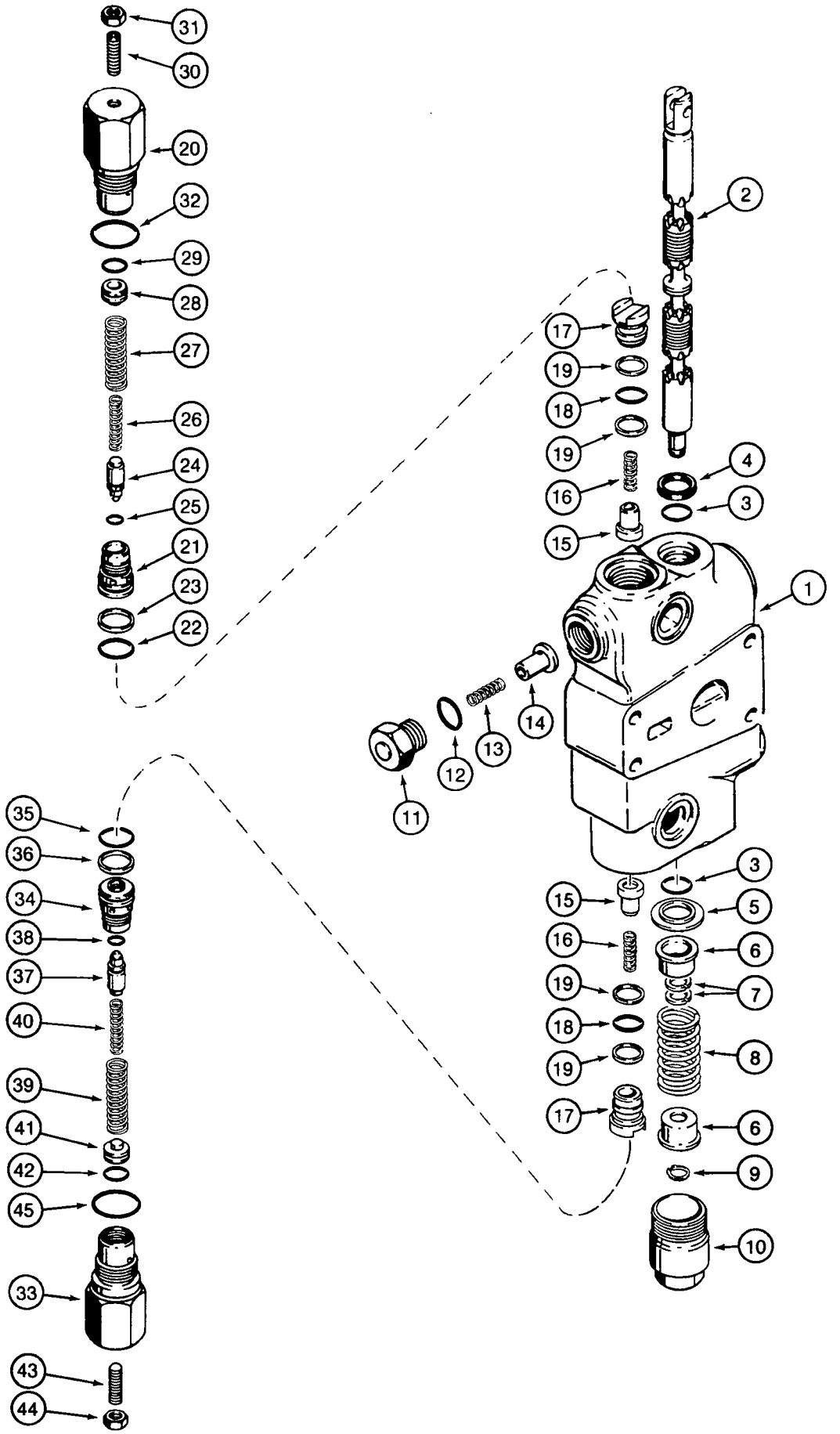
31
30
20
32
29
28
27
26
24
25
21
23
22
2
17
19
18
19
16
15
4
3
1
14
13
12
11
35
36
34
38
37
40
39
41
42
45
33
43
44
3
15
5
16
6
19
7
18
8
19
17
6
9
10

BACKHOE CONTROL VALVE

BOOM SECTION

REF.	PART NO.	DESCRIPTION	REQ'D.
	144321A5	SECTION ASSEMBLY - boom, with circuit relief valves and anticavitation valve	1
	#G109391	VALVE ASSEMBLY - circuit relief, 3200 psi, upper, boom section, used in production, order G109449 kit for service, continued from previous page	1
28	NSS	PISTON - circuit relief valve	1
29	NSS	O-RING - piston	1
30	484-43116	SCREW - set, hex socket headless, 5/16 NF x 1 inch, oval point	1
31	425-155	NUT - hex, jam, 5/16 inch NF	1
32	**237-6012	O-RING - 59/64 ID x 7/64 inch wide, large, housing	1
	*1346023C1	VALVE ASSEMBLY - circuit relief, lower, boom section, used in production, order G110077 kit for service	1
33	NSS	HOUSING - circuit relief valve	1
34	NSS	SEAT - circuit relief valve	1
35	**238-6018	O-RING - 3/4 ID x 1/16 inch wide, circuit relief valve seat	1
36	**G35540	RING - backup, seat O-ring	1
37	NSS	POPPET - circuit relief valve	1
38	NSS	O-RING - poppet	1
39	NSS	SPRING - relief, outer	1
40	NSS	SPRING - relief, inner	1
41	NSS	PISTON - circuit relief valve	1
42	NSS	O-RING - piston	1
43	484-43120	SCREW - set, hex socket headless, 5/16 NF x 1-1/4 inch, oval point	1
44	425-155	NUT - hex, jam, 5/16 inch NF	1
45	**237-6012	O-RING - 59/64 ID x 7/64 inch wide, large, housing	1
	#G109449	KIT - service, for G109391 circuit relief valve, kit includes an instruction sheet and G109447 circuit relief valve (items 20-32) which is the same as G109391 except with a different pressure setting	1
	*G110077	KIT - service, for 1346023C1 circuit relief valve, kit includes an instruction sheet and G110078 circuit relief valve (items 33-45) which is the same as 1346023C1 except with a different pressure setting	1
	**1346105C2	KIT - seal, includes above items marked with a double asterisk, plus additional O-rings not required for this application	1

NOTE: The pressure setting of the repair circuit relief valve is not preset for this application. Adjust the setting according to the instructions sent with the repair valve or according to the service manual.

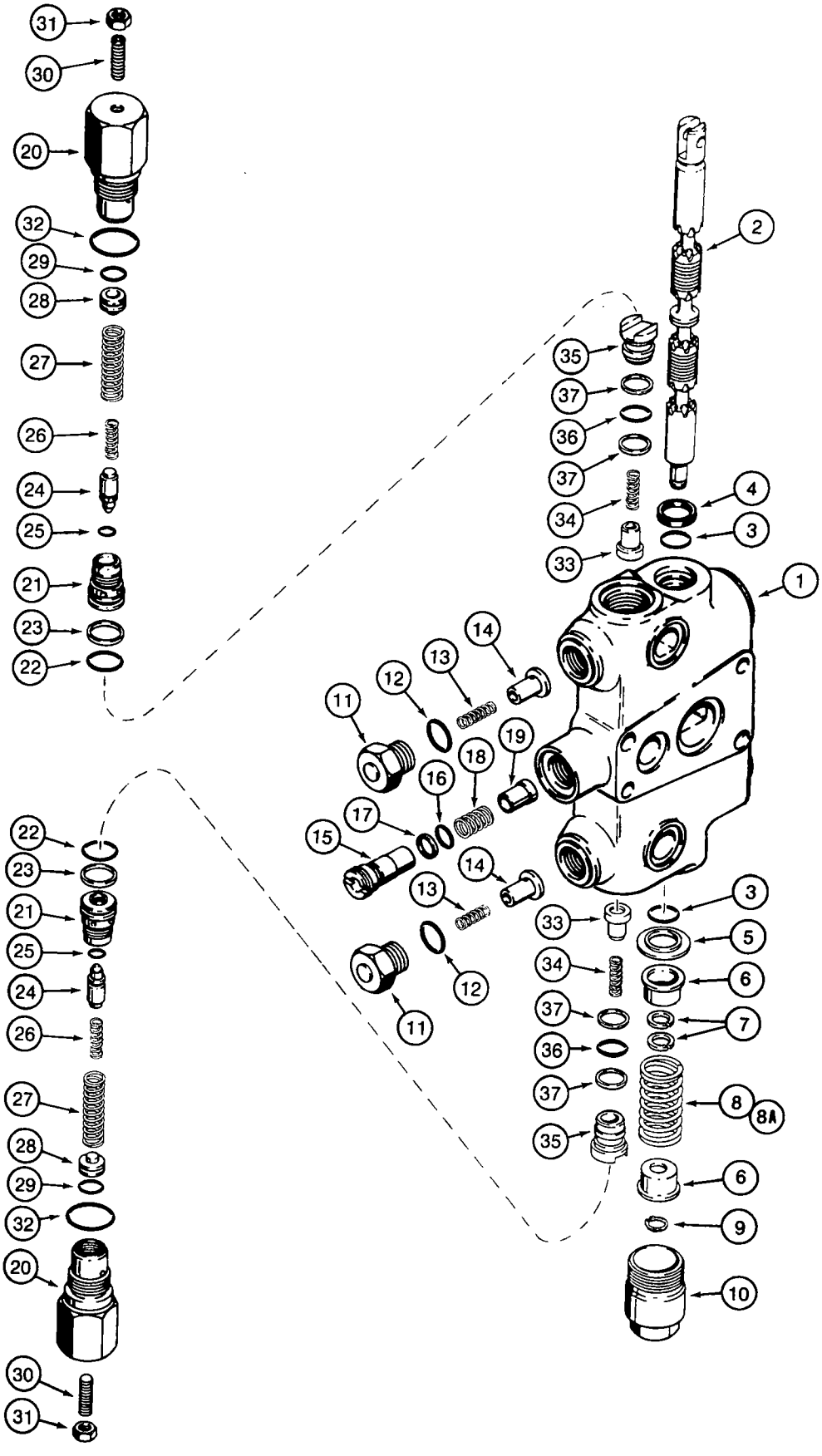
31
30
20
32
29
28
27
26
24
25
21
23
22
2
35
37
36
37
34
33
4
3
1
14
13
12
11
19
18
16
17
15
14
13
12
11
22
23
21
25
24
26
27
28
29
32
20
30
31
3
5
6
7
8
8A
6
9
10

BACKHOE CONTROL VALVE

SWING SECTIONS

REF.	PART NO.	DESCRIPTION	REQ'D.
	241088A3	SECTION ASSEMBLY - swing, uses item 8 spring, foot swing control valves, with circuit relief and anticavitation valves, if used	1
	243145A3	SECTION ASSEMBLY - swing, uses item 8A spring, hand swing control valves, with circuit relief and anticavitation valves, if used	1
1	NSS	HOUSING - swing section	1
2	NSS	SPOOL - swing section	1
3	*1994608C1	O-RING - spool	2
4	*65457C1	SEAL - oil, spool	1
5	G102711	RETAINER - O-ring	1
6	G33075	SEAT - centering spring	2
7	G106410	SPACER - spool	2
8	1986722C1	SPRING - centering, 2-1/4 inch free length, spool, used in 241088A3 swing section	1
8A	1994596C1	SPRING - centering, purple, 2-15/16 inch free length, spool, used in 243145A3 swing section	1
9	100-1647	RING - heavy external retaining, No. 47, spool end	1
10	G33080	CAP - centering spring, spool end	1
	1346221C2	VALVE ASSEMBLY - anticavitation (order items 11-14)	2
11	G34937	PLUG - anticavitation valve	1
12	*237-6010	O-RING - 3/4 ID x 3/32 inch wide	1
13	G34458	SPRING - anticavitation valve	1
14	278735A1	POPPET - anticavitation valve	1
	1346222C1	VALVE ASSEMBLY - check (order items 15-17)	1
15	G109964	HOUSING - valve check	1
16	*238-6015	O-RING - 9/16 ID x 1/16 inch wide	1
17	*G108723	RING - backup	1
18	G109971	SPRING - valve check	1
19	1978068C1	POPPET - valve check	1
	*1346105C2	KIT - seal, includes above items marked with an asterisk, plus additional O-rings not required for this application	1

Continued on next page

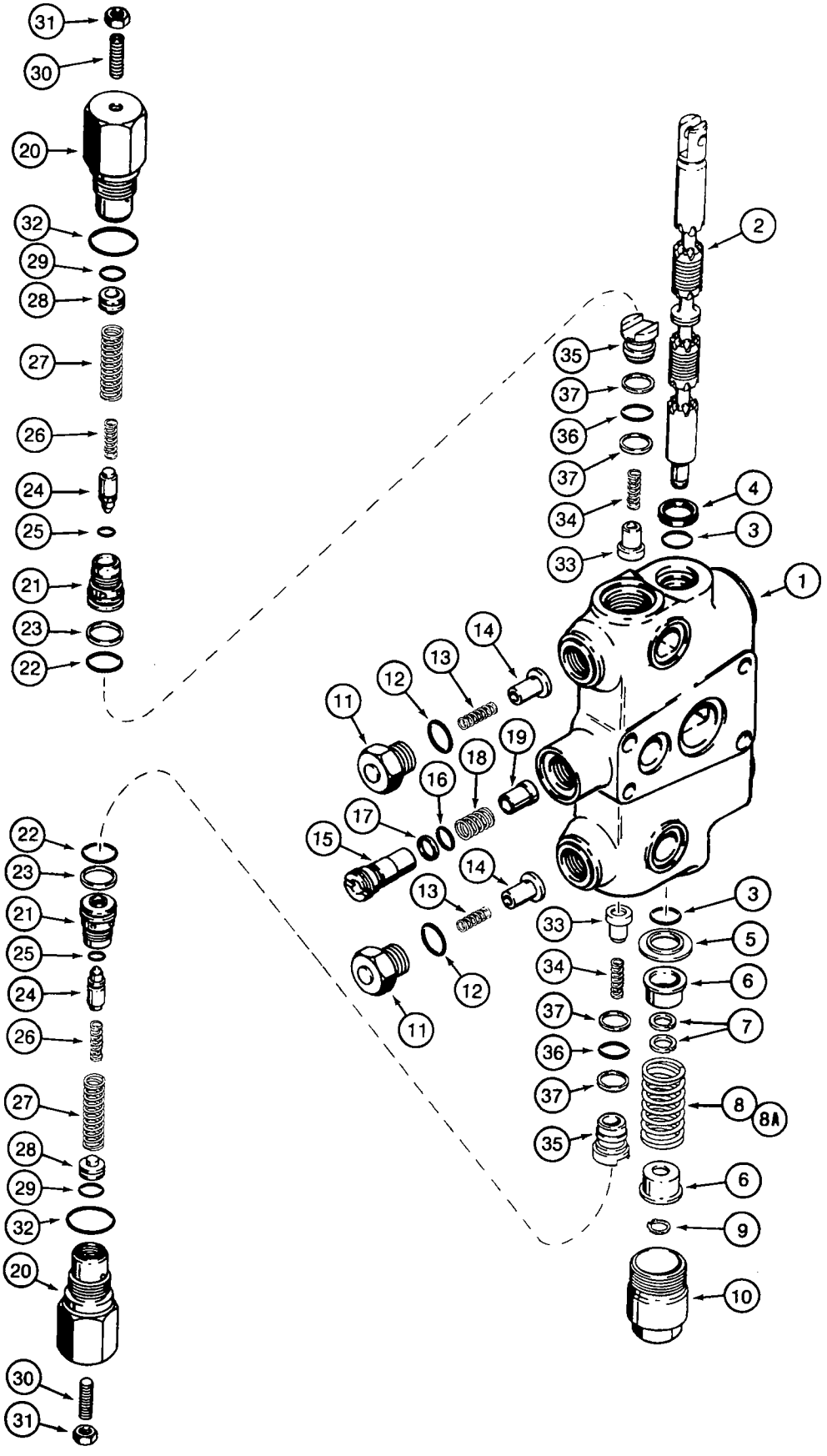
31
30
20
32
29
28
27
26
24
25
21
23
22
2
35
37
36
37
34
33
4
3
1
14
13
12
11
19
18
16
17
15
22
23
21
25
24
26
27
28
29
32
20
30
31
14
13
12
11
3
33
5
34
6
37
7
36
37
8
8A
35
6
9
10

BACKHOE CONTROL VALVE

SWING SECTIONS

REF.	PART NO.	DESCRIPTION	REQ'D.
	REF	SECTION ASSEMBLY - swing, continued from previous page	1
	*G107786	VALVE ASSEMBLY - circuit relief, swing section, used in production, order G109449 kit for service	2
20	NSS	HOUSING - circuit relief valve	1
21	NSS	SEAT - circuit relief valve	1
22	**238-6018	O-RING - 3/4 ID x 1/16 inch wide	1
23	**G35540	RING - backup, seat O-ring	1
24	NSS	POPPET - circuit relief valve	1
25	NSS	O-RING - poppet	1
26	NSS	SPRING - relief, inner	1
27	NSS	SPRING - relief, outer	1
28	NSS	PISTON - circuit relief valve	1
29	NSS	O-RING - piston	1
30	484-43116	SCREW - set, hex socket headless, 5/16 NF x 1 inch, oval point	1
31	425-155	NUT - hex, jam, 5/16 inch NF	1
32	**237-6012	O-RING - 59/64 ID x 7/64 inch wide, large, housing	1
	1346219C3	VALVE ASSEMBLY - load check, hollow poppet pin	2
33	302246A1	POPPET - hollow poppet pin with orifice, load check	1
34	1346175C1	SPRING - load check	1
35	1343708C1	PLUG - load check	1
36	*238-6016	O-RING - 5/8 ID x 1/16 inch wide	1
37	*G103862	RING - backup, plug O-ring	2
	*G109449	KIT - service, for G107786 circuit relief valve, kit includes an instruction sheet and G109447 circuit relief valve (items 20-32) which is the same as G107786 except with a different pressure setting	1
	**1346105C2	KIT - seal, includes above items marked with a double asterisk, plus additional O-rings not required for this application	1

NOTE: The pressure setting of the repair circuit relief valve is not preset for this application. Adjust the setting according to the instructions sent with the repair valve or according to the service manual.

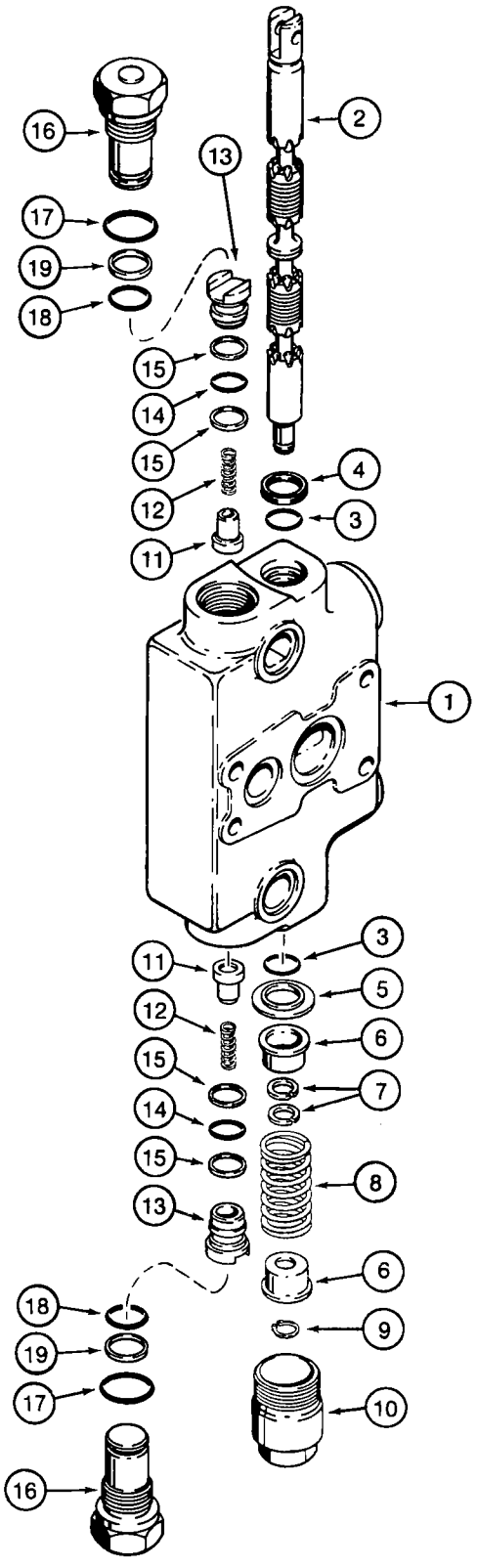
16
17
19
18
13
2
15
14
15
12
11
4
3
1
11
12
15
14
15
13
3
5
6
7
8
6
9
10
18
19
17
16

BACKHOE CONTROL VALVE

DIPPER EXTENSION SECTION

REF.	PART NO.	DESCRIPTION	REQ'D.
	144324A4	SECTION ASSEMBLY - dipper extension	1
1	NSS	HOUSING - dipper extension	1
2	NSS	SPOOL - dipper extension	1
3	*1994608C1	O-RING - spool	2
4	*65457C1	SEAL - oil, spool	1
5	G102711	RETAINER - O-ring	1
6	G33075	SEAT - centering spring	2
7	G106410	SPACER - spool	2
8	1994596C1	SPRING - centering, purple, 2-15/16 inch free length, spool	1
9	100-1647	RING - heavy external retaining, No. 47, spool end	1
10	G33080	CAP - centering spring, spool end	1
	1346219C3	VALVE ASSEMBLY - load check, hollow poppet pin	2
11	302246A1	POPPET - hollow poppet pin with orifice, load check	1
12	1346175C1	SPRING - load check	1
13	1343708C1	PLUG - load check	1
14	*238-6016	O-RING - 5/8 ID x 1/16 inch wide	1
15	*G103862	RING - backup, plug O-ring	2
	G33122	PLUG ASSEMBLY - relief	2
16	NSS	PLUG - relief	1
17	*237-6012	O-RING - 59/64 ID x 7/64 inch wide, plug, large	1
18	*238-6018	O-RING - 3/4 ID x 1/16 inch wide, plug, small	1
19	*G35540	RING - backup, small O-ring	1
	*1346105C2	KIT - seal, includes above items marked with an asterisk, plus additional O-rings not required for this application	1

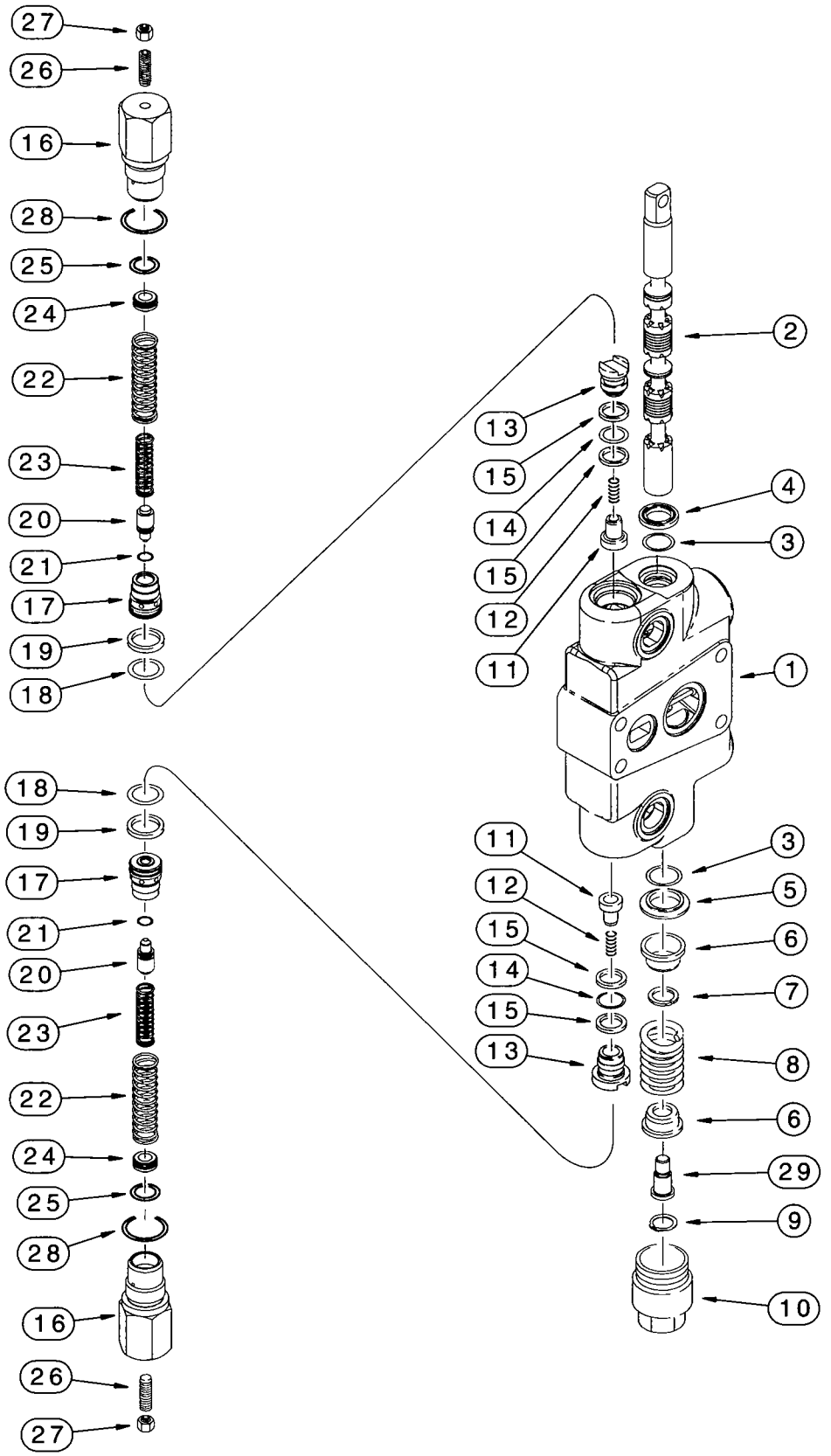
27
26
16
28
25
24
22
23
20
21
17
19
18
2
13
15
14
15
12
11
4
3
1
18
19
17
21
20
23
22
24
25
28
16
26
27
11
12
15
14
15
13
3
5
6
7
8
6
29
9
10

BACKHOE CONTROL VALVE

OPTIONS, AUXILIARY HYDRAULICS SECTION

REF.	PART NO.	DESCRIPTION	REQ'D.
	294198A1	SECTION ASSEMBLY - options, auxiliary hydraulics, with circuit relief valves	1
1	NSS	HOUSING - bucket section	1
2	NSS	SPOOL - bucket section	1
3	*1994608C1	O-RING - spool	2
4	*65457C1	SEAL - oil	1
5	G102711	RETAINER - O-ring	1
6	G33075	SEAT - centering spring	2
7	G106410	SPACER - spool	1
8	1994596C1	SPRING - centering, purple, 2-15/16 inch free length, spool	1
9	100-1647	RING - heavy external retaining, No. 47, spool end	1
10	G33080	CAP - centering spring, spool end	1
	1346219C3	VALVE ASSEMBLY - load check, hollow poppet pin	2
11	302246A1	POPPET - hollow poppet pin with orifice, load check	1
12	1346175C1	SPRING - load check	1
13	1343708C1	PLUG - load check	1
14	*238-6016	O-RING - 5/8 ID x 1/16 inch wide, plug	1
15	*G103862	RING - backup, plug O-ring	2
	**G109391	VALVE ASSEMBLY - circuit relief, 3200 psi, options section, used in production, order G109449 kit for service	2
16	NSS	HOUSING - circuit relief valve	1
17	NSS	SEAT - circuit relief valve	1
18	*238-6018	O-RING - 3/4 ID x 1/16 inch wide, circuit relief valve seat	1
19	*G35540	RING - backup, seat O-ring	1
20	NSS	POPPET - circuit relief valve	1
21	NSS	O-RING - poppet	1
22	NSS	SPRING - relief, outer	1
23	NSS	SPRING - relief, inner	1
24	NSS	PISTON - circuit relief valve	1
25	NSS	O-RING - 1/2 ID x 1/16 inch wide	1
26	484-43116	SCREW - set, hex socket headless, 5/16 NF x 1 inch, oval point	1
27	425-155	NUT - hex, jam, 5/16 inch NF	1
28	*237-6012	O-RING - 59/64 ID x 7/64 inch wide, housing	1
29	G106409	SCREW - spool end	1
	*1346105C2	KIT - seal, includes above items marked with an asterisk, plus additional O-rings not required for this application	1
	**G109449	KIT - service, for G109391 circuit relief valve, kit includes an instruction sheet and G109447 circuit relief valve (items 16-28) which is the same as G109391 except with a different pressure setting	1

NOTE: The pressure setting of the repair circuit relief valve is not preset for this application. Adjust the setting according to the instructions sent with the repair valve or according to the service manual.

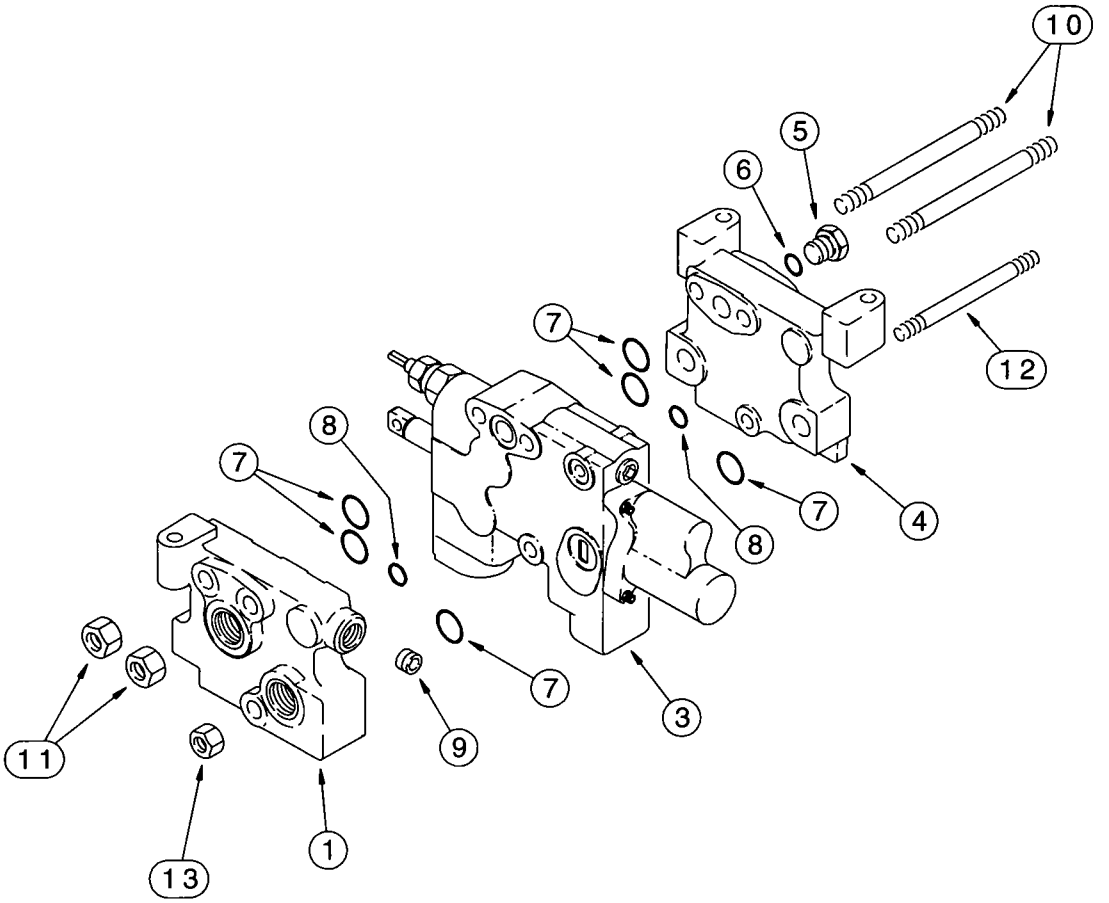
10
5
6
12
7
8
7
8
7
4
11
7
3
9
13
1

AUXILIARY VALVE
HAND HELD HYDRAULICS
ONE SPOOL

REF.	PART NO.	DESCRIPTION	REQ'D.
	121741A1	VALVE ASSEMBLY - auxiliary, for hand held hydraulics	1
1	121638A2	MANIFOLD - cover, inlet/outlet	1
3	131197A1	SECTION ASSEMBLY - hand held auxiliary hydraulics, parts list page 8-119	1
4	121639A2	MANIFOLD - cover, power beyond	1
5	218-5158	PLUG - hex, 1-1/16-12 inch O-ring boss	1
6	237-6012	O-RING - 59/64 ID x 7/64 inch wide	1
7	238-6117	O-RING - 13/16 ID x 3/32 inch wide, section ports, large	6
8	238-6112	O-RING - 1/2 ID x 3/32 inch wide, section ports, small	2
9	137039A1	PLUG - hex socket	1
10	1346129C3	STUD - tie	2
11	829-1312	NUT - hex, 12 mm - 1.75, class 10	4
12	1346128C3	STUD - tie	1
13	829-1310	NUT - hex, 10 mm - 1.5, class 10.9	2

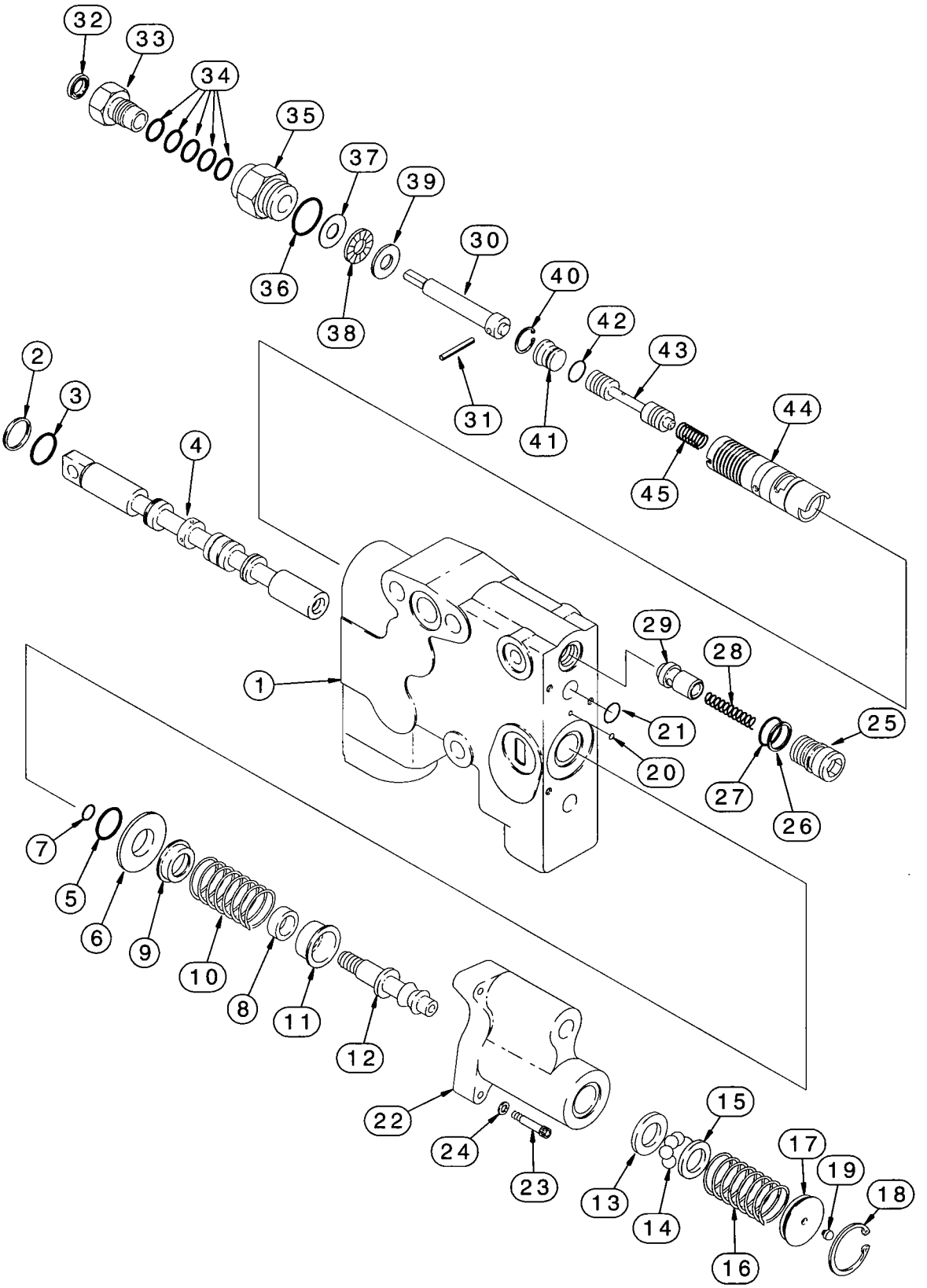
32
33
34
35
37
39
30
40
42
43
44
36
38
31
41
45
2
3
4
1
29
28
21
25
20
27
26
7
5
6
9
10
8
11
12
22
24
23
15
17
19
18
13
14
16

AUXILIARY VALVE

HAND HELD SECTION

REF.	PART NO.	DESCRIPTION	REQ'D.
	131197A1	SECTION ASSEMBLY - hand held auxiliary hydraulics	1
1	NSS	HOUSING - section	1
2	71121	WIPER - shaft seal	1
3	G110391	O-RING - spool	1
	131196A1	SPOOL ASSEMBLY - detent	1
4	NSS	SPOOL - detent	1
5	G110391	O-RING - spool	1
6	G108630	RETAINER - O-ring	1
7	237-6002	O-RING - 1/4 ID x 1/16 inch wide	1
8	1980085C1	STOP - spool	1
9	G108914	SEAT - spring, upper	1
10	130932A1	SPRING - centering	1
11	G108913	SEAT - spring, lower	1
12	1980084C3	SHAFT - detent	1
13	G108912	WASHER - detent, ball	1
14	211-1007	BALL - chrome alloy steel, 7/32 inch, grade 24	8
15	G108911	WASHER - detent, ball	1
16	130919A1	SPRING - detent	1
17	1341975C1	RETAINER - detent, spring	1
18	100-21118	RING - internal retaining, No. 118	1
19	G107780	PLUG - check valve	1
20	238-6011	O-RING - 5/16 ID x 1/16 inch wide	1
21	238-6015	O-RING - 9/16 ID x 1/16 inch wide	1
22	129391A1	HOUSING - detent	1
23	61-31016	BOLT - hex socket, 10 NC x 1 inch, detent housing retaining	3
24	495-11022	WASHER - flat, 7/32 x 7/16 x 3/64 inch	3
	1542563C1	VALVE ASSEMBLY - check	1
25	NSS	PLUG - load check	1
26	G108723	RING - backup	1
27	238-6015	O-RING - 9/16 ID x 1/16 inch wide	1
28	1994581C1	SPRING - load check	1
29	1543329C1	PLUG - poppet	1
	1343791C2	KIT - flow control adjustment, includes an instruction sheet (order items 30-39)	1
30	1980302C2	ROD ASSEMBLY - adjusting, flow control	1
31	38-1812	PIN - roll, 1/8 x 3/4 inch	1
32	G101066	SEAL - oil, adjusting rod	1
33	1980227C1	NUT - compression	1
34	1986628C1	O-RING - 3/8 ID x 9/16 inch wide, rod seal	5
35	1980226C1	PLUG - adjusting, flow	1
36	237-6010	O-RING - 3/4 ID x 3/32 inch wide	1
37	G108956	RACE - bearing, thin	1
38	F13537	BEARING - thrust	1
39	G108957	RACE - bearing, thick	1
	1994677C1	SLEEVE ASSEMBLY - control	1
40	100-2156	RING - internal retaining, No. 56	1
41	1346312C2	PLUG - sleeve	1
42	238-6012	O-RING - 3/8 ID x 1/16 inch wide	1
43	1957856C1	SPOOL - flow control, select fit with item 44 sleeve, must retain together	1
44	1957855C3	SLEEVE - flow control	1
45	1957887C1	SPRING - control, flow control, not included in sleeve assembly	1

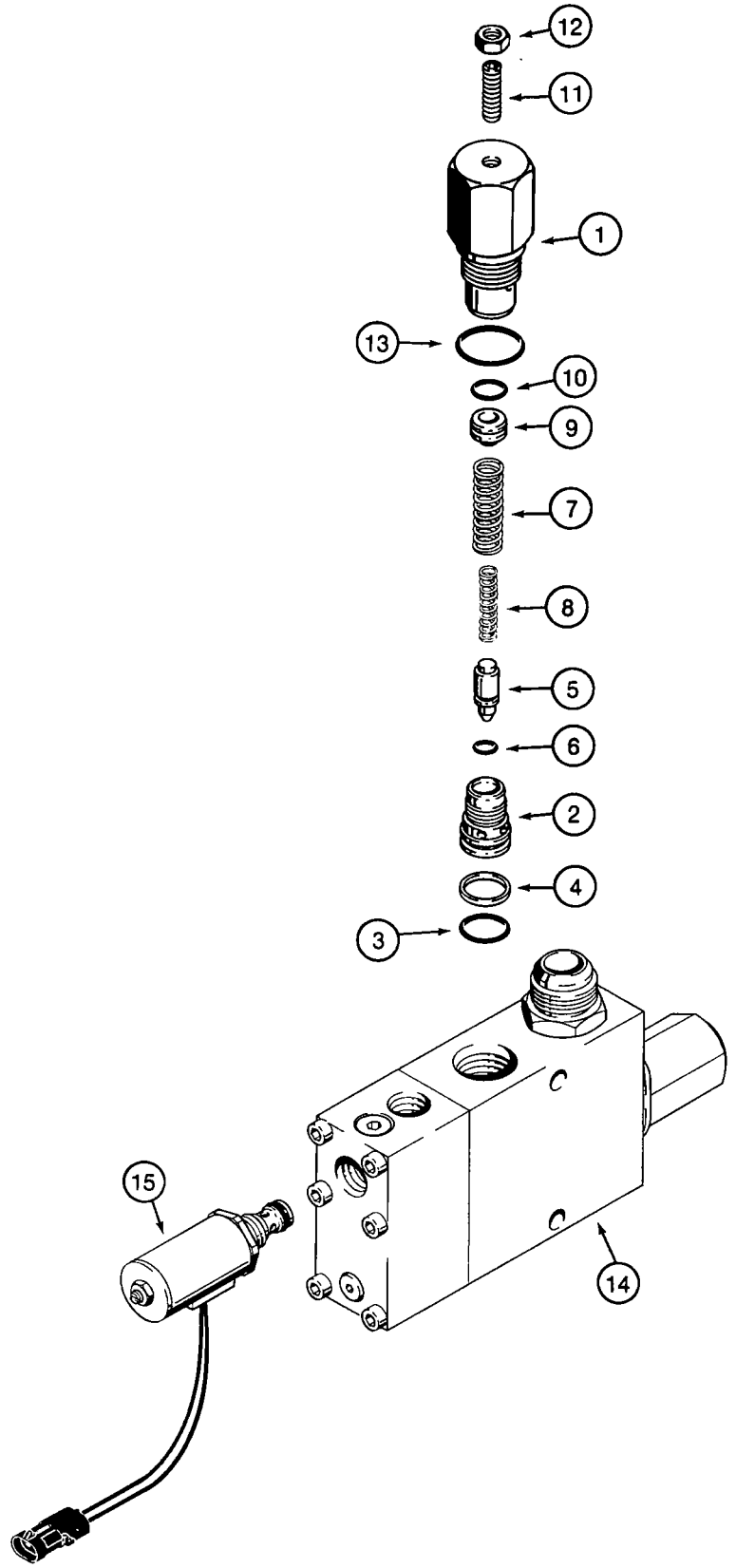
12
11
1
13
10
9
7
8
5
6
2
4
3
15
14

BOOM LOCK SOLENOID VALVE

REF.	PART NO.	DESCRIPTION	REQ'D.
	189957A1	VALVE ASSEMBLY - solenoid, backhoe boom lock, includes (2) 321-6046 warning decals, see page 9-157 for decal	1
	*G110467	RELIEF ASSEMBLY - circuit, solenoid, used in production, order G110077 kit for service	1
1	NSS	BODY - relief valve	1
2	NSS	SEAT - relief valve	1
3	238-6018	O-RING - 3/4 ID x 1/16 inch wide, relief valve seat	1
4	G35540	RING - backup, seat O-ring	1
5	NSS	POPPET - relief valve	1
6	NSS	O-RING - poppet	1
7	NSS	SPRING - relief, outer	1
8	NSS	SPRING - relief, inner	1
9	NSS	PISTON - relief valve	1
10	NSS	O-RING - piston	1
11	484-43116	SCREW - set, hex socket headless, 5/16 NF x 1 inch, oval point	1
12	425-155	NUT - hex, jam, 5/16 inch NF	1
13	237-6012	O-RING - 59/64 ID x 7/64 inch wide	1
14	NSS	BODY - solenoid	1
15	221168A1	SOLENOID - relief, with connector, 12 volt	1
	D150781	KIT - repair, includes (3) springs, (1) ball, (1) poppet, and (1) plug which are not serviced separately and D150810 seal kit, not shown	1
	D150810	KIT - seal, includes (9) O-rings and (2) backup rings which are not service separately, not shown	1
	*G110077	KIT - service, for G110467 circuit relief valve, includes G110078 circuit relief valve assembly (items 1 through 13) and an instruction sheet	1

***NOTE:** The pressure setting of the repair circuit relief valve is not preset for this application. Adjust the setting according to the instructions sent with the repair valve.

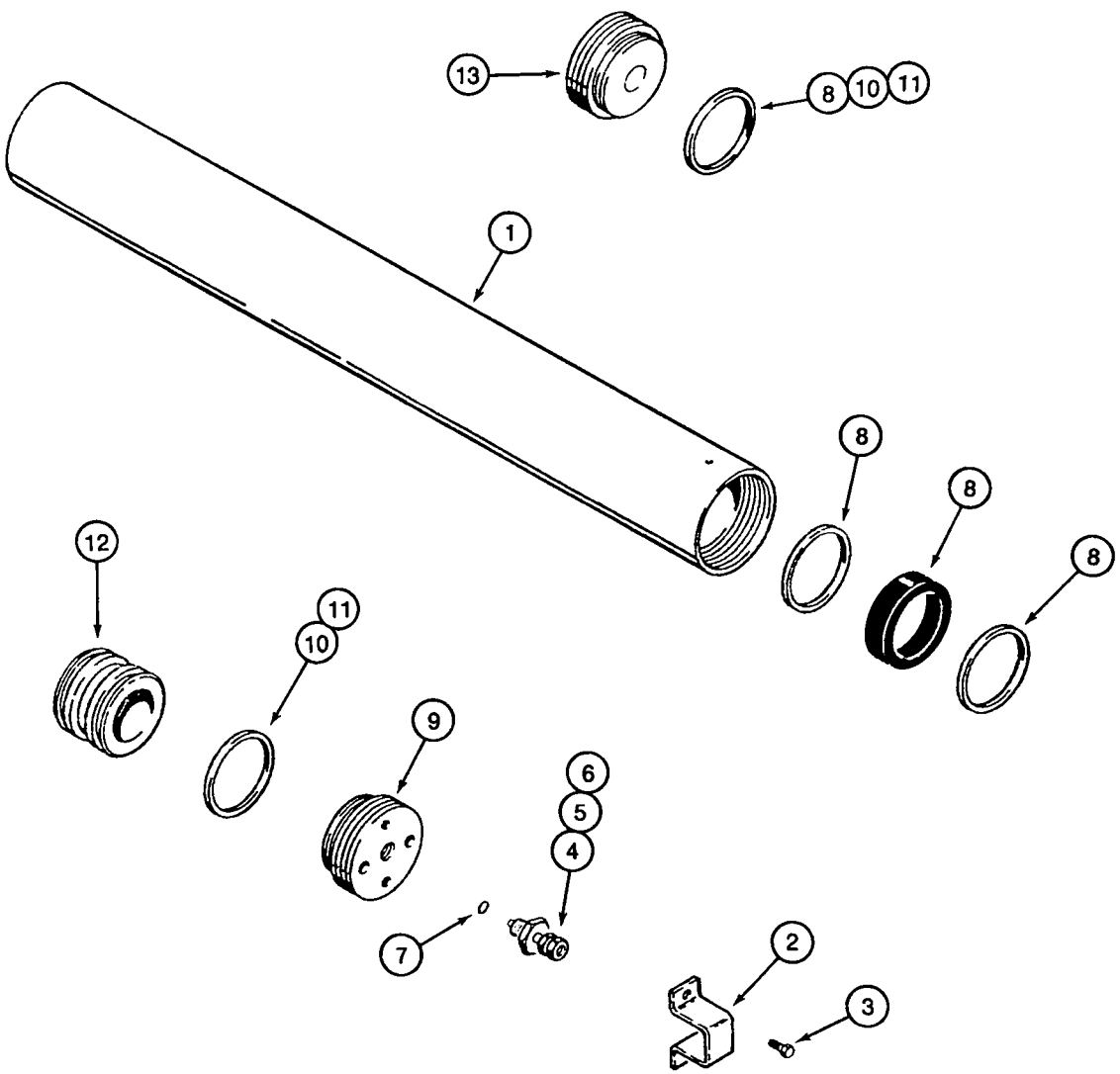
13
8
10
11
1
8
8
8
12
11
10
9
6
5
4
7
2
3

ACCUMULATOR ASSEMBLY
RIDE CONTROL

REF.	PART NO.	DESCRIPTION	REQ'D.
	234412A1	ACCUMULATOR ASSEMBLY - hydraulic, ride control	1
1	NSS	BODY - accumulator, tube	1
2	192895A1	GUARD - valve	1
3	276-2456	SCREW - self-tapping, hex head, No. 10 NC x 3/8 inch	2
	1978142C1	VALVE ASSEMBLY - charge, gas	1
4	NSS	VALVE - accumulator charging	1
5	1978143C1	CORE - valve	1
6	1978144C1	CAP - valve	1
7	1978158C1	O-RING - valve	1
8	1978141C1	KIT - seal, includes (1) V-type O-ring, (2) Teflon bearing rings and (1) body end seal ring	1
9	NSS	GLAND - gas valve	1
10	NSS	O-RING - gland	2
11	NSS	RING - backup, if used	2
12	NSS	PISTON - accumulator	1
13	NSS	GLAND - end cap	1
14	L129440	DECAL - hydraulic accumulator application instructions, mounts on accumulator, not shown, see page 9-157 for decal	1

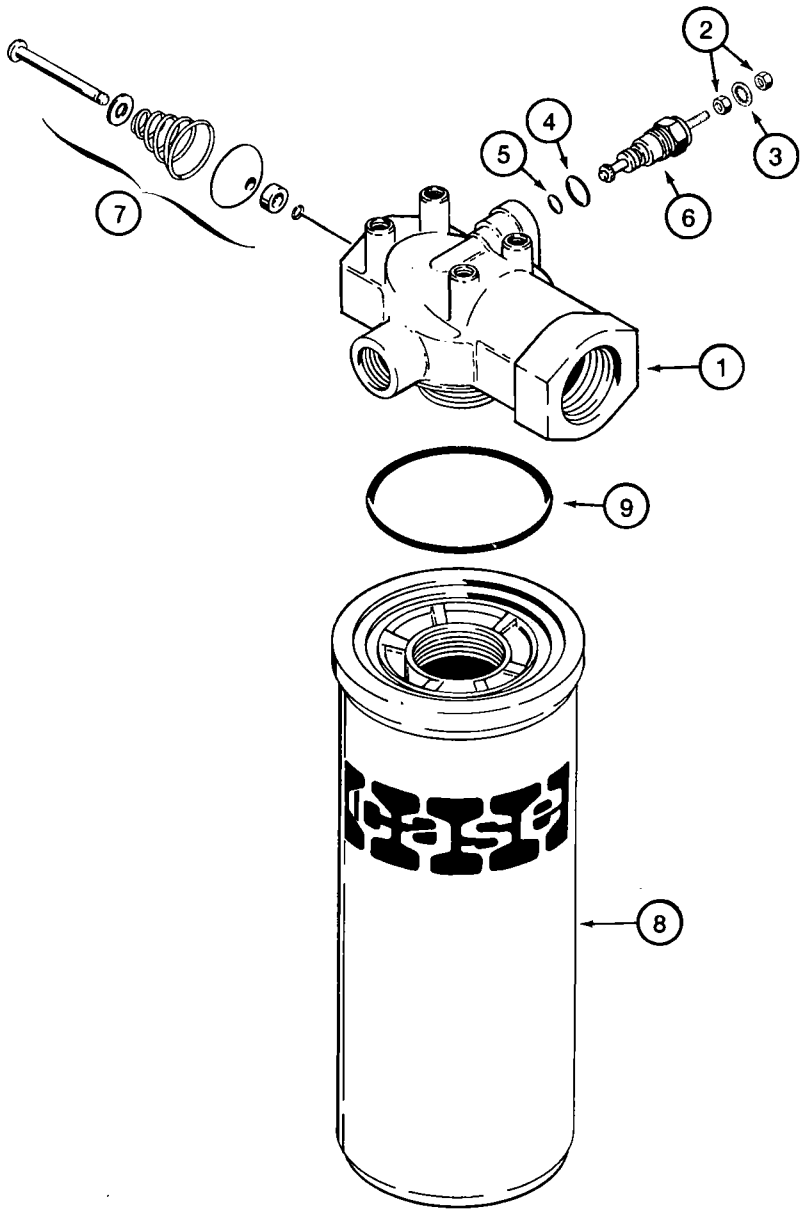
1
2
3
4
5
6
7
8
9

HYDRAULIC OIL FILTER

REF.	PART NO.	DESCRIPTION	REQ'D.
	122536A1	FILTER ASSEMBLY - hydraulic oil	1
1	NSS	HEAD - filter	1
	N6755	INDICATOR ASSEMBLY - restriction, electric	1
	N6941	KIT - restriction indicator repair (order items 2-5)	1
2	129-667	NUT - hex, left-hand thread, No. 10 NF	2
3	493-21020	WASHER - internal tooth lock, 3/16 inch	1
4	237-6006	O-RING - 15/32 ID x 5/64 inch wide, outer	1
5	238-5011	O-RING - 5/16 ID x 1/16 inch wide, inner	1
6	NSS	INDICATOR - restriction, electric	1
7	NSS	VALVE - bypass	1
	N9025	ELEMENT ASSEMBLY - filter	1
8	NSS	ELEMENT - filter	1
9	238-5230	O-RING - 2-1/2 ID x 1/8 inch wide, filter to head	1

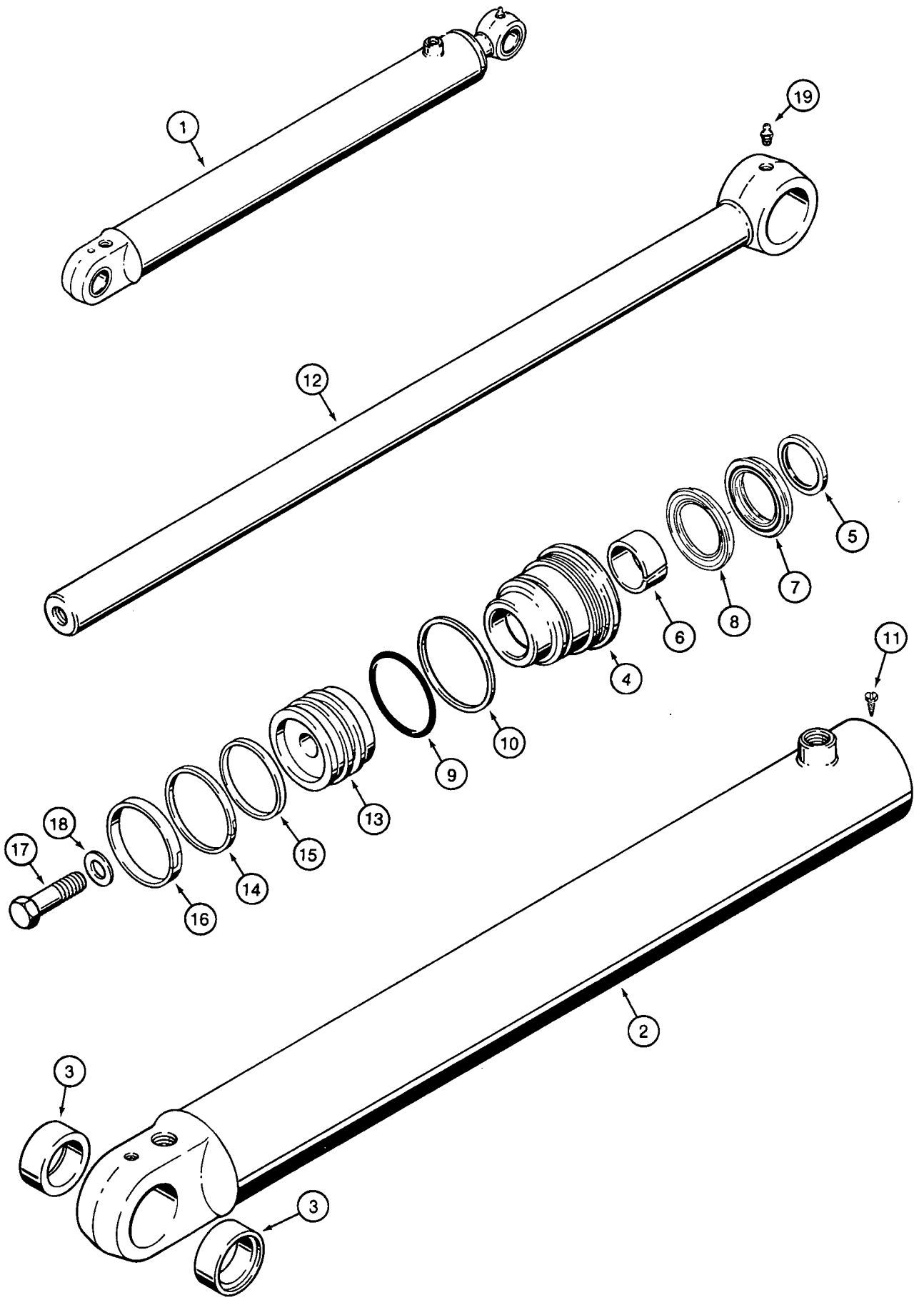

B9401132S

LOADER LIFT CYLINDERS

REF.	PART NO.	DESCRIPTION	REQ'D.
1	112366A2	CYLINDER ASSEMBLY - 83 (3-1/4) ID x 766 mm (30-1/8 inch) stroke, lift, right-hand and left-hand, see note	2
2	112432A1	TUBE ASSEMBLY - cylinder	1
3	1980335C1	BUSHING - tube	2
	NSS	GLAND ASSEMBLY - cylinder	1
4	1980321C2	GLAND - cylinder	1
5	*D95143	WIPER - piston rod	1
6	*G102425	BUSHING - center	1
	*1542875C1	KIT - seal, NSS, order 1543260C1 kit below	1
7	1542999C1	SEAL - rod, NSS, order 1543260C1 kit below	1
8	1542998C1	SEAL - buffer, NSS, order 1543260C1 kit below	1
9	*238-5233	O-RING - 2-7/8 ID x 1/8 inch wide, gland	1
10	*G32122	RING - backup	1
11	276-2446	SCREW - self-tapping, hex head, No. 8 NC x 3/8 inch	1
12	133083A1	ROD - piston, 44 mm (1-3/4 inch) diameter, cylinder, without bushings	1
13	135161A1	PISTON - cylinder	1
14	*G102287	SEAL - piston	1
15	*S109444	RING - backup, piston seal	1
16	*S109445	RING - wear, piston	1
17	25974R1	BOLT - hex, 1 NF x 2-1/2 inch, grade 8	1
18	G32303	WASHER - flat, special, 1 inch, hardened	1
19	219-1	FITTING - grease, straight, 1/8 PT x 21/32 inch	1
	*1543260C1	KIT - seal, includes all items with an asterisk and an instruction sheet	1

NOTE: The cylinder assembly part number is stamped on some cylinder glands or tubes.

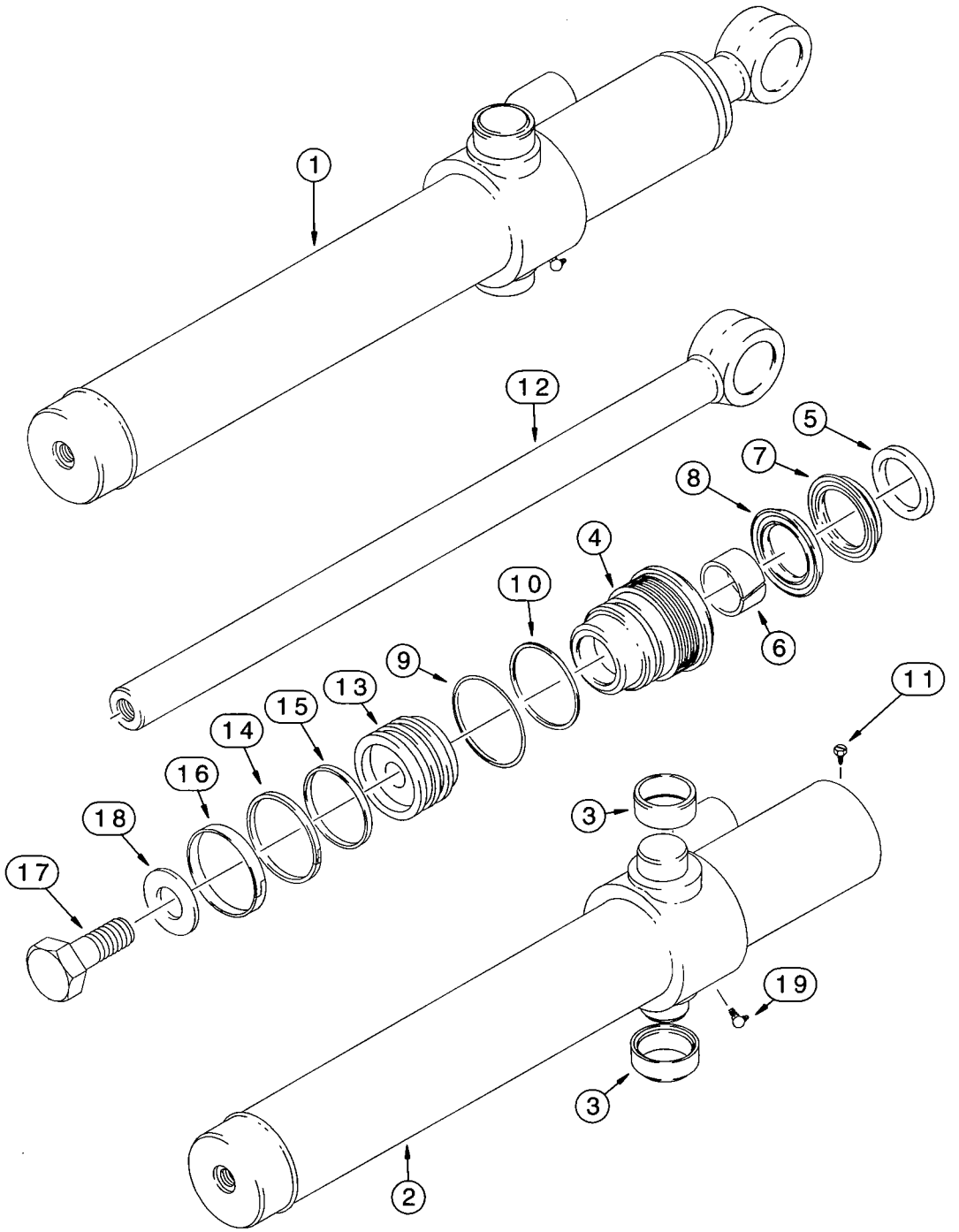
1
12
5
7
8
4
10
6
9
11
13
15
14
16
3
18
17
19
3
2

LOADER BUCKET CYLINDERS

REF.	PART NO.	DESCRIPTION	REQ'D.
1	113133A2	CYLINDER ASSEMBLY - 76 (3) ID x 522 mm (20-9/16 inch) stroke, bucket, left-hand and right-hand, includes bushings in cylinder tube and without bushings at rod eye, see note	2
2	113135A2	TUBE ASSEMBLY - cylinder	1
3	G108512	BUSHING - tube	2
	NSS	GLAND ASSEMBLY - cylinder	1
4	G109881	GLAND - cylinder	1
5	*D95142	WIPER - piston rod	1
6	*G102424	BUSHING - center, gland	1
	*1542874C1	KIT - seal, NSS, order 1543256C1 kit below	1
7	1542997C1	SEAL - rod, NSS, order 1543256C1 kit below	1
8	1542996C1	SEAL - buffer, NSS, order 1543256C1 kit below	1
9	*238-5231	O-RING - 2-5/8 ID x 1/8 inch wide, gland	1
10	*G109298	RING - backup, gland O-ring	1
11	276-2446	SCREW - self-tapping, hex head, No. 8 NC x 3/8 inch	1
12	110307A1	ROD - piston, 38 mm (1-1/2 inch) diameter, without bushings in eye	1
13	G108518	PISTON - cylinder	1
14	*G102288	SEAL - piston	1
15	*G100444	RING - backup, piston seal	1
16	*G100449	RING - wear, piston	1
17	25863R1	BOLT - hex, 3/4 NF x 2-1/2 inch, grade 8	1
18	S94643	WASHER - flat, special, hardened	1
19	219-55	FITTING - grease, 90 degree, 1/8 PT x 27/32 inch	1
	*1543256C1	KIT - seal, includes all items with an asterisk and an instruction sheet	1

NOTE: The cylinder assembly part number is stamped on some cylinder glands or tubes.

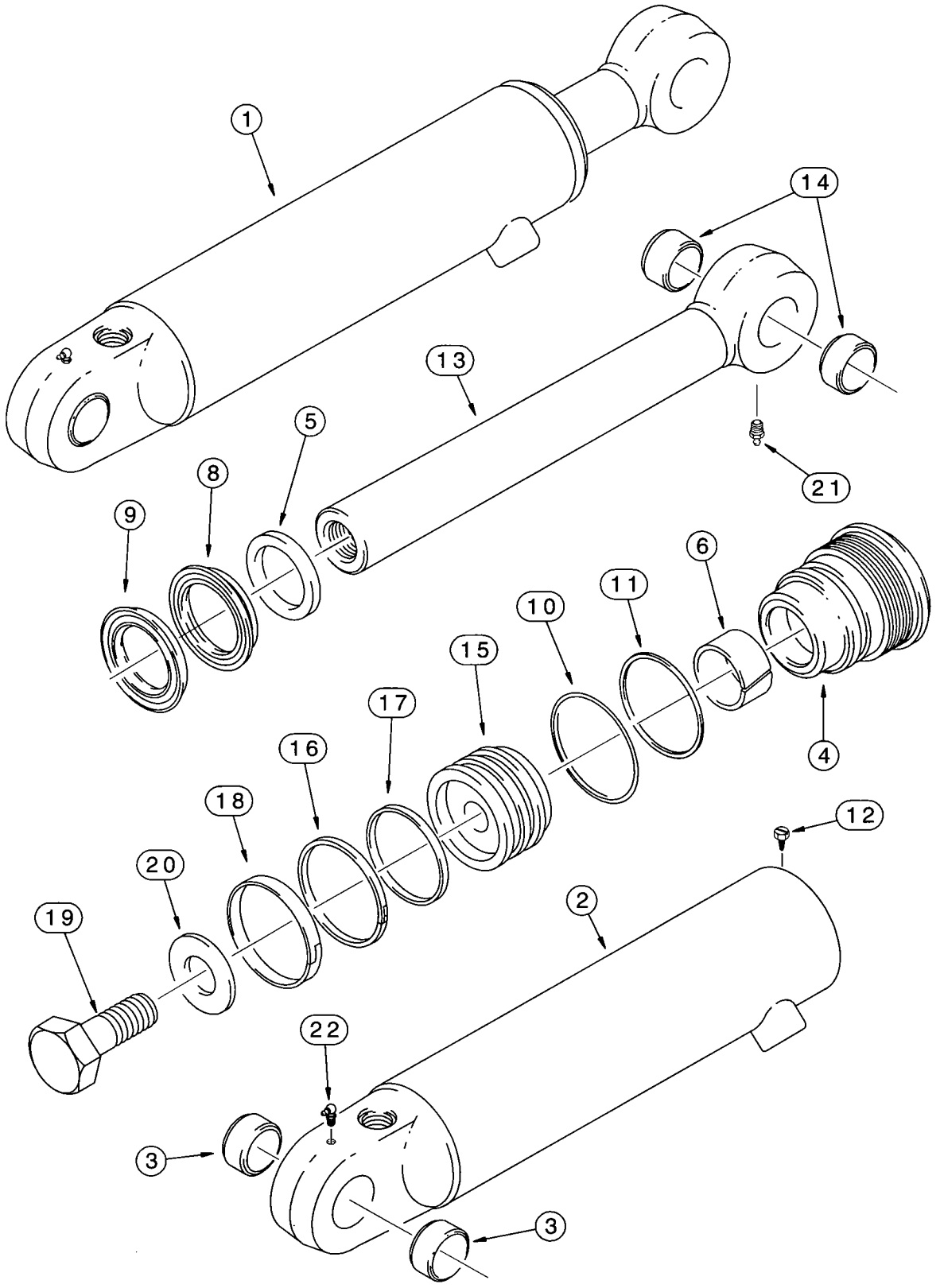
1
14
13
5
8
9
21
6
11
10
15
17
16
18
20
19
12
2
22
3
3
4

LOADER CLAM CYLINDERS

REF.	PART NO.	DESCRIPTION	REQ'D.
1	1346189C1	CYLINDER ASSEMBLY - 76 (3) ID x 231 mm (9 inch) stroke, clam, right-hand, see note	1
1	1346190C1	CYLINDER ASSEMBLY - 76 (3) ID x 231 mm (9 inch) stroke, clam, left-hand, see note	1
2	1346191C1	TUBE ASSEMBLY - cylinder, right-hand	1
2	1346192C1	TUBE ASSEMBLY - cylinder, left-hand	1
3	30634	BUSHING - 1346191C1 or 1346192C1 tube	2
	NSS	GLAND ASSEMBLY - cylinder	1
4	G109884	GLAND - cylinder	1
5	*D95143	WIPER - piston rod	1
6	*G102425	BUSHING - center	1
	*1542875C1	KIT - seal, NSS, order 1543267C1 kit below	1
8	1542999C1	SEAL - rod, NSS, order 1543267C1 kit below	1
9	1542998C1	SEAL - buffer, NSS, order 1543267C1 kit below	1
10	*238-5231	O-RING - 2-5/8 ID x 1/8 inch wide, gland	1
11	*G109298	RING - backup, gland O-ring	1
12	276-2446	SCREW - self-tapping, hex head, No. 8 NC x 3/8 inch	1
13	1346195C1	ROD ASSEMBLY - piston, 44 mm diameter	1
14	30634	BUSHING -	2
15	1340798C1	PISTON - cylinder	1
16	*G102288	SEAL - piston	1
17	*G100444	RING - backup, piston seal	1
18	*G100449	RING - wear, piston	1
19	25974R1	BOLT - hex, 1 NF x 2-1/2 inch, grade 8	1
20	G32303	WASHER - flat, special, 1 inch, hardened	1
21	219-1	FITTING - grease, straight, 1/8 PT x 21/32 inch	1
22	219-55	FITTING - grease, 90 degree, 1/8 PT x 27/32 inch	1
	*1543267C1	KIT - seal, includes all items with an asterisk and an instruction sheet	1

NOTE: The cylinder assembly part number is stamped on some cylinder glands or tubes.

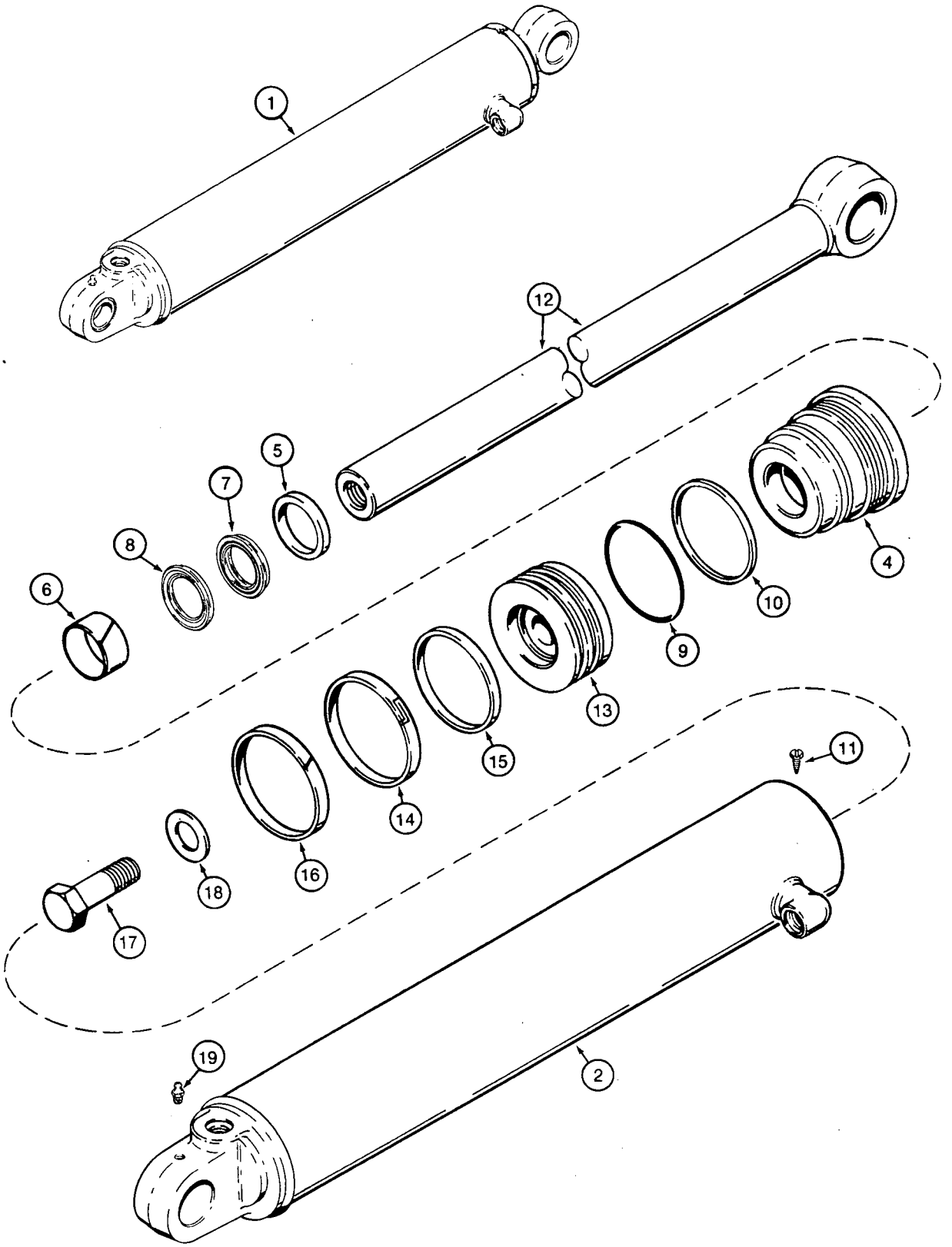
1
12
5
7
8
6
4
10
9
13
15
14
16
18
17
11
19
2

BACKHOE STABILIZER CYLINDERS
(9/16 INCH THREADED SPUD ON CYLINDER TUBE)

REF.	PART NO.	DESCRIPTION	REQ'D.
1	199720A1	CYLINDER ASSEMBLY - 108 (4-1/4) ID x 553 mm (21-3/4 inch) stroke, stabilizer, right-hand, without tube or rod bushings, see note	1
1	199721A1	CYLINDER ASSEMBLY - 108 (4-1/4) ID x 553 mm (21-3/4 inch) stroke, stabilizer, left-hand, without tube or rod bushings, see note	1
2	199722A1	TUBE - cylinder, right-hand	1
2	199723A1	TUBE - cylinder, left-hand	1
	NSS	GLAND ASSEMBLY - cylinder	1
4	G110519	GLAND - cylinder	1
5	*D95144	WIPER - piston rod	1
6	*G101533	BUSHING - center	1
	*1542876C1	KIT - seal, NSS, order 1543275C1 kit below	1
7	1543001C1	SEAL - rod, NSS, order 1543275C1 kit below	1
8	1543000C1	SEAL - buffer, NSS, order 1543275C1 kit below	1
9	*238-5241	O-RING - 3-7/8 ID x 1/8 inch wide, gland	1
10	*G32176	RING - backup, gland O-ring	1
11	276-2446	SCREW - self-tapping, hex head, No. 8 NC x 3/8 inch	1
12	123726A1	ROD - piston, 51 mm (2 inch) diameter	1
13	123732A1	PISTON - cylinder	1
14	*G110531	SEAL - piston	1
15	*G110529	RING - backup, piston seal	1
16	*G110530	RING - wear, piston	1
17	28-2048	BOLT - hex, 1-1/4 NF x 3 inch, grade 8	1
18	G104989	WASHER - flat, hardened, special, 1-1/32 x 2-3/8 x 3/16 inch	1
19	219-1	FITTING - grease, straight, 1/8 PT x 21/32 inch	1
	*1543275C1	KIT - seal, includes all items with an asterisk and an instruction sheet	1

NOTE: The cylinder assembly part number is stamped on some cylinder glands or tubes.

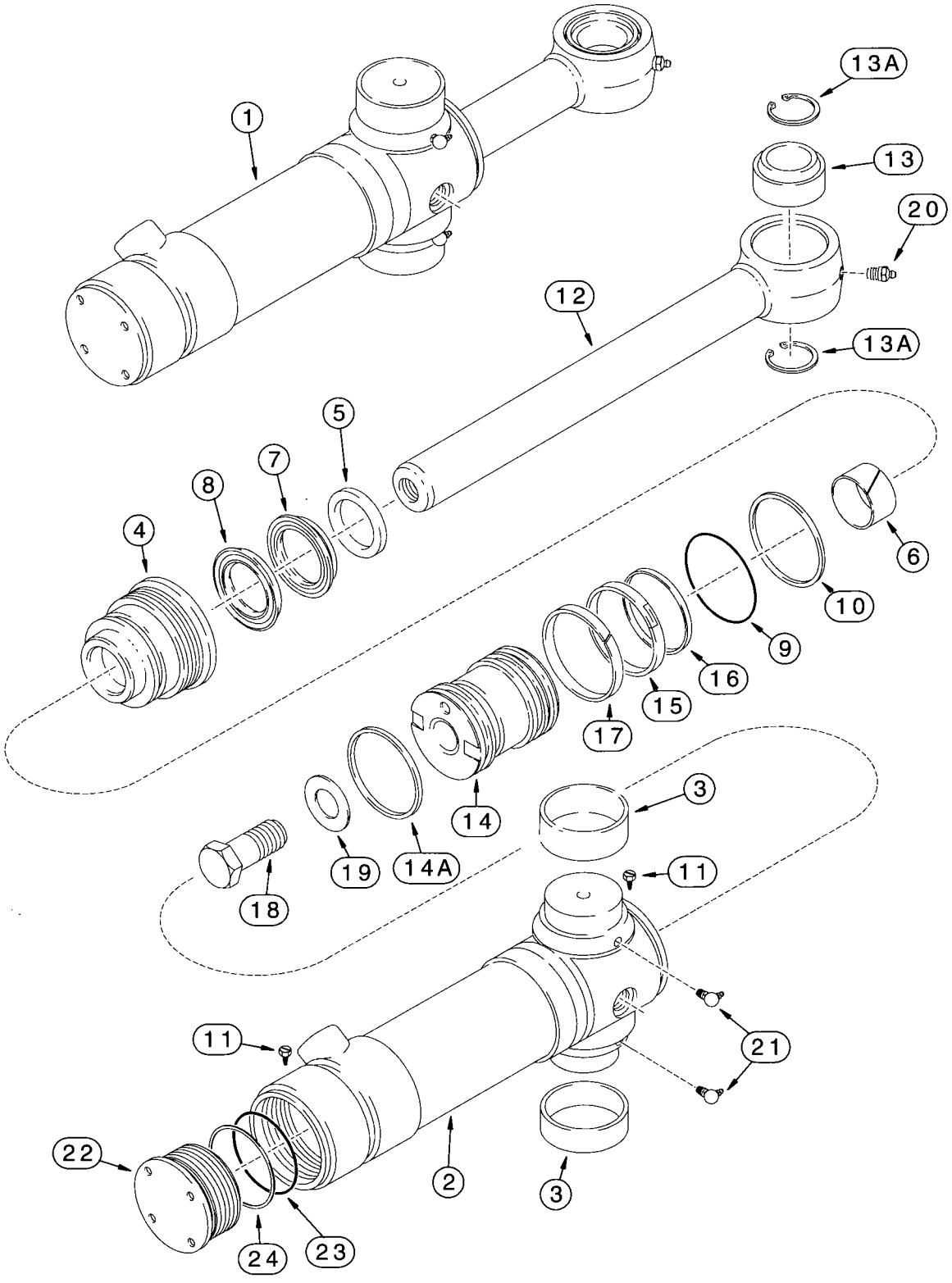
1
13A
13
20
12
13A
5
7
8
4
6
10
9
16
15
17
14
3
19
14A
11
18
11
21
22
2
3
24
23

BACKHOE SWING CYLINDERS

REF.	PART NO.	DESCRIPTION	REQ'D.
1	139808A2	CYLINDER ASSEMBLY - 102 (4) ID X 292 mm (11-1/2 inch) stroke, swing, see note	2
2	199953A2	TUBE ASSEMBLY - cylinder, includes 139810A2 tube, 124462A1 end cap assembly (Ref 22-24) and (1) 276-2446 screw (Ref 11), not available as an assembly, order components	1
2	139810A2	TUBE ASSEMBLY - cylinder, does not include 124462A1 end cap assembly or (1) 276-2446 screw	1
3	124568A2	BUSHING - tube, external	2
	NSS	GLAND ASSEMBLY - cylinder	1
4	G109899	GLAND - cylinder	1
5	*D95144	WIPER - piston rod	1
6	*G101533	BUSHING - center	1
	*1542876C1	KIT - seal, NSS, order 122535A1 kit below	1
7	1543001C1	SEAL - rod, NSS, order 122535A1 kit below	1
8	1543000C1	SEAL - buffer, NSS, order 122535A1 kit below	1
9	*238-5239	O-RING - 3-5/8 x 1/8 inch wide, gland	1
10	*G109299	RING - backup, gland O-ring	1
11	276-2446	SCREW - self-tapping, hex head, No. 8 NC x 3/8 inch	2
12	177518A1	ROD ASSEMBLY - piston, 51 mm (2 inch) diameter	1
13	137248A1	BUSHING - piston rod, self-aligning	1
13A	100-21315	RING - internal retaining, No. 315	2
14	112370A3	PISTON - cylinder	1
14A	*121478A1	RING - cast iron, 4 inch OD	1
15	*G102285	SEAL - piston	1
16	*G100440	RING - backup, piston seal	1
17	*G100448	RING - wear, piston	1
18	28-1664	BOLT - hex, 1-14 x 4 inch, grade 8	1
19	G32303	WASHER - flat, special, 1 inch, hardened	1
20	219-1	FITTING - grease, straight, 1/8 PT x 21/32 inch	1
21	219-55	FITTING - grease, 90 degree, 1/8 PT x 27/32 inch	2
	124462A1	CAP ASSEMBLY - end, order items 22-24	1
22	124463A1	CAP - end	1
23	238-5242	O-RING - 4 ID x 1/8 inch wide	1
24	G32176	RING - backup	1
	*122535A1	KIT - seal, includes all items with an asterisk and an instruction sheet	1

NOTE: The cylinder assembly part number is stamped on some cylinder glands or tubes.

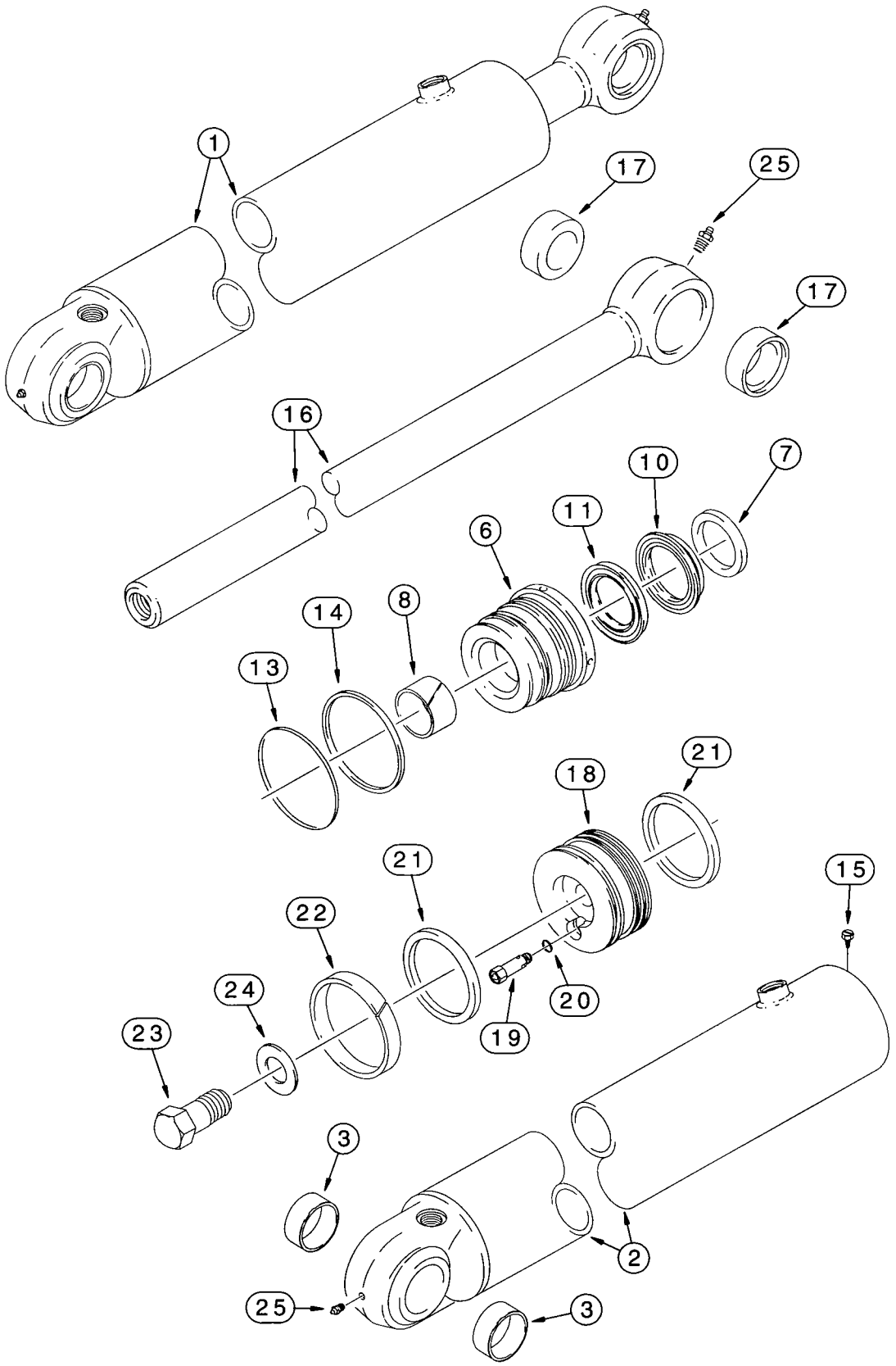
1
17
25
17
16
10
7
11
6
14
8
13
21
18
21
22
15
24
20
23
19
3
2
25
3

BACKHOE BOOM CYLINDER

REF.	PART NO.	DESCRIPTION	REQ'D.
1	144200A1	CYLINDER ASSEMBLY - 127 (5) ID x 842 mm (33-5/32 inch) stroke, boom, without grease seals at rod and tube eyes, see note	1
2	144201A1	TUBE ASSEMBLY - cylinder	1
3	1346101C1	BUSHING - tube	2
	NSS	GLAND ASSEMBLY - cylinder	1
6	1542918C1	GLAND - cylinder, has identification groove on outer lip	1
7	*D95145	WIPER - piston rod	1
8	*G102426	BUSHING - center	1
	*1542877C1	KIT - seal, NSS, order 1542919C2 kit below	1
10	1542929C1	SEAL - rod, NSS, order 1542919C2 kit below	1
11	1542928C1	SEAL - buffer, NSS, order 1542919C2 kit below	1
13	*238-5247	O-RING - 4-5/8 ID x 1/8 inch wide, gland	1
14	*G107970	RING - backup, gland O-ring	1
15	276-2446	SCREW - self-tapping, hex head, No. 8 NC x 3/8 inch	1
16	123405A6	ROD ASSEMBLY - piston, 57 mm (2-1/4 inch) diameter	1
17	123407A1	BUSHING - rod	2
18	1346018C2	PISTON - cylinder, used with 1958028C1 relief valve cartridge	1
19	1958028C1	VALVE ASSEMBLY - relief, cartridge, internal component parts not serviced separately	1
20	237-6006	O-RING - 15/32 ID x 5/64 inch wide, relief valve cartridge, external	1
21	*G110269	SEAL - piston	2
22	*G102090	RING - wear, piston	1
23	28-2048	BOLT - hex, 1-1/4 NF x 3 inch, grade 8	1
24	G104989	WASHER - flat, hardened, special, 1-1/4 inch	1
25	219-1	FITTING - grease, straight, 1/8 PT x 21/32 inch	2
	*1542919C2	KIT - seal, includes all items with an asterisk; also includes G108712 piston rod wiper not used in this application, and an instruction sheet	1

NOTE: The cylinder assembly part number is stamped on some cylinder glands or tubes.

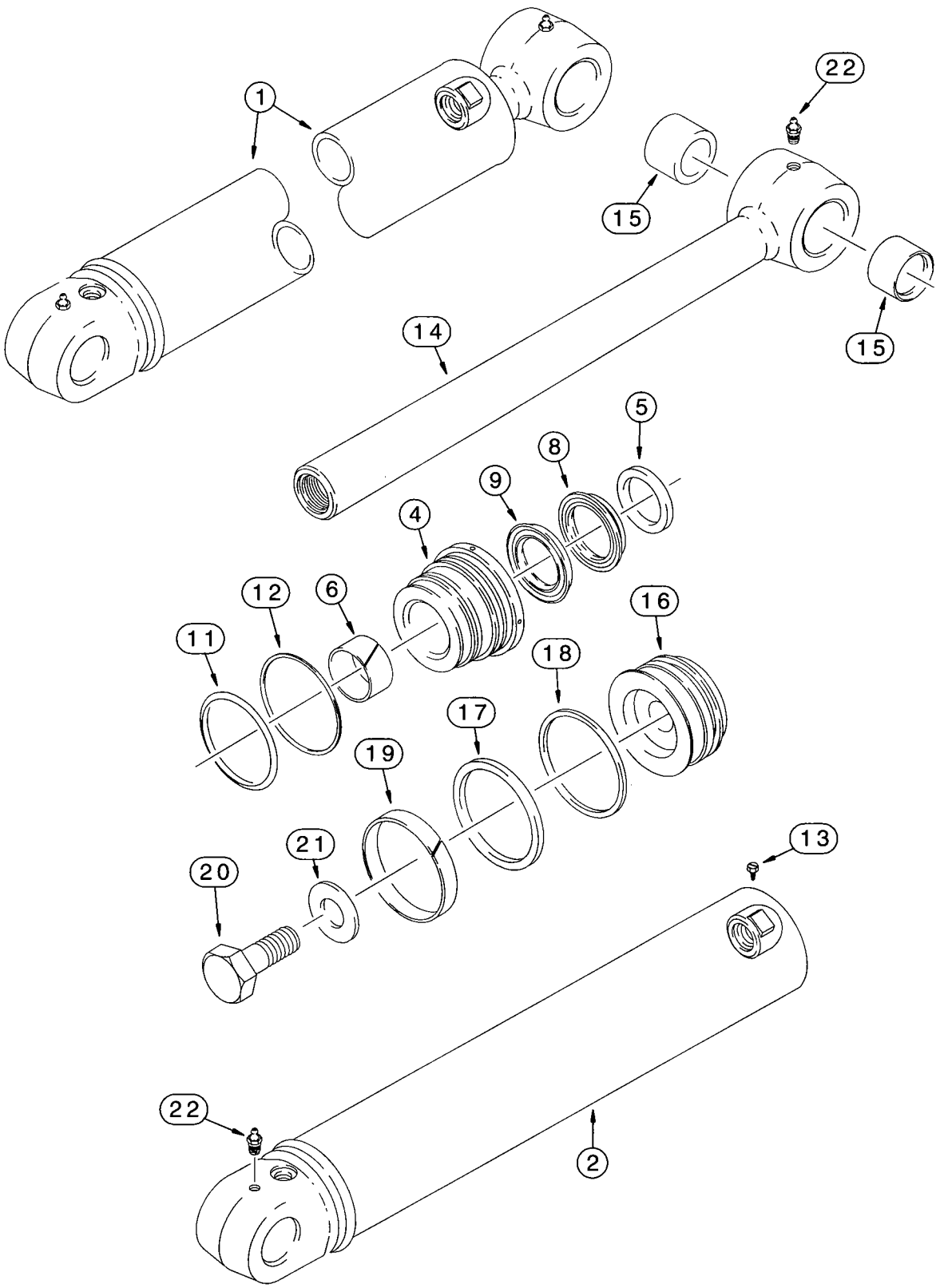
1
22
15
15
14
5
8
9
4
12
6
16
11
18
17
19
21
13
20
22
2

BACKHOE DIPPER CYLINDER

REF.	PART NO.	DESCRIPTION	REQ'D.
1	183795A2	CYLINDER ASSEMBLY - 127 (5) ID x 583 mm (23 inch) stroke, dipper, see note	1
2	183796A2	TUBE - cylinder	1
	NSS	GLAND ASSEMBLY - cylinder	1
4	1542914C1	GLAND - cylinder	1
5	*D95146	WIPER - piston rod	1
6	*G102427	BUSHING - center	1
	*1542879C1	KIT - seal, NSS, order 1542915C2 kit below	1
8	1542931C1	SEAL - rod, NSS, order 1542915C2 kit below	1
9	1542930C1	SEAL - buffer, NSS, order 1542915C2 kit below	1
11	*238-5247	O-RING - 4-5/8 ID x 1/8 inch wide, gland	1
12	*G107970	RING - backup, gland O-ring	1
13	276-2446	SCREW - self-tapping, hex head, No. 8 NC x 3/8 inch	1
14	178850A1	ROD ASSEMBLY - piston, 64 mm (2-1/2 inch) diameter, cylinder	1
15	D141555	BUSHING - rod	2
16	G110569	PISTON - cylinder	1
17	*1986753C1	SEAL - piston	1
18	*G102092	RING - backup, piston seal	1
19	*G102090	RING - wear, piston	1
20	25987R1	BOLT - hex, 1-1/2 NF x 3-1/2 inch, grade 8	1
21	G104990	WASHER - flat, hardened, special, 1-1/2 inch	1
22	219-1	FITTING - grease, straight, 1/8 PT x 21/32 inch	2
	*1542915C2	KIT - seal, includes all items with an asterisk, also a seal and wiper not used in this application, and an instruction sheet	1

NOTE: The cylinder assembly part number is stamped on some cylinder glands or tubes.

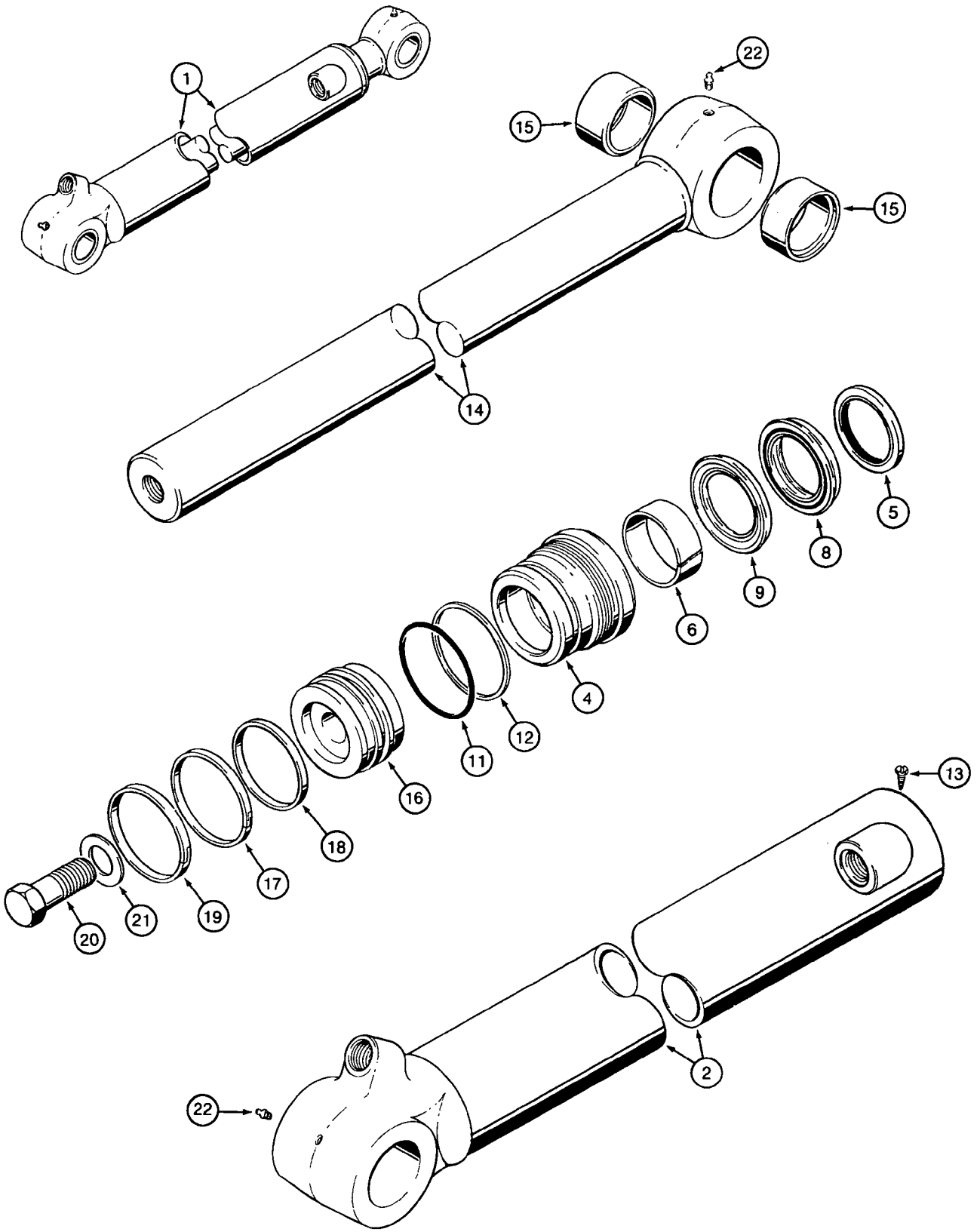
1
22
15
15
14
5
8
9
6
4
12
11
16
18
17
19
21
20
13
2
22

BACKHOE BUCKET CYLINDER

REF.	PART NO.	DESCRIPTION	REQ'D.
1	235916A1	CYLINDER ASSEMBLY - 80 (3-1/2) ID x 872 mm (34-5/16 inch) stroke, bucket, see note	1
2	235917A2	TUBE ASSEMBLY - cylinder	1
	NSS	GLAND ASSEMBLY - cylinder	1
4	235921A1	GLAND - cylinder	1
5	*D95146	WIPER - piston rod	1
6	*G109908	BUSHING - center	1
	*1542879C1	KIT - seal, NSS, order 1542923C2 kit below	1
8	1542931C1	SEAL - rod, NSS, order 1542923C2 kit below	1
9	1542930C1	SEAL - buffer, NSS, order 1542923C2 kit below	1
11	*238-5235	O-RING - 3-1/8 ID x 1/8 inch wide, gland	1
12	*D38858	RING - backup	1
13	276-2446	SCREW - self-tapping, hex head, No. 8 NC x 3/8 inch	1
14	196164A1	ROD ASSEMBLY - piston, 64 mm (2-1/2 inch) diameter, cylinder	1
15	D140029	BUSHING - 50 x 60 x 25.5 mm long, piston rod	2
16	1986906C1	PISTON - cylinder	1
17	*G102286	SEAL - piston	1
18	*G100710	RING - backup, piston seal	1
19	*G100711	RING - wear, piston	1
20	28-2052	BOLT - hex, 1-1/4 NF x 3-1/4 inch, grade 8	1
21	G104989	WASHER - flat, hardened, special, 1-1/4 inch	1
22	219-1	FITTING - grease, straight, 1/8 PT x 21/32 inch	2
	*1542923C2	KIT - seal, includes all items with an asterisk and an instruction sheet	1

NOTE: The cylinder assembly part number is stamped on some cylinder glands or tubes.

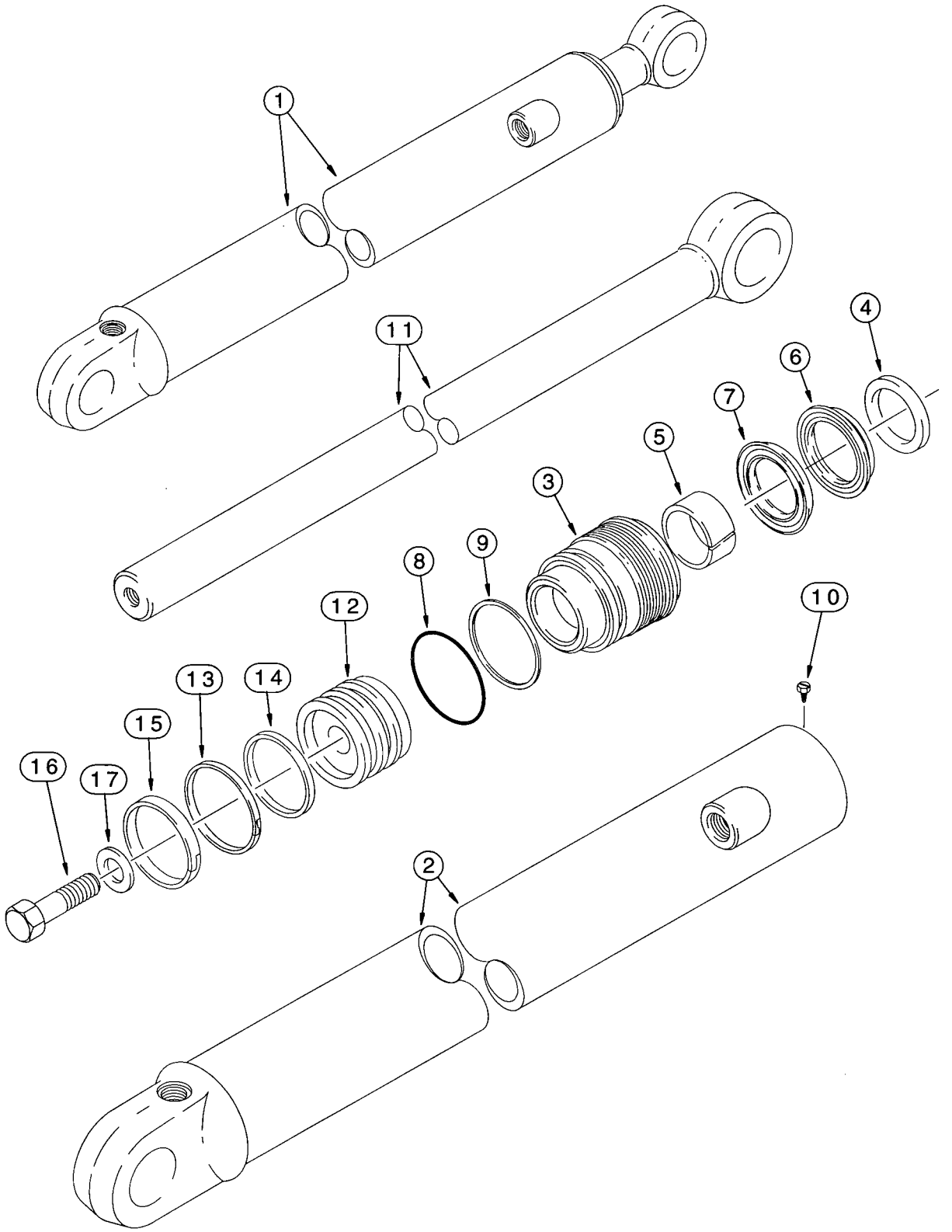
1
11
4
6
7
5
3
9
8
12
10
13
14
15
16
17
2

BACKHOE DIPPER EXTENSION CYLINDER

REF.	PART NO.	DESCRIPTION	REQ'D.
1	1340969C2	CYLINDER ASSEMBLY - 76 (3) ID x 1068 mm (42 inch) stroke, dipper extension, see note	1
2	1340970C1	TUBE - cylinder, without bushing	1
	NSS	GLAND ASSEMBLY - cylinder	1
3	G109884	GLAND - cylinder	1
4	*D95143	WIPER - piston rod	1
5	*G102425	BUSHING - center	1
	*1542875C1	KIT - seal, NSS, order 1543267C1 kit below	1
6	1542999C1	SEAL - rod, NSS, order 1543267C1 kit below	1
7	1542998C1	SEAL - buffer, NSS, order 1543267C1 kit below	1
8	*238-5231	O-RING - 2-5/8 ID x 1/8 inch wide, gland	1
9	*G109298	RING - backup, gland O-ring	1
10	276-2446	SCREW - self-tapping, hex head, No. 8 NC x 3/8 inch	1
11	1980296C1	ROD - piston, 44 mm (1-3/4 inch) diameter, without bushing	1
12	G107277	PISTON - cylinder	1
13	*G102288	SEAL - piston	1
14	*G100444	RING - backup, piston seal	1
15	*G100449	RING - wear, piston	1
16	25863R1	BOLT - hex, 3/4 NF x 2-1/2 inch, grade 8	1
17	S94643	WASHER - flat, special, hardened	1
	*1543267C1	KIT - seal, includes all items with an asterisk and an instruction sheet	1

NOTE: The cylinder assembly part number is stamped on some cylinder glands or tubes.

ALPHABETICAL INDEX
CHASSIS

DESCRIPTION	PAGE
Backhoe	
Boom	9-49,9-51
Boom Latch	9-53
Buckets	9-63 - 9-71
Control Tower and Covers	9-25,9-27
Controls	9-29 - 9-41
Controls - Backhoe Auxiliary Hydraulics	9-43
Controls - Excavator Control Pattern	9-39
Dipper and Bucket	9-55,9-57
Extendable Dipper	9-59,9-61
Stabilizers, Plates, and Pads	9-45
Swing Cylinders and Swing Tower	9-47
Battery Box and Right-Hand Step	9-79,9-81
Cab	
Air Conditioner, Heater, and Blower	9-137 - 9-145
Air Filter	9-135
Control Panel and Wiring	9-125
Doors and Mounting and Rear Window	9-117 - 9-123
Frame, Covers and Insulation	9-115
Glass	9-113
Headliner, Louvers, and Dome Lamp	9-133
Windshield Washers and Wipers	9-127 - 9-131
Canopy - ROPS	9-147
Chassis	9-77
Counterweight - Front	9-75
Couplers - Quick, Loader Hydraulic Tool	9-23
Decals	9-153 - 9-157
Fenders and Closure Panels	9-97,9-99
Floor Plates and Mats	9-95
Frost Point Assembly	9-73
Guard - Mud	9-101
Guard - Pump and Baffle Plates	9-85 - 9-89
Hood, Engine Side Panels, and Grille Unit	9-91,9-93
Loader	
Antirollback Control/Return-To-Dig Control	9-11
Buckets	9-15 - 9-19
Bucket and Lift Controls	9-3
Clam Controls	9-5,9-7
Frame and Mounting Parts	9-11
Guard - Valve	9-21
Links - Bucket and Cylinder	9-13
Self-Leveling Control	9-9
Mirror - Rear View	9-149
Radiator Wrapper	9-83
Seats and Seat Mounting Parts	9-103 - 9-111
Slow Moving Vehicle Emblem	9-151
Tank - Hydraulic Oil	9-79

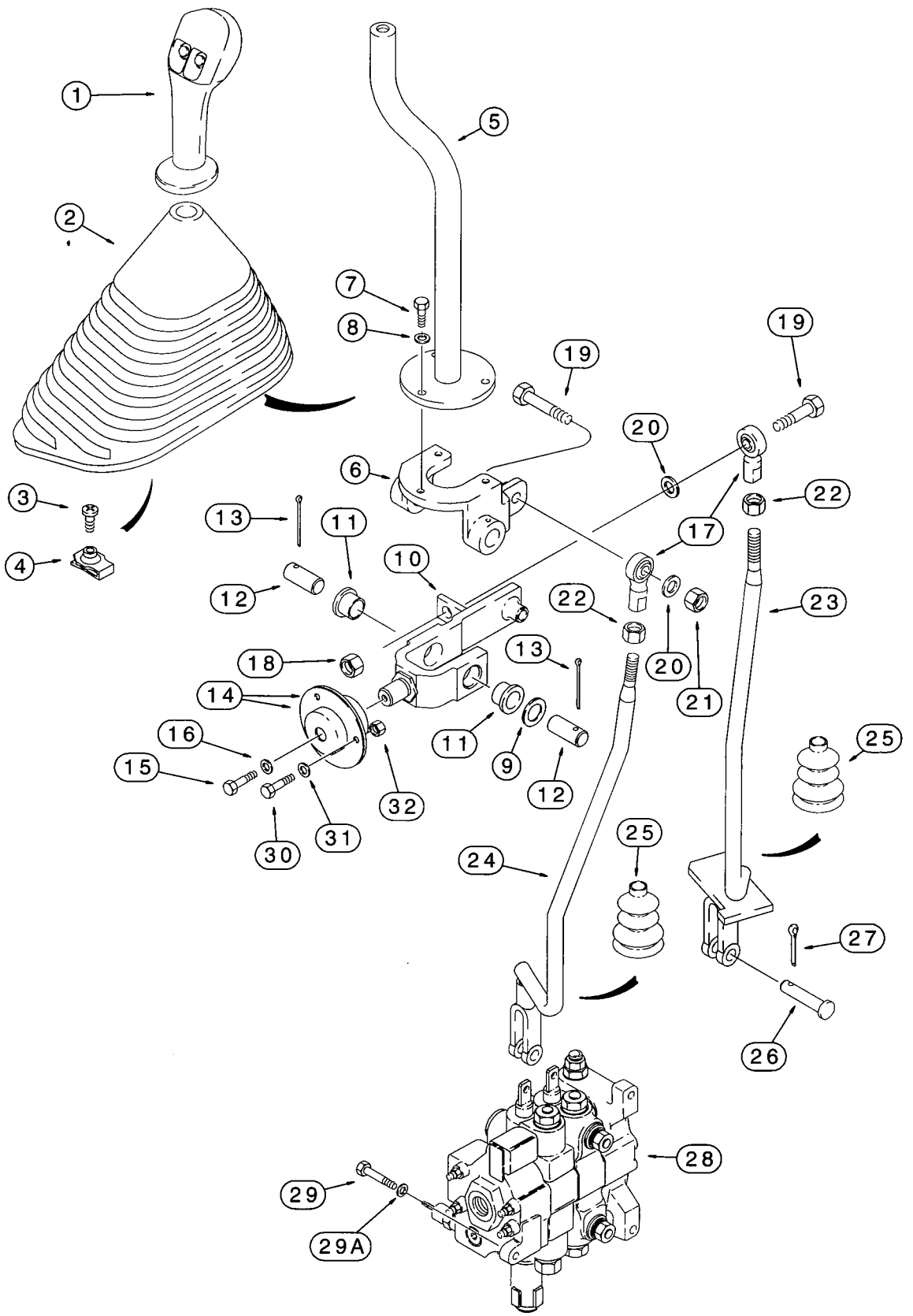
1
2
3
4
5
6
7
8
9
10
11
12
13
14
15
16
17
18
19
20
21
22
23
24
25
26
27
28
29
29A
30
31
32

LOADER LIFT AND BUCKET CONTROLS

REF.	PART NO.	DESCRIPTION	REQ'D.
1	292904A1	HANDLE - control lever, loader, two button, declutch and differential lock switches, models without powershift transmission	1
1A	293262A1	HANDLE - control lever, loader, two button, declutch and differential lock switches, models with powershift transmission, not shown	1
	256347A1	CONNECTOR - harness	1
	258616A1	LOCK - four-pin	1
	298176A1	PLUG - cavity, not used with Ref 1A	1
	345-133	ADHESIVE - Superbonder 409, 1 ml	UAR
2	133615A1	BOOT - control lever, models without clam control lever, see page 9-7 for boot used on models with clam control lever	1
3	140-107	SCREW - machine, pan head Phillips, No. 10 NC x 3/4 inch	1
4	131-623	NUT - U-type, No. 10 NC	1
5	132661A1	LEVER - control, loader lift and bucket control	1
6	195615A1	BRACKET - control lever to bellcrank	1
7	614-6016	BOLT - hex, full threads, 6 - 1.0 x 16 mm	3
8	495-11028	WASHER - flat, 9/32 x 5/8 x 1/16 inch	3
9	495-81184	WASHER - flat, 21/32 x 1-1/2 x 1/32 inch, use as a spacer	1
10	176311A1	BELLCRANK - control, loader lift and bucket control	1
11	108088A1	BUSHING - flanged, bellcrank	2
12	102761A1	PIN - bellcrank to control lever bracket	2
13	432-828	PIN - cotter, 1/8 x 1-3/4 inch	2
14	112380A1	RETAINER - bearing	2
14A	465004R91	BEARING - ball, retainer	1
15	614-6016	BOLT - hex, full threads, 6 - 1.0 x 16 mm	1
16	396-41028	WASHER - flat, 9/32 x 7/8 x 3/32 inch, hardened	1
17	D136773	JOINT - ball, 3/8 inch NF	2
18	231-1446	NUT - hex, self-locking, 3/8 inch NC	1
19	413-628	BOLT - hex, 3/8 NC x 1-3/4 inch	2
20	496-21041	WASHER - flat, 13/32 x 13/16 x 3/32 inch, hardened	2
21	425-106	NUT - hex, 3/8 inch NC	2
22	425-116	NUT - hex, 3/8 inch NF	2
23	122359A1	ROD - bucket control	1
24	120204A1	ROD - lift control	1
25	132931A1	BOOT - 1/2 inch rod, at loader valve	2
26	D149288	PIN - clevis, special	2
27	432-612	PIN - cotter, 3/32 x 3/4 inch	2
28	302965A1	VALVE ASSEMBLY - control, loader, two spool, parts list page 8-73	1
29	814-10040	BOLT - hex, 10 - 1.5 x 40 mm	3
29A	896-11010	WASHER - flat, 11 x 21 x 2.5 mm, hardened	3
30	614-6020	BOLT - hex, full threads, 6 - 1.0 x 20 mm	3
31	396-41028	WASHER - flat, 9/32 x 7/8 x 3/32 inch, hardened	3
32	829-1406	NUT - hex, 6 mm - 1.0, class 10	3

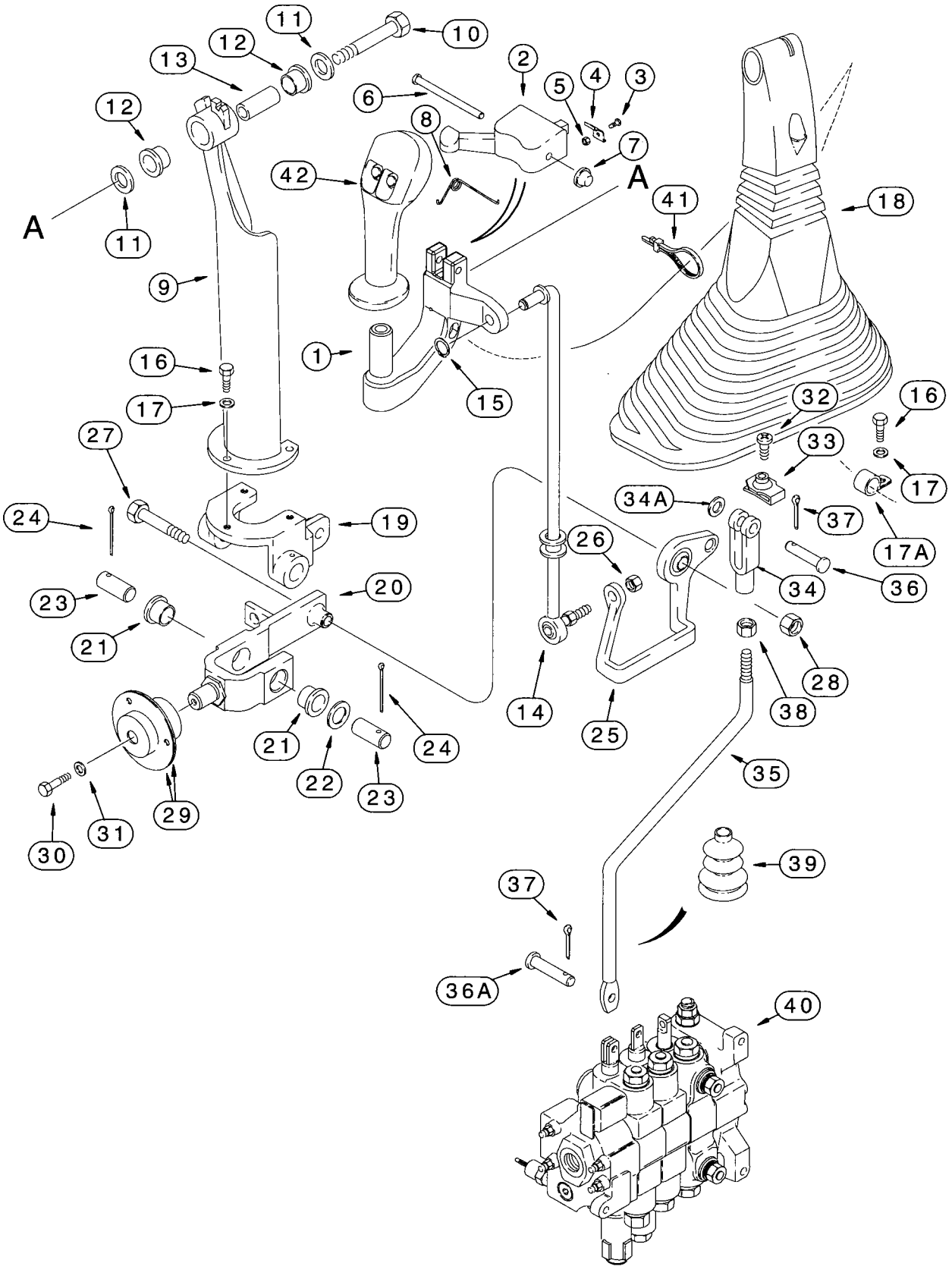
11
10
12
13
2
6
5
4
3
12
8
7
42
A
41
18
A
11
9
1
16
15
17
32
16
27
33
17
34A
37
24
19
26
17A
34
36
23
20
21
14
25
28
38
21
24
22
23
35
30
31
29
39
37
36A
40

LOADER CLAM CONTROL

REF.	PART NO.	DESCRIPTION	REQ'D.
1	297615A1	HANDLE - control lever	1
2	123815A1	LATCH - clam lock	1
3	170-104	SCREW - machine, pan head Phillips, No. 5 NC x 3/8 inch	2
4	129914A1	SPRING - leaf, clam lock	2
5	225-14105	NUT - hex, No. 5 NC	2
6	439-5436	PIN - headed, 1/4 x 2-1/4 inch	1
7	143210A1	CAP - push, 1/4 inch	1
8	124243A1	SPRING - torsion, latch	1
9	123493A1	LEVER - control, loader clam	1
10	413-632	BOLT - hex, 3/8 NC x 2 inch	1
11	495-21044	WASHER - flat, 7/16 x 1 x 5/64 inch	2
12	108088A1	BUSHING - flanged, control lever	2
13	133989A1	SLEEVE - pivot	1
14	239306A1	ROD - control, clam	1
15	103-1437	RING - heavy section external retaining, No. 37	1
16	614-6016	BOLT - hex, full threads, 6 - 1.0 x 16 mm	3
17	495-11028	WASHER - flat, 9/32 x 5/8 x 1/16 inch	3
17A	515-2295	CLAMP - P-type, 3/8 inch ID, clutch cutout control harness to control lever	1
18	133617A1	BOOT - control lever, clam	1
19	195615A1	BRACKET - control lever to bellcrank	1
20	176311A1	BELLCRANK - control, loader	1
21	108088A1	BUSHING - flanged, bellcrank	2
22	495-81184	WASHER - flat, 21/32 x 1-1/2 x 1/32 inch, use as a spacer	1
23	102761A1	PIN - bellcrank to control lever bracket	2
24	432-828	PIN - cotter, 1/8 x 1-3/4 inch	2
25	112382A1	BELLCRANK - control, loader clam	1
26	425-116	NUT - hex, 3/8 inch NF	1
27	413-632	BOLT - hex, 3/8 NC x 2 inch	1
28	231-1446	NUT - hex, self-locking, 3/8 inch NC	1
29	112380A1	RETAINER - bearing	2

Continued on next page

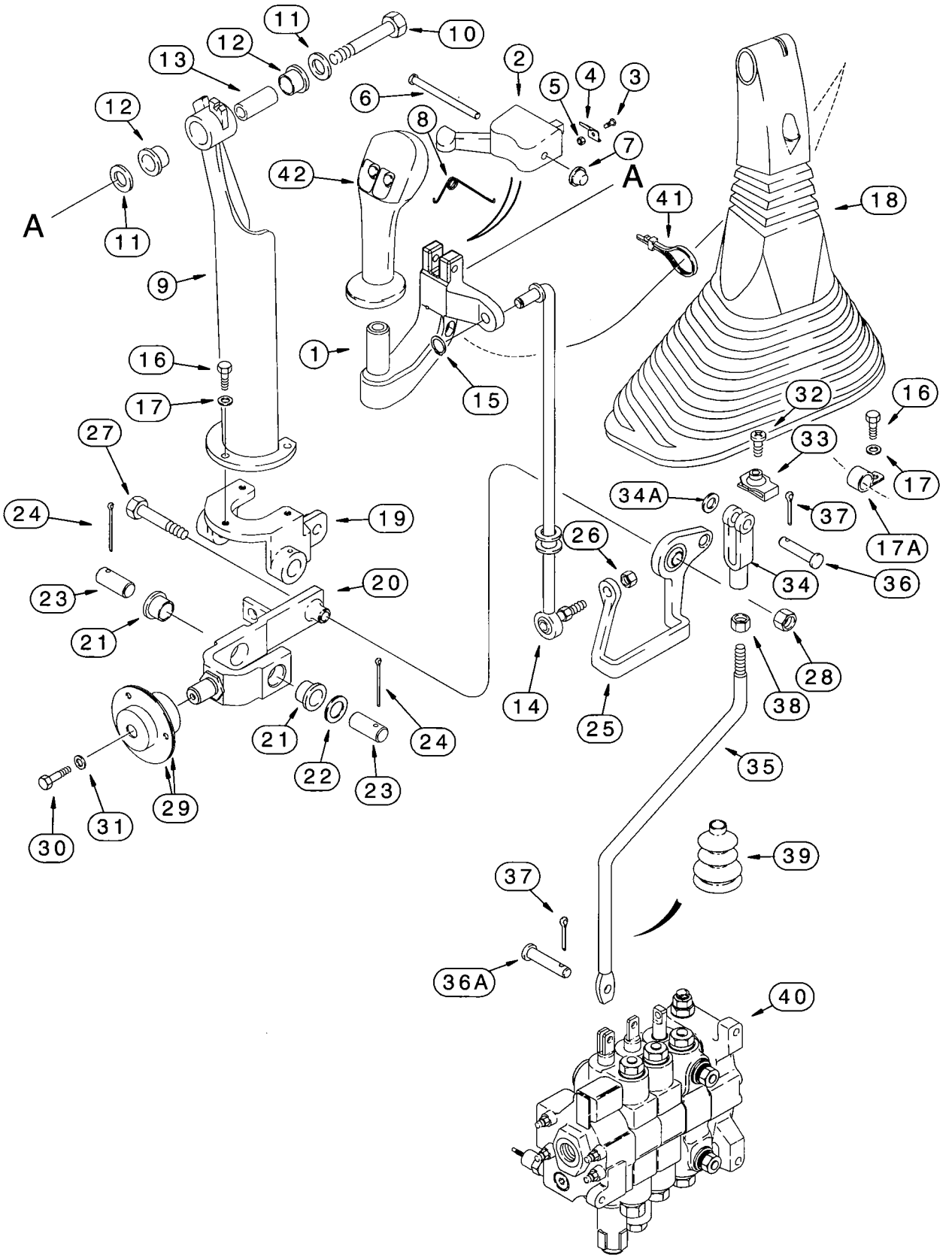
11
10
12
13
2
6
5
4
3
12
8
7
42
A
41
18
A
11
9
1
15
16
17
32
16
27
33
17
34A
37
24
19
26
17A
23
20
34
36
21
28
14
25
38
21
24
22
23
35
29
31
30
37
39
36A
40

LOADER CLAM CONTROL

REF.	PART NO.	DESCRIPTION	REQ'D.
30	614-6016	BOLT - hex, full threads, 6 - 1.0 x 16 mm	1
31	396-41028	WASHER - flat, 9/32 x 7/8 x 3/32 inch, hardened	1
32	140-107	SCREW - machine, pan head Phillips, No. 10 NC x 3/4 inch	1
33	131-623	NUT - U-type, No. 10 NC	1
34	213-126	CLEVIS - adjustable, 3/8 inch NF	1
34A	495-11041	WASHER - flat, 13/32 x 13/16 x 1/16 inch, between clevis and bellcrank	1
35	187438A1	ROD - control, clam, at loader valve	1
36	D149288	PIN - clevis, special, upper	1
36A	D149287	PIN - clevis, special, 5/16 x 15/16 inch, hardened, clam control rod lower clevis	1
37	432-612	PIN - cotter, 3/32 x 3/4 inch	2
38	425-116	NUT - hex, 3/8 inch NF	1
39	132873A1	BOOT - 3/8 inch rod, at loader valve	1
40	302966A1	VALVE ASSEMBLY - loader control, three-spool, parts list page 8-75	1
41	L18337	STRAP - tie, 15 inch, if used	1
42	292904A1	HANDLE - control lever, two button, declutch and differential lock	1
	256347A1	CONNECTOR - harness	1
	258616A1	LOCK - four-pin	1
	298176A1	PLUG - cavity	1
	345-133	ADHESIVE - Superbonder 409, 1 ml	UAR

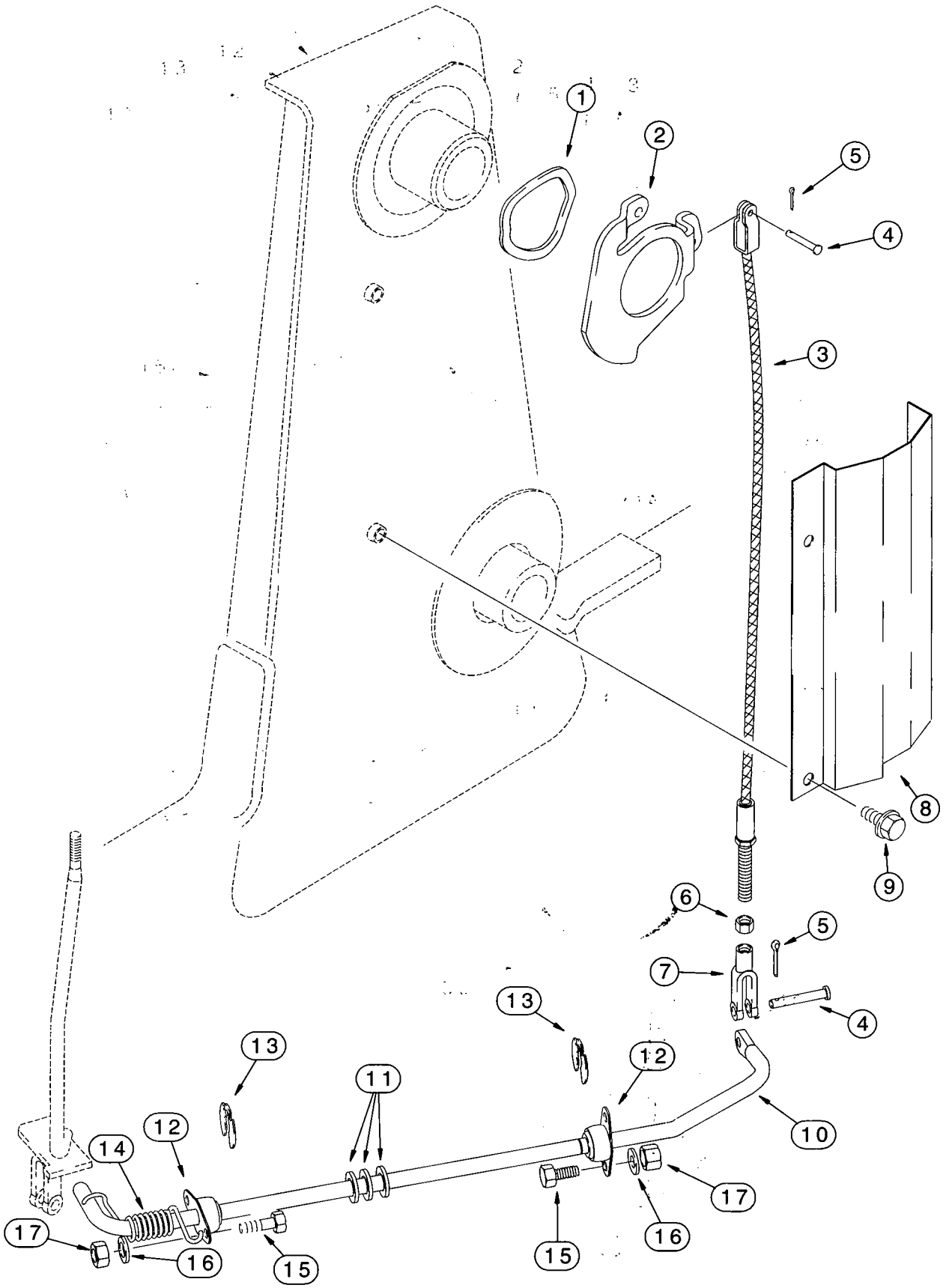
1
2
5
4
3
8
9
6
5
7
4
13
12
10
13
11
12
14
17
16
15
15
16
17

LOADER SELF-LEVELING CONTROL

REF.	PART NO.	DESCRIPTION	REQ'D.
1	137283A1	WASHER - wave, at upright, loader arm pivot	1
2	142404A1	CAM - self-leveling	1
3	193854A1	CABLE - bucket level	1
4	D149287	PIN - clevis, special, 5/16 x 15/16 inch, hardened	2
5	432-612	PIN - cotter, 3/32 x 3/4 inch	2
6	425-115	NUT - hex, 5/16 inch NF	1
7	213-125	CLEVIS - adjustable, 5/16 inch NF	1
8	139865A1	GUARD - cable	1
9	844-10020	BOLT - heavy hex flange, 10 - 1.5 x 20 mm	2
	128580A1	ROD ASSEMBLY - bucket level	1
10	NSS	ROD - bucket level	1
11	A30881	WASHER - special, hardened, flat, used as shim between bearing and snap ring	3
12	L15401	BEARING - pivot, self-aligning, 5/8 inch	2
13	D95096	RING - retaining, 5/8 inch, shaft retaining, special	2
14	124721A1	SPRING - coil	1
15	614-8025	BOLT - hex, full threads, 8 - 1.25 x 25 mm	4
16	895-11008	WASHER - flat, 9 x 17 x 1.6 mm	4
17	829-1408	NUT - hex, 8 mm - 1.25, class 10	4

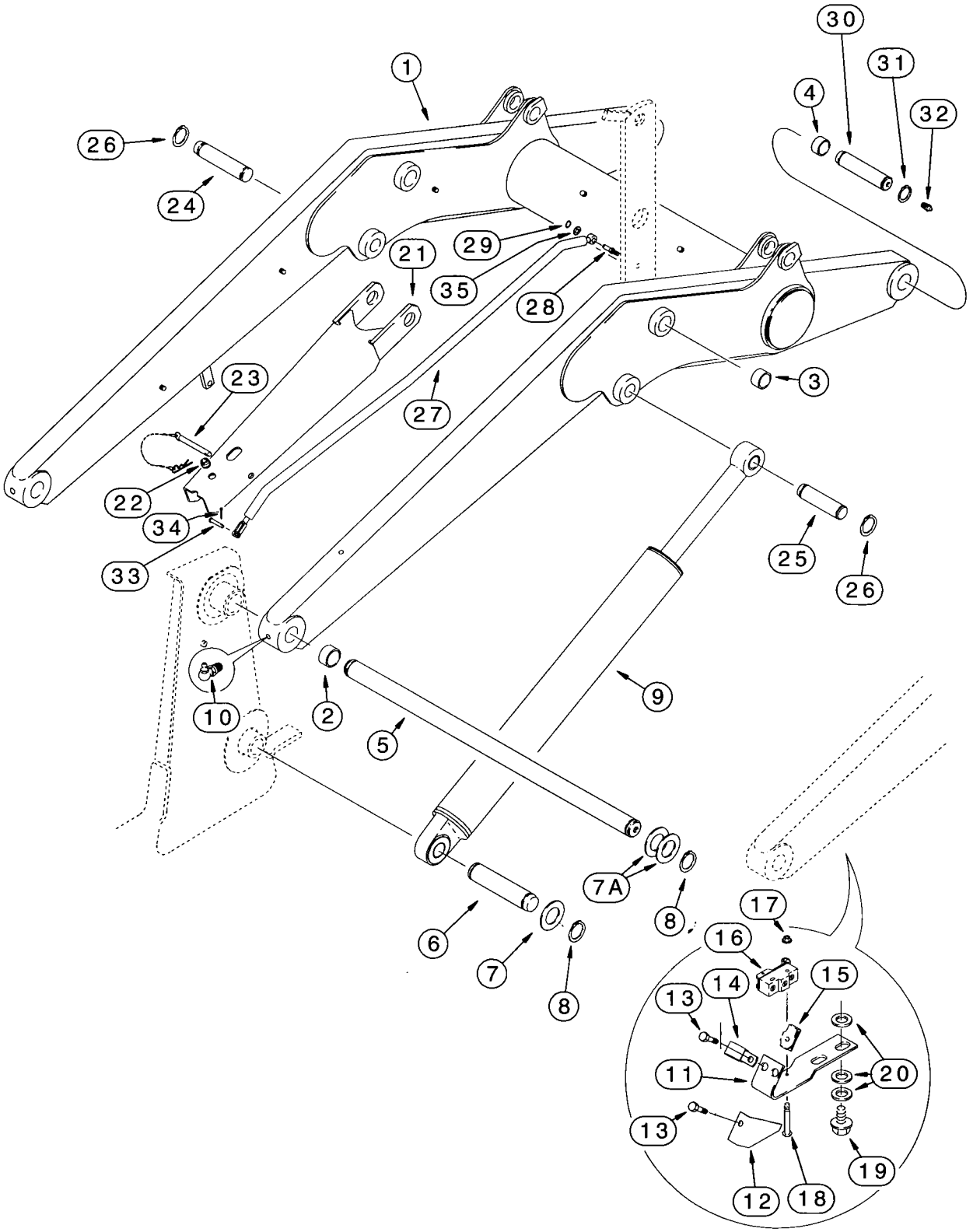
1
2
3
4
5
6
7
7A
8
9
10
11
12
13
14
15
16
17
18
19
20
21
22
23
24
25
26
27
28
29
30
31
32
33
34
35

LOADER LIFT FRAME AND MOUNTING PARTS

LIFT CYLINDER, SUPPORT STRUT, RETURN-TO-DIG AND ANTIROLLBACK

REF.	PART NO.	DESCRIPTION	REQ'D.
1	141324A1	FRAME - loader lift	1
2	D127542	BUSHING - loader frame pivot	4
3	100696A1	BUSHING - bucket cylinder link pivot, no longer included with frame, purchase separately	4
4	109268A1	BUSHING - bucket mounting	4
5	111522A1	SHAFT - loader lift frame pivot	1
6	119129A1	PIN - lift cylinder pivot, closed end	2
7	495-81282	WASHER - flat, 2-1/16 x 3 x 3/32 inch	4
7A	181842A1	WASHER - special, hardened, install a minimum of one washer per side	UAR
8	800-44050	RING - external retaining, No. 50, 50 mm	6
9	112366A2	CYLINDER ASSEMBLY - 83 (3-1/4) ID x 766 mm (30-1/8 inch) stroke, loader lift, parts list page 8-127	2
10	219-55	FITTING - grease, 90 degree, 1/8 PT x 27/32 inch	2
11	128818A1	BRACKET - mounting, return-to-dig switch	1
12	142524A1	COVER - return-to-dig switch	1
13	614-6016	BOLT - hex, full threads, 6 - 1.0 x 16 mm	2
14	A62209	CLAMP - P-type	1
15	833-40406	NUT - U-type, 6 mm - 1.0	2
16	D137363	SWITCH - return-to-dig	1
17	193-1003	NUT - hex, with external tooth lock washer, No. 6 NC	2
18	440-10616	SCREW - machine, pan Phillips, No. 6 NC x 1 inch	2
19	128312A1	BOLT - hex flange, special, 10 x 15 mm	2
20	895-11010	WASHER - flat, 11 x 20 x 2 mm	6
21	242369A1	STRUT - support, loader frame, left-hand lift arm only	1
22	D121047	GROMMET - support strut	1
23	104824A1	PIN - lock, includes lanyard and hair pin	1
24	118900A1	PIN - left-hand lift cylinder rod end and support strut, mounts in the loader lift frame with the tapered end towards the outside of the frame	1
25	113629A1	PIN - 155 mm (6-1/8 inch) long, right-hand lift cylinder rod end	1
26	800-44040	RING - external retaining, No. 40, pin retaining	4
27	182895A1	ROD - antirollback, attaches to bucket cylinder link	1
28	192815A1	PIN - antirollback rod to bucket cylinder link	1
29	103-3350	RING - E-type, external retaining, No. 50	1
30	118901A1	PIN - loader lift frame to loader bucket	2
31	800-44040	RING - external retaining, No. 40, pin retaining	4
32	219-1	FITTING - grease, straight, 1/8 PT x 21/32 inch	2
33	427-6088	PIN - clevis, 3/8 x 7/8 inch, hardened	1
34	432-612	PIN - cotter, 3/32 x 3/4 inch	1
35	495-11053	WASHER - flat, 17/32 x 1-1/16 x 3/32 inch	1

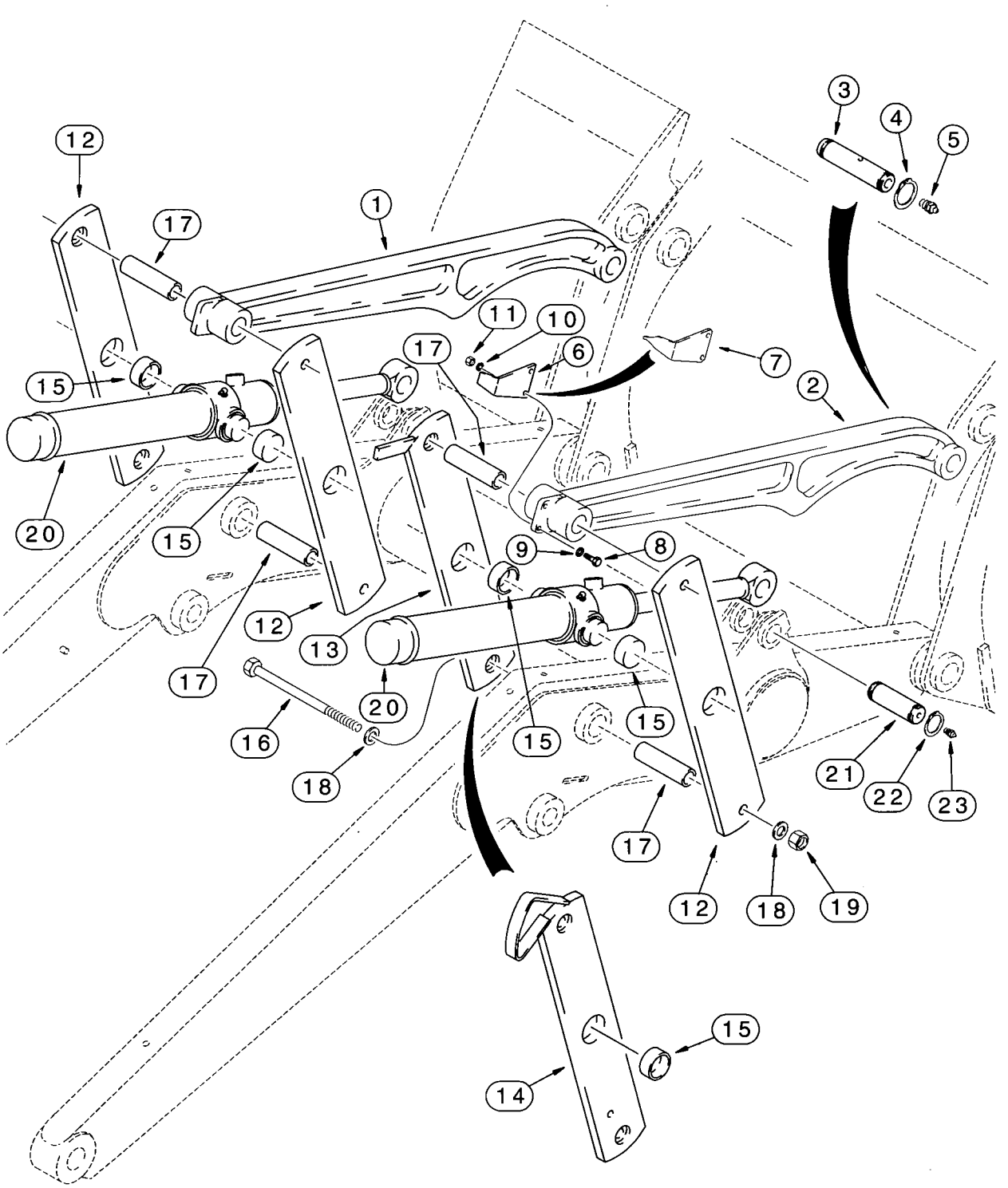
12
17
1
3
4
5
11
10
6
7
17
15
2
20
15
9
8
12
13
17
20
16
15
15
18
21
22
23
17
12
18
19
15
14

LOADER FRAME BUCKET LINKS AND BUCKET CYLINDER LINKS

REF.	PART NO.	DESCRIPTION	REQ'D.
1	141471A1	LINK - bucket, left-hand, without mounting holes for bucket position pointer, used in production, for service order 141472A1 link, item 2	1
2	141472A1	LINK - bucket, left-hand or right-hand, with mounting holes for bucket position pointer	1-2
3	118901A1	PIN - bucket links to loader bucket	2
4	800-44040	RING - external retaining, No. 40, pin retaining	4
5	219-1	FITTING - grease, straight, 1/8 PT x 21/32 inch	2
6	D121194	POINTER - bucket position, models without clam bucket	1
7	250851A1	POINTER - bucket position, models with clam bucket	1
8	614-8030	BOLT - hex, full threads, 8 - 1.25 x 30 mm	2
9	895-11008	WASHER - flat, 9 x 17 x 1.6 mm	2
10	892-11008	WASHER - lock, 8 mm	2
11	829-1408	NUT - hex, 8 mm - 1.25, class 10	2
12	139180A1	LINK - bucket cylinder, outer right-hand and inner and outer left-hand, includes item 15 bushing	3
13	139235A1	LINK - bucket cylinder, inner right-hand, with extra hole for antirollback rod, includes item 15 bushing, models without clam bucket, see item 14 link for models with clam bucket	1
14	139195A1	LINK - bucket cylinder, inner right-hand, with extra hole for antirollback rod, includes item 15 bushing, models with clam bucket, see item 13 for models without clam bucket.	1
15	D151034	BUSHING - one per each link, items 12-14	1
16	827-20190	BOLT - hex, 20 - 2.5 x 190 mm, class 10.9	4
17	D132076	BUSHING - spacer, cylinder links	4
18	896-11020	WASHER - flat, 22 x 37 x 4 mm, hardened	8
19	829-1420	NUT - hex, 20 mm - 2.5, class 10	4
20	113133A2	CYLINDER ASSEMBLY - 76 (3) ID x 522 mm (20-9/16 inch) stroke, loader bucket, parts list page 8-129.	2
21	116339A1	PIN - bucket cylinder rod end	2
22	800-44040	RING - external retaining, No. 40, pin retaining.	4
23	219-1	FITTING - grease, straight, 1/8 PT x 21/32 inch	2

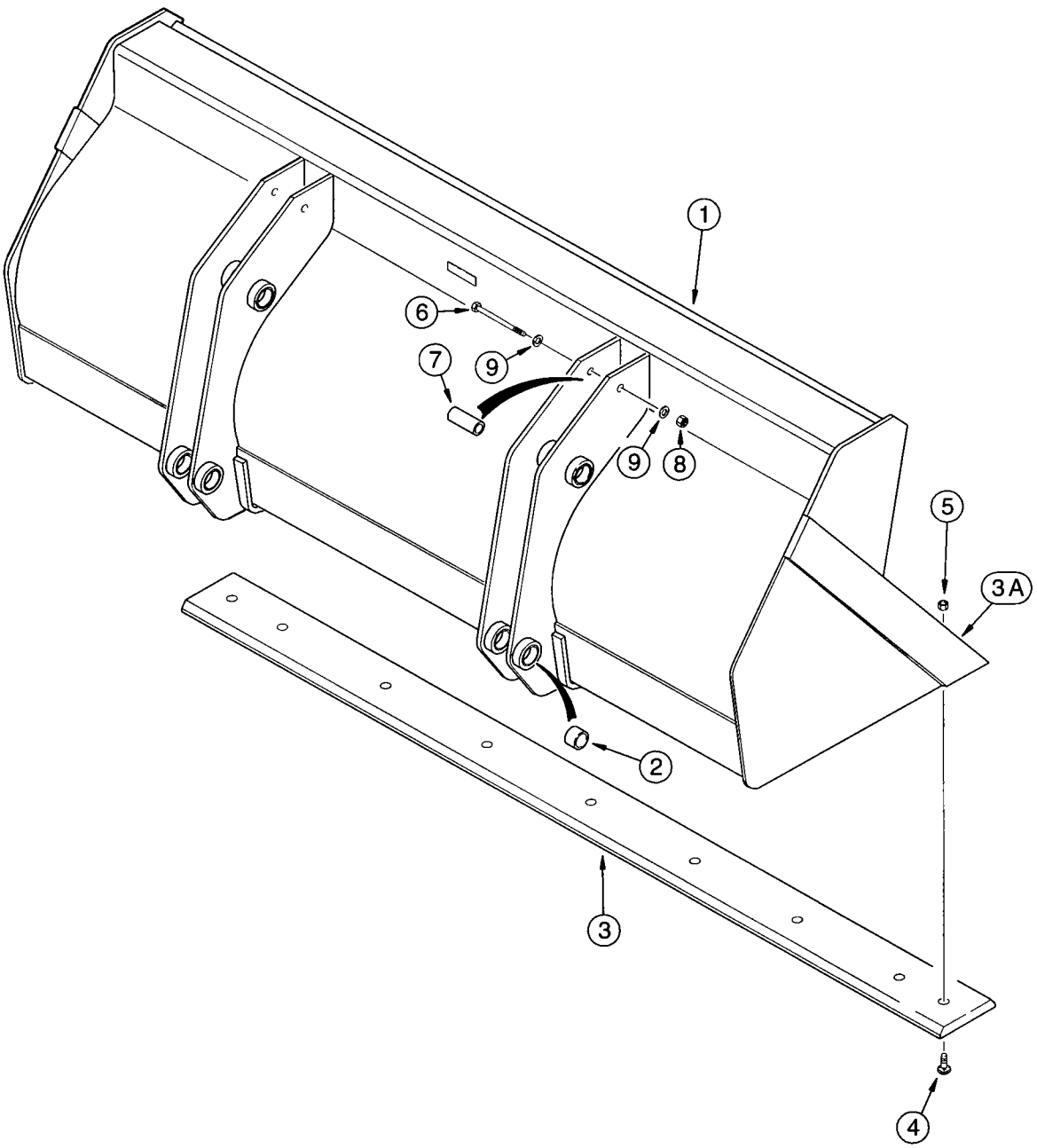
1
6
9
7
9
8
5
3A
2
3
4

LOADER LONG LIP BUCKET

REF.	PART NO.	DESCRIPTION	REQ'D.
	141473A1	BUCKET ASSEMBLY - loader, without bucket teeth, order from Machinery Price List, 2083 mm (82 inch) wide	1
1	NSS	BUCKET - loader	1
2	D129264	BUSHING - bucket ear	8
3	112946A1	EDGE - cutting, center, 2083 mm (82 inch) bucket	1
3A	113457A1	EDGE - cutting, weld-on, blade mounting	1
4	20-21232	BOLT - plow, 3/4 NC x 2 inch, grade 8	10
5	429-1012	NUT - hex, 3/4 inch NC, grade 8	10
6	828-20160	BOLT - hex, 20 - 2.5 x 160 mm, class 10.9	2
7	142538A1	SPACER - chain hook	2
8	832-10420	NUT - hex, self-locking, 20 mm - 2.5	2
9	896-11020	WASHER - flat, 22 x 37 x 4 mm, hardened	4

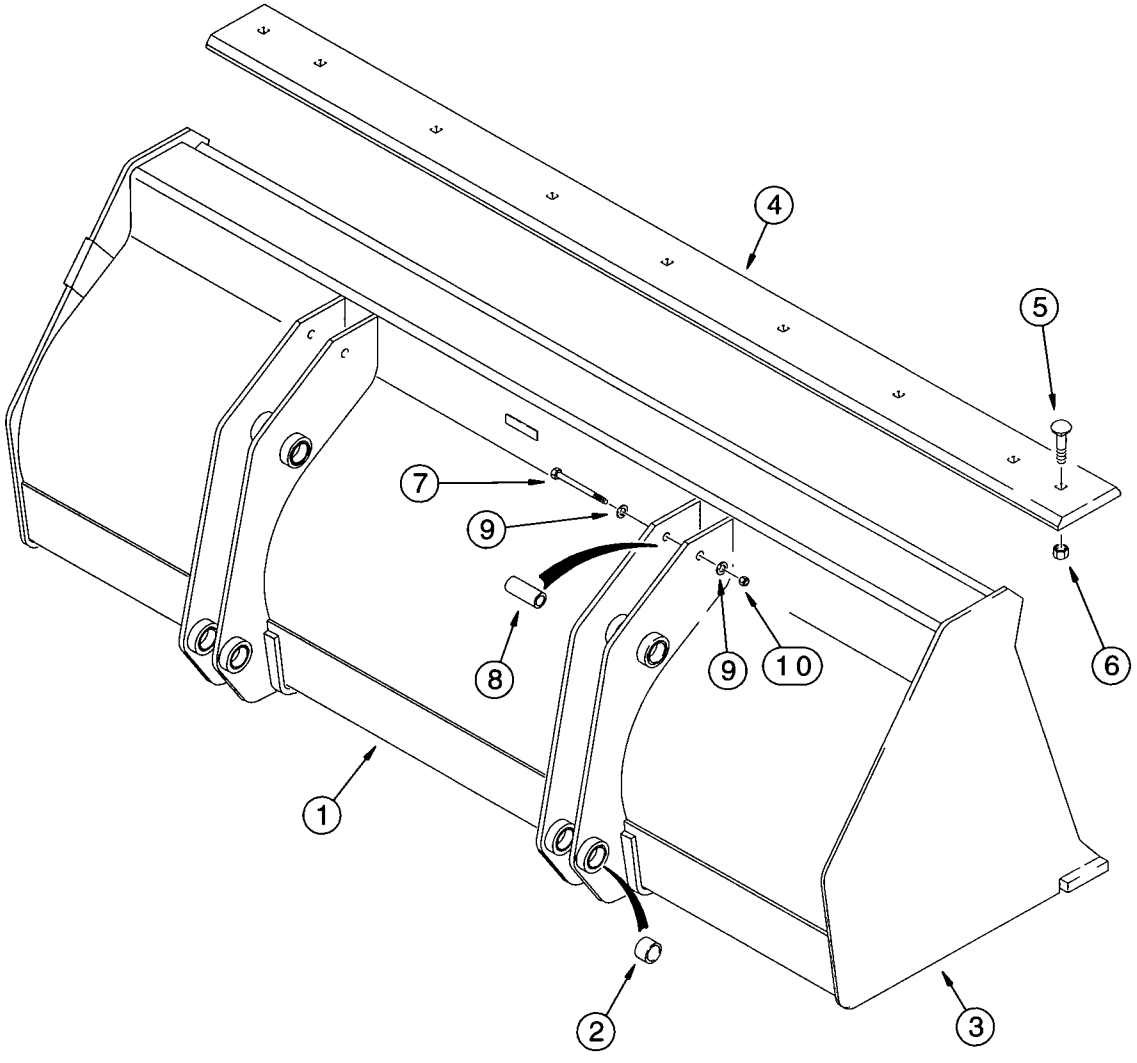
4
5
7
9
8
9
10
6
1
2
3

LOADER LONG LIP BUCKETS

REF.	PART NO.	DESCRIPTION	REQ'D.
	198539A1	BUCKET ASSEMBLY - loader, without bucket teeth, order from Machinery Price List, 2362 mm (93 inch) wide, if used	1
1	NSS	BUCKET - loader	1
2	D129264	BUSHING - bucket ear	8
3	134844A1	EDGE - cutting, weld-on, blade mounting	1
4	185506A1	EDGE - cutting, bolt-on, 93 inch (2362 mm) bucket	1
5	20-21232	BOLT - plow, 3/4 NC x 2 inch, grade 8	10
6	429-1012	NUT - hex, 3/4 inch NC, grade 8	10
7	828-20160	BOLT - hex, 20 - 2.5 x 160 mm, class 10.9	2
8	142538A1	SPACER - chain hook	2
9	896-11020	WASHER - flat, 22 x 37 x 4 mm, hardened	4
10	832-10420	NUT - hex, self-locking, 20 mm - 2.5	2

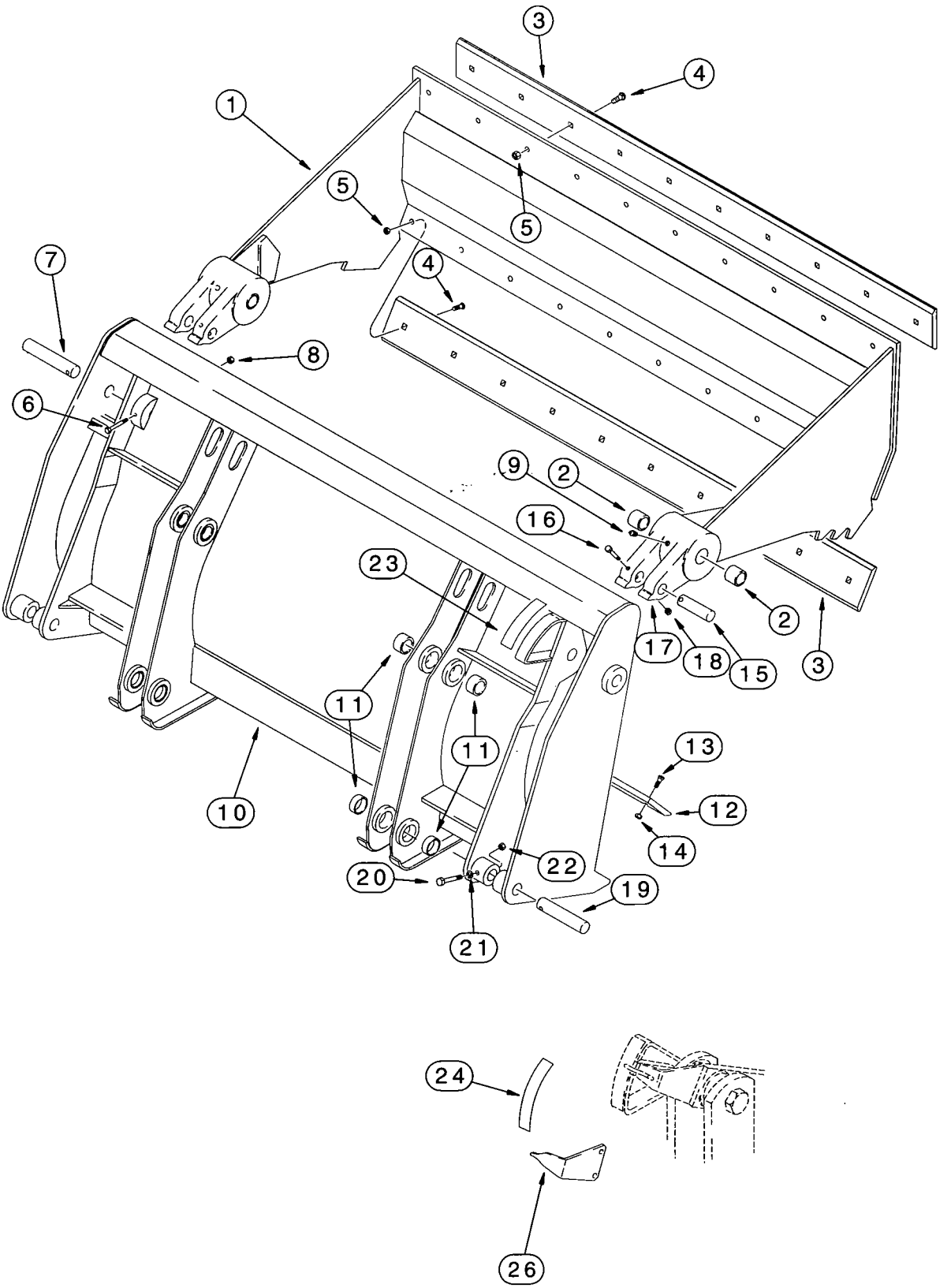
3
4
1
5
5
7
4
8
6
9
2
16
23
2
17
18
15
3
11
11
13
10
12
14
22
20
19
21
24
26

LOADER CLAM BUCKET

REF.	PART NO.	DESCRIPTION	REQ'D.
	185488A1	BUCKET ASSEMBLY - clam, order from Machinery Price List, 2083 mm (82 inch) wide	1
	175156A1	CLAM ASSEMBLY - bucket	1
1	NSS	CLAM - bucket	1
2	D31140	BUSHING - 25 mm (1 inch) long, clam pivot	4
3	142300A1	EDGE - cutting, bucket	2
4	20-21232	BOLT - plow, 3/4 NC x 2 inch, grade 8	20
5	29-1012	NUT - hex, 3/4 inch NC, grade 8	20
6	844-10110	BOLT - heavy hex flange, 10 - 1.5 x 110 mm	2
7	D51391	PIN - pivot, clam to blade	2
8	832-10410	NUT - hex, self-locking, 10 mm - 1.5	2
9	219-1	FITTING - grease, straight, 1/8 PT x 21/32 inch	2
	175160A1	BLADE ASSEMBLY - clam bucket	1
10	NSS	BLADE - bucket	1
11	D129264	BUSHING - bucket ear	8
12	121920A1	EDGE - cutting, blade	1
13	20-21032	BOLT - plow, 5/8 NC x 2 inch, grade 8	10
14	29-1010	NUT - hex, 5/8 inch NC, grade 8	10
15	D51392	PIN - cylinder mounting, upper	2
16	814-10090	BOLT - hex, 10 - 1.5 x 90 mm	2
17	895-11010	WASHER - flat, 11 x 20 x 2 mm	2
18	832-10410	NUT - hex, self-locking, 10 mm - 1.5	2
19	D51393	PIN - cylinder mounting, lower	2
20	814-10080	BOLT - hex, 10 - 1.5 x 80 mm	2
21	895-11010	WASHER - flat, 11 x 20 x 2 mm	2
22	832-10410	NUT - hex, self-locking, 10 mm - 1.5	2
23	321-1708	DECAL - 0 - 2 - 4, clam bucket opening indicator	1
24	321-1707	DECAL - clam bucket position	1
26	250851A1	POINTER - bucket position, bolts to clam bucket link, see page 9-13 for link and mounting hardware	1

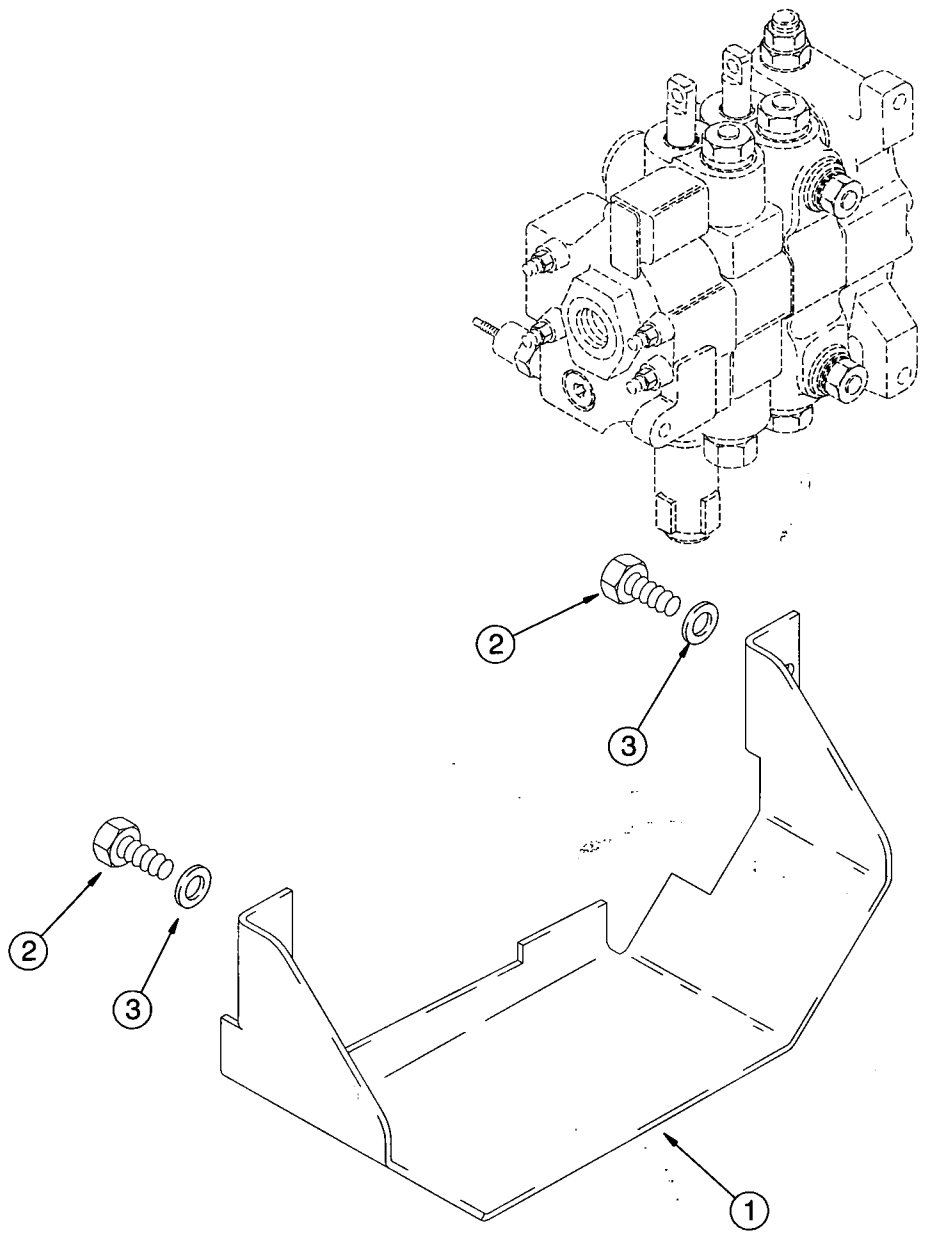
2
3
2
3
1

LOADER VALVE GUARD

REF.	PART NO.	DESCRIPTION	REQ'D.
1	238048A2	GUARD - valve shield, if used	1
2	614-10025	BOLT - hex, full threads, 10 - 1.5 x 25 mm	2
3	896-11010	WASHER - flat, 11 x 21 x 2.5 mm, hardened	2

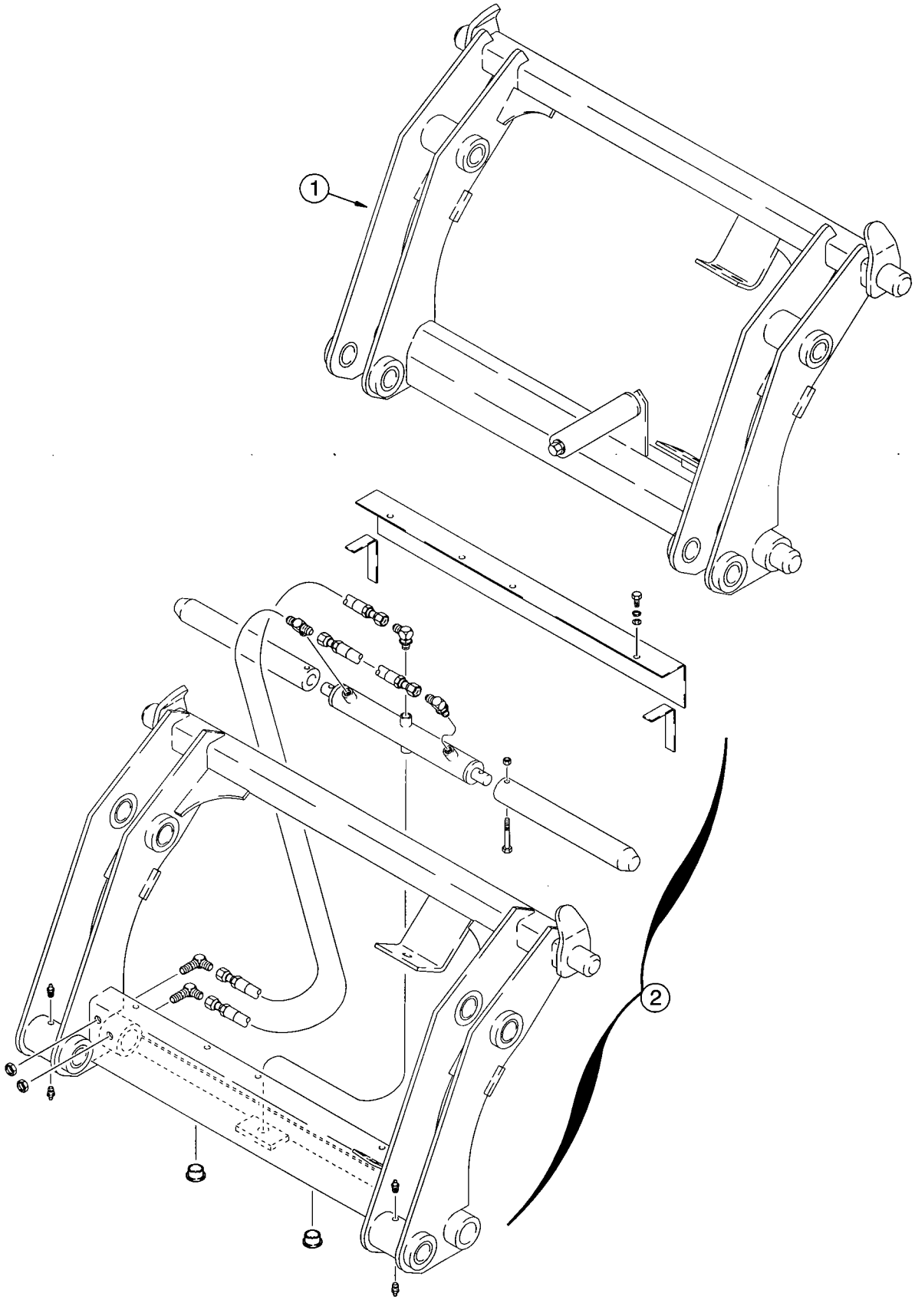
1
2

TOOL QUICK COUPLERS

REF.	PART NO.	DESCRIPTION	REQ'D.
		***TOOL QUICK COUPLER, MANUAL**	
1	*191239A1	COUPLER - tool, loader, manual, used with D121194 bucket position pointer and 139235A1 right-hand bucket cylinder link, Ref 6 and 13 on page 9-13, if used	1
		TOOL QUICK COUPLER, HYDRAULIC	
2	+292969A2	COUPLER - quick, tool, loader, hydraulic, component parts list not available at time of printing	1

* **NOTE:** Coupler comes complete, component parts are not serviced separately.

\+ **NOTE:** See page 8-65 for hydraulic tool quick coupler hydraulics.

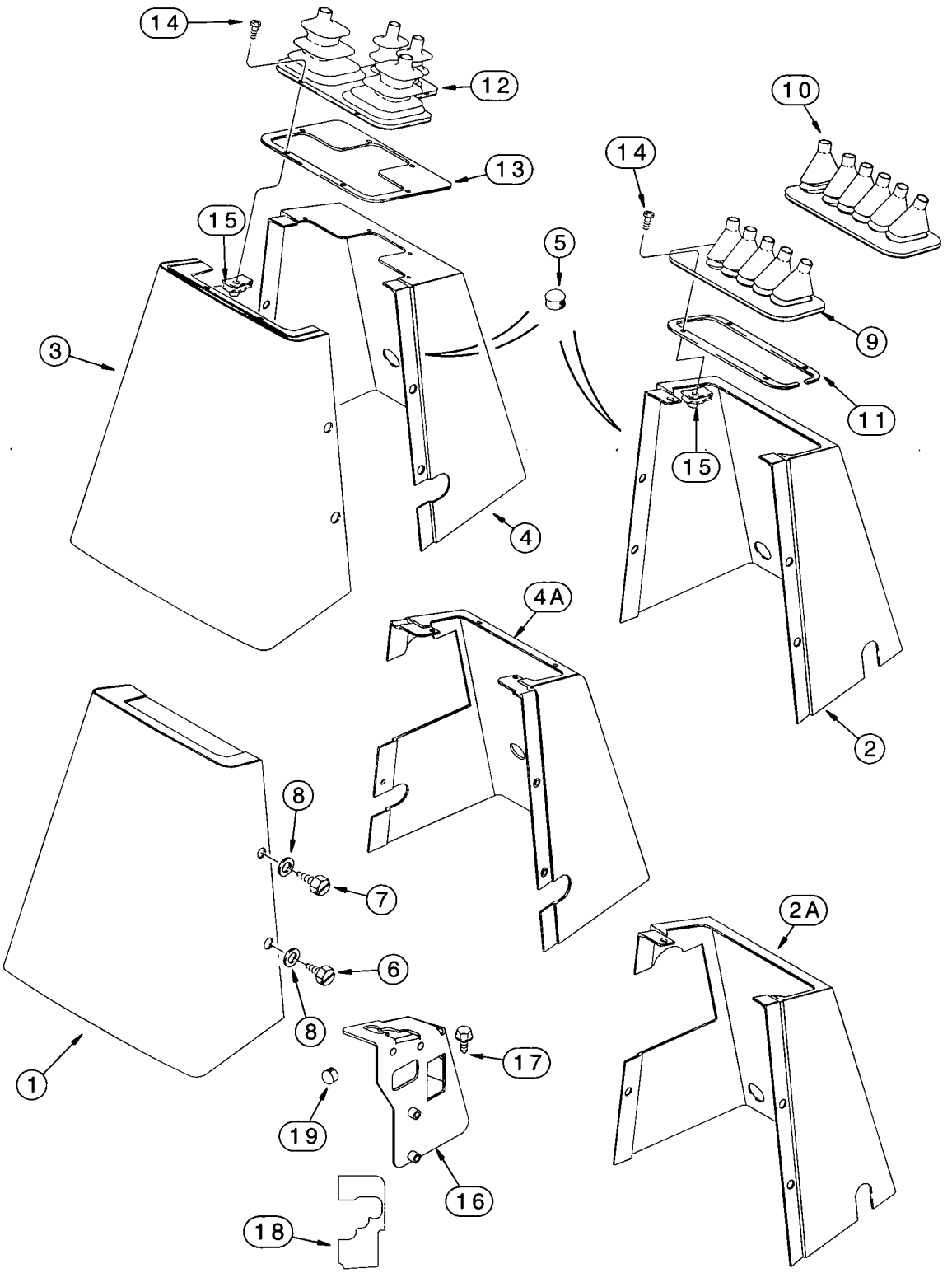
14
12
13
15
5
3
4
14
10
9
11
15
2
4A
8
7
6
8
1
17
19
16
18
2A

BACKHOE CONTROL TOWER COVERS

REF.	PART NO.	DESCRIPTION	REQ'D.
1	128403A1	COVER - rear, console, used on all models with foot swing	1
2	130480A1	COVER - console, front, used on models with foot swing, without auxiliary hydraulics	1
2A	253394A1	COVER - console, front, used on models with foot swing, with auxiliary hydraulics	1
3	128401A1	COVER - console, rear, used on all models with hand swing	1
4	130479A1	COVER - front, console, used on models with hand swing, without auxiliary hydraulics	1
4A	277187A1	COVER - console, front, used on models with hand swing, with auxiliary hydraulics	1
5	353-411	PLUG - button, 1 inch, nylon, 1 used with 130479A1 console - 2 used with 130480A1 console cover	1-2
6	281-1878	SCREW - self-tapping, hex washer head, 1/4 NC x 1/2 inch, lower	2
7	281-18712	SCREW - self-tapping, hex washer head, 1/4 NC x 3/4 inch, upper	3
8	195-140	WASHER - flat, 9/32 x 5/8 x 1/16 inch	5
9	D149866	BOOT - used with 130480A1 console cover with 5 control levers	1
10	D149867	BOOT - used with 130480A1 console cover with 6 control levers	1
11	136822A1	RETAINER - boot, used with items 9 and 10	1
12	D149868	BOOT - used with 130479A1 console cover with 4 control levers	1
13	136824A1	RETAINER - boot, used with item 12 only	1
14	140-106	SCREW - machine, pan head Phillips, No. 10 NC x 1/2 inch (4) used with 136822A1 retainer, (6) used with 136824A1 retainer	4-6
15	131-623	NUT - U-type, No. 10 NC (4) used with 136822A1 retainer, (6) used with 136824A1 retainer	4-6

MODELS WITH BACKHOE AUXILIARY HYDRAULICS

16	277184A2	BRACKET - control lever	1
17	281-14716	SCREW - self-tapping, hex washer head, 1/4 NC x 1 inch	2
18	299383A1	DECAL - backhoe auxiliary hydraulic control	1
19	353-408	PLUG - button, 3/4 inch	1

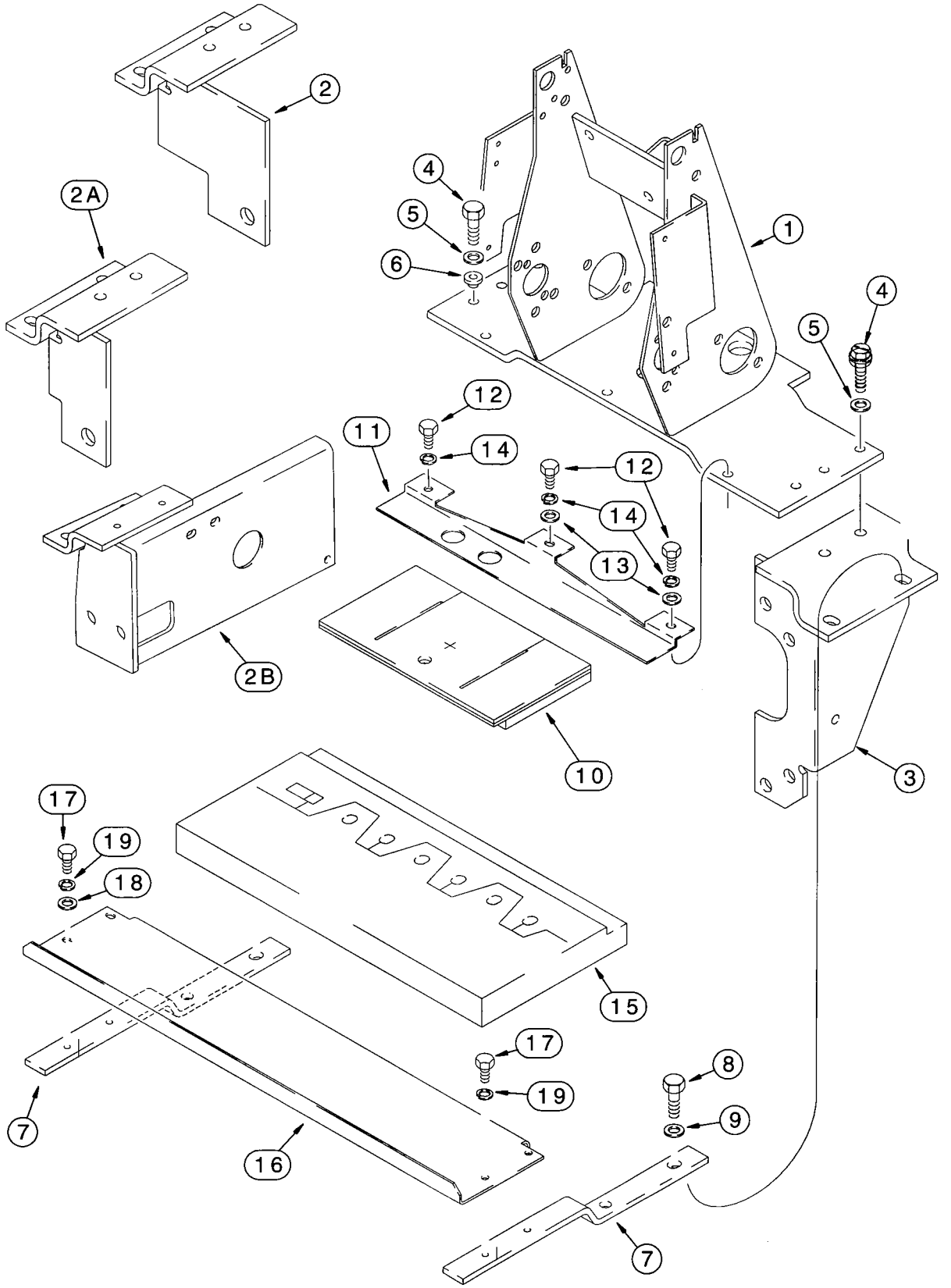
2
2A
4
5
6
1
4
5
12
11
14
12
14
13
2B
10
3
17
19
18
15
17
19
8
9
7
16
7

BACKHOE CONTROL TOWER SUPPORT AND SEALS

REF.	PART NO.	DESCRIPTION	REQ'D.
1	185975A1	SUPPORT - backhoe control mounting, with 3 mounting holes in base for item 11 seal support bracket	1
2	180376A1	BRACKET - mounting, left-hand, 6 spool valve	1
2A	180402A1	BRACKET - mounting, left-hand, 7 spool valve, without auxiliary hydraulics	1
2B	300580A1	BRACKET - mounting, left-hand, 7 or 8 spool valve, with auxiliary hydraulics	1
3	121519A1	BRACKET - mounting, right-hand, valve mounting	1
4	614-10035	BOLT - hex, full threads, 10 - 1.5 x 35 mm	4
5	496-41041	WASHER - flat, 13/32 x 1-1/8 x 9/64 inch, hardened	4
6	179956A1	MOUNT - console	2
7	184696A1	BRACKET - seal support, front	2
8	814-10060	BOLT - hex, 10 - 1.5 x 60 mm	4
9	496-41041	WASHER - flat, 13/32 x 1-1/8 x 9/64 inch, hardened	4
10	182295A1	SEAL - foam, control tower	1
11	184695A1	BRACKET - seal support, front	1
12	614-8020	BOLT - hex, full threads, 8 - 1.25 x 20 mm	3
13	895-11008	WASHER - flat, 9 x 17 x 1.6 mm	2
14	892-11008	WASHER - lock, 8 mm	3
15	232875A1	SEAL - noise reduction, backhoe valve rods	1
16	184694A1	BRACKET - seal support, rear	1
17	614-6016	BOLT - hex, full threads, 6 - 1.0 x 16 mm	4
18	895-11006	WASHER - flat, 6.6 x 12 x 1.6 mm	2
19	892-11006	WASHER - lock, 6 mm	4

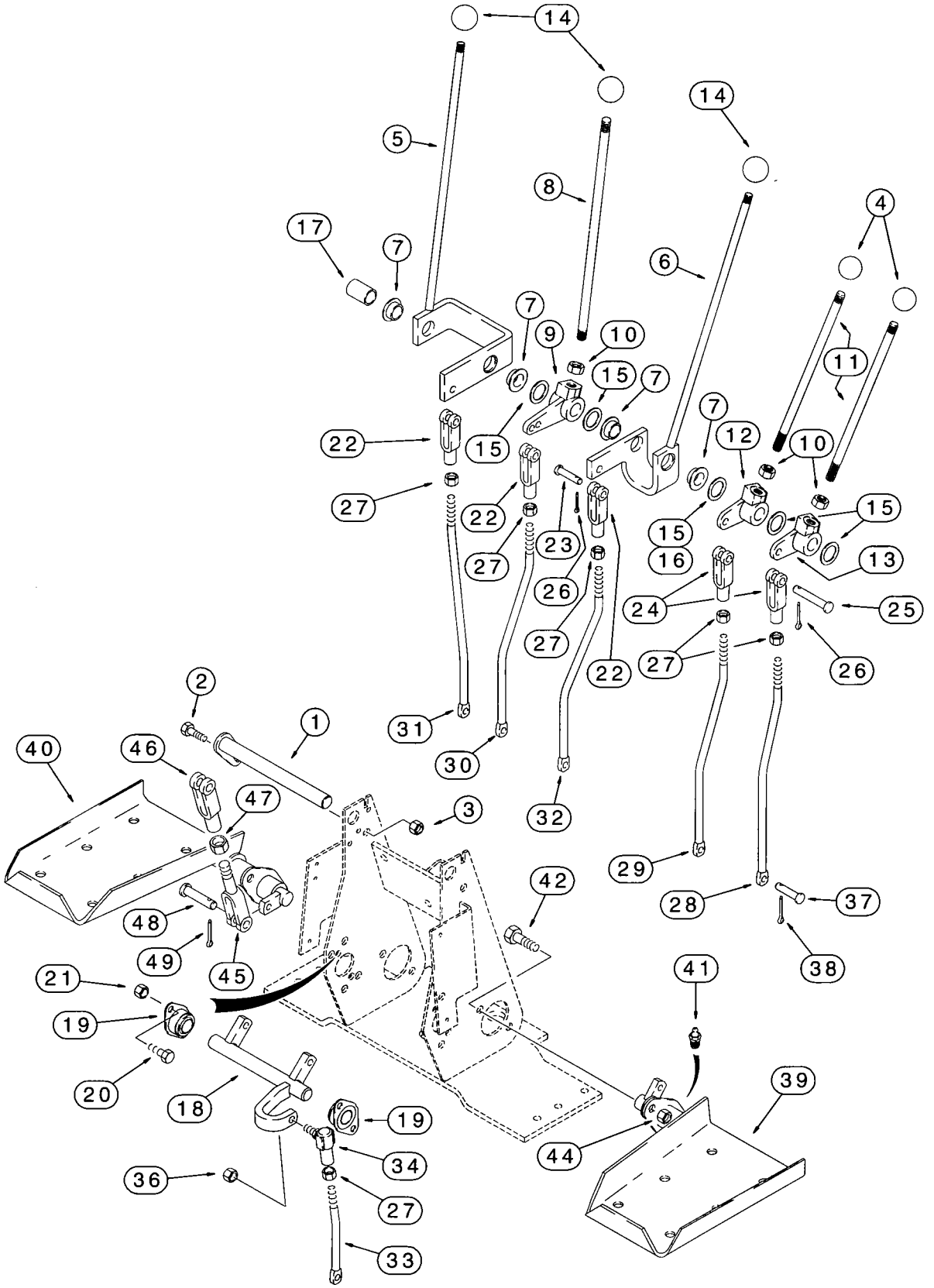
14
14
5
8
4
17
7
6
7
9
10
11
15
7
7
12
10
22
15
27
22
23
15
15
16
13
24
25
26
27
27
22
26
2
1
31
40
46
30
47
3
32
29
42
48
28
37
49
45
38
21
41
19
20
18
39
19
44
34
36
27
33

BACKHOE CONTROLS WITH FOOT SWING
WITH NON-EXTENDABLE DIPPER

REF.	PART NO.	DESCRIPTION	REQ'D.
1	129015A1	SHAFT - pivot, control levers	1
2	614-8025	BOLT - hex, full threads, 8 - 1.25 x 25 mm	1
3	832-10408	NUT - hex, self-locking, 8 mm - 1.25	1
4	D59912	KNOB - lever, stabilizer control levers	2
5	136267A1	LEVER - control, boom	1
6	136269A1	LEVER - control, bucket	1
7	D148992	BUSHING - control lever, used with 136267A1 and 136269A1 control levers	2
8	136263A1	LEVER - control, dipper	1
9	D150397	BELLCRANK - dipper control	1
10	425-118	NUT - hex, 1/2 inch NF	3
11	136261A1	LEVER - control, stabilizer	2
12	D150435	BELLCRANK - right-hand stabilizer control	1
13	D150434	BELLCRANK - left-hand stabilizer control	1
14	L54563	KNOB - control lever, boom, dipper and bucket control levers	3
15	A30881	WASHER - special, hardened, flat, used as a shim between control levers	UAR
16	D34666	WASHER - flat, special, 3/4 inch, 3/4 inch, hardened, may be used in place of item 15	1
17	D150486	SPACER - control lever, not used on models with extendable dipper	1
18	D148994	SHAFT - swing control	1
19	D148993	BEARING - self-aligning, shaft	2
20	614-8025	BOLT - hex, full threads, 8 - 1.25 x 25 mm	4
21	832-10408	NUT - hex, self-locking, 8 mm - 1.25	4
22	213-126	CLEVIS - adjustable, 3/8 inch NF	3
23	D149288	PIN - clevis, special	3
24	D150493	CLEVIS - 3/8 inch, stabilizer control rod, special	2
25	427-6088	PIN - clevis, 3/8 x 7/8 inch, hardened	2
26	432-612	PIN - cotter, 3/32 x 3/4 inch	5
27	425-156	NUT - hex, jam, 3/8 inch NF	6
28	189297A1	ROD - left-hand stabilizer control	1
29	189296A1	ROD - right-hand stabilizer control	1
30	189295A1	ROD - dipper control	1
31	189298A1	ROD - boom control	1
32	189294A1	ROD - bucket control	1
33	189299A1	ROD - swing control	1

Continued on next page

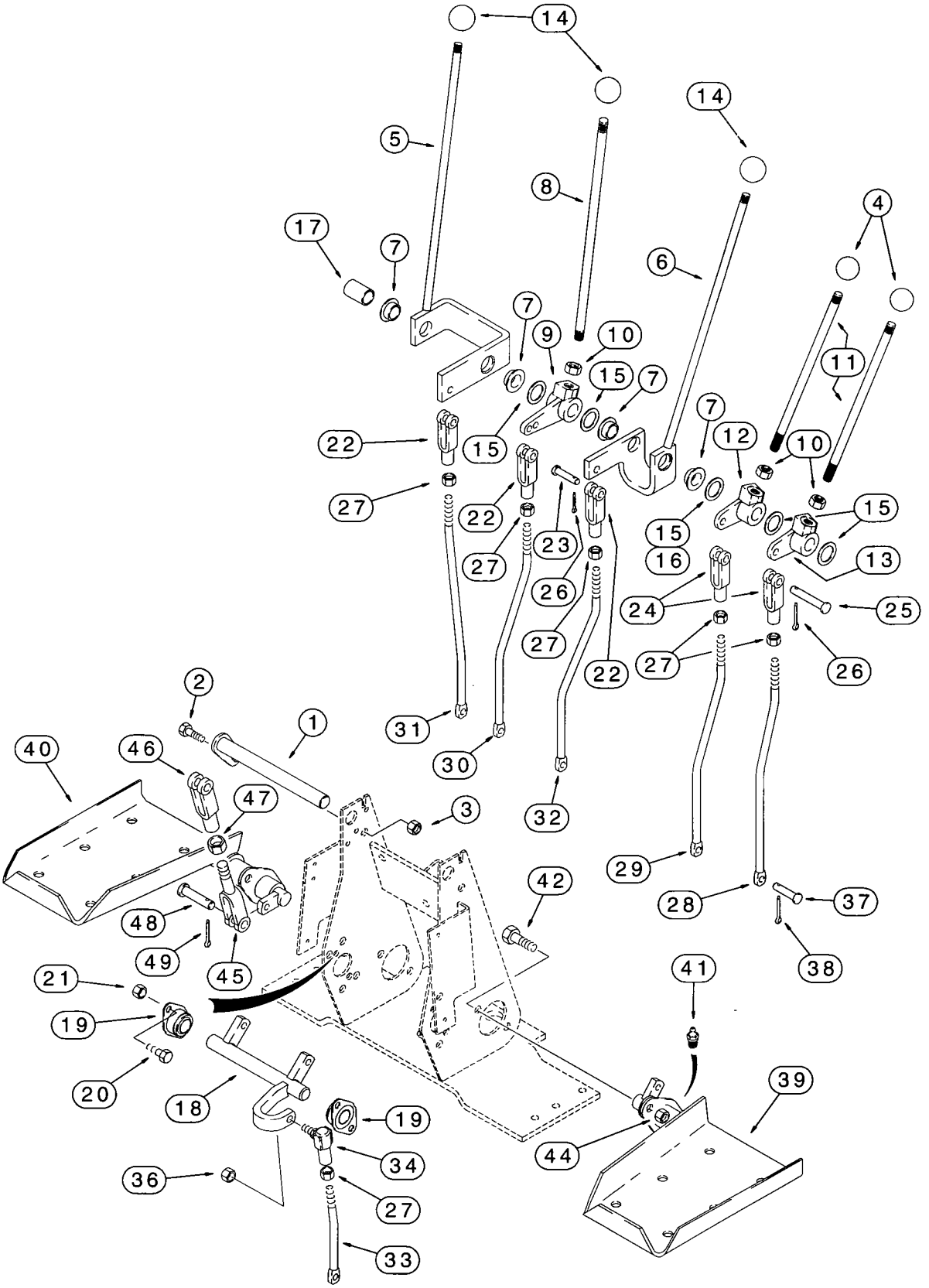
14
14
5
8
4
17
7
6
7
9
10
11
15
7
22
15
7
12
10
27
22
23
15
15
27
26
16
13
24
25
27
27
26
22
2
1
31
40
46
47
30
3
32
42
29
48
28
37
49
45
38
21
41
19
20
18
39
19
44
34
36
27
33

BACKHOE CONTROLS WITH FOOT SWING
WITH NON-EXTENDABLE DIPPER

REF.	PART NO.	DESCRIPTION	REQ'D.
34	D149295	JOINT - ball, swing control rod to shaft	1
36	425-116	NUT - hex, 3/8 inch NF	1
37	D149287	PIN - clevis, special, 5/16 x 15/16 inch, hardened, rods to valve	6
38	432-612	PIN - cotter, 3/32 x 3/4 inch	6
39	136271A1	PEDAL - left-hand swing	1
40	136270A1	PEDAL - right-hand swing	1
41	219-1	FITTING - grease, straight, 1/8 PT x 21/32 inch	2
42	614-10025	BOLT - hex, full threads, 10 - 1.5 x 25 mm	4
44	832-10410	NUT - hex, self-locking, 10 mm - 1.5	4
45	D150503	ROD - with clevis, swing pedal to cross shaft	2
46	D149262	CLEVIS - special, swing pedal rod	2
47	425-156	NUT - hex, jam, 3/8 inch NF	2
48	D149288	PIN - clevis, special, swing pedal rod	4
49	432-612	PIN - cotter, 3/32 x 3/4 inch	4

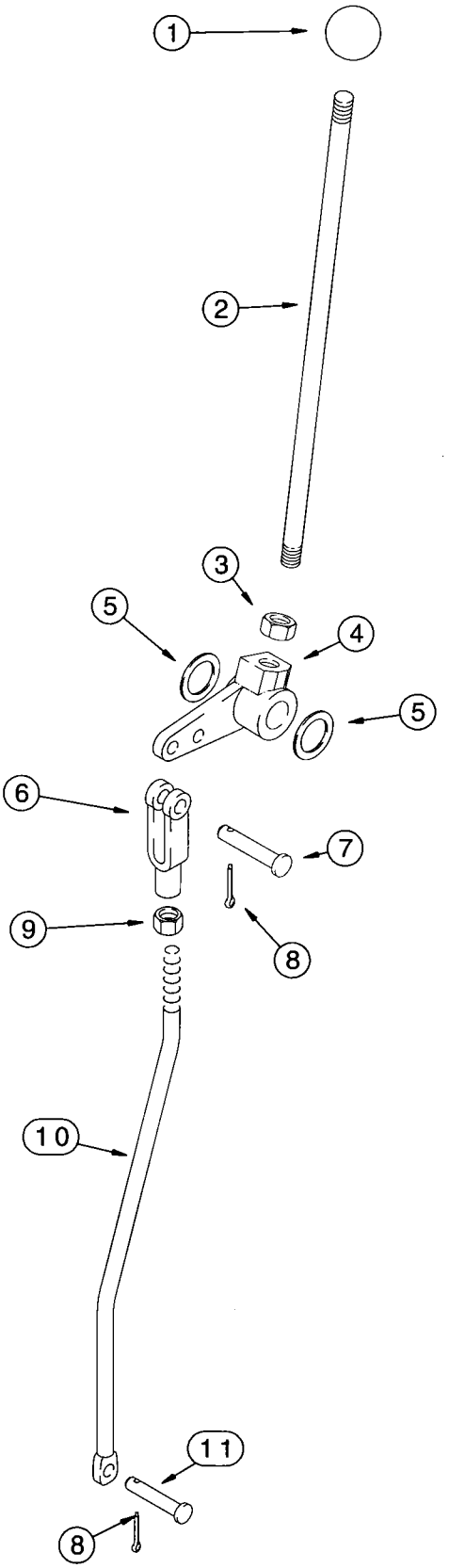
1
2
3
5
4
5
6
7
9
8
10
11
8

BACKHOE CONTROLS WITH FOOT SWING

PARTS USED WITH EXTENDABLE DIPPER

REF.	PART NO.	DESCRIPTION	REQ'D.
1	L54563	KNOB - control lever, extendahoe	1
2	136263A1	LEVER - control, extendahoe	1
3	425-118	NUT - hex, 1/2 inch NF	1
4	182006A1	BELLCRANK - extendahoe control lever	1
5	A30881	WASHER - special, hardened, flat, spacer	UAR
6	213-126	CLEVIS - adjustable, 3/8 inch NF	1
7	427-6088	PIN - clevis, 3/8 x 7/8 inch, hardened	1
8	432-612	PIN - cotter, 3/32 x 3/4 inch	2
9	425-156	NUT - hex, jam, 3/8 inch NF	1
10	189293A1	ROD - extendahoe control lever to valve	1
11	D149287	PIN - clevis, special, 5/16 x 15/16 inch, hardened, rod to valve	1

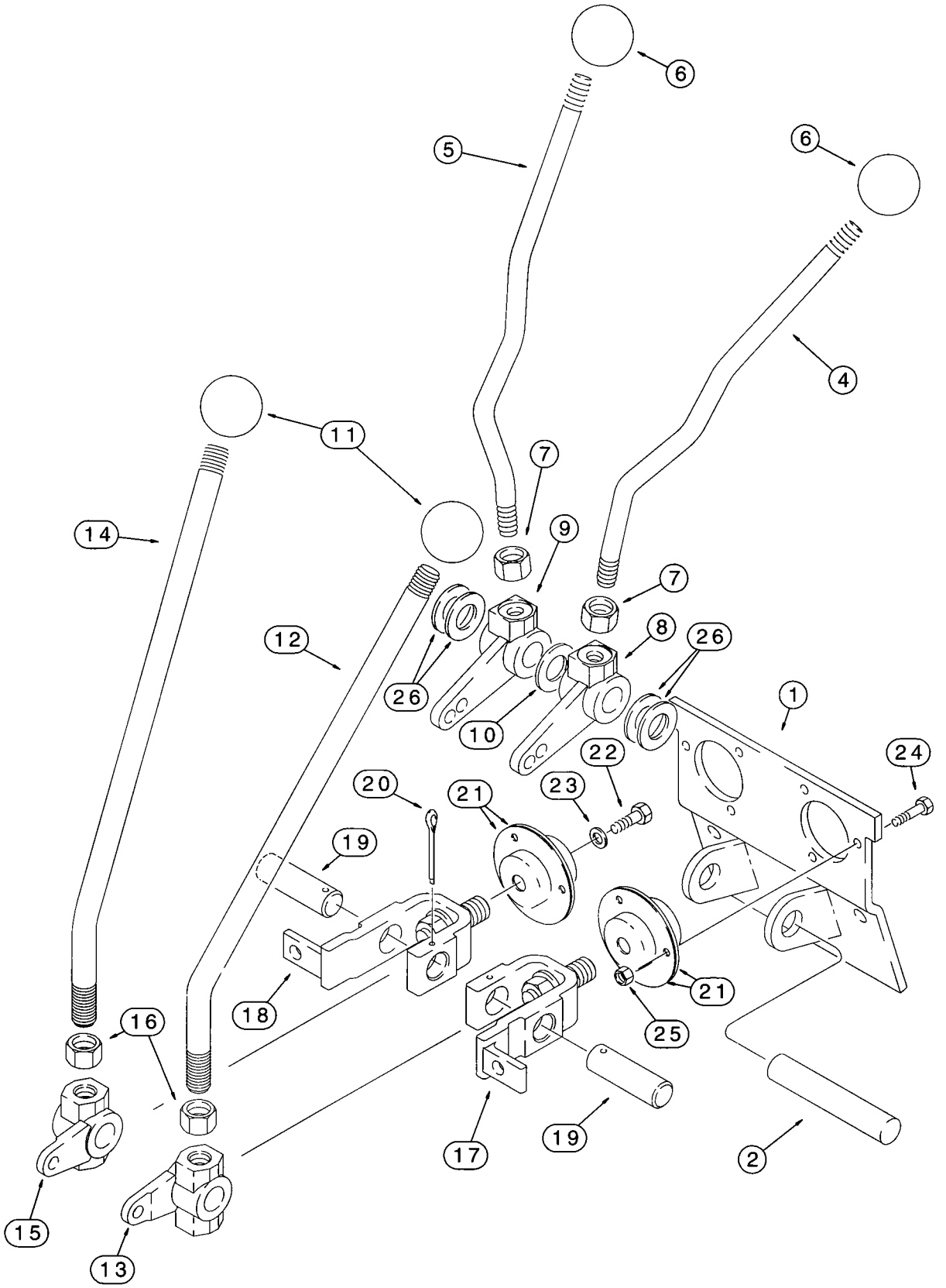
6
5
6
4
11
7
14
9
7
12
8
26
26
1
10
22
24
20
21
23
19
18
21
16
25
17
19
2
15
13

BACKHOE CONTROLS WITH HAND SWING

*UPPER CONTROL LEVERS WITH NON-EXTENDABLE DIPPER

REF.	PART NO.	DESCRIPTION	REQ'D.
1	108864A1	PLATE - mounting, bearing and bellcrank	1
2	D148947	SHAFT - pivot, stabilizer lever	1
4	109131A1	LEVER - stabilizer, left-hand	1
5	109132A1	LEVER - stabilizer, right-hand	1
6	D59912	KNOB - lever, stabilizer levers	2
7	425-118	NUT - hex, 1/2 inch NF	2
8	108924A1	BELLCRANK - left-hand stabilizer lever	1
9	108923A1	BELLCRANK - right-hand stabilizer lever	1
10	495-11081	WASHER - flat, 13/16 x 1-15/32 x 1/8 inch	1
11	D39118	KNOB - control lever	2
12	125113A1	LEVER - control, boom and swing	1
13	106989A1	BELLCRANK - left-hand boom and swing lever	1
14	125113A1	LEVER - control, bucket and dipper	1
15	106990A1	BELLCRANK - right-hand bucket and dipper lever	1
16	425-1110	NUT - hex, 5/8 inch NF	2
17	178006A1	BELLCRANK - boom and swing control lever	1
18	178004A1	BELLCRANK - bucket and dipper control lever	1
19	102765A1	PIN - bellcrank	2
20	432-828	PIN - cotter, 1/8 x 1-3/4 inch	2
21	112380A1	RETAINER - bearing	4
22	614-6016	BOLT - hex, full threads, 6 - 1.0 x 16 mm	2
23	396-41028	WASHER - flat, 9/32 x 7/8 x 3/32 inch, hardened	2
24	614-6020	BOLT - hex, full threads, 6 - 1.0 x 20 mm	6
25	829-1406	NUT - hex, 6 mm - 1.0, class 10	6
26	A30881	WASHER - special, hardened	UAR

***NOTE:** See page 9-37 for lower control levers.

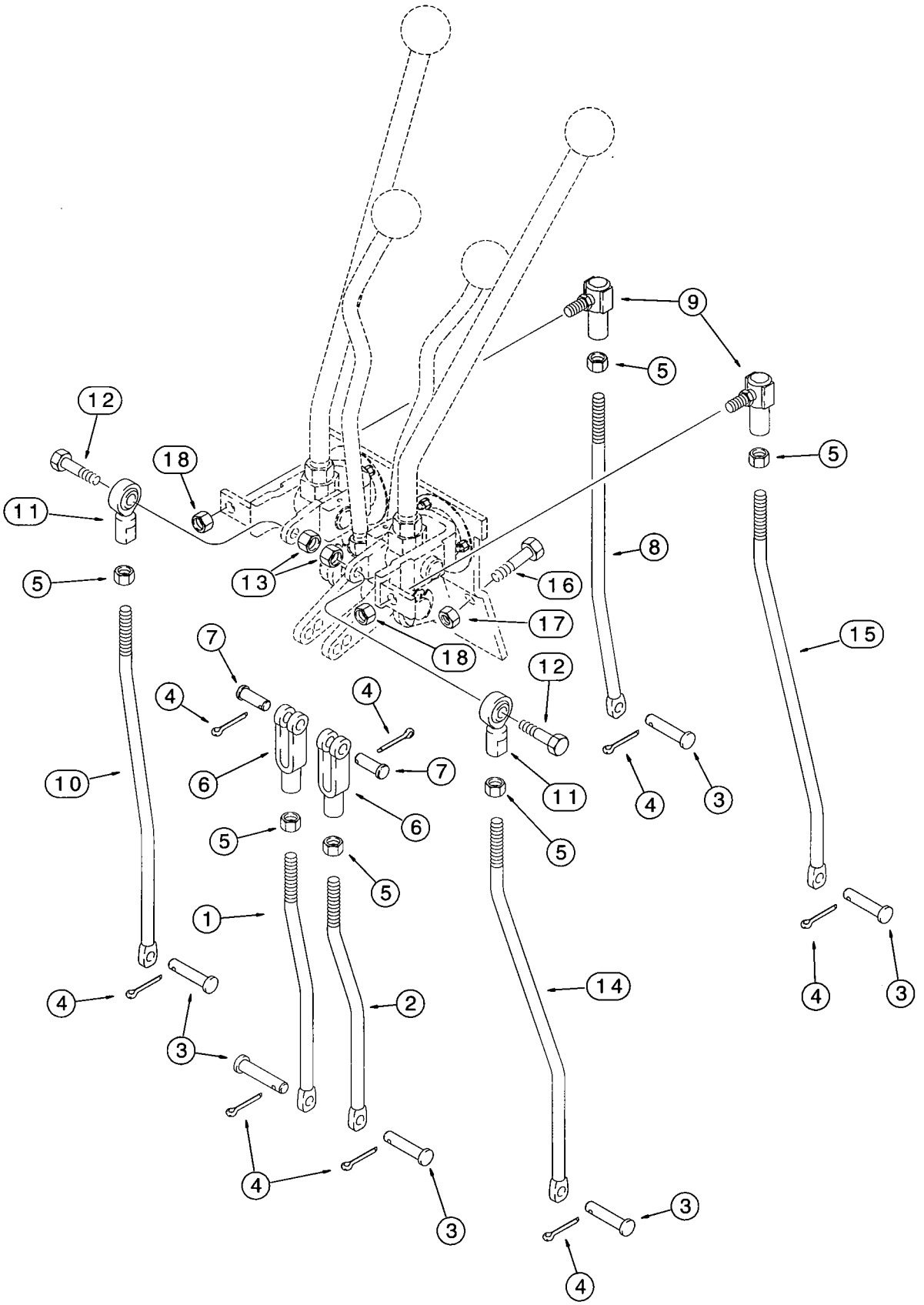
1
2
3
4
5
6
7
8
9
10
11
12
13
14
15
16
17
18

BACKHOE CONTROLS WITH HAND SWING

*LOWER CONTROL LEVERS WITH NON-EXTENDABLE DIPPER

REF.	PART NO.	DESCRIPTION	REQ'D.
1	185981A1	ROD - stabilizer, right-hand stabilizer	1
2	185982A1	ROD - stabilizer, left-hand stabilizer	1
3	D149287	PIN - clevis, special, 5/16 x 15/16 inch, hardened, rods to valve	6
4	432-612	PIN - cotter, 3/32 x 3/4 inch	8
5	425-116	NUT - hex, 3/8 inch NF	6
6	213-126	CLEVIS - adjustable, 3/8 inch NF	2
7	D149288	PIN - clevis, special	2
8	185977A1	ROD - bucket control	1
9	D149295	JOINT - ball, control rod	2
10	185978A1	ROD - dipper control	1
11	D136773	JOINT - ball, 3/8 inch NF, control rods	2
12	413-624	BOLT - hex, 3/8 NC x 1-1/2 inch	2
13	425-106	NUT - hex, 3/8 inch NC	2
14	185979A1	ROD - boom control	1
15	185980A1	ROD - swing control	1
16	614-10025	BOLT - hex, full threads, 10 - 1.5 x 25 mm	2
17	832-10410	NUT - hex, self-locking, 10 mm - 1.5	2
18	231-2446	NUT - hex, self-locking, 3/8 inch NF	2

* **NOTE:** See page 9-35 for upper control levers.

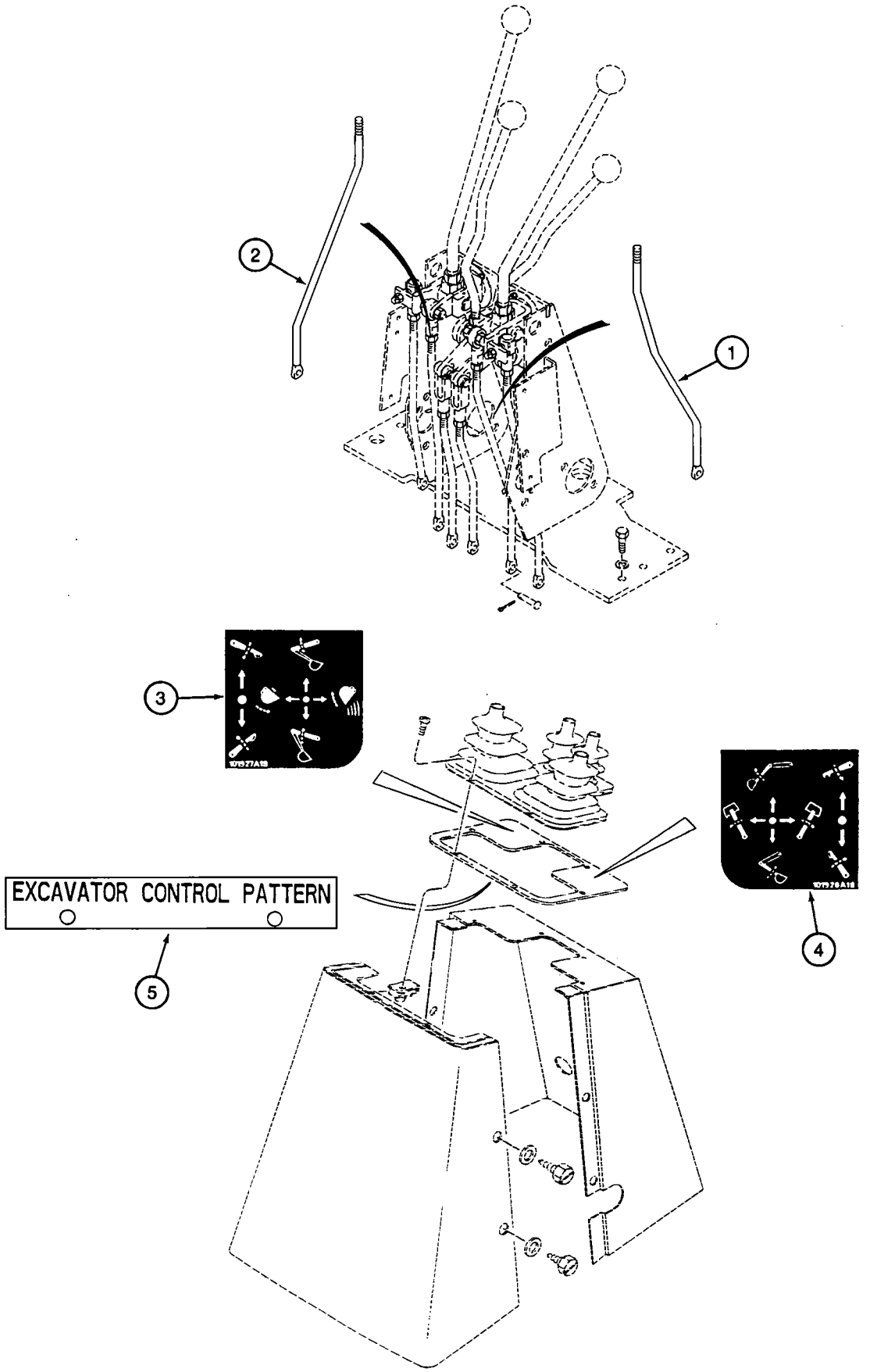
2
1
3
EXCAVATOR CONTROL PATTERN
4
5

BACKHOE CONTROLS
IN EXCAVATOR CONTROL PATTERN

REF.	PART NO.	DESCRIPTION	REQ'D.
	245592A1	KIT - excavator control pattern, purchase from Parts and Components	1
1	*195030A2	ROD - dipper, replaces existing boom control rod	1
2	*195032A1	ROD - boom, replaces existing dipper control rod	1
3	E49498	DECAL - control, right-hand	1
4	E49497	DECAL - control, left-hand	1
5	198410A1	PLATE - excavator control pattern	1

***NOTE:** The right-hand control lever, which used to control the dipper, now controls the boom and the left-hand control lever, which used to control the boom, now controls the dipper.

NOTE: The machine must be equipped with hand swing controls. If your machine is equipped with (Case) foot swing controls, the foot swing to hand swing controls field kit must be ordered and installed before installing this kit.

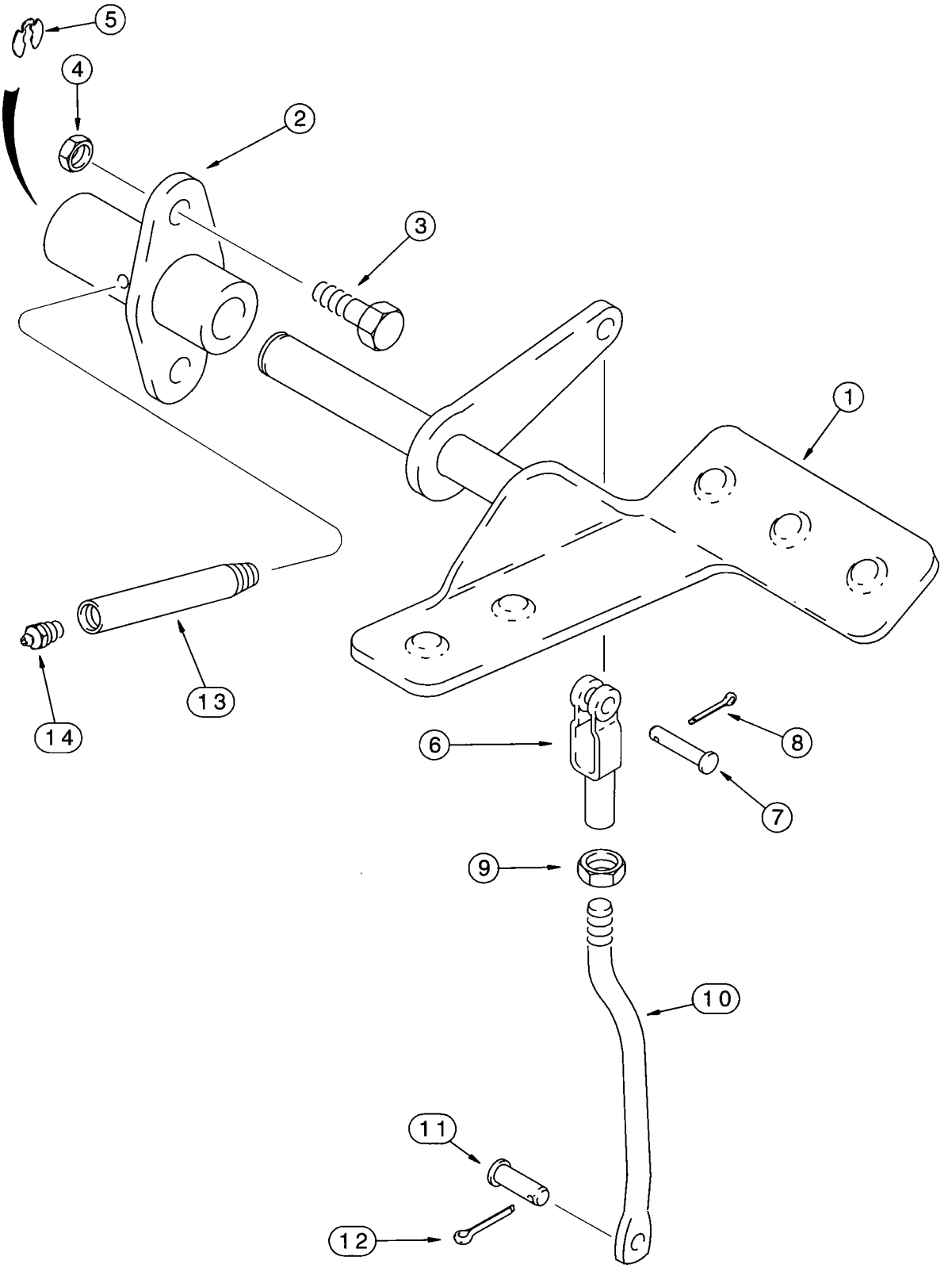
5
4
2
3
1
13
14
6
8
7
9
10
11
12

BACKHOE CONTROLS WITH HAND SWING

PARTS USED WITH EXTENDABLE DIPPER

REF.	PART NO.	DESCRIPTION	REQ'D.
1	179029A1	PEDAL - extendahoe control, right-hand	1
2	126918A1	SUPPORT - pedal, with hole for tube and grease fitting	1
3	614-10025	BOLT - hex, full threads, 10 - 1.5 x 25 mm	2
4	832-10410	NUT - hex, self-locking, 10 mm - 1.5	2
5	D143416	RING - retaining, clip ring, special	1
6	D134900	CLEVIS - special, 3/8 inch	1
7	427-6088	PIN - clevis, 3/8 x 7/8 inch, hardened	1
8	432-612	PIN - cotter, 3/32 x 3/4 inch	1
9	425-156	NUT - hex, jam, 3/8 inch NF	1
10	185976A1	ROD - extendahoe control	1
11	D149287	PIN - clevis, special, 5/16 x 15/16 inch, hardened, rod to valve	1
12	432-612	PIN - cotter, 3/32 x 3/4 inch	1
13	D150032	TUBE - pedal lube	1
14	219-1	FITTING - grease, straight, 1/8 PT x 21/32 inch	1

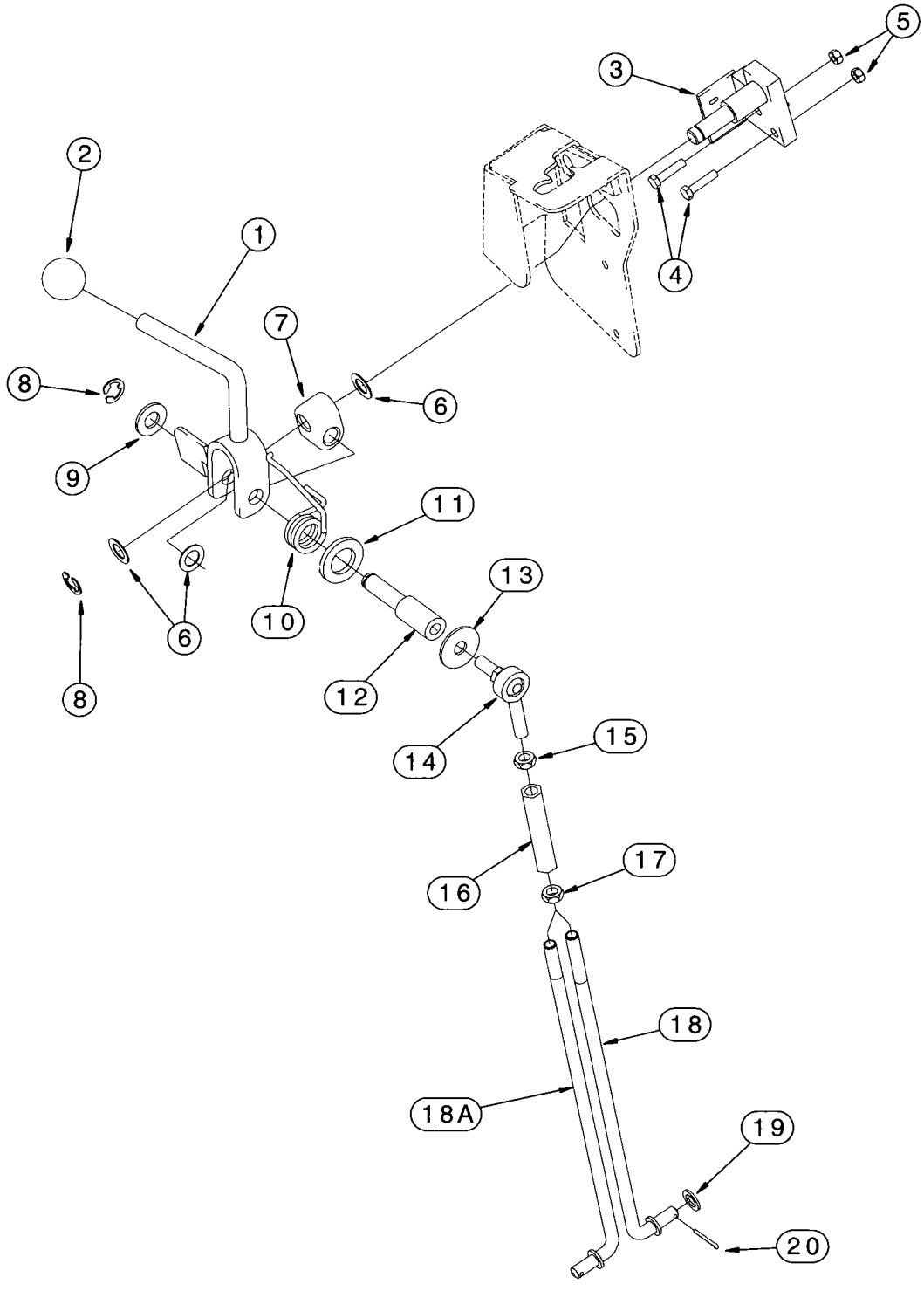
1
2
3
4
5
6
7
8
9
10
11
12
13
14
15
16
17
18
18A
19
20

BACKHOE AUXILIARY HYDRAULIC CONTROL LEVER

REF.	PART NO.	DESCRIPTION	REQ'D.
1	275820A3	LEVER - auxiliary control, detent lever, backhoe, uni-directional flow, activates flow to the attachment through the use of the foot switch, see page 4-47 for foot switch	1
2	D59912	KNOB - lever	1
3	275677A1	SHAFT - pivot, 7 or 8 spool	1
4	614-6025	BOLT - hex, full threads, 6 - 1.0 x 25 mm	2
5	829-1406	NUT - hex, 6 mm - 1.0, class 10	2
6	195-81013	WASHER - flat, 33/64 x 7/8 1/32 inch, used as a shim	3
7	D136635	BLOCK - shifter pivot	1
8	103-3350	RING - E-type, external retaining, No. 50	2
9	495-11053	WASHER - flat, 17/32 x 1-1/16 x 3/32 inch	1
10	283226A1	SPRING - return	1
11	896-11020	WASHER - flat, 22 x 37 x 4 mm, hardened	1
12	276070A1	SHAFT - spring pivot	1
13	495-81002	WASHER - flat, 7/16 x 1-3/8 x 5/64 inch	1
14	R47941	JOINT - ball, male, 3/8 inch NF	1
15	425-156	NUT - hex, jam, 3/8 inch NF	1
16	259410A1	TURNBUCKLE - hex	1
17	129-289	NUT - hex, jam, 3/8 inch NF, left-hand thread	1
18	257810A1	ROD - control, 7 spool valve	1
18A	283332A1	ROD - control, 8 spool valve	1
19	895-18010	WASHER - flat, 11 x 18 x 1.6 mm	1
20	432-612	PIN - cotter, 3/32 x 3/4 inch	1

NOTE: See pages 8-51 - 8-55 for backhoe auxiliary hydraulics, page 4-47 for backhoe auxiliary electrical circuit and page 9-25 for the backhoe control tower cover used with auxiliary hydraulics.

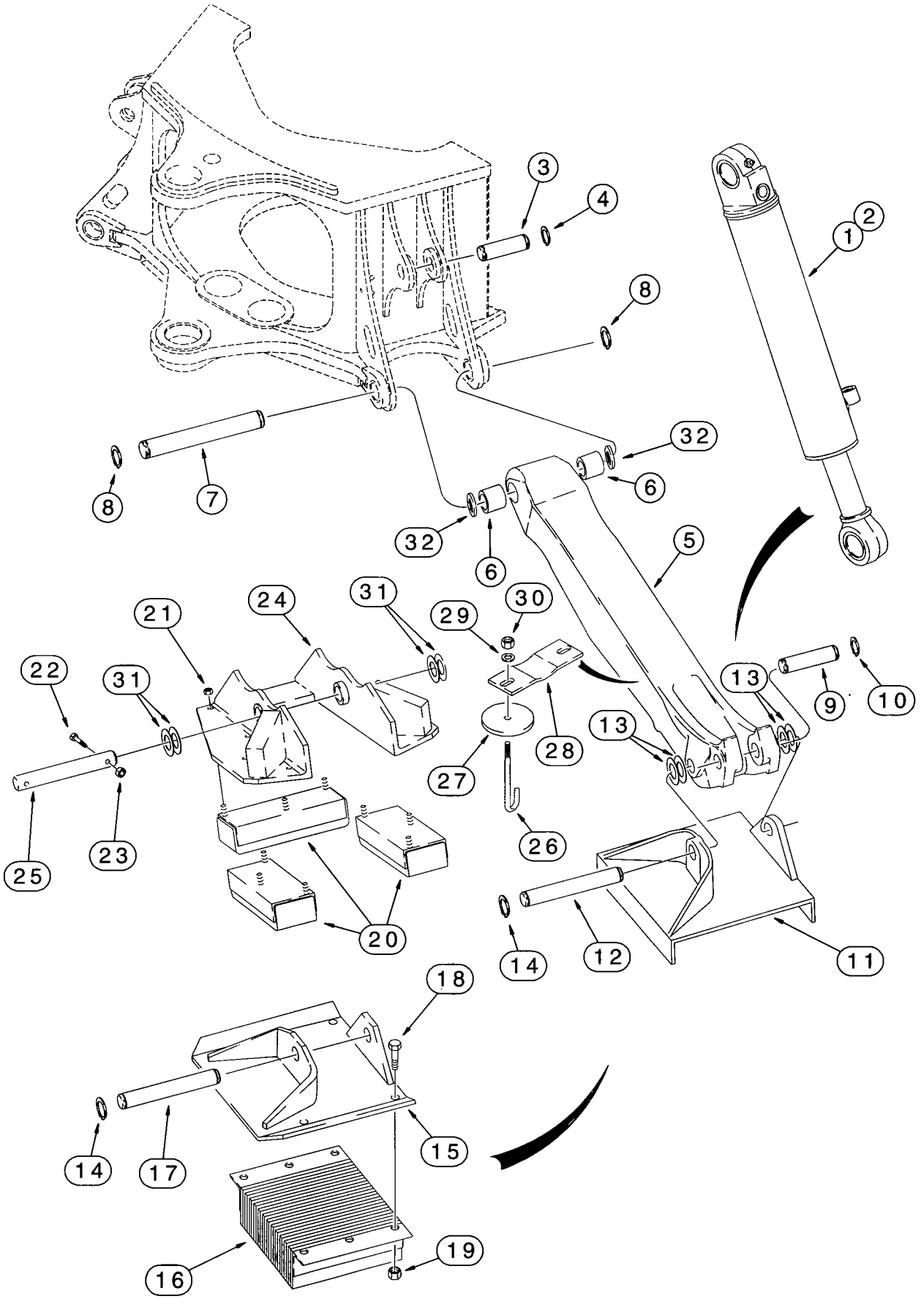
1
2
3
4
5
6
7
8
9
10
11
12
13
14
15
16
17
18
19
20
21
22
23
24
25
26
27
28
29
30
31
32

BACKHOE STABILIZERS, PLATES AND PADS

REF.	PART NO.	DESCRIPTION	REQ'D.
1	REF	CYLINDER ASSEMBLY - 108 (4-1/4) ID x 553 mm (21-3/4 inch) stroke, stabilizer, right-hand, parts list page 8-133	1
2	REF	CYLINDER ASSEMBLY - 108 (4-1/4) ID x 553 mm (21-3/4 inch) stroke, stabilizer, left-hand, parts list page 8-133	1
3	D38907	PIN - stabilizer cylinder to frame	2
4	103-16175	RING - heavy external retaining, No. 175, pin retaining	4
5	D133428	LEG - stabilizer	2
6	D50146	BUSHING - leg to frame	2
7	121665A1	PIN - stabilizer leg to frame	2
8	103-16175	RING - heavy external retaining, No. 175, pin retaining	4
9	D26002	PIN - stabilizer cylinder to leg	2
10	D25279	RING - snap, pin retaining	4
11	D88427	PLATE - stabilizer, cleated, if used	2
12	D28648	PIN - D88427 stabilizer plate to leg	2
13	D143406	WASHER - flat, special, 1-17/32 x 2-23/64 x 1/8 inch, used as a spacer	UAR
14	D25279	RING - snap, pin retaining	4
15	D142519	PLATE - stabilizer, street or cemetery, if used	2
16	D61368	PAD - rubber, if used	2
17	D39256	PIN - 9-3/8 inch (238 mm) long, D142519 plate to leg	2
18	413-1228	BOLT - hex, 3/4 NC x 1-3/4 inch	8
19	425-1012	NUT - hex, 3/4 inch NC	8
	186405A1	PLATE ASSEMBLY - stabilizer flip over, if used	2
20	D142314	PAD - rubber	3
21	231-4247	NUT - hex, self-locking, 7/16 inch NC	9
22	413-632	BOLT - hex, 3/8 NC x 2 inch	2
23	230-4216	NUT - hex, self-locking, 3/8 inch NC	2
24	189955A1	PLATE - stabilizer, flip over	1
25	D149033	PIN - 323.5 mm (12-3/4 inch) long, plate to stabilizer leg	1
26	190035A1	BOLT - J-type	2
27	190967A1	PAD - rubber, round	2
28	190036A1	PLATE - steel	1
29	495-21044	WASHER - flat, 7/16 x 1 x 5/64 inch	2
30	230-4216	NUT - hex, self-locking, 3/8 inch NC	2
31	D143406	WASHER - flat, special, 1-17/32 x 2-23/64 x 1/8 inch, used as a spacer	UAR
32	495-81282	WASHER - flat, 2-1/16 x 3 x 3/32 inch	UAR

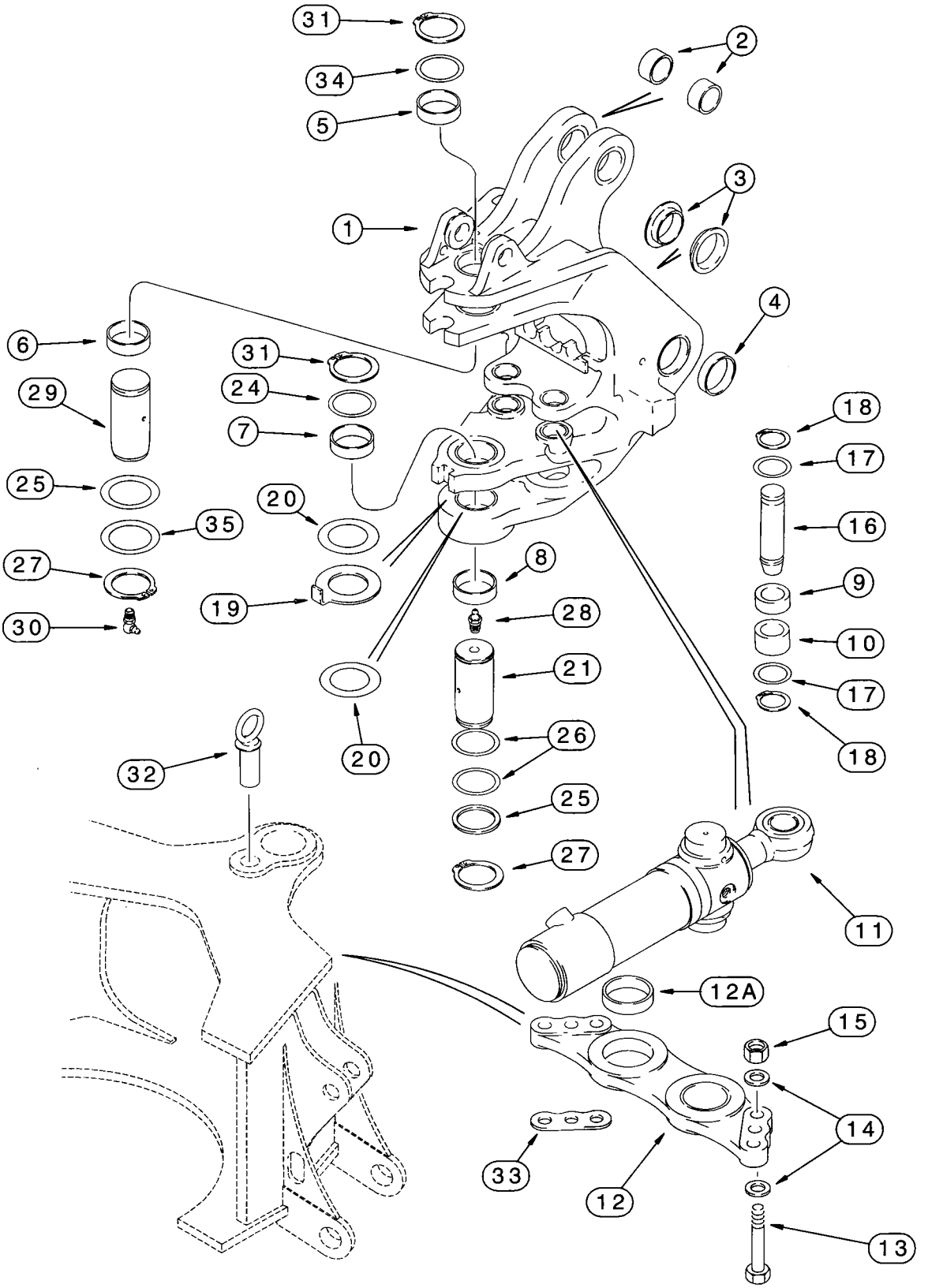
31
34
5
2
3
1
4
6
31
24
7
29
25
35
20
27
30
19
8
28
21
26
25
27
20
18
17
16
9
10
17
18
32
11
12A
15
14
33
12
13

BACKHOE SWING CYLINDERS AND SWING TOWER

REF.	PART NO.	DESCRIPTION	REQ'D.
1	249867A1	TOWER ASSEMBLY - backhoe swing	1
2	191017A1	BUSHING - boom cylinder pivot	2
3	121778A1	BUSHING - inner, boom pivot	2
4	D135741	BUSHING - outer, boom pivot	2
5	D135557	BUSHING - upper, swing tower pivot	1
6	D135559	BUSHING - upper, tower pivot	1
7	D151073	BUSHING - tower pivot	1
8	D151074	BUSHING - 70 x 86 x 28 mm long, lower	1
9	135248A1	BUSHING - upper, swing cylinder pivot	2
10	135249A1	BUSHING - lower, swing cylinder pivot	2
11	REF	CYLINDER ASSEMBLY - 102 (4) ID X 292 mm (11-1/2 inch) stroke, swing, parts list page 8-135	2
12	198976A1	BRACKET - swing cylinder to frame	1
12A	114318A1	BUSHING - 80 mm ID, cylinder pivot	2
13	827-20075	BOLT - hex, 20 - 2.5 x 75 mm, class 10.9	6
14	896-11020	WASHER - flat, 22 x 37 x 4 mm, hardened	12
15	829-1420	NUT - hex, 20 mm - 2.5, class 10	6
16	135247A1	PIN - swing cylinder rod end to swing tower	2
17	495-81227	WASHER - flat, 2-1/16 x 2-15/16 x 1/16 inch	4
18	103-16200	RING - heavy external retaining, No. 200, pin retaining	4
19	243084A1	WASHER - bearing, special, 5 mm thick, swing tower	1
20	134167A1	SHIM - 2.05 mm (.08 inch) thick	UAR
21	D151065	PIN - lower, swing tower to frame, grease fitting mounts in top of pin	1
24	D136392	SHIM - 72 x 89 x 3.0 mm, upper	UAR
25	D136700	SHIM - 67 x 83 x 2.0 mm	2
26	D136391	SHIM - 72 x 89 x 1.6 mm	UAR
27	800-40065	RING - external retaining, No. 65, pin retaining, lower	2
28	219-1	FITTING - grease, straight, 1/8 PT x 21/32 inch	1
29	292385A1	PIN - swing tower to frame, upper	1
30	219-55	FITTING - grease, 90 degree, 1/8 PT x 27/32 inch	1
31	800-40070	RING - external retaining, No. 70, pin retaining	2
32	D149239	PIN - swing stop, without snap ring	1
33	197718A1	SHIM - swing cylinder spacer, use as required between bracket and ear of main frame, shims may be required on one end or both ends of bracket, if used	UAR
34	293636A1	WASHER - flat, upper	1
35	D144423	WASHER - 2-5/8 x 3-3/8 x 1/8 inch, used as a shim	UAR

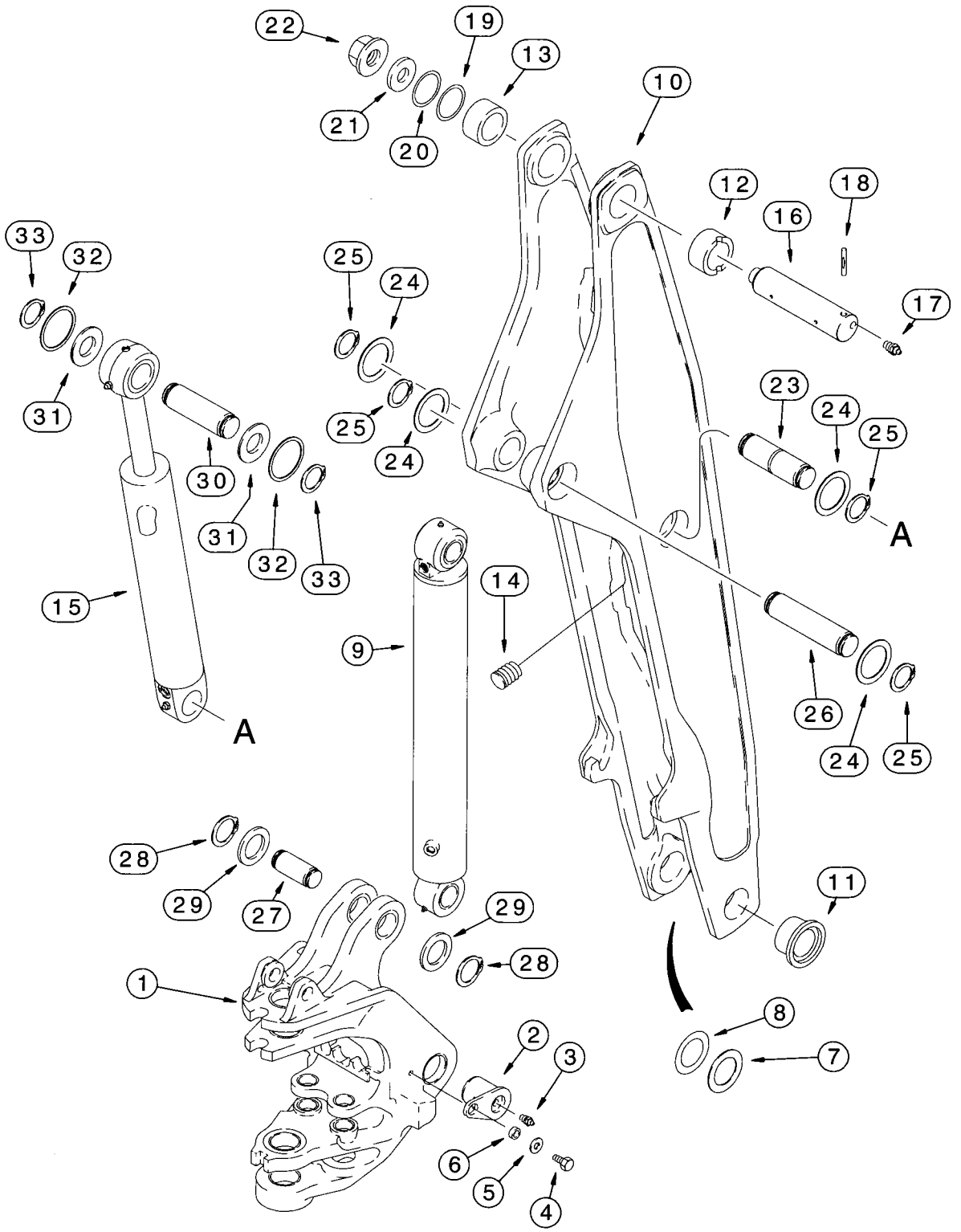
22
19
13
21
20
10
12
18
16
17
33
32
25
24
31
25
24
30
31
32
33
23
24
25
A
15
14
9
26
24
25
A
28
29
27
29
28
11
1
8
7
2
3
6
5
4

BACKHOE SWING TOWER AND BOOM

REF.	PART NO.	DESCRIPTION	REQ'D.
1	REF	SWING TOWER - backhoe, with inner ears, see page 9-47 for swing tower and bushings	1
2	121779A1	PIN - swing tower to boom	2
3	219-1	FITTING - grease, straight, 1/8 PT x 21/32 inch	2
4	604-20040	BOLT - hex, self-locking, 20 - 2.5 x 40 mm	2
5	496-41081	WASHER - flat, 13/16 x 1-3/4 x 7/32 inch, hardened	2
6	122897A1	SPACER - 21 x 32 x 12 mm	2
7	H71514	WASHER - special, boom to swing tower	UAR
8	R32119	SHIM - 71 (2-13/16) ID x 114 mm (4-1/2 inch)	UAR
9	144200A1	CYLINDER ASSEMBLY - 127 (5) ID x 842 mm (33-5/32 inch) stroke, boom, parts list page 8-137	1
10	122284A1	BOOM - backhoe, service replacement	1
11	D151071	BUSHING - 70 (2-3/4) ID x 34 mm (1-5/16 inc) long	2
12	D135739	BUSHING - 70 (2-3/4) ID x 44 mm (1-3/4 inch) long, with slot for groove pin, right-hand side of boom at boom to dipper pivot	1
13	D137218	BUSHING - 70 (2-3/4) ID x 44 mm (1-3/4 inch) long, without slot for groove pin, left-hand side of boom at boom to dipper pivot	1
14	D120450	PLUG - plastic	7
15	REF	CYLINDER ASSEMBLY - 5 (127) ID x 23 inch (583 mm) stroke, dipper, parts list page 8-139	1
16	D132494	PIN - boom to dipper	1
17	219-1	FITTING - grease, straight, 1/8 PT x 21/32 inch	2
18	300013A1	PIN - center groove, 1/2 x 3-1/4 inch, hardened	1
19	D136391	SHIM - 72 x 89 x 1.6 mm, boom to dipper	UAR
20	D136392	SHIM - 72 x 89 x 3.0 mm, boom to dipper	UAR
21	D133632	WASHER - flat, hardened, special	1
22	181042A1	NUT - hex flange, special, 1-3/4 inch NF	1
23	123167A2	PIN - dipper cylinder to boom, with center lubrication groove	1
24	H433285	SHIM - 57 x 76 x 1.5 mm	4
25	800-4155	RING - external retaining, No. 55, pin retaining	4
26	123168A1	PIN - boom cylinder closed end to boom	1
27	190313A1	PIN - boom cylinder rod end to swing tower	1

Continued on next page

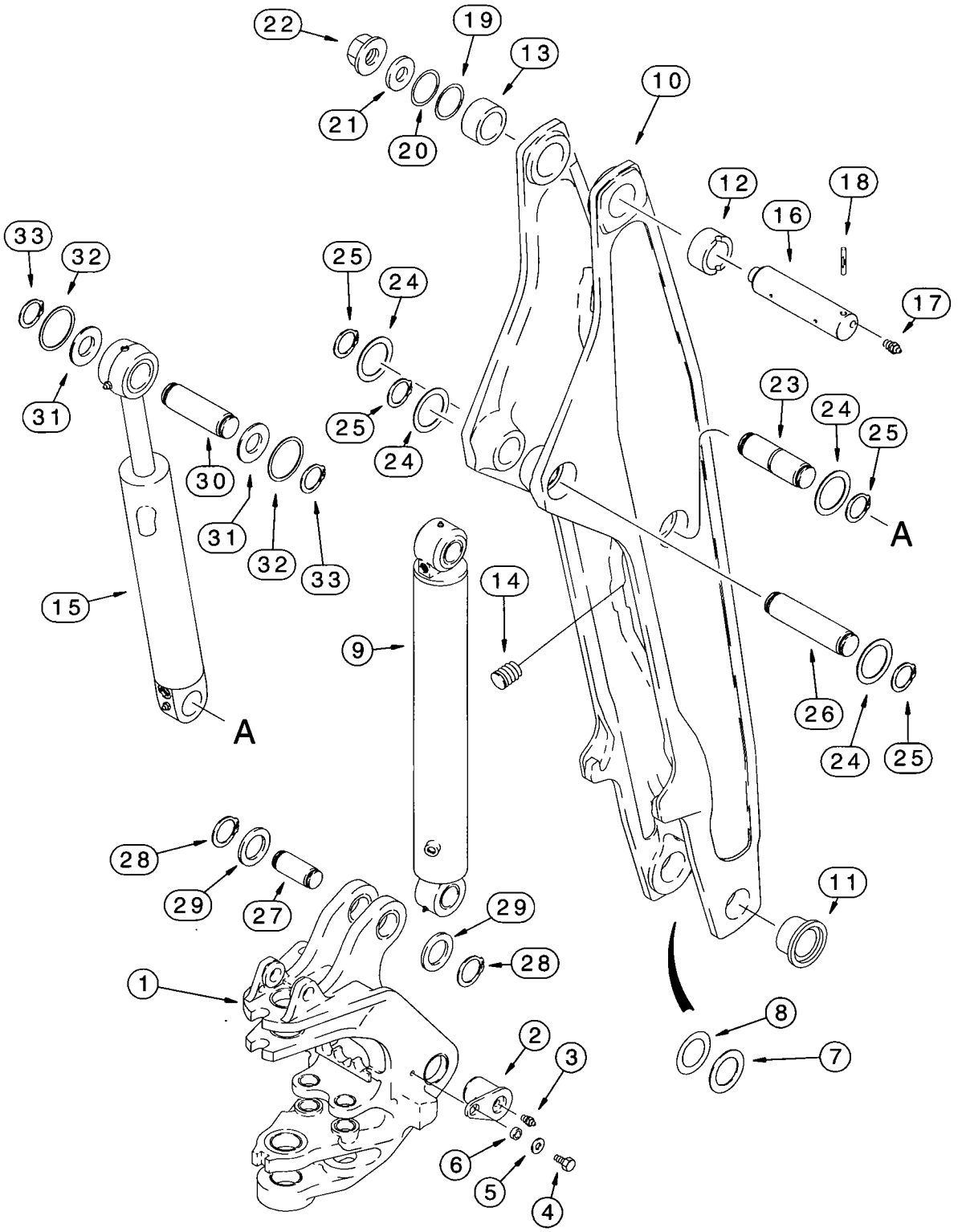
22
19
13
21
20
10
12
18
16
17
33
32
25
24
31
25
24
23
24
25
30
31
32
33
A
15
14
9
26
24
25
A
28
29
27
29
28
11
1
8
7
2
3
6
5
4

BACKHOE SWING TOWER AND BOOM

REF.	PART NO.	DESCRIPTION	REQ'D.
28	103-11237	RING - external retaining, No. 237, pin retaining	2
29	123318A1	WASHER - special, 62 mm ID	UAR
30	D138022	PIN - dipper cylinder rod end to dipper	1
31	495-81227	WASHER - flat, 2-1/16 x 2-15/16 x 1/16 inch	UAR
32	495-81226	WASHER - flat, 1-13/16 x 2-1/2 x 1/8 inch	2
33	103-16175	RING - heavy external retaining, No. 175, pin retaining	2

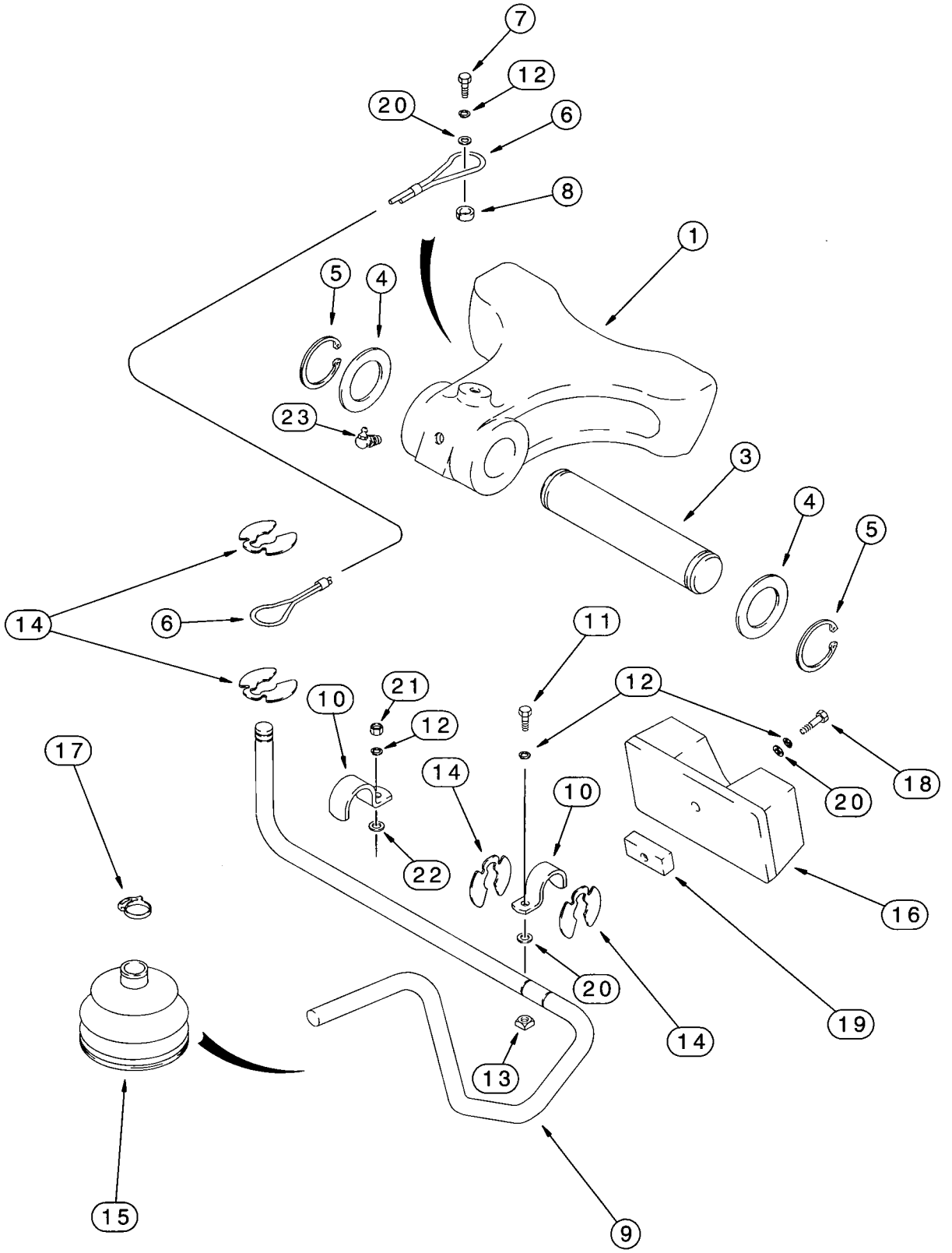
7
12
20
6
8
1
5
4
23
3
4
5
14
6
11
12
21
10
12
17
14
10
18
20
22
16
20
19
14
13
15
9

BOOM LATCH

REF.	PART NO.	DESCRIPTION	REQ'D.
1	122974A1	LATCH - backhoe boom	1
3	D129227	PIN - boom latch to swing tower	1
4	D144592	WASHER - flat, special	2
5	800-44040	RING - external retaining, No. 40, pin retaining	2
6	D129641	CABLE - latch control	1
7	614-10025	BOLT - hex, full threads, 10 - 1.5 x 25 mm	1
8	D143417	SPACER - 10 ID x 16 OD x 6 mm long	1
9	185632A2	ROD - boom latch control	1
10	D143723	CLAMP - rod	2
11	614-10020	BOLT - hex, full threads, 10 - 1.5 x 20 mm	1
12	892-11010	WASHER - lock, 10 mm	4
13	122958A1	NUT - square, special, 10 mm - 1.5	1
14	D143591	RETAINER - clip ring	4
15	D86664	BOOT - rod	1
16	122995A1	BUMPER - boom	1
17	D143735	CLAMP - boot	1
18	614-10050	BOLT - hex, full threads, 10 - 1.5 x 50 mm	1
19	122993A1	PLATE - boom stop	1
20	895-11010	WASHER - flat, 11 x 20 x 2 mm	3
21	829-1410	NUT - hex, 10 mm - 1.5, class 10.9	1
22	896-11012	WASHER - flat, 13.5 x 24 x 3 mm, hardened	1
23	219-55	FITTING - grease, 90 degree, 1/8 PT x 27/32 inch	1

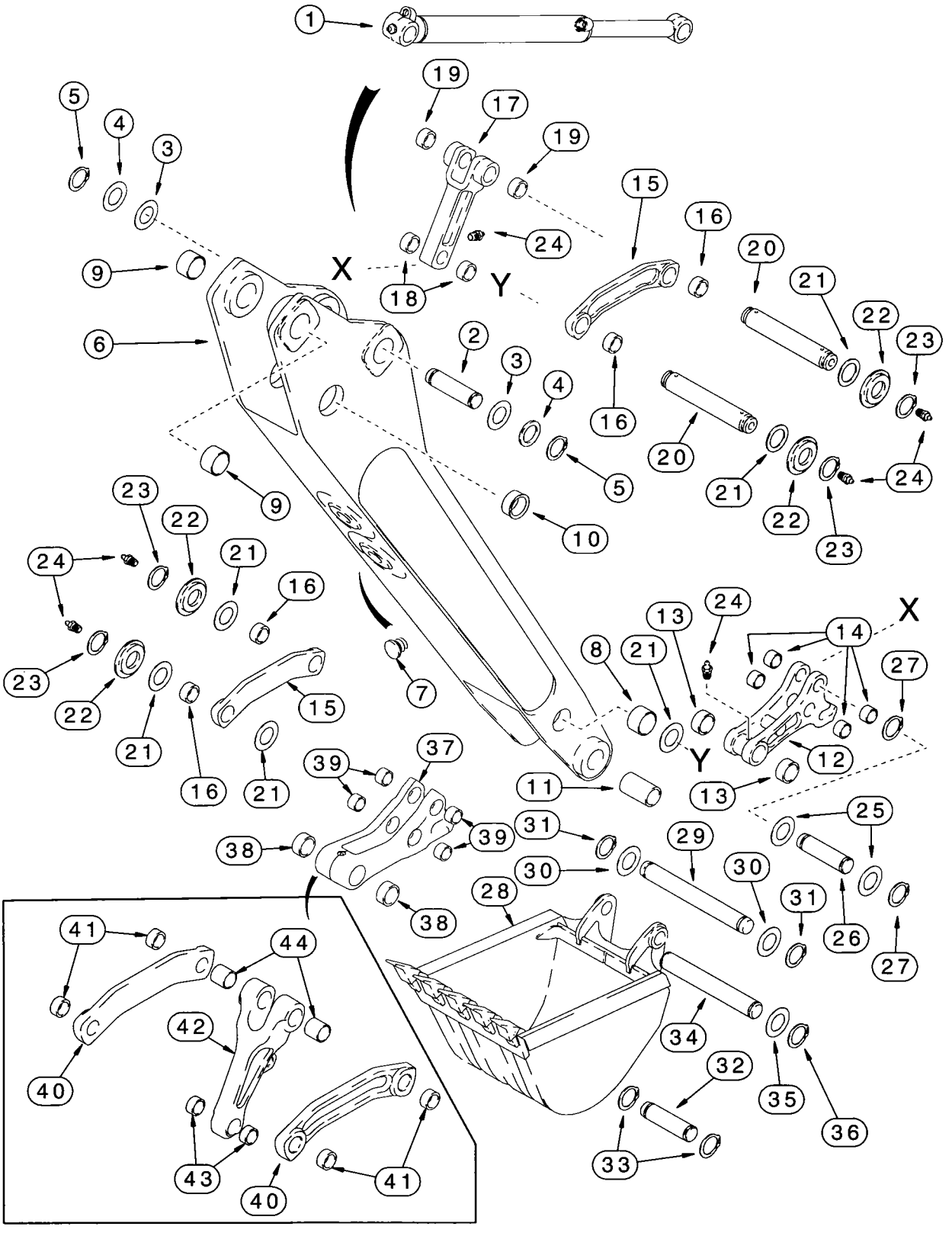
1
19
17
19
5
4
3
15
16
20
21
22
23
24
9
X
18
Y
6
2
3
4
16
20
21
22
23
24
5
9
10
23
22
21
24
16
23
22
21
15
7
16
21
8
21
13
24
14
X
27
12
Y
13
39
37
11
25
31
39
29
38
30
30
31
28
26
27
38
41
44
42
34
32
40
35
36
43
40
41
33

BACKHOE DIPPER AND BUCKET

REF.	PART NO.	DESCRIPTION	REQ'D.
1	REF	CYLINDER ASSEMBLY - 80 (3-1/2) ID x 872 mm (34-5/16 inch) stroke, bucket, parts list page 8-141	1
2	D138022	PIN - bucket cylinder closed end to dipper	1
3	495-81227	WASHER - flat, 2-1/16 x 2-15/16 x 1/16 inch	UAR
4	495-81226	WASHER - flat, 1-13/16 x 2-1/2 x 1/8 inch	2
5	103-16175	RING - heavy external retaining, No. 175, pin retaining	2
	101631A1	DIPPER ASSEMBLY - backhoe	1
6	NSS	DIPPER - backhoe	1
7	D120450	PLUG - plastic	6
8	D140029	BUSHING - 50 x 60 x 25.5 mm long	2
9	D138047	BUSHING - 54 mm (2-1/8 inch) long, dipper cylinder rod end, not included with dipper assembly, order separately	2
10	D150121	BUSHING - 70 ID x 36 mm long, not included with dipper assembly, order separately	2
11	D127168	BUSHING - 45 ID x 94 mm long, bucket coupler pivot, not included with dipper assembly, order separately	2
	134437A1	COUPLER ASSEMBLY - bucket, used with Ref 15 and 17 links, if used, see Ref 37 - 44 for optional coupler and links	1
12	NSS	COUPLER - backhoe bucket	1
13	D127167	BUSHING - 30 mm long, special, at dipper	2
14	D127172	BUSHING - 28 mm long, at bucket link	4
15	D150608	LINK - bucket guide, used with 134437A1 coupler, if used, see Ref 37 - 44 for optional coupler and links	2
16	D150122	BUSHING - 50 x 60 x 33 mm	2
17	D150080	LINK - bucket dump, with two bushings at forked end, used with 134437A1 coupler, if used, see Ref 37 - 44 for optional coupler and links	1
18	D127172	BUSHING - 28 mm long	2
19	D138047	BUSHING - 54 mm (2-1/8 inch) long	2
20	D141142	PIN - 306 mm long	2
21	495-81282	WASHER - flat, 2-1/16 x 3 x 3/32 inch	UAR
22	D141164	SPACER - 1-13/16 x 3 x 1/8 inch	4
23	103-16175	RING - heavy external retaining, No. 175, pin retaining	4
24	219-1	FITTING - grease, straight, 1/8 PT x 21/32 inch	6
25	495-81226	WASHER - flat, 1-13/16 x 2-1/2 x 1/8 inch	2
26	D146288	PIN - dump link to bucket coupler	1
27	103-16175	RING - heavy external retaining, No. 175	2
28	REF	BUCKET - backhoe, see pages 9-63 - 9-71 for bucket options	1

Continued on next page

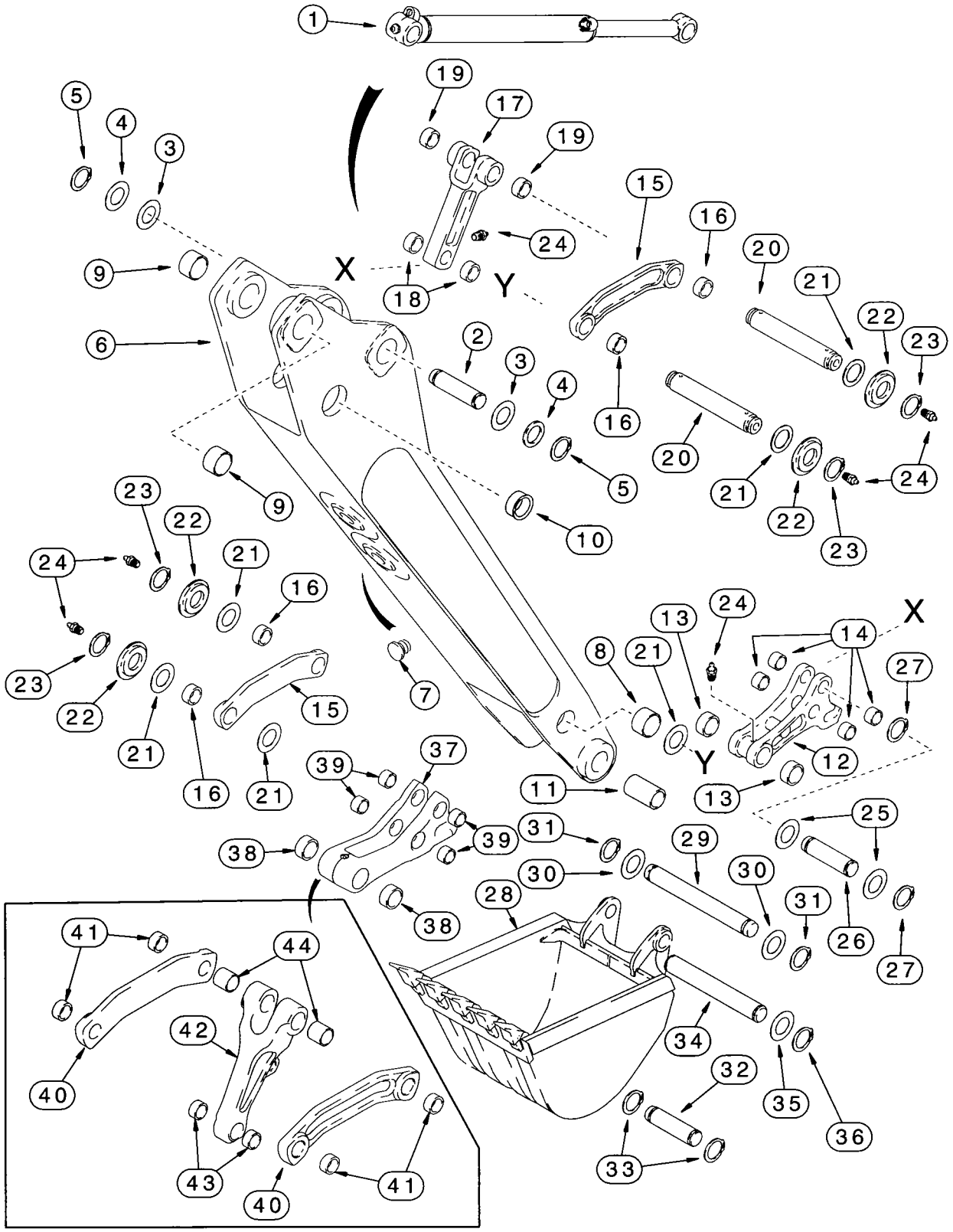
1
19
17
19
5
4
3
15
16
20
21
22
23
24
9
X
18
Y
6
2
3
4
16
20
21
22
23
24
5
9
10
23
22
21
24
16
13
24
X
14
8
21
27
23
22
21
16
15
7
12
Y
13
16
21
39
37
11
25
39
31
29
38
30
30
31
28
26
38
27
41
44
42
34
32
40
35
36
43
40
41
33

BACKHOE DIPPER AND BUCKET

REF.	PART NO.	DESCRIPTION	REQ'D.
29	D37614	PIN - bucket to coupler	1
30	D143324	WASHER - spacer, 38 x 64 x 2 mm	2
31	D25279	RING - snap, pin retaining	2
32	D149298	PIN - dipper to bucket, 305 mm (12 inch) Universal bucket only	1
33	103-16175	RING - heavy external retaining, No. 175, pin retaining	2
34	D150619	PIN - dipper to bucket, all buckets except 12 inch (305 mm) buckets, for models with 12 inch bucket see item 32 pin	1
35	495-81226	WASHER - flat, 1-13/16 x 2-1/2 x 1/8 inch	UAR
36	103-16175	RING - heavy external retaining, No. 175, dipper to bucket pin	2
	281185A1	COUPLER ASSEMBLY - bucket, may replace 134437A1 (Ref 12) coupler on some models, used with Ref 40 and 42 links, if used	1
37	NSS	COUPLER - bucket, if used	1
38	D127167	BUSHING - 30 mm long, special, at dipper	2
39	D127172	BUSHING - 28 mm long, at bucket link	4
40	242562A1	LINK - bucket guide, used with 281185A1 coupler, if used	2
41	D150122	BUSHING - 50 x 60 x 33 mm	2
42	242561A1	LINK - bucket dump, used with 281185A1 coupler, if used	1
43	D127172	BUSHING - 28 mm long	2
44	D138047	BUSHING - 54 mm (2-1/8 inch) long	2

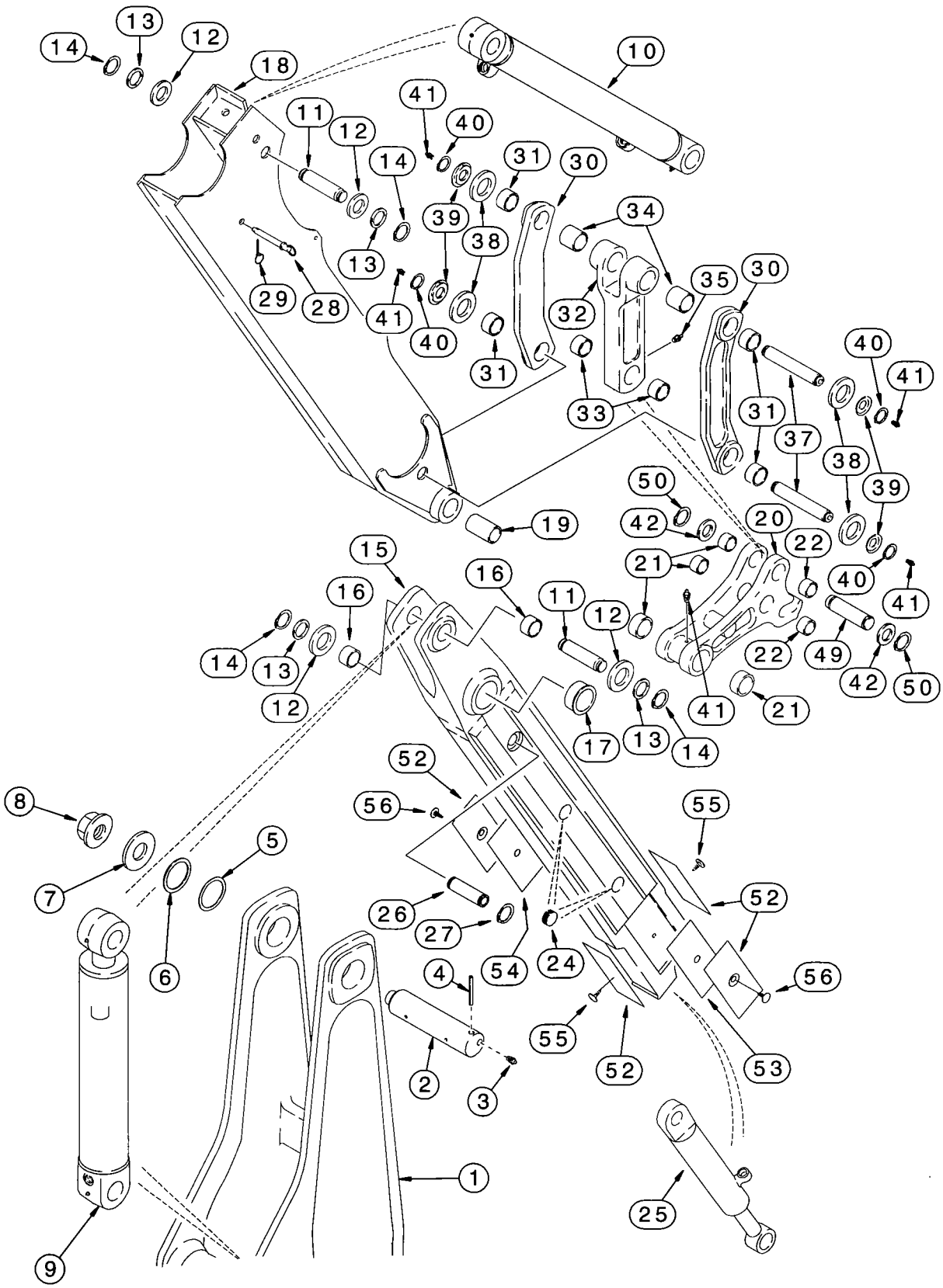
14
13
12
18
10
11
12
41
40
14
31
30
39
38
34
13
29
28
41
40
31
32
35
30
33
31
37
40
41
38
39
50
42
20
22
21
40
41
19
15
16
16
11
12
14
13
12
22
49
42
50
41
21
17
13
14
52
56
55
8
5
7
26
27
54
24
52
6
4
56
55
52
53
2
3
1
25
9

BT97N176

EXTENDABLE DIPPER

REF.	PART NO.	DESCRIPTION	REQ'D.
1	REF	BOOM - backhoe, see page 9-49 for boom and bushings	1
2	D132494	PIN - boom to dipper	1
3	219-1	FITTING - grease, straight, 1/8 PT x 21/32 inch	2
4	435-51652	PIN - center groove, 1/2 x 3-1/4 inch, hardened	1
5	D136391	SHIM - 72 x 89 x 1.6 mm, boom to dipper	2
6	D136392	SHIM - 72 x 89 x 3.0 mm	1
7	D133632	WASHER - flat, hardened, special	1
8	181042A1	NUT - hex flange, special, 1-3/4 inch NF	1
9	REF	CYLINDER ASSEMBLY - 5 (127) ID x 23 inch (583 mm) stroke, dipper, parts list page 8-139	1
10	REF	CYLINDER ASSEMBLY - 80 (3-1/2) ID x 872 mm (34-5/16 inch) stroke, bucket, parts list page 8-141	1
11	D141666	PIN - dipper and bucket cylinder to dippers	2
12	495-81227	WASHER - flat, 2-1/16 x 2-15/16 x 1/16 inch	UAR
13	495-81226	WASHER - flat, 1-13/16 x 2-1/2 x 1/8 inch	4
14	103-16175	RING - heavy external retaining, No. 175, pin retaining	4
	140453A1	DIPPER ASSEMBLY - extension, inner, uses wear plates (Ref 52-54) with one mounting hole	1
15	NSS	DIPPER - inner	1
16	D149079	BUSHING - 50 x 34 mm long, dipper cylinder rod end pivot	2
17	D150121	BUSHING - 70 ID x 36 mm long, to dipper pivot	2
18	102649A1	HOUSING - dipper, outer	1
19	D127168	BUSHING - 45 ID x 94 mm long, bucket coupler pivot	2
	*134437A1	COUPLER ASSEMBLY - bucket, used with Ref 30 and 32 links, if used, see note	1
20	NSS	COUPLER - backhoe bucket	1
21	D127167	BUSHING - 30 mm long, special, at dipper	2
22	D127172	BUSHING - 28 mm long, at bucket link	4
24	D133865	PLUG - plastic	4
25	1340969C2	CYLINDER ASSEMBLY - 76 (3) ID x 1068 mm (42 inch) stroke, dipper extension, parts list page 8-143	1
26	300588A1	PIN - dipper extension cylinder closed end	1
27	800-44040	RING - external retaining, No. 40, pin retaining	2
28	D140247	PIN - lock, used at dipper extension cylinder closed end when transporting only, used with item 29 lock pin	1
29	A33509	PIN - lock, 7/16 inch diameter	1
30	*D150608	LINK - 33 mm wide bushing, bucket guide, used with 134437A1 coupler, if used, see note	2
31	D150122	BUSHING - 50 x 60 x 33 mm	2
32	*D150080	LINK - bucket dump, with two bushings at forked end, used with 134437A1 coupler, if used, see note	1
33	D127172	BUSHING - 28 mm long	2
34	D138047	BUSHING - 54 mm (2-1/8 inch) long	2

***NOTE:** See page 9-57, Ref 37-44 for optional coupler and bucket links.

Continued on next page

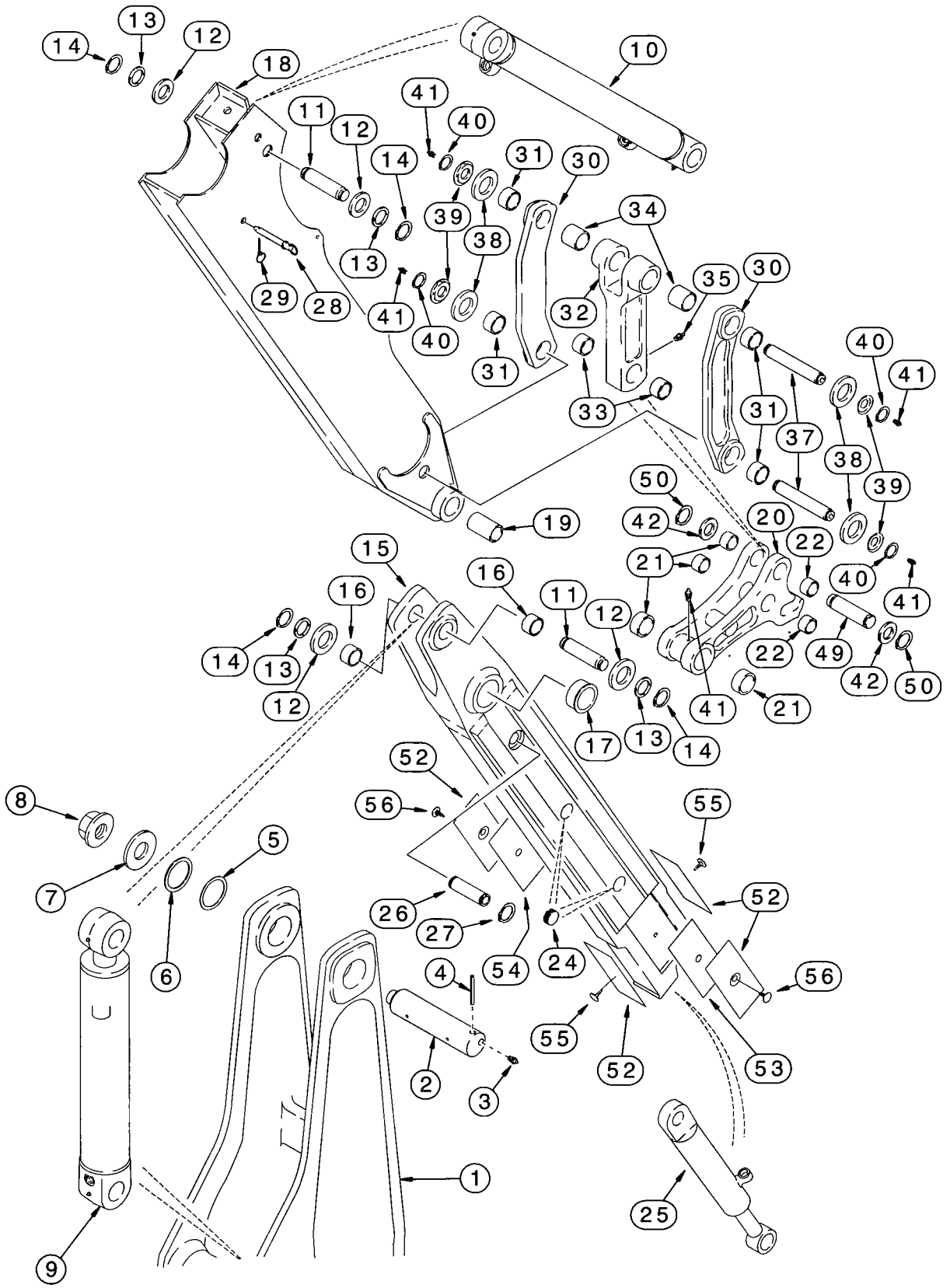
14
13
12
18
10
41
11
12
40
14
31
30
39
38
13
34
29
28
41
40
31
32
35
30
33
40
41
31
37
38
39
50
42
20
22
21
40
41
15
16
16
11
12
14
13
12
22
49
42
50
41
21
17
13
14
52
56
55
8
5
7
52
26
27
54
24
6
4
56
55
52
53
2
3
1
25
9

EXTENDABLE DIPPER

REF.	PART NO.	DESCRIPTION	REQ'D.
35	219-1	FITTING - grease, straight, 1/8 PT x 21/32 inch	1
37	D141142	PIN - 306 mm long, bucket cylinder rod end to links and links to dipper	2
38	495-81282	WASHER - flat, 2-1/16 x 3 x 3/32 inch	4
39	D141164	SPACER - 1-13/16 x 3 x 1/8 inch	4
40	103-16175	RING - heavy external retaining, No. 175, pin retaining	4
41	219-1	FITTING - grease, straight, 1/8 PT x 21/32 inch	5
42	495-81226	WASHER - flat, 1-13/16 x 2-1/2 x 1/8 inch	2
48	409-768	BOLT - hex serrated flange, 3/8 NC x 1/2 inch	4
49	D146288	PIN - dump link to bucket coupler	1
50	103-16175	RING - heavy external retaining, No. 175	2
52	132716A1	PLATE - wear, outer	4
53	132844A1	SHIM - 0.8 mm thick, wear plate	UAR
54	132842A1	SHIM - 1.6 mm thick, wear plate	UAR
55	183443A1	PIN - pine tree, long	2
56	D143242	RETAINER - push-in, plastic	2

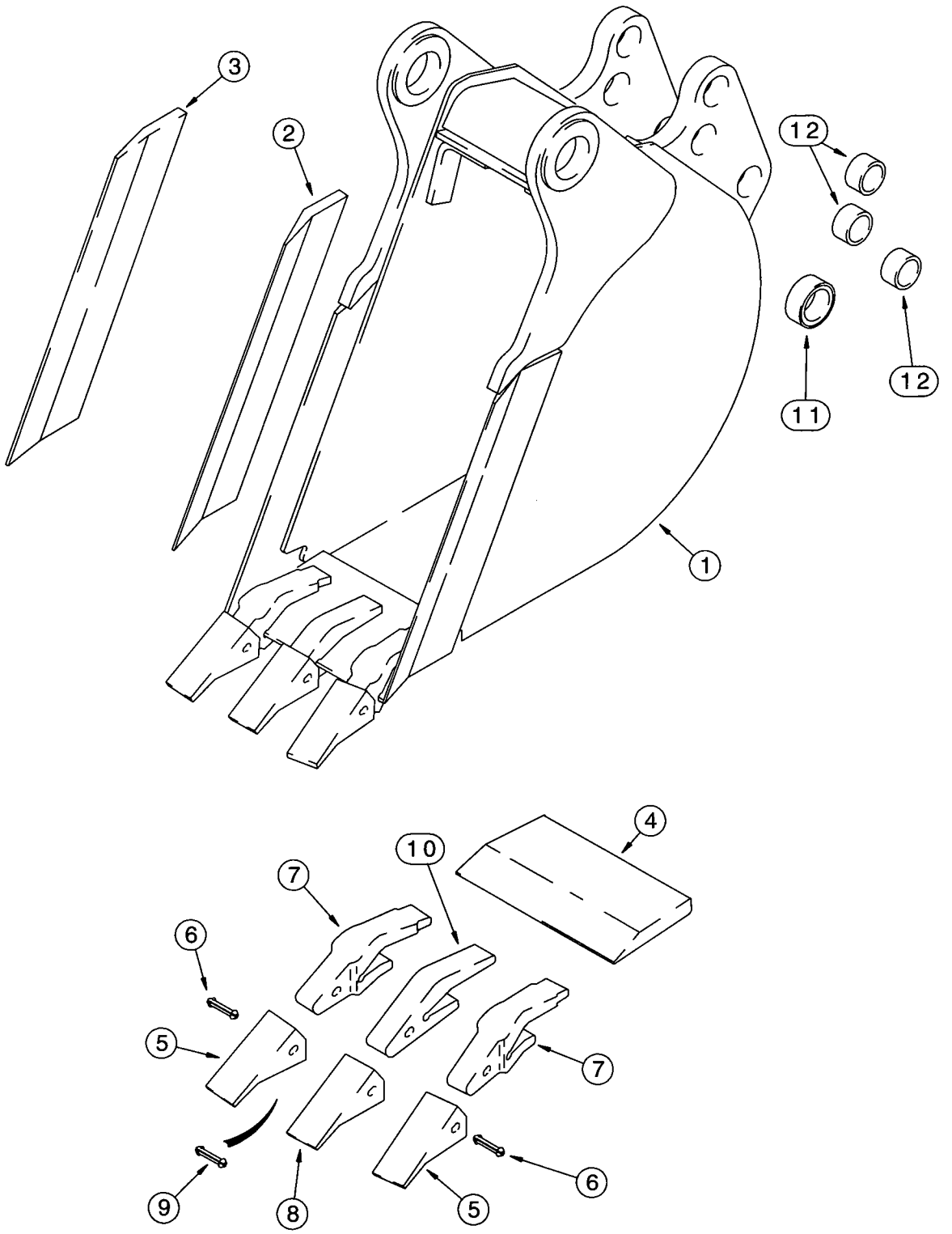
3
2
12
12
11
12
1
4
10
7
6
5
7
9
8
5
6

UNIVERSAL BACKHOE BUCKET

305 MM (12 INCH) WIDE

REF.	PART NO.	DESCRIPTION	REQ'D.
		305 MM (12 INCH) WIDE TRENCHING BUCKET AND TEETH - HEAVY DUTY	
1	*D147418	BUCKET ASSEMBLY - heavy duty trenching, with 3 teeth, order from Machinery Price List, 305 mm (12 inch) wide	1
2	D147411	EDGE - cutting, right-hand side, bucket	1
3	D147410	EDGE - cutting, left-hand side, bucket	1
4	D147409	EDGE - cutting, center, 305 mm (12 inch) bucket	1
	D139851	TOOTH ASSEMBLY - outer corners	2
5	D39093	POINT - tooth, outer corners	1
6	245466A1	PIN - flex, outer point and shank	1
7	D138157	SHANK - tooth, outer corners	1
	D139849	TOOTH ASSEMBLY - center (order items 8-10)	1
8	D51750	POINT - tooth, center	1
9	245466A1	PIN - flex, center point and shank	1
10	D48212	SHANK - tooth, center	1
11	D40243	BUSHING - 1-3/4 x 2-1/4 x 3/4 inch	2
12	D30933	BUSHING - 1-1/2 x 1-7/8 x 1-1/4 inch	6

***NOTE:** See item 32 on page 9-57 for pin used on 12 inch Universal bucket.

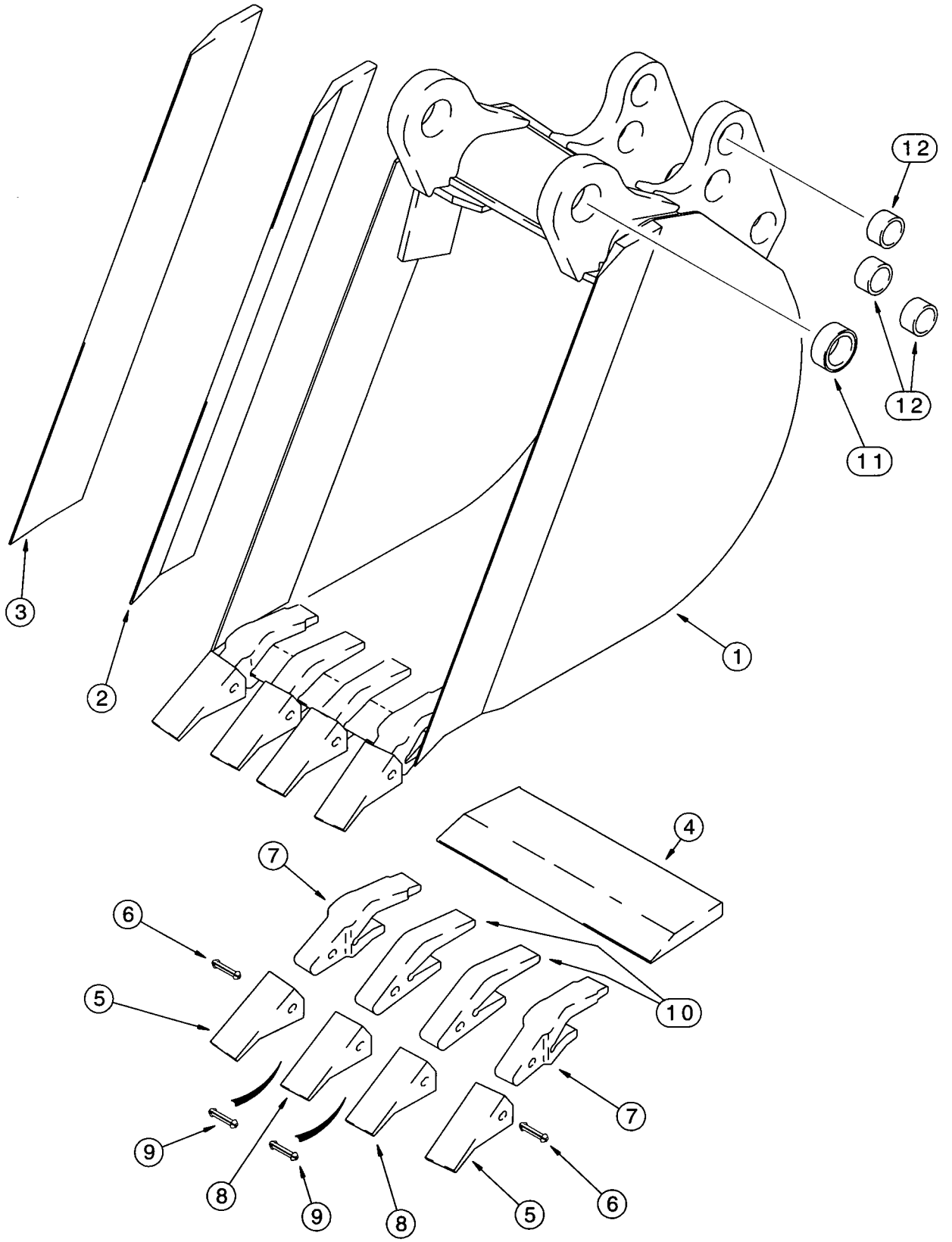
12
12
11
3
2
1
4
7
6
5
10
7
9
8
9
8
5
6

UNIVERSAL BACKHOE BUCKETS

406 MM (16 INCH) AND 457 MM (18 INCH) WIDE

406 MM (16 INCH) WIDE TRENCHING BUCKET AND TEETH - HEAVY DUTY

REF.	PART NO.	DESCRIPTION	REQ'D.
1	D147247	BUCKET ASSEMBLY - heavy duty trenching, with 3 teeth, order from Machinery Price List, 406 mm (16 inch) wide, not shown	1
2	D146421	EDGE - cutting, right-hand side, bucket	1
3	D146420	EDGE - cutting, left-hand side, bucket	1
4	D147249	EDGE - cutting, center, 406 mm (16 inch) bucket	1
	D139851	TOOTH ASSEMBLY - outer corners	2
5	D39093	POINT - tooth, outer corners	1
6	245466A1	PIN - flex, outer point and shank	1
7	D138157	SHANK - tooth, outer corners	1
	D139849	TOOTH ASSEMBLY - center (order items 8-10)	1
8	D51750	POINT - tooth, center	1
9	245466A1	PIN - flex, center point and shank	1
10	D48212	SHANK - tooth, center	1
11	D37495	BUSHING - 1-3/4 x 2-1/2 x 1-1/4 inch	2
12	D30933	BUSHING - 1-1/2 x 1-7/8 x 1-1/4 inch	6

457 MM (18 INCH) WIDE TRENCHING BUCKET AND TEETH - HEAVY DUTY

1	D146588	BUCKET ASSEMBLY - heavy duty trenching, with 4 teeth, order from Machinery Price List, 457 mm (18 inch) wide	1
2	D146421	EDGE - cutting, right-hand side, bucket	1
3	D146420	EDGE - cutting, left-hand side, bucket	1
4	D145060	EDGE - cutting, center, 457 mm (18 inch) bucket	1
	D139851	TOOTH ASSEMBLY - outer corners	2
5	D39093	POINT - tooth, outer corners	1
6	245466A1	PIN - flex, outer point and shank	1
7	D138157	SHANK - tooth, outer corners	1
	D139849	TOOTH ASSEMBLY - center (order items 8-10)	2
8	D51750	POINT - tooth, center	1
9	245466A1	PIN - flex, center point and shank	1
10	D48212	SHANK - tooth, center	1
11	D37495	BUSHING - 1-3/4 x 2-1/2 x 1-1/4 inch	2
12	D30933	BUSHING - 1-1/2 x 1-7/8 x 1-1/4 inch	6

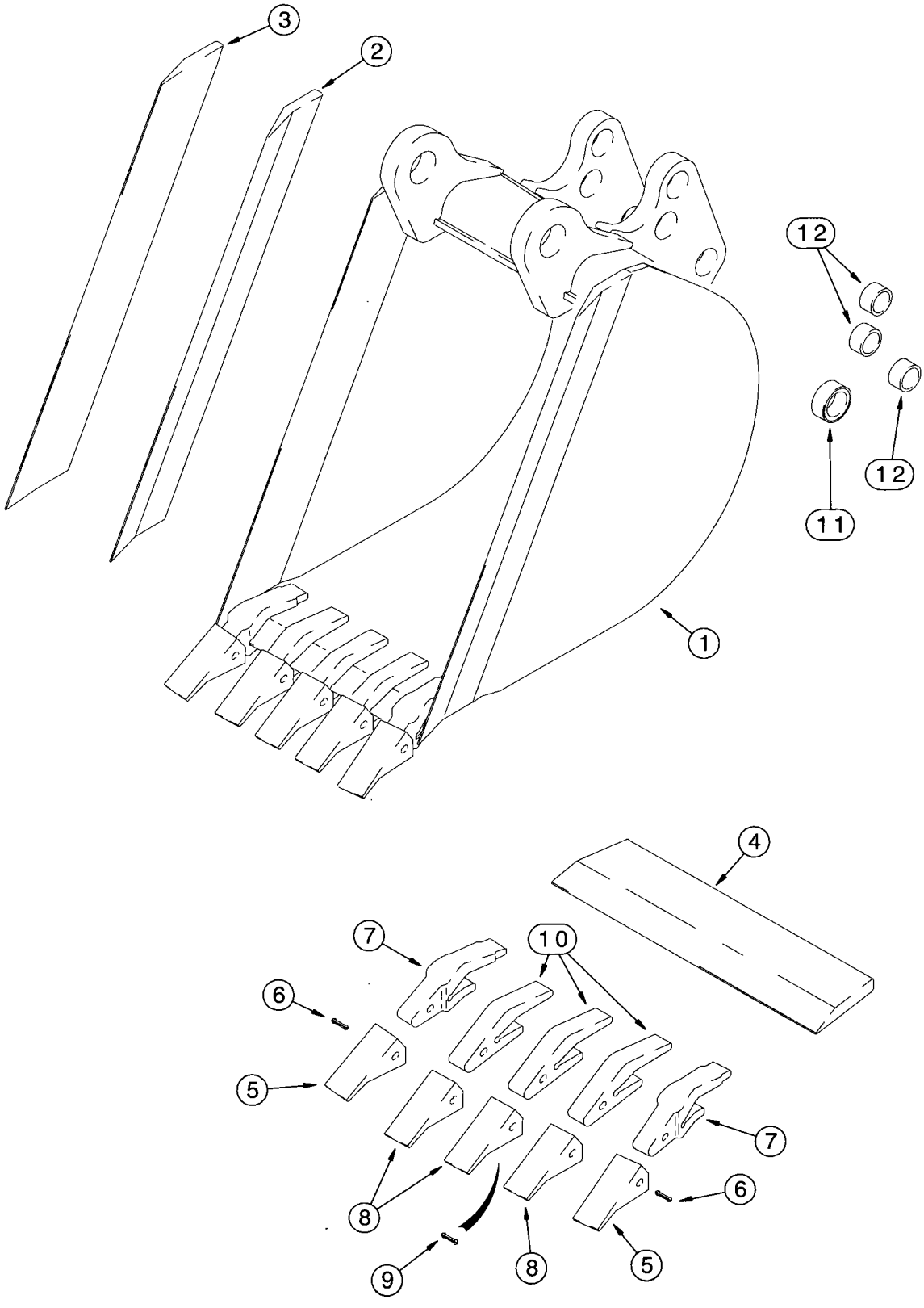
3
2
12
12
11
1
4
7
10
6
5
7
6
8
9
8
5

UNIVERSAL BACKHOE BUCKETS

610 MM (24 INCH) AND 762 MM (30 INCH) WIDE

REF.	PART NO.	DESCRIPTION	REQ'D.

610 MM (24 INCH) WIDE TRENCHING BUCKET AND TEETH - HEAVY DUTY

1	D150348	BUCKET ASSEMBLY - heavy duty trenching, with 5 teeth, order from Machinery Price List, 610 mm (24 inch) wide	1
2	D146421	EDGE - cutting, right-hand side, bucket	1
3	D146420	EDGE - cutting, left-hand side, bucket	1
4	D142012	EDGE - cutting, center, 610 mm (24 inch) bucket	1
	D139851	TOOTH ASSEMBLY - outer corners	2
5	D39093	POINT - tooth, outer corners	1
6	245466A1	PIN - flex, outer point and shank	1
7	D138157	SHANK - tooth, outer corners	1
	D139849	TOOTH ASSEMBLY - center (order items 8-10)	3
8	D51750	POINT - tooth, center	1
9	245466A1	PIN - flex, center point and shank	1
10	D48212	SHANK - tooth, center	1
11	D37495	BUSHING - 1-3/4 x 2-1/2 x 1-1/4 inch	2
12	D30933	BUSHING - 1-1/2 x 1-7/8 x 1-1/4 inch	6

762 MM (30 INCH) WIDE TRENCHING BUCKET AND TEETH - HEAVY DUTY

1	D150364	BUCKET ASSEMBLY - heavy duty trenching, with 5 teeth, order from Machinery Price List, 762 mm (30 inch) wide, not shown	1
2	D146421	EDGE - cutting, right-hand side, bucket	1
3	D146420	EDGE - cutting, left-hand side, bucket	1
4	D145061	EDGE - cutting, center, 762 mm (30 inch) bucket	1
	D139851	TOOTH ASSEMBLY - outer corners	2
5	D39093	POINT - tooth, outer corners	1
6	245466A1	PIN - flex, outer point and shank	1
7	D138157	SHANK - tooth, outer corners	1
	D139849	TOOTH ASSEMBLY - center (order items 8-10)	3
8	D51750	POINT - tooth, center	1
9	245466A1	PIN - flex, center point and shank	1
10	D48212	SHANK - tooth, center	1
11	D37495	BUSHING - 1-3/4 x 2-1/2 x 1-1/4 inch	2
12	D30933	BUSHING - 1-1/2 x 1-7/8 x 1-1/4 inch	6

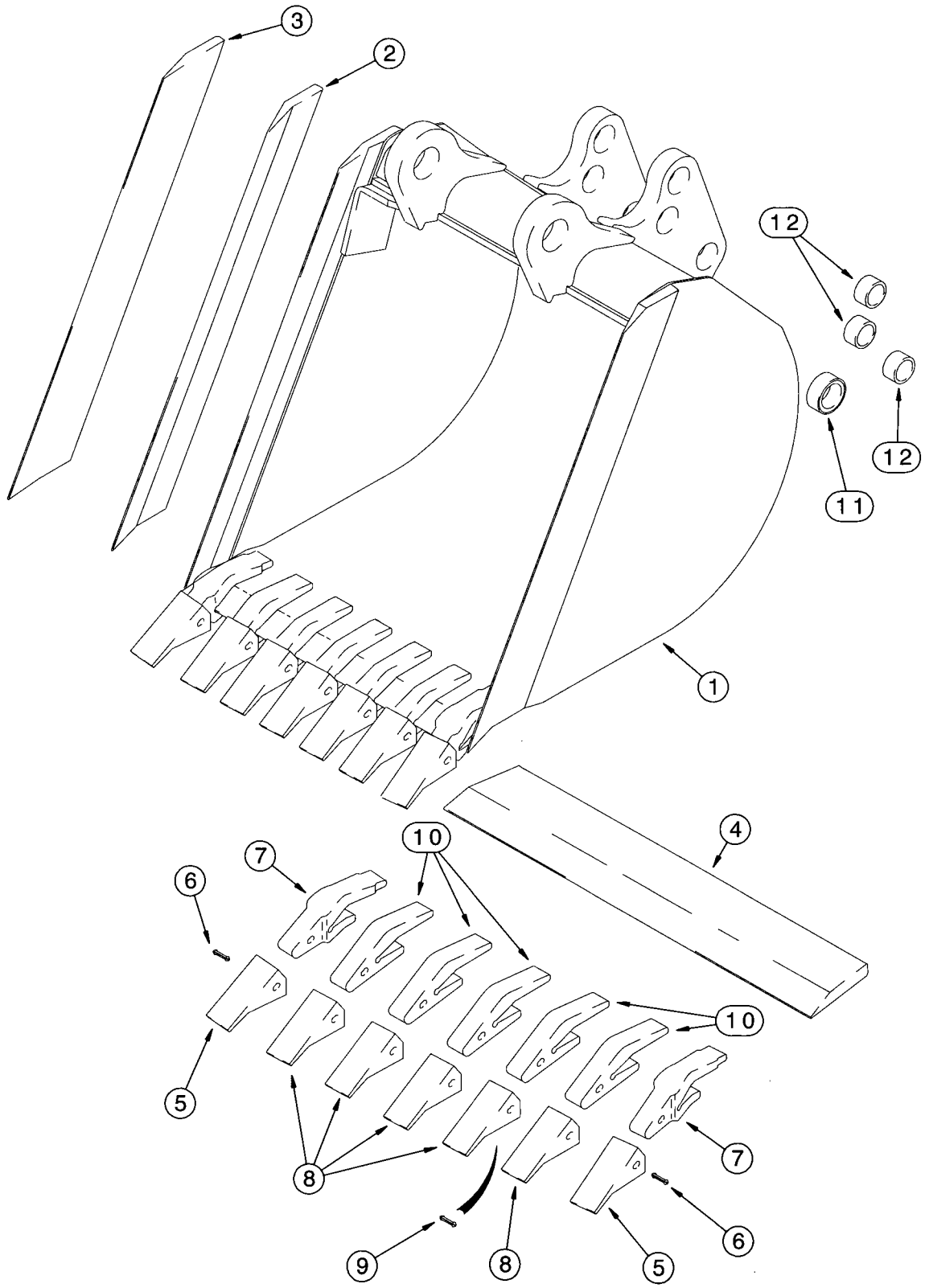
3
2
12
12
11
1
4
10
7
6
10
5
8
7
6
9
8
5

UNIVERSAL BACKHOE BUCKETS

914 MM (36 INCH) WIDE

REF.	PART NO.	DESCRIPTION	REQ'D.
		914 MM (36 INCH) WIDE TRENCHING BUCKETS AND TEETH - HEAVY DUTY	
1	D150365	BUCKET ASSEMBLY - heavy duty trenching, with 7 teeth, order from Machinery Price List, 914 mm (36 inch) wide	1
2	D146421	EDGE - cutting, right-hand side, bucket	1
3	D146420	EDGE - cutting, left-hand side, bucket	1
4	D145062	EDGE - cutting, center, 914 mm (36 inch) bucket	1
	D139851	TOOTH ASSEMBLY - outer corners	2
5	D39093	POINT - tooth, outer corners	1
6	245466A1	PIN - flex, outer point and shank	1
7	D138157	SHANK - tooth, outer corners	1
	D139849	TOOTH ASSEMBLY - center (order items 8-10)	5
8	D51750	POINT - tooth, center	1
9	245466A1	PIN - flex, center point and shank	1
10	D48212	SHANK - tooth, center	1
11	D37495	BUSHING - 1-3/4 x 2-1/2 x 1-1/4 inch	2
12	D30933	BUSHING - 1-1/2 x 1-7/8 x 1-1/4 inch	6

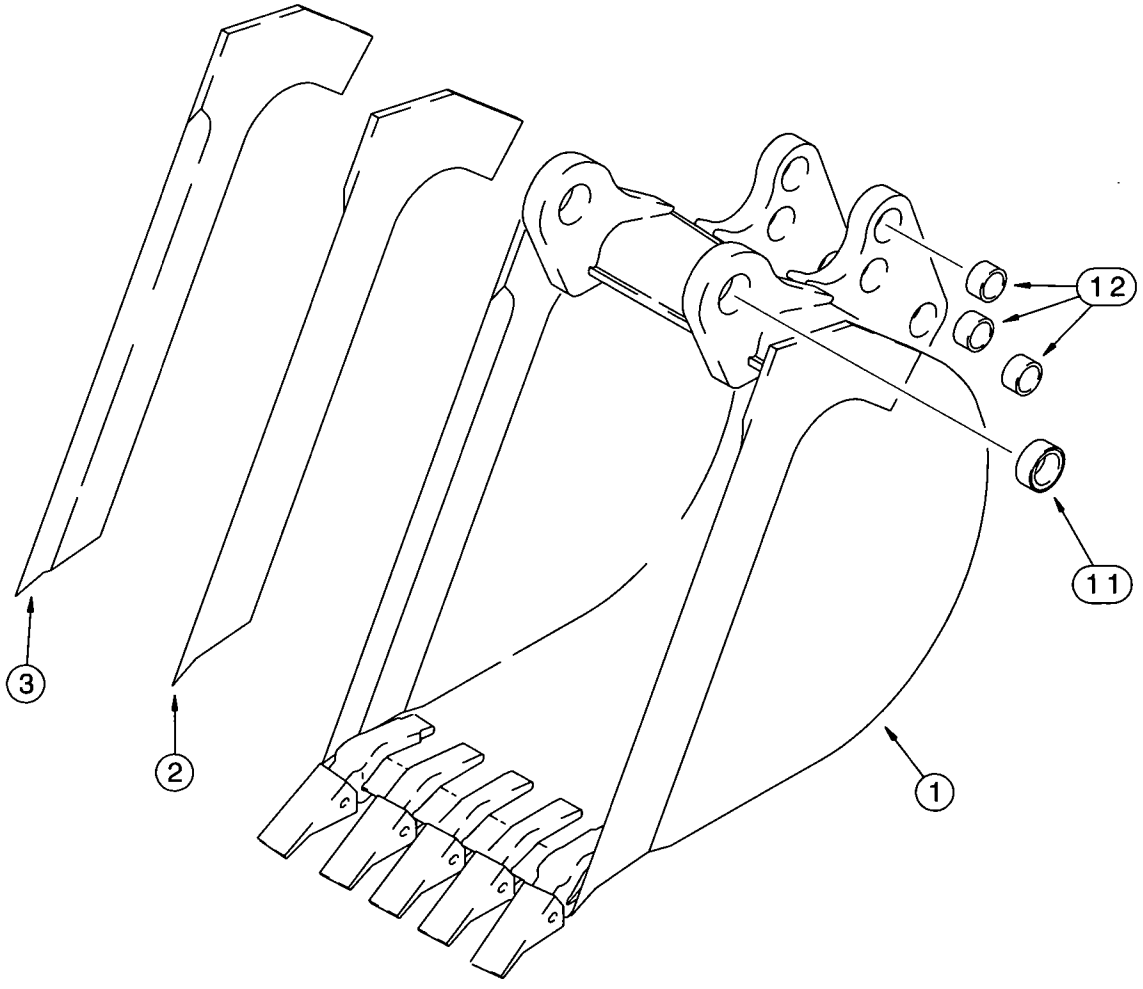
12
11
3
2
1

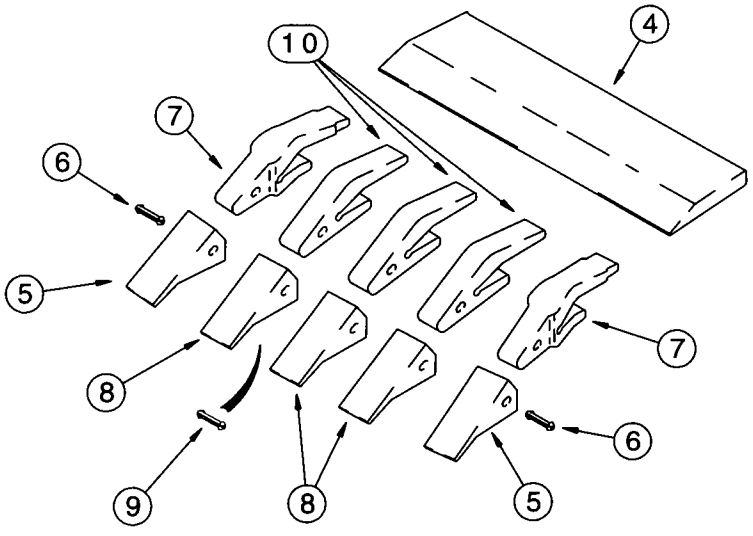
4
10
7
6
5
8
9
8
7
6
5

UNIVERSAL BACKHOE BUCKET

610 MM (24 INCH) AND 762 MM (30 INCH) WIDE

REF.	PART NO.	DESCRIPTION	REQ'D.
		610 MM (24 INCH) WIDE - HIGH CAPACITY TRENCHING BUCKET	
1	141232A1	BUCKET ASSEMBLY - high capacity trenching, with 5 teeth, order from Machinery Price List, 610 mm (24 inch) wide	1
2	141234A1	EDGE - cutting, right-hand side, bucket	1
3	141233A1	EDGE - cutting, left-hand side, bucket	1
4	D142012	EDGE - cutting, center, 610 mm (24 inch) bucket	1
	D139851	TOOTH ASSEMBLY - outer corners	2
5	D39093	POINT - tooth, outer corners	1
6	245466A1	PIN - flex, outer point and shank	1
7	D138157	SHANK - tooth, outer corners	1
	D139849	TOOTH ASSEMBLY - center (order items 8-10)	3
8	D51750	POINT - tooth, center	1
9	245466A1	PIN - flex, center point and shank	1
10	D48212	SHANK - tooth, center	1
11	D37495	BUSHING - 1-3/4 x 2-1/2 x 1-1/4 inch	2
12	D30933	BUSHING - 1-1/2 x 1-7/8 x 1-1/4 inch	6
		762 MM (30 INCH) WIDE - HIGH CAPACITY TRENCHING BUCKET	
1	190267A1	BUCKET ASSEMBLY - high capacity trenching, with 5 teeth, order from Machinery Price List, 762 mm (30 inch) wide	1
2	141234A1	EDGE - cutting, right-hand side, bucket	1
3	141233A1	EDGE - cutting, left-hand side, bucket	1
4	D145061	EDGE - cutting, center, 762 mm (30 inch) bucket	1
	D139851	TOOTH ASSEMBLY - outer corners	2
5	D39093	POINT - tooth, outer corners	1
6	245466A1	PIN - flex, outer point and shank	1
7	D138157	SHANK - tooth, outer corners	1
	D139849	TOOTH ASSEMBLY - center (order items 8-10)	3
8	D51750	POINT - tooth, center	1
9	245466A1	PIN - flex, center point and shank	1
10	D48212	SHANK - tooth, center	1
11	D37495	BUSHING - 1-3/4 x 2-1/2 x 1-1/4 inch	2
12	D30933	BUSHING - 1-1/2 x 1-7/8 x 1-1/4 inch	6

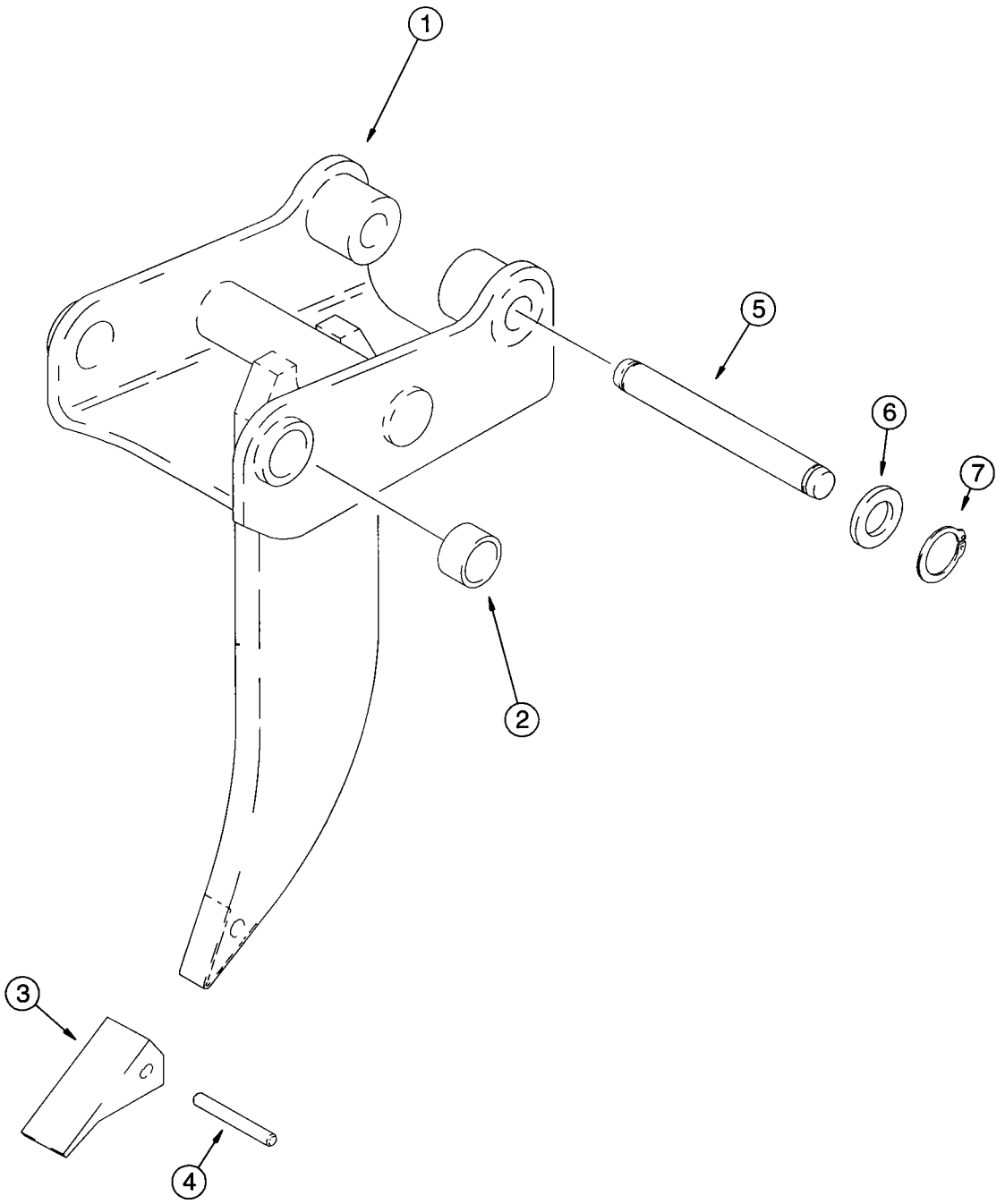
1
5
6
7
2
3
4

FROST POINT ASSEMBLY

REF.	PART NO.	DESCRIPTION	REQ'D.
	D140679	POINT ASSEMBLY - frost, backhoe	1
1	NSS	BODY - frost point	1
2	D37495	BUSHING - 1-3/4 x 2-1/2 x 1-1/4 inch	2
3	D83306	POINT - tooth	1
4	D43417	PIN - tooth point	1
5	D54218	PIN - link, to frost point	1
6	495-81292	WASHER - flat, 1-9/16 x 3-1/4 x 3/16 inch	2
7	D25279	RING - snap	2

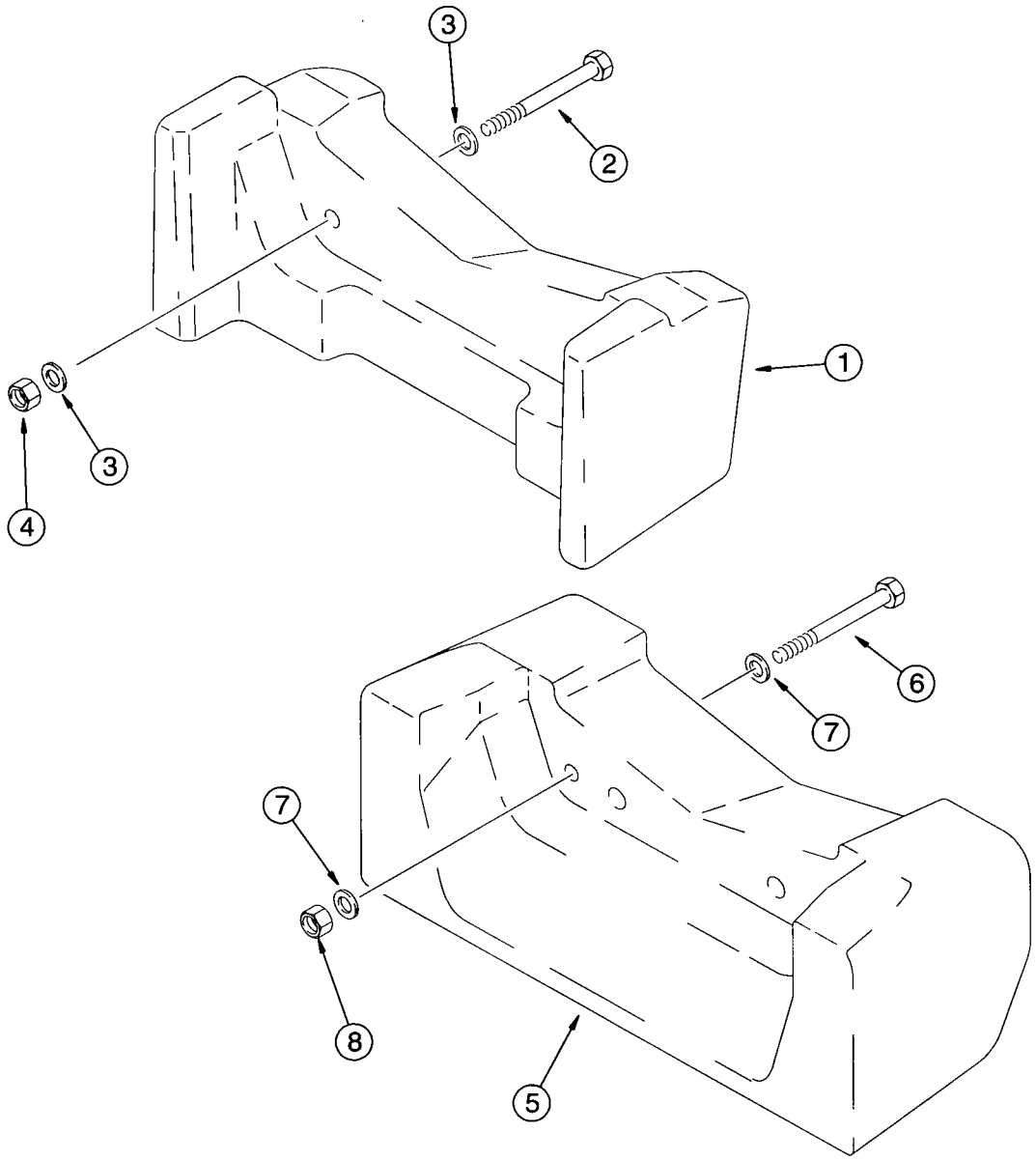
3
2
1
3
4
6
7
7
8
5

FRONT COUNTERWEIGHT

REF.	PART NO.	DESCRIPTION	REQ'D.
1	194520A1	COUNTERWEIGHT - front, 200 kg (441 lbs), if used	1
2	827-20170	BOLT - hex, 20 - 2.5 x 170 mm, class 10.9	2
3	896-11020	WASHER - flat, 22 x 37 x 4 mm, hardened	4
4	829-1420	NUT - hex, 20 mm - 2.5, class 10	2
5	230513A1	COUNTERWEIGHT - front, 408 kg (900 lbs), if used	1
6	827-20170	BOLT - hex, 20 - 2.5 x 170 mm, class 10.9	2
7	896-11020	WASHER - flat, 22 x 37 x 4 mm, hardened	4
8	829-1420	NUT - hex, 20 mm - 2.5, class 10	2

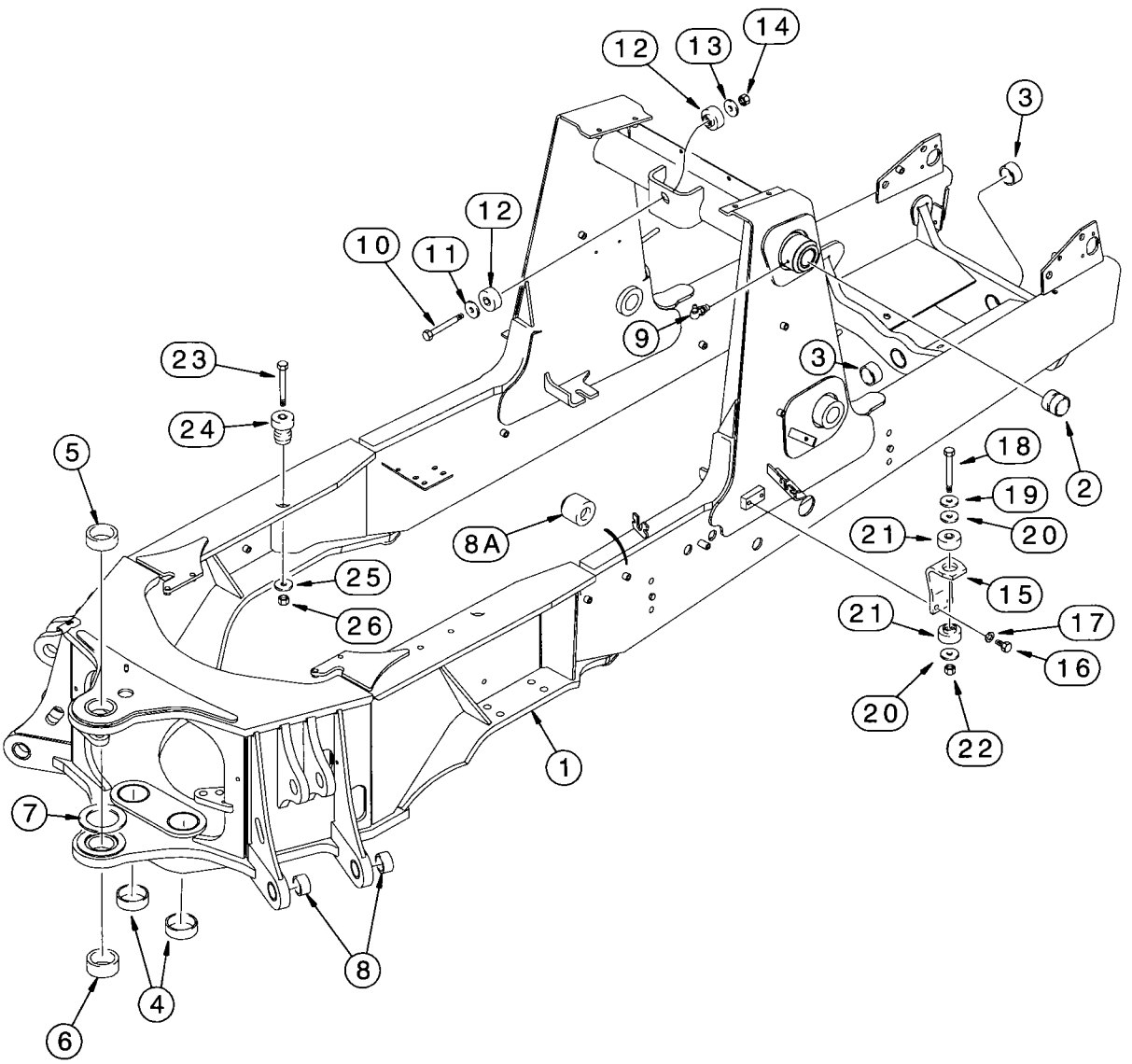
12
13
14
3
12
10
11
9
3
23
24
5
18
19
2
8A
21
20
25
15
26
21
17
16
20
22
1
7
8
4
6

CHASSIS AND OPERATOR COMPARTMENT POD MOUNTS

REF.	PART NO.	DESCRIPTION	REQ'D.
		CHASSIS	
1	299395A1	CHASSIS - loader backhoe, integral	1
2	180427A1	BUSHING - loader frame pivot	2
3	D127542	BUSHING - front axle pivot	2
4	192559A1	BUSHING - 80 mm ID, swing cylinder pivot	2
5	D151069	BUSHING - 70 mm ID, upper, backhoe frame, swing tower mounting	1
6	D151070	BUSHING - 70 mm ID, lower, backhoe frame, swing tower mounting	1
7	220413A1	SPACER - 93 x 135 x 5 mm, bearing, welds to frame	1
8	107124A1	BUSHING - lower, side, backhoe frame, at stabilizer leg mounting	4
8A	185356A1	BOSS - 10 mm, welded to chassis frame	7
9	219-55	FITTING - grease, 90 degree, 1/8 PT x 27/32 inch, loader frame pivot	2
		OPERATOR COMPARTMENT POD MOUNTS	
10	827-16110	BOLT - hex, 16 - 2.0 x 110 mm, class 10.9	1
11	495-81259	WASHER - flat, 21/32 x 2 x 1/4 inch	1
12	D138565	INSULATOR - mounting, frame, upper, firewall	2
13	186977A1	WASHER - flat, special	1
14	829-1416	NUT - hex, 16 mm - 2.0, class 10	1
15	141249A1	BRACKET - mounting, frame, right-hand and left-hand	2
16	627-12030	BOLT - hex, full threads, 12 - 1.75 x 30 mm, class 10.9	4
17	896-11012	WASHER - flat, 13.5 x 24 x 3 mm, hardened	4
18	827-16110	BOLT - hex, 16 - 2.0 x 110 mm, class 10.9	2
19	495-81259	WASHER - flat, 21/32 x 2 x 1/4 inch	2
20	186977A1	WASHER - flat, special	4
21	D138565	INSULATOR - mounting, frame, lower, front	4
22	829-1416	NUT - hex, 16 mm - 2.0, class 10	2
23	180578A1	BOLT - special	2
24	A141451	MOUNT - rubber, frame, rear	2
25	186977A1	WASHER - flat, special	2
26	829-1416	NUT - hex, 16 mm - 2.0, class 10	2

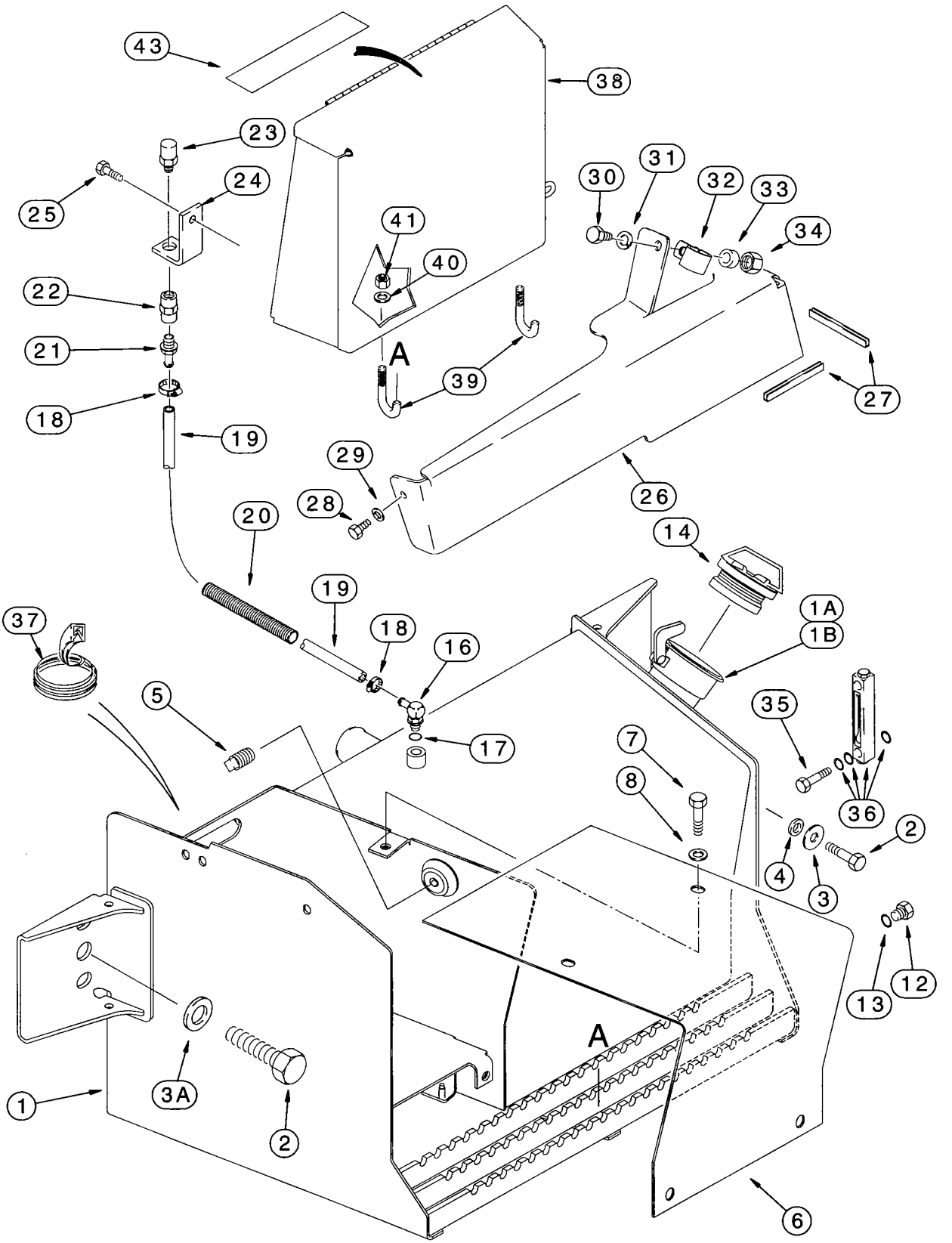
43
38
23
24
25
41
40
30
31
32
33
34
22
21
18
19
A
39
27
29
28
26
20
14
19
18
16
1A
1B
37
5
17
35
7
8
36
2
4
3
12
13
3A
1
2
A
6

BATTERY BOX, HYDRAULIC OIL TANK AND RIGHT-HAND STEP

REF.	PART NO.	DESCRIPTION	REQ'D.
1	283325A3	TANK - hydraulic oil, right-hand side of chassis	1
1A	230857A1	SCREEN - strainer, fill tube	1
1B	440-1066	SCREW - machine, pan Phillips, No. 6 NC x 3/8 inch	2
2	627-20040	BOLT - hex, full threads, 20 - 2.5 x 40 mm, class 10.9	4
3	302358A1	WASHER - flat, hardened, special, right-hand side of tank	2
3A	896-11020	WASHER - flat, 22 x 37 x 4 mm, hardened, left-hand side of tank	2
4	185926A1	SPACER - bushing, right-hand side of tank	2
5	217-436	PLUG - hex socket headless, 3/8 inch PT, if used	1
6	231656A1	COVER - battery, 3 mm thick	1
7	614-10025	BOLT - hex, full threads, 10 - 1.5 x 25 mm	4
8	495-21044	WASHER - flat, 7/16 x 1 x 5/64 inch	4
12	218-5211	PLUG - hex socket, 7/8-14 inch O-ring boss, drain	1
13	237-6010	O-RING - 3/4 ID x 3/32 inch wide	1
14	138595A1	CAP - hydraulic oil tank, nonvented	1
16	217-347	ELBOW - 90 degree, 3/8 stem end x 9/16-18 inch adj O-ring boss	1
17	237-6006	O-RING - 15/32 ID x 5/64 inch wide	1
18	214-1406	CLAMP - adj, 7/16 - 25/32 inch dia	2
19	143218A1	HOSE - 9.5 (3/8) x 15 (19/32) x 735 mm (28-15/16 inch) long, vent	1
20	143219A1	GUARD - hose sleeve	1
21	217-380	ADAPTER - straight, 3/8 inch stem end x PT	1
22	217-1102	COUPLING - pipe, 3/8 inch	1
23	120943A1	BREATHER - pressure vacuum, hydraulic oil tank	1
24	122603A1	BRACKET - breather mounting	1
25	121856A1	BOLT - hex washer, special, 10 - 1.5 x 30 mm	1
26	188008A2	COVER - right-hand loader lift frame tubing, mounted above hydraulic oil tank	1
27	*191047A1	TRIM - edge, 315 mm (12-13/32 inch) long	1
28	614-8016	BOLT - hex, full threads, 8 - 1.25 x 16 mm	1
29	895-15008	WASHER - flat, 9 x 20 x 1.6 mm	1
30	814-10045	BOLT - hex, 10 - 1.5 x 45 mm	1
31	892-11010	WASHER - lock, 10 mm	1
32	D138055	CLAMP - tube	1
33	120303A1	SPACER - clamp	1
34	829-1410	NUT - hex, 10 mm - 1.5, class 10.9	1

***NOTE:** Apply 75 mm (3 inch) of trim to front lower edge and 240 mm (9-7/16 inch) of trim to outside lower edge of cover.

Continued on next page

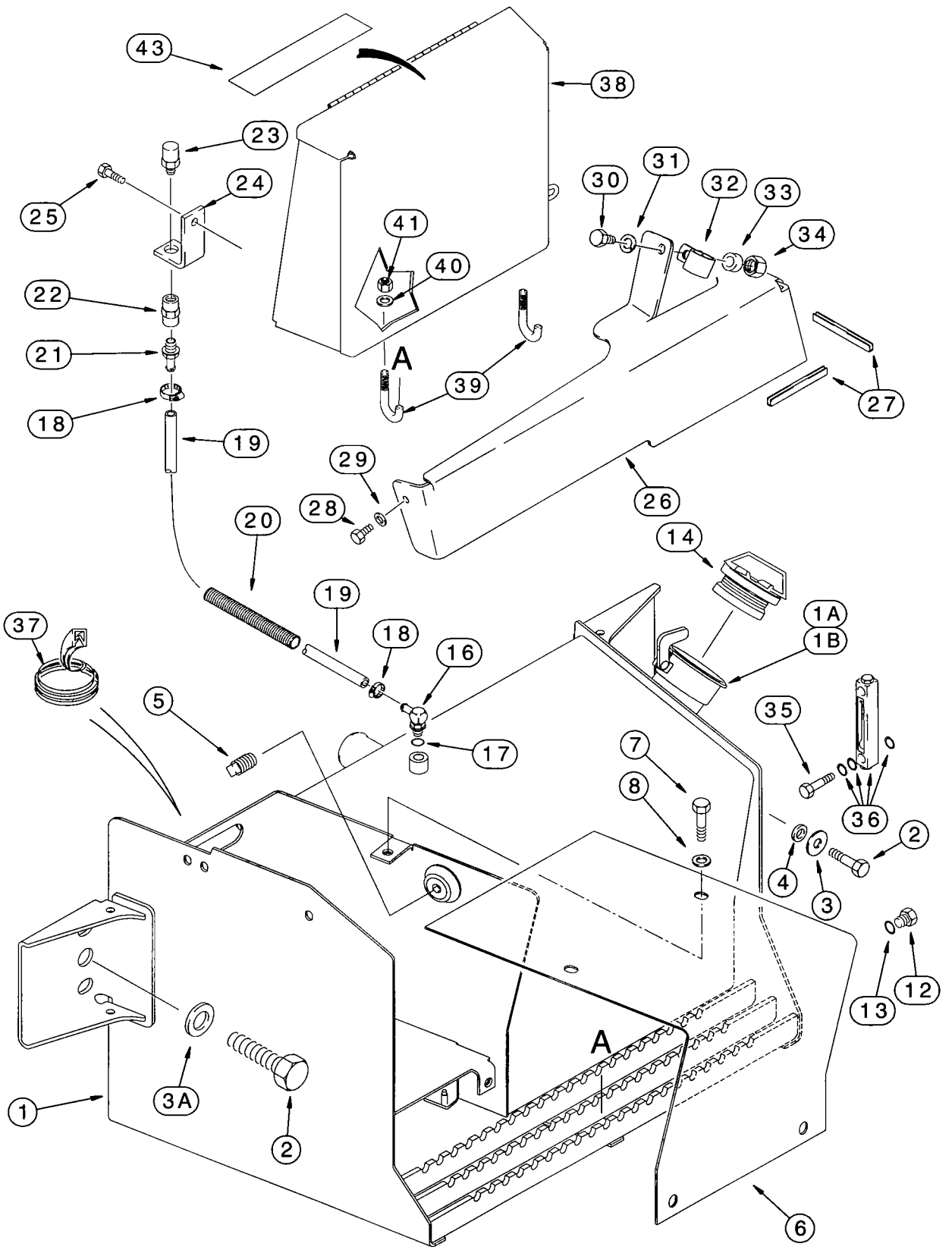
43
38
23
24
25
41
40
30
31
32
33
34
22
21
18
19
A
39
27
29
28
26
20
14
19
18
16
1A
1B
37
5
17
35
7
8
36
2
4
3
12
13
3A
1
2
A
6

BATTERY BOX, HYDRAULIC OIL TANK AND RIGHT-HAND STEP

REF.	PART NO.	DESCRIPTION	REQ'D.
35	B17576	SEALANT - gasket, RTV No. 595, clear, 300 ml tube	1
36	226456A1	GAUGE ASSEMBLY - sight, hydraulic oil, full/cold lettering, aluminum, includes two hollow head bolts and four O-rings which are not serviced separately, used with Ref 35 sealant	1
37	D40442	TRIM - edge, 305 mm (12 inch) long, cut from F42827 bulk trim	1
38	284223A1	BOX - tool	1
39	811-10070	BOLT - carriage, 10 - 1.5 x 70 mm	4
40	280164A1	PLATE - mounting	2
41	832-10410	NUT - hex, self-locking, 10 mm - 1.5	4
42	D40442	TRIM - edge, 305 mm (12 inch) long, cut from F42827 bulk trim	1
43	D55216	PAD - anti-skid, 2 x 9 inch	1
	F42827	TRIM - edge, bulk, 2946 mm (116 inch) long	UAR

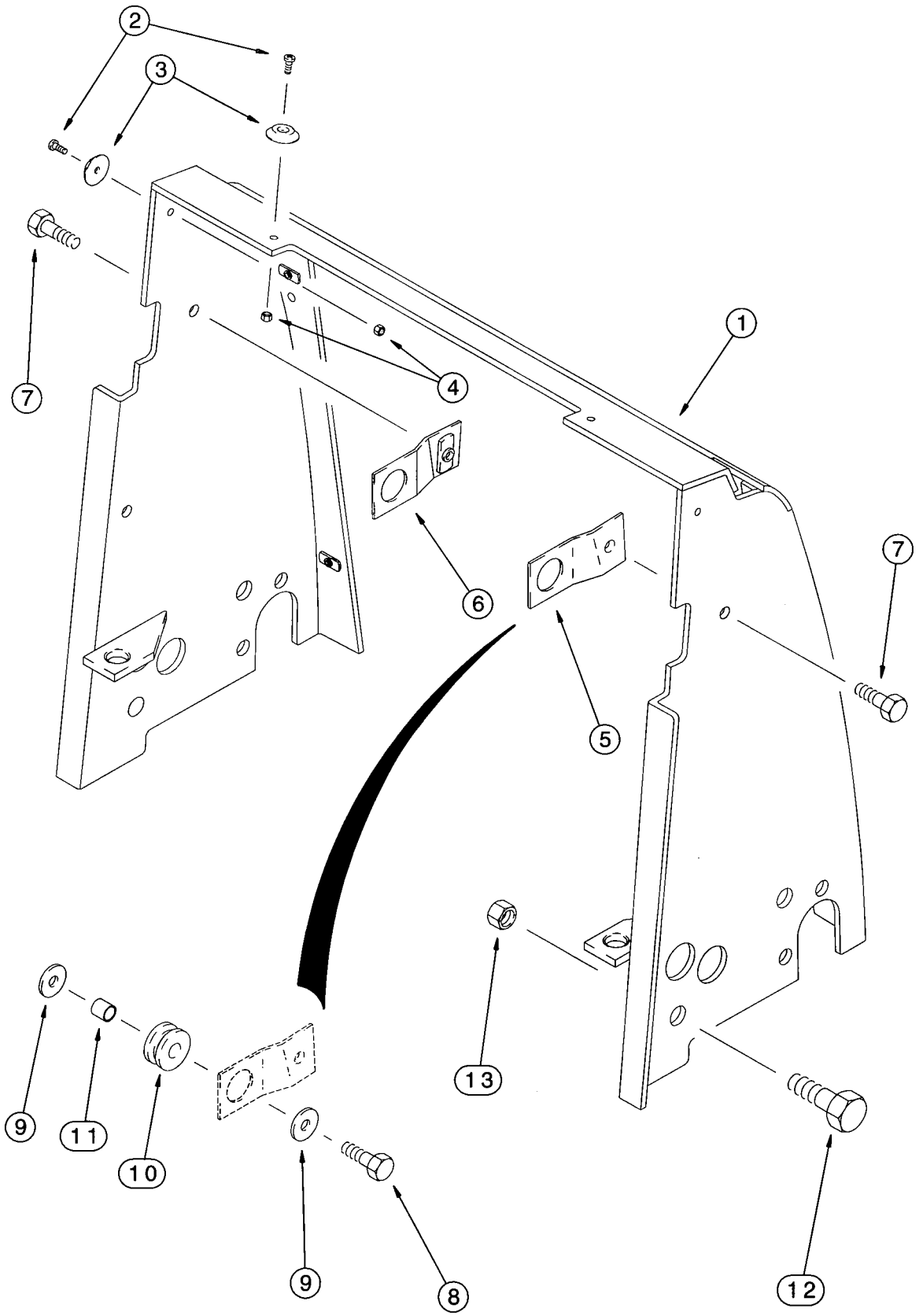
2
3
7
4
1
6
7
5
13
9
11
10
9
8
12

RADIATOR WRAPPER

REF.	PART NO.	DESCRIPTION	REQ'D.
1	139494A2	SHROUD - radiator wrapper	1
2	440-11010	SCREW - machine, pan Phillips, No. 10 NC x 5/8 inch	4
3	109879A1	SPACER - plastic, hood	4
4	231-14109	NUT - hex, self-locking, No. 10 NC	4
5	176952A1	BRACKET - right-hand upper radiator mounting to shroud	1
6	176957A1	BRACKET - left-hand, upper radiator mounting to shroud	1
7	614-10020	BOLT - hex, full threads, 10 - 1.5 x 20 mm	2
8	614-10035	BOLT - hex, full threads, 10 - 1.5 x 35 mm	2
9	K691987	WASHER - flat, special	4
10	D132895	GROMMET - upper radiator to shroud mounting	2
11	D146035	SPACER - upper radiator to shroud	2
12	614-20040	BOLT - hex, full threads, 20 - 2.5 x 40 mm	4
13	829-1420	NUT - hex, 20 mm - 2.5, class 10	4

NOTE: See page 2-3 for radiator mounting parts.

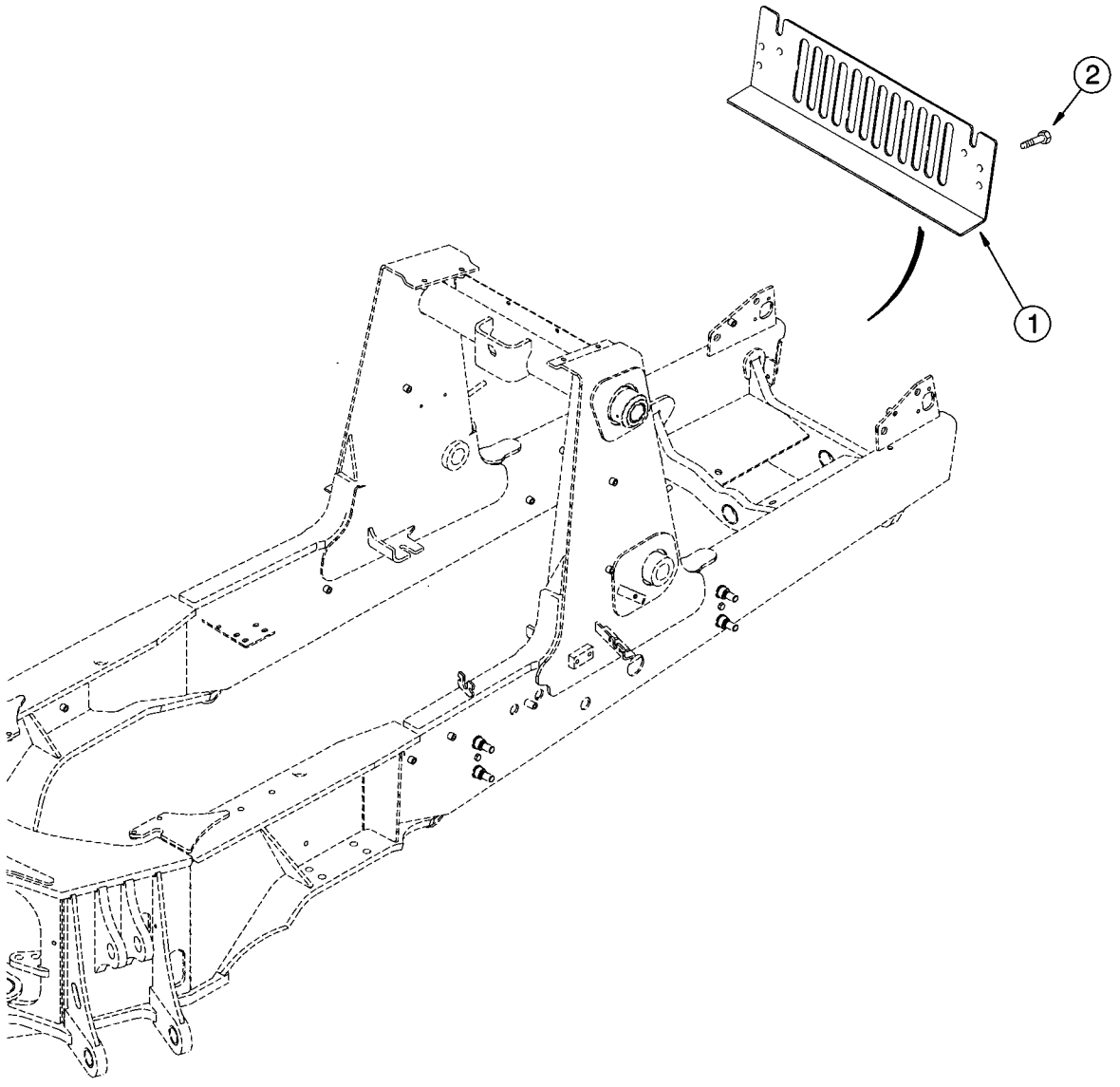
2
1

PUMP GUARD

REF.	PART NO.	DESCRIPTION	REQ'D.
1	229676A1	GUARD - pump, plate	1
2	121856A1	BOLT - hex washer, special, 10 - 1.5 x 30 mm	2

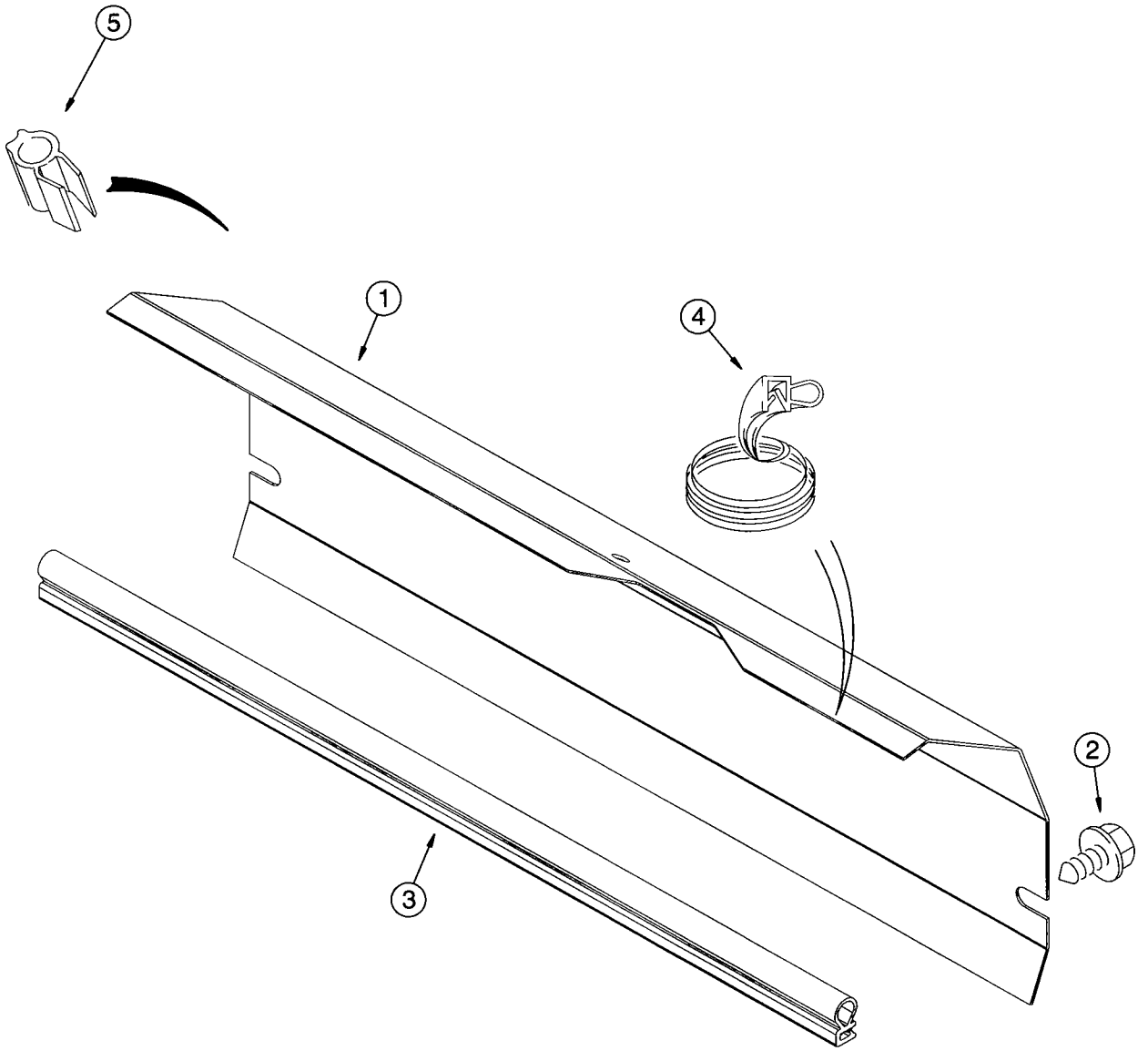
5
1
4
2
3

BAFFLE PLATE AND SEALS
WITHOUT AIR CONDITIONING

REF.	PART NO.	DESCRIPTION	REQ'D.
1	277502A1	PLATE - baffle, if used	1
2	121856A1	BOLT - hex washer, special, 10 - 1.5 x 30 mm	2
3	245450A1	TRIM - edge, 571 mm (22-1/2 inch) long	1
4	277664A1	TRIM - edge, 575 mm (22-5/8 inch) long	1
5	185493A1	TRIM - edge, 160 mm (6-5/16 inch) long, cut from 137315A1 bulk trim	2
	137315A1	TRIM - edge, bulk, 900 mm (35-7/16 inch) long	1

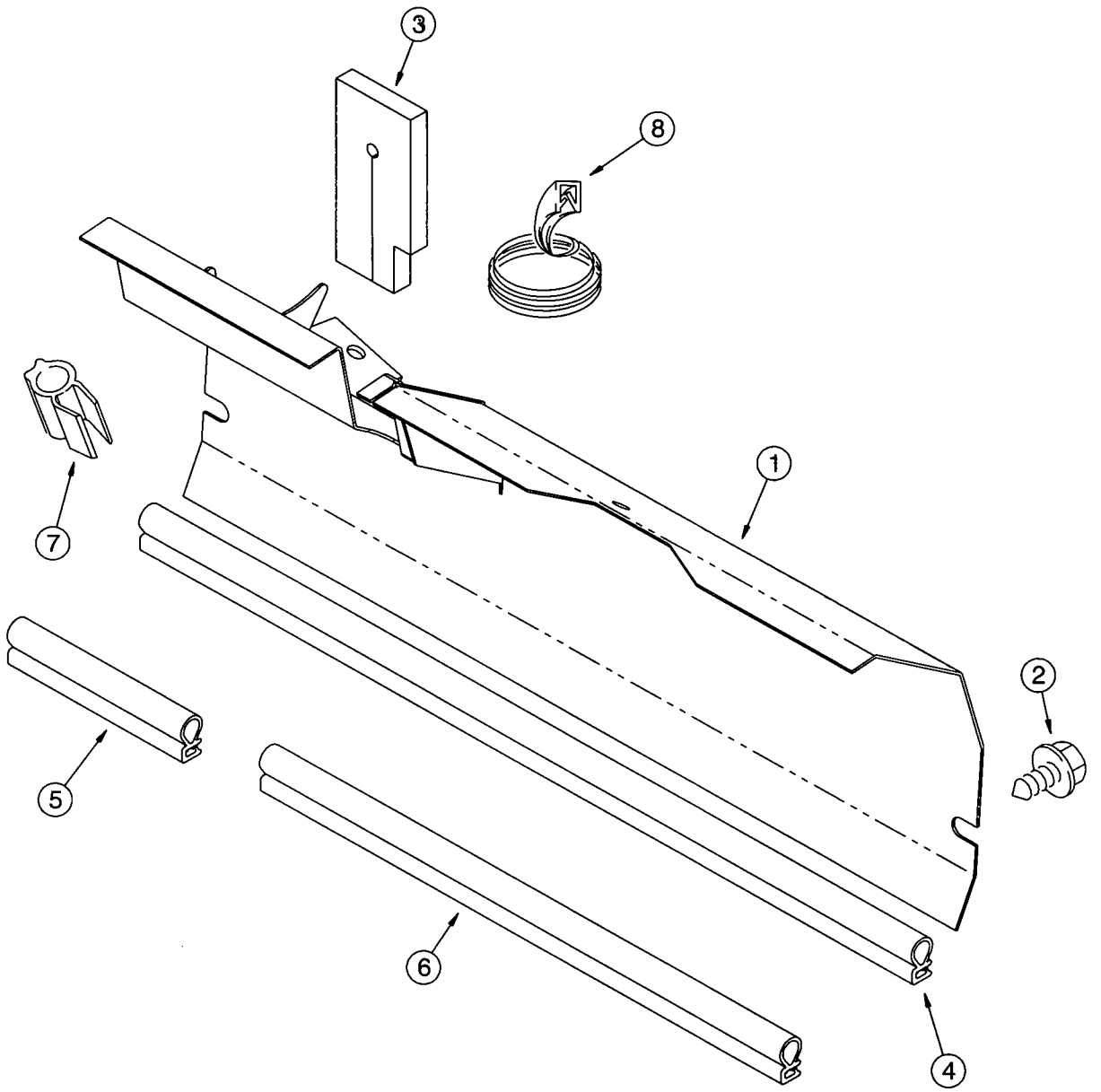
3
8
7
1
2
5
6
4

BAFFLE PLATE AND SEALS
WITH AIR CONDITIONING

REF.	PART NO.	DESCRIPTION	REQ'D.
1	245011A1	PLATE - baffle, if used	1
2	121856A1	BOLT - hex washer, special, 10 - 1.5 x 30 mm	2
3	305690A1	SEAL - foam, adhesive-backed	1
4	245450A1	TRIM - edge, 571 mm (22-1/2 inch) long	1
5	246063A1	TRIM - edge, 170 mm (6-11/16 inch) long, cut from 233749A1 bulk trim	1
6	246064A1	TRIM - edge, 365 mm (14-3/8 inch) long, cut from 233749A1 bulk trim	1
7	185493A1	TRIM - edge, 160 mm (6-5/16 inch) long, cut from 137315A1 bulk trim	2
8	D36179	TRIM - edge, 108 mm (4-1/2 inch) long, cut from F42827 bulk trim	1
	F42827	TRIM - edge, bulk, 2946 mm (116 inch) long	1
	137315A1	TRIM - edge, bulk, 900 mm (35-7/16 inch) long	1
	233749A1	TRIM - edge, bulk, 76200 mm (3000 inch or 250 feet) long	1

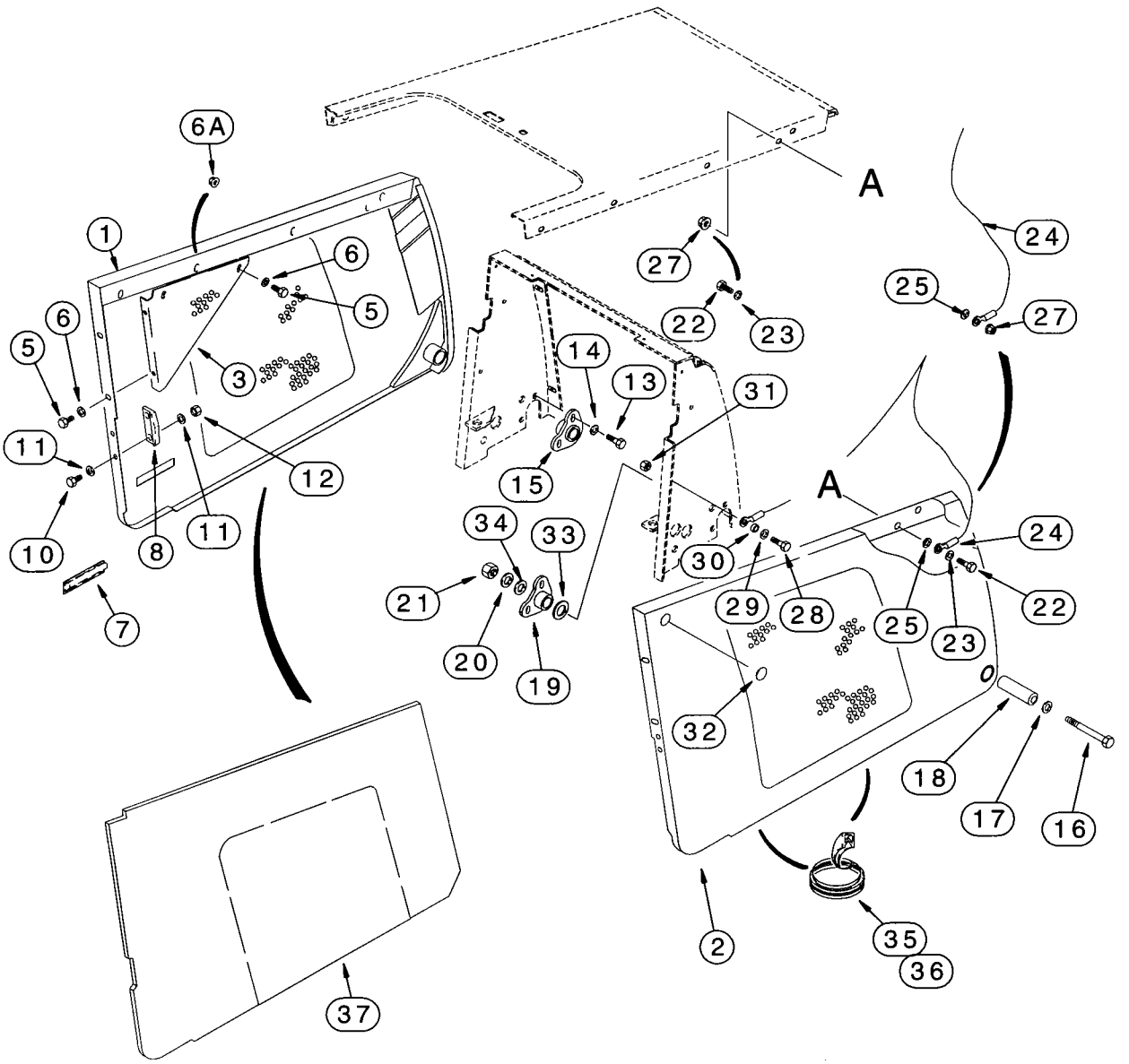
6A
1
6
5
6
5
3
11
12
10
8
11
7
A
27
22
23
14
13
31
15
34
33
21
20
19
30
29
28
25
23
24
22
A
24
25
27
32
18
17
16
2
35
36
37

ENGINE SIDE PANELS

REF.	PART NO.	DESCRIPTION	REQ'D.
1	233523A1	PANEL - engine, left-hand side, with grille	1
2	233522A1	PANEL - engine, right-hand side, with grille	1
3	139492A1	BRACE - side panel, left-hand	1
4	139490A1	BRACE - side panel, right-hand, not shown	1
5	614-10025	BOLT - hex, full threads, 10 - 1.5 x 25 mm	8
6	895-11010	WASHER - flat, 11 x 20 x 2 mm	8
6A	825-2410	NUT - hex flange, 10 mm - 1.5	4
7	183168A1	HANDLE - side panel, left-hand	1
8	D143715	BRACKET - side panel, left-hand	1
9	D143714	BRACKET - side panel, right-hand, not shown	1
10	614-10025	BOLT - hex, full threads, 10 - 1.5 x 25 mm	4
11	895-11010	WASHER - flat, 11 x 20 x 2 mm	8
12	832-10410	NUT - hex, self-locking, 10 mm - 1.5	4
13	121856A1	BOLT - hex washer, special, 10 - 1.5 x 30 mm	4
14	896-11010	WASHER - flat, 11 x 21 x 2.5 mm, hardened	4
15	139835A1	PLATE - pivot, left-hand	1
16	814-12110	BOLT - hex, 12 - 1.75 x 110 mm	2
17	896-15012	WASHER - flat, 13.5 x 28 x 4 mm, hardened	2
18	140428A1	TUBE - pivot	2
19	139834A1	PLATE - pivot, right-hand	1
20	896-15012	WASHER - flat, 13.5 x 28 x 4 mm, hardened	2
21	829-1412	NUT - hex, 12 mm - 1.75, class 10	2
22	614-10025	BOLT - hex, full threads, 10 - 1.5 x 25 mm	1
23	895-11010	WASHER - flat, 11 x 20 x 2 mm	1
24	144908A1	CABLE - hood retaining	1
25	D143417	SPACER - 10 ID x 16 OD x 6 mm long, cable	1
27	825-2410	NUT - hex flange, 10 mm - 1.5	1
28	614-10025	BOLT - hex, full threads, 10 - 1.5 x 25 mm	1
29	895-11010	WASHER - flat, 11 x 20 x 2 mm	1
30	D143417	SPACER - 10 ID x 16 OD x 6 mm long, cable	1
31	829-1410	NUT - hex, 10 mm - 1.5, class 10.9	1
32	D140267	PLUG - side panel	2
33	495-11106	WASHER - flat, 1-1/16 x 2 x 1/8 inch	2
34	896-11012	WASHER - flat, 13.5 x 24 x 3 mm, hardened	2
35	234923A1	TRIM - 150 mm (5-29/32 inch) long, used on models with air conditioning	2
36	244441A1	TRIM - 700 mm (27-9/16 inch) long, used on models with air conditioning	2
37	297837A1	PANEL - noise reduction, insulation, left-hand side	1
38	297836A1	PANEL - noise reduction, insulation, right-hand side, not shown	1

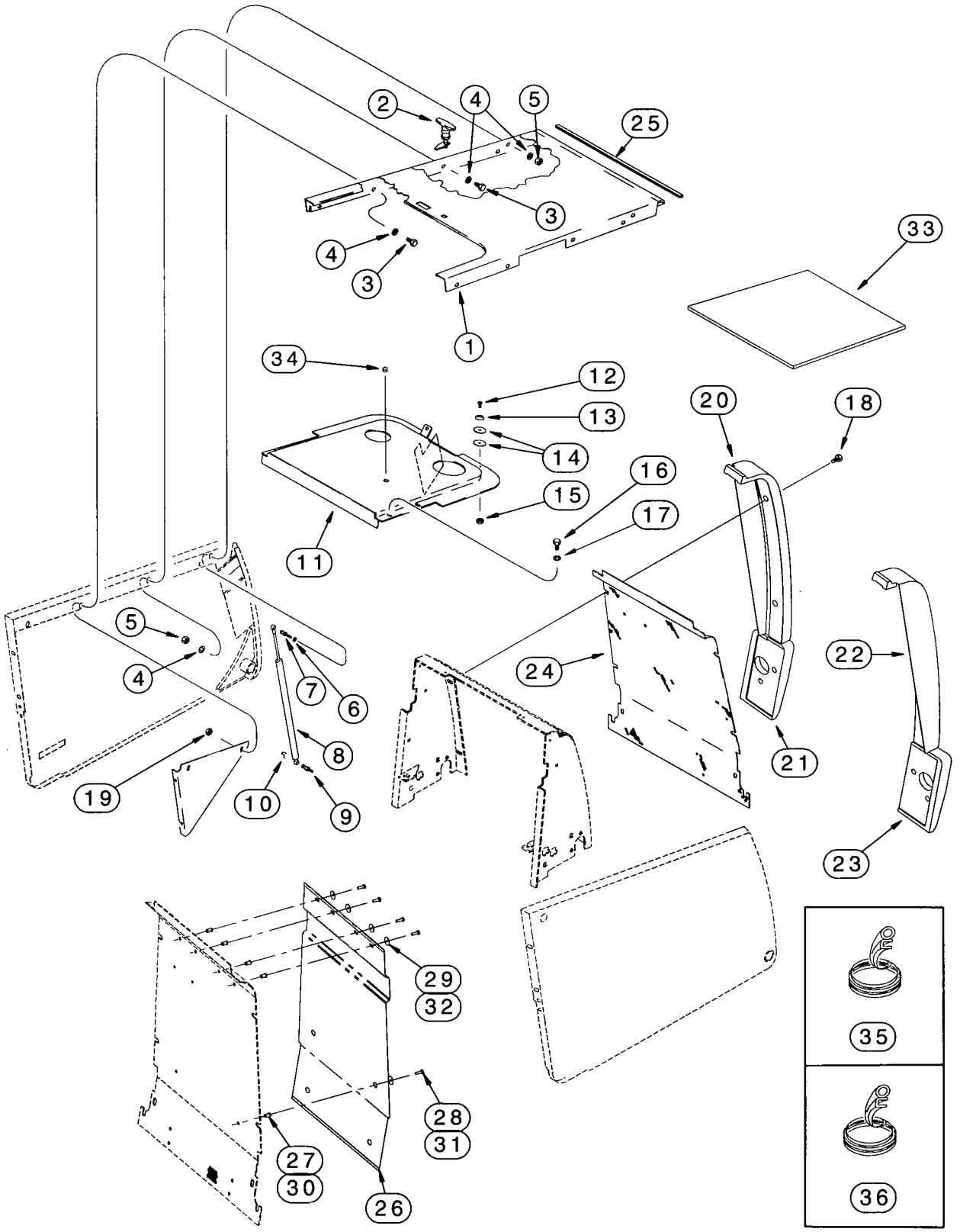
2
4
5
25
3
4
3
1
33
34
12
13
14
16
15
17
11
20
18
5
4
7
6
8
10
9
19
24
21
22
23
29
32
28
31
27
30
26
35
36

TILT HOOD, UPRIGHT COVER, GRILLE UNIT AND CHAFF SCREEN

REF.	PART NO.	DESCRIPTION	REQ'D.
1	139486A2	HOOD - engine, tilt	1
2	175599A1	LATCH - hood	1
3	614-10025	BOLT - hex, full threads, 10 - 1.5 x 25 mm	10
4	895-11010	WASHER - flat, 11 x 20 x 2 mm	14
5	829-1410	NUT - hex, 10 mm - 1.5, class 10.9	8
6	895-11010	WASHER - flat, 11 x 20 x 2 mm	2
7	139362A1	STUD - upper ball, 10 mm - 1.5	2
8	114980A1	CYLINDER - spring, counterbalance, hood	2
9	139363A1	STUD - lower ball	2
10	F44883	RETAINER - lock, ball stud retainer	4
11	292785A1	COVER - chassis upright, with turbocharged engine	1
12	440-11012	SCREW - machine, pan Phillips, No. 10 NC x 3/4 inch	2
13	109879A1	SPACER - plastic, hood spacer	2
14	185325A1	WASHER - spacer	4
15	231-14109	NUT - hex, self-locking, No. 10 NC	2
16	614-10025	BOLT - hex, full threads, 10 - 1.5 x 25 mm	4
17	895-11010	WASHER - flat, 11 x 20 x 2 mm	4
18	121856A1	BOLT - hex washer, special, 10 - 1.5 x 30 mm	8
19	825-2410	NUT - hex flange, 10 mm - 1.5	4
20	139502A1	BUMPER - grille, left-hand upper	1
21	244287A1	BUMPER - grille, left-hand lower	1
22	139500A1	BUMPER - grille, right-hand upper	1
23	244286A1	BUMPER - grille, right-hand lower	1
24	229398A2	GRILLE - radiator shroud, see page 9-157 for Case emblem	1
25	233262A1	SEAL - foam, adhesive-backed, 20 (25/32) x 596 (23-15/32) x 6 mm (1/4 inch), with or without air conditioning, if used	1
26	253889A1	SCREEN - chaff	1
27	255447A1	INSERT - threaded, 1/4 inch, if used	10
28	257381A1	BOLT - hex, 1/4 NC x 3/4 inch, if used	8
29	257382A1	WASHER - flat, 1/4 inch, if used	8
30	255687A1	INSERT - threaded, No. 10, if used	10
31	140-107	SCREW - machine, pan head Phillips, No. 10 NC x 3/4 inch, if used	8
32	185325A1	WASHER - spacer, flat, No. 10, if used	8
33	187389A1	PANEL - noise reduction, insulation	1
34	353-402	PLUG - button, 3/8 inch, models without windshield washer, if used	1
35	234923A1	TRIM - 150 mm (5-29/32 inch) long, hood, if used	2
36	246228A1	TRIM - 1040 mm (41 inch) long, hood, if used	2

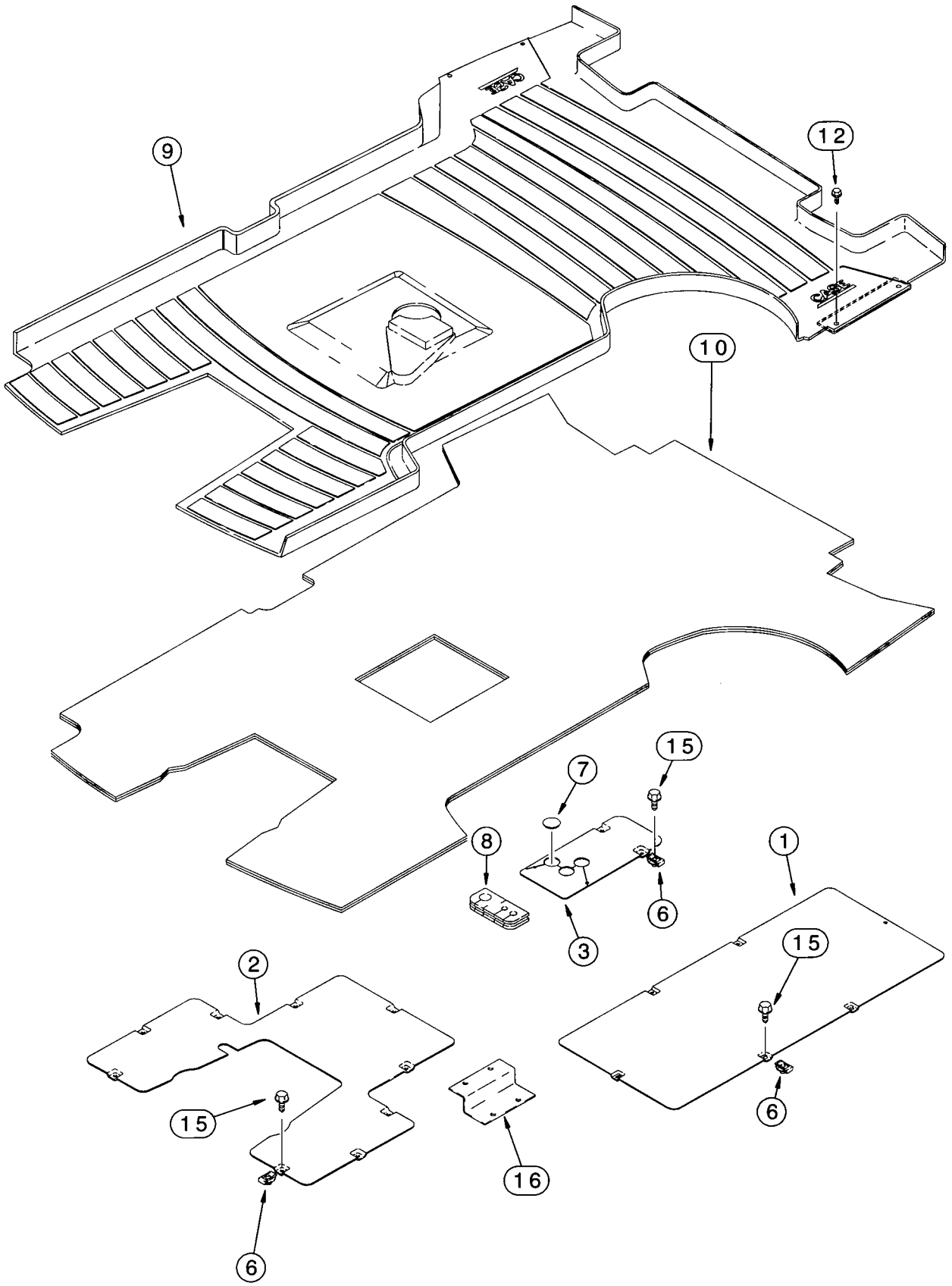
9
12
10
15
7
8
6
3
1
15
6
2
15
6
16

FLOOR PLATES AND FLOORMATS

REF.	PART NO.	DESCRIPTION	REQ'D.
1	234913A1	PLATE - floor, front cover	1
2	298449A1	PLATE - floor, rear cover	1
3	127377A1	PLATE - floor, loader control lever mounting	1
6	833-40406	NUT - U-type, 6 mm - 1.0	21
7	353-422	PLUG - button, 1-1/4 inch, nylon, used on models without clam bucket	1
8	127378A3	GROMMET - rubber, floor	1
9	243122A1	FLOORMAT - cab models, waffle back	1
10	182296A1	PAD - foam, floormat, if used	1
12	280-16516	SCREW - self-tapping, hex washer head, No. 10 - 16 x 1 inch	4
15	233724A1	BOLT - hex washer, self-aligning, 6 - 1.0 x 25 mm	19
16	223199A1	BRACKET - mounting, heater hoses, if used	1

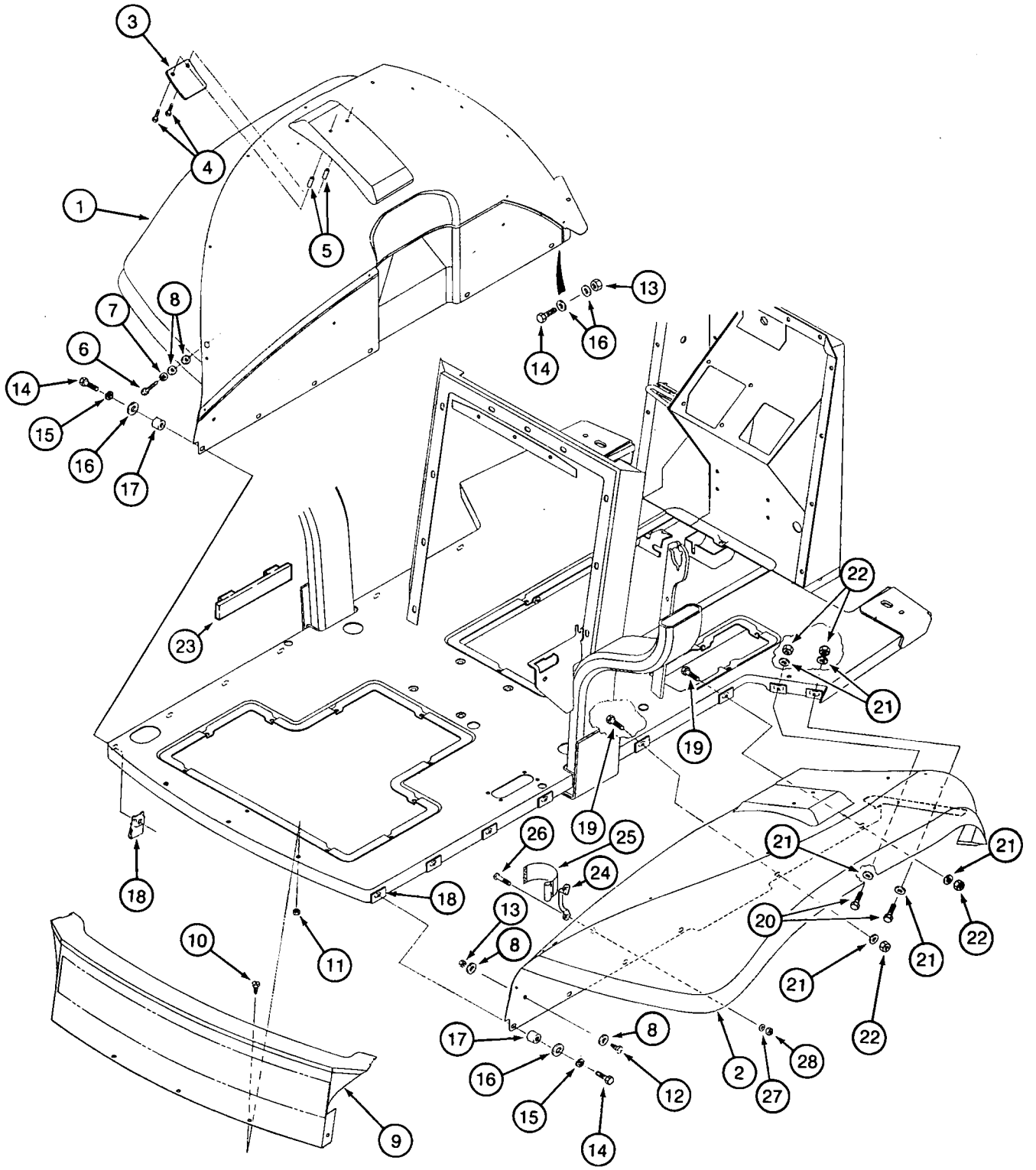
3
4
1
5
13
16
14
8
7
6
14
15
16
17
23
22
21
19
19
26
25
24
18
18
13
8
10
11
21
21
20
21
22
21
22
17
8
16
15
14
12
2
27
28
9

REAR FENDERS AND REAR CLOSURE PANEL

ROPS CANOPY MODELS

REF.	PART NO.	DESCRIPTION	REQ'D.
1	133025A1	FENDER - left-hand	1
2	133024A1	FENDER - right-hand	1
3	141404A1	PLATE - fender support	2
4	781-24830	BOLT - hex flange, self-tapping, 8 - 1.25 x 30 mm	4
5	144282A1	SPACER - 16 x 10 mm long, fender support plate	4
6	413-516	BOLT - hex, 5/16 NC x 1 inch	2
7	492-11031	WASHER - lock, 5/16 inch	2
8	495-21038	WASHER - flat, 3/8 x 7/8 x 3/32 inch	8
9	136745A1	PANEL - rear closure	1
10	112865A1	SCREW - pointed, self-aligning, special, 5/16 NC x 13/16 inch	3
11	425-285	NUT - hex flange, 5/16 inch NC	3
12	614-8025	BOLT - hex, full threads, 8 - 1.25 x 25 mm	2
13	832-10408	NUT - hex, self-locking, 8 mm - 1.25	4
14	614-8030	BOLT - hex, full threads, 8 - 1.25 x 30 mm	12
15	892-11008	WASHER - lock, 8 mm	19
16	495-81001	WASHER - flat, 3/8 x 1-1/8 x 1/16 inch	14
17	144282A1	SPACER - 16 x 10 mm long	10
18	833-40408	NUT - U-type, 8 mm - 1.25	12
19	614-8045	BOLT - hex, full threads, 8 - 1.25 x 45 mm, mud guard to fender, see page 9-101 for mud guard	2
20	814-8035	BOLT - hex, 8 - 1.25 x 35 mm, mud guard to fender, see page 9-101 for mud guard	2
21	895-11008	WASHER - flat, 9 x 17 x 1.6 mm	6
22	832-10408	NUT - hex, self-locking, 8 mm - 1.25	4
23	188482A1	SEAL - foam, fender	2
24	182594A1	BRACKET - velcro retainer	2
25	184726A1	STRAP - velcro, right-hand fender	1
26	842-1425	SCREW - machine, oval countersunk Phillips, 4 - 0.7 x 25 mm	4
27	895-11004	WASHER - flat, 4.4 x 9 x 0.8 mm	4
28	832-10404	NUT - hex, self-locking, 4 mm - 0.7	4

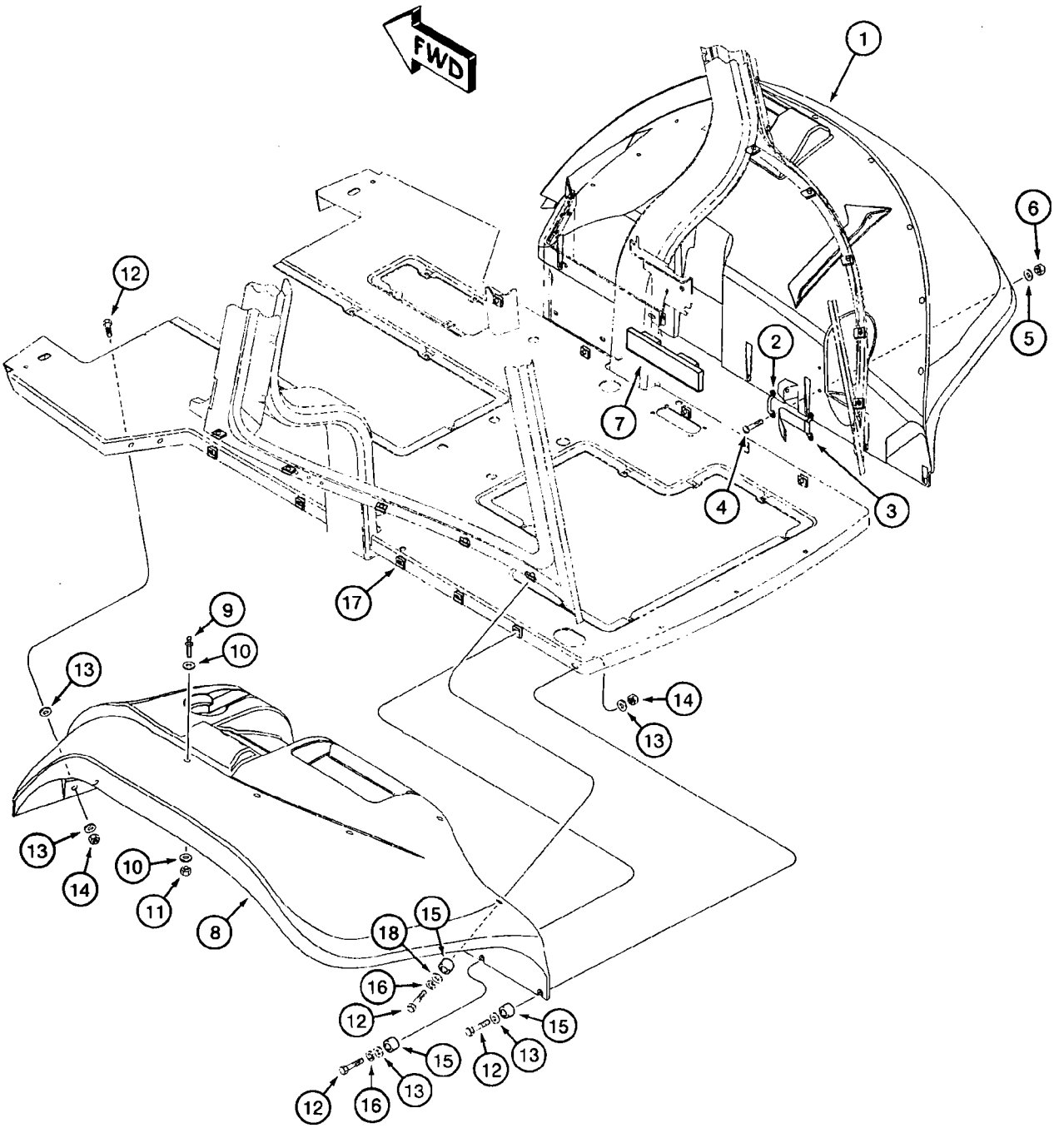
FWD
1
2
3
4
5
6
7
8
9
10
11
12
13
14
15
16
17
18

REAR FENDERS

CAB MODELS

REF.	PART NO.	DESCRIPTION	REQ'D.
1	132134A1	FENDER - right-hand, gray, for hardware mounting the front of the fender, see mud guard page 9-101	1
1A	181457A2	PANEL - fender, right-hand upper, gray vinyl, optional deluxe interior, not shown	1
1B	131975A2	PANEL - fender, right-hand lower, gray vinyl, optional deluxe interior, not shown	1
2	182594A1	BRACKET - velcro retainer	2
3	184726A1	STRAP - velcro, right-hand cab fender	1
4	842-1425	SCREW - machine, oval countersunk Phillips, 4 - 0.7 x 25 mm	4
5	895-11004	WASHER - flat, 4.4 x 9 x 0.8 mm	4
6	832-10404	NUT - hex, self-locking, 4 mm - 0.7	4
7	188482A1	SEAL - foam, ROPS post to fender	2
8	132133A1	FENDER - left-hand, gray	1
8A	304390A1	PANEL - fender, left-hand, gray vinyl, optional deluxe interior, not shown	1
8B	303022A1	INSERT - coffee cup holder, black plastic liner, optional deluxe interior, not shown, see items 19 and 20 for screw and nut	1
8C	188411A2	INSERT - tool tray, black plastic liner, optional deluxe interior, not shown, see items 19 and 20 for screw and nut	1
8D	192274A2	COVER - left-hand fender at cab entrance, black plastic, optional deluxe interior, not shown, see items 19 and 20 for screw and nut	1
9	139362A1	STUD - upper ball, 10 mm - 1.5, left-hand fender	1
10	495-81002	WASHER - flat, 7/16 x 1-3/8 x 5/64 inch	2
11	832-10410	NUT - hex, self-locking, 10 mm - 1.5	1
12	614-8030	BOLT - hex, full threads, 8 - 1.25 x 30 mm	22
13	495-81001	WASHER - flat, 3/8 x 1-1/8 x 1/16 inch	16
14	832-10408	NUT - hex, self-locking, 8 mm - 1.25	4
15	144282A1	SPACER - 16 x 10 mm long, fender support plate	22
16	892-11008	WASHER - lock, 8 mm	18
17	833-40408	NUT - U-type, 8 mm - 1.25	20
18	495-21038	WASHER - flat, 3/8 x 7/8 x 3/32 inch	10
19	140-107	SCREW - machine, pan head Phillips, No. 10 NC x 3/4 inch, retains tool tray and coffee cup inserts and fender cover at cab entrance, not shown	7
20	231-14109	NUT - hex, self-locking, No. 10 NC, used with item 19, not shown	7

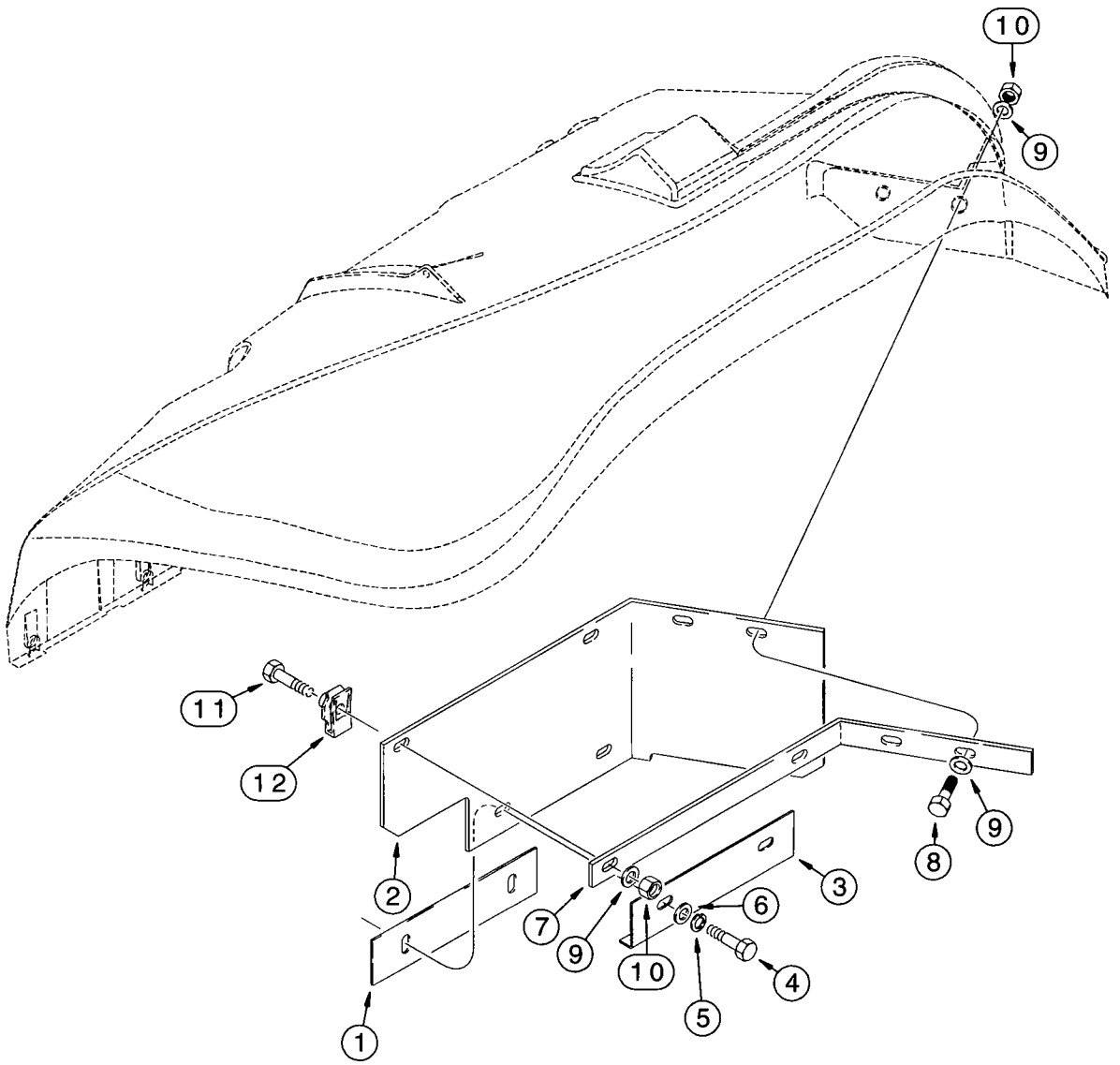
10
9
11
12
2
7
9
10
6
5
4
3
8
9
1

MUD GUARD

REF.	PART NO.	DESCRIPTION	REQ'D.
1	137655A3	PLATE - reinforcement	1
2	182396A2	GUARD - mud, mounts at right-hand fender	1
3	136279A2	ANGLE - mud guard	1
4	614-10030	BOLT - hex, full threads, 10 - 1.5 x 30 mm	2
5	892-11010	WASHER - lock, 10 mm	2
6	895-11010	WASHER - flat, 11 x 20 x 2 mm	2
7	136280A1	ANGLE - mud guard	1
8	814-8035	BOLT - hex, 8 - 1.25 x 35 mm	2
9	895-11008	WASHER - flat, 9 x 17 x 1.6 mm	6
10	832-10408	NUT - hex, self-locking, 8 mm - 1.25	4
11	614-8045	BOLT - hex, full threads, 8 - 1.25 x 45 mm	2
12	833-40408	NUT - U-type, 8 mm - 1.25, fender to frame	2

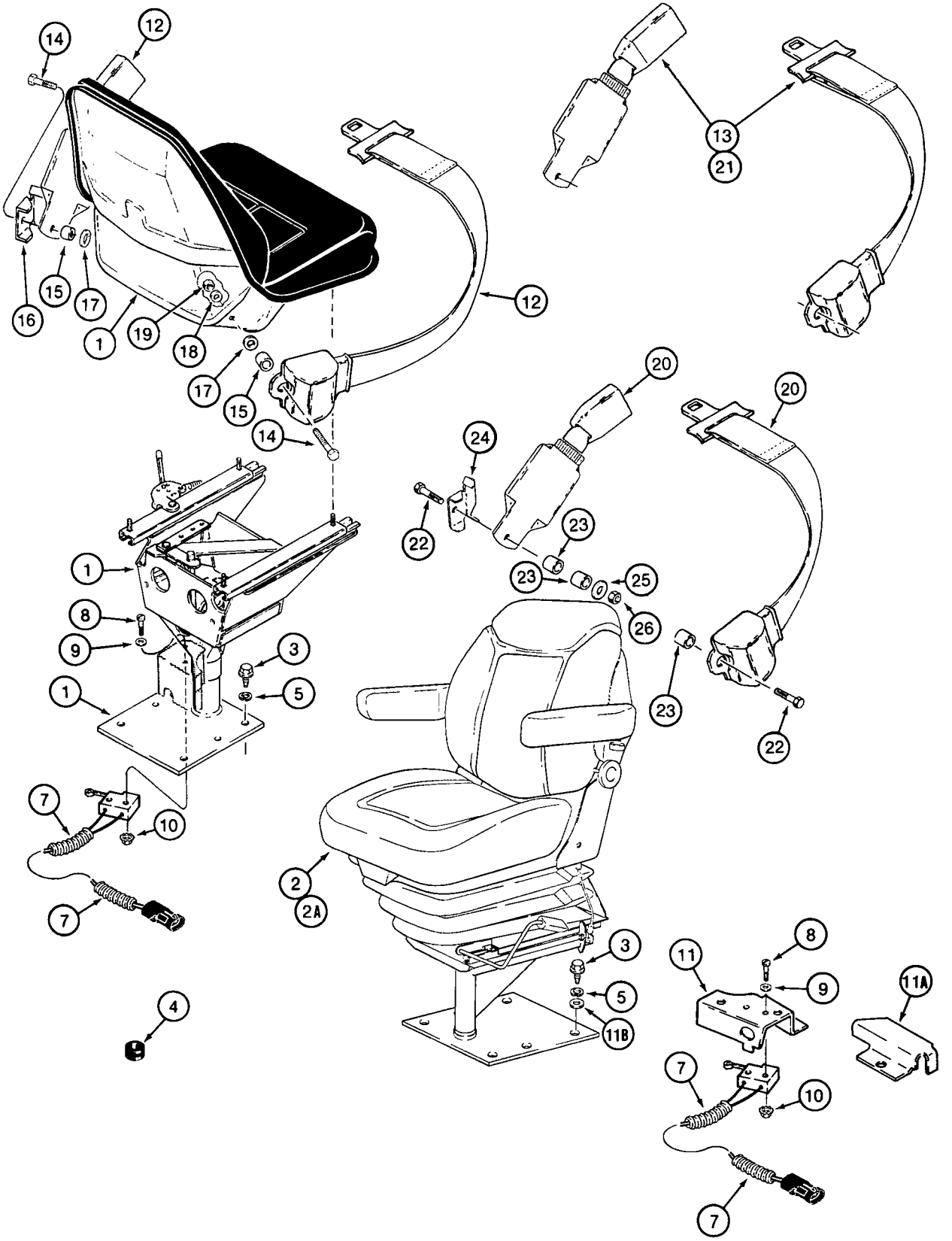
14
12
16
15
17
1
19
18
17
15
14
12
13
21
20
24
22
23
23
25
26
20
23
22
1
8
9
3
5
1
7
10
7
2
2A
4
3
5
11B
11
8
9
11A
7
10
7

SEATS AND MOUNTING PARTS

REF.	PART NO.	DESCRIPTION	REQ'D.
1	185156A1	SEAT ASSEMBLY - standard, gray vinyl, without armrests, includes seat, pedestal, and support, see parts list page 9-109 for seat and page 9-111 for support and pedestal	1
	293021A1	SEAT ASSEMBLY - suspension, gray cloth, complete, includes armrests and mounting hardware (Ref 3-11 and 11B), without seat belts and hardware, component parts list not available at time of printing	1
2	258313A1	SEAT ASSEMBLY - suspension, gray cloth, includes seat, suspension and pedestal, without armrests, component parts list not available at time of printing	1
	293022A1	SEAT ASSEMBLY - suspension, gray vinyl, complete, includes armrests and mounting hardware (Ref 3-11 and 11B), without seat belts, component parts list not available at time of printing	1
2A	259071A1	SEAT ASSEMBLY - suspension, gray vinyl, includes seat, suspension and pedestal, without armrests, component parts list not available at time of printing	1
	292262A1	KIT - left-hand armrest, included in 293021A1 or 293022A1 complete seat assembly, component parts list not available at time of printing	1
	292263A1	KIT - right-hand armrest, included in 293021A1 or 293022A1 complete seat assembly, component parts list not available at time of printing	1
3	614-12040	BOLT - hex, full threads, 12 - 1.75 x 40 mm, standard or suspension seat	4
4	L77821	GROMMET - wire, standard or suspension seat	1
5	892-11012	WASHER - lock, 12 mm	4
7	118769A1	SWITCH - limit, with harness, attaches to side console harness	1
8	470-10620	SCREW - machine, pan head slotted, No. 6 NC x 1-1/4 inch	2
9	495-31016	WASHER - flat, 5/32 x 3/8 x 3/64 inch	2
10	193-1003	NUT - hex, with external tooth lock washer, No. 6 NC	2
11	119211A1	BRACKET - switch mounting, suspension seat only	1
11A	186351A1	BRACKET - harness guard, seat swivel	1
11B	896-11012	WASHER - flat, 13.5 x 24 x 3 mm, hardened, at switch bracket mounting	1

SEAT BELT MOUNTING - STANDARD SEAT

12	D150377	BELT - seat, 51 mm (2 inch) wide, if used	1
13	R58418	BELT - seat, retractable, 76 mm (3 inch) wide, if used	1
14	414-728	BOLT - hex, 7/16 NF x 1-3/4 inch	2
15	D150391	SPACER - belt	2
17	495-81169	WASHER - flat, 17/32 x 2-1/2 x 3/64 inch, not used on deluxe air seat	2
18	496-81010	WASHER - flat, 15/32 x 1 x 7/64 inch, hardened	5
19	232-4617	NUT - hex, self-locking, 7/16 inch NF	2

SEAT BELT MOUNTING - SUSPENSION SEAT

20	*D150377	BELT - seat, 51 mm (2 inch) wide, if used	1
21	*R58418	BELT - seat, retractable, 76 mm (3 inch) wide, if used	1
22	*414-724	BOLT - hex, 7/16 NF x 1-1/2 inch	2
23	D150391	SPACER - belt	2
25	*496-81010	WASHER - flat, 15/32 x 1 x 7/64 inch, hardened	3
26	*232-4617	NUT - hex, self-locking, 7/16 inch NF	2

***NOTE:** Above parts are also used with the deluxe air suspension seat.

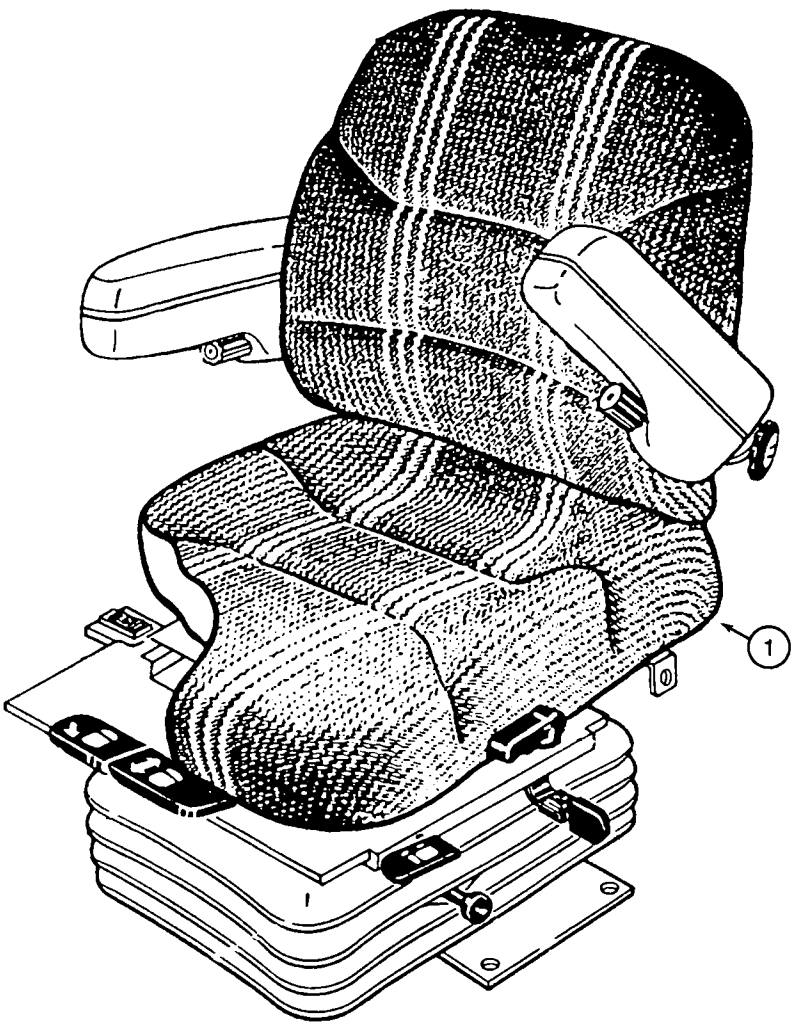
1

DELUXE AIR SUSPENSION SEAT

REF.	PART NO.	DESCRIPTION	REQ'D.
	121414A1	FUSE - mini, 20 ampere, not shown	1
	614-12030	BOLT - hex, full threads, 12 - 1.75 x 30 mm	4
	892-11012	WASHER - lock, 12 mm	4
1	275547A1	SEAT ASSEMBLY - air suspension, cloth, deluxe, complete with armrests, exploded illustration of seat not available at time of printing	1
	300657A1	KIT - seat top assembly	1
	300659A1	KIT - armrest, right-hand	1
	300661A1	KIT - armrest, left-hand	1
	300662A1	KIT - seat cushion, with frame	1
	300663A1	KIT - backrest cushion, with frame	1
	300664A1	KIT - backrest cover	1
	1999693C1	CLIP - christmas tree, package of 14	1
	300665A1	KIT - lumbar, with knob	1
	300667A1	KNOB - lumbar	1
	1987212C1	KIT - seat cushion, back tilt knob	1
	300669A1	PEDESTAL - weldment	1
	300670A1	KIT - lateral isolator	1
	1987219C2	KIT - lateral isolator shock	1
	1987290C1	KIT - spring, isolator	1
	135512A3	KIT - roller bearing, isolator	1
	259054A1	KIT - lateral isolator control	1
	1344025C1	PIN - clevis, pivot	1
	1344026C1	SPRING - latch	1
	300672A1	SWITCH - height adjustment	1
	D137363	SWITCH - contact	1
	300674A1	HARNESS - swivel switch	1
	300675A1	KIT - slide/swivel assembly	1
	300677A1	KIT - upper slide plate assembly	1
	300679A1	SLIDE - latch weldment	1
	300680A1	KIT - slide puck	1
	300681A1	LEVER - slide control	1
	300683A1	LEVER - swivel	1
	300684A1	BELT - tether	1
	300685A1	KIT - air suspension assembly	1
	226560A1	HOUSING - lower, with upper stop bracket	1
	300688A1	HOUSING - upper	1
	132862A1	ARM - suspension	1
	143786A1	SHAFT - bearing	1
	197793A1	KIT - air spring	1
	132866A1	KIT - shock absorber	1
	300689A1	KIT - compressor and valve	1
	300690A1	MOUNT - compressor	1
	180593A1	KIT - bumper	1
	231-1444	NUT - hex, self-locking, 1/4 inch NC	2
	340-12520	SCREW - machine, pan Phillips, 1/4 NC x 1-1/4 inch	2
	300691A1	KIT - fore/aft isolator latch	1

NOTE: See page 9-103 for seat belts and mounting.

Continued on next page

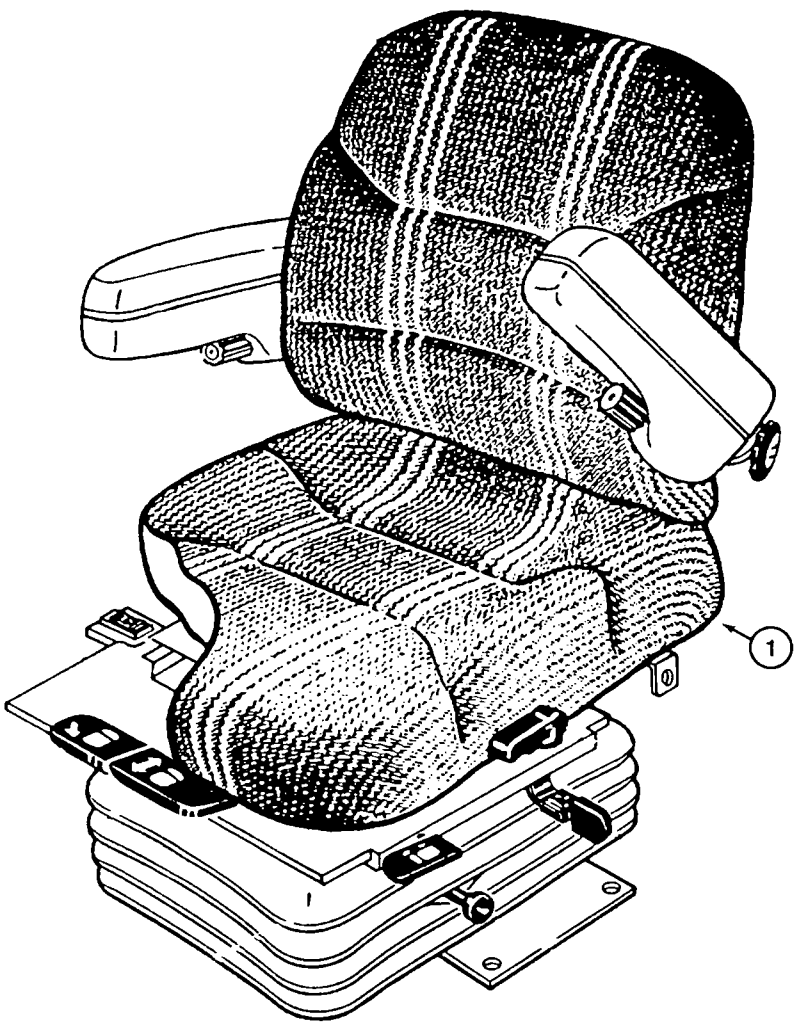
1

DELUXE AIR SUSPENSION SEAT

REF.	PART NO.	DESCRIPTION	REQ'D.
1	275547A1	SEAT ASSEMBLY - air suspension; cloth, deluxe, complete with armrests, exploded illustration of seat not available at time of printing, continued from previous page	1
	1981850C1	KNOB - isolator control	1
	300692A1	KIT - fore/aft isolator latch	1
	133422A1	BUMPER - rubber	2
	A45054	BUMPER - seat	1
	133421A1	KIT - boot, with pins	1
	132872A1	KIT - boot pin, package of 23 retainers and 3 dome nuts	1
	180594A3	KIT - rollers and bearings	1
	131-425	NUT - push-on type, 1/2 inch	1
	300896A1	HARNESS - wire	1
	1990548C4	KIT - air line and fittings	1
	L18337	STRAP - tie, 15 inch	4
	176091A1	KIT - retaining, hog ring, package of 50 rings for cushions	1

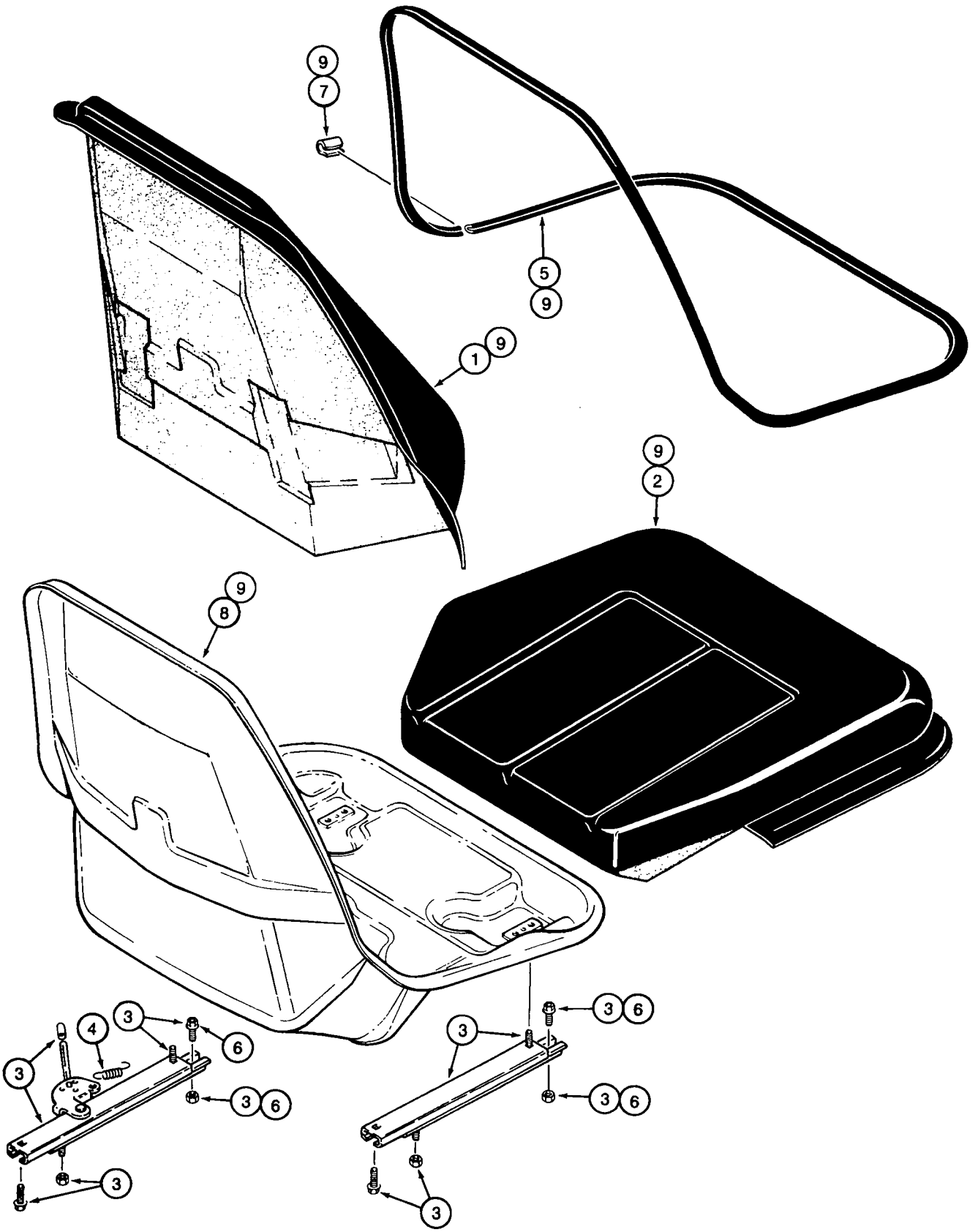
9
7
5
9
1
9
9
2
9
8
4
3
6
3
6
3
3
6
3
6
3

STANDARD SEAT ASSEMBLY

REF.	PART NO.	DESCRIPTION	REQ'D.
	185156A1	SEAT ASSEMBLY - standard, gray vinyl, not serviced as a complete assembly, for service order respective component kits, see page 9-111 for standard support and pedestal	1
1	176926A1	KIT - backrest cushion, gray	1
2	176925A1	KIT - seat cushion, gray	1
3	116760A1	KIT - adjuster, seat slide, fore/aft	1
4	119171A1	KIT - spring, seat adjuster slide, also includes vertical latch and extension springs used in the standard pedestal on page 9-111	1
5	176924A1	TRIM - edging, gray, cushion to shell	1
6	181169A1	KIT - cable, fore-aft/swivel mechanism, also includes cable on page 9-111	1
7	NSS	CLIP - retainer, order N7802 clip kit, see below	1
8	NSS	SHELL - seat frame, order 234223A1 shell, cushion and trim kit, Ref 9	1
9	234223A1	KIT - seat shell, cushion and trim, includes Ref 1, 2, 5 and 8	1
	N7802	KIT - clip, includes item 7 clip above, plus 6 additional narrow clips	1

NOTE: Each kit includes an instruction sheet.

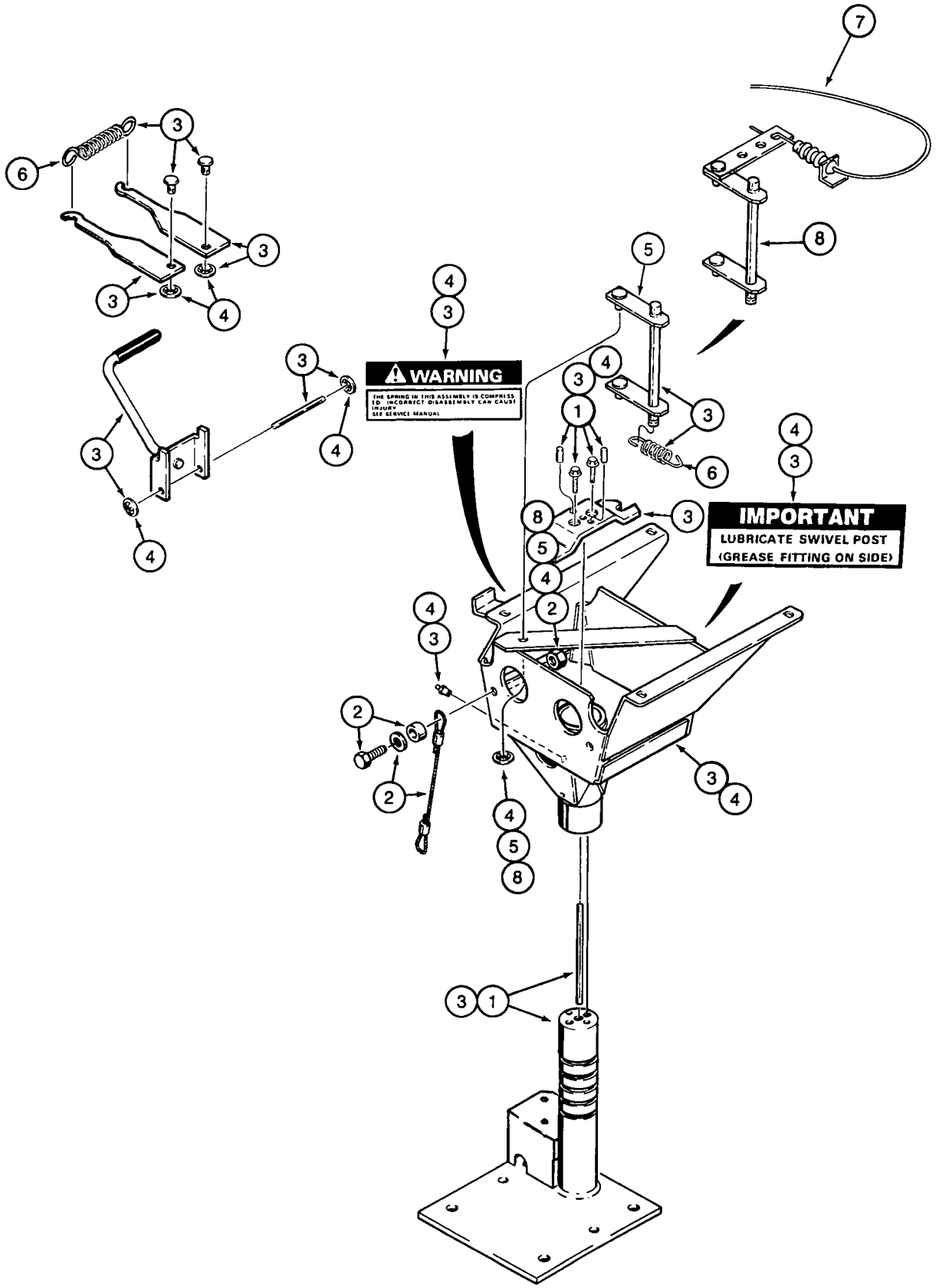
WARNING
IMPORTANT
LUBRICATE SWIVEL POST
(GREASE FITTING ON SIDE)

STANDARD SEAT SUPPORT AND PEDESTAL

REF.	PART NO.	DESCRIPTION	REQ'D.
	185156A1	SEAT ASSEMBLY - standard, gray vinyl, includes seat on page 9-109 and support and pedestal below, individual component parts not serviced separately, for service order respective kits	1
1	*116761A2	KIT - support, base	1
2	116763A1	KIT - cable, anchor, includes hardware for both ends of cable	1
3	*116764A2	KIT - pedestal, includes 219-16 grease fitting	1
4	*116766A2	KIT - pedestal box, includes 219-16 grease fitting	1
5	*116767A1	KIT - swivel latch, includes (6) lock nuts, (1) push nut and (1) swivel latch, if used	1
6	119171A1	KIT - spring, also includes seat slide adjuster spring on page 9-109	1
7	181169A1	KIT - cable, fore-aft/swivel mechanism, also includes (4) nuts on page 9-109	1
8	253209A1	KIT - swivel latch, includes (4) lock nuts, (1) rivet, (1) spacer, (1) washer, (1) push nut and (1) swivel latch, if used	1

NOTE: Each kit includes an instruction sheet.

***NOTE:** Also includes (4) lock nuts for seat adjuster slide on page 9-109.

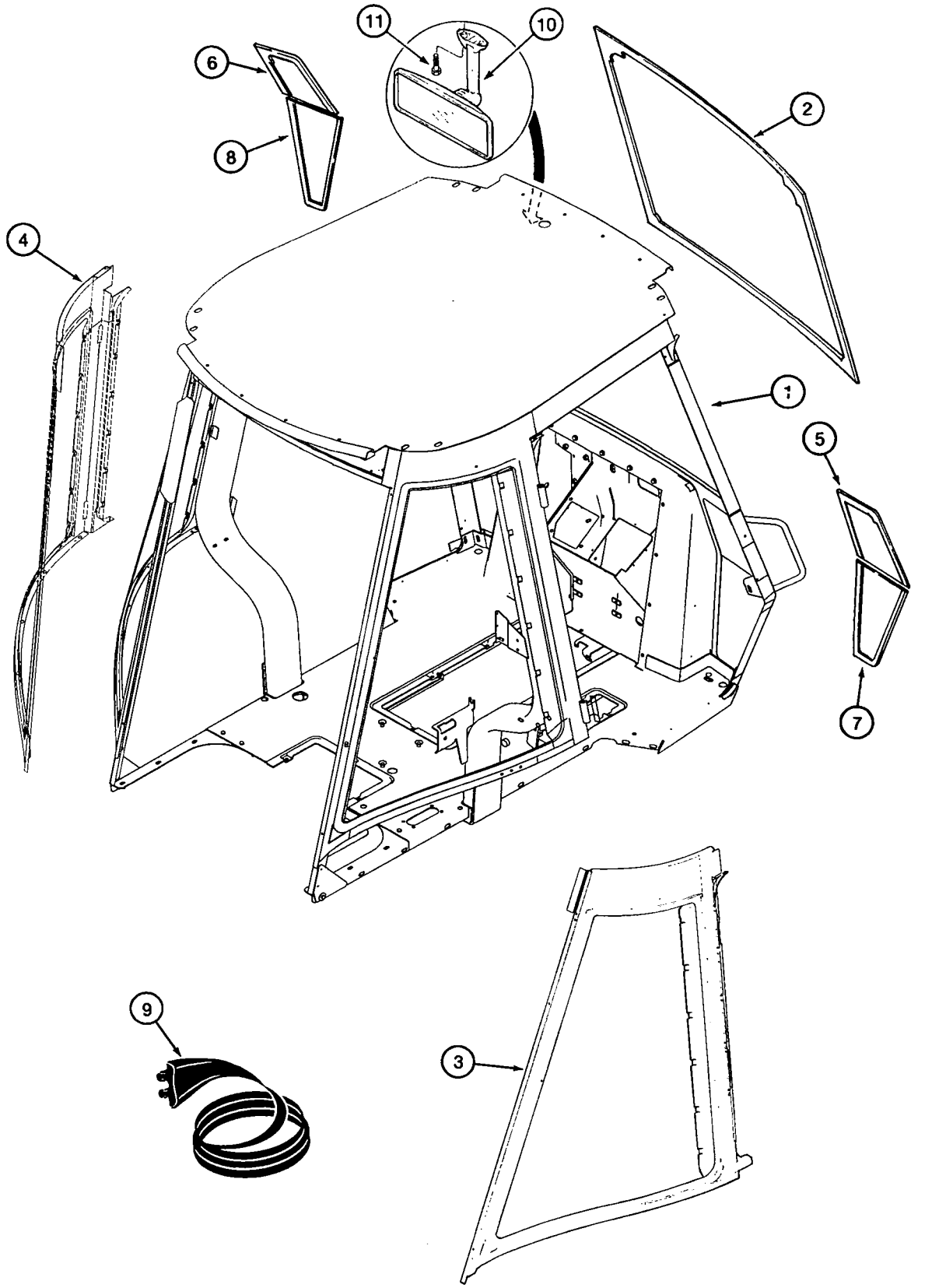
11
10
6
2
8
4
1
5
7
9
3

ROPS CAB AND GLASS

REF.	PART NO.	DESCRIPTION	REQ'D.
1	280995A1	CAB ASSEMBLY - ROPS, operators, complete with heat, order from Machinery Price List, parts list pages 9-113 thru 9-145	1
1	280996A1	CAB ASSEMBLY - ROPS, operators, complete with heat and air conditioning, order from Machinery Price List, parts list pages 9-113 thru 9-145	1
2	97290C1	GLASS - front windshield	1
3	D126204	GLASS - right-hand rear quarter panel window	1
4	D126205	GLASS - left-hand rear quarter panel window	1
5	107230A1	GLASS - knee, upper, right-hand	1
6	107233A1	GLASS - knee, upper, left-hand	1
7	107232A1	GLASS - knee, lower, right-hand	1
8	107234A1	GLASS - knee, lower, left-hand	1
9	108513A1	SEAL - 290 mm (11-7/16 inch) long, front knee glass	2
10	143369A2	MIRROR - rear view, interior	1
11	286-56520	SCREW - self-tapping, Fillister head, No. 10 NC x 1-1/4 inch	2

NOTE: The grab handles are welded to the cab frame and there is no service replacement for these handles.

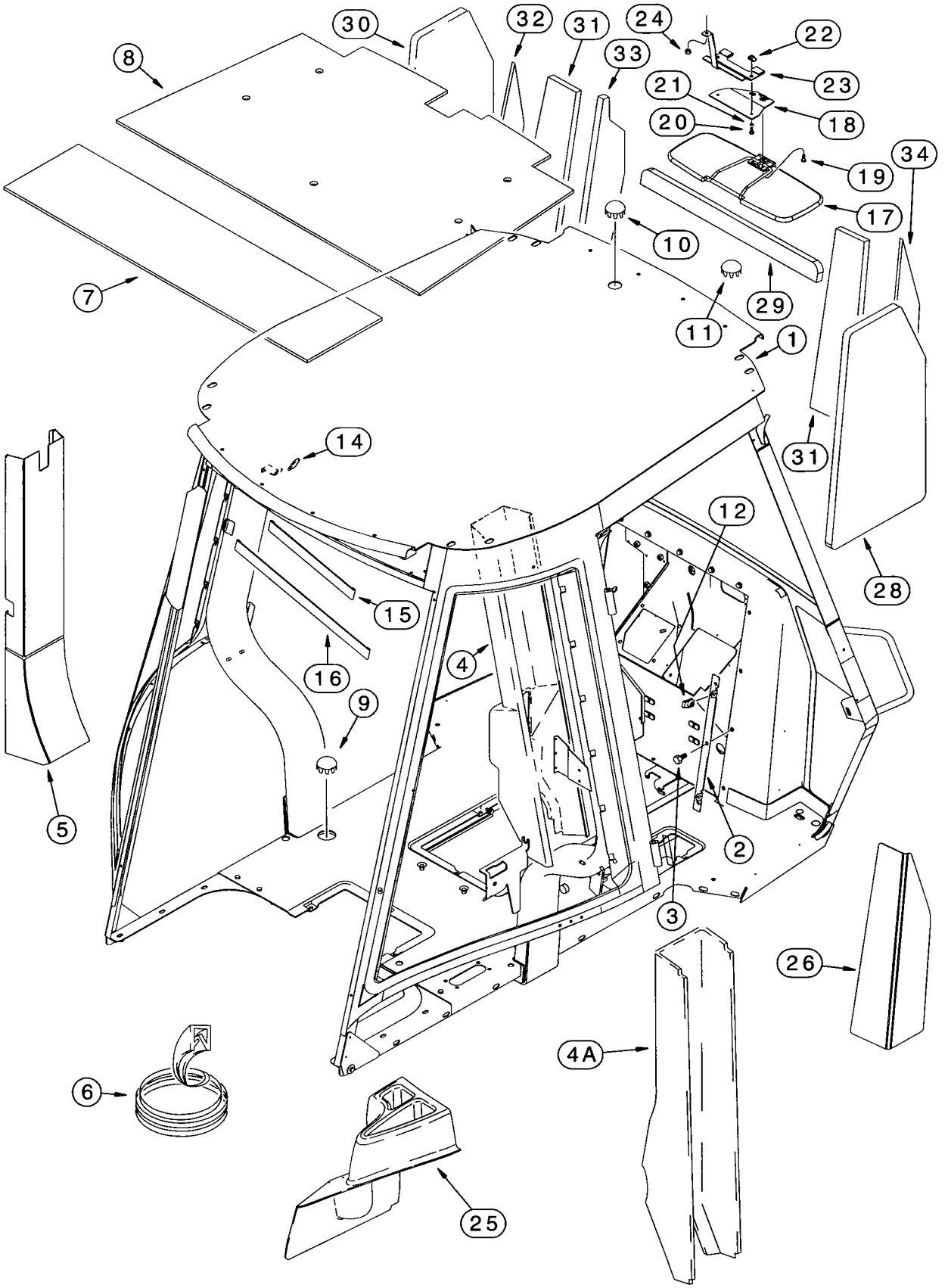
30
32
31
24
22
8
33
21
23
20
18
34
19
17
10
7
29
11
1
14
31
12
28
15
16
4
9
5
2
3
26
4A
6
25

CAB FRAME, COVERS AND INSULATION

REF.	PART NO.	DESCRIPTION	REQ'D.
1	281009A1	FRAME - ROPS cab, this frame is not serviced separately	1
2	137851A1	PLATE - bar, front console mounting to firewall, also shown on page 4-23, no longer included with frame, purchase separately	2
3	844-8020	BOLT - heavy hex flange, 8 - 1.25 x 20 mm, no longer included with frame, purchase separately	13
4	126371A1	COVER - plastic, right-hand post	1
4A	131977A2	COVER - gray vinyl, right-hand post, optional deluxe interior	1
5	291609A1	COVER - gray vinyl, left-hand post, optional deluxe interior	1
6	108963A1	SEAL - trim, right-hand post	2
7	108797A1	PAD - insulation, rear, 200 x 813 x 6.4 mm, cut from 108794A2 bulk pad	1
8	127021A2	PAD - insulation, front cab roof	1
9	205-129	PLUG - button, 2 inch ID, floor	2
10	353-415	PLUG - button, 1-1/2 inch, cab roof, models without radio antenna	1
11	353-410	PLUG - button, 7/8 inch, windshield frame, top, models without radio antenna	1
12	833-40406	NUT - U-type, 6 mm - 1.0	4
14	294666A1	COVER - coat hook	1
15	296367A1	STRAP - velcro	1
16	282845A1	STRAP - velcro	1
17	E47027	VISOR - sun shade	1
18	227420A1	BRACKET - visor mounting	1
19	840-1516	SCREW - machine, pan Phillips, 5 - 0.8 x 16 mm	3
20	614-6025	BOLT - hex, full threads, 6 - 1.0 x 25 mm	2
21	892-11006	WASHER - lock, 6 mm	2
22	833-40406	NUT - U-type, 6 mm - 1.0	2
23	227178A2	BRACKET - visor support	1
24	829-1408	NUT - hex, 8 mm - 1.25, class 10	1
25	292264A1	TRAY - tool, storage, mounts behind right-hand console, optional deluxe interior	1
26	299001A1	COVER - right-hand lower front, optional deluxe interior	1
27	300152A1	COVER - left-hand lower front, optional deluxe interior, not shown	1
	833-40406	NUT - U-type, 6 mm - 1.0	2
	614-6020	BOLT - hex, full threads, 6 - 1.0 x 20 mm	2
	895-15006	WASHER - flat, 6.6 x 25 x 1.6 mm	2
28	297915A1	SEAL - noise reduction, insulation, right-hand front firewall	1
29	297913A1	SEAL - noise reduction, insulation, front firewall	1
30	297914A1	SEAL - noise reduction, insulation, left-hand front firewall	1
31	303105A1	SEAL - noise reduction, insulation, front firewall	2
32	303108A1	SEAL - noise reduction, insulation, left-hand firewall	1
33	303109A1	SEAL - noise reduction, insulation, firewall	1
34	303106A1	SEAL - noise reduction, insulation, right-hand firewall	1
	108794A2	PAD - bulk, 577 x 813 x 6.4 mm, insulation	1

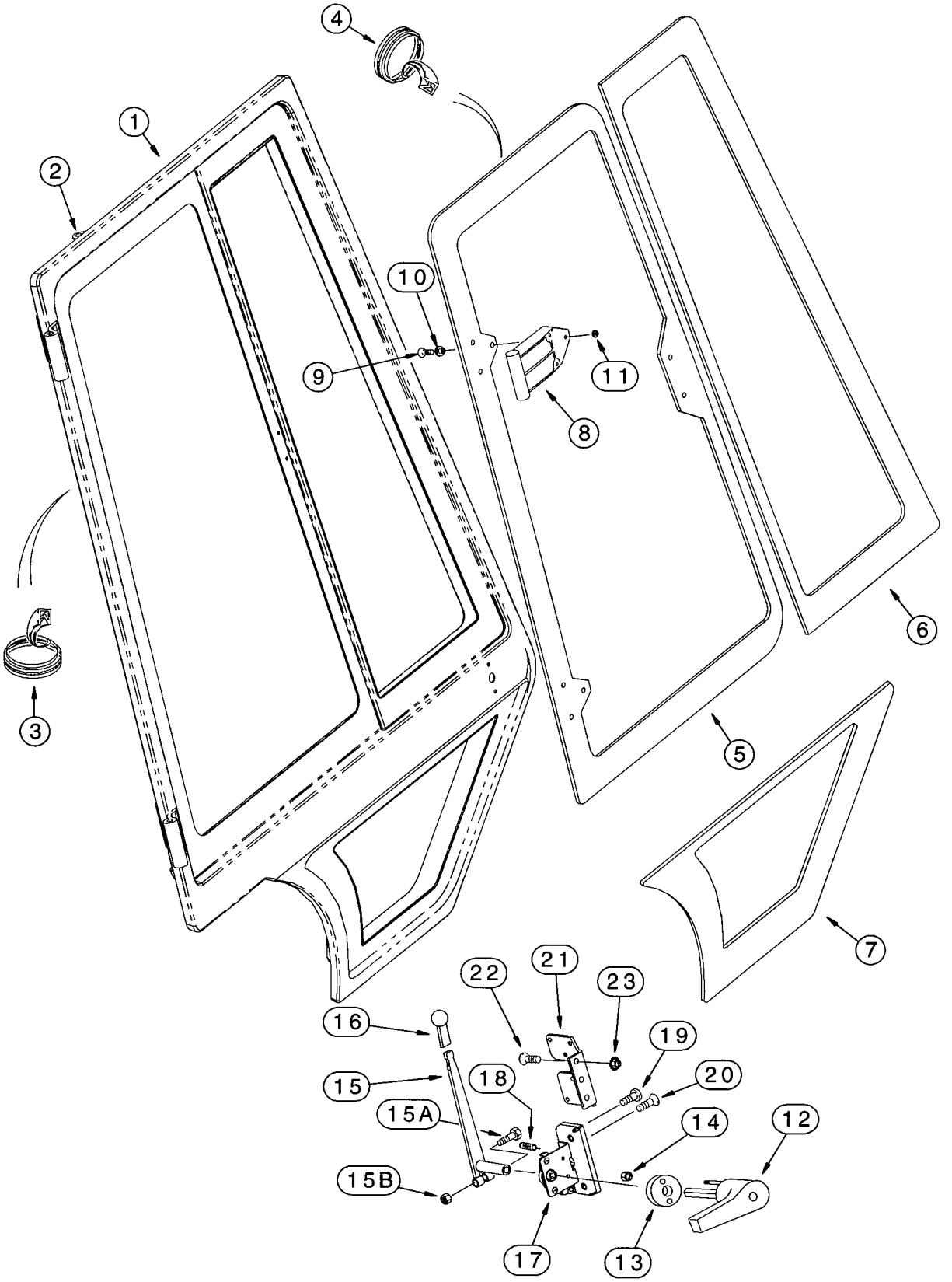
4
1
2
10
9
11
8
6
3
5
7
22
21
23
16
19
15
18
20
15A
14
12
15B
17
13

LEFT-HAND AND RIGHT-HAND CAB DOORS - EXTERIOR

REF.	PART NO.	DESCRIPTION	REQ'D.
1	137869A3	FRAME - right-hand door	1
1A	137868A3	FRAME - left-hand door, not shown	1
2	R53562	BRACKET - cable, welded to left-hand or right-hand door frame	1
3	187582A2	SEAL - bulb type, with drain holes, 4585 mm (180-1/2 inch) long, with self adhesive	2
4	R53444	SEAL - bulb type, 2689 mm (105-7/8 inch) long, left-hand and right-hand window frames	2
5	R52882	GLASS - right-hand door, rear window, tinted	1
5A	R52881	GLASS - left-hand door, rear, window, tinted, not shown	1
6	R52880	GLASS - right-hand door, front, tinted	1
6A	R52879	GLASS - left-hand door, front, tinted, not shown	1
7	R52884	GLASS - right-hand door, lower, tinted	1
7A	R52883	GLASS - left-hand door, lower, tinted, not shown	1
8	R52917	HINGE - glass, door window	4
9	142-103	SCREW - machine, oval Phillips, No. 10 NC x 3/4 inch, left-hand and right-hand door window hinge	12
10	F64198	SPACER - nylon, black, glass to hinge, left-hand and right-hand door window hinge	12
11	F45165	NUT - hex, self-locking, special, No. 10 NC, Teflon coated, left-hand and right-hand door window hinge	12
12	196675A2	HANDLE - right-hand door, outer	1
12A	196673A2	HANDLE - left-hand door, outer, not shown	1
13	F64342	GASKET - door handle, left-hand and right-hand	2
14	231-14109	NUT - hex, self-locking, No. 10 NC, left-hand and right-hand handles	4
	255450A1	KIT - service, inner door handle, includes (1 each) Ref 15 - 15B, plus instructions	1
15	255453A1	LEVER - inner left-hand or right-hand door latch handle	1
15A	814-8045	BOLT - hex, 8 - 1.25 x 45 mm	1
15B	832-10408	NUT - hex, self-locking, 8 mm - 1.25	1
16	D135387	KNOB - lever, inner door latch	2
17	R55000	LATCH ASSEMBLY - door, right-hand, rotary	1
17A	R55001	LATCH ASSEMBLY - door, left-hand, rotary, not shown	1
18	A180163	SPRING - extension, left-hand or right-hand door latch	1
19	265-16512	SCREW - self-tapping, oval Phillips, No. 10-16 x 3/4 inch, left-hand and right-hand door latch	4
20	137731A1	SCREW - machine, flat head Phillips, special, 1/4 NC x 1 inch, left-hand and right-hand door latch	8
21	1977401C1	BRACKET - latch, right-hand rotary	1
21A	1977402C1	BRACKET - latch, left-hand rotary, not shown	1
22	443-13112	SCREW - machine, flat Phillips, 5/16 NC x 3/4 inch	6
23	231-5145	NUT - hex serrated flange, 5/16 inch NC	6

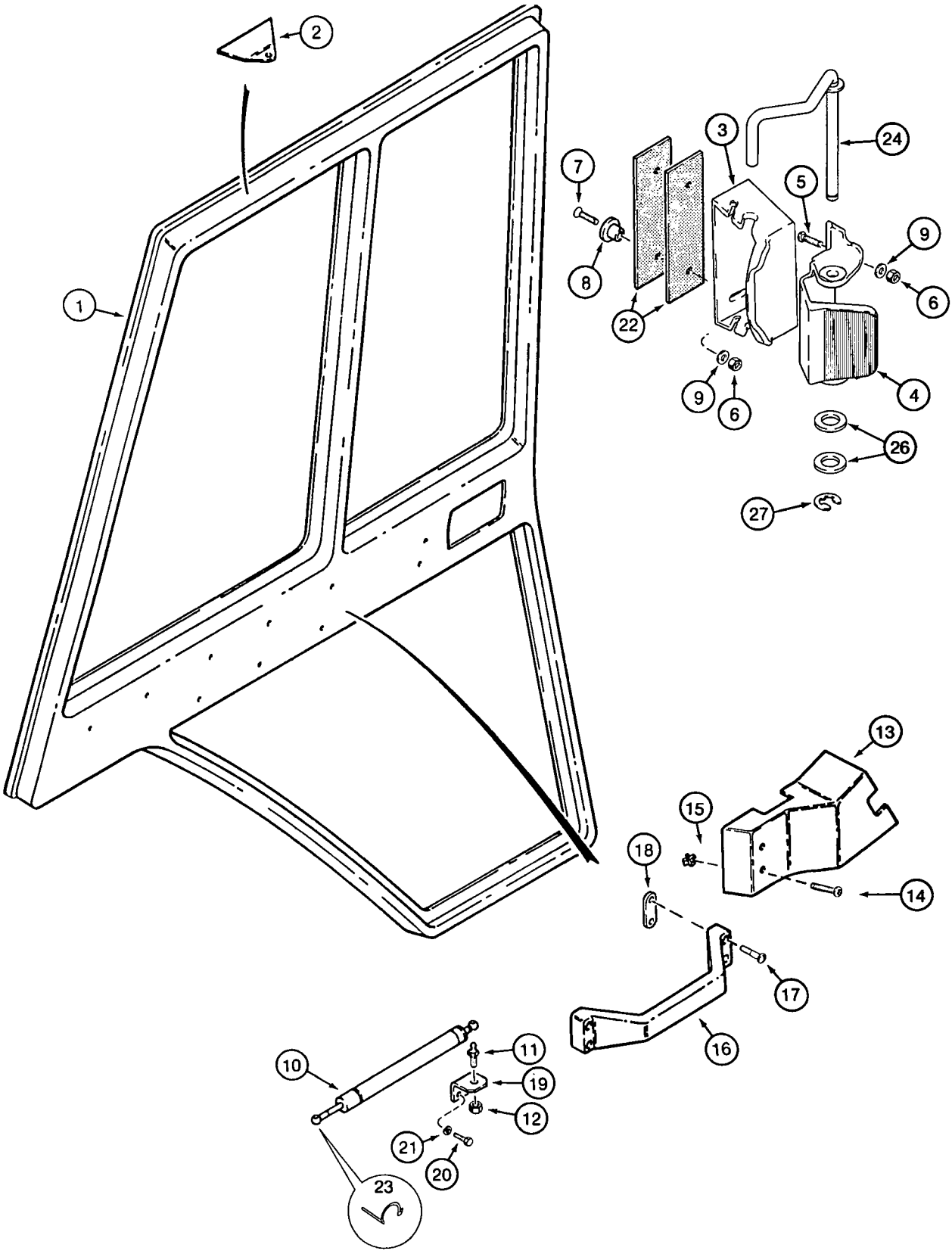
1
2
3
4
5
6
7
8
9
10
11
12
13
14
15
16
17
18
19
20
21
22
23
24
26
27

LEFT-HAND AND RIGHT-HAND CAB DOORS - INTERIOR

REF.	PART NO.	DESCRIPTION	REQ'D.
1	137868A3	FRAME - left-hand door	1
1A	137869A3	FRAME - right-hand door, not shown	1
2	R53562	BRACKET - cable, welded to left-hand or right-hand door frame	1
3	281069A1	HANDLE - door window	2
4	281068A1	LATCH - push type, door window	2
5	140-104	SCREW - machine, pan head Phillips, No. 8 NC x 3/4 inch	4
6	F45165	NUT - hex, self-locking, special, No. 10 NC	8
7	142-103	SCREW - machine, oval Phillips, No. 10 NC x 3/4 inch	4
8	F64198	SPACER - nylon, black, glass to bracket	4
9	195-81023	WASHER - flat, 1/4 x 9/16 x 3/64 inch	8
10	F44881	CYLINDER - door, left-hand and right-hand	2
11	1340345C1	STUD - ball, cylinder	2
12	230-4215	NUT - hex, self-locking, 5/16 inch NC	2
13	108938A2	PANEL - left-hand door	1
13A	108936A2	PANEL - right-hand door	1
14	260-16524	SCREW - self-tapping, pan Phillips, No. 10-16 x 1-1/2 inch, black, left-hand and right-hand door panels	4
15	R53000	RETAINER - screw, left-hand and right-hand door panels	4
16	1958970C1	HANDLE - left-hand and right-hand inner door	2
17	165-129	BOLT - hex socket, self-locking, 1/4 NC x 3/4 inch, black, left-hand and right-hand inner door handles	8
18	1971368C1	PLATE - retainer, left-hand and right-hand inner door handle	4
19	1977399C1	BRACKET - cylinder	2
20	413-48	BOLT - hex, 1/4 NC x 1/2 inch	4
21	492-11025	WASHER - lock, 1/4 inch	4
22	R54047	SHIM - latch bracket, left-hand and right-hand door window	4
23	F44883	RETAINER - lock, clip	2
24	291129A1	ROD - window prop, hold open, left-hand	1
25	280336A1	ROD - window prop, hold open, right-hand, not shown	1
26	895-11008	WASHER - flat, 9 x 17 x 1.6 mm	4
27	100-3331	RING - E-type, external retaining, No. 31	2

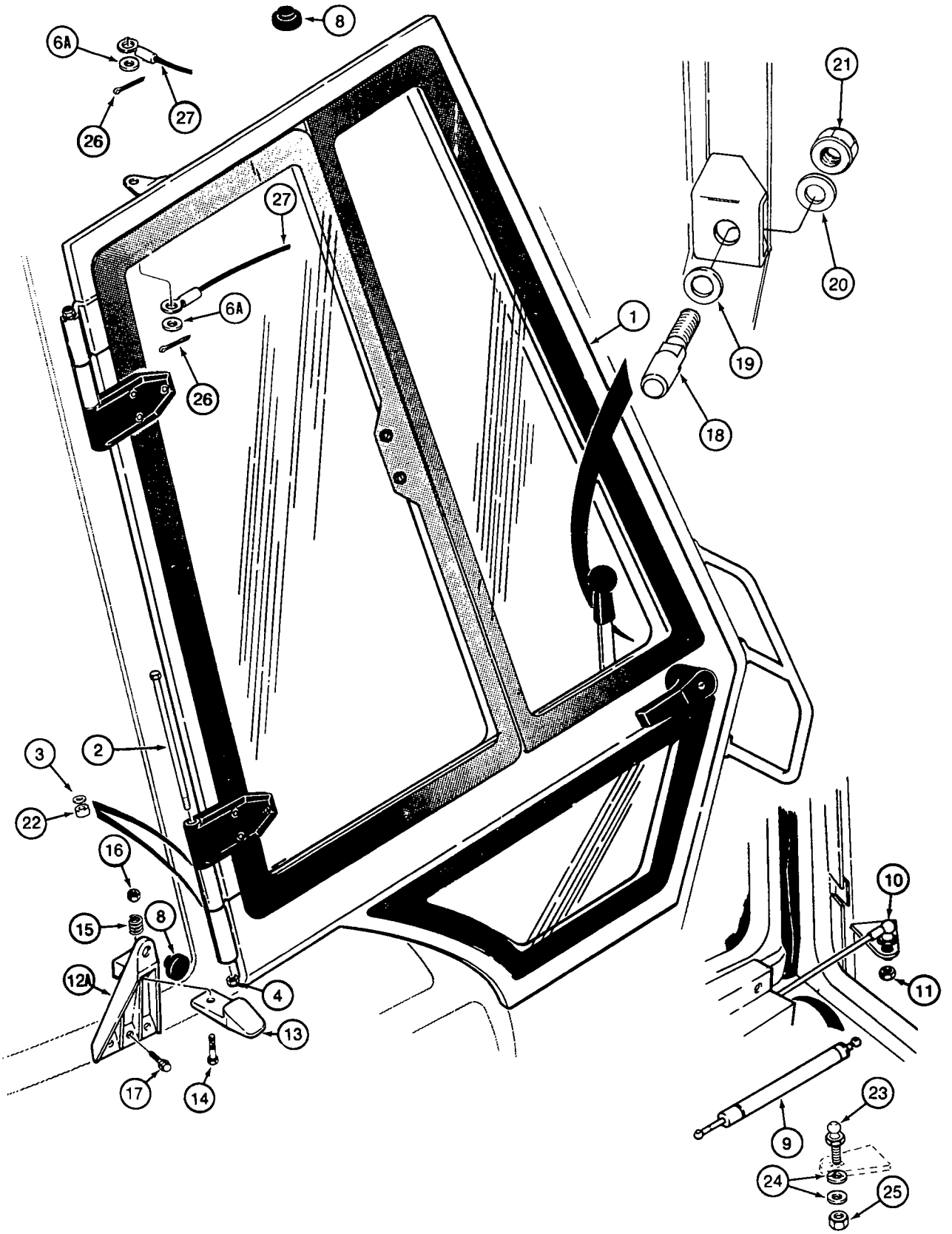
8
6A
26
27
21
20
19
1
18
27
6A
26
3
2
22
16
15
8
12A
4
13
17
14
10
11
9
23
24
25

LEFT-HAND AND RIGHT-HAND CAB DOOR MOUNTING

REF.	PART NO.	DESCRIPTION	REQ'D.
1	REF	DOOR - cab, see page 9-117 through 9-121	1
2	413-6152	BOLT - hex, 3/8 NC x 9-1/2 inch	4
3	F64046	WASHER - thrust, plastic	8
4	131-203	NUT - light hex, self locking, 3/8 inch NC	4
6A	495-21038	WASHER - flat, 3/8 x 7/8 x 3/32 inch	4
8	L60224	BUMPER - rubber, cab door frame and window latch	4
9	F44881	CYLINDER - door, left-hand and right-hand	2
10	1340345C1	STUD - ball, cylinder, right-hand door	1
11	230-4215	NUT - hex, self-locking, 5/16 inch NC	2
12	230590A1	BRACKET - left-hand cab door window retaining, mounts to frame, black, not shown	1
12A	230589A1	BRACKET - right-hand cab door window retaining, mounts to frame, black	1
13	230588A1	LATCH - door window to cab frame	2
14	413-420	BOLT - hex, 1/4 NC x 1-1/4 inch, latch to bracket	2
15	D36669	SPRING - compression, left-hand and right-hand window latch release	2
16	230-4214	NUT - hex, self-locking, 1/4 inch NC	2
17	281-18712	SCREW - self-tapping, hex washer head, 1/4 NC x 3/4 inch, bracket to frame	6
18	R52735	STRIKER - door latch	2
19	F44748	SPRING - Belleville, washer	2
20	495-81148	WASHER - flat, 7/16 x 1-1/4 x 1/8 inch	2
21	230-4217	NUT - hex, self-locking, 7/16 inch NC	2
22	107949A1	BUSHING - door hinge	8
23	139362A1	STUD - upper ball, 10 mm - 1.5, cylinder, left-hand door	1
24	495-71041	WASHER - flat, 13/32 x 1-1/4 x 3/32 inch	2
25	832-10410	NUT - hex, self-locking, 10 mm - 1.5	1
26	136-154	PIN - cotter, hair, 7/64 x 1-1/8 inch, mounts to clevis pin welded to frame	4
27	225059A1	CABLE - door, upper	2
	228689A1	PIN - clevis, welded to cab frame, not shown	4

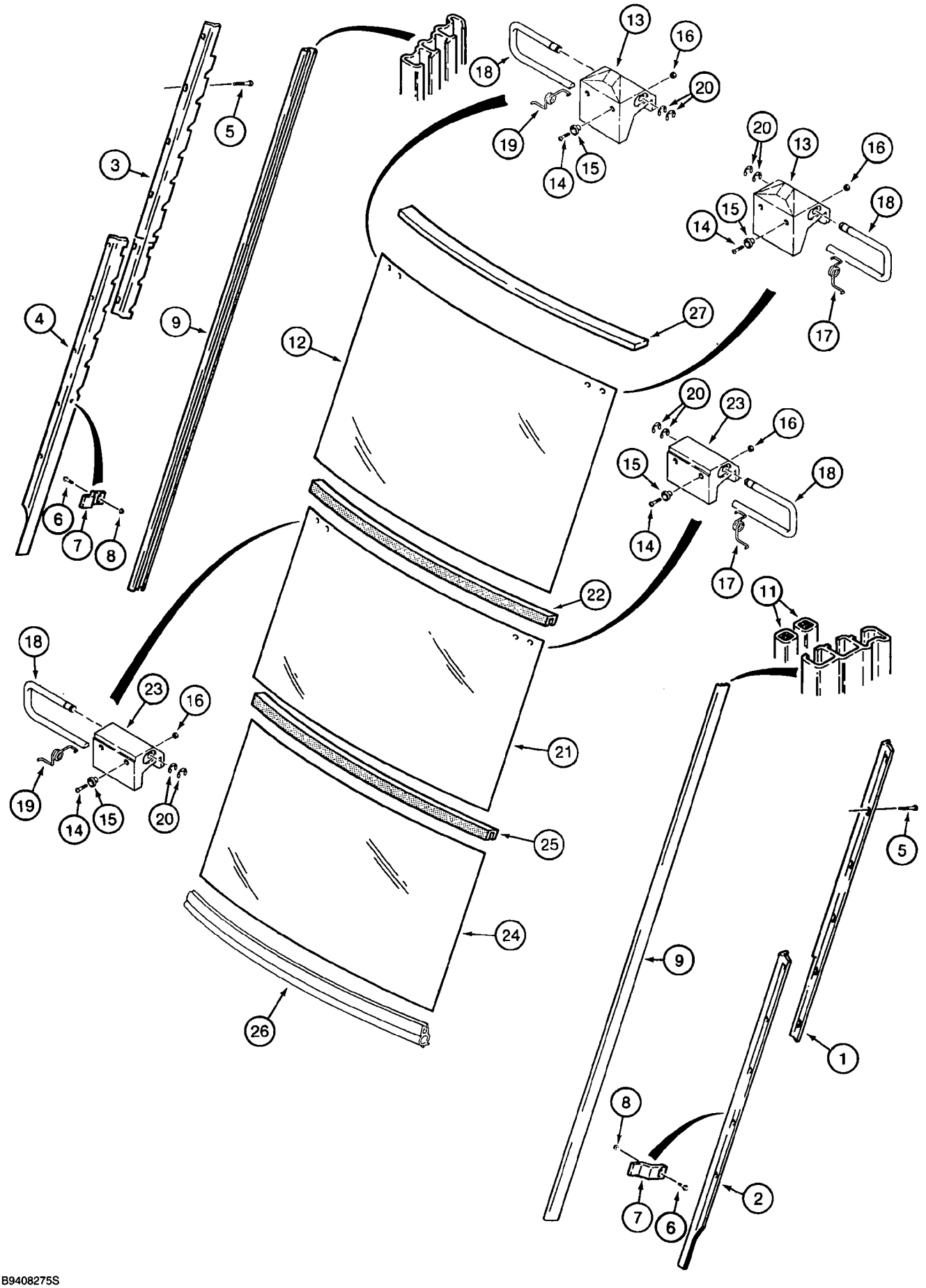
1
2
3
4
5
6
7
8
9
11
12
13
14
15
16
17
18
19
20
21
22
23
24
25
26
27

CAB REAR WINDOW

REF.	PART NO.	DESCRIPTION	REQ'D.
1	97256C3	BRACKET - right-hand, upper	1
2	97257C3	BRACKET - right-hand, lower	1
3	97258C3	BRACKET - left-hand, upper	1
4	97259C3	BRACKET - left-hand, lower	1
5	281-54512	SCREW - self-tapping, hex washer head, No. 10 NC x 3/4 inch	18
6	458-412	BOLT - hex flange, 1/4 NC x 3/4 inch	2
7	D129974	BRACKET - window, lower rear	2
8	231-5344	NUT - hex flange, self-locking, 1/4 inch NC	2
9	1989960C1	CHANNEL - track	2
11	179355A1	SEAL - foam, adhesive-backed, 1536 mm (60-15/32 inch) long, special, track channel both sides	4
12	D129967	GLASS - upper rear window	1
13	97278C1	LATCH - upper rear window only	2
14	442-11016	SCREW - machine, oval Phillips, No. 10 NC x 1 inch	8
15	F64198	SPACER - nylon, black, special	8
16	230-42409	NUT - hex, self-locking, No. 10 NC	8
17	1990727C1	SPRING - right-hand latch	2
18	1344232C1	LEVER - latch, metal, left-hand and right-hand	4
19	1990728C1	SPRING - left-hand latch	2
20	100-3337	RING - E-type, external retaining, No. 37, latch lever	8
21	D129968	GLASS - center rear window	1
22	D126198	SEAL - 912 mm (35-29/32 inch) long, center window glass	1
23	97277C1	LATCH - window, center window	2
24	D129969	GLASS - lower rear window	1
25	D126198	SEAL - 912 mm (35-29/32 inch) long, lower window glass	1
26	137315A1	TRIM - edge, bulk, 900 mm (35-7/16 inch) long, lower rear glass	1
27	106974A1	SEAL - foam, adhesive-backed, 20 x 10 x 912 mm, upper rear glass	1

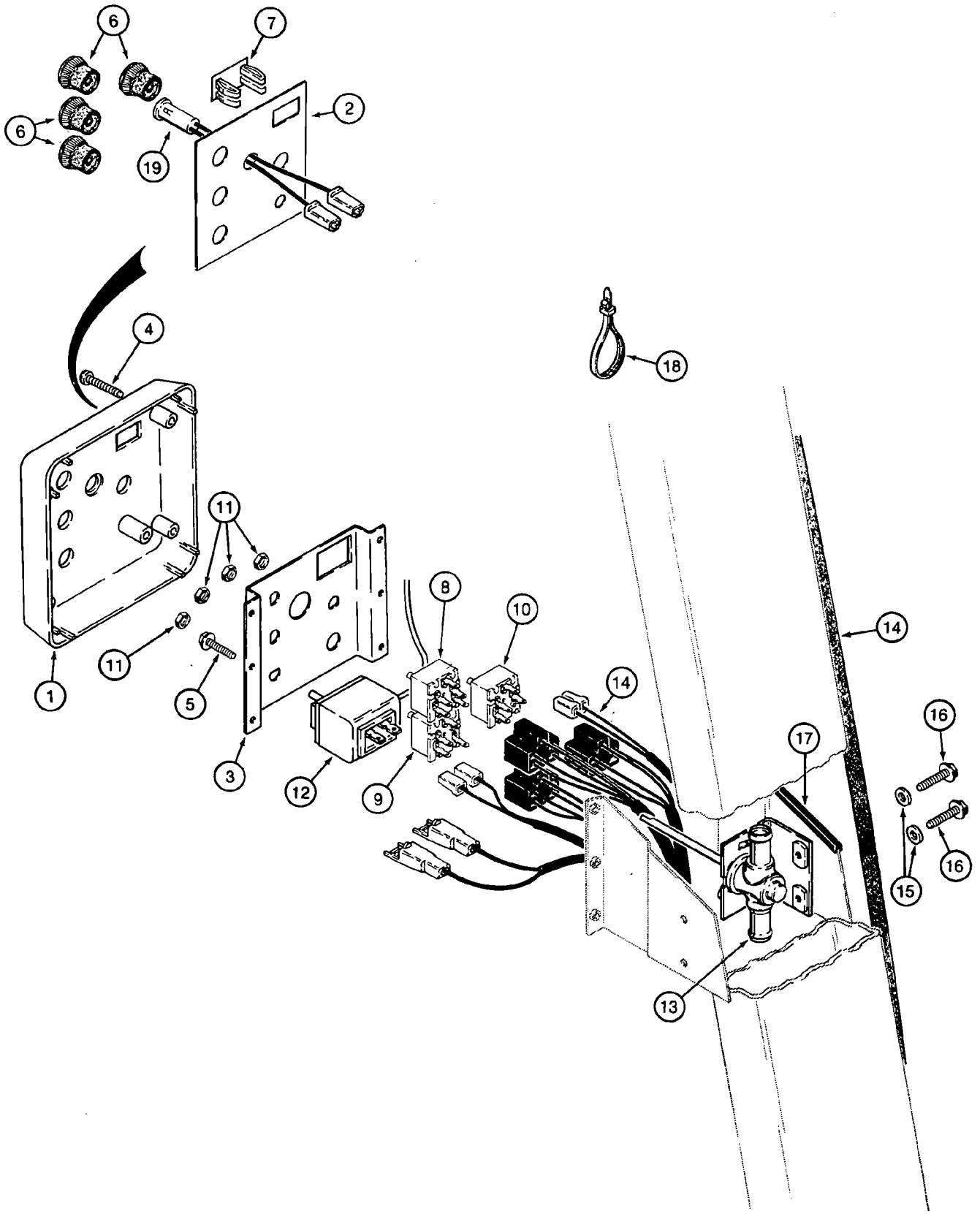
6
7
2
6
19
4
18
11
8
10
14
11
1
5
3
12
9
14
16
17
15
16
13

CAB CONTROL PANEL AND WIRING

REF.	PART NO.	DESCRIPTION	REQ'D.
1	135185A1	PANEL - cab control, includes decal, mounts on right-hand ROPS post	1
2	135183A1	DECAL - instrument symbols, wipers and environmental control, item 3 shown on page 9-155	1
3	136036A1	BRACKET - switch support	1
4	286-56520	SCREW - self-tapping, Fillister head, No. 10 NC x 1-1/4 inch	4
5	281-54512	SCREW - self-tapping, hex washer head, No. 10 NC x 3/4 inch	2
6	111282C1	KNOB - control, switch, front and rear wiper, heater, blower, and air conditioner	4-5
7	126844A1	PLUG - cab accessory, see page 9-127 for windshield washer switch	1
8	245258A1	SWITCH - blower	1
9	R52440	SWITCH - rear wiper	1
	245706C1	PLUG - plastic, rear wiper, blower, windshield wiper, if used, not shown	3
10	R52415	SWITCH - front wiper	1
11	A42561	NUT - retaining, 7/16 inch NC, switch	4
12	1340287C1	SWITCH - temperature control, air conditioning	1
13	R52483	VALVE - temperature control, heater	1
14	REF	HARNESS - cab, main, see page 4-31 for cab harness	1
15	895-11008	WASHER - flat, 9 x 17 x 1.6 mm	2
16	458-412	BOLT - hex flange, 1/4 NC x 3/4 inch, mounts heater temperature control valve to ROPS post	2
17	D36179	TRIM - edge, 108 mm (4-1/2 inch) long, cut from F42827 bulk trim, control panel bracket, see below	1
18	473321C1	STRAP - tie	4
19	1964672C1	LIGHT - indicator, amber, 14 volt, air conditioning	1
	F42827	TRIM - edge, bulk, 2946 mm (116 inch) long	1

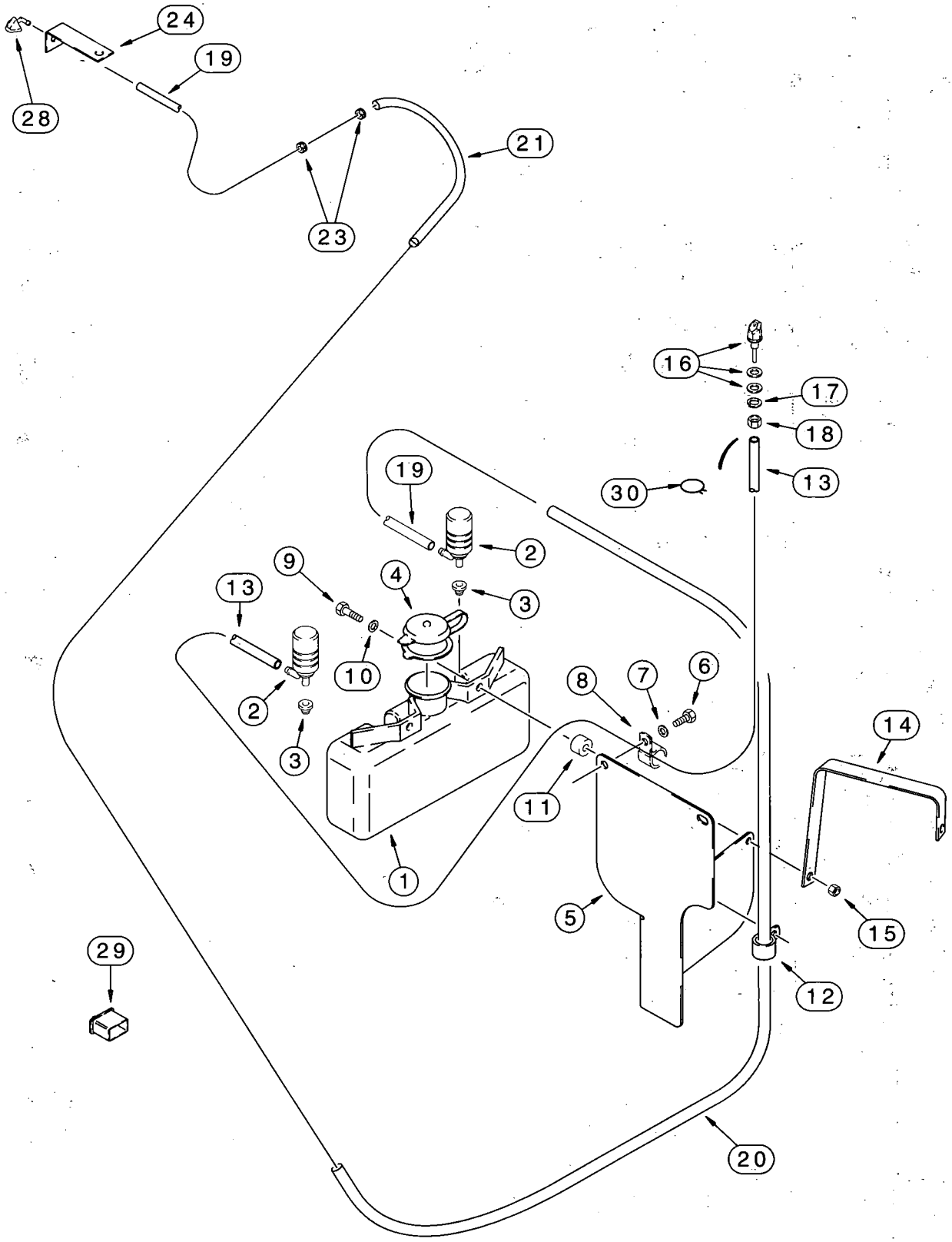
24
19
28
21
23
16
17
18
13
30
19
2
9
4
3
13
10
2
3
8
7
6
14
11
1
5
15
29
12
20

WINDSHIELD WASHERS - FRONT AND REAR

REF.	PART NO.	DESCRIPTION	REQ'D.
	E46560	RESERVOIR - windshield washer	1
1	NSS	RESERVOIR - windshield washer	1
2	E47238	PUMP - windshield washer	2
3	E47239	GASKET - mounting	2
4	E47240	CAP - reservoir	1
5	226376A1	BRACKET - reservoir mounting, mountings to firewall	1
6	806-8040	BOLT - hex, self-locking, 10 - 1.5 x 40 mm, class 10.9	2
7	895-15008	WASHER - flat, 9 x 20 x 1.6 mm	2
8	515-2295	CLAMP - P-type, 3/8 inch ID	1
9	814-10040	BOLT - hex, 10 - 1.5 x 40 mm	2
10	895-11010	WASHER - flat, 11 x 20 x 2 mm	2
11	E46561	SPACER - plastic	2
12	D147383	CLAMP - J-type, 5/8 inch diameter	1
13	292408A1	HOSE - 850 mm (33-1/2 inch) long, front washer, fixed hood to reservoir pump closest to the firewall	1
14	295597A1	BRACKET - support, uses existing air cleaner mounting hardware	1
15	832-10410	NUT - hex, self-locking, 10 mm - 1.5	2
16	284154A1	NOZZLE - washer, front, includes steel and rubber washer which are not serviced separately	1
17	492-11038	WASHER - lock, 3/8 inch	1
18	425-106	NUT - hex, 3/8 inch NC	1
19	226584A1	HOSE - 5020 mm (197-11/16 inch) long, rear washer, mounts to reservoir pump located the furthest away from the firewall	1
20	226582A1	SLEEVE - hose, 1850 mm (72-7/8 inch), lower hose	1
21	226580A1	SLEEVE - hose, 520 mm (20-1/2 inch), upper hose	1
23	E46524	GROMMET - rubber, 8 (5/16) ID x 23 mm (29/32 inch) OD	2
24	305818A1	BRACKET - rear nozzle mounting, uses existing lamp mounting hardware	1
28	E43769	NOZZLE - washer, rear, includes rubber gasket which is not serviced separately	1
29	144900A1	SWITCH - rocker, windshield washer, front and rear, mounts in cab control panel	1
30	305578A1	CLAMP - hose	1

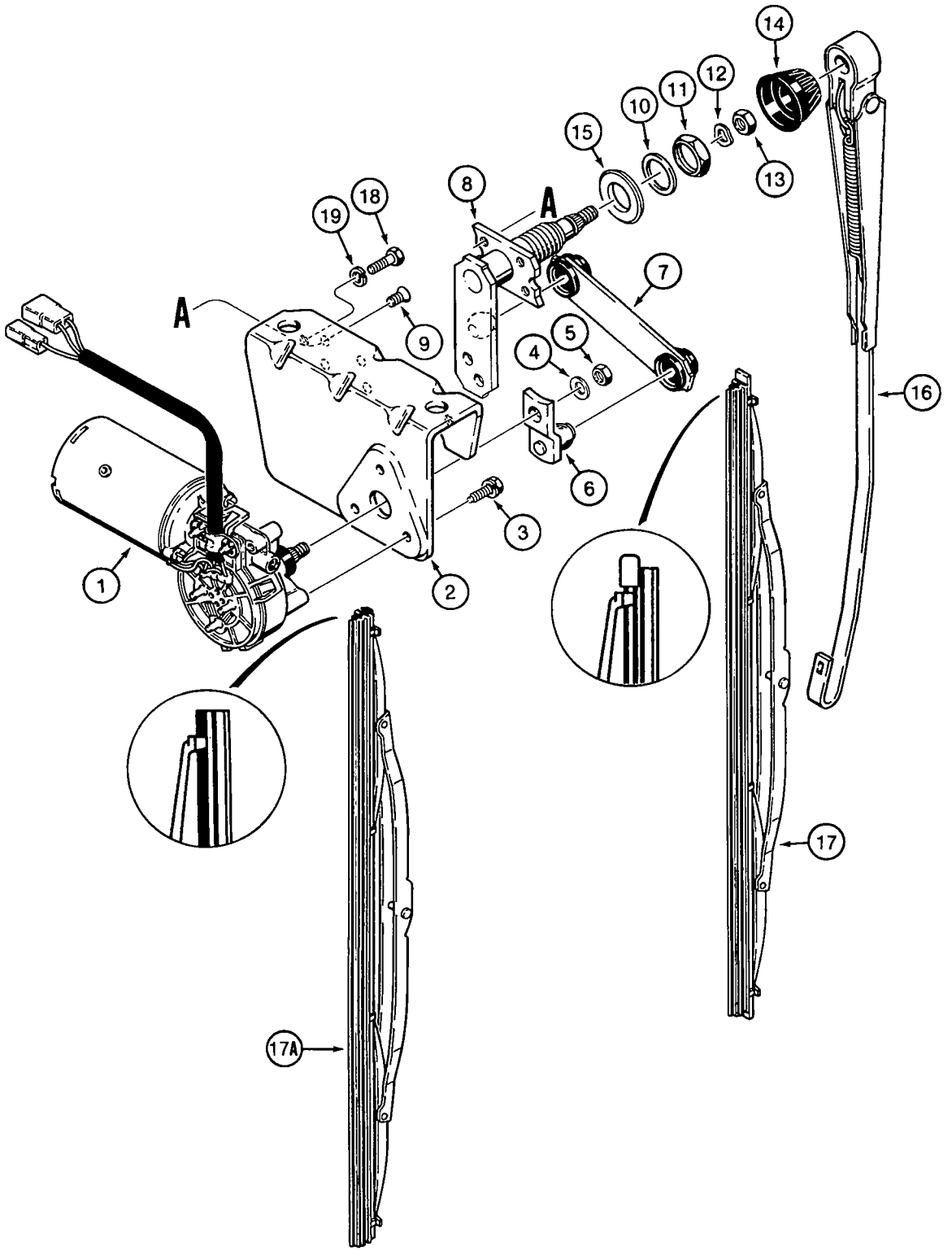
A
A
1
2
3
4
5
6
7
8
9
10
11
12
13
14
15
16
17
17A
18
19

CAB FRONT WINDSHIELD WIPER

REF.	PART NO.	DESCRIPTION	REQ'D.
	A186171	WIPER ASSEMBLY - windshield, 12 volt, with bracket, front windshield wiper	1
1	A186256	MOTOR - wiper, 12 volt, windshield wiper	1
2	N8359	BRACKET - windshield wiper assembly	1
3	N8362	SCREW - with washer, special, motor to bracket	3
4	N8361	WASHER - Belleville	1
5	L112090	NUT - hex, special	1
6	N8360	ARM - drive	1
7	N8358	LINK - wiper	1
8	N14112	SHAFT - pivot	1
9	N8356	SCREW - special, pivot shaft to bracket	4
10	L112088	WASHER - special, large, shaft	1
11	L112087	NUT - special, large, shaft	1
12	L112089	WASHER - wave, special, shaft end	1
13	L112090	NUT - hex, special, shaft end	1
14	L112081	CAP - pivot shaft end	1
15	R54504	SPACER - pivot shaft	1
16	D128745	ARM - windshield wiper, 570 mm (22-7/16 inch) long, complete	1
17	*A187909	BLADE - wiper arm, complete, used in production, 500 mm (19-11/16 inch) long, not available for service, for complete blade order item 17A, 132024A1	1
17A	*132024A1	BLADE - wiper arm, complete, for blade only, order 132025A1 blade refill, shown below	1
18	414-412	BOLT - hex, 1/4 NF x 3/4 inch	2
19	492-11025	WASHER - lock, 1/4 inch	2
	*1983335C1	BLADE - rubber, 500 mm long, refill for A187909 complete blade, see note, no longer available, order item 17A, 132024A1	1
	*132025A1	BLADE - rubber, 500 mm long, refill for 132024A1 complete blade, see note	1

NOTE: See the blade ends in the illustrations for items 17 and 17A to determine which blade to order.

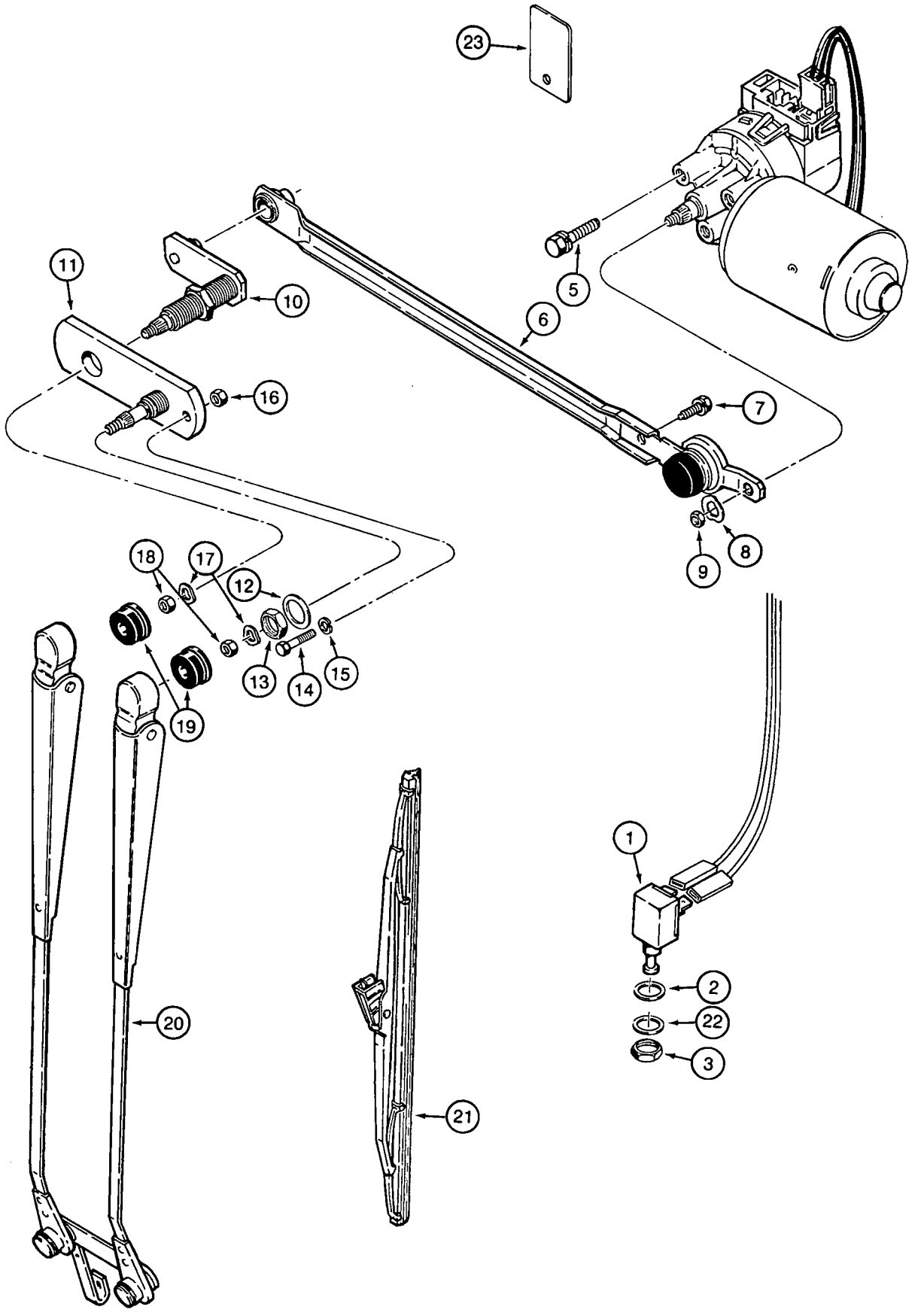
23
11
10
5
6
16
7
18
17
12
8
9
13
14
15
19
1
2
22
3
20
21

CAB REAR WINDSHIELD WIPER

REF.	PART NO.	DESCRIPTION	REQ'D.
1	A187714	SWITCH - wiper stop, mounts to window frame inside filter compartment	1
2	A165395	WASHER - flat, 1/2 x 1 x 1/16 inch, used as a seal	1
3	425-157	NUT - hex, jam, 7/16 inch NF	1
4	184118A1	MOTOR - wiper, 12 volt, rear windshield wiper	1
5	N8362	SCREW - with washer, special, motor to cab frame	3
	D128018	LINK ASSEMBLY - wiper, rear motor to wiper pivot shafts	1
6	NSS	LINK - crank	1
7	N8362	SCREW - with washer, special	1
8	N8361	WASHER - Belleville	1
9	L112090	NUT - hex, special	1
10	D128020	SHAFT - pivot, with ball, includes nut	1
11	D128021	SHAFT - pivot	1
12	L112088	WASHER - special, large, shaft	1
13	L112087	NUT - special, large, shaft	1
14	413-416	BOLT - hex, 1/4 NC x 1 inch	1
15	492-11025	WASHER - lock, 1/4 inch	1
16	425-104	NUT - hex, 1/4 inch NC	1
17	L112089	WASHER - wave, special, shaft end	2
18	L112090	NUT - hex, special, shaft end	2
19	L112081	CAP - pivot shaft end	2
20	R52408	ARM - wiper, rear windshield	1
21	D128022	BLADE - wiper, rear windshield	1
22	495-21044	WASHER - flat, 7/16 x 1 x 5/64 inch	1
23	193707A1	PLATE - retainer, harness, mounts on existing wiper motor mounting bolt	1

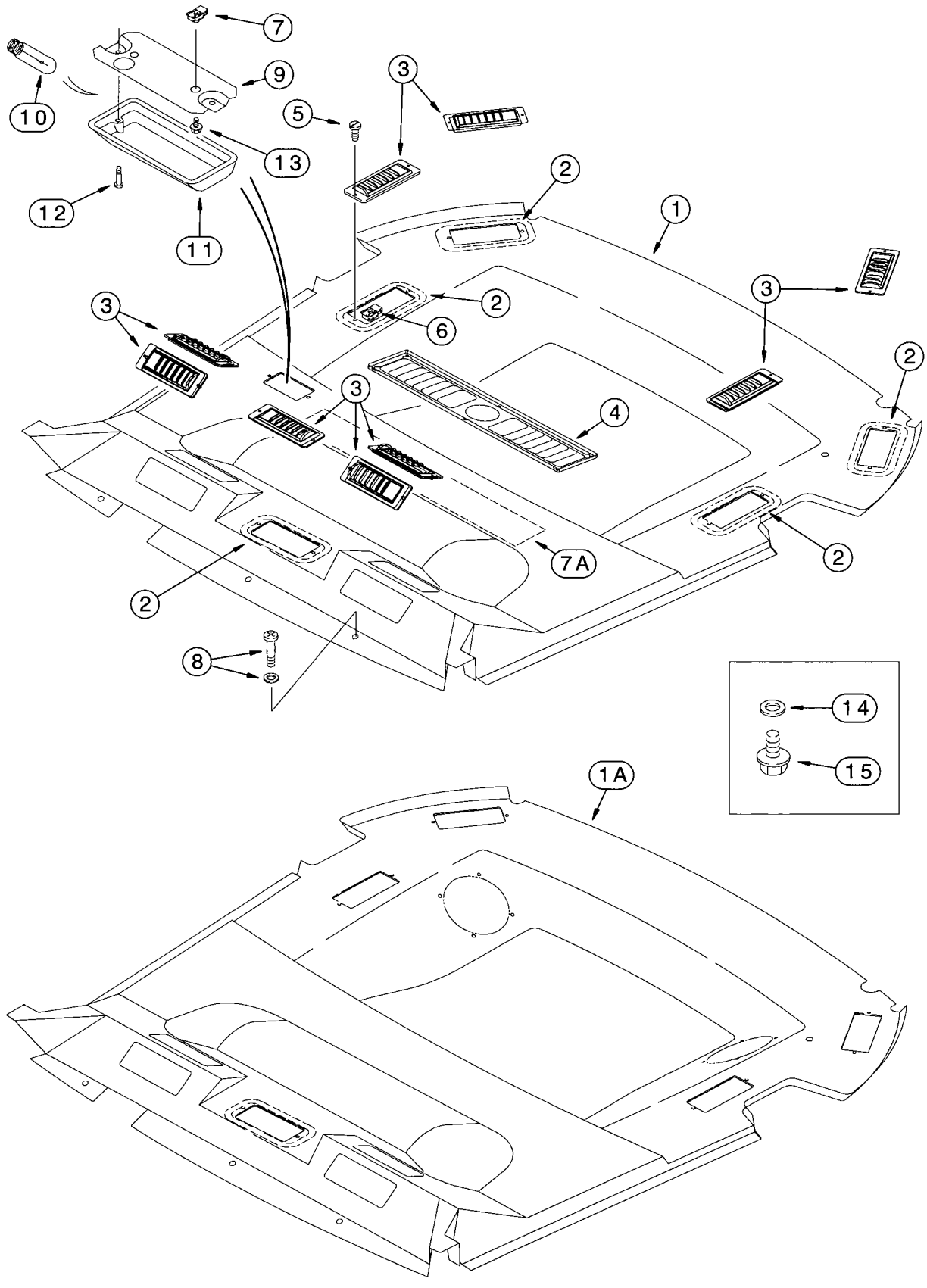
7
9
10
5
3
13
12
11
2
1
6
4
7A
8
14
15
1A

CAB HEADLINER, LOUVERS AND DOME LAMP

REF.	PART NO.	DESCRIPTION	REQ'D.
	137135A1	HEADLINER ASSEMBLY - cab, standard, models without speakers and radio	1
	*300157A1	HEADLINER ASSEMBLY - cab, models with speakers and radio	1
1	NSS	HEADLINER - cab, without speakers and radio	1
1A	NSS	HEADLINER - cab, models with speakers and radio	1
2	131973A1	SEAL - duct	5
3	125688A1	LOUVER - headliner, heat and air	9
4	1331102C2	LOUVER - air recirculation	1
4A	NSS	KNOB - louver, not shown	1
5	140-103	SCREW - machine, pan head Phillips, No. 6 NC x 3/4 inch	24
6	125749A1	NUT - U-type, No. 6 NC	24
7	131-861	CLAMP - U-type, No. 10 NC, no threads, dome lamp retaining	2
7A	186797A1	SEAL - adhesive-backed, 19 x 75 x 550 mm, 137135A1 headliner only	1
8	*F64519	SCREW - self-tapping, special, No. 10-16 x 3/4 inch, with washer, headliner to cab frame, used in production, order F64315 washer and 265-16512 screw for service	5
	R53755	LAMP ASSEMBLY - dome, 12 volt, see page 4-17 for switch	1
9	NSS	BASE - dome lamp	1
10	N14466	BULB - dome lamp	1
11	N14465	LENS - dome lamp	1
12	440-1088	SCREW - machine, pan Phillips, No. 8 NC x 1/2 inch, base to lens	2
13	*281-54512	SCREW - self-tapping, hex washer head, No. 10 NC x 3/4 inch, lamp to headliner	2
14	*194858A1	WASHER - flat, special	2
15	*D134923	CAP - bolt, rear headliner	2
	*292654A1	KIT - radio-ready package, includes above items marked with an asterisk, plus see parts on pages 4-25 and 4-45	1

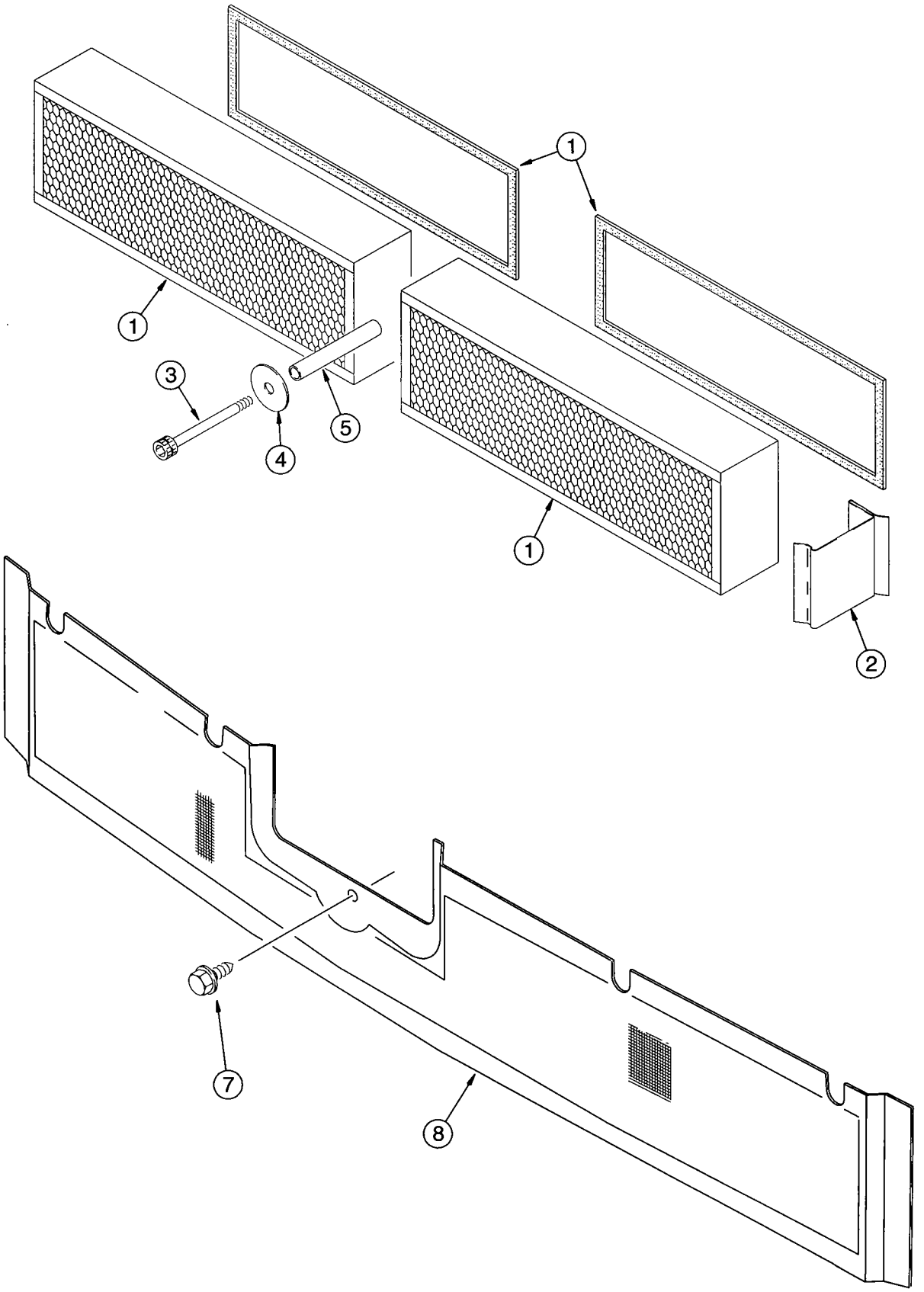
1
1
1
2
3
4
5
7
8

CAB AIR FILTER

REF.	PART NO.	DESCRIPTION	REQ'D.
1	139768A1	FILTER - air, complete, includes gasket	2
2	123206A2	BRACKET - right-hand, air filter retainer	1
3	461-33148	BOLT - hex socket, 5/16 NC x 3 inch	1
4	495-81121	WASHER - flat, 11/32 x 1-1/2 x 1/16 inch	1
5	140327A1	SPACER - filter	1
7	281-54712	SCREW - self tapping, hex washer head, 1/4 NC x 3/4 inch	1
8	243603A1	SCREEN - filter, rear	1

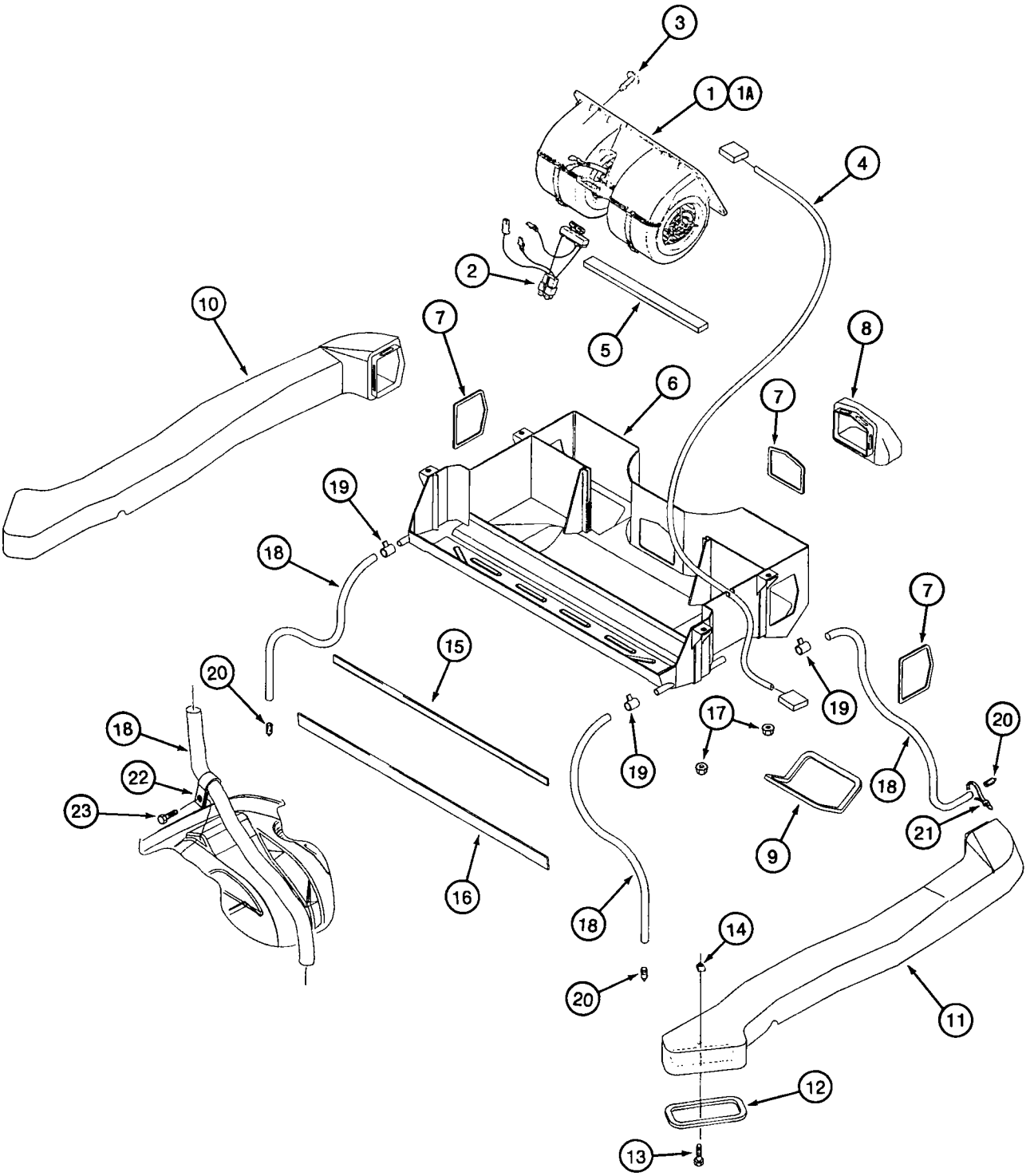
3
1
1A
4
2
5
10
7
6
8
7
19
18
7
15
20
19
17
20
18
22
18
23
9
21
16
18
14
20
11
12
13

CAB

BLOWER HOUSING, HEAT AND AIR VENTILATION DUCTS AND DRAIN LINES

REF.	PART NO.	DESCRIPTION	REQ'D.
1	1340492C2	BLOWER ASSEMBLY - air, cab, component parts not serviced separately, used in production, for service order 1977564C2 blower assembly and 1343938C1 resistor, items 1A and 2 below	1
1A	1977564C2	BLOWER - cab, air, component parts not serviced separately	1
2	1343938C2	RESISTOR - blower	1
3	182697A1	RETAINER - plastic fastener	5
4	189404A1	HARNESS - jumper, blower	1
5	181981A1	SEAL - adhesive-backed, 6 (5/16) x 20 (51/64) x 355 mm (14 inch) long	1
6	134125A1	HOUSING - ventilation, heat and air	1
7	128406A1	SEAL - ventilation housing to duct	3
8	131039A1	DUCT - small, front	1
9	131974A1	SEAL - ventilation housing, lower front	2
10	131041A1	DUCT - left-hand, large	1
11	131042A1	DUCT - right-hand, large	1
12	131973A1	SEAL - duct	2
13	845-6020	BOLT - heavy hex flange, 6 - 1.0 x 20 mm	2
14	833-40406	NUT - U-type, 6 mm - 1.0	2
15	1987097C1	SEAL - 9 (23/64) x 19 (3/4) x 735 mm (29 inch) long, air conditioning drain pan	1
16	1987096C1	SEAL - 9 (23/64) x 19 (3/4) x 765 mm (30-1/8 inch) long, air conditioning drain pan	1
17	832-10408	NUT - hex, self-locking, 8 mm - 1.25	4
18	127073A1	HOSE - 13 (1/2) x 16 (5/8) x 2850 mm (112-13/64 inch) long, front and rear drain	4
19	214-1404	CLAMP - adj, 1/4 - 5/8 inch dia	4
20	109239C2	VALVE - check, drain	4
21	L18337	STRAP - tie, 15 inch, nylon, retaining, retain front drain hoses to hydraulic lines	2
22	184289A1	CLAMP - hose, mounts on left-hand fender	1
23	282-16512	SCREW - self-drilling tapping, hex washer head, No. 10-16 x 3/4 inch, Teflon	1

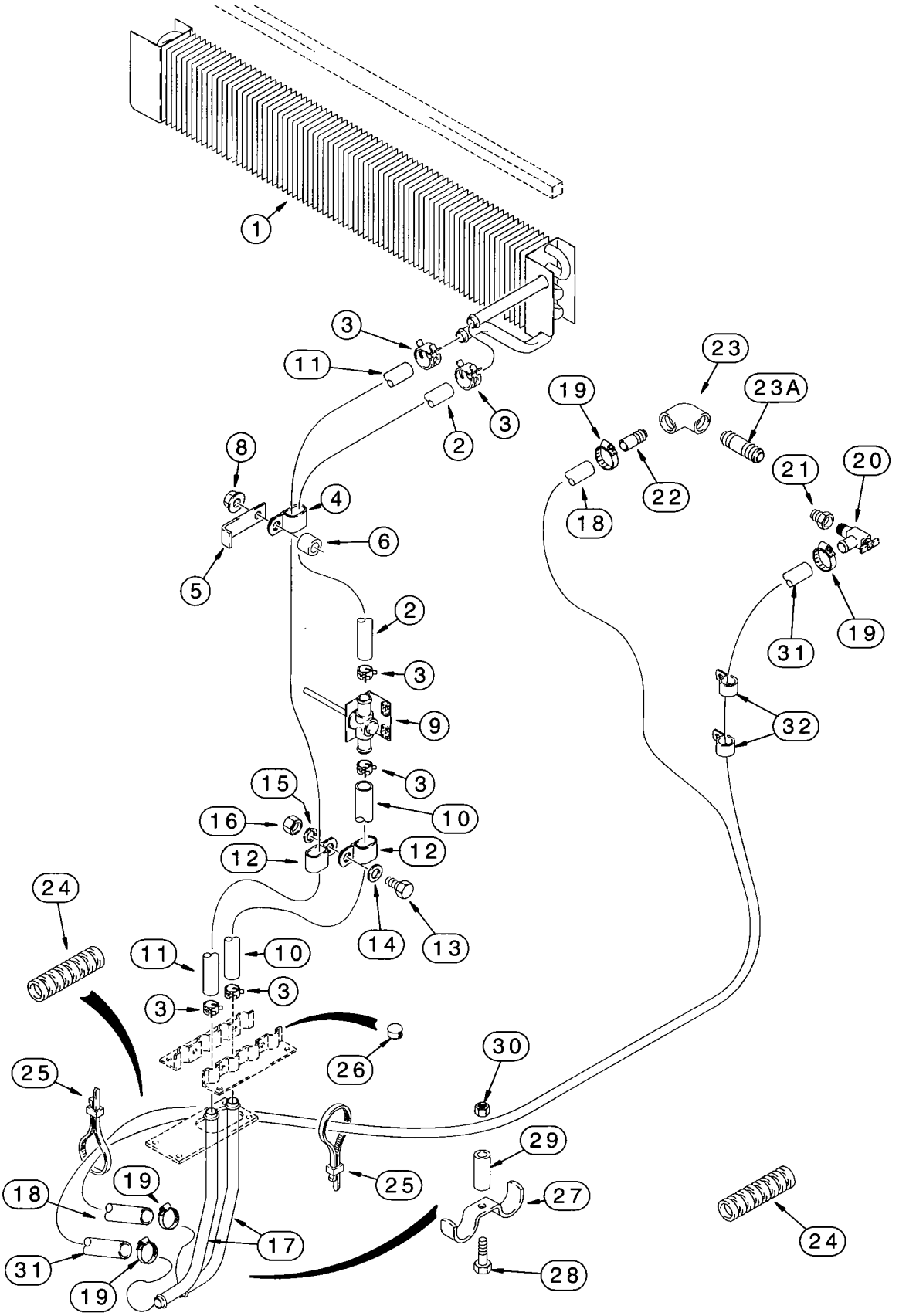
1
3
11
2
3
23
23A
19
22
18
21
20
19
31
32
8
4
6
5
2
3
9
3
15
16
10
12
12
14
13
24
11
10
3
3
26
30
25
25
29
27
28
24
18
19
17
31
19

CAB

*HEATER

REF.	PART NO.	DESCRIPTION	REQ'D.
1	131124A1	CORE - heater, mounts in blower housing box, seal mounts on top of heater core on models with heater only, see page 9-141 for seal	1
2	128412A1	HOSE - 1100 mm (43-5/16 inch) long, cut from 97252CX bulk hose, heater core to temperature control valve	1
3	1954736C1	CLAMP - adjustable, hose	6
4	L50062	CLAMP - P-type	2
5	R53634	CLAMP - hose, included in air conditioner package	2
6	126907A1	SPACER - hose	2
8	825-2408	NUT - hex flange, 8 mm - 1.25	2
9	R52483	VALVE - temperature control, heater, see page 9-125 for mounting hardware	1
10	128410A1	HOSE - 925 mm (36-27/64 inch) long, cut form 97252CX bulk hose, temperature control valve to floor	1
11	128411A1	HOSE - 2030 mm (79-15/16 inch) long, cut from 97252CX bulk hose, heater core to floor	1
12	L50062	CLAMP - P-type, hose	2
13	614-8025	BOLT - hex, full threads, 8 - 1.25 x 25 mm	1
14	895-11008	WASHER - flat, 9 x 17 x 1.6 mm	1
15	892-11008	WASHER - lock, 8 mm	1
16	829-1408	NUT - hex, 8 mm - 1.25, class 10	1
17	190675A1	TUBE - heater elbow at floor	2
18	225713A1	HOSE - 2400 mm (94 inch) long, cut from 97252CX bulk hose, floor to left-hand side of engine, short	1
19	214-1410	CLAMP - adj, 9/16 - 1-1/16 inch dia	4
20	301803R1	VALVE - shutoff, shutoff, right-hand side of engine	1
21	221-89	REDUCER - pipe, 1/2 male x 3/8 inch female, replaces existing plug	1
22	L17985	NIPPLE - 3/8 inch PT, left-hand side of engine	1
23	221-1382	ELBOW - street, 90 degree 1/2 x 3/8 inch PT	1
23A	221-190	NIPPLE - straight, 1/2 PT x 2 inch, replaces existing plug	1
24	D132982	SLEEVE - hose guard	4
25	L18337	STRAP - tie, 15 inch, nylon, retaining	3
26	353-406	PLUG - button, 5/8 inch, air conditioning drain, used on models with heat only	2
27	D143427	CLAMP - tube	1
28	614-8030	BOLT - hex, full threads, 8 - 1.25 x 30 mm	1
29	D143417	SPACER - 10 ID x 16 OD x 6 mm long	1
30	825-2408	NUT - hex flange, 8 mm - 1.25	1
31	225714A1	HOSE - 3300 mm (130 inch) long, cut from 97252CX bulk hose, right-hand side of engine	1
32	D88052	CLAMP - P-type, 1 inch ID, uses existing bellhousing hardware	2
	97252CX	HOSE - bulk, 16 (5/8) x 25 (1) x 15240 mm (600 inch) long	1

***NOTE:** See page 9-141 for hose clamping at floor plate.

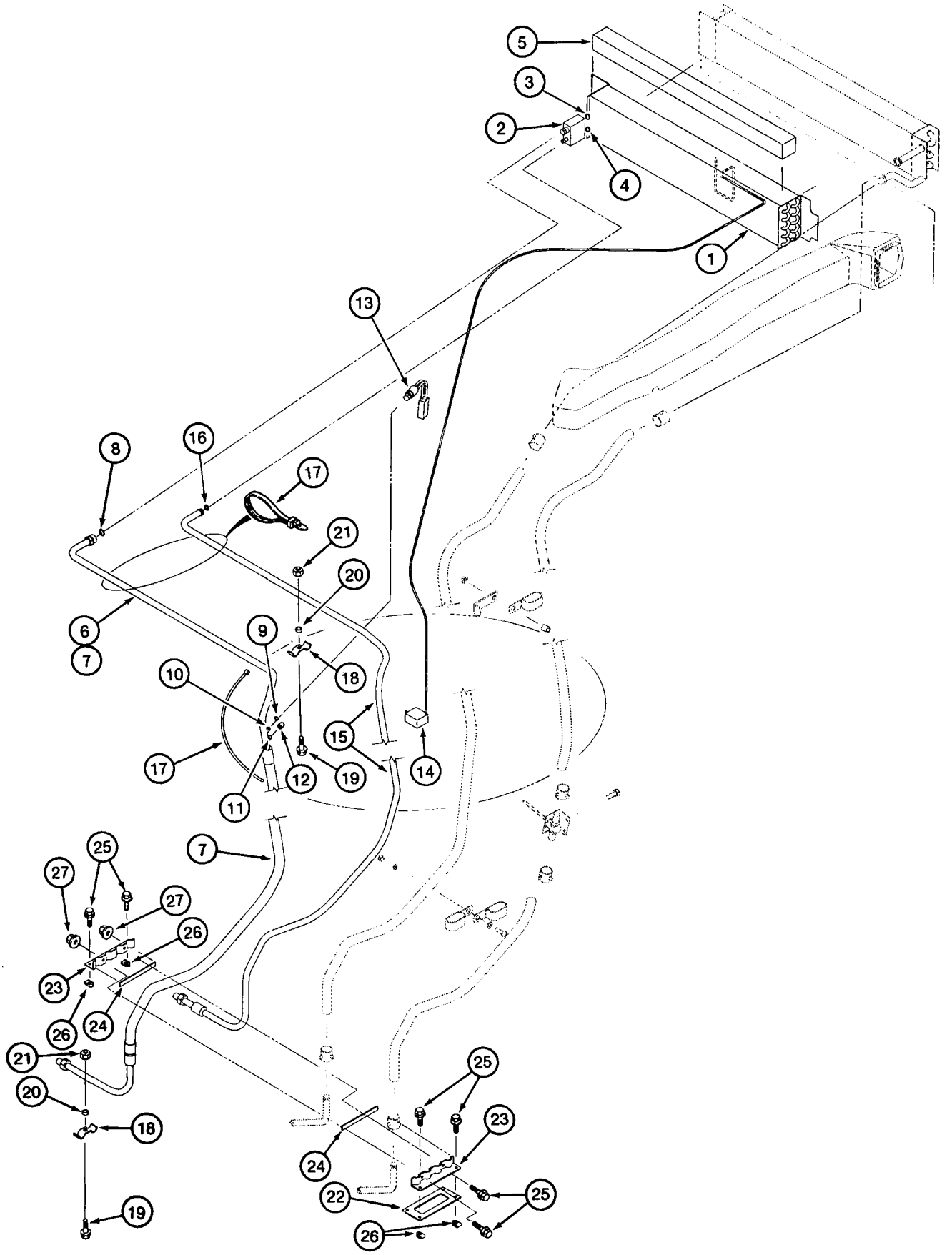
5
3
2
4
1
13
8
16
17
21
20
6
7
9
18
10
15
17
12
19
14
11
7
25
27
27
26
23
24
26
21
20
18
19
25
23
24
22
25
26

CAB

*EVAPORATOR CORE AIR CONDITIONING LINES

REF.	PART NO.	DESCRIPTION	REQ'D.
1	131127A2	CORE ASSEMBLY - evaporator	1
2	1990756C2	VALVE - expansion	1
3	128485A1	O-RING - 9/16 ID x 1/16 inch wide	1
4	128484A1	O-RING - 7/16 ID x 1/16 inch wide	1
5	181980A1	SEAL - adhesive-backed, 19 (3/4) x 19 (3/4) x 680 mm (26-3/4 inch) long, apply seal to top of evaporator core on models with heat and air conditioning	1
6	83822C1	TAPE - 610 mm (24 inch) long, cut from 1954475C1 bulk tape, insulation, expansion valve and hoses at expansion valve	3
7	190599A1	HOSE - suction	1
8	128485A1	O-RING - 9/16 ID x 1/16 inch wide, hose end	1
9	128483A1	O-RING - 5/16 ID x 1/16 inch wide, hose valve core	1
10	1250594C1	VALVE - core, hose, low pressure switch	1
11	1250594C1	VALVE - core, hose, low side service port	1
12	122553A1	CAP - sealing	1
13	122579A1	SWITCH - low pressure	1
14	1340287C1	SWITCH - temperature control, air conditioning	1
15	124727A1	HOSE - 3200 mm (126 inch) long, pressure, liquid line, attaches to item 24 hose on page 9-143	1
16	128483A1	O-RING - 5/16 ID x 1/16 inch wide, hose end	1
17	L18337	STRAP - tie, 15 inch, nylon, retaining	UAR
18	D143427	CLAMP - tube	2
19	614-8030	BOLT - hex, full threads, 8 - 1.25 x 30 mm	2
20	D143417	SPACER - 10 ID x 16 OD x 6 mm long, hose clamp	2
21	825-2408	NUT - hex flange, 8 mm - 1.25	2
22	124011A1	GASKET - at cab floor, heat or air conditioned models, trim center of gasket for air conditioned units	1
23	123980A1	CLAMP - heater and air conditioning hoses	2
24	181979A1	SEAL - foam	2
25	845-6020	BOLT - heavy hex flange, 6 - 1.0 x 20 mm	6
26	833-40406	NUT - U-type, 6 mm - 1.0	4
27	825-2406	NUT - hex flange, 6 mm - 1	2
	1954475C1	TAPE - bulk, 63.5 (2-1/2) x 9150 (360) x 3 mm (1/8 inch) thick, insulation	1

***NOTE:** Also see page 9-139 for hose clamping.

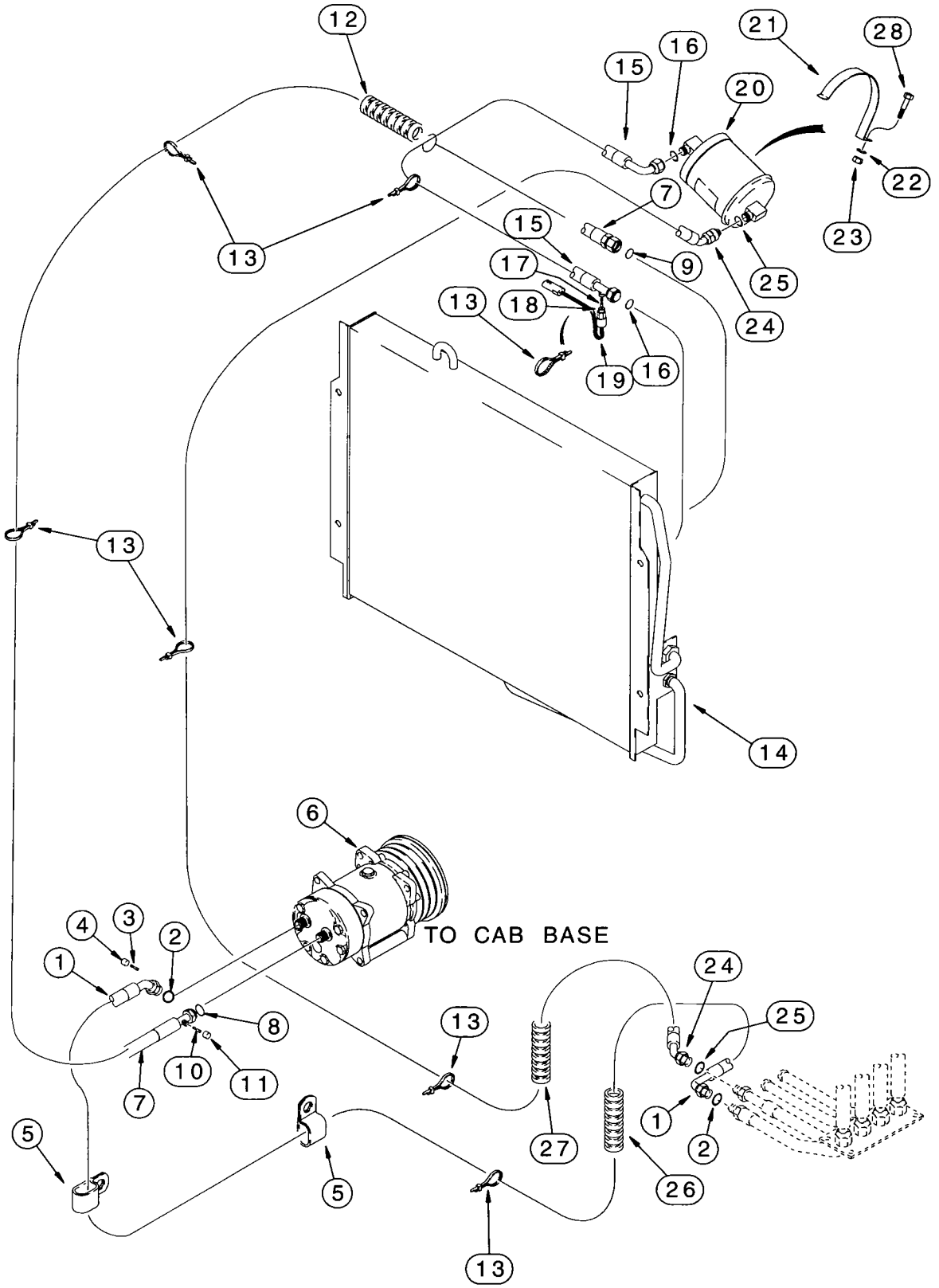
TO CAB BASE

AIR CONDITIONING

CONDENSER AND RECEIVER-DRIER

REF.	PART NO.	DESCRIPTION	REQ'D.
1	305822A1	HOSE - 2650 mm (104-11/32 inch) long, compressor to cab base	1
2	128485A1	O-RING - 9/16 ID x 1/16 inch wide, hose end	2
3	1250594C1	VALVE - core, hose, low side service port	1
4	122553A1	CAP - sealing	1
5	D88052	CLAMP - P-type, 1 inch ID, hose to inner left-hand side of chassis, uses existing hardware, if used	1-2
6	1999755C2	COMPRESSOR ASSEMBLY - air conditioning, parts list page 9-145	1
7	242724A1	HOSE - 2600 mm (102-3/8 inch) long, straight hose end, compressor to condenser	1
8	128485A1	O-RING - 9/16 ID x 1/16 inch wide, hose end, at compressor	1
9	128484A1	O-RING - 7/16 ID x 1/16 inch wide, hose end	1
10	1250594C1	VALVE - core, hose, high side charge port	1
11	122554A1	CAP - sealing	1
12	193913A1	SLEEVE - hose guard, mounts to item 7 hose at hood hinge bolt area	1
13	L18337	STRAP - tie, 15 inch, nylon, retaining	UAR
14	246060A1	CONDENSER - coil, refrigerant cooler, uses existing oil cooler to radiator hardware	1
15	138255A1	HOSE - 550 mm (25-11/16 inch) long, condenser to receiver-drier	1
16	128483A1	O-RING - 5/16 ID x 1/16 inch wide, hose ends	2
17	1250594C1	VALVE - core, for high pressure switch	1
18	128483A1	O-RING - 5/16 ID x 1/16 inch wide, hose	1
19	232948A1	SWITCH - high pressure, 400 psi	1
20	1990758C2	RECEIVER-DRIER - air conditioning, refrigerant	1
21	253404A1	CLAMP - receiver-drier	1
22	895-11008	WASHER - flat, 9 x 17 x 1.6 mm	1
23	832-10408	NUT - hex, self-locking, 8 mm - 1.25	1
24	305821A1	HOSE - 3060 mm (120-1/2 inch) long, receiver-drier to cab base	1
25	128483A1	O-RING - 5/16 ID x 1/16 inch wide, hose ends	2
26	191703A1	SLEEVE - hose guard, 400 mm (15-3/4 inch) long, suction hose, compressor to cab base	2
27	191704A1	SLEEVE - hose guard, 460 mm (18-1/8 inch) long, receiver-drier to cab base hose	2
28	614-8030	BOLT - hex, full threads, 8 - 1.25 x 30 mm	1

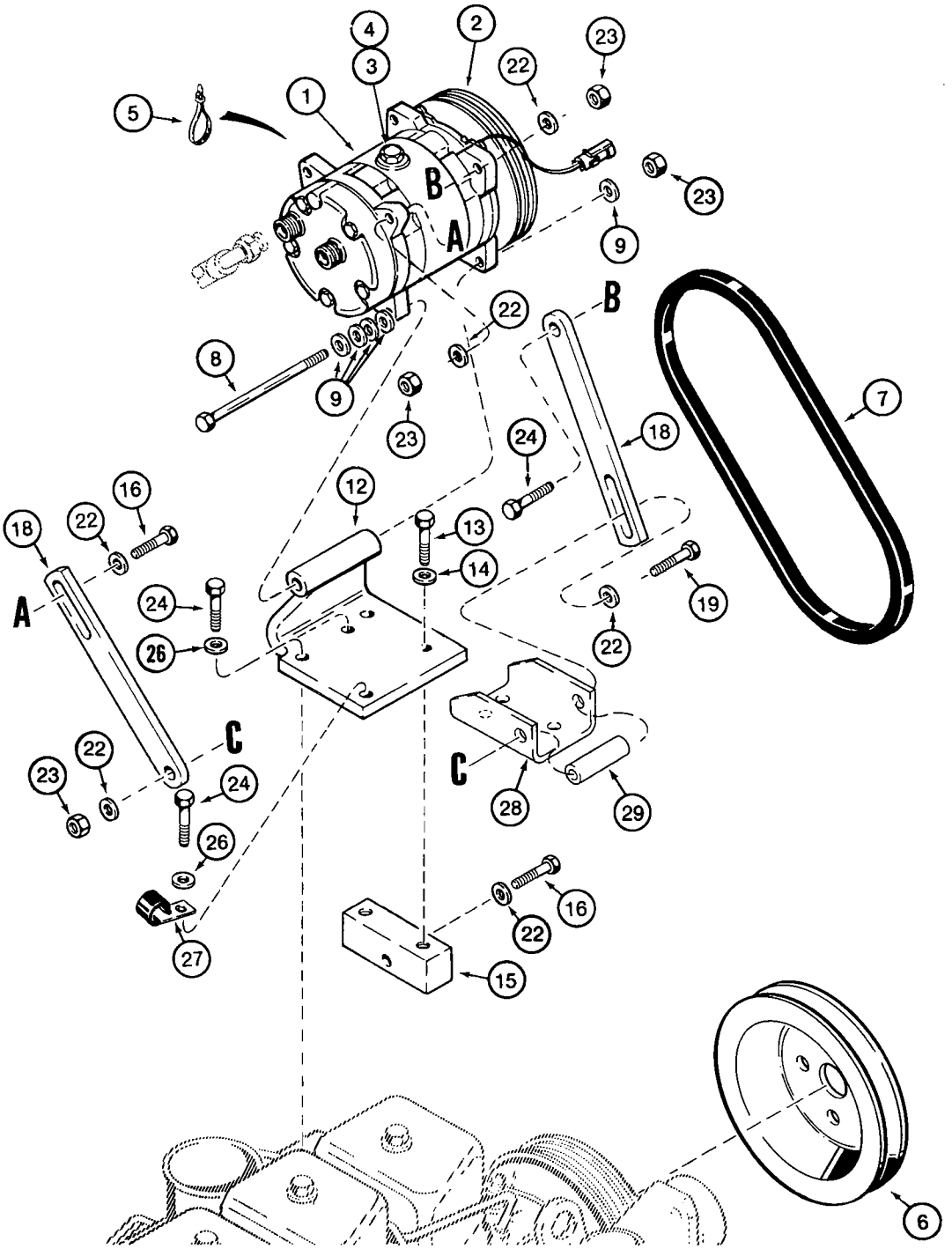
1
2
3
4
5
6
7
8
9
10
11
12
13
14
15
16
17
18
19
20
21
22
23
24
25
26
27
28
29
A
B
C

AIR CONDITIONING

COMPRESSOR MOUNTING AND DRIVE

REF.	PART NO.	DESCRIPTION	REQ'D.
	1999755C2	COMPRESSOR ASSEMBLY - air conditioning	1
1	NSS	COMPRESSOR - air conditioning	1
2	135324A1	CLUTCH ASSEMBLY - compressor	1
3	A49667	PLUG - hex, oil filler	1
4	128483A1	O-RING - 5/16 ID x 1/16 inch wide, plug	1
5	L18337	STRAP - tie, 15 inch, nylon, retaining, compressor wire	2
6	A189284	PULLEY - air conditioner compressor drive, without powershift transmission	1
6A	196050A1	PULLEY - air conditioner compressor drive, with powershift transmission, not shown	1
7	277546A1	BELT - drive, compressor, without powershift transmission	1
7A	S80928	BELT - drive, compressor, with powershift transmission, not shown	1
8	827-10130	BOLT - hex, 10 - 1.5 x 130 mm, class 10.9	1
9	896-11010	WASHER - flat, 11 x 21 x 2.5 mm, hardened	5
12	304530A1	BRACKET - compressor mounting	1
13	627-10030	BOLT - hex, full threads, 10 - 1.5 x 30 mm, class 10.9	2
14	896-11010	WASHER - flat, 11 x 21 x 2.5 mm, hardened	2
15	A184614	BLOCK - bracket support	1
16	827-10040	BOLT - hex, 10 - 1.5 x 40 mm, class 10.9	2
18	304527A1	STRAP - compressor adjusting	2
19	827-10110	BOLT - hex, 10 - 1.5 x 110 mm, class 10.9	1
22	896-11010	WASHER - flat, 11 x 21 x 2.5 mm, hardened	6
23	832-10410	NUT - hex, self-locking, 10 mm - 1.5	4
24	627-10035	BOLT - hex, full threads, 10 - 1.5 x 35 mm, class 10.9	4
26	896-11010	WASHER - flat, 11 x 21 x 2.5 mm, hardened	3
27	D147383	CLAMP - J-type, main engine harness to compressor bracket	1
28	304525A1	BRACKET - compressor mounting	1
29	304528A1	SPACER - short	1

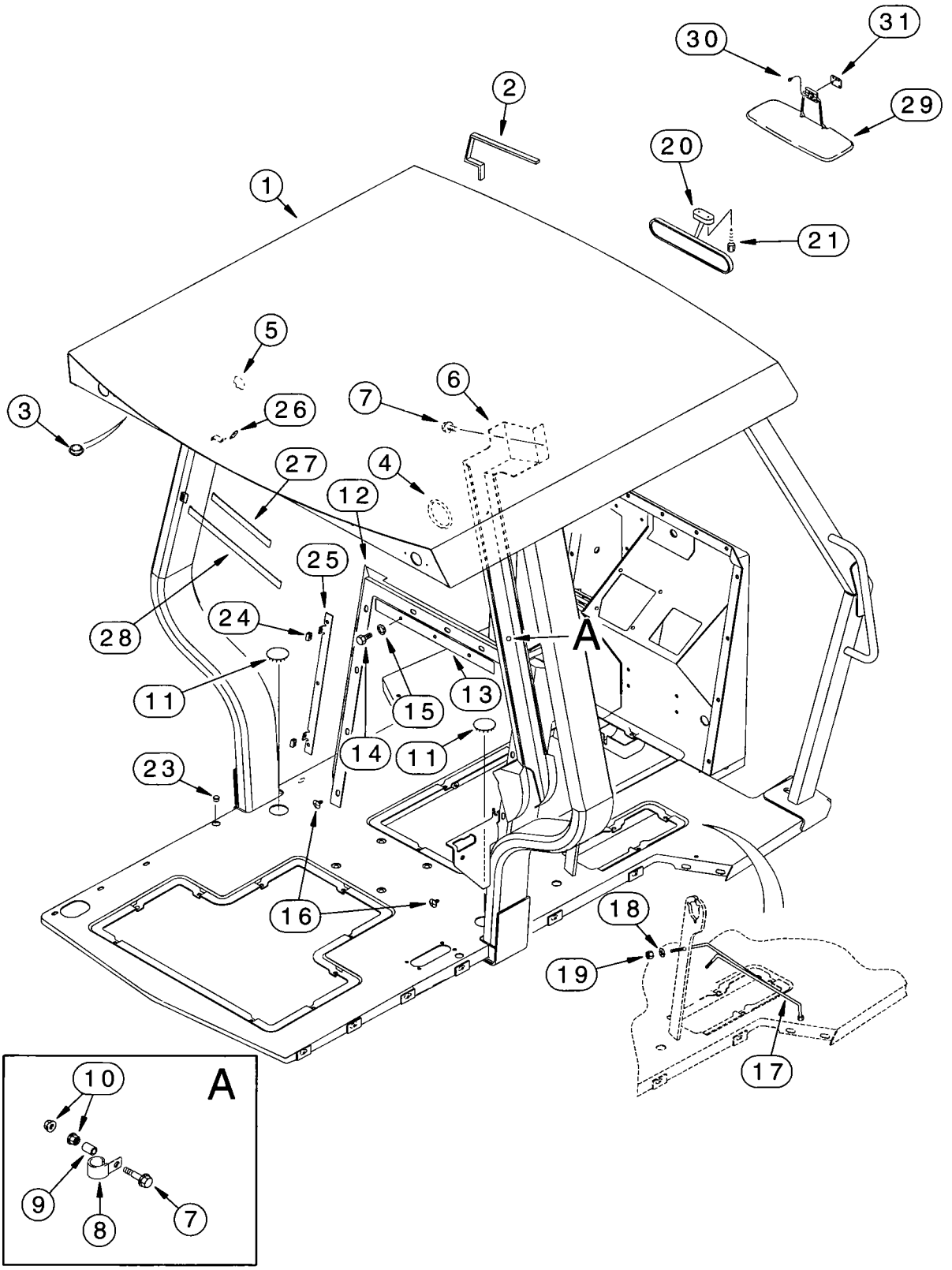
30
31
2
29
20
1
21
5
6
7
3
26
27
4
12
25
28
24
A
11
15
13
14
11
23
16
18
19
17
10
A
9
8
7

ROPS CANOPY

OPERATOR COMPARTMENT

REF.	PART NO.	DESCRIPTION	REQ'D.
1	281001A1	CANOPY - ROPS, order from Machinery Price List, for service order 281004A1 which is the complete ROPS canopy with decals and mounts	1
2	D60180	TRIM - edge, 368 mm (14-1/2 inch) long, cut from F42827 bulk trim, if used	2
	345-133	ADHESIVE - Superbonder 409, attaches wire harness to ROPS post, if used	1
3	353-405	PLUG - button, 9/16 inch	4-8
4	D93716	PLUG - plastic, 3 inch (76 mm) diameter	4
5	353-417	PLUG - button, 2 inch, nylon, driving, flood and work lamps	8
6	127324A1	COVER - wiring, right-hand ROPS post	1
7	282-16512	SCREW - self-drilling tapping, hex washer head, No. 10-16 x 3/4 inch, Teflon	3
8	D147383	CLAMP - J-type, canopy harness to ROPS post	2
9	128265A1	SPACER - clamp	2
10	825-2408	NUT - hex flange, 8 mm - 1.25	4
11	205-129	PLUG - button, 2 inch ID, floor	2
12	143121A1	SEAL - firewall	1
13	143127A1	PLATE - stiffener, firewall	1
14	781-24820	BOLT - hex flange, self-tapping, 8 - 1.25 x 20 mm	9
15	892-11008	WASHER - lock, 8 mm	9
16	D143242	RETAINER - push-in, plastic	2
17	180801A1	BRACE - loader control bracket	1
18	495-11041	WASHER - flat, 13/32 x 13/16 x 1/16 inch	6
19	425-106	NUT - hex, 3/8 inch NC	6
20	194513A1	MIRROR - rear view, interior	1
21	286-56520	SCREW - self-tapping, Fillister head, No. 10 NC x 1-1/4 inch	2
23	353-406	PLUG - button, 5/8 inch, if used	1
24	127367A1	NUT - U-type, special, 6 mm	4
25	137851A1	PLATE - bar, front console mounting to firewall	2
26	294666A1	COVER - coat hook	1
27	296367A1	STRAP - velcro	1
28	282845A1	STRAP - velcro	1
29	E47027	VISOR - sun shade	1
30	260-14512	SCREW - self-tapping, pan Phillips, No. 10-16 x 3/4 inch	3
31	307243A1	SHIM - plate, visor mounting	1
	F42827	TRIM - edge, bulk, 2946 mm (116 inch) long	1

NOTE: See page 9-77 for operator compartment to chassis mounting hardware.

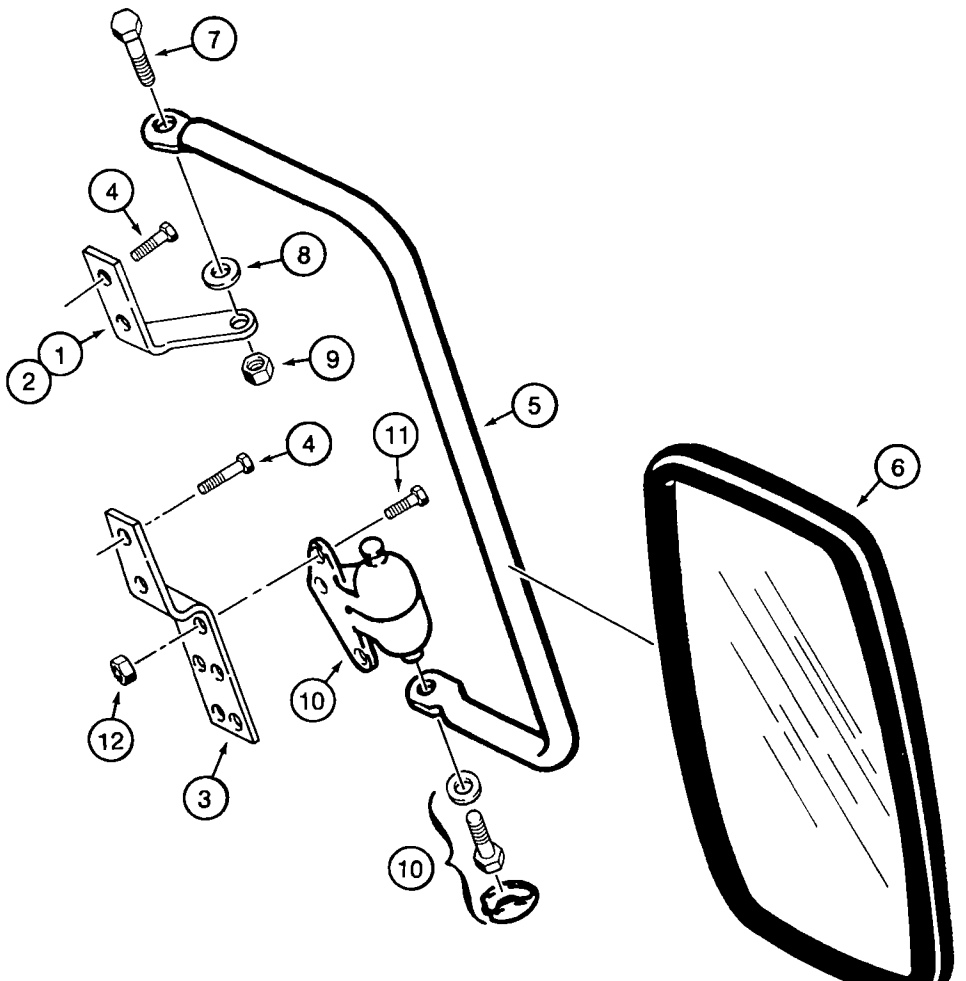
7
4
8
1
2
9
5
4
11
6
10
12
3
10

REAR VIEW MIRROR

ROPS CAB MODELS - EXTERIOR

REF.	PART NO.	DESCRIPTION	REQ'D.
	D102964	KIT - mirror, rear view	1
1	D142084	BRACKET - mirror, right-hand upper	1
2	D142085	BRACKET - mirror, left-hand upper, not shown	1
3	D142083	BRACKET - mirror, lower	2
4	281-54712	SCREW - self tapping, hex washer head, 1/4 NC x 3/4 inch	8
5	D142086	SUPPORT - mirror	2
6	R54682	MIRROR - rear view, exterior	2
7	413-516	BOLT - hex, 5/16 NC x 1 inch	2
8	A167037	WASHER - nylon	2
9	231-4115	NUT - hex, self-locking, 5/16 inch NC	2
10	D142144	KNUCKLE - support pivot, includes hardware	2
11	413-412	BOLT - hex, 1/4 NC x 3/4 inch	6
12	231-1444	NUT - hex, self-locking, 1/4 inch NC	6

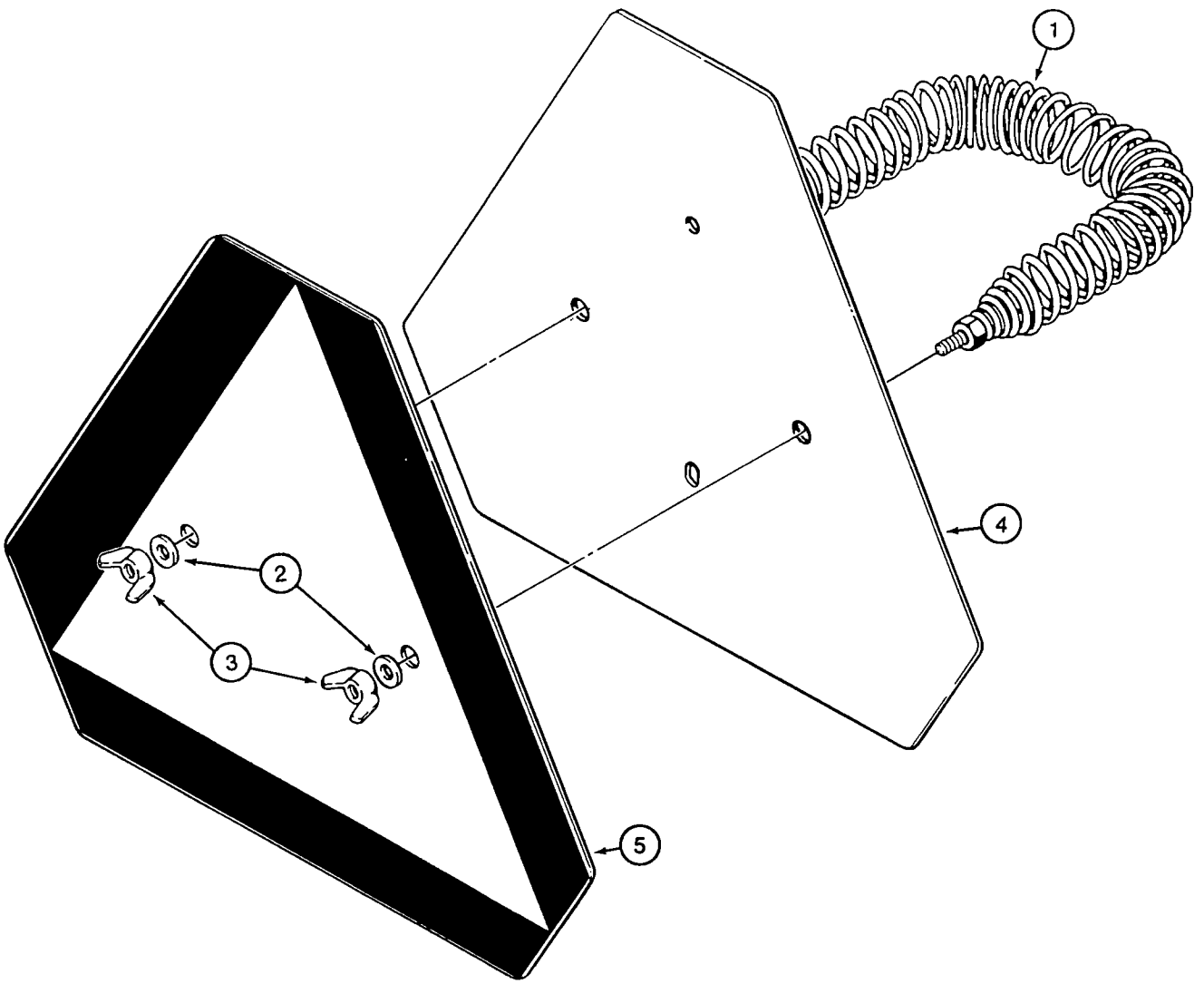
1
2
3
4
5

SLOW MOVING VEHICLE EMBLEM

REF.	PART NO.	DESCRIPTION	REQ'D.
1	D52564	SPRING - emblem retaining	1
2	495-11028	WASHER - flat, 9/32 x 5/8 x 1/16 inch	2
3	126177	NUT - wing, 1/4 inch NC	2
4	D123347	EMBLEM - plate and decal, slow moving vehicle	1
5	321-4311	DECAL - SMV emblem	1

①580 Super L
①A Series 2

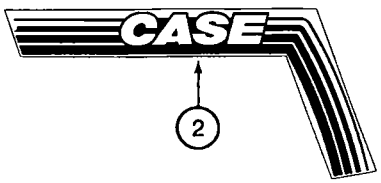

2

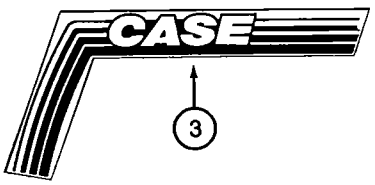

3



4



5



6



7



8



22

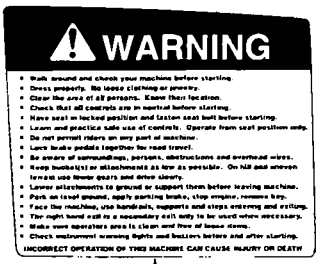

10

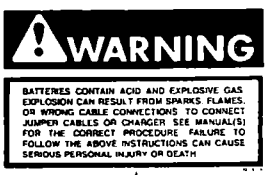

12



13

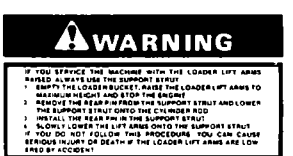

14

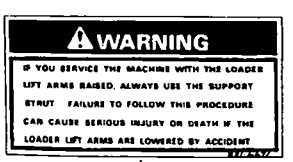

15

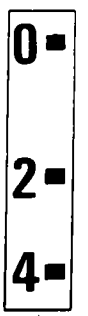

16

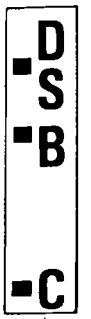

17



18

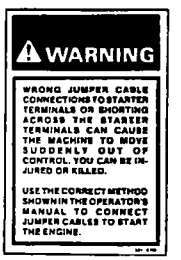

19

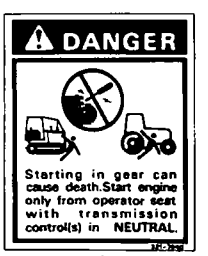

20

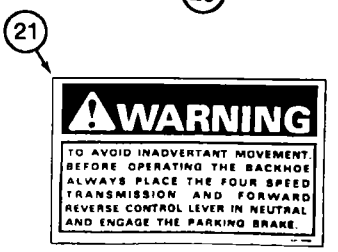

21



23

DECALS

REF.	PART NO.	DESCRIPTION	REQ'D.
1	182368A1	DECAL - 580 Super L	2
1A	301343A1	DECAL - Series 2	2
2	183113A1	DECAL - Case, right-hand side of hood	1
3	183112A1	DECAL - Case, left-hand side of hood	1
4	183115A1	DECAL - Case, with right-hand stripes, standard dipper right-hand side	1
5	183114A1	DECAL - Case, with left-hand stripes, standard dipper left-hand side	1
6	183111A1	DECAL - Case extendahoe, right-hand	1
7	183110A1	DECAL - Case extendahoe, left-hand	1
8	183864A2	DECAL - Case, with right-hand stripe, rear closure panel, canopy models	1
10	144194A1	DECAL - Warning, walk around and check your machine before starting	1
12	321-6714	DECAL - Warning, batteries contain acid and explosive gas	1
13	321-4481	DECAL - Warning, keep clear of this area, swinging boom can crush	2
14	321-6413	DECAL - Warning, left-hand loader lift arm support strut usage	1
15	321-6671	DECAL - Warning, right-hand chassis channel	1
16	321-1708	DECAL - 0 - 2 - 4, clam bucket opening indicator	1
17	321-1707	DECAL - clam bucket position	1
18	321-3596	DECAL - Warning, rotating fan and belts	2
19	321-6872	DECAL - Warning, wrong jumper cable connections to starter terminals	1
20	321-7040	DECAL - Danger, starting in gear can cause death	1
21	D150899	DECAL - Warning, to avoid inadvertant movement, before operating the backhoe	1
22	239880A1	DECAL - powershift, left-hand side	1
23	239881A1	DECAL - powershift, right-hand side	1

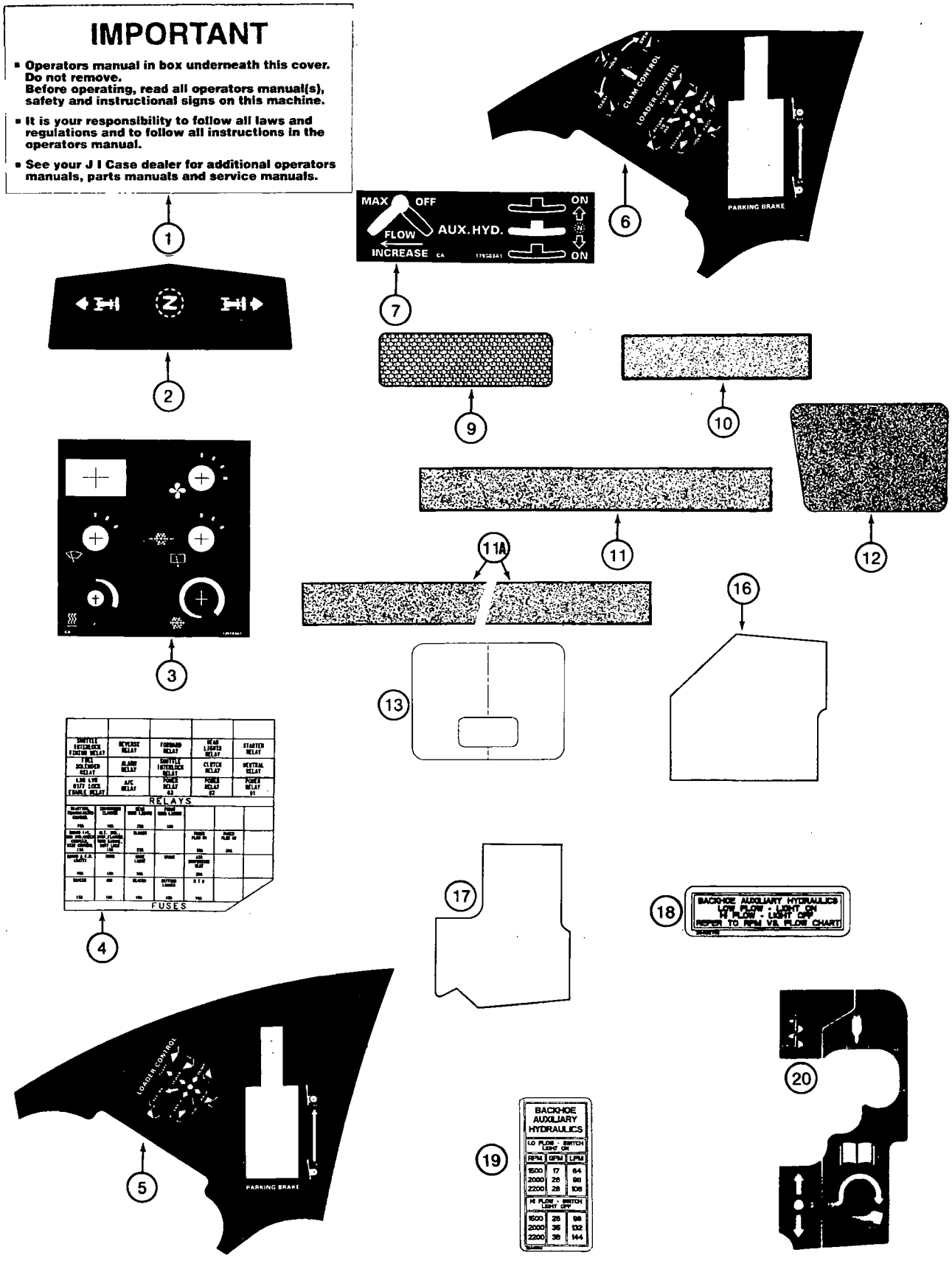
IMPORTANT
▪ Operators manual in box underneath this cover. Do not remove.
Before operating, read all operators manual(s), safety and instructional signs on this machine.
▪ It is your responsibility to follow all laws and regulations and to follow all instructions in the operators manual.
▪ See your J I Case dealer for additional operators manuals, parts manuals and service manuals.
1
2
3
4
5
6
7
9
10
11
11A
12
13
16
17
18
19
20
MAX
OFF
FLOW
AUX. HYD.
INCREASE
ON
ON
CLAM CONTROL
LOADER CONTROL
PARKING BRAKE
RELAYS
FUSES
BACKHOE AUXILIARY HYDRAULICS
LOW FLOW - LIGHT ON
HI FLOW - LIGHT OFF
REFER TO RPM VS. FLOW CHART
BACKHOE AUXILIARY HYDRAULICS
LO FLOW - SWITCH LIGHT ON
HI FLOW - SWITCH LIGHT OFF
RPM
GPM
LPM
1500 17 64
2000 26 98
2200 28 106
1500 25 98
2000 35 132
2200 38 144

DECALS

REF.	PART NO.	DESCRIPTION	REQ'D.
1	144193A1	DECAL - Important, operator's manual in box underneath this cover, glove box lid	1
2	D137615	DECAL - shuttle shift lever control pattern, on steering column cover	1
3	135183A1	DECAL - instrument symbols, wipers and environmental control	1
4	284482A3	DECAL - fuses and relays, loader control console fuse access panel cover	1
5	137290A1	DECAL - two function loader control, lift and bucket control pattern	1
6	137289A1	DECAL - three function loader control, lift, bucket and clam control pattern	1
7	179683A1	DECAL - hand held auxilliary hydraulics, if used	1
9	D87870	REFLECTOR - red	2
10	D55216	PAD - anti-skid, 5 used on cab models, 11 used on canopy models, one used on hydraulic oil tank	5-11
11	D80270	PAD - anti-skid, 2 used on cab models, 3 used on canopy models	2-3
11A	307348A1	PAD - anti-skid, 700 mm (27-9/16 inch) long, fuel tank	2
12	128804A1	STRIP - anti-skid	2
13	192450A1	DECAL - clear vinyl, hood	1
14	192299A1	DECAL - auxiliary hydraulics, at rocker switch on instrument panel, if used	1
15	192300A1	DECAL - remote auxiliary hydraulics, operating instructions, if used	1
16	197345A1	PAD - anti-skid, left-hand, ROPS canopy models	1
17	197346A1	PAD - anti-skid, right-hand, ROPS canopy models	1
18	284627A1	DECAL - backhoe auxiliary hydraulics, low flow - light on/hi flow - light off	1
19	284479A1	DECAL - backhoe auxiliary hydraulics, hi flow/low flow	1
20	299383A1	DECAL - backhoe auxiliary hydraulic control, mounts on control tower	1

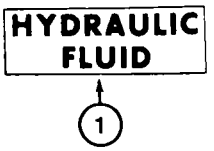

1



2



3



4

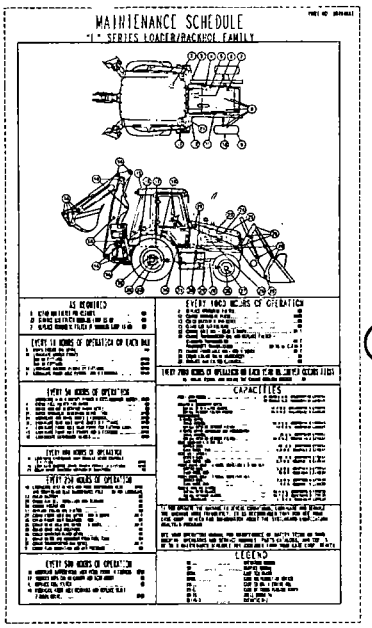

5

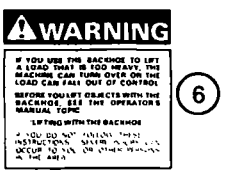

6



7

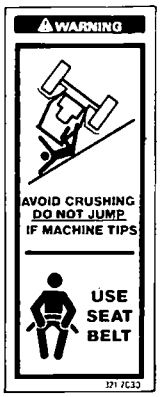

8

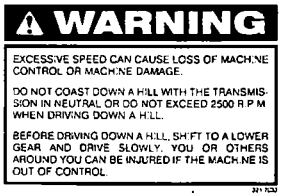

9



10



11



12

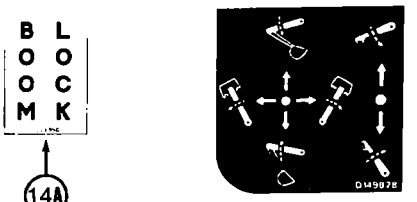

14A

13

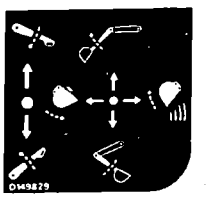

14



15

15A

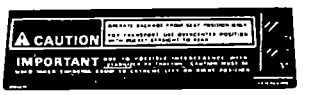

16



17



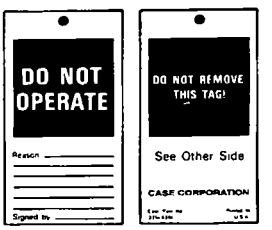

18



22

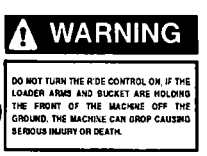

19

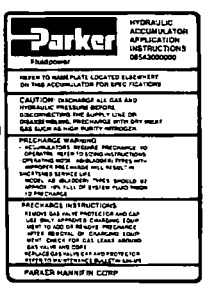

20



21

BS97N179

BS97N179

DECALS

REF.	PART NO.	DESCRIPTION	REQ'D.
1	321-229	DECAL - hydraulic fluid, used in production, for service order 321-6376, item 2	1
2	321-6376	DECAL - hydraulic fluid	1
3	321-230	DECAL - diesel fuel	1
4	321-6672	DECAL - Warning, check and service cooling system	2
5	304940A1	DECAL - maintenance schedule, supplied by Parts and Components	1
6	321-6046	DECAL - Warning, if you use the backhoe to lift a load that is too heavy	1-3
7	116534A1	KIT - decal, seat weight adjustment, includes instructions, included in seat assembly	1
8	321-7030	DECAL - Warning, do not jump - use seat belt	1
9	D150900	DECAL - Warning, excessive speed can cause loss of machine control	1
10	112236A1	DECAL - Caution, this is an insulated roof system, cab models	1
11	D149824	DECAL - standard backhoe control pattern, with foot swing, upper	1
12	D149825	DECAL - extendahoe control pattern, with foot swing, upper	1
13	D149828	DECAL - standard backhoe control pattern, with hand swing, upper, left-hand side of control console	1
14	D149829	DECAL - standard backhoe control pattern, with hand swing, upper, right-hand side of control console	1
14A	L111356	DECAL - boom lock	1
15	D149826	DECAL - Caution, operate backhoe from seat position only, lower, for all models, with foot swing backhoe controls and standard backhoe models with hand swing	1
15A	D149827	DECAL - Caution, operate backhoe from seat position only, lower, for extendahoe backhoe models with hand swing	1
16	186989A1	EMBLEM - Case	1
17	131-431	NUT - push-on type	2
18	321-4614	TAG - do not operate	1
19	255927A1	DECAL - Warning, do not turn the ride control on, if the loader arms and bucket are holding the front of the machine off the ground, mounts on console by ride control switch, models with ride control, if used	1
20	L129440	DECAL - hydraulic accumulator application instructions, mounts on accumulator, models with ride control, if used	1
21	256318A1	DECAL - Warning, pressure accumulator in loader hydraulic system, mounts on accumulator mounting plate, models with ride control, if used	1
22	321-6774	DECAL - Warning, the spring in this assembly is, seat spring	1

NUMERICAL INDEX

PART NO.	PAGE	REF.
A10454	4-5	44
A13240	8-63	25
A14141	8-3	8
A141451	9-77	24
A15672	6-23	23
A156873	6-5	6
A165395	9-131	2
A165860	3-5	
A166057	4-11	2
A166057	4-11	17
A167037	9-149	8
A170241	2-3	2
A170241	2-5	9
A170309	2-15	4
A170467	2-11	4
A171099	2-3	15
A171940	2-13	6
A172116	2-13	7
A177435	3-7	2
A178706	6-23	24
A180163	9-117	18
A184545	2-3	30
A184614	9-145	15
A186171	9-129	
A186182	4-7	24
A186183	4-7	18
A186186	4-7	15
A186193	4-7	25
A186256	9-129	1
A187504	4-7	13
A187542	4-43	5
A187575	4-43	11
A187714	9-131	1
A187873	4-7	
A187873	4-9	4
A187899	4-7	12
A187901	4-7	17
A187903	4-7	1
A187904	4-7	9
A187906	4-7	2
A187909	9-129	17
A187911	4-35	2A
A187912	4-35	2
A187914	4-35	4
A187917	4-7	11
A187923	2-13	10
A187965	4-27	
A187990	4-17	11
A187990	7-7	32
A188028	7-13	23
A189154	2-13	1
A189284	9-145	6
A191114	4-27	
A20058	6-53	2
A20058	6-53	2
A23870	4-43	1
A27602	5-15	28
A28230	5-15	34
A30013	8-3	16
A30881	9-9	11
A30881	9-29	15
A30881	9-33	5
A30881	9-35	26
A33509	9-59	29
A38208	5-17	5
A38208	5-19	7
A38261	5-19	3
A38261	5-19	6
A41264	4-37	9
A41264	4-39	5
A41852	3-17	14
A42465	2-9	3
A42561	9-125	11
A45007	4-27	5
A45054	9-107	
A45093	4-27	15
A46948	4-3	2
A46950	4-5	39
A47123	4-27	18
A47125	4-27	19
A47127	4-3	13
A47128	4-3	10
A47129	4-5	36
A47130	4-5	38
A47230	4-5	
A47232	4-3	16
A47233	4-3	17
A47234	4-3	18
A47235	4-3	19
A47236	4-3	20
A47237	4-5	33
A47238	4-5	34
A47239	4-5	31
A47240	4-3	
A47241	4-3	27
A47242	4-5	28
A47243	4-3	
A47244	4-5	35
A47247	4-5	30
A47249	4-5	32
A47688	4-27	8
A48041	6-13	11
A48041	6-39	6
A48041	6-41	2
A49667	9-145	3
A52216	4-33	13
A61447	5-17	12
A61448	5-17	11
A61449	5-17	10
A62209	9-11	14
A65544	5-3	5
A66759	5-17	1
A77310	7-7	14
A77313	4-21	19
A77314	4-21	18
A77405	2-41	44
A77405	2-43	11
A77406	2-41	45
A77406	2-43	12
A77416	2-21	
A77424	2-41	30
A77429	2-39	17
A77429	2-41	34
A77465	2-41	43
A77465	2-47	11
A77466	2-47	11
A77467	2-47	11
A77468	2-47	11
A77469	2-47	11
A77472	2-43	11
A77473	2-43	12
A77474	2-43	11
A77475	2-43	12
A77476	2-43	11
A77477	2-43	12
A77478	2-43	11
A77479	2-43	12
A77490	2-31	
A77505	2-39	6A
A77512	3-17	26
A77673	2-31	
A77673	2-41	48
A77720	3-17	2
A77736	2-33	
A77775	3-17	13
A77782	2-39	6
A77783	2-35	2
A77809	2-43	23
A77810	2-43	26
A77817	2-17	19
A77840	2-43	12
A77841	2-43	12
A77864	2-51	
A77870	2-41	46
A77870	2-49	
A77887	2-41	
A77889	2-43	13
A77890	2-43	18
AC77752	2-39	
B17575	6-5	
B17575	6-7	
B17575	6-9	
B17575	6-13	
B17575	6-15	
B17575	6-17	
B17576	9-81	35
B93222	5-17	
BMF28S	4-15	1
BMF31E	4-13	1
D102964	9-149	
D103626	5-15	
D120450	9-49	14
D120450	9-55	7
D120561	4-19	19
D121047	9-11	22
D121152	4-29	6
D121152	4-37	
D121194	9-13	6
D121385	8-59	29
D121608	7-13	12
D123347	9-151	4
D123655	5-15	7
D123684	5-15	6
D123684	6-3	10
D123806	5-15	16
D123865	5-15	29
D124528	7-7	19
D124529	7-7	13
D124530	7-7	23

NUMERICAL INDEX

PART NO.	PAGE	REF.	PART NO.	PAGE	REF.	PART NO.	PAGE	REF.
D124857	3-9	8	D134923	9-133	15	D138492	6-55	2
D125079	4-13	7	D135384	4-29	5	D138565	9-77	12
D125223	5-19	1	D135384	4-37		D138565	9-77	21
D125340	5-15	17	D135387	9-117	16	D138954	5-15	1
D125341	5-15	18	D135557	9-47	5	D139175	4-41	12
D126198	9-123	22	D135559	9-47	6	D139849	9-63	
D126198	9-123	25	D135739	9-49	12	D139849	9-65	
D126204	9-113	3	D135741	9-47	4	D139849	9-65	
D126205	9-113	4	D136391	9-47	26	D139849	9-67	
D126409	4-15	4	D136391	9-49	19	D139849	9-67	
D126821	4-23	19	D136391	9-59	5	D139849	9-69	
D127018	4-13	10	D136392	9-47	24	D139849	9-71	
D127167	9-55	13	D136392	9-49	20	D139849	9-71	
D127167	9-57	38	D136392	9-59	6	D139851	9-63	
D127167	9-59	21	D136430	7-9	2	D139851	9-65	
D127168	9-55	11	D136635	9-43	7	D139851	9-65	
D127168	9-59	19	D136700	9-47	25	D139851	9-67	
D127172	9-55	14	D136773	9-3	17	D139851	9-67	
D127172	9-55	18	D136773	9-37	11	D139851	9-69	
D127172	9-57	39	D137077	7-7	6	D139851	9-71	
D127172	9-57	43	D137218	9-49	13	D139851	9-71	
D127172	9-59	22	D137345	5-15	2	D140029	8-141	15
D127172	9-59	33	D137363	4-11	12	D140029	9-55	8
D127335	4-23	24	D137363	4-47	9	D140035	7-7	9
D127507	5-15	19	D137363	9-11	16	D140247	9-59	28
D127542	9-11	2	D137363	9-105		D140267	9-91	32
D127542	9-77	3	D137468	4-19	18	D140679	9-73	
D128018	9-131		D137615	9-155	2	D140706	8-37	23
D128020	9-131	10	D137625	8-3		D141142	9-55	20
D128021	9-131	11	D137627	6-3	17	D141142	9-61	37
D128022	9-131	21	D137627	6-19	13	D141164	9-55	22
D128310	4-19	6	D137627	6-25	41	D141164	9-61	39
D128402	2-13	9	D137627	6-69	13	D141555	8-139	15
D128745	9-129	16	D137820	4-21	20	D141666	9-59	11
D129227	9-53	3	D138022	9-51	30	D142012	9-67	4
D129264	9-15	2	D138022	9-55	2	D142012	9-71	4
D129264	9-17	2	D138047	5-15	3	D142083	9-149	3
D129264	9-19	11	D138047	9-55	9	D142084	9-149	1
D129641	9-53	6	D138047	9-55	19	D142085	9-149	2
D129747	7-13	13	D138047	9-57	44	D142086	9-149	5
D129967	9-123	12	D138047	9-59	34	D142144	9-149	10
D129968	9-123	21	D138055	8-11	8	D142314	9-45	20
D129969	9-123	24	D138055	8-13	6	D142366	8-27	10
D129974	9-123	7	D138055	8-13	15	D142519	9-45	15
D132076	9-13	17	D138055	8-17	7	D142787	8-11	20
D132494	9-49	16	D138055	8-17	14	D142787	8-21	27
D132494	9-59	2	D138055	8-65	24	D142787	8-23	21
D132681	4-29	1	D138055	8-67	29	D142787	8-25	32
D132681	4-33		D138055	8-69	8	D142787	8-59	15
D132682	4-29	2	D138055	8-69	12	D142898	6-41	21
D132682	4-33		D138055	8-69	22	D142898	6-47	16
D132895	9-83	10	D138055	9-79	32	D142971	6-61	5
D132982	5-7	39	D138157	9-63	7	D142986	6-67	2
D132982	7-9	22	D138157	9-65	7	D143033	6-61	18
D132982	8-39	17	D138157	9-65	7	D143242	9-61	56
D132982	8-43	50	D138157	9-67	7	D143242	9-147	16
D132982	9-139	24	D138157	9-67	7	D143324	9-57	30
D133428	9-45	5	D138157	9-69	7	D143405	5-17	4
D133632	9-49	21	D138157	9-71	7	D143406	9-45	13
D133632	9-59	7	D138157	9-71	7	D143406	9-45	31
D133865	9-59	24	D138380	6-53	4	D143411	8-7	10
D134737	4-21		D138380	6-55	3	D143411	8-21	14
D134900	9-41	6	D138492	6-53	5	D143411	8-53	46

NUMERICAL INDEX

PART NO.	PAGE	REF.
D143412	8-33	31
D143416	9-41	5
D143417	9-53	8
D143417	9-91	25
D143417	9-91	30
D143417	9-139	29
D143417	9-141	20
D143422	8-5	32
D143422	8-43	54
D143426	8-33	29
D143427	9-139	27
D143427	9-141	18
D143430	8-9	18
D143591	9-53	14
D143714	9-91	9
D143715	9-91	8
D143723	9-53	10
D143735	9-53	17
D143797	8-7	5
D143797	8-7	9
D143797	8-39	19
D143797	8-43	55
D143830	4-11	6
D144423	9-47	35
D144592	9-53	4
D145060	9-65	4
D145061	9-67	4
D145061	9-71	4
D145062	9-69	4
D145367	2-13	2
D146035	8-21	24
D146035	9-83	11
D146288	9-55	26
D146288	9-61	49
D146335	4-27	11
D146420	9-65	3
D146420	9-65	3
D146420	9-67	3
D146420	9-67	3
D146420	9-69	3
D146421	9-65	2
D146421	9-65	2
D146421	9-67	2
D146421	9-67	2
D146421	9-69	2
D146588	9-65	1
D147166	4-19	17
D147247	9-65	1
D147249	9-65	4
D147383	4-11	11
D147383	4-11	14
D147383	4-11	33
D147383	4-17	2
D147383	9-127	12
D147383	9-145	27
D147383	9-147	8
D147409	9-63	4
D147410	9-63	3
D147411	9-63	2
D147418	9-63	1
D147773	8-59	26
D148108	4-17	10
D148108	7-7	31
D148947	9-35	2
D148962	3-7	6
D148992	9-29	7
D148993	9-29	19
D148994	9-29	18
D149033	9-45	25
D149079	9-59	16
D149239	9-47	32
D149262	9-31	46
D149287	9-7	36A
D149287	9-9	4
D149287	9-31	37
D149287	9-33	11
D149287	9-37	3
D149287	9-41	11
D149288	7-13	20
D149288	9-3	26
D149288	9-7	36
D149288	9-29	23
D149288	9-31	48
D149288	9-37	7
D149295	9-31	34
D149295	9-37	9
D149298	9-57	32
D149725	6-5	2
D149726	6-5	4
D149737	6-9	8
D149738	6-9	6
D149739	6-9	
D149824	9-157	11
D149825	9-157	12
D149826	9-157	15
D149827	9-157	15A
D149828	9-157	13
D149829	9-157	14
D149860	6-19	
D149860	6-69	
D149866	9-25	9
D149867	9-25	10
D149868	9-25	12
D150032	9-41	13
D150053	8-59	3
D150054	8-59	2
D150080	9-55	17
D150080	9-59	32
D150099	8-21	25
D150121	9-55	10
D150121	9-59	17
D150122	9-55	16
D150122	9-57	41
D150122	9-59	31
D150155	5-15	20
D150348	9-67	1
D150364	9-67	1
D150365	9-69	1
D150377	9-103	12
D150377	9-103	20
D150391	9-103	15
D150391	9-103	23
D150397	9-29	9
D150434	9-29	13
D150435	9-29	12
D150486	9-29	17
D150493	9-29	24
D150503	9-31	45
D150608	9-55	15
D150608	9-59	30
D150619	9-57	34
D150633	7-13	11
D150781	8-121	
D150810	8-121	
D150899	9-153	21
D150900	9-157	9
D151034	9-13	15
D151065	9-47	21
D151069	9-77	5
D151070	9-77	6
D151071	9-49	11
D151073	9-47	7
D151074	9-47	8
D25279	9-45	10
D25279	9-45	14
D25279	9-57	31
D25279	9-73	7
D26002	9-45	9
D28648	9-45	12
D30933	9-63	12
D30933	9-65	12
D30933	9-65	12
D30933	9-67	12
D30933	9-67	12
D30933	9-69	12
D30933	9-71	12
D30933	9-71	12
D31140	9-19	2
D34033	8-45	2
D34666	9-29	16
D35009	6-23	32
D36179	9-89	8
D36179	9-125	17
D36264	2-9	11
D36505	5-15	15
D36669	9-121	15
D37495	9-65	11
D37495	9-65	11
D37495	9-67	11
D37495	9-67	11
D37495	9-69	11
D37495	9-71	11
D37495	9-71	11
D37495	9-73	2
D37614	9-57	29
D38435	8-9	23
D38648	8-19	20
D38648	8-37	26
D38858	8-141	12
D38907	9-45	3
D39093	9-63	5
D39093	9-65	5
D39093	9-65	5
D39093	9-67	5
D39093	9-67	5
D39093	9-69	5
D39093	9-71	5
D39093	9-71	5
D39118	9-35	11

NUMERICAL INDEX

PART NO.	PAGE	REF.
D39256	9-45	17
D39696	4-11	19
D40236	5-7	25
D40236	8-19	6
D40236	8-21	23
D40236	8-31	37
D40236	8-35	48
D40236	8-37	13
D40243	9-63	11
D40442	3-5	37
D40442	9-81	37
D40442	9-81	42
D42458	7-13	2
D42833	8-47	6
D43417	9-73	4
D48212	9-63	10
D48212	9-65	10
D48212	9-65	10
D48212	9-67	10
D48212	9-67	10
D48212	9-69	10
D48212	9-71	10
D48212	9-71	10
D50146	9-45	6
D51391	9-19	7
D51392	9-19	15
D51393	9-19	19
D51750	9-63	8
D51750	9-65	8
D51750	9-65	8
D51750	9-67	8
D51750	9-67	8
D51750	9-69	8
D51750	9-71	8
D51750	9-71	8
D52275	8-21	6
D52275	8-23	6
D52275	8-25	6
D52275	8-27	6
D52275	8-29	6
D52275	8-33	6
D52275	8-37	6
D52276	2-3	25
D52276	8-21	7
D52276	8-23	7
D52276	8-25	7
D52276	8-27	7
D52276	8-29	7
D52276	8-33	7
D52276	8-37	7
D52564	9-151	1
D54218	9-73	5
D55216	9-81	43
D55216	9-155	10
D55561	4-13	8
D57486	5-15	25
D59912	9-29	4
D59912	9-35	6
D59912	9-43	2
D60180	9-147	2
D61297	5-15	36
D61368	9-45	16
D67251	8-57	7
D67297	8-3	29
D71342	4-27	12
D71343	4-27	13
D71344	4-27	14
D71346	4-27	16
D72371	5-15	32
D72372	5-15	35
D73383	4-15	5
D73741	2-13	14
D74182	8-53	45
D74949	5-17	8
D75103	5-17	
D75465	3-3	12
D77182	8-25	10
D80270	9-155	11
D82804	5-11	26
D82805	5-11	24
D82806	5-11	22
D83306	9-73	3
D83485	4-13	2
D83885	3-3	28
D86664	9-53	15
D87870	9-155	9
D88052	9-139	32
D88052	9-143	5
D88427	9-45	11
D93716	9-147	4
D95096	9-9	13
D95142	5-13	8
D95142	8-129	5
D95143	8-127	5
D95143	8-131	5
D95143	8-143	4
D95144	8-133	5
D95144	8-135	5
D95145	8-137	7
D95146	8-139	5
D95146	8-141	5
E135750	6-59	18
E135762	6-63	8
E135777	6-61	3
E135785	6-61	8
E135810	7-5	7
E43769	9-127	28
E46524	9-127	23
E46560	9-127	
E46561	9-127	11
E47027	9-115	17
E47027	9-147	29
E47238	9-127	2
E47239	9-127	3
E47240	9-127	4
E49497	9-39	4
E49498	9-39	3
F13537	8-119	38
F22426	4-25	21
F42827	3-5	
F42827	4-25	
F42827	9-81	
F42827	9-89	
F42827	9-125	
F42827	9-147	
F44748	9-121	19
F44881	9-119	10
F44881	9-121	9
F44883	9-93	10
F44883	9-119	23
F45165	9-117	11
F45165	9-119	6
F64046	9-121	3
F64198	9-117	10
F64198	9-119	8
F64198	9-123	15
F64342	9-117	13
F64519	9-133	8
G100440	8-135	16
G100444	8-129	15
G100444	8-131	17
G100444	8-143	14
G100448	8-135	17
G100449	8-129	16
G100449	8-131	18
G100449	8-143	15
G100710	8-141	18
G100711	8-141	19
G101066	8-119	32
G101533	8-133	6
G101533	8-135	6
G102090	8-137	22
G102090	8-139	19
G102092	8-139	18
G102285	8-135	15
G102286	8-141	17
G102287	8-127	14
G102288	8-129	14
G102288	8-131	16
G102288	8-143	13
G102424	8-129	6
G102425	8-127	6
G102425	8-131	6
G102425	8-143	5
G102426	8-137	8
G102427	8-139	6
G102711	8-79	5
G102711	8-81	5
G102711	8-85	5
G102711	8-99	5
G102711	8-101	5
G102711	8-103	5
G102711	8-105	5
G102711	8-109	5
G102711	8-113	5
G102711	8-115	5
G103862	8-79	22
G103862	8-81	25
G103862	8-85	19
G103862	8-99	15
G103862	8-101	19
G103862	8-105	19
G103862	8-111	37
G103862	8-113	15
G103862	8-115	15
G104439	5-13	15
G104454	5-13	16
G104989	8-133	18
G104989	8-137	24

NUMERICAL INDEX

PART NO.	PAGE	REF.
G104989	8-141	21
G104990	8-139	21
G105187	5-13	14
G106395	8-81	8
G106396	8-81	9
G106398	8-81	12
G106409	8-115	29
G106410	8-85	9
G106410	8-99	7
G106410	8-101	7
G106410	8-105	7
G106410	8-109	7
G106410	8-113	7
G106410	8-115	7
G106425	8-81	14
G106808	5-13	2
G106810	5-13	7
G106813	5-13	18
G106817	5-13	6
G106832	5-13	4
G107251	8-73	10
G107251	8-75	11
G107251	8-89	10
G107251	8-91	11
G107251	8-93	11
G107251	8-95	11
G107277	8-143	12
G107447	8-79	9
G107720	5-5	17
G107720	5-13	1
G107720	5-15	11
G107721	5-13	
G107780	8-79	16
G107780	8-81	16
G107780	8-119	19
G107786	8-111	
G107921	5-13	9
G107970	8-137	14
G107970	8-139	12
G108512	8-129	3
G108518	8-129	13
G108556	8-77	12
G108630	8-119	6
G108723	8-109	17
G108723	8-119	26
G108805	8-75	13
G108866	8-77	7
G108867	8-77	9
G108870	8-73	12
G108899	8-91	13
G108899	8-93	13
G108900	8-89	12
G108902	8-97	2
G108911	8-119	15
G108912	8-119	13
G108913	8-119	11
G108914	8-119	9
G108956	8-119	37
G108957	8-119	39
G109127	8-81	10
G109295	8-79	10
G109298	8-129	10
G109298	8-131	11
G109298	8-143	9
G109299	8-135	10
G109384	8-81	15
G109391	8-79	23
G109391	8-87	
G109391	8-105	
G109391	8-107	
G109391	8-115	
G109449	8-87	
G109449	8-105	
G109449	8-107	
G109449	8-111	
G109449	8-115	
G109627	8-103	
G109630	8-103	23
G109644	8-83	2
G109646	8-83	4
G109881	8-129	4
G109884	8-131	4
G109884	8-143	3
G109899	8-135	4
G109908	8-141	6
G109964	8-109	15
G109971	8-109	18
G110045	5-13	
G110077	8-99	
G110077	8-101	
G110077	8-107	
G110077	8-121	
G110269	8-137	21
G110391	8-119	3
G110391	8-119	5
G110467	8-121	
G110468	8-103	21
G110519	8-133	4
G110529	8-133	15
G110530	8-133	16
G110531	8-133	14
G110569	8-139	16
G13609	5-11	25
G15215	5-17	9
G32122	8-127	10
G32129	5-13	11
G32176	8-133	10
G32176	8-135	24
G32303	8-127	18
G32303	8-131	20
G32303	8-135	19
G33075	8-79	6
G33075	8-81	6
G33075	8-85	6
G33075	8-99	6
G33075	8-101	6
G33075	8-103	7
G33075	8-105	6
G33075	8-109	6
G33075	8-113	6
G33075	8-115	6
G33080	8-85	10
G33080	8-99	10
G33080	8-101	10
G33080	8-103	9
G33080	8-105	10
G33080	8-109	10
G33080	8-113	10
G33080	8-115	10
G33112	8-97	4
G33122	8-81	
G33122	8-85	
G33122	8-103	
G33122	8-113	
G33965	8-73	11
G33965	8-75	12
G33965	8-89	11
G33965	8-91	12
G33965	8-93	12
G33965	8-95	12
G34458	8-79	25
G34458	8-85	21
G34458	8-97	11
G34458	8-101	13
G34458	8-105	13
G34458	8-109	13
G34463	8-103	6
G34937	8-97	9
G34937	8-101	11
G34937	8-105	11
G34937	8-109	11
G35540	8-77	16
G35540	8-81	20
G35540	8-85	14
G35540	8-87	4
G35540	8-99	19
G35540	8-101	23
G35540	8-103	13
G35540	8-103	19
G35540	8-105	23
G35540	8-107	36
G35540	8-111	23
G35540	8-113	19
G35540	8-115	19
G35540	8-121	4
H275784	2-13	13
H422758	4-27	3
H422766	4-27	4
H422774	4-27	2
H433285	9-49	24
H434163	8-3	26
H71514	9-49	7
J280911	2-35	11
J282406	3-15	8
J283333	2-33	2
J283333	2-41	47
J283336	2-33	2
J283338	2-33	2
J283767	2-41	23
J283767	2-51	8
J330478	2-39	17D
J527759	2-25	22
J528177	2-27	2
J528204	2-27	4
J528221	2-27	5
J531582	2-25	19
J531598	2-25	20
J531670	2-25	17
J532195	2-27	7

NUMERICAL INDEX

PART NO.	PAGE	REF.	PART NO.	PAGE	REF.	PART NO.	PAGE	REF.
J535001	2-25	21	J903475	2-51	1	J913759	2-23	8
J535203	2-27	10	J903740	2-23	9	J913994	2-19	14
J535800	2-25	24	J903744	2-41	19	J913994	2-51	5
J535971	2-25	18	J903757	2-33	9	J914284	3-11	3
J537560	2-27	1	J903857	2-43	7	J914409	2-33	10
J537560	3-15	1	J903924	2-19	13	J914462	2-17	5
J575205	2-25		J904105	2-35	13	J914494	2-43	5
J580234	2-25	1	J904166	2-47	7	J914856	2-49	12
J678912	2-39	17B	J904230	2-41	36	J914868	2-19	18
J678921	2-39	17A	J904287	2-41	26	J915036	3-17	23
J678923	2-39	16	J904339	2-21	4	J915772	2-19	11
J802358	2-17		J904361	2-45	13	J915772	2-51	4
J802422	2-47		J904408	2-35	14	J915787	2-29	9
J802423	2-47		J904409	2-35	15	J916361	3-11	10
J802746	2-47		J904483	2-43	3	J917280	3-11	7
J802747	2-41	41	J904711	3-13	13	J917433	2-35	1
J802747	2-47		J904849	2-19	15	J917717	3-13	15
J802764	2-47		J905127	2-41	25	J917746	3-13	12
J802765	2-47		J905206	2-31	3	J918109	2-21	7
J802798	2-25		J905307	3-13	8	J918188	3-11	9
J802798	2-27		J905403	3-11	20	J918191	3-11	8
J802998	3-17		J905443	2-21	2	J918191	3-15	14
J818823	2-23	6	J905443	2-49	4	J918192	3-11	14
J818824	2-23	7	J905820	2-43	6	J918192	3-11	18
J823921	2-49	13	J905860	3-11		J918428	2-29	6
J900068	2-39	3	J906206	2-35	16	J918536	3-17	25
J900068	2-39	15	J906619	2-29	13	J918612	2-41	35
J900227	2-17	4	J906619	2-35	4	J918673	2-19	3
J900227	2-37	5	J906659	2-49	10	J918673	2-51	2
J900242	2-35	19	J906659	3-13	10	J918675	2-19	1
J900245	2-35	20	J906659	3-19	3	J918784	3-13	18
J900250	2-35	5	J906696	2-41	28	J918785	3-13	16
J900257	2-19	9	J906696	2-51	14	J918786	3-13	17
J900257	2-39	13	J906697	2-41	32	J918944	2-17	17
J900299	2-35	6	J906697	2-51	10	J918954	2-29	
J900677	2-31	2	J906773	2-21	6	J919053	2-41	42
J900706	2-35	23	J906854	2-35	12	J919053	2-47	6
J900706	2-35	27	J907049	2-33	6	J919053	2-47	6
J900919	2-47	10	J907185	2-21	5	J919053	2-47	6
J900955	2-39	10	J907586	2-41	24	J919369	2-23	5
J900956	2-39	7	J907769	2-17	7	J919369	2-49	3
J900958	2-39	9	J907998	2-19	12	J919644	3-15	12
J900967	2-39	2	J908031	2-43	1	J919683	2-19	10
J901049	2-31	6	J908118	2-33	7	J919687	2-23	14
J901097	2-35	8	J908560	4-7	27	J920344	3-15	4
J901097	2-49	2	J908563	4-7	28	J920348	3-15	5
J901395	2-45	14	J908616	2-29	3	J920400	2-31	10
J901706	2-47	5	J909355	2-29	2	J920414	3-13	11
J901706	2-47	5	J909356	2-49	11	J920706	2-39	12A
J901706	2-47	5	J909356	3-19	2	J920773	2-31	9
J901919	2-21	1	J910248	2-45	6	J920779	2-35	17
J902343	2-39	14	J910517	2-41	40	J920780	2-35	17
J902425	2-31	12	J910739	2-17	10	J920781	2-35	30
J902425	2-51	13	J910810	2-35	25	J920854	3-13	14
J902469	4-9	6	J910811	2-35	21	J920867	2-35	9
J903035	3-15	13	J911205	2-17	6	J920868	2-35	10
J903089	4-9	7	J911446	3-11	19	J921043	2-43	8
J903102	2-41	31	J911924	2-17	11	J921557	2-29	11
J903242	2-37	3	J912473	2-45	5	J921603	4-9	3
J903380	2-49	9	J912473	2-51	16	J921640	2-35	8A
J903380	3-13	7	J912772	2-19	21	J921640	2-49	2
J903463	2-19	19	J912888	3-17	4	J922488	2-35	18
J903475	2-19	20	J913689	2-45	11	J922595	2-45	

NUMERICAL INDEX

PART NO.	PAGE	REF.	PART NO.	PAGE	REF.	PART NO.	PAGE	REF.
J923044	2-17	8	J931062	3-11	2	K395086	6-15	13
J923262	2-35	31	J931348	2-51	17	K395087	6-15	6
J923331	2-33	11	J931348	3-11	4	K395090	6-17	8
J923331	2-49	1	J931349	2-31	4	K395090	6-63	10
J923387	2-33	15	J931350	2-23	10	K395091	6-13	21
J924147	2-31	8	J931350	2-49	6	K395093	6-13	16
J924148	2-31	11	J931351	2-19	5	K395093	6-67	9
J924725	3-11	17	J931351	2-51	3	K395101	6-67	25
J924726	3-11	11	J931450	3-17	22	K395131	6-67	15
J924962	2-19	7	J931605	2-21	8	K691987	2-3	24
J924962	2-19	8	J931605	2-49	5	K691987	9-83	9
J925009	2-29	7	J931623	2-35	32	L100659	8-57	5
J925186	2-17	16	J931784	2-23	1	L101998	8-57	9
J925195	2-17	14	J931804	2-23	2	L105735	8-57	8
J925234	2-45	3	J931970	2-23	12	L111356	9-157	14A
J925680	2-41	22	J932012	2-39	1	L11182	7-13	19
J925953	2-3	31	J932035	3-11	16	L112081	9-129	14
J925955	3-11	1	J932096	3-11	15	L112081	9-131	19
J926047	2-39	12	J932096	3-17	6	L112087	9-129	11
J926113	3-15	3	J932120	2-19	4	L112087	9-131	13
J926700	2-35	7	J932296	2-39	17C	L112088	9-129	10
J926738	3-15	11	J932529	3-17	30	L112088	9-131	12
J927155	2-37	4	J933026	2-23	2A	L112089	9-129	12
J927330	2-35	1	J933220	2-39		L112089	9-131	17
J927622	2-29	4	J933250	3-11	13	L112090	9-129	5
J927633	3-11	12	J933254	3-11	5	L112090	9-129	13
J927633	3-13	6	J933291	3-17	28	L112090	9-131	9
J927948	2-39	4	J933648	2-39		L112090	9-131	18
J928404	2-33	3	J934022	3-17	43	L126767	2-3	
J928406	2-33	5	J934190	2-41	27	L129440	8-123	14
J928406	2-49	15	J934429	2-29	3	L129440	9-157	20
J928493	2-43	10	J940059	2-37	2	L15401	9-9	12
J928493	2-51	9	J941472	3-17	27	L17985	9-139	22
J928759	2-41	20	J941476	2-47	9	L18337	2-7	14
J928759	2-51	18	J942581	2-47		L18337	2-13	17
J928981	3-17	3	J942914	2-29	12	L18337	3-3	22
J928989	2-41	37	J942914	2-51	11	L18337	3-7	12
J929027	2-43	2	JC537562	2-25		L18337	4-11	28
J929028	2-37	7	JC901569	2-47		L18337	4-19	26
J929393	3-13	2	JC908031	2-43		L18337	4-31	22
J929394	3-13	3	JC926202	2-31		L18337	4-41	5
J929395	3-13	4	JC927330	2-35		L18337	4-47	6
J929396	3-13	5	JC929490	3-19		L18337	5-7	22
J929456	3-17	40	JC930153	3-17		L18337	5-7	32
J929457	2-29	8	JR802798	2-25		L18337	5-7	41
J929457	2-51	15	JR908031	2-43		L18337	6-21	10
J929490	3-13	9	JR927330	2-35		L18337	6-57	8
J929490	3-19	1	JR929490	3-19		L18337	6-57	23
J929751	2-19	16	JR930152	3-17		L18337	7-9	23
J929751	2-51	6	JR930336	2-31		L18337	7-13	28
J929792	2-29	10	JR933648	2-39		L18337	8-5	39
J929792	2-51	12	JR942581	2-47		L18337	8-21	13
J929885	2-37	1	K260177	6-29	5	L18337	8-25	20
J930139	2-41	18	K260177	6-31	5	L18337	8-27	20
J930152	3-13	1	K261014	6-17	4	L18337	8-29	19
J930152	3-17	1	K261014	6-63	4	L18337	8-33	19
J930336	2-31	1	K261065	6-17	3	L18337	8-37	19
J930590	3-17	38	K261065	6-63	3	L18337	8-39	18
J930886	2-45	1	K262143	6-17	9	L18337	8-43	51
J930906	2-33	4	K262143	6-63	12	L18337	8-45	7
J930906	2-49	8	K395027	6-15	12	L18337	8-57	6
J930993	2-51	19	K395075	6-15	8	L18337	8-59	17
J930993	3-17	37	K395082	6-67	8	L18337	8-63	36

NUMERICAL INDEX

PART NO.	PAGE	REF.
L18337	8-65	23
L18337	8-69	18
L18337	9-7	41
L18337	9-107	
L18337	9-137	21
L18337	9-139	25
L18337	9-141	17
L18337	9-143	13
L18337	9-145	5
L26209	7-7	7
L30878	5-11	16
L30881	5-9	5
L30888	5-11	6
L30889	5-11	4
L30893	5-11	21
L32318	8-71	2
L35368	5-11	19
L50062	9-139	4
L50062	9-139	12
L54563	9-29	14
L54563	9-33	1
L59682	2-13	16
L60224	4-31	23
L60224	9-121	8
L60539X	2-13	
L71879	4-11	21
L71879	4-19	2
L72776	2-13	
L77821	9-103	4
L79937	8-15	39
N13505	6-7	11
N13542	4-27	7
N13543	4-27	6
N13545	4-27	1
N13546	4-27	10
N14112	9-129	8
N14225	4-27	21
N14250	5-11	
N14283	4-37	10
N14284	4-33	4
N14285	4-33	12
N14330	8-3	13
N14367	6-5	3
N14407	6-15	5
N14408	6-15	7
N14410	6-11	3
N14465	9-133	11
N14466	9-133	10
N14763	5-11	10
N14784	7-11	
N6755	8-125	
N6807	4-27	9
N6836	4-37	3
N6941	8-125	
N7802	9-109	
N8356	9-129	9
N8358	9-129	7
N8359	9-129	2
N8360	9-129	6
N8361	9-129	4
N8361	9-131	8
N8362	9-129	3
N8362	9-131	5
N8362	9-131	7
N9025	8-125	
P2745466	6-47	21
P2930467	6-67	3
P3034505	6-61	9
P3533055	6-45	35
P3533055	6-47	20
R21391	2-9	9
R32119	9-49	8
R46493	8-5	31
R46493	8-19	7
R46493	8-43	56
R47941	9-43	14
R52408	9-131	20
R52415	9-125	10
R52440	9-125	9
R52483	9-125	13
R52483	9-139	9
R52735	9-121	18
R52879	9-117	6A
R52880	9-117	6
R52881	9-117	5A
R52882	9-117	5
R52883	9-117	7A
R52884	9-117	7
R52917	9-117	8
R53000	9-119	15
R53444	9-117	4
R53562	9-117	2
R53562	9-119	2
R53634	9-139	5
R53755	9-133	
R54047	9-119	22
R54504	9-129	15
R54682	9-149	6
R55000	9-117	17
R55001	9-117	17A
R58418	9-103	13
R58418	9-103	21
S109444	8-127	15
S109445	8-127	16
S110169	5-11	31
S110170	5-11	27
S115351	5-9	2
S118383X	8-9	
S300976	6-61	7
S301064	6-5	18
S301065	6-5	15
S80928	9-145	7A
S88754	8-71	16
S88756	8-71	17
S94643	8-129	18
S94643	8-143	17
ST205A	6-39	1
ST205A	6-47	6
T34857	4-37	2
T34857	4-39	2
W10478	4-27	17
W16323	8-71	24
100-1125	8-79	11
100-1647	8-85	8
100-1647	8-99	9
100-1647	8-101	9
100-1647	8-103	8
100-1647	8-105	9
100-1647	8-109	9
100-1647	8-113	9
100-1647	8-115	9
100-21118	8-119	18
100-21237	5-15	31
100-21250	2-17	9
100-21315	8-135	13A
100-2156	8-119	40
100-3331	9-119	27
100-3337	9-123	20
100520A1	6-5	12
100522A1	6-5	9
100529A1	6-7	4
100532A1	6-7	3
100533A1	6-7	8
100552A1	6-13	5
100553A1	6-13	
100554A1	6-13	
100555A1	6-13	18
100556A1	6-13	4
100557A1	6-13	22
100557A1	6-29	8
100557A1	6-31	8
100557A1	6-59	1
100557A1	6-67	7
100559A1	6-13	6
100561A1	6-13	13
100562A1	6-13	19
100696A1	9-11	3
100747A1	6-47	12
100748A1	6-27	9
100748A1	6-47	14
100753A1	6-47	17
100760A1	6-59	21
101479A1	8-35	40
101531A1	4-43	9
101631A1	9-55	
102-1387	5-9	4
102649A1	9-59	18
102761A1	9-3	12
102761A1	9-5	23
102765A1	9-35	19
103-11237	9-51	28
103-1437	9-5	15
103-16175	9-45	4
103-16175	9-45	8
103-16175	9-51	33
103-16175	9-55	5
103-16175	9-55	23
103-16175	9-55	27
103-16175	9-57	33
103-16175	9-57	36
103-16175	9-59	14
103-16175	9-61	40
103-16175	9-61	50
103-16200	9-47	18
103-1687	5-15	38
103-3350	9-11	29
103-3350	9-43	8
103670A1	8-33	36
103670A1	8-55	18

NUMERICAL INDEX

PART NO.	PAGE	REF.	PART NO.	PAGE	REF.	PART NO.	PAGE	REF.
104587A1	4-3	14	112486A1	6-15	10	119211A1	9-103	11
104588A1	4-3	3	112486A1	6-61	10	119241A1	6-53	1
104589A1	4-5	45	112509A1	6-9	3	119243A1	5-19	4
104824A1	9-11	23	112517A1	6-47	4	119266A1	4-23	1
104907A1	6-53	1	112865A1	9-97	10	119267A2	4-23	6
106974A1	9-123	27	112946A1	9-15	3	119268A1	4-23	7
106989A1	9-35	13	113133A2	8-15	34	119895A3	8-39	22
106990A1	9-35	15	113133A2	8-129	1	120032A1	4-25	3
107071A1	6-67	17	113133A2	9-13	20	120148A2	8-79	13
107124A1	9-77	8	113135A2	8-129	2	120204A1	9-3	24
107230A1	9-113	5	113248A2	8-89	1	1202956C1	4-31	24
107232A1	9-113	7	113248A2	8-91	1	120303A1	8-11	10
107233A1	9-113	6	113248A2	8-93	1	120303A1	8-13	8
107234A1	9-113	8	113248A2	8-95	1	120303A1	8-13	21
107949A1	9-121	22	113248A2	8-97		120303A1	8-17	8
108088A1	9-3	11	113457A1	9-15	3A	120303A1	8-65	26
108088A1	9-5	12	113561A1	6-3	1	120303A1	8-67	31
108088A1	9-5	21	113561A1	6-5		120303A1	8-69	14
108335A1	8-33	33	113561A1	6-7		120303A1	9-79	33
108336A1	8-33	34	113561A1	6-9		120386A1	5-5	13
108366A1	4-43	4	113561A1	6-11		120388A1	5-5	14
108513A1	9-113	9	113561A1	6-13		120421A2	5-7	23
108794A2	9-115		113561A1	6-15		120421A2	5-11	
108797A1	9-115	7	113561A1	6-17		120943A1	9-79	23
108864A1	9-35	1	113629A1	9-11	25	121-119	4-33	14
108923A1	9-35	9	113787A3	8-79	17	121-145	7-7	20
108924A1	9-35	8	113793A4	8-73	3	121335A1	3-7	11
108936A2	9-119	13A	113793A4	8-75	3	121412A1	4-19	7
108938A2	9-119	13	113793A4	8-81		121413A1	4-19	9
108963A1	9-115	6	113794A4	8-75	4	121413A1	4-21	30
109080A1	4-31	2	113794A4	8-85		121413A1	4-47	1
109080A1	4-35		114295A1	6-13	20	121413A1	8-43	40
109081A1	4-31	3	114296A1	6-9	9	121413A1	8-63	32
109081A1	4-35		114318A1	9-47	12A	121413A1	8-67	37
109131A1	9-35	4	114882A1	5-3	2	121414A1	4-19	8
109132A1	9-35	5	114903A1	8-77	6	121414A1	9-105	
109239C2	9-137	20	114980A1	9-93	8	121416A1	4-19	9A
109268A1	9-11	4	115507A1	8-3	28	121478A1	8-135	14A
109511A1	4-41	8	115633A1	8-7	8	121501A1	2-3	21
109686A1	6-15		115633A1	8-9	17	121519A1	9-27	3
109879A1	9-83	3	116339A1	9-13	21	121638A2	8-117	1
109879A1	9-93	13	116423A1	4-41	2	121639A2	8-117	4
110307A1	8-129	12	116425A1	6-13	12	121658A1	6-23	20
111282C1	9-125	6	116426A1	6-13	7	121665A1	9-45	7
111522A1	9-11	5	116427A1	6-13	8	121729A1	7-9	8
111583A1	8-71	18	116534A1	9-157	7	121730A2	7-9	4
111588A1	8-71	14	116760A1	9-109	3	121736A2	8-73	1
111589A1	8-71	21	116761A2	9-111	1	121736A2	8-75	1
111592A1	8-71	23	116763A1	9-111	2	121736A2	8-77	
111593A1	8-71	12	116764A2	9-111	3	121741A1	8-41	1
111594A1	8-71	5	116766A2	9-111	4	121741A1	8-117	
111596A1	8-71	7	116767A1	9-111	5	121778A1	9-47	3
111597A1	8-71	8	117844A1	2-15	7	121779A1	9-49	2
112236A1	9-157	10	117846A1	6-23	33	121817A1	8-3	5
112366A2	8-11	18	117933A1	6-55	6	121856A1	3-3	17
112366A2	8-127	1	118318A1	8-79	8	121856A1	9-79	25
112366A2	9-11	9	118769A1	9-103	7	121856A1	9-85	2
112370A3	8-135	14	118900A1	9-11	24	121856A1	9-87	2
112380A1	9-3	14	118901A1	9-11	30	121856A1	9-89	2
112380A1	9-5	29	118901A1	9-13	3	121856A1	9-91	13
112380A1	9-35	21	119129A1	9-11	6	121856A1	9-93	18
112382A1	9-5	25	119171A1	9-109	4	121920A1	9-19	12
112432A1	8-127	2	119171A1	9-111	6	122125A1	8-3	27

NUMERICAL INDEX

PART NO.	PAGE	REF.
122127A1	8-7	4
122140A1	8-77	5
122141A1	8-77	5A
122176A1	8-9	11
122178A2	8-45	20
122178A2	8-47	20
122179A1	8-45	18
122179A1	8-47	18
122264A1	6-7	10
122265A1	6-7	9
122268A1	6-5	13
122270A1	6-5	7
122284A1	9-49	10
122330A1	8-79	15
122359A1	9-3	23
122535A1	8-135	
122536A1	5-5	18
122536A1	8-9	1
122536A1	8-125	
122553A1	9-141	12
122553A1	9-143	4
122554A1	9-143	11
122579A1	9-141	13
122603A1	9-79	24
122736A1	4-17	5
122740A1	4-17	7
122897A1	9-49	6
122958A1	9-53	13
122974A1	9-53	1
122993A1	9-53	19
122995A1	9-53	16
123097A1	4-11	32
123167A2	9-49	23
123168A1	9-49	26
123206A2	9-135	2
123318A1	9-51	29
123392A1	3-9	13
123405A6	8-137	16
123407A1	8-137	17
123493A1	9-5	9
123538A1	4-17	4
123558A1	3-9	12
123615A2	4-25	12
123726A1	8-133	12
123732A1	8-133	13
123800A1	6-45	21
123803A1	6-45	24
123809A2	4-11	31
123815A1	9-5	2
123842A2	6-23	14
123842A2	6-27	
123842A2	6-29	
123842A2	6-33	
123842A2	6-35	
123842A2	6-37	
123842A2	6-39	
123842A2	6-41	
123842A2	6-43	
123842A2	6-45	
123842A2	6-49	
123842A2C	6-27	
123842A2R	6-27	
123843A2	6-23	15
123843A2	6-27	
123843A2	6-31	
123843A2	6-33	
123843A2	6-35	
123843A2	6-37	
123843A2	6-39	
123843A2	6-41	
123843A2	6-43	
123843A2	6-45	
123843A2	6-47	
123843A2	6-49	
123843A2	6-51	
123843A2C	6-27	
123843A2R	6-27	
123942A1	8-49	9
123943A1	8-49	27
123980A1	9-141	23
124011A1	9-141	22
124243A1	9-5	8
124462A1	8-135	
124463A1	8-135	22
124568A2	8-135	3
124646A1	7-13	5
124690A1	8-23	15
124721A1	9-9	14
124727A1	9-141	15
1250594C1	9-141	10
1250594C1	9-141	11
1250594C1	9-143	3
1250594C1	9-143	10
1250594C1	9-143	17
125113A1	9-35	12
125113A1	9-35	14
125688A1	9-133	3
125749A1	9-133	6
126-116	6-23	12
126155A1	8-45	16
126155A1	8-47	16
126177	9-151	3
126371A1	9-115	4
126844A1	4-23	13
126844A1	4-25	15
126844A1	4-25	15A
126844A1	4-25	17
126844A1	4-25	18
126844A1	4-25	30
126844A1	9-125	7
126907A1	9-139	6
126918A1	9-41	2
127009A1	4-25	5
127021A2	9-115	8
127073A1	9-137	18
127158A1	4-43	6
127324A1	9-147	6
127367A1	9-147	24
127377A1	9-95	3
127378A3	9-95	8
1280055C2	8-49	14
128265A1	9-147	9
128312A1	9-11	19
128376A1	6-65	11
128401A1	9-25	3
128403A1	9-25	1
128406A1	9-137	7
128410A1	9-139	10
128411A1	9-139	11
128412A1	9-139	2
128483A1	9-141	9
128483A1	9-141	16
128483A1	9-143	16
128483A1	9-143	18
128483A1	9-143	25
128483A1	9-145	4
128484A1	9-141	4
128484A1	9-143	9
128485A1	9-141	3
128485A1	9-141	8
128485A1	9-143	2
128485A1	9-143	8
128570A1	6-17	11
128570A1	6-63	9
128580A1	9-9	
128804A1	9-155	12
128818A1	9-11	11
129-289	9-43	17
129-369	5-13	3
129-667	8-125	2
129015A1	9-29	1
129391A1	8-119	22
129586A1	4-25	
129698A1	8-85	20
129699A1	8-79	27
129699A1	8-85	23
129735A1	8-85	
129735A2	8-79	
129842A2	8-73	5
129842A2	8-75	6
129861A1	8-99	
129861A1	8-101	
129864A4	8-89	2
129864A4	8-91	3
129864A4	8-93	3
129864A4	8-95	3
129864A4	8-99	
129914A1	9-5	4
13-1638	5-15	14
130047A1	3-3	15
130048A1	3-3	21
130049A1	3-3	5
130059A1	8-77	11
130060A2	8-77	
130245A1	7-13	32
130479A1	9-25	4
130480A1	9-25	2
130876A1	4-19	27
130919A1	8-119	16
130932A1	8-119	10
131-203	9-121	4
131-425	9-107	
131-431	9-157	17
131-619	4-25	14
131-623	4-23	9
131-623	4-25	6
131-623	9-3	4
131-623	9-7	33
131-623	9-25	15

NUMERICAL INDEX

PART NO.	PAGE	REF.
131-861	9-133	7
131039A1	9-137	8
131041A1	9-137	10
131042A1	9-137	11
131084A1	2-3	8
131124A1	9-139	1
131127A2	9-141	1
131196A1	8-119	
131197A1	8-117	3
131197A1	8-119	
131586A1	8-3	3
131600A1	8-45	10
131676A1	7-9	14
131691A1	4-17	6
131794A1	4-31	19
131794A1	4-39	
131795A1	4-31	17
131795A1	4-39	
131796A1	4-31	15
131796A1	4-39	
131797A1	4-31	14
131797A1	4-39	
131973A1	9-133	2
131973A1	9-137	12
131974A1	9-137	9
131975A2	9-99	1B
131977A2	9-115	4A
132004A2	8-73	4
132004A2	8-75	5
132004A2	8-83	
132024A1	9-129	17A
132025A1	9-129	
132133A1	9-99	8
132134A1	9-99	1
132212A1	8-25	17
132212A1	8-27	17
132212A1	8-29	16
132212A1	8-33	16
132215A1	2-3	12
132217A1	2-3	14
132218A1	2-3	13
132661A1	9-3	5
132716A1	9-61	52
132842A1	9-61	54
132844A1	9-61	53
132862A1	9-105	
132866A1	9-105	
132872A1	9-107	
132873A1	9-7	39
132929A1	5-5	12
132930A1	8-25	38
132930A1	8-27	32
132930A1	8-29	24
132930A1	8-33	24
132931A1	3-9	2
132931A1	9-3	25
133024A1	9-97	2
133025A1	9-97	1
133041A1	4-19	
133083A1	8-127	12
1331102C2	9-133	4
133421A1	9-107	
133422A1	9-107	
133604A1	8-29	26
133604A1	8-33	26
133605A1	8-25	36
133605A1	8-27	30
133605A1	8-29	22
133605A1	8-33	22
133615A1	9-3	2
133617A1	9-5	18
133711A1	4-21	12
133713A1	4-21	13
133715A1	4-21	15
133716A1	4-21	14
133989A1	9-5	13
1340287C1	9-125	12
1340287C1	9-141	14
1340319C1	4-25	31
1340345C1	9-119	11
1340345C1	9-121	10
1340478C1	8-49	13
1340492C2	9-137	1
1340798C1	8-131	15
1340969C2	8-37	22
1340969C2	8-143	1
1340969C2	9-59	25
1340970C1	8-143	2
134125A1	9-137	6
134167A1	9-47	20
1341975C1	8-119	17
1342054C1	5-3	1
1343658C3	5-11	
1343708C1	8-79	20
1343708C1	8-81	23
1343708C1	8-85	17
1343708C1	8-99	13
1343708C1	8-101	17
1343708C1	8-105	17
1343708C1	8-111	35
1343708C1	8-113	13
1343708C1	8-115	13
1343777C1	8-81	21
1343777C1	8-85	15
1343791C2	8-119	
1343938C2	9-137	2
1344025C1	9-105	
1344026C1	9-105	
1344232C1	9-123	18
134437A1	9-55	
134437A1	9-59	
1345488C3	4-11	4
1346018C2	8-137	18
1346023C1	8-107	
1346101C1	8-137	3
1346105C2	8-79	
1346105C2	8-81	
1346105C2	8-85	
1346105C2	8-99	
1346105C2	8-101	
1346105C2	8-105	
1346105C2	8-107	
1346105C2	8-109	
1346105C2	8-111	
1346105C2	8-113	
1346105C2	8-115	
1346106C1	8-103	
1346107C2	8-89	
1346107C2	8-91	
1346107C2	8-93	
1346107C2	8-95	
1346108C2	8-73	
1346108C2	8-75	
1346128C3	8-117	12
1346129C3	8-117	10
1346175C1	8-79	19
1346175C1	8-81	22
1346175C1	8-85	16
1346175C1	8-99	12
1346175C1	8-101	16
1346175C1	8-105	16
1346175C1	8-111	34
1346175C1	8-113	12
1346175C1	8-115	12
1346189C1	8-19	2
1346189C1	8-131	1
1346190C1	8-19	1
1346190C1	8-131	1
1346191C1	8-131	2
1346192C1	8-131	2
1346195C1	8-131	13
1346219C2	8-81	
1346219C2	8-85	
1346219C3	8-79	
1346219C3	8-99	
1346219C3	8-101	
1346219C3	8-105	
1346219C3	8-111	
1346219C3	8-113	
1346219C3	8-115	
1346221C2	8-97	
1346221C2	8-101	
1346221C2	8-105	
1346221C2	8-109	
1346222C1	8-109	
1346312C2	8-119	41
1348264C1	3-3	18
134844A1	9-17	3
1349058C1	6-17	5
1349059C1	6-17	6
1349059C1	6-63	5
135161A1	8-127	13
135183A1	9-125	2
135183A1	9-155	3
135185A1	9-125	1
135247A1	9-47	16
135248A1	9-47	9
135249A1	9-47	10
135324A1	9-145	2
135512A3	9-105	
135867A1	5-11	12
135869A1	5-11	17
136-154	9-121	26
136-54	4-43	14
136008A1	8-7	17
136008A1	8-43	52
136036A1	9-125	3
136226A1	8-13	26
136261A1	9-29	11

NUMERICAL INDEX

PART NO.	PAGE	REF.
136263A1	9-29	8
136263A1	9-33	2
136267A1	9-29	5
136269A1	9-29	6
136270A1	9-31	40
136271A1	9-31	39
136279A2	9-101	3
136280A1	9-101	7
136436A1	8-35	51
136450A1	4-23	14
136454A1	4-23	18
136494A1	5-11	9
136610A5	8-89	3
136610A5	8-91	4
136610A5	8-93	4
136610A5	8-95	4
136610A5	8-101	
136745A1	9-97	9
136822A1	9-25	11
136824A1	9-25	13
136977A1	8-41	16
136990A1	6-5	8
137012A1	8-41	14
137039A1	8-117	9
137135A1	9-133	
137219A1	4-47	13
137223A2	6-3	13
137248A1	8-135	13
137283A1	9-9	1
137289A1	9-155	6
137290A1	9-155	5
137315A1	9-87	
137315A1	9-89	
137315A1	9-123	26
137343A1	8-45	19
137343A1	8-47	19
137344A1	8-45	21
137344A1	8-47	21
137655A3	9-101	1
137713A1	8-41	15
137731A1	9-117	20
137851A1	4-23	2
137851A1	9-115	2
137851A1	9-147	25
137868A3	9-117	1A
137868A3	9-119	1
137869A3	9-117	1
137869A3	9-119	1A
138255A1	9-143	15
138467A1	8-13	12
138467A1	8-17	11
138595A1	9-79	14
138616A1	5-15	8
138616A1	6-3	9
139043A1	8-49	8
139180A1	9-13	12
139195A1	9-13	14
139227A1	8-49	1
139230A1	8-49	23
139235A1	9-13	13
139362A1	9-93	7
139362A1	9-99	9
139362A1	9-121	23
139363A1	9-93	9
139486A2	9-93	1
139490A1	9-91	4
139492A1	9-91	3
139494A2	9-83	1
139500A1	9-93	22
139502A1	9-93	20
139768A1	9-135	1
139808A2	8-135	1
139810A2	8-135	2
139834A1	9-91	19
139835A1	9-91	15
139865A1	9-9	8
140-103	9-133	5
140-104	9-119	5
140-106	4-25	13
140-106	9-25	14
140-107	4-23	8
140-107	4-23	11
140-107	4-23	15
140-107	4-27	22
140-107	9-3	3
140-107	9-7	32
140-107	9-93	31
140-107	9-99	19
140-119	4-25	24
140327A1	9-135	5
140428A1	9-91	18
140453A1	9-59	
140943A1	6-17	7
140944A1	6-17	7
140945A1	6-17	7
140946A1	6-17	7
140947A1	6-17	7
140948A1	6-17	7
140949A1	6-17	7
140951A1	6-17	7
140953A1	6-17	7
140954A1	6-17	7
141232A1	9-71	1
141233A1	9-71	3
141233A1	9-71	3
141234A1	9-71	2
141234A1	9-71	2
141249A1	9-77	15
141324A1	9-11	1
141404A1	9-97	3
141471A1	9-13	1
141472A1	9-13	2
141473A1	9-15	
141513A1	2-3	18
141801A1	8-29	21
141806A1	8-29	20
141809A1	8-37	11
141811A1	8-37	12
142-103	9-117	9
142-103	9-119	7
142003A1	7-9	3
142007A1	7-9	18
142120A1	8-25	22
142122A1	8-25	35
142124A1	8-27	29
142126A1	8-27	21
142300A1	9-19	3
142404A1	9-9	2
142524A1	9-11	12
142538A1	9-15	7
142538A1	9-17	8
142733A1	8-71	4
142735A1	8-71	11
142815A1	8-25	31
142930A1	5-3	6
142930A1	5-9	
143121A1	9-147	12
143127A1	9-147	13
143210A1	9-5	7
143218A1	9-79	19
143219A1	9-79	20
143369A2	9-113	10
143370A1	6-23	13
143384A1	8-21	19
143439A1	8-25	12
143439A1	8-27	12
143439A1	8-29	11
143439A1	8-33	11
143717A1	5-11	11
143721A1	5-11	
143723A1	5-11	13
143786A1	9-105	
143882A1	8-25	16
143882A1	8-27	16
143882A1	8-29	15
143882A1	8-33	15
144171A1	4-13	4
144193A1	9-155	1
144194A1	9-153	10
144200A1	8-25	28
144200A1	8-137	1
144200A1	9-49	9
144201A1	8-137	2
144215A1	8-3	19
144216A1	8-7	3
144219A1	5-5	15
144220A1	8-9	12
144221A1	5-5	6
144227A1	8-5	36
144233A1	8-9	6
144235A1	8-27	28
144240A1	8-7	16
144241A1	8-7	16A
144242A1	8-19	5
144243A1	8-19	12
144251A1	8-21	10
144278A1	6-19	
144278A1	6-69	
144279A1	6-19	7
144279A1	6-69	7
144282A1	9-97	5
144282A1	9-97	17
144282A1	9-99	15
144321A5	8-89	5
144321A5	8-91	6
144321A5	8-93	6
144321A5	8-95	6
144321A5	8-105	
144321A5	8-107	

NUMERICAL INDEX

PART NO.	PAGE	REF.
144324A4	8-93	2
144324A4	8-95	2
144324A4	8-113	
144453A1	6-5	1
144454A1	6-5	
144455A1	6-7	1
144456A1	6-7	2
144457A1	6-9	
144458A1	6-9	5
144459A1	6-9	7
144460A1	6-17	
144461A1	6-11	
144462A1	6-11	1
144463A1	6-11	5
144464A1	6-11	2
144465A1	6-11	4
144466A1	6-13	
144477A1	8-7	27
144477A1	8-39	4
144477A1	8-51	32
144477A1	8-53	39
144479A1	8-7	30
144479A1	8-51	31
144900A1	9-127	29
144908A1	9-91	24
151-522	4-23	20
1530028C1	6-29	2
1530028C1	6-31	2
1530431C1	4-7	5
1537663C1	6-7	5
1537664C1	6-7	6
1542563C1	8-119	
1542829C1	8-89	7
1542829C1	8-91	8
1542829C1	8-93	8
1542829C1	8-95	8
1542829C1	8-97	
1542874C1	8-129	
1542875C1	8-127	
1542875C1	8-131	
1542875C1	8-143	
1542876C1	8-133	
1542876C1	8-135	
1542877C1	8-137	
1542879C1	8-139	
1542879C1	8-141	
1542914C1	8-139	4
1542915C2	8-139	
1542918C1	8-137	6
1542919C2	8-137	
1542923C2	8-141	
1542928C1	8-137	11
1542929C1	8-137	10
1542930C1	8-139	9
1542930C1	8-141	9
1542931C1	8-139	8
1542931C1	8-141	8
1542996C1	8-129	8
1542997C1	8-129	7
1542998C1	8-127	8
1542998C1	8-131	9
1542998C1	8-143	7
1542999C1	8-127	7
1542999C1	8-131	8
1542999C1	8-143	6
1543000C1	8-133	8
1543000C1	8-135	8
1543001C1	8-133	7
1543001C1	8-135	7
1543256C1	8-129	
1543260C1	8-127	
1543267C1	8-131	
1543267C1	8-143	
1543275C1	8-133	
1543329C1	8-119	29
1546500C1	4-3	9
1547924C1	2-3	9
161-115	4-45	2
165-129	9-119	17
168-71	4-43	7
170-104	9-5	3
172599	2-39	11
174-93	2-13	15
175156A1	9-19	
175160A1	9-19	
175161A1	2-5	1
175162A1	2-5	4
175163A1	2-5	3
175164A1	2-5	5
175165A1	2-5	6
175599A1	9-93	2
175637A1	2-15	1
175955A1	6-59	14
175959A1	6-61	11
175961A1	6-61	19
175964A2	6-65	9
175965A1	6-65	10
175966A1	6-65	8
175968A1	6-65	12
175974A1	6-67	1
175976A1	6-67	4
175982A1	6-67	14
175984A1	6-67	19
176091A1	9-107	
176226A1	8-25	13
176226A1	8-27	13
176226A1	8-29	12
176226A1	8-33	12
176311A1	9-3	10
176311A1	9-5	20
176328A1	5-7	21
176437A1	2-11	2
176857A1	4-23	12
176924A1	9-109	5
176925A1	9-109	2
176926A1	9-109	1
176952A1	9-83	5
176957A1	9-83	6
177164A1	4-23	10
177269A1	4-45	9
177518A1	8-135	12
177634A1	8-25	34
178004A1	9-35	18
178006A1	9-35	17
178850A1	8-139	14
179029A1	9-41	1
179355A1	9-123	11
179683A1	8-49	25
179683A1	9-155	7
179689A1	6-23	6
179956A1	9-27	6
180318A1	8-45	3
180376A1	9-27	2
180402A1	9-27	2A
180427A1	9-77	2
180578A1	9-77	23
180593A1	9-105	
180594A3	9-107	
1806233C1	3-19	10
1806234C1	3-19	10
1806235C1	3-19	10
1806236C1	3-19	10
1806237C1	3-19	10
1806238C1	3-19	10
1806239C1	3-19	10
1806240C1	3-19	10
1806241C1	3-19	10
1806242C1	3-19	10
1806243C1	3-19	10
1806244C1	3-19	10
1806245C1	3-19	10
1806246C1	3-19	10
1806247C1	3-19	10
1806248C1	3-19	10
1806249C1	3-19	10
1806250C1	3-19	10
1806251C1	3-19	10
1806252C1	3-19	10
1806253C1	3-19	10
1806254C1	3-19	10
1806255C1	3-19	10
1806256C1	3-19	10
1806257C1	3-19	10
1806258C1	3-19	10
1806259C1	3-19	10
1806260C1	3-19	10
1806261C1	3-19	10
1806262C1	3-19	10
180801A1	7-13	25
180801A1	9-147	17
1808728C1	3-17	10
1808822C1	3-17	17
181042A1	9-49	22
181042A1	9-59	8
181100A1	6-29	4
181100A1	6-31	4
181100A1	6-49	35
181100A1	6-51	5
181101A1	6-27	2
181102A1	6-27	12
181103A1	6-49	20
181104A1	6-37	23
181105A1	6-29	12
181105A1	6-31	12
181107A1	6-49	19
181108A1	6-41	19
181108A1	6-45	26
181109A1	6-33	5
181111A1	6-41	13

NUMERICAL INDEX

PART NO.	PAGE	REF.	PART NO.	PAGE	REF.	PART NO.	PAGE	REF.
181114A1	6-43	5	181190A1	6-43	4	182295A1	9-27	10
181116A1	6-41	9	181191A1	6-45	28	182296A1	9-95	10
181118A1	6-43	1	181192A1	6-43	19	182368A1	9-153	1
181120A1	6-47	19	181193A1	6-43	3	182396A2	9-101	2
181122A1	6-47	5	181194A1	6-47	8	182445A1	7-7	1
181123A1	6-45	31	181196A1	6-27	5	182445A1	7-9	1
181126A1	6-41	24	181197A1	6-29	6	182445A1	7-11	
181126A1	6-47	9	181197A1	6-31	6	182594A1	9-97	24
181128A1	6-39	7	181198A1	6-47	3	182594A1	9-99	2
181128A1	6-41	3	181199A4	6-33	1	182697A1	9-137	3
181130A1	6-45	30	181200A1	6-31	1	182721A2	4-45	6
181132A1	6-39	12	181201A1	6-31	10	182895A1	9-11	27
181132A1	6-43	2	181203A1	6-37	21	183085A2	5-3	9
181135A1	6-41	6	181205A1	6-33	15	183110A1	9-153	7
181136A1	6-49	5	181207A1	6-49	23	183111A1	9-153	6
181137A1	6-49	28	181208A1	6-49	24	183112A1	9-153	3
181138A1	6-35	12	181214A1	6-33	10	183113A1	9-153	2
181139A1	6-35	5	181215A1	6-33	12	183114A1	9-153	5
181141A1	6-27	4	181216A1	6-33	14	183115A1	9-153	4
181141A1	6-29	14	181218A1	6-33	21	183168A1	9-91	7
181141A1	6-31	15	181219A1	6-27	10	183243A1	8-23	14
181142A1	6-33	19	181223A1	6-47	11	183443A1	9-61	55
181144A1	6-45	33	181224A1	6-43	18	183504A1	4-31	16
181145A1	6-33	9	181226A1	6-43	17	183504A1	4-39	
181146A1	6-49	18	181227A2	6-41	22	183505A1	4-31	18
181149A1	6-51	4	181228A2	6-41	7	183505A1	4-39	
181151A1	6-39	2	181232A1	6-29	13	183598A2	4-31	12
181152A3	6-41	1	181232A1	6-31	13	183658A1	8-31	35
181152A3	6-47	7	181234A1	6-49	15	183660A1	8-29	29
181153A1	6-41	4	181245A2	6-35	19	183736A1	8-35	52
181154A1	6-39	8	181248A1	6-47	15	183748A1	4-39	6
181154A1	6-41	5	181251A1	6-49	9	183749A1	4-39	3
181154A1	6-45	29	181253A1	6-49	31	183795A2	8-139	1
181154A1	6-47	10	181254A1	6-49	25	183796A2	8-139	2
181156A3	6-41	18	181255A1	6-49	27	183864A2	9-153	8
181157A3	6-41	17	181256A1	6-49	10	184118A1	9-131	4
181158A1	6-41	12	181258A1	6-49	29	184188A1	4-11	23
181159A1	6-41	11	181260A1	6-49	26	184277A1	4-19	12
181161A1	6-41	14	181261A1	6-49	17	184289A1	9-137	22
181162A1	6-41	8	181262A1	6-49	30	184297A1	8-35	38
181163A1	6-41	10	181267A1	6-29	1	184497A1	4-15	3
181164A1	6-41	23	181268A1	6-29	10	184498A1	4-15	2
181165A1	6-45	34	181270A1	6-33	3	184505A1	6-57	11
181166A1	6-49	22	181272A1	6-49	7	184616A1	8-37	18
181169A1	9-109	6	181273A1	6-49	6	184617A1	8-37	17
181169A1	9-111	7	181274A1	6-27	3	184694A1	9-27	16
181171A1	6-35	7	181275A1	6-37	24	184695A1	9-27	11
181173A1	6-35	16	181276A1	6-47	18	184696A1	9-27	7
181175A1	6-35	18	181316A1	4-23	1A	184726A1	9-97	25
181176A1	6-31	14	181338A1	4-15	6	184726A1	9-99	3
181177A1	6-35	11	181378A3	4-19	3	185156A1	9-103	1
181178A1	6-45		181385A1	4-25	25	185156A1	9-109	
181179A1	6-29	11	181385A1	4-31	13A	185156A1	9-111	
181179A1	6-31	11	181457A2	9-99	1A	185325A1	9-93	14
181181A1	6-39	4	181459A1	4-31	21	185325A1	9-93	32
181182A1	6-47	13	181842A1	9-11	7A	185356A1	9-77	8A
181183A1	6-45	27	181979A1	9-141	24	185377A1	2-3	27
181184A1	6-39	11	181980A1	9-141	5	185488A1	9-19	
181186A1	6-39	3	181981A1	9-137	5	185493A1	9-87	5
181186A1	6-39	5	182006A1	9-33	4	185493A1	9-89	7
181187A1	6-39	10	182222A1	8-23	26	185506A1	9-17	4
181188A1	6-39	9	182222A1	8-31	40	185632A2	9-53	9
181189A1	6-43	16	182276A1	4-25	4	185926A1	3-3	4

NUMERICAL INDEX

PART NO.	PAGE	REF.
185926A1	9-79	4
185975A1	9-27	1
185976A1	9-41	10
185977A1	9-37	8
185978A1	9-37	10
185979A1	9-37	14
185980A1	9-37	15
185981A1	9-37	1
185982A1	9-37	2
186351A1	9-103	11A
186405A1	9-45	
186433A1	2-3	5
186607A1	4-19	28
186756A1	4-31	11
186797A1	9-133	7A
186977A1	9-77	13
186977A1	9-77	20
186977A1	9-77	25
186989A1	9-157	16
187013A1	4-21	28
187281A1	4-45	7
187389A1	9-93	33
187438A1	9-7	35
187535A1	8-11	14
187536A1	8-11	15
187582A2	9-117	3
187612A1	8-59	25
187637A1	8-33	20
187639A1	8-33	21
187677A1	8-59	10
187714A1	6-23	1
187715A1	6-23	2
187834A1	4-31	6
187836A1	4-31	7
187845A1	8-25	23
188008A2	9-79	26
188009A1	3-3	29A
188058A1	8-17	18
188311A2	3-3	11
188411A2	9-99	8C
188482A1	9-97	23
188482A1	9-99	7
189103A1	8-59	20
189109A1	3-9	2A
189111A1	8-57	
189111A1	8-59	
189263A1	8-59	21
189293A1	9-33	10
189294A1	9-29	32
189295A1	9-29	30
189296A1	9-29	29
189297A1	9-29	28
189298A1	9-29	31
189299A1	9-29	33
189404A1	9-137	4
189414A1	8-57	2
189601A1	8-57	4
189602A1	3-3	29
189709A1	8-59	12
189955A1	9-45	24
189957A1	8-59	1
189957A1	8-121	
19-488	8-71	19
190-105	4-31	20
190035A1	9-45	26
190036A1	9-45	28
190155A1	4-41	1
190267A1	9-71	1
190313A1	9-49	27
190426A1	6-27	6
190429A1	6-51	8
190430A1	6-51	9
190431A1	6-51	10
190432A1	6-51	
190433A1	6-27	7
190434A1	6-49	
190435A1	6-49	13
190436A1	6-49	37
190437A1	6-49	4
190438A1	6-49	12
190439A1	6-49	11
190440A1	6-49	38
190441A1	6-49	14
190442A1	6-49	2
190443A1	6-49	3
190444A1	6-49	32
190447A1	7-3	15
190448A1	7-5	12
190449A1	7-3	7
190450A1	7-3	9
190451A1	7-5	1
190452A1	6-61	14
190453A1	7-3	17
190456A1	7-5	9
190457A2	6-59	3
190458A2	6-59	7
190459A1	6-59	8
190460A1	7-3	6
190461A1	7-3	5
190463A1	7-5	2
190468A1	6-61	16
190469A1	6-61	6
190471A1	6-61	4
190473A1	7-5	8
190476A2	7-5	4
190477A2	7-5	4
190492A1	7-3	12
190493A1	7-3	14
190500A1	7-3	20
190502A1	7-3	13
190504A1	7-3	22
190506A1	6-63	7
190508A1	6-63	7
190509A1	6-63	7
190510A1	6-63	7
190511A1	6-63	7
190512A1	6-63	7
190513A1	6-63	7
190514A1	6-63	7
190515A1	6-63	7
190516A1	6-63	7
190599A1	9-141	7
190618A1	6-23	7
190675A1	9-139	17
190682A1	6-13	10
190684A1	6-13	9
190967A1	9-45	27
191017A1	9-47	2
191046A1	3-5	30
191047A1	9-79	27
191067A1	6-61	15
191075A1	8-45	11
191076A1	8-49	2
191215A1	8-45	1
191239A1	9-23	1
191532A1	4-21	21
191532A1	8-43	38
191703A1	9-143	26
191704A1	5-7	40
191704A1	9-143	27
191758A1	8-21	31
191796A1	5-15	5
191796A1	6-3	8
192025A1	8-59	9
192152A1	8-15	27
192154A1	8-15	31
192156A1	8-15	30
192196A2	4-11	22
192274A2	9-99	8D
192299A1	4-21	29
192299A1	8-43	39
192299A1	9-155	14
192300A1	8-49	26
192300A1	9-155	15
192345A1	8-19	4
192352A1	8-19	3
192450A1	9-155	13
192481A1	6-59	19
192559A1	9-77	4
192693A1	8-41	23
192815A1	9-11	28
192895A1	8-123	2
193-1000	4-11	3
193-1000	4-11	18
193-1000	4-19	5
193-1000	4-19	15
193-1003	4-47	12
193-1003	9-11	17
193-1003	9-103	10
193117A1	8-25	11A
193117A1	8-27	11A
193117A1	8-29	10A
193117A1	8-33	10A
193117A1	8-37	10A
193261A1	8-45	19
193261A1	8-47	19
193262A1	8-45	21
193262A1	8-47	21
193499A1	8-25	11
193499A1	8-27	11
193499A1	8-29	10
193499A1	8-33	10
193499A1	8-37	10
193707A1	9-131	23
193793A1	8-27	22
193854A1	9-9	3
193913A1	9-143	12
194199A1	3-3	23
194513A1	9-147	20

NUMERICAL INDEX

PART NO.	PAGE	REF.
194520A1	9-75	1
194858A1	9-133	14
195-140	9-25	8
195-2015	4-5	37
195-81013	9-43	6
195-81023	9-119	9
195030A2	9-39	1
195032A1	9-39	2
1954475C1	9-141	
1954736C1	9-139	3
195615A1	9-3	6
195615A1	9-5	19
1957855C3	8-119	44
1957856C1	8-119	43
1957887C1	8-119	45
1958028C1	8-137	19
1958970C1	9-119	16
1959509C1	5-3	4
196050A1	9-145	6A
196065A1	6-67	21
196066A1	6-67	22
196087A1	5-11	33
196090A1	6-67	2
196095A1	8-77	17
196096A1	8-77	18
196164A1	8-141	14
196247A1	3-3	25
196252A1	3-3	13
196278A1	8-23	10
196466A1	2-31	14
196466A1	2-41	39
1964672C1	9-125	19
1964964C1	4-7	16
1964966C1	4-7	14
1964968C1	4-7	4
1964969C1	4-7	7
1966136C1	6-5	16
1966138C1	6-5	17
1966149C1	6-5	5
1966149C2	6-59	13
1966153C1	6-15	9
1966169C1	6-13	2
1966186C1	6-5	10
1966191C1	6-5	11
1966559C1	6-15	11
196673A2	9-117	12A
196675A2	9-117	12
1966835C1	6-35	3
1966993C1	6-35	4
1967003C1	6-15	4
1967506C1	6-45	23
1967537C1	6-45	25
196803A1	2-41	
196813A1	8-13	25
196815A1	8-13	24
196817A1	8-13	13
196819A1	8-13	14
196821A1	8-17	13
196824A1	8-17	12
1971368C1	9-119	18
197345A1	9-155	16
197346A1	9-155	17
1976943C1	7-9	13
197718A1	9-47	33
1977399C1	9-119	19
1977401C1	9-117	21
1977402C1	9-117	21A
197745A1	4-45	11
1977564C2	9-137	1A
197793A1	9-105	
1978068C1	8-109	19
1978141C1	8-123	8
1978142C1	8-123	
1978143C1	8-123	5
1978144C1	8-123	6
1978158C1	8-123	7
1980084C3	8-119	12
1980085C1	8-119	8
1980226C1	8-119	35
1980227C1	8-119	33
1980296C1	8-143	11
1980302C2	8-119	30
1980321C2	8-127	4
1980335C1	8-127	3
1981850C1	9-107	
1983233C1	4-11	29
1983335C1	9-129	
198410A1	9-39	5
1984938C1	6-13	1
198539A1	9-17	
1986568C1	8-81	13
1986612C1	8-81	7
1986628C1	8-119	34
1986722C1	8-109	8
1986753C1	8-139	17
1986754C1	8-103	14
1986906C1	8-141	16
1987096C1	9-137	16
1987097C1	9-137	15
198712A1	6-33	11
198713A1	6-33	4
1987212C1	9-105	
1987219C2	9-105	
1987290C1	9-105	
1987559C1	4-3	1
1987559C1	4-9	1
198976A1	9-47	12
1989960C1	9-123	9
1990548C4	9-107	
1990727C1	9-123	17
1990728C1	9-123	19
1990756C2	9-141	2
1990758C2	9-143	20
1994581C1	8-119	28
1994596C1	8-85	7
1994596C1	8-99	8
1994596C1	8-101	8
1994596C1	8-105	8
1994596C1	8-109	8A
1994596C1	8-113	8
1994596C1	8-115	8
1994608C1	8-79	3
1994608C1	8-81	3
1994608C1	8-85	3
1994608C1	8-99	3
1994608C1	8-101	3
1994608C1	8-103	3
1994608C1	8-105	3
1994608C1	8-109	3
1994608C1	8-113	3
1994608C1	8-115	3
1994677C1	8-119	
1995137C1	6-23	21
1995137C1C	6-23	21
1995137C1R	6-23	21
199720A1	8-21	38
199720A1	8-133	1
199721A1	8-21	37
199721A1	8-133	1
199722A1	8-133	2
199723A1	8-133	2
199953A2	8-135	2
1999693C1	9-105	
1999755C2	9-143	6
1999755C2	9-145	
20-21032	9-19	13
20-21232	9-15	4
20-21232	9-17	5
20-21232	9-19	4
205-129	9-115	9
205-129	9-147	11
211-1006	5-11	8
211-1007	8-119	14
211-1009	8-81	11
211-1010	5-11	20
211-1311	4-3	15
213-123	3-7	14
213-123	3-9	17
213-125	9-9	7
213-126	9-7	34
213-126	9-29	22
213-126	9-33	6
213-126	9-37	6
214-1404	3-15	2
214-1404	9-137	19
214-1406	9-79	18
214-1410	9-139	19
214-14104	8-25	33
214-1416	2-23	13
214-1420	8-9	24
214-1432	2-3	17
214-1440	2-3	19
214-1456	2-7	9
214-1464	2-7	15
214-1464	2-9	4
214-1464	8-15	40
214-1464	8-19	21
214-1464	8-37	27
214-1472	8-11	21
214-1472	8-31	34
214-1472	8-35	47
214-1488	8-23	22
214-1704	3-3	8
214-1704	7-9	10
214-1706	7-9	11
214-1708	3-3	7
214-31104	8-59	16
214-3132	8-33	37
214-3132	8-35	39

NUMERICAL INDEX

PART NO.	PAGE	REF.
214-3132	8-55	19
214-3156	8-55	16
214-3188	8-21	28
214-3240	2-23	3
217-1102	9-79	22
217-281	3-15	9
217-347	9-79	16
217-372	3-3	24
217-380	9-79	21
217-436	9-79	5
217-466	2-35	3
217-92	2-3	20
218-1023	6-31	9
218-1237	8-19	10
218-1251	8-19	11
218-1256	8-45	15
218-1256	8-47	15
218-1256	8-55	22
218-335	8-39	25
218-335	8-53	43
218-335	8-55	23
218-435	8-11	22
218-435	8-15	41
218-435	8-17	20
218-459	6-25	38
218-5053	5-5	7
218-5053	7-9	19
218-5057	5-7	35
218-5057	6-57	3
218-5057	8-39	7
218-5057	8-41	8
218-5057	8-65	5
218-5058	8-41	12
218-5059	5-5	10
218-5062	8-7	7A
218-5062	8-7	12
218-5062	8-13	2
218-5062	8-15	28
218-5062	8-17	2
218-5062	8-37	24
218-5062	8-53	49
218-5062	8-67	42
218-5063	8-7	1
218-5064	8-25	8
218-5064	8-27	8
218-5064	8-27	26
218-5064	8-29	8
218-5064	8-29	31
218-5064	8-33	8
218-5064	8-35	45
218-5064	8-37	8
218-5064	8-43	47
218-5069	8-5	34
218-5069	8-7	14
218-5069	8-9	7
218-5069	8-51	20
218-5077	8-3	17
218-5086	8-9	20
218-5105	6-57	1
218-5105	8-65	3
218-5106	8-21	8
218-5106	8-21	20
218-5106	8-23	11
218-5106	8-23	24
218-5107	8-11	16
218-5107	8-15	32
218-5107	8-19	18
218-5107	8-37	20
218-5107	8-41	27
218-5108	8-25	24
218-5108	8-27	34
218-5108	8-51	9
218-5108	8-51	11
218-5117	8-61	3
218-5118	8-59	7
218-5119	8-23	8
218-5119	8-23	19
218-5123	8-25	29
218-5128	8-41	21
218-5135	6-57	24
218-5136	5-7	27
218-5136	5-15	12
218-5137	6-21	11
218-5137	8-3	6
218-5137	8-9	15
218-5137	8-19	16
218-5137	8-51	17
218-5138	8-51	27
218-5145	8-61	2
218-5157	8-89	14
218-5157	8-91	15
218-5157	8-93	15
218-5157	8-95	15
218-5158	8-41	32
218-5158	8-117	5
218-5174	8-39	5
218-5185	8-51	14
218-5207	8-73	6
218-5207	8-75	7
218-5210	8-103	24
218-5211	3-3	6
218-5211	8-77	3
218-5211	9-79	12
218-5213	8-97	6
218-5220	8-13	18
218-5220	8-61	15
218-5220	8-63	38
218-5220	8-65	7
218-5241	8-11	2
218-5243	8-39	20
218-5245	8-5	37
218-5245	8-9	4
218-5245	8-9	7A
218-5280	5-5	19
218-5280	6-3	5
218-5283	8-59	13
218-5351	6-3	4
218-5351	8-21	35
218-5359	8-59	18
218-5382	8-59	23
218-5490	8-51	24
218-5490	8-61	16
218-5490	8-67	38
218-5576	5-5	4
218-5576	8-39	1
218-5576	8-43	42
218-5577	8-65	10
218-5600	8-63	24
218-587	8-3	20
218-676	8-55	21
218-736	8-7	6
218-752	3-17	29
218-754	8-39	24
218-756	8-41	29
218-756	8-51	25
218-776	8-17	17
219-1	5-15	9
219-1	6-3	6
219-1	8-127	19
219-1	8-131	21
219-1	8-133	19
219-1	8-135	20
219-1	8-137	25
219-1	8-139	22
219-1	8-141	22
219-1	9-11	32
219-1	9-13	5
219-1	9-13	23
219-1	9-19	9
219-1	9-31	41
219-1	9-41	14
219-1	9-47	28
219-1	9-49	3
219-1	9-49	17
219-1	9-55	24
219-1	9-59	3
219-1	9-61	35
219-1	9-61	41
219-10	6-19	5
219-10	6-19	8
219-10	6-69	5
219-10	6-69	8
219-55	8-11	19
219-55	8-129	19
219-55	8-131	22
219-55	8-135	21
219-55	9-11	10
219-55	9-47	30
219-55	9-53	23
219-55	9-77	9
219-89	5-15	21
219-89	5-15	30
220169A1	8-13	5
220276A1	8-59	28
220413A1	9-77	7
221-1382	9-139	23
221-190	9-139	23A
221-87	3-15	7
221-89	9-139	21
221143A1	8-15	44
221146A1	8-15	45
221158A1	8-11	28
221162A1	8-11	24
221168A1	8-121	15
221330A1	8-59	27
221418A1	4-45	1
221425R1	4-7	26
221553A1	8-39	16
221733A1	8-13	19

NUMERICAL INDEX

PART NO.	PAGE	REF.
222-41	3-15	10
222-615	2-13	
222-650	2-13	4
222-660	2-13	5
222-993	2-23	16
222421A1	2-9	6
222422A1	2-9	7
222688A1	6-59	20
223-26	8-57	11
223199A1	9-95	16
223722A1	7-13	29
223944A1	2-7	8
224423A1	5-5	9
224788A2	8-41	2
225-14105	9-5	5
225-14106	4-27	20
225-14110	4-23	17
225-14210	3-7	13
225-14210	3-9	20
225-14210	8-49	29
225033A1	2-11	5
225059A1	9-121	27
225326A1	8-17	4
225328A1	8-17	5
225330A1	8-11	4
225332A1	8-11	6
225713A1	9-139	18
225714A1	9-139	31
226376A1	9-127	5
226378A1	2-9	
226456A1	9-81	36
226560A1	9-105	
226580A1	9-127	21
226582A1	9-127	20
226584A1	9-127	19
227178A2	9-115	23
227293A1	2-11	3
227420A1	9-115	18
228120A1	2-7	1
228120A1	2-9	
228133A1	2-3	27
228689A1	9-121	
228959A1	8-9	9
229398A2	9-93	24
229676A1	9-85	1
229684A1	8-95	13
230-4214	9-121	16
230-4215	9-119	12
230-4215	9-121	11
230-4216	9-45	23
230-4216	9-45	30
230-4217	9-121	21
230-42409	9-123	16
230072A1	8-61	19
230073A1	8-61	20
230078A2	8-61	17
230513A1	9-75	5
230588A1	9-121	13
230589A1	9-121	12A
230590A1	9-121	12
230857A1	9-79	1A
230973A1	7-7	26
231-14109	9-83	4
231-14109	9-93	15
231-14109	9-99	20
231-14109	9-117	14
231-1444	4-33	6
231-1444	4-33	11
231-1444	4-45	4
231-1444	9-105	
231-1444	9-149	12
231-1445	4-33	16
231-1446	8-59	6
231-1446	9-3	18
231-1446	9-5	28
231-2446	9-37	18
231-4115	9-149	9
231-4247	9-45	21
231-5144	4-35	6
231-5145	9-117	23
231-5344	9-123	8
231397A1	6-15	
231520A2	4-17	8
231656A1	9-79	6
231982A1	8-11	7
231984A1	8-11	5
232-4617	9-103	19
232-4617	9-103	26
232366A1	2-3	16
232447A1	8-13	4
232875A1	9-27	15
232929A1	8-11	29
232931A1	8-11	32
232934A1	8-15	46
232936A1	8-15	47
232939A1	8-11	30
232941A1	8-11	31
232945A1	8-17	19
232947A1	8-17	21
232948A1	9-143	19
233262A1	9-93	25
233272A1	2-3	4
233283A1	6-47	1
233284A1	6-45	32
233522A1	9-91	2
233523A1	9-91	1
233724A1	9-95	15
233749A1	9-89	
233970A1	6-21	15
233971A1	6-21	16
233972A1	6-21	13
234223A1	9-109	9
234277A1C	2-39	
234277A2	2-39	
234277A2R	2-39	
234412A1	8-63	23
234412A1	8-123	
234499A1	6-21	17
234622A1	7-7	34
234623A1	7-7	33
234719A1	6-21	14
234888A1	3-3	19
234892A1	3-3	14
234913A1	9-95	1
234923A1	9-91	35
234923A1	9-93	35
235002A1	8-63	26
235038A1	2-3	35
235040A1	2-3	34
235916A1	8-141	1
235917A2	8-141	2
235921A1	8-141	4
236231A1	8-9	14
236300A1	2-39	
236521A1	4-17	8A
237-6002	8-119	7
237-6004	5-5	8
237-6004	7-9	19A
237-6004	8-73	7
237-6004	8-75	8
237-6006	5-5	3
237-6006	5-7	36
237-6006	6-3	4A
237-6006	6-3	5A
237-6006	6-57	2
237-6006	6-57	4
237-6006	6-57	25
237-6006	8-21	36
237-6006	8-39	8
237-6006	8-39	21
237-6006	8-41	9
237-6006	8-41	31
237-6006	8-59	14
237-6006	8-65	4
237-6006	8-65	6
237-6006	8-125	4
237-6006	8-137	20
237-6006	9-79	17
237-6008	5-5	11
237-6008	5-5	20
237-6008	5-7	28
237-6008	5-15	13
237-6008	6-57	12
237-6008	8-21	9
237-6008	8-21	21
237-6008	8-23	12
237-6008	8-23	25
237-6008	8-41	13
237-6008	8-41	22
237-6008	8-59	19
237-6008	8-61	2A
237-6008	8-61	3A
237-6008	8-63	24A
237-6008	8-83	3
237-6008	8-103	25
237-6010	3-3	6A
237-6010	5-5	5
237-6010	6-21	12
237-6010	8-3	7
237-6010	8-7	7B
237-6010	8-7	13
237-6010	8-9	10
237-6010	8-9	16
237-6010	8-11	3
237-6010	8-11	17
237-6010	8-13	3
237-6010	8-15	29
237-6010	8-15	33
237-6010	8-17	3

NUMERICAL INDEX

PART NO.	PAGE	REF.
237-6010	8-19	17
237-6010	8-19	19
237-6010	8-25	30
237-6010	8-37	21
237-6010	8-37	25
237-6010	8-39	2
237-6010	8-39	23
237-6010	8-41	28
237-6010	8-43	43
237-6010	8-51	18
237-6010	8-53	50
237-6010	8-57	3
237-6010	8-67	43
237-6010	8-77	4
237-6010	8-79	26
237-6010	8-85	22
237-6010	8-89	15
237-6010	8-91	16
237-6010	8-93	16
237-6010	8-95	16
237-6010	8-97	10
237-6010	8-101	12
237-6010	8-105	12
237-6010	8-109	12
237-6010	8-119	36
237-6010	9-79	13
237-6012	8-7	2
237-6012	8-23	9
237-6012	8-23	20
237-6012	8-25	9
237-6012	8-25	25
237-6012	8-27	9
237-6012	8-27	27
237-6012	8-27	35
237-6012	8-29	9
237-6012	8-29	32
237-6012	8-31	36
237-6012	8-33	9
237-6012	8-33	35
237-6012	8-35	46
237-6012	8-37	9
237-6012	8-41	33
237-6012	8-43	48
237-6012	8-45	17
237-6012	8-47	17
237-6012	8-51	9A
237-6012	8-51	12
237-6012	8-51	15
237-6012	8-51	28
237-6012	8-59	11
237-6012	8-77	14
237-6012	8-81	19
237-6012	8-85	13
237-6012	8-87	13
237-6012	8-99	28
237-6012	8-101	32
237-6012	8-103	11
237-6012	8-103	17
237-6012	8-107	32
237-6012	8-107	45
237-6012	8-111	32
237-6012	8-113	17
237-6012	8-115	28
237-6012	8-117	6
237-6012	8-121	13
237-6014	8-97	7
237-6016	8-3	18
237-6016	8-5	35
237-6016	8-5	38
237-6016	8-7	15
237-6016	8-9	5
237-6016	8-9	8
237-6016	8-51	21
237-6016	8-51	23
237-6016	8-59	8
237-6016	8-59	24
237-6016	8-65	11
237-6020	8-9	21
237021A1	7-3	1
237022A1	7-3	2
237023A1	7-3	3
237024A1	7-3	16
237025A1	7-3	21
237026A1	7-3	11
237948A1	6-25	39
238-5005	4-43	8
238-5011	8-125	5
238-5012	5-11	23
238-5013	2-23	15
238-5013	6-57	13
238-5014	6-57	14
238-5040	5-11	18
238-5118	8-97	5
238-5120	8-79	14
238-5127	8-79	12
238-5139	5-15	33
238-5152	6-17	10
238-5152	6-63	11
238-5212	2-45	7
238-5225	5-11	28
238-5227	5-3	3
238-5228	8-3	10
238-5230	5-13	10
238-5230	8-125	9
238-5231	8-129	9
238-5231	8-131	10
238-5231	8-143	8
238-5233	8-127	9
238-5235	8-141	11
238-5239	8-135	9
238-5241	8-133	9
238-5242	8-135	23
238-5247	8-137	13
238-5247	8-139	11
238-5270	6-59	2
238-5341	2-17	3
238-5341	2-51	7
238-6011	8-119	20
238-6012	8-77	10
238-6012	8-119	42
238-6015	8-109	16
238-6015	8-119	21
238-6015	8-119	27
238-6016	8-79	21
238-6016	8-81	24
238-6016	8-85	18
238-6016	8-99	14
238-6016	8-101	18
238-6016	8-105	18
238-6016	8-111	36
238-6016	8-113	14
238-6016	8-115	14
238-6018	8-77	15
238-6018	8-81	18
238-6018	8-85	12
238-6018	8-87	3
238-6018	8-99	18
238-6018	8-101	22
238-6018	8-103	12
238-6018	8-103	15
238-6018	8-103	18
238-6018	8-105	22
238-6018	8-107	35
238-6018	8-111	22
238-6018	8-113	18
238-6018	8-115	18
238-6018	8-121	3
238-6019	8-103	20
238-6112	8-117	8
238-6117	8-117	7
238-6119	8-73	8
238-6119	8-75	9
238-6119	8-89	9
238-6119	8-91	10
238-6119	8-93	10
238-6119	8-95	10
238-6121	6-13	22A
238-6121	6-29	8A
238-6121	6-31	8A
238-6121	6-59	1A
238-6121	6-67	7A
238-6127	8-73	9
238-6127	8-75	10
238-6127	8-89	8
238-6127	8-91	9
238-6127	8-93	9
238-6127	8-95	9
238-8217	6-47	22
238048A2	9-21	1
239306A1	9-5	14
239606A1	6-31	1A
239739A1	2-3	1
239739A1	2-5	
239880A1	9-153	22
239881A1	9-153	23
240693A2	8-61	7
240703A2	8-61	14
240706A2	8-61	13
240709A4	8-61	11
240711A4	8-61	12
241088A3	8-89	6
241088A3	8-91	7
241088A3	8-93	7
241088A3	8-95	7
241088A3	8-109	
241957A1	6-45	20
242369A1	9-11	21
242459A1	8-55	9
242561A1	9-57	42

NUMERICAL INDEX

PART NO.	PAGE	REF.
242562A1	9-57	40
242724A1	9-143	7
243084A1	9-47	19
243122A1	9-95	9
243135A1	8-89	
243136A1	8-89	
243137A1	8-93	
243138A1	8-93	
243139A2	8-91	
243141A2	8-91	
243142A2	8-95	
243143A2	8-95	
243145A3	8-89	6A
243145A3	8-91	7A
243145A3	8-93	7A
243145A3	8-95	7A
243145A3	8-109	
243291A1	8-55	20
243338A1	8-43	44
243339A1	8-39	3
243603A1	9-135	8
243679A1	8-55	14
243790A1	8-7	7
243805A2	6-21	6
243893A1	7-3	
244286A1	9-93	23
244287A1	9-93	21
244441A1	9-91	36
245011A1	9-89	1
245258A1	9-125	8
245287A1	3-9	14
245450A1	9-87	3
245450A1	9-89	4
245466A1	9-63	6
245466A1	9-63	9
245466A1	9-65	6
245466A1	9-65	6
245466A1	9-65	9
245466A1	9-65	9
245466A1	9-67	6
245466A1	9-67	6
245466A1	9-67	9
245466A1	9-67	9
245466A1	9-69	6
245466A1	9-69	9
245466A1	9-71	6
245466A1	9-71	6
245466A1	9-71	9
245466A1	9-71	9
245592A1	9-39	
245706C1	9-125	
245891A2	4-25	1
246060A1	9-143	14
246063A1	9-89	5
246064A1	9-89	6
246151A1	8-55	17
246158A1	8-55	15
246228A1	9-93	36
246767A1	6-33	20
247550A1	6-67	13
247570A1	7-9	18
247743A1	2-9	8
247744A1	6-33	2
247746A1	6-33	13
247748A1	6-33	18
247749A1	6-33	
247877A1	6-67	24
248071A1	7-3	
249773A1	8-53	41
249775A1	8-53	40
249867A1	9-47	1
250648A1	8-15	35
250851A1	9-13	7
250851A1	9-19	26
250854A1	4-15	10
252737A1	8-53	38
252883A1	8-55	2
252885A1	8-55	1
253038A1	8-55	4
253209A1	9-111	8
253394A1	9-25	2A
253404A1	9-143	21
253740A1	8-53	37
253889A1	9-93	26
253989A2	8-89	4
253989A2	8-91	5
253989A2	8-93	5
253989A2	8-95	5
253989A2	8-103	
254686A1	6-27	1
254729A1	2-13	18
255051A1	8-55	5
255291A1	3-9	4
255447A1	9-93	27
255450A1	9-117	
255453A1	9-117	15
255659A1	8-23	23
255687A1	9-93	30
255927A1	8-63	33
255927A1	9-157	19
256091A1	8-29	30
256210A1	8-55	14A
256318A1	8-63	34
256318A1	9-157	21
256347A1	9-3	
256347A1	9-7	
256412A1	8-51	30
256478A1	7-5	13
256481A1	7-5	14
256482A1	7-5	17
256483A1	7-5	5
256485A1	7-5	18
256776A1	3-9	5
256888A3	6-35	
256888A3	6-37	
256888A3	6-41	
256888A3	6-43	
257279A1	4-13	16
257279A1	4-15	11
257381A1	9-93	28
257382A1	9-93	29
257387A1	8-97	3
257434A1	2-5	2
257810A1	9-43	18
257948A1	8-3	
257954A1	8-3	11
257954A1	8-71	
258313A1	9-103	2
258616A1	9-3	
258616A1	9-7	
25863R1	8-129	17
25863R1	8-143	16
259044A1	8-3	1
259054A1	9-105	
259071A1	9-103	2A
259410A1	9-43	16
25974R1	8-127	17
25974R1	8-131	19
259777A3	8-65	1
25987R1	8-139	20
260-14512	9-147	30
260-16524	9-119	14
261-14310	4-37	4
261-14310	4-37	11
265-16512	9-117	19
273-10510	4-33	3
273-10510	4-33	9
273-5048	4-35	3
275454A1	3-9	21
275455A1	3-9	25
275456A1	3-9	22
275457A1	3-9	29
275464A1	2-7	10
275488A2	8-67	36
275547A1	9-105	1
275547A1	9-107	1
275677A1	9-43	3
275820A3	9-43	1
275967A1	2-11	1
276-2446	8-127	11
276-2446	8-129	11
276-2446	8-131	12
276-2446	8-133	11
276-2446	8-135	11
276-2446	8-137	15
276-2446	8-139	13
276-2446	8-141	13
276-2446	8-143	10
276-2456	8-123	3
276-24916	2-13	8
276070A1	9-43	12
276743A1	7-9	16
276746A1	7-9	17
276962A1	8-65	12
277016A1	4-11	30
277184A2	9-25	16
277187A1	9-25	4A
277320A1	8-65	2
277377R1	2-9	2
277502A1	9-87	1
277546A1	9-145	7
277664A1	9-87	4
278183A1	3-9	28
278328A1	4-17	8
278534A1	6-27	8
278665A4	4-19	26A
278735A1	8-97	12
278735A1	8-101	14
278735A1	8-105	14

NUMERICAL INDEX

PART NO.	PAGE	REF.
278735A1	8-109	14
279169A1	6-55	1
279169A1	6-59	
279169A1	6-61	
279169A1	6-63	
279169A1	6-65	
279169A1	6-67	
279169A1	7-3	
279169A1	7-5	
279261A1	7-13	
279520A1	4-17	
28-1664	8-135	18
28-2048	8-133	17
28-2048	8-137	23
28-2052	8-141	20
280-16516	6-23	8
280-16516	9-95	12
280164A1	9-81	40
280336A1	9-119	25
280436A1	7-5	3
280450A1	7-5	20
280452A1	7-5	21
280457A1	7-5	22
280681A1	7-13	9
280886A1	7-13	16
280995A1	9-113	1
280996A1	9-113	1
281-14716	9-25	17
281-18712	9-25	7
281-18712	9-121	17
281-1878	9-25	6
281-4556	4-19	16
281-4556	4-29	7
281-54512	9-123	5
281-54512	9-125	5
281-54512	9-133	13
281-54712	9-135	7
281-54712	9-149	4
281001A1	9-147	1
281009A1	9-115	1
281068A1	9-119	4
281069A1	9-119	3
281185A1	9-57	
281819A4	3-3	1A
281952A1	7-5	
281960A1	7-5	23
282-16512	9-137	23
282-16512	9-147	7
282013A3	4-19	1
282013A3	4-21	1
282014A2	4-17	1
282015A3	4-11	1
282016A3	4-11	1A
282017A2	4-31	1
282018A2	4-31	1A
282033A1	6-3	19
282038A1	6-3	18
282242A1	3-9	1
282428A1	5-5	2
282428A1	8-41	30
282496A1	8-3	4
282497A1	8-3	2
282842A1	8-53	44
282845A1	9-115	16
282845A1	9-147	28
282931A1	3-9	3
283001A1	4-29	9
283226A1	9-43	10
283325A3	9-79	1
283332A1	9-43	18A
283417A1	8-83	5
283462A1	7-5	6
283466A1	7-5	19
283579A1	6-57	9
283779A1	4-21	26
283781A1	4-21	27
284041A3	3-3	1
284058A1	4-47	3
284154A1	9-127	16
284223A1	9-81	38
284431A1	3-3	10
284452A2	3-3	20
284479A1	4-47	2
284479A1	9-155	19
284482A3	9-155	4
284549A1	4-45	12
284627A1	4-47	4
284627A1	9-155	18
284641A1	6-23	29
284712A1	6-25	35
284712A1	6-69	
284713A1	6-3	11
284713A1	6-19	
284723A1	6-23	30
286-56520	9-113	11
286-56520	9-125	4
286-56520	9-147	21
29-1010	9-19	14
29-1012	9-19	5
291010A1	4-45	13
291129A1	9-119	24
291288A1	6-21	1
291288A1	8-9	13
291609A1	9-115	5
292207A1	6-61	12
292208A1	6-61	13
292210A1	6-65	3
292212A1	6-65	4
292213A1	6-65	1
292214A1	6-65	6
292262A1	9-103	
292263A1	9-103	
292264A1	9-115	25
292268A1	6-61	
292385A1	9-47	29
292408A1	9-127	13
292436A1	8-65	13
292514A1	6-25	42
292528A1	8-65	9
292654A1	4-25	
292654A1	4-45	
292654A1	9-133	
292740A1	2-9	10
292785A1	9-93	11
292890A1	6-61	17
292891A1	6-67	5
292893A1	6-67	10
292894A1	6-67	11
292896A1	6-67	23
292898A1	6-67	12
292899A1	6-67	28
292900A1	6-67	27
292901A1	6-67	29
292902A1	6-65	7
292904A1	9-3	1
292904A1	9-7	42
292962A1	6-21	5
292969A2	8-69	4
292969A2	9-23	2
293021A1	9-103	
293022A1	9-103	
293037A1	8-63	39
293037A1	8-65	8
293262A1	9-3	1A
293269A1	8-51	26
293571A1	2-7	2
293571A1	2-9	
293636A1	9-47	34
293924A1	8-71	
293925A1	8-71	6A
293926A1	8-71	6
293927A1	8-71	22
293928A1	8-71	22A
294189A1	6-63	
294192A1	6-61	
294198A1	8-91	2
294198A1	8-95	1A
294198A1	8-115	
294666A1	9-115	14
294666A1	9-147	26
294792A1	4-25	7A
295032A1	7-3	8
295108A1	6-59	11
295109A1	6-59	12
295110A1	6-63	6
295111A1	7-3	18
295112A1	7-3	23
295113A1	7-3	24
295114A1	6-59	4
295172A1	8-9	22
295378A1	4-25	7
295580A1	6-67	18
295597A1	9-127	14
296171A1	7-9	9
296367A1	9-115	15
296367A1	9-147	27
296508A2	4-19	35
296508A2	4-47	5
296508A2	8-63	27
296508A2	8-67	35
297255A1	6-57	10
297615A1	9-5	1
297635A1	8-45	8
297836A1	9-91	38
297837A1	9-91	37
297913A1	9-115	29
297914A1	9-115	30
297915A1	9-115	28
297977A2	8-61	1

NUMERICAL INDEX

PART NO.	PAGE	REF.
298176A1	9-3	
298176A1	9-7	
298203A1	6-41	20
298228A1	4-45	10
298394A1	6-25	37
298449A1	9-95	2
298463A1	3-3	10
298681A1	4-47	8
298772A1	8-51	1
299001A1	9-115	26
299324A1	6-49	16
299383A1	9-25	18
299383A1	9-155	20
299395A1	9-77	1
300013A1	9-49	18
300030A1	4-47	14
300152A1	9-115	27
300157A1	4-45	5
300157A1	9-133	
300490A1	8-47	9
300580A1	8-51	2
300580A1	9-27	2B
300588A1	9-59	26
300657A1	9-105	
300659A1	9-105	
300661A1	9-105	
300662A1	9-105	
300663A1	9-105	
300664A1	9-105	
300665A1	9-105	
300667A1	9-105	
300669A1	9-105	
300670A1	9-105	
300672A1	9-105	
300674A1	9-105	
300675A1	9-105	
300677A1	9-105	
300679A1	9-105	
300680A1	9-105	
300681A1	9-105	
300683A1	9-105	
300684A1	9-105	
300685A1	9-105	
300688A1	9-105	
300689A1	9-105	
300690A1	9-105	
300691A1	9-105	
300692A1	9-107	
300884A1	8-53	51
300896A1	9-107	
300905A1	8-51	10
300906A1	8-51	16
300907A1	8-51	19
300939A1	8-53	42
300952A1	8-53	48
300983A1	8-41	11
300996A2	8-69	3
301008A2	8-65	21
301009A2	8-65	22
301343A1	9-153	1A
301355A1	8-47	4
301698A1	8-47	3
301700A1	8-47	2
301803R1	9-139	20
302097A1	8-51	22
302246A1	8-79	18
302246A1	8-99	11
302246A1	8-101	15
302246A1	8-105	15
302246A1	8-111	33
302246A1	8-113	11
302246A1	8-115	11
302247A1	8-79	24
302326A1	8-79	7
302358A1	3-3	3
302358A1	9-79	3
302472A1	8-51	29
302474A1	8-43	49
302501A1	8-47	1
302641A1	8-51	6
302803A1	4-19	36
302803A1	4-47	7
302803A1	8-63	37
302803A1	8-67	34
302820A1	8-69	5
302821A1	8-69	9
302846A1	3-9	15
302964A1	8-73	2
302964A1	8-75	2
302964A1	8-79	
302965A1	8-73	
302965A1	9-3	28
302966A1	8-17	1
302966A1	8-75	
302966A1	9-7	40
303022A1	9-99	8B
303105A1	9-115	31
303106A1	9-115	34
303108A1	9-115	32
303109A1	9-115	33
303804A1	8-69	19
303806A1	8-69	21
304019A1	6-57	5
304020A1	6-57	21
304390A1	9-99	8A
304424A1	8-67	40
304525A1	9-145	28
304527A1	9-145	18
304528A1	9-145	29
304530A1	9-145	12
304572A1	8-69	1
304574A1	8-69	2
304612A1	8-67	44
304890A1	8-67	41
304940A1	9-157	5
305067A1	3-7	1
305152A1	6-65	2
305578A1	9-127	30
305690A1	9-89	3
305818A1	9-127	24
305821A1	9-143	24
305822A1	9-143	1
30634	8-131	3
30634	8-131	14
307243A1	9-147	31
307277A1	8-69	17
307348A1	3-5	39
307348A1	9-155	11A
3078897R1	4-7	
3079134R1	4-7	6
3125705R1	4-43	10
321-1707	9-19	24
321-1707	9-153	17
321-1708	9-19	23
321-1708	9-153	16
321-229	9-157	1
321-230	9-157	3
321-3596	9-153	18
321-4311	9-151	5
321-4481	9-153	13
321-4614	9-157	18
321-6046	9-157	6
321-6376	9-157	2
321-6413	9-153	14
321-6671	9-153	15
321-6672	9-157	4
321-6714	9-153	12
321-6774	9-157	22
321-6872	9-153	19
321-7030	9-157	8
321-7040	9-153	20
326-852	8-71	15
340-12520	9-105	
345-133	9-3	
345-133	9-7	
345-133	9-147	
345-44	6-21	
353-225	2-45	12
353-401	4-25	33
353-402	9-93	34
353-405	9-147	3
353-406	4-25	16
353-406	9-139	26
353-406	9-147	23
353-408	9-25	19
353-410	9-115	11
353-411	9-25	5
353-415	9-115	10
353-417	9-147	5
353-422	9-95	7
353-429	4-25	32
376852R91	8-57	10
38-1812	8-119	31
383619R1	4-13	5
396-41028	9-3	16
396-41028	9-3	31
396-41028	9-7	31
396-41028	9-35	23
409-768	4-31	4
409-768	9-61	48
41-1616	2-39	8
413-1228	9-45	18
413-412	9-149	11
413-416	9-131	14
413-420	9-121	14
413-432	4-33	5A
413-432	4-33	10A
413-432	4-35	5
413-48	9-119	20

NUMERICAL INDEX

PART NO.	PAGE	REF.
413-516	9-97	6
413-516	9-149	7
413-536	4-33	14A
413-6152	9-121	2
413-624	8-21	5
413-624	8-23	5
413-624	8-25	5
413-624	8-27	5
413-624	8-29	5
413-624	8-33	5
413-624	8-37	5
413-624	9-37	12
413-628	9-3	19
413-632	5-15	22
413-632	9-5	10
413-632	9-5	27
413-632	9-45	22
413-648	8-59	4
413-728	8-3	14
414-412	9-129	18
414-724	9-103	22
414-728	9-103	14
425-1012	9-45	19
425-104	9-131	16
425-105	7-7	21
425-106	4-19	13
425-106	4-21	8
425-106	5-13	5
425-106	5-15	24
425-106	7-13	27
425-106	8-73	13
425-106	8-75	14
425-106	8-89	13
425-106	8-91	14
425-106	8-93	14
425-106	8-95	14
425-106	9-3	21
425-106	9-37	13
425-106	9-127	18
425-106	9-147	19
425-108	4-33	6B
425-1110	9-35	16
425-1120	8-3	22
425-115	9-9	6
425-116	2-35	24
425-116	2-35	28
425-116	9-3	22
425-116	9-5	26
425-116	9-7	38
425-116	9-31	36
425-116	9-37	5
425-118	5-15	27
425-118	9-29	10
425-118	9-33	3
425-118	9-35	7
425-148	4-29	4
425-1510	8-77	8
425-1514	5-13	17
425-154	3-9	31
425-155	2-27	3
425-155	8-87	12
425-155	8-99	27
425-155	8-101	31
425-155	8-107	31
425-155	8-107	44
425-155	8-111	31
425-155	8-115	27
425-155	8-121	12
425-156	7-7	5
425-156	7-13	17
425-156	9-29	27
425-156	9-31	47
425-156	9-33	9
425-156	9-41	9
425-156	9-43	15
425-157	9-131	3
425-1918	5-17	7
425-285	9-97	11
427-3058	3-7	15
427-3058	3-9	18
427-6088	9-11	33
427-6088	9-29	25
427-6088	9-33	7
427-6088	9-41	7
428-510	6-23	22
429-1010	8-71	20
429-1012	9-15	5
429-1012	9-17	6
432-1232	5-17	6
432-48	3-7	10
432-48	3-7	16
432-48	3-9	19
432-612	7-7	8
432-612	7-13	3
432-612	7-13	18
432-612	9-3	27
432-612	9-7	37
432-612	9-9	5
432-612	9-11	34
432-612	9-29	26
432-612	9-31	38
432-612	9-31	49
432-612	9-33	8
432-612	9-37	4
432-612	9-41	8
432-612	9-41	12
432-612	9-43	20
432-828	9-3	13
432-828	9-5	24
432-828	9-35	20
435-51652	9-59	4
438-12040	7-7	24
439-5436	9-5	6
440-10616	4-47	10
440-10616	9-11	18
440-1066	9-79	1B
440-1088	9-133	12
440-11010	9-83	2
440-11012	9-93	12
442-11016	9-123	14
443-13112	9-117	22
452698C1	4-5	29
458-412	9-123	6
458-412	9-125	16
459-11014	6-23	4
461-33148	9-135	3
465004R91	9-3	14A
470-10620	9-103	8
473321C1	9-125	18
484-43116	8-87	11
484-43116	8-99	26
484-43116	8-101	30
484-43116	8-107	30
484-43116	8-111	30
484-43116	8-115	26
484-43116	8-121	11
484-43120	8-107	43
484-6316	6-23	3
490-11010	3-3	27
490-1106	4-19	4A
490-1108	4-19	4
490-1108	4-19	14
492-11025	3-9	30
492-11025	9-119	21
492-11025	9-129	19
492-11025	9-131	15
492-11031	9-97	7
492-11038	5-15	23
492-11038	9-127	17
492-11044	8-3	15
492-11050	4-33	6A
492-11050	5-15	26
493-11026	4-43	2
493-11039	4-13	12
493-11052	4-29	3
493-21020	4-11	9
493-21020	8-125	3
493-21033	4-11	7
493-41020	6-23	5
495-11022	8-119	24
495-11028	4-45	3
495-11028	9-3	8
495-11028	9-5	17
495-11028	9-151	2
495-11034	2-13	11
495-11041	4-13	9
495-11041	4-15	8
495-11041	4-21	23
495-11041	7-13	26
495-11041	8-59	5
495-11041	9-7	34A
495-11041	9-147	18
495-11053	6-23	10
495-11053	9-11	35
495-11053	9-43	9
495-11081	9-35	10
495-11094	5-15	37
495-11106	9-91	33
495-21031	4-43	3
495-21038	7-13	4
495-21038	9-97	8
495-21038	9-99	18
495-21038	9-121	6A
495-21044	9-5	11
495-21044	9-45	29
495-21044	9-79	8
495-21044	9-131	22
495-21056	4-31	13
495-21056	6-3	15

NUMERICAL INDEX

PART NO.	PAGE	REF.
495-21056	6-3	20
495-31016	9-103	9
495-31022	3-7	9
495-31022	4-23	16
495-31022	4-23	21
495-31022	4-29	8
495-71041	9-121	24
495-81001	4-31	10
495-81001	9-97	16
495-81001	9-99	13
495-81002	9-43	13
495-81002	9-99	10
495-81121	9-135	4
495-81148	9-121	20
495-81153	4-17	12
495-81169	9-103	17
495-81184	9-3	9
495-81184	9-5	22
495-81226	9-51	32
495-81226	9-55	4
495-81226	9-55	25
495-81226	9-57	35
495-81226	9-59	13
495-81226	9-61	42
495-81227	9-47	17
495-81227	9-51	31
495-81227	9-55	3
495-81227	9-59	12
495-81252	4-3	12
495-81259	9-77	11
495-81259	9-77	19
495-81261	7-7	30
495-81282	9-11	7
495-81282	9-45	32
495-81282	9-55	21
495-81282	9-61	38
495-81292	9-73	6
496-21041	2-3	29
496-21041	6-23	17
496-21041	6-23	25
496-21041	9-3	20
496-41041	9-27	5
496-41041	9-27	9
496-41081	9-49	5
496-81000	5-19	9
496-81000	6-3	3
496-81000	6-13	24
496-81010	9-103	18
496-81010	9-103	25
496-81018	2-15	6
496-81018	3-7	7
49773	4-11	24
49773	5-7	42
515-22127	5-7	30
515-22127	7-9	12
515-2295	9-5	17A
515-2295	9-127	8
515-23127	3-3	16
515-23127	4-11	5
515-23127	4-11	13
515-23127	4-11	15
515-23127	4-11	26
515-23127	7-9	15
515-23159	5-7	31
515-23190	5-7	29
515-23190	8-21	15A
515-23254	8-21	15
515-2379	8-41	20
515-25159	8-39	10
515-25190	8-59	22
515-25254	8-19	13
555-2	4-23	4
555-2	4-25	2
555-2	4-25	8
604-20040	9-49	4
608-12025	6-3	12
61-31016	8-119	23
613-8016	2-45	4
614-10020	5-3	7
614-10020	5-9	7
614-10020	6-21	2
614-10020	8-9	2
614-10020	9-53	11
614-10020	9-83	7
614-10025	4-19	20
614-10025	7-7	10
614-10025	7-13	6
614-10025	7-13	24
614-10025	8-7	11
614-10025	8-9	19
614-10025	8-39	12
614-10025	8-41	5A
614-10025	8-45	4
614-10025	8-45	13
614-10025	8-47	13
614-10025	8-49	5
614-10025	8-53	47
614-10025	9-21	2
614-10025	9-31	42
614-10025	9-37	16
614-10025	9-41	3
614-10025	9-53	7
614-10025	9-79	7
614-10025	9-91	5
614-10025	9-91	10
614-10025	9-91	22
614-10025	9-91	28
614-10025	9-93	3
614-10025	9-93	16
614-10030	5-3	8
614-10030	5-7	26
614-10030	6-29	7
614-10030	6-31	7
614-10030	8-21	32
614-10030	8-35	53
614-10030	8-51	33
614-10030	8-55	24
614-10030	9-101	4
614-10035	9-27	4
614-10035	9-83	8
614-10050	9-53	18
614-12016	6-35	2
614-12030	8-7	18
614-12030	9-105	
614-12035	8-3	9
614-12040	6-23	27
614-12040	9-103	3
614-18035	8-51	7
614-20040	9-83	12
614-6016	3-9	32
614-6016	9-3	7
614-6016	9-3	15
614-6016	9-5	16
614-6016	9-7	30
614-6016	9-11	13
614-6016	9-27	17
614-6016	9-35	22
614-6020	4-43	13
614-6020	8-49	15
614-6020	9-3	30
614-6020	9-35	24
614-6020	9-115	
614-6025	9-43	4
614-6025	9-115	20
614-6050	6-57	17
614-8012	2-5	7
614-8016	2-3	22
614-8016	2-3	33
614-8016	3-5	31
614-8016	6-37	25
614-8016	7-9	21
614-8016	9-79	28
614-8018	6-27	11
614-8020	2-7	4
614-8020	2-25	23
614-8020	2-27	9
614-8020	4-9	8
614-8020	5-3	10
614-8020	9-27	12
614-8022	6-47	2
614-8025	3-9	23
614-8025	4-41	9
614-8025	8-21	16
614-8025	8-25	14
614-8025	8-27	14
614-8025	8-29	13
614-8025	8-33	13
614-8025	8-49	3
614-8025	9-9	15
614-8025	9-29	2
614-8025	9-29	20
614-8025	9-97	12
614-8025	9-139	13
614-8030	6-65	13
614-8030	7-7	2
614-8030	7-9	5
614-8030	9-13	8
614-8030	9-97	14
614-8030	9-99	12
614-8030	9-139	28
614-8030	9-141	19
614-8030	9-143	28
614-8045	7-7	27
614-8045	9-97	19
614-8045	9-101	11
619387R1	5-17	2
625743C1	5-17	3
626-10016	6-23	26
627-10030	2-11	6

NUMERICAL INDEX

PART NO.	PAGE	REF.
627-10030	2-11	9
627-10030	9-145	13
627-10035	6-23	16
627-10035	8-69	20
627-10035	9-145	24
627-12030	3-9	26
627-12030	9-77	16
627-20040	3-3	2
627-20040	9-79	2
628-6016	3-17	21
637-62081	4-11	30A
637-72081	2-39	16A
637-72081	3-17	27A
65457C1	8-79	4
65457C1	8-81	4
65457C1	8-85	4
65457C1	8-99	4
65457C1	8-101	4
65457C1	8-103	4
65457C1	8-105	4
65457C1	8-109	4
65457C1	8-113	4
65457C1	8-115	4
65881H	4-33	15
680187C1	3-17	9
691292C1	3-17	8
697494R91	5-11	30
70-12532	4-33	5
70-12532	4-33	10
70973	2-7	3
711-10030	8-63	30
711-10040	8-65	14
711-6050	8-65	17
71121	8-119	2
712998R91	6-7	7
733-2012	8-49	12
760-14413	4-45	14
761-17325	4-45	8
781-24613	4-11	34
781-24820	4-17	3
781-24820	9-147	14
781-24830	9-97	4
800-1134	6-13	17
800-2136	6-67	26
800-40065	9-47	27
800-40070	9-47	31
800-4155	9-49	25
800-435	3-9	7
800-44040	9-11	26
800-44040	9-11	31
800-44040	9-13	4
800-44040	9-13	22
800-44040	9-53	5
800-44040	9-59	27
800-44050	5-15	4
800-44050	5-15	10
800-44050	6-3	7
800-44050	9-11	8
800-5120	6-65	5
806-8016	2-3	6
806-8025	2-7	11
806-8040	9-127	6
806-8050	2-3	10
811-10070	9-81	39
814-10040	4-9	2
814-10040	8-11	9
814-10040	8-13	7
814-10040	8-13	20
814-10040	8-15	36
814-10040	8-17	6
814-10040	8-19	8
814-10040	8-51	34
814-10040	9-3	29
814-10040	9-127	9
814-10045	3-5	38
814-10045	8-35	41
814-10045	8-49	18
814-10045	9-79	30
814-10050	2-3	23
814-10050	8-5	33
814-10050	8-37	14
814-10050	8-43	53
814-10050	8-47	5
814-10055	8-31	38
814-10055	8-33	30
814-10055	8-35	49
814-10060	4-11	27
814-10060	7-13	30
814-10060	8-21	22
814-10060	9-27	8
814-10070	2-3	28
814-10070	8-41	5
814-10070	8-55	10
814-10080	9-19	20
814-10090	8-69	13
814-10090	9-19	16
814-10100	4-9	5
814-10140	8-61	4
814-10150	6-29	9
814-10180	8-51	3
814-10245	4-13	6
814-10245	4-15	7
814-12045	3-7	3
814-12045	8-21	2
814-12045	8-23	2
814-12045	8-25	2
814-12045	8-27	2
814-12045	8-29	2
814-12045	8-33	2
814-12045	8-37	2
814-12050	8-41	3
814-12060	8-29	27
814-12060	8-33	27
814-12080	8-25	37
814-12080	8-27	31
814-12080	8-29	23
814-12080	8-33	23
814-12085	2-15	5
814-12090	8-55	6
814-12100	8-25	18
814-12100	8-27	18
814-12100	8-29	17
814-12100	8-33	17
814-12110	2-15	2
814-12110	9-91	16
814-14140	6-59	9
814-16110	6-23	31
814-6035	7-3	10
814-6060	8-41	17
814-8035	2-27	8
814-8035	4-13	15
814-8035	4-31	8
814-8035	9-97	20
814-8035	9-101	8
814-8040	7-7	15
814-8045	9-117	15A
814-8050	3-9	9
814-8060	6-33	16
814-8060	6-51	7
814-8075	2-35	29
814-8080	6-49	34
814-8080	6-65	14
814-8110	4-41	4
824-1405	4-11	10
824-1405	4-47	17
825-11418	5-19	8
825-11418	6-3	2
825-11418	6-13	25
825-1410	4-5	43
825-2406	4-21	4
825-2406	9-141	27
825-2408	3-15	6
825-2408	9-139	8
825-2408	9-139	30
825-2408	9-141	21
825-2408	9-147	10
825-2410	3-17	24
825-2410	9-91	6A
825-2410	9-91	27
825-2410	9-93	19
827-10040	9-145	16
827-10050	8-45	9
827-10075	6-15	3
827-10110	9-145	19
827-10130	9-145	8
827-12045	6-3	14
827-12045	6-3	21
827-16110	9-77	10
827-16110	9-77	18
827-20075	9-47	13
827-20170	9-75	2
827-20170	9-75	6
827-20190	9-13	16
827-20230	6-55	4
827-8050	7-13	10
827-8060	7-13	10A
828-10060	8-65	25
828-10090	8-67	30
828-12055	6-23	9
828-20160	9-15	6
828-20160	9-17	7
829-1306	3-17	20
829-1310	8-117	13
829-1312	8-117	11
829-1406	6-57	20
829-1406	8-41	19
829-1406	8-65	20
829-1406	9-3	32
829-1406	9-35	25

NUMERICAL INDEX

PART NO.	PAGE	REF.	PART NO.	PAGE	REF.	PART NO.	PAGE	REF.
829-1406	9-43	5	829-1416	9-77	22	832-10420	9-17	10
829-1408	2-7	6	829-1416	9-77	26	832-41306	3-17	42
829-1408	4-11	8	829-1420	6-55	7	833-40406	4-23	5
829-1408	4-13	14	829-1420	9-13	19	833-40406	9-11	15
829-1408	4-21	25	829-1420	9-47	15	833-40406	9-95	6
829-1408	4-41	7	829-1420	9-75	4	833-40406	9-115	
829-1408	5-3	11	829-1420	9-75	8	833-40406	9-115	12
829-1408	7-7	28	829-1420	9-83	13	833-40406	9-115	22
829-1408	7-9	7	829-2410	4-11	20	833-40406	9-137	14
829-1408	7-13	15	83-1108	8-49	24	833-40406	9-141	26
829-1408	8-21	18	832-10404	9-97	28	833-40408	2-7	13
829-1408	9-9	17	832-10404	9-99	6	833-40408	9-97	18
829-1408	9-13	11	832-10406	4-19	11	833-40408	9-99	17
829-1408	9-115	24	832-10406	4-19	24	833-40408	9-101	12
829-1408	9-139	16	832-10406	4-25	11	836-4065	2-37	6
829-1410	2-11	10	832-10408	4-21	5	838-3640	3-9	16
829-1410	3-5	35	832-10408	4-41	11	83822C1	9-141	6
829-1410	4-19	21	832-10408	7-7	17	84-2106	8-49	28
829-1410	7-7	12	832-10408	9-29	3	840-1516	9-115	19
829-1410	7-13	8	832-10408	9-29	21	840-1535	4-17	9
829-1410	7-13	21	832-10408	9-97	13	842-1425	9-97	26
829-1410	8-7	29	832-10408	9-97	22	842-1425	9-99	4
829-1410	8-11	13	832-10408	9-99	14	843-1516	4-47	15
829-1410	8-13	11	832-10408	9-101	10	844-10020	4-11	16
829-1410	8-13	17	832-10408	9-117	15B	844-10020	4-13	3
829-1410	8-13	23	832-10408	9-137	17	844-10020	4-19	22
829-1410	8-17	10	832-10408	9-143	23	844-10020	9-9	9
829-1410	8-17	15	832-10410	2-3	26	844-10025	4-11	25
829-1410	8-21	26	832-10410	8-19	15	844-10025	4-13	11
829-1410	8-21	34	832-10410	8-31	39	844-10110	9-19	6
829-1410	8-39	14	832-10410	8-33	32	844-6025	4-19	10
829-1410	8-41	7	832-10410	8-35	43	844-6025	4-19	23
829-1410	8-43	57	832-10410	8-35	50	844-6025	4-21	2
829-1410	8-45	6	832-10410	8-35	54	844-6025	4-25	9
829-1410	8-45	12	832-10410	8-37	16	844-8016	2-39	17E
829-1410	8-47	8	832-10410	8-55	26	844-8020	4-23	3
829-1410	8-47	12	832-10410	9-19	8	844-8020	9-115	3
829-1410	8-49	7	832-10410	9-19	18	844-8025	3-11	21
829-1410	8-51	5	832-10410	9-19	22	844-8025	4-21	6
829-1410	8-51	36	832-10410	9-31	44	845-6012	3-17	39
829-1410	8-63	31	832-10410	9-37	17	845-6015	2-43	9
829-1410	8-65	16	832-10410	9-41	4	845-6020	9-137	13
829-1410	8-65	28	832-10410	9-81	41	845-6020	9-141	25
829-1410	8-67	33	832-10410	9-91	12	845-8016	2-31	5
829-1410	8-69	7	832-10410	9-99	11	845-8016	2-41	21
829-1410	8-69	11	832-10410	9-121	25	845-8020	2-23	11
829-1410	8-69	16	832-10410	9-127	15	845-8025	2-17	15
829-1410	8-69	24	832-10410	9-145	23	845-8025	2-33	16
829-1410	9-53	21	832-10412	2-15	9	845-8025	3-11	6
829-1410	9-79	34	832-10412	3-7	8	845-8030	2-17	13
829-1410	9-91	31	832-10412	6-23	11	845-8035	2-29	5
829-1410	9-93	5	832-10412	8-25	19	845-8035	2-33	14
829-1412	6-3	22	832-10412	8-25	39	845-8040	2-17	12
829-1412	8-7	19	832-10412	8-27	19	845-8050	2-19	6
829-1412	8-21	4	832-10412	8-27	33	845-8060	2-19	22
829-1412	8-23	4	832-10412	8-29	18	845-8070	2-33	13
829-1412	8-25	4	832-10412	8-29	25	854-10065	2-21	3
829-1412	8-27	4	832-10412	8-29	28	854-10070	2-17	18
829-1412	8-29	4	832-10412	8-33	18	854-10075	2-41	33
829-1412	8-33	4	832-10412	8-33	25	854-12025	2-19	17
829-1412	8-37	4	832-10412	8-33	28	854-12025	2-41	29
829-1412	9-91	21	832-10416	6-23	34	854-12030	2-33	8
829-1416	9-77	14	832-10420	9-15	8	854-12040	2-45	2

NUMERICAL INDEX

PART NO.	PAGE	REF.
863-6020	7-3	25
864-10025	6-35	17
864-12130	6-59	10
864-6020	6-49	8
864-6025	6-33	7
864-6035	7-3	19
864-8016	7-3	4
864-8020	6-49	21
864-8025	6-35	6
892-11005	4-5	40
892-11005	4-47	16
892-11006	3-9	33
892-11006	3-17	19
892-11006	4-3	11
892-11006	6-57	19
892-11006	8-49	17
892-11006	8-65	19
892-11006	9-27	19
892-11006	9-115	21
892-11008	3-9	10
892-11008	3-9	24
892-11008	4-21	24
892-11008	4-31	9
892-11008	7-7	3
892-11008	7-9	6
892-11008	7-13	14
892-11008	8-21	17
892-11008	8-25	15
892-11008	8-27	15
892-11008	8-29	14
892-11008	8-33	14
892-11008	9-13	10
892-11008	9-27	14
892-11008	9-97	15
892-11008	9-99	16
892-11008	9-139	15
892-11008	9-147	15
892-11010	4-5	42
892-11010	7-7	11
892-11010	7-13	7
892-11010	7-13	22
892-11010	8-11	12
892-11010	8-13	10
892-11010	8-13	16
892-11010	8-13	22
892-11010	8-15	37
892-11010	8-17	9
892-11010	8-17	16
892-11010	8-19	9
892-11010	8-21	33
892-11010	8-47	7
892-11010	8-51	35
892-11010	8-61	6
892-11010	8-65	15
892-11010	8-65	27
892-11010	8-67	32
892-11010	8-69	6
892-11010	8-69	10
892-11010	8-69	15
892-11010	8-69	23
892-11010	9-53	12
892-11010	9-79	31
892-11010	9-101	5
892-11012	3-9	27
892-11012	9-103	5
892-11012	9-105	
892-11018	8-51	8
893-11005	4-45	15
893-11006	4-21	3
893-11008	4-41	3
895-11004	4-47	11
895-11004	9-97	27
895-11004	9-99	5
895-11005	3-9	6
895-11006	3-9	34
895-11006	3-17	18
895-11006	6-57	18
895-11006	8-41	18
895-11006	8-49	16
895-11006	8-65	18
895-11006	9-27	18
895-11008	2-3	11
895-11008	2-5	8
895-11008	2-7	5
895-11008	2-27	6
895-11008	3-9	11
895-11008	4-41	6
895-11008	4-41	10
895-11008	7-9	20
895-11008	8-49	4
895-11008	9-9	16
895-11008	9-13	9
895-11008	9-27	13
895-11008	9-97	21
895-11008	9-101	9
895-11008	9-119	26
895-11008	9-125	15
895-11008	9-139	14
895-11008	9-143	22
895-11010	3-5	34
895-11010	6-21	3
895-11010	7-13	31
895-11010	8-9	3
895-11010	8-15	38
895-11010	8-19	14
895-11010	8-41	6
895-11010	8-45	14
895-11010	8-47	14
895-11010	8-49	6
895-11010	8-51	4
895-11010	8-61	5
895-11010	9-11	20
895-11010	9-19	17
895-11010	9-19	21
895-11010	9-53	20
895-11010	9-91	6
895-11010	9-91	11
895-11010	9-91	23
895-11010	9-91	29
895-11010	9-93	4
895-11010	9-93	6
895-11010	9-93	17
895-11010	9-101	6
895-11010	9-127	10
895-15006	4-25	10
895-15006	9-115	
895-15008	2-3	7
895-15008	2-7	12
895-15008	3-5	32
895-15008	4-13	13
895-15008	9-79	29
895-15008	9-127	7
895-15010	8-63	35
895-18010	9-43	19
896-11010	2-11	8
896-11010	8-11	11
896-11010	8-13	9
896-11010	8-55	25
896-11010	9-3	29A
896-11010	9-21	3
896-11010	9-91	14
896-11010	9-145	9
896-11010	9-145	14
896-11010	9-145	22
896-11010	9-145	26
896-11012	3-7	4
896-11012	8-21	3
896-11012	8-23	3
896-11012	8-25	3
896-11012	8-27	3
896-11012	8-29	3
896-11012	8-33	3
896-11012	8-37	3
896-11012	8-41	4
896-11012	9-53	22
896-11012	9-77	17
896-11012	9-91	34
896-11012	9-103	11B
896-11020	3-3	3A
896-11020	6-55	5
896-11020	9-13	18
896-11020	9-15	9
896-11020	9-17	9
896-11020	9-43	11
896-11020	9-47	14
896-11020	9-75	3
896-11020	9-75	7
896-11020	9-79	3A
896-15012	2-15	3
896-15012	2-15	8
896-15012	6-23	28
896-15012	9-91	17
896-15012	9-91	20
90-6682T1	6-3	16
90-6682T1	6-19	12
90-6682T1	6-25	40
90-6682T1	6-69	12
905794R1	6-35	20
905839R1	6-9	4
905876R1	6-13	23
91946C1	4-33	2
91947C1	4-33	8
933697R1	3-17	7
934667R1	6-29	3
934667R1	6-31	3
934667R1	6-49	36
934667R1	6-51	6
934727R1	6-9	2
96790C2	8-49	10

NUMERICAL INDEX

PART NO.	PAGE	REF.	PART NO.	PAGE	REF.	PART NO.	PAGE	REF.
96846C2	8-49	11						
97252CX	9-139							
97256C3	9-123	1						
97257C3	9-123	2						
97258C3	9-123	3						
97259C3	9-123	4						
97277C1	9-123	23						
97278C1	9-123	13						
97290C1	9-113	2						